| Dist | COUNTY | ROUTE | POST MILES TOTAL PROJECT | SHEET No. | TOTAL SHEETS |
|---|---|---|---|---|---|
| 12 | Ora | 5 | 6.2/8.7 | 401 | 595 |

REGISTERED CIVIL ENGINEER 1-23-13 DATE

4-29-13
PLANS APPROVAL DATE

REGISTERED PROFESSIONAL ENGINEER GARY HANSEN No. 26543 Exp. 3/31/14 CIVIL STATE OF CALIFORNIA

*THE STATE OF CALIFORNIA OR ITS OFFICERS OR AGENTS SHALL NOT BE RESPONSIBLE FOR THE ACCURACY OR COMPLETENESS OF SCANNED COPIES OF THIS PLAN SHEET.*

LIN CONSULTING, INC.
1432 EDINGER AVE, #230
TUSTIN, CA 92780

ORANGE COUNTY
TRANSPORTATION AUTHORITY
550 S. MAIN STREET
ORANGE, CA 92863-1584

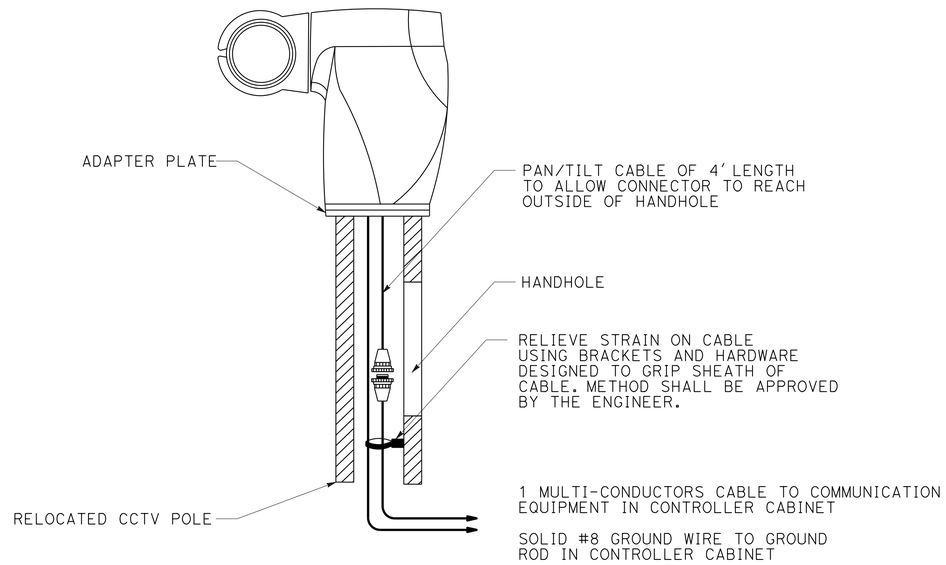


## CCTV CAMERA ASSEMBLY MOUNTING DETAIL

FOR EXISTING CCTV POLES

**NOTE:** SEE Std PLAN ES-16B FOR CCTV POLE DETAILS.

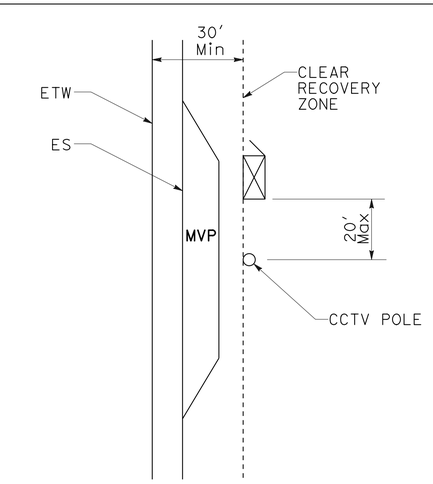


## TYPICAL LAYOUT OF CCTV POLE AND CABINET RELATIVE TO MVP

(NTS)

**NOTES:**

1. CCTV POLE AND CABINET TO BE PLACED Min 30' FROM ETW WHERE THERE IS SUFFICIENT SPACE.
2. WHERE THERE IS INSUFFICIENT SPACE AND CCTV POLE AND CABINET MUST BE PLACED WITHIN THE 30' CRZ, MBGR WILL BE REQUIRED.
3. SEE CONSTRUCTION SHEETS FOR CCTV POLE AND CABINET LOCATIONS.

## LEGEND AND ABBREVIATIONS: (FOR THIS SHEET ONLY)

- SURGE PROTECTOR
- CIRCUIT BREAKER
- HT — RELAY COIL - * RELAY NAME
- RELAY CONTACT N.C.
- 8 — WIRE SIZE, IF NOT INDICATED SHALL BE #14 AWG
- F — FAN
- L — INDICATOR LAMP
- THERMOSTATIC CONTROL
- THERMO — ADJUSTABLE CALIBRATED THERMOSTAT
- R — DUPLEX RECEPTACLE
- W\GFI — WITH GROUND FAULT INTERRUPTOR
- NTS — NOT TO SCALE

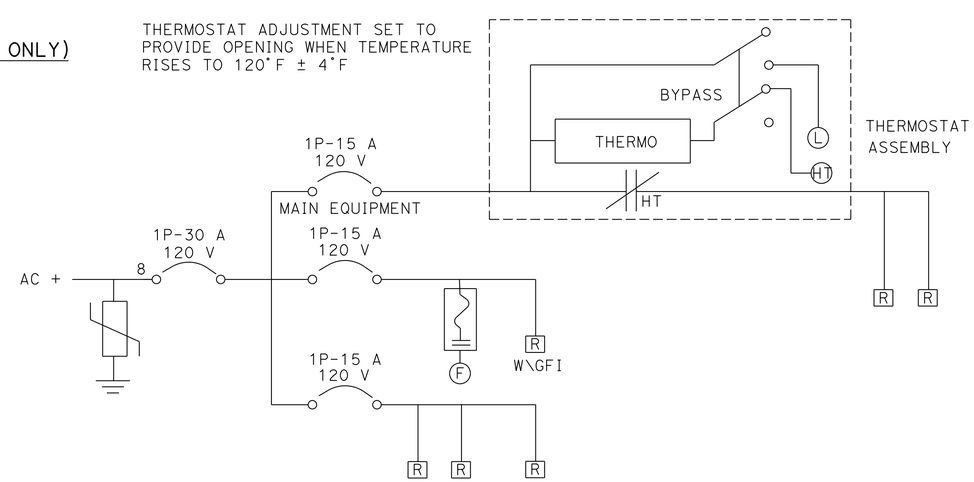


## POWER DISTRIBUTION ASSEMBLY (PDA)

*APPROVED FOR ELECTRICAL WORK ONLY*

# COMMUNICATION SYSTEM
## (CLOSED CIRCUIT TELEVISION)

NO SCALE

**E-92**

| REVISED BY | DATE REVISED |
|---|---|
| GE MOUA | TIMMY TO |

CALCULATED-DESIGNED BY
CHECKED BY

CONSULTANT FUNCTIONAL SUPERVISOR: GARY HANSEN

STATE OF CALIFORNIA - DEPARTMENT OF TRANSPORTATION

Caltrans

LAST REVISION 01-23-13 | DATE PLOTTED => 29-APR-2013 | TIME PLOTTED => 14:19

| Dist | COUNTY | ROUTE | POST MILES TOTAL PROJECT | SHEET No. | TOTAL SHEETS |
|---|---|---|---|---|---|
| 12 | Ora | 5 | 6.2/8.7 | 402 | 595 |

REGISTERED CIVIL ENGINEER 1-23-13 DATE

4-29-13
PLANS APPROVAL DATE

REGISTERED PROFESSIONAL ENGINEER GARY HANSEN No. 26543 Exp. 3/31/14 CIVIL STATE OF CALIFORNIA

*THE STATE OF CALIFORNIA OR ITS OFFICERS OR AGENTS SHALL NOT BE RESPONSIBLE FOR THE ACCURACY OR COMPLETENESS OF SCANNED COPIES OF THIS PLAN SHEET.*

LIN CONSULTING, INC.
1432 EDINGER AVE, #230
TUSTIN, CA 92780

ORANGE COUNTY
TRANSPORTATION AUTHORITY
550 S. MAIN STREET
ORANGE, CA 92863-1584

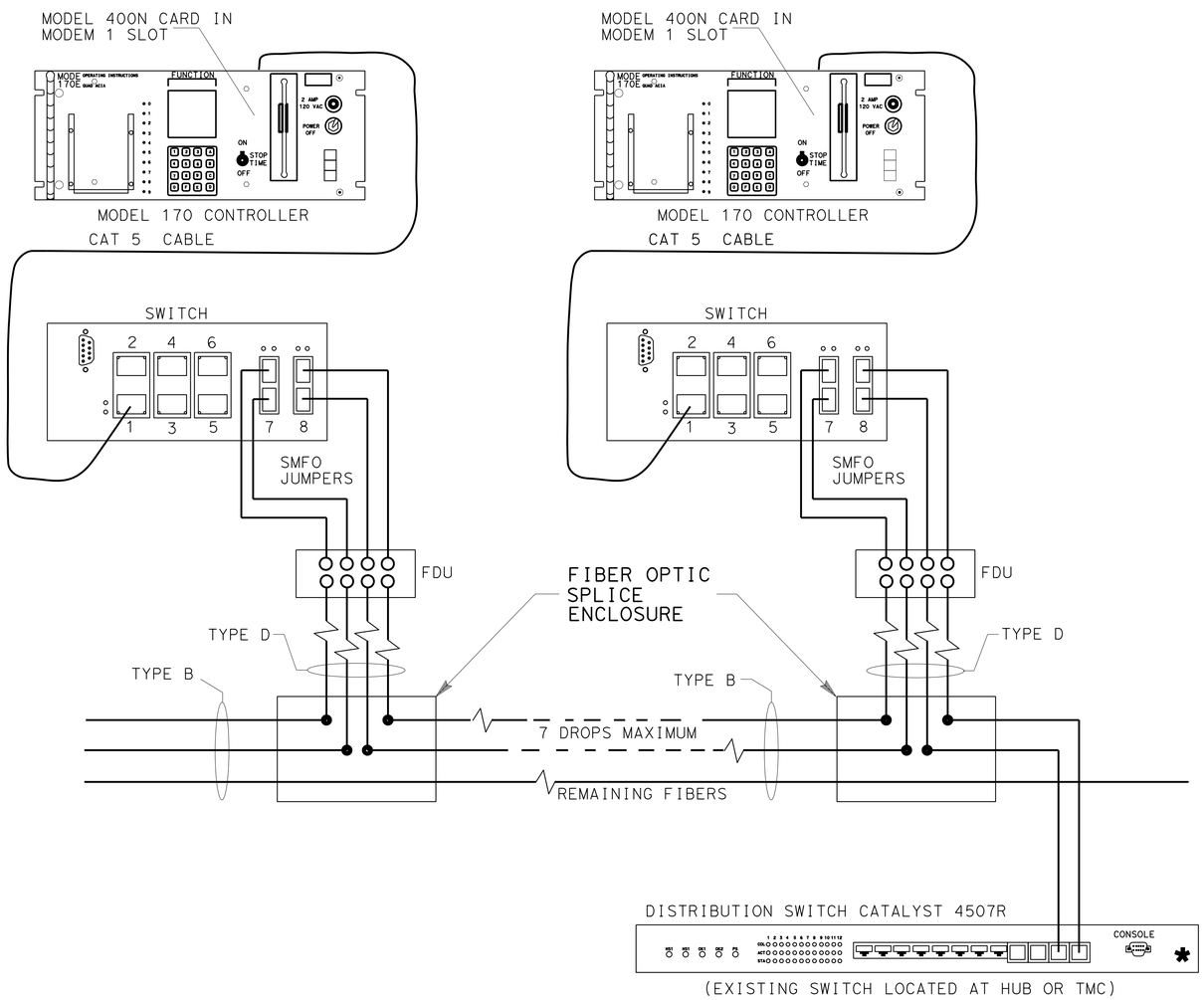


**TYPICAL CONNECTION OF FIELD ELEMENTS WITH SMFO (EXISTING)**

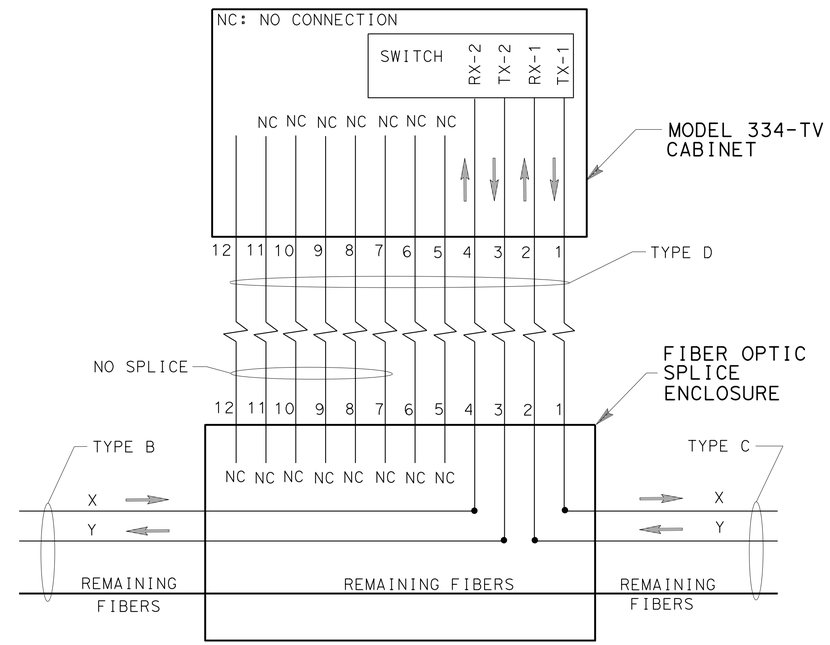


TYPICAL CONNECTION OF TYPE D TO TYPE B

| FIBER ASSIGNMENTS | | |
|---|---|---|
| | X | Y |
| TMS - 4 | 3 | 4 |
| TS - 1 | 19 | 20 |
| | | |

## NOTES: (FOR THIS SHEET ONLY)

1. REMOVE MODEL 400 MODEM CARD FROM 170 CONTROLLER.
2. INSTALL MODEL 400N CARD WITH 5-FOOT CABLE (CAT 5) TO MODEM SLOT OF 170 CONTROLLER.
3. CONNECT OTHER END PLUG OF CAT 5 CABLE TO COPPER NETWORK SOCKET OF SWITCH
4. INSTALL 4 SMFO SC JUMPERS BETWEEN SWITCH AND FDU.

## ABBREVIATIONS: (FOR THIS SHEET ONLY)

| | |
|---|---|
| TYPE B | 72 SINGLE MODE FIBER OPTIC |
| TYPE C | 72 SINGLE MODE FIBER OPTIC |
| TYPE D | 12 SINGLE MODE FIBER OPTIC |
| TX-1 | TRANSMIT UPSTREAM TO SWITCH |
| RX-1 | RECEIVE DOWNSTREAM FROM SWITCH |
| TX-2 | TRANSMIT DOWNSTREAM FROM SWITCH |
| RX-2 | RECEIVE UPSTREAM FROM SWITCH |
| SMFO | SINGLE MODE FIBER OPTIC |
| FDU | FIBER DISTRIBUTION UNIT |
| TMC | TRANSPORTATION MANAGEMENT CENTER |
| TS | TRAFFIC SIGNAL |

*APPROVED FOR ELECTRICAL WORK ONLY*

# COMMUNICATION SYSTEM
## (FIBER OPTIC SPLICING FOR TYPE D TO TYPE B DETAIL)

NO SCALE

**E-93**

REVISED BY | DATE REVISED
GE MOUA | TIMMY TO
CALCULATED-DESIGNED BY | CHECKED BY
CONSULTANT FUNCTIONAL SUPERVISOR | GARY HANSEN
STATE OF CALIFORNIA - DEPARTMENT OF TRANSPORTATION
Caltrans

LAST REVISION 01-23-13 | DATE PLOTTED => 01-MAY-2013 | TIME PLOTTED => 13:03

| Dist | COUNTY | ROUTE | POST MILES TOTAL PROJECT | SHEET No. | TOTAL SHEETS |
|---|---|---|---|---|---|
| 12 | Ora | 5 | 6.2/8.7 | 403 | 595 |

REGISTERED CIVIL ENGINEER 1-23-13 DATE

4-29-13
PLANS APPROVAL DATE

REGISTERED PROFESSIONAL ENGINEER GARY HANSEN No. 26543 Exp. 3/31/14 CIVIL STATE OF CALIFORNIA

*THE STATE OF CALIFORNIA OR ITS OFFICERS OR AGENTS SHALL NOT BE RESPONSIBLE FOR THE ACCURACY OR COMPLETENESS OF SCANNED COPIES OF THIS PLAN SHEET.*

LIN CONSULTING, INC.
1432 EDINGER AVE, #230
TUSTIN, CA 92780

ORANGE COUNTY
TRANSPORTATION AUTHORITY
550 S. MAIN STREET
ORANGE, CA 92863-1584

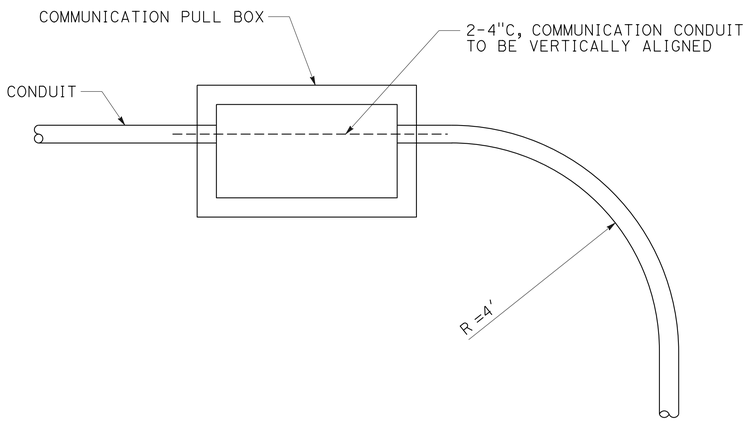


DETAIL A

## NOTES: (FOR THIS SHEET ONLY)

1. DIMENSIONS VARY ACCORDING TO SIZE OF CONDUIT. THE MINIMUM BEND RADIUS OF 4' SHALL BE MAINTAINED ON ALL TRUNK CONDUITS CONTAINING FIBER OPTIC CABLE AND SIX TIMES THE CONDUIT DIAMETER FOR ALL OTHER CONDUITS.
2. ALL CONDUIT BENDS SHALL BE FACTORY BENDS.
3. CONTRACTOR SHALL ADAPT CONDUIT STUBOUTS FOR SPECIFIC PROJECT REQUIREMENTS.
4. CONTRACTOR SHALL INSTALL ADDITIONAL CONDUIT AS REQUIRED.
5. TOP 4"C CONDUIT TO BE SPARE.
6. SEE ELECTRICAL PLAN FOR LOCATIONS WHERE THIS DETAIL APPLY.
7. ALL CONDUITS SHALL BE Min 2'-6" BELOW FINISHED GRADE.

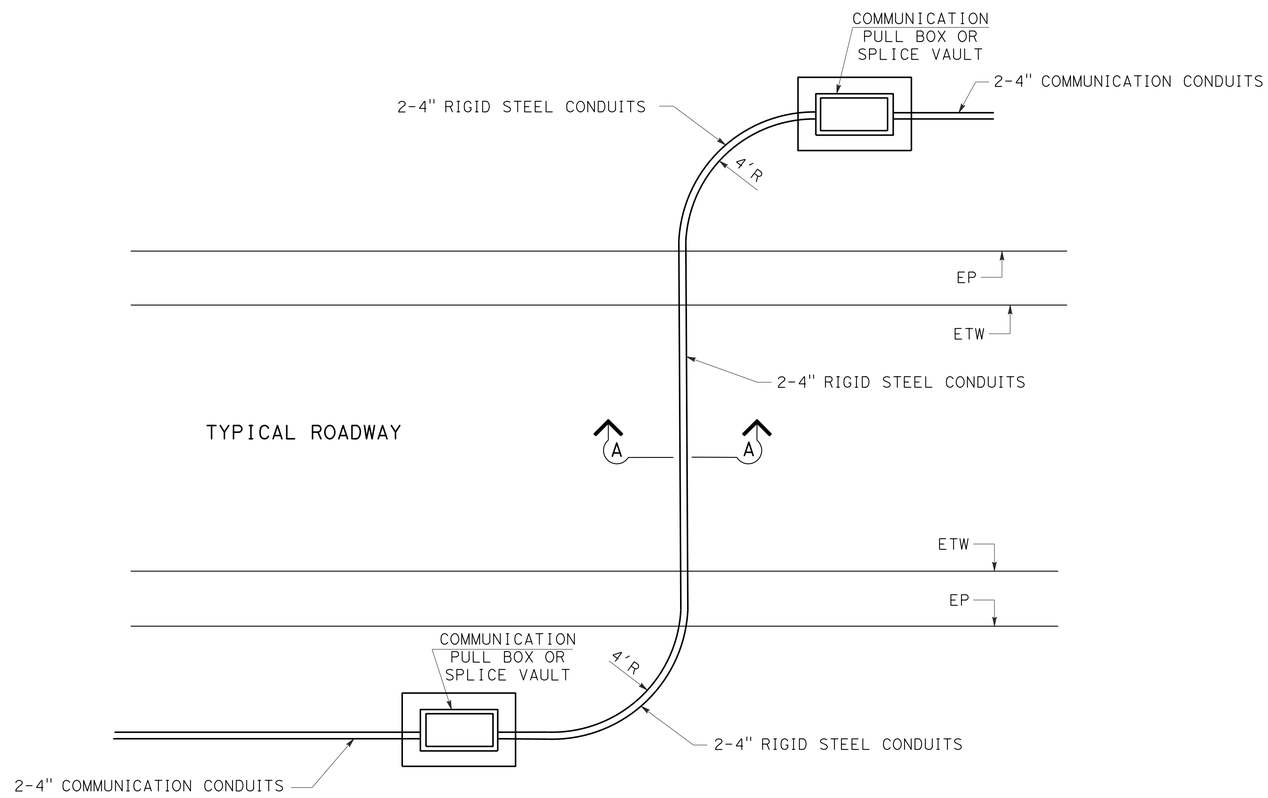


TYPICAL MAINLINE CROSSING
JACKED COMMUNICATION CONDUIT

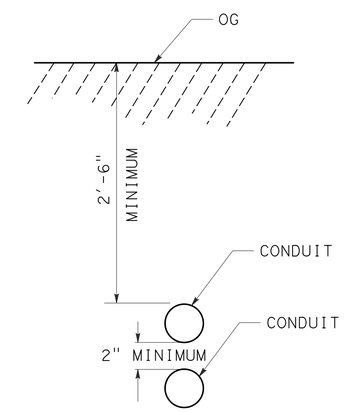


SECTION A-A

*APPROVED FOR ELECTRICAL WORK ONLY*

# COMMUNICATION SYSTEM
## (CONSTRUCTION DETAILS)
NO SCALE

**E-94**

STATE OF CALIFORNIA - DEPARTMENT OF TRANSPORTATION
Caltrans

CONSULTANT FUNCTIONAL SUPERVISOR: GARY HANSEN
CALCULATED-DESIGNED BY: GE MOUA
CHECKED BY: TIMMY TO
REVISED BY
DATE REVISED

LAST REVISION 01-23-13
DATE PLOTTED => 29-APR-2013
TIME PLOTTED => 14:19

| Dist | COUNTY | ROUTE | POST MILES TOTAL PROJECT | SHEET No. | TOTAL SHEETS |
|---|---|---|---|---|---|
| 12 | Ora | 5 | 6.2/8.7 | 404 | 595 |

REGISTERED CIVIL ENGINEER 1-23-13 DATE

4-29-13
PLANS APPROVAL DATE

REGISTERED PROFESSIONAL ENGINEER GARY HANSEN No. 26543 Exp. 3/31/14 CIVIL STATE OF CALIFORNIA

*THE STATE OF CALIFORNIA OR ITS OFFICERS OR AGENTS SHALL NOT BE RESPONSIBLE FOR THE ACCURACY OR COMPLETENESS OF SCANNED COPIES OF THIS PLAN SHEET.*

LIN CONSULTING, INC.
1432 EDINGER AVE, #230
TUSTIN, CA 92780

ORANGE COUNTY TRANSPORTATION AUTHORITY
550 S. MAIN STREET
ORANGE, CA 92863-1584

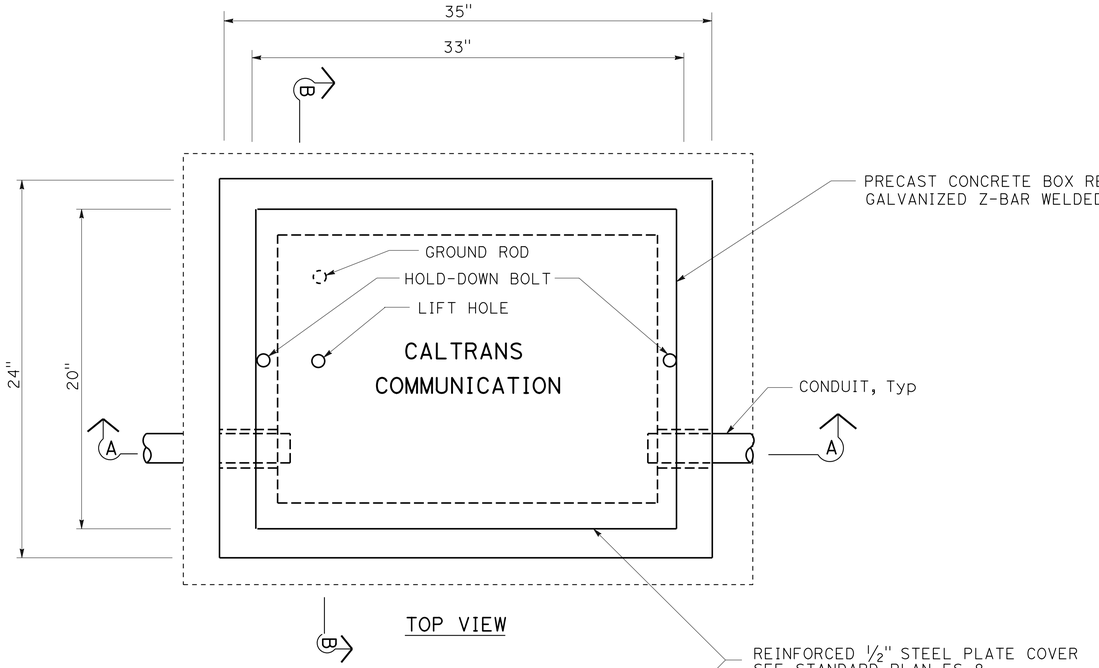


TOP VIEW

NOTES: (FOR THIS SHEET ONLY)

1. ADDITIONAL CONDUIT ENTRANCE AS SHOWN IN THE PLANS.
2. HOLD DOWN BOLTS OR CAP SCREWS AND NUTS MUST BE BRASS, STAINLESS STEEL OR OTHER NON-CORRODING METAL.
3. WHERE PRESENT, TOP CONDUIT TO BE SPARE.

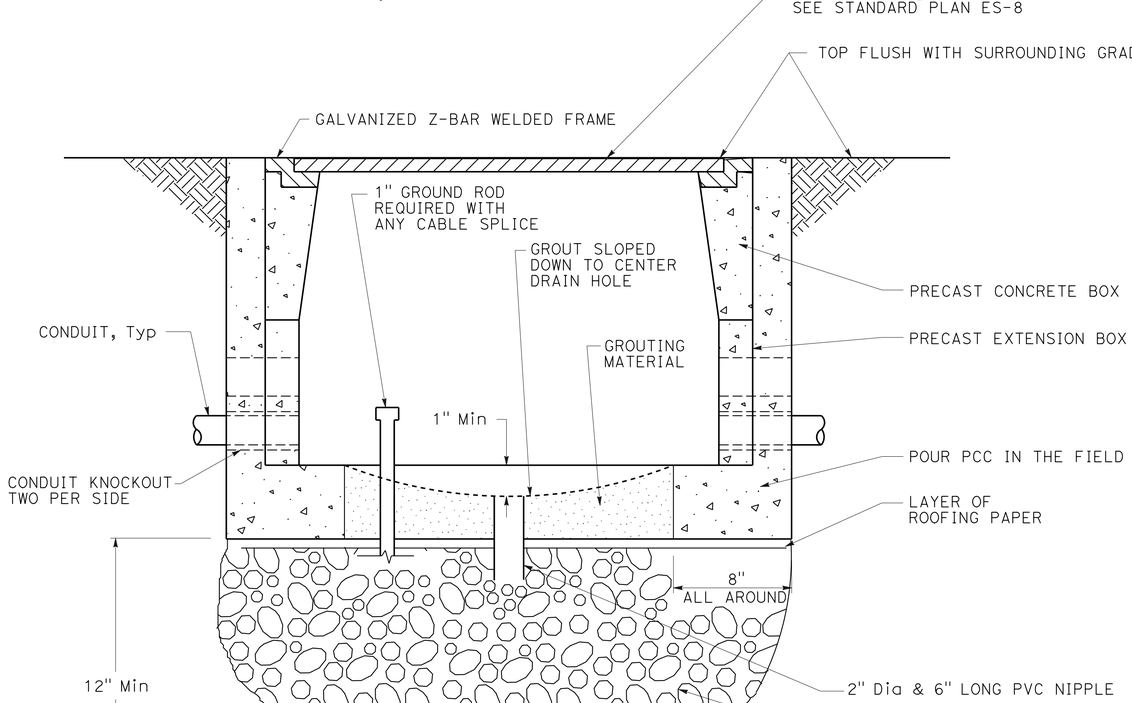


SECTION A-A

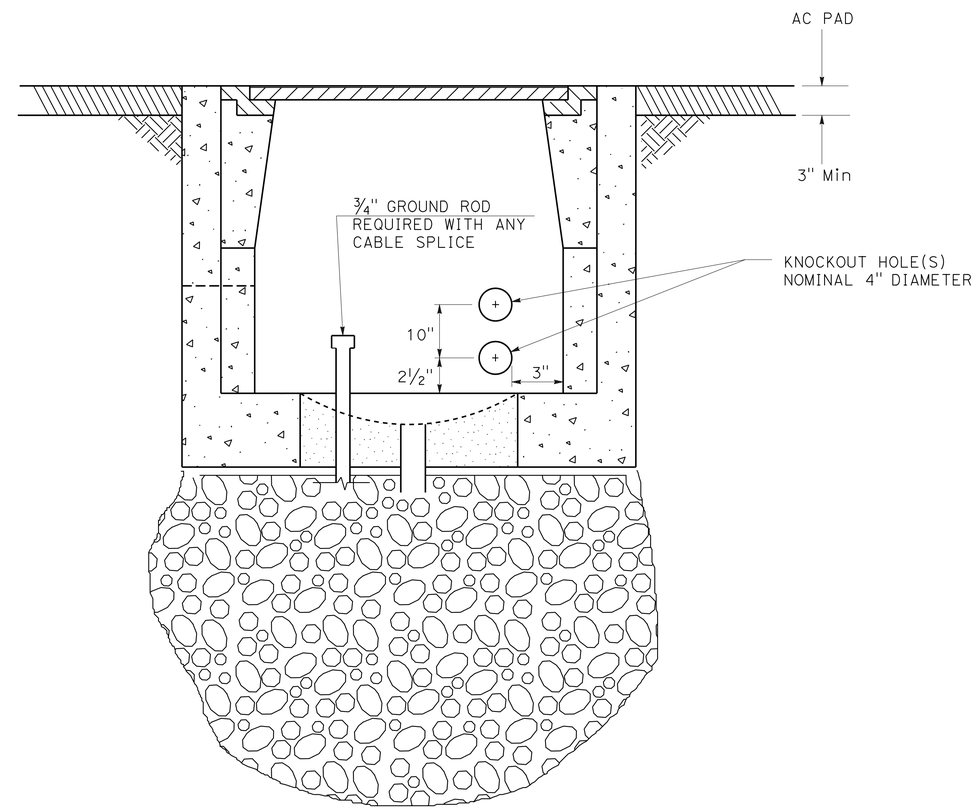


SECTION B-B

# COMMUNICATION SYSTEM
## (PULL BOX DETAILS)
NO SCALE

*APPROVED FOR ELECTRICAL WORK ONLY*

**E-95**

| REVISED BY | DATE REVISED |
|---|---|
| | |

| CALCULATED-DESIGNED BY | CHECKED BY |
|---|---|
| GE MOUA | TIMMY TO |

CONSULTANT FUNCTIONAL SUPERVISOR: GARY HANSEN

STATE OF CALIFORNIA - DEPARTMENT OF TRANSPORTATION

Caltrans

LAST REVISION 01-23-13 | DATE PLOTTED => 29-APR-2013 | TIME PLOTTED => 14:19

| Dist | COUNTY | ROUTE | POST MILES TOTAL PROJECT | SHEET No. | TOTAL SHEETS |
|---|---|---|---|---|---|
| 12 | Ora | 5 | 6.2/8.7 | 405 | 595 |

Gary R. Hansen 1-23-13
REGISTERED CIVIL ENGINEER DATE

4-29-13
PLANS APPROVAL DATE

REGISTERED PROFESSIONAL ENGINEER
GARY HANSEN
No. 26543
Exp. 3/31/14
CIVIL
STATE OF CALIFORNIA

*THE STATE OF CALIFORNIA OR ITS OFFICERS OR AGENTS SHALL NOT BE RESPONSIBLE FOR THE ACCURACY OR COMPLETENESS OF SCANNED COPIES OF THIS PLAN SHEET.*

LIN CONSULTING, INC.
1432 EDINGER AVE, #230
TUSTIN, CA 92780

ORANGE COUNTY
TRANSPORTATION AUTHORITY
550 S. MAIN STREET
ORANGE, CA 92863-1584

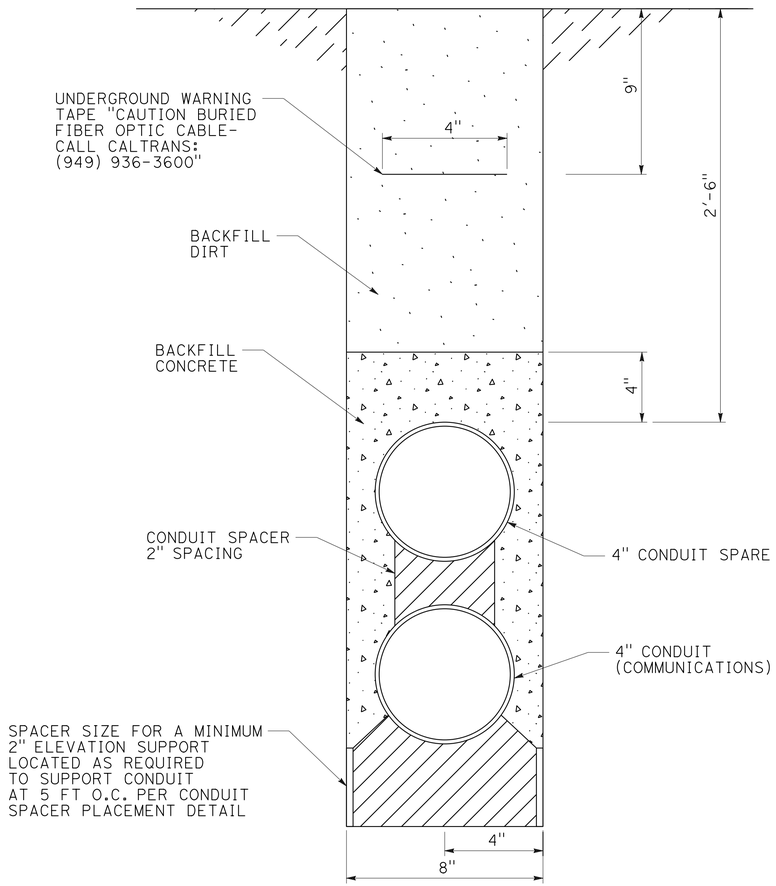


DETAIL 1

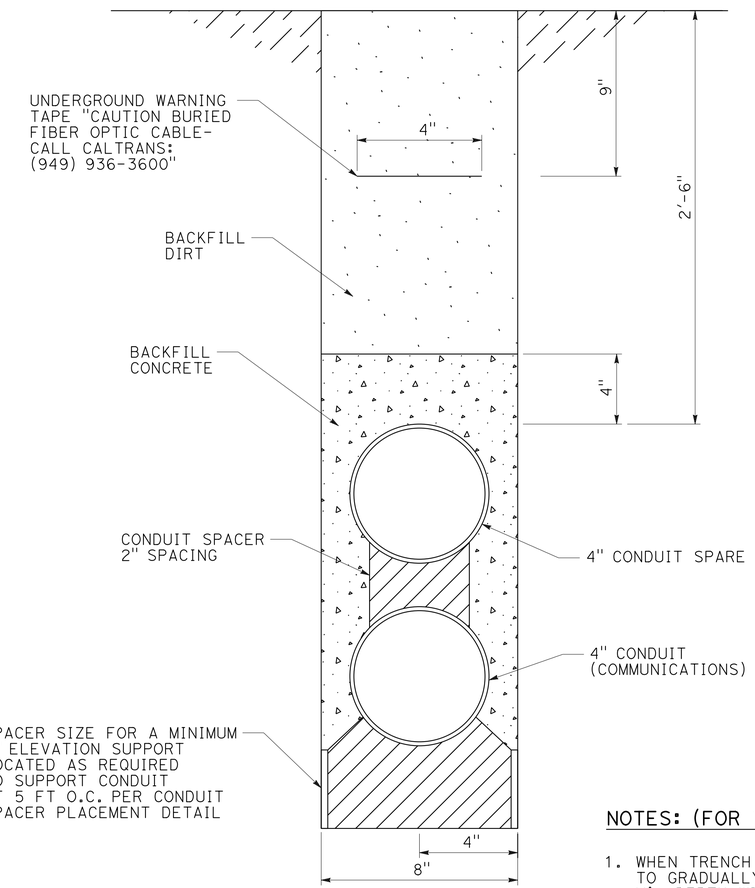


DETAIL 2

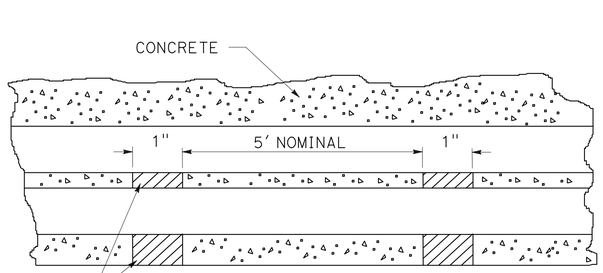


CONDUIT SPACER PLACEMENT
SIDE VIEW

NOTES: (FOR THIS SHEET ONLY)

1. WHEN TRENCH TRANSITIONS FROM ASPHALT TO DIRT AREAS, CONDUIT TO GRADUALLY DROP FROM 9" Min DEPTH BENEATH ASPHALT TO 30" Min DEPTH WITHIN DIRT AREA.
2. INSTALL A MINIMUM OF 4" THICK OF FINE SOIL OR SAND OVER THE CONDUIT WITH SAND SHADING ON TOP BEFORE ADDITIONAL BACKFILL MATERIAL IS PLACED.
3. CONTRACTOR MAY CONCRETE ENCASE CONDUIT INSTALLING A SPACER ON TOP OF COMMUNICATION CONDUIT, PROVIDING A MINIMUM 30" OVERALL DEPTH AND 4" CONCRETE BACKFILL COVER ON TOP.

*APPROVED FOR ELECTRICAL WORK ONLY*

# COMMUNICATION SYSTEM
## (TRENCH IN DIRT DETAILS)

NO SCALE

**E-96**

STATE OF CALIFORNIA - DEPARTMENT OF TRANSPORTATION
Caltrans
CONSULTANT FUNCTIONAL SUPERVISOR: GARY HANSEN
CALCULATED-DESIGNED BY: GE MOUA
CHECKED BY: TIMMY TO
REVISED BY
DATE REVISED

LAST REVISION 01-23-13 | DATE PLOTTED => 29-APR-2013 | TIME PLOTTED => 14:19

| Dist | COUNTY | ROUTE | POST MILES TOTAL PROJECT | SHEET No. | TOTAL SHEETS |
|---|---|---|---|---|---|
| 12 | Ora | 5 | 6.2/8.7 | 406 | 595 |

Gary R. Hansen 1-23-13
REGISTERED CIVIL ENGINEER DATE

4-29-13
PLANS APPROVAL DATE

REGISTERED PROFESSIONAL ENGINEER
GARY HANSEN
No. 26543
Exp. 3/31/14
CIVIL
STATE OF CALIFORNIA

*THE STATE OF CALIFORNIA OR ITS OFFICERS OR AGENTS SHALL NOT BE RESPONSIBLE FOR THE ACCURACY OR COMPLETENESS OF SCANNED COPIES OF THIS PLAN SHEET.*

LIN CONSULTING, INC.
1432 EDINGER AVE, #230
TUSTIN, CA 92780

ORANGE COUNTY
TRANSPORTATION AUTHORITY
550 S. MAIN STREET
ORANGE, CA 92863-1584

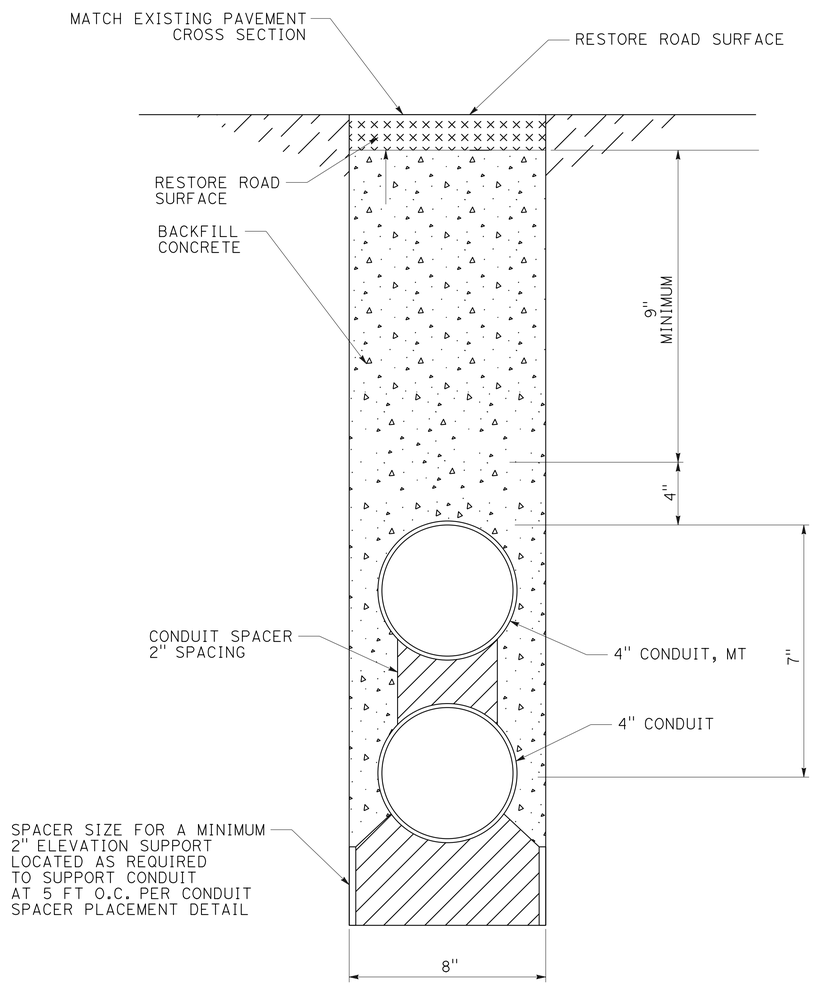


DETAIL 1

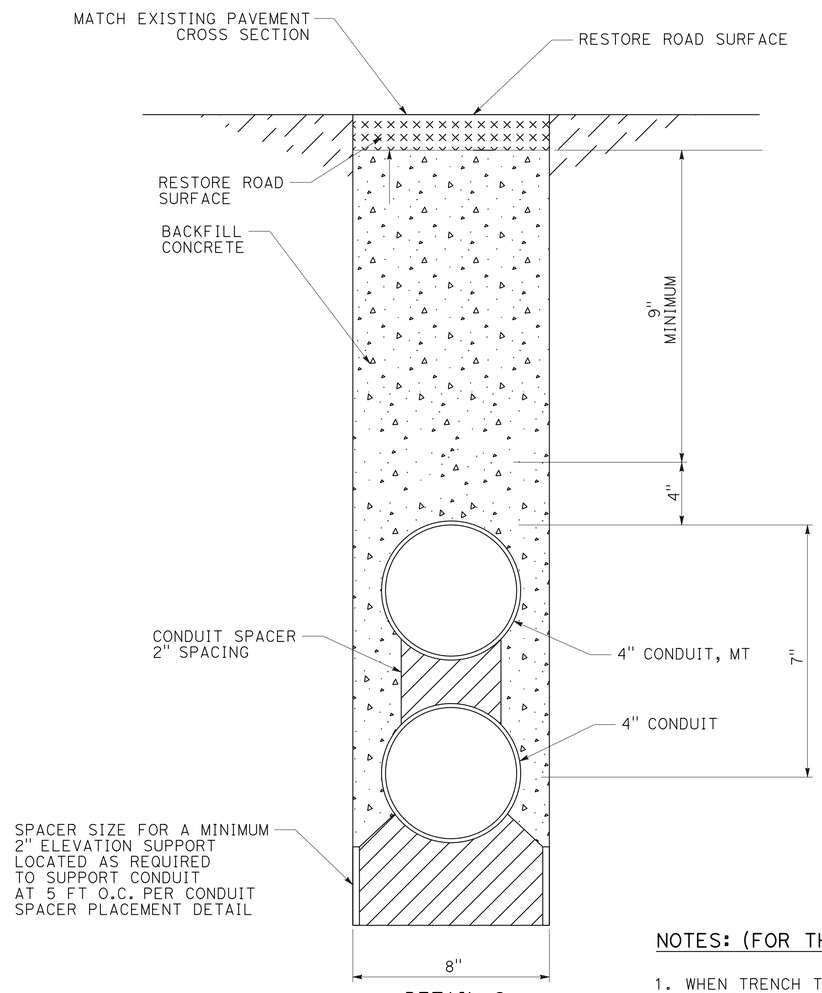


DETAIL 2

NOTES: (FOR THIS SHEET ONLY)

1. WHEN TRENCH TRANSITIONS FROM ASPHALT TO DIRT AREAS, CONDUIT TO GRADUALLY DROP FROM 9" Min DEPTH TO 30" Min DEPTH WITHIN DIRT AREA.

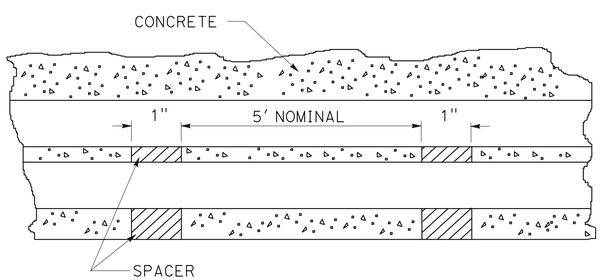


CONDUIT SPACER PLACEMENT
SIDE VIEW

*APPROVED FOR ELECTRICAL WORK ONLY*

# COMMUNICATION SYSTEM
## (TRENCH IN PAVEMENT DETAILS)

NO SCALE

**E-97**

STATE OF CALIFORNIA - DEPARTMENT OF TRANSPORTATION
Caltrans

CONSULTANT FUNCTIONAL SUPERVISOR: GARY HANSEN
CALCULATED-DESIGNED BY: GE MOUA
CHECKED BY: TIMMY TO
REVISED BY
DATE REVISED

LAST REVISION 01-23-13
DATE PLOTTED => 29-APR-2013
TIME PLOTTED => 14:19

| Dist | COUNTY | ROUTE | POST MILES TOTAL PROJECT | SHEET No. | TOTAL SHEETS |
|---|---|---|---|---|---|
| 12 | Ora | 5 | 6.2/8.7 | 407 | 595 |

REGISTERED CIVIL ENGINEER 1-23-13 DATE

4-29-13
PLANS APPROVAL DATE

REGISTERED PROFESSIONAL ENGINEER GARY HANSEN No. 26543 Exp. 3/31/14 CIVIL STATE OF CALIFORNIA

*THE STATE OF CALIFORNIA OR ITS OFFICERS OR AGENTS SHALL NOT BE RESPONSIBLE FOR THE ACCURACY OR COMPLETENESS OF SCANNED COPIES OF THIS PLAN SHEET.*

LIN CONSULTING, INC.
1432 EDINGER AVE, #230
TUSTIN, CA 92780

ORANGE COUNTY
TRANSPORTATION AUTHORITY
550 S. MAIN STREET
ORANGE, CA 92863-1584

## NOTES: (FOR THIS SHEET ONLY)

1. THE OVERALL CABLE SHIELD AND DRAIN WIRES SHALL BE PIGTAILED SOLDERED TO A MINIMUM 22 AWG BLACK WIRE ON THE CABINET SIDE.
2. EXPOSED SHIELD/SOLDER INTERFACE SHALL BE TAPED OR PROTECTED BY HEAT SHRINK TUBING.
3. THE GREEN GROUND WIRE SHALL BE TERMINATED TO THE CABINET GROUND BUS.
4. THE SHIELD SHALL ONLY BE GROUNDED AT THE CABINET END. DO NOT GROUND THE SHIELD AT THE CAMERA SIDE TO AVOID GROUND LOOPS.
5. ALL UNUSED CONDUCTORS ARE TO BE FOLDED BACK AND SECURELY TAPED. CONDUCTORS AT THE CABINET SIDE SHALL BE PROPERLY PROTECTED AND DRESSED.
6. THE 75 OHM COAXIAL CABLE FOR VIDEO MUST HAVE MAXIMUM LOSS OF 6 dB AT 10 MHZ FOR THE LENGTH OF THE CABLE. CABLE MUST HAVE 22 AWG STRANDED BARE COPPER CENTER CONDUCTOR, LOW LOSS POLYETHYLENE FOAM DIELECTRIC, BRAIDED SHIELD 90 PERCENT COVERAGE WITH OUTDOOR RATED BLACK PVC JACKET.
7. INSTALL CABLE/CONDUCTOR WITHOUT SPLICES OR BREAK UNLESS OTHERWISE SHOWN.

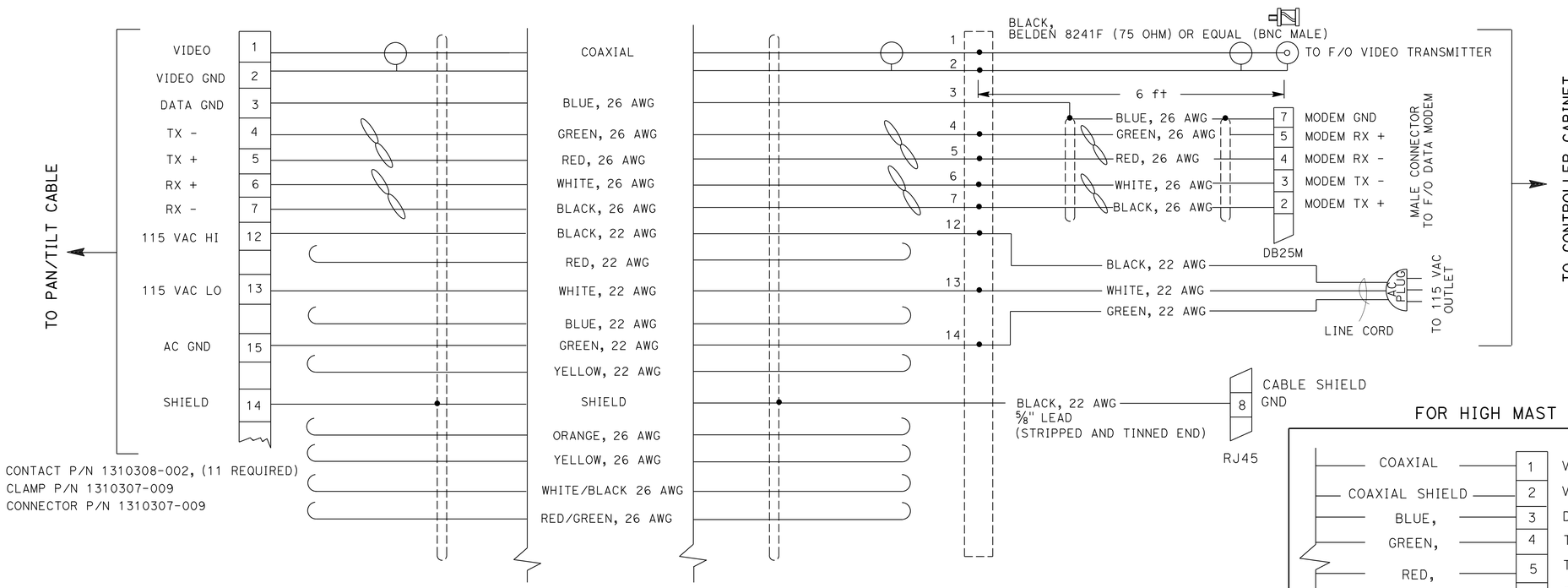


## ABBREVIATIONS: (FOR THIS SHEET ONLY)

AC = ALTERNATING CURRENT
AWG = AMERICAN WIRE GAUGE
GND = GROUND
RX = RECEIVE
TX = TRANSMIT

*APPROVED FOR ELECTRICAL WORK ONLY*

# CLOSED CIRCUIT TELEVISION SYSTEM
## (CCTV WIRING SCHEDULE AND PIN-OUT)

NO SCALE

**E-98**

STATE OF CALIFORNIA - DEPARTMENT OF TRANSPORTATION
Caltrans®
CONSULTANT FUNCTIONAL SUPERVISOR: GARY HANSEN
CALCULATED-DESIGNED BY: GE MOUA
CHECKED BY: TIMMY TO
REVISED BY
DATE REVISED

LAST REVISION 01-23-13
DATE PLOTTED => 30-APR-2013
TIME PLOTTED => 12:19

| Dist | COUNTY | ROUTE | POST MILES TOTAL PROJECT | SHEET No. | TOTAL SHEETS |
|---|---|---|---|---|---|
| 12 | Ora | 5 | 6.2/8.7 | 408 | 595 |

REGISTERED CIVIL ENGINEER 1-23-13 DATE

4-29-13
PLANS APPROVAL DATE

REGISTERED PROFESSIONAL ENGINEER GARY HANSEN No. 26543 Exp. 3/31/14 CIVIL STATE OF CALIFORNIA

*THE STATE OF CALIFORNIA OR ITS OFFICERS OR AGENTS SHALL NOT BE RESPONSIBLE FOR THE ACCURACY OR COMPLETENESS OF SCANNED COPIES OF THIS PLAN SHEET.*

LIN CONSULTING, INC.
1432 EDINGER AVE, #230
TUSTIN, CA 92780

ORANGE COUNTY TRANSPORTATION AUTHORITY
550 S. MAIN STREET
ORANGE, CA 92863-1584

NOTES: (FOR THIS SHEET ONLY)

1. CONTRACTOR SHALL COIL 70 FOOT SLACK OF TYPE A, TYPE B, AND TYPE C CABLES AT THIS SPLICE VAULT.
2. CONTRACTOR SHALL SPLICE FIBER TO FIBER OF EACH CABLE TYPE TO EXISTING FIBER CABLES.

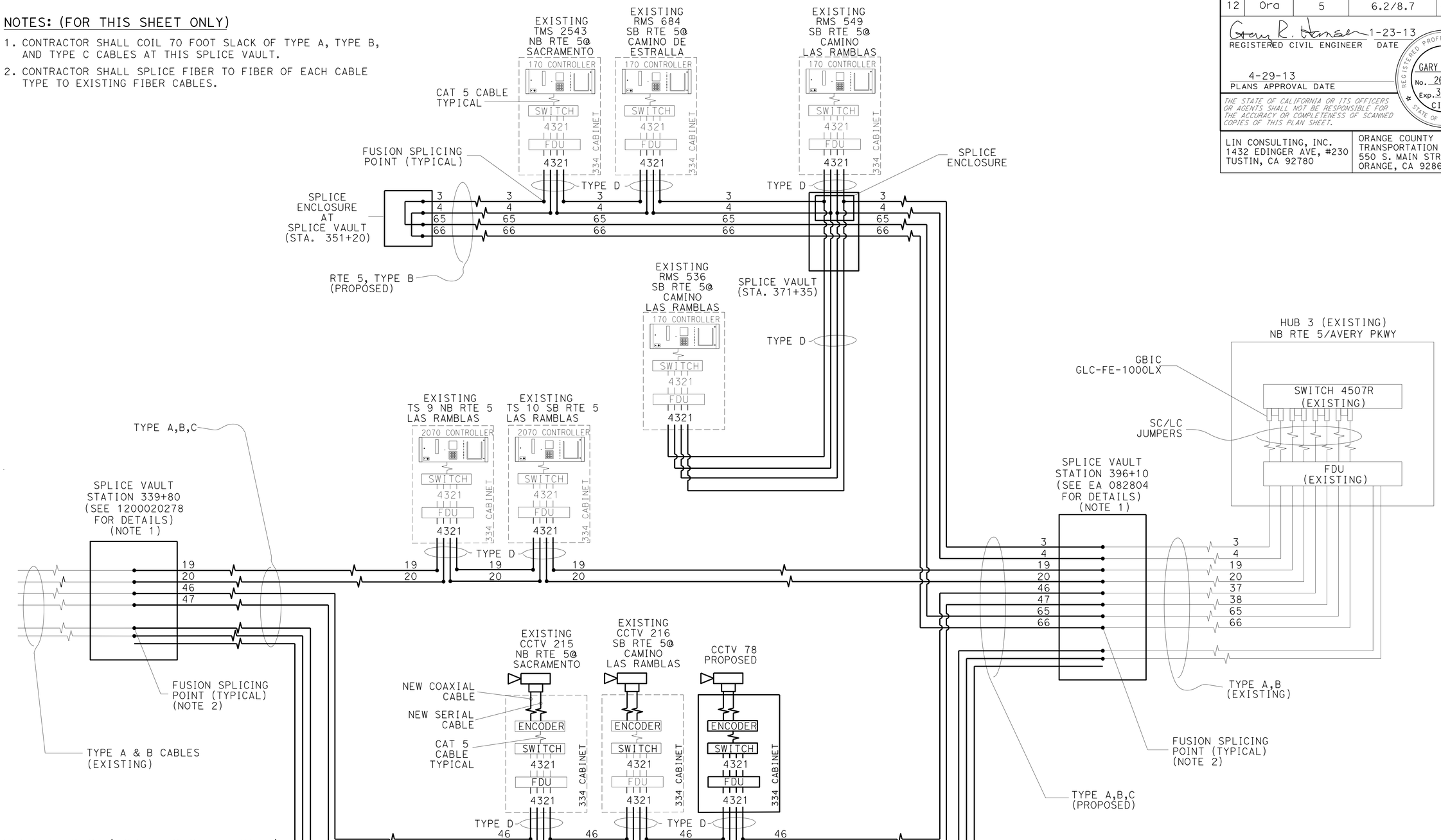


ABBREVIATIONS: (FOR THIS SHEET ONLY)

| | |
|---|---|
| TYPE A | 36 SINGLE MODE FIBER OPTIC |
| TYPE B | 72 SINGLE MODE FIBER OPTIC |
| TYPE C | 72 SINGLE MODE FIBER OPTIC |
| TYPE D | 12 SINGLE MODE FIBER OPTIC |
| SMFO | SINGLE MODE FIBER OPTIC |
| FDU | FIBER DISTRIBUTION UNIT |
| RMS | RAMP METERING SYSTEM |
| TS | TRAFFIC SIGNAL |

# COMMUNICATION SYSTEM
## (ROUTE 5 FIELD ELEMENTS SCHEMATIC)

NO SCALE

*APPROVED FOR ELECTRICAL WORK ONLY*

E-99

STATE OF CALIFORNIA - DEPARTMENT OF TRANSPORTATION
Caltrans

CONSULTANT FUNCTIONAL SUPERVISOR: GARY HANSEN
CALCULATED-DESIGNED BY: GE MOUA
CHECKED BY: TIMMY TO
REVISED BY
DATE REVISED

LAST REVISION 01-23-13
DATE PLOTTED => 29-APR-2013
TIME PLOTTED => 14:19

| Dist | COUNTY | ROUTE | POST MILES TOTAL PROJECT | SHEET No. | TOTAL SHEETS |
|---|---|---|---|---|---|
| 12 | Ora | 5 | 6.2/8.7 | 409 | 595 |

REGISTERED CIVIL ENGINEER 1-23-13 DATE

4-29-13
PLANS APPROVAL DATE

REGISTERED PROFESSIONAL ENGINEER GARY HANSEN No. 26543 Exp. 3/31/14 CIVIL STATE OF CALIFORNIA

*THE STATE OF CALIFORNIA OR ITS OFFICERS OR AGENTS SHALL NOT BE RESPONSIBLE FOR THE ACCURACY OR COMPLETENESS OF SCANNED COPIES OF THIS PLAN SHEET.*

LIN CONSULTING, INC.
1432 EDINGER AVE, #230
TUSTIN, CA 92780

ORANGE COUNTY
TRANSPORTATION AUTHORITY
550 S. MAIN STREET
ORANGE, CA 92863-1584

## NOTES: (FOR THIS SHEET ONLY)

1. ADJACENT EXISTING FIELD ELEMENT ( FOR REFERENCE ONLY.)
2. AT SPLICE VAULT (STATION 396+10) [SEE E-104 FOR DETAILS]:
   SPLICE FIBERS 1,2 OF TYPE D CABLE TO FIBERS 37,38 RESPECTIVELY, OF PROPOSED TYPE B CABLE (NORTH DIRECTION TO HUB 3.)
   SPLICE FIBERS 3,4 OF TYPE D CABLE TO FIBERS 47,46 RESPECTIVELY, OF PROPOSED TYPE B CABLE.
3. AT SPLICE VAULT (STATION 351+20), SPLICE FIBERS 3,4 TO FIBERS 65,66 RESPECTIVELY, OF PROPOSED TYPE B CABLE (NORTH DIRECTION TO HUB 3) [SEE E-104 FOR DETAILS.]

X - TERMINATED ACTIVE

O - TERMINATED SPARE

< > - ARROW POINTS TO THE DIRECTION OF TRANSMISSION

### ROUTE 5 - TYPE B CABLE

| FIBER NO. | | | SPLICE VAULT STATION 351+20 | | CCTV 215 SACRAMENTO | TMS 2543 SACRAMENTO | RMS 684 ROUTE 1 | TS 9 LAS RAMBLAS | TS 10 LAS RAMBLAS | RMS 549 LAS RAMBLAS | RMS 536 LAS RAMBLAS | CCTV 216 LAS RAMBLAS | CCTV 78 [NEW] LAS RAMBLAS | RMS 539 CAPISTRANO | | CCTV 217 NOTE 1 [EXISTING] NOTE 2 | | EXISTING HUB # 3 AVERY | FIBER NO. | REMARKS |
|---|---|---|---|---|---|---|---|---|---|---|---|---|---|---|---|---|---|---|---|---|
| 1-2 | | | | | | | | | | | | | | | | | | | 1-2 | EXISTING CIRCUIT - PROTECT IN PLACE |
| 3-4 | | | <XX> | | | <XX> | <XX> | | | <XX> | <XX> | | | <XX> | | | | <XX> | 3-4 | TMS-4 : HUB 3 - PRIMARY :: NOTE 3 |
| 5-6 | | | | | | | | | | | | | | | | | | | 5-6 | EXISTING CIRCUIT - PROTECT IN PLACE |
| 7-8 | | | | | | | | | | | | | | | | | | | 7-8 | EXISTING CIRCUIT - PROTECT IN PLACE |
| 9-10 | | | | | | | | | | | | | | | | | | | 9-10 | EXISTING CIRCUIT - PROTECT IN PLACE |
| 11-16 | | | | | | | | | | | | | | | | | | | 11-16 | FUTURE USE |
| 17-18 | | | | | | | | | | | | | | | | | | | 17-18 | EXISTING CIRCUIT - PROTECT IN PLACE |
| 19-20 | | | | | | | | <XX> | <XX> | | | | | | | | | <XX> | 19-20 | TS-1: HUB 3 - PRIMARY |
| 21-22 | | | | | | | | | | | | | | | | | | | 21-22 | FUTURE USE |
| 23-26 | | | | | | | | | | | | | | | | | | | 23-26 | FUTURE USE |
| 27 | | | | | <00> | <00> | <00> | <00> | <00> | <00> | <00> | <00> | <00> | <00> | | <00> | | <00> | 27 | VOICE |
| 28-33 | | | | | | | | | | | | | | | | | | | 28-33 | EXISTING CIRCUIT - PROTECT IN PLACE |
| 34-35 | | | | | | | | | | | | | | | | | | | 34-35 | EXISTING CIRCUIT - PROTECT IN PLACE |
| 36 | | | | | | | | | | | | | | | | | | | 36 | FUTURE USE |
| 37-38 | | | | | | | | | | | | | | | | <XX> | | <XX> | 37-38 | VIDEO CIRCUIT VC-2: HUB 3 - PRIMARY :: NOTE 2 |
| 39-45 | | | | | | | | | | | | | | | | | | | 39-45 | FUTURE USE |
| 46-47 | | | | | <XX> | | | | | | | <XX> | <XX> | | | <XX> | | | 46-47 | VIDEO CIRCUIT VC-2: HUB 3 - PRIMARY :: NOTE 2 |
| 49-51 | | | | | | | | | | | | | | | | | | | 49-51 | FUTURE USE |
| 52 | | | | | | | | | | | | | | | | | | | 52 | EXISTING CIRCUIT - PROTECT IN PLACE |
| 53-54 | | | | | | | | | | | | | | | | | | | 53-54 | EXISTING DN #8 TO HUB#3,TMC [PROTECT IN PLACE] |
| 55-56 | | | | | | | | | | | | | | | | | | | 55-64 | FUTURE USE |
| 65-66 | | | <XX> | | | <XX> | <XX> | | | <XX> | <XX> | | | <XX> | | | | <XX> | 65-66 | TMS-4: HUB 3 - SECONDARY :: NOTE 3 |
| 67-72 | | | | | | | | | | | | | | | | | | | 67-72 | FUTURE USE |

*APPROVED FOR ELECTRICAL WORK ONLY*

# COMMUNICATION SYSTEM
## (FIBER ASSIGNMENT TABLE)

NO SCALE

**E-100**

STATE OF CALIFORNIA - DEPARTMENT OF TRANSPORTATION
Caltrans

CONSULTANT FUNCTIONAL SUPERVISOR: GARY HANSEN

CALCULATED-DESIGNED BY: GE MOUA
CHECKED BY: TIMMY TO

REVISED BY
DATE REVISED

LAST REVISION 01-23-13
DATE PLOTTED => 29-APR-2013
TIME PLOTTED => 14:19

| Dist | COUNTY | ROUTE | POST MILES TOTAL PROJECT | SHEET No. | TOTAL SHEETS |
|---|---|---|---|---|---|
| 12 | Ora | 5 | 6.2/8.7 | 410 | 595 |

Gary R. Hansen 1-23-13
REGISTERED CIVIL ENGINEER DATE

4-29-13
PLANS APPROVAL DATE

REGISTERED PROFESSIONAL ENGINEER
GARY HANSEN
No. 26543
Exp. 3/31/14
CIVIL
STATE OF CALIFORNIA

*THE STATE OF CALIFORNIA OR ITS OFFICERS OR AGENTS SHALL NOT BE RESPONSIBLE FOR THE ACCURACY OR COMPLETENESS OF SCANNED COPIES OF THIS PLAN SHEET.*

LIN CONSULTING, INC.
1432 EDINGER AVE, #230
TUSTIN, CA 92780

ORANGE COUNTY
TRANSPORTATION AUTHORITY
550 S. MAIN STREET
ORANGE, CA 92863-1584

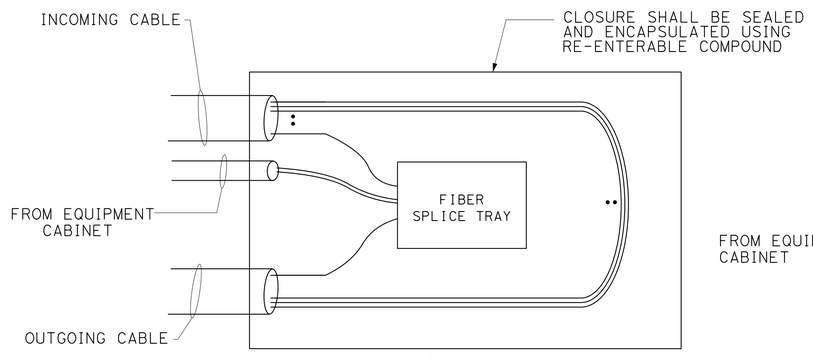


STEP 1
TYPICAL FIBER SPLICE CLOSURE

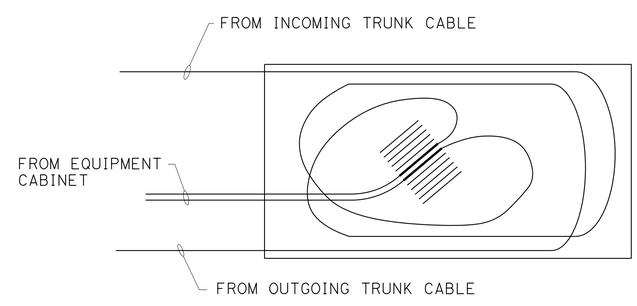


STEP 2
TYPICAL FIBER SPLICE TRAY

SPLICE PROCEDURE

*APPROVED FOR ELECTRICAL WORK ONLY*

# COMMUNICATION SYSTEM
## (SPLICE DETAILS)
NO SCALE

**E-101**

STATE OF CALIFORNIA - DEPARTMENT OF TRANSPORTATION
Caltrans
CONSULTANT FUNCTIONAL SUPERVISOR: GARY HANSEN
CALCULATED-DESIGNED BY: GE MOUA
CHECKED BY: TIMMY TO
REVISED BY
DATE REVISED

LAST REVISION 01-23-13
DATE PLOTTED => 29-APR-2013
TIME PLOTTED => 14:20

| Dist | COUNTY | ROUTE | POST MILES TOTAL PROJECT | SHEET No. | TOTAL SHEETS |
|---|---|---|---|---|---|
| 12 | Ora | 5 | 6.2/8.7 | 411 | 595 |

REGISTERED CIVIL ENGINEER 1-23-13 DATE

4-29-13
PLANS APPROVAL DATE

REGISTERED PROFESSIONAL ENGINEER GARY HANSEN No. 26543 Exp. 3/31/14 CIVIL STATE OF CALIFORNIA

*THE STATE OF CALIFORNIA OR ITS OFFICERS OR AGENTS SHALL NOT BE RESPONSIBLE FOR THE ACCURACY OR COMPLETENESS OF SCANNED COPIES OF THIS PLAN SHEET.*

LIN CONSULTING, INC.
1432 EDINGER AVE, #230
TUSTIN, CA 92780

ORANGE COUNTY
TRANSPORTATION AUTHORITY
550 S. MAIN STREET
ORANGE, CA 92863-1584

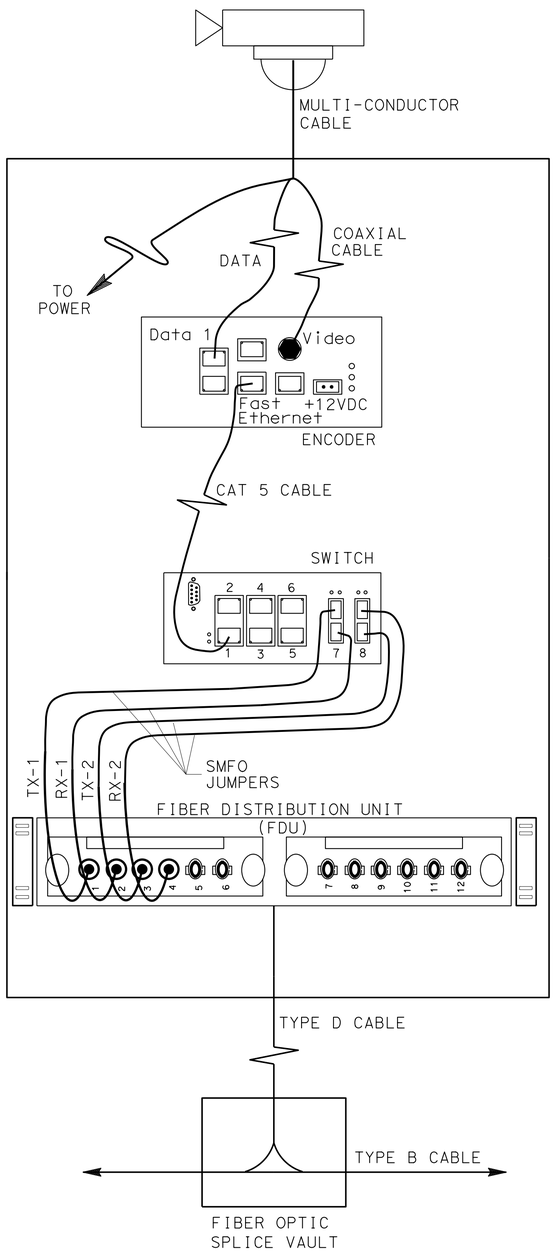


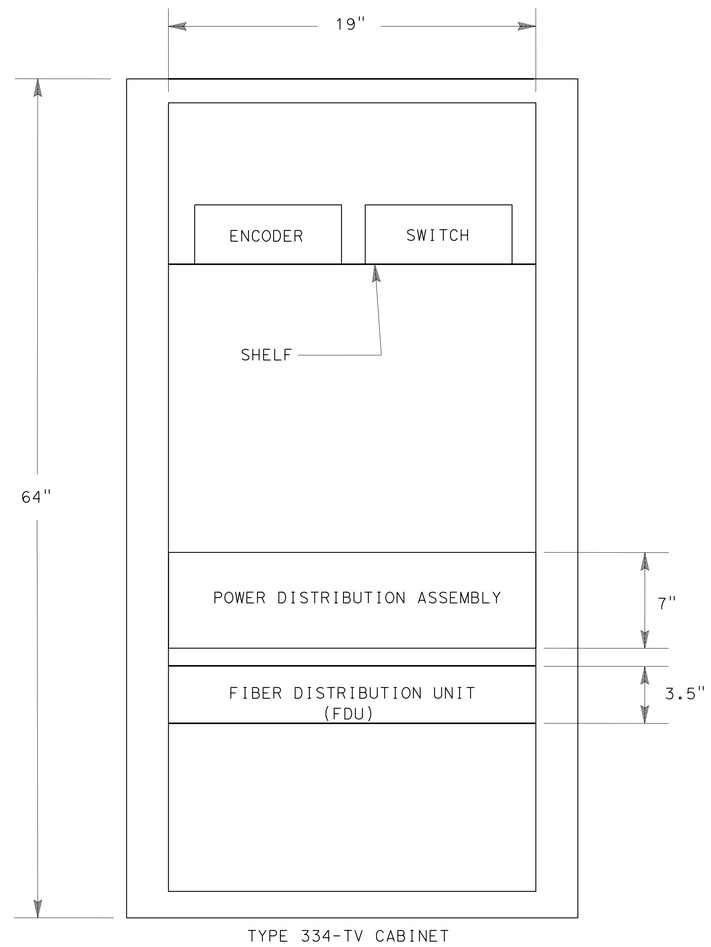


EQUIPMENT RACK LAYOUT

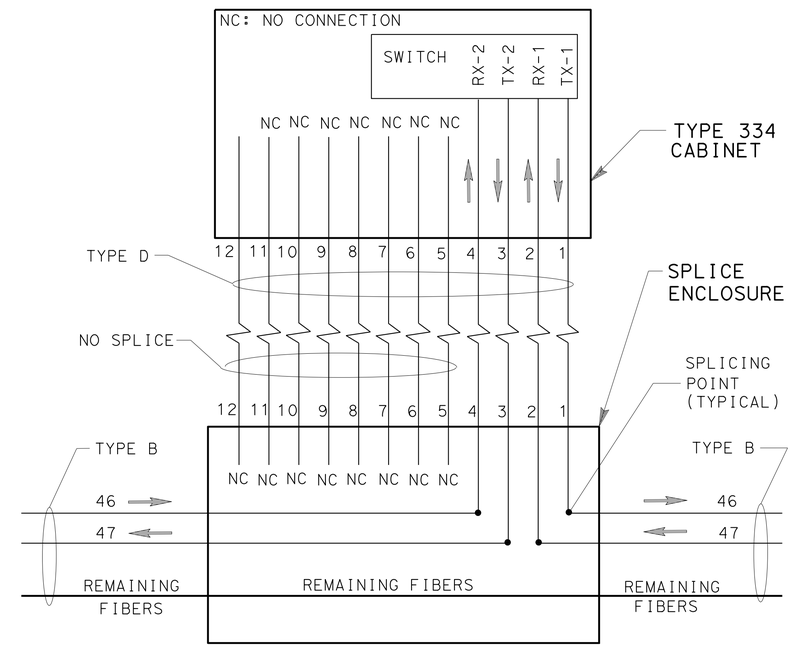


TYPE D TO TYPE B CONNECTION

ABBREVIATIONS: (FOR THIS SHEET ONLY)

| | |
|---|---|
| TYPE B | 72 SINGLE MODE FIBER OPTIC |
| TYPE D | 12 SINGLE MODE FIBER OPTIC |
| TX-1 | TRANSMIT UPSTREAM TO SWITCH |
| RX-1 | RECEIVE DOWNSTREAM FROM SWITCH |
| TX-2 | TRANSMIT DOWNSTREAM FROM SWITCH |
| RX-2 | RECEIVE UPSTREAM FROM SWITCH |
| SMFO | SINGLE MODE FIBER OPTIC |

*APPROVED FOR ELECTRICAL WORK ONLY*

# COMMUNICATION SYSTEM (CLOSED CIRCUIT TELEVISION CCTV 78 INTERFACE)

NO SCALE

**E-102**

STATE OF CALIFORNIA - DEPARTMENT OF TRANSPORTATION
Caltrans
CONSULTANT FUNCTIONAL SUPERVISOR: GARY HANSEN
CALCULATED-DESIGNED BY: GE MOUA
CHECKED BY: TIMMY TO
REVISED BY
DATE REVISED

LAST REVISION 01-23-13
DATE PLOTTED => 01-MAY-2013
TIME PLOTTED => 13:03

| Dist | COUNTY | ROUTE | POST MILES TOTAL PROJECT | SHEET No. | TOTAL SHEETS |
|---|---|---|---|---|---|
| 12 | Ora | 5 | 6.2/8.7 | 412 | 595 |

REGISTERED CIVIL ENGINEER 1-23-13 DATE

4-29-13
PLANS APPROVAL DATE

REGISTERED PROFESSIONAL ENGINEER GARY HANSEN No. 26543 Exp. 3/31/14 CIVIL STATE OF CALIFORNIA

*THE STATE OF CALIFORNIA OR ITS OFFICERS OR AGENTS SHALL NOT BE RESPONSIBLE FOR THE ACCURACY OR COMPLETENESS OF SCANNED COPIES OF THIS PLAN SHEET.*

LIN CONSULTING, INC.
1432 EDINGER AVE, #230
TUSTIN, CA 92780

ORANGE COUNTY TRANSPORTATION AUTHORITY
550 S. MAIN STREET
ORANGE, CA 92863-1584

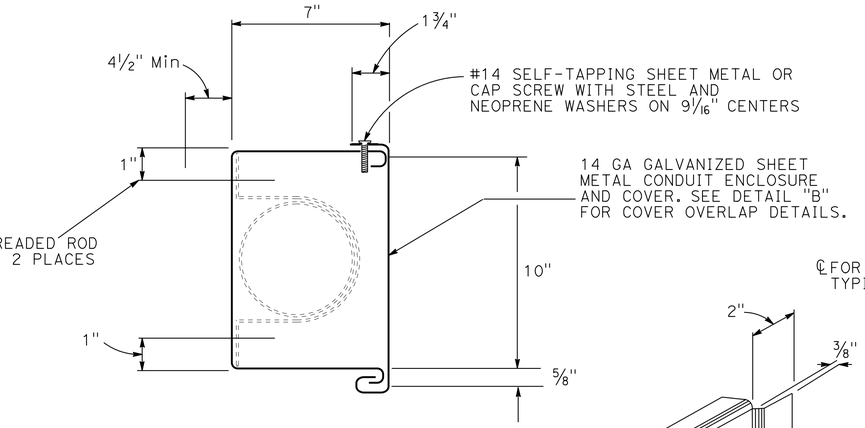


DETAIL "A"
CONDUIT COVER DETAILS (TYP)

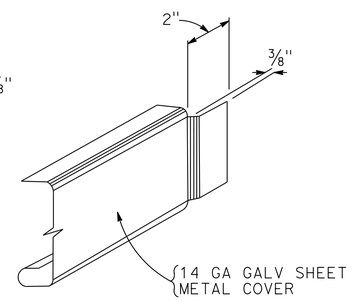


DETAIL "B"
COVER OVERLAP DETAILS (TYP)

NOTE: OVERLAP DETAIL ONE END ONLY

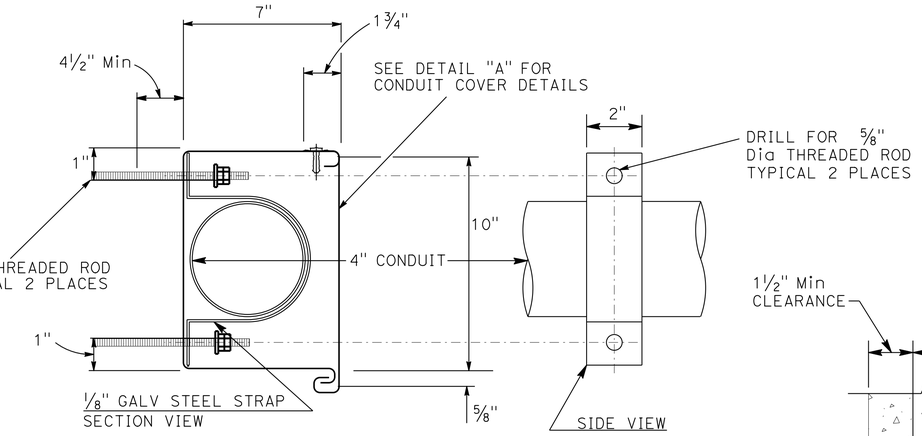


TWO HOLE PIPE STRAP (TYP)

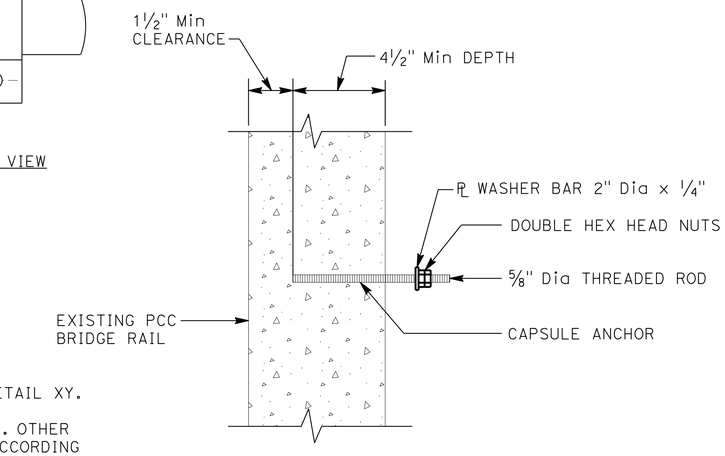


RESIN CAPSULE TYPE
BOLT ANCHORAGE

CONDUIT EXPANSION JOINT. SEE STD. PLAN ES-9B, DETAIL XY. PROVIDE A MINIMUM MOVEMENT OF 1 1/2" AT EACH ABUTMENT WHERE NO EXPANSION JOINTS ARE LOCATED. OTHER EXPANSION ASSEMBLIES SHALL PROVIDE MOVEMENTS ACCORDING TO EXPANSION JOINT SIZE. TWO-HOLE PIPE STRAP SUPPORTS ARE TO BE LOCATED 24" MAXIMUM EACH SIDE OF THE EXPANSION ASSEMBLIES.

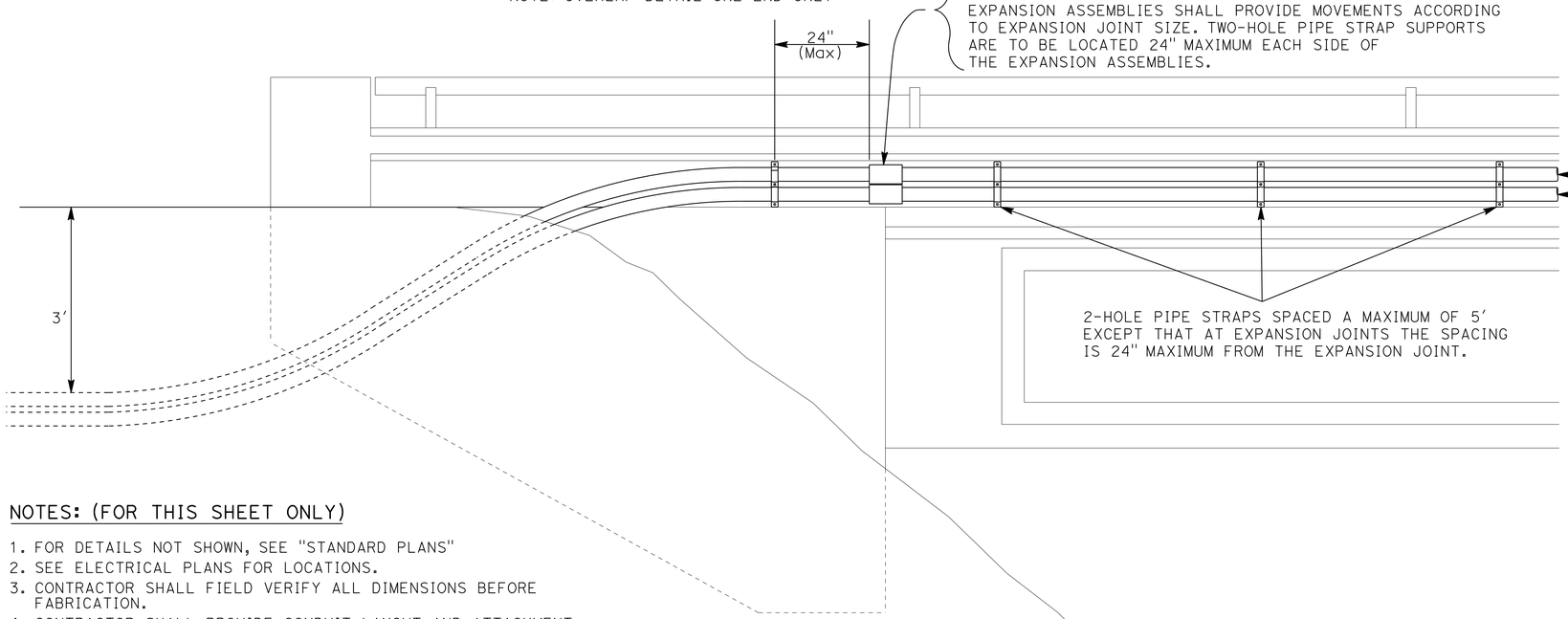


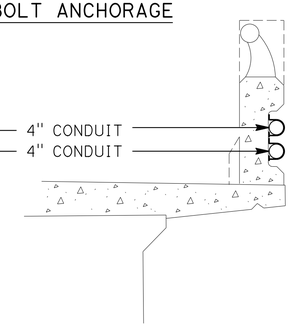


SECTION VIEW OF BRIDGE RAIL

NOTES: (FOR THIS SHEET ONLY)

1. FOR DETAILS NOT SHOWN, SEE "STANDARD PLANS"
2. SEE ELECTRICAL PLANS FOR LOCATIONS.
3. CONTRACTOR SHALL FIELD VERIFY ALL DIMENSIONS BEFORE FABRICATION.
4. CONTRACTOR SHALL PROVIDE CONDUIT LAYOUT AND ATTACHMENT LOCATION BEFORE INSTALLATION.
5. SAW CUT SLOPE PAVING AS REQUIRED TO TRENCH, REPLACE SLOPE PAVING AFTER BACKFILL.
6. TWO-HOLE PIPE STRAPS SHALL BE USED AT EACH ABUTMENT. SEE "TYPICAL CONDUIT STRAPPING INSTALLATION" DETAIL.

TYPICAL CONDUIT STRAPPING INSTALLATION
SIDE VIEW OF BRIDGE RAIL, ABUTMENT AND GIRDER

*APPROVED FOR ELECTRICAL WORK ONLY*

# COMMUNICATION SYSTEM
## (CONDUIT STRAPPING DETAILS)

NO SCALE

**E-103**

STATE OF CALIFORNIA - DEPARTMENT OF TRANSPORTATION
Caltrans

CONSULTANT FUNCTIONAL SUPERVISOR: GARY HANSEN
CALCULATED-DESIGNED BY: GE MOUA
CHECKED BY: TIMMY TO
REVISED BY
DATE REVISED

LAST REVISION 01-23-13
DATE PLOTTED => 29-APR-2013
TIME PLOTTED => 14:20

| Dist | COUNTY | ROUTE | POST MILES TOTAL PROJECT | SHEET No. | TOTAL SHEETS |
|---|---|---|---|---|---|
| 12 | Ora | 5 | 6.2/8.7 | 413 | 595 |

Gary R. Hansen 1-23-13
REGISTERED CIVIL ENGINEER DATE

4-29-13
PLANS APPROVAL DATE

REGISTERED PROFESSIONAL ENGINEER
GARY HANSEN
No. 26543
Exp. 3/31/14
CIVIL
STATE OF CALIFORNIA

*THE STATE OF CALIFORNIA OR ITS OFFICERS OR AGENTS SHALL NOT BE RESPONSIBLE FOR THE ACCURACY OR COMPLETENESS OF SCANNED COPIES OF THIS PLAN SHEET.*

LIN CONSULTING, INC.
1432 EDINGER AVE, #230
TUSTIN, CA 92780

ORANGE COUNTY
TRANSPORTATION AUTHORITY
550 S. MAIN STREET
ORANGE, CA 92863-1584

# LIGHTING AND SIGN ILLUMINATION (STAGE CONSTRUCTION)

| SHEET No. | (N) #6 WIRES LF | (N) #8 WIRES LF | (N) 2" STEEL CONDUIT LF | (N) 3" STEEL CONDUIT LF | (N) No. 5(T) PULL BOX EA | (N) No. 5 PULL BOX EA | (N) No. 9A PULL BOX EA | (N) BC EA | (N) CB EA | (N) CC EA | (N) SC EA | (N) ISL-85W LIGHTING FIXTURES EA | (N) TYPE SC3 CONTROL EA | (N) TYPE 15 LIGHTING STANDARD EA | (N) TYPE 21 LIGHTING STANDARD EA | (N) TYPE 21D LIGHTING STANDARD EA | (N) TYPE 30 LIGHTING STANDARD EA | (N) TYPE 31 LIGHTING STANDARD EA | (N) TYPE 32 LIGHTING STANDARD EA | (N) DEAD-END ASSEMBLIES EA | (N) TEMP LIGHTING ON CONCRETE BLOCK ASSEMBLY EA | (N) TEMP LIGHTING ON 40' WOOD POLE EA | (N) TEMP 40' WOOD POLE EA | (N) TYPE "H" RISER EA | (N) TYPE III-CF EQUIPMENT ENCLOSURE EA | (N) ADD CIRCUIT BREAKER EA |
|---|---|---|---|---|---|---|---|---|---|---|---|---|---|---|---|---|---|---|---|---|---|---|---|---|---|---|
| E-1 | - | 4,450 | 350 | - | - | 2 | 3 | - | 1 | 1 | 1 | 2 | 1 | - | - | - | - | - | - | 2 | 8 | - | 5 | 2 | - | - |
| E-2 | - | 2,500 | 1,200 | - | - | 2 | 7 | 1 | - | - | 1 | - | - | - | - | - | - | - | - | 2 | - | 5 | 2 | 1 | - | - |
| E-3 | - | 3,000 | 75 | - | - | 1 | - | - | 3 | - | 3 | 1 | 1 | - | - | - | - | - | - | 6 | 1 | 8 | 7 | 4 | - | - |
| E-4 | - | 400 | - | - | - | - | - | - | - | - | - | - | - | - | - | - | - | - | - | - | - | 2 | - | - | - | - |
| E-5 | 1,630 | - | 75 | - | - | - | - | - | 2 | - | 2 | - | - | - | - | - | - | - | - | 2 | 5 | - | 2 | 2 | - | - |
| E-6 | 1,260 | - | - | - | - | - | - | - | 1 | - | 1 | - | - | - | - | - | - | - | - | - | 3 | - | 1 | 1 | - | - |
| E-7 | - | 5,160 | 1,400 | 10 | - | 6 | - | - | 4 | - | 4 | 4 | 1 | - | * 1 | - | - | - | - | 2 | - | - | 2 | 2 | - | - |
| E-8 | - | 2,900 | 160 | 10 | - | 1 | - | - | 3 | - | - | - | - | - | ** 5 | - | - | 1 | - | - | - | - | - | 1 | 1 | - |
| E-9 | - | 2,500 | 1,500 | 70 | - | 8 | - | - | 3 | 1 | 4 | - | 1 | - | - | - | 5 | - | - | 4 | - | 1 | 4 | 3 | - | - |
| E-10 | - | - | - | - | - | - | - | - | - | - | - | - | - | - | - | - | - | - | - | - | - | - | - | - | - | - |
| E-11 | - | 1,660 | 550 | 120 | - | 4 | - | - | 2 | - | 2 | - | - | 3 | - | - | 1 | - | - | - | - | - | - | - | - | - |
| E-12 | 1,700 | - | 40 | - | - | - | - | - | 1 | - | 1 | - | - | - | - | - | - | - | - | 4 | 3 | - | 2 | 2 | - | - |
| E-13 | 1,320 | - | - | - | - | - | - | - | - | - | - | - | - | - | - | - | - | - | - | - | 4 | - | - | - | - | - |
| E-14 | - | 1,030 | 450 | - | - | 6 | - | 1 | 1 | - | 2 | 6 | 1 | - | - | - | 2 | - | - | - | - | - | - | - | - | - |
| E-15 | - | 600 | 200 | 110 | - | 2 | - | - | 1 | - | 1 | - | - | - | - | - | 1 | 1 | - | - | - | - | - | - | - | - |
| E-16 | - | 750 | 350 | - | - | 1 | 2 | - | - | - | - | - | - | - | 2 | - | - | - | - | - | - | - | - | - | - | - |
| E-17 | 1,800 | - | 1,110 | - | 1 | 2 | 3 | 1 | 3 | 2 | 2 | 5 | 1 | - | - | 3 | - | - | 1 | - | - | - | - | - | - | - |
| E-18 | 2,300 | - | 1,960 | - | - | 6 | 5 | - | - | - | - | 3 | 1 | - | - | 5 | - | - | 2 | - | - | - | - | - | - | - |
| TOTAL | 10,010 | 24,950 | 12,330 | 320 | 1 | 41 | 20 | 3 | 25 | 4 | 24 | 21 | 7 | 3 | 8 | 8 | 9 | 2 | 3 | 22 | 24 | 16 | 25 | 18 | 1 | - |

(N) = NOT A SEPERATE PAY ITEM, FOR INFORMATION ONLY
* = FOUNDATION INSTALLED PER SHEET No. E-1.
** = FOUNDATION INSTALLED PER SHEET No. E-2.

## ELECTRICAL QUANTITIES

## E-104

*APPROVED FOR ELECTRICAL WORK ONLY*

STATE OF CALIFORNIA - DEPARTMENT OF TRANSPORTATION
Caltrans
CONSULTANT FUNCTIONAL SUPERVISOR: GARY HANSEN
CALCULATED-DESIGNED BY: CHRISTINA RUIZ
CHECKED BY: TIMMY TO
REVISED BY
DATE REVISED

LAST REVISION 01-23-13
DATE PLOTTED => 29-APR-2013
TIME PLOTTED => 14:20

| Dist | COUNTY | ROUTE | POST MILES TOTAL PROJECT | SHEET No. | TOTAL SHEETS |
|---|---|---|---|---|---|
| 12 | Ora | 5 | 6.2/8.7 | 414 | 595 |

REGISTERED CIVIL ENGINEER 1-23-13 DATE

4-29-13
PLANS APPROVAL DATE

REGISTERED PROFESSIONAL ENGINEER GARY HANSEN No. 26543 Exp. 3/31/14 CIVIL STATE OF CALIFORNIA

*THE STATE OF CALIFORNIA OR ITS OFFICERS OR AGENTS SHALL NOT BE RESPONSIBLE FOR THE ACCURACY OR COMPLETENESS OF SCANNED COPIES OF THIS PLAN SHEET.*

LIN CONSULTING, INC.
1432 EDINGER AVE, #230
TUSTIN, CA 92780

ORANGE COUNTY
TRANSPORTATION AUTHORITY
550 S. MAIN STREET
ORANGE, CA 92863-1584

## LIGHTING AND SIGN ILLUMINATION

| SHEET No. | (N) #6 WIRES | (N) #8 WIRES | (N) 2" STEEL CONDUIT | (N) 3" STEEL CONDUIT | (N) No. 5 PULL BOX | (N) No. 9A PULL BOX | (N) BC | (N) CB | (N) CC | (N) SC | (N) ISL-85W LIGHTING FIXTURES | (N) TYPE SC3 CONTROL | (N) TYPE 15 LIGHTING STANDARD | (N) TYPE 21 LIGHTING STANDARD | (N) TYPE 30 LIGHTING STANDARD | (N) TYPE 31 LIGHTING STANDARD | (N) TYPE 32 LIGHTING STANDARD | (N) DEAD-END ASSEMBLIES | (N) TEMP LIGHTING ON CONCRETE BLOCK ASSEMBLY | (N) TEMP LIGHTING ON 40' WOOD POLE | (N) TEMP 40' WOOD POLE | (N) TYPE "H" RISER | (N) TYPE III-CF EQUIPMENT ENCLOSURE | (N) ADD CIRCUIT BREAKER |
|---|---|---|---|---|---|---|---|---|---|---|---|---|---|---|---|---|---|---|---|---|---|---|---|---|
| | LF | LF | LF | LF | EA | EA | EA | EA | EA | EA | EA | EA | EA | EA | EA | EA | EA | EA | EA | EA | EA | EA | EA | EA |
| E-20 | - | 1,000 | 500 | - | 3 | - | - | 1 | - | 1 | - | - | - | - | 2 | - | 1 | - | - | - | - | - | - | - |
| E-21 | - | - | - | - | - | - | - | - | - | - | - | - | - | - | - | - | - | - | - | - | - | - | - | - |
| E-22 | - | 200 | 100 | - | 1 | - | - | 1 | - | 1 | - | - | - | - | - | 1 | - | - | - | - | - | - | - | - |
| E-23 | - | 400 | 200 | - | 2 | - | - | - | 2 | - | - | - | - | - | - | - | - | - | - | - | - | - | - | - |
| E-24 | 500 | 1,700 | - | - | - | - | - | - | - | 2 | - | - | - | - | - | - | - | - | - | - | - | - | - | 1 |
| E-25 | - | 1,650 | - | - | - | - | - | - | - | - | - | - | - | - | - | - | - | - | - | - | - | - | - | - |
| TOTAL | 500 | 4,950 | 800 | - | 6 | - | - | 2 | 2 | 4 | - | - | - | - | 2 | 1 | 1 | - | - | - | - | - | - | 1 |

(N) = NOT A SEPERATE PAY ITEM, FOR INFORMATION ONLY

## ELECTRIC SERVICE (IRRIGATION)

| SHEET No. | (N) #6 WIRES | (N) #8 WIRES | (N) 2" STEEL CONDUIT | (N) 3" STEEL CONDUIT | (N) No. 5 PULL BOX | (N) No. 9A PULL BOX | (N) BC | (N) CB | (N) CC | (N) SC | (N) ISL-85W LIGHTING FIXTURES | (N) TYPE SC3 CONTROL | (N) TYPE 15 LIGHTING STANDARD | (N) TYPE 21 LIGHTING STANDARD | (N) TYPE 30 LIGHTING STANDARD | (N) TYPE 31 LIGHTING STANDARD | (N) TYPE 32 LIGHTING STANDARD | (N) DEAD-END ASSEMBLIES | (N) TEMP LIGHTING ON CONCRETE BLOCK ASSEMBLY | (N) TEMP LIGHTING ON 40' WOOD POLE | (N) TEMP 40' WOOD POLE | (N) TYPE "H" RISER | (N) TYPE III-CF EQUIPMENT ENCLOSURE | (N) ADD CIRCUIT BREAKER |
|---|---|---|---|---|---|---|---|---|---|---|---|---|---|---|---|---|---|---|---|---|---|---|---|---|
| | LF | LF | LF | LF | EA | EA | EA | EA | EA | EA | EA | EA | EA | EA | EA | EA | EA | EA | EA | EA | EA | EA | EA | EA |
| E-73 | - | 1,300 | 240 | - | - | - | - | 4 | - | - | - | - | - | - | - | - | - | - | - | - | - | - | - | 3 |
| E-74 | - | 500 | 200 | - | 2 | - | - | 2 | - | - | - | - | - | - | - | - | - | - | - | - | - | - | - | 1 |
| TOTAL | - | 1,800 | 440 | - | 2 | - | - | 6 | - | - | - | - | - | - | - | - | - | - | - | - | - | - | - | 4 |

(N) = NOT A SEPERATE PAY ITEM, FOR INFORMATION ONLY

REVISED BY | DATE REVISED
CHRISTINA RUIZ | TIMMY TO
CALCULATED-DESIGNED BY | CHECKED BY
CONSULTANT FUNCTIONAL SUPERVISOR | GARY HANSEN
STATE OF CALIFORNIA - DEPARTMENT OF TRANSPORTATION
Caltrans

# ELECTRICAL QUANTITIES

# E-105

*APPROVED FOR ELECTRICAL WORK ONLY*

LAST REVISION 01-23-13 | DATE PLOTTED => 01-MAY-2013 | TIME PLOTTED => 13:03

| Dist | COUNTY | ROUTE | POST MILES TOTAL PROJECT | SHEET No. | TOTAL SHEETS |
|---|---|---|---|---|---|
| 12 | Ora | 5 | 6.2/8.7 | 415 | 595 |

Gary R. Hansen 1-23-13
REGISTERED CIVIL ENGINEER DATE

4-29-13
PLANS APPROVAL DATE

REGISTERED PROFESSIONAL ENGINEER
GARY HANSEN
No. 26543
Exp. 3/31/14
CIVIL
STATE OF CALIFORNIA

THE STATE OF CALIFORNIA OR ITS OFFICERS OR AGENTS SHALL NOT BE RESPONSIBLE FOR THE ACCURACY OR COMPLETENESS OF SCANNED COPIES OF THIS PLAN SHEET.

LIN CONSULTING, INC.
1432 EDINGER AVE, #230
TUSTIN, CA 92780

ORANGE COUNTY
TRANSPORTATION AUTHORITY
550 S. MAIN STREET
ORANGE, CA 92863-1584

# RAMP METERING SYSTEM (STAGE CONSTRUCTION)

| LOCATION | SHEET No. | (N) #14 LF | (N) #10 LF | (N) #6 LF | (N) DLC LF | (N) TYPE E DETECTOR LOOP EA | (N) 6'x10' DETECTOR LOOP EA | (N) SC EA | (N) CB EA | (N) BC EA | (N) CC EA | (N) 2" CONDUIT LF | (N) 3" CONDUIT LF | (N) 4" CONDUIT LF | (N) No. 5 PULL BOX EA | (N) No. 5(T) PULL BOX EA | (N) No. 6 PULL BOX EA | (N) No. 6(T) PULL BOX EA | (N) RL CONTROLLER CABINET EA | (N) RAMP METER SIGNAL ASSEMBLY EA | (N) "METER ON" ASSEMBLY EA | (N) MVDS ASSEMBLY EA | (N) TEMPORARY 40' WOOD POLE EA | (N) TYPE "H" RISER EA | (N) DEAD-END ASSEMBLY EA |
|---|---|---|---|---|---|---|---|---|---|---|---|---|---|---|---|---|---|---|---|---|---|---|---|---|---|
| 1 | E-28 | 8,600 | 1,550 | - | 70 | - | - | - | - | 1 | - | 700 | 200 | - | 5 | 2 | - | 1 | - | - | 3 | 1 | 1 | - | - |
| | E-29 | - | - | - | 130 | 5 | - | 2 | - | - | - | - | - | - | - | - | - | - | - | - | - | - | - | - | - |
| | E-30 | 330 | 120 | - | 440 | - | - | - | 1 | - | - | 10 | - | - | - | - | - | - | - | - | - | - | 1 | 1 | - |
| | E-31 | 620 | 230 | - | 1,210 | 5 | - | - | - | - | - | 55 | - | - | 2 | - | - | - | - | 1 | - | - | 4 | 2 | 2 |
| | E-32 | 10,100 | 1,580 | 1,320 | 2,420 | - | - | 2 | - | 1 | - | 55 | 10 | 250 | - | 3 | 1 | - | 1 | - | - | - | - | - | - |
| | E-33 | 7,000 | 620 | - | 4,380 | 9 | - | - | - | - | - | 320 | 65 | 550 | - | 4 | - | 2 | - | 1 | - | - | - | - | - |
| TOTAL | | 26,650 | 4,100 | 1,320 | 8,650 | 19 | - | 4 | 1 | 2 | - | 1,140 | 275 | 800 | 7 | 9 | 1 | 3 | 1 | 2 | 3 | 1 | 6 | 3 | 2 |
| 2 | E-34 | 1,925 | 800 | 500 | 2,200 | 6 | - | 2 | 3 | 1 | - | 180 | 10 | - | 3 | - | - | - | 1 | - | - | - | 4 | 4 | 4 |
| | E-35 | - | - | - | 200 | 1 | - | - | - | - | - | 20 | - | - | 1 | - | - | - | - | - | - | 1 | 3 | 1 | - |
| | E-36 | 3,050 | 575 | 450 | 2,150 | - | 6 | 1 | 1 | - | 1 | 375 | 425 | - | 3 | 4 | - | 2 | 1 | 1 | - | - | - | 1 | - |
| | E-37 | - | - | - | 200 | 1 | - | - | - | - | - | - | - | - | - | - | - | - | - | - | - | - | - | - | - |
| | E-38 | - | - | - | 1,300 | - | 5 | 2 | 1 | - | - | - | 275 | - | - | 1 | - | - | - | - | - | - | - | - | - |
| | E-39 | - | - | - | - | 2 | - | - | - | - | - | - | 375 | - | - | 3 | - | - | - | - | - | - | - | - | - |
| TOTAL | | 4,975 | 1,375 | 950 | 6,050 | 10 | 11 | 5 | 5 | 1 | 1 | 575 | 1,085 | - | 7 | 8 | - | 2 | 2 | 1 | - | 1 | 7 | 6 | 4 |
| 3 | E-40 | 2,800 | 400 | 2,000 | 1,850 | 2 | - | 1 | 3 | - | - | 175 | - | - | 1 | 1 | - | - | - | - | 1 | 1 | 9 | 4 | 8 |
| | E-41 | - | - | 900 | - | - | - | 1 | 1 | - | - | 10 | - | - | - | - | - | - | - | - | - | - | 2 | 1 | - |
| | E-42 | 2,800 | 650 | 2,050 | 1,100 | 6 | - | - | - | - | - | 950 | 150 | - | 2 | 4 | 1 | - | 1 | 1 | 1 | - | - | - | - |
| | E-43 | - | - | 650 | - | - | - | 1 | - | - | 1 | 350 | - | - | 1 | 2 | - | - | - | - | - | - | - | - | - |
| | E-44 | 3,300 | 750 | - | 2,500 | 11 | - | - | 2 | - | - | 350 | 100 | - | - | 3 | - | 1 | - | 1 | 1 | - | - | - | - |
| | E-45 | - | - | - | - | - | - | - | - | - | - | - | - | - | - | - | - | - | - | - | - | - | - | - | - |
| TOTAL | | 8,900 | 1,800 | 5,600 | 5,450 | 19 | - | 3 | 6 | - | 1 | 1,835 | 250 | - | 4 | 10 | 1 | 1 | 1 | 2 | 3 | 1 | 11 | 5 | 8 |

(N) = NOT A SEPERATE PAY ITEM, FOR INFORMATION ONLY

## ELECTRICAL QUANTITIES

## E-106

*APPROVED FOR ELECTRICAL WORK ONLY*

REVISED BY | DATE REVISED
RYAN WALBERT | TIMMY TO
CALCULATED-DESIGNED BY | CHECKED BY
CONSULTANT FUNCTIONAL SUPERVISOR | GARY HANSEN
STATE OF CALIFORNIA - DEPARTMENT OF TRANSPORTATION
Caltrans

LAST REVISION 01-23-13 | DATE PLOTTED => 30-APR-2013 | TIME PLOTTED => 06:03

| Dist | COUNTY | ROUTE | POST MILES TOTAL PROJECT | SHEET No. | TOTAL SHEETS |
|---|---|---|---|---|---|
| 12 | Ora | 5 | 6.2/8.7 | 416 | 595 |

Gary R. Hansen 1-23-13
REGISTERED CIVIL ENGINEER DATE

4-29-13
PLANS APPROVAL DATE

REGISTERED PROFESSIONAL ENGINEER
GARY HANSEN
No. 26543
Exp. 3/31/14
CIVIL
STATE OF CALIFORNIA

THE STATE OF CALIFORNIA OR ITS OFFICERS OR AGENTS SHALL NOT BE RESPONSIBLE FOR THE ACCURACY OR COMPLETENESS OF SCANNED COPIES OF THIS PLAN SHEET.

LIN CONSULTING, INC.
1432 EDINGER AVE, #230
TUSTIN, CA 92780

ORANGE COUNTY
TRANSPORTATION AUTHORITY
550 S. MAIN STREET
ORANGE, CA 92863-1584

# MODIFY RAMP METERING SYSTEM

| LOCATION | SHEET No. | (N) #14 LF | (N) #10 LF | (N) #6 LF | (N) DLC LF | (N) TYPE E DETECTOR LOOP EA | (N) 6'x10' DETECTOR LOOP EA | (N) SC EA | (N) CB EA | (N) BC EA | (N) CC EA | (N) 2" CONDUIT LF | (N) 3" CONDUIT LF | (N) 4" CONDUIT LF | (N) No. 5 PULL BOX EA | (N) No. 5(T) PULL BOX EA | (N) No. 6 PULL BOX EA | (N) No. 6(T) PULL BOX EA | (N) RL CONTROLLER CABINET EA | (N) RAMP METER SIGNAL ASSEMBLY EA | (N) "METER ON" ASSEMBLY EA | (N) MVDS ASSEMBLY EA | (N) TEMPORARY 40' WOOD POLE EA | (N) TYPE "H" RISER EA | (N) DEAD-END ASSEMBLY EA |
|---|---|---|---|---|---|---|---|---|---|---|---|---|---|---|---|---|---|---|---|---|---|---|---|---|---|
| 1 | E-46 | - | - | 500 | 2,400 | - | - | 2 | - | 1 | 1 | 125 | - | - | - | - | - | - | - | - | - | - | - | - | - |
| | E-47 | 600 | - | - | 6,300 | 10 | - | - | 1 | - | - | - | 100 | - | - | 2 | - | - | - | - | - | - | - | - | - |
| TOTAL | | 600 | - | 500 | 8,700 | 10 | - | 2 | 1 | 1 | 1 | 125 | 100 | - | - | 2 | - | - | - | - | - | - | - | - | - |
| 2 | E-48 | - | - | - | 6,350 | - | - | - | - | - | - | - | - | - | - | - | - | - | - | - | - | - | - | - | - |
| | E-49 | 700 | - | - | 4,650 | 10 | - | - | 1 | - | - | - | 160 | - | - | 2 | - | - | - | - | - | - | - | - | - |
| TOTAL | | 700 | - | - | 11,000 | 10 | - | - | 1 | - | - | - | 160 | - | - | 2 | - | - | - | - | - | - | - | - | - |
| 3 | E-50 | 1,000 | - | - | 2,900 | - | - | - | 1 | - | - | - | 150 | - | - | 2 | - | - | - | - | - | - | - | - | - |
| | E-51 | - | - | - | - | - | - | - | - | - | - | - | - | - | - | - | - | - | - | - | - | - | - | - | - |
| TOTAL | | 1,000 | - | - | 2,900 | - | - | - | 1 | - | - | - | 150 | - | - | 2 | - | - | - | - | - | - | - | - | - |

(N) = NOT A SEPERATE PAY ITEM, FOR INFORMATION ONLY

## ELECTRICAL QUANTITIES

## E-107

*APPROVED FOR ELECTRICAL WORK ONLY*

REVISED BY | DATE REVISED
RYAN WALBERT | TIMMY TO
CALCULATED-DESIGNED BY | CHECKED BY
CONSULTANT FUNCTIONAL SUPERVISOR | GARY HANSEN
STATE OF CALIFORNIA - DEPARTMENT OF TRANSPORTATION
Caltrans

LAST REVISION 01-23-13 | DATE PLOTTED => 30-APR-2013 | TIME PLOTTED => 05:59

| Dist | COUNTY | ROUTE | POST MILES TOTAL PROJECT | SHEET No. | TOTAL SHEETS |
|---|---|---|---|---|---|
| 12 | Ora | 5 | 6.2/8.7 | 417 | 595 |

Gary R. Hansen 1-23-13
REGISTERED CIVIL ENGINEER DATE

4-29-13
PLANS APPROVAL DATE

REGISTERED PROFESSIONAL ENGINEER
GARY HANSEN
No. 26543
Exp. 3/31/14
CIVIL
STATE OF CALIFORNIA

*THE STATE OF CALIFORNIA OR ITS OFFICERS OR AGENTS SHALL NOT BE RESPONSIBLE FOR THE ACCURACY OR COMPLETENESS OF SCANNED COPIES OF THIS PLAN SHEET.*

LIN CONSULTING, INC.
1432 EDINGER AVE, #230
TUSTIN, CA 92780

ORANGE COUNTY
TRANSPORTATION AUTHORITY
550 S. MAIN STREET
ORANGE, CA 92863-1584

## SIGNAL AND LIGHTING (STAGE CONSTRUCTION)

| LOCATION | SHEET No. | (N) #14 LF | (N) #10 LF | (N) #8 LF | (N) 12CSC LF | (N) DLC LF | (N) SIC LF | (N) TYPE D DETECTOR LOOP EA | (N) TYPE E DETECTOR LOOP EA | (N) SC EA | (N) CB EA | (N) BC EA | (N) CC EA | (N) 2" CONDUIT LF | (N) 3" CONDUIT LF | (N) No. 5 PULL BOX EA | (N) No. 6 PULL BOX EA | (N) 15TS STANDARD EA | (N) 1-A STANDARD EA | (N) 19-3-100 STANDARD EA | (N) PPB POST EA | (N) 3-12" SIGNAL HEAD EA | (N) MAS EA | (N) SV-1-T MTG EA | (N) SV-2-T MTG EA | (N) TV-2-T MTG EA | (N) SP-1-T MTG EA | (N) 2070 CONTROLLER EA | (N) TEMPORARY 40' WOOD POLE EA | (N) TYPE "H" RISER EA |
|---|---|---|---|---|---|---|---|---|---|---|---|---|---|---|---|---|---|---|---|---|---|---|---|---|---|---|---|---|---|---|
| 1 | E-57 | - | - | - | - | - | - | - | 3 | 2 | - | - | - | - | - | - | - | - | - | - | - | - | - | - | - | - | - | - | - | - |
| | E-58 | 5,800 | 700 | 1,200 | - | 2,100 | - | - | 9 | 3 | 1 | 1 | - | 50 | - | 1 | - | - | - | - | - | 2 | 1 | - | 1 | - | - | - | 3 | 3 |
| | E-59 | - | - | 1,100 | 1,300 | 3,000 | - | 3 | 10 | 2 | 3 | - | - | 350 | 210 | 3 | - | - | 1 | 1 | - | 2 | 1 | 1 | - | 1 | - | 1 | - | - |
| TOTAL | | 5,800 | 700 | 2,300 | 1,300 | 5,100 | - | 3 | 22 | 7 | 4 | 1 | - | 400 | 210 | 4 | - | - | 1 | 1 | - | 4 | 2 | 1 | 1 | 1 | - | 1 | 3 | 3 |

(N) = NOT A SEPERATE PAY ITEM, FOR INFORMATION ONLY

## MODIFY SIGNAL AND LIGHTING

| LOCATION | SHEET No. | (N) #14 LF | (N) #10 LF | (N) #8 LF | (N) 12CSC LF | (N) DLC LF | (N) SIC LF | (N) TYPE D DETECTOR LOOP EA | (N) TYPE E DETECTOR LOOP EA | (N) SC EA | (N) CB EA | (N) BC EA | (N) CC EA | (N) 2" CONDUIT LF | (N) 3" CONDUIT LF | (N) No. 5 PULL BOX EA | (N) No. 6 PULL BOX EA | (N) 15TS STANDARD EA | (N) 1-A STANDARD EA | (N) 19-3-100 STANDARD EA | (N) PPB POST EA | (N) 3-12" SIGNAL HEAD EA | (N) MAS EA | (N) SV-1-T MTG EA | (N) SV-2-T MTG EA | (N) TV-2-T MTG EA | (N) SP-1-T MTG EA | (N) 2070 CONTROLLER EA | (N) TEMPORARY 40' WOOD POLE EA | (N) TYPE "H" RISER EA |
|---|---|---|---|---|---|---|---|---|---|---|---|---|---|---|---|---|---|---|---|---|---|---|---|---|---|---|---|---|---|---|
| 1 | E-61 | - | - | - | - | - | - | - | - | - | - | - | - | - | - | - | - | - | - | - | - | - | - | - | - | - | - | - | - | - |
| TOTAL | | - | - | - | - | - | - | - | - | - | - | - | - | - | - | - | - | - | - | - | - | - | - | - | - | - | - | - | - | - |
| 2 | E-62 | 6,500 | 350 | 700 | - | 1,650 | 1,400 | - | 4 | 2 | - | 1 | 3 | 100 | 50 | 4 | 1 | 2 | - | 1 | 2 | 4 | 1 | 3 | - | - | 1 | - | - | - |
| TOTAL | | 6,500 | 350 | 700 | - | 1,650 | 1,400 | - | 4 | 2 | - | 1 | 3 | 100 | 50 | 4 | 1 | 2 | - | 1 | 2 | 4 | 1 | 3 | - | - | 1 | - | - | - |

(N) = NOT A SEPERATE PAY ITEM, FOR INFORMATION ONLY

REVISED BY | DATE REVISED
RYAN WALBERT | TIMMY TO
CALCULATED-DESIGNED BY | CHECKED BY
CONSULTANT FUNCTIONAL SUPERVISOR | GARY HANSEN
STATE OF CALIFORNIA - DEPARTMENT OF TRANSPORTATION
Caltrans

# ELECTRICAL QUANTITIES

# E-108

*APPROVED FOR ELECTRICAL WORK ONLY*

LAST REVISION 01-23-13 | DATE PLOTTED => 30-APR-2013 | TIME PLOTTED => 05:59

| Dist | COUNTY | ROUTE | POST MILES TOTAL PROJECT | SHEET No. | TOTAL SHEETS |
|---|---|---|---|---|---|
| 12 | Ora | 5 | 6.2/8.7 | 418 | 595 |

Gary R. Hansen 1-23-13
REGISTERED CIVIL ENGINEER DATE

4-29-13
PLANS APPROVAL DATE

REGISTERED PROFESSIONAL ENGINEER
GARY HANSEN
No. 26543
Exp. 3/31/14
CIVIL
STATE OF CALIFORNIA

*THE STATE OF CALIFORNIA OR ITS OFFICERS OR AGENTS SHALL NOT BE RESPONSIBLE FOR THE ACCURACY OR COMPLETENESS OF SCANNED COPIES OF THIS PLAN SHEET.*

LIN CONSULTING, INC.
1432 EDINGER AVE, #230
TUSTIN, CA 92780

ORANGE COUNTY
TRANSPORTATION AUTHORITY
550 S. MAIN STREET
ORANGE, CA 92863-1584

## TEMPORARY TRAFFIC MONITORING STATION

| SHEET No. | (N) #14 | (N) DLC | (N) TYPE E DETECTOR LOOP | (N) CB | (N) 3" CONDUIT | (N) No. 5 PULL BOX | (N) No. 5(T) PULL BOX | (N) MVDS ASSEMBLY | (N) TEMPORARY 40' WOOD POLE |
|---|---|---|---|---|---|---|---|---|---|
| | LF | LF | EA | EA | LF | EA | EA | EA | EA |
| E-64 | - | - | - | - | - | - | - | 3 | 2 |
| E-65 | - | - | - | - | - | - | - | - | - |
| E-66 | - | - | - | - | - | - | - | - | - |
| TOTAL | - | - | - | - | - | - | - | 3 | 2 |

(N) = NOT A SEPERATE PAY ITEM, FOR INFORMATION ONLY

## MODIFY TRAFFIC MONITORING STATION

| SHEET No. | (N) #14 | (N) DLC | (N) TYPE E DETECTOR LOOP | (N) CB | (N) 3" CONDUIT | (N) No. 5 PULL BOX | (N) No. 5(T) PULL BOX | (N) MVDS ASSEMBLY | (N) TEMPORARY 40' WOOD POLE |
|---|---|---|---|---|---|---|---|---|---|
| | LF | LF | EA | EA | LF | EA | EA | EA | EA |
| E-67 | 2,680 | 5,100 | 24 | 1 | 1,200 | 2 | 11 | - | - |
| TOTAL | 2,680 | 5,100 | 24 | 1 | 1,200 | 2 | 11 | - | - |

(N) = NOT A SEPERATE PAY ITEM, FOR INFORMATION ONLY

## CLOSED CIRCUIT TELEVISION SYSTEM (STAGE CONSTRUCTION)

| LOCATION | SHEET No. | (N) #6 | (N) #8 | (N) MULTI-CONDUCTOR CABLE | (N) CB | (N) SC | (N) 2" CONDUIT | (N) 3" CONDUIT | (N) No. 5 PULL BOX | (N) No. 6 PULL BOX | (N) RELOCATE CABINET | (N) TYPE 334 CABINET | (N) FOUNDATION TYPE 334 CABINET | (N) CCTV CAMERA ASSEMLBY | (N) RELOCATE CCTV CAMERA ASSEMLBY | (N) RELOCATE 45' CCTV POLE | (N) 45' CCTV POLE | (N) 15' CCTV POLE | (N) FOUNDATION 45' CCTV POLE | (N) INSTALL 1-20A-120V-1P CB FOR CCTV |
|---|---|---|---|---|---|---|---|---|---|---|---|---|---|---|---|---|---|---|---|---|
| | | LF | LF | LF | EA | EA | LF | LF | EA | EA | EA | EA | EA | EA | EA | EA | EA | EA | EA | EA |
| 1 | E-68 | - | - | - | 1 | - | 900 | - | 5 | 1 | - | - | - | - | - | - | - | - | - | - |
| | E-69 | - | 1,900 | 120 | - | 1 | - | 20 | - | - | 1 | - | 1 | 1 | - | - | - | 1 | - | - |
| TOTAL | | - | 1,900 | 120 | 1 | 1 | 900 | 20 | 5 | 1 | 1 | - | 1 | 1 | - | - | - | 1 | - | - |
| 2 | E-70 | 300 | - | 100 | 1 | 1 | 150 | 20 | 1 | - | 1 | - | 1 | 1 | - | 1 | - | - | 1 | - |
| | E-71 | 310 | - | 100 | 1 | 1 | 320 | 20 | - | 1 | 1 | - | 1 | - | 1 | 1 | - | - | 1 | - |
| TOTAL | | 610 | - | 200 | 2 | 2 | 470 | 40 | 1 | 1 | 2 | - | 2 | 1 | 1 | 2 | - | - | 2 | - |
| 3 | E-72 | - | 4,800 | 100 | 1 | - | 800 | 30 | 4 | 1 | - | 1 | 1 | 1 | - | - | 1 | - | 1 | 1 |
| TOTAL | | - | 4,800 | 100 | 1 | - | 800 | 30 | 4 | 1 | - | 1 | 1 | 1 | - | - | 1 | - | 1 | 1 |

(N) = NOT A SEPERATE PAY ITEM, FOR INFORMATION ONLY

# ELECTRICAL QUANTITIES

# E-109

*APPROVED FOR ELECTRICAL WORK ONLY*

STATE OF CALIFORNIA - DEPARTMENT OF TRANSPORTATION
Caltrans

CONSULTANT FUNCTIONAL SUPERVISOR: GARY HANSEN
CALCULATED-DESIGNED BY: GE MOUA
CHECKED BY: TIMMY TO
REVISED BY
DATE REVISED

LAST REVISION 01-23-13
DATE PLOTTED => 30-APR-2013
TIME PLOTTED => 05:59

| Dist | COUNTY | ROUTE | POST MILES TOTAL PROJECT | SHEET No. | TOTAL SHEETS |
|---|---|---|---|---|---|
| 12 | Ora | 5 | 6.2/8.7 | 419 | 595 |

Gary R. Hansen 1-23-13
REGISTERED CIVIL ENGINEER DATE

4-29-13
PLANS APPROVAL DATE

REGISTERED PROFESSIONAL ENGINEER
GARY HANSEN
No. 26543
Exp. 3/31/14
CIVIL
STATE OF CALIFORNIA

*THE STATE OF CALIFORNIA OR ITS OFFICERS OR AGENTS SHALL NOT BE RESPONSIBLE FOR THE ACCURACY OR COMPLETENESS OF SCANNED COPIES OF THIS PLAN SHEET.*

LIN CONSULTING, INC.
1432 EDINGER AVE, #230
TUSTIN, CA 92780

ORANGE COUNTY
TRANSPORTATION AUTHORITY
550 S. MAIN STREET
ORANGE, CA 92863-1584

## TEMPORARY COMMUNICATION SYSTEM

| SHEET No. | (N) FIBER OPTIC TYPE A | (N) FIBER OPTIC TYPE B | (N) FIBER OPTIC TYPE A & B (AFO) | (N) FIBER OPTIC TYPE D (AFO) | (N) FIBER OPTIC TYPE D | (N) CB | (N) BC | (N) CC | (N) 2" CONDUIT | (N) 4" CONDUIT WITH INNERDUCTS | (N) No. 5 PULL BOX | (N) COMMUNICATION PULL BOX | (N) SPLICE VAULT | (N) TEMPORARY 40' WOOD POLE | (N) TYPE "H" RISER | (N) DEAD-END ASSEMBLY |
|---|---|---|---|---|---|---|---|---|---|---|---|---|---|---|---|---|
| | LF | LF | LF | LF | LF | EA | EA | EA | LF | LF | EA | EA | EA | EA | EA | EA |
| E-75 | 20 | 20 | 1,350 | - | 20 | 1 | 1 | - | 15 | 40 | - | 1 | 1 | 8 | - | 2 |
| E-76 | 130 | 130 | 2,340 | - | - | - | - | - | - | 130 | 2 | - | - | - | - | - |
| E-77 | - | - | 2,600 | 615 | 115 | 1 | - | - | 60 | - | - | - | - | 3 | 3 | 4 |
| E-78 | - | - | 2,200 | 720 | 655 | 3 | - | 1 | 95 | - | - | - | 1 | 10 | 3 | 8 |
| E-79 | - | - | 1,000 | - | - | - | - | - | 300 | - | - | - | - | 5 | - | - |
| E-80 | | - | - | - | 320 | 1 | 1 | - | 15 | 35 | - | - | 1 | 6 | - | - |
| E-81 | - | - | - | - | 70 | 1 | - | - | 40 | - | - | - | - | - | 1 | - |
| E-82 | - | - | - | 330 | 70 | 2 | - | - | 30 | - | - | - | - | 2 | 2 | - |
| E-83 | - | - | - | 250 | 40 | 1 | - | - | 20 | - | - | - | - | 1 | 1 | - |
| E-84 | - | - | - | 200 | 30 | 1 | - | - | - | - | - | - | - | 1 | 1 | - |
| TOTAL | 150 | 150 | 9,490 | 2,115 | 1,320 | 11 | 2 | 1 | 575 | 205 | 2 | 1 | 3 | 36 | 11 | 14 |

(N) = NOT A SEPERATE PAY ITEM, FOR INFORMATION ONLY
(AFO) = AERIAL FIBER OPTIC

## MODIFY COMMUNICATION SYSTEM

| SHEET No. | (N) FIBER OPTIC TYPE A | (N) FIBER OPTIC TYPE B | (N) FIBER OPTIC TYPE C | (N) FIBER OPTIC TYPE D | (N) CB | (N) BC | (N) 2" CONDUIT | (N) 4" CONDUIT WITH INNERDUCTS | (N) PULL ROPE | (N) #5 PULL BOX | (N) COMMUNICATION PULL BOX | (N) SPLICE VAULT |
|---|---|---|---|---|---|---|---|---|---|---|---|---|
| | LF | LF | LF | LF | EA | EA | LF | LF | LF | EA | EA | EA |
| E-85 | 1,300 | 1,300 | 1,300 | 280 | 3 | 1 | 280 | 2,440 | 6,100 | - | 2 | 1 |
| E-86 | 1,300 | 1,300 | 1,300 | - | - | - | - | 2,600 | 6,500 | - | 2 | - |
| E-87 | - | - | - | 1,200 | 4 | - | 610 | - | - | 4 | - | - |
| E-88 | 1,000 | 1,000 | 1,000 | 2,010 | 4 | 3 | 130 | 2,000 | 5,000 | 4 | 3 | - |
| E-89 | 1,200 | 1,200 | 1,200 | 70 | 1 | - | 60 | 2,400 | 6,000 | - | 2 | 1 |
| E-90 | 960 | 960 | 960 | 290 | 1 | - | - | 1,920 | 4,800 | - | - | - |
| TOTAL | 5,760 | 5,760 | 5,760 | 3,850 | 13 | 4 | 1,080 | 11,360 | 28,400 | 8 | 9 | 2 |

(N) = NOT A SEPERATE PAY ITEM, FOR INFORMATION ONLY

# ELECTRICAL QUANTITIES

# E-110

*APPROVED FOR ELECTRICAL WORK ONLY*

STATE OF CALIFORNIA - DEPARTMENT OF TRANSPORTATION
Caltrans
CONSULTANT FUNCTIONAL SUPERVISOR: GARY HANSEN
CALCULATED-DESIGNED BY: GE MOUA
CHECKED BY: TIMMY TO
REVISED BY
DATE REVISED

LAST REVISION 01-23-13
DATE PLOTTED => 01-MAY-2013
TIME PLOTTED => 13:03

| Dist | COUNTY | ROUTE | POST MILES TOTAL PROJECT | SHEET No. | TOTAL SHEETS |
|---|---|---|---|---|---|
| 12 | Ora | 5 | 6.2/8.7 | 420 | 595 |

E. Tavassoli 4-24-13
REGISTERED CIVIL ENGINEER DATE

4-29-13
PLANS APPROVAL DATE

REGISTERED PROFESSIONAL ENGINEER EHSAN TAVASSOLI No. C68678 Exp. 09-30-13 CIVIL STATE OF CALIFORNIA

*THE STATE OF CALIFORNIA OR ITS OFFICERS OR AGENTS SHALL NOT BE RESPONSIBLE FOR THE ACCURACY OR COMPLETENESS OF SCANNED COPIES OF THIS PLAN SHEET.*

LIN CONSULTING, INC.
1432 EDINGER AVE, #230
TUSTIN, CA 92780

ORANGE COUNTY
TRANSPORTATION AUTHORITY
550 S. MAIN STREET
ORANGE, CA 92863-1584

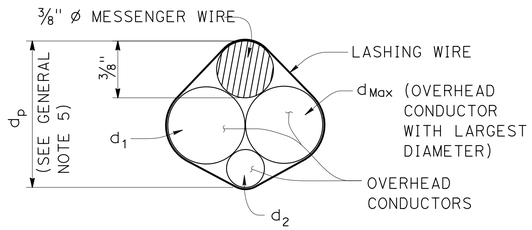


$d_p = 3/8" + d_{Max} + 0.30 * (d_1 + d_2 + ... d_n)$

## PROJECTED DEPTH OF OVERHEAD BUNDLE, ($d_p$)

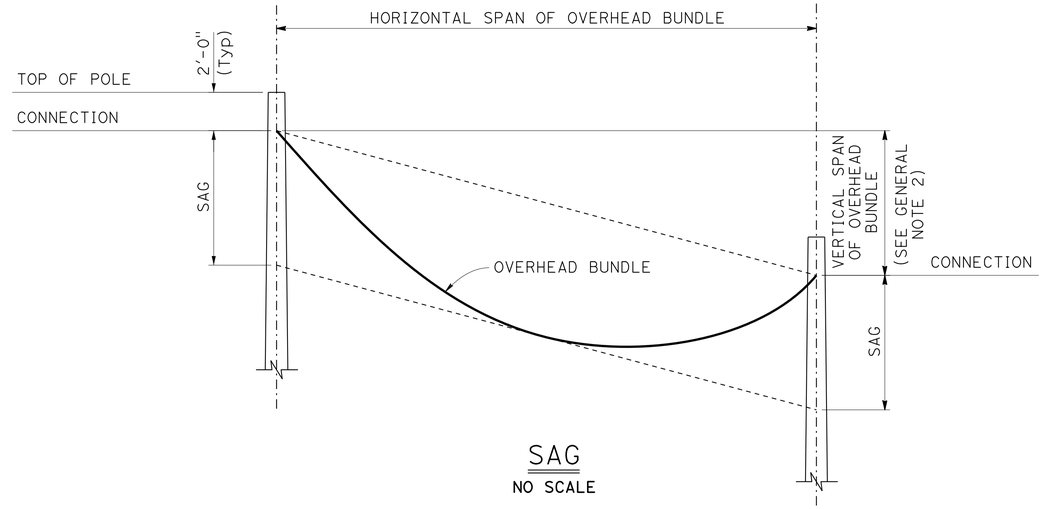


## SAG

NO SCALE

Design: AASHTO Standard Specifications for Structural Supports for Highway Signs, Luminaires and Traffic Signals, Fifth Edition (LTS-5).

### GROUP LOAD COMBINATIONS:

I Dead Load
II Dead Load + Wind Load
III Dead Load + 0.5 (Wind Load) + Ice Load
IV Fatigue: Not used

### LOADING:

Wind Loading: 100 mph (3-second gust)
Wind Recurrence Interval: 10 years
Combined height, exposure, and elevated terrain factor = 1.05 (Exposure C, structure is not located on or over the top half of a ridge, hill, or escarpment)

Ice Loading: 3.0 psf on surfaces, 0.60 in radial thickness of ice at a unit weight of 60 pcf on overhead bundles

### BASIC DESIGN VALUES:

Timber Poles: Fb = 1850 psi
Fv = 110 psi
Fcp = 230 psi
Fc = 950 psi
E = 1500 x $10^3$ psi

### DESIGN WIRE BREAKING STRENGTHS:

ASTM A475, Utilities Grade, 7 strand modified by termination efficiency factor of 0.8

### FOUDATION DESIGN NOTES:

1. Pole embedment depth design is based on Broms' approximate procedure as described in Article 13.6 of AASHTO LTS-5.

2. Embedment depth is calculated based on following soil parameters,
Cohesive Soil:
Shear strength of soil c = 1500 psf.
Cohesionless Soil:
Ø = 30 deg, γ = 120 pcf.
Soil assumed to be unsaturated.

3. An overload factor of 2.0 and an undercapacity factor of 0.7 were used for safety factor of 2.86.

4. Allowable vertical bearing pressure at the end bearing of poles is 3000 psf at 6 feet or more embedment.

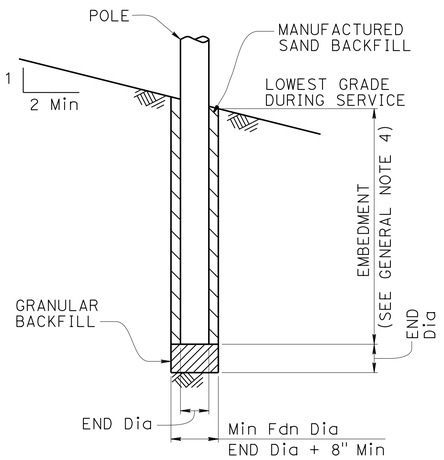


## POLE FOUNDATION

### GENERAL NOTES

1. The messenger wire and any combination of overhead conductors must not exceed either a self weight of 3.0 lb/ft or the maximun $d_p$.

2. The maximum vertical span is 10% of the horizontal span.

3. For poles with adjacent unbalanced horizontal spans, the shortest horizontal span must be at least 50% of the largest horizontal span.

4. Add 2'-0" for slopes above 1V:4H.

5. For a pole supporting multiple spans, calculate $d_p$ for each span and use the largest value.

6. Do not exceed the attachments shown.

## DIAMETERS AND SELF WEIGHT OF OVERHEAD CONDUCTORS

| CONDUCTOR OR CABLE TYPE | DIAMETER d (in) | WEIGHT w (plf) |
|---|---|---|
| 3 CONDUCTOR SIGNAL CABLE (3CSC) | 0.400 | 0.0980 |
| 5 CONDUCTOR SIGNAL CABLE (5CSC) | 0.500 | 0.1560 |
| 9 CONDUCTOR SIGNAL CABLE (9CSC) | 0.650 | 0.2760 |
| 12 CONDUCTOR SIGNAL CABLE (12CSC) | 0.800 | 0.3970 |
| 28 CONDUCTOR SIGNAL CABLE (28CSC) | 0.900 | 0.6490 |
| 1-#14 | 0.166 | 0.0235 |
| 1-#12 | 0.185 | 0.0330 |
| 1-#10 | 0.210 | 0.0476 |
| 1-#8 | 0.271 | 0.0774 |
| 1-#6 | 0.310 | 0.1130 |
| 1-#4 | 0.359 | 0.1690 |
| 1-#3 | 0.388 | 0.2080 |
| 1-#2 | 0.420 | 0.2560 |
| 1-#1 | 0.498 | 0.3340 |
| 6-CONDUCTOR SIGNAL INTERCONNECT CABLE (SIC) | 0.350 | 0.0860 |
| 12-CONDUCTOR SIGNAL INTERCONNECT CABLE (SIC) | 0.500 | 0.1440 |
| DETECTOR LEAD-IN CABLE (DLC) | 0.310 | 0.0440 |
| 12 to 48-STRAND FIBER OPTIC CABLE (48FOC) | 0.424 | 0.0600 |
| 72-STRAND FIBER OPTIC CABLE (72FOC) | 0.484 | 0.0770 |
| 96-STRAND FIBER OPTIC CABLE (96FOC) | 0.535 | 0.1050 |
| 144-STRAND FIBER OPTIC CABLE (144FOC) | 0.670 | 0.1890 |
| 3/8" Ø MESSENGER WIRE | 0.375 | 0.2730 |

*APPROVED FOR ELECTRICAL WORK ONLY*

# TEMPORARY WOOD POLES GENERAL NOTES

NO SCALE

**EXS-1**

STATE OF CALIFORNIA - DEPARTMENT OF TRANSPORTATION
Caltrans
CONSULTANT FUNCTIONAL SUPERVISOR: GARY HANSEN
CALCULATED-DESIGNED BY: CHRISTINA RUIZ
CHECKED BY: TIMMY TO
REVISED BY / DATE REVISED

LAST REVISION 04-24-13 | DATE PLOTTED => 30-APR-2013 | TIME PLOTTED => 05:59

| Dist | COUNTY | ROUTE | POST MILES TOTAL PROJECT | SHEET No. | TOTAL SHEETS |
|---|---|---|---|---|---|
| 12 | Ora | 5 | 6.2/8.7 | 421 | 595 |

E. Tavassoli 4-24-13
REGISTERED CIVIL ENGINEER DATE

4-29-13
PLANS APPROVAL DATE

REGISTERED PROFESSIONAL ENGINEER
EHSAN TAVASSOLI
No. C68678
Exp. 09-30-13
CIVIL
STATE OF CALIFORNIA

*THE STATE OF CALIFORNIA OR ITS OFFICERS OR AGENTS SHALL NOT BE RESPONSIBLE FOR THE ACCURACY OR COMPLETENESS OF SCANNED COPIES OF THIS PLAN SHEET.*

LIN CONSULTING, INC.
1432 EDINGER AVE, #230
TUSTIN, CA 92780

ORANGE COUNTY
TRANSPORTATION AUTHORITY
550 S. MAIN STREET
ORANGE, CA 92863-1584

# POLE SELECTION TABLE

## LEGEND

- Wood Pole No Attachments
- A Wood Pole with Attachments
- —OH— Overhead Bundle

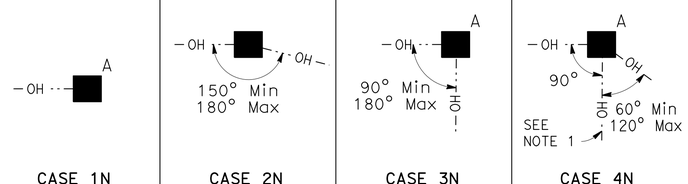


| | | CASE 1N | | | | CASE 2N | | | | CASE 3N | | | | CASE 4N | | | | CASE 5N |
|---|---|---|---|---|---|---|---|---|---|---|---|---|---|---|---|---|---|---|
| | MAXIMUM $d_p$ | 1" | 1.5" | 2.0" | 2.5" | 1" | 1.5" | 2.0" | 2.5" | 1.0" | 1.5" | 2.0" | 2.5" | 1" | 1.5" | 2.0" | 2.5" | N/A |
| OVERHEAD BUNDLE HORIZONTAL SPAN (Max) 50′ | MINIMUM POLE CLASS | H-1 | H-2 | H-2 | H-2 | 4 | 3 | 2 | 1 | H-2 | H-2 | H-3 | H-3 | H-4 | H-4 | H-4 | H-5 | CLASS 1 E = 10′ |
| | POLE EMBEDMENT (E) | 11′ | | | | 10′ | | | | 11′ | | | | 12′ | | | | |
| 100′ | MINIMUM POLE CLASS | H-2 | H-3 | H-4 | H-5 | 1 | H-1 | H-2 | H-3 | H-4 | H-5 | H-5 | H-6 | H-5 | H-5 | H-6 | | |
| | POLE EMBEDMENT (E) | 12′ | | | | 11′ | | | | 12′ | | | | 12′ | | | | |
| 150′ | MINIMUM POLE CLASS | H-4 | H-5 | H-6 | | H-1 | H-2 | H-3 | H-5 | H-6 | | | | H-6 | | | | |
| | POLE EMBEDMENT (E) | 12′ | | | | 12′ | | | | 12′ | | | | 12′ | | | | |
| 200′ | MINIMUM POLE CLASS | H-5 | H-6 | | | H-2 | H-3 | H-5 | | | | | | | | | | |
| | POLE EMBEDMENT (E) | 12′ | | | | 12′ | | | | | | | | | | | | |

1. CCTV camera assembly or vehicle detection system
2. Overhead bundle consisting of a ⅜" Ø messenger wire and overhead conductors and lashing wire.
3. Luminaire with mast arm
4. Pedestrian pushbutton
5. Signal face with 3 indications or single sheet sign panel (10 SQFT Max)
6. Riser with weather head as required
7. Pull box as required
8. Grounding as required
9. Single section flashing beacon or single sheet sign panel (4 SQFT Max)
10. Single sheet sign panel (4′ x 4′ Max) or signal face with 3 indications
11. Flashing beacon control assembly
12. NEMA 3R enclosure, 26"(W) x 56"(H) x 12"(D) Max dimensions. Max weight including batteries, 450 lbs
13. 25′ SQFT Max total photovoltaic panels mounted as shown as required
14. 2-section 12" flashing beacon

## NOTES:

1. In addition to other restrictions on maximum horizontal span, this horizontal span must not exceed 100′.
2. Cases 1N, 3N and 4N may substitute the attachments shown in Case 5N if the photovoltaic panel is not included.

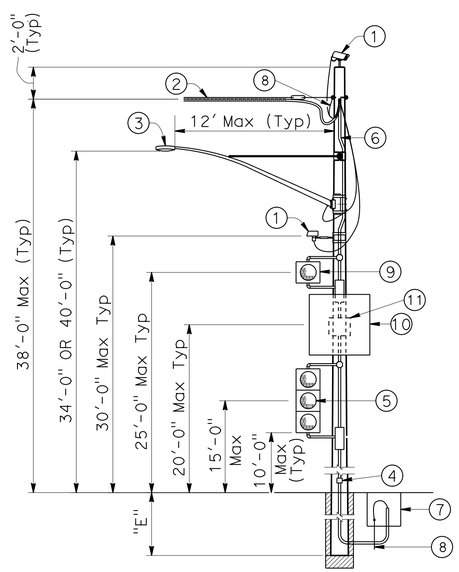


CASE 1N
POLE AT DEAD END
WITH ATTACHMENTS
SEE NOTE 2

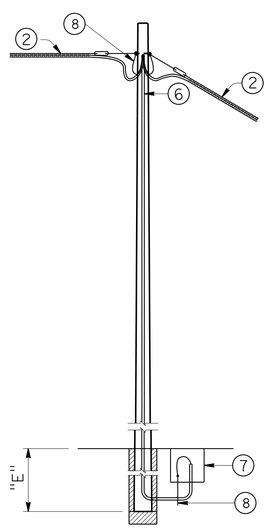


CASE 2N
POLE AT TANGENT
WITHOUT ATTACHMENTS

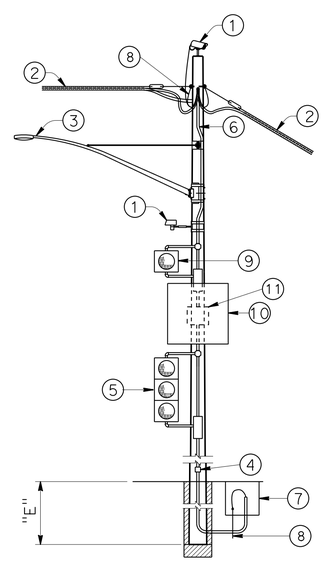


CASE 3N
POLE AT TANGENT OR CORNER
WITH ATTACHMENTS
SEE NOTE 2

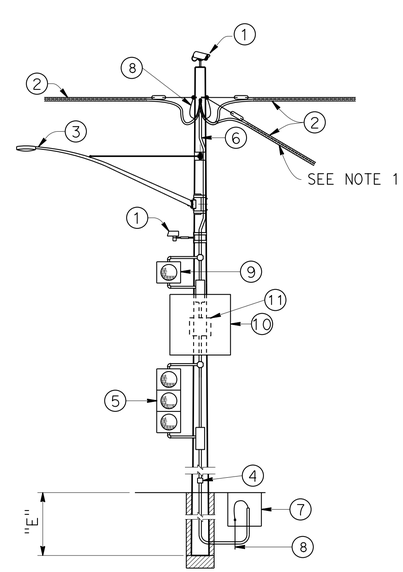


CASE 4N
POLE AT JUNCTION
WITH ATTACHMENTS
SEE NOTE 2

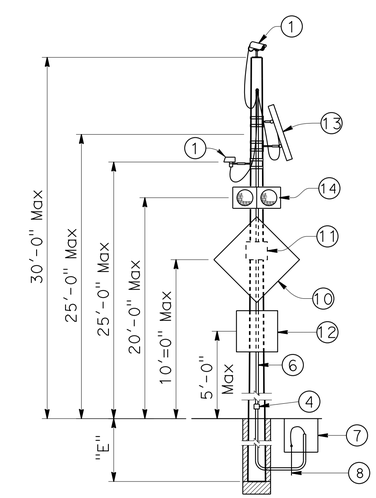


CASE 5N
POLE WITHOUT OVERHEAD BUNDLE
WITH ATTACHMENTS

# TEMPORARY WOOD POLES
# NON-GUYED - NO SIGNAL ON SPANS

NO SCALE

*APPROVED FOR ELECTRICAL WORK ONLY*

**EXS-2**

STATE OF CALIFORNIA - DEPARTMENT OF TRANSPORTATION
Caltrans

CONSULTANT FUNCTIONAL SUPERVISOR: GARY HANSEN
CALCULATED-DESIGNED BY: CHRISTINA RUIZ
CHECKED BY: TIMMY TO
REVISED BY
DATE REVISED

LAST REVISION 04-24-13
DATE PLOTTED => 30-APR-2013
TIME PLOTTED => 05:59

| Dist | COUNTY | ROUTE | POST MILES TOTAL PROJECT | SHEET No. | TOTAL SHEETS |
|---|---|---|---|---|---|
| 12 | Ora | 5 | 6.2/8.7 | 422 | 595 |

E. Tavassoli 4-24-13
REGISTERED CIVIL ENGINEER DATE

4-29-13
PLANS APPROVAL DATE

REGISTERED PROFESSIONAL ENGINEER
EHSAN TAVASSOLI
No. C68678
Exp. 09-30-13
CIVIL
STATE OF CALIFORNIA

*THE STATE OF CALIFORNIA OR ITS OFFICERS OR AGENTS SHALL NOT BE RESPONSIBLE FOR THE ACCURACY OR COMPLETENESS OF SCANNED COPIES OF THIS PLAN SHEET.*

LIN CONSULTING, INC.
1432 EDINGER AVE, #230
TUSTIN, CA 92780

ORANGE COUNTY
TRANSPORTATION AUTHORITY
550 S. MAIN STREET
ORANGE, CA 92863-1584

## LEGEND

- Wood Pole with Attachments
- —OH··— Overhead Bundle
- Guy Anchor

## POLE SELECTION TABLE

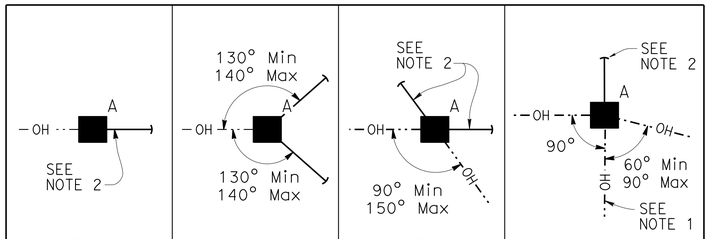


| OVERHEAD BUNDLE HORIZONTAL SPAN (Max) | MAXIMUM $d_p$ | 1" | 1.5" | 2.0" | 2.5" | 1" | 1.5" | 2.0" | 2.5" | 1" | 1.5" | 2.0" | 2.5" | 1" | 1.5" | 2.0" | 2.5" |
|---|---|---|---|---|---|---|---|---|---|---|---|---|---|---|---|---|---|
| 50′ | MINIMUM POLE CLASS | H-1 | H-1 | H-2 | H-2 | 1 | 1 | 1 | 1 | 1 | 1 | 1 | H-1 | H-2 | H-2 | H-3 | H-3 |
| | POLE EMBEDMENT (E) | 10′ | | | | 9′ | | | | 9′ | | | | 11′ | | | |
| 100′ | MINIMUM POLE CLASS | H-2 | H-2 | H-3 | H-4 | 1 | H-1 | H-1 | H-1 | 1 | H-1 | H-2 | H-2 | H-3 | H-3 | H-4 | H-4 |
| | POLE EMBEDMENT (E) | 11′ | | | | 9′ | | | | 9′ | | | | 12′ | | | |
| 150′ | MINIMUM POLE CLASS | H-3 | H-3 | H-4 | H-5 | H-1 | H-1 | H-2 | H-2 | H-2 | H-3 | H-3 | H-3 | H-4 | H-5 | H-5 | H-6 |
| | POLE EMBEDMENT (E) | 11′ | | | | 9′ | | | | 9′ | | | | 12′ | | | |
| 200′ | MINIMUM POLE CLASS | H-4 | H-4 | H-5 | H-6 | H-1 | H-2 | H-3 | H-3 | H-3 | H-3 | H-4 | H-4 | H-5 | H-6 | | |
| | POLE EMBEDMENT (E) | 11′ | | | | 9′ | | | | 9′ | | | | 12′ | | | |

1. CCTV camera assembly or vehicle detection system
2. Overhead bundle consisting of a ⅜" ø messenger wire and overhead conductors and lashing wire.
3. Luminaire with mast arm
4. Pedestrian pushbutton
5. Signal face with 3 indications or single sheet sign panel (10 SQFT Max)
6. Riser with weather head as required
7. Pull box as required
8. Grounding as required
9. Single section flashing beacon or single sheet sign panel (4 SQFT Max)
10. Single sheet sign panel (4′ x 4′ Max) or signal face with 3 indications
11. Flashing beacon control assembly
12. ½" ø guy wire with white guy marker and strain insulator (for anchorage see "TEMPORARY WOOD POLES-DETAILS No. 2" sheet)

## NOTES:

1. In addition to other restrictions on maximum horizontal span, this horizontal span must not exceed 100′.
2. Guy wire in line with opposing span ± 5°.

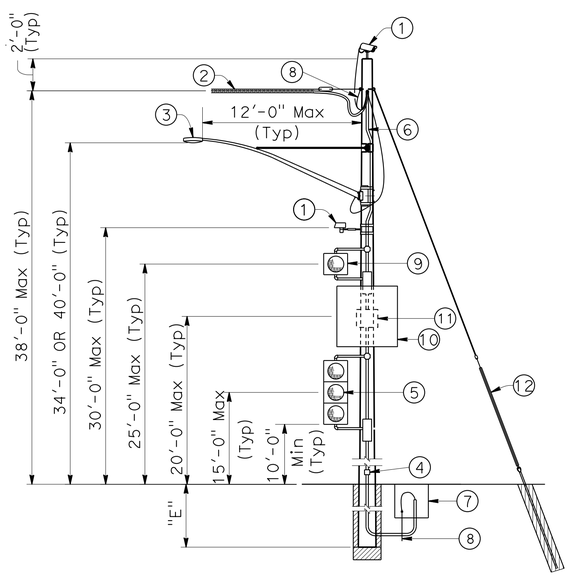


CASE 1G
POLE AT DEAD END
WITH ATTACHMENTS

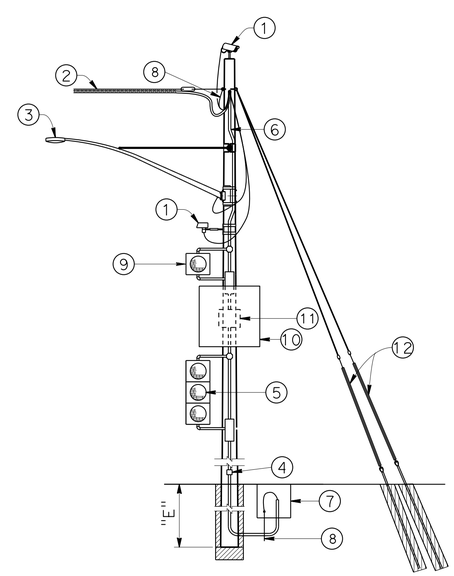


CASE 2G
POLE AT DEAD END
WITH ATTACHMENTS

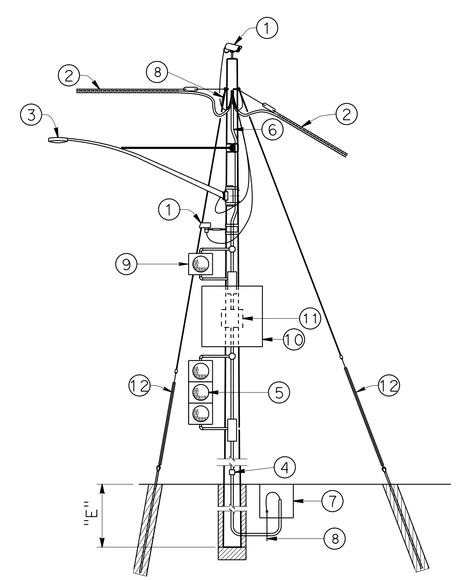


CASE 3G
POLE AT CORNER
WITH ATTACHMENTS

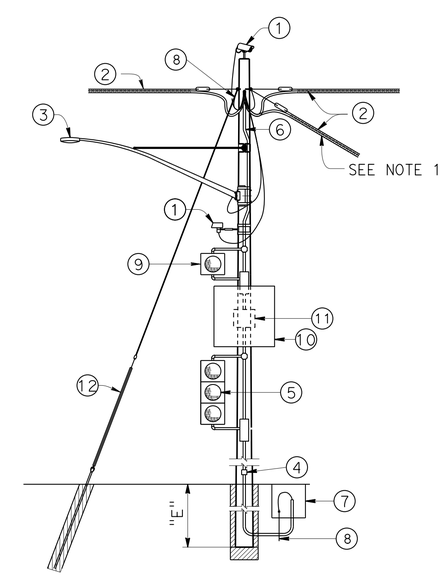


CASE 4G
POLE AT JUNCTION
WITH ATTACHMENTS

# TEMPORARY WOOD POLES GUYED - NO SIGNALS ON SPANS

NO SCALE

*APPROVED FOR ELECTRICAL WORK ONLY*

**EXS-3**

STATE OF CALIFORNIA - DEPARTMENT OF TRANSPORTATION
Caltrans
CONSULTANT FUNCTIONAL SUPERVISOR: GARY HANSEN
CALCULATED-DESIGNED BY: CHRISTINA RUIZ
CHECKED BY: TIMMY TO
REVISED BY
DATE REVISED

LAST REVISION 04-24-13
DATE PLOTTED => 30-APR-2013
TIME PLOTTED => 05:59

| Dist | COUNTY | ROUTE | POST MILES TOTAL PROJECT | SHEET No. | TOTAL SHEETS |
|---|---|---|---|---|---|
| 12 | Ora | 5 | 6.2/8.7 | 423 | 595 |

E. Tavassoli 4-24-13
REGISTERED CIVIL ENGINEER DATE

4-29-13
PLANS APPROVAL DATE

REGISTERED PROFESSIONAL ENGINEER EHSAN TAVASSOLI No. C68678 Exp. 09-30-13 CIVIL STATE OF CALIFORNIA

*THE STATE OF CALIFORNIA OR ITS OFFICERS OR AGENTS SHALL NOT BE RESPONSIBLE FOR THE ACCURACY OR COMPLETENESS OF SCANNED COPIES OF THIS PLAN SHEET.*

LIN CONSULTING, INC.
1432 EDINGER AVE, #230
TUSTIN, CA 92780

ORANGE COUNTY TRANSPORTATION AUTHORITY
550 S. MAIN STREET
ORANGE, CA 92863-1584

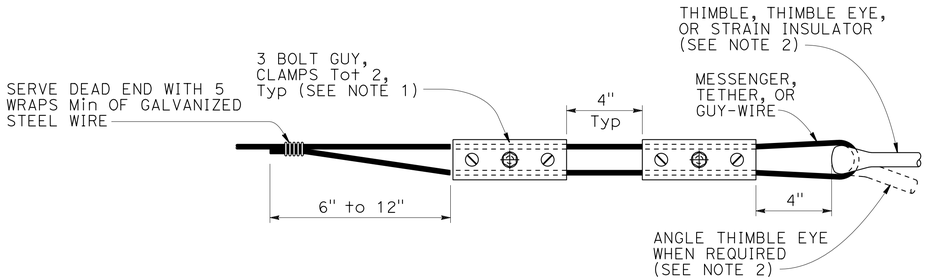


## ALTERNATIVE TERMINATION OF MESSENGER WIRES USING GUY CLAMPS

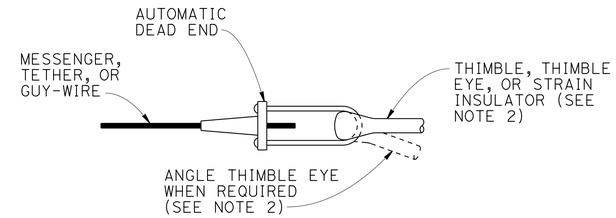


## TERMINATION OF WIRES USING AUTOMATIC DEAD END

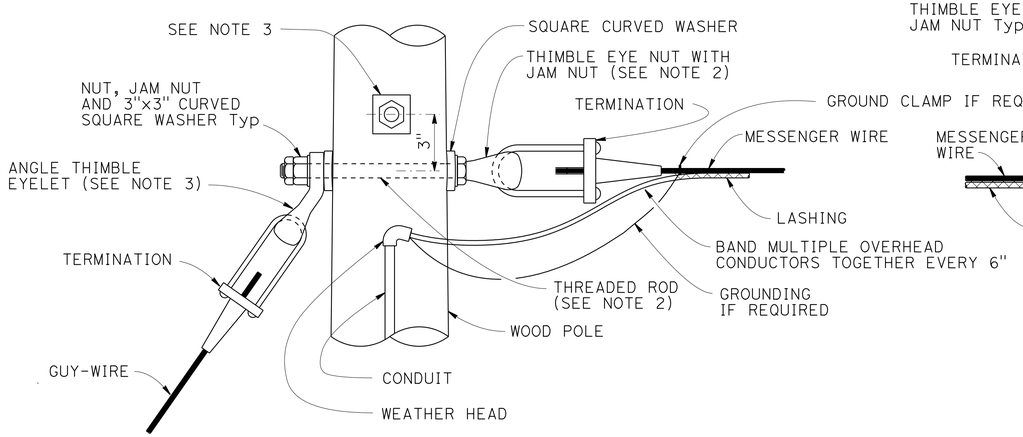


## POLE AT DEAD END WITH GUY-WIRE CONNECTION

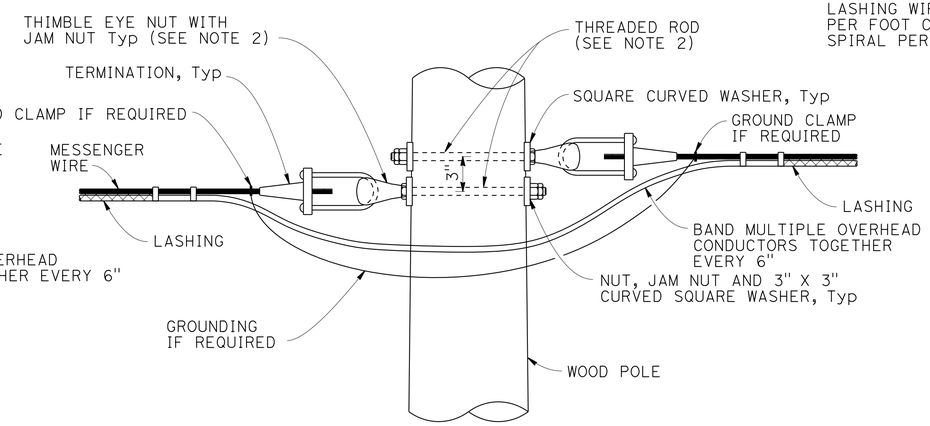


## POLE AT TANGENT OR CORNER CONNECTION

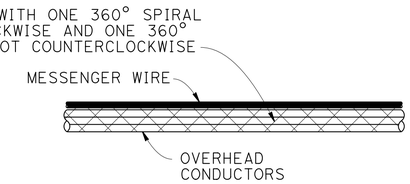


## DOUBLE LASHING DETAIL

USE IF $d_p$ IS GREATER THAN 1½"

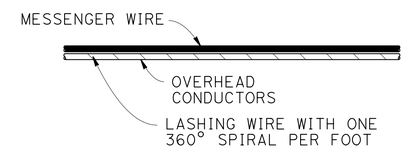


## TYPICAL LASHING DETAIL

USE IF $d_p$ IS 1½" OR LESS

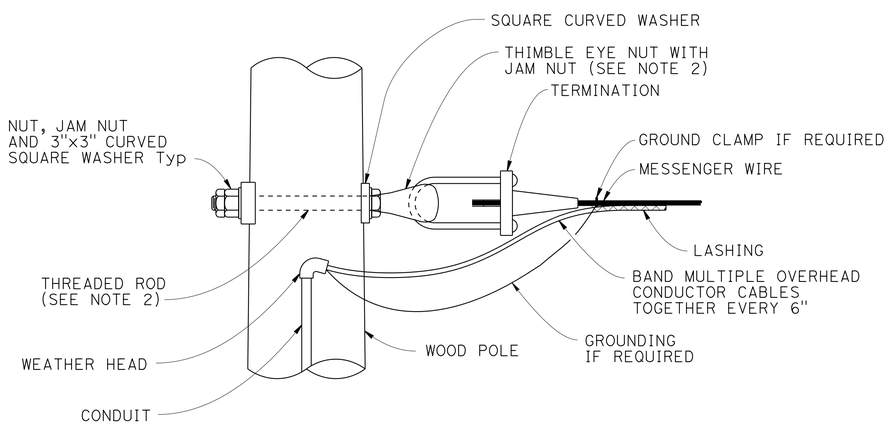


## POLE AT DEAD END CONNECTION

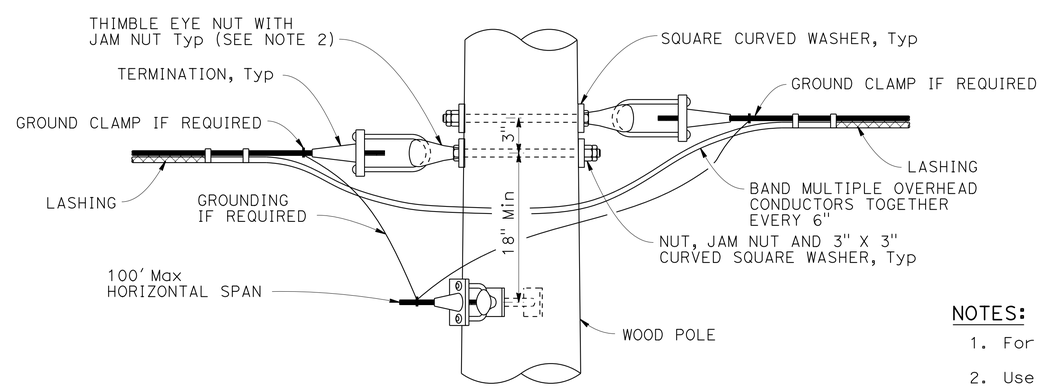


## POLE AT JUNCTION CONNECTION

**NOTES:**

1. For guy wires use 3 clamps.
2. Use ⅝" ø except ¾" ø at guyed wires
3. Install additional angle thimble eyelet at poles with two guy wires.

# TEMPORARY WOOD POLES DETAILS No. 1

NO SCALE

*APPROVED FOR ELECTRICAL WORK ONLY*

**EXS-4**

REVISED BY | DATE REVISED
CHRISTINA RUIZ | TIMMY TO
CALCULATED-DESIGNED BY | CHECKED BY
CONSULTANT FUNCTIONAL SUPERVISOR: GARY HANSEN
STATE OF CALIFORNIA - DEPARTMENT OF TRANSPORTATION
Caltrans

LAST REVISION 04-24-13 | DATE PLOTTED => 30-APR-2013 | TIME PLOTTED => 05:59

| Dist | COUNTY | ROUTE | POST MILES TOTAL PROJECT | SHEET No. | TOTAL SHEETS |
|---|---|---|---|---|---|
| 12 | Ora | 5 | 6.2/8.7 | 424 | 595 |

E. Tavassoli 4-24-13
REGISTERED CIVIL ENGINEER DATE

4-29-13
PLANS APPROVAL DATE

REGISTERED PROFESSIONAL ENGINEER
EHSAN TAVASSOLI
No. C68678
Exp. 09-30-13
CIVIL
STATE OF CALIFORNIA

*THE STATE OF CALIFORNIA OR ITS OFFICERS OR AGENTS SHALL NOT BE RESPONSIBLE FOR THE ACCURACY OR COMPLETENESS OF SCANNED COPIES OF THIS PLAN SHEET.*

LIN CONSULTING, INC.
1432 EDINGER AVE, #230
TUSTIN, CA 92780

ORANGE COUNTY
TRANSPORTATION AUTHORITY
550 S. MAIN STREET
ORANGE, CA 92863-1584

NOTES:

1. Minimum allowable tension capacity "Qa" = 8,900 lbs.
2. Minimum installation torque "T" = 1780 lbs-ft.
3. Helical anchor detail may be used in place of expanded steel anchors.

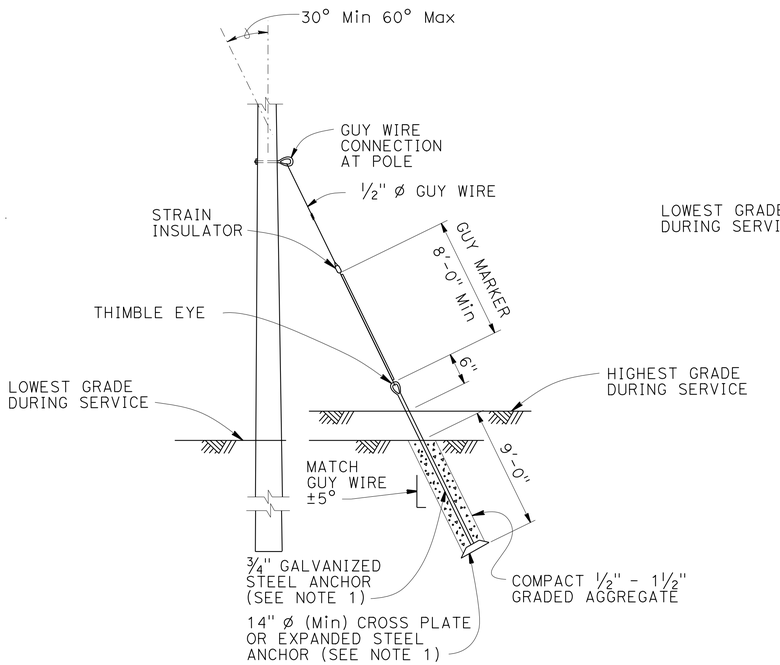


EXPANDED STEEL ANCHOR DETAIL

SEE NOTE 3

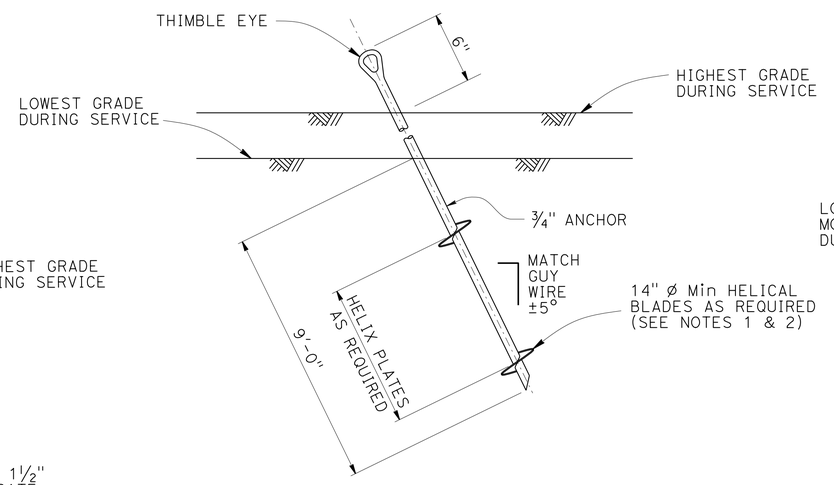


HELICAL ANCHOR DETAIL

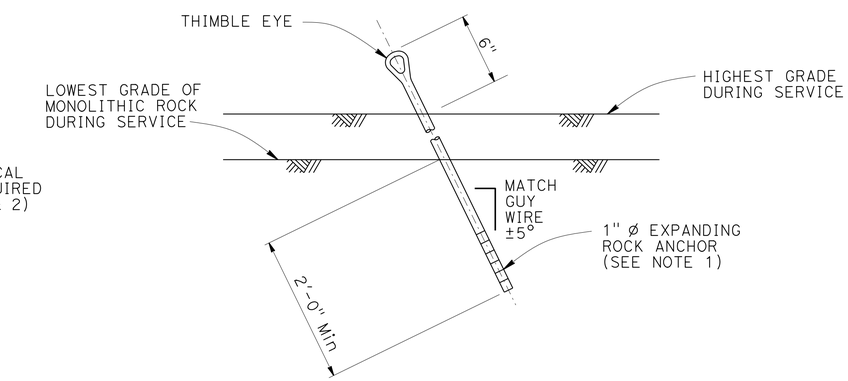


EXPANDING ROCK ANCHOR DETAIL

*APPROVED FOR ELECTRICAL WORK ONLY*

# TEMPORARY WOOD POLES DETAILS No. 2

NO SCALE

**EXS-5**

STATE OF CALIFORNIA - DEPARTMENT OF TRANSPORTATION
Caltrans

CONSULTANT FUNCTIONAL SUPERVISOR: GARY HANSEN
CALCULATED-DESIGNED BY: CHRISTINA RUIZ
CHECKED BY: TIMMY TO
REVISED BY
DATE REVISED

LAST REVISION 04-24-13
DATE PLOTTED => 30-APR-2013
TIME PLOTTED => 05:59

| Dist | COUNTY | ROUTE | POST MILES TOTAL PROJECT | SHEET No. | TOTAL SHEETS |
|---|---|---|---|---|---|
| 12 | Ora | 5 | 6.2/8.7 | 425 | 595 |

E. Tavassoli 4-24-13
REGISTERED CIVIL ENGINEER DATE

4-29-13
PLANS APPROVAL DATE

REGISTERED PROFESSIONAL ENGINEER
EHSAN TAVASSOLI
No. C68678
Exp. 09-30-13
CIVIL
STATE OF CALIFORNIA

*THE STATE OF CALIFORNIA OR ITS OFFICERS OR AGENTS SHALL NOT BE RESPONSIBLE FOR THE ACCURACY OR COMPLETENESS OF SCANNED COPIES OF THIS PLAN SHEET.*

LIN CONSULTING, INC.
1432 EDINGER AVE, #230
TUSTIN, CA 92780

ORANGE COUNTY
TRANSPORTATION AUTHORITY
550 S. MAIN STREET
ORANGE, CA 92863-1584

NOTES:

1. Luminaire mast arms must be in compliance with Standard Plan ES-6D with noted modifications.
2. Verify pole dimensions at tie-rod attachment height. Fabricate 8" flat bar with "L" Dimension to maintain an open gap between flanges in finished installation.
3. Not all screw heads and bolt heads are shown for clarity.
4. Mast arm not shown for clarity.

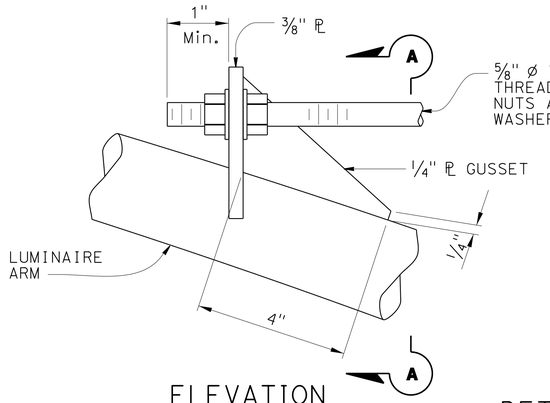


ELEVATION

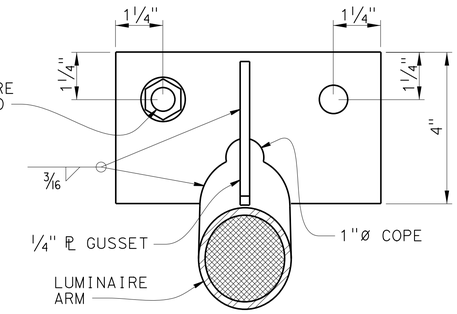


SECTION A-A

DETAIL A
TIE-ROD AT LUMINAIRE ARM
NO SCALE

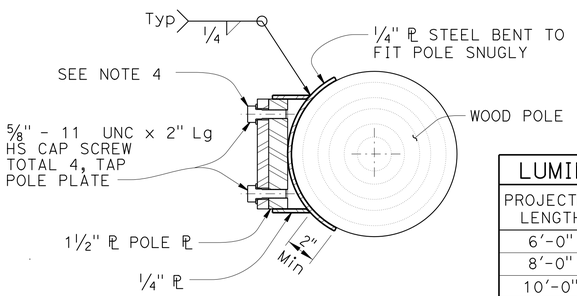


SECTION E-E

| LUMINAIRE MAST ARM DATA | | | |
|---|---|---|---|
| PROJECTED LENGTH | N RISE | Min OD AT POLE | NOMINAL THICKNESS |
| 6'-0" | 2'-0"± | 3 1/4" | 0.1196" |
| 8'-0" | 2'-6"± | 3 1/2" | |
| 10'-0" | 3'-3"± | 3 7/8" | |
| 12'-0" | 4'-3"± | | |

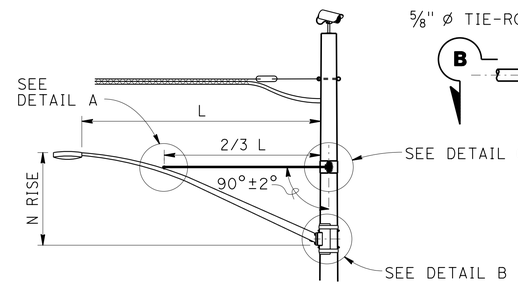


LUMINAIRE MAST ARM

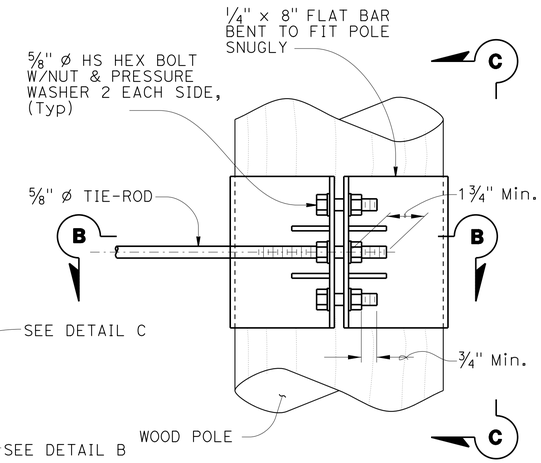


ELEVATION

NOTE:
Not all screw and bolt heads shown for clarity.

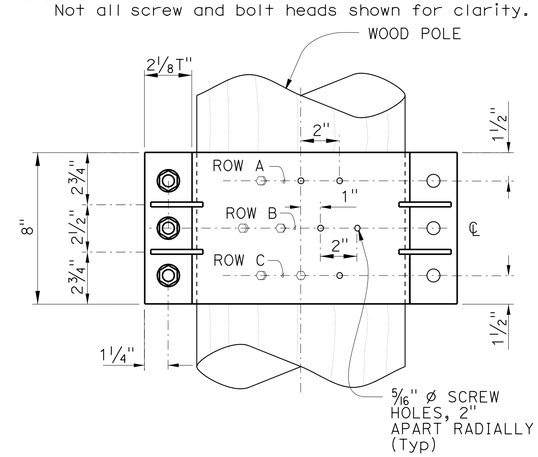


VIEW C-C

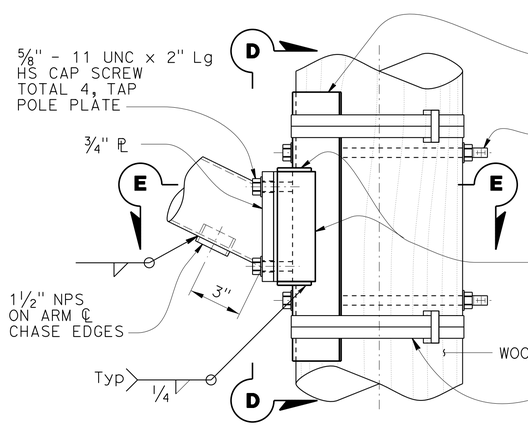


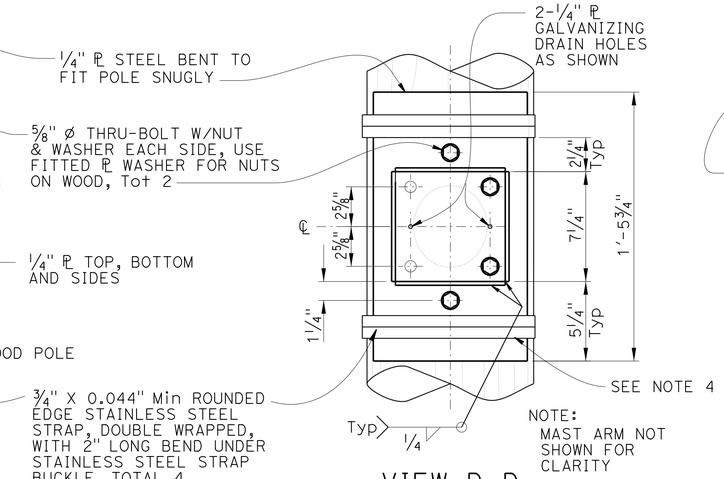


ELEVATION

VIEW D-D

DETAIL B
ARM CONNECTION DETAILS
NO SCALE

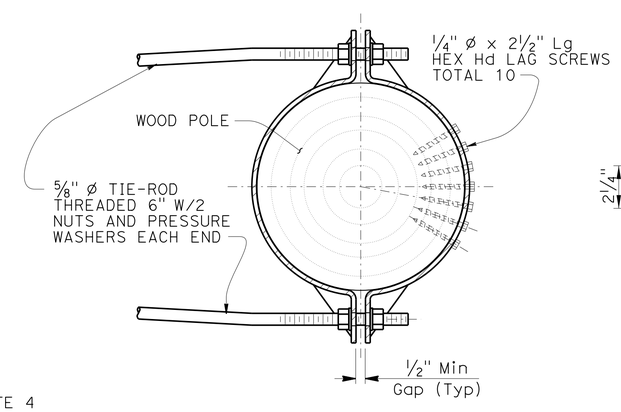


SECTION B-B

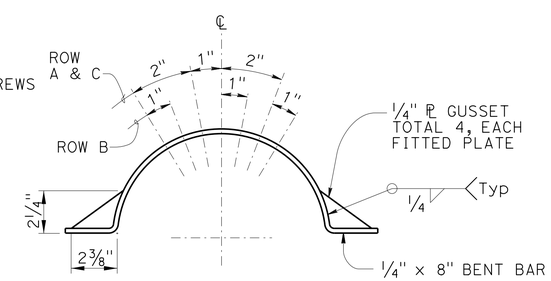


LAG SCREW AND
GUSSET PLATE LAYOUT

DETAIL C
TIE-ROD AT POLE
NO SCALE

*APPROVED FOR ELECTRICAL WORK ONLY*

# TEMPORARY WOOD POLES DETAILS No. 3

NO SCALE

**EXS-6**

STATE OF CALIFORNIA - DEPARTMENT OF TRANSPORTATION
Caltrans
CONSULTANT FUNCTIONAL SUPERVISOR: GARY HANSEN
CALCULATED-DESIGNED BY: CHRISTINA RUIZ
CHECKED BY: TIMMY TO
REVISED BY
DATE REVISED

LAST REVISION 04-24-13
DATE PLOTTED => 30-APR-2013
TIME PLOTTED => 05:59

| Dist | COUNTY | ROUTE | POST MILES TOTAL PROJECT | SHEET No. | TOTAL SHEETS |
|---|---|---|---|---|---|
| 12 | Ora | 5 | 6.2/8.7 | 426 | 595 |

REGISTERED CIVIL ENGINEER

April 20, 2012
PLANS APPROVAL DATE

REGISTERED PROFESSIONAL ENGINEER
Roberta L. McLaughlin
No. C40375
Exp. 3-31-13
CIVIL
STATE OF CALIFORNIA

*THE STATE OF CALIFORNIA OR ITS OFFICERS OR AGENTS SHALL NOT BE RESPONSIBLE FOR THE ACCURACY OR COMPLETENESS OF SCANNED COPIES OF THIS PLAN SHEET.*

TO ACCOMPANY PLANS DATED 4-29-13

**2010 REVISED STANDARD PLAN RSP A24A**

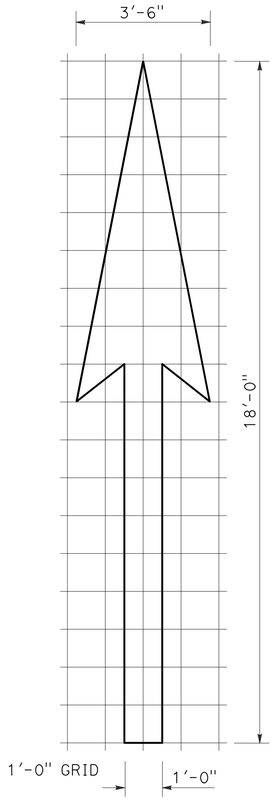


A=25 ft$^2$

TYPE I 18'-0" ARROW

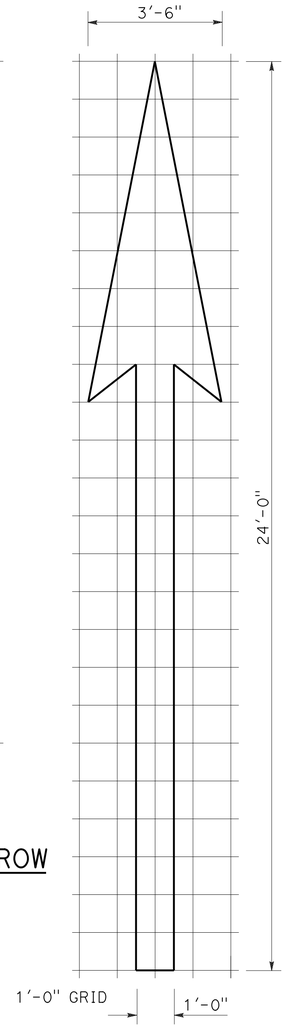


A=31 ft$^2$

TYPE I 24'-0" ARROW

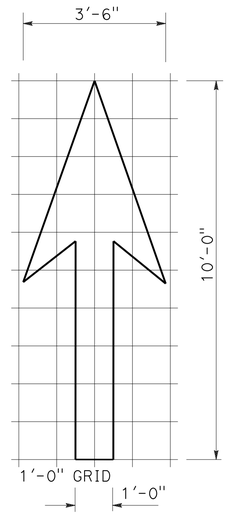


A=14 ft$^2$

TYPE I 10'-0" ARROW

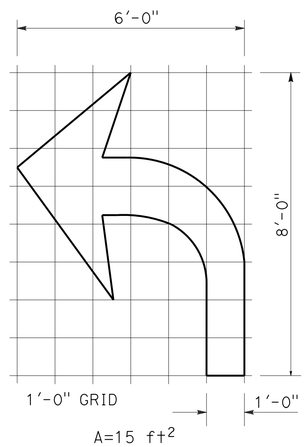


A=15 ft$^2$

TYPE IV (L) ARROW

(For Type IV (R) arrow, use mirror image)

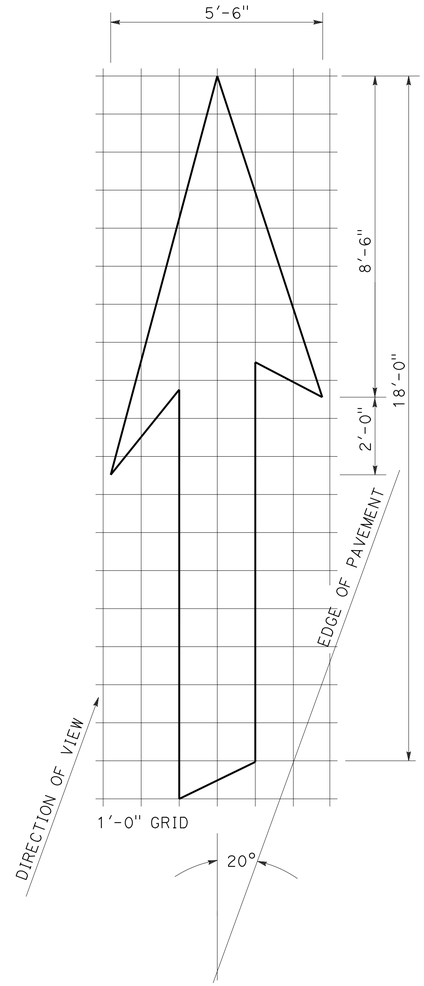


A=42 ft$^2$

TYPE VI ARROW

Right lane drop arrow
(For left lane, use mirror image)

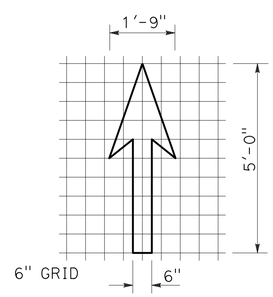


A=3.5 ft$^2$

BIKE LANE ARROW

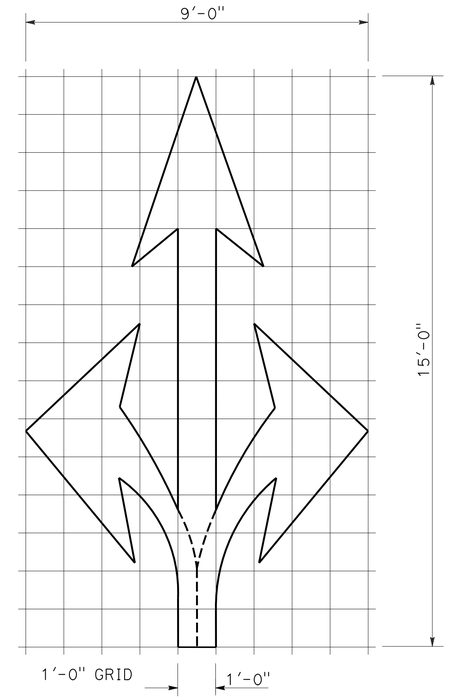


A=36 ft$^2$

TYPE VIII ARROW

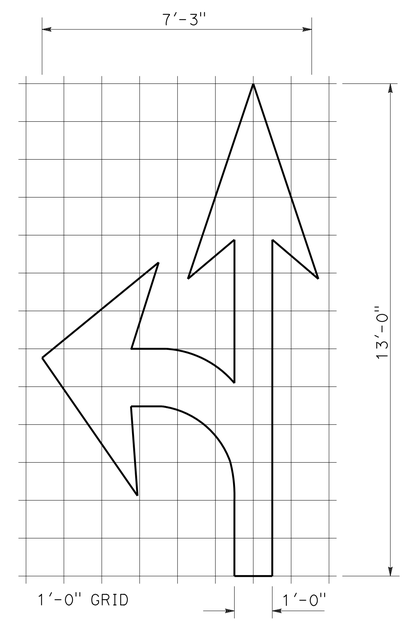


A=27 ft$^2$

TYPE VII (L) ARROW

(For Type VII (R) arrow, use mirror image)

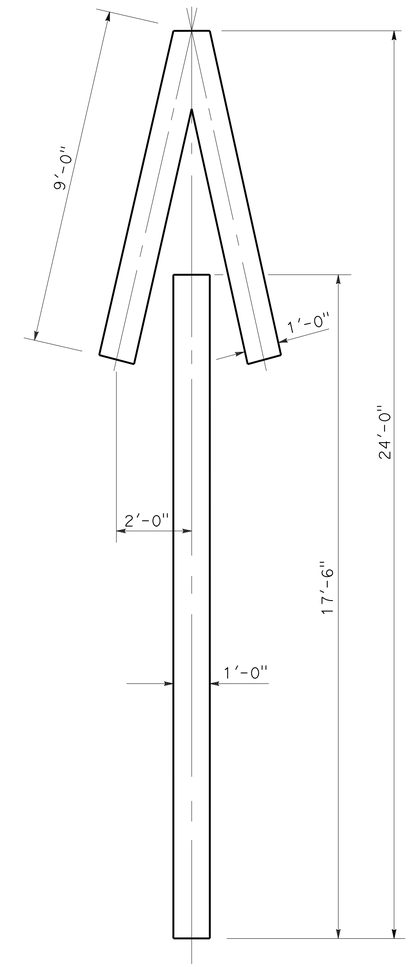


A=33 ft$^2$

TYPE V ARROW

NOTE:
Minor variations in dimensions may be accepted by the Engineer.

STATE OF CALIFORNIA
DEPARTMENT OF TRANSPORTATION

# PAVEMENT MARKINGS ARROWS

NO SCALE

RSP A24A DATED APRIL 20, 2012 SUPERSEDES STANDARD PLAN A24A DATED MAY 20, 2011 - PAGE 13 OF THE STANDARD PLANS BOOK DATED 2010.

**REVISED STANDARD PLAN RSP A24A**

3-14-12

| Dist | COUNTY | ROUTE | POST MILES TOTAL PROJECT | SHEET No. | TOTAL SHEETS |
|---|---|---|---|---|---|
| 12 | Ora | 5 | 6.2/8.7 | 427 | 595 |

REGISTERED CIVIL ENGINEER

October 19, 2012
PLANS APPROVAL DATE

REGISTERED PROFESSIONAL ENGINEER
Roberta L. McLaughlin
No. C40375
Exp. 3-31-13
CIVIL
STATE OF CALIFORNIA

*THE STATE OF CALIFORNIA OR ITS OFFICERS OR AGENTS SHALL NOT BE RESPONSIBLE FOR THE ACCURACY OR COMPLETENESS OF SCANNED COPIES OF THIS PLAN SHEET.*

**NOTE:** TO ACCOMPANY PLANS DATED 4-29-13

Minor variations in dimensions may be accepted by the Engineer.

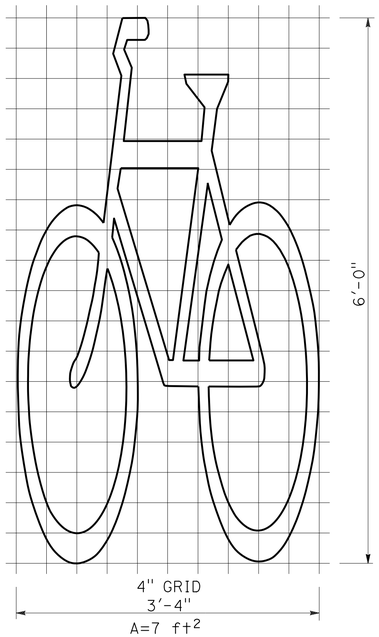


BIKE LANE SYMBOL WITHOUT PERSON

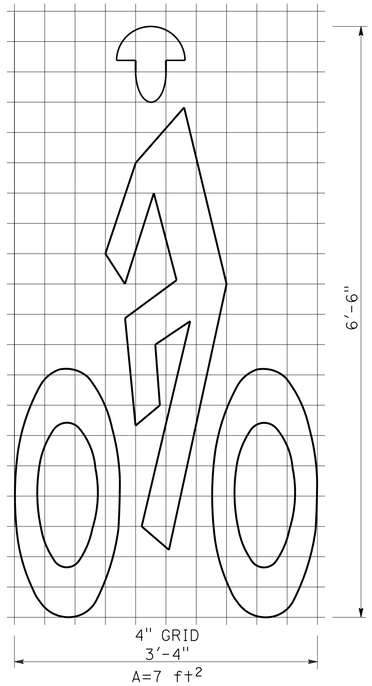


BIKE LANE SYMBOL WITH PERSON

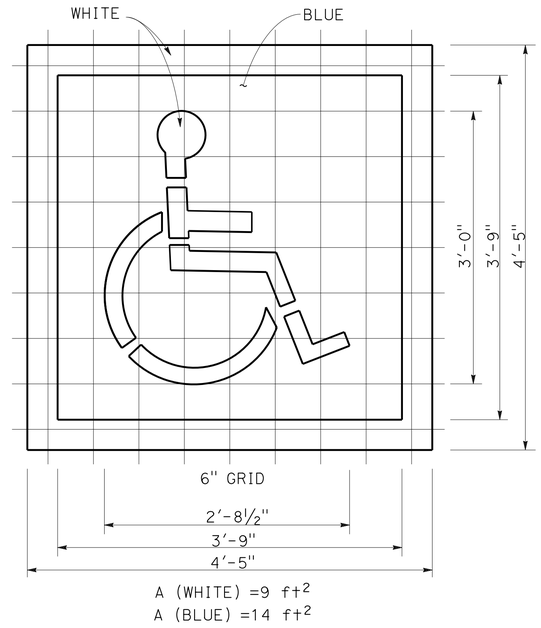


INTERNATIONAL SYMBOL OF ACCESSIBILITY (ISA) MARKING

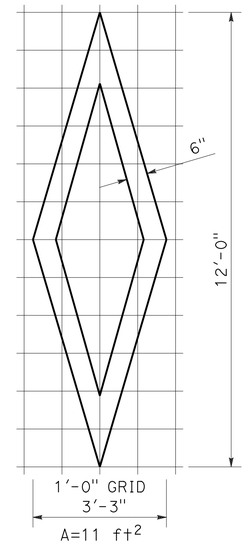


DIAMOND SYMBOL

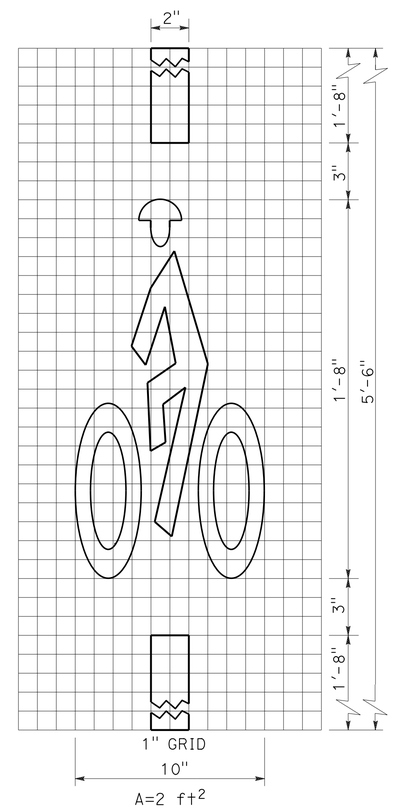


BICYCLE LOOP DETECTOR SYMBOL

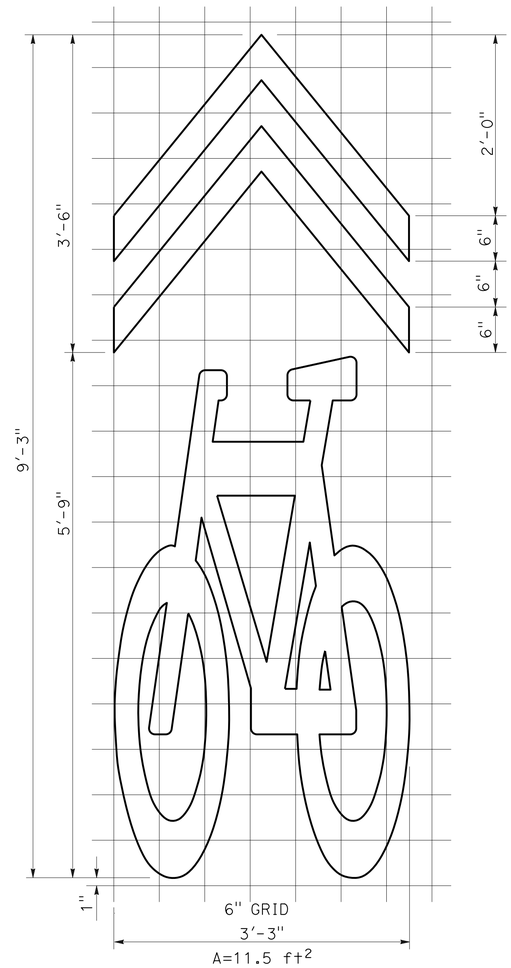


SHARED ROADWAY BICYCLE MARKING

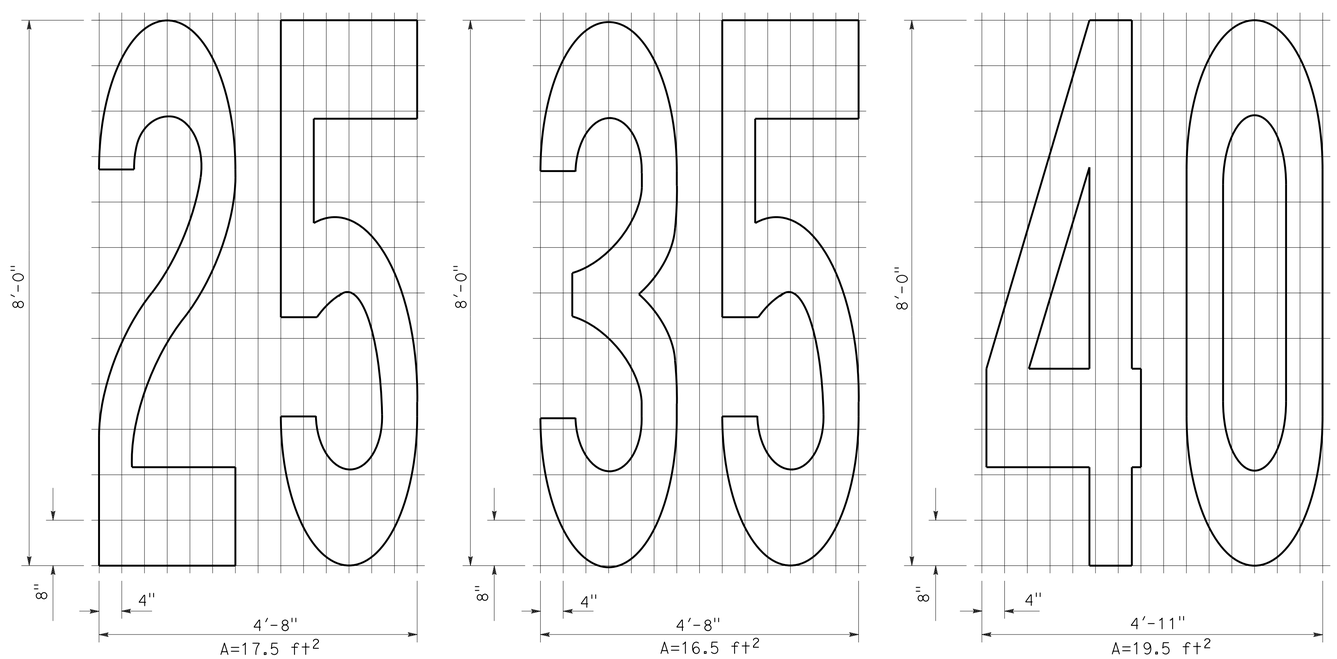


NUMERALS

STATE OF CALIFORNIA
DEPARTMENT OF TRANSPORTATION

# PAVEMENT MARKINGS SYMBOLS AND NUMERALS

NO SCALE

RSP A24C DATED OCTOBER 19, 2012 SUPERSEDES STANDARD PLAN A24C DATED MAY 20, 2011 - PAGE 15 OF THE STANDARD PLANS BOOK DATED 2010.

**REVISED STANDARD PLAN RSP A24C**

**2010 REVISED STANDARD PLAN RSP A24C**

6-28-12

| Dist | COUNTY | ROUTE | POST MILES TOTAL PROJECT | SHEET No. | TOTAL SHEETS |
|---|---|---|---|---|---|
| 12 | Ora | 5 | 6.2/8.7 | 428 | 595 |

REGISTERED CIVIL ENGINEER

July 20, 2012
PLANS APPROVAL DATE

REGISTERED PROFESSIONAL ENGINEER
Roberta L. McLaughlin
No. C40375
Exp. 3-31-13
CIVIL
STATE OF CALIFORNIA

*THE STATE OF CALIFORNIA OR ITS OFFICERS OR AGENTS SHALL NOT BE RESPONSIBLE FOR THE ACCURACY OR COMPLETENESS OF SCANNED COPIES OF THIS PLAN SHEET.*

TO ACCOMPANY PLANS DATED 4-29-13

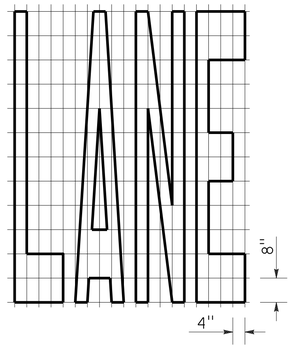


A=24 ft²

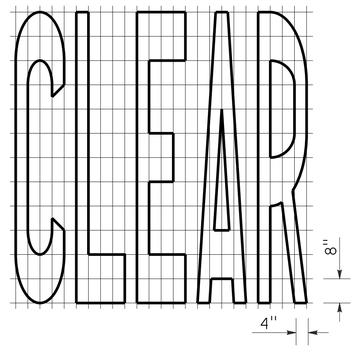


A=27 ft²

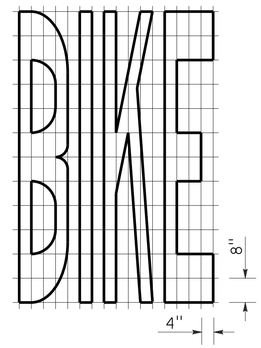


A=21 ft²

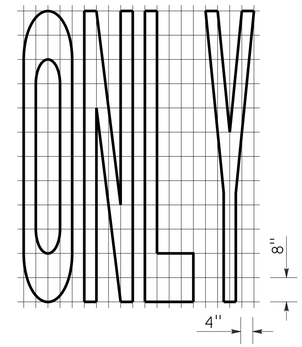


A=22 ft²

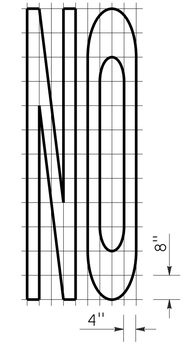


A=14 ft²

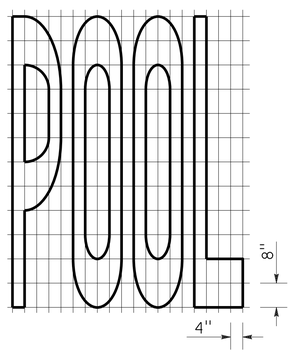


A=23 ft²

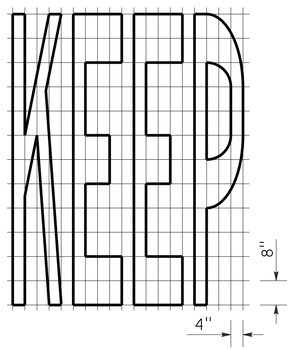


A=24 ft²

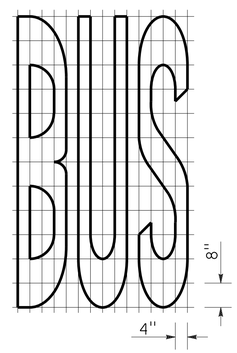


A=20 ft²

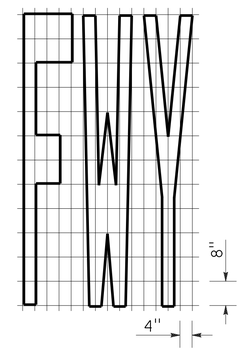


A=16 ft²

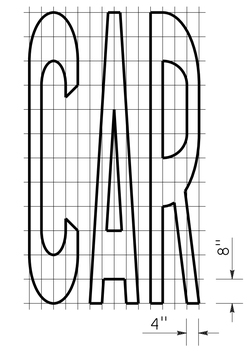


A=17 ft²

| WORD MARKINGS | | | |
|---|---|---|---|
| ITEM | ft² | ITEM | ft² |
| LANE | 24 | NO | 14 |
| POOL | 23 | BIKE | 21 |
| CAR | 17 | BUS | 20 |
| CLEAR | 27 | ONLY | 22 |
| KEEP | 24 | FWY | 16 |

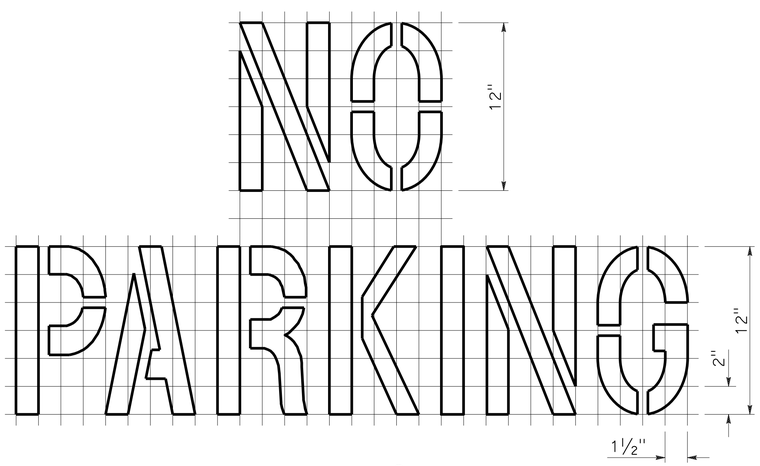


A=2 ft²

See Notes 6 and 7

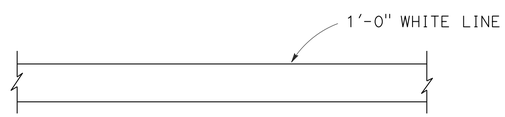


LIMIT LINE (STOP LINE)

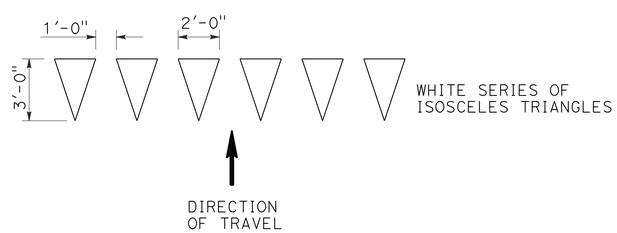


YIELD LINE

NOTES:

1. If a message consists of more than one word, it should read "UP", i.e., the first word should be nearest the driver.
2. The space between words should be at least four times the height of the characters for low speed roads, but not more than ten times the height of the characters. The space may be reduced appropriately where there is limited space because of local conditions.
3. Minor variations in dimensions may be accepted by the Engineer.
4. Portions of a letter, number or symbol may be separated by connecting segments not to exceed 2" in width.
5. The words "NO PARKING" pavement marking is to be used for parking facilities. For typical locations of markings, see Standard Plans A90A and A90B.
6. The words "NO PARKING", shall be painted in white letters no less than 1'-0" high on a contrasting background and located so that it is visible to traffic enforcement officials.

STATE OF CALIFORNIA
DEPARTMENT OF TRANSPORTATION

# PAVEMENT MARKINGS WORDS, LIMIT AND YIELD LINES

NO SCALE

RSP A24E DATED JULY 20, 2012 SUPERSEDES STANDARD PLAN A24E
DATED MAY 20, 2011 - PAGE 17 OF THE STANDARD PLANS BOOK DATED 2010.

**REVISED STANDARD PLAN RSP A24E**

**2010 REVISED STANDARD PLAN RSP A24E**

6-12-12

| Dist | COUNTY | ROUTE | POST MILES TOTAL PROJECT | SHEET No. | TOTAL SHEETS |
|---|---|---|---|---|---|
| 12 | Ora | 5 | 6.2/8.7 | 429 | 595 |

Randell D. Hiatt
REGISTERED CIVIL ENGINEER

October 19, 2012
PLANS APPROVAL DATE

REGISTERED PROFESSIONAL ENGINEER
Randell D. Hiatt
No. C50200
Exp. 6-30-13
CIVIL
STATE OF CALIFORNIA

*THE STATE OF CALIFORNIA OR ITS OFFICERS OR AGENTS SHALL NOT BE RESPONSIBLE FOR THE ACCURACY OR COMPLETENESS OF SCANNED COPIES OF THIS PLAN SHEET.*

TO ACCOMPANY PLANS DATED 4-29-13

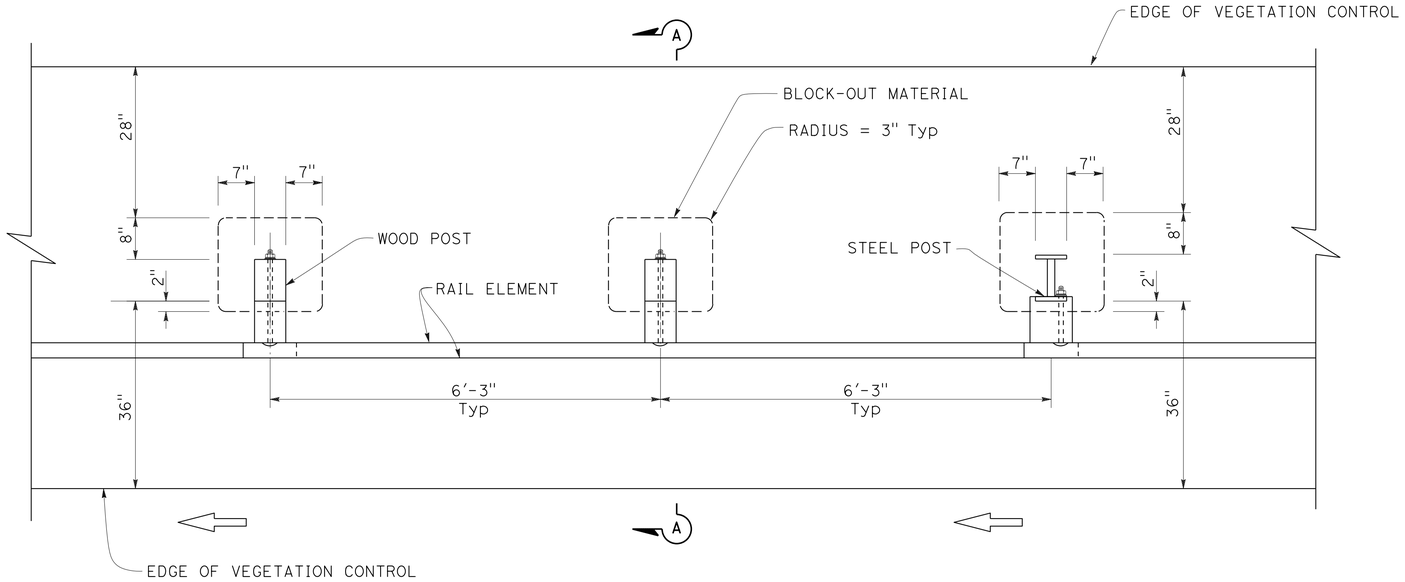


PLAN

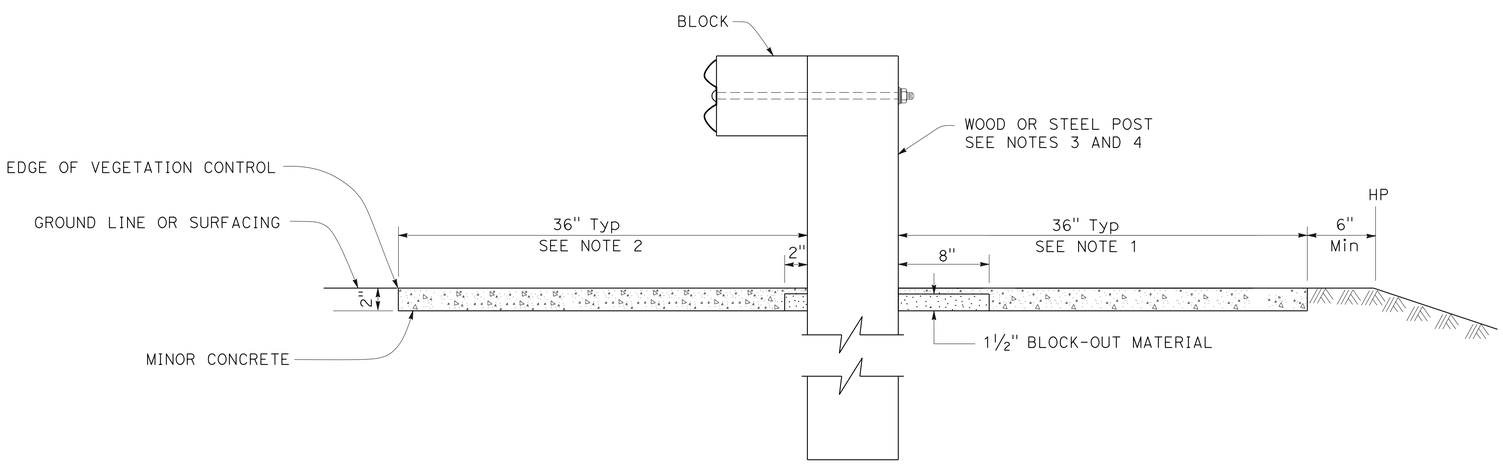


SECTION A-A

## NOTES:

1. Where the distance between back of post and hinge point is less than 42", construct vegetation control to 6" from hinge point while maintaining the 8" block-out at back of post. If the 8" block-out at back of post can not be maintained, construct vegetation control flush with the back edge of post.
2. Where dike is constructed under railing, construct vegetation control to back edge of dike. Where paved shoulder is constructed within 36" in front of the post, construct vegetation control to the edge of paved shoulder.
3. For wood post sizes, see Standard Plan A77C1.
4. For steel post sizes, see Standard Plan A77C2.
5. For details not shown, see Standard Plans A77A1 and A77A2.

STATE OF CALIFORNIA
DEPARTMENT OF TRANSPORTATION

# METAL BEAM GUARD RAILING TYPICAL VEGETATION CONTROL STANDARD RAILING SECTION

NO SCALE

RSP A77C5 DATED OCTOBER 19, 2012 SUPERSEDES STANDARD PLAN A77C5 DATED MAY 20, 2011 - PAGE 53 OF THE STANDARD PLANS BOOK DATED 2010.

**REVISED STANDARD PLAN RSP A77C5**

**2010 REVISED STANDARD PLAN RSP A77C5**

9-26-12

| Dist | COUNTY | ROUTE | POST MILES TOTAL PROJECT | SHEET No. | TOTAL SHEETS |
|---|---|---|---|---|---|
| 12 | Ora | 5 | 6.2/8.7 | 430 | 595 |

Randell D. Hiatt
REGISTERED CIVIL ENGINEER

October 19, 2012
PLANS APPROVAL DATE

REGISTERED PROFESSIONAL ENGINEER
Randell D. Hiatt
No. C50200
Exp. 6-30-13
CIVIL
STATE OF CALIFORNIA

*THE STATE OF CALIFORNIA OR ITS OFFICERS OR AGENTS SHALL NOT BE RESPONSIBLE FOR THE ACCURACY OR COMPLETENESS OF SCANNED COPIES OF THIS PLAN SHEET.*

TO ACCOMPANY PLANS DATED 4-29-13

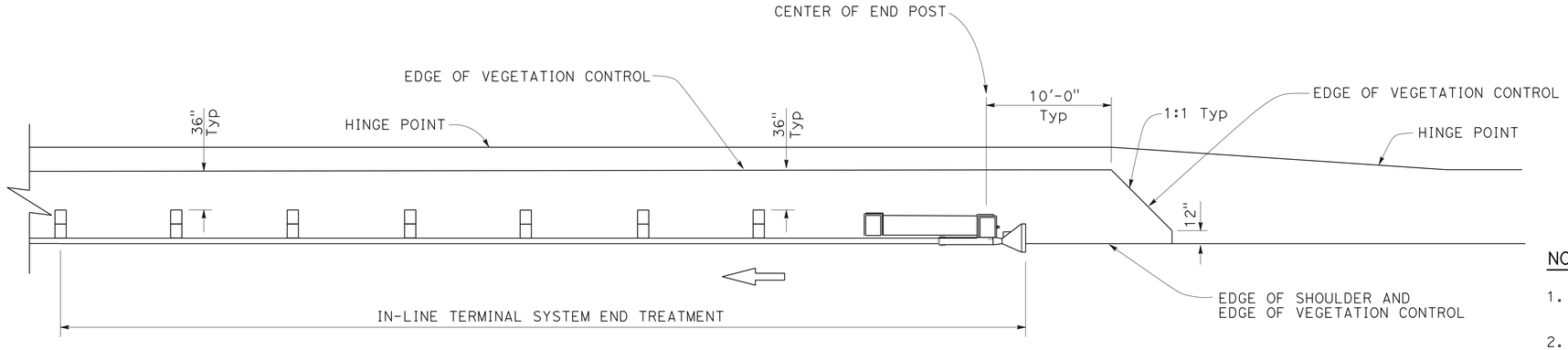


PLAN

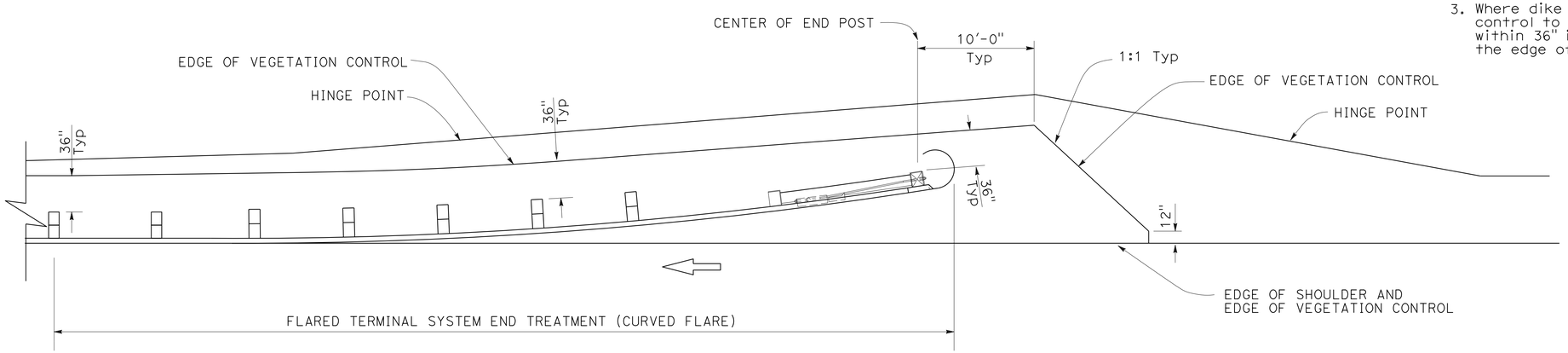


PLAN

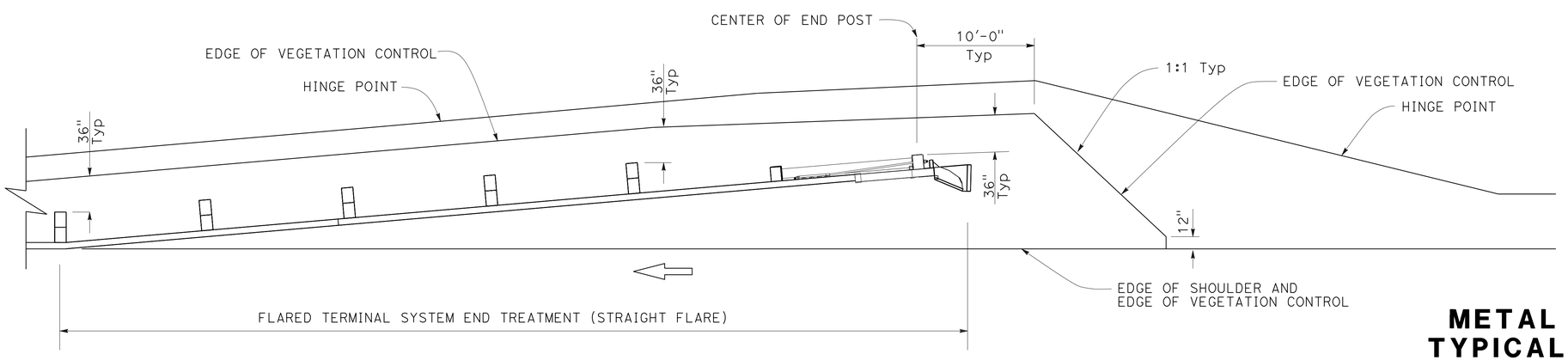


PLAN

## NOTES:

1. See Revised Standard Plan RSP A77C5 for additional vegetation control details.
2. Where the distance between back of post and hinge point is less than 42", construct vegetation control to 6" from hinge point while maintaining the 8" block-out at back of post. If the 8" block-out at back of post can not be maintained, construct vegetation control flush with the back edge of post.
3. Where dike is constructed under railing, construct vegetation control to back edge of dike. Where paved shoulder is constructed within 36" in front of the post, construct vegetation control to the edge of paved shoulder.

STATE OF CALIFORNIA
DEPARTMENT OF TRANSPORTATION

# METAL BEAM GUARD RAILING TYPICAL VEGETATION CONTROL FOR TERMINAL SYSTEM END TREATMENTS

NO SCALE

RSP A77C6 DATED OCTOBER 19, 2012 SUPERSEDES STANDARD PLAN A77C6 DATED MAY 20, 2011 - PAGE 54 OF THE STANDARD PLANS BOOK DATED 2010.

**REVISED STANDARD PLAN RSP A77C6**

**2010 REVISED STANDARD PLAN RSP A77C6**

9-26-12

| Dist | COUNTY | ROUTE | POST MILES TOTAL PROJECT | SHEET No. | TOTAL SHEETS |
|---|---|---|---|---|---|
| 12 | Ora | 5 | 6.2/8.7 | 431 | 595 |

Randell D. Hiatt
REGISTERED CIVIL ENGINEER

October 19, 2012
PLANS APPROVAL DATE

REGISTERED PROFESSIONAL ENGINEER
Randell D. Hiatt
No. C50200
Exp. 6-30-13
CIVIL
STATE OF CALIFORNIA

*THE STATE OF CALIFORNIA OR ITS OFFICERS OR AGENTS SHALL NOT BE RESPONSIBLE FOR THE ACCURACY OR COMPLETENESS OF SCANNED COPIES OF THIS PLAN SHEET.*

TO ACCOMPANY PLANS DATED 4-29-13

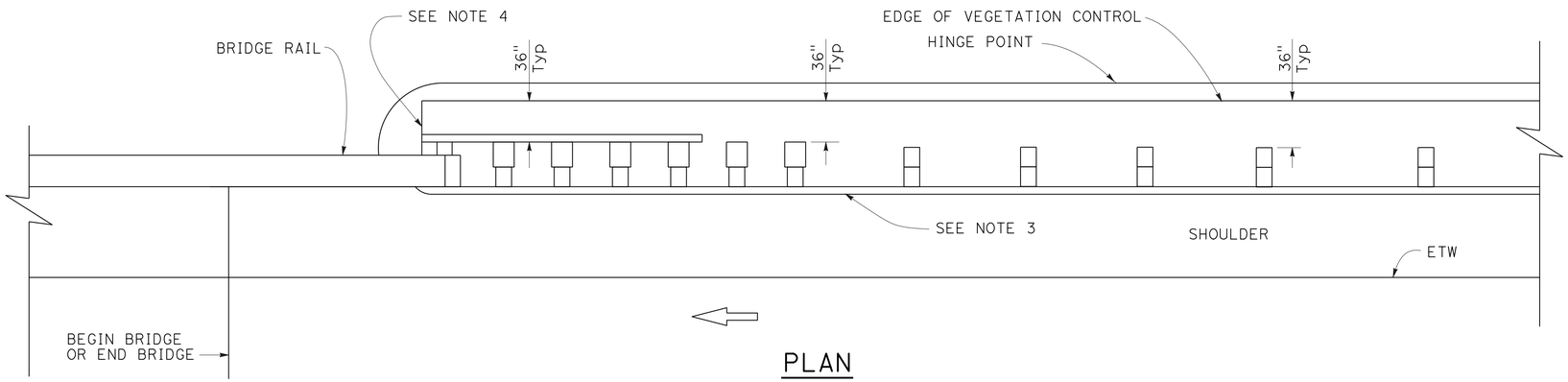


PLAN

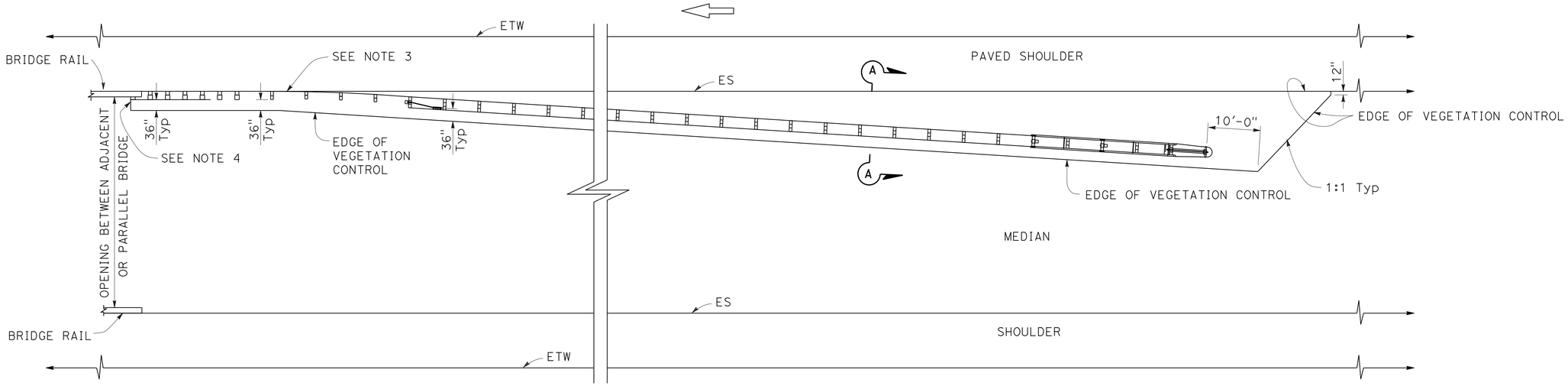


PLAN

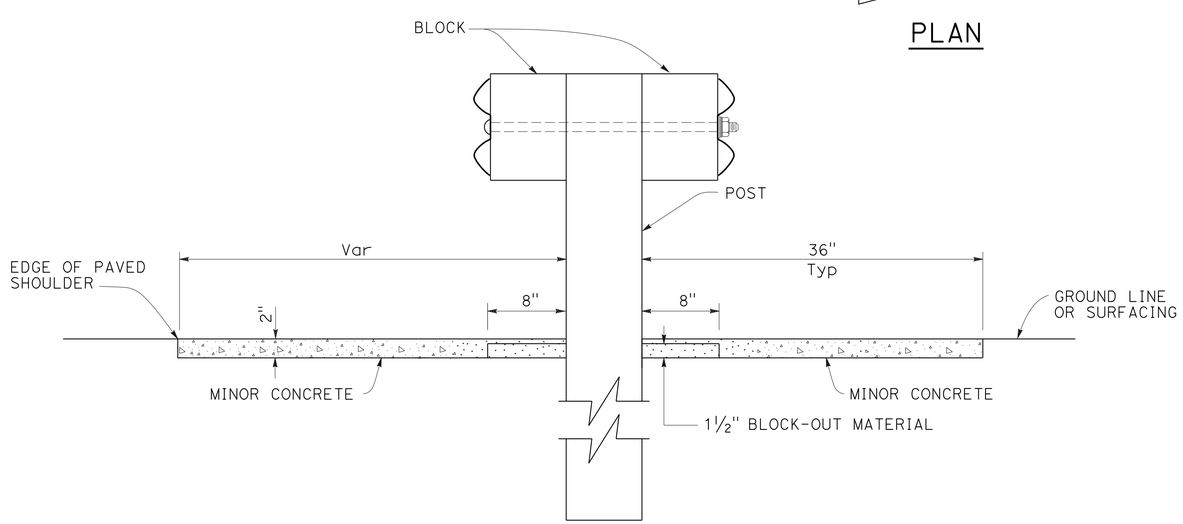


SECTION A-A

NOTES:

1. See Revised Standard Plan RSP A77C5 for additional vegetation control details.
2. Where the distance between back of post and hinge point is less than 42", construct vegetation control to 6" from hinge point while maintaining the 8" block-out at back of post. If the 8" block-out at back of post can not be maintained, construct vegetation control flush with the back edge of post.
3. Where dike is constructed under railing, construct vegetation control to back edge of dike. Where paved shoulder is constructed within 36" in front of the post, construct vegetation control to the edge of paved shoulder.
4. End vegetation control at end of backside rail element.

STATE OF CALIFORNIA
DEPARTMENT OF TRANSPORTATION

# METAL BEAM GUARD RAILING TYPICAL VEGETATION CONTROL AT STRUCTURE APPROACH

NO SCALE

RSP A77C7 DATED OCTOBER 19, 2012 SUPERSEDES STANDARD PLAN A77C7 DATED MAY 20, 2011 - PAGE 55 OF THE STANDARD PLANS BOOK DATED 2010.

**REVISED STANDARD PLAN RSP A77C7**

**2010 REVISED STANDARD PLAN RSP A77C7**

9-26-12

| Dist | COUNTY | ROUTE | POST MILES TOTAL PROJECT | SHEET No. | TOTAL SHEETS |
|---|---|---|---|---|---|
| 12 | Ora | 5 | 6.2/8.7 | 432 | 595 |

Randell D. Hiatt
REGISTERED CIVIL ENGINEER

October 19, 2012
PLANS APPROVAL DATE

REGISTERED PROFESSIONAL ENGINEER
Randell D. Hiatt
No. C50200
Exp. 6-30-13
CIVIL
STATE OF CALIFORNIA

THE STATE OF CALIFORNIA OR ITS OFFICERS OR AGENTS SHALL NOT BE RESPONSIBLE FOR THE ACCURACY OR COMPLETENESS OF SCANNED COPIES OF THIS PLAN SHEET.

TO ACCOMPANY PLANS DATED 4-29-13

2010 REVISED STANDARD PLAN RSP A77C8

## NOTES:

1. See Revised Standard Plan RSP A77C5 for additional vegetation control details.
2. Where the distance between back of post and hinge point is less than 42", construct vegetation control to 6" from hinge point while maintaining the 8" block-out at back of post. If the 8" block-out at back of post can not be maintained, construct vegetation control flush with the back edge of post.
3. Where dike is constructed under railing, construct vegetation control to back edge of dike. Where paved shoulder is constructed within 36" in front of the post, construct vegetation control to the edge of paved shoulder.

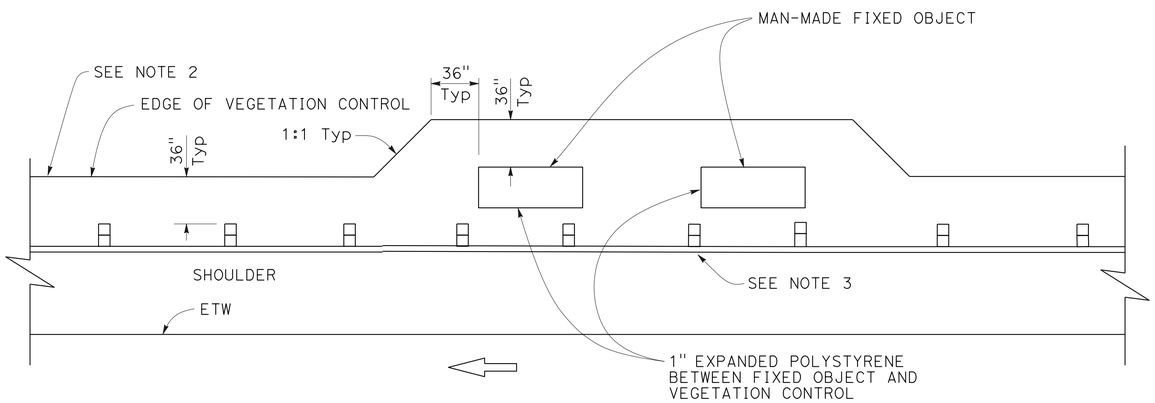


PLAN

Fixed object(s) on shoulder

STATE OF CALIFORNIA
DEPARTMENT OF TRANSPORTATION

# METAL BEAM GUARD RAILING TYPICAL VEGETATION CONTROL AT FIXED OBJECT

NO SCALE

RSP A77C8 DATED OCTOBER 19, 2012 SUPERSEDES STANDARD PLAN A77C8 DATED MAY 20, 2011 - PAGE 56 OF THE STANDARD PLANS BOOK DATED 2010.

**REVISED STANDARD PLAN RSP A77C8**

| Dist | COUNTY | ROUTE | POST MILES TOTAL PROJECT | SHEET No. | TOTAL SHEETS |
|---|---|---|---|---|---|
| 12 | Ora | 5 | 6.2/8.7 | 433 | 595 |

Glenn DeCou
REGISTERED CIVIL ENGINEER

October 19, 2012
PLANS APPROVAL DATE

REGISTERED PROFESSIONAL ENGINEER
Glenn DeCou
No. C34547
Exp. 9-30-13
CIVIL
STATE OF CALIFORNIA

*THE STATE OF CALIFORNIA OR ITS OFFICERS OR AGENTS SHALL NOT BE RESPONSIBLE FOR THE ACCURACY OR COMPLETENESS OF SCANNED COPIES OF THIS PLAN SHEET.*

TO ACCOMPANY PLANS DATED 4-29-13

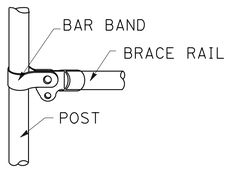


BRACE RAIL

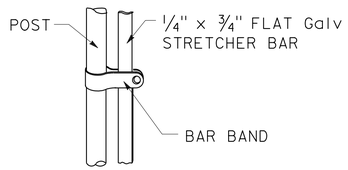


STRETCHER BAR

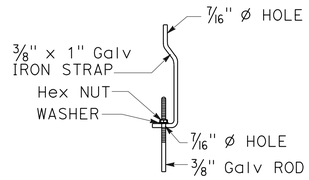


TRUSS TIGHTENER

## NOTES:

1. All material for abutment connection to be galvanized.
2. The chain link fabric shall be replaced by barbed wire strands at 12" maximum centers between the double posts.
3. When the width of the culvert makes it necessary to anchor a post to the top of the culvert, a cast iron shoe or other device approved by the Engineer shall be used.
4. Fencing over stream and around headwall may also use Barbed Wire or Wire Mesh fencing with either wood post or steel post installation.
5. See Standard Plan A85 for Chain Link fence dimensions. See Standard Plan A86 for Barbed Wire and Wire Mesh fence dimensions and for wood post and steel post installation.

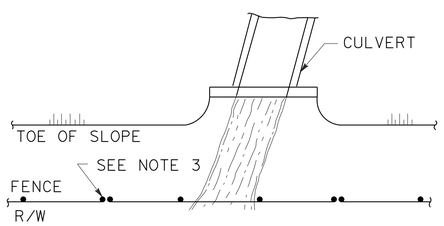


PLAN

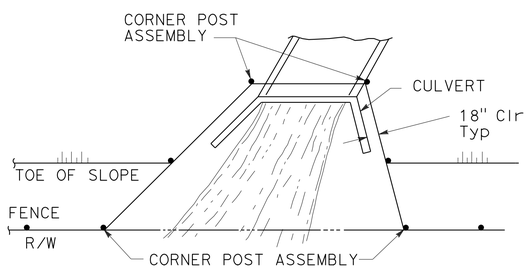


PLAN

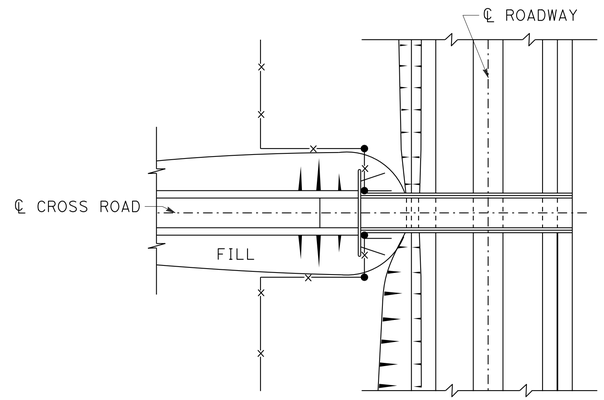


PLAN OF ROADWAY - OVERCROSSING

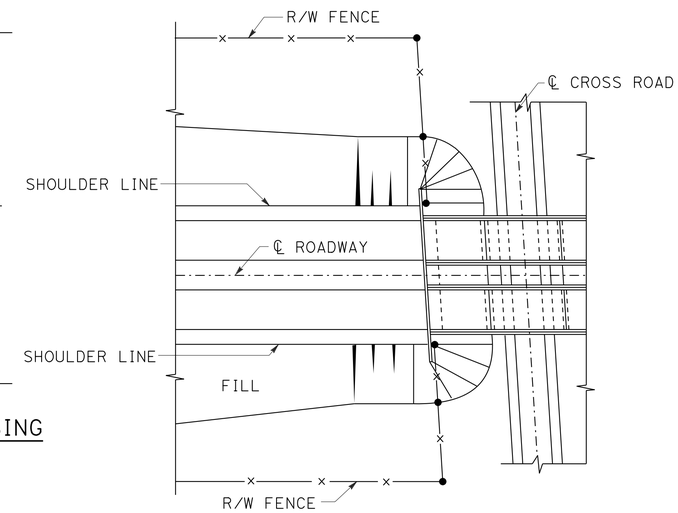


PLAN OF ROADWAY - UNDERCROSSING

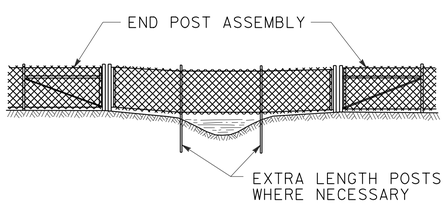


ELEVATION

INSTALLATION OVER STREAM

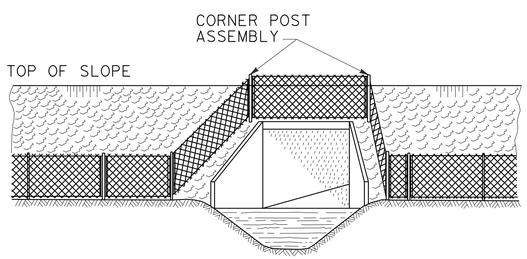


ELEVATION

INSTALLATION AROUND HEADWALL

See Note 4

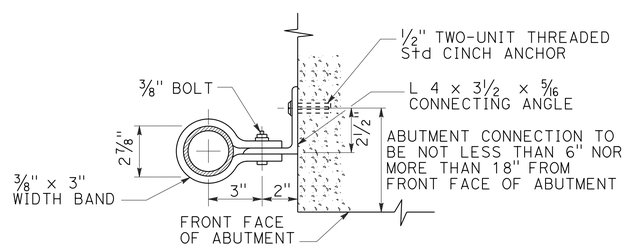


ABUTMENT CONNECTION

TYPICAL INSTALLATION AT BRIDGES

STATE OF CALIFORNIA
DEPARTMENT OF TRANSPORTATION

# CHAIN LINK FENCE DETAILS

NO SCALE

RSP A85B DATED OCTOBER 19, 2012 SUPERSEDES STANDARD PLAN A85B
DATED MAY 20, 2011 - PAGE 114 OF THE STANDARD PLANS BOOK DATED 2010.

**REVISED STANDARD PLAN RSP A85B**

**2010 REVISED STANDARD PLAN RSP A85B**

7-19-12

| Dist | COUNTY | ROUTE | POST MILES TOTAL PROJECT | SHEET No. | TOTAL SHEETS |
|---|---|---|---|---|---|
| 12 | Ora | 5 | 6.2/8.7 | 434 | 595 |

REGISTERED CIVIL ENGINEER

April 20, 2012
PLANS APPROVAL DATE

REGISTERED PROFESSIONAL ENGINEER William K. Farnbach No. C49042 Exp. 9-30-12 CIVIL STATE OF CALIFORNIA

*THE STATE OF CALIFORNIA OR ITS OFFICERS OR AGENTS SHALL NOT BE RESPONSIBLE FOR THE ACCURACY OR COMPLETENESS OF SCANNED COPIES OF THIS PLAN SHEET.*

TO ACCOMPANY PLANS DATED 4-29-13

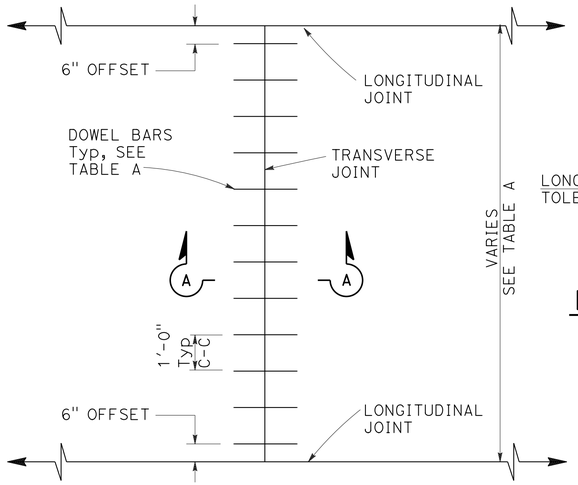


TRANSVERSE JOINT DOWEL BAR LAYOUT

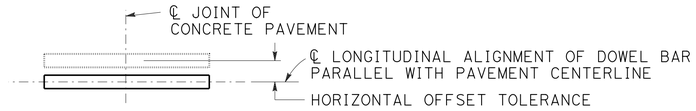


PLAN

HORIZONTAL OFFSET TOLERANCE

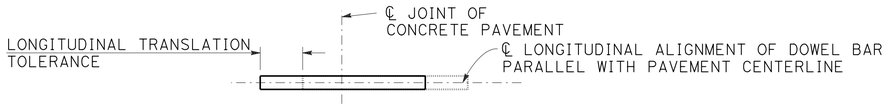


PLAN

LONGITUDINAL TRANSLATION TOLERANCE

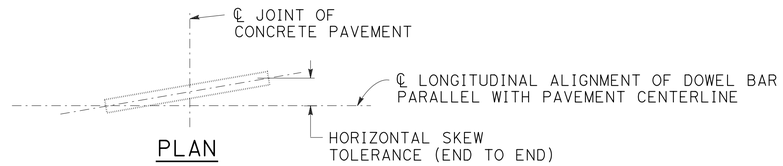


PLAN

HORIZONTAL SKEW TOLERANCE

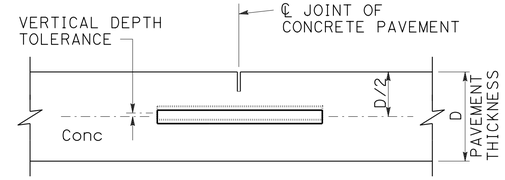


ELEVATION

VERTICAL DEPTH TOLERANCE

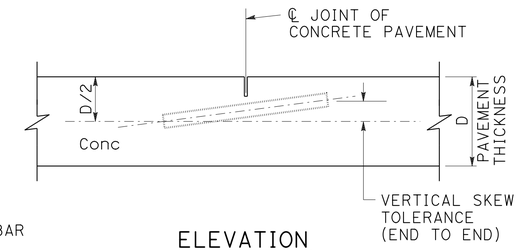


ELEVATION

VERTICAL SKEW TOLERANCE

## NOTES:

1. See Standard Plan P1 for typical dowel bar placement and locations.
2. 1½" Dia dowel bars are to be used with a pavement thickness, D, equal to or greater than 0.70 feet. For pavement thickness, D, less than 0.70 feet, use 1¼" Dia dowel bars.
3. For widths not shown, see Project Plans.
4. If fresh concrete pavement is placed adjacent to existing concrete pavement, the top corner of the existing concrete pavement does not need to be rounded to the ¼" radius, as shown.
5. May also use ¾" Dia dowel bars 2'-4" ± ¼" in length. Center the length of dowel bars at the centerline of longitudinal joint.

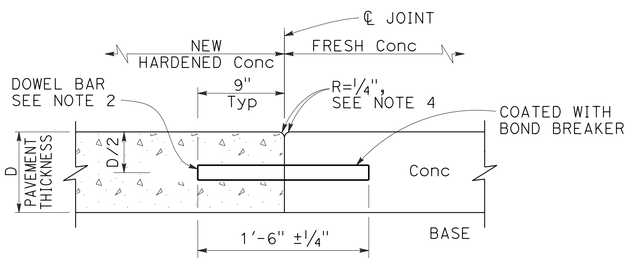


SECTION A-A

TRANSVERSE CONSTRUCTION JOINT DETAIL

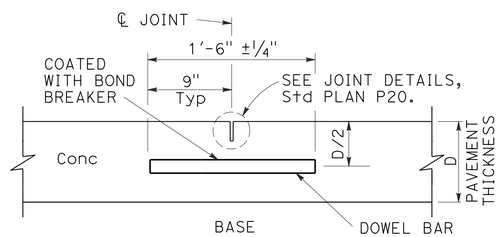


TRANSVERSE CONTRACTION JOINT

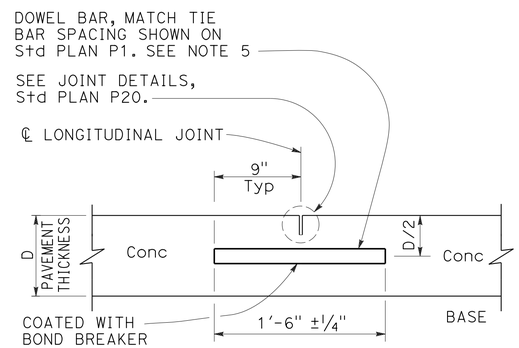


LONGITUDINAL CONTRACTION JOINT WITH DOWEL BARS

See Revised Std Plan RSP P18

TABLE A (See Note 3)

| DOWEL BAR TRANSVERSE SPACING TABLE | |
|---|---|
| WIDTH BETWEEN LONGITUDINAL JOINTS | NUMBER OF DOWELS BETWEEN LONGITUDINAL JOINTS |
| 14'-0" | 14 |
| 13'-0" | 13 |
| 12'-0" | 12 |
| 11'-0" | 11 |
| 10'-0" | 10 |
| 8'-0" | 8 |
| 5'-0" | 5 |
| 4'-0" | 4 |

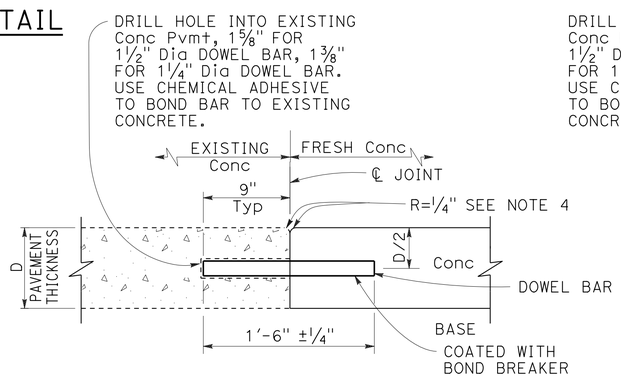


TRANSVERSE CONSTRUCTION JOINT FOR EXISTING CONCRETE PAVEMENT

Drill and bond locations

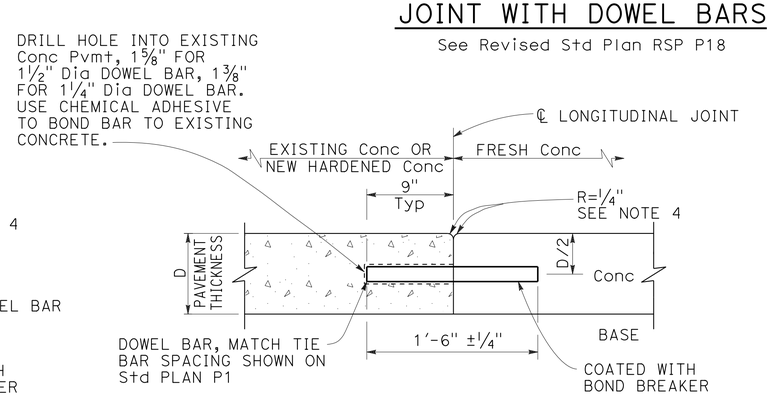


LONGITUDINAL CONSTRUCTION JOINT WITH DOWEL BARS

See Revised Std Plan RSP P18

STATE OF CALIFORNIA
DEPARTMENT OF TRANSPORTATION

# CONCRETE PAVEMENT-DOWEL BAR DETAILS

NO SCALE

RSP P10 DATED APRIL 20, 2012 SUPERSEDES STANDARD PLAN P10 DATED MAY 20, 2011 - PAGE 131 OF THE STANDARD PLANS BOOK DATED 2010.

**REVISED STANDARD PLAN RSP P10**

**2010 REVISED STANDARD PLAN RSP P10**

2-22-12

| Dist | COUNTY | ROUTE | POST MILES TOTAL PROJECT | SHEET No. | TOTAL SHEETS |
|---|---|---|---|---|---|
| 12 | Ora | 5 | 6.2/8.7 | 435 | 595 |

William K. Farnbach
REGISTERED CIVIL ENGINEER

April 20, 2012
PLANS APPROVAL DATE

REGISTERED PROFESSIONAL ENGINEER William K. Farnbach No. C49042 Exp. 9-30-12 CIVIL STATE OF CALIFORNIA

*THE STATE OF CALIFORNIA OR ITS OFFICERS OR AGENTS SHALL NOT BE RESPONSIBLE FOR THE ACCURACY OR COMPLETENESS OF SCANNED COPIES OF THIS PLAN SHEET.*

TO ACCOMPANY PLANS DATED 4-29-13

**2010 REVISED STANDARD PLAN RSP P18**

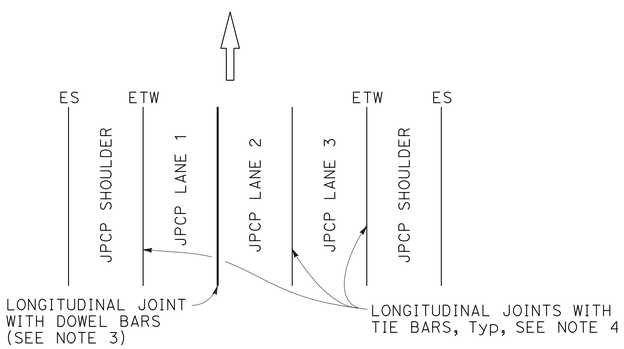


3 LANES WITH CONCRETE SHOULDERS
PLAN

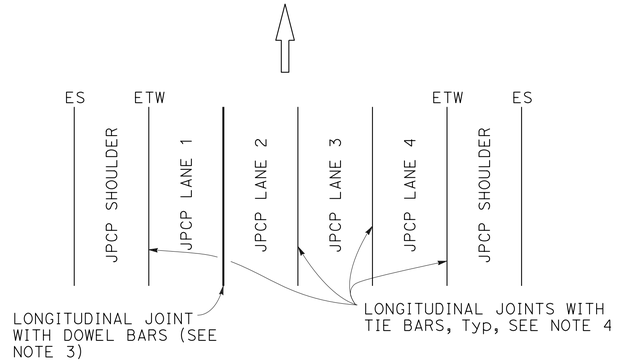


4 LANES WITH CONCRETE SHOULDERS
PLAN

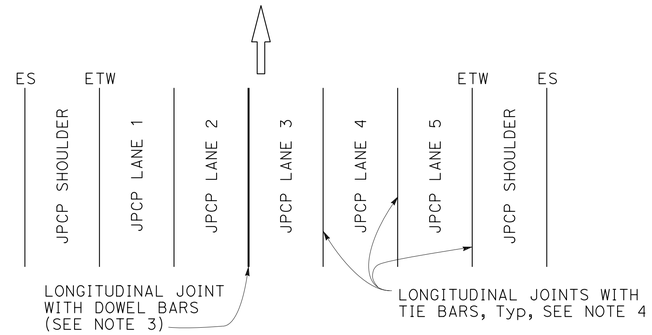


5 LANES WITH CONCRETE SHOULDERS
PLAN

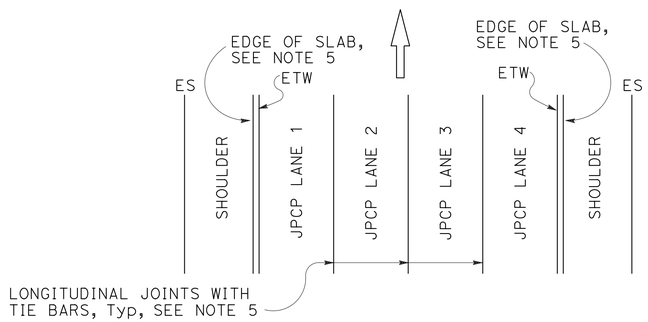


4 LANES OR LESS WITH AC SHOULDERS
PLAN

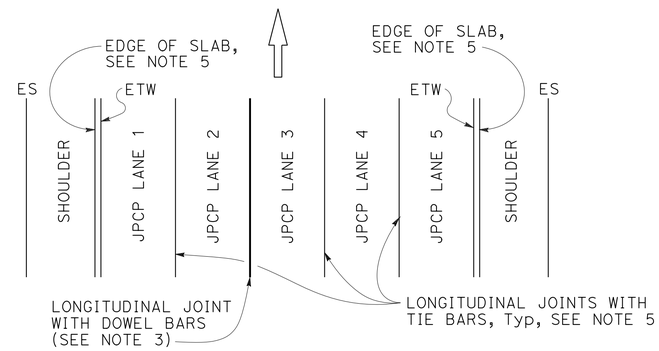


5 LANES WITH AC SHOULDERS
PLAN

## NEW CONSTRUCTION

Location of Longitudinal Joints For JPCP

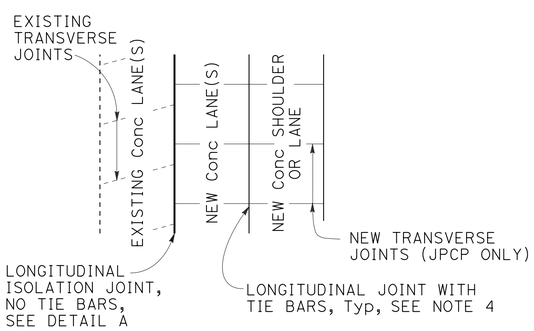


CASE 1
PLAN

Transverse Joints do not align between new and existing.

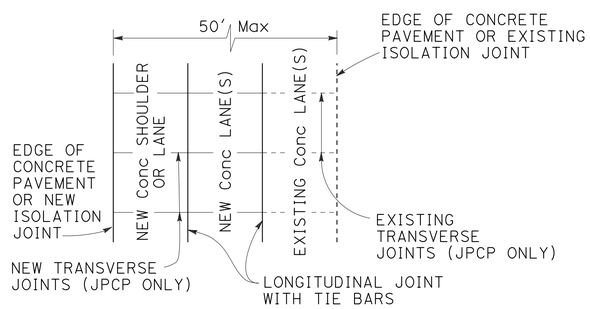


CASE 2
PLAN

Transverse Joints align between new and existing.

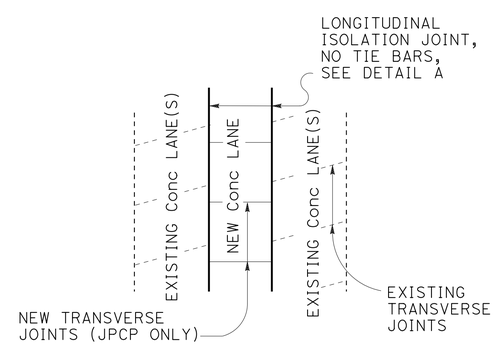


CASE 3 (INTERIOR LANE REPLACEMENT)
PLAN

Transverse Joints do not align between new and existing.

## LANE/SHOULDER ADDITION OR RECONSTRUCTION

For JPCP and CRCP

## NOTES:

1. Where Lean Concrete Base is not used as base material, the joint filler material used for the longitudinal isolation joint shall only extend to the bottom of the new concrete slab. See Detail A.
2. Use 5/8" ±1/16" dimension for silicone sealant.
3. See Revised Standard Plan RSP P10 for longitudinal joint with dowel bars.
4. See Standard Plan P1.
5. See Standard Plan P2.

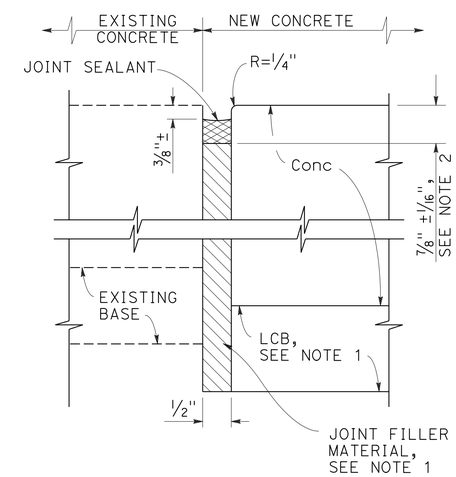


DETAIL "A"

## ISOLATION JOINT

STATE OF CALIFORNIA
DEPARTMENT OF TRANSPORTATION

# CONCRETE PAVEMENT-LANE SCHEMATICS AND ISOLATION JOINT DETAIL

NO SCALE

RSP P18 DATED APRIL 20, 2012 SUPERSEDES STANDARD PLAN P18 DATED MAY 20, 2011 - PAGE 135 OF THE STANDARD PLANS BOOK DATED 2010.

**REVISED STANDARD PLAN RSP P18**

2-22-12

| Dist | COUNTY | ROUTE | POST MILES TOTAL PROJECT | SHEET No. | TOTAL SHEETS |
|---|---|---|---|---|---|
| 12 | Ora | 5 | 6.2/8.7 | 436 | 595 |

William K. Farnbach
REGISTERED CIVIL ENGINEER

April 20, 2012
PLANS APPROVAL DATE

REGISTERED PROFESSIONAL ENGINEER William K. Farnbach No. C49042 Exp. 9-30-12 CIVIL STATE OF CALIFORNIA

*THE STATE OF CALIFORNIA OR ITS OFFICERS OR AGENTS SHALL NOT BE RESPONSIBLE FOR THE ACCURACY OR COMPLETENESS OF SCANNED COPIES OF THIS PLAN SHEET.*

TO ACCOMPANY PLANS DATED 4-29-13

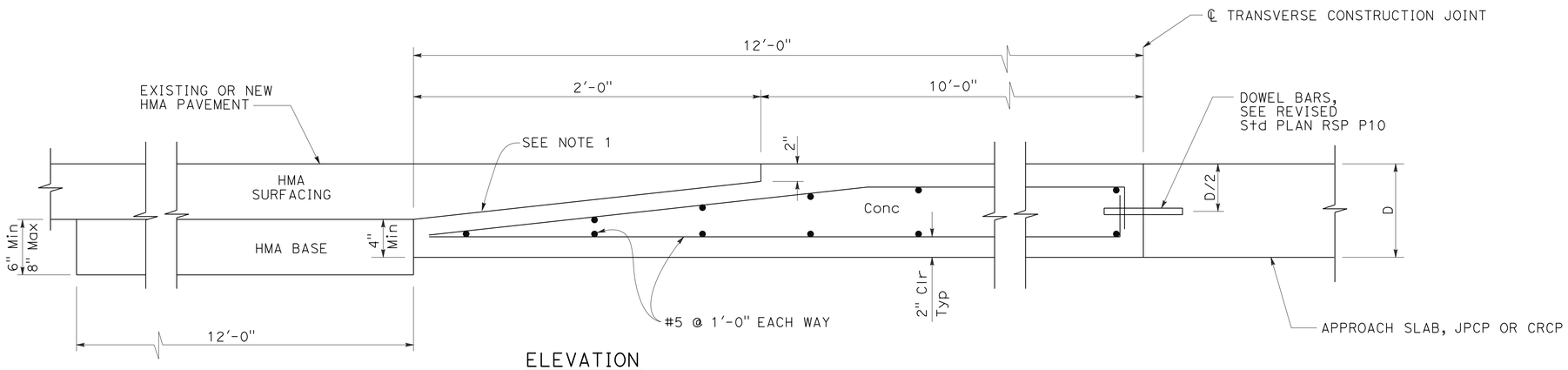


ELEVATION

## CONCRETE PAVEMENT TRANSITION PANEL

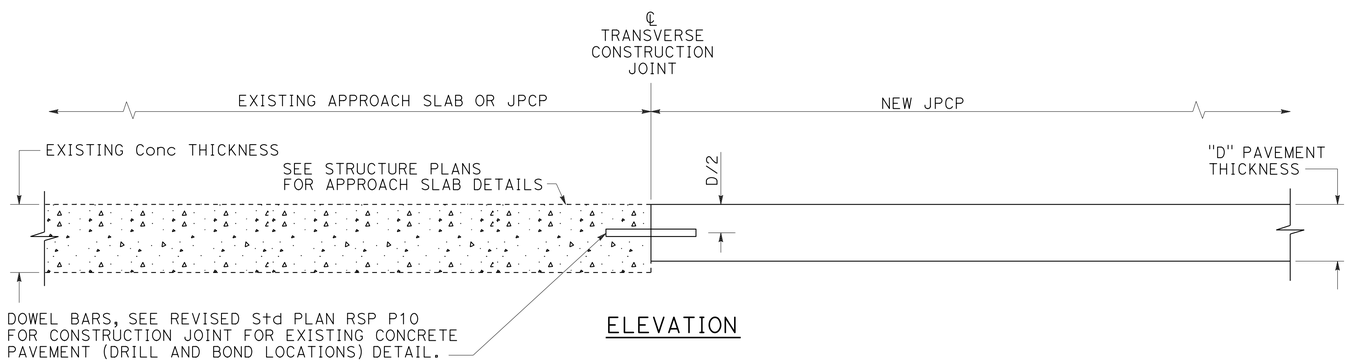


ELEVATION

## TERMINAL JOINT TYPE 1

For Exist JPCP or Structure Approach Slab

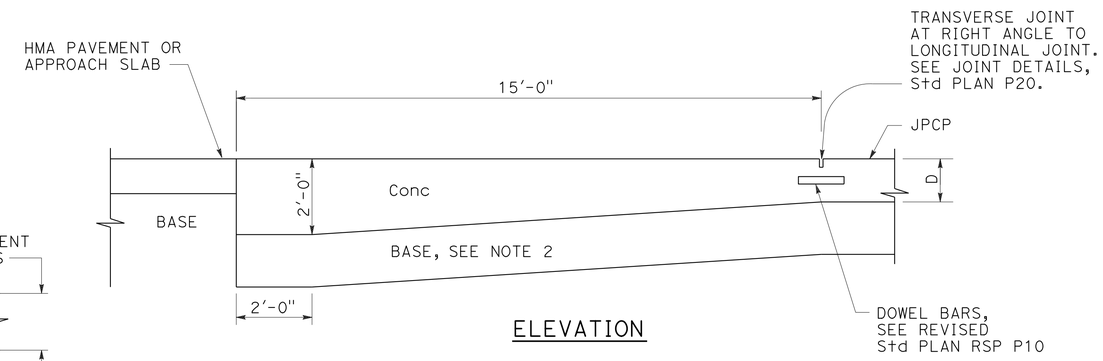


ELEVATION

## PAVEMENT END ANCHOR

For HMA Pvmt or Structure Approach Slab

NOTES:

1. Heavy broom finish.
2. Maintain same base thickness as JPCP.

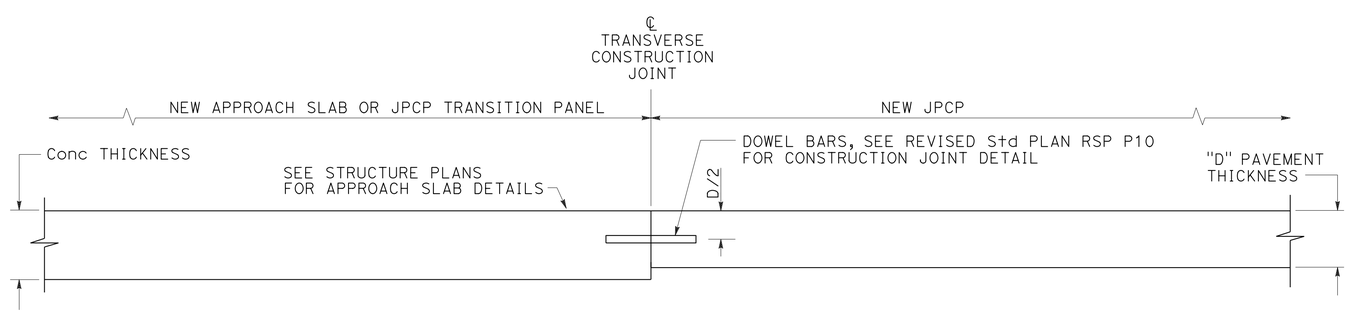


ELEVATION

## TERMINAL JOINT TYPE 2

For JPCP Transition Panel or Structure Approach Slab

STATE OF CALIFORNIA
DEPARTMENT OF TRANSPORTATION

# CONCRETE PAVEMENT-END PANEL PAVEMENT TRANSITIONS

NO SCALE

RSP P30 DATED APRIL 20, 2012 SUPERSEDES STANDARD PLAN P30 DATED MAY 20, 2011 - PAGE 137 OF THE STANDARD PLANS BOOK DATED 2010.

**REVISED STANDARD PLAN RSP P30**

**2010 REVISED STANDARD PLAN RSP P30**

2-22-12

| DIST | COUNTY | ROUTE | POST MILES TOTAL PROJECT | SHEET No. | TOTAL SHEETS |
|---|---|---|---|---|---|
| 12 | Ora | 5 | 6.2/8.7 | 437 | 595 |

REGISTERED CIVIL ENGINEER

January 20, 2012
PLANS APPROVAL DATE

REGISTERED PROFESSIONAL ENGINEER
Cornelis M. Hakim
No. C55610
Exp. 12-31-12
CIVIL
STATE OF CALIFORNIA

*THE STATE OF CALIFORNIA OR ITS OFFICERS OR AGENTS SHALL NOT BE RESPONSIBLE FOR THE ACCURACY OR COMPLETENESS OF SCANNED COPIES OF THIS PLAN SHEET.*

TO ACCOMPANY PLANS DATED 4-29-13

## ABBREVIATIONS:

SE SAFETY EDGE

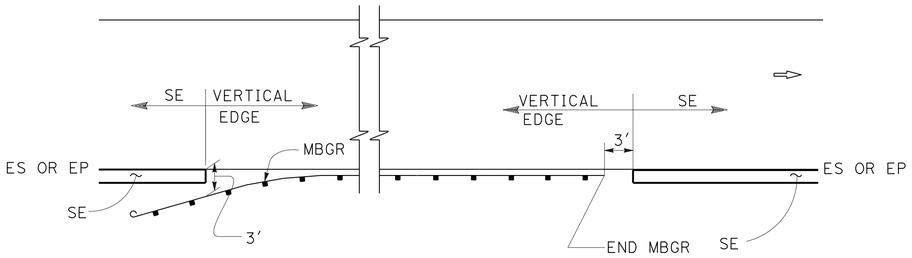


MBGR

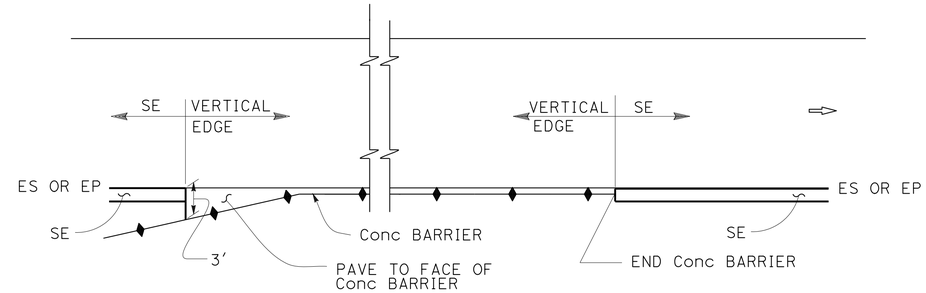


CONCRETE BARRIER

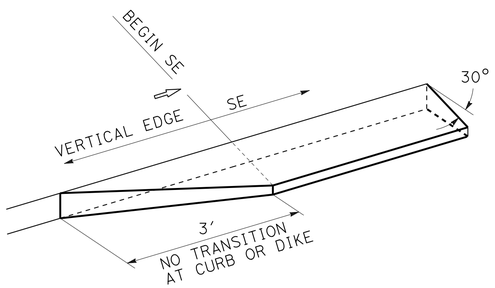


TRANSITION DETAIL FOR CONCRETE ONLY

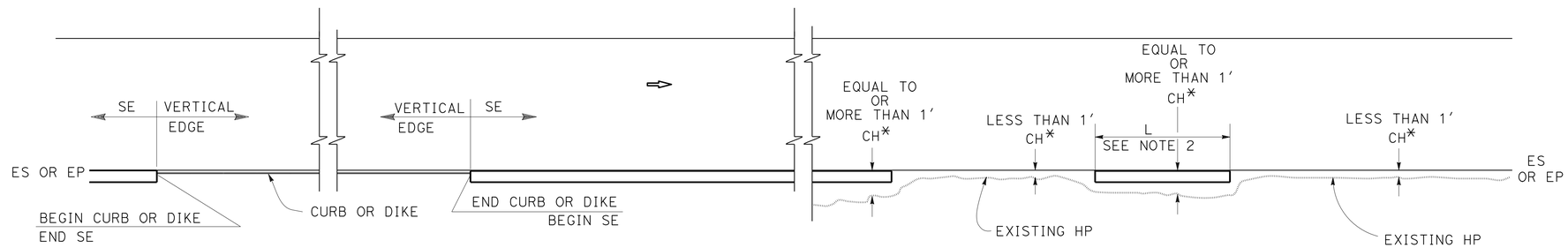


CURB OR DIKE




NARROW SIDE SLOPE

* CH = Distance from ES or EP to existing HP.

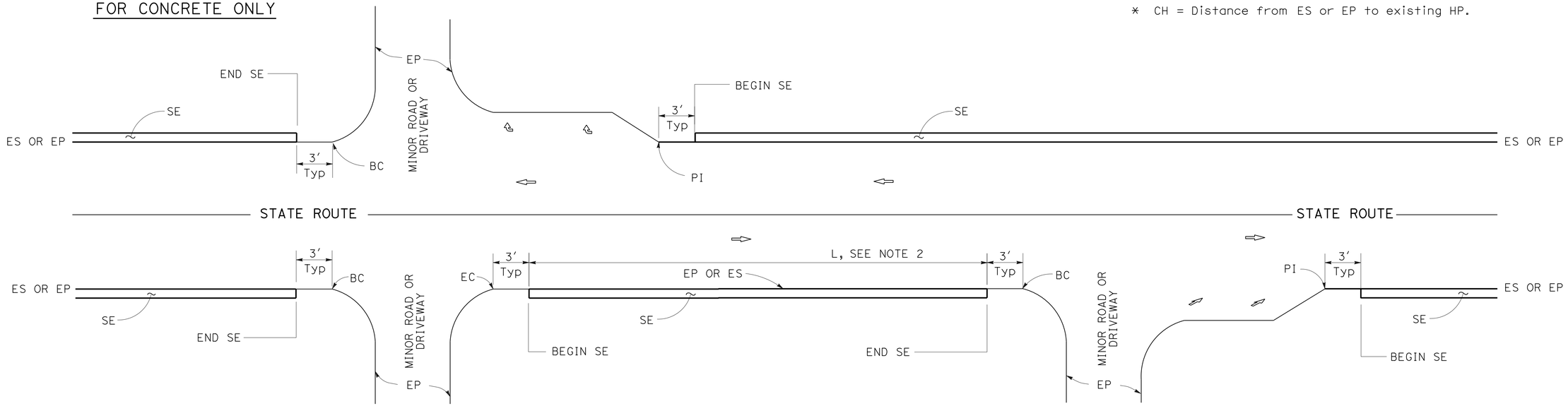


INTERSECTION

MINOR ROADWAY OR DRIVEWAY

DRIVEWAY AND INTERSECTION

## NOTES:

1. For details not shown, see Revised Standard Plans RSP P75 and RSP P76.
2. Safety edge is optional when L is less than 30′.

STATE OF CALIFORNIA
DEPARTMENT OF TRANSPORTATION

# PAVEMENT EDGE TREATMENTS

NO SCALE

RSP P74 DATED JANUARY 20, 2012 SUPPLEMENTS THE STANDARD PLANS BOOK DATED 2010.

**REVISED STANDARD PLAN RSP P74**

**2010 REVISED STANDARD PLAN RSP P74**

01-05-12

| DIST | COUNTY | ROUTE | POST MILES TOTAL PROJECT | SHEET No. | TOTAL SHEETS |
|---|---|---|---|---|---|
| 12 | Ora | 5 | 6.2/8.7 | 438 | 595 |

REGISTERED CIVIL ENGINEER

January 20, 2012
PLANS APPROVAL DATE

REGISTERED PROFESSIONAL ENGINEER
Cornelis M. Hakim
No. C55610
Exp. 12-31-12
CIVIL
STATE OF CALIFORNIA

*THE STATE OF CALIFORNIA OR ITS OFFICERS OR AGENTS SHALL NOT BE RESPONSIBLE FOR THE ACCURACY OR COMPLETENESS OF SCANNED COPIES OF THIS PLAN SHEET.*

TO ACCOMPANY PLANS DATED 4-29-13

## LEGEND:

- HMA PAVEMENT
- HMA OR CONCRETE PAVEMENT
- CONCRETE PAVEMENT

## ABBREVIATIONS:

SE SAFETY EDGE
TT TOTAL THICKNESS OF SE
HW HINGE WIDTH, DISTANCE FROM ES OR EP TO HP

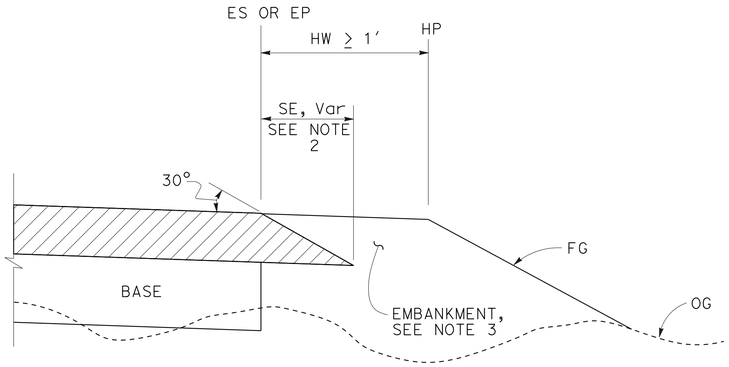


### CASE K
Safety Edge - Fill Section, HW ≥ 1′

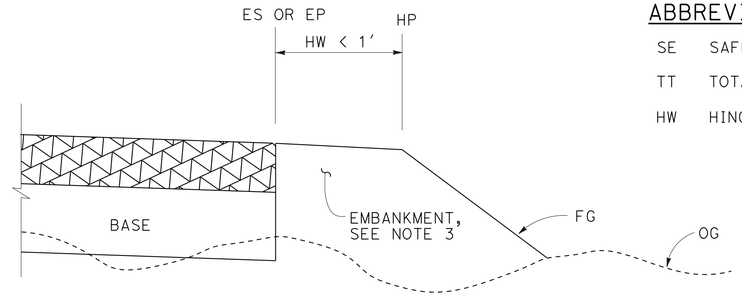


### CASE L
Vertical Edge - Fill Section, HW < 1′

## FILL SECTION

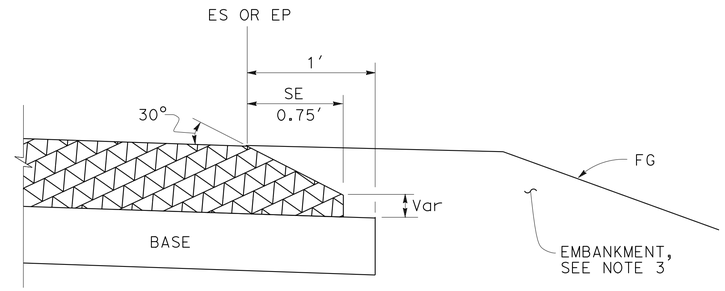


### DETAIL "B"
For HMA pavement thickness more than 0.43′ or concrete pavement

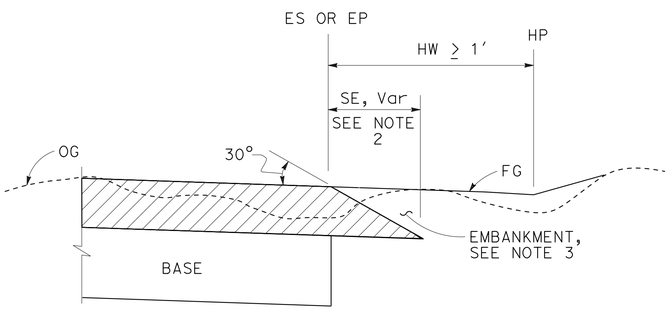


### CASE M
Safety Edge - Cut Section, HW ≥ 1′

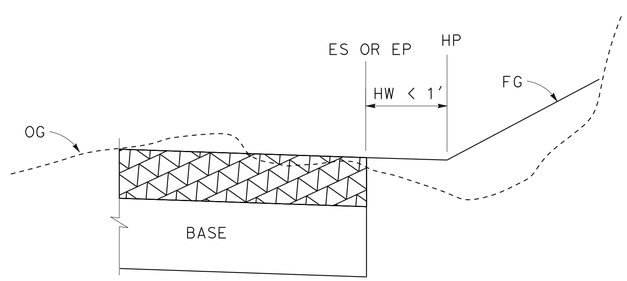


### CASE N
Vertical Edge - Cut Section, HW < 1′

## CUT SECTION

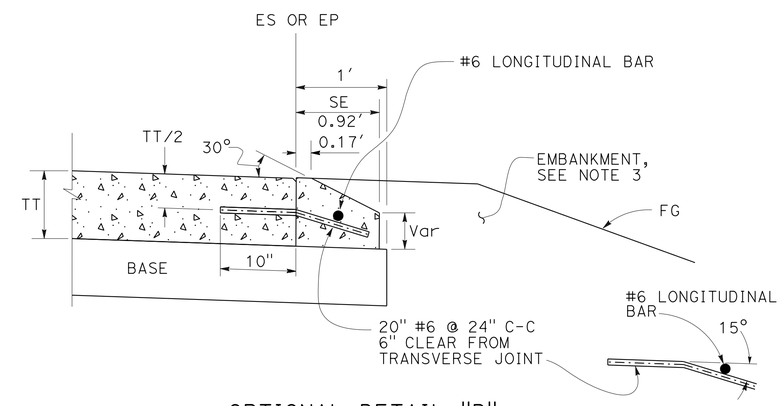


### OPTIONAL DETAIL "B"
For concrete pavement
See Note 4

## NOTES:

1. For limits of safety edge and vertical edge treatments, see Revised Standard Plan RSP P74
2. Details shown for HMA pavement thickness less than 0.43′. See Detail "B" for HMA pavement thickness more than 0.43′ or concrete pavement.
3. For locations and limits of embankment see project plans.
4. Safety edge transverse joint must match pavement transverse joint. End of #6 longitudinal bar must be 2" ±½" clear from transverse joint.
5. Safety edge is not needed in the area of MBGR, barrier, right turn lane and acceleration lane. See Revised Standard Plan RSP P74.

STATE OF CALIFORNIA
DEPARTMENT OF TRANSPORTATION

# PAVEMENT EDGE TREATMENTS-NEW CONSTRUCTION

NO SCALE

RSP P76 DATED JANUARY 20, 2012 SUPPLEMENTS THE STANDARD PLANS BOOK DATED 2010.

**REVISED STANDARD PLAN RSP P76**

**2010 REVISED STANDARD PLAN RSP P76**

TO ACCOMPANY PLANS DATED 4-29-13

| Dist | COUNTY | ROUTE | POST MILES TOTAL PROJECT | SHEET No. | TOTAL SHEETS |
|---|---|---|---|---|---|
| 12 | Ora | 5 | 6.2/8.7 | 439 | 595 |

REGISTERED CIVIL ENGINEER

October 19, 2012
PLANS APPROVAL DATE

REGISTERED PROFESSIONAL ENGINEER Glenn DeCou No. C34547 Exp. 9-30-13 CIVIL STATE OF CALIFORNIA

*THE STATE OF CALIFORNIA OR ITS OFFICERS OR AGENTS SHALL NOT BE RESPONSIBLE FOR THE ACCURACY OR COMPLETENESS OF SCANNED COPIES OF THIS PLAN SHEET.*

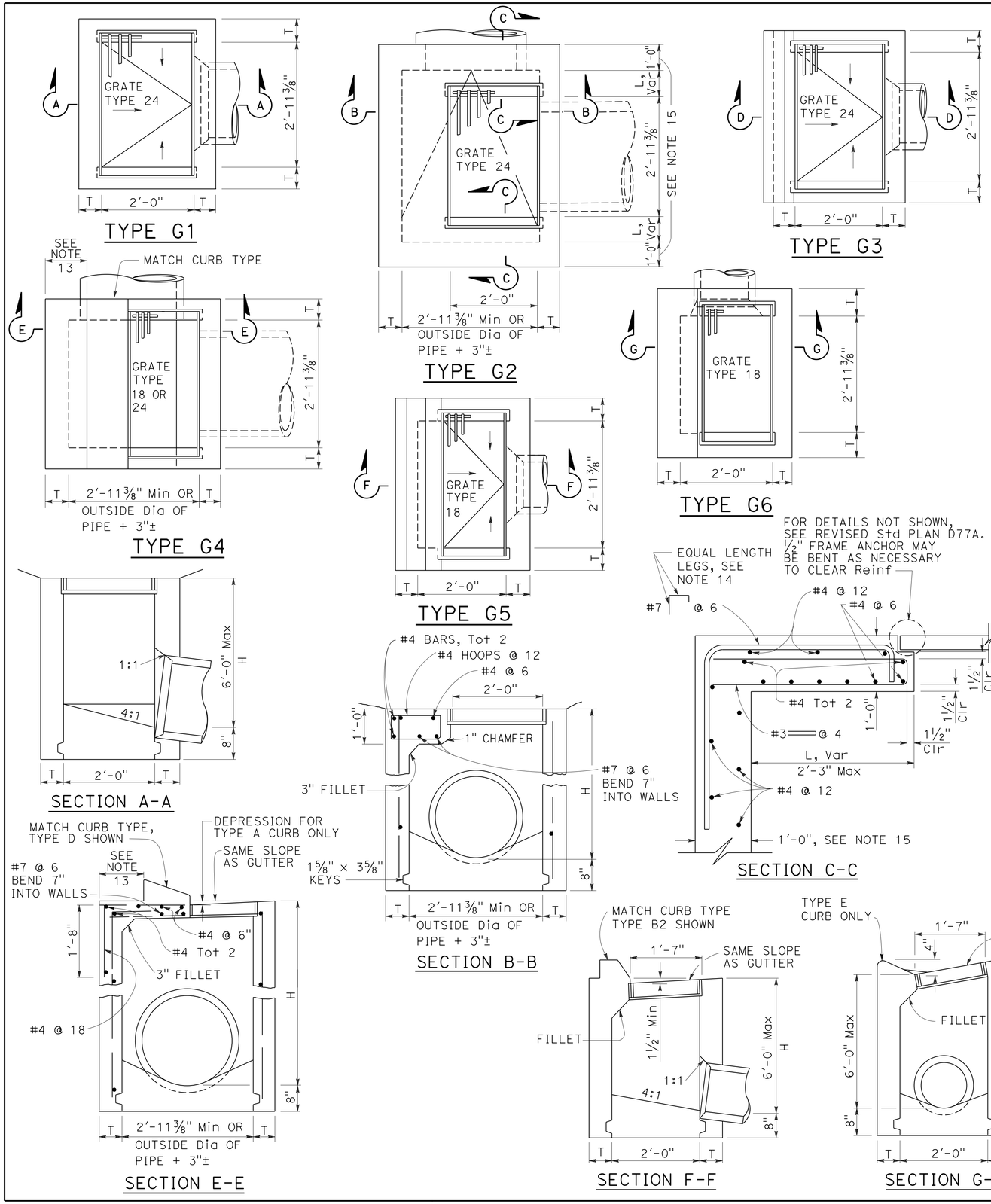


## NOTES:

1. "H" is the difference in elevation between the outlet pipe flow line and the normal gutter grade line undepressed.
2. For "T" wall thickness, see Table A below.
3. Wall reinforcing not required when "H" is 8'-0" or less and the unsupported width or length is 7'-0" or less. Walls exceeding these limits shall be reinforced with #4 bars @ 1'-6" ± centers placed 1½" clear to inside of box unless otherwise shown.
4. Inlet bottom reinforcing not required. See Standard Plan D74C for alternative reinforced bottom and alternative half round bottom.
5. Steps-None required where "H" is less than 2'-6". Where "H" is 2'-6" or more, install steps with lowest rung 1'-0" above the floor and highest rung not more than 6" below top of inlet. The distance between steps shall not exceed 1'-0" and shall be uniform throughout the length of the wall. Place steps in the wall without an opening. Steps inserts may be substituted for the bar steps. Step inserts shall comply with State Industrial Safety requirements. See Standard Plan D74C for step details.
6. Details shown apply to both metal and concrete pipe.
7. Pipe(s) can be placed in any wall.
8. Curb section shall match adjacent curb.
9. Basin floors shall have wood trowel finish and a minimum slope of 12:3 from all directions toward outlet pipe.
10. Set inlet so that grate bars are parallel to direction of principal surface flow.
11. See Revised Standard Plans D77A and D77B for grate and frame details and weights of miscellaneous iron and steel.
12. See Standard Plan D78A for gutter depression details.
13. This dimenison will vary with different grates, curbs types, box width and wall thickness.
14. Bar may be rotated as necessary to clear opening. Where "L" is 6" or less, bar may be omitted.
15. Where "L" is 6" or less, wall thickness shall be as shown in Table A.
16. Cast-in-place inlets to be formed around all pipes/stubs intersecting the inlet, and concrete poured in one continuous operation. Precast inlets shall have mortared connections conforming to details for Type GCP Inlet shown on Standard Plan D75B. See Standard Specifications for mortar composition.

TABLE A

| CONCRETE QUANTITIES | | | | |
|---|---|---|---|---|
| TYPE | H=3'-0" TO 8'-0" (T=6") | | H=8'-1" TO 20'-0" (T=8") | |
| | H=3'-0" (CY) | ADDITIONAL PCC PER FOOT (CY) | H=8'-1" (CY) | ADDITIONAL PCC PER FOOT (CY) |
| G-1 | 0.95 | 0.220 | See Note A | SEE NOTE A |
| G-2* | 1.31 | 0.255 | 3.50 | 0.357 |
| G-3 | 1.03 | 0.220 | See Note A | SEE NOTE A |
| G-4* (TYPE 24) | 1.27 | 0.255 | 3.48 | 0.357 |
| G-4* (TYPE 18) | 1.30 | 0.255 | 3.50 | 0.357 |
| G-5 | 1.02 | 0.220 | SEE NOTE A | SEE NOTE A |
| G-6 | 1.04 | 0.220 | SEE NOTE A | SEE NOTE A |

TABLE BASED ON 8" FLOOR SLAB. NO DEDUCTIONS ARE TO BE MADE TO THESE QUANTITIES BECAUSE OF PIPE OPENINGS, DIFFERENT FLOOR ALTERNATIVES OR DIFFERENT CURB TYPES. * QUANTITIES FOR TYPE G-2 AND G-4 INLETS BASED ON THE MINIMUM INTERIOR DIMENSIONS.

NOTE A:

Maximum allowable height 6'-0".

STATE OF CALIFORNIA
DEPARTMENT OF TRANSPORTATION

# DRAINAGE INLETS

NO SCALE

RSP D73 DATED OCTOBER 19, 2012 SUPERSEDES STANDARD PLAN D73 DATED MAY 20, 2011 - PAGE 156 OF THE STANDARD PLANS BOOK DATED 2010.

**REVISED STANDARD PLAN RSP D73**

**2010 REVISED STANDARD PLAN RSP D73**

7-19-12

| Dist | COUNTY | ROUTE | POST MILES TOTAL PROJECT | SHEET No. | TOTAL SHEETS |
|---|---|---|---|---|---|
| 12 | Ora | 5 | 6.2/8.7 | 440 | 595 |

Raymond Don Tsztoo
REGISTERED CIVIL ENGINEER

April 19, 2013
PLANS APPROVAL DATE

REGISTERED PROFESSIONAL ENGINEER Raymond Don Tsztoo No. C37332 Exp. 6-30-14 CIVIL STATE OF CALIFORNIA

*THE STATE OF CALIFORNIA OR ITS OFFICERS OR AGENTS SHALL NOT BE RESPONSIBLE FOR THE ACCURACY OR COMPLETENESS OF SCANNED COPIES OF THIS PLAN SHEET.*

TO ACCOMPANY PLANS DATED 4-29-13

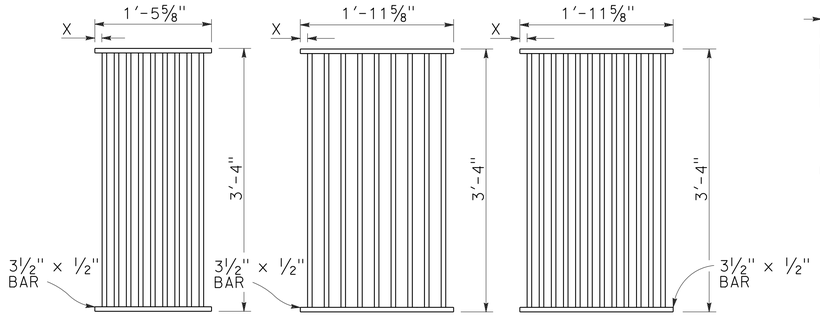


TYPE 18-9

1⅜" Clear spacing. Use within the roadbed on highways where bicycles and pedestrians are excluded.

TYPE 24-9

2" Clear spacing. Use in locations off the roadbed on all types of highways.

TYPE 24-12

1⅜" Clear spacing. Use within the roadbed on highways where bicycles and pedestrians are excluded.

## RECTANGULAR GRATE DETAILS

(See table below)

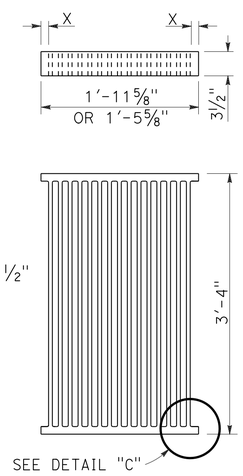


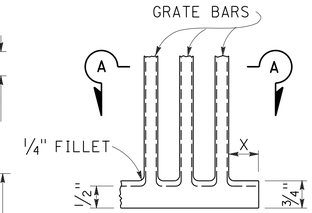


DETAIL "C"

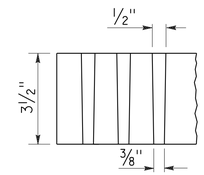


SECTION A-A

## ALTERNATIVE CAST DUCTILE IRON GRATE OR CAST CARBON STEEL GRATE

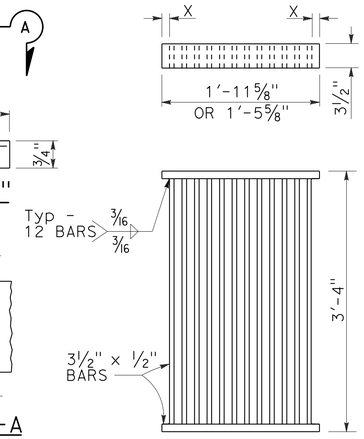


## ALTERNATIVE WELDED GRATE

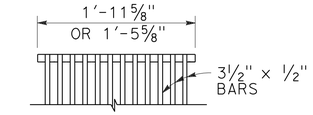


CAST END BLOCK

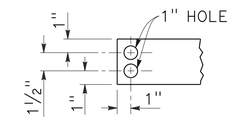


END OF BAR

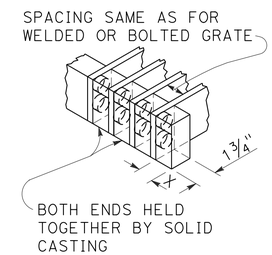


## ALTERNATIVE CAST DUCTILE IRON OR CAST CARBON STEEL END BLOCK GRATE

## NOTES:

1. Grate type numbers refer to approximate width of grate in inches and number of bars, respectively.
2. Contractor has the option of using cast ductile iron, cast carbon steel, welded, bolted, or cast end block grate.
3. Rounded top of bars optional on all grates.
4. Pipe inlets with a grate shall be placed so that bars parallel direction of principle surface flow.
5. Complete joint penetration butt welds may be substituted for the fillet welds on all anchors.
6. Standard square, hexagon, round or equivalent headed anchors may be substituted for the right angle hooks on the anchors shown on this plan.
7. Grate and frame weights are based on welded grates (weights of face angles, steps, protection bars, etc. are not included).
8. Connect chain to grate and frame only at locations shown on the plans. When chain is required, do not use cast ductile iron grates.

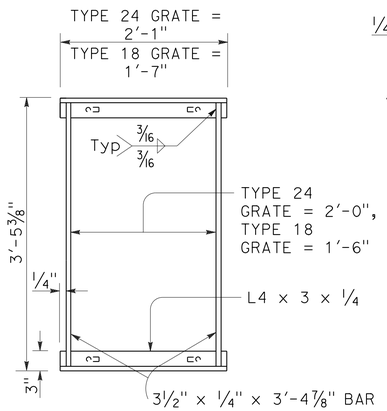


TYPICAL FRAME

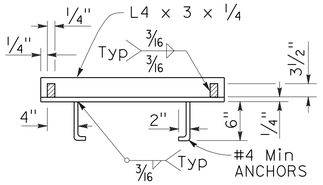


CROSS SECTION

(Thru frame)

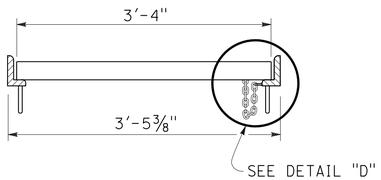


LONGITUDINAL SECTION

(Thru frame and grate)

## RECTANGULAR FRAME DETAILS

(For all rectangular grates)

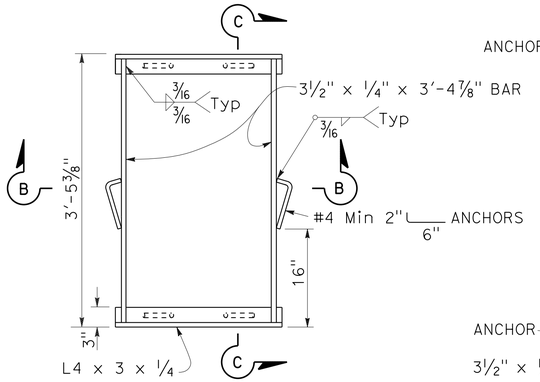


TYPICAL FRAME

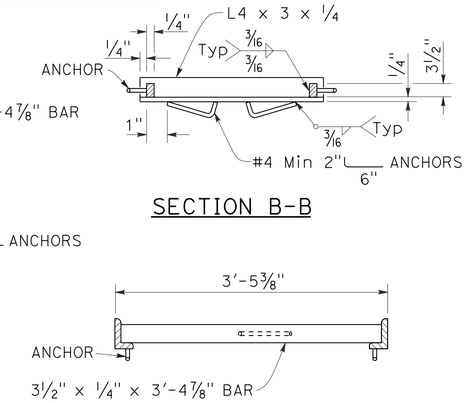


SECTION B-B

SECTION C-C

## ALTERNATIVE ANCHOR FOR RECTANGULAR FRAME

(For details not shown, See Rectangular Frame Details)

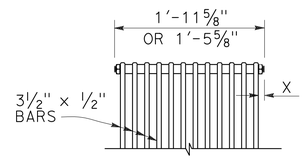


BOLTED END BLOCK

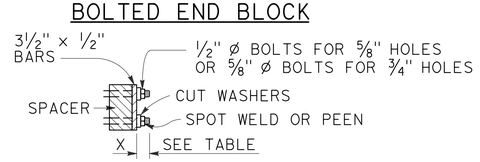


BOLTING DETAIL

## ALTERNATIVE BOLTED GRATE

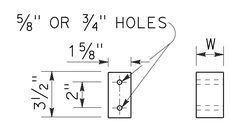


BAR SPACER

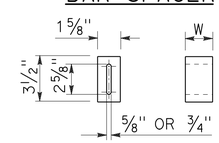


ALTERNATIVE SPACER

W = 1⅜" or 2"

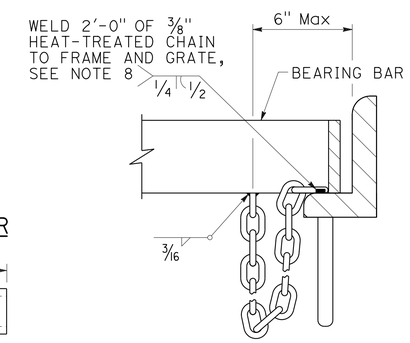


DETAIL "D"

(Steel grates only)

GRATE BAR SPACING TABLE

| TYPE | No. OF BARS | CLEAR BAR SPACING | X |
|---|---|---|---|
| 18-9 | 9 | 1⅜" | 1 1/16" |
| 24-9 | 9 | 2" | 1 9/16" |
| 24-12 | 12 | 1⅜" | 1¼" |

| INLET TYPE | COVER TYPE | WEIGHT LB |
|---|---|---|
| OS | PLATE | 174 |
| OL-7 | PLATE | 170 |
| OL-10 | PLATE | 170 |
| OL-14 | PLATE | 170 |
| OL-21 | PLATE | 170 |
| OCP | PLATE | 112 |
| OCPI | PLATE | 112 |
| OCPI | REDWOOD | 42 |
| OMP | PLATE | 177 |
| OMPI | PLATE | 177 |

| INLET TYPE | GRATE TYPE | No. OF GRATES | WEIGHT LB |
|---|---|---|---|
| GDO | 24-12 | 2 | 634 |
| | | | |
| GOL-7 | 24-12 | 1 | 326 |
| | | | |
| GOL-10 | 24-12 | 1 | 326 |
| | | | |
| GO,G1,G2,G3,G4 (TYPE 24) | 24-9 | 1 | 263 |
| | 24-12 | 1 | 326 |
| | | | |
| G4 (TYPE 18),G5,G6 | 18-9 | 1 | 249 |
| GT1 | 18-9 | 2 | 498 |
| GT2 | 18-9 | 2 | 498 |
| GT3 | 24-12 | 2 | 652 |
| | | | |
| GT4 | 24-12 | 2 | 652 |
| | | | |
| TRASH RACK | | | 22 |
| GRATE CHAIN | | | 3 |

## BASIS FOR Misc IRON & STEEL FINAL PAY WEIGHTS FOR DRAINAGE INLETS

(See Note 7)

STATE OF CALIFORNIA
DEPARTMENT OF TRANSPORTATION

# GRATE DETAILS No. 1

NO SCALE

RSP D77A DATED APRIL 19, 2013 SUPERSEDES RSP D77A DATED JULY 20, 2012 AND STANDARD PLAN D77A DATED MAY 20, 2011 - PAGE 164 OF THE STANDARD PLANS BOOK DATED 2010.

**REVISED STANDARD PLAN RSP D77A**

**2010 REVISED STANDARD PLAN RSP D77A**

4-4-13

| Dist | COUNTY | ROUTE | POST MILES TOTAL PROJECT | SHEET No. | TOTAL SHEETS |
|---|---|---|---|---|---|
| 12 | Ora | 5 | 6.2/8.7 | 441 | 595 |

Raymond Don Tsztoo
REGISTERED CIVIL ENGINEER

April 19, 2013
PLANS APPROVAL DATE

REGISTERED PROFESSIONAL ENGINEER Raymond Don Tsztoo No. C37332 Exp. 6-30-14 CIVIL STATE OF CALIFORNIA

*THE STATE OF CALIFORNIA OR ITS OFFICERS OR AGENTS SHALL NOT BE RESPONSIBLE FOR THE ACCURACY OR COMPLETENESS OF SCANNED COPIES OF THIS PLAN SHEET.*

TO ACCOMPANY PLANS DATED 4-29-13

**2010 REVISED STANDARD PLAN RSP D77B**

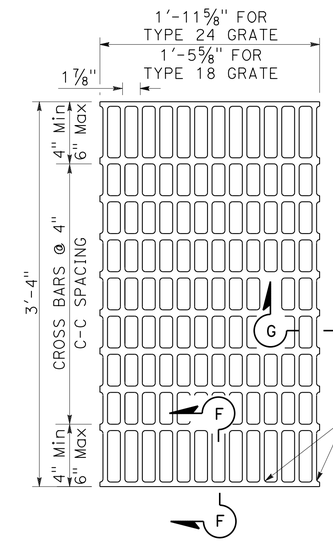


## NOTES:

Bearing bars to be 3½" x ¼" bars on 1⅞" centers.

⅜"± ø Cross bars may be fillet welded, resistance welded or electroforged to bearing bars.

Weight of Type 24 grate = 141 LBS.

Weight of Type 18 grate = 107 LBS. (Type 24 grate shown).

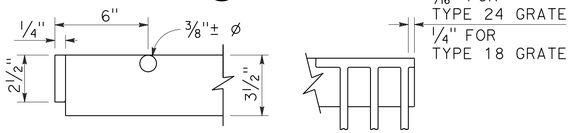


SECTION F-F SECTION G-G

## TYPE 18-10 AND 24-13 GRATE

(Welded Steel)

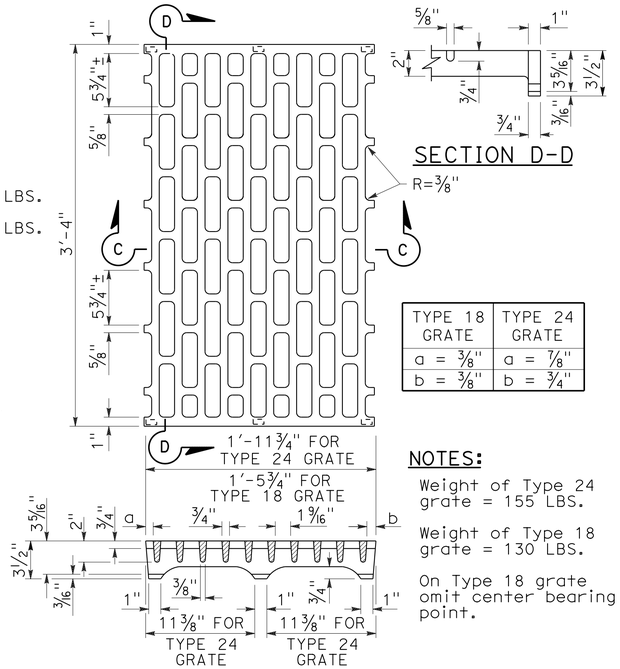


SECTION D-D

| TYPE 18 GRATE | TYPE 24 GRATE |
|---|---|
| a = ⅜" | a = ⅞" |
| b = ⅜" | b = ¾" |

## NOTES:

Weight of Type 24 grate = 155 LBS.

Weight of Type 18 grate = 130 LBS.

On Type 18 grate omit center bearing point.

SECTION C-C

## TYPE 18-8C AND 24-10C GRATE

(Cast ductile iron)

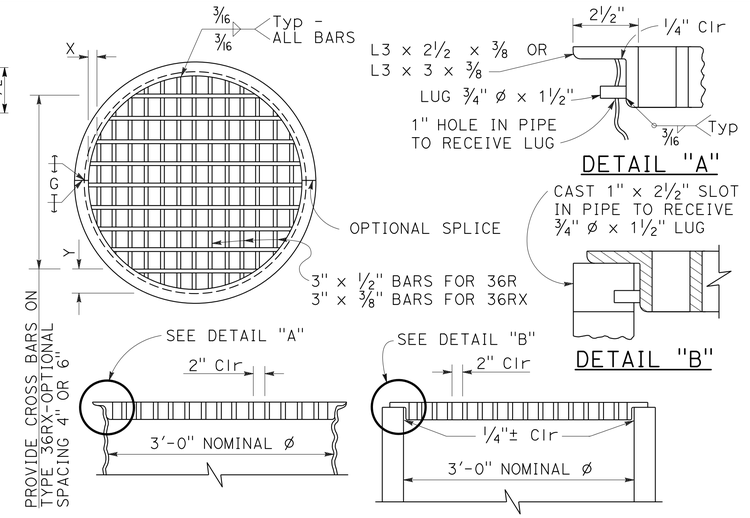


## TYPE 36R AND 36RX GRATE DETAILS

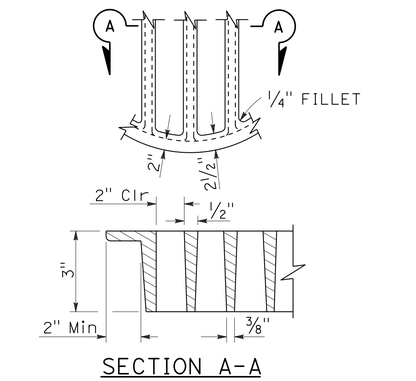


SECTION A-A

## ALTERNATIVE CAST DUCTILE IRON GRATE OR CAST CARBON STEEL GRATE TYPE 36R AND 36RX

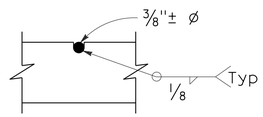


⅜"± ø Cross bars may be fillet welded, resistance welded or electroforged to bearing bars.

## CROSS BAR DETAIL TYPE 36RX GRATE (WELDED STEEL)

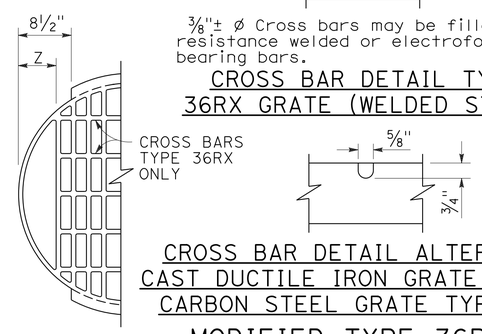


## CROSS BAR DETAIL ALTERNATIVE CAST DUCTILE IRON GRATE OR CAST CARBON STEEL GRATE TYPE 36RX

## MODIFIED TYPE 36R AND 36RX GRATE FOR ODI INLET

BASIS FOR Misc IRON AND STEEL FINAL PAY WEIGHTS FOR DRAINAGE INLETS

| INLET TYPE | GRATE TYPE | No. OF GRATES | WEIGHT LB |
|---|---|---|---|
| GDO (SEE NOTE 4) | 24-10C | 2 | 391 |
| | 24-10S | 2 | 456 |
| | 24-12X | 2 | 473 |
| | 24-13 | 2 | 374 |
| GO,GOL,G1,G2, G3,G4 (TYPE 24) | 24-10C | 1 | 202 |
| | 24-10S | 1 | 229 |
| | 24-12X | 1 | 239 |
| | 24-13 | 1 | 188 |
| G4 (TYPE 18) G5,G6 | 18-8S | 1 | 187 |
| | 18-9X | 1 | 187 |
| | 18-10 | 1 | 149 |
| GT1,GT2 | 18-8S | 2 | 374 |
| | 18-9X | 2 | 374 |
| | 18-10 | 2 | 298 |
| GT3,GT4 | 24-10C | 2 | 404 |
| | 24-10S | 2 | 458 |
| | 24-12X | 2 | 478 |
| | 24-13 | 2 | 376 |
| ODI | 36RX (Mod) | 1 | 196 |
| GMP,GCP,GCPI | 36RX | 1 | 215 |
| ODI | 36R (Mod) | 1 | 220 |
| GMP,GCP,GCPI | 36R | 1 | 236 |
| TRASH RACK | | | 22 |
| GRATE CHAIN | | | 3 |

## NOTES:

1. When alternative grates are allowed - Final pay based on alternative with the lesser weight.
2. Use frame shown on Standard Plan D74A, D74B or RSP D77A as appropriate.
3. When Type 24-10S, 24-12X or 24-13 grates are used with GDO Inlets, a ¼" x 3½" x 3'-4⅞" steel bar shall be welded across the center of inlet frame to separate the individual grates.
4. See Revised Standard Plan RSP D77A for connecting chain to welded grate and frame. When chain is required, do not use cast ductile iron grate.

GRATE BAR SPACING TABLE

| TYPE | No. OF BARS | CLEAR BAR SPACING | X | Y 4" SPACING | Y 6" SPACING | Z |
|---|---|---|---|---|---|---|
| 36R | 13 | 2" | 2⅛" | - | - | - |
| 36RX (STEEL) | 15 | 2" | 9/16" | 3¾" | 5¾" | - |
| 36RX (CAST) | 13 | 2" | 2⅛" | 3¾" | 5¾" | - |
| 36R Mod | 12 | 2" | 2⅛" | - | - | 5" |
| 36RX Mod (STEEL) | 13 | 2" | 9/16" | 3¾" | 5¾" | 5 11/16" |
| 36RX Mod (CAST) | 12 | 2" | 2⅛" | 3¾" | 5¾" | 5" |

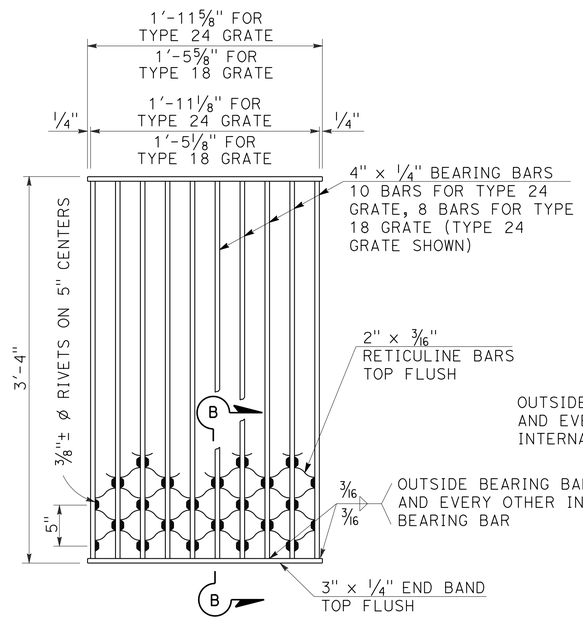


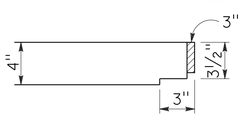


## NOTES:

Weight of Type 24 grate = 182 LBS.
Weight of Type 18 grate = 145 LBS.

SECTION B-B

## TYPE 18-8S AND 24-10S GRATE

(Welded Steel) Reticuline type

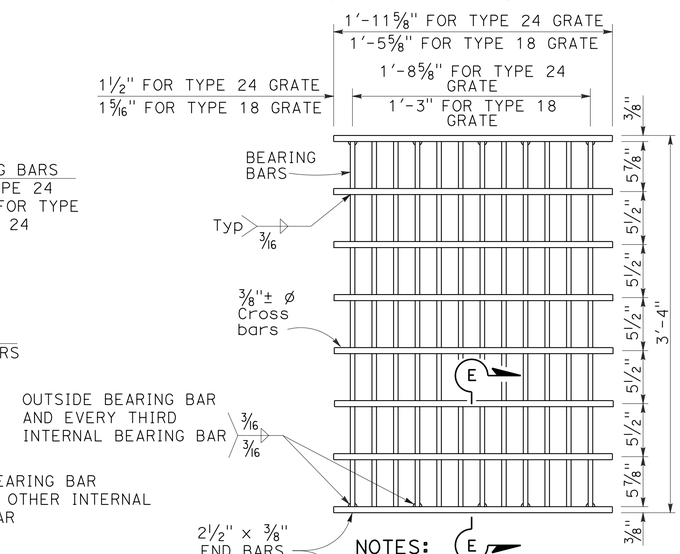


SECTION E-E

## NOTES:

Bearing bars to be 3½" x ⅜" bars on 1⅞" centers.

12 Bars for Type 24 grate - 9 bars for Type 18 grates. (Type 24 grate shown).

Weight of Type 24 grate = 192 LBS.

Weight of Type 18 grate = 145 LBS.

⅜"± ø Cross bars may be fillet welded, resistance welded or electroforged to bearing bars.

## TYPE 18-9X AND 24-12X GRATE

(Welded Steel)

STATE OF CALIFORNIA
DEPARTMENT OF TRANSPORTATION

# GRATE DETAILS No. 2

NO SCALE

RSP D77B DATED APRIL 19, 2013 SUPERSEDES RSP D77B DATED JULY 20, 2012 AND STANDARD PLAN D77B DATED MAY 20, 2011 - PAGE 165 OF THE STANDARD PLANS BOOK DATED 2010.

**REVISED STANDARD PLAN RSP D77B**

4-4-13

| Dist | COUNTY | ROUTE | POST MILES TOTAL PROJECT | SHEET No. | TOTAL SHEETS |
|---|---|---|---|---|---|
| 12 | Ora | 5 | 6.2/8.7 | 442 | 595 |

REGISTERED CIVIL ENGINEER

April 20, 2012
PLANS APPROVAL DATE

REGISTERED PROFESSIONAL ENGINEER Gary Wang No. C58298 Exp. 6-30-12 CIVIL STATE OF CALIFORNIA

*THE STATE OF CALIFORNIA OR ITS OFFICERS OR AGENTS SHALL NOT BE RESPONSIBLE FOR THE ACCURACY OR COMPLETENESS OF SCANNED COPIES OF THIS PLAN SHEET.*

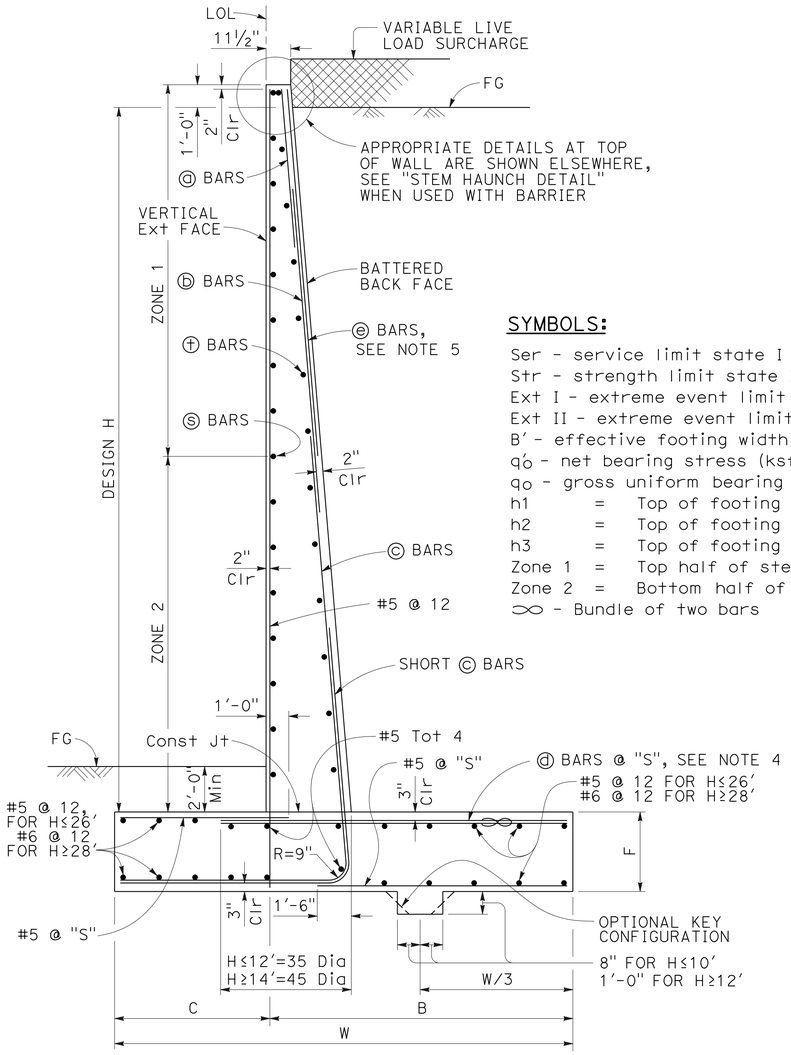


## TYPICAL SECTION

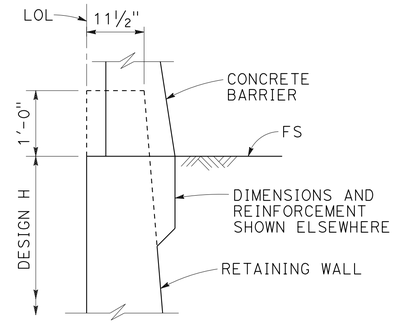


## STEM HAUNCH DETAIL

## SYMBOLS:

Ser - service limit state I
Str - strength limit state I
Ext I - extreme event limit state I
Ext II - extreme event limit state II
B' - effective footing width (ft)
$q_o'$ - net bearing stress (ksf), OG assumed to be FG at toe
$q_o$ - gross uniform bearing stress (ksf)
h1 = Top of footing to top of short ⓒ bar
h2 = Top of footing to top of ⓒ bar
h3 = Top of footing to top of ⓑ bar
Zone 1 = Top half of stem height
Zone 2 = Bottom half of stem height
∞ - Bundle of two bars

## DESIGN CONDITIONS:

Design H may be exceeded by 6" before going to the next size. Special footing design is required where foundation material is incapable of supporting bearing stress listed in the table.

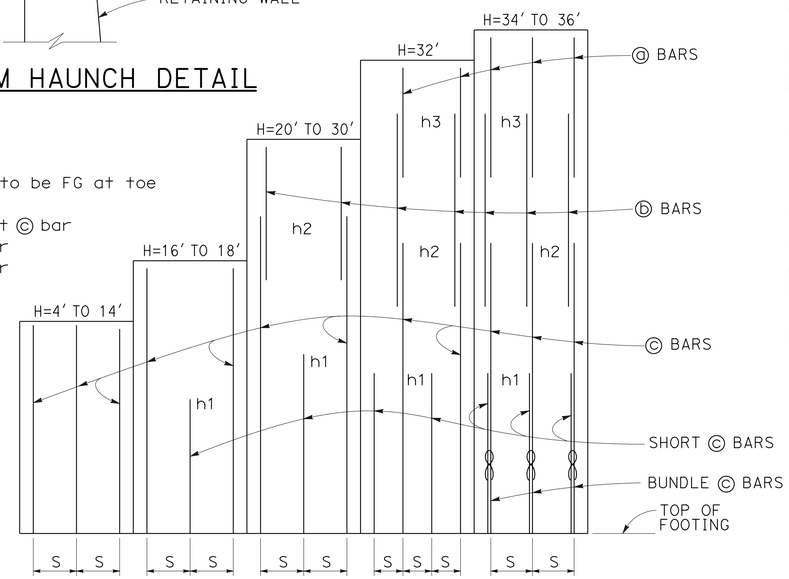


## ELEVATION

## DESIGN NOTES:

TO ACCOMPANY PLANS DATED 4-29-13

DESIGN: AASHTO LRFD Bridge Design Specifications, 4th Edition with California Amendments

LS: Varied surcharge on level ground surface

DC: Stem Architectural Treatment of thickness up to 6" of concrete (75 psf) considered

CT: 54 kip transverse force applied at He = 32", distributed over 10 feet at the top of wall and 1 : 1 distribution down and outward. Distribution below footing taken no less than 40'.

SEISMIC: $k_h = 0.2$, $k_v = 0.0$

SOIL: $\phi = 34°$, $\gamma = 120$ pcf

REINFORCED CONCRETE: f'c = 3,600 psi, fy = 60,000 psi

LOAD COMBINATIONS AND LIMIT STATES:

| | |
|---|---|
| Service I | Q = 1.00DC+1.00EV+1.00EH+1.00LS |
| Strength I | Q = αDC+βEV+ηEH+1.75LS |
| Extreme I | Q = 1.00DC+1.00EV+1.00EH+1.00EQD+1.00EQE |
| Extreme II | Q = 1.00DC+1.00EV+1.00EH+1.00CT |

Where:

| | |
|---|---|
| Q: | Force Effects |
| α: | 1.25 or 0.90, Whichever Controls Design |
| β: | 1.35 or 1.00, Whichever Controls Design |
| η: | 1.50 or 0.90, Whichever Controls Design |
| DC: | Dead Load of Structure Components |
| EH: | Horizontal Earth Fill Pressure |
| EV: | Vertical Earth Pressure from Earth Fill Weight |
| LS: | Live Load Surcharge |
| EQE: | Seismic Earth Pressure |
| EQD: | Soil and Structural and Nonstructural Components Inertia |
| CT: | Vehicular Collision Force |

## TABLE OF REINFORCING STEEL, DIMENSIONS AND DATA

| DESIGN H | 4' | 6' | 8' | 10' | 12' | 14' | 16' | 18' | 20' | 22' | 24' | 26' | 28' | 30' | 32' | 34' | 36' |
|---|---|---|---|---|---|---|---|---|---|---|---|---|---|---|---|---|---|
| W | 6'-10" | 7'-0" | 7'-3" | 7'-7" | 8'-4" | 9'-7" | 10'-9" | 12'-0" | 13'-3" | 14'-6" | 15'-9" | 17'-1" | 18'-5" | 19'-10" | 21'-2" | 22'-7" | 24'-0" |
| C | 2'-2" | 2'-3" | 2'-3" | 2'-4" | 2'-6" | 3'-0" | 3'-6" | 4'-0" | 4'-6" | 5'-0" | 5'-5" | 6'-0" | 6'-6" | 7'-2" | 7'-8" | 8'-2" | 9'-0" |
| B | 4'-8" | 4'-9" | 5'-0" | 5'-3" | 5'-10" | 6'-7" | 7'-3" | 8'-0" | 8'-9" | 9'-6" | 10'-4" | 11'-1" | 11'-11" | 12'-8" | 13'-6" | 14'-5" | 15'-0" |
| F | 1'-4" | 1'-4" | 1'-4" | 1'-4" | 1'-6" | 1'-8" | 1'-8" | 1'-9" | 1'-9" | 1'-11" | 2'-2" | 2'-5" | 2'-10" | 3'-3" | 3'-6" | 4'-0" | 4'-3" |
| BATTER | ½: 12 | ½: 12 | ½: 12 | ½: 12 | ½: 12 | ½: 12 | ½: 12 | ½: 12 | ½: 12 | ½: 12 | ⅝: 12 | ⅝: 12 | ¾: 12 | ⅞: 12 | 1 : 12 | 1 : 12 | 1 : 12 |
| SPACING "S" | 9" | 9" | 9" | 9" | 9" | 7" | 6" | 5" | 6" | 6" | 6" | 6" | 6" | 6" | 6" | 10" | 8" |
| ⓐ BARS | - | - | - | - | - | - | - | - | - | - | - | - | - | - | #7 | #7 | #6 |
| ⓑ BARS | - | - | - | - | - | - | - | - | #7 | #7 | #7 | #7 | #7 | #7 | #9 | #9 | #8 |
| ⓒ BARS | #6 | #6 | #6 | #6 | #6 | #6 | #7 | #7 | #8 | #9 | #9 | #10 | #10 | #10 | #11 | #11 | #11 |
| ⓓ BARS | #5 | #5 | #6 | #6 | #6 | #6 | #9 | #8 | #8 | #9 | #9 | #10 | #10 | #10 | #11 | #11 | #11 |
| h1 | - | - | - | - | - | - | 5'-9" | 5'-10" | 8'-0" | 9'-0" | 10'-1" | 11'-0" | 12'-1" | 13'-0" | 13'-0" | 12'-7" | 11'-6" |
| h2 | - | - | - | - | - | - | - | - | 10'-5" | 13'-0" | 14'-7" | 17'-6" | 19'-0" | 20'-5" | 19'-0" | 18'-0" | 20'-2" |
| h3 | - | - | - | - | - | - | - | - | - | - | - | - | - | - | 21'-2" | 21'-10" | 24'-0" |
| ZONE 1 ⓢ BARS | #5 @ 18 | #5 @ 18 | #5 @ 18 | #5 @ 18 | #5 @ 18 | #5 @ 18 | #5 @ 18 | #5 @ 18 | #5 @ 18 | #5 @ 18 | #5 @ 12 | #5 @ 12 | #5 @ 12 | #5 @ 12 | #5 @ 12 | #5 @ 12 | #5 @ 12 |
| ZONE 2 ⓢ BARS | #5 @ 18 | #5 @ 18 | #5 @ 18 | #5 @ 18 | #5 @ 18 | #5 @ 18 | #5 @ 12 | #5 @ 12 | #5 @ 12 | #5 @ 12 | #5 @ 12 | #5 @ 12 | #6 @ 12 | #6 @ 12 | #6 @ 12 | #7 @ 12 | #7 @ 12 |
| ZONE 1 ⓣ BARS | #4 @ 18 | #4 @ 18 | #4 @ 18 | #4 @ 18 | #4 @ 18 | #4 @ 18 | #4 @ 18 | #4 @ 18 | #4 @ 18 | #4 @ 18 | #4 @ 12 | #4 @ 12 | #4 @ 18 | #4 @ 12 | #4 @ 12 | #4 @ 12 | #4 @ 12 |
| ZONE 2 ⓣ BARS | #4 @ 18 | #4 @ 18 | #4 @ 18 | #4 @ 18 | #4 @ 18 | #4 @ 18 | #4 @ 18 | #4 @ 18 | #4 @ 18 | #4 @ 18 | #4 @ 12 | #4 @ 12 | #4 @ 12 | #4 @ 12 | #5 @ 12 | #5 @ 12 | #5 @ 12 |
| Ser: B', $q_o'$ | 6.8, 0.7 | 6.5, 1.0 | 6.2, 1.3 | 6.0, 1.6 | 6.3, 2.0 | 7.5, 2.1 | 8.6, 2.2 | 9.8, 2.3 | 11.0, 2.4 | 12.1, 2.5 | 13.2, 2.8 | 14.4, 2.9 | 15.5, 3.1 | 16.8, 3.3 | 18.0, 3.5 | 19.2, 3.7 | 20.6, 3.7 |
| Str: B', $q_o$ | 6.6, 1.6 | 5.0, 1.8 | 3.6, 2.3 | 3.0, 3.3 | 3.2, 4.0 | 4.3, 3.8 | 5.3, 3.7 | 6.4, 3.7 | 7.4, 3.8 | 8.2, 4.1 | 9.0, 4.4 | 9.9, 4.6 | 10.7, 4.9 | 11.7, 5.2 | 12.6, 5.4 | 13.6, 5.8 | 14.6, 5.9 |
| Ext I: B', $q_o$ | 5.2, 1.1 | 4.7, 1.5 | 3.9, 2.2 | 3.1, 3.4 | 2.8, 4.8 | 3.2, 5.3 | 3.6, 5.7 | 4.1, 6.1 | 4.6, 6.4 | 5.0, 6.9 | 5.3, 7.6 | 5.8, 8.1 | 6.1, 8.9 | 6.7, 9.4 | 7.1, 10.0 | 7.5, 10.7 | 8.2, 10.9 |
| Ext II: B', $q_o$ | 2.6, 2.2 | 2.7, 2.6 | 2.8, 3.1 | 2.9, 3.6 | 3.7, 3.6 | 5.2, 3.3 | 6.7, 3.1 | 8.3, 3.0 | 9.8, 3.0 | 11.2, 3.1 | 12.5, 3.2 | 13.9, 3.4 | 15.2, 3.6 | 16.7, 3.8 | 18.0, 4.0 | 19.3, 4.2 | 20.8, 4.3 |

## NOTES:

1. For details not shown and drainage notes see RSP B3-5
2. For wall stem joint details see B0-3 3-3 and B0-3 3-4
3. At ⓒ bars:
   H ≤ 6', no splices are allowed within 1'-8" above the top of footing.
   H > 6', no splices are allowed within H/4 above the top of footing.
4. Bundle ⓓ bars for H = 34' & 36'.
5. Provide #6 @ 10" x 15'-0" ⓔ bars over a distance of 8'-0" measured from all expansion joints, begin wall and end wall locations. For H ≤ 14', hook ⓔ bar into footing and reduce bar length as needed to maintain Min Clr cover.

STATE OF CALIFORNIA
DEPARTMENT OF TRANSPORTATION

# RETAINING WALL TYPE 1 (CASE 1)

NO SCALE

RSP B3-1A DATED APRIL 20, 2012 SUPPLEMENTS THE STANDARD PLANS BOOK DATED 2010.

**REVISED STANDARD PLAN RSP B3-1A**

**2010 REVISED STANDARD PLAN RSP B3-1A**

2-22-12

| Dist | COUNTY | ROUTE | POST MILES TOTAL PROJECT | SHEET No. | TOTAL SHEETS |
|---|---|---|---|---|---|
| 12 | Ora | 5 | 6.2/8.7 | 443 | 595 |

REGISTERED CIVIL ENGINEER

April 20, 2012
PLANS APPROVAL DATE

REGISTERED PROFESSIONAL ENGINEER
Gary Wang
No. C58298
Exp. 6-30-12
CIVIL
STATE OF CALIFORNIA

*THE STATE OF CALIFORNIA OR ITS OFFICERS OR AGENTS SHALL NOT BE RESPONSIBLE FOR THE ACCURACY OR COMPLETENESS OF SCANNED COPIES OF THIS PLAN SHEET.*

TO ACCOMPANY PLANS DATED 4-29-13

**2010 REVISED STANDARD PLAN RSP B3-5**

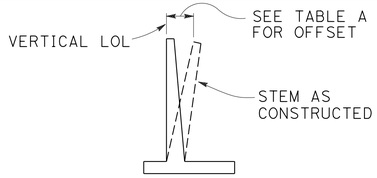


## APPROXIMATE WALL OFFSET VALUES

Values for offseting forms to be determined by the Engineer.

### TABLE A

| H | OFFSET |
|---|---|
| 4'-12' | H/200 |
| 14'-16' | H/160 |
| 18'-20' | H/140 |
| 22'-24' | H/130 |
| 26'-36' | 2½" |

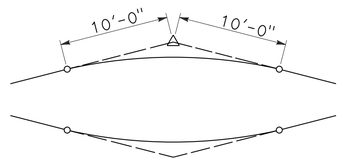


## 20'-0" VC AT TOP OF WALL SLOPE CHANGE

Where shown on the plans

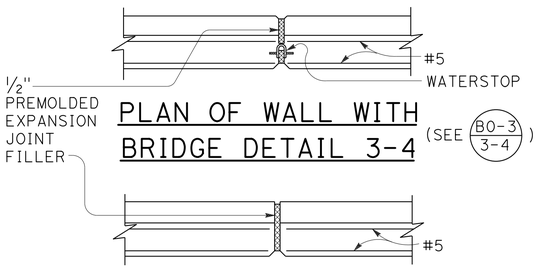


## PLAN OF WALL WITH BRIDGE DETAIL 3-4

(SEE B0-3/3-4)

## PLAN OF WALL WITH EXPANSION JOINT ONLY

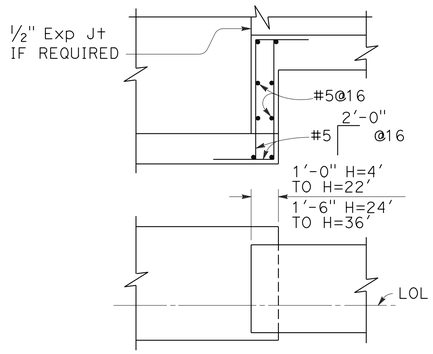


## FOOTING STEP

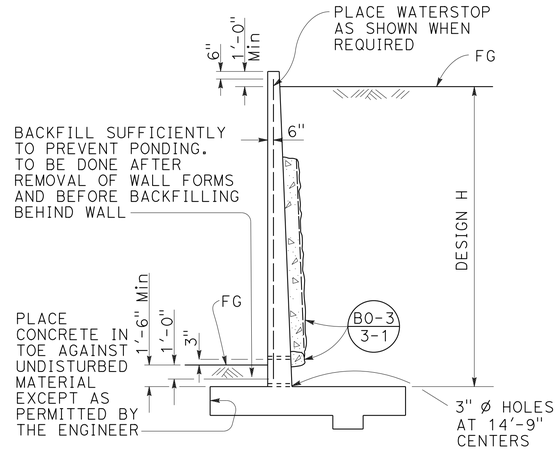


## DESIGN AND DRAINAGE

## DESIGN CONDITIONS:

Design "H" may be exceeded by 6" before going to the next size. Special footing design is required where foundation material is incapable of supporting bearing stress listed in table

Return wall not required unless shown elsewhere

## DESIGN NOTES:

DESIGN: AASHTO LRFD Bridge Design Specifications, 4th edition with California Amendments

LIVE LOAD: Surcharge on level ground surface

SOIL: $\phi$ = 34°
$\gamma$ = 120 pcf

REINFORCED CONCRETE: fy = 60,000 psi
fc' = 3,600 psi

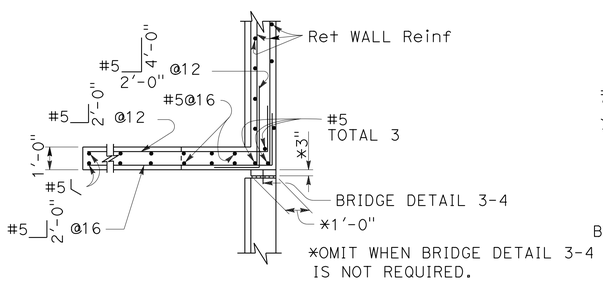


## PLAN

(For return wall Type "A")

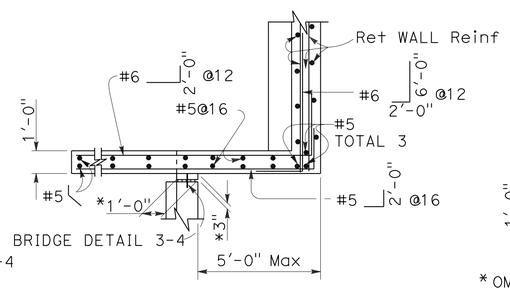


## PLAN

(For return wall Type "B")

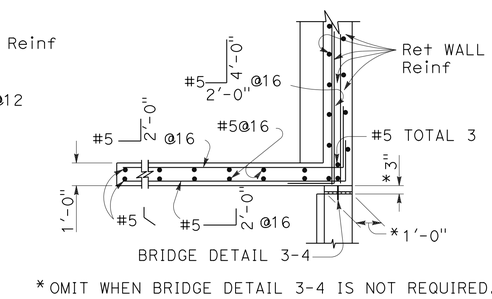


*OMIT WHEN BRIDGE DETAIL 3-4 IS NOT REQUIRED.

## PLAN

(For return wall Type "C")

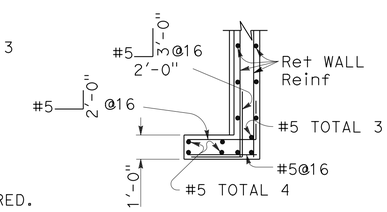


## PLAN

(For return wall Type "D")

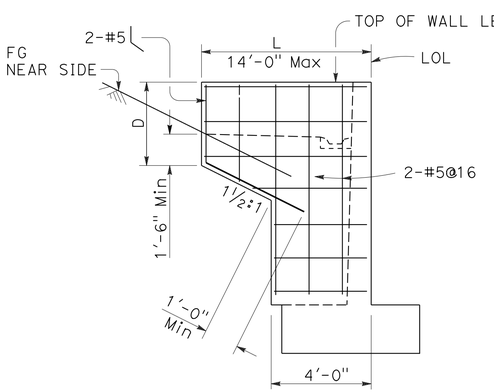


## ELEVATION

## RETURN WALL TYPE "A"

Use where H=8' or less

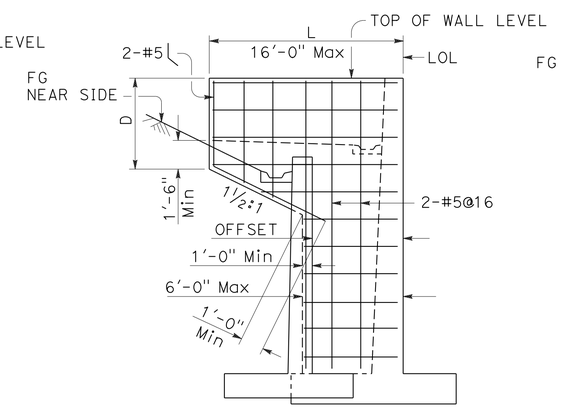


## ELEVATION

## RETURN WALL TYPE "B"

Use where H=10' or more on offset walls

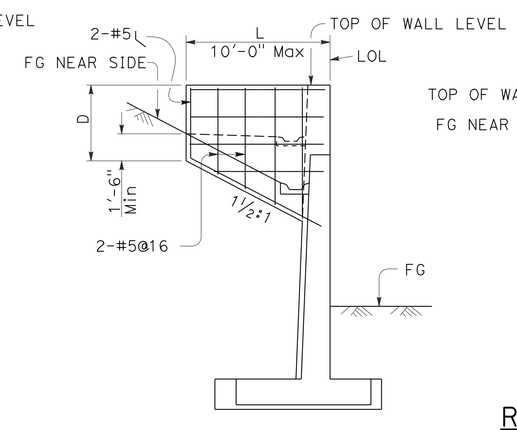


## ELEVATION

## RETURN WALL TYPE "C"

Use where H=10' or more on straight walls

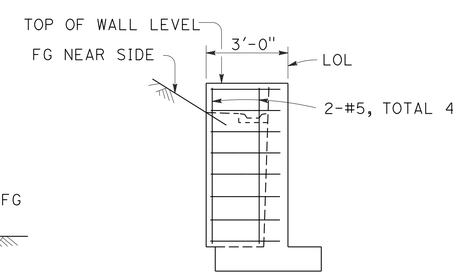


## ELEVATION

## RETURN WALL TYPE "D"

Use where H=6' or less

STATE OF CALIFORNIA
DEPARTMENT OF TRANSPORTATION

# RETAINING WALL DETAILS No. 1

NO SCALE

RSP B3-5 DATED APRIL 20, 2012 SUPERSEDES STANDARD PLAN B3-5
DATED MAY 20, 2011 - PAGE 277 OF THE STANDARD PLANS BOOK DATED 2010.

**REVISED STANDARD PLAN RSP B3-5**

| Dist | COUNTY | ROUTE | POST MILES TOTAL PROJECT | SHEET No. | TOTAL SHEETS |
|---|---|---|---|---|---|
| 12 | Ora | 5 | 6.2/8.7 | 444 | 595 |

REGISTERED CIVIL ENGINEER

October 21, 2011
PLANS APPROVAL DATE

REGISTERED PROFESSIONAL ENGINEER
Tillat Satter
No. C42892
Exp. 3-31-12
CIVIL
STATE OF CALIFORNIA

*THE STATE OF CALIFORNIA OR ITS OFFICERS OR AGENTS SHALL NOT BE RESPONSIBLE FOR THE ACCURACY OR COMPLETENESS OF SCANNED COPIES OF THIS PLAN SHEET.*

TO ACCOMPANY PLANS DATED 4-29-13

**2010 REVISED STANDARD PLAN RSP B11-47**

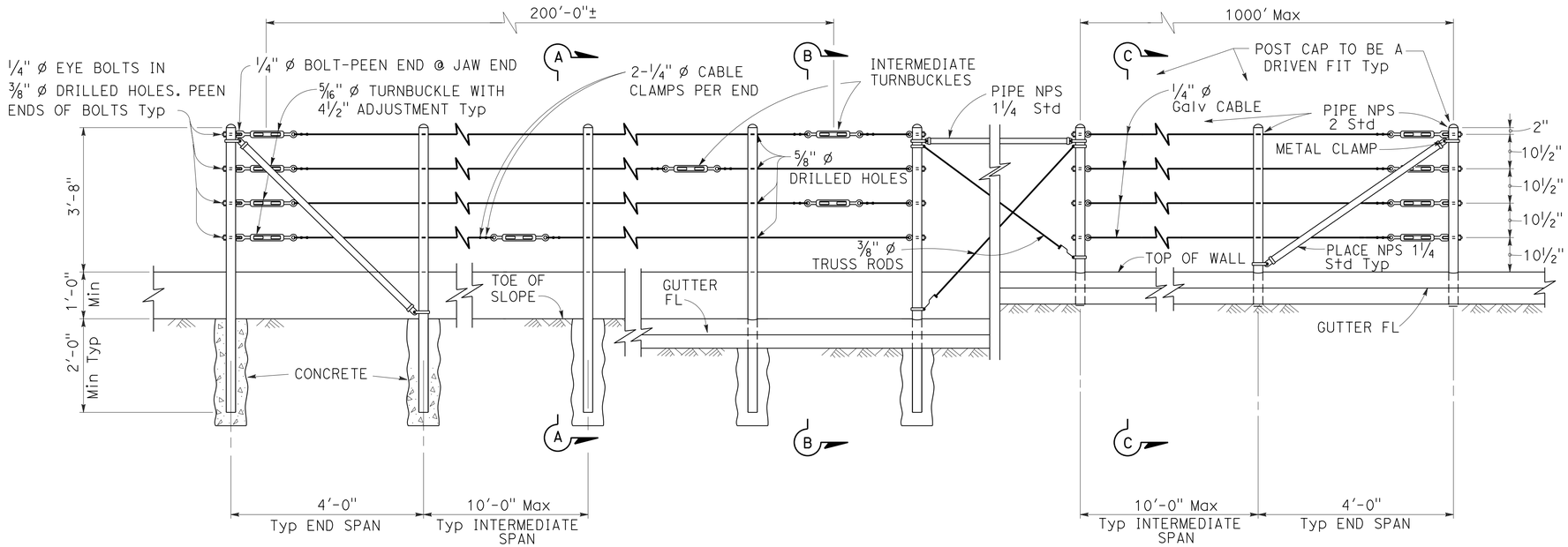


EXISTING WALL (WITHOUT GUTTER)
Existing

RETAINING WALL (WITH GUTTER)
Existing

RETAINING WALL (WITH GUTTER)
New construction

## ELEVATION

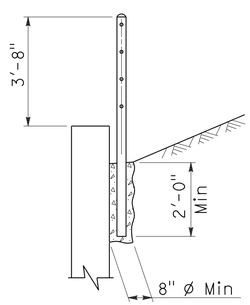


SECTION A-A
Existing

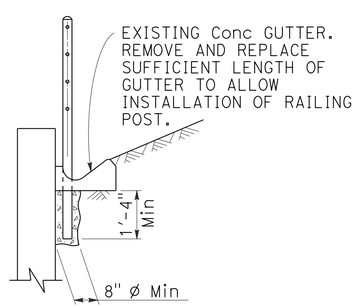


SECTION B-B
Existing

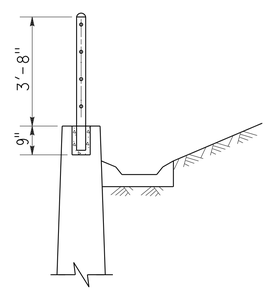


SECTION C-C
New construction

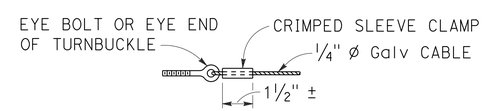


ALTERNATIVE CABLE CONNECTION

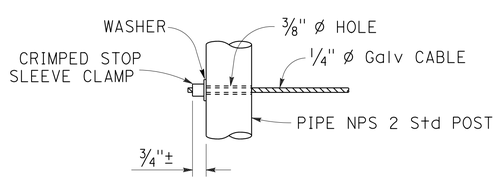


ALTERNATIVE DEAD END ANCHORAGE

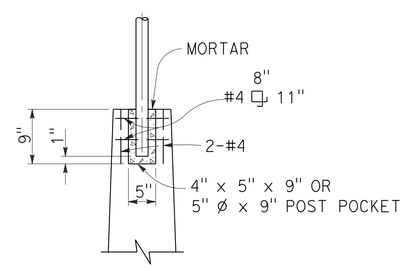


POST POCKET

## NOTES:

1. Maximum distance between turnbuckles shall be 200'-0"±.
2. Intermediate turnbuckles to be placed in adjacent spans.
3. Cable shall not be spliced between intermediate turnbuckles and end posts.
4. Posts to be vertical.
5. Alignment of holes in posts may vary to conform to slope of top of retaining wall.
6. The Contractor shall verify all dependent dimensions in the field before ordering or fabricating any material.
7. Line posts shall be braced horizontally and trussed diagonally in both directions at intervals not to exceed 1000'.
8. Post pockets to be centered in top of wall.
9. Typical end spans, braced in both directions, shall be constructed at changes in line where the angle of deflection is 15° or more.
10. Provide thimbles at all cable loops.

STATE OF CALIFORNIA
DEPARTMENT OF TRANSPORTATION

# CABLE RAILING

NO SCALE

RSP B11-47 DATED OCTOBER 21, 2011 SUPERSEDES STANDARD PLAN B11-47 DATED MAY 20, 2011 - PAGE 293 OF THE STANDARD PLANS BOOK DATED 2010.

**REVISED STANDARD PLAN RSP B11-47**

| Dist | COUNTY | ROUTE | POST MILES TOTAL PROJECT | SHEET No. | TOTAL SHEETS |
|---|---|---|---|---|---|
| 12 | Ora | 5 | 6.2/8.7 | 445 | 595 |

REGISTERED CIVIL ENGINEER

October 19, 2012
PLANS APPROVAL DATE

REGISTERED PROFESSIONAL ENGINEER — Tillat Satter — No. C42892 — Exp. 3-31-14 — CIVIL — STATE OF CALIFORNIA

*THE STATE OF CALIFORNIA OR ITS OFFICERS OR AGENTS SHALL NOT BE RESPONSIBLE FOR THE ACCURACY OR COMPLETENESS OF SCANNED COPIES OF THIS PLAN SHEET.*

TO ACCOMPANY PLANS DATED 4-29-13

**2010 REVISED STANDARD PLAN RSP B15-6**

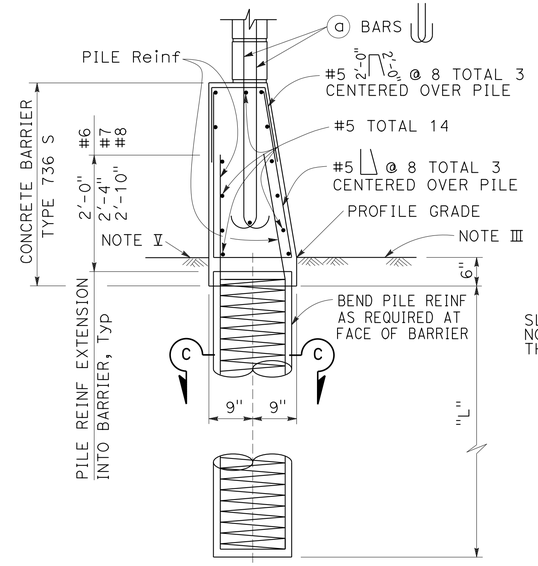


## CASE 1

For details not shown, See Case 2.
Level ground ±10% on both sides of barrier.

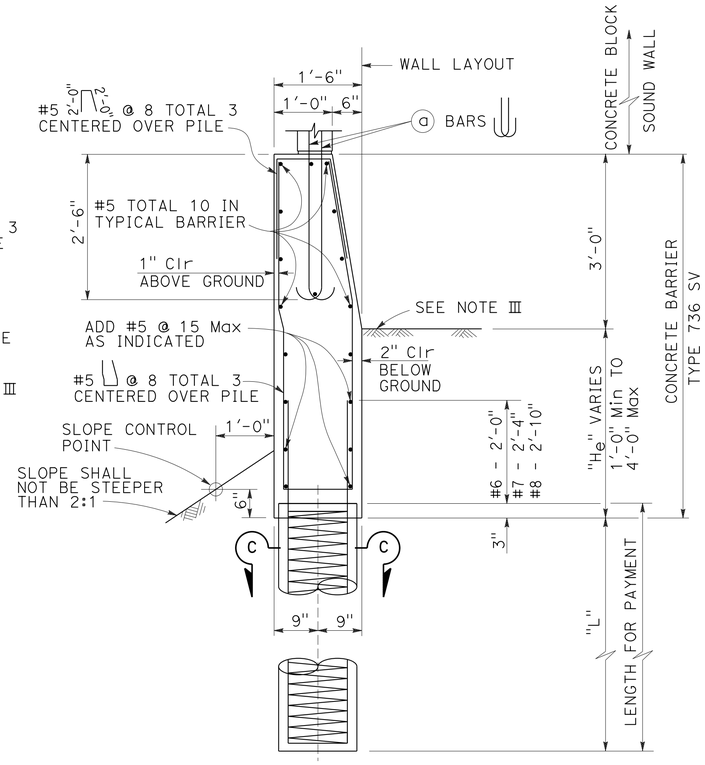


## CASE 2

For details not shown, See Case 1.
Level ground ±10% at the traffic side of barrier and sloping ground on the opposite side.

## BARRIER SECTIONS

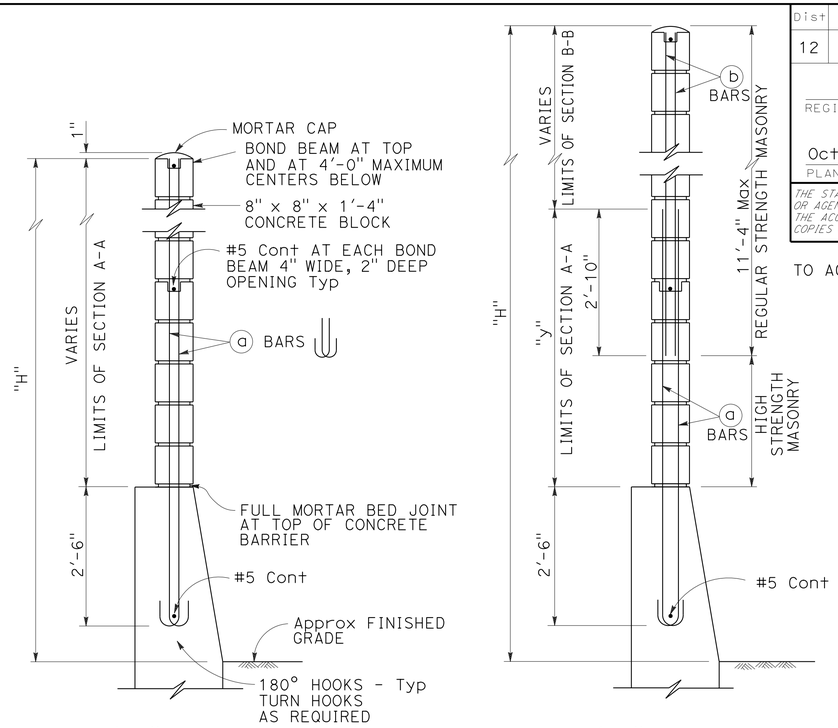


H=6'-4" THRU H=10'-4"

H=12'-4" THRU H=16'-4"

For details not shown, see H=6'-4" thru H=10'-4".

## TYPICAL SECTIONS

See Standard Plan B15-8 for pile details.

### SOUND WALL REINFORCEMENT TABLE

| MAXIMUM H | (a) BARS @ 1'-4" Max | (b) BARS @ 1'-4" Max | "y" | f'm (psi) | COMPRESSIVE STRENGTH OF CMU (psi) | H |
|---|---|---|---|---|---|---|
| 6'-4" | #4 | --- | --- | 1500 | 1900 | 6'-4" |
| 8'-4" | #4 | --- | --- | 1500 | 1900 | 8'-4" |
| 10'-4" | #4 | --- | --- | 1500 | 1900 | 10'-4" |
| 12'-4" | #5 | #4 | 5'-0" | 1500 | 1900 | 12'-4" |
| 14'-4" | #6 | #4 | 7'-0" | 1500 | 1900 | 14'-4" |
| 16'-4" | #6 | #4 | 9'-0" | 2500 | 3750 | 16'-4" |

### NOTES I THROUGH VI:

I. Details shown are primarily to conform design of sound walls to Type 736S and Type 736 SV Concrete Barriers. For sound wall details conforming with barriers see Standard Plans B15-7 and B15-8.

II. For details and sections not shown, see Standard Plans B15-7 and B15-8.

III. Slope ground at traffic side of barrier to drain. Maximum slope ±10%. See Std Plan B11-56, Note 3.

IV. Pile spacing may be varied, but shall not exceed the tabular values. See Standard Plan B15-8.

V. For Case 1 - ground line to be at the same elevation on both sides of the barrier. Barrier shall not be used to retain earth.

VI. See Standard Plan B15-9 for other details.

### NOTES A THROUGH F:

A. For type of block, type of block bond, and joint finish, see other sheets.

B. When blocks are laid in stacked bond, ladder type, galvanized joint reinforcement shall be provided. A minimum of 2-9 gauge wires continuous at 4'-0" maximum to be used. Locate reinforcement in joints that are at the approximate midpoint between bond beams.

C. Horizontal joints shall be tooled concave or may be weathered. Vertical joints shall be tooled concave or may be raked.

D. For intermediate wall heights (H), or barrier depths ($H_e$), that are between the values given, use the tabular information for the next higher (H) or ($H_e$).

E. Concrete to be used for the barrier shall contain not less than 590 pounds of cementitious material per cubic yard.

F. Masonry strengths are listed in the "SOUND WALL REINFORCEMENT TABLE".

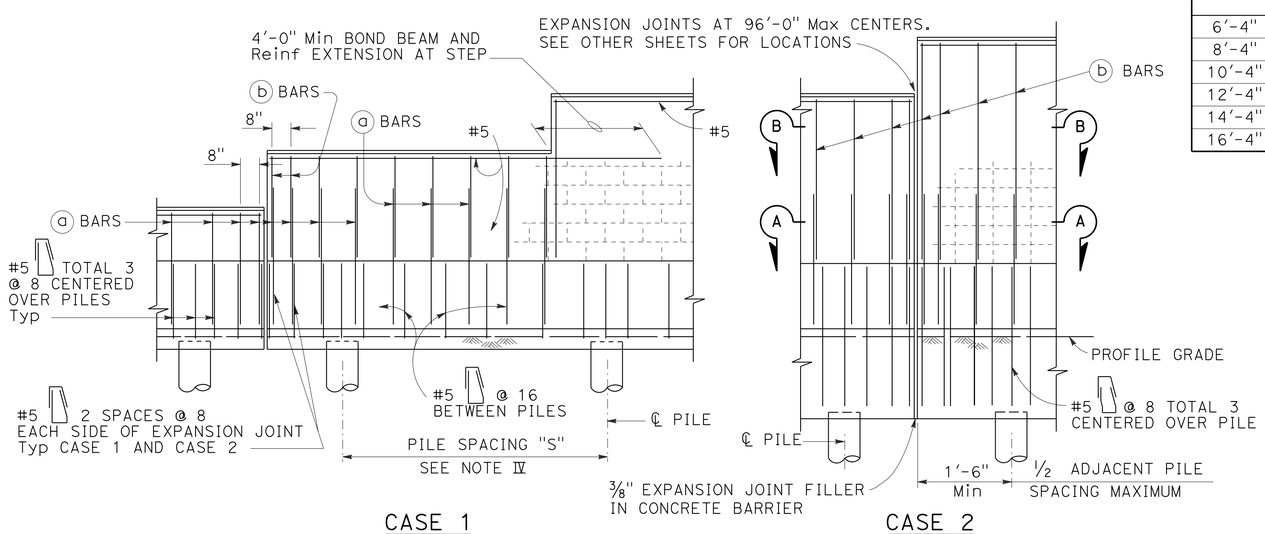


CASE 1
For details not shown, See Case 2.

CASE 2
For details not shown, See Case 1.

## PARTIAL ELEVATIONS

STATE OF CALIFORNIA
DEPARTMENT OF TRANSPORTATION

# SOUND WALL MASONRY BLOCK ON TYPE 736S/SV BARRIER DETAILS (1)

NO SCALE

RSP B15-6 DATED OCTOBER 19, 2012 SUPERSEDES STANDARD PLAN B15-6 DATED MAY 20, 2011 - PAGE 320 OF THE STANDARD PLANS BOOK DATED 2010.

**REVISED STANDARD PLAN RSP B15-6**

7-19-12

| DIST | COUNTY | ROUTE | POST MILES TOTAL PROJECT | SHEET NO. | TOTAL SHEETS |
|---|---|---|---|---|---|
| 12 | Ora | 5 | 6.2/8.7 | 446 | 595 |

REGISTERED ELECTRICAL ENGINEER

January 20, 2012
PLANS APPROVAL DATE

REGISTERED PROFESSIONAL ENGINEER
Jeffery G. McRae
No. E14512
Exp. 6-30-12
ELECTRICAL
STATE OF CALIFORNIA

*THE STATE OF CALIFORNIA OR ITS OFFICERS OR AGENTS SHALL NOT BE RESPONSIBLE FOR THE ACCURACY OR COMPLETENESS OF SCANNED COPIES OF THIS PLAN SHEET.*

TO ACCOMPANY PLANS DATED 4-29-13

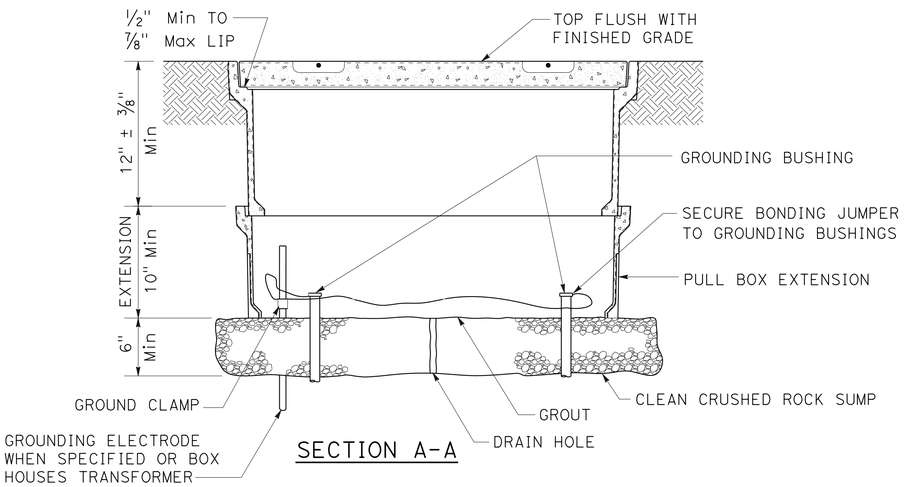


SECTION A-A

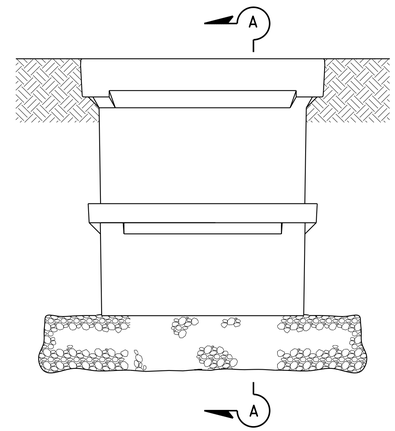


SIDE VIEW

# INSTALLATION DETAILS

## DETAIL A

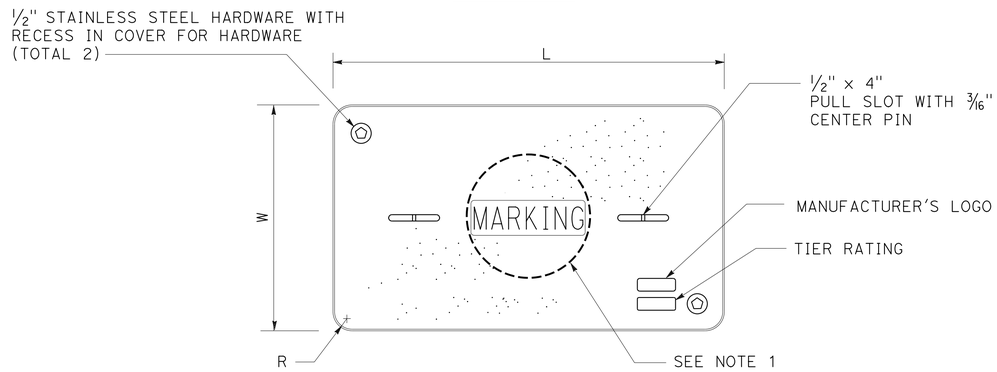


COVER TOP VIEW

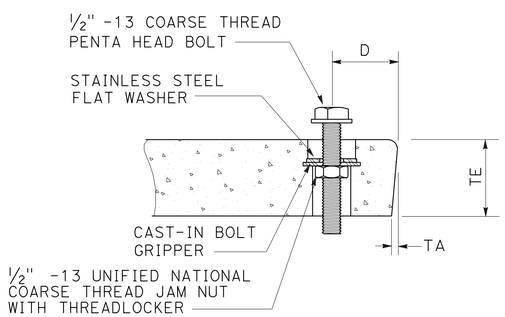


TYPICAL COVER CAPTIVE BOLT

OR SIMILAR

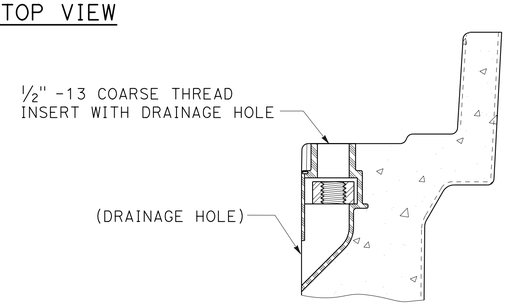


TYPICAL THREADED INSERT

OR SIMILAR

| DIMENSION TABLE | | | | | | | | | | |
|---|---|---|---|---|---|---|---|---|---|---|
| PULL BOX | PULL BOX | | | COVER | | | | | | |
| | MINIMUM DEPTH BOX | MINIMUM DEPTH EXTENSION | MAXIMUM WEIGHT | L | W | R | TE | TA | D | MAXIMUM WEIGHT |
| No. 3½ | 12" | N/A | 40 lb | 1' - 3⅜" | 10⅛" | 1⅜" | 2" | ⅛" | 1¾" | 30 lb |
| No. 5 | 12" | 10" | 55 lb | 1' - 11¼" | 1' - 1¾" | 1⅜" | 2" | ⅛" | 1¾" | 60 lb |
| No. 6 | 12" | 10" | 70 lb | 2' - 6½" | 1' - 5½" | 1⅜" | 2" | ⅛" | 2" | 85 lb |

## NOTES ON PULL BOXES:

1. Pull box covers must be marked as follows: "SERVICE" Service circuits between service point and service disconnect; "SPRINKLER-CONTROL" sprinkler control circuits, 50 V or less; "CALTRANS" on all pull boxes, except pull boxes marked "SPRINKLER-CONTROL"; and "TELEPHONE" Telephone service;

   A) No. 3½ pull box.
      1) "SIGNAL" - Traffic signal circuits with or without street or sign lighting circuits.
      2) "ST LIGHTING" - Street or sign lighting circuits where voltage is under 600 V.

   B) No. 5, 6, 9 or 9A pull box.
      1) "TRAFFIC SIGNAL" - Traffic signal circuits with or without street or sign lighting circuits.
      2) "STREET LIGHTING" - Street or sign lighting circuits where voltage is under 600 V.
      3) "STREET LIGHTING-HIGH VOLTAGE" - Street or sign lighting circuits where voltage is above 600 V.
      4) "IRRIGATION" - Circuits to irrigation controller 120 V or more.
      5) "RAMP METER" - Ramp meter circuits.
      6) "COUNT STATION" - Count or speed monitor circuits.
      7) "COMMUNICATIONS" - Communication circuits.
      8) "TOS COMMUNICATIONS" - TOS communication line.
      9) "TOS POWER" - TOS power.
      10) "TDC POWER" - Telephone demarcation cabinet power.
      11) "CCTV" - Closed circuit television circuits.
      12) "TMS" - Traffic monitoring station circuits.
      13) "CMS" - Changeable message sign circuits.
      14) "HAR" - Highway advisory radio circuits.

2. The nominal dimensions of the opening in which the cover sets must be the same as the cover dimensions (L and W) plus ⅛" or greater.

3. Covers and boxes must be interchangeable with California Standard. When interchanged with a standard, the top surfaces must be flush within ⅛". Top outside radius of covers and pull boxes must have a ⅛" radius.

4. Pull box extension may be another pull box as long as the bottom edge of the pull box can fit into the cover opening.

STATE OF CALIFORNIA
DEPARTMENT OF TRANSPORTATION

# ELECTRICAL SYSTEMS (PULL BOX)

NO SCALE

RSP ES-8A DATED JANUARY 20, 2012 SUPPLEMENTS THE STANDARD PLANS BOOK DATED 2010.

**REVISED STANDARD PLAN RSP ES-8A**

**2010 REVISED STANDARD PLAN RSP ES-8A**

01-09-12

| DIST | COUNTY | ROUTE | POST MILES TOTAL PROJECT | SHEET NO. | TOTAL SHEETS |
|---|---|---|---|---|---|
| 12 | Ora | 5 | 6.2/8.7 | 447 | 595 |

REGISTERED ELECTRICAL ENGINEER

January 20, 2012
PLANS APPROVAL DATE

REGISTERED PROFESSIONAL ENGINEER
Jeffery G. McRae
No. E14512
Exp. 6-30-12
ELECTRICAL
STATE OF CALIFORNIA

*THE STATE OF CALIFORNIA OR ITS OFFICERS OR AGENTS SHALL NOT BE RESPONSIBLE FOR THE ACCURACY OR COMPLETENESS OF SCANNED COPIES OF THIS PLAN SHEET.*

TO ACCOMPANY PLANS DATED 4-29-13

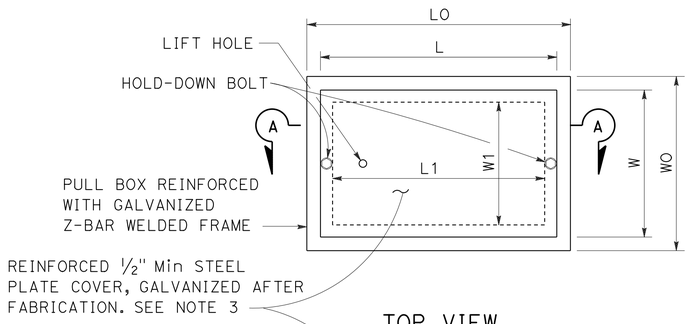


TOP VIEW

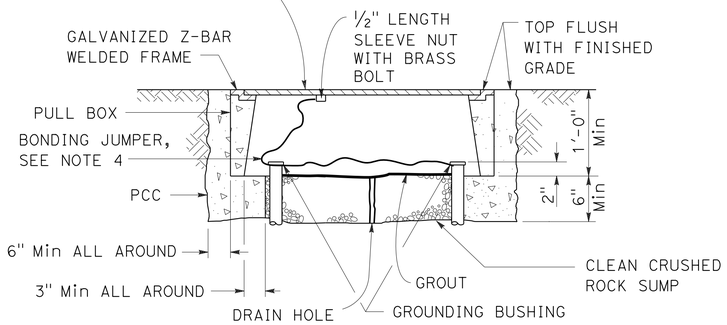


SECTION A-A

## No. 3½(T), No. 5(T) AND No. 6(T) TRAFFIC PULL BOX

## NOTES ON PULL BOXES:

1. Traffic pull box shall be provided with steel cover and special concrete footing. Steel cover shall have embossed non-skid pattern.
2. Steel reinforcing shall be as regularly used in the standard products of the respective manufacturer.
3. Pull box covers must be marked as follows: "SERVICE" Service circuits between service point and service disconnect; "SPRINKLER-CONTROL" Sprinkler control circuits, 50 V or less; "CALTRANS" On all pull boxes, except pull boxes marked "SPRINKLER-CONTROL"; and "TELEPHONE" Telephone service.
   A) No. 3½(T) pull box.
      1) "SIGNAL" - Traffic signal circuits with or without street or sign lighting circuits.
      2) "ST LIGHTING" - Street or sign lighting circuits where voltage is under 600 V.
   B) No. 5(T) or 6(T) pull box.
      1) "TRAFFIC SIGNAL" - Traffic signal circuits with or without street or sign lighting circuits.
      2) "STREET LIGHTING" - Street or sign lighting circuits where voltage is under 600 V.
      3) "STREET LIGHTING-HIGH VOLTAGE" - Street or sign lighting circuits where voltage is above 600 V.
      4) "IRRIGATION" - Circuits to irrigation controller 120 V or more.
      5) "RAMP METER" - Ramp meter circuits.
      6) "COUNT STATION" - Count or speed monitor circuits.
      7) "COMMUNICATION" - Communication circuits.
      8) "TOS COMMUNICATIONS" - TOS communications line.
      9) "TOS POWER" - TOS power.
      10) "TDC POWER" - Telephone demarcation cabinet power.
      11) "CCTV" - Closed circuit television circuits.
      12) "TMS" - Traffic monitoring station circuits.
      13) "CMS" - Changeable message sign circuits.
      14) "HAR" - Highway advisory radio circuits.
4. Bonding jumper for metal covers shall be 3' long, minimum.
5. The nominal dimensions of the opening in which the cover sets must be the same as the cover dimensions except the length and width dimensions shall be ⅛" greater.
6. Covers and boxes must be interchangeable with California standard male and female gages. When interchanged with a standard male or female gage, the top surfaces must be flush within ⅛".

### DIMENSION TABLE

| PULL BOX | BOX | | | | | | COVER | | | | |
|---|---|---|---|---|---|---|---|---|---|---|---|
| | MINIMUM * THICKNESS | MINIMUM DEPTH BOX AND EXTENSION | WO | LO | L1 | W1 | L ** | W ** | R | EDGE THICKNESS | EDGE TAPER |
| No. 3½(T) | 1½" | 1'-0" | 1'-5"± 1" | 1'-8⅞"± | 1'-2½"± | 10⅝"± 1" | 1'-8"± | 1'-1¾"± | 0" | ½" | NONE |
| No. 5(T) | 1¾" | 1'-0" | 1'-11½"± 1" | 2'-5½"± | 1'-7"± | 1'-1"± 1" | 2'-3"± | 1'-4"± | 0" | ½" | NONE |
| No. 6(T) | 2" | 1'-0" | 2'-6"± 1" | 2'-11½"± | 1'-11½"± | 1'-5"± 1" | 2'-9"± | 1'-8"± | 0" | ½" | NONE |

* EXCLUDING CONDUIT WEB ** TOP DIMENSION

STATE OF CALIFORNIA
DEPARTMENT OF TRANSPORTATION

# ELECTRICAL SYSTEMS (TRAFFIC RATED PULL BOX)

NO SCALE

RSP ES-8B DATED JANUARY 20, 2012 SUPPLEMENTS THE STANDARD PLANS BOOK DATED 2010.

**REVISED STANDARD PLAN RSP ES-8B**

**2010 REVISED STANDARD PLAN RSP ES-8B**

| Dist | COUNTY | ROUTE | POST MILES TOTAL PROJECT | SHEET No. | TOTAL SHEETS |
|---|---|---|---|---|---|
| 12 | Ora | 5 | 6.2/8.7 | 448 | 595 |

REGISTERED ELECTRICAL ENGINEER

July 20, 2012
PLANS APPROVAL DATE

REGISTERED PROFESSIONAL ENGINEER
Jeffery G. McRae
No. E14512
Exp. 6-30-14
ELECTRICAL
STATE OF CALIFORNIA

*THE STATE OF CALIFORNIA OR ITS OFFICERS OR AGENTS SHALL NOT BE RESPONSIBLE FOR THE ACCURACY OR COMPLETENESS OF SCANNED COPIES OF THIS PLAN SHEET.*

TO ACCOMPANY PLANS DATED 4-29-13

## ISOFOOTCANDLE CURVE - MINIMUM

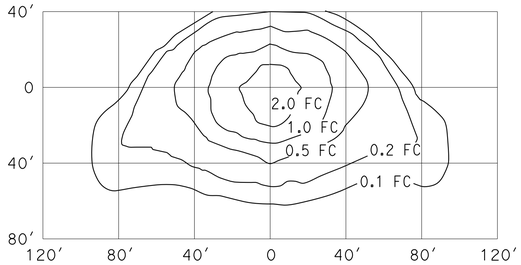


### TYPE III MEDIUM CUTOFF

Cutoff Luminaire
34′ Mounting Height
Lamp operated at 22,000 lm
200-W high pressure sodium lamp
ANSI Designation S66

## ISOFOOTCANDLE CURVE - MINIMUM

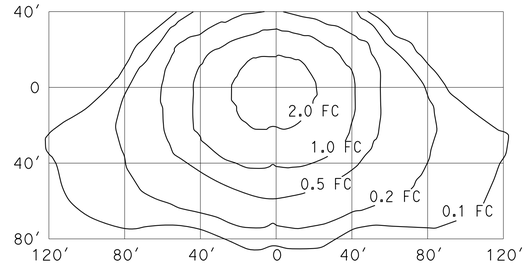


### TYPE III MEDIUM CUTOFF

Cutoff Luminaire
40′ Mounting Height
Lamp operated at 37,000 lm
310-W high pressure sodium lamp
ANSI Designation S67

## ISOFOOTCANDLE CURVE - MINIMUM

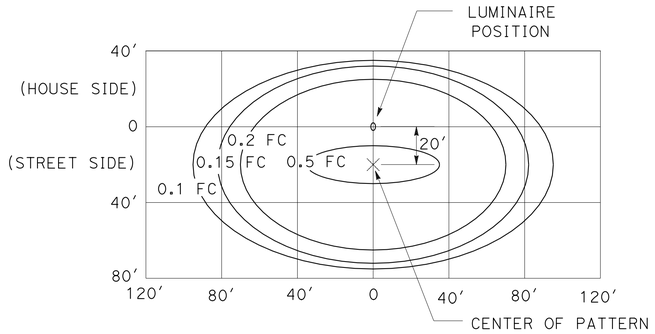


### LED LUMINAIRE ROADWAY 1

200-W HPS Equivalent at 34′ Mounting Height

## ISOFOOTCANDLE CURVE - MINIMUM

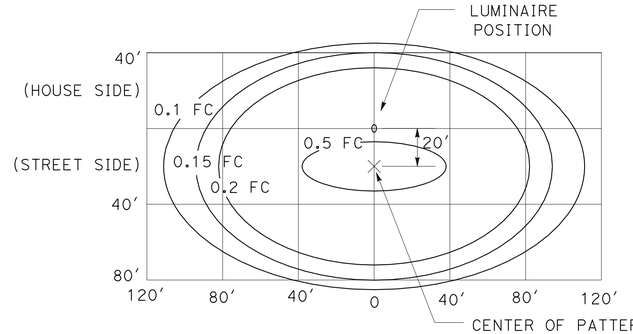


### LED LUMINAIRE ROADWAY 2

310-W HPS Equivalent at 40′ Mounting Height

## ISOFOOTCANDLE CURVE - MINIMUM

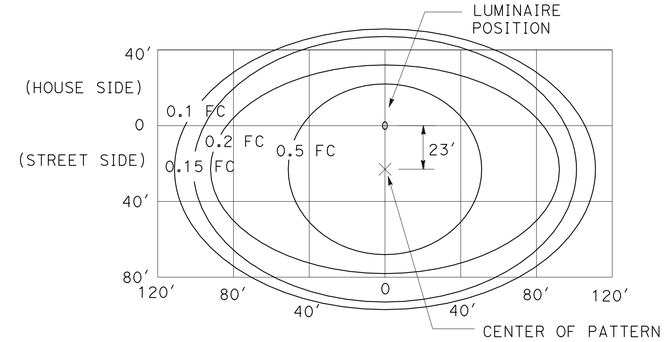


### LED LUMINAIRE ROADWAY 4

400-W HPS Equivalent at 40′ Mounting Height

## ISOFOOTCANDLE CURVE - MINIMUM

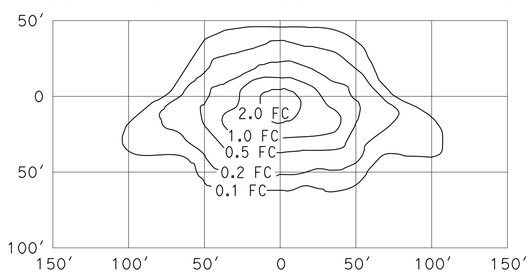


### TYPE III MEDIUM CUTOFF

Cutoff Luminaire
30′ Mounting Height
Lamp operated at 16,000 lm
150-W high pressure sodium lamp
ANSI Designation S55

## ISOFOOTCANDLE CURVE - MINIMUM

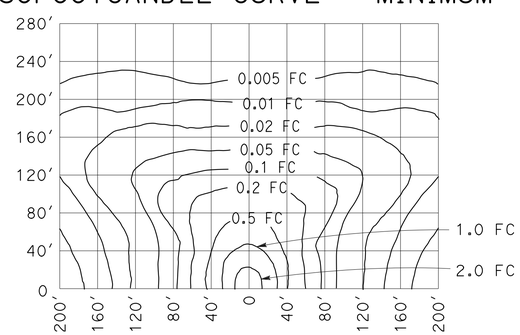


### LOW PRESSURE SODIUM LUMINAIRE

40′ Mounting Height
Lamp operated at 33,000 lm
180-W low pressure sodium lamp

STATE OF CALIFORNIA
DEPARTMENT OF TRANSPORTATION

# ELECTRICAL SYSTEMS (ISOFOOTCANDLE DIAGRAMS)

NO SCALE

RSP ES-10A DATED JULY 20, 2012 SUPPLEMENTS THE STANDARD PLANS BOOK DATED 2010.

**REVISED STANDARD PLAN RSP ES-10A**

**2010 REVISED STANDARD PLAN RSP ES-10A**

2-16-12

| Dist | COUNTY | ROUTE | POST MILES TOTAL PROJECT | SHEET No. | TOTAL SHEETS |
|---|---|---|---|---|---|
| 12 | Ora | 5 | 6.2/8.7 | 449 | 595 |

REGISTERED ELECTRICAL ENGINEER

July 20, 2012
PLANS APPROVAL DATE

REGISTERED PROFESSIONAL ENGINEER
Jeffery G. McRae
No. E14512
Exp. 6-30-14
ELECTRICAL
STATE OF CALIFORNIA

*THE STATE OF CALIFORNIA OR ITS OFFICERS OR AGENTS SHALL NOT BE RESPONSIBLE FOR THE ACCURACY OR COMPLETENESS OF SCANNED COPIES OF THIS PLAN SHEET.*

TO ACCOMPANY PLANS DATED 4-29-13

## ISOFOOTCANDLE CURVE - MINIMUM

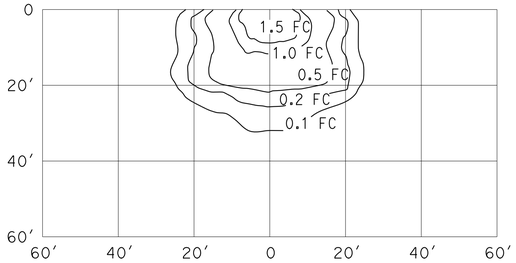


WALL LUMINAIRE
15′ Mounting Height
Lamp operated at 5,800 lm
70-W high pressure sodium lamp
ANSI Designation S62

## ISOFOOTCANDLE CURVE - MINIMUM

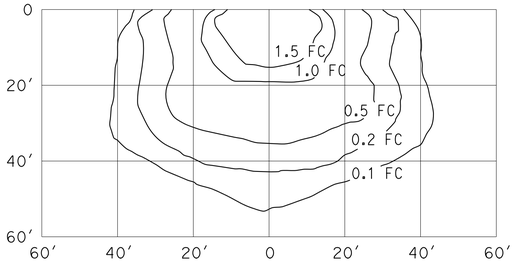


WALL LUMINAIRE
15′ Mounting Height
Lamp operated at 9,500 lm
100-W high pressure sodium lamp
ANSI Designation S54

## ISOFOOTCANDLE CURVE - MINIMUM

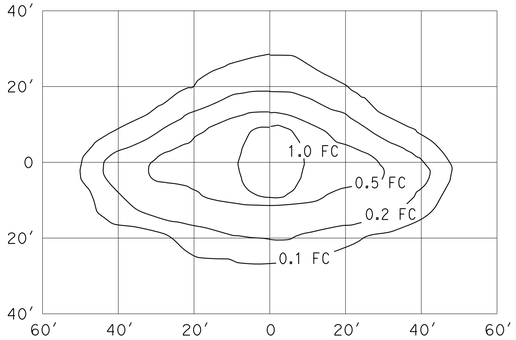


PENDANT SOFFIT LUMINAIRE
TYPE III SHORT
17′ Mounting Height
Lamp operated at 5,800 lm
70-W high pressure sodium lamp
ANSI Designation S62

## ISOFOOTCANDLE CURVE - MINIMUM

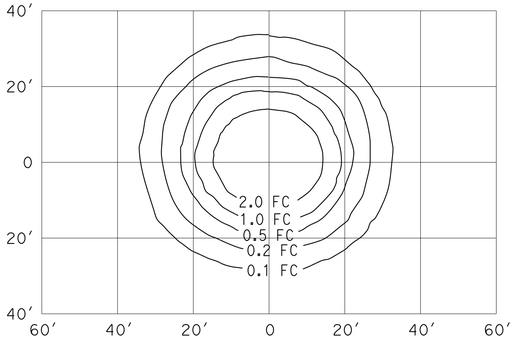


PENDANT SOFFIT LUMINAIRE
17′ Mounting Height
Lamp operated at 5,800 lm
70-W high pressure sodium lamp
ANSI Designation S62

## ISOFOOTCANDLE CURVE - MINIMUM

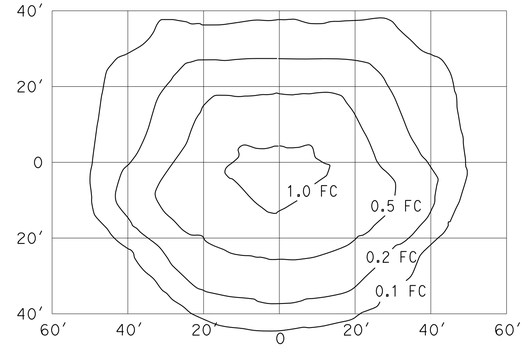


FLUSH SOFFIT LUMINAIRE
17′ Mounting Height
Lamp operated at 5,800 lm
70-W high pressure sodium lamp
ANSI Designation S62

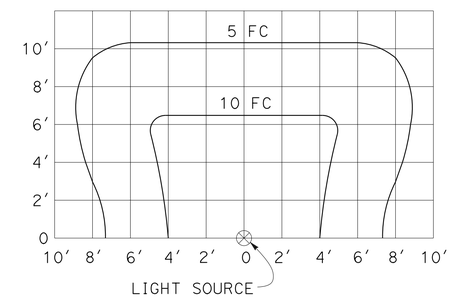


SIGN LIGHTING FIXTURE
ISOFOOTCANDLE DIAGRAM

NOTES:

1. Curves represent the minimum footcandle (FC) of initial illumination on a 10′-0" x 20′-0" panel.
2. The FC shown are with the fixture attached to the light fixture mounting channel which places the center of the source 4′-8" in front of panel and 1′-0" below the bottom edge.
3. Applicable lamp: 85-W fluorescent phosphor coated induction lamp.

STATE OF CALIFORNIA
DEPARTMENT OF TRANSPORTATION

# ELECTRICAL SYSTEMS (ISOFOOTCANDLE DIAGRAMS)

NO SCALE

RSP ES-10B DATED JULY 20, 2012 SUPPLEMENTS THE STANDARD PLANS BOOK DATED 2010.

**REVISED STANDARD PLAN RSP ES-10B**

2010 REVISED STANDARD PLAN RSP ES-10B

| DIST | COUNTY | ROUTE | POST MILES TOTAL PROJECT | SHEET No | TOTAL SHEETS |
|---|---|---|---|---|---|
| 12 | Ora | 5 | 6.2/8.7 | 450 | 595 |

REGISTERED CIVIL ENGINEER 11/12/12 DATE

4-29-13
PLANS APPROVAL DATE

REGISTERED PROFESSIONAL ENGINEER Sam Xie No. C51942 Exp. 6/30/2014 CIVIL STATE OF CALIFORNIA

*The State of California or its officers or agents shall not be responsible for the accuracy or completeness of electronic copies of this plan sheet.*

JACOBS
3161 MICHELSON, STE 500
IRVINE, CA 92612

ORANGE COUNTY TRANSPORTATION AUTHORITY
550 S. MAIN STREET
ORANGE, CA 92863-1584

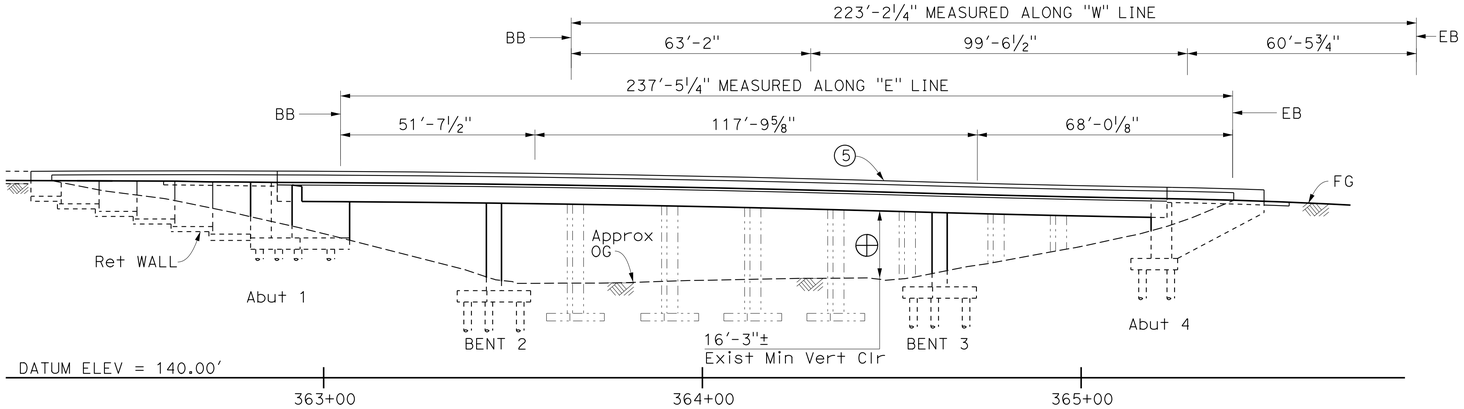


## DEVELOPED ELEVATION

1" = 20'

## CURVE DATA:

| CURVE NO. | R | Δ | T | L |
|---|---|---|---|---|
| 1 | 2500.00'± | 13°19'10"± | 291.90'± | 581.17'± |
| 2 | 800.00'± | 52°57'25"± | 398.49'± | 739.42'± |
| 3 | 2490.00'± | 06°53'53"± | 150.07'± | 299.78'± |
| 4 | 2409.00' | 07°04'23" | 148.88' | 297.39' |
| 5 | 2478.00' | 06°53'42" | 149.28' | 298.21' |
| 6 | 2563.00' | 13°20'30" | 299.76' | 596.81' |
| 7 | 1600.00' | 12°50'17" | 180.00' | 358.50' |

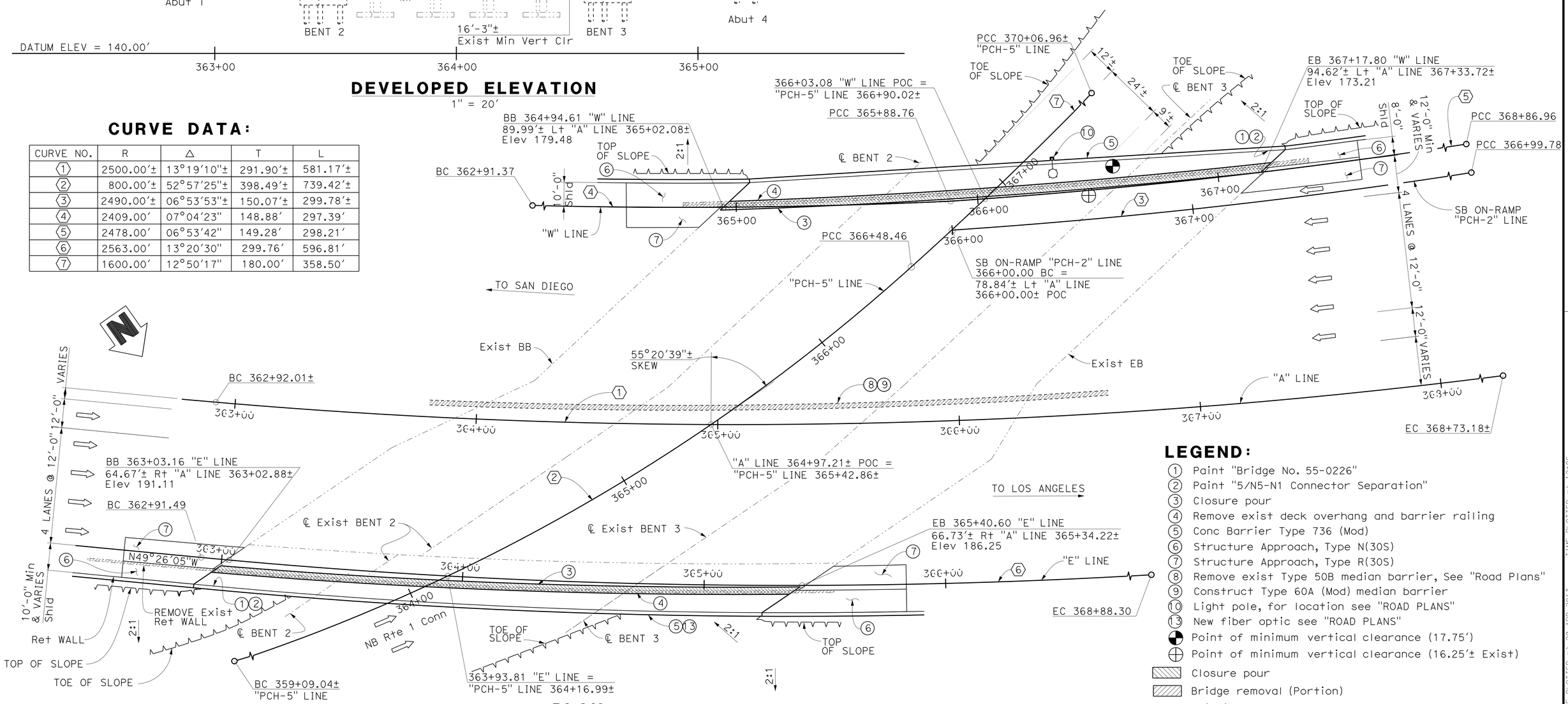


## PLAN

1" = 20'

## LEGEND:

1. Paint "Bridge No. 55-0226"
2. Paint "5/N5-N1 Connector Separation"
3. Closure pour
4. Remove exist deck overhang and barrier railing
5. Conc Barrier Type 736 (Mod)
6. Structure Approach, Type N(30S)
7. Structure Approach, Type R(30S)
8. Remove exist Type 50B median barrier, See "Road Plans"
9. Construct Type 60A (Mod) median barrier
10. Light pole, for location see "ROAD PLANS"
13. New fiber optic see "ROAD PLANS"

Point of minimum vertical clearance (17.75')
Point of minimum vertical clearance (16.25'± Exist)
Closure pour
Bridge removal (Portion)
Existing structure
New Structure

NOTE:
THE CONTRACTOR SHALL VERIFY ALL CONTROLLING FIELD DIMENSIONS BEFORE ORDERING OR FABRICATING ANY MATERIAL.

Luqi Yang
DESIGN OVERSIGHT Luqi Yang
1-16-13
SIGN OFF DATE

| | BY | CHECKED |
|---|---|---|
| DESIGN | J. Lee/ S. Xie | S. Nagi |
| DETAILS | I. Karkoutli | S. Nagi |
| QUANTITIES | M. Metcalf | B. Bailey |

LOAD & RESISTANCE FACTOR DESIGN — LIVE LOADING: HL93 W/"LOW-BOY"; PERMIT DESIGN VEHICLE
LAYOUT: I. Karkoutli — CHECKED: A. Moubayed
SPECIFICATIONS: S. xie — PLANS AND SPECS COMPARED: S. xie

PREPARED FOR THE STATE OF CALIFORNIA DEPARTMENT OF TRANSPORTATION

Alaedin Moubayed
PROJECT ENGINEER

BRIDGE NO. 55-0226
POST MILES 6.70

# 5/N5-N1 CONN SEPARATION (WIDEN)
# GENERAL PLAN No. 1

DESIGN GENERAL PLAN SHEET (ENGLISH) (REV.7/16/10)

ORIGINAL SCALE IN INCHES FOR REDUCED PLANS 0 1 2 3

UNIT: 2998
PROJECT NUMBER & PHASE: 12000202791
CONTRACT NO.: 12-0F96E4

DISREGARD PRINTS BEARING EARLIER REVISION DATES
REVISION DATES 4/23/12 8/13/12 11/12/12
SHEET 1 OF 38

FILE => 55-0226-a-gp01.dgn

USERNAME => s124496 DATE PLOTTED => 29-APR-2013 TIME PLOTTED => 12:06

| DIST | COUNTY | ROUTE | POST MILES TOTAL PROJECT | SHEET No | TOTAL SHEETS |
|---|---|---|---|---|---|
| 12 | Ora | 5 | 6.2/8.7 | 451 | 595 |

REGISTERED CIVIL ENGINEER 11/12/12 DATE

4-29-13
PLANS APPROVAL DATE

REGISTERED PROFESSIONAL ENGINEER Sam Xie No. C51942 Exp. 6/30/2014 CIVIL STATE OF CALIFORNIA

*The State of California or its officers or agents shall not be responsible for the accuracy or completeness of electronic copies of this plan sheet.*

JACOBS
3161 MICHELSON, STE 500
IRVINE, CA 92612

ORANGE COUNTY TRANSPORTATION AUTHORITY
550 S. MAIN STREET
ORANGE, CA 92863-1584

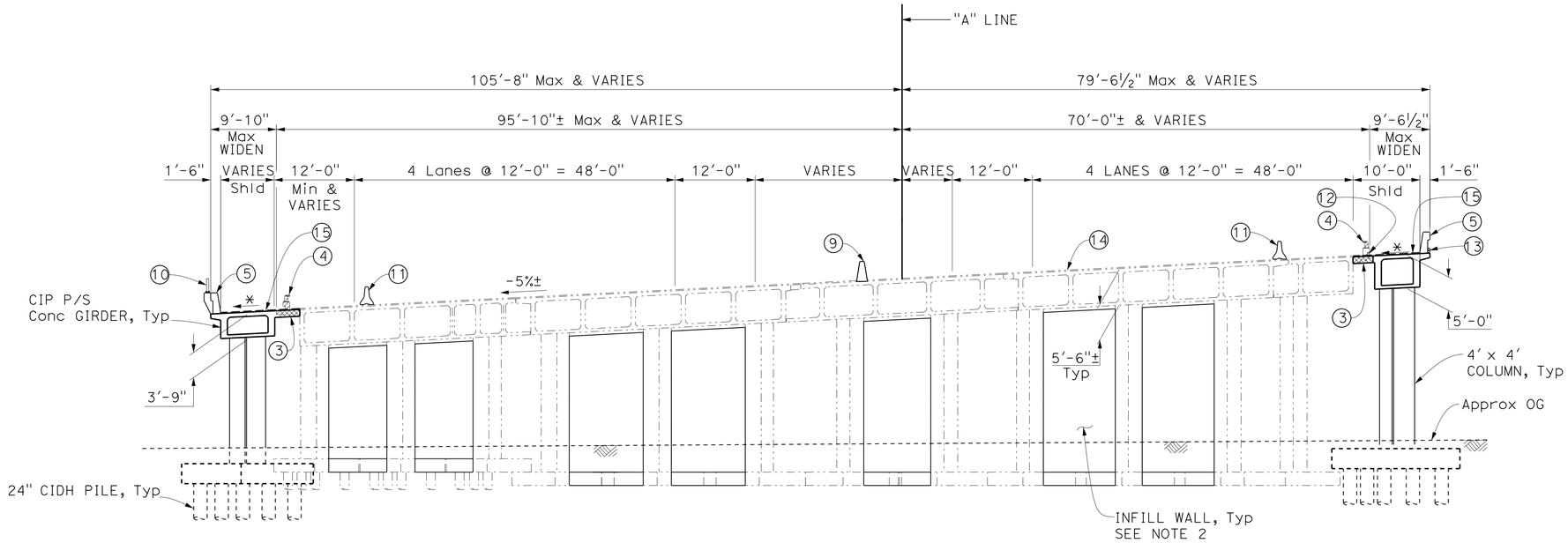


**(SB WIDENING)** **(NB WIDENING)**

## TYPICAL SECTION (BENT 2 SHOWN, BENT 3 SIMILAR)

1" = 10'

## NOTES:

1. For exist Abut retrofit, see "ABUTMENT RETROFIT DETAILS" sheets.
2. For exist bents retrofit, see "INFILL WALL LAYOUT" & "INFILL WALL DETAILS" sheets.

## LEGEND:

- (3) Closure pour
- (4) Remove exist deck overhang and barrier railing
- (5) Conc Barrier Type 736 (Mod)
- (9) Construct Type 60A (Mod) median barrier
- (10) Light pole, for location see "ROAD PLANS"
- (11) Temporary Railing, Type K, see "ROAD PLANS"
- (12) Remove Exist fiber optic line, see "ROAD PLANS"
- (13) New fiber optic lines, see "ROAD PLANS"
- (14) Exist HMA overlay
- (15) New HMA overlay
- Closure pour
- Bridge removal (Portion)
- Existing Structure
- New Structure
- * Match exist cross slope & grade

5/N5-N1 CONNECTOR SEPARATION (WIDEN) BRIDGE NO 55-0226

QUANTITIES

| | | |
|---|---|---|
| REMOVE RETAINING WALL (LS) | LUMP | SUM |
| BRIDGE REMOVAL (PORTION), LOCATION A | LUMP | SUM |
| STRUCTURE EXCAVATION (BRIDGE) | 1,681 | CY |
| STRUCTURE EXCAVATION (RETAINING WALL) | 202 | CY |
| STRUCTURE BACKFILL (BRIDGE) | 1,329 | CY |
| STRUCTURE BACKFILL (RETAINING WALL) | 160 | CY |
| RUBBERIZED HOT MIX ASPHALT (OPEN GRADED) | 94 | TON |
| TACK COAT | 0.2 | TON |
| 24" CAST-IN-DRILLED-HOLE CONCRETE PILING | 2,761 | LF |
| PRESTRESSING CAST-IN-PLACE CONCRETE | LUMP | SUM |
| STRUCTURAL CONCRETE, BRIDGE FOOTING | 261 | CY |
| STRUCTURAL CONCRETE, BRIDGE | 969 | CY |
| STRUCTURAL CONCRETE, RETAINING WALL | 51 | CY |
| STRUCTURAL CONCRETE, APPROACH SLAB(TYPE N) | 53 | CY |
| STRUCTURAL CONCRETE, APPROACH SLAB(TYPE R) | 55 | CY |
| DRILL AND BOND DOWEL | 970 | LF |
| DRILL AND BOND DOWEL (CHEMICAL ADHESIVE) | 168 | EA |
| JOINT SEAL (MR 2") | 73 | LF |
| BAR REINFORCING STEEL (BRIDGE) | 300,322 | LB |
| BAR REINFORCING STEEL (RETAINING WALL) | 5,499 | LB |
| HEADED BAR REINFORCEMENT | 742 | EA |
| CONCRETE BARRIER (TYPE 60A MODIFIED) | 221 | LF |
| CONCRETE BARRIER (TYPE 736A MODIFIED) | 119 | LF |
| CONCRETE BARRIER (TYPE 736 MODIFIED) | 461 | LF |

NOTE:
THE CONTRACTOR SHALL VERIFY ALL CONTROLLING FIELD DIMENSIONS BEFORE ORDERING OR FABRICATING ANY MATERIAL.

Luqi Yang
DESIGN OVERSIGHT Luqi Yang
1-16-13
SIGN OFF DATE

| | BY | CHECKED | | | |
|---|---|---|---|---|---|
| DESIGN | J. Lee/ S. Xie | S. Nagi | LOAD & RESISTANCE FACTOR DESIGN | LIVE LOADING: HL93 W/"LOW-BOY"; PERMIT DESIGN VEHICLE | |
| DETAILS | I. Karkoutli | S. Nagi | LAYOUT | I. Karkoutli | A. Moubayed |
| QUANTITIES | M. Metcalf | B. Bailey | SPECIFICATIONS | S. xie | S. xie |

PREPARED FOR THE STATE OF CALIFORNIA DEPARTMENT OF TRANSPORTATION

Alaedin Moubayed
PROJECT ENGINEER

BRIDGE NO. 55-0226
POST MILES 6.70

# 5/N5-N1 CONN SEPARATION (WIDEN)
# GENERAL PLAN No. 2

DESIGN GENERAL PLAN SHEET (ENGLISH) (REV.7/16/10)

ORIGINAL SCALE IN INCHES FOR REDUCED PLANS 0 1 2 3

UNIT: 2998
PROJECT NUMBER & PHASE: 12000202791 CONTRACT NO.: 12-0F96E4

DISREGARD PRINTS BEARING EARLIER REVISION DATES

REVISION DATES 1/23/12 8/13/12 11/12/12

SHEET 2 OF 38

FILE => 55-0226-a-gp02.dgn

USERNAME => s124396 DATE PLOTTED => 29-APR-2013 TIME PLOTTED => 12:06

| DIST | COUNTY | ROUTE | POST MILES TOTAL PROJECT | SHEET No | TOTAL SHEETS |
|---|---|---|---|---|---|
| 12 | Ora | 5 | 6.2/8.7 | 452 | 595 |

REGISTERED CIVIL ENGINEER 11/12/12 DATE

4-29-13
PLANS APPROVAL DATE

REGISTERED PROFESSIONAL ENGINEER Sam Xie No. C51942 Exp. 6/30/2014 CIVIL STATE OF CALIFORNIA

*The State of California or its officers or agents shall not be responsible for the accuracy or completeness of electronic copies of this plan sheet.*

JACOBS
3161 MICHELSON, STE 500
IRVINE, CA 92612

ORANGE COUNTY
TRANSPORTATION AUTHORITY
550 S. MAIN STREET
ORANGE, CA 92863-1584

# GENERAL NOTES
## LOAD AND RESISTANCE FACTOR DESIGN

DESIGN:
AASHTO LRFD BRIDGE DESIGN SPECIFICATIONS, 4TH edition
with California Amendments preface dated November 2011.

SEISMIC DESIGN:
CALTRANS SEISMIC DESIGN CRITERIA (SDC),
Version 1.6 dated November 2010

DEAD LOAD:
Includes 35 psf for wearing surface.

LIVE LOAD:
HL-93 and permit design load

SEISMIC LOADING:
SOIL PROFILE: shear wave velocity $V_S30$ = 804 to 1430 feet/sec
for the top 100 feet of soil
Moment Magnitute: Mmax = 7.5
Peak Ground Acceleration 0.4g

ACCELERATION RESPONSE SPECTRUM (5% DAMPING)

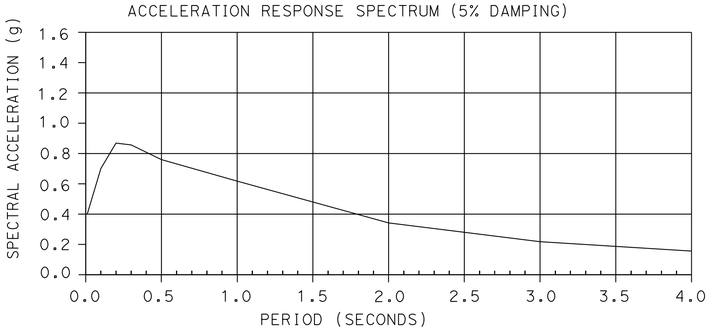


REINFORCED CONCRETE:
$f_y$ = 60 Ksi
$f'_c$ = See "CONCRETE STRENGTH AND TYPE LIMITS"

EXISTING REINFORCED CONCRETE:
$f_y$ = 40 Ksi, $f_{ye}$ = 44 Ksi (Assumed for seismic retrofit)
$f'_c$ = 3.0 Ksi, $f'_{ce}$ = 5.0 Ksi (Assumed for seismic retrofit)

PRESTRESSED CONCRETE:
For "PRESTRESSING NOTES", see GIRDER LAYOUT sheets

## INDEX TO PLANS


| SHEET NO. | TITLE |
|---|---|
| 1 | GENERAL PLAN No. 1 |
| 2 | GENERAL PLAN No. 2 |
| 3 | INDEX TO PLANS |
| 4 | BRIDGE REMOVAL DETAILS No. 1 |
| 5 | BRIDGE REMOVAL DETAILS No. 2 |
| 6 | FOUNDATION PLAN |
| 7 | ABUTMENT 1 LAYOUT |
| 8 | ABUTMENT 4 LAYOUT |
| 9 | ABUTMENT FOOTING AND PILE LAYOUT |
| 10 | ABUTMENT FOOTING REINFORCEMENT |
| 11 | ABUTMENT DETAILS No. 1 |
| 12 | ABUTMENT DETAILS No. 2 |
| 13 | ABUTMENT DETAILS No. 3 |
| 14 | ABUTMENT RETROFIT DETAILS No. 1 |
| 15 | ABUTMENT RETROFIT DETAILS No. 2 |
| 16 | RETAINING WALL DETAILS |
| 17 | BENT LAYOUT No. 1 |
| 18 | BENT LAYOUT No. 2 |
| 19 | BENT DETAILS No. 1 |
| 20 | BENT DETAILS No. 2 |
| 21 | BENT DETAILS No. 3 |
| 22 | INFILL WALL LAYOUT |
| 23 | INFILL WALL DETAILS |
| 24 | TYPICAL SECTION No. 1 |
| 25 | TYPICAL SECTION No. 2 |
| 26 | GIRDER LAYOUT No. 1 |
| 27 | GIRDER LAYOUT No. 2 |
| 28 | DECK CORNER DETAILS |
| 29 | ADDITIONAL DECK REINFORCEMENT |
| 30 | STRUCTURE APPROACH TYPE N(30S) |
| 31 | STRUCTURE APPROACH TYPE R(30S) |
| 32 | STRUCTURE APPROACH DRAINAGE DETAILS |
| 33 | LOG OF TEST BORINGS 1 OF 6 |
| 34 | LOG OF TEST BORINGS 2 OF 6 |
| 35 | LOG OF TEST BORINGS 3 OF 6 |
| 36 | LOG OF TEST BORINGS 4 OF 6 |
| 37 | LOG OF TEST BORINGS 5 OF 6 |
| 38 | LOG OF TEST BORINGS 6 OF 6 |


## STANDARD PLANS DATED 2010

| | |
|---|---|
| A10A | ABBREVIATIONS (SHEET 1 OF 2) |
| A10B | ABBREVIATIONS (SHEET 2 OF 2) |
| A10C | LINES AND SYMBOLS (SHEET 1 OF 3) |
| A10D | LINES AND SYMBOLS (SHEET 2 OF 3) |
| A10E | LINES AND SYMBOLS (SHEET 3 OF 3) |
| A10F | LEGEND - SOIL (SHEET 1 OF 2) |
| A10G | LEGEND - SOIL (SHEET 2 OF 2) |
| A62B | LIMITS OF PAYMENT FOR EXCAVATION AND BACKFILL - BRIDGE SURCHARGE AND WALL |
| A62C | LIMITS OF PAYMENT FOR EXCAVATION AND BACKFILL - BRIDGE |
| A76A | CONCRETE BARRIER TYPE 60 |
| T3A | TEMPORARY RAILING (TYPE K) |
| T3B | TEMPORARY RAILING (TYPE K) |
| B0-1 | BRIDGE DETAILS |
| B0-3 | BRIDGE DETAILS |
| B0-5 | BRIDGE DETAILS |
| B0-13 | BRIDGE DETAILS |
| B2-3 | 16" AND 24" CAST-IN-DRILLED-HOLE CONCRETE PILE |
| RSP B3-1A | RETAINING WALL TYPE 1 (CASE 1) |
| RSP B3-5 | RETAINING WALL DETAILS NO. 1 |
| B6-21 | JOINT SEALS (MAXIMUM MOVEMENT RATING = 2") |
| B7-1 | BOX GIRDER DETAILS |
| B8-5 | CAST-IN-PLACE PRESTRESSED GIRDER DETAILS |
| B11-56 | CONCRETE BARRIER TYPE 736 |

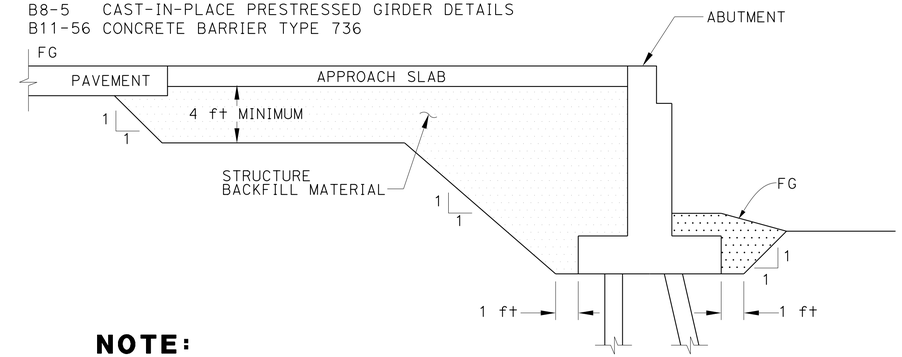


## NOTE:

Transverse limit of backfill material shall be
1'-0" from edges of abutment footing

## LIMITS OF PAYMENT FOR STRUCTURAL EXCAVATION AND BACKFILL IN BRIDGE EMBANKMENT

NO SCALE

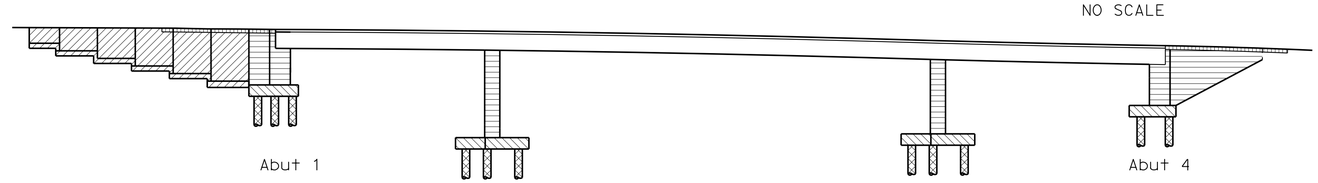


Structural Concrete, Bridge, (f'c = 5.0 Ksi @ 28 days)

Structural Concrete, Bridge, (f'c = 4.0 Ksi @ 28 days) (Including infill wall)

Structural Concrete, CIDH Concrete Piling (f'c = 4.0 Ksi @ 28 days)

Structural Concrete, Bridge Footing (f'c = 4.0 Ksi @ 28 days)

Structural Concrete, Approach Slab

Structural Concrete, Retaining Wall

## CONCRETE STRENGTH AND TYPE LIMITS

NO SCALE

## PLAN SYMBOLS

STANDARD PLAN SHEET No.

DETAIL No.

SECTION IDENTIFICATION

NOTE:
THE CONTRACTOR SHALL VERIFY ALL CONTROLLING FIELD DIMENSIONS BEFORE ORDERING OR FABRICATING ANY MATERIAL.

Luqi Yang
DESIGN OVERSIGHT Luqi Yang
1-16-13
SIGN OFF DATE

| | BY | CHECKED |
|---|---|---|
| DESIGN | J. Lee/ S. Xie | S. Nagi |
| DETAILS | I. Karkoutli | S. Nagi |
| QUANTITIES | M. Metcalf | S. Xie |

PREPARED FOR THE STATE OF CALIFORNIA DEPARTMENT OF TRANSPORTATION

Alaedin Moubayed
PROJECT ENGINEER

BRIDGE NO. 55-0226
POST MILES 6.70

5/N5-N1 CONN SEPARATION (WIDEN)

INDEX TO PLANS

DESIGN DETAIL SHEET (ENGLISH) (REV.7/16/10)

ORIGINAL SCALE IN INCHES FOR REDUCED PLANS 0 1 2 3

UNIT: 2998
PROJECT NUMBER & PHASE: 12000202791 CONTRACT NO.: 12-0F96E4

DISREGARD PRINTS BEARING EARLIER REVISION DATES

REVISION DATES 4/23/12 8/13/12 11/12/12

SHEET 3 OF 38

FILE => 55-0226-a-itp.dgn

USERNAME => s124936 DATE PLOTTED => 23-APR-2013 TIME PLOTTED => 12:06

| DIST | COUNTY | ROUTE | POST MILES TOTAL PROJECT | SHEET No | TOTAL SHEETS |
|---|---|---|---|---|---|
| 12 | Ora | 5 | 6.2/8.7 | 453 | 595 |

REGISTERED CIVIL ENGINEER 11/12/12 DATE

4-29-13
PLANS APPROVAL DATE

REGISTERED PROFESSIONAL ENGINEER Sam Xie No. C51942 Exp. 6/30/2014 CIVIL STATE OF CALIFORNIA

*The State of California or its officers or agents shall not be responsible for the accuracy or completeness of electronic copies of this plan sheet.*

JACOBS
3161 MICHELSON, STE 500
IRVINE, CA 92612

ORANGE COUNTY
TRANSPORTATION AUTHORITY
550 S. MAIN STREET
ORANGE, CA 92863-1584

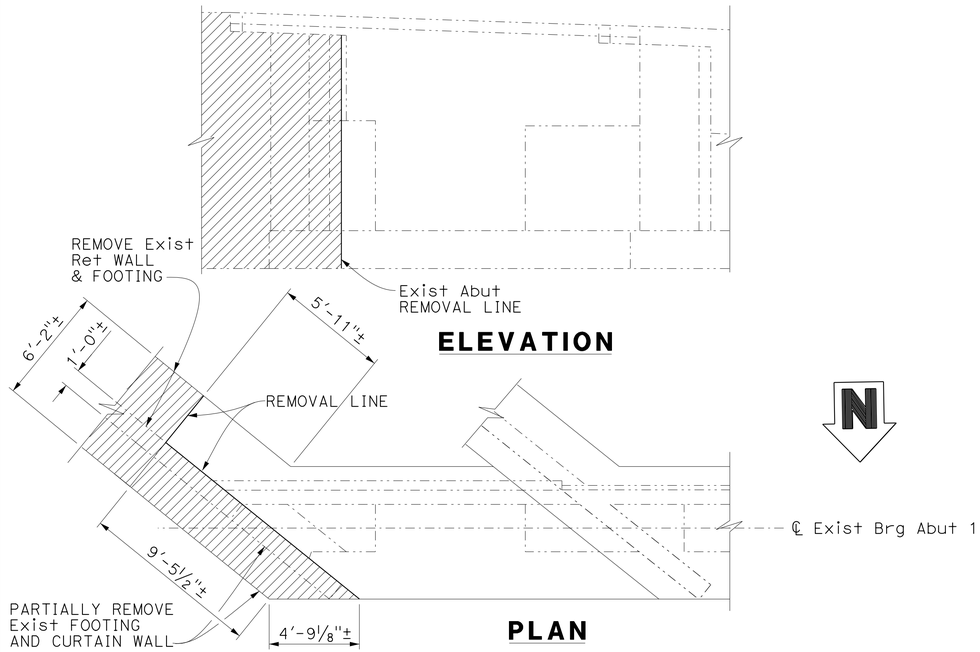


ELEVATION

PLAN

## ABUTMENT 1 REMOVAL (NB)

NO SCALE

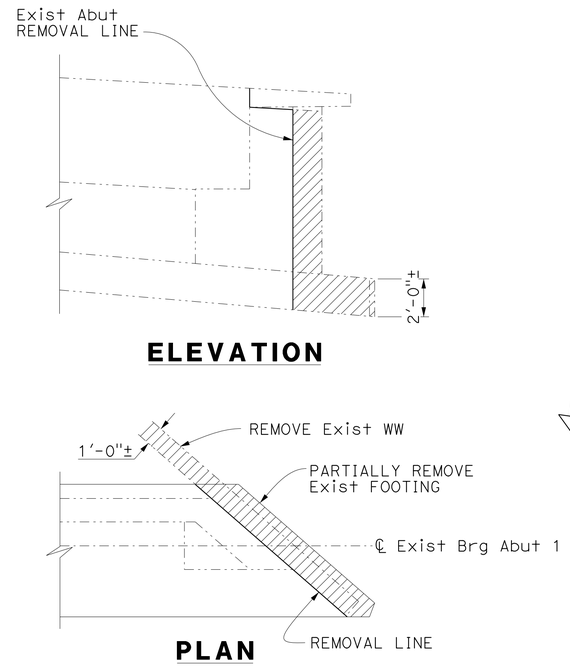


ELEVATION

PLAN

## ABUTMENT 1 REMOVAL SB

NO SCALE

## NOTES:

1. Limit of overhang removal is from BB to EB.
2. Limit of barrier removal is between ends of WW.
3. For Exist RW and Abut 1 (NB) removal plan, see "RETAINING WALL DETAILS" sheet.

## LEGEND:

- Bridge removal (Portion)
- Retaining wall removal
- Existing Structure

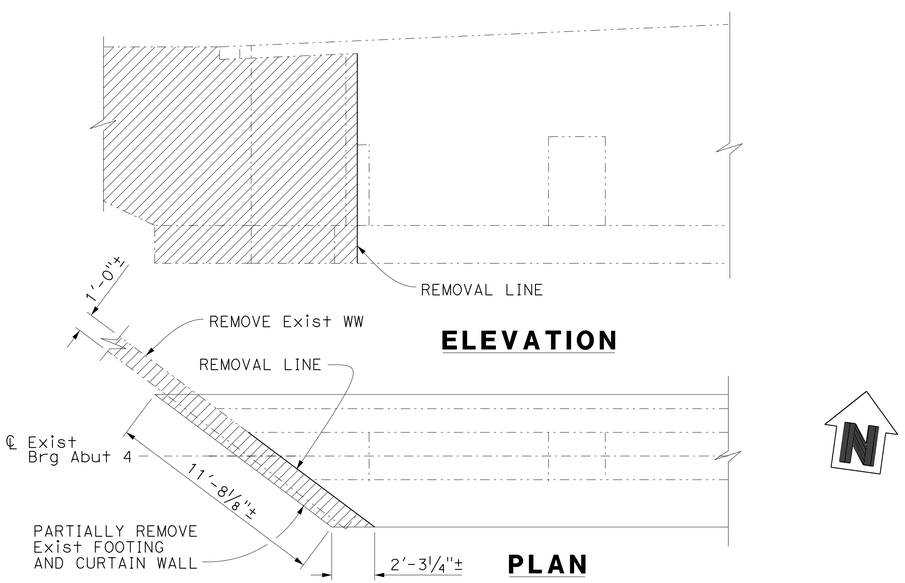


ELEVATION

PLAN

## ABUTMENT 4 REMOVAL (SB)

NO SCALE

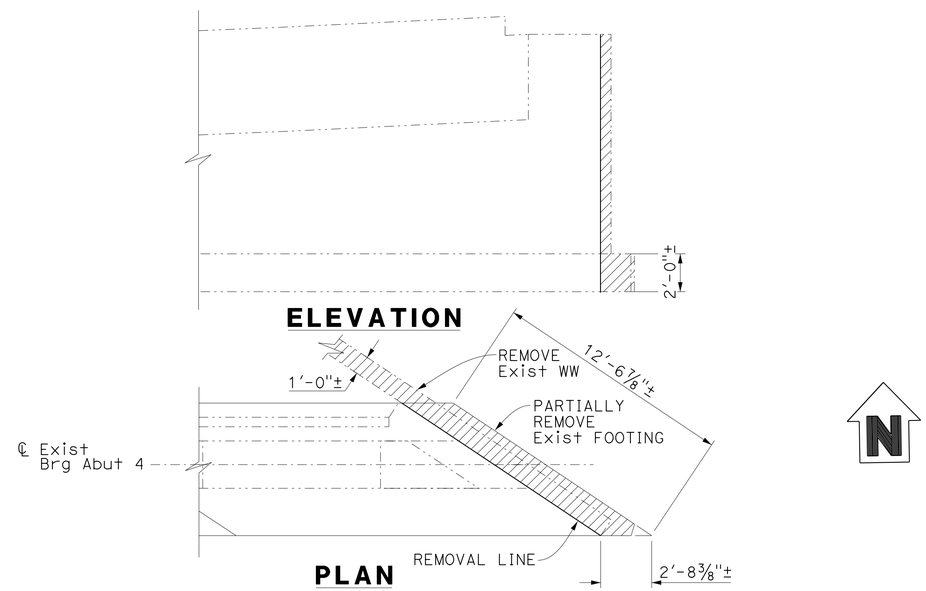


ELEVATION

PLAN

## ABUTMENT 4 REMOVAL (NB)

NO SCALE

NOTE:
THE CONTRACTOR SHALL VERIFY ALL CONTROLLING FIELD DIMENSIONS BEFORE ORDERING OR FABRICATING ANY MATERIAL.

Luqi Yang
DESIGN OVERSIGHT Luqi Yang
1-16-13
SIGN OFF DATE

| | BY | CHECKED |
|---|---|---|
| DESIGN | J. Lee/ S. Xie | S. Nagi |
| DETAILS | I. Karkoutli | S. Nagi |
| QUANTITIES | M. Metcalf | S. Xie |

PREPARED FOR THE STATE OF CALIFORNIA DEPARTMENT OF TRANSPORTATION

Alaedin Moubayed
PROJECT ENGINEER

BRIDGE NO. 55-0226
POST MILES 6.70

# 5/N5-N1 CONN SEPARATION (WIDEN)

# BRIDGE REMOVAL DETAILS NO. 1

DESIGN DETAIL SHEET (ENGLISH) (REV.7/16/10)

ORIGINAL SCALE IN INCHES FOR REDUCED PLANS 0 1 2 3

UNIT: 2998
PROJECT NUMBER & PHASE: 12000202791 CONTRACT NO.: 12-0F96E4

DISREGARD PRINTS BEARING EARLIER REVISION DATES

REVISION DATES 4/23/12 8/13/12 11/12/12

SHEET 4 OF 38

FILE => 55-0226-c-BRP01.dgn

USERNAME => s124936 DATE PLOTTED => 29-APR-2013 TIME PLOTTED => 12:06

| DIST | COUNTY | ROUTE | POST MILES TOTAL PROJECT | SHEET No | TOTAL SHEETS |
|---|---|---|---|---|---|
| 12 | Org | 5 | 6.2/8.7 | 454 | 595 |

REGISTERED CIVIL ENGINEER 11/12/12 DATE

4-29-13
PLANS APPROVAL DATE

REGISTERED PROFESSIONAL ENGINEER Sam Xie No. C51942 Exp. 6/30/2014 CIVIL STATE OF CALIFORNIA

*The State of California or its officers or agents shall not be responsible for the accuracy or completeness of electronic copies of this plan sheet.*

JACOBS
3161 MICHELSON, STE 500
IRVINE, CA 92612

ORANGE COUNTY TRANSPORTATION AUTHORITY
550 S. MAIN STREET
ORANGE, CA 92863-1584

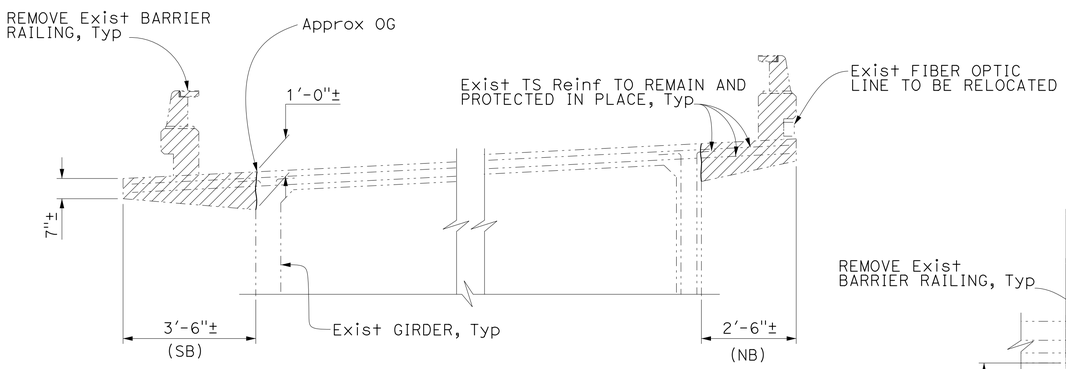


## OVERHANG REMOVAL DETAILS
NO SCALE

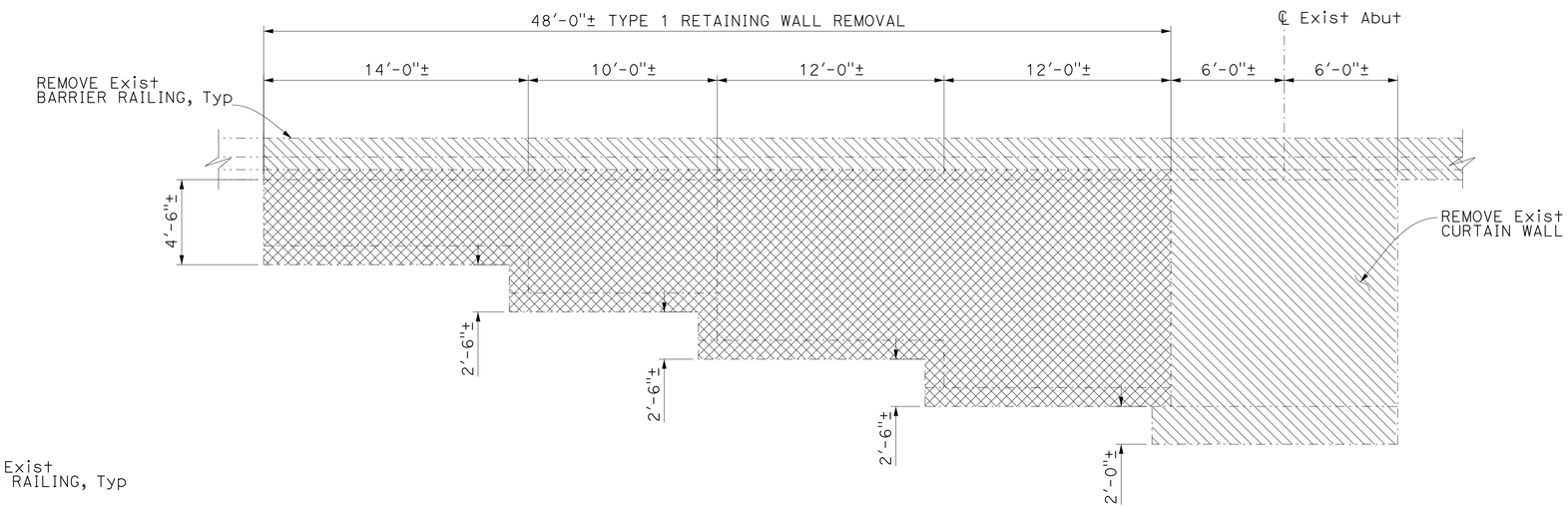


## ELEVATION ABUTMENT 1 RETAINING WALL (EXISTING)
NO SCALE

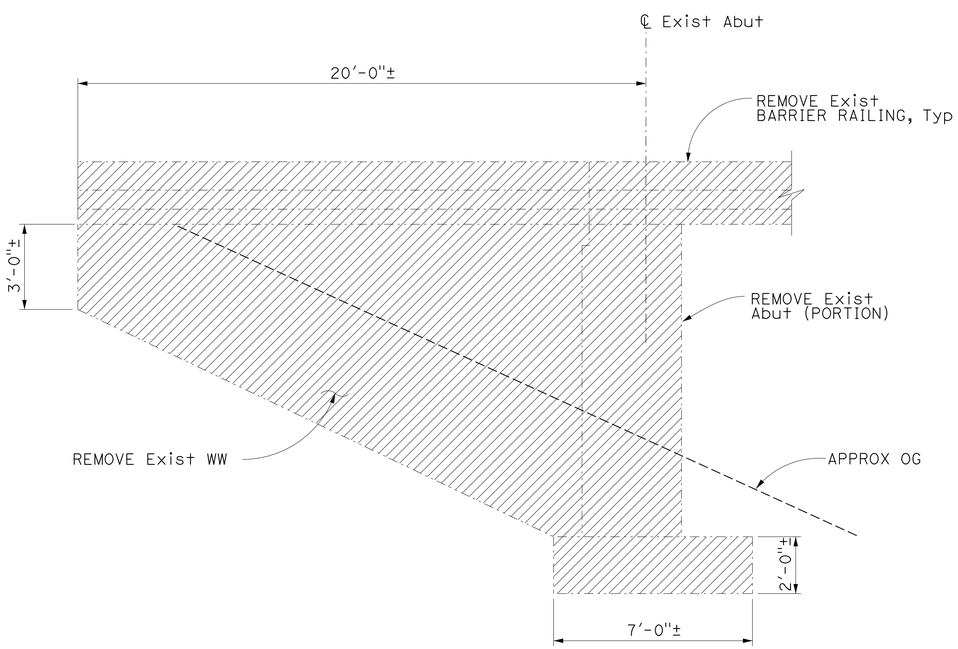


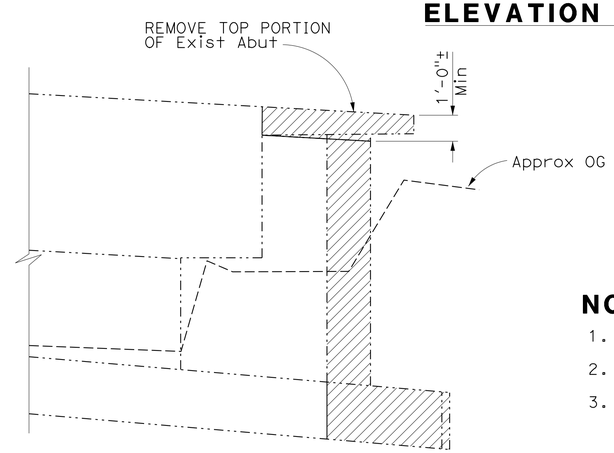


## ABUTMENT AND WINGWALL REMOVAL DETAILS
NO SCALE

## NOTES:

1. Limit of overhang removal is from BB to EB.
2. Limit of barrier removal is between ends of WW.
3. For Exist RW and Abut 1 (NB) removed plan, see "RETAINING WALL DETAILS" sheet.

## LEGEND:

- Bridge removal (Portion)
- Retaining wall removed
- Existing Structure

NOTE:
THE CONTRACTOR SHALL VERIFY ALL CONTROLLING FIELD DIMENSIONS BEFORE ORDERING OR FABRICATING ANY MATERIAL.

Luqi Yang
DESIGN OVERSIGHT Luqi Yang
1-16-13
SIGN OFF DATE

| | BY | CHECKED |
|---|---|---|
| DESIGN | J. Lee/ S. Xie | S. Nagi |
| DETAILS | I. Karkoutli | S. Nagi |
| QUANTITIES | M. Metcalf | S. Xie |

PREPARED FOR THE STATE OF CALIFORNIA DEPARTMENT OF TRANSPORTATION

Alaedin Moubayed
PROJECT ENGINEER

BRIDGE NO. 55-0226
POST MILES 6.70

# 5/N5-N1 CONN SEPARATION (WIDEN)
# BRIDGE REMOVAL DETAILS No. 2

DESIGN DETAIL SHEET (ENGLISH) (REV.7/16/10)

ORIGINAL SCALE IN INCHES FOR REDUCED PLANS 0 1 2 3

UNIT: 2998
PROJECT NUMBER & PHASE: 12000202791
CONTRACT NO.: 12-0F96E4

DISREGARD PRINTS BEARING EARLIER REVISION DATES

REVISION DATES: 4/23/12 8/13/12 11/12/12

SHEET 5 OF 38

FILE => 55-0226-c-BRP02.dgn

USERNAME => s124436 DATE PLOTTED => 29-APR-2013 TIME PLOTTED => 12:06

| DIST | COUNTY | ROUTE | POST MILES TOTAL PROJECT | SHEET No | TOTAL SHEETS |
|---|---|---|---|---|---|
| 12 | Org | 5 | 6.2/8.7 | 455 | 595 |

REGISTERED CIVIL ENGINEER 11/12/12 DATE

4-29-13
PLANS APPROVAL DATE

PROFESSIONAL ENGINEER Sam Xie No. C51942 Exp. 6/30/2014 CIVIL STATE OF CALIFORNIA

*The State of California or its officers or agents shall not be responsible for the accuracy or completeness of electronic copies of this plan sheet.*

JACOBS
3161 MICHELSON, STE 500
IRVINE, CA 92612

ORANGE COUNTY TRANSPORTATION AUTHORITY
550 S. MAIN STREET
ORANGE, CA 92863-1584

## PILE DATA TABLE (SB WIDENING)

| LOCATION | PILE TYPE | NOMINAL RESISTANCE | | DESIGN TIP ELEVATION (FT) | SPECIFIED TIP ELEVATION (FT) |
|---|---|---|---|---|---|
| | | COMPRESSION (Kips) | TENSION (Kips) | | |
| Abut 1 | 24" CIDH | 310 | 0 | +122(a)<br>+137(d) | +122 |
| BENT 2 | 24" CIDH | 340 | 200 | +98(a)<br>+102(b)<br>+126(c)<br>+120(d) | +98 |
| BENT 3 | 24" CIDH | 320 | 180 | +96(a)<br>+101(b)<br>+121(c)<br>+115(d) | +96 |
| Abut 4 | 24" CIDH | 270 | 0 | +119(a)<br>+131(d) | +119 |

NOTE: DESIGN TIP ELEVATION IS CONTROLLED BY THE FOLLOWING DEMANDS:
(a) COMPRESSION, (b) TENSION, (c) SETTLEMENT, (d) LATERAL LOADS

## BENCHMARK:

Description: 3¾" US Coast and Geodetic survey Bronzed Disk Stamped "F 785 1946", set in the top of a concrete bridge abutment. Monument is located in the Southwesterly corner of the Atchinso/Topeka and Santa Fe Railway overcrossing of San Mateo Creek.

Designation: F-785

## LEGEND:

- XXX.X — Bottom of footing elevation
- XXX.X± — Bottom of Exist footing elevation (adjusted for revised datum)
- Existing 16" dia CIDH Pile
- New 24" dia CIDH Pile
- Existing Structure
- New Structure

## NOTES:

1. For alignment geometry information, see "GENERAL PLAN No. 1" sheet.
2. Locations of existing structure foundations are approximate.
3. NB ℄ Abutments and ℄ Bents Bearings are N89°01′45"W.
4. SB ℄ Abutments and ℄ Bents Bearings are S82°08′15"W.

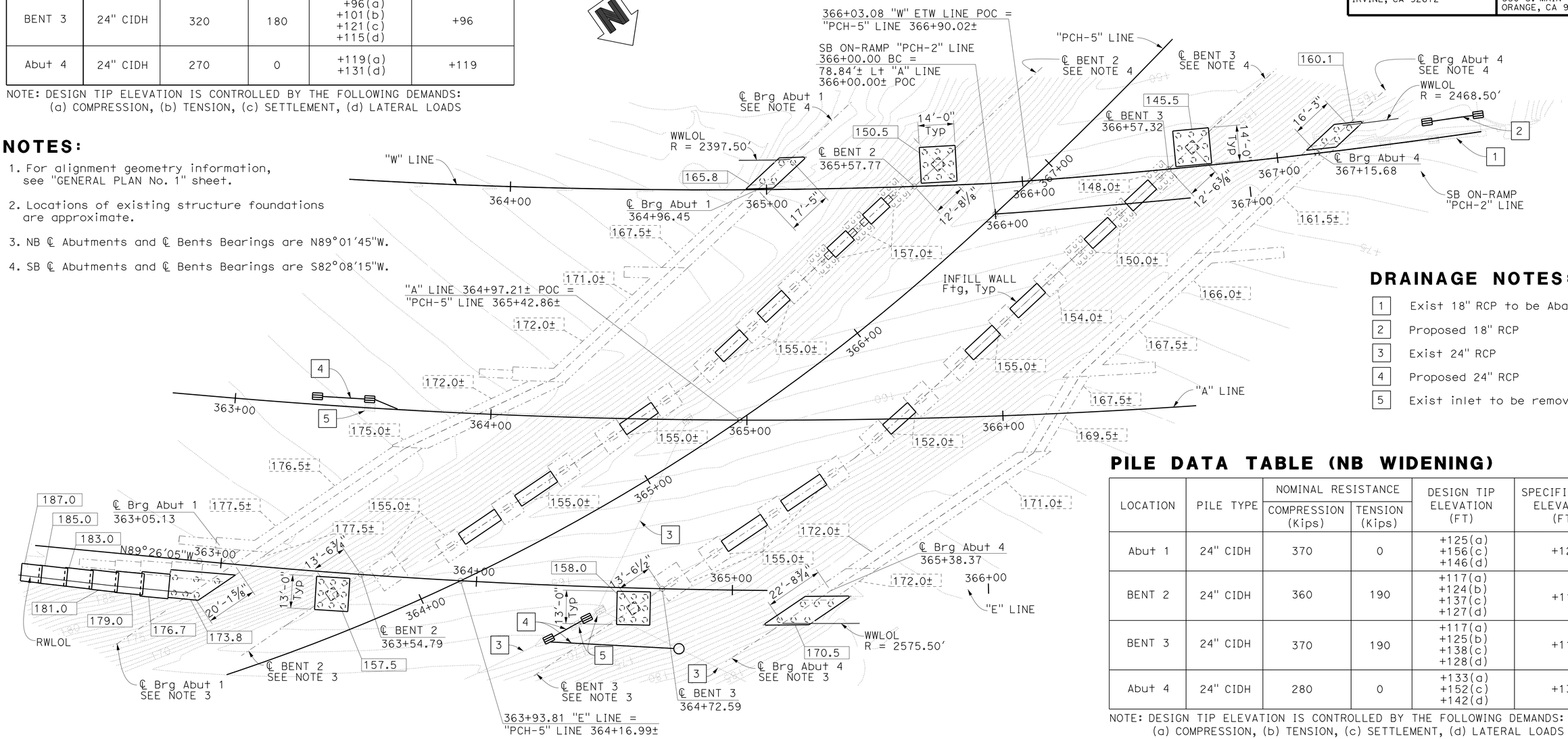


## PLAN
1" = 20′

## DRAINAGE NOTES:

1. Exist 18" RCP to be Abandoned
2. Proposed 18" RCP
3. Exist 24" RCP
4. Proposed 24" RCP
5. Exist inlet to be removed

## PILE DATA TABLE (NB WIDENING)

| LOCATION | PILE TYPE | NOMINAL RESISTANCE | | DESIGN TIP ELEVATION (FT) | SPECIFIED TIP ELEVATION (FT) |
|---|---|---|---|---|---|
| | | COMPRESSION (Kips) | TENSION (Kips) | | |
| Abut 1 | 24" CIDH | 370 | 0 | +125(a)<br>+156(c)<br>+146(d) | +125 |
| BENT 2 | 24" CIDH | 360 | 190 | +117(a)<br>+124(b)<br>+137(c)<br>+127(d) | +117 |
| BENT 3 | 24" CIDH | 370 | 190 | +117(a)<br>+125(b)<br>+138(c)<br>+128(d) | +117 |
| Abut 4 | 24" CIDH | 280 | 0 | +133(a)<br>+152(c)<br>+142(d) | +133 |

NOTE: DESIGN TIP ELEVATION IS CONTROLLED BY THE FOLLOWING DEMANDS:
(a) COMPRESSION, (b) TENSION, (c) SETTLEMENT, (d) LATERAL LOADS

## NOTE:

Bottom of existing footing elevations do not match as-built.
Difference between as-built elevation and elevation shown is 2.0′±.

NOTE:
THE CONTRACTOR SHALL VERIFY ALL CONTROLLING FIELD DIMENSIONS BEFORE ORDERING OR FABRICATING ANY MATERIAL.

L. Cheang 11/12/12
GEOTECHNICAL PROFESSIONAL APPROVAL DATE

Luqi Yang
DESIGN OVERSIGHT Luqi Yang
1-16-13
SIGN OFF DATE

| | | | | | |
|---|---|---|---|---|---|
| SCALE: As Shown | VERT.DATUM NAD83, 1991.35 Epoch | HORZ.DATUMNAVD88, O.C.S. 1995 Adj. | | | |
| PHOTOGRAMMETRY AS OF: Caltrans | ALIGNMENT TIES W. Estepa | | | | |
| SURVEYED | BY R. Gould | DRAFTED | BY I. Karkoutli | | |
| FIELD CHECKED | BY K. Launen | CHECKED | BY S. Xie | | |

| | BY | CHECKED |
|---|---|---|
| DESIGN | J. Lee/ Sam Xie | S. Nagi |
| DETAILS | I. Karkoutli | S. Nagi |
| QUANTITIES | M. Metcalf | B. Bailey |

PREPARED FOR THE STATE OF CALIFORNIA DEPARTMENT OF TRANSPORTATION

Alaedin Moubayed
PROJECT ENGINEER

BRIDGE NO. 55-0226
POST MILES 6.70

# 5/N5-N1 CONN SEPARATION (WIDEN)
# FOUNDATION PLAN

FOUNDATION PLAN SHEET (ENGLISH) (REV.7/16/10)

ORIGINAL SCALE IN INCHES FOR REDUCED PLANS 0 1 2 3

UNIT: 2998
PROJECT NUMBER & PHASE: 12000202791 CONTRACT NO.: 12-0F96E4

DISREGARD PRINTS BEARING EARLIER REVISION DATES 4/23/12 8/13/12 11/12/12

SHEET 6 OF 38

FILE => 55-0226-e-fdp101.dgn

USERNAME => s124496 DATE PLOTTED => 29-APR-2013 TIME PLOTTED => 12:06

| DIST | COUNTY | ROUTE | POST MILES TOTAL PROJECT | SHEET No | TOTAL SHEETS |
|---|---|---|---|---|---|
| 12 | Org | 5 | 6.2/8.7 | 456 | 595 |

REGISTERED CIVIL ENGINEER 11/12/12 DATE

4-29-13
PLANS APPROVAL DATE

REGISTERED PROFESSIONAL ENGINEER Sam Xie No. C51942 Exp. 6/30/2014 CIVIL STATE OF CALIFORNIA

*The State of California or its officers or agents shall not be responsible for the accuracy or completeness of electronic copies of this plan sheet.*

JACOBS
3161 MICHELSON, STE 500
IRVINE, CA 92612

ORANGE COUNTY TRANSPORTATION AUTHORITY
550 S. MAIN STREET
ORANGE, CA 92863-1584

## NOTES:

1. For footing and pile layouts, see "ABUTMENT FOOTING AND PILE LAYOUT" sheet.
2. For cut sections, see "ABUTMENT DETAILS" sheets.
3. For Exist RW and abutment (portion) removal, see "BRIDGE REMOVAL DETAILS" sheets and "RETAINING WALL DETAILS" sheets.
4. For Abut (portion) and WW removal, see "BRIDGE REMOVAL DETAILS" sheets.

## LEGEND:

⑥ Limits of Structure Approach, Type N(30S)
⑦ Limits of Structure Approach, Type R(30S)
Existing Structure
New Structure

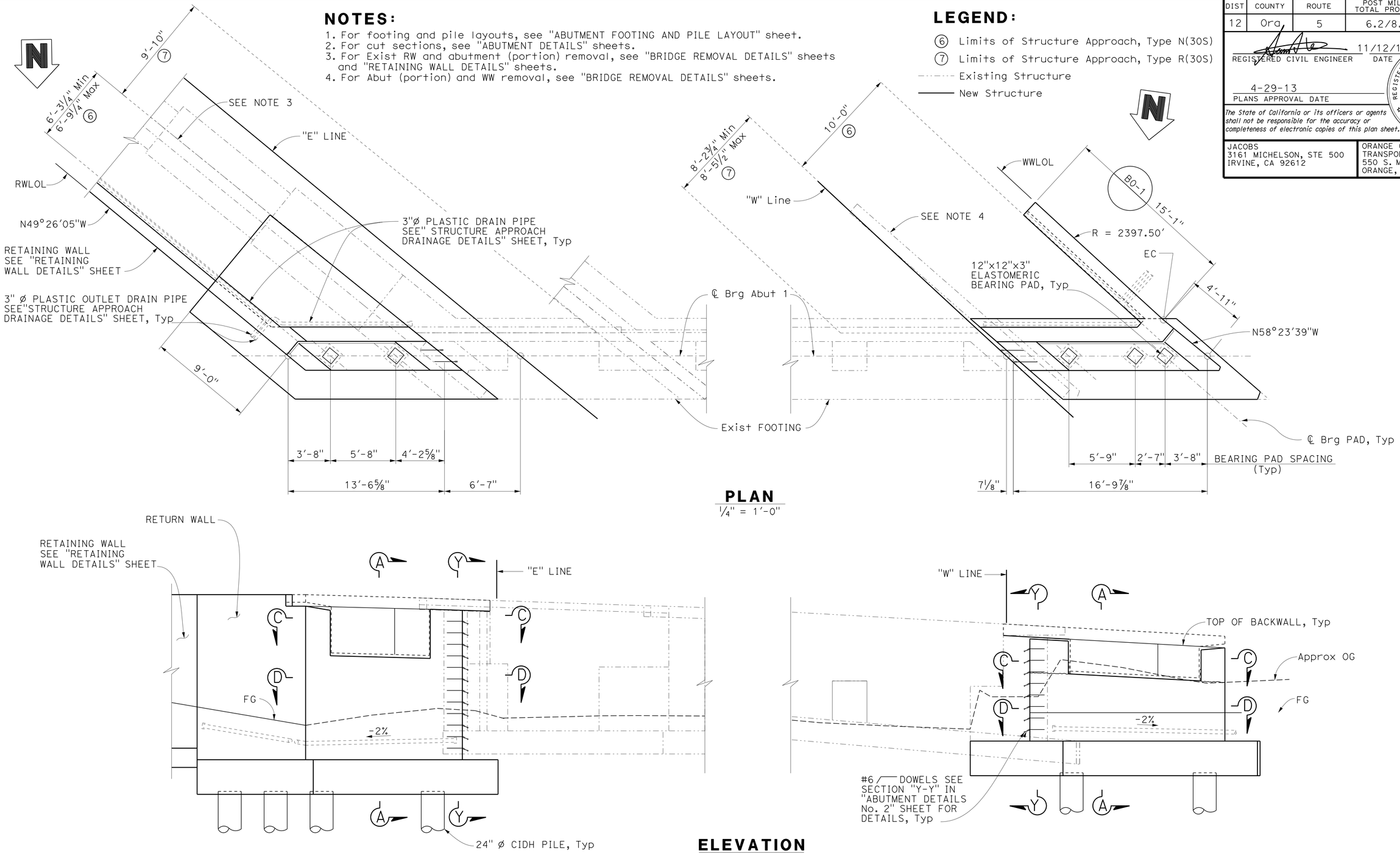


## PLAN
¼" = 1'-0"




## ELEVATION
¼" = 1'-0"

NOTE:
THE CONTRACTOR SHALL VERIFY ALL CONTROLLING FIELD DIMENSIONS BEFORE ORDERING OR FABRICATING ANY MATERIAL.

Luqi Yang
DESIGN OVERSIGHT Luqi Yang
1-16-13
SIGN OFF DATE

| | BY | CHECKED |
|---|---|---|
| DESIGN | J. Lee/ S. Xie | S. Nagi |
| DETAILS | I. Karkoutli | S. Nagi |
| QUANTITIES | M. Metcalf | S. Xie |

PREPARED FOR THE STATE OF CALIFORNIA DEPARTMENT OF TRANSPORTATION

Alaedin Moubayed
PROJECT ENGINEER

BRIDGE NO. 55-0226
POST MILES 6.70

# 5/N5-N1 CONN SEPARATION (WIDEN)
# ABUTMENT 1 LAYOUT

DESIGN DETAIL SHEET (ENGLISH) (REV.7/16/10)

ORIGINAL SCALE IN INCHES FOR REDUCED PLANS 0 1 2 3

UNIT: 2998
PROJECT NUMBER & PHASE: 12000202791 CONTRACT NO.: 12-0F96E4

DISREGARD PRINTS BEARING EARLIER REVISION DATES → 4/23/12 8/13/12 11/12/12

SHEET 7 OF 38

FILE => 55-0226-f-a01_lo1.dgn

USERNAME => s124496 DATE PLOTTED => 23-APR-2013 TIME PLOTTED => 12:06

| DIST | COUNTY | ROUTE | POST MILES TOTAL PROJECT | SHEET No | TOTAL SHEETS |
|---|---|---|---|---|---|
| 12 | Ora | 5 | 6.2/8.7 | 457 | 595 |

REGISTERED CIVIL ENGINEER 11/12/12 DATE

4-29-13
PLANS APPROVAL DATE

REGISTERED PROFESSIONAL ENGINEER Sam Xie No. C51942 Exp. 6/30/2014 CIVIL STATE OF CALIFORNIA

*The State of California or its officers or agents shall not be responsible for the accuracy or completeness of electronic copies of this plan sheet.*

JACOBS
3161 MICHELSON, STE 500
IRVINE, CA 92612

ORANGE COUNTY TRANSPORTATION AUTHORITY
550 S. MAIN STREET
ORANGE, CA 92863-1584

## NOTES:

1. For footing and pile layouts, see "ABUTMENT FOOTING AND PILE LAYOUT" sheet.
2. For cut sections, see "ABUTMENT DETAILS" sheets.
3. For Exist WW and abutment (portion) removal, see "BRIDGE REMOVAL DETAILS" sheets and "RETAINING WALL DETAILS" sheets.

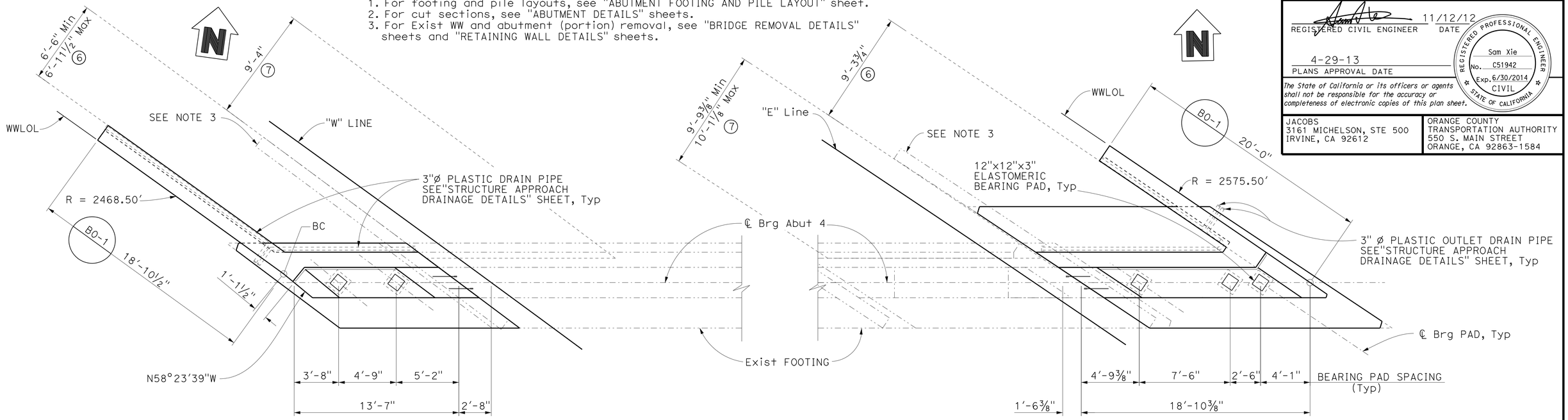


## PLAN

¼" = 1'-0"

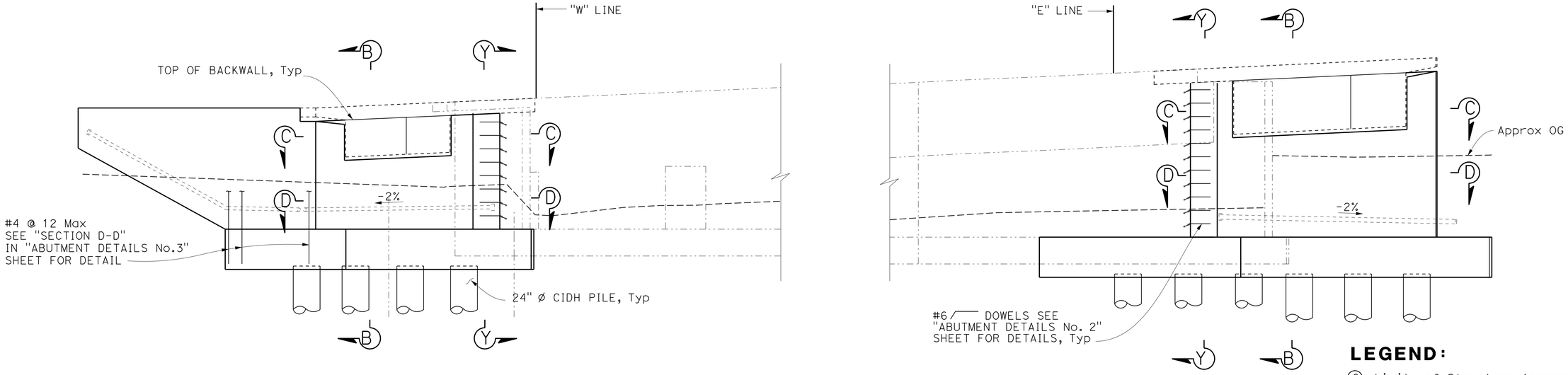


## ELEVATION

¼" = 1'-0"

## LEGEND:

⑥ Limits of Structure Approach, Type N(30S)
⑦ Limits of Structure Approach, Type R(30S)
Existing Structure
New Structure

NOTE:
THE CONTRACTOR SHALL VERIFY ALL CONTROLLING FIELD DIMENSIONS BEFORE ORDERING OR FABRICATING ANY MATERIAL.

Luqi Yang
DESIGN OVERSIGHT Luqi Yang
1-16-13
SIGN OFF DATE

| | BY | CHECKED |
|---|---|---|
| DESIGN | J. Lee/ S. Xie | S. Nagi |
| DETAILS | I. Karkoutli | S. Nagi |
| QUANTITIES | M. Metcalf | S. Xie |

PREPARED FOR THE STATE OF CALIFORNIA DEPARTMENT OF TRANSPORTATION

Alaedin Moubayed
PROJECT ENGINEER

BRIDGE NO. 55-0226
POST MILES 6.70

# 5/N5-N1 CONN SEPARATION (WIDEN)
# ABUTMENT 4 LAYOUT

DESIGN DETAIL SHEET (ENGLISH) (REV.7/16/10)

ORIGINAL SCALE IN INCHES FOR REDUCED PLANS 0 1 2 3

UNIT: 2998
PROJECT NUMBER & PHASE: 12000202791 CONTRACT NO.: 12-0F96E4

DISREGARD PRINTS BEARING EARLIER REVISION DATES
REVISION DATES 4/23/12 8/13/12 11/12/12

SHEET 8 OF 38

FILE => 55-0226-f-a01_lo2.dgn

USERNAME => s124496 DATE PLOTTED => 29-APR-2013 TIME PLOTTED => 12:06

| DIST | COUNTY | ROUTE | POST MILES TOTAL PROJECT | SHEET No | TOTAL SHEETS |
|---|---|---|---|---|---|
| 12 | Org | 5 | 6.2/8.7 | 458 | 595 |

REGISTERED CIVIL ENGINEER 11/12/12 DATE

4-29-13
PLANS APPROVAL DATE

REGISTERED PROFESSIONAL ENGINEER Sam Xie No. C51942 Exp. 6/30/2014 CIVIL STATE OF CALIFORNIA

*The State of California or its officers or agents shall not be responsible for the accuracy or completeness of electronic copies of this plan sheet.*

JACOBS
3161 MICHELSON, STE 500
IRVINE, CA 92612

ORANGE COUNTY TRANSPORTATION AUTHORITY
550 S. MAIN STREET
ORANGE, CA 92863-1584

## LEGEND:

- Existing Structure
- New Structure
- 24" dia CIDH Pile

## NOTES:

1. For abutment layout, see "ABUTMENT 1 LAYOUT" and "ABUTMENT 4 LAYOUT" sheets.
2. No two adjacent piles can be constructed concurrently.
3. For Abut (portion), Ret wall and WW removal not shown, see "BRIDGE REMOVAL DETAILS" sheets and "RETAINING WALL DETAILS" sheet.

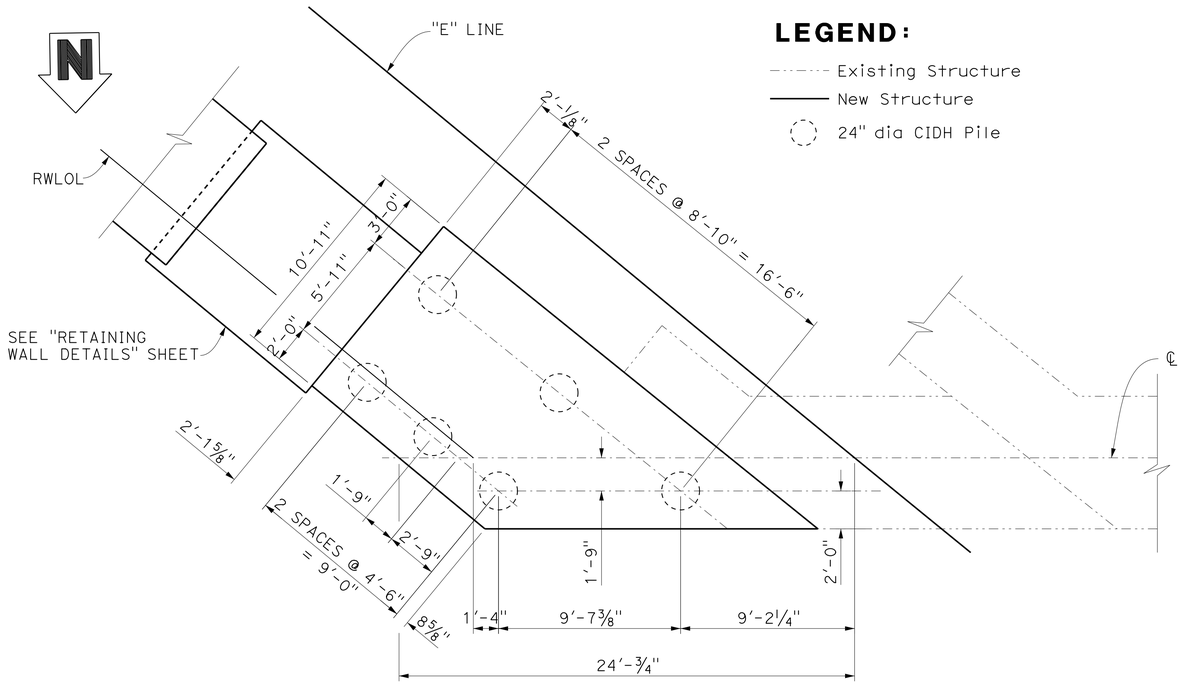


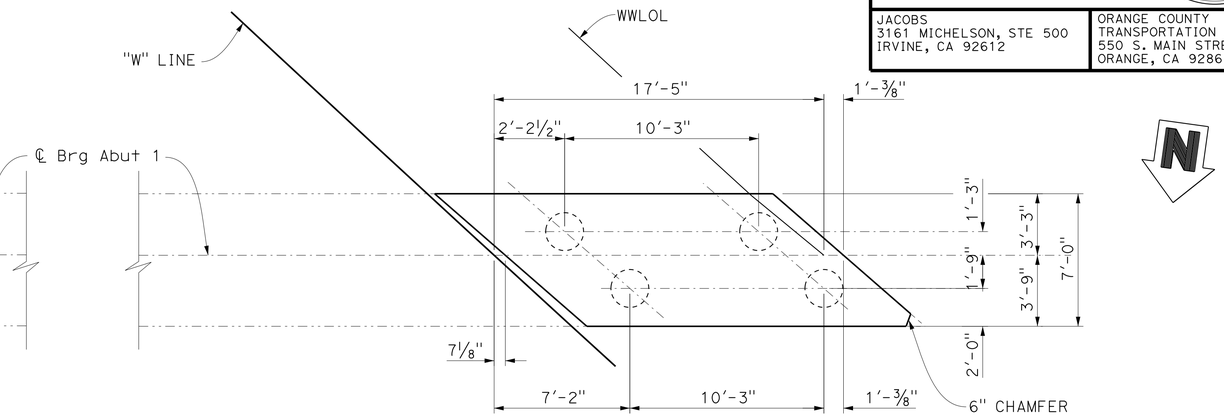


## FOOTING AND PILE LAYOUT - ABUTMENT 1

¼" = 1'-0"

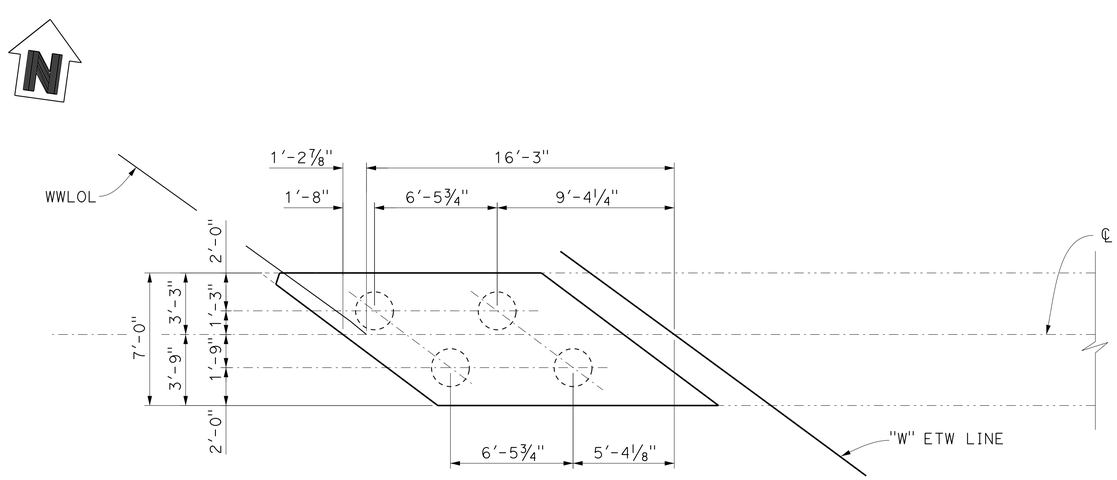


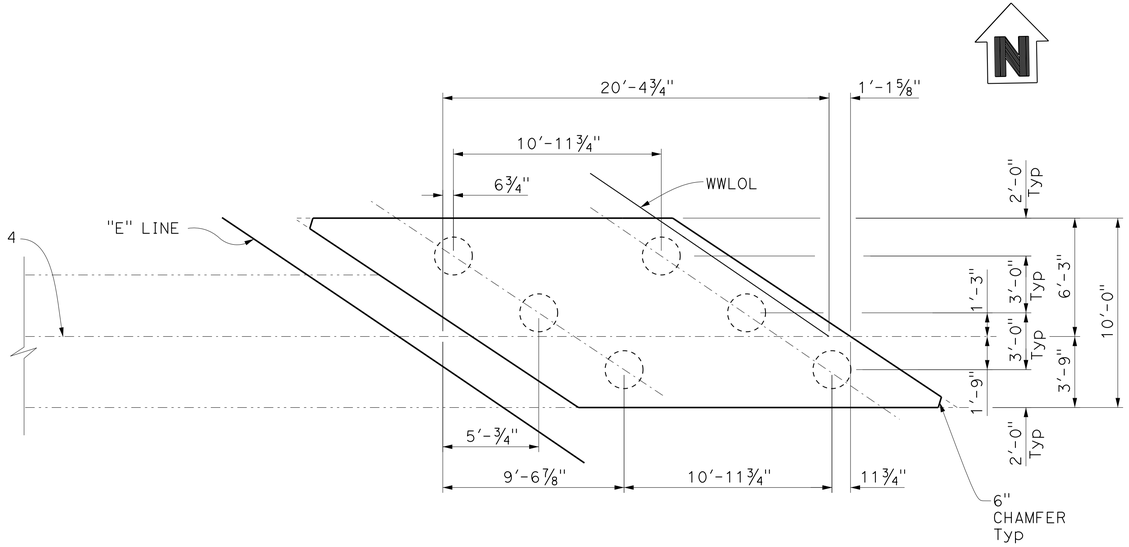


## FOOTING AND PILE LAYOUT - ABUTMENT 4

¼" = 1'-0"

NOTE:
THE CONTRACTOR SHALL VERIFY ALL CONTROLLING FIELD DIMENSIONS BEFORE ORDERING OR FABRICATING ANY MATERIAL.

Luqi Yang
DESIGN OVERSIGHT Luqi Yang
1-16-13
SIGN OFF DATE

| | BY | CHECKED |
|---|---|---|
| DESIGN | J. Lee/ S. Xie | S. Nagi |
| DETAILS | I. Karkoutli | S. Nagi |
| QUANTITIES | M. Metcalf | S. Xie |

PREPARED FOR THE STATE OF CALIFORNIA DEPARTMENT OF TRANSPORTATION

Alaedin Moubayed
PROJECT ENGINEER

BRIDGE NO. 55-0226
POST MILES 6.70

# 5/N5-N1 CONN SEPARATION (WIDEN)
# ABUTMENT FOOTING AND PILE LAYOUT

DESIGN DETAIL SHEET (ENGLISH) (REV.7/16/10)

ORIGINAL SCALE IN INCHES FOR REDUCED PLANS 0 1 2 3

UNIT: 2998
PROJECT NUMBER & PHASE: 12000202791 CONTRACT NO.: 12-0F96E4

DISREGARD PRINTS BEARING EARLIER REVISION DATES

REVISION DATES 4/23/12 8/13/12 11/12/12

SHEET 9 OF 38

FILE => 55-0226-f-a01_1o3.dgn

USERNAME => s124496 DATE PLOTTED => 29-APR-2013 TIME PLOTTED => 12:06

| DIST | COUNTY | ROUTE | POST MILES TOTAL PROJECT | SHEET No | TOTAL SHEETS |
|---|---|---|---|---|---|
| 12 | Ora | 5 | 6.2/8.7 | 459 | 595 |

REGISTERED CIVIL ENGINEER 11/12/12 DATE

4-29-13
PLANS APPROVAL DATE

REGISTERED PROFESSIONAL ENGINEER Sam Xie No. C51942 Exp. 6/30/2014 CIVIL STATE OF CALIFORNIA

*The State of California or its officers or agents shall not be responsible for the accuracy or completeness of electronic copies of this plan sheet.*

JACOBS
3161 MICHELSON, STE 500
IRVINE, CA 92612

ORANGE COUNTY
TRANSPORTATION AUTHORITY
550 S. MAIN STREET
ORANGE, CA 92863-1584

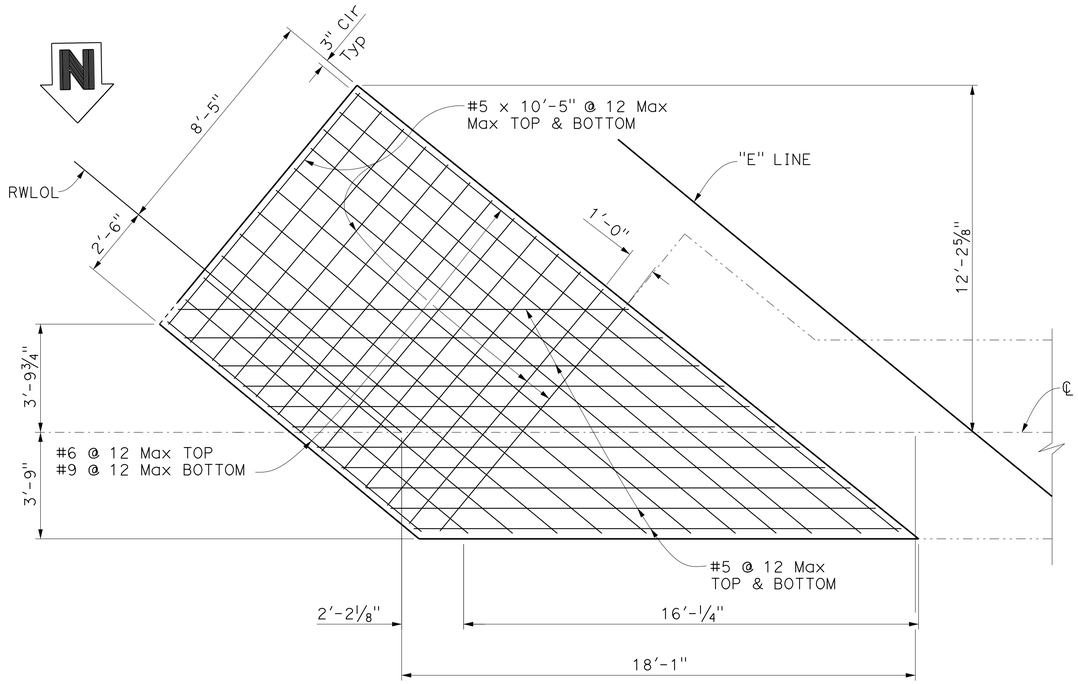


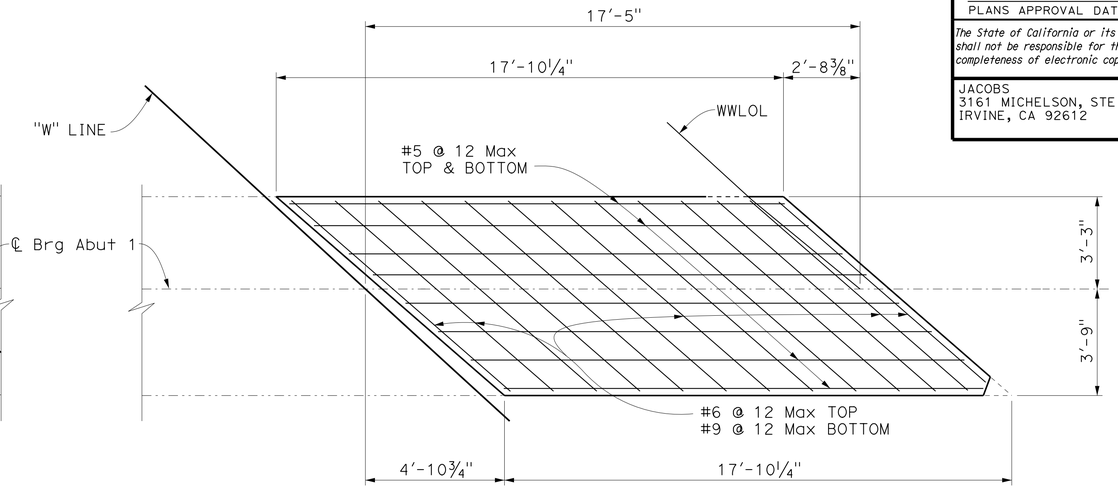


## FOOTING LAYOUT - ABUTMENT 1

⅜" = 1'-0"

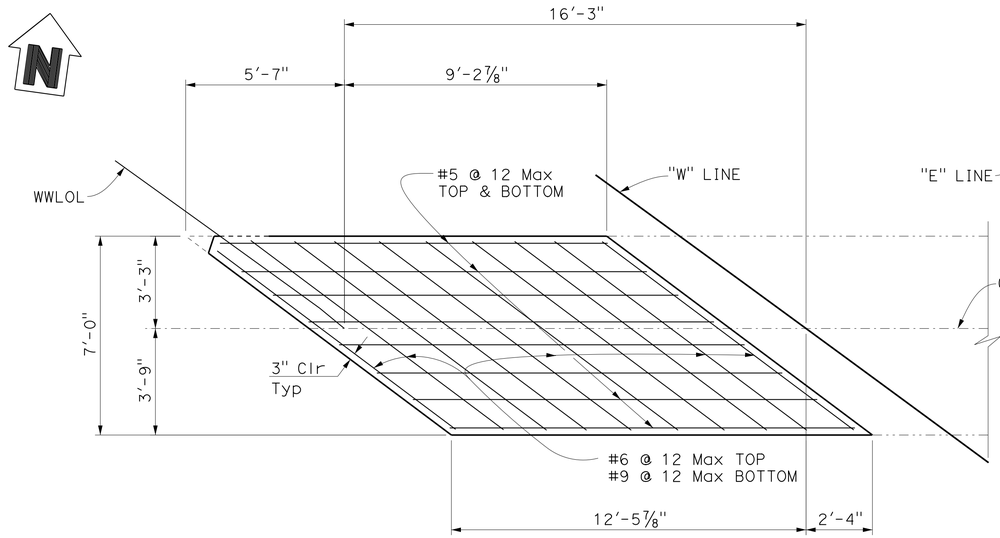


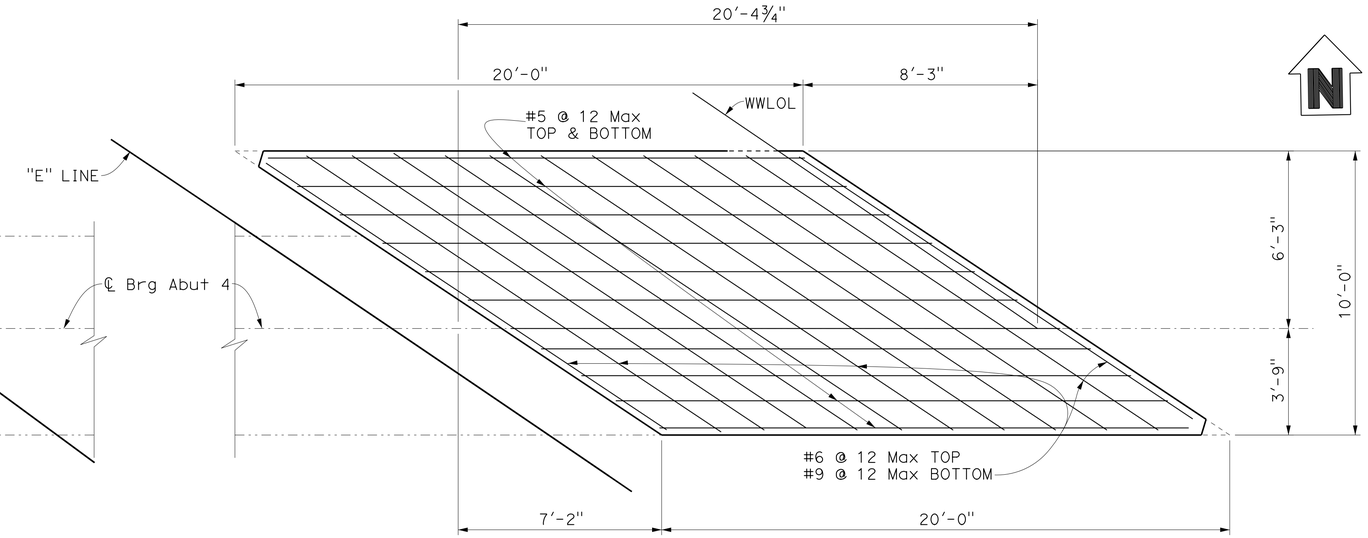


## FOOTING LAYOUT - ABUTMENT 4

⅜" = 1'-0"

NOTE:
THE CONTRACTOR SHALL VERIFY ALL CONTROLLING FIELD DIMENSIONS BEFORE ORDERING OR FABRICATING ANY MATERIAL.

Luqi Yang
DESIGN OVERSIGHT Luqi Yang
1-16-13
SIGN OFF DATE

| | BY | CHECKED |
|---|---|---|
| DESIGN | J. Lee/ S. Xie | S. Nagi |
| DETAILS | I. Karkoutli | S. Nagi |
| QUANTITIES | M. Metcalf | S. Xie |

PREPARED FOR THE STATE OF CALIFORNIA DEPARTMENT OF TRANSPORTATION

Alaedin Moubayed
PROJECT ENGINEER

BRIDGE NO. 55-0226
POST MILES 6.70

# 5/N5-N1 CONN SEPARATION (WIDEN)
# ABUTMENT FOOTING REINFORCEMENT

DESIGN DETAIL SHEET (ENGLISH) (REV.7/16/10)

ORIGINAL SCALE IN INCHES FOR REDUCED PLANS 0 1 2 3

UNIT: 2998
PROJECT NUMBER & PHASE: 12000202791 CONTRACT NO.: 12-0F96E4

DISREGARD PRINTS BEARING EARLIER REVISION DATES

REVISION DATES 4/23/12 8/13/12 11/12/12

SHEET 10 OF 38

FILE => 55-0226-f-a01_1o4.dgn

USERNAME => s124496 DATE PLOTTED => 29-APR-2013 TIME PLOTTED => 12:06

| DIST | COUNTY | ROUTE | POST MILES TOTAL PROJECT | SHEET No | TOTAL SHEETS |
|---|---|---|---|---|---|
| 12 | Org | 5 | 6.2/8.7 | 460 | 595 |

REGISTERED CIVIL ENGINEER 11/12/12 DATE

4-29-13
PLANS APPROVAL DATE

REGISTERED PROFESSIONAL ENGINEER Sam Xie No. C51942 Exp. 6/30/2014 CIVIL STATE OF CALIFORNIA

*The State of California or its officers or agents shall not be responsible for the accuracy or completeness of electronic copies of this plan sheet.*

JACOBS
3161 MICHELSON, STE 500
IRVINE, CA 92612

ORANGE COUNTY TRANSPORTATION AUTHORITY
550 S. MAIN STREET
ORANGE, CA 92863-1584

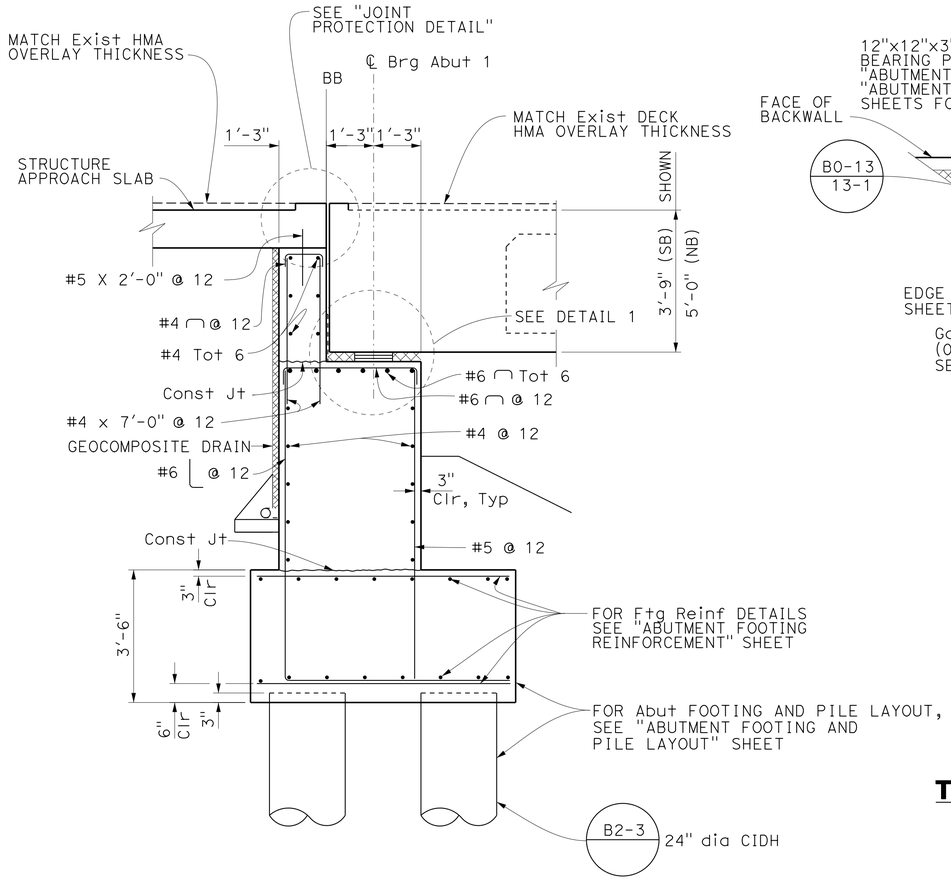


## SECTION A-A

½" = 1'-0"

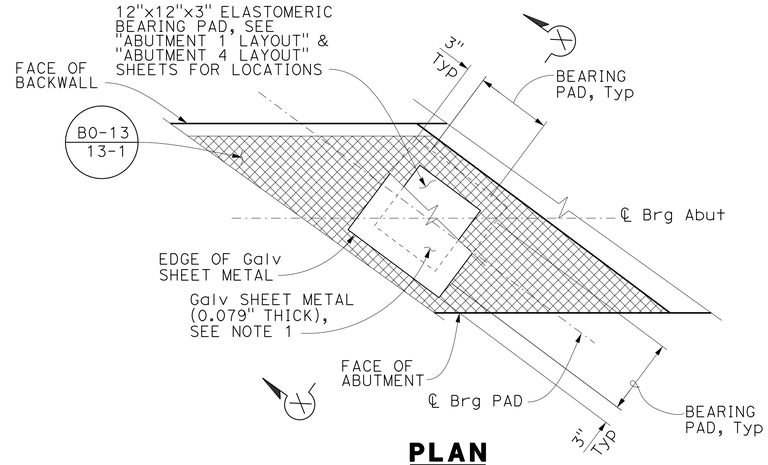


## PLAN

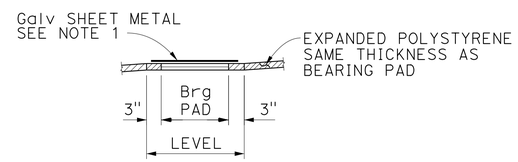


## SECTION X-X

## TYPICAL BEARING PAD DETAIL

NO SCALE

## LEGEND:

Expanded Polystyrene

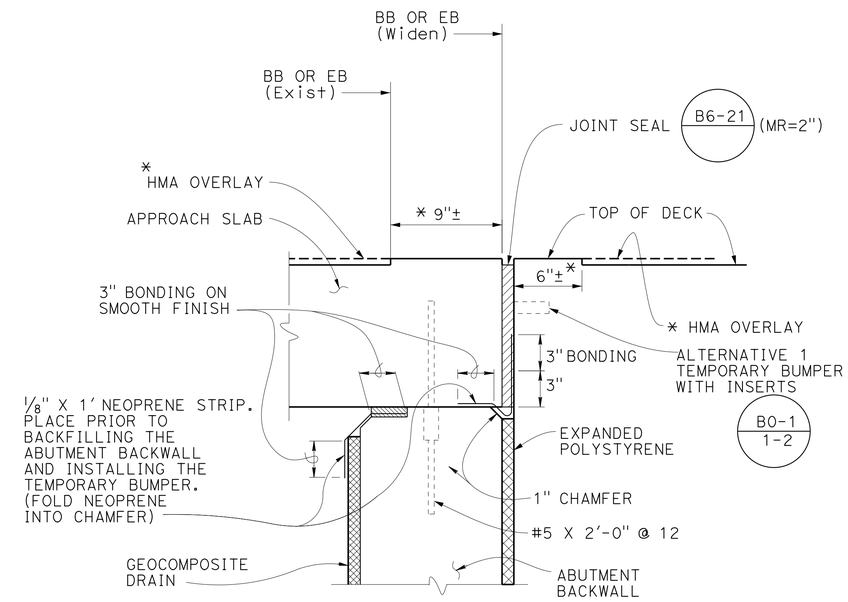


## JOINT PROTECTION DETAIL

NO SCALE

* MATCH EXISTING HMA OVERLAY THICKNESS AND DIMENSIONS

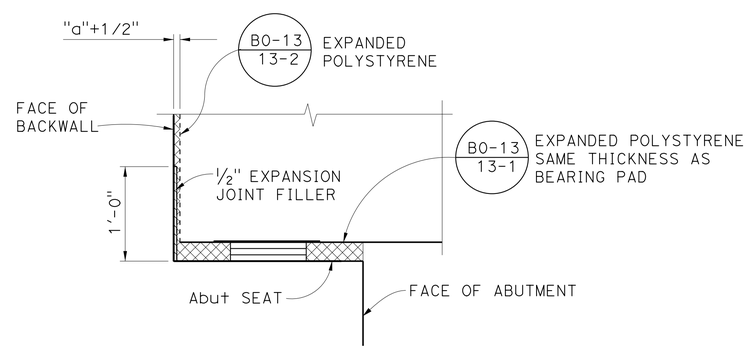


## DETAIL 1

1" = 1'-0"

## NOTE:

1. Coat top of bearing pad with silicone grease prior to placing sheet metal. Epoxy bond pad to abutment seat.

NOTE:
THE CONTRACTOR SHALL VERIFY ALL CONTROLLING FIELD DIMENSIONS BEFORE ORDERING OR FABRICATING ANY MATERIAL.

Luqi Yang
DESIGN OVERSIGHT Luqi Yang
1-16-13
SIGN OFF DATE

| | BY | CHECKED |
|---|---|---|
| DESIGN | J. Lee/ S. Xie | S. Nagi |
| DETAILS | I. Karkoutli | S. Nagi |
| QUANTITIES | M. Metcalf | S. Xie |

PREPARED FOR THE STATE OF CALIFORNIA DEPARTMENT OF TRANSPORTATION

Alaedin Moubayed
PROJECT ENGINEER

BRIDGE NO. 55-0226
POST MILES 6.70

# 5/N5-N1 CONN SEPARATION (WIDEN)
# ABUTMENT DETAILS NO. 1

DESIGN DETAIL SHEET (ENGLISH) (REV.7/16/10)

ORIGINAL SCALE IN INCHES FOR REDUCED PLANS 0 1 2 3

UNIT: 2998
PROJECT NUMBER & PHASE: 12000202791 CONTRACT NO.: 12-0F96E4

DISREGARD PRINTS BEARING EARLIER REVISION DATES
REVISION DATES 4/29/12 8/13/12 11/12/12

SHEET 11 OF 38

FILE => 55-0226-f-a01dt01.dgn

USERNAME => s124496 DATE PLOTTED => 29-APR-2013 TIME PLOTTED => 12:06

| DIST | COUNTY | ROUTE | POST MILES TOTAL PROJECT | SHEET No | TOTAL SHEETS |
|---|---|---|---|---|---|
| 12 | Ora | 5 | 6.2/8.7 | 461 | 595 |

REGISTERED CIVIL ENGINEER 11/12/12 DATE

4-29-13
PLANS APPROVAL DATE

REGISTERED PROFESSIONAL ENGINEER Sam Xie No. C51942 Exp. 6/30/2014 CIVIL STATE OF CALIFORNIA

*The State of California or its officers or agents shall not be responsible for the accuracy or completeness of electronic copies of this plan sheet.*

JACOBS
3161 MICHELSON, STE 500
IRVINE, CA 92612

ORANGE COUNTY TRANSPORTATION AUTHORITY
550 S. MAIN STREET
ORANGE, CA 92863-1584

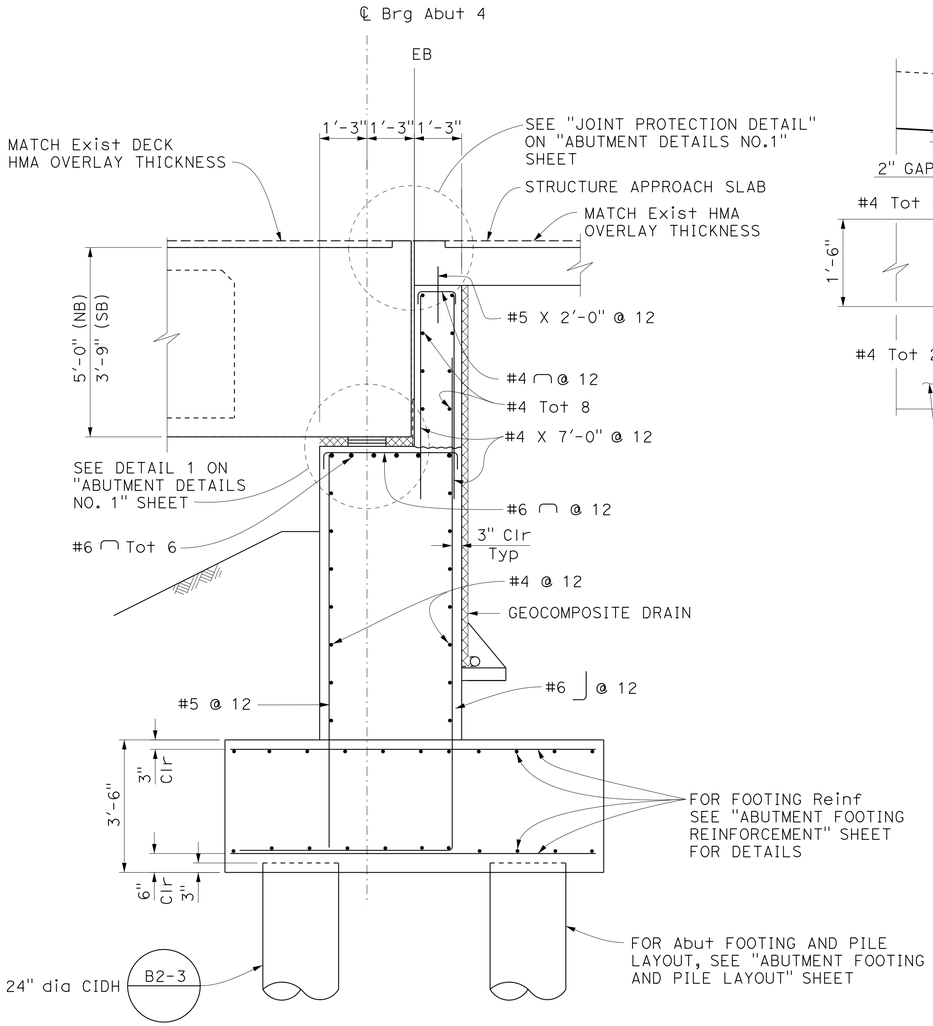


**SECTION B-B**
1/4" = 1'-0"

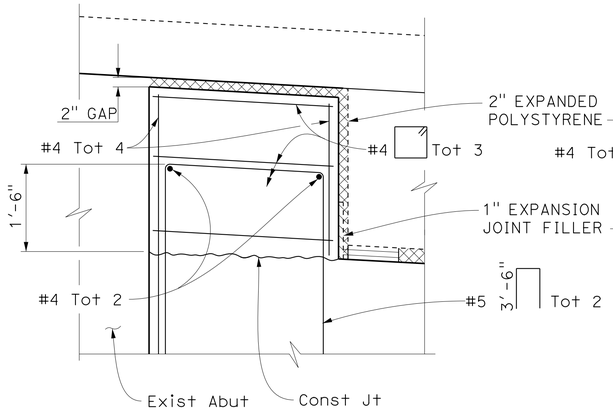


**DETAIL 1**
3/4" = 1'-0"

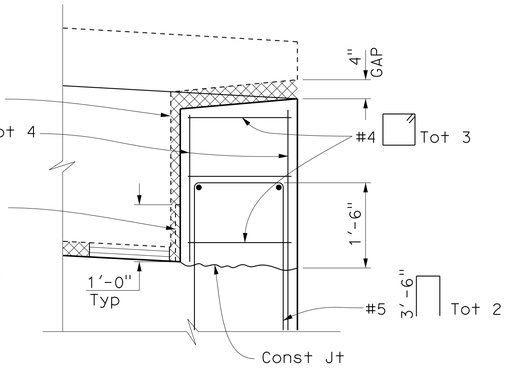


**DETAIL 2**
3/4" = 1'-0"

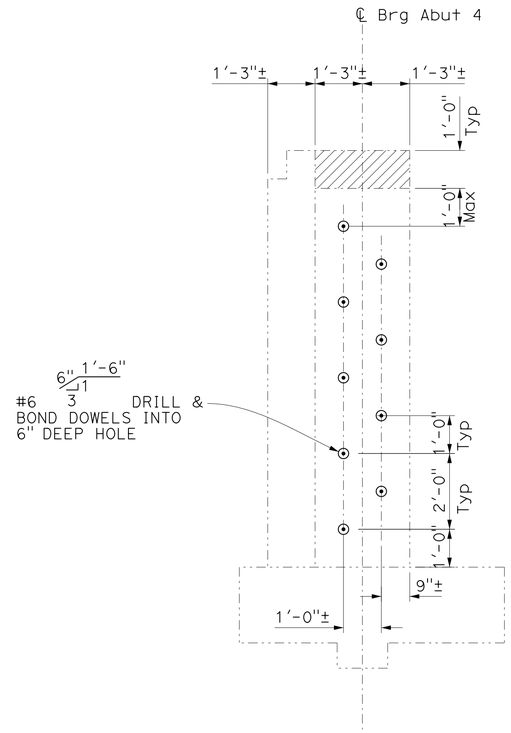


**SECTION Y-Y**
1/4" = 1'-0"

## LEGEND:

- Expanded polystyrene
- Bridge removal (Portion)

NOTE:
THE CONTRACTOR SHALL VERIFY ALL CONTROLLING FIELD DIMENSIONS BEFORE ORDERING OR FABRICATING ANY MATERIAL.

Luqi Yang
DESIGN OVERSIGHT Luqi Yang
1-16-13
SIGN OFF DATE

| | BY | CHECKED |
|---|---|---|
| DESIGN | J. Lee/ S. Xie | S. Nagi |
| DETAILS | I. Karkoutli | S. Nagi |
| QUANTITIES | M. Metcalf | S. Xie |

PREPARED FOR THE STATE OF CALIFORNIA DEPARTMENT OF TRANSPORTATION

Alaedin Moubayed
PROJECT ENGINEER

BRIDGE NO. 55-0226
POST MILES 6.70

# 5/N5-N1 CONN SEPARATION (WIDEN)
# ABUTMENT DETAILS No. 2

DESIGN DETAIL SHEET (ENGLISH) (REV.7/16/10)

ORIGINAL SCALE IN INCHES FOR REDUCED PLANS 0 1 2 3

UNIT: 2998
PROJECT NUMBER & PHASE: 12000202791 CONTRACT NO.: 12-0F96E4

DISREGARD PRINTS BEARING EARLIER REVISION DATES

REVISION DATES: 4/23/12 8/13/12 11/12/12

SHEET 12 OF 38

FILE => 55-0226-f-a01dt02.dgn

USERNAME => s124496 DATE PLOTTED => 29-APR-2013 TIME PLOTTED => 12:06

| DIST | COUNTY | ROUTE | POST MILES TOTAL PROJECT | SHEET No | TOTAL SHEETS |
|---|---|---|---|---|---|
| 12 | Ora | 5 | 6.2/8.7 | 462 | 595 |

REGISTERED CIVIL ENGINEER 11/12/12 DATE

4-29-13
PLANS APPROVAL DATE

REGISTERED PROFESSIONAL ENGINEER Sam Xie No. C51942 Exp. 6/30/2014 CIVIL STATE OF CALIFORNIA

*The State of California or its officers or agents shall not be responsible for the accuracy or completeness of electronic copies of this plan sheet.*

JACOBS
3161 MICHELSON, STE 500
IRVINE, CA 92612

ORANGE COUNTY TRANSPORTATION AUTHORITY
550 S. MAIN STREET
ORANGE, CA 92863-1584

## LEGEND:

- Expanded polystyrene
- Existing Structure
- New Structure

## NOTES:

1. For WW Reinf not shown or not called out, see B0-1
2. For dowels and Reinf in barrier, see B11-56
3. For #6 drill and bond dowel details see "SECTION Y-Y" on "ABUTMENT DETAILS No. 2" sheet.
4. For Abut and WW removal not shown, see "BRIDGE REMOVAL DETAILS" sheets and "RETAINING WALL DETAILS" sheet.
5. See "RETAINING WALL DETAILS" sheet.

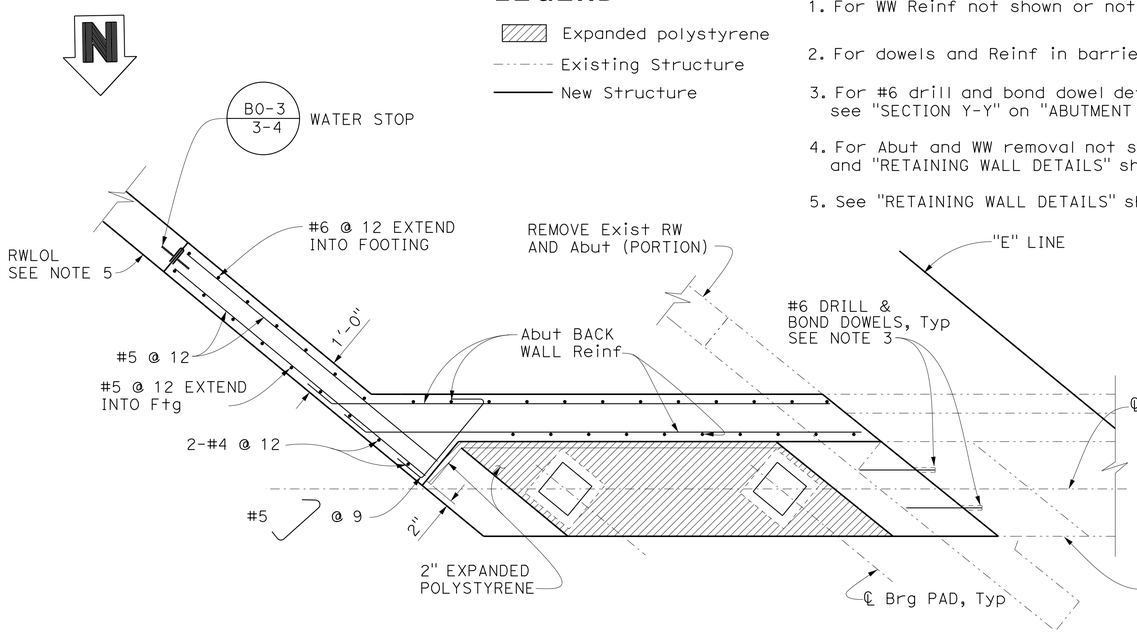


## SECTION C-C

½" = 1'-0"

(ABUTMENT 1 SHOWN, ABUTMENT 4 SIMILAR EXCEPT RETURN WALL @ ABUT 1 NB)

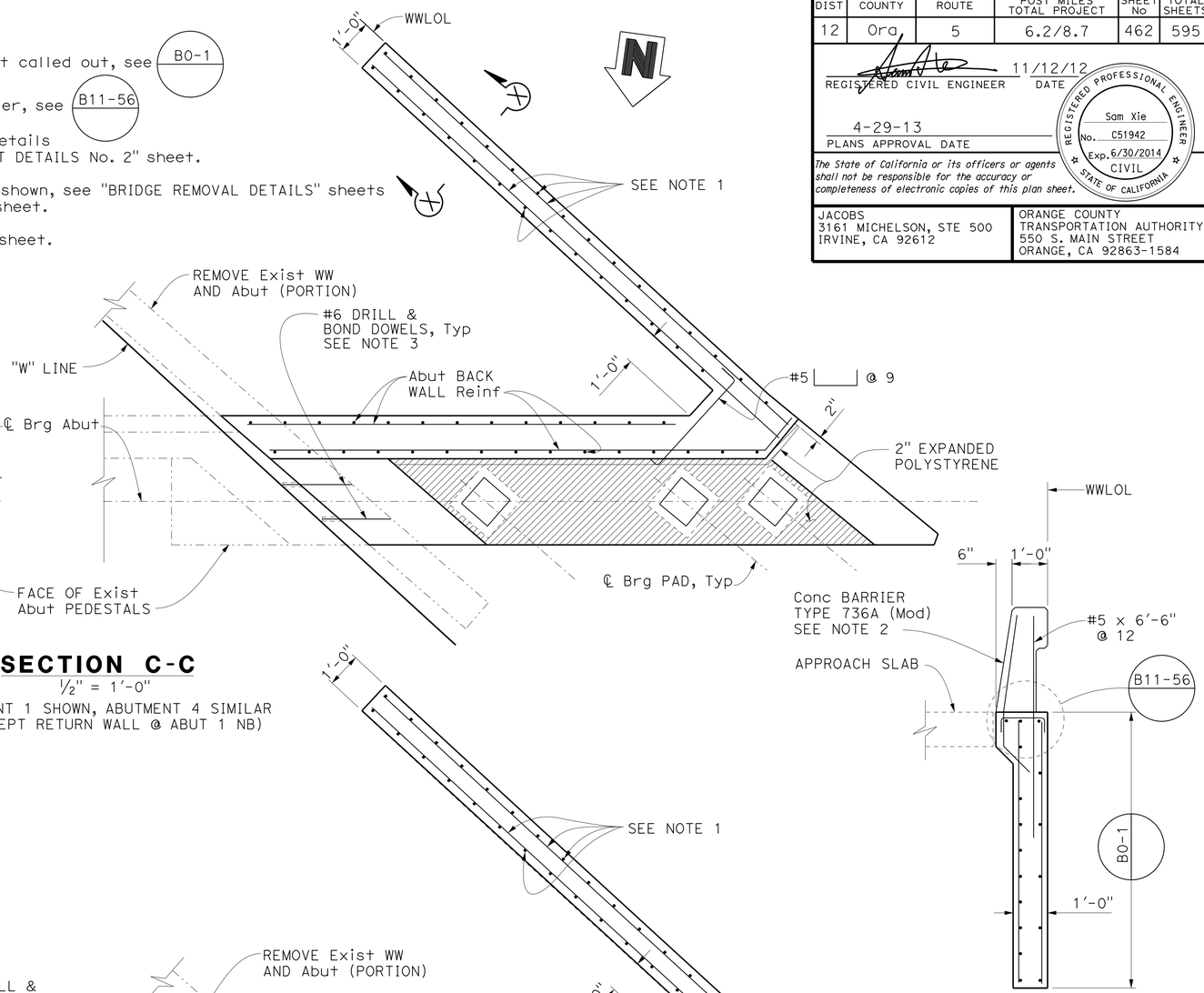


## SECTION X-X

½" = 1'-0"

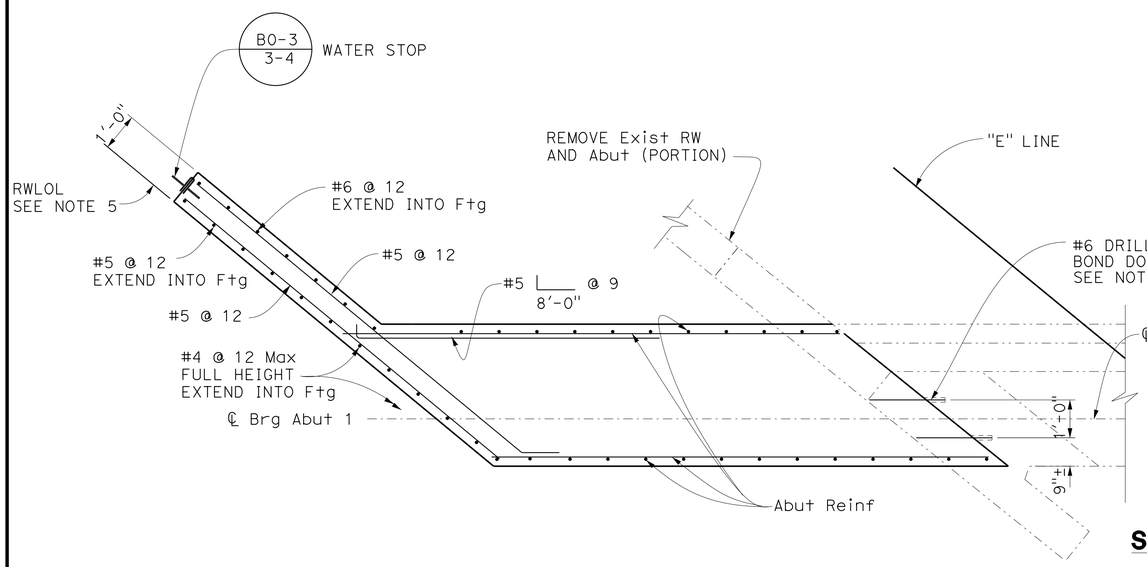


## SECTION D-D

½" = 1'-0"

(ABUTMENT 1 SHOWN, ABUTMENT 4 SIMILAR EXCEPT RETURN WALL ABUT 1 NB)

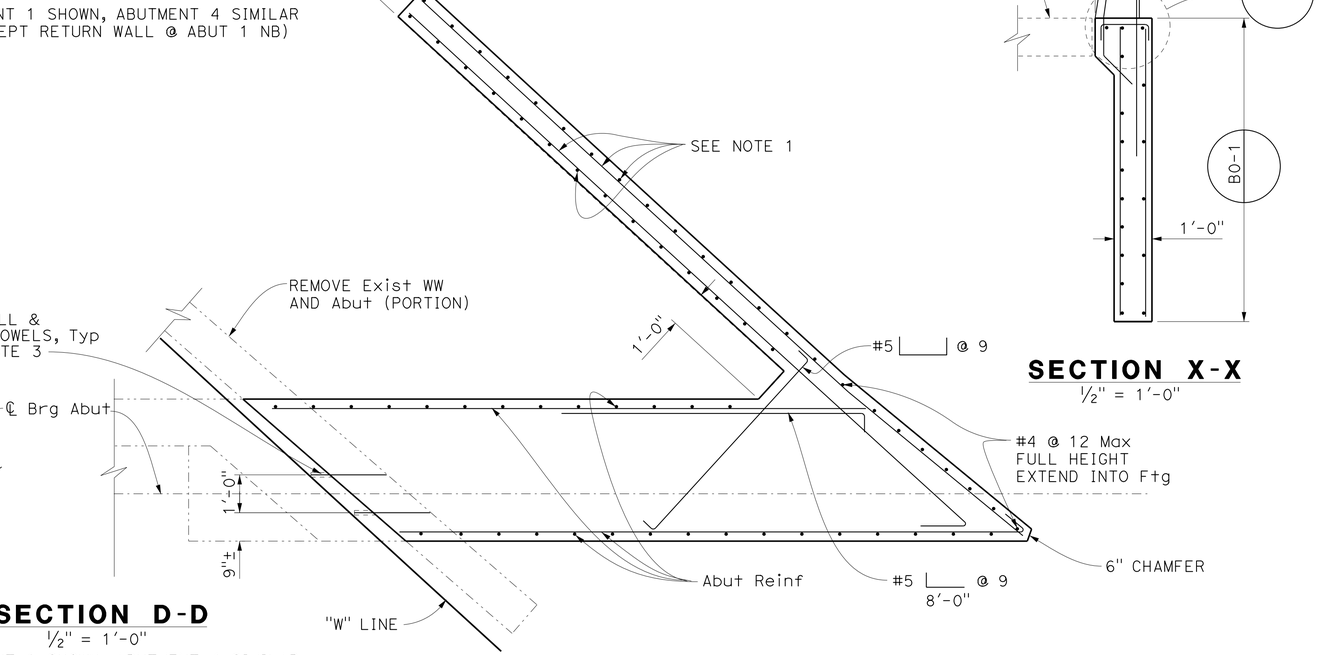


NOTE:
THE CONTRACTOR SHALL VERIFY ALL CONTROLLING FIELD DIMENSIONS BEFORE ORDERING OR FABRICATING ANY MATERIAL.

Luqi Yang
DESIGN OVERSIGHT Luqi Yang
1-16-13
SIGN OFF DATE

| | BY | CHECKED |
|---|---|---|
| DESIGN | J. Lee/ S. Xie | S. Nagi |
| DETAILS | I. Karkoutli | S. Nagi |
| QUANTITIES | M. Metcalf | S. Xie |

PREPARED FOR THE STATE OF CALIFORNIA DEPARTMENT OF TRANSPORTATION

Alaedin Moubayed
PROJECT ENGINEER

BRIDGE NO. 55-0226
POST MILES 6.70

# 5/N5-N1 CONN SEPARATION (WIDEN)
# ABUTMENT DETAILS No. 3

DESIGN DETAIL SHEET (ENGLISH) (REV.7/16/10)

ORIGINAL SCALE IN INCHES FOR REDUCED PLANS 0 1 2 3

UNIT: 2998
PROJECT NUMBER & PHASE: 12000202791 CONTRACT NO.: 12-0F96E4

DISREGARD PRINTS BEARING EARLIER REVISION DATES

REVISION DATES 4/23/12 8/13/12 11/12/12

SHEET 13 OF 38

FILE => 55-0226-f-a01dt03.dgn

USERNAME => s124496 DATE PLOTTED => 29-APR-2013 TIME PLOTTED => 12:06

| DIST | COUNTY | ROUTE | POST MILES TOTAL PROJECT | SHEET No | TOTAL SHEETS |
|---|---|---|---|---|---|
| 12 | Org | 5 | 6.2/8.7 | 463 | 595 |

REGISTERED CIVIL ENGINEER 11/12/12 DATE

4-29-13
PLANS APPROVAL DATE

REGISTERED PROFESSIONAL ENGINEER Sam Xie No. C51942 Exp. 6/30/2014 CIVIL STATE OF CALIFORNIA

*The State of California or its officers or agents shall not be responsible for the accuracy or completeness of electronic copies of this plan sheet.*

JACOBS
3161 MICHELSON, STE 500
IRVINE, CA 92612

ORANGE COUNTY
TRANSPORTATION AUTHORITY
550 S. MAIN STREET
ORANGE, CA 92863-1584

## NOTES:

1. Abutment 1 shown, Abutment 4 similar and opposite hand
2. For Section "A-A", see "ABUTMENT RETROFIT DETAILS No. 2" sheet
3. See "FOUNDATION PLAN" sheet for exist bottom of footing elevations.

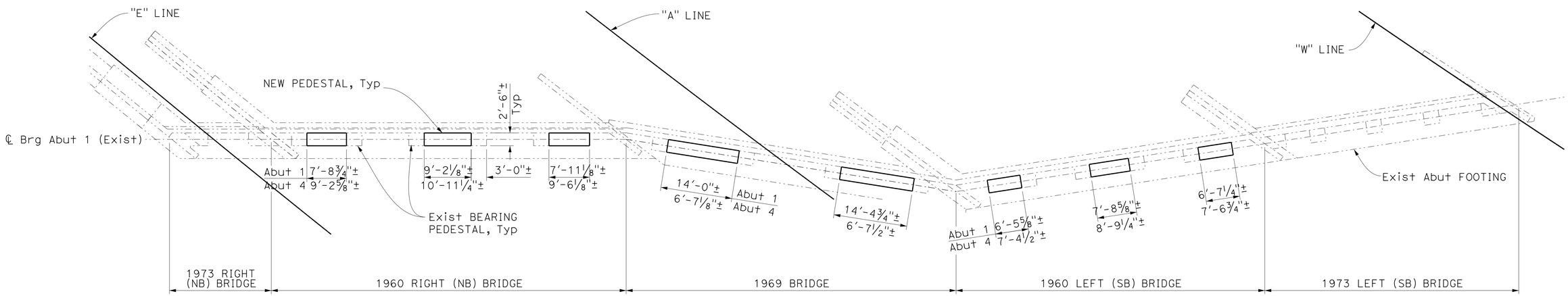


## ABUTMENT 1 PLAN

1" = 10'

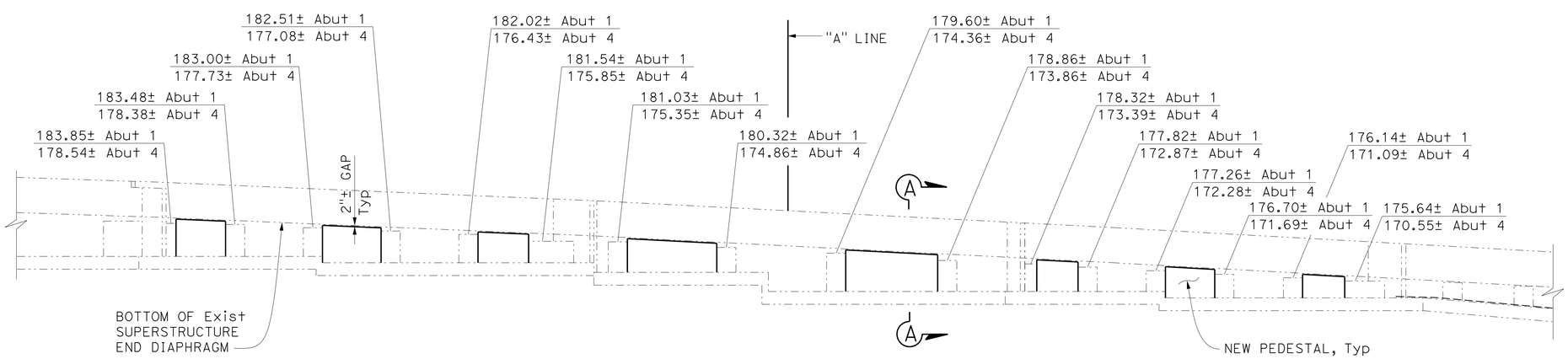


## ABUTMENT 1 ELEVATION

1" = 10'

(NOTE: All exist elevations are added 2.0'± to the elevation shown in the as-built plans and are to the top of exist masonry plates)

NOTE:
THE CONTRACTOR SHALL VERIFY ALL CONTROLLING FIELD DIMENSIONS BEFORE ORDERING OR FABRICATING ANY MATERIAL.

Luqi Yang
DESIGN OVERSIGHT Luqi Yang
1-16-13
SIGN OFF DATE

| | BY | CHECKED |
|---|---|---|
| DESIGN | J. Lee/ S. Xie | S. Nagi |
| DETAILS | I. Karkoutli | S. Nagi |
| QUANTITIES | M. Metcalf | S. Xie |

PREPARED FOR THE STATE OF CALIFORNIA DEPARTMENT OF TRANSPORTATION

Alaedin Moubayed
PROJECT ENGINEER

BRIDGE NO. 55-0226
POST MILES 6.70

# 5/N5-N1 CONN SEPARATION (WIDEN)

# ABUTMENT RETROFIT DETAILS No. 1

DESIGN DETAIL SHEET (ENGLISH) (REV.7/16/10)

ORIGINAL SCALE IN INCHES FOR REDUCED PLANS 0 1 2 3

UNIT: 2998
PROJECT NUMBER & PHASE: 12000202791 CONTRACT NO.: 12-0F96E4

DISREGARD PRINTS BEARING EARLIER REVISION DATES

REVISION DATES 4/23/12 8/13/12 11/12/12

SHEET 14 OF 38

FILE => 55-0226-f-a01dt04.dgn

USERNAME => s124496 DATE PLOTTED => 29-APR-2013 TIME PLOTTED => 12:06

| DIST | COUNTY | ROUTE | POST MILES TOTAL PROJECT | SHEET No | TOTAL SHEETS |
|---|---|---|---|---|---|
| 12 | Ora | 5 | 6.2/8.7 | 464 | 595 |

REGISTERED CIVIL ENGINEER 11/12/12 DATE

4-29-13
PLANS APPROVAL DATE

REGISTERED PROFESSIONAL ENGINEER Sam Xie No. C51942 Exp. 6/30/2014 CIVIL STATE OF CALIFORNIA

*The State of California or its officers or agents shall not be responsible for the accuracy or completeness of electronic copies of this plan sheet.*

JACOBS
3161 MICHELSON, STE 500
IRVINE, CA 92612

ORANGE COUNTY
TRANSPORTATION AUTHORITY
550 S. MAIN STREET
ORANGE, CA 92863-1584

## NOTES:

1. Abut 1 shown, Abut 4 similar and opposite hand.
2. For reinforcement call-out not shown, see "SECTION A-A".

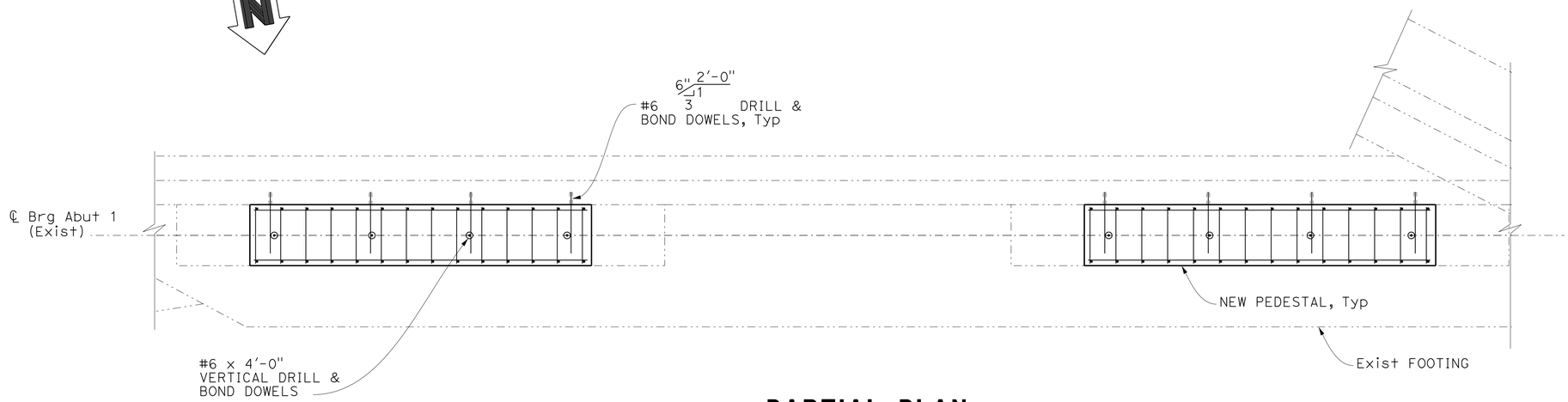


## PARTIAL PLAN

3/8" = 1'-0"

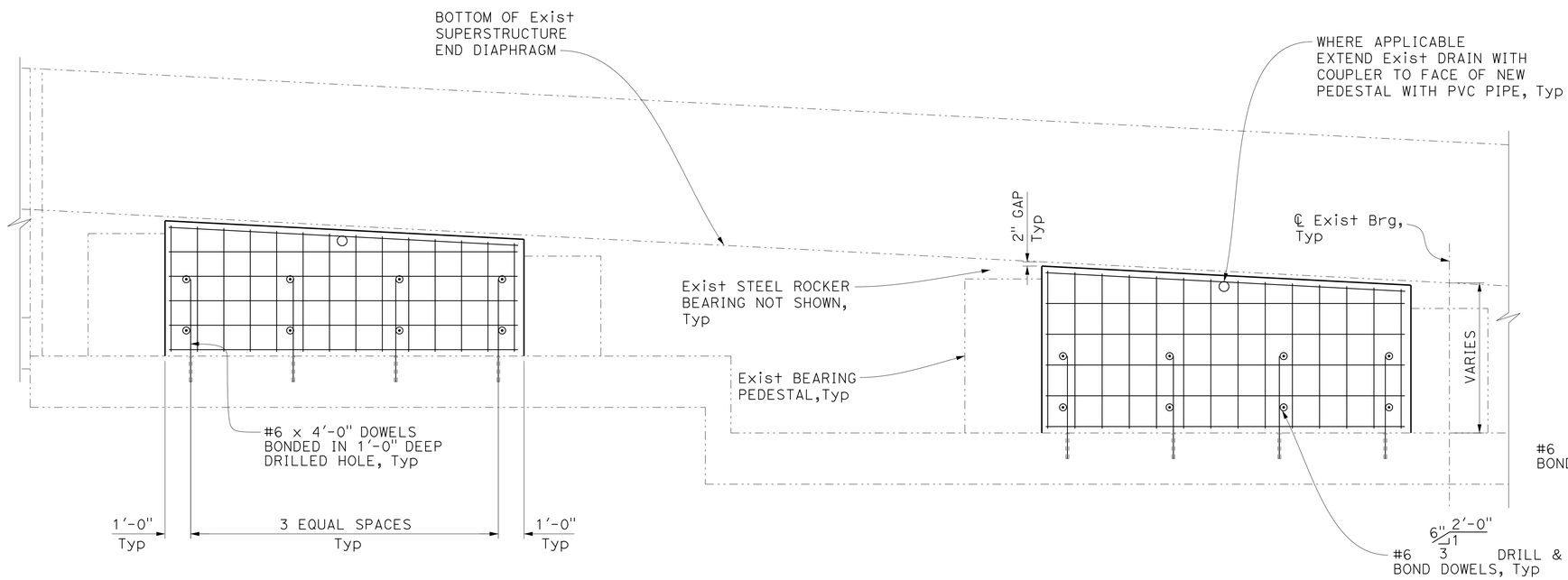


## PARTIAL ELEVATION

3/8" = 1'-0"

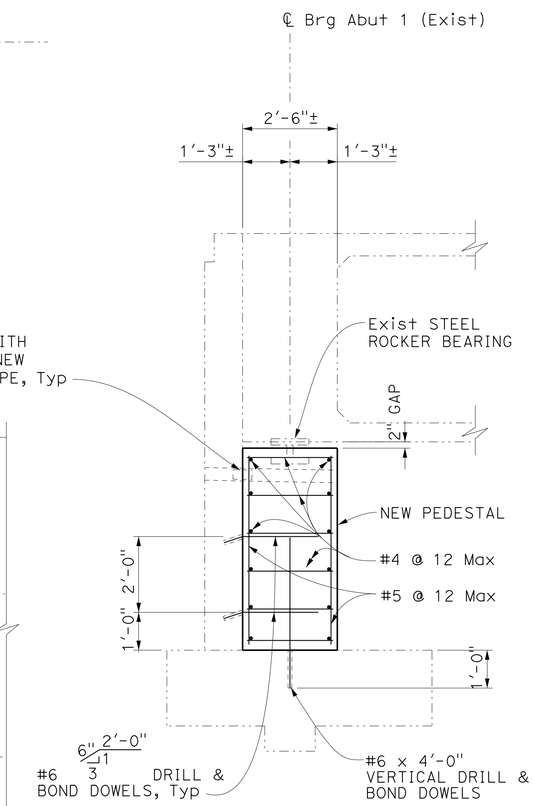


## SECTION A-A

1/2" = 1'-0"

NOTE:
THE CONTRACTOR SHALL VERIFY ALL CONTROLLING FIELD DIMENSIONS BEFORE ORDERING OR FABRICATING ANY MATERIAL.

Luqi Yang
DESIGN OVERSIGHT Luqi Yang
1-16-13
SIGN OFF DATE

| | BY | CHECKED |
|---|---|---|
| DESIGN | J. Lee/ S. Xie | S. Nagi |
| DETAILS | I. Karkoutli | S. Nagi |
| QUANTITIES | M. Metcalf | S. Xie |

PREPARED FOR THE STATE OF CALIFORNIA DEPARTMENT OF TRANSPORTATION

Alaedin Moubayed
PROJECT ENGINEER

BRIDGE NO. 55-0226
POST MILES 6.70

# 5/N5-N1 CONN SEPARATION (WIDEN)
# ABUTMENT RETROFIT DETAILS No. 2

DESIGN DETAIL SHEET (ENGLISH) (REV.7/16/10)

ORIGINAL SCALE IN INCHES FOR REDUCED PLANS 0 1 2 3

UNIT: 2998
PROJECT NUMBER & PHASE: 12000202791 CONTRACT NO.: 12-0F96E4

DISREGARD PRINTS BEARING EARLIER REVISION DATES

REVISION DATES 4/23/12 8/13/12 11/12/12

SHEET 15 OF 38

FILE => 55-0226-f-a01dt05.dgn

USERNAME => s124496 DATE PLOTTED => 29-APR-2013 TIME PLOTTED => 12:06

| DIST | COUNTY | ROUTE | POST MILES TOTAL PROJECT | SHEET No | TOTAL SHEETS |
|---|---|---|---|---|---|
| 12 | Ora | 5 | 6.2/8.7 | 465 | 595 |

REGISTERED CIVIL ENGINEER 11/12/12 DATE

4-29-13
PLANS APPROVAL DATE

REGISTERED PROFESSIONAL ENGINEER Sam Xie No. C51942 Exp. 6/30/2014 CIVIL STATE OF CALIFORNIA

*The State of California or its officers or agents shall not be responsible for the accuracy or completeness of electronic copies of this plan sheet.*

JACOBS
3161 MICHELSON, STE 500
IRVINE, CA 92612

ORANGE COUNTY TRANSPORTATION AUTHORITY
550 S. MAIN STREET
ORANGE, CA 92863-1584

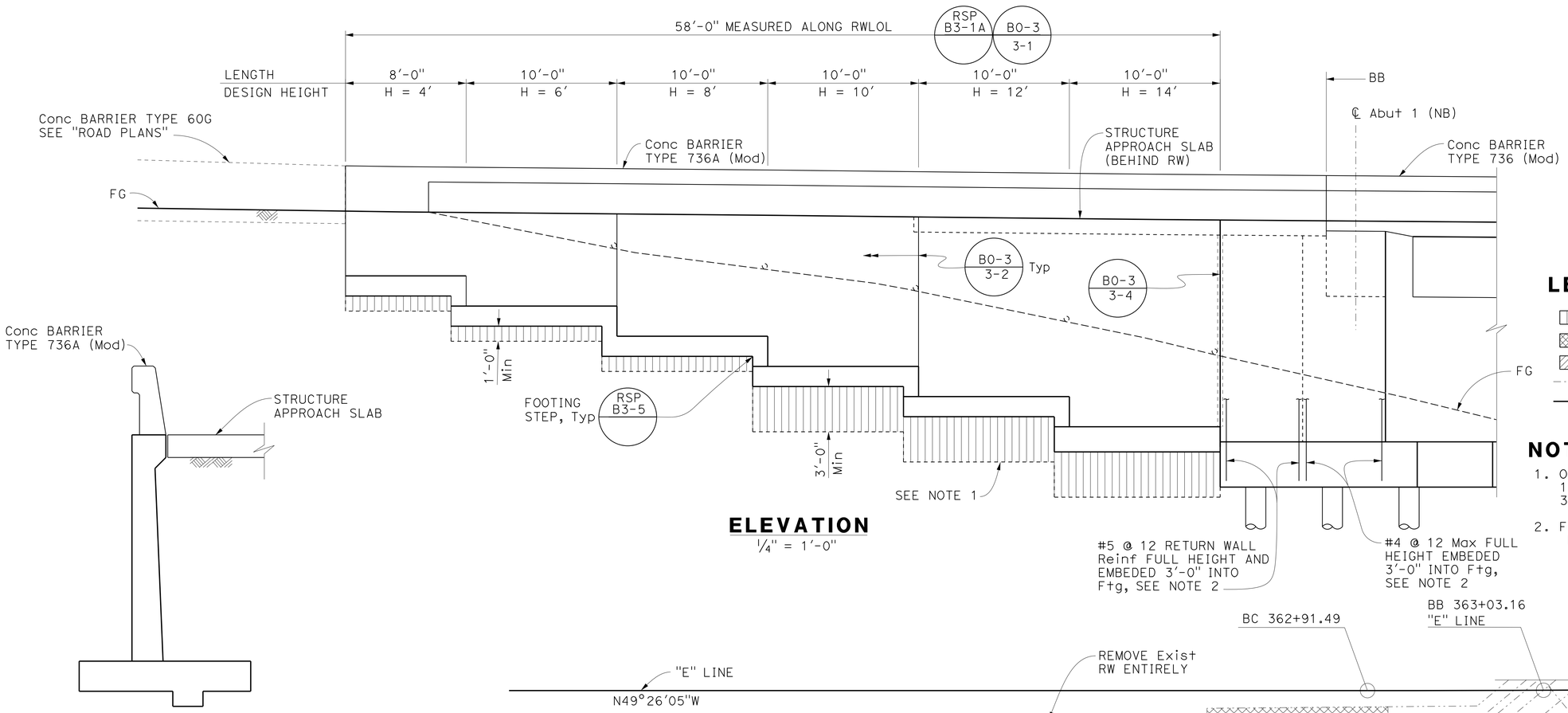


## ELEVATION

1/4" = 1'-0"

## LEGEND:

- Structure Excavation (Retaining Wall) and Structure backfill (Retaining Wall)
- Remove Retaining Wall
- Bridge Removal (Portion)
- Existing Structure
- New Structure

## NOTES:

1. Overexcavate and backfill recompact 1'-0" min for wall height H<8' and 3'-0" min for wall height H>10'
2. For reinf details, see "ABUTMENT DETAILS No. 3" sheet




## TYPICAL WALL SECTION

NO SCALE

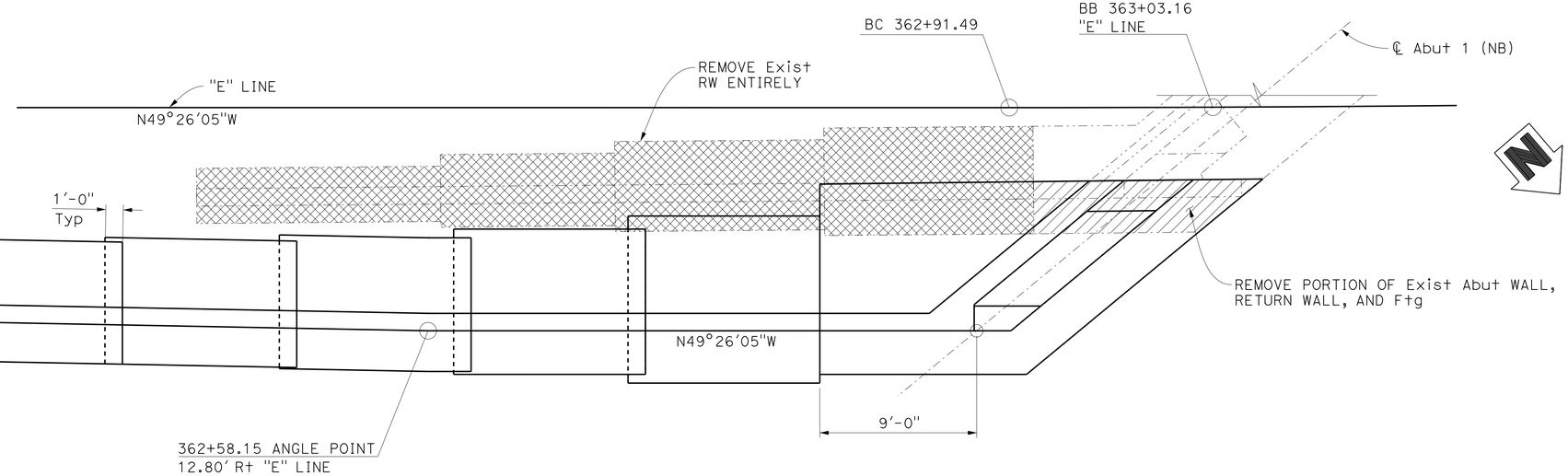


## RETAINING WALL PLAN AT ABUTMENT 1 (NB)

1/4" = 1'-0"

NOTE:
THE CONTRACTOR SHALL VERIFY ALL CONTROLLING FIELD DIMENSIONS BEFORE ORDERING OR FABRICATING ANY MATERIAL.

Luqi Yang
DESIGN OVERSIGHT Luqi Yang
1-16-13
SIGN OFF DATE

| | BY | CHECKED |
|---|---|---|
| DESIGN | J. Lee/ S. Xie | S. Nagi |
| DETAILS | I. Karkoutli | S. Nagi |
| QUANTITIES | M. Metcalf | S. Xie |

PREPARED FOR THE STATE OF CALIFORNIA DEPARTMENT OF TRANSPORTATION

Alaedin Moubayed
PROJECT ENGINEER

BRIDGE NO. 55-0226
POST MILES 6.70

# 5/N5-N1 CONN SEPARATION (WIDEN)
# RETAINING WALL DETAILS

DESIGN DETAIL SHEET (ENGLISH) (REV.7/16/10)

ORIGINAL SCALE IN INCHES FOR REDUCED PLANS 0 1 2 3

UNIT: 2998
PROJECT NUMBER & PHASE: 12000202791 CONTRACT NO.: 12-0F96E4

DISREGARD PRINTS BEARING EARLIER REVISION DATES 4/23/12 8/13/12 11/12/12

SHEET 16 OF 38

FILE => 55-0226-g-rwdt01.dgn

USERNAME => s124496 DATE PLOTTED => 29-APR-2013 TIME PLOTTED => 12:07

| DIST | COUNTY | ROUTE | POST MILES TOTAL PROJECT | SHEET No | TOTAL SHEETS |
|---|---|---|---|---|---|
| 12 | Ora | 5 | 6.2/8.7 | 466 | 595 |

REGISTERED CIVIL ENGINEER 11/12/12 DATE

4-29-13
PLANS APPROVAL DATE

REGISTERED PROFESSIONAL ENGINEER Sam Xie No. C51942 Exp. 6/30/2014 CIVIL STATE OF CALIFORNIA

*The State of California or its officers or agents shall not be responsible for the accuracy or completeness of electronic copies of this plan sheet.*

JACOBS
3161 MICHELSON, STE 500
IRVINE, CA 92612

ORANGE COUNTY TRANSPORTATION AUTHORITY
550 S. MAIN STREET
ORANGE, CA 92863-1584

## LEGEND:

- Bundled bars
- Expanded polystyrene
- Closure Pour
- Existing Structure
- New Structure

## NOTES:

1. No splices allowed in main cap reinforcement.
2. For pile layout and ftg reinf, see "BENT DETAILS No. 1" sheet.
3. For bent cap stirrup placement details see "BENT DETAILS No. 3" sheet.
4. For cut sections not shown, footing pile layout and details, see "BENT DETAILS No. 1" sheet.

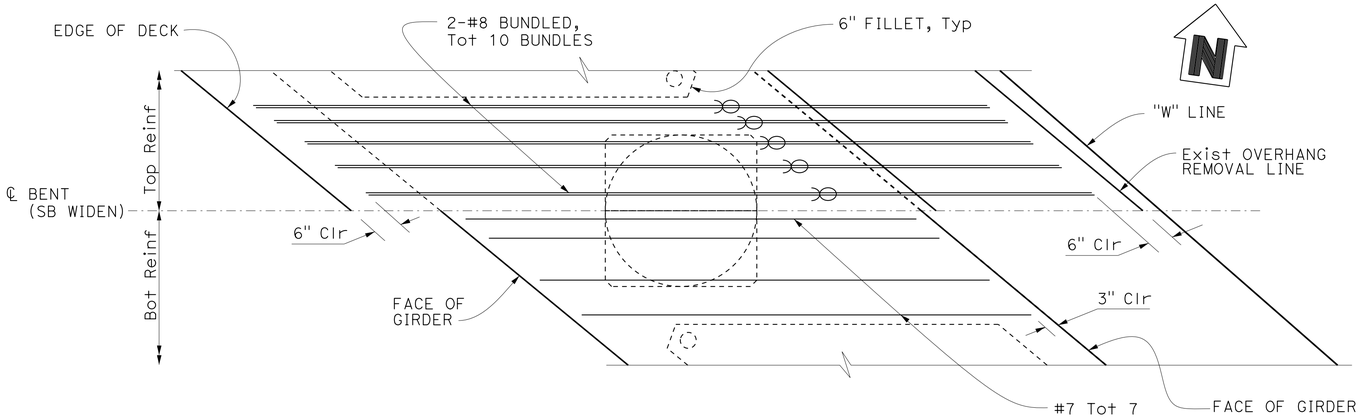


## PLAN - SB WIDEN

½" = 1'-0"

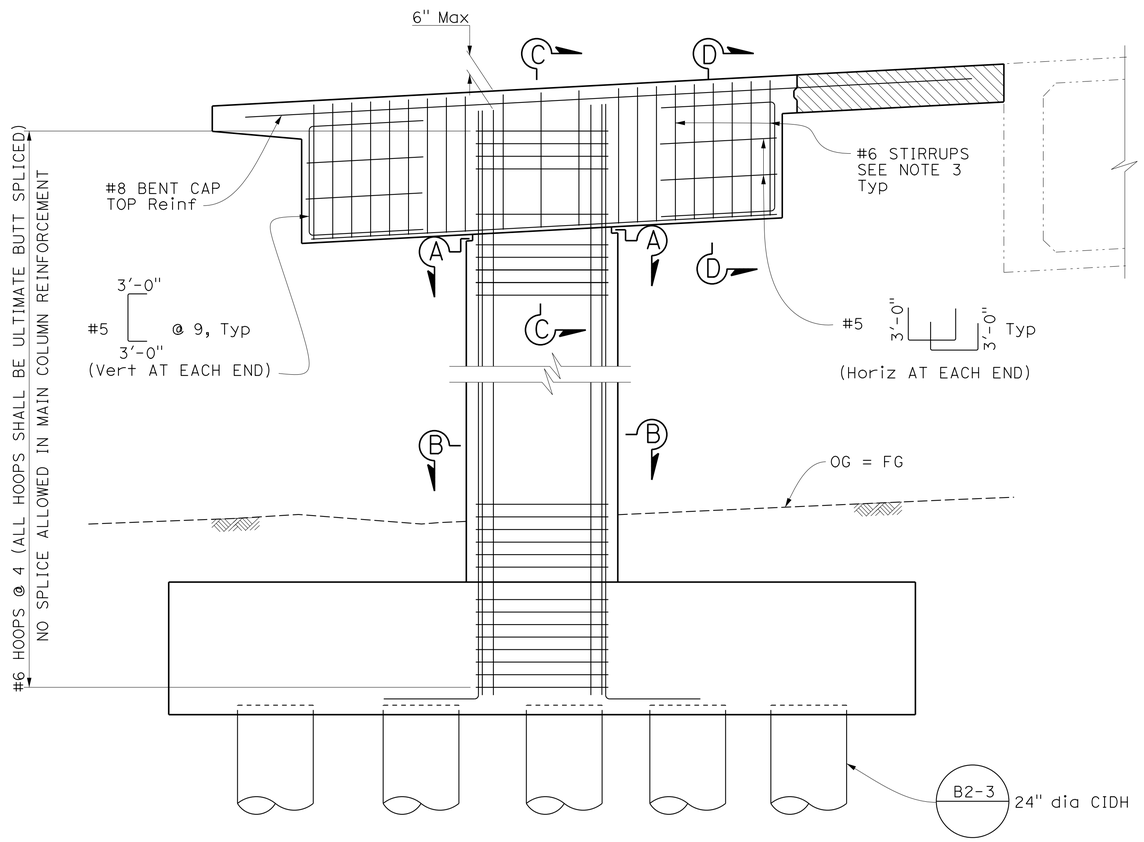


## ELEVATION - SB WIDEN

½" = 1'-0"

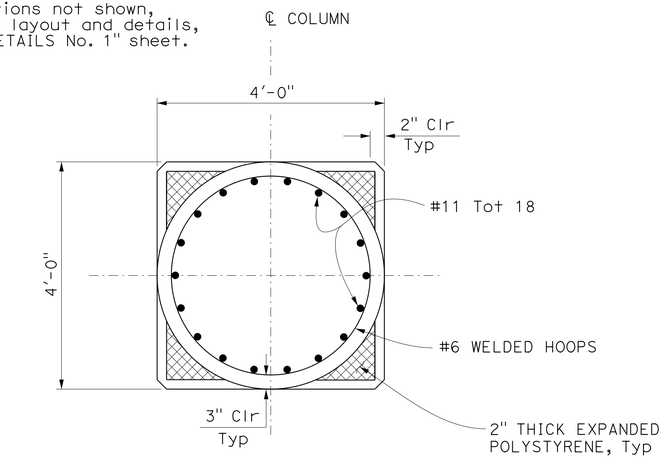


## SECTION A-A

¾" = 1'-0"

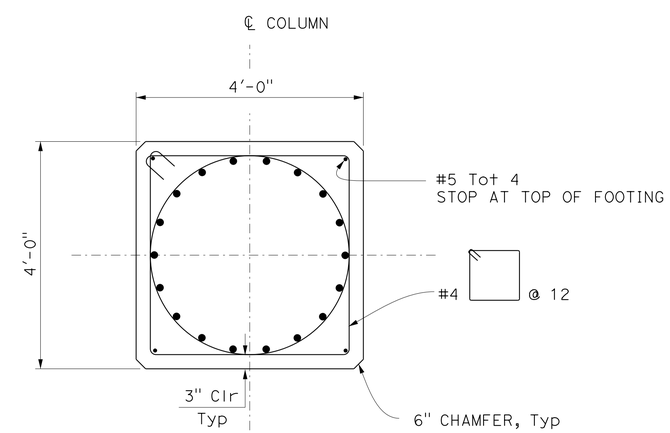


## SECTION B-B

¾" = 1'-0"

NOTE:
THE CONTRACTOR SHALL VERIFY ALL CONTROLLING FIELD DIMENSIONS BEFORE ORDERING OR FABRICATING ANY MATERIAL.

| | | | |
|---|---|---|---|
| DESIGN | BY J. Lee/ S. Xie | CHECKED S. Nagi | |
| DETAILS | BY I. Karkoutli | CHECKED S. Nagi | |
| QUANTITIES | BY M. Metcalf | CHECKED S. Xie | |

DESIGN OVERSIGHT Luqi Yang
1-16-13
SIGN OFF DATE

PREPARED FOR THE STATE OF CALIFORNIA DEPARTMENT OF TRANSPORTATION

Alaedin Moubayed
PROJECT ENGINEER

BRIDGE NO. 55-0226
POST MILES 6.70

# 5/N5-N1 CONN SEPARATION (WIDEN)

# BENT LAYOUT No. 1

DESIGN DETAIL SHEET (ENGLISH) (REV.7/16/10)

ORIGINAL SCALE IN INCHES FOR REDUCED PLANS 0 1 2 3

UNIT: 2998
PROJECT NUMBER & PHASE: 12000202791 CONTRACT NO.: 12-0F96E4

DISREGARD PRINTS BEARING EARLIER REVISION DATES

REVISION DATES 1/23/12 8/13/12 11/12/12

SHEET 17 OF 38

FILE => 55-0226-h-b01_1o01.dgn

USERNAME => s124496 DATE PLOTTED => 29-APR-2013 TIME PLOTTED => 12:07

| DIST | COUNTY | ROUTE | POST MILES TOTAL PROJECT | SHEET No | TOTAL SHEETS |
|---|---|---|---|---|---|
| 12 | Ora | 5 | 6.2/8.7 | 467 | 595 |

REGISTERED CIVIL ENGINEER 11/12/12 DATE

4-29-13
PLANS APPROVAL DATE

REGISTERED PROFESSIONAL ENGINEER Sam Xie No. C51942 Exp. 6/30/2014 CIVIL STATE OF CALIFORNIA

*The State of California or its officers or agents shall not be responsible for the accuracy or completeness of electronic copies of this plan sheet.*

JACOBS
3161 MICHELSON, STE 500
IRVINE, CA 92612

ORANGE COUNTY TRANSPORTATION AUTHORITY
550 S. MAIN STREET
ORANGE, CA 92863-1584

## LEGEND:

- Expanded polystyrene
- Closure Pour
- Existing Structure
- New Structure

## NOTES:

1. No splices allowed in main cap reinforcement.
2. For pile layout and ftg reinf, see "BENT DETAILS No. 2" sheet.
3. For bent cap stirrup placement details see "BENT DETAILS NO. 3" sheet.
4. For cut sections not shown, footing pile layout and details, see "BENT DETAILS No. 2" sheet.

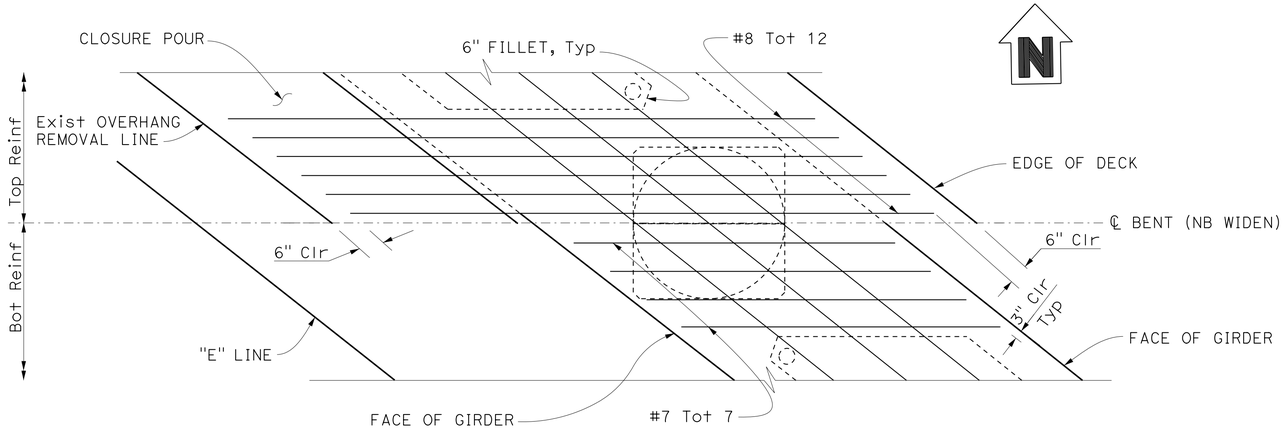


## PLAN - NB WIDEN

½" = 1'-0"

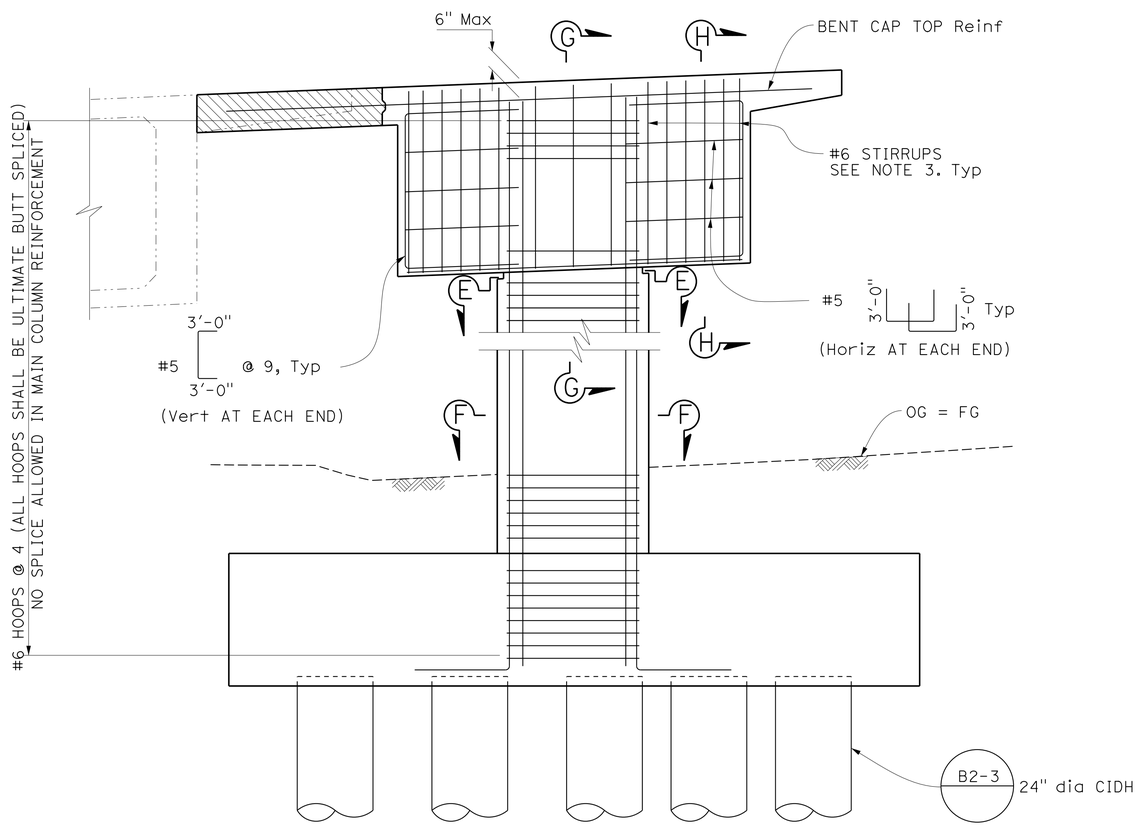


## ELEVATION - NB WIDEN

½" = 1'-0"

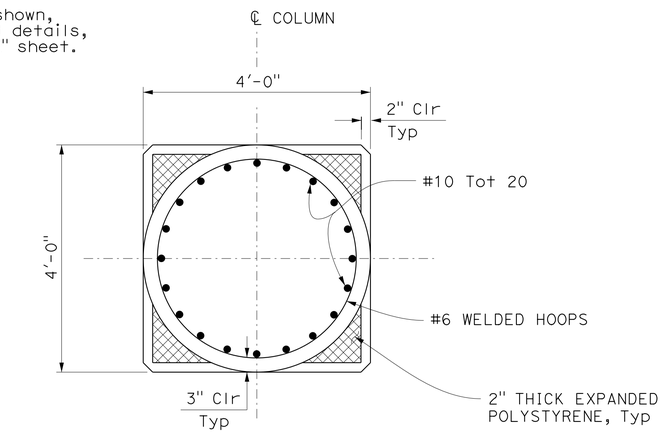


## SECTION E-E

¾" = 1'-0"

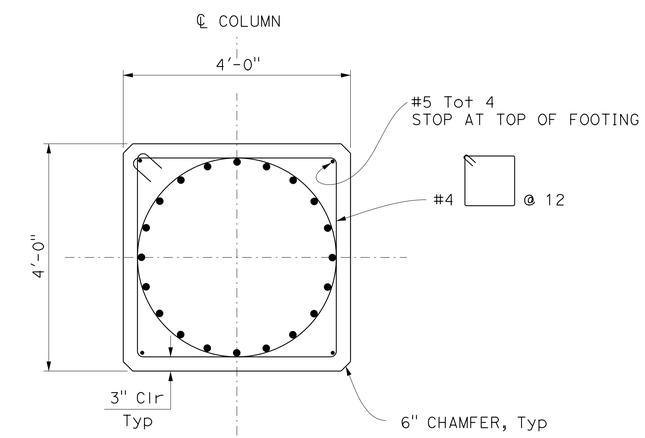


## SECTION F-F

¾" = 1'-0"

NOTE:
THE CONTRACTOR SHALL VERIFY ALL CONTROLLING FIELD DIMENSIONS BEFORE ORDERING OR FABRICATING ANY MATERIAL.

Luqi Yang
DESIGN OVERSIGHT Luqi Yang
1-16-13
SIGN OFF DATE

| | BY | CHECKED |
|---|---|---|
| DESIGN | J. Lee/ S. Xie | S. Nagi |
| DETAILS | I. Karkoutli | S. Nagi |
| QUANTITIES | M. Metcalf | S. Xie |

PREPARED FOR THE STATE OF CALIFORNIA DEPARTMENT OF TRANSPORTATION

Alaedin Moubayed
PROJECT ENGINEER

BRIDGE NO. 55-0226
POST MILES 6.70

# 5/N5-N1 CONN SEPARATION (WIDEN)

# BENT LAYOUT No. 2

DESIGN DETAIL SHEET (ENGLISH) (REV.7/16/10)

ORIGINAL SCALE IN INCHES FOR REDUCED PLANS 0 1 2 3

UNIT: 2998
PROJECT NUMBER & PHASE: 12000202791 CONTRACT NO.: 12-0F96E4

DISREGARD PRINTS BEARING EARLIER REVISION DATES → 4/23/12 8/13/12 11/12/12

SHEET 18 OF 38

FILE => 55-0226-h-b01_1o02.dgn

USERNAME => s124496 DATE PLOTTED => 29-APR-2013 TIME PLOTTED => 12:07

| DIST | COUNTY | ROUTE | POST MILES TOTAL PROJECT | SHEET No | TOTAL SHEETS |
|---|---|---|---|---|---|
| 12 | Ora | 5 | 6.2/8.7 | 468 | 595 |

REGISTERED CIVIL ENGINEER 11/12/12 DATE

4-29-13
PLANS APPROVAL DATE

REGISTERED PROFESSIONAL ENGINEER Sam Xie No. C51942 Exp. 6/30/2014 CIVIL STATE OF CALIFORNIA

*The State of California or its officers or agents shall not be responsible for the accuracy or completeness of electronic copies of this plan sheet.*

JACOBS
3161 MICHELSON, STE 500
IRVINE, CA 92612

ORANGE COUNTY TRANSPORTATION AUTHORITY
550 S. MAIN STREET
ORANGE, CA 92863-1584

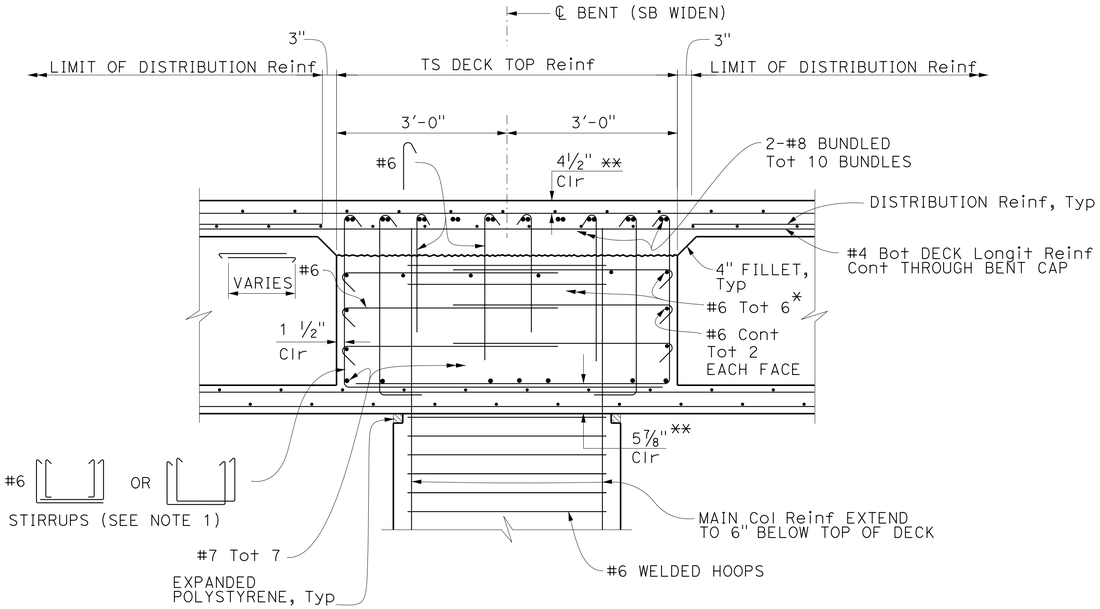


## SECTION C-C

¾" = 1'-0"

* Reinforcement may be adjusted to clear PS ducts.

** Clearance to top main cap reinf.

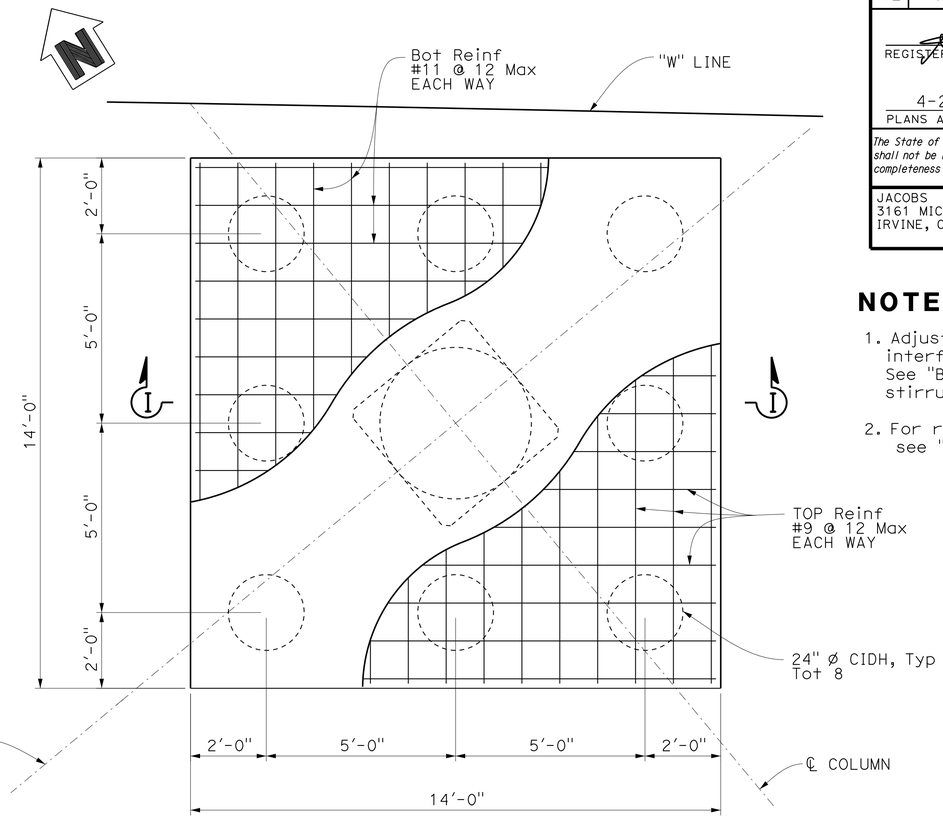


## FOOTING PILE LAYOUT

½" = 1'-0"

(Typ BENTS 2 & 3)

## NOTES:

1. Adjust #6 stirrup spacing to avoid interference with long deck reinf. See "BENT DETAILS NO. 3" sheet for stirrup placement details.
2. For reinforcement not called out, see "SECTION C-C".

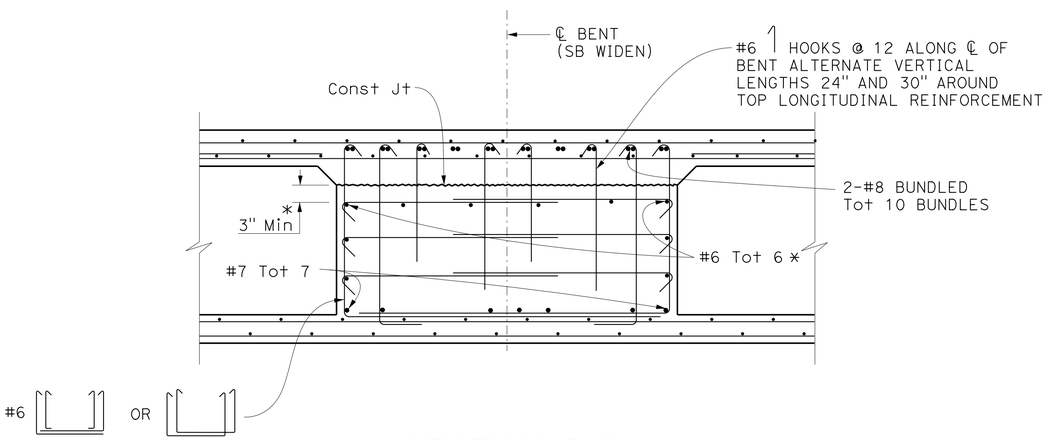


## SECTION D-D

¾" = 1'-0"

(SEE NOTE 2)

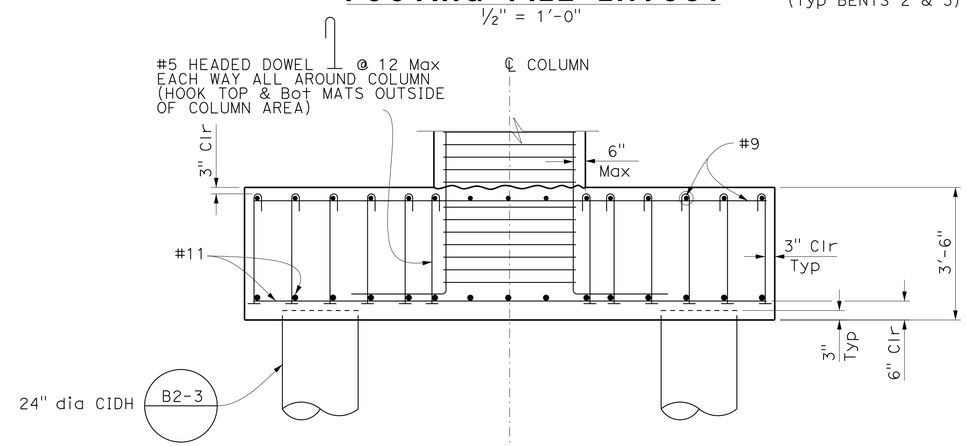


## SECTION I-I

½" = 1'-0"

NOTE:
THE CONTRACTOR SHALL VERIFY ALL CONTROLLING FIELD DIMENSIONS BEFORE ORDERING OR FABRICATING ANY MATERIAL.

Luqi Yang
DESIGN OVERSIGHT Luqi Yang
1-16-13
SIGN OFF DATE

| | BY | CHECKED |
|---|---|---|
| DESIGN | J. Lee/ S. Xie | S. Nagi |
| DETAILS | I. Karkoutli | S. Nagi |
| QUANTITIES | M. Metcalf | S. Xie |

PREPARED FOR THE STATE OF CALIFORNIA DEPARTMENT OF TRANSPORTATION

Alaedin Moubayed
PROJECT ENGINEER

BRIDGE NO. 55-0226
POST MILES 6.70

# 5/N5-N1 CONN SEPARATION (WIDEN)

# BENT DETAILS No. 1

DESIGN DETAIL SHEET (ENGLISH) (REV.7/16/10)

ORIGINAL SCALE IN INCHES FOR REDUCED PLANS 0 1 2 3

UNIT: 2998
PROJECT NUMBER & PHASE: 12000202791
CONTRACT NO.: 12-0F96E4

DISREGARD PRINTS BEARING EARLIER REVISION DATES

REVISION DATES 4/23/12 8/13/12 11/12/12

SHEET 19 OF 38

FILE => 55-0226-h-b01dt01.dgn

USERNAME => s124496 DATE PLOTTED => 29-APR-2013 TIME PLOTTED => 12:07

| DIST | COUNTY | ROUTE | POST MILES TOTAL PROJECT | SHEET No | TOTAL SHEETS |
|---|---|---|---|---|---|
| 12 | Ora | 5 | 6.2/8.7 | 469 | 595 |

REGISTERED CIVIL ENGINEER 11/12/12 DATE

4-29-13
PLANS APPROVAL DATE

REGISTERED PROFESSIONAL ENGINEER Sam Xie No. C51942 Exp. 6/30/2014 CIVIL STATE OF CALIFORNIA

*The State of California or its officers or agents shall not be responsible for the accuracy or completeness of electronic copies of this plan sheet.*

JACOBS
3161 MICHELSON, STE 500
IRVINE, CA 92612

ORANGE COUNTY TRANSPORTATION AUTHORITY
550 S. MAIN STREET
ORANGE, CA 92863-1584

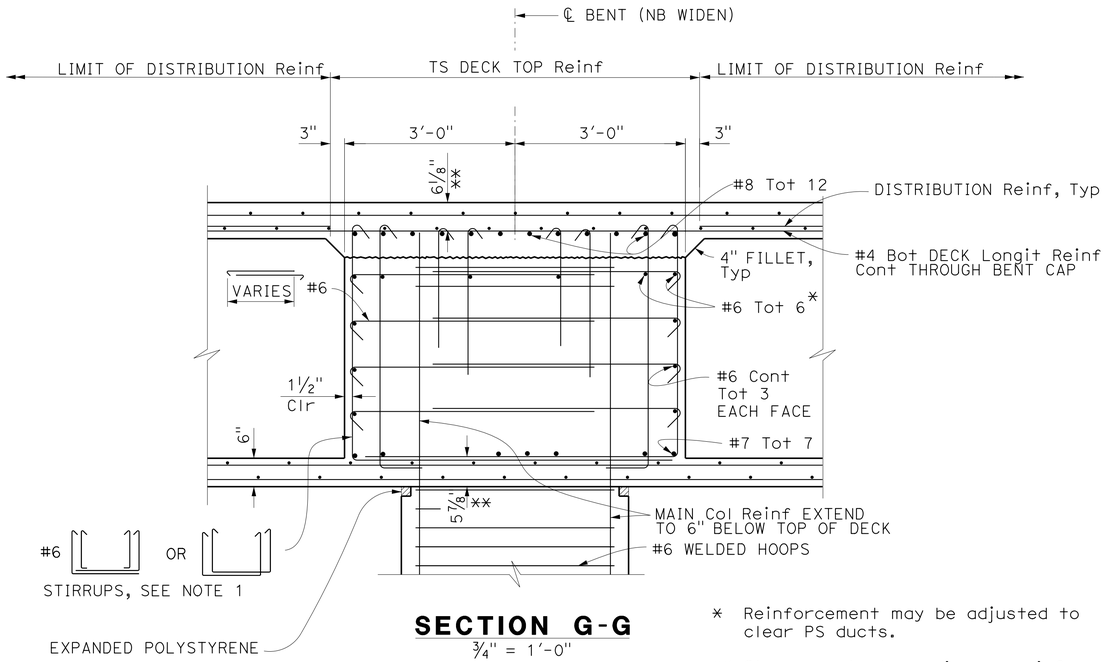


## SECTION G-G

3/4" = 1'-0"

* Reinforcement may be adjusted to clear PS ducts.

** Clearance to top main cap reinf.

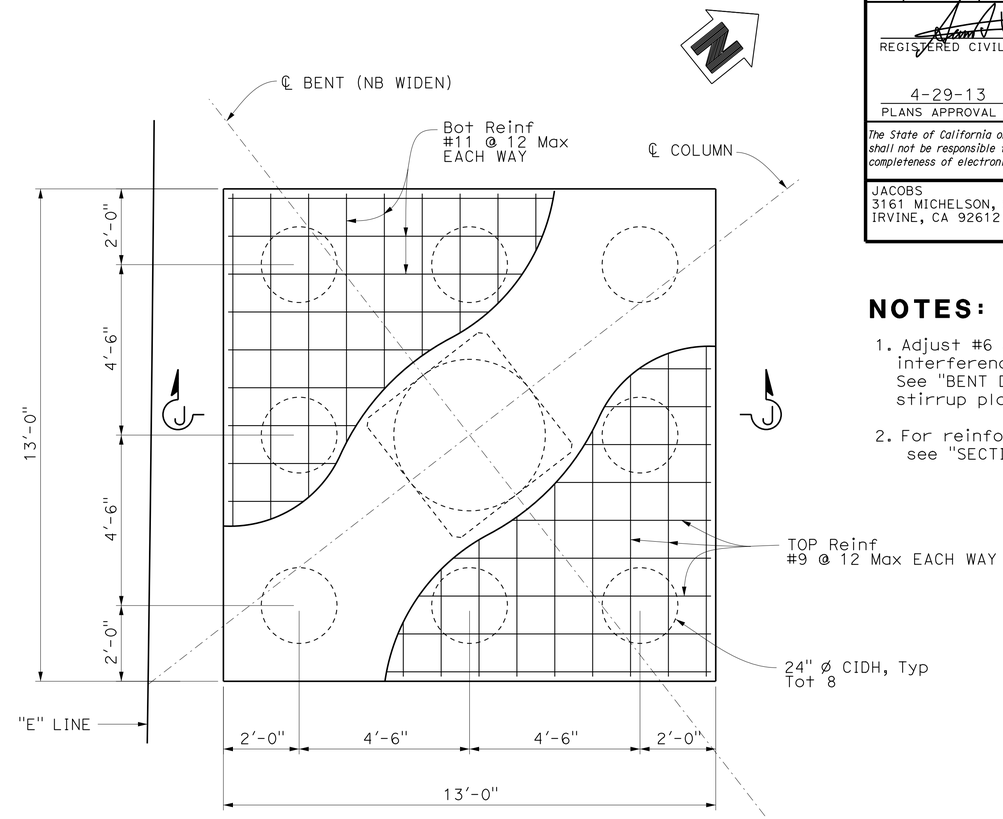


## PILE LAYOUT

1/2" = 1'-0" (Typ BENTS 2 & 3)

## NOTES:

1. Adjust #6 stirrup spacing to avoid interference with long deck reinf. See "BENT DETAILS NO. 3" sheet for stirrup placement details.
2. For reinforcement not called out, see "SECTION G-G".

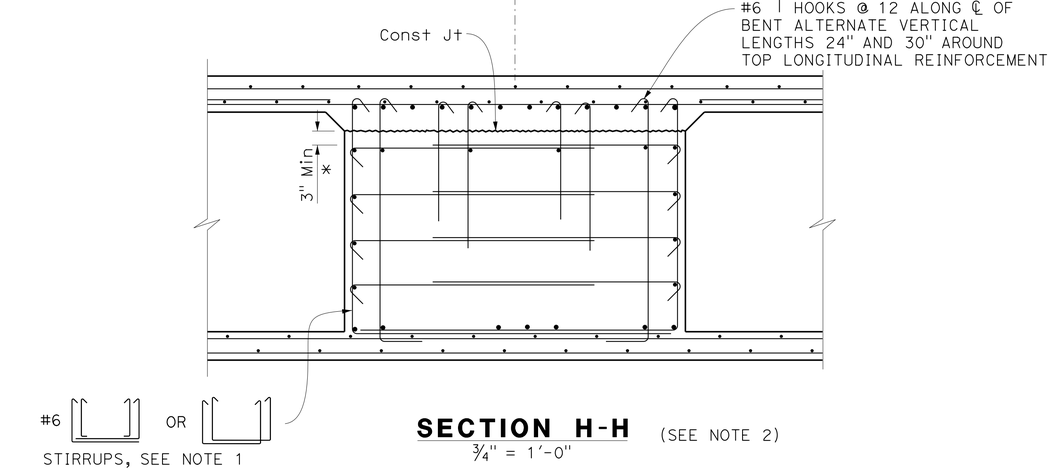


## SECTION H-H

3/4" = 1'-0" (SEE NOTE 2)

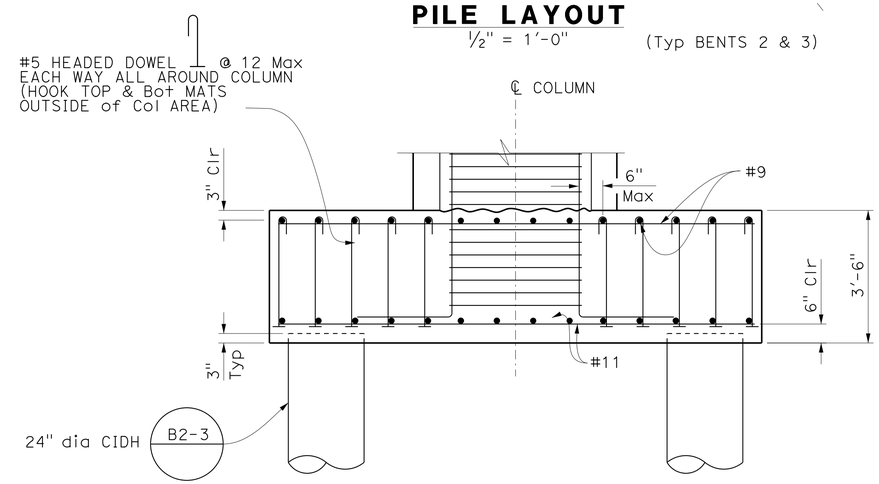


## SECTION J-J

1/2" = 1'-0"

NOTE:
THE CONTRACTOR SHALL VERIFY ALL CONTROLLING FIELD DIMENSIONS BEFORE ORDERING OR FABRICATING ANY MATERIAL.

| | | | |
|---|---|---|---|
| DESIGN | BY J. Lee/ S. Xie | CHECKED S. Nagi | |
| DETAILS | BY I. Karkoutli | CHECKED S. Nagi | |
| QUANTITIES | BY M. Metcalf | CHECKED S. Xie | |

Luqi Yang
DESIGN OVERSIGHT Luqi Yang
1-16-13
SIGN OFF DATE

PREPARED FOR THE STATE OF CALIFORNIA DEPARTMENT OF TRANSPORTATION

Alaedin Moubayed
PROJECT ENGINEER

BRIDGE NO. 55-0226
POST MILES 6.70

# 5/N5-N1 CONN SEPARATION (WIDEN)

# BENT DETAILS No. 2

DESIGN DETAIL SHEET (ENGLISH) (REV.7/16/10)

ORIGINAL SCALE IN INCHES FOR REDUCED PLANS 0 1 2 3

UNIT: 2998
PROJECT NUMBER & PHASE: 12000202791 CONTRACT NO.: 12-0F96E4

DISREGARD PRINTS BEARING EARLIER REVISION DATES

REVISION DATES 1/23/12 8/13/12 11/12/12

SHEET 20 OF 38

FILE => 55-0226-h-b01dt02.dgn

USERNAME => s124496 DATE PLOTTED => 29-APR-2013 TIME PLOTTED => 12:07

| DIST | COUNTY | ROUTE | POST MILES TOTAL PROJECT | SHEET No | TOTAL SHEETS |
|---|---|---|---|---|---|
| 12 | Ora | 5 | 6.2/8.7 | 470 | 595 |

REGISTERED CIVIL ENGINEER 11/12/12 DATE

4-29-13
PLANS APPROVAL DATE

REGISTERED PROFESSIONAL ENGINEER Sam Xie No. C51942 Exp. 6/30/2014 CIVIL STATE OF CALIFORNIA

*The State of California or its officers or agents shall not be responsible for the accuracy or completeness of electronic copies of this plan sheet.*

JACOBS
3161 MICHELSON, STE 500
IRVINE, CA 92612

ORANGE COUNTY
TRANSPORTATION AUTHORITY
550 S. MAIN STREET
ORANGE, CA 92863-1584

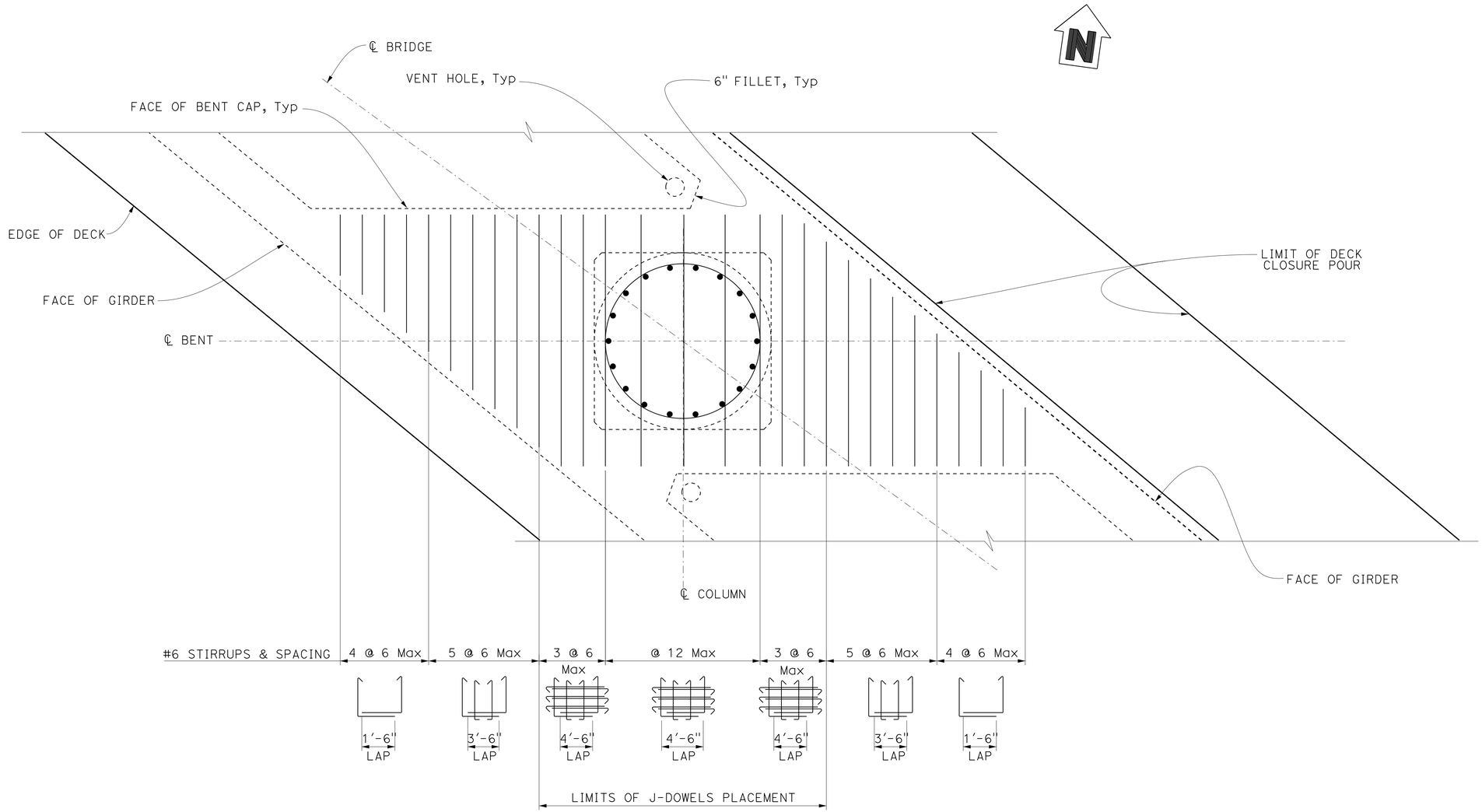


**PLAN**
3/4" = 1'-0"

## NOTES:

1. For other details and Reinf not shown, See "BENT LAYOUT" sheets.
2. SB widen shown, NB widen similar. Stirrup details shown are typical for all bents.

NOTE:
THE CONTRACTOR SHALL VERIFY ALL CONTROLLING FIELD DIMENSIONS BEFORE ORDERING OR FABRICATING ANY MATERIAL.

Luqi Yang
DESIGN OVERSIGHT Luqi Yang
1-16-13
SIGN OFF DATE

| | BY | CHECKED |
|---|---|---|
| DESIGN | J. Lee/ S. Xie | S. Nagi |
| DETAILS | I. Karkoutli | S. Nagi |
| QUANTITIES | M. Metcalf | S. Xie |

PREPARED FOR THE STATE OF CALIFORNIA DEPARTMENT OF TRANSPORTATION

Alaedin Moubayed
PROJECT ENGINEER

BRIDGE NO. 55-0226
POST MILES 6.70

# 5/N5-N1 CONN SEPARATION (WIDEN)
# BENT DETAILS No. 3

DESIGN DETAIL SHEET (ENGLISH) (REV.7/16/10)

ORIGINAL SCALE IN INCHES FOR REDUCED PLANS 0 1 2 3

UNIT: 2998
PROJECT NUMBER & PHASE: 12000202791 CONTRACT NO.: 12-0F96E4

DISREGARD PRINTS BEARING EARLIER REVISION DATES

REVISION DATES 4/23/12 8/13/12 11/12/12

SHEET 21 OF 38

FILE => 55-0226-h-b01dt03.dgn

USERNAME => s124496 DATE PLOTTED => 29-APR-2013 TIME PLOTTED => 12:07

| DIST | COUNTY | ROUTE | POST MILES TOTAL PROJECT | SHEET No | TOTAL SHEETS |
|---|---|---|---|---|---|
| 12 | Ora | 5 | 6.2/8.7 | 471 | 595 |

REGISTERED CIVIL ENGINEER 11/12/12 DATE

4-29-13
PLANS APPROVAL DATE

REGISTERED PROFESSIONAL ENGINEER Sam Xie No. C51942 Exp. 6/30/2014 CIVIL STATE OF CALIFORNIA

*The State of California or its officers or agents shall not be responsible for the accuracy or completeness of electronic copies of this plan sheet.*

JACOBS
3161 MICHELSON, STE 500
IRVINE, CA 92612

ORANGE COUNTY TRANSPORTATION AUTHORITY
550 S. MAIN STREET
ORANGE, CA 92863-1584

| EXISTING BRIDGE | a | b | † |
|---|---|---|---|
| 1960 LEFT & RIGHT | 9'-6"± | 3'-0"± | 2'-0"± |
| 1969 BRIDGE | 10'-0"± | 3'-3"± | 2'-0"± |
| 1973 LEFT BRIDGE | 9'-0"± | 2'-9"± | 3'-3"± |
| 1973 RIGHT BRIDGE | 11'-0"± | 3'-9"± | 2'-0"± |

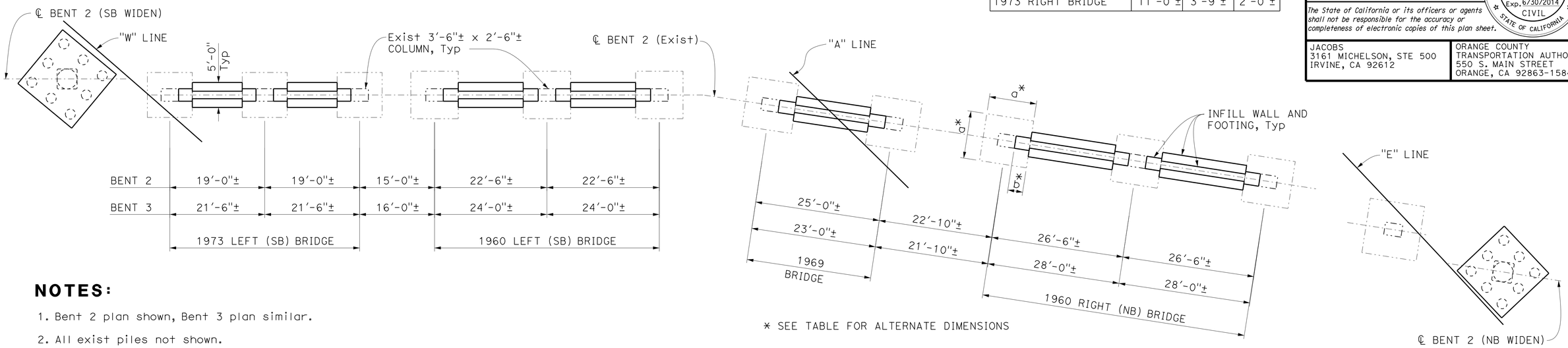


## BENT 2 PLAN
1" = 10'

## NOTES:

1. Bent 2 plan shown, Bent 3 plan similar.
2. All exist piles not shown.
3. See "FOUNDATION PLAN" for bottom of exist footing elevations.
4. The Contractor shall take field measurements and determine the exist column length.
5. For infill wall ftg step reinforcing detail, See RSP B3-5

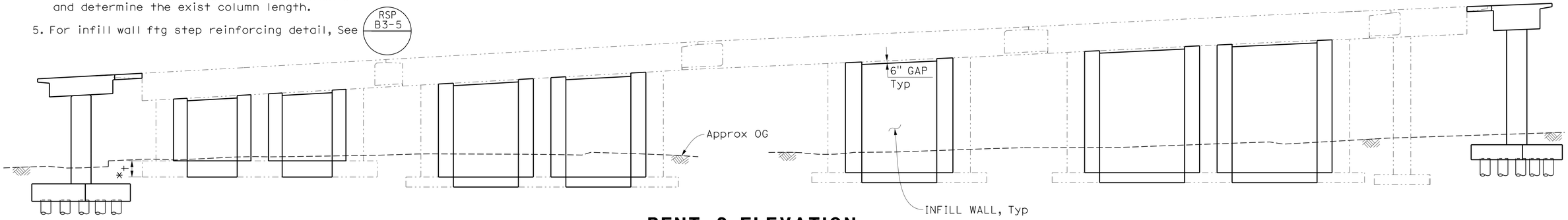


## BENT 2 ELEVATION
1" = 10'

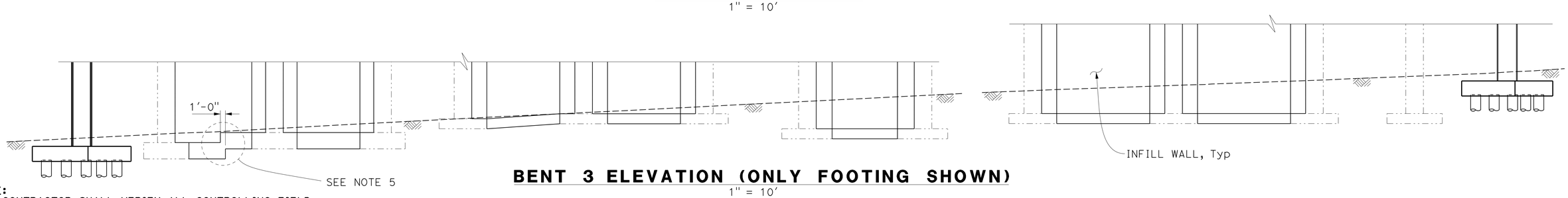


## BENT 3 ELEVATION (ONLY FOOTING SHOWN)
1" = 10'

NOTE:
THE CONTRACTOR SHALL VERIFY ALL CONTROLLING FIELD DIMENSIONS BEFORE ORDERING OR FABRICATING ANY MATERIAL.

Luqi Yang
DESIGN OVERSIGHT Luqi Yang
1-16-13
SIGN OFF DATE

| | BY | CHECKED |
|---|---|---|
| DESIGN | J. Lee/ S. Xie | S. Nagi |
| DETAILS | I. Karkoutli | S. Nagi |
| QUANTITIES | M. Metcalf | S. Xie |

PREPARED FOR THE STATE OF CALIFORNIA DEPARTMENT OF TRANSPORTATION

Alaedin Moubayed
PROJECT ENGINEER

BRIDGE NO. 55-0226
POST MILES 6.70

# 5/N5-N1 CONN SEPARATION (WIDEN)
# INFILL WALL LAYOUT

DESIGN DETAIL SHEET (ENGLISH) (REV.7/16/10)

ORIGINAL SCALE IN INCHES FOR REDUCED PLANS 0 1 2 3

UNIT: 2998
PROJECT NUMBER & PHASE: 12000202791 CONTRACT NO.: 12-0F96E4

DISREGARD PRINTS BEARING EARLIER REVISION DATES → 4/29/13 8/13/12 11/12/12

SHEET 22 OF 38

FILE => 55-0226-h-b01dt04.dgn

USERNAME => s124936 DATE PLOTTED => 29-APR-2013 TIME PLOTTED => 12:07

| DIST | COUNTY | ROUTE | POST MILES TOTAL PROJECT | SHEET No | TOTAL SHEETS |
|---|---|---|---|---|---|
| 12 | Ora | 5 | 6.2/8.7 | 472 | 595 |

REGISTERED CIVIL ENGINEER 11/12/12 DATE

4-29-13
PLANS APPROVAL DATE

REGISTERED PROFESSIONAL ENGINEER Sam Xie No. C51942 Exp. 6/30/2014 CIVIL STATE OF CALIFORNIA

*The State of California or its officers or agents shall not be responsible for the accuracy or completeness of electronic copies of this plan sheet.*

JACOBS
3161 MICHELSON, STE 500
IRVINE, CA 92612

ORANGE COUNTY TRANSPORTATION AUTHORITY
550 S. MAIN STREET
ORANGE, CA 92863-1584

## NOTES:

1. See table on "INFILL WALL LAYOUT" sheet.
2. Drill & bond (chemical adhesive) 12" into exist bent cap. Adjust dowel location where encountering exist reinf during drilling operation.

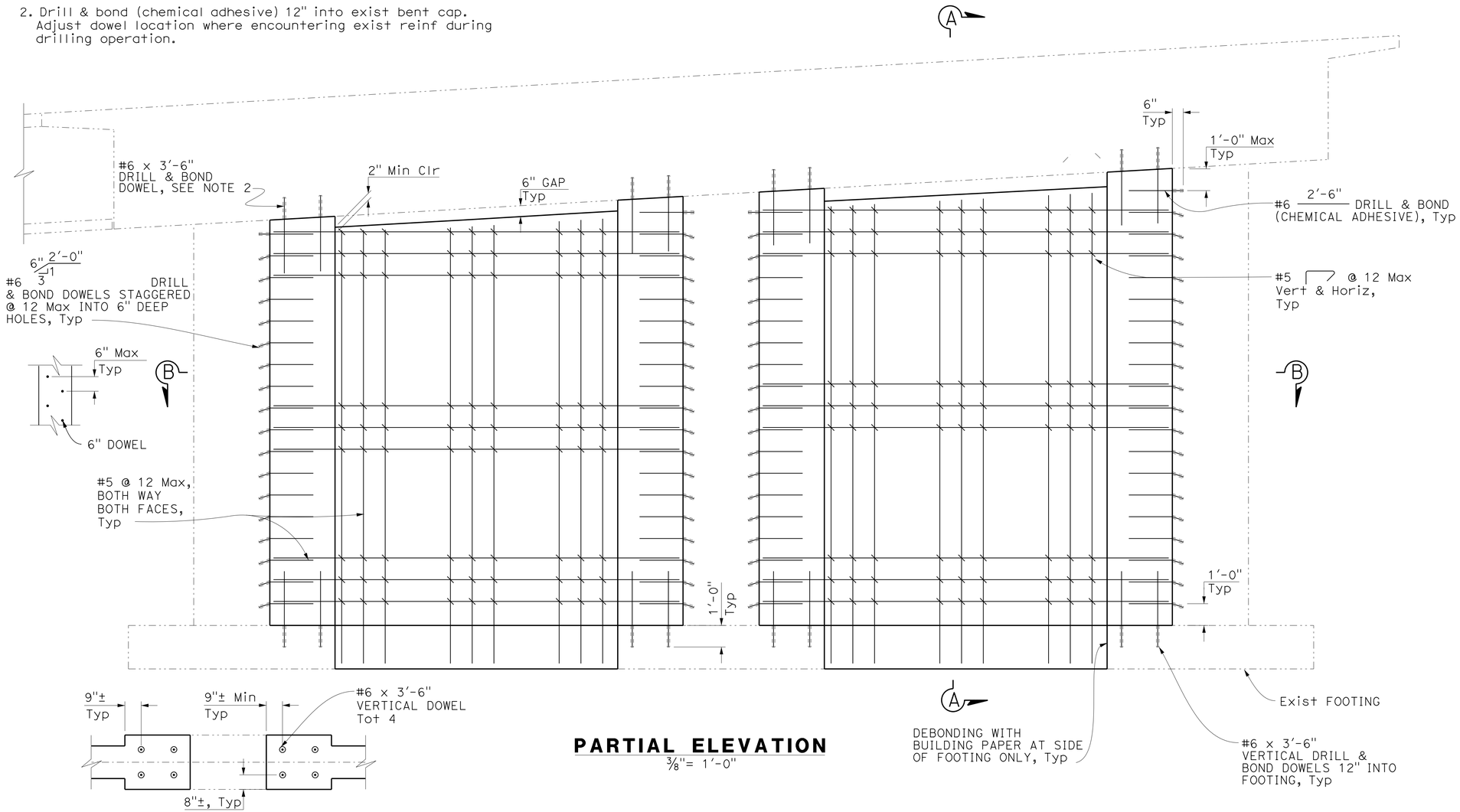


## PARTIAL ELEVATION

3/8"= 1'-0"




## TOP & BOTTOM OF COLUMN

3/8"= 1'-0"

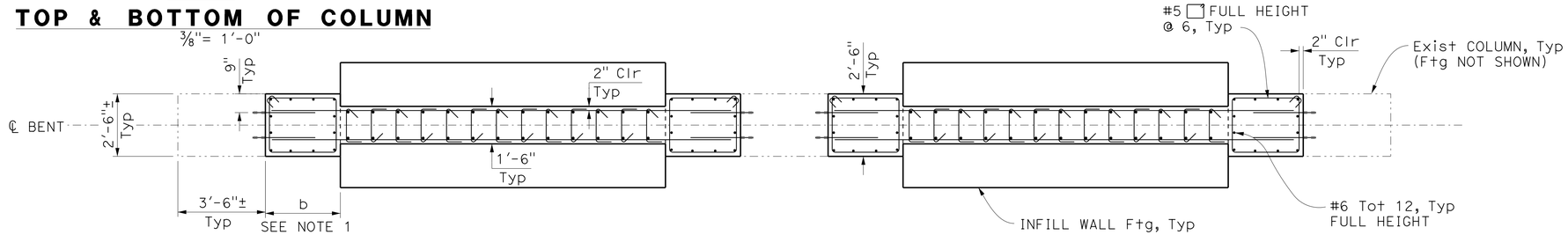


## SECTION B-B

3/8' = 1'-0"

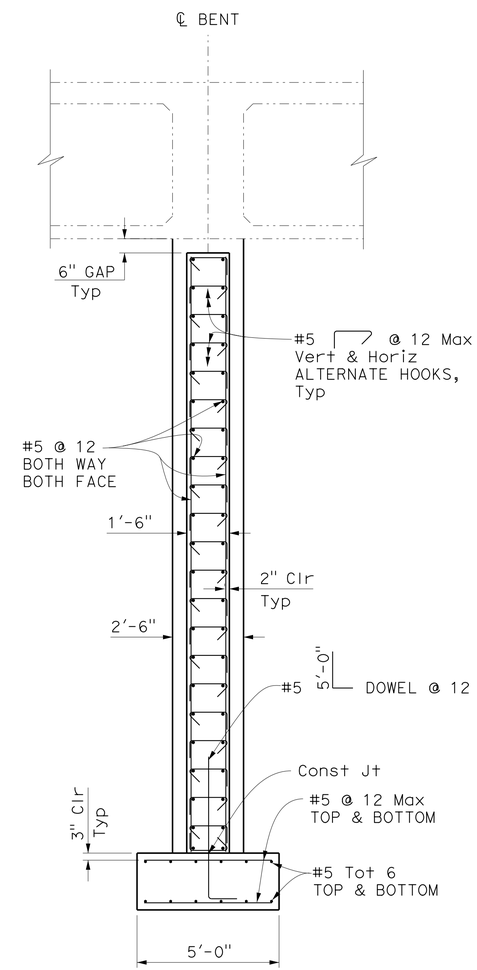


## SECTION A-A

3/8' = 1'-0"

NOTE:
THE CONTRACTOR SHALL VERIFY ALL CONTROLLING FIELD DIMENSIONS BEFORE ORDERING OR FABRICATING ANY MATERIAL.

Luqi Yang
DESIGN OVERSIGHT Luqi Yang
1-16-13
SIGN OFF DATE

| | BY | CHECKED |
|---|---|---|
| DESIGN | J. Lee/ S. Xie | S. Nagi |
| DETAILS | I. Karkoutli | S. Nagi |
| QUANTITIES | M. Metcalf | S. Xie |

PREPARED FOR THE STATE OF CALIFORNIA DEPARTMENT OF TRANSPORTATION

Alaedin Moubayed
PROJECT ENGINEER

BRIDGE NO. 55-0226
POST MILES 6.70

# 5/N5-N1 CONN SEPARATION (WIDEN)
# INFILL WALL DETAILS

DESIGN DETAIL SHEET (ENGLISH) (REV.7/16/10)

ORIGINAL SCALE IN INCHES FOR REDUCED PLANS 0 1 2 3

UNIT: 2998
PROJECT NUMBER & PHASE: 12000202791 CONTRACT NO.: 12-0F96E4

DISREGARD PRINTS BEARING EARLIER REVISION DATES

REVISION DATES: 1/23/12 8/13/12 11/12/12

SHEET 23 OF 38

FILE => 55-0226-h-b01dt05.dgn

USERNAME => s124496 DATE PLOTTED => 29-APR-2013 TIME PLOTTED => 12:07

| DIST | COUNTY | ROUTE | POST MILES TOTAL PROJECT | SHEET No | TOTAL SHEETS |
|---|---|---|---|---|---|
| 12 | Ora | 5 | 6.2/8.7 | 473 | 595 |

REGISTERED CIVIL ENGINEER 11/12/12 DATE

4-29-13
PLANS APPROVAL DATE

REGISTERED PROFESSIONAL ENGINEER Sam Xie No. C51942 Exp. 6/30/2014 CIVIL STATE OF CALIFORNIA

*The State of California or its officers or agents shall not be responsible for the accuracy or completeness of electronic copies of this plan sheet.*

JACOBS
3161 MICHELSON, STE 500
IRVINE, CA 92612

ORANGE COUNTY TRANSPORTATION AUTHORITY
550 S. MAIN STREET
ORANGE, CA 92863-1584

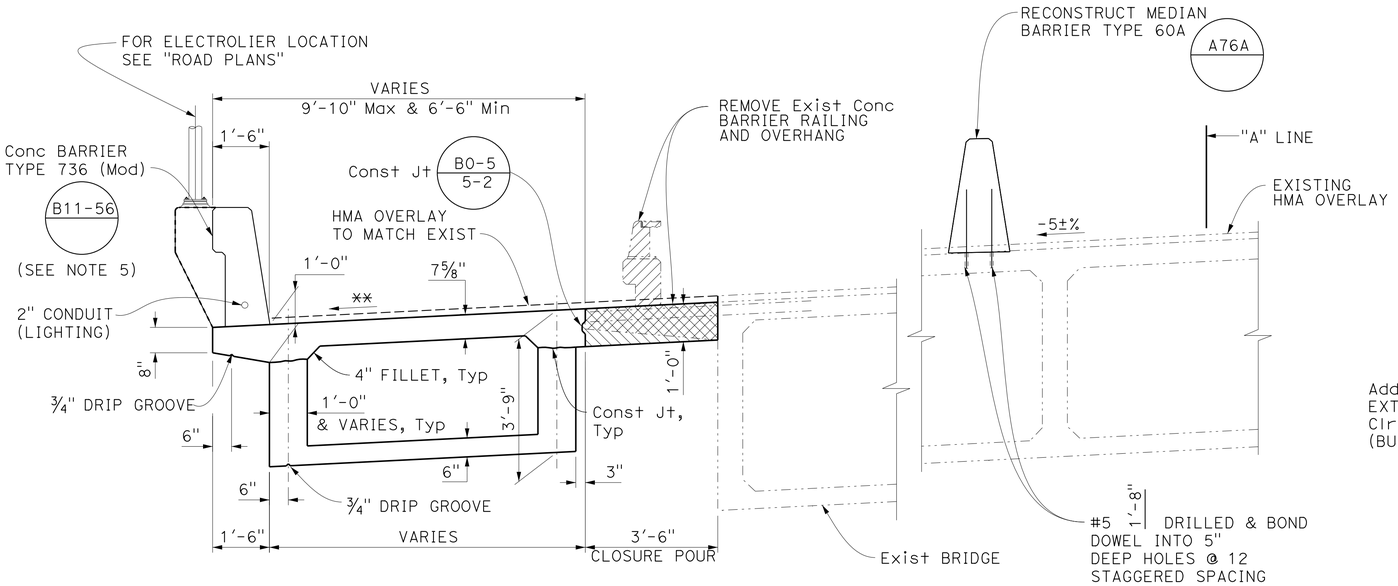


## TYPICAL SECTION (SB WIDENING)

1/2" = 1'-0"

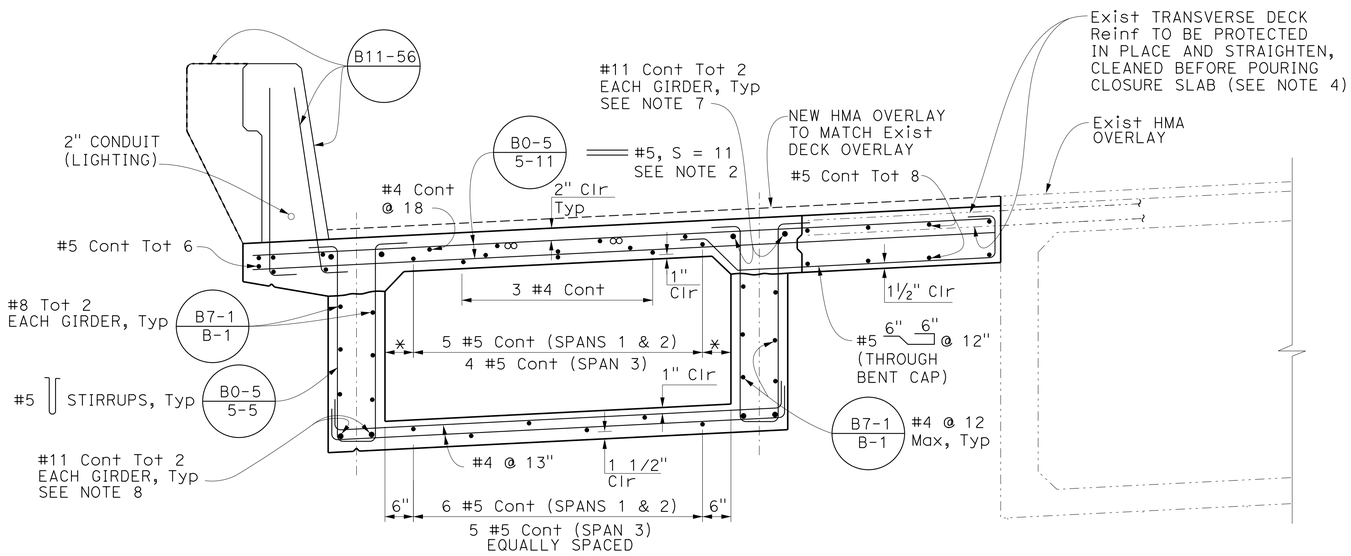


* 6" Const IN SPAN 1
7" IN SPAN 2 AT BENT 2 VARIES TO 6" AT BENT 3
7" IN SPAN 3 AT BENT 3 VARIES TO 5" AT Abut 4

## TYPICAL REINFORCEMENT SECTION

3/4" = 1'-0"

B0-5 B7-1 B8-5 B11-56

NOTE:
THE CONTRACTOR SHALL VERIFY ALL CONTROLLING FIELD DIMENSIONS BEFORE ORDERING OR FABRICATING ANY MATERIAL.

## LEGEND:

- Closure pour
- Bridge removal (portion)
- Existing Structure
- New Structure
- o Additional longitudinal reinf, See "ADDITIONAL REINFORCEMENT" Sheet.
- * Match exist
- ** Match exist deck cross slope & grade

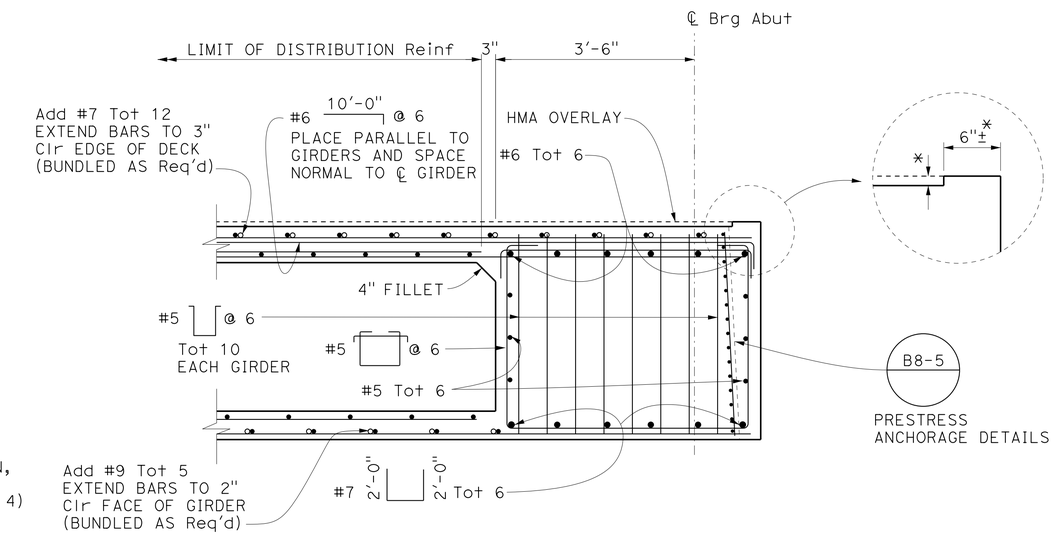


## END DIAPHRAGM DETAIL (NORMAL TO ℄ ABUTMENT)

3/4" = 1'-0"

## NOTES:

1. Special shallow falsework design is required for the SB widening box girder construction.
2. Transverse deck reinf shall be placed normal to and spaced along ℄ bridge.
3. For additional reinforcement, See "ADDITIONAL DECK REINFORCEMENT" sheet.
4. Field bend the existing deck reinf as necessary to provide 2" deck cover as required.
5. Conc barrier height shall be measured from HMA overlay surface.
6. Only service splices are allowed in cont long reinf.
7. No splice allowed within 30' about ℄ of bents.
8. No splice allowed within 25' on each side of ℄ span for bottom cont reinf.

## FALSEWORK RELEASE NOTES:

Alternative 1:
Falsework shall be released as soon as permitted by the specifications.
Closure pour shall not be placed sooner than 60 days after the falsework has been released.

Alternative 2:
Falsework shall not be released less than 28 days after the last concrete has been placed.
Closure pour shall not be placed sooner than 14 days after the falsework has been released.

When falsework release alternative 2 is used, camber values are 0.75 times those shown.

Luqi Yang
DESIGN OVERSIGHT Luqi Yang
1-16-13
SIGN OFF DATE

| | BY | CHECKED |
|---|---|---|
| DESIGN | J. Lee/ S. Xie | S. Nagi |
| DETAILS | I. Karkoutli | S. Nagi |
| QUANTITIES | M. Metcalf | S. Xie |

PREPARED FOR THE STATE OF CALIFORNIA DEPARTMENT OF TRANSPORTATION

Alaedin Moubayed
PROJECT ENGINEER

BRIDGE NO. 55-0226
POST MILES 6.70

# 5/N5-N1 CONN SEPARATION (WIDEN)
# TYPICAL SECTION No. 1

DESIGN DETAIL SHEET (ENGLISH) (REV.7/16/10)

ORIGINAL SCALE IN INCHES FOR REDUCED PLANS 0 1 2 3

UNIT: 2998
PROJECT NUMBER & PHASE: 12000202791 CONTRACT NO.: 12-0F96E4

DISREGARD PRINTS BEARING EARLIER REVISION DATES 4/23/12 8/13/12 11/12/12

SHEET 24 OF 38

FILE => 55-0226-k-ts01.dgn

USERNAME => s124496 DATE PLOTTED => 29-APR-2013 TIME PLOTTED => 12:07

| DIST | COUNTY | ROUTE | POST MILES TOTAL PROJECT | SHEET No | TOTAL SHEETS |
|---|---|---|---|---|---|
| 12 | Ora | 5 | 6.2/8.7 | 474 | 595 |

REGISTERED CIVIL ENGINEER 11/12/12 DATE

4-29-13
PLANS APPROVAL DATE

REGISTERED PROFESSIONAL ENGINEER Sam Xie No. C51942 Exp. 6/30/2014 CIVIL STATE OF CALIFORNIA

*The State of California or its officers or agents shall not be responsible for the accuracy or completeness of electronic copies of this plan sheet.*

JACOBS
3161 MICHELSON, STE 500
IRVINE, CA 92612

ORANGE COUNTY TRANSPORTATION AUTHORITY
550 S. MAIN STREET
ORANGE, CA 92863-1584

## LEGEND:

- Closure pour
- Bridge removal (portion)
- Existing Structure
- New Structure
- o Additional longitudinal reinf See "ADDITIONAL REINFORCEMENT" Sheet.
- * Match exist
- ** Match exist deck cross slope & GRADE

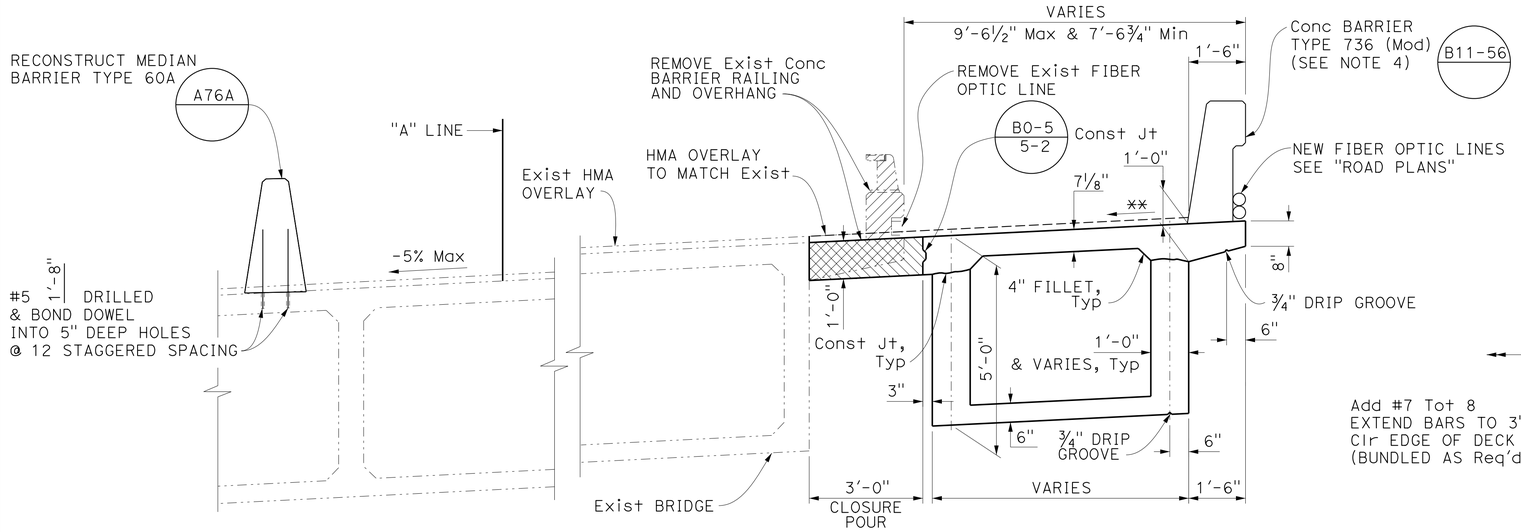


## TYPICAL SECTION (NB WIDENING)

½" = 1'-0"

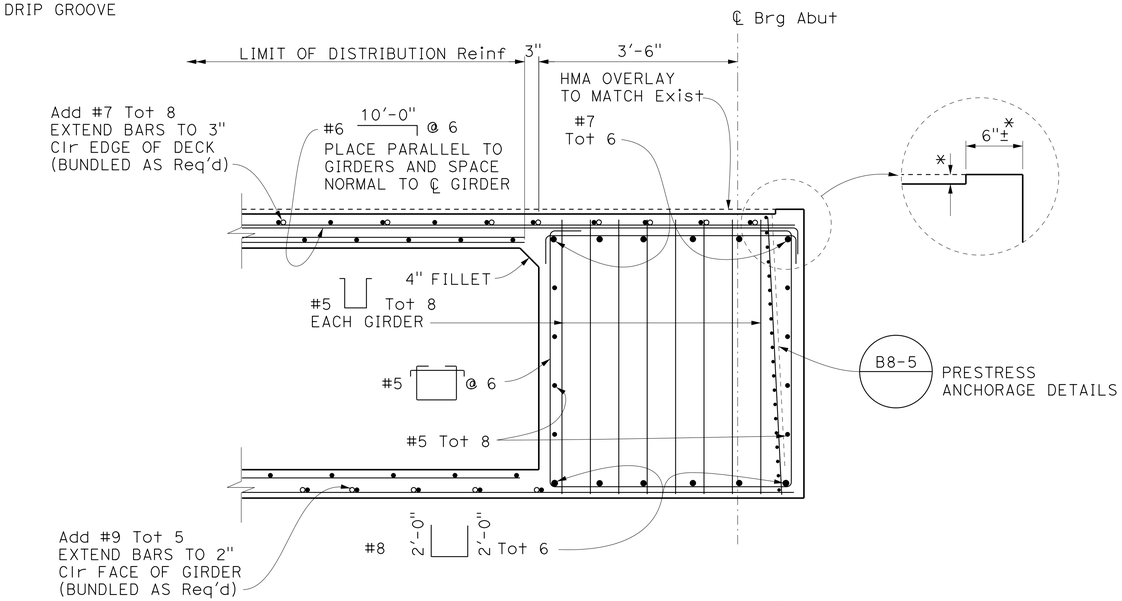


## END DIAPHRAGM DETAIL (NORMAL TO ℄ ABUTMENT)

¾" = 1'-0"

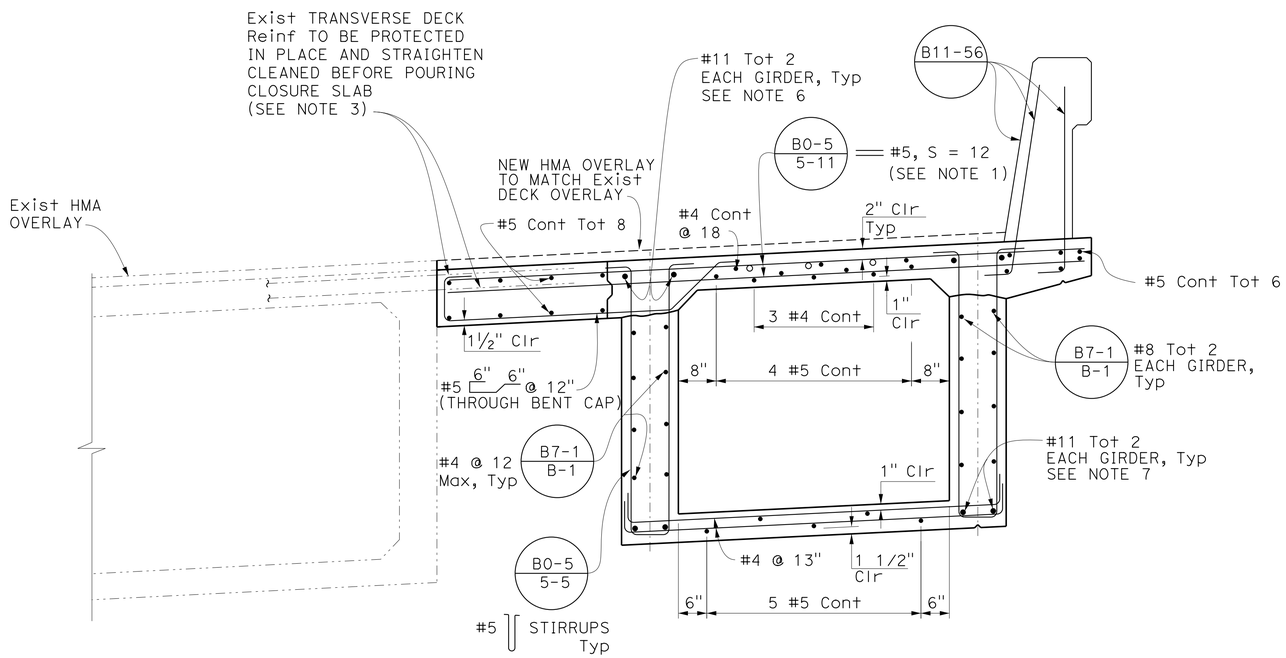


## TYPICAL REINFORCEMENT SECTION

¾" = 1'-0"

B0-5 B7-1 B8-5 B11-56

## NOTES:

1. Transverse deck reinf shall be placed normal to and spaced along ℄ bridge.
2. For additional reinforcement, See "ADDITIONAL DECK REINFORCEMENT" sheet.
3. Field bend the existing deck reinf as necessary to provide 2" deck cover as required.
4. Conc barrier height shall be measured from HMA overlay surface.
5. Only service splices are allowed in cont long reinf.
6. No splice allowed within 30' about ℄ of bents.
7. No splice allowed within 25' on each side of ℄ span of bottom cont reinf.

## FALSEWORK RELEASE NOTES:

Alternative 1:
Falsework shall be released as soon as permitted by the specifications.
Closure pour shall not be placed sooner than 60 days after the falsework has been released.

Alternative 2:
Falsework shall not be released less than 28 days after the last concrete has been placed.
Closure pour shall not be placed sooner than 14 days after the falsework has been released.

When falsework release alternative 2 is used, camber values are 0.75 times those shown.

NOTE:
THE CONTRACTOR SHALL VERIFY ALL CONTROLLING FIELD DIMENSIONS BEFORE ORDERING OR FABRICATING ANY MATERIAL.

| | BY | CHECKED |
|---|---|---|
| DESIGN | J. Lee/ S. Xie | S. Nagi |
| DETAILS | I. Karkoutli | S. Nagi |
| QUANTITIES | M. Metcalf | S. Xie |

Luqi Yang
DESIGN OVERSIGHT Luqi Yang
1-16-13
SIGN OFF DATE

PREPARED FOR THE STATE OF CALIFORNIA DEPARTMENT OF TRANSPORTATION

Alaedin Moubayed
PROJECT ENGINEER

BRIDGE NO. 55-0226
POST MILES 6.70

# 5/N5-N1 CONN SEPARATION (WIDEN)
# TYPICAL SECTION No. 2

DESIGN DETAIL SHEET (ENGLISH) (REV.7/16/10)

ORIGINAL SCALE IN INCHES FOR REDUCED PLANS 0 1 2 3

UNIT: 2998
PROJECT NUMBER & PHASE: 12000202791 CONTRACT NO.: 12-0F96E4

DISREGARD PRINTS BEARING EARLIER REVISION DATES → 1/23/12 8/13/12 11/12/12

SHEET 25 OF 38

FILE => 55-0226-k-ts02.dgn

USERNAME => s124496 DATE PLOTTED => 29-APR-2013 TIME PLOTTED => 12:07

| DIST | COUNTY | ROUTE | POST MILES TOTAL PROJECT | SHEET No | TOTAL SHEETS |
|---|---|---|---|---|---|
| 12 | Ora | 5 | 6.2/8.7 | 475 | 595 |

REGISTERED CIVIL ENGINEER 11/12/12 DATE

4-29-13
PLANS APPROVAL DATE

REGISTERED PROFESSIONAL ENGINEER Sam Xie No. C51942 Exp. 6/30/2014 CIVIL STATE OF CALIFORNIA

*The State of California or its officers or agents shall not be responsible for the accuracy or completeness of electronic copies of this plan sheet.*

JACOBS
3161 MICHELSON, STE 500
IRVINE, CA 92612

ORANGE COUNTY TRANSPORTATION AUTHORITY
550 S. MAIN STREET
ORANGE, CA 92863-1584

## PRESTRESSING NOTES:

270 Ksi low relaxation strand:

$P_{jack}$ = 2,150 Kips

Anchor set = 3/8 in

Total number of girders = 2

Friction curvature coefficient $\mu = 15 \times 10^{-2}$ (1/rad)

Friction wobble coefficient $k = 2.0 \times 10^{-4}$ (1/ft)

Prestress force (Pjack) shall be evenly distributed between girders.

Maximum final force variation between girders shall not exceed 45 Kips.

Concrete: $f'_c$ = 5.0 Ksi @ 28 days

$f'_{ci}$ = 3.5 Ksi @ time of stressing

Contractor shall submit elongation calculations based on initial stress at

x = 0.8190 times jacking stress.

One end stressing shall be performed from the Abut 1 end only.

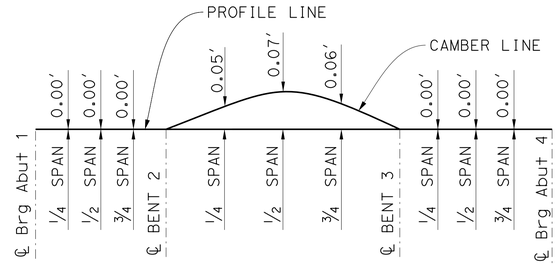


## CAMBER DIAGRAGM

NO SCALE

Does not include allowance for falsework settlement

## LEGEND:

- Closure pour
- Existing Structure
- New Structure
- Point of no movement
- Girder stem width in inches
- Soffit vent hole on plan view

## NOTE:

1. Girder flare is measured along ℄ of each girder web

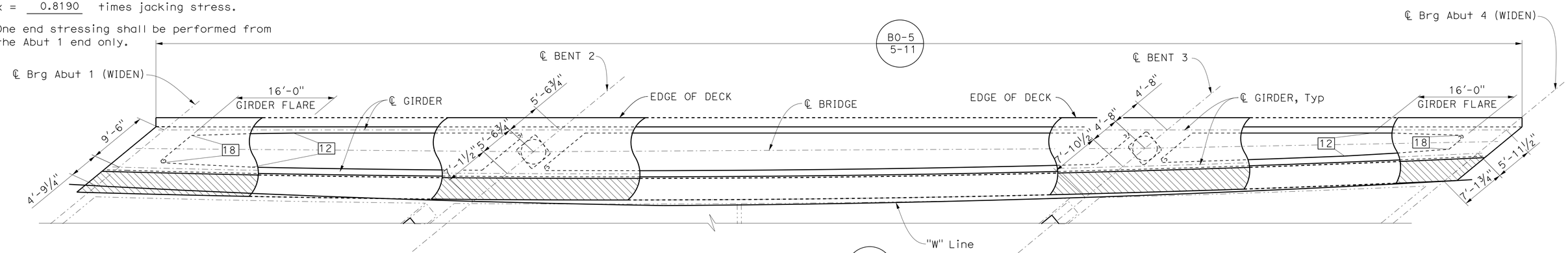


## PLAN (SB WIDEN) B7-1

1/8" = 1'-0"

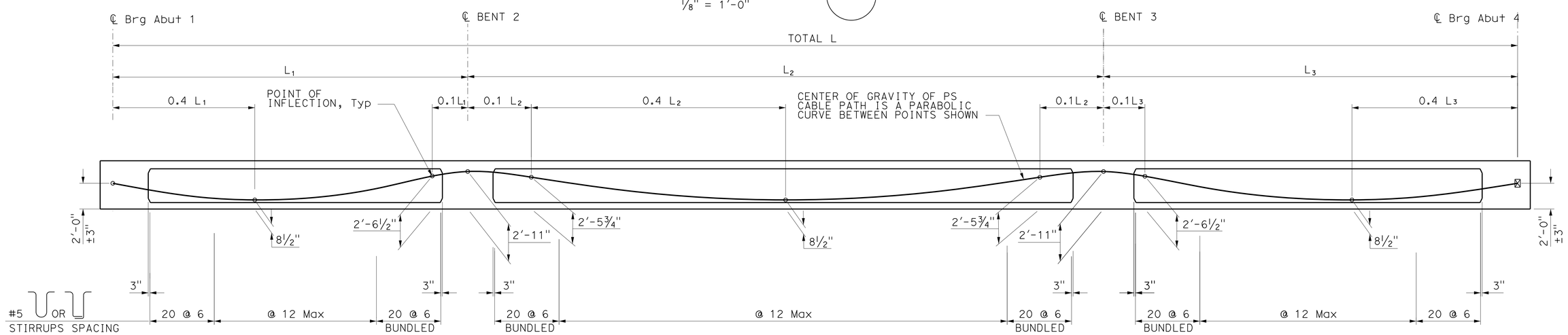


## ELEVATION B0-5 5-5 B8-5

NO SCALE

NOTE:
THE CONTRACTOR SHALL VERIFY ALL CONTROLLING FIELD DIMENSIONS BEFORE ORDERING OR FABRICATING ANY MATERIAL.

Luqi Yang
DESIGN OVERSIGHT Luqi Yang
1-16-13
SIGN OFF DATE

| | BY | CHECKED |
|---|---|---|
| DESIGN | J. Lee/ S. Xie | S. Nagi |
| DETAILS | I. Karkoutli | S. Nagi |
| QUANTITIES | M. Metcalf | S. Xie |

PREPARED FOR THE STATE OF CALIFORNIA DEPARTMENT OF TRANSPORTATION

Alaedin Moubayed
PROJECT ENGINEER

BRIDGE NO. 55-0226
POST MILES 6.70

# 5/N5-N1 CONN SEPARATION (WIDEN)
# GIRDER LAYOUT No. 1

DESIGN DETAIL SHEET (ENGLISH) (REV.7/16/10)

ORIGINAL SCALE IN INCHES FOR REDUCED PLANS 0 1 2 3

UNIT: 2998
PROJECT NUMBER & PHASE: 12000202791 CONTRACT NO.: 12-0F96E4

DISREGARD PRINTS BEARING EARLIER REVISION DATES

REVISION DATES 4/23/12 8/13/12 11/12/12

SHEET 26 OF 38

FILE => 55-0226-1-g_1o01.dgn

USERNAME => s124496 DATE PLOTTED => 29-APR-2013 TIME PLOTTED => 12:07

| DIST | COUNTY | ROUTE | POST MILES TOTAL PROJECT | SHEET No | TOTAL SHEETS |
|---|---|---|---|---|---|
| 12 | Ora | 5 | 6.2/8.7 | 476 | 595 |

REGISTERED CIVIL ENGINEER 11/12/12 DATE

4-29-13
PLANS APPROVAL DATE

REGISTERED PROFESSIONAL ENGINEER Sam Xie No. C51942 Exp. 6/30/2014 CIVIL STATE OF CALIFORNIA

*The State of California or its officers or agents shall not be responsible for the accuracy or completeness of electronic copies of this plan sheet.*

JACOBS
3161 MICHELSON, STE 500
IRVINE, CA 92612

ORANGE COUNTY TRANSPORTATION AUTHORITY
550 S. MAIN STREET
ORANGE, CA 92863-1584

## PRESTRESSING NOTES

270 Ksi low relaxation strand:

$P_{jack}$ = 2,000 Kips

Anchor set = 3/8 in

Total number of girders = 2

Friction curvature coefficient $\mu = 15\times10^{-2}$ (1/rad)

Friction wobble coefficient $k = 2.0\times10^{-4}$ (1/ft)

Prestress force (Pjack) shall be evenly distributed between girders.

Maximum final force variation between girders shall not exceed 45 Kips.

Concrete: $f'_c$ = 5.0 Ksi @ 28 days

$f'_{ci}$ = 3.5 Ksi @ time of stressing

Contractor shall submit elongation calculations based on initial stress at

x = 0.8212 times jacking stress.

One end stressing shall be performed from the Abut 4 end only.

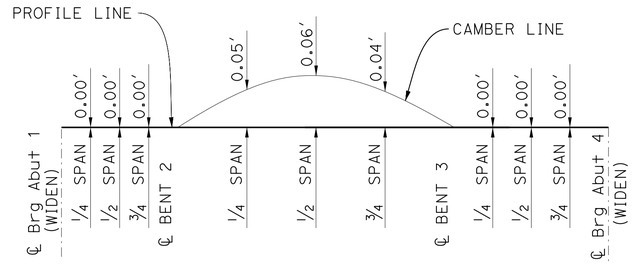


## CAMBER DIAGRAGM

NO SCALE

Does not include allowance for falsework settlement

## LEGEND:

- Closure pour
- Existing Structure
- New Structure
- Point of no movement
- Girder stem width in inches
- Soffit vent hole on plan view

## NOTE:

1. Girder flare is measured along ℄ of each girder web.

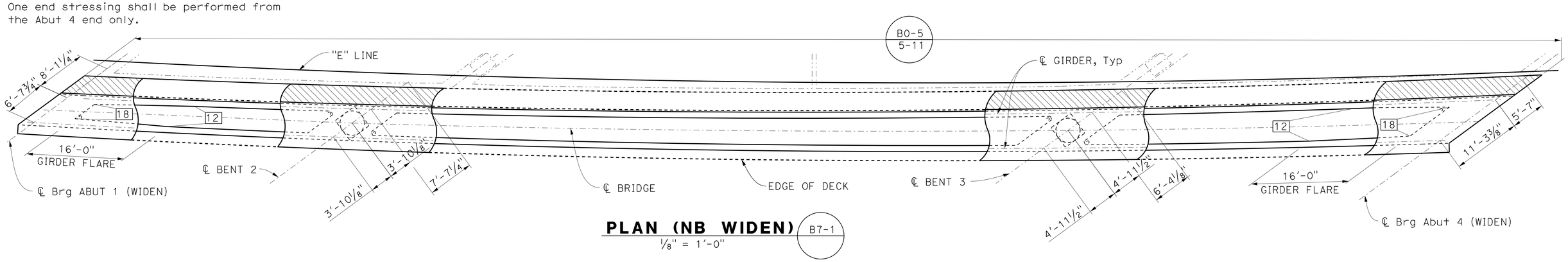


## PLAN (NB WIDEN) B7-1

1/8" = 1'-0"

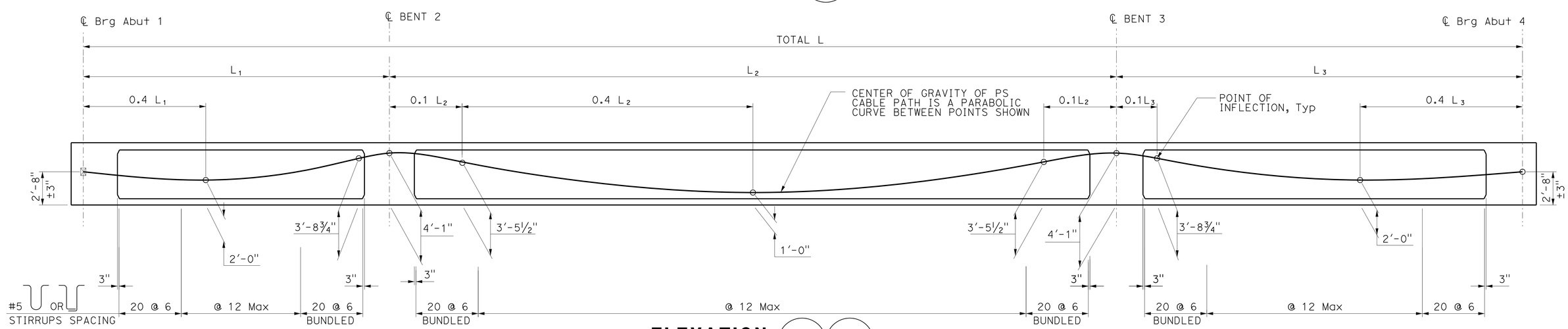


## ELEVATION

NO SCALE

B0-5 / 5-5 B8-5

NOTE:
THE CONTRACTOR SHALL VERIFY ALL CONTROLLING FIELD DIMENSIONS BEFORE ORDERING OR FABRICATING ANY MATERIAL.

Luqi Yang
DESIGN OVERSIGHT Luqi Yang
1-16-13
SIGN OFF DATE

| | BY | CHECKED |
|---|---|---|
| DESIGN | J. Lee/ S. Xie | S. Nagi |
| DETAILS | I. Karkoutli | S. Nagi |
| QUANTITIES | M. Metcalf | S. Xie |

PREPARED FOR THE STATE OF CALIFORNIA DEPARTMENT OF TRANSPORTATION

Alaedin Moubayed
PROJECT ENGINEER

BRIDGE NO. 55-0226
POST MILES 6.70

# 5/N5-N1 CONN SEPARATION (WIDEN)
# GIRDER LAYOUT No. 2

DESIGN DETAIL SHEET (ENGLISH) (REV.7/16/10)

ORIGINAL SCALE IN INCHES FOR REDUCED PLANS 0 1 2 3

UNIT: 2998
PROJECT NUMBER & PHASE: 12000202791 CONTRACT NO.: 12-0F96E4

DISREGARD PRINTS BEARING EARLIER REVISION DATES

REVISION DATES 4/23/12 8/13/12 11/12/12

SHEET 27 OF 38

FILE => 55-0226-1-g_1o02.dgn

USERNAME => s124496 DATE PLOTTED => 29-APR-2013 TIME PLOTTED => 12:07

| DIST | COUNTY | ROUTE | POST MILES TOTAL PROJECT | SHEET No | TOTAL SHEETS |
|---|---|---|---|---|---|
| 12 | Ora | 5 | 6.2/8.7 | 477 | 595 |

REGISTERED CIVIL ENGINEER 11/12/12 DATE

4-29-13
PLANS APPROVAL DATE

REGISTERED PROFESSIONAL ENGINEER Sam Xie No. C51942 Exp. 6/30/2014 CIVIL STATE OF CALIFORNIA

*The State of California or its officers or agents shall not be responsible for the accuracy or completeness of electronic copies of this plan sheet.*

JACOBS
3161 MICHELSON, STE 500
IRVINE, CA 92612

ORANGE COUNTY
TRANSPORTATION AUTHORITY
550 S. MAIN STREET
ORANGE, CA 92863-1584

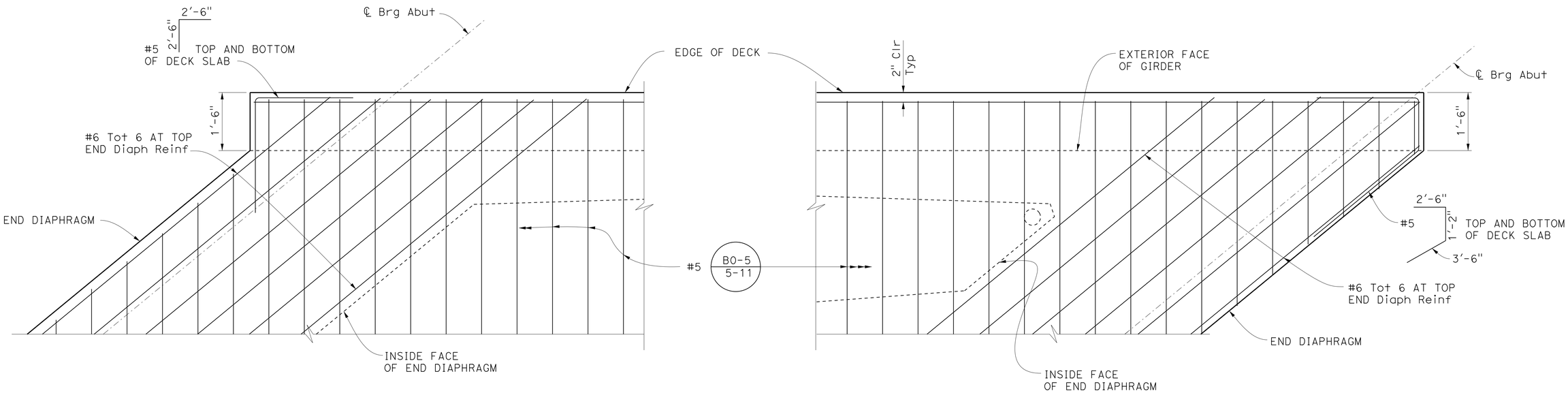


**OBTUSE CORNER**
NOT TO SCALE

**ACUTE CORNER**
NOT TO SCALE

**PLAN**
NO SCALE

**NOTE:**

1. SB Widen shown, NB Widen similar.

NOTE:
THE CONTRACTOR SHALL VERIFY ALL CONTROLLING FIELD DIMENSIONS BEFORE ORDERING OR FABRICATING ANY MATERIAL.

DESIGN OVERSIGHT Luqi Yang
1-16-13
SIGN OFF DATE

| | BY | CHECKED |
|---|---|---|
| DESIGN | J. Lee/ S. Xie | S. Nagi |
| DETAILS | I. Karkoutli | S. Nagi |
| QUANTITIES | M. Metcalf | S. Xie |

PREPARED FOR THE
STATE OF CALIFORNIA
DEPARTMENT OF TRANSPORTATION

Alaedin Moubayed
PROJECT ENGINEER

BRIDGE NO. 55-0226
POST MILES 6.70

# 5/N5-N1 CONN SEPARATION (WIDEN)
# DECK CORNER DETAILS

DESIGN DETAIL SHEET (ENGLISH) (REV.7/16/10)

ORIGINAL SCALE IN INCHES FOR REDUCED PLANS 0 1 2 3

UNIT: 2998
PROJECT NUMBER & PHASE: 12000202791 CONTRACT NO.: 12-0F96E4

DISREGARD PRINTS BEARING EARLIER REVISION DATES

REVISION DATES 4/23/12 8/13/12 11/12/12

SHEET 28 OF 38

FILE => 55-0226-1-gdt01.dgn

USERNAME => s124496 DATE PLOTTED => 29-APR-2013 TIME PLOTTED => 12:07

| DIST | COUNTY | ROUTE | POST MILES TOTAL PROJECT | SHEET No | TOTAL SHEETS |
|---|---|---|---|---|---|
| 12 | Ora | 5 | 6.2/8.7 | 478 | 595 |

REGISTERED CIVIL ENGINEER 11/12/12 DATE

4-29-13
PLANS APPROVAL DATE

REGISTERED PROFESSIONAL ENGINEER Sam Xie No. C51942 Exp. 6/30/2014 CIVIL STATE OF CALIFORNIA

*The State of California or its officers or agents shall not be responsible for the accuracy or completeness of electronic copies of this plan sheet.*

JACOBS
3161 MICHELSON, STE 500
IRVINE, CA 92612

ORANGE COUNTY
TRANSPORTATION AUTHORITY
550 S. MAIN STREET
ORANGE, CA 92863-1584

## NOTES:

1. Service splices are allowed in cont long reinf outside the no splice allowed zone.
2. For reinforcement not shown, see "TYPICAL SECTION" sheets.

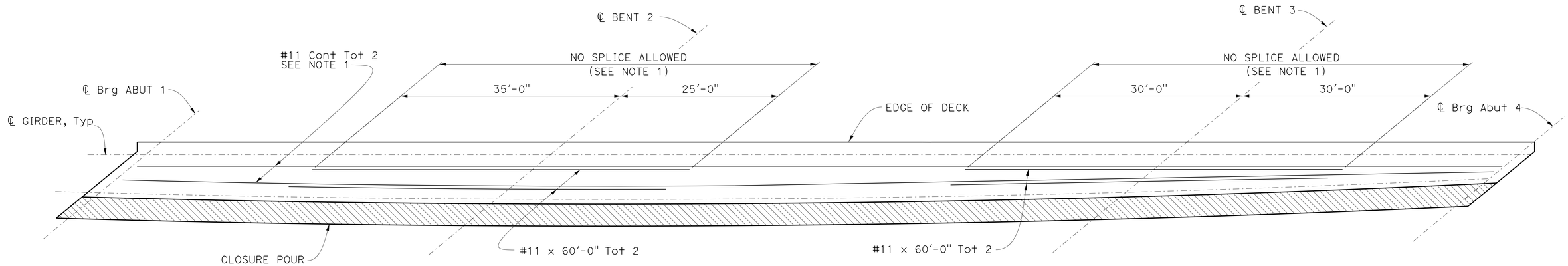


## ADDITIONAL TOP LONGITUDINAL REINFORCEMENT (SB)

NO SCALE

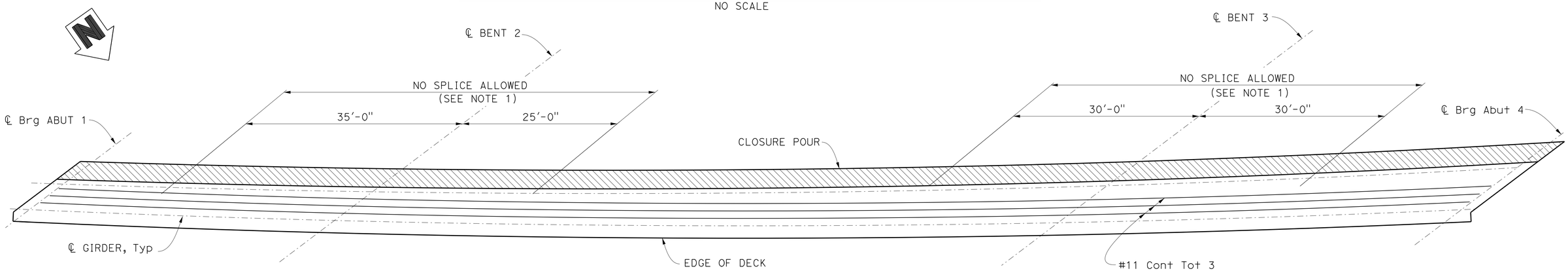


## ADDITIONAL TOP LONGITUDINAL REINFORCEMENT (NB)

NO SCALE

NOTE:
THE CONTRACTOR SHALL VERIFY ALL CONTROLLING FIELD DIMENSIONS BEFORE ORDERING OR FABRICATING ANY MATERIAL.

# SPECIAL DETAILS

Luqi Yang
DESIGN OVERSIGHT Luqi Yang
1-16-13
SIGN OFF DATE

| | BY | CHECKED |
|---|---|---|
| DESIGN | J. Lee/ S. Xie | S. Nagi |
| DETAILS | I. Karkoutli | S. Nagi |
| QUANTITIES | M. Metcalf | S. Xie |

PREPARED FOR THE STATE OF CALIFORNIA DEPARTMENT OF TRANSPORTATION

Alaedin Moubayed
PROJECT ENGINEER

BRIDGE NO. 55-0226
POST MILES 6.70

## 5/N5-N1 CONN SEPARATION (WIDEN)
## ADDITIONAL DECK REINFORCEMENT

DESIGN DETAIL SHEET (ENGLISH) (REV.7/16/10)

ORIGINAL SCALE IN INCHES FOR REDUCED PLANS 0 1 2 3

UNIT: 2998
PROJECT NUMBER & PHASE: 12000202791 CONTRACT NO.: 12-0F96E4

DISREGARD PRINTS BEARING EARLIER REVISION DATES

REVISION DATES: 4/23/12 8/13/12 11/12/12

SHEET 29 OF 38

FILE => 55-0226-1-gir_rf01.dgn

USERNAME => s124496 DATE PLOTTED => 29-APR-2013 TIME PLOTTED => 12:07

| DIST | COUNTY | ROUTE | POST MILES TOTAL PROJECT | SHEET No. | TOTAL SHEETS |
|---|---|---|---|---|---|
| 12 | Ora | 5 | 6.2/8.7 | 479 | 595 |

REGISTERED CIVIL ENGINEER 11/12/12 DATE

4-29-13
PLANS APPROVAL DATE

REGISTERED PROFESSIONAL ENGINEER Sam Xie No. C51942 Exp. 6/30/2014 CIVIL STATE OF CALIFORNIA

*The State of California or its officers or agents shall not be responsible for the accuracy or completeness of electronic copies of this plan sheet.*

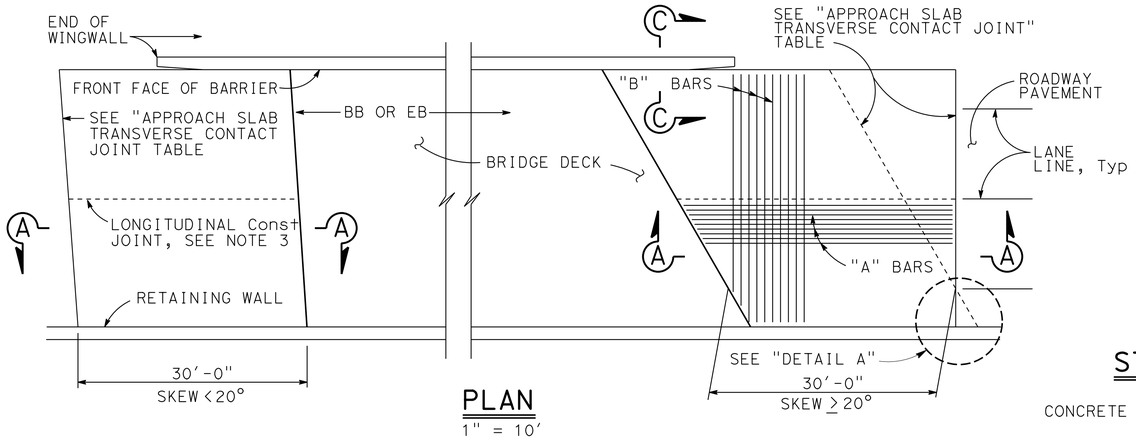


## PLAN
1" = 10'

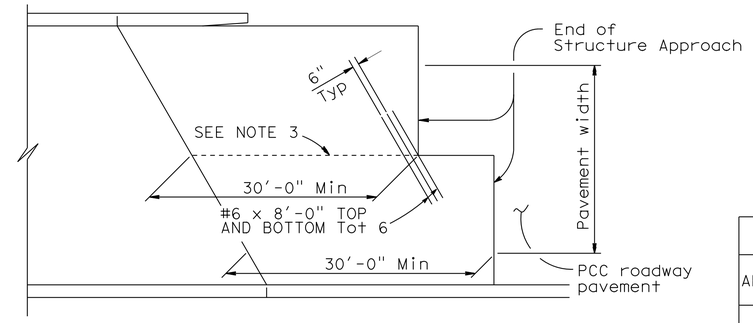


## STRUCTURE APPROACH - END STAGGER DETAIL
No Scale

| APPROACH SLAB TRANSVERSE CONTACT JOINT | | |
|---|---|---|
| APPROACH SKEW | WITH AC ROADWAY PAVEMENT | WITH PCC ROADWAY PAVEMENT |
| < 20° | PARALLEL TO FACE OF PN | PARALLEL TO FACE OF PN |
| 20° - 45° | PARALLEL TO FACE OF PN USE "DETAIL A" | STAGGER LINES 24' TO 36' APART |
| > 45° | PARALLEL TO FACE OF PN USE "DETAIL A" | STAGGER AT EACH LANE LINE |

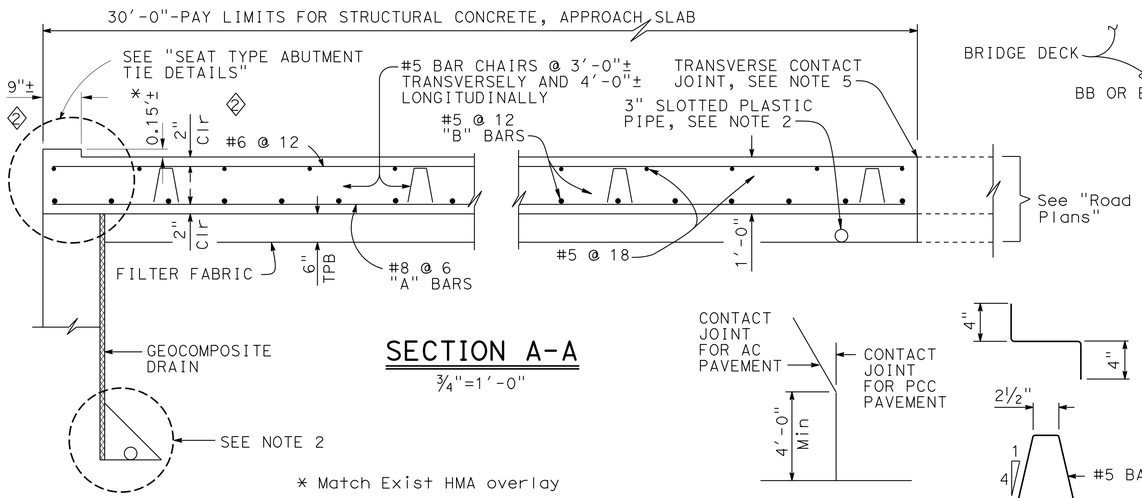


## SECTION A-A
¾"=1'-0"

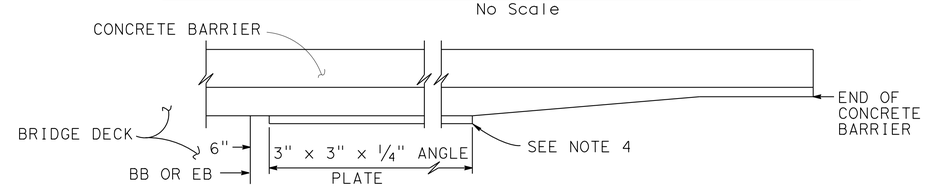


## EDGE ANGLE DETAIL
½"=1'-0"

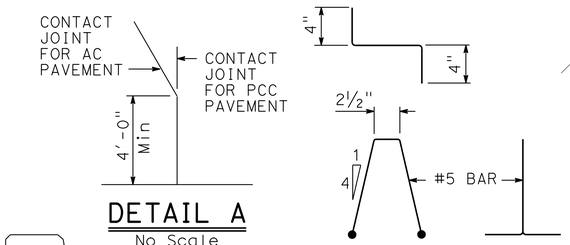


## DETAIL A
No Scale




## BAR CHAIR DETAIL
1½"=1'-0"

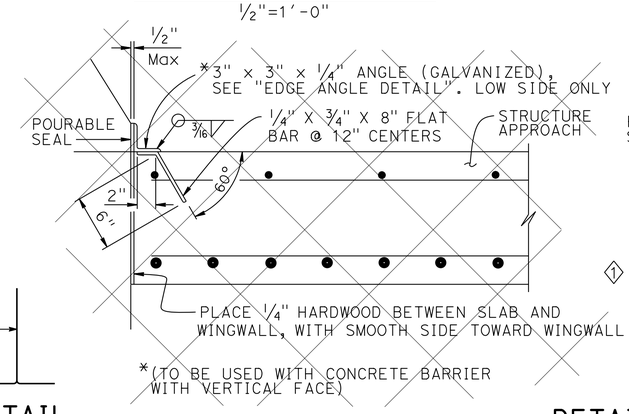


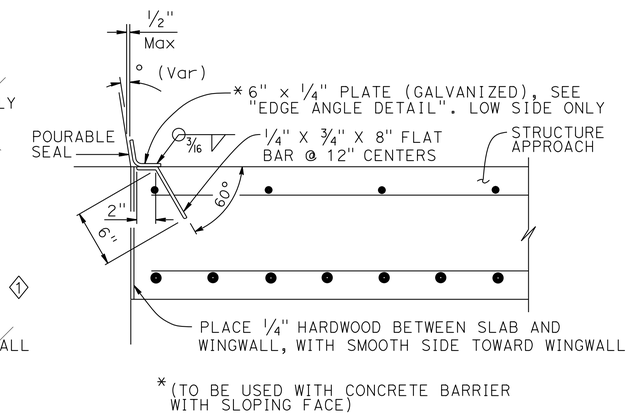


## DETAIL B
1½" = 1'-0"

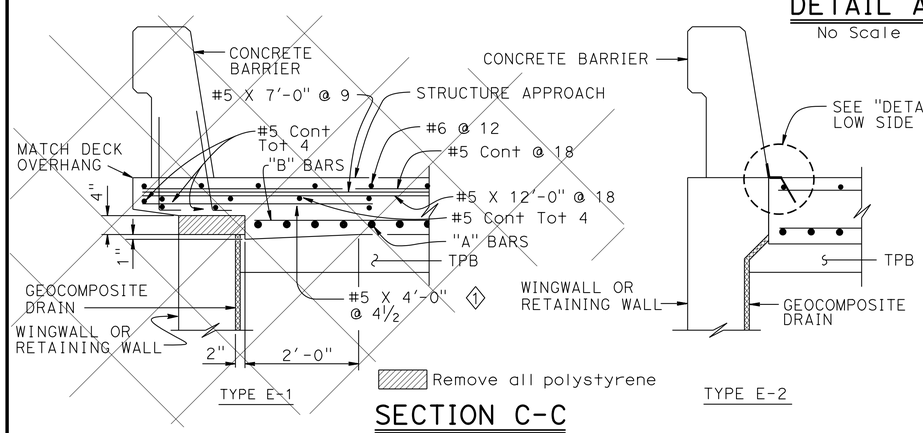


## SECTION C-C
¾"=1'-0"

(Type E-1 to be used, unless otherwise shown on plans)

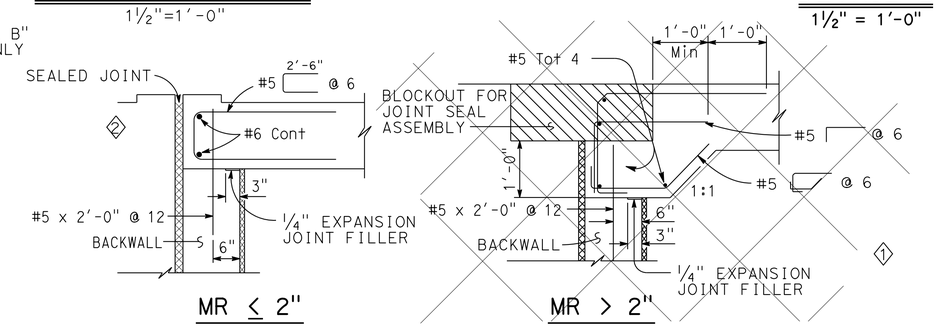


## SEAT TYPE ABUTMENT TIE DETAILS (SEE NOTE 1)
¾"=1'-0"

NOTES:
1. For details not shown, see Structure Plans. For MR ≤ 2", adjust bar reinforcement to clear a sawcut for sealed joint, when required
2. For drainage details, see "STRUCTURE APPROACH DRAINAGE DETAILS" sheet
3. Longitudinal construction joints, when permitted by the Engineer, shall be located on lane lines
4. End angle or plate at beginning of barrier transition, end of wingwall or end of structure approach as applicable
5. For transverse contact joint with new PCC paving, refer to Standard Plan P10
6. At the Contractor's option, approach slab transverse reinforcement may be placed parallel to paving notch. Spacing of transverse reinforcement is measured along ℄ roadway

# SPECIAL DETAILS

REVISED STANDARD DRAWING

FILE NO. xs3-120

APPROVAL DATE July 2011

① Does not apply
② Revised Detail

STATE OF CALIFORNIA
DEPARTMENT OF TRANSPORTATION

DIVISION OF ENGINEERING SERVICES

BRIDGE NO. 55-0226
POST MILE 6.70

5/N5-N1 CONN SEPARATION
STRUCTURE APPROACH TYPE N(30S)

DS OSD 2147A (ENGLISH STANDARD DRAWING "XS" BORDER REV. (02-02-11)

ORIGINAL SCALE IN INCHES FOR REDUCED PLANS 0 1 2 3

UNIT: X
PROJECT NUMBER & PHASE: X
CONTRACT NO.: X

DISREGARD PRINTS BEARING EARLIER REVISION DATES

REVISION DATES 4/23/12 8/13/12 11/12/12

SHEET 30 OF 38

USERNAME => s124496 DATE PLOTTED => 29-APR-2013 TIME PLOTTED => 12:07

FILE => 55-0226-s-sap_n30s.dgn

| DIST | COUNTY | ROUTE | POST MILES TOTAL PROJECT | SHEET No. | TOTAL SHEETS |
|---|---|---|---|---|---|
| 12 | Ora | 5 | 6.2/8.7 | 480 | 595 |

REGISTERED CIVIL ENGINEER 11/12/12 DATE

4-29-13
PLANS APPROVAL DATE

REGISTERED PROFESSIONAL ENGINEER Sam Xie No. C51942 Exp. 6/30/2014 CIVIL STATE OF CALIFORNIA

*The State of California or its officers or agents shall not be responsible for the accuracy or completeness of electronic copies of this plan sheet.*

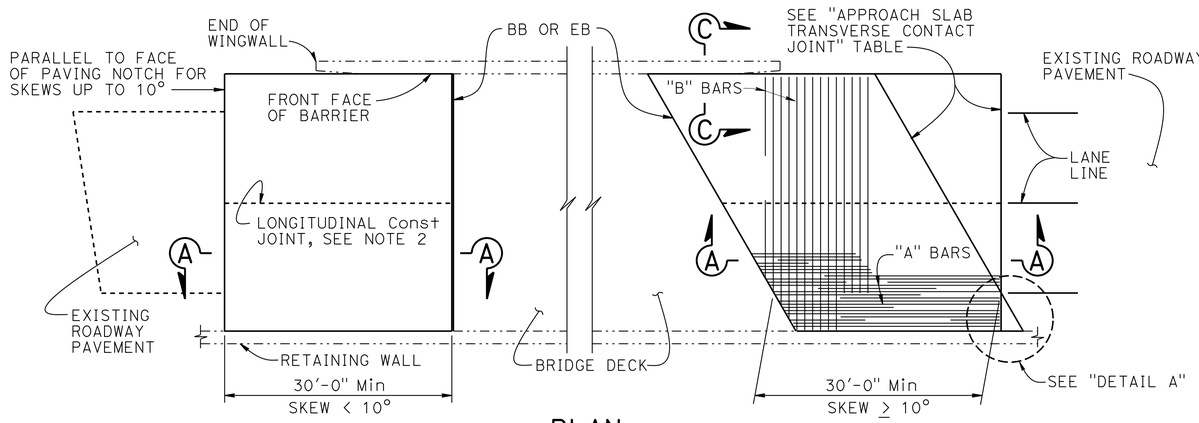


## PLAN
1" = 10'

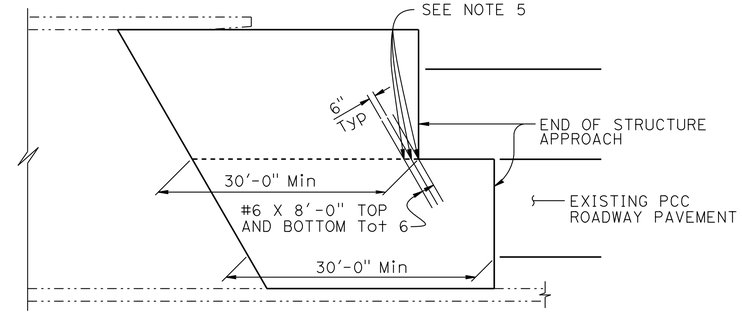


## STRUCTURE APPROACH - END STAGGER DETAIL
NO SCALE

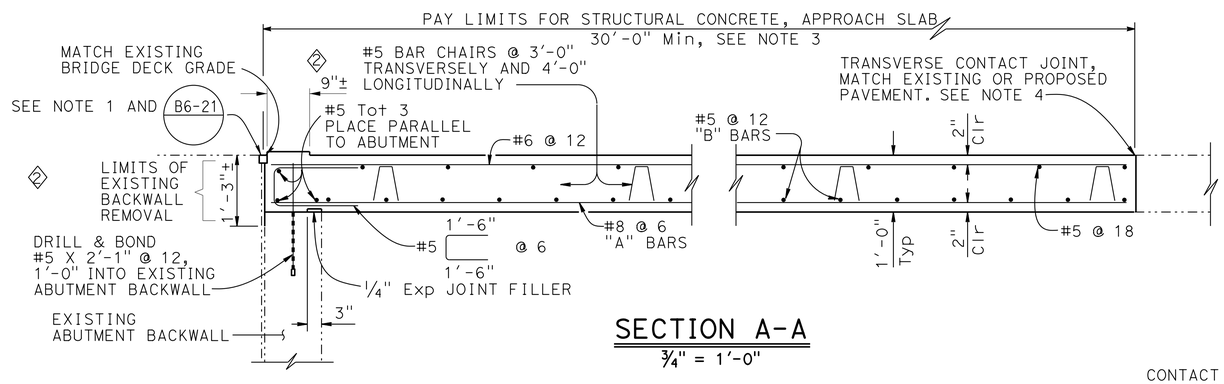


## SECTION A-A
3/4" = 1'-0"

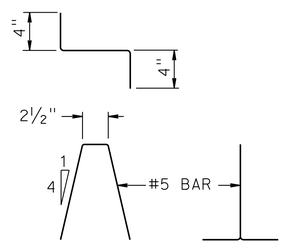


## BAR CHAIR DETAIL
1 1/2" = 1'-0"

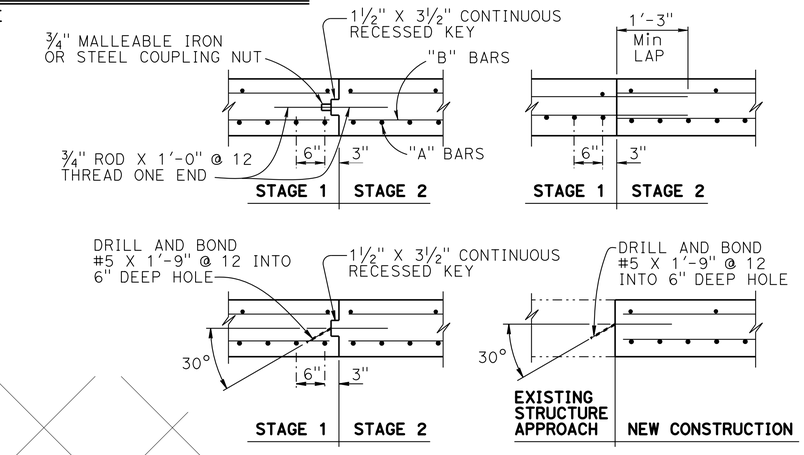


## LONGITUDINAL CONSTRUCTION JOINT ALTERNATIVES
3/4" = 1'-0"

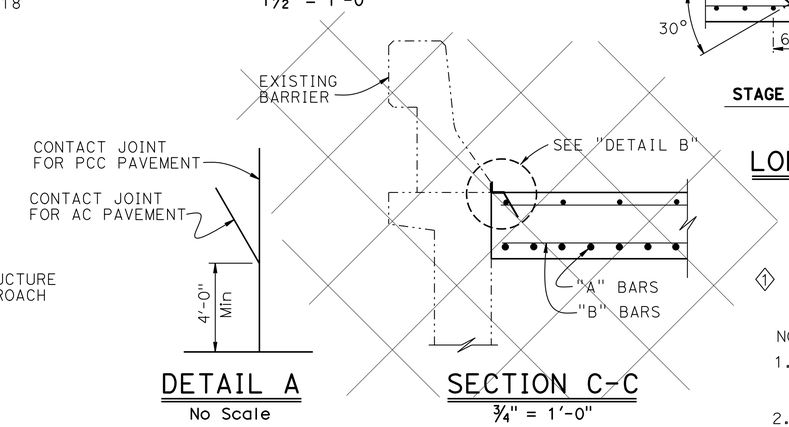


## DETAIL A
No Scale

## SECTION C-C
3/4" = 1'-0"

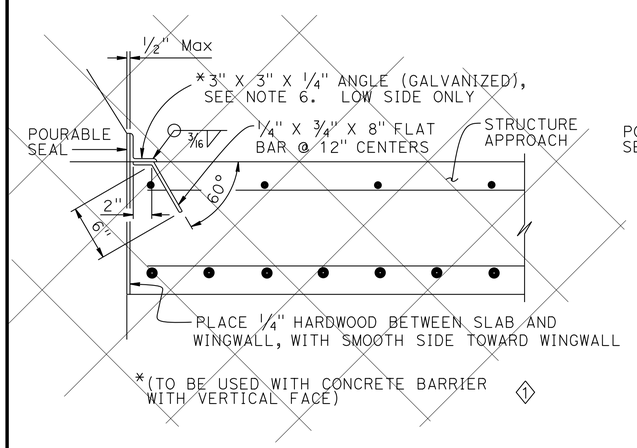


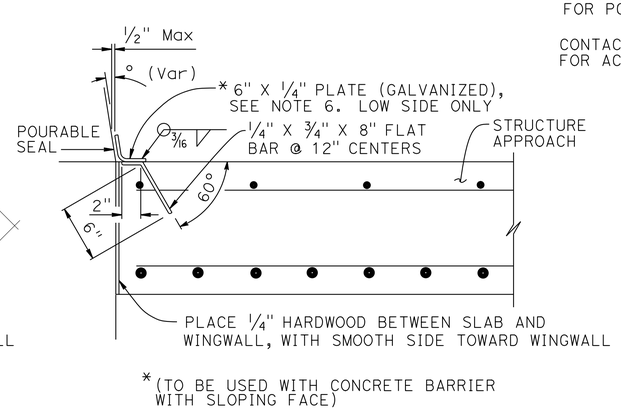


## DETAIL B
1 1/2" = 1'-0"

NOTES:
1. Sealed joint,for MR see Structure Plans. Adjust bar reinforcement to clear a sawcut for sealed joint, when required
2. Longitudinal construction joints, when permitted by Engineer, shall be located on lane lines
3. Transverse contact joint shall be a minimum of 5'-0" from an existing or constructed weakened plane joint
4. For transverse contact joint with new PCC paving, refer to Standard Plan P10
5. Couplers are required for stage construction
6. End angle or plate at beginning of barrier transition, end of wingwall or end of structure approach as applicable

NOTE:
THE CONTRACTOR SHALL VERIFY ALL CONTROLLING FIELD DIMENSIONS BEFORE ORDERING OR FABRICATING ANY MATERIAL.

**APPROACH SLAB TRANSVERSE CONTACT JOINT**

| APPROACH SKEW | WITH AC ROADWAY PAVEMENT | WITH PCC ROADWAY PAVEMENT |
|---|---|---|
| < 10° | PARALLEL TO FACE OF PN | PARALLEL TO FACE OF PN |
| 10° - 45° | PARALLEL TO FACE OF PN USE "DETAIL A" | STAGGER LINES 24' TO 36' APART |
| > 45° | PARALLEL TO FACE OF PN USE "DETAIL A" | STAGGER AT EACH LANE LINE |

# SPECIAL DETAILS

REVISED STANDARD DRAWING
FILE NO. xs3-130
APPROVAL DATE July 2011

1 Does not apply
2 Revised Detail

STATE OF CALIFORNIA
DEPARTMENT OF TRANSPORTATION

DIVISION OF ENGINEERING SERVICES

BRIDGE NO. 55-0226
POST MILE 6.70

5/N5-N1 CONN SEPARATION
STRUCTURE APPROACH TYPE R(30S)

DS OSD 2147A (ENGLISH STANDARD DRAWING "XS" BORDER REV. (02-02-11)

ORIGINAL SCALE IN INCHES FOR REDUCED PLANS 0 1 2 3

UNIT: X
PROJECT NUMBER & PHASE: X
CONTRACT NO.: X

DISREGARD PRINTS BEARING EARLIER REVISION DATES
REVISION DATES 4/29/13 9/23/12 11/12/12

SHEET 31 OF 38

FILE => 55-0226-s-sap_r30s.dgn

USERNAME => s124496 DATE PLOTTED => 23-APR-2013 TIME PLOTTED => 12:07

| DIST | COUNTY | ROUTE | POST MILES TOTAL PROJECT | SHEET No. | TOTAL SHEETS |
|---|---|---|---|---|---|
| 12 | Ora | 5 | 6.2/8.7 | 481 | 595 |

REGISTERED CIVIL ENGINEER 11/12/12 DATE

4-29-13
PLANS APPROVAL DATE

REGISTERED PROFESSIONAL ENGINEER Sam Xie No. C51942 Exp. 6/30/2014 CIVIL STATE OF CALIFORNIA

*The State of California or its officers or agents shall not be responsible for the accuracy or completeness of electronic copies of this plan sheet.*

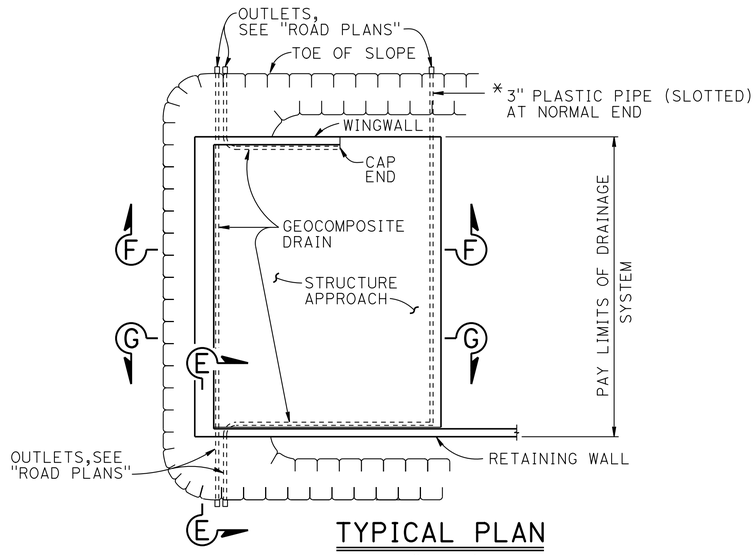


## TYPICAL PLAN

1" = 10'

* FOR PIPE LAYOUT AT STAGGERED END, SEE "DETAIL B"

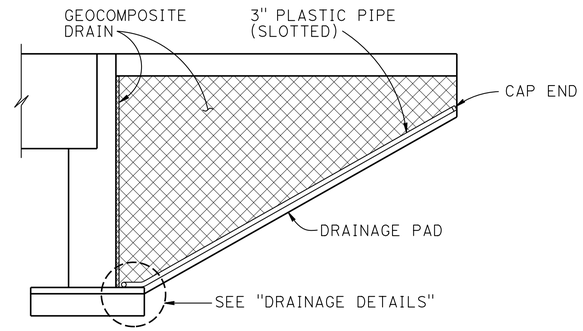


## CANTILEVER WINGWALL

## SECTION F-F

1/4" = 1'-0"

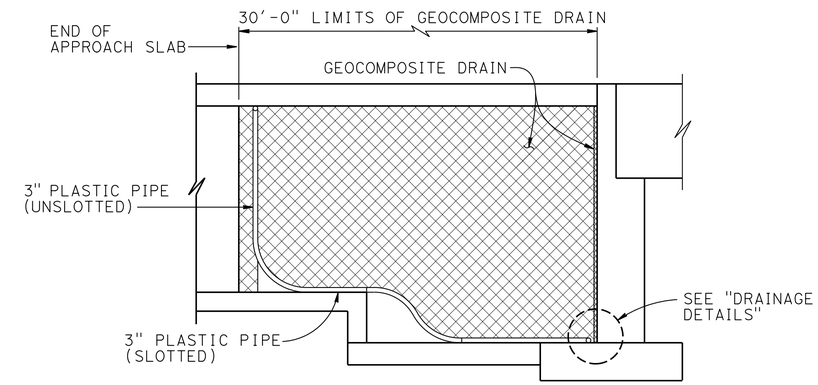


## RETAINING WALL WINGWALL DRAINAGE DETAILS

## SECTION G-G

1/4" = 1'-0"

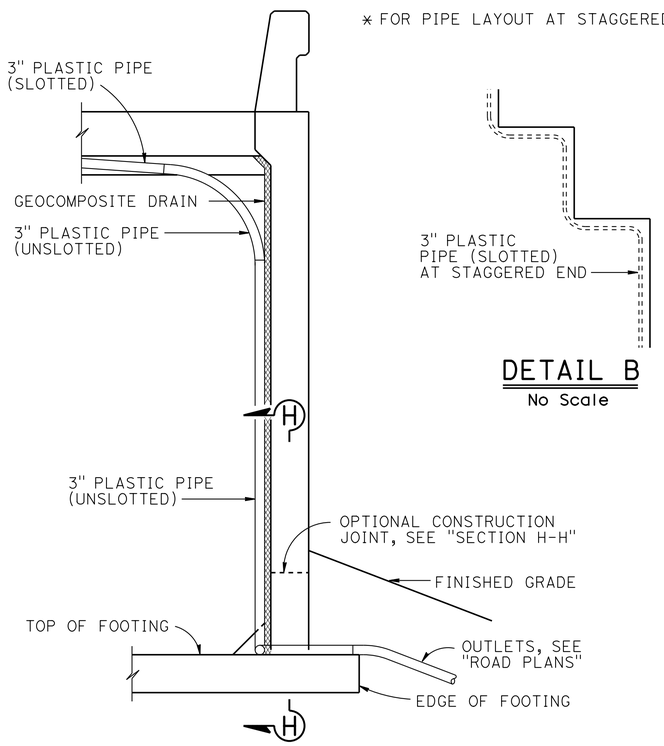


## DETAIL B

No Scale

## SECTION E-E

1/2" = 1'-0"

NOTE: Bends and junctions in 3" plastic pipe are 30" radius Min

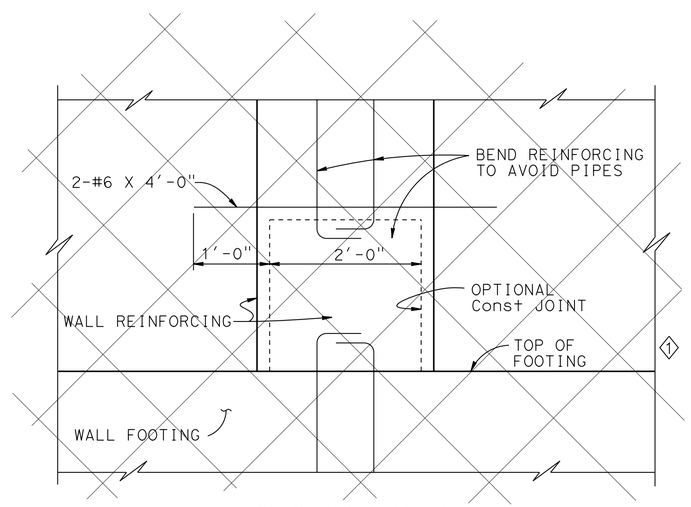


## SECTION H-H

1" = 1'-0"

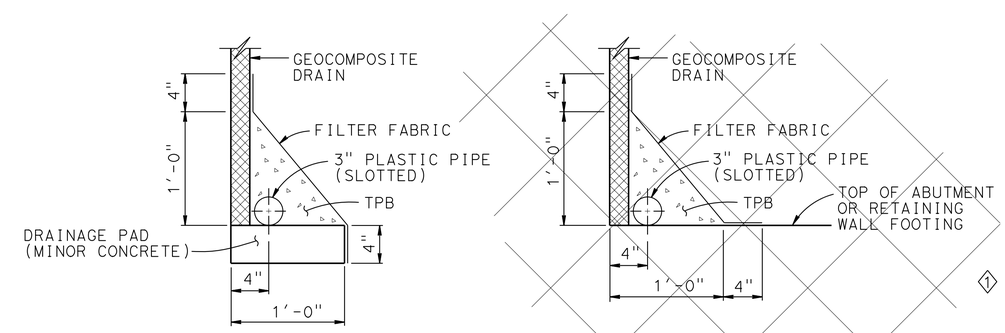


## WITHOUT FOOTING

## WITH FOOTING

## DRAINAGE DETAILS

1 1/2" = 1'-0"

# SPECIAL DETAILS

STANDARD DRAWING

FILE NO. xs3-110

APPROVAL DATE July 2011

1 Does not apply

STATE OF CALIFORNIA DEPARTMENT OF TRANSPORTATION

DIVISION OF ENGINEERING SERVICES

55-0226

POST MILE 6.70

## 5/N5-N1 CONN SEPARATION

## STRUCTURE APPROACH DRAINAGE DETAILS

DS OSD 2147A (ENGLISH STANDARD DRAWING "XS" BORDER REV. (02-02-11)

ORIGINAL SCALE IN INCHES FOR REDUCED PLANS 0 1 2 3

UNIT: X
PROJECT NUMBER & PHASE: X
CONTRACT NO.: X

DISREGARD PRINTS BEARING EARLIER REVISION DATES

REVISION DATES 8/23/12 8/30/12 11/12/12

SHEET 32 OF 38

FILE => 55-0226-t-sadd.dgn

USERNAME => s124496 DATE PLOTTED => 23-APR-2013 TIME PLOTTED => 12:07

| DIST | COUNTY | ROUTE | POST MILES TOTAL PROJECT | SHEET No | TOTAL SHEETS |
|---|---|---|---|---|---|
| 12 | Ora | 5 | 6.2/8.7 | 482 | 595 |

GEOTECHNICAL PROFESSIONAL 11/12/12 DATE

4-29-13
PLANS APPROVAL DATE

REGISTERED PROFESSIONAL ENGINEER S. PIRATHIVIRAJ NO. GE 2963 EXP. 12-31-13 GEOTECHNICAL STATE OF CALIFORNIA

*The State of California or its officers or agents shall not be responsible for the accuracy or completeness of electronic copies of this plan sheet.*

ORANGE COUNTY TRANSPORTATION AUTHORITY
550 S. MAIN STREET
ORANGE, CA 92863-1584

EARTH MECHANICS, INC.
17800 NEWHOPE STREET, SUITE B
FOUNTAIN VALLEY, CA 92708

BENCH MARK

Designation: F-785 Elev = 75.717 feet (NAVD 88); 73.413 feet (NGVD29) Described by OCS 2003 - Found 3¾" US Coast and Geodectic Survey Bronzed Disk Stamped "F 785 1946", Set in the Top of a Concrete Bridge Abutment. Monument is Located in the Southwesterly Corner of the Atchinso\Topeka and Santa Fe Railway Overcrossing of San Mateo Creek, 69 ft. Northerly Along the Railway from the Centerline of the Interstate 5 Freeway Southbound Onramp at Camino Capistrano Prolonged to the West and 150± Westerly from the Centerline of Camino Capistrano. Monument is Set 2.0 ft. below the Tracks.

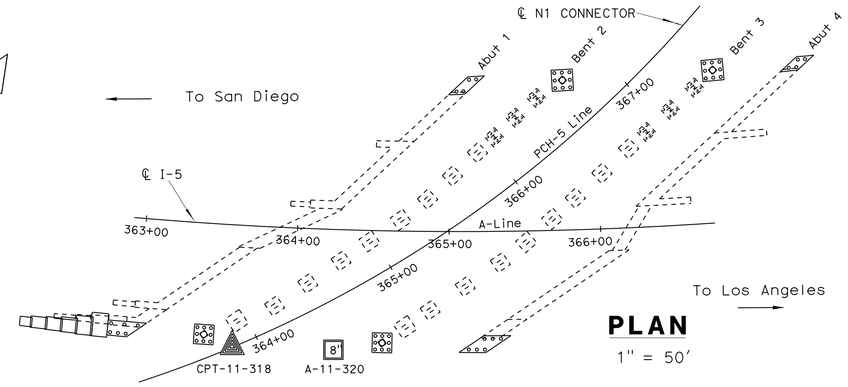


**PLAN**
1" = 50'

NOTES:

(1) This LOTB sheet was prepared in accordance with the Caltrans Soil and Rock Logging, Classification and Presentation Manual (June 2010)

(2) 2.4" samples were taken using a California Modified Sampler.

(3) An automatic trip hammer system consisting of a hammer weight of 140 lbs falling a distance of 30" was used to advance the drive sampler.

(4) Conversion factor from 2.4" Modified California Ring Sampler blowcounts to Standard Penetration Test (SPT) blowcounts is 0.5.

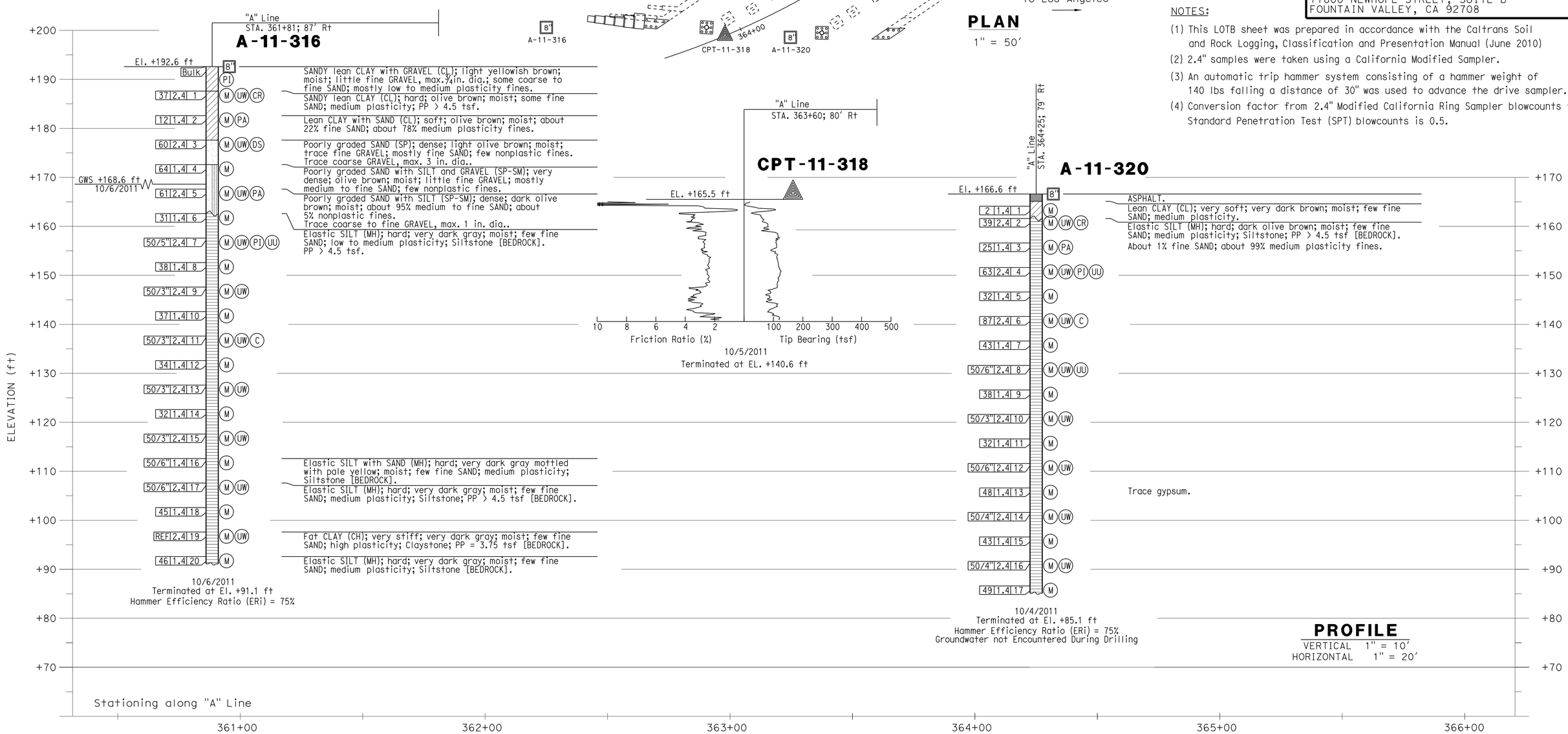


**PROFILE**
VERTICAL 1" = 10'
HORIZONTAL 1" = 20'

| | | | | | | | |
|---|---|---|---|---|---|---|---|
| Luqi Yang DESIGN OVERSIGHT Luqi Yang 1-16-13 SIGN OFF DATE | DRAWN BY J. Fang | R. Jie FIELD INVESTIGATION BY: | PREPARED FOR THE STATE OF CALIFORNIA DEPARTMENT OF TRANSPORTATION | S. PIRATHIVIRAJ PROJECT ENGINEER | BRIDGE NO. 55-0226 POST MILES 6.70 | 5/N5-N1 CONNECTOR SEPARATION (WIDEN) | |
| | CHECKED BY S. PIRATHIVIRAJ | DATE: 9/2011, 10/2011 | | | | LOG OF TEST BORINGS 1 OF 6 | |

GS GEOTECHNICAL LOG OF TEST BORINGS SHEET (ENGLISH) (REV. 7/16/10)

ORIGINAL SCALE IN INCHES FOR REDUCED PLANS 0 1 2 3

UNIT: 2998
PROJECT NUMBER & PHASE: 12000202791

DISREGARD PRINTS BEARING EARLIER REVISION DATES

REVISION DATES

SHEET 33 OF 38

FILE => 55-0226-z-lotb1.dgn

CONTRACT NO.: 12-0F96E1 PROJECT ID:

USERNAME => s124496 DATE PLOTTED => 29-APR-2013 TIME PLOTTED => 12:07

| DIST | COUNTY | ROUTE | POST MILES TOTAL PROJECT | SHEET No | TOTAL SHEETS |
|---|---|---|---|---|---|
| 12 | Ora | 5 | 6.2/8.7 | 483 | 595 |

GEOTECHNICAL PROFESSIONAL — DATE 11/12/12

4-29-13
PLANS APPROVAL DATE

REGISTERED PROFESSIONAL ENGINEER — S. PIRATHIVIRAJ — NO. GE 2963 — EXP. 12-31-13 — GEOTECHNICAL — STATE OF CALIFORNIA

*The State of California or its officers or agents shall not be responsible for the accuracy or completeness of electronic copies of this plan sheet.*

ORANGE COUNTY TRANSPORTATION AUTHORITY
550 S. MAIN STREET
ORANGE, CA 92863-1584

EARTH MECHANICS, INC.
17800 NEWHOPE STREET, SUITE B
FOUNTAIN VALLEY, CA 92708

BENCH MARK

Designation: F-785 Elev = 75.717 feet (NAVD 88); 73.413 feet (NGVD29) Described by OCS 2003 - Found 3¾" US Coast and Geodectic Survey Bronzed Disk Stamped "F 785 1946", Set in the Top of a Concrete Bridge Abutment. Monument is Located in the Southwesterly Corner of the Atchinso\Topeka and Santa Fe Railway Overcrossing of San Mateo Creek, 69 ft. Northerly Along the Railway from the Centerline of the Interstate 5 Freeway Southbound Onramp at Camino Capistrano Prolonged to the West and 150± Westerly from the Centerline of Camino Capistrano. Monument is Set 2.0 ft. below the Tracks.

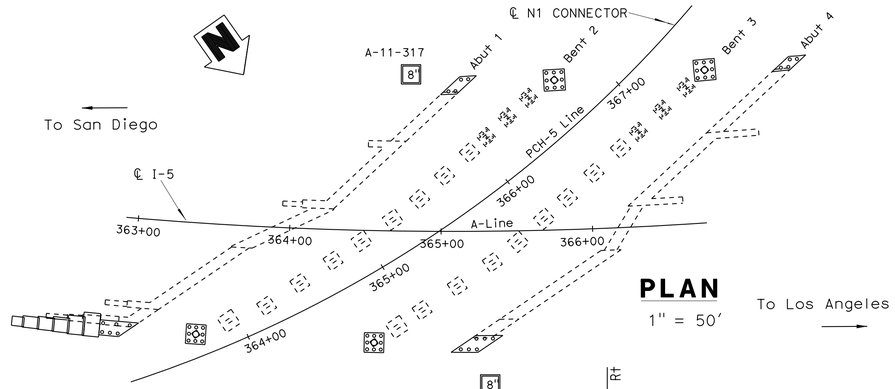


## PLAN

1" = 50'

NOTES:

(1) This LOTB sheet was prepared in accordance with the Caltrans Soil and Rock Logging, Classification and Presentation Manual (June 2010)

(2) 2.4" samples were taken using a California Modified Sampler.

(3) An automatic trip hammer system consisting of a hammer weight of 140 lbs falling a distance of 30" was used to advance the drive sampler.

(4) Conversion factor from 2.4" Modified California Ring Sampler blowcounts to Standard Penetration Test (SPT) blowcounts is 0.5.

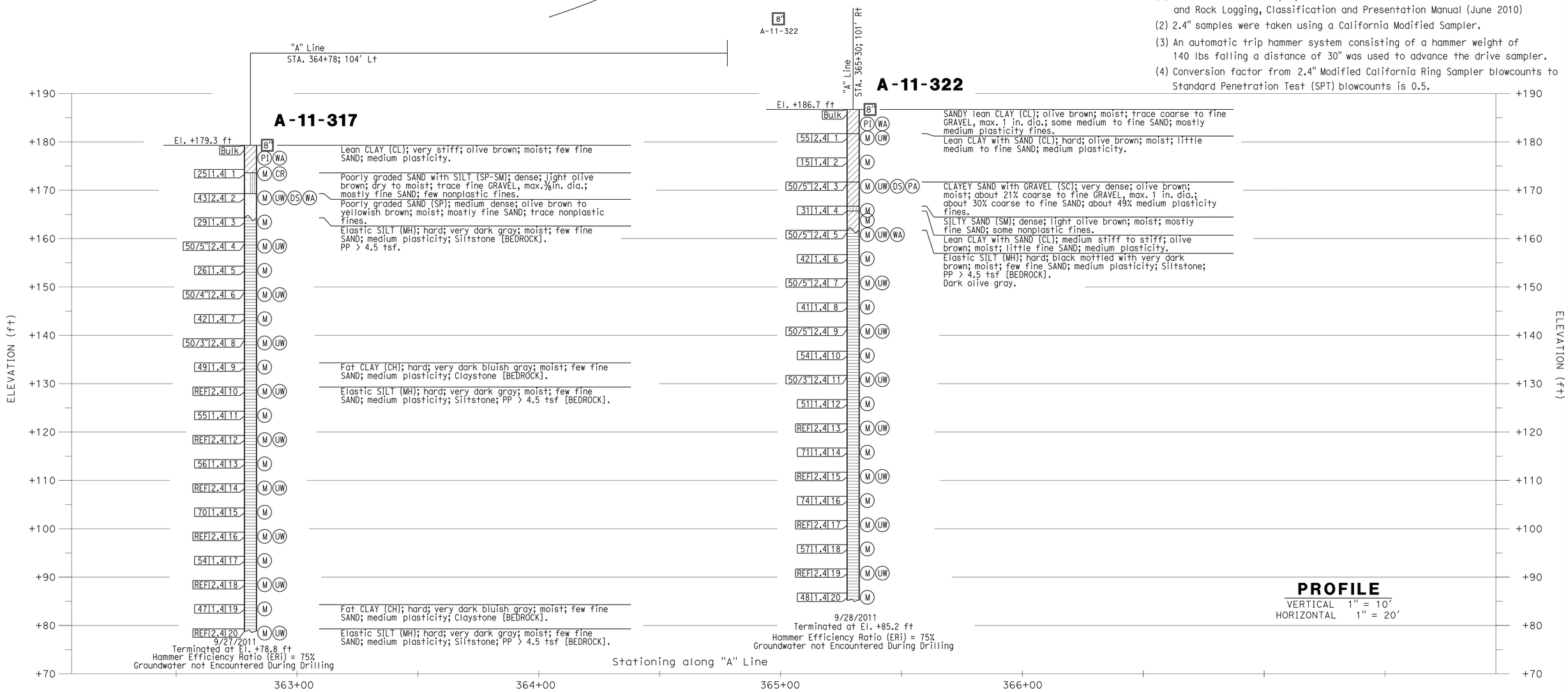


## PROFILE

VERTICAL 1" = 10'
HORIZONTAL 1" = 20'

| | | | | | | |
|---|---|---|---|---|---|---|
| Luqi Yang — DESIGN OVERSIGHT — Luqi Yang — 1-16-13 SIGN OFF DATE | DRAWN BY | J. Fang | R. Jie — FIELD INVESTIGATION BY: | PREPARED FOR THE STATE OF CALIFORNIA DEPARTMENT OF TRANSPORTATION | S. PIRATHIVIRAJ — PROJECT ENGINEER | BRIDGE NO. 55-0226 / POST MILES 6.70 |
| | CHECKED BY | S. PIRATHIVIRAJ | DATE: 9/2011, 10/2011 | | | |

5/N5-N1 CONNECTOR SEPARATION (WIDEN)

LOG OF TEST BORINGS 2 OF 6

GS GEOTECHNICAL LOG OF TEST BORINGS SHEET (ENGLISH) (REV. 7/16/10)

ORIGINAL SCALE IN INCHES FOR REDUCED PLANS 0 1 2 3

UNIT: 2998
PROJECT NUMBER & PHASE: 12000202791

DISREGARD PRINTS BEARING EARLIER REVISION DATES

REVISION DATES

SHEET 34 OF 38

FILE => 55-0226-z-lotb2.dgn

CONTRACT NO.: 12-0F96E1 PROJECT ID:

USERNAME => s124496 DATE PLOTTED => 29-APR-2013 TIME PLOTTED => 12:07

| DIST | COUNTY | ROUTE | POST MILES TOTAL PROJECT | SHEET No | TOTAL SHEETS |
|---|---|---|---|---|---|
| 12 | Ora | 5 | 6.2/8.7 | 484 | 595 |

GEOTECHNICAL PROFESSIONAL — DATE 11/12/12

4-29-13
PLANS APPROVAL DATE

REGISTERED PROFESSIONAL ENGINEER — S. PIRATHIVIRAJ — NO. GE 2963 — EXP. 12-31-13 — GEOTECHNICAL — STATE OF CALIFORNIA

*The State of California or its officers or agents shall not be responsible for the accuracy or completeness of electronic copies of this plan sheet.*

ORANGE COUNTY TRANSPORTATION AUTHORITY
550 S. MAIN STREET
ORANGE, CA 92863-1584

EARTH MECHANICS, INC.
17800 NEWHOPE STREET, SUITE B
FOUNTAIN VALLEY, CA 92708

BENCH MARK

Designation: F-785 Elev = 75.717 feet (NAVD 88); 73.413 feet (NGVD29) Described by OCS 2003 - Found 3¾" US Coast and Geodectic Survey Bronzed Disk Stamped "F 785 1946", Set in the Top of a Concrete Bridge Abutment. Monument is Located in the Southwesterly Corner of the Atchinso\Topeka and Santa Fe Railway Overcrossing of San Mateo Creek, 69 ft. Northerly Along the Railway from the Centerline of the Interstate 5 Freeway Southbound Onramp at Camino Capistrano Prolonged to the West and 150± Westerly from the Centerline of Camino Capistrano. Monument is Set 2.0 ft. below the Tracks.

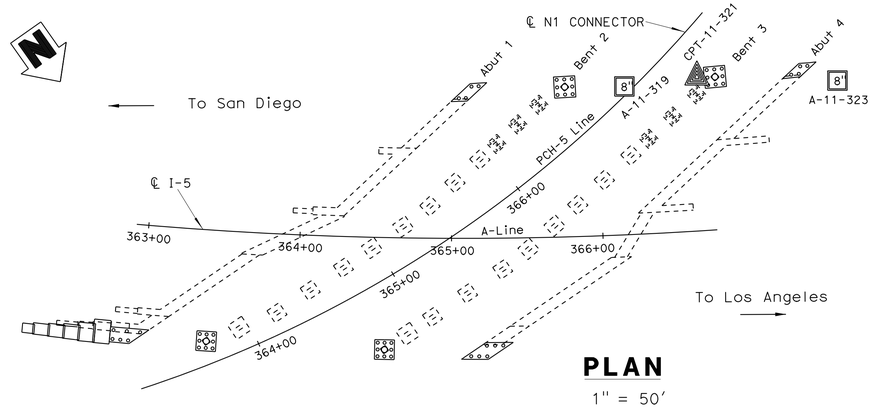


## PLAN

1" = 50'

NOTES:

(1) This LOTB sheet was prepared in accordance with the Caltrans Soil and Rock Logging, Classification and Presentation Manual (June 2010)

(2) 2.4" samples were taken using a California Modified Sampler.

(3) An automatic trip hammer system consisting of a hammer weight of 140 lbs falling a distance of 30" was used to advance the drive sampler.

(4) Conversion factor from 2.4" Modified California Ring Sampler blowcounts to Standard Penetration Test (SPT) blowcounts is 0.5.

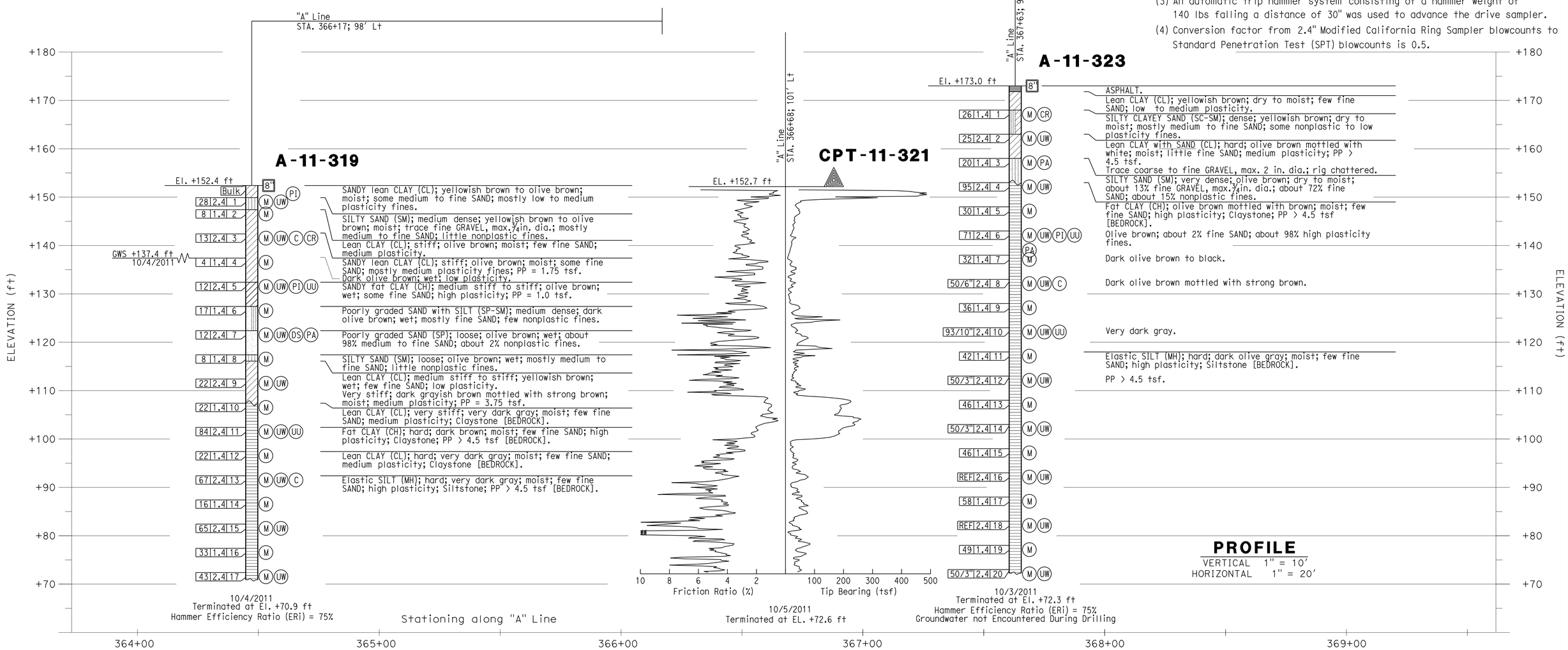


## PROFILE

VERTICAL 1" = 10'
HORIZONTAL 1" = 20'

Luqi Yang
DESIGN OVERSIGHT Luqi Yang
1-16-13
SIGN OFF DATE

DRAWN BY J. Fang
CHECKED BY S. PIRATHIVIRAJ

R. Jie
FIELD INVESTIGATION BY:
DATE: 9/2011, 10/2011

PREPARED FOR THE STATE OF CALIFORNIA DEPARTMENT OF TRANSPORTATION

S. PIRATHIVIRAJ
PROJECT ENGINEER

BRIDGE NO. 55-0226
POST MILES 6.70

# 5/N5-N1 CONNECTOR SEPARATION (WIDEN)

# LOG OF TEST BORINGS 3 OF 6

GS GEOTECHNICAL LOG OF TEST BORINGS SHEET (ENGLISH) (REV. 7/16/10)

ORIGINAL SCALE IN INCHES FOR REDUCED PLANS 0 1 2 3

UNIT: 2998
PROJECT NUMBER & PHASE: 12000202791

DISREGARD PRINTS BEARING EARLIER REVISION DATES

REVISION DATES

SHEET 35 OF 38

FILE => 55-0226-z-lotb3.dgn

CONTRACT NO.: 12-0F96E1 PROJECT ID:

USERNAME => s124496 DATE PLOTTED => 23-APR-2013 TIME PLOTTED => 12:07

| DIST. | COUNTY | ROUTE | SECTION | SHEET NO. | TOTAL SHEETS |
|---|---|---|---|---|---|
| VII | Ora | | | | |

BRIDGE ENGINEER — CIVIL AND STRUCTURAL ENGINEER — LICENSE 5880

DATE APPROVED DECEMBER 15 1958

TO ACCOMPANY PLANS DATED 4-29-13

DIVISION OF ENGINEERING SERVICES - GEOTECHNICAL SERVICES

As-Built Log of Test Borings sheet is considered an informational document only. As such, the State of California registration seal with signature, license number and registration certificate expiration date confirm that this is a true and accurate copy of the original document. This drawing is available and presented only for the convenience of any bidder, contractor or other interested party.

| DIST. | COUNTY | ROUTE | POST MILES-TOTAL PROJECT | Sheet No. | Total Sheets |
|---|---|---|---|---|---|
| 12 | Ora | 5 | 6.2/8.7 | 485 | 595 |

GEOTECHNICAL PROFESSIONAL — DATE 11/12/12

REGISTERED PROFESSIONAL ENGINEER — S. PIRATHIVIRAJ — NO. GE 2963 — EXP. 12-31-13 — GEOTECHNICAL — STATE OF CALIFORNIA

## 5/N5-N1 CONNECTOR SEPARATION (WIDEN)

## LOG OF TEST BORINGS 4 OF 6

NOTE: A COPY OF THIS LOG OF TEST BORINGS IS AVAILABLE AT OFFICE OF STRUCTURE MAINTENANCE AND INVESTIGATIONS, SACRAMENTO, CALIFORNIA

UNIT:
PROJECT NUMBER & PHASE: 12000202791

| BRIDGE No. | Sheet | of |
|---|---|---|
| 55-0226 | 36 | 38 |

Revisions made to this Log of Test Borings from the original ____ Log of Test Borings are the addition of the following table and notes:

| Boring | Station | Offset from C/L Rte. 101 |
|---|---|---|
| | | |
| | | |
| | | |
| | | |
| | | |
| | | |

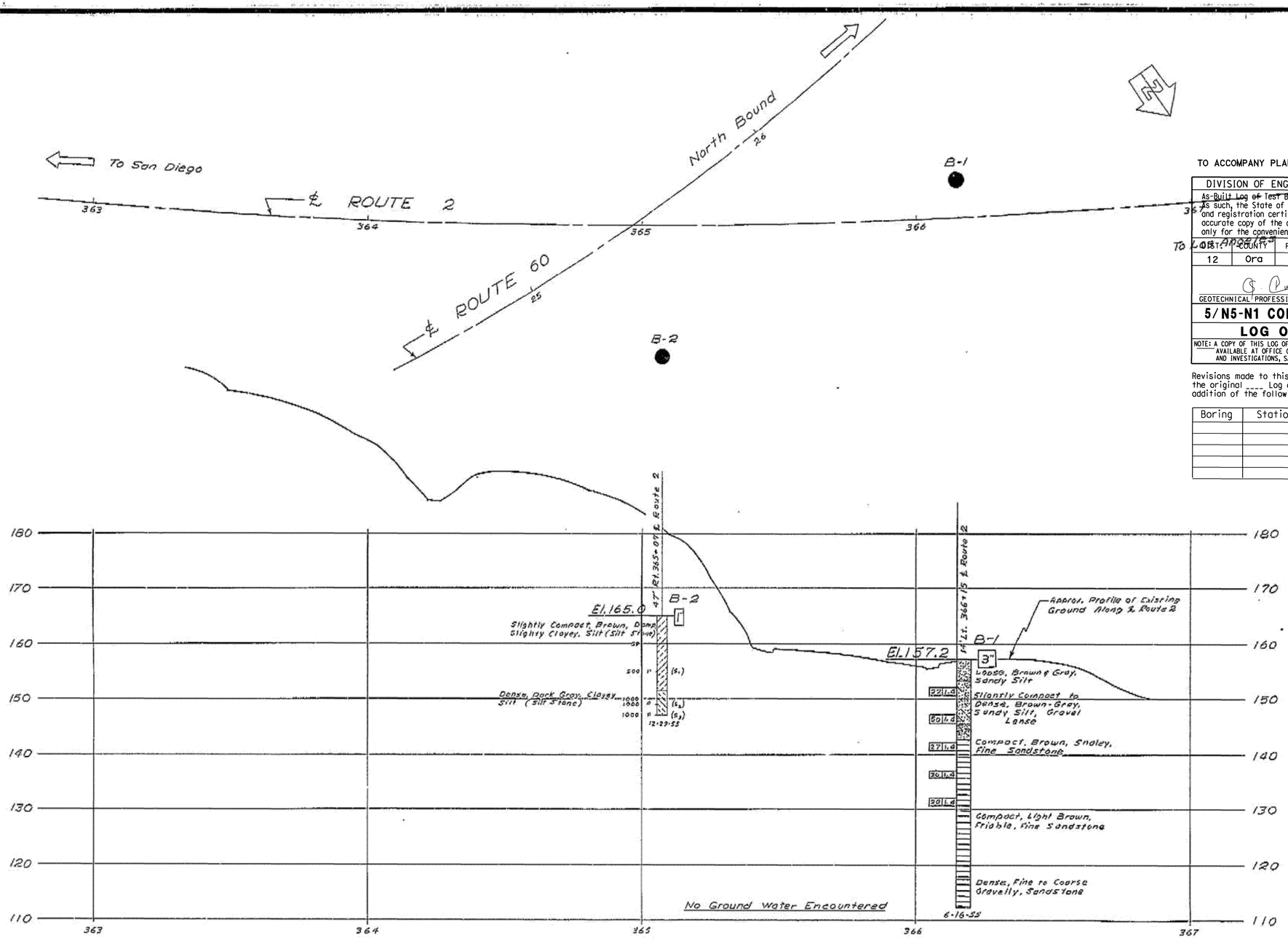


AS BUILT PLANS
Contract No. 060-7VC2
Date Completed
Document No. 70002283

B.M. #37-a-5C12-54
L & T in P.C.C. Curb on N.W. Cor. of Int. of Via Serra & Via Corona. 18' W. & 42' N. of Int. Elev. 78.45

THIS SET OF PLANS HAS BEEN CORRECTED TO CORRESPOND TO THE "AS BUILT" PRINTS DATED 10-6-60, AS SUBMITTED BY RESIDENT ENGINEER C.R. Hall
TRACINGS CORRECTED BY: JJ DATE: 3-21-62

### CLASSIFICATION OF MATERIAL BASED ON STANDARD GRADE SIZE LIMITS

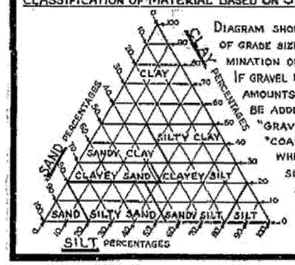


DIAGRAM SHOWING THE BASIS FOR ESTIMATES OF GRADE SIZE DISTRIBUTION USED IN DETERMINATION OF CLASS NAMES.

IF GRAVEL IS PRESENT IN APPRECIABLE AMOUNTS THE TERM "GRAVELLY" MAY BE ADDED TO THE CLASS NAME, VIZ. "GRAVELLY SAND". THE TERMS "COARSE", "MEDIUM" AND "FINE" WHEN USED TO DESCRIBE SAND, SILT AND GRAVEL REFER TO STANDARD GRADE SIZE LIMITS.

### LEGEND OF EARTH MATERIALS

- GRAVEL
- SAND
- SILT
- CLAY
- SANDY CLAY OR CLAYEY SAND
- SANDY SILT OR SILTY SAND
- SILTY CLAY OR CLAYEY SILT
- PEAT AND/OR ORGANIC MATTER
- FILL MATERIAL
- IGNEOUS ROCK
- SEDIMENTARY ROCK
- METAMORPHIC ROCK

### LEGEND OF BORING OPERATIONS

- PLAN OF ANY BORING
- PENETROMETER
- 2¼" CONE PENETROMETER
- SAMPLER BORING (DRY)
- ROTARY BORING (WET)
- AUGER BORING (DRY)
- JET BORING
- CORE BORING
- TEST PIT

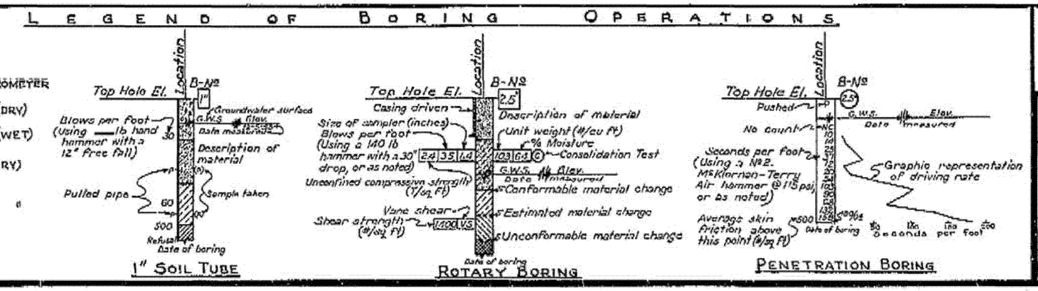


### NOTES

The contractor's attention is directed to Section 2, Article (c) of the Standard Specifications and to the Special Provisions accompanying this set of plans.

Classification of earth material as shown on this sheet is based upon field inspection and is not to be construed to imply mechanical analysis.

STATE OF CALIFORNIA
DEPARTMENT OF PUBLIC WORKS
DIVISION OF HIGHWAYS

RTE. 2/60 - SEPARATION

## LOG OF TEST BORINGS

SCALE Horiz. 1" = 20' Vert. 1" = 10' | BRIDGE 55-226 | FILE E-55 | DRAWING E-4306-12

PREL. DRAWING NO. P-4306 | 12

537

| FED. ROAD DIV. NO. | STATE | F.A. PROJECT No. | SHEET No. | TOTAL SHEETS |
|---|---|---|---|---|
| 7 | CALIF. | | | |

| DIST. | COUNTY | ROUTE | SECTION | SHEET No. | TOTAL SHEETS |
|---|---|---|---|---|---|
| 07 | Ora. | 5 | 19/23.5 | 225 | 394 |

BRIDGE ENGINEER CIVIL ENGINEER LICENSE EXPS.

DATE APPROVED February 27, 1967

TO ACCOMPANY PLANS DATED 4-29-13

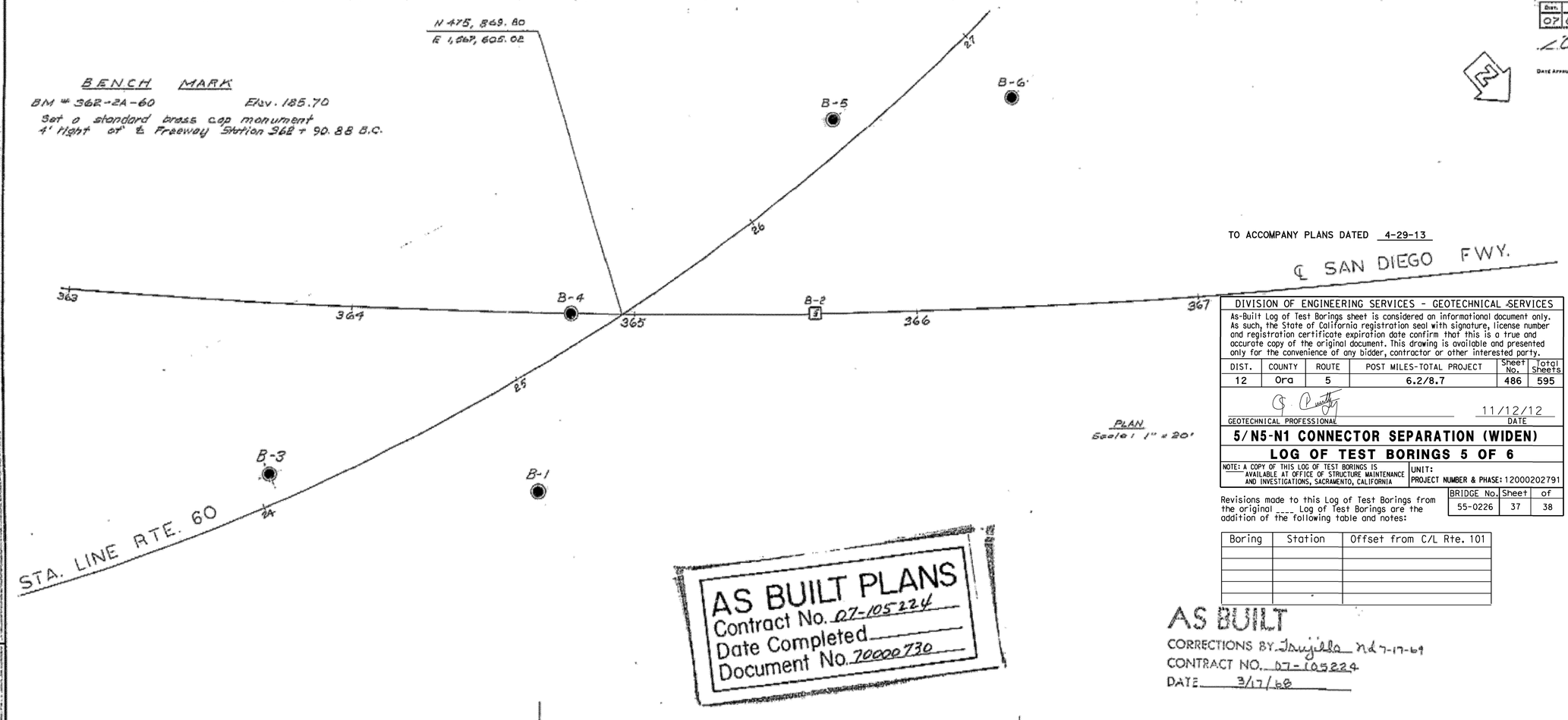


PLAN
Scale: 1" = 20'

AS BUILT PLANS
Contract No. 07-105224
Date Completed
Document No. 70000730

AS BUILT
CORRECTIONS BY Trujillo Nd 7-17-69
CONTRACT NO. 07-105224
DATE 3/17/68

DIVISION OF ENGINEERING SERVICES - GEOTECHNICAL SERVICES

As-Built Log of Test Borings sheet is considered an informational document only. As such, the State of California registration seal with signature, license number and registration certificate expiration date confirm that this is a true and accurate copy of the original document. This drawing is available and presented only for the convenience of any bidder, contractor or other interested party.

| DIST. | COUNTY | ROUTE | POST MILES-TOTAL PROJECT | Sheet No. | Total Sheets |
|---|---|---|---|---|---|
| 12 | Ora | 5 | 6.2/8.7 | 486 | 595 |

GEOTECHNICAL PROFESSIONAL — DATE 11/12/12

REGISTERED PROFESSIONAL ENGINEER
S. PIRATHIVIRAJ
NO. GE 2963
EXP. 12-31-13
GEOTECHNICAL
STATE OF CALIFORNIA

## 5/N5-N1 CONNECTOR SEPARATION (WIDEN)

## LOG OF TEST BORINGS 5 OF 6

NOTE: A COPY OF THIS LOG OF TEST BORINGS IS AVAILABLE AT OFFICE OF STRUCTURE MAINTENANCE AND INVESTIGATIONS, SACRAMENTO, CALIFORNIA

UNIT:
PROJECT NUMBER & PHASE: 12000202791

| BRIDGE No. | Sheet | of |
|---|---|---|
| 55-0226 | 37 | 38 |

Revisions made to this Log of Test Borings from the original ____ Log of Test Borings are the addition of the following table and notes:

| Boring | Station | Offset from C/L Rte. 101 |
|---|---|---|
| | | |
| | | |
| | | |
| | | |
| | | |

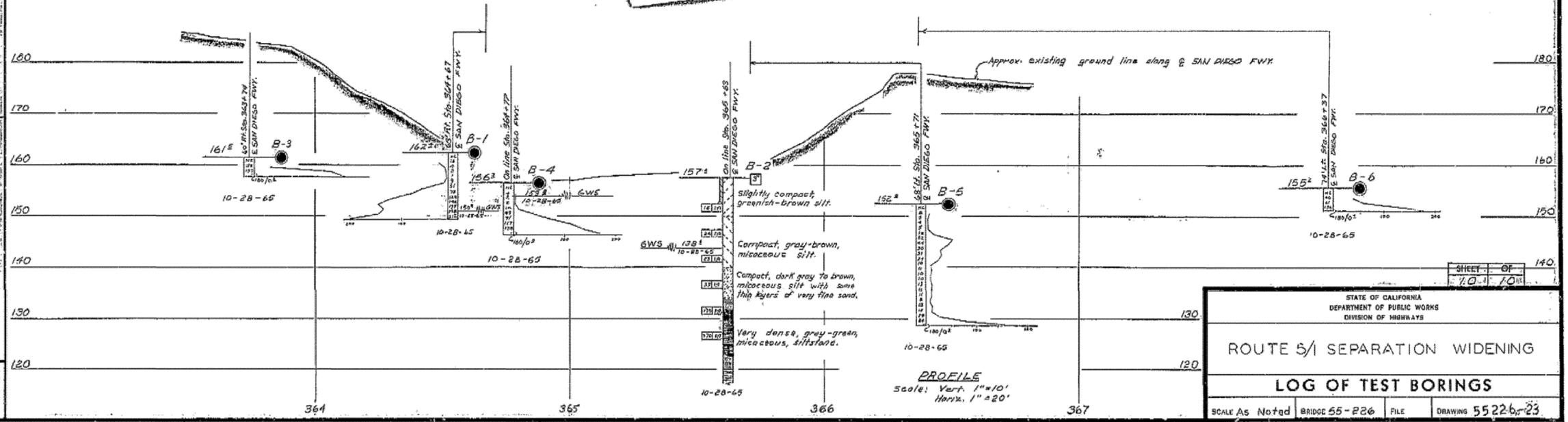


PROFILE
Scale: Vert. 1" = 10'
Horiz. 1" = 20'

LEGEND OF BORING OPERATIONS

LEGEND OF EARTH MATERIALS

CLASSIFICATION OF MATERIAL, BASED ON STANDARD GRADE SIZE LIMITS

NOTE: Classification of earth material as shown on this sheet is based upon field inspection and is not to be construed to imply mechanical analysis.

BRIDGE DEPARTMENT
ENGINEERING GEOLOGY SECTION

STATE OF CALIFORNIA
DEPARTMENT OF PUBLIC WORKS
DIVISION OF HIGHWAYS

ROUTE 5/1 SEPARATION WIDENING

## LOG OF TEST BORINGS

SCALE As Noted | BRIDGE 55-226 | FILE | DRAWING 55226-23

SHEET ___ OF ___

Charge: 07209

Disregard prints bearing earlier numbers

PREL. DRAWING No. PR-

FILENAME => 55-0226-z-lotb5.tif

| DIST. | COUNTY | ROUTE | SECTION | SHEET NO. | TOTAL SHEETS |
|---|---|---|---|---|---|
| 07 | ORA | 5/I | G/G3 | 171 | 171 |

DIVISION OF CONSTRUCTION SUPERVISION — REGISTERED CIVIL ENGINEER NO. 5888

DATE APPROVED May 24, 1971

TO ACCOMPANY PLANS DATED 4-29-13

DIVISION OF ENGINEERING SERVICES - GEOTECHNICAL SERVICES

As-Built Log of Test Borings sheet is considered an informational document only. As such, the State of California registration seal with signature, license number and registration certificate expiration date confirm that this is a true and accurate copy of the original document. This drawing is available and presented only for the convenience of any bidder, contractor or other interested party.

| DIST. | COUNTY | ROUTE | POST MILES-TOTAL PROJECT | Sheet No. | Total Sheets |
|---|---|---|---|---|---|
| 12 | Ora | 5 | 6.2/8.7 | 487 | 595 |

GEOTECHNICAL PROFESSIONAL — DATE 11/12/12

## 5/N5-N1 CONNECTOR SEPARATION (WIDEN)

## LOG OF TEST BORINGS 6 OF 6

NOTE: A COPY OF THIS LOG OF TEST BORINGS IS AVAILABLE AT OFFICE OF STRUCTURE MAINTENANCE AND INVESTIGATIONS, SACRAMENTO, CALIFORNIA

UNIT:
PROJECT NUMBER & PHASE: 12000202791

| BRIDGE No. | Sheet | of |
|---|---|---|
| 55-0226 | 38 | 38 |

Revisions made to this Log of Test Borings from the original ____ Log of Test Borings are the addition of the following table and notes:

| Boring | Station | Offset from C/L Rte. 101 |
|---|---|---|
| | | |
| | | |
| | | |

INFORMATION ON ACTUAL FOUNDATION CONDITIONS ENCOUNTERED IS ON FILE IN BRIDGE GEOLOGY SECTION

REGISTERED PROFESSIONAL ENGINEER — S. PIRATHIVIRAJ — NO. GE 2963 — EXP. 12-31-13 — GEOTECHNICAL — STATE OF CALIFORNIA

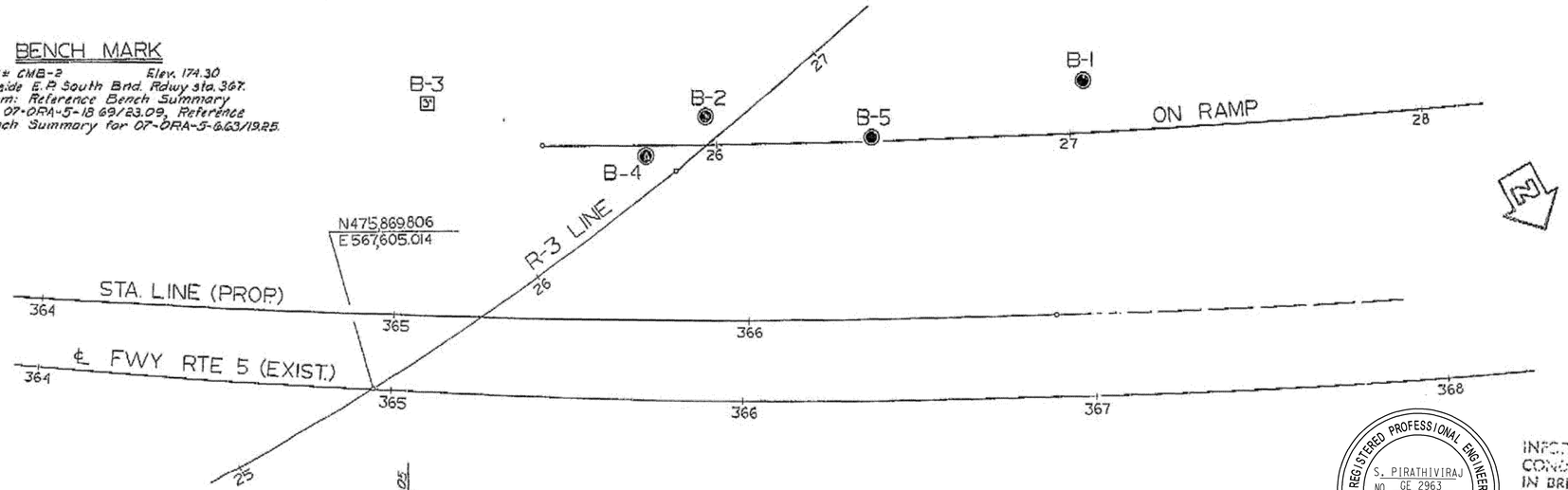


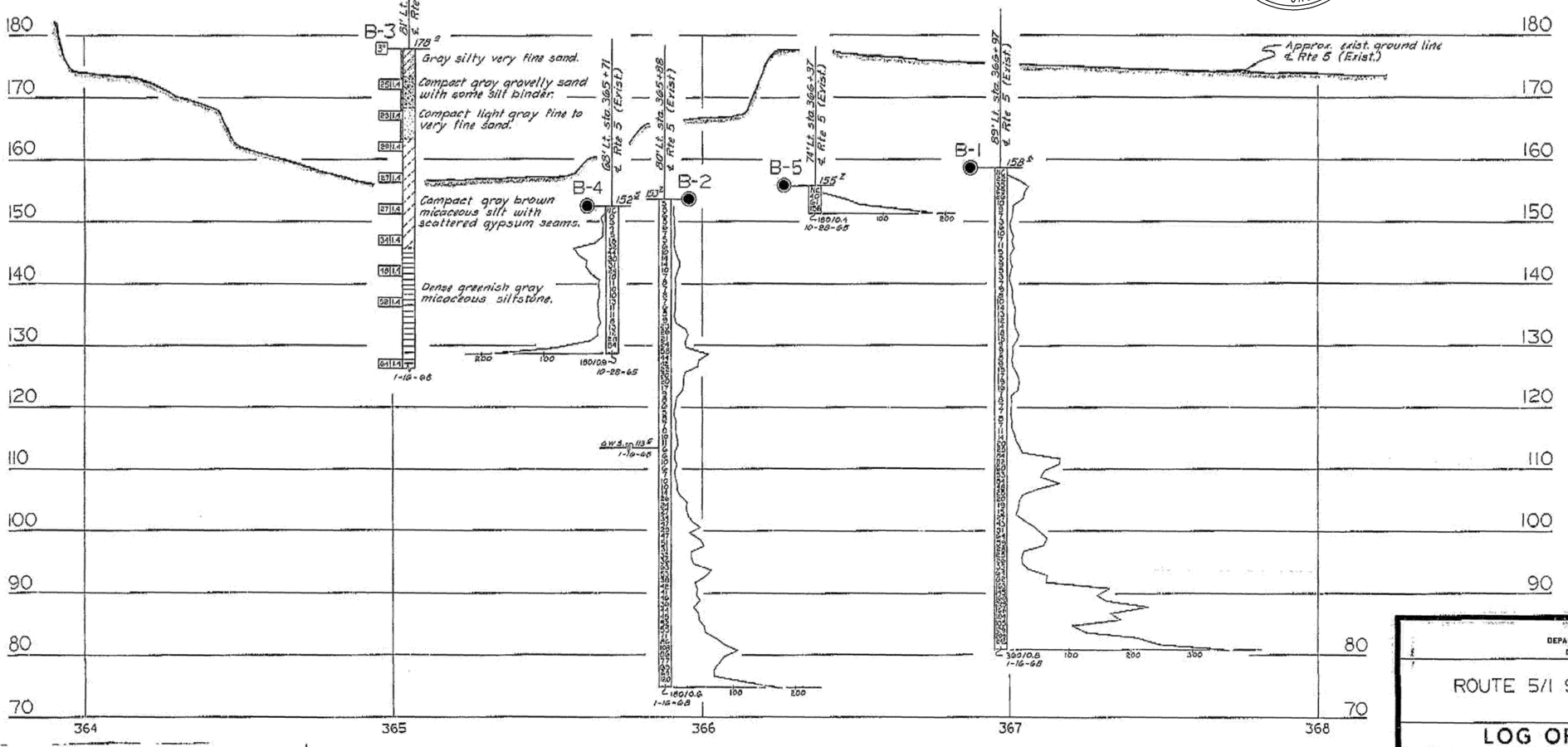


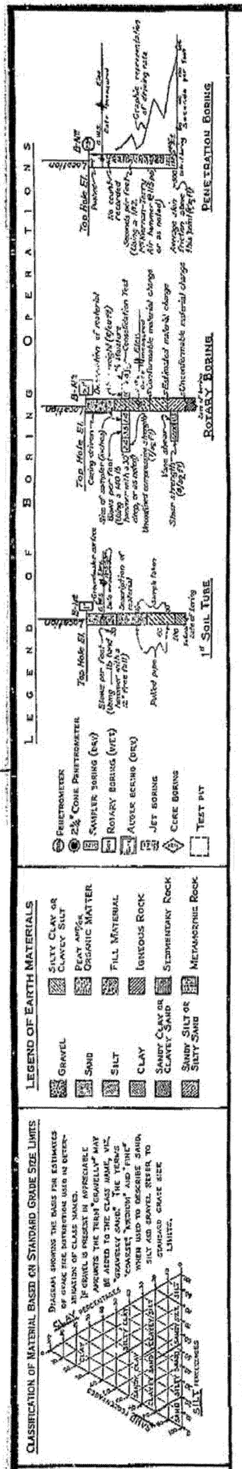


NOTE: Classification of earth material as shown on this sheet is based upon field inspection and is not to be construed to imply mechanical analysis.

AS BUILT PLANS
Contract No. 12052H

Chg: 07209
WA: 105211

Disregard prints bearing earlier numbers

PREL. DRAWING NO. PR-

| SHEET | OF |
|---|---|
| 187 | 1-7/8 |

STATE OF CALIFORNIA
DEPARTMENT OF PUBLIC WORKS
DIVISION OF HIGHWAYS

ROUTE 5/I SEPARATION (WIDEN)

## LOG OF TEST BORINGS

SCALE As Noted | BRIDGE 55-226 | FILE | DRAWING 55226-23

ENGINEERING GEOLOGY SECTION

FILENAME => 55-0226-z-lotb6.tif

| DIST | COUNTY | ROUTE | POST MILES TOTAL PROJECT | SHEET No | TOTAL SHEETS |
|---|---|---|---|---|---|
| 12 | Ora | 5 | 6.2/8.7 | 488 | 595 |

REGISTERED CIVIL ENGINEER — DATE 1-7-13

4-29-13
PLANS APPROVAL DATE

REGISTERED PROFESSIONAL ENGINEER — CAMERON J. PINKERTON — No. 73288 — Exp. 12-31-14 — CIVIL — STATE OF CALIFORNIA

*The State of California or its officers or agents shall not be responsible for the accuracy or completeness of electronic copies of this plan sheet.*

TRC
123 TECHNOLOGY DRIVE
IRVINE, CA 92618

ORANGE COUNTY TRANSPORTATION AUTHORITY
550 S. MAIN STREET
ORANGE, CA 92863-1584

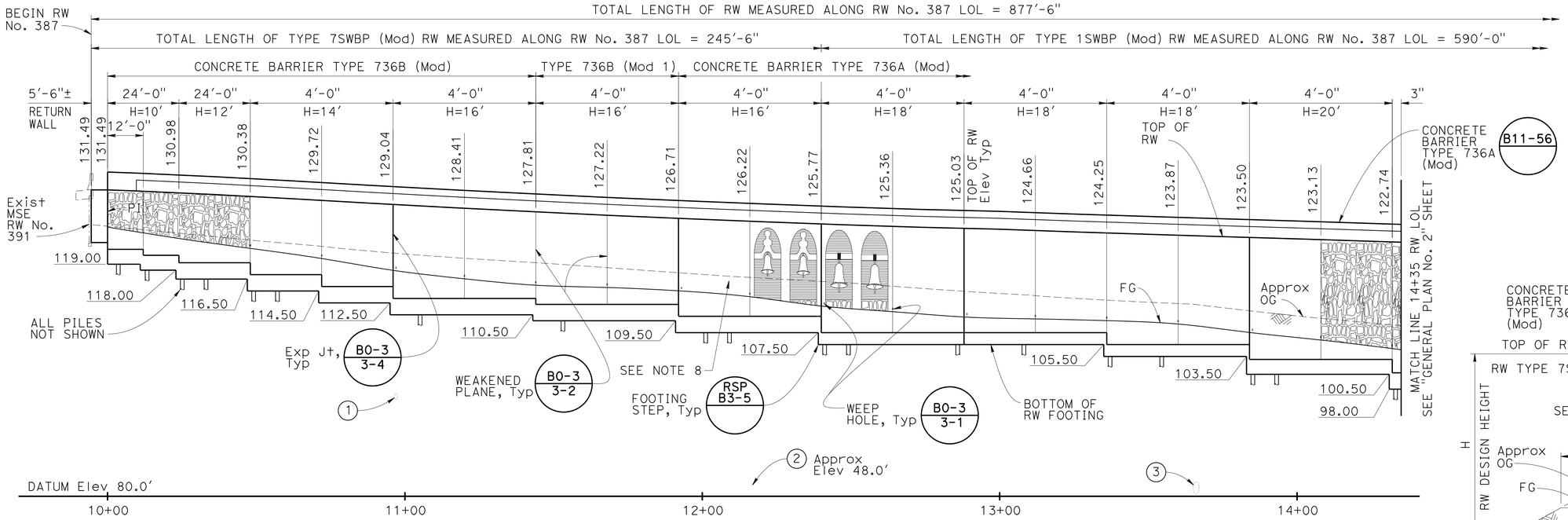


## DEVELOPED MIRROR ELEVATION

Horiz 1"=20'
Vert 1"=10'

## CURVE DATA

| NO. | R | Δ | T | L |
|---|---|---|---|---|
| 1 | 2200'.00 | 59°15'20" | 1251.18' | 2275.25' |
| 2 | 1950.08' | 05°38'29" | 96.08' | 192.00' |
| 3 | 2294.58' | 09°42'06" | 194.73' | 388.53' |

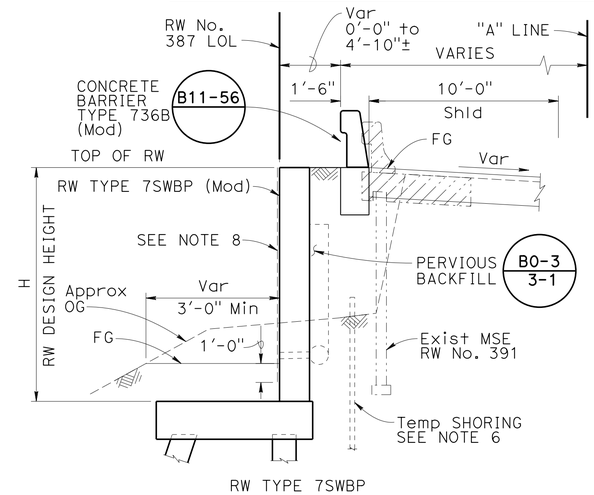


## TYPICAL SECTION

1/4"=1'-0'

RETAINING WALL NO. 387 — BRIDGE NO 55E0135

QUANTITIES

| | LUMP | SUM |
|---|---|---|
| REMOVE RETAINING WALL (PORTION) (LS) | | |
| STRUCTURE EXCAVATION (RETAINING WALL) | 3,834 | CY |
| STRUCTURE BACKFILL (RETAINING WALL) | 3,604 | CY |
| PERVIOUS BACKFILL MATERIAL (RETAINING WALL) | 380 | CY |
| FURNISH PILING (CLASS 90) | 16,803 | LF |
| DRIVE PILE (CLASS 90) | 388 | EA |
| STRUCTURAL CONCRETE, RETAINING WALL | 1,800 | CY |
| ARCHITECTURAL TREATMENT (MISSION) | 14,200 | SQFT |
| BAR REINFORCING STEEL (RETAINING WALL) | 282,070 | LB |
| 8" CORRUGATED STEEL PIPE (.064" THICK) | 185 | LF |
| ROCK SLOPE PROTECTION (NO. 3, METHOD B) (CY) | 3 | CY |
| CONCRETE BARRIER (TYPE 736A MODIFIED) | 680 | LF |
| CONCRETE BARRIER (TYPE 736B MODIFIED) | 192 | LF |

MATCH LINE 14+35 RW LOL
SEE "GENERAL PLAN No. 2" SHEET

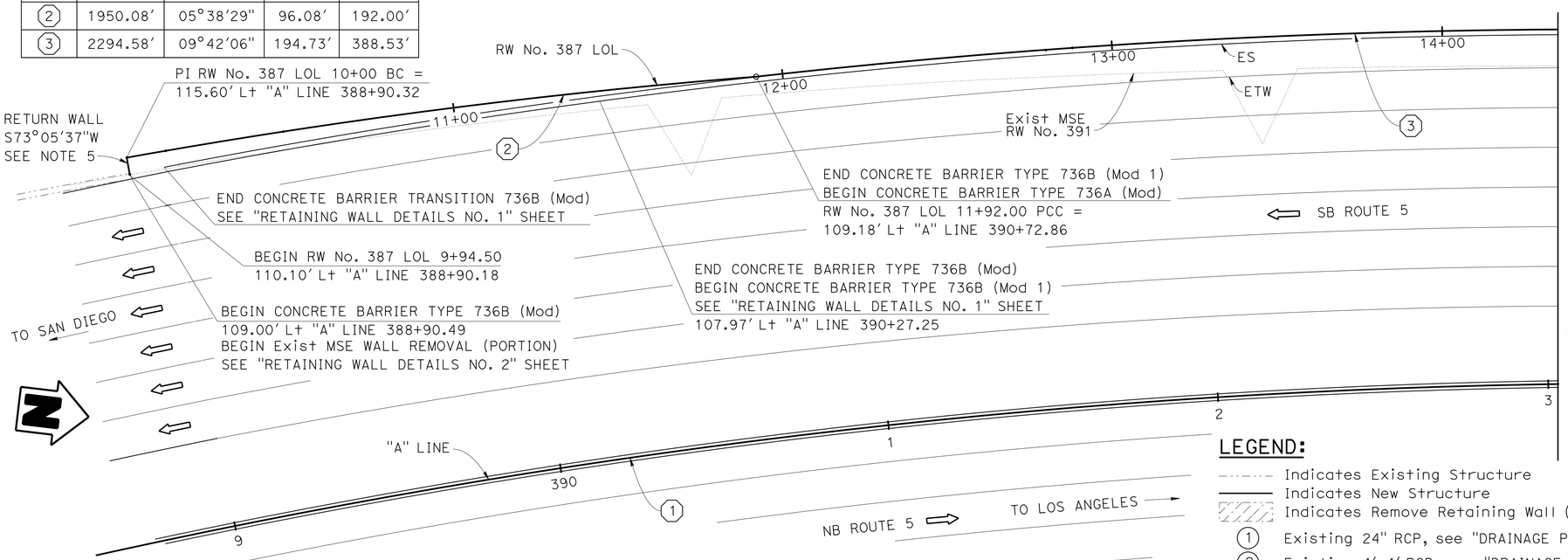


## PLAN

1"=20'

## NOTES:

1. For "INDEX TO PLANS", see "FOUNDATION PLAN NO. 1" sheet.
2. All joints are at 24'-0" intervals unless otherwise shown.
3. For "TYPICAL SECTION - RW TYPE 1SWBP" see "GENERAL PLAN NO. 2" sheet.
4. For "PILE DATA TABLE", see "FOUNDATION PLAN" sheets.
5. For "RETURN WALL DETAILS", see "RETAINING WALL DETAILS NO. 1" sheet.
6. The Contractor shall provide temporary shoring to prevent any instability to the near by existing MSE wall. Temporary shoring design shall be approved by the Engineer.
7. The maximum length of slot-cut shall be 150' or as field conditions permit.
8. For aesthetic details, see "ARCHITECTURAL TREATMENT DETAILS" sheets.

## LEGEND:

- Indicates Existing Structure
- Indicates New Structure
- Indicates Remove Retaining Wall (Portion)
- (1) Existing 24" RCP, see "DRAINAGE PLANS"
- (2) Existing 4'x4' RCB, see "DRAINAGE PLANS"
- (3) Existing 24" RCP, see DRAINAGE PLANS

NOTE:
THE CONTRACTOR SHALL VERIFY ALL CONTROLLING FIELD DIMENSIONS BEFORE ORDERING OR FABRICATING ANY MATERIAL.

Luqi Yang
DESIGN OVERSIGHT — Luqi Yang
1-16-13
SIGN OFF DATE

| | BY | CHECKED |
|---|---|---|
| DESIGN | C. Pinkerton | B. Holton |
| DETAILS | G. Imbsen | B. Holton |
| QUANTITIES | C. Pinkerton | A. Cardoza |

LOAD & RESISTANCE FACTOR DESIGN — LIVE LOADING: HL93 W/"LOW-BOY"
LAYOUT: G. Imbsen — CHECKED: C. Pinkerton
SPECIFICATIONS: S. Xie — PLANS AND SPECS COMPARED: A. Salama

PREPARED FOR THE STATE OF CALIFORNIA DEPARTMENT OF TRANSPORTATION

Ayman Salama
PROJECT ENGINEER

BRIDGE NO. 55E0135
POST MILES 7.2

# RETAINING WALL NO. 387
# GENERAL PLAN NO. 1

DESIGN GENERAL PLAN SHEET (ENGLISH) (REV.7/16/10)

ORIGINAL SCALE IN INCHES FOR REDUCED PLANS 0 1 2 3

UNIT: 2998
PROJECT NUMBER & PHASE: 12000202791 — CONTRACT NO.: 12-0F96E4

DISREGARD PRINTS BEARING EARLIER REVISION DATES — 12/20/12 — 08/28/12 — 10/18/12

SHEET 1 OF 20

FILE => 55-227-ga-rw_gp1.dgn

USERNAME => s124496 DATE PLOTTED => 29-APR-2013 TIME PLOTTED => 12:17

| DIST | COUNTY | ROUTE | POST MILES TOTAL PROJECT | SHEET No | TOTAL SHEETS |
|---|---|---|---|---|---|
| 12 | Ora | 5 | 6.2/8.7 | 489 | 595 |

REGISTERED CIVIL ENGINEER — DATE 1-7-13

4-29-13
PLANS APPROVAL DATE

REGISTERED PROFESSIONAL ENGINEER — CAMERON J. PINKERTON — No. 73288 — Exp. 12-31-14 — CIVIL — STATE OF CALIFORNIA

*The State of California or its officers or agents shall not be responsible for the accuracy or completeness of electronic copies of this plan sheet.*

TRC
123 TECHNOLOGY DRIVE
IRVINE, CA 92618

ORANGE COUNTY TRANSPORTATION AUTHORITY
550 S. MAIN STREET
ORANGE, CA 92863-1584

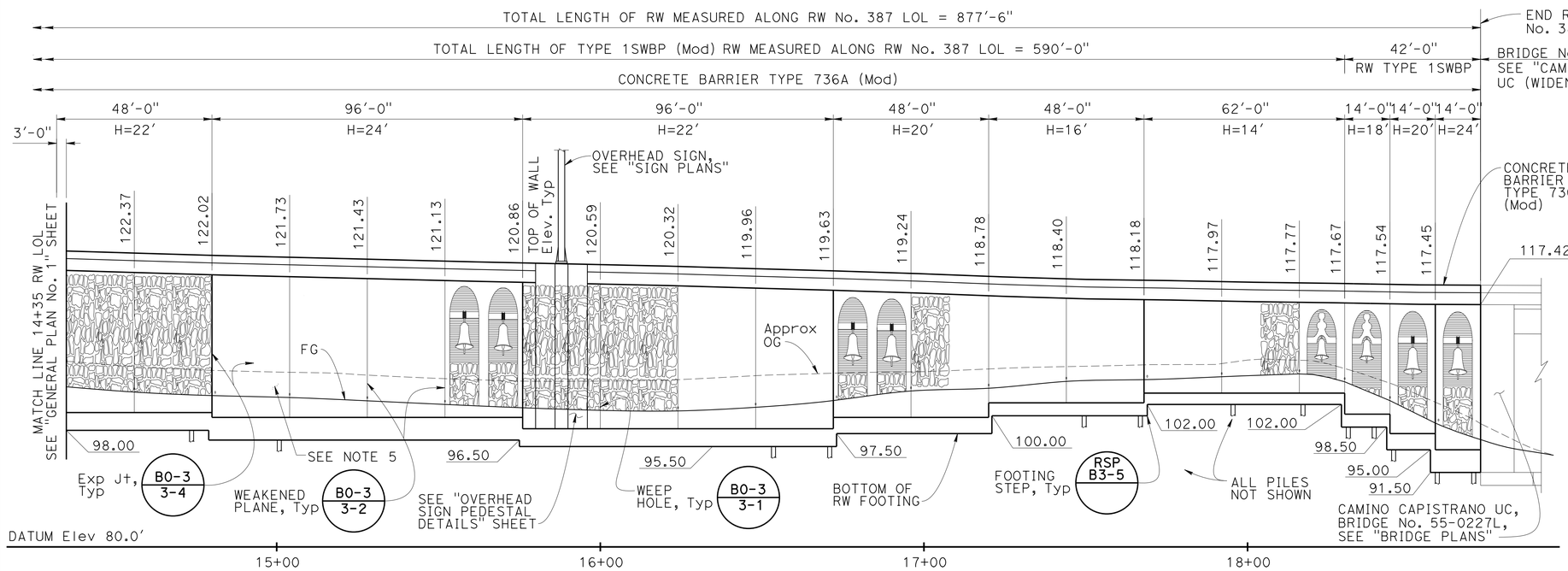


## DEVELOPED MIRROR ELEVATION

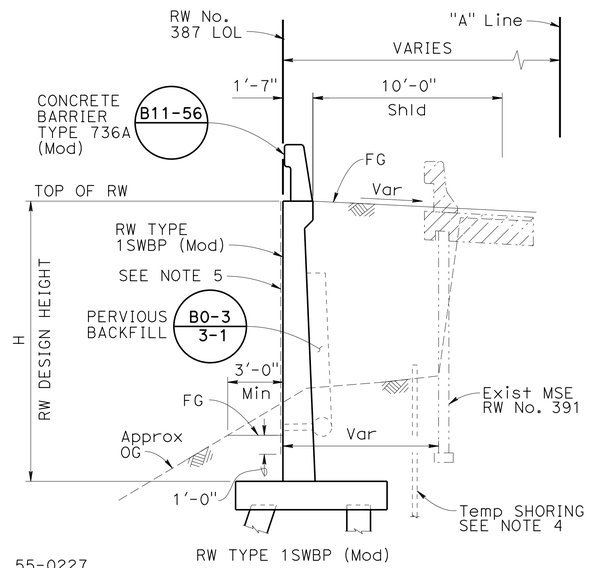


## TYPICAL SECTION

1/4"=1'-0'

Horiz 1"=20'
Vert 1"=10'

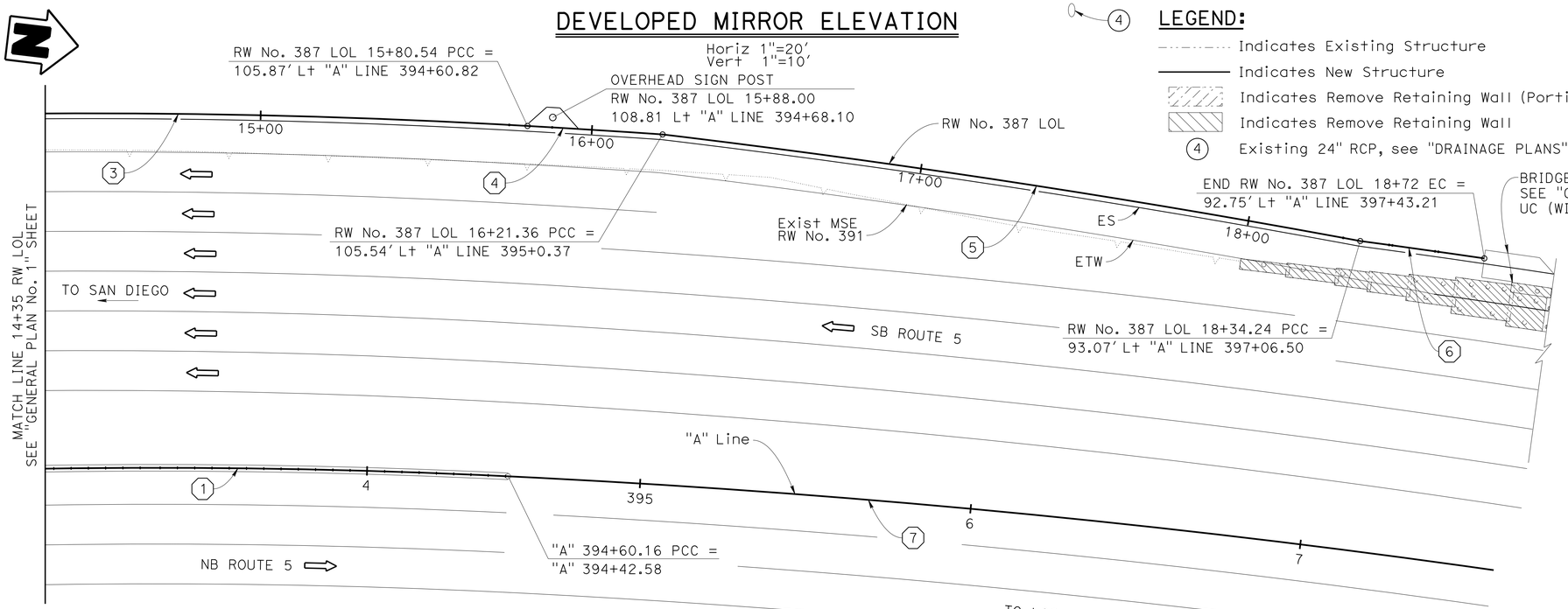


## PLAN

1"=20'

## LEGEND:

- Indicates Existing Structure
- Indicates New Structure
- Indicates Remove Retaining Wall (Portion)
- Indicates Remove Retaining Wall
- (4) Existing 24" RCP, see "DRAINAGE PLANS"

## NOTES:

1. For "INDEX TO PLANS", see "FOUNDATION PLAN NO. 1" sheet.
2. All joints are at 24'-0" intervals unless otherwise noted.
3. For "PILE DATA TABLE", see "FOUNDATION PLAN" sheets.
4. The Contractor shall provide temporary shoring to prevent any instability to the near by existing MSE wall. Temporary shoring design shall be approved by the Engineer.
5. For aesthetic details, see "ARCHITECTURAL TREATMENT DETAILS" sheets.

## CURVE DATA

| NO. | R | Δ | T | L |
|---|---|---|---|---|
| 1 | 2200'.00 | 59°15'20" | 1251.18' | 2275.25' |
| 3 | 2294.58' | 09°42'06" | 194.73' | 388.53' |
| 4 | 3294.58' | 0°42'35" | 20.41' | 40.82' |
| 5 | 3282.58' | 3°42'57" | 106.48' | 212.88' |
| 6 | 3283.83' | 0°39'33" | 18.91' | 37.78' |
| 7 | 3200.00' | 40°37'32" | 1184.53' | 2268.96' |

NOTE:
THE CONTRACTOR SHALL VERIFY ALL CONTROLLING FIELD DIMENSIONS BEFORE ORDERING OR FABRICATING ANY MATERIAL.

Luqi Yang
DESIGN OVERSIGHT Luqi Yang
1-16-13
SIGN OFF DATE

| | BY | CHECKED |
|---|---|---|
| DESIGN | C. Pinkerton | B. Holton |
| DETAILS | G. Imbsen | B. Holton |
| QUANTITIES | C. Pinkerton | A. Cardoza |

LOAD & RESISTANCE FACTOR DESIGN — LIVE LOADING: HL93 W/"LOW-BOY"

| | BY | CHECKED |
|---|---|---|
| LAYOUT | G. Imbsen | C. Pinkerton |
| SPECIFICATIONS | S. Xie | PLANS AND SPECS COMPARED A. Salama |

PREPARED FOR THE STATE OF CALIFORNIA DEPARTMENT OF TRANSPORTATION

Ayman Salama
PROJECT ENGINEER

BRIDGE NO. 55E0135
POST MILES 7.2

# RETAINING WALL NO. 387
# GENERAL PLAN NO. 2

DESIGN GENERAL PLAN SHEET (ENGLISH) (REV.7/16/10)

ORIGINAL SCALE IN INCHES FOR REDUCED PLANS 0 1 2 3

UNIT: 2998
PROJECT NUMBER & PHASE: 12000202791
CONTRACT NO.: 12-0F96E4

DISREGARD PRINTS BEARING EARLIER REVISION DATES — REVISION DATES 03/06/12 08/14/12 08/28/12 10/10/12 — SHEET 2 OF 20

FILE => 55-227-ga-rw_gp2.dgn

USERNAME => s124496 DATE PLOTTED => 23-APR-2013 TIME PLOTTED => 12:17

| DIST | COUNTY | ROUTE | POST MILES TOTAL PROJECT | SHEET No | TOTAL SHEETS |
|---|---|---|---|---|---|
| 12 | Ora | 5 | 6.2/8.7 | 490 | 595 |

REGISTERED CIVIL ENGINEER — DATE 1-7-13

PLANS APPROVAL DATE 4-29-13

REGISTERED PROFESSIONAL ENGINEER — CAMERON J. PINKERTON — No. 73288 — Exp. 12-31-14 — CIVIL — STATE OF CALIFORNIA

*The State of California or its officers or agents shall not be responsible for the accuracy or completeness of electronic copies of this plan sheet.*

TRC
123 TECHNOLOGY DRIVE
IRVINE, CA 92618

ORANGE COUNTY
TRANSPORTATION AUTHORITY
550 S. MAIN STREET
ORANGE, CA 92863-1584

## PILE DATA TABLE

| WALL TYPE | WALL HEIGHT (ft) | PILE TYPE | NOMINAL RESISTANCE (kips) COMPRESSION | NOMINAL RESISTANCE (kips) TENSION | DESIGN TIP ELEVATION (ft) | SPECIFIED TIP ELEVATION (ft) | NOMINAL DRIVING RESISTANCE (kips) |
|---|---|---|---|---|---|---|---|
| 7SWBP (Mod) | 10 | CLASS 90 Alt X | 80 | 20 | +89 (a); +109 (b); +94 (d) | +89 | 90 |
| | 10 | | 80 | 20 | +88 (a); +108 (b); +93 (d) | +88 | 90 |
| | 12 | | 100 | 40 | +86 (a); +101 (b); +91 (d) | +86 | 120 |
| | 14 | | 100 | 60 | +84 (a); +94 (b); +89 (d) | +84 | 120 |
| | 14 | | 100 | 60 | +82 (a); +92 (b); +87 (d) | +82 | 120 |
| | 16 | | 110 | 70 | +75 (a); +85 (b); +85 (d) | +75 | 130 |
| | 16 | | 110 | 70 | +74 (a); +84 (b); +84 (d) | +74 | 130 |
| | 16 | | 110 | 70 | +72 (a); +82 (b); +82 (d) | +72 | 130 |
| 1SWBP (Mod) | 18 | CLASS 90 Alt X | 110 | 20 | +70 (a); +95 (b); +80 (d) | +70 | 130 |
| | 18 | | 140 | 20 | +65 (a); +95 (b); +80 (d) | +65 | 160 |
| | 18 | | 140 | 20 | +63 (a); +93 (b); +78 (d) | +63 | 160 |
| | 20 | | 150 | 30 | +55 (a); +90 (b); +85 (c); +75 (d) | +55 | 170 |

NOTES:
1. Design tip elevations are controlled by the following demands: (a) Compression, (b) Tension, (c) Settlement and (d) Lateral Load.
2. There are no design tip elevations for Tension and tolerable Settlement in some of the wall heights.
3. The specified tip elevations shall not be raised above the design tip elevation for tension, Settlement and Lateral Load.

## LEGEND:

- Indicates Existing Structure
- Indicates New Structure
- Indicates Class 90 Pile
- Indicates Class 90 Pile (battered 3:1)
- (1) Existing 24" RCP, see "DRAINAGE PLANS"
- (2) Existing 4'x4' RCB, see "DRAINAGE PLANS"
- (3) Existing 24" RCP, see "DRAINAGE PLANS"
- (4) Existing MSE RW 8" PSP underdrain
- (5) Existing MSE RW 8" CSP outlet
- (6) Existing MSE RW 8" CSP cleanout

## NOTES:

1. Locations of existing structure foundations are approximate.
2. For "CURVE DATA", see "GENERAL PLAN NO. 1" sheet.

## INDEX TO PLANS


| SHEET NO. | TITLE |
|---|---|
| 1. | GENERAL PLAN NO. 1 |
| 2. | GENERAL PLAN NO. 2 |
| 3. | FOUNDATION PLAN NO. 1 |
| 4. | FOUNDATION PLAN NO. 2 |
| 5. | PILE LAYOUT NO. 1 |
| 6. | PILE LAYOUT NO. 2 |
| 7. | PILE LAYOUT NO. 3 |
| 8. | RETAINING WALL TYPE 1SWBP (MOD)-DETAILS |
| 9. | RETAINING WALL TYPE 7SWBP (MOD)-DETAILS |
| 10. | RETAINING WALL DETAILS NO. 1 |
| 11. | RETAINING WALL DETAILS NO. 2 |
| 12. | SIGN PEDESTAL DETAILS |
| 13. | ARCHITECTURAL TREATMENT DETAILS NO. 1 |
| 14. | ARCHITECTURAL TREATMENT DETAILS NO. 2 |
| 15. | ARCHITECTURAL TREATMENT DETAILS NO. 3 |
| 16. | ARCHITECTURAL TREATMENT DETAILS NO. 4 |
| 17. | ARCHITECTURAL TREATMENT DETAILS NO. 5 |
| 18. | ARCHITECTURAL TREATMENT DETAILS NO. 6 |
| 19. | LOG OF TEST BORINGS NO. 1 |
| 20. | LOG OF TEST BORINGS NO. 2 |


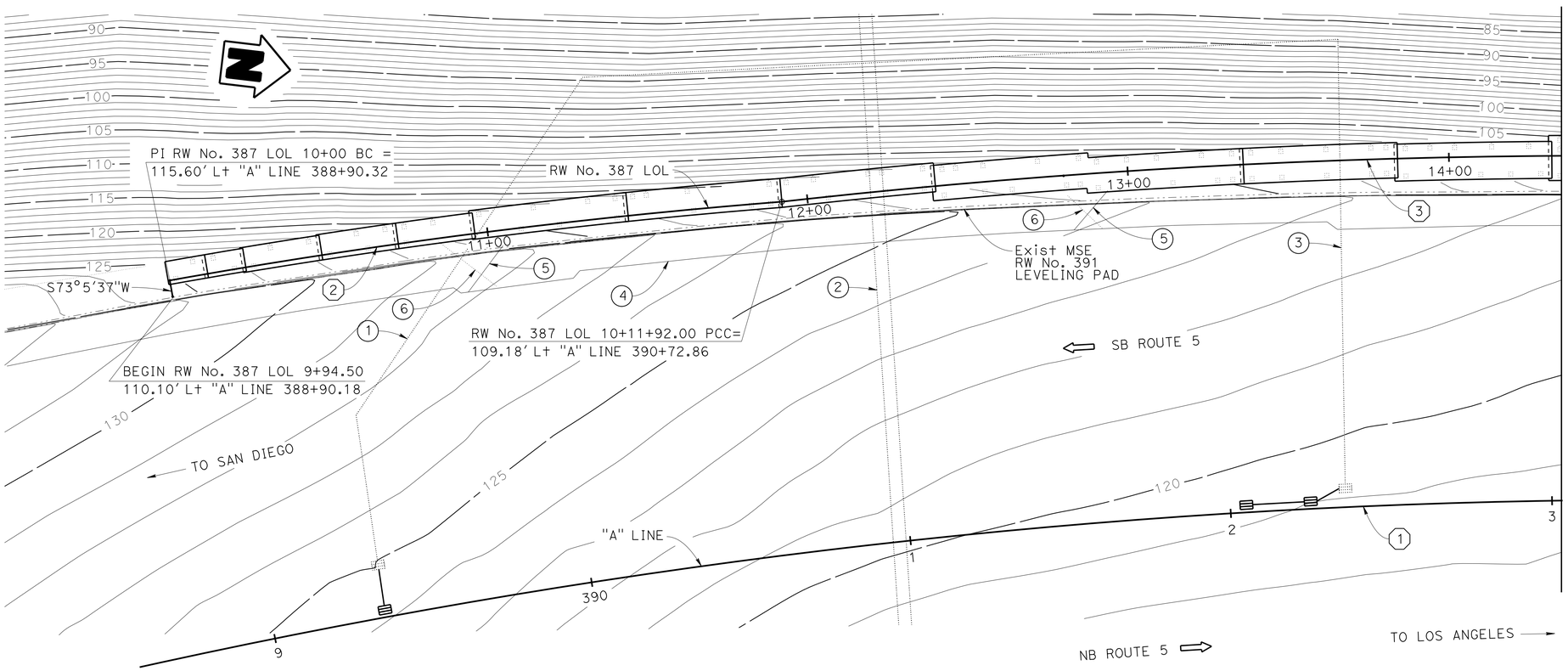


MATCH LINE 14+35 RW LOL
SEE "FOUNDATION PLAN No. 2" SHEET

## STANDARD PLANS MAY 2010

| | |
|---|---|
| A10A & A10B | ACRONYMS AND ABBREVIATIONS |
| A10C, A10D & A10E | LINES & SYMBOLS |
| A10F & A10G | LEGEND - SOIL |
| A62B | LIMITS OF PAYMENT FOR EXCAVATION AND BACKFILL BRIDGE SURCHARGE AND WALL |
| B0-3 | BRIDGE DETAILS |
| B2-5 | PILE DETAILS-CLASS 90 AND CLASS 140 |
| RSP B3-5 | RETAINING WALL DETAILS NO. 1 |
| B3-6 | RETAINING WALL DETAILS NO. 2 |
| B11-56 | CONCRETE BARRIER TYPE 736 |

STANDARD PLAN SHEET NO.
DETAIL NO.

## BENCHMARK:

Description: 3¾" US Coast and Geodetic survey Bronzed Disk Stamped "F 785 1946", set in the top of a concrete bridge abutment. Monument is located in the Southwesterly corner of the Atchinso/Topeka and Santa Fe Railway overcrossing of San Mateo Creek.

Designation: F-785

NOTE:
THE CONTRACTOR SHALL VERIFY ALL CONTROLLING FIELD DIMENSIONS BEFORE ORDERING OR FABRICATING ANY MATERIAL.

## PLAN
1"=20'

GEOTECHNICAL PROFESSIONAL — APPROVAL DATE 1-7-13

DESIGN OVERSIGHT Luqi Yang — SIGN OFF DATE 1-16-13

SCALE: AS SHOWN | VERT.DATUM NAVD83,1991.35 Epoch | HORZ.DATUM NAD88,O.C.S. 1995 Adj.
PHOTOGRAMMETRY AS OF: CALTRANS 4-24-09 ASC 0901-04 | ALIGNMENT TIES W. Estepa
SURVEYED | BY R. Gould | DRAFTED | BY G. Imbsen
FIELD CHECKED | BY K. Launen | CHECKED | BY C. Pinkerton

| | BY | CHECKED |
|---|---|---|
| DESIGN | C. Pinkerton | B. Holton |
| DETAILS | G. Imbsen | B. Holton |
| QUANTITIES | C. Pinkerton | A. Cardoza |

PREPARED FOR THE STATE OF CALIFORNIA DEPARTMENT OF TRANSPORTATION

Ayman Salama
PROJECT ENGINEER

BRIDGE NO. 55E0135
POST MILES 7.2

# RETAINING WALL NO. 387
# FOUNDATION PLAN NO. 1

FOUNDATION PLAN SHEET (ENGLISH) (REV.7/16/10)

ORIGINAL SCALE IN INCHES FOR REDUCED PLANS 0 1 2 3

UNIT: 2998
PROJECT NUMBER & PHASE: 12000202791 CONTRACT NO.: 12-0F96E4

DISREGARD PRINTS BEARING EARLIER REVISION DATES — REVISION DATES 03/06/12 08/14/12 08/28/12 10/10/12 — SHEET 3 OF 20

FILE => 55-227-ge-rwfp1.dgn

USERNAME => s124496 DATE PLOTTED => 29-APR-2013 TIME PLOTTED => 12:17

| DIST | COUNTY | ROUTE | POST MILES TOTAL PROJECT | SHEET No | TOTAL SHEETS |
|---|---|---|---|---|---|
| 12 | Ora | 5 | 6.2/8.7 | 491 | 595 |

REGISTERED CIVIL ENGINEER — DATE 1-7-13

4-29-13
PLANS APPROVAL DATE

REGISTERED PROFESSIONAL ENGINEER — CAMERON J. PINKERTON — No. 73288 — Exp. 12-31-14 — CIVIL — STATE OF CALIFORNIA

*The State of California or its officers or agents shall not be responsible for the accuracy or completeness of electronic copies of this plan sheet.*

TRC
123 TECHNOLOGY DRIVE
IRVINE, CA 92618

ORANGE COUNTY
TRANSPORTATION AUTHORITY
550 S. MAIN STREET
ORANGE, CA 92863-1584

## PILE DATA TABLE

| WALL TYPE | WALL HEIGHT (ft) | PILE TYPE | NOMINAL RESISTANCE (kips) COMPRESSION | NOMINAL RESISTANCE (kips) TENSION | DESIGN TIP ELEVATION (ft) | SPECIFIED TIP ELEVATION (ft) | NOMINAL DRIVING RESISTANCE (kips) |
|---|---|---|---|---|---|---|---|
| 1SWBP (Mod) | 22 | CLASS 90 Alt X | 160 | 30 | +53 (a); +88 (b); +81 (c); +73 (d) | +53 | 180 |
| | 24 | | 140 | 80 | +56 (a); +66 (b); +75 (c); +71 (d) | +56 | 160 |
| | 22 | | 140 | 60 | +55 (a); +75 (b); +77 (c); +70 (d) | +55 | 160 |
| | 20 | | 170 | 20 | +42 (a); +87 (b); +85 (c); +72 (d) | +42 | 190 |
| | 16 | | 180 | 0 | +45 (a); +75 (d) | +45 | 200 |
| | 14 | | 170 | 0 | +47 (a); +77 (d) | +47 | 190 |
| 1SWBP | 18 | CLASS 90 Alt X | 150 | 10 | +48 (a); +88 (b); +73 (d) | +48 | 170 |
| | 20 | | 180 | 20 | +40 (a); +85 (b); +70 (d) | +40 | 200 |
| | 24 | | 160 | 60 | +41 (a); +66 (b); +66 (d) | +41 | 180 |

NOTES:
1. Design tip elevations are controlled by the following demands: (a) Compression, (b) Tension, (c) Settlement and (d) Lateral Load.
2. There are no design tip elevations for Tension and tolerable Settlement in some of the wall heights.
3. The specified tip elevations shall not be raised above the design tip elevation for tension, Settlement and Lateral Load.

## LEGEND:

- Indicates Existing Structure
- Indicates New Structure
- Indicates Remove Retaning Wall
- Indicates Class 90 Pile
- Indicates Class 90 Pile (battered 3:1)
- (4) Existing MSE RW 8" PSP underdrain
- (5) Existing MSE RW 8" CSP outlet
- (6) Existing MSE RW 8" CSP cleanout
- (7) Existing 24" RCP, see "DRAINAGE PLANS"

## NOTES:

1. Locations of existing structure foundations are approximate.
2. For "CURVE DATA", see "GENERAL PLAN NO. 2" sheet.
3. For "BENCHMARK", see "FOUNDATION PLAN No. 1" sheet.

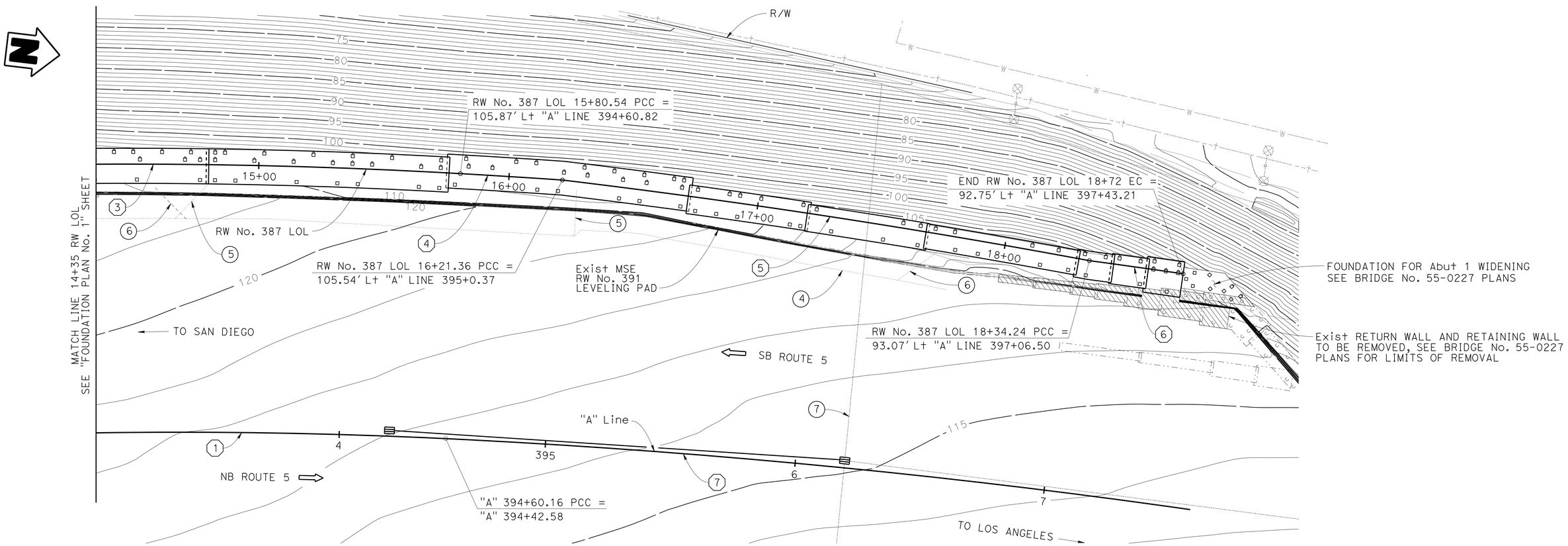


NOTE:
THE CONTRACTOR SHALL VERIFY ALL CONTROLLING FIELD DIMENSIONS BEFORE ORDERING OR FABRICATING ANY MATERIAL.

## PLAN
1"=20'

GEOTECHNICAL PROFESSIONAL — APPROVAL DATE 1-7-13

DESIGN OVERSIGHT Luqi Yang — 1-16-13 — SIGN OFF DATE

| | | | |
|---|---|---|---|
| SCALE: AS SHOWN | VERT.DATUM NAVD83,1991.35 Epoch | HORZ.DATUM NAD88,O.C.S. 1995 Adj. | |
| PHOTOGRAMMETRY AS OF: CALTRANS 4-24-09 ASC 0901-04 | ALIGNMENT TIES W. Estepa | | |
| SURVEYED | BY R. Gould | DRAFTED | BY G. Imbsen |
| FIELD CHECKED | BY K. Launen | CHECKED | BY C. Pinkerton |

| | BY | CHECKED |
|---|---|---|
| DESIGN | C. Pinkerton | B. Holton |
| DETAILS | G. Imbsen | B. Holton |
| QUANTITIES | C. Pinkerton | A. Cardoza |

PREPARED FOR THE STATE OF CALIFORNIA DEPARTMENT OF TRANSPORTATION

Ayman Salama
PROJECT ENGINEER

BRIDGE NO. 55E0135
POST MILES 7.2

# RETAINING WALL NO. 387
# FOUNDATION PLAN NO. 2

FOUNDATION PLAN SHEET (ENGLISH) (REV.7/16/10)

ORIGINAL SCALE IN INCHES FOR REDUCED PLANS 0 1 2 3

UNIT: 2998
PROJECT NUMBER & PHASE: 12000202791
CONTRACT NO.: 12-0F96E4

DISREGARD PRINTS BEARING EARLIER REVISION DATES → REVISION DATES 01/06/12 08/14/12 09/26/12 10/10/12

SHEET 4 OF 20

FILE => 55-227-ge-rwfp2.dgn

USERNAME => s124496 DATE PLOTTED => 29-APR-2013 TIME PLOTTED => 12:17

| DIST | COUNTY | ROUTE | POST MILES TOTAL PROJECT | SHEET No | TOTAL SHEETS |
|---|---|---|---|---|---|
| 12 | Ora | 5 | 6.2/8.7 | 492 | 595 |

REGISTERED CIVIL ENGINEER — DATE 1-7-13

4-29-13
PLANS APPROVAL DATE

REGISTERED PROFESSIONAL ENGINEER — CAMERON J. PINKERTON — No. 73288 — Exp. 12-31-14 — CIVIL — STATE OF CALIFORNIA

*The State of California or its officers or agents shall not be responsible for the accuracy or completeness of electronic copies of this plan sheet.*

TRC
123 TECHNOLOGY DRIVE
IRVINE, CA 92618

ORANGE COUNTY
TRANSPORTATION AUTHORITY
550 S. MAIN STREET
ORANGE, CA 92863-1584

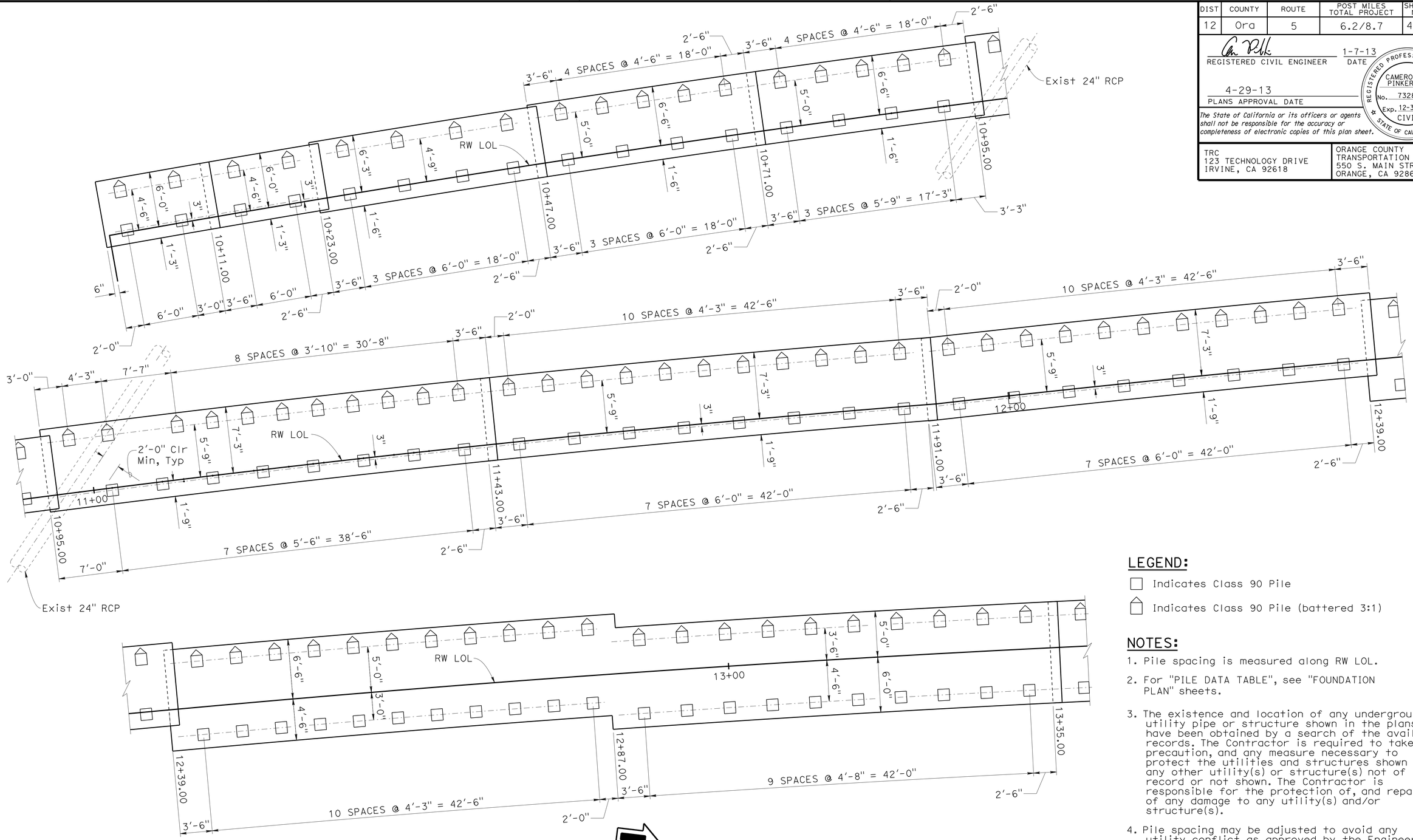


## LEGEND:

- ☐ Indicates Class 90 Pile
- ⌂ Indicates Class 90 Pile (battered 3:1)

## NOTES:

1. Pile spacing is measured along RW LOL.
2. For "PILE DATA TABLE", see "FOUNDATION PLAN" sheets.
3. The existence and location of any underground utility pipe or structure shown in the plans have been obtained by a search of the available records. The Contractor is required to take due precaution, and any measure necessary to protect the utilities and structures shown and any other utility(s) or structure(s) not of record or not shown. The Contractor is responsible for the protection of, and repair of any damage to any utility(s) and/or structure(s).
4. Pile spacing may be adjusted to avoid any utility conflict as approved by the Engineer prior to pile installation.

NOTE:
THE CONTRACTOR SHALL VERIFY ALL CONTROLLING FIELD DIMENSIONS BEFORE ORDERING OR FABRICATING ANY MATERIAL.

## PILE LAYOUT

1"=5'

DESIGN OVERSIGHT Luqi Yang — 1-16-13 — SIGN OFF DATE

| | BY | CHECKED |
|---|---|---|
| DESIGN | C. Pinkerton | B. Holton |
| DETAILS | G. Imbsen | B. Holton |
| QUANTITIES | C. Pinkerton | A. Cardoza |

PREPARED FOR THE STATE OF CALIFORNIA DEPARTMENT OF TRANSPORTATION

Ayman Salama — PROJECT ENGINEER

BRIDGE NO. 55E0135
POST MILES 7.2

# RETAINING WALL NO. 387
# PILE LAYOUT NO. 1

DESIGN DETAIL SHEET (ENGLISH) (REV.7/16/10)

ORIGINAL SCALE IN INCHES FOR REDUCED PLANS 0 1 2 3

UNIT: 2998
PROJECT NUMBER & PHASE: 12000202791
CONTRACT NO.: 12-0F96E4

DISREGARD PRINTS BEARING EARLIER REVISION DATES

REVISION DATES: 03/06/12 08/14/12 08/28/12 10/10/12

SHEET 5 OF 20

FILE => 55-227-gf-rwfl1.dgn

USERNAME => s124496 DATE PLOTTED => 29-APR-2013 TIME PLOTTED => 12:17

| DIST | COUNTY | ROUTE | POST MILES TOTAL PROJECT | SHEET No | TOTAL SHEETS |
|---|---|---|---|---|---|
| 12 | Ora | 5 | 6.2/8.7 | 493 | 595 |

REGISTERED CIVIL ENGINEER — DATE: 1-7-13

4-29-13
PLANS APPROVAL DATE

REGISTERED PROFESSIONAL ENGINEER — CAMERON J. PINKERTON — No. 73288 — Exp. 12-31-14 — CIVIL — STATE OF CALIFORNIA

*The State of California or its officers or agents shall not be responsible for the accuracy or completeness of electronic copies of this plan sheet.*

TRC
123 TECHNOLOGY DRIVE
IRVINE, CA 92618

ORANGE COUNTY
TRANSPORTATION AUTHORITY
550 S. MAIN STREET
ORANGE, CA 92863-1584

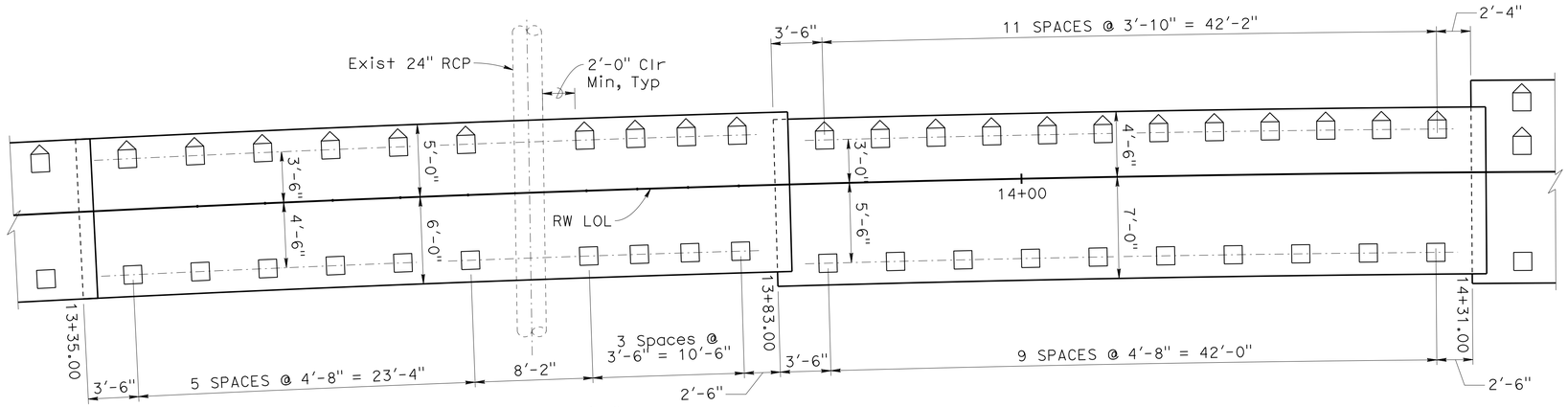


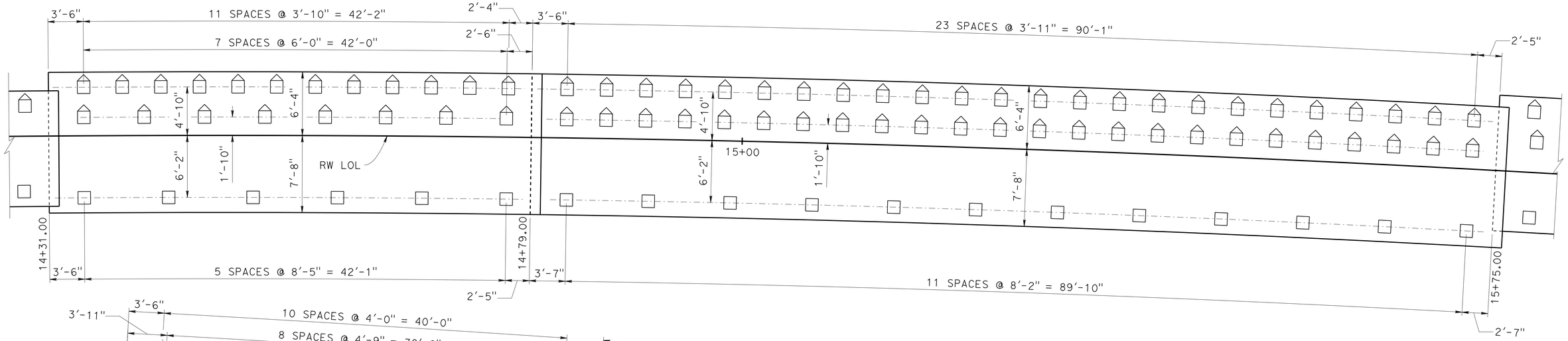


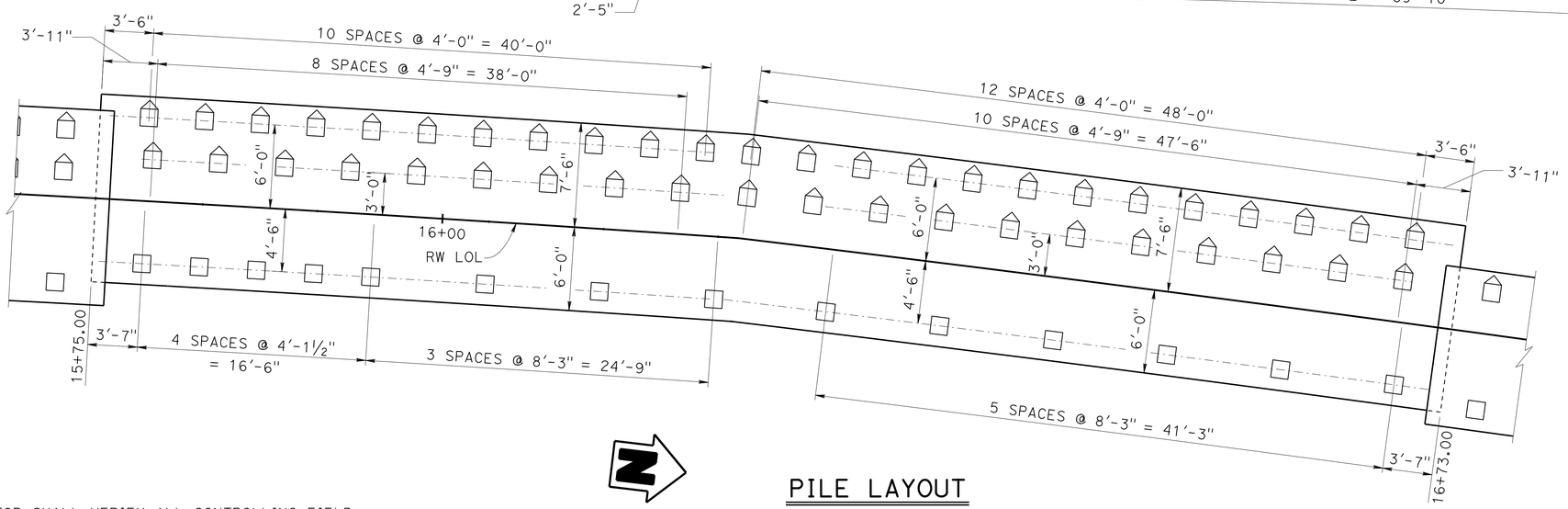


## PILE LAYOUT

1"=5'

## LEGEND:

☐ Indicates Class 90 Pile

⌂ Indicates Class 90 Pile (battered 3:1)

## NOTES:

1. Pile spacing is measured along RW LOL.
2. For "PILE DATA TABLE", see "FOUNDATION PLAN" sheets.
3. The existence and location of any underground utility pipe or structure shown in the plans have been obtained by a search of the available records. The Contractor is required to take due precaution, and any measure necessary to protect the utilities and structures shown and any other utility(s) or structure(s) not of record or not shown. The Contractor is responsible for the protection of, and repair of any damage to any utility(s) and/or structure(s).
4. Pile spacing may be adjusted to avoid any utility conflict as approved by the Engineer prior to pile installation.

NOTE:
THE CONTRACTOR SHALL VERIFY ALL CONTROLLING FIELD DIMENSIONS BEFORE ORDERING OR FABRICATING ANY MATERIAL.

Luqi Yang
DESIGN OVERSIGHT — Luqi Yang
1-16-13
SIGN OFF DATE

| | BY | CHECKED |
|---|---|---|
| DESIGN | C. Pinkerton | B. Holton |
| DETAILS | G. Imbsen | B. Holton |
| QUANTITIES | C. Pinkerton | A. Cardoza |

PREPARED FOR THE STATE OF CALIFORNIA DEPARTMENT OF TRANSPORTATION

Ayman Salama
PROJECT ENGINEER

BRIDGE NO. 55E0135
POST MILES 7.2

# RETAINING WALL NO. 387
# PILE LAYOUT NO. 2

DESIGN DETAIL SHEET (ENGLISH) (REV.7/16/10)

ORIGINAL SCALE IN INCHES FOR REDUCED PLANS 0 1 2 3

UNIT: 2998
PROJECT NUMBER & PHASE: 12000202791
CONTRACT NO.: 12-0F96E4

DISREGARD PRINTS BEARING EARLIER REVISION DATES

REVISION DATES: 01/06/12 08/14/12 08/28/12 10/10/12

SHEET 6 OF 20

FILE => 55-227-gf-rwf12.dgn

USERNAME => s124496 DATE PLOTTED => 29-APR-2013 TIME PLOTTED => 12:17

| DIST | COUNTY | ROUTE | POST MILES TOTAL PROJECT | SHEET No | TOTAL SHEETS |
|---|---|---|---|---|---|
| 12 | Ora | 5 | 6.2/8.7 | 494 | 595 |

REGISTERED CIVIL ENGINEER — DATE: 1-7-13

PLANS APPROVAL DATE: 4-29-13

REGISTERED PROFESSIONAL ENGINEER — CAMERON J. PINKERTON — No. 73288 — Exp. 12-31-14 — CIVIL — STATE OF CALIFORNIA

*The State of California or its officers or agents shall not be responsible for the accuracy or completeness of electronic copies of this plan sheet.*

TRC
123 TECHNOLOGY DRIVE
IRVINE, CA 92618

ORANGE COUNTY
TRANSPORTATION AUTHORITY
550 S. MAIN STREET
ORANGE, CA 92863-1584

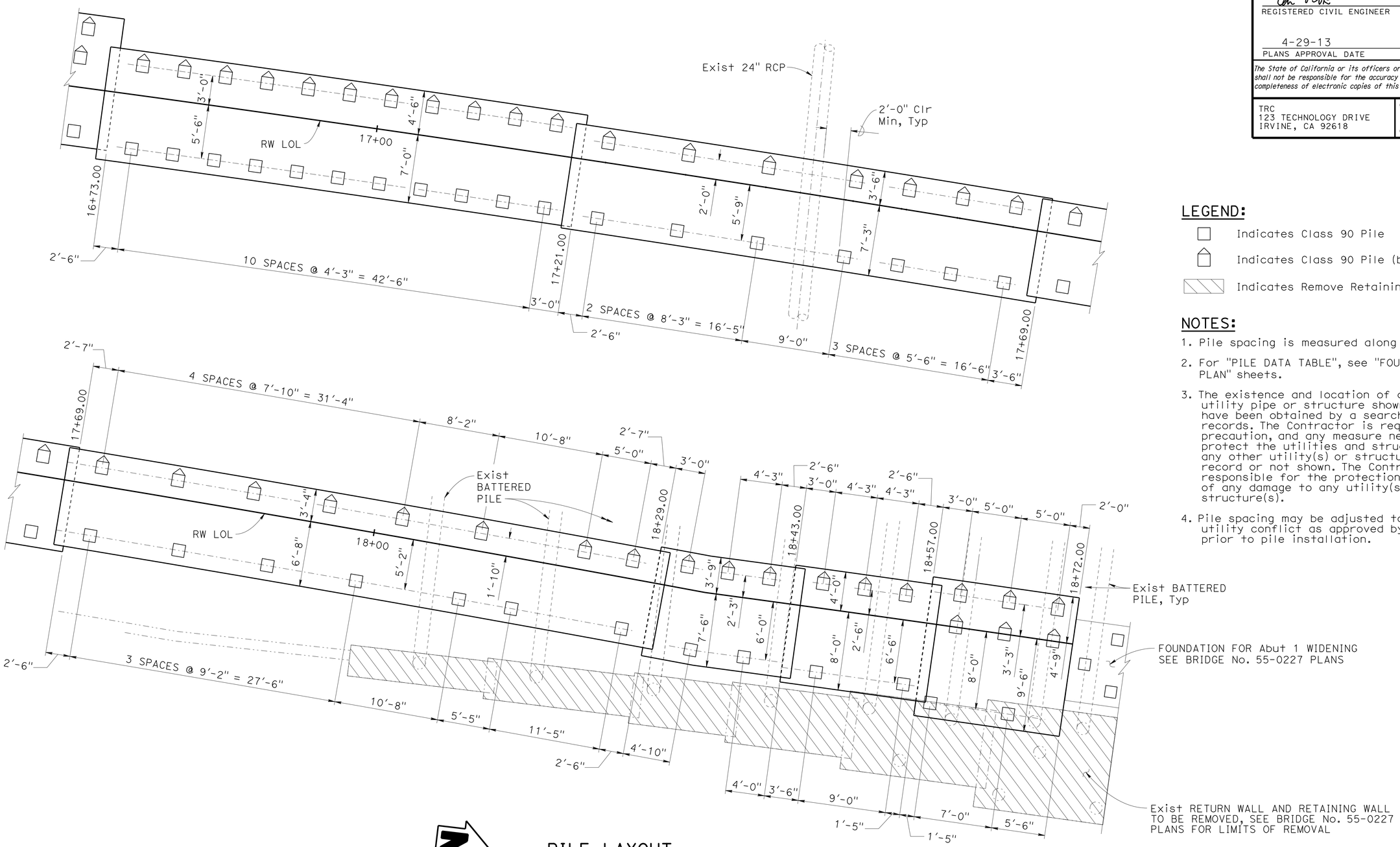


## LEGEND:

- Indicates Class 90 Pile
- Indicates Class 90 Pile (battered 3:1)
- Indicates Remove Retaining Wall

## NOTES:

1. Pile spacing is measured along RW LOL.
2. For "PILE DATA TABLE", see "FOUNDATION PLAN" sheets.
3. The existence and location of any underground utility pipe or structure shown in the plans have been obtained by a search of the available records. The Contractor is required to take due precaution, and any measure necessary to protect the utilities and structures shown and any other utility(s) or structure(s) not of record or not shown. The Contractor is responsible for the protection of, and repair of any damage to any utility(s) and/or structure(s).
4. Pile spacing may be adjusted to avoid any utility conflict as approved by the Engineer prior to pile installation.

## PILE LAYOUT

1"=5'

NOTE:
THE CONTRACTOR SHALL VERIFY ALL CONTROLLING FIELD DIMENSIONS BEFORE ORDERING OR FABRICATING ANY MATERIAL.

DESIGN OVERSIGHT: Luqi Yang — 1-16-13 SIGN OFF DATE

| | BY | CHECKED |
|---|---|---|
| DESIGN | C. Pinkerton | B. Holton |
| DETAILS | G. Imbsen | B. Holton |
| QUANTITIES | C. Pinkerton | A. Cardoza |

PREPARED FOR THE STATE OF CALIFORNIA DEPARTMENT OF TRANSPORTATION

Ayman Salama — PROJECT ENGINEER

BRIDGE NO. 55E0135 — POST MILES 7.2

# RETAINING WALL NO. 387
# PILE LAYOUT NO. 3

DESIGN DETAIL SHEET (ENGLISH) (REV.7/16/10)

ORIGINAL SCALE IN INCHES FOR REDUCED PLANS 0 1 2 3

UNIT: 2998
PROJECT NUMBER & PHASE: 12000202791 CONTRACT NO.: 12-0F96E4

DISREGARD PRINTS BEARING EARLIER REVISION DATES — REVISION DATES 01/06/12 08/14/12 08/28/12 10/10/12 — SHEET 7 OF 20

FILE => 55-227-gf-rwf13.dgn

USERNAME => s124496 DATE PLOTTED => 29-APR-2013 TIME PLOTTED => 12:17

| DIST | COUNTY | ROUTE | POST MILES TOTAL PROJECT | SHEET No | TOTAL SHEETS |
|---|---|---|---|---|---|
| 12 | Ora | 5 | 6.2/8.7 | 495 | 595 |

REGISTERED CIVIL ENGINEER — DATE 1-7-13

4-29-13
PLANS APPROVAL DATE

REGISTERED PROFESSIONAL ENGINEER — CAMERON J. PINKERTON — No. 73288 — Exp. 12-31-14 — CIVIL — STATE OF CALIFORNIA

*The State of California or its officers or agents shall not be responsible for the accuracy or completeness of electronic copies of this plan sheet.*

TRC
123 TECHNOLOGY DRIVE
IRVINE, CA 92618

ORANGE COUNTY
TRANSPORTATION AUTHORITY
550 S. MAIN STREET
ORANGE, CA 92863-1584

## NOTES:

1. All piles are class 90 concrete piles.
2. Pile batter shown are 1:3.
3. Minimum distance between center pile and edge of footing is 1′-6".
4. Lateral resistance of each pile:
   11 kip for strength limit states.
   23 kip for extreme limit states.
5. For retaining wall architectural finish or texture, see details elsewhere in Project Plans.
6. For details not shown and drainage notes, see RSP B3-5
7. Footing cover, 2′-0" minimum.
8. For Barrier reinforcement, see B11-56
9. For H=14′, extend ⓑ bars into Barrier for stem with haunch.
10. For H≥16′, extend ⓐ bars into Barrier for stem with haunch.

## TABLE OF REINFORCING STEEL DIMENSIONS AND DATA

| DESIGN H | 14′ | 16′ | 18′ | 20′ | 22′ | 24′ |
|---|---|---|---|---|---|---|
| F PILE FOOTING | 1′-9" | 2′-0" | 2′-0" | 2′-6" | 2′-9" | 3′-6" |
| STEM WITH HAUNCH, BATTER | ½:12 | ½:12 | ½:12 | ½:12 | ½:12 | ⅝:12 |
| ⓐ BARS | | #7 @ 15 | #7 @ 12 | #7 @ 12 | #8 @ 12 | #6 @ 6 |
| ⓑ BARS | #7 @ 6 | #9 @ 7.5 | #9 @ 6 | #10 @ 6 | #10 @ 6 | #8 @ 6 ϋ |
| ha | 7′- 0" | 7′ - 0" | 6′- 0" | 7′- 0" | 7′- 0" | 7′- 6" |
| hb | | 11′ - 6" | 12′- 0" | 13′- 3" | 16′- 0" | 15′- 6" |
| ⓒ BARS | #6 @ 6 | #8 @ 7.5 | #8 @ 6 | #9 @ 6 | #9 @ 6 | #10 @ 6 |
| ⓓ BARS | #5 @ 12 | #6 @ 15 | #5 @ 12 | #5 @ 12 | #6 @ 12 | #6 @ 12 |
| ⓔ BARS | 6-#6 @ 12 | 6-#5 @ 12 | 6-#5 @ 12 | 6-#5 @ 15 | #5 @ 18 | #5 @ 18 |
| ⓕ BARS | 8-#7 @ 11 | 7-#6 @ 13 | 8-#6 @ 12 | 8-#5 @ 15 | #5 @ 18 | #5 @ 18 |

NOTE:
Total ⓔ bars and ⓕ bars shown are total number of top and bottom bars combined.

LEGEND:
ϋ : 2 bar bundle

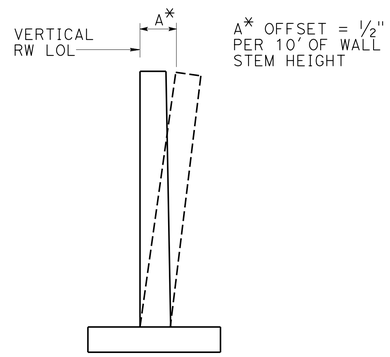


## WALL OFFSET

No scale

Values for offsetting forms to be determined by the engineer

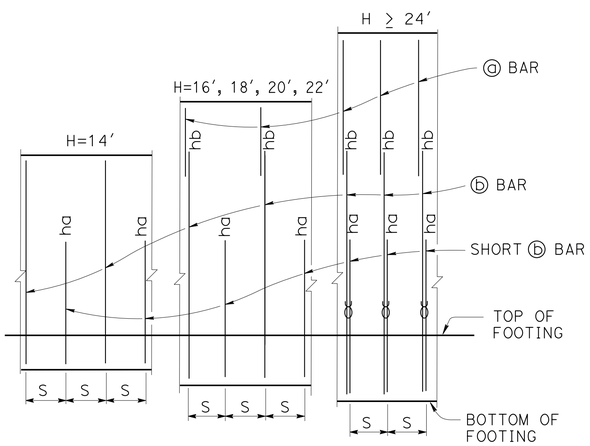


## ELEVATION

No Scale

NOTE:
"ha" and "hb" above ⓑ bars indicate distance from top of footing to upper end of ⓑ bars, see table.
"S" is ⓑ bar spacing, see table.
ϋ : 2 bar bundle

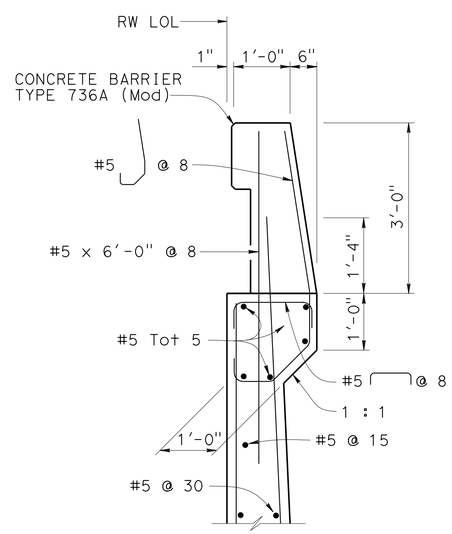


## DETAIL A

¾ = 1′-0"

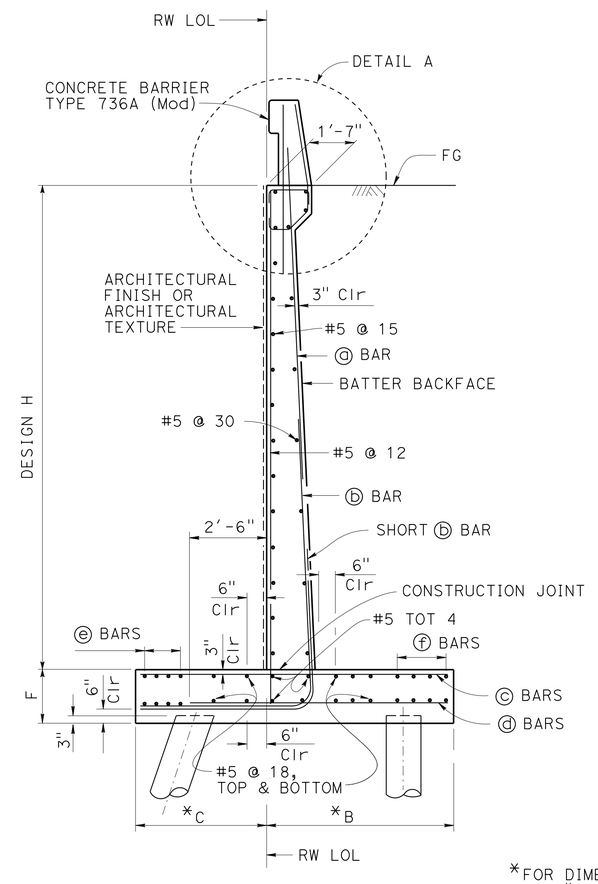


*FOR DIMENSIONS, SEE "PILE LAYOUT" SHEETS

## PILE FOOTING SECTION

No scale

All piles not shown

## DESIGN DATA

Design: AASHTO LRFD Bridge Design Specifications 4th edition with California Amendments

WS: 33 psf on Sound Wall and Barrier

LS: Varied surcharge on level ground surface

CT: 54 kip maximum traffic impact loading evenly distributed over 10 feet at top of the barrier and 1:1 distribution down and outward

EQE: Inverted triangular distribution with a horizontal pressure of 17H psf

EQD: 0.57 Dead Load

Soil: Ø = 34°
γ = 120 pcf

Reinforced Concrete: f′c = 3600 psi
fy = 60,000 psi

Load Combinations and Limit States

Service I: Q=1.00DC+1.00EV+1.00EH+1.00LS+0.30WS

Service II: Q=1.00DC+1.00EV+1.00EH+1.00WS

Strength I: Q=αDC+βEV+1.50EH+1.75LS
Q=1.25DC + 1.35EV + 0.90EH +1.75LS (for piles at heel)

Strength III: Q=αDC+βEV+1.50EH+1.40WS

Strength V: Q=αDC+βEV+1.50EH+1.35LS+0.40WS

Extreme I: Q=1.00DC+1.00EV+1.00EH+1.00EQD+1.00EQE

Extreme II: Q=1.00DC+1.00EV+1.00EH+1.00CT

Where:

Q: Force Effects
α: 1.25 or 0.90, Which ever Controls Design
β: 1.35 or 1.00, which ever Controls Design
DC: Dead Load of Structure Components
EV: Vertical Earth Fill Pressure
LS: Live Load Surcharge
EQE: Seismic Earth Pressure
EQD: Soil and Structure Components Inertia. Soil inertia ignored for stem design
WS: Wind Load on Sound Wall and Barrier
CT: Vehicular Collision Force

NOTE:
THE CONTRACTOR SHALL VERIFY ALL CONTROLLING FIELD DIMENSIONS BEFORE ORDERING OR FABRICATING ANY MATERIAL.

DESIGN OVERSIGHT: Luqi Yang — 1-16-13 — SIGN OFF DATE

| | BY | CHECKED |
|---|---|---|
| DESIGN | C. Pinkerton | B. Holton |
| DETAILS | G. Imbsen | B. Holton |
| QUANTITIES | C. Pinkerton | A. Cardoza |

PREPARED FOR THE STATE OF CALIFORNIA DEPARTMENT OF TRANSPORTATION

Ayman Salama — PROJECT ENGINEER

BRIDGE NO. 55E0135
POST MILES 7.2

# RETAINING WALL NO. 387

## RETAINING WALL TYPE 1SWBP (MOD)-DETAILS

DESIGN DETAIL SHEET (ENGLISH) (REV.7/16/10)

ORIGINAL SCALE IN INCHES FOR REDUCED PLANS 0 1 2 3

UNIT: 2998
PROJECT NUMBER & PHASE: 12000202791
CONTRACT NO.: 12-0F96E4

DISREGARD PRINTS BEARING EARLIER REVISION DATES — REVISION DATES 03/06/12 08/14/12 10/10/12

SHEET 8 OF 20

FILE => 55-227-gg-xs14-320-1.dgn

USERNAME => s124496 DATE PLOTTED => 29-APR-2013 TIME PLOTTED => 12:17

| DIST | COUNTY | ROUTE | POST MILES TOTAL PROJECT | SHEET No | TOTAL SHEETS |
|---|---|---|---|---|---|
| 12 | Ora | 5 | 6.2/8.7 | 496 | 595 |

REGISTERED CIVIL ENGINEER — DATE 1-7-13

4-29-13
PLANS APPROVAL DATE

REGISTERED PROFESSIONAL ENGINEER — CAMERON J. PINKERTON — No. 73288 — Exp. 12-31-14 — CIVIL — STATE OF CALIFORNIA

*The State of California or its officers or agents shall not be responsible for the accuracy or completeness of electronic copies of this plan sheet.*

TRC
123 TECHNOLOGY DRIVE
IRVINE, CA 92618

ORANGE COUNTY
TRANSPORTATION AUTHORITY
550 S. MAIN STREET
ORANGE, CA 92863-1584

## NOTES:

1. All piles are class 90 concrete piles.
2. Pile batter shown are 1:3.
3. Minimum distance between center pile and edge of footing is 1′-6″.
4. Lateral resistance of each pile:
   11 kip for strength limit states.
   23 kip for extreme limit states.
5. For retaining wall architectural finish or texture, see details elsewhere in Project Plans.
6. For details not shown and drainage notes, see RSP B3-5
7. Footing cover, 2′-0″ minimum.

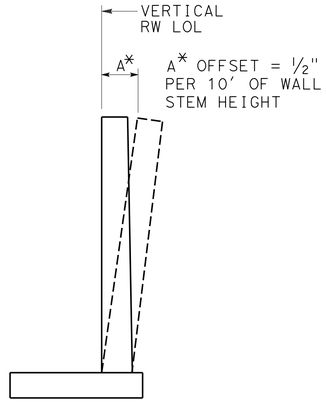


## WALL OFFSET

NO SCALE

Values for offsetting forms to be determined by the engineer

## TABLE OF REINFORCING STEEL DIMENSIONS AND DATA

| DESIGN H | STEM WITH HAUNCH | | | STEM WITHOUT HAUNCH |
|---|---|---|---|---|
| | 10′ | 12′ | 14′ | 16′ |
| F | 2′-6″ | 2′-9″ | 2′-9″ | 2′-9″ |
| STEM THICKNESS AT TOP | | | | 1′-7″ |
| STEM THICKNESS AT HAUNCH | 1′-0″ | 1′-3″ | 1′-3″ | |
| ⓐ BARS | | | | #5 @ 14 |
| ⓑ BARS | #5 @ 5.5 | #5 @ 4.5 | #6 @ 5 | #8 @ 7 |
| ha | 9′-10″ | 6′-0″ | 6′-0″ | 6′-3″ |
| hb | | | | 12′-0″ |
| hx | 5′-9″ | 6′-0″ | 6′-3″ | 7′-0″ |
| ⓓ BARS | #5 @ 11 | #5 @ 9 | #5 @ 10 | #5 @ 14 |
| ⓓ BAR LENGTH | 4′-6″ | 4′-6″ | 6′-0″ | 7′-0″ |
| ⓢ Bars | #4 @ 12 | #5 @ 15 | #5 @ 15 | #5 @ 12 |
| ⓣ Bars | #4 @ 18 | #4 @ 18 | #4 @ 18 | #4 @ 12 |
| $H_D$(k/ft), SVC | 3.3 | 4.2 | 5.1 | 6.2 |
| $H_D$(k/ft), Str | 5.2 | 6.6 | 8.0 | 9.4 |
| $H_D$(k/ft), ext | 6.5 | 8.6 | 10.5 | 13.0 |

## LEGEND:

$H_D$ : Factored Horizontal Driving Force
SVC : Service Limit State
Str : Strength Limit State
ext : Extreme Event Limit State

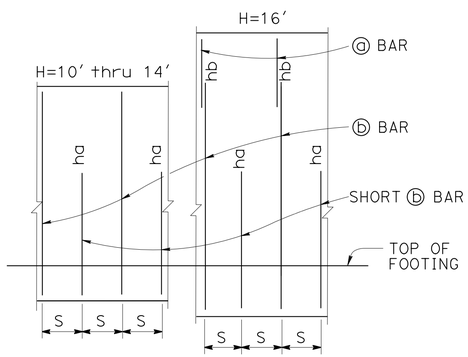


## ELEVATION

NOTES:
"ha", "hb" above ⓑ bars indicate distance from top of footing to upper end of ⓑ bars, see table.
"S" is ⓑ bar spacing, see table.

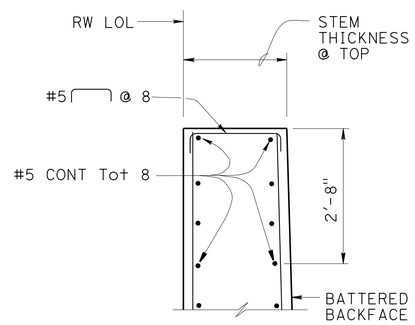


## DETAIL A - WITHOUT HAUNCH

No Scale

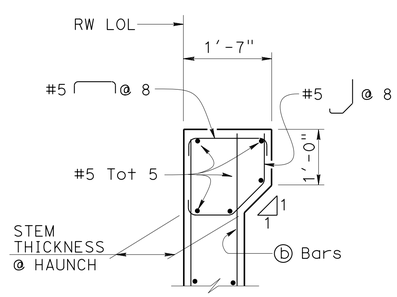


## DETAIL A - WITH HAUNCH

No Scale

For Details not shown, see "DETAIL A - WITHOUT HAUNCH"

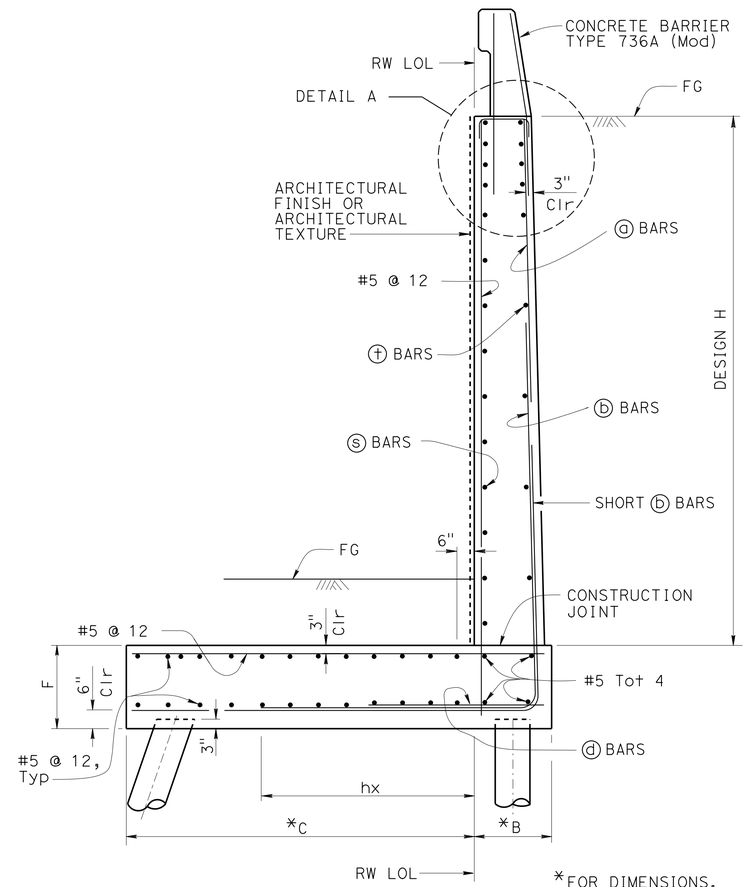


*FOR DIMENSIONS, SEE "PILE LAYOUT" SHEETS

## PILE FOOTING SECTION

No Scale

## DESIGN DATA

Design: AASHTO LRFD Bridge Design Specifications, 4th edition with California Amendments

WS: 33 psf on Sound wall and Barrier

LS: Varied surcharge on level ground surface

CT: 54 kip maximum traffic impact loading evenly distributed over 10 feet at top of the barrier and 1:1 distribution down and outward

EQE: Inverted triangular distribution with a horizontal pressure of 17H psf

EQD: 0.57 Dead Load

Soil: $\emptyset = 34°$
$\gamma = 120$ pcf

Reinforced Concrete: f′c = 3600 psi
fy = 60,000 psi

Load Combinations and Limit States

| | |
|---|---|
| Service I | Q=1.00DC+1.00EV+1.00EH+1.00LS+0.30WS |
| Service II | Q=1.00DC+1.00EV+1.00EH+1.00WS |
| Strength I | Q=αDC+βEV+1.50EH+1.75LS |
| Strength III | Q=αDC+βEV+1.50EH+1.40WS |
| Strength V | Q=αDC+βEV+1.50EH+1.35LS+0.40WS |
| Extreme I | Q=1.00DC+1.00EV+1.00EH+1.00EQD+1.00EQE |
| Extreme II | Q=1.00DC+1.00EV+1.00EH+1.00CT |

Where:
Q: Force Effects
α: 1.25 or 0.90, Which ever Controls Design
β: 1.35 or 1.00, which ever Controls Design
DC: Dead Load of Structure Components
EV: Vertical Earth Fill Pressure
LS: Live Load Surcharge
EQE: Seismic Earth Pressure
EQD: Soil and Structure Components Inertia. Soil inertia ignored for stem design
WS: Wind Load on Sound wall and Barrier
CT: Vehicular Collision Force

NOTE:
THE CONTRACTOR SHALL VERIFY ALL CONTROLLING FIELD DIMENSIONS BEFORE ORDERING OR FABRICATING ANY MATERIAL.

Luqi Yang
DESIGN OVERSIGHT — Luqi Yang
1-16-13
SIGN OFF DATE

| | BY | CHECKED |
|---|---|---|
| DESIGN | C. Pinkerton | B. Holton |
| DETAILS | G. Imbsen | B. Holton |
| QUANTITIES | C. Pinkerton | A. Cardoza |

PREPARED FOR THE STATE OF CALIFORNIA DEPARTMENT OF TRANSPORTATION

Ayman Salama
PROJECT ENGINEER

BRIDGE NO. 55E0135
POST MILES 7.2

# RETAINING WALL NO. 387

## RETAINING WALL TYPE 7SWBP (MOD)-DETAILS

DESIGN DETAIL SHEET (ENGLISH) (REV.7/16/10)

ORIGINAL SCALE IN INCHES FOR REDUCED PLANS 0 1 2 3

UNIT: 2998
PROJECT NUMBER & PHASE: 12000202791
CONTRACT NO.: 12-0F96E4

DISREGARD PRINTS BEARING EARLIER REVISION DATES
REVISION DATES 03/06/12 05/14/12 10/10/12
SHEET 9 OF 20

FILE => 55-227-gg-xs14-410-1.dgn

USERNAME => s124496 DATE PLOTTED => 29-APR-2013 TIME PLOTTED => 12:17

| DIST | COUNTY | ROUTE | POST MILES TOTAL PROJECT | SHEET No | TOTAL SHEETS |
|---|---|---|---|---|---|
| 12 | Ora | 5 | 6.2/8.7 | 497 | 595 |

REGISTERED CIVIL ENGINEER — DATE 1-7-13

4-29-13
PLANS APPROVAL DATE

REGISTERED PROFESSIONAL ENGINEER — CAMERON J. PINKERTON — No. 73288 — Exp. 12-31-14 — CIVIL — STATE OF CALIFORNIA

*The State of California or its officers or agents shall not be responsible for the accuracy or completeness of electronic copies of this plan sheet.*

TRC
123 TECHNOLOGY DRIVE
IRVINE, CA 92618

ORANGE COUNTY
TRANSPORTATION AUTHORITY
550 S. MAIN STREET
ORANGE, CA 92863-1584

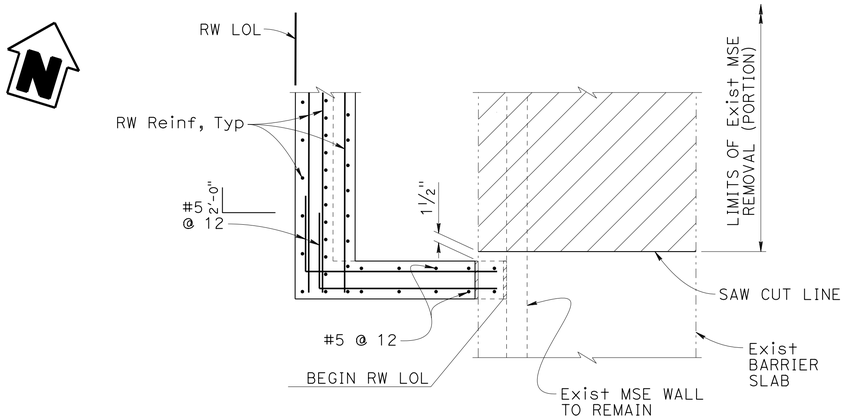


PLAN

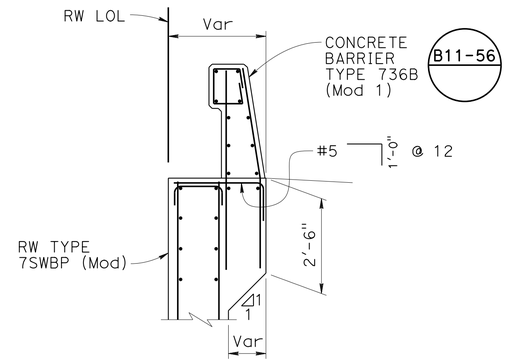


SECTION B-B

1/2" = 1'-0"

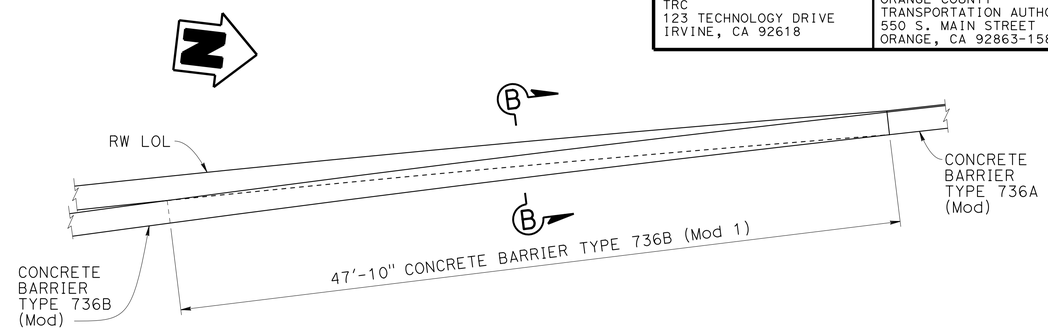


CONCRETE BARRIER TYPE 736B (Mod 1)

1"=5'

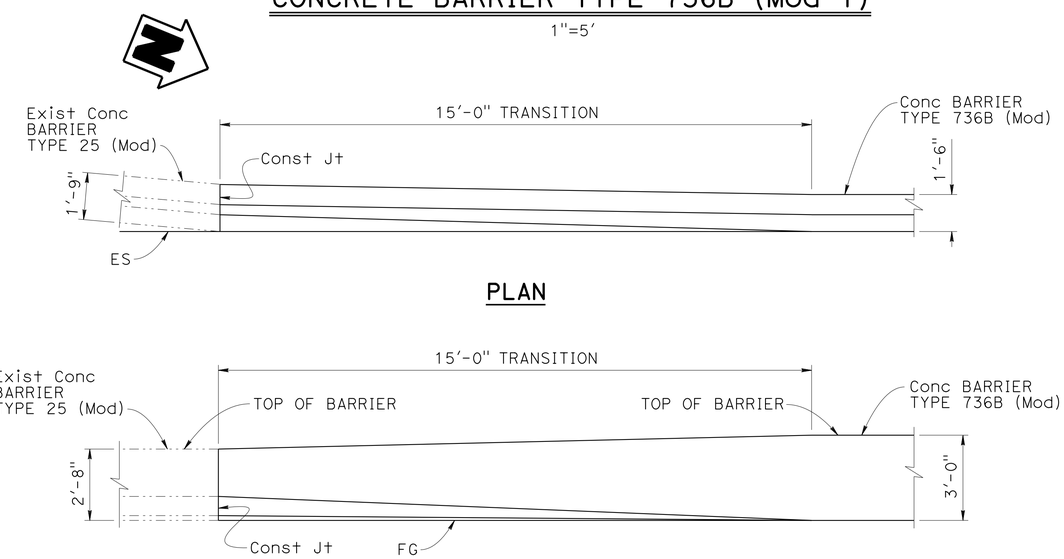


TRANSITION CONCRETE BARRIER TYPE 736B (Mod) TO CONCRETE BARRIER TYPE 25 (Mod)

3/8" = 1'-0"

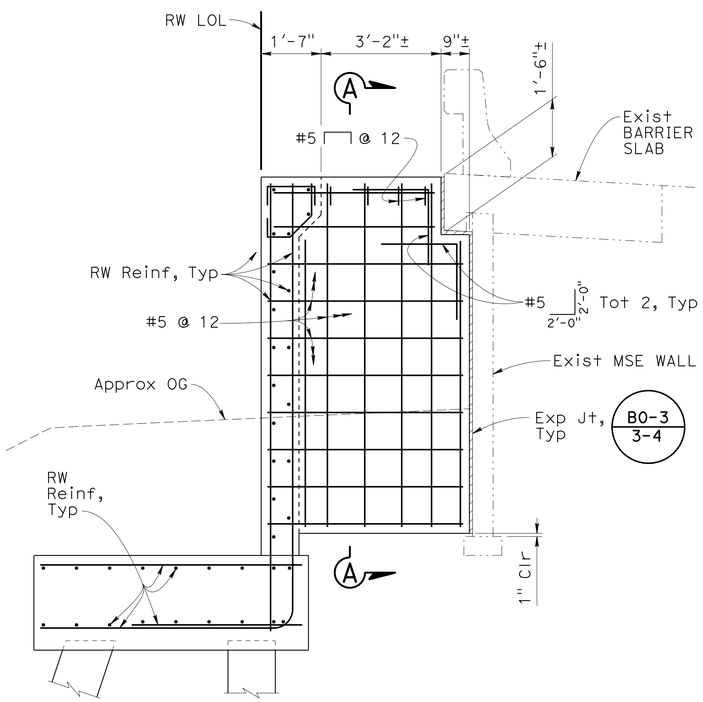


ELEVATION

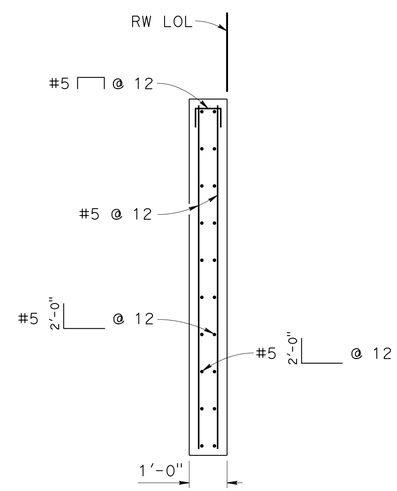


SECTION A-A

RETURN WALL DETAILS

1/2" = 1'-0"

LEGEND:

- Indicates Existing Structure
- Indicates New Structure
- Indicates Remove Rataining Wall (Portion)

NOTE:
THE CONTRACTOR SHALL VERIFY ALL CONTROLLING FIELD DIMENSIONS BEFORE ORDERING OR FABRICATING ANY MATERIAL.

DESIGN OVERSIGHT — Luqi Yang — 1-16-13 — SIGN OFF DATE

| | BY | CHECKED |
|---|---|---|
| DESIGN | C. Pinkerton | B. Holton |
| DETAILS | G. Imbsen | B. Holton |
| QUANTITIES | C. Pinkerton | A. Cardoza |

PREPARED FOR THE STATE OF CALIFORNIA DEPARTMENT OF TRANSPORTATION

Ayman Salama — PROJECT ENGINEER

BRIDGE NO. 55E0135 — POST MILES 7.2

# RETAINING WALL NO. 387

# RETAINING WALL DETAILS NO. 1

DESIGN DETAIL SHEET (ENGLISH) (REV.7/16/10)

ORIGINAL SCALE IN INCHES FOR REDUCED PLANS 0 1 2 3

UNIT: 2998
PROJECT NUMBER & PHASE: 12000202791 CONTRACT NO.: 12-0F96E4

DISREGARD PRINTS BEARING EARLIER REVISION DATES — REVISION DATES 03/06/12 08/14/12 10/10/12 — SHEET 10 OF 20

FILE => 55-227-gh-rwmd1.dgn

USERNAME => s124496 DATE PLOTTED => 29-APR-2013 TIME PLOTTED => 12:17

| DIST | COUNTY | ROUTE | POST MILES TOTAL PROJECT | SHEET No | TOTAL SHEETS |
|---|---|---|---|---|---|
| 12 | Ora | 5 | 6.2/8.7 | 498 | 595 |

REGISTERED CIVIL ENGINEER — DATE: 1-7-13

PLANS APPROVAL DATE: 4-29-13

REGISTERED PROFESSIONAL ENGINEER — CAMERON J. PINKERTON — No. 73288 — Exp. 12-31-14 — CIVIL — STATE OF CALIFORNIA

*The State of California or its officers or agents shall not be responsible for the accuracy or completeness of electronic copies of this plan sheet.*

TRC
123 TECHNOLOGY DRIVE
IRVINE, CA 92618

ORANGE COUNTY
TRANSPORTATION AUTHORITY
550 S. MAIN STREET
ORANGE, CA 92863-1584

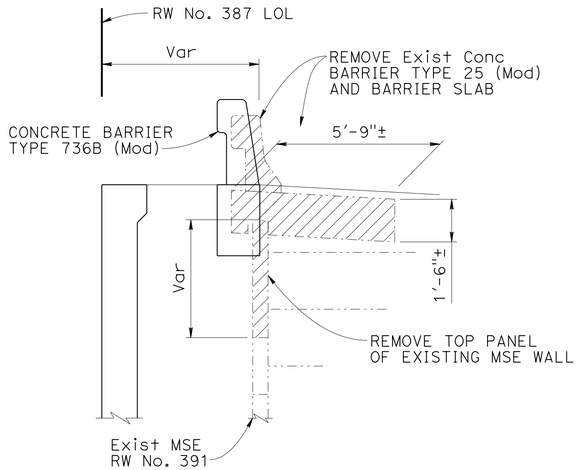


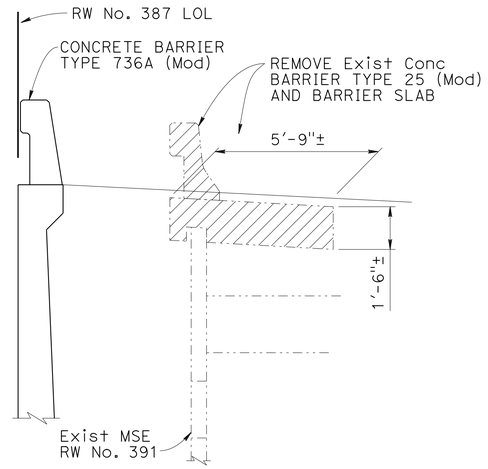


## MSE RETAINING WALL No. 391 REMOVAL DETAILS

3/8"=1'-0"

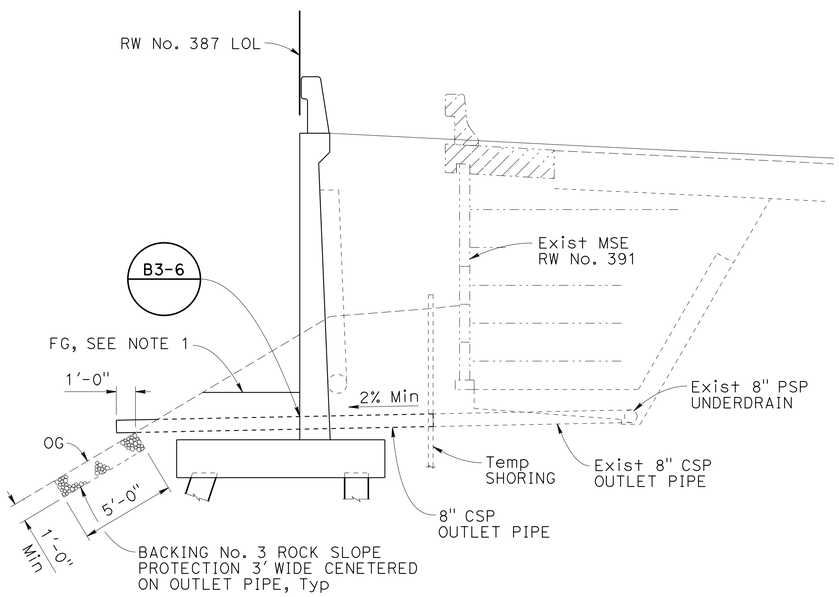


## TYPICAL SECTION AT OUTLET PIPE

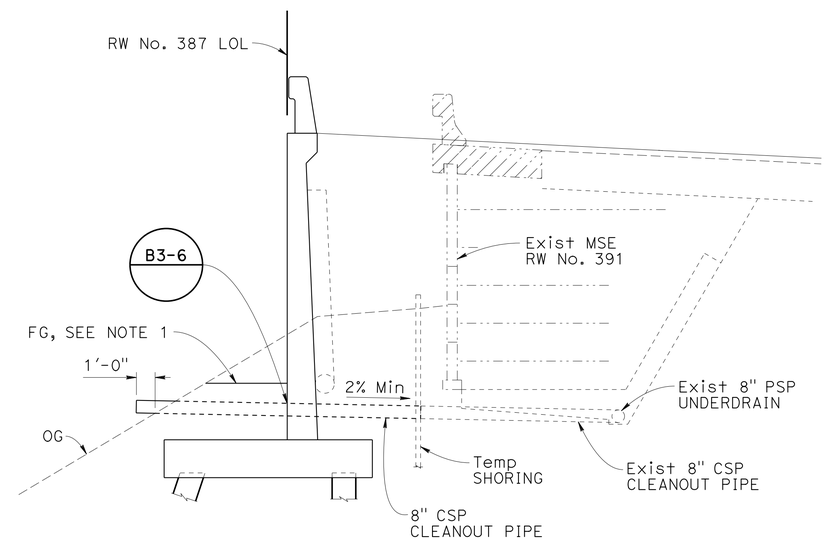


## TYPICAL SECTION AT CLEANOUT PIPE

## LEGEND:

- Indicates Existing Structure
- Indicates New Structure
- Indicates Remove Retaining Wall (Portion)

## NOTES:

1. Adjust finish grade to provide 1'-0" cover over outlet and cleanout pipes.
2. For approximate locations of existing outlet and cleanout pipes, see "FOUNDATION PLAN" sheets.

## DRAINAGE DETAILS

1/4"=1'-0"

NOTE:
THE CONTRACTOR SHALL VERIFY ALL CONTROLLING FIELD DIMENSIONS BEFORE ORDERING OR FABRICATING ANY MATERIAL.

DESIGN OVERSIGHT: Luqi Yang — SIGN OFF DATE: 1-16-13

| | BY | CHECKED |
|---|---|---|
| DESIGN | C. Pinkerton | B. Holton |
| DETAILS | G. Imbsen | B. Holton |
| QUANTITIES | C. Pinkerton | A. Cardoza |

PREPARED FOR THE STATE OF CALIFORNIA DEPARTMENT OF TRANSPORTATION

Ayman Salama — PROJECT ENGINEER

BRIDGE NO. 55E0135 — POST MILES 7.2

# RETAINING WALL NO. 387
# RETAINING WALL DETAILS NO. 2

DESIGN DETAIL SHEET (ENGLISH) (REV.7/16/10)

ORIGINAL SCALE IN INCHES FOR REDUCED PLANS 0 1 2 3

UNIT: 2998
PROJECT NUMBER & PHASE: 12000202791
CONTRACT NO.: 12-0F96E4

DISREGARD PRINTS BEARING EARLIER REVISION DATES — REVISION DATES: 03/06/12 05/14/12 10/10/12

SHEET 11 OF 20

FILE => 55-227-gh-rwmd2.dgn

USERNAME => s124496 DATE PLOTTED => 29-APR-2013 TIME PLOTTED => 12:17

| DIST | COUNTY | ROUTE | POST MILES TOTAL PROJECT | SHEET No | TOTAL SHEETS |
|---|---|---|---|---|---|
| 12 | Ora | 5 | 6.2/8.7 | 499 | 595 |

REGISTERED CIVIL ENGINEER — DATE 1-7-13

4-29-13
PLANS APPROVAL DATE

REGISTERED PROFESSIONAL ENGINEER — CAMERON J. PINKERTON — No. 73288 — Exp. 12-31-14 — CIVIL — STATE OF CALIFORNIA

*The State of California or its officers or agents shall not be responsible for the accuracy or completeness of electronic copies of this plan sheet.*

TRC
123 TECHNOLOGY DRIVE
IRVINE, CA 92618

ORANGE COUNTY
TRANSPORTATION AUTHORITY
550 S. MAIN STREET
ORANGE, CA 92863-1584

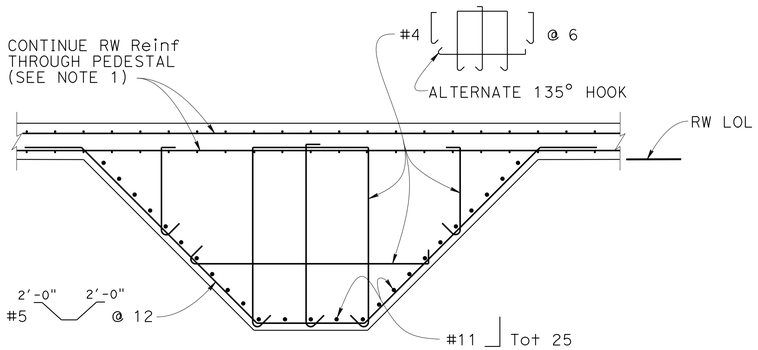


## SECTION C-C

3/8" = 1'-0"

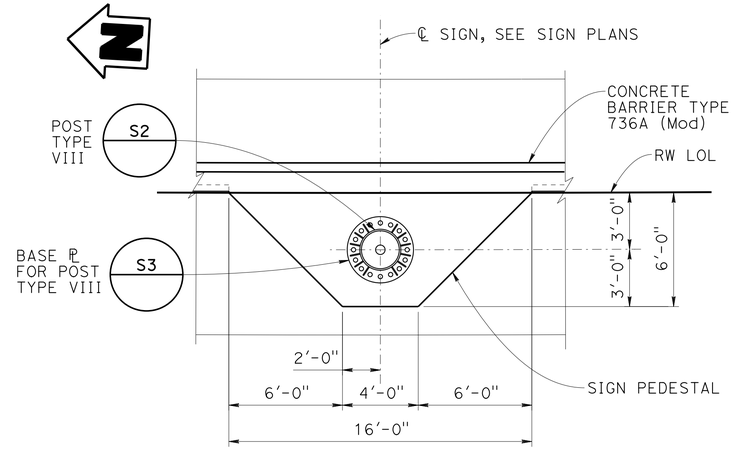


## PLAN

1/4" = 1'-0"

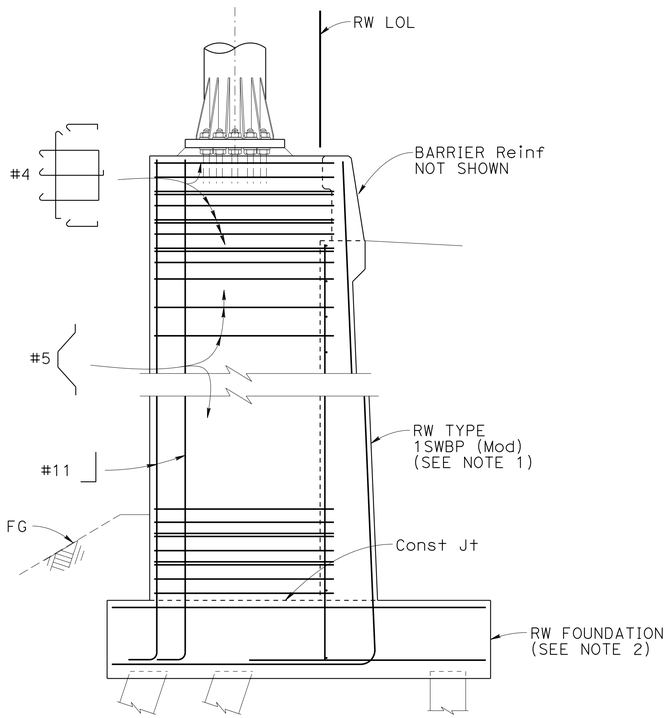


ALL RW Reinf NOT SHOWN, SEE NOTE 1

## SECTION D-D

3/8" = 1'-0"

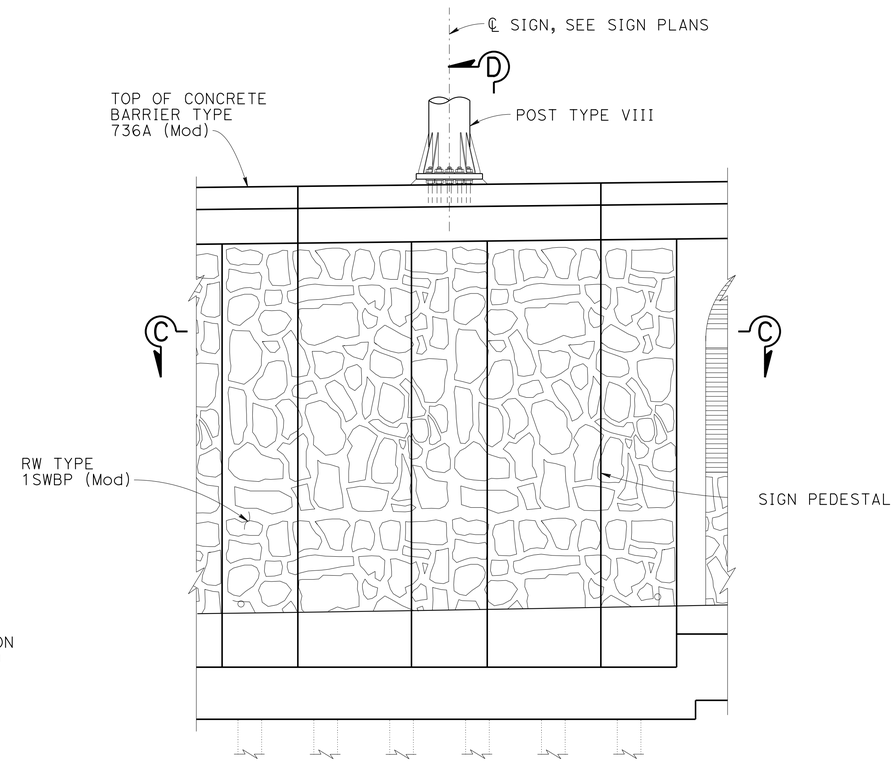


## ELEVATION

1/4" = 1'-0"

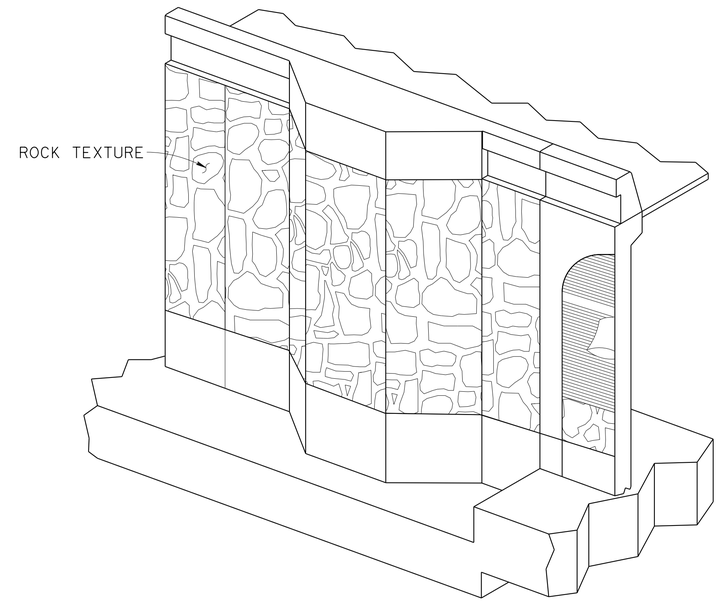


## ISOMETRIC VIEW

NO SCALE

## NOTES:

1. For RW Reinf, see "RETAINING WALL TYPE 1SWBP (MOD) DETAILS" sheet.
2. For pile layout and foundation dimensions, see "PILE LAYOUT NO. 2" and "RETAINING WALL TYPE 1SWBP (MOD) DETAILS" sheet.

NOTE:
THE CONTRACTOR SHALL VERIFY ALL CONTROLLING FIELD DIMENSIONS BEFORE ORDERING OR FABRICATING ANY MATERIAL.

DESIGN OVERSIGHT Luqi Yang — Luqi Yang
1-16-13
SIGN OFF DATE

| | BY | CHECKED |
|---|---|---|
| DESIGN | C. Pinkerton | A. Kalidindi |
| DETAILS | G. Imbsen | A. Kalidindi |
| QUANTITIES | C. Pinkerton | A. Cardoza |

PREPARED FOR THE STATE OF CALIFORNIA DEPARTMENT OF TRANSPORTATION

Ayman Salama
PROJECT ENGINEER

BRIDGE NO. 55E0135
POST MILES 7.2

# RETAINING WALL NO. 387
# SIGN PEDESTAL DETAILS

DESIGN DETAIL SHEET (ENGLISH) (REV.7/16/10)

ORIGINAL SCALE IN INCHES FOR REDUCED PLANS 0 1 2 3

UNIT: 2998
PROJECT NUMBER & PHASE: 12000202791
CONTRACT NO.: 12-0F96E4

DISREGARD PRINTS BEARING EARLIER REVISION DATES 11/07/12

SHEET 12 OF 20

FILE => 55-227-gh-rwmd3.dgn

USERNAME => s124496 DATE PLOTTED => 29-APR-2013 TIME PLOTTED => 12:17

| DIST | COUNTY | ROUTE | POST MILES TOTAL PROJECT | SHEET No | TOTAL SHEETS |
|---|---|---|---|---|---|
| 12 | Ora | 5 | 6.2/8.7 | 500 | 595 |

REGISTERED CIVIL ENGINEER — DATE: 1-7-13

PLANS APPROVAL DATE: 4-29-13

REGISTERED PROFESSIONAL ENGINEER — CAMERON J. PINKERTON — No. 73288 — Exp. 12-31-14 — CIVIL — STATE OF CALIFORNIA

*The State of California or its officers or agents shall not be responsible for the accuracy or completeness of electronic copies of this plan sheet.*

TRC
123 TECHNOLOGY DRIVE
IRVINE, CA 92618

ORANGE COUNTY
TRANSPORTATION AUTHORITY
550 S. MAIN STREET
ORANGE, CA 92863-1584

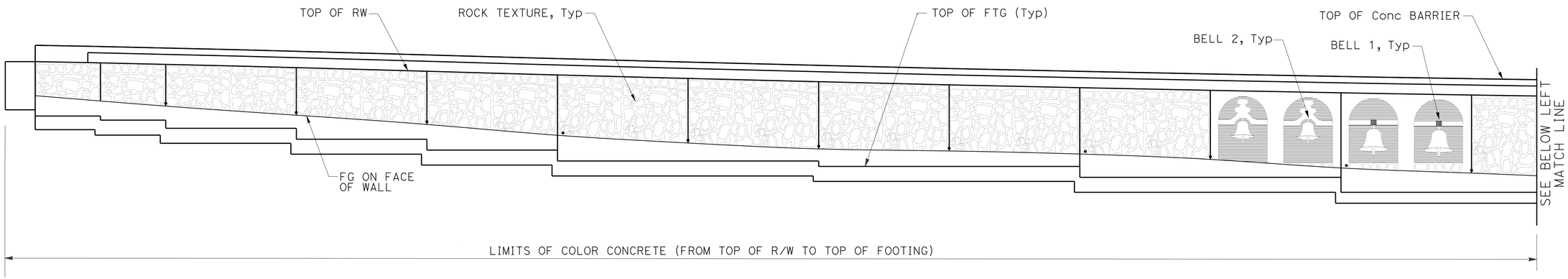


## DEVELOPED MIRROR ELEVATION

NO SCALE

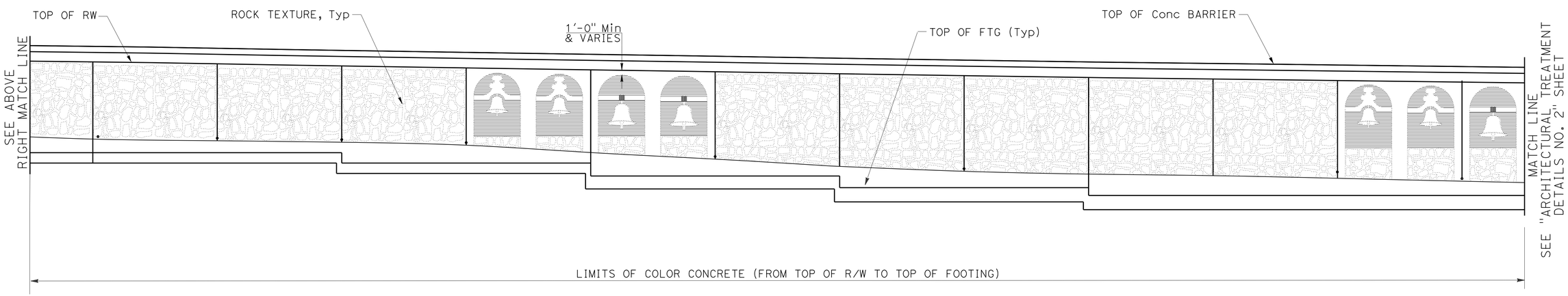


## DEVELOPED MIRROR ELEVATION

NO SCALE

NOTE:
THE CONTRACTOR SHALL VERIFY ALL CONTROLLING FIELD DIMENSIONS BEFORE ORDERING OR FABRICATING ANY MATERIAL.

DESIGN OVERSIGHT: Luqi Yang — 1-16-13 SIGN OFF DATE

| | BY | CHECKED |
|---|---|---|
| DESIGN | C. Pinkerton | E. Dickson |
| DETAILS | I. Karkoutli | E. Dickson |
| QUANTITIES | C. Pinkerton | A. Cardoza |

PREPARED FOR THE STATE OF CALIFORNIA DEPARTMENT OF TRANSPORTATION

Ayman Salama — PROJECT ENGINEER

BRIDGE NO. 55E0135 — POST MILES 7.2

# RETAINING WALL NO. 387

## ARCHITECTURAL TREATMENT DETAILS NO. 1

DESIGN DETAIL SHEET (ENGLISH) (REV.7/16/10)

ORIGINAL SCALE IN INCHES FOR REDUCED PLANS 0 1 2 3

UNIT: 2998
PROJECT NUMBER & PHASE: 12000202791 — CONTRACT NO.: 12-0F96E4

DISREGARD PRINTS BEARING EARLIER REVISION DATES — REVISION DATES 11/20/12 12/20/12

SHEET 13 OF 20

FILE => 55-227-gi-rw_at1.dgn

USERNAME => s124496 DATE PLOTTED => 29-APR-2013 TIME PLOTTED => 12:17