Dist	COUNTY	ROUTE	POST MILES TOTAL PROJECT	SHEET No.	TOTAL SHEETS
11	SD	94,805	Var	1	51

ACNH-X073(097)E

STATE OF CALIFORNIA
DEPARTMENT OF TRANSPORTATION

PROJECT PLANS FOR CONSTRUCTION ON
STATE HIGHWAY
IN SAN DIEGO COUNTY
AT VARIOUS LOCATIONS

TO BE SUPPLEMENTED BY STANDARD PLANS DATED MAY 2006

INDEX OF PLANS

SHEET NO.	DESCRIPTION
1	TITLE AND LOCATION MAP
2-5	TYPICAL CROSS SECTIONS
6-9	LAYOUT
10-12	CONSTRUCTION DETAILS
13-16	TEMPORARY WATER POLUTION CONTROL PLAN
17-18	CONSTRUCTION AREA SIGNS
19-21	STAGE CONSTRUCTION
22-24	TRAFFIC HANDLING PLAN
25-26	PAVEMENT DELINEATION DETAILS AND QUANTITIES
27-28	SIGN PLAN AND QUANTITIES
29-30	SUMMARY OF QUANTITIES
31-32	ELECTRICAL PLANS
33-51	REVISED AND NEW STANDARD PLANS

THE STANDARD PLANS LIST APPLICABLE TO THIS CONTRACT IS INCLUDED IN THE NOTICE TO BIDDERS AND SPECIAL PROVISIONS BOOK.

LOCATION MAP

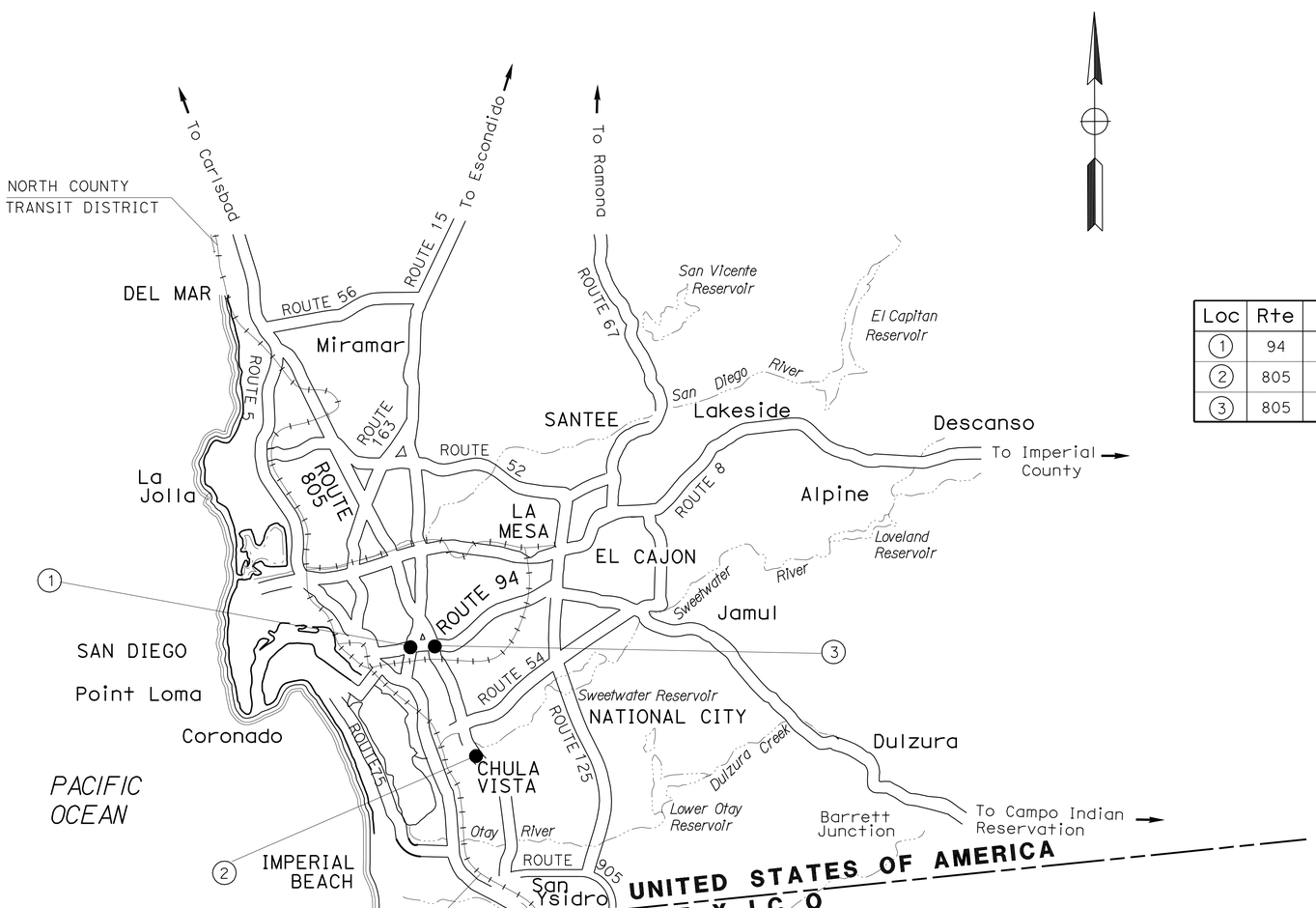

LOCATIONS OF CONSTRUCTION

Loc	Rte	PM	CITY	DESCRIPTION
1	94	3.10	SAN DIEGO	WB 94 TO SB 15 CONNECTOR
2	805	7.20	CHULA VISTA	SB 805 TO LOOP OFF RAMP "H STREET"
3	805	14.10	SAN DIEGO	SB 805 TO EB 94 CONNECTOR

THE CONTRACTOR SHALL POSSESS THE CLASS (OR CLASSES) OF LICENSE AS SPECIFIED IN THE "NOTICE TO BIDDERS."

NO SCALE

PROJECT ENGINEER REGISTERED CIVIL ENGINEER — DATE 02-21-12

February 27, 2012
PLANS APPROVAL DATE

REGISTERED PROFESSIONAL ENGINEER FELIZARDO BAGCUS No. 63551 Exp. 09-30-12 CIVIL STATE OF CALIFORNIA

THE STATE OF CALIFORNIA OR ITS OFFICERS OR AGENTS SHALL NOT BE RESPONSIBLE FOR THE ACCURACY OR COMPLETENESS OF SCANNED COPIES OF THIS PLAN SHEET.

PROJECT MANAGER CHRIS M. THOMAS

DESIGN ENGINEER FELIZARDO BAGCUS

CONTRACT No.	11-407204
PROJECT ID	1100020400

LAST REVISION 02-28-12

DATE PLOTTED => 14-MAR-2012
TIME PLOTTED => 16:15

Dist	COUNTY	ROUTE	POST MILES TOTAL PROJECT	SHEET No.	TOTAL SHEETS
11	SD	94,805	Var	2	51

REGISTERED CIVIL ENGINEER 02-21-12 DATE

02-27-12
PLANS APPROVAL DATE

REGISTERED PROFESSIONAL ENGINEER FELIZARDO BAGCUS No. C63551 Exp. 9-30-12 CIVIL STATE OF CALIFORNIA

THE STATE OF CALIFORNIA OR ITS OFFICERS OR AGENTS SHALL NOT BE RESPONSIBLE FOR THE ACCURACY OR COMPLETENESS OF SCANNED COPIES OF THIS PLAN SHEET.

NOTES:

1. DIMENSIONS OF THE PAVEMENT STRUCTURES (STRUCTURAL SECTIONS) ARE SUBJECT TO TOLERANCES SPECIFIED IN THE STANDARD SPECIFICATIONS.
2. FOR LOCATION OF MBGR AND LOCATION AND TYPE OF DIKES SEE LAYOUT SHEETS AND SUMMARY OF QUANTITIES SHEET.
3. FOG SEAL COAT SHALL BE APPLIED TO ALL HMA SURFACES EXCEPT TRAVELED WAYS.
4. * = MATCH Exist CROSS SLOPE

DESIGN DESIGNATION

LOCATION	ADT 2008	ADT 2030	ADT 2035	DHV	D(%)	T(%)	TRAFFIC INDEX	V(MPH)
WB 94 TO SB 15 CONNECTOR	22,200	—	38,400	3,570	100	4.2	8.0	N/A
SB 805 TO LOOP OFF RAMP "H- STREET"	21,287	**18,200	—	1,700	100	7.0	10.0	N/A
SB 805 TO EB 94 CONNECTOR	43,700	—	51,900	4,500	100	6.0	10.0	N/A

**FOR LOCATION SB 805 TO LOOP OFF RAMP "H-STREET", THE 2035 PROJECTED ADT IS LOWER THAN THE 2008 ADT SINCE PART OF THE FUTURE TRAFFIC VOLLUME WILL BE DIVERTED TO THE NEW STATE ROUTE 125 FREEWAY.

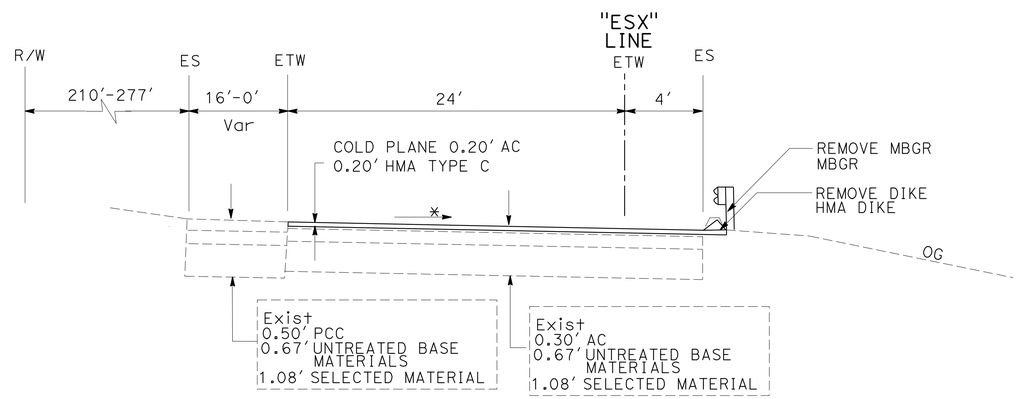

WB 94 TO SB 15 CONNECTOR

Sta 122+59.10 TO 126+62.35 "ESX" LINE

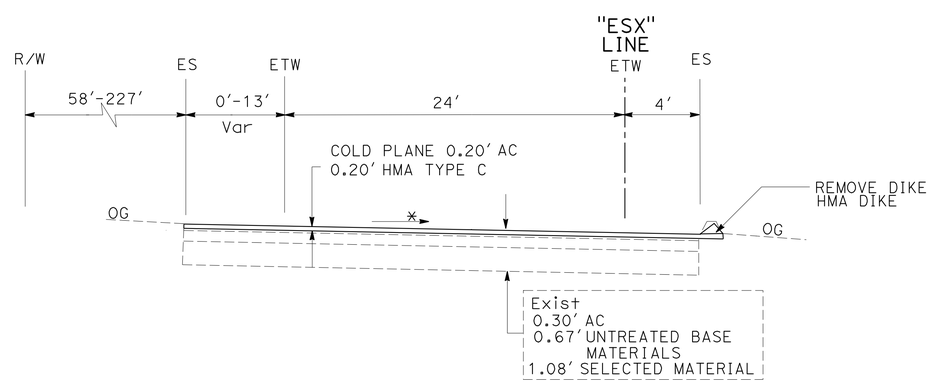

WB 94 TO SB 15 CONNECTOR

Sta 117+68.21 TO 120+57.66 "ESX" LINE

TYPICAL CROSS SECTIONS
(LOCATION 1)

NO SCALE

X-1

STATE OF CALIFORNIA - DEPARTMENT OF TRANSPORTATION
Caltrans® MINOR PROJECTS

FUNCTIONAL SUPERVISOR: CHRIS M. THOMAS
CALCULATED-DESIGNED BY: FELIZARDO BAGCUS
CHECKED BY: RICARDO PADILLA
REVISED BY / DATE REVISED

LAST REVISION 02-28-12 | DATE PLOTTED => 14-MAR-2012 | TIME PLOTTED => 15:47

Dist	COUNTY	ROUTE	POST MILES TOTAL PROJECT	SHEET No.	TOTAL SHEETS
11	SD	94,805	Var	3	51

REGISTERED CIVIL ENGINEER 02-21-12 DATE

02-27-12
PLANS APPROVAL DATE

REGISTERED PROFESSIONAL ENGINEER FELIZARDO BAGCUS No. C63551 Exp. 9-30-12 CIVIL STATE OF CALIFORNIA

THE STATE OF CALIFORNIA OR ITS OFFICERS OR AGENTS SHALL NOT BE RESPONSIBLE FOR THE ACCURACY OR COMPLETENESS OF SCANNED COPIES OF THIS PLAN SHEET.

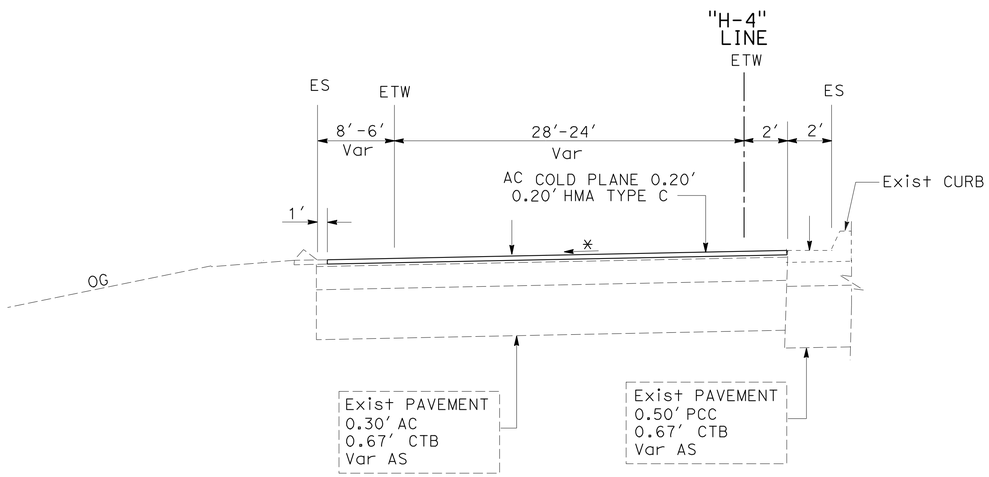

SB 805 OFF RAMP TO EB "H" STREET

Sta 397+20.00 TO 403+15.00 "H-4"

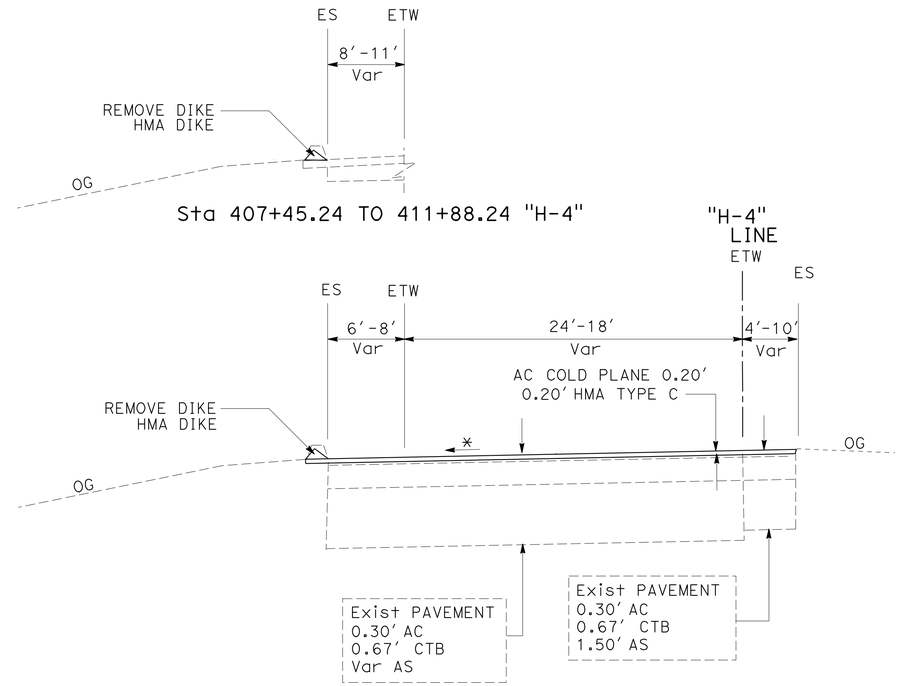

SB 805 OFF RAMP TO EB "H" STREET

Sta 403+15.00 TO 407+45.24 "H-4"

TYPICAL CROSS SECTIONS
(LOCATION 2)

NO SCALE

X-2

STATE OF CALIFORNIA - DEPARTMENT OF TRANSPORTATION
Caltrans MINOR PROJECTS

FUNCTIONAL SUPERVISOR: CHRIS M. THOMAS

CALCULATED-DESIGNED BY: FELIZARDO BAGCUS
CHECKED BY: RICARDO PADILLA

REVISED BY
DATE REVISED

LAST REVISION 02-28-12 | DATE PLOTTED => 14-MAR-2012 | TIME PLOTTED => 15:47

Dist	COUNTY	ROUTE	POST MILES TOTAL PROJECT	SHEET No.	TOTAL SHEETS
11	SD	94,805	Var	4	51

REGISTERED CIVIL ENGINEER 02-21-12 DATE

02-27-12
PLANS APPROVAL DATE

REGISTERED PROFESSIONAL ENGINEER FELIZARDO BAGCUS No. C63551 Exp. 9-30-12 CIVIL STATE OF CALIFORNIA

THE STATE OF CALIFORNIA OR ITS OFFICERS OR AGENTS SHALL NOT BE RESPONSIBLE FOR THE ACCURACY OR COMPLETENESS OF SCANNED COPIES OF THIS PLAN SHEET.

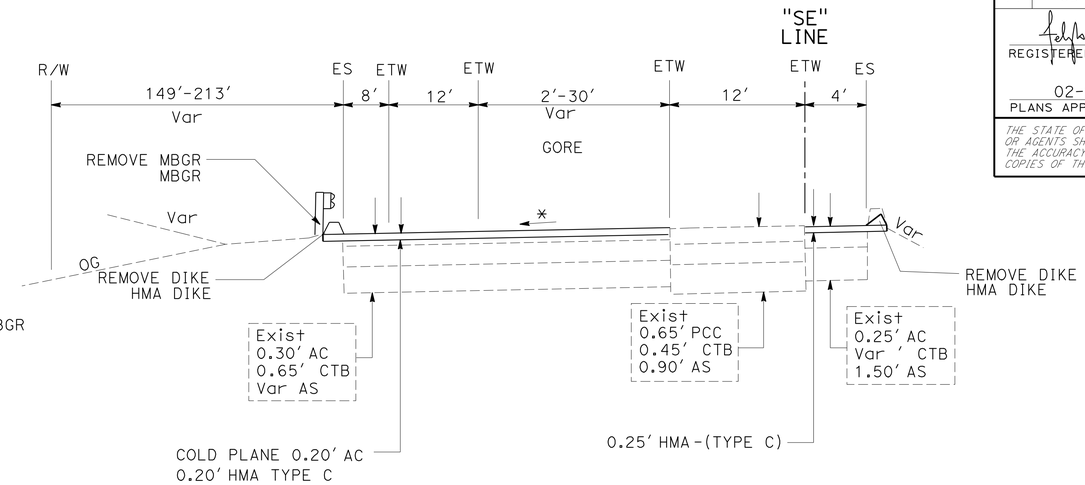

SB 805 TO EB 94 CONNECTOR

Sta 752+52.10 - 757+09.79 "SE" LINE

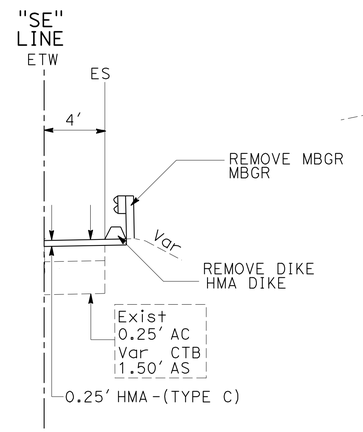

Sta 737+23.14 - 740+69.10 "SE" LINE

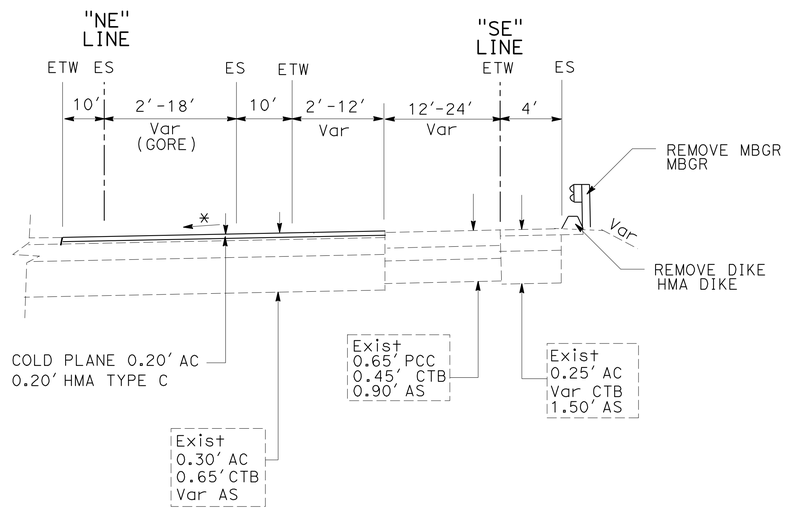

SB 805 TO EB 94 CONNECTOR

Sta 735+71.24 - 740+69.10 "SE" LINE

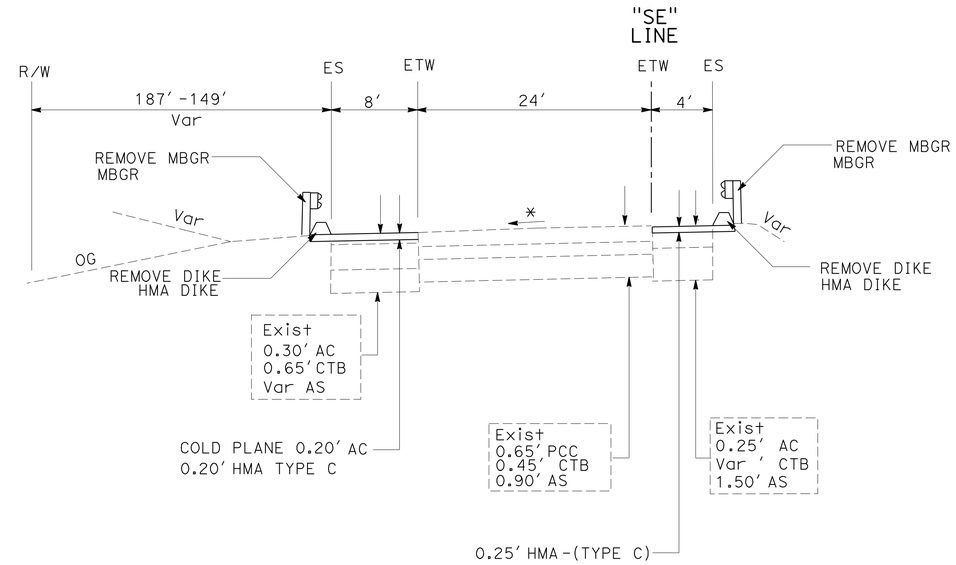

SB 805 TO EB 94 CONNECTOR

Sta 751+06.24 - 752+52.10 "SE" LINE

TYPICAL CROSS SECTIONS
(LOCATION 3)

NO SCALE

X-3

STATE OF CALIFORNIA - DEPARTMENT OF TRANSPORTATION
Caltrans® MINOR PROJECTS

FUNCTIONAL SUPERVISOR: CHRIS M. THOMAS
CALCULATED-DESIGNED BY: FELIZARDO BAGCUS
CHECKED BY: RICARDO PADILLA
REVISED BY
DATE REVISED

LAST REVISION 02-28-12 | DATE PLOTTED => 14-MAR-2012 | TIME PLOTTED => 15:47

Dist	COUNTY	ROUTE	POST MILES TOTAL PROJECT	SHEET No.	TOTAL SHEETS
11	SD	94,805	Var	5	51

REGISTERED CIVIL ENGINEER 02-21-12 DATE

02-27-12
PLANS APPROVAL DATE

REGISTERED PROFESSIONAL ENGINEER FELIZARDO BAGCUS No. C63551 Exp. 9-30-12 CIVIL STATE OF CALIFORNIA

THE STATE OF CALIFORNIA OR ITS OFFICERS OR AGENTS SHALL NOT BE RESPONSIBLE FOR THE ACCURACY OR COMPLETENESS OF SCANNED COPIES OF THIS PLAN SHEET.

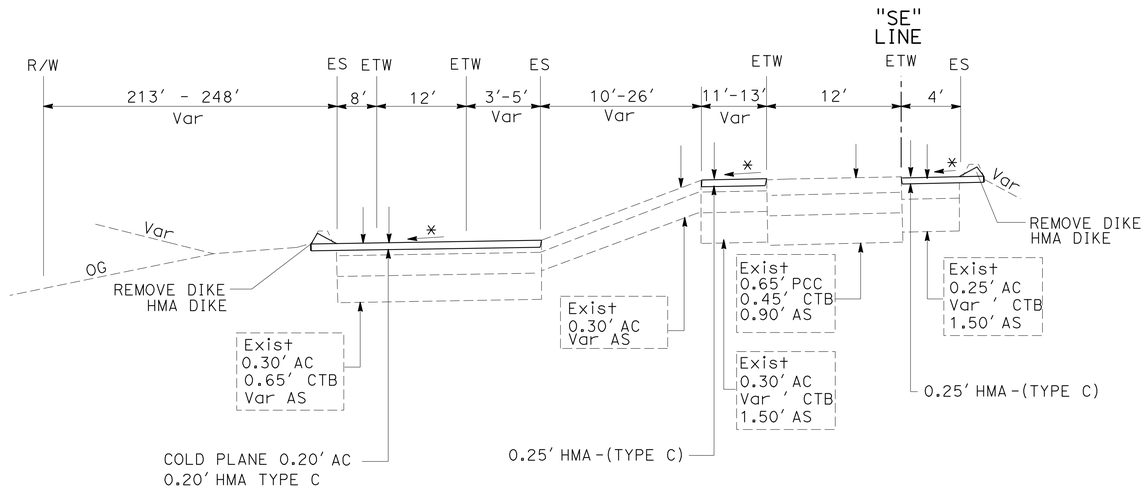

SB 805 TO EB 94 CONNECTOR

Sta 757+09.79 - 760+20.00 "SE" LINE

TYPICAL CROSS SECTIONS
(LOCATION 3)

NO SCALE

X-4

STATE OF CALIFORNIA - DEPARTMENT OF TRANSPORTATION
Caltrans MINOR PROJECTS

FUNCTIONAL SUPERVISOR: CHRIS M. THOMAS
CALCULATED-DESIGNED BY: FELIZARDO BAGCUS
CHECKED BY: RICARDO PADILLA
REVISED BY
DATE REVISED

LAST REVISION DATE PLOTTED => 14-MAR-2012
02-28-12 TIME PLOTTED => 15:47

Dist	COUNTY	ROUTE	POST MILES TOTAL PROJECT	SHEET No.	TOTAL SHEETS
11	SD	94,805	Var	6	51

REGISTERED CIVIL ENGINEER 02-21-12 DATE

02-27-12
PLANS APPROVAL DATE

REGISTERED PROFESSIONAL ENGINEER FELIZARDO BAGCUS No. C63551 Exp. 9-30-12 CIVIL STATE OF CALIFORNIA

THE STATE OF CALIFORNIA OR ITS OFFICERS OR AGENTS SHALL NOT BE RESPONSIBLE FOR THE ACCURACY OR COMPLETENESS OF SCANNED COPIES OF THIS PLAN SHEET.

NOTES:

1. LOCATION OF UTILITY FACILITIES SHOWN ON THESE PLANS WERE OBTAINED EITHER FROM THE OWNER'S RECORDS AND/OR FROM STATE SURVEYS.
2. LOCATION OF UTILITY LINES SHOWN ON THESE PLANS ARE APPROXIMATE. THE CONTRACTOR IS TO FIELD VERIFY OR POTHOLE IN ORDER TO DETERMINE EXACT LOCATION.
3. FOR ACCURATE RIGHT OF WAY DATA, CONTACT RIGHT OF WAY ENGINEERING AT THE DISTRICT OFFICE.

LEGEND

- COLD PLANE AC (0.20') HMA (TYPE C) (0.20')
- X METAL BEAM GUARDRAIL
- EXISTING CROSSOVER
- HMA (TYPE C) (0.25')

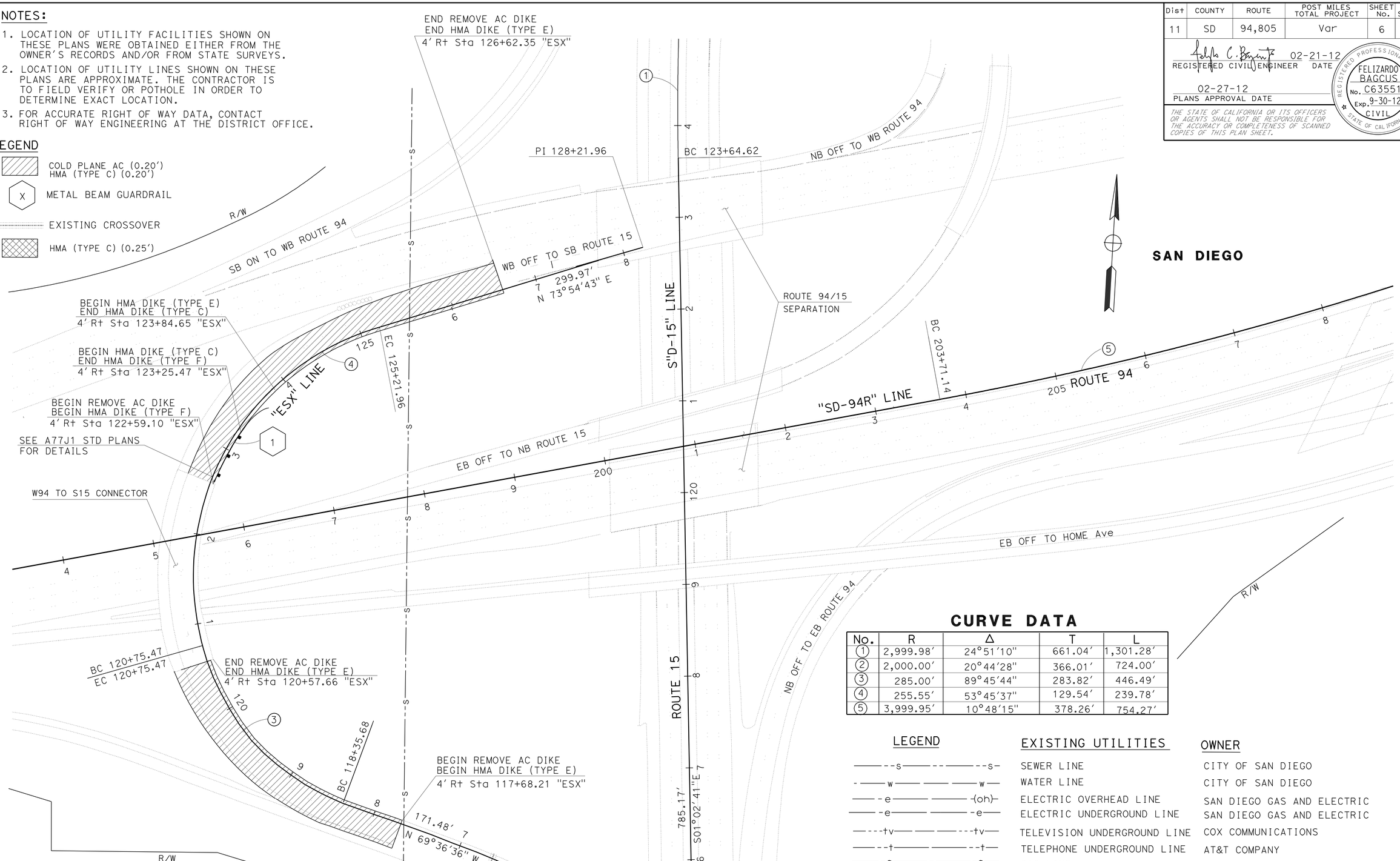

CURVE DATA

No.	R	Δ	T	L
1	2,999.98'	24°51'10"	661.04'	1,301.28'
2	2,000.00'	20°44'28"	366.01'	724.00'
3	285.00'	89°45'44"	283.82'	446.49'
4	255.55'	53°45'37"	129.54'	239.78'
5	3,999.95'	10°48'15"	378.26'	754.27'

LEGEND	EXISTING UTILITIES	OWNER
——s——s—	SEWER LINE	CITY OF SAN DIEGO
—w——w—	WATER LINE	CITY OF SAN DIEGO
—e——(oh)—	ELECTRIC OVERHEAD LINE	SAN DIEGO GAS AND ELECTRIC
—e——e—	ELECTRIC UNDERGROUND LINE	SAN DIEGO GAS AND ELECTRIC
—tv——tv—	TELEVISION UNDERGROUND LINE	COX COMMUNICATIONS
—t——t—	TELEPHONE UNDERGROUND LINE	AT&T COMPANY
—g——g—	GAS LINE	SAN DIEGO GAS AND ELECTRIC

LAYOUT (LOCATION 1)

SCALE: 1" = 50'

L-1

STATE OF CALIFORNIA - DEPARTMENT OF TRANSPORTATION
Caltrans® MINOR PROJECTS

FUNCTIONAL SUPERVISOR: CHRIS M. THOMAS
CALCULATED-DESIGNED BY: FELIZARDO BAGCUS
CHECKED BY: RICARDO PADILLA
REVISED BY / DATE REVISED

LAST REVISION 02-29-12
DATE PLOTTED => 14-MAR-2012
TIME PLOTTED => 15:47

Dist	COUNTY	ROUTE	POST MILES TOTAL PROJECT	SHEET No.	TOTAL SHEETS
11	SD	94,805	Var	7	51

REGISTERED CIVIL ENGINEER 02-21-12 DATE

02-27-12
PLANS APPROVAL DATE

REGISTERED PROFESSIONAL ENGINEER FELIZARDO BAGCUS No. C63551 Exp. 9-30-12 CIVIL STATE OF CALIFORNIA

THE STATE OF CALIFORNIA OR ITS OFFICERS OR AGENTS SHALL NOT BE RESPONSIBLE FOR THE ACCURACY OR COMPLETENESS OF SCANNED COPIES OF THIS PLAN SHEET.

NOTES:

1. LOCATION OF UTILITY FACILITIES SHOWN ON THESE PLANS WERE OBTAINED EITHER FROM THE OWNER'S RECORDS AND/OR FROM STATE SURVEYS.
2. LOCATION OF UTILITY LINES SHOWN ON THESE PLANS ARE APPROXIMATE. THE CONTRACTOR IS TO FIELD VERIFY OR POTHOLE IN ORDER TO DETERMINE EXACT LOCATION.
3. FOR ACCURATE RIGHT OF WAY DATA, CONTACT RIGHT OF WAY ENGINEERING AT THE DISTRICT OFFICE.
4. HAND DIGGING MAY BE NECESSARY AROUND UTILITIES OF CONCERN.

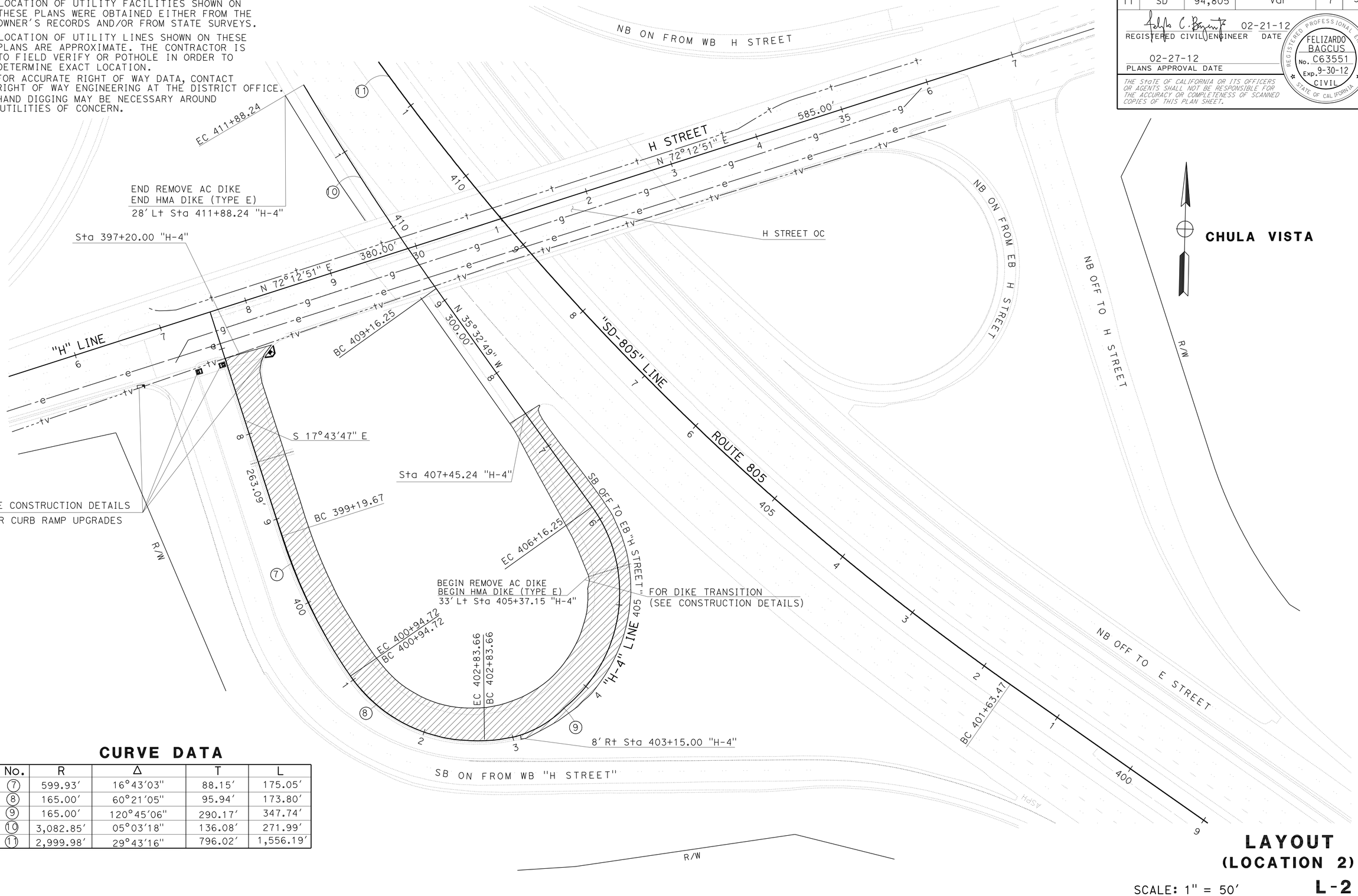

CURVE DATA

No.	R	Δ	T	L
7	599.93'	16°43'03"	88.15'	175.05'
8	165.00'	60°21'05"	95.94'	173.80'
9	165.00'	120°45'06"	290.17'	347.74'
10	3,082.85'	05°03'18"	136.08'	271.99'
11	2,999.98'	29°43'16"	796.02'	1,556.19'

LAYOUT (LOCATION 2)

SCALE: 1" = 50'

L-2

REVISED BY | DATE REVISED
FELIZARDO BAGCUS | RICARDO PADILLA
CALCULATED-DESIGNED BY | CHECKED BY
FUNCTIONAL SUPERVISOR | CHRIS M. THOMAS

STATE OF CALIFORNIA - DEPARTMENT OF TRANSPORTATION
Caltrans® MINOR PROJECTS

LAST REVISION 03-01-12 | DATE PLOTTED => 14-MAR-2012 | TIME PLOTTED => 15:47

Dist	COUNTY	ROUTE	POST MILES TOTAL PROJECT	SHEET No.	TOTAL SHEETS
11	SD	94,805	Var	8	51

REGISTERED CIVIL ENGINEER 02-21-12 DATE

02-27-12
PLANS APPROVAL DATE

REGISTERED PROFESSIONAL ENGINEER FELIZARDO BAGCUS No. C63551 Exp. 9-30-12 CIVIL STATE OF CALIFORNIA

THE STATE OF CALIFORNIA OR ITS OFFICERS OR AGENTS SHALL NOT BE RESPONSIBLE FOR THE ACCURACY OR COMPLETENESS OF SCANNED COPIES OF THIS PLAN SHEET.

NOTES:

1. LOCATION OF UTILITY FACILITIES SHOWN ON THESE PLANS WERE OBTAINED EITHER FROM THE OWNER'S RECORDS AND/OR FROM STATE SURVEYS.
2. LOCATION OF UTILITY LINES SHOWN ON THESE PLANS ARE APPROXIMATE. THE CONTRACTOR IS TO FIELD VERIFY OR POTHOLE IN ORDER TO DETERMINE EXACT LOCATION.
3. FOR ACCURATE RIGHT OF WAY DATA, CONTACT RIGHT OF WAY ENGINEERING AT THE DISTRICT OFFICE.

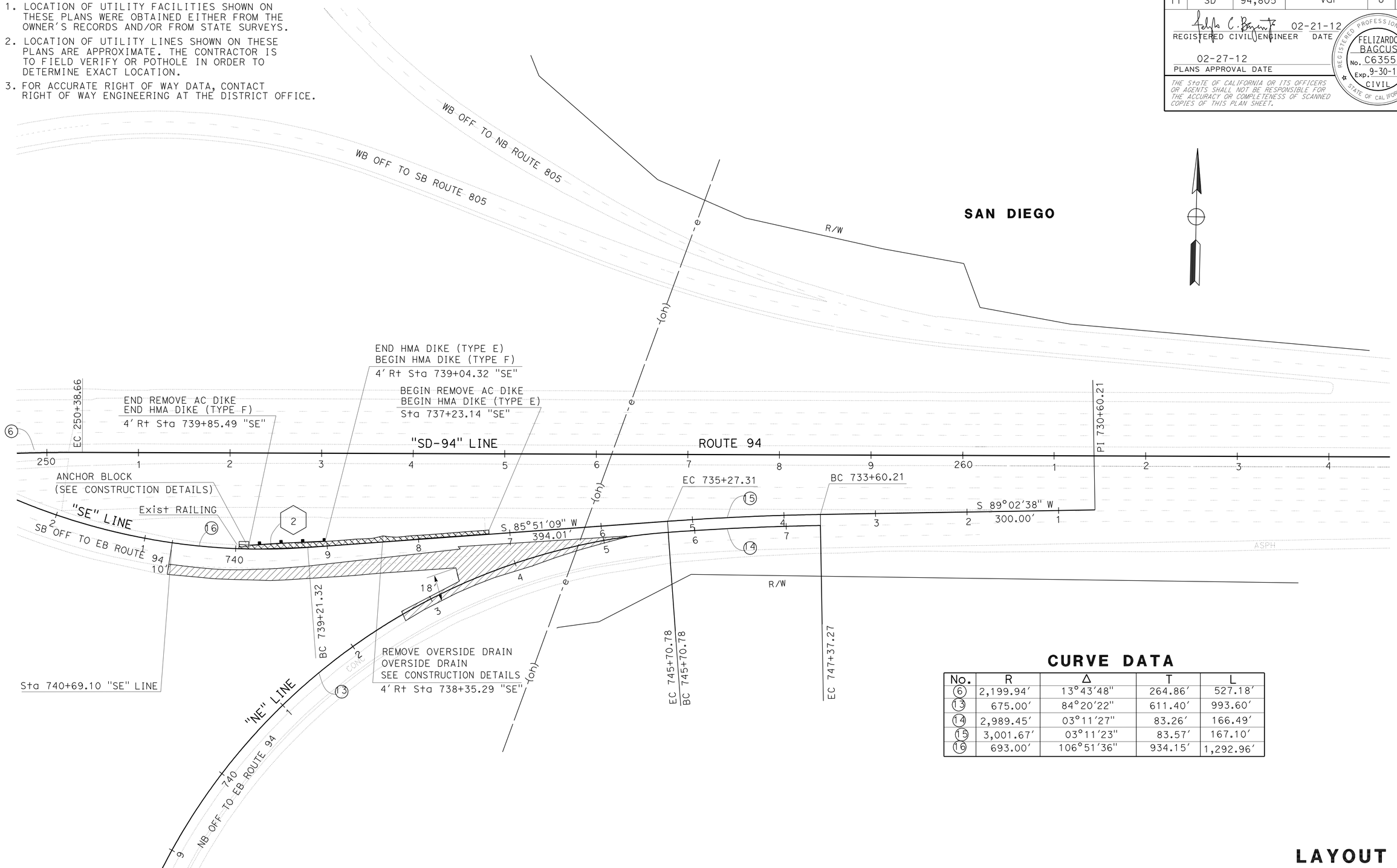

CURVE DATA

No.	R	Δ	T	L
6	2,199.94'	13°43'48"	264.86'	527.18'
13	675.00'	84°20'22"	611.40'	993.60'
14	2,989.45'	03°11'27"	83.26'	166.49'
15	3,001.67'	03°11'23"	83.57'	167.10'
16	693.00'	106°51'36"	934.15'	1,292.96'

LAYOUT
(LOCATION 3)

SCALE: 1" = 50'

L-3

REVISED BY | DATE REVISED
FELIZARDO BAGCUS | RICARDO PADILLA
CALCULATED-DESIGNED BY | CHECKED BY
FUNCTIONAL SUPERVISOR | CHRIS M. THOMAS

STATE OF CALIFORNIA - DEPARTMENT OF TRANSPORTATION
Caltrans® MINOR PROJECTS

LAST REVISION 03-01-12 | DATE PLOTTED => 14-MAR-2012 TIME PLOTTED => 15:47

Dist	COUNTY	ROUTE	POST MILES TOTAL PROJECT	SHEET No.	TOTAL SHEETS
11	SD	94,805	Var	9	51

REGISTERED CIVIL ENGINEER 02-21-12 DATE

02-27-12
PLANS APPROVAL DATE

REGISTERED PROFESSIONAL ENGINEER FELIZARDO BAGCUS No. C63551 Exp. 9-30-12 CIVIL STATE OF CALIFORNIA

THE STATE OF CALIFORNIA OR ITS OFFICERS OR AGENTS SHALL NOT BE RESPONSIBLE FOR THE ACCURACY OR COMPLETENESS OF SCANNED COPIES OF THIS PLAN SHEET.

NOTES:

1. LOCATION OF UTILITY FACILITIES SHOWN ON THESE PLANS WERE OBTAINED EITHER FROM THE OWNER'S RECORDS AND/OR FROM STATE SURVEYS.
2. LOCATION OF UTILITY LINES SHOWN ON THESE PLANS ARE APPROXIMATE. THE CONTRACTOR IS TO FIELD VERIFY OR POTHOLE IN ORDER TO DETERMINE EXACT LOCATION.
3. FOR ACCURATE RIGHT OF WAY DATA, CONTACT RIGHT OF WAY ENGINEERING AT THE DISTRICT OFFICE.

CURVE DATA

No.	R	Δ	T	L
17	693.00′	106°51′36"	934.15′	1,292.96′
18	2,400.00′	18°44′46"	396.16′	785.23′

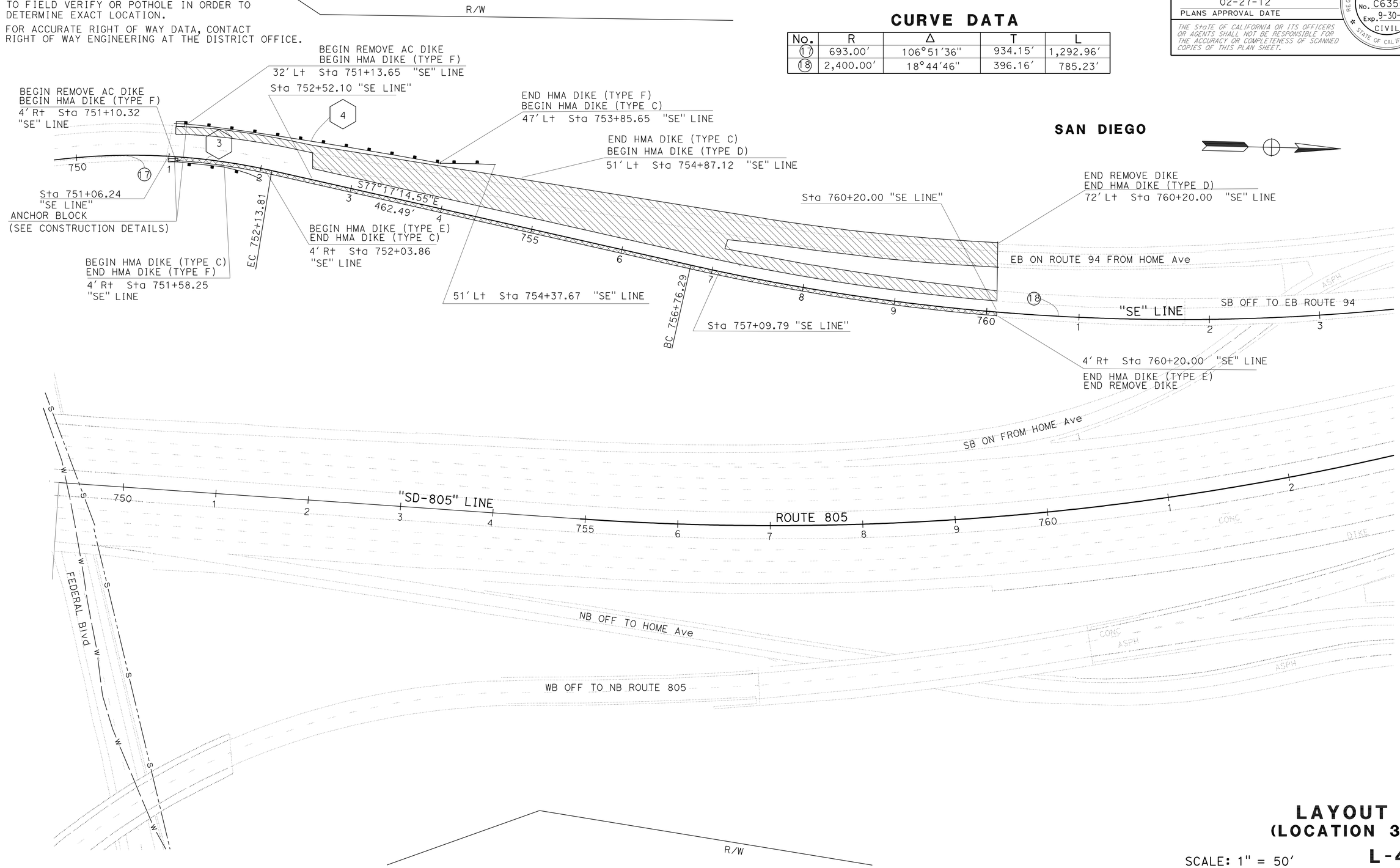

LAYOUT (LOCATION 3)

SCALE: 1" = 50′

L-4

REVISED BY | DATE REVISED
FELIZARDO BAGCUS | RICARDO PADILLA
CALCULATED-DESIGNED BY | CHECKED BY
FUNCTIONAL SUPERVISOR | CHRIS M. THOMAS

STATE OF CALIFORNIA - DEPARTMENT OF TRANSPORTATION
Caltrans MINOR PROJECTS

LAST REVISION 03-05-12 | DATE PLOTTED => 14-MAR-2012 TIME PLOTTED => 15:47

Dist	COUNTY	ROUTE	POST MILES TOTAL PROJECT	SHEET No.	TOTAL SHEETS
11	SD	94,805	Var	10	51

REGISTERED CIVIL ENGINEER 02-21-12 DATE

02-27-12
PLANS APPROVAL DATE

REGISTERED PROFESSIONAL ENGINEER FELIZARDO BAGCUS No. C63551 Exp. 9-30-12 CIVIL STATE OF CALIFORNIA

THE STATE OF CALIFORNIA OR ITS OFFICERS OR AGENTS SHALL NOT BE RESPONSIBLE FOR THE ACCURACY OR COMPLETENESS OF SCANNED COPIES OF THIS PLAN SHEET.

NOTES:

1. FOR DETAILS NOT SHOWN, SEE 2006 STANDARD PLANS
2. CUT AND REMOVE THAT PORTION OF EXISTING TYPE 9-11.
3. DIMENSIONS WILL BE VERIFIED IN THE FIELD BEFORE FABRICATING ANY END CONNECTION TO CONFORM WITH EXISTING PAVED CONDITIONS.

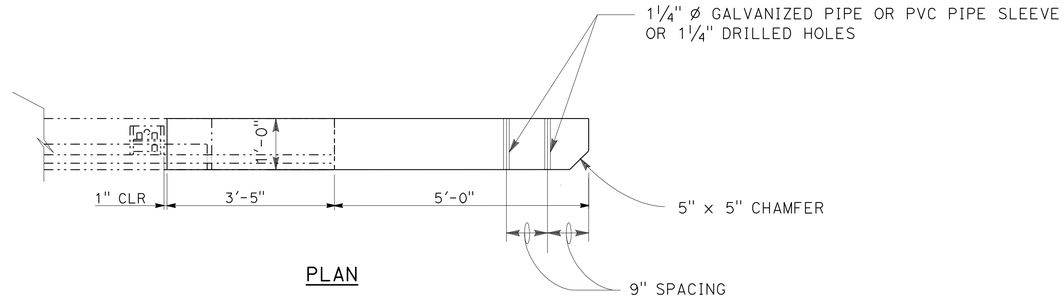

PLAN

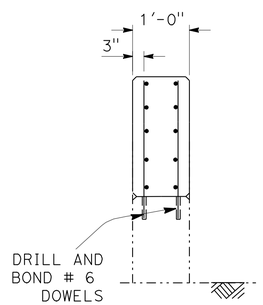

SECTION A-A

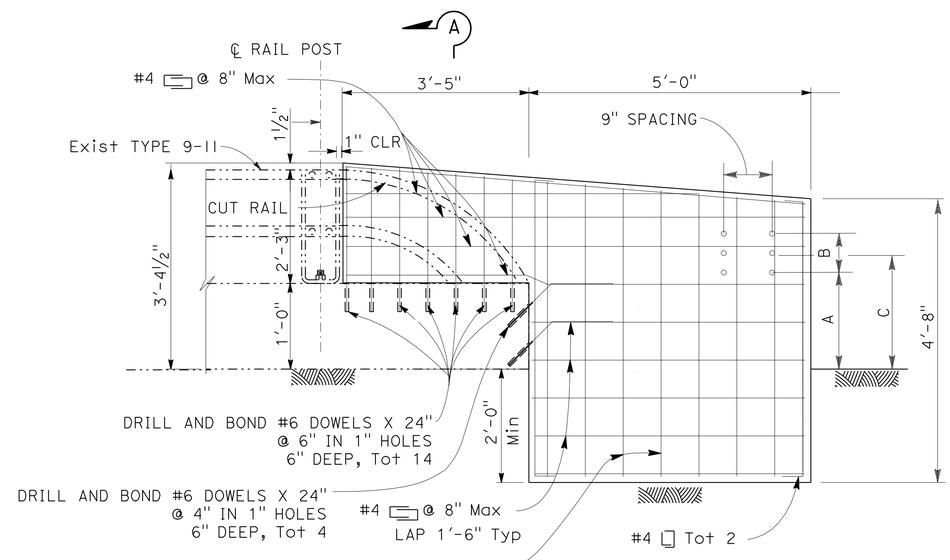

ELEVATION

ANCHOR BLOCK

BARRIER RAILING CONNECTION TYPE 9-11

"SE" LINE Rt Sta 739+85.49	A=*	B=*	C=22⅞"
"SE" LINE Rt Sta 751+10.32	A=18 3/16"	B=7⅝"	C=*
"SE" LINE Lt Sta 751+13.65	A=18 3/16"	B=7⅝"	C=*

* : NOT USED

CONSTRUCTION DETAILS

NO SCALE

C-1

STATE OF CALIFORNIA - DEPARTMENT OF TRANSPORTATION
Caltrans MINOR PROJECTS

FUNCTIONAL SUPERVISOR: CHRIS M. THOMAS
CALCULATED-DESIGNED BY: FELIZARDO BAGCUS
CHECKED BY: RICARDO PADILLA
REVISED BY
DATE REVISED

LAST REVISION 03-05-12
DATE PLOTTED => 14-MAR-2012
TIME PLOTTED => 15:48

Dist	COUNTY	ROUTE	POST MILES TOTAL PROJECT	SHEET No.	TOTAL SHEETS
11	SD	94,805	Var	11	51

REGISTERED CIVIL ENGINEER 02-21-12 DATE

02-27-12
PLANS APPROVAL DATE

REGISTERED PROFESSIONAL ENGINEER FELIZARDO BAGCUS No. C63551 Exp. 9-30-12 CIVIL STATE OF CALIFORNIA

THE STATE OF CALIFORNIA OR ITS OFFICERS OR AGENTS SHALL NOT BE RESPONSIBLE FOR THE ACCURACY OR COMPLETENESS OF SCANNED COPIES OF THIS PLAN SHEET.

NOTES:

1. SEE STANDARD PLAN A88A FOR ADDITIONAL INFORMATION.
2. HAND DIGGING MAY BE NECESSARY AROUND UTILITIES OF CONCERN.

LEGEND:

EXISTING CURB RAMP, CURB, AND SIDEWALK TO BE REMOVED

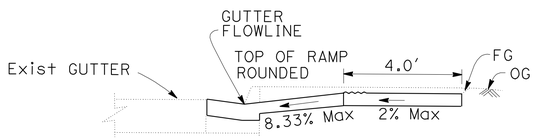

SECTION A-A
TYPICAL

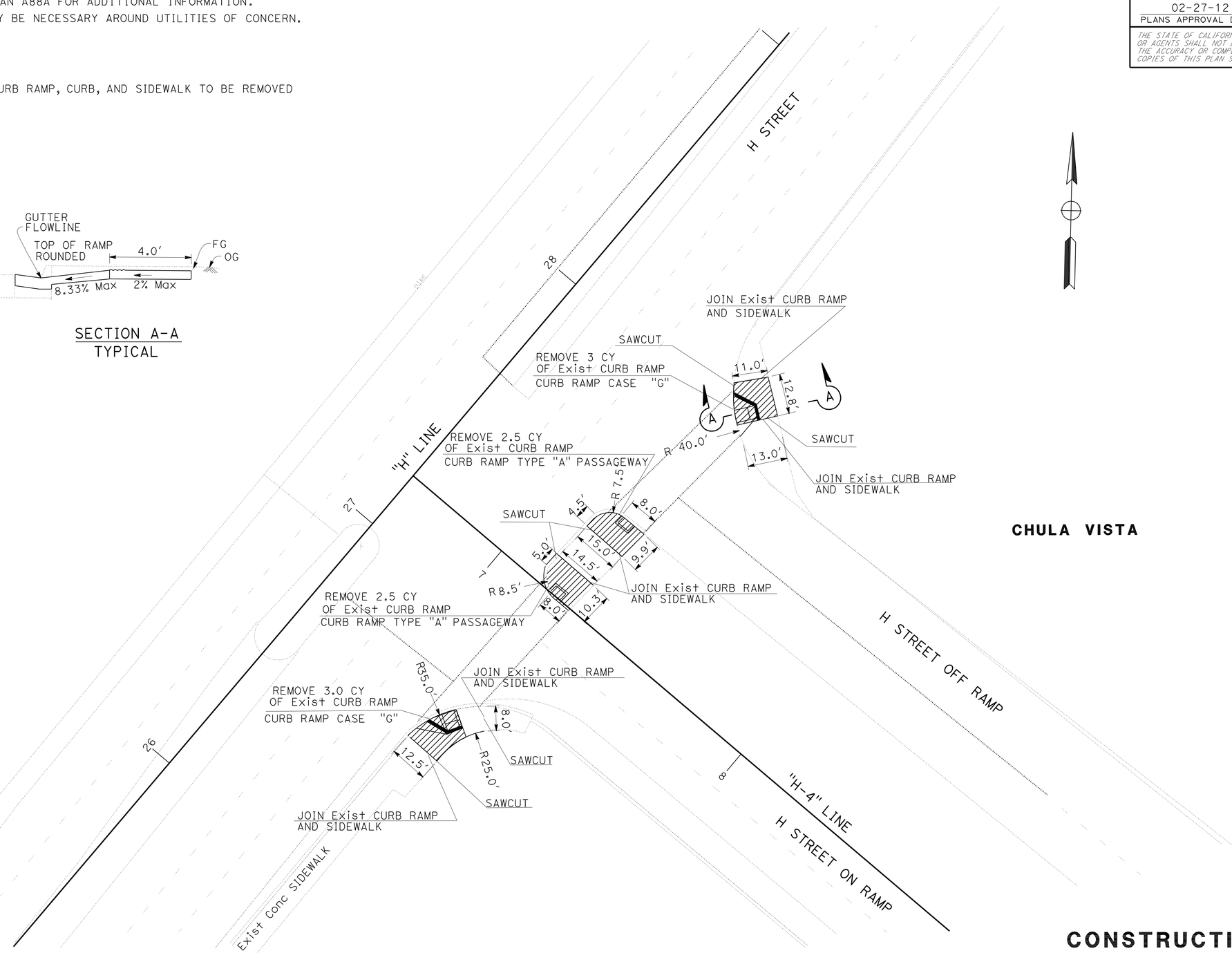

CHULA VISTA

CONSTRUCTION DETAILS

NO SCALE

C-2

STATE OF CALIFORNIA - DEPARTMENT OF TRANSPORTATION
Caltrans® **MINOR PROJECTS**

FUNCTIONAL SUPERVISOR: CHRIS M. THOMAS
CALCULATED-DESIGNED BY: FELIZARDO BAGCUS
CHECKED BY: RICARDO PADILLA
REVISED BY
DATE REVISED

LAST REVISION 03-05-12
DATE PLOTTED => 14-MAR-2012
TIME PLOTTED => 15:48

Dist	COUNTY	ROUTE	POST MILES TOTAL PROJECT	SHEET No.	TOTAL SHEETS
11	SD	94,805	Var	12	51

REGISTERED CIVIL ENGINEER 02-21-12 DATE

02-27-12
PLANS APPROVAL DATE

REGISTERED PROFESSIONAL ENGINEER FELIZARDO BAGCUS No. C63551 Exp. 9-30-12 CIVIL STATE OF CALIFORNIA

THE STATE OF CALIFORNIA OR ITS OFFICERS OR AGENTS SHALL NOT BE RESPONSIBLE FOR THE ACCURACY OR COMPLETENESS OF SCANNED COPIES OF THIS PLAN SHEET.

NOTE:

1. DEPENDENT DIMENSIONS SHALL BE VERIFIED IN THE FIELD BEFORE FABRICATING ANY END CONNECTION TO CONFORM WITH EXISTING CONDITIONS.

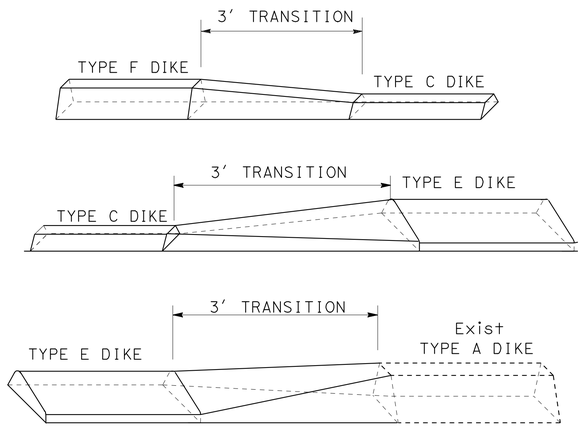

HMA DIKE TRANSITION

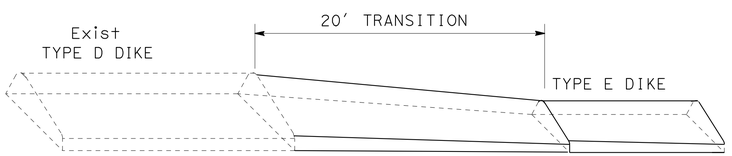

HMA DIKE TRANSITION

33' Lt Sta 405+37.15 "H-4"

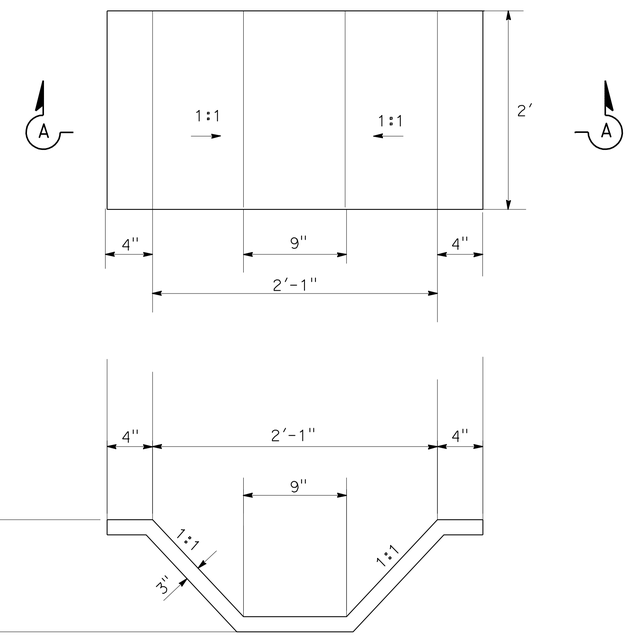

SECTION A-A

OVERSIDE DRAIN

STA 738+35.29 "SE" LINE

CONSTRUCTION DETAILS

NO SCALE

C-3

STATE OF CALIFORNIA - DEPARTMENT OF TRANSPORTATION
Caltrans® MINOR PROJECTS

FUNCTIONAL SUPERVISOR: CHRIS M. THOMAS
CALCULATED-DESIGNED BY: FELIZARDO BAGCUS
CHECKED BY: RICARDO PADILLA
REVISED BY
DATE REVISED

LAST REVISION 03-05-12
DATE PLOTTED => 14-MAR-2012
TIME PLOTTED => 15:48

Dist	COUNTY	ROUTE	POST MILES TOTAL PROJECT	SHEET No.	TOTAL SHEETS
11	SD	94,805	Var	13	51

REGISTERED CIVIL ENGINEER 02-21-12 DATE

02-27-12
PLANS APPROVAL DATE

REGISTERED PROFESSIONAL ENGINEER FELIZARDO BAGCUS No. C63551 Exp. 9-30-12 CIVIL STATE OF CALIFORNIA

THE STATE OF CALIFORNIA OR ITS OFFICERS OR AGENTS SHALL NOT BE RESPONSIBLE FOR THE ACCURACY OR COMPLETENESS OF SCANNED COPIES OF THIS PLAN SHEET.

NOTES:

1. FOR ACCURATE RIGHT OF WAY DATA, CONTACT RIGHT OF WAY ENGINEERING AT THE DISTRICT OFFICE.
2. FOR TEMPORARY POLLUTION CONTROL, SEE SUMMARY OF QUANTITIES.

LEGEND:

- TEMPORARY DRAINAGE INLET PROTECTION (TYPE 5)
- TEMPORARY COVER (10' WIDE)
- TEMPORARY DRAINAGE INLET PROTECTION (TYPE 4B)
- (X) TEMPORARY COVER DESIGNATION
- TEMPORARY DRAINAGE INLET PROTECTION (TYPE 3B)

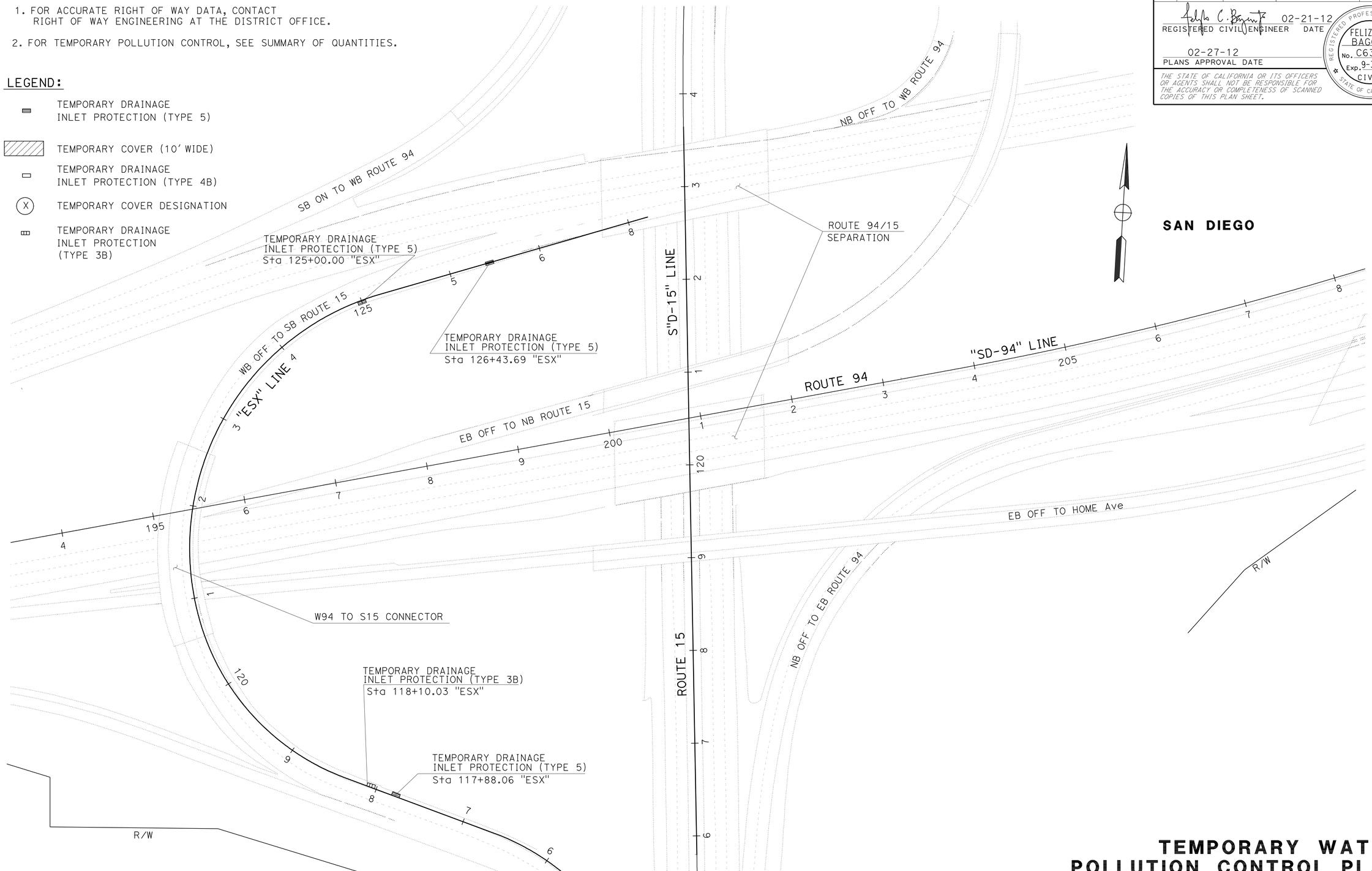

TEMPORARY WATER POLLUTION CONTROL PLAN

APPROVED FOR TEMPORARY WATER POLLUTION CONTROL WORK ONLY

SCALE: 1" = 50'

WPC-1

STATE OF CALIFORNIA - DEPARTMENT OF TRANSPORTATION
Caltrans® MINOR PROJECTS

FUNCTIONAL SUPERVISOR: CHRIS M. THOMAS
CALCULATED-DESIGNED BY: FELIZARDO BAGCUS
CHECKED BY: RICARDO PADILLA
REVISED BY / DATE REVISED

LAST REVISION 03-05-12 | DATE PLOTTED => 14-MAR-2012 | TIME PLOTTED => 15:48

Dist	COUNTY	ROUTE	POST MILES TOTAL PROJECT	SHEET No.	TOTAL SHEETS
11	SD	94,805	Var	14	51

REGISTERED CIVIL ENGINEER 02-21-12 DATE

02-27-12
PLANS APPROVAL DATE

REGISTERED PROFESSIONAL ENGINEER FELIZARDO BAGCUS No. C63551 Exp. 9-30-12 CIVIL STATE OF CALIFORNIA

THE STATE OF CALIFORNIA OR ITS OFFICERS OR AGENTS SHALL NOT BE RESPONSIBLE FOR THE ACCURACY OR COMPLETENESS OF SCANNED COPIES OF THIS PLAN SHEET.

NOTES:

1. FOR ACCURATE RIGHT OF WAY DATA, CONTACT RIGHT OF WAY ENGINEERING AT THE DISTRICT OFFICE.
2. FOR TEMPORARY POLLUTION CONTROL, SEE SUMMARY OF QUANTITIES.

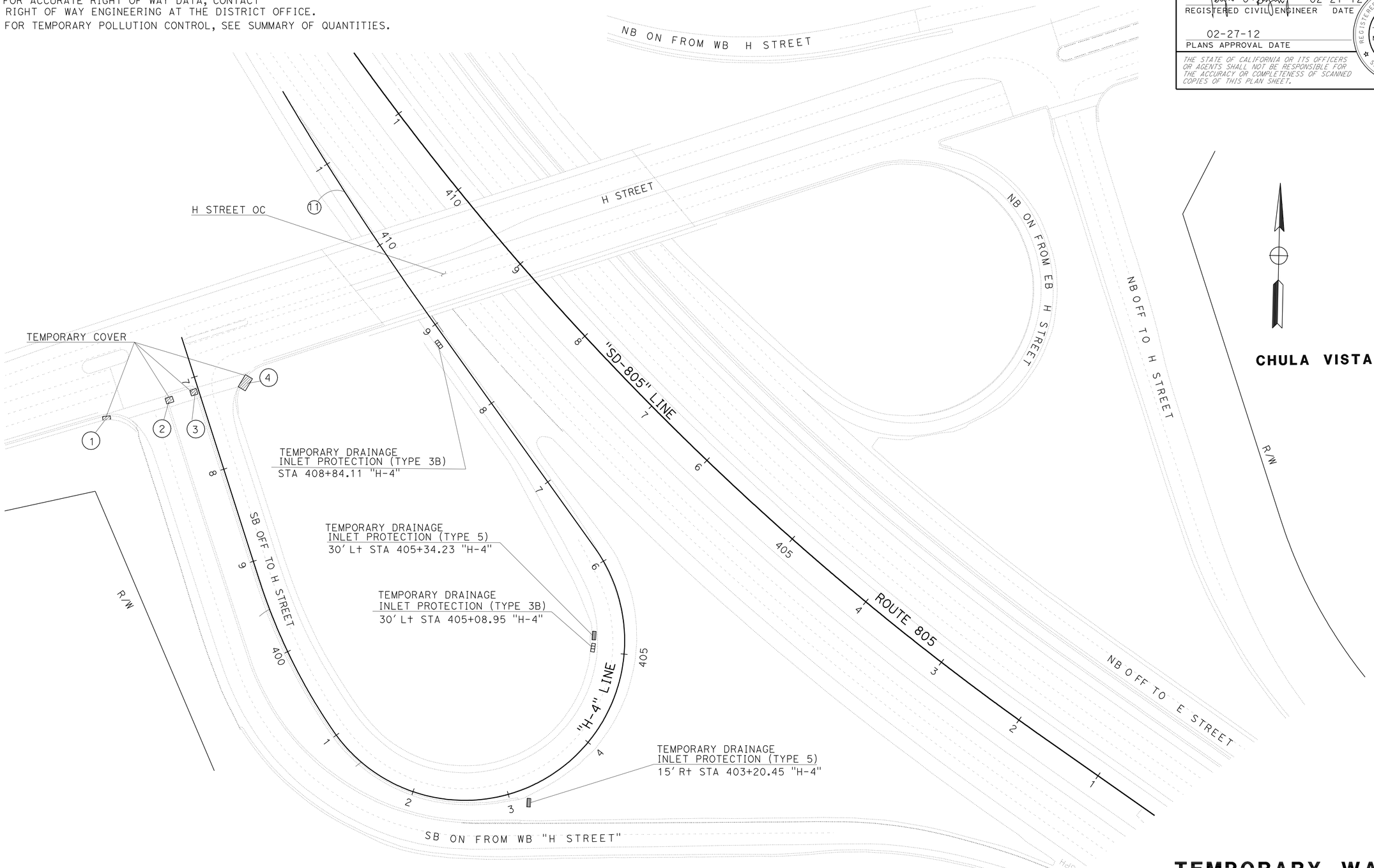

TEMPORARY WATER POLLUTION CONTROL PLAN

APPROVED FOR TEMPORARY WATER POLLUTION CONTROL WORK ONLY

SCALE: 1"=50'

WPC-2

STATE OF CALIFORNIA - DEPARTMENT OF TRANSPORTATION
Caltrans® MINOR PROJECTS

FUNCTIONAL SUPERVISOR: CHRIS M. THOMAS
CALCULATED-DESIGNED BY: FELIZARDO BAGCUS
CHECKED BY: RICARDO PADILLA
REVISED BY
DATE REVISED

LAST REVISION 03-05-12 | DATE PLOTTED => 14-MAR-2012 | TIME PLOTTED => 15:48

Dist	COUNTY	ROUTE	POST MILES TOTAL PROJECT	SHEET No.	TOTAL SHEETS
11	SD	94,805	Var	15	51

REGISTERED CIVIL ENGINEER 02-21-12 DATE

02-27-12
PLANS APPROVAL DATE

REGISTERED PROFESSIONAL ENGINEER FELIZARDO BAGCUS No. C63551 Exp. 9-30-12 CIVIL STATE OF CALIFORNIA

THE STATE OF CALIFORNIA OR ITS OFFICERS OR AGENTS SHALL NOT BE RESPONSIBLE FOR THE ACCURACY OR COMPLETENESS OF SCANNED COPIES OF THIS PLAN SHEET.

NOTES:

1. FOR ACCURATE RIGHT OF WAY DATA, CONTACT RIGHT OF WAY ENGINEERING AT THE DISTRICT OFFICE.
2. FOR TEMPORARY POLLUTION CONTROL, SEE SUMMARY OF QUANTITIES.

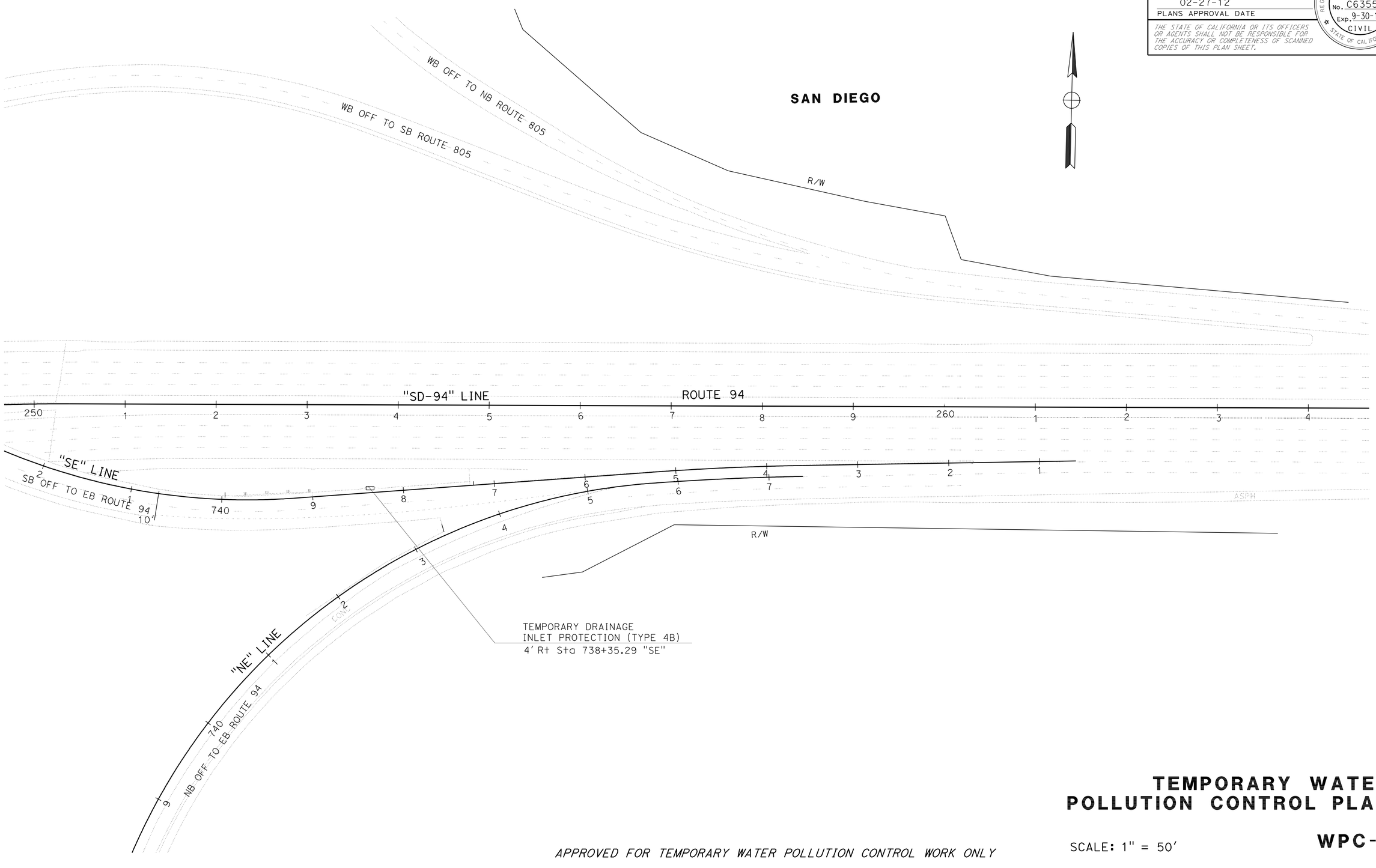

TEMPORARY WATER POLLUTION CONTROL PLAN

SCALE: 1" = 50'

WPC-3

APPROVED FOR TEMPORARY WATER POLLUTION CONTROL WORK ONLY

STATE OF CALIFORNIA - DEPARTMENT OF TRANSPORTATION
Caltrans® MINOR PROJECTS

FUNCTIONAL SUPERVISOR: CHRIS M. THOMAS
CALCULATED-DESIGNED BY: FELIZARDO BAGCUS
CHECKED BY: RICARDO PADILLA
REVISED BY
DATE REVISED

LAST REVISION 03-05-12
DATE PLOTTED => 14-MAR-2012
TIME PLOTTED => 15:48

Dist	COUNTY	ROUTE	POST MILES TOTAL PROJECT	SHEET No.	TOTAL SHEETS
11	SD	94,805	Var	16	51

REGISTERED CIVIL ENGINEER 02-21-12 DATE

02-27-12
PLANS APPROVAL DATE

REGISTERED PROFESSIONAL ENGINEER
FELIZARDO BAGCUS
No. C63551
Exp. 9-30-12
CIVIL
STATE OF CALIFORNIA

THE STATE OF CALIFORNIA OR ITS OFFICERS OR AGENTS SHALL NOT BE RESPONSIBLE FOR THE ACCURACY OR COMPLETENESS OF SCANNED COPIES OF THIS PLAN SHEET.

NOTE:

FOR ACCURATE RIGHT OF WAY DATA, CONTACT RIGHT OF WAY ENGINEERING AT THE DISTRICT OFFICE.

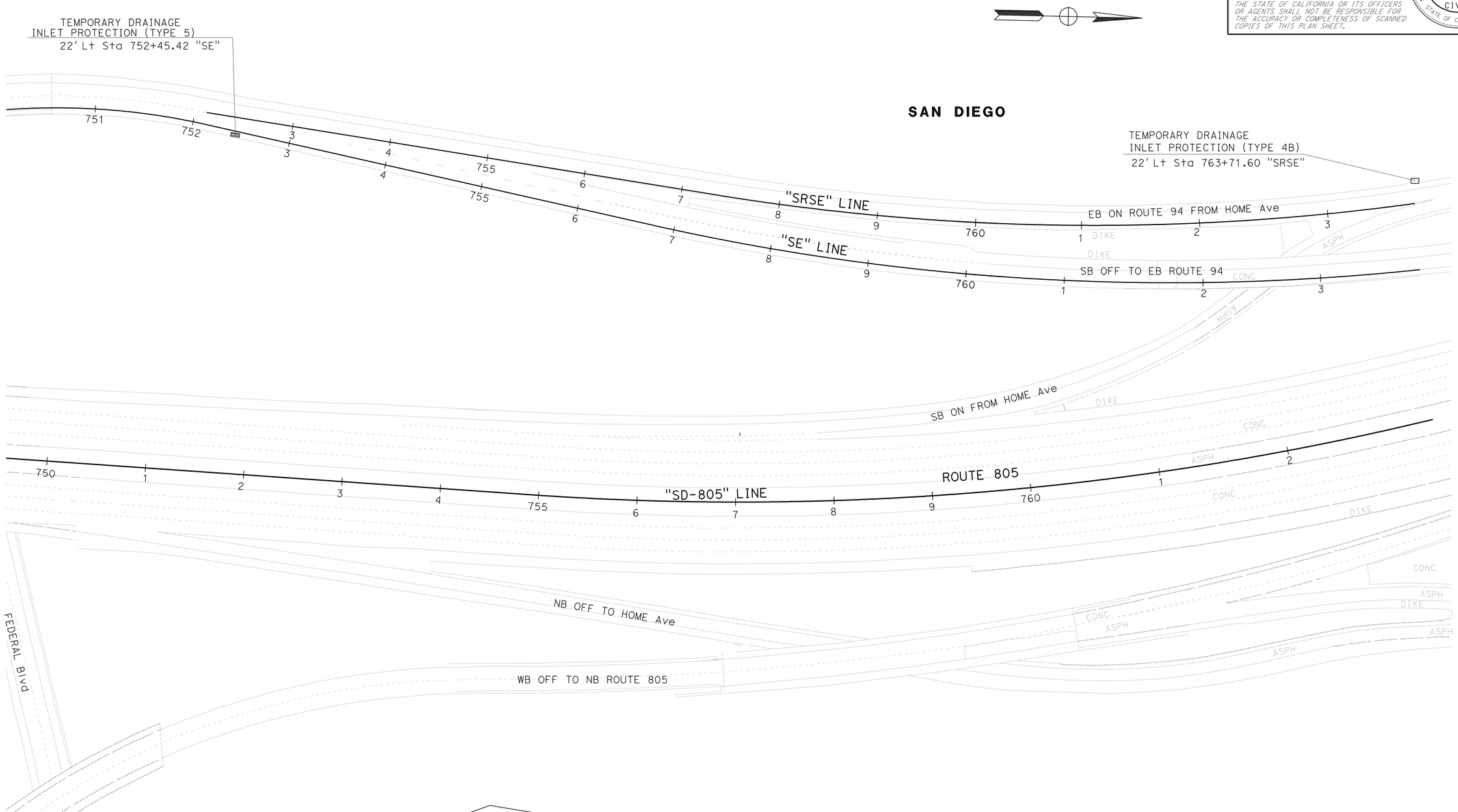

APPROVED FOR TEMPORARY WATER POLLUTION CONTROL WORK ONLY

SCALE: 1" = 50'

TEMPORARY WATER POLLUTION CONTROL PLAN

WPC-4

STATE OF CALIFORNIA - DEPARTMENT OF TRANSPORTATION
Caltrans® **MINOR PROJECTS**

FUNCTIONAL SUPERVISOR: CHRIS M. THOMAS
CALCULATED-DESIGNED BY: FELIZARDO BAGCUS
CHECKED BY: RICARDO PADILLA
REVISED BY
DATE REVISED

LAST REVISION 03-05-12
DATE PLOTTED => 14-MAR-2012
TIME PLOTTED => 15:48

Dist	COUNTY	ROUTE	POST MILES TOTAL PROJECT	SHEET No.	TOTAL SHEETS
11	SD	94,805	Var	17	51

REGISTERED CIVIL ENGINEER 02-21-12 DATE

02-27-12
PLANS APPROVAL DATE

REGISTERED PROFESSIONAL ENGINEER SHAHIN T. ADIBI No. 54839 Exp. 06-30-12 CIVIL STATE OF CALIFORNIA

THE STATE OF CALIFORNIA OR ITS OFFICERS OR AGENTS SHALL NOT BE RESPONSIBLE FOR THE ACCURACY OR COMPLETENESS OF SCANNED COPIES OF THIS PLAN SHEET.

NOTES:

1. EXACT LOCATION OF CONSTRUCTION AREA SIGNS WILL BE DETERMINED BY THE ENGINEER.
2. FEDERAL MANUAL ON UNIFORM TRAFFIC CONTROL DEVICES (MUTCD) SIGN CODES ARE SHOWN UNLESS DESIGNATED BY (CA), INDICATING CALIFORNIA MUTCD.
3. EXISTING UTILITIES ARE NOT SHOWN ON THESE PLAN SHEETS. THE CONTRACTOR SHALL VERIFY LOCATIONS OF EXISTING UTILITIES AND ADJUST THE FIELD LOCATION OF THE SIGN POSTS IN CONSULTATION WITH THE ENGINEER.
4. FOR ADDITIONAL CONSTRUCTION AREA SIGNS, SEE TRAFFIC HANDLING PLAN.

LEGEND:

XX = CONSTRUCTION AREA SIGN

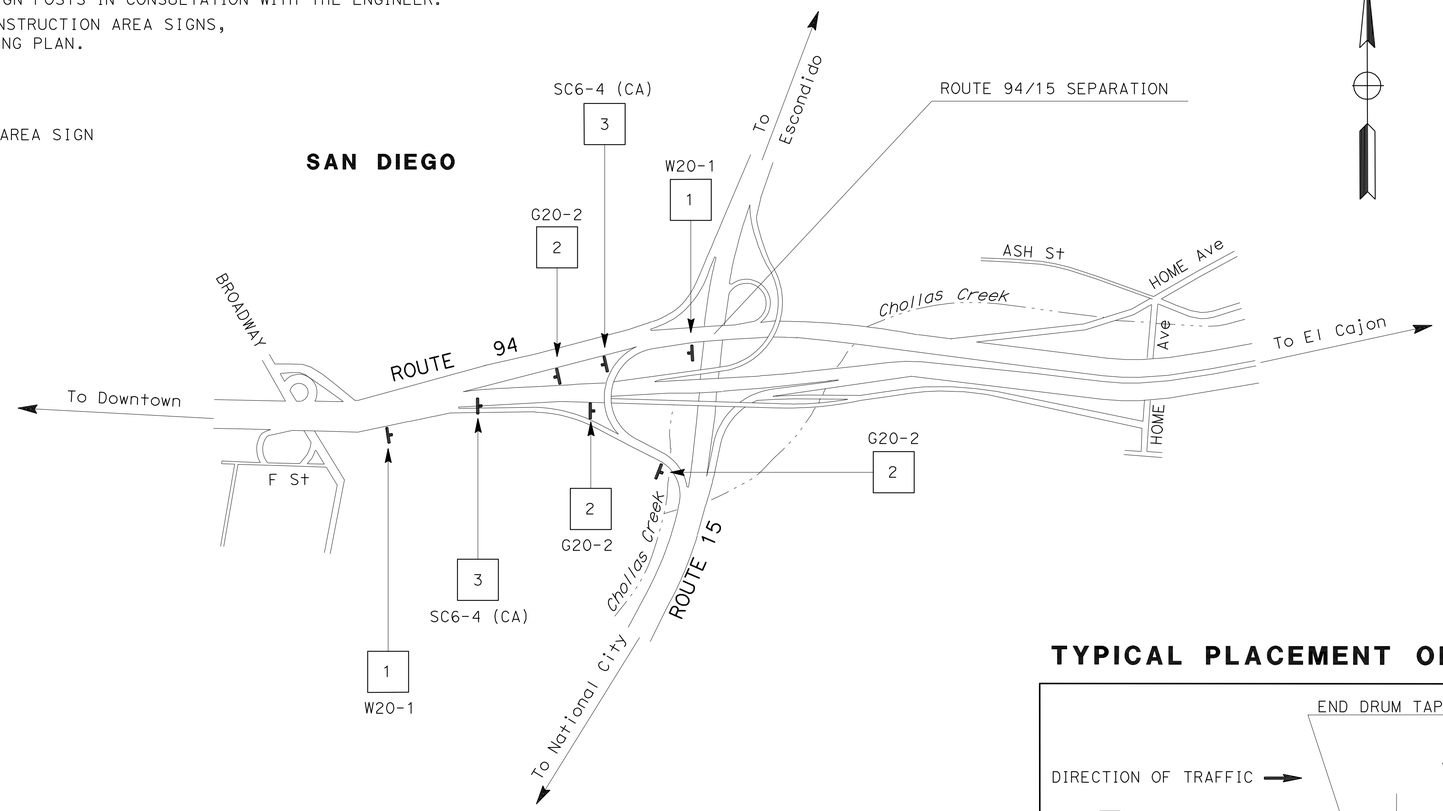

LOCATION 1
"SD-94" PM 3.10

TYPICAL PLACEMENT OF TRAFFIC PLASTIC DRUM

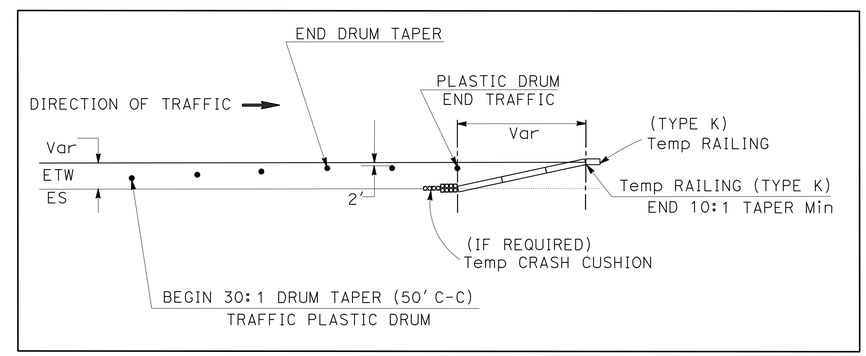

CONSTRUCTION AREA SIGNS

SIGN No.	TYPE	PANEL SIZE (In)	No. OF POST AND SIZE (In)	No. OF SIGNS	REMARKS
1	W20-1	48 X 48	1-4 X 6 (S)	8	CS SHEETS
2	G20-2	48 X 24	1-4 X 4 (S)	7	CS SHEETS
3	SC6-4 (CA)	48 X 60	PORTABLE	6	CS SHEETS
4	SC9 (CA)	36 X 36	PORTABLE	33	TH SHEETS
5	M4-8a	24 X 18	PORTABLE	3	TH SHEETS
6	SPCL-1	72 X 72	PORTABLE	5	TH SHEETS
7	SPCL-2	72 X 72	PORTABLE	2	TH SHEETS

(S) DENOTES STATIONARY MOUNTED SIGN

APPROVED FOR CONSTRUCTION AREA SIGN WORK ONLY

CONSTRUCTION AREA SIGNS

NO SCALE

CS-1

STATE OF CALIFORNIA - DEPARTMENT OF TRANSPORTATION
Caltrans® TRAFFIC DESIGN

FUNCTIONAL SUPERVISOR: CAMILLE ABOU FADEL
CALCULATED-DESIGNED BY: ROBERT EDEJER
CHECKED BY: SHAHIN T. ADIBI
REVISED BY
DATE REVISED

LAST REVISION 03-05-12
DATE PLOTTED => 14-MAR-2012
TIME PLOTTED => 15:49

Dist	COUNTY	ROUTE	POST MILES TOTAL PROJECT	SHEET No.	TOTAL SHEETS
11	SD	94,805	Var	18	51

REGISTERED CIVIL ENGINEER 02-21-12 DATE

02-27-12
PLANS APPROVAL DATE

REGISTERED PROFESSIONAL ENGINEER
SHAHIN T. ADIBI
No. 54839
Exp. 06-30-12
CIVIL
STATE OF CALIFORNIA

THE STATE OF CALIFORNIA OR ITS OFFICERS OR AGENTS SHALL NOT BE RESPONSIBLE FOR THE ACCURACY OR COMPLETENESS OF SCANNED COPIES OF THIS PLAN SHEET.

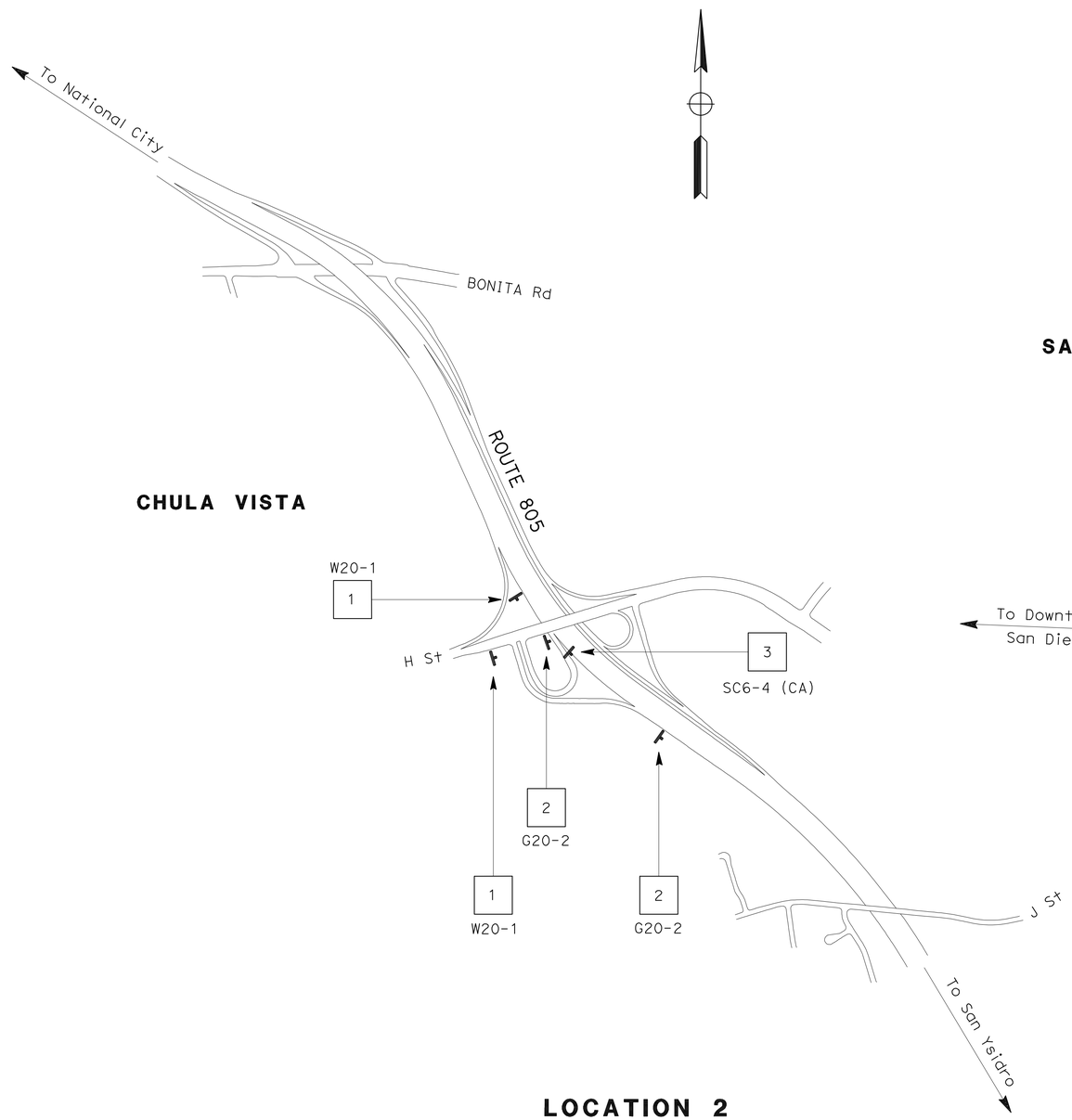

LOCATION 2

"SD-805" PM 7.20

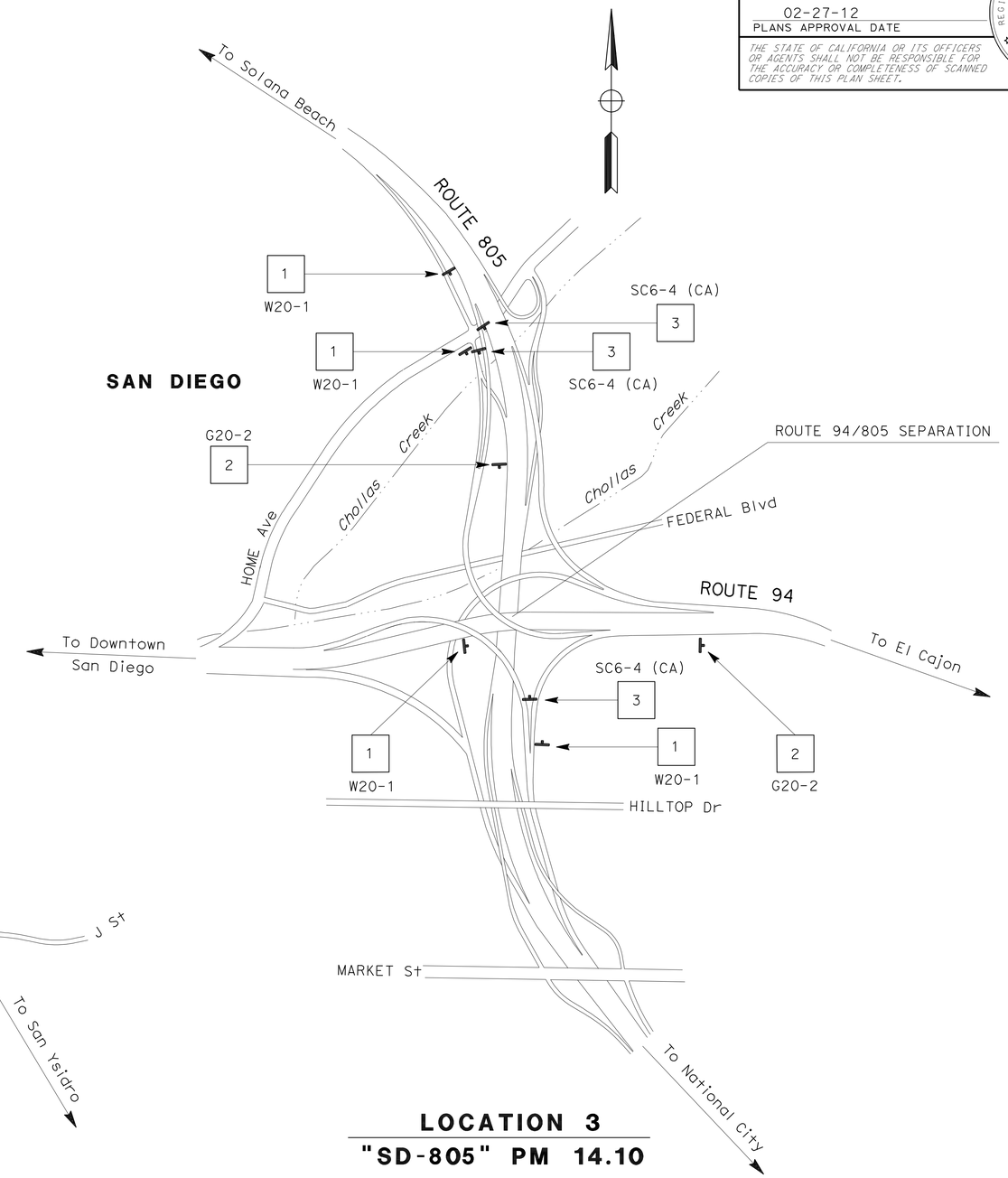

LOCATION 3

"SD-805" PM 14.10

CONSTRUCTION AREA SIGNS

NO SCALE

CS-2

APPROVED FOR CONSTRUCTION AREA SIGN WORK ONLY

STATE OF CALIFORNIA - DEPARTMENT OF TRANSPORTATION
Caltrans
TRAFFIC DESIGN

FUNCTIONAL SUPERVISOR: CAMILLE ABOU FADEL

CALCULATED-DESIGNED BY: ROBERT EDEJER
CHECKED BY: SHAHIN T. ADIBI

REVISED BY
DATE REVISED

LAST REVISION 03-05-12
DATE PLOTTED => 14-MAR-2012
TIME PLOTTED => 15:49

Dist	COUNTY	ROUTE	POST MILES TOTAL PROJECT	SHEET No.	TOTAL SHEETS
11	SD	94,805	Var	19	51

REGISTERED CIVIL ENGINEER 02-21-12 DATE

02-27-12
PLANS APPROVAL DATE

REGISTERED PROFESSIONAL ENGINEER FELIZARDO BAGCUS No. C63551 Exp. 9-30-12 CIVIL STATE OF CALIFORNIA

THE STATE OF CALIFORNIA OR ITS OFFICERS OR AGENTS SHALL NOT BE RESPONSIBLE FOR THE ACCURACY OR COMPLETENESS OF SCANNED COPIES OF THIS PLAN SHEET.

NOTES:

1. PLACE TEMPORARY K-RAIL. TEMPORARY K-RAIL SHALL NOT BE REMOVED UNTIL THE END OF CONSTRUCTION.
2. REMOVE EXISTING METAL BEAM GUARD RAILING.
3. CONSTRUCT ANCHOR BLOCK. SEE CONSTRUCTION DETAILS.
4. CONSTRUCT METAL BEAM GUARD RAILING.

LEGEND:

= WORK AREA

= TEMPORARY K-RAIL

= TRAFFIC PLASTIC DRUM

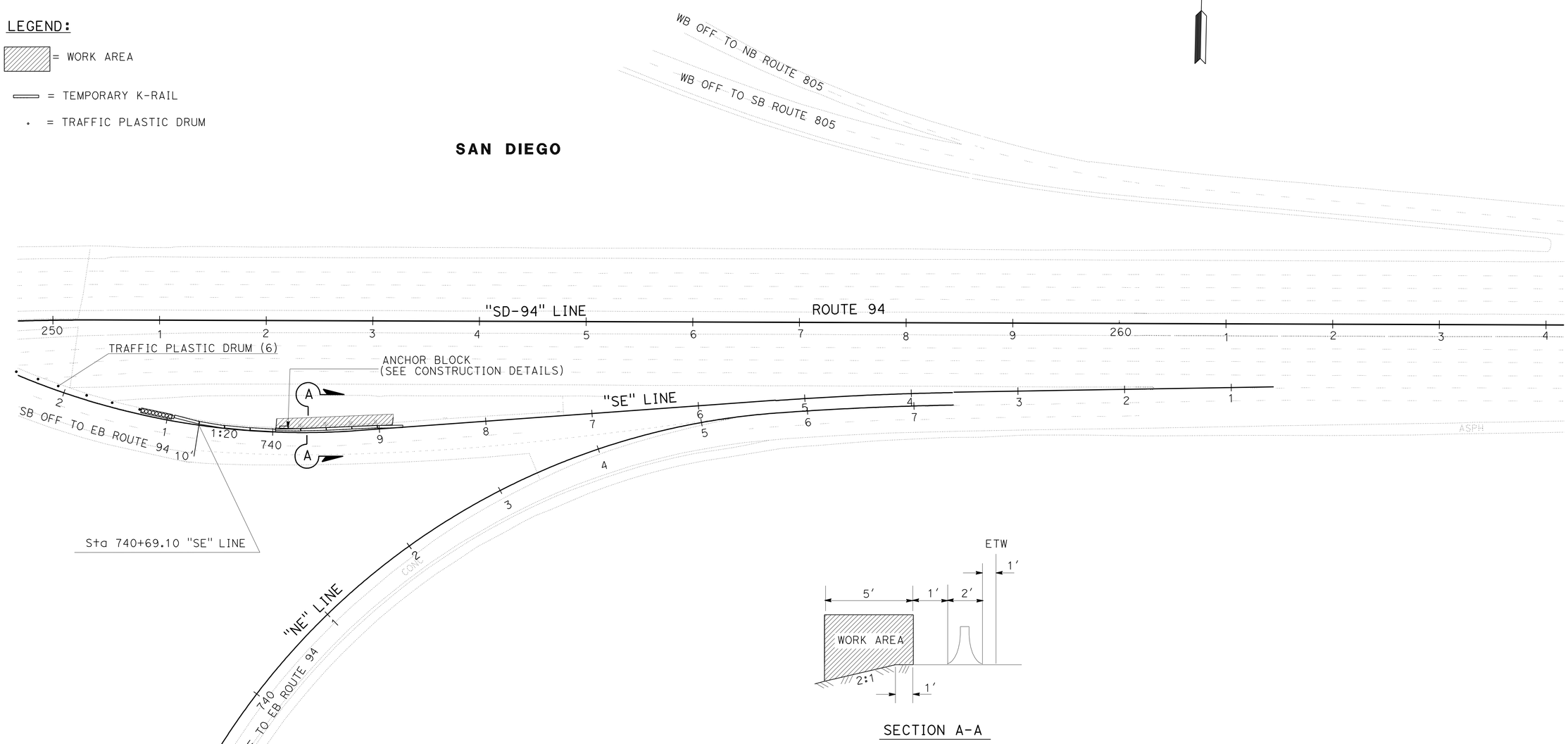

STAGE CONSTRUCTION
STAGE 1 LOCATION 3

SCALE: 1" = 50'

SC-1

APPROVED FOR STAGE CONSTRUCTION WORK ONLY

STATE OF CALIFORNIA - DEPARTMENT OF TRANSPORTATION
Caltrans® MINOR PROJECTS

FUNCTIONAL SUPERVISOR: CHRIS M. THOMAS
CALCULATED-DESIGNED BY: FELIZARDO BAGCUS
CHECKED BY: RICARDO PADILLA
REVISED BY
DATE REVISED

LAST REVISION 03-05-12
DATE PLOTTED => 14-MAR-2012
TIME PLOTTED => 15:49

Dist	COUNTY	ROUTE	POST MILES TOTAL PROJECT	SHEET No.	TOTAL SHEETS
11	SD	94,805	Var	20	51

REGISTERED CIVIL ENGINEER 02-21-12 DATE

02-27-12
PLANS APPROVAL DATE

REGISTERED PROFESSIONAL ENGINEER FELIZARDO BAGCUS No. C63551 Exp. 9-30-12 CIVIL STATE OF CALIFORNIA

THE STATE OF CALIFORNIA OR ITS OFFICERS OR AGENTS SHALL NOT BE RESPONSIBLE FOR THE ACCURACY OR COMPLETENESS OF SCANNED COPIES OF THIS PLAN SHEET.

NOTE:

FOR ACCURATE RIGHT OF WAY DATA, CONTACT
RIGHT OF WAY ENGINEERING AT THE DISTRICT OFFICE.

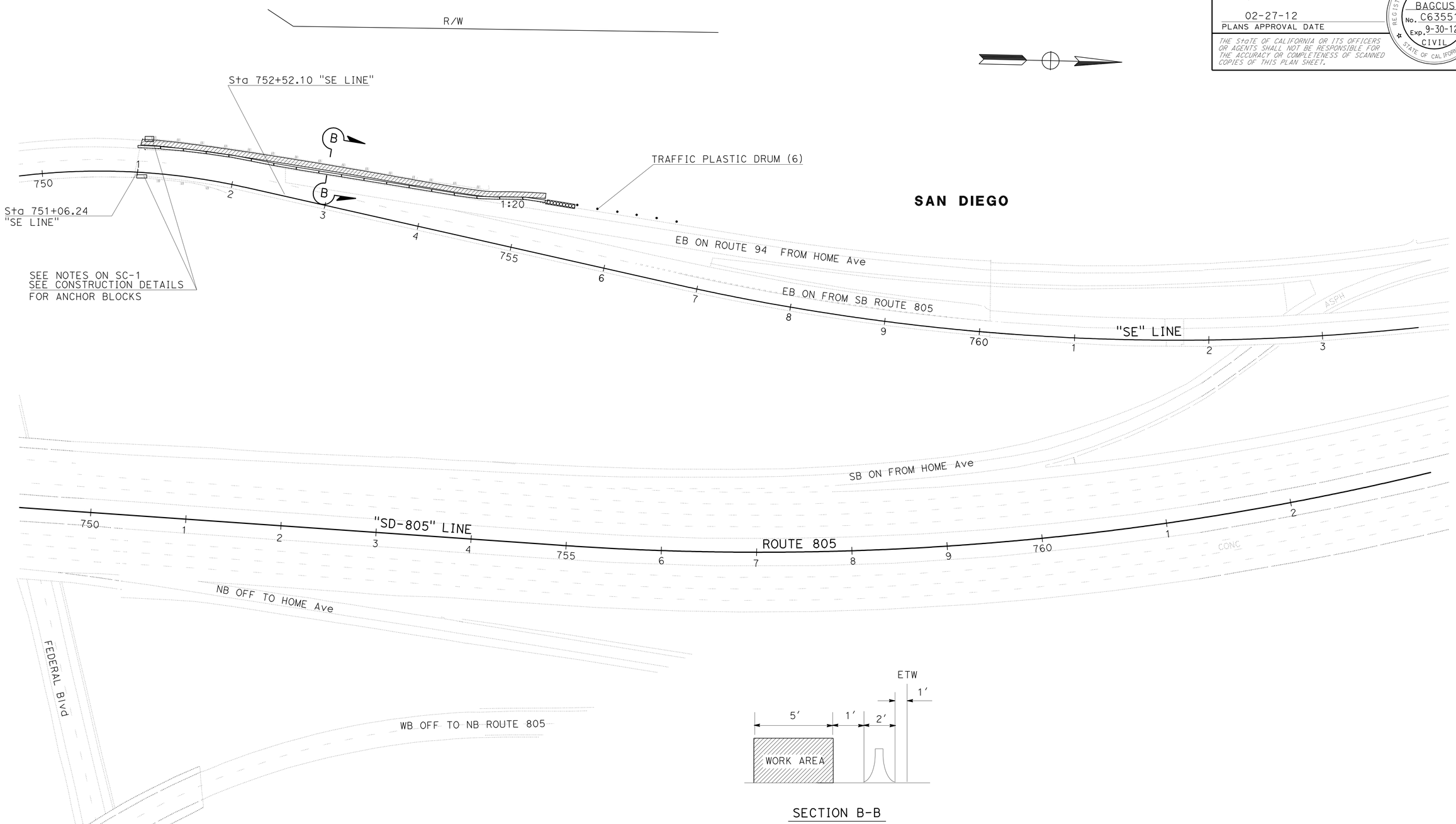

APPROVED FOR STAGE CONSTRUCTION WORK ONLY

STAGE CONSTRUCTION
STAGE 2 LOCATION 3

SCALE: 1" = 50'

SC-2

REVISED BY | DATE REVISED

FELIZARDO BAGCUS | RICARDO PADILLA

CALCULATED-DESIGNED BY | CHECKED BY

FUNCTIONAL SUPERVISOR: CHRIS M. THOMAS

STATE OF CALIFORNIA - DEPARTMENT OF TRANSPORTATION
Caltrans® **MINOR PROJECTS**

LAST REVISION 03-05-12 | DATE PLOTTED => 14-MAR-2012 | TIME PLOTTED => 15:49

Dist	COUNTY	ROUTE	POST MILES TOTAL PROJECT	SHEET No.	TOTAL SHEETS
11	SD	94,805	Var	21	51

REGISTERED CIVIL ENGINEER 02-21-12 DATE

02-27-12
PLANS APPROVAL DATE

REGISTERED PROFESSIONAL ENGINEER FELIZARDO BAGCUS No. C63551 Exp. 9-30-12 CIVIL STATE OF CALIFORNIA

THE STATE OF CALIFORNIA OR ITS OFFICERS OR AGENTS SHALL NOT BE RESPONSIBLE FOR THE ACCURACY OR COMPLETENESS OF SCANNED COPIES OF THIS PLAN SHEET.

NOTE:

FOR ACCURATE RIGHT OF WAY DATA, CONTACT RIGHT OF WAY ENGINEERING AT THE DISTRICT OFFICE.

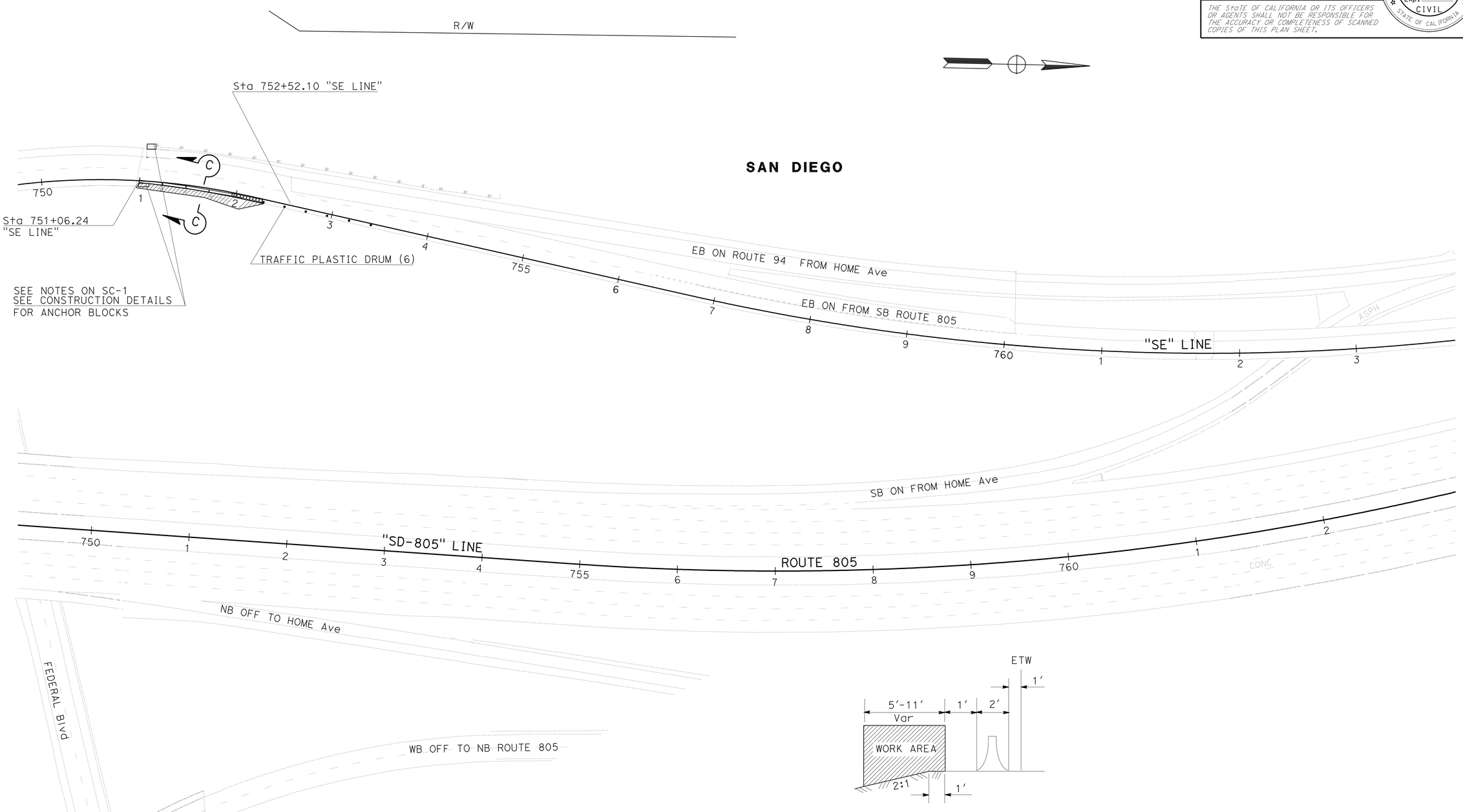

SECTION C-C

APPROVED FOR STAGE CONSTRUCTION WORK ONLY

STAGE CONSTRUCTION
STAGE 3 LOCATION 3

SCALE: 1" = 50'

SC-3

REVISED BY	DATE REVISED
FELIZARDO BAGCUS	RICARDO PADILLA
CALCULATED-DESIGNED BY	CHECKED BY
FUNCTIONAL SUPERVISOR	CHRIS M. THOMAS

STATE OF CALIFORNIA - DEPARTMENT OF TRANSPORTATION
Caltrans MINOR PROJECTS

LAST REVISION 03-05-12 | DATE PLOTTED => 14-MAR-2012 | TIME PLOTTED => 15:49

Dist	COUNTY	ROUTE	POST MILES TOTAL PROJECT	SHEET No.	TOTAL SHEETS
11	SD	94,805	Var	22	51

02-21-12
REGISTERED CIVIL ENGINEER DATE

02-27-12
PLANS APPROVAL DATE

REGISTERED PROFESSIONAL ENGINEER
SHAHIN T. ADIBI
No. 54839
Exp. 06-30-12
CIVIL
STATE OF CALIFORNIA

THE STATE OF CALIFORNIA OR ITS OFFICERS OR AGENTS SHALL NOT BE RESPONSIBLE FOR THE ACCURACY OR COMPLETENESS OF SCANNED COPIES OF THIS PLAN SHEET.

NOTES:

1. EXACT LOCATION OF CONSTRUCTION AREA SIGNS WILL BE DETERMINED BY THE ENGINEER.
2. FEDERAL MANUAL ON UNIFORM TRAFFIC CONTROL DEVICES (MUTCD) SIGN CODES ARE SHOWN UNLESS DESIGNATED BY (CA), INDICATING CALIFORNIA MUTCD.
3. EXISTING UTILITIES ARE NOT SHOWN ON THESE PLAN SHEETS. THE CONTRACTOR SHALL VERIFY LOCATIONS OF EXISTING UTILITIES AND ADJUST THE FIELD LOCATION OF THE SIGN POSTS IN CONSULTATION WITH THE ENGINEER.
4. FOR ADDITIONAL CONSTRUCTION AREA SIGNS, SEE CONSTRUCTION AREA SIGN PLAN.

LEGEND:

XX = CONSTRUCTION AREA SIGN

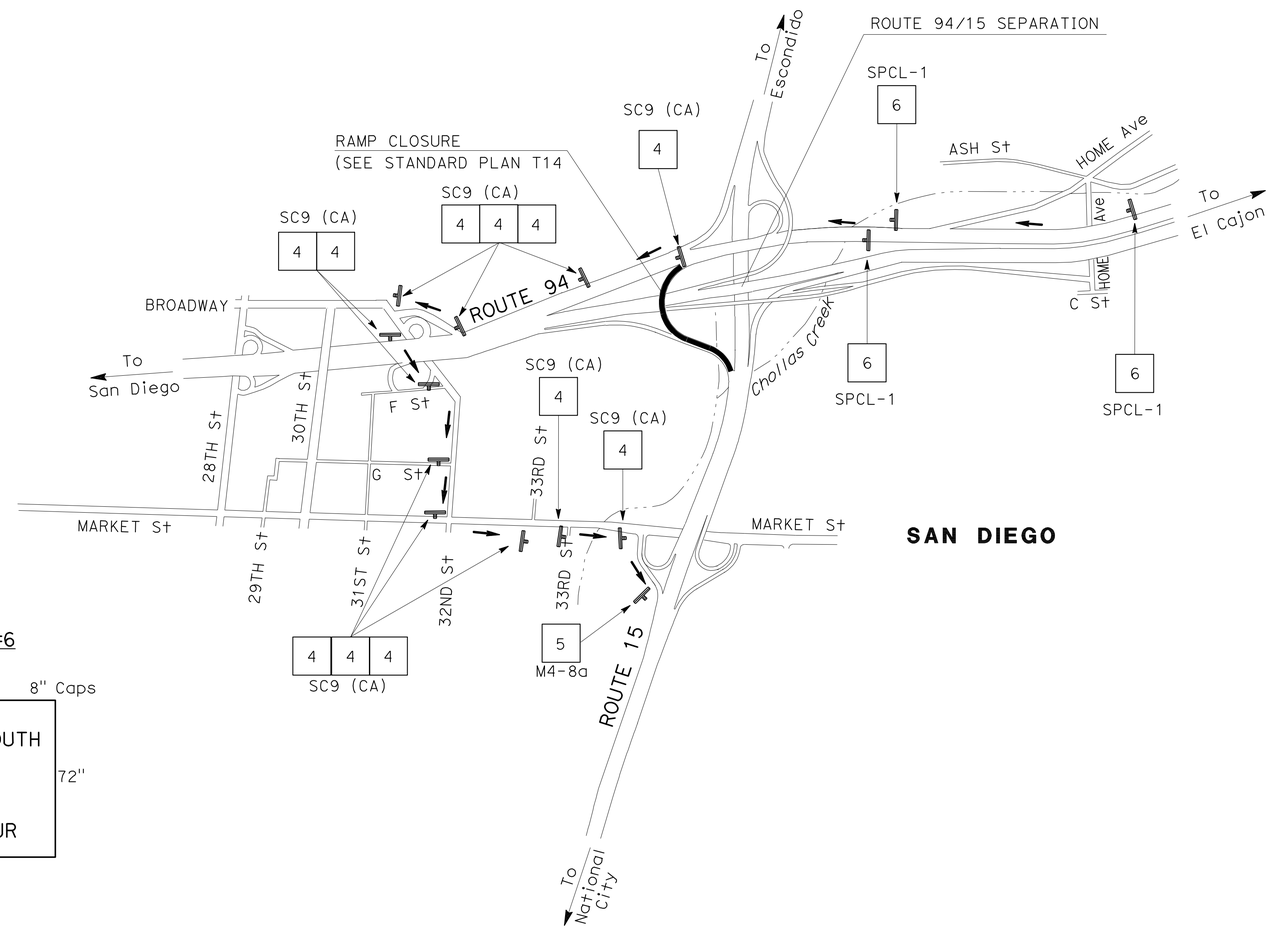

SIGN #6

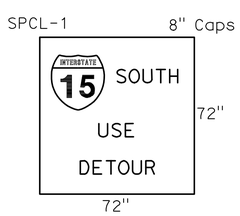

APPROVED FOR TRAFFIC HANDLING WORK ONLY

TRAFFIC HANDLING PLAN

NO SCALE

TH-1

STATE OF CALIFORNIA - DEPARTMENT OF TRANSPORTATION
Caltrans
TRAFFIC DESIGN

FUNCTIONAL SUPERVISOR: CAMILLE ABOU FADEL
CALCULATED-DESIGNED BY: ROBERT EDEJER
CHECKED BY: SHAHIN T. ADIBI
REVISED BY
DATE REVISED

LAST REVISION 03-06-12
DATE PLOTTED => 14-MAR-2012
TIME PLOTTED => 15:49

Dist	COUNTY	ROUTE	POST MILES TOTAL PROJECT	SHEET No.	TOTAL SHEETS
11	SD	94,805	Var	23	51

02-21-12
REGISTERED CIVIL ENGINEER DATE

02-27-12
PLANS APPROVAL DATE

REGISTERED PROFESSIONAL ENGINEER
SHAHIN T. ADIBI
No. 54839
Exp. 06-30-12
CIVIL
STATE OF CALIFORNIA

THE STATE OF CALIFORNIA OR ITS OFFICERS OR AGENTS SHALL NOT BE RESPONSIBLE FOR THE ACCURACY OR COMPLETENESS OF SCANNED COPIES OF THIS PLAN SHEET.

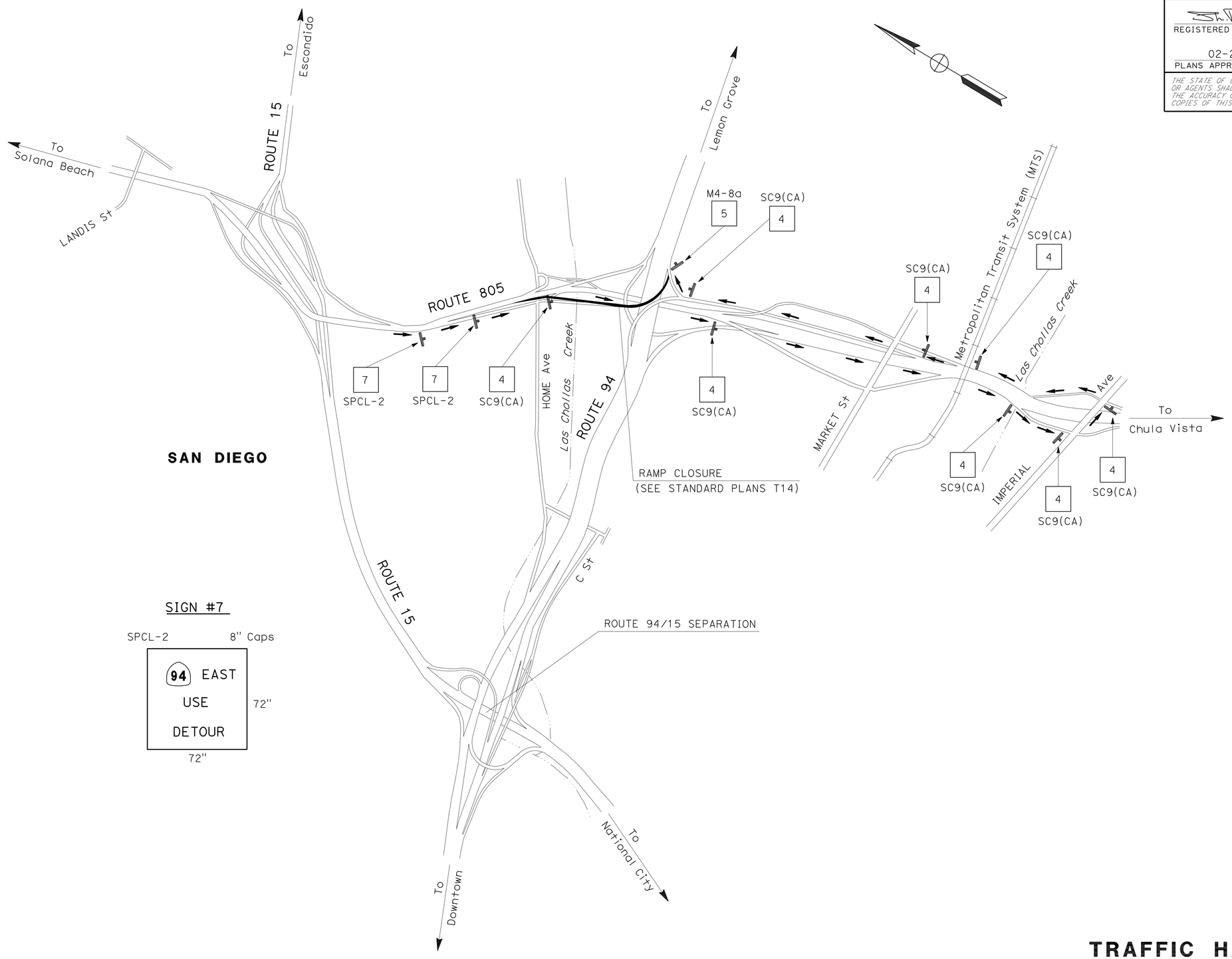

SIGN #7

SPCL-2 8" Caps

94 EAST
USE
DETOUR

72" × 72"

APPROVED FOR TRAFFIC HANDLING WORK ONLY

TRAFFIC HANDLING PLAN

NO SCALE

TH-2

STATE OF CALIFORNIA - DEPARTMENT OF TRANSPORTATION
Caltrans® TRAFFIC DESIGN

FUNCTIONAL SUPERVISOR: CAMILLE ABOU FADEL
CALCULATED-DESIGNED BY: ROBERT EDEJER
CHECKED BY: SHAHIN T. ADIBI
REVISED BY
DATE REVISED

LAST REVISION 03-06-12
DATE PLOTTED => 14-MAR-2012
TIME PLOTTED => 15:49

Dist	COUNTY	ROUTE	POST MILES TOTAL PROJECT	SHEET No.	TOTAL SHEETS
11	SD	94,805	Var	24	51

02-21-12
REGISTERED CIVIL ENGINEER DATE

02-27-12
PLANS APPROVAL DATE

REGISTERED PROFESSIONAL ENGINEER
SHAHIN T. ADIBI
No. 54839
Exp. 06-30-12
CIVIL
STATE OF CALIFORNIA

THE STATE OF CALIFORNIA OR ITS OFFICERS OR AGENTS SHALL NOT BE RESPONSIBLE FOR THE ACCURACY OR COMPLETENESS OF SCANNED COPIES OF THIS PLAN SHEET.

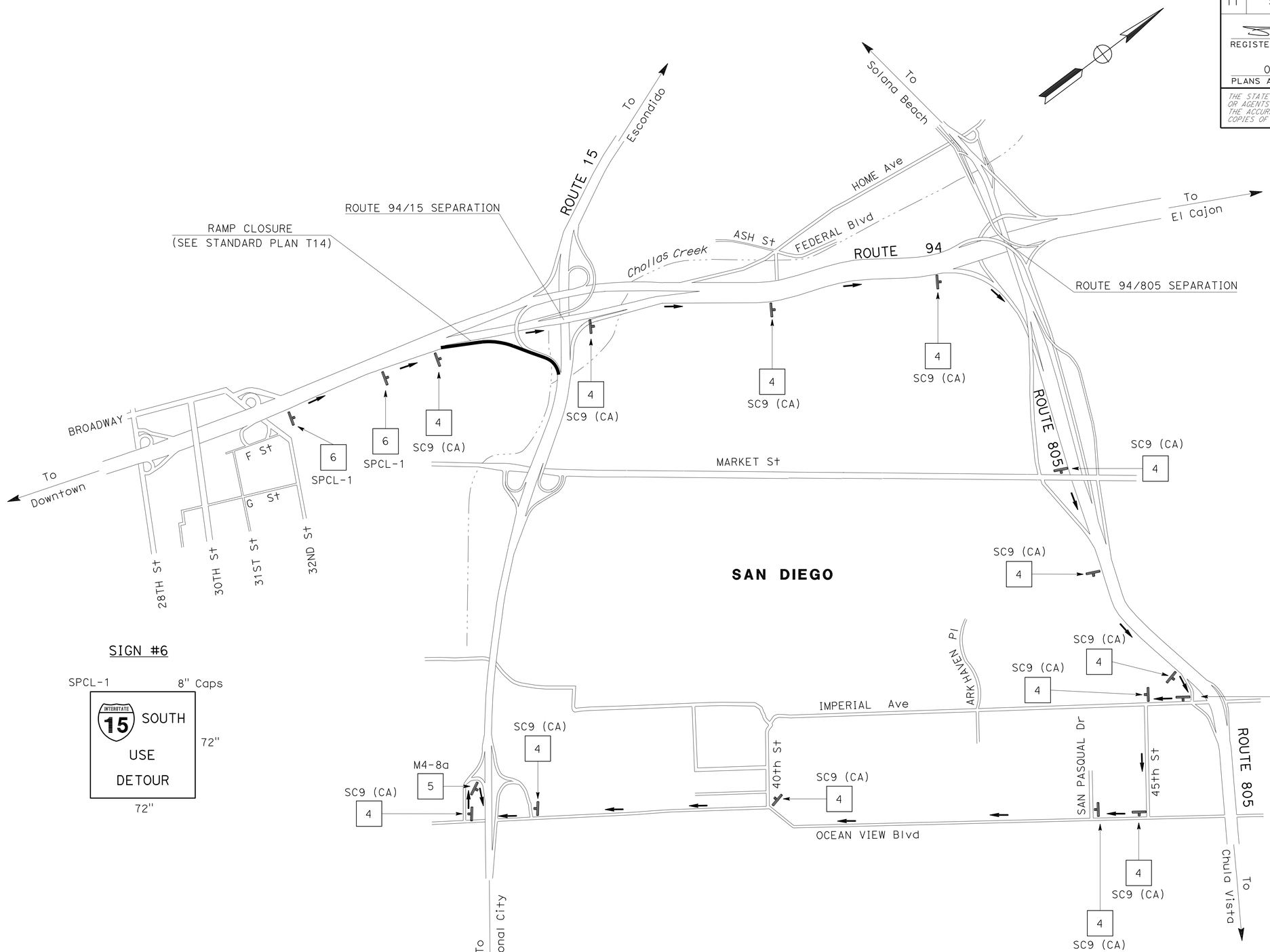

SIGN #6

SPCL-1 8" Caps

INTERSTATE 15 SOUTH
USE
DETOUR

72" 72"

TRAFFIC HANDLING PLAN

APPROVED FOR TRAFFIC HANDLING WORK ONLY

NO SCALE

TH-3

STATE OF CALIFORNIA - DEPARTMENT OF TRANSPORTATION
Caltrans® **TRAFFIC DESIGN**

FUNCTIONAL SUPERVISOR: CAMILLE ABOU FADEL
CALCULATED-DESIGNED BY: ROBERT EDEJER
CHECKED BY: SHAHIN T. ADIBI
REVISED BY
DATE REVISED

LAST REVISION 03-06-12
DATE PLOTTED => 14-MAR-2012
TIME PLOTTED => 15:49

Dist	COUNTY	ROUTE	POST MILES TOTAL PROJECT	SHEET No.	TOTAL SHEETS
11	SD	94,805	Var	25	51

02-21-12
REGISTERED CIVIL ENGINEER DATE

02-27-12
PLANS APPROVAL DATE

REGISTERED PROFESSIONAL ENGINEER
SHAHIN T. ADIBI
No. 54839
Exp. 06/30/12
CIVIL
STATE OF CALIFORNIA

THE STATE OF CALIFORNIA OR ITS OFFICERS OR AGENTS SHALL NOT BE RESPONSIBLE FOR THE ACCURACY OR COMPLETENESS OF SCANNED COPIES OF THIS PLAN SHEET.

REMOVE PAVEMENT MARKER SUMMARY (N)

ROUTE	LINE	DETAIL	NON-REFLECTIVE (EA)	RETRO-REFLECTIVE (EA)	
			TYPE A	TYPE G	TYPE H
			WHITE	CLEAR	YELLOW
94	"ESX"	11/13	75	20	
94	"ESX"	25			20
805	"H-4"	8/10	109	20	
805	"H-4"	25A			45
805	"SRSE"	25A			20
805	"SRSE"	36A		10	
805	"SE"	11/13	63	17	
805	"SE"	25			20
805	"SE"	25			9
805	"SE"	38		6	

(N) - NOT A SEPARATE PAY ITEM, FOR INFORMATION ONLY.

DETAIL 8/10 COMBINATION

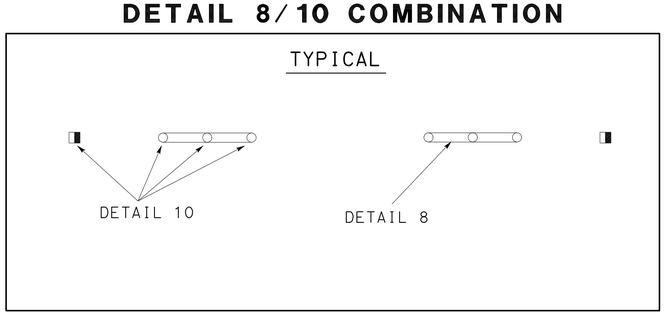

DETAIL 11/13 COMBINATION

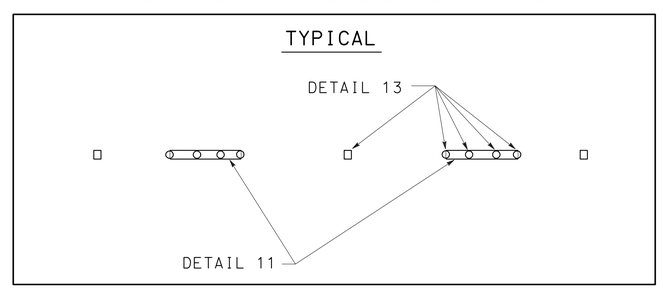

PAVEMENT DELINEATION DETAILS AND QUANTITIES

NO SCALE

PDD-1

STATE OF CALIFORNIA - DEPARTMENT OF TRANSPORTATION
Caltrans®
TRAFFIC DESIGN

FUNCTIONAL SUPERVISOR: CAMILLE ABOUFADEL
CALCULATED-DESIGNED BY: ROBERT EDEJER
CHECKED BY: SHAHIN T. ADIBI
REVISED BY
DATE REVISED

LAST REVISION 03-06-12
DATE PLOTTED => 14-MAR-2012
TIME PLOTTED => 15:49

Dist	COUNTY	ROUTE	POST MILES TOTAL PROJECT	SHEET No.	TOTAL SHEETS
11	SD	94,805	Var	26	51

REGISTERED CIVIL ENGINEER 02-21-12 DATE

02-27-12
PLANS APPROVAL DATE

REGISTERED PROFESSIONAL ENGINEER
SHAHIN T. ADIBI
No. 54839
Exp. 06/30/12
CIVIL
STATE OF CALIFORNIA

THE STATE OF CALIFORNIA OR ITS OFFICERS OR AGENTS SHALL NOT BE RESPONSIBLE FOR THE ACCURACY OR COMPLETENESS OF SCANNED COPIES OF THIS PLAN SHEET.

NOTES:

1. ALL PAVEMENT DELINEATION SHALL BE REPLACED IN KIND UNLESS INDICATED OTHERWISE.
2. ALL PAVEMENT DELINEATION ON BRIDGES SHALL BE REPLACED WITH THERMOPLASTIC TRAFFIC STRIPE.

LOCATION			PAVEMENT MARKER SUMMARY			TRAFFIC STRIPE SUMMARY				REMARKS
ROUTE	LINE	DETAIL	NON-REFLECTIVE (EA)	RETRO-REFLECTIVE (EA)		THERMOPLASTIC (LF)				
			TYPE A	TYPE G	TYPE H	4" SOLID	4" BROKEN	4" BROKEN	8" SOLID	
			WHITE	CLEAR	YELLOW		(36-12)	(17-7)		
94	"ESX"	11/13	75	20			900			LOCATION 1
94	"ESX"	25			20	900				LOCATION 1
94	"ESX"	27B				900				LOCATION 1
805	"H-4"	8/10	109	20				870		LOCATION 2
805	"H-4"	25A			45	1,040				LOCATION 2
805	"H-4"	27B				1,040				LOCATION 2
805	"H-4"	SEE REMARKS	4							LOCATION 2 (IRRIGATION CROSSOVER-Std PLAN H9)
805	"SRSE"	8						100		LOCATION 3 (APPROACH)
805	"SRSE"	25A			20	450				LOCATION 3 (APPROACH)
805	"SRSE"	27B				900				LOCATION 3 (APPROACH)
805	"SRSE"	36A		10					200	LOCATION 3 (APPROACH)
805	"SE"	11/13	63	17			750			LOCATION 3 (APPROACH)
805	"SE"	25			20	900				LOCATION 3 (APPROACH)
805	"SE"	27B				650				LOCATION 3 (APPROACH)
805	"SE"	25			9	360				LOCATION 3 (DEPARTURE)
805	"SE"	27B				360				LOCATION 3 (DEPARTURE)
805	"SE"	38		6					115	LOCATION 3 (DEPARTURE)
		SUBTOTAL	251	73	114	7,500	1,650	970	315	
		TOTAL	251	187		7,500	1,650	970	315	

THERMOPLASTIC PAVEMENT MARKING

ROUTE	LINE	TYPE III (R) SQFT	TYPE V SQFT	SIGNAL SQFT	AHEAD SQFT	12" CROSSWALK SQFT	12" - 45° HATCHING SQFT	REMARKS
805	"H-4"	168	66	64	62	200*		
805	"NE"						60	
SUBTOTAL		168	66	64	62	200*	60	
TOTAL		620						

* - SB 805 OFF-RAMP AND ON-RAMP.

PAVEMENT DELINEATION QUANTITIES

PDQ-1

REVISED BY | DATE REVISED
ROBERT EDEJER | SHAHIN T. ADIBI
CALCULATED-DESIGNED BY | CHECKED BY
FUNCTIONAL SUPERVISOR: CAMILLE ABOUFADEL
STATE OF CALIFORNIA - DEPARTMENT OF TRANSPORTATION
Caltrans® TRAFFIC DESIGN

LAST REVISION 03-06-12 | DATE PLOTTED => 14-MAR-2012 | TIME PLOTTED => 15:49

Dist	COUNTY	ROUTE	POST MILES TOTAL PROJECT	SHEET No.	TOTAL SHEETS
11	SD	94,805	Var	27	51

02-21-12
REGISTERED CIVIL ENGINEER DATE

02-27-12
PLANS APPROVAL DATE

REGISTERED PROFESSIONAL ENGINEER
SHAHIN T ADIBI
No. 54839
Exp. 06/30/12
CIVIL
STATE OF CALIFORNIA

THE STATE OF CALIFORNIA OR ITS OFFICERS OR AGENTS SHALL NOT BE RESPONSIBLE FOR THE ACCURACY OR COMPLETENESS OF SCANNED COPIES OF THIS PLAN SHEET.

LEGEND:

RM
(XX) = REMOVE ROADSIDE SIGN

(XX) = ROADSIDE SIGN

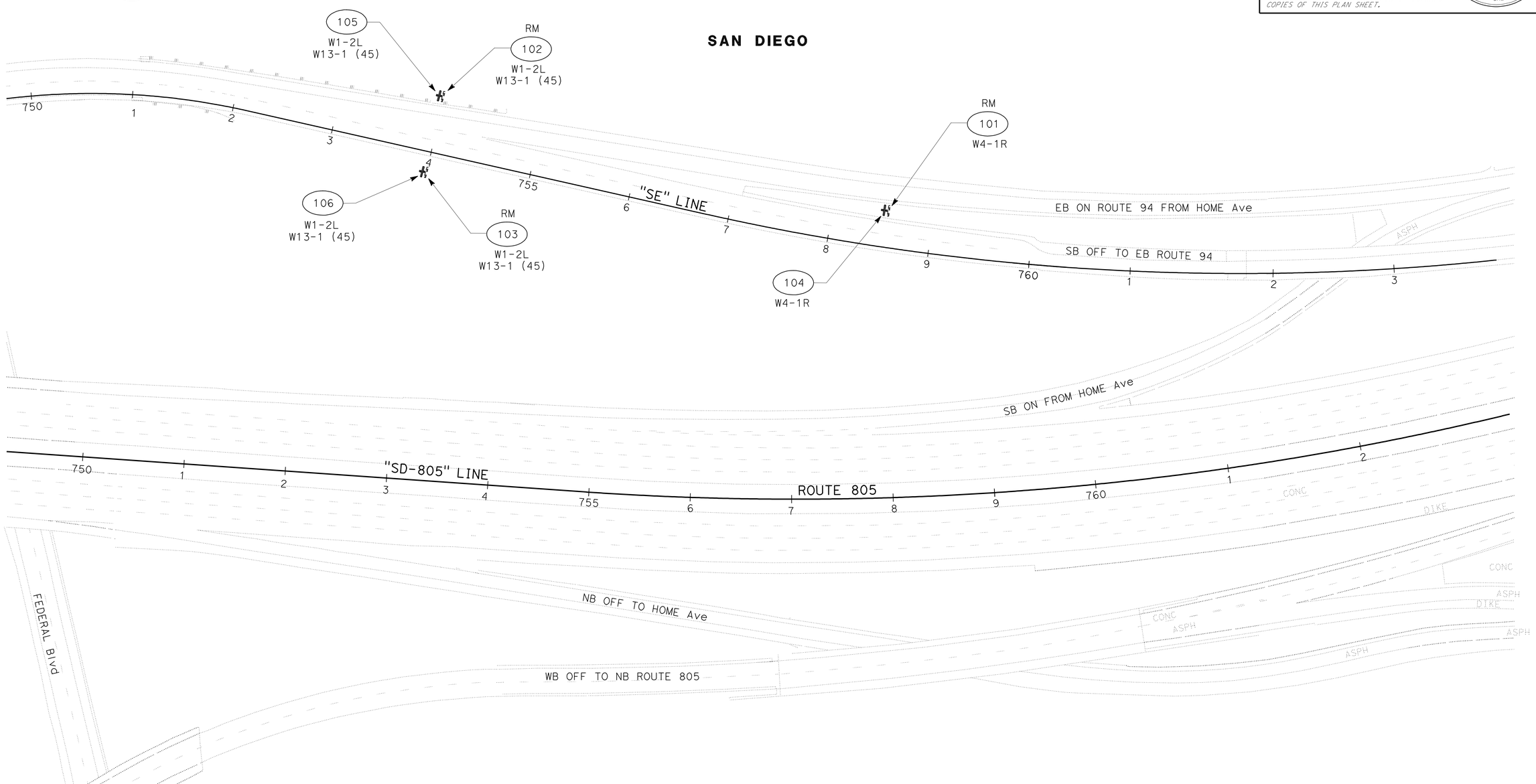

SIGN PLAN
(LOCATION 3)

SCALE: 1" = 50'

S-1

APPROVED FOR SIGN WORK ONLY.

STATE OF CALIFORNIA - DEPARTMENT OF TRANSPORTATION
Caltrans® **TRAFFIC DESIGN**

FUNCTIONAL SUPERVISOR: CAMILLE ABOUFADEL
CALCULATED-DESIGNED BY: ROBERT EDEJER
CHECKED BY: SHAHIN ADIBI
REVISED BY
DATE REVISED

LAST REVISION 03-07-12
DATE PLOTTED => 14-MAR-2012
TIME PLOTTED => 15:49

Dist	COUNTY	ROUTE	POST MILES TOTAL PROJECT	SHEET No.	TOTAL SHEETS
11	SD	94,805	Var	28	51

02-21-12
REGISTERED CIVIL ENGINEER DATE

02-27-12
PLANS APPROVAL DATE

REGISTERED PROFESSIONAL ENGINEER
SHAHIN T. ADIBI
No. 54839
Exp. 6-30-12
CIVIL
STATE OF CALIFORNIA

THE STATE OF CALIFORNIA OR ITS OFFICERS OR AGENTS SHALL NOT BE RESPONSIBLE FOR THE ACCURACY OR COMPLETENESS OF SCANNED COPIES OF THIS PLAN SHEET.

NOTES:

1. FEDERAL (MUTCD) SIGN CODES ARE SHOWN UNLESS DESIGNATED BY (CA) INDICATING STANDARD CALIFORNIA SIGN SPECIFICATIONS.
2. MINIMUM POST LENGTHS WERE CALCULATED ASSUMING A LEVEL GROUND SURFACE FROM THE EP. ENSURE "C" DIMENSION IS MET. POST LENGTHS MAY VARY DUE TO SITE CONDITIONS.
3. EXACT LOCATIONS OF SIGNS AND POSTS SHALL BE DETERMINED BY THE ENGINEER.
4. REFER TO "FURNISH ROADSIDE SIGN PANEL" CHART FOR FURTHER INFORMATION.

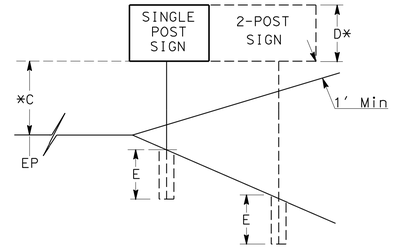

*TO BOTTOM OF LOWER PANEL ON MULTIPLE SIGN INSTALLATIONS.

ROADSIDE SIGN QUANTITIES

SIGN No.	CODE	SHEET No.	PANEL SIZE (N) HORIZ	PANEL SIZE (N) VERT	D	C	E	Min POST LENGTH	POST SIZE (N) 6 x 6	ROADSIDE SIGN ONE POST	REMOVE ROADSIDE SIGN	REMARKS
			INCHES x INCHES		Ft	Ft	Ft	Ft	INCHES x INCHES	EA	EA	
101	W4-1R	S-1									1	GORE AREA
102	W1-2L	S-1									1	RIGHT SIDE
	W13-1 (45)											
103	W1-2L	S-1									1	LEFT SIDE
	W13-1 (45)											
104	W4-1R	S-1	48x48		5.65	6.0	5.0	16.65	X	1		GORE AREA
105	W1-2L	S-1	48x48		8.15	5.0	5.0	18.15	X	1		RIGHT SIDE
	W13-1 (45)		30x30									
106	W1-2L	S-1	48x48		8.15	5.0	5.0	18.15	X	1		LEFT SIDE
	W13-1 (45)		30x30									
									TOTAL	3	3	

(N) - NOT A SEPARATE PAY ITEM. FOR INFORMATION ONLY.

FURNISH ROADSIDE SIGN PANEL

SIGN No.	CODE	PANEL SIZE Horiz	PANEL SIZE Vert	BACKGROUND SHEETING COLOR	BACKGROUND RETRO-REFLECTIVE ASTM TYPE	LEGEND SHEETING COLOR	LEGEND REFLECTIVE ASTM TYPE	LEGEND BLACK (NON-REFLECTIVE)	SIGN PANEL SINGLE SHEET ALUMINUM (SQFT) UNFRAMED 0.063"	SIGN PANEL SINGLE SHEET ALUMINUM (SQFT) UNFRAMED 0.080"	SIGN PANEL PROTECTIVE OVERLAY
		INCHES x INCHES									PREMIUM FILM
104	W4-1R	48x48		YELLOW	IV	BLACK	IV	X		16.00	X
105	W1-2L	48x48		YELLOW	IV	BLACK	IV	X		16.00	X
	W13-1 (45)	30x30		YELLOW	IV	BLACK	IV	X	6.25		X
106	W1-2L	48x48		YELLOW	IV	BLACK	IV	X		16.00	X
	W13-1 (45)	30x30		YELLOW	IV	BLACK	IV	X	6.25		X
								TOTAL	12.50	48.00	

SIGN QUANTITIES

SQ-1

REVISED BY | DATE REVISED
ROBERT EDEJER | SHAHIN ADIBI
CALCULATED-DESIGNED BY | CHECKED BY
FUNCTIONAL SUPERVISOR
CAMILLE ABOUFADEL

STATE OF CALIFORNIA - DEPARTMENT OF TRANSPORTATION
Caltrans
TRAFFIC DESIGN

LAST REVISION 03-07-12 | DATE PLOTTED => 14-MAR-2012 | TIME PLOTTED => 15:50

Dist	COUNTY	ROUTE	POST MILES TOTAL PROJECT	SHEET No.	TOTAL SHEETS
11	SD	94,805	Var	29	51

REGISTERED CIVIL ENGINEER 02-21-12 DATE

02-27-12
PLANS APPROVAL DATE

REGISTERED PROFESSIONAL ENGINEER FELIZARDO BAGCUS No. C63551 Exp. 9-30-12 CIVIL STATE OF CALIFORNIA

THE STATE OF CALIFORNIA OR ITS OFFICERS OR AGENTS SHALL NOT BE RESPONSIBLE FOR THE ACCURACY OR COMPLETENESS OF SCANNED COPIES OF THIS PLAN SHEET.

ROADWAY QUANTITIES

SHEET	BEGIN STATION	BEGIN LINE	END STATION	END LINE	COLD PLANE AC PAVEMENT 0.20' (SQYD)	ROADWAY EXCAVATION (CUYD)	HMA (TYPE C) (TON)	ASPHALTIC EMULSION (FOG SEAL COAT) (TON)	TACK COAT (TON)
L-1	117+68.21	ESX	120+57.66	ESX	1,191.3		158.8	0.129	0.3
	122+59.10	ESX	126+62.35	ESX	1,478.0		197.1	0.067	0.4
L-2	397+20.00	H-4	403+15.00	H-4	2,101.2		280.2	0.147	0.5
	403+15.00	H-4	407+45.24	H-4	2,065.3		275.4	0.347	0.5
L-3	735+71.74	SE	740+69.10	SE	1,050.8	13.5	167.1	0.377	0.3
L-4	751+06.24	SE	752+52.10	SE	134.9	5.3	28.6	0.075	0.1
	752+52.10	SE	757+09.79	SE	1,969.1	17.0	296.5	0.532	0.5
	757+09.79	SE	760+20.00	SE	1,289.0	11.2	194.3	0.353	0.3
SHOULDER PAD UNDER DIKE							77.54		
DIKE								0.226	
TOTAL					11,279.7	47.0	1,675.5	2.253	2.9

TEMPORARY DRAINAGE INLET PROTECTION

STATION	SIZE OF INLET	(TYPE 5) (EA)	(TYPE 4B) (EA)	(TYPE3B) (EA)
STA 117+88.06 "ESX"	36" X 24"	1		
STA 118+10.03 "ESX"	3" X 10' SLOTTED DRAIN			1
STA 125+00.00 "ESX"	36" X 24"	1		
STA 126+43.69 "ESX"	36" X 24"	1		
STA 403+20.45 "H-4"	36" OCP	1		
STA 405+34.23 "H-4"	3" X 10' SLOTTED DRAIN			1
STA 405+34.23 "H-4"	36" X 24"	1		
STA 408+84.11 "H-4"	3" X 10' SLOTTED DRAIN		1	1
STA 738+35.29 "SE"	24" OVERDRAIN			
STA 752+45.42 "SE"	36" X 24"	1		
STA 763+71.60 "SE"	24" OVERDRAIN		1	
SUBTOTAL		6	2	3
TOTAL		11		

MINOR HMA DIKE QUANTITIES

SHEET	STATION BEGIN	STATION END	PLACE HMA DIKE TYPE F LENGTH (LF)	PLACE HMA DIKE TYPE C LENGTH (LF)	PLACE HMA DIKE TYPE D LENGTH (LF)	PLACE HMA DIKE TYPE E LENGTH (LF)	REMOVE AC DIKE LENGTH (LF)	HMA (TYPE C) * * (TONS)	MINOR HMA (TONS)	ASPHALTIC EMULSION (FOG SEAL COAT) (TONS)	REMARKS
L-1	117+68.21 "ESX" LINE R+	120+57.66 "ESX" LINE R+				289.5	289.5	5.70	3.76	0.019	
	122+59.10 "ESX" LINE R+	123+25.47 "ESX" LINE R+	66.4				66.4	0.65	0.44	0.003	
	123+25.47 "ESX" LINE R+	123+84.65 "ESX" LINE R+		59.2			59.2	0.72	0.22	0.002	
	123+84.65 "ESX" LINE R+	126+62.35 "ESX" LINE R+				277.7	277.7	6.84	3.61	0.018	
L-2	405+37.15 "H-4" LINE L+	411+88.24 "H-4" LINE L+				651.1	651.1	12.06	8.46	0.042	
L-3	737+23.14 "SE" LINE R+	739+04.32 "SE" LINE R+				181.2	181.2	3.36	2.36	0.012	
	739+04.32 "SE" LINE R+	739+85.49 "SE" LINE R+	81.2				81.2	0.99	0.54	0.004	
L-4	751+10.32 "SE" LINE R+	751+58.25 "SE" LINE R+	47.9				47.9	0.59	0.32	0.002	
	751+13.65 "SE" LINE L+	753+85.65 "SE" LINE L+	272.0				272.0	3.32	1.80	0.012	
	751+58.25 "SE" LINE R+	752+03.86 "SE" LINE R+		45.6			—	0.56	0.17	0.002	INCLUDED IN ROADWAY EXCAVATION
	753+85.65 "SE" LINE L+	754+87.12 "SE" LINE L+		101.5			—	1.24	0.39	0.003	INCLUDED IN ROADWAY EXCAVATION
	752+03.86 "SE" LINE R+	760+20.00 "SE" LINE R+				816.1	—	20.10	10.61	0.052	INCLUDED IN ROADWAY EXCAVATION
	754+87.12 "SE" LINE L+	760+20.00 "SE" LINE L+			532.9		532.9	21.41	15.61	0.055	
L-3	738+35.29 "SE"LINE R+	738+35.29 "SE"LINE R+							0.12	0.001	OVERSIDE DRAIN
TOTAL			467.5	206.3	532.9	2,215.6	2,459.0	77.54*	48.41	0.226*	

*SEE ROADWAY QUANTITIES TABLE
* * FOR SHOULDER PAD UNDER DIKE

TEMPORARY COVER

DESIGNATION No.	SHEET	(SQYD)
1	WPC-2	67
2	WPC-2	45
3	WPC-2	45
4	WPC-2	67
TOTAL		224

* TEMPORARY COVER IS BASED ON A 10-FOOT WIDTH PER LINEAR FOOT.

SUMMARY OF QUANTITIES

Q-1

REVISED BY | DATE REVISED
FELIZARDO BAGCUS | RICARDO PADILLA
CALCULATED-DESIGNED BY | CHECKED BY
FUNCTIONAL SUPERVISOR
CHRIS M. THOMAS

STATE OF CALIFORNIA - DEPARTMENT OF TRANSPORTATION
Caltrans MINOR PROJECTS

LAST REVISION 03-05-12 | DATE PLOTTED => 14-MAR-2012 | TIME PLOTTED => 15:50

Dist	COUNTY	ROUTE	POST MILES TOTAL PROJECT	SHEET No.	TOTAL SHEETS
11	SD	94,805	Var	30	51

REGISTERED CIVIL ENGINEER 02-21-12 DATE

02-27-12
PLANS APPROVAL DATE

REGISTERED PROFESSIONAL ENGINEER FELIZARDO BAGCUS No. C63551 Exp. 9-30-12 CIVIL STATE OF CALIFORNIA

THE STATE OF CALIFORNIA OR ITS OFFICERS OR AGENTS SHALL NOT BE RESPONSIBLE FOR THE ACCURACY OR COMPLETENESS OF SCANNED COPIES OF THIS PLAN SHEET.

METAL BEAM GUARD RAILING

MBGR No. ⬡	SHEET	STATION	LINE	REMOVE METAL BEAM GUARD RAILING (LF)	ALTERNATIVE FLARED TERMINAL SYSTEM (EA)	BURRIED POST END ANCHOR (N) (EA)	TRANSITION RAILING (TYPE WB) (EA)	END ANCHOR ASSEMBLY (TYPE SFT) (EA)	METAL BEAM GUARD RAILING (WOOD POST) (LF)	GUARD RAILING DELINEATOR (TYPE F) (EA)	LAYOUT TYPE (N)
1	L-1	122+59.10 TO 123+25.47	"ESX" LINE	66.37	1		1		12.5	3	12B
2	L-3	739+04.32 TO 739+85.49	"SE" LINE	81.17				1	75	3	12DD
3	L-4	751+06.24 TO 751+58.21	"SE" LINE	51.97	1		1		—	3	12B
4	L-4	751+13.65 TO 754+37.67	"SE" LINE	324.02		1	1		450	18	12C
			TOTAL	471.51	2		3	1	537.5	27	

(N) - NOT A SEPARATE PAY ITEM. FOR INFORMATION ONLY.

TEMPORARY ALTERNATIVE CRASH CUSHION

MBGR No. ⬡	SHEET	LINE	TEMPORARY ALTERNATIVE CRASH CUSHION (EA)
2	SC-1	"SE" LINE	1
3	SC-2	"SE" LINE	1
4	SC-2	"SE" LINE	1
		TOTAL	3

ANCHOR BLOCK QUANTITIES

STATION	MINOR CONCRETE (MINOR STRUCTURE) (CY)
"SE" LINE Rt Sta 739+85.49	1.2
"SE" LINE Rt Sta 751+10.32	1.2
"SE" LINE Lt Sta 751+13.65	1.2
TOTAL	3.6

CURB RAMP QUANTITIES

RAMP DESIGNATION ◯	SHEET	REMOVE CONCRETE (CY)	MINOR CONCRETE (CURB, SIDEWALK AND CURB RAMP) (CY)
1	CS-2	3.0	3.0
2	CS-2	2.5	2.5
3	CS-2	2.5	2.5
4	CS-2	3.0	3.0
TOTAL		11.0	11.0

OVERSIDE DRAIN QUANTITIES

SHEET	STATION	REMOVE AC OVERSIDE DRAIN (EA)
L-3	4' Rt STA 738+35.29 "SE" LINE	1
	TOTAL	1

TEMPORARY RAILING

MBGR No. ⬡	SHEET	LINE	(TYPE K) (LF)
2	SC-1	"SE" LINE	180.00
3	SC-2	"SE" LINE	360.00
4	SC-3	"SE" LINE	80.00
		TOTAL	620.00

TRAFFIC PLASTIC DRUM

MBGR No. ⬡	SHEET	LINE	TRAFFIC PLASTIC DRUM (EA)
2	SC-1	"SE" LINE	6
3	SC-2	"SE" LINE	6
4	SC-2	"SE" LINE	6
		TOTAL	18

SUMMARY OF QUANTITIES
Q-2

REVISED BY | DATE REVISED
FELIZARDO BAGCUS | RICARDO PADILLA
CALCULATED-DESIGNED BY | CHECKED BY
FUNCTIONAL SUPERVISOR | CHRIS M. THOMAS
STATE OF CALIFORNIA - DEPARTMENT OF TRANSPORTATION
Caltrans MINOR PROJECTS

LAST REVISION 03-05-12 | DATE PLOTTED => 14-MAR-2012 | TIME PLOTTED => 15:50

Dist	COUNTY	ROUTE	POST MILES TOTAL PROJECT	SHEET No.	TOTAL SHEETS
11	SD	94,805	Var	31	51

Héctor A. Santamaría 02-21-12
REGISTERED ELECTRICAL ENGINEER DATE

02-27-12
PLANS APPROVAL DATE

REGISTERED PROFESSIONAL ENGINEER
HECTOR A. SANTAMARIA
No. 18207
Exp. 12-31-13
ELECTRICAL
STATE OF CALIFORNIA

THE STATE OF CALIFORNIA OR ITS OFFICERS OR AGENTS SHALL NOT BE RESPONSIBLE FOR THE ACCURACY OR COMPLETENESS OF SCANNED COPIES OF THIS PLAN SHEET.

LEGEND:

N C =NO CHANGE EXISTING CONDUIT

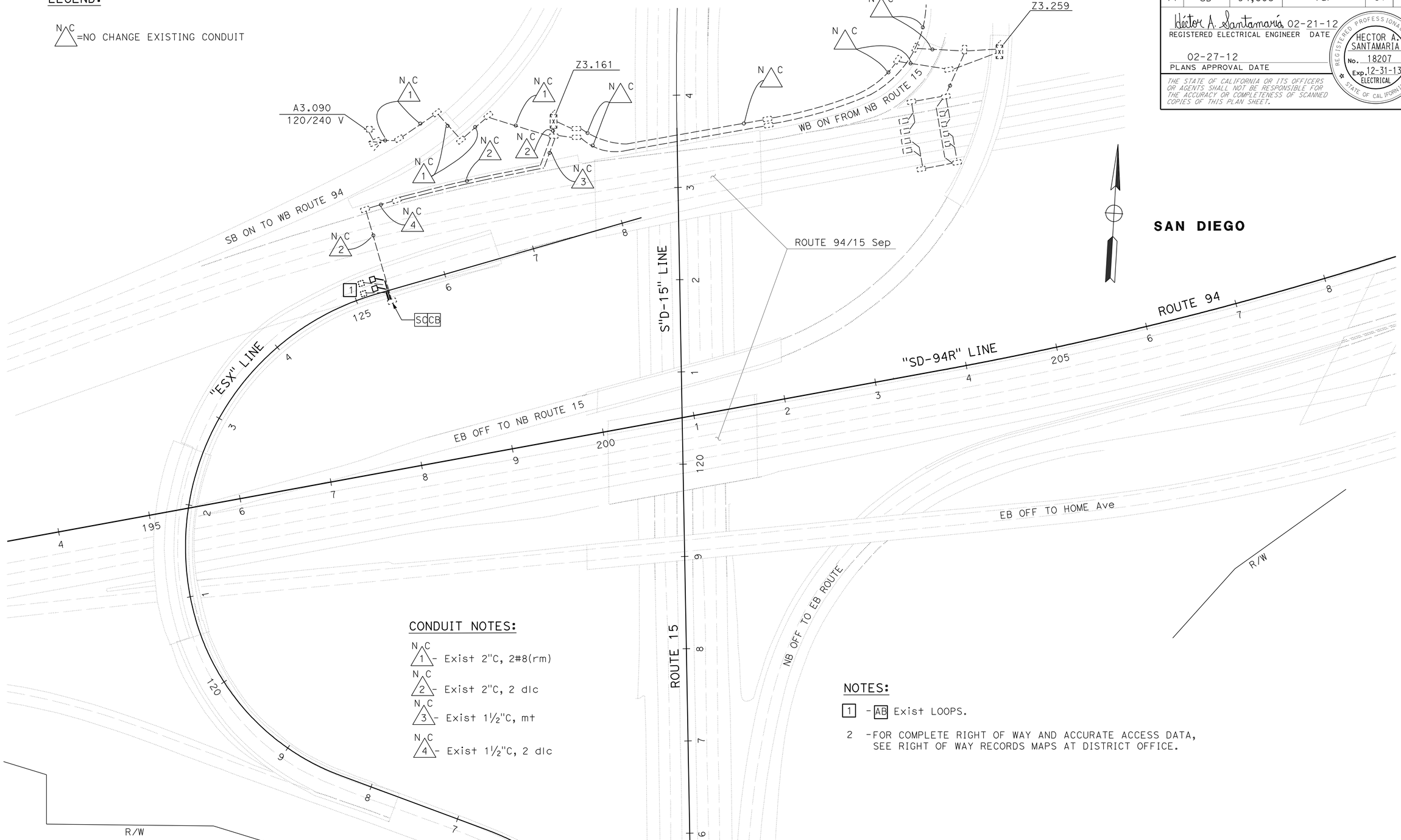

CONDUIT NOTES:

N C 1 - Exist 2"C, 2#8(rm)

N C 2 - Exist 2"C, 2 dlc

N C 3 - Exist 1½"C, mt

N C 4 - Exist 1½"C, 2 dlc

NOTES:

1 - AB Exist LOOPS.

2 -FOR COMPLETE RIGHT OF WAY AND ACCURATE ACCESS DATA, SEE RIGHT OF WAY RECORDS MAPS AT DISTRICT OFFICE.

APPROVED FOR ELECTRICAL WORK ONLY

INDUCTIVE LOOP DETECTION

SCALE: 1" = 50'

E-1

STATE OF CALIFORNIA - DEPARTMENT OF TRANSPORTATION
Caltrans® TRAFFIC ELECTRICAL

FUNCTIONAL SUPERVISOR: BRIAN PECUS
CALCULATED-DESIGNED BY: HECTOR SANTAMARIA
CHECKED BY: ENRIQUE BERNAL
REVISED BY
DATE REVISED

LAST REVISION 03-07-12
DATE PLOTTED => 14-MAR-2012
TIME PLOTTED => 15:50

Dist	COUNTY	ROUTE	POST MILES TOTAL PROJECT	SHEET No.	TOTAL SHEETS
11	SD	94,805	Var	32	51

Héctor A. Santamaría 02-21-12
REGISTERED ELECTRICAL ENGINEER DATE

02-27-12
PLANS APPROVAL DATE

REGISTERED PROFESSIONAL ENGINEER HECTOR A. SANTAMARIA No. 18207 Exp. 12-31-13 ELECTRICAL STATE OF CALIFORNIA

THE STATE OF CALIFORNIA OR ITS OFFICERS OR AGENTS SHALL NOT BE RESPONSIBLE FOR THE ACCURACY OR COMPLETENESS OF SCANNED COPIES OF THIS PLAN SHEET.

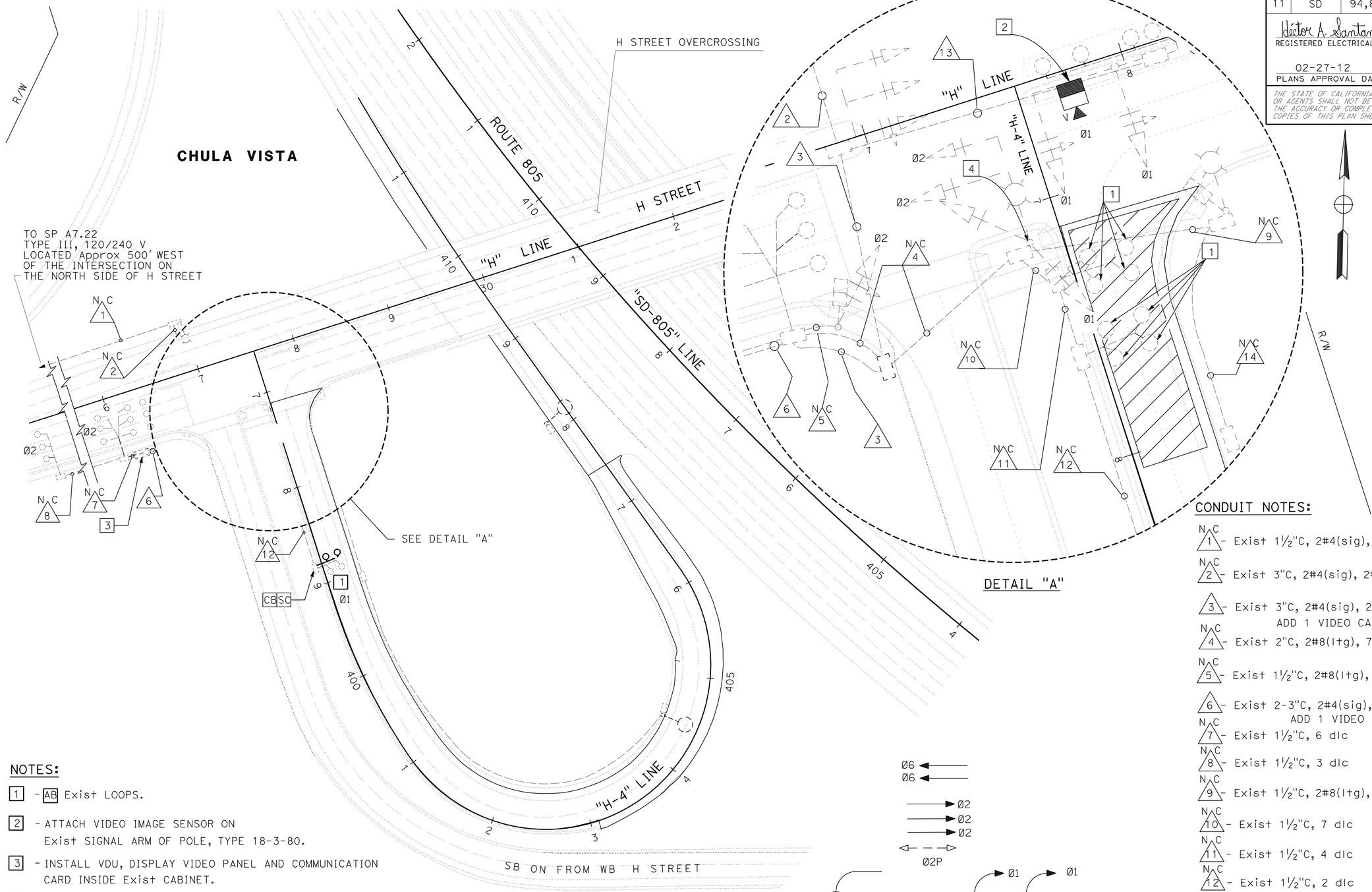

NOTES:

1 - AB Exist LOOPS.

2 - ATTACH VIDEO IMAGE SENSOR ON Exist SIGNAL ARM OF POLE, TYPE 18-3-80.

3 - INSTALL VDU, DISPLAY VIDEO PANEL AND COMMUNICATION CARD INSIDE Exist CABINET.

4 - PROTECT SIGNAL POLE IN PLACE.

5 - FOR COMPLETE RIGHT OF WAY AND ACCURATE ACCESS DATA, SEE RIGHT OF WAY RECORDS MAPS AT DISTRICT OFFICE.

ROUTE 805 SB AT
H STREET
SIGNAL No. P7.167

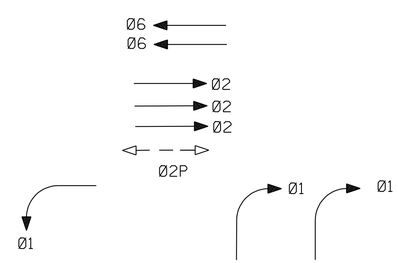

Exist TRAFFIC PHASE DIAGRAM

STEADY DEMAND SEQUENCE

CONDUIT NOTES:

N C 1 - Exist 1½"C, 2#4(sig), 2#8(ltg), 3#14(peu)

N C 2 - Exist 3"C, 2#4(sig), 2#8(ltg), 3#14(peu), 1-12csc

3 - Exist 3"C, 2#4(sig), 2#8(ltg), 1 dlc, 3-12csc
ADD 1 VIDEO CABLE HARNESS

N C 4 - Exist 2"C, 2#8(ltg), 7 dlc, 3-12csc, 2-3csc

N C 5 - Exist 1½"C, 2#8(ltg), 1-12csc, 1-3csc

6 - Exist 2-3"C, 2#4(sig), 17 dlc, 5-12csc, 3-csc
ADD 1 VIDEO CABLE HARNESS

N C 7 - Exist 1½"C, 6 dlc

N C 8 - Exist 1½"C, 3 dlc

N C 9 - Exist 1½"C, 2#8(ltg), 1-12csc, 1-3csc

N C 10 - Exist 1½"C, 7 dlc

N C 11 - Exist 1½"C, 4 dlc

N C 12 - Exist 1½"C, 2 dlc

13 - Exist 1½"C, 1-12csc, 2 dlc
ADD 1 VIDEO CABLE HARNESS

N C 14 - Exist 1½"C, 2#8 (ltg)

MODIFY SIGNAL

SCALE: 1" = 50'

E-2

APPROVED FOR ELECTRICAL WORK ONLY

STATE OF CALIFORNIA - DEPARTMENT OF TRANSPORTATION
Caltrans® TRAFFIC ELECTRICAL

FUNCTIONAL SUPERVISOR: BRIAN PECUS
CALCULATED-DESIGNED BY: ENRIQUE BERNAL
CHECKED BY: HECTOR SANTAMARIA
REVISED BY / DATE REVISED

LAST REVISION 03-07-12 | DATE PLOTTED => 14-MAR-2012 | TIME PLOTTED => 15:50

Dist	COUNTY	ROUTE	POST MILES TOTAL PROJECT	SHEET No.	TOTAL SHEETS
11	SD	94,805	Var	33	51

Randell D. Hiatt
REGISTERED CIVIL ENGINEER

May 20, 2011
PLANS APPROVAL DATE

REGISTERED PROFESSIONAL ENGINEER Randell D. Hiatt No. C50200 Exp. 6-30-11 CIVIL STATE OF CALIFORNIA

The State of California or its officers or agents shall not be responsible for the accuracy or completeness of electronic copies of this plan sheet.

To accompany plans dated 02-27-12

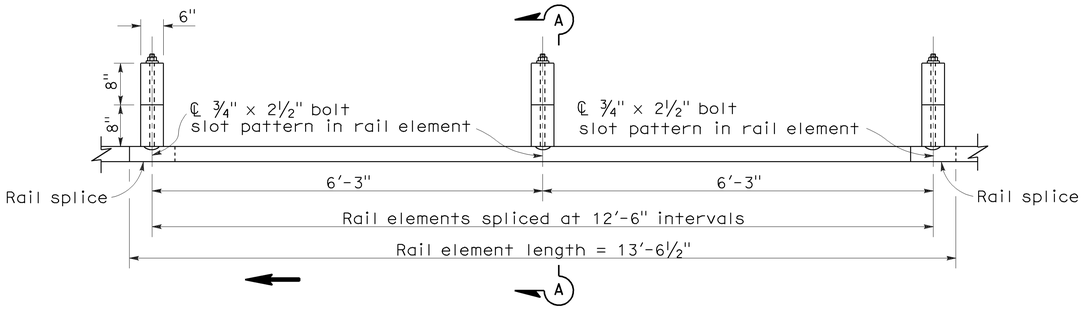

PLAN

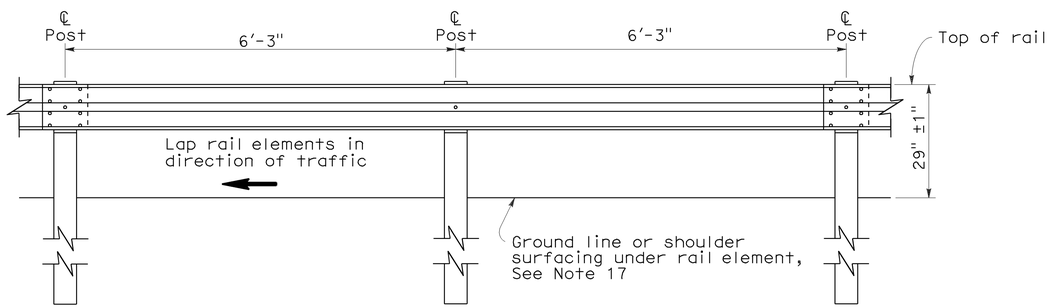

ELEVATION

METAL BEAM GUARD RAILING WITH WOOD POST AND BLOCKS

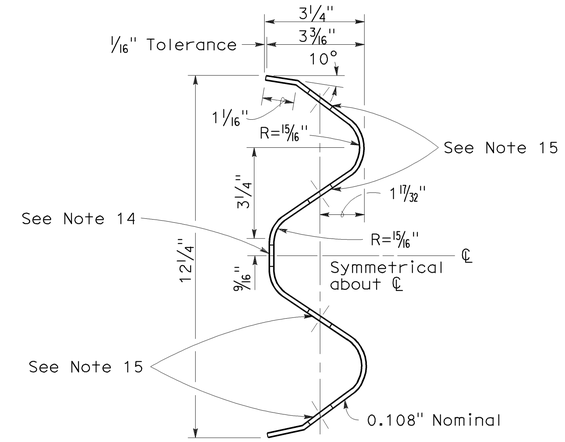

SECTION THRU RAIL ELEMENT

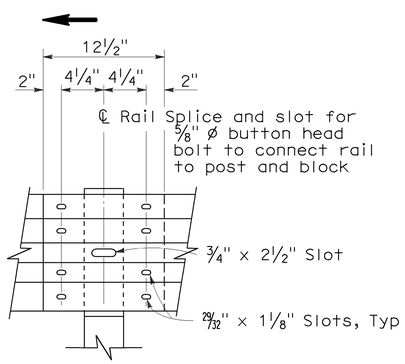

ELEVATION

RAIL ELEMENT SPLICE DETAIL

a) Connect the over lapped end of the rail elements with ⅝" ø x 1⅜" button head oval shoulder splice bolts inserted into the 29⁄32" x 1⅛" slots and bolted together with ⅝" ø recessed hex nuts. Recess of hex nut points toward rail element. A total of 8 bolts and nuts are to be used at each rail splice connection.

b) The ends of the rail elements are to be overlapped in the direction of traffic (see details).

c) Where end cap is to be attached to the end of a rail element, a total of 4 of the above described splice bolts and nuts are to be used.

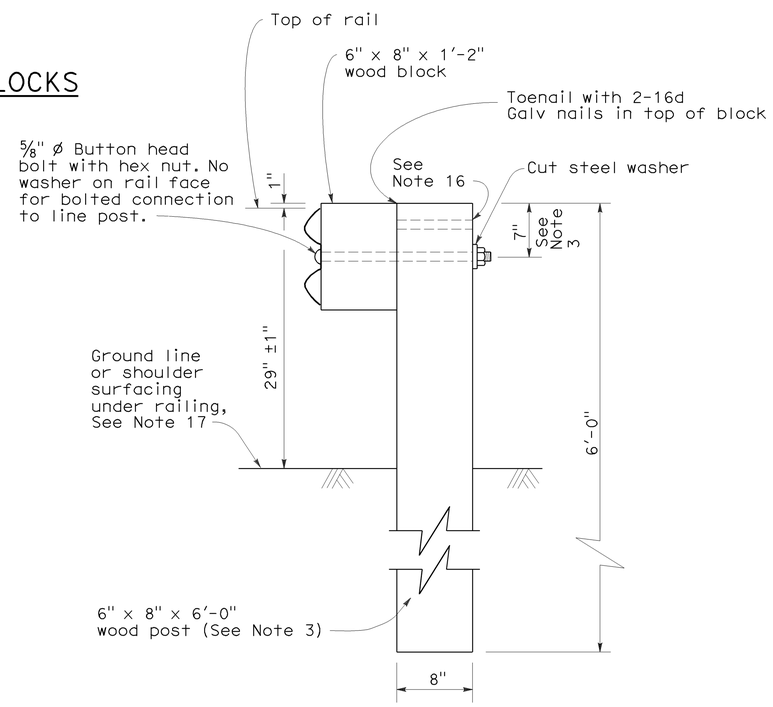

SECTION A-A

TYPICAL WOOD LINE POST INSTALLATION

See Note 4

NOTES:

1. For details of steel post installations, see Standard Plan A77A2.
2. For details of standard hardware used to construct guard railing, see Standard Plan A77B1.
3. For details of wood posts and wood blocks used to construct guard railing, see Standard Plan A77C1.
4. For additional installation details, see Standard Plan A77C3.
5. Guard railing post spacing to be 6'-3" center to center, except as otherwise noted.
6. For guard railing typical layouts, see the A77E, A77F and A77G Series of Standard Plans.
7. For terminal system end treatment details, see the A77L Series of Standard Plans. To connect railing to terminal system end treatment, transition the top of railing height at a ratio of 120:1 to terminal system end treatment height plus one 12'-6" standard railing section at the transitioned height for a horizontal connection to the end treatment.
8. For guard railing end anchor details, see Standard Plans A77H1 and A77I2.
9. For details of guard railing transition to bridge railing, see Standard Plan A77J4.
10. For additional details of guard railing connection to bridge railings, see Standard Plans A77J1, A77J2 and A77K1.
11. For guard railing connection details to abutments and walls, see Standard Plan A77J3.
12. Direction of adjacent traffic indicated by ➡.
13. For typical guard railing delineation and dike positioning details, see Standard Plan A77C4.
14. Slotted hole for bolted connection of rail element to block and post. See "Section Thru Rail Element".
15. Slotted holes for splice bolts to overlap ends of rail element. See "Section Thru Rail Element".
16. Additional hole in uppermost portion of line post is for potential future adjustments of railing height. See Standard Plan A77C1.
17. Install posts in soil.

STATE OF CALIFORNIA
DEPARTMENT OF TRANSPORTATION

METAL BEAM GUARD RAILING STANDARD RAILING SECTION (WOOD POST WITH WOOD BLOCK)

NO SCALE

RSP A77A1 DATED MAY 20, 2011 SUPERSEDES STANDARD PLAN A77A1
DATED MAY 1, 2006 - PAGE 41 OF THE STANDARD PLANS BOOK DATED MAY 2006.

REVISED STANDARD PLAN RSP A77A1

2006 REVISED STANDARD PLAN RSP A77A1

3-10-11

Dist	COUNTY	ROUTE	POST MILES TOTAL PROJECT	SHEET No.	TOTAL SHEETS
11	SD	94,805	Var	34	51

Randell D. Hiatt
REGISTERED CIVIL ENGINEER

May 20, 2011
PLANS APPROVAL DATE

REGISTERED PROFESSIONAL ENGINEER
Randell D. Hiatt
No. C50200
Exp. 6-30-11
CIVIL
STATE OF CALIFORNIA

The State of California or its officers or agents shall not be responsible for the accuracy or completeness of electronic copies of this plan sheet.

To accompany plans dated 02-27-12

NOTES:

1. When necessary to place dike in front of face of guard railing, only Type C dike may be used. For dike details, see Standard Plan A87B.
2. For standard railing post embedment, see Standard Plans A77C3.
3. Guard railing delineation to be used where shown on the Project Plans.
4. When dike or curb is placed under guard railing, the maximum height of the dike or curb shall be 4". Mountable dike should not be used. For dike and curb details, see Standard Plans A87A and A87B.
5. For details of typical distance between the face of rail and hinge point, see Standard Plan A77C3.
6. For steel line posts, use 1/4 - 20 self-tapping screws in 0.22" diameter holes or 1/4" bolts in 9/32" diameter holes.

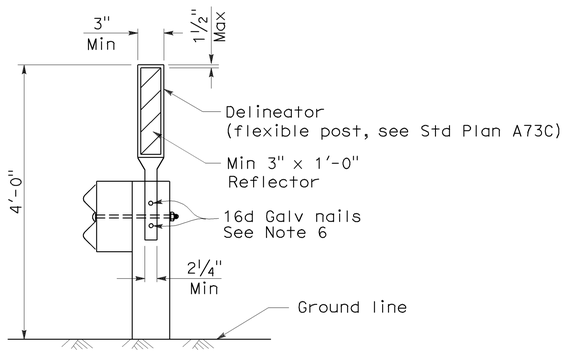

GUARD RAILING DELINEATION

See Note 3

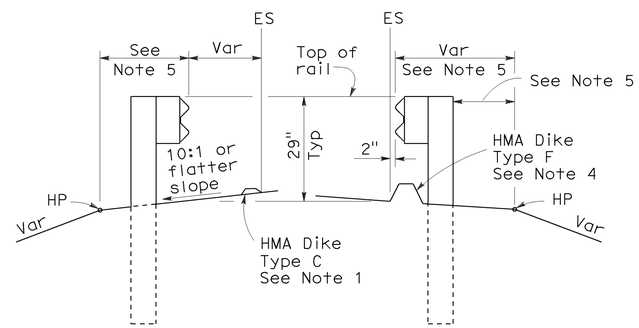

DIKE POSITIONING

See Note 1

STATE OF CALIFORNIA
DEPARTMENT OF TRANSPORTATION

METAL BEAM GUARD RAILING TYPICAL RAILING DELINEATION AND DIKE POSITIONING DETAILS

NO SCALE

RSP A77C4 DATED MAY 20, 2011 SUPERSEDES RSP A77C4 DATED JUNE 6, 2008 AND STANDARD PLAN A77C4 DATED MAY 1, 2006 - PAGE 47 OF THE STANDARD PLANS BOOK DATED MAY 2006.

REVISED STANDARD PLAN RSP A77C4

2006 REVISED STANDARD PLAN RSP A77C4

3-10-11

DIST	COUNTY	ROUTE	POST MILES TOTAL PROJECT	SHEET NO.	TOTAL SHEETS
11	SD	94,805	Var	35	51

Randell D. Hiatt
REGISTERED CIVIL ENGINEER

June 6, 2008
PLANS APPROVAL DATE

REGISTERED PROFESSIONAL ENGINEER
Randell D. Hiatt
No. C50200
Exp. 6-30-09
CIVIL
STATE OF CALIFORNIA

The State of California or its officers or agents shall not be responsible for the accuracy or completeness of electronic copies of this plan sheet.

To accompany plans dated 02-27-12

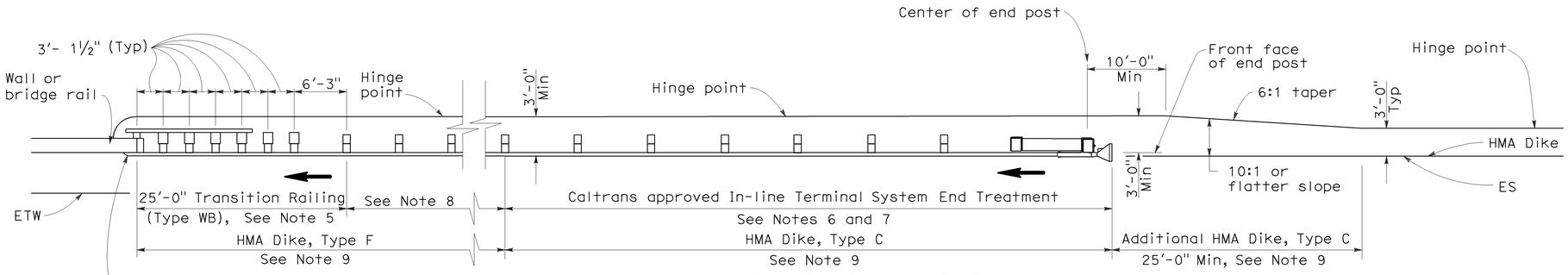

TYPE 12A LAYOUT

(GUARD RAILING INSTALLATION AT STRUCTURE APPROACH WITH AN IN-LINE END TREATMENT AT TRAFFIC APPROACH END OF RAILING)
See Notes 10

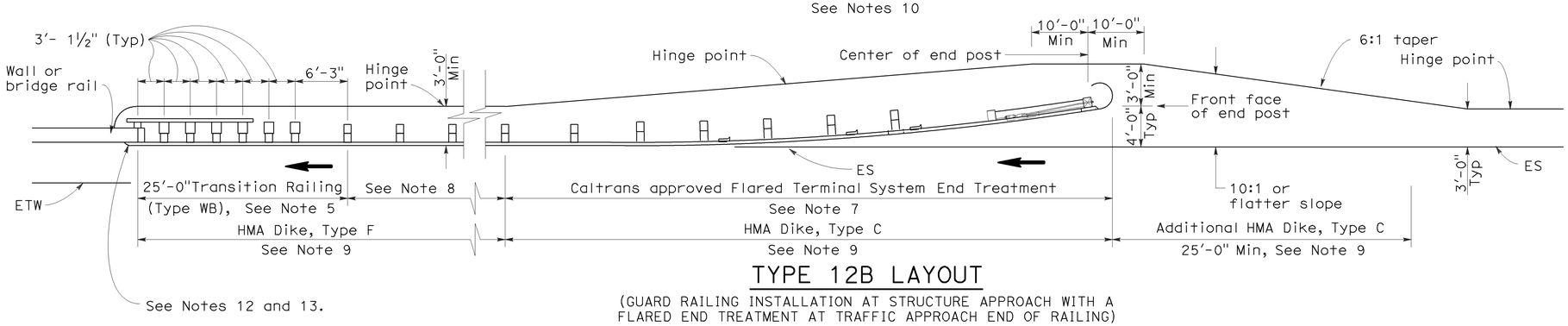

TYPE 12B LAYOUT

(GUARD RAILING INSTALLATION AT STRUCTURE APPROACH WITH A FLARED END TREATMENT AT TRAFFIC APPROACH END OF RAILING)
See Notes 10

NOTES:

1. Line post, blocks and hardware to be used are shown on Standard Plans A77A1, A77A2, A77B1, A77C1 and A77C2.
2. Guard rail post spacing to be 6'-3" center to center, except as otherwise noted.
3. Except as noted, line posts are 6" x 8" x 6'-0" wood with 6" x 8" x 1'-2" wood blocks. W6 x 9 steel posts, 6'-0" in length, with 6" x 8" x 1'-2" notched wood blocks or plastic blocks may be used for 6" x 8" x 6'-0" wood posts with 6" x 8" x 1'-2" wood blocks where applicable and when specified.
4. Direction of adjacent traffic indicated by ➡.
5. For Transition Railing (Type WB) details for Types 12A and 12B Layouts, see Standard Plan A77J4.
6. In-line Terminal System End Treatments are used where site conditions will not accommodate a flared end treatment.
7. The type of terminal system end treatment to be used will be shown on the Project Plans.
8. Dependent on site conditions (embankment height, side slopes, or other fixed objects), it may be advisable to construct additional guard railing (a length equal to multiples of 12'-6" with 6'-3" post spacing) between the transition railing and end treatment.
9. Where placement of dike is required with guard railing installations, see Revised Standard Plan RSP A77C4 for dike positioning details.
10. Type 12A or Type 12B Layouts are typically used:
    a. To the right of approaching traffic, at the end of a structure, on two-lane conventional highway where the roadbed width across the structure is less than 40 feet.
    b. To the left of approaching traffic, at the end of a structure, on two-lane conventional highway where the roadbed width across the structure is less than 40 feet.
    c. To the right of approaching traffic at the end of each structure on multilane freeways or expressways with separate adjacent or parallel bridges.
    d. To the right of approaching traffic at the end of the structure on multilane freeways or expressways with decked median on the bridge.
11. See Revised Standard Plan RSP A77F3 for typical layout used left of approaching traffic at the ends of each structure on multilane freeways or expressways with separate adjacent or parallel bridges.
12. For additional details of typical connections to bridge rail, see Connection Detail AA on Revised Standard Plans RSP A77J1 and RSP A77J2 and Connection Detail FF on Standard Plans A77K1 and A77K2.
13. For additional details of a typical connection to walls or abutments, see Standard Plan A77J3.

STATE OF CALIFORNIA
DEPARTMENT OF TRANSPORTATION

METAL BEAM GUARD RAILING TYPICAL LAYOUTS FOR STRUCTURE APPROACH

NO SCALE

RSP A77F1 DATED JUNE 6, 2008 SUPERSEDES STANDARD PLAN A77F1
DATED MAY 1, 2006 - PAGE 54 OF THE STANDARD PLANS BOOK DATED MAY 2006.

REVISED STANDARD PLAN RSP A77F1

2006 REVISED STANDARD PLAN RSP A77F1

Dist	COUNTY	ROUTE	POST MILES TOTAL PROJECT	SHEET No.	TOTAL SHEETS
11	SD	94,805	Var	36	51

Randell D. Hiatt
REGISTERED CIVIL ENGINEER

May 20, 2011
PLANS APPROVAL DATE

REGISTERED PROFESSIONAL ENGINEER
Randell D. Hiatt
No. C50200
Exp. 6-30-11
CIVIL
STATE OF CALIFORNIA

The State of California or its officers or agents shall not be responsible for the accuracy or completeness of electronic copies of this plan sheet.

To accompany plans dated 02-27-12

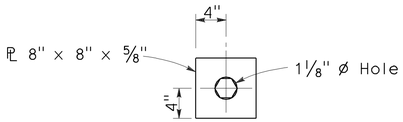

DETAIL A
CABLE CONNECTION
END PLATE

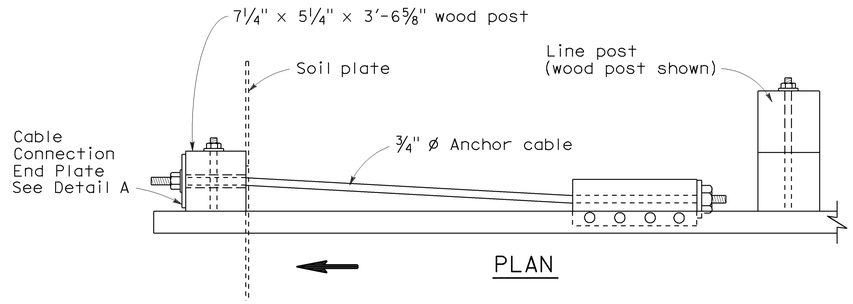

PLAN

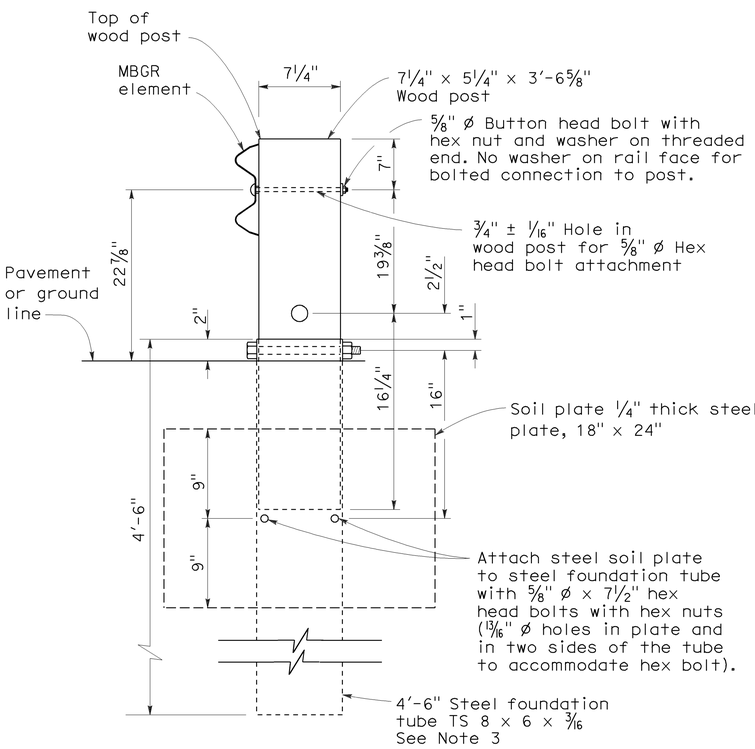

SECTION A-A

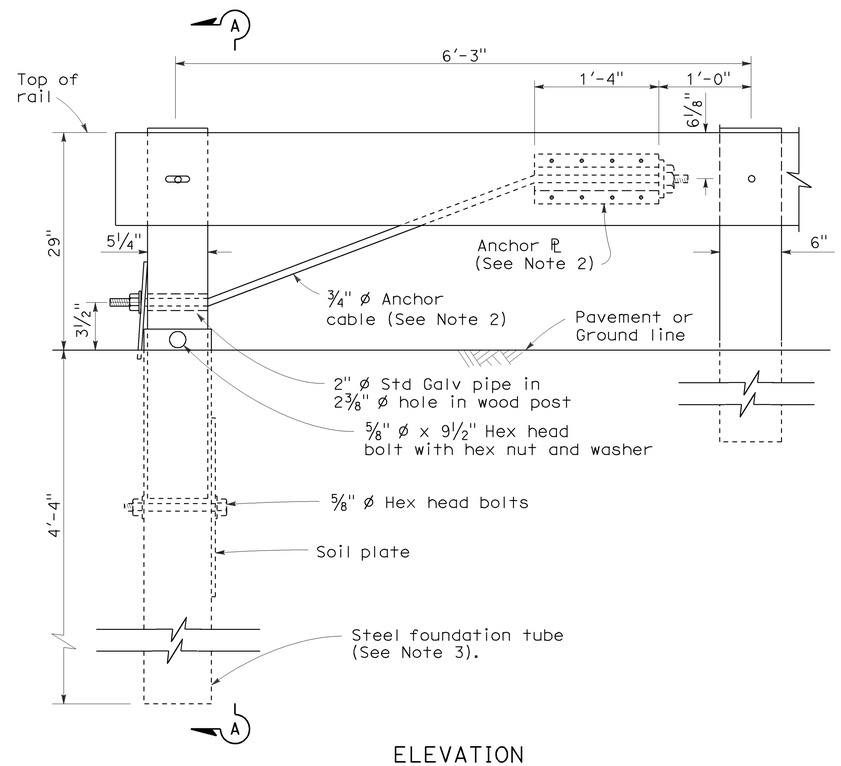

ELEVATION
END ANCHOR
ASSEMBLY (TYPE SFT)
See Note 1

NOTES:

1. See the A77E, A77F and A77G series of Standard Plans for typical use of End Anchor Assembly (Type SFT).
2. For details of the anchor plate and 3/4" cable, see Standard Plan A77H3.
3. A 6'-0" length steel foundation tube, TS 8 x 6 x 3/16, without a soil plate, may be furnished and installed in place of the 4'-6" length steel foundation tube and soil plate shown. Minimum embedment of the 6'-0" length tube shall be 5'-9". A 5/8" Ø hex head bolt and nut shall be installed in the hole in the 6'-0" length tube to keep the wood post from dropping into the tube.
4. Direction of traffic indicated by ⟹.
5. Install line post, steel foundation tube and soil plate in soil.

STATE OF CALIFORNIA
DEPARTMENT OF TRANSPORTATION

METAL RAILING END ANCHOR ASSEMBLY (TYPE SFT)

NO SCALE

RSP A77H1 DATED MAY 20, 2011 SUPERSEDES STANDARD PLAN A77H1
DATED MAY 1, 2006 - PAGE 67 OF THE STANDARD PLANS BOOK DATED MAY 2006.

REVISED STANDARD PLAN RSP A77H1

2006 REVISED STANDARD PLAN RSP A77H1

3-10-07

Dist	COUNTY	ROUTE	POST MILES TOTAL PROJECT	SHEET No.	TOTAL SHEETS
11	SD	94,805	Var	37	51

To accompany plans dated 02-27-12

Randell D. Hiatt
REGISTERED CIVIL ENGINEER

May 20, 2011
PLANS APPROVAL DATE

REGISTERED PROFESSIONAL ENGINEER Randell D. Hiatt No. C50200 Exp. 6-30-11 CIVIL STATE OF CALIFORNIA

The State of California or its officers or agents shall not be responsible for the accuracy or completeness of electronic copies of this plan sheet.

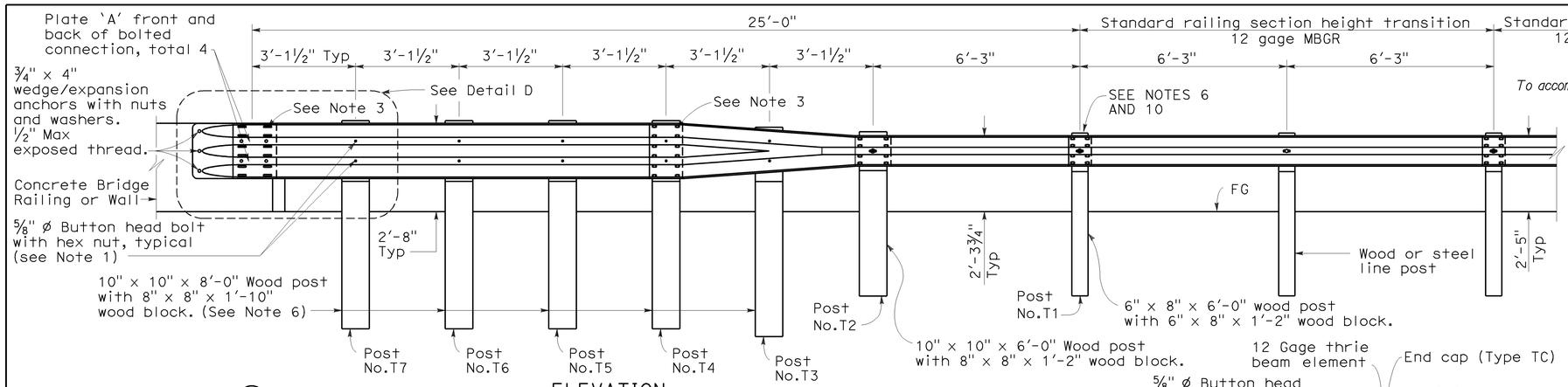

ELEVATION

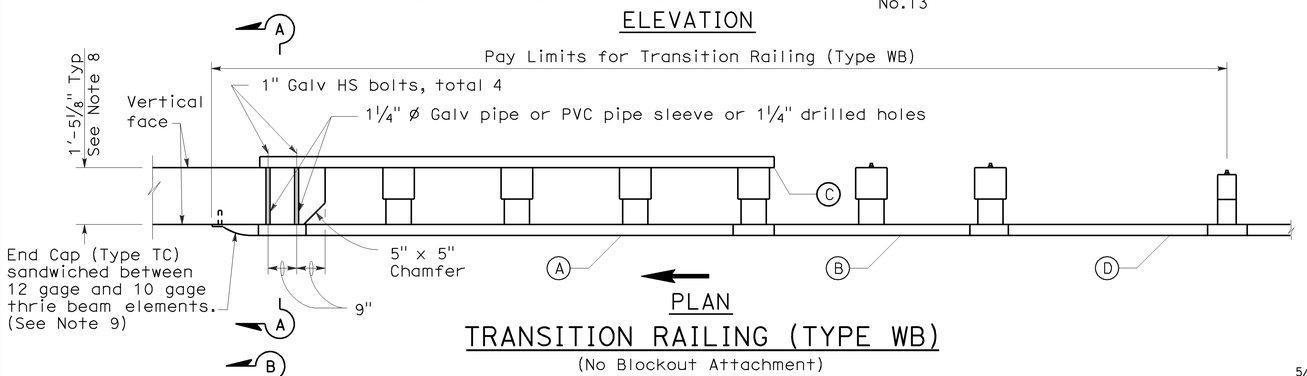

PLAN

TRANSITION RAILING (TYPE WB)

(No Blockout Attachment)

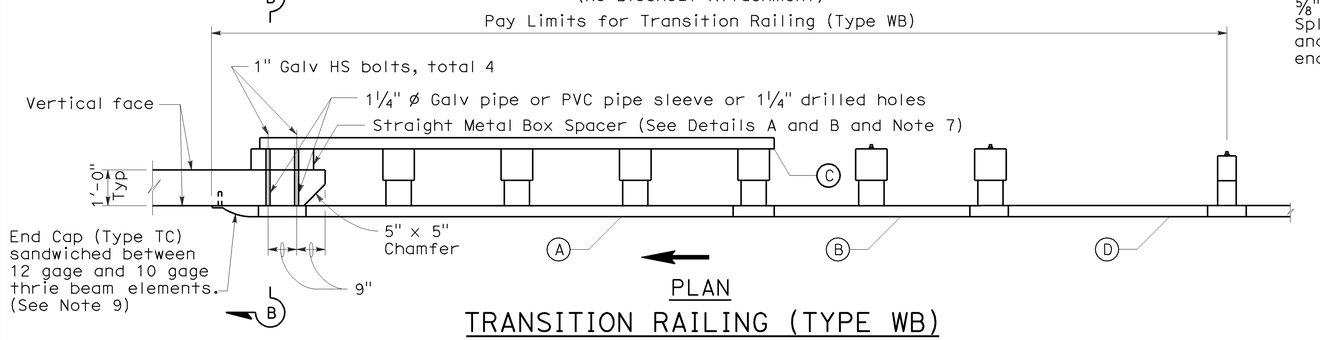

PLAN

TRANSITION RAILING (TYPE WB)

(Blockout Attachment)

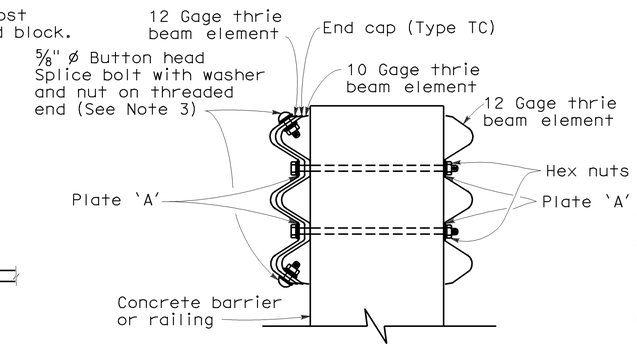

SECTION A-A

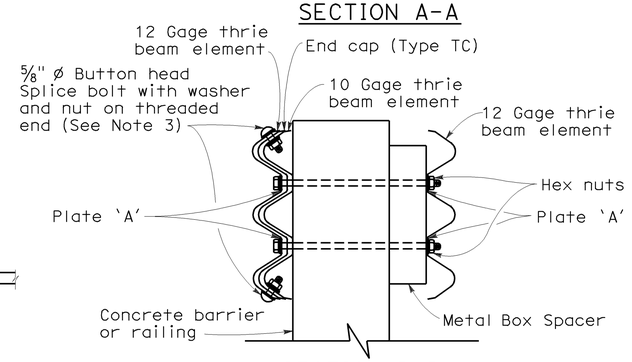

SECTION B-B

LEGEND

(A) Nested thrie beam elements (one 12 gage element nested over one 10 gage element).

(B) One 10 gage "W" beam to thrie beam element.

(C) One 12 gage thrie beam element.

(D) One 10 gage "W" beam rail element (7'-3½" length)

10 gage = 0.135" thick

12 gage = 0.108" thick

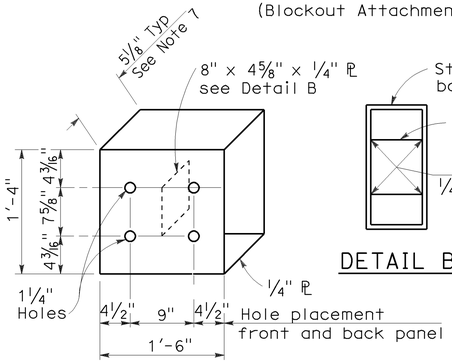

DETAIL A

STRAIGHT METAL BOX SPACER

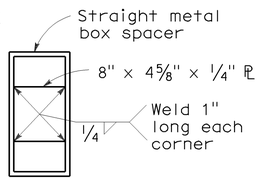

DETAIL B

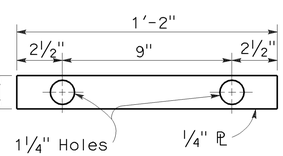

DETAIL C

PLATE 'A'

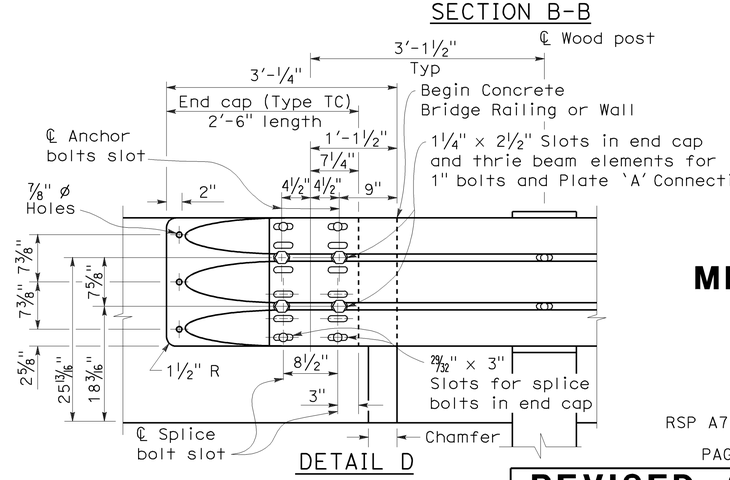

DETAIL D

NOTES:

1. Use ⅝" ø Button head bolts and hex nuts for connections to posts. No washer on rail face for bolted connections to post.

2. The nested rail elements, end cap, and 'W' beam to thrie beam element may be spliced together prior to bolting the elements to the wood post and concrete barrier or railing.

3. Exterior splice bolt holes for rail element splices at Post No. T4 and the connection to the concrete barrier or railing shall be the standard 29⁄32" x 1⅛" slot size. Interior splice bolt holes at these locations may be increased up to 1¼" ø. Only the top 2 and the bottom 2 splice bolts with washers and nuts are required for rail splices at Post No. T4 and the connection to the concrete barrier or railing.

4. Direction of adjacent traffic indicated by ➡.

5. The top elevation of Posts No. T2 through No. T7 shall not project more than 1" above the top elevation of the rail element.

6. Typically, the railing connected to Transition Railing (Type WB) will be either standard railing section of metal beam guard railing with height transition ratio of 120:1 or an approved Caltrans end treatment attached to Post No. T1.

7. The depth of the metal box spacer varies from the 5⅛" to 1½" and is dependent on the width of the concrete railing or wall. The combined dimension for the depth of the metal box spacer plus the width of railing or wall is typically 17⅛". Where the space between the backside of the concrete railing or wall and the rear thrie beam element is less than 1½", metal plates similar to Plate 'A' are to be used as spacers.

8. Where the width of the concrete railing or wall is greater than 17⅛", wood blocks are to be used to fill the space created between the backside of Posts No. T4 through No. T7 and the rear thrie beam element. These wood blocks shall be 8" in width and 1'-2" in length. The dimension between the front thrie beam element and the rear thrie beam element is to match the width of the concrete railing or wall.

9. End cap may be installed over 12 gage and 10 gage thrie beam elements where transition railing is installed on the departure end of bridge railing.

10. Conform standard railing section height to 2'-3¾" at Post No. T1 using height transition ratio of 120:1.

STATE OF CALIFORNIA
DEPARTMENT OF TRANSPORTATION

METAL BEAM GUARD RAILING TRANSITION RAILING (TYPE WB)

NO SCALE

RSP A77J4 DATED MAY 20, 2011 SUPERSEDES
RSP A77J4 DATED JUNE 5, 2009, RSP A77J4 DATED JUNE 6, 2008
AND STANDARD PLAN A77J4 DATED MAY 1, 2006 -
PAGE 75 OF THE STANDARD PLANS BOOK DATED MAY 2006.

REVISED STANDARD PLAN RSP A77J4

2006 REVISED STANDARD PLAN RSP A77J4

5-14-09

DIST	COUNTY	ROUTE	POST MILES TOTAL PROJECT	SHEET NO.	TOTAL SHEETS
11	SD	94,805	Var	38	51

REGISTERED CIVIL ENGINEER

November 17, 2006
PLANS APPROVAL DATE

REGISTERED PROFESSIONAL ENGINEER Michael Janzen No. 44788 Exp. 03-31-08 CIVIL STATE OF CALIFORNIA

The State of California or its officers or agents shall not be responsible for the accuracy or completeness of electronic copies of this plan sheet.

To accompany plans dated 02-27-12

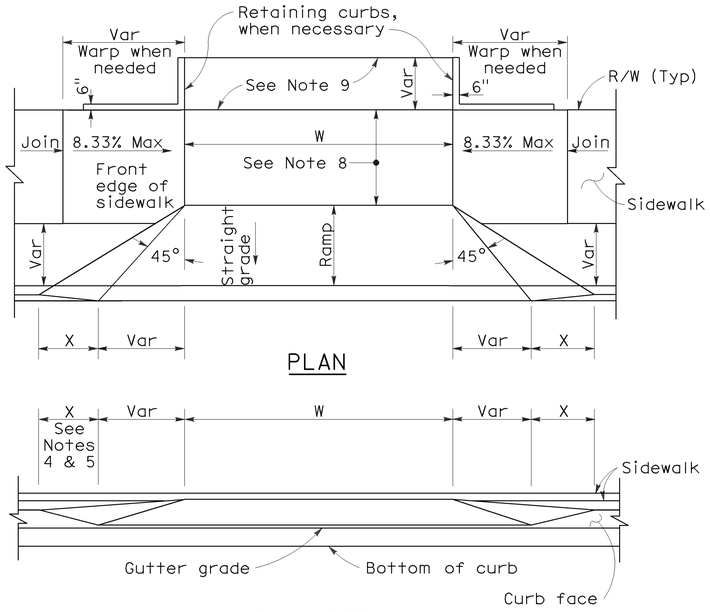

PLAN

ELEVATION

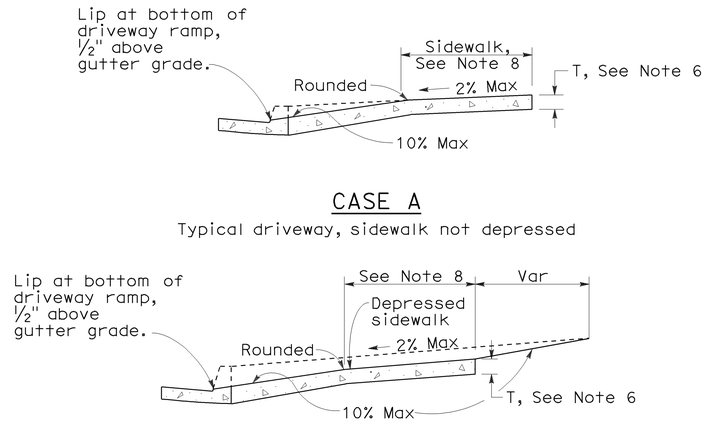

CASE A

Typical driveway, sidewalk not depressed

CASE B

Driveway with depressed sidewalk

SECTIONS

CURB QUANTITIES

TYPE	CUBIC YARDS PER LINEAR FOOT
A1-6	0.02585
A1-8	0.03084
A2-6	0.05903
A2-8	0.06379
A3-6	0.01036
A3-8	0.01435
B1-4	0.02185
B1-6	0.02930
B2-4	0.05515
B2-6	0.06171
B3-4	0.00641
B3-6	0.01074
B4	0.05709
D-4	0.04083
D-6	0.06804
E	0.06661

TABLE A

CURB TYPE	DIMENSIONS "H1"	"H2"	"W1"	"W2"
A1-6	1'-2"	6"	7½"	1½"
A1-8	1'-4"	8"	8"	2"
A2-6	1'-0"	6"	2'-7½"	1½"
A2-8	1'-2"	8"	2'-8"	2"
A3-6	6"	5"	7¼"	1¼"
A3-8	8"	7"	7¾"	1¾"
B1-4	1'-0"	4"	7½"	2½"
B1-6	1'-2"	6"	9"	4"
B2-4	10"	4"	2'-7½"	2½"
B2-6	1'-0"	6"	2'-9"	4"
B3-4	4"	3"	7"	2"
B3-6	6"	5"	8½"	3½"
D-4	10"	4"	1'-6"	1'-1"
D-6	1'-0"	6"	2'-2"	1'-8"

DRIVEWAYS

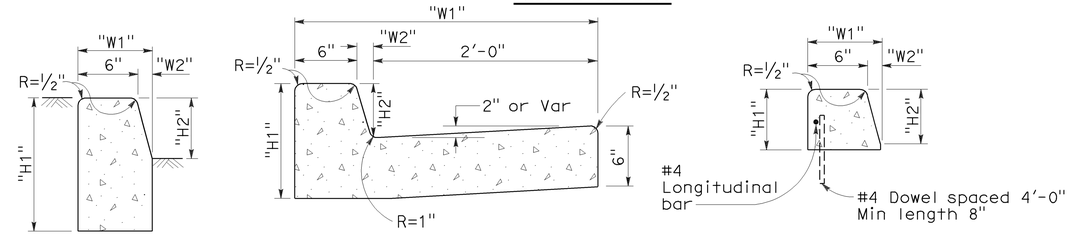

TYPE A1 CURBS
See Table A

TYPE A2 CURBS
See Table A

TYPE A3 CURBS
Superimposed on existing pavement
See Table A

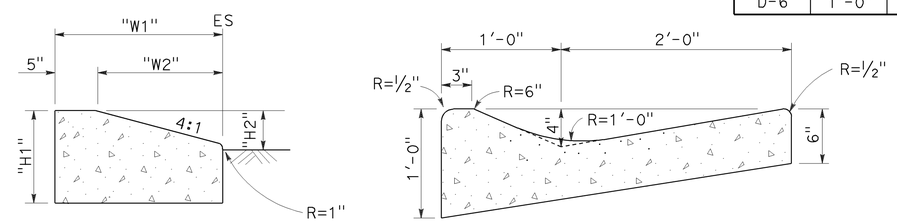

TYPE D CURBS
See Table A

TYPE E CURB

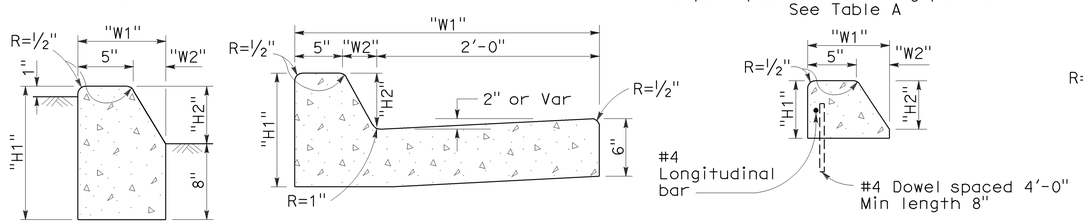

TYPE B1 CURBS
See Table A

TYPE B2 CURBS
See Table A

TYPE B3 CURBS
Superimposed on existing pavement
See Table A

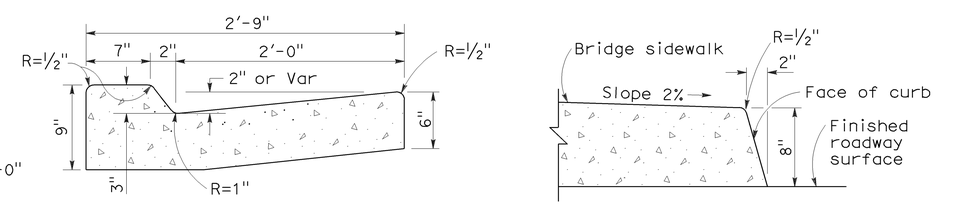

TYPE B4 CURBS

TYPE H CURB
On Bridges

CURBS

NOTES:

1. Case A driveway section typically applies.
2. Use Case B driveway section when ramp slopes would exceed 10% in Case A.
3. Use Case B driveway section when sidewalk cross slope would exceed 2% in Case A.
4. X=3'-0" except for curb heights over 10" where 4:1 slopes shall be used on curb slope.
5. X is a variable when sidewalk is located where wheelchairs may traverse the surface. Slopes shall not exceed 8.33%.
6. Sidewalk and ramp thickness "T" at driveway shall be 4" for residental and 6" for commercial.
7. Difference in slope of the driveway ramp and the slope of a line between the gutter and a point on the roadway 5'-0" from gutter line shall not exceed 15%. Reduce driveway ramp slope, not gutter slope, where required.
8. Minimum width of clear passageway for sidewalk shall be 4'-0".
9. Retaining curbs and acquisition of construction easement may be necessary for narrow sidewalks or curb heights in excess of 6".
10. Across the pedestrian route at curb ramp locations, the gutter pan slope shall not exceed 1" of depth for each 2'-0" of width.

STATE OF CALIFORNIA
DEPARTMENT OF TRANSPORTATION

CURBS AND DRIVEWAYS

NO SCALE

RSP A87A DATED NOVEMBER 17, 2006 SUPERSEDES STANDARD PLAN A87A DATED MAY 1, 2006 - PAGE 113 OF THE STANDARD PLANS BOOK DATED MAY 2006.

REVISED STANDARD PLAN RSP A87A

2006 REVISED STANDARD PLAN RSP A87A

10-25-06

DIST	COUNTY	ROUTE	POST MILES TOTAL PROJECT	SHEET NO.	TOTAL SHEETS
11	SD	94,805	Var	39	51

REGISTERED CIVIL ENGINEER

September 1, 2006
PLANS APPROVAL DATE

REGISTERED PROFESSIONAL ENGINEER Hector David Cordova No. C41957 Exp. 3-31-08 CIVIL STATE OF CALIFORNIA

The State of California or its officers or agents shall not be responsible for the accuracy or completeness of electronic copies of this plan sheet.

To accompany plans dated 02-27-12

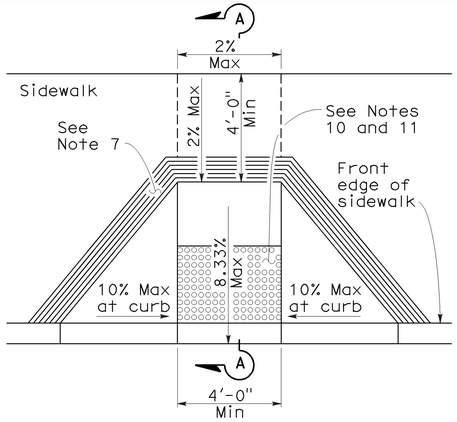

CASE A

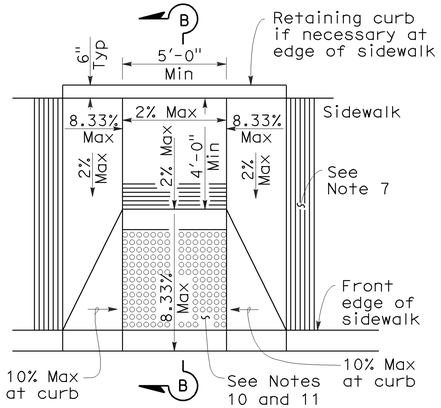

CASE B

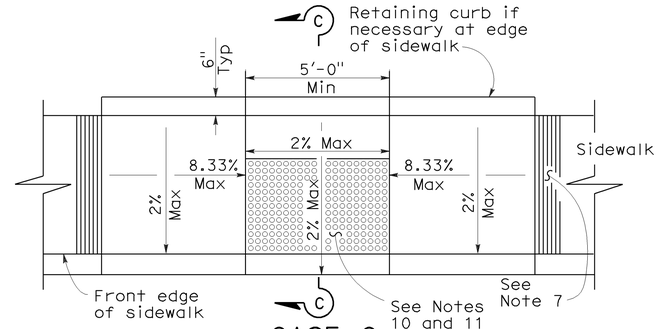

CASE C

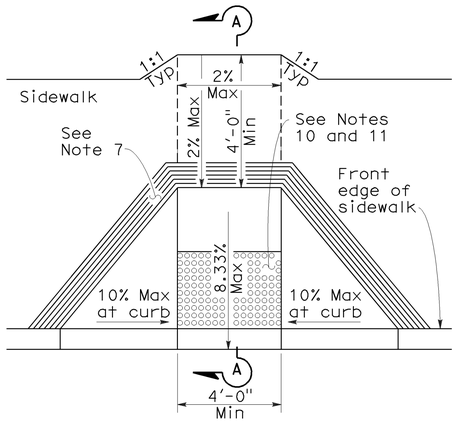

CASE D

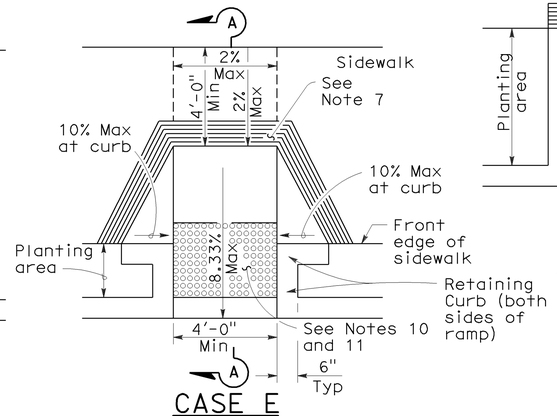

CASE E

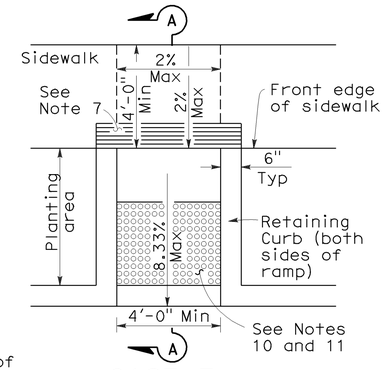

CASE F

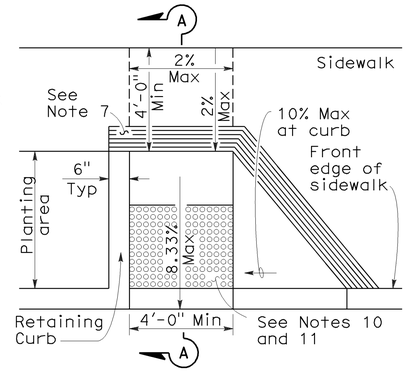

CASE G
See Note 4

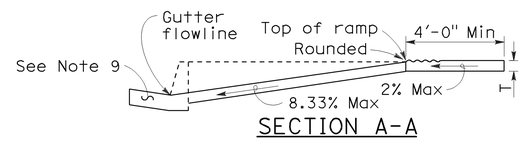

SECTION A-A

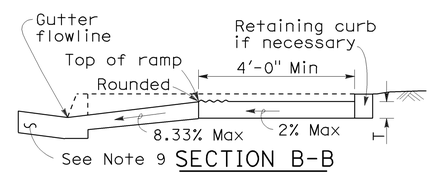

SECTION B-B
Depress entire sidewalk as required

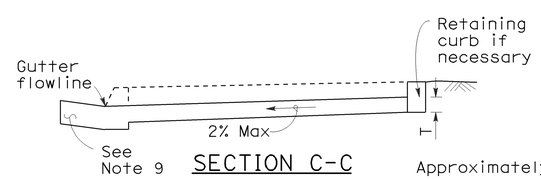

SECTION C-C

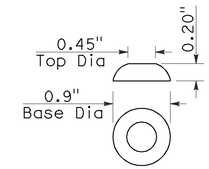

RAISED TRUNCATED DOME

NOTES:

1. As site conditions dictate, Case A through Case G curb ramps may be used for corner installations similar to those shown in Detail A and Detail B. The case of curb ramps used in Detail A do not have to be the same. Case A through Case G curb ramps also may be used at mid block locations, as site conditions dictate.
2. If distance from curb to back of sidewalk is too short to accommodate ramp and 4'-0" platform (landing) as shown in Case A, the sidewalk may be depressed longitudinally as in Case B, or C or may be widened as in Case D.
3. When ramp is located in center of curb return, crosswalk configuration must be similar to that shown for Detail B.
4. As site conditions dictate, the retaining curb side and the flared side of the Case G ramp shall be constructed in reversed position.
5. If located on a curve, the sides of the ramp need not be parallel, but the minimum width of the ramp shall be 4'-0".
6. Side slope of ramp flares vary uniformly from a maximum of 10% at curb to conform with longitudinal sidewalk slope adjacent to top of the ramp, except in Case C and Case F.
7. The curb ramp shall be outlined, as shown, with a 1'-0" wide border with 1/4" grooves approximately 3/4" on center. See grooving detail.
8. Transitions from ramps and landing to walks, gutters or streets shall be flush and free of abrupt changes.
9. Maximum slopes of adjoining gutters, the road surface immediately adjacent to the curb ramp or accessible route shall not exceed 5 percent within 4'-0" of the top and bottom of the curb ramp.
10. Curb ramps shall have a detectable warning surface that extends the full width and 3'-0" depth of the ramp. Detectable Warning Surfaces shall conform to the details on this plan and the requirements in the Special Provisions.
11. The edge of the detectable warning surface nearest the street shall be between 6" and 8" from the gutter flowline.
12. Sidewalk and ramp thickness, "T", shall be 3½" minimum.
13. Utility pull boxes, manholes, vaults and all other utility facilities within the boundaries of the curb ramp will be relocated or adjusted to grade by the owner prior to, or in conjunction with, curb ramp construction.
14. For retrofit conditions, removal and replacement of curb apron will be at the Contractor's option, unless otherwise shown on project plans.

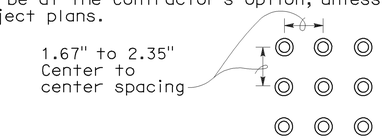

RAISED TRUNCATED DOME PATTERN (IN-LINE)
DETECTABLE WARNING SURFACE
See Note 10

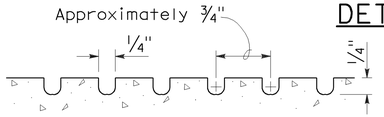

GROOVING DETAIL

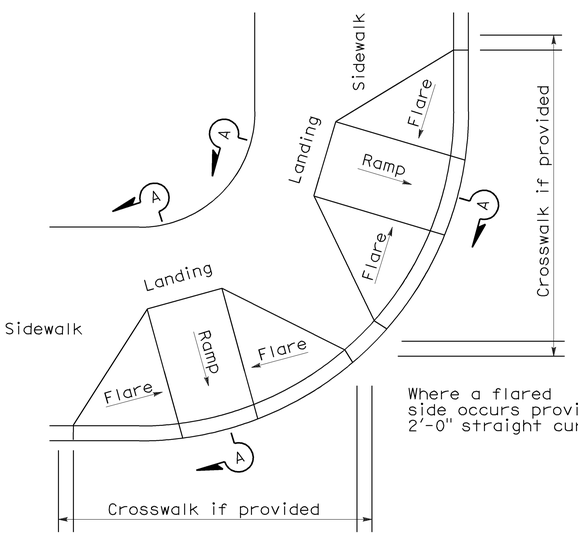

DETAIL A
TYPICAL TWO-RAMP CORNER INSTALLATION
See Note 1

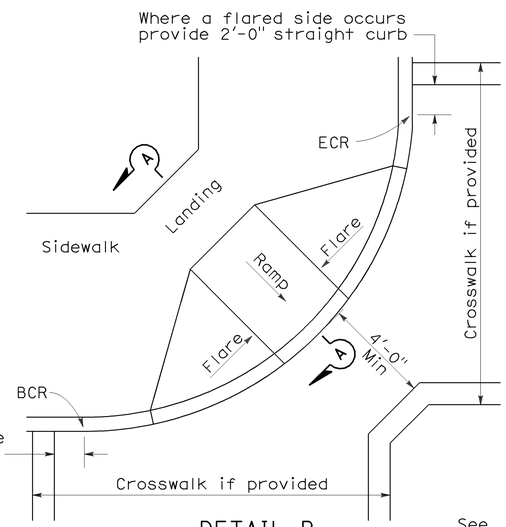

DETAIL B
TYPICAL ONE-RAMP CORNER INSTALLATION
See Notes 1 and 3

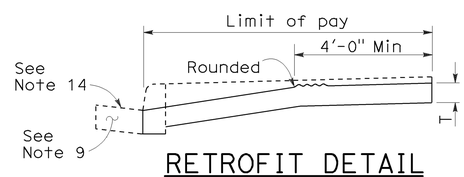

RETROFIT DETAIL
Existing curb and sidewalk

STATE OF CALIFORNIA
DEPARTMENT OF TRANSPORTATION

CURB RAMP DETAILS

NO SCALE

RSP A88A DATED SEPTEMBER 1, 2006 SUPERSEDES STANDARD PLAN A88A DATED MAY 1, 2006 - PAGE 115 OF THE STANDARD PLANS BOOK DATED MAY 2006.

REVISED STANDARD PLAN RSP A88A

2006 REVISED STANDARD PLAN RSP A88A

8-3-06

DIST	COUNTY	ROUTE	POST MILES TOTAL PROJECT	SHEET NO.	TOTAL SHEETS
11	SD	94,805	Var	40	51

Randell D. Hiatt
REGISTERED CIVIL ENGINEER

June 6, 2008
PLANS APPROVAL DATE

REGISTERED PROFESSIONAL ENGINEER
Randell D. Hiatt
No. C50200
Exp. 6-30-09
CIVIL
STATE OF CALIFORNIA

The State of California or its officers or agents shall not be responsible for the accuracy or completeness of electronic copies of this plan sheet.

To accompany plans dated 02-27-12

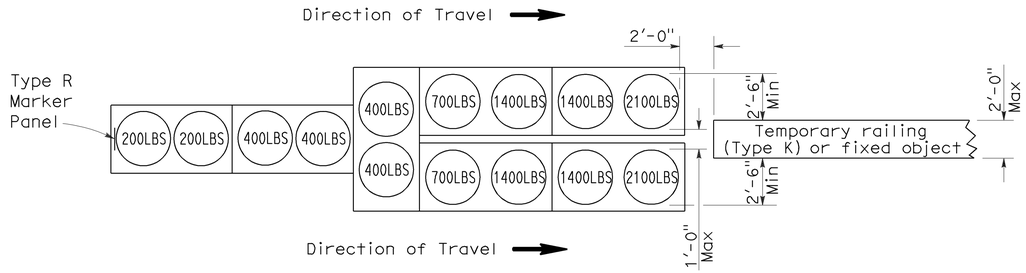

ARRAY 'TU14'

Approach speed 45 mph or more

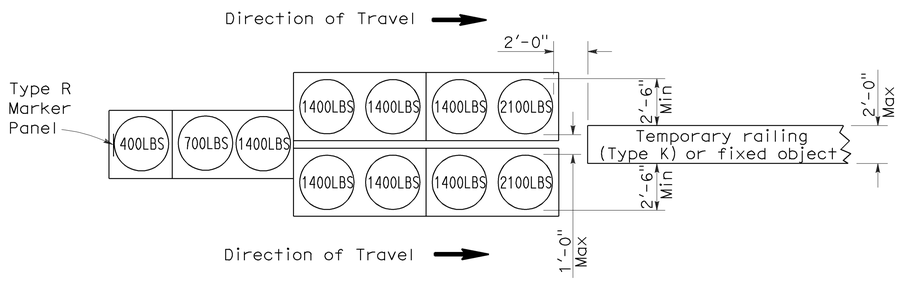

ARRAY 'TU11'

Approach speed less than 45 mph

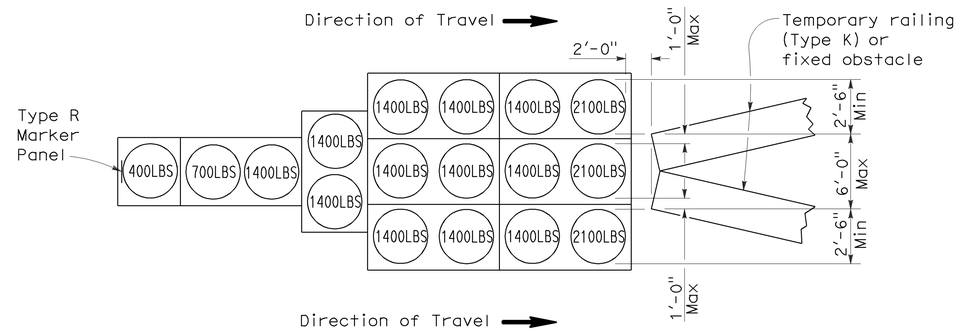

ARRAY 'TU17'

Approach speed less than 45 mph

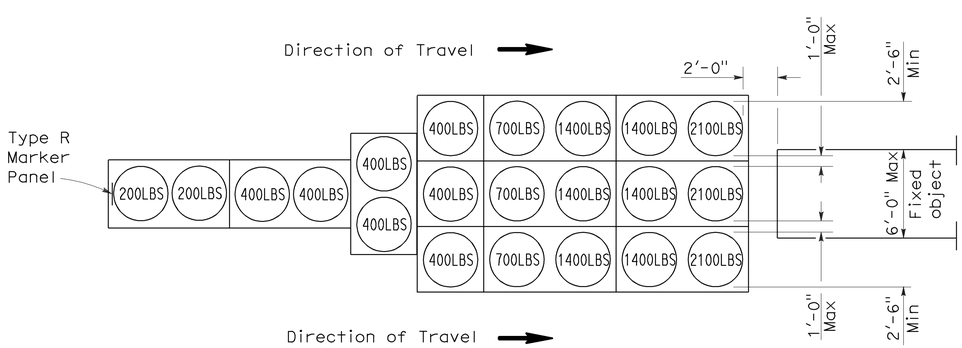

ARRAY 'TU21'

Approach speed 45 mph or more

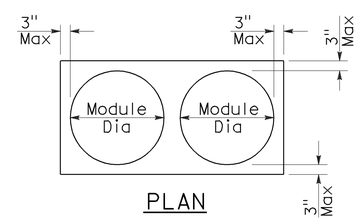

PLAN

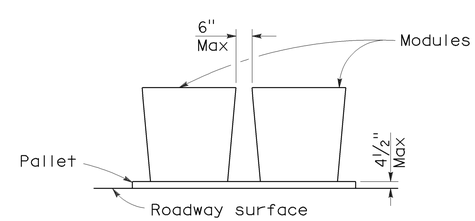

ELEVATION

CRASH CUSHION PALLET DETAIL

See Note 7

NOTES:

1. (XXX) Indicates sand filled module location and weight of sand in pounds for each module. Module spacing is based on the greater diameter of the module.
2. All sand weights are nominal.
3. Temporary crash cushion arrays shall not encroach on the traveled way.
4. Place the top of Type R marker panel 1" below the module lid.
5. Refer to Standard Plan A73B for marker details.
6. Approach speeds indicated conform to NCHRP 350 Report criteria.
7. Use of pallets is optional.

STATE OF CALIFORNIA
DEPARTMENT OF TRANSPORTATION

TEMPORARY CRASH CUSHION, SAND FILLED (UNIDIRECTIONAL)

NO SCALE

RSP T1A DATED JUNE 6, 2008 SUPERSEDES STANDARD PLAN T1A
DATED MAY 1, 2006 - PAGE 211 OF THE STANDARD PLANS BOOK DATED MAY 2006.

REVISED STANDARD PLAN RSP T1A

2006 REVISED STANDARD PLAN RSP T1A

DIST	COUNTY	ROUTE	POST MILES TOTAL PROJECT	SHEET NO.	TOTAL SHEETS
11	SD	94,805	Var	41	51

Randell D. Hiatt
REGISTERED CIVIL ENGINEER

June 6, 2008
PLANS APPROVAL DATE

REGISTERED PROFESSIONAL ENGINEER
Randell D. Hiatt
No. C50200
Exp. 6-30-09
CIVIL
STATE OF CALIFORNIA

The State of California or its officers or agents shall not be responsible for the accuracy or completeness of electronic copies of this plan sheet.

To accompany plans dated 02-27-12

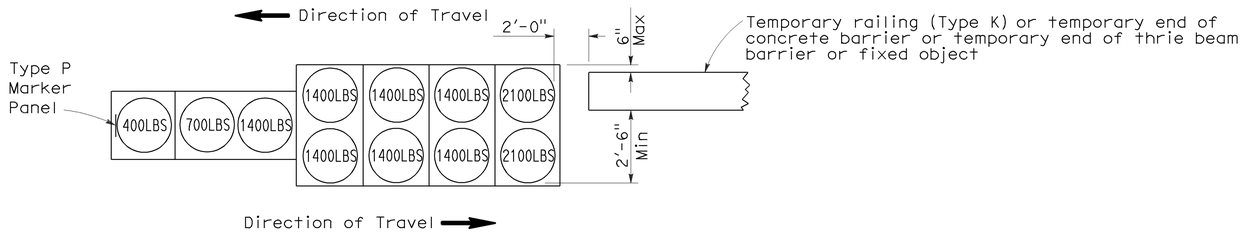

ARRAY 'TB11'

Approach speed less than 45 mph

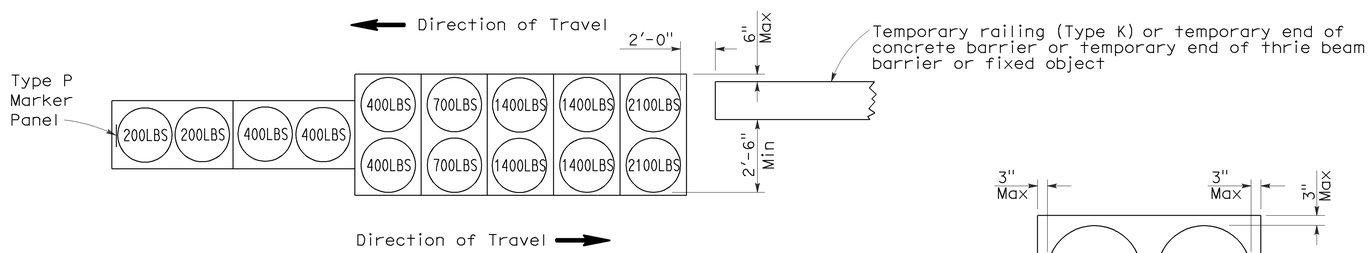

ARRAY 'TB14'

Approach speed 45 mph or more

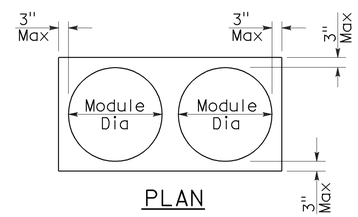

PLAN

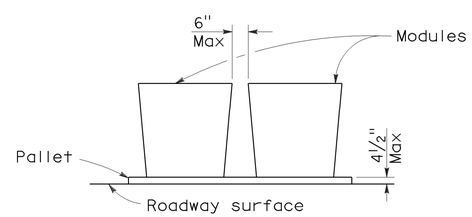

ELEVATION

CRASH CUSHION PALLET DETAIL

See Note 7

NOTES:

1. (XXX) Indicates sand filled module location and weight of sand in pounds for each module. Module spacing is based on the greater diameter of the module.
2. All sand weights are nominal.
3. Temporary crash cushion arrays shall not encroach on the traveled way.
4. Place the Type P marker panel so that the bottom of the panel rests upon the pallet.
5. Refer to Standard Plan A73B for marker details.
6. Approach speeds indicated conform to NCHRP 350 Report criteria.
7. Use of pallets is optional.

STATE OF CALIFORNIA
DEPARTMENT OF TRANSPORTATION

TEMPORARY CRASH CUSHION, SAND FILLED (BIDIRECTIONAL)

NO SCALE

RSP T1B DATED JUNE 6, 2008 SUPERSEDES STANDARD PLAN T1B
DATED MAY 1, 2006 - PAGE 212 OF THE STANDARD PLANS BOOK DATED MAY 2006.

REVISED STANDARD PLAN RSP T1B

2006 REVISED STANDARD PLAN RSP T1B

5-15-08

DIST	COUNTY	ROUTE	POST MILES TOTAL PROJECT	SHEET NO.	TOTAL SHEETS
11	SD	94,805	Var	42	51

Randell D. Hiatt
REGISTERED CIVIL ENGINEER

June 6, 2008
PLANS APPROVAL DATE

REGISTERED PROFESSIONAL ENGINEER
Randell D. Hiatt
No. C50200
Exp. 6-30-09
CIVIL
STATE OF CALIFORNIA

The State of California or its officers or agents shall not be responsible for the accuracy or completeness of electronic copies of this plan sheet.

To accompany plans dated 02-27-12

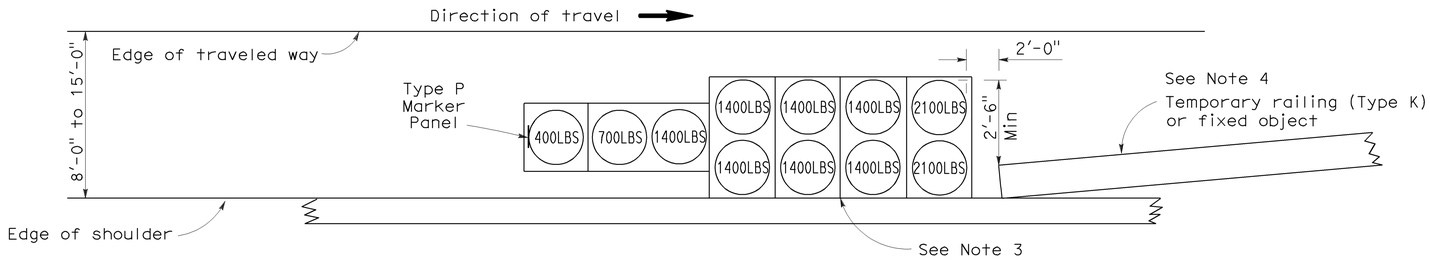

ARRAY 'TS11'

Approach speed less than 45 mph
See Note 9

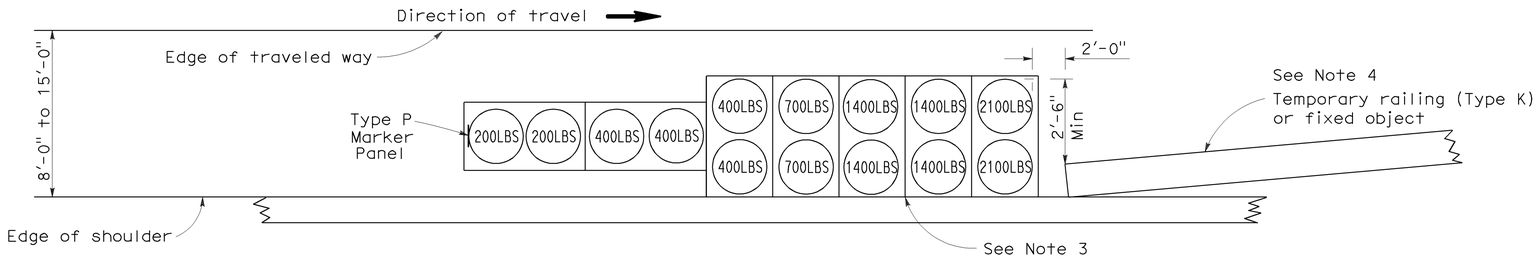

ARRAY 'TS14'

Approach speed 45 mph or more
See Note 9

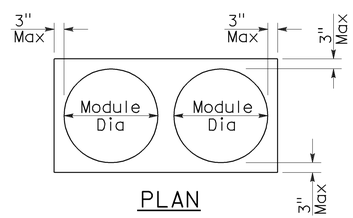

PLAN

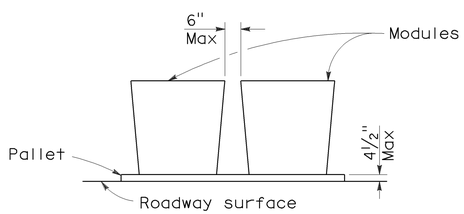

ELEVATION

CRASH CUSHION PALLET DETAIL

See Note 11

NOTES:

1. (XXX) Indicates sand filled module location and weight of sand in pounds for each module. Module spacing is based on the greater diameter of the module.
2. All sand weights are nominal.
3. The temporary crash cushion arrays shown on this plan shall be used only in locations where there will be traffic on one side of the temporary crash cushion array.
4. If the fixed object or approach end of the temporary railing is less than 15'-0" from the edge of traveled way, a temporary crash cushion is required in a construction or work zone.
5. Temporary crash cushion arrays shall not encroach on the traveled way.
6. Arrays for median shoulders shall conform to details shown on this plan for outside shoulders.
7. Place the Type P marker panel so that the bottom of the panel rests upon the pallet and faces traffic.
8. Refer to Standard Plan A73B for marker details.
9. For shoulder widths less than 8'-0", appropriate approved crash cushion protection, other than sand filled modules, shall be provided at fixed objects and at approach ends of temporary railing. The specific type of crash cushion shall be as shown on the project plans or as specified in the Special Provisions, or if not shown on the project plans or specified in the Special Provisions, shall be as approved by the Engineer.
10. Approach speeds indicated conform to NCHRP 350 Report criteria.
11. Use of pallets is optional.

STATE OF CALIFORNIA
DEPARTMENT OF TRANSPORTATION

TEMPORARY CRASH CUSHION, SAND FILLED (SHOULDER INSTALLATIONS)

NO SCALE

RSP T2 DATED JUNE 6, 2008 SUPERSEDES STANDARD PLAN T2
DATED MAY 1, 2006 - PAGE 213 OF THE STANDARD PLANS BOOK DATED MAY 2006.

REVISED STANDARD PLAN RSP T2

2006 REVISED STANDARD PLAN RSP T2

5-15-08

Dist	COUNTY	ROUTE	POST MILES TOTAL PROJECT	SHEET No.	TOTAL SHEETS
11	SD	94,805	Var	43	51

Randell D. Hiatt
REGISTERED CIVIL ENGINEER

May 20, 2011
PLANS APPROVAL DATE

REGISTERED PROFESSIONAL ENGINEER
Randell D. Hiatt
No. C50200
Exp. 6-30-11
CIVIL
STATE OF CALIFORNIA

The State of California or its officers or agents shall not be responsible for the accuracy or completeness of electronic copies of this plan sheet.

To accompany plans dated 02-27-12

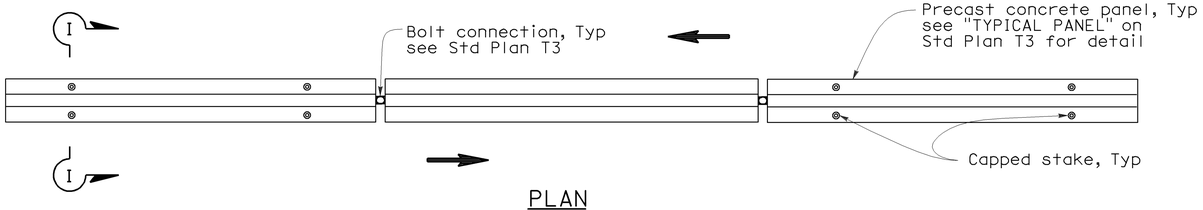

PLAN

RAILING STAKING CONFIGURATION FOR TWO-WAY TRAFFIC

See Note 1

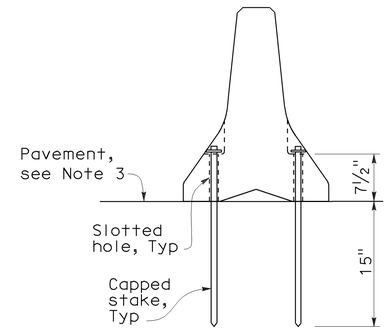

SECTION I-I

NOTES:

1. Where Type K Temporary Railing is placed as a temporary or long term barrier in two-way traffic on highways with less than 24" from the edge of traveled way, use four capped stakes per every other panel with end panels staked.
2. Where Type K Temporary Railing is placed 3" to 24" from the edge of an excavation on highways, use two capped stakes per panel along the traffic side.
3. Staked Type K Temporary Railing must be supported by at least 4" thick concrete, hot mix asphalt or existing asphalt concrete pavement.
4. The minimum yield strength for the washer must be 60,000 psi.
5. Direction of adjacent traffic indicated by ⟹.

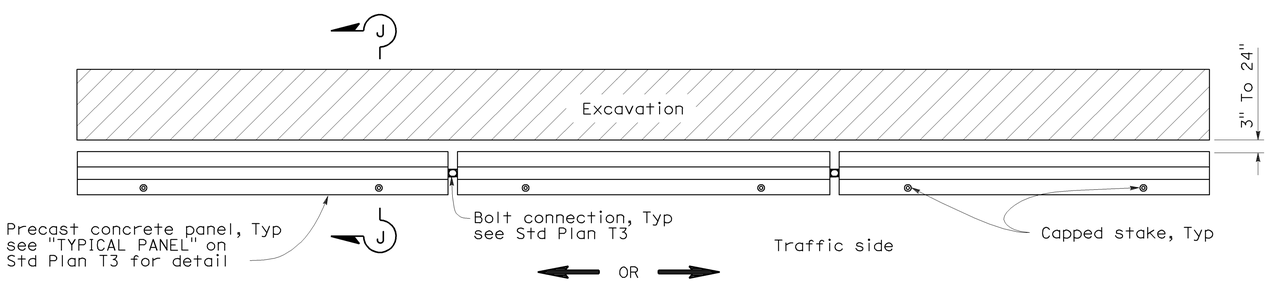

PLAN

RAILING STAKING CONFIGURATION ADJACENT TO AN EXCAVATION

See Note 2

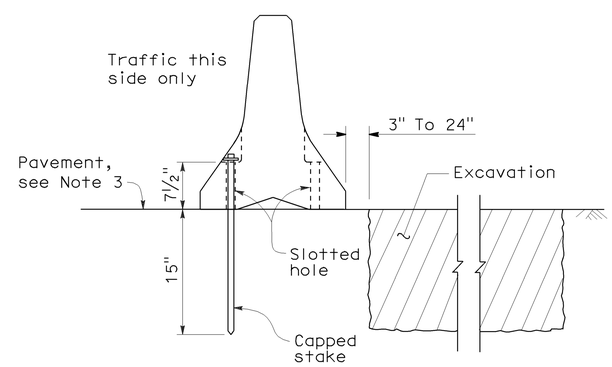

SECTION J-J

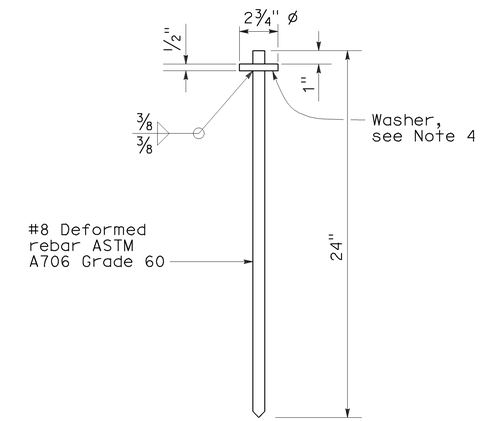

CAPPED STAKE DETAIL

STATE OF CALIFORNIA
DEPARTMENT OF TRANSPORTATION

TEMPORARY RAILING (TYPE K)

NO SCALE

NSP T3A DATED MAY 20, 2011 SUPPLEMENTS
THE STANDARD PLANS BOOK DATED MAY 2006.

NEW STANDARD PLAN NSP T3A

2006 NEW STANDARD PLAN NSP T3A

DIST	COUNTY	ROUTE	POST MILES TOTAL PROJECT	SHEET NO.	TOTAL SHEETS
11	SD	94,805	Var	44	51

LICENSED LANDSCAPE ARCHITECT

August 15, 2008
PLANS APPROVAL DATE

The State of California or its officers or agents shall not be responsible for the accuracy or completeness of electronic copies of this plan sheet.

LICENSED LANDSCAPE ARCHITECT — Robert B. Schott — Signature — 11-04-08 Renewal Date — 08-11-08 Date — STATE OF CALIFORNIA

To accompany plans dated 02-27-12

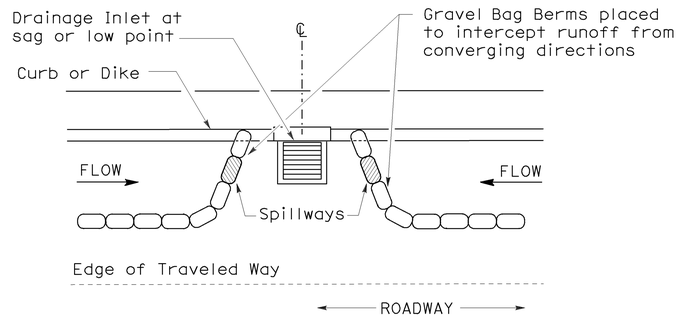

PLAN

CONFIGURATION FOR SAG POINT INLET (GRAVEL BAG BERM)

GRAVEL BAG BERM (TYPE 3A) SPACING TABLE

SLOPE OF ROADWAY (PERCENT)	1 to 3.9	4 to 5.9	6 to 7.9	8 to 10	10+
INTERVAL BETWEEN BERM	100′	75′	50′	25′	12′

For slope of less than 1%, install barriers only if erosion/sediment is prevalent

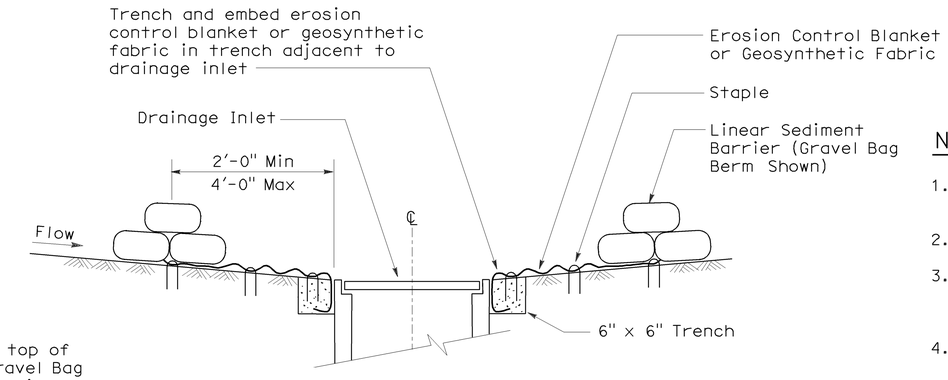

SECTION A-A

NOTES:

1. Place safety cones adjacent to drainage inlet protection.
2. Dimensions may vary to fit field conditions.
3. Install a minimum of 3 gravel bag berms upstream of each drainage inlet to be protected.
4. Position erosion control blanket or geosynthetic fabric at edge of concrete apron and secure in trench.
5. Erosion control blanket or geosynthetic fabric is not required if the area adjacent to the drainage inlet is vegetated or paved.

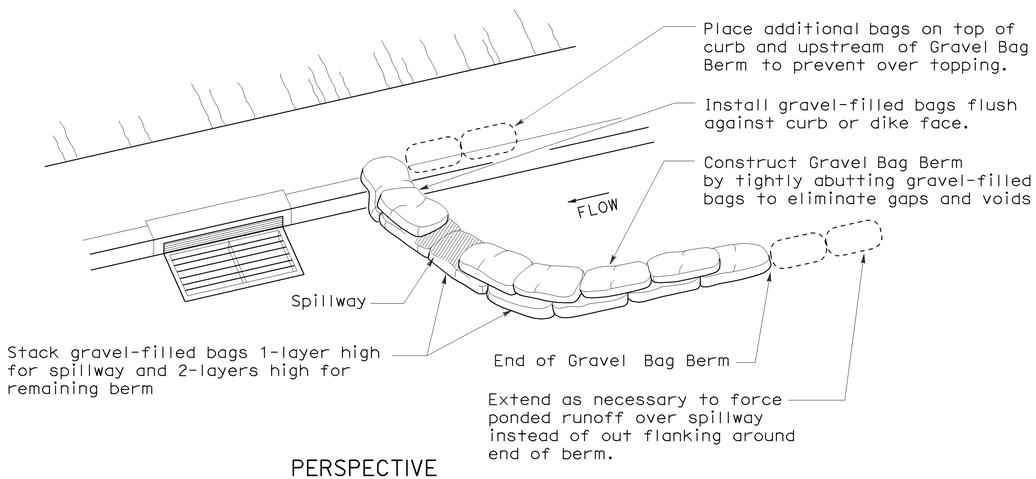

PERSPECTIVE

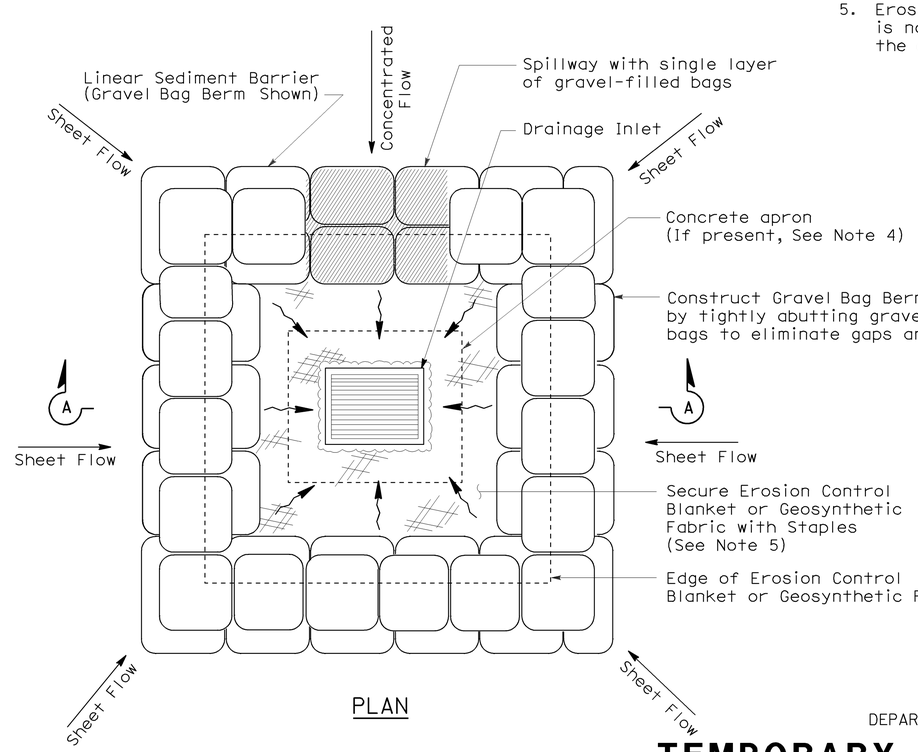

PLAN

TEMPORARY DRAINAGE INLET PROTECTION (TYPE 3B)

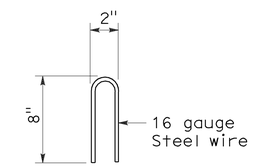

STAPLE DETAIL

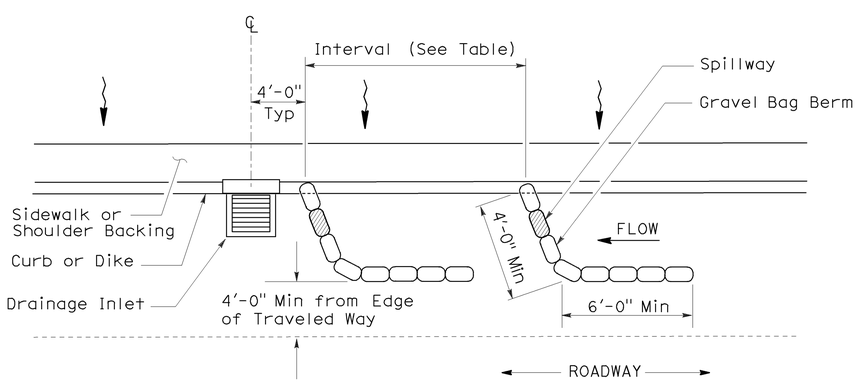

PLAN

TEMPORARY DRAINAGE INLET PROTECTION (TYPE 3A) (GRAVEL BAG BERM)

STATE OF CALIFORNIA
DEPARTMENT OF TRANSPORTATION

TEMPORARY WATER POLLUTION CONTROL DETAILS (TEMPORARY DRAINAGE INLET PROTECTION)

NO SCALE

NSP T62 DATED AUGUST 15, 2008 SUPPLEMENTS THE STANDARD PLANS BOOK DATED MAY 2006.

NEW STANDARD PLAN NSP T62

2006 NEW STANDARD PLAN NSP T62

7-11-08

DIST	COUNTY	ROUTE	POST MILES TOTAL PROJECT	SHEET NO.	TOTAL SHEETS
11	SD	94,805	Var	45	51

LICENSED LANDSCAPE ARCHITECT

August 15, 2008
PLANS APPROVAL DATE

The State of California or its officers or agents shall not be responsible for the accuracy or completeness of electronic copies of this plan sheet.

LICENSED LANDSCAPE ARCHITECT — Robert B. Schott — 3635 — Signature — 11-04-08 Renewal Date — 08-11-08 Date — STATE OF CALIFORNIA

To accompany plans dated 02-27-12

FLEXIBLE SEDIMENT BARRIER SPACING TABLE

SLOPE OF ROADWAY (PERCENT)	0 to 0.9	1 to 1.9	2 to 2.9	3 to 4	5+
INTERVAL BETWEEN BARRIERS	50′	35′	30′	25′	20′
ANGLE FROM FACE OF CURB	70°	70°	70°	45°	45°
SUGGESTED BARRIER LENGTH	6′	6′	6′	6′	6′

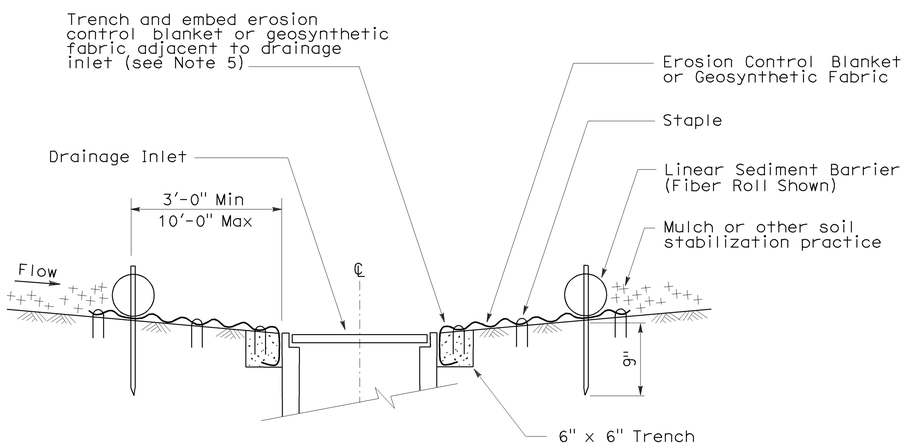

SECTION A-A

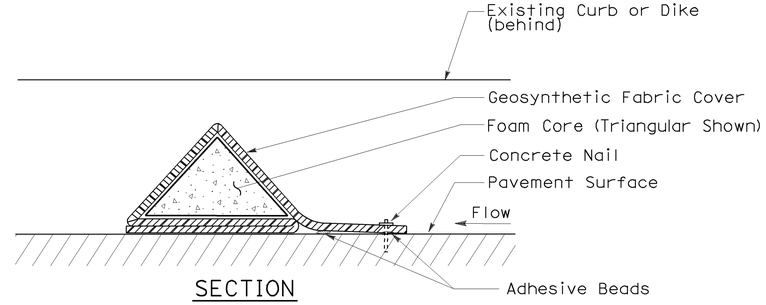

SECTION

FLEXIBLE SEDIMENT BARRIER DETAIL (FOAM BARRIER SHOWN)

NOTES:

1. See Standard Plan T51 for Temporary Silt Fence.
2. Dimensions may vary to fit field conditions.
3. Install a minimum of 3 flexible sediment barriers upstream of each drainage inlet to be protected.
4. Position erosion control blanket or geosynthetic fabric at edge of concrete apron and secure in trench.
5. Erosion control blanket or geosynthetic fabric is not required if the area adjacent to the drainage inlet is vegetated.

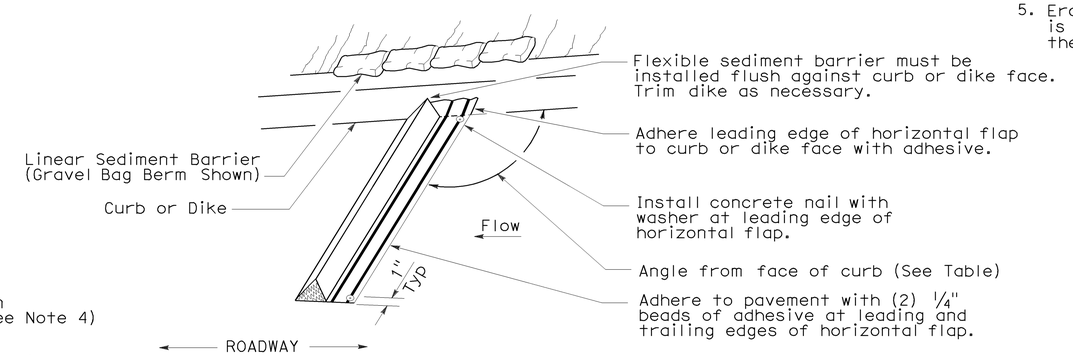

PERSPECTIVE

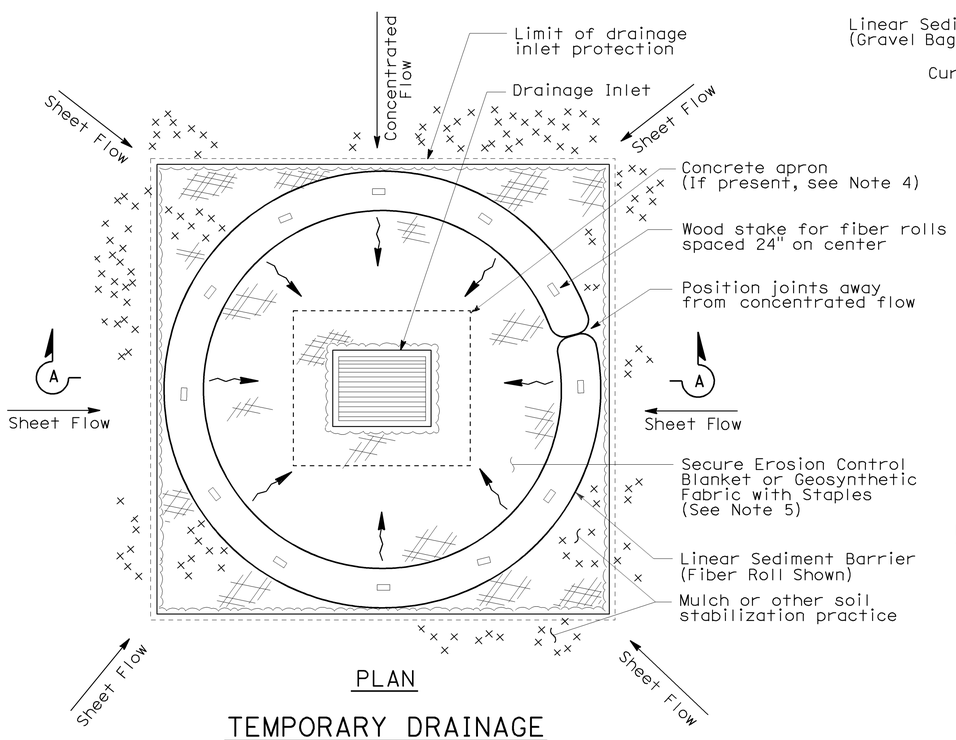

PLAN

TEMPORARY DRAINAGE INLET PROTECTION (TYPE 4A)

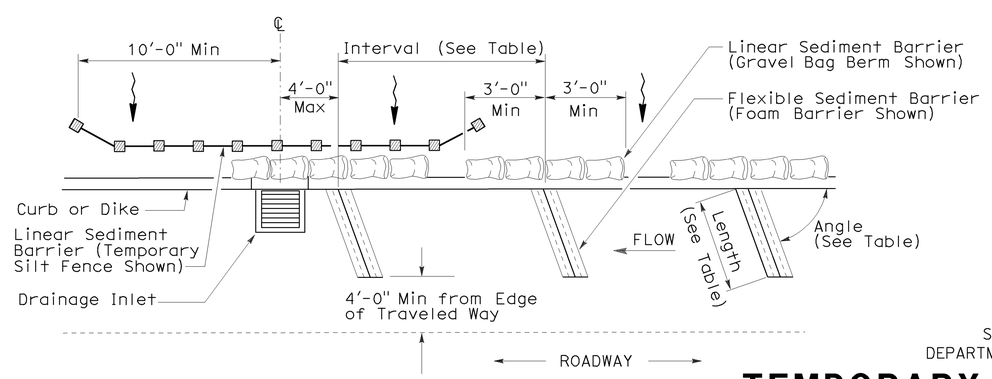

PLAN

TEMPORARY DRAINAGE INLET PROTECTION (TYPE 4B) FLEXIBLE SEDIMENT BARRIER

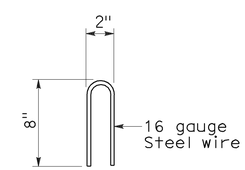

STAPLE DETAIL

STATE OF CALIFORNIA
DEPARTMENT OF TRANSPORTATION

TEMPORARY WATER POLLUTION CONTROL DETAILS (TEMPORARY DRAINAGE INLET PROTECTION)

NO SCALE

NSP T63 DATED AUGUST 15, 2008 SUPPLEMENTS THE STANDARD PLANS BOOK DATED MAY 2006.

NEW STANDARD PLAN NSP T63

2006 NEW STANDARD PLAN NSP T63

7-11-08

DIST	COUNTY	ROUTE	POST MILES TOTAL PROJECT	SHEET NO.	TOTAL SHEETS
11	SD	94,805	Var	46	51

LICENSED LANDSCAPE ARCHITECT

August 15, 2008
PLANS APPROVAL DATE

LICENSED LANDSCAPE ARCHITECT — Robert B. Schott — 3635 — Signature — 11-04-08 Renewal Date — 08-11-08 Date — STATE OF CALIFORNIA

The State of California or its officers or agents shall not be responsible for the accuracy or completeness of electronic copies of this plan sheet.

To accompany plans dated 02-27-12

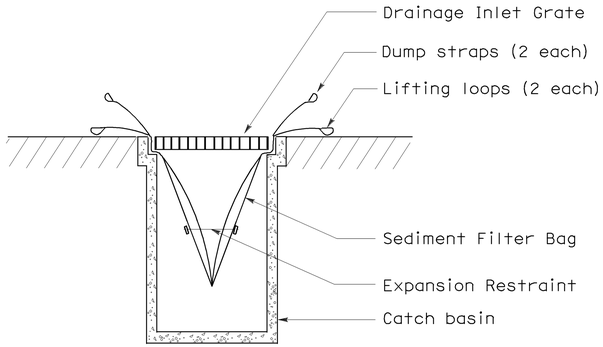

SECTION B-B

SEDIMENT FILTER BAG DETAIL

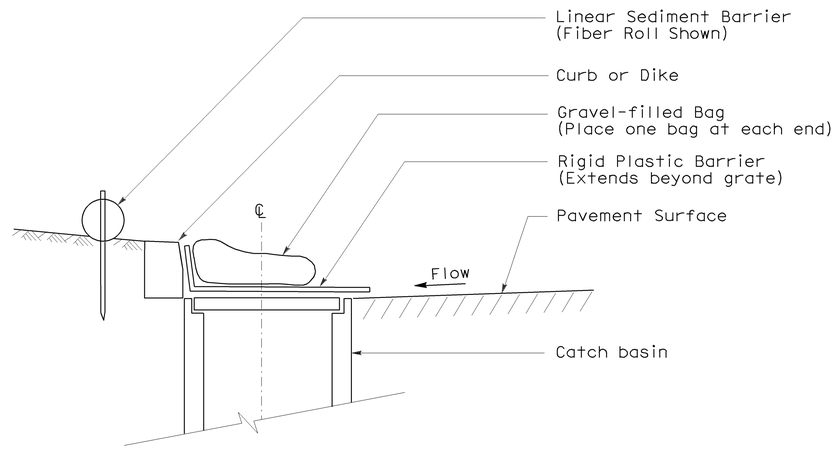

SECTION

TEMPORARY DRAINAGE INLET PROTECTION (TYPE 6A) (CATCH BASIN WITH GRATE)

NOTES:

1. See Standard Plan T51 for Temporary Silt Fence.
2. Dimensions may vary to fit field conditions.

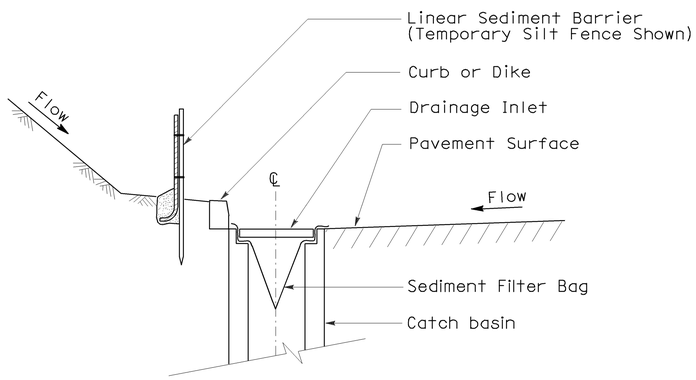

SECTION A-A

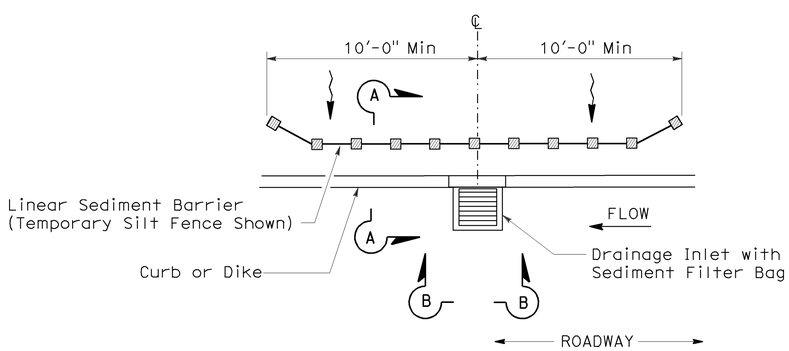

PLAN

TEMPORARY DRAINAGE INLET PROTECTION (TYPE 5) (SEDIMENT FILTER BAG)

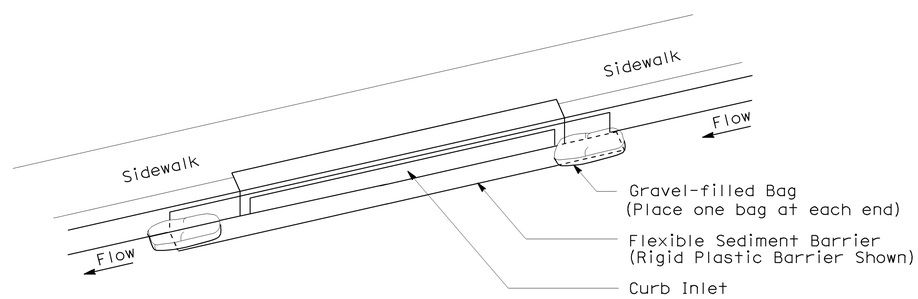

PERSPECTIVE

TEMPORARY DRAINAGE INLET PROTECTION (TYPE 6B) (CURB INLET WITHOUT GRATE)

STATE OF CALIFORNIA
DEPARTMENT OF TRANSPORTATION

TEMPORARY WATER POLLUTION CONTROL DETAILS (TEMPORARY DRAINAGE INLET PROTECTION)

NO SCALE

NSP T64 DATED AUGUST 15, 2008 SUPPLEMENTS THE STANDARD PLANS BOOK DATED MAY 2006.

NEW STANDARD PLAN NSP T64

2006 NEW STANDARD PLAN NSP T64

7-11-08

DIST	COUNTY	ROUTE	POST MILES TOTAL PROJECT	SHEET NO.	TOTAL SHEETS
11	SD	94,805	Var	47	51

REGISTERED ELECTRICAL ENGINEER

October 5, 2007
PLANS APPROVAL DATE

REGISTERED PROFESSIONAL ENGINEER Jeffery G. McRae No. E14512 Exp. 6-30-08 ELECTRICAL STATE OF CALIFORNIA

The State of California or its officers or agents shall not be responsible for the accuracy or completeness of electronic copies of this plan sheet.

To accompany plans dated 02-27-12

2006 REVISED STANDARD PLAN RSP ES-1A

ELECTROLIERS

STANDARD TYPES
15, 15D
15 STRUCTURE
21, 21D STRUCTURE
30
31
32
35
36-20A

High mast light pole

Double Arm lighting standard

Existing electrolier

Electrolier foundation (Future installation)

NOTES:

1. Luminaires shall be 310 W HPS when installed on Type 21, 21D, 30, 31, 32, 35 and 36-20A Standards, unless otherwise specified. Luminaires shall be 200 W HPS when installed on other type standards or poles, unless otherwise specified.
2. Luminaires shall be the cutoff type, ANSI Type Ⅲ medium cutoff lighting distribution, unless otherwise specified.
3. Variations noted adjacent to symbol on project plans.

Electrolier (see project notes or project plans)

Luminaire on wood pole

STANDARD NOTES:

- AB Abandon. If applied to conduit, remove conductors.
- BC Install pull box in existing conduit run.
- BP Pedestrian barricade, type as indicated on plan.
- CB Install conduit into existing pull box.
- CC Connect new and existing conduit. Remove existing conductors and install conductors as indicated.
- CF Conduit to remain for future use. Remove conductors. Install pull wire or rope.
- DH Detector handhole.
- FA Foundation to be abandoned.
- IS Install sign on signal mast arm.
- NS No slip base on standard.
- PEC Photoelectric control.
- PEU Photoelectric unit.
- RC Equipment or material to be removed and become the property of the Contractor.
- RE Remove electrolier, fuses and ballast. Tape ends of conductors.
- RL Relocate equipment.
- RR Remove and reuse equipment.
- RS Remove and salvage equipment.
- SC Splice new to existing conductors.
- SD Service disconnect.
- SF Standard to remain for future use. Remove luminaire, pole conductors, fuses and ballast.
- TSP Telephone service point.

ABBREVIATIONS AND EQUIPMENT DESIGNATIONS

PROPOSED	EXISTING	
BBS	bbs	Battery backup system
BC	bc	Bolt circle
C	C	Conduit
CCTV	cctv	Closed circuit television
CKT	ckt	Circuit
CMS	cms	Changeable message sign
DLC	dlc	Loop detector lead-in cable
EMS	ems	Extinguishable message sign
EVC	evc	Emergency vehicle cable
EVD	evd	Emergency vehicle detector
FB	fb	Flashing beacon
FBCA	fbca	Flashing beacon control assembly
FBS	fbs	Flashing beacon with slip base
FO	fo	Fiber optic
G	G	Ground (Equipment Grounding Conductor)
GFCI	GFCI	Ground fault circuit interrupt
HAR	har	Highway advisory radio
HEX	hex	Hexagonal
HPS	hps	High pressure sodium
IISNS	iisns	Internally illuminated street name sign
ISL	isl	Induction sign lighting
LED	led	Light emitting diode
LMA	lma	Luminaire mast arm
LPS	lps	Low pressure sodium
LTG	ltg	Lighting
LUM	lum	Luminaire
MAT	mat	Mast arm mounting vehicle signal faces, top attachment
MAS	mas	Mast arm mounting vehicle signal faces, side attachment
MAS-4A	mas-4A	Mast arm mounting vehicle signal faces, side attachment - 4 signal section
MAS-4B	mas-4B	
MAS-4C	mas-4C	
MAS-5A	mas-5A	Mast arm mounting vehicle signal faces, side attachment - 5 signal section
MAS-5B	mas-5B	
MC	mc	Mercury contactor
M/M	m/m	Multiple to multiple transformer
MT	mt	Conduit with pull wire or rope only
MTG	mtg	Mounting
	mv	Mercury vapor lighting fixture
N	N	Neutral (Grounded Conductor)
NC	NC	Normally closed
NO	NO	Normally open
PB	pb	Pull box
PEC	pec	Photoelectric control (Type Ⅰ, Ⅱ, Ⅲ, Ⅳ or Ⅴ as shown)
PED	ped	Pedestrian
PEU	peu	Photoelectric unit
PPB	ppb	Pedestrian push button
RL		Relocated equipment
RM	rm	Ramp metering
SB	sb	Slip base
SIC	sic	Signal interconnect cable
SIG	sig	Signal
SMA	sma	Signal mast arm
SNS	sns	Street name sign
SP	sp	Service point
TDC	tdc	Telephone demarcation cabinet
TMS	tms	Traffic monitoring station
TOS	tos	Traffic Operations System
VEH	veh	Vehicle
XFMR	xfmr	Transformer
COMM	comm	Communication
RWIS	rwis	Roadway weather information system

SOFFIT AND WALL MOUNTED LUMINAIRES

Pendant, 70 W HPS unless otherwise specified.

Flush, 70 W HPS unless otherwise specified.

Wall surface, 70 W HPS unless otherwise specified.

Existing soffit or wall luminaire to remain unmodified.

Existing soffit or wall luminaire to be modified as specified.

NOTE:

Arrow indicates "street side" of luminaire.

STATE OF CALIFORNIA
DEPARTMENT OF TRANSPORTATION

ELECTRICAL SYSTEMS (SYMBOLS AND ABBREVIATIONS)

NO SCALE

RSP ES-1A DATED OCTOBER 5, 2007 SUPERSEDES STANDARD PLAN ES-1A DATED MAY 1, 2006 - PAGE 400 OF THE STANDARD PLANS BOOK DATED MAY 2006.

REVISED STANDARD PLAN RSP ES-1A

DIST	COUNTY	ROUTE	POST MILES TOTAL PROJECT	SHEET NO.	TOTAL SHEETS
11	SD	94,805	Var	48	51

REGISTERED ELECTRICAL ENGINEER

October 5, 2007
PLANS APPROVAL DATE

REGISTERED PROFESSIONAL ENGINEER Jeffery G. McRae No. E14512 Exp. 6-30-08 ELECTRICAL STATE OF CALIFORNIA

The State of California or its officers or agents shall not be responsible for the accuracy or completeness of electronic copies of this plan sheet.

To accompany plans dated 02-27-12

CONDUIT

PROPOSED	EXISTING	
		Lighting Conduit, unless otherwise indicated or noted
		Traffic signal conduit
C	c	Communication conduit
T	t	Telephone conduit
F	f	Fire alarm conduit
FO	fo	Fiber optic conduit
		Conduit termination (RSP ES-9A C)
R	r	Conduit riser in/on structure or service pole

SERVICE EQUIPMENT

PROPOSED	EXISTING	
OH	oh	Overhead lines
U	U	Wood pole "U" indicates utility owned
		Pole guy with anchor
		Utility transformer - ground mounted
III		Service equipment enclosure type
		Service equipment enclosure door indicates front of enclosure
T	t	Telephone demarcation cabinet

POLE-MOUNTED SERVICE DESIGNATION

Type of installation

TYPE H SERVICE - 28'-10" ← Pole height above grade

ILLUMINATED OVERHEAD SIGN

PROPOSED	EXISTING	
		Overhead sign - Single post
		Overhead sign - Two post
		Overhead sign - Mounted on structure
		Overhead sign with electrolier

SIGNAL EQUIPMENT

PROPOSED	EXISTING	
		Pedestrian signal face
		Pedestrian push button post
		Pedestrian barricade
		Vehicle signal face (with backplate, 3-Section: red, yellow and green)
		Vehicle signal face with angle visors
PV	PV	Modifications of basic symbols: "L" Indicates all non-arrow sections louvered "LG" Indicates louvered green section only "PV" indicates 12" programmed visibility sections "8" indicates all 8" sections (only when specified)
		Type 15TS and Vehicle signal face
		Vehicle signal face with red, yellow and green left arrow sections
		Vehicle signal face with red and yellow sections and up green arrow
		Vehicle signal face (5 Section) with red, yellow and green sections and yellow and green right arrows
		Type 1 Standard and attached vehicle signal faces
		Standard with signal mast arm only and attached vehicle signal faces and internally illuminated street name sign
		Type 33 Standard, Left-turn vehicle signal face and sign
		Standard with luminaire and signal mast arms and attached vehicle signal faces
		Cantilever flashing beacon Type 9 Frame, with a sign unless otherwise specified or indicated
		Type 15-FBS Standard with two vehicle signal face sections with lens, backplate and visor with a sign
R	Y	Flashing beacon. One vehicle signal face section with lens, backplate and visor. "R" indicates red indication, "Y" indicates yellow indication
		Controller assembly. Door indicates front of cabinet

SIGNAL EQUIPMENT Cont

PROPOSED	EXISTING	
		Guard post
		Type 1 Standard with "Meter On" sign
		Emergency Vehicle detector

NOTES:

1. All signal sections shall be 12" unless shown otherwise.
2. Signal heads shall be provided with backplates unless shown otherwise.
3. Signal indication shall be LED.

STATE OF CALIFORNIA
DEPARTMENT OF TRANSPORTATION

ELECTRICAL SYSTEMS (SYMBOLS AND ABBREVIATIONS)

NO SCALE

RSP ES-1B DATED OCTOBER 5, 2007 SUPERCEDES STANDARD PLAN ES-1B DATED MAY 1, 2006 - PAGE 401 OF THE STANDARD PLANS BOOK DATED MAY 2006.

REVISED STANDARD PLAN RSP ES-1B

2006 REVISED STANDARD PLAN RSP ES-1B

7-10-07

DIST	COUNTY	ROUTE	POST MILES TOTAL PROJECT	SHEET NO.	TOTAL SHEETS
11	SD	94,805	Var	49	51

REGISTERED ELECTRICAL ENGINEER

October 5, 2007
PLANS APPROVAL DATE

REGISTERED PROFESSIONAL ENGINEER Jeffery G. McRae No. E14512 Exp. 6-30-08 ELECTRICAL STATE OF CALIFORNIA

The State of California or its officers or agents shall not be responsible for the accuracy or completeness of electronic copies of this plan sheet.

To accompany plans dated 02-27-12

EQUIPMENT IDENTIFICATION

ILLUMINATED SIGN IDENTIFICATION NUMBER:

Sign No. 12345 — Sign number - Place on post or structure

10 ISL SCI 1.0

- 1.0 — Transformer rating (kVA)
- SCI — Lighting control type
- ISL — Number and type of fixtures

Do NOT place on standard or structure

ELECTROLIER OR EQUIPMENT IDENTIFICATION NUMBER:

12345 - 15'-0"

- 15'-0" — Mast arm length, if shown. Do not place on standard or structure.
- 12345 — Equipment number - Place on standard or structure. Existing equipment numbers are shown in parenthesis

CONDUIT AND CONDUCTOR IDENTIFICATION:

1½"C, 2#10, 15#14, 2 DLC

- 2#10, 15#14, 2 DLC — Number and size of conductors and cables
- 1½"C — Size of conduit in inches

Ø1, Ø2, Ø2P, etc.	Traffic phase identification for signal faces, detectors and phase diagrams
1 2 3	Project note numbers
A B C	Equipment description, installation or item numbers
1 2 3	Conduit run numbers

SIGNAL AND LIGHTING STANDARD (TYPICAL DESIGNATION):

19A - 3 - 100

- 100 — Wind velocity = 100 mph
- 3 — Case 3 arm loading
- 19A — Standard type
- Standard Plan sheet number
- Detail number or letter

MISCELLANEOUS EQUIPMENT

PROPOSED	EXISTING	
CMS	cms	Changeable message sign
		Closed circuit television camera
		Highway advisory radio pole and antenna
EMS	ems	Extinguishable message sign
M V	m v	Detection device M = Microwave sensor V = Video image sensor

WIRING DIAGRAM LEGEND

P	Pole
CB	Circuit breaker
A	Ampere
V	Volt
M	Metered
UM	Unmetered
NB	Neutral bus
GB	Ground bus
G	Equipment grounding conductor
N	Grounded conductor (Neutral)

External conductor
Conductor or bus
Tie point
Contactor coil
Contactor, Contact NO
Terminal blocks
Contactor, Contact NC
Enclosure bond
Grounding electrode
Circuit breaker
Receptacle

PULL BOXES

PROPOSED EXISTING

Pull box-No. 5 unless otherwise indicated or noted.

3 — 9A(21)

Pull box-Additional designations or descriptions

- 3 = No. 3½ pull box
- 5 = No. 5 pull box
- 6 = No. 6 pull box
- 7 = No. 7 (Ceiling pull box)
- 8 = No. 8 (Pendant soffit pull box)
- 9 = No. 9 pull box
- 9A = No. 9A pull box

- (C) = Communications pull box
- (E) = Pull box with extension
- (S) = Sprinkler control pull box
- (21) = Anchor bolts and conduit for future installation of Type 21 Standard
- (T) = Traffic pull box

VEHICLE DETECTORS

5 J 9 U

- U — U = Upper, L = Lower
- 9 — Slot number in input file
- J — Input file (I or J)
- 5 — Phase

PROPOSED	EXISTING	
		Type A detector loop. Outline of sawcut shown.
		Type B detector loop. Outline of sawcut shown.
		Type C detector loop. Outline of sawcut shown.
		Type D detector loop. Outline of sawcut shown.
		Type E detector loop. Outline of sawcut shown.
		Type Q detector loop. Outline of sawcut shown.
		Magnetic detector
DH	dh	Detector handhole
		Microwave or video detection zone

STATE OF CALIFORNIA
DEPARTMENT OF TRANSPORTATION

ELECTRICAL SYSTEMS (SYMBOLS AND ABBREVIATIONS)

NO SCALE

RSP ES-1C DATED OCTOBER 5, 2007 SUPERCEDES STANDARD PLAN ES-1C DATED MAY 1, 2006 - PAGE 402 OF THE STANDARD PLANS BOOK DATED MAY 2006.

REVISED STANDARD PLAN RSP ES-1C

2006 REVISED STANDARD PLAN RSP ES-1C

7-10-07

DIST	COUNTY	ROUTE	POST MILES TOTAL PROJECT	SHEET NO.	TOTAL SHEETS
11	SD	94,805	Var	50	51

REGISTERED ELECTRICAL ENGINEER

October 5, 2007
PLANS APPROVAL DATE

REGISTERED PROFESSIONAL ENGINEER Jeffery G. McRae No. E14512 Exp. 6-30-08 ELECTRICAL STATE OF CALIFORNIA

The State of California or its officers or agents shall not be responsible for the accuracy or completeness of electronic copies of this plan sheet.

To accompany plans dated 02-27-12

2006 REVISED STANDARD PLAN RSP ES-5A

LOOP INSTALLATION PROCEDURE

1. Loops shall be centered in lanes.
2. Saw slots in pavement for loop conductors as shown in details.
3. Distance between side of loop and a lead-in saw cut from adjacent detectors shall be 2'-0" minimum. Distance between lead-in saw cuts shall be 6" minimum.
4. Bottom of saw slot shall be smooth with no sharp edges.
5. Slots shall be washed until clean, blown out and thoroughly dried before installing loop conductors.
6. Adjacent loops on the same sensor unit channel shall be wound in opposite directions.
7. Identify and tag loop circuit pairs in the pull box with loop number, start (S) and finish (F) of conductor. Identify and tag lead-in-cable with sensor number and phase.
8. Install loop conductor in slot using a 3/16" to 1/4" thick wood paddle. Hold loop conductors with wood paddles (at the bottom of the sawed slot) during sealant placement.
9. No more than 2 twisted pairs shall be installed in one sawed slot.
10. Allow additional 5'-0" of slack length of conductor for the lead-in run to pull box.
11. The additional length of each conductor for each loop shall be twisted together into a pair (6 turns per 3'-4" minimum) before being placed in the slot and conduit leading to pull box.
12. Test each loop circuit for continuity, circuit resistance and insulation resistance at the pull box before filling slots.
13. Fill slots as shown in details.
14. Splice loop conductors to lead-in-cable. Splices shall be soldered.
15. End of lead-in-cable and Type 2 loop conductor shall be waterproofed prior to installing in conduit to prevent moisture from entering the cable.
16. Lead-in-cable shall not be spliced between the pull box and the controller cabinet terminals.
17. Test each loop circuit for continuity, circuit resistance and insulation resistance at the controller cabinet location.
18. Where loop conductors are not to be spliced to a lead-in-cable, the ends of the conductors shall be taped and waterproofed with electrical insulating coating.

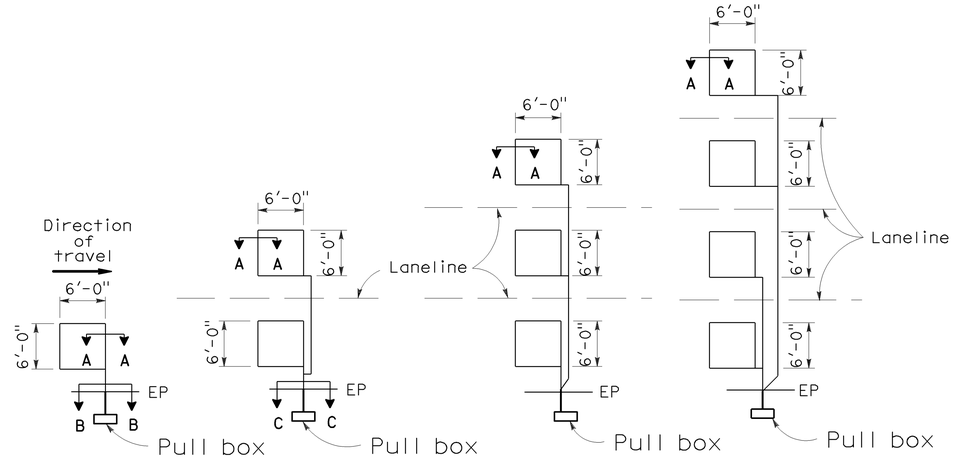

TYPE 1A INSTALLATION | TYPE 2A INSTALLATION | TYPE 3A INSTALLATION | TYPE 4A INSTALLATION

SAWCUT DETAILS

(Type A loop detector configurations illustrated)

1. 1A thru 4A = 1 Type A loop configuration in each lane.
2. 1B thru 4B = 1 Type B loop configuration in each lane.
3. 1C = 1 Type C loop configuration entering lanes as required.
4. 1D thru 4D = 1 Type D loop configuration in each lane.
5. 1E thru 4E = 1 Type E loop configuration in each lane.
6. 1Q thru 4Q = 1 Type Q loop configuration in each lane. (Use Type A, B, C, D, E or Q loop detector configurations only when specified or shown on plans)

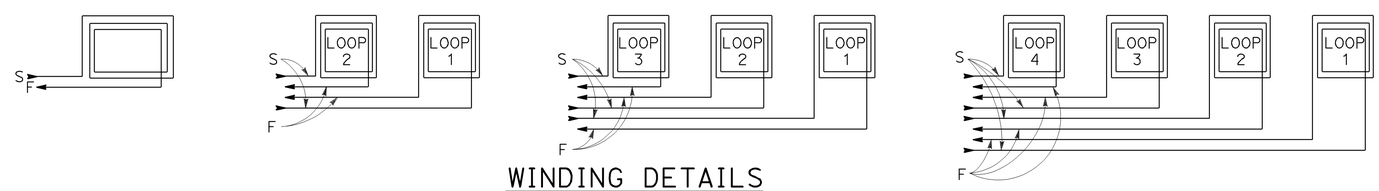

WINDING DETAILS

See Notes 6 and 7

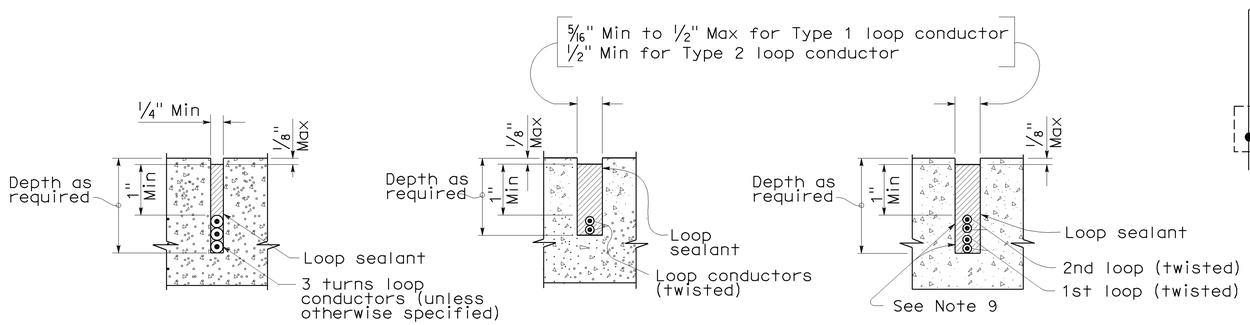

SECTION A-A | SECTION B-B | SECTION C-C

SLOT DETAILS - TYPE 1 AND TYPE 2 LOOP CONDUCTOR

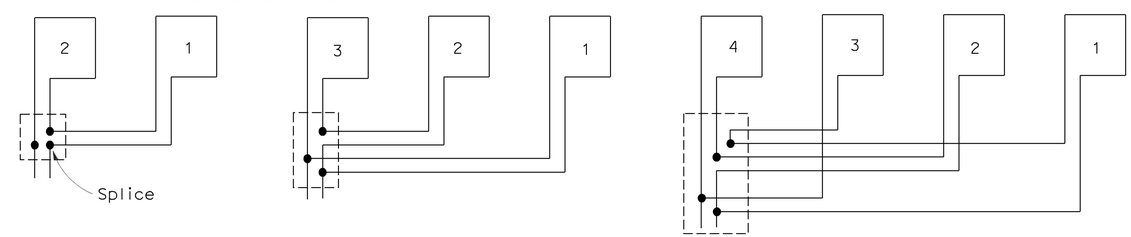

TYPICAL LOOP CONNECTIONS

(Dashed lines represent the pull box)

STATE OF CALIFORNIA
DEPARTMENT OF TRANSPORTATION

ELECTRICAL SYSTEMS (DETECTORS)

NO SCALE

RSP ES-5A DATED OCTOBER 5, 2007 SUPERCEDES STANDARD PLAN ES-5A DATED MAY 1, 2006 - PAGE 423 OF THE STANDARD PLANS BOOK DATED MAY 2006.

REVISED STANDARD PLAN RSP ES-5A

8-17-07

DIST	COUNTY	ROUTE	POST MILES TOTAL PROJECT	SHEET NO.	TOTAL SHEETS
11	SD	94,805	Var	51	51

REGISTERED ELECTRICAL ENGINEER

January 20, 2012
PLANS APPROVAL DATE

REGISTERED PROFESSIONAL ENGINEER
Jeffery G. McRae
No. E14512
Exp. 6-30-12
ELECTRICAL
STATE OF CALIFORNIA

The State of California or its officers or agents shall not be responsible for the accuracy or completeness of electronic copies of this plan sheet.

To accompany plans dated 02-27-12

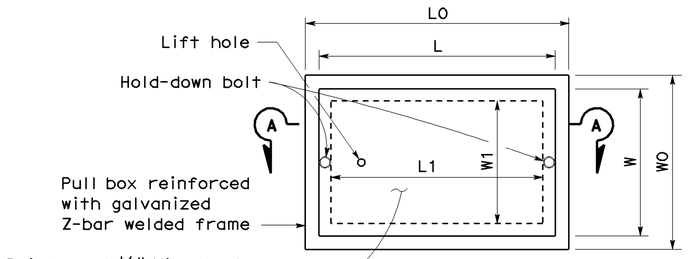

TOP VIEW

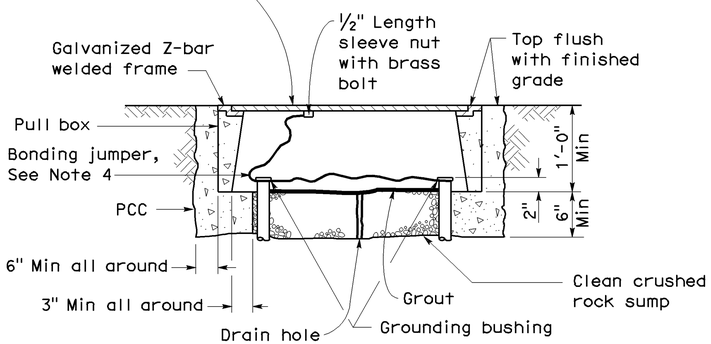

SECTION A-A

No. 3½(T), No. 5(T) AND No. 6(T) TRAFFIC PULL BOX

NOTES ON PULL BOXES:

1. Traffic pull box shall be provided with steel cover and special concrete footing. Steel cover shall have embossed non-skid pattern.
2. Steel reinforcing shall be as regularly used in the standard products of the respective manufacturer.
3. Pull box covers must be marked as follows: "SERVICE" Service circuits between service point and service disconnect; "SPRINKLER-CONTROL" Sprinkler control circuits, 50 V or less; "CALTRANS" On all pull boxes, except pull boxes marked "SPRINKLER-CONTROL"; and "TELEPHONE" Telephone service.
   A) No. 3½(T) pull box.
      1) "SIGNAL" - Traffic signal circuits with or without street or sign lighting circuits.
      2) "ST LIGHTING" - Street or sign lighting circuits where voltage is under 600 V.
   B) No. 5(T) or 6(T) pull box.
      1) "TRAFFIC SIGNAL" - Traffic signal circuits with or without street or sign lighting circuits.
      2) "STREET LIGHTING" - Street or sign lighting circuits where voltage is under 600 V.
      3) "STREET LIGHTING-HIGH VOLTAGE" - Street or sign lighting circuits where voltage is above 600 V.
      4) "IRRIGATION" - Circuits to irrigation controller 120 V or more.
      5) "RAMP METER" - Ramp meter circuits.
      6) "COUNT STATION" - Count or speed monitor circuits.
      7) "COMMUNICATION" - Communication circuits.
      8) "TOS COMMUNICATIONS" - TOS communications line.
      9) "TOS POWER" - TOS power.
      10) "TDC POWER" - Telephone demarcation cabinet power.
      11) "CCTV" - Closed circuit television circuits.
      12) "TMS" - Traffic monitoring station circuits.
      13) "CMS" - Changeable message sign circuits.
      14) "HAR" - Highway advisory radio circuits.
4. Bonding jumper for metal covers shall be 3' long, minimum.
5. The nominal dimensions of the opening in which the cover sets must be the same as the cover dimensions except the length and width dimensions shall be ⅛" greater.
6. Covers and boxes must be interchangeable with California standard male and female gages. When interchanged with a standard male or female gage, the top surfaces must be flush within ⅛".

DIMENSION TABLE

PULL BOX	BOX						COVER				
	Minimum * Thickness	Minimum Depth Box and Extension	WO	LO	L1	W1	L **	W **	R	Edge Thickness	Edge Taper
No. 3½(T)	1½"	1'-0"	1'-5"± 1"	1'-8⅞"±	1'-2½"±	10⅝"± 1"	1'-8"±	1'-1¾"±	0"	½"	None
No. 5(T)	1¾"	1'-0"	1'-11½"± 1"	2'-5½"±	1'-7"±	1'-1"± 1"	2'-3"±	1'-4"±	0"	½"	None
No. 6(T)	2"	1'-0"	2'-6"± 1"	2'-11½"±	1'-11½"±	1'-5"± 1"	2'-9"±	1'-8"±	0"	½"	None

* Excluding conduit web ** Top dimension

STATE OF CALIFORNIA
DEPARTMENT OF TRANSPORTATION

ELECTRICAL SYSTEMS (TRAFFIC RATED PULL BOX)

NO SCALE

NSP ES-8B DATED JANUARY 20, 2012 SUPPLEMENTS THE STANDARD PLANS BOOK DATED MAY 2006.

NEW STANDARD PLAN NSP ES-8B

2006 NEW STANDARD PLAN NSP ES-8B

9-28-11