CMLN-6211(110)

Dist	COUNTY	ROUTE	POST MILES TOTAL PROJECT	SHEET No.	TOTAL SHEETS
11	SD	15	R30.1/R31.5	1	57

STATE OF CALIFORNIA

DEPARTMENT OF TRANSPORTATION

PROJECT PLANS FOR CONSTRUCTION ON

STATE HIGHWAY

IN SAN DIEGO COUNTY
IN ESCONDIDO FROM
NINTH AVENUE UNDERCROSSING
TO ROUTE 15/78 SEPARATION

TO BE SUPPLEMENTED BY STANDARD PLANS DATED MAY 2006

INDEX OF PLANS

SHEET NO.	DESCRIPTION
1	TITLE AND LOCATION MAP
2-9	WATER POLLUTION CONTROL PLAN AND QUANTITIES
10	PLANT LIST
11-17	PLANTING PLAN
18-20	IRRIGATION REMOVAL PLAN
21-27	IRRIGATION PLAN
28-36	LANDSCAPE DETAILS
37-39	IRRIGATION QUANTITIES
40-45	EXISTING UTILITIES PLAN
46	CONSTRUCTION AREA SIGNS
47-57	NEW AND REVISED STANDARD PLAN

THE STANDARD PLANS LIST APPLICABLE TO THIS CONTRACT IS INCLUDED IN THE NOTICE TO BIDDERS AND SPECIAL PROVISIONS BOOK.

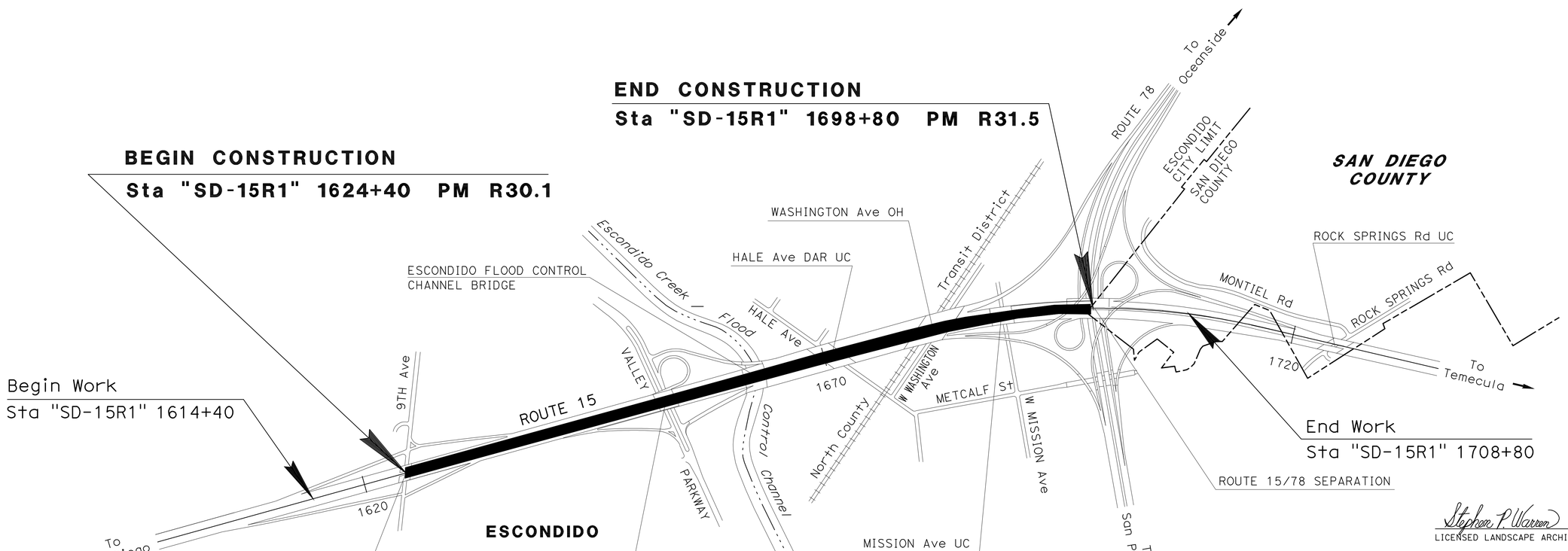

NO SCALE

THE CONTRACTOR SHALL POSSESS THE CLASS (OR CLASSES) OF LICENSE AS SPECIFIED IN THE "NOTICE TO BIDDERS."

Stephen P. Warren
LICENSED LANDSCAPE ARCHITECT

AUGUST 8, 2011
PLANS APPROVAL DATE

THE STATE OF CALIFORNIA OR ITS OFFICERS OR AGENTS SHALL NOT BE RESPONSIBLE FOR THE ACCURACY OR COMPLETENESS OF SCANNED COPIES OF THIS PLAN SHEET.

LICENSED LANDSCAPE ARCHITECT — STEPHEN P. WARREN No. 5442 — Signature — 10-31-12 Renewal Date — 07-20-11 Date — STATE OF CALIFORNIA

CONTRACT No.	11-2T0884
PROJECT ID	1100020317

PROJECT MANAGER: ANDREW RICE
SENIOR LANDSCAPE ARCHITECT: STEPHEN ALVAREZ

LAST REVISION 07-27-11 — DATE PLOTTED => 02-DEC-2011 — TIME PLOTTED => 15:05

Dist	COUNTY	ROUTE	POST MILES TOTAL PROJECT	SHEET No.	TOTAL SHEETS
11	SD	15	R30.1/R31.5	2	57

LICENSED LANDSCAPE ARCHITECT

08-08-11
PLANS APPROVAL DATE

LICENSED LANDSCAPE ARCHITECT
STEPHEN P. WARREN No. 3442
Signature
10-31-12
Renewal Date
07-20-11
Date
STATE OF CALIFORNIA

THE STATE OF CALIFORNIA OR ITS OFFICERS OR AGENTS SHALL NOT BE RESPONSIBLE FOR THE ACCURACY OR COMPLETENESS OF SCANNED COPIES OF THIS PLAN SHEET.

NOTE:

1. FOR ACCURATE RIGHT OF WAY, CONTACT RIGHT OF WAY ENGINEERING AT THE DISTRICT OFFICE.
2. FIBER ROLLS ARE THE ONLY PERMANENT ITEM OF WORK.

LEGEND:

- FR — FIBER ROLLS
- TEMPORARY CHECK DAM (TYPE 2) (10 LF EACH)
- TEMPORARY DRAINAGE INLET PROTECTION (TYPE 4A)
- TEMPORARY CONSTRUCTION ENTRANCE (TYPE 2)
- FLOW DIRECTION
- CWB — TEMPORARY CONCRETE WASHOUT BIN

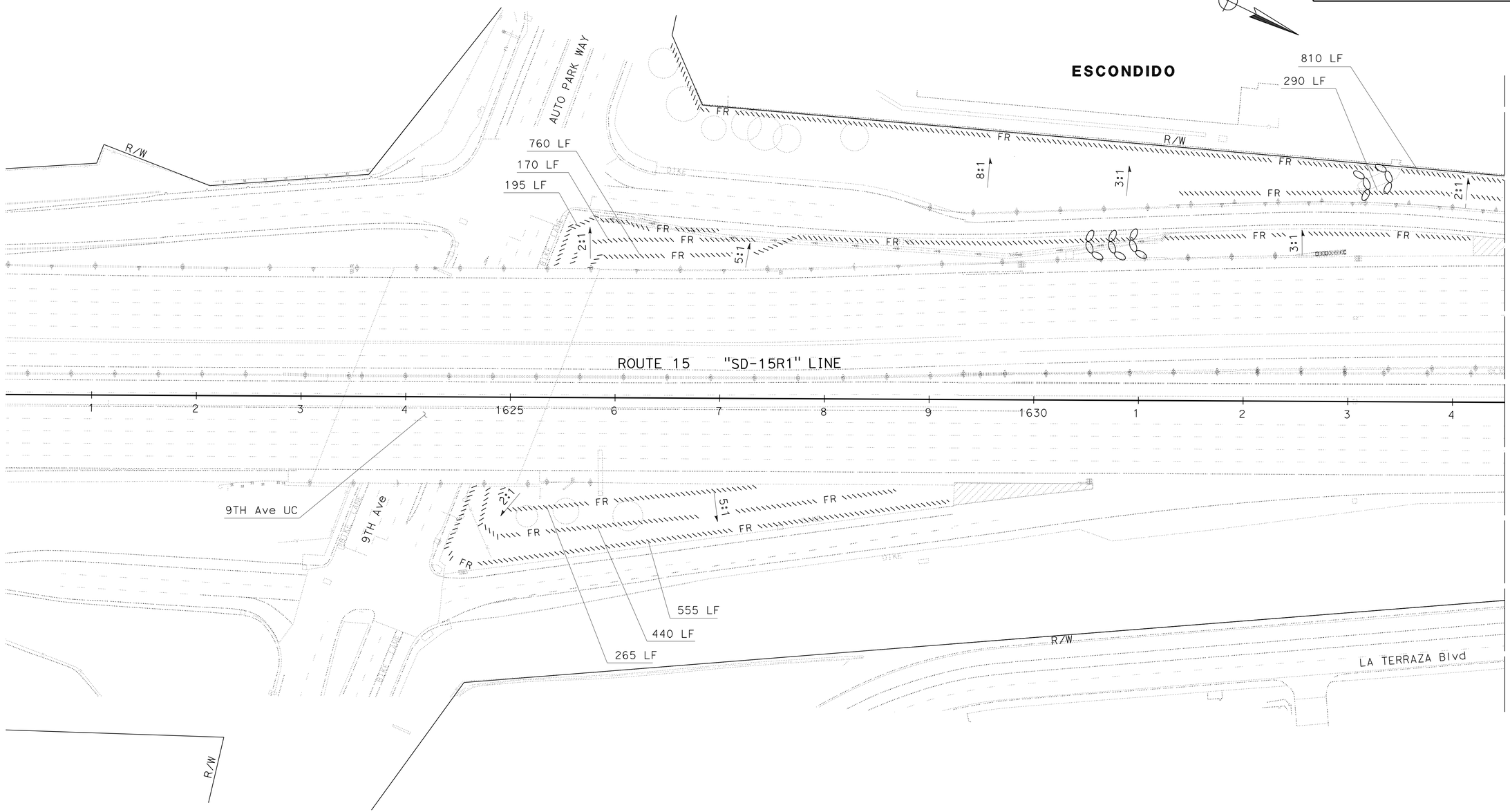

WATER POLLUTION CONTROL PLAN
(TEMPORARY AND PERMANENT)

THIS PLAN ACCURATE FOR WATER POLLUTION CONTROL WORK ONLY

SCALE: 1" = 50'

W-1

STATE OF CALIFORNIA - DEPARTMENT OF TRANSPORTATION
Caltrans® LANDSCAPE ARCHITECTURE

SENIOR LANDSCAPE ARCHITECT: STEPHEN ALVAREZ

CALCULATED-DESIGNED BY: STEPHEN WARREN
CHECKED BY: RUDY MEDINA

REVISED BY
DATE REVISED

LAST REVISION 07-28-11
DATE PLOTTED => 30-NOV-2011
TIME PLOTTED => 14:54

Dist	COUNTY	ROUTE	POST MILES TOTAL PROJECT	SHEET No.	TOTAL SHEETS
11	SD	15	R30.1/R31.5	3	57

Stephen P. Warren
LICENSED LANDSCAPE ARCHITECT

08-08-11
PLANS APPROVAL DATE

LICENSED LANDSCAPE ARCHITECT
STEPHEN P. WARREN No. 3442
Signature
10-31-12
Renewal Date
07-20-11
Date
STATE OF CALIFORNIA

THE STATE OF CALIFORNIA OR ITS OFFICERS OR AGENTS SHALL NOT BE RESPONSIBLE FOR THE ACCURACY OR COMPLETENESS OF SCANNED COPIES OF THIS PLAN SHEET.

NOTE:

1. FOR ACCURATE RIGHT OF WAY, CONTACT RIGHT OF WAY ENGINEERING AT THE DISTRICT OFFICE.

ESCONDIDO

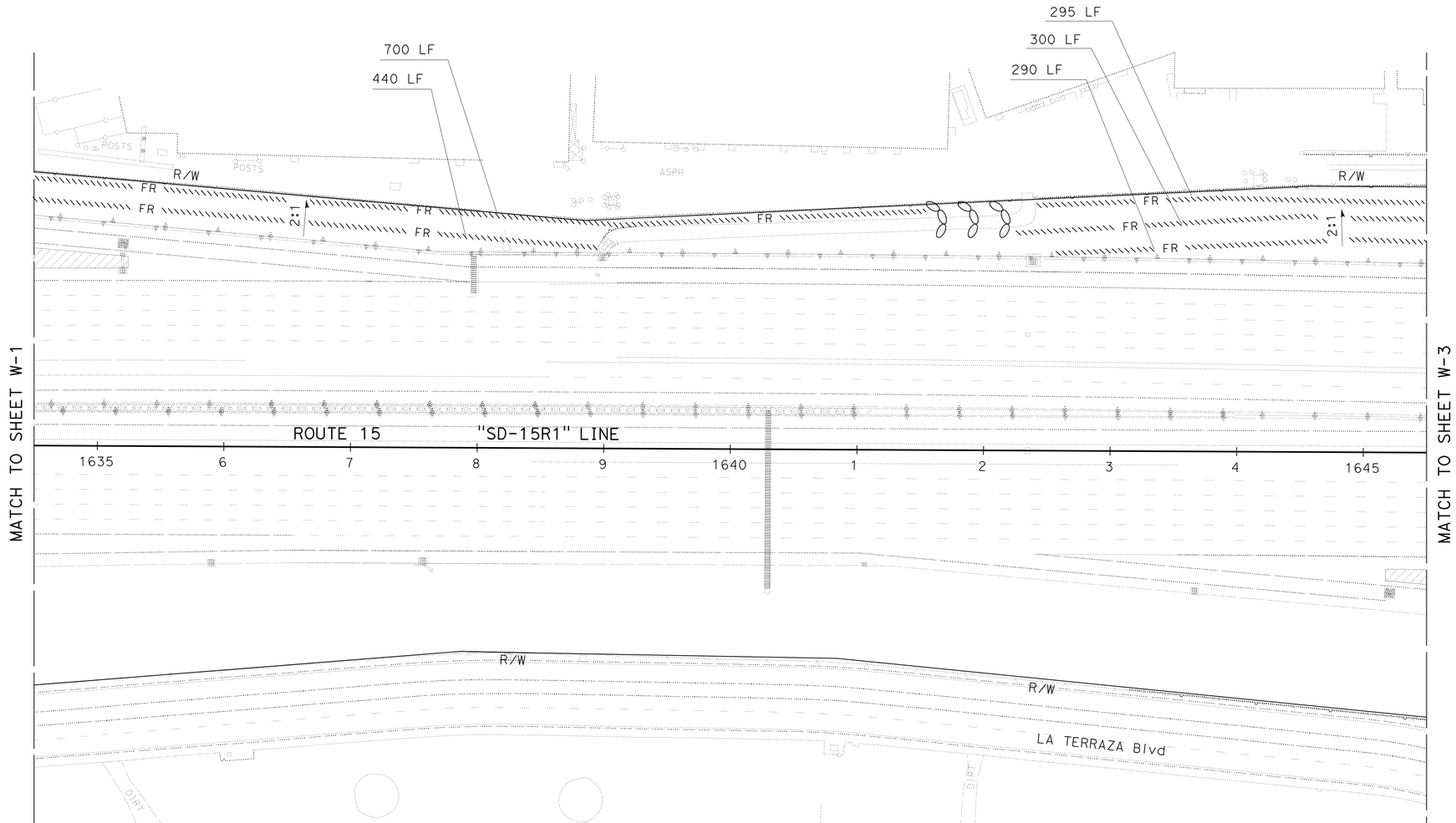

WATER POLLUTION CONTROL PLAN
(TEMPORARY AND PERMANENT)

THIS PLAN ACCURATE FOR WATER POLLUTION CONTROL WORK ONLY

SCALE: 1" = 50'

W-2

STATE OF CALIFORNIA - DEPARTMENT OF TRANSPORTATION
Caltrans® LANDSCAPE ARCHITECTURE

SENIOR LANDSCAPE ARCHITECT: STEPHEN ALVAREZ
CALCULATED-DESIGNED BY: STEPHEN WARREN
CHECKED BY: RUDY MEDINA
REVISED BY
DATE REVISED

LAST REVISION 07-28-11
DATE PLOTTED => 30-NOV-2011
TIME PLOTTED => 14:54

Dist	COUNTY	ROUTE	POST MILES TOTAL PROJECT	SHEET No.	TOTAL SHEETS
11	SD	15	R30.1/R31.5	4	57

Stephen P. Warren
LICENSED LANDSCAPE ARCHITECT

08-08-11
PLANS APPROVAL DATE

LICENSED LANDSCAPE ARCHITECT
STEPHEN P. WARREN No. 3442
Signature
10-31-12
Renewal Date
07-20-11
Date
STATE OF CALIFORNIA

THE STATE OF CALIFORNIA OR ITS OFFICERS OR AGENTS SHALL NOT BE RESPONSIBLE FOR THE ACCURACY OR COMPLETENESS OF SCANNED COPIES OF THIS PLAN SHEET.

NOTE:

1. FOR ACCURATE RIGHT OF WAY, CONTACT RIGHT OF WAY ENGINEERING AT THE DISTRICT OFFICE.

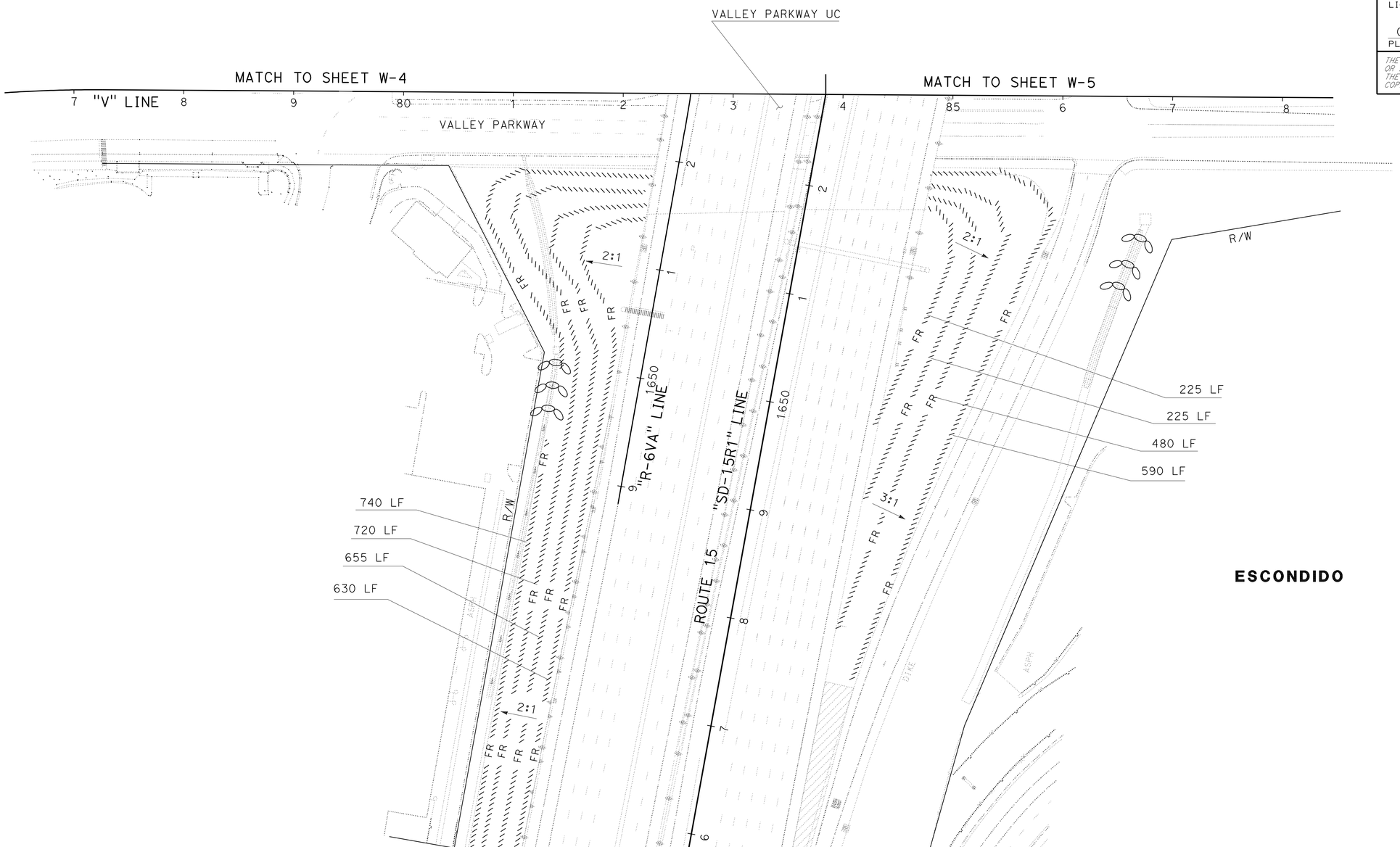

ESCONDIDO

WATER POLLUTION CONTROL PLAN
(TEMPORARY AND PERMANENT)

THIS PLAN ACCURATE FOR WATER POLLUTION CONTROL WORK ONLY

SCALE: 1" = 50'

W-3

STATE OF CALIFORNIA - DEPARTMENT OF TRANSPORTATION
Caltrans® LANDSCAPE ARCHITECTURE

SENIOR LANDSCAPE ARCHITECT: STEPHEN ALVAREZ
CALCULATED-DESIGNED BY: STEPHEN WARREN
CHECKED BY: RUDY MEDINA
REVISED BY
DATE REVISED

LAST REVISION 07-28-11
DATE PLOTTED => 30-NOV-2011
TIME PLOTTED => 14:54

Dist	COUNTY	ROUTE	POST MILES TOTAL PROJECT	SHEET No.	TOTAL SHEETS
11	SD	15	R30.1/R31.5	5	57

Stephen P. Warren
LICENSED LANDSCAPE ARCHITECT

08-08-11
PLANS APPROVAL DATE

LICENSED LANDSCAPE ARCHITECT
STEPHEN P. WARREN No. 3442
Signature
10-31-12
Renewal Date
07-20-11
Date
STATE OF CALIFORNIA

THE STATE OF CALIFORNIA OR ITS OFFICERS OR AGENTS SHALL NOT BE RESPONSIBLE FOR THE ACCURACY OR COMPLETENESS OF SCANNED COPIES OF THIS PLAN SHEET.

NOTE:

1. FOR ACCURATE RIGHT OF WAY, CONTACT RIGHT OF WAY ENGINEERING AT THE DISTRICT OFFICE.

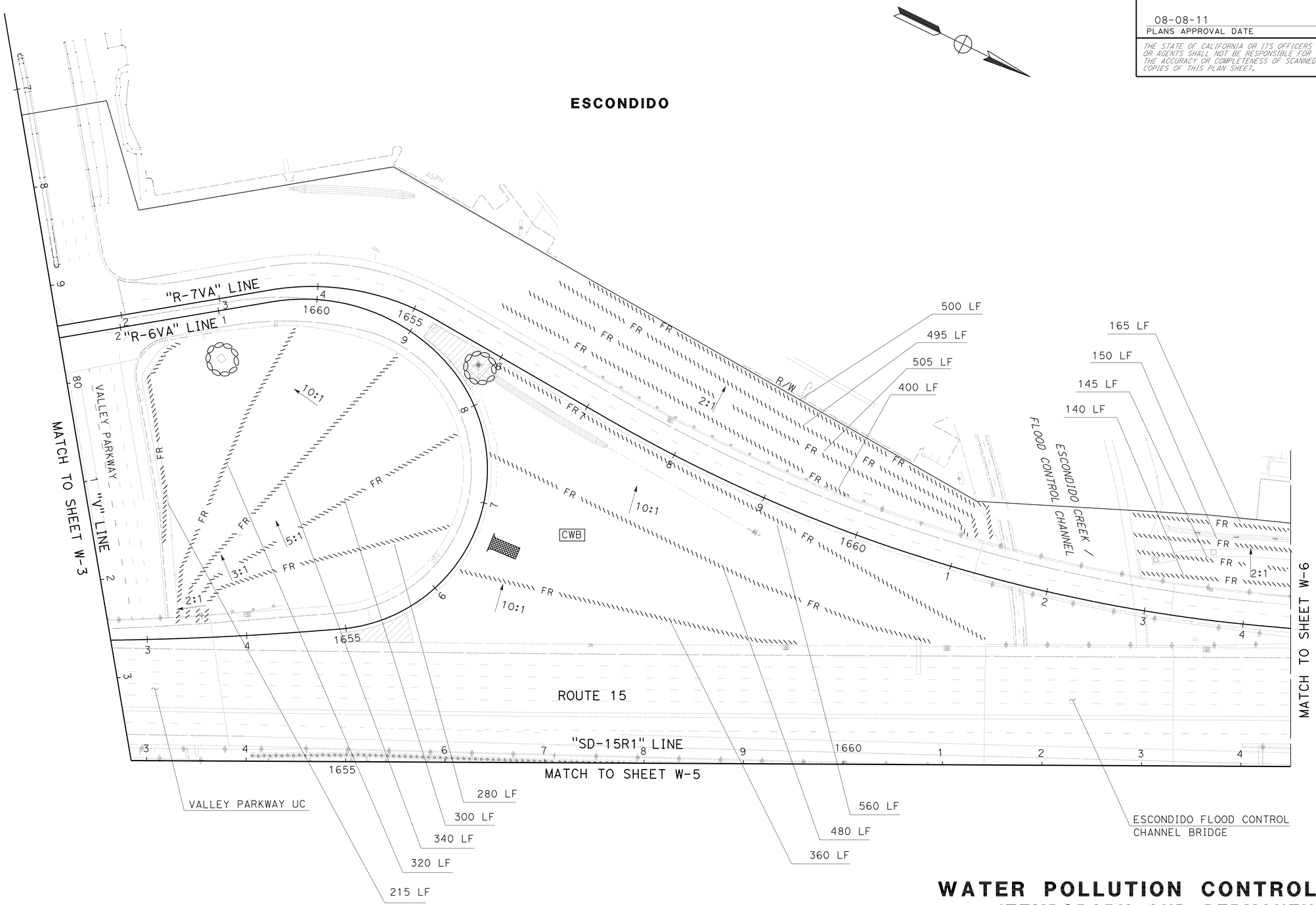

THIS PLAN ACCURATE FOR WATER POLLUTION CONTROL WORK ONLY

WATER POLLUTION CONTROL PLAN
(TEMPORARY AND PERMANENT)

SCALE: 1" = 50'

W-4

STATE OF CALIFORNIA - DEPARTMENT OF TRANSPORTATION
Caltrans® LANDSCAPE ARCHITECTURE

SENIOR LANDSCAPE ARCHITECT: STEPHEN ALVAREZ
CALCULATED-DESIGNED BY: STEPHEN WARREN
CHECKED BY: RUDY MEDINA
REVISED BY
DATE REVISED

LAST REVISION 07-28-11
DATE PLOTTED => 30-NOV-2011
TIME PLOTTED => 14:54

Dist	COUNTY	ROUTE	POST MILES TOTAL PROJECT	SHEET No.	TOTAL SHEETS
11	SD	15	R30.1/R31.5	6	57

Stephen P. Warren
LICENSED LANDSCAPE ARCHITECT

08-08-11
PLANS APPROVAL DATE

THE STATE OF CALIFORNIA OR ITS OFFICERS OR AGENTS SHALL NOT BE RESPONSIBLE FOR THE ACCURACY OR COMPLETENESS OF SCANNED COPIES OF THIS PLAN SHEET.

LICENSED LANDSCAPE ARCHITECT
STEPHEN P. WARREN No. 3442
Signature
10-31-12
Renewal Date
07-20-11
Date
STATE OF CALIFORNIA

NOTE:

1. FOR ACCURATE RIGHT OF WAY, CONTACT RIGHT OF WAY ENGINEERING AT THE DISTRICT OFFICE.

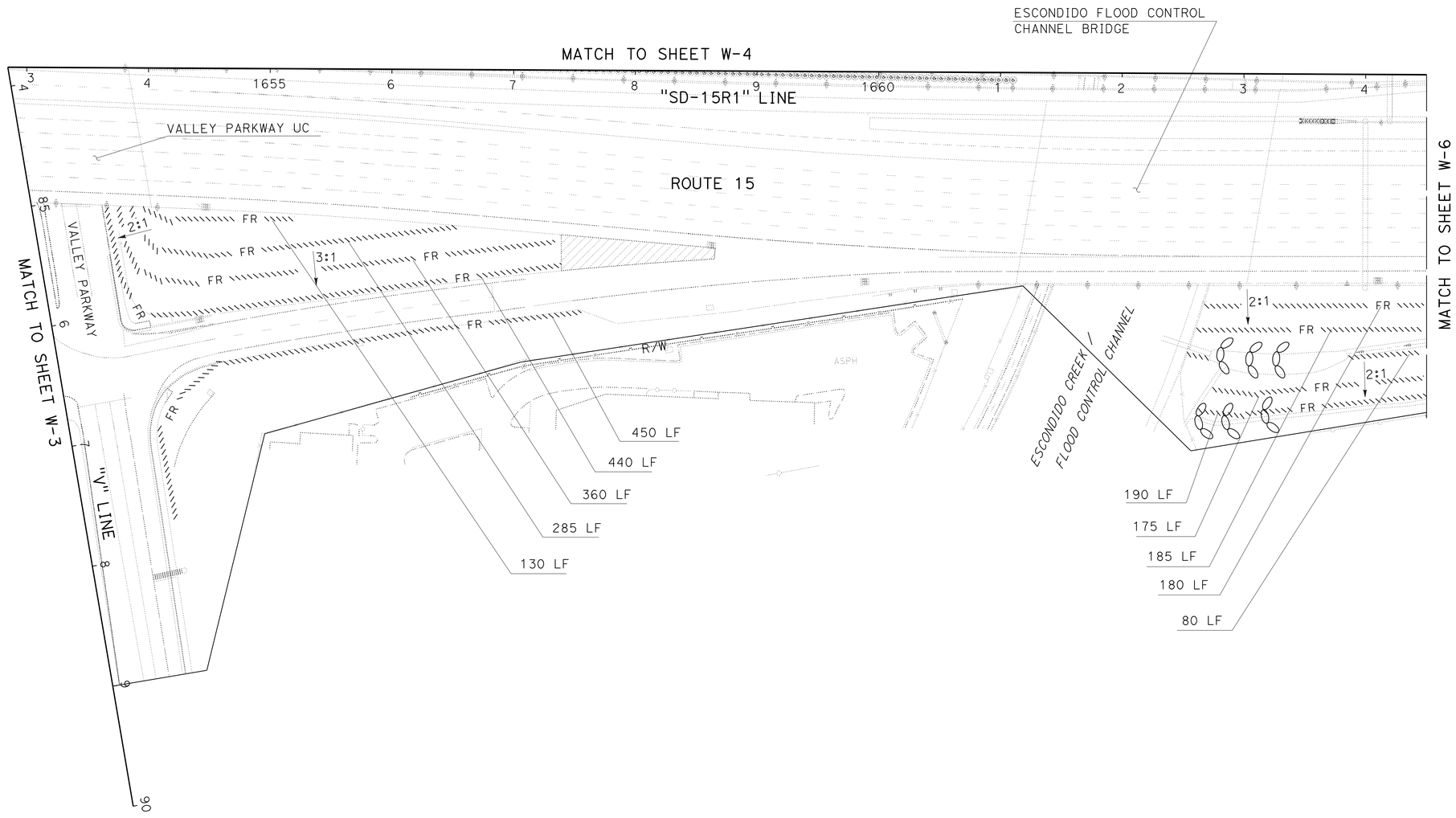

THIS PLAN ACCURATE FOR WATER POLLUTION CONTROL WORK ONLY

WATER POLLUTION CONTROL PLAN
(TEMPORARY AND PERMANENT)

SCALE: 1" = 50'

W-5

STATE OF CALIFORNIA - DEPARTMENT OF TRANSPORTATION
Caltrans LANDSCAPE ARCHITECTURE

SENIOR LANDSCAPE ARCHITECT: STEPHEN ALVAREZ
CALCULATED-DESIGNED BY: STEPHEN WARREN
CHECKED BY: RUDY MEDINA
REVISED BY
DATE REVISED

LAST REVISION 07-28-11
DATE PLOTTED => 30-NOV-2011
TIME PLOTTED => 14:54

Dist	COUNTY	ROUTE	POST MILES TOTAL PROJECT	SHEET No.	TOTAL SHEETS
11	SD	15	R30.1/R31.5	7	57

LICENSED LANDSCAPE ARCHITECT

08-08-11
PLANS APPROVAL DATE

LICENSED LANDSCAPE ARCHITECT
STEPHEN P. WARREN No. 3442
Signature
10-31-12
Renewal Date
07-20-11
Date
STATE OF CALIFORNIA

THE STATE OF CALIFORNIA OR ITS OFFICERS OR AGENTS SHALL NOT BE RESPONSIBLE FOR THE ACCURACY OR COMPLETENESS OF SCANNED COPIES OF THIS PLAN SHEET.

NOTE:

1. FOR ACCURATE RIGHT OF WAY, CONTACT RIGHT OF WAY ENGINEERING AT THE DISTRICT OFFICE.

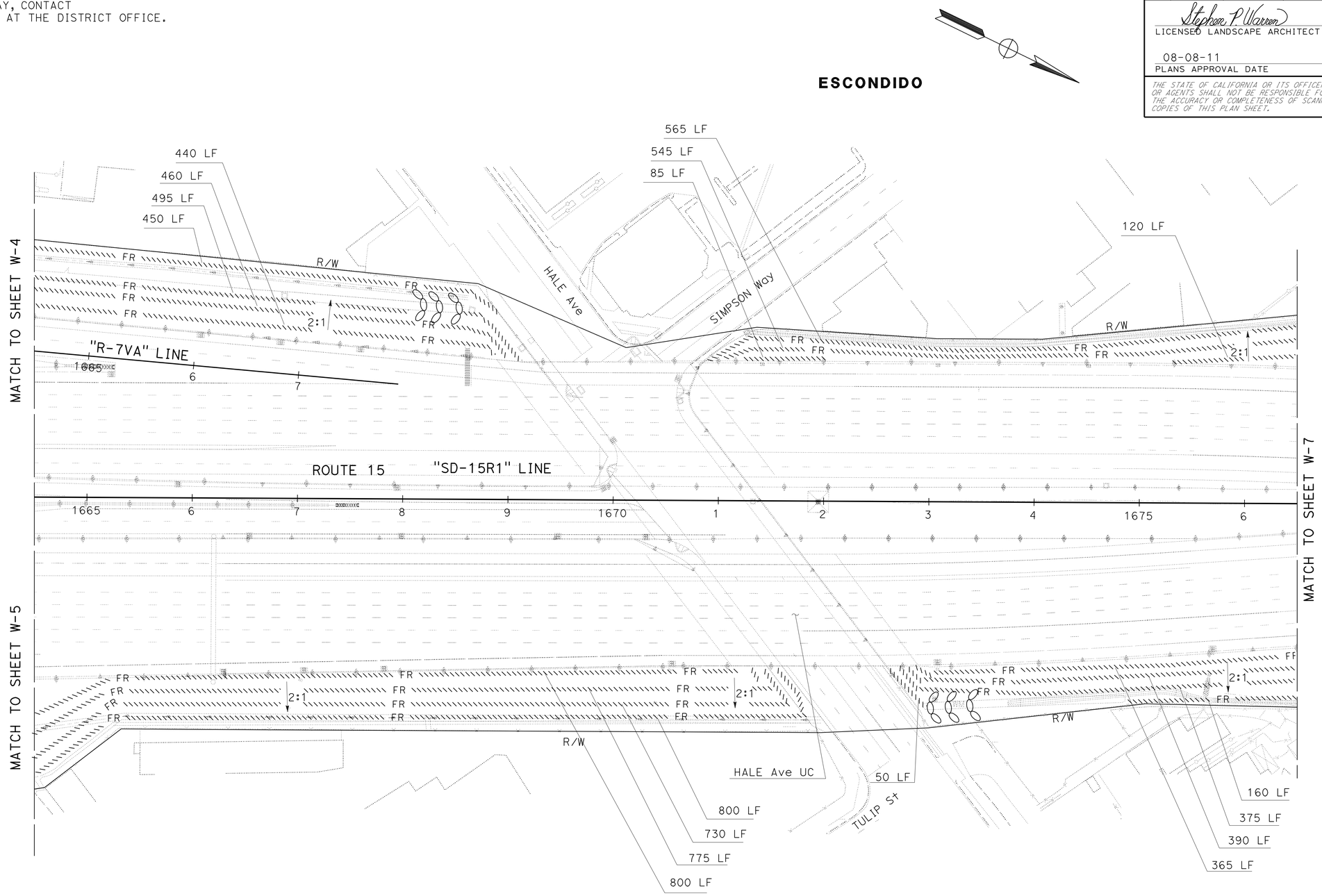

WATER POLLUTION CONTROL PLAN
(TEMPORARY AND PERMANENT)

THIS PLAN ACCURATE FOR WATER POLLUTION CONTROL WORK ONLY

SCALE: 1" = 50'

W-6

STATE OF CALIFORNIA - DEPARTMENT OF TRANSPORTATION
Caltrans® LANDSCAPE ARCHITECTURE

SENIOR LANDSCAPE ARCHITECT: STEPHEN ALVAREZ
CALCULATED-DESIGNED BY: STEPHEN WARREN
CHECKED BY: RUDY MEDINA
REVISED BY
DATE REVISED

LAST REVISION 07-28-11
DATE PLOTTED => 30-NOV-2011
TIME PLOTTED => 14:54

Dist	COUNTY	ROUTE	POST MILES TOTAL PROJECT	SHEET No.	TOTAL SHEETS
11	SD	15	R30.1/R31.5	8	57

Stephen P. Warren
LICENSED LANDSCAPE ARCHITECT

08-08-11
PLANS APPROVAL DATE

LICENSED LANDSCAPE ARCHITECT
STEPHEN P. WARREN No. 3442
Signature
10-31-12
Renewal Date
07-20-11
Date
STATE OF CALIFORNIA

THE STATE OF CALIFORNIA OR ITS OFFICERS OR AGENTS SHALL NOT BE RESPONSIBLE FOR THE ACCURACY OR COMPLETENESS OF SCANNED COPIES OF THIS PLAN SHEET.

NOTE:

1. FOR ACCURATE RIGHT OF WAY, CONTACT RIGHT OF WAY ENGINEERING AT THE DISTRICT OFFICE.

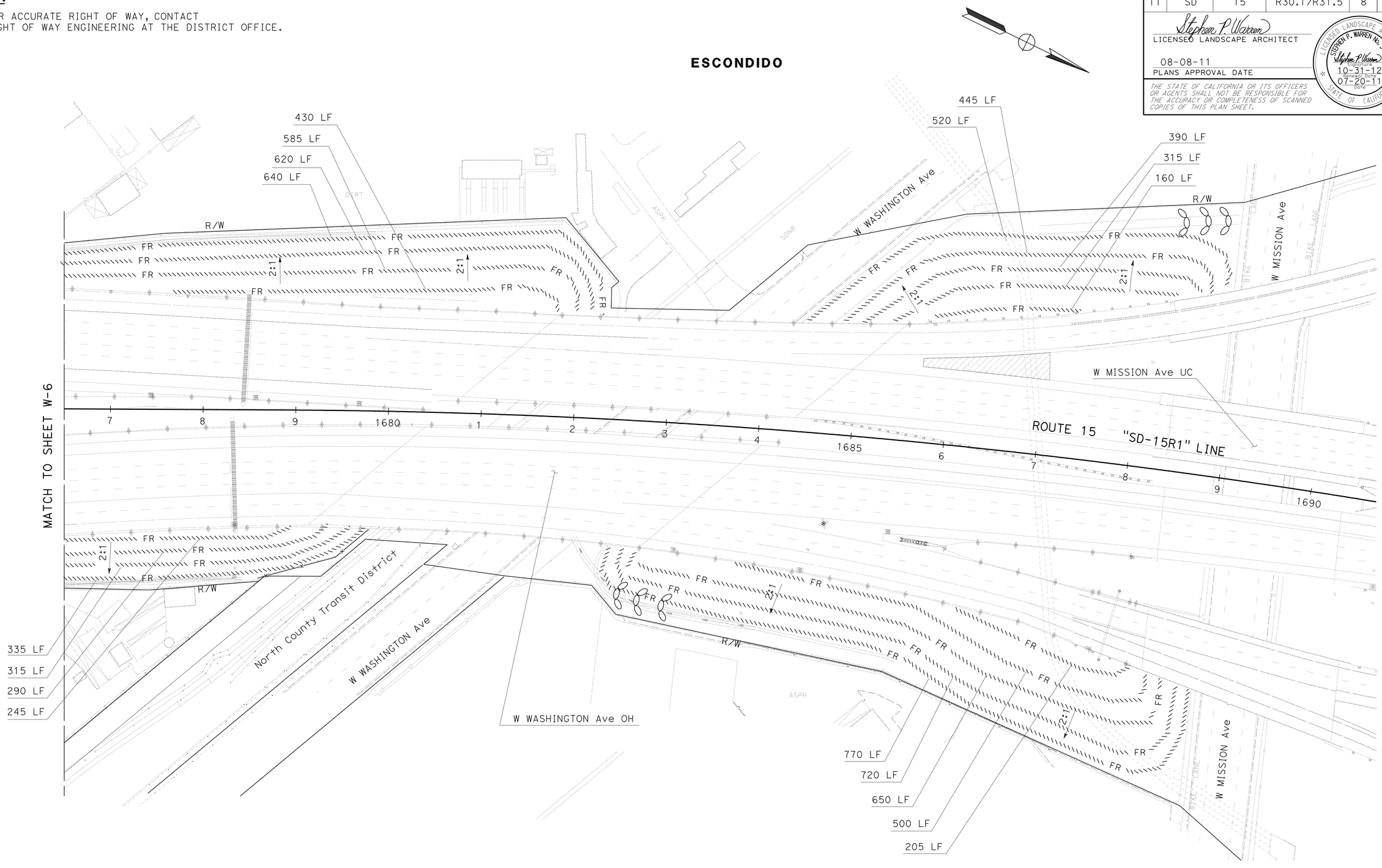

WATER POLLUTION CONTROL PLAN
(TEMPORARY AND PERMANENT)

THIS PLAN ACCURATE FOR WATER POLLUTION CONTROL WORK ONLY

SCALE: 1" = 50'

W-7

STATE OF CALIFORNIA - DEPARTMENT OF TRANSPORTATION
Caltrans® LANDSCAPE ARCHITECTURE

SENIOR LANDSCAPE ARCHITECT: STEPHEN ALVAREZ
CALCULATED-DESIGNED BY: STEPHEN WARREN
CHECKED BY: RUDY MEDINA
REVISED BY
DATE REVISED

LAST REVISION 07-29-11
DATE PLOTTED => 30-NOV-2011
TIME PLOTTED => 14:55

Dist	COUNTY	ROUTE	POST MILES TOTAL PROJECT	SHEET No.	TOTAL SHEETS
11	SD	15	R30.1/R31.5	9	57

Stephen P. Warren
LICENSED LANDSCAPE ARCHITECT

08-08-11
PLANS APPROVAL DATE

LICENSED LANDSCAPE ARCHITECT
STEPHEN P. WARREN No. 3442
Signature
10-31-12
Renewal Date
07-20-11
Date
STATE OF CALIFORNIA

THE STATE OF CALIFORNIA OR ITS OFFICERS OR AGENTS SHALL NOT BE RESPONSIBLE FOR THE ACCURACY OR COMPLETENESS OF SCANNED COPIES OF THIS PLAN SHEET.

WATER POLLUTION CONTROL (TEMPORARY AND PERMANENT) QUANTITIES

SHEET	FIBER ROLLS (LF)	TEMPORARY CHECK DAM (LF)	TEMPORARY CONSTRUCTION ENTRANCE (EA)	TEMPORARY DRAINAGE INLET PROTECTION (EA)	TEMPORARY CONCRETE WASHOUT BIN (EA)
W-1	3,485	50	—	—	—
W-2	2,025	30	—	—	—
W-3	4,265	60	—	—	—
W-4	5,355	—	1	2	1
W-5	2,475	60	—	—	—
W-6	7,605	60	—	—	—
W-7	8,135	60	—	—	—
TOTAL	33,345	320	1	2	1

WATER POLLUTION CONTROL QUANTITIES
(TEMPORARY AND PERMANENT)

WQ-1

STATE OF CALIFORNIA - DEPARTMENT OF TRANSPORTATION
Caltrans® LANDSCAPE ARCHITECTURE

SENIOR LANDSCAPE ARCHITECT: STEPHEN ALVAREZ
CALCULATED-DESIGNED BY: STEPHEN WARREN
CHECKED BY: RUDY MEDINA
REVISED BY
DATE REVISED

LAST REVISION 07-29-11
DATE PLOTTED => 30-NOV-2011
TIME PLOTTED => 14:55

Dist	COUNTY	ROUTE	POST MILES TOTAL PROJECT	SHEET No.	TOTAL SHEETS
11	SD	15	R30.1/R31.5	10	57

LICENSED LANDSCAPE ARCHITECT

08-08-11
PLANS APPROVAL DATE

LICENSED LANDSCAPE ARCHITECT — STEPHEN P. WARREN No. 3442 — Signature — 10-31-12 Renewal Date — 07-20-11 Date — STATE OF CALIFORNIA

THE STATE OF CALIFORNIA OR ITS OFFICERS OR AGENTS SHALL NOT BE RESPONSIBLE FOR THE ACCURACY OR COMPLETENESS OF SCANNED COPIES OF THIS PLAN SHEET.

NOTE:

UNDERLINED PORTIONS OF BOTANICAL NAMES INDICATE ABBREVIATIONS USED ON PLANTING PLANS.

ABBREVIATION:

BTH - BROWN TRUNK HEIGHT

PLANT LIST AND PLANTING SPECIFICATIONS

PLANT GROUP	PLANT No.	SYMBOL	BOTANICAL NAME	COMMON NAME	SIZE	QUANTITY EACH	HOLE SIZE (INCH) Dia	HOLE SIZE (INCH) DEPTH	BASIN TYPE	IRON SULFATE ①	SOIL Amend	FERTILIZER ① PLANTING	FERTILIZER ① PLT ESTB	BASIN MULCH ① (CY)	STAKING	PLANTING LIMITS MINIMUM DISTANCE (Ft) FROM TRVD WAY	Pvmt	FENCE	WALL	PAVED DITCH	EARTH DITCH	ON CENTER (Ft)	REMARKS
A	1		ACACIA REDOLENS 'DESERT CARPET'	LOW ACACIA	No. 1	2,534	②	②	I	4 Oz	-	1 Pkt	8 Oz	0.06	-	-	10	10	10	10	10	8	SHRUB
	2		CISTUS LADANIFER 'SKANBERGII'	PINK ROCKROSE	No. 1	1,749	②	②	I	4 Oz	-	1 Pkt	8 Oz	0.06	-	-	8	6	6	6	4	2	SHRUB
	3		CISTUS LADANIFER 'SKANBERGII'	PINK ROCKROSE	No. 1	541	②	②	I	4 Oz	-	1 Pkt	8 Oz	0.06	-	-	8	6	6	6	4	2	SHRUB
	4		PARTHENOCISSUS TRICUSPIDATA	BOSTON IVY	No. 1	320	②	②	I	4 Oz	-	1 Pkt	8 Oz	0.06	-	-	-	-	-	-	-	10	VINE
B	5		AGAVA ATTENUATA	AGAVA	No. 5	82	②	②	I	4 Oz	-	2 Pkt	8 Oz	0.06	-	-	4	3	3	3	4	④	SHRUB
	6		DISTICTIS BUCCINATORIA	BLOOD RED TRUMPET VINE	No. 5	25	②	②	I	4 Oz	-	2 Pkt	8 Oz	0.06	-	-	4	3	3	3	4	④	VINE
	7		EUCALYPTUS CITRIODORA	LEMON SCENTED GUM	No. 5	400	②	②	I	4 Oz	-	2 Pkt	8 Oz	0.06	-	40	-	30	30	15	17	④	TREE
F	8		PELARGONIUM PELTATUM	IVY GERANIUM (50% RED / 50% WHITE)	IN FLATS	32,580	②	②	-	10 lb/ 1,000 SQFT	-	8 lb/ 1,000 SQFT	4 lb/ 1,000 SQFT	-	-	-	8	6	6	6	8	0.66	GROUNDCOVER
	9		BACCHARIS PILULARIS 'PIGEON POINT'	DWARF COYOTE BRUSH	IN FLATS	302,500	②	②	-	10 lb/ 1,000 SQFT	-	8 lb/ 1,000 SQFT	4 lb/ 1,000 SQFT	-	-	-	8	6	6	6	8	1.5	GROUNDCOVER
G	10		SENECIO MANDRALISAE	BLUE CHALK STICKS	ROOTED CUTTINGS	281,215	②	②	-	10 lb/ 1,000 SQFT	-	8 lb/ 1,000 SQFT	4 lb/ 1,000 SQFT	-	-	-	8	3	3	3	8	0.66	GROUNDCOVER
H	11		CARPOBROTUS EDULIS	HOTTENTOT FIG	CUTTINGS	156,500	②	②	-	10 lb/ 1,000 SQFT	-	8 lb/ 1,000 SQFT	4 lb/ 1,000 SQFT	-	-	-	8	3	3	3	3	1	GROUNDCOVER
K	12		BUTIA CAPITATA	PINDO PALM	24" BOX	112	②	②	I	16 Oz	-	8 Pkt	24 Oz	0.30	-	-	6	2	2	2	2	2	PALM
	13		KOELREULTERIA BIPINNATA	CHINESE FLAME TREE	24" BOX	59	②	②	I	16 Oz	-	8 Pkt	24 Oz	0.30	⑥	30	-	10	10	10	12	④	TREE
M	14		FESTUCA CALIFORNICA	CALIFORNIA FESCUE	LINERS	30,215	②	②	-	2 Oz	-	1 Pkt	2 lb/ 1,000 SQFT	-	-	-	8	6	6	6	4	1	GRASS
	15		LEYMUS CONDENSATUS 'CANYON PRINCE'	WILD RYE	LINERS	15,400	②	②	-	2 Oz	-	1 Pkt	2 lb/ 1,000 SQFT	-	-	-	8	6	6	6	4	1.5	GRASS
T	16		NATIVE SOD	N.C.N.	SOD	1,700 SQYD	-	-	-	-	-	8 lb/ 1,000 SQFT	4 lb/ 1,000 SQFT	-	-	-	-	-	-	-	-	-	TURF ⑦
U	17		CERCIS CANDENSIS 'FOREST PANSY'	HYBRID REDBUD	No. 15	193	②	②	I	8 Oz	-	5 Pkt	16 Oz	0.20	⑥	30	-	15	15	15	17	④	TREE
	18		SCHINUS MOLLE	CALIFORNIA PEPPER	No. 15	123	②	②	I	8 Oz	-	5 Pkt	16 Oz	0.20	⑥	40	-	30	25	20	22	④	TREE
Z	19		PHOENIX DACTYLIFERA	DATE PALM	8'BTH	14	②	②	I	8 Oz	-	8 Pkt	24 Oz	0.30	⑥	30	25	25	20	20	22	④	PALM (SKINNED TRUNK)
	20		WASHINGTONIA FILIFERA	CALIFORNIA FAN PALM	15'BTH	50	②	②	I	8 Oz	-	8 Pkt	24 Oz	0.30	⑥	30	25	25	20	20	22	④	PALM

APPLICABLE WHEN CIRCLED:

① - QUANTITIES SHOWN ARE 'PER PLANT' UNLESS SHOWN AS SQFT APPLICATION RATES.
② - SUFFICIENT TO RECEIVE ROOT BALL.
3 - DOES NOT APPLY TO MULCH AREAS.
④ - AS SHOWN ON PLANS.
5 - UNLESS OTHERWISE SHOWN ON PLANS.
⑥ - PER STANDARD PLAN H4.
⑦ - SEE SPECIAL PROVISIONS.
8 - RANDOMLY PLANT IN AREA SHOWN IN GROUPS OF ODD NUMBERS EXAMPLE: 3'S,5'S,7'S,9'S,11'S ETC.
9 - MINIMUM DISTANCE FROM SIDEWALK, CURB OR ROCK MULCH IS 3'.
10 - MINIMUM DISTANCE FROM PAVING OR ROCK MULCH IS 2'.

LEGEND:

- MAINTAIN EXISTING PLANTED AREAS
- ROCK MULCH
- ROCK BLANKET
- RUBBER MULCH (2" DEEP)

OR - MULCH (2" DEEP)

STATE OF CALIFORNIA - DEPARTMENT OF TRANSPORTATION
Caltrans® LANDSCAPE ARCHITECTURE
SENIOR LANDSCAPE ARCHITECT: STEPHEN ALVAREZ
STEPHEN WARREN
CALCULATED-DESIGNED BY: RUDY MEDINA
CHECKED BY
REVISED BY
DATE REVISED

PLANT LIST
PL-1

LAST REVISION 07-29-11
DATE PLOTTED => 01-DEC-2011
TIME PLOTTED => 14:54

Dist	COUNTY	ROUTE	POST MILES TOTAL PROJECT	SHEET No.	TOTAL SHEETS
11	SD	15	R30.1/R31.5	11	57

LICENSED LANDSCAPE ARCHITECT

08-08-11
PLANS APPROVAL DATE

THE STATE OF CALIFORNIA OR ITS OFFICERS OR AGENTS SHALL NOT BE RESPONSIBLE FOR THE ACCURACY OR COMPLETENESS OF SCANNED COPIES OF THIS PLAN SHEET.

LICENSED LANDSCAPE ARCHITECT
STEPHEN P. WARREN No. 3442
Signature
10-31-12
Renewal Date
07-20-11
Date
STATE OF CALIFORNIA

NOTE:

1. FOR ACCURATE RIGHT OF WAY, CONTACT RIGHT OF WAY ENGINEERING AT THE DISTRICT OFFICE.

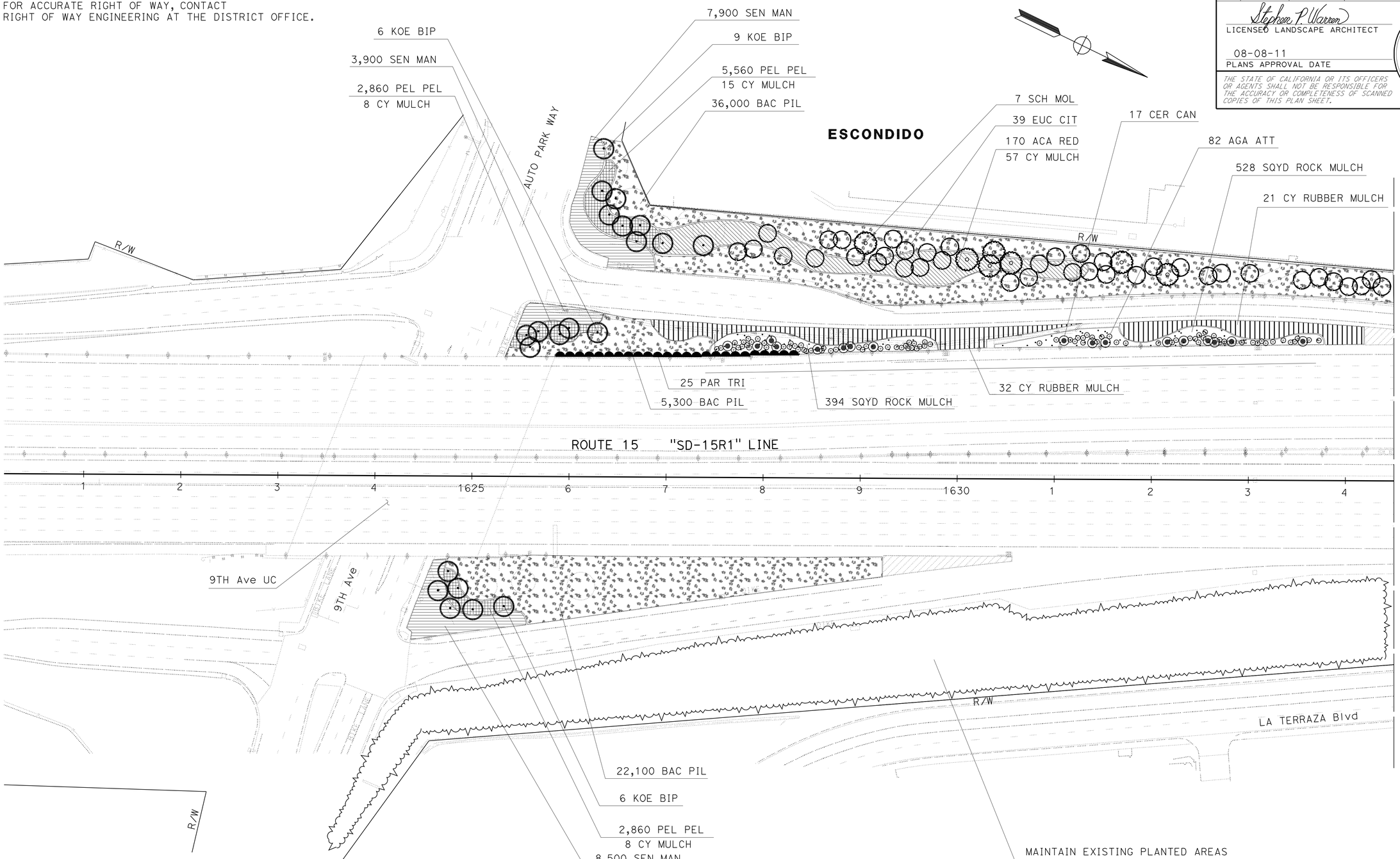

PLANTING PLAN

SCALE: 1" = 50'

PP-1

THIS PLAN ACCURATE FOR PLANTING WORK ONLY.

STATE OF CALIFORNIA - DEPARTMENT OF TRANSPORTATION
Caltrans® LANDSCAPE ARCHITECTURE

SENIOR LANDSCAPE ARCHITECT: STEPHEN ALVAREZ
CALCULATED-DESIGNED BY: STEPHEN WARREN
CHECKED BY: RUDY MEDINA
REVISED BY
DATE REVISED

LAST REVISION 07-29-11
DATE PLOTTED => 30-NOV-2011
TIME PLOTTED => 14:55

Dist	COUNTY	ROUTE	POST MILES TOTAL PROJECT	SHEET No.	TOTAL SHEETS
11	SD	15	R30.1/R31.5	12	57

Stephen P. Warren
LICENSED LANDSCAPE ARCHITECT

08-08-11
PLANS APPROVAL DATE

LICENSED LANDSCAPE ARCHITECT
STEPHEN P. WARREN No. 3442
Signature
10-31-12
Renewal Date
07-20-11
Date
STATE OF CALIFORNIA

THE STATE OF CALIFORNIA OR ITS OFFICERS OR AGENTS SHALL NOT BE RESPONSIBLE FOR THE ACCURACY OR COMPLETENESS OF SCANNED COPIES OF THIS PLAN SHEET.

NOTE:

1. FOR ACCURATE RIGHT OF WAY, CONTACT RIGHT OF WAY ENGINEERING AT THE DISTRICT OFFICE.

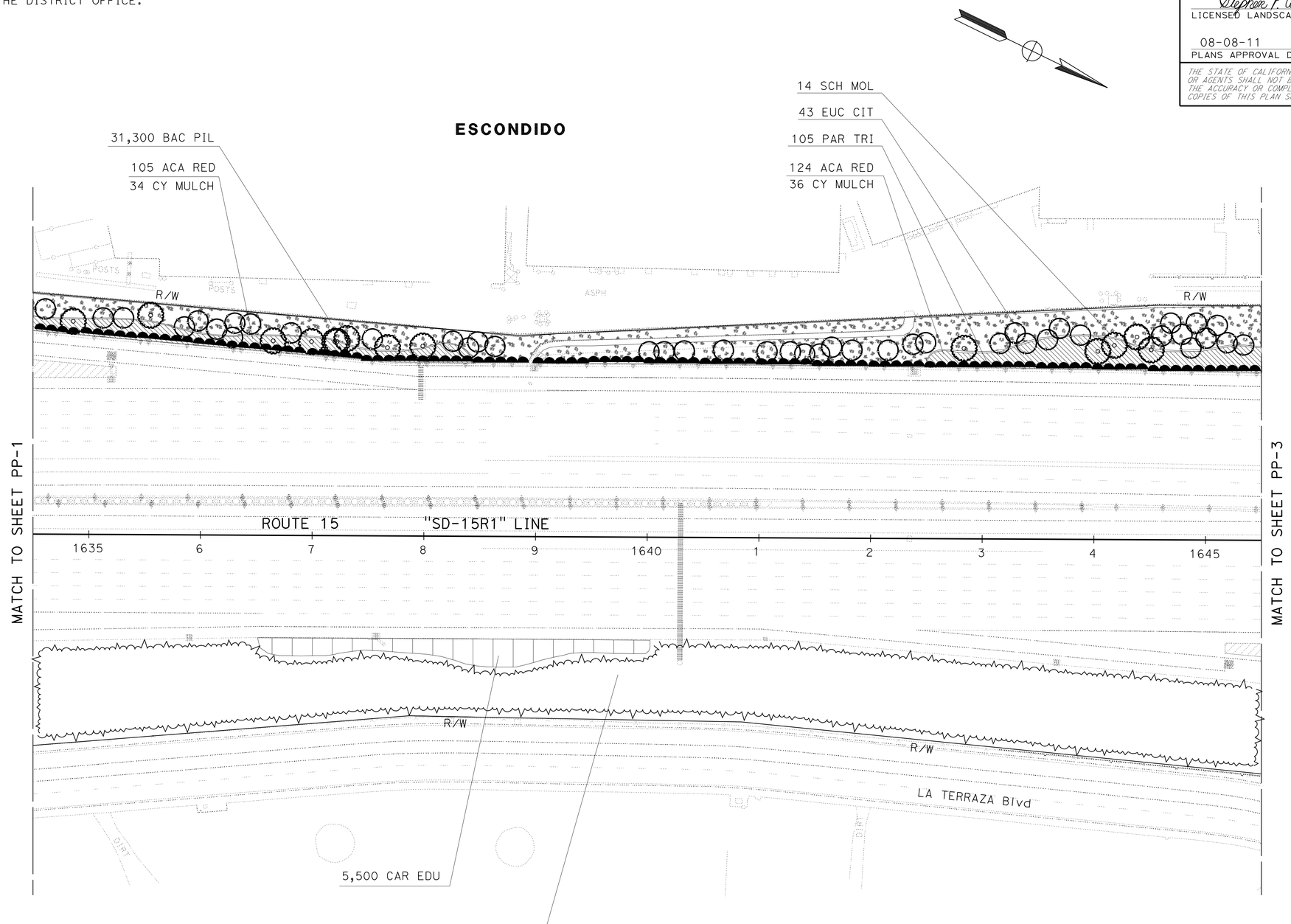

THIS PLAN ACCURATE FOR PLANTING WORK ONLY.

PLANTING PLAN

SCALE: 1" = 50'

PP-2

STATE OF CALIFORNIA - DEPARTMENT OF TRANSPORTATION
Caltrans LANDSCAPE ARCHITECTURE

SENIOR LANDSCAPE ARCHITECT: STEPHEN ALVAREZ
CALCULATED-DESIGNED BY: STEPHEN WARREN
CHECKED BY: RUDY MEDINA
REVISED BY
DATE REVISED

LAST REVISION 07-29-11
DATE PLOTTED => 30-NOV-2011
TIME PLOTTED => 14:55

Dist	COUNTY	ROUTE	POST MILES TOTAL PROJECT	SHEET No.	TOTAL SHEETS
11	SD	15	R30.1/R31.5	13	57

Stephen P. Warren
LICENSED LANDSCAPE ARCHITECT

08-08-11
PLANS APPROVAL DATE

LICENSED LANDSCAPE ARCHITECT
STEPHEN P. WARREN No. 3442
Signature
10-31-12
Renewal Date
07-20-11
Date
STATE OF CALIFORNIA

THE STATE OF CALIFORNIA OR ITS OFFICERS OR AGENTS SHALL NOT BE RESPONSIBLE FOR THE ACCURACY OR COMPLETENESS OF SCANNED COPIES OF THIS PLAN SHEET.

NOTE:

1. FOR ACCURATE RIGHT OF WAY, CONTACT RIGHT OF WAY ENGINEERING AT THE DISTRICT OFFICE.

ESCONDIDO

PLANTING PLAN

THIS PLAN ACCURATE FOR PLANTING WORK ONLY.

SCALE: 1" = 50'

PP-3

STATE OF CALIFORNIA - DEPARTMENT OF TRANSPORTATION
Caltrans® LANDSCAPE ARCHITECTURE

SENIOR LANDSCAPE ARCHITECT: STEPHEN ALVAREZ
CALCULATED-DESIGNED BY: STEPHEN WARREN
CHECKED BY: RUDY MEDINA
REVISED BY
DATE REVISED

LAST REVISION 07-29-11
DATE PLOTTED => 30-NOV-2011
TIME PLOTTED => 14:55

Dist	COUNTY	ROUTE	POST MILES TOTAL PROJECT	SHEET No.	TOTAL SHEETS
11	SD	15	R30.1/R31.5	14	57

Stephen P. Warren
LICENSED LANDSCAPE ARCHITECT

08-08-11
PLANS APPROVAL DATE

LICENSED LANDSCAPE ARCHITECT
STEPHEN P. WARREN No. 3442
Signature
10-31-12
Renewal Date
07-20-11
Date
STATE OF CALIFORNIA

THE STATE OF CALIFORNIA OR ITS OFFICERS OR AGENTS SHALL NOT BE RESPONSIBLE FOR THE ACCURACY OR COMPLETENESS OF SCANNED COPIES OF THIS PLAN SHEET.

NOTE:

1. FOR ACCURATE RIGHT OF WAY, CONTACT RIGHT OF WAY ENGINEERING AT THE DISTRICT OFFICE.

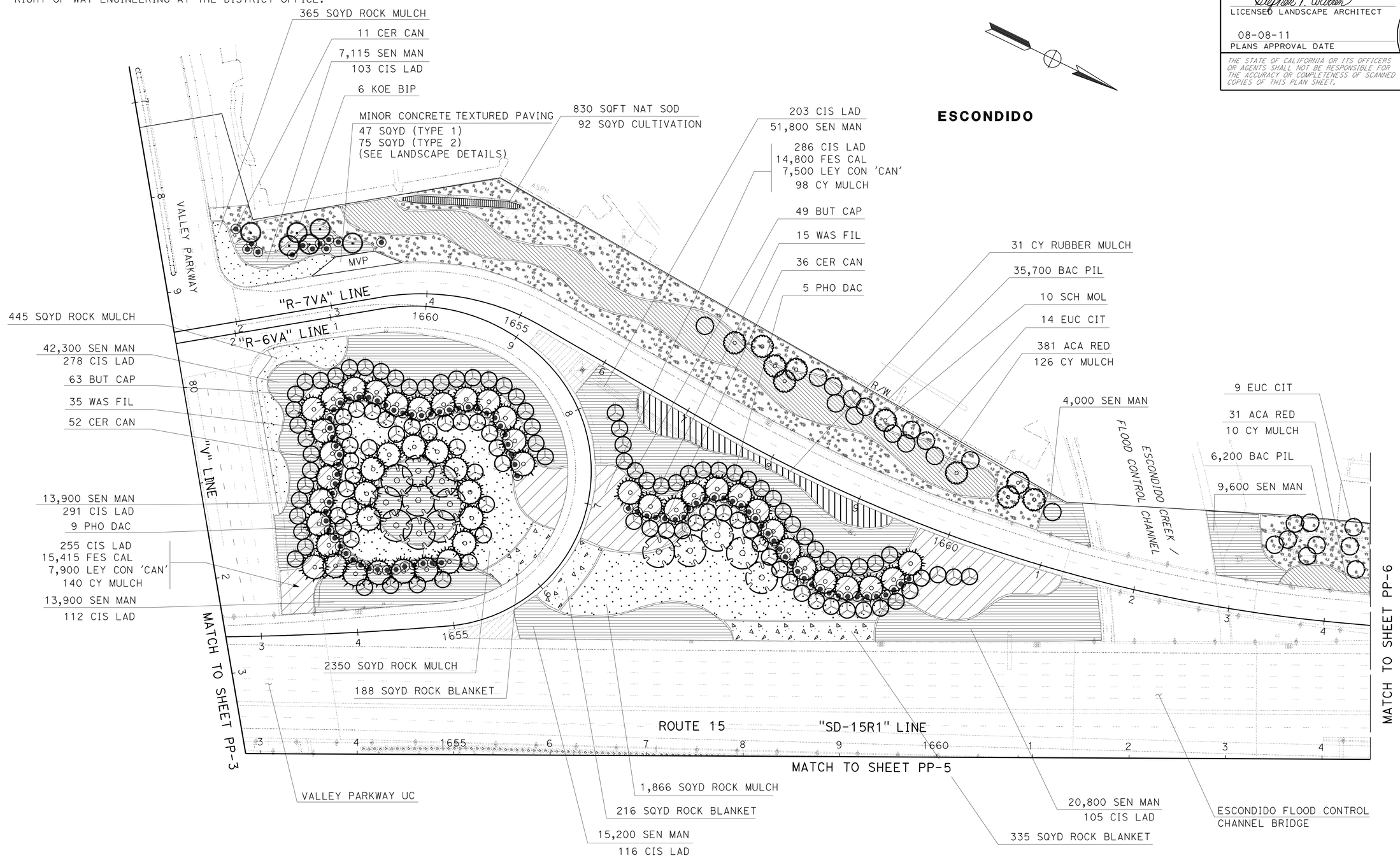

THIS PLAN ACCURATE FOR PLANTING WORK ONLY.

SCALE: 1" = 50'

PLANTING PLAN

PP-4

STATE OF CALIFORNIA - DEPARTMENT OF TRANSPORTATION
Caltrans® LANDSCAPE ARCHITECTURE

SENIOR LANDSCAPE ARCHITECT: STEPHEN ALVAREZ
CALCULATED-DESIGNED BY: STEPHEN WARREN
CHECKED BY: RUDY MEDINA
REVISED BY
DATE REVISED

LAST REVISION 07-29-11
DATE PLOTTED => 30-NOV-2011
TIME PLOTTED => 14:55

Dist	COUNTY	ROUTE	POST MILES TOTAL PROJECT	SHEET No.	TOTAL SHEETS
11	SD	15	R30.1/R31.5	15	57

Stephen P. Warren
LICENSED LANDSCAPE ARCHITECT

08-08-11
PLANS APPROVAL DATE

THE STATE OF CALIFORNIA OR ITS OFFICERS OR AGENTS SHALL NOT BE RESPONSIBLE FOR THE ACCURACY OR COMPLETENESS OF SCANNED COPIES OF THIS PLAN SHEET.

LICENSED LANDSCAPE ARCHITECT
STEPHEN P. WARREN No. 3442
Signature
10-31-12
Renewal Date
07-20-11
Date
STATE OF CALIFORNIA

NOTE:

1. FOR ACCURATE RIGHT OF WAY, CONTACT RIGHT OF WAY ENGINEERING AT THE DISTRICT OFFICE.

ESCONDIDO

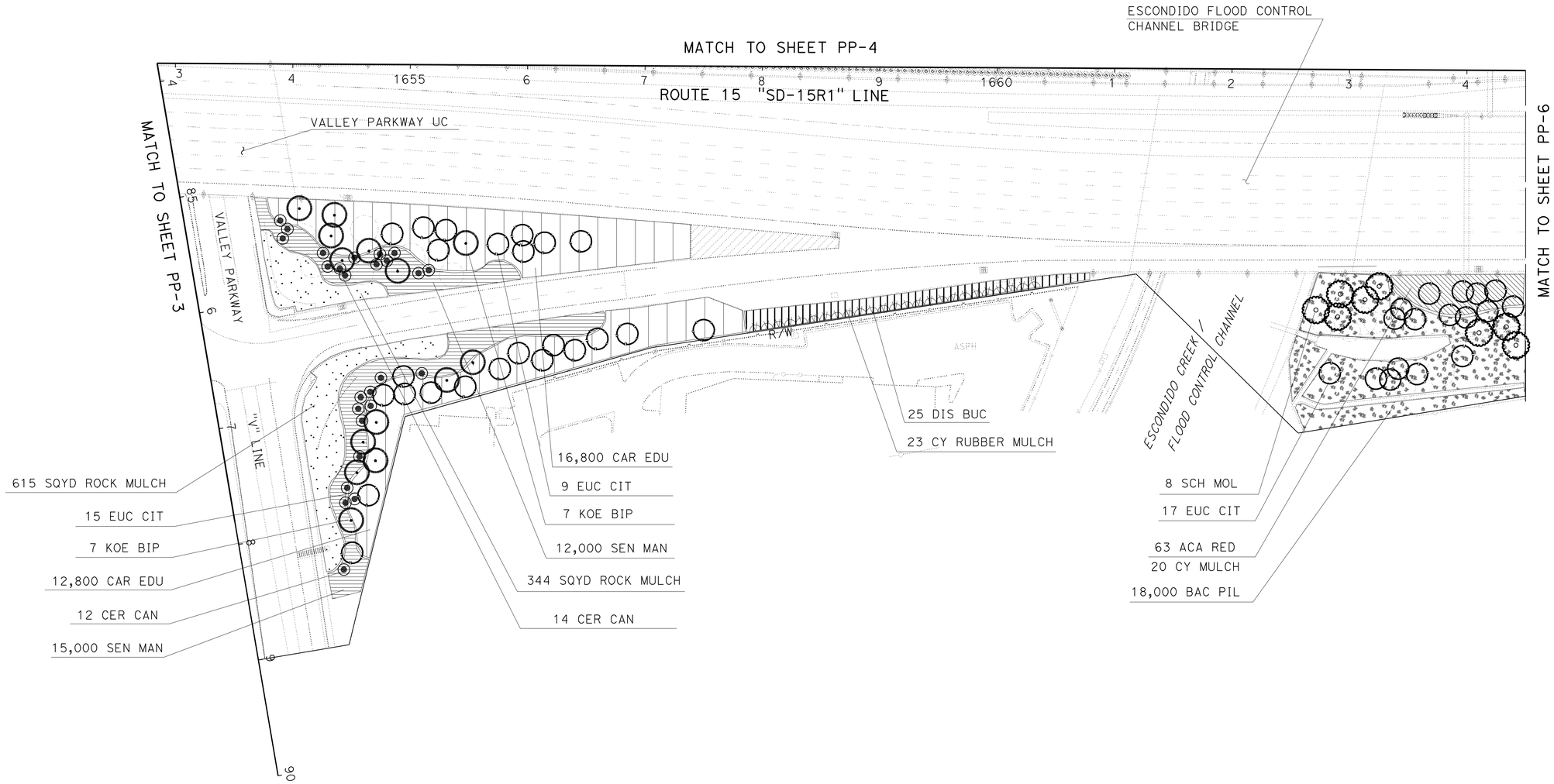

THIS PLAN ACCURATE FOR PLANTING WORK ONLY.

SCALE: 1" = 50'

PLANTING PLAN

PP-5

STATE OF CALIFORNIA - DEPARTMENT OF TRANSPORTATION
Caltrans® LANDSCAPE ARCHITECTURE

SENIOR LANDSCAPE ARCHITECT: STEPHEN ALVAREZ
CALCULATED-DESIGNED BY: STEPHEN WARREN
CHECKED BY: RUDY MEDINA
REVISED BY
DATE REVISED

LAST REVISION 07-29-11
DATE PLOTTED => 30-NOV-2011
TIME PLOTTED => 14:55

Dist	COUNTY	ROUTE	POST MILES TOTAL PROJECT	SHEET No.	TOTAL SHEETS
11	SD	15	R30.1/R31.5	16	57

Stephen P. Warren
LICENSED LANDSCAPE ARCHITECT

08-08-11
PLANS APPROVAL DATE

LICENSED LANDSCAPE ARCHITECT
STEPHEN P. WARREN No. 3442
Signature
10-31-12
Renewal Date
07-20-11
Date
STATE OF CALIFORNIA

THE STATE OF CALIFORNIA OR ITS OFFICERS OR AGENTS SHALL NOT BE RESPONSIBLE FOR THE ACCURACY OR COMPLETENESS OF SCANNED COPIES OF THIS PLAN SHEET.

NOTE:

1. FOR ACCURATE RIGHT OF WAY, CONTACT RIGHT OF WAY ENGINEERING AT THE DISTRICT OFFICE.

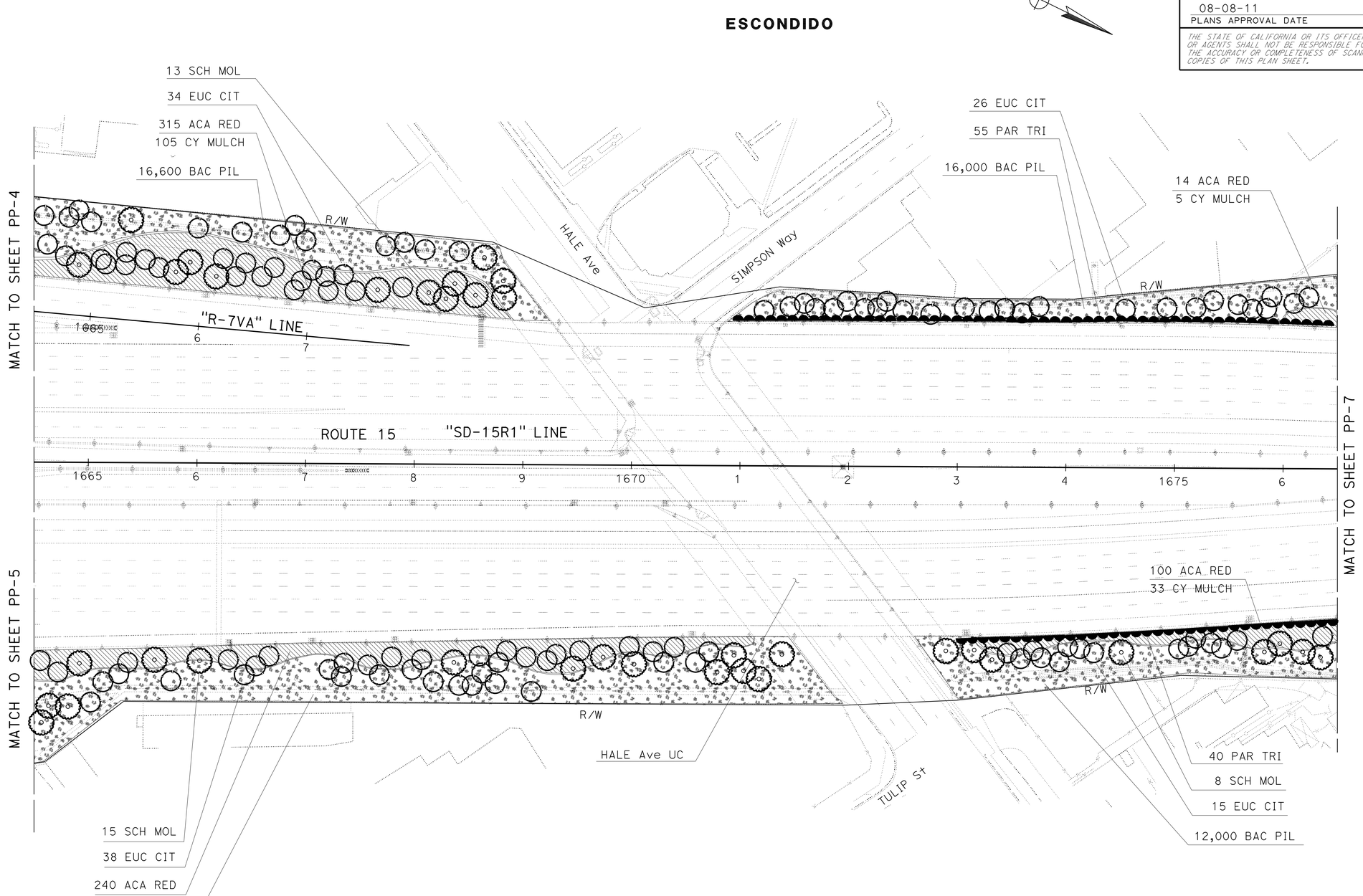

PLANTING PLAN

THIS PLAN ACCURATE FOR PLANTING WORK ONLY.

SCALE: 1" = 50'

PP-6

STATE OF CALIFORNIA - DEPARTMENT OF TRANSPORTATION
Caltrans® LANDSCAPE ARCHITECTURE

SENIOR LANDSCAPE ARCHITECT: STEPHEN ALVAREZ
CALCULATED-DESIGNED BY: STEPHEN WARREN
CHECKED BY: RUDY MEDINA
REVISED BY
DATE REVISED

LAST REVISION 07-29-11
DATE PLOTTED => 30-NOV-2011
TIME PLOTTED => 14:55

Dist	COUNTY	ROUTE	POST MILES TOTAL PROJECT	SHEET No.	TOTAL SHEETS
11	SD	15	R30.1/R31.5	17	57

Stephen P. Warren
LICENSED LANDSCAPE ARCHITECT

08-08-11
PLANS APPROVAL DATE

LICENSED LANDSCAPE ARCHITECT
STEPHEN P. WARREN No. 3442
Signature
10-31-12
Renewal Date
07-20-11
Date
STATE OF CALIFORNIA

THE STATE OF CALIFORNIA OR ITS OFFICERS OR AGENTS SHALL NOT BE RESPONSIBLE FOR THE ACCURACY OR COMPLETENESS OF SCANNED COPIES OF THIS PLAN SHEET.

NOTE:

1. FOR ACCURATE RIGHT OF WAY, CONTACT RIGHT OF WAY ENGINEERING AT THE DISTRICT OFFICE.

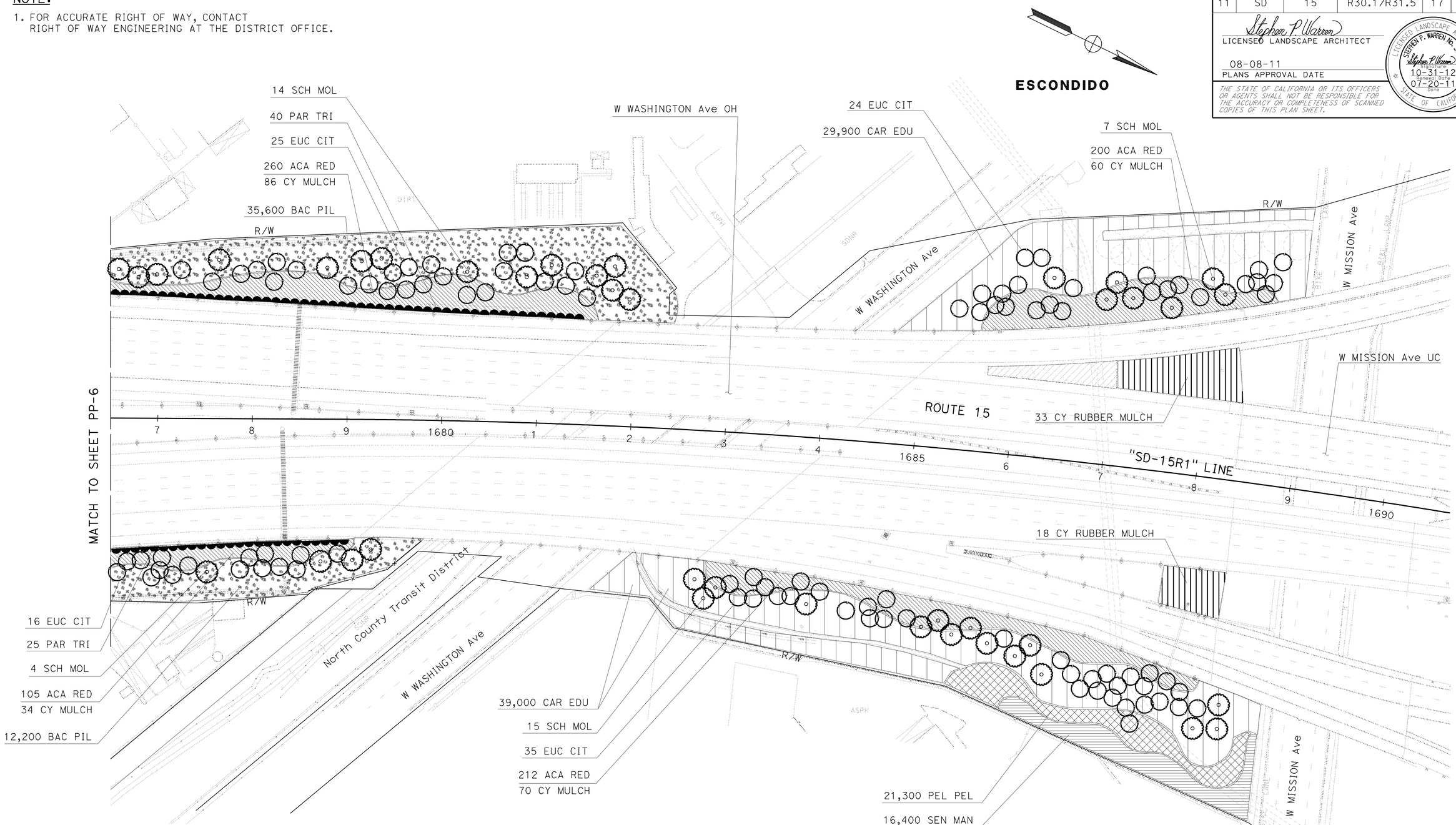

PLANTING PLAN

THIS PLAN ACCURATE FOR PLANTING WORK ONLY.

SCALE: 1" = 50'

PP-7

STATE OF CALIFORNIA - DEPARTMENT OF TRANSPORTATION
Caltrans® LANDSCAPE ARCHITECTURE

SENIOR LANDSCAPE ARCHITECT: STEPHEN ALVAREZ

CALCULATED-DESIGNED BY: STEPHEN WARREN
CHECKED BY: RUDY MEDINA

REVISED BY
DATE REVISED

LAST REVISION 07-29-11
DATE PLOTTED => 30-NOV-2011
TIME PLOTTED => 14:56

Dist	COUNTY	ROUTE	POST MILES TOTAL PROJECT	SHEET No.	TOTAL SHEETS
11	SD	15	R30.1/R31.5	18	57

LICENSED LANDSCAPE ARCHITECT

08-08-11
PLANS APPROVAL DATE

LICENSED LANDSCAPE ARCHITECT
STEPHEN P. WARREN No. 3442
Signature
10-31-12
Renewal Date
07-20-11
Date
STATE OF CALIFORNIA

THE STATE OF CALIFORNIA OR ITS OFFICERS OR AGENTS SHALL NOT BE RESPONSIBLE FOR THE ACCURACY OR COMPLETENESS OF SCANNED COPIES OF THIS PLAN SHEET.

NOTE:

1. FOR ACCURATE RIGHT OF WAY, CONTACT RIGHT OF WAY ENGINEERING AT THE DISTRICT OFFICE.

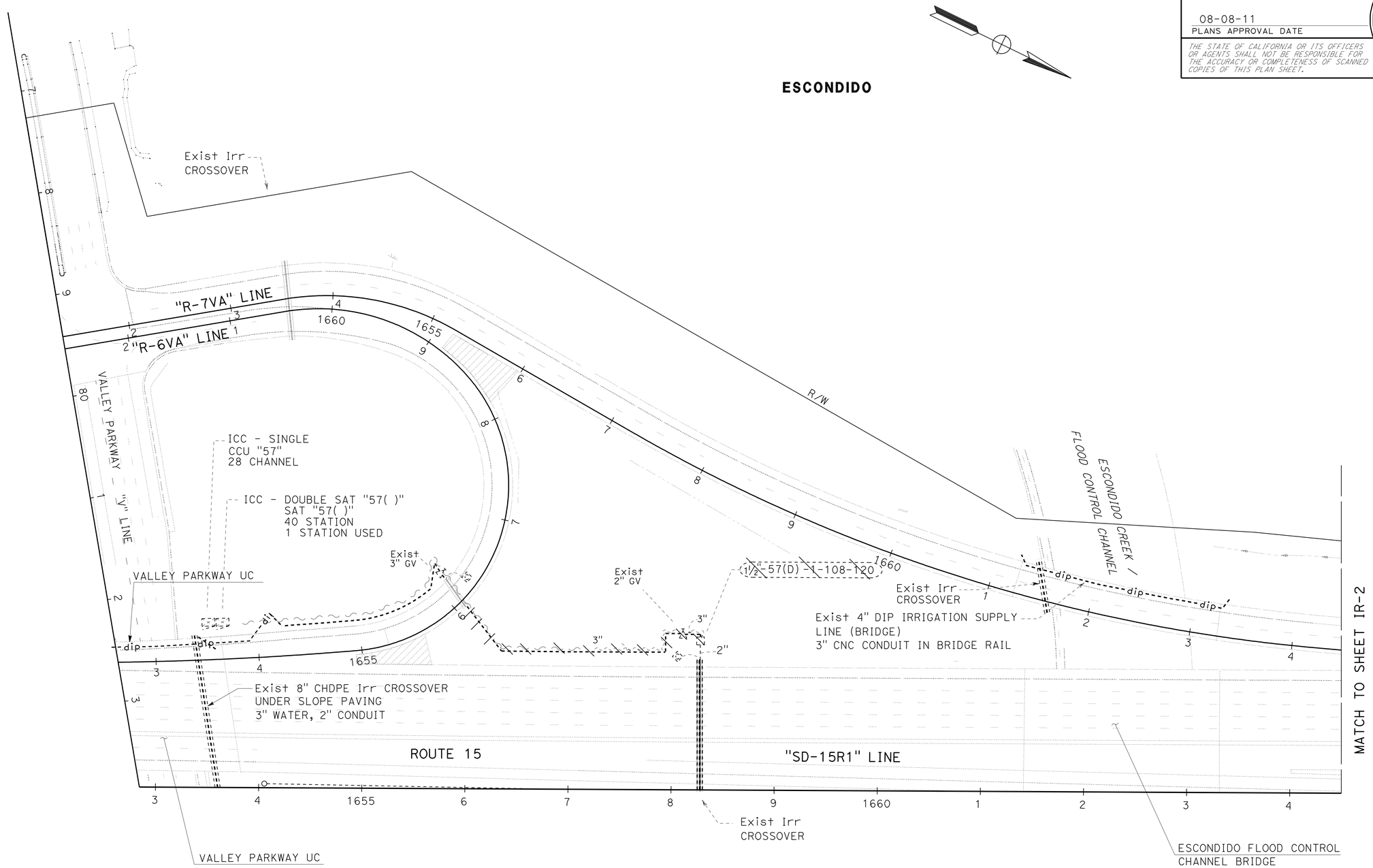

THIS PLAN ACCURATE FOR IRRIGATION REMOVAL WORK ONLY

IRRIGATION REMOVAL PLAN

SCALE: 1" = 50'

IR-1

STATE OF CALIFORNIA - DEPARTMENT OF TRANSPORTATION
Caltrans® LANDSCAPE ARCHITECTURE

SENIOR LANDSCAPE ARCHITECT: STEPHEN ALVAREZ
CALCULATED-DESIGNED BY: STEPHEN WARREN
CHECKED BY: RUDY MEDINA
REVISED BY
DATE REVISED

LAST REVISION 07-29-11
DATE PLOTTED => 30-NOV-2011
TIME PLOTTED => 14:56

Dist	COUNTY	ROUTE	POST MILES TOTAL PROJECT	SHEET No.	TOTAL SHEETS
11	SD	15	R30.1/R31.5	19	57

Stephen P. Warren
LICENSED LANDSCAPE ARCHITECT

08-08-11
PLANS APPROVAL DATE

LICENSED LANDSCAPE ARCHITECT
STEPHEN P. WARREN No. 3442
Signature
10-31-12
Renewal date
07-20-11
Date
STATE OF CALIFORNIA

THE STATE OF CALIFORNIA OR ITS OFFICERS OR AGENTS SHALL NOT BE RESPONSIBLE FOR THE ACCURACY OR COMPLETENESS OF SCANNED COPIES OF THIS PLAN SHEET.

NOTE:

1. FOR ACCURATE RIGHT OF WAY, CONTACT RIGHT OF WAY ENGINEERING AT THE DISTRICT OFFICE.

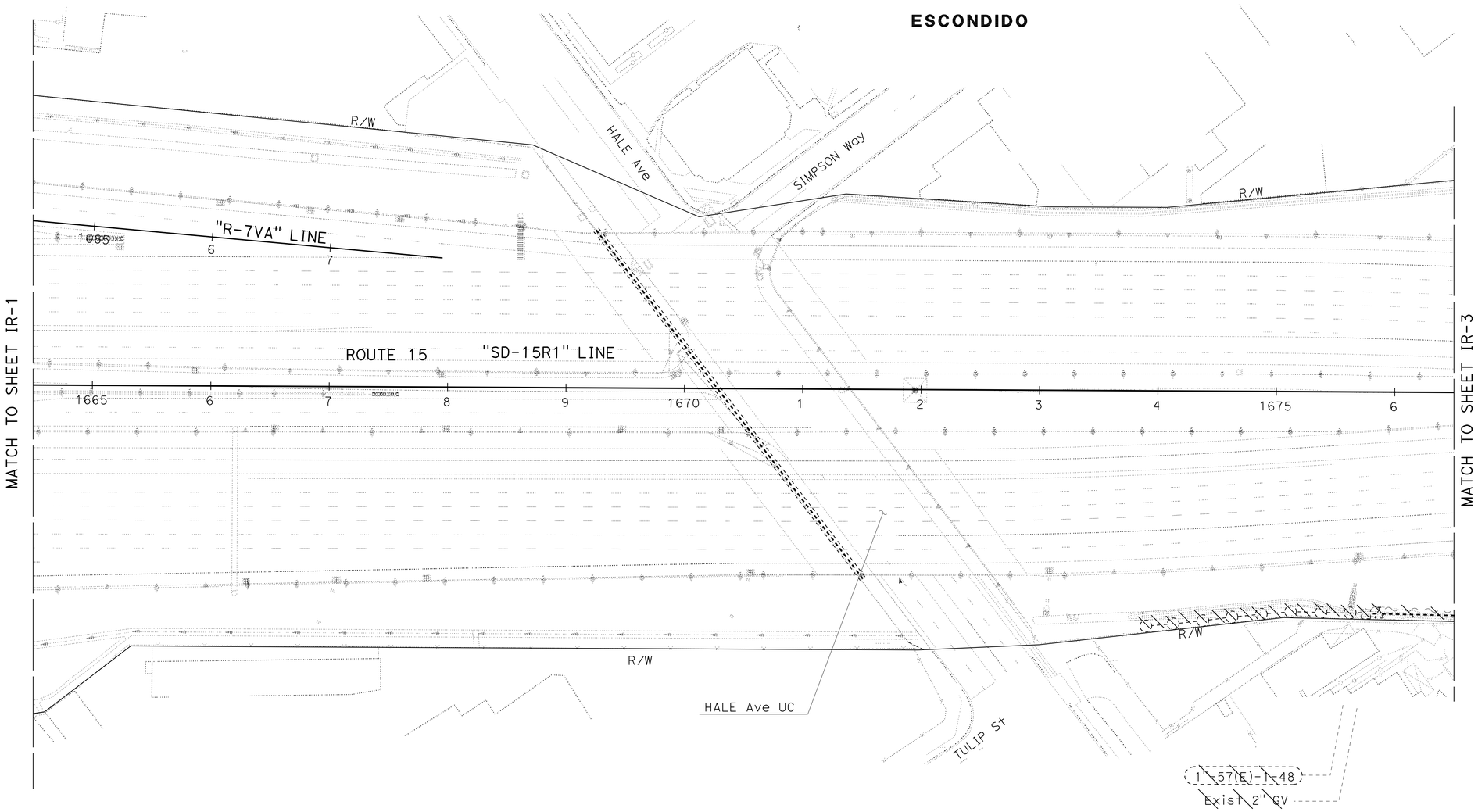

THIS PLAN ACCURATE FOR IRRIGATION REMOVAL WORK ONLY

IRRIGATION REMOVAL PLAN

SCALE: 1" = 50'

IR-2

STATE OF CALIFORNIA - DEPARTMENT OF TRANSPORTATION
Caltrans® LANDSCAPE ARCHITECTURE

SENIOR LANDSCAPE ARCHITECT: STEPHEN ALVAREZ
CALCULATED-DESIGNED BY: STEPHEN WARREN
CHECKED BY: RUDY MEDINA
REVISED BY
DATE REVISED

LAST REVISION 07-29-11
DATE PLOTTED => 30-NOV-2011
TIME PLOTTED => 14:56

Dist	COUNTY	ROUTE	POST MILES TOTAL PROJECT	SHEET No.	TOTAL SHEETS
11	SD	15	R30.1/R31.5	20	57

Stephen P. Warren
LICENSED LANDSCAPE ARCHITECT

08-08-11
PLANS APPROVAL DATE

LICENSED LANDSCAPE ARCHITECT
STEPHEN P. WARREN No. 3442
Signature
10-31-12
Renewal Date
07-20-11
Date
STATE OF CALIFORNIA

THE STATE OF CALIFORNIA OR ITS OFFICERS OR AGENTS SHALL NOT BE RESPONSIBLE FOR THE ACCURACY OR COMPLETENESS OF SCANNED COPIES OF THIS PLAN SHEET.

NOTE:

1. FOR ACCURATE RIGHT OF WAY, CONTACT RIGHT OF WAY ENGINEERING AT THE DISTRICT OFFICE.

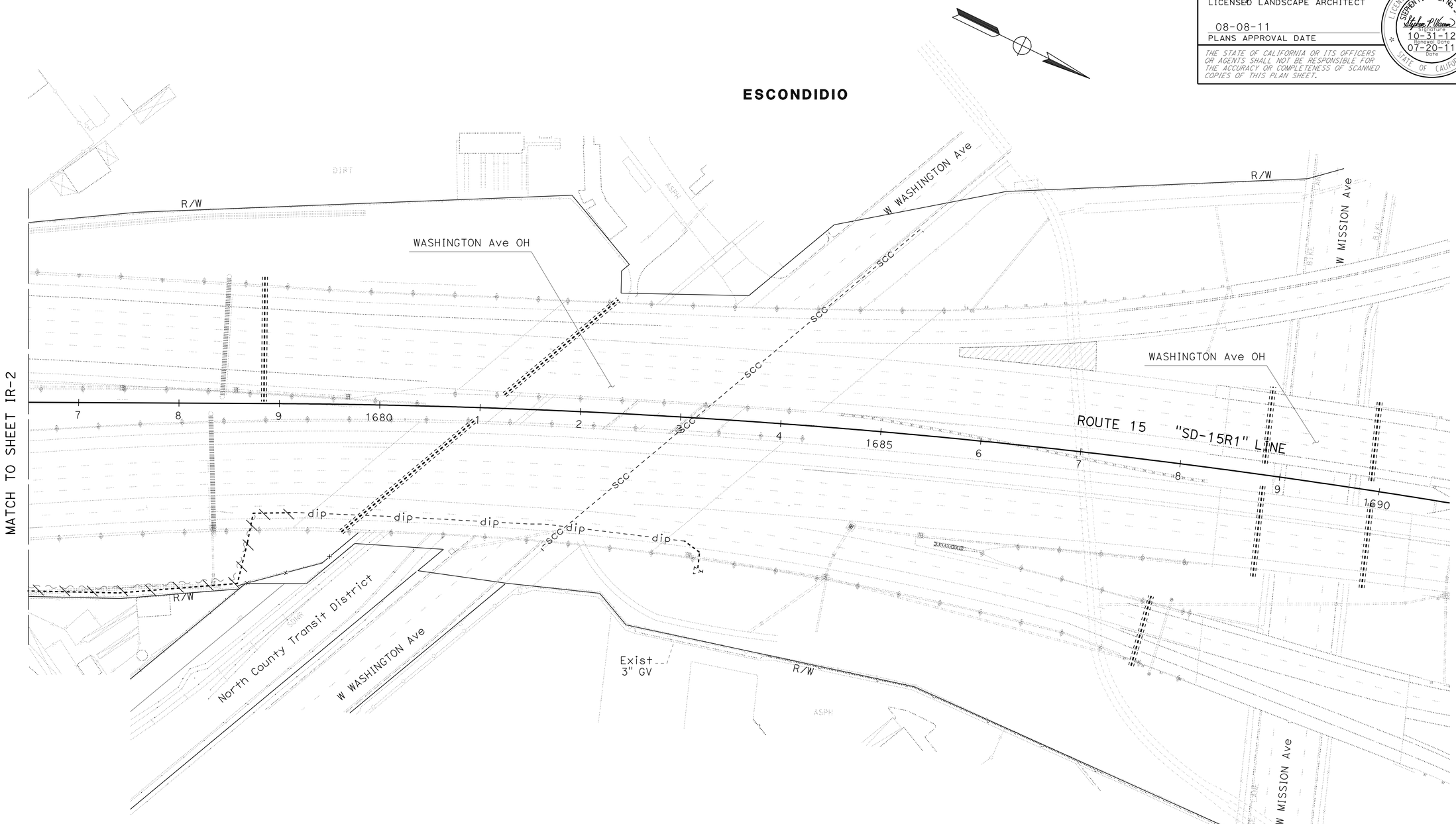

THIS PLAN ACCURATE FOR IRRIGATION REMOVAL WORK ONLY

IRRIGATION REMOVAL PLAN

SCALE: 1" = 50'

IR-3

STATE OF CALIFORNIA - DEPARTMENT OF TRANSPORTATION
Caltrans® LANDSCAPE ARCHITECTURE

SENIOR LANDSCAPE ARCHITECT: STEPHEN ALVAREZ
CALCULATED-DESIGNED BY: STEPHEN WARREN
CHECKED BY: RUDY MEDINA
REVISED BY
DATE REVISED

LAST REVISION 07-29-11
DATE PLOTTED => 30-NOV-2011
TIME PLOTTED => 14:56

Dist	COUNTY	ROUTE	POST MILES TOTAL PROJECT	SHEET No.	TOTAL SHEETS
11	SD	15	R30.1/R31.5	21	57

LICENSED LANDSCAPE ARCHITECT

08-08-11
PLANS APPROVAL DATE

LICENSED LANDSCAPE ARCHITECT
STEPHEN P. WARREN No. 3442
Signature
10-31-12
Renewal Date
07-20-11
Date
STATE OF CALIFORNIA

THE STATE OF CALIFORNIA OR ITS OFFICERS OR AGENTS SHALL NOT BE RESPONSIBLE FOR THE ACCURACY OR COMPLETENESS OF SCANNED COPIES OF THIS PLAN SHEET.

NOTES:

1. FOR ACCURATE RIGHT OF WAY, CONTACT RIGHT OF WAY ENGINEERING AT THE DISTRICT OFFICE.
2. ALL EXISTING CROSSOVERS HAVE A 3" WATERLINE, AND A 2" CONDUIT UNLESS OTHERWISE NOTED.

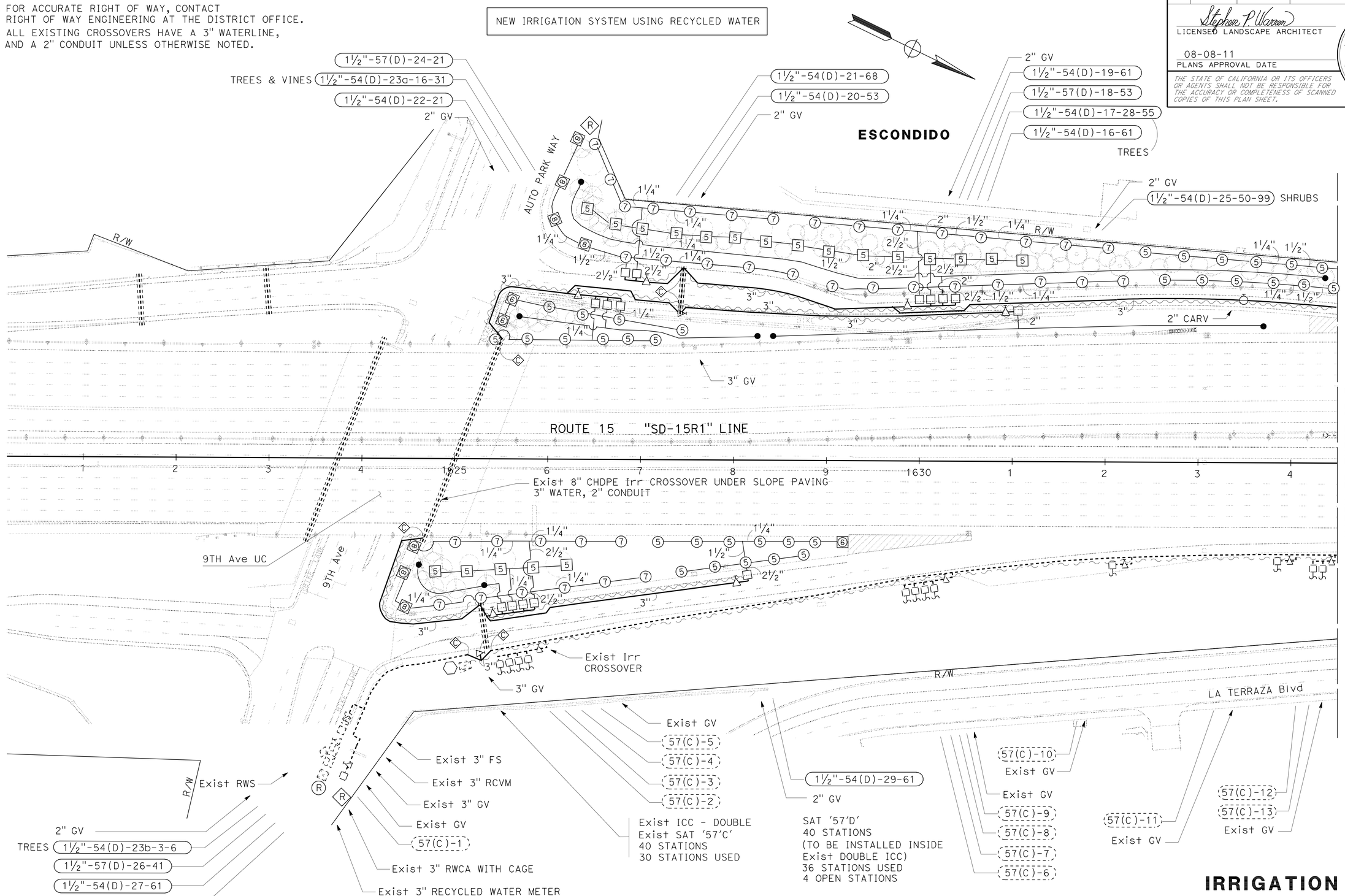

THIS PLAN ACCURATE FOR IRRIGATION WORK ONLY.

IRRIGATION PLAN

SCALE: 1" = 50'

IP-1

STATE OF CALIFORNIA - DEPARTMENT OF TRANSPORTATION
Caltrans® LANDSCAPE ARCHITECTURE

SENIOR LANDSCAPE ARCHITECT: STEPHEN ALVAREZ

CALCULATED-DESIGNED BY: STEPHEN WARREN
CHECKED BY: RUDY MEDINA

REVISED BY / DATE REVISED

LAST REVISION 07-29-11
DATE PLOTTED => 30-NOV-2011
TIME PLOTTED => 14:56

Dist	COUNTY	ROUTE	POST MILES TOTAL PROJECT	SHEET No.	TOTAL SHEETS
11	SD	15	R30.1/R31.5	22	57

Stephen P. Warren
LICENSED LANDSCAPE ARCHITECT

08-08-11
PLANS APPROVAL DATE

LICENSED LANDSCAPE ARCHITECT
STEPHEN P. WARREN No. 3442
Signature
10-31-12
Renewal Date
07-20-11
Date
STATE OF CALIFORNIA

THE STATE OF CALIFORNIA OR ITS OFFICERS OR AGENTS SHALL NOT BE RESPONSIBLE FOR THE ACCURACY OR COMPLETENESS OF SCANNED COPIES OF THIS PLAN SHEET.

NOTE:

1. FOR ACCURATE RIGHT OF WAY, CONTACT RIGHT OF WAY ENGINEERING AT THE DISTRICT OFFICE.

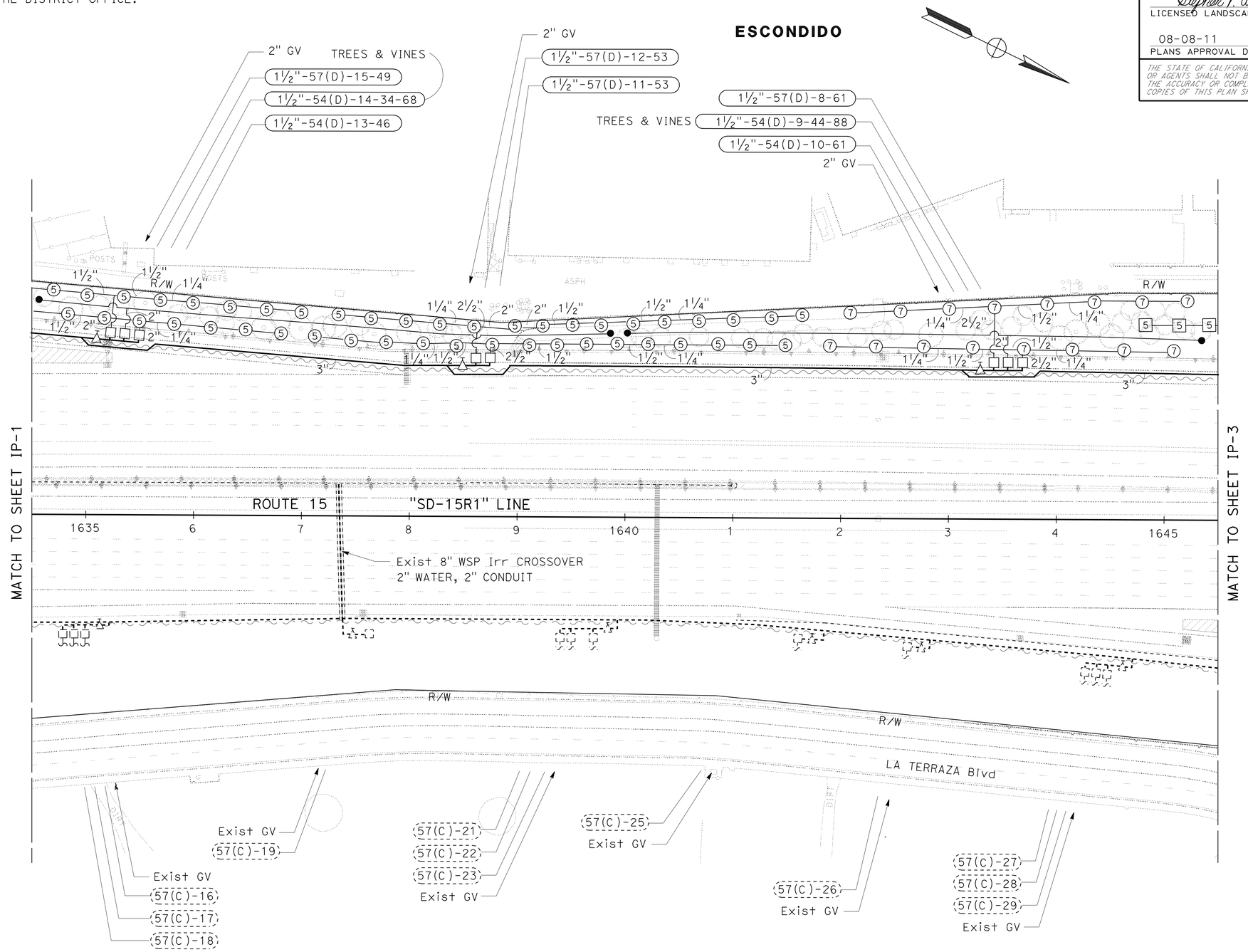

NEW IRRIGATION SYSTEM USING RECYCLED WATER

THIS PLAN ACCURATE FOR IRRIGATION WORK ONLY.

IRRIGATION PLAN

SCALE: 1" = 50'

IP-2

STATE OF CALIFORNIA - DEPARTMENT OF TRANSPORTATION
Caltrans® LANDSCAPE ARCHITECTURE

SENIOR LANDSCAPE ARCHITECT: STEPHEN ALVAREZ
CALCULATED-DESIGNED BY: STEPHEN WARREN
CHECKED BY: RUDY MEDINA
REVISED BY
DATE REVISED

LAST REVISION 07-29-11
DATE PLOTTED => 30-NOV-2011
TIME PLOTTED => 14:56

Dist	COUNTY	ROUTE	POST MILES TOTAL PROJECT	SHEET No.	TOTAL SHEETS
11	SD	15	R30.1/R31.5	23	57

LICENSED LANDSCAPE ARCHITECT

08-08-11
PLANS APPROVAL DATE

LICENSED LANDSCAPE ARCHITECT
STEPHEN P. WARREN No. 3442
Signature
10-31-12
Renewal Date
07-20-11
Date
STATE OF CALIFORNIA

THE STATE OF CALIFORNIA OR ITS OFFICERS OR AGENTS SHALL NOT BE RESPONSIBLE FOR THE ACCURACY OR COMPLETENESS OF SCANNED COPIES OF THIS PLAN SHEET.

NOTES:

1. FOR ACCURATE RIGHT OF WAY, CONTACT RIGHT OF WAY ENGINEERING AT THE DISTRICT OFFICE.
2. ALL EXISTING CROSSOVERS HAVE A 3" WATERLINE, AND A 2" CONDUIT UNLESS OTHERWISE NOTED.

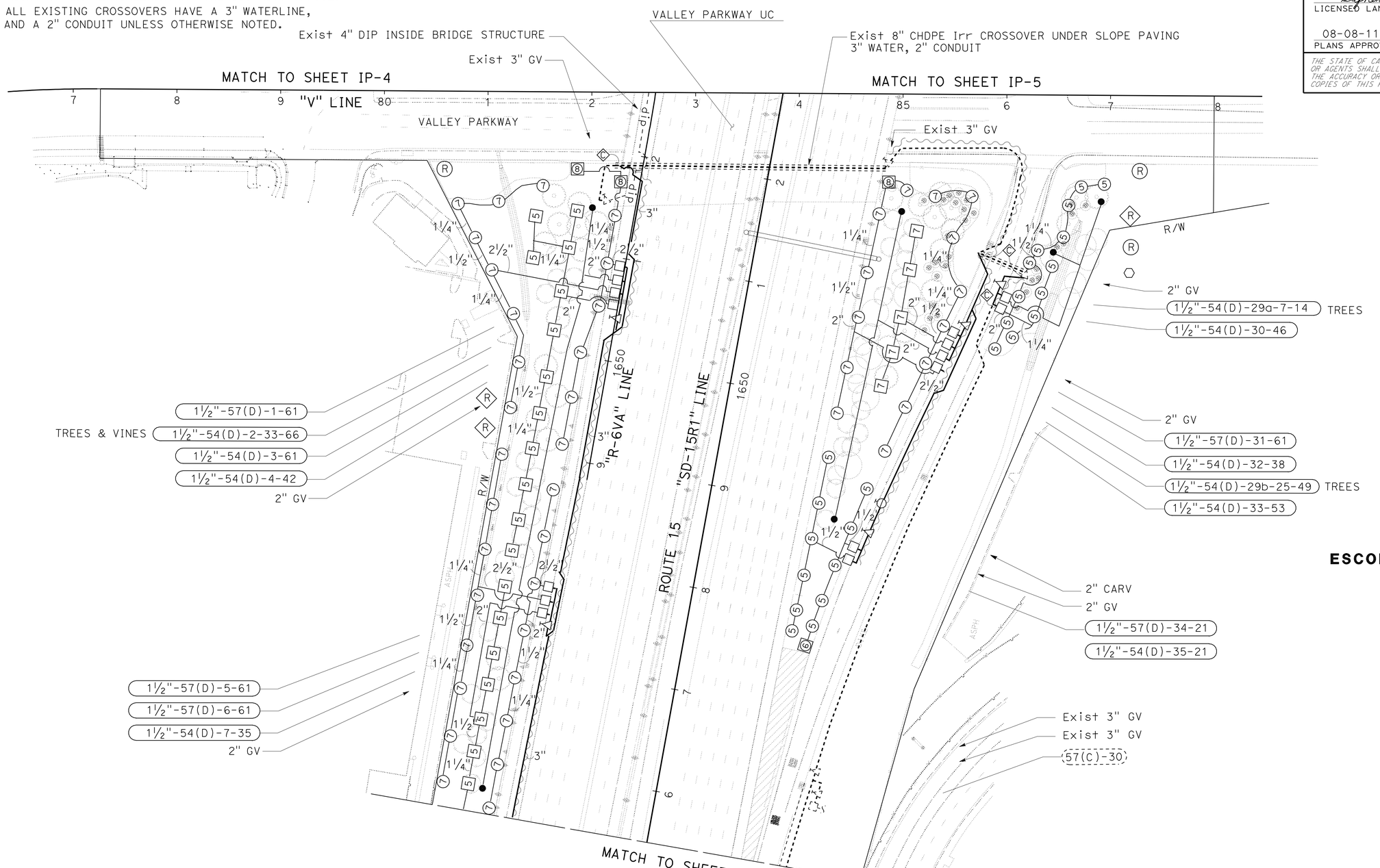

ESCONDIDO

NEW IRRIGATION SYSTEM USING RECYCLED WATER

THIS PLAN ACCURATE FOR IRRIGATION WORK ONLY.

IRRIGATION PLAN

SCALE: 1" = 50'

IP-3

STATE OF CALIFORNIA - DEPARTMENT OF TRANSPORTATION
Caltrans LANDSCAPE ARCHITECTURE

SENIOR LANDSCAPE ARCHITECT: STEPHEN ALVAREZ
CALCULATED-DESIGNED BY: STEPHEN WARREN
CHECKED BY: RUDY MEDINA
REVISED BY
DATE REVISED

LAST REVISION 07-29-11
DATE PLOTTED => 30-NOV-2011
TIME PLOTTED => 14:56

Dist	COUNTY	ROUTE	POST MILES TOTAL PROJECT	SHEET No.	TOTAL SHEETS
11	SD	15	R30.1/R31.5	24	57

LICENSED LANDSCAPE ARCHITECT

08-08-11
PLANS APPROVAL DATE

LICENSED LANDSCAPE ARCHITECT
STEPHEN P. WARREN No. 3442
Signature
10-31-12
Renewal Date
07-20-11
Date
STATE OF CALIFORNIA

THE STATE OF CALIFORNIA OR ITS OFFICERS OR AGENTS SHALL NOT BE RESPONSIBLE FOR THE ACCURACY OR COMPLETENESS OF SCANNED COPIES OF THIS PLAN SHEET.

NOTES:

1. FOR ACCURATE RIGHT OF WAY, CONTACT RIGHT OF WAY ENGINEERING AT THE DISTRICT OFFICE.
2. ALL EXISTING CROSSOVERS HAVE A 3" WATERLINE, AND A 2" CONDUIT UNLESS OTHERWISE NOTED.

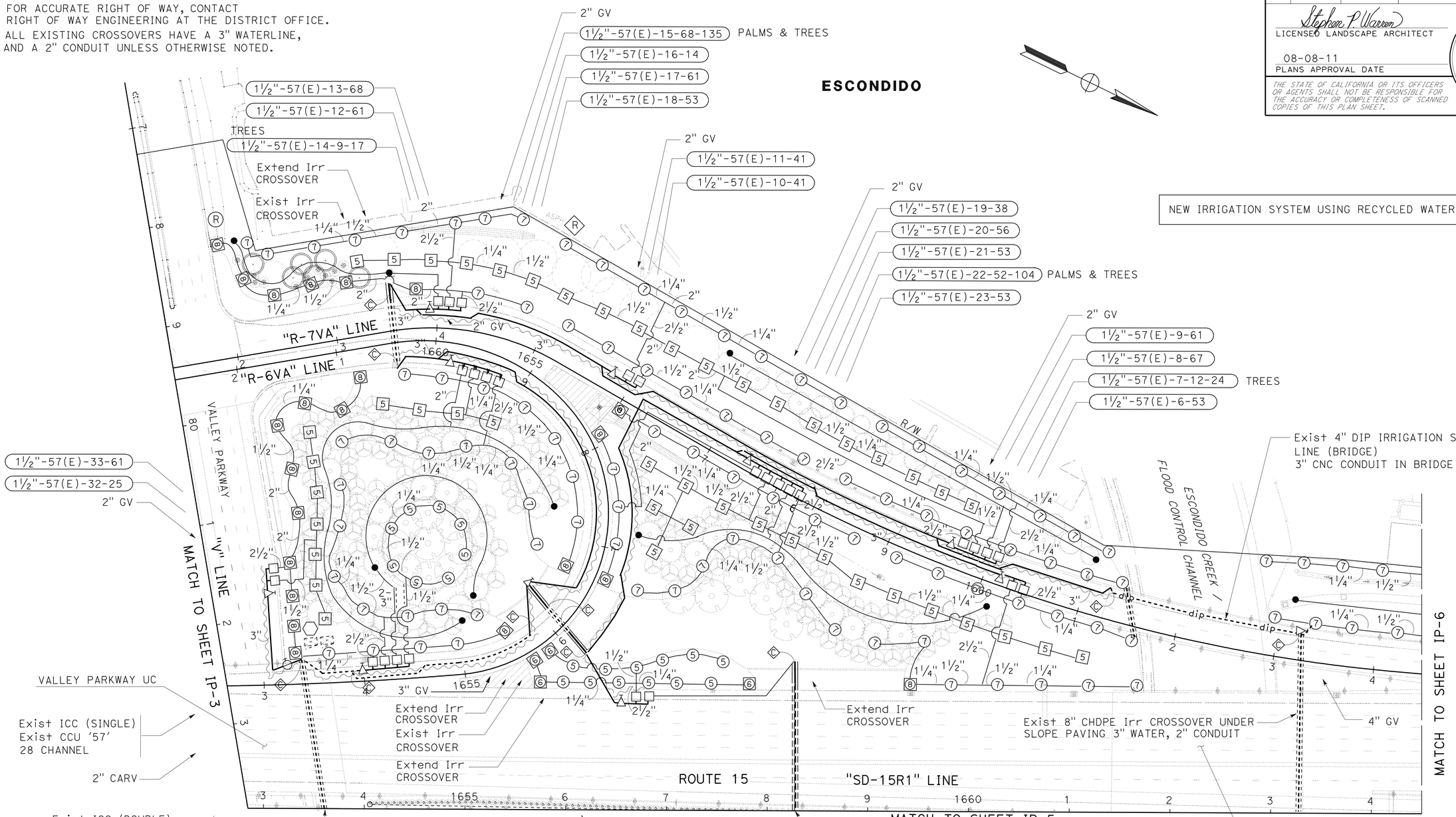

THIS PLAN ACCURATE FOR IRRIGATION WORK ONLY.

IRRIGATION PLAN

SCALE: 1" = 50'

IP-4

STATE OF CALIFORNIA - DEPARTMENT OF TRANSPORTATION
Caltrans® LANDSCAPE ARCHITECTURE

SENIOR LANDSCAPE ARCHITECT: STEPHEN ALVAREZ
CALCULATED-DESIGNED BY: STEPHEN WARREN
CHECKED BY: RUDY MEDINA
REVISED BY
DATE REVISED

LAST REVISION 07-29-11
DATE PLOTTED => 30-NOV-2011
TIME PLOTTED => 14:57

Dist	COUNTY	ROUTE	POST MILES TOTAL PROJECT	SHEET No.	TOTAL SHEETS
11	SD	15	R30.1/R31.5	25	57

LICENSED LANDSCAPE ARCHITECT

08-08-11
PLANS APPROVAL DATE

LICENSED LANDSCAPE ARCHITECT
STEPHEN P. WARREN No. 3442
Signature
10-31-12
Renewal Date
07-20-11
Date
STATE OF CALIFORNIA

THE STATE OF CALIFORNIA OR ITS OFFICERS OR AGENTS SHALL NOT BE RESPONSIBLE FOR THE ACCURACY OR COMPLETENESS OF SCANNED COPIES OF THIS PLAN SHEET.

NOTES:

1. FOR ACCURATE RIGHT OF WAY, CONTACT RIGHT OF WAY ENGINEERING AT THE DISTRICT OFFICE.
2. ALL EXISTING CROSSOVERS HAVE A 3" WATERLINE, AND A 2" CONDUIT UNLESS OTHERWISE NOTED.

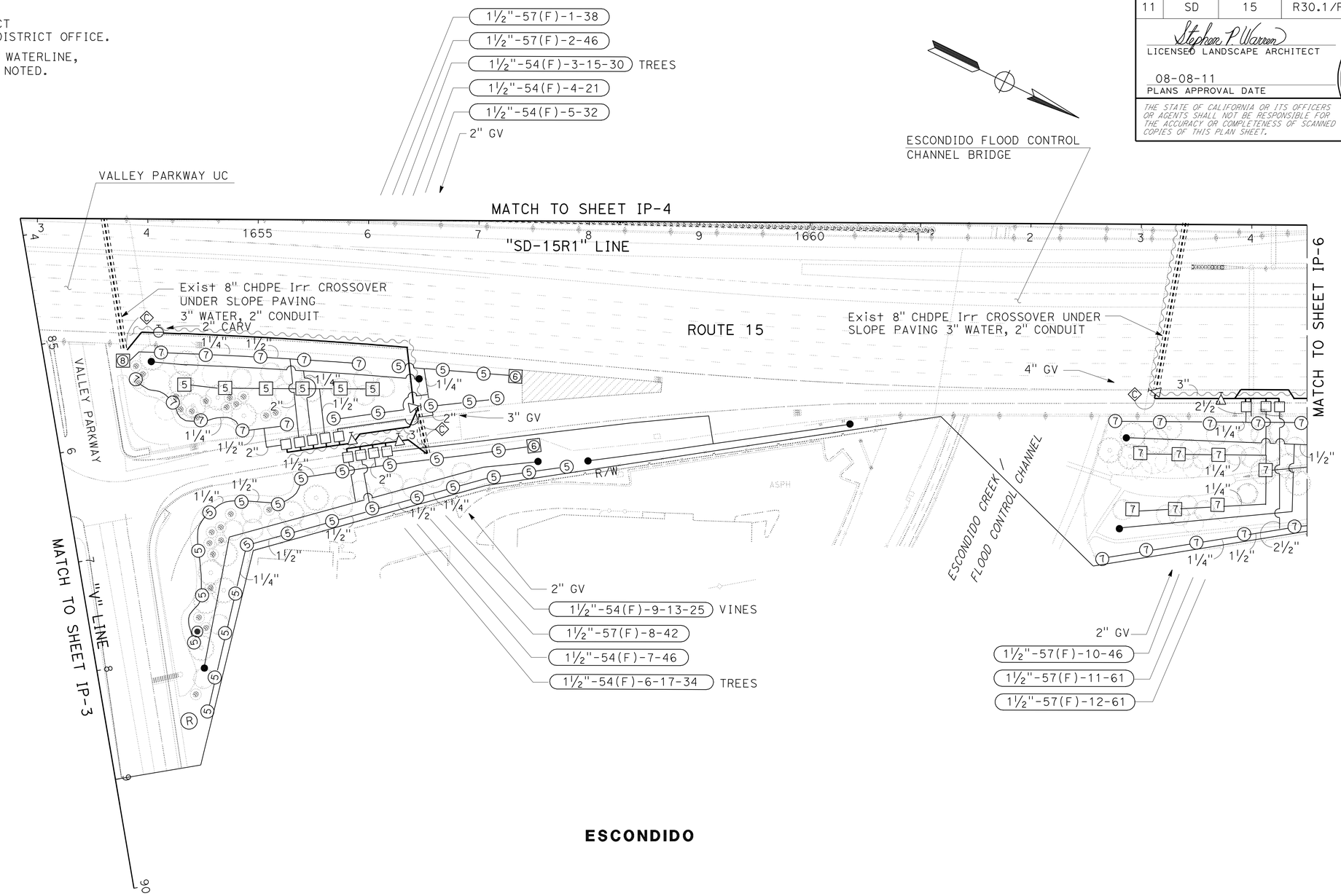

ESCONDIDO

NEW IRRIGATION SYSTEM USING RECYCLED WATER

THIS PLAN ACCURATE FOR IRRIGATION WORK ONLY.

IRRIGATION PLAN

SCALE: 1" = 50'

IP-5

STATE OF CALIFORNIA - DEPARTMENT OF TRANSPORTATION
Caltrans® LANDSCAPE ARCHITECTURE

SENIOR LANDSCAPE ARCHITECT: STEPHEN ALVAREZ
CALCULATED-DESIGNED BY: STEPHEN WARREN
CHECKED BY: RUDY MEDINA
REVISED BY
DATE REVISED

LAST REVISION 07-30-11
DATE PLOTTED => 30-NOV-2011
TIME PLOTTED => 14:57

Dist	COUNTY	ROUTE	POST MILES TOTAL PROJECT	SHEET No.	TOTAL SHEETS
11	SD	15	R30.1/R31.5	26	57

LICENSED LANDSCAPE ARCHITECT

08-08-11
PLANS APPROVAL DATE

LICENSED LANDSCAPE ARCHITECT
STEPHEN P. WARREN No. 3442
Signature
10-31-12
Renewal Date
07-20-11
Date
STATE OF CALIFORNIA

THE STATE OF CALIFORNIA OR ITS OFFICERS OR AGENTS SHALL NOT BE RESPONSIBLE FOR THE ACCURACY OR COMPLETENESS OF SCANNED COPIES OF THIS PLAN SHEET.

NOTES:

1. FOR ACCURATE RIGHT OF WAY, CONTACT RIGHT OF WAY ENGINEERING AT THE DISTRICT OFFICE.
2. ALL EXISTING CROSSOVERS HAVE A 3" WATERLINE, AND A 2" CONDUIT UNLESS OTHERWISE NOTED.

NEW IRRIGATION SYSTEM USING RECYCLED WATER

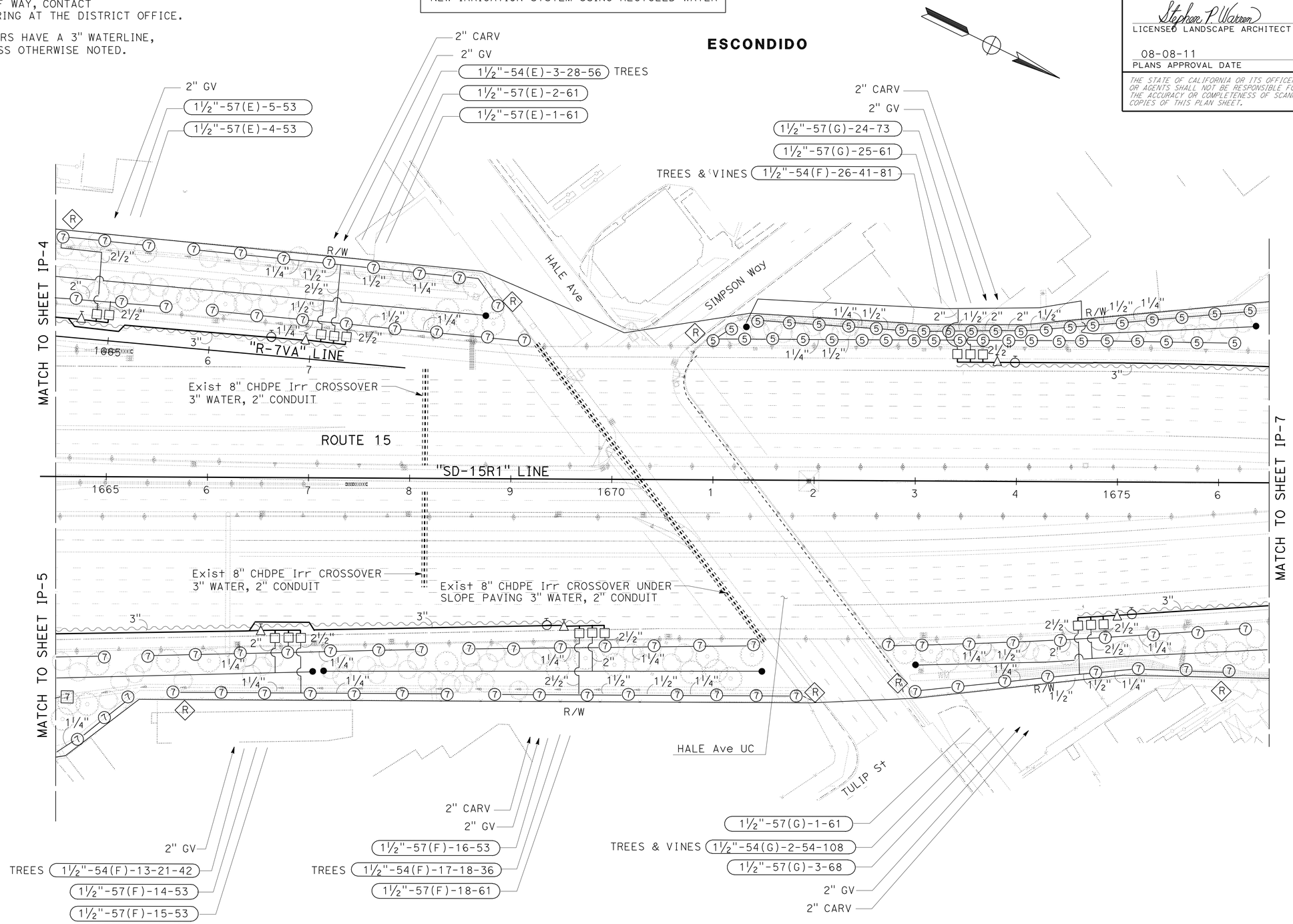

IRRIGATION PLAN

SCALE: 1" = 50'

IP-6

THIS PLAN ACCURATE FOR IRRIGATION WORK ONLY.

STATE OF CALIFORNIA - DEPARTMENT OF TRANSPORTATION
Caltrans® LANDSCAPE ARCHITECTURE

SENIOR LANDSCAPE ARCHITECT: STEPHEN ALVAREZ
STEPHEN WARREN
RUDY MEDINA
CALCULATED-DESIGNED BY
CHECKED BY
REVISED BY
DATE REVISED

LAST REVISION 07-30-11
DATE PLOTTED => 30-NOV-2011
TIME PLOTTED => 14:57

Dist	COUNTY	ROUTE	POST MILES TOTAL PROJECT	SHEET No.	TOTAL SHEETS
11	SD	15	R30.1/R31.5	27	57

LICENSED LANDSCAPE ARCHITECT

08-08-11
PLANS APPROVAL DATE

LICENSED LANDSCAPE ARCHITECT STEPHEN P. WARREN No. 3442 Signature 10-31-12 Renewal Date 07-20-11 Date STATE OF CALIFORNIA

THE STATE OF CALIFORNIA OR ITS OFFICERS OR AGENTS SHALL NOT BE RESPONSIBLE FOR THE ACCURACY OR COMPLETENESS OF SCANNED COPIES OF THIS PLAN SHEET.

NOTES:

1. FOR ACCURATE RIGHT OF WAY, CONTACT RIGHT OF WAY ENGINEERING AT THE DISTRICT OFFICE.
2. ALL EXISTING CROSSOVERS HAVE A 3" WATERLINE, AND A 2" CONDUIT UNLESS OTHERWISE NOTED.

NEW IRRIGATION SYSTEM USING RECYCLED WATER

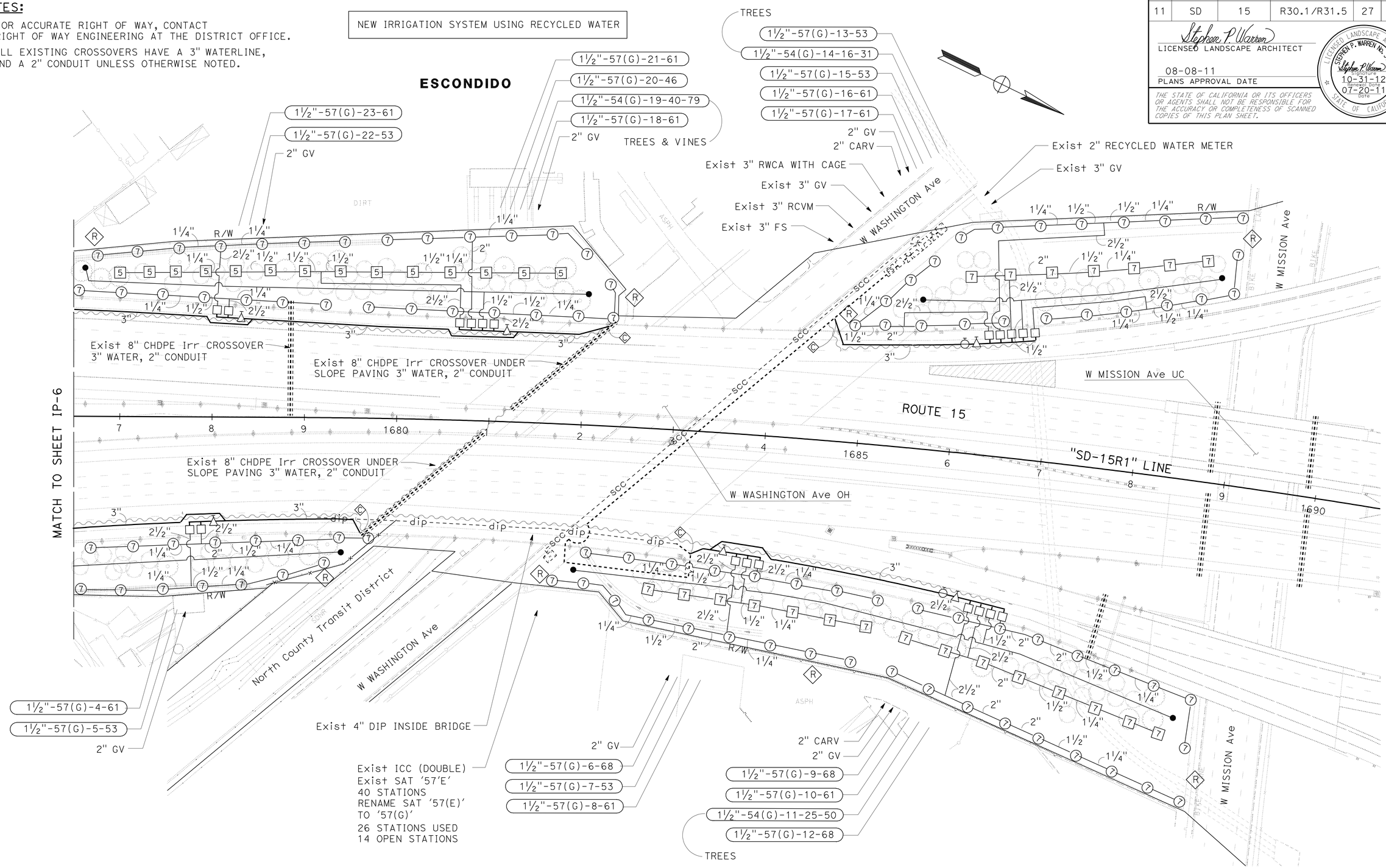

IRRIGATION PLAN

THIS PLAN ACCURATE FOR IRRIGATION WORK ONLY.

SCALE: 1" = 50'

IP-7

STATE OF CALIFORNIA - DEPARTMENT OF TRANSPORTATION
Caltrans® LANDSCAPE ARCHITECTURE

SENIOR LANDSCAPE ARCHITECT: STEPHEN ALVAREZ
CALCULATED-DESIGNED BY: STEPHEN WARREN
CHECKED BY: RUDY MEDINA
REVISED BY / DATE REVISED

LAST REVISION 07-30-11
DATE PLOTTED => 30-NOV-2011
TIME PLOTTED => 14:57

Stephen P. Warren
LICENSED LANDSCAPE ARCHITECT
08-08-11
PLANS APPROVAL DATE
LICENSED LANDSCAPE ARCHITECT STEPHEN P. WARREN No. 3442 Signature 10-31-12 Renewal Date 07-20-11 Date STATE OF CALIFORNIA

THE STATE OF CALIFORNIA OR ITS OFFICERS OR AGENTS SHALL NOT BE RESPONSIBLE FOR THE ACCURACY OR COMPLETENESS OF SCANNED COPIES OF THIS PLAN SHEET.

SPRINKLER SCHEDULE

SYMBOL	TYPE	DESCRIPTION	SPRAY PATTERN	OPERATING PRESSURE (PSI)	PRESSURE COMPENSATING	PLUS/MINUS 5% (2) DISCHARGE: GALLONS PER MINUTE (GPM)	GALLONS PER HOUR (GPH)	RADIUS (Ft)	WIDTH x LENGTH (Ft)	MATERIAL	INLET CONNECTION (NPT) (DN INCH)	POSITIVE-LOCKING Adj ARC STOP	BACKSPLASH PREVENTER	DIFFUSER PIN	DISTANCE CONTROL FLAP	Adj DISCHARGE	RISER MATERIAL: TYPE	PLASTIC	GALVANIZED	SIZE (IPS INCH)	HEIGHT (INCH)	FLOW SHUTOFF DEVICE	SWING JOINT (TYPE)	RISER SUPPORT	SPRINKLER PROTECTOR (TYPE)	REMARKS
(5)	A-5	GEAR DRIVEN	P	50	-	3.5	-	40	-	PL	¾	-	-	X	-	-	I	X	-	¾	6	-	1	-	-	(3)(7)(11)
■	A-5	GEAR DRIVEN	F	50	-	3.5	-	40	-	PL	¾	-	-	X	-	-	I	X	-	¾	6	-	1	-	-	(3)(7)(11)
[(6)]	A-6	GEAR DRIVEN	F	50	-	3.5	-	40	-	PL	¾	-	-	X	-	-	I	X	-	¾	6	-	1	-	1	(3)(7)(11) 12" POP-UP
●	A-7	GEAR DRIVEN	P	50	-	7.6	-	48	-	PL	¾	-	-	X	-	-	I	X	-	¾	6	-	1	-	-	(3)(7)(11)
[7]	A-7	GEAR DRIVEN	F	50	-	7.6	-	48	-	PL	¾	-	-	X	-	-	I	X	-	¾	6	-	1	-	-	(3)(7)(11)
[(8)]	A-8	GEAR DRIVEN	P	50	-	7.6	-	48	-	PL	¾	-	-	X	-	-	I	X	-	¾	6	-	1	-	1	(3)(7)(11) 12" POP-UP
•	C-2 Mod	MODIFIED FLOOD BUBBLER	-	30	X	1.0	-	-	-	PL	½	-	-	-	-	-	(10)	X	-	½	-	-	1	-	-	(4)(9)(11)

X IN BOX DENOTES REQUIREMENT

APPLICABLE WHEN CIRCLED BELOW:

1 - SEE SPECIAL PROVISIONS.
(2) - IF A PRESSURE COMPENSATING DEVICE IS SPECIFIED, THE DISCHARGE AND RADII SHOWN REFLECT ITS USE.
(3) - SHALL HAVE AN INTERNAL OR EXTERNAL CHECK VALVE.
(4) - NON-ADJUSTABLE DISCHARGE RATE.
5 - REQUIRED ADJACENT TO SHOULDERS, CURBS, SIDEWALKS, AND DIKES.
6 - UNLESS OTHERWISE SHOWN ON PLANS.
(7) - ADJUSTABLE ARC.
8 - MATCHED PRECIPITATION RATE NOZZLES.
(9) - REFER TO PIPE SIZING CHARTS.
(10) - SEE DETAIL
(11) - SHALL HAVE PURPLE CAP COMPATIBLE FOR USE WITH RECYCLED WATER WHERE APPLICABLE

ABBREVIATIONS:

Adj — ADJUSTABLE
B/B — BRASS/BRONZE
B/B/PL — BRASS/BRONZE/PLASTIC
B/PL — BRASS/PLASTIC
CST — CENTER STRIP
DN — DIAMETER NOMINAL
EST — END STRIP
Ft — FEET
F — FULL CIRCLE
F/P — FULL/PART CIRCLE
GPH — GALLONS PER HOUR
GPM — GALLONS PER MINUTE
GPS — GALLONS PER SECOND
H — HALF CIRCLE
IPS — IRON PIPE SIZE
NPT — NATIONAL PIPE THREAD
P — PART CIRCLE
PL — PLASTIC
PSI — POUNDS PER SQUARE INCH
Q — QUARTER CIRCLE
SAT — SATELLITE
SST — SIDE STRIP
T — THIRD CIRCLE
TQ — THREE QUARTER CIRCLE
TT — TWO THIRDS CIRCLE

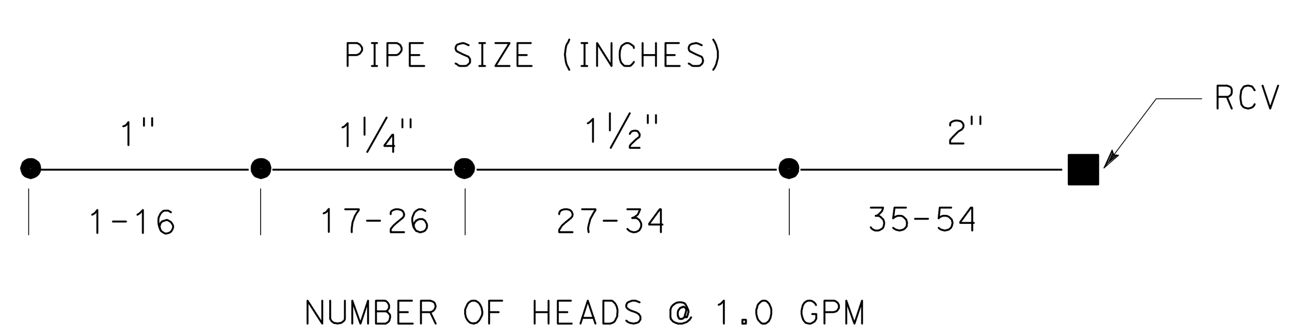

PIPE SIZING CHART
C-2 (Mod) SPRINKLERS
(FLOOD BUBBLER)

NOTES:

1. ALL LATERAL PIPE NOT LABELED SHALL BE 1 INCH, OR AS SHOWN ON PIPE SIZING CHARTS.
2. ALL SPRINKLER HEADS, VALVES AND MAINLINE SHOWN NEAR MVP LOCATIONS ARE TO BE INSTALLED OUTSIDE OF THE PAVED MVP AREA. VALVES TO BE INSTALLED AT EXITING END OF THE MVP.
3. PULL ONE ADDITIONAL CNC WIRE FROM EACH CONTROLLER TO THE LAST VALVE BOX AT EACH VALVE MANIFOLD (FOR FUTURE USE).
4. C-2 MODIFIED FLOOD BUBBLER SYSTEMS ARE DOUBLED (a & b ON SAME STATION).
5. INDIVIDUAL C-2 MODIFIED FLOOD BUBBLER OFFSETS AT ROCK MULCH/BLANKET AREAS DO NOT HAVE IRRIGATION SLEEVE.

LEGEND:

RWCA - RECYCLED WATER CONNECTION ASSEMBLY (RWCA) WITH ENCLOSURE
(R) - RECYCLED WATER WARNING SIGN FOR FENCE OR ENCLOSURE MOUNTED.
(R) - RECYCLED WATER WARNING SIGN - POST MOUNTED
● - COMBINATION AIR RELEASE VALVE (CARV)
--dip----- - Exist DUCTILE IRON PIPE
— — — - Exist BRIDGE LINE WATER
-------- - Exist BRIDGE LINE CNC
--scc----- - EXISTING 1½" SPRINKLER CONTROL CONDUIT (SCC) FOR FLOW SENSOR CABLE/CNC FOR RCVM
-------- - IRRIGATION SLEEVE

VALVE CODE:

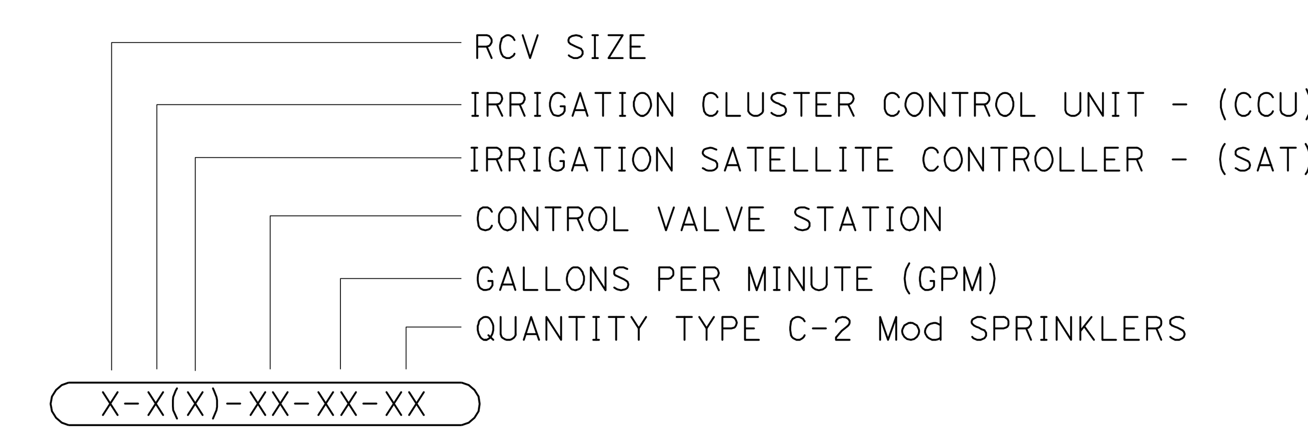

EXISTING VALVE CODE:

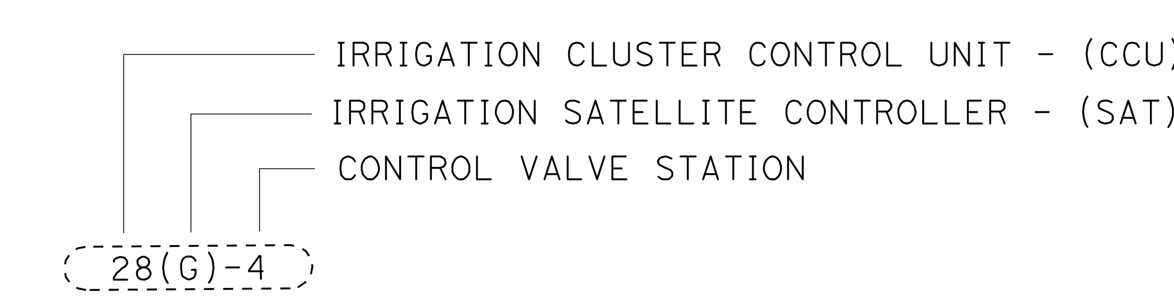

LANDSCAPE DETAILS

NO SCALE

LD-1

Dist	COUNTY	ROUTE	POST MILES TOTAL PROJECT	SHEET No.	TOTAL SHEETS
11	SD	15	R30.1/R31.5	29	57

Stephen P. Warren
LICENSED LANDSCAPE ARCHITECT

08-08-11
PLANS APPROVAL DATE

LICENSED LANDSCAPE ARCHITECT
STEPHEN P. WARREN No. 3462
Signature
10-31-12
Renewal Date
07-20-11
Date
STATE OF CALIFORNIA

THE STATE OF CALIFORNIA OR ITS OFFICERS OR AGENTS SHALL NOT BE RESPONSIBLE FOR THE ACCURACY OR COMPLETENESS OF SCANNED COPIES OF THIS PLAN SHEET.

NOTES:

1. INSTALL SPRINKLER TYPE C-2 Mod ON UP-HILL SIDE OF PLANT WHEN ON SLOPE
2. INSTALL SPRINKLER WITHIN TREE BASIN

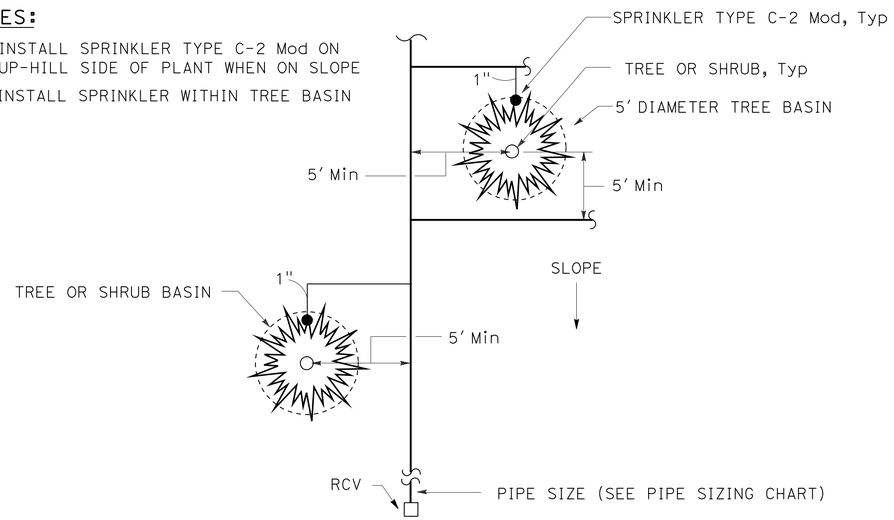

PLAN

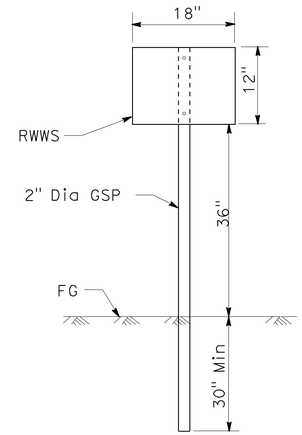

NOTE:

ATTACH RWWS TO POST WITH 1/4" THEFT PROOF BOLTS

RECYCLED WATER WARNING SIGN (RWWS)

(POST MOUNTED)

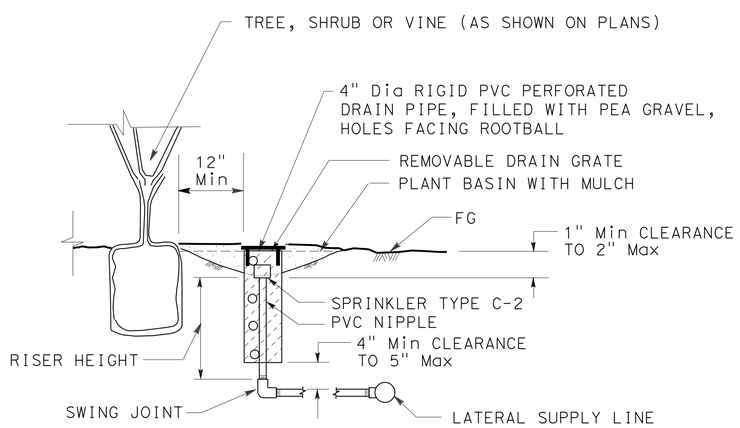

SECTION

SPRINKLER TYPE C-2 Mod INSTALLATION

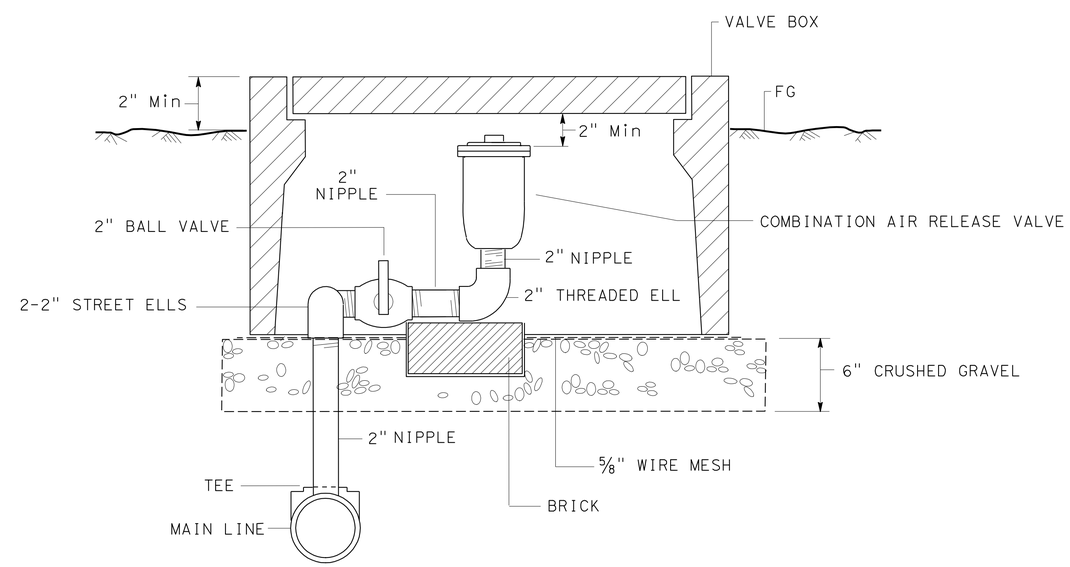

COMBINATION AIR RELEASE VALVE (CARV)

LANDSCAPE DETAILS

NO SCALE

LD-2

STATE OF CALIFORNIA - DEPARTMENT OF TRANSPORTATION
Caltrans® LANDSCAPE ARCHITECTURE
SENIOR LANDSCAPE ARCHITECT: STEPHEN ALVAREZ
CALCULATED-DESIGNED BY: STEPHEN WARREN
CHECKED BY: JOEL HORTIZUELA
REVISED BY / DATE REVISED

LAST REVISION 07-30-11
DATE PLOTTED => 30-NOV-2011
TIME PLOTTED => 14:57

Dist	COUNTY	ROUTE	POST MILES TOTAL PROJECT	SHEET No.	TOTAL SHEETS
11	SD	15	R30.1/R31.5	30	57

LICENSED LANDSCAPE ARCHITECT

08-08-11
PLANS APPROVAL DATE

LICENSED LANDSCAPE ARCHITECT
STEPHEN P. WARREN No. 3462
Signature
10-31-12
Renewal Date
07-20-11
Date
STATE OF CALIFORNIA

THE STATE OF CALIFORNIA OR ITS OFFICERS OR AGENTS SHALL NOT BE RESPONSIBLE FOR THE ACCURACY OR COMPLETENESS OF SCANNED COPIES OF THIS PLAN SHEET.

NOTE:
BACKFILLED PLASTER SAND IS TO BE WATER JETTED WHILE BACKFILLING PLANT HOLE.

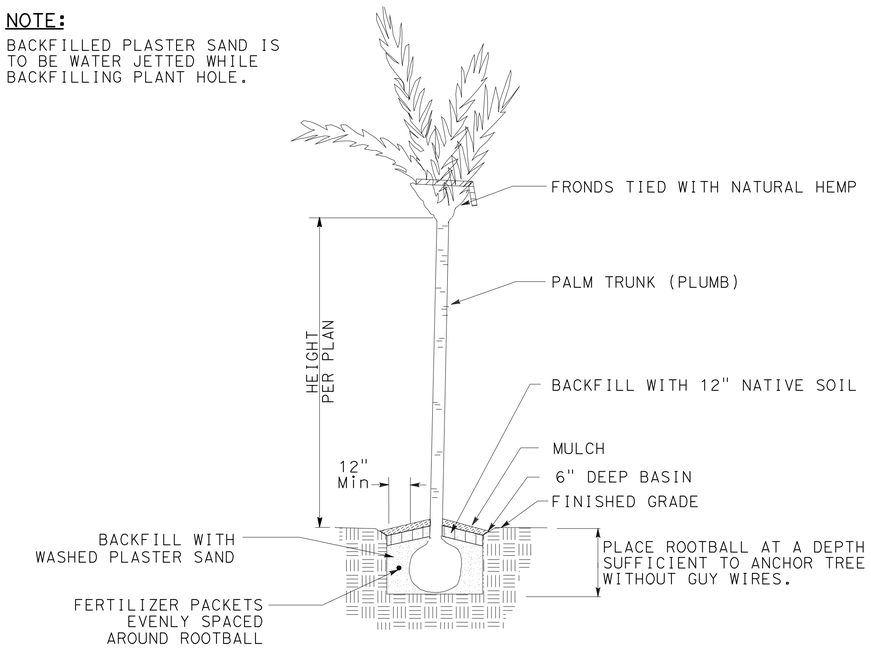

PALM TREE PLANTING

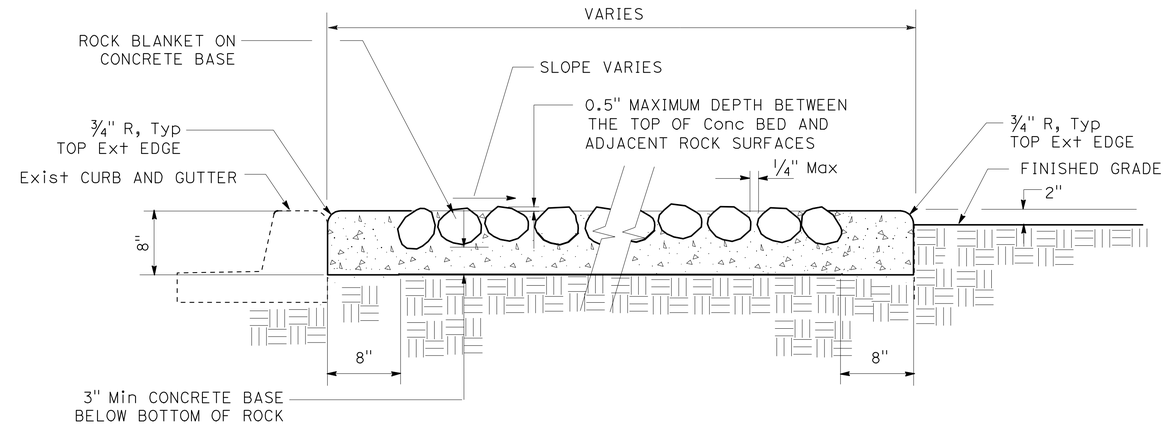

ROCK BLANKET

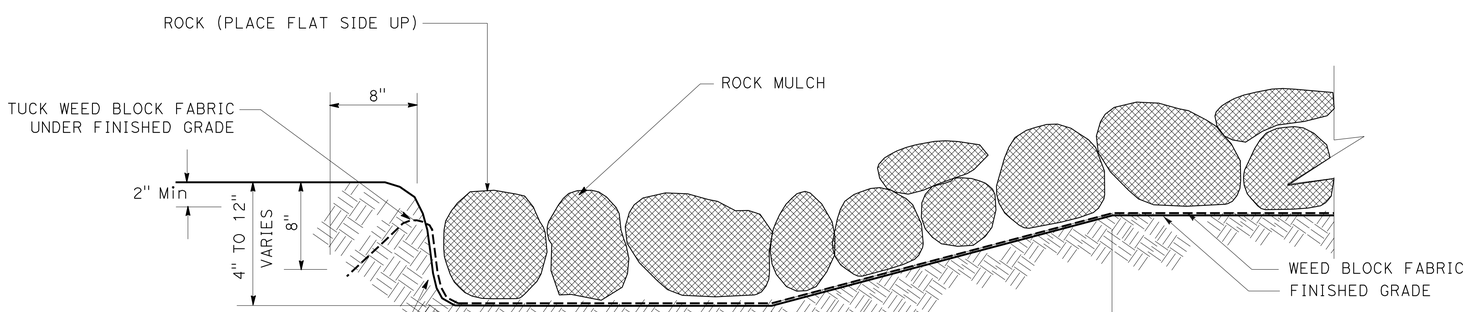

ROCK MULCH

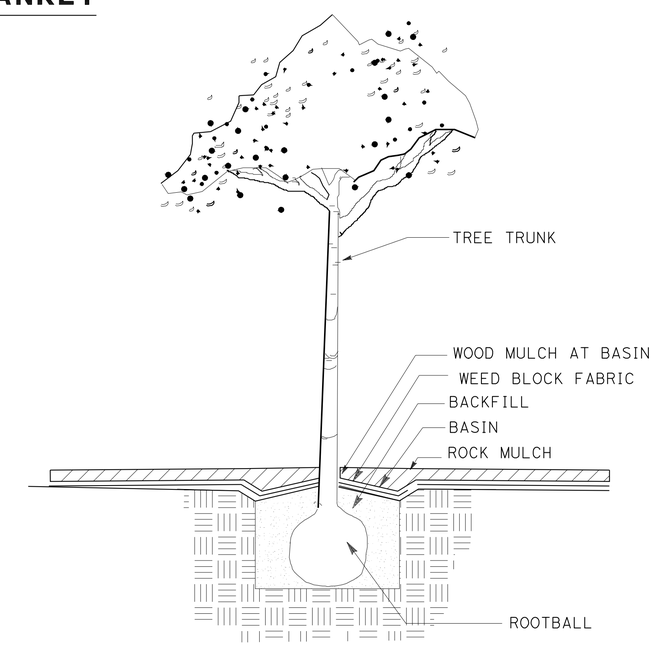

PALM AND TREE PLANTING

IN ROCK MULCH AREAS

LANDSCAPE DETAILS

NO SCALE

LD-3

STATE OF CALIFORNIA - DEPARTMENT OF TRANSPORTATION
Caltrans® LANDSCAPE ARCHITECTURE

SENIOR LANDSCAPE ARCHITECT: STEPHEN ALVAREZ
CALCULATED-DESIGNED BY: STEPHEN WARREN
CHECKED BY: JOEL HORTIZUELA
REVISED BY
DATE REVISED

LAST REVISION 07-30-11
DATE PLOTTED => 30-NOV-2011
TIME PLOTTED => 14:57

Dist	COUNTY	ROUTE	POST MILES TOTAL PROJECT	SHEET No.	TOTAL SHEETS
11	SD	15	R30.1/R31.5	31	57

Stephen P. Warren
LICENSED LANDSCAPE ARCHITECT

08-08-11
PLANS APPROVAL DATE

LICENSED LANDSCAPE ARCHITECT
STEPHEN P. WARREN No. 3442
Stephen P. Warren
Inactive
10-31-12
Renewal Date
07-20-11
Date
STATE OF CALIFORNIA

THE STATE OF CALIFORNIA OR ITS OFFICERS OR AGENTS SHALL NOT BE RESPONSIBLE FOR THE ACCURACY OR COMPLETENESS OF SCANNED COPIES OF THIS PLAN SHEET.

NOTE:

1. ALL OFFSET DIMENSIONS ARE PERPENDICULAR TO THE FACE OF THE EDGE OF SHOULDER AND OR CENTERLINE.

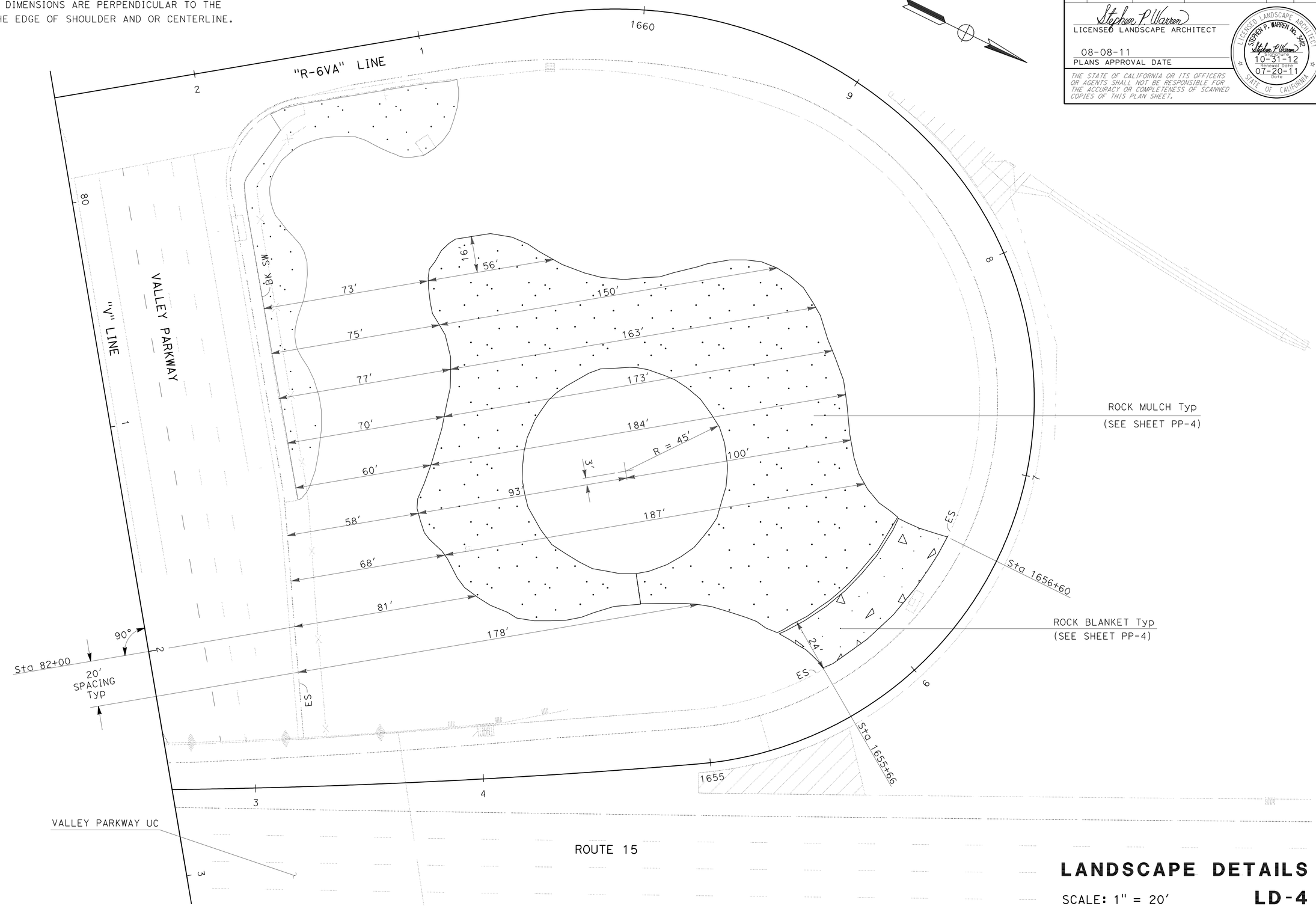

LANDSCAPE DETAILS

SCALE: 1" = 20'

LD-4

STATE OF CALIFORNIA - DEPARTMENT OF TRANSPORTATION
Caltrans LANDSCAPE ARCHITECTURE

SENIOR LANDSCAPE ARCHITECT: STEPHEN ALVAREZ
CALCULATED-DESIGNED BY: STEPHEN WARREN
CHECKED BY: JOHN NEWLON
REVISED BY
DATE REVISED

LAST REVISION 07-30-11
DATE PLOTTED => 30-NOV-2011
TIME PLOTTED => 14:57

Dist	COUNTY	ROUTE	POST MILES TOTAL PROJECT	SHEET No.	TOTAL SHEETS
11	SD	15	R30.1/R31.5	32	57

Stephen P. Warren
LICENSED LANDSCAPE ARCHITECT

08-08-11
PLANS APPROVAL DATE

LICENSED LANDSCAPE ARCHITECT
STEPHEN P. WARREN No. 3442
Signature
10-31-12
Renewal Date
07-20-11
Date
STATE OF CALIFORNIA

THE STATE OF CALIFORNIA OR ITS OFFICERS OR AGENTS SHALL NOT BE RESPONSIBLE FOR THE ACCURACY OR COMPLETENESS OF SCANNED COPIES OF THIS PLAN SHEET.

NOTE:

1. ALL OFFSET DIMENSIONS ARE PERPENDICULAR TO THE FACE OF THE EDGE OF SHOULDER AND OR CENTERLINE.

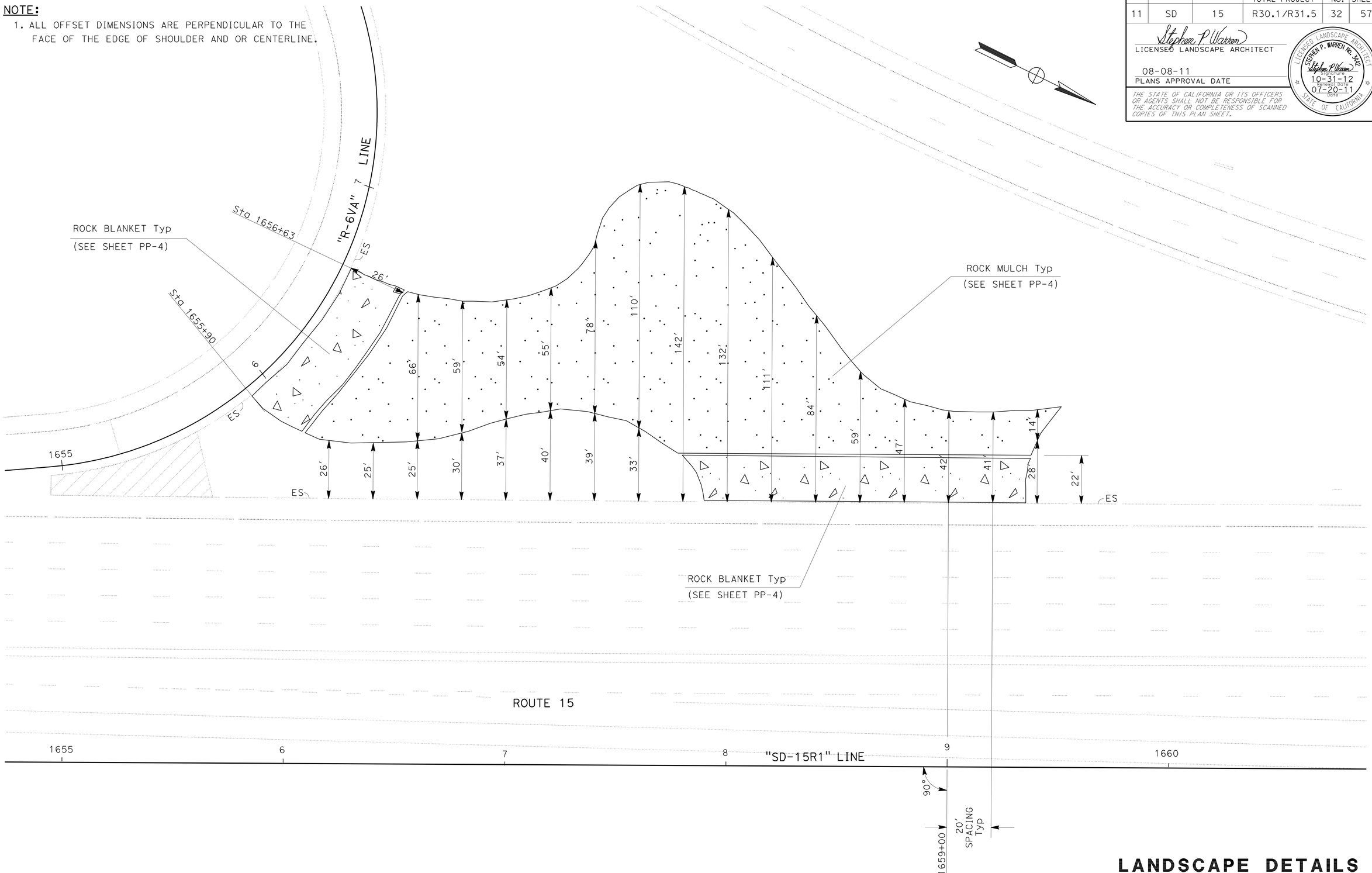

LANDSCAPE DETAILS

SCALE 1" = 20'

LD-5

STATE OF CALIFORNIA - DEPARTMENT OF TRANSPORTATION
Caltrans® LANDSCAPE ARCHITECTURE

SENIOR LANDSCAPE ARCHITECT: STEPHEN ALVAREZ
CALCULATED-DESIGNED BY: STEPHEN WARREN
CHECKED BY: JOHN NEWLON
REVISED BY
DATE REVISED

LAST REVISION 07-30-11
DATE PLOTTED => 30-NOV-2011
TIME PLOTTED => 14:57

Dist	COUNTY	ROUTE	POST MILES TOTAL PROJECT	SHEET No.	TOTAL SHEETS
11	SD	15	R30.1/R31.5	33	57

Stephen P. Warren
LICENSED LANDSCAPE ARCHITECT

08-08-11
PLANS APPROVAL DATE

LICENSED LANDSCAPE ARCHITECT
STEPHEN P. WARREN No. 3462
Signature
10-31-12
Renewal Date
07-20-11
Date
STATE OF CALIFORNIA

THE STATE OF CALIFORNIA OR ITS OFFICERS OR AGENTS SHALL NOT BE RESPONSIBLE FOR THE ACCURACY OR COMPLETENESS OF SCANNED COPIES OF THIS PLAN SHEET.

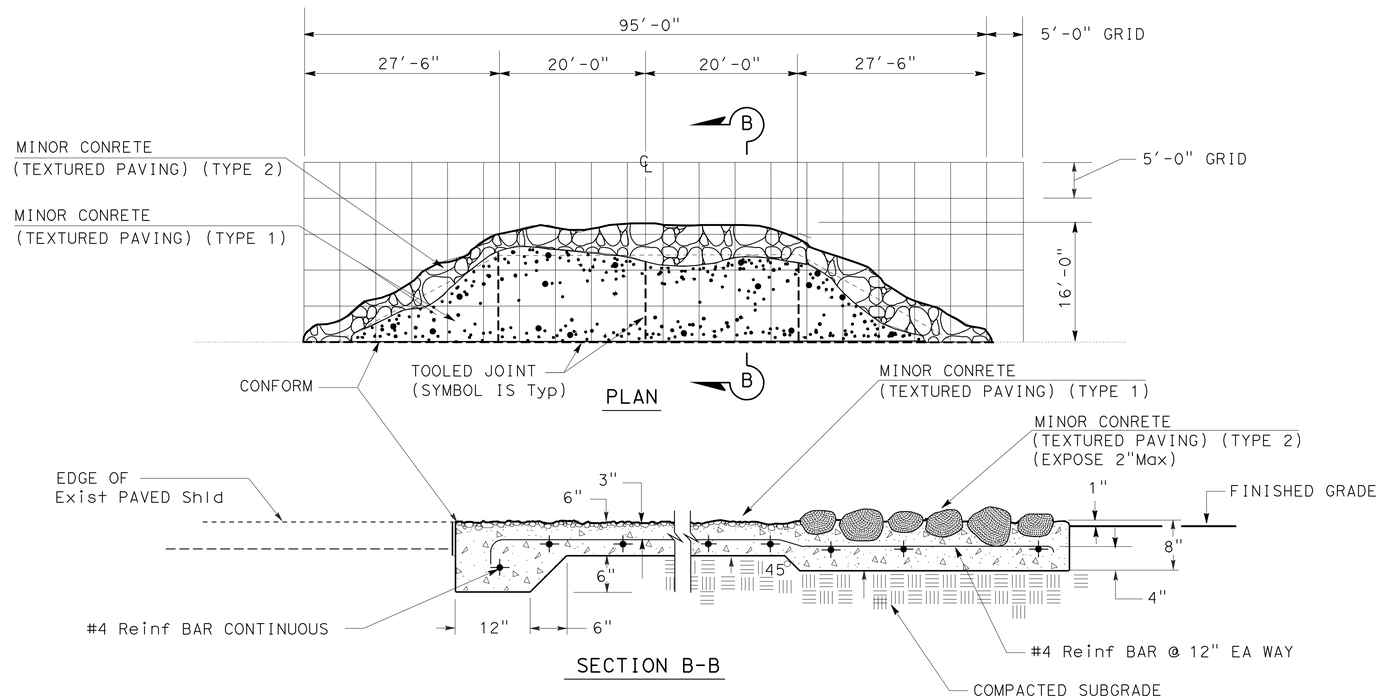

MINOR CONCRETE
MAINTENANCE VEHICLE PULLOUT (MVP)

LANDSCAPE DETAILS

NO SCALE

LD-6

STATE OF CALIFORNIA - DEPARTMENT OF TRANSPORTATION
Caltrans® LANDSCAPE ARCHITECTURE

SENIOR LANDSCAPE ARCHITECT: STEPHEN ALVAREZ
CALCULATED-DESIGNED BY: STEPHEN WARREN
CHECKED BY: JOEL HORTIZUELA
REVISED BY
DATE REVISED

LAST REVISION 07-30-11
DATE PLOTTED => 30-NOV-2011
TIME PLOTTED => 14:58

Dist	COUNTY	ROUTE	POST MILES TOTAL PROJECT	SHEET No.	TOTAL SHEETS
11	SD	15	R30.1/R31.5	34	57

Stephen P. Warren
LICENSED LANDSCAPE ARCHITECT

08-08-11
PLANS APPROVAL DATE

LICENSED LANDSCAPE ARCHITECT
STEPHEN P. WARREN No. 3462
Stephen P. Warren
Signature
10-31-12
Renewal Date
07-20-11
Date
STATE OF CALIFORNIA

THE STATE OF CALIFORNIA OR ITS OFFICERS OR AGENTS SHALL NOT BE RESPONSIBLE FOR THE ACCURACY OR COMPLETENESS OF SCANNED COPIES OF THIS PLAN SHEET.

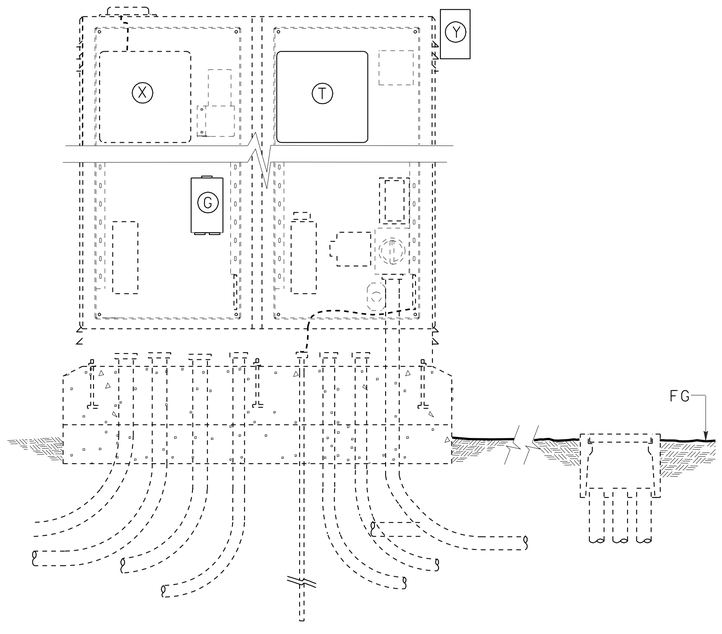

SAT LAYOUT

IRRIGATION CONTROLLER ENCLOSURE CABINET LAYOUT

LEGEND:

- Ⓐ STAINLESS STEEL CONTROLLER ENCLOSURE CABINET
- Ⓑ DOOR WITH THREE POINT LOCKING MECHANISM, FLUSH-MOUNTED ACCESS HANDLE FOR PADLOCK, AND STORAGE FOR PLANS
- Ⓒ CONTINUOUS STAINLESS STEEL PIANO HINGE
- Ⓓ LOUVERS AT TOP AND BOTTOM FOR CROSS VENTILATION
- Ⓔ STORAGE COMPARTMENT
- Ⓕ LOW PRO ANTENNA AND CABLE (FOR COMMUNICATION BETWEEN CCU AND SAT) (NOT NEEDED WITH POLE MOUNT ANTENNA)
- Ⓖ CAM-CLUSTER
- Ⓗ SURGE PROTECTION
- Ⓘ PCC PAD AND FOUNDATION
- Ⓙ 3/8" DIAMETER, 2 3/4" LONG, WINGED STAINLESS STEEL ANCHOR BOLTS WITH WASHERS AND HEX HEAD LOCKNUTS (4 BOLTS FOR SINGLE, 6 BOLTS FOR DOUBLE)
- Ⓚ 5/8" X 10' LONG COPPER CLAD STEEL ROD GROUND ELECTRODE AND GROUND CLAMP WITH No. 8 AWG GROUND CONDUCTOR.
- Ⓛ SIZE 1", TYPE 3 CONDUIT FOR ELECTRICAL SERVICE (2 FOR CABINET WITH TELEPHONE SERVICE)
- Ⓜ SIZE 1 1/2", TYPE 3 CONDUIT FOR RCVM AND FS INPUT WIRING
- Ⓝ SIZE 3" & 2" (ONE EACH), TYPE 3 CONDUIT FOR LOW VOLTAGE WIRING
- Ⓞ FLOW MONITOR
- (P1) 2 GANG WEATHER PROOF BOX WITH GROUND FAULT PROTECTED RECEPTACLE
- (P2) ON-OFF SWITCH
- Ⓠ STAINLESS STEEL BACK BOARD ATTACHED TO ENCLOSURE
- Ⓡ CIRCUIT BREAKERS
- Ⓢ TERMINAL STRIPS FOR LOW VOLTAGE WIRE CONNECTIONS
- Ⓣ SATELLITE IRRIGATION CONTROLLER (SAT) '57 (D) & (F) WITH TWO WAY RADIO CONNECTIONS (QUANTITIES SHOWN ON PLANS). EXISTING WHERE CALLED OUT ON PLAN.
- Ⓤ SIZE 1 1/2", TYPE 3 CONDUIT FOR ELECTRICAL RIBBON FROM SAT'S.
- Ⓥ MASTER VALVE RELAY
- Ⓦ 450-470 MHZ RADIO MODEM KIT
- Ⓧ EXISTING SAT'S '57 (C),(D)&(E)'
- Ⓨ RAIN SENSOR (AT CONTROLLER 57 'D' ONLY)

NOTES:

1. SATELLITE CONTROLLERS '57(C) & (E)' ARE EXISTING.
2. ALL ABOVE ITEMS ARE EXISTING IN CABINET EXCEPT ITEM 'T', 'G' & 'Y'.

LANDSCAPE DETAILS

NO SCALE

LD-7

STATE OF CALIFORNIA - DEPARTMENT OF TRANSPORTATION
Caltrans® LANDSCAPE ARCHITECTURE

SENIOR LANDSCAPE ARCHITECT: STEPHEN ALVAREZ
CALCULATED-DESIGNED BY: STEPHEN WARREN
CHECKED BY: JOEL HORTIZUELA
REVISED BY
DATE REVISED

LAST REVISION 07-30-11
DATE PLOTTED => 30-NOV-2011
TIME PLOTTED => 14:58

Dist	COUNTY	ROUTE	POST MILES TOTAL PROJECT	SHEET No.	TOTAL SHEETS
11	SD	15	R30.1/R31.5	35	57

Stephen P. Warren
LICENSED LANDSCAPE ARCHITECT

08-08-11
PLANS APPROVAL DATE

LICENSED LANDSCAPE ARCHITECT
STEPHEN P. WARREN No. 3462
Signature
10-31-12
Renewal Date
07-20-11
Date
STATE OF CALIFORNIA

THE STATE OF CALIFORNIA OR ITS OFFICERS OR AGENTS SHALL NOT BE RESPONSIBLE FOR THE ACCURACY OR COMPLETENESS OF SCANNED COPIES OF THIS PLAN SHEET.

EXTEND IRRIGATION CROSSOVERS

SHEET	LINE	STATION	Exist Cond SIZE (INCH)	Exist Cond TYPE	SIDE R†	SIDE L†	EXTEND Cond LENGTH (LF) SIZE (10") DN LF		CB	OL	(N) WATER LINE CROSSOVER SIZE(INCH)	(N) SPRINKLER CONTROL CROSSOVER SIZE(INCH)
IP-4	"R-6VA" LINE	1656+00	8"	CHDPE	X	-	28′		-	X	3"	2"
IP-4	"R-6VA" LINE	1656+00	8"	CHDPE	-	X	28′		-	X	3"	2"
IP-4	"R-7VA" LINE	1653+58	8"	CHDPE	-	X	25′		-	X	3"	2"
IP-4	"SD-15R1" LINE	1658+28	8"	CHDPE	-	X	25′		-	X	3"	2"
				TOTAL			106′	-				

(N) - NOT A SEPARATE PAY ITEM, FOR INFORMATION ONLY
X - DENOTES REQUIREMENT
DN - DIAMETER NOMINAL

CB - COUPLING BAND
OL - OVERLAP

NOTE:
INSTALL PULL BOX FLUSH WITH THE ROCK MULCH IN ROCK MULCH AREAS.

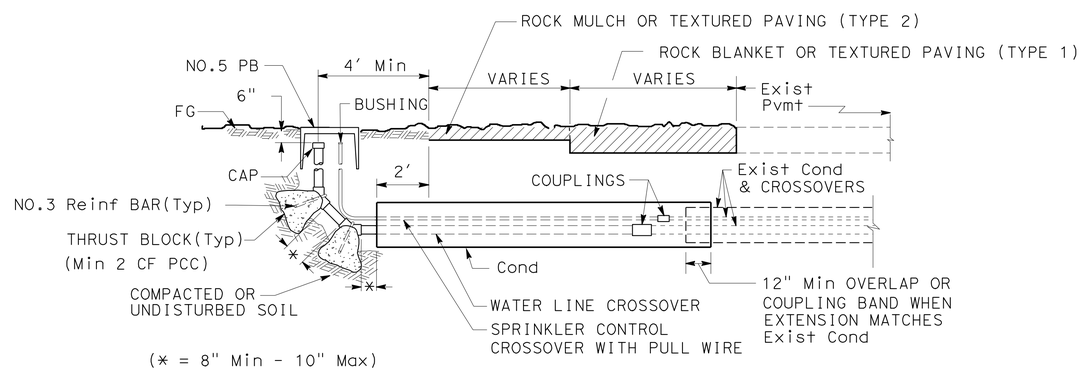

SECTION

EXTEND IRRIGATION CROSSOVER

(MODIFIED)

LANDSCAPE DETAILS

NO SCALE

LD-8

STATE OF CALIFORNIA - DEPARTMENT OF TRANSPORTATION
Caltrans® LANDSCAPE ARCHITECTURE

SENIOR LANDSCAPE ARCHITECT: STEPHEN ALVAREZ
CALCULATED-DESIGNED BY: STEPHEN WARREN
CHECKED BY: JOEL HORTIZUELA
REVISED BY
DATE REVISED

LAST REVISION 07-30-11
DATE PLOTTED => 30-NOV-2011
TIME PLOTTED => 14:58

Dist	COUNTY	ROUTE	POST MILES TOTAL PROJECT	SHEET No.	TOTAL SHEETS
11	SD	15	R30.1/R31.5	36	57

Stephen P. Warren
LICENSED LANDSCAPE ARCHITECT

08-08-11
PLANS APPROVAL DATE

LICENSED LANDSCAPE ARCHITECT
STEPHEN P. WARREN No. 3462
Signature
10-31-12
Renewal Date
07-20-11
Date
STATE OF CALIFORNIA

THE STATE OF CALIFORNIA OR ITS OFFICERS OR AGENTS SHALL NOT BE RESPONSIBLE FOR THE ACCURACY OR COMPLETENESS OF SCANNED COPIES OF THIS PLAN SHEET.

RECYCLED WATER WARNING SIGN (RWWS)

SHEET	POST MOUNTED EA (N)	FENCE MOUNTED EA (N)	ASSEMBLY ENCLOSURE MOUNTED EA (N)
IP-1	1	2	1
IP-3	2	1	-
IP-4	1	1	-
IP-5	1	-	-
IP-6	-	7	-
IP-7	-	8	-
TOTAL	5	19	1

(N) - NOT A SEPARATE PAY ITEM, FOR INFORMATION ONLY

ROCK MULCH

SHEET	SQYD
PP-1	922
PP-3	1,100
PP-4	5,026
PP-5	959
TOTAL	8,007

NOTE:

1. ROCK MULCH TO BE PLACED OVER THE WOOD MULCH WITHIN PLANT BASINS.

MULCH

SHEET	CY
PP-1	88
PP-2	70
PP-3	70
PP-4	374
PP-5	20
PP-6	223
PP-7	250
PLANT BASIN	433
TOTAL	1,528

RUBBER MULCH

SHEET	CY
PP-1	53
PP-4	31
PP-5	23
PP-7	51
TOTAL	158

NOTE:

1. RUBBER MULCH TO BE PLACED OVER THE WOOD MULCH WITHIN PLANT BASINS.

ROCK BLANKET

SHEET	SQYD
PP-4	739
TOTAL	739

MINOR CONCRETE TEXTURED PAVING

SHEET	MINOR CONCRETE (TEXTURED PAVING) (TYPE 1)	MINOR CONCRETE (TEXTURED PAVING) (TYPE 2)
	SQYD	SQYD
PP-4	47	75
TOTAL	47	75

THRUST BLOCK DETAIL

INSTALLATION	TYPE FITTING	INSTALLATION	TYPE FITTING
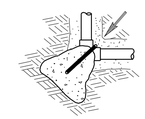	90° ELL	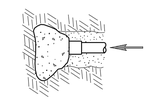	DEAD END
	BEND 45° 22.5° 11.25°		GATE VALVE
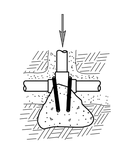	TEE	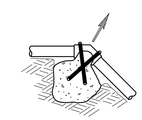	VERTICAL BEND (TYPE I) 45° 22.5° 11.25°
			OR
		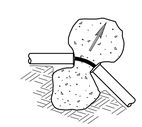	VERTICAL BEND (TYPE II) 45° 22.5° 11.25°

NOTES:

Min 1 CF PCC FOR 1½" PIPE SIZE AND SMALLER.
Min 2 CF PCC FOR 2" PIPE SIZE.
Min 3 CF PCC FOR 3" AND 4" PIPE SIZE.
USE #3 REINFORCING BAR WHERE SHOWN.

LANDSCAPE DETAILS

NO SCALE

LD-9

STATE OF CALIFORNIA - DEPARTMENT OF TRANSPORTATION
Caltrans® LANDSCAPE ARCHITECTURE

SENIOR LANDSCAPE ARCHITECT: STEPHEN ALVAREZ
CALCULATED-DESIGNED BY: STEPHEN WARREN
CHECKED BY: JOEL HORTIZUELA
REVISED BY / DATE REVISED

LAST REVISION 07-30-11
DATE PLOTTED => 30-NOV-2011
TIME PLOTTED => 14:58

Dist	COUNTY	ROUTE	POST MILES TOTAL PROJECT	SHEET No.	TOTAL SHEETS
111	SD	15	R30.1/R31.5	37	57

Stephen P. Warren
LICENSED LANDSCAPE ARCHITECT

08-08-11
PLANS APPROVAL DATE

LICENSED LANDSCAPE ARCHITECT
STEPHEN P. WARREN No. 3462
Signature
10-31-12
Renewal Date
07-20-11
Date
STATE OF CALIFORNIA

THE STATE OF CALIFORNIA OR ITS OFFICERS OR AGENTS SHALL NOT BE RESPONSIBLE FOR THE ACCURACY OR COMPLETENESS OF SCANNED COPIES OF THIS PLAN SHEET.

SUBTOTALS PER VALVE ON LATERAL SUPPLY SIDE OF CONTROL VALVE

VALVE OR ASSEMBLY NUMBER FOR SAT - 40 STATION '57 (D)'

DESCRIPTION		UNIT	1	2	3	4	5	6	7	8	9	10	11	12	13	14	15	16	17	18	19	20	21	22	23a	23b	24	25	26	27	28	29a	29b	30	31	32	33	34	35	36			SUBTOTALS	UNIT	DESCRIPTION	
PLASTIC PIPE SUPPLY LINE	SCH 40	1 INCH	LF	180	410	180	200	180	180	200	180	425	180	240	240	240	550	240	180	800	220	180	180	180	175	270	120	110	530	140	180	180	220	300	315	200	180	150	180	160	170	-	-	9,145	LF	1 INCH	PR 200 PLASTIC PIPE SUPPLY LINE
		1¼ INCH	LF	90	160	90	40	90	90	40	90	60	90	70	70	70	45	50	90	20	35	90	80	90	40	-	-	3	-	40	90	45	-	-	20	80	45	-	45	-	-	-	-	1,950	LF	1¼ INCH	
		1½ INCH	LF	45	-	45	120	45	45	120	45	40	45	110	110	35	-	175	45	50	170	30	-	90	-	-	-	-	-	-	45	-	-	-	35	70	70	-	45	3	35	-	-	1,668	LF	1½ INCH	
		2 INCH	LF	-	20	-	45	-	-	160	-	20	-	35	70	3	10	35	-	-	70	10	-	-	-	-	-	-	10	-	-	-	-	70	-	-	-	45	10	-	-	-	-	613	LF	2 INCH	
	PR 315	2½ INCH	LF	3	-	120	-	3	60	-	3	-	50	3	35	-	-	-	3	-	45	70	70		-	-	-	-	-	-	3	70	-	-	3	-	3	-	80	-	-	-	-	624	LF	2½ INCH	
DIP GSP																																														
DIP																																														
SPRINKLER TYPE		A-5	EA	-	-	-	12	-	-	10	-	-	-	15	15	13	-	14	-	-	-	-	-	-	6	-	-	4	-	5	-	-	-	-	11	13	-	-	-	5	6	-	-	129	EA	A-5	SPRINKLER TYPE
		A-6	EA	-	-	-	-	-	-	-	-	-	-	-	-	-	-	-	-	-	-	-	-	-	-	-	-	2	-	-	-	-	-	-	1	-	-	-	-	1	-	-	-	4	EA	A-6	
		A-7	EA	6	-	8	-	8	8	-	8	-	8	-	-	-	-	-	8	-	-	8	7	5	-	-	-	-	-	-	6	5	-	-	-	-	8	5	-	-	-	-	-	98	EA	A-7	
		A-8	EA	2	-	-	-	-	-	-	-	-	-	-	-	-	-	-	-	-	-	-	-	4		-	-	-	-	-	2	1	-	-	-	-	-	-	-	-	-	-	-	9	EA	A-8	
		A-11	EA	-	-	-	-	-	-	-	-	-	-	-	-	-	-	-	-	-	-	-	-	-	-	-	-	-	-	-	-	-	-	-	-	-	-	-	-	-	-	-	-	-	EA	A-11	
		B-1	EA	-	-	-	-	-	-	-	-	-	-	-	-	-	-	-	-	-	-	-	-	-	-	-	-	-	-	-	-	-	-	-	-	-	-	-	-	-	-	-	-	-	EA	B-1	
		B-2	EA	-	-	-	-	-	-	-	-	-	-	-	-	-	-	-	-	-	-	-	-	-	-	-	-	-	-	-	-	-	-	-	-	-	-	-	-	-	-	-	-	-	EA	B-2	
		C-2 Mod	EA	-	66	-	-	-	-	-	-	88	-	-	-	-	68	-	-	55	-	-	-	-	-	31	6	-	99	-	-	-	14	49	-	-	-	-	-	-	-	-	-	476	EA	C-2 Mod	

VALVE OR ASSEMBLY NUMBER FOR Exist SAT - 40 STATION '57 (E)'

DESCRIPTION		UNIT	1	2	3	4	5	6	7	8	9	10	11	12	13	14	15	16	17	18	19	20	21	22	23	24	25	26	27	28	29	30	31	32	33	34	35	36	37	38	39	40	SUBTOTALS	UNIT	DESCRIPTION	
PLASTIC PIPE SUPPLY LINE	SCH 40	1 INCH	LF	180	180	550	135	180	180	420	210	180	180	180	180	160	220	360	110	180	180	150	280	180	260	180	180	180	360	-	135	280	180	180	150	135	-	-	-	-	-	-	-	6,535	LF	1 INCH	PR 200 PLASTIC PIPE SUPPLY LINE
		1¼ INCH	LF	90	90	-	45	45	90	-	80	90	45	90	90	45	-	100	40	90	90	-	45	90	110	90	90	90	55	-	45	-	90	90	-	45	-	-	-	-	-	-	-	1,960	LF	1¼ INCH	
		1½ INCH	LF	45	45	45	90	45	30	45	280	45	45	45	45	45	-	60	-	45	15	-	270	45	60	45	45	-	10	145	135	90	45	-	70	45	-	-	-	-	-	-	-	2,285	LF	1½ INCH	
		2 INCH	LF	-	-	-	-	-	-	-	90	-	-	-	45	110	-	60	-	45	-	290	-	-	50	-	-	-	-	-	-	-	-	-	-	90	-	-	-	-	-	-	-	780	LF	2 INCH	
	PR 315	2½ INCH	LF	3	65	-	3	105	50	80	300	3	3	80	80	3	-	-	-	3	65	-	40	3	-	60	90	3	3	145	-	-	40	3	-	3	-	-	-	-	-	-	-	1,233	LF	2½ INCH	
DIP GSP																																														
DIP																																														
SPRINKLER TYPE		A-5	EA	-	-	-	-	-	-	-	19	-	-	-	-	-	-	-	4	-	-	-	16	-	-	-	-	-	12	-	8	-	-	-	7	-	-	-	-	-	-	-	-	66	EA	A-5	SPRINKLER TYPE
		A-6	EA	-	-	-	-	-	-	-	-	-	-	-	-	-	-	-	-	-	-	-	-	-	-	-	-	-	4	-	-	-	-	-	-	-	-	-	-	-	-	-	-	4	EA	A-6	
		A-7	EA	8	8	-	7	7	-	-	-	8	7	8	8	2	-	-	-	7	7	3	-	6	-	7	7	7	-	-	-	-	7	4	-	-	-	-	-	-	-	-	-	118	EA	A-7	
		A-8	EA	-	-	-	-	-	-	-	-	-	-	-	-	6	-	-	-	1	-	2	-	1	-	-	1	-	-	-	-	-	-	3	-	8	-	-	-	-	-	-	-	22	EA	A-8	
		A-11	EA	-	-	-	-	-	-	-	-	-	-	-	-	-	-	-	-	-	-	-	-	-	-	-	-	-	-	-	-	-	-	-	-	-	-	-	-	-	-	-	-	-	EA	A-11	
		B-1	EA	-	-	-	-	-	-	-	-	-	-	-	-	-	-	-	-	-	-	-	-	-	-	-	-	-	-	-	-	-	-	-	-	-	-	-	-	-	-	-	-	-	EA	B-1	
		B-2	EA	-	-	-	-	-	-	-	-	-	-	-	-	-	-	-	-	-	-	-	-	-	-	-	-	-	-	-	-	-	-	-	-	-	-	-	-	-	-	-	-	-	EA	B-2	
		C-2 Mod	EA	-	-	56	-	-	-	24	-	-	-	-	-	-	17	135	-	-	-	-	-	-	104	-	-	-	-	-	-	24	-	-	-	-	-	-	-	-	-	-	-	360	EA	C-2 Mod	

IRRIGATION QUANTITIES
IQ-1

STATE OF CALIFORNIA - DEPARTMENT OF TRANSPORTATION
Caltrans® LANDSCAPE ARCHITECTURE

SENIOR LANDSCAPE ARCHITECT: STEPHEN ALVAREZ
CALCULATED-DESIGNED BY: STEPHEN WARREN
CHECKED BY: RUDY MEDINA
REVISED BY / DATE REVISED

LAST REVISION 07-30-11
DATE PLOTTED => 30-NOV-2011
TIME PLOTTED => 14:58

Dist	COUNTY	ROUTE	POST MILES TOTAL PROJECT	SHEET No.	TOTAL SHEETS
11	SD	15	R30.1/R31.5	38	57

Stephen P. Warren
LICENSED LANDSCAPE ARCHITECT

08-08-11
PLANS APPROVAL DATE

LICENSED LANDSCAPE ARCHITECT
STEPHEN P. WARREN No. 3462
Signature
10-31-12
Renewal Date
07-20-11
Date
STATE OF CALIFORNIA

THE STATE OF CALIFORNIA OR ITS OFFICERS OR AGENTS SHALL NOT BE RESPONSIBLE FOR THE ACCURACY OR COMPLETENESS OF SCANNED COPIES OF THIS PLAN SHEET.

SUBTOTALS PER VALVE ON LATERAL SUPPLY SIDE OF CONTROL VALVE

VALVE OR ASSEMBLY NUMBER FOR SAT - 24 STATION '57 (F)'

DESCRIPTION		UNIT	1	2	3	4	5	6	7	8	9	10	11	12	13	14	15	16	17	18	SUBTOTALS	UNIT	DESCRIPTION	
PLASTIC PIPE SUPPLY LINE	SCH 40	1 INCH	LF	90	140	240	170	255	440	220	240	560	180	225	180	420	180	180	180	440	180	4,520	LF	1 INCH	PR 200 PLASTIC PIPE SUPPLY LINE
		1¼ INCH	LF	45	45	60	-	35	-	60	30	-	45	90	90	-	90	90	45	-	90	815	LF	1¼ INCH	
		1½ INCH	LF	45	40	-	40	-	-	160	110	-	-	-	45	40	-	-	90	-	-	570	LF	1½ INCH	
		2 INCH	LF	10	70	-	-	90	-	40	10	-	-	-	-	-	-	-	-	40	-	260	LF	2 INCH	
	PR 315	2½ INCH	LF	-	-	-	-	-	-	-	-	-	10	60	110	-	10	60	60	-	10	320	LF	2½ INCH	PR 315 PLASTIC PIPE SUPPLY LINE
DIP GSP																									DIP GSP
DIP																									DIP
SPRINKLER TYPE		A-5	EA	-	-	-	6	8	-	13	11	-	-	-	-	-	-	-	-	-	-	38	EA	A-5	SPRINKLER TYPE
		A-6	EA	-	-	-	-	1	-	-	1	-	-	-	-	-	-	-	-	-	-	2	EA	A-6	
		A-7	EA	5	5	-	-	-	-	-	-	-	6	8	8	-	7	7	8	-	7	61	EA	A-7	
		A-8	EA	-	1	-	-	-	-	-	-	-	-	-	-	-	-	-	-	-	-	-	EA	A-8	
		A-11	EA	-	-	-	-	-	-	-	-	-	-	-	-	-	-	-	-	-	-	-	EA	A-11	
		B-1	EA	-	-	-	-	-	-	-	-	-	-	-	-	-	-	-	-	-	-	-	EA	B-1	
		B-2	EA	-	-	-	-	-	-	-	-	-	-	-	-	-	-	-	-	-	-	-	EA	B-2	
		C-2 Mod	EA	-	-	30	-	-	34	-	-	25	-	-	-	42	-	-	-	36	-	167	EA	C-2 Mod	

VALVE OR ASSEMBLY NUMBER FOR Exist SAT - 40 STATION '57 (G)'

DESCRIPTION		UNIT	1	2	3	4	5	6	7	8	9	10	11	12	13	14	15	16	17	18	19	20	21	22	23	24	25	26	SUBTOTALS	UNIT	DESCRIPTION	
PLASTIC PIPE SUPPLY LINE	SCH 40	1 INCH	LF	180	520	180	180	180	180	180	180	160	180	660	180	180	330	135	180	180	180	570	180	170	180	180	185	200	520	6,330	LF	1 INCH	PR 200 PLASTIC PIPE SUPPLY LINE
		1¼ INCH	LF	90	65	90	80	80	90	90	90	45	45	-	45	65	-	45	90	65	45	-	45	70	65	90	60	60	-	1,510	LF	1¼ INCH	
		1½ INCH	LF	45	60	45	10	45	45	10	45	45	45	40	45	25	40	45	45	45	90	-	-	230	20	-	200	200	-	1,420	LF	1½ INCH	
		2 INCH	LF	-	-	45	-	10	45	-	-	90	60	-	90	-	-	45	-	20	-	-	100	-	-	-	75	50	20	650	LF	2 INCH	
	PR 315	2½ INCH	LF	40	30	3	60	3	90	50	3	120	50	-	3	120	-	70	220	90	3	30	-	190	3	70	3	20	-	1,271	LF	2½ INCH	PR 315 PLASTIC PIPE SUPPLY LINE
DIP GSP																																	DIP GSP
DIP																																	DIP
SPRINKLER TYPE		A-5	EA	-	-	-	-	-	-	-	-	-	-	-	-	-	-	-	-	-	-	-	-	14	-	-	21	19	-	54	EA	A-5	SPRINKLER TYPE
		A-6	EA	-	-	-	-	-	-	-	-	-	-	-	-	-	-	-	-	-	-	-	-	-	-	-	-	-	-	-	EA	A-6	
		A-7	EA	8	-	9	7	8	9	7	8	9	8	-	9	7	-	7	8	8	8	-	6	-	7	7	-	-	-	140	EA	A-7	
		A-8	EA	-	-	-	-	-	-	-	-	-	-	-	-	-	-	-	-	-	-	-	-	-	-	-	-	-	-	-	EA	A-8	
		A-11	EA	-	-	-	-	-	-	-	-	-	-	-	-	-	-	-	-	-	-	-	-	-	-	-	-	-	-	-	EA	A-11	
		B-1	EA	-	-	-	-	-	-	-	-	-	-	-	-	-	-	-	-	-	-	-	-	-	-	-	-	-	-	-	EA	B-1	
		B-2	EA	-	-	-	-	-	-	-	-	-	-	-	-	-	-	-	-	-	-	-	-	-	-	-	-	-	-	-	EA	B-2	
		C-2 Mod	EA	-	108	-	-	-	-	-	-	-	-	50	-	-	31	-	-	-	-	79	-	-	-	-	-	-	81	349	EA	C-2 Mod	

IRRIGATION QUANTITIES
IQ-2

STATE OF CALIFORNIA - DEPARTMENT OF TRANSPORTATION
Caltrans® LANDSCAPE ARCHITECTURE

SENIOR LANDSCAPE ARCHITECT: STEPHEN ALVAREZ
STEPHEN WARREN
RUDY MEDINA
CALCULATED-DESIGNED BY
CHECKED BY
REVISED BY
DATE REVISED

LAST REVISION 07-30-11
DATE PLOTTED => 30-NOV-2011
TIME PLOTTED => 14:58

Dist	COUNTY	ROUTE	POST MILES TOTAL PROJECT	SHEET No.	TOTAL SHEETS
11	SD	15	R30.1/R31.5	39	57

Stephen P. Warren
LICENSED LANDSCAPE ARCHITECT

08-08-11
PLANS APPROVAL DATE

LICENSED LANDSCAPE ARCHITECT
STEPHEN P. WARREN No. 3462
Signature
10-31-12
Renewal Date
07-20-11
Date
STATE OF CALIFORNIA

THE STATE OF CALIFORNIA OR ITS OFFICERS OR AGENTS SHALL NOT BE RESPONSIBLE FOR THE ACCURACY OR COMPLETENESS OF SCANNED COPIES OF THIS PLAN SHEET.

SUBTOTALS PER PLAN SHEET ON MAIN SUPPLY SIDE OF CONTROL VALVE

DESCRIPTION			UNIT	SHEET NUMBER IP-1	IP-2	IP-3	IP-4	IP-5	IP-6	IP-7	IP-8	IP-9	IP-10	IP-11	IP-12	IP-13	IP-14	IP-15	SUBTOTALS
3" PRVAE			EA	-	-	-	-	-	-	-									
2" CARV			EA	1	-	1	1	1	2	2									
				-	-	-	-	-	-	-									
ANTENNA MAST			EA	-	-	-	-		-	-									
OMNI POLE MOUNT				-	-	-	-	-	-	-									
HOSE ASSEMBLY			EA	-	-	-	-		-	-									
				-	-	-	-	-	-	-									
2" (RWCA)			EA	-	-	-	-		-	-									
IRRIGATION CONTROLLER	CCU			-	-	-	-	-	-	-									
				-	-	-	-	-	-	-									
	SAT	40 STATION	EA	1	-	-	-	-	-	-									
		24 STATION	EA	-	-	-	1	-	-	-									
				-	-	-	-	-	-	-									
				-	-	-	-	-	-	-									
	CEC	DOUBLE	EA	-	-	-	-	-	-	-									
		SINGLE	EA	-	-	-	-	-	-	-									
VALVES AND ASSEMBLIES	RCVM			-	-	-	-	-	-	-									
				-	-	-	-	-	-	-									
				-	-	-	-	-	-	-									
	MVA			-	-	-	-	-	-	-									
				-	-	-	-	-	-	-									
	RCV	1 INCH	EA	-	-	-	-	-	-	-									
		1½ INCH	EA	14	8	15	28	12	17	20									
				-	-	-	-	-	-	-									
	GV	2 INCH	EA	5	3	4	8	3	6	6									
		2½ INCH	EA	-	-	-	-	-	-	-									
		3 INCH	EA	-	-	-	1	1	-	-									
		4 INCH	EA	-	-	-	1	1	-	-									
				-	-	-	-	-	-	-									
	PRV	2 INCH	EA	-	-		-	-	-	-									
				-	-	-	-	-	-	-									
	FS	3 INCH	EA	-	-	-	-	-	-	-									
				-	-	-	-	-	-	-									
Irr SLEEVE				-	-	-	-	-	-	-									
		3 INCH	LF	-	-	-	70	-	-	-									
		6 INCH	LF	-	-	-	-	-	-	-									
				-	-	-	-	-	-	-									
PLASTIC PIPE SUPPLY LINE	SCH 40			-	-	-	-	-	-	-									
		1 INCH	LF	-	-	-	-	-	-	-									
		1¼ INCH	LF	-	-	-	-	-	-	-									
		1½ INCH	LF	-	-	-	-	-	-	-									
		2 INCH	LF	-	-	-	-	-	-	-									
	PR 315	2½ INCH	LF	-	-	-	-	-	-	-									
		3 INCH	LF	1,870	1,100	1,070	2,040	660	1,320	1,520									
		4 INCH	LF	-	-	-			-	-									
				-	-	-	-	-	-	-									
				-	-	-	-	-	-	-									
				-	-	-	-	-	-	-									
GALV PIPE																			
DIP																			

(N) NOT A SEPARATE PAY ITEM, FOR INFORMATION ONLY

TOTAL QUANTITIES

TOTALS	UNIT	DESCRIPTION		
	EA	3" PRVAE		
8	EA	2" CARV		
	EA	ANTENNA MAST		
		OMNI POLE MOUNT		
	EA	HOSE ASSEMBLY		
	EA	2" (RWCA)		
			CCU	IRRIGATION CONTROLLER
1	EA	40 STATION	SAT	
1	EA	24 STATION		
	EA	DOUBLE	CEC	
	EA	SINGLE		
			RCVM	VALVES AND ASSEMBLIES
			MVA	
	EA	1 INCH	RCV	
114	EA	1½ INCH		
35	EA	2 INCH	GV	
	EA	2½ INCH		
2	EA	3 INCH		
2	EA	4 INCH		
	EA	2 INCH	PRV	
	EA	3 INCH	FS	
				Irr SLEEVE
70	LF	3 INCH		
	LF	6 INCH		
				PLASTIC PIPE SUPPLY LINE
26,530	LF	1 INCH	SCH 40	
6,235	LF	1¼ INCH		
5,943	LF	1½ INCH		
2,303	LF	2 INCH		
3,448	LF	2½ INCH	PR 315	
9,580	LF	3 INCH		
	LF	4 INCH		
				GALV PIPE
				DIP
287	EA	A-5		SPRINKLER TYPE
10	EA	A-6		
417	EA	A-7		
31	EA	A-8		
	EA	A-11		
	EA	B-1		
1,352	EA	C-2 Mod		

IRRIGATION QUANTITIES

IQ-3

STATE OF CALIFORNIA - DEPARTMENT OF TRANSPORTATION
Caltrans® LANDSCAPE ARCHITECTURE

SENIOR LANDSCAPE ARCHITECT: STEPHEN ALVAREZ
CALCULATED-DESIGNED BY: STEPHEN WARREN
CHECKED BY: RUDY MEDINA
REVISED BY
DATE REVISED

LAST REVISION 07-30-11
DATE PLOTTED => 30-NOV-2011
TIME PLOTTED => 14:58

Dist	COUNTY	ROUTE	POST MILES TOTAL PROJECT	SHEET No.	TOTAL SHEETS
11	SD	15	R30.1/R31.5	40	57

Simon Tse 07-20-11
REGISTERED CIVIL ENGINEER DATE

08-08-11
PLANS APPROVAL DATE

REGISTERED PROFESSIONAL ENGINEER SIMON TSE No. C66401 Exp. 06-30-12 CIVIL STATE OF CALIFORNIA

THE STATE OF CALIFORNIA OR ITS OFFICERS OR AGENTS SHALL NOT BE RESPONSIBLE FOR THE ACCURACY OR COMPLETENESS OF SCANNED COPIES OF THIS PLAN SHEET.

NOTES:

1. LOCATION OF UTILITY FACILITIES SHOWN ON THESE PLANS WERE OBTAINED EITHER FROM THE OWNER'S RECORDS AND/OR FROM STATE SURVEYS.
2. LOCATION OF UTILITY LINES SHOWN ON THESE PLANS ARE APPROXIMATE. THE CONTRACTOR IS TO FIELD VERIFY OR POTHOLE IN ORDER TO DETERMINE EXACT LOCATION.
3. FOR ACCURATE RIGHT OF WAY, CONTACT RIGHT OF WAY ENGINEERING AT THE DISTRICT OFFICE.

LEGEND:

SYMBOL	EXISTING UTILITY	OWNER
—— w ——	WATER	CITY OF ESCONDIDO
—— s ——	SEWER	CITY OF ESCONDIDO
—— g ——	GAS	SAN DIEGO GAS & ELECTRIC
—— e ——	ELECTRICAL	SAN DIEGO GAS & ELECTRIC
—— t ——	TELEPHONE	SBC CALIFORNIA
—— tv ——	CABLE-TV	COX
—— rw ——	RECLAIMED WATER LINE	CITY OF ESCONDIDO
—— fo ——	FIBER OPTIC	COX CABLE

ABBREVIATIONS:

TM - THREADED MOUNT

CCP - CONCRETE CYLINDER PIPE

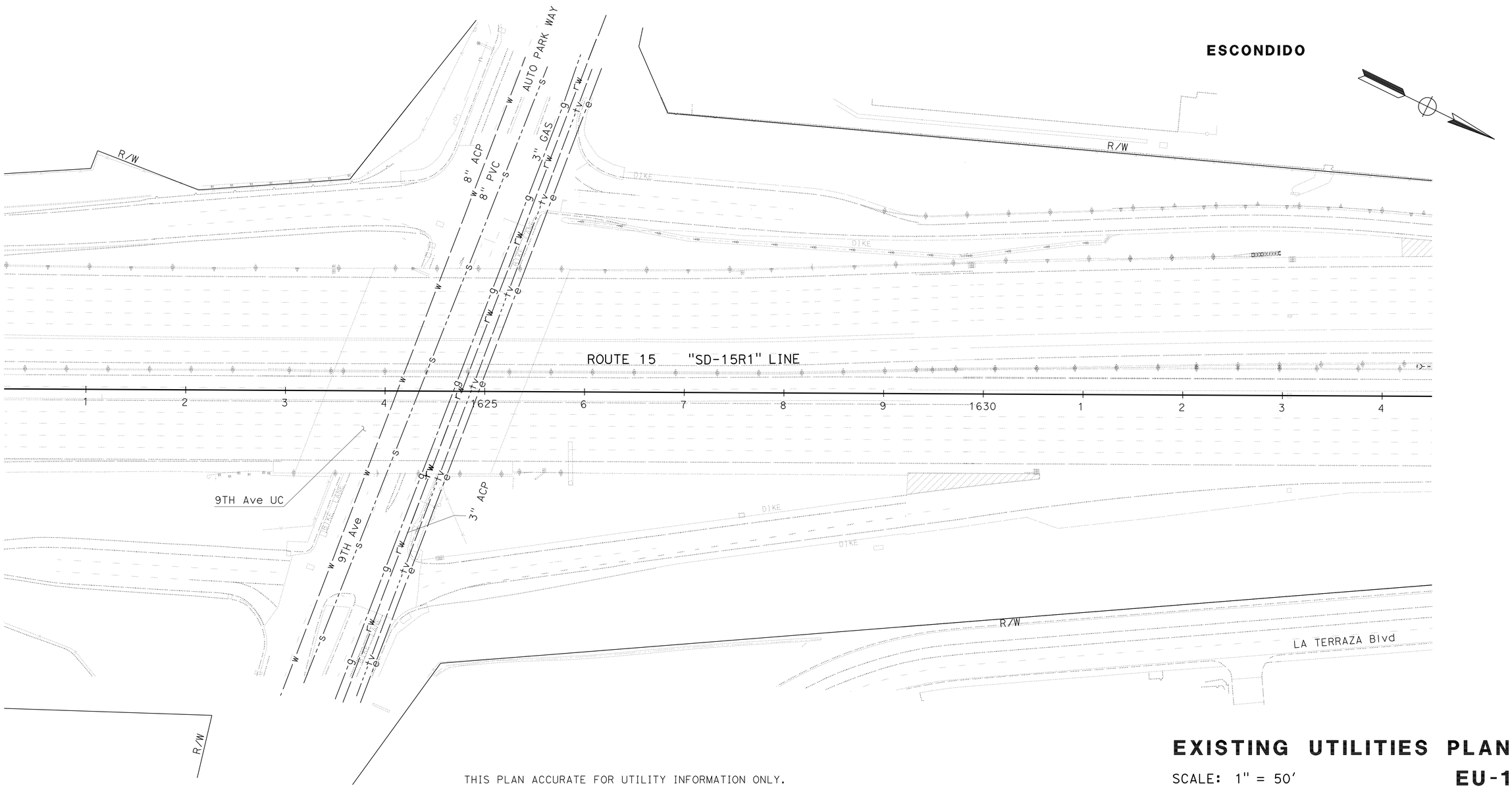

THIS PLAN ACCURATE FOR UTILITY INFORMATION ONLY.

EXISTING UTILITIES PLAN

SCALE: 1" = 50'

EU-1

REVISED BY | DATE REVISED

ANH HOANG | SIMON TSE

CALCULATED-DESIGNED BY | CHECKED BY

SENIOR CIVIL ENGINEER: ABU-BAKR-JAFRI

STATE OF CALIFORNIA - DEPARTMENT OF TRANSPORTATION
Caltrans® ENGINEERING SERVICES

LAST REVISION 07-30-11 | DATE PLOTTED => 30-NOV-2011 | TIME PLOTTED => 14:58

Dist	COUNTY	ROUTE	POST MILES TOTAL PROJECT	SHEET No.	TOTAL SHEETS
11	SD	15	R30.1/R31.5	41	57

Simon Tse 07-20-11
REGISTERED CIVIL ENGINEER DATE

08-08-11
PLANS APPROVAL DATE

REGISTERED PROFESSIONAL ENGINEER SIMON TSE No. C66401 Exp. 06-30-12 CIVIL STATE OF CALIFORNIA

THE STATE OF CALIFORNIA OR ITS OFFICERS OR AGENTS SHALL NOT BE RESPONSIBLE FOR THE ACCURACY OR COMPLETENESS OF SCANNED COPIES OF THIS PLAN SHEET.

NOTES:

1. LOCATION OF UTILITY FACILITIES SHOWN ON THESE PLANS WERE OBTAINED EITHER FROM THE OWNER'S RECORDS AND/OR FROM STATE SURVEYS.
2. LOCATION OF UTILITY LINES SHOWN ON THESE PLANS ARE APPROXIMATE. THE CONTRACTOR IS TO FIELD VERIFY OR POTHOLE IN ORDER TO DETERMINE EXACT LOCATION.
3. FOR ACCURATE RIGHT OF WAY, CONTACT RIGHT OF WAY ENGINEERING AT THE DISTRICT OFFICE.

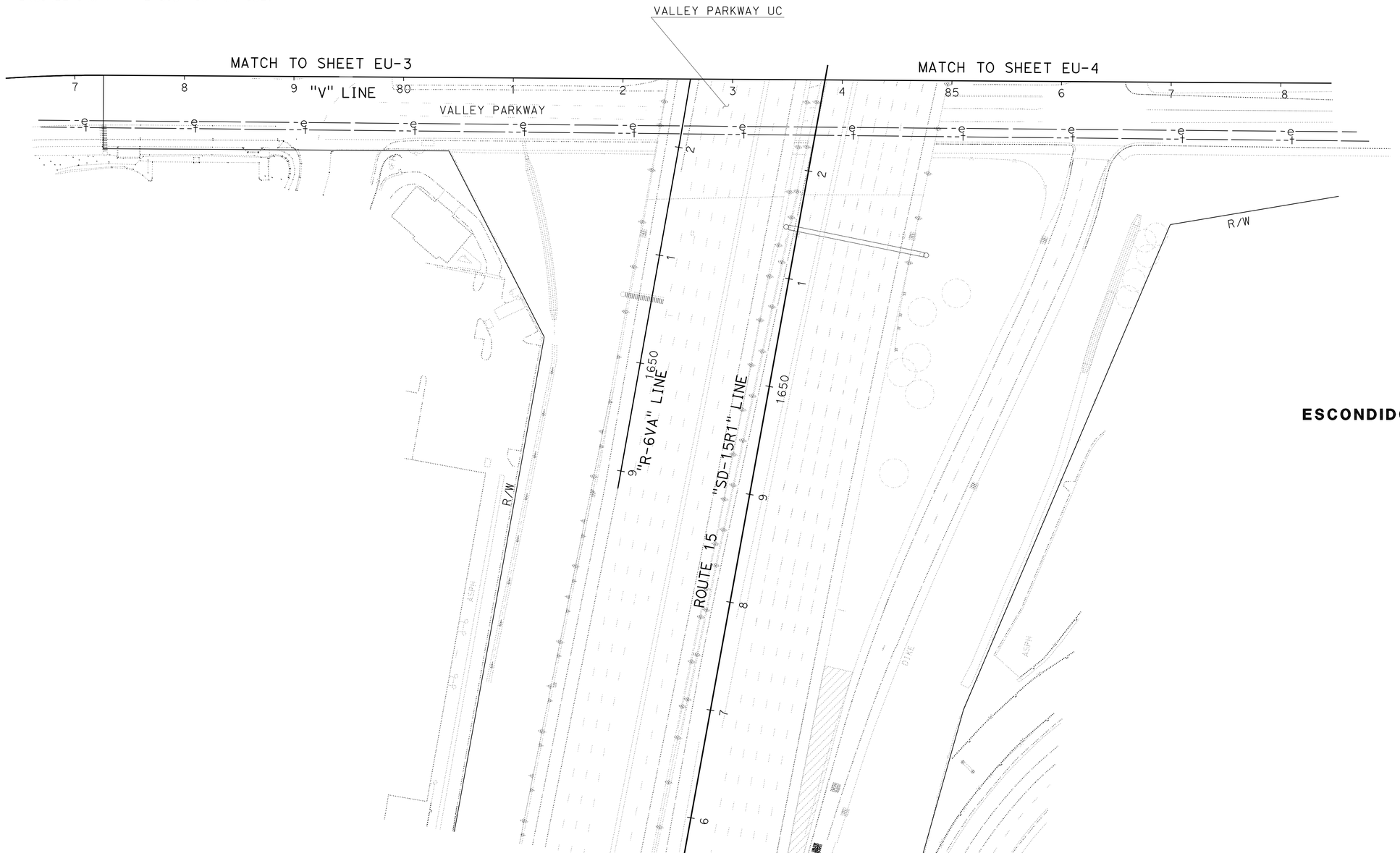

ESCONDIDO

THIS PLAN ACCURATE FOR UTILITY INFORMATION ONLY.

EXISTING UTILITIES PLAN

SCALE: 1" = 50'

EU-2

STATE OF CALIFORNIA - DEPARTMENT OF TRANSPORTATION
Caltrans ENGINEERING SERVICES

SENIOR CIVIL ENGINEER: ABU-BAKR-JAFRI
CALCULATED-DESIGNED BY: ANH HOANG
CHECKED BY: SIMON TSE
REVISED BY
DATE REVISED

LAST REVISION 07-30-11
DATE PLOTTED => 30-NOV-2011
TIME PLOTTED => 14:58

Dist	COUNTY	ROUTE	POST MILES TOTAL PROJECT	SHEET No.	TOTAL SHEETS
11	SD	15	R30.1/R31.5	42	57

Simon Tse 07-20-11
REGISTERED CIVIL ENGINEER DATE

08-08-11
PLANS APPROVAL DATE

REGISTERED PROFESSIONAL ENGINEER SIMON TSE No. C66401 Exp. 06-30-12 CIVIL STATE OF CALIFORNIA

THE STATE OF CALIFORNIA OR ITS OFFICERS OR AGENTS SHALL NOT BE RESPONSIBLE FOR THE ACCURACY OR COMPLETENESS OF SCANNED COPIES OF THIS PLAN SHEET.

NOTES:

1. LOCATION OF UTILITY FACILITIES SHOWN ON THESE PLANS WERE OBTAINED EITHER FROM THE OWNER'S RECORDS AND/OR FROM STATE SURVEYS.
2. LOCATION OF UTILITY LINES SHOWN ON THESE PLANS ARE APPROXIMATE. THE CONTRACTOR IS TO FIELD VERIFY OR POTHOLE IN ORDER TO DETERMINE EXACT LOCATION.
3. FOR ACCURATE RIGHT OF WAY, CONTACT RIGHT OF WAY ENGINEERING AT THE DISTRICT OFFICE.

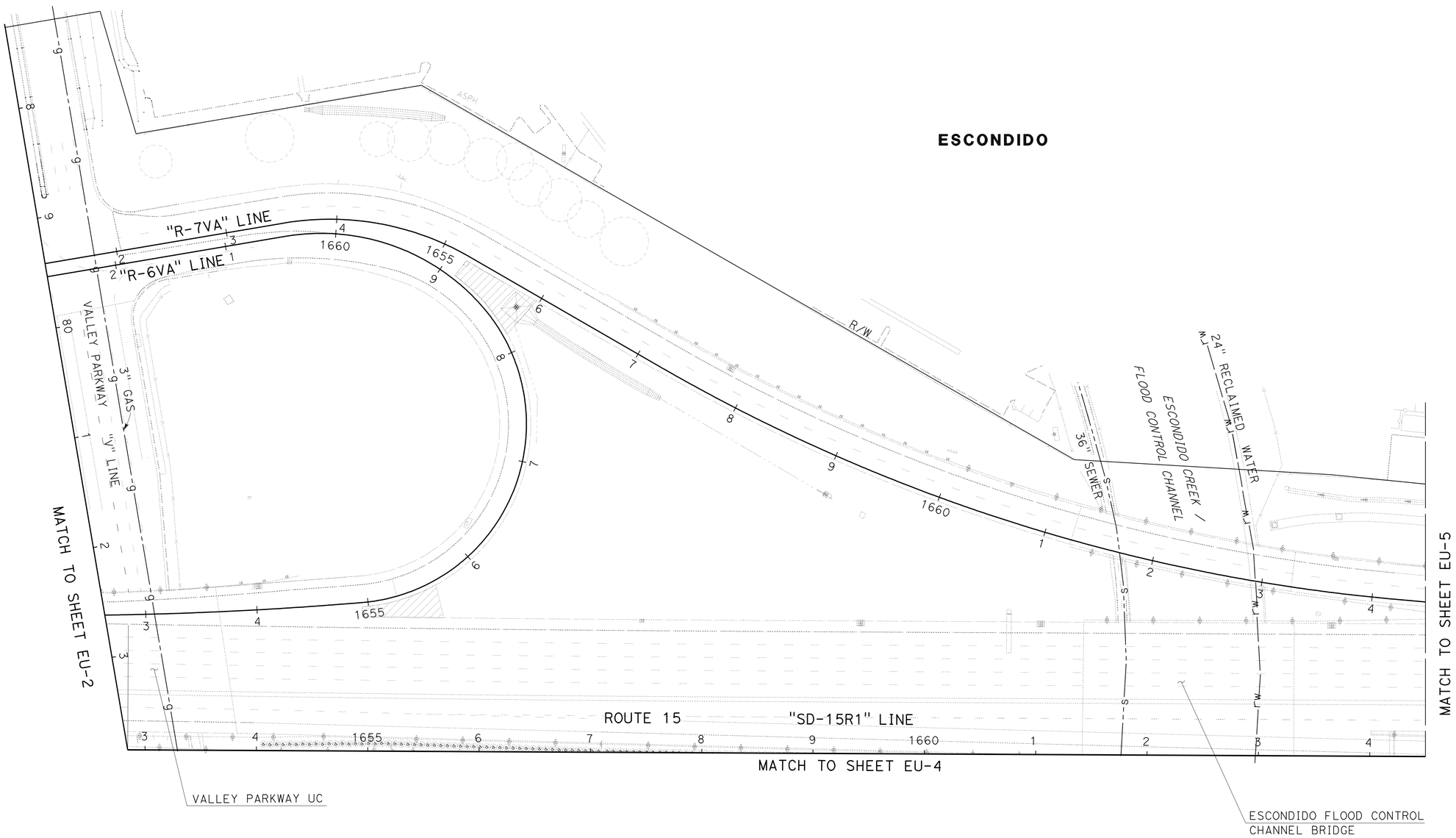

THIS PLAN ACCURATE FOR UTILITY INFORMATION ONLY.

EXISTING UTILITIES PLAN

SCALE: 1" = 50'

EU-3

STATE OF CALIFORNIA - DEPARTMENT OF TRANSPORTATION
Caltrans® ENGINEERING SERVICES

SENIOR CIVIL ENGINEER: ABU-BAKR-JAFRI
CALCULATED-DESIGNED BY: ANH HOANG
CHECKED BY: SIMON TSE
REVISED BY
DATE REVISED

LAST REVISION 07-30-11
DATE PLOTTED => 30-NOV-2011
TIME PLOTTED => 14:58

Dist	COUNTY	ROUTE	POST MILES TOTAL PROJECT	SHEET No.	TOTAL SHEETS
11	SD	15	R30.1/R31.5	43	57

Simon Tse 07-20-11
REGISTERED CIVIL ENGINEER DATE

08-08-11
PLANS APPROVAL DATE

REGISTERED PROFESSIONAL ENGINEER SIMON TSE No. C66401 Exp. 06-30-12 CIVIL STATE OF CALIFORNIA

THE STATE OF CALIFORNIA OR ITS OFFICERS OR AGENTS SHALL NOT BE RESPONSIBLE FOR THE ACCURACY OR COMPLETENESS OF SCANNED COPIES OF THIS PLAN SHEET.

NOTES:

1. LOCATION OF UTILITY FACILITIES SHOWN ON THESE PLANS WERE OBTAINED EITHER FROM THE OWNER'S RECORDS AND/OR FROM STATE SURVEYS.
2. LOCATION OF UTILITY LINES SHOWN ON THESE PLANS ARE APPROXIMATE. THE CONTRACTOR IS TO FIELD VERIFY OR POTHOLE IN ORDER TO DETERMINE EXACT LOCATION.
3. FOR ACCURATE RIGHT OF WAY, CONTACT RIGHT OF WAY ENGINEERING AT THE DISTRICT OFFICE.

ESCONDIDO

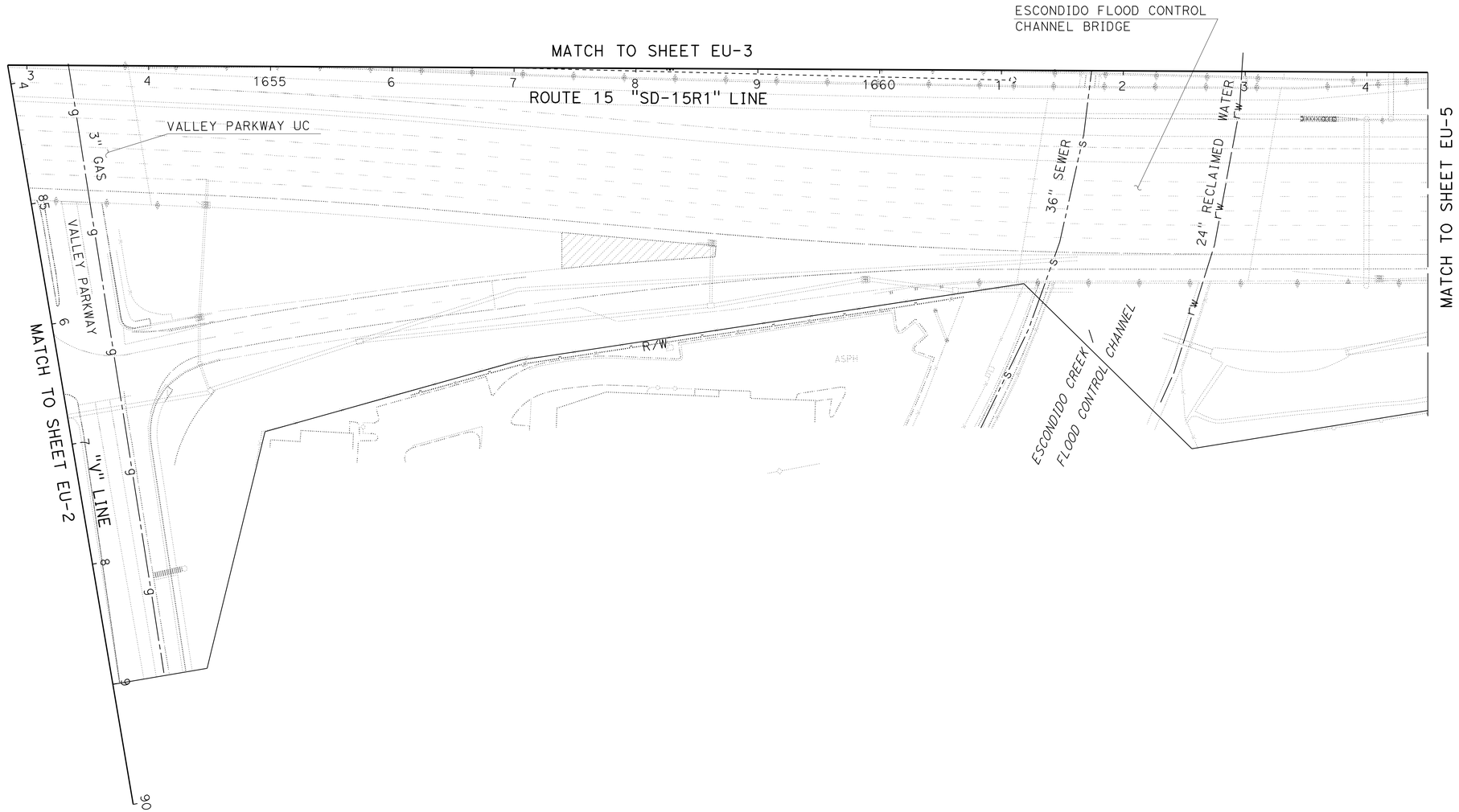

THIS PLAN ACCURATE FOR UTILITY INFORMATION ONLY.

EXISTING UTILITIES PLAN

SCALE: 1" = 50'

EU-4

STATE OF CALIFORNIA - DEPARTMENT OF TRANSPORTATION
Caltrans ENGINEERING SERVICES

SENIOR CIVIL ENGINEER: ABU-BAKR-JAFRI
CALCULATED-DESIGNED BY: ANH HOANG
CHECKED BY: SIMON TSE
REVISED BY
DATE REVISED

LAST REVISION 07-30-11
DATE PLOTTED => 30-NOV-2011
TIME PLOTTED => 14:58

Dist	COUNTY	ROUTE	POST MILES TOTAL PROJECT	SHEET No.	TOTAL SHEETS
11	SD	15	R30.1/R31.5	44	57

Simon Tse 07-20-11
REGISTERED CIVIL ENGINEER DATE

08-08-11
PLANS APPROVAL DATE

REGISTERED PROFESSIONAL ENGINEER SIMON TSE No. C66401 Exp. 06-30-12 CIVIL STATE OF CALIFORNIA

THE STATE OF CALIFORNIA OR ITS OFFICERS OR AGENTS SHALL NOT BE RESPONSIBLE FOR THE ACCURACY OR COMPLETENESS OF SCANNED COPIES OF THIS PLAN SHEET.

NOTES:

1. LOCATION OF UTILITY FACILITIES SHOWN ON THESE PLANS WERE OBTAINED EITHER FROM THE OWNER'S RECORDS AND/OR FROM STATE SURVEYS.
2. LOCATION OF UTILITY LINES SHOWN ON THESE PLANS ARE APPROXIMATE. THE CONTRACTOR IS TO FIELD VERIFY OR POTHOLE IN ORDER TO DETERMINE EXACT LOCATION.
3. FOR ACCURATE RIGHT OF WAY, CONTACT RIGHT OF WAY ENGINEERING AT THE DISTRICT OFFICE.

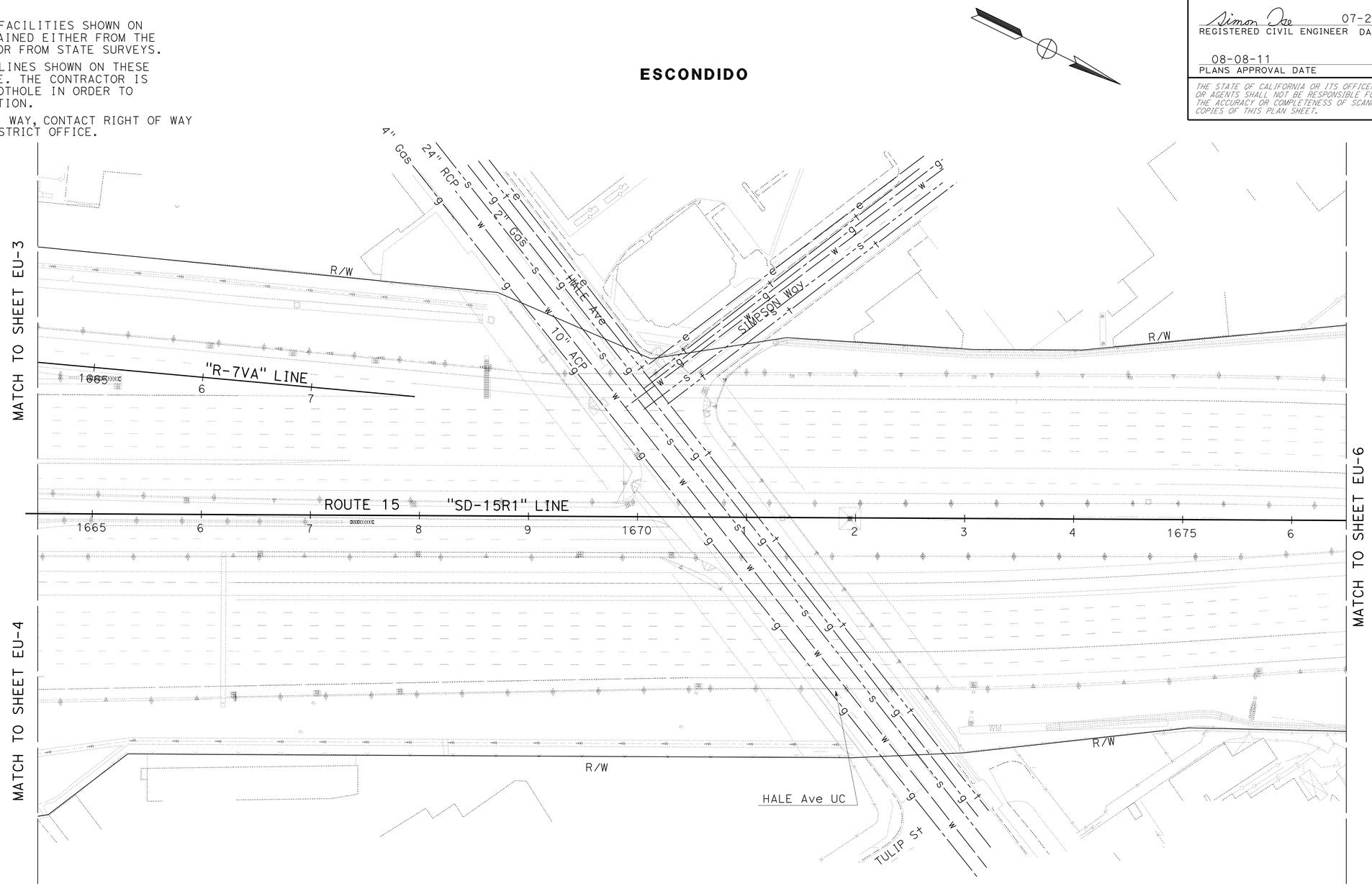

THIS PLAN ACCURATE FOR UTILITY INFORMATION ONLY.

EXISTING UTILITIES PLAN

SCALE: 1" = 50'

EU-5

STATE OF CALIFORNIA - DEPARTMENT OF TRANSPORTATION
Caltrans ENGINEERING SERVICES

SENIOR CIVIL ENGINEER: ABU-BAKR-JAFRI
CALCULATED-DESIGNED BY: ANH HOANG
CHECKED BY: SIMON TSE
REVISED BY
DATE REVISED

LAST REVISION 07-30-11
DATE PLOTTED => 30-NOV-2011
TIME PLOTTED => 14:59

Dist	COUNTY	ROUTE	POST MILES TOTAL PROJECT	SHEET No.	TOTAL SHEETS
11	SD	15	R30.1/R31.5	45	57

Simon Tse 07-20-11
REGISTERED CIVIL ENGINEER DATE

08-08-11
PLANS APPROVAL DATE

REGISTERED PROFESSIONAL ENGINEER SIMON TSE No. C66401 Exp. 06-30-12 CIVIL STATE OF CALIFORNIA

THE STATE OF CALIFORNIA OR ITS OFFICERS OR AGENTS SHALL NOT BE RESPONSIBLE FOR THE ACCURACY OR COMPLETENESS OF SCANNED COPIES OF THIS PLAN SHEET.

NOTES:

1. LOCATION OF UTILITY FACILITIES SHOWN ON THESE PLANS WERE OBTAINED EITHER FROM THE OWNER'S RECORDS AND/OR FROM STATE SURVEYS.
2. LOCATION OF UTILITY LINES SHOWN ON THESE PLANS ARE APPROXIMATE. THE CONTRACTOR IS TO FIELD VERIFY OR POTHOLE IN ORDER TO DETERMINE EXACT LOCATION.
3. FOR ACCURATE RIGHT OF WAY, CONTACT RIGHT OF WAY ENGINEERING AT THE DISTRICT OFFICE.

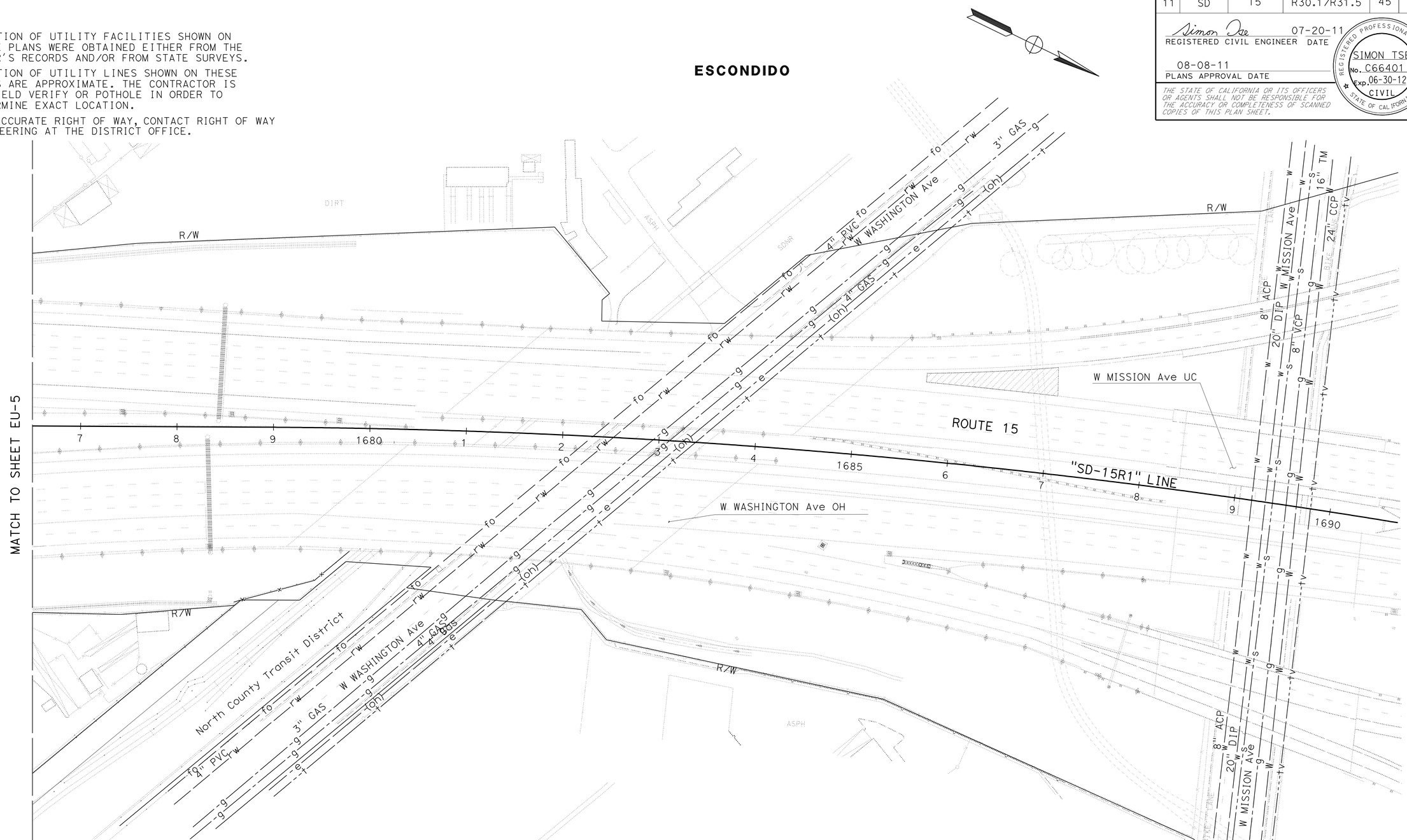

THIS PLAN ACCURATE FOR UTILITY INFORMATION ONLY.

EXISTING UTILITIES PLAN

SCALE: 1" = 50'

EU-6

STATE OF CALIFORNIA - DEPARTMENT OF TRANSPORTATION
Caltrans ENGINEERING SERVICES

SENIOR CIVIL ENGINEER: ABU-BAKR-JAFRI
CALCULATED-DESIGNED BY: ANH HOANG
CHECKED BY: SIMON TSE
REVISED BY
DATE REVISED

LAST REVISION 07-30-11
DATE PLOTTED => 30-NOV-2011
TIME PLOTTED => 14:59

Dist	COUNTY	ROUTE	POST MILES TOTAL PROJECT	SHEET No.	TOTAL SHEETS
11	SD	15	R30.1/R31.5	46	57

REGISTERED CIVIL ENGINEER DATE 07-20-11

08-08-11
PLANS APPROVAL DATE

REGISTERED PROFESSIONAL ENGINEER SHAHIN T. ADIBI No. 54839 Exp. 06-30-12 CIVIL STATE OF CALIFORNIA

THE STATE OF CALIFORNIA OR ITS OFFICERS OR AGENTS SHALL NOT BE RESPONSIBLE FOR THE ACCURACY OR COMPLETENESS OF SCANNED COPIES OF THIS PLAN SHEET.

CONSTRUCTION AREA SIGNS

SIGN No.	CODE	PANEL SIZE (In)	No. OF POST AND SIZE (In)	No. OF SIGNS
1	C14(Mod)(CA)	48 X 24	1-4 X 4 (S)	11
2	C23(Mod)(CA)	48 X 48	1-4 X 6 (S)	11
			TOTAL	22

(S) DENOTES STATIONARY MOUNTED SIGN

NOTES:

1. EXACT LOCATION OF CONSTRUCTION AREA SIGNS WILL BE DETERMINED BY THE ENGINEER.
2. FEDERAL MANUAL ON UNIFORM TRAFFIC CONTROL DEVICES (MUTCD) SIGN CODES ARE SHOWN UNLESS DESIGNATED BY (CA), INDICATING CALIFORNIA SIGN SPECIFICATIONS ARE USED.
3. EXISTING UTILITIES ARE NOT SHOWN ON THESE PLAN SHEETS. THE CONTRACTOR SHALL VERIFY LOCATIONS OF EXISTING UTILITIES AND ADJUST THE FIELD LOCATION OF SIGN POSTS IN CONSULTATION WITH THE ENGINEER.

LEGEND:

[XX] = CONSTRUCTION AREA SIGN

TYPICAL PLACEMENT OF TRAFFIC PLASTIC DRUM

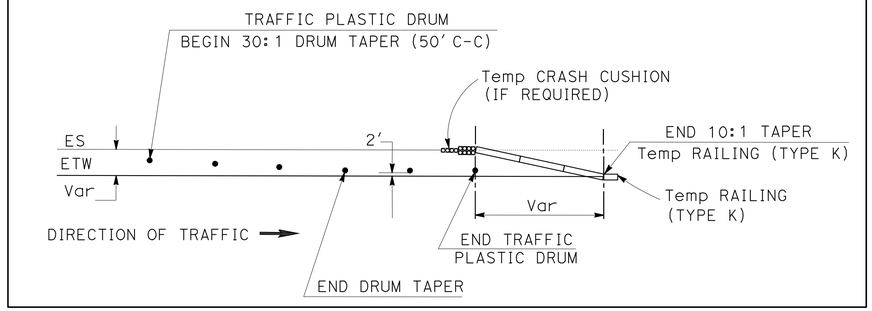

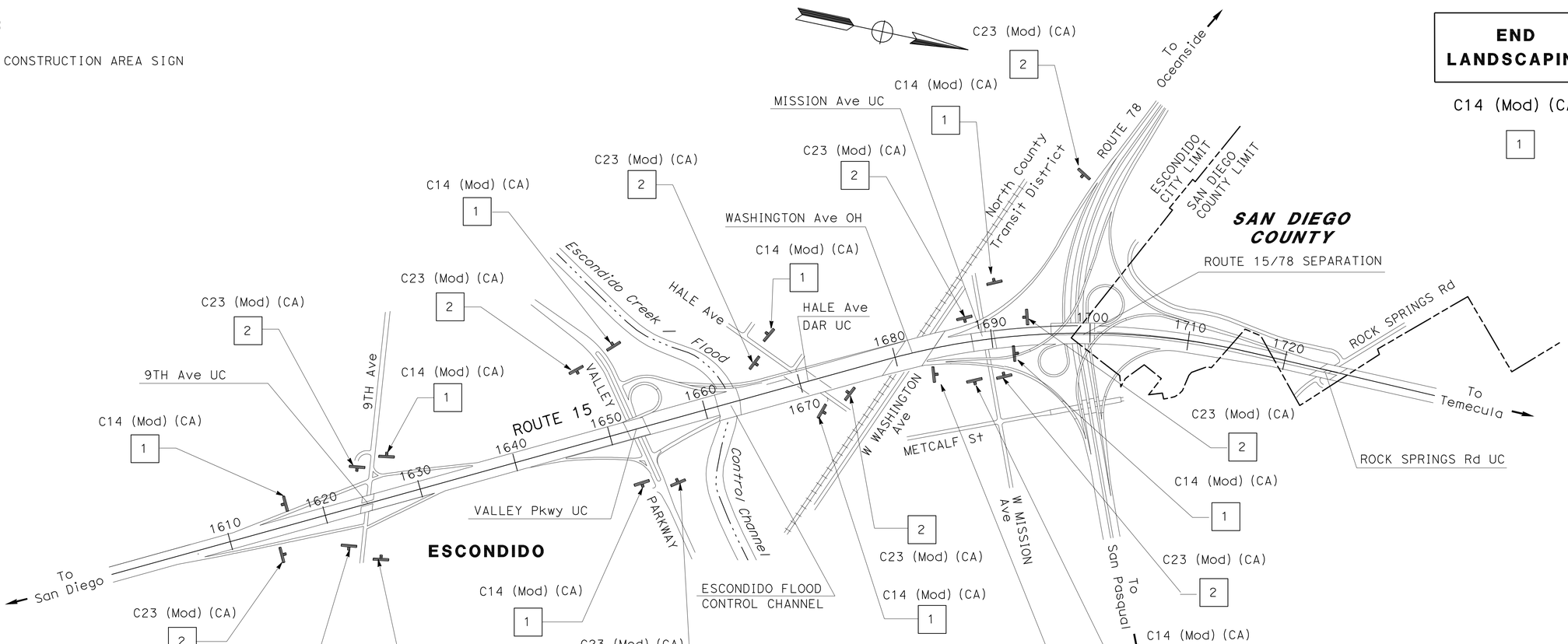

C23 (Mod) (CA)

[2]

C14 (Mod) (CA)

[1]

THIS PLAN ACCURATE FOR CONSTRUCTION AREA SIGN WORK ONLY

NO SCALE

CONSTRUCTION AREA SIGNS

CS-1

STATE OF CALIFORNIA - DEPARTMENT OF TRANSPORTATION
Caltrans® TRAFFIC DESIGN

SENIOR LANDSCAPE ARCHITECT: CAMILLE ABOUFADEL

CALCULATED-DESIGNED BY: SHAHIN T. ADIBI
CHECKED BY: STEPHEN WARREN

REVISED BY
DATE REVISED

LAST REVISION 07-30-11
DATE PLOTTED => 30-NOV-2011
TIME PLOTTED => 14:59

Dist	COUNTY	ROUTE	POST MILES TOTAL PROJECT	SHEET No.	TOTAL SHEETS
11	SD	15	R30.1/R31.5	47	57

Randell D. Hiatt
REGISTERED CIVIL ENGINEER

May 20, 2011
PLANS APPROVAL DATE

REGISTERED PROFESSIONAL ENGINEER
Randell D. Hiatt
No. C50200
Exp. 6-30-11
CIVIL
STATE OF CALIFORNIA

The State of California or its officers or agents shall not be responsible for the accuracy or completeness of electronic copies of this plan sheet.

To accompany plans dated 08-08-11

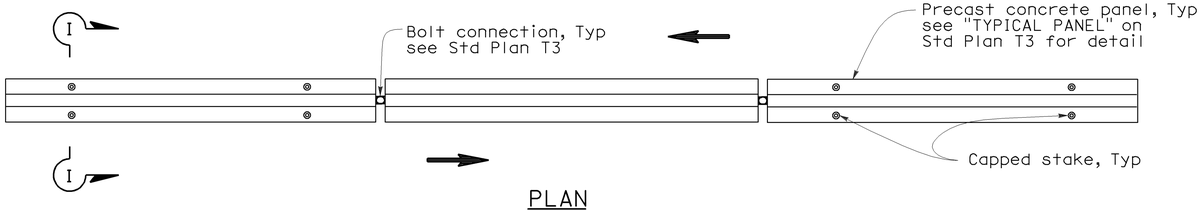

PLAN

RAILING STAKING CONFIGURATION FOR TWO-WAY TRAFFIC

See Note 1

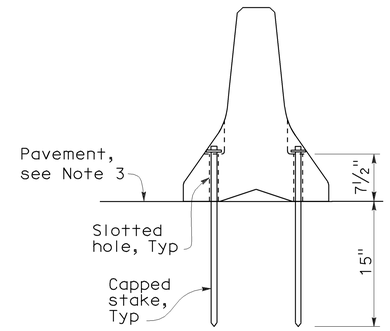

SECTION I-I

NOTES:

1. Where Type K Temporary Railing is placed as a temporary or long term barrier in two-way traffic on highways with less than 24" from the edge of traveled way, use four capped stakes per every other panel with end panels staked.
2. Where Type K Temporary Railing is placed 3" to 24" from the edge of an excavation on highways, use two capped stakes per panel along the traffic side.
3. Staked Type K Temporary Railing must be supported by at least 4" thick concrete, hot mix asphalt or existing asphalt concrete pavement.
4. The minimum yield strength for the washer must be 60,000 psi.
5. Direction of adjacent traffic indicated by ⟹.

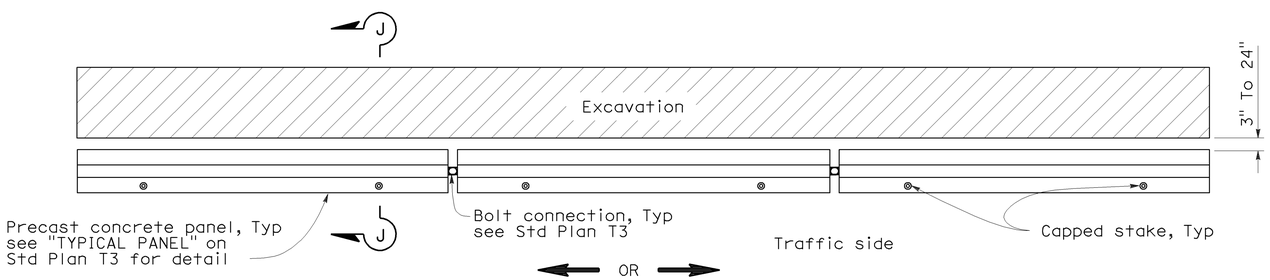

PLAN

RAILING STAKING CONFIGURATION ADJACENT TO AN EXCAVATION

See Note 2

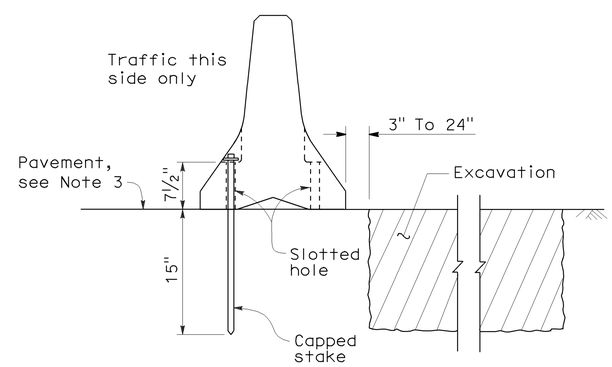

SECTION J-J

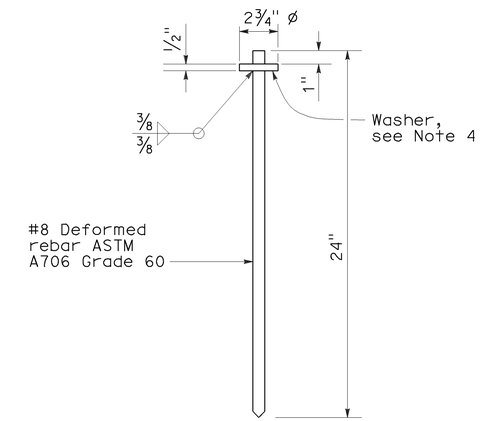

CAPPED STAKE DETAIL

STATE OF CALIFORNIA
DEPARTMENT OF TRANSPORTATION

TEMPORARY RAILING (TYPE K)

NO SCALE

NSP T3A DATED MAY 20, 2011 SUPPLEMENTS
THE STANDARD PLANS BOOK DATED MAY 2006.

NEW STANDARD PLAN NSP T3A

2006 NEW STANDARD PLAN NSP T3A

DIST	COUNTY	ROUTE	POST MILES TOTAL PROJECT	SHEET NO.	TOTAL SHEETS
11	SD	15	R30.1/R31.5	48	57

LICENSED LANDSCAPE ARCHITECT

August 15, 2008
PLANS APPROVAL DATE

LICENSED LANDSCAPE ARCHITECT Robert B. Schott 3635 Signature 11-04-08 Renewal Date 08-11-08 Date STATE OF CALIFORNIA

The State of California or its officers or agents shall not be responsible for the accuracy or completeness of electronic copies of this plan sheet.

To accompany plans dated 08-08-11

FLEXIBLE SEDIMENT BARRIER SPACING TABLE

SLOPE OF ROADWAY (PERCENT)	0 to 0.9	1 to 1.9	2 to 2.9	3 to 4	5+
INTERVAL BETWEEN BARRIERS	50′	35′	30′	25′	20′
ANGLE FROM FACE OF CURB	70°	70°	70°	45°	45°
SUGGESTED BARRIER LENGTH	6′	6′	6′	6′	6′

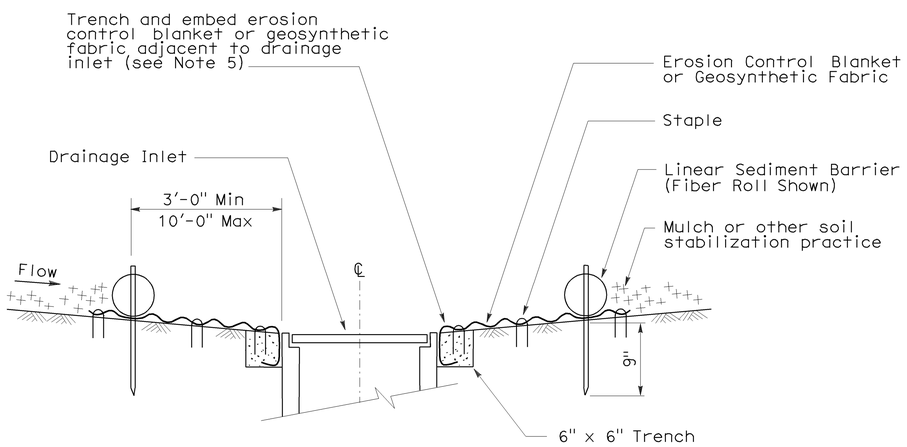

SECTION A-A

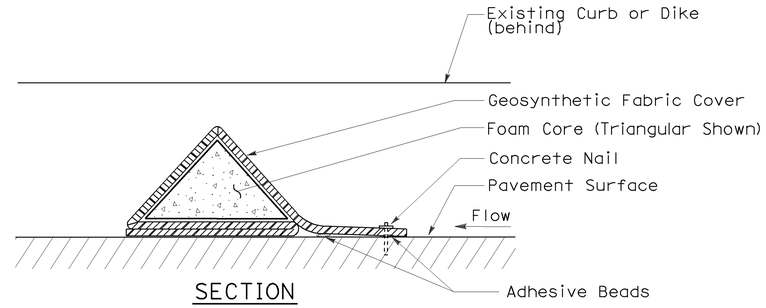

SECTION

FLEXIBLE SEDIMENT BARRIER DETAIL (FOAM BARRIER SHOWN)

NOTES:

1. See Standard Plan T51 for Temporary Silt Fence.
2. Dimensions may vary to fit field conditions.
3. Install a minimum of 3 flexible sediment barriers upstream of each drainage inlet to be protected.
4. Position erosion control blanket or geosynthetic fabric at edge of concrete apron and secure in trench.
5. Erosion control blanket or geosynthetic fabric is not required if the area adjacent to the drainage inlet is vegetated.

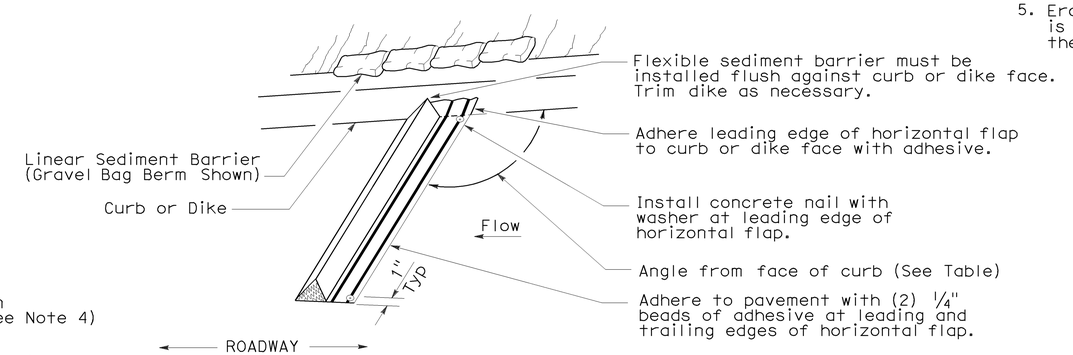

PERSPECTIVE

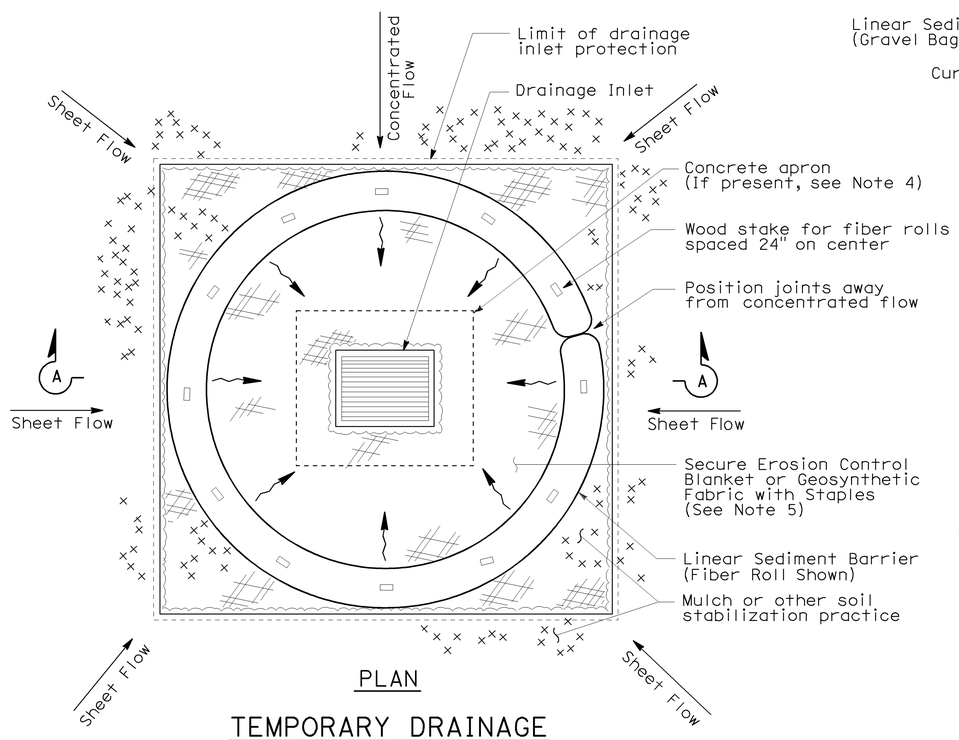

PLAN

TEMPORARY DRAINAGE INLET PROTECTION (TYPE 4A)

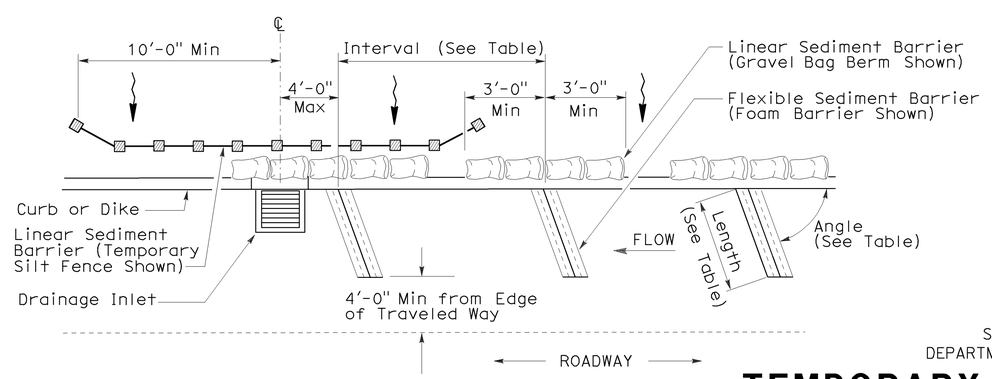

PLAN

TEMPORARY DRAINAGE INLET PROTECTION (TYPE 4B) FLEXIBLE SEDIMENT BARRIER

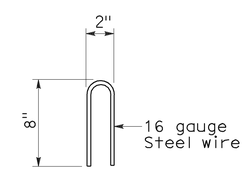

STAPLE DETAIL

STATE OF CALIFORNIA
DEPARTMENT OF TRANSPORTATION

TEMPORARY WATER POLLUTION CONTROL DETAILS (TEMPORARY DRAINAGE INLET PROTECTION)

NO SCALE

NSP T63 DATED AUGUST 15, 2008 SUPPLEMENTS THE STANDARD PLANS BOOK DATED MAY 2006.

NEW STANDARD PLAN NSP T63

2006 NEW STANDARD PLAN NSP T63

7-11-08

DIST	COUNTY	ROUTE	POST MILES TOTAL PROJECT	SHEET NO.	TOTAL SHEETS
11	SD	15	R30.1/R31.5	49	57

LICENSED LANDSCAPE ARCHITECT

April 3, 2009
PLANS APPROVAL DATE

The State of California or its officers or agents shall not be responsible for the accuracy or completeness of electronic copies of this plan sheet.

LICENSED LANDSCAPE ARCHITECT — Gregory A. Balzer — 02-28-11 Renewal Date — 03-04-09 Date — STATE OF CALIFORNIA

To accompany plans dated 08-08-11

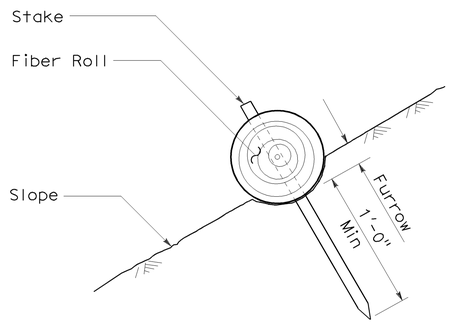

SECTION

FIBER ROLL (TYPE 1)

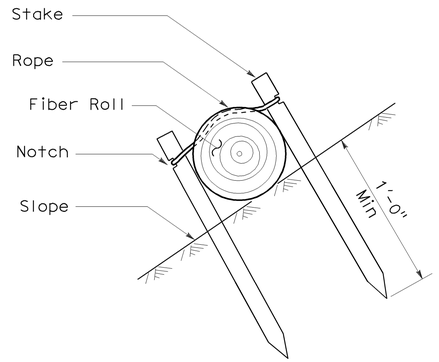

SECTION

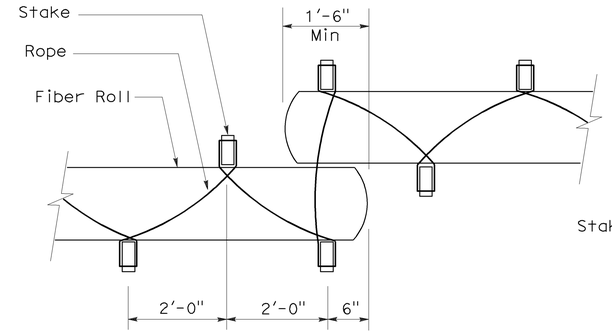

PLAN

FIBER ROLL (TYPE 2)

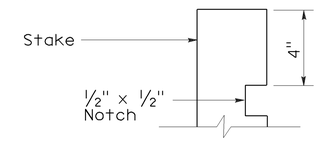

ELEVATION

STAKE NOTCH DETAIL

NOTES:

1. Fiber roll spacing varies depending upon slope inclination.
2. Installations shown in the perspectives are for slope inclination of 10:1 and steeper.

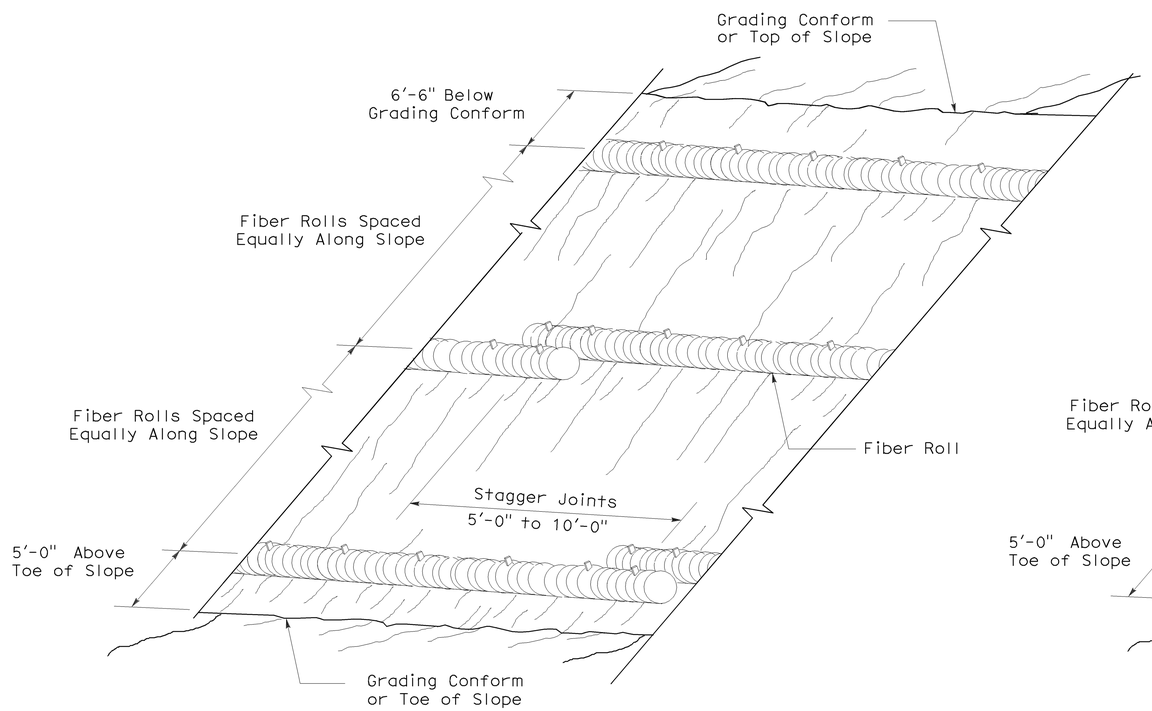

PERSPECTIVE

FIBER ROLL (TYPE 1)

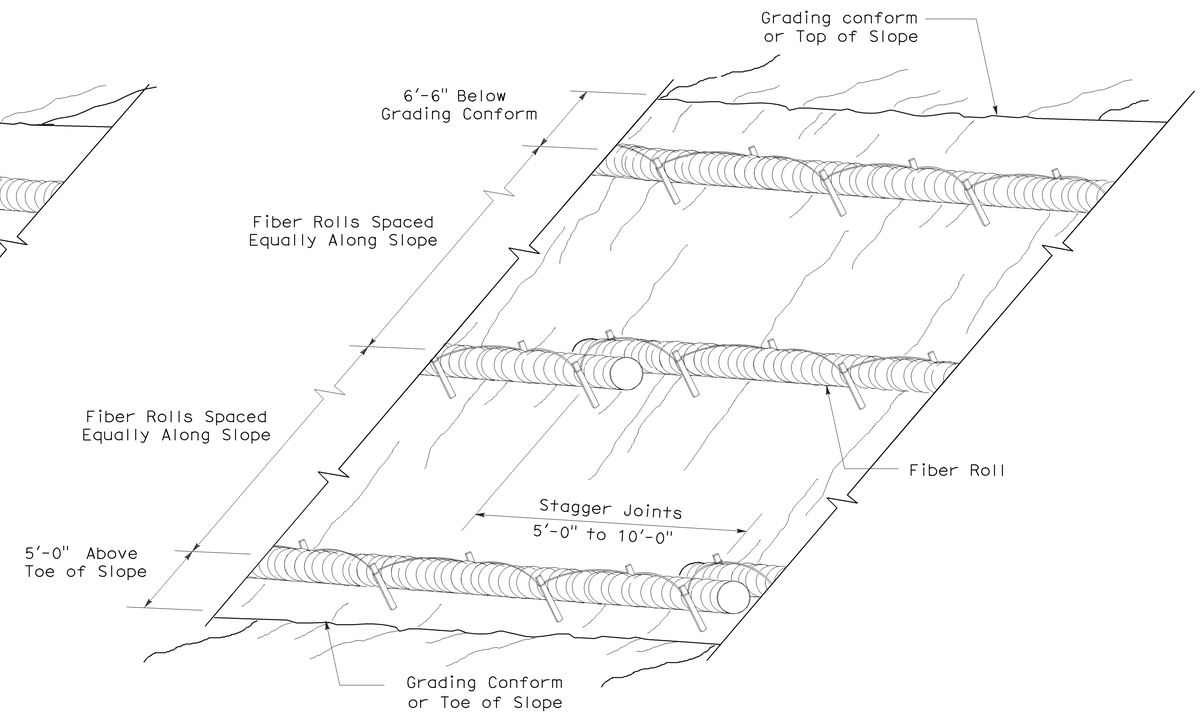

PERSPECTIVE

FIBER ROLL (TYPE 2)

STATE OF CALIFORNIA
DEPARTMENT OF TRANSPORTATION

EROSION CONTROL DETAILS (FIBER ROLL)

NO SCALE

RNSP H51 DATED APRIL 3, 2009 SUPERSEDES NSP H51 DATED DECEMBER 1, 2006 THAT SUPPLEMENTS THE STANDARD PLANS BOOK DATED MAY 2006.

REVISED NEW STANDARD PLAN RNSP H51

2006 REVISED NEW STANDARD PLAN RNSP H51

3-4-09

DIST	COUNTY	ROUTE	POST MILES TOTAL PROJECT	SHEET NO.	TOTAL SHEETS
11	SD	15	R30.1/R31.5	50	57

LICENSED LANDSCAPE ARCHITECT

June 5, 2009
PLANS APPROVAL DATE

LICENSED LANDSCAPE ARCHITECT
Gregory A. Balzer 2576
10-29-09 Renewal Date
2-28-11 Renewal Date
5-14-09 Date
STATE OF CALIFORNIA

The State of California or its officers or agents shall not be responsible for the accuracy or completeness of electronic copies of this plan sheet.

To accompany plans dated 08-08-11

2006 REVISED STANDARD PLAN RSP H1

A

AB	aggregate base
ABS	acrylonitrile-butadiene-styrene
AC	asphalt concrete
Adj	adjacent/adjustable
AIC	auxiliary irrigation controller
Alt	alternative
AMEND	amendment
ARV	air release valve
AUTO	automatic
AUX	auxiliary
AVB	atmospheric vacuum breaker

B

B&B	balled and burlapped
B/B	brass/bronze
B/B/PL	brass/bronze/plastic
B/PL	brass/plastic
BFM	bonded fiber matrix
Bit Ctd	bituminous coated
BP	booster pump
BPA	backflow preventer assembly
BPAE	backflow preventer assembly in enclosure
BPE	backflow preventer enclosure
BV	ball valve

C

CAP	corrugated aluminum pipe
CARV	combination air release valve
CCA	cam coupler assembly
CEC	controller enclosure cabinet
CHDPE	corrugated high density polyethylene
CL	chain link
CNC	control and neutral conductors
Conc	concrete
Cond	conduit
CSP	corrugated steel pipe
CST	center strip
CV	check valve

D

Dia	diameter
DIP	ductile iron pipe
DN	diameter nominal

E

EA	each
Elect	electric/electrical
Elev	elevation
ENCL	enclosure
EP	edge of pavement
ES	edge of shoulder
EST	end strip
ESTB	establishment
ETW	edge of traveled way

F

F	full circle
F/P	full/part circle
FAU	filter assembly unit
FCV	flow control valve
FERT	fertilizer
FG	finished grade
FIPT	female iron pipe thread
FIS	fertilizer injector system
FL	flow line
FM	flow monitor
FS	flow sensor
Ft	foot/feet
FV	flush valve

G

GAL	Gallon(s)
Galv	galvanized
GARV	garden valve
GPH	gallons per hour
GPM	gallons per minute
GSP	galvanized steel pipe
GV	gate valve

H

H	half circle
HB	hose bib
HDPE	high density polyethylene
HP	horsepower/hinge point
HPL	high pressure line
Hwy	highway

I

IC	irrigation controller
ICC	irrigation controller(s) in controller enclosure cabinet
ID	inside diameter
In	inches
IFS	irrigation filtration system
IPS	iron pipe size
IPT	iron pipe thread
Irr	irrigation

L

L	length
LF	linear foot

M

Max	maximum
MBGR	metal beam guard railing
MCV	manual control valve
MIC	master irrigation controller
Min	minimum
MIPT	male iron pipe thread
Misc	miscellaneous
Mtl	material
MVP	maintenance vehicle pullout

N

NCN	no common name
NL	nozzle line
No.	number
NPT	national pipe thread

O

O/C	on center
OD	outside diameter
Oz	ounce

P

P	part circle
PB	pull box
PCC	portland cement concrete
PE	polyethylene
Pkt	packet
PL	plastic
PLT	plant/planting
PLT ESTB	plant establishment
PM	post mile
PR	pressure rated
PRLV	pressure relief valve
PSFM	polymer stabilized fiber matrix
PSI	pounds per square inch
PRV	pressure reducing valve
PVC	polyvinyl chloride
Pvmt	pavement

Q

Q	quarter circle
QCV	quick coupling valve

R

R	radius
RCP	reinforced concrete pipe
RCV	remote control valve
RCVM	remote control valve (master)
RCVMF	remote control valve (master) w/ flow meter
RCW	recycled/reclaimed water
RECP	rolled erosion control product
REQ	required
R/W	right of way

S

S	slip
SCC	sprinkler control conduit
SCH	schedule
SF	state-furnished
Shld	shoulder
SQFT	square foot/feet
SQYD	square yard(s)
SST	side strip
Sta	station
Std	standard
SW	sidewalk/sound wall

T

T	third circle/thread
TLS	truck loading standpipe
TQ	three quarter circle
TRM	turf reinforcement mat
TRVD	traveled
TT	two third circle
Typ	typical

U

UG	underground

V

VAU	valve assembly unit

W

W	width
W/	with
WM	water meter
WS	wye strainer
WSP	welded steel pipe
WWM	welded wire mesh

NOTE:

FOR ADDITIONAL ABBREVIATIONS, SEE STANDARD PLANS A10A AND A10B.

STATE OF CALIFORNIA
DEPARTMENT OF TRANSPORTATION

PLANTING AND IRRIGATION ABBREVIATIONS

NO SCALE

RSP H1 DATED JUNE 5, 2009 SUPERSEDES STANDARD PLAN H1
DATED MAY 1, 2006 - PAGE 201 OF THE STANDARD PLANS BOOK DATED MAY 2006.

REVISED STANDARD PLAN RSP H1

DIST	COUNTY	ROUTE	POST MILES TOTAL PROJECT	SHEET NO.	TOTAL SHEETS
11	SD	15	R30.1/R31.5	51	57

LICENSED LANDSCAPE ARCHITECT

June 5, 2009
PLANS APPROVAL DATE

The State of California or its officers or agents shall not be responsible for the accuracy or completeness of electronic copies of this plan sheet.

Gregory A. Balzer 2576 — Registered Date 2-28-11 — Renewal Date 5-14-09 — Date — LICENSED LANDSCAPE ARCHITECT — STATE OF CALIFORNIA

To accompany plans dated 08-08-11

EXISTING	PROPOSED	ITEM DESCRIPTION
		WATER METER (WM)
		BACKFLOW PREVENTER ASSEMBLY (BPA)
		BACKFLOW PREVENTER ASSEMBLY IN ENCLOSURE (BPAE)
		BACKFLOW PREVENTER ENCLOSURE (BPE)
		BOOSTER PUMP (BP)
		TRUCK LOADING STANDPIPE (TLS)
	FS	FLOW SENSOR (FS)
X	X	MASTER IRRIGATION CONTROLLER (MIC)
		AUXILIARY IRRIGATION CONTROLLER (AIC)
		IRRIGATION CONTROLLER (IC)/ IRRIGATION CONTROLLER (IC) (BATTERY) IRRIGATION CONTROLLER (IC) (SOLAR)
		IRRIGATION CONTROLLER(S) IN CONTROLLER ENCLOSURE CABINET (ICC)
		CONTROL AND NEUTRAL CONDUCTORS (CNC)
SCC	SCC	SPRINKLER CONTROL CONDUIT (SCC)
		IRRIGATION CROSSOVER
		EXTEND IRRIGATION CROSSOVER
		IRRIGATION SLEEVE
dip	DIP	DUCTILE IRON PIPE (SUPPLY LINE) (MAIN) (DIP)
		GALVANIZED STEEL PIPE (SUPPLY LINE) (MAIN) (GSP)
		GALVANIZED STEEL PIPE (SUPPLY LINE) (LATERAL) (GSP)
		PLASTIC PIPE (PR 200) (SUPPLY LINE) (MAIN)
		PLASTIC PIPE (PR 200) (SUPPLY LINE) (LATERAL)
		PLASTIC PIPE (IRRIGATION LINE)
		REMOTE CONTROL VALVE (RCV) REMOTE CONTROL VALVE (MASTER) (RCVM) REMOTE CONTROL VALVE (MASTER) W/FLOW METER (RCVMF)
		MANUAL CONTROL VALVE (MCV)
		VALVE ASSEMBLY UNIT (VAU)
		WYE STRAINER (WS)
		FILTER ASSEMBLY UNIT (FAU)
		GATE VALVE (GV)
		BALL VALVE (BV)

EXISTING	PROPOSED	ITEM DESCRIPTION
		QUICK COUPLING VALVE (QCV)
		CAM COUPLER ASSEMBLY (CCA)
		PRESSURE REDUCING VALVE (PRV)
		PRESSURE RELIEF VALVE (PRLV)
		FLOW CONTROL VALVE (FCV)
		COMBINATION AIR RELEASE VALVE (CARV)
		CHECK VALVE (CV)
		FLUSH VALVE (FV)
		NOZZLE LINE W/TURNING UNION
		IRRIGATION SYSTEM
		IRRIGATION SYSTEM TO BE REMOVED
		CHAIN LINK GATE
		QUICK COUPLING VALVE W/SPRINKLER PROTECTOR
3	3	SPRINKLER W/SPRINKLER PROTECTOR
	C	CONNECT TO EXISTING SYSTEM
		CAP
		CAP EXISTING

VALVE CODE

RCV SIZE
IRRIGATION CONTROLLER
CONTROLLER STATION
VALVE IN PARALLEL (IF APPLICABLE)
GPM
QUANTITY OF SPRINKLERS (WHEN SHOWN)

* 2½"-A-2b-40 -60

MCV SIZE
VALVE NUMBER
GPM
QUANTITY OF TYPE SPRINKLERS (WHEN SHOWN)

* 2"-3-30 -50

* VALVE CODES FOR EXISTING VALVES ARE SHOWN IN A DASHED ENCLOSURE.

STATE OF CALIFORNIA
DEPARTMENT OF TRANSPORTATION

PLANTING AND IRRIGATION SYMBOLS

NO SCALE

RSP H2 DATED JUNE 5, 2009 SUPERSEDES RSP H2 DATED MARCH 7, 2008 AND STANDARD PLAN H2 DATED MAY 1, 2006 - PAGE 202 OF THE STANDARD PLANS BOOK DATED MAY 2006.

REVISED STANDARD PLAN RSP H2

2006 REVISED STANDARD PLAN RSP H2

5-11-09

DIST	COUNTY	ROUTE	POST MILES TOTAL PROJECT	SHEET NO.	TOTAL SHEETS
11	SD	15	R30.1/R31.5	52	57

LICENSED LANDSCAPE ARCHITECT

June 5, 2009
PLANS APPROVAL DATE

The State of California or its officers or agents shall not be responsible for the accuracy or completeness of electronic copies of this plan sheet.

LICENSED LANDSCAPE ARCHITECT
Gregory A. Balzer 2576
10-28-10 Renewal Date
2-28-11 Renewal Date
5-14-09 Date
STATE OF CALIFORNIA

To accompany plans dated 08-08-11

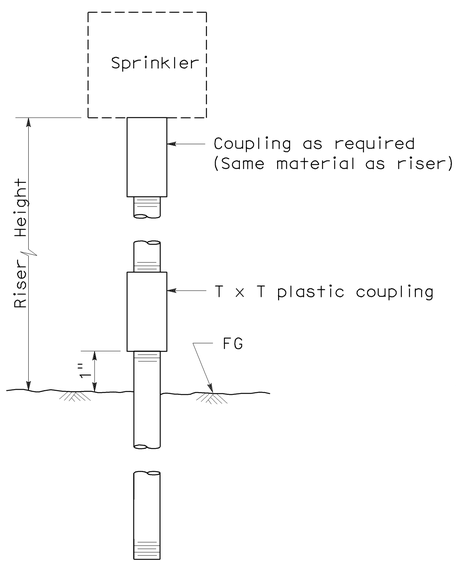

ELEVATION
RISER TYPE I

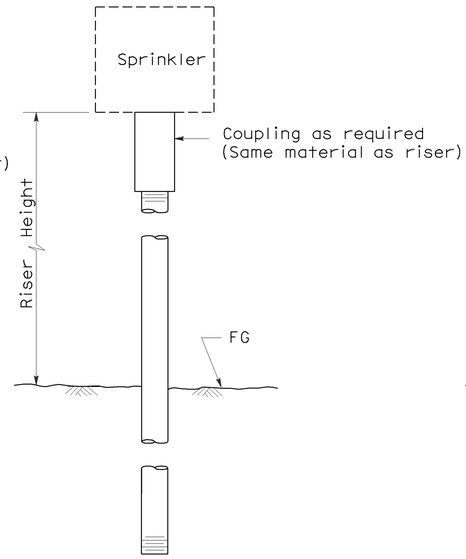

ELEVATION
RISER TYPE II

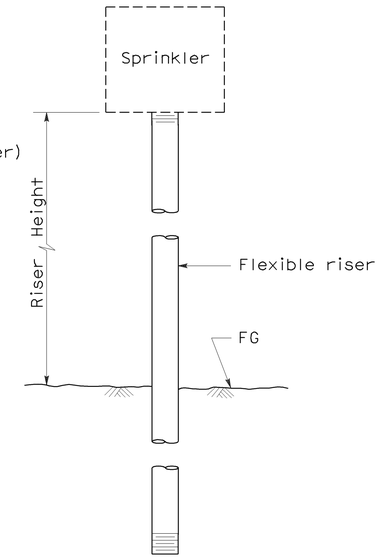

ELEVATION
RISER TYPE III

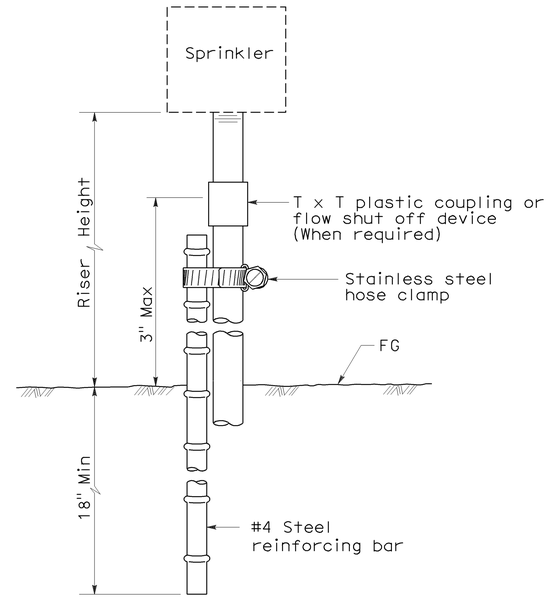

ELEVATION
RISER TYPE IV

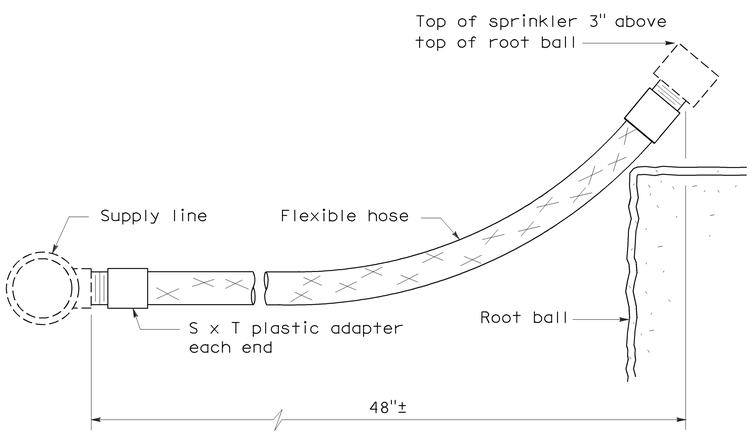

ELEVATION
RISER TYPE V

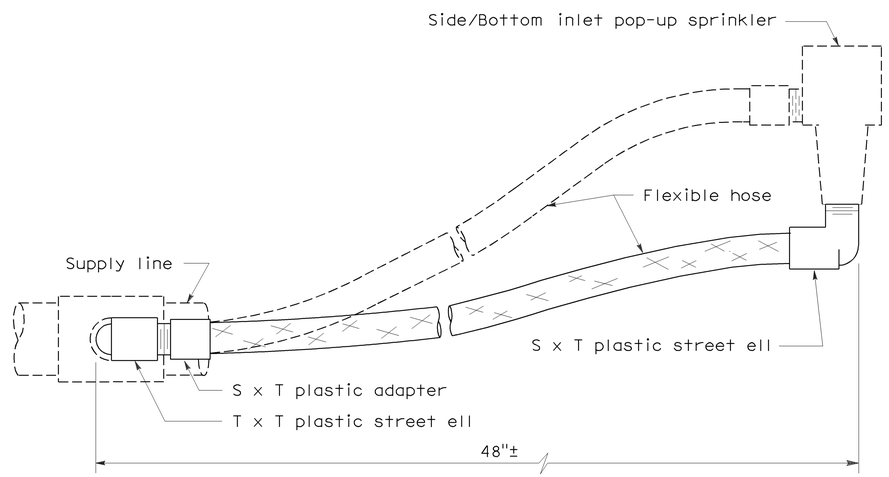

ELEVATION
RISER TYPE VI

STATE OF CALIFORNIA
DEPARTMENT OF TRANSPORTATION

PLANTING AND IRRIGATION DETAILS

NO SCALE

RSP H5 DATED JUNE 5, 2009 SUPERSEDES STANDARD PLAN H5
DATED MAY 1, 2006 - PAGE 205 OF THE STANDARD PLANS BOOK DATED MAY 2006.

REVISED STANDARD PLAN RSP H5

2006 REVISED STANDARD PLAN RSP H5

5-28-09

DIST	COUNTY	ROUTE	POST MILES TOTAL PROJECT	SHEET NO.	TOTAL SHEETS
11	SD	15	R30.1/R31.5	53	57

LICENSED LANDSCAPE ARCHITECT

June 5, 2009
PLANS APPROVAL DATE

Gregory A. Balzer 2576 — 10-31-11 Renewal Date — 2-28-11 Renewal Date — 5-14-09 Date — LICENSED LANDSCAPE ARCHITECT — STATE OF CALIFORNIA

The State of California or its officers or agents shall not be responsible for the accuracy or completeness of electronic copies of this plan sheet.

To accompany plans dated 08-08-11

2006 REVISED STANDARD PLAN RSP H7

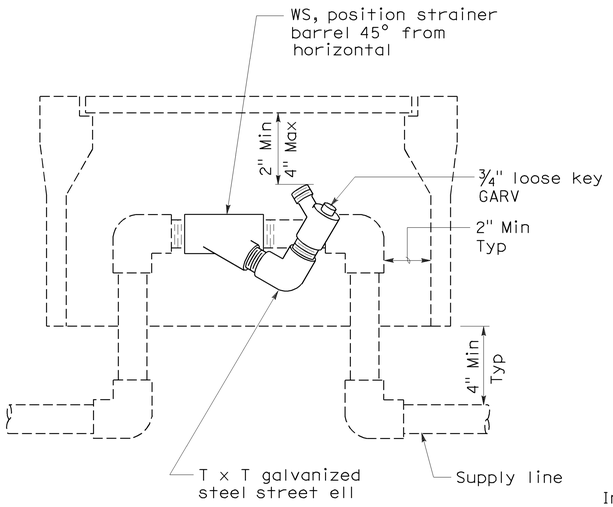

ELEVATION
WYE STRAINER

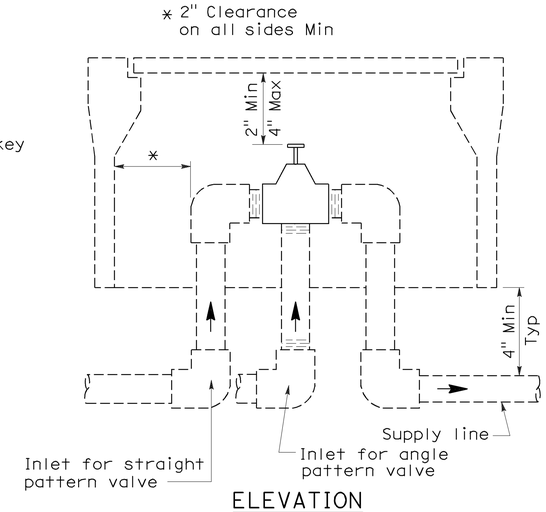

ELEVATION
VALVE

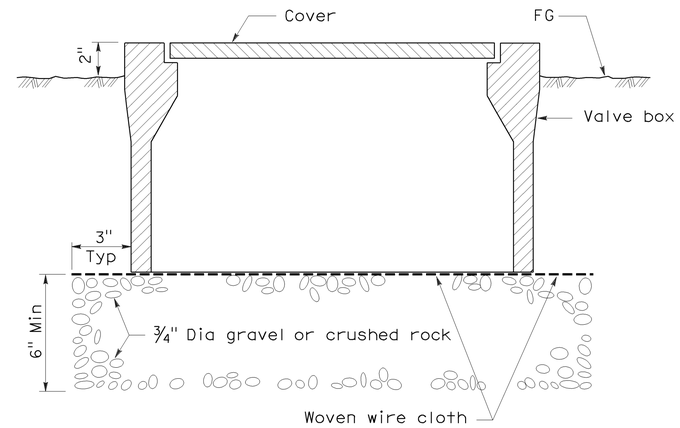

SECTION
VALVE BOX

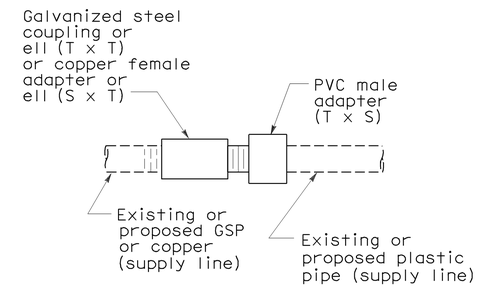

PLAN
GALVANIZED OR COPPER PIPE CONNECTION TO PLASTIC PIPE

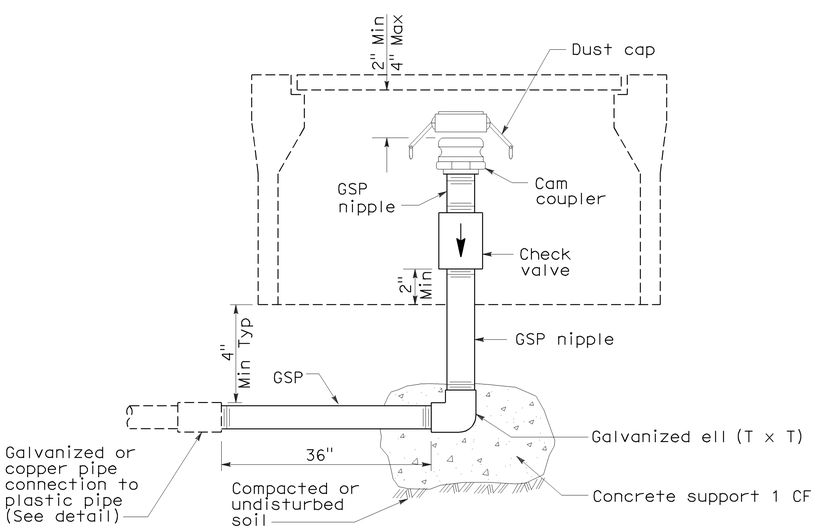

ELEVATION
CAM COUPLER ASSEMBLY

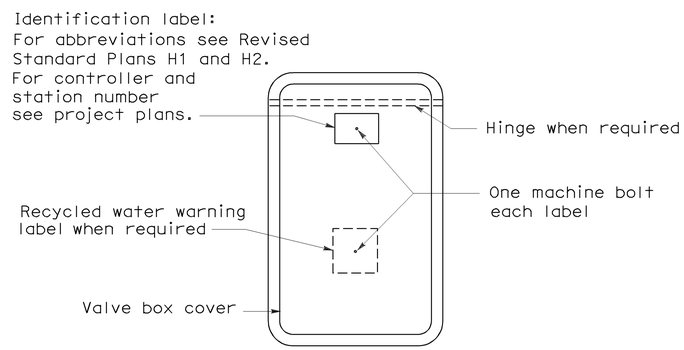

PLAN

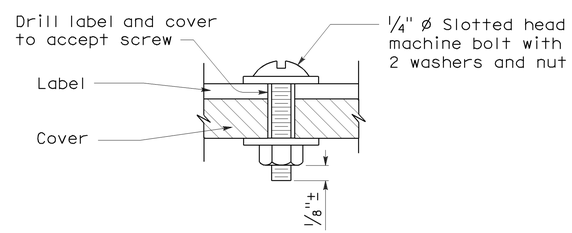

SECTION
VALVE BOX IDENTIFICATION

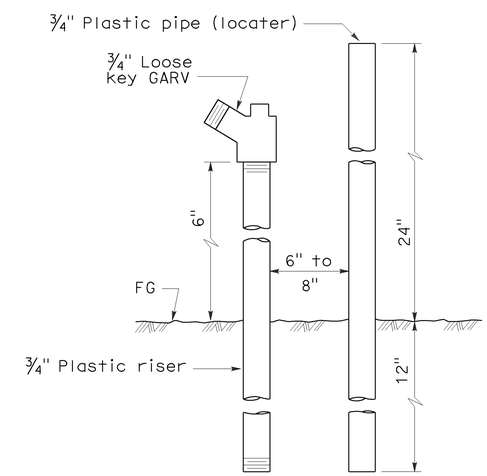

ELEVATION
FLUSH VALVE

STATE OF CALIFORNIA
DEPARTMENT OF TRANSPORTATION

PLANTING AND IRRIGATION DETAILS

NO SCALE

RSP H7 DATED JUNE 5, 2009 SUPERSEDES STANDARD PLAN H7
DATED MAY 1, 2006 - PAGE 207 OF THE STANDARD PLANS BOOK DATED MAY 2006.

REVISED STANDARD PLAN RSP H7

5-28-09

DIST	COUNTY	ROUTE	POST MILES TOTAL PROJECT	SHEET NO.	TOTAL SHEETS
11	SD	15	R30.1/R31.5	54	57

Randell D. Hiatt
REGISTERED CIVIL ENGINEER

June 6, 2008
PLANS APPROVAL DATE

REGISTERED PROFESSIONAL ENGINEER
Randell D. Hiatt
No. C50200
Exp. 6-30-09
CIVIL
STATE OF CALIFORNIA

The State of California or its officers or agents shall not be responsible for the accuracy or completeness of electronic copies of this plan sheet.

To accompany plans dated 08-08-11

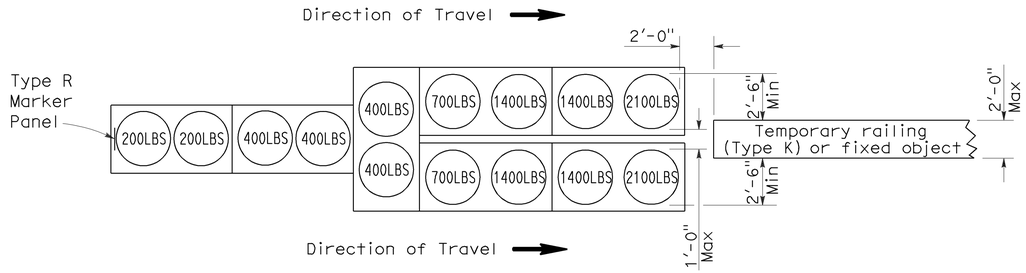

ARRAY 'TU14'

Approach speed 45 mph or more

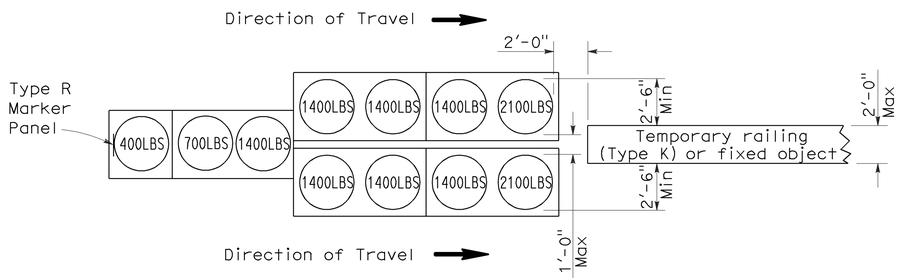

ARRAY 'TU11'

Approach speed less than 45 mph

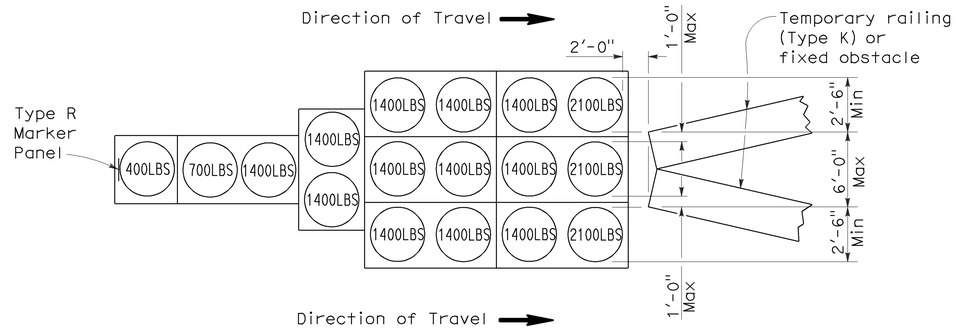

ARRAY 'TU17'

Approach speed less than 45 mph

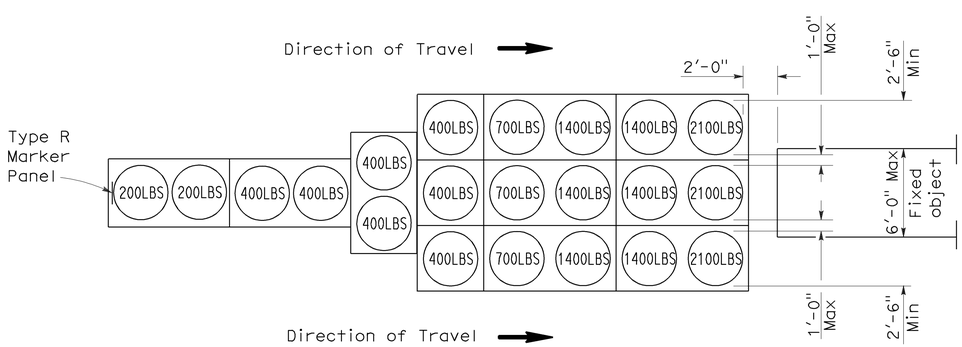

ARRAY 'TU21'

Approach speed 45 mph or more

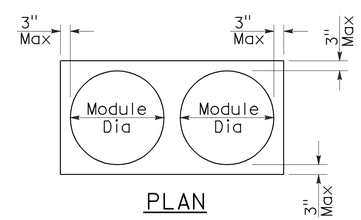

PLAN

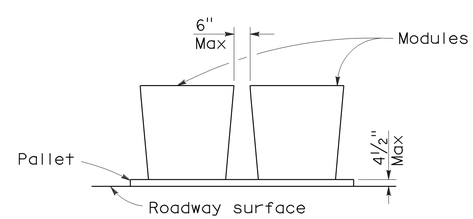

ELEVATION

CRASH CUSHION PALLET DETAIL

See Note 7

NOTES:

1. (XXX) Indicates sand filled module location and weight of sand in pounds for each module. Module spacing is based on the greater diameter of the module.
2. All sand weights are nominal.
3. Temporary crash cushion arrays shall not encroach on the traveled way.
4. Place the top of Type R marker panel 1" below the module lid.
5. Refer to Standard Plan A73B for marker details.
6. Approach speeds indicated conform to NCHRP 350 Report criteria.
7. Use of pallets is optional.

STATE OF CALIFORNIA
DEPARTMENT OF TRANSPORTATION

TEMPORARY CRASH CUSHION, SAND FILLED (UNIDIRECTIONAL)

NO SCALE

RSP T1A DATED JUNE 6, 2008 SUPERSEDES STANDARD PLAN T1A
DATED MAY 1, 2006 - PAGE 211 OF THE STANDARD PLANS BOOK DATED MAY 2006.

REVISED STANDARD PLAN RSP T1A

2006 REVISED STANDARD PLAN RSP T1A

DIST	COUNTY	ROUTE	POST MILES TOTAL PROJECT	SHEET NO.	TOTAL SHEETS
11	SD	15	R30.1/R31.5	55	57

Randell D. Hiatt
REGISTERED CIVIL ENGINEER

June 6, 2008
PLANS APPROVAL DATE

REGISTERED PROFESSIONAL ENGINEER
Randell D. Hiatt
No. C50200
Exp. 6-30-09
CIVIL
STATE OF CALIFORNIA

The State of California or its officers or agents shall not be responsible for the accuracy or completeness of electronic copies of this plan sheet.

To accompany plans dated 08-08-11

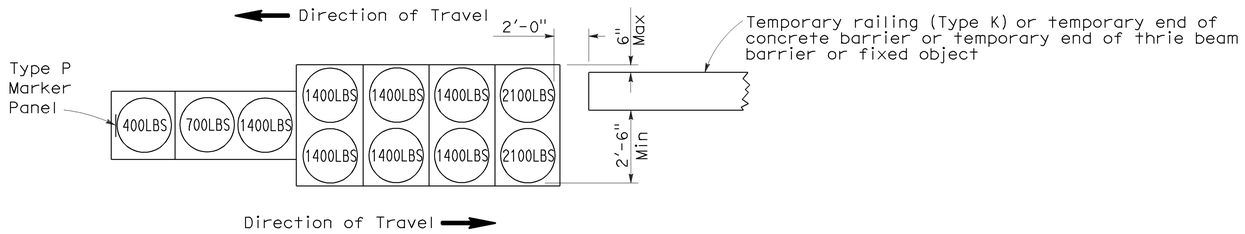

ARRAY 'TB11'

Approach speed less than 45 mph

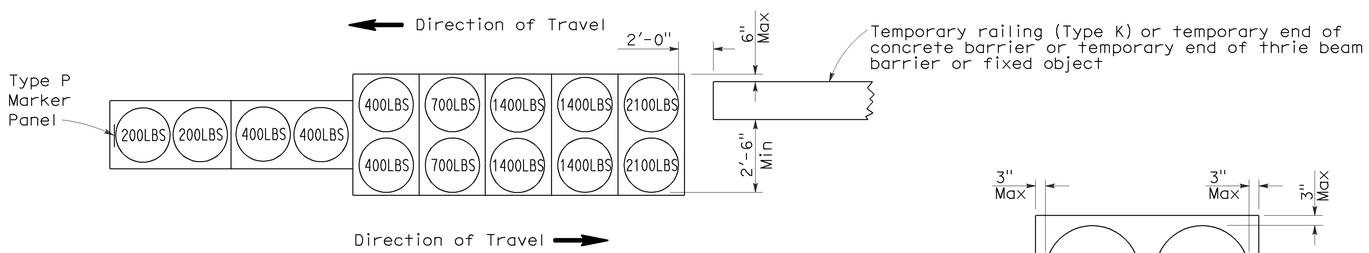

ARRAY 'TB14'

Approach speed 45 mph or more

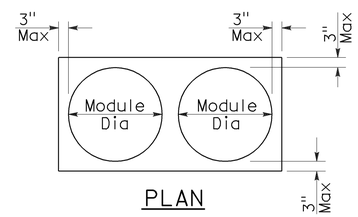

PLAN

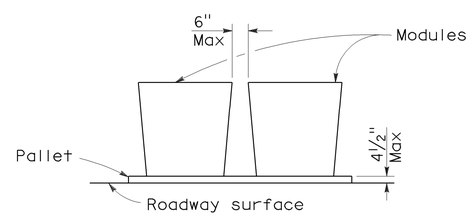

ELEVATION

CRASH CUSHION PALLET DETAIL

See Note 7

NOTES:

1. (XXX) Indicates sand filled module location and weight of sand in pounds for each module. Module spacing is based on the greater diameter of the module.
2. All sand weights are nominal.
3. Temporary crash cushion arrays shall not encroach on the traveled way.
4. Place the Type P marker panel so that the bottom of the panel rests upon the pallet.
5. Refer to Standard Plan A73B for marker details.
6. Approach speeds indicated conform to NCHRP 350 Report criteria.
7. Use of pallets is optional.

STATE OF CALIFORNIA
DEPARTMENT OF TRANSPORTATION

TEMPORARY CRASH CUSHION, SAND FILLED (BIDIRECTIONAL)

NO SCALE

RSP T1B DATED JUNE 6, 2008 SUPERSEDES STANDARD PLAN T1B
DATED MAY 1, 2006 - PAGE 212 OF THE STANDARD PLANS BOOK DATED MAY 2006.

REVISED STANDARD PLAN RSP T1B

2006 REVISED STANDARD PLAN RSP T1B

5-15-08

DIST	COUNTY	ROUTE	POST MILES TOTAL PROJECT	SHEET NO.	TOTAL SHEETS
11	SD	15	R30.1/R31.5	56	57

Randell D. Hiatt
REGISTERED CIVIL ENGINEER

June 6, 2008
PLANS APPROVAL DATE

REGISTERED PROFESSIONAL ENGINEER
Randell D. Hiatt
No. C50200
Exp. 6-30-09
CIVIL
STATE OF CALIFORNIA

The State of California or its officers or agents shall not be responsible for the accuracy or completeness of electronic copies of this plan sheet.

To accompany plans dated 08-08-11

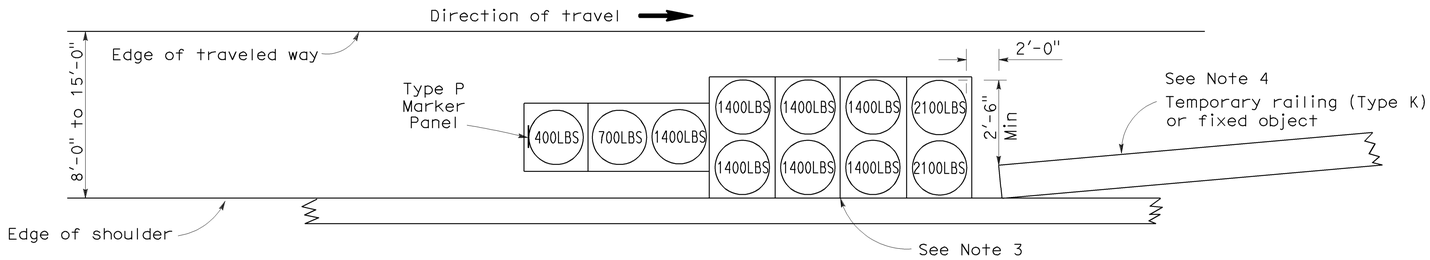

ARRAY 'TS11'

Approach speed less than 45 mph
See Note 9

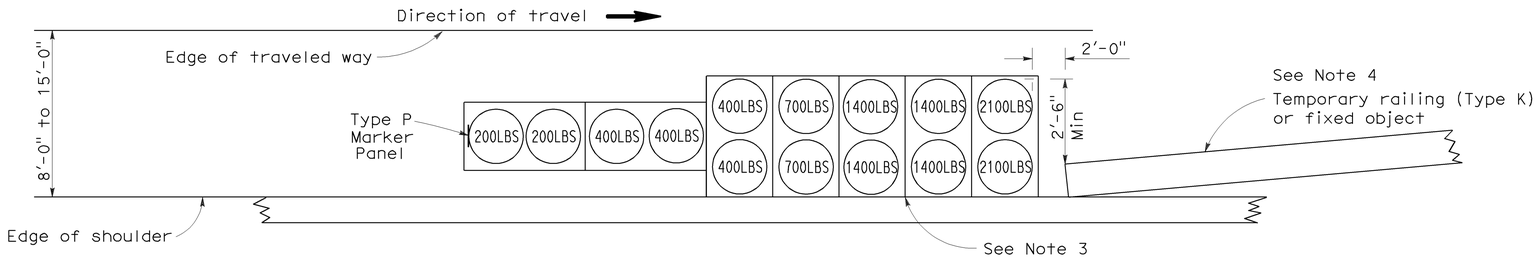

ARRAY 'TS14'

Approach speed 45 mph or more
See Note 9

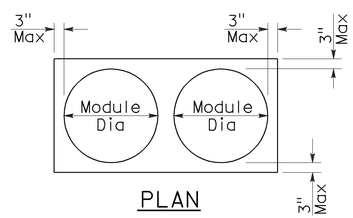

PLAN

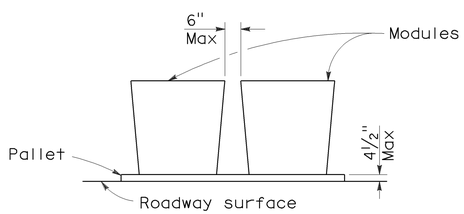

ELEVATION

CRASH CUSHION PALLET DETAIL

See Note 11

NOTES:

1. (XXX) Indicates sand filled module location and weight of sand in pounds for each module. Module spacing is based on the greater diameter of the module.
2. All sand weights are nominal.
3. The temporary crash cushion arrays shown on this plan shall be used only in locations where there will be traffic on one side of the temporary crash cushion array.
4. If the fixed object or approach end of the temporary railing is less than 15'-0" from the edge of traveled way, a temporary crash cushion is required in a construction or work zone.
5. Temporary crash cushion arrays shall not encroach on the traveled way.
6. Arrays for median shoulders shall conform to details shown on this plan for outside shoulders.
7. Place the Type P marker panel so that the bottom of the panel rests upon the pallet and faces traffic.
8. Refer to Standard Plan A73B for marker details.
9. For shoulder widths less than 8'-0", appropriate approved crash cushion protection, other than sand filled modules, shall be provided at fixed objects and at approach ends of temporary railing. The specific type of crash cushion shall be as shown on the project plans or as specified in the Special Provisions, or if not shown on the project plans or specified in the Special Provisions, shall be as approved by the Engineer.
10. Approach speeds indicated conform to NCHRP 350 Report criteria.
11. Use of pallets is optional.

STATE OF CALIFORNIA
DEPARTMENT OF TRANSPORTATION

TEMPORARY CRASH CUSHION, SAND FILLED (SHOULDER INSTALLATIONS)

NO SCALE

RSP T2 DATED JUNE 6, 2008 SUPERSEDES STANDARD PLAN T2
DATED MAY 1, 2006 - PAGE 213 OF THE STANDARD PLANS BOOK DATED MAY 2006.

REVISED STANDARD PLAN RSP T2

2006 REVISED STANDARD PLAN RSP T2

5-15-08

DIST	COUNTY	ROUTE	POST MILES TOTAL PROJECT	SHEET NO.	TOTAL SHEETS
11	SD	15	R30.1/R31.5	57	57

REGISTERED CIVIL ENGINEER

November 17, 2006
PLANS APPROVAL DATE

REGISTERED PROFESSIONAL ENGINEER — Greg W. Edwards — No. C36386 — Exp. 6-30-08 — CIVIL — STATE OF CALIFORNIA

The State of California or its officers or agents shall not be responsible for the accuracy or completeness of electronic copies of this plan sheet.

To accompany plans dated 08-08-11

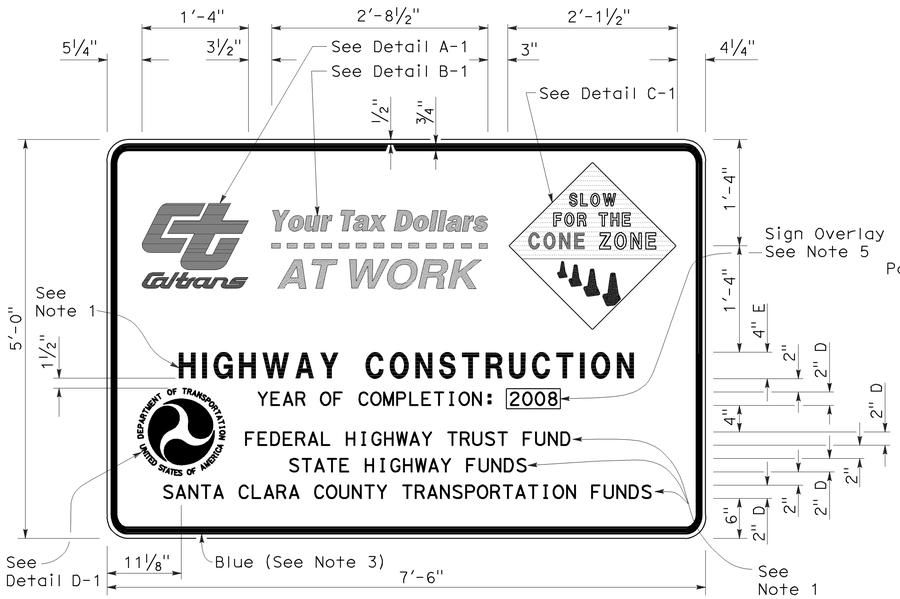

TYPE 1

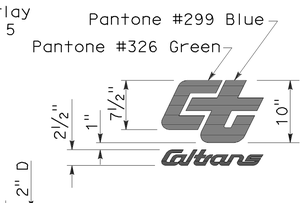

DETAIL A-1

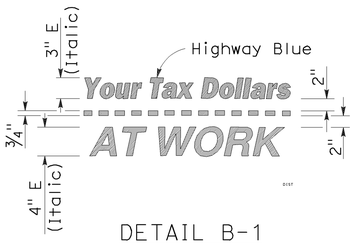

DETAIL B-1
(See Note 3)

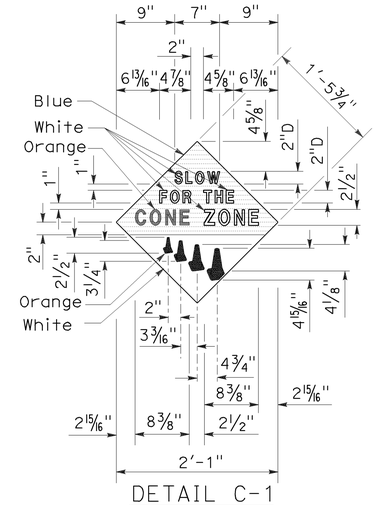

DETAIL C-1
(See Note 4)

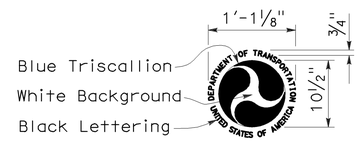

DETAIL D-1
(See Note 6)

NOTES:

1. The sign messages shown for type of project and fund types are examples only. See the Special Provisions for the applicable type of project and fund type messages to be used.
2. Except as otherwise shown, the legend of sign shall be black on a white background (non-reflective).
3. The border of the signs and details "B-1" and "B-2" shall be blue (non-reflective).
4. The diamond in details "C-1" and "C-2" shall be blue for the background of message, " SLOW FOR THE CONE ZONE", and white background for the orange cones. The color and type of font for the "SLOW FOR THE CONE ZONE" message shall be: "SLOW" white D; "FOR THE" white D; "CONE" orange Arial font; "ZONE" white Arial font.
5. Year of completion of project construction shown on the overlay is an example only. See the Special Provisions.
6. Use when the Project involves Federal Highway Trust Fund.

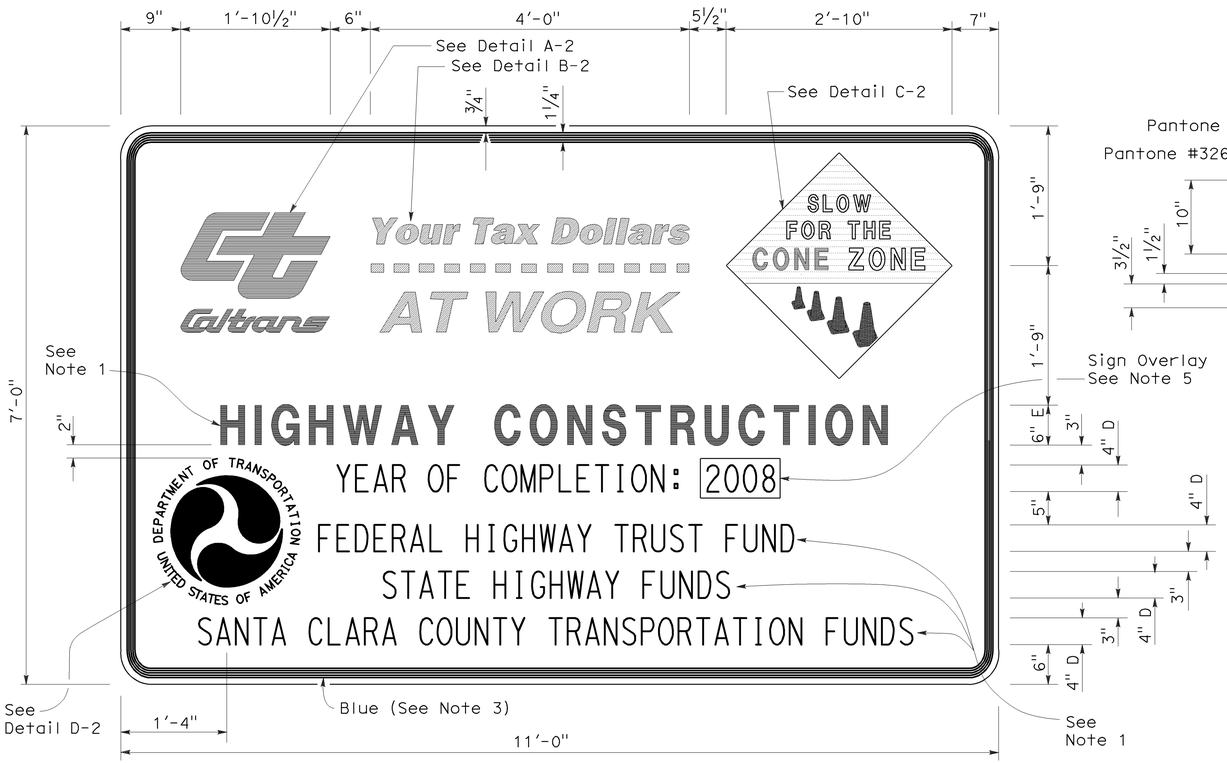

TYPE 2

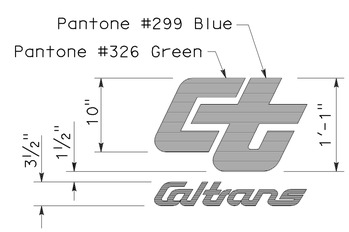

DETAIL A-2

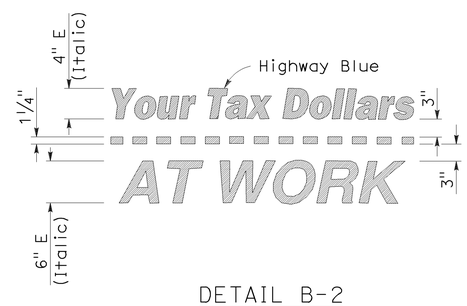

DETAIL B-2
(See Note 3)

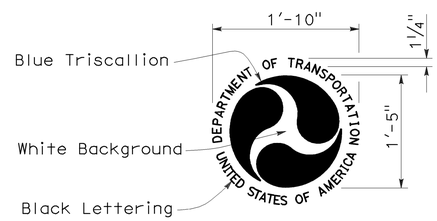

DETAIL D-2
(See Note 6)

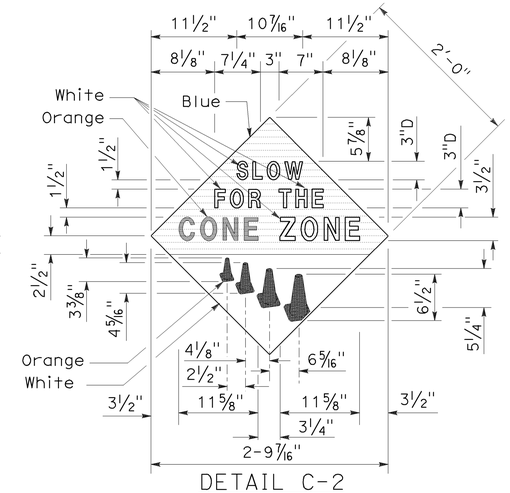

DETAIL C-2
(See Note 4)

STATE OF CALIFORNIA
DEPARTMENT OF TRANSPORTATION

CONSTRUCTION PROJECT FUNDING IDENTIFICATION SIGNS

NO SCALE

RSP T7 DATED NOVEMBER 17, 2006 SUPERSEDES STANDARD PLAN T7
DATED MAY 1, 2006 - PAGE 217 OF THE STANDARD PLANS BOOK DATED MAY 2006.

REVISED STANDARD PLAN RSP T7

2006 REVISED STANDARD PLAN RSP T7

9-7-06