STPLN-6211(102)

Dist	COUNTY	ROUTE	POST MILES TOTAL PROJECT	SHEET No.	TOTAL SHEETS
11	SD	52,125	14.5/15.5, 21.9/22.3	1	72

STATE OF CALIFORNIA

DEPARTMENT OF TRANSPORTATION

PROJECT PLANS FOR CONSTRUCTION ON

STATE HIGHWAY

IN SAN DIEGO COUNTY IN SANTEE ON ROUTE 52 FROM 0.4 MILE WEST OF MISSION GORGE ROAD UNDERCROSSING TO FORESTER CREEK BRIDGE AND ON ROUTE 125 FROM PROSPECT AVENUE UNDERCROSSING TO MISSION GORGE ROAD

TO BE SUPPLEMENTED BY STANDARD PLANS DATED MAY 2006

INDEX OF PLANS

SHEET No.	DESCRIPTION
1	TITLE AND LOCATION MAP
2-8	TEMPORARY WATER POLLUTION CONTROL PLANS
9	TEMPORARY WATER POLLUTION CONTROL QUANTITIES
10-11	PLANT LIST
12-14	PLANT REMOVAL PLANS
15-21	PLANTING PLANS
22-25	IRRIGATION REMOVAL PLANS
26-32	IRRIGATION PLANS
33-43	LANDSCAPE DETAILS
44-47	IRRIGATION QUANTITIES
48-54	EXISTING UTILITIES PLANS
55	CONSTRUCTION AREA SIGNS
56-59	ELECTRICAL SERVICE (IRRIGATION) PLANS
60-72	REVISED AND NEW STANDARD PLANS

THE STANDARD PLANS LIST APPLICABLE TO THIS CONTRACT IS INCLUDED IN THE NOTICE TO BIDDERS AND SPECIAL PROVISIONS BOOK.

LOCATION MAP

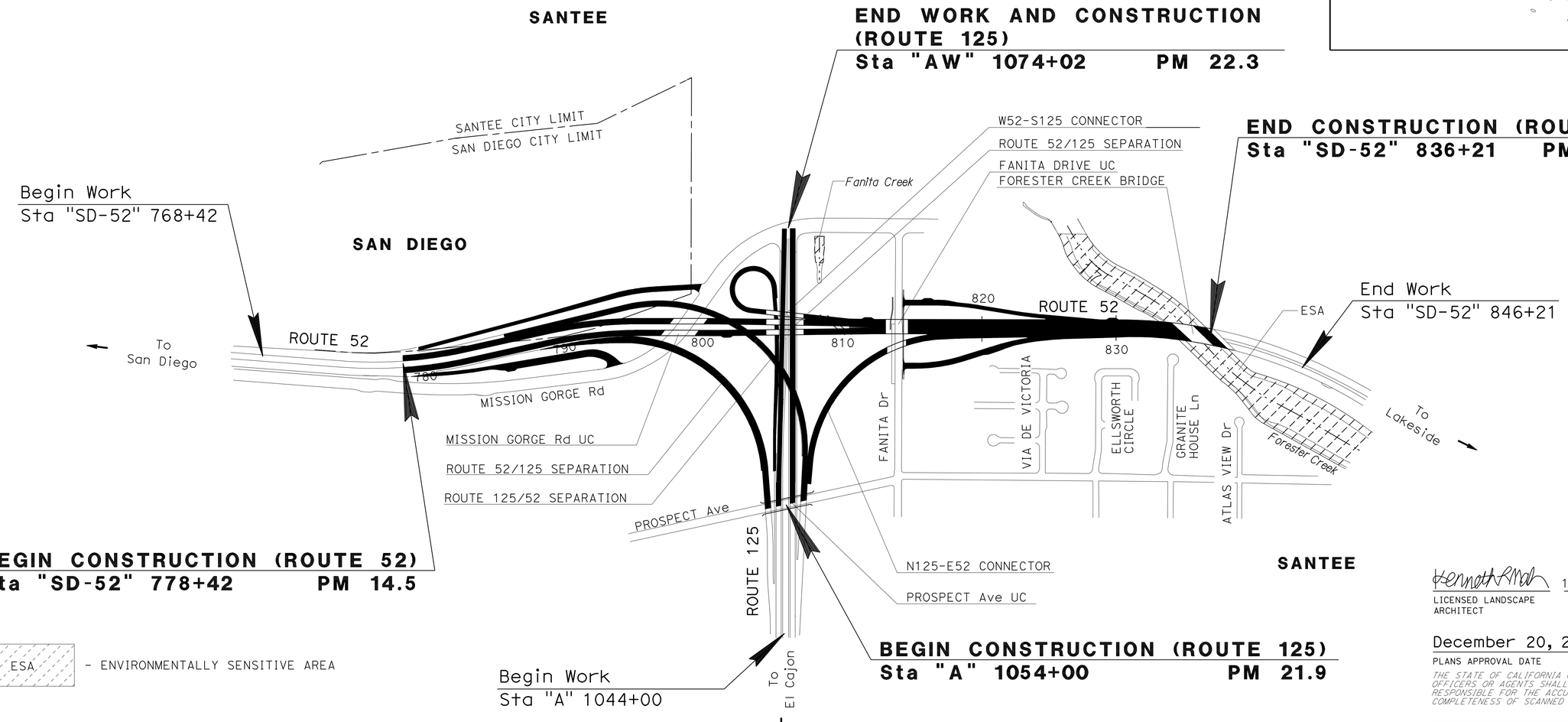

ESA - ENVIRONMENTALLY SENSITIVE AREA

THE CONTRACTOR SHALL POSSESS THE CLASS (OR CLASSES) OF LICENSE AS SPECIFIED IN THE "NOTICE TO BIDDERS."

NO SCALE

PROJECT MANAGER: RON CARAET

SENIOR LANDSCAPE ARCHITECT: STEPHEN ALVAREZ

Kenneth Mah 10-07-10
LICENSED LANDSCAPE ARCHITECT — DATE

December 20, 2010
PLANS APPROVAL DATE

LICENSED LANDSCAPE ARCHITECT — KENNETH L. MAH — No. 4609 — Kenneth Mah — Signature — 02/29/12 — Renewal Date — 10/07/10 — Date — STATE OF CALIFORNIA

THE STATE OF CALIFORNIA OR ITS OFFICERS OR AGENTS SHALL NOT BE RESPONSIBLE FOR THE ACCURACY OR COMPLETENESS OF SCANNED COPIES OF THIS PLAN SHEET.

CONTRACT No.	11-2T0704
PROJECT ID	1100000447

LAST REVISION 10-13-10 — DATE PLOTTED => 01-FEB-2011 — TIME PLOTTED => 12:53

Dist	COUNTY	ROUTE	POST MILES TOTAL PROJECT	SHEET No.	TOTAL SHEETS
11	SD	52,125	14.5/15.5, 21.9/22.3	2	72

LICENSED LANDSCAPE ARCHITECT

12-20-10
PLANS APPROVAL DATE

LICENSED LANDSCAPE ARCHITECT
KENNETH L. MAH No. 3649
Signature
02/29/12
Renewal Date
10/07/10
Date
STATE OF CALIFORNIA

THE STATE OF CALIFORNIA OR ITS OFFICERS OR AGENTS SHALL NOT BE RESPONSIBLE FOR THE ACCURACY OR COMPLETENESS OF SCANNED COPIES OF THIS PLAN SHEET.

NOTE:

FOR ACCURATE RIGHT OF WAY DATA, CONTACT RIGHT OF WAY ENGINEERING AT THE DISTRICT OFFICE.

LEGEND:

- FR — FIBER ROLL
- FR — MAINTAIN EXISTING FIBER ROLL
- TEMPORARY CHECK DAM (TYPE 2) (10 LF EACH)
- TEMPORARY DRAINAGE INLET PROTECTION (TYPE 4A)
- EXISTING DRAINAGE INLET PROTECTION TO REMAIN
- ESA — ENVIRONMENTALLY SENSITIVE AREA
- TEMPORARY CONSTRUCTION ENTRANCE (TYPE 2)
- FLOW DIRECTION

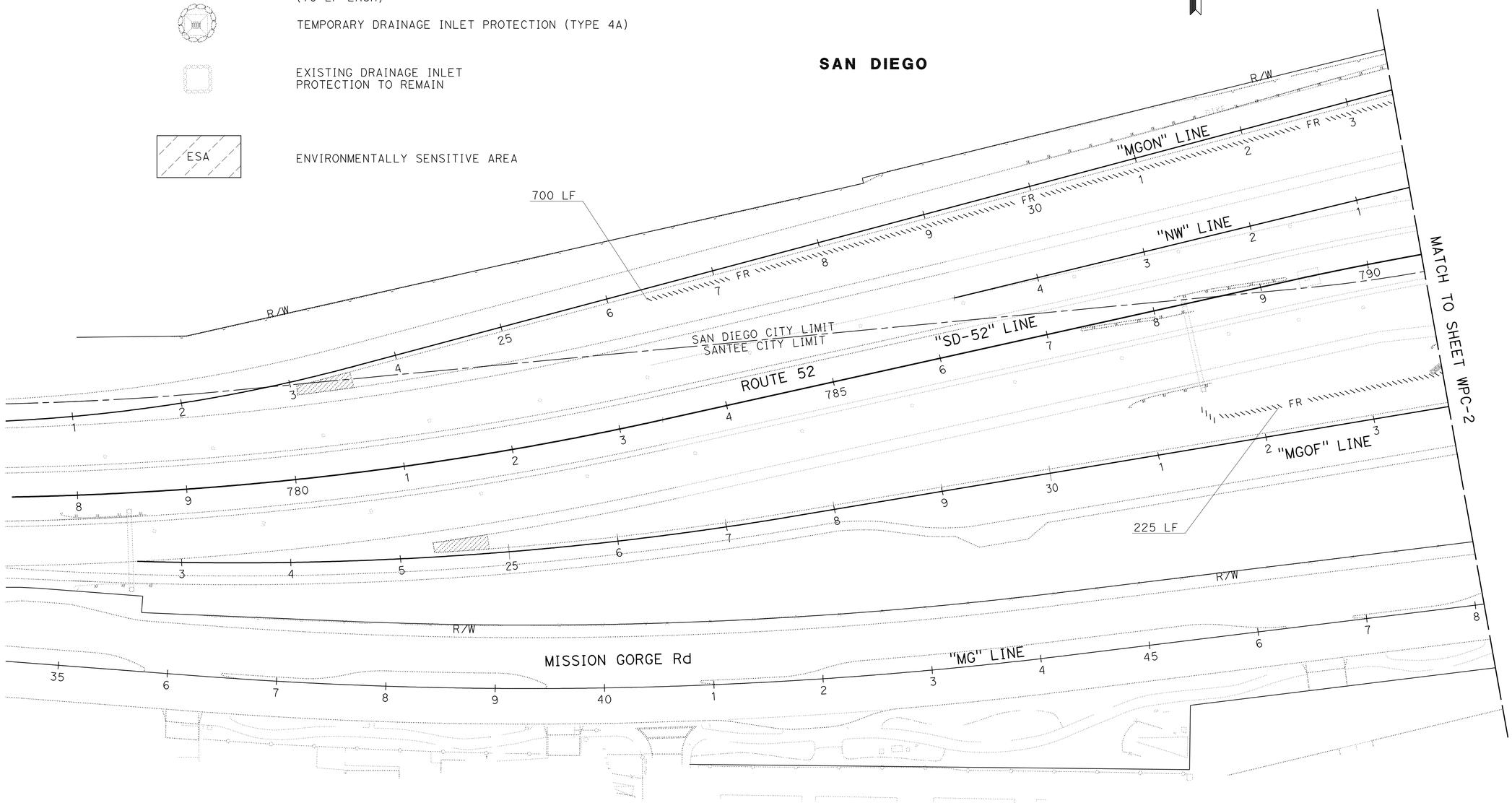

THIS PLAN ACCURATE FOR TEMPORARY WATER POLLUTION CONTROL WORK ONLY.

TEMPORARY WATER POLLUTION CONTROL PLAN

SCALE: 1" = 50'

WPC-1

STATE OF CALIFORNIA - DEPARTMENT OF TRANSPORTATION
Caltrans® LANDSCAPE ARCHITECTURE

SENIOR LANDSCAPE ARCHITECT: STEPHEN ALVAREZ
CALCULATED-DESIGNED BY: CATALINA FLORES
CHECKED BY: KENNY MAH
REVISED BY: X
DATE REVISED: MM-DD-YY

LAST REVISION: 10-13-10
DATE PLOTTED => 24-DEC-2010
TIME PLOTTED => 07:05

Dist	COUNTY	ROUTE	POST MILES TOTAL PROJECT	SHEET No.	TOTAL SHEETS
11	SD	52,125	14.5/15.5, 21.9/22.3	3	72

LICENSED LANDSCAPE ARCHITECT

12-20-10
PLANS APPROVAL DATE

LICENSED LANDSCAPE ARCHITECT
KENNETH L. MAH No. 3649
Expiration Date 02/29/12
Renewal Date 10/07/10
Date
STATE OF CALIFORNIA

THE STATE OF CALIFORNIA OR ITS OFFICERS OR AGENTS SHALL NOT BE RESPONSIBLE FOR THE ACCURACY OR COMPLETENESS OF SCANNED COPIES OF THIS PLAN SHEET.

NOTE:

FOR ACCURATE RIGHT OF WAY DATA, CONTACT RIGHT OF WAY ENGINEERING AT THE DISTRICT OFFICE.

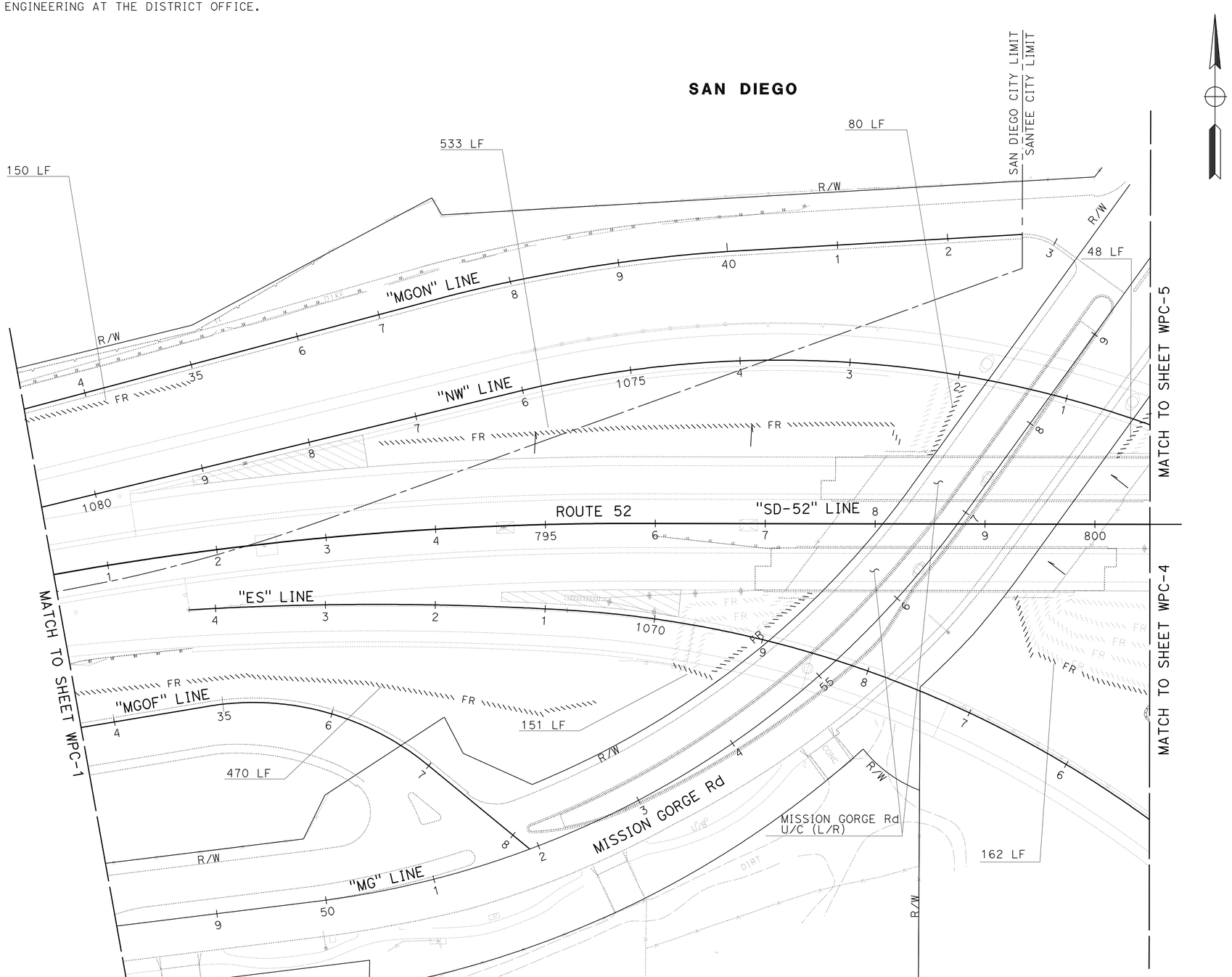

THIS PLAN ACCURATE FOR TEMPORARY WATER POLLUTION CONTROL WORK ONLY.

TEMPORARY WATER POLLUTION CONTROL PLAN

SCALE: 1" = 50'

WPC-2

STATE OF CALIFORNIA - DEPARTMENT OF TRANSPORTATION
Caltrans® LANDSCAPE ARCHITECTURE

SENIOR LANDSCAPE ARCHITECT: STEPHEN ALVAREZ

CALCULATED-DESIGNED BY: CATALINA FLORES
CHECKED BY: KENNY MAH

REVISED BY: X
DATE REVISED: MM-DD-YY

LAST REVISION: 10-15-10
DATE PLOTTED => 24-DEC-2010
TIME PLOTTED => 07:05

Dist	COUNTY	ROUTE	POST MILES TOTAL PROJECT	SHEET No.	TOTAL SHEETS
11	SD	52,125	14.5/15.5, 21.9/22.3	4	72

LICENSED LANDSCAPE ARCHITECT

12-20-10
PLANS APPROVAL DATE

LICENSED LANDSCAPE ARCHITECT
KENNETH L. MAH No. 3649
02/29/12
10/07/10
STATE OF CALIFORNIA

THE STATE OF CALIFORNIA OR ITS OFFICERS OR AGENTS SHALL NOT BE RESPONSIBLE FOR THE ACCURACY OR COMPLETENESS OF SCANNED COPIES OF THIS PLAN SHEET.

NOTE:

FOR ACCURATE RIGHT OF WAY DATA, CONTACT RIGHT OF WAY ENGINEERING AT THE DISTRICT OFFICE.

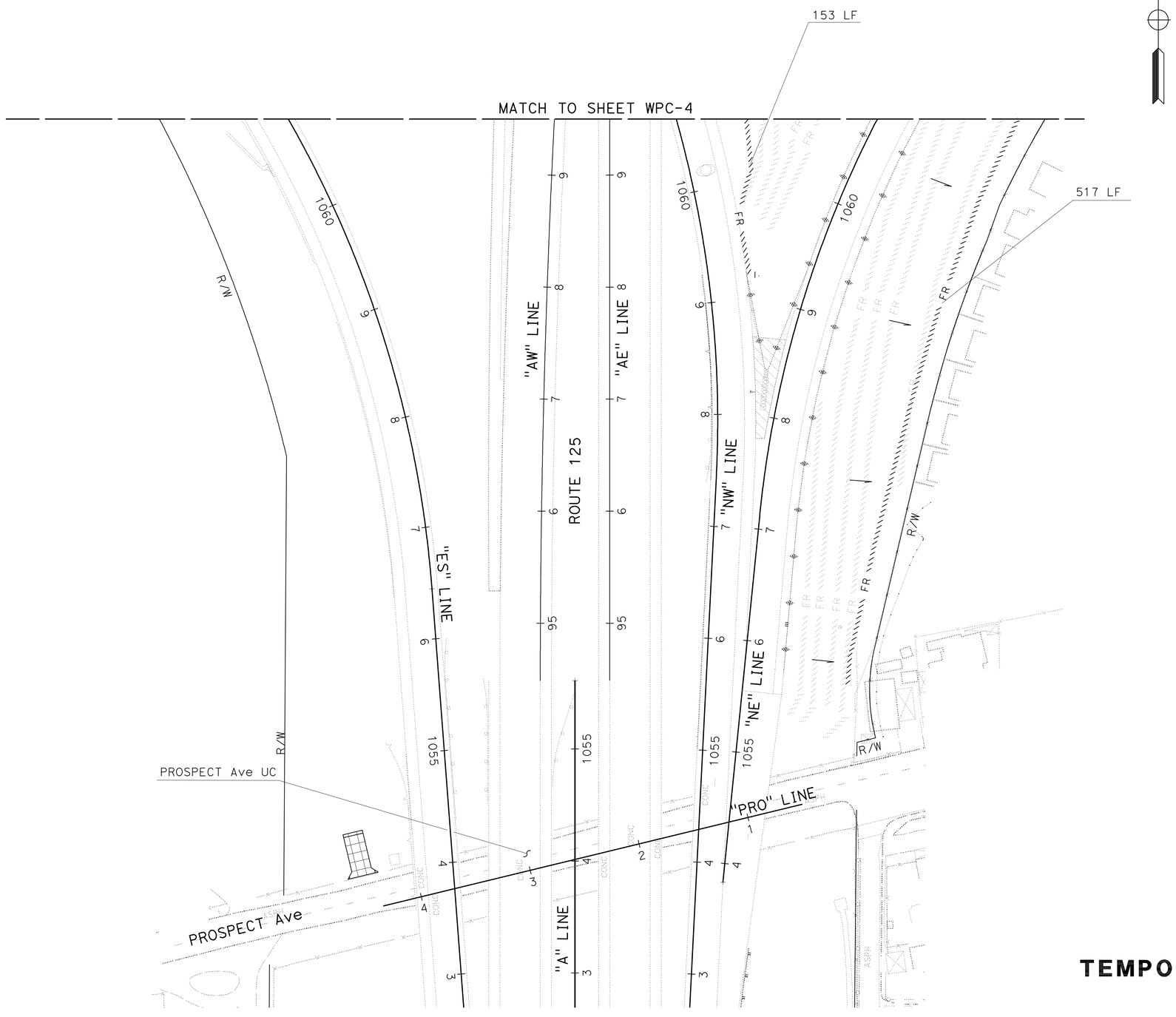

THIS PLAN ACCURATE FOR TEMPORARY WATER POLLUTION CONTROL WORK ONLY.

TEMPORARY WATER POLLUTION CONTROL PLAN

SCALE: 1" = 50'

WPC-3

STATE OF CALIFORNIA - DEPARTMENT OF TRANSPORTATION
Caltrans® LANDSCAPE ARCHITECTURE

SENIOR LANDSCAPE ARCHITECT: STEPHEN ALVAREZ

CALCULATED-DESIGNED BY: CATALINA FLORES
CHECKED BY: KENNY MAH

REVISED BY: X
DATE REVISED: MM-DD-YY

LAST REVISION: 10-15-10
DATE PLOTTED => 24-DEC-2010
TIME PLOTTED => 07:05

Dist	COUNTY	ROUTE	POST MILES TOTAL PROJECT	SHEET No.	TOTAL SHEETS
11	SD	52,125	14.5/15.5, 21.9/22.3	5	72

LICENSED LANDSCAPE ARCHITECT

12-20-10
PLANS APPROVAL DATE

LICENSED LANDSCAPE ARCHITECT KENNETH L. MAH No. 3649 STATE OF CALIFORNIA
02/29/12 Renewal Date
10/07/10 Date

THE STATE OF CALIFORNIA OR ITS OFFICERS OR AGENTS SHALL NOT BE RESPONSIBLE FOR THE ACCURACY OR COMPLETENESS OF SCANNED COPIES OF THIS PLAN SHEET.

NOTE:

FOR ACCURATE RIGHT OF WAY DATA, CONTACT RIGHT OF WAY ENGINEERING AT THE DISTRICT OFFICE.

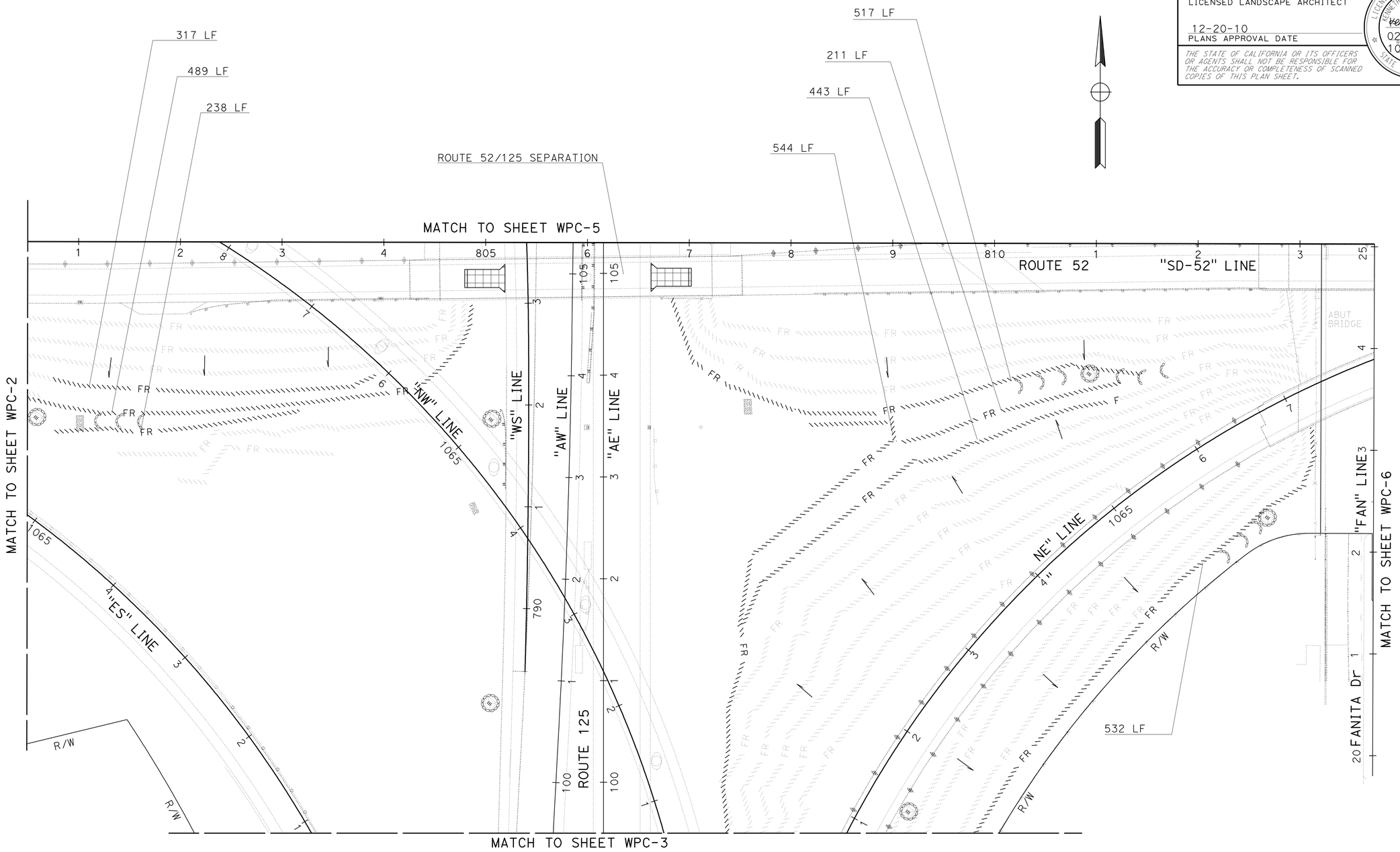

TEMPORARY WATER POLLUTION CONTROL PLAN

THIS PLAN ACCURATE FOR TEMPORARY WATER POLLUTION CONTROL WORK ONLY.

SCALE: 1" = 50'

WPC-4

STATE OF CALIFORNIA - DEPARTMENT OF TRANSPORTATION
Caltrans® LANDSCAPE ARCHITECTURE

SENIOR LANDSCAPE ARCHITECT: STEPHEN ALVAREZ
CALCULATED-DESIGNED BY: KENNY MAH
CHECKED BY: CATALINA FLORES
REVISED BY: X
DATE REVISED: MM-DD-YY

LAST REVISION 10-15-10
DATE PLOTTED => 05-JAN-2011
TIME PLOTTED => 14:50

Dist	COUNTY	ROUTE	POST MILES TOTAL PROJECT	SHEET No.	TOTAL SHEETS
11	SD	52,125	14.5/15.5, 21.9/22.3	6	72

LICENSED LANDSCAPE ARCHITECT

12-20-10
PLANS APPROVAL DATE

LICENSED LANDSCAPE ARCHITECT
KENNETH L. MAH No. 3649
Signature
02/29/12
Renewal Date
10/07/10
Date
STATE OF CALIFORNIA

THE STATE OF CALIFORNIA OR ITS OFFICERS OR AGENTS SHALL NOT BE RESPONSIBLE FOR THE ACCURACY OR COMPLETENESS OF SCANNED COPIES OF THIS PLAN SHEET.

NOTE:

FOR ACCURATE RIGHT OF WAY DATA, CONTACT RIGHT OF WAY ENGINEERING AT THE DISTRICT OFFICE.

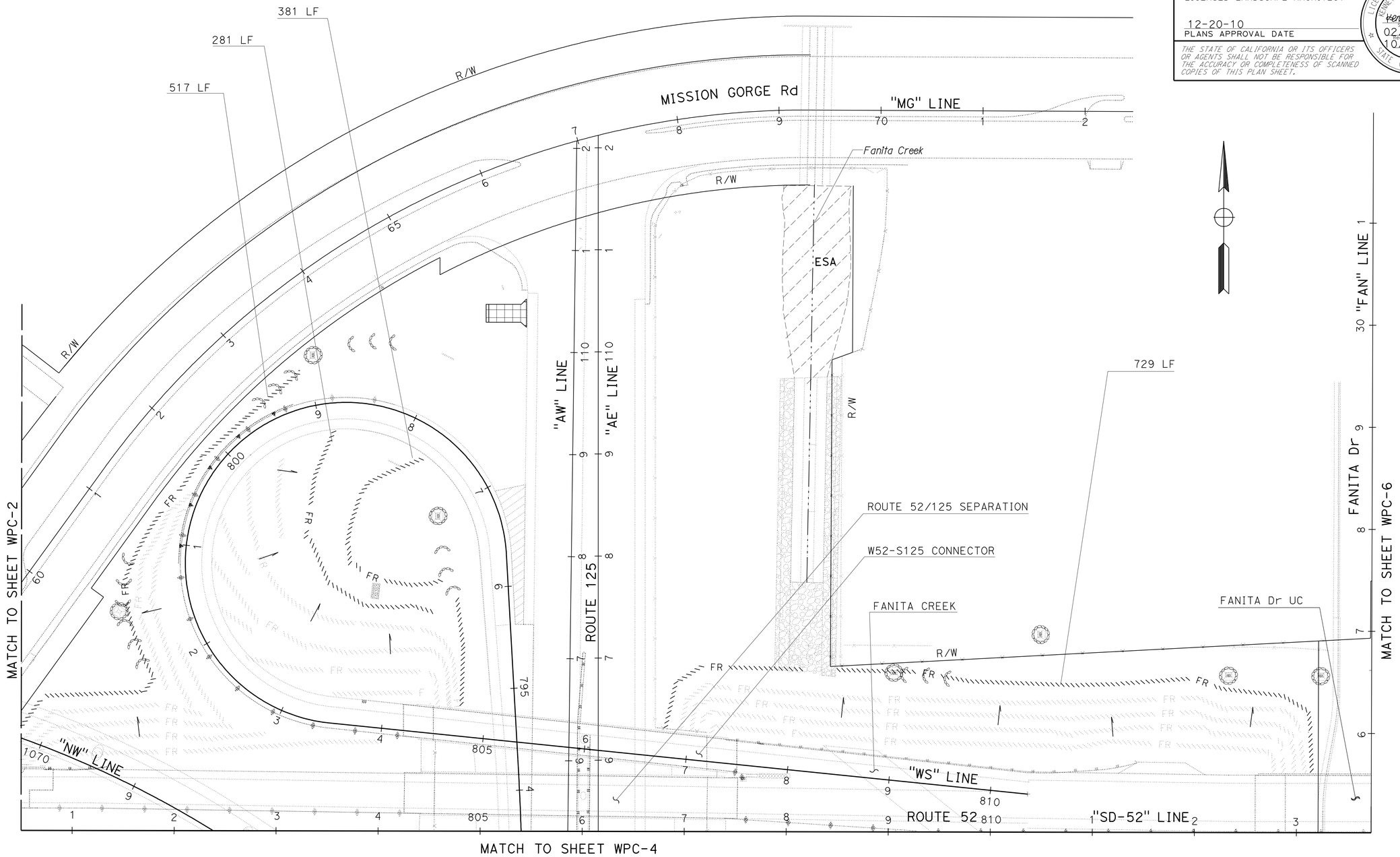

TEMPORARY WATER POLLUTION CONTROL PLAN

THIS PLAN ACCURATE FOR TEMPORARY WATER POLLUTION CONTROL WORK ONLY.

SCALE: 1" = 50'

WPC-5

STATE OF CALIFORNIA - DEPARTMENT OF TRANSPORTATION
Caltrans® LANDSCAPE ARCHITECTURE

SENIOR LANDSCAPE ARCHITECT: STEPHEN ALVAREZ

CALCULATED-DESIGNED BY: CATALINA FLORES
CHECKED BY: KENNY MAH

REVISED BY: X
DATE REVISED: MM-DD-YY

LAST REVISION: 10-15-10
DATE PLOTTED => 24-DEC-2010
TIME PLOTTED => 07:28

Dist	COUNTY	ROUTE	POST MILES TOTAL PROJECT	SHEET No.	TOTAL SHEETS
11	SD	52,125	14.5/15.5, 21.9/22.3	7	72

LICENSED LANDSCAPE ARCHITECT

12-20-10
PLANS APPROVAL DATE

LICENSED LANDSCAPE ARCHITECT
KENNETH L. MAH No. 3449
SIGNATURE
02/29/12
EXPIRATION DATE
10/07/10
DATE
STATE OF CALIFORNIA

THE STATE OF CALIFORNIA OR ITS OFFICERS OR AGENTS SHALL NOT BE RESPONSIBLE FOR THE ACCURACY OR COMPLETENESS OF SCANNED COPIES OF THIS PLAN SHEET.

NOTE:

FOR ACCURATE RIGHT OF WAY AND ACCESS DATA,
CONTACT RIGHT OF WAY ENGINEERING AT THE DISTRICT OFFICE.

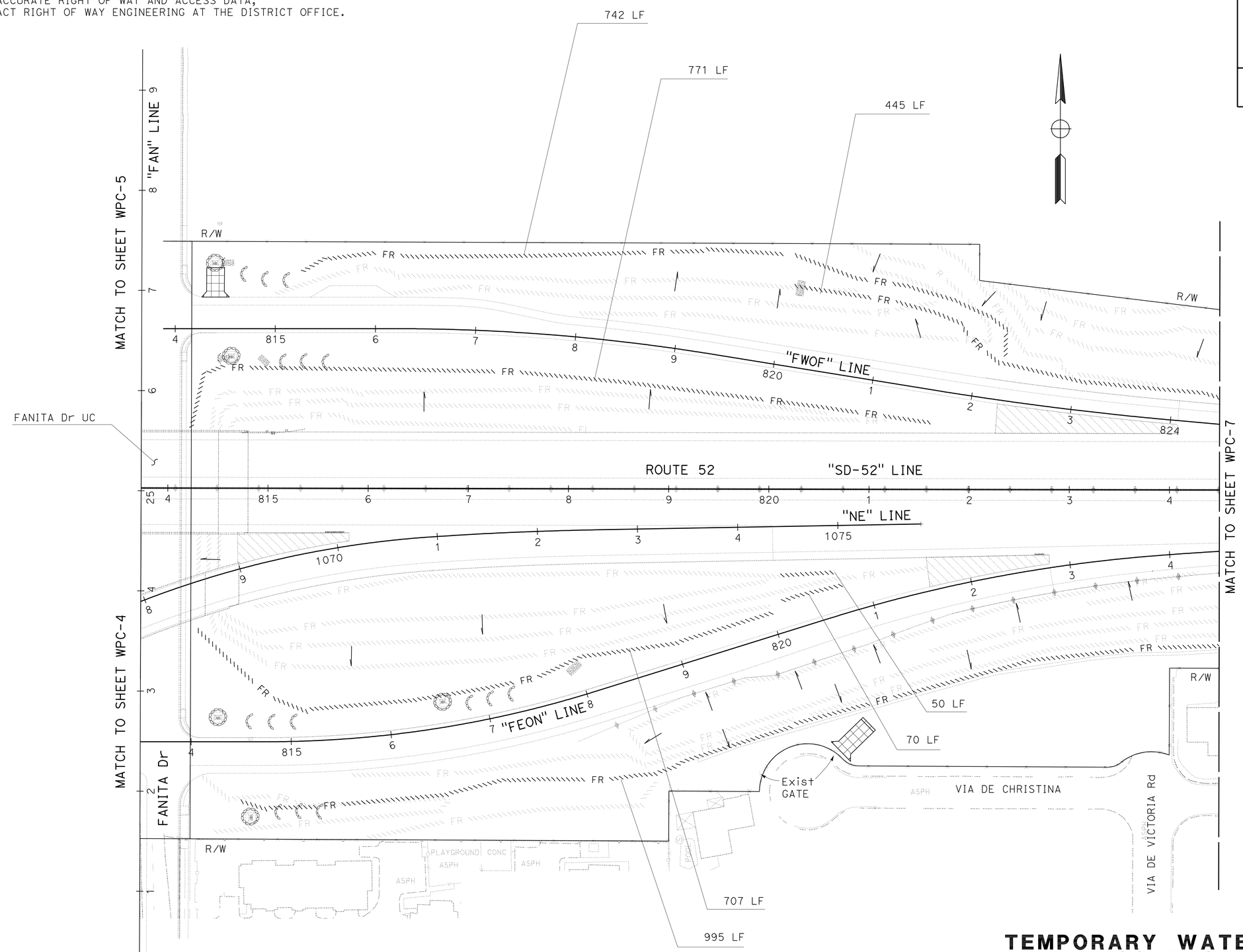

TEMPORARY WATER POLLUTION CONTROL PLAN

SCALE: 1" = 50'

WPC-6

THIS PLAN ACCURATE FOR TEMPORARY WATER POLLUTION CONTROL WORK ONLY.

STATE OF CALIFORNIA - DEPARTMENT OF TRANSPORTATION
Caltrans® LANDSCAPE ARCHITECTURE

SENIOR LANDSCAPE ARCHITECT: STEPHEN ALVAREZ
CALCULATED-DESIGNED BY: CATALINA FLORES
CHECKED BY: KENNY MAH
REVISED BY: X
DATE REVISED: MM-DD-YY

LAST REVISION 10-15-10
DATE PLOTTED => 24-DEC-2010
TIME PLOTTED => 06:59

Dist	COUNTY	ROUTE	POST MILES TOTAL PROJECT	SHEET No.	TOTAL SHEETS
11	SD	52,125	14.5/15.5, 21.9/22.3	8	72

LICENSED LANDSCAPE ARCHITECT

12-20-10
PLANS APPROVAL DATE

LICENSED LANDSCAPE ARCHITECT
KENNETH L. MAH No. 3649
Signature
02/29/12
Renewal Date
10/07/10
Date
STATE OF CALIFORNIA

THE STATE OF CALIFORNIA OR ITS OFFICERS OR AGENTS SHALL NOT BE RESPONSIBLE FOR THE ACCURACY OR COMPLETENESS OF SCANNED COPIES OF THIS PLAN SHEET.

NOTE:

FOR ACCURATE RIGHT OF WAY AND ACCESS DATA,
CONTACT RIGHT OF WAY ENGINEERING AT THE DISTRICT OFFICE.

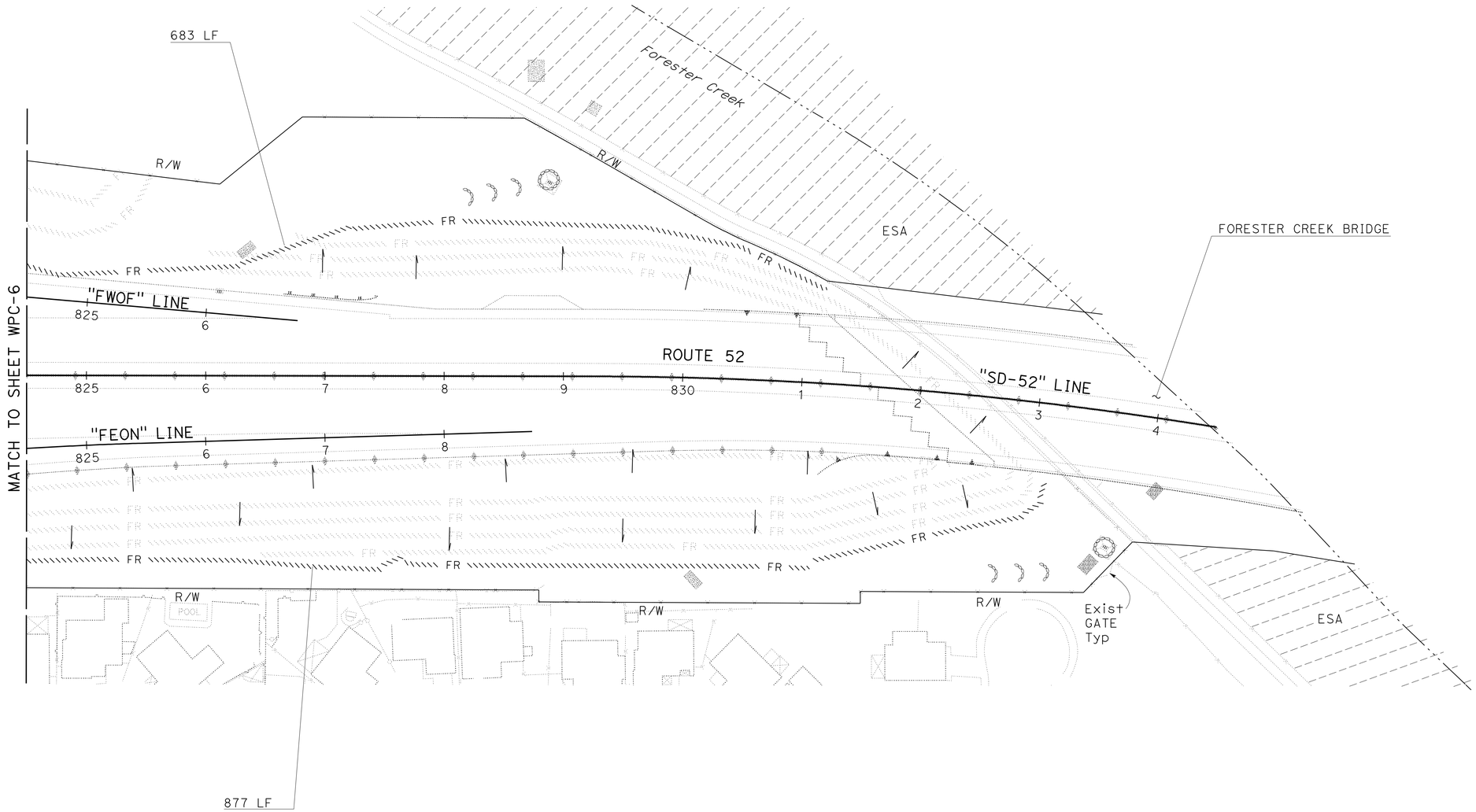

TEMPORARY WATER POLLUTION CONTROL PLAN

SCALE: 1" = 50'

WPC-7

THIS PLAN ACCURATE FOR TEMPORARY WATER POLLUTION CONTROL WORK ONLY.

STATE OF CALIFORNIA - DEPARTMENT OF TRANSPORTATION
Caltrans® LANDSCAPE ARCHITECTURE

SENIOR LANDSCAPE ARCHITECT: STEPHEN ALVAREZ

CALCULATED-DESIGNED BY: CATALINA FLORES
CHECKED BY: KENNY MAH

REVISED BY: X
DATE REVISED: MM-DD-YY

LAST REVISION: 10-18-10
DATE PLOTTED => 27-DEC-2010
TIME PLOTTED => 06:06

Dist	COUNTY	ROUTE	POST MILES TOTAL PROJECT	SHEET No.	TOTAL SHEETS
11	SD	52,125	14.5/15.5, 21.9/22.3	9	72

LICENSED LANDSCAPE ARCHITECT

12-20-10
PLANS APPROVAL DATE

LICENSED LANDSCAPE ARCHITECT
KENNETH L. MAH No. 3649
Signature
02/29/12
Renewal Date
10/07/10
Date
STATE OF CALIFORNIA

THE STATE OF CALIFORNIA OR ITS OFFICERS OR AGENTS SHALL NOT BE RESPONSIBLE FOR THE ACCURACY OR COMPLETENESS OF SCANNED COPIES OF THIS PLAN SHEET.

WATER POLLUTION CONTROL QUANTITIES

SHEET	MAINTAIN EXISTING FIBER ROLLS (LF) *	FIBER ROLL (LF)	TEMPORARY CHECK DAM (LF)	TEMPORARY CONSTRUCTION ENTRANCE (EA)	TEMPORARY DRAINAGE INLET PROTECTION (EA)
WPC-1	-	925	-	-	-
WPC-2	1,062	1,594	-	-	-
WPC-3	2,592	670	-	1	-
WPC-4	8,562	3,291	120	2	6
WPC-5	5,377	1,908	180	1	6
WPC-6	9,234	3,780	150	2	5
WPC-7	5,711	1,560	60	-	2
TOTAL	32,538	13,728	510	6	19

* - LINEAR FOOT QUANTITIES ARE FOR INFORMATION ONLY.

THIS PLAN ACCURATE FOR TEMPORARY WATER POLLUTION CONTROL WORK ONLY.

TEMPORARY WATER POLLUTION CONTROL QUANTITIES

NO SCALE

WPCQ-1

STATE OF CALIFORNIA - DEPARTMENT OF TRANSPORTATION
Caltrans® LANDSCAPE ARCHITECTURE

SENIOR LANDSCAPE ARCHITECT: STEPHEN ALVAREZ
CALCULATED-DESIGNED BY: CATALINA FLORES
CHECKED BY: KENNY MAH
REVISED BY: X
DATE REVISED: MM-DD-YY

LAST REVISION 10-18-10
DATE PLOTTED => 24-DEC-2010
TIME PLOTTED => 09:01

Dist	COUNTY	ROUTE	POST MILES TOTAL PROJECT	SHEET No.	TOTAL SHEETS
11	SD	52,125	14.5/15.5, 21.9/22.3	10	72

LICENSED LANDSCAPE ARCHITECT

12-20-10
PLANS APPROVAL DATE

LICENSED LANDSCAPE ARCHITECT KENNETH L. MAH No. 3649 STATE OF CALIFORNIA
02/29/12 Expiration Date
10/07/10 Date

THE STATE OF CALIFORNIA OR ITS OFFICERS OR AGENTS SHALL NOT BE RESPONSIBLE FOR THE ACCURACY OR COMPLETENESS OF SCANNED COPIES OF THIS PLAN SHEET.

ABBREVIATIONS:

Amend — AMENDMENT
Dia — DIAMETER
EA — EACH
Oz — OUNCE
Lb — POUND
SQFT — SQUARE FOOT
YD — YARD
SQYD — SQUARE YARD
CY — CUBIC YARD
Max — MAXIMUM
Min — MINIMUM
EC — EROSION CONTROL
ECH — EROSION CONTROL (HYDROSEED)
No. — NUMBER
Pkt — PACKET(S)
PLT ESTB — PLANT ESTABLISHMENT
Pvmt — PAVEMENT
R/W — RIGHT OF WAY
TAB — TABLET(S)
TRVD — TRAVELED
" — INCH
' — FOOT
PSFM — POLYMER STABILIZED FIBER MATRIX
Ac — ACRES
RTD CUT — ROOTED CUTTING(S)

NOTE:

UNDERLINED PORTIONS OF BOTANICAL NAMES INDICATE ABBREVIATIONS USED ON PLANTING PLANS.

PLANT LIST AND PLANTING SPECIFICATIONS

PLANT GROUP	PLANT No.	SYMBOL	BOTANICAL NAME	COMMON NAME	SIZE	QUANTITY EACH	HOLE SIZE (INCH) Dia	HOLE SIZE (INCH) DEPTH	BASIN TYPE	IRON SULFATE (1)	SOIL AMEND (CY)	COMMERCIAL FERTILIZER (1) PLANTING	COMMERCIAL FERTILIZER (1) PLT ESTB	BASIN MULCH (CY)	STAKING	PLANTING LIMITS MINIMUM DISTANCE (Ft) FROM TRVD WAY	PVMT	FENCE	WALL	PAVED DITCH	EARTH DITCH	CENTER (Ft)	REMARKS
A	1		AEONIUM HYBRID "JOLLY GREEN'	SAUCER PLANT	No. 1	710	(2)	(2)	I	-	-	1 Pkt	-	0.06	-	-	8	6	6	6	6	3	SUCCULENT (8)
	2		AGAVE ATTENUATA	FOXTAIL AGAVE	No. 1	155	(2)	(2)	I	-	-	1 Pkt	-	0.06	-	-	8	6	6	6	6	6	SUCCULENT (8)
	3		ASPARAGUS SPRENGERII "MYERII"	MEYER ASPARAGUS	No. 1	50	(2)	(2)	I	4 Oz	-	1 Pkt	8 Oz	(3)	-	-	-	-	-	-	-	(4)	SHRUB (10)
	4		BACCHARIS PILULARIS "PIGEON POINT"	DWARF COYOTE BRUSH	No. 1	2,135	(2)	(2)	I	-	-	1 Pkt	-	0.06	-	-	8	3	3	4	3	8	SHRUB
	5		BACCHARIS SAROTHROIDES	BROOM BACCHARIS	No. 1	820	(2)	(2)	I	-	-	1 Pkt	-	0.06	-	-	10	6	6	6	6	10	SHRUB (8)
	6		CALLISTEMON VIMINALIS "LITTLE JOHN"	DWARF BOTTLEBRUSH	No. 1	139	(2)	(2)	I	4 Oz	-	1 Pkt	8 Oz	(3)	-	-	-	-	-	-	-	(4)	SHRUB (10)
	7		CERCIS OCCIDENTALIS	WESTERN REDBUD	No. 1	820	(2)	(2)	I	-	-	1 Pkt	-	0.06	-	-	10	6	6	6	6	10	SHRUB (8)
	8		CISTUS 'SUNSET'	SUNSET ROCKROSE	No. 1	510	(2)	(2)	I	-	-	1 Pkt	-	0.06	-	-	8	6	6	6	6	6	SHRUB (8)
	9		CLIVIA MINIATA 'BELGIAN HYBRID'	KAFFIR LILY	No. 1	66	(2)	(2)	I	4 Oz	-	1 Pkt	8 Oz	(3)	-	-	-	-	-	-	-	(4)	SHRUB (10)
	10		ENCELIA CALIFORNICA	COAST SUNFLOWER	No. 1	1,590	(2)	(2)	I	-	-	1 Pkt	-	0.06	-	-	10	6	6	6	6	10	SHRUB (8)
	11		ERIOGONUM FASCICULATUM	FLAT-TOP BUCKWHEAT	No. 1	500	(2)	(2)	I	-	-	1 Pkt	-	0.06	-	-	8	3	3	4	3	6	SHRUB (8)
	12		HETEROMELES ARBUTIFOLIA	TOYON	No. 1	292	(2)	(2)	I	-	-	1 Pkt	-	0.06	-	-	8	3	3	4	3	(4)	SHRUB

APPLICABLE WHEN CIRCLED:

(1) - QUANTITIES SHOWN ARE "PER PLANT" UNLESS SHOWN AS SQFT OR SQYD APPLICATION RATES.
(2) - SUFFICIENT TO RECEIVE ROOT BALL.
(3) - INCLUDED WITH AREA MULCH.
(4) - AS SHOWN ON PLANS.
5 - UNLESS OTHERWISE SHOWN ON PLANS.
(6) - SEE STANDARD DETAIL.
7 - SEE SPECIAL PROVISIONS.
(8) - RANDOMLY PLANTED IN GROUPS OF THREES, FIVES AND SEVENS THROUGHOUT DESIGNATED AREA.
(9) - MINIMUM DISTANCE FROM SIDEWALK, CURB OR ROCK MULCH IS 3'.
(10) - MINIMUM DISTANCE FROM PAVING OR ROCK MULCH IS 2'.

LEGEND:

LIMITS OF CONTAINER STOCK PLANTING AREA

EC (PSFM) (TYPE 1) (FLAT AREAS)

EC (PSFM) (TYPE 2) (IRRIGATED SLOPES WITH NATIVE PLANTINGS)

EC (PSFM) (TYPE 3) (IRRIGATED SLOPES WITH NON-NATIVE PLANTINGS)

(WEED GERMINATION) EROSION CONTROL (COMPOST INCORPORATE) SEE LANDSCAPE DETAILS CITY MEDIAN PLANTING

EC (COMPOST BLANKET) (2" DEEP)

(WEED GERMINATION)

ROCK MULCH

MULCH (3" DEEP)

PLANT REMOVAL

Exist TREE TO REMAIN

MAINTAIN Exist PLANTED AREAS

Exist MAINTENANCE ACCESS PATH

Exist PAVING BEYOND THE GORE

ESA — ENVIRONMENTALLY SENSITIVE AREA

PLANT LIST

PL-1

STATE OF CALIFORNIA - DEPARTMENT OF TRANSPORTATION
Caltrans LANDSCAPE ARCHITECTURE
SENIOR LANDSCAPE ARCHITECT STEPHEN ALVAREZ
CALCULATED-DESIGNED BY MARLENE GROS
CHECKED BY KENNY MAH
REVISED BY X
DATE REVISED MM-DD-YY

LAST REVISION 10-18-10 | DATE PLOTTED => 24-DEC-2010 | TIME PLOTTED => 09:01

Dist	COUNTY	ROUTE	POST MILES TOTAL PROJECT	SHEET No.	TOTAL SHEETS
11	SD	52,125	14.5/15.5, 21.9/22.3	11	72

LICENSED LANDSCAPE ARCHITECT

12-20-10
PLANS APPROVAL DATE

LICENSED LANDSCAPE ARCHITECT KENNETH L. MAH No. 3649 STATE OF CALIFORNIA
Approved 02/29/12
Reviewed 10/07/10
Date

THE STATE OF CALIFORNIA OR ITS OFFICERS OR AGENTS SHALL NOT BE RESPONSIBLE FOR THE ACCURACY OR COMPLETENESS OF SCANNED COPIES OF THIS PLAN SHEET.

PLANT LIST AND PLANTING SPECIFICATIONS

PLANT GROUP	PLANT No.	SYMBOL	BOTANICAL NAME	COMMON NAME	SIZE	QUANTITY EACH	HOLE SIZE (INCH) Dia	HOLE SIZE (INCH) DEPTH	BASIN TYPE	IRON SULFATE ①	SOIL AMEND (CY)	COMMERCIAL FERTILIZER ① PLANTING	COMMERCIAL FERTILIZER ① PLT ESTB	BASIN MULCH (CY)	STAKING	PLANTING LIMITS MINIMUM DISTANCE (Ft) FROM TRVD WAY	PVMT	FENCE	WALL	PAVED DITCH	EARTH DITCH	ON CENTER (Ft)	REMARKS
A	13		MALOSMA LAURINA	LAUREL SUMAC	No. 1	1,590	②	②	I	-	-	1 Pkt	-	0.06	-	-	4	1	1	1	-	10	SHRUB ⑧
	14		MUHLENBERGIA RIGENS	DEER GRASS	No. 1	540	②	②	I	-	-	1 Pkt	-	0.06	-	-	8	3	3	4	3	6	GRASS
	15		PARTHENOCISSUS TRICUSPIDATA	BOSTON IVY	No. 1	54	②	②	I	4 Oz	-	1 Pkt	8 Oz	0.06	⑥	-	8	3	3	3	3	12	VINE
	16		PORTULACARIA AFRA	ELEPHANT FOOD	No. 1	510	②	②	I	-	-	1 Pkt	8 Oz	0.06	-	-	8	6	6	6	6	6	SUCCULENT ⑧
	17		RHUS INTEGRIFOLIA	LEMONADE BERRY	No. 1	1,590	②	②	I	-	-	1 Pkt	-	0.06	-	-	8	6	6	6	6	10	SHRUB ⑧
	18		ROMNEYA COULTERI 'WHITE CLOUD'	MATILIJA POPPY	No. 1	1,590	②	②	I	-	-	1 Pkt	-	0.06	-	-	8	6	6	6	6	10	SHRUB ⑧
	19		SEDUM DENDROIDEUM	BUSH SEDUM	No. 1	710	②	②	I	-	-	1 Pkt	8 Oz	③	-	-	-	-	-	-	-	3	SUCCULENT ⑧
B	20		AGAVE ATTENUATA	FOXTAIL AGAVE	No. 5	160	②	②	I	-	-	3 Pkt	8 Oz	0.06	-	-	8	6	6	6	6	4	SUCCULENT
	21		ALOE STRIATA	CORAL ALOE	No. 5	166	②	②	I	-	-	3 Pkt	8 Oz	0.06	-	-	8	6	6	6	6	4	SUCCULENT
	22		CERCIS OCCIDENTALIS	WESTERN REDBUD	No. 5	72	②	②	I	4 Oz	-	3 Pkt	8 Oz	0.06	-	-	8	6	6	6	6	4	SHRUB
	23		EUCALYPTUS CLADOCALYX	SUGAR GUM	No. 5	12	②	②	I	-	-	3 Pkt	8 Oz	0.06	-	40	-	20	15	15	17	4	TREE
	24		PHORMIUM TENAX 'MONROVIA RED'	NEW ZEALAND FLAX	No. 5	25	②	②	I	4 Oz	-	3 Pkt	8 Oz	③	-	-	-	-	-	-	-	4	SHRUB ⑩
	25		XYLOSMA CONGESTUM	SHINY XYLOSMA	No. 5	66	②	②	I	4 Oz	-	3 Pkt	8 Oz	0.06	-	-	4	3	3	3	-	4	SHRUB
F	26		BACCHARIS PILULARIS "PIGEON POINT"	DWARF COYOTE BRUSH	FLAT	46,065	-	-	-	-	-	8 lb/ 1,000 SQFT	4 lb/ 1,000 SQFT	-	-	-	4	3	3	3	-	1.5	GROUNDCOVER
G	27		AEONIUM HYBRID 'JOLLY GREEN'	SAUCER PLANT	RTD CUT	235	-	-	-	-	-	8 lb/ 1,000 SQFT	4 lb/ 1,000 SQFT	③	-	-	-	-	-	-	-	2	SUCCULENT ⑩
	28		SENECIO MANDRALISCAE	KLEINA	RTD CUT	228,390	-	-	-	-	-	8 lb/ 1,000 SQFT	4 lb/ 1,000 SQFT	-	-	-	4	3	3	3	-	1	GROUNDCOVER ⑨
	29		SENECIO MANDRALISCAE	KLEINA	RTD CUT	930	-	-	-	-	-	8 lb/ 1,000 SQFT	4 lb/ 1,000 SQFT	③	-	-	-	-	-	-	-	2.5	GROUNDCOVER ⑩
H	30		CARPOBROTIS EDULIS	HOTTENTOT FIG	CUTTINGS	54,700	-	-	-	-	-	8 lb/ 1,000 SQFT	4 lb/ 1,000 SQFT	-	-	-	4	3	3	3	-	1.5	GROUNDCOVER
K	31		ARBUTUS UNEDO	STRAWBERRY TREE	24" BOX	9	②	②	I	8 Oz	-	5 Pkt	1 lb	③	⑥	30	-	20	20	10	12	4	TREE
	32		CINNAMOMUM CAMPHORA	CAMPHOR TREE	24" BOX	7	②	②	I	8 Oz	-	5 Pkt	1 lb	③	⑥	30	-	20	20	20	12	4	TREE
	33		ROBINIA AMBIGUA 'PURPLE ROBE"	LOCUST	24" BOX	17	②	②	I	8 Oz	-	5 Pkt	1 lb	0.2	⑥	30	-	20	20	20	12	4	TREE
	34		TIPUANA TIPU	TIPU TREE	24" BOX	14	②	②	I	8 Oz	-	5 Pkt	1 lb	0.2	⑥	30	-	30	25	20	22	4	TREE
M	35		LEYMUS TRITICOIDES	BEARDLESS WILD RYE	LINER	4,080	②	②	I	-	-	-	-	-	-	-	4	1	1	1	-	2	GRASS
U	36		ALBIZIA JULIBRISSIN	FLOSS TREE	15 GAL	26	②	②	I	8 Oz	-	5 Pkt	1 lb	0.2	⑥	30	-	30	25	20	22	4	TREE
	37		PINUS TORREYANA	TORREY PINE	15 GAL	38	②	②	I	8 Oz	-	5 Pkt	1 lb	0.2	⑥	30	-	30	25	20	22	4	TREE
	38		PLATANUS RACEMOSA	WESTERN SYCAMORE	15 GAL	91	②	②	I	8 Oz	-	5 Pkt	1 lb	0.2	⑥	30	-	30	25	20	22	4	TREE
	39		POPULUS FREMONTII	WESTERN COTTONWOOD	15 GAL	182	②	②	I	8 Oz	-	5 Pkt	1 lb	0.2	⑥	30	-	30	25	20	22	4	TREE
	40		QUERCUS AGRIFOLIA	CALIFORNIA LIVE OAK	16 GAL	363	②	②	I	8 Oz	-	5 Pkt	1 lb	0.2	⑥	30	-	30	25	20	22	4	TREE
	41		SCHINUS MOLLE	PERUVIAN PEPPER	15 GAL	70	②	②	I	8 Oz	-	5 Pkt	1 lb	0.2	⑥	30	-	30	25	20	22	4	TREE
	42		TIPUANA TIPU	TIPU TREE	15 GAL	33	②	②	I	8 Oz	-	5 Pkt	1 lb	0.2	⑥	30	-	30	25	20	22	4	TREE

REVISED BY | DATE REVISED | MM-DD-YY | X
MARLENE GROS | KENNY MAH
CALCULATED-DESIGNED BY | CHECKED BY
SENIOR LANDSCAPE ARCHITECT | STEPHEN ALVAREZ

STATE OF CALIFORNIA - DEPARTMENT OF TRANSPORTATION
Caltrans® LANDSCAPE ARCHITECTURE

PLANT LIST
PL-2

LAST REVISION 10-16-10 | DATE PLOTTED => 24-DEC-2010 | TIME PLOTTED => 07:28

Dist	COUNTY	ROUTE	POST MILES TOTAL PROJECT	SHEET No.	TOTAL SHEETS
11	SD	52,125	14.5/15.5, 21.9/22.3	12	72

LICENSED LANDSCAPE ARCHITECT

12-20-10
PLANS APPROVAL DATE

LICENSED LANDSCAPE ARCHITECT
KENNETH L. MAH No. 3449
LICENSE EXPIRATION DATE 02/29/12
REGISTERED PROFESSIONAL ENGINEER
10/07/10
DATE
STATE OF CALIFORNIA

THE STATE OF CALIFORNIA OR ITS OFFICERS OR AGENTS SHALL NOT BE RESPONSIBLE FOR THE ACCURACY OR COMPLETENESS OF SCANNED COPIES OF THIS PLAN SHEET.

NOTE:

FOR ACCURATE RIGHT OF WAY AND ACCESS DATA,
CONTACT RIGHT OF WAY ENGINEERING AT THE DISTRICT OFFICE.

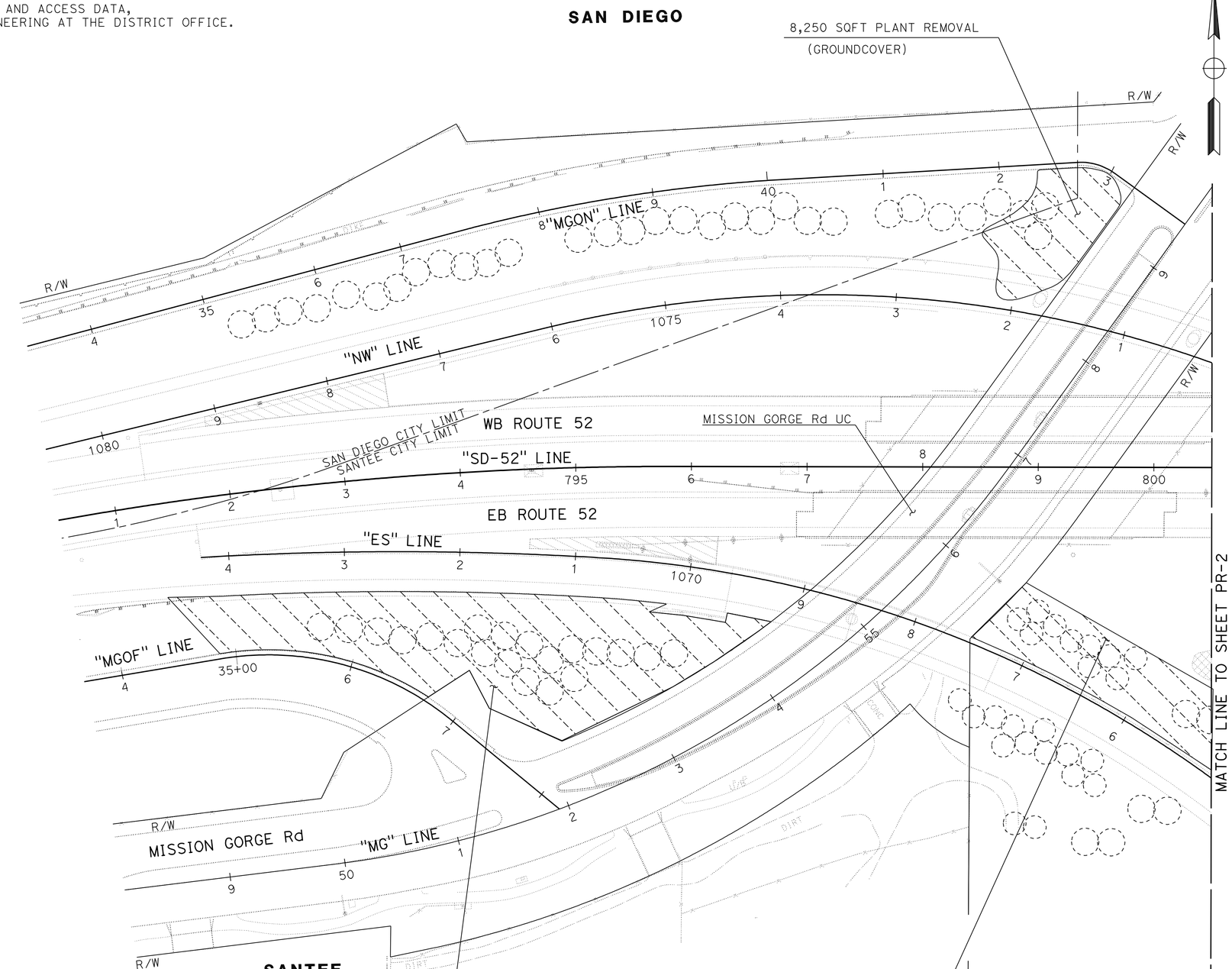

THIS PLAN ACCURATE FOR PLANT REMOVAL WORK ONLY.

PLANT REMOVAL PLAN

SCALE: 1" = 50'

PR-1

STATE OF CALIFORNIA - DEPARTMENT OF TRANSPORTATION
Caltrans® LANDSCAPE ARCHITECTURE

SENIOR LANDSCAPE ARCHITECT: STEPHEN ALVAREZ

CALCULATED-DESIGNED BY: MARLENE GROS
CHECKED BY: KENNY MAH

REVISED BY: X
DATE REVISED: MM-DD-YY

LAST REVISION 10-18-10
DATE PLOTTED => 24-DEC-2010
TIME PLOTTED => 07:29

Dist	COUNTY	ROUTE	POST MILES TOTAL PROJECT	SHEET No.	TOTAL SHEETS
11	SD	52,125	14.5/15.5, 21.9/22.3	13	72

LICENSED LANDSCAPE ARCHITECT

12-20-10
PLANS APPROVAL DATE

LICENSED LANDSCAPE ARCHITECT
KENNETH L. MAH No. 3649
Signature
02/29/12
Renewal Date
10/07/10
Date
STATE OF CALIFORNIA

THE STATE OF CALIFORNIA OR ITS OFFICERS OR AGENTS SHALL NOT BE RESPONSIBLE FOR THE ACCURACY OR COMPLETENESS OF SCANNED COPIES OF THIS PLAN SHEET.

NOTE:

FOR ACCURATE RIGHT OF WAY AND ACCESS DATA,
CONTACT RIGHT OF WAY ENGINEERING AT THE DISTRICT OFFICE.

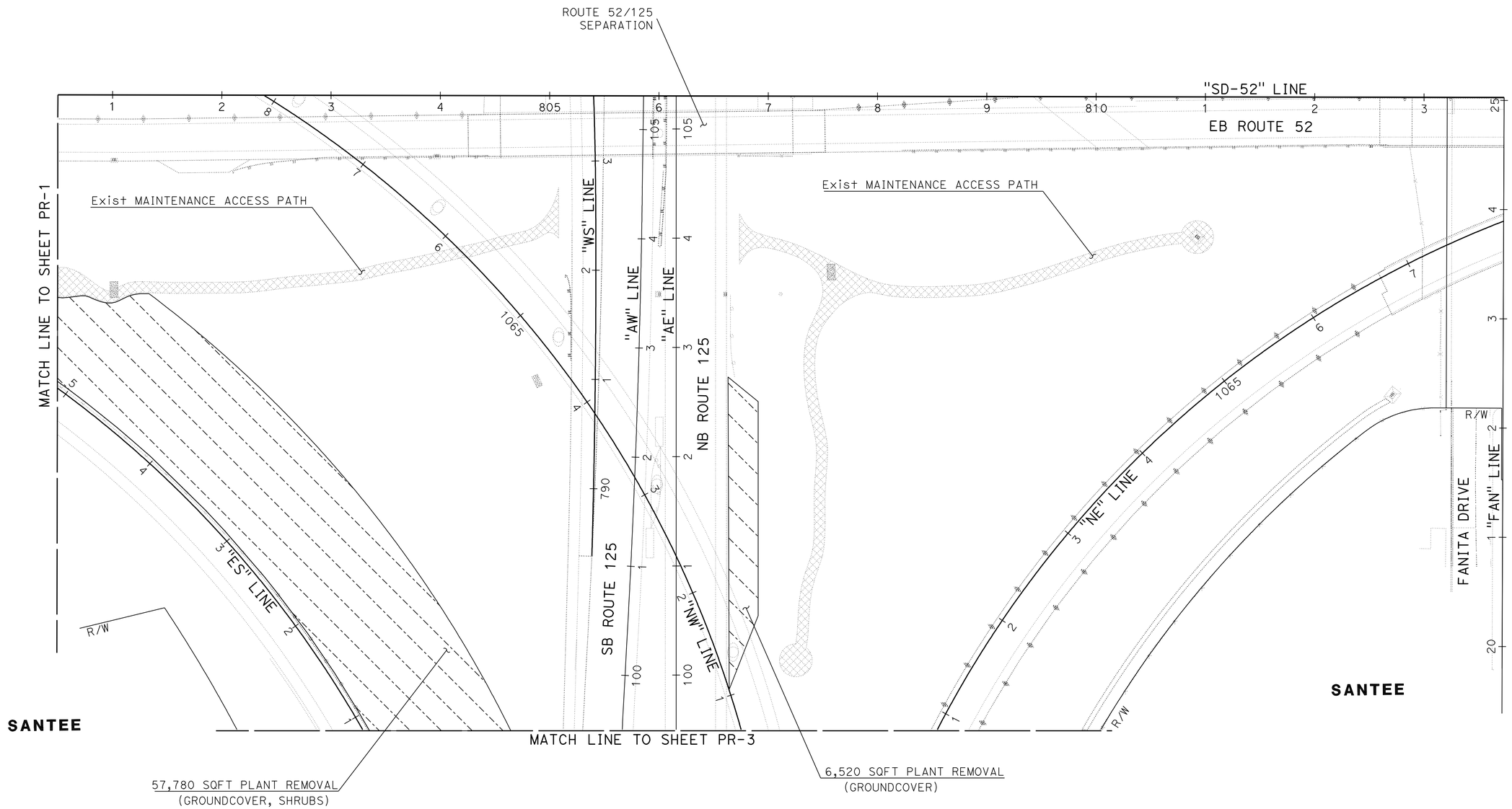

THIS PLAN ACCURATE FOR PLANT REMOVAL WORK ONLY.

PLANT REMOVAL PLAN

SCALE: 1" = 50'

PR-2

STATE OF CALIFORNIA - DEPARTMENT OF TRANSPORTATION
Caltrans® LANDSCAPE ARCHITECTURE

SENIOR LANDSCAPE ARCHITECT: STEPHEN ALVAREZ
CALCULATED-DESIGNED BY: MARLENE GROS
CHECKED BY: KENNY MAH
REVISED BY: X
DATE REVISED: MM-DD-YY

LAST REVISION: 10-18-10
DATE PLOTTED => 24-DEC-2010
TIME PLOTTED => 07:29

BORDER LAST REVISED 7/2/2010
USERNAME => trlenard
DGN FILE => b2t070tf002.dgn
RELATIVE BORDER SCALE IS IN INCHES 0 1 2 3
UNIT 2816
PROJECT NUMBER & PHASE 11000004471

Dist	COUNTY	ROUTE	POST MILES TOTAL PROJECT	SHEET No.	TOTAL SHEETS
11	SD	52,125	14.5/15.5, 21.9/22.3	14	72

LICENSED LANDSCAPE ARCHITECT

12-20-10
PLANS APPROVAL DATE

LICENSED LANDSCAPE ARCHITECT
KENNETH L. MAH No. 3449
Approved 02/29/12
Revised Date
10/07/10
Date
STATE OF CALIFORNIA

THE STATE OF CALIFORNIA OR ITS OFFICERS OR AGENTS SHALL NOT BE RESPONSIBLE FOR THE ACCURACY OR COMPLETENESS OF SCANNED COPIES OF THIS PLAN SHEET.

NOTE:

FOR ACCURATE RIGHT OF WAY AND ACCESS DATA,
CONTACT RIGHT OF WAY ENGINEERING AT THE DISTRICT OFFICE.

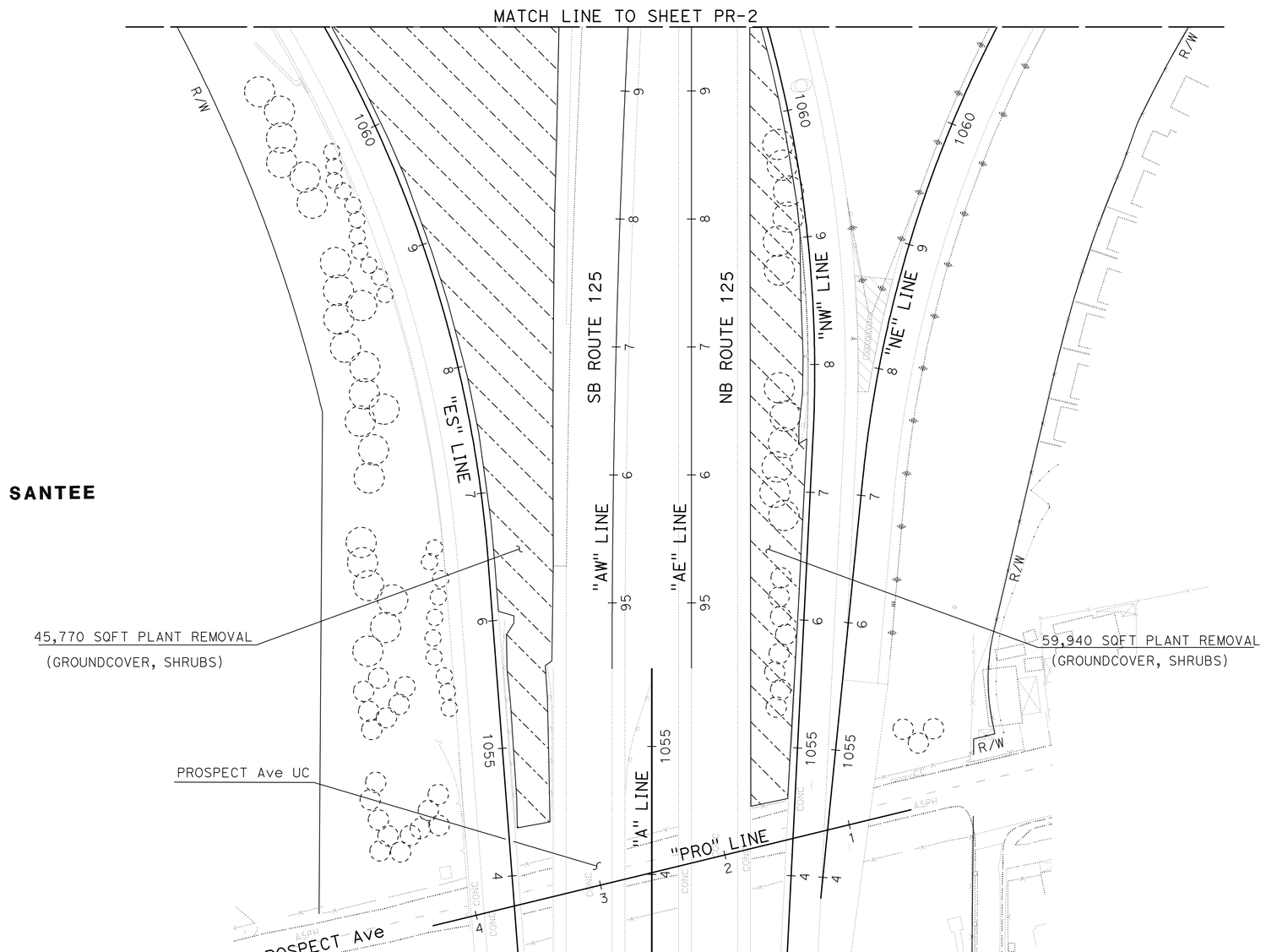

THIS PLAN ACCURATE FOR PLANT REMOVAL WORK ONLY.

PLANT REMOVAL PLAN

SCALE: 1" = 50'

PR-3

STATE OF CALIFORNIA - DEPARTMENT OF TRANSPORTATION
Caltrans® LANDSCAPE ARCHITECTURE

SENIOR LANDSCAPE ARCHITECT: STEPHEN ALVAREZ
CALCULATED-DESIGNED BY: MARLENE GROS
CHECKED BY: KENNY MAH
REVISED BY: X
DATE REVISED: MM-DD-YY

LAST REVISION 10-18-10
DATE PLOTTED => 24-DEC-2010
TIME PLOTTED => 07:29

Dist	COUNTY	ROUTE	POST MILES TOTAL PROJECT	SHEET No.	TOTAL SHEETS
11	SD	52,125	14.5/15.5, 21.9/22.3	15	72

LICENSED LANDSCAPE ARCHITECT

12-20-10
PLANS APPROVAL DATE

THE STATE OF CALIFORNIA OR ITS OFFICERS OR AGENTS SHALL NOT BE RESPONSIBLE FOR THE ACCURACY OR COMPLETENESS OF SCANNED COPIES OF THIS PLAN SHEET.

LICENSED LANDSCAPE ARCHITECT
KENNETH L. MAH No. 3649
02/29/12
10/07/10
STATE OF CALIFORNIA

NOTE:

FOR ACCURATE RIGHT OF WAY AND ACCESS DATA,
CONTACT RIGHT OF WAY ENGINEERING AT THE DISTRICT OFFICE.

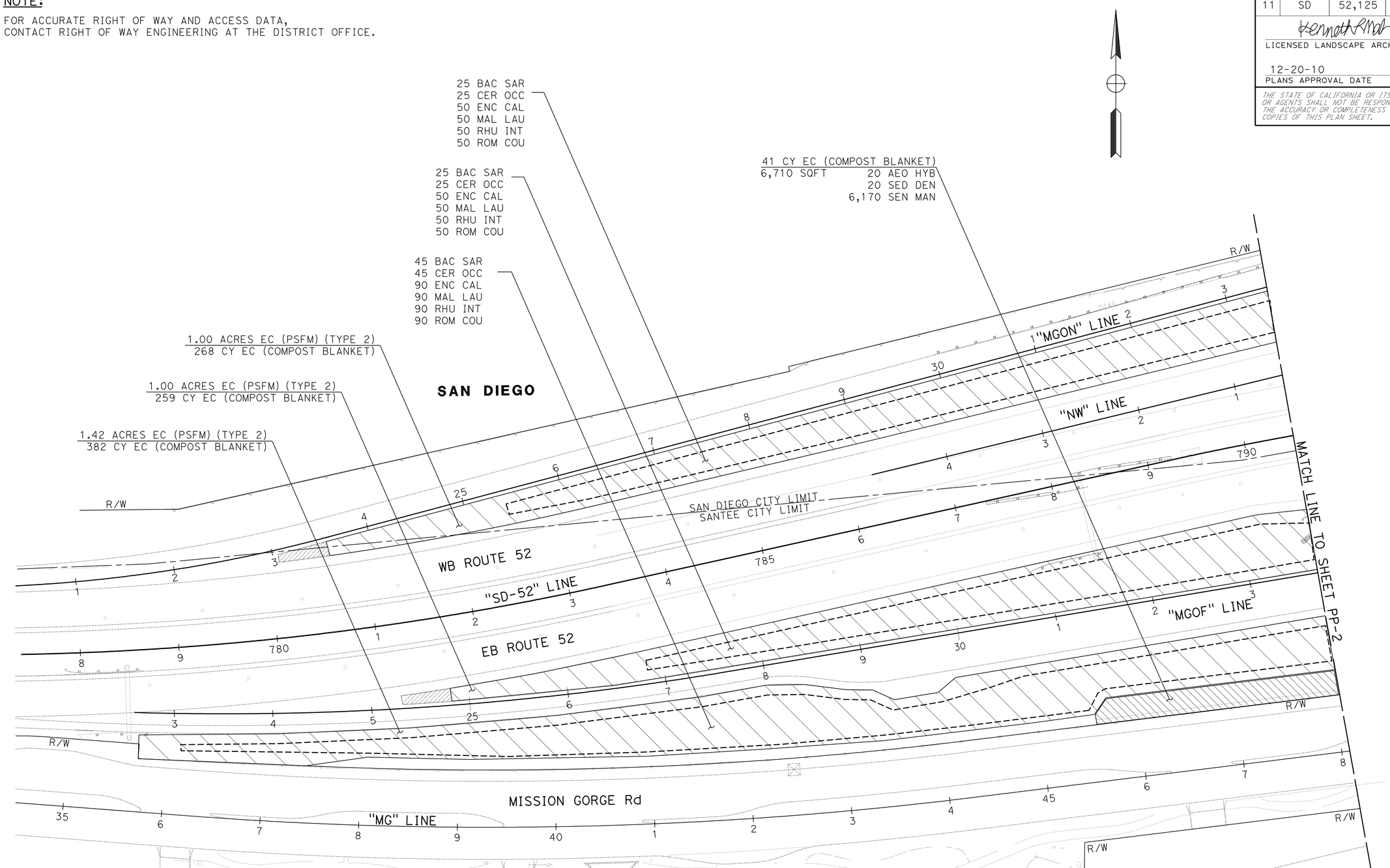

THIS PLAN ACCURATE FOR PLANTING WORK ONLY.

PLANTING PLAN

SCALE: 1" = 50'

PP-1

STATE OF CALIFORNIA - DEPARTMENT OF TRANSPORTATION
Caltrans® LANDSCAPE ARCHITECTURE

SENIOR LANDSCAPE ARCHITECT: STEPHEN ALVAREZ

CALCULATED-DESIGNED BY: MARLENE GROS
CHECKED BY: KENNY MAH

REVISED BY: X
DATE REVISED: MM-DD-YY

LAST REVISION 10-18-10
DATE PLOTTED => 24-DEC-2010
TIME PLOTTED => 07:29

Dist	COUNTY	ROUTE	POST MILES TOTAL PROJECT	SHEET No.	TOTAL SHEETS
11	SD	52,125	14.5/15.5, 21.9/22.3	16	72

LICENSED LANDSCAPE ARCHITECT

12-20-10
PLANS APPROVAL DATE

THE STATE OF CALIFORNIA OR ITS OFFICERS OR AGENTS SHALL NOT BE RESPONSIBLE FOR THE ACCURACY OR COMPLETENESS OF SCANNED COPIES OF THIS PLAN SHEET.

LICENSED LANDSCAPE ARCHITECT
KENNETH L. MAH No. 3049
Registered Date 02/29/12
Renewal Date 10/07/10
Date
STATE OF CALIFORNIA

NOTES:

1. FOR ACCURATE RIGHT OF WAY AND ACCESS DATA, CONTACT RIGHT OF WAY ENGINEERING AT THE DISTRICT OFFICE.
2. SEE LANDSCAPE DETAILS FOR MISSION GORGE Rd. MEDIAN PLANTING.

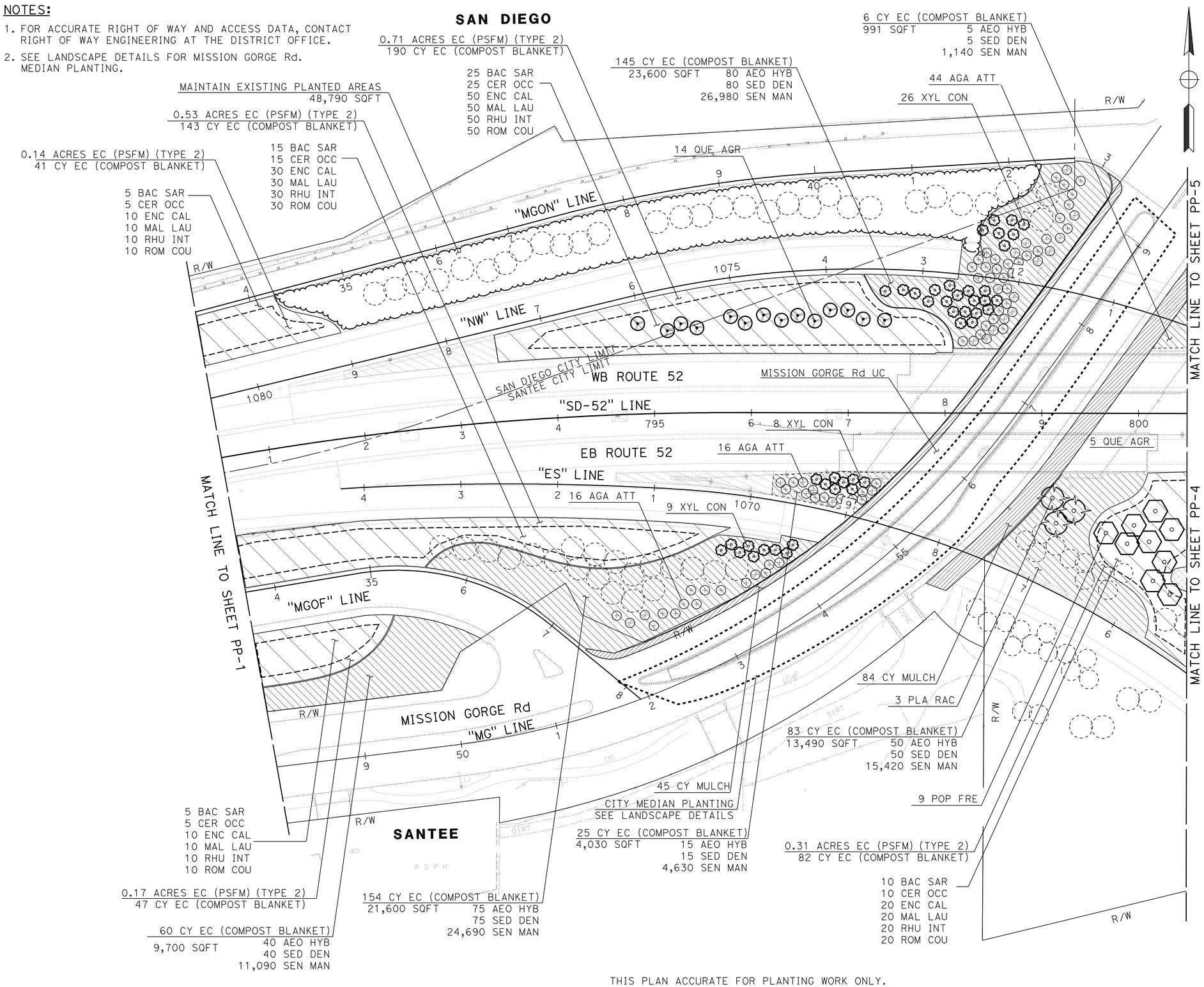

THIS PLAN ACCURATE FOR PLANTING WORK ONLY.

PLANTING PLAN

SCALE: 1" = 50'

PP-2

STATE OF CALIFORNIA - DEPARTMENT OF TRANSPORTATION
Caltrans® LANDSCAPE ARCHITECTURE

SENIOR LANDSCAPE ARCHITECT: STEPHEN ALVAREZ
CALCULATED-DESIGNED BY: MARLENE GROS
CHECKED BY: KENNY MAH
REVISED BY: X
DATE REVISED: MM-DD-YY

LAST REVISION: 10-18-10
DATE PLOTTED => 24-DEC-2010
TIME PLOTTED => 07:29

Dist	COUNTY	ROUTE	POST MILES TOTAL PROJECT	SHEET No.	TOTAL SHEETS
11	SD	52,125	14.5/15.5, 21.9/22.3	17	72

LICENSED LANDSCAPE ARCHITECT

12-20-10
PLANS APPROVAL DATE

LICENSED LANDSCAPE ARCHITECT
KENNETH L. MAH No. 3649
Expiration Date 02/29/12
Retired Date 10/07/10
STATE OF CALIFORNIA

THE STATE OF CALIFORNIA OR ITS OFFICERS OR AGENTS SHALL NOT BE RESPONSIBLE FOR THE ACCURACY OR COMPLETENESS OF SCANNED COPIES OF THIS PLAN SHEET.

NOTE:

FOR ACCURATE RIGHT OF WAY AND ACCESS DATA,
CONTACT RIGHT OF WAY ENGINEERING AT THE DISTRICT OFFICE.

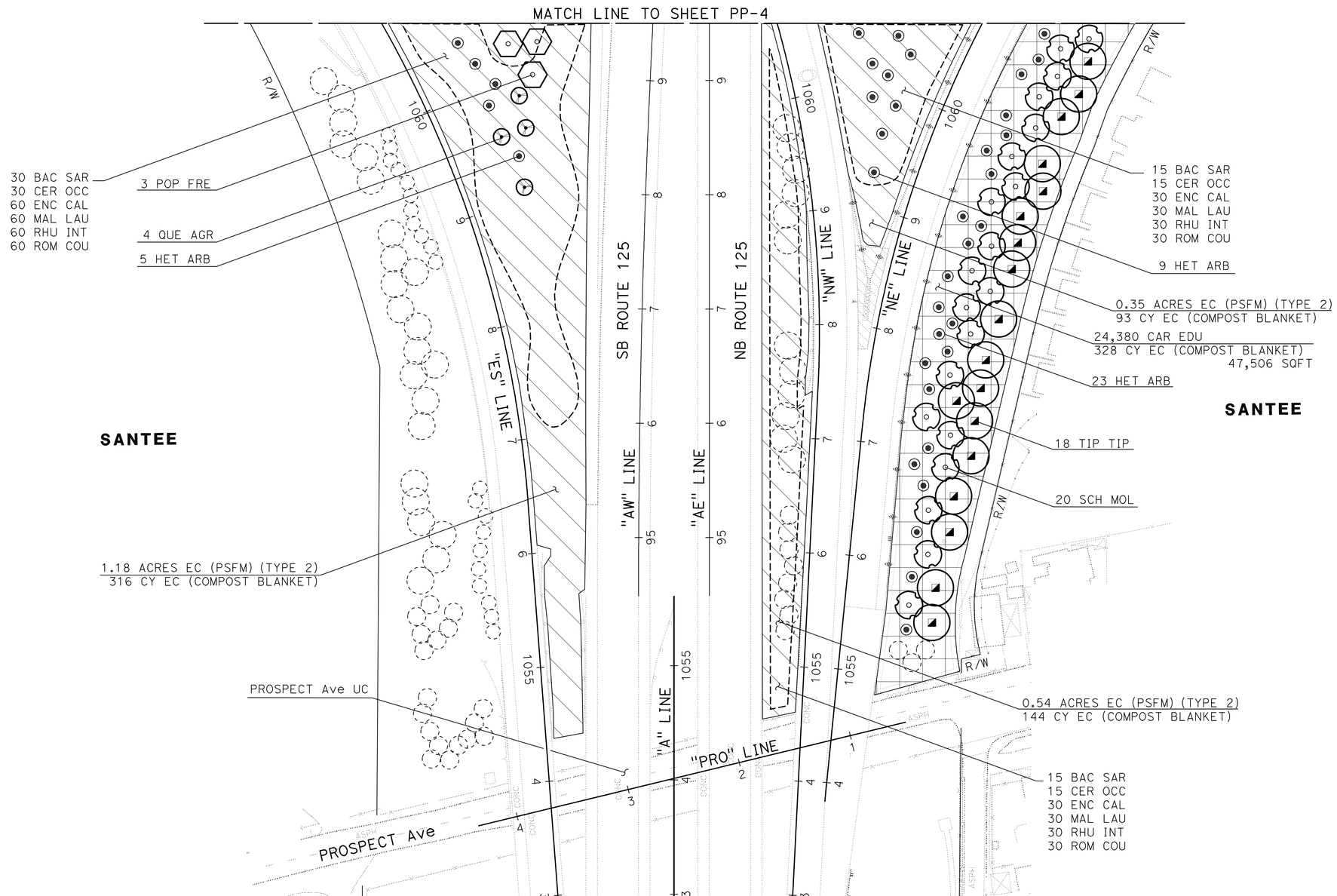

THIS PLAN ACCURATE FOR PLANTING WORK ONLY.

PLANTING PLAN

SCALE: 1" = 50'

PP-3

STATE OF CALIFORNIA - DEPARTMENT OF TRANSPORTATION
Caltrans® LANDSCAPE ARCHITECTURE

SENIOR LANDSCAPE ARCHITECT: STEPHEN ALVAREZ
CALCULATED-DESIGNED BY: MARLENE GROS
CHECKED BY: KENNY MAH
REVISED BY: X
DATE REVISED: MM-DD-YY

LAST REVISION 10-18-10
DATE PLOTTED => 24-DEC-2010
TIME PLOTTED => 07:29

Dist	COUNTY	ROUTE	POST MILES TOTAL PROJECT	SHEET No.	TOTAL SHEETS
11	SD	52,125	14.5/15.5, 21.9/22.3	18	72

LICENSED LANDSCAPE ARCHITECT

12-20-10
PLANS APPROVAL DATE

LICENSED LANDSCAPE ARCHITECT
KENNETH L. MAH No. 3049
Expiration Date 02/29/12
Renewal Date 10/07/10
Date
STATE OF CALIFORNIA

THE STATE OF CALIFORNIA OR ITS OFFICERS OR AGENTS SHALL NOT BE RESPONSIBLE FOR THE ACCURACY OR COMPLETENESS OF SCANNED COPIES OF THIS PLAN SHEET.

NOTE:

FOR ACCURATE RIGHT OF WAY AND ACCESS DATA, CONTACT RIGHT OF WAY ENGINEERING AT THE DISTRICT OFFICE.

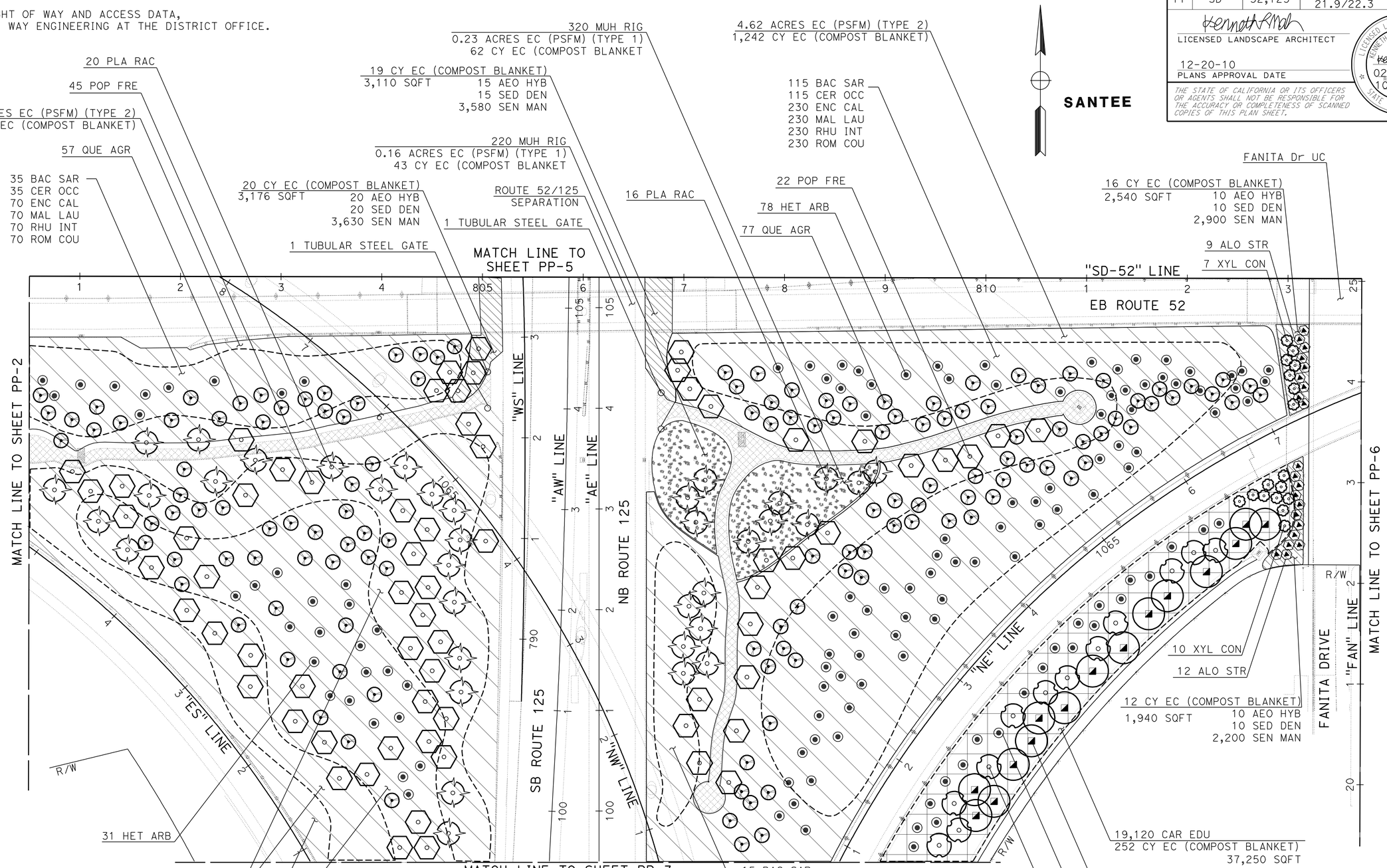

THIS PLAN ACCURATE FOR PLANTING WORK ONLY.

PLANTING PLAN

SCALE: 1" = 50'

PP-4

STATE OF CALIFORNIA - DEPARTMENT OF TRANSPORTATION
Caltrans® LANDSCAPE ARCHITECTURE

SENIOR LANDSCAPE ARCHITECT: STEPHEN ALVAREZ
CALCULATED-DESIGNED BY: MARLENE GROS
CHECKED BY: KENNY MAH
REVISED BY: X
DATE REVISED: MM-DD-YY

LAST REVISION: 10-16-10
DATE PLOTTED => 24-DEC-2010
TIME PLOTTED => 07:29

Dist	COUNTY	ROUTE	POST MILES TOTAL PROJECT	SHEET No.	TOTAL SHEETS
11	SD	52,125	14.5/15.5, 21.9/22.3	19	72

LICENSED LANDSCAPE ARCHITECT

12-20-10
PLANS APPROVAL DATE

LICENSED LANDSCAPE ARCHITECT KENNETH L. MAH No. 3649 — Expiration Date 02/29/12 — Renewal Date 10/07/10 — STATE OF CALIFORNIA

THE STATE OF CALIFORNIA OR ITS OFFICERS OR AGENTS SHALL NOT BE RESPONSIBLE FOR THE ACCURACY OR COMPLETENESS OF SCANNED COPIES OF THIS PLAN SHEET.

NOTE:

FOR ACCURATE RIGHT OF WAY AND ACCESS DATA, CONTACT RIGHT OF WAY ENGINEERING AT THE DISTRICT OFFICE.

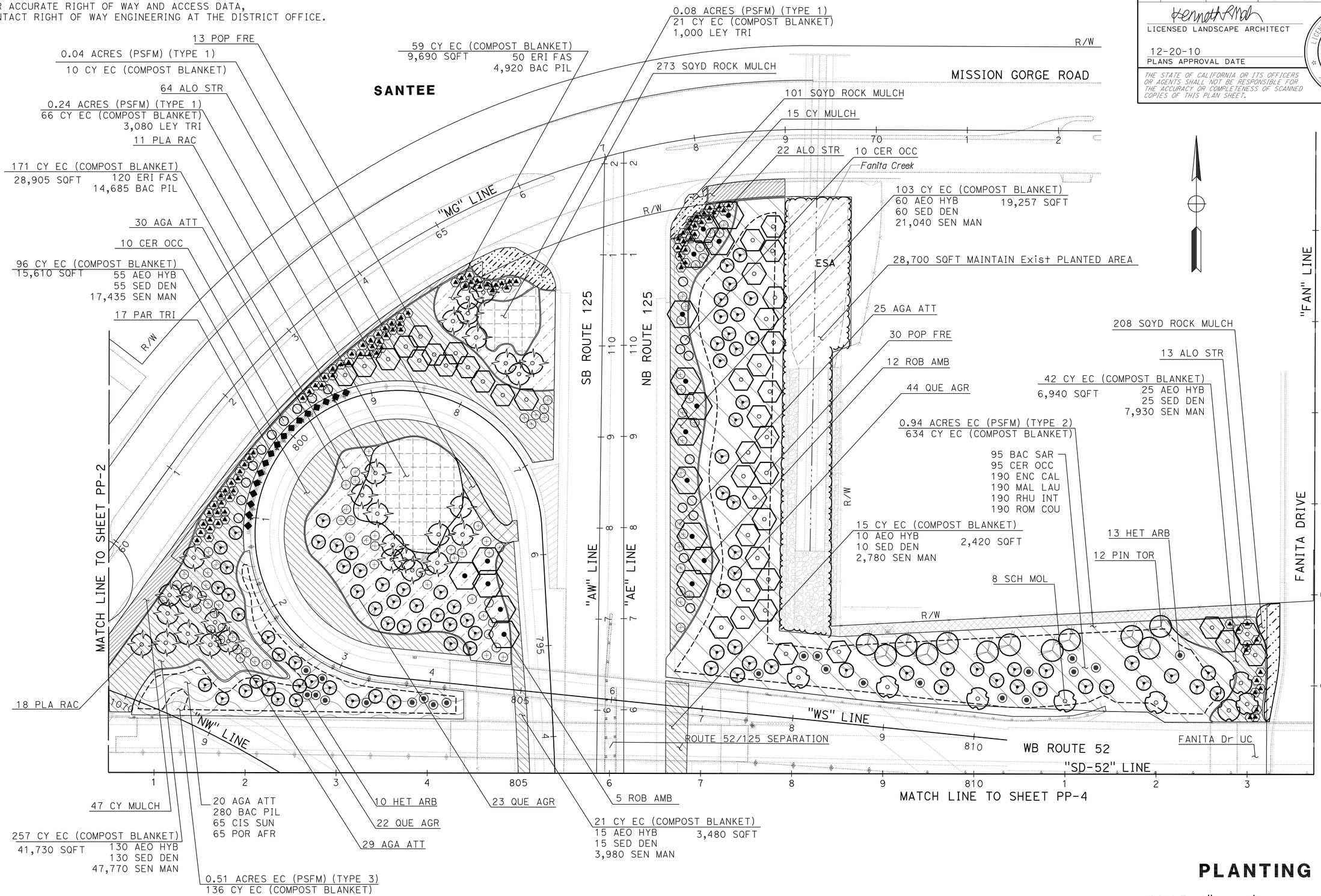

THIS PLAN ACCURATE FOR PLANTING WORK ONLY.

PLANTING PLAN

SCALE: 1" = 50'

PP-5

STATE OF CALIFORNIA - DEPARTMENT OF TRANSPORTATION
Caltrans® LANDSCAPE ARCHITECTURE

SENIOR LANDSCAPE ARCHITECT: STEPHEN ALVAREZ
CALCULATED-DESIGNED BY: MARLENE GROS
CHECKED BY: KENNY MAH
REVISED BY: X
DATE REVISED: MM-DD-YY

LAST REVISION 10-16-10
DATE PLOTTED => 24-DEC-2010
TIME PLOTTED => 07:29

Dist	COUNTY	ROUTE	POST MILES TOTAL PROJECT	SHEET No.	TOTAL SHEETS
11	SD	52,125	14.5/15.5, 21.9/22.3	20	72

LICENSED LANDSCAPE ARCHITECT

12-20-10
PLANS APPROVAL DATE

LICENSED LANDSCAPE ARCHITECT KENNETH L. MAH No. 3449 STATE OF CALIFORNIA
Effective Date 02/29/12
Expiration Date 10/07/10
Date

THE STATE OF CALIFORNIA OR ITS OFFICERS OR AGENTS SHALL NOT BE RESPONSIBLE FOR THE ACCURACY OR COMPLETENESS OF SCANNED COPIES OF THIS PLAN SHEET.

NOTE:

FOR ACCURATE RIGHT OF WAY AND ACCESS DATA, CONTACT RIGHT OF WAY ENGINEERING AT THE DISTRICT OFFICE.

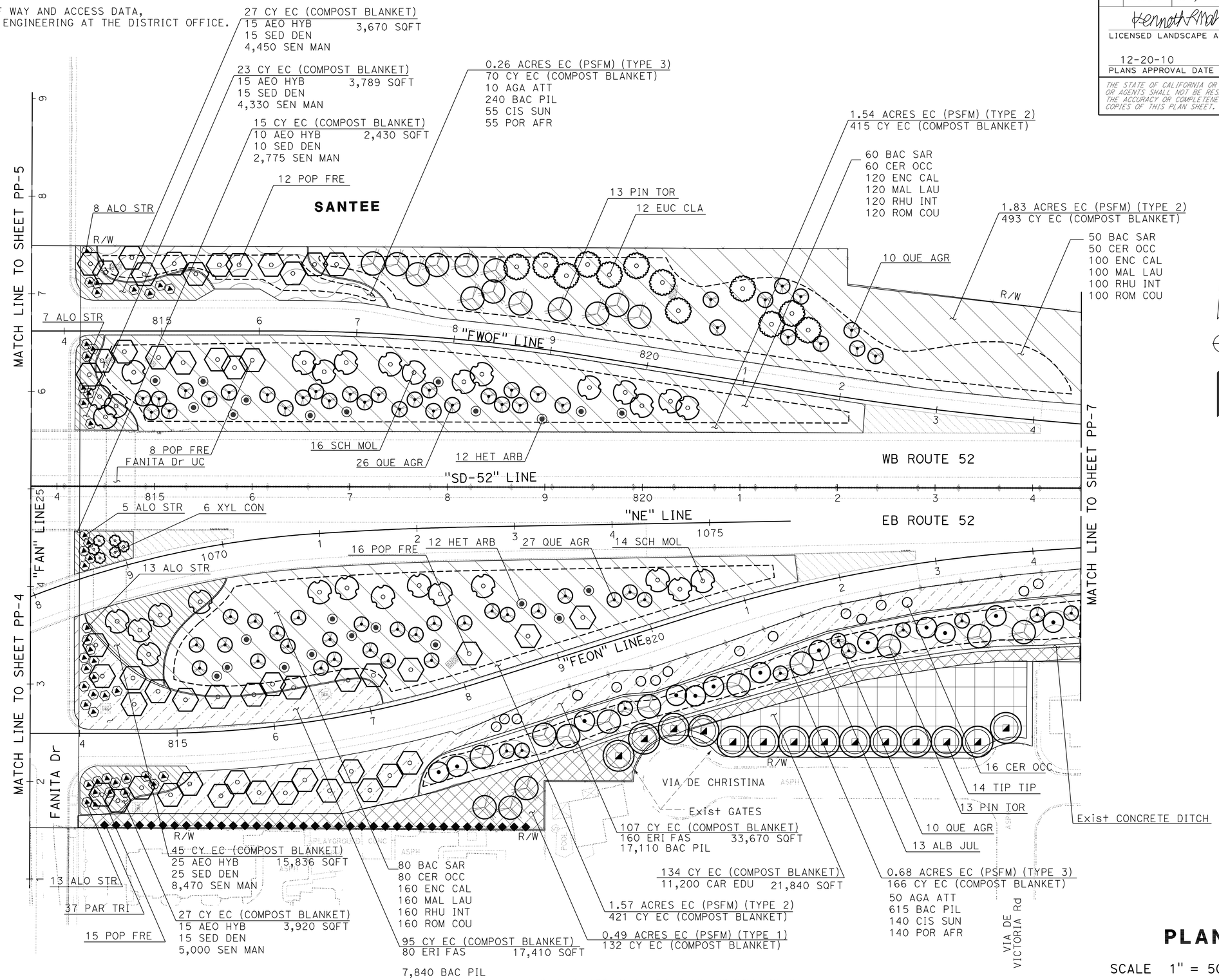

THIS PLAN ACCURATE FOR PLANTING WORK ONLY

PLANTING PLAN

SCALE 1" = 50'

PP-6

MARLENE GROS	REVISED BY
KENNY MAH	DATE REVISED
X	MM-DD-YY
CALCULATED-DESIGNED BY	
CHECKED BY	
SENIOR LANDSCAPE ARCHITECT	
STEPHEN ALVAREZ	

STATE OF CALIFORNIA - DEPARTMENT OF TRANSPORTATION
Caltrans® LANDSCAPE ARCHITECTURE

LAST REVISION 10-16-10
DATE PLOTTED => 23-DEC-2010
TIME PLOTTED => 15:13

Dist	COUNTY	ROUTE	POST MILES TOTAL PROJECT	SHEET No.	TOTAL SHEETS
11	SD	52,125	14.5/15.5, 21.9/22.3	21	72

LICENSED LANDSCAPE ARCHITECT

12-20-10
PLANS APPROVAL DATE

LICENSED LANDSCAPE ARCHITECT KENNETH L. MAH No. 3649 STATE OF CALIFORNIA
REGISTERED 02/29/12
REVISED DATE 10/07/10
DATE

THE STATE OF CALIFORNIA OR ITS OFFICERS OR AGENTS SHALL NOT BE RESPONSIBLE FOR THE ACCURACY OR COMPLETENESS OF SCANNED COPIES OF THIS PLAN SHEET.

NOTE:

FOR ACCURATE RIGHT OF WAY AND ACCESS DATA,
CONTACT RIGHT OF WAY ENGINEERING AT THE DISTRICT OFFICE.

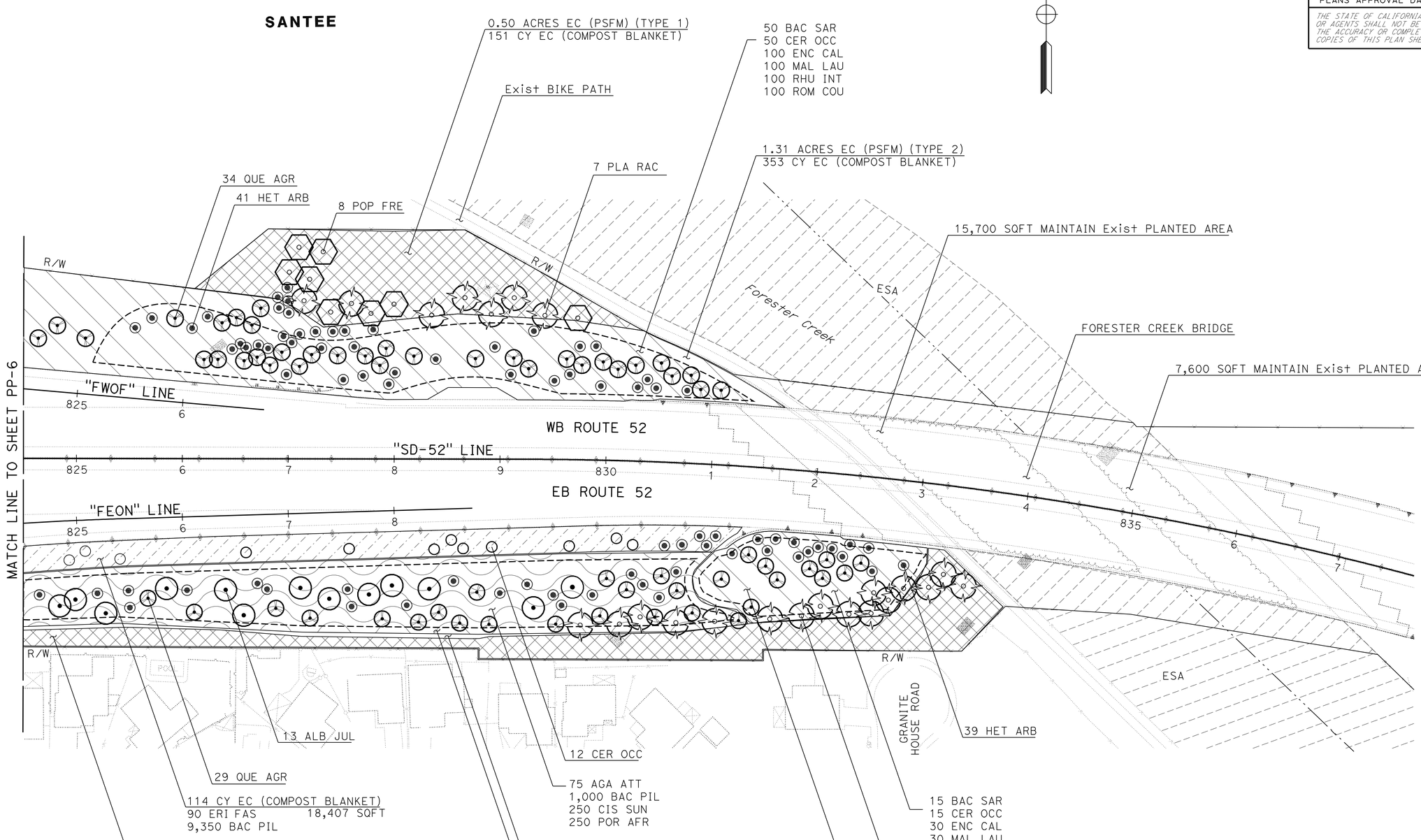

THIS PLAN ACCURATE FOR PLANTING WORK ONLY

PLANTING PLAN PP-7

SCALE 1" = 50'

STATE OF CALIFORNIA - DEPARTMENT OF TRANSPORTATION
Caltrans® LANDSCAPE ARCHITECTURE

SENIOR LANDSCAPE ARCHITECT: STEPHEN ALVAREZ
CALCULATED-DESIGNED BY: MARLENE GROS
CHECKED BY: KENNY MAH
REVISED BY: X
DATE REVISED: MM-DD-YY

LAST REVISION: 10-16-10
DATE PLOTTED => 23-DEC-2010
TIME PLOTTED => 15:01

Dist	COUNTY	ROUTE	POST MILES TOTAL PROJECT	SHEET No.	TOTAL SHEETS
11	SD	52,125	14.5/15.5, 21.9/22.3	22	72

LICENSED LANDSCAPE ARCHITECT

12-20-10
PLANS APPROVAL DATE

LICENSED LANDSCAPE ARCHITECT
KENNETH L. MAH No. 3649
REGISTRATION EXPIRES 02/29/12
10/07/10
DATE
STATE OF CALIFORNIA

THE STATE OF CALIFORNIA OR ITS OFFICERS OR AGENTS SHALL NOT BE RESPONSIBLE FOR THE ACCURACY OR COMPLETENESS OF SCANNED COPIES OF THIS PLAN SHEET.

NOTE:

FOR ACCURATE RIGHT OF WAY AND ACCESS DATA,
CONTACT RIGHT OF WAY ENGINEERING AT THE DISTRICT OFFICE.

THIS AREA IRRIGATED
WITH RECYCLED WATER

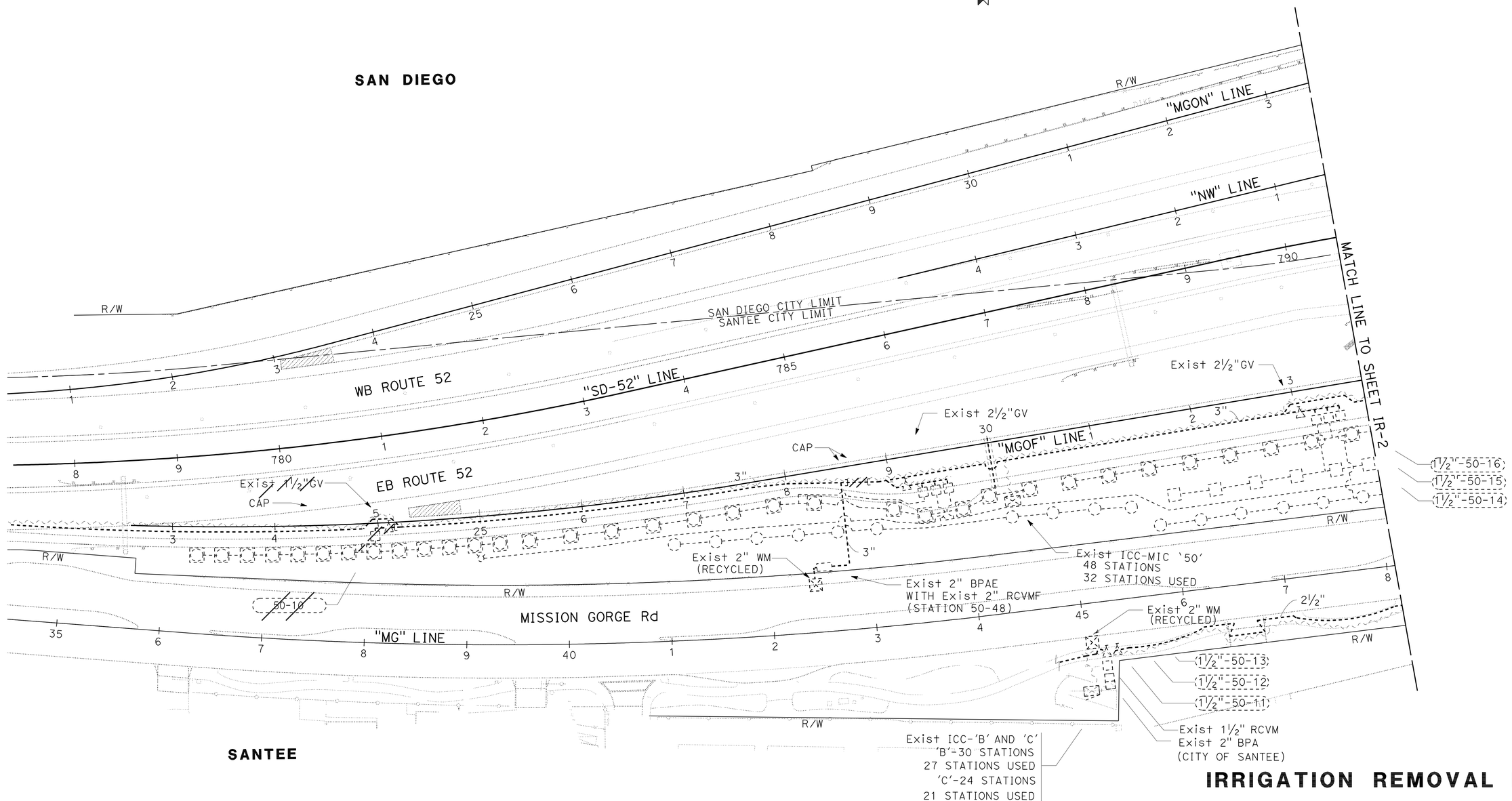

THIS PLAN ACCURATE FOR IRRIGATION REMOVAL WORK ONLY

IRRIGATION REMOVAL PLAN

SCALE 1" = 50'

IR-1

LAST REVISION	10-16-10
DATE PLOTTED =>	23-DEC-2010
TIME PLOTTED =>	15:01

STATE OF CALIFORNIA - DEPARTMENT OF TRANSPORTATION
Caltrans® LANDSCAPE ARCHITECTURE

SENIOR LANDSCAPE ARCHITECT: STEPHEN ALVAREZ

CALCULATED-DESIGNED BY: KENNY MAH
CHECKED BY: MARLENE GROS

REVISED BY: X
DATE REVISED: MM-DD-YY

Dist	COUNTY	ROUTE	POST MILES TOTAL PROJECT	SHEET No.	TOTAL SHEETS
11	SD	52,125	14.5/15.5, 21.9/22.3	23	72

LICENSED LANDSCAPE ARCHITECT

12-20-10
PLANS APPROVAL DATE

LICENSED LANDSCAPE ARCHITECT
KENNETH L. MAH No. 3649
Registered Expires
02/29/12
Renewal Date
10/07/10
Date
STATE OF CALIFORNIA

THE STATE OF CALIFORNIA OR ITS OFFICERS OR AGENTS SHALL NOT BE RESPONSIBLE FOR THE ACCURACY OR COMPLETENESS OF SCANNED COPIES OF THIS PLAN SHEET.

NOTES:

1. FOR ACCURATE RIGHT OF WAY AND ACCESS DATA, CONTACT RIGHT OF WAY ENGINEERING AT THE DISTRICT OFFICE.
2. EXISTING SPRINKLERS WERE REMOVED PREVIOUSLY BY OTHERS.

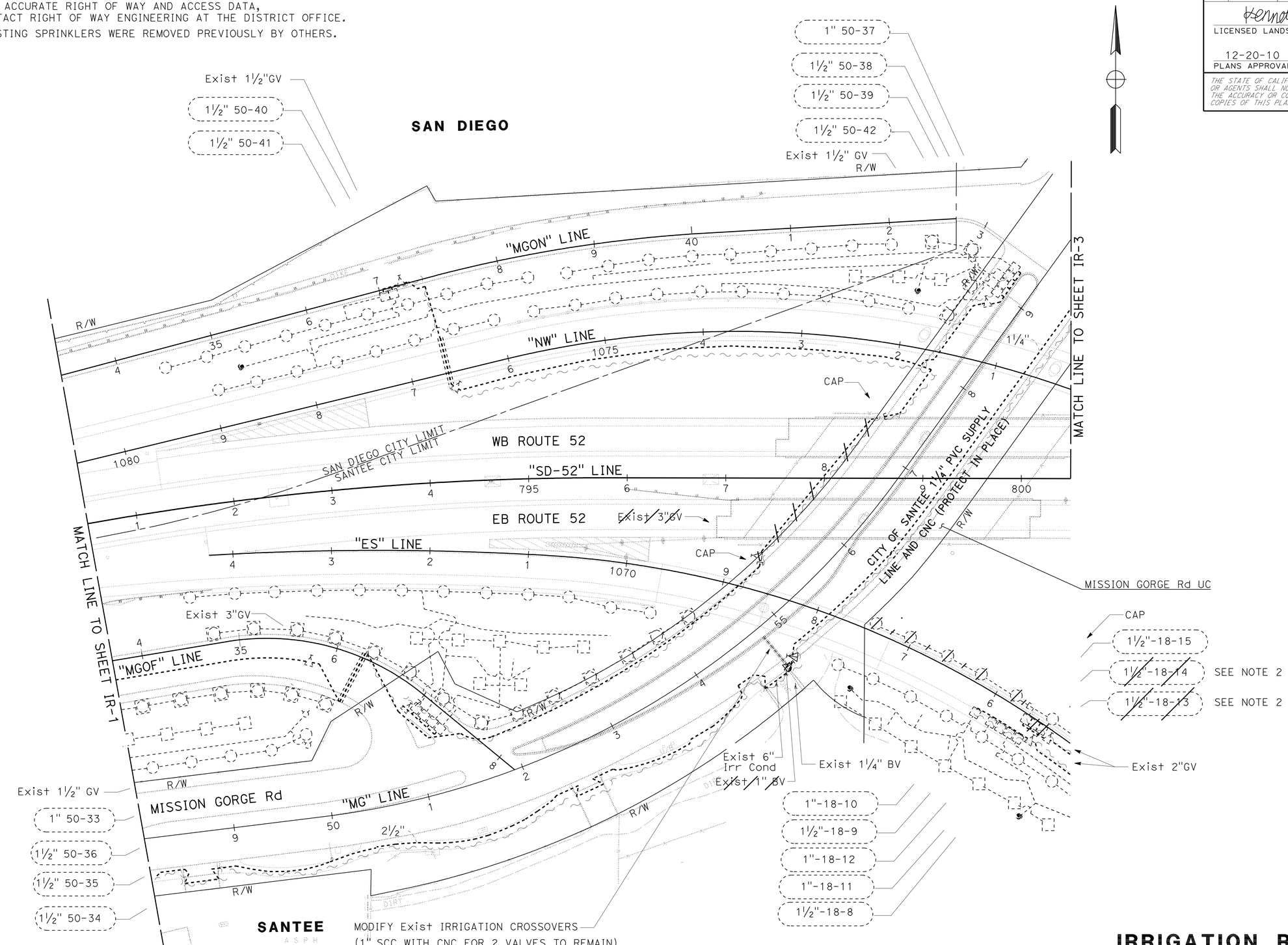

THIS PLAN ACCURATE FOR IRRIGATION REMOVAL WORK ONLY

IRRIGATION REMOVAL PLAN

SCALE 1" = 50'

IR-2

REVISED BY	DATE REVISED
X	MM-DD-YY

KENNY MAH — MARLENE GROS

CALCULATED-DESIGNED BY — CHECKED BY

SENIOR LANDSCAPE ARCHITECT — STEPHEN ALVAREZ

STATE OF CALIFORNIA - DEPARTMENT OF TRANSPORTATION
Caltrans® LANDSCAPE ARCHITECTURE

LAST REVISION 10-16-10 | DATE PLOTTED => 23-DEC-2010 | TIME PLOTTED => 15:01

Dist	COUNTY	ROUTE	POST MILES TOTAL PROJECT	SHEET No.	TOTAL SHEETS
11	SD	52,125	14.5/15.5, 21.9/22.3	24	72

LICENSED LANDSCAPE ARCHITECT

12-20-10
PLANS APPROVAL DATE

LICENSED LANDSCAPE ARCHITECT
KENNETH L. MAH No. 3649
REGISTERED 02/29/12
EXPIRES DATE
10/07/10
DATE
STATE OF CALIFORNIA

THE STATE OF CALIFORNIA OR ITS OFFICERS OR AGENTS SHALL NOT BE RESPONSIBLE FOR THE ACCURACY OR COMPLETENESS OF SCANNED COPIES OF THIS PLAN SHEET.

NOTE:

FOR ACCURATE RIGHT OF WAY AND ACCESS DATA, CONTACT RIGHT OF WAY ENGINEERING AT THE DISTRICT OFFICE.

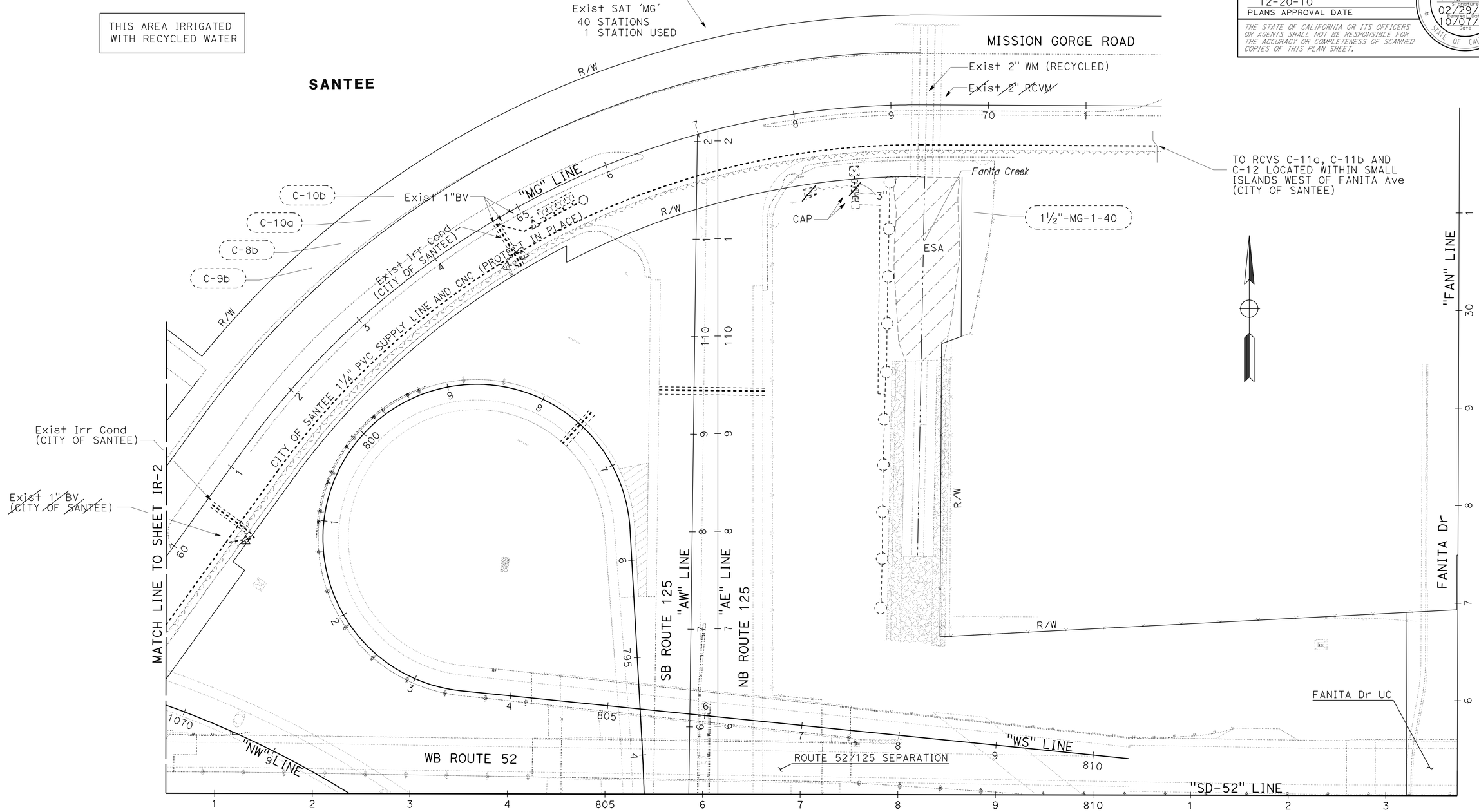

IRRIGATION REMOVAL PLAN

SCALE 1" = 50'

IR-3

THIS PLAN ACCURATE FOR IRRIGATION REMOVAL WORK ONLY

STATE OF CALIFORNIA - DEPARTMENT OF TRANSPORTATION
Caltrans LANDSCAPE ARCHITECTURE

SENIOR LANDSCAPE ARCHITECT: STEPHEN ALVAREZ
CALCULATED-DESIGNED BY: KENNY MAH
CHECKED BY: MARLENE GROS
REVISED BY: X
DATE REVISED: MM-DD-YY

LAST REVISION 10-18-10
DATE PLOTTED => 23-DEC-2010
TIME PLOTTED => 15:02

Dist	COUNTY	ROUTE	POST MILES TOTAL PROJECT	SHEET No.	TOTAL SHEETS
11	SD	52,125	14.5/15.5, 21.9/22.3	25	72

LICENSED LANDSCAPE ARCHITECT

12-20-10
PLANS APPROVAL DATE

LICENSED LANDSCAPE ARCHITECT
KENNETH L. MAH No. 3449
Signature
Renewal Date 02/29/12
Date 10/07/10
STATE OF CALIFORNIA

THE STATE OF CALIFORNIA OR ITS OFFICERS OR AGENTS SHALL NOT BE RESPONSIBLE FOR THE ACCURACY OR COMPLETENESS OF SCANNED COPIES OF THIS PLAN SHEET.

NOTE:

FOR ACCURATE RIGHT OF WAY AND ACCESS DATA, CONTACT RIGHT OF WAY ENGINEERING AT THE DISTRICT OFFICE.

THIS AREA IRRIGATED WITH RECYCLED WATER

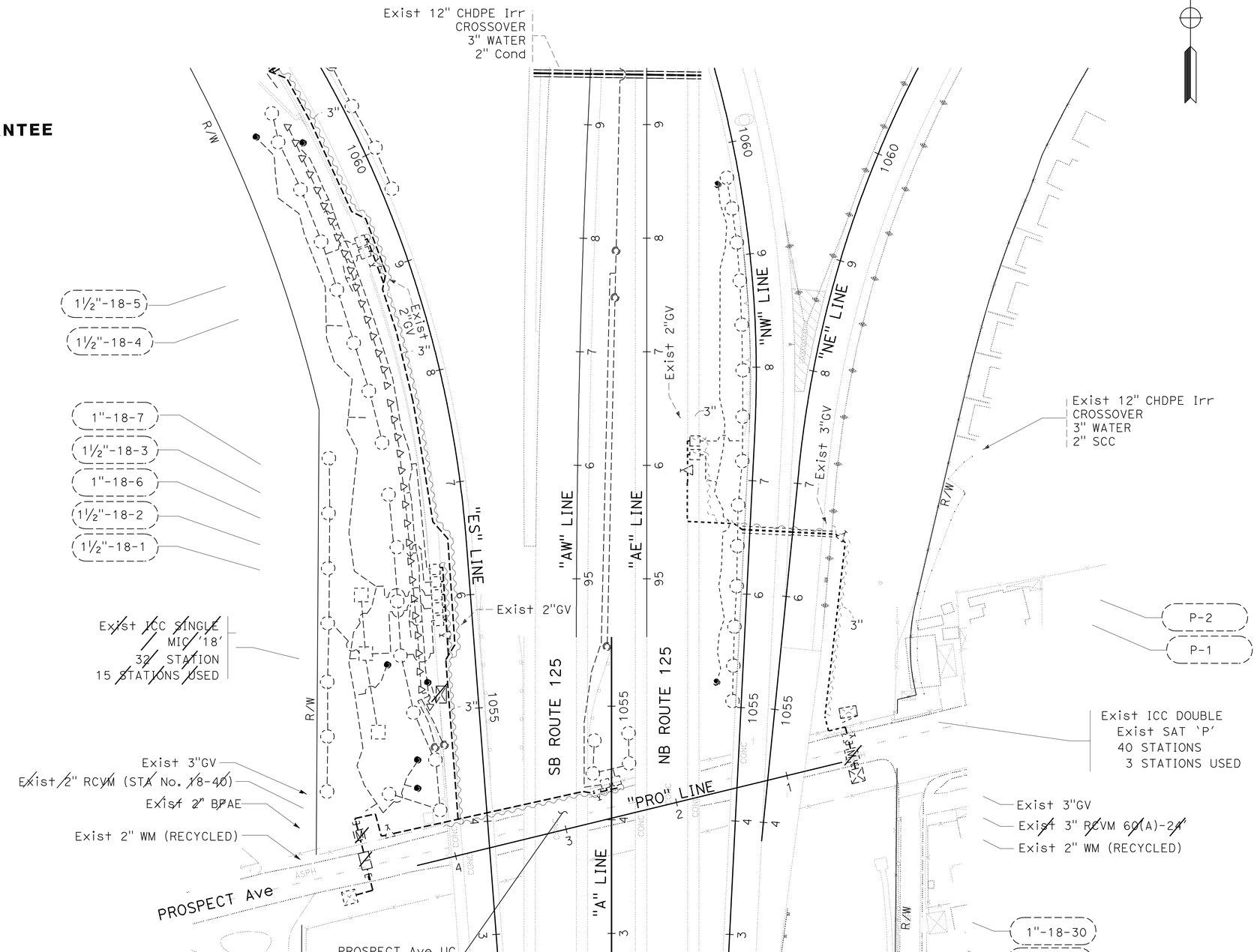

IRRIGATION REMOVAL PLAN

SCALE 1" = 50'

IR-4

THIS PLAN ACCURATE FOR IRRIGATION REMOVAL WORK ONLY

STATE OF CALIFORNIA - DEPARTMENT OF TRANSPORTATION
Caltrans® LANDSCAPE ARCHITECTURE

SENIOR LANDSCAPE ARCHITECT: STEPHEN ALVAREZ
CALCULATED-DESIGNED BY: KENNY MAH
CHECKED BY: MARLENE GROS
REVISED BY: X
DATE REVISED: MM-DD-YY

LAST REVISION: 10-19-10
DATE PLOTTED => 23-DEC-2010
TIME PLOTTED => 15:02

Dist	COUNTY	ROUTE	POST MILES TOTAL PROJECT	SHEET No.	TOTAL SHEETS
11	SD	52,125	14.5/15.5, 21.9/22.3	26	72

LICENSED LANDSCAPE ARCHITECT

12-20-10
PLANS APPROVAL DATE

LICENSED LANDSCAPE ARCHITECT
KENNETH L. MAH No. 3649
Approved 02/29/12
Revised Figure 10/07/10
Date
STATE OF CALIFORNIA

THE STATE OF CALIFORNIA OR ITS OFFICERS OR AGENTS SHALL NOT BE RESPONSIBLE FOR THE ACCURACY OR COMPLETENESS OF SCANNED COPIES OF THIS PLAN SHEET.

NOTE:

FOR ACCURATE RIGHT OF WAY DATA, CONTACT RIGHT OF WAY ENGINEERING AT THE DISTRICT OFFICE.

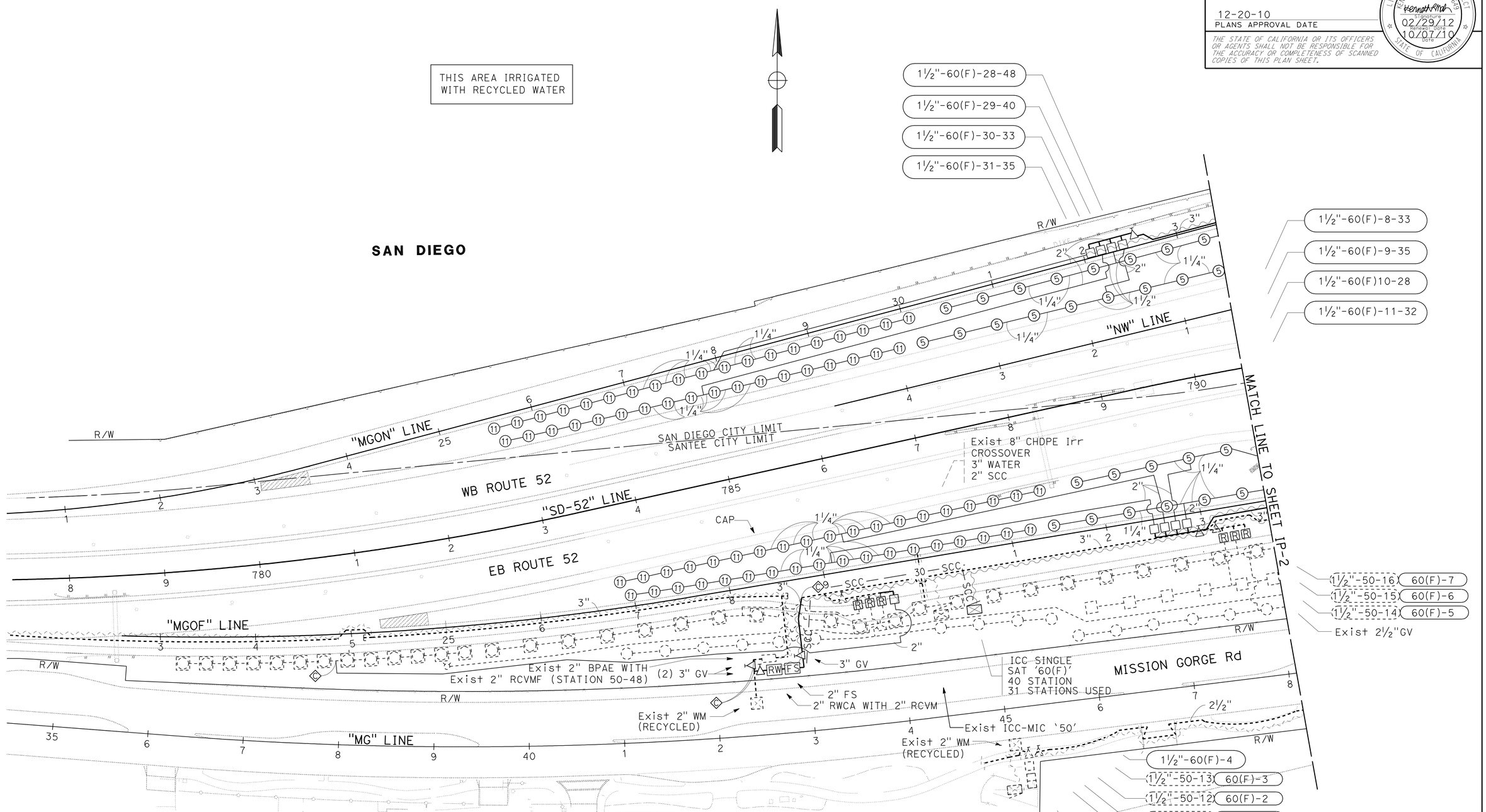

THIS PLAN ACCURATE FOR IRRIGATION WORK ONLY.

IRRIGATION PLAN

SCALE: 1" = 50'

IP-1

STATE OF CALIFORNIA - DEPARTMENT OF TRANSPORTATION
Caltrans® LANDSCAPE ARCHITECTURE

SENIOR LANDSCAPE ARCHITECT: STEPHEN ALVAREZ
CALCULATED-DESIGNED BY: KENNY MAH
CHECKED BY: MARLENE GROS
REVISED BY
DATE REVISED

LAST REVISION 10-19-10 | DATE PLOTTED => 13-JAN-2011 | TIME PLOTTED => 17:51

Dist	COUNTY	ROUTE	POST MILES TOTAL PROJECT	SHEET No.	TOTAL SHEETS
11	SD	52,125	14.5/15.5, 21.9/22.3	27	72

LICENSED LANDSCAPE ARCHITECT

12-20-10
PLANS APPROVAL DATE

LICENSED LANDSCAPE ARCHITECT KENNETH L. MAH No. 3049 STATE OF CALIFORNIA
Expiration Date 02/29/12
Renewal Date 10/07/10
Date

THE STATE OF CALIFORNIA OR ITS OFFICERS OR AGENTS SHALL NOT BE RESPONSIBLE FOR THE ACCURACY OR COMPLETENESS OF SCANNED COPIES OF THIS PLAN SHEET.

NOTES:

1. FOR ACCURATE RIGHT OF WAY DATA, CONTACT RIGHT OF WAY ENGINEERING AT THE DISTRICT OFFICE.
2. SEE LANDSCAPE DETAILS FOR MISSION GORGE Rd. MEDIAN IRRIGATION.

THIS AREA IRRIGATED WITH RECYCLED WATER

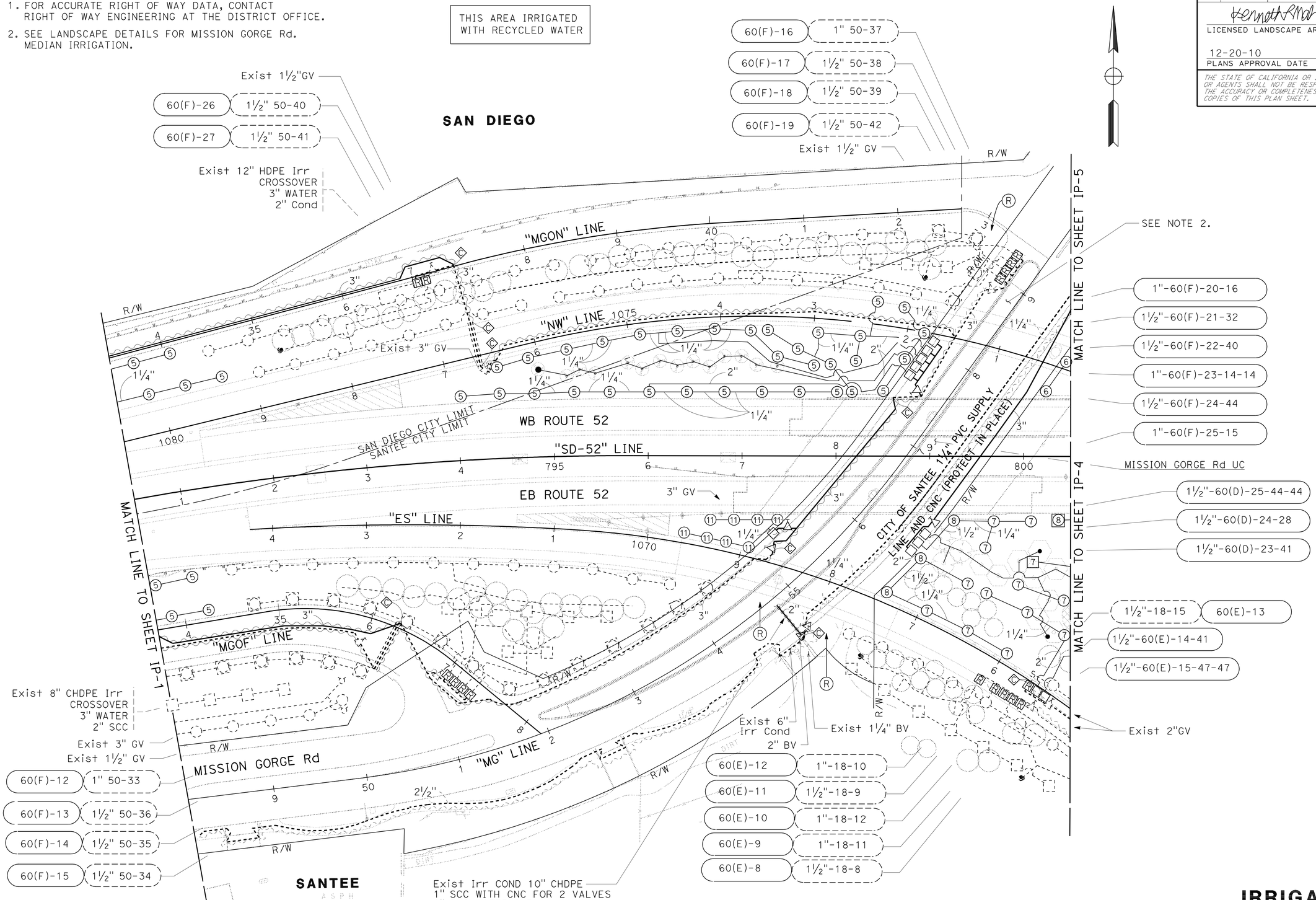

THIS PLAN ACCURATE FOR IRRIGATION WORK ONLY.

IRRIGATION PLAN

SCALE: 1" = 50'

IP-2

REVISED BY	DATE REVISED
KENNY MAH	MARLENE GROS
CALCULATED-DESIGNED BY	CHECKED BY
SENIOR LANDSCAPE ARCHITECT	STEPHEN ALVAREZ

STATE OF CALIFORNIA - DEPARTMENT OF TRANSPORTATION
Caltrans® LANDSCAPE ARCHITECTURE

LAST REVISION 10-19-10 | DATE PLOTTED => 13-JAN-2011 | TIME PLOTTED => 17:51

Dist	COUNTY	ROUTE	POST MILES TOTAL PROJECT	SHEET No.	TOTAL SHEETS
11	SD	52,125	14.5/15.5, 21.9/22.3	28	72

LICENSED LANDSCAPE ARCHITECT

12-20-10
PLANS APPROVAL DATE

LICENSED LANDSCAPE ARCHITECT KENNETH L. MAH No. 3449 STATE OF CALIFORNIA
REGISTRATION EXPIRES 02/29/12
REVISED PLANS 10/07/10 DATE

THE STATE OF CALIFORNIA OR ITS OFFICERS OR AGENTS SHALL NOT BE RESPONSIBLE FOR THE ACCURACY OR COMPLETENESS OF SCANNED COPIES OF THIS PLAN SHEET.

NOTE:

FOR ACCURATE RIGHT OF WAY DATA, CONTACT RIGHT OF WAY ENGINEERING AT THE DISTRICT OFFICE.

THIS AREA IRRIGATED WITH RECYCLED WATER

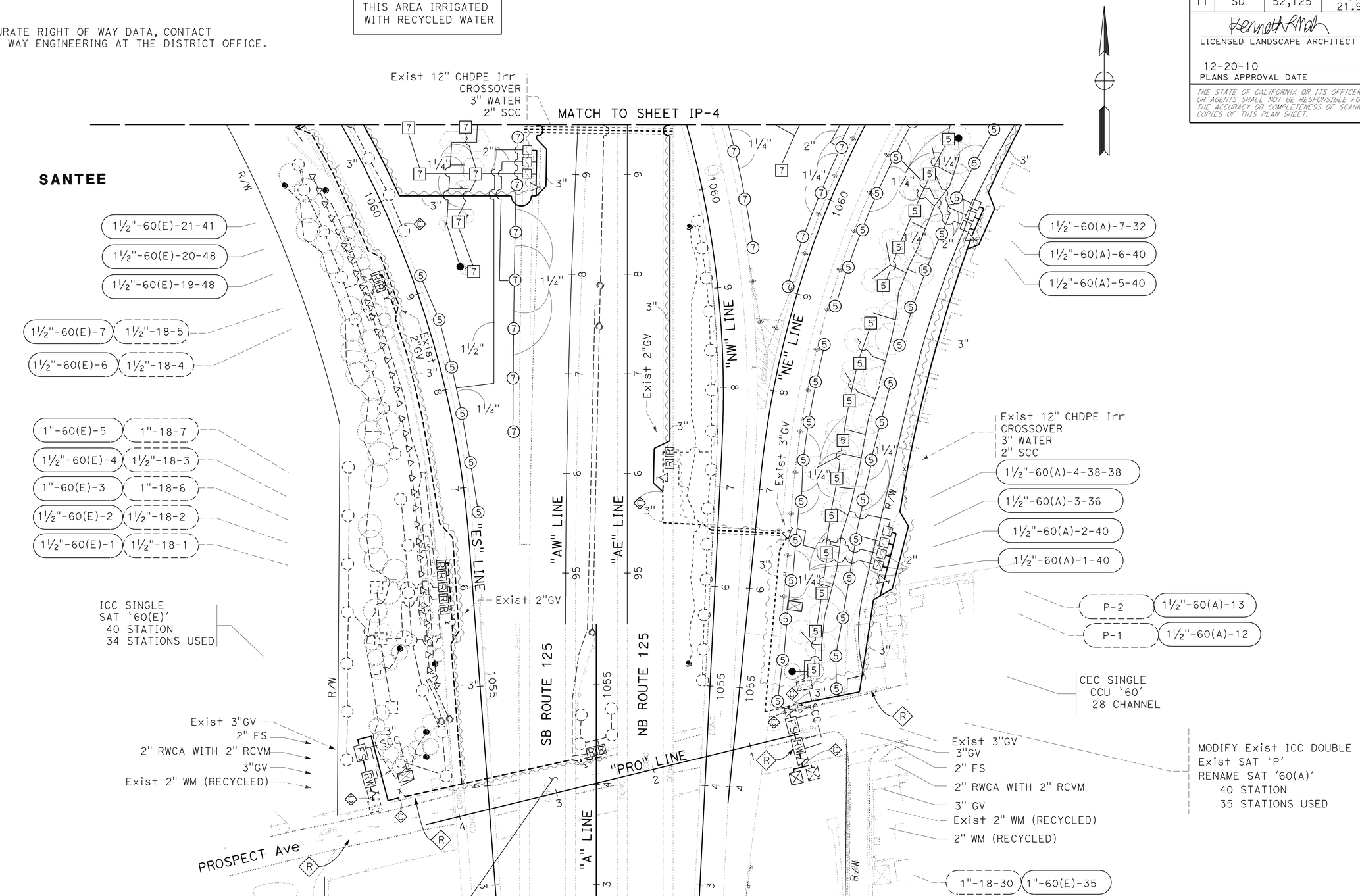

THIS PLAN ACCURATE FOR IRRIGATION WORK ONLY.

IRRIGATION PLAN

SCALE: 1" = 50'

IP-3

STATE OF CALIFORNIA - DEPARTMENT OF TRANSPORTATION
Caltrans® LANDSCAPE ARCHITECTURE

SENIOR LANDSCAPE ARCHITECT: STEPHEN ALVAREZ
CALCULATED-DESIGNED BY: KENNY MAH
CHECKED BY: MARLENE GROS
REVISED BY / DATE REVISED

LAST REVISION 10-19-10 | DATE PLOTTED => 24-DEC-2010 | TIME PLOTTED => 08:53

Dist	COUNTY	ROUTE	POST MILES TOTAL PROJECT	SHEET No.	TOTAL SHEETS
11	SD	52,125	14.5/15.5, 21.9/22.3	29	72

LICENSED LANDSCAPE ARCHITECT

12-20-10
PLANS APPROVAL DATE

LICENSED LANDSCAPE ARCHITECT KENNETH L. MAH No. 3049 STATE OF CALIFORNIA
Expiration Date 02/29/12
Renewal Date 10/07/10
Date

THE STATE OF CALIFORNIA OR ITS OFFICERS OR AGENTS SHALL NOT BE RESPONSIBLE FOR THE ACCURACY OR COMPLETENESS OF SCANNED COPIES OF THIS PLAN SHEET.

NOTE:

FOR ACCURATE RIGHT OF WAY AND ACCESS DATA,
CONTACT RIGHT OF WAY ENGINEERING AT THE DISTRICT OFFICE.

THIS AREA IRRIGATED WITH RECYCLED WATER

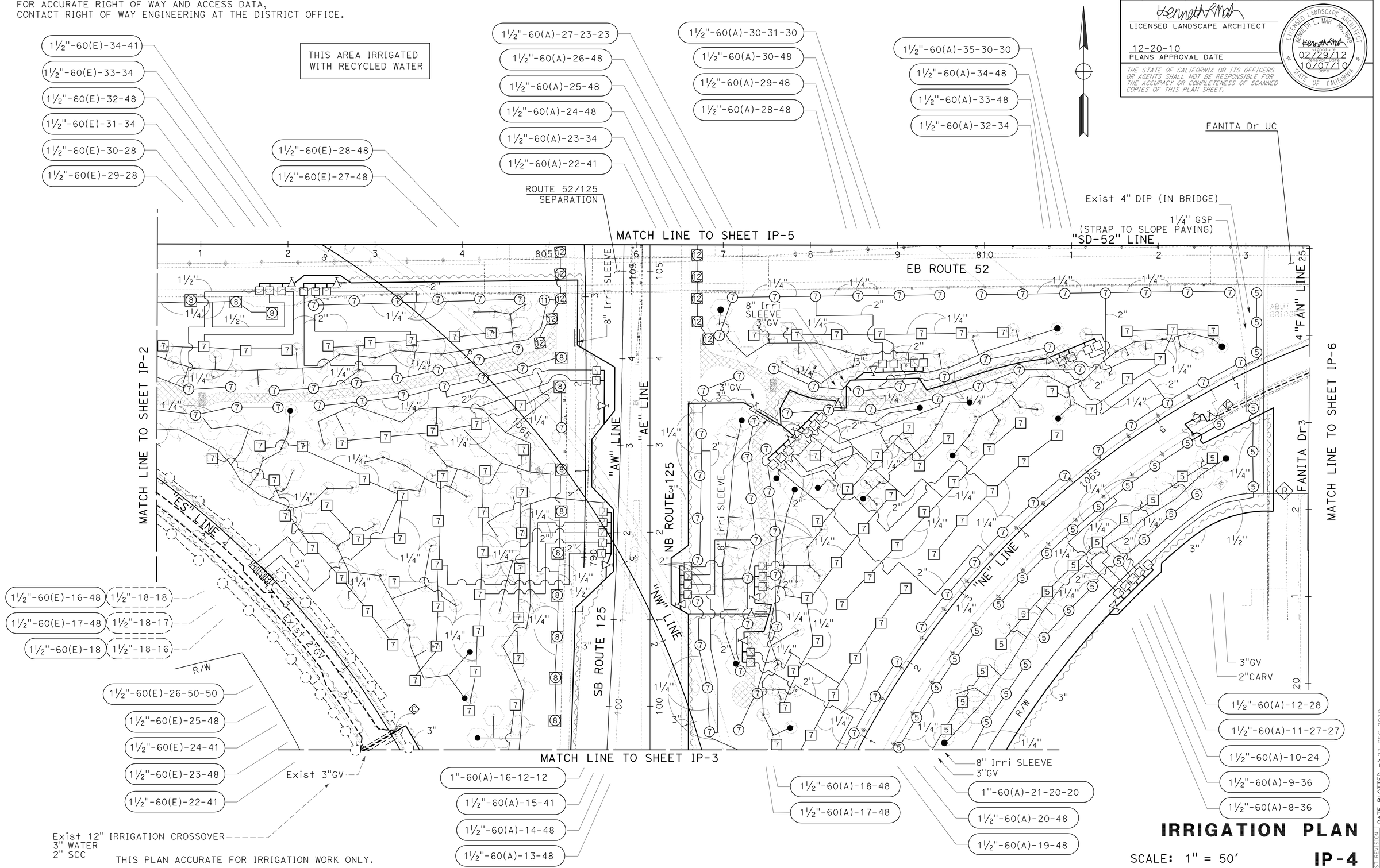

Exist 12" IRRIGATION CROSSOVER
3" WATER
2" SCC

THIS PLAN ACCURATE FOR IRRIGATION WORK ONLY.

IRRIGATION PLAN

SCALE: 1" = 50'

IP-4

REVISED BY	DATE REVISED
KENNY MAH	MARLENE GROS

CALCULATED-DESIGNED BY	CHECKED BY
SENIOR LANDSCAPE ARCHITECT	STEPHEN ALVAREZ

STATE OF CALIFORNIA - DEPARTMENT OF TRANSPORTATION
Caltrans® LANDSCAPE ARCHITECTURE

LAST REVISION 10-19-10
DATE PLOTTED => 27-DEC-2010
TIME PLOTTED => 06:07

Dist	COUNTY	ROUTE	POST MILES TOTAL PROJECT	SHEET No.	TOTAL SHEETS
11	SD	52,125	14.5/15.5, 21.9/22.3	30	72

LICENSED LANDSCAPE ARCHITECT

12-20-10
PLANS APPROVAL DATE

LICENSED LANDSCAPE ARCHITECT KENNETH L. MAH No. 3649 — Kenneth L. Mah — Registered Date 02/29/12 — Revised Date 10/07/10 — STATE OF CALIFORNIA

THE STATE OF CALIFORNIA OR ITS OFFICERS OR AGENTS SHALL NOT BE RESPONSIBLE FOR THE ACCURACY OR COMPLETENESS OF SCANNED COPIES OF THIS PLAN SHEET.

SANTEE

NOTES:

1. FOR ACCURATE RIGHT OF WAY AND ACCESS DATA, CONTACT RIGHT OF WAY ENGINEERING AT THE DISTRICT OFFICE.
2. CONTROLLER 'C' IS LOCATED AT Sta 45 OF THE 'MG' LINE.

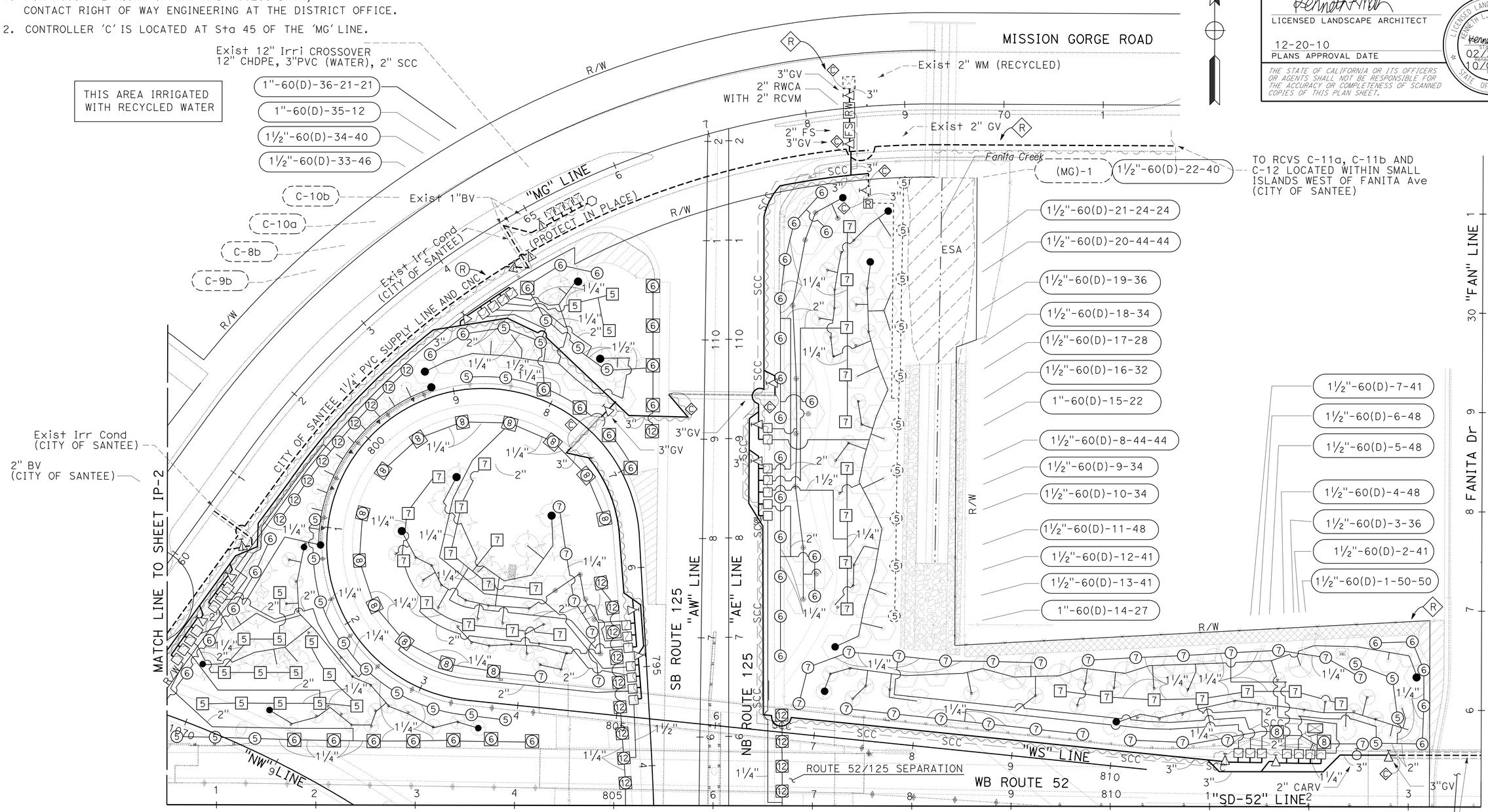

THIS PLAN ACCURATE FOR IRRIGATION WORK ONLY.

IRRIGATION PLAN

SCALE: 1" = 50'

IP-5

REVISED BY	DATE REVISED
KENNY MAH	MARLENE GROS
CALCULATED-DESIGNED BY	CHECKED BY
SENIOR LANDSCAPE ARCHITECT	STEPHEN ALVAREZ

STATE OF CALIFORNIA - DEPARTMENT OF TRANSPORTATION
Caltrans® LANDSCAPE ARCHITECTURE

LAST REVISION 10-19-10 | DATE PLOTTED => 13-JAN-2011 | TIME PLOTTED => 17:56

Dist	COUNTY	ROUTE	POST MILES TOTAL PROJECT	SHEET No.	TOTAL SHEETS
11	SD	52,125	14.5/15.5, 21.9/22.3	31	72

LICENSED LANDSCAPE ARCHITECT

12-20-10
PLANS APPROVAL DATE

LICENSED LANDSCAPE ARCHITECT
KENNETH L. MAH No. 3649
02/29/12 Renewal Date
10/07/10 Date
STATE OF CALIFORNIA

THE STATE OF CALIFORNIA OR ITS OFFICERS OR AGENTS SHALL NOT BE RESPONSIBLE FOR THE ACCURACY OR COMPLETENESS OF SCANNED COPIES OF THIS PLAN SHEET.

NOTE:

FOR ACCURATE RIGHT OF WAY AND ACCESS DATA, CONTACT RIGHT OF WAY ENGINEERING AT THE DISTRICT OFFICE.

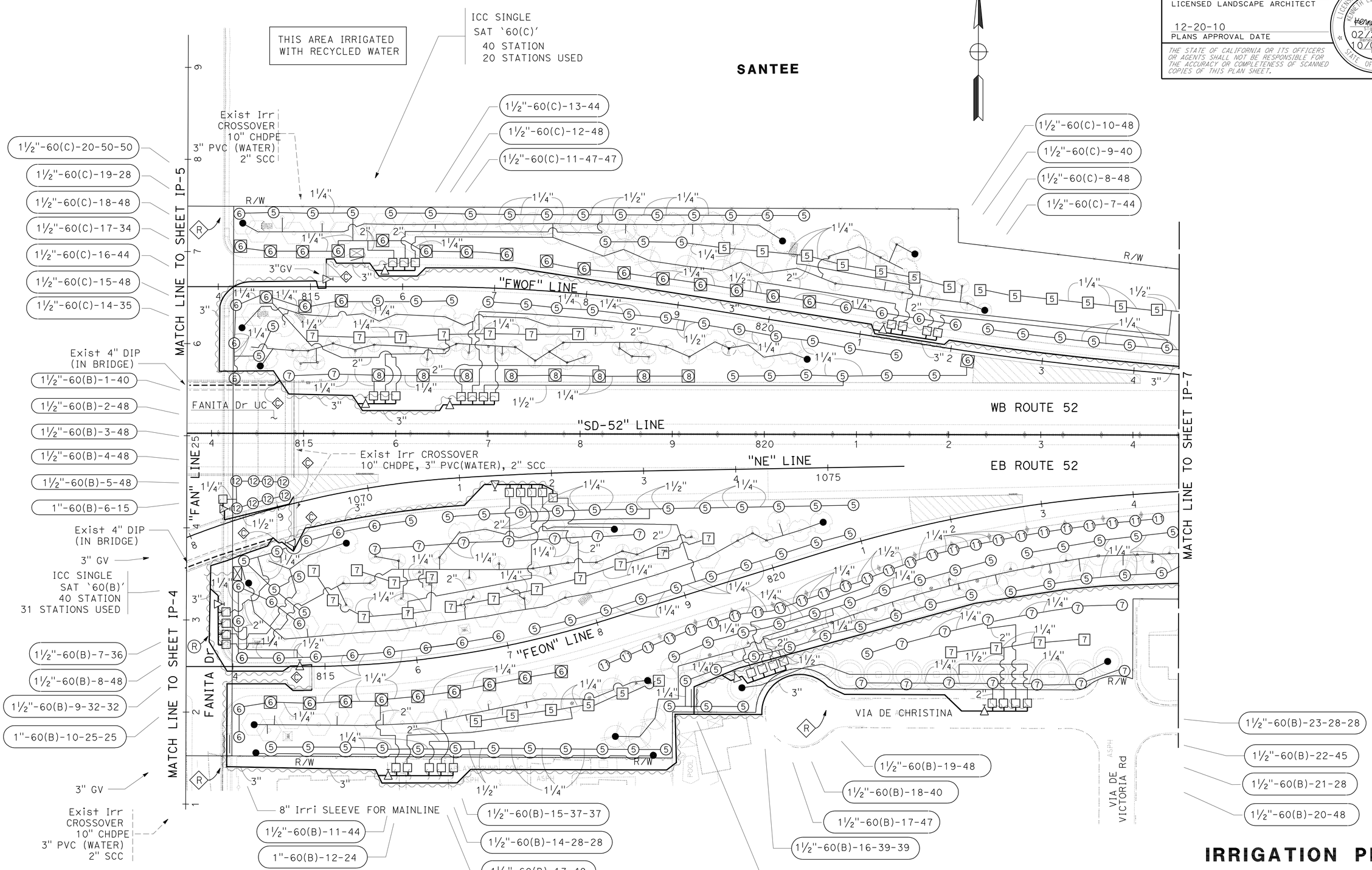

THIS PLAN ACCURATE FOR IRRIGATION WORK ONLY.

IRRIGATION PLAN

SCALE: 1" = 50'

IP-6

REVISED BY	DATE REVISED
KENNY MAH	MARLENE GROS

CALCULATED-DESIGNED BY | CHECKED BY

SENIOR LANDSCAPE ARCHITECT: STEPHEN ALVAREZ

STATE OF CALIFORNIA - DEPARTMENT OF TRANSPORTATION
Caltrans® LANDSCAPE ARCHITECTURE

LAST REVISION 10-19-10 | DATE PLOTTED => 24-DEC-2010 | TIME PLOTTED => 08:53

Dist	COUNTY	ROUTE	POST MILES TOTAL PROJECT	SHEET No.	TOTAL SHEETS
11	SD	52,125	14.5/15.5, 21.9/22.3	32	72

LICENSED LANDSCAPE ARCHITECT

12-20-10
PLANS APPROVAL DATE

LICENSED LANDSCAPE ARCHITECT
KENNETH L. MAH No. 3049
Approved 02/29/12
Revised Date 10/07/10
Date
STATE OF CALIFORNIA

THE STATE OF CALIFORNIA OR ITS OFFICERS OR AGENTS SHALL NOT BE RESPONSIBLE FOR THE ACCURACY OR COMPLETENESS OF SCANNED COPIES OF THIS PLAN SHEET.

NOTE:

FOR ACCURATE RIGHT OF WAY AND ACCESS DATA,
CONTACT RIGHT OF WAY ENGINEERING AT THE DISTRICT OFFICE.

THIS AREA IRRIGATED WITH RECYCLED WATER

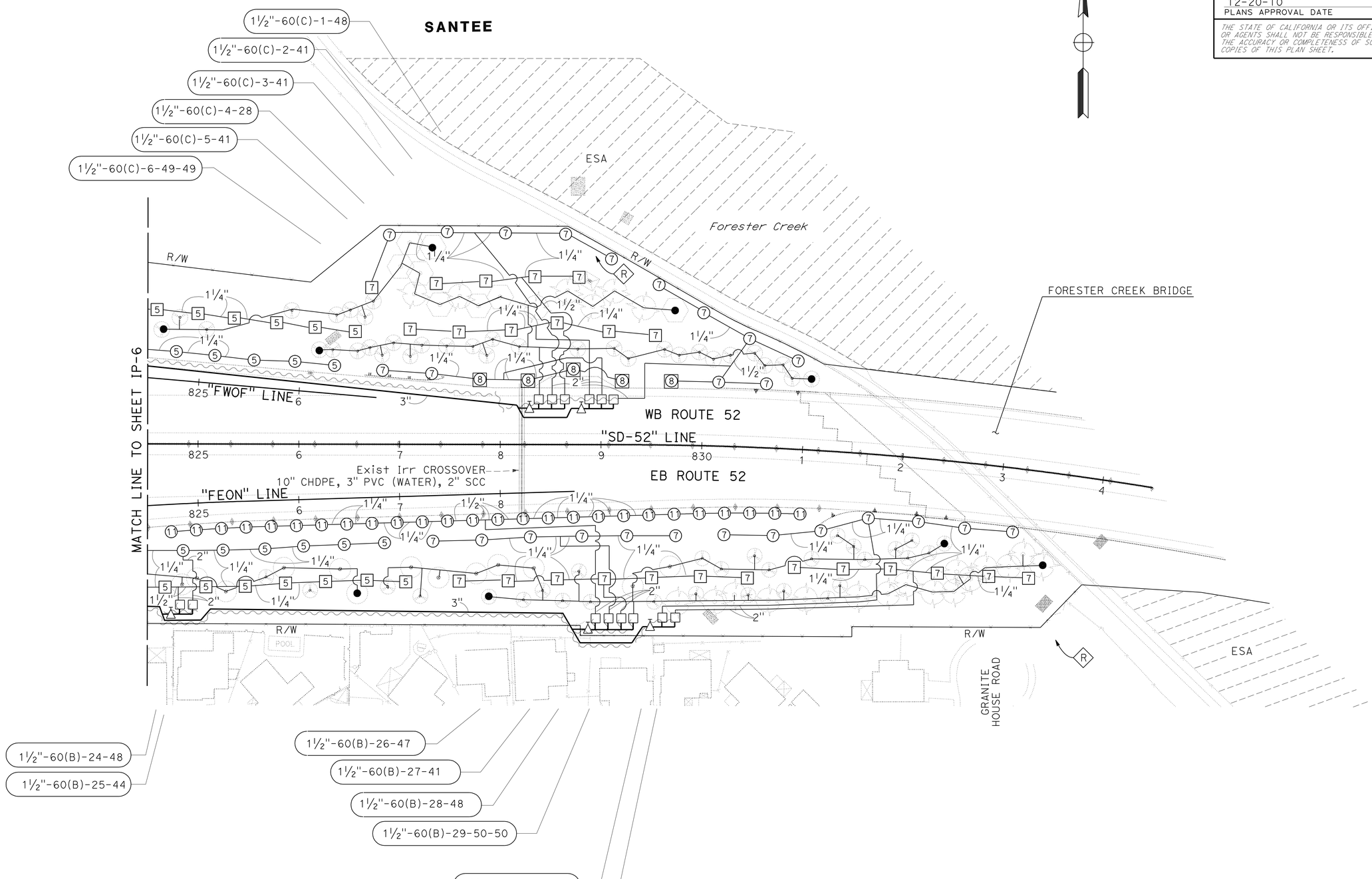

THIS PLAN ACCURATE FOR IRRIGATION WORK ONLY.

IRRIGATION PLAN

SCALE: 1" = 50'

IP-7

STATE OF CALIFORNIA - DEPARTMENT OF TRANSPORTATION
Caltrans® LANDSCAPE ARCHITECTURE

SENIOR LANDSCAPE ARCHITECT: STEPHEN ALVAREZ

CALCULATED-DESIGNED BY: KENNY MAH
CHECKED BY: MARLENE GROS

REVISED BY
DATE REVISED

LAST REVISION: DATE PLOTTED => 24-DEC-2010
10-19-10 TIME PLOTTED => 08:53

Dist	COUNTY	ROUTE	POST MILES TOTAL PROJECT	SHEET No.	TOTAL SHEETS
11	SD	52,125	14.5/15.5, 21.9/22.3	33	72

LICENSED LANDSCAPE ARCHITECT

12-20-10
PLANS APPROVAL DATE

LICENSED LANDSCAPE ARCHITECT — KENNETH L. MAH No. 3649 — Registered Date 02/29/12 — Renewal Date 10/07/10 — STATE OF CALIFORNIA

THE STATE OF CALIFORNIA OR ITS OFFICERS OR AGENTS SHALL NOT BE RESPONSIBLE FOR THE ACCURACY OR COMPLETENESS OF SCANNED COPIES OF THIS PLAN SHEET.

SPRINKLER SCHEDULE

SYMBOL	TYPE	DESCRIPTION	SPRAY PATTERN	OPERATING PRESSURE (PSI)	PRESSURE COMPENSATING	PLUS / MINUS 5% ② DISCHARGE: GALLONS PER SECOND (GPS)	GALLONS PER MINUTE (GPM)	GALLONS PER HOUR (GPH)	RADIUS (F†)	WIDTH x LENGTH (F†)	MATERIAL	NOZZLE SIZE (INCH)	INLET CONNECTION (NPT) (DN IN INCHES)(INCH)	POSITIVE-LOCKING ADJ ARC STOP	BACKSPLASH PREVENTER	DIFFUSER PIN	DISTANCE CONTROL FLAP	ADJ DISCHARGE	RISER: TYPE	RISER MATERIAL: PLASTIC	GALVANIZED	RISER: SIZE (IPS) (INCH)	HEIGHT (INCH)	FLOW SHUTOFF DEVICE	SWING JOINT (TYPE)	RISER SUPPORT	SPRINKLER PROTECTOR (TYPE)	REMARKS
[5]	A-5	GEAR DRIVEN	F	50	-	-	4	-	40	-	PL	-	¾	-	-	X	-	-	I	X	-	¾	6	-	1	-	-	③
⑤	A-5	GEAR DRIVEN	P	50	-	-	4	-	40	-	PL	-	¾	-	-	X	-	-	I	X	-	¾	6	-	1	-	-	③⑦
⑥	A-6	GEAR DRIVEN	P	50	-	-	4	-	40	-	PL	-	¾	-	-	X	-	-	-	-	-	-	-	-	1	-	1	③⑦ 12" POP-UP
[7]	A-7	GEAR DRIVEN	F	50	-	-	6.8	-	48	-	PL	-	¾	-	-	X	-	-	I	X	-	¾	6	-	1	-	-	③
⑦	A-7	GEAR DRIVEN	P	50	-	-	6.8	-	48	-	PL	-	¾	-	-	X	-	-	I	X	-	¾	6	-	1	-	-	③⑦
⑧	A-8	GEAR DRIVEN	P	50	-	-	6.8	-	48	-	PL	-	¾	-	-	X	-	-	-	-	-	-	-	-	1	-	1	③⑦ 12" POP-UP
[11]	A-11	GEAR DRIVEN	F	50	-	-	1.8	-	25	-	PL	-	¾	-	-	X	-	-	I	X	-	¾	6	-	1	-	-	③
⑪	A-11	GEAR DRIVEN	P	50	-	-	1.8	-	25	-	PL	-	¾	-	-	X	-	-	I	X	-	¾	6	-	1	-	-	③⑦
⑫	A-12	GEAR DRIVEN	P	50	-	-	1.8	-	25	-	PL	-	¾	-	-	X	-	-	-	-	-	-	-	-	1	-	1	③⑦ 12" POP-UP
•	C-2 Mod	MODIFIED FLOOD BUBBLER	-	30	X	-	1.0	-	-	-	PL	-	½	-	-	-	-	-	I	X	-	½	-	-	1	-	-	④⑨⑩ SEE DETAIL

APPLICABLE WHEN CIRCLED BELOW:

1 - SEE SPECIAL PROVISIONS.
② - IF A PRESSURE COMPENSATING DEVICE IS SPECIFIED, THE DISCHARGE AND RADII SHOWN REFLECT ITS USE.
③ - SHALL HAVE AN INTERNAL OR EXTERNAL CHECK VALVE.
④ - NON-ADJUSTABLE DISCHARGE RATE.
5 - REQUIRED ADJACENT TO SHOULDERS, CURBS, SIDEWALKS, AND DIKES.
6 - UNLESS OTHERWISE SHOWN ON PLANS.

X IN BOX DENOTES REQUIREMENT

⑦ - ADJUSTABLE ARC.
8 - MATCHED PRECIPITATION RATE NOZZLES.
⑨ - REFER TO PIPE SIZING CHARTS.
⑩ - PROVIDE 2 BUBBLERS PER BOX TREE, 1 BUBBLER FOR ALL OTHER TREES, VINES, AND FOR CER OCC AT "MG" LINE Sta 60-63. NO NEW BUBBLERS FOR EXISTING TREES, UNLESS OTHERWISE SHOWN ON PLANS.

ABBREVIATIONS:

ADJ — ADJUSTABLE
B/B — BRASS/BRONZE
B/B/PL — BRASS/BRONZE/PLASTIC
B/PL — BRASS/PLASTIC
CST — CENTER STRIP
DN — DIAMETER NOMINAL
EST — END STRIP
F† — FEET
F — FULL CIRCLE
F/P — FULL/PART CIRCLE
GPM — GALLONS PER MINUTE
H — HALF CIRCLE
IPS — IRON PIPE SIZE
NPT — NATIONAL PIPE THREAD
P — PART CIRCLE
PL — PLASTIC
PSI — POUNDS PER SQUARE INCH
Q — QUARTER CIRCLE
SST — SIDE STRIP
T — THIRD CIRCLE
TQ — THREE QUARTER CIRCLE
TT — TWO THIRDS CIRCLE

NOTES:

1. ALL NEW LATERAL PIPE NOT LABELED SHALL BE 1 INCH, OR AS SHOWN ON PIPE SIZING CHARTS.
2. AT ALL RCV MANIFOLDS, PVC PIPE AND GATE VALVES SHALL BE 2" UNLESS OTHERWISE NOTED.
3. ALL SPRINKLER HEADS, VALVES, MAINLINE AND LATERAL LINE NEAR MVP LOCATIONS ARE TO BE INSTALLED OUTSIDE OF THE MVP AREA. VALVES TO BE INSTALLED AT EXITING END OF MVP. HEADS TO BE INSTALLED 6.5 FEET FROM ENTRANCE AND EXIT EDGES.
4. LOCATE VALVE MANIFOLDS AND MAINLINE OUTSIDE OF ROCK MULCH AND MAINTENANCE ACCESS AREAS.
5. ALL NEW MAINLINE PIPE WHICH HAS A CHANGE IN DIRECTION OF 90 DEGREES OR MORE SHALL HAVE (2)-45 DEGREE ELBOWS.
6. PULL ONE ADDITIONAL CNC WIRE FROM EACH CONTROLLER TO THE LAST VALVE BOX AT EACH VALVE MANIFOLD. (FOR FUTURE USE)
7. ALL IRRIGATION EQUIPMENT SHALL BE PURPLE IN COLOR AND/OR LABELED AS PER SAN DIEGO COUNTY DEPARTMENT OF ENVIRONMENTAL HEALTH REQUIREMENTS. NO PONDING, RUNOFF, OR OVERSPRAY IS PERMITTED. ADJUST ALL SPRINKLER HEADS TO PREVENT OVERSPRAYING ONTO SIDEWALKS, STREETS, AND PRIVATE LOTS.

	51-69	31-50	22-30	12-21	1-11
□	2½"	2"	1½"	1¼"	1"

C-2 (Mod) PIPE SIZING CHART

LEGEND:

— SCC — — 2" SPRINKLER CONTROL CONDUIT(SCC) FOR FLOW SENSOR CABLE/CNC FOR RCVM
[RW] — RWCA (RECYCLED WATER CONNECTION ASSEMBLY)
◇R — RECYCLED WATER WARNING SIGN - FENCE OR ENCLOSURE MOUNTED
Ⓡ — RECYCLED WATER WARNING SIGN - POST MOUNTED
[R] — REPLACE VALVE BOX COVER

X" RCVM XX(X)-X
- RCVM SIZE
- IRRIGATION CLUSTER CONTROL UNIT -(CCU)
- IRRIGATION SATELLITE CONTROLLER - (SAT)
- CONTROL VALVE STATION

EXISTING RCVM CODE

XX(X)-X
- IRRIGATION CLUSTER CONTROL UNIT - (CCU)
- IRRIGATION SATELLITE CONTROLLER - (SAT)
- CONTROL VALVE STATION

EXISTING VALVE CODE

X-X(X)-XX-XX-XX
- RCV SIZE
- IRRIGATION CLUSTER CONTROL UNIT - (CCU)
- IRRIGATION SATELLITE CONTROLLER - (SAT)
- CONTROL VALVE STATION
- GALLONS PER MINUTE (GPM)
- QUANTITY OF SPRINKLERS (WHEN SHOWN)

PROPOSED VALVE CODE SAT CONTROLLED VALVES

XX(X)-X XX(X)-X-XX
- IRRIGATION CLUSTER CONTROL UNIT - (CCU)
- IRRIGATION SATELLITE CONTROLLER - (SAT)
- CONTROL VALVE STATION

EXISTING VALVE CODE TO BE REPLACED

LANDSCAPE DETAILS

NO SCALE

LD-1

REVISED BY	DATE REVISED
KENNY MAH	MARLENE GROS

CALCULATED-DESIGNED BY — CHECKED BY

SENIOR LANDSCAPE ARCHITECT — STEPHEN ALVAREZ

STATE OF CALIFORNIA - DEPARTMENT OF TRANSPORTATION — Caltrans® LANDSCAPE ARCHITECTURE

LAST REVISION 10-19-10 — DATE PLOTTED => 24-DEC-2010 — TIME PLOTTED => 08:54

Dist	COUNTY	ROUTE	POST MILES TOTAL PROJECT	SHEET No.	TOTAL SHEETS
11	SD	52,125	14.5/15.5, 21.9/22.3	34	72

LICENSED LANDSCAPE ARCHITECT

12-20-10
PLANS APPROVAL DATE

LICENSED LANDSCAPE ARCHITECT
KENNETH L. MAH No. 3049
Expiration Date 02/29/12
10/07/10
Date
STATE OF CALIFORNIA

THE STATE OF CALIFORNIA OR ITS OFFICERS OR AGENTS SHALL NOT BE RESPONSIBLE FOR THE ACCURACY OR COMPLETENESS OF SCANNED COPIES OF THIS PLAN SHEET.

NOTES:

1. WEED GERMINATION, MULCH AND COMPOST INCORPORATE AREA LIMITS ARE TO EDGE OF Exist TEXTURED PAVING OR ROCK MULCH.
2. FOR ACCURATE RIGHT OF WAY AND ACCESS DATA, CONTACT RIGHT OF WAY ENGINEERING AT THE DISTRICT OFFICE.

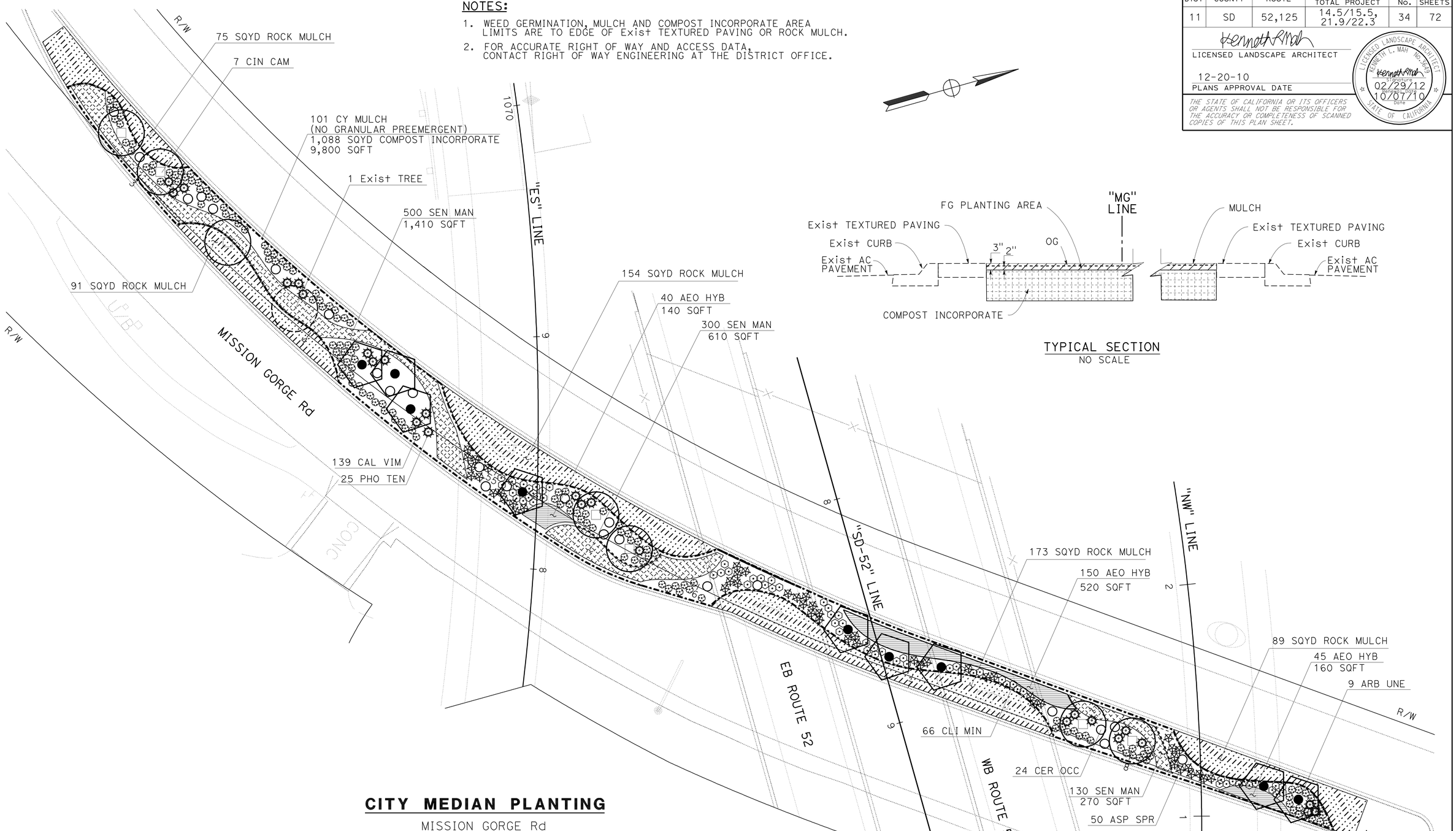

TYPICAL SECTION
NO SCALE

CITY MEDIAN PLANTING

MISSION GORGE Rd

LANDSCAPE DETAILS

SCALE: 1" = 20'

LD-2

CALCULATED-DESIGNED BY	KENNY MAH
CHECKED BY	MARLENE GROS
REVISED BY	X
DATE REVISED	MM-DD-YY
SENIOR LANDSCAPE ARCHITECT	STEPHEN ALVAREZ

STATE OF CALIFORNIA - DEPARTMENT OF TRANSPORTATION
Caltrans® LANDSCAPE ARCHITECTURE

LAST REVISION 10-19-10 | DATE PLOTTED => 13-JAN-2011 | TIME PLOTTED => 17:52

Dist	COUNTY	ROUTE	POST MILES TOTAL PROJECT	SHEET No.	TOTAL SHEETS
11	SD	52,125	14.5/15.5, 21.9/22.3	35	72

LICENSED LANDSCAPE ARCHITECT

12-20-10
PLANS APPROVAL DATE

THE STATE OF CALIFORNIA OR ITS OFFICERS OR AGENTS SHALL NOT BE RESPONSIBLE FOR THE ACCURACY OR COMPLETENESS OF SCANNED COPIES OF THIS PLAN SHEET.

LICENSED LANDSCAPE ARCHITECT
KENNETH L. MAH No. 3449
SIGNATURE
02/29/12
EXPIRATION DATE
10/07/10
DATE
STATE OF CALIFORNIA

LEGEND:

- AUTOMATIC FLUSH VALVE AND AIR/VACUUM RELIEF VALVE (SEE DETAIL)
- MANUAL DISC FILTER AND PRESSURE REGULATOR (SEE DETAIL)
- DRIPPERLINE - 0.4 GPH DRIPPER FLOW @ 18" SPACING

NOTE:

FOR ACCURATE RIGHT OF WAY AND ACCESS DATA, CONTACT RIGHT OF WAY ENGINEERING AT THE DISTRICT OFFICE.

NOTE:

DRIPPERLINES ARE ON GRADE WITH 18" LATERAL SPACING AND 18" FROM EDGE OF ROCK MULCH OR TEXTURED PAVING.

SECTION

DRIPPERLINE INSTALLATION (CITY MEDIAN)

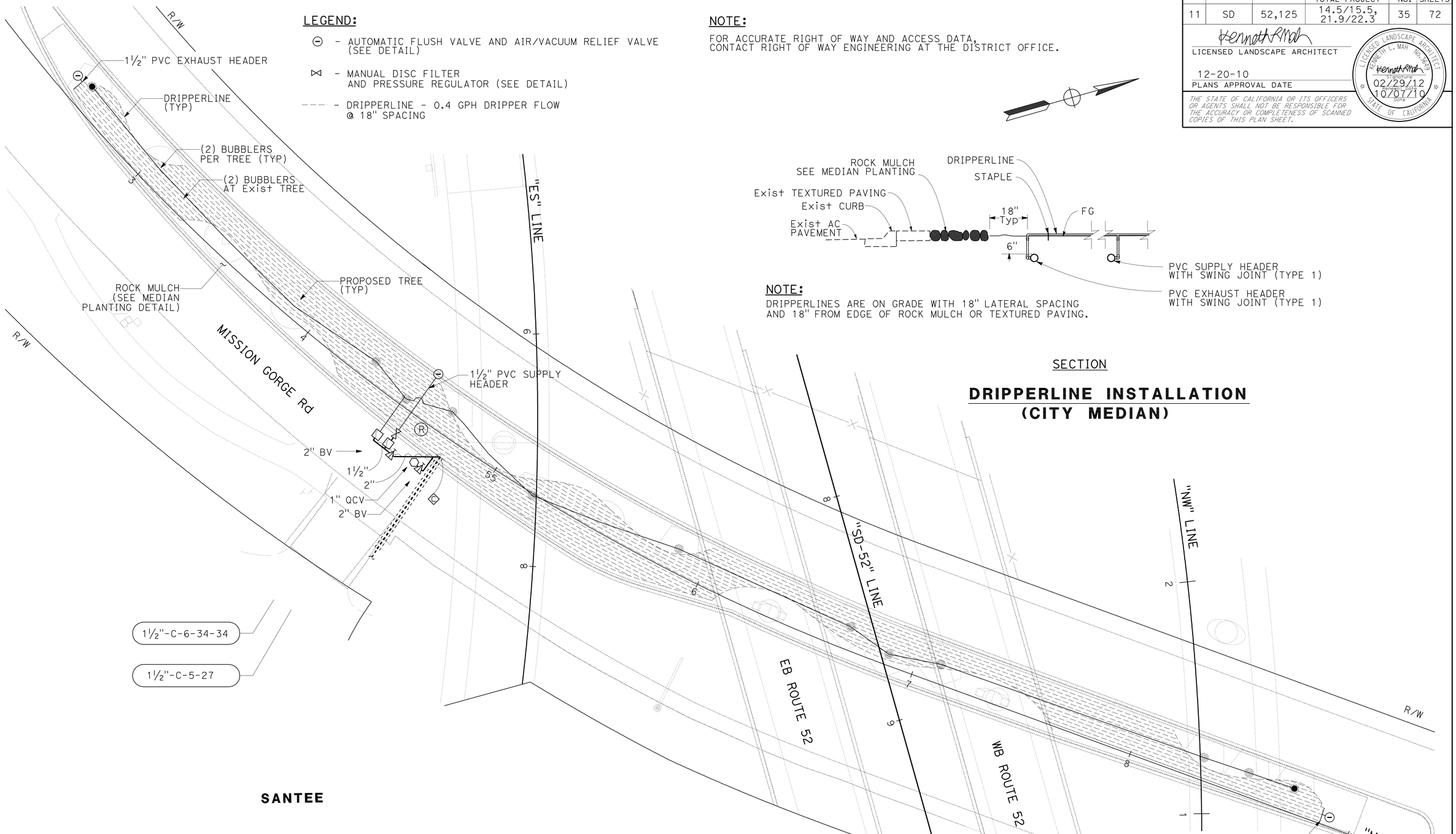

CITY MEDIAN IRRIGATION

MISSION GORGE Rd

LANDSCAPE DETAILS

SCALE: 1" = 20'

LD-3

STATE OF CALIFORNIA - DEPARTMENT OF TRANSPORTATION
Caltrans® LANDSCAPE ARCHITECTURE
SENIOR LANDSCAPE ARCHITECT: STEPHEN ALVAREZ
CALCULATED-DESIGNED BY: KENNY MAH
CHECKED BY: MARLENE GROS
REVISED BY: X
DATE REVISED: MM-DD-YY

LAST REVISION 10-19-10
DATE PLOTTED => 24-DEC-2010
TIME PLOTTED => 08:35

Dist	COUNTY	ROUTE	POST MILES TOTAL PROJECT	SHEET No.	TOTAL SHEETS
11	SD	52,125	14.5/15.5, 21.9/22.3	36	72

LICENSED LANDSCAPE ARCHITECT

12-20-10
PLANS APPROVAL DATE

LICENSED LANDSCAPE ARCHITECT
KENNETH L. MAH No. 3449
Signature
02/29/12
Renewal Date
10/07/10
Date
STATE OF CALIFORNIA

THE STATE OF CALIFORNIA OR ITS OFFICERS OR AGENTS SHALL NOT BE RESPONSIBLE FOR THE ACCURACY OR COMPLETENESS OF SCANNED COPIES OF THIS PLAN SHEET.

NOTES:

1. INSTALL SPRINKLER TYPE C-2 Mod ON UP-HILL SIDE OF PLANT WHEN ON SLOPE
2. INSTALL SPRINKLER WITHIN BASIN

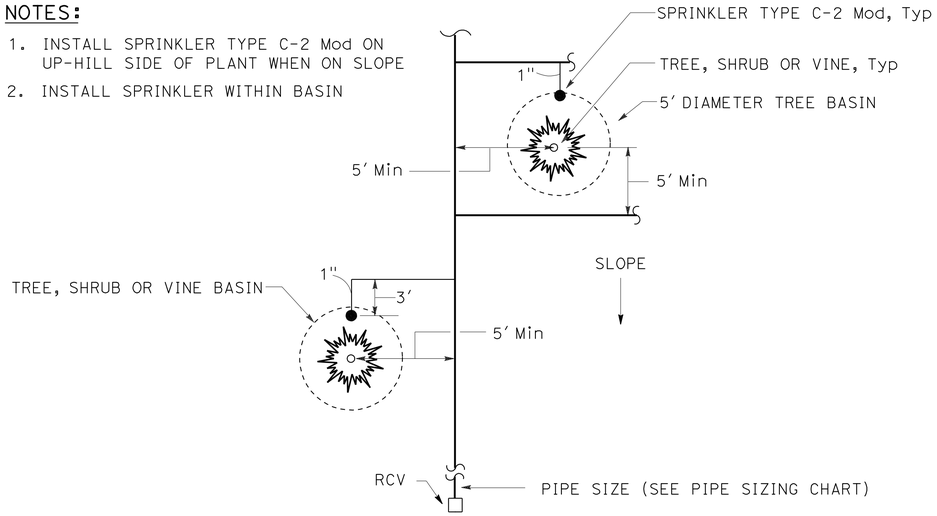

PLAN

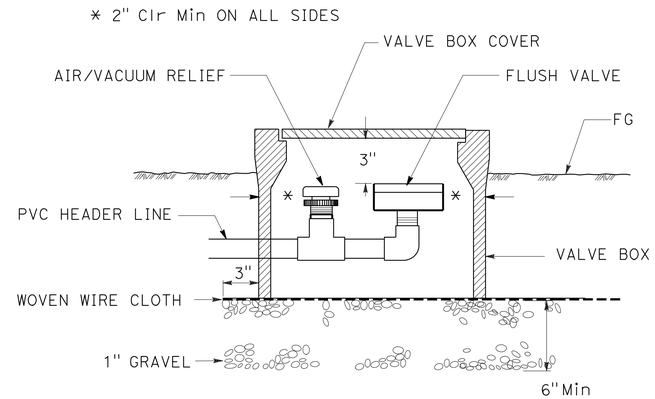

SECTION

AUTOMATIC FLUSH VALVE AND AIR/VACUUM RELIEF VALVE

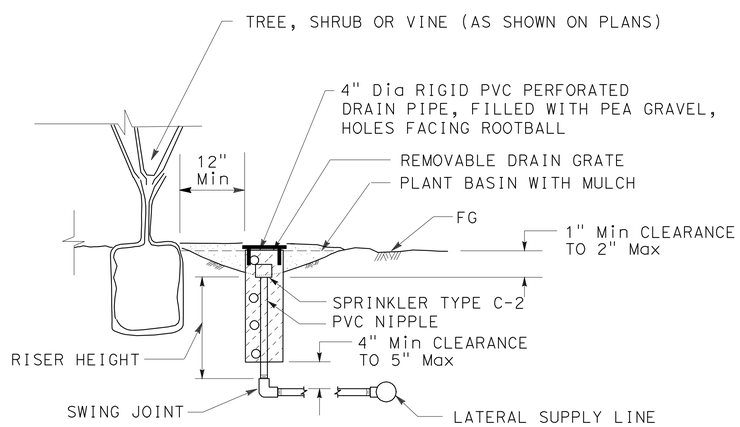

SECTION

SPRINKLER TYPE C-2 Mod INSTALLATION

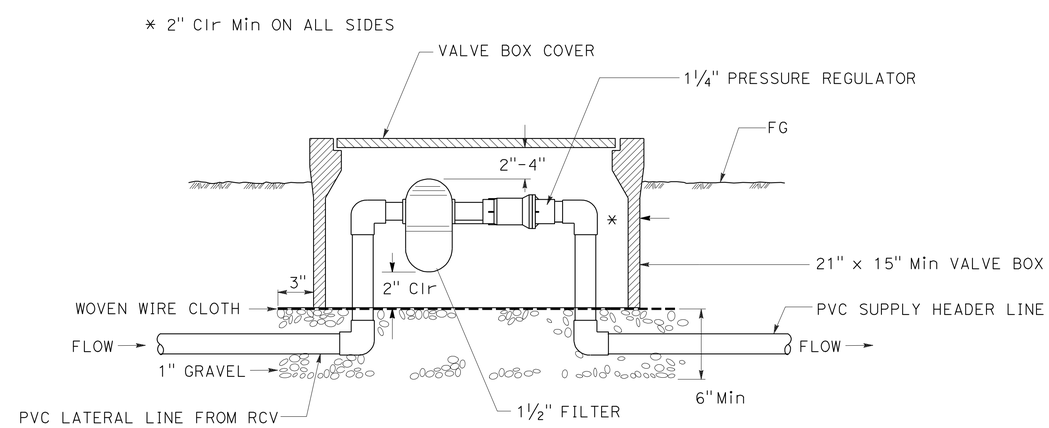

SECTION

MANUAL DISC FILTER AND PRESSURE REGULATOR VALVE

LANDSCAPE DETAILS

NO SCALE

LD-4

STATE OF CALIFORNIA - DEPARTMENT OF TRANSPORTATION
Caltrans® LANDSCAPE ARCHITECTURE
SENIOR LANDSCAPE ARCHITECT: STEPHEN ALVAREZ
CALCULATED-DESIGNED BY: KENNY MAH
CHECKED BY: MARLENE GROS
REVISED BY: X
DATE REVISED: MM-DD-YY

LAST REVISION 10-19-10
DATE PLOTTED => 24-DEC-2010
TIME PLOTTED => 08:27

Dist	COUNTY	ROUTE	POST MILES TOTAL PROJECT	SHEET No.	TOTAL SHEETS
11	SD	52,125	14.5/15.5, 21.9/22.3	37	72

LICENSED LANDSCAPE ARCHITECT

12-20-10
PLANS APPROVAL DATE

LICENSED LANDSCAPE ARCHITECT
KENNETH L. MAH No. 3449
REGISTRATION EXPIRES 02/29/12
REVIEWED BY 10/07/10 DATE
STATE OF CALIFORNIA

THE STATE OF CALIFORNIA OR ITS OFFICERS OR AGENTS SHALL NOT BE RESPONSIBLE FOR THE ACCURACY OR COMPLETENESS OF SCANNED COPIES OF THIS PLAN SHEET.

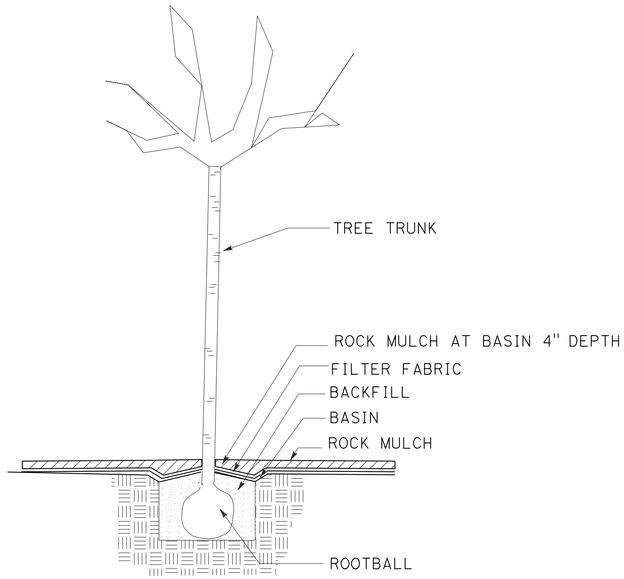

TREE PLANTING

IN ROCK MULCH AREAS

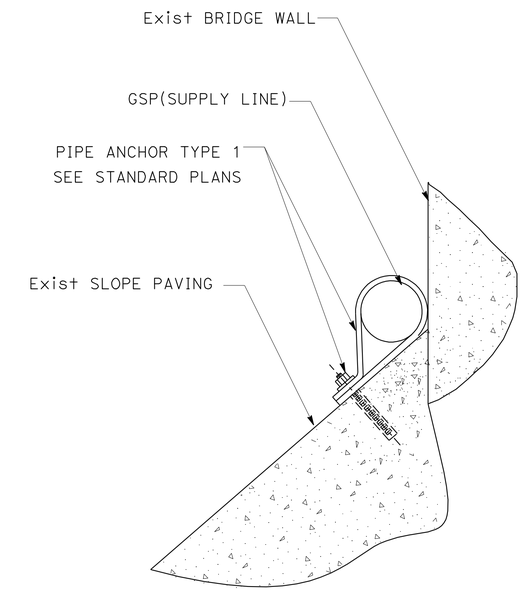

PIPE ANCHOR

SEE STANDARD DETAIL PIPE ANCHOR TYPE 1

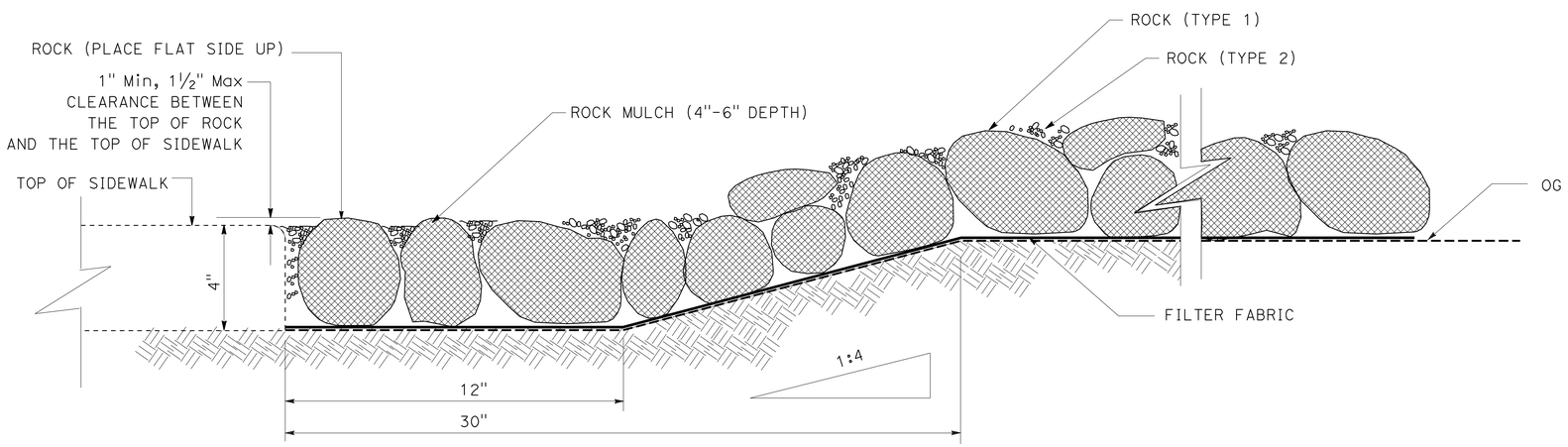

ROCK MULCH

LANDSCAPE DETAILS

NO SCALE

LD-5

STATE OF CALIFORNIA - DEPARTMENT OF TRANSPORTATION
Caltrans® LANDSCAPE ARCHITECTURE
SENIOR LANDSCAPE ARCHITECT STEPHEN ALVAREZ
CALCULATED-DESIGNED BY KENNY MAH
CHECKED BY MARLENE GROS
REVISED BY X
DATE REVISED MM-DD-YY

LAST REVISION 10-19-10
DATE PLOTTED => 24-DEC-2010
TIME PLOTTED => 08:28

Dist	COUNTY	ROUTE	POST MILES TOTAL PROJECT	SHEET No.	TOTAL SHEETS
11	SD	52,125	14.5/15.5, 21.9/22.3	38	72

LICENSED LANDSCAPE ARCHITECT

12-20-10
PLANS APPROVAL DATE

LICENSED LANDSCAPE ARCHITECT
KENNETH L. MAH No. 3449
Kenneth L. Mah
Registered Professional
02/29/12
Expiration Date
10/07/10
Date
STATE OF CALIFORNIA

THE STATE OF CALIFORNIA OR ITS OFFICERS OR AGENTS SHALL NOT BE RESPONSIBLE FOR THE ACCURACY OR COMPLETENESS OF SCANNED COPIES OF THIS PLAN SHEET.

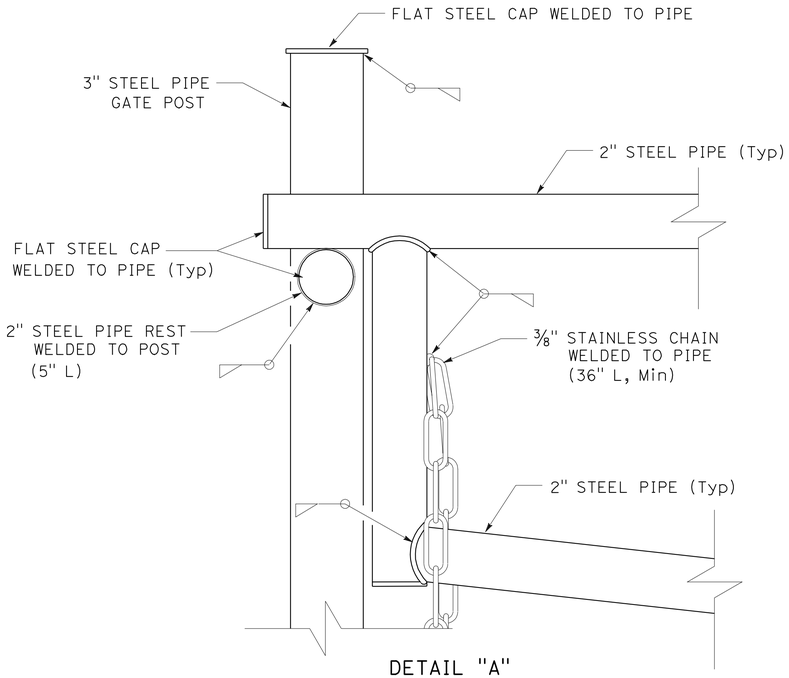

DETAIL "A"

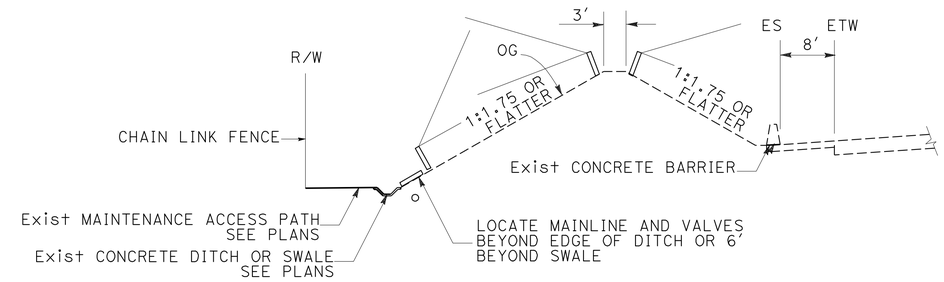

TYPICAL SECTION

IRRIGATION LAYOUT AT SOUND BERM

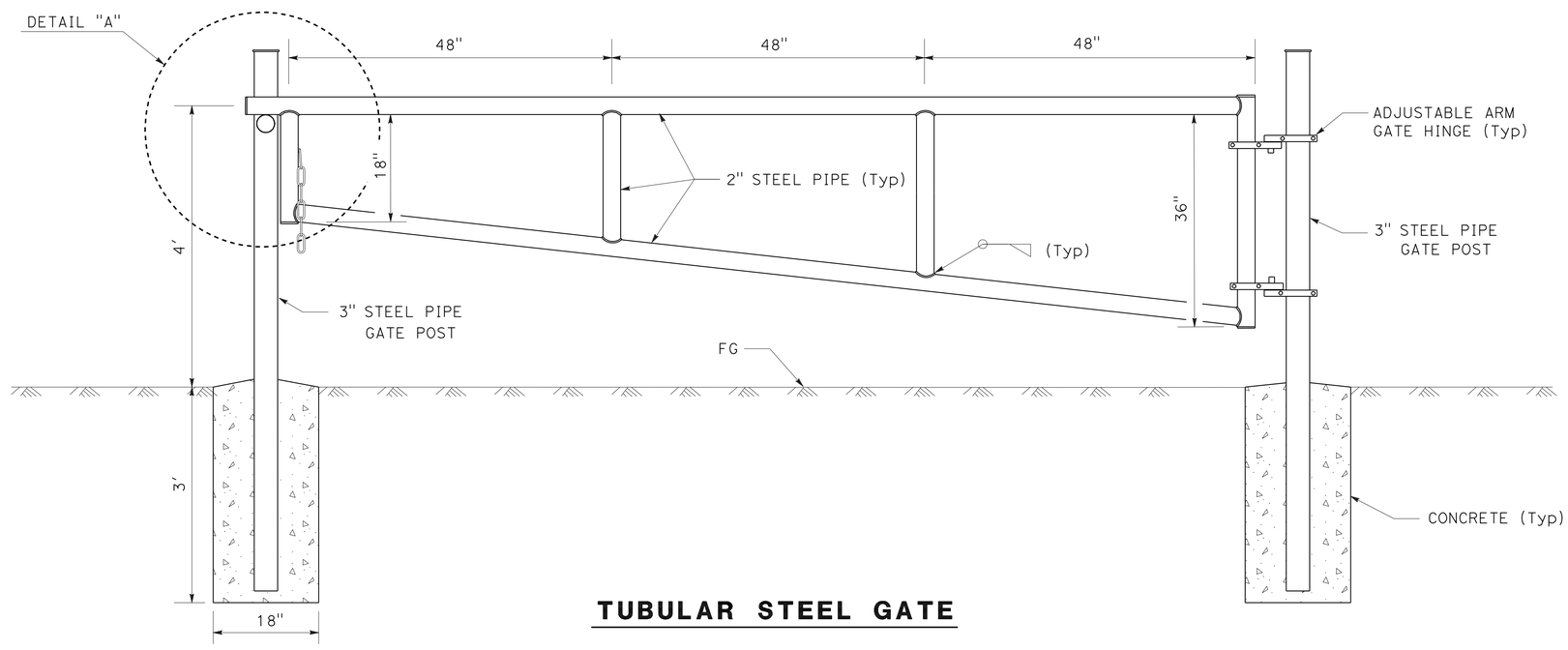

TUBULAR STEEL GATE

LANDSCAPE DETAILS

NO SCALE

LD-6

STATE OF CALIFORNIA - DEPARTMENT OF TRANSPORTATION
Caltrans® LANDSCAPE ARCHITECTURE

SENIOR LANDSCAPE ARCHITECT: STEPHEN ALVAREZ
CALCULATED-DESIGNED BY: KENNY MAH
CHECKED BY: MARLENE GROS
REVISED BY | DATE REVISED: X | MM-DD-YY

LAST REVISION 10-19-10 | DATE PLOTTED => 24-DEC-2010 | TIME PLOTTED => 08:28

Dist	COUNTY	ROUTE	POST MILES TOTAL PROJECT	SHEET No.	TOTAL SHEETS
11	SD	52,125	14.5/15.5, 21.9/22.3	39	72

LICENSED LANDSCAPE ARCHITECT

12-20-10
PLANS APPROVAL DATE

LICENSED LANDSCAPE ARCHITECT
KENNETH L. MAH No. 3449
Signature
02/29/12
Renewal Date
10/07/10
Date
STATE OF CALIFORNIA

THE STATE OF CALIFORNIA OR ITS OFFICERS OR AGENTS SHALL NOT BE RESPONSIBLE FOR THE ACCURACY OR COMPLETENESS OF SCANNED COPIES OF THIS PLAN SHEET.

THRUST BLOCK DETAIL

INSTALLATION	TYPE FITTING	INSTALLATION	TYPE FITTING
	90° ELL	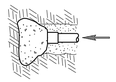	DEAD END
	BEND 45° 22.5° 11.25°		GATE VALVE
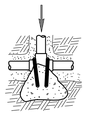	TEE	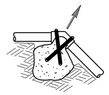	VERTICAL BEND (TYPE I) 45° 22.5° 11.25°
		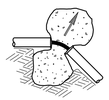	OR VERTICAL BEND (TYPE II) 45° 22.5° 11.25°

NOTES:

Min 1 CF PCC FOR 1½" PIPE SIZE AND SMALLER.
Min 2 CF PCC FOR 2" PIPE SIZE.
Min 3 CF PCC FOR 3" AND 4" PIPE SIZE.
USE #3 REINFORCING BAR WHERE SHOWN.

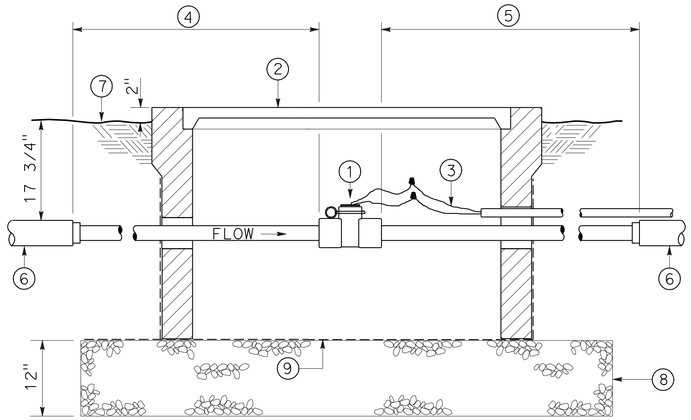

LEGEND:

1. - FLOW SENSOR AS SHOWN ON PLANS
2. - RECTANGULAR VALVE BOX (SIZE AS REQUIRED)
3. - SHIELDED FLOW SENSOR CABLE INSTALL IN 2" SPRINKLER CONTROL CONDUIT WITH RCVM CONTROL WIRES
4. - 2" SCH 40 PVC PIPE - LENGTH = 10 X Dia OF SUPPLY LINE
5. - 2" SCH 40 PVC PIPE - LENGTH = 5 X Dia OF SUPPLY LINE
6. - SCH 40 PVC SUPPLY LINE (SIZE PER PLANS)
7. - FINISH GRADE
8. - ¾" GRAVEL OR CRUSHED ROCK
9. - ½" MESH 18 GAUGE GALVANIZED WIRE FABRIC (COVER VALVE BOX BOTTOM AND ALL CUT-OUTS)

FLOW SENSOR

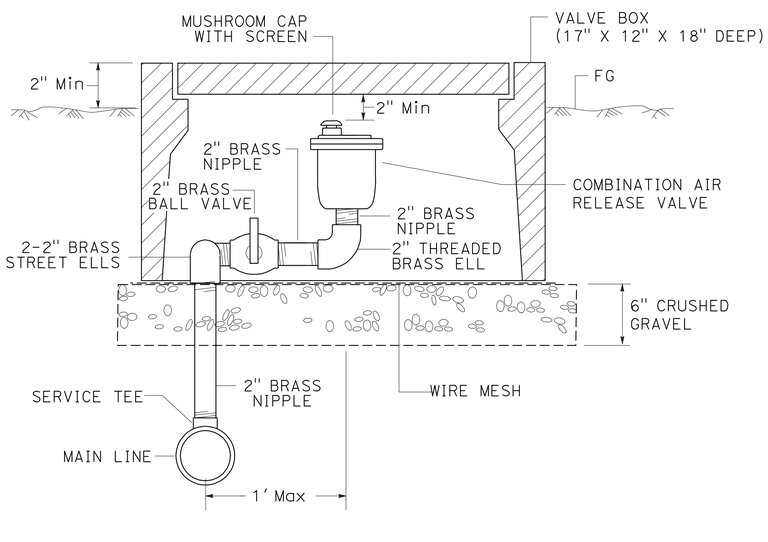

COMBINATION AIR RELEASE VALVE (CARV)

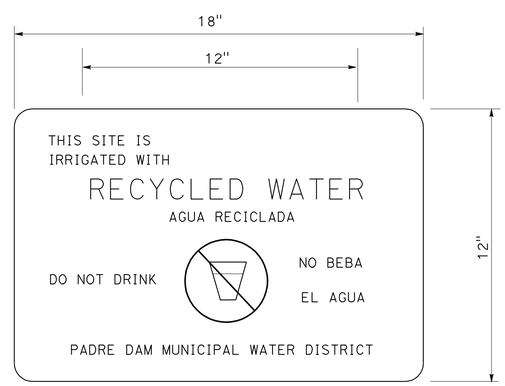

'DO NOT DRINK' SIGN

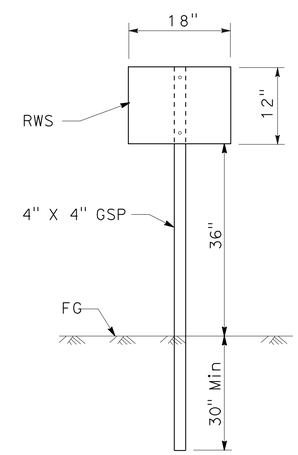

NOTE:
ATTACH RWS TO POST WITH ¼" THEFT PROOF BOLTS.

RECYCLED WATER WARNING SIGN (RWS)

(POST MOUNTED)

LANDSCAPE DETAILS

NO SCALE

LD-7

STATE OF CALIFORNIA - DEPARTMENT OF TRANSPORTATION
LANDSCAPE ARCHITECTURE
SENIOR LANDSCAPE ARCHITECT: STEPHEN ALVAREZ
CALCULATED-DESIGNED BY: KENNY MAH
CHECKED BY: MARLENE GROS
REVISED BY: X
DATE REVISED: MM-DD-YY

LAST REVISION 10-19-10 | DATE PLOTTED => 24-DEC-2010 | TIME PLOTTED => 08:28

Dist	COUNTY	ROUTE	POST MILES TOTAL PROJECT	SHEET No.	TOTAL SHEETS
11	SD	52,125	14.5/15.5, 21.9/22.3	40	72

LICENSED LANDSCAPE ARCHITECT

12-20-10
PLANS APPROVAL DATE

LICENSED LANDSCAPE ARCHITECT
KENNETH L. MAH No. 3449
Signature
02/29/12
Expiration Date
10/07/10
Date
STATE OF CALIFORNIA

THE STATE OF CALIFORNIA OR ITS OFFICERS OR AGENTS SHALL NOT BE RESPONSIBLE FOR THE ACCURACY OR COMPLETENESS OF SCANNED COPIES OF THIS PLAN SHEET.

NOTES:

1. GV, FITTINGS, AND PIPE SHALL BE SAME SIZE AS SUPPLY LINE SHOWN ON PLANS.
2. ALL METAL IN CONTACT WITH SOIL AND PCC SHALL BE POLYETHYLENE WRAPPED USING 2" WIDE PLASTIC BACKED ADHESIVE TAPE 0.02" THICK WITH ½" OVERLAP.
3. ASSEMBLY MATERIAL PIPING TO BE COPPER OR BRASS.
4. JOINTS SHALL BE THREADED.

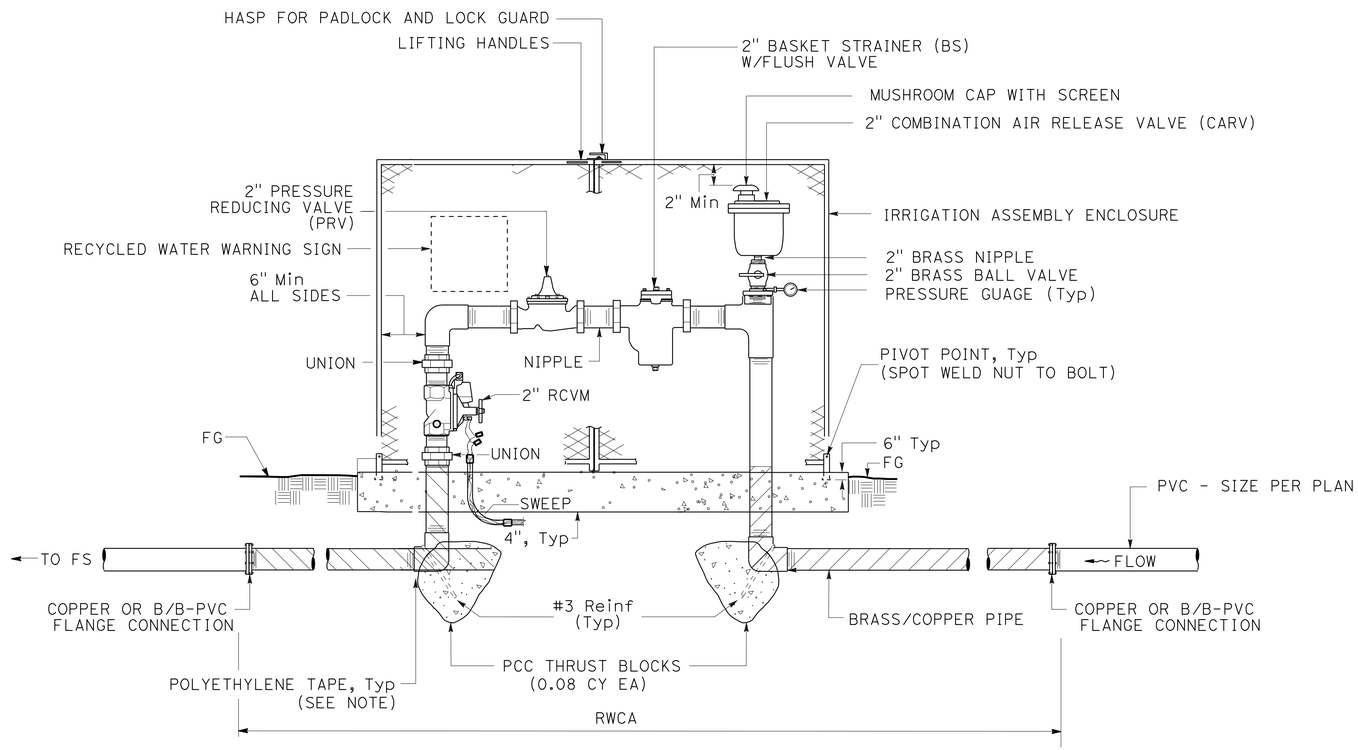

2" RECYCLED WATER CONNECTION ASSEMBLY (RWCA)

LANDSCAPE DETAILS

NO SCALE

LD-8

STATE OF CALIFORNIA - DEPARTMENT OF TRANSPORTATION
Caltrans® LANDSCAPE ARCHITECTURE

SENIOR LANDSCAPE ARCHITECT: STEPHEN ALVAREZ

CALCULATED-DESIGNED BY: KENNY MAH
CHECKED BY: MARLENE GROS

REVISED BY: X
DATE REVISED: MM-DD-YY

LAST REVISION: 10-19-10
DATE PLOTTED => 24-DEC-2010
TIME PLOTTED => 08:28

Dist	COUNTY	ROUTE	POST MILES TOTAL PROJECT	SHEET No.	TOTAL SHEETS
11	SD	52,125	14.5/15.5, 21.9/22.3	41	72

LICENSED LANDSCAPE ARCHITECT

12-20-10
PLANS APPROVAL DATE

LICENSED LANDSCAPE ARCHITECT KENNETH L. MAH No. 3649 STATE OF CALIFORNIA
Revision Date 02/29/12
Renewal Date 10/07/10

THE STATE OF CALIFORNIA OR ITS OFFICERS OR AGENTS SHALL NOT BE RESPONSIBLE FOR THE ACCURACY OR COMPLETENESS OF SCANNED COPIES OF THIS PLAN SHEET.

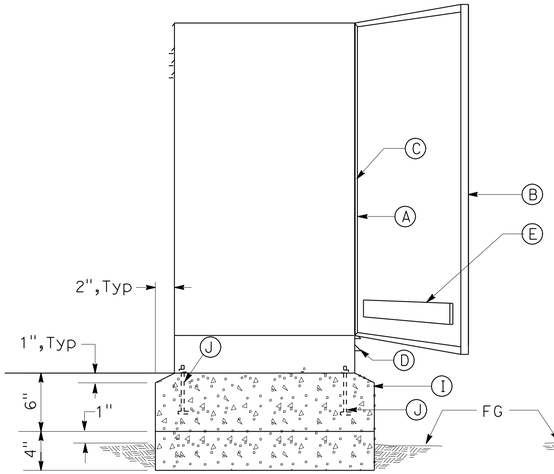

FRONT ELEVATION

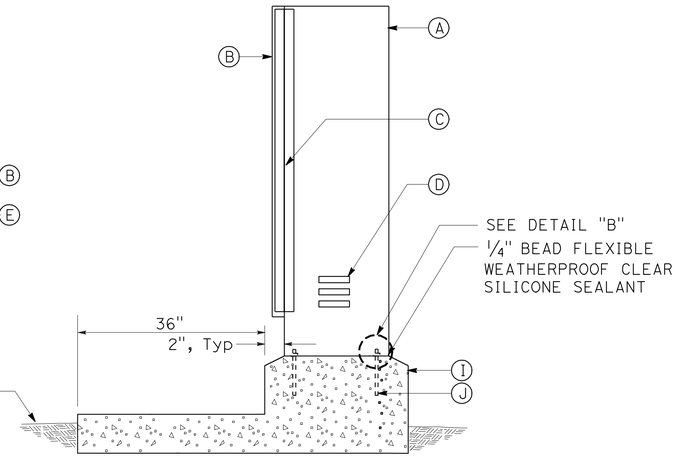

SIDE SECTION

CABINET, SECURITY DOOR, AND FOUNDATION

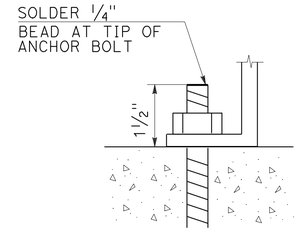

DETAIL "B"

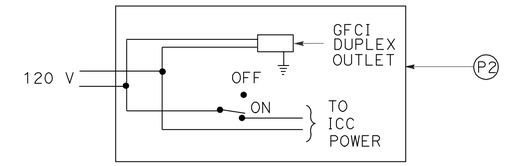

DETAIL "A"

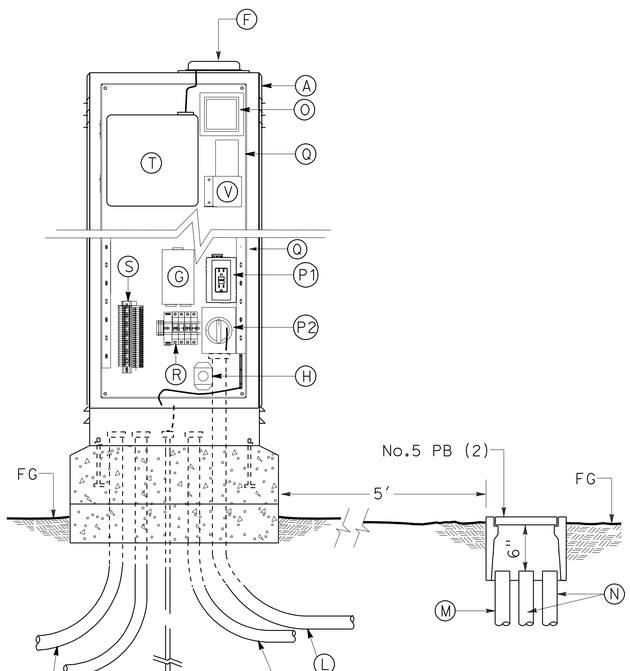

SAT LAYOUT

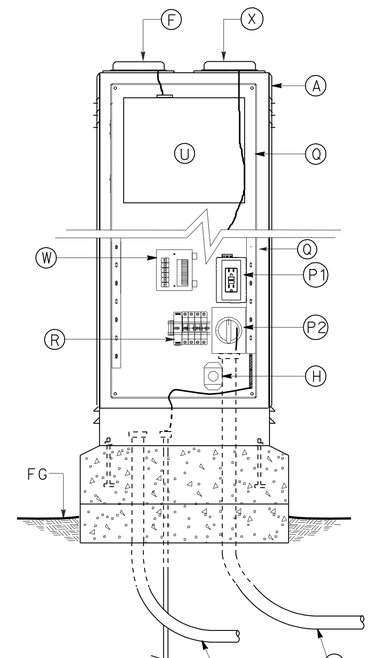

CCU LAYOUT

ELECTRICAL LAYOUT
IRRIGATION CONTROLLER ENCLOSURE CABINET

LEGEND:

- (A) STAINLESS STEEL CONTROLLER ENCLOSURE CABINET
- (B) DOOR WITH THREE POINT LOCKING MECHANISM, FLUSH-MOUNTED ACCESS HANDLE FOR PADLOCK, AND STORAGE FOR PLANS
- (C) CONTINUOUS STAINLESS STEEL PIANO HINGE
- (D) LOUVERS AT TOP AND BOTTOM FOR CROSS VENTILATION
- (E) STORAGE COMPARTMENT
- (F) LOW PRO ANTENNA AND CABLE (FOR COMMUNICATION BETWEEN CCU AND SAT)
- (G) CAM-CLUSTER
- (H) SURGE PROTECTION
- (I) PCC PAD AND FOUNDATION
- (J) 3/8" DIAMETER, 2 3/4" LONG, WINGED STAINLESS STEEL ANCHOR BOLTS WITH WASHERS AND HEX HEAD LOCKNUTS (4 BOLTS FOR SINGLE, 6 BOLTS FOR DOUBLE)
- (K) 5/8" X 10' LONG COPPER CLAD STEEL ROD GROUND ELECTRODE AND GROUND CLAMP WITH No. 8 AWG GROUND CONDUCTOR.
- (L) 1"C TYPE 3 CONDUIT FOR ELECTRICAL SERVICE (2 FOR CABINET WITH TELEPHONE SERVICE)
- (M) 1/2"C TYPE 3 CONDUIT FOR RCVM AND FS INPUT WIRING
- (N) 2"C TYPE 3 CONDUIT FOR LOW VOLTAGE WIRING
- (O) FLOW MONITOR
- (P1) 2 GANG WEATHER PROOF BOX WITH GROUND FAULT PROTECTED RECEPTACLE
- (P2) ON-OFF SWITCH, SEE DETAIL "A" ON THIS SHEET
- (Q) STAINLESS STEEL BACK BOARD (3/16" Min THICKNESS), ATTACHED TO ENCLOSURE
- (R) CIRCUIT BREAKERS
- (S) TERMINAL STRIPS FOR LOW VOLTAGE WIRE CONNECTIONS
- (T) SATELLITE IRRIGATION CONTROLLER (SAT) WITH TWO WAY RADIO CONNECTIONS (QUANTITIES SHOWN ON PLANS)
- (U) IRRIGATION CLUSTER CONTROL UNIT (CCU) WITH TELEPHONE AND TWO WAY RADIO CONNECTIONS.
- (V) 450-470 MH RADIO
- (W) RJ-11 TELEPHONE CONNECTION (CCU ONLY)
- (X) LOW PRO ANTENNA AND CABLE (FOR PHONE COMMUNICATION) (CCU ONLY)

LANDSCAPE DETAILS

NO SCALE

LD-9

STATE OF CALIFORNIA - DEPARTMENT OF TRANSPORTATION
Caltrans LANDSCAPE ARCHITECTURE

SENIOR LANDSCAPE ARCHITECT: STEPHEN ALVAREZ
CALCULATED-DESIGNED BY: KENNY MAH
CHECKED BY: MARLENE GROS
REVISED BY: X
DATE REVISED: MM-DD-YY

LAST REVISION 10-19-10
DATE PLOTTED => 27-DEC-2010
TIME PLOTTED => 06:50

Dist	COUNTY	ROUTE	POST MILES TOTAL PROJECT	SHEET No.	TOTAL SHEETS
11	SD	52,125	14.5/15.5, 21.9/22.3	42	72

LICENSED LANDSCAPE ARCHITECT

12-20-10
PLANS APPROVAL DATE

LICENSED LANDSCAPE ARCHITECT
KENNETH L. MAH No. 3449
02/29/12 Renewal Date
10/07/10 Date
STATE OF CALIFORNIA

THE STATE OF CALIFORNIA OR ITS OFFICERS OR AGENTS SHALL NOT BE RESPONSIBLE FOR THE ACCURACY OR COMPLETENESS OF SCANNED COPIES OF THIS PLAN SHEET.

LOCATIONS OF WORK:

- PROSPECT Ave - Exist SAT 'P' RENAME SAT '60(A)'
- Sta "SD-52" 812+05 - Exist SAT 'MG' RENAME SAT '60(D)'

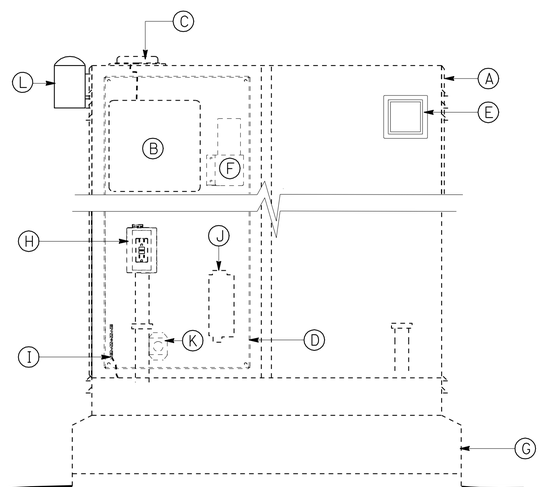

FRONT ELEVATION

LEGEND:

Ⓐ EXISTING CONTROLLER ENCLOSURE CABINET
Ⓑ EXISTING IRRIGATION CONTROLLER
Ⓒ EXISTING LO PRO ANTENNA
Ⓓ EXISTING STAINLESS STEEL BACK BOARD
Ⓔ FLOW MONITOR
Ⓕ EXISTING 450-470 MH RADIO
Ⓖ EXISTING PCC PAD AND FOUNDATION
Ⓗ EXISTING 2 GANG WEATHER PROOF BOX WITH GROUND FAULT PROTECTED RECEPTACLE AND ON-OFF SWITCH
Ⓘ EXISTING GROUND CONDUCTOR
Ⓙ EXISTING TERMINAL STRIPS FOR LOW VOLTAGE WIRE CONNECTIONS
Ⓚ EXISTING SURGE PROTECTION
Ⓛ RAIN SWITCH WITH STAINLESS STEEL HOUSING MOUNTED TO CABINET AT PROSPECT Ave LOCATION

MODIFY EXISTING IRRIGATION CONTROLLER ENCLOSURE CABINET

LANDSCAPE DETAILS

NO SCALE

LD-10

STATE OF CALIFORNIA - DEPARTMENT OF TRANSPORTATION
Caltrans LANDSCAPE ARCHITECTURE

SENIOR LANDSCAPE ARCHITECT: STEPHEN ALVAREZ
CALCULATED-DESIGNED BY / CHECKED BY
KENNY MAH / MARLENE GROS
REVISED BY / DATE REVISED: X / MM-DD-YY

LAST REVISION 10-19-10 | DATE PLOTTED => 24-DEC-2010 | TIME PLOTTED => 08:28

Dist	COUNTY	ROUTE	POST MILES TOTAL PROJECT	SHEET No.	TOTAL SHEETS
11	SD	52,125	14.5/15.5, 21.9/22.3	43	72

LICENSED LANDSCAPE ARCHITECT

12-20-10
PLANS APPROVAL DATE

LICENSED LANDSCAPE ARCHITECT KENNETH L. MAH No. 3649 STATE OF CALIFORNIA
02/29/12 Renewal Date
10/07/10 Date

THE STATE OF CALIFORNIA OR ITS OFFICERS OR AGENTS SHALL NOT BE RESPONSIBLE FOR THE ACCURACY OR COMPLETENESS OF SCANNED COPIES OF THIS PLAN SHEET.

NOTES:

1. (N) - NOT A SEPARATE PAY ITEM. FOR INFORMATION ONLY.
2. * - SQFT QUANTITIES ARE FOR INFORMATION ONLY.

RECYCLED WATER WARNING SIGN

SHEET	POST MOUNTED EA (N)	FENCE MOUNTED EA (N)	ENCLOSURE MOUNTED EA (N)
IP-1	-	-	2
IP-2	3	-	-
IP-3	-	2	2
IP-4	-	1	-
IP-5	1	2	1
IP-6	1	3	-
IP-7	-	2	-

ROCK MULCH

SHEET NUMBER	SQYD
PP-1	0.00
PP-2	0.00
PP-3	0.00
PP-4	0.00
PP-5	582.00
PP-6	0.00
PP-7	0.00
LD-2	582.00
TOTAL	1,164.00

PLANT REMOVAL

SHEET NUMBER	SQFT (N)
PR-1	55,865.00
PR-2	64,300.00
PR-3	105,710.00

MODIFY Exist IRRIGATION CONTROLLER ENCLOSURE CABINET

SHEET NUMBER	EA
IP-3	1
IP-5	1
TOTAL	2

MODIFY Exist IRRIGATION CROSSOVERS

SHEET NUMBER	LINE	STATION	Exist Cond SIZE (INCH)	Exist Cond TYPE	Exist Cond LENGTH (LF)	SIDE R+	SIDE L+	(N) REMOVE WATER LINE CROSSOVER SIZE (INCH)	(N) INSTALL WATER LINE CROSSOVER SIZE (INCH)	Exist SPRINKLER CONTROL CROSSOVER SIZE (INCH)
IR-2	"MG"	54+80	10"	CHDPE	50	X	0	1"	2"	1"
TOTAL					50					

WEED GERMINATION

SHEET NUMBER	ACRES (N)
PP-1	3.57
PP-2	3.55
PP-3	3.16
PP-4	10.73
PP-5	4.75
PP-6	8.72
PP-7	4.23
LD-2	0.22

MAINTAIN Exist PLANTED AREAS

SHEET NUMBER	SQFT *
PP-1	0.00
PP-2	48,790.00
PP-3	0.00
PP-4	0.00
PP-5	28,700.00
PP-6	0.00
PP-7	23,300.00

EROSION CONTROL (COMPOST BLANKET)

SHEET NUMBER	CY
PP-1	950
PP-2	976
PP-3	881
PP-4	2,908
PP-5	1,631
PP-6	2,170
PP-7	1,160
TOTAL	10,676

EROSION CONTROL (PSFM) COMPONENTS (N)

	AREA ACRE	TACKIFIER LB	WOOD FIBER LB	CELLULOSE FIBER LB	PURE LIVE SEED SEED (TYPE 1) LB	PURE LIVE SEED SEED (TYPE 2) LB	PURE LIVE SEED SEED (TYPE 3) LB
(TYPE 1)	2.26	56.5	4,068.0	2,712.0	15.8	0.0	0.0
(TYPE 2)	24.16	604.0	43,488.0	28,992.0	0.0	606.4	0.0
(TYPE 3)	2.55	63.8	4,590.0	3,060.0	0.0	0.0	15.3

EROSION CONTROL (PSFM)

SHEET NUMBER	(TYPE 1) ACRE	(TYPE 2) ACRE	(TYPE 3) ACRE
PP-1	0	3.42	0
PP-2	0	1.86	0
PP-3	0	2.07	0
PP-4	0.39	9.24	0
PP-5	0.36	0.94	0.51
PP-6	0.49	4.94	0.94
PP-7	1.02	1.69	1.1
SUBTOTAL	2.26	24.16	2.55
TOTAL	28.97		

MULCH

SHEET NUMBER	CY
PP-1	0.00
PP-2	129.00
PP-3	0.00
PP-4	0.00
PP-5	62.00
PP-6	0.00
PP-7	0.00
LD-2	101.00
PLANT BASINS	1,000.00
TOTAL	1,292.00

REPLACE VALVE BOX COVER

SHEET NUMBER	EA
IP-1	6
IP-2	16
IP-3	11
IP-4	3
IP-5	1
IP-6	-
IP-7	-
TOTAL	37

IRRIGATION SLEEVE

SHEET NUMBER	8" LF
IP-1	-
IP-2	-
IP-3	-
IP-4	48
IP-5	12
IP-6	12
IP-7	-
TOTAL	72

TUBULAR STEEL GATE

SHEET NUMBER	EA
PP-4	2
TOTAL	2

COMPOST INCORPORATE

SHEET NUMBER	SQYD
LD-2	1,088
TOTAL	1,088

LANDSCAPE DETAILS

NO SCALE

LD-11

STATE OF CALIFORNIA - DEPARTMENT OF TRANSPORTATION
Caltrans® LANDSCAPE ARCHITECTURE

SENIOR LANDSCAPE ARCHITECT: STEPHEN ALVAREZ

CALCULATED-DESIGNED BY: KENNY MAH
CHECKED BY: MARLENE GROS

REVISED BY: X
DATE REVISED: MM-DD-YY

LAST REVISION DATE PLOTTED => 24-DEC-2010
10-19-10 TIME PLOTTED => 07:47

Dist	COUNTY	ROUTE	POST MILES TOTAL PROJECT	SHEET No.	TOTAL SHEETS
11	SD	52,125	14.5/15.5, 21.9/22.3	44	72

LICENSED LANDSCAPE ARCHITECT

12-20-10
PLANS APPROVAL DATE

LICENSED LANDSCAPE ARCHITECT
KENNETH L. MAH No. 3649
SIGNATURE
02/29/12
EXPIRATION DATE
10/07/10
DATE
STATE OF CALIFORNIA

THE STATE OF CALIFORNIA OR ITS OFFICERS OR AGENTS SHALL NOT BE RESPONSIBLE FOR THE ACCURACY OR COMPLETENESS OF SCANNED COPIES OF THIS PLAN SHEET.

SUBTOTALS PER VALVE ON LATERAL SUPPLY SIDE OF CONTROL VALVE

VALVE OR ASSEMBLY NUMBER FOR CONTROLLER 60(A)

DESCRIPTION			UNIT	1	2	3	4	5	6	7	8	9	10	11	12	13	14	15	16	17	18	19	20	21	22	23	24	25	26	27	28	29	30	31	32	33	34	35	36	37	38	39	40	SUBTOTALS	UNIT	DESCRIPTION		
PLASTIC PIPE SUPPLY LINE	SCH 40	1"	LF	160	160	160	558	160	160	160	160	160	160	535	80	96	96	96	400	96	143	96	96	-	96	96	96	108	118	-	118	118	96	695	96	144	-	-	-	-	-	-	-	5,609	LF	1"	SCH 40	PLASTIC PIPE SUPPLY LINE
		1¼"	LF	200	200	160	123	200	120	200	160	120	80	112	80	192	102	147	-	192	147	192	236	-	144	96	192	132	234	-	192	192	192	110	96	144	-	-	-	-	-	-	-	4,879	LF	1¼"		
		1½"	LF	-	-	-	127	-	-	-	-	-	-	30	156	-	-	-	-	-	-	-	-	-	-	-	-	-	-	-	-	-	-	-	-	-	-	-	-	-	-	-	-	313	LF	1½"		
		2"	LF	89	35	6	6	96	54	6	135	49	6	-	-	185	136	153	-	170	110	38	6	-	325	311	218	80	152	-	156	156	42	-	179	66	-	-	-	-	-	-	-	2,971	LF	2"		
		2½"	LF	-	-	-	-	-	-	-	-	-	-	-	-	-	-	-	-	-	-	-	-	-	-	-	-	-	-	-	-	-	-	-	-	-	-	-	-	-	-	-	-	0	LF	2½"		
		3"	LF	-	-	-	-	-	-	-	-	-	-	-	-	-	-	-	-	-	-	-	-	-	-	-	-	-	-	-	-	-	-	-	-	-	-	-	-	-	-	-	-	0	LF	3"		
GSP		1¼"	LF	-	-	-	-	-	-	-	-	-	-	-	50	-	-	-	-	-	-	-	-	-	-	-	-	-	-	-	-	-	-	-	-	-	-	-	-	-	-	-	-	50	LF	1¼"	GSP	
		1½"	LF	-	-	-	-	-	-	-	-	-	-	-	-	-	-	-	-	-	-	-	-	-	-	-	-	-	-	-	-	-	-	-	-	-	-	-	-	-	-	-	-	0	LF	1½"		
SPRINKLER TYPE		A-5	EA	10	10	9	-	10	10	8	9	9	6	-	7	-	-	-	-	-	-	-	-	-	-	-	-	-	-	-	-	-	-	-	-	-	-	-	-	-	-	-	-	88	EA	A-5	SPRINKLER TYPE	
		A-6	EA	-	-	-	-	-	-	-	-	-	-	-	-	-	-	-	-	-	-	-	-	-	-	-	-	-	-	-	-	-	-	-	-	-	-	-	-	-	-	-	-	0	EA	A-6		
		A-7	EA	-	-	-	-	-	-	-	-	-	-	-	-	7	7	6	-	7	7	7	7	-	6	5	7	7	7	-	7	7	7	-	5	7	-	-	-	-	-	-	-	120	EA	A-7		
		A-8	EA	-	-	-	-	-	-	-	-	-	-	-	-	-	-	-	-	-	-	-	-	-	-	-	-	-	-	-	-	-	-	-	-	-	-	-	-	-	-	-	-	0	EA	A-8		
		A-11	EA	-	-	-	-	-	-	-	-	-	-	-	-	-	-	-	-	-	-	-	-	-	-	-	-	-	-	-	-	-	-	-	-	-	-	-	-	-	-	-	-	0	EA	A-11		
		A-12	EA	-	-	-	-	-	-	-	-	-	-	-	-	-	-	-	-	-	-	-	-	-	-	-	-	-	-	-	-	-	-	-	-	-	-	-	-	-	-	-	-	0	EA	A-12		
		C-2 Mod	EA	-	-	-	38	-	-	-	-	-	-	27	-	-	-	-	12	-	-	-	-	24	-	-	-	-	-	29	-	-	-	30	-	-	-	-	-	-	-	-	-	160	EA	C-2 Mod		

VALVE OR ASSEMBLY NUMBER FOR CONTROLLER 60(B)

DESCRIPTION			UNIT	1	2	3	4	5	6	7	8	9	10	11	12	13	14	15	16	17	18	19	20	21	22	23	24	25	26	27	28	29	30	31	32	33	34	35	36	37	38	39	40	SUBTOTALS	UNIT	DESCRIPTION		
PLASTIC PIPE SUPPLY LINE	SCH 40	1"	LF	160	96	96	160	96	132	157	160	681	621	160	160	160	500	264	600	150	160	160	45	50	50	325	160	160	150	96	96	922	-	-	-	-	-	-	-	-	-	-	-	6,919	LF	1"	SCH 40	PLASTIC PIPE SUPPLY LINE
		1¼"	LF	200	192	192	240	192	6	160	240	212	110	240	40	240	-	198	182	250	200	200	200	25	200	87	240	240	250	150	192	337	-	-	-	-	-	-	-	-	-	-	-	5,557	LF	1¼"		
		1½"	LF	-	-	-	-	-	-	-	40	74	142	-	-	40	32	84	185	75	-	40	-	40	-	50	40	-	75	-	-	45	-	-	-	-	-	-	-	-	-	-	-	962	LF	1½"		
		2"	LF	220	-	113	148	33	-	68	95	42	-	73	208	58	-	6	72	176	103	6	103	-	6	-	6	61	210	127	57	6	-	-	-	-	-	-	-	-	-	-	-	2,574	LF	2"		
		2½"	LF	-	-	-	-	-	-	-	-	-	-	-	-	-	-	-	-	-	-	-	-	-	-	-	-	-	-	-	-	-	-	-	-	-	-	-	-	-	-	-	-	0	LF	2½"		
		3"	LF	-	-	-	-	-	-	-	-	-	-	-	-	-	-	-	-	-	-	-	-	-	-	-	-	-	-	-	-	-	-	-	-	-	-	-	-	-	-	-	-	0	LF	3"		
GSP		1¼"	LF	-	-	-	-	-	-	-	-	-	-	-	-	-	-	-	-	-	-	-	-	-	-	-	-	-	-	-	-	-	-	-	-	-	-	-	-	-	-	-	-	0	LF	1¼"	GSP	
		1½"	LF	-	-	-	-	-	-	-	-	-	-	-	-	-	-	-	-	-	-	-	-	-	-	-	-	-	-	-	-	-	-	-	-	-	-	-	-	-	-	-	-	0	LF	1½"		
SPRINKLER TYPE		A-5	EA	10	-	-	12	-	-	6	-	-	-	-	6	12	-	-	-	-	10	12	-	-	1	-	11	12	-	-	-	-	-	-	-	-	-	-	-	-	-	-	-	92	EA	A-5	SPRINKLER TYPE	
		A-6	EA	-	-	-	-	-	-	3	12	-	-	11	-	-	-	-	-	-	-	-	-	-	-	-	-	-	-	-	-	-	-	-	-	-	-	-	-	-	-	-	-	26	EA	A-6		
		A-7	EA	-	7	7	-	7	-	-	-	-	-	-	-	-	-	-	-	-	-	-	7	4	6	-	-	-	-	6	7	-	-	-	-	-	-	-	-	-	-	-	-	64	EA	A-7		
		A-8	EA	-	-	-	-	-	-	-	-	-	-	-	-	-	-	-	-	-	-	-	-	-	-	-	-	-	-	-	-	-	-	-	-	-	-	-	-	-	-	-	-	0	EA	A-8		
		A-11	EA	-	-	-	-	-	-	-	-	-	-	-	-	-	-	-	-	26	-	-	-	-	-	-	-	-	26	-	-	-	-	-	-	-	-	-	-	-	-	-	-	52	EA	A-11		
		A-12	EA	-	-	-	-	-	8	-	-	-	-	-	-	-	-	-	-	-	-	-	-	-	-	-	-	-	-	-	-	-	-	-	-	-	-	-	-	-	-	-	-	8	EA	A-12		
		C-2 Mod	EA	-	-	-	-	-	-	-	-	32	25	-	-	-	28	37	39	-	-	-	-	-	-	28	-	-	-	-	-	50	-	-	-	-	-	-	-	-	-	-	-	239	EA	C-2 Mod		

IRRIGATION QUANTITIES
IQ-1

STATE OF CALIFORNIA - DEPARTMENT OF TRANSPORTATION
Caltrans® LANDSCAPE ARCHITECTURE

SENIOR LANDSCAPE ARCHITECT: STEPHEN ALVAREZ
CALCULATED-DESIGNED BY: MARLENE GROS
CHECKED BY: EMILIO VIRAMONTES
REVISED BY: X
DATE REVISED: MM-DD-YY

LAST REVISION 10-20-10
DATE PLOTTED => 24-DEC-2010
TIME PLOTTED => 07:47

Dist	COUNTY	ROUTE	POST MILES TOTAL PROJECT	SHEET No.	TOTAL SHEETS
11	SD	52,125	14.5/15.5, 21.9/22.3	45	72

LICENSED LANDSCAPE ARCHITECT

12-20-10
PLANS APPROVAL DATE

LICENSED LANDSCAPE ARCHITECT
KENNETH L. MAH No. 3649
02/29/12 Renewal Date
10/07/10 Date
STATE OF CALIFORNIA

THE STATE OF CALIFORNIA OR ITS OFFICERS OR AGENTS SHALL NOT BE RESPONSIBLE FOR THE ACCURACY OR COMPLETENESS OF SCANNED COPIES OF THIS PLAN SHEET.

SUBTOTALS PER VALVE ON LATERAL SUPPLY SIDE OF CONTROL VALVE

DESCRIPTION		UNIT	VALVE OR ASSEMBLY NUMBER FOR CONTROLLER 60(C)																			VALVE OR ASSEMBLY NUMBER FOR CONTROLLER (C) AT MEDIAN	SUBTOTALS	UNIT	DESCRIPTION		
			1	2	3	4	5	6	7	8	9	10	11	12	13	14	15	16	17	18	19	20	6				
PLASTIC PIPE SUPPLY LINE	SCH 40	1"	LF	200	96	96	96	117	805	160	160	160	160	950	160	240	96	96	102	96	96	183	1,072	1,210	6,351	LF	1"	SCH 40	PLASTIC PIPE SUPPLY LINE
		1¼"	LF	50	150	150	50	175	253	240	240	200	240	332	240	159	96	150	192	96	240	80	158	-	3,491	LF	1¼"		
		1½"	LF	53	-	-	100	-	45	-	40	-	40	74	40	-	-	-	-	-	40	-	-	-	432	LF	1½"		
		2"	LF	126	118	90	-	165	30	262	299	171	176	165	242	25	6	107	182	156	305	381	60	-	3,066	LF	2"		
		2½"	LF	-	-	-	-	-	-	-	-	-	-	-	-	-	-	-	-	-	-	-	-	-	0	LF	2½"		
		3"	LF	-	-	-	-	-	-	-	-	-	-	-	-	-	-	-	-	-	-	-	-	-	0	LF	3"		
																											1"	GSP	PLASTIC PIPE SUPPLY LINE
	GSP	1¼"	LF	-	-	-	-	-	-	-	-	-	-	-	-	-	-	-	-	-	-	-	-	-	0	LF	1¼"		
		1½"	LF	-	-	-	-	-	-	-	-	-	-	-	-	-	-	-	-	-	-	-	-	-	0	LF	1½"		
SPRINKLER TYPE		A-5	EA	-	-	-	-	-	-	11	12	10	-	-	12	4	-	-	5	-	12	6	-	-	72	EA	A-5	SPRINKLER TYPE	
		A-6	EA	-	-	-	-	-	-	-	-	-	12	-	-	8	-	-	6	-	-	1	-	-	27	EA	A-6		
		A-7	EA	6	2	6	4	6	-	-	-	-	-	-	-	-	2	7	-	-	-	-	-	-	33	EA	A-7		
		A-8	EA	1	4	-	-	-	-	-	-	-	-	-	-	-	3	-	-	5	-	-	-	-	13	EA	A-8		
		A-11	EA	-	-	-	-	-	-	-	-	-	-	-	-	-	-	-	-	-	-	-	-	-	0	EA	A-11		
		A-12	EA	-	-	-	-	-	-	-	-	-	-	-	-	-	-	-	-	-	-	-	-	-	0	EA	A-12		
		C-2 Mod	EA	-	-	-	-	-	49	-	-	-	-	47	-	-	-	-	-	-	-	-	50	34	180	EA	C-2 Mod		

DESCRIPTION		UNIT	VALVE OR ASSEMBLY NUMBER FOR CONTROLLER 60(D)																																					SUBTOTALS	UNIT	DESCRIPTION		
			1	2	3	4	5	6	7	8	9	10	11	12	13	14	15	16	17	18	19	20	21	22	23	24	25	26	27	28	29	30	31	32	33	34	35	36	37	38	39	40					
PLASTIC PIPE SUPPLY LINE	SCH 40	1"	LF	1,066	90	80	96	96	96	96	762	96	150	96	96	96	300	200	240	96	96	160	739	417	-	96	70	603	96	160	156	160	483	185	150	240	227	80	675	-	-	-	-	8,545	LF	1"	SCH 40	PLASTIC PIPE SUPPLY LINE
		1¼"	LF	146	150	93	192	192	192	150	67	100	100	192	192	192	50	288	40	50	100	160	162	51	-	96	50	155	250	80	40	80	109	72	160	80	80	80	118	-	-	-	-	4,309	LF	1¼"		
		1½"	LF	148	-	-	-	-	-	-	52	-	-	-	-	-	82	-	-	115	-	-	54	20	-	96	54	135	-	-	-	-	20	196	-	40	80	-	-	-	-	-	-	1,092	LF	1½"		
		2"	LF	97	6	160	130	100	410	299	25	61	218	370	220	222	-	-	61	-	220	170	90	-	-	6	-	210	160	157	38	6	85	-	180	76	121	-	-	-	-	-	-	3,898	LF	2"		
		2½"	LF	-	-	-	-	-	-	-	-	-	-	-	-	-	-	-	-	-	-	-	-	-	-	-	-	-	-	-	-	-	-	-	-	-	-	-	-	-	-	-	-	0	LF	2½"		
		3"	LF	-	-	-	-	-	-	-	-	-	-	-	-	-	-	-	-	-	-	-	-	-	-	-	-	-	-	-	-	-	-	-	-	-	-	-	-	-	-	-	-	0	LF	3"		
GSP		1¼"	LF	-	-	-	-	-	-	-	-	-	-	-	-	-	-	-	-	-	-	-	-	-	-	-	-	-	-	-	-	-	-	-	-	-	-	-	-	-	-	-	-	0	LF	1¼"		
		1½"	LF	-	-	-	-	-	-	-	-	-	-	-	-	-	-	-	-	-	-	-	-	-	-	-	-	-	-	-	-	-	-	-	-	-	-	-	-	-	-	-	-	0	LF	1½"		
SPRINKLER TYPE		A-5	EA	-	-	-	-	-	-	-	-	-	-	-	-	-	-	-	-	-	-	-	-	-	-	-	-	-	3	7	6	-	-	-	9	4	3	3	-	-	-	-	-	35	EA	A-5	SPRINKLER TYPE	
		A-6	EA	-	-	5	-	-	-	-	-	-	-	-	-	-	-	-	8	-	-	9	-	-	-	-	-	-	7	-	-	7	-	-	-	6	7	-	-	-	-	-	-	49	EA	A-6		
		A-7	EA	-	4	-	7	7	7	6	-	5	5	-	7	1	-	-	-	4	5	-	-	-	-	4	3	-	-	-	-	-	-	-	-	-	-	-	-	-	-	-	-	65	EA	A-7		
		A-8	EA	-	2	-	-	-	-	-	-	-	-	7	-	6	-	-	-	-	-	-	-	-	-	2	1	-	-	-	-	-	-	-	-	-	-	-	-	-	-	-	-	18	EA	A-8		
		A-11	EA	-	-	-	-	-	-	-	-	-	-	-	-	-	1	-	-	-	-	-	-	-	-	-	-	-	-	-	-	-	-	-	-	-	-	-	-	-	-	-	-	1	EA	A-11		
		A-12	EA	-	-	-	-	-	-	-	-	-	-	-	-	-	14	9	-	-	-	-	-	-	-	-	-	-	-	-	-	-	-	-	-	-	1	-	-	-	-	-	-	24	EA	A-12		
		C-2 Mod	EA	50	-	-	-	-	-	-	44	-	-	-	-	-	-	-	-	-	-	-	44	24	-	-	-	44	-	-	-	-	32	27	-	-	-	-	21	-	-	-	-	286	EA	C-2 Mod		

IRRIGATION QUANTITIES
IQ-2

STATE OF CALIFORNIA - DEPARTMENT OF TRANSPORTATION
Caltrans® LANDSCAPE ARCHITECTURE
SENIOR LANDSCAPE ARCHITECT STEPHEN ALVAREZ
CALCULATED-DESIGNED BY EMILIO VIRAMONTES
CHECKED BY MARLENE GROS
REVISED BY X
DATE REVISED MM-DD-YY

LAST REVISION 10-20-10
DATE PLOTTED => 24-DEC-2010
TIME PLOTTED => 07:47

Dist	COUNTY	ROUTE	POST MILES TOTAL PROJECT	SHEET No.	TOTAL SHEETS
11	SD	52,125	14.5/15.5, 21.9/22.3	46	72

LICENSED LANDSCAPE ARCHITECT

12-20-10
PLANS APPROVAL DATE

LICENSED LANDSCAPE ARCHITECT
KENNETH L. MAH No. 3649
Expiration Date 02/29/12
Renewal Date 10/07/10
Date
STATE OF CALIFORNIA

THE STATE OF CALIFORNIA OR ITS OFFICERS OR AGENTS SHALL NOT BE RESPONSIBLE FOR THE ACCURACY OR COMPLETENESS OF SCANNED COPIES OF THIS PLAN SHEET.

SUBTOTALS PER VALVE ON LATERAL SUPPLY SIDE OF CONTROL VALVE

VALVE OR ASSEMBLY NUMBER FOR CONTROLLER 60(E)

DESCRIPTION		UNIT	1	2	3	4	5	6	7	8	9	10	11	12	13	14	15	16	17	18	19	20	21	22	23	24	25	26	27	28	29	30	31	32	33	34	SUBTOTALS	UNIT	DESCRIPTION	
PLASTIC PIPE SUPPLY LINE SCH 40	1"	LF	-	-	-	-	-	-	-	-	-	-	-	-	-	96	781	116	96	-	144	96	160	96	96	96	96	1,308	96	96	96	96	96	96	96	96	3,949	LF	1"	SCH 40 PLASTIC PIPE SUPPLY LINE
	1¼"	LF	-	-	-	-	-	-	-	-	-	-	-	-	-	192	185	192	225	-	144	192	40	144	192	144	192	353	192	192	48	48	96	192	96	144	3,203	LF	1¼"	
	1½"	LF	-	-	-	-	-	-	-	-	-	-	-	-	-	-	58	-	-	-	-	-	-	-	-	-	-	88	-	-	-	-	-	-	-	-	146	LF	1½"	
	2"	LF	-	-	-	-	-	-	-	-	-	-	-	-	-	52	183	74	224	-	41	119	193	173	150	61	57	10	119	148	200	100	120	202	180	145	2,551	LF	2"	
	2½"	LF	-	-	-	-	-	-	-	-	-	-	-	-	-	-	-	-	-	-	-	-	-	-	-	-	-	-	-	-	-	-	-	-	-	-	0	LF	2½"	
	3"	LF	-	-	-	-	-	-	-	-	-	-	-	-	-	-	-	-	-	-	-	-	-	-	-	-	-	-	-	-	-	-	-	-	-	-	0	LF	3"	
GSP	1¼"	LF	-	-	-	-	-	-	-	-	-	-	-	-	-	-	-	-	-	-	-	-	-	-	-	-	-	-	-	-	-	-	-	-	-	-	0	LF	1¼"	GSP
	1½"	LF	-	-	-	-	-	-	-	-	-	-	-	-	-	-	-	-	-	-	-	-	-	-	-	-	-	-	-	-	-	-	-	-	-	-	0	LF	1½"	
SPRINKLER TYPE	A-5	EA	-	-	-	-	-	-	-	-	-	-	-	-	-	-	-	-	-	-	-	-	6	-	-	-	-	-	-	-	-	-	-	-	-	-	6	EA	A-5	SPRINKLER TYPE
	A-6	EA	-	-	-	-	-	-	-	-	-	-	-	-	-	-	-	-	-	-	-	-	-	-	-	-	-	-	-	-	-	-	-	-	-	-	0	EA	A-6	
	A-7	EA	-	-	-	-	-	-	-	-	-	-	-	-	-	6	-	7	7	-	7	7	-	6	7	6	-	-	6	6	4	-	5	7	5	6	92	EA	A-7	
	A-8	EA	-	-	-	-	-	-	-	-	-	-	-	-	-	-	-	-	-	-	-	-	-	-	-	-	7	-	1	1	-	4	-	-	-	-	13	EA	A-8	
	A-11	EA	-	-	-	-	-	-	-	-	-	-	-	-	-	-	-	-	-	-	-	-	-	-	-	-	-	-	-	-	-	-	-	-	-	-	0	EA	A-11	
	A-12	EA	-	-	-	-	-	-	-	-	-	-	-	-	-	-	-	-	-	-	-	-	-	-	-	-	-	-	-	-	-	-	-	-	-	-	0	EA	A-12	
	C-2 Mod	EA	-	-	-	-	-	-	-	-	-	-	-	-	-	-	47	-	-	-	-	-	-	-	-	-	-	50	-	-	-	-	-	-	-	-	97	EA	C-2 Mod	

VALVE OR ASSEMBLY NUMBER FOR CONTROLLER 60(F)

DESCRIPTION		UNIT	1	2	3	4	5	6	7	8	9	10	11	12	13	14	15	16	17	18	19	20	21	22	23	24	25	26	27	28	29	30	31	SUBTOTALS	UNIT	DESCRIPTION	
PLASTIC PIPE SUPPLY LINE SCH 40	1"		-	-	-	-	-	-	-	300	300	160	180	-	-	-	-	-	-	-	-	120	200	160	230	160	-	-	-	160	160	300	300	1,970	LF	1"	SCH 40 PLASTIC PIPE SUPPLY LINE
	1¼"		-	-	-	-	-	-	-	125	150	80	9	-	-	-	-	-	-	-	-	6	80	200	194	240	-	-	-	160	160	125	150	1,324	LF	1¼"	
	1½"		-	-	-	-	-	-	-	-	-	-	-	-	-	-	-	-	-	-	-	-	-	-	-	-	-	-	-	-	-	40	80	120	LF	1½"	
	2"		-	-	-	-	-	-	-	360	376	70	6	-	-	-	-	-	-	-	-	-	62	300	-	282	-	-	-	413	459	6	59	1,587	LF	2"	
	2½"		-	-	-	-	-	-	-	-	-	-	-	-	-	-	-	-	-	-	-	-	-	-	-	-	-	-	-	-	-	-	-	0	LF	2½"	
	3"		-	-	-	-	-	-	-	-	-	-	-	-	-	-	-	-	-	-	-	-	-	-	-	-	-	-	-	-	-	-	-	0	LF	3"	
GSP	1¼"		-	-	-	-	-	-	-	-	-	-	-	-	-	-	-	-	-	-	-	-	-	-	-	-	-	-	-	-	-	-	-	0	LF	1¼"	GSP
	1½"		-	-	-	-	-	-	-	-	-	-	-	-	-	-	-	-	-	-	-	-	-	-	-	-	-	-	-	-	-	-	-	0	LF	1½"	
SPRINKLER TYPE	A-5		-	-	-	-	-	-	-	-	-	7	8	-	-	-	-	-	-	-	-	4	8	10	-	11	-	-	-	12	10	-	-	63	EA	A-5	SPRINKLER TYPE
	A-6		-	-	-	-	-	-	-	-	-	-	-	-	-	-	-	-	-	-	-	-	-	-	-	-	-	-	-	-	-	-	-	0	EA	A-6	
	A-7		-	-	-	-	-	-	-	-	-	-	-	-	-	-	-	-	-	-	-	-	-	-	-	-	-	-	-	-	-	-	-	0	EA	A-7	
	A-8		-	-	-	-	-	-	-	-	-	-	-	-	-	-	-	-	-	-	-	-	-	-	-	-	-	-	-	-	-	-	-	0	EA	A-8	
	A-11		-	-	-	-	-	-	-	18	19	-	-	-	-	-	-	-	-	-	-	-	-	-	-	-	-	-	-	-	-	18	19	37	EA	A-11	
	A-12		-	-	-	-	-	-	-	-	-	-	-	-	-	-	-	-	-	-	-	-	-	-	-	-	8	-	-	-	-	-	-	8	EA	A-12	
	C-2 Mod		-	-	-	-	-	-	-	-	-	-	-	-	-	-	-	-	-	-	-	-	-	-	14	-	-	-	-	-	-	-	-	14	EA	C-2 Mod	

IRRIGATION QUANTITIES
IQ-3

STATE OF CALIFORNIA - DEPARTMENT OF TRANSPORTATION
Caltrans® LANDSCAPE ARCHITECTURE
SENIOR LANDSCAPE ARCHITECT: STEPHEN ALVAREZ
CALCULATED-DESIGNED BY: EMILIO VIRAMONTES
CHECKED BY: MARLENE GROS
REVISED BY: X
DATE REVISED: MM-DD-YY

LAST REVISION 10-20-10 | DATE PLOTTED => 24-DEC-2010 | TIME PLOTTED => 07:47

Dist	COUNTY	ROUTE	POST MILES TOTAL PROJECT	SHEET No.	TOTAL SHEETS
11	SD	52,125	14.5/15.5, 21.9/22.3	47	72

LICENSED LANDSCAPE ARCHITECT

12-20-10
PLANS APPROVAL DATE

LICENSED LANDSCAPE ARCHITECT
KENNETH L. MAH No. 3649
Expiration Date 02/29/12
Renewal Date 10/07/10
STATE OF CALIFORNIA

THE STATE OF CALIFORNIA OR ITS OFFICERS OR AGENTS SHALL NOT BE RESPONSIBLE FOR THE ACCURACY OR COMPLETENESS OF SCANNED COPIES OF THIS PLAN SHEET.

SUBTOTALS PER PLAN SHEET ON MAIN SUPPLY SIDE OF CONTROL VALVE

DESCRIPTION			UNIT	SHEET NUMBER IP-1	IP-2	IP-3	IP-4	IP-5	IP-6	IP-7	LD-3	SUBTOTALS
IRRIGATION WATER METER		2"	EA	-	-	1	-	-	-	-	-	1
IRRIGATION CONTROLLER		40 STATION	EA	1	-	1	-	-	2	-	-	4
		28 CHANNEL CCU	EA	-	-	1	-	-	-	-	-	1
	CEC	SINGLE	EA	1	-	2	-	-	2	-	-	5
		DOUBLE	EA	-	-	-	-	-	-	-	-	
VALVES AND ASSEMBLIES	RWCA	2"	EA	1	-	2	-	1	-	-	-	4
	RCV	1"	EA	-	3	-	2	6	3	-	-	14
		1½"	EA	9	8	10	39	26	34	14	2	142
		2"	EA	-	-	-	-	-	-	-	-	-
	GV	2"	EA	2	3	3	12	9	10	5	-	44
		3"	EA	3	1	3	4	5	3	-	-	19
	CARV	2"	EA	-	-	-	1	1	-	-	-	2
	FS	2"	EA	1	-	2	-	1	-	-	-	4
	BV	2"	EA	-	1	-	-	1	-	-	2	4
	QCV	1"	EA	-	-	-	-	-	-	-	1	1
	RCVM											
	PRV											
PLASTIC PIPE SUPPLY LINE	SCH 40	1"	LF	-	-	-	-	-	-	-	-	0
		1¼"	LF	-	-	-	-	-	-	-	-	0
		1½"	LF	-	-	-	-	-	80	-	-	80
		2"	LF	33	33	39	153	105	132	57	-	552
		2½"	LF	-	-	-	-	-	-	-	-	0
		3"	LF	229	1,099	1,364	2,437	2,119	2,907	840	-	10,995
	PR 315											
GSP		1¼"	LF	-	-	-	-	-	-	-	-	0
DIP												

TOTAL QUANTITIES

TOTALS	UNIT	DESCRIPTION		
1	EA	2"		IRRIGATION WATER METER
4	EA	40 STATION		IRRIGATION CONTROLLER
	EA			
1	EA	28 CHANNEL CCU		
5	EA	SINGLE	CEC	
	EA	DOUBLE		
4	EA	2"	RWCA	VALVES AND ASSEMBLIES
14	EA	1"	RCV	
142	EA	1½"		
-	EA	2"		
44	EA	2"	GV	
19	EA	3"		
2	EA	2"	CARV	
4	EA	2"	FS	
4	EA	2"	BV	
1	EA	1"	QCV	
			RCVM	
			PRV	
33,343	LF	1"	SCH 40	PLASTIC PIPE SUPPLY LINE
22,763	LF	1¼"		
3,145	LF	1½"		
17,199	LF	2"		
0	LF	2½"		
10,995	LF	3"		
			PR 315	
50	LF	1¼"	GSP	
			DIP	
356	EA	A-5	SPRINKLER TYPE	
102	EA	A-6		
374	EA	A-7		
44	EA	A-8		
90	EA	A-11		
40	EA	A-12		
976	EA	C-2 Mod		
			CHECK VALVE	

ABBREVIATIONS:

BPA — BACKFLOW PREVENTER ASSEMBLY
BV — BALL VALVE
CV — CHECK VALVE
CEC — CONTROLLER ENCLOSURE CABINET
CSP — CORRUGATED STEEL PIPE
DIP — DUCTILE IRON PIPE
FAU — FILTER ASSEMBLY UNIT
EA — EACH
FCV — FLOW CONTROL VALVE
FS — FLOW SENSOR
FV — FLUSH VALVE
GSP — GALVANIZED STEEL PIPE
GV — GATE VALVE
MCV — MANUAL CONTROL VALVE
LF — FOOT/FEET
PR — PRESSURE RATED
PRV — PRESSURE REDUCING VALVE
PRLV — PRESSURE RELIEF VALVE
QCV — QUICK COUPLING VALVE
RCV — REMOTE CONTROL VALVE
VAU — VALVE ASSEMBLY UNIT
WSP — WELDED STEEL PIPE
WS — WYE STRAINER
RCVM — REMOTE CONTROL VALVE (MASTER)
RWCA — RECYCLED WATER CONNECTION ASSEMBLY

IRRIGATION QUANTITIES
IQ-4

STATE OF CALIFORNIA - DEPARTMENT OF TRANSPORTATION
Caltrans® LANDSCAPE ARCHITECTURE

SENIOR LANDSCAPE ARCHITECT: STEPHEN ALVAREZ
CALCULATED-DESIGNED BY: EMILIO VIRAMONTES
CHECKED BY: MARLENE GROS
REVISED BY: X
DATE REVISED: MM-DD-YY

LAST REVISION: 10-20-10
DATE PLOTTED => 24-DEC-2010
TIME PLOTTED => 07:47

Dist	COUNTY	ROUTE	POST MILES TOTAL PROJECT	SHEET No.	TOTAL SHEETS
11	SD	52,125	14.5/15.5, 21.9/22.3	48	72

REGISTERED CIVIL ENGINEER — DATE: 10-07-10

12-20-10
PLANS APPROVAL DATE

REGISTERED PROFESSIONAL ENGINEER — SIMON TSE — No. C66401 — Exp. 06-30-12 — CIVIL — STATE OF CALIFORNIA

THE STATE OF CALIFORNIA OR ITS OFFICERS OR AGENTS SHALL NOT BE RESPONSIBLE FOR THE ACCURACY OR COMPLETENESS OF SCANNED COPIES OF THIS PLAN SHEET.

NOTES:

1. LOCATION OF UTILITY FACILITIES SHOWN ON THESE PLANS WERE OBTAINED EITHER FROM THE OWNER'S RECORDS AND/OR FROM STATE SURVEYS.
2. LOCATION OF UTILITY LINES SHOWN ON THESE PLANS ARE APPROXIMATE. THE CONTRACTOR IS TO FIELD VERIFY OR POTHOLE IN ORDER TO DETERMINE EXACT LOCATION.
3. FOR ACCURATE RIGHT OF WAY AND ACCESS DATA, CONTACT RIGHT OF WAY ENGINEERING AT THE DISTRICT OFFICE.

ABBREVIATIONS:

A/V	AIR RELEASE/VACUUM
BO	BLOW OFF
RW	RECYCLED WATER
VCES	VITRIFIED CLAY EXTRA STRENGTH

LEGEND:

SYMBOL	EXISTING UTILITY	OWNER
-——w———	WATER	PADRE DAM MUNICIPAL WATER DISTRICT
-——w———	ABANDONED WATER	
——--s——--—	SEWER	PADRE DAM MUNICIPAL WATER DISTRICT
——-g——-—	GAS	SAN DIEGO GAS & ELECTRIC
——-e———	ELECTRICAL	SAN DIEGO GAS & ELECTRIC
——--t———	TELEPHONE	SBC CALIFORNIA
-(oh)——--t———	TELEPHONE (OVERHEAD)	SBC CALIFORNIA
——---tv———	CABLE-TV	COX COMMUNICATIONS
▶●◀	FIRE HYDRANT	PADRE DAM MUNICIPAL WATER DISTRICT
●	WATER VALVE	PADRE DAM MUNICIPAL WATER DISTRICT

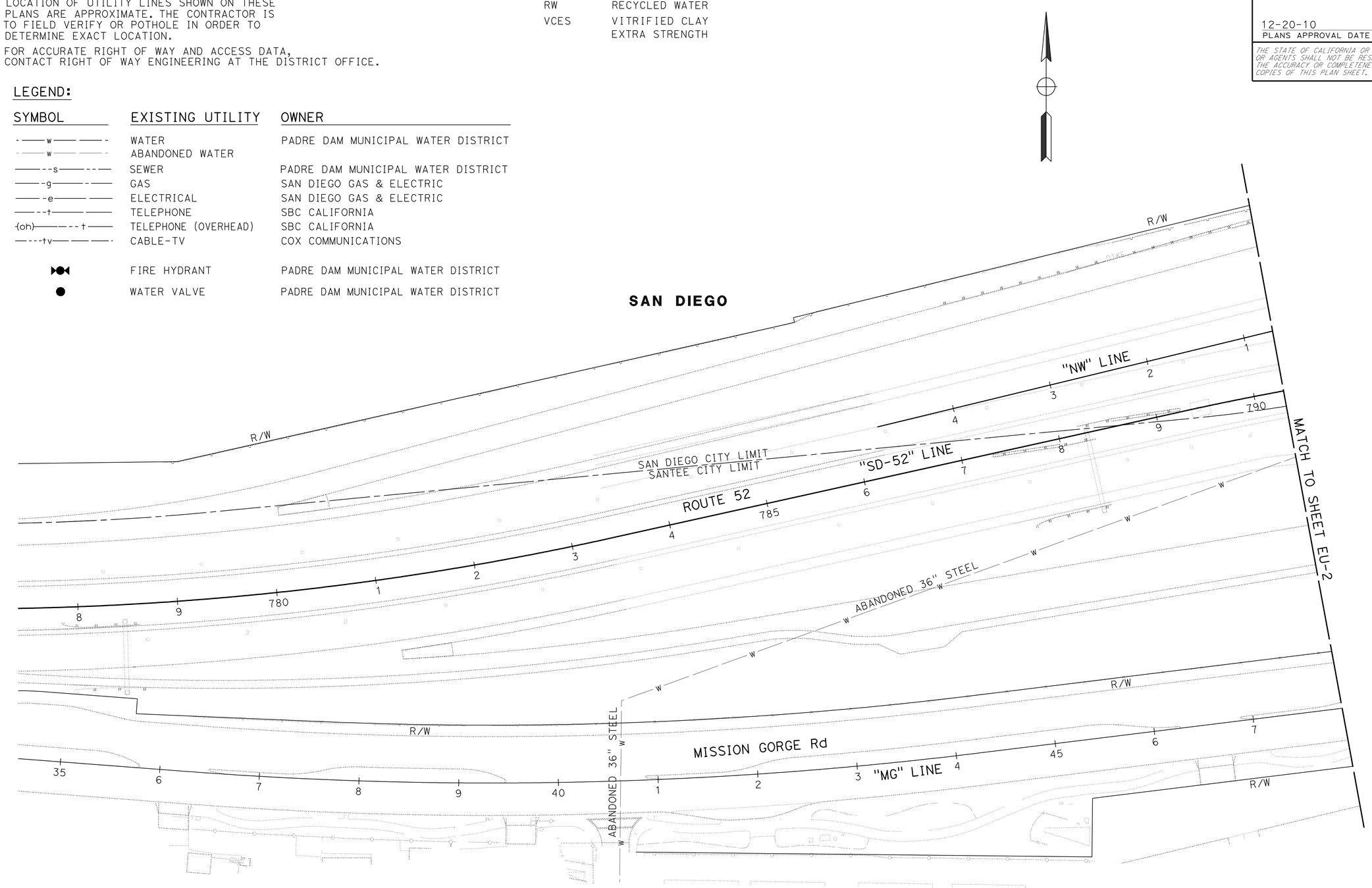

THIS PLAN ACCURATE FOR EXISTING UTILITIES WORK ONLY.

EXISTING UTILITIES PLAN

SCALE: 1" = 50'

EU-1

STATE OF CALIFORNIA - DEPARTMENT OF TRANSPORTATION
Caltrans ENGINEERING SERVICES

FUNCTIONAL SUPERVISOR: ABU-BAKR AL-JAFRI
CALCULATED-DESIGNED BY: SIMON TSE
CHECKED BY: ANH HOANG
REVISED BY: X
DATE REVISED: MM-DD-YY

LAST REVISION 10-20-10 | DATE PLOTTED => 27-DEC-2010 | TIME PLOTTED => 06:07

Dist	COUNTY	ROUTE	POST MILES TOTAL PROJECT	SHEET No.	TOTAL SHEETS
11	SD	52,125	14.5/15.5, 21.9/22.3	49	72

REGISTERED CIVIL ENGINEER 10-07-10 DATE

12-20-10
PLANS APPROVAL DATE

REGISTERED PROFESSIONAL ENGINEER SIMON TSE No. C66401 Exp. 06-30-12 CIVIL STATE OF CALIFORNIA

THE STATE OF CALIFORNIA OR ITS OFFICERS OR AGENTS SHALL NOT BE RESPONSIBLE FOR THE ACCURACY OR COMPLETENESS OF SCANNED COPIES OF THIS PLAN SHEET.

NOTES:

1. LOCATION OF UTILITY FACILITIES SHOWN ON THESE PLANS WERE OBTAINED EITHER FROM THE OWNER'S RECORDS AND/OR FROM STATE SURVEYS.
2. LOCATION OF UTILITY LINES SHOWN ON THESE PLANS ARE APPROXIMATE. THE CONTRACTOR IS TO FIELD VERIFY OR POTHOLE IN ORDER TO DETERMINE EXACT LOCATION.
3. FOR ACCURATE RIGHT OF WAY AND ACCESS DATA, CONTACT RIGHT OF WAY ENGINEERING AT THE DISTRICT OFFICE.

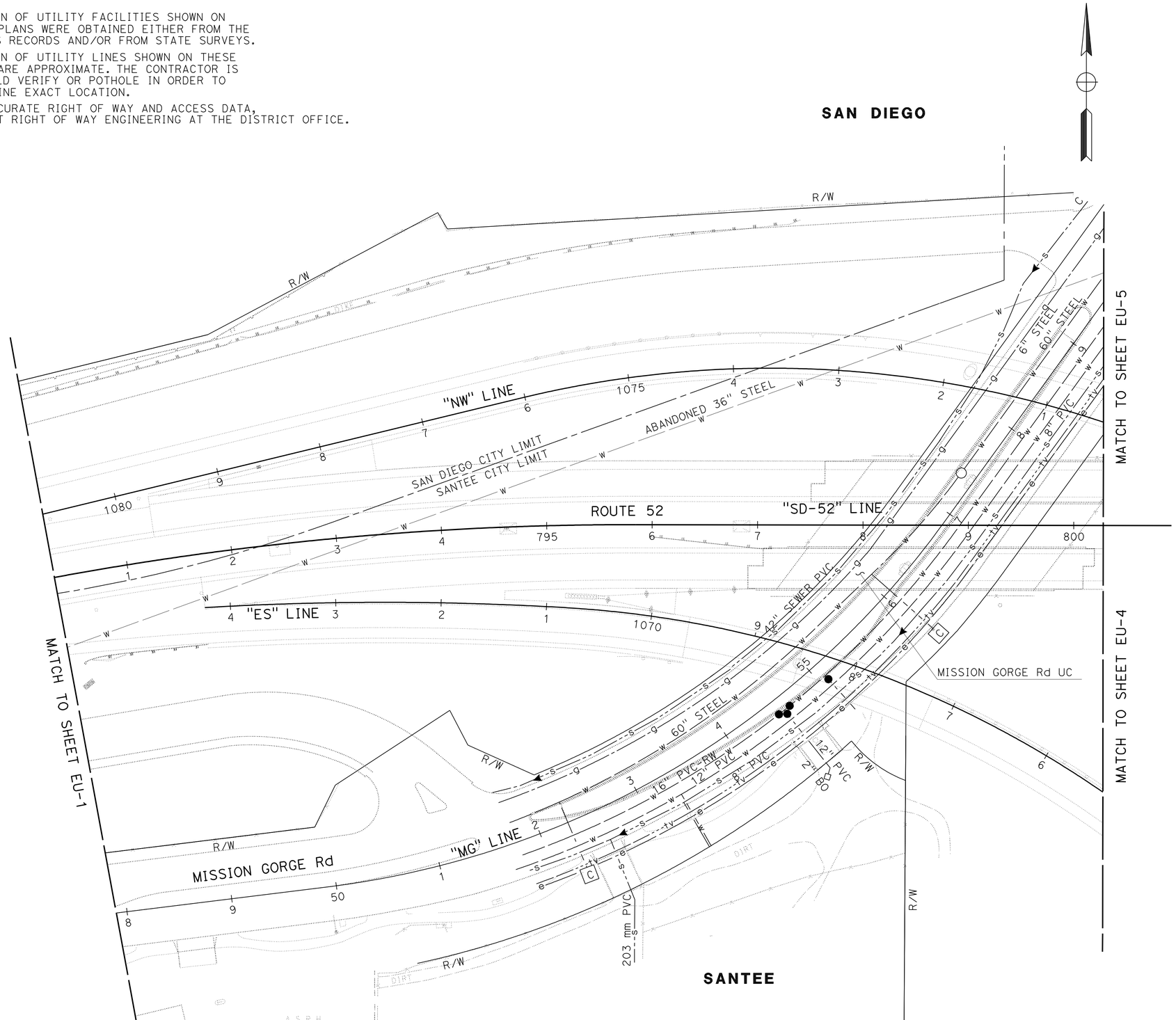

THIS PLAN ACCURATE FOR EXISTING UTILITIES WORK ONLY.

EXISTING UTILITIES PLAN

SCALE: 1" = 50'

EU-2

STATE OF CALIFORNIA - DEPARTMENT OF TRANSPORTATION
Caltrans ENGINEERING SERVICES

FUNCTIONAL SUPERVISOR: ABU-BAKR AL-JAFRI

CALCULATED-DESIGNED BY: ANH HOANG
CHECKED BY: SIMON TSE

REVISED BY: X
DATE REVISED: MM-DD-YY

LAST REVISION 10-20-10
DATE PLOTTED => 27-DEC-2010
TIME PLOTTED => 06:07

Dist	COUNTY	ROUTE	POST MILES TOTAL PROJECT	SHEET No.	TOTAL SHEETS
11	SD	52,125	14.5/15.5, 21.9/22.3	50	72

Simon Tse 10-07-10
REGISTERED CIVIL ENGINEER DATE

12-20-10
PLANS APPROVAL DATE

REGISTERED PROFESSIONAL ENGINEER SIMON TSE No. C66401 Exp. 06-30-12 CIVIL STATE OF CALIFORNIA

THE STATE OF CALIFORNIA OR ITS OFFICERS OR AGENTS SHALL NOT BE RESPONSIBLE FOR THE ACCURACY OR COMPLETENESS OF SCANNED COPIES OF THIS PLAN SHEET.

NOTES:

1. LOCATION OF UTILITY FACILITIES SHOWN ON THESE PLANS WERE OBTAINED EITHER FROM THE OWNER'S RECORDS AND/OR FROM STATE SURVEYS.
2. LOCATION OF UTILITY LINES SHOWN ON THESE PLANS ARE APPROXIMATE. THE CONTRACTOR IS TO FIELD VERIFY OR POTHOLE IN ORDER TO DETERMINE EXACT LOCATION.
3. FOR ACCURATE RIGHT OF WAY AND ACCESS DATA, CONTACT RIGHT OF WAY ENGINEERING AT THE DISTRICT OFFICE.

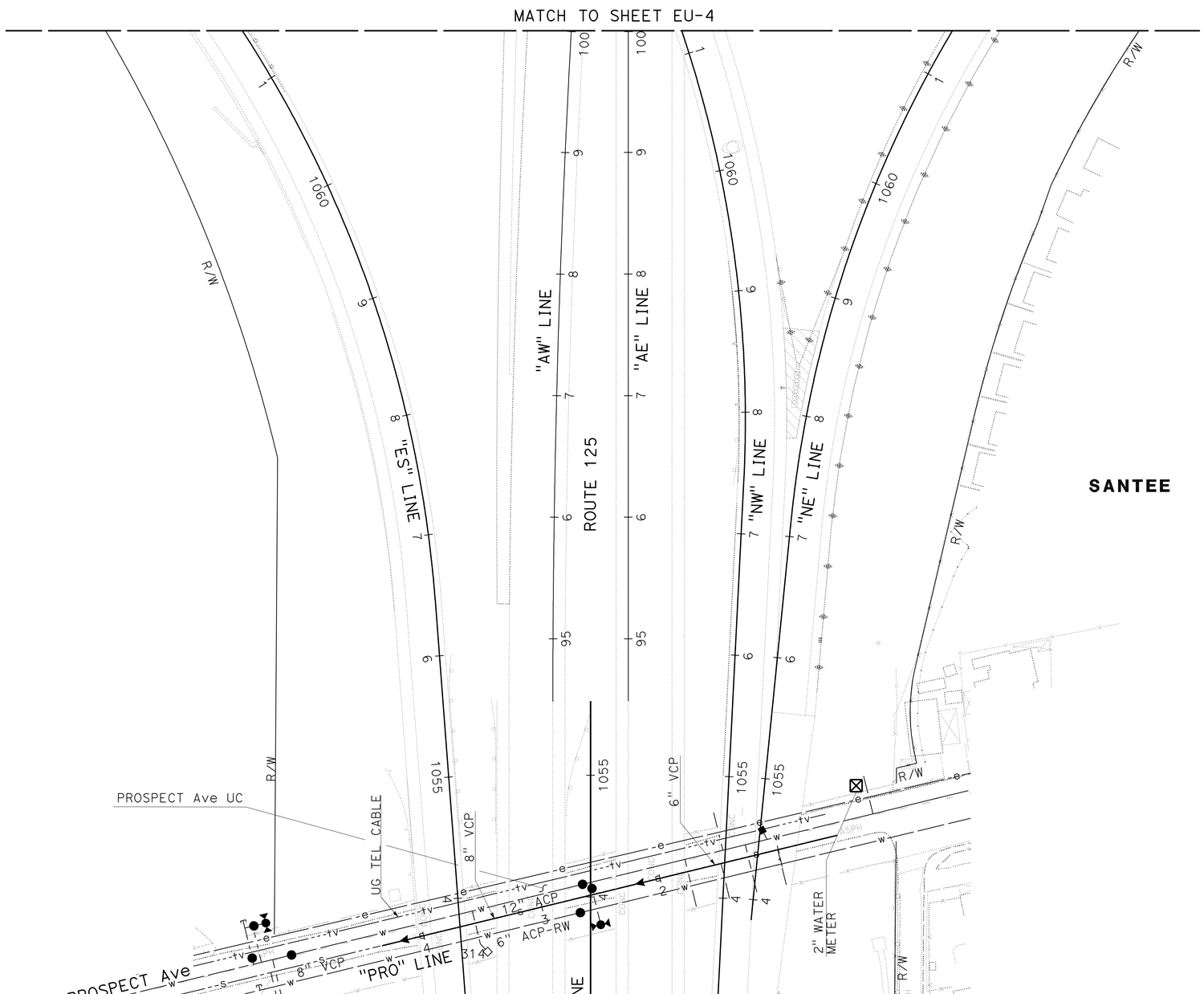

THIS PLAN ACCURATE FOR EXISTING UTILITIES WORK ONLY.

EXISTING UTILITIES PLAN

SCALE: 1" = 50'

EU-3

STATE OF CALIFORNIA - DEPARTMENT OF TRANSPORTATION
Caltrans® ENGINEERING SERVICES

FUNCTIONAL SUPERVISOR: ABU-BAKR AL-JAFRI
CALCULATED-DESIGNED BY: ANH HOANG
CHECKED BY: SIMON TSE
REVISED BY: X
DATE REVISED: MM-DD-YY

LAST REVISION 10-20-10 | DATE PLOTTED => 24-DEC-2010 | TIME PLOTTED => 07:47

Dist	COUNTY	ROUTE	POST MILES TOTAL PROJECT	SHEET No.	TOTAL SHEETS
11	SD	52,125	14.5/15.5, 21.9/22.3	51	72

Simon Tse 10-07-10
REGISTERED CIVIL ENGINEER DATE

12-20-10
PLANS APPROVAL DATE

REGISTERED PROFESSIONAL ENGINEER SIMON TSE No. C66401 Exp. 06-30-12 CIVIL STATE OF CALIFORNIA

THE STATE OF CALIFORNIA OR ITS OFFICERS OR AGENTS SHALL NOT BE RESPONSIBLE FOR THE ACCURACY OR COMPLETENESS OF SCANNED COPIES OF THIS PLAN SHEET.

NOTES:

1. LOCATION OF UTILITY FACILITIES SHOWN ON THESE PLANS WERE OBTAINED EITHER FROM THE OWNER'S RECORDS AND/OR FROM STATE SURVEYS.
2. LOCATION OF UTILITY LINES SHOWN ON THESE PLANS ARE APPROXIMATE. THE CONTRACTOR IS TO FIELD VERIFY OR POTHOLE IN ORDER TO DETERMINE EXACT LOCATION.
3. FOR ACCURATE RIGHT OF WAY AND ACCESS DATA, CONTACT RIGHT OF WAY ENGINEERING AT THE DISTRICT OFFICE.

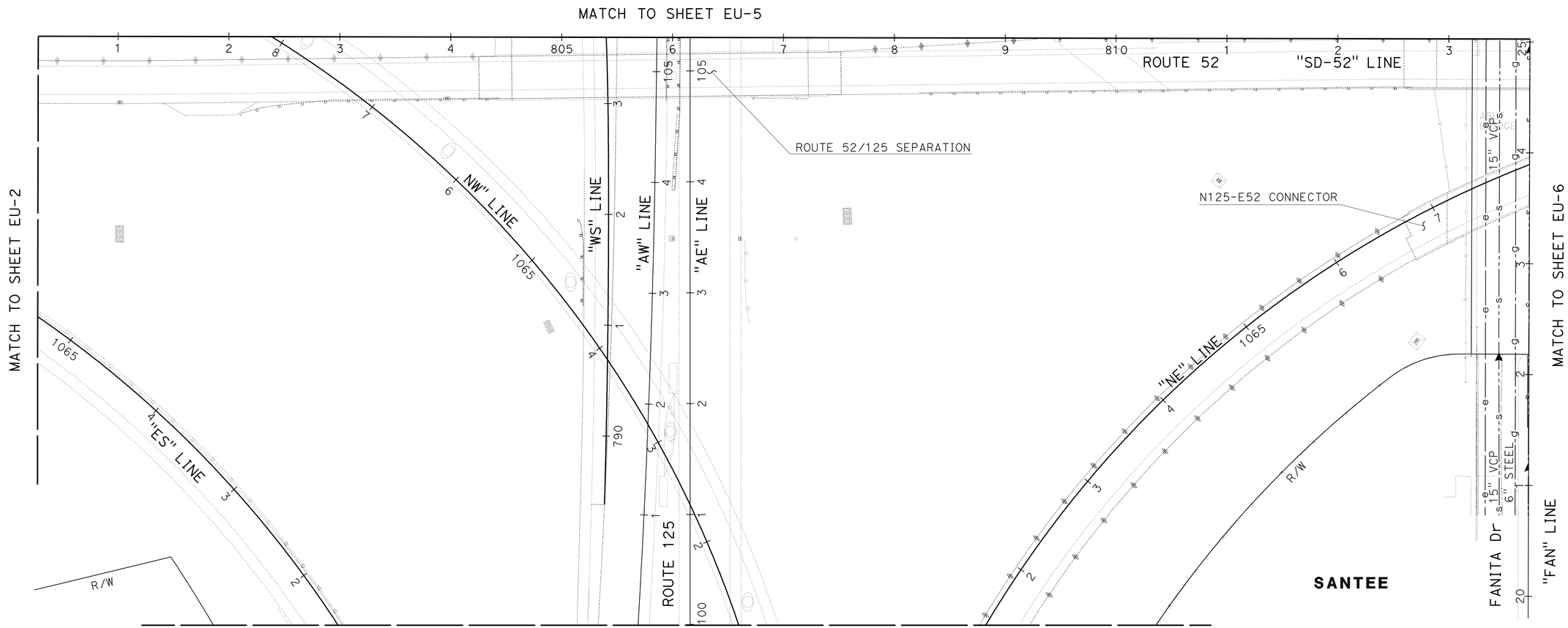

THIS PLAN ACCURATE FOR EXISTING UTILITIES WORK ONLY.

EXISTING UTILITIES PLAN

SCALE: 1" = 50'

EU-4

STATE OF CALIFORNIA - DEPARTMENT OF TRANSPORTATION
Caltrans ENGINEERING SERVICES

FUNCTIONAL SUPERVISOR: ABU-BAKR AL-JAFRI
CALCULATED-DESIGNED BY: ANH HOANG
CHECKED BY: SIMON TSE
REVISED BY: X
DATE REVISED: MM-DD-YY

LAST REVISION 10-20-10 | DATE PLOTTED => 24-DEC-2010 | TIME PLOTTED => 07:47

Dist	COUNTY	ROUTE	POST MILES TOTAL PROJECT	SHEET No.	TOTAL SHEETS
11	SD	52,125	14.5/15.5, 21.9/22.3	52	72

Simon Tse 10-07-10
REGISTERED CIVIL ENGINEER DATE

12-20-10
PLANS APPROVAL DATE

REGISTERED PROFESSIONAL ENGINEER SIMON TSE No. C66401 Exp. 06-30-12 CIVIL STATE OF CALIFORNIA

THE STATE OF CALIFORNIA OR ITS OFFICERS OR AGENTS SHALL NOT BE RESPONSIBLE FOR THE ACCURACY OR COMPLETENESS OF SCANNED COPIES OF THIS PLAN SHEET.

NOTES:

1. LOCATION OF UTILITY FACILITIES SHOWN ON THESE PLANS WERE OBTAINED EITHER FROM THE OWNER'S RECORDS AND/OR FROM STATE SURVEYS.
2. LOCATION OF UTILITY LINES SHOWN ON THESE PLANS ARE APPROXIMATE. THE CONTRACTOR IS TO FIELD VERIFY OR POTHOLE IN ORDER TO DETERMINE EXACT LOCATION.
3. FOR ACCURATE RIGHT OF WAY AND ACCESS DATA, CONTACT RIGHT OF WAY ENGINEERING AT THE DISTRICT OFFICE.

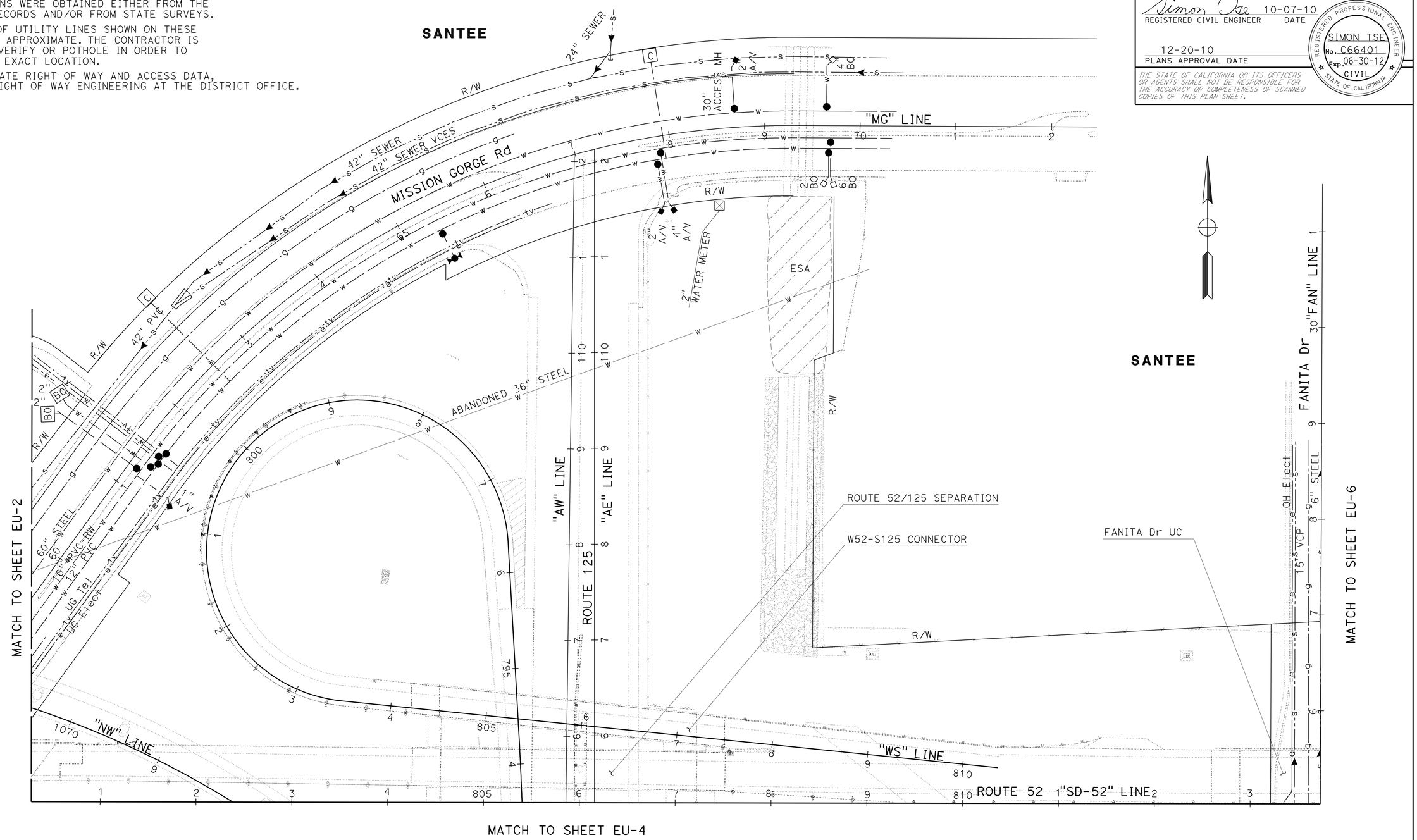

THIS PLAN ACCURATE FOR EXISTING UTILITIES WORK ONLY.

EXISTING UTILITIES PLAN

SCALE: 1" = 50'

EU-5

STATE OF CALIFORNIA - DEPARTMENT OF TRANSPORTATION
Caltrans ENGINEERING SERVICES

FUNCTIONAL SUPERVISOR: ABU-BAKR AL-JAFRI
CALCULATED-DESIGNED BY: ANH HOANG
CHECKED BY: SIMON TSE
REVISED BY: X
DATE REVISED: MM-DD-YY

LAST REVISION 10-20-10
DATE PLOTTED => 24-DEC-2010
TIME PLOTTED => 07:47

Dist	COUNTY	ROUTE	POST MILES TOTAL PROJECT	SHEET No.	TOTAL SHEETS
11	SD	52,125	14.5/15.5, 21.9/22.3	53	72

REGISTERED CIVIL ENGINEER 10-07-10 DATE

12-20-10
PLANS APPROVAL DATE

REGISTERED PROFESSIONAL ENGINEER SIMON TSE No. C66401 Exp. 06-30-12 CIVIL STATE OF CALIFORNIA

THE STATE OF CALIFORNIA OR ITS OFFICERS OR AGENTS SHALL NOT BE RESPONSIBLE FOR THE ACCURACY OR COMPLETENESS OF SCANNED COPIES OF THIS PLAN SHEET.

NOTES:

1. LOCATION OF UTILITY FACILITIES SHOWN ON THESE PLANS WERE OBTAINED EITHER FROM THE OWNER'S RECORDS AND/OR FROM STATE SURVEYS.
2. LOCATION OF UTILITY LINES SHOWN ON THESE PLANS ARE APPROXIMATE. THE CONTRACTOR IS TO FIELD VERIFY OR POTHOLE IN ORDER TO DETERMINE EXACT LOCATION.
3. FOR COMPLETE RIGHT OF WAY AND ACCURATE ACCESS DATA, SEE RIGHT OF WAY RECORD MAPS AT DISTRICT OFFICE.

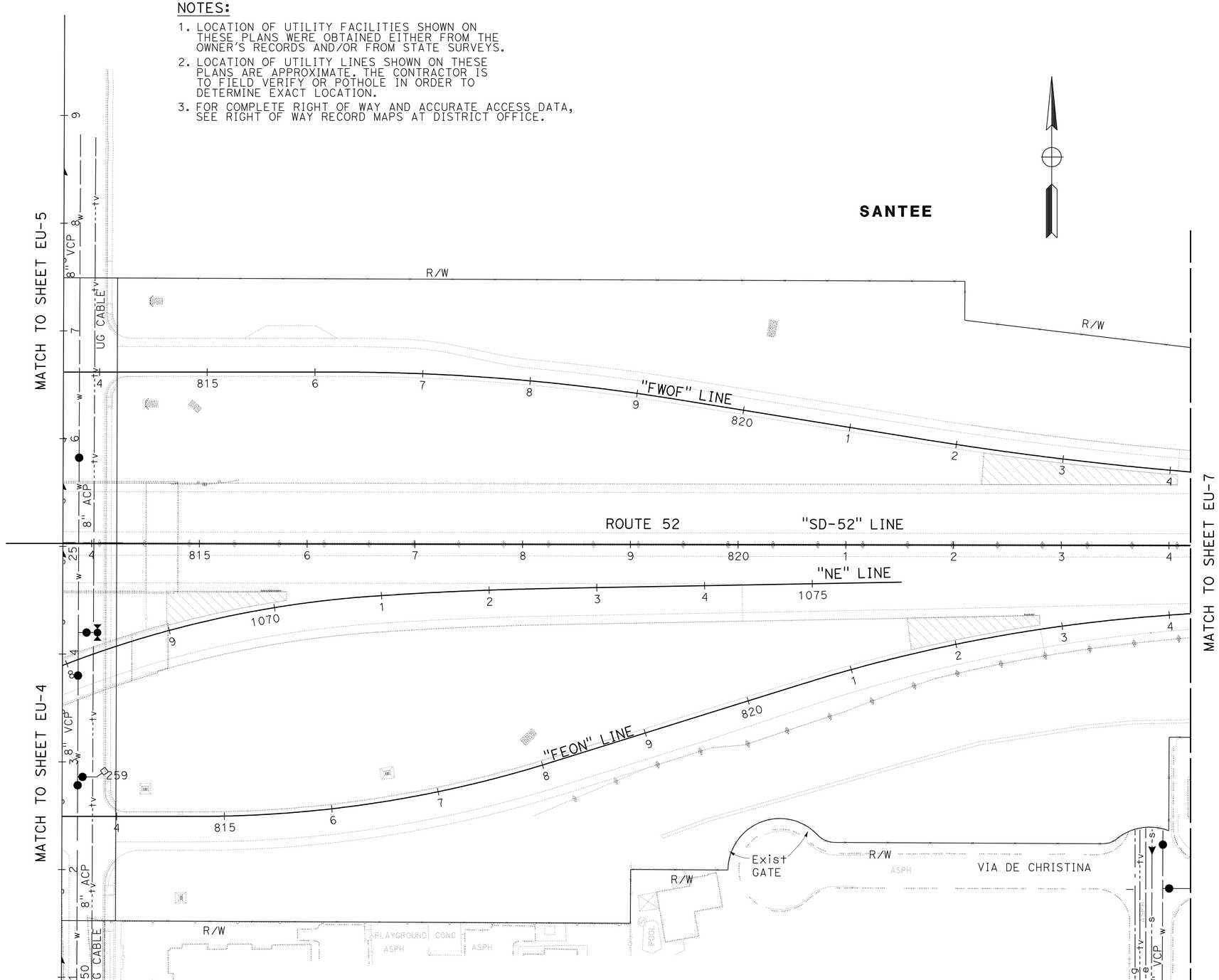

THIS PLAN ACCURATE FOR EXISTING UTILITIES WORK ONLY.

EXISTING UTILITIES PLAN

SCALE: 1" = 50'

EU-6

STATE OF CALIFORNIA - DEPARTMENT OF TRANSPORTATION
Caltrans® ENGINEERING SERVICES

FUNCTIONAL SUPERVISOR: ABU-BAKR AL-JAFRI
CALCULATED-DESIGNED BY: ANH HOANG
CHECKED BY: SIMON TSE
REVISED BY: X
DATE REVISED: MM-DD-YY

LAST REVISION: 10-20-10
DATE PLOTTED => 24-DEC-2010
TIME PLOTTED => 07:47

Dist	COUNTY	ROUTE	POST MILES TOTAL PROJECT	SHEET No.	TOTAL SHEETS
11	SD	52,125	14.5/15.5, 21.9/22.3	54	72

REGISTERED CIVIL ENGINEER 10-07-10 DATE

12-20-10
PLANS APPROVAL DATE

REGISTERED PROFESSIONAL ENGINEER SIMON TSE No. C66401 Exp. 06-30-12 CIVIL STATE OF CALIFORNIA

THE STATE OF CALIFORNIA OR ITS OFFICERS OR AGENTS SHALL NOT BE RESPONSIBLE FOR THE ACCURACY OR COMPLETENESS OF SCANNED COPIES OF THIS PLAN SHEET.

NOTES:

1. LOCATION OF UTILITY FACILITIES SHOWN ON THESE PLANS WERE OBTAINED EITHER FROM THE OWNER'S RECORDS AND/OR FROM STATE SURVEYS.
2. LOCATION OF UTILITY LINES SHOWN ON THESE PLANS ARE APPROXIMATE. THE CONTRACTOR IS TO FIELD VERIFY OR POTHOLE IN ORDER TO DETERMINE EXACT LOCATION.
3. FOR ACCURATE RIGHT OF WAY AND ACCESS DATA, CONTACT RIGHT OF WAY ENGINEERING AT THE DISTRICT OFFICE.

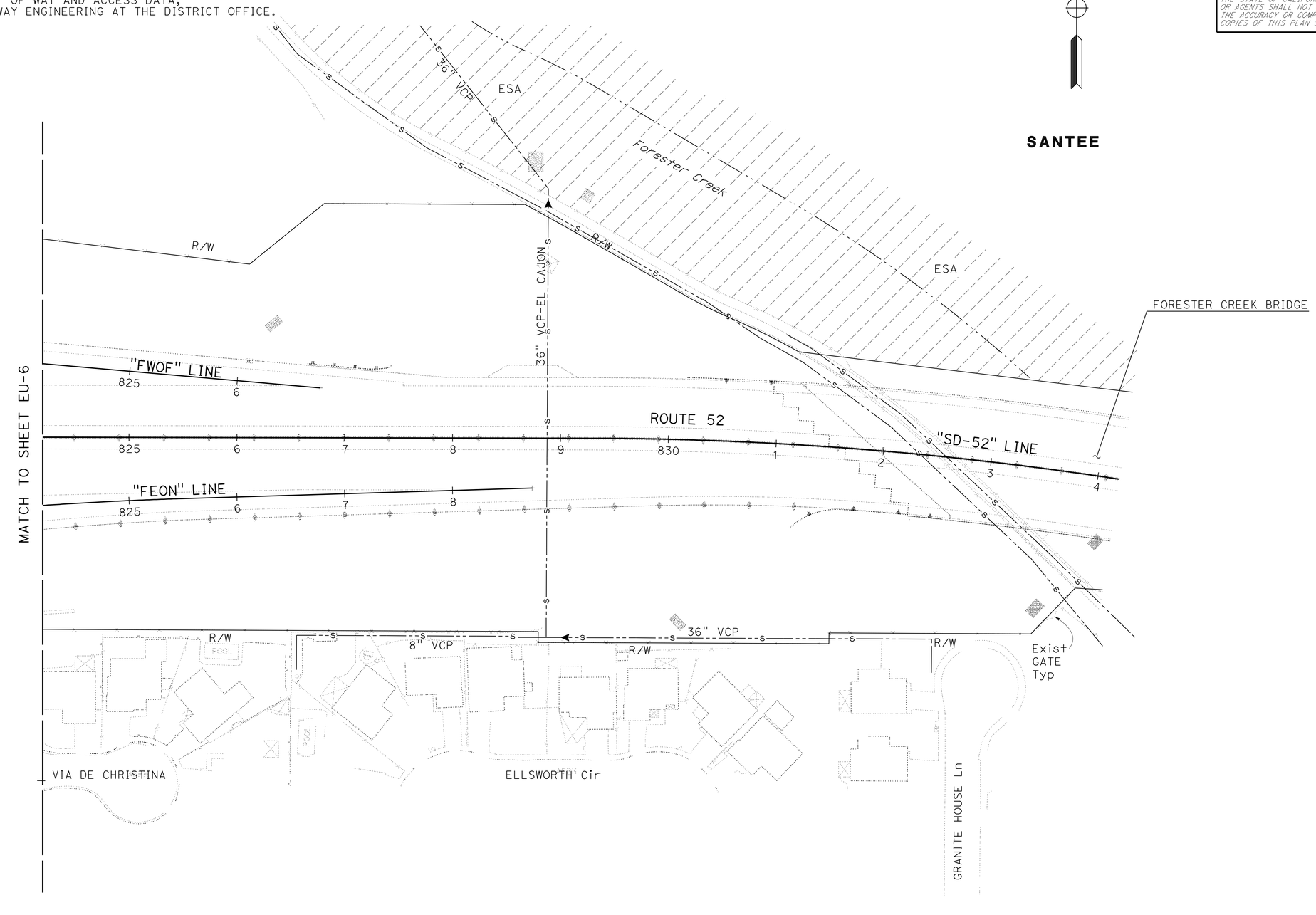

THIS PLAN ACCURATE FOR EXISTING UTILITY WORK ONLY.

EXISTING UTILITIES PLAN

SCALE: 1" = 50'

EU-7

STATE OF CALIFORNIA - DEPARTMENT OF TRANSPORTATION
Caltrans® ENGINEERING SERVICES

FUNCTIONAL SUPERVISOR: ABU-BAKR AL-JAFRI

CALCULATED-DESIGNED BY: ANH HOANG
CHECKED BY: SIMON TSE

REVISED BY: X
DATE REVISED: MM-DD-YY

LAST REVISION: 10-20-10
DATE PLOTTED => 24-DEC-2010
TIME PLOTTED => 07:47

Dist	COUNTY	ROUTE	POST MILES TOTAL PROJECT	SHEET No.	TOTAL SHEETS
11	SD	52,125	14.5/15.5, 21.9/22.3	55	72

REGISTERED CIVIL ENGINEER 10-07-10 DATE

12-20-10
PLANS APPROVAL DATE

REGISTERED PROFESSIONAL ENGINEER SHAHIN T. ADIBI No. 54839 Exp. 06/30/12 CIVIL STATE OF CALIFORNIA

THE STATE OF CALIFORNIA OR ITS OFFICERS OR AGENTS SHALL NOT BE RESPONSIBLE FOR THE ACCURACY OR COMPLETENESS OF SCANNED COPIES OF THIS PLAN SHEET.

LEGEND:

XX = CONSTRUCTION AREA SIGN

ESA = ENVIRONMENTALLY SENSITIVE AREA

TYPICAL PLACEMENT OF TRAFFIC PLASTIC DRUM

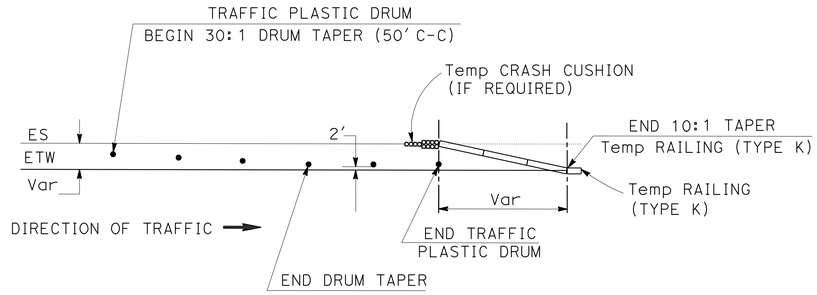

CONSTRUCTION AREA SIGNS

SIGN No.	CODE	PANEL SIZE (In)	No. OF POST AND SIZE (In)	No. OF SIGNS
1	C40 (CA)	108 X 42	2-4 X 6 (S)	3
2	C23 (Mod) (CA)	48 X 48	1-4 X 6 (S)	7
3	C14 (Mod) (CA)	48 X 24	1-4 X 4 (S)	7
			TOTAL	17

(S) DENOTES STATIONARY MOUNTED SIGN

NOTES:

1. EXACT LOCATION OF CONSTRUCTION AREA SIGNS WILL BE DETERMINED BY THE ENGINEER.
2. FEDERAL MUTCD SIGN CODES ARE SHOWN UNLESS DESIGNATED BY (CA) INDICATING STANDARD CALIFORNIA SIGN SPECIFICATIONS ARE USED.
3. EXISTING UTILITIES ARE NOT SHOWN ON THESE PLAN SHEETS. THE CONTRACTOR SHALL VERIFY LOCATIONS OF EXISTING UTILITIES AND ADJUST THE FIELD LOCATION OF SIGN POSTS IN CONSULTATION WITH THE ENGINEER.

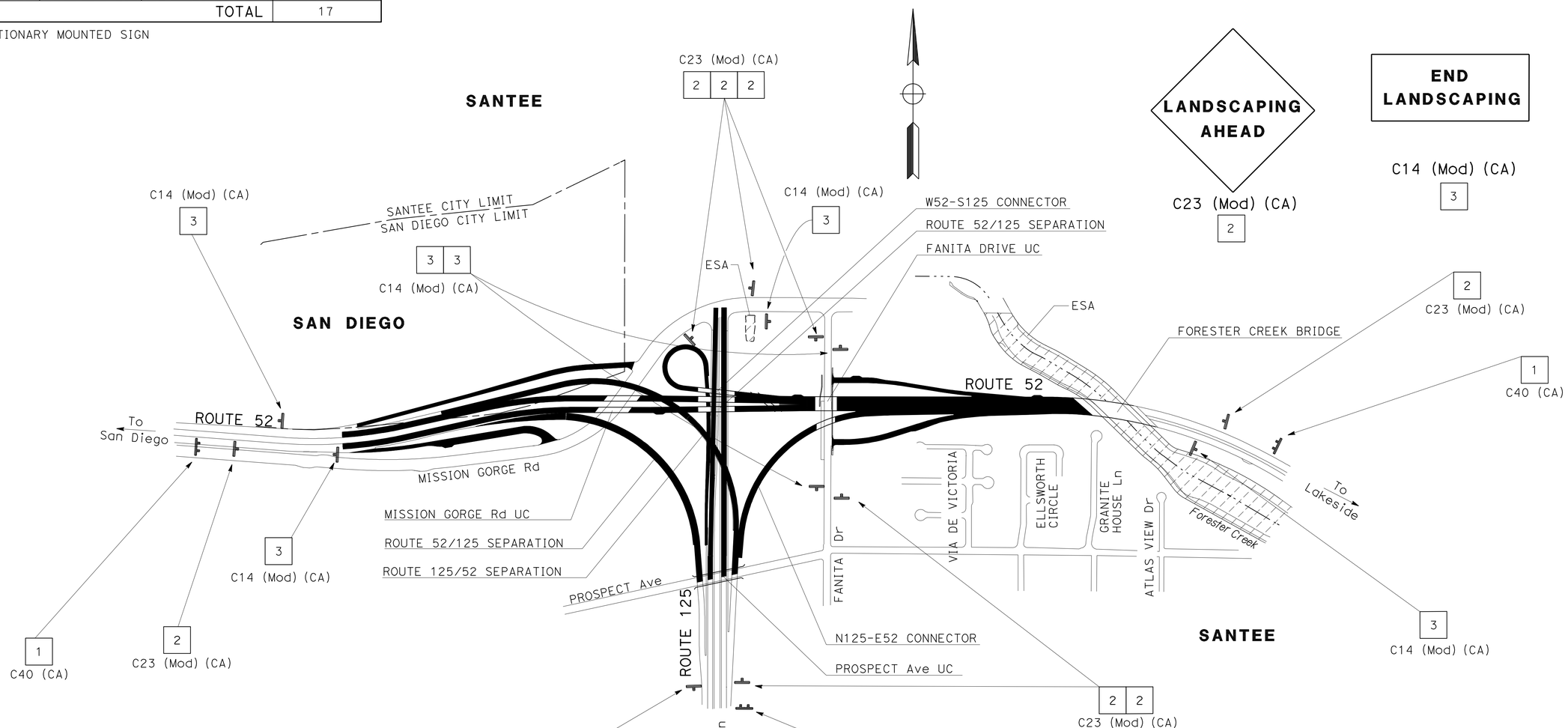

THIS PLAN ACCURATE FOR CONSTRUCTION AREA SIGN WORK ONLY

CONSTRUCTION AREA SIGNS

NO SCALE

CS-1

STATE OF CALIFORNIA - DEPARTMENT OF TRANSPORTATION
Caltrans
TRAFFIC DESIGN

FUNCTIONAL SUPERVISOR: CAMILLE ABOUFADEL
CALCULATED-DESIGNED BY: IRAM SYED
CHECKED BY: SHAHIN ADIBI
REVISED BY
DATE REVISED

LAST REVISION 10-20-10 | DATE PLOTTED => 24-DEC-2010 | TIME PLOTTED => 08:58

Dist	COUNTY	ROUTE	POST MILES TOTAL PROJECT	SHEET No.	TOTAL SHEETS
11	SD	52,125	14.5/15.5, 21.9/22.3	56	72

Enrique P. Bernal 10-07-10
REGISTERED ELECTRICAL ENGINEER DATE

12-20-10
PLANS APPROVAL DATE

REGISTERED PROFESSIONAL ENGINEER
ENRIQUE P. BERNAL
No. 15675
Exp. 6/30/12
ELECT
STATE OF CALIFORNIA

THE STATE OF CALIFORNIA OR ITS OFFICERS OR AGENTS SHALL NOT BE RESPONSIBLE FOR THE ACCURACY OR COMPLETENESS OF SCANNED COPIES OF THIS PLAN SHEET.

FOR ACCURATE RIGHT OF WAY AND ACCESS DATA,
CONTACT RIGHT OF WAY ENGINEERING AT THE DISTRICT OFFICE.

NOTES:

1. Irr CABINET PER LANDSCAPE DETAILS
   CONNECT 2#10 (Irr).
2. CONDUIT PER LANDSCAPE DETAILS
   INSTALL 1"C 2#10 (Irr).
3. SD LOCATED ON THE SE QUADRANT OF THE INTERSECTION OF MISSION GORGE Rd/EB RAMP (sp B4.68).
4. RC No. 3 pb AND REPLACE WITH No. 5 PULL BOX.

CONDUIT NOTES:

N 1 C — EXISTING 2"C, 2#8 (Irr)

N 2 C — EXISTING 1"C, 2#8 (Irr)

LEGEND:

N C — EXISTING CONDUIT, NO CHANGE

OCC - OUTDOOR RATED CATEGORY 5E CABLE

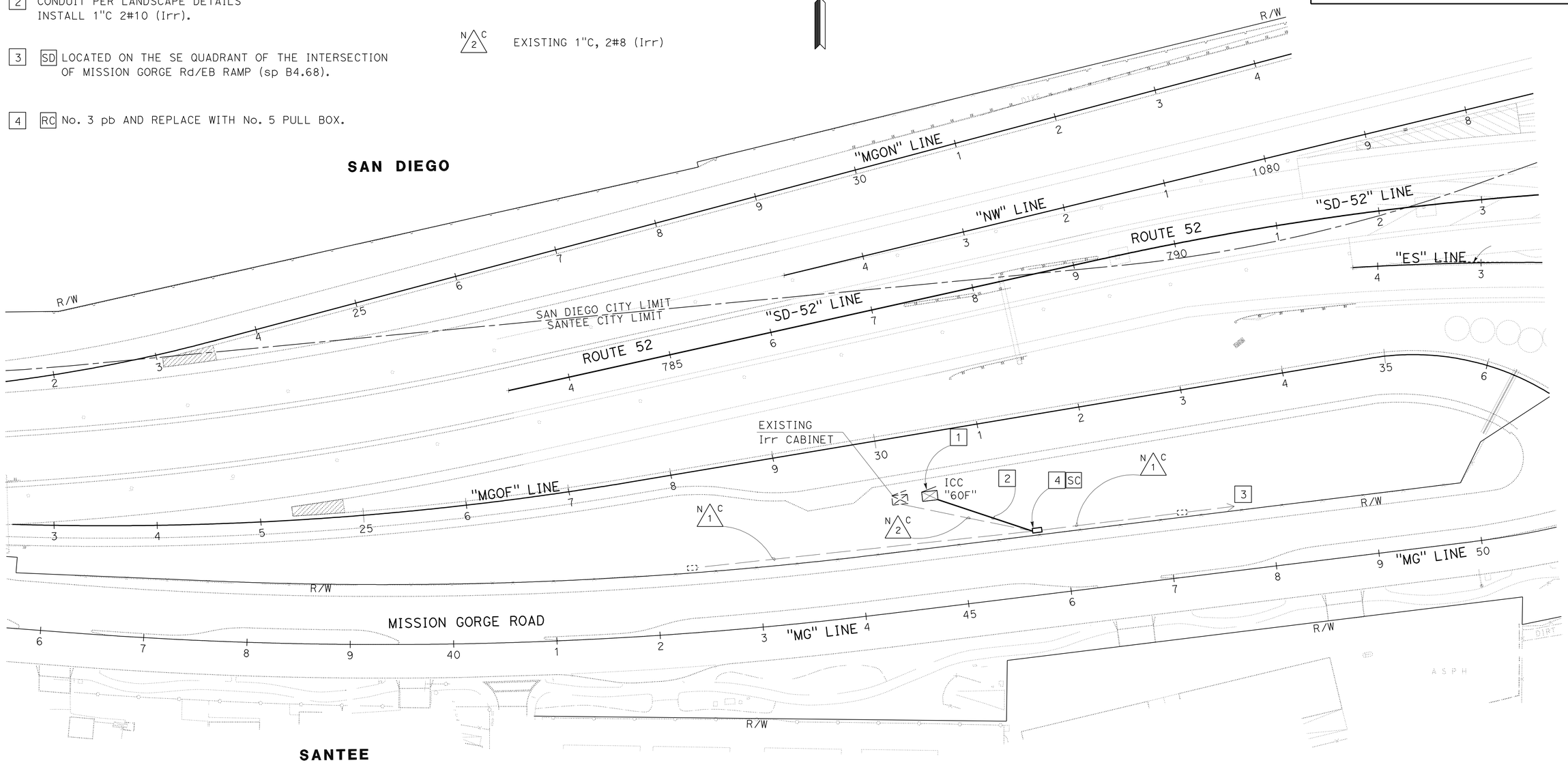

THIS PLAN IS ACCURATE FOR ELECTRICAL WORK ONLY.

ELECTRICAL SERVICE (IRRIGATION)

SCALE: 1" = 50'

E-1

STATE OF CALIFORNIA - DEPARTMENT OF TRANSPORTATION
Caltrans®
TRAFFIC ELECTRICAL

FUNCTIONAL SUPERVISOR: DALE WILSON
CALCULATED-DESIGNED BY: ENRIQUE BERNAL
CHECKED BY:
REVISED BY: X
DATE REVISED: 05-04-10

LAST REVISION 10-21-10
DATE PLOTTED => 27-DEC-2010
TIME PLOTTED => 06:07

Dist	COUNTY	ROUTE	POST MILES TOTAL PROJECT	SHEET No.	TOTAL SHEETS
11	SD	52,125	14.5/15.5, 21.9/22.3	57	72

Enrique P. Bernal 10-07-10
REGISTERED ELECTRICAL ENGINEER DATE

12-20-10
PLANS APPROVAL DATE

REGISTERED PROFESSIONAL ENGINEER ENRIQUE P. BERNAL No. 15675 Exp. 6/30/12 ELECT STATE OF CALIFORNIA

THE STATE OF CALIFORNIA OR ITS OFFICERS OR AGENTS SHALL NOT BE RESPONSIBLE FOR THE ACCURACY OR COMPLETENESS OF SCANNED COPIES OF THIS PLAN SHEET.

NOTE:

FOR ACCURATE RIGHT OF WAY AND ACCESS DATA, CONTACT RIGHT OF WAY ENGINEERING AT THE DISTRICT OFFICE.

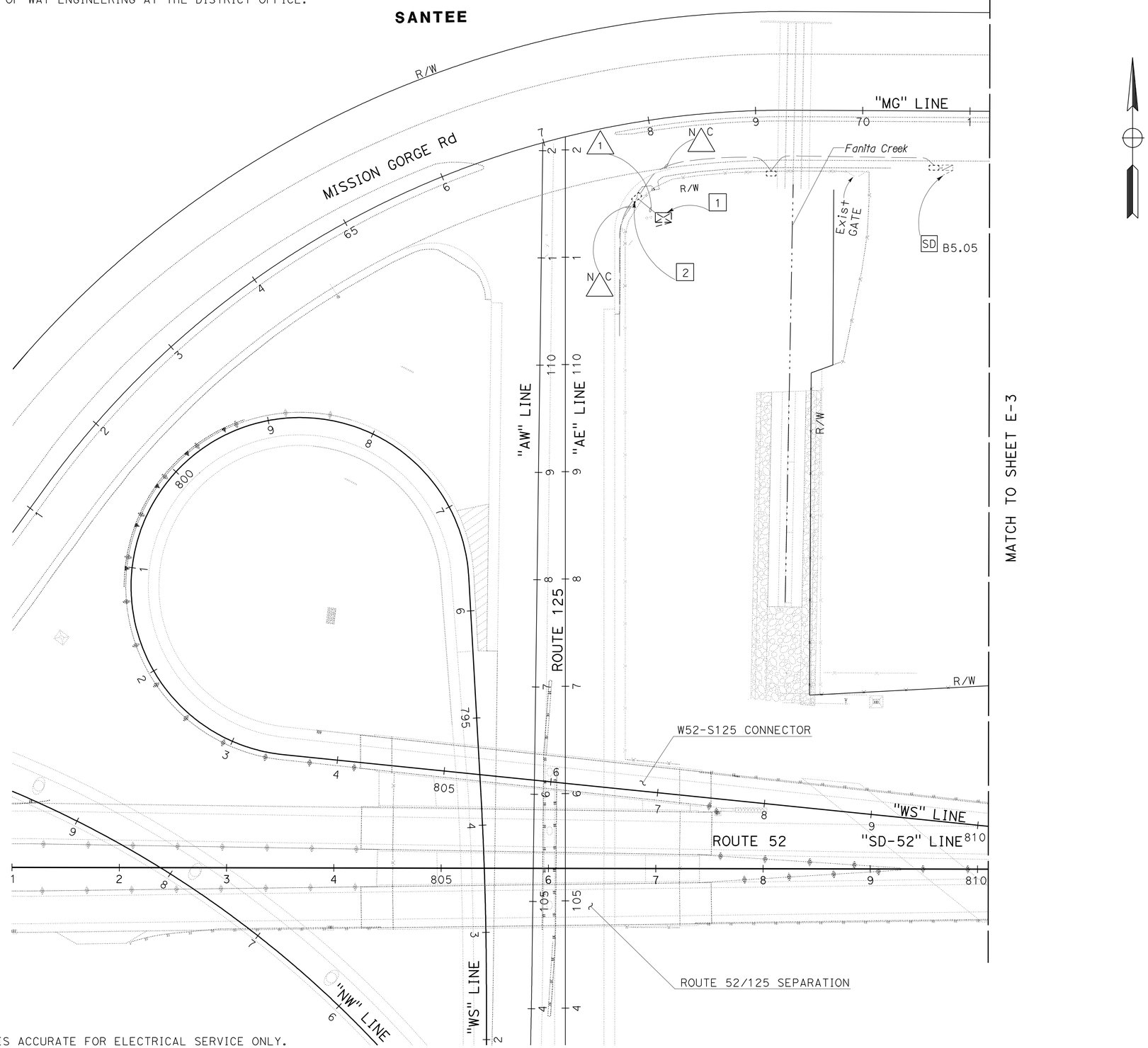

THIS PLAN IS ACCURATE FOR ELECTRICAL SERVICE ONLY.

NOTES:

1. RELOCATE Irr CABINET PER IRRIGATION REMOVAL PLAN IR-3. DISCONNECT CONDUCTORS.
2. TAPE ENDS OF CONDUCTORS WEATHERTIGHT.

CONDUIT NOTES:

1. EXISTING 1"C, 2#10 (Irr),
   RC 2#10 (Irr), ABANDON CONDUIT

ELECTRICAL SERVICE (IRRIGATION)

SCALE: 1" = 50'

E-2

STATE OF CALIFORNIA - DEPARTMENT OF TRANSPORTATION
Caltrans
TRAFFIC ELECTRICAL

FUNCTIONAL SUPERVISOR: DALE WILSON
CALCULATED-DESIGNED BY: ENRIQUE BERNAL
CHECKED BY:
REVISED BY: X
DATE REVISED: 05-04-10

LAST REVISION 10-21-10
DATE PLOTTED => 27-DEC-2010
TIME PLOTTED => 06:11

FOR ACCURATE RIGHT OF WAY AND ACCESS DATA,
CONTACT RIGHT OF WAY ENGINEERING AT THE DISTRICT OFFICE.

SANTEE

Dist	COUNTY	ROUTE	POST MILES TOTAL PROJECT	SHEET No.	TOTAL SHEETS
11	SD	52,125	14.5/15.5, 21.9/22.3	58	72

Enrique P Bernal 10-07-10
REGISTERED ELECTRICAL ENGINEER DATE

12-20-10
PLANS APPROVAL DATE

REGISTERED PROFESSIONAL ENGINEER
ENRIQUE P. BERNAL
No. 15675
Exp. 6/30/12
ELECT
STATE OF CALIFORNIA

THE STATE OF CALIFORNIA OR ITS OFFICERS OR AGENTS SHALL NOT BE RESPONSIBLE FOR THE ACCURACY OR COMPLETENESS OF SCANNED COPIES OF THIS PLAN SHEET.

NOTES:

1. Irr CABINET PER LANDSCAPE DETAILS. CONNECT 2#10 (Irr).
2. CONDUIT PER LANDSCAPE DETAILS. INSTALL 1"C, 2#10 (Irr).
3. EXISTING CIRCUIT BREAKERS TO BE USED.
4. RELOCATED Irr CABINET PER LANDSCAPE DETAILS. CONNECT 2#10 (Irr).

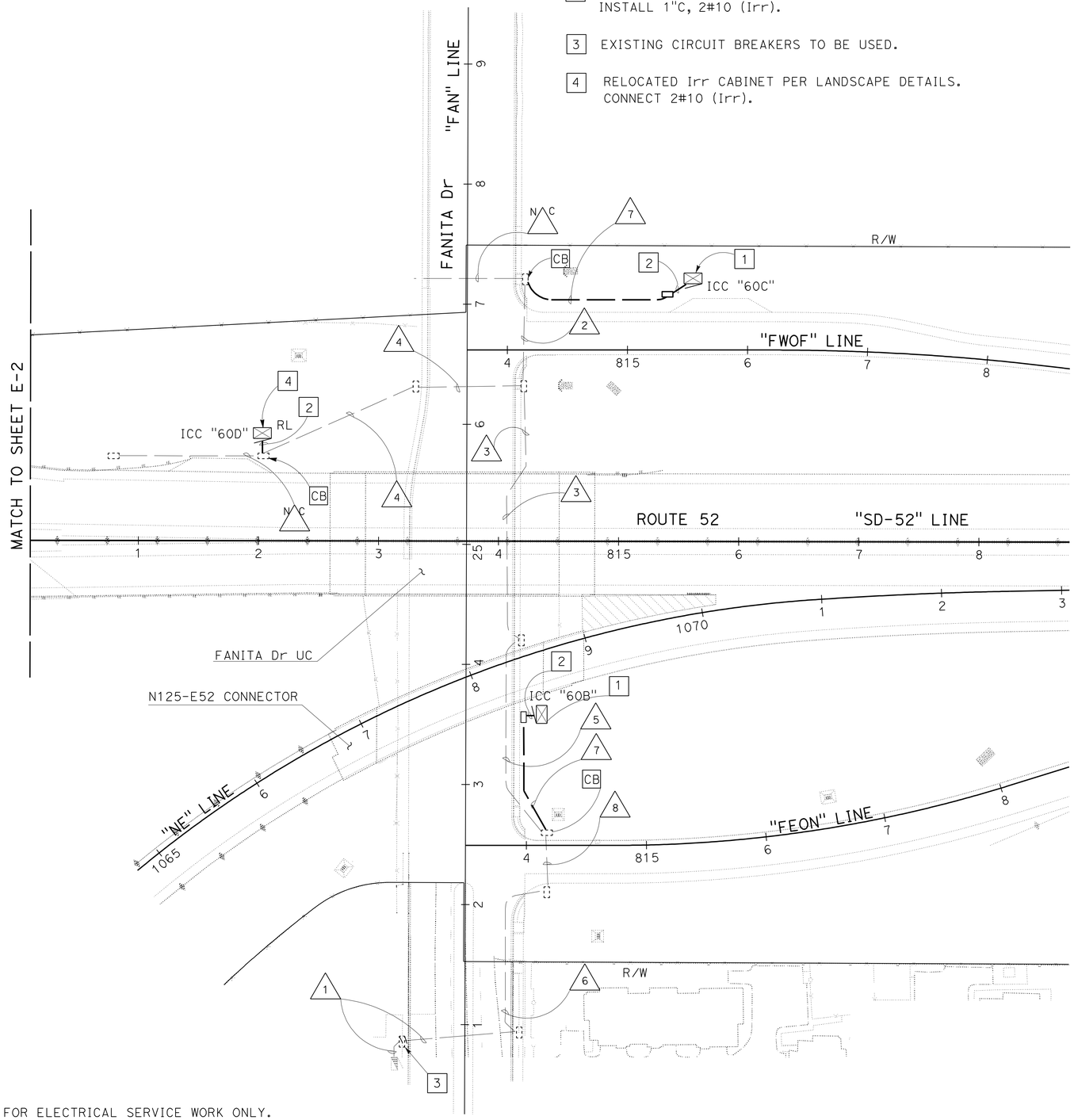

CONDUIT NOTES:

1. EXISTING TWO 2"C, 2#6 (Itg), 2#6 (SIGN), 2#8 (SOFFIT), 4#14 (peu), 2#8 (cctv). ADD 6#10 (Irr).
2. EXISTING 2"C, 2#6 (Itg). ADD 2#10 (Irr).
3. EXISTING 3"C, 2#6 (Itg), 2#6 (SIGN), 2#8 (cctv). ADD 4#10 (Irr).
4. EXISTING 3"C, 2#6 (Itg), 2#6 (SIGN), 2#8 (cctv). ADD 2#10 (Irr).
5. EXISTING TWO 2"C, 2#6 (Itg), 2#6 (SIGN), 2#8 (SOFFIT),, 2#8 (cctv). ADD 4#10 (Irr).
6. EXISTING TWO 2"C, 2#6 (Itg), 2#6 (SIGN), 2#8 (SOFFIT), 4#14 (peu), 2#8 (cctv). ADD 6#10 (Irr).
7. 2"C, 2#10 (Irr)
8. EXISTING TWO 2"C, 2#6 (Itg), 2#6 (SIGN), 2#8 (SOFFIT), 2#8 (cctv). ADD 6#10 (Irr).

THIS PLAN IS ACCURATE FOR ELECTRICAL SERVICE WORK ONLY.

ELECTRICAL SERVICE (IRRIGATION)

SCALE: 1" = 50'

E-3

REVISED BY	DATE REVISED
X	05-04-10

CALCULATED-DESIGNED BY: CATALINA FLORES
CHECKED BY: ENRIQUE BERNAL
FUNCTIONAL SUPERVISOR: DALE WILSON

STATE OF CALIFORNIA - DEPARTMENT OF TRANSPORTATION
Caltrans®
TRAFFIC ELECTRICAL

LAST REVISION 10-21-10
DATE PLOTTED => 27-DEC-2010
TIME PLOTTED => 06:08

FOR ACCURATE RIGHT OF WAY AND ACCESS DATA,
CONTACT RIGHT OF WAY ENGINEERING AT THE DISTRICT OFFICE.

Dist	COUNTY	ROUTE	POST MILES TOTAL PROJECT	SHEET No.	TOTAL SHEETS
11	SD	52,125	14.5/15.5, 21.9/22.3	59	72

Enrique P. Bernal 10-07-10
REGISTERED ELECTRICAL ENGINEER DATE

12-20-10
PLANS APPROVAL DATE

REGISTERED PROFESSIONAL ENGINEER ENRIQUE P. BERNAL No. 15675 Exp. 6/30/12 ELECT STATE OF CALIFORNIA

THE STATE OF CALIFORNIA OR ITS OFFICERS OR AGENTS SHALL NOT BE RESPONSIBLE FOR THE ACCURACY OR COMPLETENESS OF SCANNED COPIES OF THIS PLAN SHEET.

CONDUIT NOTES:

△1 EXISTING 2"C, 1 sic. ADD 1 OCC.

N△2 C EXISTING 2"C, 1 sic.

△3 EXISTING 3"C, 2#8 (ltg),
2#8 (SIGN),
2#6 (tms),
3#14 (peu),
2#8 (cctv).
ADD 2#10 (Irr).
EXISTING 1"C, 2#10 (tdc).
EXISTING 1"C, 2#10 (Irr).

N△4 C EXISTING 3"C, 2#8 (ltg),
2#8 (SIGN),
2#6 (tms),
2#10 (tdc),
3#14 (peu),
2#8 (cctv),
2#10 (Irr).

△5 EXISTING 1"C, 2#10 (Irr).
RC 2#10 (Irr).
ABANDON CONDUIT.

N△6 C EXISTING 2"C, 2#8 (Irr).

△7 EXISTING 1"C, 1 sic. ADD 1 OCC.

NOTES:

1. CONDUIT PER LANDSCAPE DETAILS. INSTALL 1"C, 1 OCC.
2. CONDUIT PER LANDSCAPE DETAILS. INSTALL 1"C, 2#10 (Irr).
3. Irr CABINET PER LANDSCAPE DETAILS. CONNECT 2#10 (Irr).
4. REMOVE Irr CABINET PER IRRIGATION PLANS. DISCONNECT CONDUCTORS.

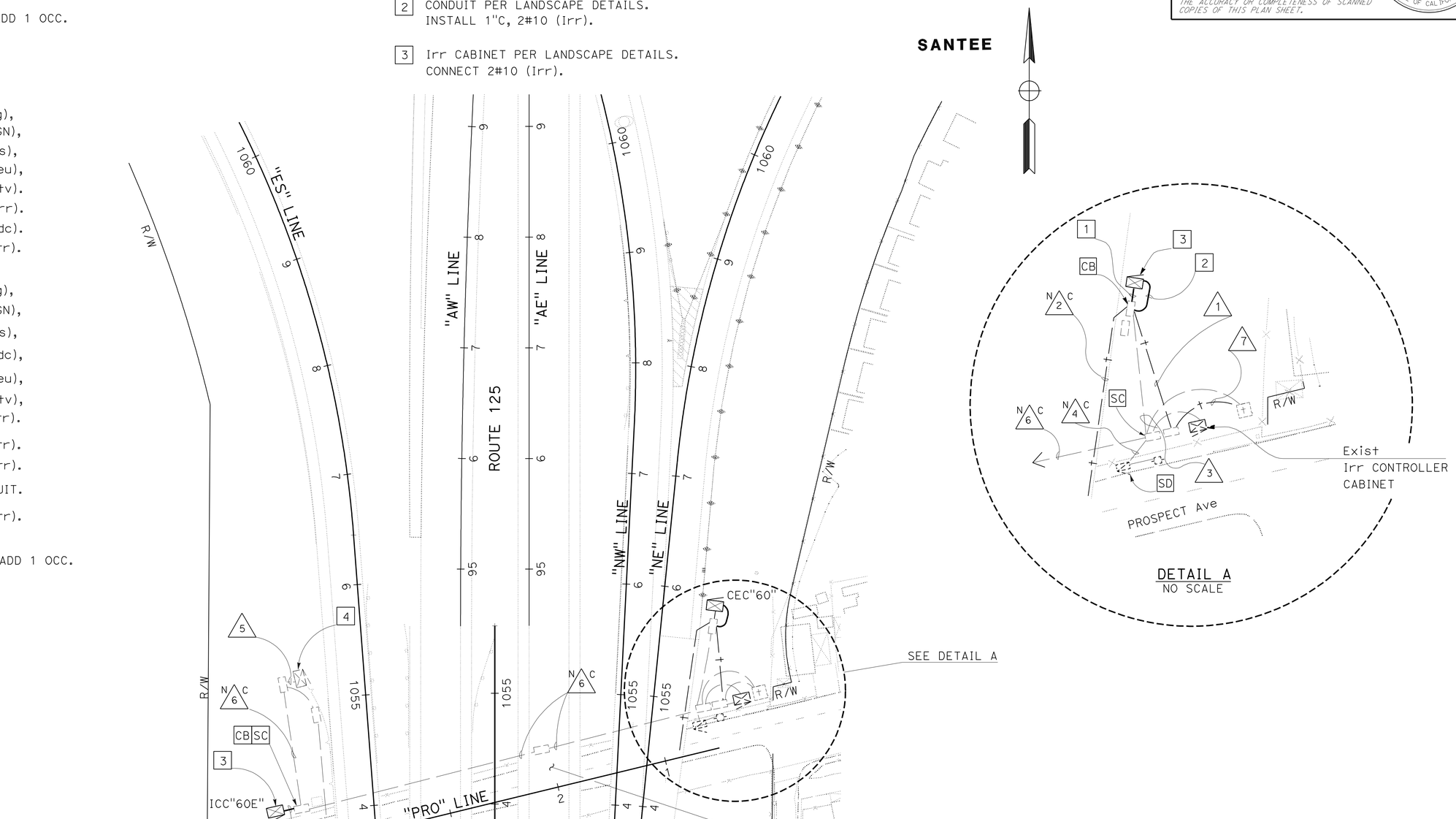

THIS PLAN IS ACCURATE FOR ELECTRICAL SERVICE ONLY.

ELECTRICAL SERVICE (IRRIGATION)

SCALE: 1" = 50'

E-4

STATE OF CALIFORNIA - DEPARTMENT OF TRANSPORTATION	Caltrans	TRAFFIC ELECTRICAL	
FUNCTIONAL SUPERVISOR	DALE WILSON		
CALCULATED-DESIGNED BY	ENRIQUE BERNAL	CATALINA FLORES	
CHECKED BY			
REVISED BY	X		
DATE REVISED	05-04-10		

LAST REVISION 10-21-10 | DATE PLOTTED => 27-DEC-2010 | TIME PLOTTED => 06:08

DIST	COUNTY	ROUTE	POST MILES TOTAL PROJECT	SHEET NO.	TOTAL SHEETS
11	SD	52,125	14.5/15.5, 21.9/22.3	60	72

Gregory A. Balzer
LICENSED LANDSCAPE ARCHITECT

June 5, 2009
PLANS APPROVAL DATE

The State of California or its officers or agents shall not be responsible for the accuracy or completeness of electronic copies of this plan sheet.

LICENSED LANDSCAPE ARCHITECT
Gregory A. Balzer 2576
10-31-10 (Renewal Date)
2-28-11 (Renewal Date)
5-14-09 Date
STATE OF CALIFORNIA

To accompany plans dated 12-20-10

A

AB	aggregate base
ABS	acrylonitrile-butadiene-styrene
AC	asphalt concrete
Adj	adjacent/adjustable
AIC	auxiliary irrigation controller
Alt	alternative
AMEND	amendment
ARV	air release valve
AUTO	automatic
AUX	auxiliary
AVB	atmospheric vacuum breaker

B

B&B	balled and burlapped
B/B	brass/bronze
B/B/PL	brass/bronze/plastic
B/PL	brass/plastic
BFM	bonded fiber matrix
Bit Ctd	bituminous coated
BP	booster pump
BPA	backflow preventer assembly
BPAE	backflow preventer assembly in enclosure
BPE	backflow preventer enclosure
BV	ball valve

C

CAP	corrugated aluminum pipe
CARV	combination air release valve
CCA	cam coupler assembly
CEC	controller enclosure cabinet
CHDPE	corrugated high density polyethylene
CL	chain link
CNC	control and neutral conductors
Conc	concrete
Cond	conduit
CSP	corrugated steel pipe
CST	center strip
CV	check valve

D

Dia	diameter
DIP	ductile iron pipe
DN	diameter nominal

E

EA	each
Elect	electric/electrical
Elev	elevation
ENCL	enclosure
EP	edge of pavement
ES	edge of shoulder
EST	end strip
ESTB	establishment
ETW	edge of traveled way

F

F	full circle
F/P	full/part circle
FAU	filter assembly unit
FCV	flow control valve
FERT	fertilizer
FG	finished grade
FIPT	female iron pipe thread
FIS	fertilizer injector system
FL	flow line
FM	flow monitor
FS	flow sensor
Ft	foot/feet
FV	flush valve

G

GAL	Gallon(s)
Galv	galvanized
GARV	garden valve
GPH	gallons per hour
GPM	gallons per minute
GSP	galvanized steel pipe
GV	gate valve

H

H	half circle
HB	hose bib
HDPE	high density polyethylene
HP	horsepower/hinge point
HPL	high pressure line
Hwy	highway

I

IC	irrigation controller
ICC	irrigation controller(s) in controller enclosure cabinet
ID	inside diameter
In	inches
IFS	irrigation filtration system
IPS	iron pipe size
IPT	iron pipe thread
Irr	irrigation

L

L	length
LF	linear foot

M

Max	maximum
MBGR	metal beam guard railing
MCV	manual control valve
MIC	master irrigation controller
Min	minimum
MIPT	male iron pipe thread
Misc	miscellaneous
Mtl	material
MVP	maintenance vehicle pullout

N

NCN	no common name
NL	nozzle line
No.	number
NPT	national pipe thread

O

O/C	on center
OD	outside diameter
Oz	ounce

P

P	part circle
PB	pull box
PCC	portland cement concrete
PE	polyethylene
Pkt	packet
PL	plastic
PLT	plant/planting
PLT ESTB	plant establishment
PM	post mile
PR	pressure rated
PRLV	pressure relief valve
PSFM	polymer stabilized fiber matrix
PSI	pounds per square inch
PRV	pressure reducing valve
PVC	polyvinyl chloride
Pvmt	pavement

Q

Q	quarter circle
QCV	quick coupling valve

R

R	radius
RCP	reinforced concrete pipe
RCV	remote control valve
RCVM	remote control valve (master)
RCVMF	remote control valve (master) w/ flow meter
RCW	recycled/reclaimed water
RECP	rolled erosion control product
REQ	required
R/W	right of way

S

S	slip
SCC	sprinkler control conduit
SCH	schedule
SF	state-furnished
Shld	shoulder
SQFT	square foot/feet
SQYD	square yard(s)
SST	side strip
Sta	station
Std	standard
SW	sidewalk/sound wall

T

T	third circle/thread
TLS	truck loading standpipe
TQ	three quarter circle
TRM	turf reinforcement mat
TRVD	traveled
TT	two third circle
Typ	typical

U

UG	underground

V

VAU	valve assembly unit

W

W	width
W/	with
WM	water meter
WS	wye strainer
WSP	welded steel pipe
WWM	welded wire mesh

NOTE:

FOR ADDITIONAL ABBREVIATIONS, SEE STANDARD PLANS A10A AND A10B.

STATE OF CALIFORNIA
DEPARTMENT OF TRANSPORTATION

PLANTING AND IRRIGATION ABBREVIATIONS

NO SCALE

RSP H1 DATED JUNE 5, 2009 SUPERSEDES STANDARD PLAN H1 DATED MAY 1, 2006 - PAGE 201 OF THE STANDARD PLANS BOOK DATED MAY 2006.

REVISED STANDARD PLAN RSP H1

2006 REVISED STANDARD PLAN RSP H1

DIST	COUNTY	ROUTE	POST MILES TOTAL PROJECT	SHEET NO.	TOTAL SHEETS
11	SD	52,125	14.5/15.5, 21.9/22.3	61	72

Gregory A. Balzer
LICENSED LANDSCAPE ARCHITECT

June 5, 2009
PLANS APPROVAL DATE

LICENSED LANDSCAPE ARCHITECT
Gregory A. Balzer 2516
Gregory A. Balzer
10-31-11
Renewal Date
2-28-11
Renewal Date
5-14-09
Date
STATE OF CALIFORNIA

The State of California or its officers or agents shall not be responsible for the accuracy or completeness of electronic copies of this plan sheet.

To accompany plans dated 12-20-10

EXISTING	PROPOSED	ITEM DESCRIPTION
		WATER METER (WM)
		BACKFLOW PREVENTER ASSEMBLY (BPA)
		BACKFLOW PREVENTER ASSEMBLY IN ENCLOSURE (BPAE)
		BACKFLOW PREVENTER ENCLOSURE (BPE)
		BOOSTER PUMP (BP)
		TRUCK LOADING STANDPIPE (TLS)
FS	FS	FLOW SENSOR (FS)
X	X	MASTER IRRIGATION CONTROLLER (MIC)
		AUXILIARY IRRIGATION CONTROLLER (AIC)
		IRRIGATION CONTROLLER (IC)/ IRRIGATION CONTROLLER (IC) (BATTERY) IRRIGATION CONTROLLER (IC) (SOLAR)
		IRRIGATION CONTROLLER(S) IN CONTROLLER ENCLOSURE CABINET (ICC)
		CONTROL AND NEUTRAL CONDUCTORS (CNC)
SCC	SCC	SPRINKLER CONTROL CONDUIT (SCC)
		IRRIGATION CROSSOVER
		EXTEND IRRIGATION CROSSOVER
		IRRIGATION SLEEVE
dip	DIP	DUCTILE IRON PIPE (SUPPLY LINE) (MAIN) (DIP)
		GALVANIZED STEEL PIPE (SUPPLY LINE) (MAIN) (GSP)
		GALVANIZED STEEL PIPE (SUPPLY LINE) (LATERAL) (GSP)
		PLASTIC PIPE (PR 200) (SUPPLY LINE) (MAIN)
		PLASTIC PIPE (PR 200) (SUPPLY LINE) (LATERAL)
		PLASTIC PIPE (IRRIGATION LINE)
		REMOTE CONTROL VALVE (RCV) REMOTE CONTROL VALVE (MASTER) (RCVM) REMOTE CONTROL VALVE (MASTER) W/FLOW METER (RCVMF)
		MANUAL CONTROL VALVE (MCV)
		VALVE ASSEMBLY UNIT (VAU)
		WYE STRAINER (WS)
		FILTER ASSEMBLY UNIT (FAU)
		GATE VALVE (GV)
		BALL VALVE (BV)

EXISTING	PROPOSED	ITEM DESCRIPTION
		QUICK COUPLING VALVE (QCV)
		CAM COUPLER ASSEMBLY (CCA)
		PRESSURE REDUCING VALVE (PRV)
		PRESSURE RELIEF VALVE (PRLV)
		FLOW CONTROL VALVE (FCV)
		COMBINATION AIR RELEASE VALVE (CARV)
		CHECK VALVE (CV)
		FLUSH VALVE (FV)
		NOZZLE LINE W/TURNING UNION
		IRRIGATION SYSTEM
		IRRIGATION SYSTEM TO BE REMOVED
		CHAIN LINK GATE
		QUICK COUPLING VALVE W/SPRINKLER PROTECTOR
3	3	SPRINKLER W/SPRINKLER PROTECTOR
		CONNECT TO EXISTING SYSTEM
		CAP
		CAP EXISTING

VALVE CODE

RCV SIZE
IRRIGATION CONTROLLER
CONTROLLER STATION
VALVE IN PARALLEL (IF APPLICABLE)
GPM
QUANTITY OF SPRINKLERS (WHEN SHOWN)

* 2½"-A-2b-40 -60

MCV SIZE
VALVE NUMBER
GPM
QUANTITY OF TYPE SPRINKLERS (WHEN SHOWN)

* 2"-3-30 -50

* VALVE CODES FOR EXISTING VALVES ARE SHOWN IN A DASHED ENCLOSURE.

STATE OF CALIFORNIA
DEPARTMENT OF TRANSPORTATION

PLANTING AND IRRIGATION SYMBOLS

NO SCALE

RSP H2 DATED JUNE 5, 2009 SUPERSEDES RSP H2 DATED MARCH 7, 2008 AND STANDARD PLAN H2 DATED MAY 1, 2006 - PAGE 202 OF THE STANDARD PLANS BOOK DATED MAY 2006.

REVISED STANDARD PLAN RSP H2

2006 REVISED STANDARD PLAN RSP H2

5-11-09

DIST	COUNTY	ROUTE	POST MILES TOTAL PROJECT	SHEET NO.	TOTAL SHEETS
11	SD	52,125	14.5/15.5, 21.9/22.3	62	72

LICENSED LANDSCAPE ARCHITECT

June 5, 2009
PLANS APPROVAL DATE

The State of California or its officers or agents shall not be responsible for the accuracy or completeness of electronic copies of this plan sheet.

LICENSED LANDSCAPE ARCHITECT
Gregory A. Balzer 2576
10 Expiration
2-28-11
Renewal Date
5-14-09
Date
STATE OF CALIFORNIA

To accompany plans dated 12-20-10

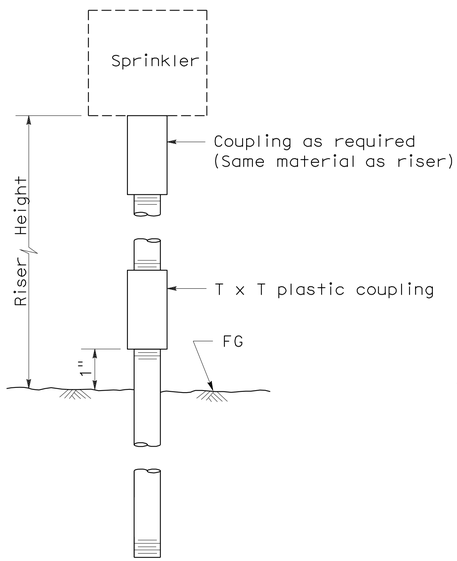

ELEVATION
RISER TYPE I

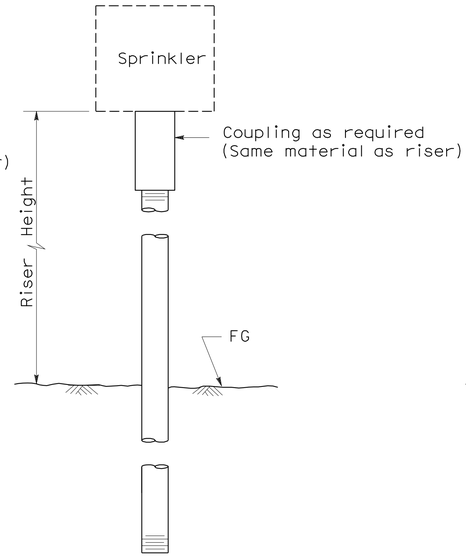

ELEVATION
RISER TYPE II

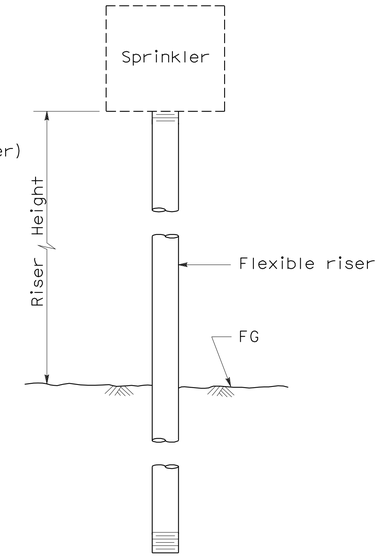

ELEVATION
RISER TYPE III

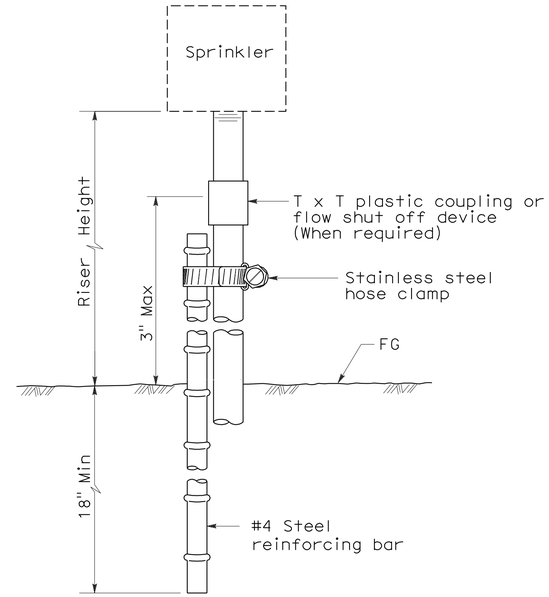

ELEVATION
RISER TYPE IV

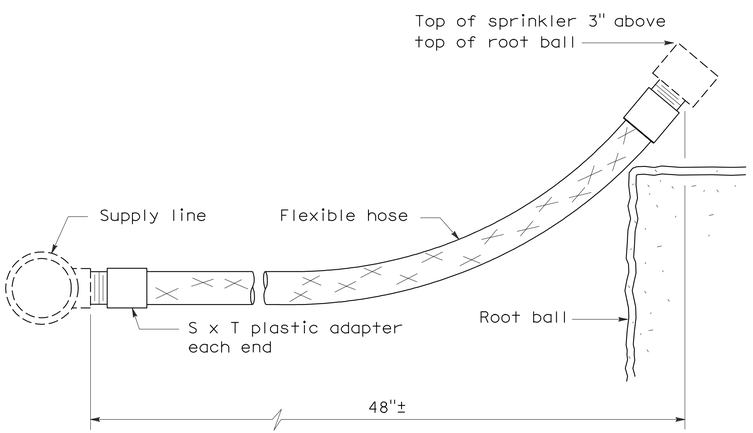

ELEVATION
RISER TYPE V

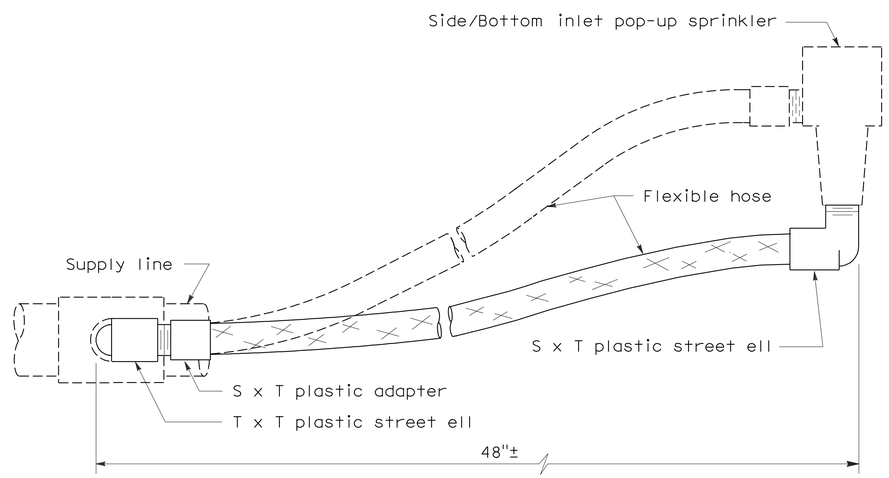

ELEVATION
RISER TYPE VI

STATE OF CALIFORNIA
DEPARTMENT OF TRANSPORTATION

PLANTING AND IRRIGATION DETAILS

NO SCALE

RSP H5 DATED JUNE 5, 2009 SUPERSEDES STANDARD PLAN H5
DATED MAY 1, 2006 - PAGE 205 OF THE STANDARD PLANS BOOK DATED MAY 2006.

REVISED STANDARD PLAN RSP H5

2006 REVISED STANDARD PLAN RSP H5

5-28-09

DIST	COUNTY	ROUTE	POST MILES TOTAL PROJECT	SHEET NO.	TOTAL SHEETS
11	SD	52,125	14.5/15.5, 21.9/22.3	63	72

LICENSED LANDSCAPE ARCHITECT

June 5, 2009
PLANS APPROVAL DATE

The State of California or its officers or agents shall not be responsible for the accuracy or completeness of electronic copies of this plan sheet.

LICENSED LANDSCAPE ARCHITECT Gregory A. Balzer 2576 STATE OF CALIFORNIA
10-31-11 Renewal Date
2-28-11 Renewal Date
5-14-09 Date

To accompany plans dated 12-20-10

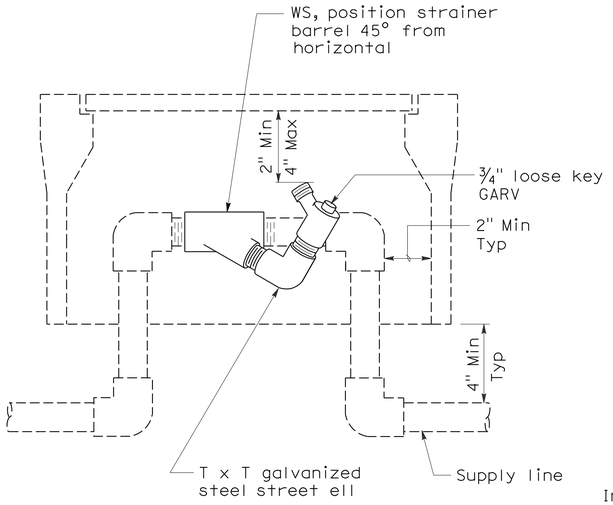

ELEVATION
WYE STRAINER

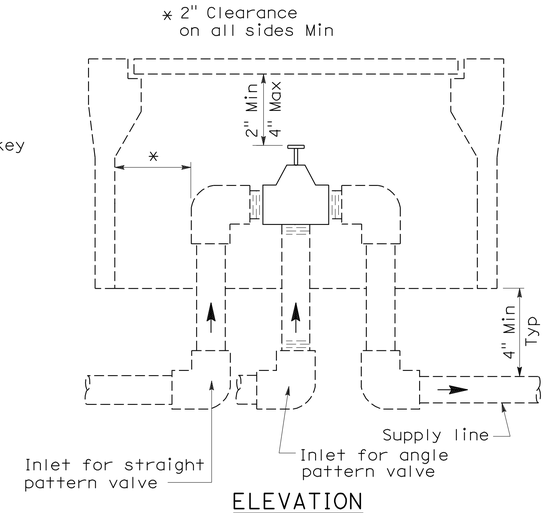

ELEVATION
VALVE

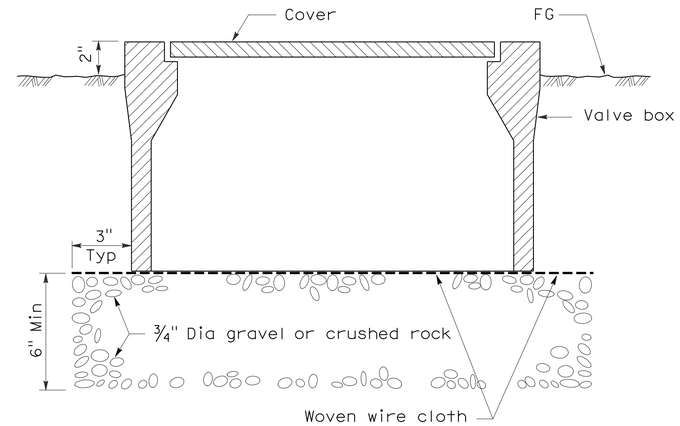

SECTION
VALVE BOX

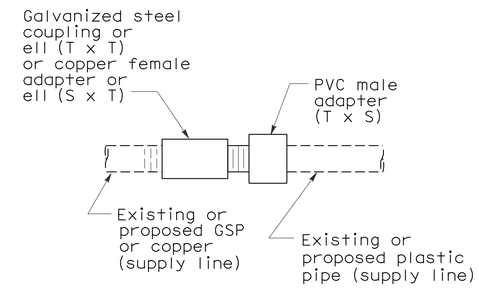

PLAN
GALVANIZED OR COPPER PIPE CONNECTION TO PLASTIC PIPE

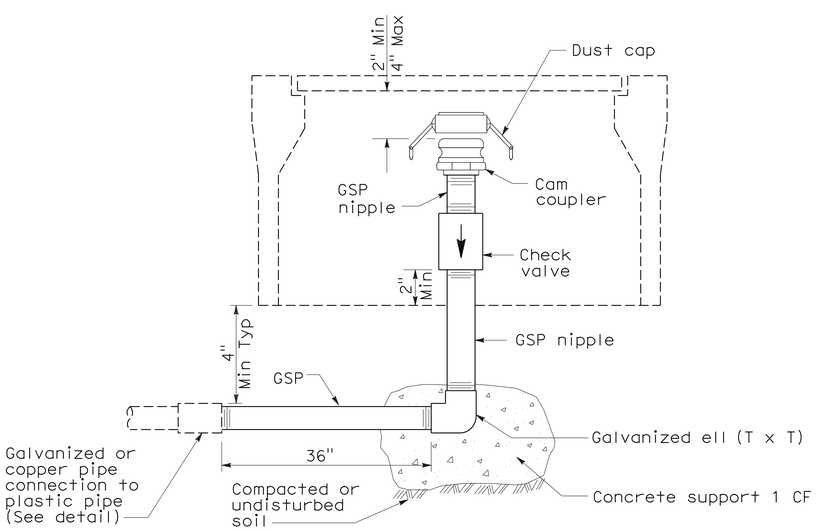

ELEVATION
CAM COUPLER ASSEMBLY

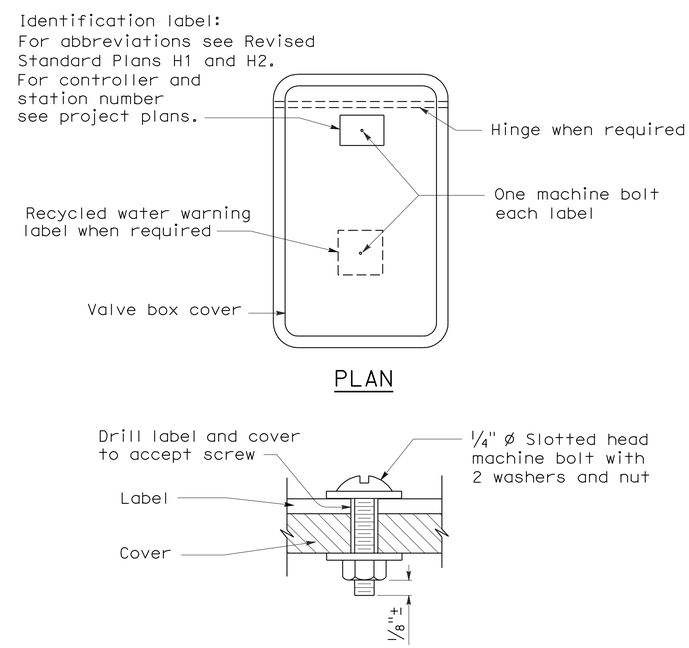

PLAN

SECTION
VALVE BOX IDENTIFICATION

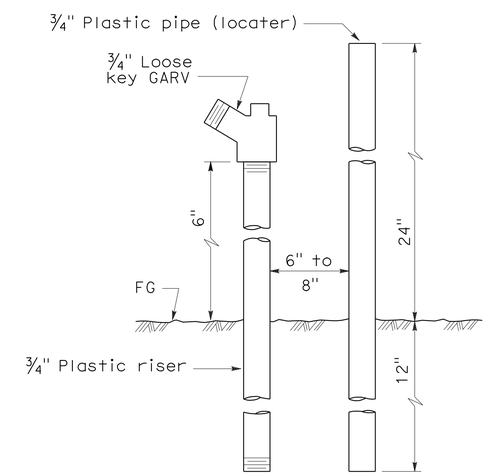

ELEVATION
FLUSH VALVE

STATE OF CALIFORNIA
DEPARTMENT OF TRANSPORTATION

PLANTING AND IRRIGATION DETAILS

NO SCALE

RSP H7 DATED JUNE 5, 2009 SUPERSEDES STANDARD PLAN H7
DATED MAY 1, 2006 - PAGE 207 OF THE STANDARD PLANS BOOK DATED MAY 2006.

REVISED STANDARD PLAN RSP H7

2006 REVISED STANDARD PLAN RSP H7

5-28-09

DIST	COUNTY	ROUTE	POST MILES TOTAL PROJECT	SHEET NO.	TOTAL SHEETS
11	SD	52,125	14.5/15.5, 21.9/22.3	64	72

LICENSED LANDSCAPE ARCHITECT

April 3, 2009
PLANS APPROVAL DATE

LICENSED LANDSCAPE ARCHITECT
Gregory A. Balzer 3598
Signature
02-28-11
Renewal Date
03-04-09
Date
STATE OF CALIFORNIA

The State of California or its officers or agents shall not be responsible for the accuracy or completeness of electronic copies of this plan sheet.

To accompany plans dated 12-20-10

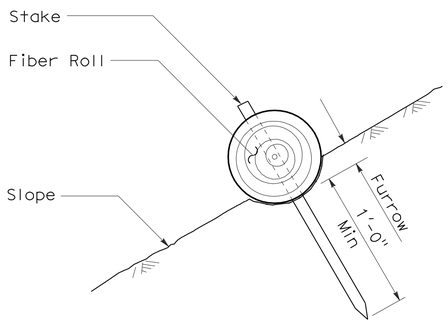

SECTION

FIBER ROLL (TYPE 1)

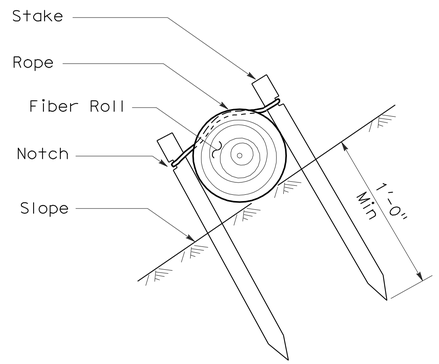

SECTION

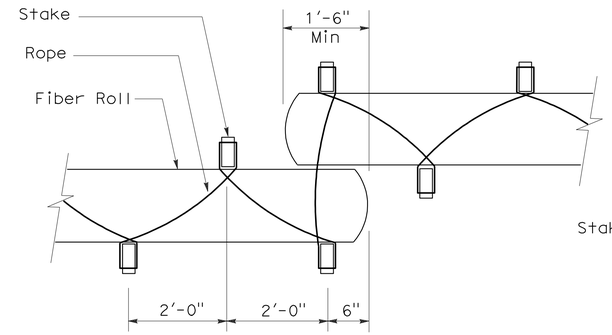

PLAN

FIBER ROLL (TYPE 2)

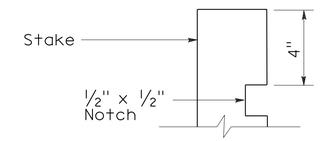

ELEVATION

STAKE NOTCH DETAIL

NOTES:

1. Fiber roll spacing varies depending upon slope inclination.
2. Installations shown in the perspectives are for slope inclination of 10:1 and steeper.

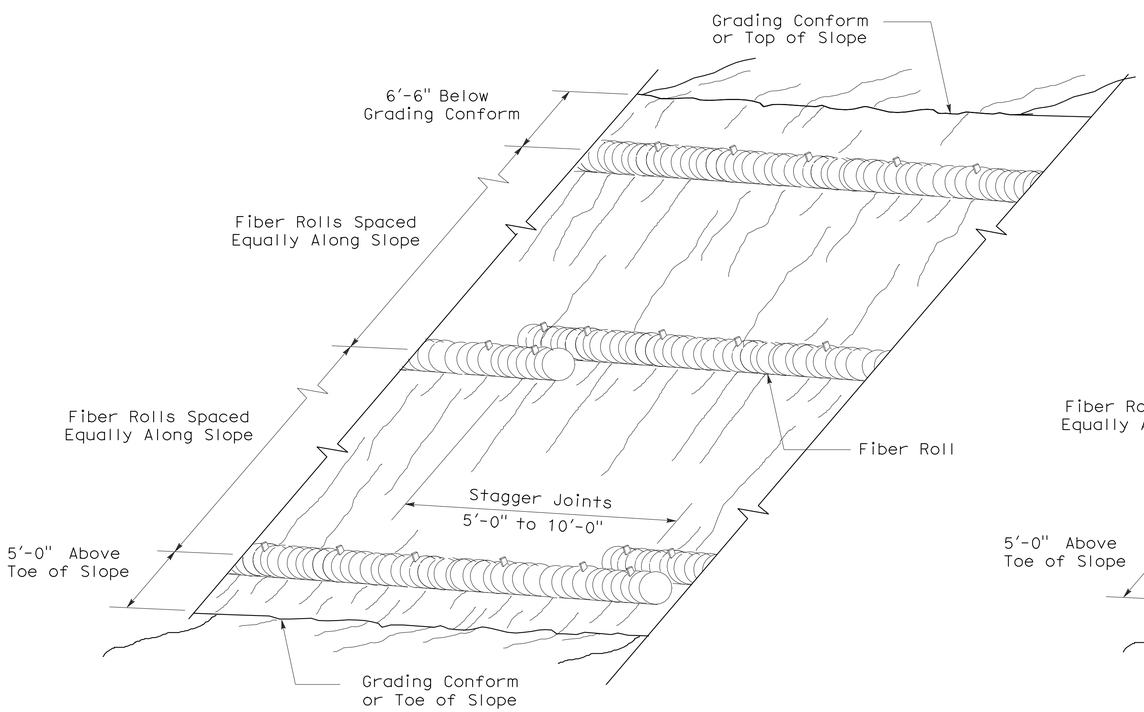

PERSPECTIVE

FIBER ROLL (TYPE 1)

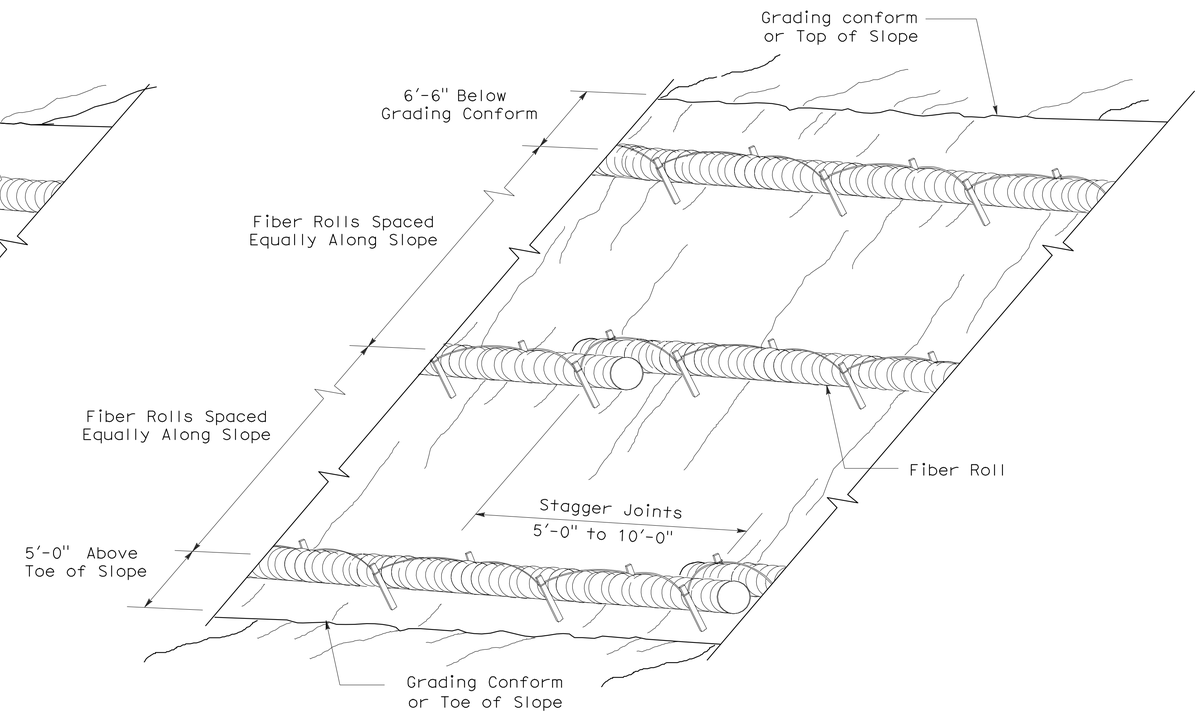

PERSPECTIVE

FIBER ROLL (TYPE 2)

STATE OF CALIFORNIA
DEPARTMENT OF TRANSPORTATION

EROSION CONTROL DETAILS (FIBER ROLL)

NO SCALE

RNSP H51 DATED APRIL 3, 2009 SUPERSEDES NSP H51 DATED DECEMBER 1, 2006 THAT SUPPLEMENTS THE STANDARD PLANS BOOK DATED MAY 2006.

REVISED NEW STANDARD PLAN RNSP H51

2006 REVISED NEW STANDARD PLAN RNSP H51

3-4-09

DIST	COUNTY	ROUTE	POST MILES TOTAL PROJECT	SHEET NO.	TOTAL SHEETS
11	SD	52,125	14.5/15.5, 21.9/22.3	65	72

Randell D. Hiatt
REGISTERED CIVIL ENGINEER

June 6, 2008
PLANS APPROVAL DATE

REGISTERED PROFESSIONAL ENGINEER
Randell D. Hiatt
No. C50200
Exp. 6-30-09
CIVIL
STATE OF CALIFORNIA

The State of California or its officers or agents shall not be responsible for the accuracy or completeness of electronic copies of this plan sheet.

To accompany plans dated 12-20-10

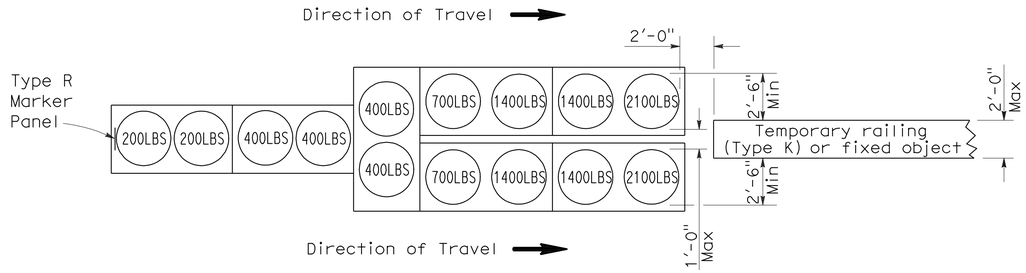

ARRAY 'TU14'

Approach speed 45 mph or more

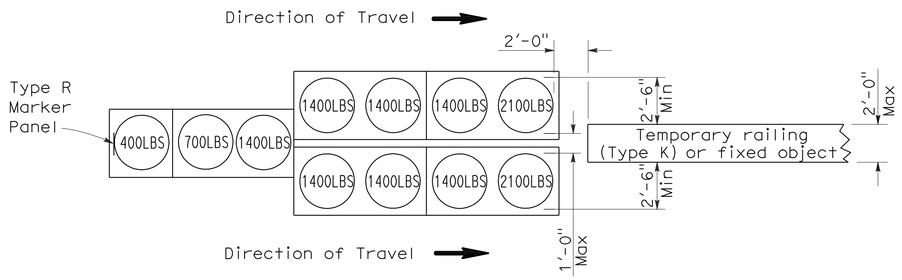

ARRAY 'TU11'

Approach speed less than 45 mph

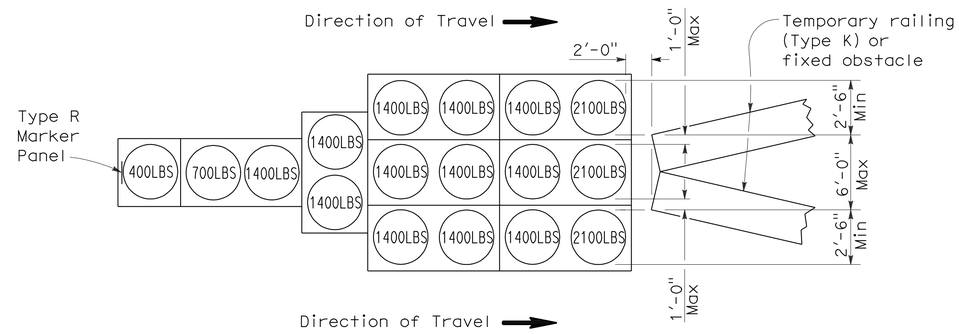

ARRAY 'TU17'

Approach speed less than 45 mph

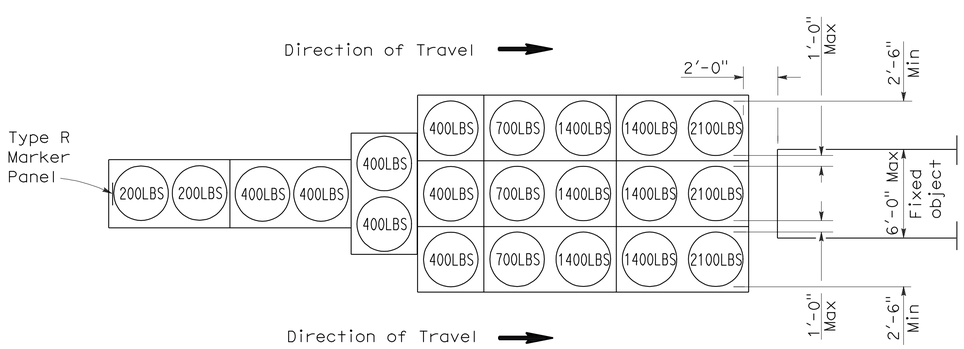

ARRAY 'TU21'

Approach speed 45 mph or more

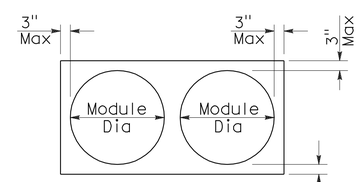

PLAN

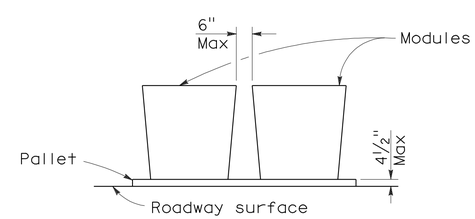

ELEVATION

CRASH CUSHION PALLET DETAIL

See Note 7

NOTES:

1. (XXX) Indicates sand filled module location and weight of sand in pounds for each module. Module spacing is based on the greater diameter of the module.
2. All sand weights are nominal.
3. Temporary crash cushion arrays shall not encroach on the traveled way.
4. Place the top of Type R marker panel 1" below the module lid.
5. Refer to Standard Plan A73B for marker details.
6. Approach speeds indicated conform to NCHRP 350 Report criteria.
7. Use of pallets is optional.

STATE OF CALIFORNIA
DEPARTMENT OF TRANSPORTATION

TEMPORARY CRASH CUSHION, SAND FILLED (UNIDIRECTIONAL)

NO SCALE

RSP T1A DATED JUNE 6, 2008 SUPERSEDES STANDARD PLAN T1A
DATED MAY 1, 2006 - PAGE 211 OF THE STANDARD PLANS BOOK DATED MAY 2006.

REVISED STANDARD PLAN RSP T1A

2006 REVISED STANDARD PLAN RSP T1A

DIST	COUNTY	ROUTE	POST MILES TOTAL PROJECT	SHEET NO.	TOTAL SHEETS
11	SD	52,125	14.5/15.5, 21.9/22.3	66	72

Randell D. Hiatt
REGISTERED CIVIL ENGINEER

June 6, 2008
PLANS APPROVAL DATE

REGISTERED PROFESSIONAL ENGINEER
Randell D. Hiatt
No. C50200
Exp. 6-30-09
CIVIL
STATE OF CALIFORNIA

The State of California or its officers or agents shall not be responsible for the accuracy or completeness of electronic copies of this plan sheet.

To accompany plans dated 12-20-10

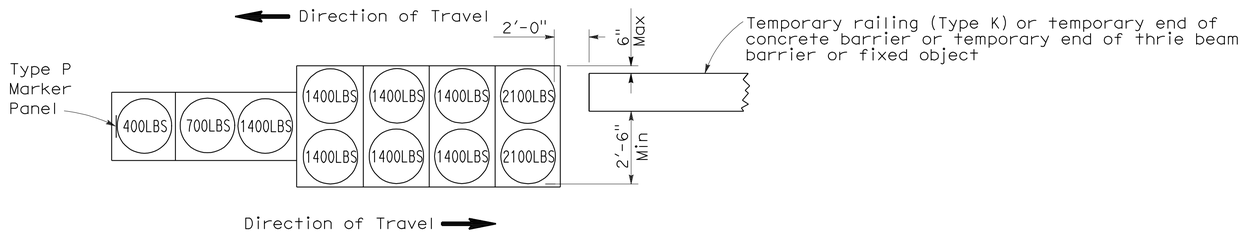

ARRAY 'TB11'

Approach speed less than 45 mph

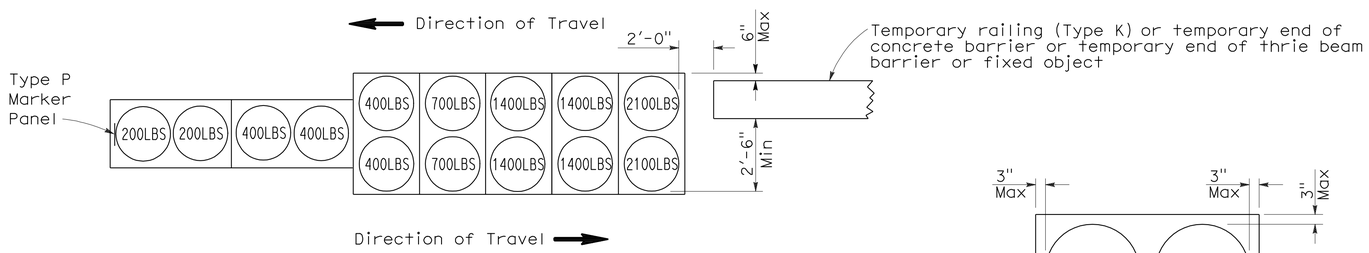

ARRAY 'TB14'

Approach speed 45 mph or more

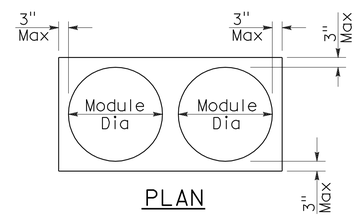

PLAN

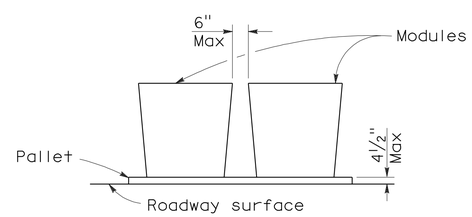

ELEVATION

CRASH CUSHION PALLET DETAIL

See Note 7

NOTES:

1. (XXX) Indicates sand filled module location and weight of sand in pounds for each module. Module spacing is based on the greater diameter of the module.
2. All sand weights are nominal.
3. Temporary crash cushion arrays shall not encroach on the traveled way.
4. Place the Type P marker panel so that the bottom of the panel rests upon the pallet.
5. Refer to Standard Plan A73B for marker details.
6. Approach speeds indicated conform to NCHRP 350 Report criteria.
7. Use of pallets is optional.

STATE OF CALIFORNIA
DEPARTMENT OF TRANSPORTATION

TEMPORARY CRASH CUSHION, SAND FILLED (BIDIRECTIONAL)

NO SCALE

RSP T1B DATED JUNE 6, 2008 SUPERSEDES STANDARD PLAN T1B
DATED MAY 1, 2006 - PAGE 212 OF THE STANDARD PLANS BOOK DATED MAY 2006.

REVISED STANDARD PLAN RSP T1B

2006 REVISED STANDARD PLAN RSP T1B

5-15-08

DIST	COUNTY	ROUTE	POST MILES TOTAL PROJECT	SHEET NO.	TOTAL SHEETS
11	SD	52,125	14.5/15.5, 21.9/22.3	67	72

Randell D. Hiatt
REGISTERED CIVIL ENGINEER

June 6, 2008
PLANS APPROVAL DATE

REGISTERED PROFESSIONAL ENGINEER
Randell D. Hiatt
No. C50200
Exp. 6-30-09
CIVIL
STATE OF CALIFORNIA

The State of California or its officers or agents shall not be responsible for the accuracy or completeness of electronic copies of this plan sheet.

To accompany plans dated 12-20-10

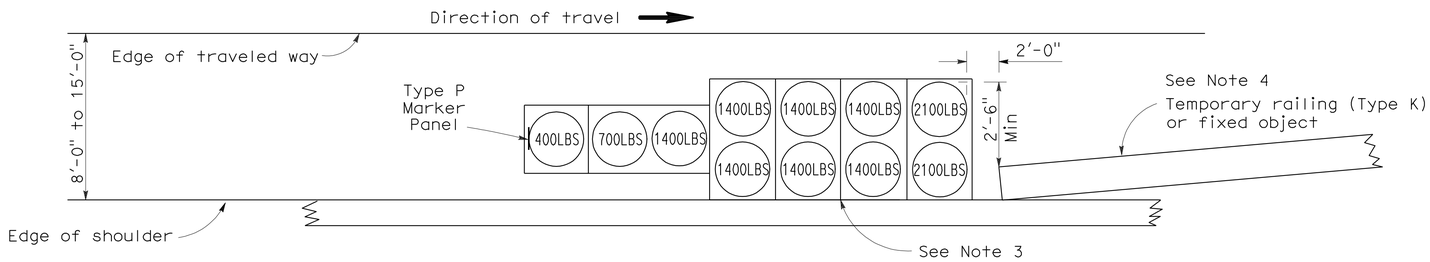

ARRAY 'TS11'

Approach speed less than 45 mph
See Note 9

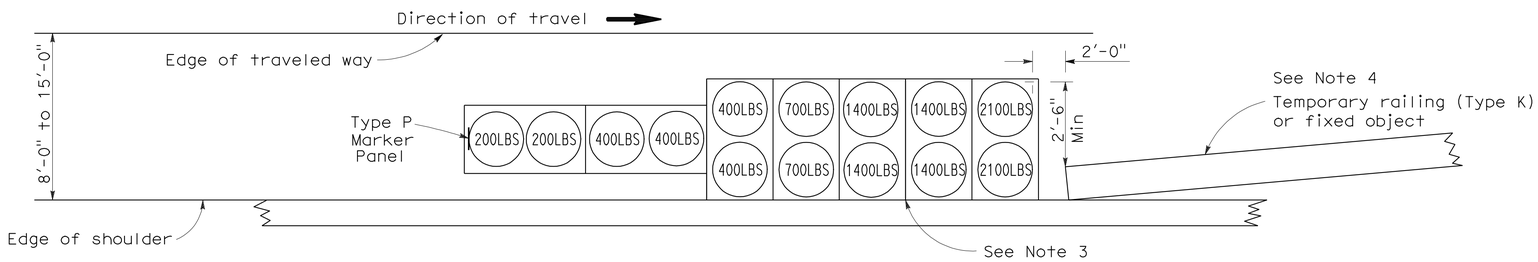

ARRAY 'TS14'

Approach speed 45 mph or more
See Note 9

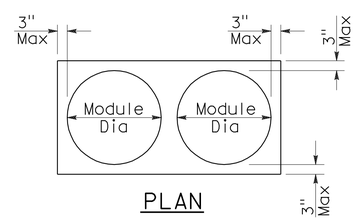

PLAN

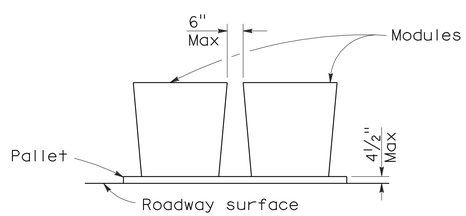

ELEVATION

CRASH CUSHION PALLET DETAIL

See Note 11

NOTES:

1. (XXX) Indicates sand filled module location and weight of sand in pounds for each module. Module spacing is based on the greater diameter of the module.
2. All sand weights are nominal.
3. The temporary crash cushion arrays shown on this plan shall be used only in locations where there will be traffic on one side of the temporary crash cushion array.
4. If the fixed object or approach end of the temporary railing is less than 15'-0" from the edge of traveled way, a temporary crash cushion is required in a construction or work zone.
5. Temporary crash cushion arrays shall not encroach on the traveled way.
6. Arrays for median shoulders shall conform to details shown on this plan for outside shoulders.
7. Place the Type P marker panel so that the bottom of the panel rests upon the pallet and faces traffic.
8. Refer to Standard Plan A73B for marker details.
9. For shoulder widths less than 8'-0", appropriate approved crash cushion protection, other than sand filled modules, shall be provided at fixed objects and at approach ends of temporary railing. The specific type of crash cushion shall be as shown on the project plans or as specified in the Special Provisions, or if not shown on the project plans or specified in the Special Provisions, shall be as approved by the Engineer.
10. Approach speeds indicated conform to NCHRP 350 Report criteria.
11. Use of pallets is optional.

STATE OF CALIFORNIA
DEPARTMENT OF TRANSPORTATION

TEMPORARY CRASH CUSHION, SAND FILLED (SHOULDER INSTALLATIONS)

NO SCALE

RSP T2 DATED JUNE 6, 2008 SUPERSEDES STANDARD PLAN T2
DATED MAY 1, 2006 - PAGE 213 OF THE STANDARD PLANS BOOK DATED MAY 2006.

REVISED STANDARD PLAN RSP T2

2006 REVISED STANDARD PLAN RSP T2

5-15-08

DIST	COUNTY	ROUTE	POST MILES TOTAL PROJECT	SHEET NO.	TOTAL SHEETS
11	SD	52,125	14.5/15.5, 21.9/22.3	68	72

REGISTERED CIVIL ENGINEER

November 17, 2006
PLANS APPROVAL DATE

REGISTERED PROFESSIONAL ENGINEER
Greg W. Edwards
No. C36386
Exp. 6-30-08
CIVIL
STATE OF CALIFORNIA

The State of California or its officers or agents shall not be responsible for the accuracy or completeness of electronic copies of this plan sheet.

To accompany plans dated 12-20-10

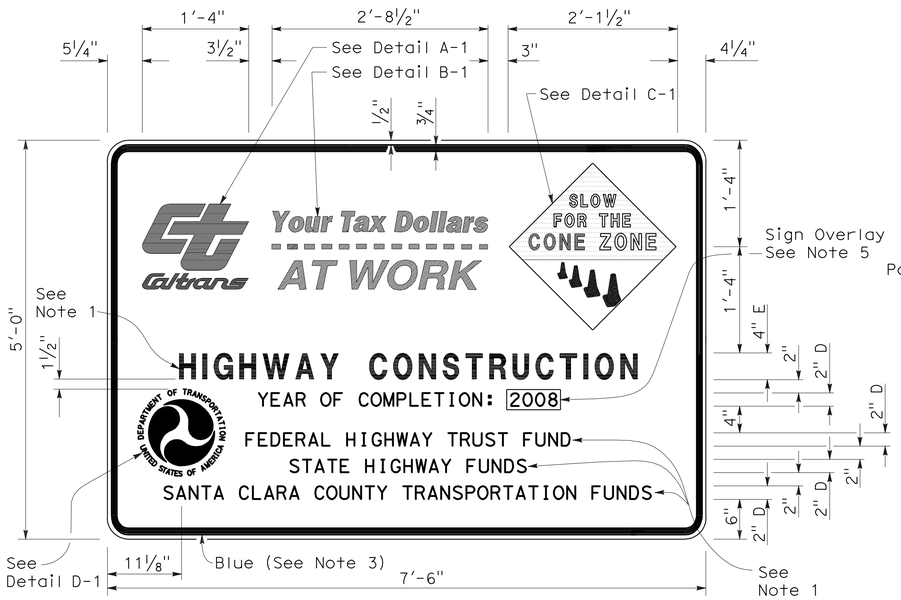

TYPE 1

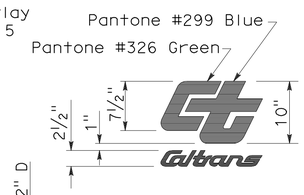

DETAIL A-1

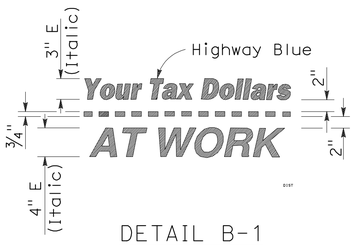

DETAIL B-1
(See Note 3)

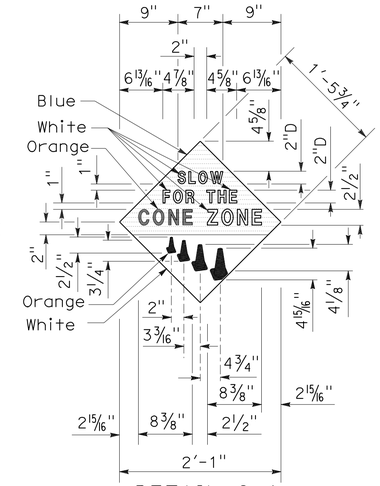

DETAIL C-1
(See Note 4)

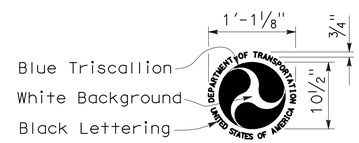

DETAIL D-1
(See Note 6)

NOTES:

1. The sign messages shown for type of project and fund types are examples only. See the Special Provisions for the applicable type of project and fund type messages to be used.
2. Except as otherwise shown, the legend of sign shall be black on a white background (non-reflective).
3. The border of the signs and details "B-1" and "B-2" shall be blue (non-reflective).
4. The diamond in details "C-1" and "C-2" shall be blue for the background of message, " SLOW FOR THE CONE ZONE", and white background for the orange cones. The color and type of font for the "SLOW FOR THE CONE ZONE" message shall be: "SLOW" white D; "FOR THE" white D; "CONE" orange Arial font; "ZONE" white Arial font.
5. Year of completion of project construction shown on the overlay is an example only. See the Special Provisions.
6. Use when the Project involves Federal Highway Trust Fund.

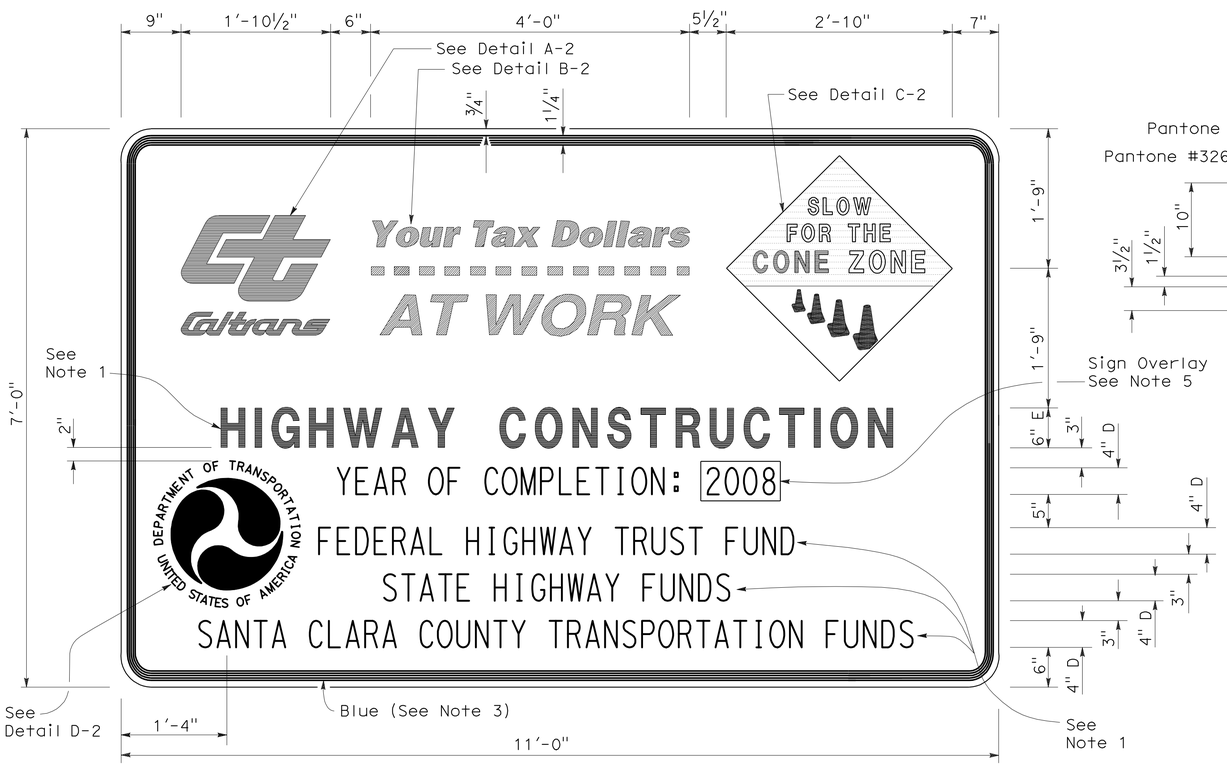

TYPE 2

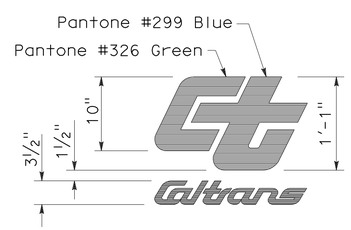

DETAIL A-2

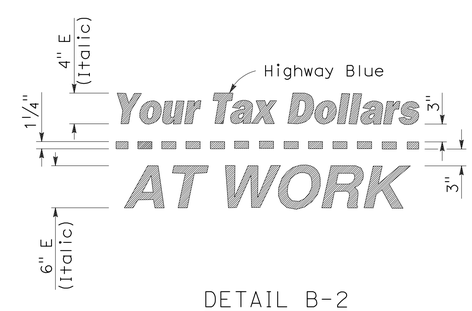

DETAIL B-2
(See Note 3)

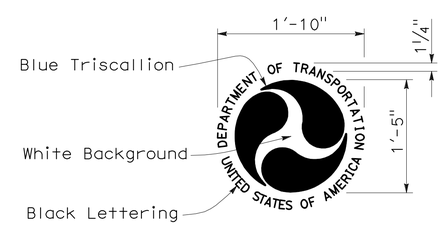

DETAIL D-2
(See Note 6)

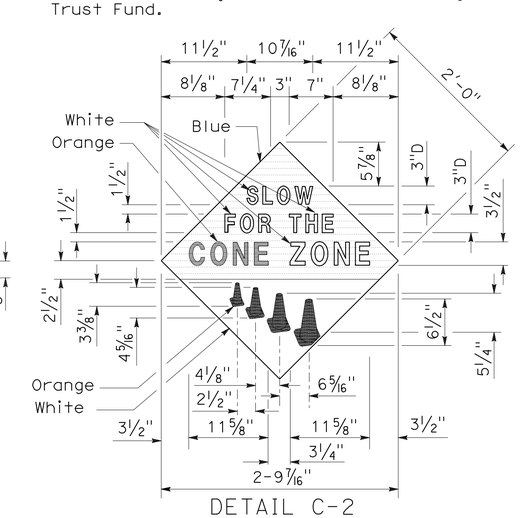

DETAIL C-2
(See Note 4)

STATE OF CALIFORNIA
DEPARTMENT OF TRANSPORTATION

CONSTRUCTION PROJECT FUNDING IDENTIFICATION SIGNS

NO SCALE

RSP T7 DATED NOVEMBER 17, 2006 SUPERSEDES STANDARD PLAN T7
DATED MAY 1, 2006 - PAGE 217 OF THE STANDARD PLANS BOOK DATED MAY 2006.

REVISED STANDARD PLAN RSP T7

2006 REVISED STANDARD PLAN RSP T7

9-7-06

DIST	COUNTY	ROUTE	POST MILES TOTAL PROJECT	SHEET NO.	TOTAL SHEETS
11	SD	52,125	14.5/15.5, 21.9/22.3	69	72

LICENSED LANDSCAPE ARCHITECT

August 15, 2008
PLANS APPROVAL DATE

The State of California or its officers or agents shall not be responsible for the accuracy or completeness of electronic copies of this plan sheet.

LICENSED LANDSCAPE ARCHITECT — Robert B. Schott — Signature — 11-04-08 Renewal Date — 08-11-08 Date — STATE OF CALIFORNIA

To accompany plans dated 12-20-10

FLEXIBLE SEDIMENT BARRIER SPACING TABLE

SLOPE OF ROADWAY (PERCENT)	0 to 0.9	1 to 1.9	2 to 2.9	3 to 4	5+
INTERVAL BETWEEN BARRIERS	50′	35′	30′	25′	20′
ANGLE FROM FACE OF CURB	70°	70°	70°	45°	45°
SUGGESTED BARRIER LENGTH	6′	6′	6′	6′	6′

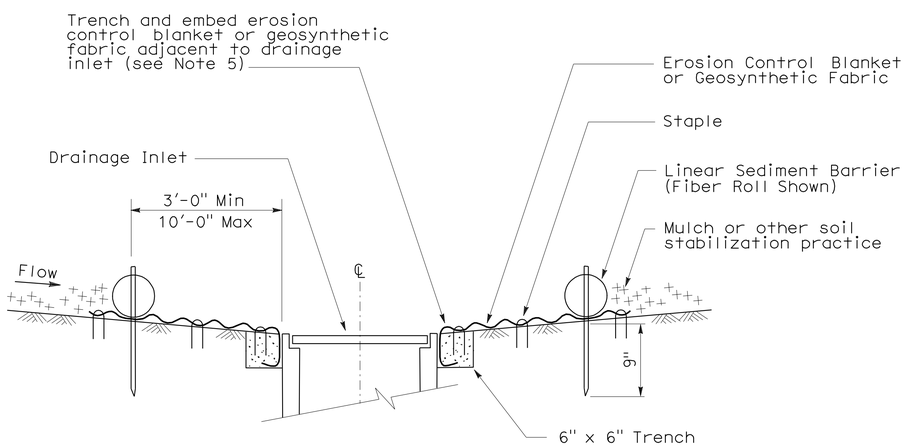

SECTION A-A

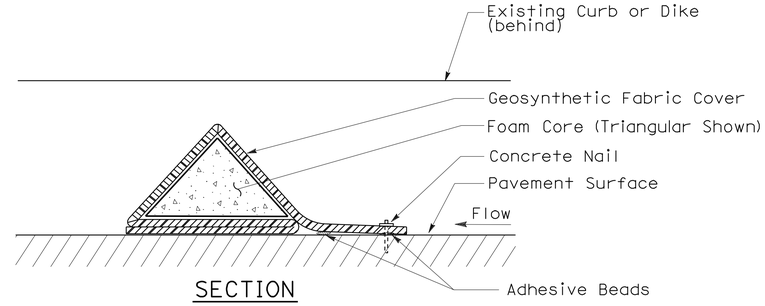

SECTION

FLEXIBLE SEDIMENT BARRIER DETAIL (FOAM BARRIER SHOWN)

NOTES:

1. See Standard Plan T51 for Temporary Silt Fence.
2. Dimensions may vary to fit field conditions.
3. Install a minimum of 3 flexible sediment barriers upstream of each drainage inlet to be protected.
4. Position erosion control blanket or geosynthetic fabric at edge of concrete apron and secure in trench.
5. Erosion control blanket or geosynthetic fabric is not required if the area adjacent to the drainage inlet is vegetated.

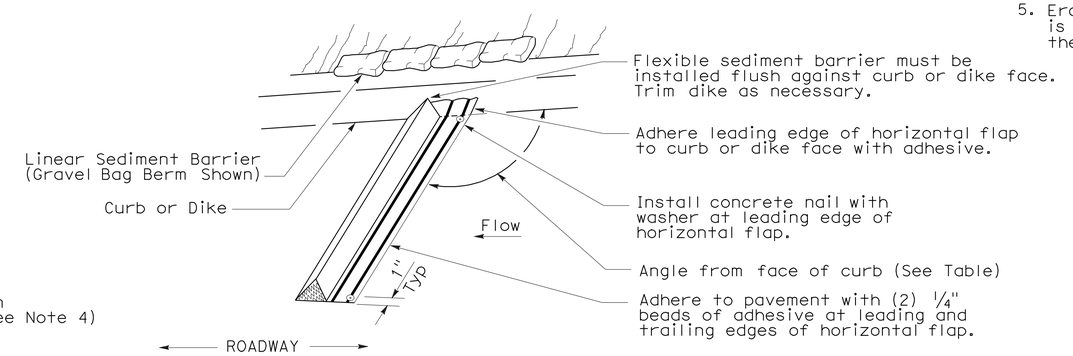

PERSPECTIVE

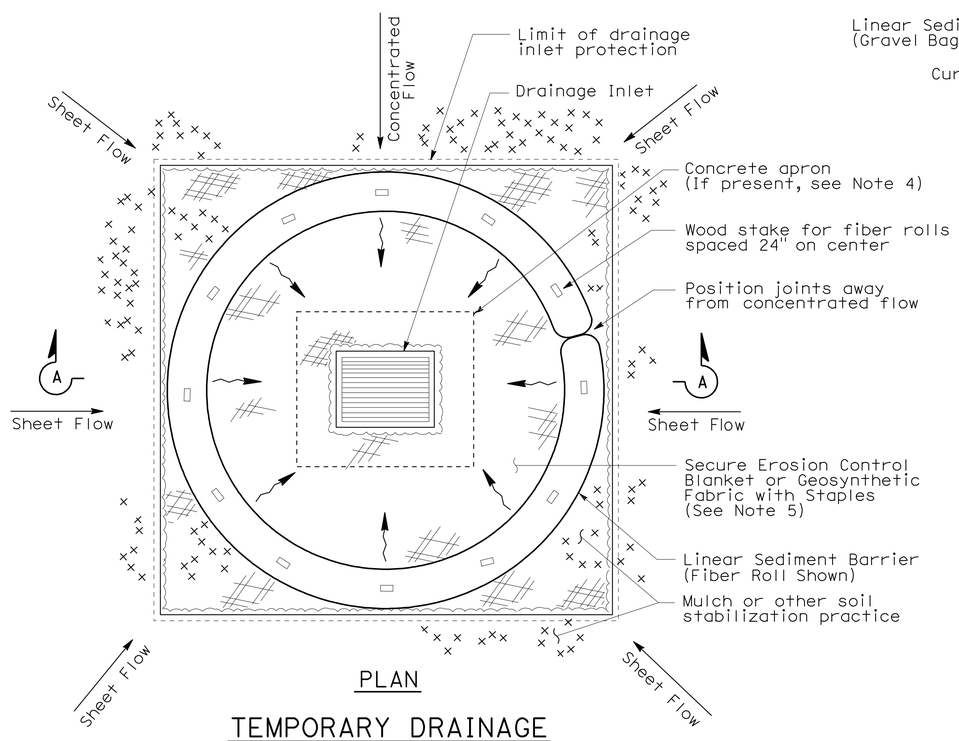

PLAN

TEMPORARY DRAINAGE INLET PROTECTION (TYPE 4A)

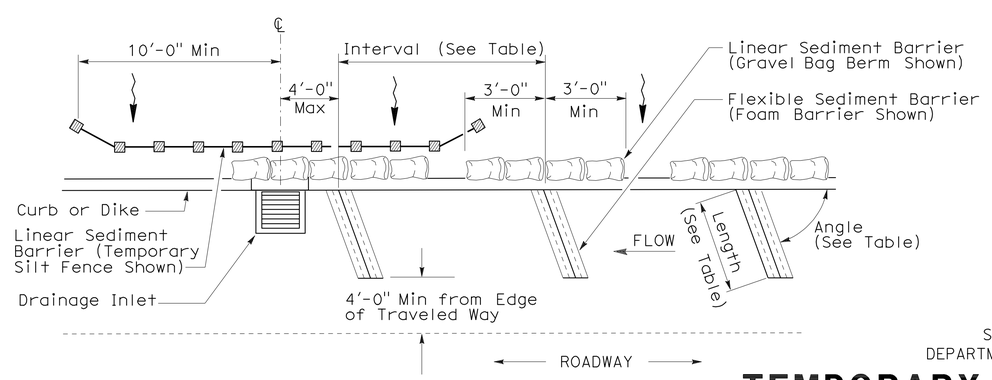

PLAN

TEMPORARY DRAINAGE INLET PROTECTION (TYPE 4B) FLEXIBLE SEDIMENT BARRIER

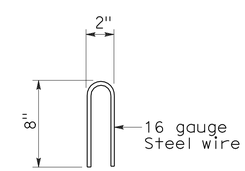

STAPLE DETAIL

STATE OF CALIFORNIA
DEPARTMENT OF TRANSPORTATION

TEMPORARY WATER POLLUTION CONTROL DETAILS (TEMPORARY DRAINAGE INLET PROTECTION)

NO SCALE

NSP T63 DATED AUGUST 15, 2008 SUPPLEMENTS THE STANDARD PLANS BOOK DATED MAY 2006.

NEW STANDARD PLAN NSP T63

2006 NEW STANDARD PLAN NSP T63

7-11-08

DIST	COUNTY	ROUTE	POST MILES TOTAL PROJECT	SHEET NO.	TOTAL SHEETS
11	SD	52,125	14.5/15.5, 21.9/22.3	70	72

REGISTERED ELECTRICAL ENGINEER

October 5, 2007
PLANS APPROVAL DATE

REGISTERED PROFESSIONAL ENGINEER Jeffery G. McRae No. E14512 Exp. 6-30-08 ELECTRICAL STATE OF CALIFORNIA

The State of California or its officers or agents shall not be responsible for the accuracy or completeness of electronic copies of this plan sheet.

To accompany plans dated 12-20-10

ELECTROLIERS

STANDARD TYPES
15, 15D
15 STRUCTURE
21, 21D STRUCTURE
30
31
32
35
36-20A

High mast light pole

Double Arm lighting standard

Existing electrolier

Electrolier foundation (Future installation)

NOTES:

1. Luminaires shall be 310 W HPS when installed on Type 21, 21D, 30, 31, 32, 35 and 36-20A Standards, unless otherwise specified. Luminaires shall be 200 W HPS when installed on other type standards or poles, unless otherwise specified.
2. Luminaires shall be the cutoff type, ANSI Type III medium cutoff lighting distribution, unless otherwise specified.
3. Variations noted adjacent to symbol on project plans.

Electrolier (see project notes or project plans)

Luminaire on wood pole

STANDARD NOTES:

- AB — Abandon. If applied to conduit, remove conductors.
- BC — Install pull box in existing conduit run.
- BP — Pedestrian barricade, type as indicated on plan.
- CB — Install conduit into existing pull box.
- CC — Connect new and existing conduit. Remove existing conductors and install conductors as indicated.
- CF — Conduit to remain for future use. Remove conductors. Install pull wire or rope.
- DH — Detector handhole.
- FA — Foundation to be abandoned.
- IS — Install sign on signal mast arm.
- NS — No slip base on standard.
- PEC — Photoelectric control.
- PEU — Photoelectric unit.
- RC — Equipment or material to be removed and become the property of the Contractor.
- RE — Remove electrolier, fuses and ballast. Tape ends of conductors.
- RL — Relocate equipment.
- RR — Remove and reuse equipment.
- RS — Remove and salvage equipment.
- SC — Splice new to existing conductors.
- SD — Service disconnect.
- SF — Standard to remain for future use. Remove luminaire, pole conductors, fuses and ballast.
- TSP — Telephone service point.

ABBREVIATIONS AND EQUIPMENT DESIGNATIONS

PROPOSED	EXISTING	
BBS	bbs	Battery backup system
BC	bc	Bolt circle
C	C	Conduit
CCTV	cctv	Closed circuit television
CKT	ckt	Circuit
CMS	cms	Changeable message sign
DLC	dlc	Loop detector lead-in cable
EMS	ems	Extinguishable message sign
EVC	evc	Emergency vehicle cable
EVD	evd	Emergency vehicle detector
FB	fb	Flashing beacon
FBCA	fbca	Flashing beacon control assembly
FBS	fbs	Flashing beacon with slip base
FO	fo	Fiber optic
G	G	Ground (Equipment Grounding Conductor)
GFCI	GFCI	Ground fault circuit interrupt
HAR	har	Highway advisory radio
HEX	hex	Hexagonal
HPS	hps	High pressure sodium
IISNS	iisns	Internally illuminated street name sign
ISL	isl	Induction sign lighting
LED	led	Light emitting diode
LMA	lma	Luminaire mast arm
LPS	lps	Low pressure sodium
LTG	ltg	Lighting
LUM	lum	Luminaire
MAT	mat	Mast arm mounting vehicle signal faces, top attachment
MAS	mas	Mast arm mounting vehicle signal faces, side attachment
MAS-4A	mas-4A	Mast arm mounting vehicle signal faces, side attachment - 4 signal section
MAS-4B	mas-4B	
MAS-4C	mas-4C	
MAS-5A	mas-5A	Mast arm mounting vehicle signal faces, side attachment - 5 signal section
MAS-5B	mas-5B	
MC	mc	Mercury contactor
M/M	m/m	Multiple to multiple transformer
MT	mt	Conduit with pull wire or rope only
MTG	mtg	Mounting
	mv	Mercury vapor lighting fixture
N	N	Neutral (Grounded Conductor)
NC	NC	Normally closed
NO	NO	Normally open
PB	pb	Pull box
PEC	pec	Photoelectric control (Type I, II, III, IV or V as shown)
PED	ped	Pedestrian
PEU	peu	Photoelectric unit
PPB	ppb	Pedestrian push button
RL		Relocated equipment
RM	rm	Ramp metering
SB	sb	Slip base
SIC	sic	Signal interconnect cable
SIG	sig	Signal
SMA	sma	Signal mast arm
SNS	sns	Street name sign
SP	sp	Service point
TDC	tdc	Telephone demarcation cabinet
TMS	tms	Traffic monitoring station
TOS	tos	Traffic Operations System
VEH	veh	Vehicle
XFMR	xfmr	Transformer
COMM	comm	Communication
RWIS	rwis	Roadway weather information system

SOFFIT AND WALL MOUNTED LUMINAIRES

Pendant, 70 W HPS unless otherwise specified.

Flush, 70 W HPS unless otherwise specified.

Wall surface, 70 W HPS unless otherwise specified.

Existing soffit or wall luminaire to remain unmodified.

Existing soffit or wall luminaire to be modified as specified.

NOTE:

Arrow indicates "street side" of luminaire.

STATE OF CALIFORNIA
DEPARTMENT OF TRANSPORTATION

ELECTRICAL SYSTEMS (SYMBOLS AND ABBREVIATIONS)

NO SCALE

RSP ES-1A DATED OCTOBER 5, 2007 SUPERSEDES STANDARD PLAN ES-1A DATED MAY 1, 2006 - PAGE 400 OF THE STANDARD PLANS BOOK DATED MAY 2006.

REVISED STANDARD PLAN RSP ES-1A

2006 REVISED STANDARD PLAN RSP ES-1A

DIST	COUNTY	ROUTE	POST MILES TOTAL PROJECT	SHEET NO.	TOTAL SHEETS
11	SD	52,125	14.5/15.5, 21.9/22.3	71	72

REGISTERED ELECTRICAL ENGINEER

October 5, 2007
PLANS APPROVAL DATE

REGISTERED PROFESSIONAL ENGINEER
Jeffery G. McRae
No. E14512
Exp. 6-30-08
ELECTRICAL
STATE OF CALIFORNIA

The State of California or its officers or agents shall not be responsible for the accuracy or completeness of electronic copies of this plan sheet.

To accompany plans dated 12-20-10

CONDUIT

PROPOSED	EXISTING	
		Lighting Conduit, unless otherwise indicated or noted
		Traffic signal conduit
C	c	Communication conduit
T	t	Telephone conduit
F	f	Fire alarm conduit
FO	fo	Fiber optic conduit
		Conduit termination (RSP ES-9A C)
R	r	Conduit riser in/on structure or service pole

SERVICE EQUIPMENT

PROPOSED	EXISTING	
OH	oh	Overhead lines
U	U	Wood pole "U" indicates utility owned
		Pole guy with anchor
		Utility transformer - ground mounted
III		Service equipment enclosure type
		Service equipment enclosure door indicates front of enclosure
T	t	Telephone demarcation cabinet

POLE-MOUNTED SERVICE DESIGNATION

Type of installation

TYPE H SERVICE - 28'-10" ← Pole height above grade

ILLUMINATED OVERHEAD SIGN

PROPOSED	EXISTING	
		Overhead sign - Single post
		Overhead sign - Two post
		Overhead sign - Mounted on structure
		Overhead sign with electrolier

SIGNAL EQUIPMENT

PROPOSED	EXISTING	
		Pedestrian signal face
		Pedestrian push button post
		Pedestrian barricade
		Vehicle signal face (with backplate, 3-Section: red, yellow and green)
		Vehicle signal face with angle visors
PV	PV	Modifications of basic symbols: "L" indicates all non-arrow sections louvered "LG" indicates louvered green section only "PV" indicates 12" programmed visibility sections "8" indicates all 8" sections (only when specified)
		Type 15TS and Vehicle signal face
		Vehicle signal face with red, yellow and green left arrow sections
		Vehicle signal face with red and yellow sections and up green arrow
		Vehicle signal face (5 Section) with red, yellow and green sections and yellow and green right arrows
		Type 1 Standard and attached vehicle signal faces
		Standard with signal mast arm only and attached vehicle signal faces and internally illuminated street name sign
		Type 33 Standard, Left-turn vehicle signal face and sign
		Standard with luminaire and signal mast arms and attached vehicle signal faces
		Cantilever flashing beacon Type 9 Frame, with a sign unless otherwise specified or indicated
		Type 15-FBS Standard with two vehicle signal face sections with lens, backplate and visor with a sign
R	Y	Flashing beacon. One vehicle signal face section with lens, backplate and visor. "R" indicates red indication, "Y" indicates yellow indication
		Controller assembly. Door indicates front of cabinet

SIGNAL EQUIPMENT Cont

PROPOSED	EXISTING	
		Guard post
		Type 1 Standard with "Meter On" sign
		Emergency Vehicle detector

NOTES:

1. All signal sections shall be 12" unless shown otherwise.
2. Signal heads shall be provided with backplates unless shown otherwise.
3. Signal indication shall be LED.

STATE OF CALIFORNIA
DEPARTMENT OF TRANSPORTATION

ELECTRICAL SYSTEMS (SYMBOLS AND ABBREVIATIONS)

NO SCALE

RSP ES-1B DATED OCTOBER 5, 2007 SUPERCEDES STANDARD PLAN ES-1B DATED MAY 1, 2006 - PAGE 401 OF THE STANDARD PLANS BOOK DATED MAY 2006.

REVISED STANDARD PLAN RSP ES-1B

2006 REVISED STANDARD PLAN RSP ES-1B

DIST	COUNTY	ROUTE	POST MILES TOTAL PROJECT	SHEET NO.	TOTAL SHEETS
11	SD	52,125	14.5/15.5, 21.9/22.3	72	72

REGISTERED ELECTRICAL ENGINEER

October 5, 2007
PLANS APPROVAL DATE

REGISTERED PROFESSIONAL ENGINEER Jeffery G. McRae No. E14512 Exp. 6-30-08 ELECTRICAL STATE OF CALIFORNIA

The State of California or its officers or agents shall not be responsible for the accuracy or completeness of electronic copies of this plan sheet.

To accompany plans dated 12-20-10

EQUIPMENT IDENTIFICATION

ILLUMINATED SIGN IDENTIFICATION NUMBER:

Sign No. 12345 — Sign number - Place on post or structure

10 ISL SCI 1.0

- 1.0 — Transformer rating (kVA)
- SCI — Lighting control type
- ISL — Number and type of fixtures

Do NOT place on standard or structure

ELECTROLIER OR EQUIPMENT IDENTIFICATION NUMBER:

12345 - 15'-0"

- 15'-0" — Mast arm length, if shown. Do not place on standard or structure.
- 12345 — Equipment number - Place on standard or structure. Existing equipment numbers are shown in parenthesis

CONDUIT AND CONDUCTOR IDENTIFICATION:

1½"C, 2#10, 15#14, 2 DLC

- 2#10, 15#14, 2 DLC — Number and size of conductors and cables
- 1½"C — Size of conduit in inches

Ø1, Ø2, Ø2P, etc.	Traffic phase identification for signal faces, detectors and phase diagrams
1 2 3	Project note numbers
A B C	Equipment description, installation or item numbers
1 2 3	Conduit run numbers

SIGNAL AND LIGHTING STANDARD (TYPICAL DESIGNATION):

19A - 3 - 100

- 100 — Wind velocity = 100 mph
- 3 — Case 3 arm loading
- 19A — Standard type
- Standard Plan sheet number
- Detail number or letter

MISCELLANEOUS EQUIPMENT

PROPOSED	EXISTING	
CMS	cms	Changeable message sign
		Closed circuit television camera
		Highway advisory radio pole and antenna
EMS	ems	Extinguishable message sign
M V	m v	Detection device M = Microwave sensor V = Video image sensor

WIRING DIAGRAM LEGEND

P	Pole
CB	Circuit breaker
A	Ampere
V	Volt
M	Metered
UM	Unmetered
NB	Neutral bus
GB	Ground bus
G	Equipment grounding conductor
N	Grounded conductor (Neutral)

- External conductor
- Conductor or bus
- Tie point
- Contactor coil
- Contactor, Contact NO
- Terminal blocks
- Contactor, Contact NC
- Enclosure bond
- Grounding electrode
- Circuit breaker
- Receptacle

PULL BOXES

PROPOSED EXISTING

Pull box-No. 5 unless otherwise indicated or noted.

3 — 9A(21)

Pull box-Additional designations or descriptions

3 = No. 3½ pull box
5 = No. 5 pull box
6 = No. 6 pull box
7 = No. 7 (Ceiling pull box)
8 = No. 8 (Pendant soffit pull box)
9 = No. 9 pull box
9A = No. 9A pull box

(C) = Communications pull box
(E) = Pull box with extension
(S) = Sprinkler control pull box
(21) = Anchor bolts and conduit for future installation of Type 21 Standard
(T) = Traffic pull box

VEHICLE DETECTORS

5 J 9 U

- U = Upper
- L = Lower
- Slot number in input file
- Input file (I or J)
- Phase

PROPOSED	EXISTING	
		Type A detector loop. Outline of sawcut shown.
		Type B detector loop. Outline of sawcut shown.
		Type C detector loop. Outline of sawcut shown.
		Type D detector loop. Outline of sawcut shown.
		Type E detector loop. Outline of sawcut shown.
		Type Q detector loop. Outline of sawcut shown.
		Magnetic detector
DH	dh	Detector handhole
		Microwave or video detection zone

STATE OF CALIFORNIA
DEPARTMENT OF TRANSPORTATION

ELECTRICAL SYSTEMS (SYMBOLS AND ABBREVIATIONS)

NO SCALE

RSP ES-1C DATED OCTOBER 5, 2007 SUPERCEDES STANDARD PLAN ES-1C DATED MAY 1, 2006 - PAGE 402 OF THE STANDARD PLANS BOOK DATED MAY 2006.

REVISED STANDARD PLAN RSP ES-1C

2006 REVISED STANDARD PLAN RSP ES-1C