Dist	COUNTY	ROUTE	POST MILES TOTAL PROJECT	SHEET No.	TOTAL SHEETS
11	SD	15,76	R46.2/R46.8, R12.1/R17.7	1001	1273

REGISTERED CIVIL ENGINEER 10-30-13 DATE

03-24-14
PLANS APPROVAL DATE

REGISTERED PROFESSIONAL ENGINEER KATHRYN WALKER No. C77900 Exp. 06-30-15 CIVIL STATE OF CALIFORNIA

THE STATE OF CALIFORNIA OR ITS OFFICERS OR AGENTS SHALL NOT BE RESPONSIBLE FOR THE ACCURACY OR COMPLETENESS OF SCANNED COPIES OF THIS PLAN SHEET.

DOKKEN ENGINEERING
5675 RUFFIN RD
SUITE 250
SAN DIEGO, CA 92123

NOTE:

FOR ACCURATE RIGHT OF WAY DATA, CONTACT RIGHT OF WAY ENGINEERING AT THE DISTRICT OFFICE.

APPROVED FOR EROSION CONTROL WORK ONLY

EROSION CONTROL PLAN

SCALE: 1" = 50'

EC-24

STATE OF CALIFORNIA - DEPARTMENT OF TRANSPORTATION
Caltrans

CONSULTANT FUNCTIONAL SUPERVISOR: JOSH STONE
CALCULATED-DESIGNED BY: KATHRYN WALKER
CHECKED BY: SHU-WEN LIU
REVISED BY
DATE REVISED

LAST REVISION 03-14-14
DATE PLOTTED => 20-MAR-2014
TIME PLOTTED => 15:56

Dist	COUNTY	ROUTE	POST MILES TOTAL PROJECT	SHEET No.	TOTAL SHEETS
11	SD	15,76	R46.2/R46.8, R12.1/R17.7	1002	1273

10-30-13
REGISTERED CIVIL ENGINEER DATE

03-24-14
PLANS APPROVAL DATE

REGISTERED PROFESSIONAL ENGINEER
KATHRYN WALKER
No. C77900
Exp. 06-30-15
CIVIL
STATE OF CALIFORNIA

THE STATE OF CALIFORNIA OR ITS OFFICERS OR AGENTS SHALL NOT BE RESPONSIBLE FOR THE ACCURACY OR COMPLETENESS OF SCANNED COPIES OF THIS PLAN SHEET.

DOKKEN ENGINEERING
5675 RUFFIN RD
SUITE 250
SAN DIEGO, CA 92123

NOTE:

FOR ACCURATE RIGHT OF WAY DATA, CONTACT RIGHT OF WAY ENGINEERING AT THE DISTRICT OFFICE.

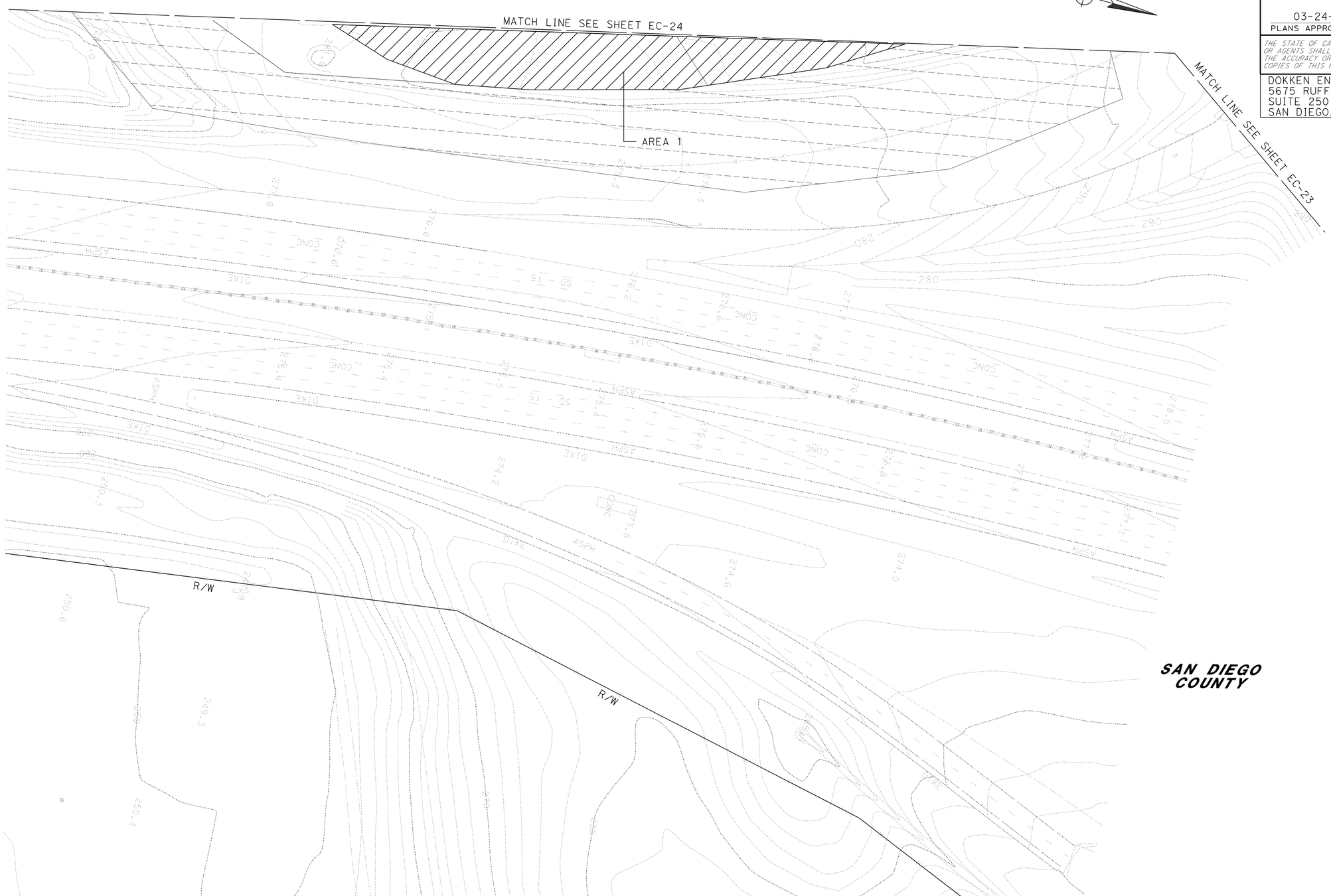

EROSION CONTROL PLAN

SCALE: 1" = 50'

EC-25

APPROVED FOR EROSION CONTROL WORK ONLY

STATE OF CALIFORNIA - DEPARTMENT OF TRANSPORTATION
Caltrans

CONSULTANT FUNCTIONAL SUPERVISOR: JOSH STONE
CALCULATED-DESIGNED BY: KATHRYN WALKER
CHECKED BY: SHU-WEN LIU
REVISED BY
DATE REVISED

LAST REVISION 03-14-14
DATE PLOTTED => 20-MAR-2014
TIME PLOTTED => 15:56

Dist	COUNTY	ROUTE	POST MILES TOTAL PROJECT	SHEET No.	TOTAL SHEETS
11	SD	15,76	R46.2/R46.8, R12.1/R17.7	1003	1273

REGISTERED CIVIL ENGINEER 10-30-13 DATE

03-24-14
PLANS APPROVAL DATE

REGISTERED PROFESSIONAL ENGINEER KATHRYN WALKER No. C77900 Exp. 06-30-15 CIVIL STATE OF CALIFORNIA

THE STATE OF CALIFORNIA OR ITS OFFICERS OR AGENTS SHALL NOT BE RESPONSIBLE FOR THE ACCURACY OR COMPLETENESS OF SCANNED COPIES OF THIS PLAN SHEET.

DOKKEN ENGINEERING
5675 RUFFIN RD
SUITE 250
SAN DIEGO, CA 92123

NOTE:

FOR ACCURATE RIGHT OF WAY DATA, CONTACT RIGHT OF WAY ENGINEERING AT THE DISTRICT OFFICE.

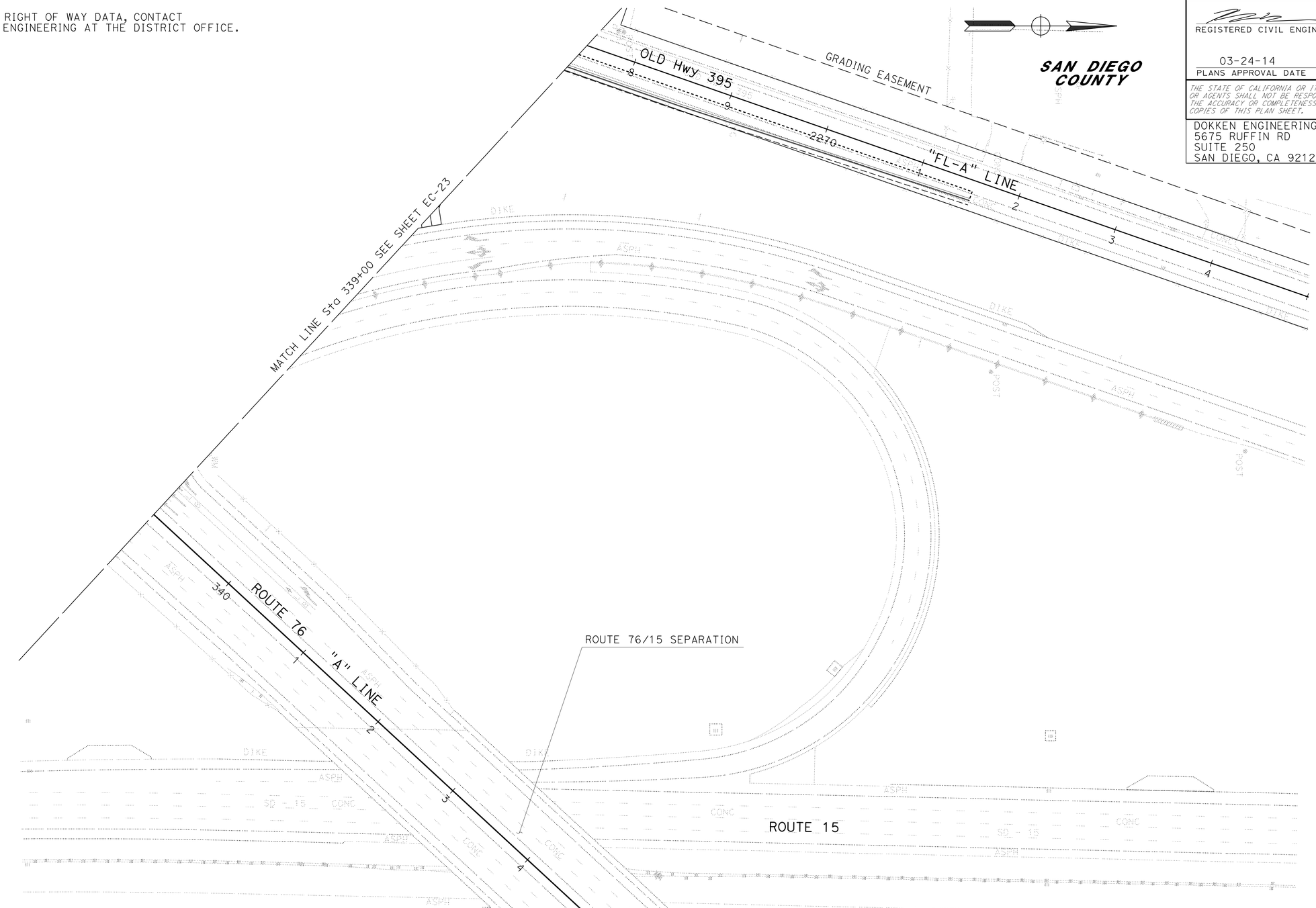

EROSION CONTROL PLAN

SCALE: 1" = 50'

APPROVED FOR EROSION CONTROL WORK ONLY

EC-26

STATE OF CALIFORNIA - DEPARTMENT OF TRANSPORTATION
Caltrans

CONSULTANT FUNCTIONAL SUPERVISOR: JOSH STONE
CALCULATED-DESIGNED BY: KATHRYN WALKER
CHECKED BY: SHU-WEN LIU
REVISED BY
DATE REVISED

LAST REVISION 03-14-14
DATE PLOTTED => 20-MAR-2014
TIME PLOTTED => 15:56

Dist	COUNTY	ROUTE	POST MILES TOTAL PROJECT	SHEET No.	TOTAL SHEETS
11	SD	15,76	R46.2/R46.8, R12.1/R17.7	1004	1273

REGISTERED CIVIL ENGINEER 10-30-13 DATE

03-24-14
PLANS APPROVAL DATE

REGISTERED PROFESSIONAL ENGINEER KATHRYN WALKER No. C77900 Exp. 06-30-15 CIVIL STATE OF CALIFORNIA

THE STATE OF CALIFORNIA OR ITS OFFICERS OR AGENTS SHALL NOT BE RESPONSIBLE FOR THE ACCURACY OR COMPLETENESS OF SCANNED COPIES OF THIS PLAN SHEET.

DOKKEN ENGINEERING
5675 RUFFIN RD
SUITE 250
SAN DIEGO, CA 92123

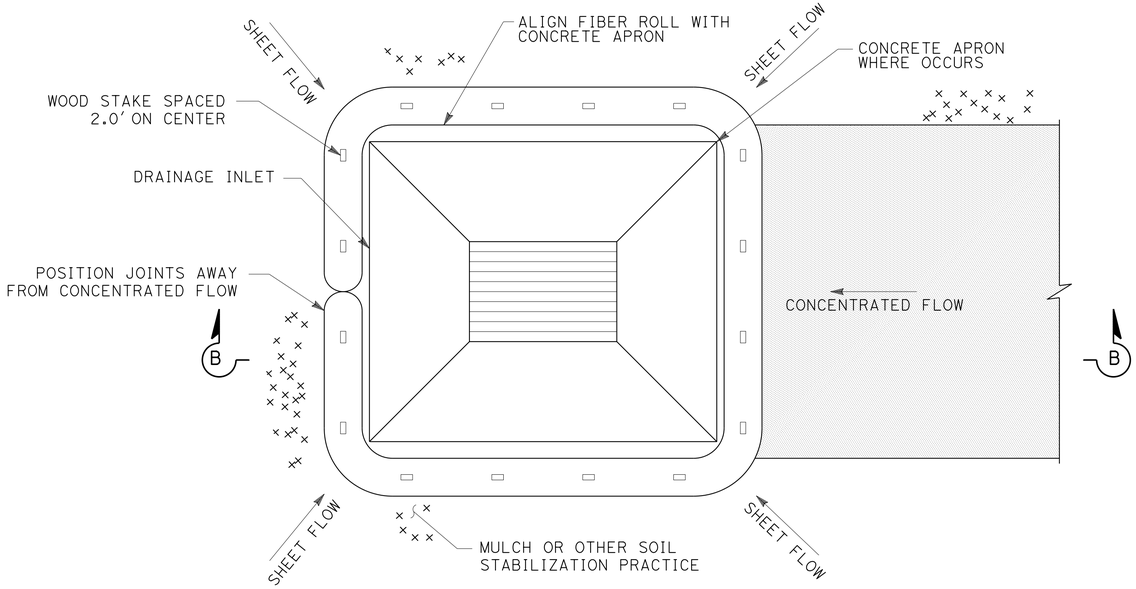

PLAN

DRAINAGE INLET PROTECTION (BIOSWALE LOCATIONS)

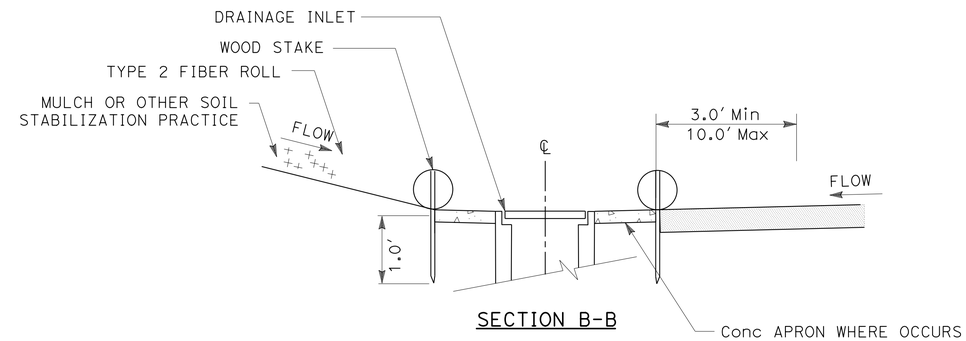

SECTION B-B

BIOFILTRATION SWALE SECTION

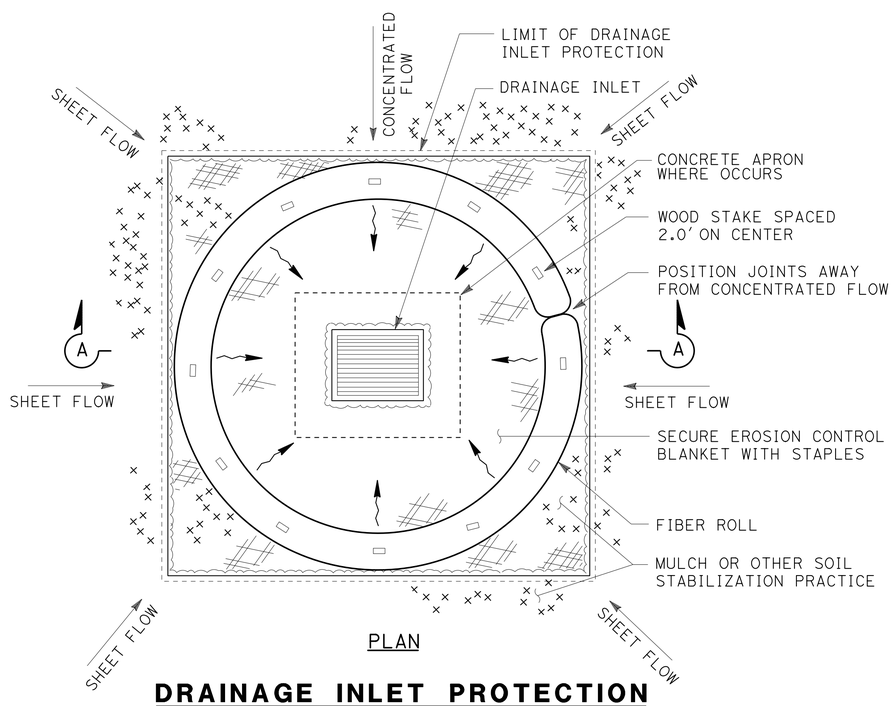

PLAN

DRAINAGE INLET PROTECTION

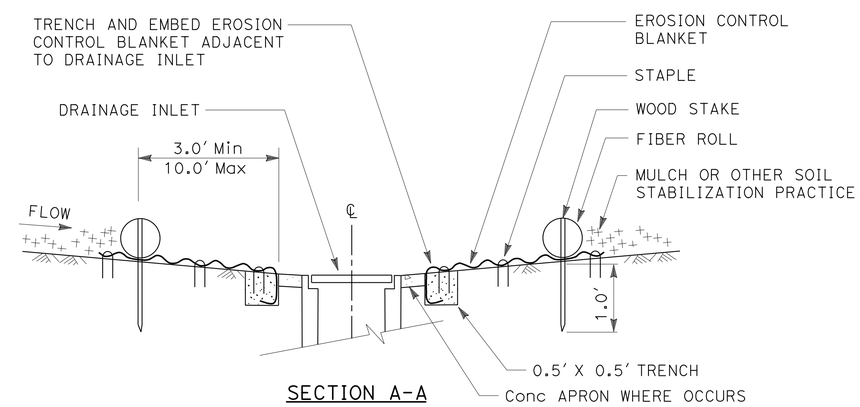

SECTION A-A

EROSION CONTROL DETAILS

NO SCALE

ECD-1

STATE OF CALIFORNIA - DEPARTMENT OF TRANSPORTATION
Caltrans

CONSULTANT FUNCTIONAL SUPERVISOR: JOSH STONE
CALCULATED-DESIGNED BY: KATHRYN WALKER
CHECKED BY: SHU-WEN-LIU
REVISED BY
DATE REVISED

LAST REVISION 03-17-14
DATE PLOTTED => 20-MAR-2014
TIME PLOTTED => 15:56

Dist	COUNTY	ROUTE	POST MILES TOTAL PROJECT	SHEET No.	TOTAL SHEETS
11	SD	15,76	R46.2/R46.8, R12.1/R17.7	1005	1273

REGISTERED CIVIL ENGINEER 10-30-13 DATE

03-24-14
PLANS APPROVAL DATE

REGISTERED PROFESSIONAL ENGINEER KATHRYN WALKER No. C77900 Exp. 06-30-15 CIVIL STATE OF CALIFORNIA

THE STATE OF CALIFORNIA OR ITS OFFICERS OR AGENTS SHALL NOT BE RESPONSIBLE FOR THE ACCURACY OR COMPLETENESS OF SCANNED COPIES OF THIS PLAN SHEET.

DOKKEN ENGINEERING
5675 RUFFIN RD
SUITE 250
SAN DIEGO, CA 92123

EROSION CONTROL QUANTITIES

SHEET	AREA	EROSION CONTROL (BONDED FIBER MATRIX) SQFT	ROLLED EROSION CONTROL PRODUCT (NETTING) SQFT	DI PROTECTION EA	FIBER ROLL LF
EC-1	-				
	1	3,035			152
	2	2,500			224
	3	28,466			1,422
	4	8,127			727
	5	7,078			354
	6	1,840			165
	7	2,618			131
EC-2	-			6	
	1	1,874			119
	2	79,455			3,896
	3	49,676			2,436
	4	33,538			3,000
	5	5,873			293
	6	4,051			202
EC-3	-			10	
	1	51,298			2,515
	2	33,263			2,975
	3	7,849			555
	4	26,896			1,327
	5	7,768			695
	6	31,122			2,784
	7	18,431			921
EC-4	-			8	
	1	44,460			2,218
	2	18,159			1,624
	3	8,773			426
	4	22,861			1,109
	5	4,983			415
	6	19302			1,726

SHEET	AREA	EROSION CONTROL (BONDED FIBER MATRIX) SQFT	ROLLED EROSION CONTROL PRODUCT (NETTING) SQFT	DI PROTECTION EA	FIBER ROLL LF
	7	34,138			1,684
	8		24,710		
EC-5	-			9	
	1	40,800			2,580
	2	22,040			1,834
	3	66,073			5,498
	4		39,960		
	5	51,654			4,620
EC-6	-			13	
	1	16,195			1,348
	2	34,737			1,731
	3	5,595			500
	4	14,050			1,257
	5	8,382			750
	6		44,485		
	7	42,188			3,773
	8	4,707			298
EC-7	-			7	
	1	30,612			1,485
	2	34,080			2,836
	3	9,469			599
	4	6,038			299
	5	28,556			2,554
	6	29,273			1,463
EC-8	-			12	
	1	52,772			2,633
	2	12,513			1,119
	3	14,291			711
	4	14,413			1,289
	5	46,955			2,316
Tot ECQ-1	-	1,142,827	109,155	65	75,588

EROSION CONTROL QUANTITIES

ECQ-1

REVISED BY	DATE REVISED

CALCULATED-DESIGNED BY: SHU-WEN LIU
CHECKED BY: KATHRYN WALKER
CONSULTANT FUNCTIONAL SUPERVISOR: JOSH STONE

STATE OF CALIFORNIA - DEPARTMENT OF TRANSPORTATION
Caltrans

LAST REVISION 03-17-14
DATE PLOTTED => 20-MAR-2014
TIME PLOTTED => 15:56

Dist	COUNTY	ROUTE	POST MILES TOTAL PROJECT	SHEET No.	TOTAL SHEETS
11	SD	15,76	R46.2/R46.8, R12.1/R17.7	1006	1273

REGISTERED CIVIL ENGINEER 10-30-13 DATE

03-24-14
PLANS APPROVAL DATE

REGISTERED PROFESSIONAL ENGINEER KATHRYN WALKER No. C77900 Exp. 06-30-15 CIVIL STATE OF CALIFORNIA

THE STATE OF CALIFORNIA OR ITS OFFICERS OR AGENTS SHALL NOT BE RESPONSIBLE FOR THE ACCURACY OR COMPLETENESS OF SCANNED COPIES OF THIS PLAN SHEET.

DOKKEN ENGINEERING
5675 RUFFIN RD
SUITE 250
SAN DIEGO, CA 92123

EROSION CONTROL QUANTITIES

SHEET	AREA	EROSION CONTROL (BONDED FIBER MATRIX) SQFT	ROLLED EROSION CONTROL PRODUCT (NETTING) SQFT	DI PROTECTION EA	FIBER ROLL LF
	6	36,549			3,269
EC-9	-			10	
	1	16,051			787
	2	31,363			2,610
	3	9,806			877
	4	40,394			2,010
	5	29,291			2,620
EC-10	-			5	
	1	11,524			1,031
	2	49,514			2,475
	3	22,010			1,969
	4	14,616			730
	5	9,480			473
	6	43,756			2,183
	7	32,013			2,863
EC-11	-			3	
	1	21,280			1,064
	2	25,664			1,283
	3	7,962			398
	4	12,796			1,145
	5	3,157			158
	6	20,112			1,799
	7		22,360		
	8	17,775			1,590
	9	10,375			928
	10	7,173			358
	12	38,486			1,924
	11	41,990			2,097
	12	20,571			1,029
EC-12	-				
	1	23,547			1,177

SHEET	AREA	EROSION CONTROL (BONDED FIBER MATRIX) SQFT	ROLLED EROSION CONTROL PRODUCT (NETTING) SQFT	DI PROTECTION EA	FIBER ROLL LF
	2	25,406			2,272
	3	2,639			132
	4	35,130			2,174
	5	2,873			257
	6		7,647		
	7	2,892			259
	8	5,043			252
EC-13	-			6	
	1	54,325			2,664
	2	10,937			543
	3	15,325			1,371
	4	10,508			940
	5	80,672			4,033
	6	48,459			4,334
EC-14	-			6	
	1	68,404			4,326
	2	76,788			3,839
	3	45,138			4,037
EC-15	-			6	
	1	16,069			801
	2	29,606			2,463
	3	11,388			569
	4	24,482			2,190
	5	21,795			1,090
	6	35,405			3,167
EC-16	-			6	
	1	30,917			1,534
	2	12,647			1,131
	3	22,313			1,996
	4	21,601			1,797
	5	26,509			2,371
Tot ECQ-2	-	1,334,526	30,007	42	89,389

EROSION CONTROL QUANTITIES
ECQ-2

STATE OF CALIFORNIA - DEPARTMENT OF TRANSPORTATION
Caltrans

CONSULTANT FUNCTIONAL SUPERVISOR: JOSH STONE
CALCULATED-DESIGNED BY: SHU-WEN LIU
CHECKED BY: KATHRYN WALKER
REVISED BY
DATE REVISED

LAST REVISION 03-17-14 | DATE PLOTTED => 20-MAR-2014 TIME PLOTTED => 15:56

Dist	COUNTY	ROUTE	POST MILES TOTAL PROJECT	SHEET No.	TOTAL SHEETS
11	SD	15,76	R46.2/R46.8, R12.1/R17.7	1007	1273

REGISTERED CIVIL ENGINEER 10-30-13 DATE

03-24-14
PLANS APPROVAL DATE

REGISTERED PROFESSIONAL ENGINEER KATHRYN WALKER No. C77900 Exp. 06-30-15 CIVIL STATE OF CALIFORNIA

THE STATE OF CALIFORNIA OR ITS OFFICERS OR AGENTS SHALL NOT BE RESPONSIBLE FOR THE ACCURACY OR COMPLETENESS OF SCANNED COPIES OF THIS PLAN SHEET.

DOKKEN ENGINEERING
5675 RUFFIN RD
SUITE 250
SAN DIEGO, CA 92123

EROSION CONTROL QUANTITIES

SHEET	AREA	EROSION CONTROL (BONDED FIBER MATRIX) SQFT	ROLLED EROSION CONTROL PRODUCT (NETTING) SQFT	DI PROTECTION EA	FIBER ROLL LF
	6	79,159			3,958
	7	63,313			5,663
EC-17	-			5	
	1	26,679			2,220
	2	4,928			246
	3	27,481			1,738
	4	16,821			1,505
	5	6,154			307
	6	62,338			3,116
	7	66,625			5,959
	8	8,420			753
EC-18	-			10	
	1	12,473			612
	2	48,357			4,325
	3	17,097			1,529
	4	12,319			779
	5	16,506			1,476
	6	30,647			1,532
	7	44,278			3,960
	8	12,468			623
EC-19	-			4	
	1	39,632			3,545
	2	1,070			96
	3	674			34
	4	10,046			899
	5	15,318			766
	6	48,121			4,304
	7	30,479			1,524
	8	19,482			1,743
EC-20	-			4	
	1	6,016			538

SHEET	AREA	EROSION CONTROL (BONDED FIBER MATRIX) SQFT	ROLLED EROSION CONTROL PRODUCT (NETTING) SQFT	DI PROTECTION EA	FIBER ROLL LF
	2	11,713			1,048
	3	16,631			1,488
	4	2,463			123
	5	6,264			313
	6	29,306			1,465
	7	29,588			2,646
	8	12,703			1,136
	9	11,575			579
	10	6,345			568
	11	29,377			1,468
	12	14,946			1,337
EC-21	-			6	
	1	33,175			2,967
	2	14,123			706
	3	28,662			1,433
	4	60,837			5,441
	5	5,495			492
EC-22	-			4	
	1	22,536			1,121
	2	3,643			326
	3	37,510			1,871
	4	28,609			2,559
	5	6,693			335
	6	8,017			717
	7	31,476			1,566
	8	32,875			2,940
EC-23	-				
	1	45,695			2,890
	2	135,540			12,123
	3	4,166			204
	4	345			17
Tot ECQ-3	-	1,397,209	0	33	103,629

EROSION CONTROL QUANTITIES

ECQ-3

STATE OF CALIFORNIA - DEPARTMENT OF TRANSPORTATION
Caltrans

CONSULTANT FUNCTIONAL SUPERVISOR: JOSH STONE
CALCULATED-DESIGNED BY: SHU-WEN LIU
CHECKED BY: KATHRYN WALKER
REVISED BY
DATE REVISED

LAST REVISION 03-17-14
DATE PLOTTED => 20-MAR-2014
TIME PLOTTED => 15:56

Dist	COUNTY	ROUTE	POST MILES TOTAL PROJECT	SHEET No.	TOTAL SHEETS
11	SD	15,76	R46.2/R46.8, R12.1/R17.7	1008	1273

REGISTERED CIVIL ENGINEER 10-30-13 DATE

03-24-14
PLANS APPROVAL DATE

REGISTERED PROFESSIONAL ENGINEER KATHRYN WALKER No. C77900 Exp. 06-30-15 CIVIL STATE OF CALIFORNIA

THE STATE OF CALIFORNIA OR ITS OFFICERS OR AGENTS SHALL NOT BE RESPONSIBLE FOR THE ACCURACY OR COMPLETENESS OF SCANNED COPIES OF THIS PLAN SHEET.

DOKKEN ENGINEERING
5675 RUFFIN RD
SUITE 250
SAN DIEGO, CA 92123

EROSION CONTROL QUANTITY SUMMARY

SHEET	AREA	EROSION CONTROL (BONDED FIBER MATRIX)	ROLLED EROSION CONTROL PRODUCT (NETTING)	DI PROTECTION	FIBER ROLL
		SQFT	SQFT	EA	LF
	5	4,686			234
	6	6,153			308
	7	540			27
	8	2,002			98
	9	4,327			213
	10	17,468			1,562
	11	5,947			296
	12	6,360			569
	13	36,175			1,808
	14	27,522			2,462
EC-24	-				
	1	222,434			11,117
	2	165,560			8,271
	3	6,626			331
EC-25	-				
	1	23,201			1,160
Tot ECQ-4	-	529,001	0	0	28,456
Tot ECQ-3	-	1,397,209	0	33	103,629
Tot ECQ-2	-	1,334,526	30,007	42	89,389
Tot ECQ-1	-	1,142,827	109,155	65	75,588
TOTAL	-	4,403,563	139,162	140	297,062

EROSION CONTROL QUANTITIES

ECQ-4

STATE OF CALIFORNIA - DEPARTMENT OF TRANSPORTATION
Caltrans

CONSULTANT FUNCTIONAL SUPERVISOR: JOSH STONE
CALCULATED-DESIGNED BY: SHU-WEN LIU
CHECKED BY: KATHRYN WALKER
REVISED BY
DATE REVISED

LAST REVISION 03-17-14
DATE PLOTTED => 20-MAR-2014
TIME PLOTTED => 15:56

Dist	COUNTY	ROUTE	POST MILES TOTAL PROJECT	SHEET No.	TOTAL SHEETS
11	SD	15,76	R46.2/R46.8, R12.1/R17.7	1009	1273

Faith Ramos 02-20-14
REGISTERED ELECTRICAL ENGINEER DATE

03-24-14
PLANS APPROVAL DATE

REGISTERED PROFESSIONAL ENGINEER FARIBA RAMOS No. E15619 Exp. 12-31-15 ELECTRICAL STATE OF CALIFORNIA

THE STATE OF CALIFORNIA OR ITS OFFICERS OR AGENTS SHALL NOT BE RESPONSIBLE FOR THE ACCURACY OR COMPLETENESS OF SCANNED COPIES OF THIS PLAN SHEET.

ABBREVIATIONS AND LEGEND:

- N△C — EXISTING CONDUIT NO CHANGE
- S△L — FOR INFORMATION SEE SIGNAL AND LIGHTING PLANS
- L△S — FOR INFORMATION SEE LIGHTING OR LIGHTING (COUNTY) PLANS
- N△C — EXISTING COUNTY CONDUIT NO CHANGE
- S/F — STATE-FURNISHED
- VCH — VIDEO CABLE HARNESS
- NWR — NO WORK REQUIRED
- COAX — COAXIAL CABLE
- MDCS(X) — MULTIDUCT CONDUIT SYSTEM (X = No. OF DUCTS) SEE E-3 FOR MDCS (Typ) FOR TRENCH DETAILS SEE CONSTRUCTION DETAILS
- SDG&E — SAN DIEGO GAS AND ELECTRIC COMPANY
- AT&T — COMMUNICATIONS SERVICE PROVIDER
- (TSO) — THIS SHEET ONLY
- S — SIGN ILLUMINATION
- SURGE PROTECTOR
- (HT) — RELAY COIL - HIGH TEMPERATURE
- HT — RELAY CONTACT - NORMALLY CLOSED
- W\GFC1 — WITH GROUND FAULT CURRENT INTERRUPT
- 8 — WIRE SIZE, IF NOT INDICATED SHALL BE #12 AWG
- (F) — FAN
- RJ45 CONNECTION
- FIBER OPTIC TRANSMITTER/RECEIVER
- THERMO — ADJUSTABLE CALIBRATED THERMOSTAT
- TBO — TERMINAL BLOCK O
- NETWORK PORT
- (L) — INDICATOR LAMP
- THERMOSTATIC CONTROL
- "DECORATIVE LIGHTING POLE" (SEE SES-3 FOR DETAILS)
- (C) — COUNTY LIGHTING PEC TYPE IV INSTALL A FUSED CONNECTOR INSIDE THE POLE PER COUNTY REQUIREMENTS. PB MARKED "COUNTY LIGHITNG"
- Exist COUNTY LIGHTING
- VLTG — VOLTAGE
- PWR — POWER
- OCC — OUTDOOR CATEGORY 6 CABLE
- VDU — VIDEO DETECTION UNIT
- VIS — VIDEO IMAGE SENSOR
- T△ — TEMPORARY CONDUIT, 2"C TYPE 1. CONDUCTORS PER PLANS. SEE ELECTRICAL DETAILS
- FOXX — FIBER OPTIC CABLE: XX DENOTES NUMBER OF SINGLEMODE FIBERS
- FIBER OPTIC CABLE LABEL SEE ELECTRICAL DETAILS
- V S — FIBER OPTIC VAULT AND SPLICE CLOSURE (SEE SES-2 FOR DETAILS)
- V — FIBER OPTIC VAULT (SEE SES-2 FOR DETAILS)
- FIBER OPTIC TRENCH DELINEATOR
- FDU — FIBER DISTRIBUTION UNIT
- SMFO — SINGLEMODE FIBER OPTIC
- HDPE — HIGH DENSITY POLYETHYLENE
- DR — DIMENSION RATIO
- CON — CONTACTOR

NOTES:

1. RC EXISTING SIGNAL PEDESTRIAN HEADS AND ppb. INSTALL ACCESSIBLE PEDESTRIAN SIGNAL (APS) AND COUNT DOWN PEDESTRIAN SIGNAL HEAD.
2. 2 - PUSH BUTTON POST, 1-RIGHT,Ø6P.
3. 3 - PUSH BUTTON POST, 1-LEFT,Ø6P.
4. RC EXISTING 180 W lps. INSTALL ROADWAY 1 LED FIXTURE.
5. EXISTING SIGNAL AND LIGHITNG PARTIALLY SHOWN.
6. SD LOCATED AT 5950 THOROUGHBRED LANE, TYPE III-BF, 120/240 V. sp: SDG&E xfmr #D113056.
7. FOR ACCURATE RIGHT OF WAY DATA, CONTACT RIGHT OF WAY ENGINEERING AT THE DISTRICT OFFICE.

CONDUIT NOTES:

- 1 — 2"C, 1-3CSC 1-9CSC
- N△C 2 — Exist 3"C, 1 dlc, 2#10 (ltg), 3#14 (peu), 2#6 (sig)
- N△C 3 — Exist 3"C, 4 dlc, 2#10 (ltg), 1-3csc, 1-12csc
- N△C 4 — Exist 3"C, 5 dlc, 2#6 (sig) 2#10 (ltg), 2-3csc, 2-12csc 1 evc

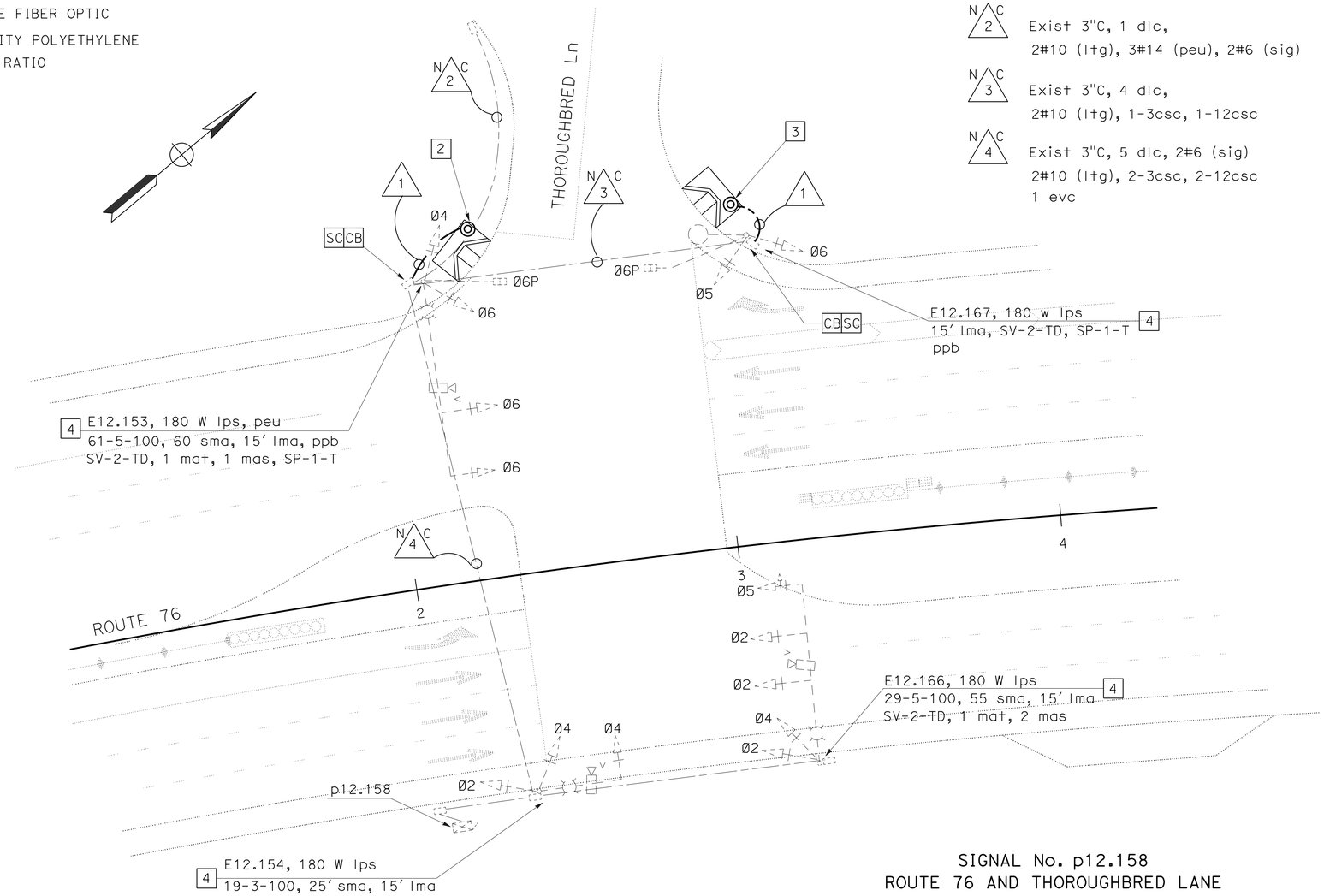

SIGNAL No. p12.158
ROUTE 76 AND THOROUGHBRED LANE

MODIFY SIGNAL AND LIGHTING

SCALE: 1" = 20'

APPROVED FOR ELECTRICAL WORK ONLY

E-1

STATE OF CALIFORNIA - DEPARTMENT OF TRANSPORTATION
Caltrans
TRAFFIC ELECTRICAL

FUNCTIONAL SUPERVISOR: RAJPREET SINGH
CALCULATED-DESIGNED BY: FARIBA RAMOS
CHECKED BY: ENRIQUE BERNAL
REVISED BY
DATE REVISED

LAST REVISION 01-18-14
DATE PLOTTED => 20-MAR-2014
TIME PLOTTED => 15:56

Dist	COUNTY	ROUTE	POST MILES TOTAL PROJECT	SHEET No.	TOTAL SHEETS
11	SD	15,76	R46.2/R46.8, R12.1/R17.7	1010	1273

REGISTERED ELECTRICAL ENGINEER — DATE: 02-20-14

03-24-14
PLANS APPROVAL DATE

REGISTERED PROFESSIONAL ENGINEER — FARIBA RAMOS — No. E15619 — Exp. 12-31-15 — ELECTRICAL — STATE OF CALIFORNIA

THE STATE OF CALIFORNIA OR ITS OFFICERS OR AGENTS SHALL NOT BE RESPONSIBLE FOR THE ACCURACY OR COMPLETENESS OF SCANNED COPIES OF THIS PLAN SHEET.

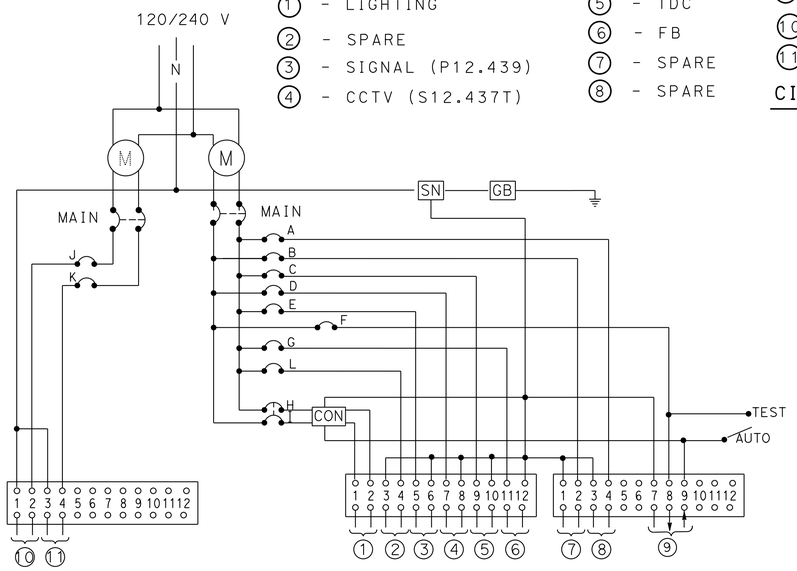

① - LIGHTING
② - SPARE
③ - SIGNAL (P12.439)
④ - CCTV (S12.437T)
⑤ - TDC
⑥ - FB
⑦ - SPARE
⑧ - SPARE
⑨ - PEU
⑩ - IRRIGATION CABINET
⑪ - IRRIGATION CABINET

CIRCUIT BREAKERS
MAIN-2P-100 A
A-1P-15 A
B-1P-15 A
C-1P-15-A
D-1P-30 A
E-1P-30 A
F-1P-15 A
G-1P-20 A
H, I } 2P-30 A
L-1P-15 A
J-1P-15 A
K-1P-15 A

WIRING DIAGRAM "SOUTH MISSION"

(TYPE III-CF SERVICE EQUIPMENT ENCLOSURE CABINET
SEE RSP ES-2C AND RSP ES-2F)

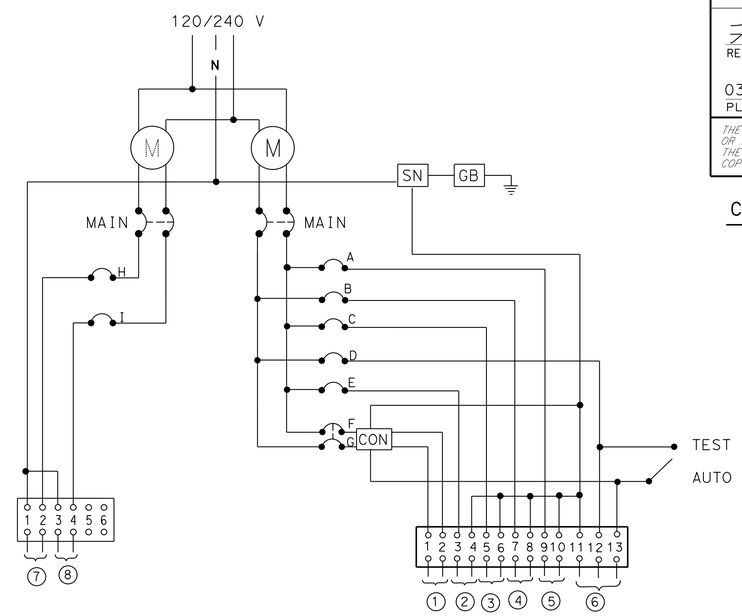

CIRCUIT BREAKERS
MAIN-2P-100 A
A-1P-15 A
B-1P-30 A
C-1P-15 A
D-1P-15 A
E-1P-30 A
F, G } 2P-30 A
H-1P-15 A
I-1P-15 A

① - LIGHTING
② - TMS (U13.343)
③ - SPARE
④ - SPARE
⑤ - SPARE
⑥ - PEU
⑦ - IRRIGATION CABINET "B"
⑧ - IRRIGATION CABINET "L"

WIRING DIAGRAM, "CALLE DE LA VUELTA"

(TYPE III-CF SERVICE EQUIPMENT ENCLOSURE
SEE RSP ES-2C & RSP ES-2F)

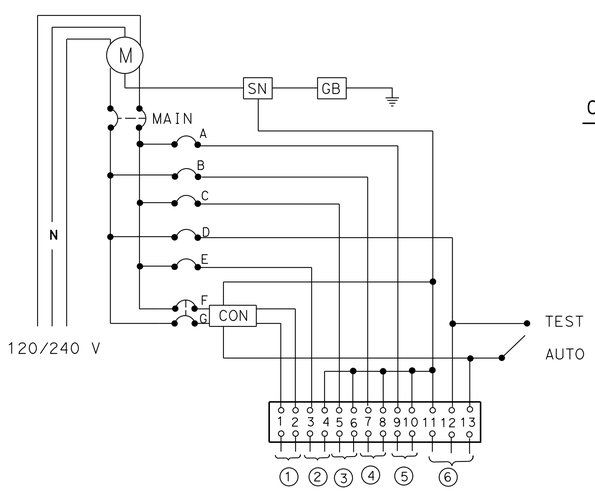

CIRCUIT BREAKERS
MAIN-2P-100 A
A-1P-15 A
B-1P-15 A
B-1P-15 A
C-1P-20 A
D-1P-15 A
E-1P-30 A
F, G } 2P-30 A

① - LIGHTING
② - SIGNAL (P13.951)
③ - CCTV (SR13.949T)
④ - SPARE
⑤ - SPARE
⑥ - PEU

WIRING DIAGRAM, "VIA MONSERATE"

(TYPE III-BF SERVICE EQUIPMENT ENCLOSURE
SEE RSP ES-2C & RSP ES-2E)

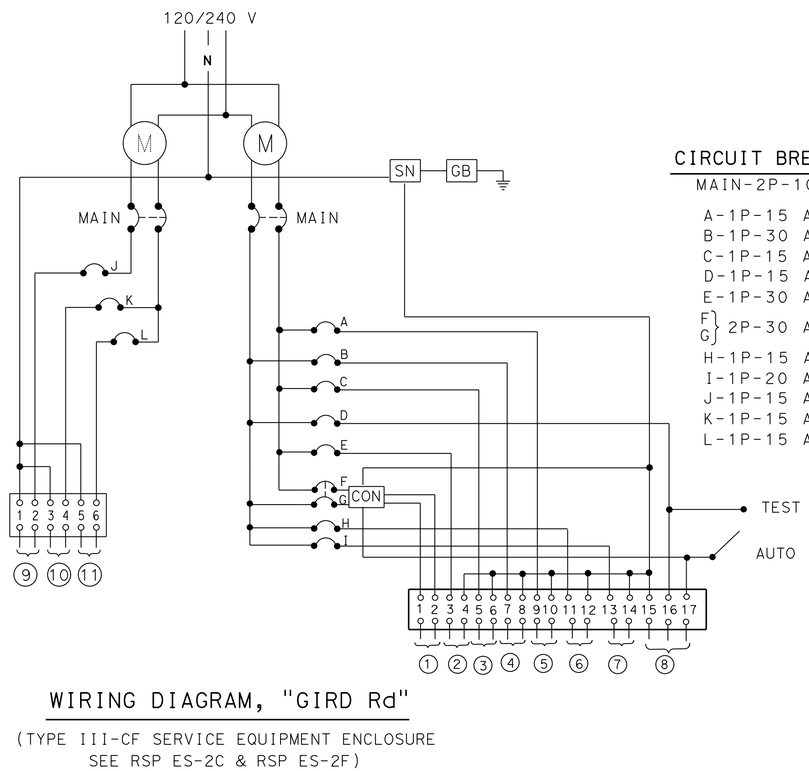

CIRCUIT BREAKERS
MAIN-2P-100 A
A-1P-15 A
B-1P-30 A
C-1P-15 A
D-1P-15 A
E-1P-30 A
F, G } 2P-30 A
H-1P-15 A
I-1P-20 A
J-1P-15 A
K-1P-15 A
L-1P-15 A

① - LIGHTING
② - SIGNAL (P14.529)
③ - FB
④ - CCTV (SR14.527T)
⑤ - SPARE
⑥ - SPARE
⑦ - SPARE
⑧ - PEU
⑨ - IRRIGATION CABINET "J"
⑩ - IRRIGATION CABINET "K"
⑪ - IRRIGATION CABINET "C & D"

WIRING DIAGRAM, "GIRD Rd"

(TYPE III-CF SERVICE EQUIPMENT ENCLOSURE
SEE RSP ES-2C & RSP ES-2F)

APPROVED FOR ELECTRICAL WORK ONLY

NO SCALE

ELECTRICAL DETAILS

E-2

STATE OF CALIFORNIA - DEPARTMENT OF TRANSPORTATION
Caltrans® TRAFFIC ELECTRICAL

FUNCTIONAL SUPERVISOR: RAJPREET SINGH
CALCULATED-DESIGNED BY: FARIBA RAMOS
CHECKED BY: ENRIQUE BERNAL
REVISED BY
DATE REVISED

LAST REVISION 01-18-14
DATE PLOTTED => 20-MAR-2014
TIME PLOTTED => 15:56

Dist	COUNTY	ROUTE	POST MILES TOTAL PROJECT	SHEET No.	TOTAL SHEETS
11	SD	15,76	R46.2/R46.8, R12.1/R17.7	1011	1273

Fariba Ramos 02-20-14
REGISTERED ELECTRICAL ENGINEER DATE

03-24-14
PLANS APPROVAL DATE

REGISTERED PROFESSIONAL ENGINEER FARIBA RAMOS No. E15619 Exp. 12-31-15 ELECTRICAL STATE OF CALIFORNIA

THE STATE OF CALIFORNIA OR ITS OFFICERS OR AGENTS SHALL NOT BE RESPONSIBLE FOR THE ACCURACY OR COMPLETENESS OF SCANNED COPIES OF THIS PLAN SHEET.

CONDUIT NOTES (TSO):

1. Exist MDCS (3), mt
   ADD: 1 FO72,
   1 SIC (SIG)
2. N C Exist MDCS (3)
   1 fo12, 2 mt
3. N C Exist 3"C, CAMERA CABLE
4. N C Exist 2"C, 2#8 (cctv)
5. 3"C, 2#6 (SIGNAL), 2#8 (LTG),
   2#8 (CCTV), 4#8 (ICC),
   2#10 (FB), 3#14 (PEU),
   2#14 (TDC)
6. 2"C, 2#8 (LTG)
7. Exist 2"C, 2#8 (ltg)
8. Exist MDCS (2)
   1 fo12, 1 sic
   ADD: 1 SIC (SIG)
9. N C Exist 2"C, 2#14 (tdc)
10. N C Exist 2"C, 1 sic
    1 occ
11. N C Exist MDCS (3)
    1 fo72
    1 sic
    1 mt

NOTES (TSO):

1. EXISTING CONDUITS, CONDUCTORS, AND PULL BOXES TO REMAIN UNLESS OTHERWISE NOTED.
2. Exist SIGNAL AND LIGHTING SYSTEM PARTIALLY SHOWN.
3. INSTALL TYPE H RISER PER SDG&E REQUIREMENTS.
4. TYPE III-CF MODIFIED SERVICE EQUIPMENT ENCLOSURE. SEE WIRING DIAGRAM "SOUTH MISSION" ON E-2.
5. 3"C, MT. (CONDUCTORS PER SDG&E REQUIREMENTS).
6. TO Exist ICC.
7. SEE "SIGNAL AND LIGHTING (LOCATION 1)" PLANS FOR CIRCUIT CONTINUITY.
8. SEE FIBER OPTIC SPLICE DETAILS IN ELECTRICAL DETAILS.
9. RC Exist PULL BOX. INSTALL No. 5(T).
10. TO Exist FIBER OPTIC SYSTEM.
11. FOR ACCURATE RIGHT OF WAY DATA, CONTACT RIGHT OF WAY ENGINEERING AT THE DISTRICT OFFICE.

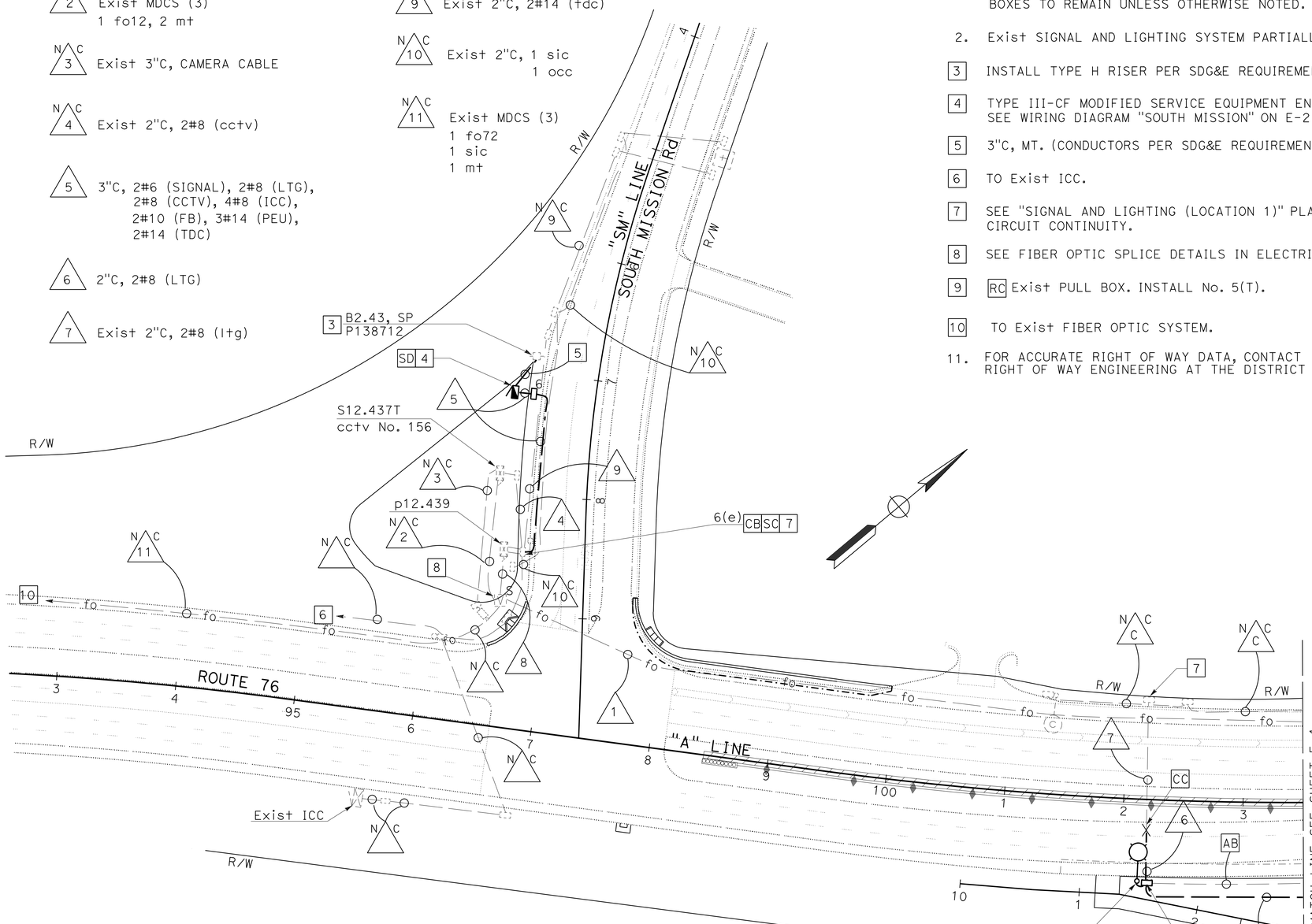

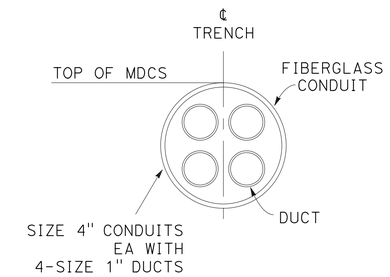

MDCS (Typ)
MDCS(4) SHOWN
FOR STRUCTURE INSTALLATION
AT LIVE OAK BRIDGE AND
SDCWA PIPELINER BRIDGE

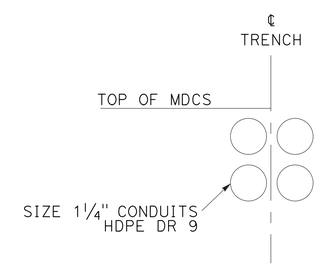

MDCS (Typ)
MDCS(4) SHOWN
SEE CONSTRUCTION
DETAILS FOR TRENCHING

LIGHTING
CLOSED CIRCUIT TELEVISION SYSTEM

APPROVED FOR ELECTRICAL WORK ONLY

SCALE: 1" = 50'

E-3

STATE OF CALIFORNIA - DEPARTMENT OF TRANSPORTATION
Caltrans
TRAFFIC ELECTRICAL

FUNCTIONAL SUPERVISOR: RAJPREET SINGH
CALCULATED-DESIGNED BY: FARIBA RAMOS
CHECKED BY: ENRIQUE BERNAL
REVISED BY
DATE REVISED

LAST REVISION 01-18-14
DATE PLOTTED => 20-MAR-2014
TIME PLOTTED => 15:56

Dist	COUNTY	ROUTE	POST MILES TOTAL PROJECT	SHEET No.	TOTAL SHEETS
11	SD	15,76	R46.2/R46.8, R12.1/R17.7	1012	1273

Fariba Ramos 02-20-14
REGISTERED ELECTRICAL ENGINEER DATE

03-24-14
PLANS APPROVAL DATE

REGISTERED PROFESSIONAL ENGINEER FARIBA RAMOS No. E15619 Exp. 12-31-15 ELECTRICAL STATE OF CALIFORNIA

THE STATE OF CALIFORNIA OR ITS OFFICERS OR AGENTS SHALL NOT BE RESPONSIBLE FOR THE ACCURACY OR COMPLETENESS OF SCANNED COPIES OF THIS PLAN SHEET.

CONDUIT NOTES (TSO):

1. Exist MDCS (3), mt
   ADD: 1 FO72,
   1 SIC
2. 2"C, 2#8 (LTG)
3. MDCS (3),
   1 FO72,
   1 SIC,
   1 MT

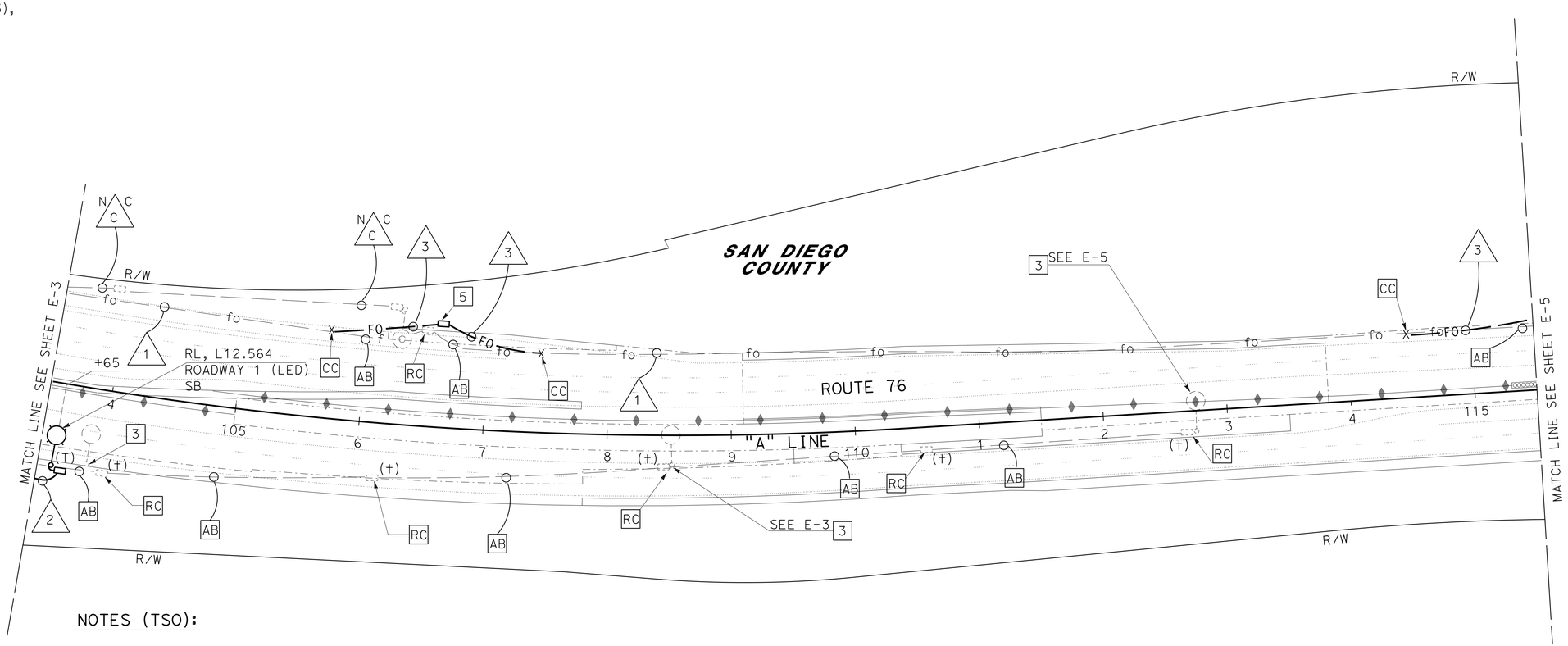

NOTES (TSO):

1. EXISTING CONDUITS, CONDUCTORS, AND PULL BOXES TO REMAIN UNLESS OTHERWISE NOTED.
2. EXISTING SIGNAL AND LIGHTING SYSTEM PARTIALLY SHOWN.
3. RL TYPE 15-15′ lma, SB.
   RC 180 W lps FIXTURE.
4. Exist FO LINE TO BE PROTECTED IN PLACE DURING SEWER LINE AND MH INSTALLATION. SEE DRAINAGE AND SEWER PLANS.
5. 6(E)(T). EXTEND PULL BOX 2" (MIN) BELOW THE BOTTOM OF CONDUIT. CONDUIT BENDS SHALL BE AT AN ANGLE OF 22.5°OR LESS. PULL BOX COVER SHALL BE MARKED "FIBER OPTIC".
6. FOR ACCURATE RIGHT OF WAY DATA, CONTACT RIGHT OF WAY ENGINEERING AT THE DISTRICT OFFICE.

LIGHTING
CLOSED CIRCUIT TELEVISION SYSTEM

APPROVED FOR ELECTRICAL WORK ONLY

SCALE: 1" = 50′

E-4

STATE OF CALIFORNIA - DEPARTMENT OF TRANSPORTATION
Caltrans
TRAFFIC ELECTRICAL

FUNCTIONAL SUPERVISOR: RAJPREET SINGH
CALCULATED-DESIGNED BY: FARIBA RAMOS
CHECKED BY: ENRIQUE BERNAL
REVISED BY
DATE REVISED

LAST REVISION 01-18-14
DATE PLOTTED => 24-MAR-2014
TIME PLOTTED => 11:25

Dist	COUNTY	ROUTE	POST MILES TOTAL PROJECT	SHEET No.	TOTAL SHEETS
11	SD	15,76	R46.2/R46.8, R12.1/R17.7	1013	1273

Fariba Ramos 02-20-14
REGISTERED ELECTRICAL ENGINEER DATE

03-24-14
PLANS APPROVAL DATE

REGISTERED PROFESSIONAL ENGINEER FARIBA RAMOS No. E15619 Exp. 12-31-15 ELECTRICAL STATE OF CALIFORNIA

THE STATE OF CALIFORNIA OR ITS OFFICERS OR AGENTS SHALL NOT BE RESPONSIBLE FOR THE ACCURACY OR COMPLETENESS OF SCANNED COPIES OF THIS PLAN SHEET.

CONDUIT NOTES (TSO):

1. MDCS (3), 1 FO72, 1 SIC, 1 MT
2. 2"C, 2#8 (LTG)
3. 3"C, 2#8 (LTG), 3#14 (PEU)
4. 2"C, 2#8 (LTG), 3#14 (PEU)

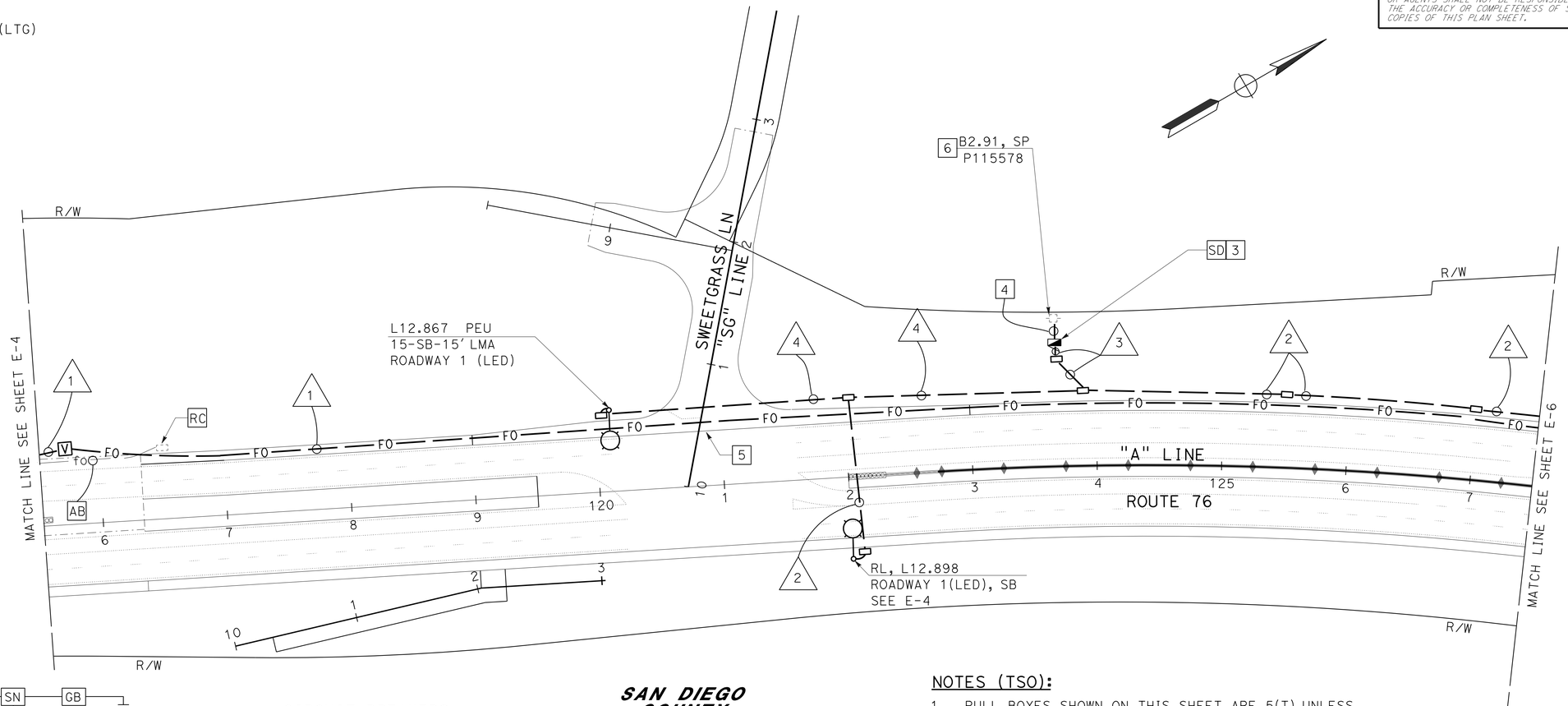

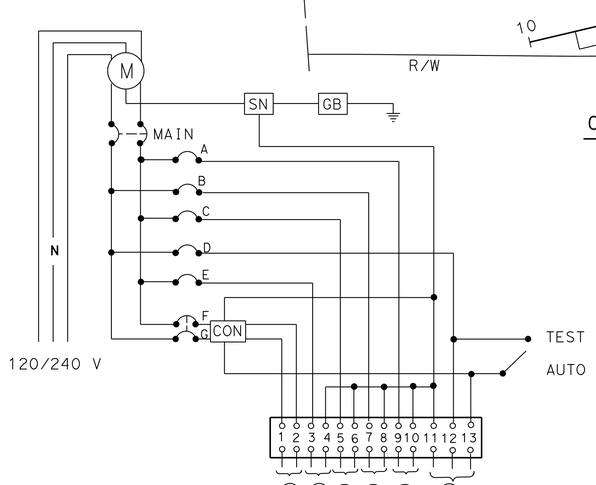

WIRING DIAGRAM, "SWEET GRASS"

(TYPE III-BR SERVICE EQUIPMENT ENCLOSURE SEE RSP ES-2C & RSP ES-2E)

CIRCUIT BREAKERS

MAIN-2P-100 A

A-1P-15 A
B-1P-15 A
C-1P-15 A
D-1P-15 A
E-1P-30 A
F, G } 2P-30 A

1 - LIGHTING
2 - SPARE
3 - SPARE
4 - SPARE
5 - SPARE
6 - PEU

SAN DIEGO COUNTY

NOTES (TSO):

1. PULL BOXES SHOWN ON THIS SHEET ARE 5(T) UNLESS OTHERWISE INDICATED.
2. FO CONDUIT BENDS SHALL BE AT ANGLE OF 22.5° OR LESS.
3. TYPE III-BF SERVICE EQUIPMENT ENCLOSURE. SEE WIRING DIAGRAM "SWEET GRASS" ON THIS SHEET.
4. 3"C, MT. (CONDUCTORS PER SDG&E REQUIREMENTS).
5. SEE DRAINAGE AND SEWER PLANS FOR INLET AND PIPE LOCATIONS.
6. INSTALL TYPE H SERVICE RISER PER SDG&E REQUIREMENTS.
7. FOR ACCURATE RIGHT OF WAY DATA, CONTACT RIGHT OF WAY ENGINEERING AT THE DISTRICT OFFICE.

LIGHTING
CLOSED CIRCUIT TELEVISION SYSTEM

APPROVED FOR ELECTRICAL WORK ONLY

E-5

STATE OF CALIFORNIA - DEPARTMENT OF TRANSPORTATION
Caltrans
TRAFFIC ELECTRICAL

FUNCTIONAL SUPERVISOR: RAJPREET SINGH
CALCULATED-DESIGNED BY: FARIBA RAMOS
CHECKED BY: ENRIQUE BERNAL
REVISED BY
DATE REVISED

LAST REVISION 01-18-14
DATE PLOTTED => 24-MAR-2014
TIME PLOTTED => 11:25

Dist	COUNTY	ROUTE	POST MILES TOTAL PROJECT	SHEET No.	TOTAL SHEETS
11	SD	15,76	R46.2/R46.8, R12.1/R17.7	1014	1273

REGISTERED ELECTRICAL ENGINEER 02-20-14 DATE

03-24-14
PLANS APPROVAL DATE

REGISTERED PROFESSIONAL ENGINEER FARIBA RAMOS No. E15619 Exp. 12-31-15 ELECTRICAL STATE OF CALIFORNIA

THE STATE OF CALIFORNIA OR ITS OFFICERS OR AGENTS SHALL NOT BE RESPONSIBLE FOR THE ACCURACY OR COMPLETENESS OF SCANNED COPIES OF THIS PLAN SHEET.

CONDUIT NOTES (TSO):

1. MDCS (3),
   1 FO72,
   1 SIC,
   1 MT
2. 2"C, 2#8 (LTG)

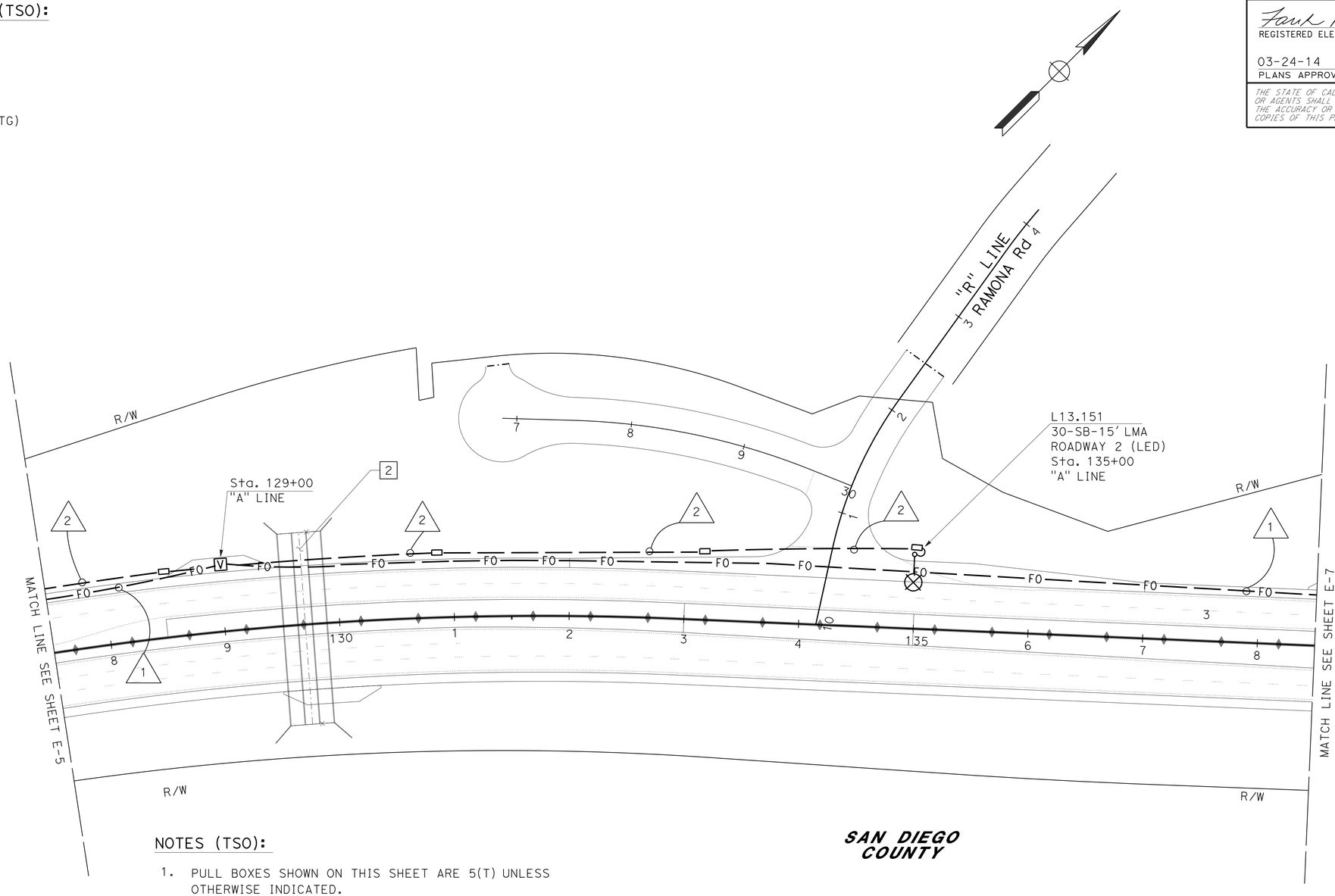

NOTES (TSO):

1. PULL BOXES SHOWN ON THIS SHEET ARE 5(T) UNLESS OTHERWISE INDICATED.
2. WILD ANIMAL CROSSING. INSTALL FIBER OPTIC AND LIGHTING CONDUITS ABOVE BOX CULVERT. SEE CONSTRUCTION DETAILS.
3. SEE DRAINAGE AND SEWER PLANS FOR INLET AND PIPE LOCATIONS.
4. FOR ACCURATE RIGHT OF WAY DATA, CONTACT RIGHT OF WAY ENGINEERING AT THE DISTRICT OFFICE.

SAN DIEGO COUNTY

LIGHTING
CLOSED CIRCUIT TELEVISION SYSTEM

APPROVED FOR ELECTRICAL WORK ONLY

SCALE: 1" = 50'

E-6

STATE OF CALIFORNIA - DEPARTMENT OF TRANSPORTATION
Caltrans
TRAFFIC ELECTRICAL

FUNCTIONAL SUPERVISOR: RAJPREET SINGH
CALCULATED-DESIGNED BY: FARIBA RAMOS
CHECKED BY: ENRIQUE BERNAL
REVISED BY
DATE REVISED

LAST REVISION 01-18-14
DATE PLOTTED => 20-MAR-2014
TIME PLOTTED => 15:56

Dist	COUNTY	ROUTE	POST MILES TOTAL PROJECT	SHEET No.	TOTAL SHEETS
11	SD	15,76	R46.2/R46.8, R12.1/R17.7	1015	1273

Farib Ramos 02-20-14
REGISTERED ELECTRICAL ENGINEER DATE

03-24-14
PLANS APPROVAL DATE

REGISTERED PROFESSIONAL ENGINEER
FARIBA RAMOS
No. E15619
Exp. 12-31-15
ELECTRICAL
STATE OF CALIFORNIA

THE STATE OF CALIFORNIA OR ITS OFFICERS OR AGENTS SHALL NOT BE RESPONSIBLE FOR THE ACCURACY OR COMPLETENESS OF SCANNED COPIES OF THIS PLAN SHEET.

CONDUIT NOTE (TSO):

1. MDCS (3),
   1 FO72,
   1 SIC,
   1 MT

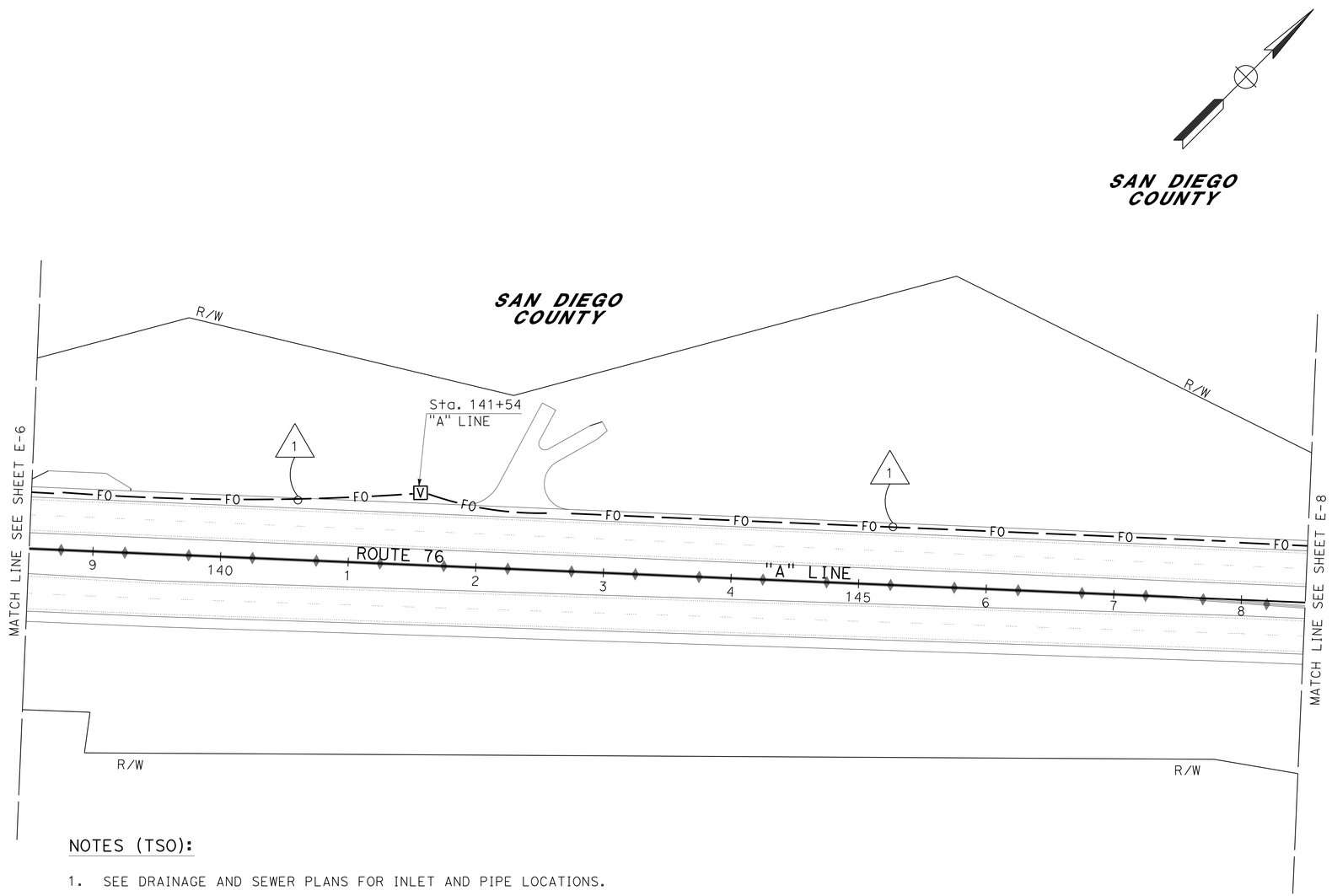

NOTES (TSO):

1. SEE DRAINAGE AND SEWER PLANS FOR INLET AND PIPE LOCATIONS.

2. FOR ACCURATE RIGHT OF WAY DATA, CONTACT RIGHT OF WAY ENGINEERING AT THE DISTRICT OFFICE.

CLOSED CIRCUIT TELEVISION SYSTEM

APPROVED FOR ELECTRICAL WORK ONLY

SCALE: 1" = 50'

E-7

STATE OF CALIFORNIA - DEPARTMENT OF TRANSPORTATION
Caltrans
TRAFFIC ELECTRICAL

FUNCTIONAL SUPERVISOR: RAJPREET SINGH
CALCULATED-DESIGNED BY: FARIBA RAMOS
CHECKED BY: ENRIQUE BERNAL
REVISED BY
DATE REVISED

LAST REVISION 01-18-14
DATE PLOTTED => 24-MAR-2014
TIME PLOTTED => 11:25

Dist	COUNTY	ROUTE	POST MILES TOTAL PROJECT	SHEET No.	TOTAL SHEETS
11	SD	15,76	R46.2/R46.8, R12.1/R17.7	1016	1273

Fariba Ramos 02-20-14
REGISTERED ELECTRICAL ENGINEER DATE

03-24-14
PLANS APPROVAL DATE

REGISTERED PROFESSIONAL ENGINEER FARIBA RAMOS No. E15619 Exp. 12-31-15 ELECTRICAL STATE OF CALIFORNIA

THE STATE OF CALIFORNIA OR ITS OFFICERS OR AGENTS SHALL NOT BE RESPONSIBLE FOR THE ACCURACY OR COMPLETENESS OF SCANNED COPIES OF THIS PLAN SHEET.

CONDUIT NOTES (TSO):

1. MDCS (3), 1 FO72, 1 SIC, 1 MT
2. 3"C, 2#8 (LTG), 2#8 (TMS), 4#10 (Irr), 3#14 (PEU)
3. 2"C, 4#10 (Irr)
4. 3"C, 2#8 (LTG), 3#14 (PEU), 8 DLC
5. 2-3"C, 2#8 (TMS), 8 DLC
6. 2"C, 4 DLC
7. 2"C, 8 DLC
8. 2"C, 8 LOOP WIRES
9. MDCS (2), 1 FO12, 1 MT

NOTES (TSO):

1. PULL BOXES SHOWN ON THIS SHEET ARE 5(T) UNLESS OTHERWISE INDICATED.
2. PLACE CABINETS 30' Min. BEHIND THE ETW.
3. FO CONDUIT BENDS SHALL BE AT AN ANGLE OF 22.5° OR LESS.
4. IRRIGATION CONTROLLER ENCLOSURE CABINET PER LANDSCAPE DETAILS. CONNECT 2#10 (Irr).
5. CONDUIT PER LANDSCAPE DETAILS. INSTALL 2#10 (Irr).
6. SEE DRAINAGE AND SEWER PLANS FOR INLET AND PIPE LOCATIONS.
7. 3"C, MT. (CONDUCTORS PER SDG&E REQUIREMENTS).

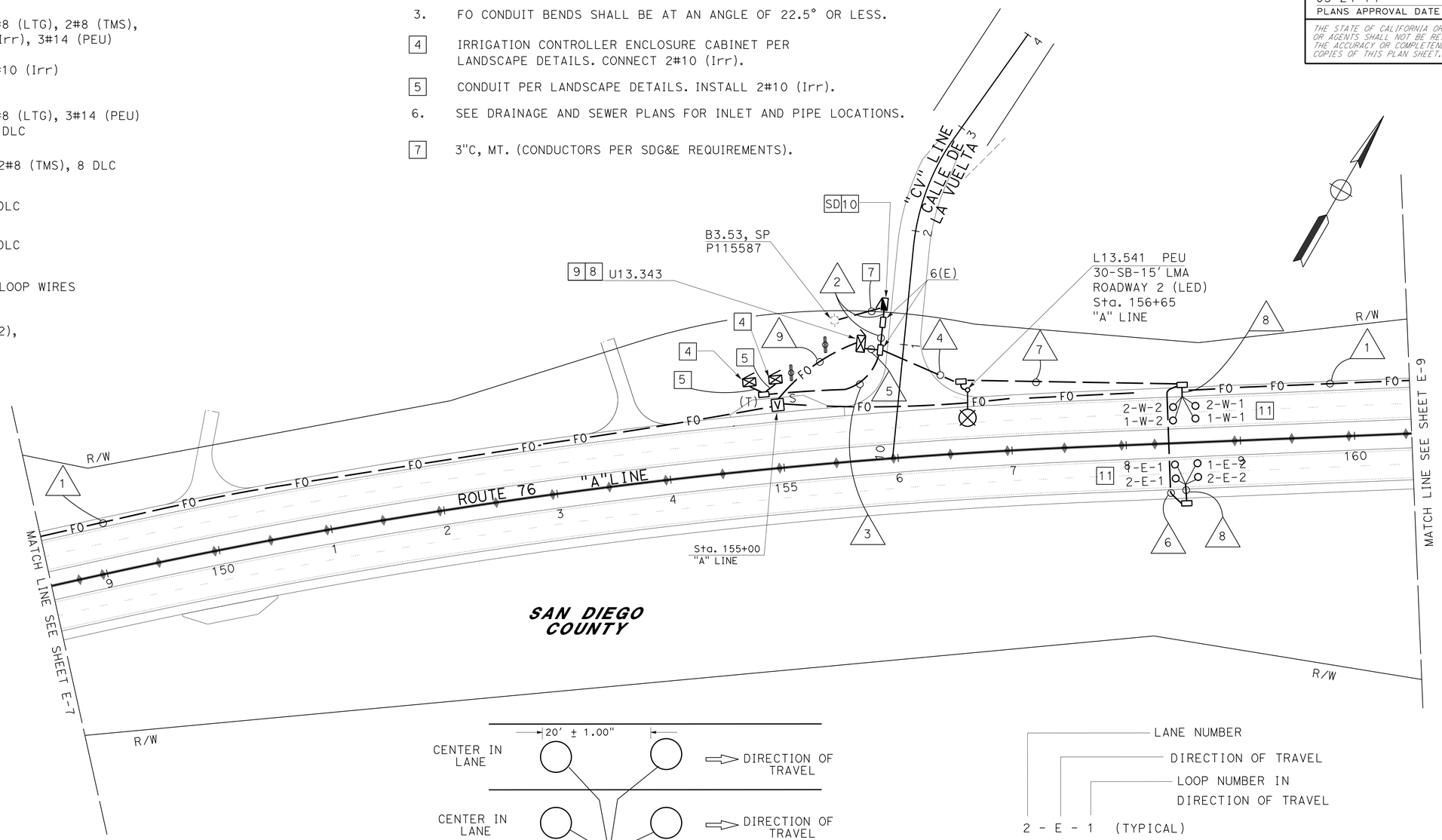

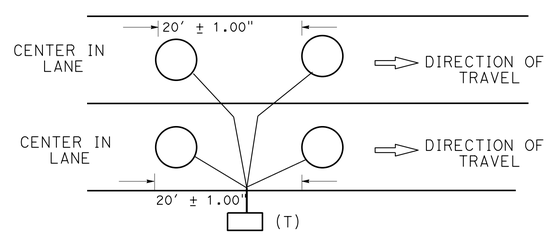

DETAIL 'LOOP'

TYPICAL TYPE E LOOP PLACEMENT
NO SCALE (SEE ES-5B)

MAINLANE LOOP DETECTOR IDENTIFICATION

NOTES (TSO):

8. STATE-FURNISHED MODEL 2070 CONTROLLER. FURNISH AND INSTALL TMS CABINET (MODEL 334).
9. SEE COMPONENT DIAGRAM IN ELECTRICAL DETAILS.
10. TYPE III-CF SERVICE EQUIPMENT ENCLOSURE. SEE WIRING DIAGRAM "CALLE DE LA VUELTA" ON SHEET E-2.
11. FOR LOOP PLACEMENT SEE DETAIL 'LOOP' ON THIS SHEET.
12. FOR ACCURATE RIGHT OF WAY DATA, CONTACT RIGHT OF WAY ENGINEERING AT THE DISTRICT OFFICE.

LIGHTING
CLOSED CIRCUIT TELEVISION SYSTEM
TRAFFIC MONITORING STATION (LOCATION 1)
ELECTRIC SERVICE (IRRIGATION)

APPROVED FOR ELECTRICAL WORK ONLY

SCALE: 1" = 50'

E-8

REVISED BY | DATE REVISED
FARIBA RAMOS | ENRIQUE BERNAL
CALCULATED-DESIGNED BY | CHECKED BY
FUNCTIONAL SUPERVISOR | RAJPREET SINGH
STATE OF CALIFORNIA - DEPARTMENT OF TRANSPORTATION
Caltrans® TRAFFIC ELECTRICAL

LAST REVISION 01-18-14 | DATE PLOTTED => 20-MAR-2014 | TIME PLOTTED => 15:56

Dist	COUNTY	ROUTE	POST MILES TOTAL PROJECT	SHEET No.	TOTAL SHEETS
11	SD	15,76	R46.2/R46.8, R12.1/R17.7	1017	1273

Fariba Ramos 02-20-14
REGISTERED ELECTRICAL ENGINEER DATE

03-24-14
PLANS APPROVAL DATE

REGISTERED PROFESSIONAL ENGINEER
FARIBA RAMOS
No. E15619
Exp. 12-31-15
ELECTRICAL
STATE OF CALIFORNIA

THE STATE OF CALIFORNIA OR ITS OFFICERS OR AGENTS SHALL NOT BE RESPONSIBLE FOR THE ACCURACY OR COMPLETENESS OF SCANNED COPIES OF THIS PLAN SHEET.

CONDUIT NOTE (TSO):

1. MDCS (3), 1 FO72, 1 SIC 1 MT

NOTES (TSO):

1. SEE DRAINAGE AND SEWER PLANS FOR INLET AND PIPE LOCATIONS.
2. 6(E)(T). EXTEND PULL BOX 2" (MIN) BELOW THE BOTTOM OF CONDUIT. CONDUIT BENDS SHALL BE AT AN ANGLE OF 22.5°OR LESS. PULL BOX COVER SHALL BE MARKED "FIBER OPTIC".
3. FOR ACCURATE RIGHT OF WAY DATA, CONTACT RIGHT OF WAY ENGINEERING AT THE DISTRICT OFFICE.

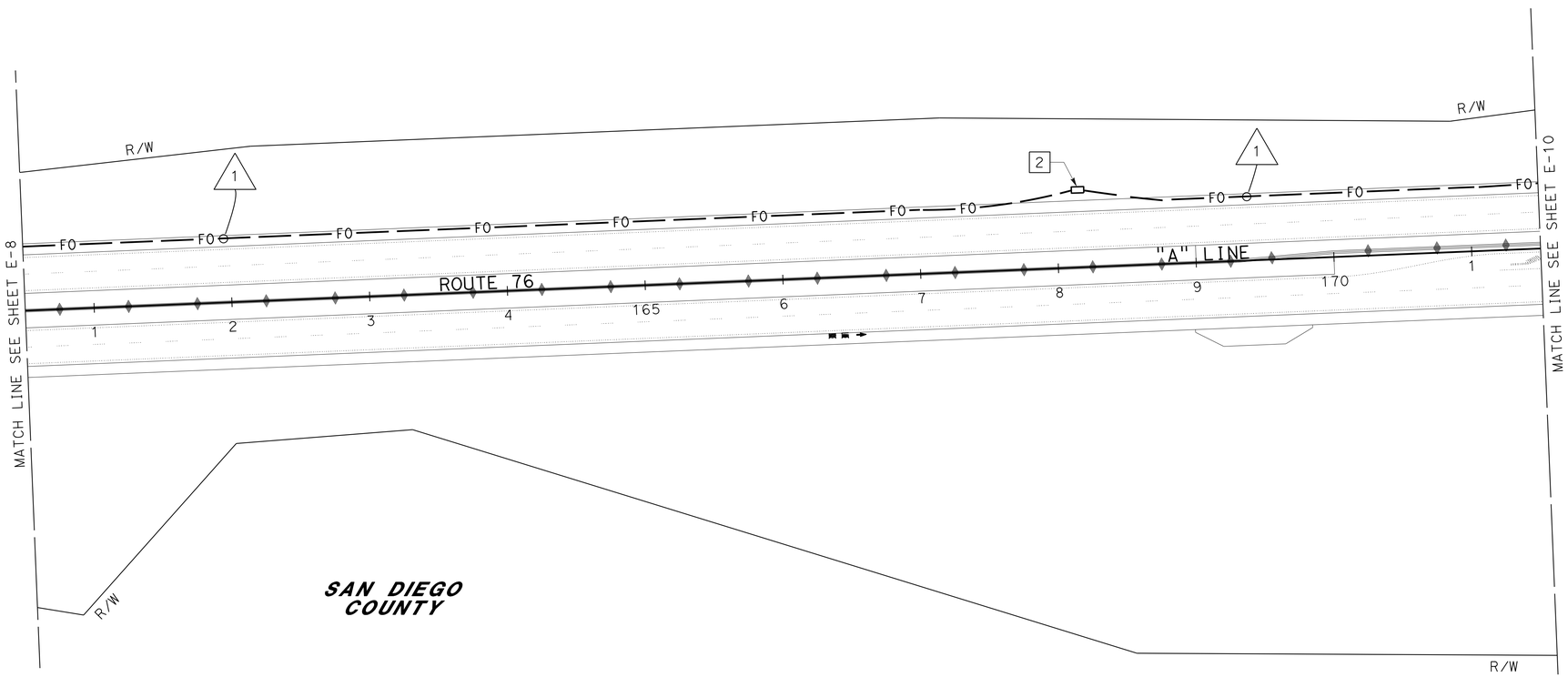

CLOSED CIRCUIT TELEVISION SYSTEM

APPROVED FOR ELECTRICAL WORK ONLY

SCALE: 1" = 50'

E-9

STATE OF CALIFORNIA - DEPARTMENT OF TRANSPORTATION
Caltrans
TRAFFIC ELECTRICAL

FUNCTIONAL SUPERVISOR: RAJPREET SINGH
CALCULATED-DESIGNED BY: FARIBA RAMOS
CHECKED BY: ENRIQUE BERNAL
REVISED BY
DATE REVISED

LAST REVISION 09-18-13
DATE PLOTTED => 24-MAR-2014
TIME PLOTTED => 11:25

Dist	COUNTY	ROUTE	POST MILES TOTAL PROJECT	SHEET No.	TOTAL SHEETS
11	SD	15,76	R46.2/R46.8, R12.1/R17.7	1018	1273

REGISTERED ELECTRICAL ENGINEER 02-20-14 DATE

03-24-14
PLANS APPROVAL DATE

THE STATE OF CALIFORNIA OR ITS OFFICERS OR AGENTS SHALL NOT BE RESPONSIBLE FOR THE ACCURACY OR COMPLETENESS OF SCANNED COPIES OF THIS PLAN SHEET.

REGISTERED PROFESSIONAL ENGINEER FARIBA RAMOS No. E15619 Exp. 12-31-15 ELECTRICAL STATE OF CALIFORNIA

CONDUIT NOTES (TSO):

1. MDCS (3), 1 FO72, 1 SIC, 1 MT
2. MDCS (4), 2 FO12, 2 SIC
3. 3"C, 2 CAMERA CABLES
4. 3"C, 2#8 (LTG), 2#8 (SIGNAL), 2#8 (CCTV), 3#14 (PEU)
5. 2"C, 2#8 (CCTV)
6. 2"C, MT
7. MDCS (2), 1 FO12, 1 MT
8. MDCS (3), 1 FO12, 2 SIC

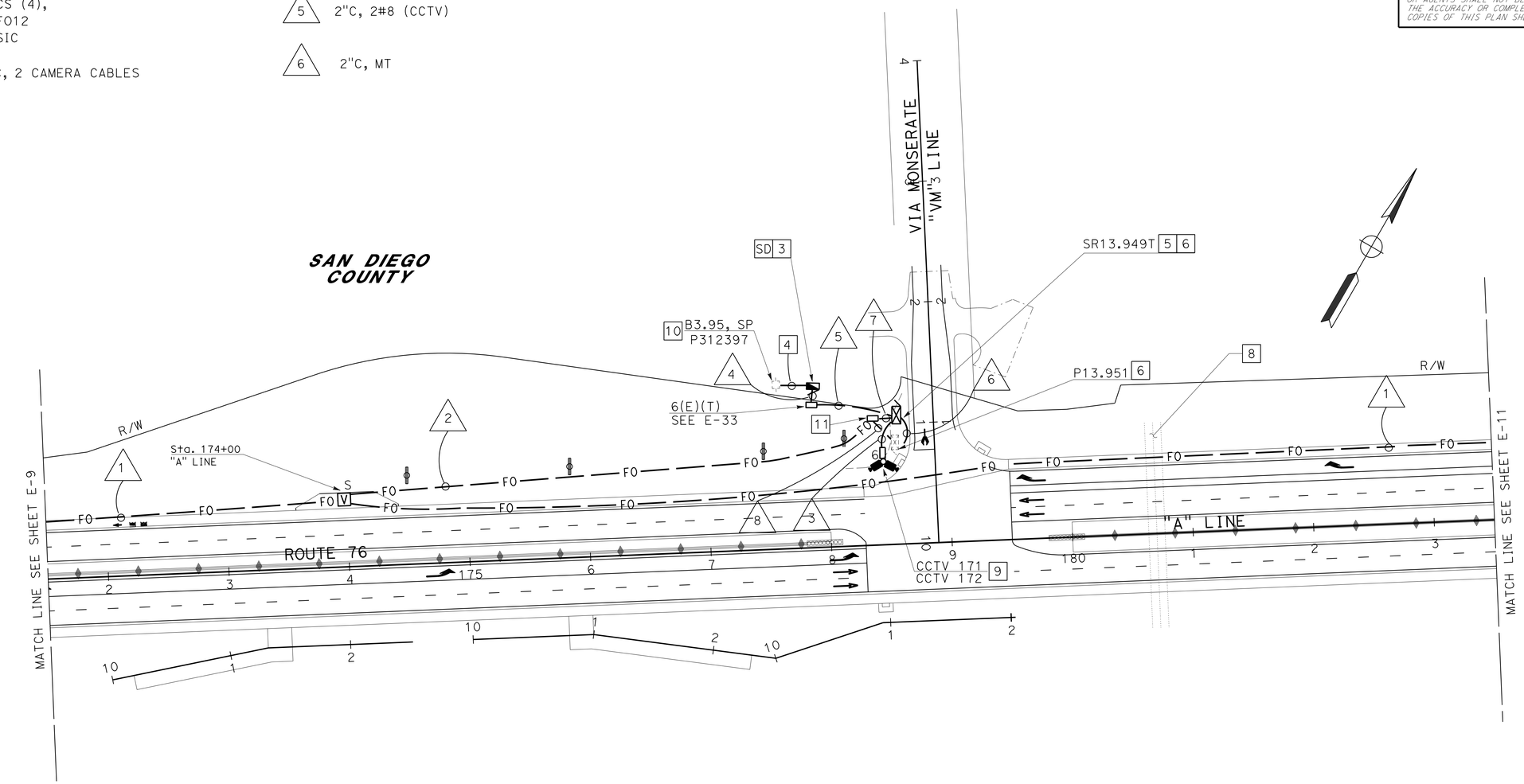

NOTES (TSO):

1. SEE "SIGNAL AND LIGHTING (LOCATION 2)" PLANS FOR CIRCUIT CONTINUITY.
2. FIBER OPTIC CONDUIT BENDS SHALL BE AT AN ANGLE OF 22.5° OR LESS.

3 TYPE III-BF SERVICE EQUIPMENT ENCLOSURE. SEE WIRING DIAGRAM "VIA MONSERATE" ON SHEET E-2.

4 3"C, MT. (CONDUCTORS PER SDG&E REQUIREMENTS).

5 FURNISH AND INSTALL MODEL 334 CCTV CABINET. SEE ELECTRICAL DETAILS.

6 INSTALL COMMUNICATION EQUIPMENT PER COMPONENT DIAGRAM IN ELECTRICAL DETAILS.

7. SEE DRAINAGE AND SEWER PLANS FOR INLET AND PIPE LOCATIONS.

8 WILD ANIMAL CROSSING. INSTALL FIBER OPTIC CONDUIT ABOVE BOX CULVERT. SEE CONSTRUCTION DETAILS.

9 MODIFIED CCTV 40. SEE DETAILS ON SES-1.

10 INSTALL TYPE H SERVICE RISER PER SDG&E REQUIREMENTS.

11 6(E)(T). EXTEND PULL BOX 2" (MIN) BELOW THE BOTTOM OF CONDUIT. CONDUIT BENDS SHALL BE AT AN ANGLE OF 22.5°OR LESS. PULL BOX COVER SHALL BE MARKED "FIBER OPTIC".

12. FOR ACCURATE RIGHT OF WAY DATA, CONTACT RIGHT OF WAY ENGINEERING AT THE DISTRICT OFFICE.

CLOSED CIRCUIT TELEVISION SYSTEM

APPROVED FOR ELECTRICAL WORK ONLY

SCALE: 1" = 50'

E-10

STATE OF CALIFORNIA - DEPARTMENT OF TRANSPORTATION
Caltrans
TRAFFIC ELECTRICAL

FUNCTIONAL SUPERVISOR: RAJPREET SINGH
CALCULATED-DESIGNED BY: FARIBA RAMOS
CHECKED BY: ENRIQUE BERNAL
REVISED BY
DATE REVISED

LAST REVISION 01-18-14
DATE PLOTTED => 20-MAR-2014
TIME PLOTTED => 15:56

Dist	COUNTY	ROUTE	POST MILES TOTAL PROJECT	SHEET No.	TOTAL SHEETS
11	SD	15,76	R46.2/R46.8, R12.1/R17.7	1019	1273

Fariba Ramos 02-20-14
REGISTERED ELECTRICAL ENGINEER DATE

03-24-14
PLANS APPROVAL DATE

REGISTERED PROFESSIONAL ENGINEER
FARIBA RAMOS
No. E15619
Exp. 12-31-15
ELECTRICAL
STATE OF CALIFORNIA

THE STATE OF CALIFORNIA OR ITS OFFICERS OR AGENTS SHALL NOT BE RESPONSIBLE FOR THE ACCURACY OR COMPLETENESS OF SCANNED COPIES OF THIS PLAN SHEET.

CONDUIT NOTE (TSO):

1. MDCS (3), 1 FO72, 1 SIC, 1 MT

NOTES (TSO):

1. SEE DRAINAGE AND SEWER PLANS FOR INLET AND PIPE LOCATIONS.
2. 6(E)(T). EXTEND PULL BOX 2" (MIN) BELOW THE BOTTOM OF CONDUIT. CONDUIT BENDS SHALL BE AT AN ANGLE OF 22.5°OR LESS. PULL BOX COVER SHALL BE MARKED "FIBER OPTIC".
3. FOR ACCURATE RIGHT OF WAY DATA, CONTACT RIGHT OF WAY ENGINEERING AT THE DISTRICT OFFICE.

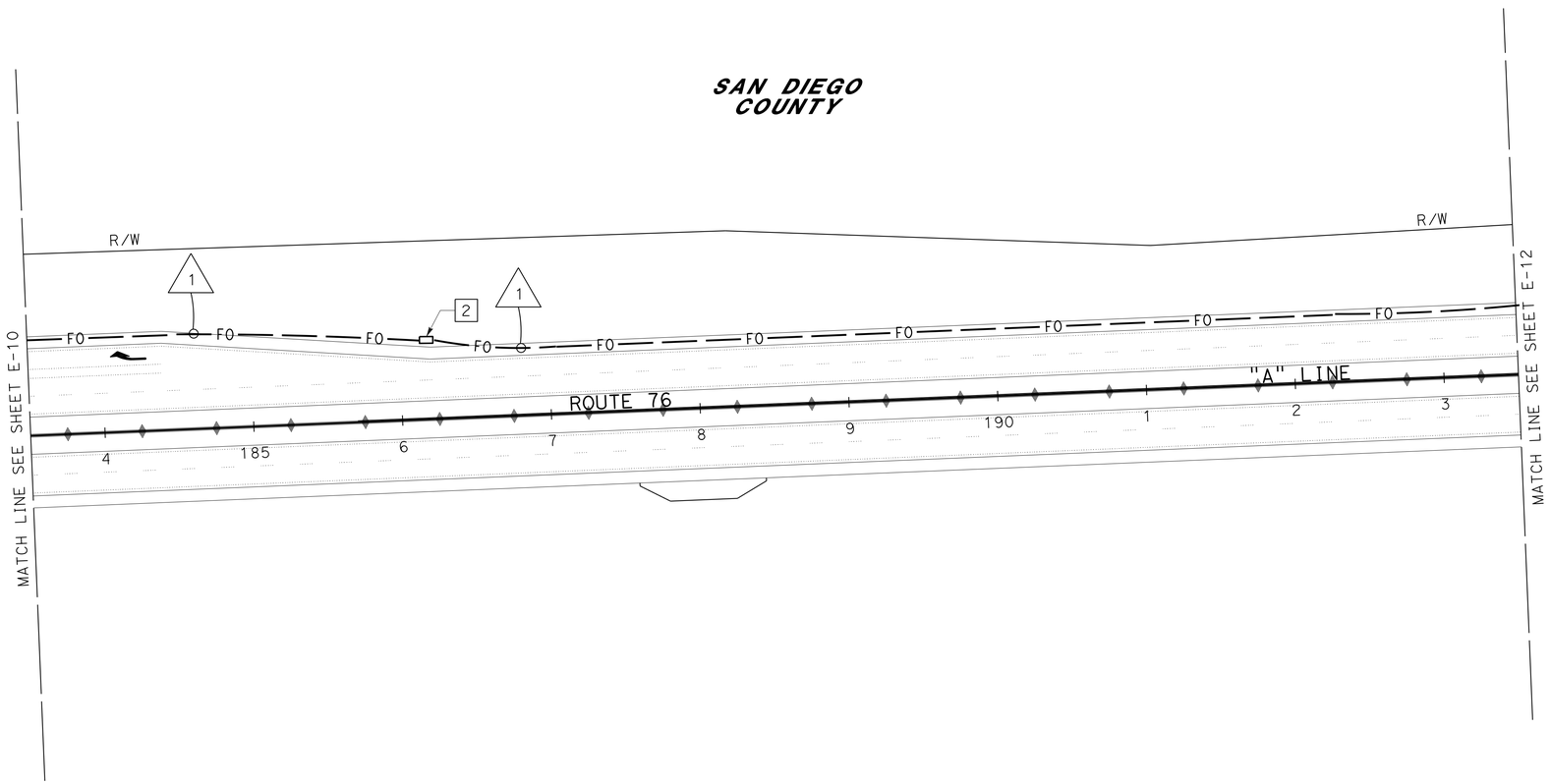

CLOSED CIRCUIT TELEVISION SYSTEM

APPROVED FOR ELECTRICAL WORK ONLY

SCALE: 1" = 50'

E-11

STATE OF CALIFORNIA - DEPARTMENT OF TRANSPORTATION
Caltrans
TRAFFIC ELECTRICAL

FUNCTIONAL SUPERVISOR: RAJPREET SINGH
CALCULATED-DESIGNED BY: FARIBA RAMOS
CHECKED BY: ENRIQUE BERNAL
REVISED BY
DATE REVISED

LAST REVISION 01-18-14
DATE PLOTTED => 20-MAR-2014
TIME PLOTTED => 15:56

Dist	COUNTY	ROUTE	POST MILES TOTAL PROJECT	SHEET No.	TOTAL SHEETS
11	SD	15,76	R46.2/R46.8, R12.1/R17.7	1020	1273

Fariba Ramos 02-20-14
REGISTERED ELECTRICAL ENGINEER DATE

03-24-14
PLANS APPROVAL DATE

REGISTERED PROFESSIONAL ENGINEER
FARIBA RAMOS
No. E15619
Exp. 12-31-15
ELECTRICAL
STATE OF CALIFORNIA

THE STATE OF CALIFORNIA OR ITS OFFICERS OR AGENTS SHALL NOT BE RESPONSIBLE FOR THE ACCURACY OR COMPLETENESS OF SCANNED COPIES OF THIS PLAN SHEET.

CONDUIT NOTE (TSO):

1. MDCS (3), 1 FO72, 1 SIC 1 MT
2. 2"C, 2#8 (COUNTY LTG)
3. Exist 2"C, 2#10 (ltg), 3#12 (fb)
   RC: 2#10 (ltg), 3#12 (fb)
   ADD: 2#8 (COUNTY LTG)

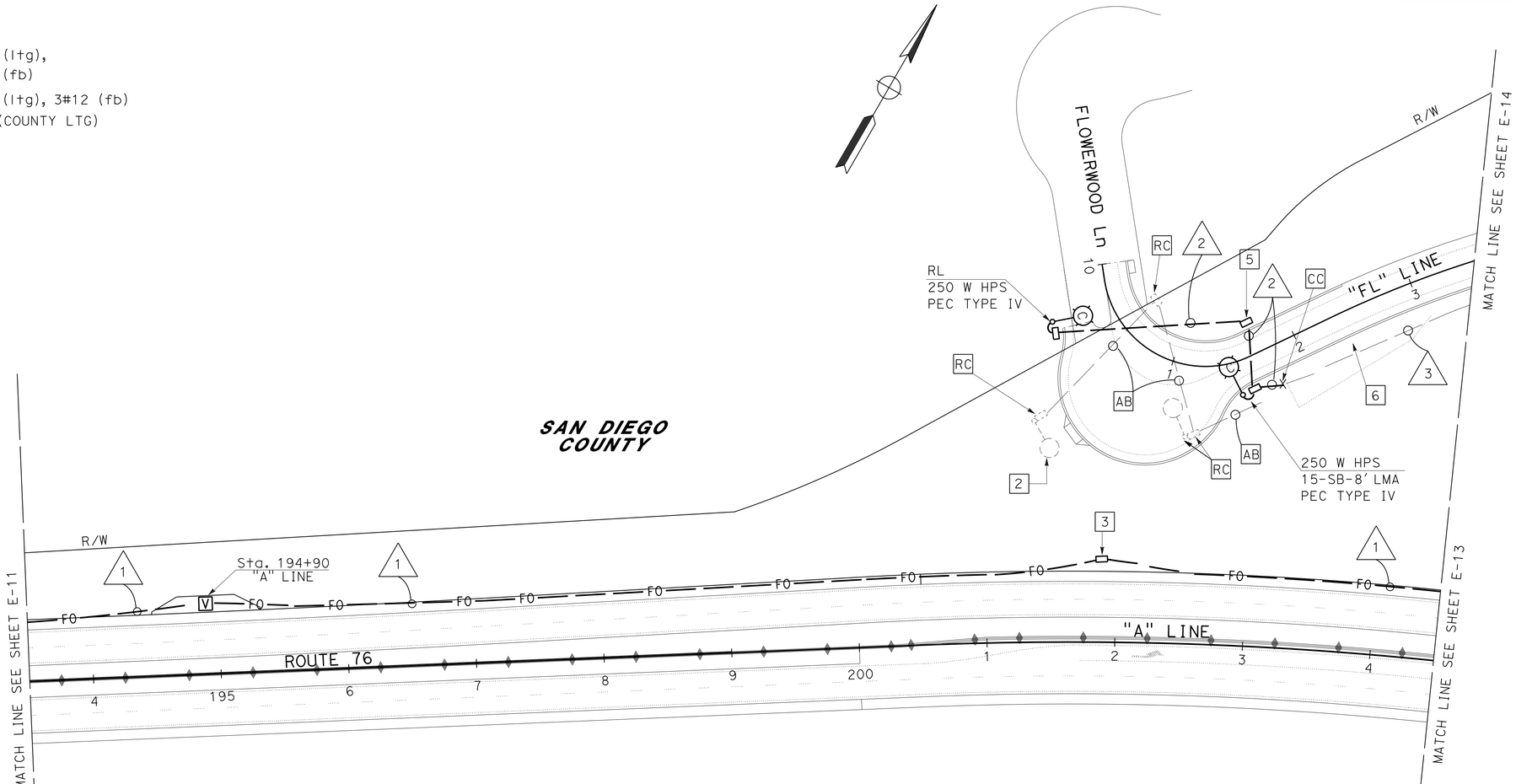

NOTE (TSO):

1. SEE DRAINAGE AND SEWER PLANS FOR INLET AND PIPE LOCATIONS.
2. RL TYPE 15, 15' lma. RC 180 W lps.
3. 6(E)(T). EXTEND PULL BOX 2" (MIN) BELOW THE BOTTOM OF CONDUIT. CONDUIT BENDS SHALL BE AT AN ANGLE OF 22.5°OR LESS. PULL BOX COVER SHALL BE MARKED "FIBER OPTIC".
4. FOR ACCURATE RIGHT OF WAY DATA, CONTACT RIGHT OF WAY ENGINEERING AT THE DISTRICT OFFICE.
5. PULL BOX SHALL BE MARKED "COUNTY LIGHTING".
6. EXISTING BOX CULVERT. SEE LAYOUT SHEETS.

CLOSED CIRCUIT TELEVISION SYSTEM LIGHTING (COUNTY)

APPROVED FOR ELECTRICAL WORK ONLY

SCALE: 1" = 50'

E-12

REVISED BY | DATE REVISED
FARIBA RAMOS | ENRIQUE BERNAL
CALCULATED-DESIGNED BY | CHECKED BY
FUNCTIONAL SUPERVISOR | RAJPREET SINGH

STATE OF CALIFORNIA - DEPARTMENT OF TRANSPORTATION
Caltrans
TRAFFIC ELECTRICAL

LAST REVISION 01-18-14 | DATE PLOTTED => 20-MAR-2014 | TIME PLOTTED => 15:56

Dist	COUNTY	ROUTE	POST MILES TOTAL PROJECT	SHEET No.	TOTAL SHEETS
11	SD	15,76	R46.2/R46.8, R12.1/R17.7	1021	1273

REGISTERED ELECTRICAL ENGINEER 02-20-14 DATE

03-24-14
PLANS APPROVAL DATE

REGISTERED PROFESSIONAL ENGINEER FARIBA RAMOS No. E15619 Exp. 12-31-15 ELECTRICAL STATE OF CALIFORNIA

THE STATE OF CALIFORNIA OR ITS OFFICERS OR AGENTS SHALL NOT BE RESPONSIBLE FOR THE ACCURACY OR COMPLETENESS OF SCANNED COPIES OF THIS PLAN SHEET.

CONDUIT NOTES (TSO):

1. MDCS (3), 1 FO72, 1 SIC, 1 MT
2. MDCS (3), 1 FO12, 2 MT
3. 3"C, 2 CAMERA CABLES
4. MDCS (4), [12] 1 FO72, 3 MT
5. 3"C, 2#8 (LTG), 2#8 (SIGNAL), 2#8 (CCTV), 6#10 (Irr), 3#14 (PEU), 2#10 (FB)
6. 3"C, 2#10 (Irr)
7. 2"C, 2#8 (CCTV)
8. 3"C, 2#8 (LTG), 2#8 (SIGNAL), 6#10 (Irr), 3#14 (PEU), 2#10 (FB)
9. 2"C, 4#10 (Irr)
10. MDCS (2), 1 SIC, 1 FO12
11. MDCS (3), 1 FO72, 2 MT

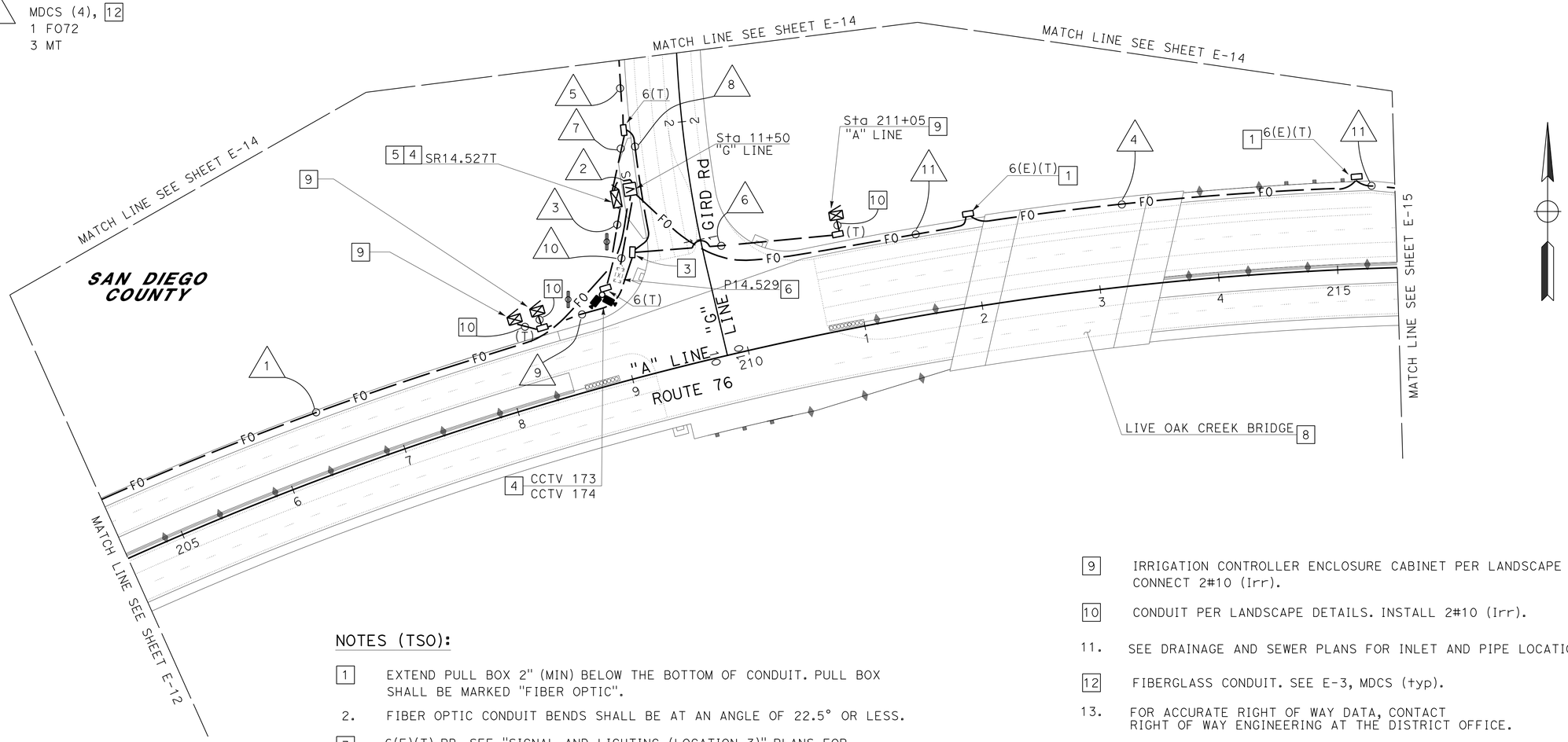

NOTES (TSO):

[1] EXTEND PULL BOX 2" (MIN) BELOW THE BOTTOM OF CONDUIT. PULL BOX SHALL BE MARKED "FIBER OPTIC".

2. FIBER OPTIC CONDUIT BENDS SHALL BE AT AN ANGLE OF 22.5° OR LESS.

[3] 6(E)(T) PB. SEE "SIGNAL AND LIGHTING (LOCATION 3)" PLANS FOR CIRCUIT CONTINUITY.

[4] MODIFIED CCTV 40. SEE DETAILS ON SES-1.

[5] FURNISH AND INSTALL MODEL 334 CCTV CABINET. SEE ELECTRICAL DETAILS.

[6] INSTALL COMMUNICATION EQUIPMENT PER COMPONENT DIAGRAM IN ELECTRICAL DETAILS.

7. PLACE CABINETS AND CCTV POLE 30' Min BEHIND THE ETW.

[8] SEE "LIVE OAK CREEK" BRIDGE ELECTRICAL DETAILS.

[9] IRRIGATION CONTROLLER ENCLOSURE CABINET PER LANDSCAPE DETAILS. CONNECT 2#10 (Irr).

[10] CONDUIT PER LANDSCAPE DETAILS. INSTALL 2#10 (Irr).

11. SEE DRAINAGE AND SEWER PLANS FOR INLET AND PIPE LOCATIONS.

[12] FIBERGLASS CONDUIT. SEE E-3, MDCS (typ).

13. FOR ACCURATE RIGHT OF WAY DATA, CONTACT RIGHT OF WAY ENGINEERING AT THE DISTRICT OFFICE.

APPROVED FOR ELECTRICAL WORK ONLY

CLOSED CIRCUIT TELEVISION SYSTEM ELECTRIC SERVICE (IRRIGATION)

SCALE: 1" = 50'

E-13

STATE OF CALIFORNIA - DEPARTMENT OF TRANSPORTATION
Caltrans® TRAFFIC ELECTRICAL

FUNCTIONAL SUPERVISOR: RAJPREET SINGH
CALCULATED-DESIGNED BY: ENRIQUE BERNAL
CHECKED BY: FARIBA RAMOS
REVISED BY
DATE REVISED

LAST REVISION 01-18-14
DATE PLOTTED => 20-MAR-2014
TIME PLOTTED => 15:56

Dist	COUNTY	ROUTE	POST MILES TOTAL PROJECT	SHEET No.	TOTAL SHEETS
11	SD	15,76	R46.2/R46.8, R12.1/R17.7	1022	1273

REGISTERED ELECTRICAL ENGINEER 02-20-14 DATE

03-24-14
PLANS APPROVAL DATE

REGISTERED PROFESSIONAL ENGINEER FARIBA RAMOS No. E15619 Exp. 12-31-15 ELECTRICAL STATE OF CALIFORNIA

THE STATE OF CALIFORNIA OR ITS OFFICERS OR AGENTS SHALL NOT BE RESPONSIBLE FOR THE ACCURACY OR COMPLETENESS OF SCANNED COPIES OF THIS PLAN SHEET.

CONDUIT NOTES (TSO):

1. 2"C, 2#8 (COUNTY LTG)

2. Exist 2"C, 2#10 (Itg),
   3#12 (fb),
   3#14 (peu),
   2#14 (tdc),
   2#6 (signal)
   RC: 2#10 (Itg),
   3#12 (fb),
   3#14 (peu),
   2#6 (signal)
   ADD: 2#8 (COUNTY LTG)

3. Exist 2"C, 2#10 (Itg),
   3#12 (fb)
   RC: 2#10 (Itg),
   3#12 (fb),
   ADD: 2#8 (COUNTY LTG)

4. 3"C, 2#8 (LTG),
   2#8 (SIGNAL),
   2#8 (CCTV),
   6#10 (Irr),
   3#14 (PEU),
   2#10 (FB)

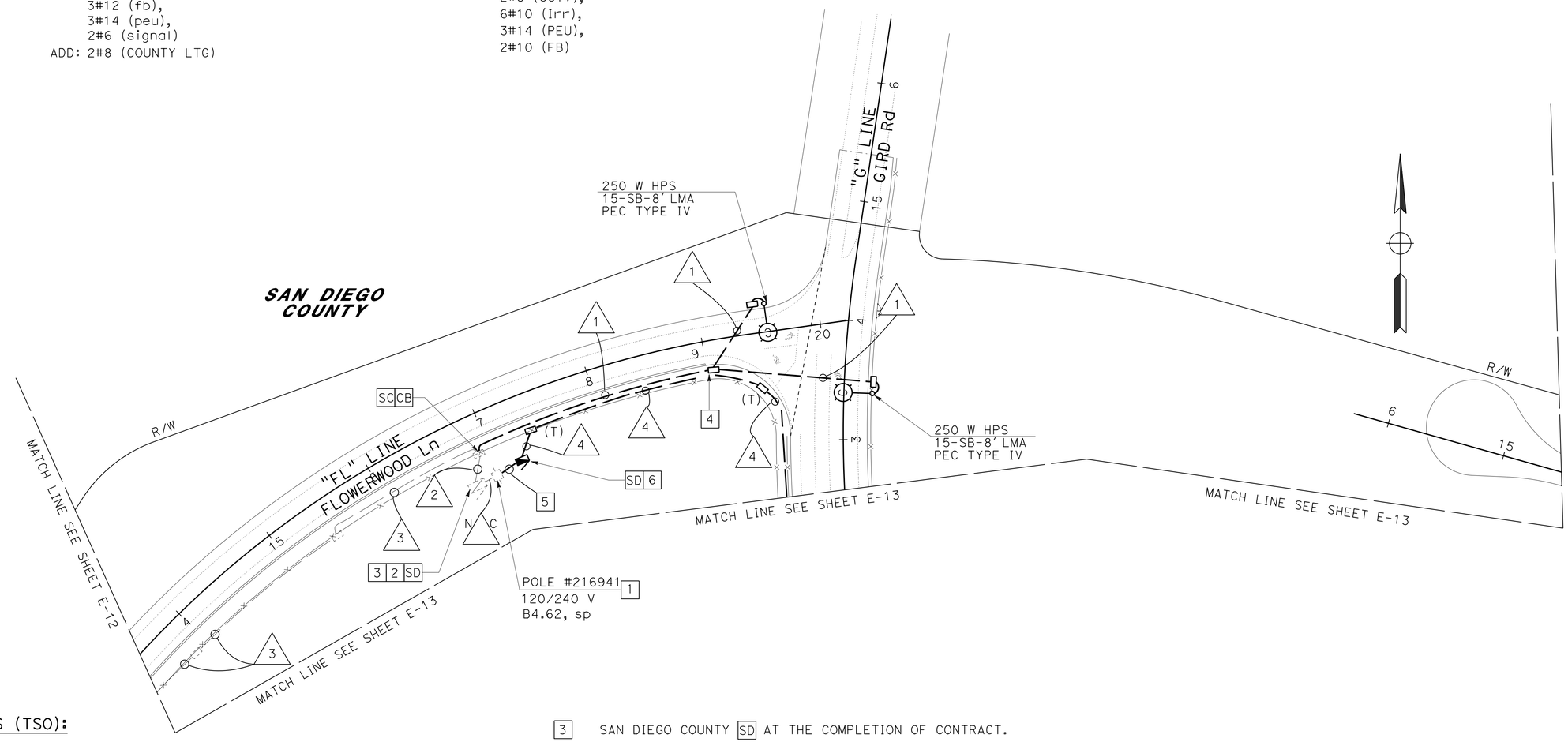

NOTES (TSO):

1. INSTALL TYPE H RISER PER SDG&E REQUIREMENTS.

2. Exist CALTRANS TYPE III SERVICE ENCLOSURE WITH:
   MAIN-2P-100 A (MAIN)
   2P-20 A (Itg), RELABEL "COUNTY LTG"
   1P-15 A (peu)
   1P-15 A (fb)
   1P-15 A (signal)
   1P-15 A (tdc)
   RC: 1P-15 A (fb), 1P-15 A (signal),
   1P-15 A (peu) AND CONTACTOR

3. SAN DIEGO COUNTY SD AT THE COMPLETION OF CONTRACT.

4. PULL BOX SHALL BE MARKED "COUNTY LIGHTING".

5. 3"C, MT. CONDUCTORS PER SDG&E REQUIREMENTS.

6. TYPE III-CF SERVICE EQUIPMENT ENCLOSURE. SEE WIRING DIAGRAM "GIRD Rd" ON E-2.

7. SEE DRAINAGE AND SEWER PLANS FOR INLET AND PIPE LOCATIONS.

8. FOR ACCURATE RIGHT OF WAY DATA, CONTACT RIGHT OF WAY ENGINEERING AT THE DISTRICT OFFICE.

CLOSED CIRCUIT TELEVISION SYSTEM LIGHTING (COUNTY)

APPROVED FOR ELECTRICAL WORK ONLY

SCALE: 1" = 50'

E-14

STATE OF CALIFORNIA - DEPARTMENT OF TRANSPORTATION
Caltrans® TRAFFIC ELECTRICAL

FUNCTIONAL SUPERVISOR: RAJPREET SINGH
CALCULATED-DESIGNED BY: FARIBA RAMOS
CHECKED BY: ENRIQUE BERNAL
REVISED BY
DATE REVISED

LAST REVISION 01-18-14
DATE PLOTTED => 20-MAR-2014
TIME PLOTTED => 15:56

Dist	COUNTY	ROUTE	POST MILES TOTAL PROJECT	SHEET No.	TOTAL SHEETS
11	SD	15,76	R46.2/R46.8, R12.1/R17.7	1023	1273

Farib Ramos 02-20-14
REGISTERED ELECTRICAL ENGINEER DATE

03-24-14
PLANS APPROVAL DATE

REGISTERED PROFESSIONAL ENGINEER
FARIBA RAMOS
No. E15619
Exp. 12-31-15
ELECTRICAL
STATE OF CALIFORNIA

THE STATE OF CALIFORNIA OR ITS OFFICERS OR AGENTS SHALL NOT BE RESPONSIBLE FOR THE ACCURACY OR COMPLETENESS OF SCANNED COPIES OF THIS PLAN SHEET.

CONDUIT NOTE (TSO):

1. MDCS (3),
   1 FO72
   2 MT

NOTES (TSO):

1. FOR ACCURATE RIGHT OF WAY DATA, CONTACT RIGHT OF WAY ENGINEERING AT THE DISTRICT OFFICE.
2. SEE DRAINAGE AND SEWER PLANS FOR INLET AND PIPE LOCATIONS.

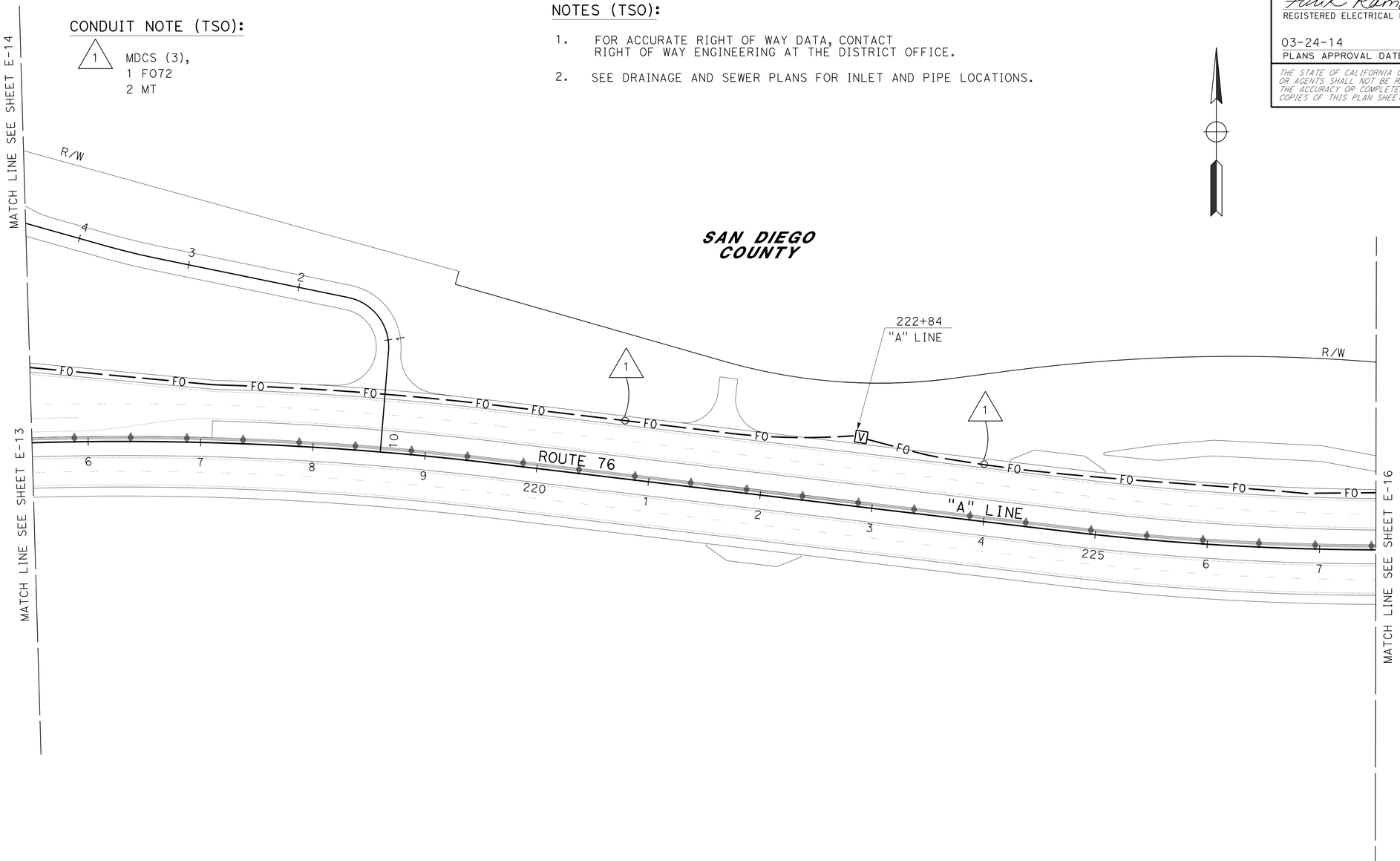

CLOSED CIRCUIT TELEVISION SYSTEM

APPROVED FOR ELECTRICAL WORK ONLY

SCALE: 1" = 50'

E-15

STATE OF CALIFORNIA - DEPARTMENT OF TRANSPORTATION
Caltrans
TRAFFIC ELECTRICAL

FUNCTIONAL SUPERVISOR: RAJPREET SINGH
CALCULATED-DESIGNED BY: FARIBA RAMOS
CHECKED BY: ENRIQUE BERNAL
REVISED BY
DATE REVISED

LAST REVISION 01-18-14
DATE PLOTTED => 20-MAR-2014
TIME PLOTTED => 15:56

Dist	COUNTY	ROUTE	POST MILES TOTAL PROJECT	SHEET No.	TOTAL SHEETS
11	SD	15,76	R46.2/R46.8, R12.1/R17.7	1024	1273

Fariba Ramos 02-20-14
REGISTERED ELECTRICAL ENGINEER DATE

03-24-14
PLANS APPROVAL DATE

REGISTERED PROFESSIONAL ENGINEER
FARIBA RAMOS
No. E15619
Exp. 12-31-15
ELECTRICAL
STATE OF CALIFORNIA

THE STATE OF CALIFORNIA OR ITS OFFICERS OR AGENTS SHALL NOT BE RESPONSIBLE FOR THE ACCURACY OR COMPLETENESS OF SCANNED COPIES OF THIS PLAN SHEET.

CONDUIT NOTE (TSO):

1. MDCS (3),
   1 FO72
   2 MT

NOTES (TSO):

1. 6(E)(T). EXTEND PULL BOX 2" (MIN) BELOW THE BOTTOM OF CONDUIT. CONDUIT BENDS SHALL BE AT AN ANGLE OF 22.5°OR LESS. PULL BOX COVER SHALL BE MARKED "FIBER OPTIC".
2. FOR ACCURATE RIGHT OF WAY DATA, CONTACT RIGHT OF WAY ENGINEERING AT THE DISTRICT OFFICE.
3. SEE DRAINAGE AND SEWER PLANS FOR INLET AND PIPE LOCATIONS.

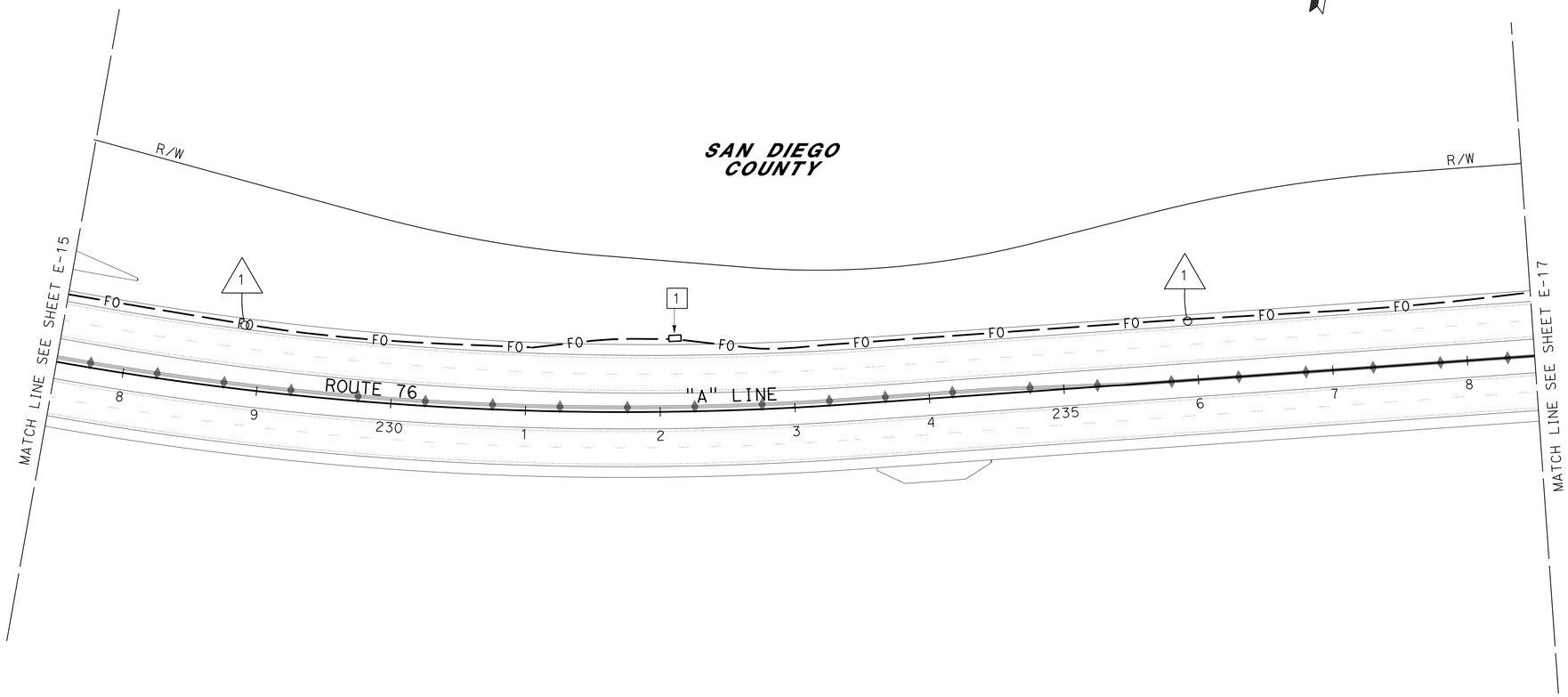

CLOSED CIRCUIT TELEVISION SYSTEM

APPROVED FOR ELECTRICAL WORK ONLY

SCALE: 1" = 50'

E-16

STATE OF CALIFORNIA - DEPARTMENT OF TRANSPORTATION
Caltrans
TRAFFIC ELECTRICAL

FUNCTIONAL SUPERVISOR: RAJPREET SINGH
CALCULATED-DESIGNED BY: FARIBA RAMOS
CHECKED BY: ENRIQUE BERNAL
REVISED BY
DATE REVISED

LAST REVISION 01-18-14
DATE PLOTTED => 20-MAR-2014
TIME PLOTTED => 15:56

Dist	COUNTY	ROUTE	POST MILES TOTAL PROJECT	SHEET No.	TOTAL SHEETS
11	SD	15,76	R46.2/R46.8, R12.1/R17.7	1025	1273

Fariba Ramos 02-20-14
REGISTERED ELECTRICAL ENGINEER DATE

03-24-14
PLANS APPROVAL DATE

REGISTERED PROFESSIONAL ENGINEER
FARIBA RAMOS
No. E15619
Exp. 12-31-15
ELECTRICAL
STATE OF CALIFORNIA

THE STATE OF CALIFORNIA OR ITS OFFICERS OR AGENTS SHALL NOT BE RESPONSIBLE FOR THE ACCURACY OR COMPLETENESS OF SCANNED COPIES OF THIS PLAN SHEET.

CONDUIT NOTE (TSO):

1. MDCS (3),
   1 FO72
   2 MT

NOTES (TSO):

1. FOR ACCURATE RIGHT OF WAY DATA, CONTACT RIGHT OF WAY ENGINEERING AT THE DISTRICT OFFICE.
2. SEE DRAINAGE AND SEWER PLANS FOR INLET AND PIPE LOCATIONS.

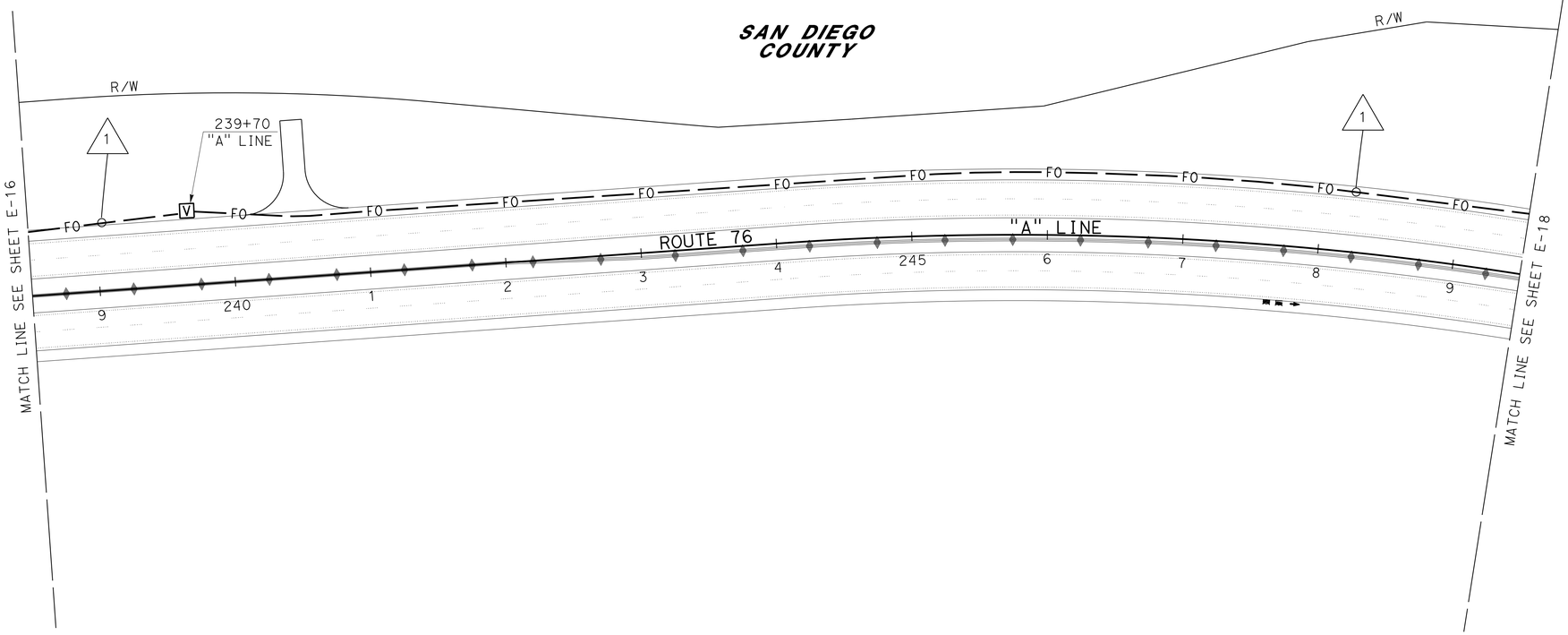

CLOSED CIRCUIT TELEVISION SYSTEM

APPROVED FOR ELECTRICAL WORK ONLY

SCALE: 1" = 50'

E-17

STATE OF CALIFORNIA - DEPARTMENT OF TRANSPORTATION
Caltrans
TRAFFIC ELECTRICAL

FUNCTIONAL SUPERVISOR: RAJPREET SINGH
CALCULATED-DESIGNED BY: FARIBA RAMOS
CHECKED BY: ENRIQUE BERNAL
REVISED BY
DATE REVISED

LAST REVISION 01-18-14
DATE PLOTTED => 20-MAR-2014
TIME PLOTTED => 15:56

Dist	COUNTY	ROUTE	POST MILES TOTAL PROJECT	SHEET No.	TOTAL SHEETS
11	SD	15,76	R46.2/R46.8, R12.1/R17.7	1026	1273

Fariba Ramos 02-20-14
REGISTERED ELECTRICAL ENGINEER DATE

03-24-14
PLANS APPROVAL DATE

REGISTERED PROFESSIONAL ENGINEER FARIBA RAMOS No. E15619 Exp. 12-31-15 ELECTRICAL STATE OF CALIFORNIA

THE STATE OF CALIFORNIA OR ITS OFFICERS OR AGENTS SHALL NOT BE RESPONSIBLE FOR THE ACCURACY OR COMPLETENESS OF SCANNED COPIES OF THIS PLAN SHEET.

CONDUIT NOTES (TSO):

1. MDCS (3),
   1 FO72
   2 MT
2. 2"C, 2#6 (LTG), 4#8 (Irr)

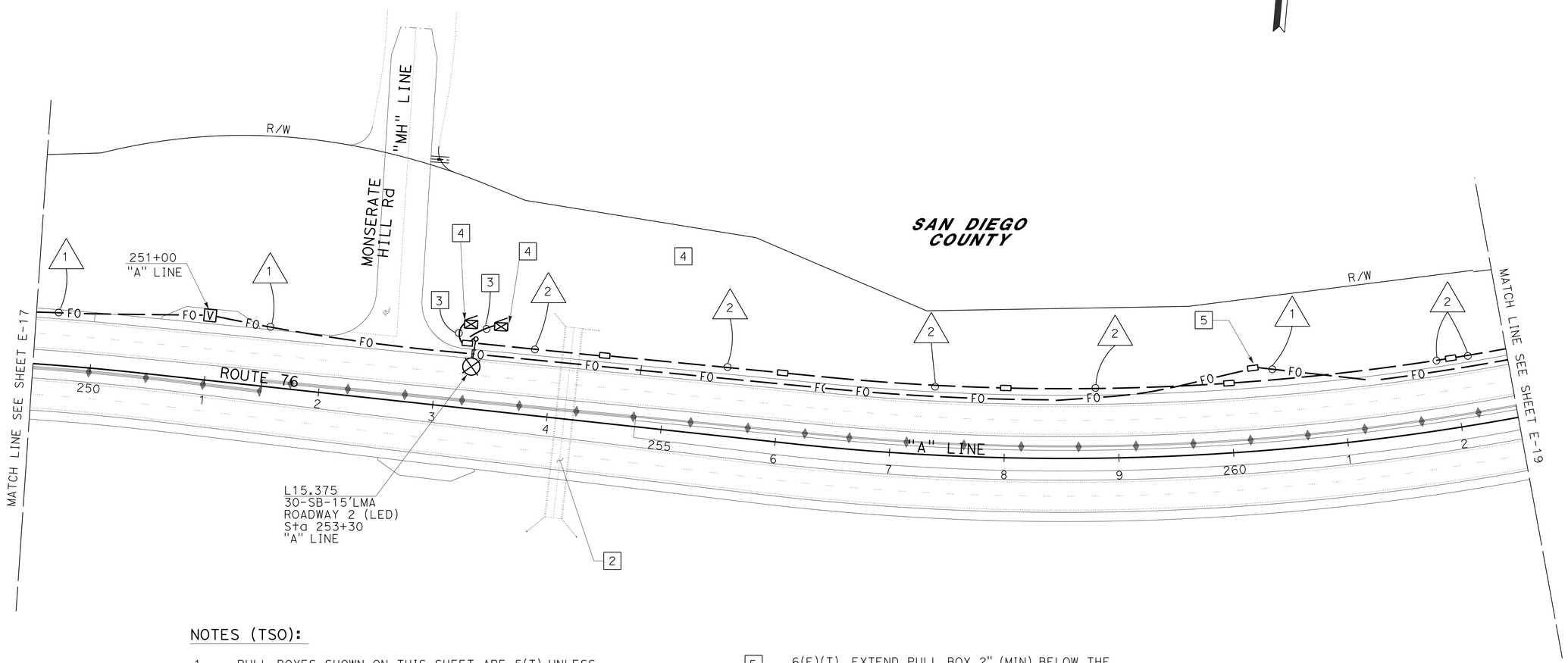

NOTES (TSO):

1. PULL BOXES SHOWN ON THIS SHEET ARE 5(T) UNLESS OTHERWISE INDICATED.

2. WILD ANIMAL CROSSING. INSTALL FIBER OPTIC CONDUITS ABOVE BOX CULVERT. SEE CONSTRUCTION DETAILS.

3. CONDUIT PER LANDSCAPE DETAILS. INSTALL 2#8 (Irr).

4. IRRIGATION CONTROLLER ENCLOSURE CABINET. PER LANDSCAPE DETAILS. CONNECT 2#8 (Irr).

5. 6(E)(T). EXTEND PULL BOX 2" (MIN) BELOW THE BOTTOM OF CONDUIT. CONDUIT BENDS SHALL BE AT AN ANGLE OF 22.5°OR LESS. PULL BOX COVER SHALL BE MARKED "FIBER OPTIC".

6. FOR ACCURATE RIGHT OF WAY DATA, CONTACT RIGHT OF WAY ENGINEERING AT THE DISTRICT OFFICE.

7. SEE DRAINAGE AND SEWER PLANS FOR INLET AND PIPE LOCATIONS.

LIGHTING
CLOSED CIRCUIT TELEVISION SYSTEM
ELECTRIC SERVICE (IRRIGATION)

APPROVED FOR ELECTRICAL WORK ONLY

SCALE: 1" = 50'

E-18

STATE OF CALIFORNIA - DEPARTMENT OF TRANSPORTATION
Caltrans® **TRAFFIC ELECTRICAL**

FUNCTIONAL SUPERVISOR: RAJPREET SINGH
CALCULATED-DESIGNED BY: FARIBA RAMOS
CHECKED BY: ENRIQUE BERNAL
REVISED BY
DATE REVISED

LAST REVISION 01-18-14 | DATE PLOTTED => 20-MAR-2014 | TIME PLOTTED => 15:56

Dist	COUNTY	ROUTE	POST MILES TOTAL PROJECT	SHEET No.	TOTAL SHEETS
11	SD	15,76	R46.2/R46.8, R12.1/R17.7	1027	1273

REGISTERED ELECTRICAL ENGINEER 02-20-14 DATE

03-24-14
PLANS APPROVAL DATE

REGISTERED PROFESSIONAL ENGINEER FARIBA RAMOS No. E15619 Exp. 12-31-15 ELECTRICAL STATE OF CALIFORNIA

THE STATE OF CALIFORNIA OR ITS OFFICERS OR AGENTS SHALL NOT BE RESPONSIBLE FOR THE ACCURACY OR COMPLETENESS OF SCANNED COPIES OF THIS PLAN SHEET.

CONDUIT NOTES (TSO):

1. MDCS(3), 1 FO72 2 MT
2. MDCS(1), 1 FO12
3. 2"C, 2#8 (TMS)
4. 3"C, 4 DLC, 4 TRANSMISSION CABLES
5. 3"C, 8 DLC, 8 TRANSMISSION CABLES
6. 2"C, 2#6 (LTG), 4#8 (Irr) 2#8 (TMS)
7. 2"C, 2#6 (LTG), 4#8 (Irr)
8. 2"C, 2#6 (COUNTY LTG)

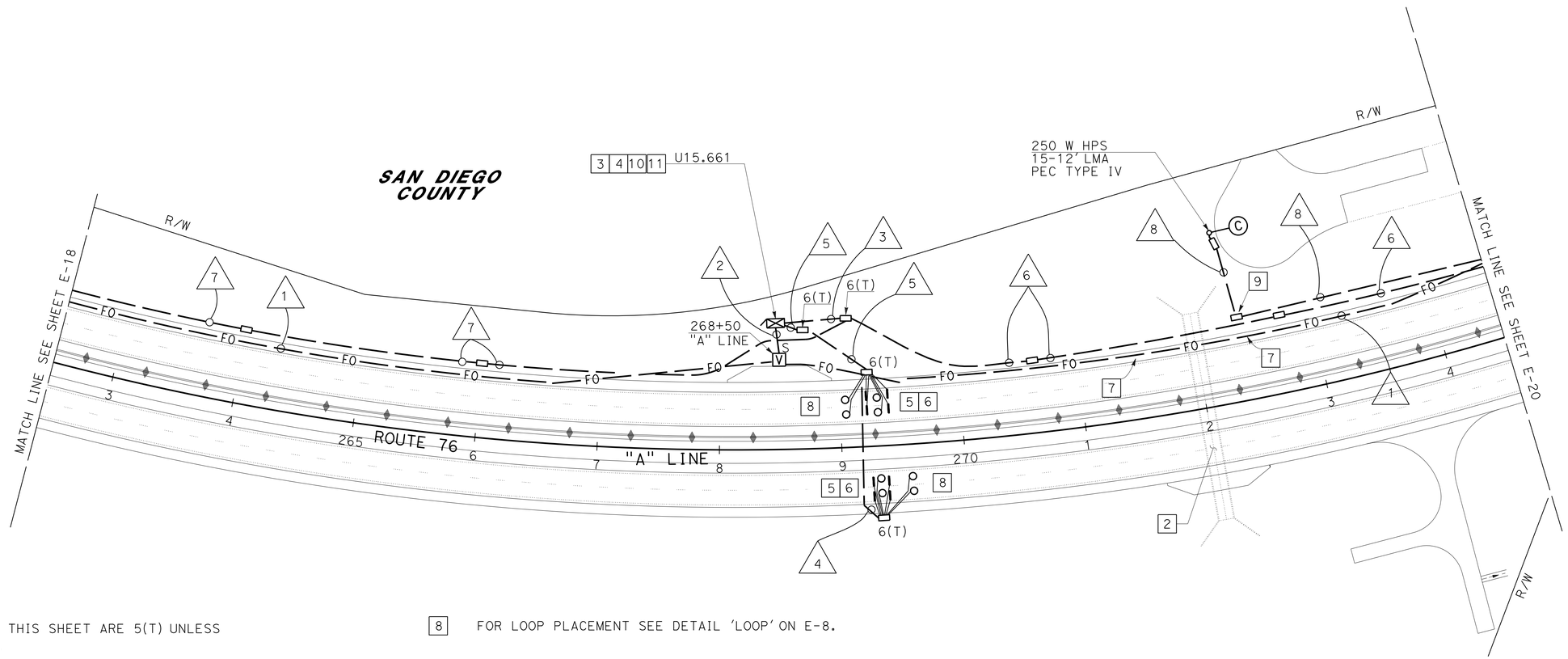

NOTES (TSO):

1. PULL BOXES SHOWN ON THIS SHEET ARE 5(T) UNLESS OTHERWISE INDICATED.

2. WILD ANIMAL CROSSING. INSTALL FIBER OPTIC AND SERVICE CONDUITS ABOVE BOX CULVERT. SEE CONSTRUCTION DETAILS.

3. PLACE CABINET 30' Min BEHIND THE ETW.

4. STATE-FURNISHED MODEL 2070 CONTROLLER. FURNISH AND INSTALL TMS CABINET (MODEL 334).

5. SEE DETAILS "SENSOR PLACEMENT" AND "IDENTIFICATION" ON SHEET E-46.

6. PIEZOELECTRIC SENSOR DETECTOR. FOR INSTALLATION DETAILS SEE E-46.

7. FIBER OPTIC CONDUIT BENDS SHALL BE AT ANGLE OF 22.5° OR LESS. SEE C-70, TABLE A, WAC #4.

8. FOR LOOP PLACEMENT SEE DETAIL 'LOOP' ON E-8.

9. PULL BOX SHALL BE MARKED "COUNTY LIGHTING".

10. INSTALL COMMUNICATION EQUIPMENT PER COMPONENT DIAGRAM. SEE ELECTRICAL DETAILS.

11. INSTALL INDIVIDUAL BNC CONNECTOR (50 OHM, MALE) AT EACH END OF TRANSMISSION CABLE. SOLDER STRANDED WIRE ON CENTER PIN.

12. FOR ACCURATE RIGHT OF WAY DATA, CONTACT RIGHT OF WAY ENGINEERING AT THE DISTRICT OFFICE.

13. SEE DRAINAGE AND SEWER PLANS FOR INLET AND PIPE LOCATIONS.

LIGHTING (COUNTY)
ELECTRIC SERVICE (IRRIGATION)
CLOSED CIRCUIT TELEVISION SYSTEM
TRAFFIC MONITORING STATION (LOCATION 2)

APPROVED FOR ELECTRICAL WORK ONLY

SCALE: 1" = 50'

E-19

REVISED BY | DATE REVISED
FARIBA RAMOS | ENRIQUE BERNAL
CALCULATED-DESIGNED BY | CHECKED BY
FUNCTIONAL SUPERVISOR | RAJPREET SINGH
STATE OF CALIFORNIA - DEPARTMENT OF TRANSPORTATION
Caltrans® TRAFFIC ELECTRICAL

LAST REVISION 01-18-14 | DATE PLOTTED => 20-MAR-2014 | TIME PLOTTED => 15:56

Dist	COUNTY	ROUTE	POST MILES TOTAL PROJECT	SHEET No.	TOTAL SHEETS
11	SD	15,76	R46.2/R46.8, R12.1/R17.7	1028	1273

REGISTERED ELECTRICAL ENGINEER 02-20-14 DATE

03-24-14
PLANS APPROVAL DATE

REGISTERED PROFESSIONAL ENGINEER FARIBA RAMOS No. E15619 Exp. 12-31-15 ELECTRICAL STATE OF CALIFORNIA

THE STATE OF CALIFORNIA OR ITS OFFICERS OR AGENTS SHALL NOT BE RESPONSIBLE FOR THE ACCURACY OR COMPLETENESS OF SCANNED COPIES OF THIS PLAN SHEET.

CONDUIT NOTES (TSO):

1. MDCS (3), 1 FO72 2 MT
2. MDCS(1), 1 FO12
3. 3"C, 2#6 (LTG), 2#8 (CCTV), 3#14 (PEU), 2#8 (TMS), 4#8 (Irr)
4. 2"C, 2#6 (LTG), 3#14 (PEU), 2#8 (TMS), 4#8 (Irr)
5. 2"C, 2#8 (CCTV)
6. 2"C, 2#6 (LTG), 3#14 (PEU)
7. 2"C, 2#6 (LTG)
8. 2"C, 2#6 (LTG), 2#8 (TMS), 4#8 (Irr)
9. 3"C, 2 CAMERA CABLES
10. 2"C, 2#6 (COUNTY LTG)

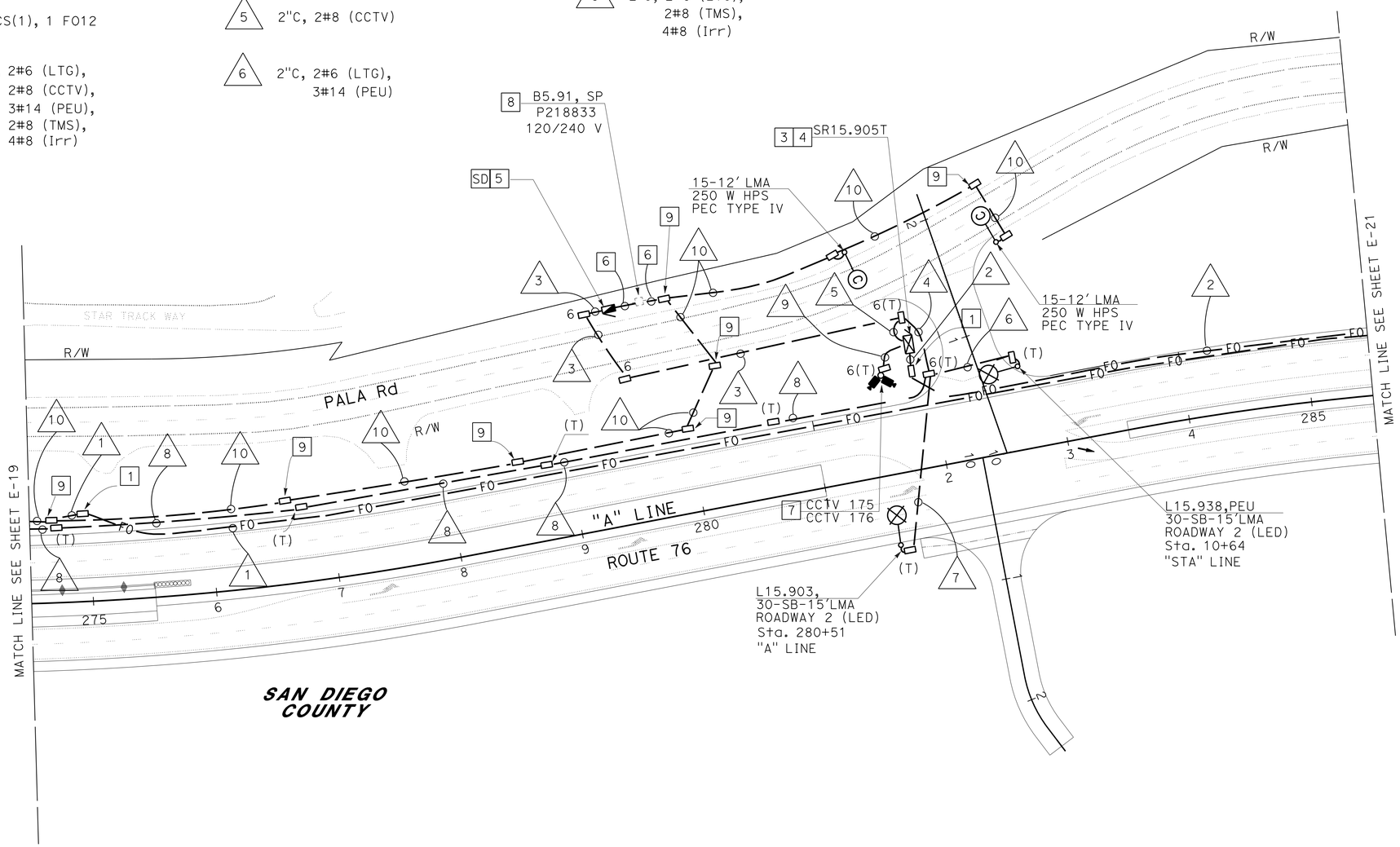

NOTE (TSO):

1. 6 (E)(T). EXTEND PULL BOX 2" (MIN) BELOW THE BOTTOM OF CONDUIT. CONDUIT BENDS SHALL BE AT AN ANGLE OF 22.5°OR LESS. PULL BOX COVER SHALL BE MARKED "FIBER OPTIC".
2. FIBER OPTIC CONDUIT BENDS SHALL BE AT ANGLE OF 22.5° OR LESS.
3. FURNISH AND INSTALL MODEL 334 CCTV CABINET. PLACE 30' Min BEHIND ETW.
4. INSTALL COMMUNICATION EQUIPMENT PER COMPONENT DIAGRAM IN ELECTRICAL DETAILS.
5. TYPE III-CF SERVICE EQUIPMENT ENCLOSURE. SEE WIRING DIAGRAM "STAR TRACK WAY" ON SHEET E-21.
6. 3"C, MT. (CONDUCTORS PER SDG&E REQUIREMENTS).
7. MODIFIED CCTV 40. SEE DETAILS ON SES-1. PLACE 30' Min BEHIND ETW.
8. INSTALL TYPE H SERVICE RISER PER SDG&E REQUIREMENTS.
9. PULL BOX SHALL BE MARKED "COUNTY LIGHTING".
10. FOR ACCURATE RIGHT OF WAY DATA, CONTACT RIGHT OF WAY ENGINEERING AT THE DISTRICT OFFICE.
11. SEE DRAINAGE AND SEWER PLANS FOR INLET AND PIPE LOCATIONS.

APPROVED FOR ELECTRICAL WORK ONLY

LIGHTING
LIGHTING (COUNTY)
ELECTRIC SERVICE (IRRIGATION)
CLOSED CIRCUIT TELEVISION SYSTEM

SCALE: 1" = 50'

E-20

STATE OF CALIFORNIA - DEPARTMENT OF TRANSPORTATION
Caltrans
TRAFFIC ELECTRICAL

FUNCTIONAL SUPERVISOR: RAJPREET SINGH
CALCULATED-DESIGNED BY: FARIBA RAMOS
CHECKED BY: ENRIQUE BERNAL
REVISED BY
DATE REVISED

LAST REVISION 01-18-14
DATE PLOTTED => 20-MAR-2014
TIME PLOTTED => 15:56

Dist	COUNTY	ROUTE	POST MILES TOTAL PROJECT	SHEET No.	TOTAL SHEETS
11	SD	15,76	R46.2/R46.8, R12.1/R17.7	1029	1273

Fariba Ramos 02-20-14
REGISTERED ELECTRICAL ENGINEER DATE

03-24-14
PLANS APPROVAL DATE

REGISTERED PROFESSIONAL ENGINEER FARIBA RAMOS No. E15619 Exp. 12-31-15 ELECTRICAL STATE OF CALIFORNIA

THE STATE OF CALIFORNIA OR ITS OFFICERS OR AGENTS SHALL NOT BE RESPONSIBLE FOR THE ACCURACY OR COMPLETENESS OF SCANNED COPIES OF THIS PLAN SHEET.

CONDUIT NOTES (TSO):

1. MDCS (3), 1 FO72 2 MT

2. MDCS (1), 1 FO12

NOTES (TSO):

1. FOR ACCURATE RIGHT OF WAY DATA, CONTACT RIGHT OF WAY ENGINEERING AT THE DISTRICT OFFICE.
2. SEE DRAINAGE AND SEWER PLANS FOR INLET AND PIPE LOCATIONS.
3. FO CONDUIT BENDS SHALL BE AT AN ANGLE OF 22.5°OR LESS.

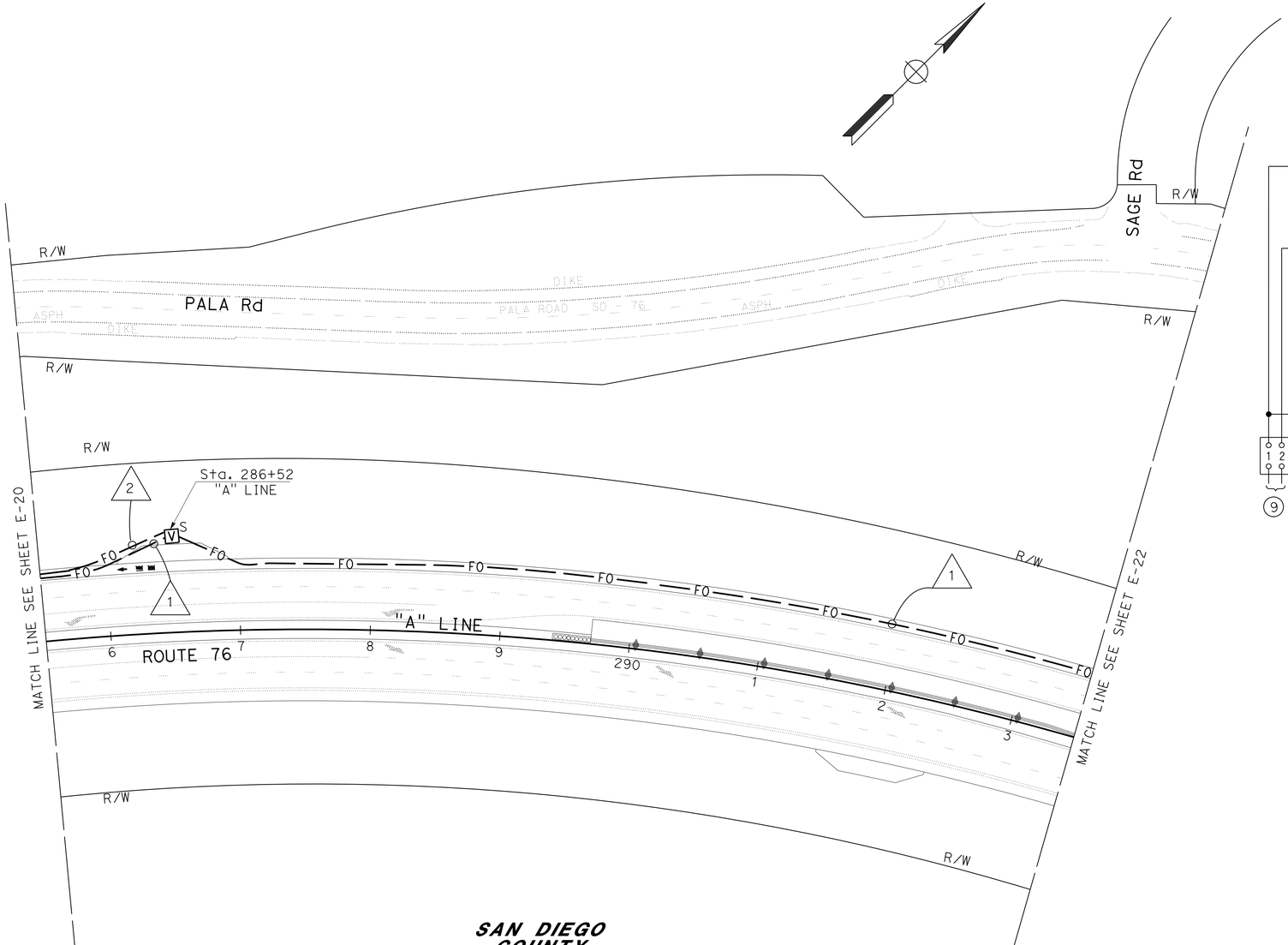

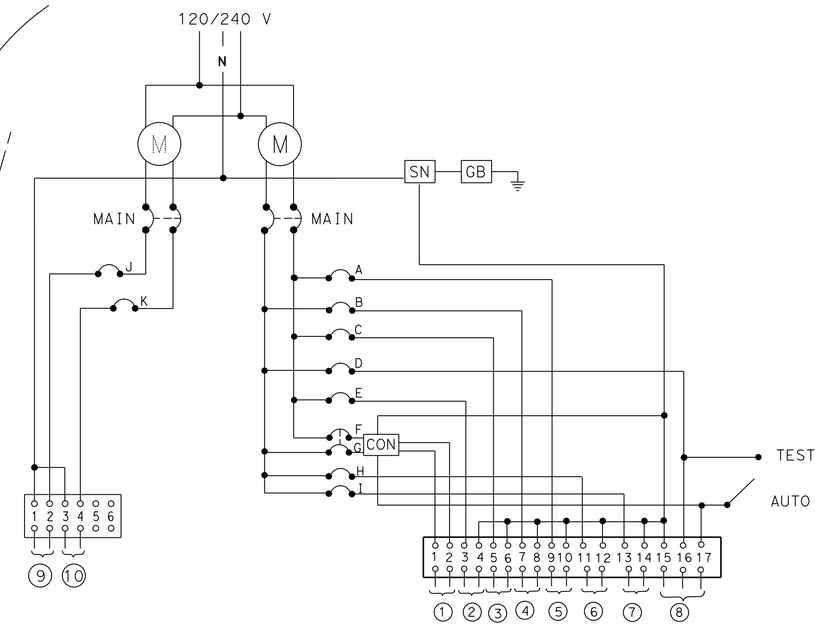

WIRING DIAGRAM, "STAR TRACK WAY"

(TYPE III-CF SERVICE EQUIPMENT ENCLOSURE
SEE RSP ES-2C & RSP ES-2F)

CIRCUIT BREAKERS

MAIN-2P-100 A

A-1P-15 A
B-1P-30 A
C-1P-15 A
D-1P-15 A
E-1P-30 A
F, G } 2P-30 A
H-1P-15 A
I-1P-20 A
J-1P-15 A
K-1P-15 A

1 - LIGHTING
2 - TMS (U15.661)
3 - SPARE
4 - CCTV (SR15.905T)
5 - SPARE
6 - SPARE
7 - SPARE
8 - PEU
9 - IRRIGATION CABINET "H"
10 - IRRIGATION CABINET "E"

CLOSED CIRCUIT TELEVISION SYSTEM

APPROVED FOR ELECTRICAL WORK ONLY

SCALE: 1" = 50'

E-21

STATE OF CALIFORNIA - DEPARTMENT OF TRANSPORTATION
Caltrans®
TRAFFIC ELECTRICAL

FUNCTIONAL SUPERVISOR: RAJPREET SINGH
CALCULATED-DESIGNED BY: FARIBA RAMOS
CHECKED BY: ENRIQUE BERNAL
REVISED BY
DATE REVISED

LAST REVISION 01-18-14
DATE PLOTTED => 20-MAR-2014
TIME PLOTTED => 15:56

Dist	COUNTY	ROUTE	POST MILES TOTAL PROJECT	SHEET No.	TOTAL SHEETS
11	SD	15,76	R46.2/R46.8, R12.1/R17.7	1030	1273

Fariba Ramos 02-20-14
REGISTERED ELECTRICAL ENGINEER DATE

03-24-14
PLANS APPROVAL DATE

REGISTERED PROFESSIONAL ENGINEER FARIBA RAMOS No. E15619 Exp. 12-31-15 ELECTRICAL STATE OF CALIFORNIA

THE STATE OF CALIFORNIA OR ITS OFFICERS OR AGENTS SHALL NOT BE RESPONSIBLE FOR THE ACCURACY OR COMPLETENESS OF SCANNED COPIES OF THIS PLAN SHEET.

NOTES (TSO):

1. EXTEND PULL BOX 2" (MIN) BELOW THE BOTTOM OF CONDUIT. CONDUIT BENDS SHALL BE AT AN ANGLE OF 22.5°OR LESS. PULL BOX COVER SHALL BE MARKED "FIBER OPTIC".
2. IRRIGATION CONTROLLER ENCLOSURE CABINET PER LANDSCAPE DETAILS. CONNECT 2#8 (Irr).
3. CONDUIT PER LANDSCAPE DETAILS. INSTALL 2#8 (Irr).
4. SEE "SDCWA PIPELINE" BRIDGE ELECTRICAL DETAILS.
5. PULL BOXES SHOWN ON THIS SHEET ARE 5(T) UNLESS OTHERWISE INDICATED.
6. FOR ACCURATE RIGHT OF WAY DATA, CONTACT RIGHT OF WAY ENGINEERING AT THE DISTRICT OFFICE.
7. SEE DRAINAGE AND SEWER PLANS FOR INLET AND PIPE LOCATIONS.
8. FIBERGLASS CONDUIT. SEE E-3, MDCS (typ).

CONDUIT NOTES (TSO):

1. MDCS (3), 1 FO72, 2 MT
2. 2"C, 2#8 (COUNTY LTG), 2"C, 2#8 (Irr)
3. MDCS (4), [8], 1 FO72, 3 MT
4. 2"C, 2#8 (Irr)
5. 2"C, 2#8 (COUNTY LTG)

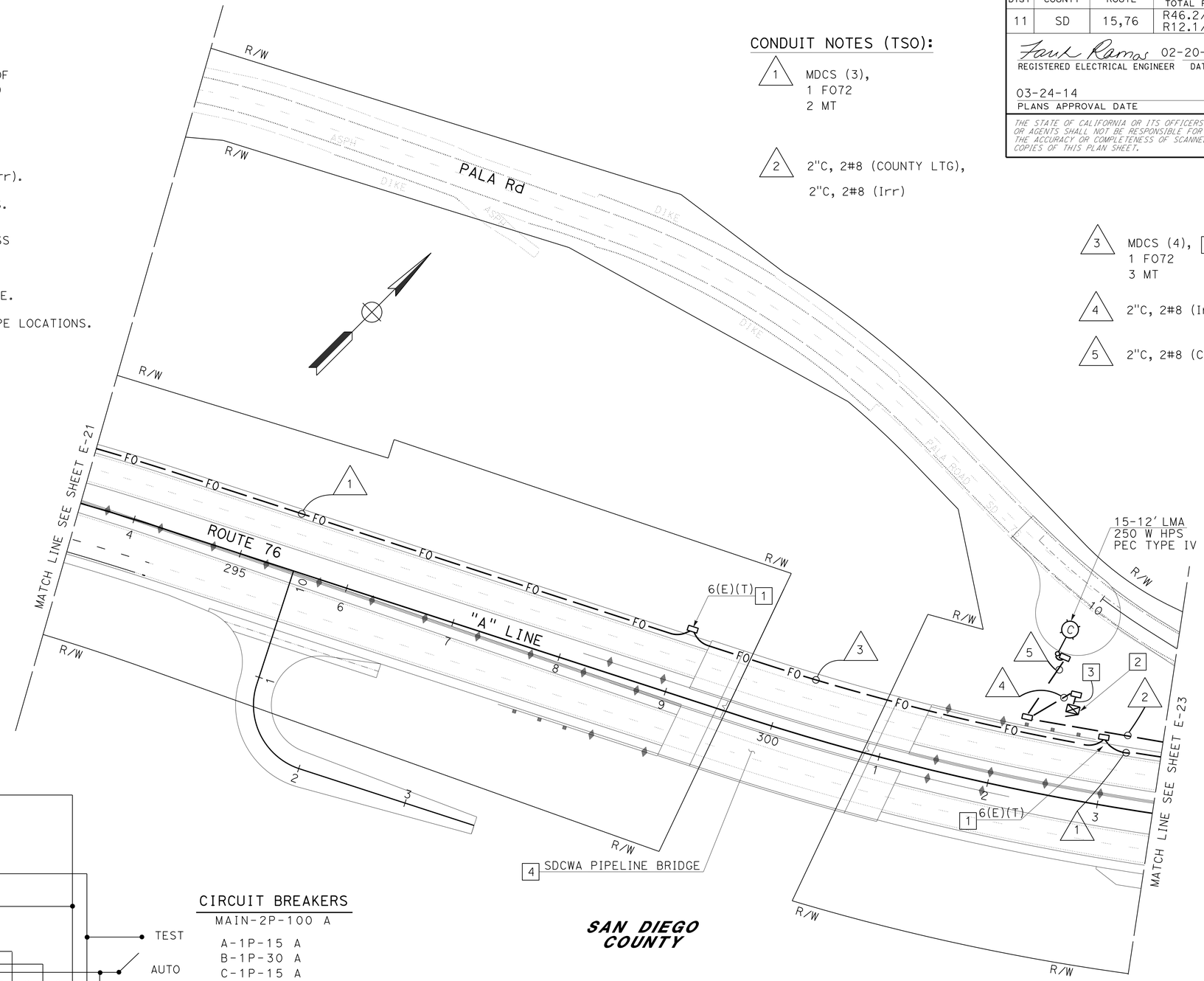

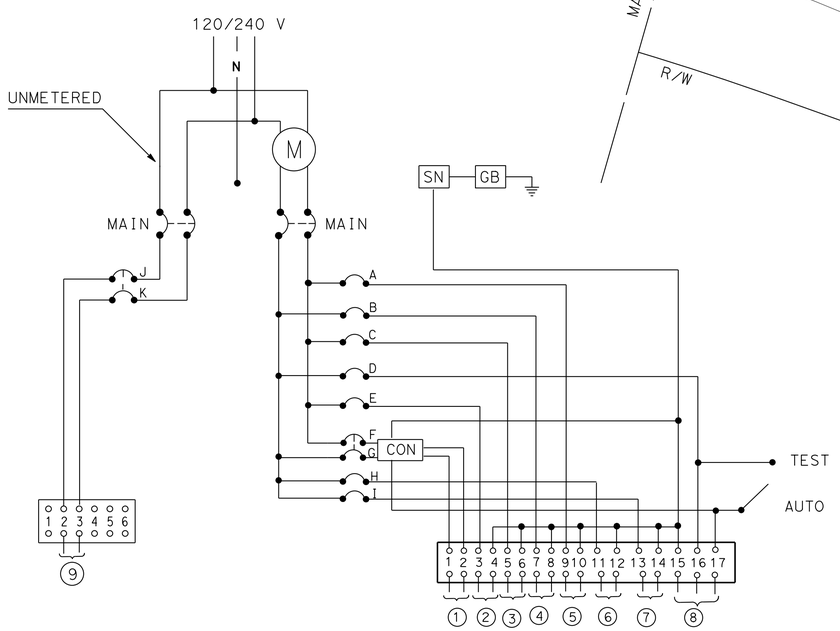

WIRING DIAGRAM, "PALA Rd"

(TYPE III-CF SERVICE EQUIPMENT ENCLOSURE SEE RSP ES-2C & RSP ES-2F)

CIRCUIT BREAKERS

MAIN-2P-100 A

A-1P-15 A
B-1P-30 A
C-1P-15 A
D-1P-15 A
E-1P-30 A
F, G } 2P-30 A
H-1P-15 A
I-1P-20 A
J, K } 2P-30 A

1 - LIGHTING
2 - SPARE
3 - SPARE
4 - SPARE
5 - IRRIGATION "G"
6 - SPARE
7 - SPARE
8 - PEU
9 - COUNTY LTG

SAN DIEGO COUNTY

APPROVED FOR ELECTRICAL WORK ONLY

LIGHTING (COUNTY)
CLOSED CIRCUIT TELEVISION SYSTEM
ELECTRIC SERVICE (IRRIGATION)

SCALE: 1" = 50'

E-22

STATE OF CALIFORNIA - DEPARTMENT OF TRANSPORTATION
Caltrans® TRAFFIC ELECTRICAL

FUNCTIONAL SUPERVISOR: RAJPREET SINGH
CALCULATED-DESIGNED BY: FARIBA RAMOS
CHECKED BY: ENRIQUE BERNAL
REVISED BY
DATE REVISED

LAST REVISION 01-18-14
DATE PLOTTED => 20-MAR-2014
TIME PLOTTED => 15:56

Dist	COUNTY	ROUTE	POST MILES TOTAL PROJECT	SHEET No.	TOTAL SHEETS
11	SD	15,76	R46.2/R46.8, R12.1/R17.7	1031	1273

Fariba Ramos 02-20-14
REGISTERED ELECTRICAL ENGINEER DATE

03-24-14
PLANS APPROVAL DATE

REGISTERED PROFESSIONAL ENGINEER FARIBA RAMOS No. E15619 Exp. 12-31-15 ELECTRICAL STATE OF CALIFORNIA

THE STATE OF CALIFORNIA OR ITS OFFICERS OR AGENTS SHALL NOT BE RESPONSIBLE FOR THE ACCURACY OR COMPLETENESS OF SCANNED COPIES OF THIS PLAN SHEET.

CONDUIT NOTE (TSO):

1. MDCS (3),
   1 FO72
   2 MT

2. 2"C, 2#8 (COUNTY LTG)
   2"C, 2#8 (Irr)

NOTES (TSO):

1. FOR ACCURATE RIGHT OF WAY DATA, CONTACT RIGHT OF WAY ENGINEERING AT THE DISTRICT OFFICE.
2. SEE DRAINAGE AND SEWER PLANS FOR INLET AND PIPE LOCATIONS.
3. FO CONDUIT BENDS SHALL BE AT AN ANGLE OF 22.5°OR LESS.

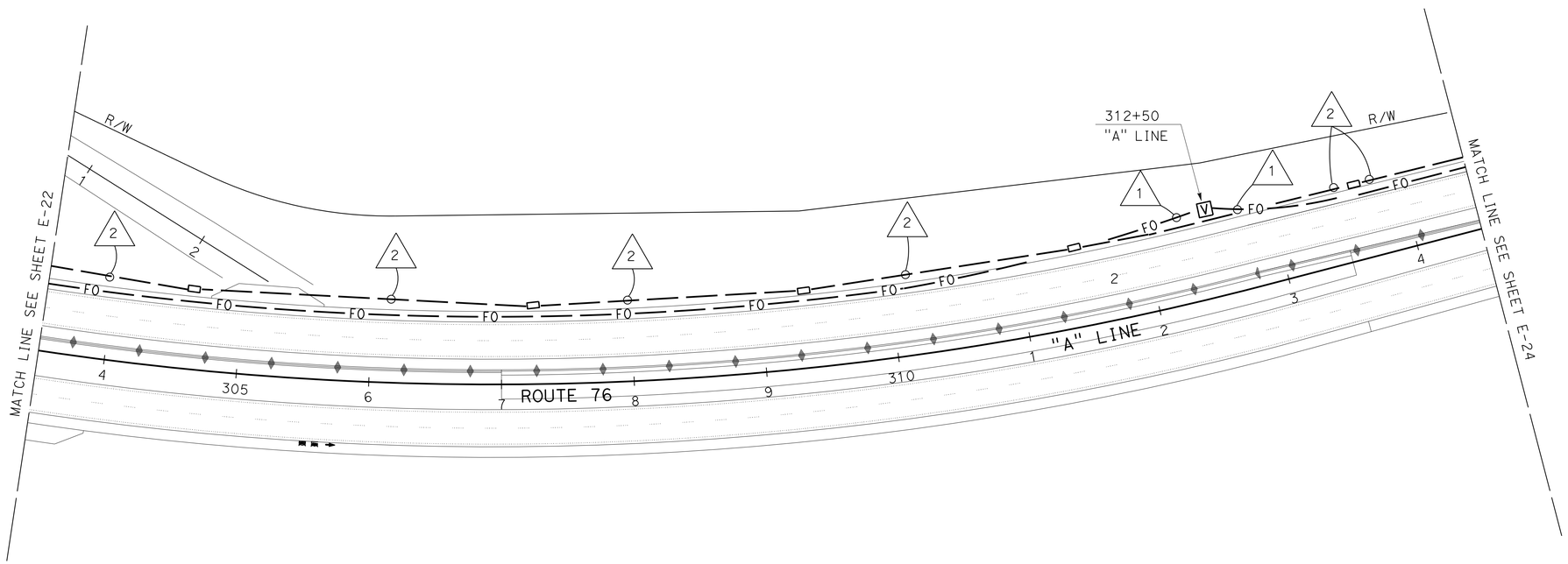

SAN DIEGO COUNTY

LIGHTING (COUNTY)
ELECTRIC SERVICE (IRRIGATION)
CLOSED CIRCUIT TELEVISION SYSTEM

APPROVED FOR ELECTRICAL WORK ONLY

SCALE: 1" = 50'

E-23

STATE OF CALIFORNIA - DEPARTMENT OF TRANSPORTATION
Caltrans
TRAFFIC ELECTRICAL

FUNCTIONAL SUPERVISOR: RAJPREET SINGH
CALCULATED-DESIGNED BY: FARIBA RAMOS
CHECKED BY: ENRIQUE BERNAL
REVISED BY
DATE REVISED

LAST REVISION 01-18-14
DATE PLOTTED => 20-MAR-2014
TIME PLOTTED => 15:56

Dist	COUNTY	ROUTE	POST MILES TOTAL PROJECT	SHEET No.	TOTAL SHEETS
11	SD	15,76	R46.2/R46.8, R12.1/R17.7	1032	1273

REGISTERED ELECTRICAL ENGINEER 02-20-14 DATE

03-24-14
PLANS APPROVAL DATE

REGISTERED PROFESSIONAL ENGINEER FARIBA RAMOS No. E15619 Exp. 12-31-15 ELECTRICAL STATE OF CALIFORNIA

THE STATE OF CALIFORNIA OR ITS OFFICERS OR AGENTS SHALL NOT BE RESPONSIBLE FOR THE ACCURACY OR COMPLETENESS OF SCANNED COPIES OF THIS PLAN SHEET.

CONDUIT NOTES (TSO):

1. MDCS (3), 1 FO72, 2 MT
2. 2"C, 2#8 (COUNTY LTG) 2"C, 2#8 (Irr)
3. 2"C, 2#10 (FB)
4. Exist MDCS (4), 4 mt ADD: 1 FO72
5. Exist 2"C, 2#8 (ltg), 2#10 (fb)
6. 2"C, 2#8 (LTG), 2#10 (FB)
7. 2"C, 2#8 (LTG), 3#14 (PEU), 2#8 (Irr) 2"C, 2#8 (COUNTY LTG)

NOTES (TSO):

1. PULL BOXES SHOWN ON THIS SHEET ARE 5(T) UNLESS OTHERWISE INDICATED.
2. WILD ANIMAL CROSSING. INSTALL FIBER OPTIC CONDUIT ABOVE BOX CULVERT. SEE CONSTRUCTION DETAILS.
3. RC 180 W lps AND REPLACE WITH ROADWAY 1 (LED) LUMINAIRE.
4. RL TYPE 15-fbs.
5. RL TYPE 15, 15' lma.
6. SEE "SIGNAL AND LIGHTING (LOCATION 4)" FOR CIRCUIT CONTINUITY.

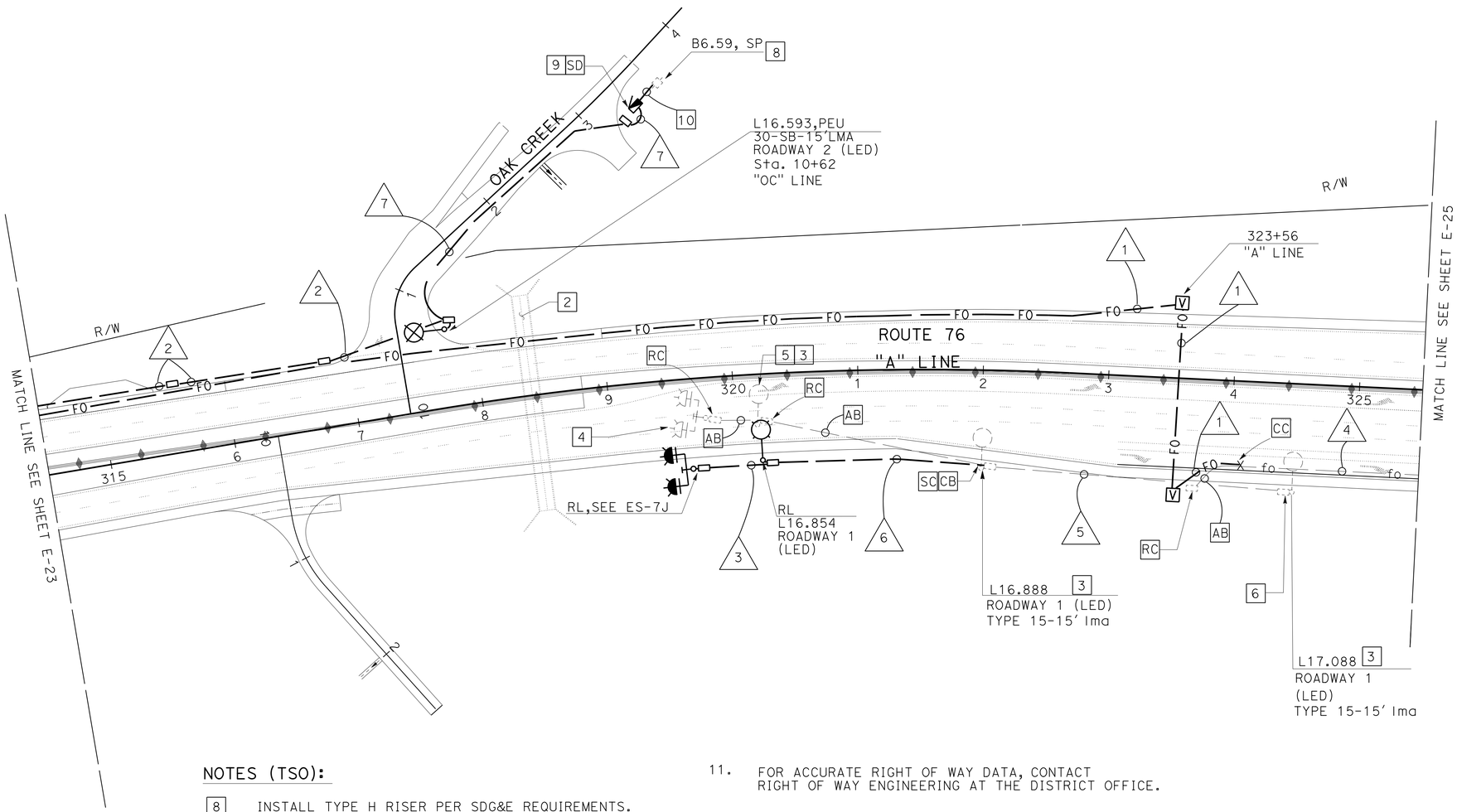

NOTES (TSO):

8. INSTALL TYPE H RISER PER SDG&E REQUIREMENTS.
9. TYPE III-CF SERVICE EQUIPMENT ENCLOSURE. SEE WIRING DIAGRAM "PALA Rd" ON SHEET E-22.
10. 3"C, MT. CONDUCTORS PER SDG&E REQUIREMENTS.
11. FOR ACCURATE RIGHT OF WAY DATA, CONTACT RIGHT OF WAY ENGINEERING AT THE DISTRICT OFFICE.
12. SEE DRAINAGE AND SEWER PLANS FOR INLET AND PIPE LOCATIONS.
13. FIBER OPTIC CONDUIT BENDS SHALL BE AT ANGLE OF 22.5° OR LESS.

APPROVED FOR ELECTRICAL WORK ONLY

LIGHTING
LIGHTING (COUNTY)
CLOSED CIRCUIT TELEVISION SYSTEM

SCALE: 1" = 50'

E-24

STATE OF CALIFORNIA - DEPARTMENT OF TRANSPORTATION
Caltrans
TRAFFIC ELECTRICAL

FUNCTIONAL SUPERVISOR: RAJPREET SINGH
CALCULATED-DESIGNED BY: FARIBA RAMOS
CHECKED BY: ENRIQUE BERNAL
REVISED BY
DATE REVISED

LAST REVISION 01-18-14
DATE PLOTTED => 20-MAR-2014
TIME PLOTTED => 15:56

Dist	COUNTY	ROUTE	POST MILES TOTAL PROJECT	SHEET No.	TOTAL SHEETS
11	SD	15,76	R46.2/R46.8, R12.1/R17.7	1033	1273

REGISTERED ELECTRICAL ENGINEER 02-20-14 DATE

03-24-14
PLANS APPROVAL DATE

THE STATE OF CALIFORNIA OR ITS OFFICERS OR AGENTS SHALL NOT BE RESPONSIBLE FOR THE ACCURACY OR COMPLETENESS OF SCANNED COPIES OF THIS PLAN SHEET.

REGISTERED PROFESSIONAL ENGINEER
FARIBA RAMOS
No. E15619
Exp. 12-31-15
ELECTRICAL
STATE OF CALIFORNIA

CONDUIT NOTES (TSO):

1. Exist MDCS (4), 4 mt
   ADD: 1 FO72
2. N C — Exist 1"C, 1 fo12
3. Exist MDCS (8), 1 fo72 [2] , 2 fo12
4. Exist MDCS (2), 1 mt
   1 fo72 [RC]
   ADD: 1 FO12 (CCTV 177 & 178)
5. Exist 3"C, mt
   ADD: 2 CAMERA CABLES
6. Exist 2"C, 2#8 (comm)
   RELABEL: 2#8 (comm) WITH (CCTV)
7. N C — Exist 2"C, 1 occ
8. 2"C, 3#6(HUB)
9. N C — Exist MDCS (8), 1 fo72
10. MDCS (4),
    1 FO72 [2] ,
    1 FO72,
    1 FO12,
    1 MT
11. 1¼"C (TYPE 1), 3#6 ((HUB)
12. N C — Exist 2"C, mt
13. 4"C, MT (CONDUCTORS BY AT&T)
14. 3"C, 2 CAMERA CABLES
15. 4"C, 2-FO72,
    1 FO12,
    1#6 (G)

NOTES (TSO):

1. Exist COMMUNICATION CABINET, MODEL 334. INSTALL EQUIPMENT PER COMPONENT DIAGRAM. SEE ELECTRICAL DETAILS.
2. SPLICE Exist fo72 FIBERS 1 THROUGH 72 TO PROPOSED FO72 IN SPLICE VAULT, Sta. 327+00
3. HUB CABINET. SEE ELECTRICAL DETAILS.
4. MODIFIED CCTV 40. SEE DETAILS ON SES-1.
5. IRRIGATION CONTROLLER ENCLOSURE CABINET. PER LANDSCAPE DETAILS. CONNECT 2#10 (Irr).
6. CONDUIT PER LANDSCAPE DETAILS. INSTALL 2#10 (Irr).
7. SEE SIGNAL AND LIGHTING (LOCATION 4) FOR CIRCUIT CONTINUITY.
8. SEE E-48, NOTE [3].
9. 6(E)(T). EXTEND PULL BOX 2" (MIN) BELOW THE BOTTOM OF CONDUIT. PULL BOX COVER SHALL BE MARKED "FIBER OPTIC". INSTALL GROUNDING ELECTRODE.
10. FIBER OPTIC CONDUIT BENDS SHALL BE AT ANGLE OF 22.5° OR LESS.
11. Exist AND PROPOSED LIGHITNG CONDUIT IS NOT SHOWN, SEE LIGHITNG (PARKING LOT) PLANS.
12. Exist SIGNAL, LIGHTING, AND COMMUNICATION SYSTEM PARTIALLY SHOWN.
13. FOR ACCURATE RIGHT OF WAY DATA, CONTACT RIGHT OF WAY ENGINEERING AT THE DISTRICT OFFICE.

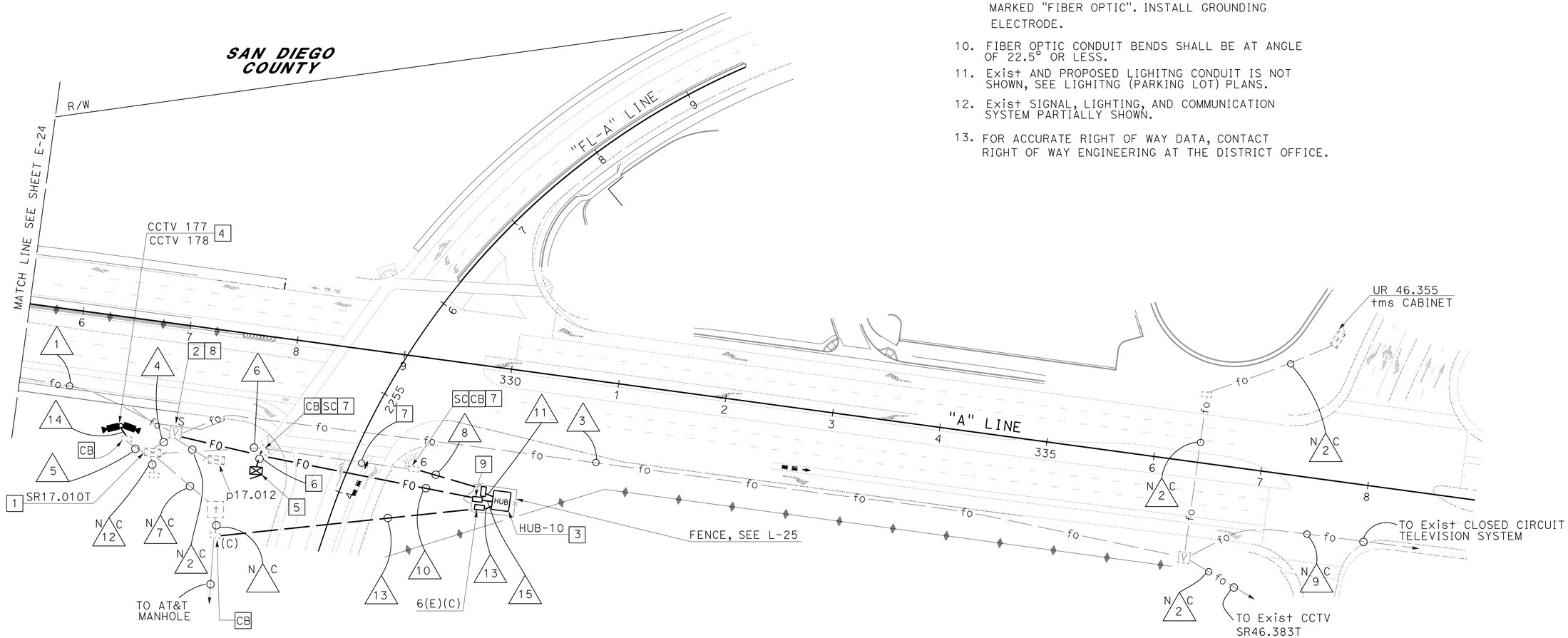

ELECTRIC SERVICE (IRRIGATION)
CLOSED CIRCUIT TELEVISION SYSTEM

APPROVED FOR ELECTRICAL WORK ONLY

SCALE: 1" = 50'

E-25

STATE OF CALIFORNIA - DEPARTMENT OF TRANSPORTATION
Caltrans
TRAFFIC ELECTRICAL

FUNCTIONAL SUPERVISOR: RAJPREET SINGH
CALCULATED-DESIGNED BY: FARIBA RAMOS
CHECKED BY: ENRIQUE BERNAL
REVISED BY
DATE REVISED

LAST REVISION 01-18-14
DATE PLOTTED => 20-MAR-2014
TIME PLOTTED => 15:56

Dist	COUNTY	ROUTE	POST MILES TOTAL PROJECT	SHEET No.	TOTAL SHEETS
11	SD	15,76	R46.2/R46.8, R12.1/R17.7	1034	1273

REGISTERED ELECTRICAL ENGINEER — DATE: 02-20-14

PLANS APPROVAL DATE: 03-24-14

REGISTERED PROFESSIONAL ENGINEER — FARIBA RAMOS — No. E15619 — Exp. 12-31-15 — ELECTRICAL — STATE OF CALIFORNIA

THE STATE OF CALIFORNIA OR ITS OFFICERS OR AGENTS SHALL NOT BE RESPONSIBLE FOR THE ACCURACY OR COMPLETENESS OF SCANNED COPIES OF THIS PLAN SHEET.

NOTES:

1. Exist LIGHTING, SIGNAL, TRAFFIC MONITORING, AND FIBER OPTIC SYSTEM NOT SHOWN.
2. AB Exist LIGHTING (PARKING LOT) CONDUITS.
3. SEE LIGHITNG (PARKING LOT) AND CLOSED CIRCUIT TELEVISION SYSTEM PLANS.
4. TYPE III-CF. 2p-100 A (SWITCH PEDESTAL), 2p-15 A (icc)
5. RC Exist PULL BOX.
6. SD SWITCH PEDESTAL.
7. TO EXISTING SIGNAL AND LIGHITNG CIRCUIT.
8. AB Exist LIGHTING CIRCUIT.
9. FOR ACCURATE RIGHT OF WAY DATA, CONTACT RIGHT OF WAY ENGINEERING AT THE DISTRICT OFFICE.

CONDUIT NOTES:

1. 3"C, 2 1/0 (SWITCH PEDESTAL), 2#10 (ICC)
2. N C Exist 3"C, 2 1/0 (SWITCH PEDESTAL), 2#10 (icc)
3. N C Exist 3"C, 2#2 (ltg/15), 2#6 (ltg 76), 2#6 (signal), 2#8 (tms), 2#2 (s), 2#10 (icc), 2#6 (cctv)

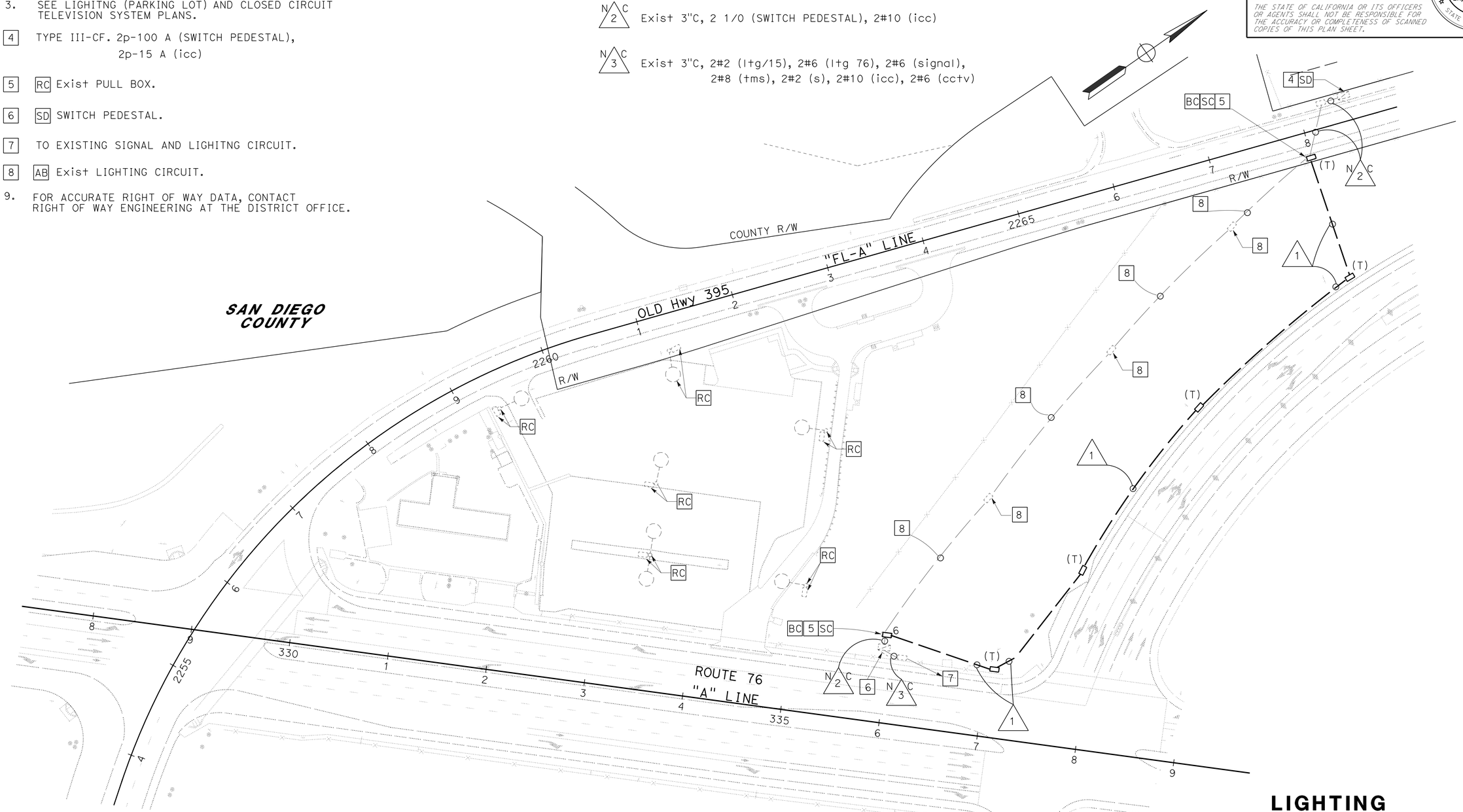

LIGHTING

LIGHTING (PARKING LOT) (EXISTING AND REMOVE)

APPROVED FOR ELECTRICAL WORK ONLY

SCALE: 1" = 50'

E-26

STATE OF CALIFORNIA - DEPARTMENT OF TRANSPORTATION — Caltrans — TRAFFIC ELECTRICAL

FUNCTIONAL SUPERVISOR: RAJPREET SINGH

CALCULATED-DESIGNED BY: FARIBA RAMOS — CHECKED BY: ENRIQUE BERNAL

REVISED BY — DATE REVISED

LAST REVISION 01-18-14 — DATE PLOTTED => 20-MAR-2014 — TIME PLOTTED => 15:57

Dist	COUNTY	ROUTE	POST MILES TOTAL PROJECT	SHEET No.	TOTAL SHEETS
11	SD	15,76	R46.2/R46.8, R12.1/R17.7	1035	1273

Farib Ramos 02-20-14
REGISTERED ELECTRICAL ENGINEER DATE

03-24-14
PLANS APPROVAL DATE

REGISTERED PROFESSIONAL ENGINEER
FARIBA RAMOS
No. E15619
Exp. 12-31-15
ELECTRICAL
STATE OF CALIFORNIA

THE STATE OF CALIFORNIA OR ITS OFFICERS OR AGENTS SHALL NOT BE RESPONSIBLE FOR THE ACCURACY OR COMPLETENESS OF SCANNED COPIES OF THIS PLAN SHEET.

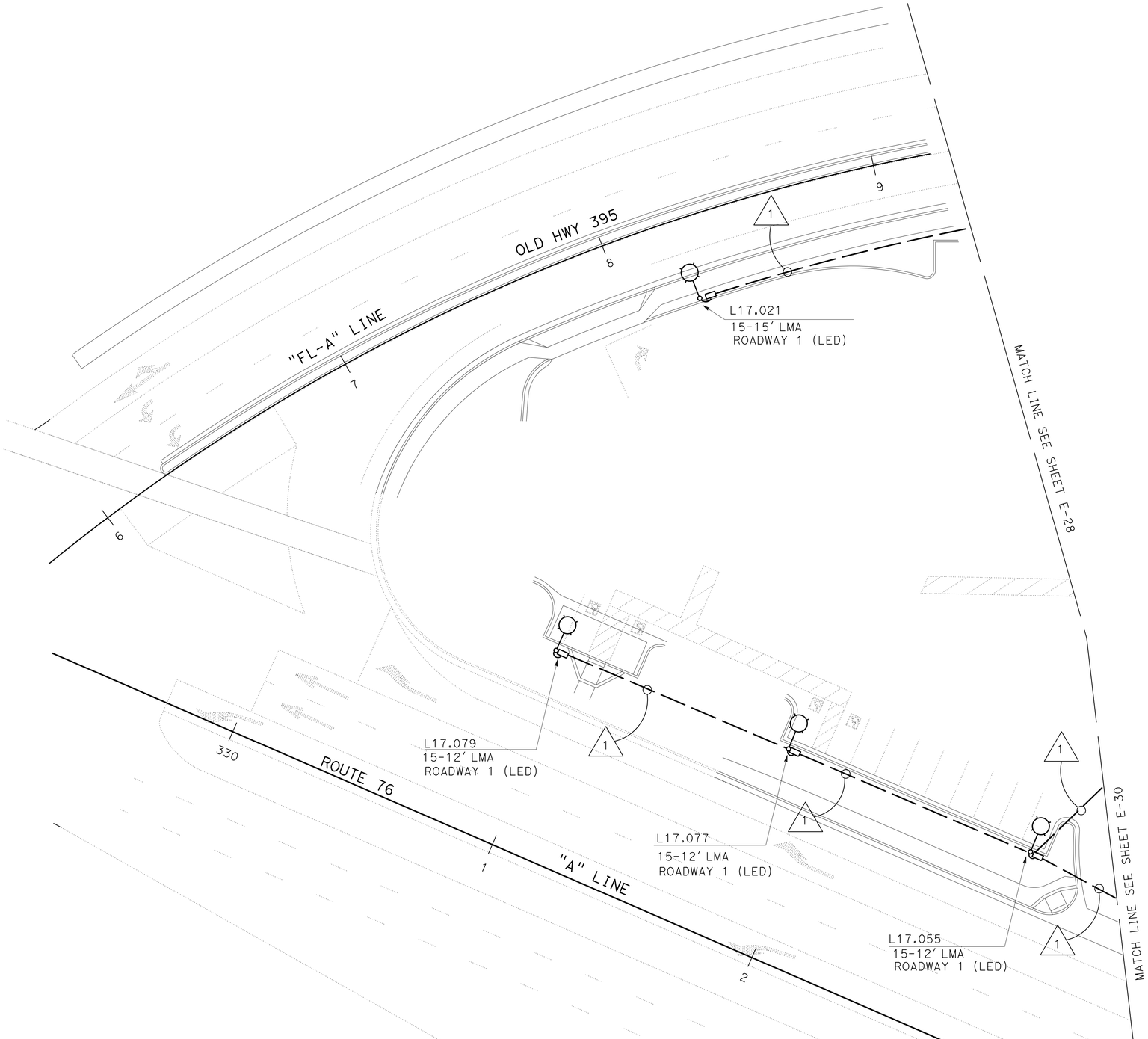

NOTES (TSO):

1. SEE DRAINAGE PLANS FOR INLET AND PIPE LOCATIONS.
2. Exist SIGNAL AND LIGHTING NOT SHOWN. SEE E-25 AND E-40.
3. FOR ACCURATE RIGHT OF WAY DATA, CONTACT RIGHT OF WAY ENGINEERING AT THE DISTRICT OFFICE.

CONDUIT NOTE (TSO):

1 — 2"C, 2#6 (LTG SOUTH)

LIGHTING (PARKING LOT)

APPROVED FOR ELECTRICAL WORK ONLY

SCALE: 1" = 20'

E-27

STATE OF CALIFORNIA - DEPARTMENT OF TRANSPORTATION
Caltrans®
TRAFFIC ELECTRICAL

FUNCTIONAL SUPERVISOR: RAJPREET SINGH
CALCULATED-DESIGNED BY: FARIBA RAMOS
CHECKED BY: ENRIQUE BERNAL
REVISED BY
DATE REVISED

LAST REVISION 01-18-14
DATE PLOTTED => 20-MAR-2014
TIME PLOTTED => 15:57

Dist	COUNTY	ROUTE	POST MILES TOTAL PROJECT	SHEET No.	TOTAL SHEETS
11	SD	15,76	R46.2/R46.8, R12.1/R17.7	1036	1273

Fariba Ramos 02-20-14
REGISTERED ELECTRICAL ENGINEER DATE

03-24-14
PLANS APPROVAL DATE

REGISTERED PROFESSIONAL ENGINEER
FARIBA RAMOS
No. E15619
Exp. 12-31-15
ELECTRICAL
STATE OF CALIFORNIA

THE STATE OF CALIFORNIA OR ITS OFFICERS OR AGENTS SHALL NOT BE RESPONSIBLE FOR THE ACCURACY OR COMPLETENESS OF SCANNED COPIES OF THIS PLAN SHEET.

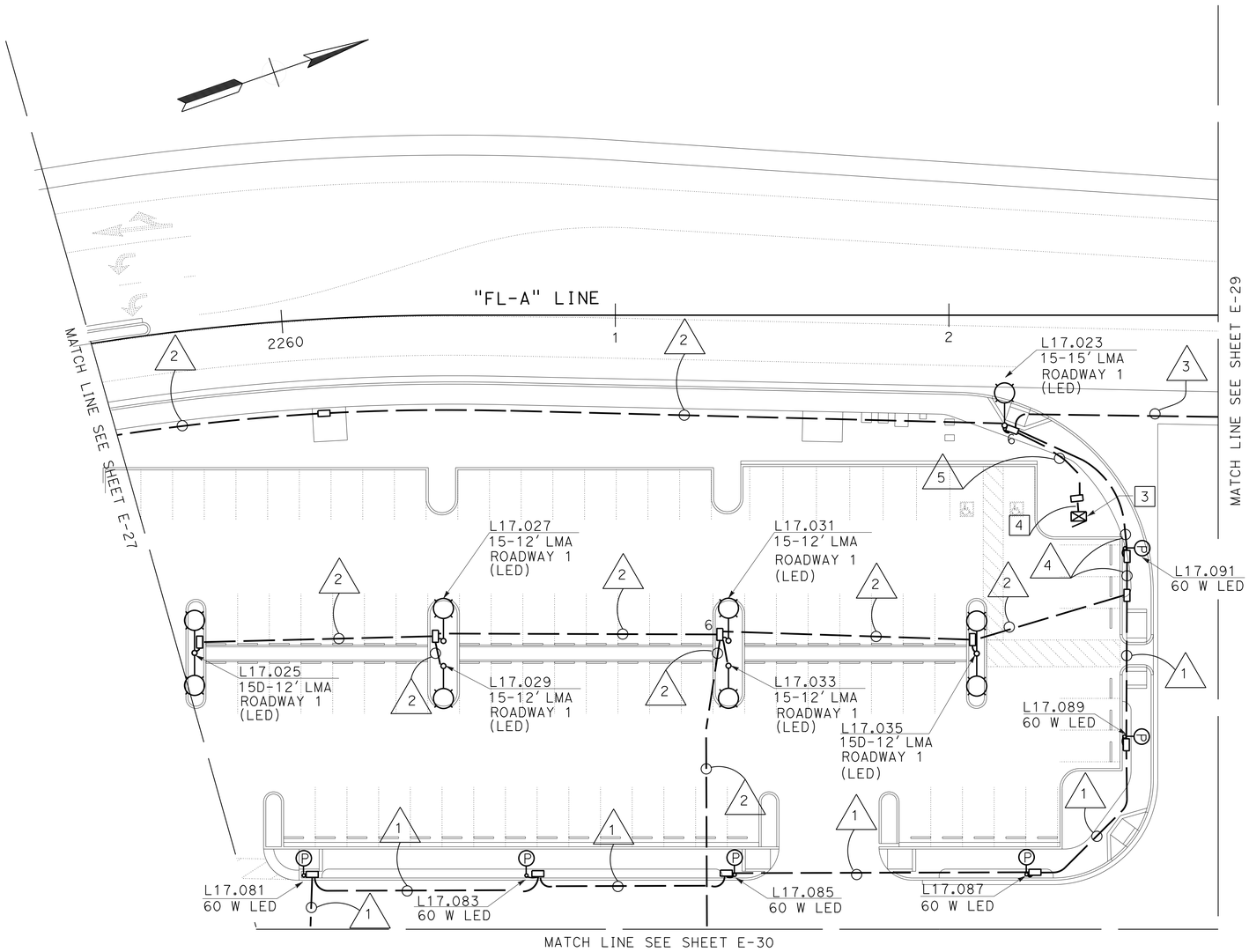

NOTES (TSO):

1. SEE DRAINAGE PLANS FOR INLET AND PIPE LOCATIONS.
2. SEE EE SHEETS FOR INTEGRATED FACILITY SYSTEM, IFS.
3. IRRIGATION CONTROLLER ENCLOSURE CABINET. PER LANDSCAPE DETAILS. CONNECT 2#10 (Irr).
4. CONDUIT PER LANDSCAPE DETAILS. INSTALL 2"C, 2#10 (Irr).
5. FOR ACCURATE RIGHT OF WAY DATA, CONTACT RIGHT OF WAY ENGINEERING AT THE DISTRICT OFFICE.

CONDUIT NOTES (TSO):

1. 2"C, 2#8 (PEDESTRIAN LTG SOUTH)
2. 2"C, 2#6 (LTG SOUTH)
3. 3"C, 2#6 (LTG SOUTH).
   2#8 (PEDESTRIAN LTG SOUTH)
   2#10 (Irr)
4. 2"C, 2#6 (LTG SOUTH).
   2#8 (PEDESTRIAN LTG SOUTH)
5. 2"C, 2#10 (Irr)

LIGHTING (PARKING LOT)
ELECTRIC SERVICE (IRRIGATION)

SCALE: 1" = 20'

APPROVED FOR ELECTRICAL WORK ONLY

E-28

STATE OF CALIFORNIA - DEPARTMENT OF TRANSPORTATION
Caltrans
TRAFFIC ELECTRICAL

FUNCTIONAL SUPERVISOR: RAJPREET SINGH
CALCULATED-DESIGNED BY: ENRIQUE BERNAL
CHECKED BY: FARIBA RAMOS
REVISED BY
DATE REVISED

LAST REVISION 01-18-14
DATE PLOTTED => 20-MAR-2014
TIME PLOTTED => 15:57

Dist	COUNTY	ROUTE	POST MILES TOTAL PROJECT	SHEET No.	TOTAL SHEETS
11	SD	15,76	R46.2/R46.8, R12.1/R17.7	1037	1273

REGISTERED ELECTRICAL ENGINEER 02-20-14 DATE

03-24-14
PLANS APPROVAL DATE

FARIBA RAMOS No. E15619 Exp. 12-31-15 ELECTRICAL — REGISTERED PROFESSIONAL ENGINEER — STATE OF CALIFORNIA

THE STATE OF CALIFORNIA OR ITS OFFICERS OR AGENTS SHALL NOT BE RESPONSIBLE FOR THE ACCURACY OR COMPLETENESS OF SCANNED COPIES OF THIS PLAN SHEET.

NOTES (TSO):

1. SEE DRAINAGE PLANS FOR INLET AND PIPE LOCATIONS.

[2] [SD]. TYPE III-CF SERVICE ENCLOSURE.
SEE WIRING DIAGRAM "PARKING" ON THIS SHEET.

[3] 3"C, MT. CONDUCTORS PER SDG&E REQUIREMENTS.

4. SEE SIGNAL AND LIGHTING (CITY) PLANS.

[5] ½"C TYPE 1, MT, FOR FUTURE BIKE LOCKERS.
SEE "CONDUIT" DETAILS ON THIS SHEET FOR CONDUIT STUB OUT LOCATION. SEE CONSTUCTION DETAILS.

6. FOR ACCURATE RIGHT OF WAY DATA, CONTACT RIGHT OF WAY ENGINEERING AT THE DISTRICT OFFICE.

[7] CONDUIT STUB OUT HEIGHT 2½" ABOVE PAD.

[8] CONDUIT TO ENTER PER SDG&E REQUIREMENTS.

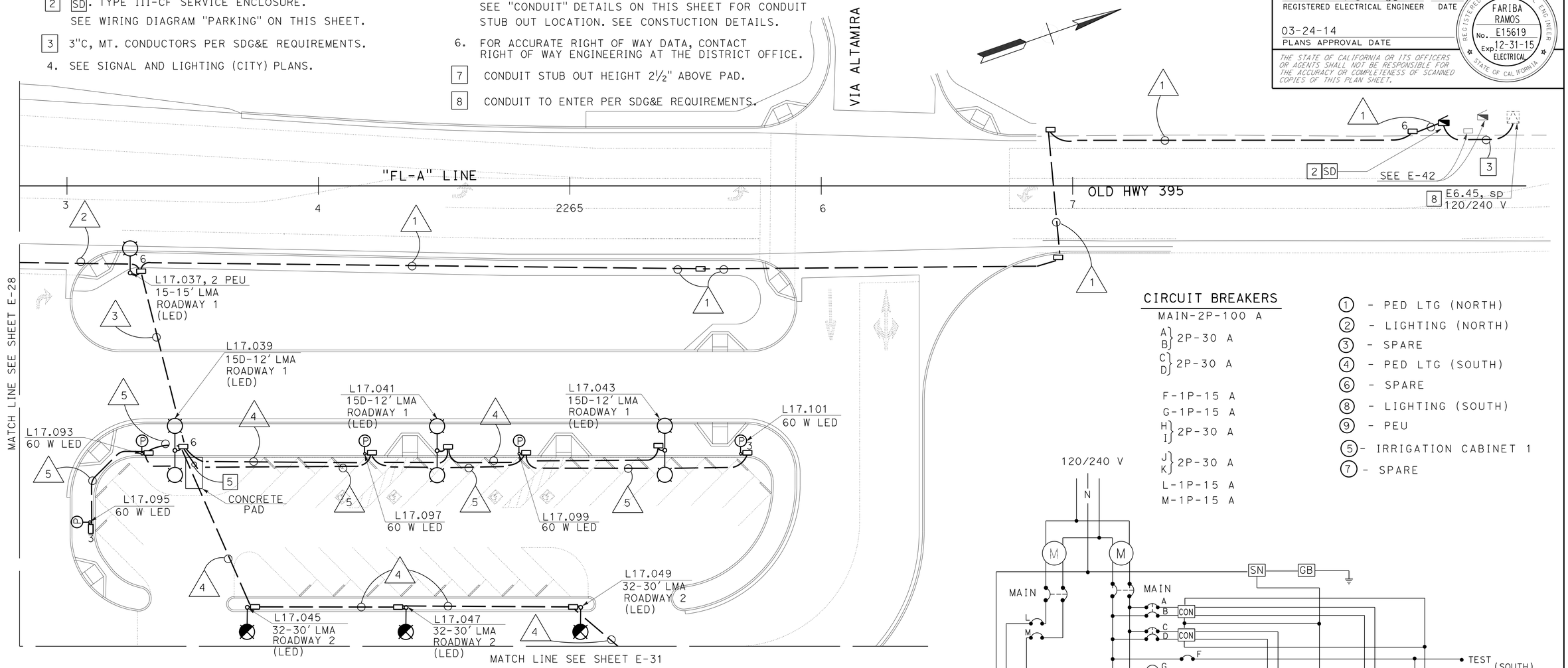

CIRCUIT BREAKERS

MAIN-2P-100 A
A, B } 2P-30 A
C, D } 2P-30 A
F-1P-15 A
G-1P-15 A
H, I } 2P-30 A
J, K } 2P-30 A
L-1P-15 A
M-1P-15 A

1 - PED LTG (NORTH)
2 - LIGHTING (NORTH)
3 - SPARE
4 - PED LTG (SOUTH)
6 - SPARE
8 - LIGHTING (SOUTH)
9 - PEU
5 - IRRIGATION CABINET 1
7 - SPARE

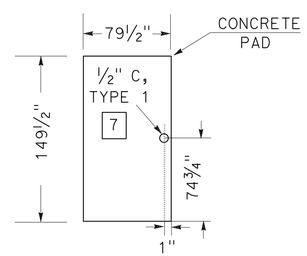

"CONDUIT" DETAILS

NO SCALE

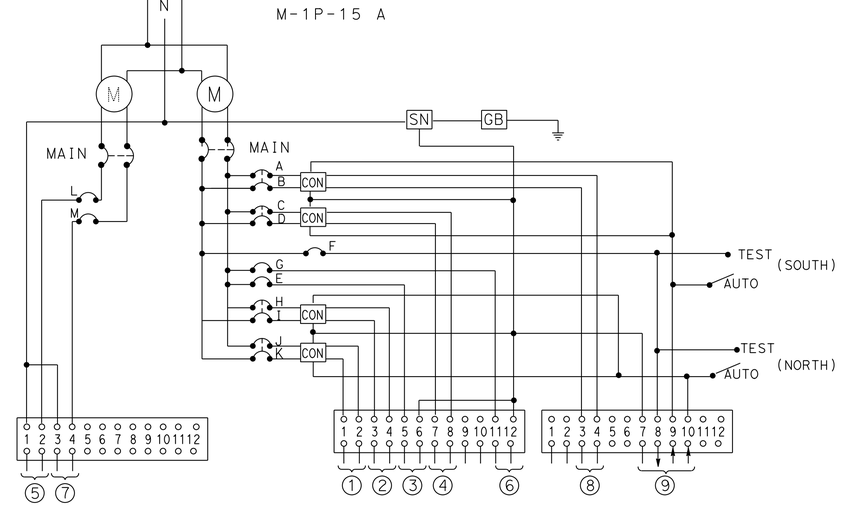

WIRING DIAGRAM, "PARKING"

(TYPE III-CF SERVICE EQUIPMENT ENCLOSURE CABINET
SEE RSP ES-2C AND RSP ES-2F)

CONDUIT NOTES (TSO):

[1] 1"C, MT
3"C, 2#6 (LTG NORTH).
2#6 (LTG SOUTH),
2#8 (PEDESTRIAN LTG SOUTH),
2#8 (PEDESTRIAN LTG NORTH),
4#14 (PEU),
2#10 (Irr)

[2] 3"C, 2#6 (LTG SOUTH).
2#8 (PEDESTRIAN LTG SOUTH),
2#10 (Irr)

[3] 1"C, MT
2"C, 2#6 (LTG NORTH).
2#8 (PEDESTRIAN LTG NORTH)

[4] 2"C, 2#6 (LTG NORTH)

[5] 2"C, 2#6 (PEDESTRIAN LTG NORTH)

APPROVED FOR ELECTRICAL WORK ONLY

LIGHTING (PARKING LOT) ELECTRIC SERVICE (IRRIGATION)

SCALE: 1" = 20'

E-29

STATE OF CALIFORNIA - DEPARTMENT OF TRANSPORTATION
Caltrans
TRAFFIC ELECTRICAL

FUNCTIONAL SUPERVISOR: RAJPREET SINGH
CALCULATED-DESIGNED BY: FARIBA RAMOS
CHECKED BY: ENRIQUE BERNAL
REVISED BY
DATE REVISED

LAST REVISION 01-18-14
DATE PLOTTED => 20-MAR-2014
TIME PLOTTED => 15:57

Dist	COUNTY	ROUTE	POST MILES TOTAL PROJECT	SHEET No.	TOTAL SHEETS
11	SD	15,76	R46.2/R46.8, R12.1/R17.7	1038	1273

Fariba Ramos 02-20-14
REGISTERED ELECTRICAL ENGINEER DATE

03-24-14
PLANS APPROVAL DATE

REGISTERED PROFESSIONAL ENGINEER FARIBA RAMOS No. E15619 Exp. 12-31-15 ELECTRICAL STATE OF CALIFORNIA

THE STATE OF CALIFORNIA OR ITS OFFICERS OR AGENTS SHALL NOT BE RESPONSIBLE FOR THE ACCURACY OR COMPLETENESS OF SCANNED COPIES OF THIS PLAN SHEET.

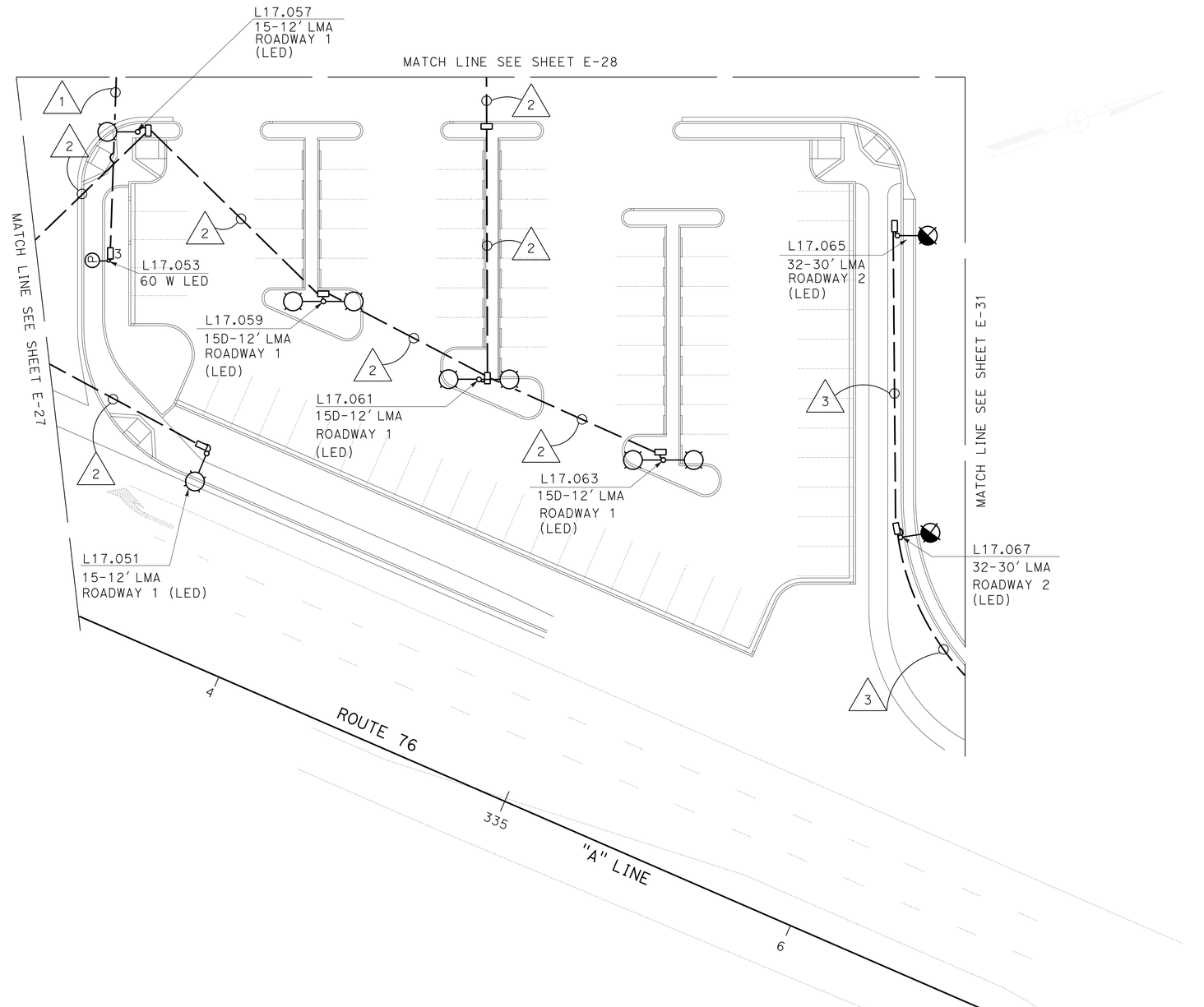

NOTES (TSO):

1. SEE DRAINAGE PLANS FOR INLET AND PIPE LOCATIONS.
2. Exist SIGNAL AND LIGHTING NOT SHOWN.
3. FOR ACCURATE RIGHT OF WAY DATA, CONTACT RIGHT OF WAY ENGINEERING AT THE DISTRICT OFFICE.

CONDUIT NOTES (TSO):

1. 2"C, 2#8 (PEDESTRIAN LTG SOUTH)
2. 2"C, 2#6 (LTG SOUTH)
3. 2"C, 2#6 (LTG NORTH)

LIGHTING (PARKING LOT)

APPROVED FOR ELECTRICAL WORK ONLY

SCALE: 1" = 20'

E-30

STATE OF CALIFORNIA - DEPARTMENT OF TRANSPORTATION
Caltrans® **TRAFFIC ELECTRICAL**

FUNCTIONAL SUPERVISOR: RAJPREET SINGH
CALCULATED-DESIGNED BY: FARIBA RAMOS
CHECKED BY: ENRIQUE BERNAL
REVISED BY
DATE REVISED

LAST REVISION 01-18-14 | DATE PLOTTED => 20-MAR-2014 | TIME PLOTTED => 15:57

Dist	COUNTY	ROUTE	POST MILES TOTAL PROJECT	SHEET No.	TOTAL SHEETS
11	SD	15,76	R46.2/R46.8, R12.1/R17.7	1039	1273

Fariba Ramos 02-20-14
REGISTERED ELECTRICAL ENGINEER DATE

03-24-14
PLANS APPROVAL DATE

REGISTERED PROFESSIONAL ENGINEER
FARIBA RAMOS
No. E15619
Exp. 12-31-15
ELECTRICAL
STATE OF CALIFORNIA

THE STATE OF CALIFORNIA OR ITS OFFICERS OR AGENTS SHALL NOT BE RESPONSIBLE FOR THE ACCURACY OR COMPLETENESS OF SCANNED COPIES OF THIS PLAN SHEET.

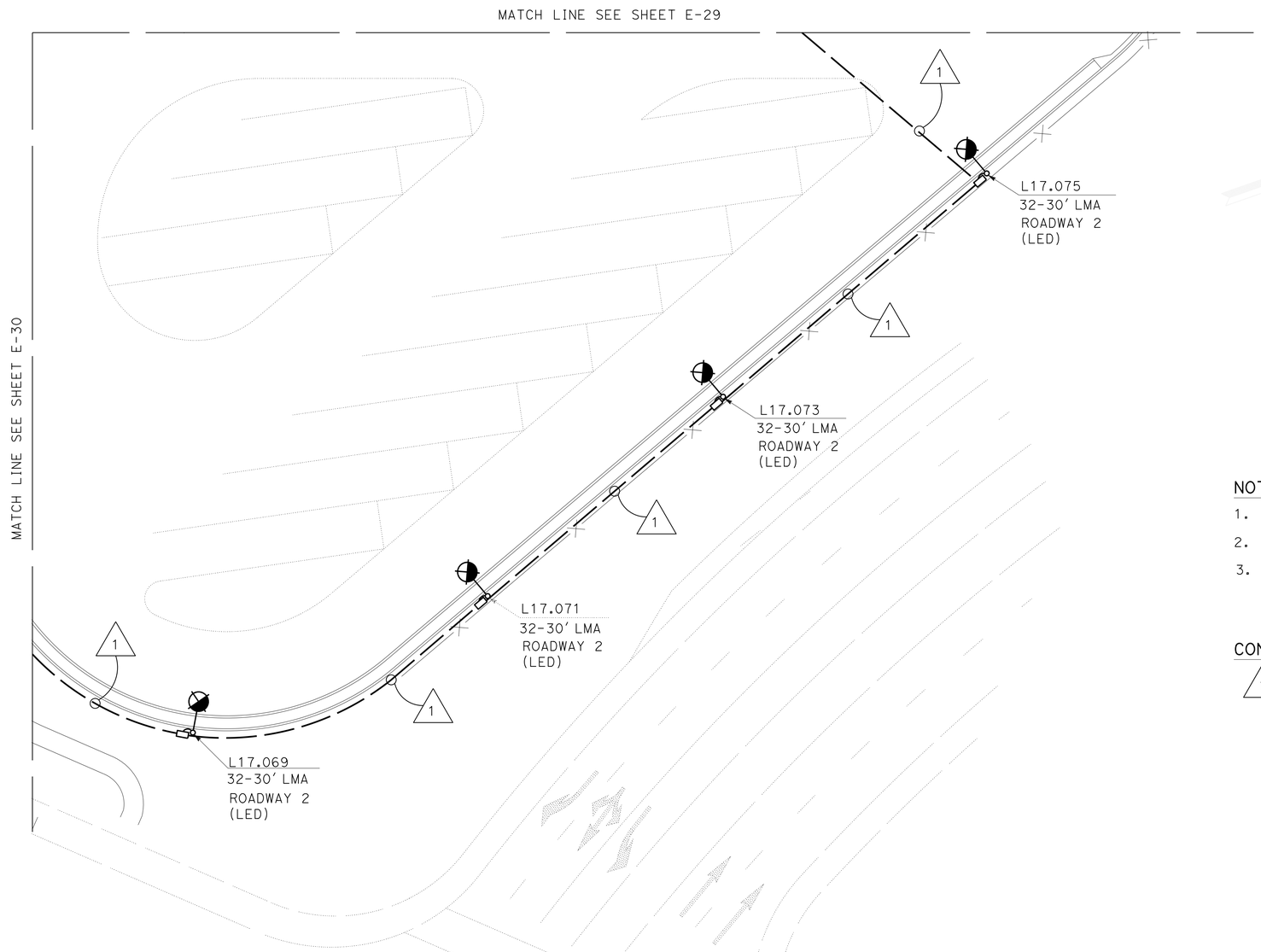

NOTES (TSO):

1. SEE DRAINAGE PLANS FOR INLET AND PIPE LOCATIONS.
2. Exist SIGNAL AND LIGHTING, AND RM SYSTEM NOT SHOWN.
3. FOR ACCURATE RIGHT OF WAY DATA, CONTACT RIGHT OF WAY ENGINEERING AT THE DISTRICT OFFICE.

CONDUIT NOTE (TSO):

1 2"C, 2#6 (LTG NORTH)

LIGHTING (PARKING LOT)

APPROVED FOR ELECTRICAL WORK ONLY

SCALE: 1" = 20'

E-31

STATE OF CALIFORNIA - DEPARTMENT OF TRANSPORTATION
Caltrans
TRAFFIC ELECTRICAL

FUNCTIONAL SUPERVISOR: RAJPREET SINGH
CALCULATED-DESIGNED BY: FARIBA RAMOS
CHECKED BY: ENRIQUE BERNAL
REVISED BY
DATE REVISED

LAST REVISION 01-18-14
DATE PLOTTED => 20-MAR-2014
TIME PLOTTED => 15:57

Dist	COUNTY	ROUTE	POST MILES TOTAL PROJECT	SHEET No.	TOTAL SHEETS
11	SD	15,76	R46.2/R46.8, R12.1/R17.7	1040	1273

REGISTERED ELECTRICAL ENGINEER 02-20-14 DATE

03-24-14
PLANS APPROVAL DATE

REGISTERED PROFESSIONAL ENGINEER FARIBA RAMOS No. E15619 Exp. 12-31-15 ELECTRICAL STATE OF CALIFORNIA

THE STATE OF CALIFORNIA OR ITS OFFICERS OR AGENTS SHALL NOT BE RESPONSIBLE FOR THE ACCURACY OR COMPLETENESS OF SCANNED COPIES OF THIS PLAN SHEET.

NOTES:

1. ALL CONDUCTORS/CABLES ARE EXISTING UNLESS OTHERWISE NOTED.
2. THE CONTRACTOR SHALL ADJUST THE VIDEO DETECTION ZONES FOR PERMANENT LANE CONFIGURATION.
3. Exist CONDUITS, CONDUCTORS, PULL BOXES, AND LOOPS TO REMAIN UNLESS OTHERWISE NOTED.
4. RC EXISTING SIGNAL PEDESTRIAN HEADS AND ppb.

5 RL 15TS AND APPURTENANCES. RC SP-1-T AND ppb.

6 RL 15TS, 15' lma, AND SV-2-TD. INSTALL SP-2-T. INSTALL APS Ø8P LEFT.

7 PPB POST, INSTALL APS FOR Ø6P, 1 LEFT.

8 PPB POST. INSTALL APS FOR Ø8P, 1-LEFT.

9 TO 15-fbs APPROXIMATELY Sta. 106+60, NWR.

10 PPB POST, INSTALL APS FOR Ø6P, 1 RIGHT.

11 INSTALL SP-1-T.

12 RR CONDUCTORS AND CABLES. SEE △2. AB CONDUIT.

CONDUIT NOTES:

△5 3"C, 1 DLC, 3 dlc (REUSED)
1-3CSC (REUSED), 1-12CSC (REUSED)
2#8 (LTG), 2#10 (FB), 1-3CSC

△6 Exist 2"C, 3 dlc,
2#8 (ltg), 2#10 (fb)
ADD: 1 DLC

△7 Exist 2"C, 2#10 (fb)
2#8 (ltg), 1 dlc

N/C △8 Exist 2"C, 2#10 (fb)

△9 Exist 2"C, 1 evc,
1-12csc, 1 vch,
2#8 (ltg)
ADD: 1-3CSC

△10 Exist 3"C, 2 evc,
2-12csc, 2 vch, 4 dlc
2#8 (ltg), 2#18 (Irr)
ADD: 1-3CSC

△11 2"C, 1-9CSC
1-3CSC

△12 2"C, 1-9CSC (APS)
1-3CSC

△13 3"C, 2#10 (FB), 1 DLC
2#8 (LTG), 2 dlc (REUSED)

△14 2"C, 1 DLC, 3 dlc (REUSED)
2#8 (ltg), 2#10 (fb)

N/C △15 Exist 1½"C, 3 dlc

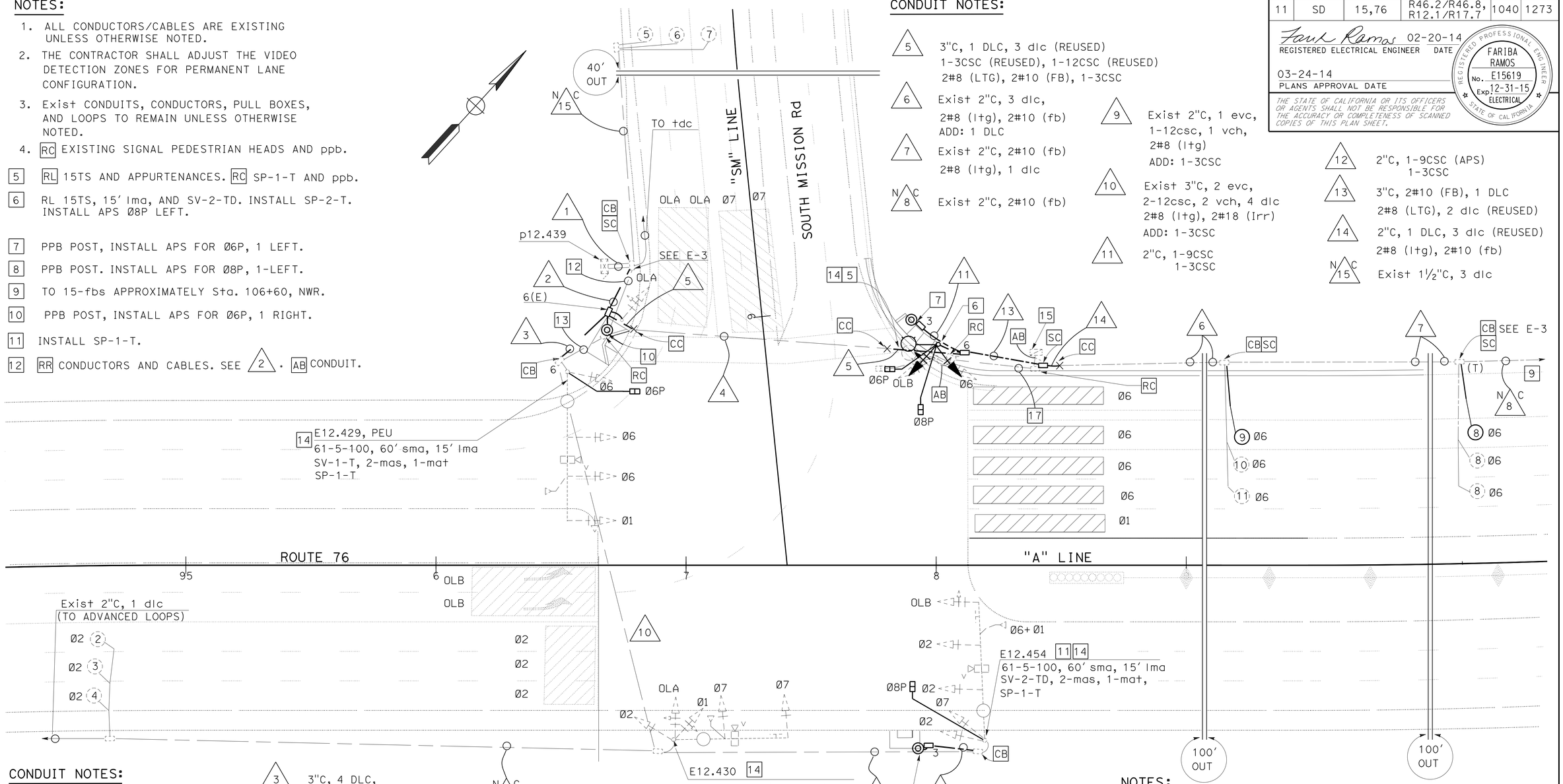

CONDUIT NOTES:

△1 Exist 2-3"C, 2#6 (sig)
2-3csc, 5-12csc
3 vch, 3 evc
10 dlc
ADD: 2-3CSC, 1 DLC

△2 3"C, 7 DLC, 4#8 (Irr)
2-3CSC, 5-12CSC,
3 VCH, 3 EVC
2#8 (LTG), 2#10 (FB)
3#14 (PEU)
(REUSED)
NEW: 2-3CSC
1 DLC

△3 3"C, 4 DLC,
2-3CSC, 4-12CSC,
3 VCH, 3 EVC
2#8 (LTG), 4#8 (Irr)
3#14 (PEU)
(REUSED)
NEW: 1-3CSC
1-9CSC (APS)

△4 Exist 3"C, 3 dlc, 2#6 (sig),
1-3csc, 1-12csc, 2#14 (tdc)
2#8 (ltg), 4#8 (Irr)
RC : 2#6 (sig), 2#14 (tdc)
4#8 (Irr)
ADD: 2#10 (FB), 1-3CSC
1 DLC

APPROVED FOR ELECTRICAL WORK ONLY

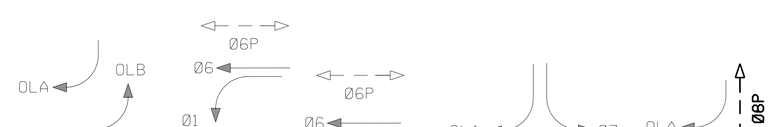

TRAFFIC PHASE DIAGRAM 16

STEADY DEMAND SEQUENCE →

NOTES:

13 RR CONDUCTORS AND CABLES. SEE △3. AB CONDUIT.

14 RC EXISTING 180 W lps. INSTALL ROADWAY 1 (LED) LUMINAIRE.

15 RC TYPE III-BR.

16 ADD Ø8P TO EXISTING TRAFFIC PHASE DIAGRAM AS SHOWN.

17 RR 3 dlc. SEE △13. AB CONDUIT.

18. FOR ACCURATE RIGHT OF WAY DATA, CONTACT RIGHT OF WAY ENGINEERING AT THE DISTRICT OFFICE.

SCALE: 1" = 20'

SIGNAL No.: P12.439
ROUTE 76 AND SOUTH MISSION ROAD

SIGNAL AND LIGHTING (LOCATION 1)

E-32

STATE OF CALIFORNIA - DEPARTMENT OF TRANSPORTATION
Caltrans TRAFFIC ELECTRICAL

FUNCTIONAL SUPERVISOR: RAJPREET SINGH
CALCULATED-DESIGNED BY: FARIBA RAMOS
CHECKED BY: ENRIQUE BERNAL
REVISED BY / DATE REVISED

LAST REVISION 01-18-14 | DATE PLOTTED => 20-MAR-2014 | TIME PLOTTED => 15:57

Dist	COUNTY	ROUTE	POST MILES TOTAL PROJECT	SHEET No.	TOTAL SHEETS
11	SD	15,76	R46.2/R46.8, R12.1/R17.7	1041	1273

REGISTERED ELECTRICAL ENGINEER — DATE 02-20-14

03-24-14
PLANS APPROVAL DATE

REGISTERED PROFESSIONAL ENGINEER — FARIBA RAMOS — No. E15619 — Exp. 12-31-15 — ELECTRICAL — STATE OF CALIFORNIA

THE STATE OF CALIFORNIA OR ITS OFFICERS OR AGENTS SHALL NOT BE RESPONSIBLE FOR THE ACCURACY OR COMPLETENESS OF SCANNED COPIES OF THIS PLAN SHEET.

NOTES (TSO):

1. STATE-FURNISHED MODEL 332 CABINET. FOUNDATION PER ES-64. FURNISH AND INSTALL: VDU, COMMUNICATION CARD, AND VIDEO DISPLAY IN CABINET.
2. FURNISH AND INSTALL BATTERIES AND EXTERNAL BBU SYSTEM CABINET. SEE ELECTRICAL DETAILS.
3. SEE COMPONENT DIAGRAM AND EQUIPMENT PLACEMENT IN ELECTRICAL DETAILS.
4. DETAIL U ES-7N. SEE SIGN PLANS.
5. TERMINATE EVC IN RED SECTION OF SIGNAL HEAD. LEAVE 3' OF SLACK.
6. SNS, SEE SIGN PLANS.
7. WILD ANIMAL CROSSING. INSTALL CONDUIT ABOVE BOX CULVERT. SEE CONSTRUCTION DETAILS.
8. SEWER MH TO BE PROTECTED IN PLACE.
9. FOR ACCURATE RIGHT OF WAY DATA, CONTACT RIGHT OF WAY ENGINEERING AT THE DISTRICT OFFICE.

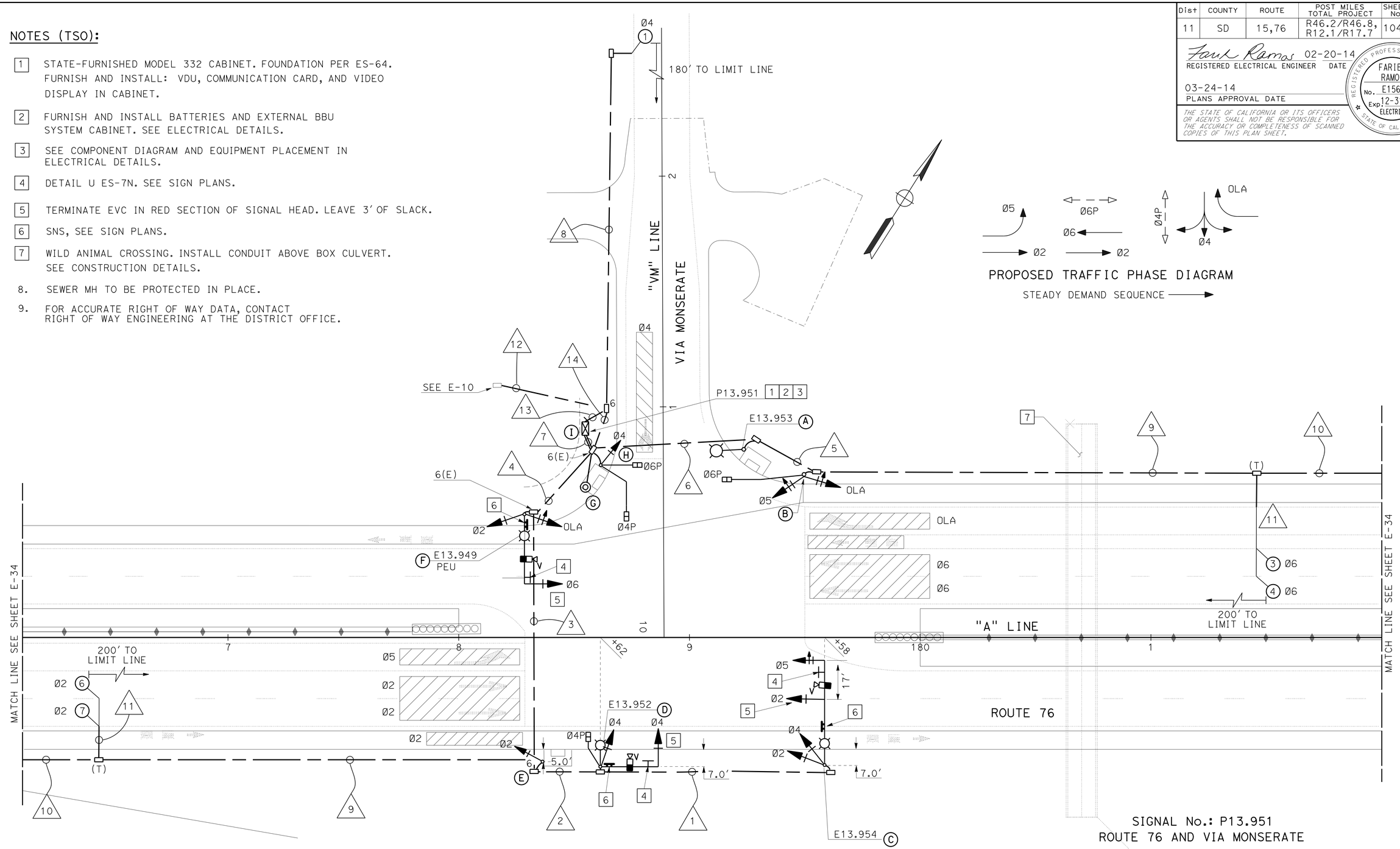

CONDUIT AND CONDUCTOR SCHEDULE:

SEE SHEET E-35.

EQUIPMENT AND POLE SCHEDULE:

SEE SHEET E-35.

APPROVED FOR ELECTRICAL WORK ONLY

SIGNAL AND LIGHTING (LOCATION 2)

SCALE: 1" = 20'

E-33

STATE OF CALIFORNIA - DEPARTMENT OF TRANSPORTATION
Caltrans
TRAFFIC ELECTRICAL

FUNCTIONAL SUPERVISOR: RAJPREET SINGH
CALCULATED-DESIGNED BY: FARIBA RAMOS
CHECKED BY: ENRIQUE BERNAL
REVISED BY
DATE REVISED

LAST REVISION 01-18-14
DATE PLOTTED => 20-MAR-2014
TIME PLOTTED => 15:57

Dist	COUNTY	ROUTE	POST MILES TOTAL PROJECT	SHEET No.	TOTAL SHEETS
11	SD	15,76	R46.2/R46.8, R12.1/R17.7	1042	1273

REGISTERED ELECTRICAL ENGINEER 02-20-14 DATE

03-24-14
PLANS APPROVAL DATE

REGISTERED PROFESSIONAL ENGINEER FARIBA RAMOS No. E15619 Exp. 12-31-15 ELECTRICAL STATE OF CALIFORNIA

THE STATE OF CALIFORNIA OR ITS OFFICERS OR AGENTS SHALL NOT BE RESPONSIBLE FOR THE ACCURACY OR COMPLETENESS OF SCANNED COPIES OF THIS PLAN SHEET.

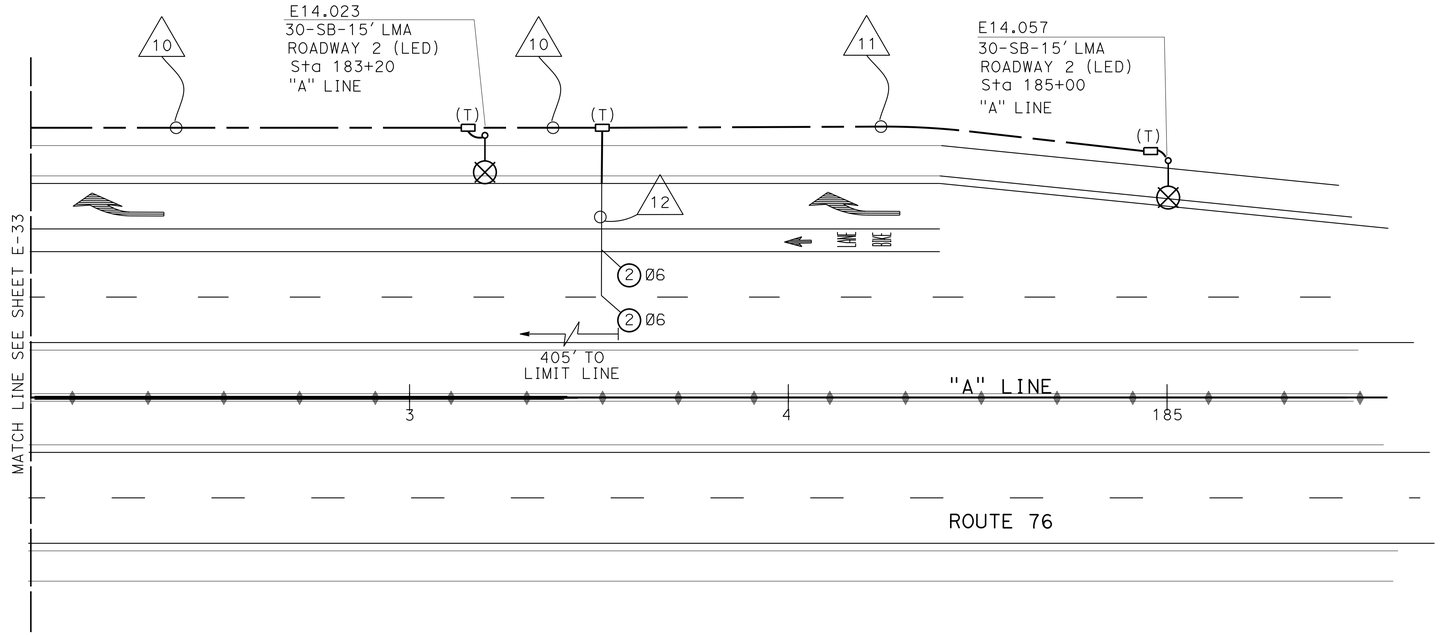

CONDUIT NOTES (TSO):

10 — 2"C, 1 DLC, 2#8 (LTG)

11 — 2"C, 2#8 (LTG)

12 — 2"C, 4 LOOP WIRE

NOTE (TSO):

1. FOR ACCURATE RIGHT OF WAY DATA, CONTACT RIGHT OF WAY ENGINEERING AT THE DISTRICT OFFICE.

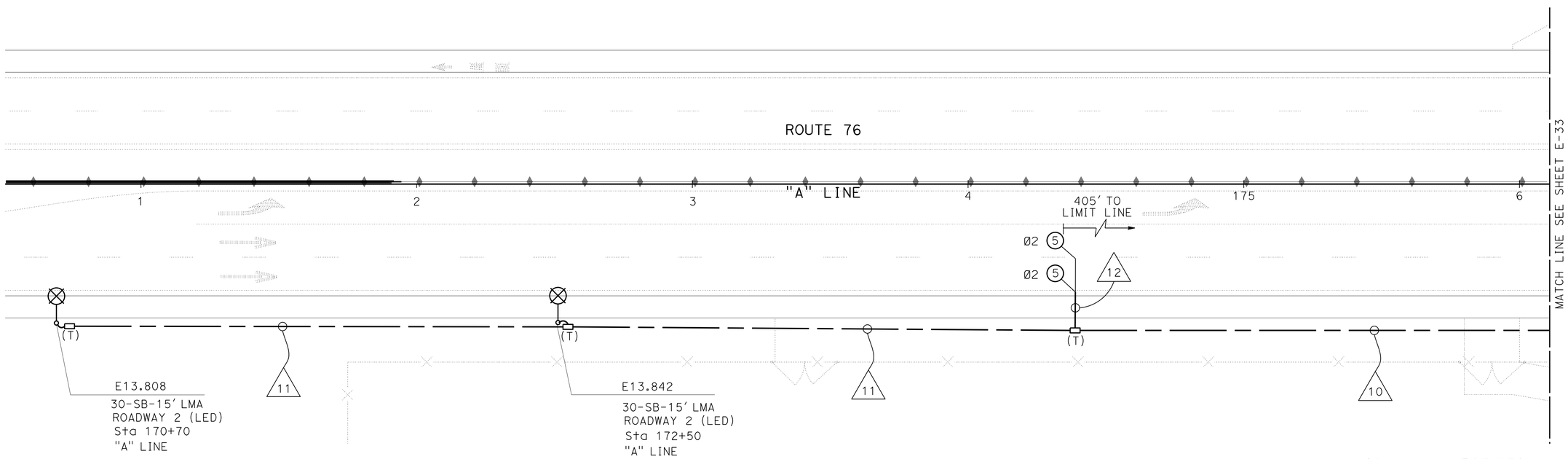

SIGNAL No.: P13.951
ROUTE 76 AND VIA MONSERATE

SIGNAL AND LIGHTING (LOCATION 2)

APPROVED FOR ELECTRICAL WORK ONLY

SCALE: 1" = 20'

E-34

STATE OF CALIFORNIA - DEPARTMENT OF TRANSPORTATION
Caltrans
TRAFFIC ELECTRICAL

FUNCTIONAL SUPERVISOR: RAJPREET SINGH
CALCULATED-DESIGNED BY: FARIBA RAMOS
CHECKED BY: ENRIQUE BERNAL
REVISED BY
DATE REVISED

LAST REVISION 01-18-14
DATE PLOTTED => 20-MAR-2014
TIME PLOTTED => 15:57

Dist	COUNTY	ROUTE	POST MILES TOTAL PROJECT	SHEET No.	TOTAL SHEETS
11	SD	15,76	R46.2/R46.8, R12.1/R17.7	1043	1273

Fariba Ramos 02-20-14
REGISTERED ELECTRICAL ENGINEER DATE

03-24-14
PLANS APPROVAL DATE

REGISTERED PROFESSIONAL ENGINEER FARIBA RAMOS No. E15619 Exp. 12-31-15 ELECTRICAL STATE OF CALIFORNIA

THE STATE OF CALIFORNIA OR ITS OFFICERS OR AGENTS SHALL NOT BE RESPONSIBLE FOR THE ACCURACY OR COMPLETENESS OF SCANNED COPIES OF THIS PLAN SHEET.

NOTES:

1. INSTALL ADDITIONAL PUSH BUTTON (EQUESTRIAN) AT 70" MOUNTING HEIGHT.
2. SV-1-T 3 SECTION SIGNAL HEAD TO BE MOUNTED 17' ABOVE BASE PLATE.
3. INSTALL LMA AT 90° RELATIVE TO SMA.
4. APS AND COUNT DOWN PEDESTRIAN SIGNAL HEAD.
5. INSTALL ROADWAY 1 (LED) LUMINAIRE.

CONDUIT AND CONDUCTOR SCHEDULE

AWG SIZE OR CABLE TYPE	PHASE	POLE OR CIRCUIT	CONDUIT SIZE AND RUN 2" (1)	3" (2)	1-3" 1-2" (3)	3" (4)	2" (5)	2" (6)	2-3" (7)
No. 14 CONDUCTORS		POLE - A						1	1
3CSC / 12CSC		B					2	2	2
		C	2	2	2	2			2
		D		1	1	1			1
		E			1	1 1	1	1	1
		F				1			1
		G							1
		H						1	1
TOTAL 3CSC / 12CSC			2	3	1 4	1 5	2	1 2	3 9
8		LIGHTING	2	2	2	2	2	2	
14		PEU				3			
No. 14 CONDUCTORS 9CSC APS				1			1		
DLC	Ø2				3	3			3
	Ø4								1
	Ø6						3	3	3
VIDEO CABLE HARNESS	Ø2 Ø5		1	1	1	1			1
	Ø4			1	1	1			1
	Ø6					1			1
EVC			1	2	2	3			3
TOTAL CONDUCTORS / CABLES			6	10	14	20	8	8	25
NOTE									

EQUIPMENT AND POLE SCHEDULE

Loc	STANDARD TYPE	SMA (ft)	LMA (ft)	PLACEMENT DIMENSIONS A (ft)	B (ft)	SIGNAL MOUNTING AND PLACEMENT VEHICLE POLE	MASTARM	PEDESTRIAN [4] SIGNAL	PPB	REMARKS
A	15TS	-	15	21.2	6.8	-	-	-	Ø6P ←	[1] [5]
B	1-A	-	-	1.9	4.1	TV-2-T	-	SP-1-T	-	-
C	26-4-100	45	15	SEE PLANS	SEE PLANS	SV-2-T	MAS MAT	-	-	[5] VIS SNS
D	19-4-100	25	15	SEE PLANS	SEE PLANS	SV-1-T	MAT	SP-1-T	-	[3] [5] VIS SNS
E	1-A	-	-	SEE PLANS	SEE PLANS	TV-1-T	-	-	Ø4P →	[1]
F	19-4-100	30	15	0.0	4.9	SV-1-T SV-1-T [2]	MAT		-	[5] VIS PEU SNS
G	PPB POST 1-A (7')	-	-	SEE PLANS	3.5	-	-	-	Ø6P →	[1]
H	1-A	-	-	11.2	5.8	TV-1-T	-	SP-2-T	Ø4P ←	[1]
I	STATE-FURNISHED MODEL 170 CONTROLLER ASSEMBLY.									

CONDUIT NOTES:

(8) - 2"C, 1 DLC

(9) - 2"C, 2 DLC, 2#8 (LTG)

(10) - 2"C, 1 DLC, 2#8 (LTG)

(11) - 2"C, 4 LOOP WIRE

(12) - 2"C, 2#8 (LTG), 3#14 (PEU), 2#8 (SIGNAL)

(13) - 2"C, 1 DLC, 2#8 (SIGNAL)

(14) - 2"C, 2#8 (LTG), 3#14 (PEU)

SIGNAL No.: P13.951
ROUTE 76 AND VIA MONSERATE

SIGNAL AND LIGHTING (LOCATION 2)

APPROVED FOR ELECTRICAL WORK ONLY

STATE OF CALIFORNIA - DEPARTMENT OF TRANSPORTATION
Caltrans TRAFFIC ELECTRICAL

FUNCTIONAL SUPERVISOR: RAJPREET SINGH
CALCULATED-DESIGNED BY: FARIBA RAMOS
CHECKED BY: ENRIQUE BERNAL
REVISED BY / DATE REVISED

LAST REVISION 01-18-14 | DATE PLOTTED => 20-MAR-2014 | TIME PLOTTED => 15:57

Dist	COUNTY	ROUTE	POST MILES TOTAL PROJECT	SHEET No.	TOTAL SHEETS
11	SD	15,76	R46.2/R46.8, R12.1/R17.7	1044	1273

REGISTERED ELECTRICAL ENGINEER 02-20-14 DATE

03-24-14
PLANS APPROVAL DATE

REGISTERED PROFESSIONAL ENGINEER FARIBA RAMOS No. E15619 Exp. 12-31-15 ELECTRICAL STATE OF CALIFORNIA

THE STATE OF CALIFORNIA OR ITS OFFICERS OR AGENTS SHALL NOT BE RESPONSIBLE FOR THE ACCURACY OR COMPLETENESS OF SCANNED COPIES OF THIS PLAN SHEET.

NOTES:

1. RC SIGNAL POLES AND APPURTENANCES EXCEPT AS NOTED.
2. AB CONDUITS AND DETECTOR LOOPS EXCEPT AS NOTED.
3. RC PULL BOXES EXCEPT AS NOTED.
4. SEE "LIGHTING (COUNTY)" PLANS FOR CIRCUIT CONTINUITY.
5. CONDUIT TO REMAIN.
6. PULL BOX TO REMAIN.
7. TYPE III SERVICE ENCLOSURE TO REMAIN, SEE "LIGHTING (COUNTY)" PLANS FOR DETAILS.
8. RC SIGNAL CONTROLLER COMPLETE.
9. RC TELEPHONE DEMARCATION CABINET.
10. RC FLASHING BEACON.
11. FOR ACCURATE RIGHT OF WAY DATA, CONTACT RIGHT OF WAY ENGINEERING AT THE DISTRICT OFFICE.

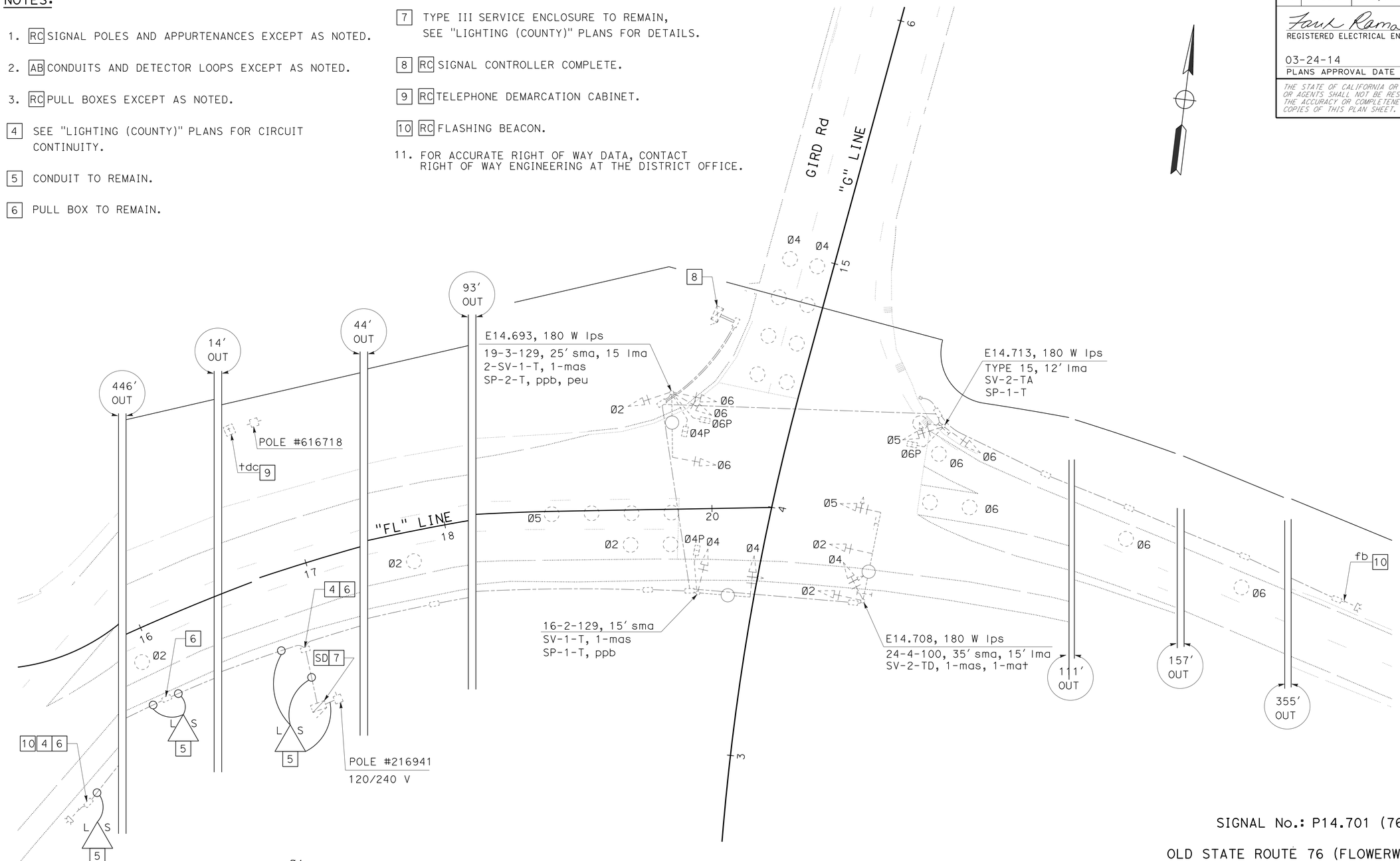

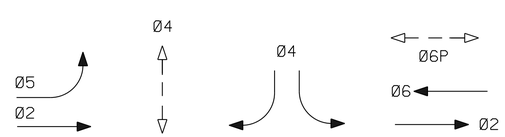

EXISTING TRAFFIC PHASE DIAGRAM

STEADY DEMAND SEQUENCE →

APPROVED FOR ELECTRICAL WORK ONLY

SIGNAL No.: P14.701 (76)

OLD STATE ROUTE 76 (FLOWERWOOD LN) AND GIRD ROAD

SIGNAL AND LIGHTING (EXISTING AND REMOVE) (LOCATION 3)

SCALE: 1" = 20′

E-36

STATE OF CALIFORNIA - DEPARTMENT OF TRANSPORTATION
Caltrans
TRAFFIC ELECTRICAL

FUNCTIONAL SUPERVISOR: RAJPREET SINGH
CALCULATED-DESIGNED BY: FARIBA RAMOS
CHECKED BY: ENRIQUE BERNAL
REVISED BY
DATE REVISED

LAST REVISION 01-18-14
DATE PLOTTED => 20-MAR-2014
TIME PLOTTED => 15:57

Dist	COUNTY	ROUTE	POST MILES TOTAL PROJECT	SHEET No.	TOTAL SHEETS
11	SD	15,76	R46.2/R46.8, R12.1/R17.7	1045	1273

REGISTERED ELECTRICAL ENGINEER 02-20-14 DATE

03-24-14
PLANS APPROVAL DATE

REGISTERED PROFESSIONAL ENGINEER FARIBA RAMOS No. E15619 Exp. 12-31-15 ELECTRICAL STATE OF CALIFORNIA

THE STATE OF CALIFORNIA OR ITS OFFICERS OR AGENTS SHALL NOT BE RESPONSIBLE FOR THE ACCURACY OR COMPLETENESS OF SCANNED COPIES OF THIS PLAN SHEET.

PROPOSED TRAFFIC PHASE DIAGRAM

STEADY DEMAND SEQUENCE →

NOTES (TSO):

1. STATE-FURNISHED MODEL 332 CABINET. FOUNDATION PER ES-64. FURNISH AND INSTALL VDU, COMMUNICATION CARD, AND VIDEO DISPLAY IN CABINET.
2. FURNISH AND INSTALL BATTERIES AND EXTERNAL BBU SYSTEM CABINET. SEE ELECTRICAL DETAILS.
3. SEE COMPONENT DIAGRAM AND EQUIPMENT PLACEMENT IN IN ELECTRICAL DETAILS.
4. SNS, SEE SIGN PLANS.
5. PREFORMED LOOPS.
6. SEE BRIDGE ELECTRICAL PLANS.
7. TERMINATE EVC IN RED SECTION OF SIGNAL HEAD. LEAVE 3' OF SLACK.
8. DETAIL U ES-7N. SEE SIGN PLANS.
9. FOR ACCURATE RIGHT OF WAY DATA, CONTACT RIGHT OF WAY ENGINEERING AT THE DISTRICT OFFICE.

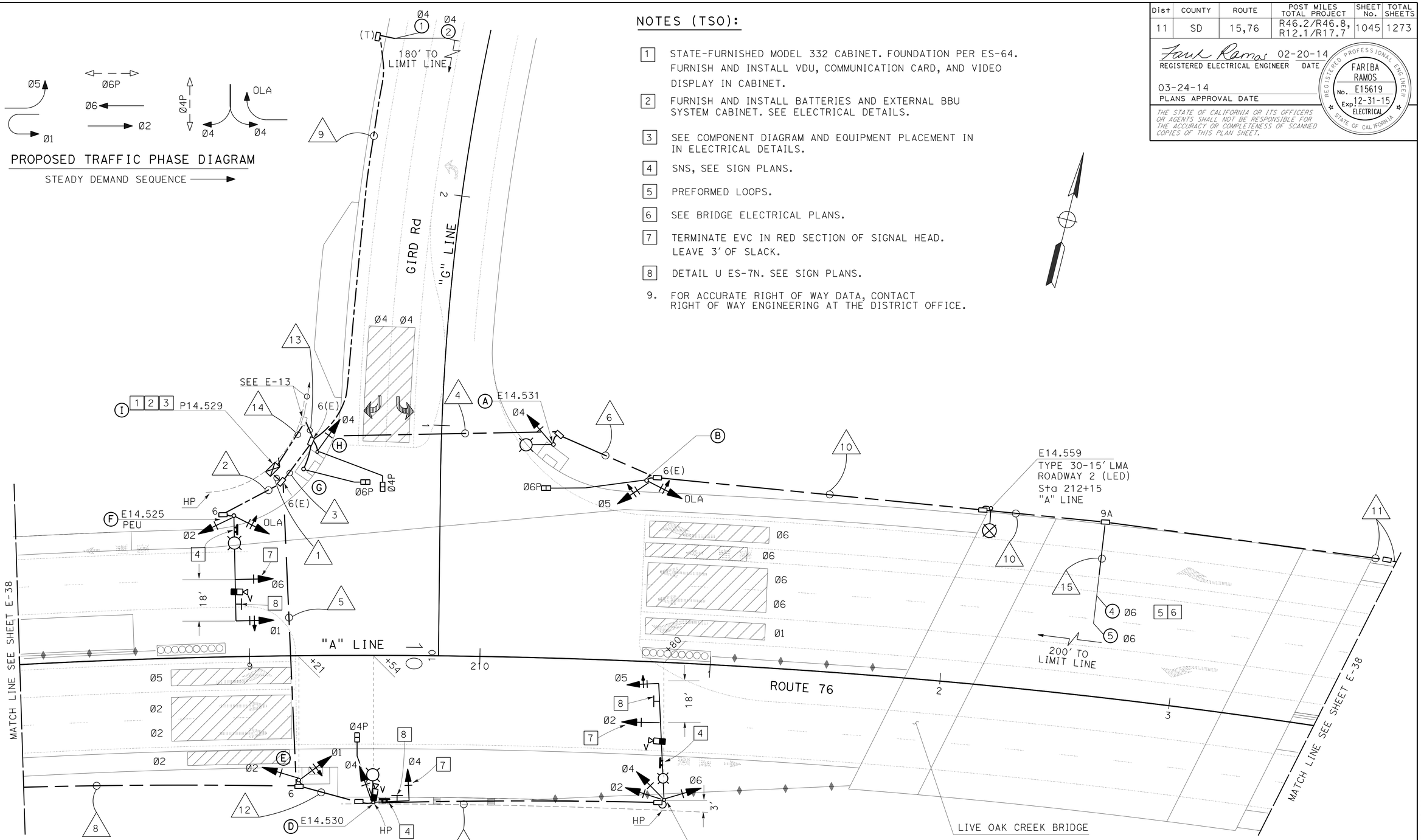

CONDUIT AND CONDUCTOR SCHEDULE:

SEE SHEET E-39.

EQUIPMENT AND POLE SCHEDULE:

SEE SHEET E-39.

APPROVED FOR ELECTRICAL WORK ONLY

SIGNAL No.: P14.529
ROUTE 76 AND GIRD ROAD

SIGNAL AND LIGHTING (LOCATION 3)

SCALE: 1" = 20'

E-37

STATE OF CALIFORNIA - DEPARTMENT OF TRANSPORTATION
Caltrans
TRAFFIC ELECTRICAL

FUNCTIONAL SUPERVISOR: RAJPREET SINGH
CALCULATED-DESIGNED BY: FARIBA RAMOS
CHECKED BY: ENRIQUE BERNAL
REVISED BY
DATE REVISED

LAST REVISION 01-18-14
DATE PLOTTED => 20-MAR-2014
TIME PLOTTED => 15:57

Dist	COUNTY	ROUTE	POST MILES TOTAL PROJECT	SHEET No.	TOTAL SHEETS
11	SD	15,76	R46.2/R46.8, R12.1/R17.7	1046	1273

Farib Ramos 02-20-14
REGISTERED ELECTRICAL ENGINEER DATE

03-24-14
PLANS APPROVAL DATE

REGISTERED PROFESSIONAL ENGINEER FARIBA RAMOS No. E15619 Exp. 12-31-15 ELECTRICAL STATE OF CALIFORNIA

THE STATE OF CALIFORNIA OR ITS OFFICERS OR AGENTS SHALL NOT BE RESPONSIBLE FOR THE ACCURACY OR COMPLETENESS OF SCANNED COPIES OF THIS PLAN SHEET.

NOTES (TSO):

1. TYPE 15-FBS, ADVANCED FB INSTALLATION, SEE ES-7J. SEE SIGN PLANS.
2. FOR ACCURATE RIGHT OF WAY DATA, CONTACT RIGHT OF WAY ENGINEERING AT THE DISTRICT OFFICE.

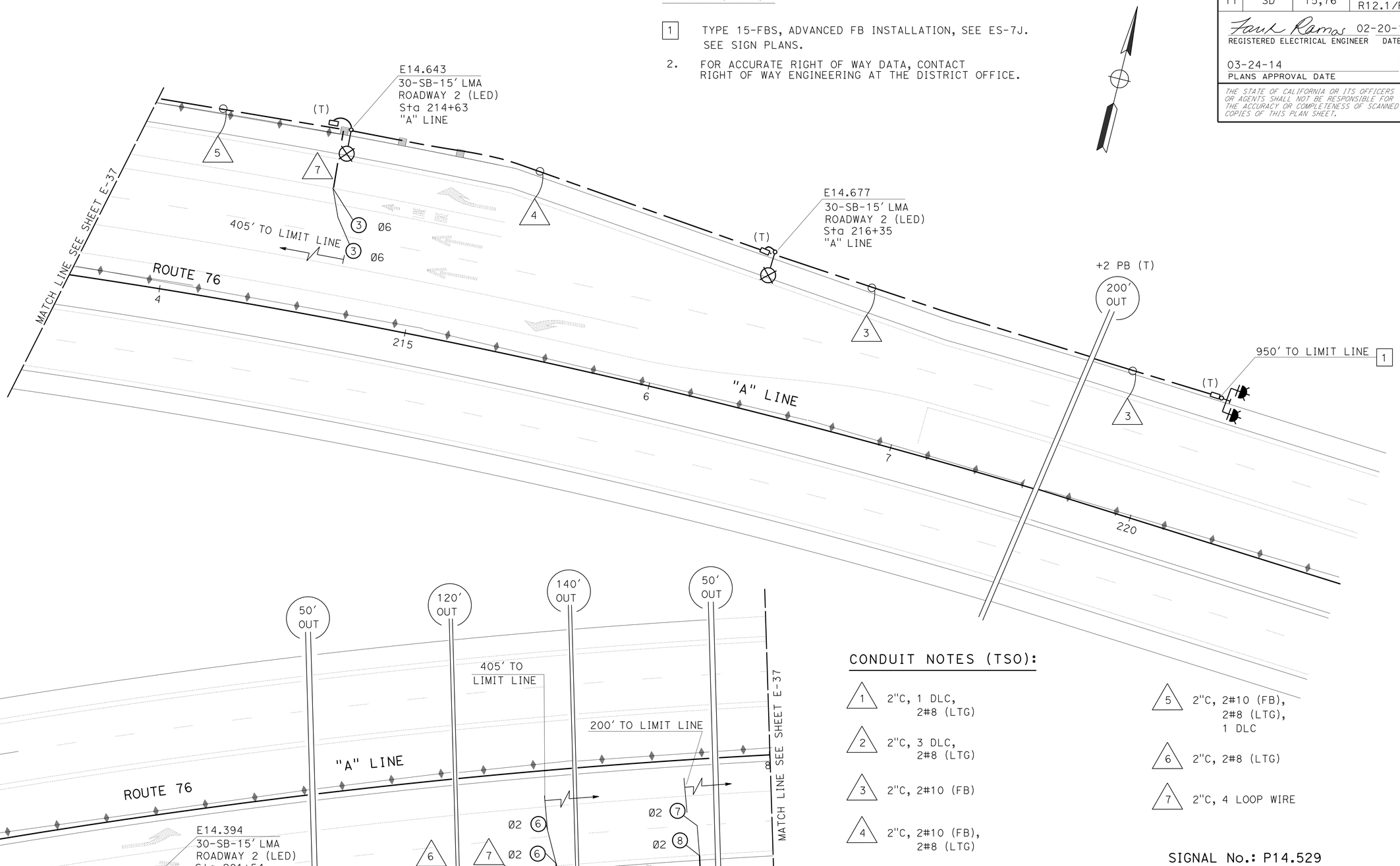

CONDUIT NOTES (TSO):

1. 2"C, 1 DLC, 2#8 (LTG)
2. 2"C, 3 DLC, 2#8 (LTG)
3. 2"C, 2#10 (FB)
4. 2"C, 2#10 (FB), 2#8 (LTG)
5. 2"C, 2#10 (FB), 2#8 (LTG), 1 DLC
6. 2"C, 2#8 (LTG)
7. 2"C, 4 LOOP WIRE

SIGNAL No.: P14.529
ROUTE 76 AND GIRD ROAD

SIGNAL AND LIGHTING (LOCATION 3)

SCALE: 1" = 20'

APPROVED FOR ELECTRICAL WORK ONLY

E-38

STATE OF CALIFORNIA - DEPARTMENT OF TRANSPORTATION
Caltrans®
TRAFFIC ELECTRICAL

FUNCTIONAL SUPERVISOR: RAJPREET SINGH
CALCULATED-DESIGNED BY: FARIBA RAMOS
CHECKED BY: ENRIQUE BERNAL
REVISED BY
DATE REVISED

LAST REVISION 01-18-14
DATE PLOTTED => 20-MAR-2014
TIME PLOTTED => 15:57

Dist	COUNTY	ROUTE	POST MILES TOTAL PROJECT	SHEET No.	TOTAL SHEETS
11	SD	15,76	R46.2/R46.8, R12.1/R17.7	1047	1273

REGISTERED ELECTRICAL ENGINEER 02-20-14 DATE

03-24-14
PLANS APPROVAL DATE

REGISTERED PROFESSIONAL ENGINEER FARIBA RAMOS No. E15619 Exp. 12-31-15 ELECTRICAL STATE OF CALIFORNIA

THE STATE OF CALIFORNIA OR ITS OFFICERS OR AGENTS SHALL NOT BE RESPONSIBLE FOR THE ACCURACY OR COMPLETENESS OF SCANNED COPIES OF THIS PLAN SHEET.

NOTES (TSO):

1. INSTALL ADDITIONAL PUSH BUTTON (EQUESTRIAN) AT 70" MOUNTING HEIGHT.
2. SV-1-T, 3 SECTION SIGNAL HEAD TO BE MOUNTED 17′ ABOVE BASE PLATE.
3. INSTALL LMA AT 90° RELATIVE TO SMA.
4. APS AND COUNT DOWN PEDESTRIAN SIGNAL HEAD.
5. INSTALL ROADWAY 1 (LED) LUMINAIRE.

EQUIPMENT AND POLE SCHEDULE

Loc	STANDARD TYPE	STANDARD SMA (ft)	STANDARD LMA (ft)	PLACEMENT DIMENSIONS A (ft)	PLACEMENT DIMENSIONS B (ft)	SIGNAL MOUNTING AND PLACEMENT VEHICLE POLE	VEHICLE MASTARM	PEDESTRIAN [4] SIGNAL	PEDESTRIAN [4] PPB	REMARKS
A	15TS	-	15	39.0	7.0	SV-1-T [2]	-	-	Ø6P ←	[1] [5]
B	1-A	-	-	9.0	4.0	TV-2-T	-	SP-1-T	-	-
C	26-4-100	50	15	PER PLAN	PER PLAN	SV-2-TA SV-1-T [2]	MAS MAT	-	-	[5] VIS SNS
D	19-3-100	15	15	PER PLAN	PER PLAN	SV-1-T	MAS	SP-1-T	-	[5] [3] VIS SNS
E	1-A	-	-	PER PLAN	PER PLAN	TV-2-T	-	-	Ø4P →	[1]
F	26-4-100	45	15	12.0	5.0	SV-1-TA SV-1-T [2]	MAS MAT		-	[5] VIS SNS
G	1-A	-	-	SEE PLANS	3.5	-	-	SP-1-T	Ø4P ←	[1]
H	1-A	-	-	33.5	4.0	TV-1-T	-	SP-1-T	Ø6P →	[1]
I	STATE-FURNISHED MODEL 170 CONTROLLER ASSEMBLY.									

CONDUIT AND CONDUCTOR SCHEDULE

AWG SIZE OR CABLE TYPE	PHASE	POLE OR CIRCUIT	2-3" (1)	2" (2)	3" (3)	3" (4)	3" (5)	2" (6)	2" (7)	2" (8)	2" (9)	2" (10)	2" (11)	2" (12)	2" (13)
No. 14 CONDUCTORS		POLE - A	1 1		1 1	1 1									
3CSC / 12CSC		B		2		2	2		2						
		C		2				2		2				2	
		D		1				1						1	
		E	1 1				1 1								
		F		2	2										
		G	1 1												
		H	1 1		1 1										
TOTAL 3CSC / 12CSC			4 1 1	1 2	2 4	1 3	2 4	2	2					1 3	
14		PEU		3	3										3
8		LIGHTING		2	2	2	2	2	2	2		2	2	2	2
10		FB				2		2				2	2		2
DLC	Ø2		3				3			3					
	Ø4		2		2						2				
	Ø6		3		3	3		3				3	1		
VIDEO CABLE HARNESS	Ø2 / Ø5		1				1		1					2	
	Ø4		1				1							2	
	Ø6 / Ø1		1	1											
EVC			3	1			2		1						
No. 14 CONDUCTORS 9CSC, (APS)								1						1	
TOTAL CONDUCTORS / CABLES			29	9	16	11	15	10	6	5	2	7	5	11	7

CONDUIT NOTES:

(14) 2"C, 2#8 (SIGNAL)

(15) 1½"C, 4 LOOP WIRE

SIGNAL No.: P14.529
ROUTE 76 AND GIRD ROAD

SIGNAL AND LIGHTING (LOCATION 3)

APPROVED FOR ELECTRICAL WORK ONLY

E-39

STATE OF CALIFORNIA - DEPARTMENT OF TRANSPORTATION
Caltrans TRAFFIC ELECTRICAL

FUNCTIONAL SUPERVISOR: RAJPREET SINGH
CALCULATED-DESIGNED BY: FARIBA RAMOS
CHECKED BY: ENRIQUE BERNAL
REVISED BY
DATE REVISED

LAST REVISION 01-18-14 | DATE PLOTTED => 20-MAR-2014 | TIME PLOTTED => 15:57

Dist	COUNTY	ROUTE	POST MILES TOTAL PROJECT	SHEET No.	TOTAL SHEETS
11	SD	15,76	R46.2/R46.8, R12.1/R17.7	1048	1273

REGISTERED ELECTRICAL ENGINEER 02-20-14 DATE

03-24-14
PLANS APPROVAL DATE

THE STATE OF CALIFORNIA OR ITS OFFICERS OR AGENTS SHALL NOT BE RESPONSIBLE FOR THE ACCURACY OR COMPLETENESS OF SCANNED COPIES OF THIS PLAN SHEET.

REGISTERED PROFESSIONAL ENGINEER FARIBA RAMOS No. E15619 Exp. 12-31-15 ELECTRICAL STATE OF CALIFORNIA

NOTE:

1. FOR ACCURATE RIGHT OF WAY DATA, CONTACT RIGHT OF WAY ENGINEERING AT THE DISTRICT OFFICE.

PROPOSED TRAFFIC PHASE DIAGRAM

STEADY DEMAND SEQUENCE →

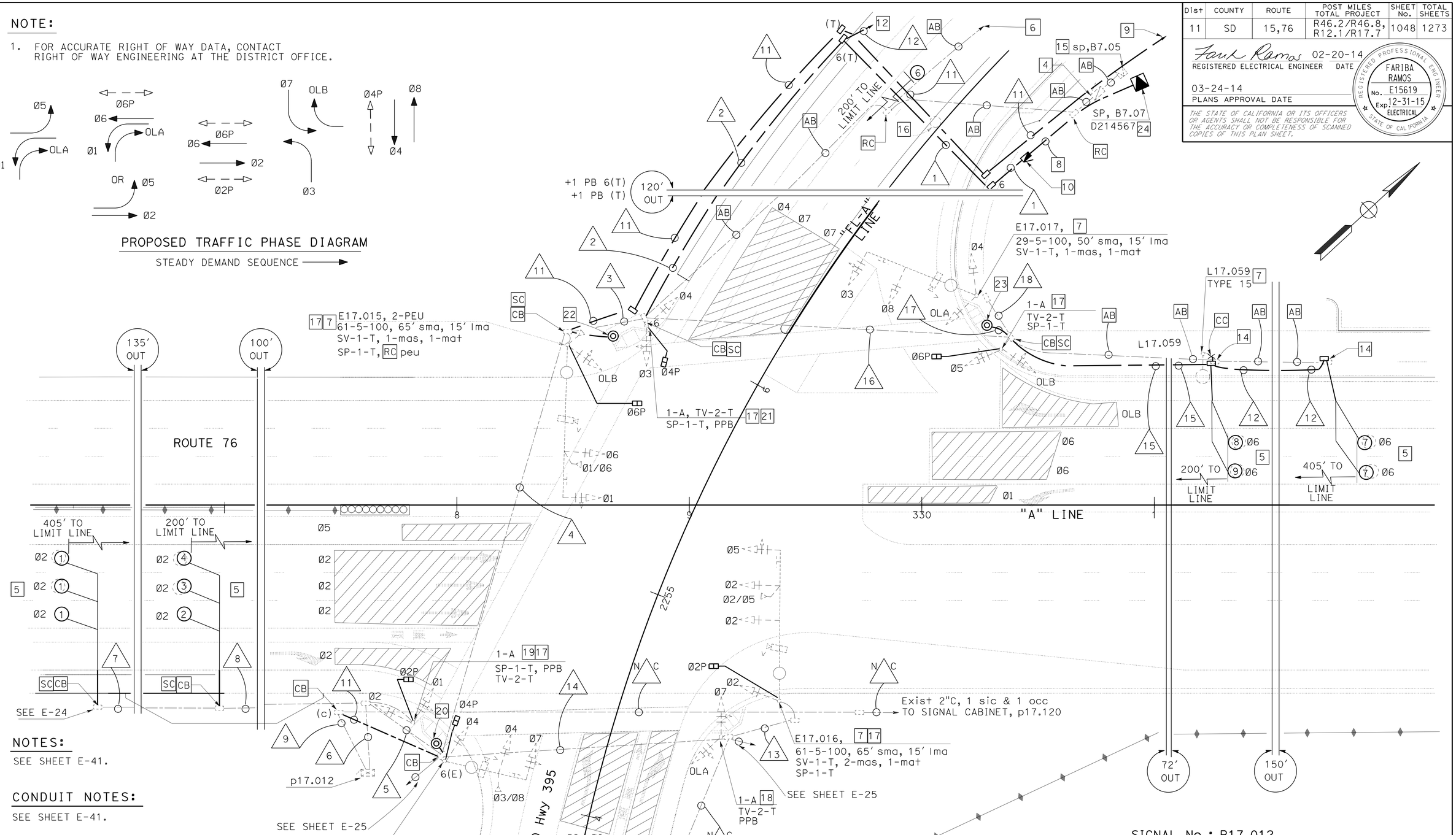

NOTES:

SEE SHEET E-41.

CONDUIT NOTES:

SEE SHEET E-41.

EXISTING TRAFFIC PHASE DIAGRAM:

SEE SHEET E-41.

SIGNAL No.: P17.012
ROUTE 76 AND OLD HIGHWAY 395

APPROVED FOR ELECTRICAL WORK ONLY

SIGNAL AND LIGHTING (LOCATION 4)

SCALE: 1" = 50'

E-40

STATE OF CALIFORNIA - DEPARTMENT OF TRANSPORTATION
Caltrans® TRAFFIC ELECTRICAL

FUNCTIONAL SUPERVISOR: RAJPREET SINGH
CALCULATED-DESIGNED BY: ENRIQUE BERNAL
CHECKED BY: FARIBA RAMOS
REVISED BY / DATE REVISED

LAST REVISION 01-18-14
DATE PLOTTED => 20-MAR-2014
TIME PLOTTED => 15:57

Dist	COUNTY	ROUTE	POST MILES TOTAL PROJECT	SHEET No.	TOTAL SHEETS
11	SD	15,76	R46.2/R46.8, R12.1/R17.7	1049	1273

Fariba Ramos 02-20-14
REGISTERED ELECTRICAL ENGINEER DATE

03-24-14
PLANS APPROVAL DATE

REGISTERED PROFESSIONAL ENGINEER FARIBA RAMOS No. E15619 Exp. 12-31-15 ELECTRICAL STATE OF CALIFORNIA

THE STATE OF CALIFORNIA OR ITS OFFICERS OR AGENTS SHALL NOT BE RESPONSIBLE FOR THE ACCURACY OR COMPLETENESS OF SCANNED COPIES OF THIS PLAN SHEET.

CONDUIT NOTES:

1. 2-3"C, 2#8 (LTG), 2#6 (SIG), 2#8 (S), 3#6 (HUB), 4#14 (PEU), 2#10 (TDC), 2#6 (CCTV), 2#10 (Irr), 2#10 (FB)

2. 2-3"C, 2#8 (LTG), 2#6 (SIG), 2#8 (S), 3#6 (HUB), 4#14 (PEU), 2#10 (TDC), 2#6 (CCTV), 2#10 (Irr), 2#10 (FB), 2 DLC

3. Exist 3"C, 2#8 (ltg), 2#6 (sig), 2#10 (fb), 2#6 (comm), 2#10 (tdc), 2#8 (s), 3#14 (peu), 4 dlc, 1 vch, 3-3csc, 4-12csc
   RELABEL: 2#6 (comm) WITH 2#6 (CCTV)
   ADD: 1#14 (PEU), 3#6 (HUB), 2#10 (Irr)
   RC : 4 dlc, ADD: 5 DLC

4. Exist 2-3"C, 2#8 (ltg), 2#6 (sig), 2#10 (fb), 2#6 (comm), 2#10 (tdc), 2#8 (s), 3#14 (peu), 3 dlc, 1 vch, 3-3csc, 5-12csc
   RELABEL: 2#6 (comm) WITH 2#6 (CCTV)
   ADD: 3#6 (HUB), 2#10 (Irr), 1 SIC
   RC : 4 dlc, ADD: 5 DLC

5. Exist 2-3"C, 2#8 (ltg), 2#6 (sig), 2#10 (fb), 7 dlc, 4 vch, 1 evc, 4-3csc, 8-12csc
   RC : 4 dlc, ADD: 5 DLC

6. Exist 2-3"C, 2#6 (sig), 10 dlc, 4 vch, 4 evc, 6-3csc, 9-12csc
   RC : 4 dlc, ADD: 6 DLC

7. Exist 2"C, 2#8 (ltg), 2#10 (fb), 1 dlc

8. Exist 2"C, 2#8 (ltg), 2#10 (fb), 3 dlc
   ADD: 1 DLC

9. Exist 2"C, 1 sic (INTERCONNECT), 1 occ
   ADD: 1 SIC (TO VIA ALTIMIRA)

10. N C Exist 2"C, 1 sic (INTERCONNECT), 1 occ

11. 2"C, 1 SIC

12. 2"C, 1 DLC

13. Exist 2"C, 2#8 (ltg), 2#6 (sig), 1 vch, 1 evc, 2-12csc
    ADD: 1-9CSC (APS)

14. Exist 3"C, 2#8 (ltg), 2#6 (sig), 1 vch, 1 evc, 1 dlc, 1-3csc, 2-12csc
    ADD: 3#6 (HUB)

15. 2"C, 3 DLC, 2#8 (LTG)

16. Exist 3"C, 2#8 (lth), 3 dlc, 1 vch, 1-3csc, 3-12csc
    RC : 3 dlc, ADD: 3 DLC

17. 1"C, 1-9CSC

18. Exist 2"C, 2#8 (ltg), 2-12csc, 1 vch

NOTES:

1. ALL CONDUCTORS/CABLES ARE EXISTING UNLESS OTHERWISE NOTED.
2. THE CONTRACTOR SHALL ADJUST THE VIDEO DETECTION ZONES FOR PERMANENT LANE CONFIGURATION.
3. Exist CONDUITS, CONDUCTORS, PULL BOXES, AND LOOPS TO REMAIN UNLESS OTHERWISE NOTED.

NOTES:

4. RS Exist TYPE III-BR SERVICE DISCONNECT.
5. AB Exist LOOPS.
6. RL Exist TYPE 15-fbs, APPROX. Sta. 2262+14, "FL-A" LINE. SEE "SIGNAL AND LIGHTING (COUNTY)".
7. RC Exist 180 W lps, INSTALL ROADWAY 1 (LED) LUMINAIRE.
8. 3"C, MT. CONDUCTORS PER SDG&E REQUIREMENTS.
9. INTERCONNECT TO SIGNAL CONTROLLER IN SOUTHEAST QUADRANT OF OLD HWY 395/VIA ALTIMIRA INTERSECTION. SEE "SIGNAL AND LIGHTING (COUNTY)", +1 PB.
10. SD. TYPE III-CF MODIFIED SERVICE ENCLOSURE. SEE WIRING DIAGRAM "HWY 395" ON THIS SHEET.
11. Exist SIGNAL AND LIGHTING SYSTEM PARTIALLY SHOWN.
12. TO ADVANCED Ø4 LOOPs. INSTALL 2 LOOPS AT Sta. 2260+30. CENTER OF LOOPS SHALL BE 6′ AND 18′ FROM ETW. INSTALL (T) PB BEHIND ES. SEE STRIPING PLANS, PD-25.
13. RC EXISTING SIGNAL PEDESTRIAN HEADS AND ppb.
14. RC Exist PB. INSTALL No. 5 PB.
15. EXISTING TRANSFORMER TO BE REMOVED BY SDG&E.
16. RC Exist DETECTOR HANDHOLE.
17. INSTALL SP-1-T.
18. INSTALL PPB APS FOR Ø2P (LEFT).
19. INSTALL PPB APS FOR Ø2P (RIGHT).
20. INSTALL PPB APS FOR Ø4P (RIGHT).
21. INSTALL PPB APS FOR Ø4P (LEFT).
22. INSTALL PPB APS FOR Ø6P (RIGHT).
23. INSTALL PPB APS FOR Ø6P (LEFT).
24. XFMR BY SDG&E. INSTALL XFMR PAD PER SDG&E REQUIREMENTS.

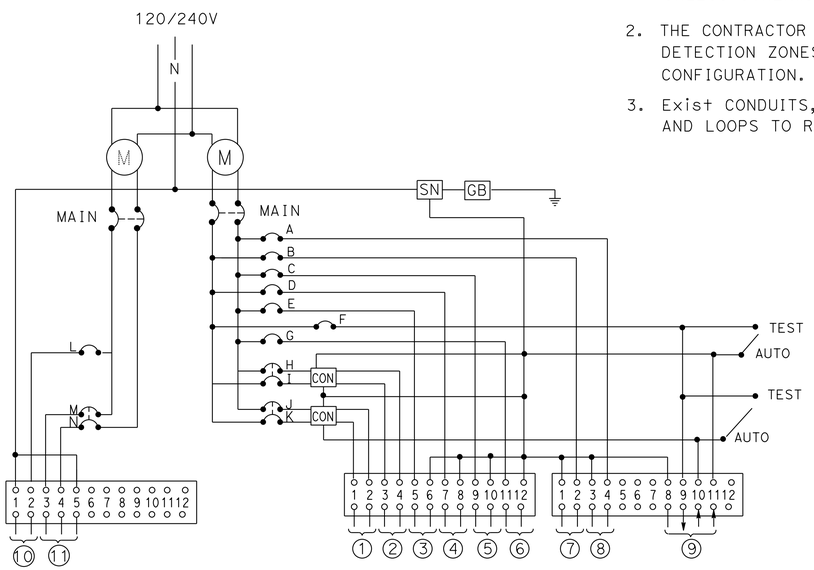

WIRING DIAGRAM, "HWY 395"

(MODIFIED TYPE III-CF SERVICE EQUIPMENT ENCLOSURE CABINET SEE RSP ES-2C AND RSP ES-2F)

CIRCUIT BREAKERS

MAIN-2P-100 A

A-1P-15 A
B-1P-15 A
B-1P-15 A
C-1P-15-A
D-1P-20 A
E-1P-30 A
F-1P-15 A
G-1P-20 A
H, I 2P-30 A
J, K 2P-30 A
L-1P-15 A
M, N 2P-40 A

1 - LIGHTING
2 - SIGN
3 - SIGNAL
4 - SPARE
5 - TDC
6 - CCTV
7 - FB
8 - SPARE
9 - PEU
10 - Irr
11 - HUB

APPROVED FOR ELECTRICAL WORK ONLY

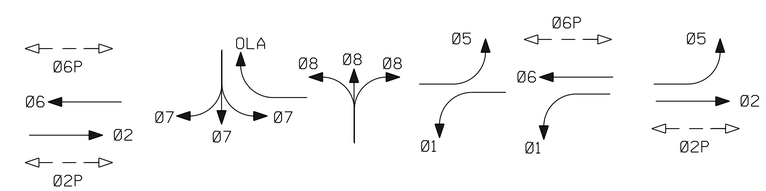

EXISTING TRAFFIC PHASE DIAGRAM

STEADY DEMAND SEQUENCE →

SIGNAL No.: P17.012
ROUTE 76 AND OLD HIGHWAY 395

SIGNAL AND LIGHTING (LOCATION 4)

E-41

STATE OF CALIFORNIA - DEPARTMENT OF TRANSPORTATION
Caltrans® TRAFFIC ELECTRICAL
FUNCTIONAL SUPERVISOR: RAJPREET SINGH
CALCULATED-DESIGNED BY: ENRIQUE BERNAL
CHECKED BY: FARIBA RAMOS
REVISED BY
DATE REVISED

LAST REVISION 01-18-14
DATE PLOTTED => 20-MAR-2014
TIME PLOTTED => 15:57

Dist	COUNTY	ROUTE	POST MILES TOTAL PROJECT	SHEET No.	TOTAL SHEETS
11	SD	15,76	R46.2/R46.8, R12.1/R17.7	1050	1273

Fariba Ramos 02-20-14
REGISTERED ELECTRICAL ENGINEER DATE

03-24-14
PLANS APPROVAL DATE

REGISTERED PROFESSIONAL ENGINEER FARIBA RAMOS No. E15619 Exp. 12-31-15 ELECTRICAL STATE OF CALIFORNIA

THE STATE OF CALIFORNIA OR ITS OFFICERS OR AGENTS SHALL NOT BE RESPONSIBLE FOR THE ACCURACY OR COMPLETENESS OF SCANNED COPIES OF THIS PLAN SHEET.

NOTES:

1. STATE-FURNISHED MODEL 332 CABINET. FOUNDATION PER ES-64. FURNISH AND INSTALL VDU, COMMUNICATION CARD, AND VIDEO DISPLAY IN CABINET.
2. FURNISH AND INSTALL BATTERIES AND EXTERNAL BBU SYSTEM CABINET. SEE ELECTRICAL DETAILS.
3. 3"C, MT. (CONDUCTORS PER SDG&E REQUIREMENTS).
4. DETAIL U ES-7N. SEE SIGN PLANS.
5. TERMINATE EVC IN RED SECTION OF SIGNAL HEAD. LEAVE 3' OF SLACK.
6. SNS, SEE SIGN PLANS.
7. RL Exist TYPE 15-FBS FROM "SIGNAL AND LIGHTING (LOCATION 4)", ADVANCED FB INSTALLATION, SEE ES-7J. SEE SIGN PLANS.
8. TYPE III-BR SERVICE EQUIPMENT ENCLOSURE. SEE WIRING DIAGRAM "VIA ALTIMIRA" ON E-43.
9. FOUR SECTION SIGNAL FACE. SEE DETAIL "S" THIS SHEET.

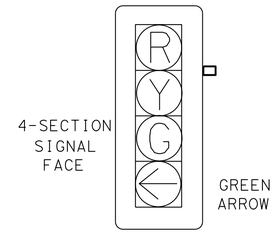

DETAIL "S"

POLES (A) & (G)

NO SCALE

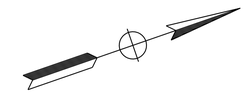

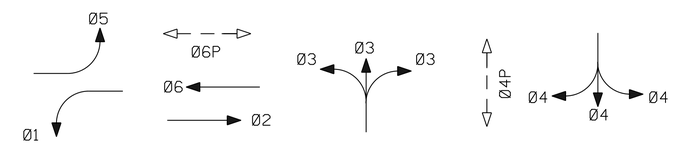

PROPOSED TRAFFIC PHASE DIAGRAM

STEADY DEMAND SEQUENCE →

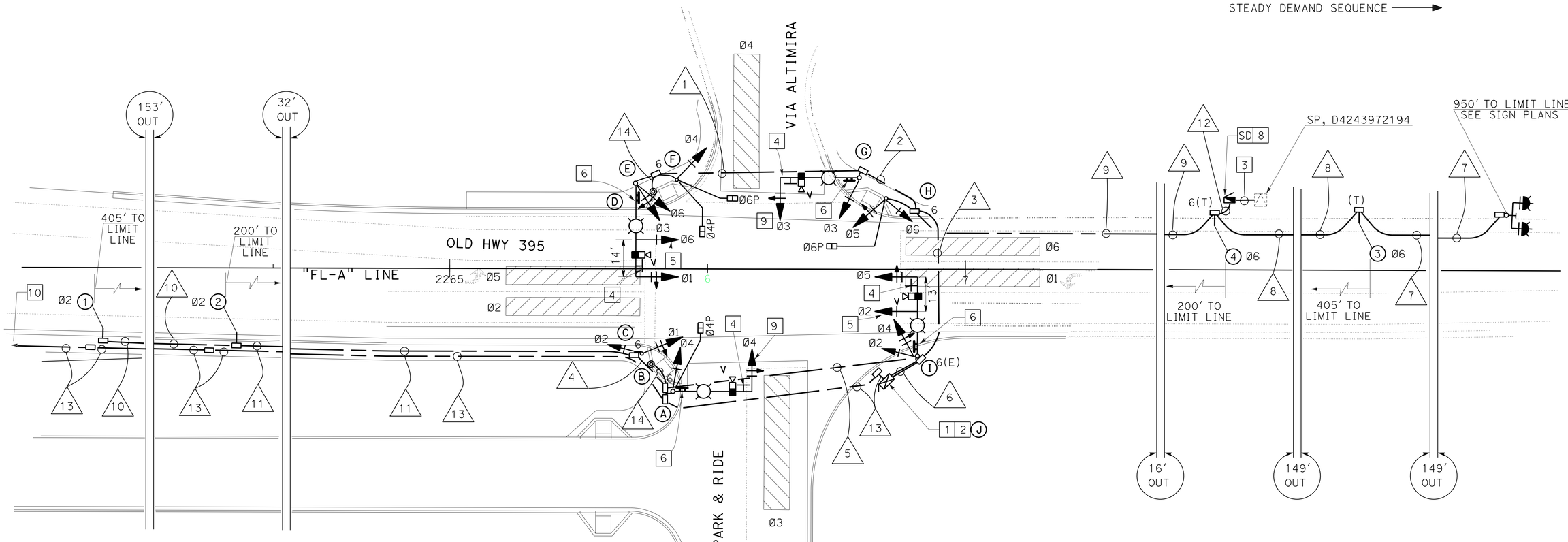

NOTES:

10. INTERCONNECT CONTINUES TO SIGNAL CONTROLLER, p17.012. SEE "SIGNAL AND LIGHTING (LOCATION 4)".
11. FOR ACCURATE RIGHT OF WAY DATA, CONTACT RIGHT OF WAY ENGINEERING AT THE DISTRICT OFFICE.

OLD HWY 395 AND VIA ALTIMIRA

SIGNAL AND LIGHTING (COUNTY)

SCALE: 1" = 20'

APPROVED FOR ELECTRICAL WORK ONLY

E-42

STATE OF CALIFORNIA - DEPARTMENT OF TRANSPORTATION
Caltrans® TRAFFIC ELECTRICAL

FUNCTIONAL SUPERVISOR: RAJPREET SINGH
CALCULATED-DESIGNED BY: ENRIQUE BERNAL
CHECKED BY: FARIBA RAMOS
REVISED BY
DATE REVISED

LAST REVISION 01-18-14 | DATE PLOTTED => 20-MAR-2014 | TIME PLOTTED => 15:57

Dist	COUNTY	ROUTE	POST MILES TOTAL PROJECT	SHEET No.	TOTAL SHEETS
11	SD	15,76	R46.2/R46.8, R12.1/R17.7	1051	1273

Fariba Ramos 02-20-14
REGISTERED ELECTRICAL ENGINEER DATE

03-24-14
PLANS APPROVAL DATE

REGISTERED PROFESSIONAL ENGINEER FARIBA RAMOS No. E15619 Exp. 12-31-15 ELECTRICAL STATE OF CALIFORNIA

THE STATE OF CALIFORNIA OR ITS OFFICERS OR AGENTS SHALL NOT BE RESPONSIBLE FOR THE ACCURACY OR COMPLETENESS OF SCANNED COPIES OF THIS PLAN SHEET.

CONDUIT AND CONDUCTOR SCHEDULE

AWG SIZE OR CABLE TYPE	PHASE	POLE OR CIRCUIT	CONDUIT SIZE AND RUN 3" (1)	3" (2)	3" (3)	2" (4)	3" (5)	2-3" (6)
No. 14 CONDUCTORS		POLE - A					1	1
3CSC / 12CSC		B					1	1
		C				1	1	1
		D	2	2	2			2
		E	1	1	1		1	
		F	1 1	1	1		1	1
		G		1	1			1
		H			1			1
		I						2
TOTAL 3CSC / 12CSC			2 3	2 4	2 5	1	1 2	3 9
6		SIGNAL			2			2
8		LIGHTING	2	2	2		2	
14		PEU		3				
DLC	Ø2					2	2	2
	Ø6				2			2
VIDEO CABLE HARNESS	Ø2+Ø5							1
	Ø4						1	1
	Ø6+Ø1		1	1	1			1
	Ø3			1	1			1
EVC			1	1	1			2
TOTAL CONDUCTORS / CABLES			9	14	16	3	8	24
NOTES								

CONDUIT NOTES:

7. 2"C, 2#10 (FB)
8. 2"C, 1 DLC, 2#10 (FB)
9. 2"C, 2#6 (SIG), 2#8 (LTG), 3#14 (PEU), 2 DLC
10. 1½"C, 1 DLC
11. 1½"C, 2 DLC
12. 2"C, 2#6 (SIG), 2#8 (LTG), 2#10 (FB), 3#14 (PEU)
13. 2"C, 1 SIC (INTERCONNECT)
14. 1"C, 1-9CSC

NOTE:

1. APS AND COUNT DOWN PEDESTRIAN SIGNAL HEAD.

EQUIPMENT AND POLE SCHEDULE

Loc	STANDARD TYPE	SMA (ft)	LMA (ft)	PLACEMENT DIMENSIONS A (ft)	B (ft)	SIGNAL MOUNTING AND PLACEMENT VEHICLE POLE	VEHICLE MASTARM	PEDESTRIAN [1] SIGNAL	PPB	REMARKS
A	19-4-100	30	12	6.0	3.0	SV-1-T	MAS-4B	SP-1-T	-	250 W HPS VIS SNS
B	PPB POST	-	-	6.0	6.4	-	-	-	Ø4P →	-
C	1-A	-	-	3.0	3.5	TV-2-T	-	-	-	-
D	24-4-100	35	15	0.0	9.0	SV-2-T	MAS MAT	-	-	250 W HPS VIS SNS
E	PPB POST	-	-	5.3	6.0	-	-	-	← Ø4P	-
F	1-A	-	-	14.5	6.0	TV-1-T	-	SP-2-T	Ø6P →	-
G	19-4-100	30	12	17.5	5.0	SV-1-T	MAS-4B	-	-	250 W HPS VIS, PEU SNS
H	1-A	-	-	6.4	6.5	TV-2-T	-	SP-1-T	Ø6P →	-
I	19-4-100	30	12	25.0	3.5	SV-2-T	MAS MAT	-	-	250 W HPS VIS SNS
J	STATE-FURNISHED MODEL 170 CONTROLLER ASSEMBLY.									

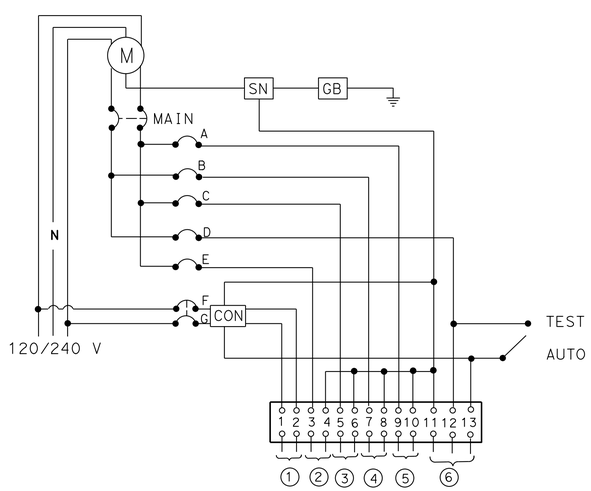

WIRING DIAGRAM, "VIA ALTIMIRA"

(TYPE III-BR SERVICE EQUIPMENT ENCLOSURE SEE RSP ES-2C & RSP ES-2E)

CIRCUIT BREAKERS

MAIN-2P-100 A

A-1P-15 A
B-1P-15 A
C-1P-15 A
D-1P-15 A
E-1P-30 A
F, G } 2P-30 A

1. - LIGHTING (UNMETERED)
2. - SIGNAL
3. - SPARE
4. - SPARE
5. - SPARE
6. - PEU

OLD HWY 395 AND VIA ALTIMIRA

SIGNAL AND LIGHTING (COUNTY)

APPROVED FOR ELECTRICAL WORK ONLY

E-43

STATE OF CALIFORNIA - DEPARTMENT OF TRANSPORTATION
Caltrans TRAFFIC ELECTRICAL
FUNCTIONAL SUPERVISOR: RAJPREET SINGH
CALCULATED-DESIGNED BY: FARIBA RAMOS
CHECKED BY: ENRIQUE BERNAL
REVISED BY
DATE REVISED

LAST REVISION 01-18-14
DATE PLOTTED => 20-MAR-2014
TIME PLOTTED => 15:57

Dist	COUNTY	ROUTE	POST MILES TOTAL PROJECT	SHEET No.	TOTAL SHEETS
11	SD	15,76	R46.2/R46.8, R12.1/R17.7	1052	1273

Fariba Ramos 02-20-14
REGISTERED ELECTRICAL ENGINEER DATE

03-24-14
PLANS APPROVAL DATE

REGISTERED PROFESSIONAL ENGINEER FARIBA RAMOS No. E15619 Exp. 12-31-15 ELECTRICAL STATE OF CALIFORNIA

THE STATE OF CALIFORNIA OR ITS OFFICERS OR AGENTS SHALL NOT BE RESPONSIBLE FOR THE ACCURACY OR COMPLETENESS OF SCANNED COPIES OF THIS PLAN SHEET.

NOTE:

1. THE CONTRACTOR SHALL VERIFY ALL CONTROLLING FIELD DIMENSIONS BEFORE ORDERING OR FABRICATING ANY MATERIAL.
2. FOR ACCURATE RIGHT OF WAY DATA, CONTACT RIGHT OF WAY ENGINEETING AT THE DISTRICT OFFICE.

[3] PREFORMED INDUCTIVE LOOPS. SEE SIGNAL AND LIGHTING (LOCATION 3) PLANS, SEE E-37.

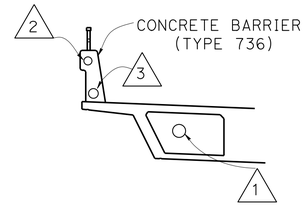

DETAIL 'L'
NO SCALE

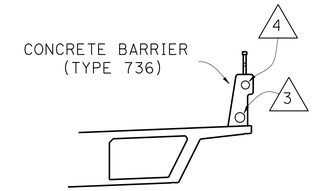

DETAIL 'R'
NO SCALE

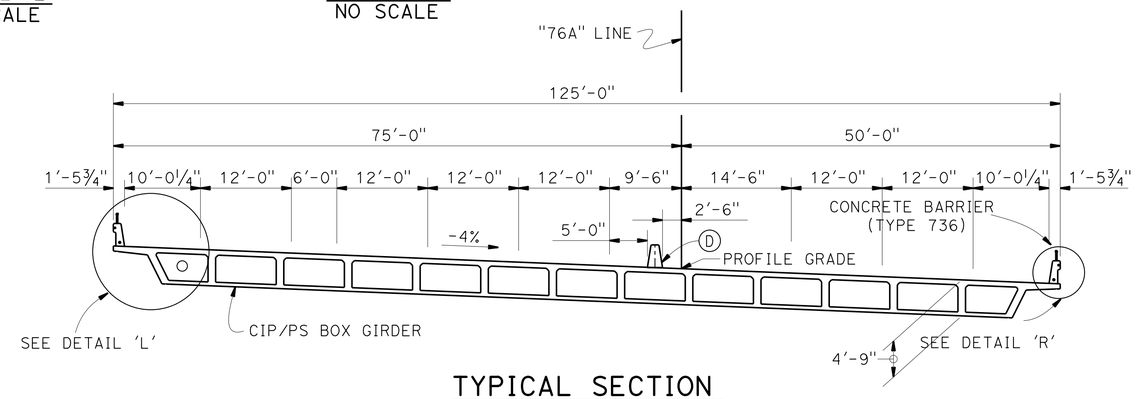

TYPICAL SECTION
1" = 10'

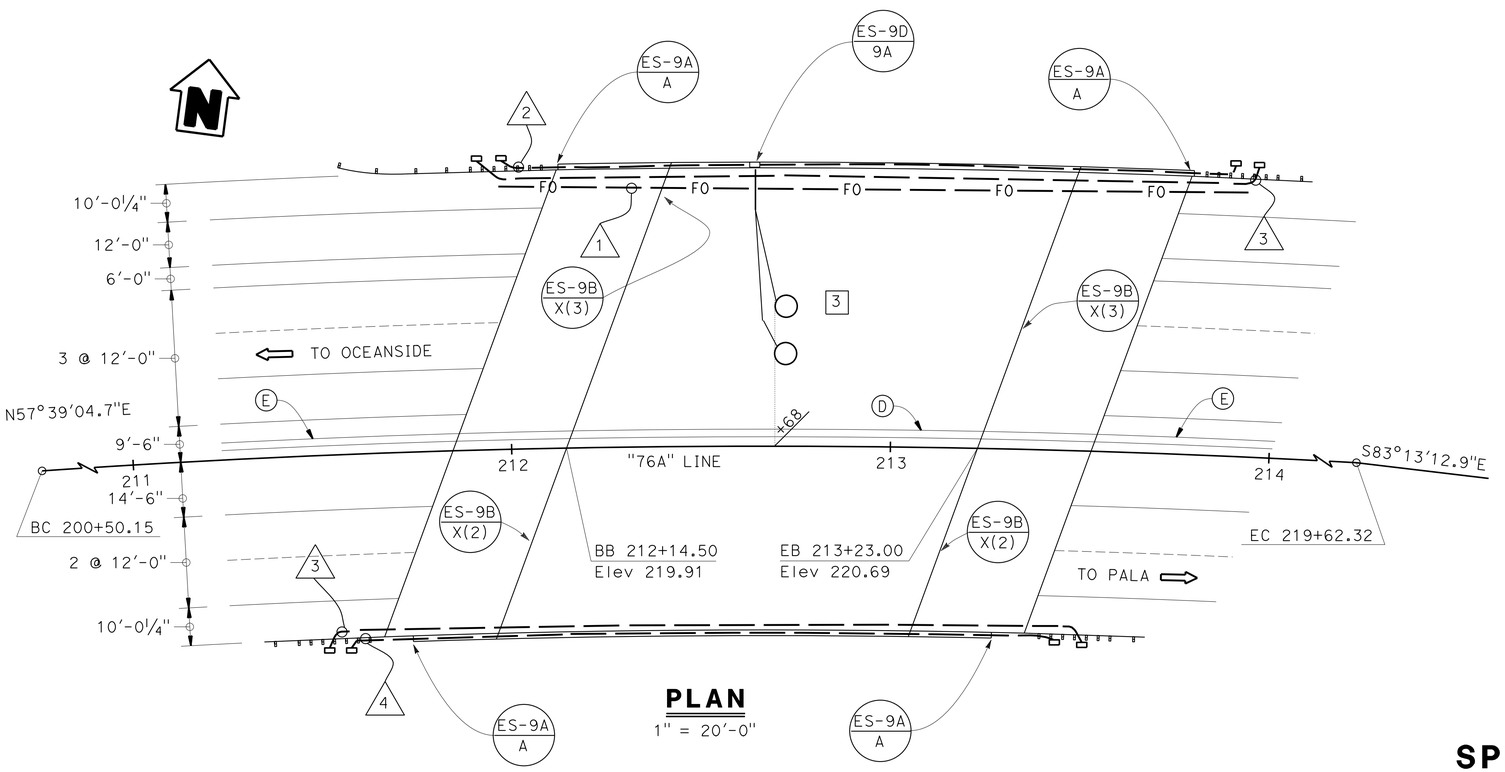

PLAN
1" = 20'-0"

CONDUIT NOTES:

1. MDCS (4), (4" FIBERGLASS CONDUIT) (SEE CLOSED CIRCUIT TELEVISION SYSTEM PLANS)
2. 2"C, SEE SIGNAL AND LIGHTING PLANS
3. 3"C, SPRINKLER CONTROL CONDUIT (BRIDGE)
4. 2"C, MT (LIGHTING CONDUIT (BRIDGE))

BRIDGE No. 57-1234

ROUTE 76 - LIVE OAK BRIDGE

LIGHTING CONDUIT (BRIDGE)
SPRINKLER CONTROL CONDUIT (BRIDGE)
BRIDGE ELECTRICAL

APPROVED FOR ELECTRICAL WORK ONLY

SCALE AS SHOWN

E-44

STATE OF CALIFORNIA - DEPARTMENT OF TRANSPORTATION
Caltrans® TRAFFIC ELECTRICAL

FUNCTIONAL SUPERVISOR: RAJPREET SINGH
CALCULATED-DESIGNED BY: ENRIQUE BERNAL
CHECKED BY: FARIBA RAMOS
REVISED BY
DATE REVISED

LAST REVISION 01-18-14
DATE PLOTTED => 20-MAR-2014
TIME PLOTTED => 15:57

Dist	COUNTY	ROUTE	POST MILES TOTAL PROJECT	SHEET No.	TOTAL SHEETS
11	SD	15,76	R46.2/R46.8, R12.1/R17.7	1053	1273

Fariba Ramos 02-20-14
REGISTERED ELECTRICAL ENGINEER DATE

03-24-14
PLANS APPROVAL DATE

REGISTERED PROFESSIONAL ENGINEER FARIBA RAMOS No. E15619 Exp. 12-31-15 ELECTRICAL STATE OF CALIFORNIA

THE STATE OF CALIFORNIA OR ITS OFFICERS OR AGENTS SHALL NOT BE RESPONSIBLE FOR THE ACCURACY OR COMPLETENESS OF SCANNED COPIES OF THIS PLAN SHEET.

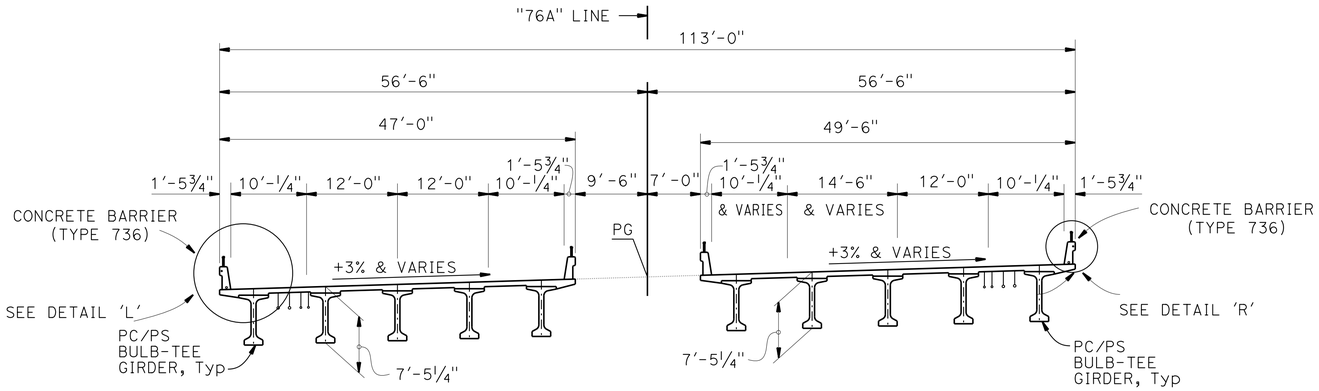

TYPICAL SECTION

1" = 10'-0"

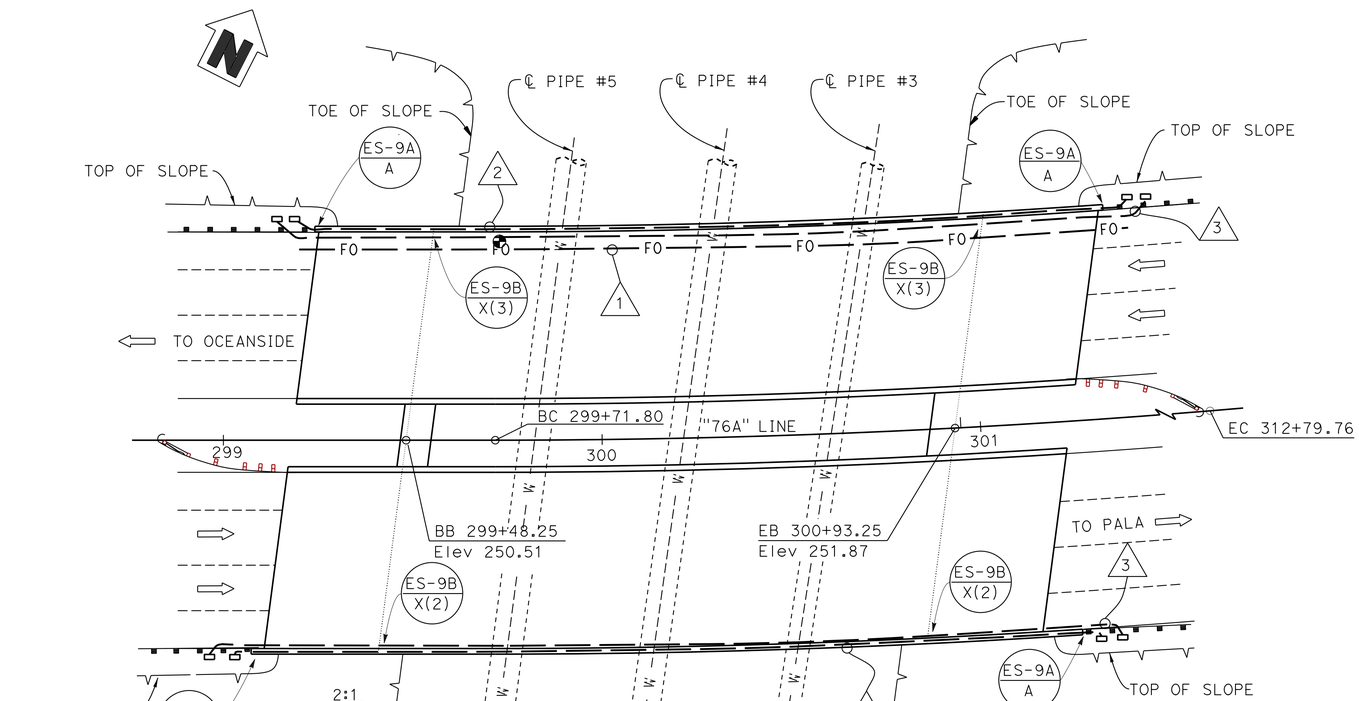

PLAN

1" = 20'-0"

CONDUIT NOTES:

1. MDCS (4), (4" FIBERGLASS CONDUIT) (SEE CLOSED CIRCUIT TELEVISION SYSTEM PLANS)
2. 2"C, MT (LIGHTING CONDUIT (BRIDGE))
3. 3"C, SPRINKLER CONTROL CONDUIT (BRIDGE)

NOTE:

1. THE CONTRACTOR SHALL VERIFY ALL CONTROLLING FIELD DIMENSIONS BEFORE ORDERING OR FABRICATING ANY MATERIAL.
2. FOR ACCURATE RIGHT OF WAY DATA, CONTACT RIGHT OF WAY ENGINEETING AT THE DISTRICT OFFICE.

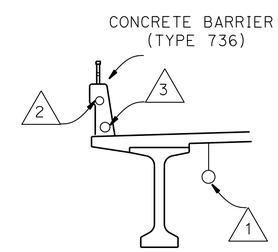

DETAIL 'L'
NO SCALE

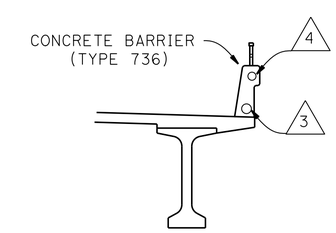

DETAIL 'R'
NO SCALE

BRIDGE No. 57-1235L/R

ROUTE 76 - SDCWA PIPELINE OVERCROSSING

LIGHTING CONDUIT (BRIDGE)
SPRINKLER CONTROL CONDUIT (BRIDGE)
BRIDGE ELECTRICAL

APPROVED FOR ELECTRICAL WORK ONLY

SCALE AS SHOWN

E-45

STATE OF CALIFORNIA - DEPARTMENT OF TRANSPORTATION
Caltrans
TRAFFIC ELECTRICAL

FUNCTIONAL SUPERVISOR: RAJPREET SINGH
CALCULATED-DESIGNED BY: FARIBA RAMOS
CHECKED BY: ENRIQUE BERNAL
REVISED BY
DATE REVISED

LAST REVISION 01-18-14 | DATE PLOTTED => 20-MAR-2014 | TIME PLOTTED => 15:57

Dist	COUNTY	ROUTE	POST MILES TOTAL PROJECT	SHEET No.	TOTAL SHEETS
11	SD	15,76	R46.2/R46.8, R12.1/R17.7	1054	1273

Fariba Ramos 02-20-14
REGISTERED ELECTRICAL ENGINEER DATE

03-24-14
PLANS APPROVAL DATE

REGISTERED PROFESSIONAL ENGINEER FARIBA RAMOS No. E15619 Exp. 12-31-15 ELECTRICAL STATE OF CALIFORNIA

THE STATE OF CALIFORNIA OR ITS OFFICERS OR AGENTS SHALL NOT BE RESPONSIBLE FOR THE ACCURACY OR COMPLETENESS OF SCANNED COPIES OF THIS PLAN SHEET.

NOTE:

1 PLACE 2" DUCT TAPE ALONG THE EDGE OF SAWCUT BEFORE POURING EPOXY SEALANT. LEVEL EPOXY SEALANT TO FINISHED ROAD SURFACE AND REMOVE DUCT TAPE WHEN EPOXY IS CURED.

FIRST SENSOR TRANSMISSION CABLE	FIRST SENSOR DLC	SECOND SENSOR TRANSMISSION CABLE	SECOND SENSOR DLC
1-N-1S	1-N-1	1-N-2S	1-N-2

PIEZOELECTRIC SENSOR IDENTIFICATION

DIRECTION OF TRAVEL ⟶
(TYPICAL)

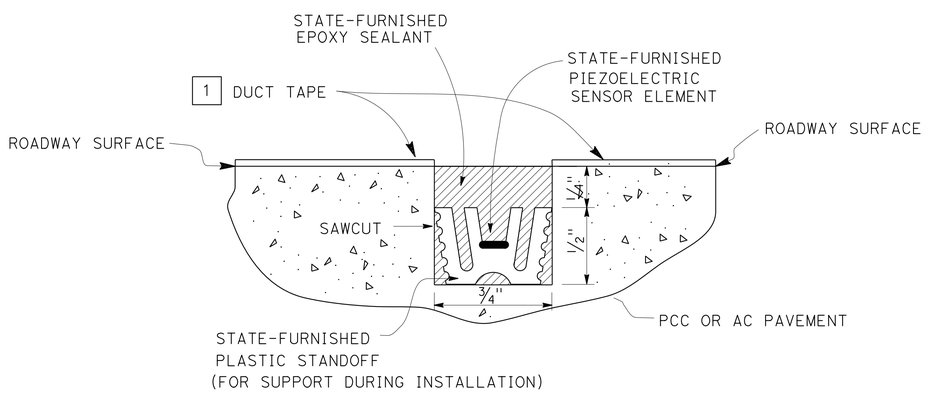

SECTION B-B

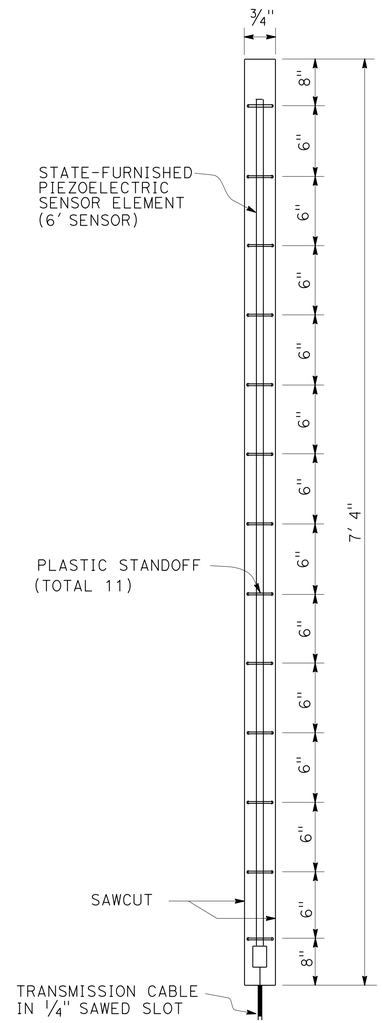

DETAIL "M"
SENSOR INSTALLATION

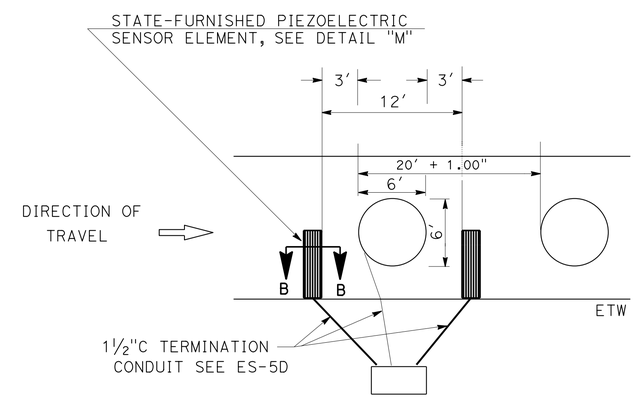

SENSOR PLACEMENT
TYPICAL

PIEZOELECTRIC SENSOR INSTALLATION DETAILS

APPROVED FOR ELECTRICAL WORK ONLY

TRAFFIC MONITORING STATION
(PIEZOELECTRIC SENSOR)
(ELECTRICAL DETAIL)

NO SCALE

E-46

STATE OF CALIFORNIA - DEPARTMENT OF TRANSPORTATION
Caltrans® TRAFFIC ELECTRICAL

FUNCTIONAL SUPERVISOR: RAJPREET SINGH
CALCULATED-DESIGNED BY: FARIBA RAMOS
CHECKED BY: ENRIQUE BERNAL
REVISED BY
DATE REVISED

LAST REVISION 01-18-14 | DATE PLOTTED => 20-MAR-2014 | TIME PLOTTED => 15:57

Dist	COUNTY	ROUTE	POST MILES TOTAL PROJECT	SHEET No.	TOTAL SHEETS
11	SD	15,76	R46.2/R46.8, R12.1/R17.7	1055	1273

REGISTERED ELECTRICAL ENGINEER 02-20-14 DATE

03-24-14
PLANS APPROVAL DATE

REGISTERED PROFESSIONAL ENGINEER FARIBA RAMOS No. E15619 Exp. 12-31-15 ELECTRICAL STATE OF CALIFORNIA

THE STATE OF CALIFORNIA OR ITS OFFICERS OR AGENTS SHALL NOT BE RESPONSIBLE FOR THE ACCURACY OR COMPLETENESS OF SCANNED COPIES OF THIS PLAN SHEET.

NOTES:

1. SEE CAMERA CABLE CROSS SECTION ON THIS SHEET.
2. RJ-45 OR CONNECTOR PER VIDEO ENCODER MANUFACTURER'S REQUIREMENT.
3. PROTECT AND INSULATE CABLES/CONDUCTORS USING HEAT-SHRINK TUBING METHOD. NO SPLICES ALLOWED EXCEPT FOR POWER.
4. GROUND CAMERA CABLE AT CCTV CABINET.
5. MIn. 50" OF SLACK IS REQUIRED FROM CAMERA CABLE TO THE CONNECTORS IN CCTV CABINETS.
6. CAMERA CONTROL CABLE 22 AWG OR LARGER.
7. TO VIDEO ENCODER AT CCTV CABINET, VIDEO INPUT.
8. SEE TABLE "A" FOR CONNECTOR'S PIN ASSIGNMENT.
9. PLACE WATER TIGHT CABLE ENTRY SEAL AND WATER TIGHT SEAL RING REQUIRED FOR CONNECTOR.
10. THE CONTRACTOR SHALL VERIFY THE LENGTH OF CAMERA CABLE AT EACH LOCATION AS SHOWN IN ELECTRICAL PLANS. A SLACK OF 80" IS REQUIRED AT EACH LOCATION.
11. SEE ELECTRICAL DETAILS FOR CCTV CABINET COMPONENT DIAGRAM.
12. STRAIN RELIEF CABLE GRIP SUITABLE FOR CABLE WEIGHT AND DIAMETER.
13. CONNECT TO ADAPETER, SEE "ADAPTER DETAIL".
14. OUTSIDE JACKET OR SLEEVING REQUIRED.

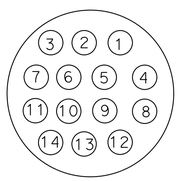

CONNECTOR TO CAMERA
(PLAN VIEW) 8

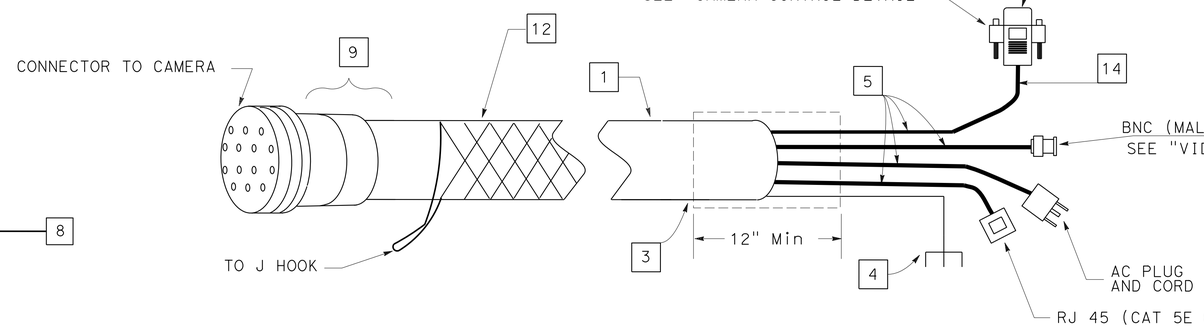

CAMERA CABLE ASSEMBLY

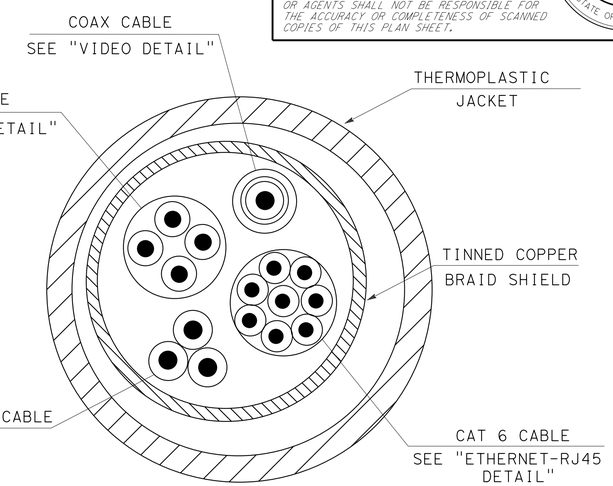

CAMERA CABLE CROSS SECTION

TABLE "A":

PIN ASSIGNMENT

PIN	FUNCTION
1	CAMERA CONTROL RX-
2	CAMERA CONTROL RX+
3	CAMERA CONTROL TX-
4	CAMERA CONTROL TX+
5	CAMERA CABLE GROUND (SHIELD)
8	VIDEO SIGNAL COAX INNER CORE
9	VIDEO SIGNAL COAX SHIELD
10	CAMERA POWER,GROUND
13	CAMERA POWER,AC LOW
14	CAMERA POWER,AC HIGH
6	ETHERNET Tx+
7	ETHERNET Tx-
11	ETHERNET Rx+
12	ETHERNET Rx-

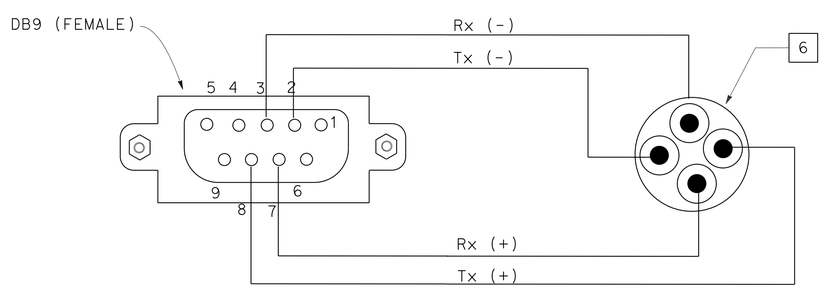

"CAMERA CONTROL DETAIL"

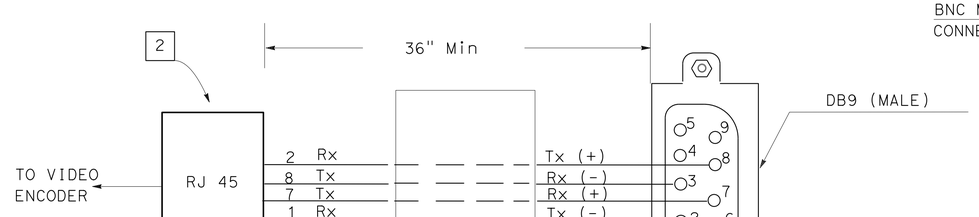

"ADAPTER DETAIL"

DB9 TO RJ 45 MODULAR ADAPTER

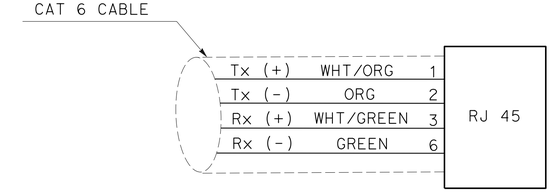

"ETHERNET-RJ45 DETAIL"

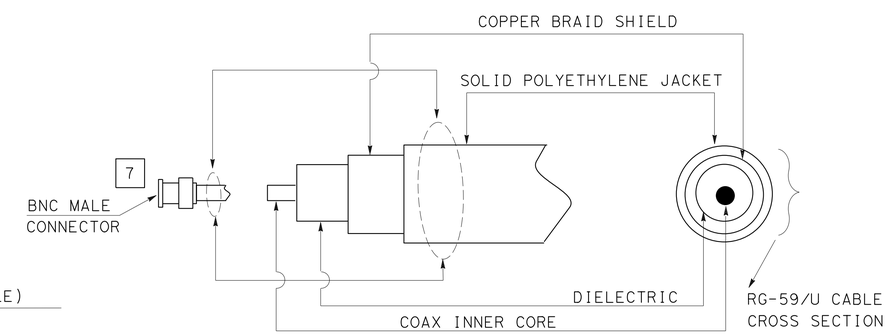

"VIDEO DETAIL"

CLOSED CIRCUIT TELEVISION SYSTEM (ELECTRICAL DETAILS)

NO SCALE

APPROVED FOR ELECTRICAL WORK ONLY

E-47

STATE OF CALIFORNIA - DEPARTMENT OF TRANSPORTATION
Caltrans
TRAFFIC ELECTRICAL

FUNCTIONAL SUPERVISOR: RAJPREET SINGH
CALCULATED-DESIGNED BY: FARIBA RAMOS
CHECKED BY: ENRIQUE BERNAL
REVISED BY
DATE REVISED

LAST REVISION 01-18-14
DATE PLOTTED => 20-MAR-2014
TIME PLOTTED => 15:57

Dist	COUNTY	ROUTE	POST MILES TOTAL PROJECT	SHEET No.	TOTAL SHEETS
11	SD	15,76	R46.2/R46.8, R12.1/R17.7	1056	1273

REGISTERED ELECTRICAL ENGINEER 02-20-14 DATE

03-24-14
PLANS APPROVAL DATE

REGISTERED PROFESSIONAL ENGINEER FARIBA RAMOS No. E15619 Exp. 12-31-15 ELECTRICAL STATE OF CALIFORNIA

THE STATE OF CALIFORNIA OR ITS OFFICERS OR AGENTS SHALL NOT BE RESPONSIBLE FOR THE ACCURACY OR COMPLETENESS OF SCANNED COPIES OF THIS PLAN SHEET.

NOTES:

1. CLOSED CIRCUIT TELEVISION SYSTEM PARTIALLY SHOWN.

[2] TO Exist COMMUNICATION SYSTEM, F/O VAULT Sta. 82+00.

[3] SPLICE FO72 TO EXIST FIBER OPTIC CABLE, fo72.
SEE E-25, [2] AND [8].

[4] TO Exist FIBER OPTIC VAULT, Approx Sta. 336+40 "A" LINE.

[5] TO Exist FDU AT SIGANL CABINET, p17.012.

[6] TO Exist FDU AT CCTV #147 CABINET, SR46.383T.

[7] TO Exist FDU AT TMS CABINET, UR46.355

[7] TO Exist FDU AT TMS CABINET, UR46.355

[8] Exist SPLICE DETAILS NOT SHOWN.

[9] SEE FDU TO FIBER CABLE TERMINATION DETAIL, E-52.

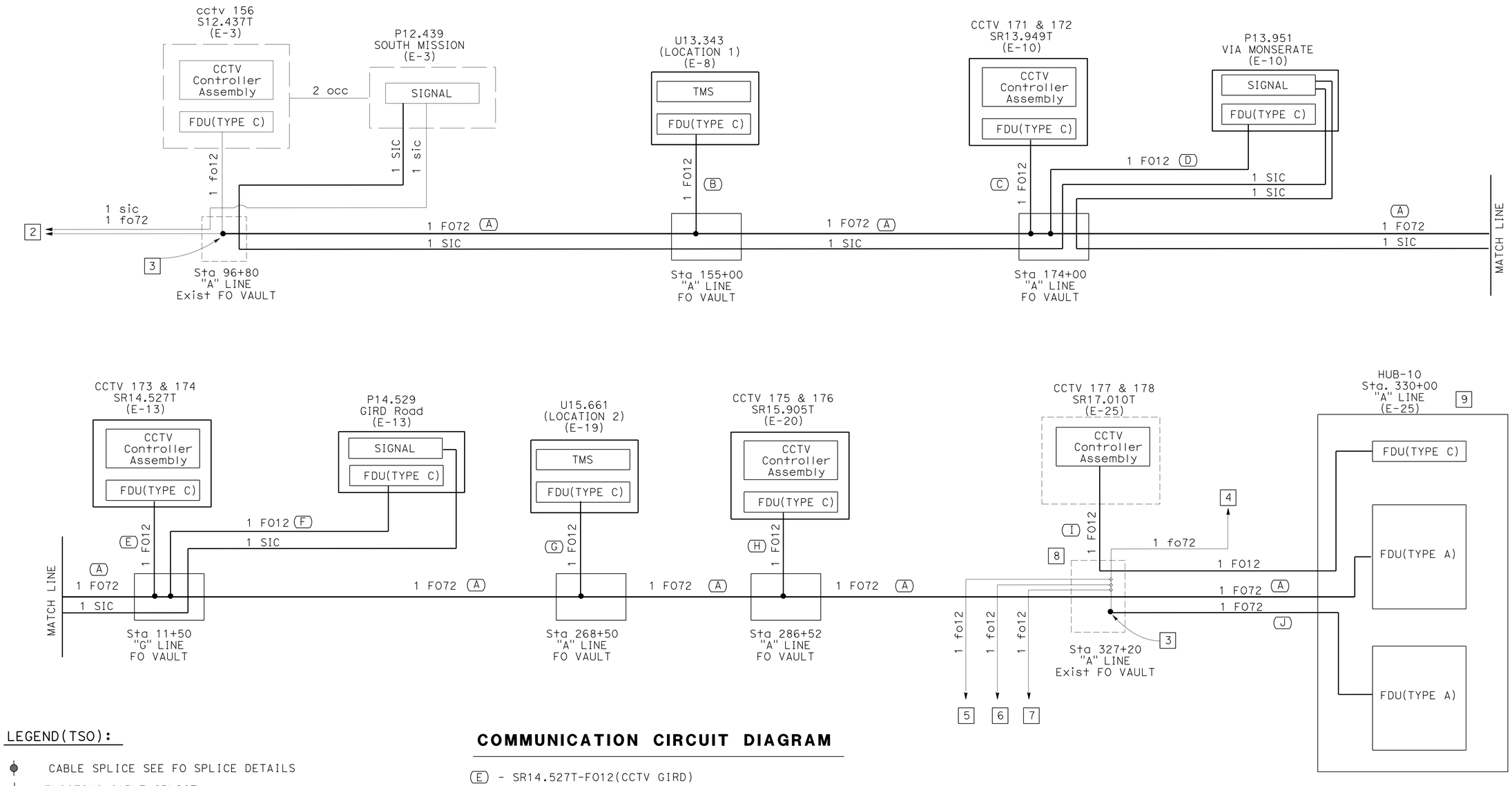

LEGEND(TSO):

- CABLE SPLICE SEE FO SPLICE DETAILS
- EXISTING CABLE SPLICE
- (A) - 76MELROSE/HUB10-FO72(DB)
- (B) - U13.343-FO12(TMS WEST OF VIA MONSERATE)
- (C) - SR13.949T-FO12(CCTV VIA MONSERATE)
- (D) - P13.951-FO12(SIGNAL VIA MONSERATE)

COMMUNICATION CIRCUIT DIAGRAM

- (E) - SR14.527T-FO12(CCTV GIRD)
- (F) - P14.529-FO12(SIGNAL GIRD)
- (G) - U15.661-FO12(TMS WEST OF STAR TRACK)
- (H) - SR15.905T-FO12(CCTV START TRACK)
- (I) - SR17.010T-FO12(CCTV OLD395)
- (J) - 76&15/HUB10-FO72(DB)

APPROVED FOR ELECTRICAL WORK ONLY

CLOSED CIRCUIT TELEVISION SYSTEM (ELECTRICAL DETAILS)

NO SCALE

E-48

STATE OF CALIFORNIA - DEPARTMENT OF TRANSPORTATION
Caltrans® TRAFFIC ELECTRICAL

FUNCTIONAL SUPERVISOR: RAJPREET SINGH
CALCULATED-DESIGNED BY: ENRIQUE BERNAL
CHECKED BY: FARIBA RAMOS
REVISED BY
DATE REVISED

LAST REVISION 01-18-14 | DATE PLOTTED => 20-MAR-2014 | TIME PLOTTED => 15:57

Dist	COUNTY	ROUTE	POST MILES TOTAL PROJECT	SHEET No.	TOTAL SHEETS
11	SD	15,76	R46.2/R46.8, R12.1/R17.7	1057	1273

REGISTERED ELECTRICAL ENGINEER 02-20-14 DATE

03-24-14
PLANS APPROVAL DATE

REGISTERED PROFESSIONAL ENGINEER FARIBA RAMOS No. E15619 Exp. 12-31-15 ELECTRICAL STATE OF CALIFORNIA

THE STATE OF CALIFORNIA OR ITS OFFICERS OR AGENTS SHALL NOT BE RESPONSIBLE FOR THE ACCURACY OR COMPLETENESS OF SCANNED COPIES OF THIS PLAN SHEET.

COLOR CODES FOR BUFFER TUBES AND FIBERS:

1. BLUE (BL)
2. ORANGE (OR)
3. GREEN (GR)
4. BROWN (BR)
5. SLATE (SL)
6. WHITE (WT)
7. RED (RD)
8. BLACK (BK)
9. YELLOW (YL)
10. VIOLET (VL)
11. ROSE (RS)
12. AQUA (AQ)

LEGEND:

- SPLICE OF TWO FIBER
- CUT END OF FIBER, NOT SPLICED
- SC FEMALE CONNECTOR ON AN FDU PANEL
- SC MALE CONNECTOR ON AN SMFO PATCHCORD
- SPLICE OF Exist FIBERS TO NEW FIBERS

NOTES:

1. THIS SHEET DOES NOT SHOW ALL THE FO VAULT AND PULL BOXES. SEE CLOSED CIRCUIT TELEVISION SYSTEM PLANS.
2. SEE COMPONENT DIAGRAM IN ELECTRICAL DETAILS.

3 Exist 72 COUNT FIBER OPTIC CABLE, SEE E-3.

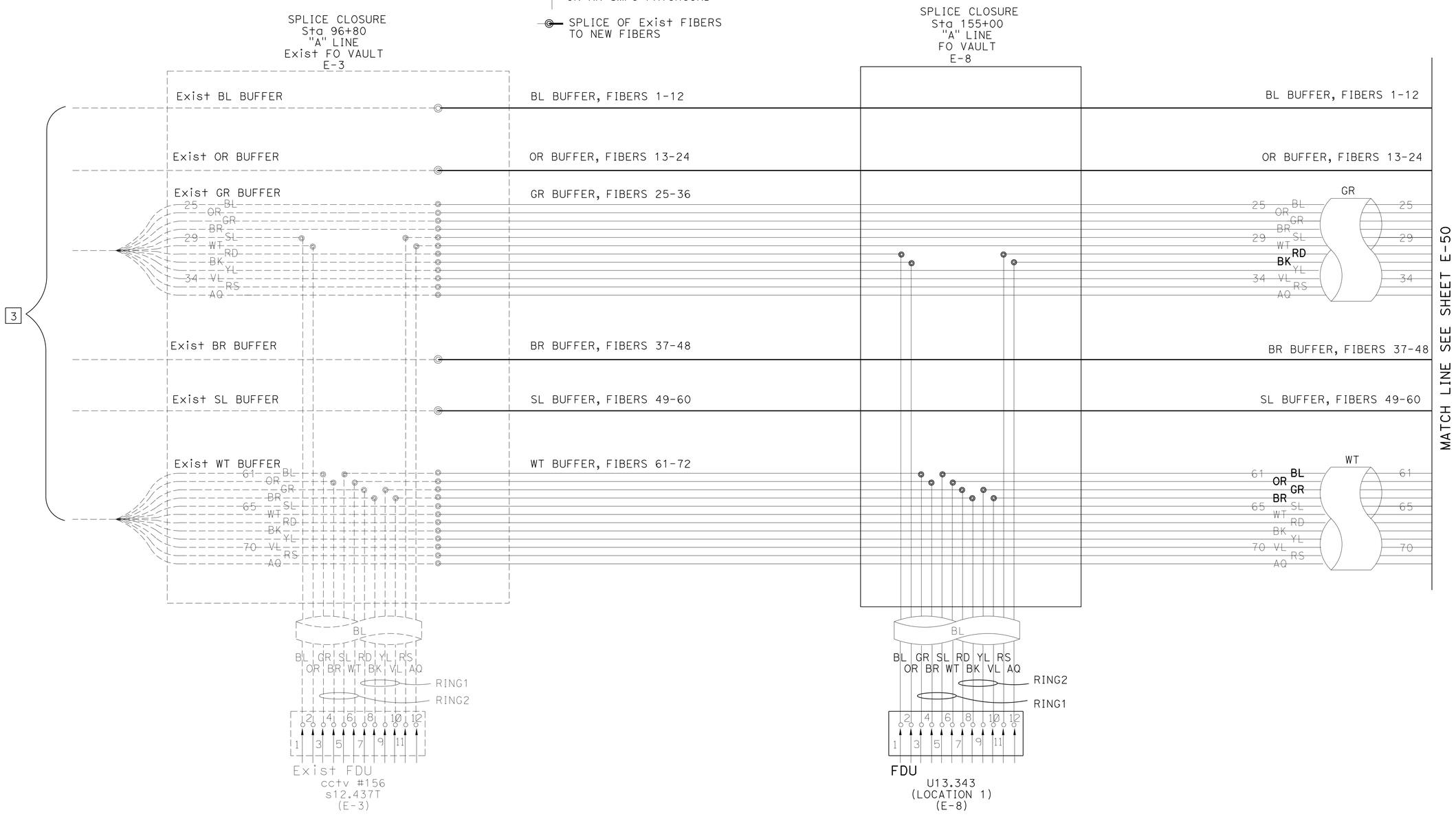

FIBER OPTIC SPLICE DETAILS

CLOSED CIRCUIT TELEVISION SYSTEM (ELECTRICAL DETAILS)

NO SCALE

APPROVED FOR ELECTRICAL WORK ONLY

E-49

STATE OF CALIFORNIA - DEPARTMENT OF TRANSPORTATION
Caltrans
TRAFFIC ELECTRICAL

FUNCTIONAL SUPERVISOR: RAJPREET SINGH
CALCULATED-DESIGNED BY: FARIBA RAMOS
CHECKED BY: ENRIQUE BERNAL
REVISED BY
DATE REVISED

LAST REVISION 01-18-14
DATE PLOTTED => 20-MAR-2014
TIME PLOTTED => 15:57

Dist	COUNTY	ROUTE	POST MILES TOTAL PROJECT	SHEET No.	TOTAL SHEETS
11	SD	15,76	R46.2/R46.8, R12.1/R17.7	1058	1273

REGISTERED ELECTRICAL ENGINEER — DATE: 02-20-14

PLANS APPROVAL DATE: 03-24-14

REGISTERED PROFESSIONAL ENGINEER — FARIBA RAMOS — No. E15619 — Exp. 12-31-15 — ELECTRICAL — STATE OF CALIFORNIA

THE STATE OF CALIFORNIA OR ITS OFFICERS OR AGENTS SHALL NOT BE RESPONSIBLE FOR THE ACCURACY OR COMPLETENESS OF SCANNED COPIES OF THIS PLAN SHEET.

COLOR CODES FOR BUFFER TUBES AND FIBERS:

1. BLUE (BL)
2. ORANGE (OR)
3. GREEN (GR)
4. BROWN (BR)
5. SLATE (SL)
6. WHITE (WT)
7. RED (RD)
8. BLACK (BK)
9. YELLOW (YL)
10. VIOLET (VL)
11. ROSE (RS)
12. AQUA (AQ)

LEGEND:

- SPLICE OF TWO FIBER
- CUT END OF FIBER, NOT SPLICED
- SC FEMALE CONNECTOR ON AN FDU PANEL
- SC MALE CONNECTOR ON AN SMFO PATCHCORD
- SPLICE OF Exist FIBERS TO NEW FIBERS

NOTES:

1. THIS SHEET DOES NOT SHOW ALL THE FO VAULT AND PULL BOXES. SEE CLOSED CIRCUIT TELEVISION SYSTEM PLANS.
2. SEE COMPONENT DIAGRAM IN ELECTRICAL DETAILS.

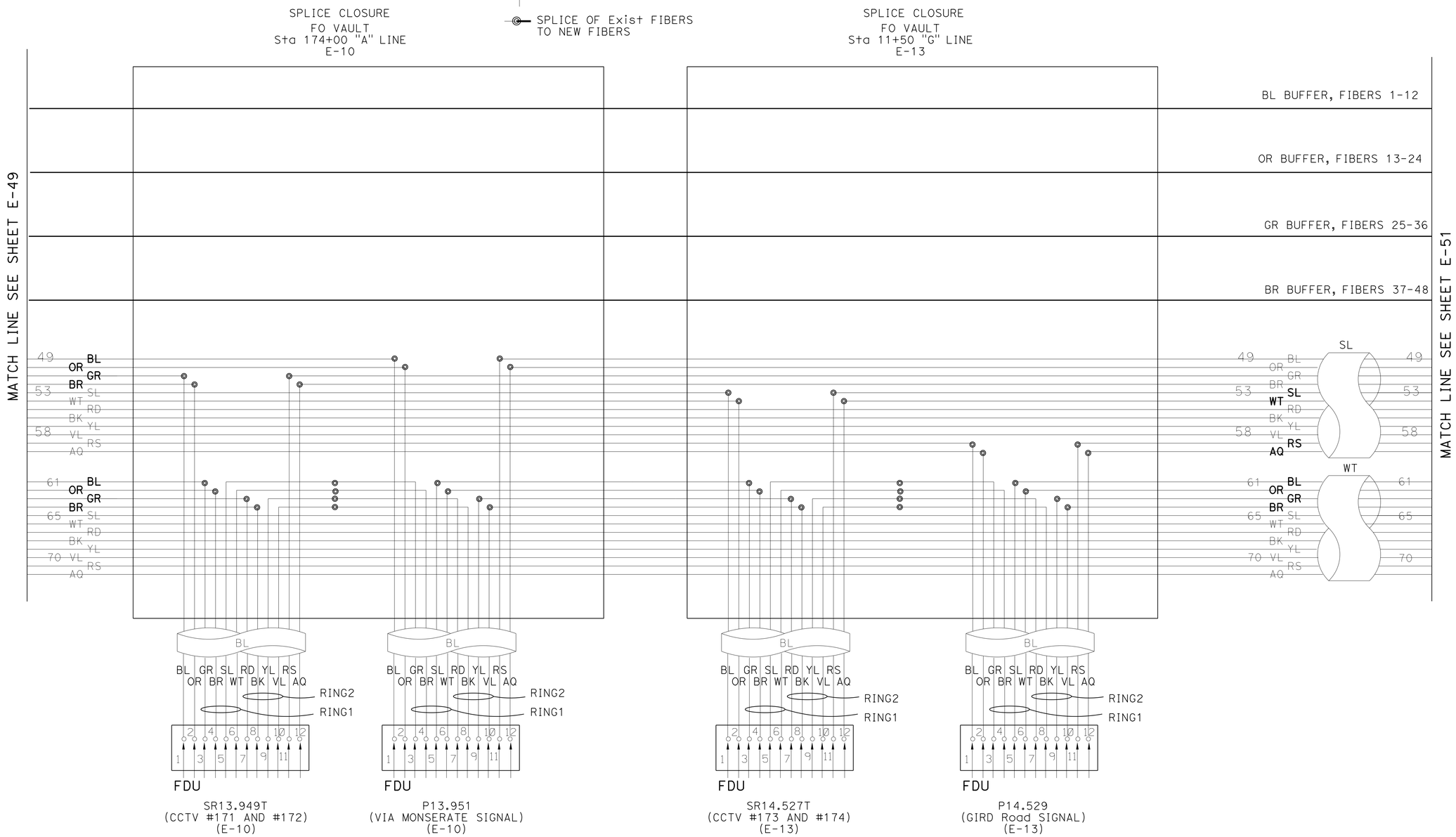

FIBER OPTIC SPLICE DETAILS

APPROVED FOR ELECTRICAL WORK ONLY

NO SCALE

CLOSED CIRCUIT TELEVISION SYSTEM (ELECTRICAL DETAILS)

E-50

STATE OF CALIFORNIA - DEPARTMENT OF TRANSPORTATION
Caltrans
TRAFFIC ELECTRICAL

FUNCTIONAL SUPERVISOR: RAJPREET SINGH
CALCULATED-DESIGNED BY: FARIBA RAMOS
CHECKED BY: ENRIQUE BERNAL
REVISED BY
DATE REVISED

LAST REVISION 01-18-14
DATE PLOTTED => 20-MAR-2014
TIME PLOTTED => 15:57

Dist	COUNTY	ROUTE	POST MILES TOTAL PROJECT	SHEET No.	TOTAL SHEETS
11	SD	15,76	R46.2/R46.8, R12.1/R17.7	1059	1273

Fariba Ramos 02-20-14
REGISTERED ELECTRICAL ENGINEER DATE

03-24-14
PLANS APPROVAL DATE

REGISTERED PROFESSIONAL ENGINEER FARIBA RAMOS No. E15619 Exp. 12-31-15 ELECTRICAL STATE OF CALIFORNIA

THE STATE OF CALIFORNIA OR ITS OFFICERS OR AGENTS SHALL NOT BE RESPONSIBLE FOR THE ACCURACY OR COMPLETENESS OF SCANNED COPIES OF THIS PLAN SHEET.

COLOR CODES FOR BUFFER TUBES AND FIBERS:

1. BLUE (BL)
2. ORANGE (OR)
3. GREEN (GR)
4. BROWN (BR)
5. SLATE (SL)
6. WHITE (WT)
7. RED (RD)
8. BLACK (BK)
9. YELLOW (YL)
10. VIOLET (VL)
11. ROSE (RS)
12. AQUA (AQ)

LEGEND:

- SPLICE OF TWO FIBER
- CUT END OF FIBER, NOT SPLICED
- SC FEMALE CONNECTOR ON AN FDU PANEL
- SC MALE CONNECTOR ON AN SMFO PATCHCORD
- SPLICE OF Exist FIBERS TO NEW FIBERS

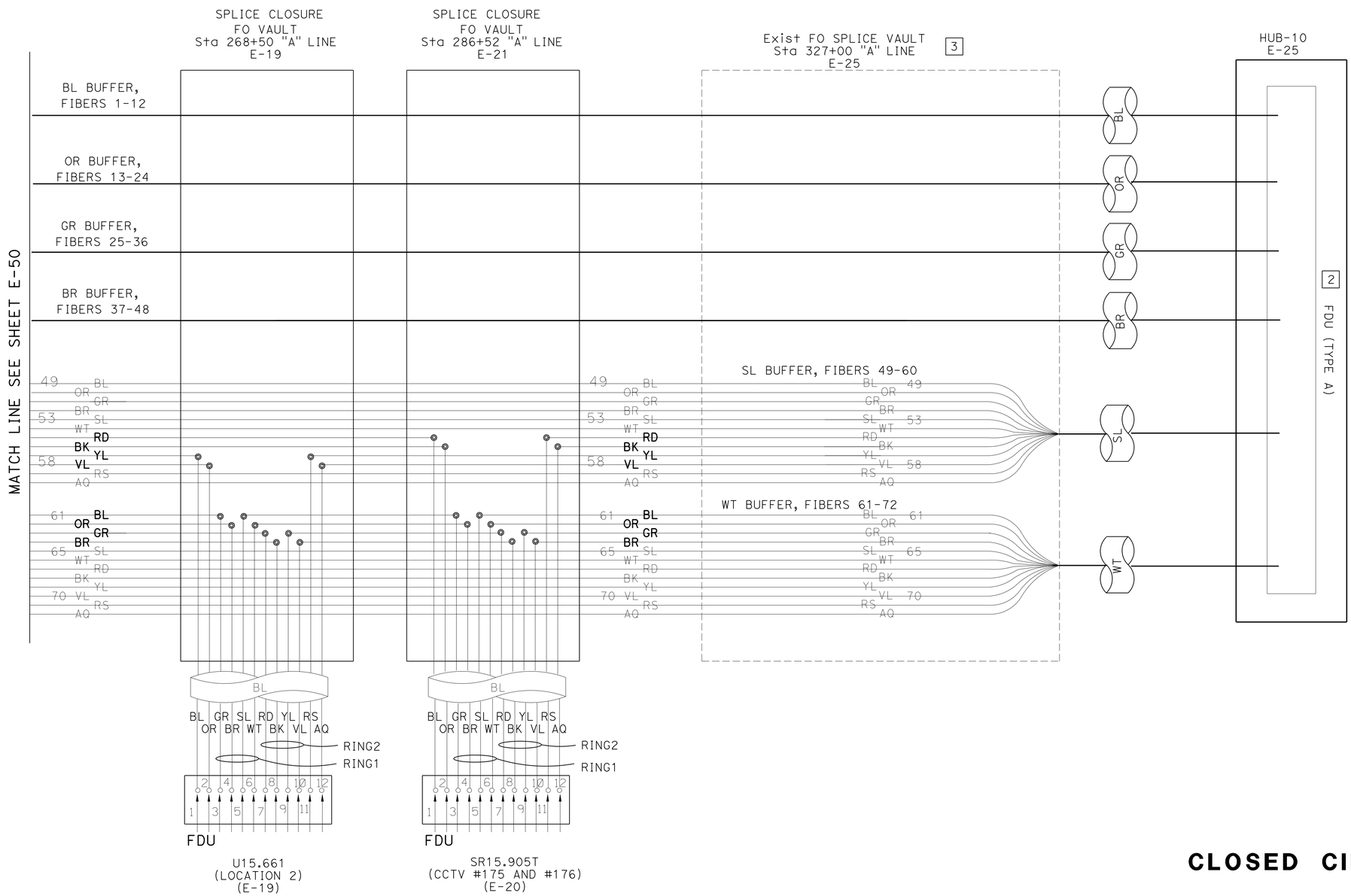

FIBER OPTIC SPLICE DETAILS

NOTES:

1. THIS SHEET DOES NOT SHOW ALL THE FO VAULT AND PULL BOXES. SEE CLOSED CIRCUIT TELEVISION SYSTEM PLANS.
2. TERMINATE FIBERS 1 THROUGH 72 AT FDU. TYPE A.
3. SEE COMPONENT DIAGRAM IN ELECTRICAL DETAILS.

CLOSED CIRCUIT TELEVISION SYSTEM (ELECTRICAL DETAILS)

APPROVED FOR ELECTRICAL WORK ONLY

NO SCALE

E-51

STATE OF CALIFORNIA - DEPARTMENT OF TRANSPORTATION
Caltrans® TRAFFIC ELECTRICAL

FUNCTIONAL SUPERVISOR: RAJPREET SINGH
CALCULATED-DESIGNED BY: ENRIQUE BERNAL
CHECKED BY: FARIBA RAMOS
REVISED BY
DATE REVISED

LAST REVISION 01-18-14
DATE PLOTTED => 20-MAR-2014
TIME PLOTTED => 15:57

Dist	COUNTY	ROUTE	POST MILES TOTAL PROJECT	SHEET No.	TOTAL SHEETS
11	SD	15,76	R46.2/R46.8, R12.1/R17.7	1060	1273

Fariba Ramos 02-20-14
REGISTERED ELECTRICAL ENGINEER DATE

03-24-14
PLANS APPROVAL DATE

REGISTERED PROFESSIONAL ENGINEER
FARIBA RAMOS
No. E15619
Exp. 12-31-15
ELECTRICAL
STATE OF CALIFORNIA

THE STATE OF CALIFORNIA OR ITS OFFICERS OR AGENTS SHALL NOT BE RESPONSIBLE FOR THE ACCURACY OR COMPLETENESS OF SCANNED COPIES OF THIS PLAN SHEET.

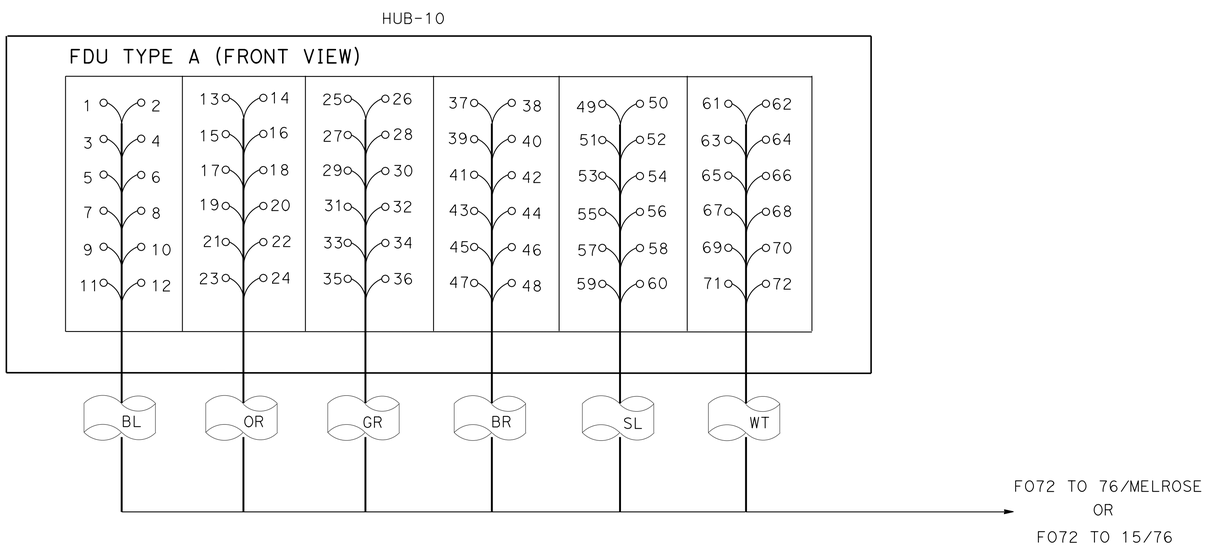

FDU (TYPE A) TO FIBER CABLE TERMINATION DETAIL

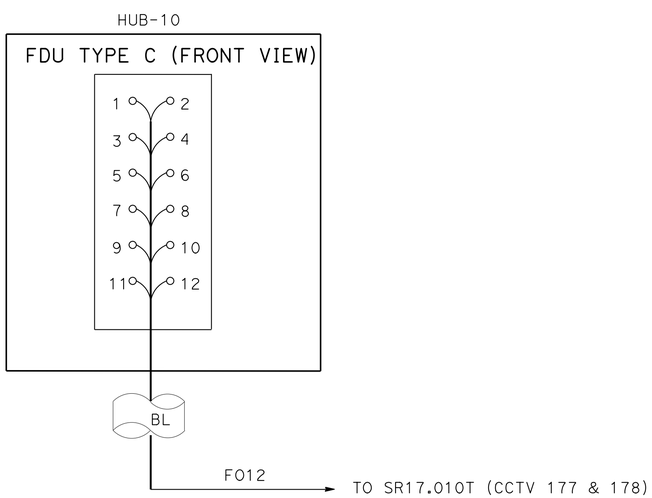

FDU (TYPE C) TO FIBER CABLE TERMINATION DETAIL

COLOR CODES FOR BUFFER TUBES AND FIBERS:

1. BLUE (BL)
2. ORANGE (OR)
3. GREEN (GR)
4. BROWN (BR)
5. SLATE (SL)
6. WHITE (WT)
7. RED (RD)
8. BLACK (BK)
9. YELLOW (YL)
10. VIOLET (VL)
11. ROSE (RS)
12. AQUA (AQ)

LEGEND:

SC FEMALE CONNECTOR ON AN FDU PANEL

CLOSED CIRCUIT TELEVISION SYSTEM (ELECTRICAL DETAILS)

NO SCALE

APPROVED FOR ELECTRICAL WORK ONLY

E-52

STATE OF CALIFORNIA - DEPARTMENT OF TRANSPORTATION
Caltrans
TRAFFIC ELECTRICAL

FUNCTIONAL SUPERVISOR: RAJPREET SINGH
CALCULATED-DESIGNED BY: FARIBA RAMOS
CHECKED BY: ENRIQUE BERNAL
REVISED BY
DATE REVISED

LAST REVISION 01-18-14
DATE PLOTTED => 20-MAR-2014
TIME PLOTTED => 15:57

Dist	COUNTY	ROUTE	POST MILES TOTAL PROJECT	SHEET No.	TOTAL SHEETS
11	SD	15,76	R46.2/R46.8, R12.1/R17.7	1061	1273

Farib Ramos 02-20-14
REGISTERED ELECTRICAL ENGINEER DATE

03-24-14
PLANS APPROVAL DATE

REGISTERED PROFESSIONAL ENGINEER
FARIBA RAMOS
No. E15619
Exp. 12-31-15
ELECTRICAL
STATE OF CALIFORNIA

THE STATE OF CALIFORNIA OR ITS OFFICERS OR AGENTS SHALL NOT BE RESPONSIBLE FOR THE ACCURACY OR COMPLETENESS OF SCANNED COPIES OF THIS PLAN SHEET.

NOTE:

1. SEE FIBER OPTIC SPLICE DETAILS.

TMS-U13.343
FDU POSITION NUMBER

1	2	3	4	5	6	7	8	9	10	11	12
MELROSE		RING 1				RING 2				HUB 10	
		SR12.437T		SR13.949T		SR12.437T		SR13.949T			
31	32	5	6	3	4	9	10	7	8	31	32

SIGNAL AT VIA MONSERATE, P13.951
FDU POSITION NUMBER

1	2	3	4	5	6	7	8	9	10	11	12
MELROSE		RING 1				RING 2				HUB 10	
		SR13.949T		SR14.527T		SR13.949T		SR14.527T			
49	50	5	6	3	4	9	10	7	8	49	50

CCTV-SR13.949T (CCTV #171 & #172)
FDU POSITION NUMBER

1	2	3	4	5	6	7	8	9	10	11	12
MELROSE		RING 1				RING 2				HUB 10	
		U13.343		P13.951		U13.343		P13.951			
51	52	5	6	3	4	9	10	7	8	51	52

CCTV-SR14.527T (CCTV #173 & #174)
FDU POSITION NUMBER

1	2	3	4	5	6	7	8	9	10	11	12
MELROSE		RING 1				RING 2				HUB 10	
		P13.951		P14.529		P13.951		P14.529			
53	54	5	6	3	4	9	10	7	8	53	54

SIGNAL AT GIRD, P14.529
FDU POSITION NUMBER

1	2	3	4	5	6	7	8	9	10	11	12
MELROSE		RING 1				RING 2				HUB 10	
		SR14.527T		U15.661		SR14.527T		U15.661			
59	60	5	6	3	4	9	10	7	8	59	60

TMS-U15.661
FDU POSITION NUMBER

1	2	3	4	5	6	7	8	9	10	11	12
MELROSE		RING 1				RING 2				HUB 10	
		P14.529		SR15.905T		P14.529		SR15.905T			
57	58	5	6	3	4	9	10	7	8	57	58

CCTV-SR15.905T (CCTV #175 & #176)
FDU POSITION NUMBER

1	2	3	4	5	6	7	8	9	10	11	12
MELROSE		RING 1				RING 2				HUB 10	
		U15.661		HUB 10		U15.661		HUB 10			
55	56	5	6	61	62	9	10	63	64	55	56

CCTV-SR17.010T (CCTV #177 & #178)
FDU POSITION NUMBER

1	2	3	4	5	6	7	8	9	10	11	12
HUB 10		HUB 10				HUB 10				HUB 10	
1	2	3	4	5	6	7	8	9	10	11	12

CLOSED CIRCUIT TELEVISION SYSTEM (ELECTRICAL DETAILS)

NO SCALE

APPROVED FOR ELECTRICAL WORK ONLY

E-53

REVISED BY	DATE REVISED
FARIBA RAMOS	ENRIQUE BERNAL
CALCULATED-DESIGNED BY	CHECKED BY
FUNCTIONAL SUPERVISOR	RAJPREET SINGH

STATE OF CALIFORNIA - DEPARTMENT OF TRANSPORTATION
Caltrans
TRAFFIC ELECTRICAL

LAST REVISION 01-18-14 | DATE PLOTTED => 20-MAR-2014 | TIME PLOTTED => 15:57

Dist	COUNTY	ROUTE	POST MILES TOTAL PROJECT	SHEET No.	TOTAL SHEETS
11	SD	15,76	R46.2/R46.8, R12.1/R17.7	1062	1273

Fariba Ramos 02-20-14
REGISTERED ELECTRICAL ENGINEER DATE

03-24-14
PLANS APPROVAL DATE

REGISTERED PROFESSIONAL ENGINEER
FARIBA RAMOS
No. E15619
Exp. 12-31-15
ELECTRICAL
STATE OF CALIFORNIA

THE STATE OF CALIFORNIA OR ITS OFFICERS OR AGENTS SHALL NOT BE RESPONSIBLE FOR THE ACCURACY OR COMPLETENESS OF SCANNED COPIES OF THIS PLAN SHEET.

NOTES:

1. RACK MOUNTABLE MEDIA CONVERTER CHASSIS.
2. REMOVE BLANK PANEL AND REPLACE WITH FDU.
3. SHELF.
4. SEE DETAIL "A" ON SHEET E-55.
5. INSTALL A HORIZONTAL INDUSTRIAL-GRADE RACK MOUNT POWER STRIP WITH METAL HOUSING AND:
   - 15 A CAPACITY WITH CIRCUIT BREAKER
   - 120 V AC - 50/60 Hz
   - 8 NEMA 5-15R OUTPUT RECEPTACLES
   - 10' POWER CORD
6. THE CONTRACTOR MUST VERIFY ALL CONTROLLING FIELD DIMENSIONS BEFORE ORDERING OR FABRICATING MATERIAL.
7. GFCI RECEPTACLES ARE FOR MAINTENANCE EQUIPMENT ONLY.
8. EQUIPMENT IN THE TMS CABINET PARTIALLY SHOWN FOR COMMUNICATION PURPOSE ONLY.
9. CONNECT POWER STRIP TO POWER DISTRIBUTION ASSEMBLY.

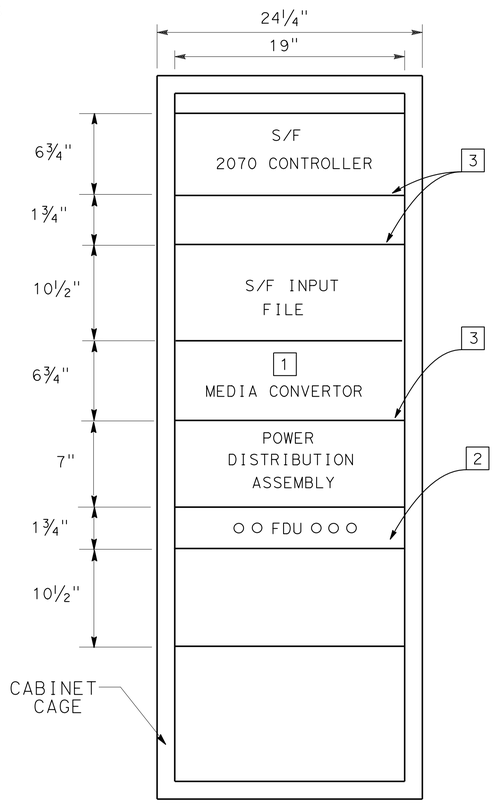

TMS CABINET EQUIPMENT PLACEMENT

4

FRONT OF CABINET

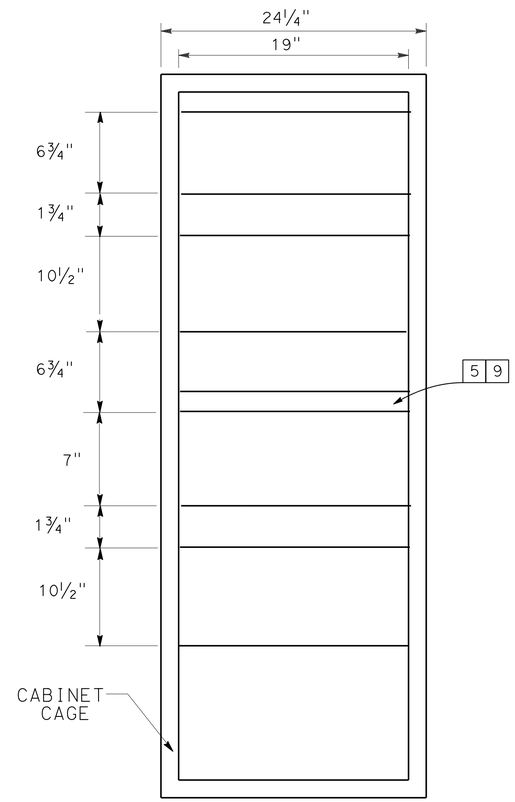

TMS CABINET EQUIPMENT PLACEMENT

4

BACK OF CABINET

TMS (LOCATION 1), U13.343
AND
TMS (LOCATION 2), U15.661

CLOSED CIRCUIT TELEVISION SYSTEM (ELECTRICAL DETAILS)

NO SCALE

APPROVED FOR ELECTRICAL WORK ONLY

E-54

STATE OF CALIFORNIA - DEPARTMENT OF TRANSPORTATION
Caltrans
TRAFFIC ELECTRICAL

FUNCTIONAL SUPERVISOR: RAJPREET SINGH
CALCULATED-DESIGNED BY: FARIBA RAMOS
CHECKED BY: ENRIQUE BERNAL
REVISED BY
DATE REVISED

LAST REVISION 01-18-14
DATE PLOTTED => 20-MAR-2014
TIME PLOTTED => 15:57

Dist	COUNTY	ROUTE	POST MILES TOTAL PROJECT	SHEET No.	TOTAL SHEETS
11	SD	15,76	R46.2/R46.8, R12.1/R17.7	1063	1273

Fariba Ramos 02-20-14
REGISTERED ELECTRICAL ENGINEER DATE

03-24-14
PLANS APPROVAL DATE

REGISTERED PROFESSIONAL ENGINEER FARIBA RAMOS No. E15619 Exp. 12-31-15 ELECTRICAL STATE OF CALIFORNIA

THE STATE OF CALIFORNIA OR ITS OFFICERS OR AGENTS SHALL NOT BE RESPONSIBLE FOR THE ACCURACY OR COMPLETENESS OF SCANNED COPIES OF THIS PLAN SHEET.

NOTES:

1. SEE DETAIL "A1" THIS SHEET.
2. RJ-45 PORT FOR NETWORK CONNECTION, 10/100 BaseT.
3. EQUIPMENT IN THE TMS CABINET PARTIALLY SHOWN FOR COMMUNICATION PURPOSE ONLY.
4. GROUND MEDIA CONVERTER CHASSIS PER MANUFACTURER'S RECOMMENDATION.
5. 2070 CONTROLLER.
6. SECU, MODEM 2 SLOT.
7. POWER STATUS LED INDICATOR.
8. COPPER LINK STATUS LED INDICATOR.
9. FIBER LINK STATUS LED INDICATOR.
10. FULL/HALF DUPLEX COPPER CONNECTION STATUS LED INDICATOR.
11. FULL/HALF DUPLEX FIBER CONNECTION STATUS LED INDICATOR.
12. 100BASE-FX WITH SC CONNECTOR.
13. THE CONTRACTOR MUST VERIFY ALL CONTROLLING FIELD DIMENSIONS BEFORE ORDERING OR FABRICATING MATERIAL.
14. GFCI RECEPTACLES ARE FOR MAINTENANCE EQUIPMENT ONLY.

LEGEND (TSO):

RJ-45

SECU - SERIAL TO ETHERNET CONVERSION UNIT

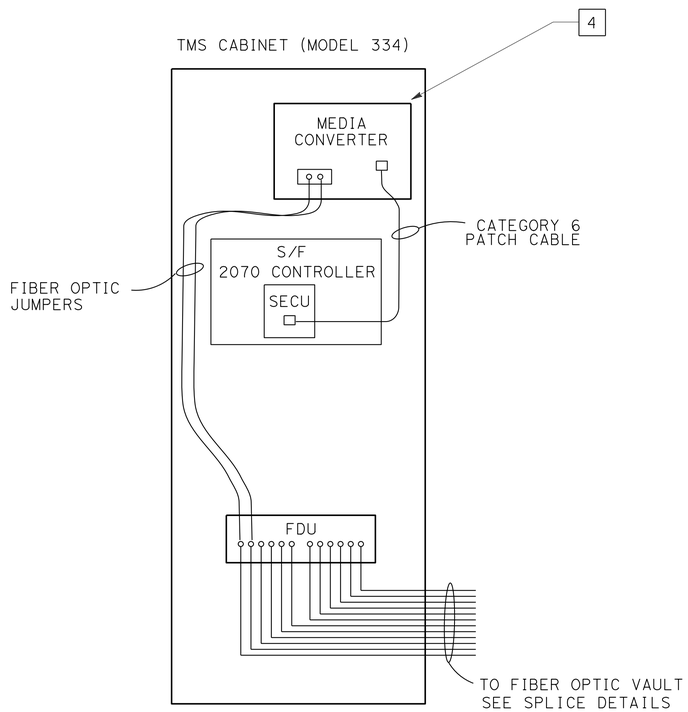

TMS CABINET
COMPONENT DIAGRAM
DETAIL "A" 1

TMS (LOCATION 1), U13.343
AND
TMS (LOCATION 2), U15.661

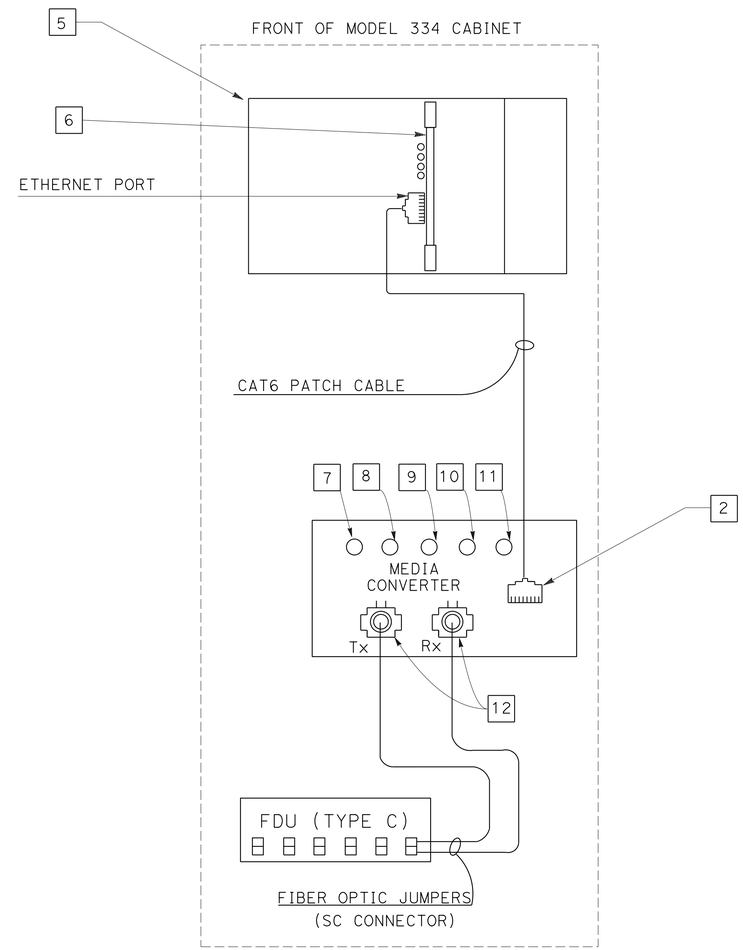

TMS CABINET
COMPONENT DIAGRAM
DETAIL "A1"

APPROVED FOR ELECTRICAL WORK ONLY

NO SCALE

CLOSED CIRCUIT TELEVISION SYSTEM (ELECTRICAL DETAILS)

E-55

STATE OF CALIFORNIA - DEPARTMENT OF TRANSPORTATION
Caltrans® TRAFFIC ELECTRICAL

FUNCTIONAL SUPERVISOR: RAJPREET SINGH
CALCULATED-DESIGNED BY: FARIBA RAMOS
CHECKED BY: ENRIQUE BERNAL
REVISED BY
DATE REVISED

LAST REVISION 01-18-14
DATE PLOTTED => 20-MAR-2014
TIME PLOTTED => 15:57

Dist	COUNTY	ROUTE	POST MILES TOTAL PROJECT	SHEET No.	TOTAL SHEETS
11	SD	15,76	R46.2/R46.8, R12.1/R17.7	1064	1273

REGISTERED ELECTRICAL ENGINEER 02-20-14 DATE

03-24-14
PLANS APPROVAL DATE

REGISTERED PROFESSIONAL ENGINEER FARIBA RAMOS No. E15619 Exp. 12-31-15 ELECTRICAL STATE OF CALIFORNIA

THE STATE OF CALIFORNIA OR ITS OFFICERS OR AGENTS SHALL NOT BE RESPONSIBLE FOR THE ACCURACY OR COMPLETENESS OF SCANNED COPIES OF THIS PLAN SHEET.

NOTES:

1. THE CONTRACTOR MUST VERIFY ALL CONTROLLING FIELD DIMENSIONS BEFORE ORDERING OR FABRICATING MATERIAL.
2. GFCI RECEPTACLES ARE FOR MAINTENANCE EQUIPMENT ONLY.

[3] REMOVE BLANK PANEL AND REPLACE WITH CAT6 TERMINAL BLOCK.

[4] SHELF REQUIRED FOR EQUIPMENT.

[5] RACK MOUNTABLE MEDIA CONVERTER CHASSIS.

[6] INSTALL A HORIZONTAL INDUSTRIAL-GRADE RACK MOUNT POWER STRIP WITH METAL HOUSING AND:
- 15 A CAPACITY WITH CIRCUIT BREAKER
- 120 V AC - 50/60 Hz
- 8 NEMA 5-15R OUTPUT RECEPTACLES
- 10' POWER CORD

7. SEE DETAIL "B" ON SHEET E-57.
8. EQUIPMENT IN THE CCTV CABINET PARTIALLY SHOWN FOR COMMUNICATION PURPOSE ONLY.

[9] INSTALL VENTED RACK SHELF. SEE DETAIL "VIDEO ENCODER SHELF" ON THIS SHEET.

[10] DIN RAIL.

[11] MOUNT VIDEO ENCODERS AND POWER SUPPLY ON DIN RAIL.

[12] CONNECT POWER STRIP TO POWER DISTRIBUTION ASSEMBLY.

CCTV 171 AND CCTV 172, SR13.949T (Via Monserate)
CCTV 173 AND CCTV 174, SR14.527T (Gird)
CCTV 175 AND CCTV 176, SR15.905T (Star Track)
CCTV 177 AND CCTV 178, SR17.010T (Old 395)

CCTV CABINET (MODEL 334)

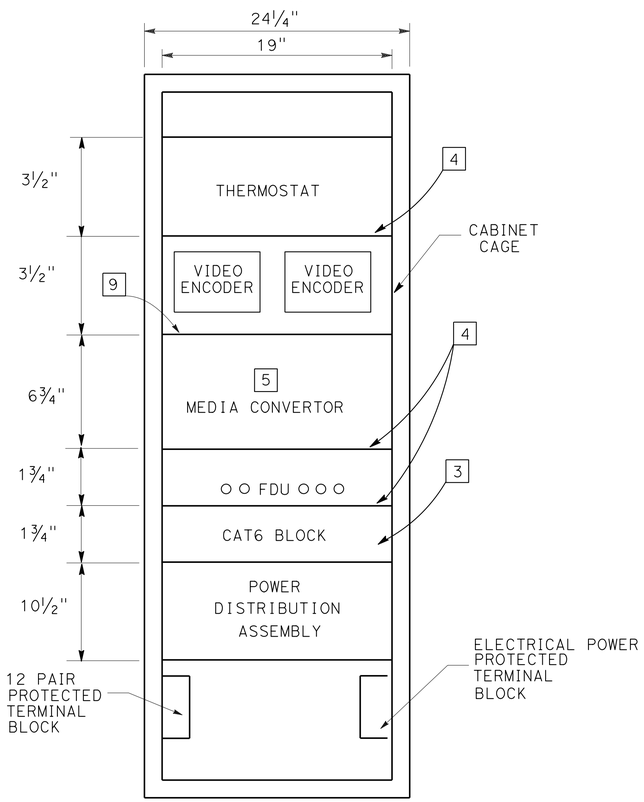

CCTV CABINET EQUIPMENT PLACEMENT

FRONT OF CABINET (TYPICAL)

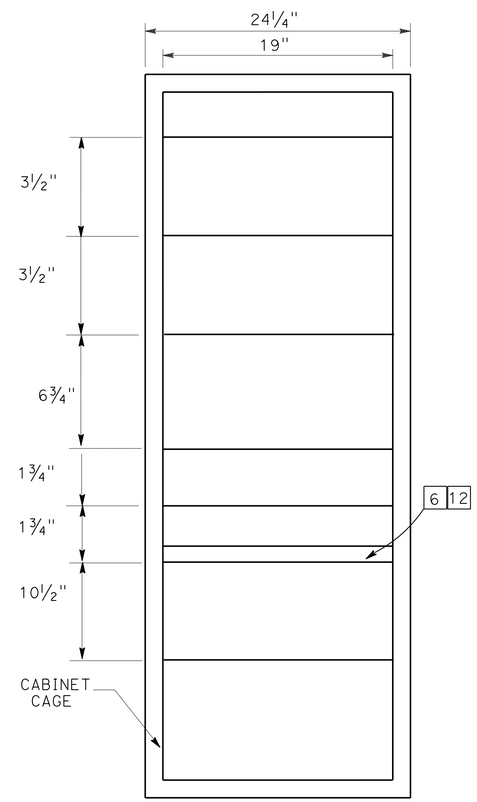

CCTV CABINET EQUIPMENT PLACEMENT

BACK OF CABINET (TYPICAL)

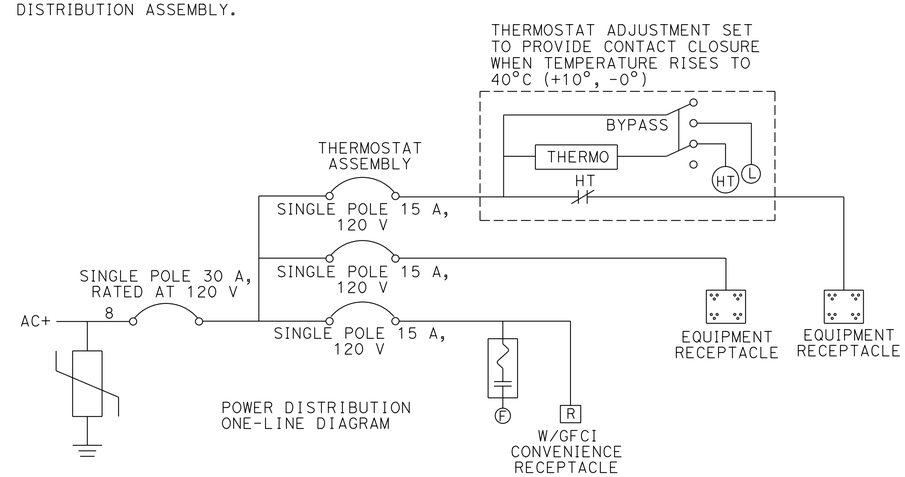

CCTV SYSTEM CABINET POWER DISTRIBUTION ASSEMBLY

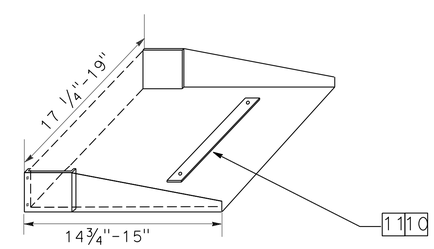

DETAIL "VIDEO ENCODER SHELF"

APPROVED FOR ELECTRICAL WORK ONLY

CLOSED CIRCUIT TELEVISION SYSTEM (ELECTRICAL DETAILS)

NO SCALE

E-56

STATE OF CALIFORNIA - DEPARTMENT OF TRANSPORTATION
Caltrans® TRAFFIC ELECTRICAL

FUNCTIONAL SUPERVISOR: RAJPREET SINGH
CALCULATED-DESIGNED BY: ENRIQUE BERNAL
CHECKED BY: FARIBA RAMOS
REVISED BY
DATE REVISED

LAST REVISION 01-18-14
DATE PLOTTED => 20-MAR-2014
TIME PLOTTED => 15:57

Dist	COUNTY	ROUTE	POST MILES TOTAL PROJECT	SHEET No.	TOTAL SHEETS
11	SD	15,76	R46.2/R46.8, R12.1/R17.7	1065	1273

REGISTERED ELECTRICAL ENGINEER 02-20-14 DATE

PLANS APPROVAL DATE 03-24-14

REGISTERED PROFESSIONAL ENGINEER FARIBA RAMOS No. E15619 Exp. 12-31-15 ELECTRICAL STATE OF CALIFORNIA

THE STATE OF CALIFORNIA OR ITS OFFICERS OR AGENTS SHALL NOT BE RESPONSIBLE FOR THE ACCURACY OR COMPLETENESS OF SCANNED COPIES OF THIS PLAN SHEET.

NOTES:

1. THE CONTRACTOR MUST VERIFY ALL CONTROLLING FIELD DIMENSIONS BEFORE ORDERING OR FABRICATING MATERIAL.

2 SEE DETAIL "B1" THIS SHEET.

3 RJ-45 PORT FOR NETWORK CONNECTION, 10/100 BaseT.

4 GROUND MEDIA CONVERTER CHASSIS PER MANUFACTURER'S RECOMMENDATION.

5 GROUNDING SCREW.

6 RS-232 AND RS-485/422 SERIAL COMMUNICATION PORT.

7 POWER STATUS LED INDICATOR.

8 COPPER LINK STATUS LED INDICATOR.

9 FIBER LINK STATUS LED INDICATOR.

10 FULL/HALF DUPLEX COPPER CONNECTION STATUS LED INDICATOR.

11 FULL/HALF DUPLEX FIBER CONNECTION STATUS LED INDICATOR.

12 100BASE-FX WITH SC CONNECTOR.

13 RS Exist FDU (TYPE A) IN MODEL 334 CABINET.

14. GFCI RECEPTACLES ARE FOR MAINTENANCE EQUIPMENT ONLY.

15. EQUIPMENT IN THE CCTV CABINET PARTIALLY SHOWN FOR COMMUNICATION PURPOSE ONLY.

CCTV 171 AND CCTV 172, SR13.949T (Via Monserate)

CCTV 173 AND CCTV 174, SR14.527T (Gird)

CCTV 175 AND CCTV 176, SR15.905T (STAR TRACK)

CCTV 177 AND CCTV 178, SR17.010T (OLD 395) 13

CCTV CABINET (MODEL 334)

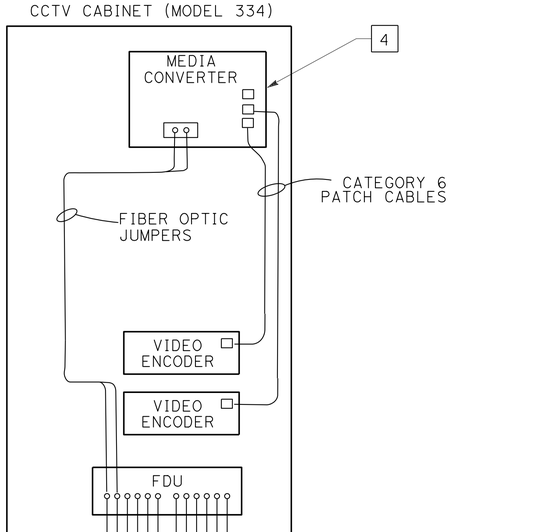

CCTV CABINET

COMPONENT DIAGRAM DETAIL "B" 2

FRONT OF CCTV CABINET

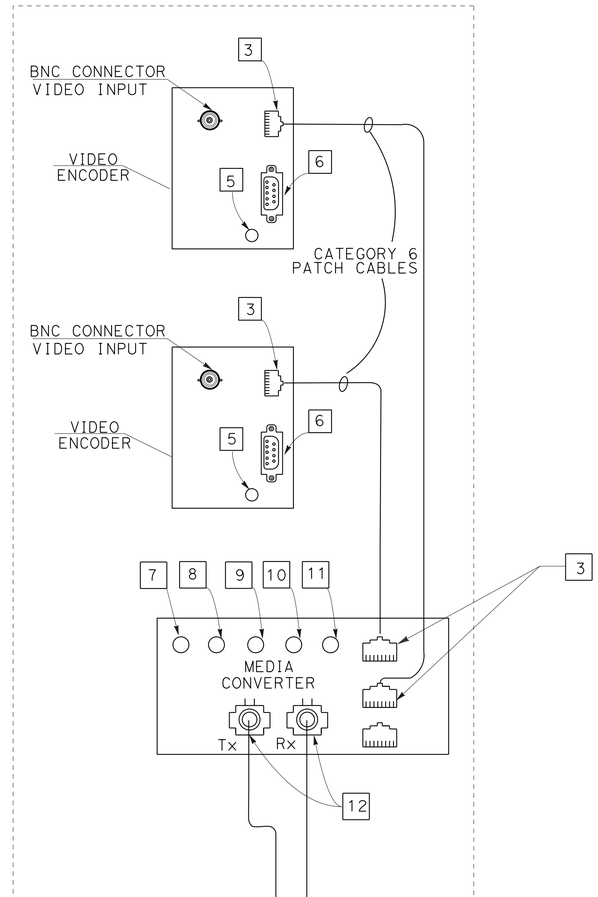

CCTV CABINET

COMPONENT DIAGRAM DETAIL "B1"

CLOSED CIRCUIT TELEVISION SYSTEM (ELECTRICAL DETAILS)

NO SCALE

APPROVED FOR ELECTRICAL WORK ONLY

E-57

REVISED BY | DATE REVISED

FARIBA RAMOS | ENRIQUE BERNAL

CALCULATED-DESIGNED BY | CHECKED BY

FUNCTIONAL SUPERVISOR | RAJPREET SINGH

STATE OF CALIFORNIA - DEPARTMENT OF TRANSPORTATION

Caltrans® TRAFFIC ELECTRICAL

LAST REVISION 01-18-14 | DATE PLOTTED => 20-MAR-2014 TIME PLOTTED => 15:57

Dist	COUNTY	ROUTE	POST MILES TOTAL PROJECT	SHEET No.	TOTAL SHEETS
11	SD	15,76	R46.2/R46.8, R12.1/R17.7	1066	1273

REGISTERED ELECTRICAL ENGINEER 02-20-14 DATE

03-24-14
PLANS APPROVAL DATE

REGISTERED PROFESSIONAL ENGINEER FARIBA RAMOS No. E15619 Exp. 12-31-15 ELECTRICAL STATE OF CALIFORNIA

THE STATE OF CALIFORNIA OR ITS OFFICERS OR AGENTS SHALL NOT BE RESPONSIBLE FOR THE ACCURACY OR COMPLETENESS OF SCANNED COPIES OF THIS PLAN SHEET.

NOTES:

1. RACK MOUNTABLE MEDIA CONVERTER CHASSIS.
2. REMOVE BLANK PANEL AND REPLACE WITH FDU.
3. SHELF.
4. SEE DETAIL "C" AND "C1" THIS SHEET.
5. INSTALL A HORIZONTAL INDUSTRIAL-GRADE RACK MOUNT POWER STRIP WITH METAL HOUSING AND:
   - 15 A CAPACITY WITH CIRCUIT BREAKER
   - 120 V AC - 50/60 Hz
   - 8 NEMA 5-15R OUTPUT RECEPTACLES
   - 10' POWER CORD
6. RJ-45 PORT FOR NETWORK CONNECTION, 10/100 BaseT.
7. POWER STATUS LED INDICATOR.
8. COPPER LINK STATUS LED INDICATOR.
9. FIBER LINK STATUS LED INDICATOR.
10. FULL/HALF DUPLEX COPPER CONNECTION STATUS LED INDICATOR.
11. FULL/HALF DUPLEX FIBER CONNECTION STATUS LED INDICATOR.
12. 100BASE-FX WITH SC CONNECTOR.
13. VIDEO DETECTION COMMUNICATION CARD (TYPICAL).
14. VIDEO INPUT INDICATOR (LED).
15. RS-232 SERIAL COMMUNICATION PORT.
16. VIDEO INPUT PORT.
17. GROUND MEDIA CONVERTER CHASSIS PER MANUFACTURER'S RECOMMENDATION.
18. GFCI RECEPTACLES ARE FOR MAINTENANCE EQUIPMENT ONLY.
19. THE CONTRACTOR MUST VERIFY ALL CONTROLLING FIELD DIMENSIONS BEFORE ORDERING OR FABRICATING MATERIAL.
20. EQUIPMENT IN THE SIGNAL CABINET PARTIALLY SHOWN FOR COMMUNICATION PURPOSE ONLY.
21. CONNECT POWER STRIP TO POWER DISTRIBUTION ASSEMBLY.
22. INSTALL AND FURNISH SECU IN MODEL 170 CONTROLLER CARD SLOT.
23. VIDEO DETECTION COMMUNICATION CARD.

LEGEND (TSO):

SECU - SERIAL TO ETHERNET CONVERSION UNIT

SIGNAL AT Via Monserate, P13.951
SIGNAL AT Gird, P14.529
SIGNAL CABINET (MODEL 332)

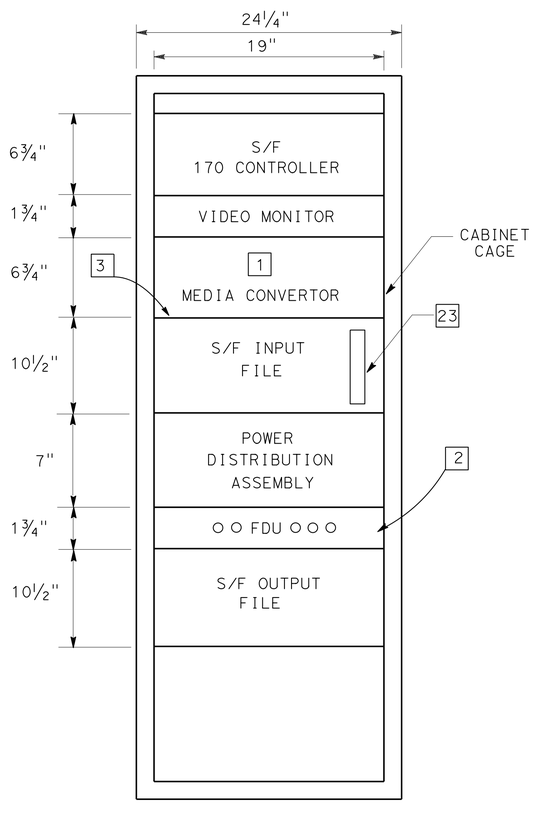

SIGNAL CABINET EQUIPMENT PLACEMENT 4

FRONT OF CABINET

SIGNAL CABINET (MODEL 332)

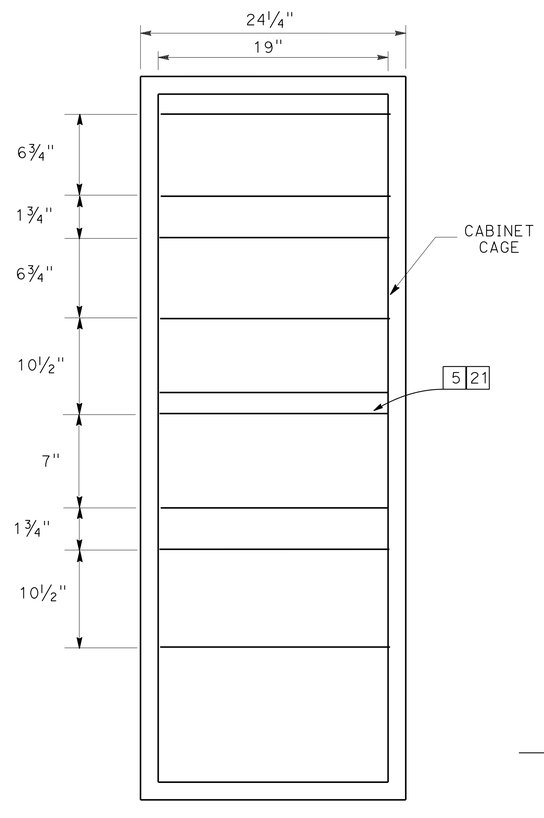

SIGNAL CABINET EQUIPMENT PLACEMENT 4

BACK OF CABINET

SIGNAL CABINET (MODEL 332)

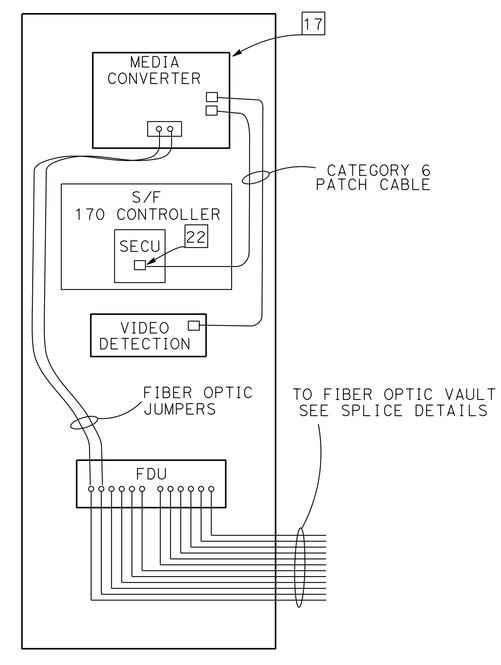

SIGNAL CABINET

COMPONENT DIAGRAM DETAIL "C"

FRONT OF SIGNAL CABINET

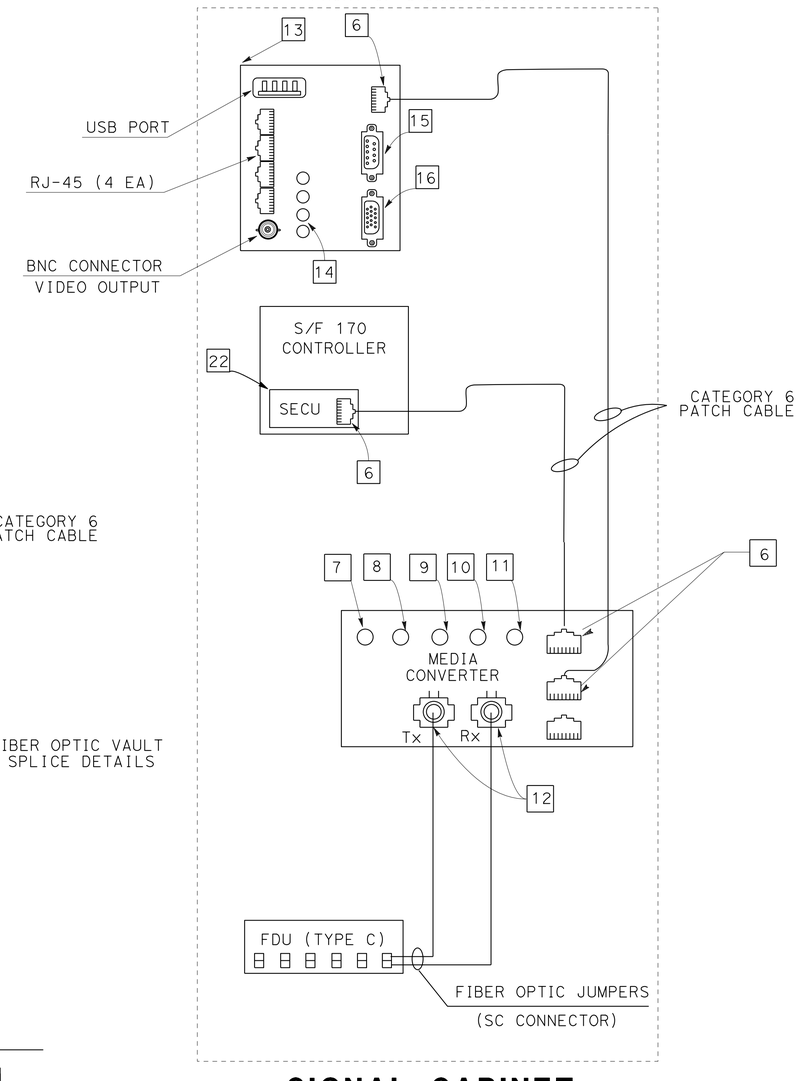

SIGNAL CABINET

COMPONENT DIAGRAM DETAIL "C1"

CLOSED CIRCUIT TELEVISION SYSTEM (ELECTRICAL DETAILS)

NO SCALE

APPROVED FOR ELECTRICAL WORK ONLY

E-58

STATE OF CALIFORNIA - DEPARTMENT OF TRANSPORTATION
Caltrans® TRAFFIC ELECTRICAL

FUNCTIONAL SUPERVISOR: RAJPREET SINGH
CALCULATED-DESIGNED BY: FARIBA RAMOS
CHECKED BY: ENRIQUE BERNAL
REVISED BY
DATE REVISED

LAST REVISION DATE PLOTTED => 20-MAR-2014
01-18-14 TIME PLOTTED => 15:57

Dist	COUNTY	ROUTE	POST MILES TOTAL PROJECT	SHEET No.	TOTAL SHEETS
11	SD	15,76	R46.2/R46.8, R12.1/R17.7	1067	1273

Fariba Ramos 02-20-14
REGISTERED ELECTRICAL ENGINEER DATE

03-24-14
PLANS APPROVAL DATE

REGISTERED PROFESSIONAL ENGINEER FARIBA RAMOS No. E15619 Exp. 12-31-15 ELECTRICAL STATE OF CALIFORNIA

THE STATE OF CALIFORNIA OR ITS OFFICERS OR AGENTS SHALL NOT BE RESPONSIBLE FOR THE ACCURACY OR COMPLETENESS OF SCANNED COPIES OF THIS PLAN SHEET.

COLOR CODES FOR BUFFER TUBES AND FIBERS:

1. BLUE (BL)
2. ORANGE (OR)
3. GREEN (GR)
4. BROWN (BR)
5. SLATE (SL)
6. WHITE (WT)
7. RED (RD)
8. BLACK (BK)
9. YELLOW (YL)
10. VIOLET (VL)
11. ROSE (RS)
12. AQUA (AQ)

DISTRIBUITON FIBER CABLE TO MELROSE		F012 AT FIELD CABINET			DISTRIBUITON FIBER CABLE TO HUB 10	
BUFFER	FIBER #	FIBER #	CABINET NAME	FIBER #	FIBER #	BUFFER
BL	1	1		11	1	BL
	2	2		12	2	
	3	1		11	3	
	4	2		12	4	
	5	1		11	5	
	6	2		12	6	
	7	1		11	7	
	8	2		12	8	
	9	1		11	9	
	10	2		12	10	
	11	1		11	11	
	12	2		12	12	
OR	13	1	CCTV #151 S7.800T	11	13	OR
	14	2		12	14	
	15	1	CCTV #152 S8.411T	11	15	
	16	2		12	16	
	17	1	TMS U9.162	11	17	
	18	2		12	18	
	19	1	CCTV #153 S9.592T	11	19	
	20	2		12	20	
	21	1	SIGNAL P10.195	11	21	
	22	2		12	22	
	23	1	CCTV #154 S10.805T	11	23	
	24	2		12	24	

DISTRIBUITON FIBER CABLE TO MELROSE		F012 AT FIELD CABINET			DISTRIBUITON FIBER CABLE TO HUB 10	
BUFFER	FIBER #	FIBER #	CABINET NAME	FIBER #	FIBER #	BUFFER
GR	25	1	CCTV #155 S12.002T	11	25	GR
	26	2		12	26	
	27	1	TMS U12.158	11	27	
	28	2		12	28	
	29	1	CCTV #156 S12.437T	11	29	
	30	2		12	30	
	31	1	TMS U13.343	11	31	
	32	2		12	32	
	33	1		11	33	
	34	2		12	34	
	35	1		11	35	
	36	2		12	36	
BR	37	1		11	37	BR
	38	2		12	38	
	39	1		11	39	
	40	2		12	40	
	41	1		11	41	
	42	2		12	42	
	43	1		11	43	
	44	2		12	44	
	45	1		11	45	
	46	2		12	46	
	47	1		11	47	
	48	2		12	48	

DISTRIBUITON FIBER CABLE TO MELROSE		F012 AT FIELD CABINET			DISTRIBUITON FIBER CABLE TO HUB 10	
BUFFER	FIBER #	FIBER #	CABINET NAME	FIBER #	FIBER #	BUFFER
SL	49	1	SIGNAL P13.951	11	49	SL
	50	2		12	50	
	51	1	CCTV #171 CCTV #172 S13.949T	11	51	
	52	2		12	52	
	53	1	CCTV #173 CCTV #174 S14.527T	11	53	
	54	2		12	54	
	55	1	CCTV #175 CCTV #176 S15.905T	11	55	
	56	2		12	56	
	57	1	TMS U15.661	11	57	
	58	2		12	58	
	59	1	SIGNAL P14.529	11	59	
	60	2		12	60	
WT	61	1		11	61	WT
	62	2		12	62	
	63	1		11	63	
	64	2		12	64	
	65	1		11	65	
	66	2		12	66	
	67	1		11	67	
	68	2		12	68	
	69	1		11	69	
	70	2		12	70	
	71	1		11	71	
	72	2		12	72	

FO SPLICE SUMMARY TABLE (F072 FROM MELROSE TO HUB 10)

APPROVED FOR ELECTRICAL WORK ONLY

NO SCALE

CLOSED CIRCUIT TELEVISION SYSTEM (ELECTRICAL DETAILS)

E-59

REVISED BY | DATE REVISED
FARIBA RAMOS | ENRIQUE BERNAL
CALCULATED-DESIGNED BY | CHECKED BY
FUNCTIONAL SUPERVISOR: RAJPREET SINGH

STATE OF CALIFORNIA - DEPARTMENT OF TRANSPORTATION
Caltrans
TRAFFIC ELECTRICAL

LAST REVISION 01-18-14 | DATE PLOTTED => 20-MAR-2014 | TIME PLOTTED => 15:57

Dist	COUNTY	ROUTE	POST MILES TOTAL PROJECT	SHEET No.	TOTAL SHEETS
11	SD	15,76	R46.2/R46.8, R12.1/R17.7	1068	1273

Fariba Ramos 02-20-14
REGISTERED ELECTRICAL ENGINEER DATE

03-24-14
PLANS APPROVAL DATE

REGISTERED PROFESSIONAL ENGINEER FARIBA RAMOS No. E15619 Exp. 12-31-15 ELECTRICAL STATE OF CALIFORNIA

THE STATE OF CALIFORNIA OR ITS OFFICERS OR AGENTS SHALL NOT BE RESPONSIBLE FOR THE ACCURACY OR COMPLETENESS OF SCANNED COPIES OF THIS PLAN SHEET.

COLOR CODES FOR BUFFER TUBES AND FIBERS:

1. BLUE (BL)
2. ORANGE (OR)
3. GREEN (GR)
4. BROWN (BR)
5. SLATE (SL)
6. WHITE (WT)
7. RED (RD)
8. BLACK (BK)
9. YELLOW (YL)
10. VIOLET (VL)
11. ROSE (RS)
12. AQUA (AQ)

DISTRIBUITON FIBER CABLE TO MELROSE		F012 AT FIELD CABINET			DISTRIBUITON FIBER CABLE TO HUB 10	
BUFFER	FIBER #	FIBER #	CABINET NAME	FIBER #	FIBER #	BUFFER
BL	1	1		11	1	BL
	2	2		12	2	
	3	1	SIGNAL P17.012 OLD 395 AND SR-76	11	3	
	4	2		12	4	
	5	1		11	5	
	6	2		12	6	
	7	1		11	7	
	8	2		12	8	
	9	1	CCTV #147 S46.383T	11	9	
	10	2		12	10	
	11	1	TMS U46.355	11	11	
	12	2		12	12	
OR	13	1		11	13	OR
	14	2		12	14	
	15	1		11	15	
	16	2		12	16	
	17	1		11	17	
	18	2		12	18	
	19	1		11	19	
	20	2		12	20	
	21	1		11	21	
	22	2		12	22	
	23	1		11	23	
	24	2		12	24	

DISTRIBUITON FIBER CABLE TO MELROSE		F012 AT FIELD CABINET			DISTRIBUITON FIBER CABLE TO HUB 10	
BUFFER	FIBER #	FIBER #	CABINET NAME	FIBER #	FIBER #	BUFFER
GR	25	1		11	25	GR
	26	2		12	26	
	27	1		11	27	
	28	2		12	28	
	29	1		11	29	
	30	2		12	30	
	31	1		11	31	
	32	2		12	32	
	33	1		11	33	
	34	2		12	34	
	35	1		11	35	
	36	2		12	36	
BR	37	1		11	37	BR
	38	2		12	38	
	39	1	CMS I47.241	11	39	
	40	2		12	40	
	41	1	TMS U47.265	11	41	
	42	2		12	42	
	43	1	CCTV #148 S47.267T	11	43	
	44	2		12	44	
	45	1	TMS U46.410	11	45	
	46	2		12	46	
	47	1		11	47	
	48	2		12	48	

DISTRIBUITON FIBER CABLE TO MELROSE		F012 AT FIELD CABINET			DISTRIBUITON FIBER CABLE TO HUB 10	
BUFFER	FIBER #	FIBER #	CABINET NAME	FIBER #	FIBER #	BUFFER
SL	49	1		11	49	SL
	50	2		12	50	
	51	1		11	51	
	52	2		12	52	
	53	1		11	53	
	54	2		12	54	
	55	1		11	55	
	56	2		12	56	
	57	1		11	57	
	58	2		12	58	
	59	1		11	59	
	60	2		12	60	
WT	61	1		11	61	WT
	62	2		12	62	
	63	1		11	63	
	64	2		12	64	
	65	1		11	65	
	66	2		12	66	
	67	1		11	67	
	68	2		12	68	
	69	1		11	69	
	70	2		12	70	
	71	1		11	71	
	72	2		12	72	

FO SPLICE SUMMARY TABLE (FO72 FROM Rte 15/76 INTERCHANGE TO HUB 10)

CLOSED CIRCUIT TELEVISION SYSTEM (ELECTRICAL DETAILS)

NO SCALE

APPROVED FOR ELECTRICAL WORK ONLY

E-60

REVISED BY | DATE REVISED
FARIBA RAMOS | ENRIQUE BERNAL
CALCULATED-DESIGNED BY | CHECKED BY
FUNCTIONAL SUPERVISOR: RAJPREET SINGH

STATE OF CALIFORNIA - DEPARTMENT OF TRANSPORTATION
Caltrans® TRAFFIC ELECTRICAL

LAST REVISION 01-18-14 | DATE PLOTTED => 20-MAR-2014 | TIME PLOTTED => 15:57

Dist	COUNTY	ROUTE	POST MILES TOTAL PROJECT	SHEET No.	TOTAL SHEETS
11	SD	15,76	R46.2/R46.8, R12.1/R17.7	1069	1273

Fariba Ramos 02-20-14
REGISTERED ELECTRICAL ENGINEER DATE

03-24-14
PLANS APPROVAL DATE

REGISTERED PROFESSIONAL ENGINEER FARIBA RAMOS No. E15619 Exp. 12-31-15 ELECTRICAL STATE OF CALIFORNIA

THE STATE OF CALIFORNIA OR ITS OFFICERS OR AGENTS SHALL NOT BE RESPONSIBLE FOR THE ACCURACY OR COMPLETENESS OF SCANNED COPIES OF THIS PLAN SHEET.

LEGEND

- EXCAVATION
- BACKFILL

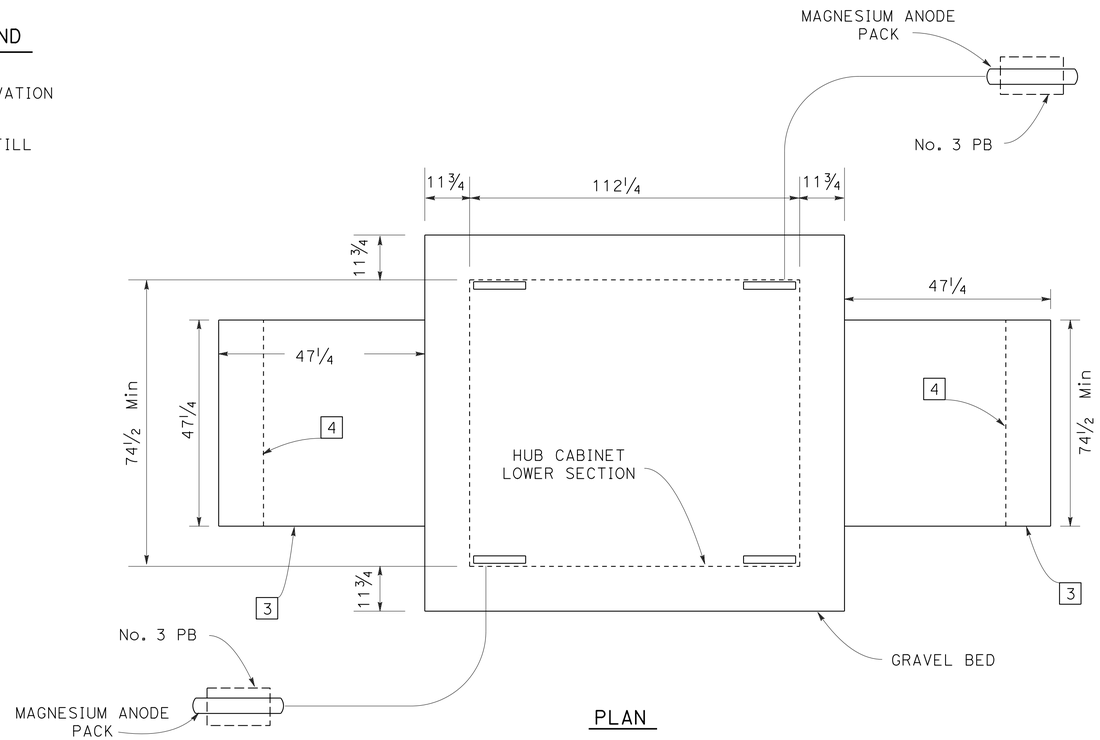

PLAN

HUB CABINET INSTALLATION

NOTES:

1. SERVICE ENTRY
2. TO No. 5 PB
3. PCC PAD
4. PCC FOOTING

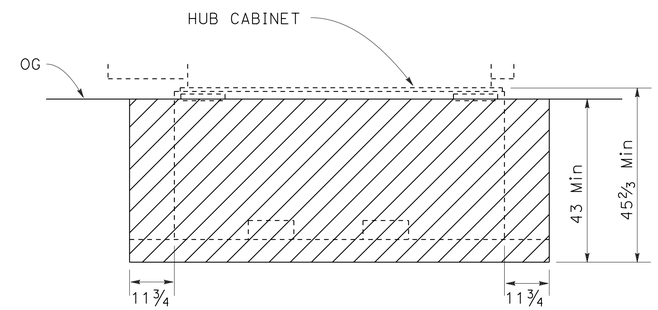

EXCAVATION

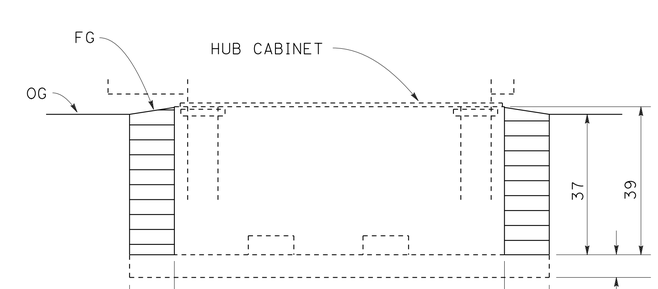

BACKFILL

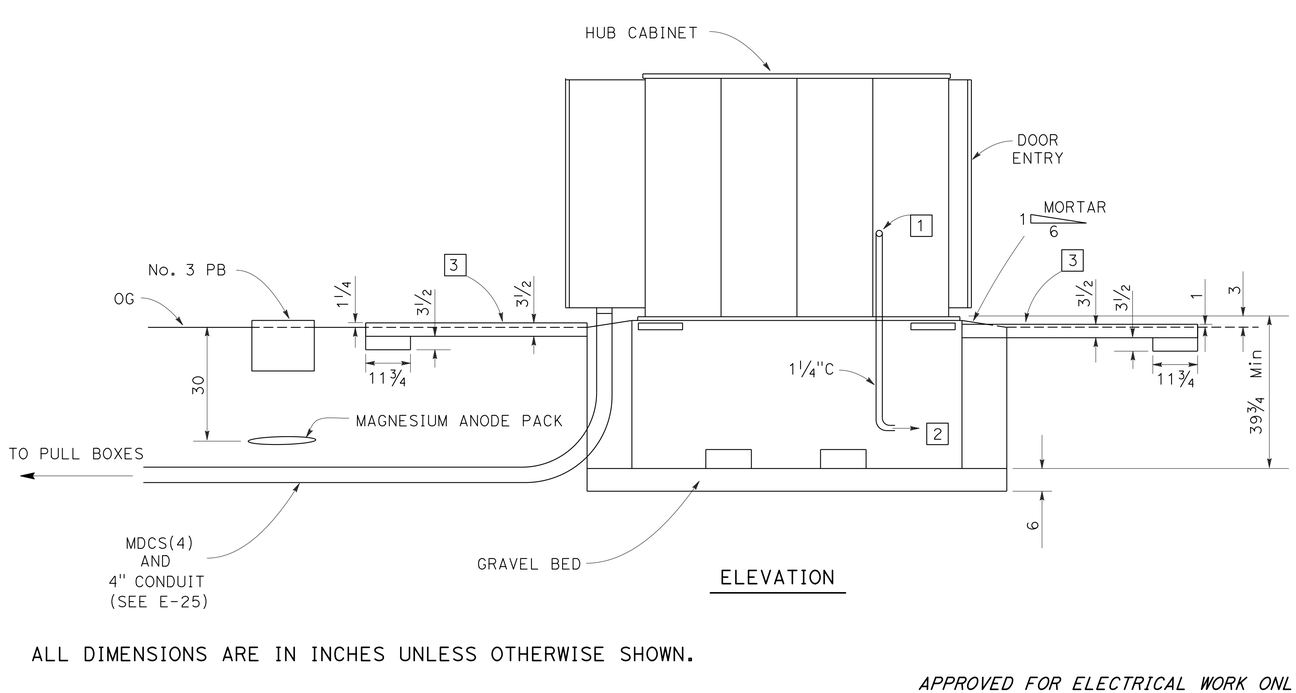

ELEVATION

ALL DIMENSIONS ARE IN INCHES UNLESS OTHERWISE SHOWN.

APPROVED FOR ELECTRICAL WORK ONLY

CLOSED CIRCUIT TELEVISION SYSTEM (HUB CABINET DETAILS)

NO SCALE

E-61

STATE OF CALIFORNIA - DEPARTMENT OF TRANSPORTATION
Caltrans® TRAFFIC ELECTRICAL

REVISED BY	DATE REVISED
FARIBA RAMOS	ENRIQUE BERNAL
CALCULATED-DESIGNED BY	CHECKED BY
FUNCTIONAL SUPERVISOR	RAJPREET SINGH

LAST REVISION 01-18-14 | DATE PLOTTED => 20-MAR-2014 TIME PLOTTED => 15:57

Dist	COUNTY	ROUTE	POST MILES TOTAL PROJECT	SHEET No.	TOTAL SHEETS
11	SD	15,76	R46.2/R46.8, R12.1/R17.7	1070	1273

REGISTERED ELECTRICAL ENGINEER 02-20-14 DATE

03-24-14
PLANS APPROVAL DATE

REGISTERED PROFESSIONAL ENGINEER FARIBA RAMOS No. E15619 Exp. 12-31-15 ELECTRICAL STATE OF CALIFORNIA

THE STATE OF CALIFORNIA OR ITS OFFICERS OR AGENTS SHALL NOT BE RESPONSIBLE FOR THE ACCURACY OR COMPLETENESS OF SCANNED COPIES OF THIS PLAN SHEET.

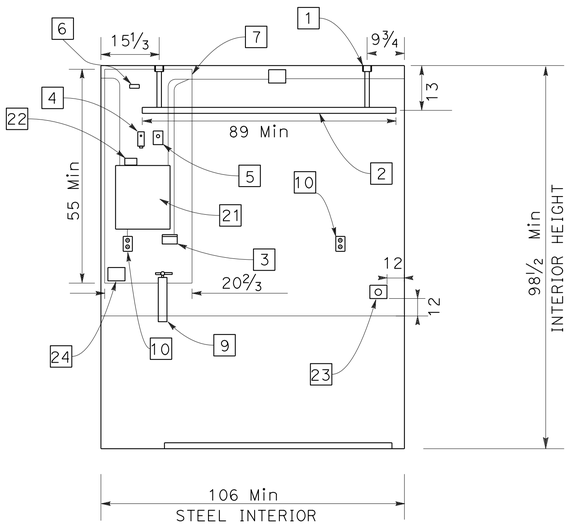

SOUTH ELEVATION

INTERIOR
HUB CABINET

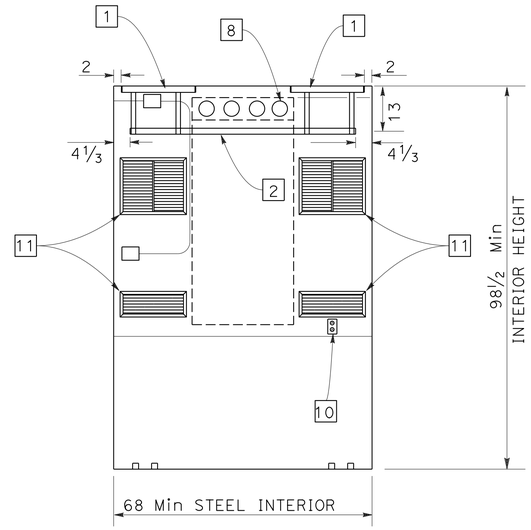

WEST ELEVATION

INTERIOR
HUB CABINET

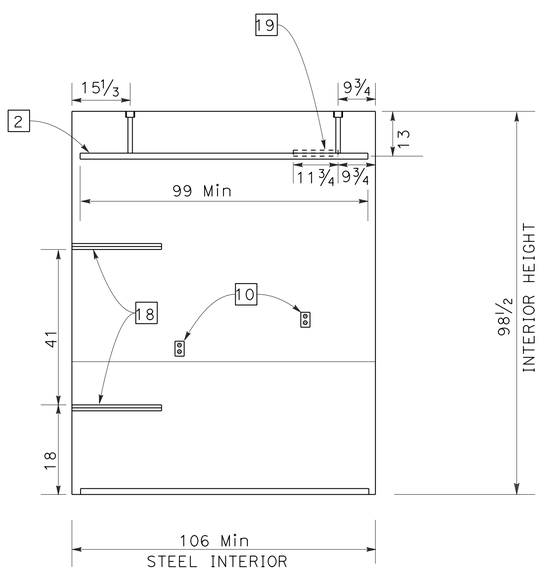

NORTH ELEVATION

INTERIOR
HUB CABINET

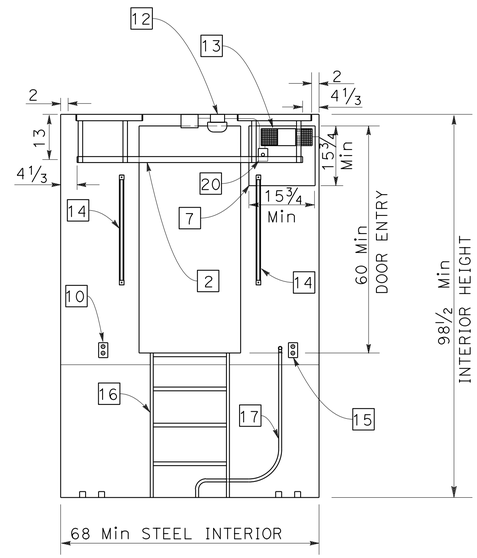

EAST ELEVATION

INTERIOR
HUB CABINET

LEGEND:

UPS - UNINTERRUPTIBLE POWER SUPPLY

NOTES:

1. CEILING MOUNTED 1 3/5" x 1 3/5" STRUT 15 3/4" Min LENGTH (TOTAL 4)
2. 11 3/4" SPLICE LADDER
3. THERMOSTAT FOR AIR CONDITIONER
4. THERMOSTAT FOR HIGH/LOW TEMPERATURE ALARM
5. HUMIDISTAT FOR HIGH HUMIDITY ALARM
6. 12 POLE TERMINAL BLOCK (ALARMS)
7. 1/3" Min MOUNTING BOARD
8. 4" CABLE ENTRY PORT WITH DUCT PLUG (TOTAL 4)
9. A-B-C RATED FIRE EXTINGUISHER
10. CONVENIENCE OUTLET (15 A)
11. VENTS FOR AIR CONDITIONER
12. CEILING MOUNTED SMOKE DETECTOR
13. EMERGENCY LIGHTS
14. SAFETY RAIL (TOTAL 2)
15. CONVENIENCE OUTLET FOR SUMP PUMP (15 A)
16. ENTRY LADDER
17. SUMP PUMP DISCHARGE CONNECTION
18. WALL MOUNTED 1 3/5" x 1 3/5" STRUT 23 3/5" Min LENGTH (TOTAL 2)
19. WALL MOUNTED 1 3/5" x 1 3/5" STRUT
20. LIGHT SWITCH/TIMER
21. SERVICE PANEL WITH:
    TWO 2P-100 A CB (MAIN/EMERGENCY SLIDEBAR)
    2P-50 A CB (UPS)
    2P-20 A CB (AIR CONDITIONER)
    1P-20 A CB (LIGHTS/SMOKE DETECTOR)
    1P-20 A CB (COMMUNICATION EQUIPMENT)
    1P-15 A CB (SUMP PUMP)
    1P-20 A CB (SPARE)
22. SECONDARY SURGE ARRESTOR
23. 50 A, 250 V, TWISTLOCK RECTIFIER BULK POWER RECEPTICLE (UPS)
24. POWER FAIL ALARM

ALL DIMENSIONS ARE IN INCHES UNLESS OTHERWISE SHOWN.

APPROVED FOR ELECTRICAL WORK ONLY

NO SCALE

CLOSED CIRCUIT TELEVISION SYSTEM (HUB CABINET DETAILS)

E-62

REVISED BY	DATE REVISED
FARIBA RAMOS	ENRIQUE BERNAL
CALCULATED-DESIGNED BY	CHECKED BY
FUNCTIONAL SUPERVISOR	RAJPREET SINGH

STATE OF CALIFORNIA - DEPARTMENT OF TRANSPORTATION
Caltrans
TRAFFIC ELECTRICAL

LAST REVISION 01-18-14 DATE PLOTTED => 20-MAR-2014 TIME PLOTTED => 15:57

Dist	COUNTY	ROUTE	POST MILES TOTAL PROJECT	SHEET No.	TOTAL SHEETS
11	SD	15,76	R46.2/R46.8, R12.1/R17.7	1071	1273

Fariba Ramos 02-20-14
REGISTERED ELECTRICAL ENGINEER DATE

03-24-14
PLANS APPROVAL DATE

REGISTERED PROFESSIONAL ENGINEER FARIBA RAMOS No. E15619 Exp. 12-31-15 ELECTRICAL STATE OF CALIFORNIA

THE STATE OF CALIFORNIA OR ITS OFFICERS OR AGENTS SHALL NOT BE RESPONSIBLE FOR THE ACCURACY OR COMPLETENESS OF SCANNED COPIES OF THIS PLAN SHEET.

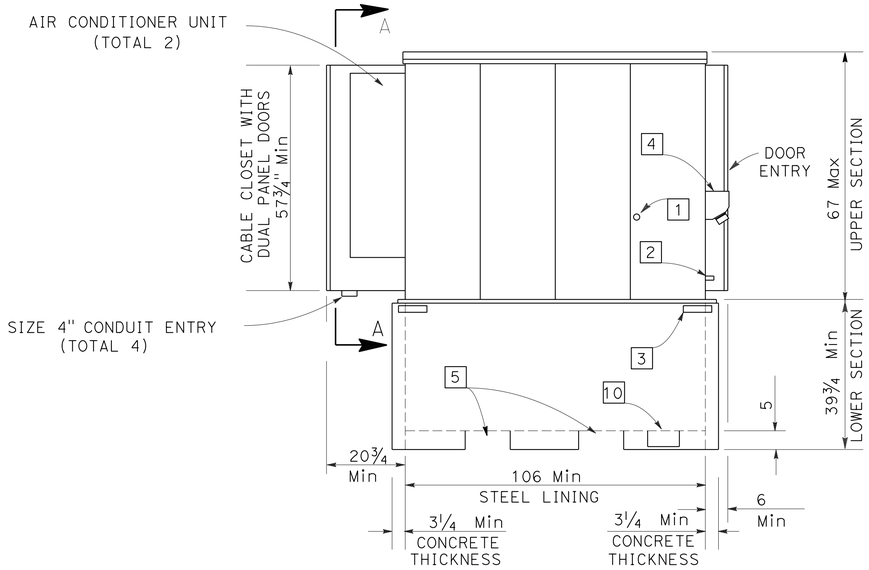

ELEVATION

EXTERIOR
HUB CABINET

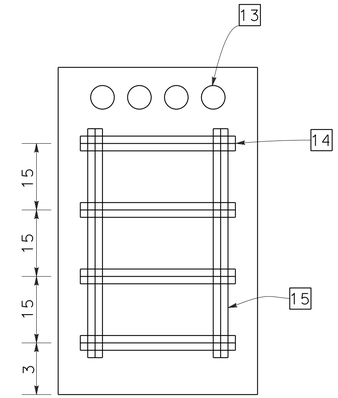

SECTION A-A

LEGEND:

UPS - UNINTERRUPTIBLE POWER SUPPLY

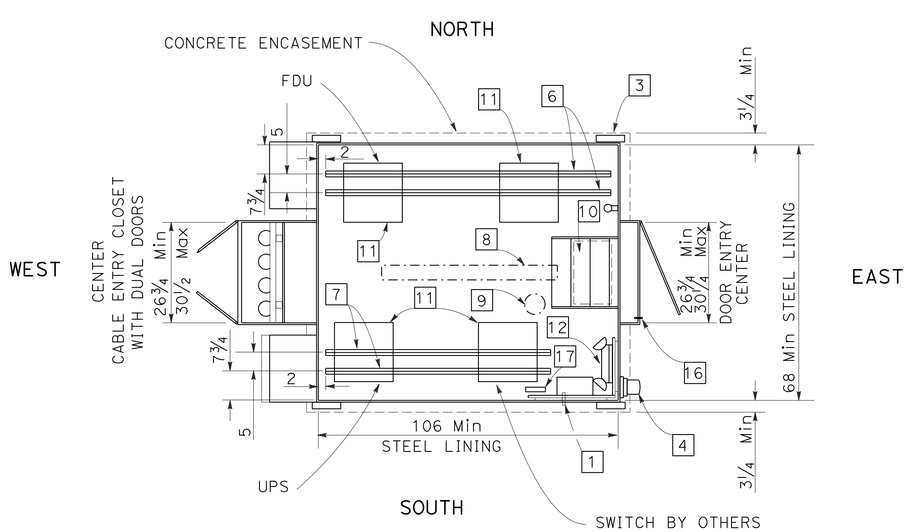

PLAN

HUB CABINET

NOTES:

1 - 1¼" Ø HOLE FOR SERVICE ENTRY

2 - ¾"C DRAIN OUTLET FOR SUMP PUMP

3 - LIFTING EYE PLATE (TOTAL 4)

4 - EMERGENCY POWER INPUT CONNECTOR FOR GENERATOR

5 - FORK-LIFT OPENING

6 - FLOOR MOUNTED 1⅗" x 1⅗" 102" Min LENGTH (TOTAL 2)

7 - FLOOR MOUNTED 1⅗" x 1⅗" STRUT 85¾" Min LENGTH (TOTAL 2)

8 - CEILING MOUNTED 2-40 W LAMP FLUORESCENT FIXTURE (CENTERED)

9 - CEILING MOUNTED SMOKE DETECTOR

10 - 250 W SUMP PUMP WITH TWO FLOAT SWITCHES. RECESSED Min 4" BELOW FLOOR

11 - MOUNT EIA 19" RACK ON STRUT RACK SHALL BE 71" NOMINAL HEIGHT AND 15¾" Min DEPTH (TOTAL 4). GROUND THE RACKS WITH #6 WIRE TO GROUND ELECTRODE IN ADJACENT PULL BOX, SEE E-25.

12 - EMERGENCY LIGHTS

13 - 4" CABLE ENTRY PORT (TOTAL 4) WITH SEALING PLUGS.

14 - STRUT-MOUNTED 1⅗" x 1⅗" STRUT, 23½" Min LENGTH (TOTAL 4)

15 - WALL MOUNTED 1⅗" x 1⅗" 47" Min LENGTH (TOTAL 2)

16 - INTRUSION ALARM SWITCH

17 - INSTALL A HORIZONTAL INDUSTRIAL-GRADE RACK MOUNT POWER STRIP WITH METAL HOUSING AND:

- 15 A CAPACITY WITH CIRCUIT BREAKER
- 120 V AC - 50/60 Hz
- 8 NEMA 5-15R OUTPUT RECEPTACLES
- 10' POWER CORD

CONNECT POWER STRIP TO UPS.

ALL DIMENSIONS ARE IN INCHES UNLESS OTHERWISE SHOWN.

APPROVED FOR ELECTRICAL WORK ONLY

NO SCALE

CLOSED CIRCUIT TELEVISION SYSTEM (HUB CABINET DETAILS)

E-63

STATE OF CALIFORNIA - DEPARTMENT OF TRANSPORTATION
Caltrans TRAFFIC ELECTRICAL

FUNCTIONAL SUPERVISOR: RAJPREET SINGH
CALCULATED-DESIGNED BY: ENRIQUE BERNAL
CHECKED BY: FARIBA RAMOS
REVISED BY
DATE REVISED

LAST REVISION 01-18-14
DATE PLOTTED => 20-MAR-2014
TIME PLOTTED => 15:57

Dist	COUNTY	ROUTE	POST MILES TOTAL PROJECT	SHEET No.	TOTAL SHEETS
11	SD	15,76	R46.2/R46.8, R12.1/R17.7	1072	1273

Fariba Ramos 02-20-14
REGISTERED ELECTRICAL ENGINEER DATE

03-24-14
PLANS APPROVAL DATE

REGISTERED PROFESSIONAL ENGINEER FARIBA RAMOS No. E15619 Exp. 12-31-15 ELECTRICAL STATE OF CALIFORNIA

THE STATE OF CALIFORNIA OR ITS OFFICERS OR AGENTS SHALL NOT BE RESPONSIBLE FOR THE ACCURACY OR COMPLETENESS OF SCANNED COPIES OF THIS PLAN SHEET.

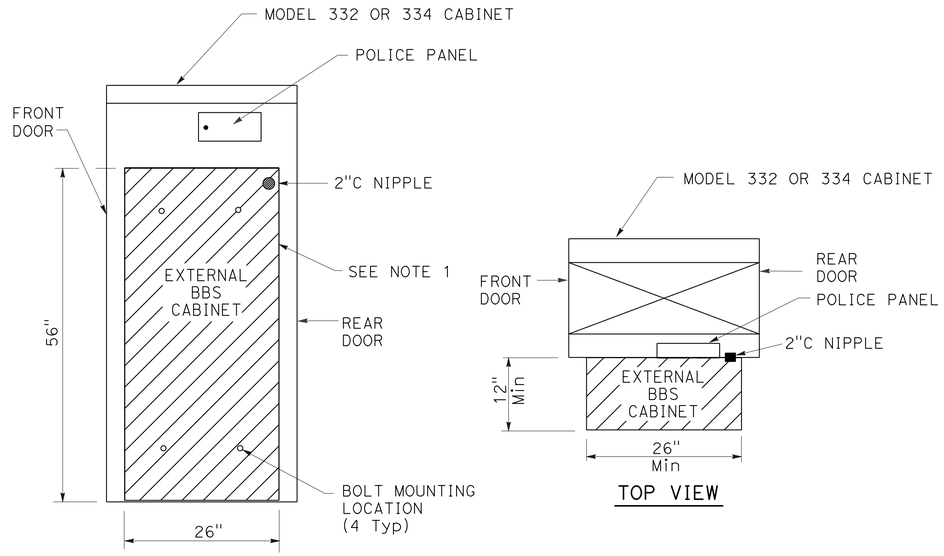

SIDE VIEW

TOP VIEW

EXTERNAL BBS CABINET MOUNTED TO THE MODEL 332 OR 334 CABINET

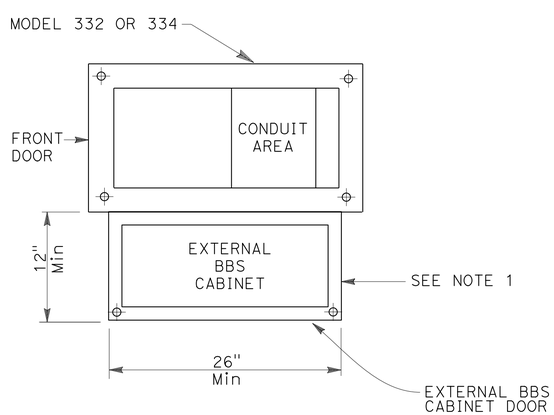

BASE PLAN FOR BBS MOUNTED TO THE MODEL 332 OR 334 CABINET

(FOR DIMENSIONS AND DETAILS NOT SHOWN, SEE SHEET A6-1 TO A6-4, CABINET HOUSING DETAILS OF THE TRANSPORTATION ELECTRICAL EQUIPMENT SPECIFICATION (TEES))

NOTES:

1. MOUNT THE EXTERNAL BBS CABINET TO THE MODEL 332 OR 334 CABINET WITH FOUR TO EIGHT 18-8 STAINLESS STEEL, FULLY THREADED, 3/8"-16 X 1", HEX HEAD BOLTS, EACH WITH TWO 18-8 STAINLESS STEEL, 1" OD, ROUND FLAT WASHERS (DESIGNED FOR 3/8" BOLTS) AND ONE STAINLESS STEEL, K-LOCK HEX NUT. OBTAIN THE ENGINEER'S APPROVAL OF THE BOLT MOUNTING LOCATIONS PRIOR TO BBS CABINET INSTALLATION.
2. THE ANCHOR BOLTS MUST BE 3/4" Dia X 15" WITH A 2"-90 DEGREE BEND. EXTERNAL BBS CABINET ANCHOR BOLT LOCATION MUST BE PER MANUFACTURER'S RECOMMENDATION. OBTAIN THE ENGINEER'S APPROVAL OF THE ANCHOR BOLT LOCATIONS PRIOR TO CONSTRUCTING THE FOUNDATION.
3. VERIFY THE DIMENSIONS OF THE BBS CABINET AND OBTAIN THE ENGINEER'S APPROVAL OF NECESSARY CHANGES PRIOR TO CONSTRUCTING THE FOUNDATION.
4. ALL DIMENSIONS ARE NOMINAL.

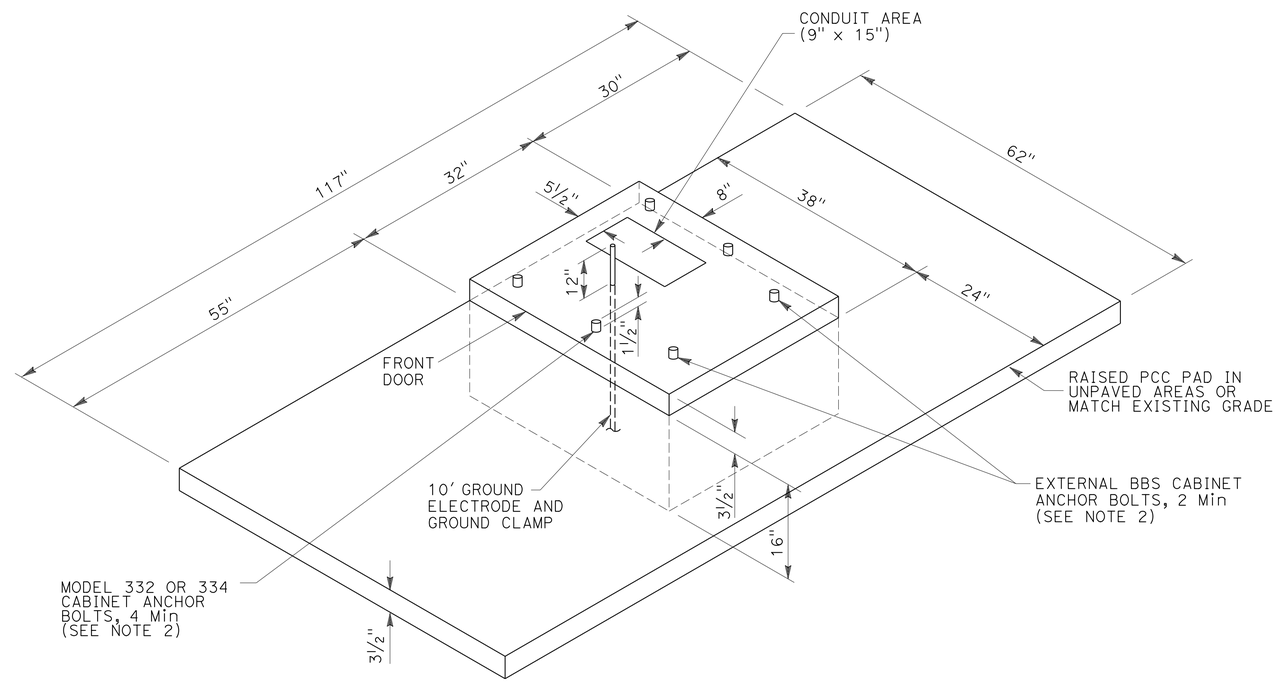

MODIFIED MODEL 332 AND 334 CABINET WITH BATTERY BACKUP SYSTEM (BBS) FOUNDATION DETAIL

(FOR DIMENSIONS AND DETAILS NOT SHOWN AND ADDITIONAL NOTES, SEE SHEET ES-3C OF THE STANDARD PLANS FOR MODEL 332 AND 334 CABINES)

SIGNAL AND LIGHTING ELECTRICAL DETAILS (BBS FOUNDATION DETAILS)

NO SCALE

E-64

APPROVED FOR ELECTRICAL WORK ONLY

STATE OF CALIFORNIA - DEPARTMENT OF TRANSPORTATION
Caltrans® TRAFFIC ELECTRICAL

FUNCTIONAL SUPERVISOR: RAJPREET SINGH
CALCULATED-DESIGNED BY: FARIBA RAMOS
CHECKED BY: ENRIQUE BERNAL
REVISED BY
DATE REVISED

LAST REVISION 01-18-14
DATE PLOTTED => 20-MAR-2014
TIME PLOTTED => 15:57

Dist	COUNTY	ROUTE	POST MILES TOTAL PROJECT	SHEET No.	TOTAL SHEETS
11	SD	15,76	R46.2/R46.8, R12.1/R17.7	1073	1273

Fariba Ramos 02-20-14
REGISTERED ELECTRICAL ENGINEER DATE

03-24-14
PLANS APPROVAL DATE

REGISTERED PROFESSIONAL ENGINEER
FARIBA RAMOS
No. E15619
Exp. 12-31-15
ELECTRICAL
STATE OF CALIFORNIA

THE STATE OF CALIFORNIA OR ITS OFFICERS OR AGENTS SHALL NOT BE RESPONSIBLE FOR THE ACCURACY OR COMPLETENESS OF SCANNED COPIES OF THIS PLAN SHEET.

NOTES FOR LIGHTING, SIGNAL AND LIGHTING (STAGE CONSTRUCTION):

1 - EXISTING AND TEMPORARY ELECTRICAL EQUIPMENT NO LONGER REQUIRED AT THE END OF A CONSTRUCTION STAGE SHALL BE REMOVED OR REUSED IN THE FOLLOWING STAGES.

2 - PERMANENT ELECTRICAL EQUIPMENT NOT SHOWN ON THE STAGE CONSTRUCTION PLANS MAY BE INSTALLED AT ANY STAGE IF NOT INTERFERING WITH CONSTRUCTION AND TRAFFIC AND AS DIRECTED BY THE ENGINEER.

3 - AT LOCATIONS WHERE PERMANENT CONDUIT INSTALLATION ARE SHOWN, CONDUCTORS AND CABLES REQUIRED ONLY DURINNG STAGE CONSTRUCTION ARE INDICATED ON THE PLANS. AT CONTRACTOR'S OPTION, OTHER PERMANENT CONDUCTORS AND CABLES MAY BE INSTALLED IF NOT INTERFERING WITH FUTURE STAGES OF CONSTRUCTION.

4 - AT THE END OF EACH STAGE CONSTRUCTION, THE CONTRACTOR MAY REUSE LED FIXTURES IN THE FOLLOWING STAGE(S) IF NOT INTERFERING WITH CONSTRUCTION AND TRAFFIC AND AS DIRECTED BY THE ENGINEER.

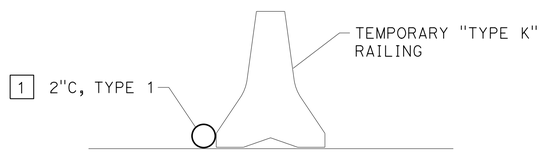

"TEMPORARY CONDUIT DETAIL"

NOTE:

1 SECURE CONDUIT TO CONCRETE BARRIER AT 10' INTERVALS.

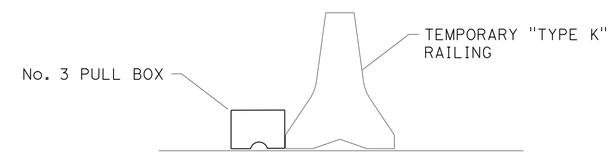

"TEMPORARY PULL BOX DETAIL"

LIGHTING (STAGE CONSTRUCTION) ELECTRICAL DETAILS

NO SCALE

APPROVED FOR ELECTRICAL WORK ONLY

E-65

STATE OF CALIFORNIA - DEPARTMENT OF TRANSPORTATION
Caltrans
TRAFFIC ELECTRICAL

FUNCTIONAL SUPERVISOR: RAJPREET SINGH
CALCULATED-DESIGNED BY: FARIBA RAMOS
CHECKED BY: ENRIQUE BERNAL
REVISED BY
DATE REVISED

LAST REVISION 01-18-14
DATE PLOTTED => 20-MAR-2014
TIME PLOTTED => 15:57

Dist	COUNTY	ROUTE	POST MILES TOTAL PROJECT	SHEET No.	TOTAL SHEETS
11	SD	15,76	R46.2/R46.8, R12.1/R17.7	1074	1273

REGISTERED ELECTRICAL ENGINEER 02-20-14 DATE

03-24-14
PLANS APPROVAL DATE

REGISTERED PROFESSIONAL ENGINEER FARIBA RAMOS No. E15619 Exp. 12-31-15 ELECTRICAL STATE OF CALIFORNIA

THE STATE OF CALIFORNIA OR ITS OFFICERS OR AGENTS SHALL NOT BE RESPONSIBLE FOR THE ACCURACY OR COMPLETENESS OF SCANNED COPIES OF THIS PLAN SHEET.

NOTES:

1. INSTALL TEMPORARY LIGHTING POLE, CASE 1G OR CASE 1N, PER SES SHEETS.
2. No. 3 PB. SEE "LIGHTING (STAGE CONSTRUCTION) ELECTRICAL DETAILS" FOR "TEMPORARY PULL BOX DETAIL".
3. INSTALL TEMPORARY LIGHTING POLE, CASE 3N, PER SES SHEETS.
4. 2#8 (LTG).
5. SEE "LIGHTING" AND "SIGNAL AND LIGHTING (LOCATION 1)" PLANS FOR CIRCUIT CONTINUITY.
6. HORIZONTAL SPAN BETWEEN TEMPORARY LIGHTING POLES SHALL BE 150′ OR LESS.
7. FOR ACCURATE RIGHT OF WAY DATA, CONTACT RIGHT OF WAY ENGINEERING AT THE DISTRICT OFFICE.

CONDUIT NOTES:

T 1 2"C, 2#8 (LTG)

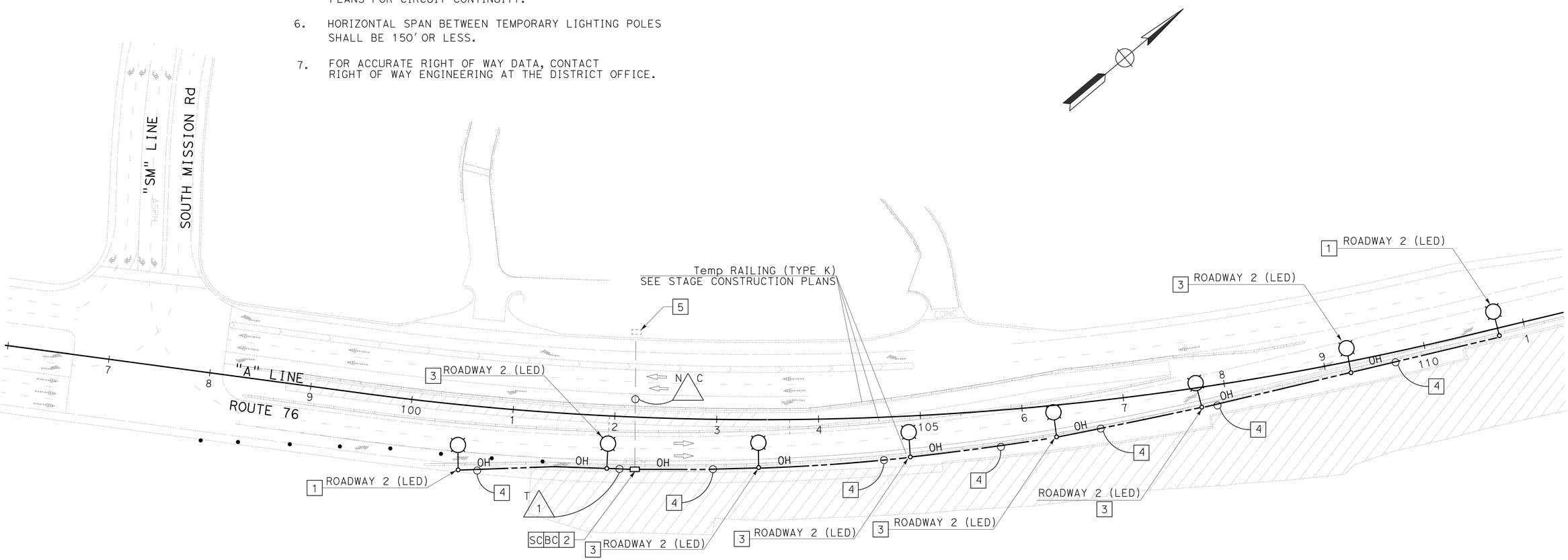

LIGHTING (STAGE CONSTRUCTION) (STAGE 1A)

APPROVED FOR ELECTRICAL WORK ONLY

SCALE: 1" = 50′

E-66

STATE OF CALIFORNIA - DEPARTMENT OF TRANSPORTATION
Caltrans
TRAFFIC ELECTRICAL

FUNCTIONAL SUPERVISOR: RAJPREET SINGH
CALCULATED-DESIGNED BY: FARIBA RAMOS
CHECKED BY: ENRIQUE BERNAL
REVISED BY
DATE REVISED

LAST REVISION 01-18-14
DATE PLOTTED => 20-MAR-2014
TIME PLOTTED => 15:57

Dist	COUNTY	ROUTE	POST MILES TOTAL PROJECT	SHEET No.	TOTAL SHEETS
11	SD	15,76	R46.2/R46.8, R12.1/R17.7	1075	1273

Fariba Ramos 02-20-14
REGISTERED ELECTRICAL ENGINEER DATE

03-24-14
PLANS APPROVAL DATE

REGISTERED PROFESSIONAL ENGINEER FARIBA RAMOS No. E15619 Exp. 12-31-15 ELECTRICAL STATE OF CALIFORNIA

THE STATE OF CALIFORNIA OR ITS OFFICERS OR AGENTS SHALL NOT BE RESPONSIBLE FOR THE ACCURACY OR COMPLETENESS OF SCANNED COPIES OF THIS PLAN SHEET.

NOTES:

1. SEE SES-7 FOR TEMPORARY WOOD POLES, SOLAR LIGHITNG.
2. PEU, SEE SES-7.
3. FOR ACCURATE RIGHT OF WAY DATA, CONTACT RIGHT OF WAY ENGINEERING AT THE DISTRICT OFFICE.

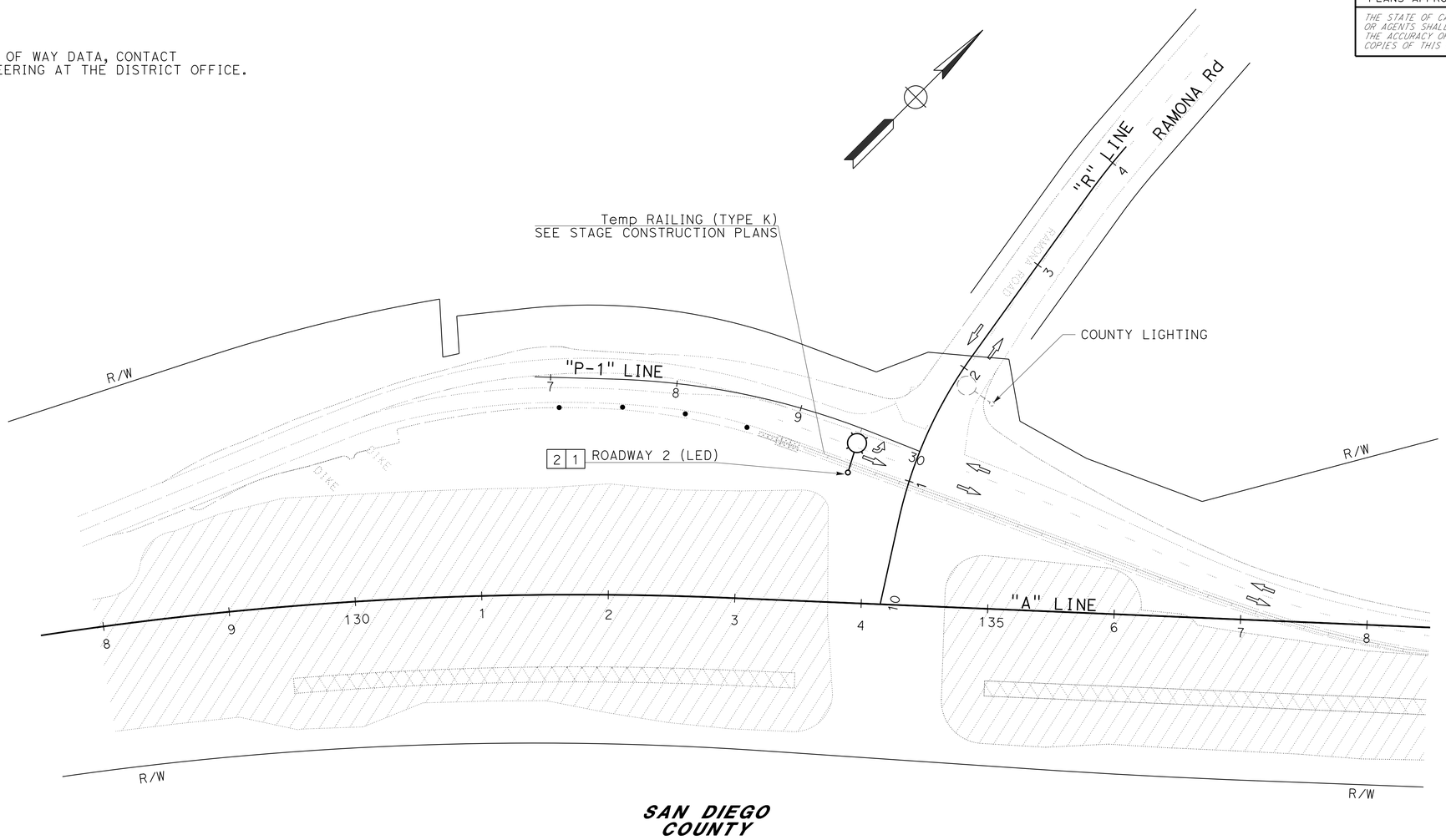

SAN DIEGO COUNTY

LIGHTING (STAGE CONSTRUCTION) (STAGE 1A)

APPROVED FOR ELECTRICAL WORK ONLY

SCALE: 1" = 50'

E-67

STATE OF CALIFORNIA - DEPARTMENT OF TRANSPORTATION
Caltrans
TRAFFIC ELECTRICAL

FUNCTIONAL SUPERVISOR: RAJPREET SINGH
CALCULATED-DESIGNED BY: FARIBA RAMOS
CHECKED BY: ENRIQUE BERNAL
REVISED BY
DATE REVISED

LAST REVISION 01-18-14
DATE PLOTTED => 20-MAR-2014
TIME PLOTTED => 15:57

Dist	COUNTY	ROUTE	POST MILES TOTAL PROJECT	SHEET No.	TOTAL SHEETS
11	SD	15,76	R46.2/R46.8, R12.1/R17.7	1076	1273

Fariba Ramos 02-20-14
REGISTERED ELECTRICAL ENGINEER DATE

03-24-14
PLANS APPROVAL DATE

REGISTERED PROFESSIONAL ENGINEER
FARIBA RAMOS
No. E15619
Exp. 12-31-15
ELECTRICAL
STATE OF CALIFORNIA

THE STATE OF CALIFORNIA OR ITS OFFICERS OR AGENTS SHALL NOT BE RESPONSIBLE FOR THE ACCURACY OR COMPLETENESS OF SCANNED COPIES OF THIS PLAN SHEET.

NOTES:

1. INSTALL TEMPORARY LIGHTING POLE, CASE 1G OR CASE 1N, PER SES SHEETS.
2. INSTALL TEMPORARY POLE, CASE IG OR 1N PER SES SHEETS. INSTALL PEU.
3. 2#8 (LTG).
4. SEE "CLOSED CIRCUIT TELEVISION SYSTEM" AND "SIGNAL AND LIGHTING (LOCATION 2)" PLANS FOR CIRCUIT CONTINUITY.
5. SERVICE TO BE TURNED ON DURING THIS STAGE. SEE SHEET E-10.
6. 3"C, 2#8 (LTG), 3#14 (PEU).
7. INSTALL TEMPORARY LIGHTING POLE, CASE 4N OR CASE 4G, PER SES SHEETS.
8. INSTALL TEMPORARY LIGHTING POLE, CASE 3N, PER SES SHEETS.
9. HORIZONTAL SPAN BETWEEN TEMPORARY LIGHITNG POLES SHALL BE 150′ OR LESS.
10. SEE SHEET E-10 FOR CIRCUIT CONTINUITY.
11. FOR ACCURATE RIGHT OF WAY DATA, CONTACT RIGHT OF WAY ENGINEERING AT THE DISTRICT OFFICE.

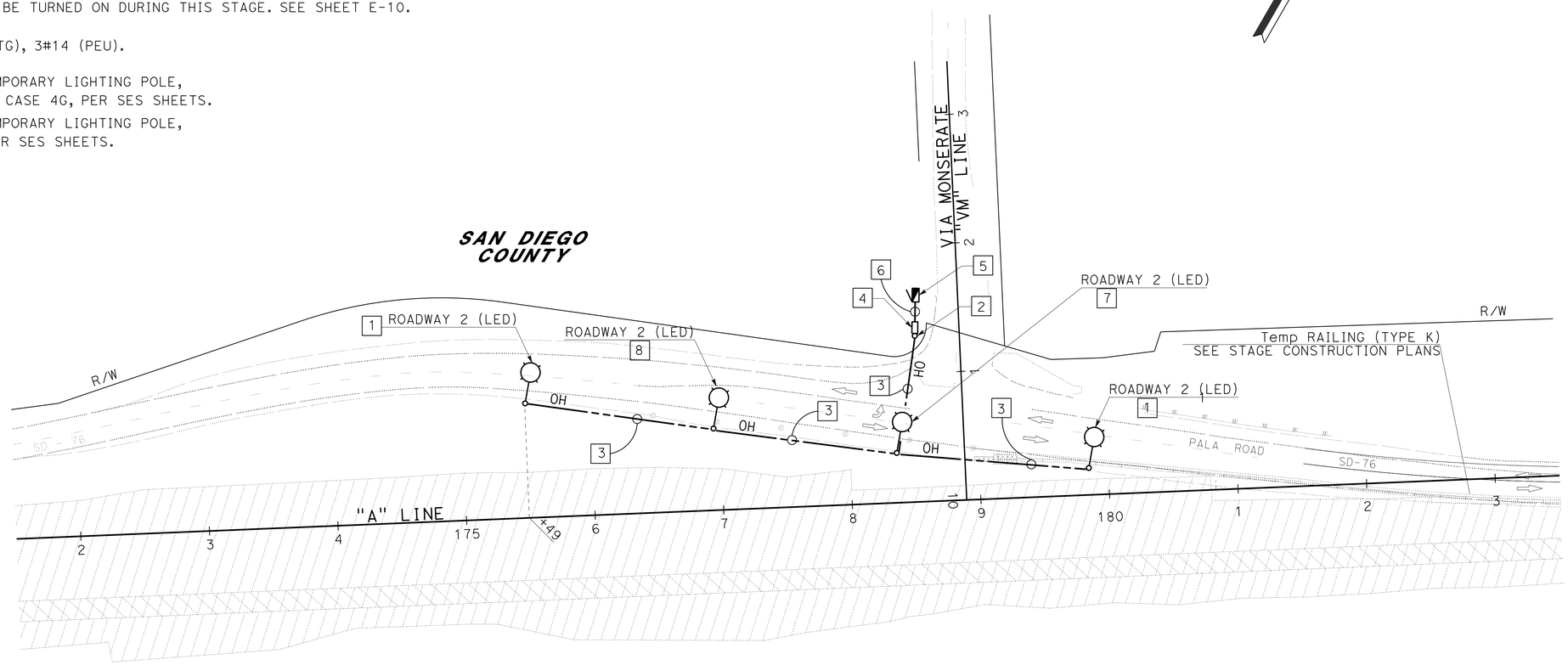

LIGHTING (STAGE CONSTRUCTION) (STAGE 1A)

APPROVED FOR ELECTRICAL WORK ONLY

SCALE: 1" = 50′

E-68

STATE OF CALIFORNIA - DEPARTMENT OF TRANSPORTATION
Caltrans
TRAFFIC ELECTRICAL

FUNCTIONAL SUPERVISOR: RAJPREET SINGH
CALCULATED-DESIGNED BY: FARIBA RAMOS
CHECKED BY: ENRIQUE BERNAL
REVISED BY
DATE REVISED

LAST REVISION 09-18-13
DATE PLOTTED => 24-MAR-2014
TIME PLOTTED => 15:40

Dist	COUNTY	ROUTE	POST MILES TOTAL PROJECT	SHEET No.	TOTAL SHEETS
11	SD	15,76	R46.2/R46.8, R12.1/R17.7	1077	1273

Fariba Ramos 02-20-14
REGISTERED ELECTRICAL ENGINEER DATE

03-24-14
PLANS APPROVAL DATE

REGISTERED PROFESSIONAL ENGINEER FARIBA RAMOS No. E15619 Exp. 12-31-15 ELECTRICAL STATE OF CALIFORNIA

THE STATE OF CALIFORNIA OR ITS OFFICERS OR AGENTS SHALL NOT BE RESPONSIBLE FOR THE ACCURACY OR COMPLETENESS OF SCANNED COPIES OF THIS PLAN SHEET.

NOTES:

1. INSTALL TEMPORARY LIGHTING POLE, CASE 1G OR CASE 1N, PER SES SHEETS.
2. No. 3 PB. SEE "LIGHTING (STAGE CONSTRUCTION) ELECTRICAL DETAILS" FOR "TEMPORARY PULL BOX DETAIL".
3. INSTALL TEMPORARY LIGHTING POLE, CASE 3N, PER SES SHEET.
4. 2#8 (LTG).
5. SEE "LIGHTING" AND "SIGNAL AND LIGHTING (LOCATION 1)" PLANS FOR CIRCUIT CONTINUITY.
6. INSTALL 2"C, TYPE 1 WITH 2#8 (LTG), 12" BELOW GRADE. CONDUIT SHALL BE PROTECTED DURING STAGE CONSTRUCTION.
7. HORIZONTAL SPAN BETWEEN TEMPORARY LIGHTING POLES SHALL BE 150′ OR LESS.
8. FOR ACCURATE RIGHT OF WAY DATA, CONTACT RIGHT OF WAY ENGINEERING AT THE DISTRICT OFFICE.

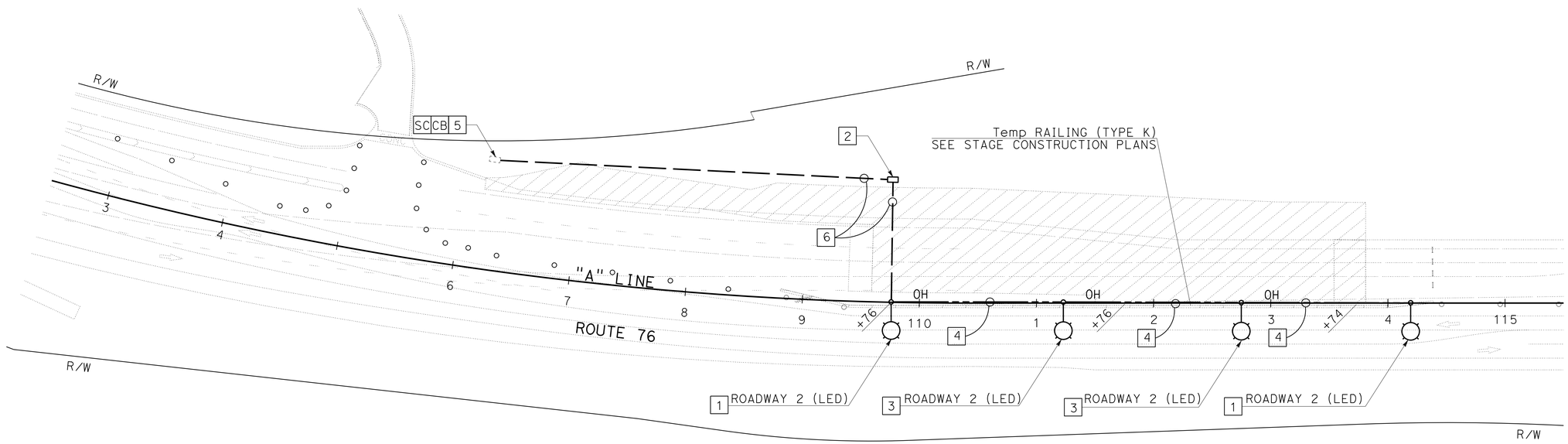

LIGHTING (STAGE CONSTRUCTION) (STAGE 2A)

APPROVED FOR ELECTRICAL WORK ONLY

SCALE: 1" = 50′

E-69

STATE OF CALIFORNIA - DEPARTMENT OF TRANSPORTATION
Caltrans
TRAFFIC ELECTRICAL

FUNCTIONAL SUPERVISOR: RAJPREET SINGH
CALCULATED-DESIGNED BY: FARIBA RAMOS
CHECKED BY: ENRIQUE BERNAL
REVISED BY
DATE REVISED

LAST REVISION 09-18-13
DATE PLOTTED => 24-MAR-2014
TIME PLOTTED => 15:40

Dist	COUNTY	ROUTE	POST MILES TOTAL PROJECT	SHEET No.	TOTAL SHEETS
11	SD	15,76	R46.2/R46.8, R12.1/R17.7	1078	1273

Fariba Ramos 02-20-14
REGISTERED ELECTRICAL ENGINEER DATE

03-24-14
PLANS APPROVAL DATE

REGISTERED PROFESSIONAL ENGINEER
FARIBA RAMOS
No. E15619
Exp. 12-31-15
ELECTRICAL
STATE OF CALIFORNIA

THE STATE OF CALIFORNIA OR ITS OFFICERS OR AGENTS SHALL NOT BE RESPONSIBLE FOR THE ACCURACY OR COMPLETENESS OF SCANNED COPIES OF THIS PLAN SHEET.

NOTES:

1. SEE SES-7 FOR TEMPORARY WOOD POLES, SOLAR LIGHITNG.
2. INSTALL TYPE IV PEC.
3. 2#8 (LTG).
4. HORIZONTAL SPAN BETWEEN TEMPORARY LIGHITNG POLES SHALL BE 150′ OR LESS.
5. FOR ACCURATE RIGHT OF WAY DATA, CONTACT RIGHT OF WAY ENGINEERING AT THE DISTRICT OFFICE.

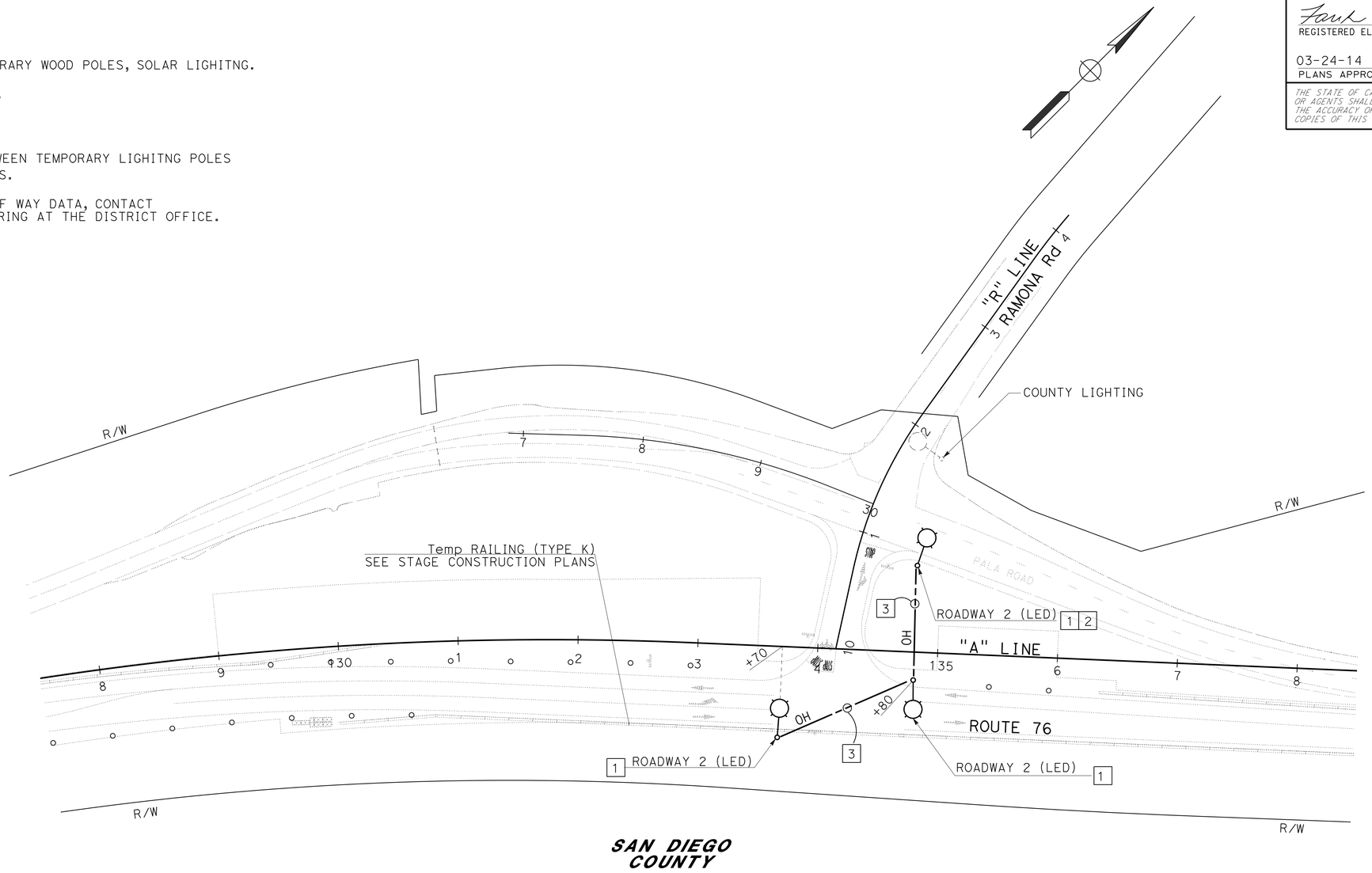

SAN DIEGO COUNTY

LIGHTING (STAGE CONSTRUCTION) (STAGES 2A & 2B)

APPROVED FOR ELECTRICAL WORK ONLY

SCALE: 1" = 50′

E-70

STATE OF CALIFORNIA - DEPARTMENT OF TRANSPORTATION
Caltrans
TRAFFIC ELECTRICAL

FUNCTIONAL SUPERVISOR: RAJPREET SINGH
CALCULATED-DESIGNED BY: FARIBA RAMOS
CHECKED BY: ENRIQUE BERNAL
REVISED BY
DATE REVISED

LAST REVISION 09-18-13
DATE PLOTTED => 24-MAR-2014
TIME PLOTTED => 15:40

Dist	COUNTY	ROUTE	POST MILES TOTAL PROJECT	SHEET No.	TOTAL SHEETS
11	SD	15,76	R46.2/R46.8, R12.1/R17.7	1079	1273

Fariba Ramos 02-20-14
REGISTERED ELECTRICAL ENGINEER DATE

03-24-14
PLANS APPROVAL DATE

REGISTERED PROFESSIONAL ENGINEER FARIBA RAMOS No. E15619 Exp. 12-31-15 ELECTRICAL STATE OF CALIFORNIA

THE STATE OF CALIFORNIA OR ITS OFFICERS OR AGENTS SHALL NOT BE RESPONSIBLE FOR THE ACCURACY OR COMPLETENESS OF SCANNED COPIES OF THIS PLAN SHEET.

NOTES:

1. INSTALL TEMPORARY LIGHTING POLE, CASE 1G OR CASE 1N, PER SES SHEETS.
2. SEE "CLOSED CIRCUIT TELEVISION SYSTEM" AND "SIGNAL AND LIGHTING (LOCATION 2)" PLANS FOR CIRCUIT CONTINUITY.
3. INSTALL PERMANENT EQUIPMENT. SERVICE TO BE TURNED ON DURING STAGE 1, SEE E-10.
4. 2#8 (LTG).
5. 3"C, 2#8 (LTG) AND 3#14 (PEU)
6. No. 3 PB. SEE "LIGHTING (STAGE CONSTRUCTION) ELECTRICAL DETALS" FOR "TEMPORARY PULL BOX DETAIL".
7. CONTRACTOR MAY INSTALL PERMANENT CONDUIT. SEE "SIGNAL AND LIGHTING (LOCATION 2)" PLANS.
8. HORIZONTAL SPAN BETWEEN TEMPORARY LIGHITNG POLES SHALL BE 150′ OR LESS.
9. FOR ACCURATE RIGHT OF WAY DATA, CONTACT RIGHT OF WAY ENGINEERING AT THE DISTRICT OFFICE.

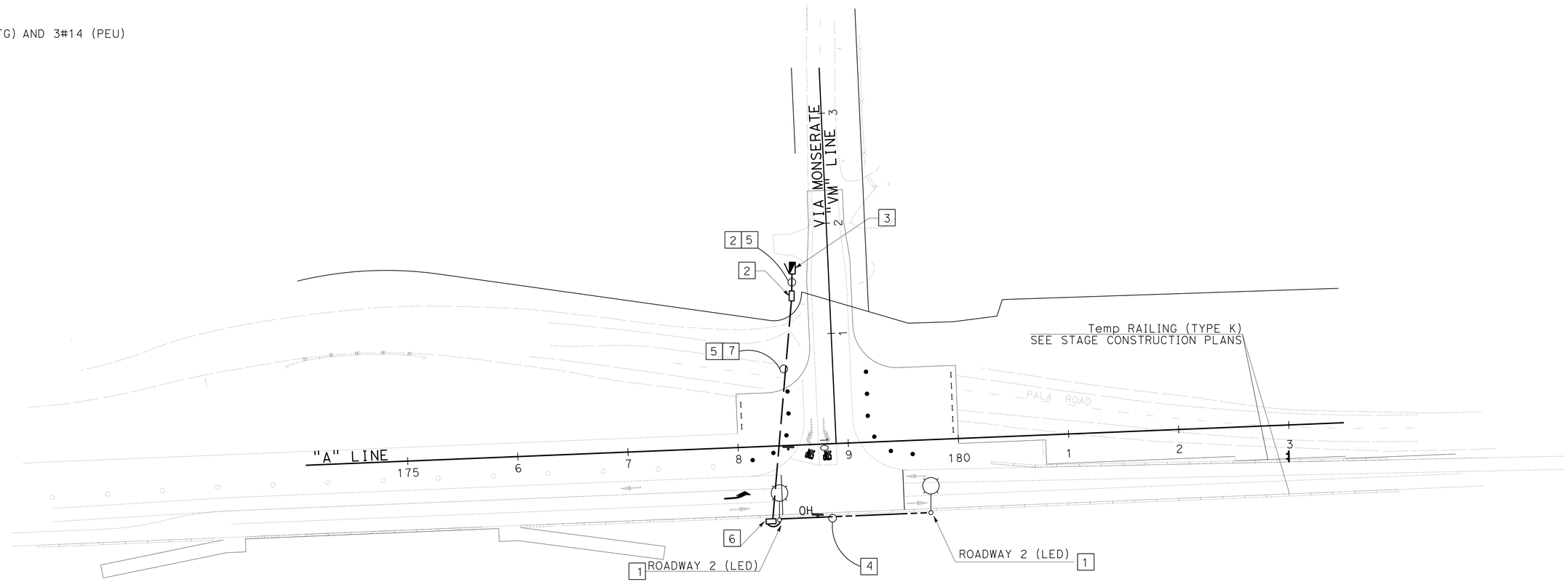

LIGHTING (STAGE CONSTRUCTION) (STAGES 2A & 2B)

APPROVED FOR ELECTRICAL WORK ONLY

SCALE: 1" = 50′

E-71

STATE OF CALIFORNIA - DEPARTMENT OF TRANSPORTATION
Caltrans®
TRAFFIC ELECTRICAL

FUNCTIONAL SUPERVISOR: RAJPREET SINGH
CALCULATED-DESIGNED BY: FARIBA RAMOS
CHECKED BY: ENRIQUE BERNAL
REVISED BY
DATE REVISED

LAST REVISION 09-18-13
DATE PLOTTED => 24-MAR-2014
TIME PLOTTED => 15:40

Dist	COUNTY	ROUTE	POST MILES TOTAL PROJECT	SHEET No.	TOTAL SHEETS
11	SD	15,76	R46.2/R46.8, R12.1/R17.7	1080	1273

Fariba Ramos 02-20-14
REGISTERED ELECTRICAL ENGINEER DATE

03-24-14
PLANS APPROVAL DATE

REGISTERED PROFESSIONAL ENGINEER
FARIBA RAMOS
No. E15619
Exp. 12-31-15
ELECTRICAL
STATE OF CALIFORNIA

THE STATE OF CALIFORNIA OR ITS OFFICERS OR AGENTS SHALL NOT BE RESPONSIBLE FOR THE ACCURACY OR COMPLETENESS OF SCANNED COPIES OF THIS PLAN SHEET.

NOTES:

1 SEE SES-7 FOR TEMPORARY WOOD POLES, SOLAR LIGHITNG.

2 PEU, SEE SES-7.

3. FOR ACCURATE RIGHT OF WAY DATA, CONTACT RIGHT OF WAY ENGINEERING AT THE DISTRICT OFFICE.

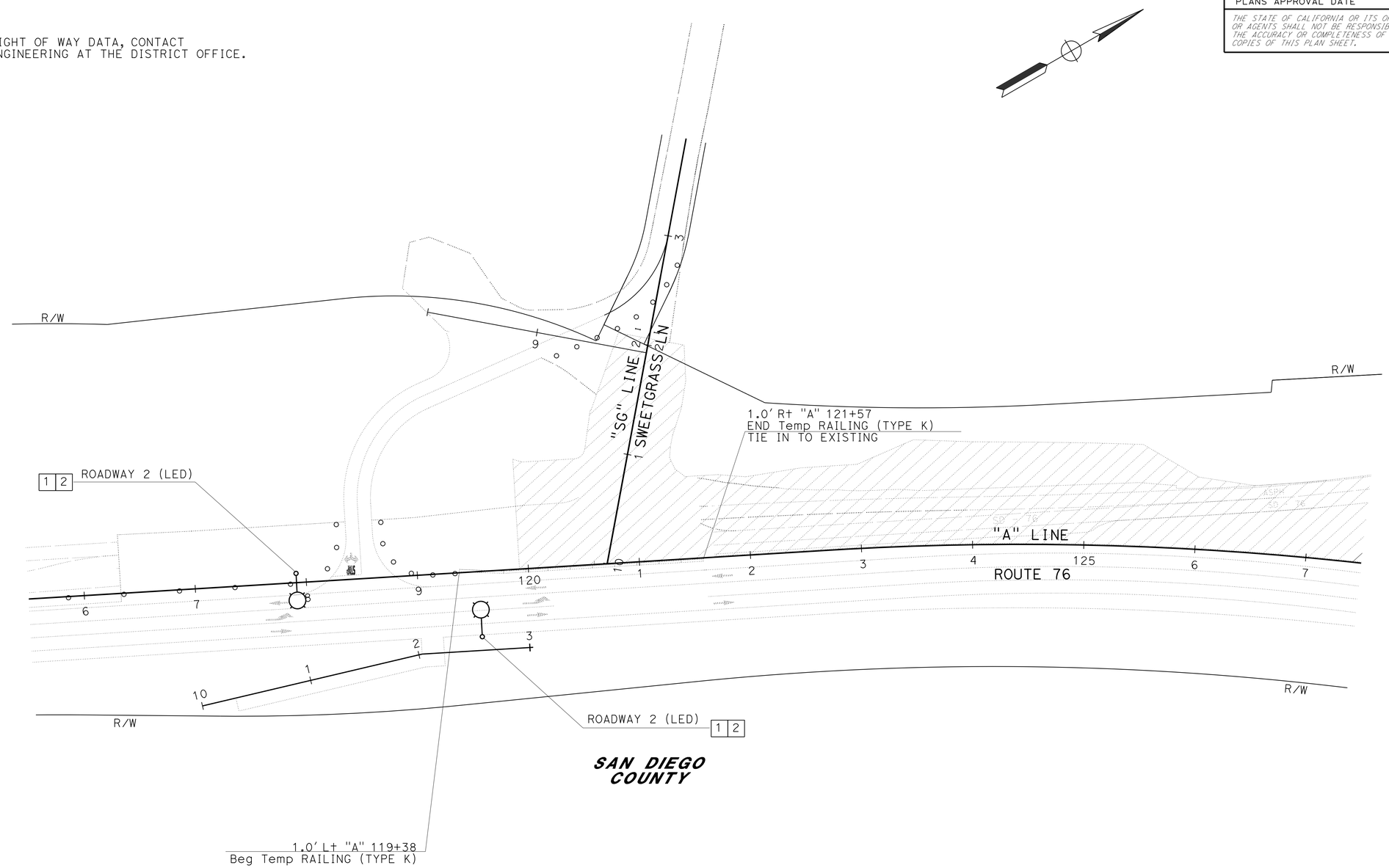

LIGHTING (STAGE CONSTRUCTION) (STAGE 2C)

APPROVED FOR ELECTRICAL WORK ONLY

SCALE: 1" = 50'

E-72

STATE OF CALIFORNIA - DEPARTMENT OF TRANSPORTATION
Caltrans
TRAFFIC ELECTRICAL

FUNCTIONAL SUPERVISOR: RAJPREET SINGH
CALCULATED-DESIGNED BY: FARIBA RAMOS
CHECKED BY: ENRIQUE BERNAL
REVISED BY
DATE REVISED

LAST REVISION 09-18-13
DATE PLOTTED => 24-MAR-2014
TIME PLOTTED => 15:40

Dist	COUNTY	ROUTE	POST MILES TOTAL PROJECT	SHEET No.	TOTAL SHEETS
11	SD	15,76	R46.2/R46.8, R12.1/R17.7	1081	1273

REGISTERED ELECTRICAL ENGINEER 02-20-14 DATE

03-24-14
PLANS APPROVAL DATE

REGISTERED PROFESSIONAL ENGINEER FARIBA RAMOS No. E15619 Exp. 12-31-15 ELECTRICAL STATE OF CALIFORNIA

THE STATE OF CALIFORNIA OR ITS OFFICERS OR AGENTS SHALL NOT BE RESPONSIBLE FOR THE ACCURACY OR COMPLETENESS OF SCANNED COPIES OF THIS PLAN SHEET.

NOTES:

1. INSTALL TEMPORARY POLE, CASE 1G OR 1N PER SES SHEETS.
2. INSTALL TEMPORARY LIGHTING POLE, CASE 3G OR 3N PER SES SHEETS.
3. SEE "LIGHTING (COUNTY)" AND "SIGNAL AND LIGHTING (LOCATION 3)" PLANS FOR MORE INFORMATION AND CIRCUIT CONTINUITY.
4. 2#8 (LTG).
5. INSTALL 2"C, TYPE 1 WITH 2#8 (LTG) AND 3#14 (PEU) 12" BELOW WORK AREA. CONDUIT SHALL BE PROTECTED DURING STAGE CONSTRUCTION.
6. INSTALL TEMPORARY POLE, CASE 4G OR 4N PER SES SHEETS.
7. INSTALL TEMPORARY LIGHTING POLE, CASE 1N OR CASE 1G, PER SES SHEETS.
8. HORIZONTAL SPAN BETWEEN TEMPORARY LIGHITNG POLES SHALL BE 150' OR LESS.
9. FOR ACCURATE RIGHT OF WAY DATA, CONTACT RIGHT OF WAY ENGINEERING AT THE DISTRICT OFFICE.

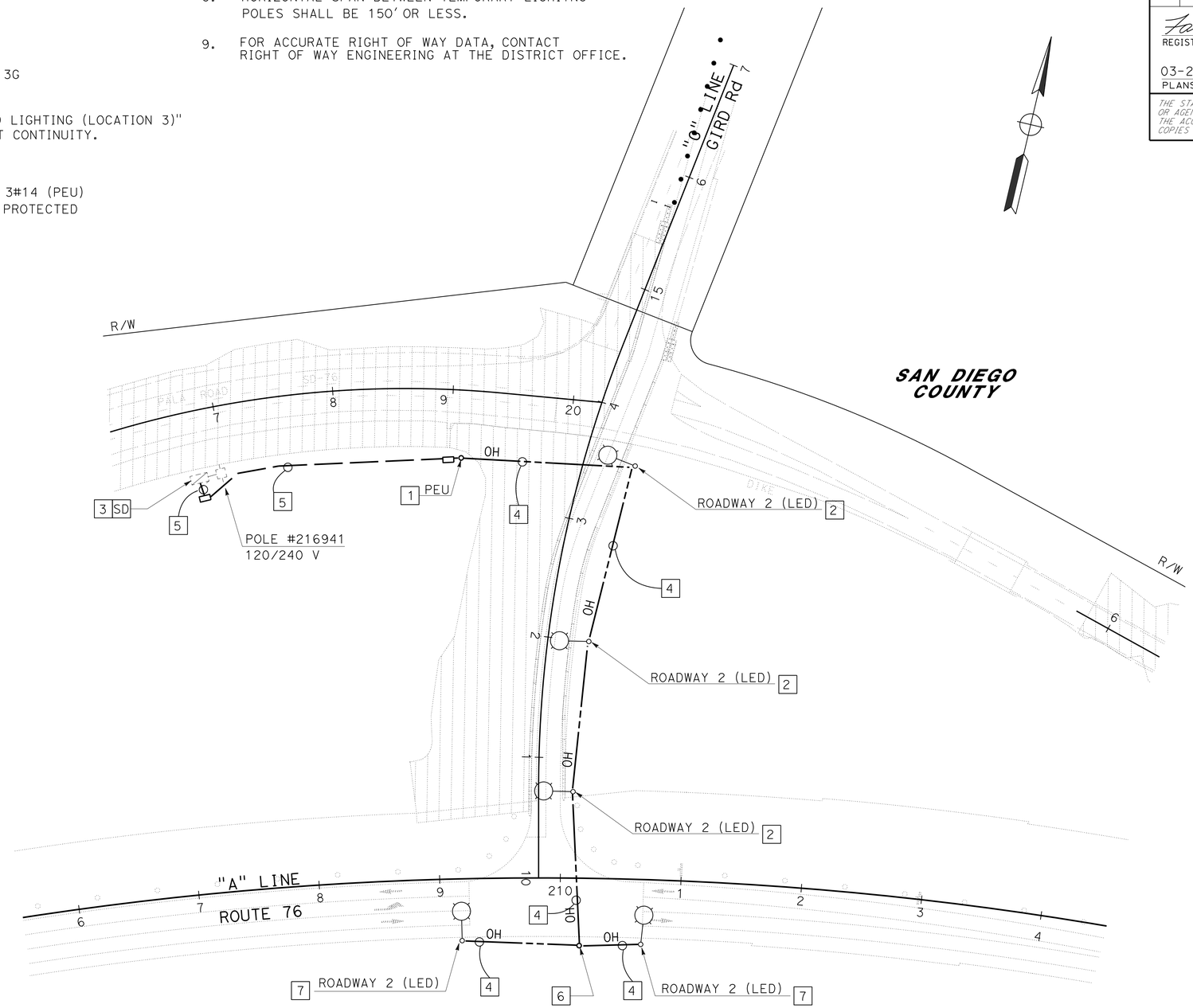

LIGHTING (STAGE CONSTRUCTION) (STAGE 4A)

APPROVED FOR ELECTRICAL WORK ONLY

SCALE: 1" = 50'

E-73

STATE OF CALIFORNIA - DEPARTMENT OF TRANSPORTATION
Caltrans
TRAFFIC ELECTRICAL

FUNCTIONAL SUPERVISOR: RAJPREET SINGH
CALCULATED-DESIGNED BY: FARIBA RAMOS
CHECKED BY: ENRIQUE BERNAL
REVISED BY
DATE REVISED

LAST REVISION 09-18-13
DATE PLOTTED => 24-MAR-2014
TIME PLOTTED => 15:40

Dist	COUNTY	ROUTE	POST MILES TOTAL PROJECT	SHEET No.	TOTAL SHEETS
11	SD	15,76	R46.2/R46.8, R12.1/R17.7	1082	1273

REGISTERED ELECTRICAL ENGINEER 02-20-14 DATE

03-24-14
PLANS APPROVAL DATE

REGISTERED PROFESSIONAL ENGINEER FARIBA RAMOS No. E15619 Exp. 12-31-15 ELECTRICAL STATE OF CALIFORNIA

THE STATE OF CALIFORNIA OR ITS OFFICERS OR AGENTS SHALL NOT BE RESPONSIBLE FOR THE ACCURACY OR COMPLETENESS OF SCANNED COPIES OF THIS PLAN SHEET.

NOTES:

1. Exist CONDUITS, PULL BOXES, CONDUCTORS, LOOPS, AND SIGNAL EQUIPMENT TO REMAIN EXCEPT AS NOTED. SEE "SIGNAL AND LIGHTING (LOCATION 4)" PLANS.

2. AB Exist 2"C, 2#14 (fb). RL Exist ADVANCED FLASHING BEACON TO APPROXIMATELY Sta. 2276+00.
   SEE NOTE 7 IN SIGNAL AND LIGHTING (COUNTY) PLANS.
   SEE NOTE 6 IN SIGNAL AND LIGHTING (LOCATION 4) PLANS.

3. No. 3 PB. SEE "LIGHTING (STAGE CONSTRUCTION) ELECTRICAL DETAILS". FOR "TEMPORARY PULL BOX DETAIL".

4. INSTALL TEMPORARY MAST ARM SIGN PER ES-7N, U. Exist MAST ARM SIGN TO BE REINSTALLED AT THE END OF THIS STAGE.

5. EXISTING SIGNAL AND LIGHTING PARTIALLY SHOWN.

6. SEE STAGE CONSTRUCTION DETAILS PLANS, PHASE 3.

7. FOR ACCURATE RIGHT OF WAY DATA, CONTACT RIGHT OF WAY ENGINEERING AT THE DISTRICT OFFICE.

8. TYPE 1. AB CONDUIT AT THE COMPLETION OF STAGE 2I PHASE 3.

9. Exist TYPE III-BR. 120/240 V WITH:
   2p-30 A (ltg), 2p-30 A (s),
   1p-30 A (sig), 1p-15 A (fb),
   1p-15 A (tdc), 1p-15 A (peu),
   1p-30 A (communication cabinet)

10. ADJUST THE VIDEO DETECTION ZONES FOR STAGE CONSTRUCTION CONFIGURATION.

11. PEDESTRIAN SIGNAL HEAD SHALL BE COVERED DURING STAGE CONSTRUCTION.

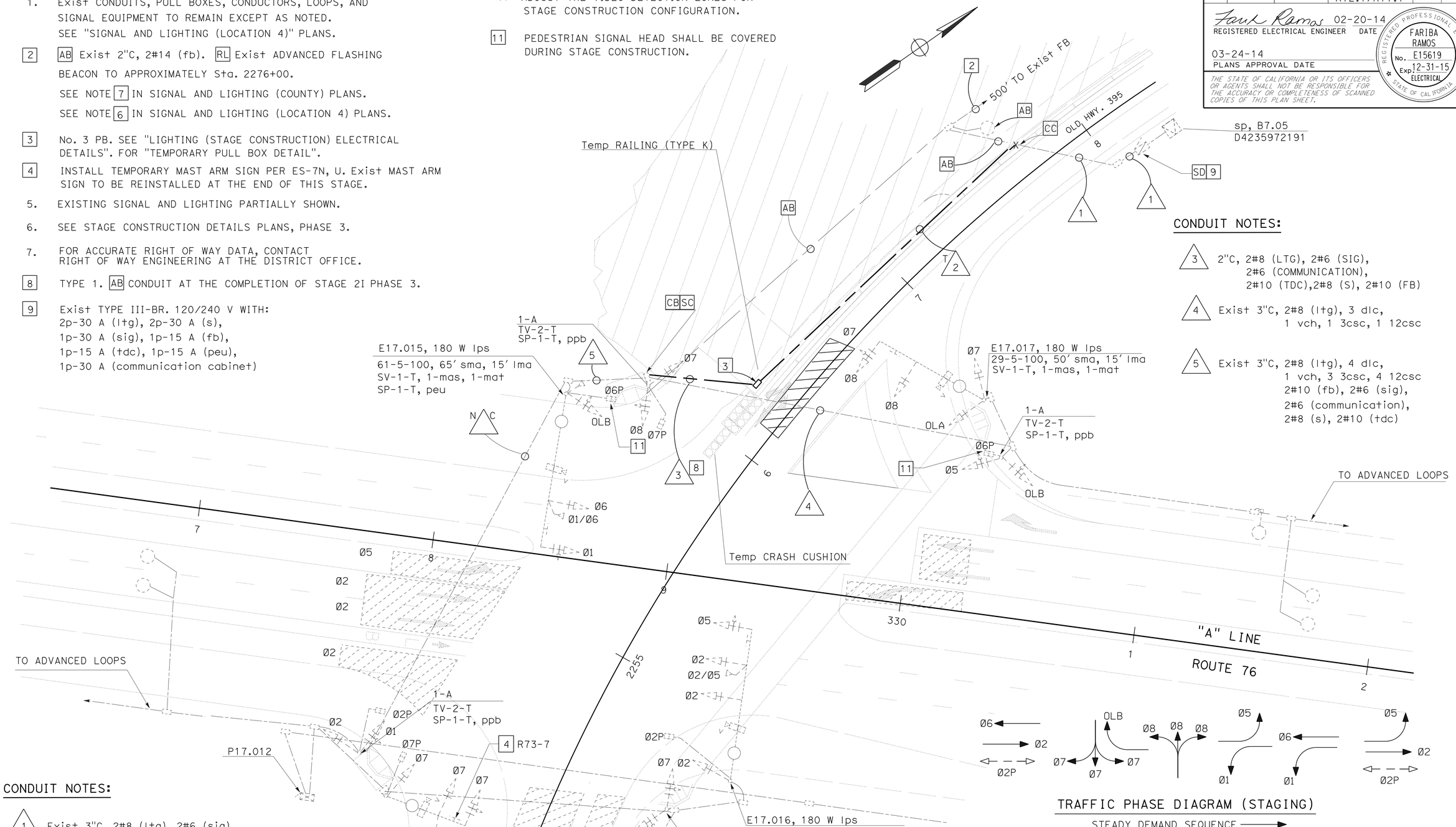

CONDUIT NOTES:

3 — 2"C, 2#8 (LTG), 2#6 (SIG), 2#6 (COMMUNICATION), 2#10 (TDC), 2#8 (S), 2#10 (FB)

4 — Exist 3"C, 2#8 (ltg), 3 dlc, 1 vch, 1 3csc, 1 12csc

5 — Exist 3"C, 2#8 (ltg), 4 dlc, 1 vch, 3 3csc, 4 12csc, 2#10 (fb), 2#6 (sig), 2#6 (communication), 2#8 (s), 2#10 (tdc)

CONDUIT NOTES:

1 — Exist 3"C, 2#8 (ltg), 2#6 (sig), 2#6 (communication), 2#10 (tdc), 4#10 (fb), 2#8 (s)
RC: 2#10 (fb)

T 2 — 2"C, 2#8 (LTG), 2#6 (SIG), 2#6 (COMMUNICATION), 2#10 (TDC), 2#8 (S), 2#10 (fb)

TRAFFIC PHASE DIAGRAM (STAGING)

STEADY DEMAND SEQUENCE →

SIGNAL AND LIGHTING
(STAGE CONSTRUCTION - STAGES 2I PHASE 3)
(LOCATION 4)

ROUTE 76 AND OLD HIGHWAY 395
SIGNAL No.: P17.012

SCALE: 1" = 20'

E-74

APPROVED FOR ELECTRICAL WORK ONLY

STATE OF CALIFORNIA - DEPARTMENT OF TRANSPORTATION
Caltrans® TRAFFIC ELECTRICAL

FUNCTIONAL SUPERVISOR: RAJPREET SINGH
CALCULATED-DESIGNED BY: ENRIQUE BERNAL — FARIBA RAMOS
CHECKED BY
REVISED BY
DATE REVISED

LAST REVISION 01-18-14 | DATE PLOTTED => 20-MAR-2014 | TIME PLOTTED => 15:58

Dist	COUNTY	ROUTE	POST MILES TOTAL PROJECT	SHEET No.	TOTAL SHEETS
11	SD	15,76	R46.2/R46.8, R12.1/R17.7	1083	1273

Fariba Ramos 02-20-14
REGISTERED ELECTRICAL ENGINEER DATE

03-24-14
PLANS APPROVAL DATE

REGISTERED PROFESSIONAL ENGINEER FARIBA RAMOS No. E15619 Exp. 12-31-15 ELECTRICAL STATE OF CALIFORNIA

THE STATE OF CALIFORNIA OR ITS OFFICERS OR AGENTS SHALL NOT BE RESPONSIBLE FOR THE ACCURACY OR COMPLETENESS OF SCANNED COPIES OF THIS PLAN SHEET.

NOTES:

1. Exist CONDUITS, PULL BOXES, CONDUCTORS, LOOPS, AND SIGNAL EQUIPMENT TO REMAIN EXCEPT AS NOTED.
2. SEE "SIGNAL AND LIGHTING (LOCATION 4)" PLANS.

3 PROTECT Exist SDG&E XFMR DURING STAGE CONSTRUCTION.

4 PROTECT SIGNAL EQUIPMENT DURING STAGE CONSTRUCTION.

5 INSTALL PERMANENT SIGNAL AND LIGHITNG EQUIPMENT. SEE SIGNAL AND LIGHTING LOCATION (LOCATION 4) PLANS.

6 INSTALL TEMPORARY MAST ARM SIGN PER ES-7N, U. Exist MAST ARM SIGN TO BE REINSTALLED AT THE END OF THIS STAGE.

7. EXISTING SIGNAL AND LIGHTING PARTIALLY SHOWN.
8. SEE STAGE CONSTRUCTION DETAILS PLANS, PHASE 4.
9. FOR ACCURATE RIGHT OF WAY DATA, CONTACT RIGHT OF WAY ENGINEERING AT THE DISTRICT OFFICE.
10. ADJUST THE VIDEO DETECTION ZONE FOR STAGE CONSTRUCTION CONFIGURATION.

11 PEDESTRIAN SIGNAL HEAD SHALL BE COVERED DURING STAGE CONSTRUCTION.

TRAFFIC PHASE DIAGRAM (STAGING)

STEADY DEMAND SEQUENCE →

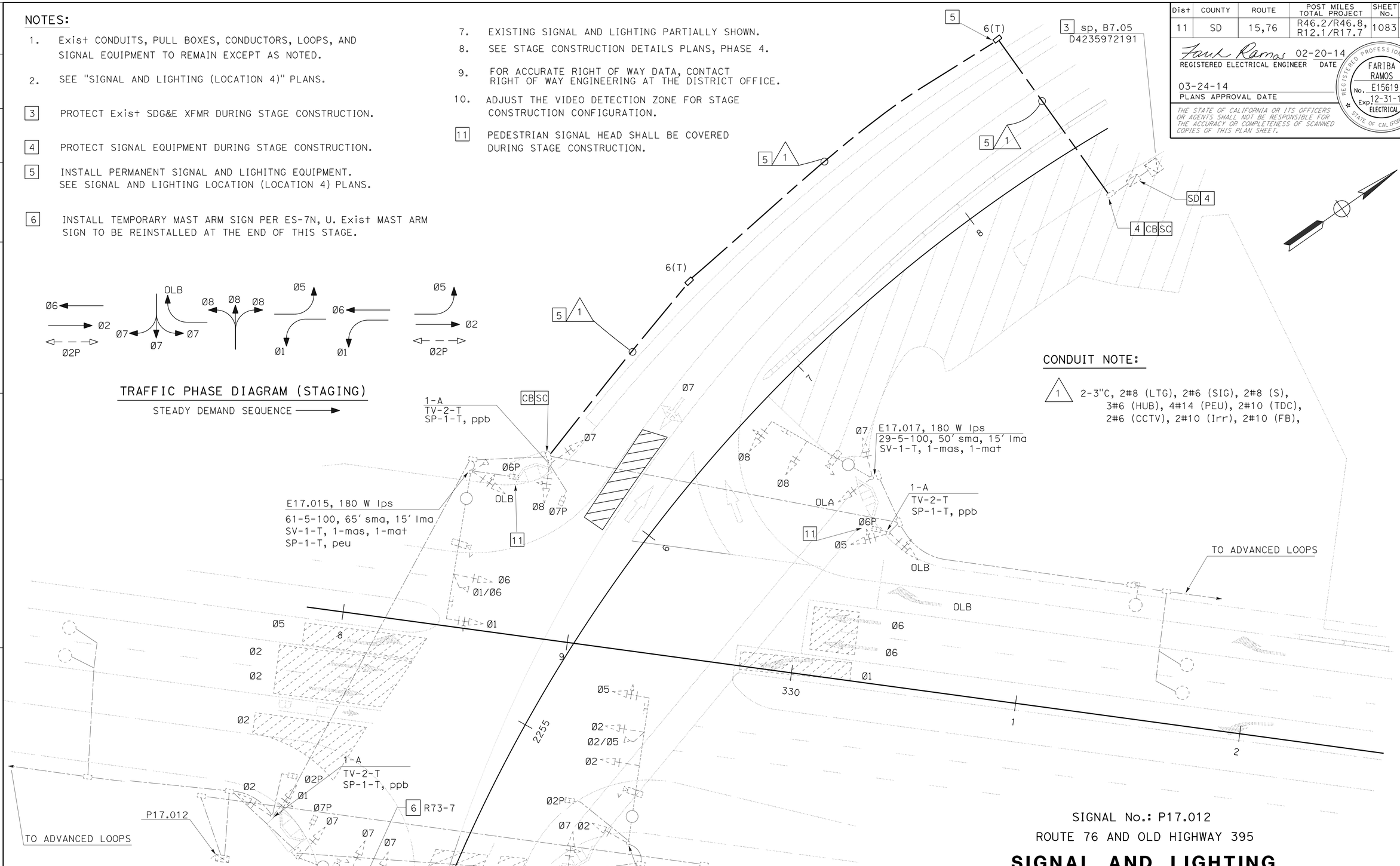

CONDUIT NOTE:

1 2-3"C, 2#8 (LTG), 2#6 (SIG), 2#8 (S), 3#6 (HUB), 4#14 (PEU), 2#10 (TDC), 2#6 (CCTV), 2#10 (Irr), 2#10 (FB),

SIGNAL No.: P17.012

ROUTE 76 AND OLD HIGHWAY 395

SIGNAL AND LIGHTING (STAGE CONSTRUCTION - STAGES 2I PHASE 4) (LOCATION 4)

APPROVED FOR ELECTRICAL WORK ONLY

SCALE: 1" = 20'

E-75

STATE OF CALIFORNIA - DEPARTMENT OF TRANSPORTATION
Caltrans® TRAFFIC ELECTRICAL

FUNCTIONAL SUPERVISOR: RAJPREET SINGH
CALCULATED-DESIGNED BY: FARIBA RAMOS
CHECKED BY: ENRIQUE BERNAL
REVISED BY
DATE REVISED

LAST REVISION 01-18-14
DATE PLOTTED => 20-MAR-2014
TIME PLOTTED => 15:58

Dist	COUNTY	ROUTE	POST MILES TOTAL PROJECT	SHEET No.	TOTAL SHEETS
11	SD	15,76	R46.2/R46.8, R12.1/R17.7	1084	1273

REGISTERED ELECTRICAL ENGINEER 02-20-14 DATE

03-24-14
PLANS APPROVAL DATE

THE STATE OF CALIFORNIA OR ITS OFFICERS OR AGENTS SHALL NOT BE RESPONSIBLE FOR THE ACCURACY OR COMPLETENESS OF SCANNED COPIES OF THIS PLAN SHEET.

REGISTERED PROFESSIONAL ENGINEER FARIBA RAMOS No. E15619 Exp. 12-31-15 ELECTRICAL STATE OF CALIFORNIA

NOTES:

1. Exist CONDUITS, PULL BOXES, CONDUCTORS, LOOPS, AND SIGNAL EQUIPMENT TO REMAIN EXCEPT AS NOTED.
2. SEE "SIGNAL AND LIGHTING (LOCATION 4)" PLANS.
3. EQUIPMENT INSTALLED IN STAGE 2I PHASE 4 TO REMAIN. SEE SIGNAL AND LIGHITNG (LOCATION 4) PLANS.
4. PROTECT SIGNAL EQUIPMENT DURING STAGE CONSTRUCTION.
5. INSTALL PERMANENT SIGNAL AND LIGHITNG EQUIPMENT. SEE SIGNAL AND LOCATION (LOCATION 4).
6. INSTALL TEMPORARY MAST ARM SIGN PER ES-7N, U. Exist MAST ARM SIGN TO BE REINSTALLED AT THE END OF THIS STAGE.
7. EXISTING SIGNAL AND LIGHTING PARTIALLY SHOWN.
8. SEE STAGE CONSTRUCTION DETAILS PLANS, PHASE 5.
9. FOR ACCURATE RIGHT OF WAY DATA, CONTACT RIGHT OF WAY ENGINEERING AT THE DISTRICT OFFICE.
10. ADJUST THE VIDEO DETECTION ZONES FOR STGE CONSTRUCTION CONFIGURATION.
11. COVER PEDESTRIAN SIGNAL HEAD DURING STAGE CONSTRUCTION.

CONDUIT NOTE:

1. Exist 2-3"C, 2#8 (LTG), 2#6 (SIG), 2#8 (S), 3#6 (HUB), 4#14 (PEU), 2#10 (TDC), 2#6 (CCTV), 2#10 (Irr), 2#10 (FB),

2. 2-3"C, 2#8 (LTG), 2#6 (SIG), 2#8 (S), 3#6 (HUB), 4#14 (PEU), 2#10 (TDC), 2#6 (CCTV), 2#10 (Irr), 2#10 (FB)

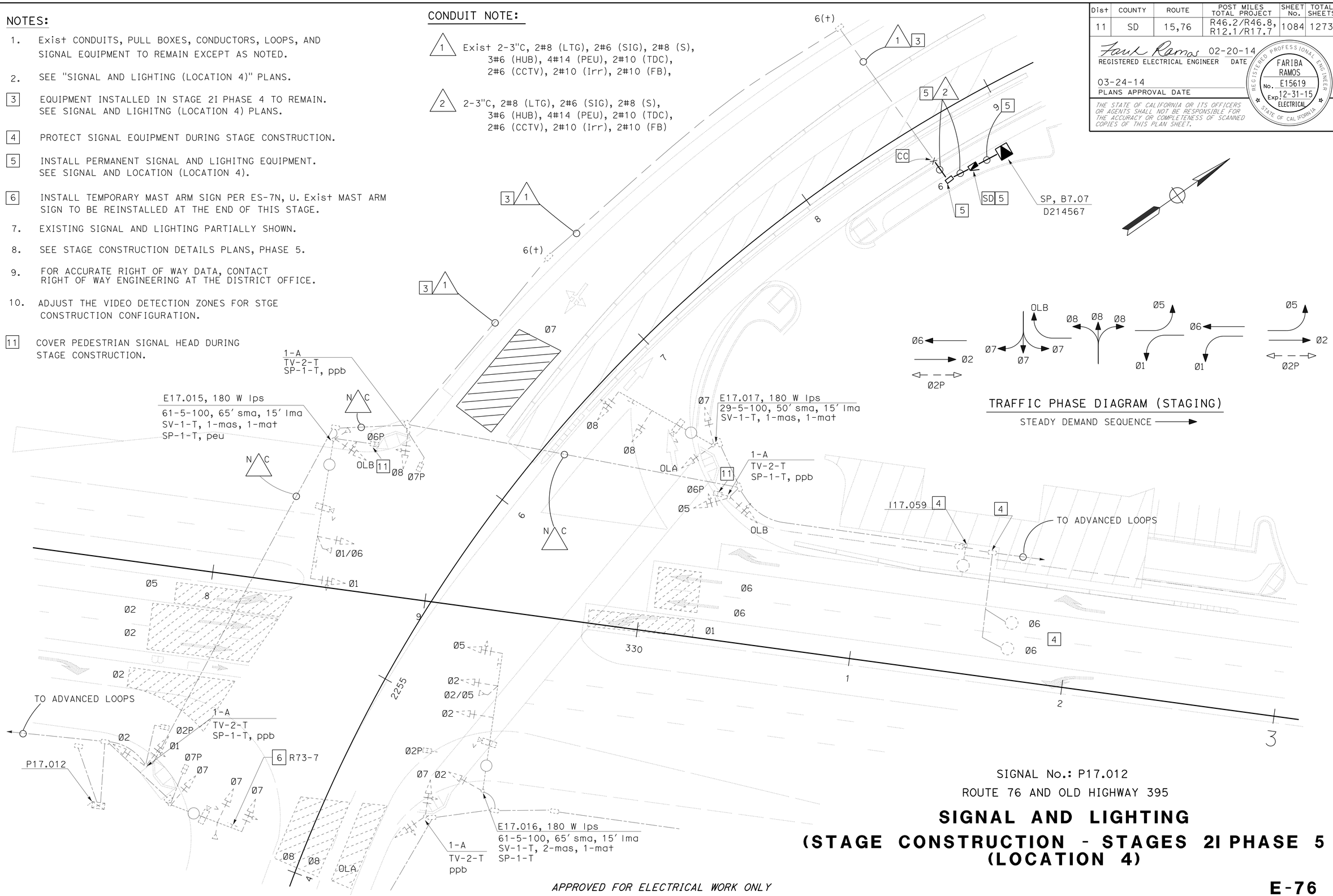

TRAFFIC PHASE DIAGRAM (STAGING)

STEADY DEMAND SEQUENCE →

SIGNAL No.: P17.012

ROUTE 76 AND OLD HIGHWAY 395

SIGNAL AND LIGHTING
(STAGE CONSTRUCTION - STAGES 2I PHASE 5 (LOCATION 4)

APPROVED FOR ELECTRICAL WORK ONLY

E-76

STATE OF CALIFORNIA - DEPARTMENT OF TRANSPORTATION
Caltrans® TRAFFIC ELECTRICAL

FUNCTIONAL SUPERVISOR: RAJPREET SINGH
CALCULATED-DESIGNED BY: FARIBA RAMOS
CHECKED BY: ENRIQUE BERNAL
REVISED BY
DATE REVISED

LAST REVISION 01-18-14
DATE PLOTTED => 20-MAR-2014
TIME PLOTTED => 15:58

Dist	COUNTY	ROUTE	POST MILES TOTAL PROJECT	SHEET No.	TOTAL SHEETS
11	SD	15,76	R46.2/R46.8, R12.1/R17.7	1085	1273

REGISTERED ELECTRICAL ENGINEER 02-20-14 DATE

03-24-14
PLANS APPROVAL DATE

REGISTERED PROFESSIONAL ENGINEER FARIBA RAMOS No. E15619 Exp. 12-31-15 ELECTRICAL STATE OF CALIFORNIA

THE STATE OF CALIFORNIA OR ITS OFFICERS OR AGENTS SHALL NOT BE RESPONSIBLE FOR THE ACCURACY OR COMPLETENESS OF SCANNED COPIES OF THIS PLAN SHEET.

NOTES:

1. Exist CONDUITS, PULL BOXES, CONDUCTORS, LOOPS, AND SIGNAL EQUIPMENT TO REMAIN EXCEPT AS NOTED. SEE "SIGNAL AND LIGHTING (LOCATION 4)" PLANS.

2 COVER SIGNAL HEADS FOR THIS STAGE.

3 EQUIPMENT INSTALLED IN STAGE 2I PHASES 4 AND 5 TO REMAIN. SEE SIGNAL AND LIGHITNG (LOCATION 4) PLANS.

4 Temp 19-1-100 (Mod), 15′ SMA, 15′ LMA. 165 W LED, SV-1-T, AND 1 MAT. RL AT THE END OF THIS STAGE. SEE E-78. SEE SES SHEETS FOR STANDARD DETAILS.

5 INSTALL MAST ARM SIGN AS INDICATED, PER ES-7N DETAIL U.

6 INSTALL VIVDS CAMERA PER DETAIL ON SES SHEETS.

7 TYPE 1 CONDUIT, 12" BELOW WORK AREA. PROTECT CONDUIT DURING STAGE CONSTRUCTION.

8. FOR ACCURATE RIGHT OF WAY DATA, CONTACT RIGHT OF WAY ENGINEERING AT THE DISTRICT OFFICE.

9. ADJUST THE VIDEO DETECTION ZONES FOR STAGE CONSTRUCTION CONFIGURATION.

10. EXISTING SIGNAL AND LIGHTING PARTIALLY SHOWN.

11 COVER PEDESTRIAN SIGNAL HEAD DURING STAGE CONSTRUCTION.

12 TYPE 1-A, 7′. TP-1-T, Ø8P (RIGHT).

13 TYPE 1-A, 7′. TP-1-T, Ø8P (LEFT).

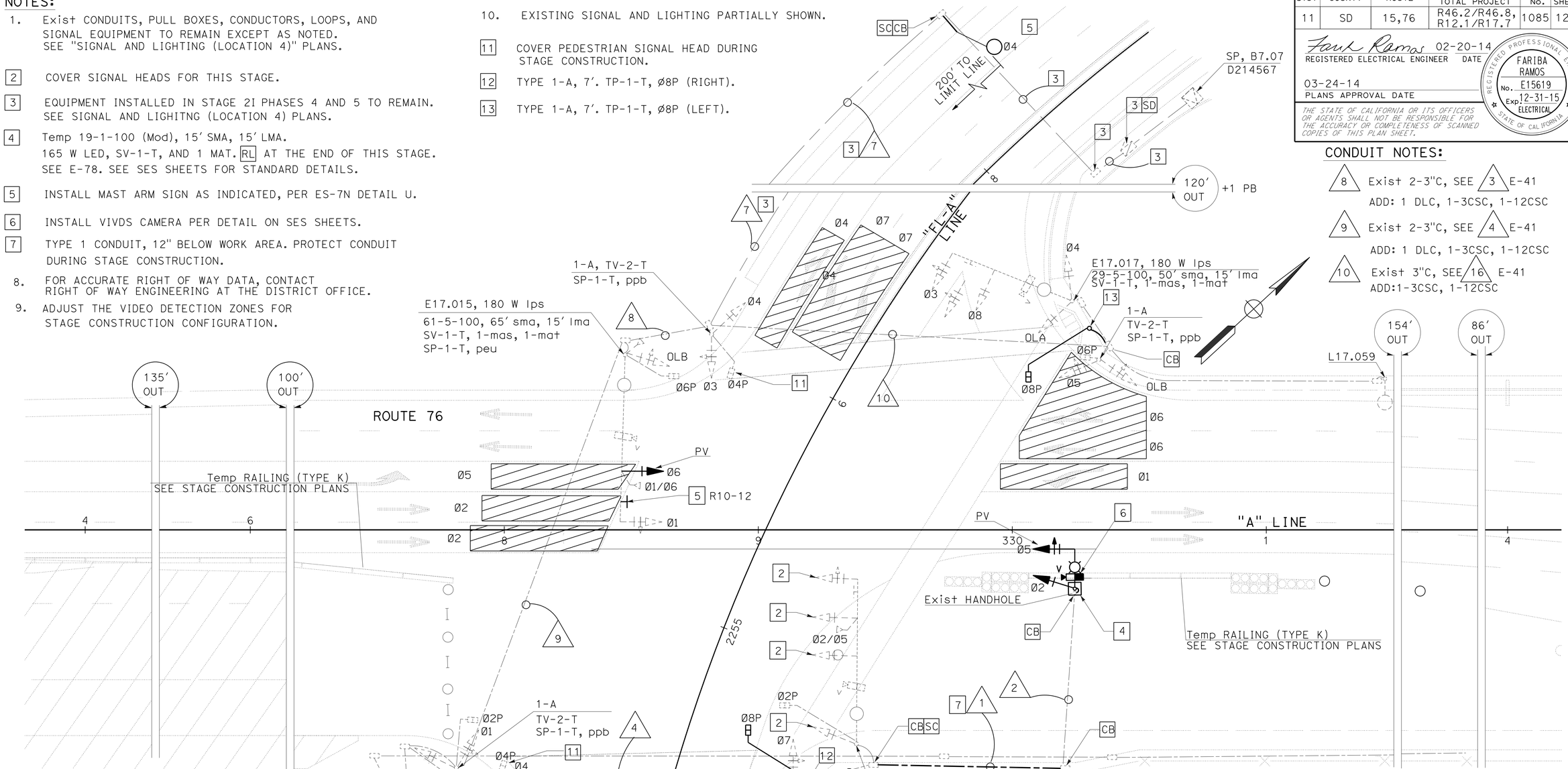

CONDUIT NOTES:

8 Exist 2-3"C, SEE 3 E-41
ADD: 1 DLC, 1-3CSC, 1-12CSC

9 Exist 2-3"C, SEE 4 E-41
ADD: 1 DLC, 1-3CSC, 1-12CSC

10 Exist 3"C, SEE 16 E-41
ADD:1-3CSC, 1-12CSC

CONDUIT NOTES:

1 2"C, 2#8 (LTG), 1-12CSC
1 VCH

2 Exist 2"C, mt
ADD: 2#8 (LTG), 1-12CSC, 1 VCH

3 Exist 2"C, 2#8 (ltg), 2#6 (s), 1evc, 1 vch, 1-12csc
ADD: 1-12CSC, 1 VCH

4 Exist 3"C, 2#8 (ltg), 2#6 (s), 1 dlc 1evc, 1 vch, 2-12csc, 1-3csc
ADD: 2-12CSC, 1-3CSC, 1 VCH

5 Exist 2-3"C, 2#8 (ltg), 6 dlc, 4 vch, 4 evc 4-3csc, 8-12csc 2#6 (sig), 2#10 (fb), ADD: 1-12CSC, 1 VCH

6 Exist 2-3"C, 2#6 (sig), 8 dlc, 4 vch, 4 evc 6-3csc, 9-12csc
ADD: 3-12CSC, 2-3CSC, 1 DLC, 1 VCH

7 Exist 2-3"C, 2#8 (LTG), 2#6 (SIG), 2#8 (S), 3#6 (HUB), 4#14 (PEU), 2#10 (TDC), 2#6 (CCTV), 2#10 (Irr), 2#10 (FB), ADD: 1 DLC

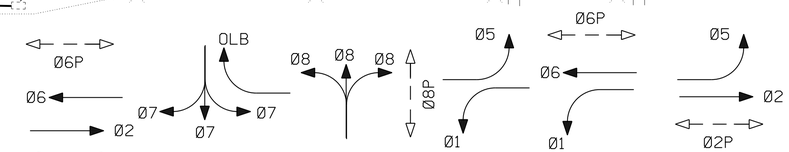

TRAFFIC PHASE DIAGRAM (STAGING)

STEADY DEMAND SEQUENCE

SIGNAL No.: P17.012
ROUTE 76 AND OLD HIGHWAY 395

SIGNAL AND LIGHTING (STAGE CONSTRUCTION - STAGE 3B) (LOCATION 4)

SCALE: 1" = 20′

E-77

APPROVED FOR ELECTRICAL WORK ONLY

STATE OF CALIFORNIA - DEPARTMENT OF TRANSPORTATION
Caltrans® TRAFFIC ELECTRICAL

FUNCTIONAL SUPERVISOR: RAJPREET SINGH
CALCULATED-DESIGNED BY: FARIBA RAMOS
CHECKED BY: ENRIQUE BERNAL
REVISED BY
DATE REVISED

LAST REVISION: DATE PLOTTED => 20-MAR-2014 TIME PLOTTED => 15:58
01-18-14

Dist	COUNTY	ROUTE	POST MILES TOTAL PROJECT	SHEET No.	TOTAL SHEETS
11	SD	15,76	R46.2/R46.8, R12.1/R17.7	1086	1273

REGISTERED ELECTRICAL ENGINEER 02-20-14 DATE

03-24-14
PLANS APPROVAL DATE

FARIBA RAMOS No. E15619 Exp. 12-31-15 ELECTRICAL — REGISTERED PROFESSIONAL ENGINEER — STATE OF CALIFORNIA

THE STATE OF CALIFORNIA OR ITS OFFICERS OR AGENTS SHALL NOT BE RESPONSIBLE FOR THE ACCURACY OR COMPLETENESS OF SCANNED COPIES OF THIS PLAN SHEET.

NOTES:

1. Exist CONDUITS, PULL BOXES, CONDUCTORS, LOOPS, AND SIGNAL EQUIPMENT TO REMAIN EXCEPT AS NOTED. SEE "SIGNAL AND LIGHTING (LOCATION 4)" PLANS.

2 COVER SIGNAL HEADS FOR THIS STAGE.

3 EQUIPMENT INSTALLED IN STAGE 2I PHASES 4 AND 5 TO REMAIN. SEE SIGNAL AND LIGHITNG (LOCATION 4) PLANS FOR NOTES AND CONDUIT NOTES.

4 RL Temp 19-1-100 (Mod), 15′ SMA, 15′ LMA. 165 W LED, SV-1-T, AND 1 MAT. SEE E-75. SEE SES SHEETS FOR STANDARD DETAILS.

5 INSTALL MAST ARM SIGN AS INDICATED, PER ES-7N DETAIL U.

6 INSTALL VIVDS CAMERA PER DETAIL ON SES SHEETS.

7 TYPE 1 CONDUIT, 12" BELOW WORK AREA. PROTECT CONDUIT DURING STAGE CONSTRUCTION.

8. FOR ACCURATE RIGHT OF WAY DATA, CONTACT RIGHT OF WAY ENGINEERING AT THE DISTRICT OFFICE.

9. ADJUST THE VIDEO DETECTION ZONE FOR STAGE CONSTRUCTION CONFIGURATION.

10 RC SIGNAL STANDARD AND EQUIPMENT WHEN DIRECTED BY THE ENGINEER.

11. RC CONDUITS, CONDUCTORS, AND CABLES THAT ARE NO LONGER REQUIRED AT THE END OF STAGE CONSTRUCTION.

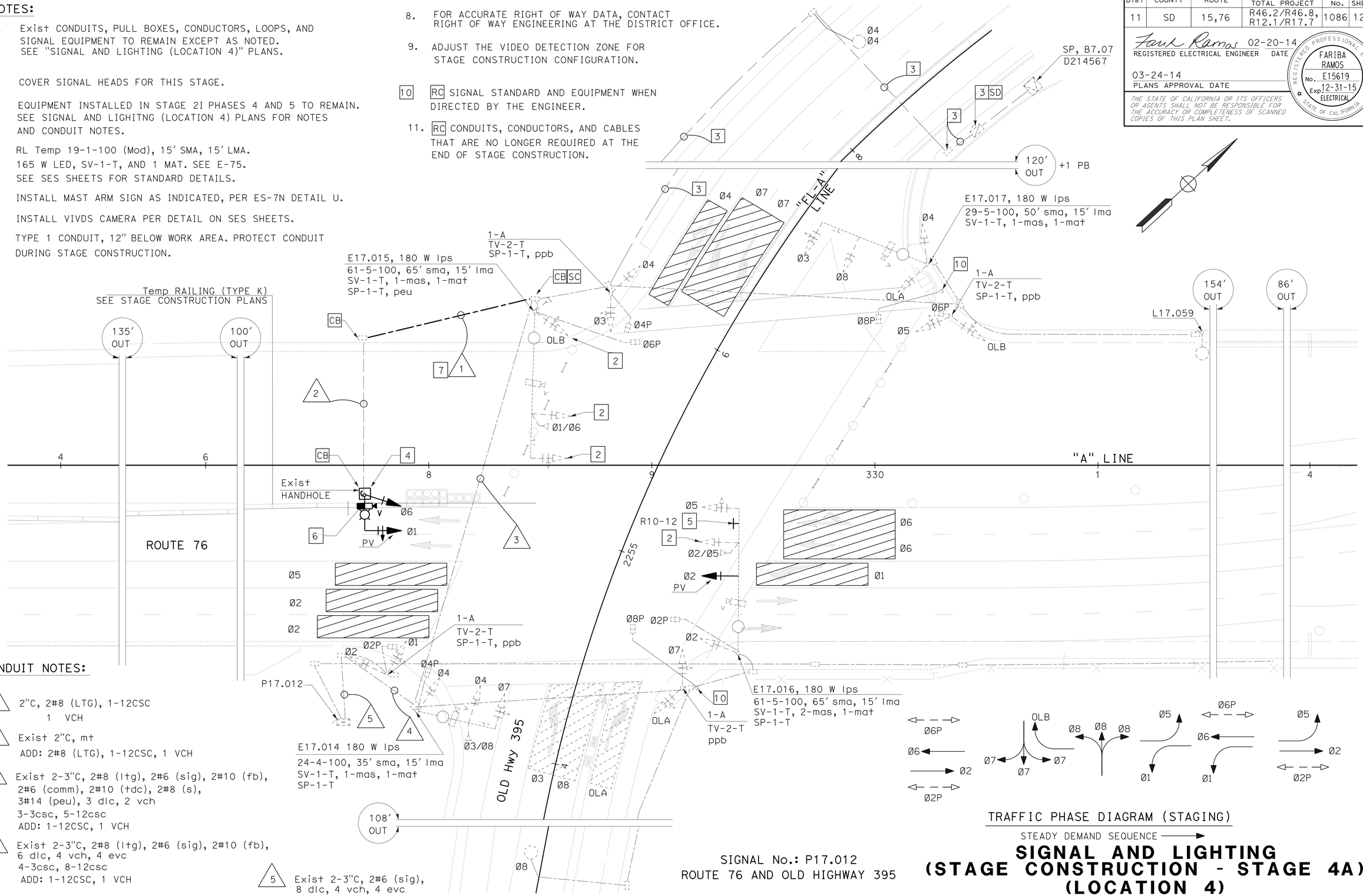

CONDUIT NOTES:

1 2"C, 2#8 (LTG), 1-12CSC
1 VCH

2 Exist 2"C, mt
ADD: 2#8 (LTG), 1-12CSC, 1 VCH

3 Exist 2-3"C, 2#8 (ltg), 2#6 (sig), 2#10 (fb), 2#6 (comm), 2#10 (tdc), 2#8 (s), 3#14 (peu), 3 dlc, 2 vch
3-3csc, 5-12csc
ADD: 1-12CSC, 1 VCH

4 Exist 2-3"C, 2#8 (ltg), 2#6 (sig), 2#10 (fb), 6 dlc, 4 vch, 4 evc
4-3csc, 8-12csc
ADD: 1-12CSC, 1 VCH

5 Exist 2-3"C, 2#6 (sig), 8 dlc, 4 vch, 4 evc
6-3csc, 9-12csc
ADD: 1-12CSC, 1 VCH

SIGNAL No.: P17.012
ROUTE 76 AND OLD HIGHWAY 395

TRAFFIC PHASE DIAGRAM (STAGING)

STEADY DEMAND SEQUENCE →

SIGNAL AND LIGHTING (STAGE CONSTRUCTION - STAGE 4A) (LOCATION 4)

SCALE: 1" = 50′

E-78

APPROVED FOR ELECTRICAL WORK ONLY

STATE OF CALIFORNIA - DEPARTMENT OF TRANSPORTATION
Caltrans® TRAFFIC ELECTRICAL

FUNCTIONAL SUPERVISOR: RAJPREET SINGH
CALCULATED-DESIGNED BY: FARIBA RAMOS
CHECKED BY: ENRIQUE BERNAL
REVISED BY
DATE REVISED

LAST REVISION 01-18-14
DATE PLOTTED => 20-MAR-2014
TIME PLOTTED => 15:58

Dist	COUNTY	ROUTE	POST MILES TOTAL PROJECT	SHEET No.	TOTAL SHEETS
11	SD	15,76	R46.2/R46.8, R12.1/R17.7	1087	1273

REGISTERED ELECTRICAL ENGINEER — 11-05-13 DATE

03-24-14
PLANS APPROVAL DATE

The State of California or its officers or agents shall not be responsible for the accuracy or completeness of scanned copies of this plan sheet.

REGISTERED PROFESSIONAL ENGINEER — James Lacy — No. E13770 — Exp. 9-30-15 — ELEC — STATE OF CALIFORNIA

GRAPHIC SYMBOLS FOR ELECTRICAL WIRING AND LAYOUT DIAGRAMS

SYMBOL	DESCRIPTION
	POLE-TOP ELECTROLIER
	POLE-ARM ELECTROLIER
CEILING / WALL	
S / S	SURFACE FLUORESCENT, METAL HALIDE, LED, OR SODIUM VAPOR FIXTURE
R / R	RECESSED FLUORESCENT, METAL HALIDE, LED, OR SODIUM VAPOR FIXTURE
X / X	EXIT LIGHT
	SURFACE OR PENDANT INDIVIDUAL FLUORESCENT OR LED FIXTURE
R	RECESSED INDIVIDUAL FLUORESCENT OR LED FIXTURE
	SURFACE OR PENDANT CONTINUOUS ROW FLUORESCENT OR LED FIXTURES

NOTE: A LOWER CASE LETTER NEAR GRAPHIC LIGHTING FIXTURE SYMBOL DENOTES THAT FIXTURE IS CONTROLLED BY A SIMILARLY MARKED SWITCH, AN ALPHA-NUMERIC SYMBOL NEAR GRAPHIC LIGHTING FIXTURE SYMBOL DENOTES FIXTURE TYPE, (I=INCANDESCENT, F=FLUORESCENT, MH=METAL HALIDE, H=HIGH PRESSURE SODIUM VAPOR, L=LED), DESIGN TYPE, NUMBER OF LAMPS AND WATTAGE.

EXAMPLE : (4) F2-2x32
- 32 WATT LAMPS
- 2 LAMPS
- DESIGN TYPE
- FLUORESCENT
- NUMBER OF FIXTURES

B / B	BLANK OUTLET
J / J	JUNCTION BOX
D	DROP CORD
	SINGLE RECEPTACLE OUTLET
	DUPLEX RECEPTACLE OUTLET
(GFCI)	DUPLEX RECEPTACLE OUTLET (WITH GFCI)
(GFCI) WP	DUPLEX RECEPTACLE OUTLET, WEATHERPROOF (WITH GFCI)
	SINGLE, SPECIAL PURPOSE RECEPTACLE OUTLET
	DUPLEX, SPECIAL PURPOSE RECEPTACLE OUTLET
R	RANGE OUTLET
C	CLOCK HANGER RECEPTACLE
F	FAN HANGER RECEPTACLE
	FLOOR SINGLE RECEPTACLE OUTLET
	FLOOR DUPLEX RECEPTACLE OUTLET
	FLOOR SPECIAL PURPOSE OUTLET
	FLOOR RADIO OUTLET
	FLOOR TELEPHONE OUTLET
	MULTI-FLOOR OUTLET, 2 OR MORE GANG
	MULTI-OUTLET ASSEMBLY
S	SWITCH AND SINGLE RECEPTACLE
S	SWITCH AND DUPLEX RECEPTACLE
	RADIO OUTLET
	COMMUNICATION OUTLET
	SOUND SYSTEM LOUD SPEAKER OUTLET
R	RADIO OUTLET
TV	TELEVISION OUTLET
M	MICROPHONE OUTLET
T	THERMOSTAT

SYMBOL	DESCRIPTION
S	SINGLE-POLE SWITCH
S_2	DOUBLE-POLE SWITCH
S_3	THREE-WAY SWITCH
S_4	FOUR-WAY SWITCH
S_D	AUTOMATIC DOOR
S_K	KEY OPERATED SWITCH
S_P	SWITCH AND PILOT LIGHT
S_{MC}	MOMENTARY CONTACT SWITCH
S_{RC}	REMOTE CONTROL SWITCH
S_{WP}	WEATHERPROOF SWITCH
S_F	FAN SWITCH
S_L	LIGHT SWITCH
S_H	HEATER SWITCH
S_{VS}	VARIABLE SPEED MOTOR CONTROL SWITCH
S_{CHLF}	TWO TIMER SWITCHES, ONE SWITCH FOR LIGHT AND FAN AND ONE SWITCH FOR HEAT LAMP
S^O_1	OCCUPANCY SENSOR WALL SWITCH, SINGLE LEVEL
S^O_2	OCCUPANCY SENSOR WALL SWITCH, BILEVEL
S_M	MOTION SENSOR SWITCH
S_T	MANUAL MOTOR STARTING SWITCH, THERMAL OVERLOAD TYPE
S_{HP}	MANUAL MOTOR STARTING SWITCH, WITHOUT OVERLOAD ELEMENT
T_S	TIMER SWITCH
	PUSHBUTTON
L	PUSHBUTTON STATION, NC, WITH LOCKING DEVICE FOR OPEN
	PUSHBUTTON STATION MOTOR CONTROL
	BUZZER
	BELL
	COMBINATION BELL-BUZZER
PS	PRESSURE SWITCH
R	CONTROL RELAY
FS	FLOW SWITCH
PEU	PHOTOELECTRIC UNIT
	HAND DRYER NOZZLE
H	HAND DRYER
	FLUSH-MOUNTED PANELBOARD AND CABINET
	SURFACE-MOUNTED PANELBOARD AND CABINET
	LIGHTING PANEL
	POWER PANEL
	COMBINATION LIGHTING AND POWER
MC	MOTOR CONTROLLER
	DISCONNECT SWITCH
	CONDUIT CONCEALED IN CEILING OR WALL
	CONDUIT CONCEALED IN FLOOR
	CONDUIT EXPOSED
	CROSS-LINES INDICATE NUMBER OF #12 AWG CONDUCTORS. LONGER CROSS-LINE INDICATES 1#12 AWG (G) FOR EQUIPMENT GROUNDING CONDUCTOR. NO CROSS-LINE INDICATES 2#12 WITH 1#12 (G) UNLESS OTHERWISE NOTED. ALL CONDUIT 1/2" UNLESS OTHERWISE NOTED.
A1,2	HOMERUN TO PANELBOARD, ARROWS INDICATE NUMBER OF CIRCUITS, LETTER DENOTES PANELBOARD, NUMERAL DENOTES CIRCUIT

SYMBOL	DESCRIPTION
SM	SURFACE METAL RACEWAY
(2) 1/2"C, PVC, 2#12	CONDUCTOR INFO (PER CONDUIT); CONDUIT TYPE; CONDUIT SIZE; NUMBER OF CONDUITS (NO NUMBER INDICATES ONE CONDUIT)
MC	CONDUIT, RIGID STEEL, UNDERGROUND
PVC	CONDUIT, POLYVINYL CHLORIDE, UNDERGROUND
	CONDUIT, FLEXIBLE
	CONDUIT, TURN UP
	CONDUIT, TURN DOWN
	CONDUIT SEAL, EXPLOSION-PROOF
X	CONDUIT, EXPANSION JOINT
	ADAPTER, ONE TYPE CONDUIT TO ANOTHER
	POLE
OC	OCCUPANCY SENSOR
P	OCCUPANCY SENSOR POWER PACK
P	MANUAL PULL STATION
AV	AUDIO/VISUAL ALARM DEVICE
H	HEAT DETECTOR
S	SMOKE DETECTOR
G	GLASS BREAK DISCRIMINATOR
C	MAGNETIC CONTACT SWITCH-PEDESTRIAN DOOR
C	MAGNETIC CONTACT SWITCH-VEHICLE DOOR
K	KEYPAD FOR ALARM SYSTEM
W	COMBINATION DETECTOR (MICROWAVE/PASSIVE INFRARED)
	PULL BOX-LETTER INDICATES TYPE OF PULL BOX (E-ELECTRICAL, T-TELEPHONE, R-RADIO)
(T)	PULL BOX (TRAFFIC-RATED)-LETTER INDICATES TYPE OF PULL BOX (E-ELECTRICAL, T-TELEPHONE, R-RADIO)
CHLF	COMBINATION HEAT, LIGHT, AND FAN UNIT
A / EE-2	SECTION/ELEVATION LETTER; SHEET NUMBER
1 / EE-2	DETAIL NUMBER; SHEET NUMBER

REMODEL WORK

SYMBOL	DESCRIPTION
	EXISTING FLUORESCENT FIXTURE-TO REMAIN
	EXISTING FLUORESCENT FIXTURE-REMOVE
	EXISTING INCANDESCENT FIXTURE-TO REMAIN
	EXISTING INCANDESCENT FIXTURE-REMOVE
	EXISTING OUTLET-TO REMAIN
	EXISTING RECEPTACLE OUTLET-TO REMAIN
	EXISTING RECEPTACLE OUTLET-REMOVE
-E---E-	EXISTING CONDUIT AND CONDUCTORS-TO REMAIN UNLESS OTHERWISE NOTED
-X---X-	EXISTING CONDUIT AND CONDUCTORS-REMOVE
S	EXISTING SWITCH-TO REMAIN
	EXISTING SWITCH-REMOVE
J	EXISTING JUNCTION BOX-TO REMAIN
	EXISTING JUNCTION BOX-REMOVE

GRAPHIC SYMBOLS FOR ELECTRICAL DIAGRAMS

SYMBOL	DESCRIPTION
	CIRCUIT BREAKER, SINGLE-POLE
	CIRCUIT BREAKER, DOUBLE-POLE
	CIRCUIT BREAKER, THREE-POLE
GFCI	CIRCUIT BREAKER, WITH GROUND FAULT CIRCUIT INTERRUPTER
	CIRCUIT BREAKER, SINGLE-POLE, SWITCHED NEUTRAL
	CONTACT, NORMALLY OPEN
	CONTACT, NORMALLY CLOSED
	CONTACT, NORMALLY CLOSED, TIME DELAY CLOSING ON DE-ENERGIZING
	CONTACT, NORMALLY OPEN, TIME DELAY OPENING ON DE-ENERGIZING
	CONTACT, NORMALLY OPEN, TIME DELAY CLOSING ON ENERGIZING
	CONTACT, NORMALLY CLOSED, TIME DELAY OPENING ON ENERGIZING
	CONTACT, SINGLE-POLE, DOUBLE-THROW
	OPERATING COIL
	LIQUID LEVEL ACTUATED SWITCH, NORMALLY CLOSED
	LIQUID LEVEL ACTUATED SWITCH, NORMALLY OPEN
	PRESSURE ACTUATED SWITCH, NORMALLY CLOSED
	PRESSURE ACTUATED SWITCH, NORMALLY OPEN
	FLOW ACTUATED SWITCH, NORMALLY CLOSED
	FLOW ACTUATED SWITCH, NORMALLY OPEN
	TEMPERATURE ACTUATED SWITCH, NORMALLY CLOSED
	TEMPERATURE ACTUATED SWITCH, NORMALLY OPEN
	LIMIT SWITCH, NORMALLY CLOSED
	LIMIT SWITCH, NORMALLY OPEN
	PUSHBUTTON SWITCH, NORMALLY CLOSED
	PUSHBUTTON SWITCH, NORMALLY OPEN
	SWITCH, SINGLE-POLE
	SWITCH, SINGLE-POLE, DOUBLE-THROW
	SWITCH, DOUBLE-POLE
	SWITCH, DOUBLE-POLE, DOUBLE-THROW
	SWITCH, SINGLE-POLE, 3-POSITION
	THERMAL OVERLOAD
	FUSE
	RESISTOR
	VARIABLE RESISTOR
	TRANSFORMER WINDING
	GROUNDING ELECTRODE
	ENCLOSURE BOND
A	PILOT LIGHT (A=AMBER, G=GREEN, R=RED)
A	INDICATING LIGHT (A=AMBER, G=GREEN, R=RED)
G	GENERATOR
M	MOTOR
F	FAN MOTOR

	BY	CHECKED
DESIGN	James R. Lacy	Fariba Ramos
DETAILS	James R. Lacy	Jesse Sandhu
QUANTITIES	James R. Lacy	Jesse Sandhu

STATE OF CALIFORNIA
DEPARTMENT OF TRANSPORTATION

DIVISION OF ENGINEERING SERVICES
ELECTRICAL-MECHANICAL-WATER AND WASTEWATER DESIGN

BRIDGE No.
POST MILE

SAN DIEGO PARK AND RIDE ELECTRICAL FACILITY

LEGEND

SHEET EE-0

TAEMWW Imperial - CCSC Rev. 02/13

ORIGINAL SCALE IN INCHES FOR REDUCED PLANS 0 1 2 3

UNIT: 2765 CONTRACT No.: 000001
PROJECT NUMBER & PHASE: 11000204891

DISREGARD PRINTS BEARING EARLIER REVISION DATES → 4-10-13 4-30-13 11-5-13

REVISION DATES (PRELIMINARY STAGE ONLY) SHEET OF

20-MAR-2014 15:58

U:\257151-1100020489\ub_EE\1100020489ub001.dgn

Dist	COUNTY	ROUTE	POST MILES TOTAL PROJECT	SHEET No.	TOTAL SHEETS
11	SD	15,76	R46.2/R46.8, R12.1/R17.7	1088	1273

James R. Lacy 11-05-13
REGISTERED ELECTRICAL ENGINEER DATE

03-24-14
PLANS APPROVAL DATE

REGISTERED PROFESSIONAL ENGINEER James Lacy No. E13770 Exp. 9-30-15 ELEC STATE OF CALIFORNIA

The State of California or its officers or agents shall not be responsible for the accuracy or completeness of scanned copies of this plan sheet.

ABBREVIATIONS

A

A	AMPERES
AC	ALTERNATING CURRENT or ASPHALT CONCRETE
A/C	AIR CONDITIONING UNIT
ACS	AIR COMPRESSOR STARTER
AFCI	ARC FAULT CIRCUIT INTERRUPTER
AI	ANALOG INPUT
AL	ALARM LIGHT
AO	ANALOG OUTPUT
Approx	APPROXIMATE
AR	ALARM RESET
AVC	AIR VOLUME CONTROLLER

B

BC	BARE COPPER
BD	BUILDING DISCONNECT
Bldg	BUILDING
BP	BOOSTER PUMP
Brk	BREAKER

C

C	CONDUIT
Cat	CATEGORY
CB	CIRCUIT BREAKER
CC	CENTER CHANNEL LIGHT
CCTV	CLOSED CIRCUIT TELEVISION
CD	CONTROL DISCONNECT
Ckt	CIRCUIT
CL	CHAIN LINK
℄	CENTER LINE
Clr	CLEAR or CLEARANCE
CM	CENTER MARGIN LIGHT
CMS	CHANGEABLE MESSAGE SIGN
COMM	COMMUNICATION
Conc	CONCRETE
CR	CONTROL RELAY
CSW	CURRENT SWITCH

D

D	DEPTH
DC	DIRECT CURRENT
DI	DIGITAL INPUT
Dia	DIAMETER
DLC	LOOP DETECTOR LEAD-IN CABLE
DO	DIGITAL OUTPUT
DP	DUPLEX PLUG RECEPTACLE
DS	DOOR SWITCH

E

(E)	EXISTING
EB	EASTBOUND
EF	EXHAUST FAN
Elev	ELEVATION
EMS	EXTINGUISHABLE MESSAGE SIGN

F

F	FUSE
FG	FINISH GRADE
FL	FAILURE LIGHT
FLA	FLASHER
Flex	FLEXIBLE CONDUIT
FLS	FLOW SWITCH
FO	FIBER OPTIC
FR	FAILURE RESET or FLAME RESISTANT
FS	FLOAT SWITCH

G

G	GROUND
Ga	GAUGE
Galv	GALVANIZED
GFCI	GROUND FAULT CIRCUIT INTERRUPTER
GRS	GALVANIZED RIGID STEEL

H

hp	HORSEPOWER
HPS	HIGH PRESSURE SODIUM

I

IC	IRRIGATION CONTROLLER
ICC	IRRIGATION CONTROLLER CABINET
IFS	INTEGRATED FACILITY SYSTEM
IR	INDUCTION RELAY
ISR	INTRINSICALLY SAFE RELAY

J

JB	JUNCTION BOX

K

kV	KILOVOLT
kVA	KILOVOLT AMPERES
kW	KILOWATT

L

L	LIGHT or LENGTH
LC	LIGHTING CONTACTOR
LCD	LIQUID CRYSTAL DISPLAY
LCP	LIGHTING CONTROL PANEL
LD	LIGHT DISCONNECT
LDCI	LEAK DETECTOR CIRCUIT INTERRUPTER
LED	LIGHT EMITTING DIODE
LL	LIQUID LEVEL RELAY
LLC	LIQUID LEVEL CONTROLLER
LP	LIGHT PANEL
LPS	LOW PRESSURE SODIUM
LS	LIGHT SWITCH
LT	LIGHT TRANSFORMER
LTO	LIGHT TRANSFORMER OVERLOAD

M

Max	MAXIMUM
MB	MAIN BREAKER
MC	METALLIC CONDUIT
MCP	MOTOR CIRCUIT PROTECTOR
MCC	MOTOR CONTROL CENTER
MD	MOTOR DISCONNECT
MH	MOUNTING HEIGHT
Min	MINIMUM
Misc	MISCELLANEOUS
MSB	MAIN SWITCHBOARD
MT	EMPTY CONDUIT

N

(N)	NEW
Nav	NAVIGATIONAL LIGHTS
NB	NEUTRAL BUS or NORTHBOUND
NC	NORMALLY CLOSED
No.	NUMBER
Nos.	NUMBERS
NO	NORMALLY OPEN
NSW	NEUTRAL SWITCHING BREAKER

O

O/C	ON CENTER
OG	ORIGINAL GROUND
OH	OVERHEAD
OL	OVERLOAD

P

P	POLE (CIRCUIT BREAKER)
PB	PULL BOX or PUSHBUTTON
PCC	PORTLAND CONCRETE CEMENT
PCP	PUMP CONTROL PANEL
PD	PUMP DISCONNECT
PEC	PHOTOELECTRIC CONTROL
PEU	PHOTOELECTRIC UNIT
PFR	PHASE FAILURE RELAY
PFRD	PHASE FAILURE RELAY DISCONNECT
ℙ	PLATE
PL	PILOT LIGHT
PRC	POWER REDUCTION CIRCUIT
PS	PRESSURE SWITCH
PTS	POWER TRANSFER SWITCH
PV	PHOTOVOLTAIC
PVC	POLYVINYL CHLORIDE

R

RD	RECEPTACLE DISCONNECT
RES	RESISTOR
Rm	ROOM
RTB	RADIO TERMINAL BOARD
R/W	RIGHT OF WAY

S

S	STARTER COIL
Sch	SCHEDULE
SD	SERVICE DISCONNECT
Sec	SECONDS
SFR	SEAL FAILURE RELAY
SL	SUMP LIGHT
SPR	STANDBY POWER RECEPTACLE
Sq	SQUARE
SS	SELECTOR SWITCH
ST	STARTER
Std	STANDARD
SV	SOLENOID VALVE
SWIM	SLOW WEIGH-IN-MOTION

T

TB	TERMINAL BLOCK
TC	TELEPHONE CABLE
TDR	TIME DELAY RELAY
TGLS	TOGGLE SWITCH
TM	TIME METER
Tot	TOTAL
TS	TIMER SWITCH
TSW	TEST SWITCH
TTB	TELEPHONE TERMINAL BOARD
Typ	TYPICAL

U

UPS	UNINTERRUPTIBLE POWER SUPPLY

V

V	VOLT(S)
Var	VARIABLE or VARIES

W

W	WATT or WIDTH
WB	WESTBOUND
WIM	WEIGH-IN-MOTION
WLS	WATER LEVEL SWITCH
WP	WEATHERPROOF
WSMS	WEIGH STATION MESSAGE SIGN

X

XFMR	TRANSFORMER

SYMBOLS

∠	ANGLE
@	AT
°	DEGREES
Δ	DELTA
Ω	OHM(S)
Ø	PHASE
±	PLUS OR MINUS

PROJECT NOTES

1. Separate grounded (Neutral) conductor must be used for each 120-volt circuit.
2. Homeruns to Panelboards must be installed as shown on the plans. Homeruns must not be combined.
3. A single insulated equipment grounding conductor, sized as required, must be installed in each conduit run.

STANDARD NOTES

- AB Abandon. If applied to conduit, remove conductors.
- BC Install pull box in existing conduit run.
- CB Install conduit into existing pull box.
- CC Connect new and existing conduit. Remove existing conductors and install conductors as indicated.
- CF Conduit to remain for future use. Remove conductors, install pull rope and plug.
- FA Remove foundation above grade and abandon foundation below grade.
- RL Relocate equipment.
- RLD Relocated equipment.
- SC Splice new to existing conductors.

STANDARD PLANS

Dated 2010

- (Add or delete as required)
- (Add or delete as required)
- (Add or delete as required)
- (Add or delete as required)

DESIGN	BY James R. Lacy	CHECKED Fariba Ramos	
DETAILS	BY James R. Lacy	CHECKED Jesse Sandhu	
QUANTITIES	BY James R. Lacy	CHECKED Jesse Sandhu	

STATE OF CALIFORNIA DEPARTMENT OF TRANSPORTATION

DIVISION OF ENGINEERING SERVICES ELECTRICAL-MECHANICAL-WATER AND WASTEWATER DESIGN

BRIDGE No.

POST MILE

SAN DIEGO PARK AND RIDE ELECTRICAL FACILITY

NOTES AND ABBREVIATIONS

SHEET EE-1

TAEMWW Imperial - CCSC Rev. 02/13

ORIGINAL SCALE IN INCHES FOR REDUCED PLANS 0 1 2 3

UNIT: 2765 CONTRACT No.: 000001
PROJECT NUMBER & PHASE: 11000204891

DISREGARD PRINTS BEARING EARLIER REVISION DATES → 4-10-13 5-28-13 11-5-13

REVISION DATES (PRELIMINARY STAGE ONLY) SHEET OF

20-MAR-2014 15:58

U:\257151-1100020489\ub_EE\1100020489ub002.dgn

Dist	COUNTY	ROUTE	POST MILES TOTAL PROJECT	SHEET No.	TOTAL SHEETS
11	SD	15,76	R46.2/R46.8, R12.1/R17.7	1089	1273

REGISTERED ELECTRICAL ENGINEER — DATE 11-05-13

03-24-14
PLANS APPROVAL DATE

REGISTERED PROFESSIONAL ENGINEER James Lacy No. E13770 Exp. 9-30-15 ELEC STATE OF CALIFORNIA

The State of California or its officers or agents shall not be responsible for the accuracy or completeness of scanned copies of this plan sheet.

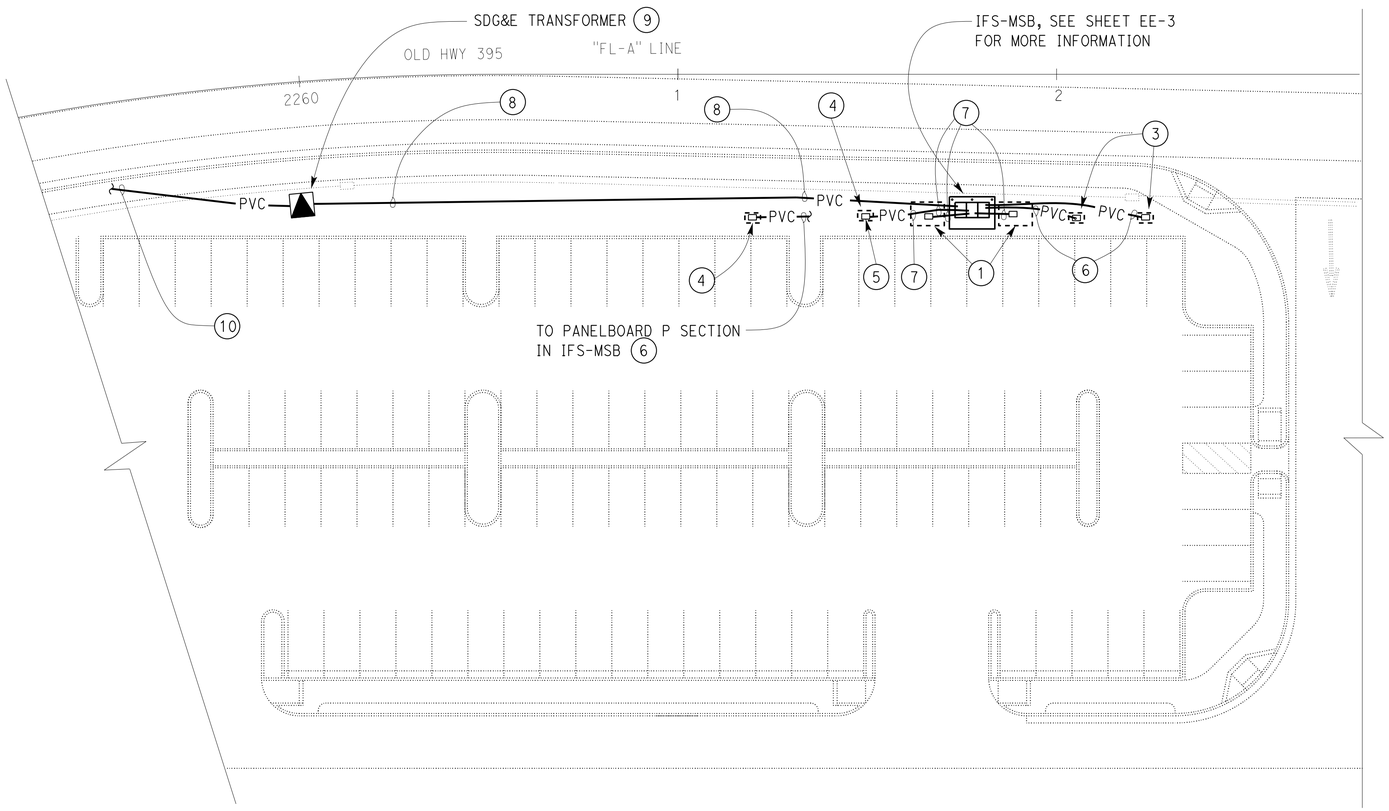

SITE PLAN

1" = 50'

NOTES:

1. Proposed (Initial) EV fast charger locations.
2. Not used.
3. Proposed (Initial) level 2 EV charger location.
4. Proposed (Future expansion) level 2 EV charger location.
5. No. 5 Pull box with conduit stub up, typical.
6. 1½" Conduit, empty.
7. 2" PVC Conduit, empty.
8. 3 at 4" Conduits to Utility Transformer. Install conductors as required by the Utility Company.
9. Install transformer pad per Utility requirements for a 800-Ampere, 277/480 Volt, 3-phase, 4-wire, Service. Pad shall have complete grounding system and all other associated devices as required for the transformer installation by SDG&E.
10. 4" PVC Conduit, empty to Utility Service Point. Conductors will be installed by SDG&E. Service point approximately 300 feet South. Exact location to be determined by SDG&E.

GENERAL NOTES:

A. For parking lot lighting, conduits and associated electrical work in planting areas see E sheets.

	BY	CHECKED
DESIGN	James R. Lacy	Fariba Ramos
DETAILS	James R. Lacy	Jesse Sandhu
QUANTITIES	James R. Lacy	Jesse Sandhu

STATE OF CALIFORNIA
DEPARTMENT OF TRANSPORTATION

DIVISION OF ENGINEERING SERVICES
ELECTRICAL-MECHANICAL-WATER AND WASTEWATER DESIGN

BRIDGE No.
POST MILE

SAN DIEGO PARK AND RIDE ELECTRICAL FACILITY

ELECTRICAL SITE PLAN

SHEET EE-2

TAEMWW Imperial - CCSC Rev. 02/13

ORIGINAL SCALE IN INCHES FOR REDUCED PLANS 0 1 2 3

UNIT: 2765 CONTRACT No.: 000001
PROJECT NUMBER & PHASE: 11000204891

DISREGARD PRINTS BEARING EARLIER REVISION DATES → 4-30-13 5-31-13 11-5-13

REVISION DATES (PRELIMINARY STAGE ONLY) SHEET OF

20-MAR-2014 15:58

U:\257151-1100020489\ub_EE\1100020489ub003.dgn

Dist	COUNTY	ROUTE	POST MILES TOTAL PROJECT	SHEET No.	TOTAL SHEETS
11	SD	15,76	R46.2/R46.8, R12.1/R17.7	1090	1273

REGISTERED ELECTRICAL ENGINEER — 11-05-13 DATE

03-24-14
PLANS APPROVAL DATE

REGISTERED PROFESSIONAL ENGINEER James Lacy No. E13770 Exp. 9-30-15 ELEC STATE OF CALIFORNIA

The State of California or its officers or agents shall not be responsible for the accuracy or completeness of scanned copies of this plan sheet.

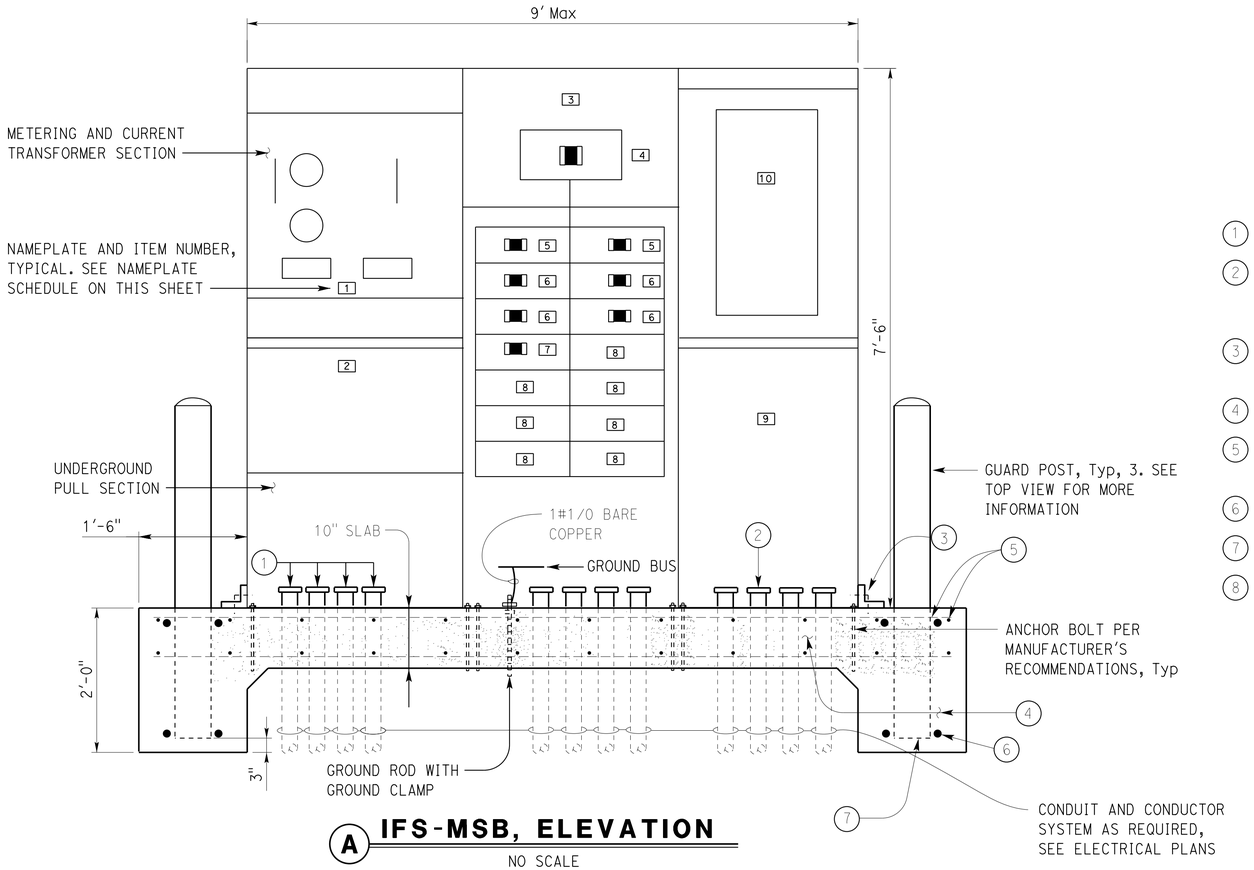

A IFS-MSB, ELEVATION

NO SCALE
(WEATHERPROOF ENCLOSURE NOT SHOWN)

NOTES:

1. Conduit bushing, typical.
2. Grounding type conduit bushing, bond to ground bus with 1#1/0 bare copper conductor. Typical for all rigid steel conduits stub ups.
3. End seismic bracing and seismic anchors, typical for seismic anchoring requirements, see project specifications.
4. Concrete foundation and footing with reinforcing bars.
5. #5 reinforcing bars @ 12 inch centers each way top and bottom. 2 inch minimum concrete cover for bars.
6. Two #5 reinforcing bars top and bottom.
7. Post stops 3 inches above bottom.
8. Steel sleeve to be constructed with diameter 1/16" larger than post. Wall thickness of sleeve to be same as post or thicker.

GENERAL NOTES:

A. All elbows and vertical risers thru concrete slab shall be PVC coated rigid steel conduit.

B. For conduit continuation see Electrical Site Plan.

C. Reinforced Concrete Properties; (Ultimate Strength Design)
f 'c = 3,000 psi
fy = 60,000 psi

D. Reinforced Steel bars ; (Allowable Strength Design)
Fy = 36 ksi

NAMEPLATE SCHEDULE

ITEM No.	LETTER HEIGHT (inch)	INSCRIPTION
1	1	METERING AND CURRENT TRANSFORMER SECTION
2	1	UNDERGROUND PULL SECTION
3	1	DISTRIBUTION SECTION
4	1	SERVICE DISCONNECT SWITCH
5	1/2	125/3 CB
6	1/2	80/3 CB
7	1/2	110/3 CB
8	1/2	HARDWARE FOR FUTURE 125/3 CB
9	1/2	TRANSFORMER SECTION
10	1/2	PANELBOARD P SECTION
11	1/2	
12	1/2	

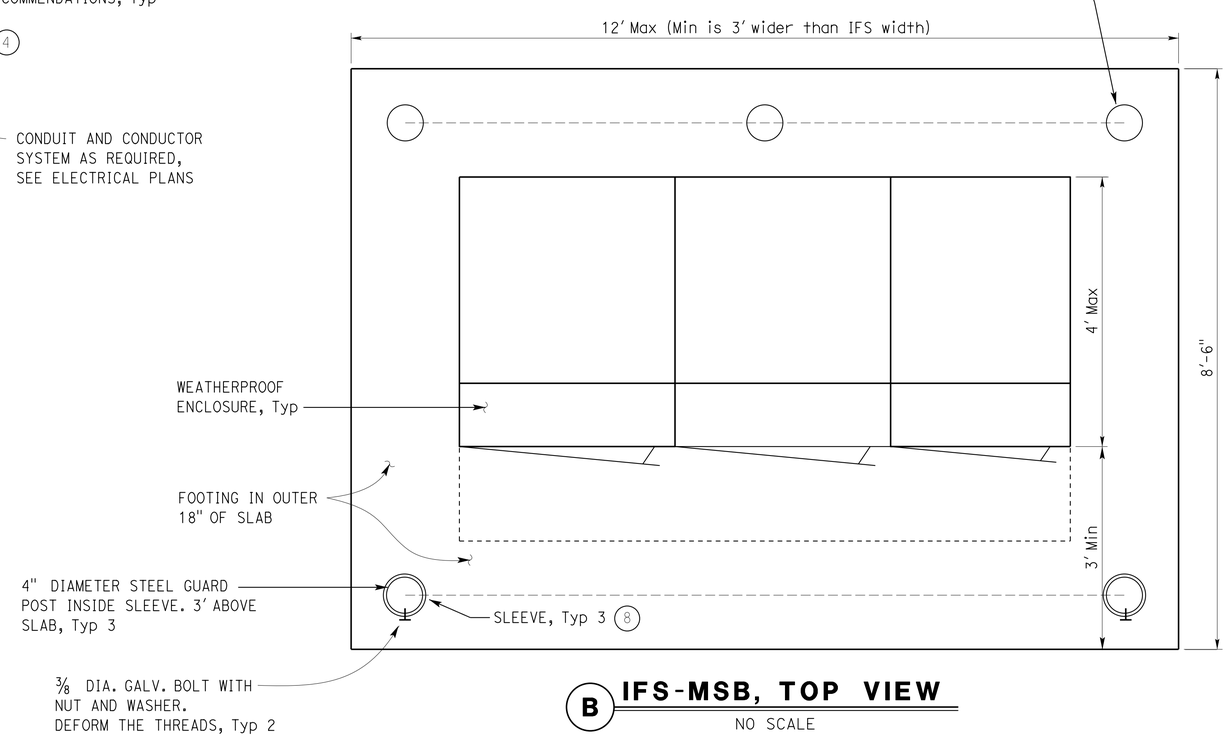

B IFS-MSB, TOP VIEW

NO SCALE

DESIGN	BY James R. Lacy	CHECKED Fariba Ramos	
DETAILS	BY James R. Lacy	CHECKED Jesse Sandhu	
QUANTITIES	BY James R. Lacy	CHECKED Jesse Sandhu	

STATE OF CALIFORNIA
DEPARTMENT OF TRANSPORTATION

DIVISION OF ENGINEERING SERVICES
ELECTRICAL-MECHANICAL-WATER AND WASTEWATER DESIGN

BRIDGE No.
POST MILE

SAN DIEGO PARK AND RIDE ELECTRICAL FACILITY

IFS-MSB PLAN AND ELEVATION

SHEET EE-3

TAEMWW Imperial - CCSC Rev. 02/13

ORIGINAL SCALE IN INCHES FOR REDUCED PLANS 0 1 2 3

UNIT: 2765 CONTRACT No.: 000001
PROJECT NUMBER & PHASE: 11000204891

DISREGARD PRINTS BEARING EARLIER REVISION DATES → 4-10-13 6-04-13 11-5-13

REVISION DATES (PRELIMINARY STAGE ONLY) SHEET OF

20-MAR-2014 15:58

U:\257151-1100020489\ub_EE\1100020489ub004.dgn

Dist	COUNTY	ROUTE	POST MILES TOTAL PROJECT	SHEET No.	TOTAL SHEETS
11	SD	15,76	R46.2/R46.8, R12.1/R17.7	1091	1273

James R. Lacy 11-05-13
REGISTERED ELECTRICAL ENGINEER DATE

03-24-14
PLANS APPROVAL DATE

REGISTERED PROFESSIONAL ENGINEER James Lacy No. E13770 Exp. 9-30-15 ELEC STATE OF CALIFORNIA

The State of California or its officers or agents shall not be responsible for the accuracy or completeness of scanned copies of this plan sheet.

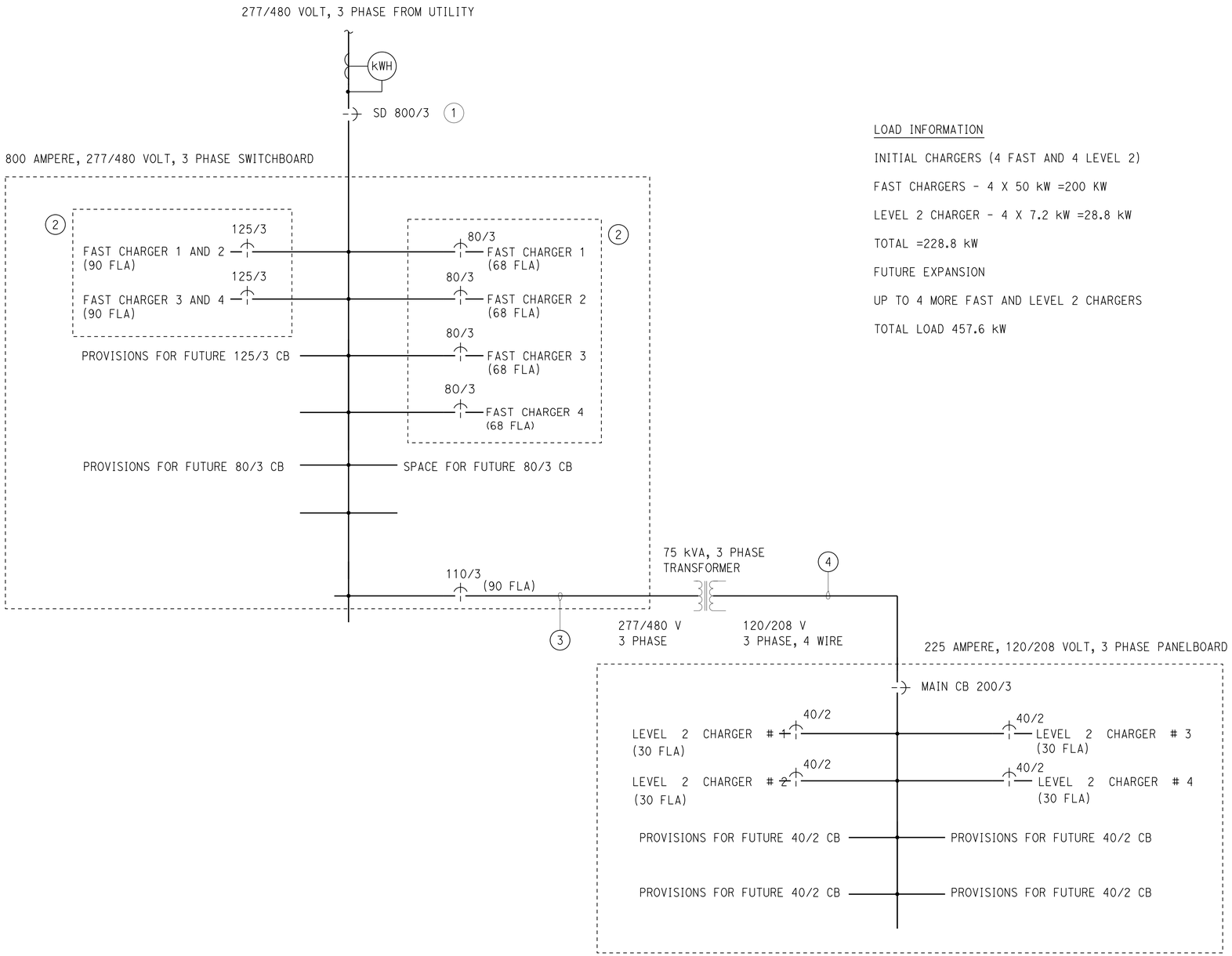

LOAD INFORMATION

INITIAL CHARGERS (4 FAST AND 4 LEVEL 2)

FAST CHARGERS - 4 X 50 kW =200 KW

LEVEL 2 CHARGER - 4 X 7.2 kW =28.8 kW

TOTAL =228.8 kW

FUTURE EXPANSION

UP TO 4 MORE FAST AND LEVEL 2 CHARGERS

TOTAL LOAD 457.6 kW

NOTES:

1. 800-Ampere, 3-pole circuit breaker frame with interchangeable trip. Trip element installed shall be 600 Amperes.
2. 4 Electric vehicle chargers will be installed initially so either 2 at 125-Ampere circuit breakers or 4 at 80-Ampere circuit breakers will be used (Not all of them)
3. 4#2, 1#6 ground.
4. 4#4/0, 1#12 ground.

	BY	CHECKED
DESIGN	James R. Lacy	Fariba Ramos
DETAILS	James R. Lacy	Jesse Sandhu
QUANTITIES	James R. Lacy	Jesse Sandhu

STATE OF CALIFORNIA
DEPARTMENT OF TRANSPORTATION

DIVISION OF ENGINEERING SERVICES
ELECTRICAL-MECHANICAL-WATER AND WASTEWATER DESIGN

BRIDGE No.
POST MILE

SAN DIEGO PARK AND RIDE ELECTRICAL FACILITY

SCHEMATIC DIAGRAM

SHEET EE-4

TAEMWW Imperial - CCSC Rev. 02/13

ORIGINAL SCALE IN INCHES FOR REDUCED PLANS 0 1 2 3

UNIT: 2765 CONTRACT No.: 000001
PROJECT NUMBER & PHASE: 11000204891

DISREGARD PRINTS BEARING EARLIER REVISION DATES → 4-10-13 5-28-13 11-5-13

REVISION DATES (PRELIMINARY STAGE ONLY) SHEET OF

20-MAR-2014 15:58

U:\257151-1100020489\ub_EE\1100020489ub005.dgn

DIST	COUNTY	ROUTE	POST MILES TOTAL PROJECT	SHEET No.	TOTAL SHEETS
11	SD	15, 76	R46.2/R46.8 R12.1/R17.7	1092	1273

Eliseo Lopez 1/14/13
REGISTERED CIVIL ENGINEER DATE

03-24-14
PLANS APPROVAL DATE

The State of California or its officers or agents shall not be responsible for the accuracy or completeness of electronic copies of this plan sheet.

REGISTERED PROFESSIONAL ENGINEER ELISEO LOPEZ No. C72910 Exp. 12/31/14 CIVIL STATE OF CALIFORNIA

NOTES:

1. During pole installation, the post shall be raked as necessary with the use of leveling nuts to provide a plumb pole axis.
2. Wind Loadings (3-second gust): 100 mph
3. Unit Stresses (Structural Steel):
   a. fy = 55,000 psi (tapered steel tube and anchor bolts)
   b. fy = 50,000 psi (unless otherwise noted)
4. Unit Stresses (Reinforced Concrete):
   a. f'c = 3,625 psi
   b. fy = 60,000 psi
5. Mounting area to be perpendicular to traffic.
6. For details not shown, see "2010 Standard Plans".

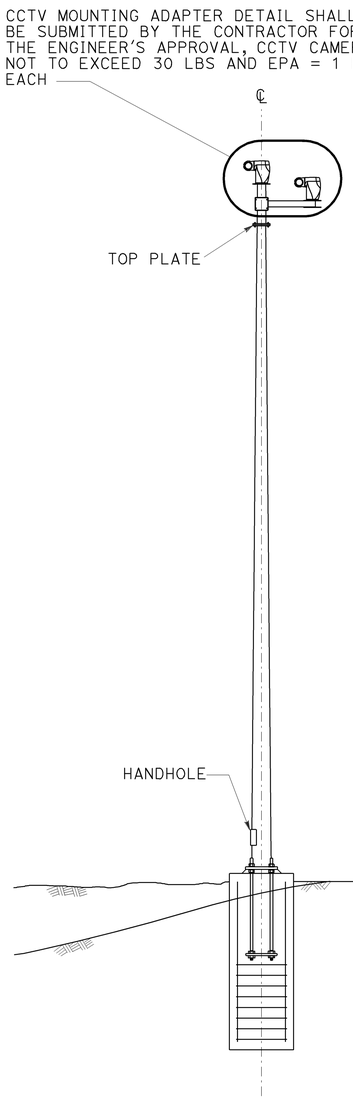

ELEVATION
MODIFIED CCTV 40

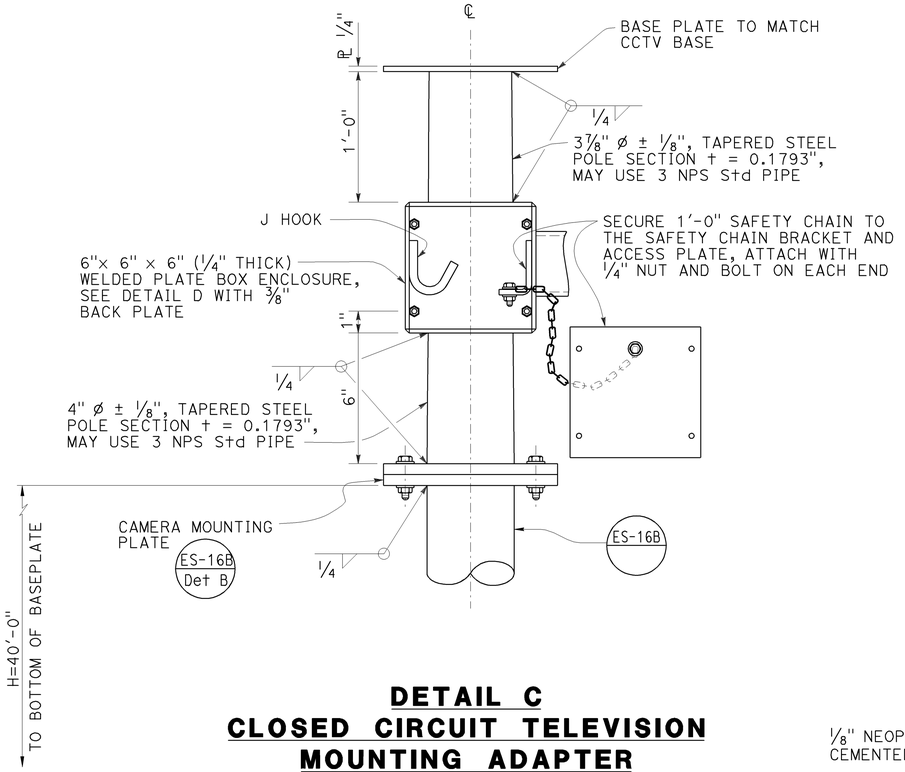

DETAIL C
CLOSED CIRCUIT TELEVISION MOUNTING ADAPTER

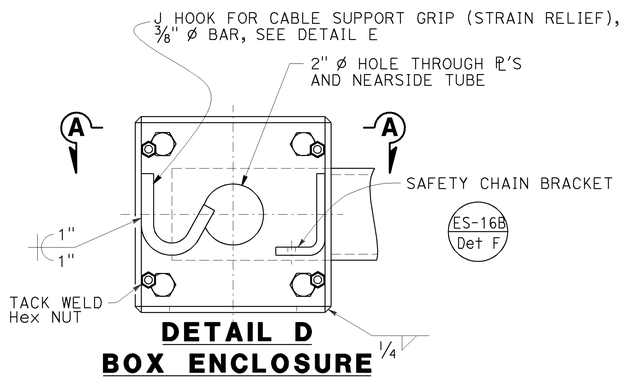

DETAIL D
BOX ENCLOSURE

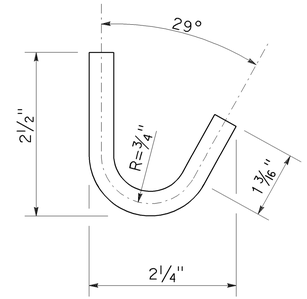

DETAIL E
J HOOK

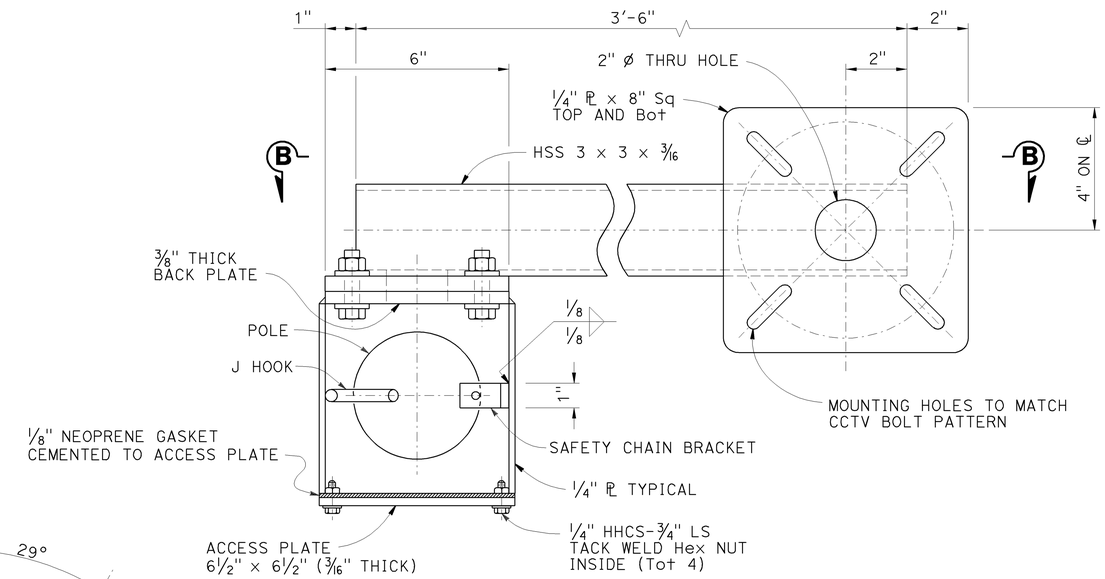

SECTION A-A

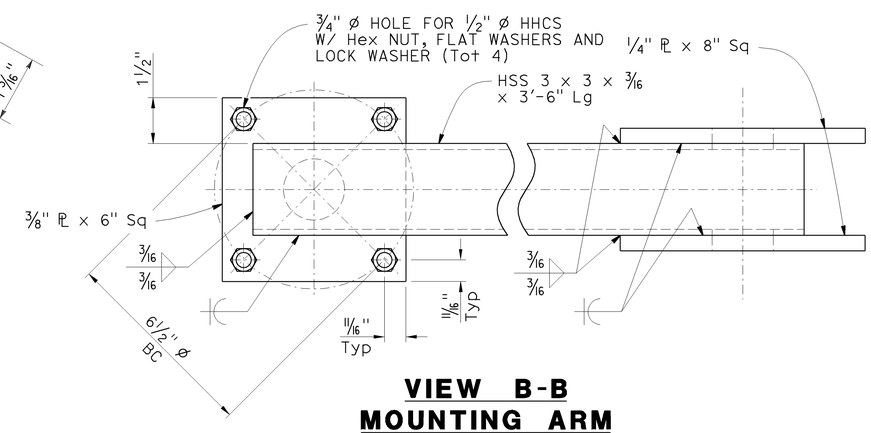

VIEW B-B
MOUNTING ARM

THE CONTRACTOR SHALL VERIFY ALL CONTROLLING FIELD DIMENSIONS BEFORE ORDERING OR FABRICATING ANY MATERIAL.

NO SCALE

	BY	CHECKED
DESIGN	A. GUTIERREZ	E. LOPEZ
DETAILS	D W JUSTICE Jr	A. GUTIERREZ
QUANTITIES		

STATE OF CALIFORNIA
DEPARTMENT OF TRANSPORTATION

DIVISION OF ENGINEERING SERVICES
STRUCTURE DESIGN
SPECIAL DESIGN BRANCH

BRIDGE NO. N/A
POST MILE R46.2/R46.8 R12.1/R17.7

CLOSED CIRCUIT TELEVISION SYSTEM
CANTILEVERED ARM DETAILS

SES-1

STRUCTURES DESIGN SPECIAL DESIGN SHEET (ENGLISH) (REV. 09-01-10)

ORIGINAL SCALE IN INCHES FOR REDUCED PLANS 0 1 2 3

UNIT: 3619
PROJECT NUMBER & PHASE: 1100020489-1
CONTRACT NO.: 11-257151

DISREGARD PRINTS BEARING EARLIER REVISION DATES

REVISION DATES: 1-9-13 1-14-13 8-06-13 9-18-13

SHEET OF

FILE => 11-257151_ses1.dgn

USERNAME => s13129055 DATE PLOTTED => 15-NOV-2013 TIME PLOTTED => 13:36

DIST	COUNTY	ROUTE	POST MILES TOTAL PROJECT	SHEET No.	TOTAL SHEETS
11	SD	15, 76	R46.2/R46.8 R12.1/R17.7	1093	1273

Eliseo Lopez 1/14/13
REGISTERED CIVIL ENGINEER DATE

03-24-14
PLANS APPROVAL DATE

REGISTERED PROFESSIONAL ENGINEER ELISEO LOPEZ No. C72910 Exp. 12/31/14 CIVIL STATE OF CALIFORNIA

The State of California or its officers or agents shall not be responsible for the accuracy or completeness of electronic copies of this plan sheet.

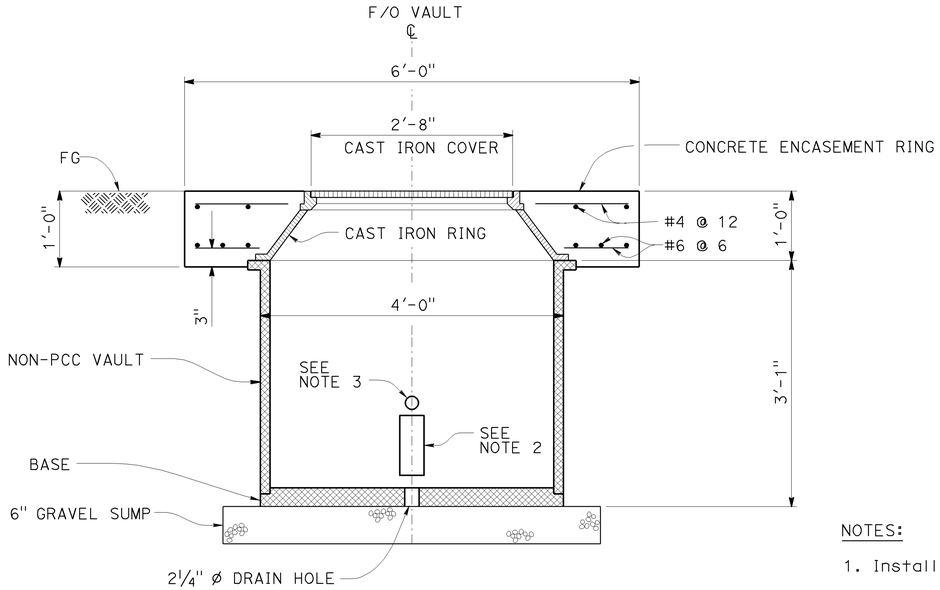

SECTION A-A

NO SCALE

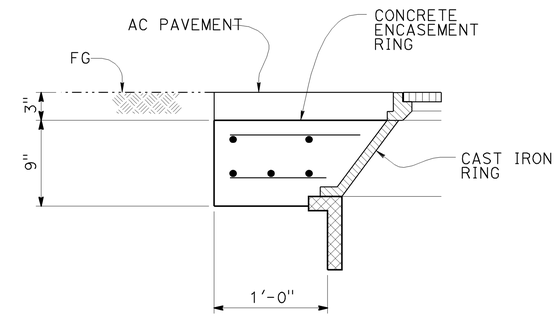

DETAIL A

NO SCALE
(VAULT INSIDE OF PULLOUT)

NOTES:

1. Install per manufacturer's recommendation.
2. Knockout for Multi-Duct Conduit System (MDCS) (8) provide two equally spaced around vault.
3. 2" knockout (total 4) equally spaced around vault.
4. Details to be used at New Bridge locations 57-1234 and 57-1235. See "ROADWAY PLANS" for Fiber Optic Vault location.

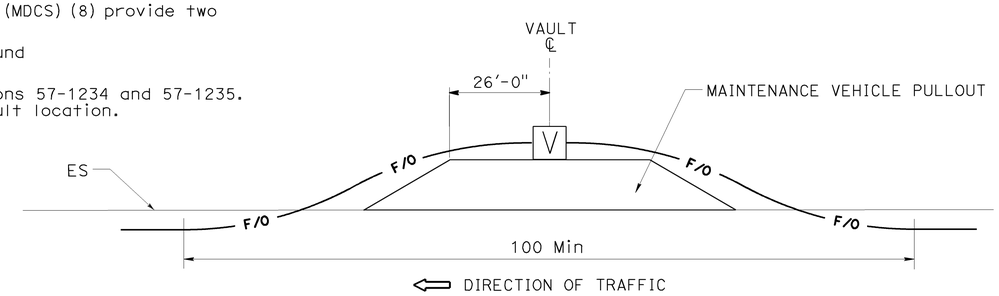

FIBER OPTIC VAULT INSTALLATION DETAIL (TYPICAL)

NO SCALE
(OUTSIDE OF PULLOUT)

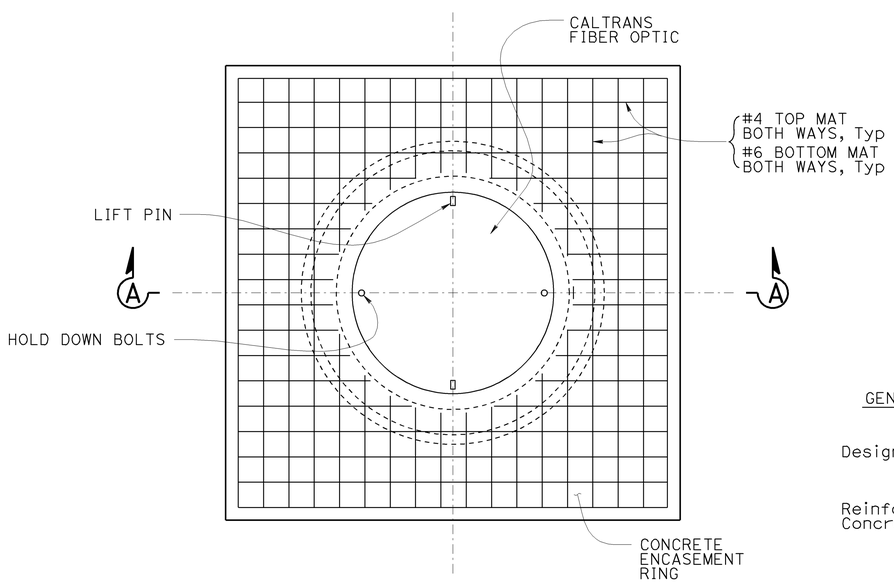

PLAN

NO SCALE

GENERAL NOTES:

Design : CALTRANS BRIDGE DESIGN SPECIFICATIONS APRIL 2000 (LFD)

Reinforced Concrete : fy = 60 ksi (Yield strength of reinforcement)
f'c = 36 ksi (Concrete compressive strength at 28 days)
n = 8

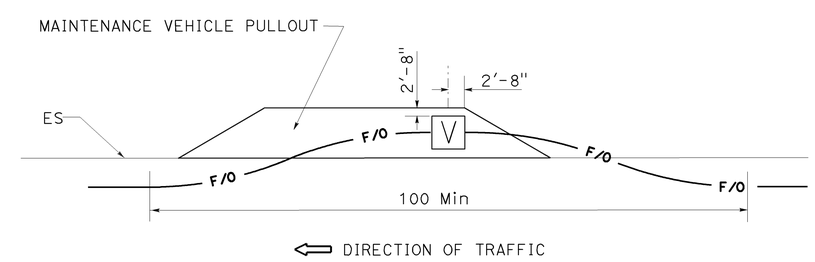

FIBER OPTIC VAULT INSTALLATION DETAIL (TYPICAL)

NO SCALE
(INSIDE OF PULLOUT)
NOTE: SEE DETAIL "A"

THE CONTRACTOR SHALL VERIFY ALL CONTROLLING FIELD DIMENSIONS BEFORE ORDERING OR FABRICATING ANY MATERIAL.

	BY	CHECKED
DESIGN	A. GUTIERREZ	E. LOPEZ
DETAILS	D W JUSTICE Jr	A. GUTIERREZ
QUANTITIES		

STATE OF CALIFORNIA
DEPARTMENT OF TRANSPORTATION

DIVISION OF ENGINEERING SERVICES
STRUCTURE DESIGN
SPECIAL DESIGN BRANCH

BRIDGE NO. N/A
POST MILE R46.2/R46.8 R12.1/R17.7

CLOSED CIRCUIT TELEVISION SYSTEM
FIBER OPTIC VAULT DETAILS

SES-2

STRUCTURES DESIGN SPECIAL DESIGN SHEET (ENGLISH) (REV. 09-01-10)

ORIGINAL SCALE IN INCHES FOR REDUCED PLANS 0 1 2 3

UNIT: 3619
PROJECT NUMBER & PHASE: 1100020489-1 CONTRACT NO.: 11-257151

DISREGARD PRINTS BEARING EARLIER REVISION DATES

REVISION DATES 1-9-13 1-14-13 1-23-13 9-18-13 SHEET OF

FILE => 11-257151_ses2.dgn

USERNAME => s13e0055 DATE PLOTTED => 15-NOV-2013 TIME PLOTTED => 13:36

DIST	COUNTY	ROUTE	POST MILES TOTAL PROJECT	SHEET No	TOTAL SHEETS
11	SD	15, 76	R46.2/R46.8 R12.1/R17.7	1094	1273

Eliseo Lopez 5/16/13
REGISTERED CIVIL ENGINEER DATE

03-24-14
PLANS APPROVAL DATE

REGISTERED PROFESSIONAL ENGINEER ELISEO LOPEZ No. C72910 Exp. 12/31/14 CIVIL STATE OF CALIFORNIA

The State of California or its officers or agents shall not be responsible for the accuracy or completeness of electronic copies of this plan sheet.

TABLE A

POLE TYPE	POLE DATA				BASE PLATE DATA			
	HEIGHT	Min OD BASE	Min OD TOP	WALL THICKNESS	C	BC = BOLT CIRCLE	THICKNESS	ANCHOR BOLT SIZE
LIGHTING	12'-0"	7"	5 3/8"	0.1196"	12"	12"	1"	1"Ø x 36"

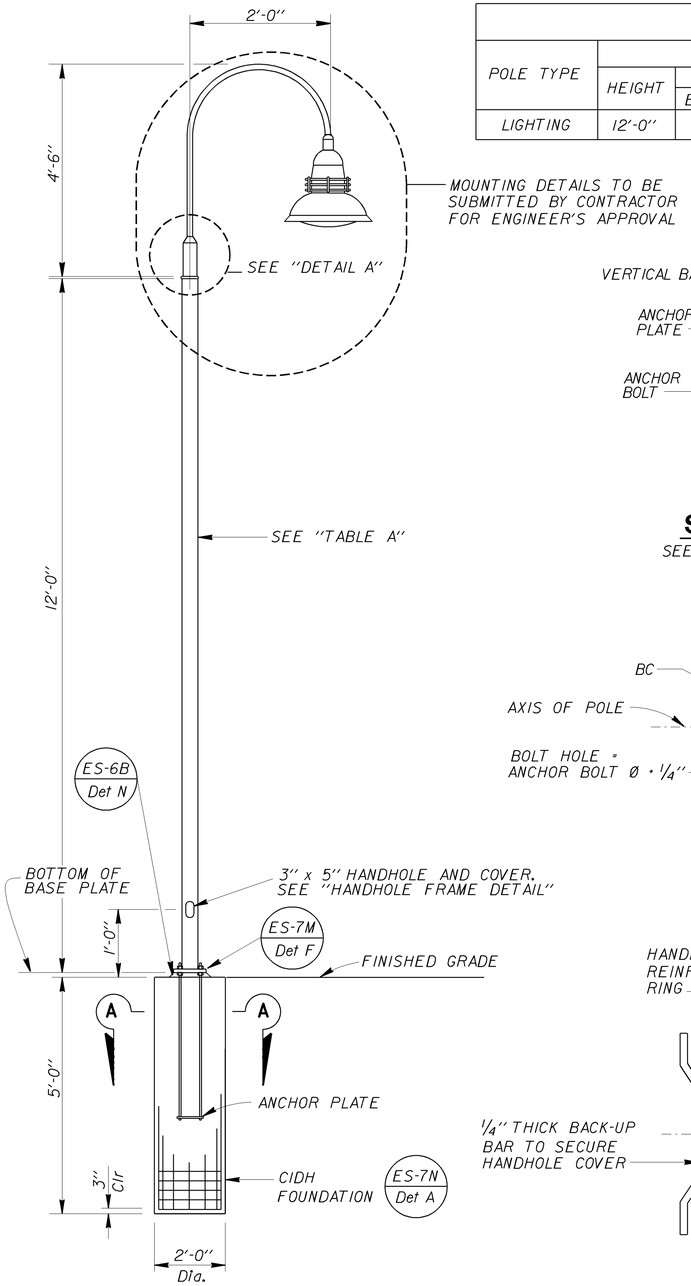

ELEVATION

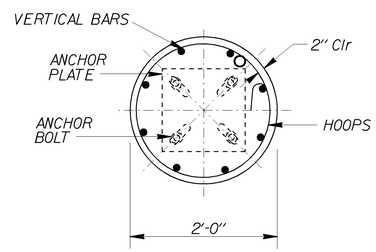

SECTION A-A

SEE 2010 STANDARD PLAN ES-7N

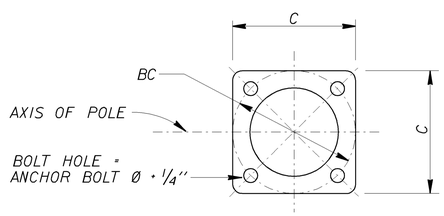

BASE PLATE

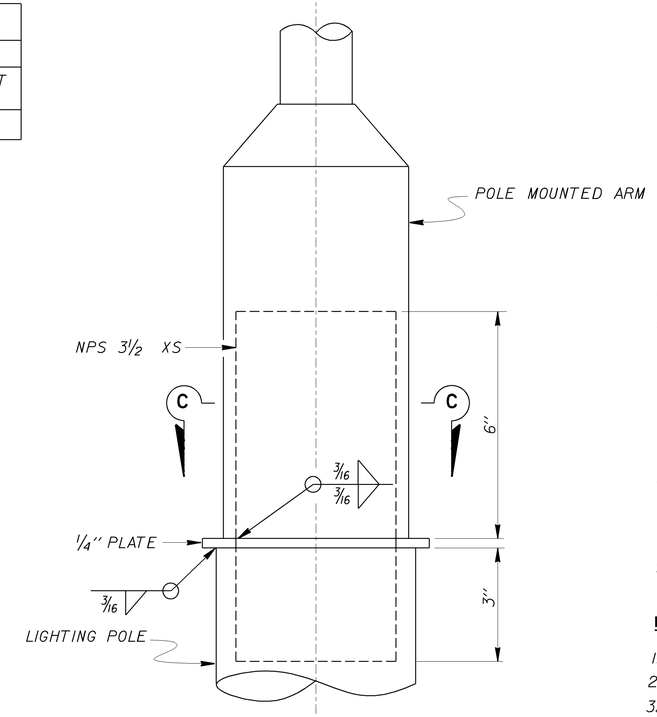

DETAIL A

GENERAL NOTES:

SPECIFICATIONS

Design : AASHTO Standard Specifications for Structural Supports for Highway Signs, Luminaires and Traffic Signals, Fifth Edition.

LOADING

Wind Loading: 100 MPH

UNIT STRESSES

Structural steel: fy = 55,000 psi (Tapered steel tube and anchor bolts)
fy = 50,000 psi unless otherwise noted.

Reinforced concrete: f'_c = 3,600 psi
fy = 60,000 psi

NOTES:

1. For pole locations, see "ELECTRICAL PLANS".
2. All steel shall be galvanized after fabrication.
3. During pole erection the pole shall be raked as necessary with the use of leveling nuts to provide a plumb pole axis.
4. Foundation design is based on AASHTO LTS-5 article 13.6 Broms' approximate procedure assuming a cohesionless material. The angle of internal friction used is 30 degrees and unit weight of soil is 120 lb/ft³.
5. Decorative lamp shall not weigh more than 50 lbs and not have an effective pressure area greater than 2.5 ft².
6. For details not shown, see "STANDARD PLANS 2010".

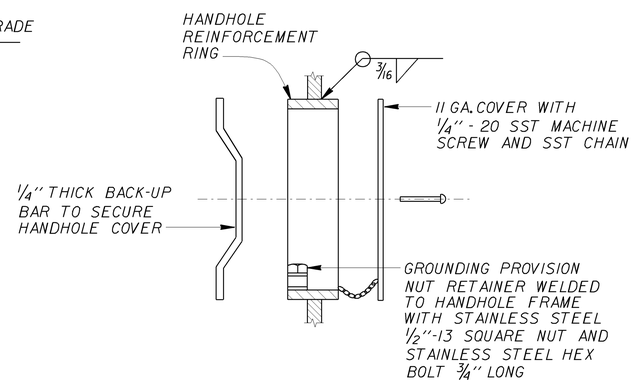

SECTION B-B

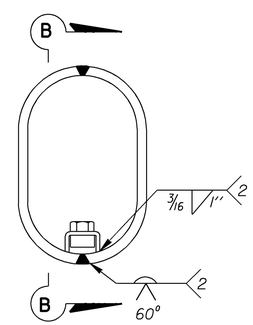

FRONT VIEW

HANDHOLE FRAME DETAIL

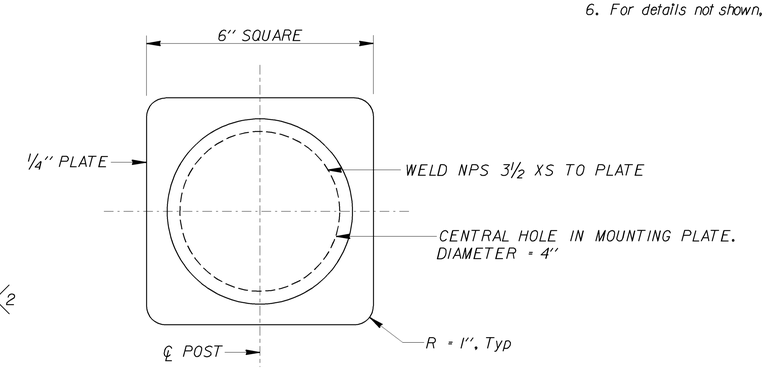

SECTION C-C

STANDARD PLAN SHEET No.
DETAIL No.

NOTE:
THE CONTRACTOR SHALL VERIFY ALL CONTROLLING FIELD DIMENSIONS BEFORE ORDERING OR FABRICATING ANY MATERIAL.

NO SCALE

BRANCH CHIEF JEFF WOODY

	BY	CHECKED
DESIGN	E. LOPEZ	J. DATILES
DETAILS	T. NGUYEN	J. DATILES
QUANTITIES		

STATE OF CALIFORNIA
DEPARTMENT OF TRANSPORTATION

DIVISION OF ENGINEERING SERVICES
DESIGN AND TECHNICAL SERVICES
SPECIAL DESIGNS BRANCH A

BRIDGE NO. N/A
POST MILE R46.2/R46.8 R12.1/R17.7

LIGHTING (PARKING LOT)
PEDESTRIAN POLE DETAILS

SES-3

(ENGLISH) SPECIAL DESIGNS BRANCH BORDER SHEET (REV. 7-1-09)

ORIGINAL SCALE IN INCHES FOR REDUCED PLANS 0 1 2 3

UNIT: 3619
PROJECT NUMBER & PHASE: 1100020489-1
CONTRACT NO.: 11-257151

DISREGARD PRINTS BEARING EARLIER REVISION DATES
REVISION DATES 4/30/13 11/05/13 5/16/13 5/16/13
SHEET OF

FILE => /2013sd/11-257151/ses-3.dgn

USERNAME => $USER DATE PLOTTED => $DATE TIME PLOTTED => $TIME

DIST	COUNTY	ROUTE	POST MILES TOTAL PROJECT	SHEET No.	TOTAL SHEETS
11	SD	15,76	R46.2/R46.8 R12.1/R17.7	1095	1273

REGISTERED CIVIL ENGINEER 8-06-13 DATE

03-24-14
PLANS APPROVAL DATE

REGISTERED PROFESSIONAL ENGINEER JOEL MAGANA No. C61500 Exp. 6-30-15 CIVIL STATE OF CALIFORNIA

The State of California or its officers or agents shall not be responsible for the accuracy or completeness of electronic copies of this plan sheet.

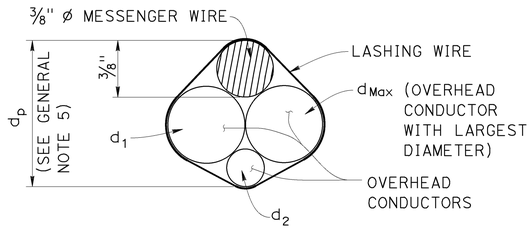

$d_p = 3/8'' + d_{Max} + 0.30 * (d_1 + d_2 + \ldots d_n)$

PROJECTED DEPTH OF OVERHEAD BUNDLE, (d_p)

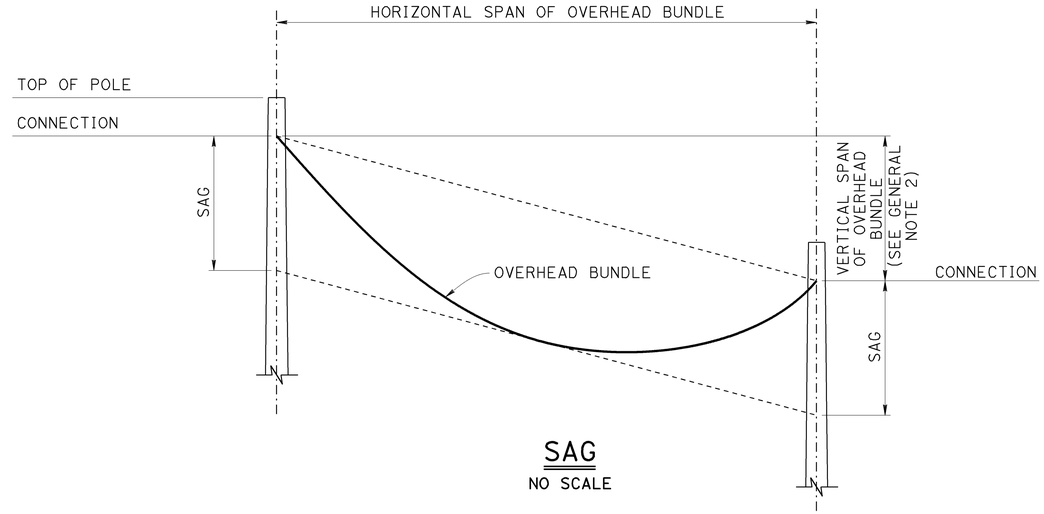

SAG

NO SCALE

Design: AASHTO Standard Specifications for Structural Supports for Highway Signs, Luminaires and Traffic Signals, Fifth Edition (LTS-5).

GROUP LOAD COMBINATIONS:

I Dead Load
II Dead Load + Wind Load
III Dead Load + 0.5 (Wind Load) + Ice Load
IV Fatigue: Not used

LOADING:

Wind Loading: 100 mph (3-second gust)
Wind Recurrence Interval: 10 years
Combined height, exposure, and elevated terrain factor = 1.05 (Exposure C, structure is not located on or over the top half of a ridge, hill, or escarpment)

Ice Loading: 3.0 psf on surfaces, 0.60 in radial thickness of ice at a unit weight of 60 pcf on overhead bundles

BASIC DESIGN VALUES:

Timber Poles: Fb = 1850 psi
Fv = 110 psi
Fcp = 230 psi
Fc = 950 psi
E = 1500 x 10^3 psi

DESIGN WIRE BREAKING STRENGTHS:

ASTM A475, Utilities Grade, 7 strand modified by termination efficiency factor of 0.8

FOUNDATION DESIGN NOTES:

1. Pole embedment depth design is based on Broms' approximate procedure as described in Article 13.6 of AASHTO LTS-5.

2. Embedment depth is calculated based on following soil parameters,
Cohesive Soil:
Shear strength of soil c = 1500 psf.
Cohesionless Soil:
Ø = 30 deg, γ = 120 pcf.
Soil assumed to be unsaturated.

3. An overload factor of 2.0 and an undercapacity factor of 0.7 were used for safety factor of 2.86.

4. Allowable vertical bearing pressure at the end bearing of poles is 3000 psf at 6 feet or more embedment.

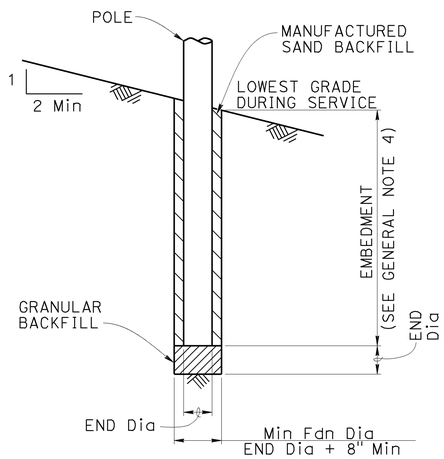

POLE FOUNDATION

GENERAL NOTES:

1. The messenger wire and any combination of overhead conductors must not exceed either a self weight of 3.0 lb/ft or the maximun d_p.

2. The maximum vertical span is 10% of the horizontal span.

3. For poles with adjacent unbalanced horizontal spans, the shortest horizontal span must be at least 50% of the largest horizontal span.

4. Add 2'-0" for slopes above 1V:4H.

5. For a pole supporting multiple spans, calculate d_p for each span and use the largest value.

6. Do not exceed the attachments shown.

DIAMETERS AND SELF WEIGHT OF OVERHEAD CONDUCTORS

CONDUCTOR OR CABLE TYPE	DIAMETER d (in)	WEIGHT w (plf)
3 CONDUCTOR SIGNAL CABLE (3CSC)	0.400	0.0980
5 CONDUCTOR SIGNAL CABLE (5CSC)	0.500	0.1560
9 CONDUCTOR SIGNAL CABLE (9CSC)	0.650	0.2760
12 CONDUCTOR SIGNAL CABLE (12CSC)	0.800	0.3970
28 CONDUCTOR SIGNAL CABLE (28CSC)	0.900	0.6490
1-#14	0.166	0.0235
1-#12	0.185	0.0330
1-#10	0.210	0.0476
1-#8	0.271	0.0774
1-#6	0.310	0.1130
1-#4	0.359	0.1690
1-#3	0.388	0.2080
1-#2	0.420	0.2560
1-#1	0.498	0.3340
6-CONDUCTOR SIGNAL INTERCONNECT CABLE (SIC)	0.350	0.0860
12-CONDUCTOR SIGNAL INTERCONNECT CABLE (SIC)	0.500	0.1440
DETECTOR LEAD-IN CABLE (DLC)	0.310	0.0440
12 to 48-STRAND FIBER OPTIC CABLE (48FOC)	0.424	0.0600
72-STRAND FIBER OPTIC CABLE (72FOC)	0.484	0.0770
96-STRAND FIBER OPTIC CABLE (96FOC)	0.535	0.1050
144-STRAND FIBER OPTIC CABLE (144FOC)	0.670	0.1890
3/8" Ø MESSENGER WIRE	0.375	0.2730

NO SCALE

BRANCH CHIEF DAVID A. NEUMANN

	BY	CHECKED
DESIGN	JOEL MAGANA	VICTOR LOPEZ
DETAILS	SHUMEI JIANG	VICTOR LOPEZ
QUANTITIES	X	X

STATE OF CALIFORNIA
DEPARTMENT OF TRANSPORTATION

DIVISION OF ENGINEERING SERVICES
STRUCTURE DESIGN
SPECIAL DESIGN BRANCH

BRIDGE NO.
POST MILE R46.2/R46.8 R12.1/R17.7

LIGHTING (STAGE CONSTRUCTION)
GENERAL NOTES

SES-4

STRUCTURES DESIGN SPECIAL DESIGN SHEET (ENGLISH) (REV. 09-01-10)

ORIGINAL SCALE IN INCHES FOR REDUCED PLANS 0 1 2 3

UNIT: 3619
PROJECT NUMBER & PHASE: 1100020489-1
CONTRACT NO.: 11-257151

DISREGARD PRINTS BEARING EARLIER REVISION DATES

REVISION DATES 5-30-13

SHEET 4 OF 14

FILE => ea-11-257151_ses-sheet04.dgn

USERNAME => s132428 DATE PLOTTED => 06-AUG-2013 TIME PLOTTED => 10:23

DIST	COUNTY	ROUTE	POST MILES TOTAL PROJECT	SHEET No.	TOTAL SHEETS
11	SD	15,76	R46.2/R46.8 R12.1/R17.7	1096	1273

REGISTERED CIVIL ENGINEER 8-06-13 DATE

03-24-14
PLANS APPROVAL DATE

REGISTERED PROFESSIONAL ENGINEER JOEL MAGANA No. C61500 Exp. 6-30-15 CIVIL STATE OF CALIFORNIA

The State of California or its officers or agents shall not be responsible for the accuracy or completeness of electronic copies of this plan sheet.

LEGEND

- Wood Pole No Attachments
- A Wood Pole with Attachments
- —OH— Overhead Bundle

POLE SELECTION TABLE

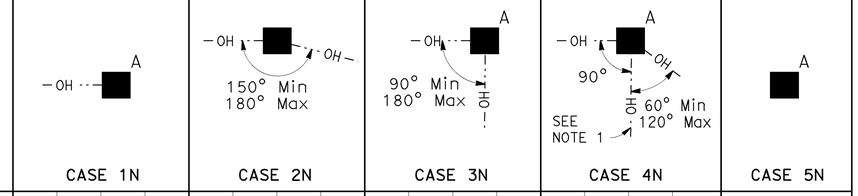

		CASE 1N				CASE 2N				CASE 3N				CASE 4N				CASE 5N
	MAXIMUM d_p	1"	1.5"	2.0"	2.5"	1"	1.5"	2.0"	2.5"	1.0"	1.5"	2.0"	2.5"	1"	1.5"	2.0"	2.5"	N/A
OVERHEAD BUNDLE HORIZONTAL SPAN (Max) 50′	MINIMUM POLE CLASS	H-1	H-2	H-2	H-2	4	3	2	1	H-2	H-2	H-3	H-3	H-4	H-4	H-4	H-5	CLASS 1 E = 10′
	POLE EMBEDMENT (E)	11′				10′				11′				12′				
100′	MINIMUM POLE CLASS	H-2	H-3	H-4	H-5	1	H-1	H-2	H-3	H-4	H-5	H-5	H-6	H-5	H-5	H-6		
	POLE EMBEDMENT (E)	12′				11′				12′				12′				
150′	MINIMUM POLE CLASS	H-4	H-5	H-6		H-1	H-2	H-3	H-5	H-6				H-6				
	POLE EMBEDMENT (E)	12′				12′				12′				12′				
200′	MINIMUM POLE CLASS	H-5	H-6			H-2	H-3	H-5										
	POLE EMBEDMENT (E)	12′				12′												

1. CCTV camera assembly or vehicle detection system
2. Overhead bundle consisting of a 3/8" ϕ messenger wire and overhead conductors and lashing wire.
3. Luminaire with mast arm
4. Pedestrian pushbutton
5. Signal face with 3 indications or single sheet sign panel (10 SQFT Max)
6. Riser with weather head as required
7. Pull box as required
8. Grounding as required
9. Single section flashing beacon or single sheet sign panel (4 SQFT Max)
10. Single sheet sign panel (4′ x 4′ Max) or signal face with 3 indications
11. Flashing beacon control assembly
12. NEMA 3R enclosure, 26"(W) x 56"(H) x 12"(D) Max dimensions. Max weight including batteries, 450 lbs
13. 25′ SQFT Max total photovoltaic panels mounted as shown as required
14. 2-section 12" flashing beacon

NOTES:

1. In addition to other restrictions on maximum horizontal span, this horizontal span must not exceed 100′.
2. Cases 1N, 3N and 4N may substitute the attachments shown in Case 5N if the photovoltaic panel is not included.

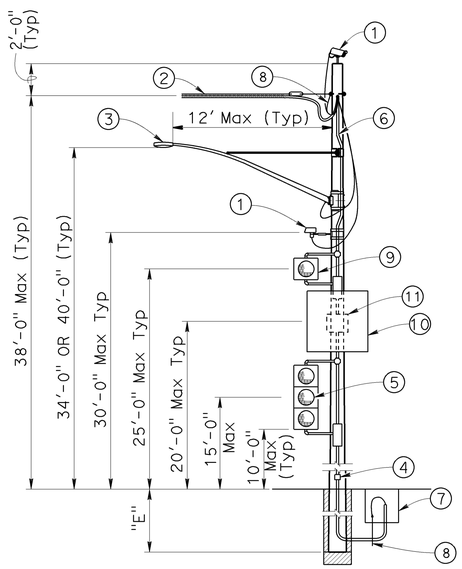

CASE 1N
POLE AT DEAD END WITH ATTACHMENTS
SEE NOTE 2

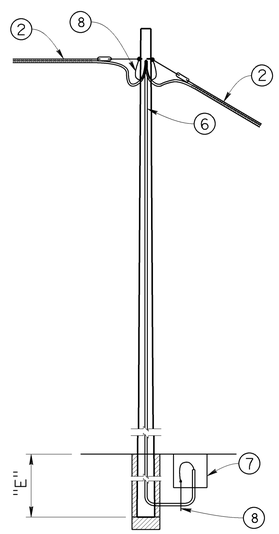

CASE 2N
POLE AT TANGENT WITHOUT ATTACHMENTS

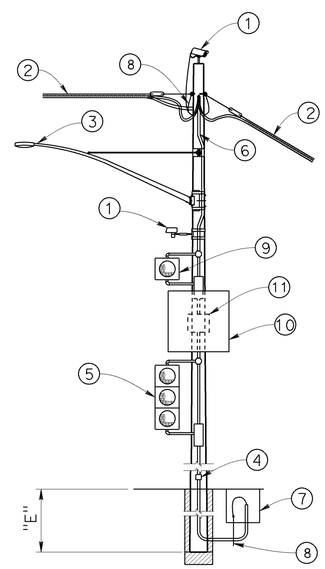

CASE 3N
POLE AT TANGENT OR CORNER WITH ATTACHMENTS
SEE NOTE 2

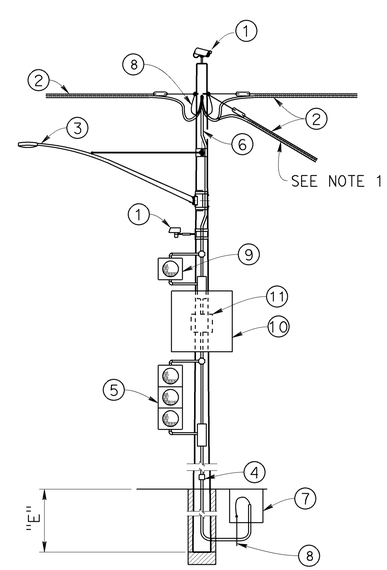

CASE 4N
POLE AT JUNCTION WITH ATTACHMENTS
SEE NOTE 2

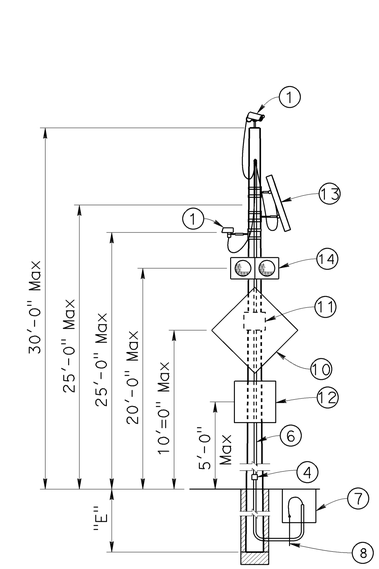

CASE 5N
POLE WITHOUT OVERHEAD BUNDLE WITH ATTACHMENTS

NO SCALE

BRANCH CHIEF DAVID A. NEUMANN	DESIGN BY JOEL MAGANA	CHECKED VICTOR LOPEZ	STATE OF CALIFORNIA DEPARTMENT OF TRANSPORTATION
	DETAILS BY SHUMEI JIANG	CHECKED VICTOR LOPEZ	DIVISION OF ENGINEERING SERVICES STRUCTURE DESIGN SPECIAL DESIGN BRANCH
	QUANTITIES BY X	CHECKED X	BRIDGE NO. / POST MILE R46.2/R46.8 R12.1/R17.7

LIGHTING (STAGE CONSTRUCTION)
NON-GUYED - NO SIGNALS ON SPANS

SES-5

STRUCTURES DESIGN SPECIAL DESIGN SHEET (ENGLISH) (REV. 09-01-10)

ORIGINAL SCALE IN INCHES FOR REDUCED PLANS 0 1 2 3

UNIT: 3619
PROJECT NUMBER & PHASE: 1100020489-1 CONTRACT NO.: 11-257151

DISREGARD PRINTS BEARING EARLIER REVISION DATES → 5-30-13

SHEET 5 OF 14

FILE => ea-11-257151_ses-sheet05.dgn

USERNAME => s132428 DATE PLOTTED => 06-AUG-2013 TIME PLOTTED => 10:23

DIST	COUNTY	ROUTE	POST MILES TOTAL PROJECT	SHEET No.	TOTAL SHEETS
11	SD	15,76	R46.2/R46.8 R12.1/R17.7	1097	1273

REGISTERED CIVIL ENGINEER 8-06-13 DATE

03-24-14
PLANS APPROVAL DATE

REGISTERED PROFESSIONAL ENGINEER JOEL MAGANA No. C61500 Exp. 6-30-15 CIVIL STATE OF CALIFORNIA

The State of California or its officers or agents shall not be responsible for the accuracy or completeness of electronic copies of this plan sheet.

LEGEND

A — Wood Pole with Attachments

—OH··— Overhead Bundle

——→ Guy Anchor

POLE SELECTION TABLE

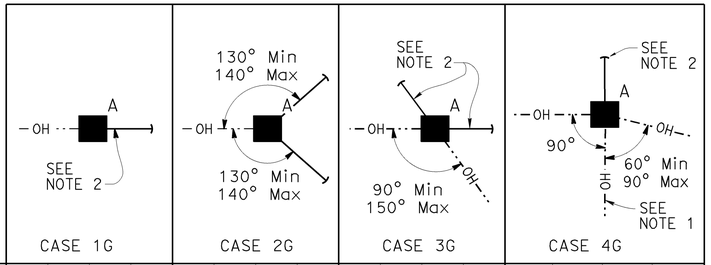

		MAXIMUM d_p	1"	1.5"	2.0"	2.5"	1"	1.5"	2.0"	2.5"	1"	1.5"	2.0"	2.5"	1"	1.5"	2.0"	2.5"
OVERHEAD BUNDLE HORIZONTAL SPAN (Max)	50′	MINIMUM POLE CLASS	H-1	H-1	H-2	H-2	1	1	1	1	1	1	1	H-1	H-2	H-2	H-3	H-3
		POLE EMBEDMENT (E)	10′				9′				9′				11′			
	100′	MINIMUM POLE CLASS	H-2	H-2	H-3	H-4	1	H-1	H-1	H-1	1	H-1	H-2	H-2	H-3	H-3	H-4	H-4
		POLE EMBEDMENT (E)	11′				9′				9′				12′			
	150′	MINIMUM POLE CLASS	H-3	H-3	H-4	H-5	H-1	H-1	H-2	H-2	H-2	H-3	H-3	H-3	H-4	H-5	H-5	H-6
		POLE EMBEDMENT (E)	11′				9′				9′				12′			
	200′	MINIMUM POLE CLASS	H-4	H-4	H-5	H-6	H-1	H-2	H-3	H-3	H-3	H-3	H-4	H-4	H-5	H-6		
		POLE EMBEDMENT (E)	11′				9′				9′				12′			

1. CCTV camera assembly or vehicle detection system
2. Overhead bundle consisting of a 3/8" ø messenger wire and overhead conductors and lashing wire.
3. Luminaire with mast arm
4. Pedestrian pushbutton
5. Signal face with 3 indications or single sheet sign panel (10 SQFT Max)
6. Riser with weather head as required
7. Pull box as required
8. Grounding as required
9. Single section flashing beacon or single sheet sign panel (4 SQFT Max)
10. Single sheet sign panel (4′ x 4′ Max) or signal face with 3 indications
11. Flashing beacon control assembly
12. 1/2" ø guy wire with white guy marker and strain insulator (for anchorage see "TEMPORARY WOOD POLES-DETAILS No. 2" sheet)

NOTES:

1. In addition to other restrictions on maximum horizontal span, this horizontal span must not exceed 100′.
2. Guy wire in line with opposing span ± 5°.

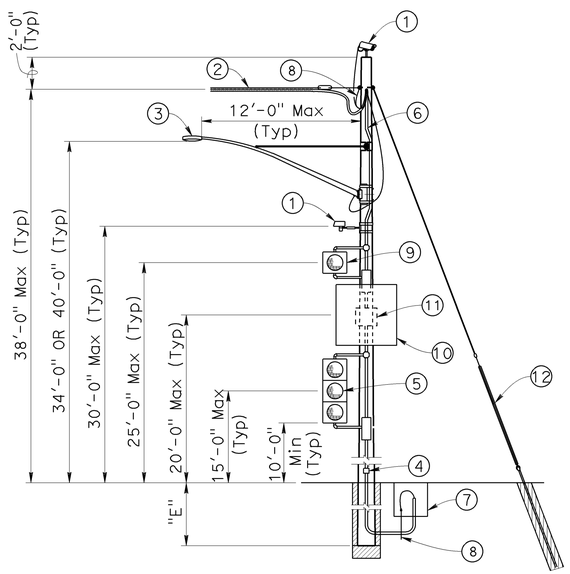

CASE 1G
POLE AT DEAD END
WITH ATTACHMENTS

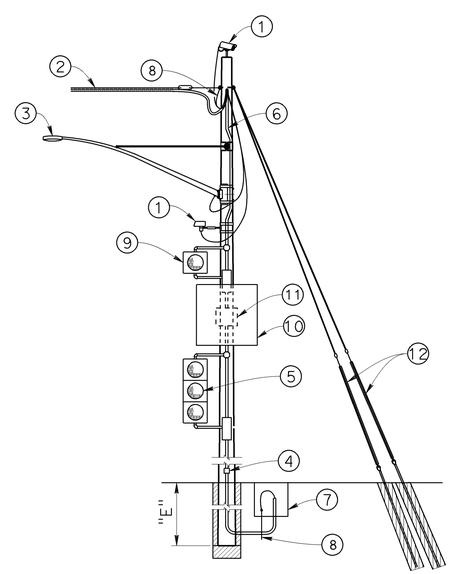

CASE 2G
POLE AT DEAD END
WITH ATTACHMENTS

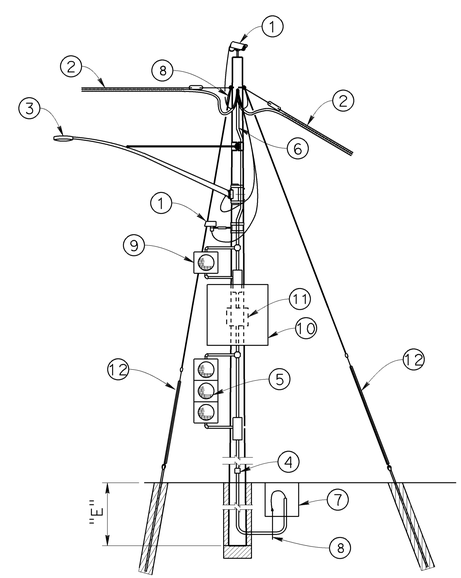

CASE 3G
POLE AT CORNER
WITH ATTACHMENTS

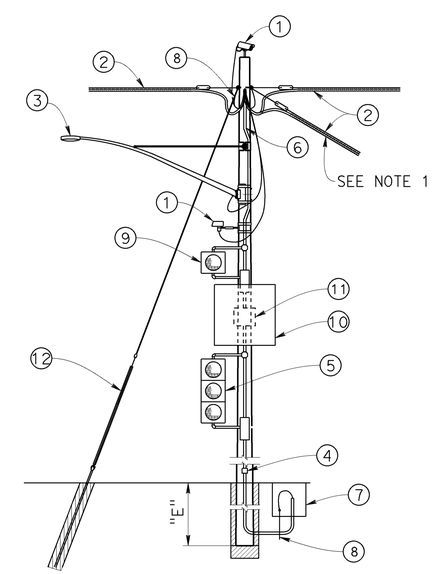

CASE 4G
POLE AT JUNCTION
WITH ATTACHMENTS

NO SCALE

BRANCH CHIEF DAVID A. NEUMANN	DESIGN	BY JOEL MAGANA	CHECKED VICTOR LOPEZ	STATE OF CALIFORNIA DEPARTMENT OF TRANSPORTATION	DIVISION OF ENGINEERING SERVICES STRUCTURE DESIGN SPECIAL DESIGN BRANCH
	DETAILS	BY SHUMEI JIANG	CHECKED VICTOR LOPEZ		BRIDGE NO. / POST MILE R46.2/R46.8 R12.1/R17.7
	QUANTITIES	BY X	CHECKED X		

LIGHTING (STAGE CONSTRUCTION)
GUYED - NO SIGNALS ON SPANS

SES-6

STRUCTURES DESIGN SPECIAL DESIGN SHEET (ENGLISH) (REV. 09-01-10)

ORIGINAL SCALE IN INCHES FOR REDUCED PLANS 0 1 2 3

UNIT: 3619
PROJECT NUMBER & PHASE: 1100020489-1 CONTRACT NO.: 11-257151

DISREGARD PRINTS BEARING EARLIER REVISION DATES → REVISION DATES 5-30-13

SHEET 6 OF 14

FILE => ea-11-257151_ses-sheet06.dgn

USERNAME => s132428 DATE PLOTTED => 06-AUG-2013 TIME PLOTTED => 10:23

DIST	COUNTY	ROUTE	POST MILES TOTAL PROJECT	SHEET No.	TOTAL SHEETS
11	SD	15,76	R46.2/R46.8 R12.1/R17.7	1098	1273

REGISTERED CIVIL ENGINEER 8-06-13 DATE

03-24-14
PLANS APPROVAL DATE

REGISTERED PROFESSIONAL ENGINEER JOEL MAGANA No. C61500 Exp. 6-30-15 CIVIL STATE OF CALIFORNIA

The State of California or its officers or agents shall not be responsible for the accuracy or completeness of electronic copies of this plan sheet.

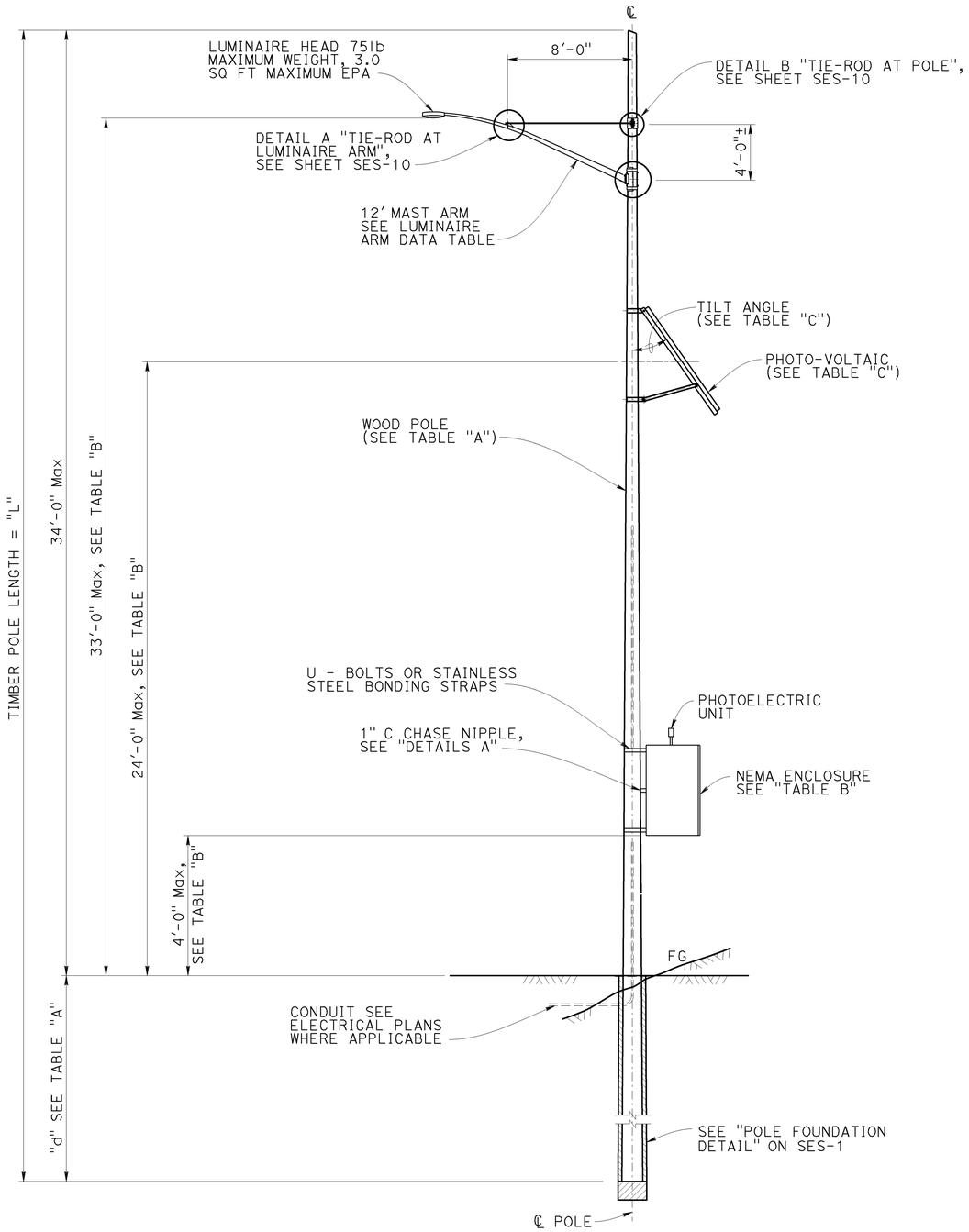

ELEVATION

NO SCALE

THE CONTRACTOR SHALL VERIFY ALL CONTROLLING FIELD DIMENSIONS BEFORE ORDERING OR FABRICATING ANY MATERIAL.

LUMINAIRE ARM DATA			
PROJECTED LENGTH	N RISE	Min OD AT POLE	THICKNESS
12'-0"	4'-3"	3 7/8"	0.1196"

Refer to RSP ES-6A for Luminaire arm details

TABLE A			
POLE DATA		"d" POLE EMBEDMENT	
POLE CLASS	LENGTH "L"	LEVEL GROUND	SLOPING GROUND
H1	50'	10'	12'

TABLE B		
ATTACHMENT	MOUNTING HEIGHT	WEIGHT LIMITS (Max)
LUMINAIRE MAST ARM (LMA)	30'-34'	-
PHOTO-VOLTAIC	18'-24'	103 lbs
NEMA ENCLOSURE	26"(W) x 56"(H) x 12"(D) Max	450 lbs

TABLE C	
PHOTO VOLTAIC PANEL LIMITS	
PANEL SIZE	TILT ANGLE
10 Ft^2 Max	30° Min
16 Ft^2 Max	40° Min
CHOSE ONLY 1 ALTERNATIVE	

NOTES:

1. Foundation design is based on AASHTO 2001 article 13.6 Broms' approximate procedure assuming a cohesionless material. The angle of internal friction used is 30° and unit weight of soil used is 120 lb/ft^3. The contractor to verify actual soil condition.
2. The foundation shall be treated as level ground condition if the slope inclination is flatter than 4H:1V.
3. For mounted devices and mounting heights see Tables B and C.

ALL DIMENSIONS ARE IN INCHES UNLESS OTHERWISE SHOWN

BRANCH CHIEF DAVID A. NEUMANN

	BY	CHECKED
DESIGN	JOEL MAGANA	VICTOR LOPEZ
DETAILS	SHUMEI JIANG	VICTOR LOPEZ
QUANTITIES	X	X

STATE OF CALIFORNIA DEPARTMENT OF TRANSPORTATION

DIVISION OF ENGINEERING SERVICES STRUCTURE DESIGN SPECIAL DESIGN BRANCH

BRIDGE NO.

POST MILE R46.2/R46.8 R12.1/R17.7

LIGHTING (STAGE CONSTRUCTION)

SOLAR LIGHTING

SES-7

STRUCTURES DESIGN SPECIAL DESIGN SHEET (ENGLISH) (REV. 09-01-10)

ORIGINAL SCALE IN INCHES FOR REDUCED PLANS 0 1 2 3

UNIT: 3619
PROJECT NUMBER & PHASE: 1100020489-1 CONTRACT NO.: 11-257151

DISREGARD PRINTS BEARING EARLIER REVISION DATES

REVISION DATES 5-30-13 6-18-13 6-20-13

SHEET 7 OF 14

FILE => ea-11-257151_ses-sheet07.dgn

USERNAME => s132428 DATE PLOTTED => 06-AUG-2013 TIME PLOTTED => 10:23

DIST	COUNTY	ROUTE	POST MILES TOTAL PROJECT	SHEET No.	TOTAL SHEETS
11	SD	15,76	R46.2/R46.8 R12.1/R17.7	1099	1273

REGISTERED CIVIL ENGINEER 8-06-13 DATE

03-24-14
PLANS APPROVAL DATE

REGISTERED PROFESSIONAL ENGINEER JOEL MAGANA No. C61500 Exp. 6-30-15 CIVIL STATE OF CALIFORNIA

The State of California or its officers or agents shall not be responsible for the accuracy or completeness of electronic copies of this plan sheet.

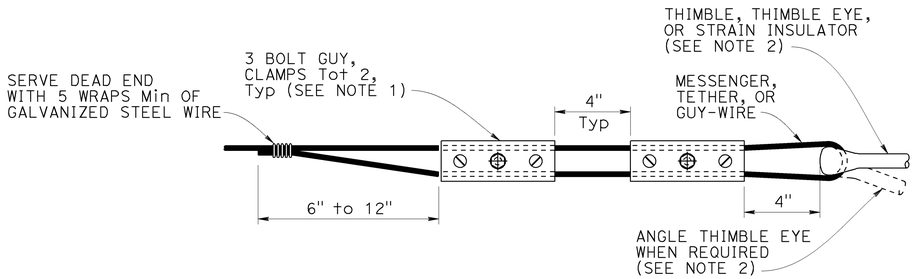

ALTERNATIVE TERMINATION OF MESSENGER WIRES USING GUY CLAMPS

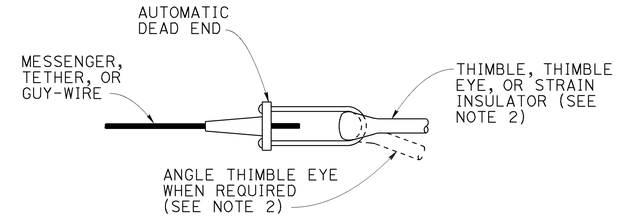

TERMINATION OF WIRES USING AUTOMATIC DEAD END

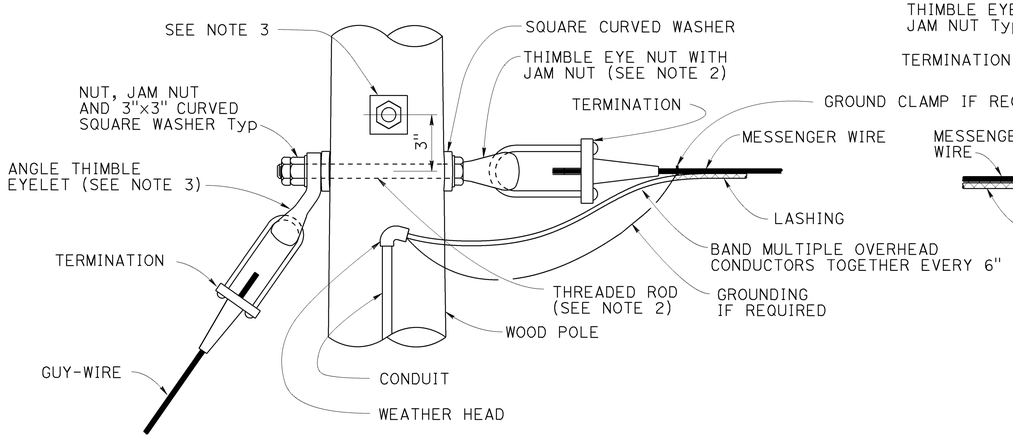

POLE AT DEAD END WITH GUY-WIRE CONNECTION

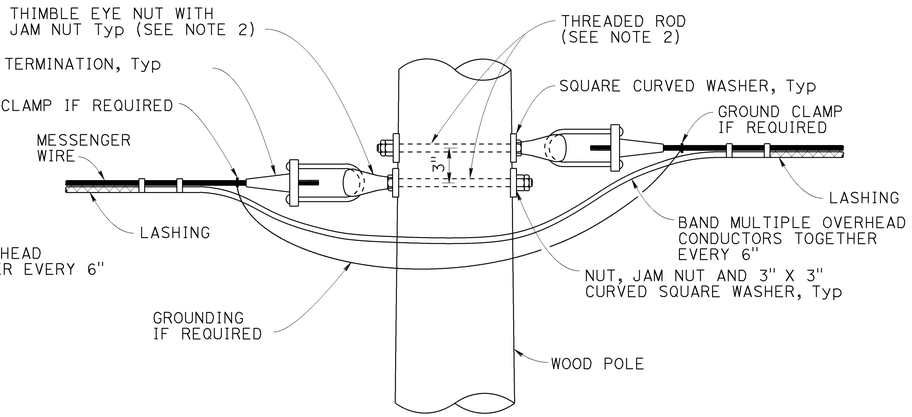

POLE AT TANGENT OR CORNER CONNECTION

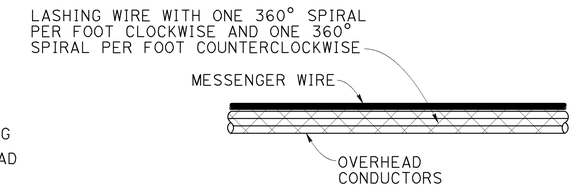

DOUBLE LASHING DETAIL

USE IF d_p IS GREATER THAN 1½"

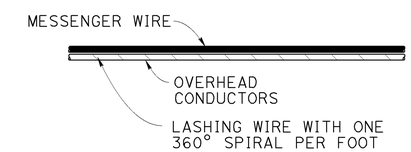

TYPICAL LASHING DETAIL

USE IF d_p IS 1½" OR LESS

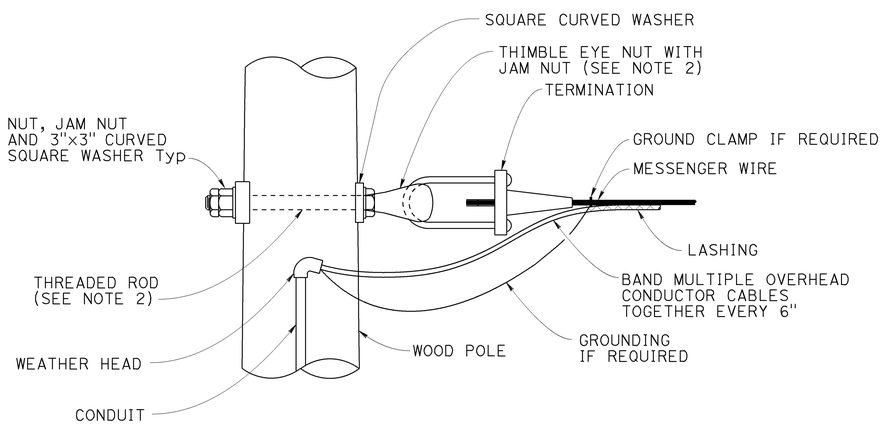

POLE AT DEAD END CONNECTION

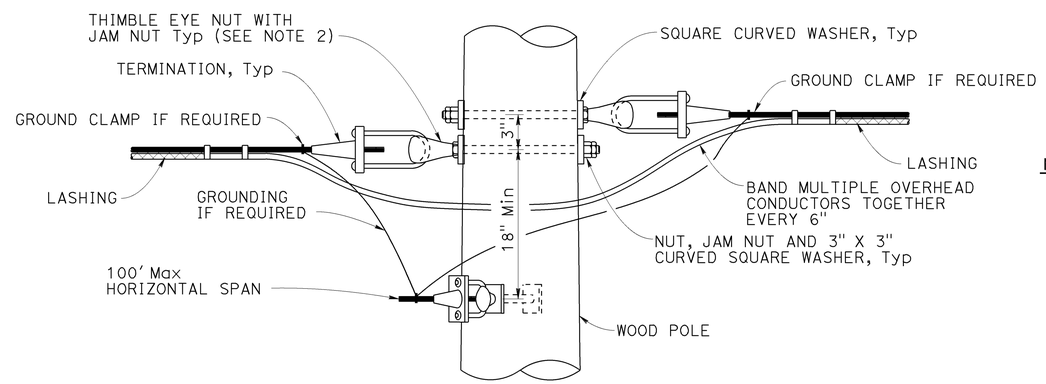

POLE AT JUNCTION CONNECTION

NOTES:

1. For guy wires use 3 clamps.
2. Use ⅝" ø except ¾" ø at guyed wires
3. Install additional angle thimble eyelet at poles with two guy wires.

NO SCALE

BRANCH CHIEF	DAVID A. NEUMANN		
DESIGN	BY JOEL MAGANA	CHECKED VICTOR LOPEZ	
DETAILS	BY SHUMEI JIANG	CHECKED VICTOR LOPEZ	
QUANTITIES	BY X	CHECKED X	

STATE OF CALIFORNIA DEPARTMENT OF TRANSPORTATION

DIVISION OF ENGINEERING SERVICES STRUCTURE DESIGN
SPECIAL DESIGN BRANCH

BRIDGE NO.
POST MILE R46.2/R46.8 R12.1/R17.7

LIGHTING (STAGE CONSTRUCTION)
DETAILS No. 1

SES-8

STRUCTURES DESIGN SPECIAL DESIGN SHEET (ENGLISH) (REV. 09-01-10)

ORIGINAL SCALE IN INCHES FOR REDUCED PLANS 0 1 2 3

UNIT: 3619
PROJECT NUMBER & PHASE: 1100020489-1
CONTRACT NO.: 11-257151

DISREGARD PRINTS BEARING EARLIER REVISION DATES

REVISION DATES 6-18-13

SHEET 8 OF 14

FILE => ea-11-257151_ses-sheet08.dgn

USERNAME => s132428 DATE PLOTTED => 06-AUG-2013 TIME PLOTTED => 10:23

DIST	COUNTY	ROUTE	POST MILES TOTAL PROJECT	SHEET No.	TOTAL SHEETS
11	SD	15,76	R46.2/R46.8 R12.1/R17.7	1100	1273

REGISTERED CIVIL ENGINEER 8-06-13 DATE

03-24-14
PLANS APPROVAL DATE

REGISTERED PROFESSIONAL ENGINEER JOEL MAGANA No. C61500 Exp. 6-30-15 CIVIL STATE OF CALIFORNIA

The State of California or its officers or agents shall not be responsible for the accuracy or completeness of electronic copies of this plan sheet.

NOTES:

1. Minimum allowable tension capacity "Qa" = 8,900 lbs.
2. Minimum installation torque "T" = 1780 lbs-ft.
3. Helical anchor detail may be used in place of expanded steel anchors.

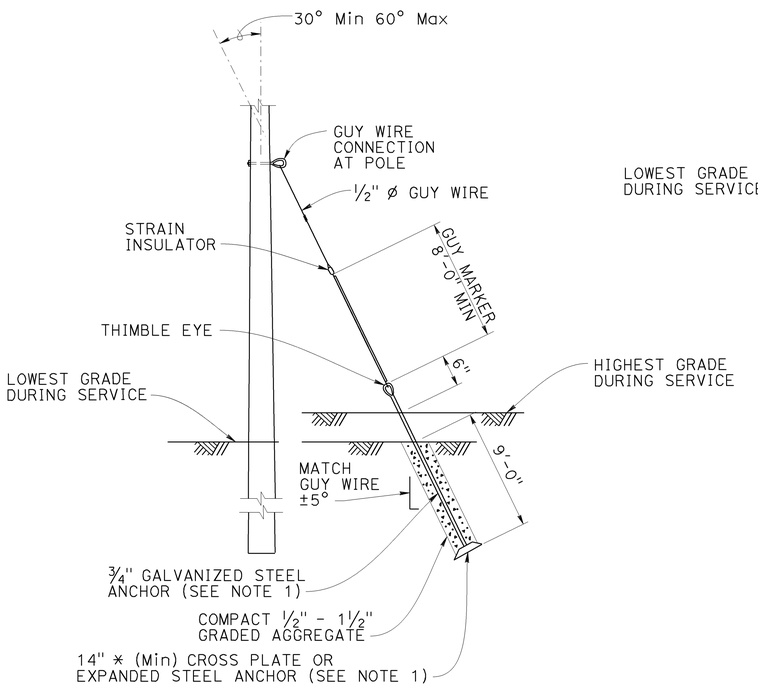

EXPANDED STEEL ANCHOR DETAIL

SEE NOTE 3

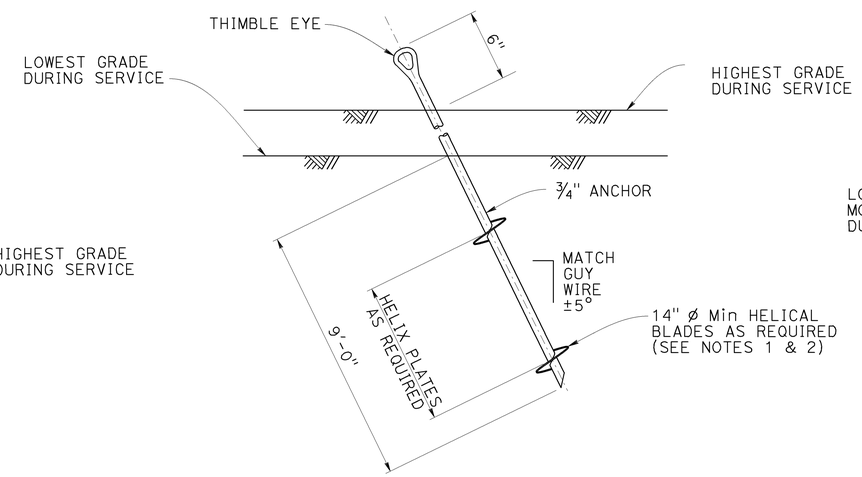

HELICAL ANCHOR DETAIL

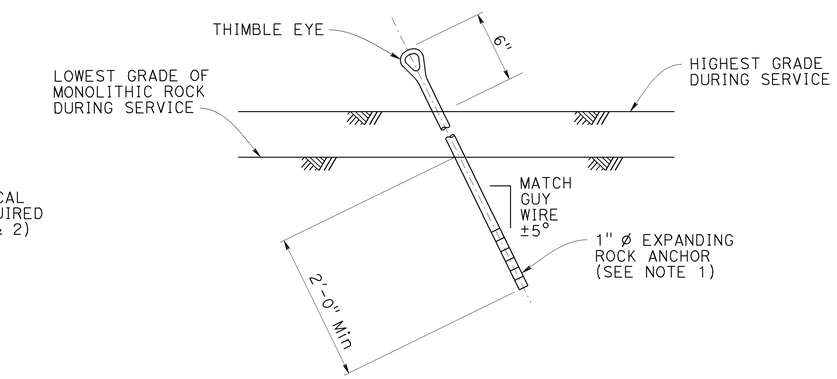

EXPANDING ROCK ANCHOR DETAIL

NO SCALE

BRANCH CHIEF DAVID A. NEUMANN	DESIGN	BY JOEL MAGANA	CHECKED VICTOR LOPEZ
	DETAILS	BY SHUMEI JIANG	CHECKED VICTOR LOPEZ
	QUANTITIES	BY X	CHECKED X

STATE OF CALIFORNIA DEPARTMENT OF TRANSPORTATION

DIVISION OF ENGINEERING SERVICES STRUCTURE DESIGN SPECIAL DESIGN BRANCH

BRIDGE NO.

POST MILE R46.2/R46.8 R12.1/R17.7

LIGHTING (STAGE CONSTRUCTION) DETAILS No. 2

SES-9

STRUCTURES DESIGN SPECIAL DESIGN SHEET (ENGLISH) (REV. 09-01-10)

ORIGINAL SCALE IN INCHES FOR REDUCED PLANS 0 1 2 3

UNIT: 3619
PROJECT NUMBER & PHASE: 1100020489-1 CONTRACT NO.: 11-257151

DISREGARD PRINTS BEARING EARLIER REVISION DATES

REVISION DATES 6-18-13

SHEET 9 OF 14

FILE => ea-11-257151_ses-sheet09.dgn

USERNAME => s132428 DATE PLOTTED => 06-AUG-2013 TIME PLOTTED => 10:23