Dist	COUNTY	ROUTE	POST MILES TOTAL PROJECT	SHEET No.	TOTAL SHEETS
11	SD	15,76	R46.2/R46.8, R12.1/R17.7	401	1273

REGISTERED CIVIL ENGINEER 10-30-13 DATE

03-24-14
PLANS APPROVAL DATE

REGISTERED PROFESSIONAL ENGINEER KATHRYN WALKER No. C77900 Exp. 06-30-15 CIVIL STATE OF CALIFORNIA

THE STATE OF CALIFORNIA OR ITS OFFICERS OR AGENTS SHALL NOT BE RESPONSIBLE FOR THE ACCURACY OR COMPLETENESS OF SCANNED COPIES OF THIS PLAN SHEET.

DOKKEN ENGINEERING
5675 RUFFIN RD
SUITE 250
SAN DIEGO, CA 92123

NOTE:

1. REMOVE MUD, SAND AND DEBRIS (RMSD) ITEMS CONSISTS AN ADDITIONAL 30 FEET TO TOTAL PIPE LENGTH.

DRAINAGE QUANTITIES

DRAINAGE PLAN SHEET No.	DRAINAGE SYSTEM No.	DRAINAGE UNIT No.	CULVERTS: 6" PERFORATED PLASTIC PIPE UNDERDRAIN	18" SLOTTED PLASTIC PIPE	GRATED LINE DRAIN	18" ALTERNATIVE PIPE CULVERT	24" ALTERNATIVE PIPE CULVERT	60" ALTERNATIVE PIPE CULVERT	18" REINFORCED Conc PIPE	24" REINFORCED Conc PIPE	30" REINFORCED Conc PIPE	36" REINFORCED Conc PIPE	42" REINFORCED Conc PIPE	48" REINFORCED Conc PIPE	60" REINFORCED Conc PIPE	66" REINFORCED Conc PIPE	30" BITUMINOUS COATED CSP (0.109" THICK)	36" REINFORCED Conc PIPE RISER	48" BITUMINOUS COATED CSP (0.109" THICK)	(N) PIPE JOINT TYPE	(N) Max HEIGHT COVER	(N) REINFORCED Conc BOX CULVERT	STRUCTURAL Conc, BOX CULVERT	BAR REINFORCEING STEEL (BOX CULVERT)	REMOVE MUD, SAND AND DEBRIS (IN CULVERT)	ABANDON CULVERT	REMOVE CULVERT	REMOVE BOX CULVERT	SAND BACKFILL	DESCRIPTION	STATION	DRAINAGE PLAN SHEET No.	DRAINAGE SYSTEM No.	DRAINAGE UNIT No.
			LF	LF	LF	LF	LF	LF	LF	LF	LF	LF	LF	LF	LF	LF	LF	LF	LF	-	LF	LF	CY	LB	LF	EA	LF	EA	CY					
D-1	1A	a																							282.5					RMSD DBL 10' X 7' RBC		D-1	1A	a
D-3	1B	a																												RSP		D-3	1B	a
D-3	1B	b																												STRAIGHT HW W/ CABLE RAIL	159.66' R+ 83+57.29 "A"	D-3	1B	b
D-3	1B	c																			2.5						117.2			REMOVE 30" RCP x 117.2'		D-3	1B	c
D-3	2	a																												RSP		D-3	2	a
D-3	2	b																												STRAIGHT HEADWALL	91.92' RT 104+95.26 "A"	D-3	2	b
D-3	2	c							6.5											SO	2.9									24" RCP x 6.5' W/ L-2 COLLAR		D-3	2	c
D-3	2	d																												G-2 INLET W/24-12 GRATE	10.67' L+ 105+26.00 "A"	D-3	2	d
D-3	2	e							19.3											S	2.8									18" RCP x 19.3'		D-3	2	e
D-3	2	f																												G-1 INLET W/24-12 GRATE	10.67' L+ 105+26.31 "A"	D-3	2	f
D-3	2	g																												REMOVE HEADWALL		D-3	2	g
D-4	3	a																												RSP		D-4	3	a
D-4	3	b																												HW (TYPE A) W/ CHAIN LINK	92.70' R+ 108+83.04 "A"	D-4	3	b
D-4	3	c							35.2											SO	12.3									24" RCP x 35.2' W/ L-2 COLL.		D-4	3	c
D-4	3	d																												REMOVE HEADWALL		D-4	3	d
D-4	4	a																												RSP		D-4	4	a
D-4	4	b																												STRAIGHT HEADWALL	89.20' R+ 109+75 "A"	D-4	4	b
D-4	4	c							31.0											SO	8.0									24" RCP x 31.0'		D-4	4	c
D-4	4	d																												G-2 INLET W/24-12 GRATE	57.0' R+ 109+75 "A"	D-4	4	d
D-4	4	e							64.1											SO	8.0									24" RCP x 64.1'		D-4	4	e
D-4	4	f																												G-2 INLET W/24-12 GRATE	10.67' L+ 109+75 "A"	D-4	4	f
D-4	4	g							65.7											S	5.0									24" RCP x 65.7'		D-4	4	g
D-4	4	h																												G-2 INLET W/24-12 GRATE	78.91' L+ 109+75 "A"	D-4	4	h
D-4	4	i					220.0													S	2.5									24" APC x 220.0'		D-4	4	i
D-4	4	j																												G-2 INLET W/24-12 GRATE	65.83' L+ 112+00 "A"	D-4	4	j
Tot DQ-3			0	0	0.0	0.0	220	0	0	221.8	0	0	0	0.0	0	0.0	0	0	0.0	-	-	-	0	0	282.5	0.0	117.2	0.0	0.0					

(N) = NOT A SEPARATE PAY ITEM, FOR INFORMATION ONLY
PIPE JOINT TYPES:
S - STANDARD
SO- SOIL TIGHT
D - DOWNDRAIN
W - WATERTIGHT

DRAINAGE QUANTITIES
DQ-3

REVISED BY | DATE REVISED
MICHAEL MANZANO | KATHRYN WALKER
CALCULATED-DESIGNED BY | CHECKED BY
CARL SAVAGE
CONSULTANT FUNCTIONAL SUPERVISOR
STATE OF CALIFORNIA - DEPARTMENT OF TRANSPORTATION
Caltrans

LAST REVISION 12-31-13 | DATE PLOTTED => 20-MAR-2014 | TIME PLOTTED => 14:31

Dist	COUNTY	ROUTE	POST MILES TOTAL PROJECT	SHEET No.	TOTAL SHEETS
11	SD	15,76	R46.2/R46.8, R12.1/R17.7	402	1273

10-30-13
REGISTERED CIVIL ENGINEER DATE

03-24-14
PLANS APPROVAL DATE

REGISTERED PROFESSIONAL ENGINEER KATHRYN WALKER No. C77900 Exp. 06-30-15 CIVIL STATE OF CALIFORNIA

THE STATE OF CALIFORNIA OR ITS OFFICERS OR AGENTS SHALL NOT BE RESPONSIBLE FOR THE ACCURACY OR COMPLETENESS OF SCANNED COPIES OF THIS PLAN SHEET.

DOKKEN ENGINEERING
5675 RUFFIN RD
SUITE 250
SAN DIEGO, CA 92123

DRAINAGE QUANTITIES

DRAINAGE PLAN SHEET No.	DRAINAGE SYSTEM No.	DRAINAGE UNIT No.	STRUCTURES (N) STRUCTURE HEIGHT	MINOR CONCRETE (MINOR STRUCTURE)	(N) STRUCTURAL CONCRETE (HEADWALL)	(N) STRUCTURAL CONCRETE (JUNCTION STRUCTURE)	(N) GRATE TYPE 24-12	(N) GRATE TYPE 36R	(N) MANHOLE FRAME AND COVER	(N) 1/4" CHECKERED PLATE COVER AND FRAME	(N) GRATE CHAIN	MISCELLANEOUS IRON AND STEEL	DRAINAGE INLET MARKER	CABLE RAILING	CHAIN LINK RAILING (TYPE 7)	REMOVE INLET	REMOVE HEADWALL	(N) Conc COLLAR	18" ALTERNATIVE FLARED END SECTION	24" ALTERNATIVE FLARED END SECTION	CONCRETE (SLOPE PROTECTION)	CONCRETE (DITCH LINING)	ROCK SLOPE PROTECTION (NO. 2, METHOD B)	ROCK SLOPE PROTECTION (NO. 1, METHOD B)	ROCK SLOPE PROTECTION (LIGHT, METHOD B)	ROCK SLOPE PROTECTION (1/4 T, METHOD B)	ROCK SLOPE PROTECTION (1/2 T, METHOD B)	ROCK SLOPE PROTECTION (2T, METHOD A)	ROCK SLOPE PROTECTION (1T, METHOD B)	ROCK SLOPE PROTECTION FABRIC (CLASS 8)	ROCK SLOPE PROTECTION FABRIC (CLASS 10)	STRUCTURE BACKFILL (SLURRY CEMENT)	DITCH EXCAVATION	MODIFY INLET	ADJUST INLET	ADJUST MANHOLE	CAP RISER	DESCRIPTION	STATION	DRAINAGE PLAN SHEET No.	DRAINAGE SYSTEM No.	DRAINAGE UNIT No.
			LF	CY	CY	CY	EA	EA	EA	EA	EA	LB	EA	LF	LF	EA	EA	EA	EA	EA	CY	CY	CY	CY	CY	CY	CY	CY	CY	SQYD	SQYD	CY	CY	EA	EA	EA	EA					
D-1	1A	a																																					RMSD DBL 10' X 7' RBC		D-1	1A	a
D-3	1B	a																							10					25.0									RSP		D-3	1B	a
D-3	1B	b			1.5									10.0																									STRAIGHT HW W/ CABLE RAIL	159.66' R+ 83+57.29 "A"	D-3	1B	b
D-3	1B	c																																					REMOVE 30" RCP x 117.2'		D-3	1B	c
D-3	2	a																							7					18.0									RSP		D-3	2	a
D-3	2	b			1.2																																		STRAIGHT HEADWALL	91.92' RT 104+95.26 "A"	D-3	2	b
D-3	2	c																1																					24" RCP x 6.5' W/ L-2 COLL.		D-3	2	c
D-3	2	d	4.30	2.4			1				1	329																											G-2 INLET W/24-12 GRATE	10.67' L+ 105+26.00 "A"	D-3	2	d
D-3	2	e																																					18" RCP x 19.3'		D-3	2	e
D-3	2	f	3.90	1.1			1				1	329																											G-1 INLET W/24-12 GRATE	10.67' L+ 105+26.31 "A"	D-3	2	f
D-3	2	g															1																						REMOVE HEADWALL		D-3	2	g
D-4	3	a																					24							45.5									RSP		D-4	3	a
D-4	3	b			14.3										21.0																								HW (TYPE A) W/ CHAIN LINK	92.70' R+ 108+83.04 "A"	D-4	3	b
D-4	3	c																1																					24" RCP x 35.2' W/ L-2 COLL		D-4	3	c
D-4	3	d															1																						REMOVE HEADWALL		D-4	3	d
D-4	4	a																							7					18.0									RSP		D-4	4	a
D-4	4	b			1.2																																		STRAIGHT HEADWALL	89.20' R+ 109+75 "A"	D-4	4	b
D-4	4	c																																					24" RCP x 31.0'		D-4	4	c
D-4	4	d	11.0	5.7			1				1	329																											G-2 INLET W/24-12 GRATE	57.0' R+ 109+75 "A"	D-4	4	d
D-4	4	e																																					24" RCP x 64.1'		D-4	4	e
D-4	4	f	8.00	3.5			1				1	329																											G-2 INLET W/24-12 GRATE	10.67' L+ 109+75 "A"	D-4	4	f
D-4	4	g																																					24" RCP x 65.7'		D-4	4	g
D-4	4	h	4.00	2.3			1				1	329									2.0																		G-2 INLET W/24-12 GRATE	78.91' L+ 109+75 "A"	D-4	4	h
D-4	4	i																																					24" APC x 220.0'		D-4	4	i
D-4	4	j	3.50	2.1			1				1	329									2.0																		G-2 INLET W/24-12 GRATE	65.83' L+ 112+00 "A"	D-4	4	j
Tot DQ-4			-	17.1	18.2	0.0	-	-	-	-	-	1974	0	10.0	21.0	0	2	-	0	0	4.0	0.0	24.0	0.0	24.0	0.0	0.0	0.0	0.0	106.5	0.0	0.0	0.0	0	0	0	0					

DRAINAGE QUANTITIES
DQ-4

STATE OF CALIFORNIA - DEPARTMENT OF TRANSPORTATION
Caltrans

CONSULTANT FUNCTIONAL SUPERVISOR: CARL SAVAGE
CALCULATED-DESIGNED BY: MICHAEL MANZANO
CHECKED BY: KATHRYN WALKER
REVISED BY
DATE REVISED

LAST REVISION 12-31-13
DATE PLOTTED => 20-MAR-2014
TIME PLOTTED => 14:31

Dist	COUNTY	ROUTE	POST MILES TOTAL PROJECT	SHEET No.	TOTAL SHEETS
11	SD	15,76	R46.2/R46.8, R12.1/R17.7	403	1273

REGISTERED CIVIL ENGINEER 10-30-13 DATE

03-24-14
PLANS APPROVAL DATE

REGISTERED PROFESSIONAL ENGINEER KATHRYN WALKER No. C77900 Exp. 06-30-15 CIVIL STATE OF CALIFORNIA

THE STATE OF CALIFORNIA OR ITS OFFICERS OR AGENTS SHALL NOT BE RESPONSIBLE FOR THE ACCURACY OR COMPLETENESS OF SCANNED COPIES OF THIS PLAN SHEET.

DOKKEN ENGINEERING
5675 RUFFIN RD
SUITE 250
SAN DIEGO, CA 92123

DRAINAGE QUANTITIES

DRAINAGE PLAN SHEET No.	DRAINAGE SYSTEM No.	DRAINAGE UNIT No.	CULVERTS: 6" PERFORATED PLASTIC PIPE UNDERDRAIN (LF)	18" SLOTTED PLASTIC PIPE (LF)	GRATED LINE DRAIN (LF)	18" ALTERNATIVE PIPE CULVERT (LF)	24" ALTERNATIVE PIPE CULVERT (LF)	60" ALTERNATIVE PIPE CULVERT (LF)	18" REINFORCED Conc PIPE (LF)	24" REINFORCED Conc PIPE (LF)	30" REINFORCED Conc PIPE (LF)	36" REINFORCED Conc PIPE (LF)	42" REINFORCED Conc PIPE (LF)	48" REINFORCED Conc PIPE (LF)	60" REINFORCED Conc PIPE (LF)	66" REINFORCED Conc PIPE (LF)	30" BITUMINOUS COATED CSP (0.109" THICK) (LF)	36" REINFORCED Conc PIPE RISER (LF)	48" BITUMINOUS COATED CSP (0.109" THICK) (LF)	(N) PIPE JOINT TYPE (-)	(N) Max HEIGHT COVER (LF)	(N) REINFORCED Conc BOX CULVERT (LF)	STRUCTURAL Conc, BOX CULVERT (CY)	BAR REINFORCEING STEEL (BOX CULVERT) (LB)	REMOVE MUD, SAND AND DEBRIS (IN CULVERT) (LF)	ABANDON CULVERT (EA)	REMOVE CULVERT (LF)	REMOVE BOX CULVERT (EA)	SAND BACKFILL (CY)	DESCRIPTION	STATION	DRAINAGE PLAN SHEET No.	DRAINAGE SYSTEM No.	DRAINAGE UNIT No.
D-4	4	k					172.4													SO	2.5									24" APC x 172.4′		D-4	4	k
D-4	4	l																												G-2 INLET W/24-12 GRATE	63.0′ R+ 111+50 "A"	D-4	4	l
D-4	4	m					146.0													SO	8.7									24" APC x 146.0′		D-4	4	m
D-4	4	n																												G-2 INLET W/24-12 GRATE	63.0′ R+ 113+00 "A"	D-4	4	n
D-4	4	o					95.1													SO	3.4									24" APC x 95.1′		D-4	4	o
D-4	4	p																												G-2 INLET W/24-12 GRATE	63.0′ R+ 114+00 "A"	D-4	4	p
D-4	5	a																												RSP		D-4	5	a
D-4	5	b																												HW (TYPE A) W/ CHAIN LINK	88.31′ R+ 114+54.36 "A"	D-4	5	b
D-4	5	c												148.8						S	6.2									48" RCP x 148.8′		D-4	5	c
D-4	5	d																												REMOVE HEADWALL		D-4	5	d
D-4	5	e																									110.3			REMOVE 48" RCP x 110.3′		D-4	5	e
D-4	5	f																												G-2 INLET W/24-12 GRT	61.92′ L+ 114+90.58 "A"	D-4	5	f
D-4	5	g																									137.8			REMOVE 48" RCP x 137.8′		D-4	5	g
D-4	5	h												128.9						S	1.5									48" RCP x 128.9′		D-4	5	h
D-4	5	i																												STRAIGHT HW W/ CABLE RAIL	194.16′ R+ 115+22.47 "A"	D-4	5	i
D-4	5	j																												RSP		D-4	5	j
D-4	5	k																												REMOVE HEADWALL		D-4	5	k
D-4	5	l																												DBL 24" APC X 30.5′		D-4	5	l
D-5	6	a																												RSP		D-5	6	a
D-5	6	b																												STRAIGHT HW	86.97′ R+ 116+00 "A"	D-5	6	b
D-5	6	c								22.5										SO	6.1									24" RCP x 22.5′		D-5	6	c
D-5	6	d																												G-2 INLET W/24-12 GRATE	63.00′ R+ 116+00 "A"	D-5	6	d
D-5	6	e								121.0										SO	5.9									24" RCP x 121.0′		D-5	6	e
D-5	6	f																												G-2 INLET W/24-12 GRATE	61.04′ L+ 116+00 "A"	D-5	6	f
D-5	6	g					146.1													S	3.8									24" APC x 146.1′		D-5	6	g
D-5	6	h																												G-2 INLET W/24-12 GRATE	61.04′ L+ 117+50 "A"	D-5	6	h
D-5	7	a																												Conc DITCH (DITCH LINING)	85.3′ L+ "A" S+a 123+22	D-5	7	a
D-5	8	a																												RSP		D-5	8	a
To+ DQ-5			0	0	0	0.0	559.6	0.0	0.0	143.5	0.0	0.0	0.0	277.7	0.0	0.0	0.0	0.0	0.0	-	-	-	0.0	0.0	0.0	0.0	248.1	0.0	0.0					

(N) = NOT A SEPARATE PAY ITEM, FOR INFORMATION ONLY
PIPE JOINT TYPES:
S - STANDARD
SO- SOIL TIGHT
D - DOWNDRAIN
W - WATERTIGHT

DRAINAGE QUANTITIES
DQ-5

STATE OF CALIFORNIA - DEPARTMENT OF TRANSPORTATION
Caltrans

CONSULTANT FUNCTIONAL SUPERVISOR: CARL SAVAGE
CALCULATED-DESIGNED BY: MICHAEL MANZANO
CHECKED BY: KATHRYN WALKER
REVISED BY
DATE REVISED

LAST REVISION 12-31-13
DATE PLOTTED => 20-MAR-2014
TIME PLOTTED => 14:31

Dist	COUNTY	ROUTE	POST MILES TOTAL PROJECT	SHEET No.	TOTAL SHEETS
11	SD	15,76	R46.2/R46.8, R12.1/R17.7	404	1273

10-30-13
REGISTERED CIVIL ENGINEER DATE

03-24-14
PLANS APPROVAL DATE

REGISTERED PROFESSIONAL ENGINEER KATHRYN WALKER No. C77900 Exp. 06-30-15 CIVIL STATE OF CALIFORNIA

THE STATE OF CALIFORNIA OR ITS OFFICERS OR AGENTS SHALL NOT BE RESPONSIBLE FOR THE ACCURACY OR COMPLETENESS OF SCANNED COPIES OF THIS PLAN SHEET.

DOKKEN ENGINEERING
5675 RUFFIN RD
SUITE 250
SAN DIEGO, CA 92123

DRAINAGE QUANTITIES

DRAINAGE PLAN SHEET No.	DRAINAGE SYSTEM No.	DRAINAGE UNIT No.	STRUCTURES (N) STRUCTURE HEIGHT	(N) MINOR CONCRETE (MINOR STRUCTURE)	STRUCTURAL CONCRETE (HEADWALL)	STRUCTURAL CONCRETE (JUNCTION STRUCTURE)	(N) GRATE TYPE 24-12	(N) GRATE TYPE 36R	(N) MANHOLE FRAME AND COVER	(N) 1/4" CHECKERED PLATE COVER AND FRAME	(N) GRATE CHAIN	MISCELLANEOUS IRON AND STEEL	DRAINAGE INLET MARKER	CABLE RAILING	CHAIN LINK RAILING (TYPE 7)	REMOVE INLET	REMOVE HEADWALL	(N) Conc COLLAR	18" ALTERNATIVE FLARED END SECTION	24" ALTERNATIVE FLARED END SECTION	CONCRETE (SLOPE PROTECTION)	CONCRETE (DITCH LINING)	ROCK SLOPE PROTECTION (NO. 2, METHOD B)	ROCK SLOPE PROTECTION (NO. 1, METHOD B)	ROCK SLOPE PROTECTION (LIGHT, METHOD B)	ROCK SLOPE PROTECTION (1/4 T, METHOD B)	ROCK SLOPE PROTECTION (1/2 T, METHOD B)	ROCK SLOPE PROTECTION (2T, METHOD A)	ROCK SLOPE PROTECTION (1T, METHOD B)	ROCK SLOPE PROTECTION FABRIC (CLASS 8)	ROCK SLOPE PROTECTION FABRIC (CLASS 10)	STRUCTURE BACKFILL (SLURRY CEMENT)	DITCH EXCAVATION	MODIFY INLET	ADJUST INLET	ADJUST MANHOLE	CAP RISER	DESCRIPTION	STATION	DRAINAGE PLAN SHEET No.	DRAINAGE SYSTEM No.	DRAINAGE UNIT No.
			LF	CY	CY	CY	EA	EA	EA	EA	EA	LB	EA	LF	LF	EA	EA	EA	EA	EA	CY	CY	CY	CY	CY	CY	CY	CY	CY	SQYD	SQYD	CY	CY	EA	EA	EA	EA					
D-4	4	k																																				24" APC x 172.4′		D-4	4	k
D-4	4	l	7.50	3.3			1				1	329																										G-2 INLET W/24-12 GRATE	63.0′ R+ 111+50 "A"	D-4	4	l
D-4	4	m																																				24" APC x 146.0′		D-4	4	m
D-4	4	n	5.00	2.6			1				1	329									2.0																	G-2 INLET W/24-12 GRATE	63.0′ R+ 113+00 "A"	D-4	4	n
D-4	4	o																																				24" APC x 95.1′		D-4	4	o
D-4	4	p	3.50	2.1			1				1	329									1.7																	G-2 INLET W/24-12 GRATE	63.0′ R+ 114+00 "A"	D-4	4	p
D-4	5	a																					43.0			114.0				172.0								RSP		D-4	5	a
D-4	5	b			20.9										28.9																							HW (TYPE A) W/ CHAIN LINK	88.31′ R+ 114+54.36 "A"	D-4	5	b
D-4	5	c																																				48" RCP x 148.8′		D-4	5	c
D-4	5	d															1																					REMOVE HEADWALL		D-4	5	d
D-4	5	e																																				REMOVE 48" RCP x 110.3′		D-4	5	e
D-4	5	f	10.40	5.5			1				1	329									1.7																	G-2 INLET W/24-12 GRT	61.92′ L+ 114+90.58 "A"	D-4	5	f
D-4	5	g																																				REMOVE 48" RCP x 137.8′		D-4	5	g
D-4	5	h																																				48" RCP x 128.9′		D-4	5	h
D-4	5	i			3.6									15.0																								STRAIGHT HW W/ CABLE RAIL	194.16′ R+ 115+22.47 "A"	D-4	5	i
D-4	5	j																							18.0					36.9								RSP		D-4	5	j
D-4	5	k															1																					REMOVE HEADWALL		D-4	5	k
D-4	5	l																																				DBL 24" APC X 30.5′ W/ STRUC	BACKFILL	D-4	5	l
D-5	6	a																							7.0					18.0								RSP		D-5	6	a
D-5	6	b			1.2																																	STRAIGHT HW	86.97′ R+ 116+00 "A"	D-5	6	b
D-5	6	c	7.70	3.4			1				1	329									2.0																	24" RCP x 22.5′		D-5	6	c
D-5	6	d																																				G-2 INLET W/24-12 GRATE	63.00′ R+ 116+00 "A"	D-5	6	d
D-5	6	e	5.00	2.6			1				1	329									2.0																	24" RCP x 121.0′		D-5	6	e
D-5	6	f																																				G-2 INLET W/24-12 GRATE	61.04′ L+ 116+00 "A"	D-5	6	f
D-5	6	g	3.90	2.3			1				1	329									2.0																	24" APC x 146.1′		D-5	6	g
D-5	6	h																																				G-2 INLET W/24-12 GRATE	61.04′ L+ 117+50 "A"	D-5	6	h
D-5	7	a																				10.3											33.4					Conc DITCH (DITCH LINING)	85.3′ L+ "A" S+a 123+22	D-5	7	a
D-5	8	a																					153.0			403.0				489.0								RSP		D-5	8	a
Tot DQ-6			-	21.8	25.7	0.0	-	-	-	-	-	2,303	0	15.0	28.9	0	2	-	0	0	11.40	10.3	196.0	0.0	25.0	517.0	0.0	0.0	0.0	715.9	0.0	0.0	33.4	0	0	0	0					

DRAINAGE QUANTITIES
DQ-6

STATE OF CALIFORNIA - DEPARTMENT OF TRANSPORTATION
Caltrans

CONSULTANT FUNCTIONAL SUPERVISOR: CARL SAVAGE
CALCULATED-DESIGNED BY: MICHAEL MANZANO
CHECKED BY: KATHRYN WALKER
REVISED BY
DATE REVISED

LAST REVISION 12-31-13
DATE PLOTTED => 20-MAR-2014
TIME PLOTTED => 14:31

Dist	COUNTY	ROUTE	POST MILES TOTAL PROJECT	SHEET No.	TOTAL SHEETS
11	SD	15,76	R46.2/R46.8, R12.1/R17.7	405	1273

REGISTERED CIVIL ENGINEER 10-30-13 DATE

03-24-14
PLANS APPROVAL DATE

REGISTERED PROFESSIONAL ENGINEER KATHRYN WALKER No. C77900 Exp. 06-30-15 CIVIL STATE OF CALIFORNIA

THE STATE OF CALIFORNIA OR ITS OFFICERS OR AGENTS SHALL NOT BE RESPONSIBLE FOR THE ACCURACY OR COMPLETENESS OF SCANNED COPIES OF THIS PLAN SHEET.

DOKKEN ENGINEERING
5675 RUFFIN RD
SUITE 250
SAN DIEGO, CA 92123

DRAINAGE QUANTITIES

DRAINAGE PLAN SHEET No.	DRAINAGE SYSTEM No.	DRAINAGE UNIT No.	CULVERTS: 6" PERFORATED PLASTIC PIPE UNDERDRAIN	18" SLOTTED PLASTIC PIPE	GRATED LINE DRAIN	18" ALTERNATIVE PIPE CULVERT	24" ALTERNATIVE PIPE CULVERT	60" ALTERNATIVE PIPE CULVERT	18" REINFORCED Conc PIPE	24" REINFORCED Conc PIPE	30" REINFORCED Conc PIPE	36" REINFORCED Conc PIPE	42" REINFORCED Conc PIPE	48" REINFORCED Conc PIPE	60" REINFORCED Conc PIPE	66" REINFORCED Conc PIPE	30" BITUMINOUS COATED CSP (0.109" THICK)	36" REINFORCED Conc PIPE RISER	48" BITUMINOUS COATED CSP (0.109" THICK)	(N) PIPE JOINT TYPE	(N) Max HEIGHT COVER	(N) REINFORCED Conc BOX CULVERT	STRUCTURAL Conc, BOX CULVERT	BAR REINFORCEING STEEL (BOX CULVERT)	REMOVE MUD, SAND AND DEBRIS (IN CULVERT)	ABANDON CULVERT	REMOVE CULVERT	REMOVE BOX CULVERT	SAND BACKFILL	DESCRIPTION	STATION	DRAINAGE PLAN SHEET No.	DRAINAGE SYSTEM No.	DRAINAGE UNIT No.
			LF	LF	LF	LF	LF	LF	LF	LF	LF	LF	LF	LF	LF	LF	LF	LF	LF	-	LF	LF	CY	LB	LF	EA	LF	EA	CY					
D-5	8	b																												HW (TYPE A) W/ CHAIN LINK	78.28' R+ 121+31.66 "A"	D-5	8	b
D-5	8	c																			6.8	63.7	131.2	30703						4 x 6'-6.9' x 4' RCB x 63.7'		D-5	8	c
D-5	8	d																												RSP		D-5	8	d
D-5	8	e																												24" AFES		D-5	8	e
D-5	8	f					68.9													SO	3.5									24" APC x 68.9'		D-5	8	f
D-5	8	g																												GD1 INLET W/ 2x24-13 GRATE	16.00' R+ 12+29.80 "SGL"	D-5	8	g
D-5	9	a																												RSP		D-5	9	a
D-5	9	b																												STRAIGHT HEADWALL	87.72' R+ 122+00 "A"	D-5	9	b
D-5	9	c								22.2										S	5.4								24" RCP x 22.2'		D-5	9	c
D-5	9	d																												G-2 INLET W/24-12 GRATE	64.00' R+ 122+00 "A"	D-5	9	d
D-5	9	e					147.2													S	4.6									24" APC x 147.2'		D-5	9	e
D-5	9	f																												G-2 INLET W/24-12 GRATE	63.00' R+ 120+50 "A"	D-5	9	f
D-5	9	g					163.0													SO	3.4									24" APC x 163.0'		D-5	9	g
D-5	9	h																												G-2 INLET W/24-12 GRATE	64.00' R+ 123+70 "A"	D-5	9	h
D-5	9	i					84.5													SO	3.3									24" APC x 84.0'		D-5	9	i
D-5	9	j																												G-2 INLET W/24-12 GRATE	64.00' R+ 124+60 "A"	D-5	9	j
D-5	9	k					84.0													SO	2.2									24" APC x 84.9'		D-5	9	k
D-5	9	l																												G-2 INLET W/24-12 GRATE	64.00' R+ 125+50 "A"	D-5	9	l
D-5	9	m					239.4													S	2.1									24" APC x 239.4'		D-5	9	m
D-6	9	n																												G-2 INLET W/24-12 GRATE	64.00' R+ 128+00 "A"	D-6	9	n
D-6	9	o								64.3										S	3.1									24" RCP x 64.3'		D-6	9	o
D-6	9	p			6.0																									G-2 INLET W/24-12 GRATE	1.00' L+ 128+00 "A"	D-6	9	p
D-5	9	q								61.6										S	3.0									24" RCP x 61.6'		D-5	9	q
D-5	9	r																												G-2 INLET W/24-12 GRATE	1.00' L+ 124+60 "A"	D-5	9	r
D-5	9	s								54.5										S	3.0									24" RCP x 54.5'		D-5	9	s
D-5	9	t																												G-2 INLET W/24-12 GRATE	59.00' L+ 124+60 "A"	D-5	9	t
D-5	9	u					88.0													S	2.6									24" APC x 88.0'		D-5	9	u
D-5	9	v																												G-2 INLET W/24-12 GRATE	59.00' L+ 125+50 "A"	D-5	9	v
D-5	9	w					86.1													SO	2.8									24" APC x 86.1'		D-5	9	w
D-5	9	x																												G-2 INLET W/24-12 GRATE	59.00 L+ 124+60 "A"	D-5	9	x
D-5	9	y					95.7													SO	2.7									24" APC x 95.7'		D-5	9	y
D-5	9	z			9.0																									G-2 INLET W/24-12 GRATE	1.00' L+ 126+50 "A"	D-5	9	z
D-5	9	aa					86.1													SO	2.4									24" APC x 86.1'		D-5	9	aa
D-5	9	ab																												G-2 INLET W/24-12 GRATE	1.00' L+ 123+70 "A"	D-5	9	ab
Tot DQ-7			0.0	0.0	15.0	0.0	1142.9	0.0	0.0	202.6	0.0	0.0	0.0	0.0	0.0	0.0	0.0	0.0	0.0	-	-	-	131.2	30703	0.0	0.0	0.0	0.0	0.0					

(N) = NOT A SEPARATE PAY ITEM, FOR INFORMATION ONLY
PIPE JOINT TYPES:
S - STANDARD
SO- SOIL TIGHT
D - DOWNDRAIN
W - WATERTIGHT

DRAINAGE QUANTITIES
DQ-7

LAST REVISION 12-31-13 | DATE PLOTTED => 20-MAR-2014 | TIME PLOTTED => 14:31

STATE OF CALIFORNIA - DEPARTMENT OF TRANSPORTATION
Caltrans
CONSULTANT FUNCTIONAL SUPERVISOR: CARL SAVAGE
CALCULATED-DESIGNED BY: MICHAEL MANZANO
CHECKED BY: KATHRYN WALKER
REVISED BY
DATE REVISED

Dist	COUNTY	ROUTE	POST MILES TOTAL PROJECT	SHEET No.	TOTAL SHEETS
11	SD	15,76	R46.2/R46.8, R12.1/R17.7	406	1273

10-30-13
REGISTERED CIVIL ENGINEER DATE

03-24-14
PLANS APPROVAL DATE

REGISTERED PROFESSIONAL ENGINEER KATHRYN WALKER No. C77900 Exp. 06-30-15 CIVIL STATE OF CALIFORNIA

THE STATE OF CALIFORNIA OR ITS OFFICERS OR AGENTS SHALL NOT BE RESPONSIBLE FOR THE ACCURACY OR COMPLETENESS OF SCANNED COPIES OF THIS PLAN SHEET.

DOKKEN ENGINEERING
5675 RUFFIN RD
SUITE 250
SAN DIEGO, CA 92123

DRAINAGE QUANTITIES

DRAINAGE PLAN SHEET No.	DRAINAGE SYSTEM No.	DRAINAGE UNIT No.	STRUCTURES (N) STRUCTURE HEIGHT LF	(N) MINOR CONCRETE (MINOR STRUCTURE) CY	(N) STRUCTURAL CONCRETE (HEADWALL) CY	(N) STRUCTURAL CONCRETE (JUNCTION STRUCTURE) CY	(N) GRATE TYPE 24-12 EA	(N) GRATE TYPE 36R EA	(N) MANHOLE FRAME AND COVER EA	(N) 1/4" CHECKERED PLATE COVER AND FRAME EA	(N) GRATE CHAIN EA	MISCELLANEOUS IRON AND STEEL LB	DRAINAGE INLET MARKER EA	CABLE RAILING LF	CHAIN LINK RAILING (TYPE 7) LF	REMOVE INLET EA	REMOVE HEADWALL EA	(N) Conc COLLAR EA	18" ALTERNATIVE FLARED END SECTION EA	24" ALTERNATIVE FLARED END SECTION EA	CONCRETE (SLOPE PROTECTION) CY	CONCRETE (DITCH LINING) CY	ROCK SLOPE PROTECTION (NO. 2, METHOD B) CY	ROCK SLOPE PROTECTION (NO. 1, METHOD B) CY	ROCK SLOPE PROTECTION (LIGHT, METHOD B) CY	ROCK SLOPE PROTECTION (1/4 T, METHOD B) CY	ROCK SLOPE PROTECTION (1/2 T, METHOD B) CY	ROCK SLOPE PROTECTION (2T, METHOD A) CY	ROCK SLOPE PROTECTION (1T, METHOD B) CY	ROCK SLOPE PROTECTION FABRIC (CLASS 8) SQYD	ROCK SLOPE PROTECTION FABRIC (CLASS 10) SQYD	STRUCTURE BACKFILL (SLURRY CEMENT) CY	DITCH EXCAVATION CY	MODIFY INLET EA	ADJUST INLET EA	ADJUST MANHOLE EA	CAP RISER EA	DESCRIPTION	STATION	DRAINAGE PLAN SHEET No.	DRAINAGE SYSTEM No.	DRAINAGE UNIT No.
D-5	8	b			62.3										68.0																								HW (TYPE A) W/ CHAIN LINK	78.28′ R+ 121+31.66 "A"	D-5	8	b
D-5	8	c																																					4 x 6′-6.9′ x 4′ RCB x 63.7′		D-5	8	c
D-5	8	d																							4.0					13.1								RSP		D-5	8	d
D-5	8	e																		1																			24" AFES		D-5	8	e
D-5	8	f																																					24" APC x 68.9′		D-5	8	f
D-5	8	g	4.30	2.0							2	362	1																										GD1 INLET W/ 2x24-13 GRT	16.00′ R+ 12+29.80 "SGL"	D-5	8	g
D-5	9	a																							7.0					18.0								RSP		D-5	9	a
D-5	9	b			1.2																																		STRAIGHT HEADWALL	87.72′ R+ 122+00 "A"	D-5	9	b
D-5	9	c																																					24" RCP x 22.2′		D-5	9	c
D-5	9	d	8.00	3.5			1				1	329									2.0																		G-2 INLET W/24-12 GRATE	64.00′ R+ 122+00 "A"	D-5	9	d
D-5	9	e																																					24" APC x 147.2′		D-5	9	e
D-5	9	f	4.00	2.3			1				1	329									2.0																		G-2 INLET W/24-12 GRATE	63.00′ R+ 120+50 "A"	D-5	9	f
D-5	9	g																																					24" APC x 163.0′		D-5	9	g
D-5	9	h	5.60	2.8			1				1	329									2.0																		G-2 INLET W/24-12 GRATE	64.00′ R+ 123+70 "A"	D-5	9	h
D-5	9	i																																					24" APC x 84.0′		D-5	9	i
D-5	9	j	4.50	2.4			1				1	329									1.7																		G-2 INLET W/24-12 GRATE	64.00′ R+ 124+60 "A"	D-5	9	j
D-5	9	k																																					24" APC x 84.9′		D-5	9	k
D-5	9	l	4.20	2.4			1				1	329									2.0																		G-2 INLET W/24-12 GRATE	64.00′ R+ 125+50 "A"	D-5	9	l
D-5	9	m																																					24" APC x 239.4′		D-5	9	m
D-6	9	n	4.30	2.4			1				1	329									2.0																		G-2 INLET W/24-12 GRATE	64.00′ R+ 128+00 "A"	D-6	9	n
D-6	9	o																																					24" RCP x 64.3′		D-6	9	o
D-6	9	p	5.30	2.7			1				1	329																											G-2 INLET W/24-12 GRATE	1.00′ L+ 128+00 "A"	D-6	9	p
D-5	9	q																																					24" RCP x 61.6′		D-5	9	q
D-5	9	r	5.30	2.7			1				1	329																											G-2 INLET W/24-12 GRATE	1.00′ L+ 124+60 "A"	D-5	9	r
D-5	9	s																																					24" RCP x 54.5′		D-5	9	s
D-5	9	t	4.10	2.3			1				1	329									1.7																		G-2 INLET W/24-12 GRATE	59.00′ L+ 124+60 "A"	D-5	9	t
D-5	9	u																																					24" APC x 88.0′		D-5	9	u
D-5	9	v	3.00	2.0			1				1	329									2.0																		G-2 INLET W/24-12 GRATE	59.00′ L+ 125+50 "A"	D-5	9	v
D-5	9	w																																					24" APC x 86.1′		D-5	9	w
D-5	9	x	4.70	2.5			1				1	329																											G-2 INLET W/24-12 GRATE	59.00 L+ 124+60 "A"	D-5	9	x
D-5	9	y																																					24" APC x 95.7′		D-5	9	y
D-5	9	z	4.50	2.4			1				1	329																											G-2 INLET W/24-12 GRATE	1.00′ L+ 126+50 "A"	D-5	9	z
D-5	9	aa																																					24" APC x 86.1′		D-5	9	aa
D-5	9	ab	4.70	2.5			1				1	329																											G-2 INLET W/24-12 GRATE	1.00′ L+ 123+70 "A"	D-5	9	ab
Tot DQ-8			-	34.9	63.5	0.0	-	-	-	-	-	4,639	1	0.0	68.0	0	0	-	0	1	15.4	0.0	0.0	0.0	11.0	0.0	0.0	0.0	0.0	31.1	0.0	0.0	0.0	0	0	0	0					

DRAINAGE QUANTITIES
DQ-8

STATE OF CALIFORNIA - DEPARTMENT OF TRANSPORTATION
Caltrans

CONSULTANT FUNCTIONAL SUPERVISOR: CARL SAVAGE
CALCULATED-DESIGNED BY: MICHAEL MANZANO
CHECKED BY: KATHRYN WALKER
REVISED BY
DATE REVISED

LAST REVISION 12-31-13
DATE PLOTTED => 20-MAR-2014
TIME PLOTTED => 14:32

Dist	COUNTY	ROUTE	POST MILES TOTAL PROJECT	SHEET No.	TOTAL SHEETS
11	SD	15,76	R46.2/R46.8, R12.1/R17.7	407	1273

10-30-13
REGISTERED CIVIL ENGINEER DATE

03-24-14
PLANS APPROVAL DATE

REGISTERED PROFESSIONAL ENGINEER KATHRYN WALKER No. C77900 Exp. 06-30-15 CIVIL STATE OF CALIFORNIA

THE STATE OF CALIFORNIA OR ITS OFFICERS OR AGENTS SHALL NOT BE RESPONSIBLE FOR THE ACCURACY OR COMPLETENESS OF SCANNED COPIES OF THIS PLAN SHEET.

DOKKEN ENGINEERING
5675 RUFFIN RD
SUITE 250
SAN DIEGO, CA 92123

DRAINAGE QUANTITIES

DRAINAGE PLAN SHEET No.	DRAINAGE SYSTEM No.	DRAINAGE UNIT No.	CULVERTS: 6" PERFORATED PLASTIC PIPE UNDERDRAIN (LF)	18" SLOTTED PLASTIC PIPE (LF)	GRATED LINE DRAIN (LF)	18" ALTERNATIVE PIPE CULVERT (LF)	24" ALTERNATIVE PIPE CULVERT (LF)	60" ALTERNATIVE PIPE CULVERT (LF)	18" REINFORCED Conc PIPE (LF)	24" REINFORCED Conc PIPE (LF)	30" REINFORCED Conc PIPE (LF)	36" REINFORCED Conc PIPE (LF)	42" REINFORCED Conc PIPE (LF)	48" REINFORCED Conc PIPE (LF)	60" REINFORCED Conc PIPE (LF)	66" REINFORCED Conc PIPE (LF)	30" BITUMINOUS COATED CSP (0.109" THICK) (LF)	36" REINFORCED Conc PIPE RISER (LF)	48" BITUMINOUS COATED CSP (0.109" THICK) (LF)	(N) PIPE JOINT TYPE -	(N) Max HEIGHT COVER (LF)	(N) REINFORCED Conc BOX CULVERT (LF)	STRUCTURAL Conc, BOX CULVERT (CY)	BAR REINFORCEING STEEL (BOX CULVERT) (LB)	REMOVE MUD, SAND AND DEBRIS (IN CULVERT) (LF)	ABANDON CULVERT (EA)	REMOVE CULVERT (LF)	REMOVE BOX CULVERT (EA)	SAND BACKFILL (CY)	DESCRIPTION	STATION	DRAINAGE PLAN SHEET No.	DRAINAGE SYSTEM No.	DRAINAGE UNIT No.
D-6	10	a																												RSP BASIN	86.60′ R+ "A" 129+70	D-6	10	a
D-6	10	b																												RSP BASIN	78.45′ L+ "A" 272+00	D-6	10	b
D-6	10	c																									273.5			RMV (2)36"APC,(1)48"RCP & (2)HW		D-6	10	c
D-6	11	a																												RSP		D-6	11	a
D-6	11	b																												HW (TYPE A) W/ CABLE RAIL	84.19′ R+ 131+82.51 "A"	D-6	11	b
D-6	11	c														171.2				W	8.6									66" RCP x 171.2′		D-6	11	c
D-6	11	d																												HW (TYPE A) W/ CHAIN LINK	83.65′ L+ 132+16.35 "A"	D-6	11	d
D-6	11	e																												RSP		D-6	11	e
D-6	11	f																							328.6					RMSD (3) 36" CMP L=328.56		D-6	11	f
D-6	11	g					129.0													SO	5.5									24" APC x 129.0′		D-6	11	g
D-6	11	h																												G-2 INLET W/24-12 GRATE	64.00′ R+ 130+50 "A"	D-6	11	h
D-6	11	i								62.6										SO	3.0									24" RCP x 62.6′		D-6	11	i
D-6	11	j																												G-2 INLET W/24-12 GRATE	1.0′ L+ 130+50 "A"	D-6	11	j
D-6	11	k								53.5										SO	3.8									24" RCP x 53.5′		D-6	11	k
D-6	11	l																												G-2 INLET W/24-12 GRATE	58.00′ L+ 130+50 "A"	D-6	11	l
D-6	11	m					60.0													SO	5.5									24" APC x 60′		D-6	11	m
D-6	11	n																												G-2 INLET W/24-12 GRATE	64.00′ L+ 132+50 "A"	D-6	11	n
D-6	11	o					128.2													SO	4.4									24" APC x 195.0′		D-6	11	o
D-6	11	p																												G-2 INLET W/24-12 GRATE	64.00′ R+ 134+50 "A"	D-6	11	p
D-6	11	q								62.6										SO	4.5									24" RCP x 62.6′		D-6	11	q
D-6	11	r																												G-2 INLET W/24-12 GRATE	1.00′ L+ 132+50 "A"	D-6	11	r
D-6	11	s																												RSP	26.0′ L+ 12+01.93 "RMN"	D-6	11	s
D-6	11	t																												EXTEND HW	43.35′ R+ 28+36.09 "P-1"	D-6	11	t
D-6	11	u						79.3												SO	5.0									60" APC X 79.3′ W/ SLURRY CEMENT		D-6	11	u
D-6	11	v																												EXTEND HW	35.28′ L+ 28+46.56 "P-1"	D-6	11	v
D-6	11	w																												JS	64.01′ R+ 131+86.82	D-6	11	w
D-6	11	x								62.7										SO	5.0									24" RCP x 62.7′		D-6	11	x
D-6	11	y			6.0																									G-2 INLET W/24-12 GRATE	1.00′ L+ 133+84 "A"	D-6	11	y
D-6	12	a																									228.4			REMOVE (3) 18" RCP		D-6	12	a
D-6	12	b																												REMOVE DI		D-6	12	b
D-6	12	c																									48.2			REMOVE Culv		D-6	12	c
D-6	12	d																									26.2			REMOVE SCSP		D-6	12	d
D-6	12	e																												RSP	30.00′ R+ 12+03.73 "RMN"	D-6	12	e
D-6	13	a																												RSP		D-6	13	a
D-6	13	b																												HEADWALL (TYPE A) w/ CABLE RAIL	81.00′ R+ 135+52.04 "A"	D-6	13	b
To+ DQ-9			0.0	0.0	6.0	0.0	317.2	79.3	0.0	241.4	0.0	0.0	0.0	0.0	0.0	171.2	0.0	0.0	0.0	-	-	-	0.0	0.0	328.6	0.0	576.3	0.0	0.0					

(N) = NOT A SEPARATE PAY ITEM, FOR INFORMATION ONLY
PIPE JOINT TYPES:
S - STANDARD
SO- SOIL TIGHT
D - DOWNDRAIN
W - WATERTIGHT

DRAINAGE QUANTITIES
DQ-9

REVISED BY | DATE REVISED
MICHAEL MANZANO | KATHRYN WALKER
CALCULATED-DESIGNED BY | CHECKED BY
CONSULTANT FUNCTIONAL SUPERVISOR: CARL SAVAGE
STATE OF CALIFORNIA - DEPARTMENT OF TRANSPORTATION
Caltrans

LAST REVISION 12-31-13
DATE PLOTTED => 20-MAR-2014
TIME PLOTTED => 14:32

Dist	COUNTY	ROUTE	POST MILES TOTAL PROJECT	SHEET No.	TOTAL SHEETS
11	SD	15,76	R46.2/R46.8, R12.1/R17.7	408	1273

REGISTERED CIVIL ENGINEER 10-30-13 DATE

03-24-14
PLANS APPROVAL DATE

REGISTERED PROFESSIONAL ENGINEER KATHRYN WALKER No. C77900 Exp. 06-30-15 CIVIL STATE OF CALIFORNIA

THE STATE OF CALIFORNIA OR ITS OFFICERS OR AGENTS SHALL NOT BE RESPONSIBLE FOR THE ACCURACY OR COMPLETENESS OF SCANNED COPIES OF THIS PLAN SHEET.

DOKKEN ENGINEERING
5675 RUFFIN RD
SUITE 250
SAN DIEGO, CA 92123

DRAINAGE QUANTITIES

DRAINAGE PLAN SHEET No.	DRAINAGE SYSTEM No.	DRAINAGE UNIT No.	STRUCTURE HEIGHT (N) LF	MINOR CONCRETE (MINOR STRUCTURE) (N) CY	STRUCTURAL CONCRETE (HEADWALL) CY	STRUCTURAL CONCRETE (JUNCTION STRUCTURE) CY	GRATE TYPE 24-12 (N) EA	GRATE TYPE 36R (N) EA	MANHOLE FRAME AND COVER (N) EA	1/4" CHECKERED PLATE COVER AND FRAME (N) EA	GRATE CHAIN (N) EA	MISCELLANEOUS IRON AND STEEL LB	DRAINAGE INLET MARKER EA	CABLE RAILING LF	CHAIN LINK RAILING (TYPE 7) LF	REMOVE INLET EA	REMOVE HEADWALL EA	Conc COLLAR (N) EA	18" ALTERNATIVE FLARED END SECTION EA	24" ALTERNATIVE FLARED END SECTION EA	CONCRETE (SLOPE PROTECTION) CY	CONCRETE (DITCH LINING) CY	ROCK SLOPE PROTECTION (NO. 2, METHOD B) CY	ROCK SLOPE PROTECTION (NO. 1, METHOD B) CY	ROCK SLOPE PROTECTION (LIGHT, METHOD B) CY	ROCK SLOPE PROTECTION (1/4 T, METHOD B) CY	ROCK SLOPE PROTECTION (1/2 T, METHOD B) CY	ROCK SLOPE PROTECTION (2T, METHOD A) CY	ROCK SLOPE PROTECTION (1T, METHOD B) CY	ROCK SLOPE PROTECTION FABRIC (CLASS 8) SQYD	ROCK SLOPE PROTECTION FABRIC (CLASS 10) SQYD	STRUCTURE BACKFILL (SLURRY CEMENT) CY	DITCH EXCAVATION CY	MODIFY INLET EA	ADJUST INLET EA	ADJUST MANHOLE EA	CAP RISER EA	DESCRIPTION	STATION	DRAINAGE PLAN SHEET No.	DRAINAGE SYSTEM No.	DRAINAGE UNIT No.
D-6	10	a																					108.0					723.1			466.0							RSP BASIN	86.60′ R+ "A" 129+70	D-6	10	a
D-6	10	b																					94.1					629.6			418.8							RSP BASIN	78.45′ L+ "A" 272+00	D-6	10	b
D-6	10	c															2																					RMV(2)36"APC,48"RCP&(2)HW		D-6	10	c
D-6	11	a																					54.0			143.0				237.0								RSP		D-6	11	a
D-6	11	b			43.8									54.8																								HW (TYPE A) W/ CABLE RAIL	84.19′ R+ 131+82.51 "A"	D-6	11	b
D-6	11	c																																				66" RCP x 171.2′		D-6	11	c
D-6	11	d			34.6										41.1																							HW (TYPE A) W/ CHAIN LINK	83.65′ L+ 132+16.35 "A"	D-6	11	d
D-6	11	e																							46.0					80.8								RSP		D-6	11	e
D-6	11	f																																				RMSD (3) 36" CMP L=328.56		D-6	11	f
D-6	11	g																																				24" APC x 129.0′		D-6	11	g
D-6	11	h	4.70	2.5			1				1	329									2.0																	G-2 INLET W/24-12 GRATE	64.00′ R+ 130+50 "A"	D-6	11	h
D-6	11	i																																				24" RCP x 62.6′		D-6	11	i
D-6	11	j	5.70	2.8			1				1	329																										G-2 INLET W/24-12 GRATE	1.0′ L+ 130+50 "A"	D-6	11	j
D-6	11	k																																				24" RCP x 53.5′		D-6	11	k
D-6	11	l	5.40	2.7			1				1	329									2.0																	G-2 INLET W/24-12 GRATE	58.00′ L+ 130+50 "A"	D-6	11	l
D-6	11	m																																				24" APC x 60′		D-6	11	m
D-6	11	n	6.20	2.9			1				1	329									2.0																	G-2 INLET W/24-12 GRATE	64.00′ L+ 132+50 "A"	D-6	11	n
D-6	11	o																																				24" APC x 195.0′		D-6	11	o
D-6	11	p	4.00	2.3			1				1	329									2.0																	G-2 INLET W/24-12 GRATE	64.00′ R+ 134+50 "A"	D-6	11	p
D-6	11	q																																				24" RCP x 62.6′		D-6	11	q
D-6	11	r	5.50	2.7			1				1	329																										G-2 INLET W/24-12 GRATE	1.00′ L+ 132+50 "A"	D-6	11	r
D-6	11	s																							3.0					10.7								RSP	26.0′ L+ 12+01.93 "RMN"	D-6	11	s
D-6	11	t			3.6																																	EXTEND HW	43.35′ R+ 28+36.09 "P-1"	D-6	11	t
D-6	11	u																														183.6						60" APC X 79.3′		D-6	11	u
D-6	11	v			3.6																																	EXTEND HW	35.28′ L+ 28+46.56 "P-1"	D-6	11	v
D-6	11	w	5.50			4.2		1				236																										JS	64.01′ R+ 131+86.82	D-6	11	w
D-6	11	x																																				24" RCP x 62.7′		D-6	11	x
D-6	11	y	4.50	2.7			1				1	329																										G-2 INLET W/24-12 GRATE	1.00′ L+ 133+84 "A"	D-6	11	y
D-6	12	a																																				REMOVE (3) 18" RCP		D-6	12	a
D-6	12	b														1																						REMOVE DI		D-6	12	b
D-6	12	c																																				REMOVE Culv		D-6	12	c
D-6	12	d																																				REMOVE SCSP		D-6	12	d
D-6	12	e																							3.0					10.7								RSP	30.00′ R+ 12+03.73 "RMN"	D-6	12	e
D-6	13	a																					34.0			90.0				152.0								RSP		D-6	13	a
D-6	13	b			20.7									26.7																								HW (TYPE A) w/ CABLE RAIL	81.00′ R+ 135+52.04 "A"	D-6	13	b
Tot DQ-10			-	18.6	106.3	4.2	-	-	-	-	-	2,539	0	81.5	41.1	1	2	-	0	0	8.0	0.0	290.1	0.0	52.0	233.0	0.0	1352.7	0.0	491.2	884.8	183.6	0.0	0	0	0	0					

DRAINAGE QUANTITIES
DQ-10

REVISED BY | DATE REVISED
MICHAEL MANZANO | KATHRYN WALKER
CALCULATED-DESIGNED BY | CHECKED BY
CONSULTANT FUNCTIONAL SUPERVISOR | CARL SAVAGE
STATE OF CALIFORNIA - DEPARTMENT OF TRANSPORTATION
Caltrans

DATE PLOTTED => 20-MAR-2014
TIME PLOTTED => 14:32
LAST REVISION 12-31-13

Dist	COUNTY	ROUTE	POST MILES TOTAL PROJECT	SHEET No.	TOTAL SHEETS
11	SD	15,76	R46.2/R46.8, R12.1/R17.7	409	1273

REGISTERED CIVIL ENGINEER 10-30-13 DATE

03-24-14
PLANS APPROVAL DATE

REGISTERED PROFESSIONAL ENGINEER KATHRYN WALKER No. C77900 Exp. 06-30-15 CIVIL STATE OF CALIFORNIA

THE STATE OF CALIFORNIA OR ITS OFFICERS OR AGENTS SHALL NOT BE RESPONSIBLE FOR THE ACCURACY OR COMPLETENESS OF SCANNED COPIES OF THIS PLAN SHEET.

DOKKEN ENGINEERING
5675 RUFFIN RD
SUITE 250
SAN DIEGO, CA 92123

DRAINAGE QUANTITIES

DRAINAGE PLAN SHEET No.	DRAINAGE SYSTEM No.	DRAINAGE UNIT No.	CULVERTS: 6" PERFORATED PLASTIC PIPE UNDERDRAIN	18" SLOTTED PLASTIC PIPE	GRATED LINE DRAIN	18" ALTERNATIVE PIPE CULVERT	24" ALTERNATIVE PIPE CULVERT	60" ALTERNATIVE PIPE CULVERT	18" REINFORCED Conc PIPE	24" REINFORCED Conc PIPE	30" REINFORCED Conc PIPE	36" REINFORCED Conc PIPE	42" REINFORCED Conc PIPE	48" REINFORCED Conc PIPE	60" REINFORCED Conc PIPE	66" REINFORCED Conc PIPE	30" BITUMINOUS COATED CSP (0.109" THICK)	36" REINFORCED Conc PIPE RISER	48" BITUMINOUS COATED CSP (0.109" THICK)	(N) PIPE JOINT TYPE	(N) Max HEIGHT COVER	(N) REINFORCED Conc BOX CULVERT	STRUCTURAL Conc, BOX CULVERT	BAR REINFORCEING STEEL (BOX CULVERT)	REMOVE MUD, SAND AND DEBRIS (IN CULVERT)	ABANDON CULVERT	REMOVE CULVERT	REMOVE BOX CULVERT	SAND BACKFILL	DESCRIPTION	STATION	DRAINAGE PLAN SHEET No.	DRAINAGE SYSTEM No.	DRAINAGE UNIT No.
			LF	LF	LF	LF	LF	LF	LF	LF	LF	LF	LF	LF	LF	LF	LF	LF	LF	-	LF	LF	CY	LB	LF	EA	LF	EA	CY					
D-6	13	c										161.4								W	8.2									36" RCP x 161.4'		D-6	13	c
D-6	13	d																												HW (TYPE A) W/ CHAIN LINK	80.42' Lt 135+52.04 "A"	D-6	13	d
D-6	13	e																												RSP		D-6	13	e
D-6	13A	a																												Conc (DITCH LINING) L=588.0'	90.0' Lt "A" Sta 135+60	D-6	13A	a
D-6	14	a																									44.1			REMOVE 18" RCP X 44.1'		D-6	14	a
D-7	15	a																												RSP		D-7	15	a
D-7	15	b																												STRAIGHT HEADWALL	93.3' Rt 139+50 "A"	D-7	15	b
D-7	15	c								27.9										SO	8.2									24" RCP x 27.9'		D-7	15	c
D-7	15	d																												G-2 INLET W/24-12 GRATE	64.0' Rt 139+50.00 "A"	D-7	15	d
D-7	15	e								116.5										S	8.1									24" RCP x 116.5'		D-7	15	e
D-7	15	f																												G-2 INLET W/24-12 GRATE	55.50' Rt 139+50.00 "A"	D-7	15	f
D-7	15	g					196.0													SO	8.2									24" APC x 196.0'		D-7	15	g
D-7	15	h																												G-2 INLET W/24-12 GRATE	61.50' Rt 141+50.00 "A"	D-7	15	h
D-6	15	i					246.1													SO	8.2									24" APC x 246.1'		D-6	15	i
D-6	15	j																												G-2 INLET W/24-12 GRATE	64.00' Rt 137+00.00 "A"	D-6	15	j
D-7	15	k					145.1													S	6.8									24" APC x 145.1'		D-7	15	k
D-7	15	l																												G-2 INLET W/24-12 GRATE	55.50' Lt 141+00.00 "A"	D-7	15	l
D-7	15	m					146.0													S	6.9									24" APC x 146.0'		D-7	15	m
D-6	15	n																												G-2 INLET W/24-12 GRATE	55.50' Lt 138+00.00 "A"	D-6	15	n
D-6	15	o					196.2													S	4.1									24" APC x 196.2'		D-6	15	o
D-6	15	p																												G-2 INLET W/24-12 GRATE	62.50' Lt 136+00.00 "A"	D-6	15	p
D-6	16	a																									49.7			REMOVE 18" RCP X 49.7'		D-6	16	a
D-7	17	a																												RSP		D-7	17	a
D-7	17	b																												HW (TYPE A) W/ CABLE RAIL	79.49' Rt 142+00.00 "A"	D-7	17	b
D-7	17	c									153.7									S	4.7									30" RCP x 153.7'		D-7	17	c
D-7	17	d																1.8												JS W/OCP(Mod)INLET W/36R GRATE	76.50' Lt "A" 142+00.00	D-7	17	d
D-7	17	e				53.8														S	2.5									18" APC x 53.8'		D-7	17	e
D-7	17	f																5.0												OCP (Mod) INLET W/ 36R GRATE	101.52' Lt "A" 142+50.84	D-7	17	f
D-7	17	g								99.0										S	2.2									24" RCP x 99.0'		D-7	17	g
D-7	17	h																												G-2 INLET W/24-12 GRATE	55.50' Lt 143+00.00 "A"	D-7	17	h
D-7	17	i					125.0													S	3.2									24" APC X 125.0'		D-7	17	i
D-7	17	j																												G-2 INLET W/24-12 GRATE	76.50' Lt 142+00.00 "A"	D-7	17	j
Tot DQ-11			0.0	0.0	0.0	53.8	1054.4	0.0	0.0	243.4	153.7	161.4	0.0	0.0	0.0	0.0	0.0	6.8	0.0	-	-	-	0.0	0	0.0	0.0	93.8	0.0	0.0					

(N) = NOT A SEPARATE PAY ITEM, FOR INFORMATION ONLY
PIPE JOINT TYPES:
S - STANDARD
SO- SOIL TIGHT
D - DOWNDRAIN
W - WATERTIGHT

DRAINAGE QUANTITIES
DQ-11

STATE OF CALIFORNIA - DEPARTMENT OF TRANSPORTATION
Caltrans®
CONSULTANT FUNCTIONAL SUPERVISOR: CARL SAVAGE
CALCULATED-DESIGNED BY: MICHAEL MANZANO
CHECKED BY: KATHRYN WALKER
REVISED BY
DATE REVISED

LAST REVISION 12-31-13
DATE PLOTTED => 20-MAR-2014
TIME PLOTTED => 14:32

Dist	COUNTY	ROUTE	POST MILES TOTAL PROJECT	SHEET No.	TOTAL SHEETS
11	SD	15,76	R46.2/R46.8, R12.1/R17.7	410	1273

REGISTERED CIVIL ENGINEER 10-30-13 DATE

03-24-14
PLANS APPROVAL DATE

REGISTERED PROFESSIONAL ENGINEER KATHRYN WALKER No. C77900 Exp. 06-30-15 CIVIL STATE OF CALIFORNIA

THE STATE OF CALIFORNIA OR ITS OFFICERS OR AGENTS SHALL NOT BE RESPONSIBLE FOR THE ACCURACY OR COMPLETENESS OF SCANNED COPIES OF THIS PLAN SHEET.

DOKKEN ENGINEERING
5675 RUFFIN RD
SUITE 250
SAN DIEGO, CA 92123

DRAINAGE QUANTITIES

DRAINAGE PLAN SHEET No.	DRAINAGE SYSTEM No.	DRAINAGE UNIT No.	STRUCTURES (N) STRUCTURE HEIGHT LF	(N) MINOR CONCRETE (MINOR STRUCTURE) CY	STRUCTURAL CONCRETE (HEADWALL) CY	STRUCTURAL CONCRETE (JUNCTION STRUCTURE) CY	(N) GRATE TYPE 24-12 EA	(N) GRATE TYPE 36R EA	(N) MANHOLE FRAME AND COVER EA	(N) 1/4" CHECKERED PLATE COVER AND FRAME EA	(N) GRATE CHAIN EA	MISCELLANEOUS IRON AND STEEL LB	DRAINAGE INLET MARKER EA	CABLE RAILING LF	CHAIN LINK RAILING (TYPE 7) LF	REMOVE INLET EA	REMOVE HEADWALL EA	(N) Conc COLLAR EA	18" ALTERNATIVE FLARED END SECTION EA	24" ALTERNATIVE FLARED END SECTION EA	CONCRETE (SLOPE PROTECTION) CY	CONCRETE (DITCH LINING) CY	ROCK SLOPE PROTECTION (NO. 2, METHOD B) CY	ROCK SLOPE PROTECTION (NO. 1, METHOD B) CY	ROCK SLOPE PROTECTION (LIGHT, METHOD B) CY	ROCK SLOPE PROTECTION (1/4 T, METHOD B) CY	ROCK SLOPE PROTECTION (1/2 T, METHOD B) CY	ROCK SLOPE PROTECTION (2T, METHOD A) CY	ROCK SLOPE PROTECTION (1T, METHOD B) CY	ROCK SLOPE PROTECTION FABRIC (CLASS 8) SQYD	ROCK SLOPE PROTECTION FABRIC (CLASS 10) SQYD	STRUCTURE BACKFILL (SLURRY CEMENT) CY	DITCH EXCAVATION CY	MODIFY INLET EA	ADJUST INLET EA	ADJUST MANHOLE EA	CAP RISER EA	DESCRIPTION	STATION	DRAINAGE PLAN SHEET No.	DRAINAGE SYSTEM No.	DRAINAGE UNIT No.
D-6	13	c																														115.1						36" RCP x 161.4'		D-6	13	c
D-6	13	d			18.3										21.9																							HW (TYPE A) W/ CHAIN LINK	80.42' L+ 135+52.04 "A"	D-6	13	d
D-6	13	e																							23.0					44.5								RSP		D-6	13	e
D-6	13A	a																				23.2											75.6					Conc (DITCH LINING) L=588.0'	90.0' L+ "A" Sta 135+60	D-6	13A	a
D-6	14	a																																				REMOVE 18" RCP X 44.1'		D-6	14	a
D-7	15	a																							7.0					18.0								RSP		D-7	15	a
D-7	15	b			1.2																																	STRAIGHT HEADWALL	93.3' R+ 139+50 "A"	D-7	15	b
D-7	15	c																																				24" RCP x 27.9'		D-7	15	c
D-7	15	d	9.80	5.2			1				1	329									2.0																	G-2 INLET W/24-12 GRATE	64.0' R+ 139+50.00 "A"	D-7	15	d
D-7	15	e																																				24" RCP x 116.5'		D-7	15	e
D-7	15	f	8.70	4.8			1				1	329									2.0																	G-2 INLET W/24-12 GRATE	55.50' R+ 139+50.00 "A"	D-7	15	f
D-7	15	g																																				24" APC x 196.0'		D-7	15	g
D-7	15	h	3.20	2.1			1				1	329									2.0																	G-2 INLET W/24-12 GRATE	61.50' R+ 141+50.00 "A"	D-7	15	h
D-6	15	i																																				24" APC x 246.1'		D-6	15	i
D-6	15	j	3.50	2.1			1				1	329									2.0																	G-2 INLET W/24-12 GRATE	64.00' R+ 137+00.00 "A"	D-6	15	j
D-7	15	k																																				24" APC x 145.1'		D-7	15	k
D-7	15	l	4.10	2.3			1				1	329									2.0																	G-2 INLET W/24-12 GRATE	55.50' L+ 141+00.00 "A"	D-7	15	l
D-7	15	m																																				24" APC x 146.0'		D-7	15	m
D-6	15	n	5.80	2.8			1				1	329									2.0																	G-2 INLET W/24-12 GRATE	55.50' L+ 138+00.00 "A"	D-6	15	n
D-6	15	o																																				24" APC x 196.2'		D-6	15	o
D-6	15	p	3.50	2.1			1				1	329									1.7																	G-2 INLET W/24-12 GRATE	62.50' L+ 136+00.00 "A"	D-6	15	p
D-6	16	a																																				REMOVE 18" RCP X 49.7'		D-6	16	a
D-7	17	a																					41.0			110.0				178.0								RSP		D-7	17	a
D-7	17	b			18.6									23.6																								HW (TYPE A) W/ CABLE RAIL	79.49' R+ 142+00.00 "A"	D-7	17	b
D-7	17	c																																				30" RCP x 153.7'		D-7	17	c
D-7	17	d	5.50			4.6		1				236									2.0																	JS W/OCP(Mod)INLET 36R GRT	76.50' L+ "A" 142+00.00	D-7	17	d
D-7	17	e																																				18" APC x 53.8'		D-7	17	e
D-7	17	f	4.50	0.5				1				236									2.0																	OCP (Mod) INLET W/ 36R GRT	101.52' L+ "A" 142+50.84	D-7	17	f
D-7	17	g																																				24" RCP x 99.0'		D-7	17	g
D-7	17	h	4.20	2.4			1				1	329									2.0																	G-2 INLET W/24-12 GRATE	55.50' L+ 143+00.00 "A"	D-7	17	h
D-7	17	i																																				24" APC X 125.0'		D-7	17	i
D-7	17	j	3.50	2.1			1				1	329									2.0																	G-2 INLET W/24-12 GRATE	76.50' L+ 142+00.00 "A"	D-7	17	j
Tot DQ-12			-	26.4	38.1	4.6	-	-	-	-	-	3433	0	23.6	21.9	0	0	-	0	0	21.7	23.2	41.0	0.0	30.0	110.0	0.0	0.0	0.0	240.5	0.0	115.1	75.6	0	0	0	0					

DRAINAGE QUANTITIES
DQ-12

STATE OF CALIFORNIA - DEPARTMENT OF TRANSPORTATION
Caltrans

CONSULTANT FUNCTIONAL SUPERVISOR: CARL SAVAGE
CALCULATED-DESIGNED BY: MICHAEL MANZANO
CHECKED BY: KATHRYN WALKER
REVISED BY
DATE REVISED

LAST REVISION 12-31-13
DATE PLOTTED => 20-MAR-2014
TIME PLOTTED => 14:32

Dist	COUNTY	ROUTE	POST MILES TOTAL PROJECT	SHEET No.	TOTAL SHEETS
11	SD	15,76	R46.2/R46.8, R12.1/R17.7	411	1273

REGISTERED CIVIL ENGINEER 10-30-13 DATE

03-24-14
PLANS APPROVAL DATE

REGISTERED PROFESSIONAL ENGINEER KATHRYN WALKER No. C77900 Exp. 06-30-15 CIVIL STATE OF CALIFORNIA

THE STATE OF CALIFORNIA OR ITS OFFICERS OR AGENTS SHALL NOT BE RESPONSIBLE FOR THE ACCURACY OR COMPLETENESS OF SCANNED COPIES OF THIS PLAN SHEET.

DOKKEN ENGINEERING
5675 RUFFIN RD
SUITE 250
SAN DIEGO, CA 92123

DRAINAGE QUANTITIES

DRAINAGE PLAN SHEET No.	DRAINAGE SYSTEM No.	DRAINAGE UNIT No.	CULVERTS: 6" PERFORATED PLASTIC PIPE UNDERDRAIN	18" SLOTTED PLASTIC PIPE	GRATED LINE DRAIN	18" ALTERNATIVE PIPE CULVERT	24" ALTERNATIVE PIPE CULVERT	60" ALTERNATIVE PIPE CULVERT	18" REINFORCED Conc PIPE	24" REINFORCED Conc PIPE	30" REINFORCED Conc PIPE	36" REINFORCED Conc PIPE	42" REINFORCED Conc PIPE	48" REINFORCED Conc PIPE	60" REINFORCED Conc PIPE	66" REINFORCED Conc PIPE	30" BITUMINOUS COATED CSP (0.109" THICK)	36" REINFORCED Conc PIPE RISER	48" BITUMINOUS COATED CSP (0.109" THICK)	(N) PIPE JOINT TYPE	(N) Max HEIGHT COVER	(N) REINFORCED Conc BOX CULVERT	STRUCTURAL Conc, BOX CULVERT	BAR REINFORCEING STEEL (BOX CULVERT)	REMOVE SAND AND DEBRISREMOVE MUD, SAND AND DEBRIS (IN CULVERT)	ABANDON CULVERT	REMOVE CULVERT	REMOVE BOX CULVERT	SAND BACKFILL	DESCRIPTION	STATION	DRAINAGE PLAN SHEET No.	DRAINAGE SYSTEM No.	DRAINAGE UNIT No.
			LF	LF	LF	LF	LF	LF	LF	LF	LF	LF	LF	LF	LF	LF	LF	LF	LF	-	LF	LF	CY	LB	LF	EA	LF	EA	CY					
D-7	18	a																												RSP		D-7	18	a
D-7	18	b																												STRAIGHT HEADWALL	79.6′ R+ 147+00 "A"	D-7	18	b
D-7	18	c								21.6										SO	8.8									24" RCP x 21.6′		D-7	18	c
D-7	18	d																												G-2 INLET W/24-12 GRATE	56.50′ R+ 147+00 "A"	D-7	18	d
D-7	18	e								108.6										S	8.6									24" RCP x 108.6′		D-7	18	e
D-7	18	f																												G-2 INLET W/24-12 GRATE	55.50′ L+ 147+00 "A"	D-7	18	f
D-7	18	g							27.1											S	6.1									18" RCP x 27.1′		D-7	18	g
D-7	18	h																7.7												OCP (Mod) INLET W/ 36R GRATE	85.04′ L+ 147+00.11 "A"	D-7	18	h
D-7	18	i				44.2														S	2.4									18" APC x 44.2′		D-7	18	i
D-7	18	j																												G-1 INLET W/24-12 GRATE	55.50′ L+ 146+50 "A"	D-7	18	j
D-7	18	k				46.0														SO	8.5									18" APC x 46.0′		D-7	18	k
D-7	18	l																												G-1 INLET W/24-12 GRATE	55.50′ R+ 146+00 "A"	D-7	18	l
D-7	18	m					195.0																							24" APC X 195.0′		D-7	18	m
D-8	18	n																												G-2 INLET W/24-12 GRATE	55.50′ R+ 149+00 "A"	D-8	18	n
D-8	19	a																												RSP		D-8	19	a
D-8	19	b																												HW (TYPE A) W/ CABLE RAIL	67.97′ R+ 149+50.00 "A"	D-8	19	b
D-8	19	c									140.2									S	2.4									30" RCP x 140.2′		D-8	19	c
D-8	19	d																												HW (TYPE A) W/ CABLE RAIL	72.25′ L+ 149+50.00 "A"	D-8	19	d
D-7	19A	a																												Conc (DITCH LINING)	85.0′ L+ "A" Sta. 147+00	D-7	19A	a
D-8	20	a																									49.6			REMOVE 18" CMP X 49.6′		D-8	20	a
D-8	21	a																												RSP		D-8	21	a
D-8	21	b																												STRAIGHT HEADWALL	77.9′ R+ 152+00 "A"	D-8	21	b
D-8	21	c								21.0										W	6.0									24" RCP x 21.0′		D-8	21	c
D-8	21	d																												G-2 INLET W/24-12 GRATE	55.5′ R+ 152+00 "A"	D-8	21	d
D-8	21	e								50.5										W	5.9									24" RCP x 50.5′		D-8	21	e
D-8	21	f																												G-2 INLET W/24-12 GRATE	1.0′ L+ 152+00 "A"	D-8	21	f
D-8	21	g								54.5										W	5.6									24" RCP x 54.5′		D-8	21	g
D-8	21	h																												G-2 INLET W/24-12 GRATE	55.5′ L+ 152+00 "A"	D-8	21	h
D-8	21	i					94.0													W	6.1									24" APC x 94.0′		D-8	21	i
D-8	21	j																												G-2 INLET W/24-12 GRATE	55.5′ R+ 153+00 "A"	D-8	21	j
D-8	21	k					95.0													W	6.1									24" APC x 95.0′		D-8	21	k
D-8	21	l																												G-2 INLET W/24-12 GRATE	55.5′ R+ 151+00 "A"	D-8	21	l
D-8	21	m					96.0													W	5.5									24" APC x 96.0′		D-8	21	m
Tot DQ-13			0.0	0.0	0.0	90.2	480.0	0.0	27.1	256.2	140.2	0.0	0.0	0.0	0.0	0.0	0.0	7.7	0.0	-	-	-	0.0	0	0.0	0.0	49.6	0.0	0.0					

(N) = NOT A SEPARATE PAY ITEM, FOR INFORMATION ONLY
PIPE JOINT TYPES:
S - STANDARD
SO- SOIL TIGHT
D - DOWNDRAIN
W - WATERTIGHT

DRAINAGE QUANTITIES
DQ-13

LAST REVISION 12-31-13
DATE PLOTTED => 20-MAR-2014
TIME PLOTTED => 14:32

STATE OF CALIFORNIA - DEPARTMENT OF TRANSPORTATION
Caltrans®
CONSULTANT FUNCTIONAL SUPERVISOR: CARL SAVAGE
CALCULATED-DESIGNED BY: MICHAEL MANZANO
CHECKED BY: KATHRYN WALKER
REVISED BY
DATE REVISED

Dist	COUNTY	ROUTE	POST MILES TOTAL PROJECT	SHEET No.	TOTAL SHEETS
11	SD	15,76	R46.2/R46.8, R12.1/R17.7	412	1273

REGISTERED CIVIL ENGINEER 10-30-13 DATE

03-24-14
PLANS APPROVAL DATE

REGISTERED PROFESSIONAL ENGINEER KATHRYN WALKER No. C77900 Exp. 06-30-15 CIVIL STATE OF CALIFORNIA

THE STATE OF CALIFORNIA OR ITS OFFICERS OR AGENTS SHALL NOT BE RESPONSIBLE FOR THE ACCURACY OR COMPLETENESS OF SCANNED COPIES OF THIS PLAN SHEET.

DOKKEN ENGINEERING
5675 RUFFIN RD
SUITE 250
SAN DIEGO, CA 92123

DRAINAGE QUANTITIES

DRAINAGE PLAN SHEET No.	DRAINAGE SYSTEM No.	DRAINAGE UNIT No.	STRUCTURES (N) STRUCTURE HEIGHT	STRUCTURES (N) MINOR CONCRETE (MINOR STRUCTURE)	STRUCTURES STRUCTURAL CONCRETE (HEADWALL)	STRUCTURES STRUCTURAL CONCRETE (JUNCTION STRUCTURE)	STRUCTURES (N) GRATE TYPE 24-12	STRUCTURES (N) GRATE TYPE 36R	STRUCTURES (N) MANHOLE FRAME AND COVER	STRUCTURES (N) 1/4" CHECKERED PLATE COVER AND FRAME	STRUCTURES (N) GRATE CHAIN	MISCELLANEOUS IRON AND STEEL	DRAINAGE INLET MARKER	CABLE RAILING	CHAIN LINK RAILING (TYPE 7)	REMOVE INLET	REMOVE HEADWALL	(N) Conc COLLAR	18" ALTERNATIVE FLARED END SECTION	24" ALTERNATIVE FLARED END SECTION	CONCRETE (SLOPE PROTECTION)	CONCRETE (DITCH LINING)	ROCK SLOPE PROTECTION (NO. 2, METHOD B)	ROCK SLOPE PROTECTION (NO. 1, METHOD B)	ROCK SLOPE PROTECTION (LIGHT, METHOD B)	ROCK SLOPE PROTECTION (1/4 T, METHOD B)	ROCK SLOPE PROTECTION (1/2 T, METHOD B)	ROCK SLOPE PROTECTION (2T, METHOD A)	ROCK SLOPE PROTECTION (1T, METHOD B)	ROCK SLOPE PROTECTION FABRIC (CLASS 8)	ROCK SLOPE PROTECTION FABRIC (CLASS 10)	STRUCTURE BACKFILL (SLURRY CEMENT)	DITCH EXCAVATION	MODIFY INLET	ADJUST INLET	ADJUST MANHOLE	CAP RISER	DESCRIPTION	STATION	DRAINAGE PLAN SHEET No.	DRAINAGE SYSTEM No.	DRAINAGE UNIT No.
			LF	CY	CY	CY	EA	EA	EA	EA	EA	LB	EA	LF	LF	EA	EA	EA	EA	EA	CY	CY	CY	CY	CY	CY	CY	CY	CY	SQYD	SQYD	CY	CY	EA	EA	EA	EA					
D-7	18	a																							7.0					18.0									RSP		D-7	18	a
D-7	18	b			1.2																																		STRAIGHT HEADWALL	79.6′ R+ 147+00 "A"	D-7	18	b
D-7	18	c																																					24" RCP x 21.6′		D-7	18	c
D-7	18	d	7.10	3.2			1				1	329									2.0																		G-2 INLET W/24-12 GRATE	56.50′ R+ 147+00 "A"	D-7	18	d
D-7	18	e																																					24" RCP x 108.6′		D-7	18	e
D-7	18	f	4.20	2.4			1				1	329									2.0																		G-2 INLET W/24-12 GRATE	55.50′ L+ 147+00 "A"	D-7	18	f
D-7	18	g																																					18" RCP x 27.1′		D-7	18	g
D-7	18	h	7.20	0.5				1				236									1.7																		OCP (Mod) INLET W/ 36R GRT	85.04′ L+ 147+00.11 "A"	D-7	18	h
D-7	18	i																																					18" APC x 44.2′		D-7	18	i
D-7	18	j	3.60	1.1			1				1	329									1.7																		G-1 INLET W/24-12 GRATE	55.50′ L+ 146+50 "A"	D-7	18	j
D-7	18	k																																					18" APC x 46.0′		D-7	18	k
D-7	18	l	3.00	1.0			1				1	329									1.7																		G-1 INLET W/24-12 GRATE	55.50′ R+ 146+00 "A"	D-7	18	l
D-7	18	m																																					24" APC X 195.0′		D-7	18	m
D-8	18	n	3.60	2.2			1				1	329									2.0																		G-2 INLET W/24-12 GRATE	55.50′ R+ 149+00 "A"	D-8	18	n
D-8	19	a																					38.0			100.0				167.0									RSP		D-8	19	a
D-8	19	b			18.7									21.9																								HW (TYPE A) W/ CABLE RAIL	67.97′ R+ 149+50.00 "A"	D-8	19	b
D-8	19	c																																					30" RCP x 140.2′		D-8	19	c
D-8	19	d			10.8									23.6							1.7																		HW (TYPE A) W/ CABLE RAIL	72.25′ L+ 149+50.00 "A"	D-8	19	d
D-7	19A	a																				32.4											105.3						Conc (DITICH LINING)	85.0′ L+ "A" Sta. 147+00	D-7	19A	a
D-8	20	a																																					REMOVE 18" CMP X 49.6′		D-8	20	a
D-8	21	a																							7.0					18.0									RSP		D-8	21	a
D-8	21	b			1.2																																		STRAIGHT HEADWALL	77.9′ R+ 152+00 "A"	D-8	21	b
D-8	21	c																																					24" RCP x 21.0′		D-8	21	c
D-8	21	d	6.70	3.1			1				1	329									1.7																		G-2 INLET W/24-12 GRATE	55.5′ R+ 152+00 "A"	D-8	21	d
D-8	21	e																																					24" RCP x 50.5′		D-8	21	e
D-8	21	f	7.90	3.4			1				1	329																											G-2 INLET W/24-12 GRATE	1.0′ L+ 152+00 "A"	D-8	21	f
D-8	21	g																																					24" RCP x 54.5′		D-8	21	g
D-8	21	h	6.60	3.1			1				1	329									1.7																		G-2 INLET W/24-12 GRATE	55.5′ L+ 152+00 "A"	D-8	21	h
D-8	21	i																																					24" APC x 94.0′		D-8	21	i
D-8	21	j	4.00	2.3			1				1	329									2.0																		G-2 INLET W/24-12 GRATE	55.5′ R+ 153+00 "A"	D-8	21	j
D-8	21	k																																					24" APC x 95.0′		D-8	21	k
D-8	21	l	4.00	2.3			1				1	329									2.0																		G-2 INLET W/24-12 GRATE	55.5′ R+ 151+00 "A"	D-8	21	l
D-8	21	m																																					24" APC x 96.0′		D-8	21	m
Tot DQ-14			-	24.6	31.9	0.0	-	-	-	-	-	3,526	0	45.5	0.0	0	0	-	0	0	20.2	32.4	38.0	0.0	14.0	100.0	0.0	0.0	0.0	203.0	0.0	0.0	105.3	0	0	0	0					

DRAINAGE QUANTITIES
DQ-14

MICHAEL MANZANO — REVISED BY
KATHRYN WALKER — DATE REVISED
CALCULATED-DESIGNED BY
CHECKED BY
CONSULTANT FUNCTIONAL SUPERVISOR
CARL SAVAGE
STATE OF CALIFORNIA - DEPARTMENT OF TRANSPORTATION
Caltrans

LAST REVISION 12-31-13 | DATE PLOTTED => 20-MAR-2014 | TIME PLOTTED => 14:32

Dist	COUNTY	ROUTE	POST MILES TOTAL PROJECT	SHEET No.	TOTAL SHEETS
11	SD	15,76	R46.2/R46.8, R12.1/R17.7	413	1273

REGISTERED CIVIL ENGINEER 10-30-13 DATE

03-24-14
PLANS APPROVAL DATE

REGISTERED PROFESSIONAL ENGINEER KATHRYN WALKER No. C77900 Exp. 06-30-15 CIVIL STATE OF CALIFORNIA

THE STATE OF CALIFORNIA OR ITS OFFICERS OR AGENTS SHALL NOT BE RESPONSIBLE FOR THE ACCURACY OR COMPLETENESS OF SCANNED COPIES OF THIS PLAN SHEET.

DOKKEN ENGINEERING
5675 RUFFIN RD
SUITE 250
SAN DIEGO, CA 92123

DRAINAGE QUANTITIES

DRAINAGE PLAN SHEET No.	DRAINAGE SYSTEM No.	DRAINAGE UNIT No.	CULVERTS: 6" PERFORATED PLASTIC PIPE UNDERDRAIN	18" SLOTTED PLASTIC PIPE	GRATED LINE DRAIN	18" ALTERNATIVE PIPE CULVERT	24" ALTERNATIVE PIPE CULVERT	60" ALTERNATIVE PIPE CULVERT	18" REINFORCED Conc PIPE	24" REINFORCED Conc PIPE	30" REINFORCED Conc PIPE	36" REINFORCED Conc PIPE	42" REINFORCED Conc PIPE	48" REINFORCED Conc PIPE	60" REINFORCED Conc PIPE	66" REINFORCED Conc PIPE	30" BITUMINOUS COATED CSP (0.109" THICK)	36" REINFORCED Conc PIPE RISER	48" BITUMINOUS COATED CSP (0.109" THICK)	(N) PIPE JOINT TYPE	(N) Max HEIGHT COVER	(N) REINFORCED Conc BOX CULVERT	STRUCTURAL Conc, BOX CULVERT	BAR REINFORCEING STEEL (BOX CULVERT)	REMOVE MUD, SAND AND DEBRIS (IN CULVERT)	ABANDON CULVERT	REMOVE CULVERT	REMOVE BOX CULVERT	SAND BACKFILL	DESCRIPTION	STATION	DRAINAGE PLAN SHEET No.	DRAINAGE SYSTEM No.	DRAINAGE UNIT No.
			LF	LF	LF	LF	LF	LF	LF	LF	LF	LF	LF	LF	LF	LF	LF	LF	LF	-	LF	LF	CY	LB	LF	EA	LF	EA	CY					
D-8	21	n																												G-2 INLET W/24-12 GRATE	1.0' Lt 153+00 "A"	D-8	21	n
D-8	21	o					196.0													W	3.7									24" APC x 196.0'		D-8	21	o
D-8	21	p																												G-2 INLET W/24-12 GRATE	1.0' Lt 155+00 "A"	D-8	21	p
D-8	21	q					96.0													W	5.5									24" APC x 96.0'		D-8	21	q
D-8	21	r																												G-2 INLET W/24-12 GRATE	1.0' Lt 151+00 "A"	D-8	21	r
D-8	21	s					121.0													W	5.1									24" APC x 121.0'		D-8	21	s
D-8	21	t																												G-2 INLET W/24-12 GRATE	1.0' Lt 149+75 "A"	D-8	21	t
D-8	21	u					96.1													W	5.0									24" APC x 96.1'		D-8	21	u
D-8	21	v																												G-2 INLET W/24-12 GRATE	55.5' Lt 153+00 "A"	D-8	21	v
D-8	21	w					122.4													W	1.4									24" APC x 122.4'		D-8	21	w
D-8	21	x																												G-2 INLET W/24-12 GRATE	55.5' Lt 154+25 "A"	D-8	21	x
D-8	21	y					96.1													W	3.9									24" APC x 96.1'		D-8	21	y
D-8	21	z																												G-2 INLET W/24-12 GRATE	55.5' Lt 151+00 "A"	D-8	21	z
D-8	21	aa								54.2										W	3.8									24" RCP x 54.2'		D-8	21	aa
D-8	21	ab																												"L" HW (Mod) W/ CABLE RAIL	72.10' Lt 150+47.12 "A"	D-8	21	ab
D-8	21	ac																												RSP		D-8	21	ac
D-8	22	a																												RSP		D-8	22	a
D-8	22	b																												HW (TYPE A) W/ CABLE RAIL	67.28' Rt 155+65.87 "A"	D-8	22	b
D-8	22	c																				137.1	95.5	19057.0						DBL 5' x 3' RCB x 137.2'		D-8	22	c
D-8	22	d																												HW (TYPE A) W/ CABLE RAIL	69.88' Lt 155+65.86 "A"	D-8	22	d
D-8	22	e																												RSP		D-8	22	e
D-8	22A	a																												Conc (DITCH LINING)	76.5' Lt "A" Sta. 154+50	D-8	22A	a
D-8	23	a																									116.6			REMOVE (2) 24" RCP		D-8	23	a
D-8	23	b																								2.0			4.2	ABANDON (2) 18" RCP		D-8	23	b
D-8	24	a																												RSP		D-8	24	a
D-8	24	b																												STRAIGHT HEADWALL	79.5' Rt 156+50 "A"	D-8	24	b
D-8	24	c								22.6										S	7.4									24" RCP x 22.6'		D-8	24	c
D-8	24	d																												G-2 INLET W/24-12 GRATE	55.5' Rt 156+50 "A"	D-8	24	d
D-8	24	e								50.5										SO	7.3									24" RCP x 50.5'		D-8	24	e
D-8	24	f																												G-2 INLET W/24-12 GRATE	1.0' Lt 156+52 "A"	D-8	24	f
D-8	24	g								63.5										S	7.2									24" RCP x 63.5'		D-8	24	g
Tot	DQ-15		0.0	0.0	0.0	0.0	727.6	0.0	0.0	190.8	0.0	0.0	0.0	0.0	0.0	0.0	0.0	0.0	0.0	-	-	-	95.5	19057.0	0.0	2.0	116.6	0.0	4.2					

(N) = NOT A SEPARATE PAY ITEM, FOR INFORMATION ONLY
PIPE JOINT TYPES:
S - STANDARD
SO- SOIL TIGHT
D - DOWNDRAIN
W - WATERTIGHT

DRAINAGE QUANTITIES
DQ-15

LAST REVISION 12-31-13
DATE PLOTTED => 20-MAR-2014
TIME PLOTTED => 14:32

STATE OF CALIFORNIA - DEPARTMENT OF TRANSPORTATION
Caltrans®

CONSULTANT FUNCTIONAL SUPERVISOR: CARL SAVAGE
CALCULATED-DESIGNED BY: MICHAEL MANZANO
CHECKED BY: KATHRYN WALKER
REVISED BY
DATE REVISED

Dist	COUNTY	ROUTE	POST MILES TOTAL PROJECT	SHEET No.	TOTAL SHEETS
11	SD	15,76	R46.2/R46.8, R12.1/R17.7	414	1273

REGISTERED CIVIL ENGINEER 10-30-13 DATE

03-24-14
PLANS APPROVAL DATE

REGISTERED PROFESSIONAL ENGINEER KATHRYN WALKER No. C77900 Exp. 06-30-15 CIVIL STATE OF CALIFORNIA

THE STATE OF CALIFORNIA OR ITS OFFICERS OR AGENTS SHALL NOT BE RESPONSIBLE FOR THE ACCURACY OR COMPLETENESS OF SCANNED COPIES OF THIS PLAN SHEET.

DOKKEN ENGINEERING
5675 RUFFIN RD
SUITE 250
SAN DIEGO, CA 92123

DRAINAGE QUANTITIES

DRAINAGE PLAN SHEET No.	DRAINAGE SYSTEM No.	DRAINAGE UNIT No.	STRUCTURES (N) STRUCTURE HEIGHT LF	(N) MINOR CONCRETE (MINOR STRUCTURE) CY	STRUCTURAL CONCRETE (HEADWALL) CY	STRUCTURAL CONCRETE (JUNCTION STRUCTURE) CY	(N) GRATE TYPE 24-12 EA	(N) GRATE TYPE 36R EA	(N) MANHOLE FRAME AND COVER EA	(N) 1/4" CHECKERED PLATE COVER AND FRAME EA	(N) GRATE CHAIN EA	MISCELLANEOUS IRON AND STEEL LB	DRAINAGE INLET MARKER EA	CABLE RAILING LF	CHAIN LINK RAILING (TYPE 7) LF	REMOVE INLET EA	REMOVE HEADWALL EA	(N) Conc COLLAR EA	18" ALTERNATIVE FLARED END SECTION EA	24" ALTERNATIVE FLARED END SECTION EA	CONCRETE (SLOPE PROTECTION) CY	CONCRETE (DITCH LINING) CY	ROCK SLOPE PROTECTION (NO. 2, METHOD B) CY	ROCK SLOPE PROTECTION (NO. 1, METHOD B) SQYD	ROCK SLOPE PROTECTION (LIGHT, METHOD B) CY	ROCK SLOPE PROTECTION (1/4 T, METHOD B) CY	ROCK SLOPE PROTECTION (1/2 T, METHOD B) CY	ROCK SLOPE PROTECTION (2T, METHOD A) CY	ROCK SLOPE PROTECTION (1T, METHOD B) SQYD	ROCK SLOPE PROTECTION FABRIC (CLASS 8) SQYD	ROCK SLOPE PROTECTION FABRIC (CLASS 10) SQYD	STRUCTURE BACKFILL (SLURRY CEMENT) CY	DITCH EXCAVATION CY	MODIFY INLET EA	ADJUST INLET EA	ADJUST MANHOLE EA	CAP RISER EA	DESCRIPTION	STATION	DRAINAGE PLAN SHEET No.	DRAINAGE SYSTEM No.	DRAINAGE UNIT No.
D-8	21	n	6.20	2.9			1				1	329																									G-2 INLET W/24-12 GRATE	1.0' L+ 153+00 "A"	D-8	21	n
D-8	21	o																																			24" APC x 196.0'		D-8	21	o
D-8	21	p	6.10	2.9			1				1	329																									G-2 INLET W/24-12 GRATE	1.0' L+ 155+00 "A"	D-8	21	p
D-8	21	q																																			24" APC x 96.0'		D-8	21	q
D-8	21	r	7.60	3.4			1				1	329																									G-2 INLET W/24-12 GRATE	1.0' L+ 151+00 "A"	D-8	21	r
D-8	21	s																																			24" APC x 121.0'		D-8	21	s
D-8	21	t	7.40	3.3			1				1	329																									G-2 INLET W/24-12 GRATE	1.0' L+ 149+75 "A"	D-8	21	t
D-8	21	u																																			24" APC x 96.1'		D-8	21	u
D-8	21	v	4.90	2.6			1				1	329									2.0																G-2 INLET W/24-12 GRATE	55.5' L+ 153+00 "A"	D-8	21	v
D-8	21	w																																			24" APC x 122.4'		D-8	21	w
D-8	21	x	3.60	2.2			1				1	329									2.0																G-2 INLET W/24-12 GRATE	55.5' L+ 154+25 "A"	D-8	21	x
D-8	21	y																																			24" APC x 96.1'		D-8	21	y
D-8	21	z	6.10	2.9			1				1	329									2.0																G-2 INLET W/24-12 GRATE	55.5' L+ 151+00 "A"	D-8	21	z
D-8	21	aa																																			24" RCP x 54.2'		D-8	21	aa
D-8	21	ab			1.5									13.9																							"L" HW (Mod) W/ CABLE RAIL	72.10' L+ 150+47.12 "A"	D-8	21	ab
D-8	21	ac																					3.0							10.7							RSP		D-8	21	ac
D-8	22	a																					98.0			260.0				337.0							RSP		D-8	22	a
D-8	22	b			23.5									33.5																							HW (TYPE A) W/ CABLE RAIL	67.28' R+ 155+65.87 "A"	D-8	22	b
D-8	22	c																																			DBL 5' x 3' RCB x 137.2'		D-8	22	c
D-8	22	d			23.4									31.3																							HW (TYPE A) W/ CABLE RAIL	69.88' L+ 155+65.86 "A"	D-8	22	d
D-8	22	e																							37.0					71.3							RSP		D-8	22	e
D-8	22A	a																				4.3											13.8				Conc (DITCH LINING)	76.5' L+ "A" Sta. 154+50	D-8	22A	a
D-8	23	a																																			REMOVE (2) 24" RCP		D-8	23	a
D-8	23	b																																			ABANDON (2) 18" RCP		D-8	23	b
D-8	24	a																					21.0		21.0					41.6							RSP		D-8	24	a
D-8	24	b			1.2																																STRAIGHT HEADWALL	79.5' R+ 156+50 "A"	D-8	24	b
D-8	24	c																																			24" RCP x 22.6'		D-8	24	c
D-8	24	d	7.50	3.3			1				1	329									2.0																G-2 INLET W/24-12 GRATE	55.5' R+ 156+50 "A"	D-8	24	d
D-8	24	e																																			24" RCP x 50.5'		D-8	24	e
D-8	24	f	8.20	4.6			1				1	329																									G-2 INLET W/24-12 GRATE	1.0' L+ 156+52 "A"	D-8	24	f
D-8	24	g																																			24" RCP x 63.5'		D-8	24	g
To+ DQ-16			-	28.1	49.6	0.0	-	-	-	-	-	2,961	0	78.7	0.0	0	0	-	0	0	8.0	4.3	122.0	0.0	58.0	260.0	0.0	0.0	0.0	460.6	0.0	0.0	13.8	0	0	0	0					

DRAINAGE QUANTITIES
DQ-16

REVISED BY | DATE REVISED
MICHAEL MANZANO | KATHRYN WALKER
CALCULATED-DESIGNED BY | CHECKED BY
CONSULTANT FUNCTIONAL SUPERVISOR
CARL SAVAGE
STATE OF CALIFORNIA - DEPARTMENT OF TRANSPORTATION
Caltrans

LAST REVISION 12-31-13 | DATE PLOTTED => 20-MAR-2014 | TIME PLOTTED => 14:32

Dist	COUNTY	ROUTE	POST MILES TOTAL PROJECT	SHEET No.	TOTAL SHEETS
11	SD	15,76	R46.2/R46.8, R12.1/R17.7	415	1273

REGISTERED CIVIL ENGINEER 10-30-13 DATE

03-24-14
PLANS APPROVAL DATE

REGISTERED PROFESSIONAL ENGINEER KATHRYN WALKER No. C77900 Exp. 06-30-15 CIVIL STATE OF CALIFORNIA

THE STATE OF CALIFORNIA OR ITS OFFICERS OR AGENTS SHALL NOT BE RESPONSIBLE FOR THE ACCURACY OR COMPLETENESS OF SCANNED COPIES OF THIS PLAN SHEET.

DOKKEN ENGINEERING
5675 RUFFIN RD
SUITE 250
SAN DIEGO, CA 92123

DRAINAGE QUANTITIES

DRAINAGE PLAN SHEET No.	DRAINAGE SYSTEM No.	DRAINAGE UNIT No.	CULVERTS: 6" PERFORATED PLASTIC PIPE UNDERDRAIN	18" SLOTTED PLASTIC PIPE	GRATED LINE DRAIN	18" ALTERNATIVE PIPE CULVERT	24" ALTERNATIVE PIPE CULVERT	60" ALTERNATIVE PIPE CULVERT	18" REINFORCED Conc PIPE	24" REINFORCED Conc PIPE	30" REINFORCED Conc PIPE	36" REINFORCED Conc PIPE	42" REINFORCED Conc PIPE	48" REINFORCED Conc PIPE	60" REINFORCED Conc PIPE	66" REINFORCED Conc PIPE	30" BITUMINOUS COATED CSP (0.109" THICK)	36" REINFORCED Conc PIPE RISER	48" BITUMINOUS COATED CSP (0.109" THICK)	(N) PIPE JOINT TYPE	(N) Max HEIGHT COVER	(N) REINFORCED Conc BOX CULVERT	STRUCTURAL Conc, BOX CULVERT	BAR REINFORCING STEEL (BOX CULVERT)	REMOVE MUD, SAND AND DEBRIS (IN CULVERT)	ABANDON CULVERT	REMOVE CULVERT	REMOVE BOX CULVERT	SAND BACKFILL	DESCRIPTION	STATION	DRAINAGE PLAN SHEET No.	DRAINING SYSTEM No.	DRAINAGE UNIT No.
			LF	LF	LF	LF	LF	LF	LF	LF	LF	LF	LF	LF	LF	LF	LF	LF	LF	-	LF	LF	CY	LB	LF	EA	LF	EA	CY					
D-8	24	h																												G-2 INLET W/24-12 GRATE	55.5' Lt 156+81.73 "A"	D-8	24	h
D-8	24	i								18.1										S	6.9									24" RCP x 18.1'		D-8	24	i
D-8	24	j																												STRAIGHT HW	75.19' Lt 156+81.74 "A"	D-8	24	j
D-8	24	k																												Conc APRON (TYPE B)		D-8	24	k
D-8	24	l					215.0													S	6.8									24" APC x 215.0'		D-8	24	l
D-8	24	m																												G-2 INLET W/24-12 GRATE	55.5' Lt 159+00 "A"	D-8	24	m
D-8	24	n								72.0										S	8.2									24" RCP x 72.0'		D-8	24	n
D-8	24	o			12.0																									G-2 INLET W/24-12 GRATE	1.0' Lt 155+74 "A"	D-8	24	o
D-8	24A	a																												Conc DITCH (DITCH LINING)	79.6' Lt "A" Sta. 156+85	D-8	24A	a
D-8	25	a																												RSP		D-8	25	a
D-8	25	b																												HW (TYPE A) W/ CABLE RAIL	73.99' Rt 159+12.19 "A"	D-8	25	b
D-8	25	c												161.3						S	4.0									DBL 48" RCP x 161.3'		D-8	25	c
D-8	25	d																												HW (TYPE A) W/ CHAIN LINK	72.88' Lt 159+78.84 "A"	D-8	25	d
D-8	25	e																												RSP		D-8	25	e
D-8	25	f																2.8												JS	54.47' Rt 159+24.71 "A"	D-8	25	f
D-8	25	g					72.0													SO	4.1									24" APC x 72.0'		D-8	25	g
D-8	25	h																												G-2 INLET W/24-12 GRATE	55.50' Rt 160+00 "A"	D-8	25	h
D-9	25	i					240.0													SO	2.1									24" APC x 240.0'		D-9	25	i
D-9	25	j																												G-2 INLET W/24-12 GRATE	55.50' Rt 162+50 "A"	D-9	25	j
D-9	25	k					246.0													SO	1.9									24" APC x 246.0'		D-9	25	k
D-9	25	l																												G-2 INLET W/24-12 GRATE	55.50' Rt 165+00 "A"	D-9	25	l
D-9	25	m					246.0													SO	2.3									24" APC x 246.0'		D-9	25	m
D-9	25	n																												G-2 INLET W/24-12 GRATE	55.50' Rt 167+50 "A"	D-9	25	n
D-8	25	o								108.0										SO	4.1									24" RCP x 108.0'		D-8	25	o
D-8	25	p																												G-2 INLET W/24-12 GRATE	55.50' Lt 160+00 "A"	D-8	25	p
D-8	25	q					246.0													S	2.7									24" APC x 246.0'		D-8	25	q
D-9	25	r																												G-2 INLET W/24-12 GRATE	55.50' Lt 162+50 "A"	D-9	25	r
D-9	25	s					280.0													S	1.9									24" APC x 280.0'		D-9	25	s
D-9	25	t																												G-2 INLET W/24-12 GRATE	55.50' Lt 165+35 "A"	D-9	25	t
D-9	25	u					212.2													S	2.4									24" APC x 212.2'		D-9	25	u
D-9	25	v																												G-2 INLET W/24-12 GRATE	55.50' Lt 167+50 "A"	D-9	25	v
D-9	25	w				62.2														S	6.3									18" APCx 62.2'		D-9	25	w
D-9	25	x																7.9												OCP (Mod) INLET W/ 36R GRATE	93.04' Lt 163+01.59 "A"	D-9	25	x
D-9	25	y							20.1											S	2.9									18" RCP x 20.1'		D-9	25	y
D-9	25	z																												HW (TYPE A) W/ CABLE RAIL	72.31' Lt 165+47.07 "A"	D-9	25	z
D-9	26	a																									44.1			REMOVE 18" CMP X 44.1'		D-9	26	a
Tot DQ-17			0.0	0.0	12.0	62.2	1757.2	0.0	20.1	198.1	0.0	0.0	0.0	161.3	0.0	0.0	0.0	10.7	0.0	-	-	-	0.0	0.0	0.0	0.0	44.1	0.0	0.0					

(N) = NOT A SEPARATE PAY ITEM, FOR INFORMATION ONLY
PIPE JOINT TYPES:
S - STANDARD
SO- SOIL TIGHT
D - DOWNDRAIN
W - WATERTIGHT

DRAINAGE QUANTITIES
DQ-17

REVISED BY | DATE REVISED
MICHAEL MANZANO | KATHRYN WALKER
CALCULATED-DESIGNED BY | CHECKED BY
CONSULTANT FUNCTIONAL SUPERVISOR: CARL SAVAGE
STATE OF CALIFORNIA - DEPARTMENT OF TRANSPORTATION
Caltrans

LAST REVISION 12-31-13 | DATE PLOTTED => 20-MAR-2014 | TIME PLOTTED => 14:32

Dist	COUNTY	ROUTE	POST MILES TOTAL PROJECT	SHEET No.	TOTAL SHEETS
11	SD	15,76	R46.2/R46.8, R12.1/R17.7	416	1273

REGISTERED CIVIL ENGINEER 10-30-13 DATE

03-24-14
PLANS APPROVAL DATE

REGISTERED PROFESSIONAL ENGINEER KATHRYN WALKER No. C77900 Exp. 06-30-15 CIVIL STATE OF CALIFORNIA

THE STATE OF CALIFORNIA OR ITS OFFICERS OR AGENTS SHALL NOT BE RESPONSIBLE FOR THE ACCURACY OR COMPLETENESS OF SCANNED COPIES OF THIS PLAN SHEET.

DOKKEN ENGINEERING
5675 RUFFIN RD
SUITE 250
SAN DIEGO, CA 92123

DRAINAGE QUANTITIES

DRAINAGE PLAN SHEET No.	DRAINAGE SYSTEM No.	DRAINAGE UNIT No.	STRUCTURES (N) STRUCTURE HEIGHT	(N) MINOR CONCRETE (MINOR STRUCTURE)	(N) STRUCTURAL CONCRETE (HEADWALL)	(N) STRUCTURAL CONCRETE (JUNCTION STRUCTURE)	(N) GRATE TYPE 24-12	(N) GRATE TYPE 36R	(N) MANHOLE FRAME AND COVER	(N) 1/4" CHECKERED PLATE COVER AND FRAME	(N) GRATE CHAIN	MISCELLANEOUS IRON AND STEEL	DRAINAGE INLET MARKER	CABLE RAILING	CHAIN LINK RAILING (TYPE 7)	REMOVE INLET	REMOVE HEADWALL	(N) Conc COLLAR	18" ALTERNATIVE FLARED END SECTION	24" ALTERNATIVE FLARED END SECTION	CONCRETE (SLOPE PROTECTION)	CONCRETE (DITCH LINING)	ROCK SLOPE PROTECTION (NO. 2, METHOD B)	ROCK SLOPE PROTECTION (NO. 1, METHOD B)	ROCK SLOPE PROTECTION (LIGHT, METHOD B)	ROCK SLOPE PROTECTION (1/4 T, METHOD B)	ROCK SLOPE PROTECTION (1/2 T, METHOD B)	ROCK SLOPE PROTECTION (2T, METHOD A)	ROCK SLOPE PROTECTION (1T, METHOD B)	ROCK SLOPE PROTECTION FABRIC (CLASS 8)	ROCK SLOPE PROTECTION FABRIC (CLASS 10)	STRUCTURE BACKFILL (SLURRY CEMENT)	DITCH EXCAVATION	MODIFY INLET	ADJUST INLET	ADJUST MANHOLE	CAP RISER	DESCRIPTION	STATION	DRAINAGE PLAN SHEET No.	DRAINAGE SYSTEM No.	DRAINAGE UNIT No.
			LF	CY	CY	CY	EA	EA	EA	EA	EA	LB	EA	LF	LF	EA	EA	EA	EA	EA	CY	CY	CY	CY	CY	CY	CY	CY	CY	SQYD	SQYD	CY	CY	EA	EA	EA	EA					
D-8	24	h	7.20	3.2			1				1	326									2.0																	G-2 INLET W/24-12 GRATE	55.5′ L+ 156+81.73 "A"	D-8	24	h
D-8	24	i																																				24" RCP x 18.1′		D-8	24	i
D-8	24	j			1.2																																	STRAIGHT HW	75.19′ L+ 156+81.74 "A"	D-8	24	j
D-8	24	k																																				Conc APRON (TYPE B)		D-8	24	k
D-8	24	l																																				24" APC x 215.0′		D-8	24	l
D-8	24	m	3.50	2.1			1				1	329									2.0																	G-2 INLET W/24-12 GRATE	55.5′ L+ 159+00 "A"	D-8	24	m
D-8	24	n																																				24" RCP x 72.0′		D-8	24	n
D-8	24	o	5.5	2.7			1				1	329																										G-2 INLET W/24-12 GRATE	1.0′ L+ 155+74 "A"	D-8	24	o
D-8	24A	a																				12.7											33.5					Conc DITCH (DITCH LINING)	79.6′ L+ "A" Sta. 156+85	D-8	24A	a
D-8	25	a																					80.0			211.0				285.0								RSP		D-8	25	a
D-8	25	b			29.7									39.4																								HW (TYPE A) W/ CABLE RAIL	73.99′ R+ 159+12.19 "A"	D-8	25	b
D-8	25	c																														112.2						DBL 48" RCP x 161.3′		D-8	25	c
D-8	25	d			22.1										29.2																							HW (TYPE A) W/ CHAIN LINK	72.88′ L+ 159+78.84 "A"	D-8	25	d
D-8	25	e																							33.0					60.0								RSP		D-8	25	e
D-8	25	f	5.50			4.2		1				236																										JS	54.47′ R+ 159+24.71 "A"	D-8	25	f
D-8	25	g																																				24" APC x 72.0′		D-8	25	g
D-8	25	h	7.40	3.3			1				1	329									2.0																	G-2 INLET W/24-12 GRATE	55.50′ R+ 160+00 "A"	D-8	25	h
D-9	25	i																																				24" APC x 240.0′		D-9	25	i
D-9	25	j	6.00	2.9			1				1	329									2.0																	G-2 INLET W/24-12 GRATE	55.50′ R+ 162+50 "A"	D-9	25	j
D-9	25	k																																				24" APC x 246.0′		D-9	25	k
D-9	25	l	4.60	2.5			1				1	329									2.0																	G-2 INLET W/24-12 GRATE	55.50′ R+ 165+00 "A"	D-9	25	l
D-9	25	m																																				24" APC x 246.0′		D-9	25	m
D-9	25	n	3.70	2.2			1				1	329									2.0																	G-2 INLET W/24-12 GRATE	55.50′ R+ 167+50 "A"	D-9	25	n
D-8	25	o																																				24" RCP x 108.0′		D-8	25	o
D-8	25	p	6.20	2.9			1				1	329									2.0																	G-2 INLET W/24-12 GRATE	55.50′ L+ 160+00 "A"	D-8	25	p
D-8	25	q																																				24" APC x 246.0′		D-8	25	q
D-9	25	r	5.00	2.6			1				1	329									2.0																	G-2 INLET W/24-12 GRATE	55.50′ L+ 162+50 "A"	D-9	25	r
D-9	25	s																																				24" APC x 280.0′		D-9	25	s
D-9	25	t	4.30	2.4			1				1	329									2.0																	G-2 INLET W/24-12 GRATE	55.50′ L+ 165+35 "A"	D-9	25	t
D-9	25	u																																				24" APC x 212.2′		D-9	25	u
D-9	25	v	3.80	2.2			1				1	329									2.0																	G-2 INLET W/24-12 GRATE	55.50′ L+ 167+50 "A"	D-9	25	v
D-9	25	w																																				18" APCx 62.2′		D-9	25	w
D-9	25	x	7.30	0.5				1			1	236									2.0																	OCP (Mod) INLET W/ 36R GRT	93.04′ L+ 163+01.59 "A"	D-9	25	x
D-9	25	y																																				18" RCP x 20.1′		D-9	25	y
D-9	25	z			9.7									15.5							2.4																	HW (TYPE A) W/ CABLE RAIL	72.31′ L+ 165+47.07 "A"	D-9	25	z
D-9	26	a																																				REMOVE 18" CMP X 44.1′		D-9	26	a
Tot DQ-18			-	29.5	62.7	4.2	-	-	-	-	-	4,088	0	54.9	29.2	0	0	-	0	0	24.4	12.7	80.0	0.0	33.0	211.0	0.0	0.0	0.0	345.0	0.0	112.2	33.5	0	0	0	0					

DRAINAGE QUANTITIES
DQ-18

STATE OF CALIFORNIA - DEPARTMENT OF TRANSPORTATION
Caltrans®

CONSULTANT FUNCTIONAL SUPERVISOR: CARL SAVAGE
CALCULATED-DESIGNED BY: MICHAEL MANZANO
CHECKED BY: KATHRYN WALKER
REVISED BY
DATE REVISED

LAST REVISION 12-31-13
DATE PLOTTED => 20-MAR-2014
TIME PLOTTED => 14:32

Dist	COUNTY	ROUTE	POST MILES TOTAL PROJECT	SHEET No.	TOTAL SHEETS
11	SD	15,76	R46.2/R46.8, R12.1/R17.7	417	1273

REGISTERED CIVIL ENGINEER 10-30-13 DATE

03-24-14
PLANS APPROVAL DATE

REGISTERED PROFESSIONAL ENGINEER KATHRYN WALKER No. C77900 Exp. 06-30-15 CIVIL STATE OF CALIFORNIA

THE STATE OF CALIFORNIA OR ITS OFFICERS OR AGENTS SHALL NOT BE RESPONSIBLE FOR THE ACCURACY OR COMPLETENESS OF SCANNED COPIES OF THIS PLAN SHEET.

DOKKEN ENGINEERING
5675 RUFFIN RD
SUITE 250
SAN DIEGO, CA 92123

DRAINAGE QUANTITIES

DRAINAGE PLAN SHEET No.	DRAINAGE SYSTEM No.	DRAINAGE UNIT No.	CULVERTS: 6" PERFORATED PLASTIC PIPE UNDERDRAIN	18" SLOTTED PLASTIC PIPE	GRATED LINE DRAIN	18" ALTERNATIVE PIPE CULVERT	24" ALTERNATIVE PIPE CULVERT	60" ALTERNATIVE PIPE CULVERT	18" REINFORCED Conc PIPE	24" REINFORCED Conc PIPE	30" REINFORCED Conc PIPE	36" REINFORCED Conc PIPE	42" REINFORCED Conc PIPE	48" REINFORCED Conc PIPE	60" REINFORCED Conc PIPE	66" REINFORCED Conc PIPE	30" BITUMINOUS COATED CSP (0.109" THICK)	36" REINFORCED Conc PIPE RISER	48" BITUMINOUS COATED CSP (0.109" THICK)	(N) PIPE JOINT TYPE	(N) Max HEIGHT COVER	(N) REINFORCED Conc BOX CULVERT	STRUCTURAL Conc, BOX CULVERT	BAR REINFORCEING STEEL (BOX CULVERT)	REMOVE MUD, SAND AND DEBRIS (IN CULVERT)	ABANDON CULVERT	REMOVE CULVERT	REMOVE BOX CULVERT	SAND BACKFILL	DESCRIPTION	STATION	DRAINAGE PLAN SHEET No.	DRAINAGE SYSTEM No.	DRAINAGE UNIT No.
			LF	LF	LF	LF	LF	LF	LF	LF	LF	LF	LF	LF	LF	LF	LF	LF	LF	-	LF	LF	CY	LB	LF	EA	LF	EA	CY					
D-9	27	a																												RSP		D-9	27	a
D-9	27	b																												HW (TYPE A) W/ CHAIN LINK	74.85′ R+ 168+83.65 "A"	D-9	27	b
D-9	27	c										170.4								S	5.8									36" RCP x 170.4′		D-9	27	c
D-9	27	d																												HW (TYPE A) W/ CHAIN LINK	70.50′ L+ 169+72.55 "A"	D-9	27	d
D-9	27	e																									33.5			RMV 12" x 33.5′ CMP		D-9	27	d
D-9	27A	a																												Conc (DITCH LINING)	101.6′ L+ "A" Sta.162+50	D-9	27A	a
D-9	28	a																												RSP		D-9	28	a
D-9	28	b																												STRAIGHT HEADWALL	80.85′ R+ 170+00 "A"	D-9	28	b
D-9	28	c								28.3										SO	4.7									24" RCP x 28.3′		D-9	28	c
D-9	28	d																												G-2 INLET W/24-12 GRATE	55.50′ R+ 170+00 "A"	D-9	28	d
D-9	28	e					245.0													SO	6.2									24" APC x 245.0′		D-9	28	e
D-10	28	f																												G-2 INLET W/24-12 GRATE	55.50′ R+ 172+50 "A"	D-10	28	f
D-10	28	g					56.5													SO	3.7									24" APC x 56.5′		D-10	28	g
D-10	28	h																												G-2 INLET W/24-12 GRATE	55.50′ R+ 173+10 "A"	D-10	28	h
D-10	28	i								108.0										S	3.6									24" RCP x 108.0′		D-10	28	i
D-10	28	j																												G-2 INLET W/24-12 GRATE	55.50′ L+ 173+10 "A"	D-10	28	j
D-10	28	k				56.0														S	2.3									18" APC x 56′		D-10	28	k
D-10	28	l																												G-1 INLET W/24-12 GRATE	55.50′ L+ 172+50 "A"	D-10	28	l
D-10	29	a																												RSP		D-10	29	a
D-10	29	b																												HW (TYPE A) W/ CABLE RAIL	74.04′ R+ 174+57.48 "A"	D-10	29	b
D-10	29	c									435.6									SO	5.0									TPL 30" RCP x 145.2′		D-10	29	c
D-10	29	d																												HW (TYPE A) W/ CABLE RAIL	71.17′ L+ 174+57.48 "A"	D-10	29	d
D-10	29	e																												RSP		D-10	29	e
D-10	29	f																									168.0			RMV (3) 36" x 56.0′ RCP		D-10	29	f
D-10	29	g																												G-2 INLET W/24-12 GRATE	55.50′ R+ 174+62 "A"	D-10	29	g
D-10	29	h					33.5													S	4.9									24" APC x 33.5′		D-10	29	h
D-10	29	i																												G-2 INLET W/24-12 GRATE	55.50′ R+ 175+00 "A"	D-10	29	i
D-10	29	j					116.0													S	4.5									24" APC x 116.0′		D-10	29	j
D-10	29	k																												G-2 INLET W/24-12 GRATE	55.50′ R+ 176+20 "A"	D-10	29	k
D-10	29	l					246.2													S	4.5									24" APC x 246.2′		D-10	29	l
D-10	29	m																												G-2 INLET W/24-12 GRATE	55.5′ R+ 178+70 "A"	D-10	29	m
D-10	29	n								108.0										SO	4.3									24" RCP x 108.0′		D-10	29	n
D-10	29	o																												G-2 INLET W/24-12 GRATE	55.50′ L+ 175+00 "A"	D-10	29	o
To+ DQ-19			0.0	0.0	0.0	56.0	697.2	0.0	0.0	244.3	435.6	170.4	0.0	0.0	0.0	0.0	0.0	0.0	0.0	-	-	-	0.0	0.0	0.0	0.0	201.5	0.0	0.0					

(N) = NOT A SEPARATE PAY ITEM, FOR INFORMATION ONLY
PIPE JOINT TYPES:
S - STANDARD
SO- SOIL TIGHT
D - DOWNDRAIN
W - WATERTIGHT

DRAINAGE QUANTITIES
DQ-19

MICHAEL MANZANO — REVISED BY
KATHRYN WALKER — DATE REVISED
CALCULATED-DESIGNED BY
CHECKED BY
CONSULTANT FUNCTIONAL SUPERVISOR
CARL SAVAGE
STATE OF CALIFORNIA - DEPARTMENT OF TRANSPORTATION
Caltrans

LAST REVISION 12-31-13 | DATE PLOTTED => 20-MAR-2014 | TIME PLOTTED => 14:32

Dist	COUNTY	ROUTE	POST MILES TOTAL PROJECT	SHEET No.	TOTAL SHEETS
11	SD	15,76	R46.2/R46.8, R12.1/R17.7	418	1273

REGISTERED CIVIL ENGINEER 10-30-13 DATE

03-24-14
PLANS APPROVAL DATE

REGISTERED PROFESSIONAL ENGINEER KATHRYN WALKER No. C77900 Exp. 06-30-15 CIVIL STATE OF CALIFORNIA

THE STATE OF CALIFORNIA OR ITS OFFICERS OR AGENTS SHALL NOT BE RESPONSIBLE FOR THE ACCURACY OR COMPLETENESS OF SCANNED COPIES OF THIS PLAN SHEET.

DOKKEN ENGINEERING
5675 RUFFIN RD
SUITE 250
SAN DIEGO, CA 92123

DRAINAGE QUANTITIES

DRAINAGE PLAN SHEET No.	DRAINAGE SYSTEM No.	DRAINAGE UNIT No.	STRUCTURES (N) STRUCTURE HEIGHT LF	MINOR CONCRETE (MINOR STRUCTURE) CY	STRUCTURAL CONCRETE (HEADWALL) CY	STRUCTURAL CONCRETE (JUNCTION STRUCTURE) CY	(N) GRATE TYPE 24-12 EA	(N) GRATE TYPE 36R EA	(N) MANHOLE FRAME AND COVER EA	(N) 1/4" CHECKERED PLATE COVER AND FRAME EA	(N) GRATE CHAIN EA	MISCELLANEOUS IRON AND STEEL LB	DRAINAGE INLET MARKER EA	CABLE RAILING LF	CHAIN LINK RAILING (TYPE 7) LF	REMOVE INLET EA	REMOVE HEADWALL EA	(N) Conc COLLAR EA	18" ALTERNATIVE FLARED END SECTION EA	24" ALTERNATIVE FLARED END SECTION EA	CONCRETE (SLOPE PROTECTION) CY	CONCRETE (DITCH LINING) CY	ROCK SLOPE PROTECTION (NO. 2, METHOD B) CY	ROCK SLOPE PROTECTION (NO. 1, METHOD B) CY	ROCK SLOPE PROTECTION (LIGHT, METHOD B) CY	ROCK SLOPE PROTECTION (1/4 T, METHOD B) CY	ROCK SLOPE PROTECTION (1/2 T, METHOD B) CY	ROCK SLOPE PROTECTION (2T, METHOD A) CY	ROCK SLOPE PROTECTION (1T, METHOD B) CY	ROCK SLOPE PROTECTION FABRIC (CLASS 8) SQYD	ROCK SLOPE PROTECTION FABRIC (CLASS 10) SQYD	STRUCTURE BACKFILL (SLURRY CEMENT) CY	DITCH EXCAVATION CY	MODIFY INLET EA	ADJUST INLET EA	ADJUST MANHOLE EA	CAP RISER EA	DESCRIPTION	STATION	DRAINAGE PLAN SHEET No.	DRAINAGE SYSTEM No.	DRAINAGE UNIT No.
D-9	27	a																					115.0			304.0				384.0							RSP		D-9	27	a
D-9	27	b			22.1										29.0																						HW (TYPE A) W/ CHAIN LINK	74.85′ R+ 168+83.65 "A"	D-9	27	b
D-9	27	c																																			36" RCP x 170.4′		D-9	27	c
D-9	27	d			26.4										35.3						4.5																HW (TYPE A) W/ CHAIN LINK	70.50′ L+ 169+72.55 "A"	D-9	27	d
D-9	27A	a																				48.5												133.0						Conc (DITCH LINING)	101.6′ L+ "A" Sta.162+50	D-9	27A	a
D-9	28	a																							7.0					18.0							RSP		D-9	28	a
D-9	28	b			1.2																																STRAIGHT HEADWALL	80.85′ R+ 170+00 "A"	D-9	28	b
D-9	28	c																																			24" RCP x 28.3′		D-9	28	c
D-9	28	d	9.80	5.2			1				1	329									1.7																G-2 INLET W/24-12 GRATE	55.50′ R+ 170+00 "A"	D-9	28	d
D-9	28	e																																			24" APC x 245.0′		D-9	28	e
D-10	28	f	6.00	2.9			1				1	329									2.0																G-2 INLET W/24-12 GRATE	55.50′ R+ 172+50 "A"	D-10	28	f
D-10	28	g																																			24" APC x 56.5′		D-10	28	g
D-10	28	h	5.30	2.7			1				1	329									1.7																G-2 INLET W/24-12 GRATE	55.50′ R+ 173+10 "A"	D-10	28	h
D-10	28	i																																			24" RCP x 108.0′		D-10	28	i
D-10	28	j	4.10	2.3			1				1	329									1.7																G-2 INLET W/24-12 GRATE	55.50′ L+ 173+10 "A"	D-10	28	j
D-10	28	k																																			18" APC x 56′		D-10	28	k
D-10	28	l	3.50	2.1			1				1	329									2.0																G-1 INLET W/24-12 GRATE	55.50′ L+ 172+50 "A"	D-10	28	l
D-10	29	a																							28.0					53.0							RSP		D-10	29	a
D-10	29	b			23.2									29.4																							HW (TYPE A) W/ CABLE RAIL	74.04′ R+ 174+57.48 "A"	D-10	29	b
D-10	29	c																														123.6					TPL 30" RCP x 145.2′		D-10	29	c
D-10	29	d			26.0									33.9																							HW (TYPE A) W/ CABLE RAIL	71.17′ L+ 174+57.48 "A"	D-10	29	d
D-10	29	e																							28.0					53.0							RSP		D-10	29	e
D-10	29	f																																			RMV (3) 36" x 56.0′ RCP		D-10	29	f
D-10	29	g	7.00	3.2			1				1	329									2.0																G-2 INLET W/24-12 GRATE	55.50′ R+ 174+62 "A"	D-10	29	g
D-10	29	h																																			24" APC x 33.5′		D-10	29	h
D-10	29	i	6.80	3.1			1				1	329									2.0																G-2 INLET W/24-12 GRATE	55.50′ R+ 175+00 "A"	D-10	29	i
D-10	29	j																																			24" APC x 116.0′		D-10	29	j
D-10	29	k	4.80	2.5			1				1	329									2.0																G-2 INLET W/24-12 GRATE	55.50′ R+ 176+20 "A"	D-10	29	k
D-10	29	l																																			24" APC x 246.2′		D-10	29	l
D-10	29	m	3.50	2.1			1				1	329									2.0																G-2 INLET W/24-12 GRATE	55.5′ R+ 178+70 "A"	D-10	29	m
D-10	29	n																																			24" RCP x 108.0′		D-10	29	n
D-10	29	o	5.90	2.9			1				1	329									2.0																G-2 INLET W/24-12 GRATE	55.50′ L+ 175+00 "A"	D-10	29	o
To+ DQ-20			-	29.0	98.9	0.0	-	-	-	-	-	3,290	0	63.3	64.3	0	0	-	0	0	23.6	48.5	115.0	0.0	63.0	304.0	0.0	0.0	0.0	508.0	0.0	123.6	133.0	0	0	0	0					

DRAINAGE QUANTITIES
DQ-20

REVISED BY | DATE REVISED
MICHAEL MANZANO | KATHRYN WALKER
CALCULATED-DESIGNED BY | CHECKED BY
CONSULTANT FUNCTIONAL SUPERVISOR: CARL SAVAGE
STATE OF CALIFORNIA - DEPARTMENT OF TRANSPORTATION
Caltrans

LAST REVISION 12-31-13
DATE PLOTTED => 20-MAR-2014
TIME PLOTTED => 14:32

DRAINAGE QUANTITIES

Dist	COUNTY	ROUTE	POST MILES TOTAL PROJECT	SHEET No.	TOTAL SHEETS
11	SD	15,76	R46.2/R46.8, R12.1/R17.7	419	1273

REGISTERED CIVIL ENGINEER 10-30-13 DATE

03-24-14
PLANS APPROVAL DATE

REGISTERED PROFESSIONAL ENGINEER KATHRYN WALKER No. C77900 Exp. 06-30-15 CIVIL STATE OF CALIFORNIA

THE STATE OF CALIFORNIA OR ITS OFFICERS OR AGENTS SHALL NOT BE RESPONSIBLE FOR THE ACCURACY OR COMPLETENESS OF SCANNED COPIES OF THIS PLAN SHEET.

DOKKEN ENGINEERING
5675 RUFFIN RD
SUITE 250
SAN DIEGO, CA 92123

CULVERTS

DRAINAGE PLAN SHEET No.	DRAINAGE SYSTEM No.	DRAINAGE UNIT No.	6" PERFORATED PLASTIC PIPE UNDERDRAIN	18" SLOTTED PLASTIC PIPE	GRATED LINE DRAIN	18" ALTERNATIVE PIPE CULVERT	24" ALTERNATIVE PIPE CULVERT	60" ALTERNATIVE PIPE CULVERT	18" REINFORCED Conc PIPE	24" REINFORCED Conc PIPE	30" REINFORCED Conc PIPE	36" REINFORCED Conc PIPE	42" REINFORCED Conc PIPE	48" REINFORCED Conc PIPE	60" REINFORCED Conc PIPE	66" REINFORCED Conc PIPE	30" BITUMINOUS COATED CSP (0.109" THICK)	36" REINFORCED Conc PIPE RISER	48" BITUMINOUS COATED CSP (0.109" THICK)	(N) PIPE JOINT TYPE	(N) Max HEIGHT COVER	(N) REINFORCED Conc BOX CULVERT	STRUCTURAL Conc, BOX CULVERT	BAR REINFORCEING STEEL (BOX CULVERT)	REMOVE MUD, SAND AND DEBRIS (IN CULVERT)	ABANDON CULVERT	REMOVE CULVERT	REMOVE BOX CULVERT	SAND BACKFILL	DESCRIPTION	STATION	DRAINAGE PLAN SHEET No.	DRAINAGE SYSTEM No.	DRAINAGE UNIT No.
			LF	LF	LF	LF	LF	LF	LF	LF	LF	LF	LF	LF	LF	LF	LF	LF	LF	-	LF	LF	CY	LB	LF	EA	LF	EA	CY					
D-10	29	p					196.0													SO	3.6									24" APC x 196.0′		D-10	29	p
D-10	29	q																												G-2 INLET W/24-12 GRATE	55.50′ L+ 177+00 "A"	D-10	29	q
D-10	29	r					297.0													SO	3.5									24" APC x 297.0′		D-10	29	r
D-10	29	s																												G-2 INLET W/24-12 GRATE	73.5′ L+ 180+00 "A"	D-10	29	s
D-10	29	t																												RSP		D-10	29	t
D-10	29	u																												18" AFES W/ TOE PLATE	35.69′ L+ 10+91.21 "VM"	D-10	29	u
D-10	29	v				67.7														S	3.7									18" APC x 67.7′		D-10	29	v
D-10	29	w																												G-2 INLET W/ 24-12 GRATE	20.00′ R+ 11+32.37 "VM"	D-10	29	w
D-10	30	a																									95.9			REMOVE 12" RCP		D-10	30	a
D-10	30	b																												REMOVE INLET		D-10	30	b
D-10	30	c																									101.2			REMOVE 12" RCP		D-10	30	c
D-10	30	d																												REMOVE INLET		D-10	30	d
D-10	31	a																												RSP BASIN	77.92′ RT "A" 180+70.00	D-10	31	a
D-10	31	b																								2.0				ABN (2) 36" RCP		D-10	31	b
D-10	31	c																												RSP BASIN		D-10	31	c
D-10	31	d																												Conc (DITCH LINING)	101.96′ L+ "A" 179+49.83	D-10	31	d
D-10	32	a																												RSP		D-10	32	a
D-10	32	b																												STRAIGHT HEADWALL	78.80′ R+ 182+00 "A"	D-10	32	b
D-10	32	c								23.0										S	4.5									24" RCP x 23.0′		D-10	32	c
D-10	32	d																												G-2 INLET W/24-12 GRATE	55.50′ R+ 182+00 "A"	D-10	32	d
D-10	32	e								126.0										SO	4.4									24" RCP x 126.0′		D-10	32	e
D-10	32	f																												G-2 INLET W/24-12 GRATE	73.50′ L+ 182+00 "A"	D-10	32	f
D-10	32	g					246.0													SO	2.5									24" APC x 246′		D-10	32	g
D-11	32	h																												G-2 INLET W/24-12 GRATE	72.58′ L+ 184+50 "A"	D-11	32	h
D-10	32	i					246.0													SO	4.3									24" APC x 246′		D-10	32	i
D-11	32	j																												G-2 INLET W/24-12 GRATE	55.50′ L+ 184+50 "A"	D-11	32	j
D-10	32A	a																												Conc (DITCH LINING)	101.2′ L+ "A" Sta. 182+00	D-10	32A	a
D-11	33	a																									40.2			REMOVE 12" CMP X 40.2′		D-11	33	a
D-11	34	a																									169.8			REMOVE (3) 24" RCP		D-11	34	a
D-11	35	a																												RSP		D-11	35	a
D-11	35	b																												STRAIGHT HW W/ CABLE RAIL	75.00′ R+ 192+00 "A"	D-11	35	b
D-11	35	c										18.0								S	3.9									36" RCP x 18.0′		D-11	35	c
D-11	35	d																												G-2 INLET W/24-12 GRATE	55.50′ R+ 192+00 "A"	D-11	35	d
D-11	35	e										110.0								S	3.6									36" RCP x 110.0′	55.50′ L+ 191+81 "A"	D-11	35	e
D-11	35	f																												G-2 INLET W/24-12 GRATE		D-11	35	f
D-11	35	g					78.0													SO	2.9									24" APC x 78.0′		D-11	35	g
Tot DQ-21			0.0	0.0	0.0	67.7	1063.0	0.0	0.0	149.0	0.0	128.0	0.0	0.0	0.0	0.0	0.0	0.0	0.0	-	-	-	0.0	0.0	0.0	2.0	407.1	0.0	0.0					

(N) = NOT A SEPARATE PAY ITEM, FOR INFORMATION ONLY
PIPE JOINT TYPES:
S - STANDARD
SO- SOIL TIGHT
D - DOWNDRAIN
W - WATERTIGHT

DRAINAGE QUANTITIES
DQ-21

REVISED BY | DATE REVISED
MICHAEL MANZANO | KATHRYN WALKER
CALCULATED-DESIGNED BY | CHECKED BY
CONSULTANT FUNCTIONAL SUPERVISOR
CARL SAVAGE
STATE OF CALIFORNIA - DEPARTMENT OF TRANSPORTATION
Caltrans

LAST REVISION 12-31-13 | DATE PLOTTED => 20-MAR-2014 | TIME PLOTTED => 14:32

Dist	COUNTY	ROUTE	POST MILES TOTAL PROJECT	SHEET No.	TOTAL SHEETS
11	SD	15,76	R46.2/R46.8, R12.1/R17.7	420	1273

REGISTERED CIVIL ENGINEER 10-30-13 DATE

03-24-14
PLANS APPROVAL DATE

REGISTERED PROFESSIONAL ENGINEER KATHRYN WALKER No. C77900 Exp. 06-30-15 CIVIL STATE OF CALIFORNIA

THE STATE OF CALIFORNIA OR ITS OFFICERS OR AGENTS SHALL NOT BE RESPONSIBLE FOR THE ACCURACY OR COMPLETENESS OF SCANNED COPIES OF THIS PLAN SHEET.

DOKKEN ENGINEERING
5675 RUFFIN RD
SUITE 250
SAN DIEGO, CA 92123

DRAINAGE QUANTITIES

DRAINAGE PLAN SHEET No.	DRAINAGE SYSTEM No.	DRAINAGE UNIT No.	STRUCTURES (N) STRUCTURE HEIGHT LF	MINOR CONCRETE (MINOR STRUCTURE) CY	STRUCTURAL CONCRETE (HEADWALL) CY	STRUCTURAL CONCRETE (JUNCTION STRUCTURE) CY	(N) GRATE TYPE 24-12 EA	(N) GRATE TYPE 36R EA	(N) MANHOLE FRAME AND COVER EA	(N) 1/4" CHECKERED PLATE COVER AND FRAME EA	(N) GRATE CHAIN EA	MISCELLANEOUS IRON AND STEEL LB	DRAINAGE INLET MARKER EA	CABLE RAILING LF	CHAIN LINK RAILING (TYPE 7) LF	REMOVE INLET EA	REMOVE HEADWALL EA	(N) Conc COLLAR EA	18" ALTERNATIVE FLARED END SECTION EA	24" ALTERNATIVE FLARED END SECTION EA	CONCRETE (SLOPE PROTECTION) CY	CONCRETE (DITCH LINING) CY	ROCK SLOPE PROTECTION (NO. 2, METHOD B) CY	ROCK SLOPE PROTECTION (NO. 1, METHOD B) CY	ROCK SLOPE PROTECTION (LIGHT, METHOD B) CY	ROCK SLOPE PROTECTION (1/4 T, METHOD B) CY	ROCK SLOPE PROTECTION (1/2 T, METHOD B) CY	ROCK SLOPE PROTECTION (2T, METHOD A) CY	ROCK SLOPE PROTECTION (1T, METHOD B) CY	ROCK SLOPE PROTECTION FABRIC (CLASS 8) SQYD	ROCK SLOPE PROTECTION FABRIC (CLASS 10) SQYD	STRUCTURE BACKFILL (SLURRY CEMENT) CY	DITCH EXCAVATION CY	MODIFY INLET EA	ADJUST INLET EA	ADJUST MANHOLE EA	CAP RISER EA	DESCRIPTION	STATION	DRAINAGE PLAN SHEET No.	DRAINAGE SYSTEM No.	DRAINAGE UNIT No.
D-10	29	p																																				24" APC x 196.0′		D-10	29	p
D-10	29	q	5.90	2.9			1				1	329									2.0																	G-2 INLET W/24-12 GRATE	55.50′ L+ 177+00 "A"	D-10	29	q
D-10	29	r																																				24" APC x 297.0′		D-10	29	r
D-10	29	s	3.80	2.2			1				1	329									2.0																	G-2 INLET W/24-12 GRATE	73.5′ L+ 180+00 "A"	D-10	29	s
D-10	29	t																							4.0					13.1								RSP		D-10	29	t
D-10	29	u																	1																			18" AFES W/ TOE PLATE	35.69′ L+ 10+91.21 "VM"	D-10	29	u
D-10	29	v																																				18" APC x 67.7′		D-10	29	v
D-10	29	w	3.80	2.2			1				1	329	1																									G-2 INLET W/ 24-12 GRATE	20.00′ R+ 11+32.37 "VM"	D-10	29	w
D-10	30	a																																				REMOVE 12" RCP		D-10	30	a
D-10	30	b														1																						REMOVE INLET		D-10	30	b
D-10	30	c																																				REMOVE 12" RCP		D-10	30	c
D-10	30	d														1																						REMOVE INLET		D-10	30	d
D-10	31	a																							162.9					240.2								RSP BASIN	77.92′ RT "A" 180+70.00	D-10	31	a
D-10	31	b																																				ABN (2) 36" RCP		D-10	31	b
D-10	31	c																																				RSP BASIN		D-10	31	c
D-10	31	d																				7.7											13.5					Conc (DITCH LINING)	101.96′ L+ "A" 179+49.83	D-10	31	d
D-10	32	a																							7.0					18.0								RSP		D-10	32	a
D-10	32	b			1.2																																	STRAIGHT HEADWALL	78.80′ R+ 182+00 "A"	D-10	32	b
D-10	32	c																																				24" RCP x 23.0′		D-10	32	c
D-10	32	d	8.50	4.7			1				1	329									2.0																	G-2 INLET W/24-12 GRATE	55.50′ R+ 182+00 "A"	D-10	32	d
D-10	32	e																																				24" RCP x 126.0′		D-10	32	e
D-10	32	f	5.50	2.7			1				1	329									2.0																	G-2 INLET W/24-12 GRATE	73.50′ L+ 182+00 "A"	D-10	32	f
D-10	32	g																																				24" APC x 246′		D-10	32	g
D-11	32	h	3.60	2.2			1				1	329									2.0																	G-2 INLET W/24-12 GRATE	72.58′ L+ 184+50 "A"	D-11	32	h
D-10	32	i																																				24" APC x 246′		D-10	32	i
D-11	32	j	3.50	2.1			1				1	329									2.0																	G-2 INLET W/24-12 GRATE	55.50′ L+ 184+50 "A"	D-11	32	j
D-10	32A	a																				34.4			2.0					8.2			112.8					Conc (DITCH LINING)	101.2′ L+ "A" Sta. 182+00	D-10	32A	a
D-11	33	a																																				REMOVE 12" CMP X 40.2′		D-11	33	a
D-11	34	a																																				REMOVE (3) 24" RCP		D-11	34	a
D-11	35	a																						11.0		31.0				48.6								RSP		D-11	35	a
D-11	35	b			2.0									12.5																								STRAIGHT HW W/ CABLE RAIL	75.00′ R+ 192+00 "A"	D-11	35	b
D-11	35	c																																				36" RCP x 18.0′		D-11	35	c
D-11	35	d	6.20	2.9			1				1	329									1.7																	G-2 INLET W/24-12 GRATE	55.50′ R+ 192+00 "A"	D-11	35	d
D-11	35	e																																				36" RCP x 110.0′		D-11	35	e
D-11	35	f	5.10	2.6			1				1	329									1.7																	G-2 INLET W/24-12 GRATE	55.50′ L+ 191+81 "A"	D-11	35	f
D-11	35	g																																				24" APC x 78.0′		D-11	35	g
Tot	DQ-22		-	24.5	3.2	0.0	-	-	-	-	-	2961	1	12.5	0.0	2	0	-	1	0	15.4	42.1	0.0	11.0	175.9	31.0	0.0	0.0	0.0	328.1	0.0	0.0	126.3	0.0	0.0	0.0	0.0					

DRAINAGE QUANTITIES
DQ-22

STATE OF CALIFORNIA - DEPARTMENT OF TRANSPORTATION
Caltrans®

CONSULTANT FUNCTIONAL SUPERVISOR: CARL SAVAGE
CALCULATED-DESIGNED BY: MICHAEL MANZANO
CHECKED BY: KATHRYN WALKER
REVISED BY
DATE REVISED

LAST REVISION 12-31-13
DATE PLOTTED => 20-MAR-2014
TIME PLOTTED => 14:32

Dist	COUNTY	ROUTE	POST MILES TOTAL PROJECT	SHEET No.	TOTAL SHEETS
11	SD	15,76	R46.2/R46.8, R12.1/R17.7	421	1273

REGISTERED CIVIL ENGINEER 10-30-13 DATE

03-24-14
PLANS APPROVAL DATE

REGISTERED PROFESSIONAL ENGINEER KATHRYN WALKER No. C77900 Exp. 06-30-15 CIVIL STATE OF CALIFORNIA

THE STATE OF CALIFORNIA OR ITS OFFICERS OR AGENTS SHALL NOT BE RESPONSIBLE FOR THE ACCURACY OR COMPLETENESS OF SCANNED COPIES OF THIS PLAN SHEET.

DOKKEN ENGINEERING
5675 RUFFIN RD
SUITE 250
SAN DIEGO, CA 92123

DRAINAGE QUANTITIES

DRAINAGE PLAN SHEET No.	DRAINAGE SYSTEM No.	DRAINAGE UNIT No.	CULVERTS: 6" PERFORATED PLASTIC PIPE UNDERDRAIN	18" SLOTTED PLASTIC PIPE	GRATED LINE DRAIN	18" ALTERNATIVE PIPE CULVERT	24" ALTERNATIVE PIPE CULVERT	60" ALTERNATIVE PIPE CULVERT	18" REINFORCED Conc PIPE	24" REINFORCED Conc PIPE	30" REINFORCED Conc PIPE	36" REINFORCED Conc PIPE	42" REINFORCED Conc PIPE	48" REINFORCED Conc PIPE	60" REINFORCED Conc PIPE	66" REINFORCED Conc PIPE	30" BITUMINOUS COATED CSP (0.109" THICK)	36" REINFORCED Conc PIPE RISER	48" BITUMINOUS COATED CSP (0.109" THICK)	(N) PIPE JOINT TYPE	(N) Max HEIGHT COVER	(N) REINFORCED Conc BOX CULVERT	STRUCTURAL Conc, BOX CULVERT	BAR REINFORCEING STEEL (BOX CULVERT)	REMOVE MUD, SAND AND DEBRIS (IN CULVERT)	ABANDON CULVERT	REMOVE CULVERT	REMOVE BOX CULVERT	SAND BACKFILL	DESCRIPTION	STATION	DRAINAGE PLAN SHEET No.	DRAINAGE SYSTEM No.	DRAINAGE UNIT No.
			LF	LF	LF	LF	LF	LF	LF	LF	LF	LF	LF	LF	LF	LF	LF	LF	LF	-	LF	LF	CY	LB	LF	EA	LF	EA	CY					
D-11	35	h																												G-2 INLET W/24-12 GRATE	55.50' L+ 191+00 "A"	D-11	35	h
D-11	35	i					96.0													S	1.8									24" APC x 96.0'		D-11	35	i
D-11	35	j																												G-2 INLET W/24-12 GRATE	55.50' L+ 190+00 "A"	D-11	35	j
D-11	35	k					116.0													SO	2.8									24" APC x 116.0'		D-11	35	k
D-11	35	l																												G-2 INLET W/24-12 GRATE	55.50' L+ 193+00 "A"	D-11	35	l
D-11	35	m					97.0													SO	3.1									24" APC x 97.0'		D-11	35	m
D-11	35	n																												G-2 INLET W/24-12 GRATE	55.50' R+ 191+00 "A"	D-11	35	n
D-11	35	o					96.0													SO	2.2									24" APC x 96.0'		D-11	35	o
D-11	35	p																												G-2 INLET W/24-12 GRATE	55.50' R+ 190+00 "A"	D-11	35	p
D-11	35	q					97.0													SO	3.1									24" APC X 97.0'		D-11	35	q
D-11	35	r																												G-2 INLET W/24-12 GRATE	55.50' R+ 193+00 "A"	D-11	35	r
D-11	35	s										21.4								S	2.2									36" RCP x 21.4'		D-11	35	s
D-11	35	+																												REMOVE HEADWALL		D-11	35	+
D-11	35	u																												G-2 INLET W/24-12 GRATE	79.84' L+ 191+80 "A"	D-11	35	u
D-12	36	a																												RSP		D-12	36	a
D-12	36	b																												STRAIGHT HW	77.00' R+ 195+50 "A"	D-12	36	b
D-12	36	c								19.0										S	5.0									24" RCP x 19.0'		D-12	36	c
D-12	36	d																												G-2 INLET W/24-12 GRATE	55.50' R+ 195+50 "A"	D-12	36	d
D-12	36	e								108.5										SO	4.5									24" RCP x 108.5'		D-12	36	e
D-12	36	f																												G-2 INLET W/24-12 GRATE	56.00' L+ 195+50 "A"	D-12	36	f
D-12	37	a																												RSP		D-12	37	a
D-12	37	b																												STRAIGHT HEADWALL	76.00' R+ 200+00 "A"	D-12	37	b
D-12	37	c								19.0										SO	4.5									24" RCP x 19.0'		D-12	37	c
D-12	37	d																												G-2 INLET W/24-12 GRATE	55.50' R+ 200+00 "A"	D-12	37	d
D-12	37	e								54.2										SO	4.3									24" RCP x 54.2'		D-12	37	e
D-12	37	f																												G-2 INLET W/24-12 GRATE	1.00' L+ 200+00 "A"	D-12	37	f
D-12	37	g								55.9										S	2.8									24" RCP x 55.9'		D-12	37	g
D-12	37	h																												G-2 INLET W/24-12 GRATE	60.58' L+ 199+00 "A"	D-12	37	h
D-12	37	i				194.0														S	2.1									18" APC x 194.0'		D-12	37	i
D-12	37	j																												G-2 INLET W/24-12 GRATE	55.50' R+ 202+00 "A"	D-12	37	j
D-12	37	k					96.0													S	4.7									24" APC x 96.0'		D-12	37	k
D-12	37	l			10.0																									G-2 INLET W/24-12 GRATE	1.00' L+ 199+00 "A"	D-12	37	l
D-12	37	m					96.1													S	4.8									24" APC x 96.1'		D-12	37	m
D-12	37	n																												G-2 INLET W/24-12 GRATE	4.50' L+ 201+00 "A"	D-12	37	n
D-12	37	o				33.5														S	2.8									18" APC x 33.5'		D-12	37	o
D-12	37	p																												RSP		D-12	37	p
D-12	37A	a																												Conc (DITCH LINING)	83.5' L+ "A" 201+00	D-12	37A	a
D-12	38	a																												RSP BASIN	69.21' R+ "A" 202+54.47	D-12	38	a
Tot DQ-23			0.0	0.0	10.0	227.5	694.1	0.0	0.0	256.6	0.0	21.4	0.0	0.0	0.0	0.0	0.0	0.0	0.0	-	-	-	0.0	0.0	0.0	0.0	0.0	0.0	0.0					

(N) = NOT A SEPARATE PAY ITEM, FOR INFORMATION ONLY
PIPE JOINT TYPES:
S - STANDARD
SO- SOIL TIGHT
D - DOWNDRAIN
W - WATERTIGHT

DRAINAGE QUANTITIES
DQ-23

STATE OF CALIFORNIA - DEPARTMENT OF TRANSPORTATION
Caltrans

CONSULTANT FUNCTIONAL SUPERVISOR: CARL SAVAGE
CALCULATED-DESIGNED BY: MICHAEL MANZANO
CHECKED BY: KATHRYN WALKER
REVISED BY
DATE REVISED

LAST REVISION 12-31-13
DATE PLOTTED => 20-MAR-2014
TIME PLOTTED => 14:32

Dist	COUNTY	ROUTE	POST MILES TOTAL PROJECT	SHEET No.	TOTAL SHEETS
11	SD	15,76	R46.2/R46.8, R12.1/R17.7	422	1273

REGISTERED CIVIL ENGINEER 10-30-13 DATE

03-24-14
PLANS APPROVAL DATE

REGISTERED PROFESSIONAL ENGINEER KATHRYN WALKER No. C77900 Exp. 06-30-15 CIVIL STATE OF CALIFORNIA

THE STATE OF CALIFORNIA OR ITS OFFICERS OR AGENTS SHALL NOT BE RESPONSIBLE FOR THE ACCURACY OR COMPLETENESS OF SCANNED COPIES OF THIS PLAN SHEET.

DOKKEN ENGINEERING
5675 RUFFIN RD
SUITE 250
SAN DIEGO, CA 92123

DRAINAGE QUANTITIES

DRAINAGE PLAN SHEET No.	DRAINAGE SYSTEM No.	DRAINAGE UNIT No.	STRUCTURES (N) STRUCTURE HEIGHT LF	MINOR CONCRETE (MINOR STRUCTURE) CY	STRUCTURAL CONCRETE (HEADWALL) CY	STRUCTURAL CONCRETE (JUNCTION STRUCTURE) CY	(N) GRATE TYPE 24-12 EA	(N) GRATE TYPE 36R EA	(N) MANHOLE FRAME AND COVER EA	(N) 1/4" CHECKERED PLATE COVER AND FRAME EA	(N) GRATE CHAIN EA	MISCELLANEOUS IRON AND STEEL LB	DRAINAGE INLET MARKER EA	CABLE RAILING LF	CHAIN LINK RAILING (TYPE 7) LF	REMOVE INLET EA	REMOVE HEADWALL EA	(N) Conc COLLAR EA	18" ALTERNATIVE FLARED END SECTION EA	24" ALTERNATIVE FLARED END SECTION EA	CONCRETE (SLOPE PROTECTION) CY	CONCRETE (DITCH LINING) CY	ROCK SLOPE PROTECTION (NO. 2, METHOD B) CY	ROCK SLOPE PROTECTION (NO. 1, METHOD B) CY	ROCK SLOPE PROTECTION (LIGHT, METHOD B) CY	ROCK SLOPE PROTECTION (1/4 T, METHOD B) CY	ROCK SLOPE PROTECTION (1/2 T, METHOD B) CY	ROCK SLOPE PROTECTION (2T, METHOD A) CY	ROCK SLOPE PROTECTION (1T, METHOD B) CY	ROCK SLOPE PROTECTION FABRIC (CLASS 8) SQYD	ROCK SLOPE PROTECTION FABRIC (CLASS 10) SQYD	STRUCTURE BACKFILL (SLURRY CEMENT) CY	DITCH EXCAVATION CY	MODIFY INLET EA	ADJUST INLET EA	ADJUST MANHOLE EA	CAP RISER EA	DESCRIPTION	STATION	DRAINAGE PLAN SHEET No.	DRAINAGE SYSTEM No.	DRAINAGE UNIT No.
D-11	35	h	4.30	2.4			1				1	329									2.0																		G-2 INLET W/24-12 GRATE	55.50' L+ 191+00 "A"	D-11	35	h
D-11	35	i																																					24" APC x 96.0'		D-11	35	i
D-11	35	j	3.50	2.1			1				1	329									2.0																		G-2 INLET W/24-12 GRATE	55.50' L+ 190+00 "A"	D-11	35	j
D-11	35	k																																					24" APC x 116.0'		D-11	35	k
D-11	35	l	3.80	2.2			1				1	329									2.0																		G-2 INLET W/24-12 GRATE	55.50' L+ 193+00 "A"	D-11	35	l
D-11	35	m																																					24" APC x 97.0'		D-11	35	m
D-11	35	n	5.10	2.6			1				1	329									2.0																		G-2 INLET W/24-12 GRATE	55.50' R+ 191+00 "A"	D-11	35	n
D-11	35	o																																					24" APC x 96.0'		D-11	35	o
D-11	35	p	4.20	2.4			1				1	329									2.0																		G-2 INLET W/24-12 GRATE	55.50' R+ 190+00 "A"	D-11	35	p
D-11	35	q																																					24" APC X 97.0'		D-11	35	q
D-11	35	r	5.00	2.6			1				1	329									2.0																		G-2 INLET W/24-12 GRATE	55.50' R+ 193+00 "A"	D-11	35	r
D-11	35	s																																					36" RCP x 21.4'		D-11	35	s
D-11	35	t															1																						REMOVE HEADWALL		D-11	35	t
D-11	35	u	5.80	2.8			1				1	329									2.0																		G-2 INLET W/24-12 GRATE	79.84' L+ 191+80 "A"	D-11	35	u
D-12	36	a																							7.0					18.0									RSP		D-12	36	a
D-12	36	b			1.2																																		STRAIGHT HW	77.00' R+ 195+50 "A"	D-12	36	b
D-12	36	c																																					24" RCP x 19.0'		D-12	36	c
D-12	36	d	6.40	3.0			1				1	329									2.0																		G-2 INLET W/24-12 GRATE	55.50' R+ 195+50 "A"	D-12	36	d
D-12	36	e																																					24" RCP x 108.5'		D-12	36	e
D-12	36	f	4.20	2.4			1				1	329									2.0																		G-2 INLET W/24-12 GRATE	56.00' L+ 195+50 "A"	D-12	36	f
D-12	37	a																							7.0					18.0									RSP		D-12	37	a
D-12	37	b			1.2																																		STRAIGHT HEADWALL	76.00' R+ 200+00 "A"	D-12	37	b
D-12	37	c																																					24" RCP x 19.0'		D-12	37	c
D-12	37	d	5.90	2.9			1				1	329									2.0																		G-2 INLET W/24-12 GRATE	55.50' R+ 200+00 "A"	D-12	37	d
D-12	37	e																																					24" RCP x 54.2'		D-12	37	e
D-12	37	f	7.00	3.2			1				1	329																											G-2 INLET W/24-12 GRATE	1.00' L+ 200+00 "A"	D-12	37	f
D-12	37	g																																					24" RCP x 55.9'		D-12	37	g
D-12	37	h	3.90	2.3			1				1	329									2.0																		G-2 INLET W/24-12 GRATE	60.58' L+ 199+00 "A"	D-12	37	h
D-12	37	i																																					18" APC x 194.0'		D-12	37	i
D-12	37	j	4.10	2.3			1				1	329									2.0																		G-2 INLET W/24-12 GRATE	55.50' R+ 202+00 "A"	D-12	37	j
D-12	37	k																																					24" APC x 96.0'		D-12	37	k
D-12	37	l	5.10	2.6			1				1	329																											G-2 INLET W/24-12 GRATE	1.00' L+ 199+00 "A"	D-12	37	l
D-12	37	m																																					24" APC x 96.1'		D-12	37	m
D-12	37	n	5.80	2.8			1				1	329																											G-2 INLET W/24-12 GRATE	4.50' L+ 201+00 "A"	D-12	37	n
D-12	37	o																																					18" APC x 33.5'		D-12	37	o
D-12	37	p																							1.0					6.2									RSP		D-12	37	p
D-12	37A	a																				2.4												7.8					Conc (DITCH LINING)	83.5' L+ "A" 201+00	D-12	37A	a
D-12	38	a																							395.0					1659.0									RSP BASIN	69.21' R+ "A" 202+54.47	D-12	38	a
Tot DQ-24			-	38.6	2.4	0.0	-	-	-	-	-	4935	0	0.0	0.0	0	1	-	0	0	24.0	2.4	0.0	0.0	410.0	0.0	0.0	0.0	0.0	1701.2	0.0	0.0	7.8	0	0	0	0					

DRAINAGE QUANTITIES
DQ-24

STATE OF CALIFORNIA - DEPARTMENT OF TRANSPORTATION
Caltrans

CONSULTANT FUNCTIONAL SUPERVISOR: CARL SAVAGE
CALCULATED-DESIGNED BY: MICHAEL MANZANO
CHECKED BY: KATHRYN WALKER
REVISED BY
DATE REVISED

LAST REVISION 12-31-13
DATE PLOTTED => 20-MAR-2014
TIME PLOTTED => 14:32

Dist	COUNTY	ROUTE	POST MILES TOTAL PROJECT	SHEET No.	TOTAL SHEETS
11	SD	15,76	R46.2/R46.8, R12.1/R17.7	423	1273

REGISTERED CIVIL ENGINEER 10-30-13 DATE

03-24-14
PLANS APPROVAL DATE

REGISTERED PROFESSIONAL ENGINEER KATHRYN WALKER No. C77900 Exp. 06-30-15 CIVIL STATE OF CALIFORNIA

THE STATE OF CALIFORNIA OR ITS OFFICERS OR AGENTS SHALL NOT BE RESPONSIBLE FOR THE ACCURACY OR COMPLETENESS OF SCANNED COPIES OF THIS PLAN SHEET.

DOKKEN ENGINEERING
5675 RUFFIN RD
SUITE 250
SAN DIEGO, CA 92123

DRAINAGE QUANTITIES

CULVERTS

DRAINAGE PLAN SHEET No.	DRAINAGE SYSTEM No.	DRAINAGE UNIT No.	6" PERFORATED PLASTIC PIPE UNDERDRAIN	18" SLOTTED PLASTIC PIPE	GRATED LINE DRAIN	18" ALTERNATIVE PIPE CULVERT	24" ALTERNATIVE PIPE CULVERT	60" ALTERNATIVE PIPE CULVERT	18" REINFORCED Conc PIPE	24" REINFORCED Conc PIPE	30" REINFORCED Conc PIPE	36" REINFORCED Conc PIPE	42" REINFORCED Conc PIPE	48" REINFORCED Conc PIPE	60" REINFORCED Conc PIPE	66" REINFORCED Conc PIPE	30" BITUMINOUS COATED CSP (0.109" THICK)	36" REINFORCED Conc PIPE RISER	48" BITUMINOUS COATED CSP (0.109" THICK)	(N) PIPE JOINT TYPE	(N) Max HEIGHT COVER	(N) REINFORCED Conc BOX CULVERT	STRUCTURAL Conc, BOX CULVERT	BAR REINFORCEING STEEL (BOX CULVERT)	REMOVE MUD, SAND AND DEBRIS (IN CULVERT)	ABANDON CULVERT	REMOVE CULVERT	REMOVE BOX CULVERT	SAND BACKFILL	DESCRIPTION	STATION	DRAINAGE PLAN SHEET No.	DRAINAGE SYSTEM No.	DRAINAGE UNIT No.
			LF	LF	LF	LF	LF	LF	LF	LF	LF	LF	LF	LF	LF	LF	LF	LF	LF	-	LF	LF	CY	LB	LF	EA	LF	EA	CY					
D-12	38	b																												HW (TYPE A) W/ CHAIN LINK	69.22' R+ 202+54.47 "A"	D-12	38	b
D-12	38	c																				156.3	558.0	133,932.0						TRIPLE 12' x 7' RCB x 156.3'		D-12	38	c
D-12	38	d																												HW (TYPE A) W/ CHAIN LINK	80.87' L+ 202+97.93 "A"	D-12	38	d
D-12	38	e																												RSP BASIN	80.88' L+ 202.97.93 "A"	D-12	38	e
D-12	39	a																												RSP BASIN	34.00' R+ 11+80.00 "FLWD"	D-12	39	a
D-12	39	b																												HW (TYPE A) W/ CHAIN LINK	34.00' R+ 11+80.02 "FLWD"	D-12	39	b
D-12	39	c																				69.2	280.4	62,576.0						TPL 13' x 6' RCB x 69.2'		D-12	39	c
D-12	39	d																												HW (TYPE A) W/ CABLE RAIL	35.25' L+ 11+79.98 "FLWD"	D-12	39	d
D-12	39	e																												RSP BASIN		D-12	39	e
D-12	39	f																												RSP		D-12	39	f
D-12	39	g																												STRAIGHT HEADWALL	72.37' R+ 11+32.49 "FLWR"	D-12	39	g
D-12	39	h							18.2											SO	2.6									24" x 18.2' RCP		D-12	39	h
D-12	39	i																												GDO INLET H=4.1'	58.19' R+ 11+25.58 "FLWR"	D-12	39	i
D-12	39	j																										1.0		REMOVE (3) 7' x 4' RCB		D-12	39	j
D-13	40	a																												RSP		D-13	40	a
D-13	40	b																												STRAIGHT HEADWALL	76.39' R+ 206+00 "A"	D-13	40	b
D-13	40	c							19.5											S	4.1									24" RCP x 19.5'		D-13	40	c
D-13	40	d																												G-2 INLET W/24-12 GRATE	55.50' R+ 206+00 "A"	D-13	40	d
D-13	40	e							57.7											SO	3.6									24" RCP x 57.7'		D-13	40	e
D-13	40	f																												G-2 INLET W/24-12 GRATE	4.50' L+ 206+00 "A"	D-13	40	f
D-13	40	g					96.0													SO	4.2									24" APC x 96.0'		D-13	40	g
D-13	40	h																												G-2 INLET W/24-12 GRATE	4.50' L+ 205+00 "A"	D-13	40	h
D-13	40	i				193.0														SO	2.9									18" APC x 193.0'		D-13	40	i
D-13	40	j																												G-1 INLET W/24-12 GRATE	55.50' R+ 208+00 "A"	D-13	40	j
D-13	41	a																												RSP		D-13	41	a
D-13	41	b																												STRAIGHT HEADWALL	76.00' R+ 209+40 "A"	D-13	41	b
D-13	41	c							13.5											S	4.9									24" RCP x 13.5'		D-13	41	c
D-13	41	d																												G-2 INLET W/24-12 GRATE	58.73' R+ 210+75 "A"	D-13	41	d
D-13	41	e							67.5											SO	3.0									24" RCP x 67.5'		D-13	41	e
D-13	41	f																												G-2 INLET W/24-12 GRATE	4.83' L+ 211+03 "A"	D-13	41	f
D-13	41	g							64.5											SO	3.4									24" RCP x 64.5'		D-13	41	g
Tot DQ-25			0.0	0.0	0.0	193.0	96.0	0.0	0.0	240.9	0.0	0.0	0.0	0.0	0.0	0.0	0.0	0.0	0.0	-	-	-	838.4	196508.0	0.0	0.0	0.0	1.0	0.0					

(N) = NOT A SEPARATE PAY ITEM, FOR INFORMATION ONLY
PIPE JOINT TYPES:
S - STANDARD
SO- SOIL TIGHT
D - DOWNDRAIN
W - WATERTIGHT

DRAINAGE QUANTITIES
DQ-25

STATE OF CALIFORNIA - DEPARTMENT OF TRANSPORTATION
Caltrans

CONSULTANT FUNCTIONAL SUPERVISOR: CARL SAVAGE
CALCULATED-DESIGNED BY: MICHAEL MANZANO
CHECKED BY: KATHRYN WALKER
REVISED BY
DATE REVISED

LAST REVISION 12-31-13
DATE PLOTTED => 20-MAR-2014
TIME PLOTTED => 14:32

Dist	COUNTY	ROUTE	POST MILES TOTAL PROJECT	SHEET No.	TOTAL SHEETS
11	SD	15,76	R46.2/R46.8, R12.1/R17.7	424	1273

REGISTERED CIVIL ENGINEER 10-30-13 DATE

03-24-14
PLANS APPROVAL DATE

REGISTERED PROFESSIONAL ENGINEER KATHRYN WALKER No. C77900 Exp. 06-30-15 CIVIL STATE OF CALIFORNIA

THE STATE OF CALIFORNIA OR ITS OFFICERS OR AGENTS SHALL NOT BE RESPONSIBLE FOR THE ACCURACY OR COMPLETENESS OF SCANNED COPIES OF THIS PLAN SHEET.

DOKKEN ENGINEERING
5675 RUFFIN RD
SUITE 250
SAN DIEGO, CA 92123

DRAINAGE QUANTITIES

DRAINAGE PLAN SHEET No.	DRAINAGE SYSTEM No.	DRAINAGE UNIT No.	STRUCTURES (N) STRUCTURE HEIGHT	MINOR CONCRETE (MINOR STRUCTURE)	STRUCTURAL CONCRETE (HEADWALL)	STRUCTURAL CONCRETE (JUNCTION STRUCTURE)	(N) GRATE TYPE 24-12	(N) GRATE TYPE 36R	(N) MANHOLE FRAME AND COVER	(N) 1/4" CHECKERED PLATE COVER AND FRAME	(N) GRATE CHAIN	MISCELLANEOUS IRON AND STEEL	DRAINAGE INLET MARKER	CABLE RAILING	CHAIN LINK RAILING (TYPE 7)	REMOVE INLET	REMOVE HEADWALL	(N) Conc COLLAR	18" ALTERNATIVE FLARED END SECTION	24" ALTERNATIVE FLARED END SECTION	CONCRETE (SLOPE PROTECTION)	CONCRETE (DITCH LINING)	ROCK SLOPE PROTECTION (NO. 2, METHOD B)	ROCK SLOPE PROTECTION (NO. 1, METHOD B)	ROCK SLOPE PROTECTION (LIGHT, METHOD B)	ROCK SLOPE PROTECTION (1/4 T, METHOD B)	ROCK SLOPE PROTECTION (1/2 T, METHOD B)	ROCK SLOPE PROTECTION (2T, METHOD A)	ROCK SLOPE PROTECTION (1T, METHOD B)	ROCK SLOPE PROTECTION FABRIC (CLASS 8)	ROCK SLOPE PROTECTION FABRIC (CLASS 10)	STRUCTURE BACKFILL (SLURRY CEMENT)	DITCH EXCAVATION	MODIFY INLET	ADJUST INLET	ADJUST MANHOLE	CAP RISER	DESCRIPTION	STATION	DRAINAGE PLAN SHEET No.	DRAINAGE SYSTEM No.	DRAINAGE UNIT No.
			LF	CY	CY	CY	EA	EA	EA	EA	EA	LB	EA	LF	LF	EA	EA	EA	EA	EA	CY	CY	CY	CY	CY	CY	CY	CY	CY	SQYD	SQYD	CY	CY	EA	EA	EA	EA					
D-12	38	b			85.9										74.2																								HW (TYPE A) W/ CHAIN LINK	69.22′ R+ 202+54.47 "A"	D-12	38	b
D-12	38	c																																					TRIPLE 12′ x 7′ RCB x 156.3′		D-12	38	c
D-12	38	d			86.1										72.5																								HW (TYPE A) W/ CHAIN LINK	80.87′ L+ 202+97.93 "A"	D-12	38	d
D-12	38	e																					119.2			314.6				389.6									RSP BASIN	80.88′ L+ 202.97.93 "A"	D-12	38	e
D-12	39	a																					128.0			337.8				419.3									RSP BASIN	34.00′ R+ 11+80.00 "FLWD"	D-12	39	a
D-12	39	b			104.4										92.5																								HW (TYPE A) W/ CHAIN LINK	34.00′ R+ 11+80.02 "FLWD"	D-12	39	b
D-12	39	c																																					TPL 13′ x 6′ RCB x 69.2′		D-12	39	c
D-12	39	d			86.2									76.8																									HW (TYPE A) W/ CABLE RAIL	35.25′ L+ 11+79.98 "FLWD"	D-12	39	d
D-12	39	e																					93.7			247.0				315.8									RSP BASIN		D-12	39	e
D-12	39	f																							4					13.1									RSP		D-12	39	f
D-12	39	g			1.2																																		STRAIGHT HEADWALL	72.37′ R+ 11+32.49 "FLWR"	D-12	39	g
D-12	39	h																																					24" x 18.2′ RCP		D-12	39	h
D-12	39	i	4.10	2.0			2				2	640	1																										GDO INLET H=4.1′	58.19′ R+ 11+25.58 "FLWR"	D-12	39	i
D-12	39	j																																					REMOVE (3) 7′ x 4′ RCB		D-12	39	j
D-13	40	a																							7.0					18.0									RSP		D-13	40	a
D-13	40	b			1.2																																		STRAIGHT HEADWALL	76.39′ R+ 206+00 "A"	D-13	40	b
D-13	40	c																																					24" RCP x 19.5′		D-13	40	c
D-13	40	d	5.50	2.7			1				1	329									2.0																		G-2 INLET W/24-12 GRATE	55.50′ R+ 206+00 "A"	D-13	40	d
D-13	40	e																																					24" RCP x 57.7′		D-13	40	e
D-13	40	f	6.70	3.1			1				1	329																											G-2 INLET W/24-12 GRATE	4.50′ L+ 206+00 "A"	D-13	40	f
D-13	40	g																																					24" APC x 96.0′		D-13	40	g
D-13	40	h	4.50	2.4			1				1	329																											G-2 INLET W/24-12 GRATE	4.50′ L+ 205+00 "A"	D-13	40	h
D-13	40	i																																					18" APC x 193.0′		D-13	40	i
D-13	40	j	4.40	2.4			1				1	329									2.0																		G-1 INLET W/24-12 GRATE	55.50′ R+ 208+00 "A"	D-13	40	j
D-13	41	a																							7.0					18.0									RSP		D-13	41	a
D-13	41	b			1.2																																		STRAIGHT HEADWALL	76.00′ R+ 209+40 "A"	D-13	41	b
D-13	41	c																																					24" RCP x 13.5′		D-13	41	c
D-13	41	d	5.20	2.7			1				1	329																											G-2 INLET W/24-12 GRATE	58.73′ R+ 210+75 "A"	D-13	41	d
D-13	41	e																																					24" RCP x 67.5′		D-13	41	e
D-13	41	f	5.00	2.6			1				1	329																											G-2 INLET W/24-12 GRATE	4.83′ L+ 211+03 "A"	D-13	41	f
D-13	41	g																																					24" RCP x 64.5′		D-13	41	g
Tot DQ-26			-	17.9	366.2	0.0	-	-	-	-	-	2,614	1	76.8	239.3	0	0	-	0	0	4.0	0.0	340.9	0.0	18.0	899.4	0.0	0.0	0.0	1173.8	0.0	0.0	0.0	0	0	0	0					

DRAINAGE QUANTITIES
DQ-26

STATE OF CALIFORNIA - DEPARTMENT OF TRANSPORTATION
Caltrans

CONSULTANT FUNCTIONAL SUPERVISOR: CARL SAVAGE
CALCULATED-DESIGNED BY: MICHAEL MANZANO
CHECKED BY: KATHRYN WALKER
REVISED BY
DATE REVISED

LAST REVISION 12-31-13
DATE PLOTTED => 20-MAR-2014
TIME PLOTTED => 14:32

Dist	COUNTY	ROUTE	POST MILES TOTAL PROJECT	SHEET No.	TOTAL SHEETS
11	SD	15,76	R46.2/R46.8, R12.1/R17.7	425	1273

10-30-13
REGISTERED CIVIL ENGINEER DATE

03-24-14
PLANS APPROVAL DATE

REGISTERED PROFESSIONAL ENGINEER
KATHRYN WALKER
No. C77900
Exp. 06-30-15
CIVIL
STATE OF CALIFORNIA

THE STATE OF CALIFORNIA OR ITS OFFICERS OR AGENTS SHALL NOT BE RESPONSIBLE FOR THE ACCURACY OR COMPLETENESS OF SCANNED COPIES OF THIS PLAN SHEET.

DOKKEN ENGINEERING
5675 RUFFIN RD
SUITE 250
SAN DIEGO, CA 92123

DRAINAGE QUANTITIES

DRAINAGE PLAN SHEET No.	DRAINAGE SYSTEM No.	DRAINAGE UNIT No.	CULVERTS: 6" PERFORATED PLASTIC PIPE UNDERDRAIN (LF)	18" SLOTTED PLASTIC PIPE (LF)	GRATED LINE DRAIN (LF)	18" ALTERNATIVE PIPE CULVERT (LF)	24" ALTERNATIVE PIPE CULVERT (LF)	60" ALTERNATIVE PIPE CULVERT (LF)	18" REINFORCED Conc PIPE (LF)	24" REINFORCED Conc PIPE (LF)	30" REINFORCED Conc PIPE (LF)	36" REINFORCED Conc PIPE (LF)	42" REINFORCED Conc PIPE (LF)	48" REINFORCED Conc PIPE (LF)	60" REINFORCED Conc PIPE (LF)	66" REINFORCED Conc PIPE (LF)	30" BITUMINOUS COATED CSP (0.109" THICK) (LF)	36" REINFORCED Conc PIPE RISER (LF)	48" BITUMINOUS COATED CSP (0.109" THICK) (LF)	(N) PIPE JOINT TYPE (-)	(N) Max HEIGHT COVER (LF)	(N) REINFORCED Conc BOX CULVERT (LF)	STRUCTURAL Conc, BOX CULVERT (CY)	BAR REINFORCEING STEEL (BOX CULVERT) (LB)	REMOVE MUD, SAND AND DEBRIS (IN CULVERT) (LF)	ABANDON CULVERT (EA)	REMOVE CULVERT (LF)	REMOVE BOX CULVERT (EA)	SAND BACKFILL (CY)	DESCRIPTION	STATION	DRAINAGE PLAN SHEET No.	DRAINAGE SYSTEM No.	DRAINAGE UNIT No.
D-13	41	h																												G-2 INLET W/24-12 GRATE	61.50' Rt 209+40 "A"	D-13	41	h
D-13	41	i								68.1																				24" RCP x 68.1'		D-13	41	i
D-13	41	j																												G-2 INLET W/24-12 GRATE	4.50' Lt 211+75 "A"	D-13	41	j
D-13	41	k																												G-2 INLET W/24-12 GRATE	61.50' Rt 210+10 "A"	D-13	41	k
D-13	41	l								59.5										SO	3.4									24" RCP x 59.5'		D-13	41	l
D-13	42	a																												RSP		D-13	42	a
D-13	42	b																												STRAIGHT HEADWALL	79.65' Rt 213+43.50 "A1"	D-13	42	b
D-13	42	c								22.9										S	3.9									24" RCP x 22.9'		D-13	42	c
D-13	42	d																												G-2 INLET W/24-12 GRATE	55.50' Rt 213+50 "A"	D-13	42	d
D-13	42	e								58.5										SO	3.0									24" RCP x 58.5'		D-13	42	e
D-13	42	f			15.0																									G-2 INLET W/24-12 GRATE	4.50' Lt 213+60 "A"	D-13	42	f
D-14	43	a																												RSP		D-14	43	a
D-14	43	b																												STRAIGHT HEADWALL	46.13' Rt "FLWD1" 18+99.18	D-14	43	b
D-14	43	c								25.4										S	5.5									24" RCP x 25.4'		D-14	43	c
D-14	43	d																												GDO INLET W/2-24-12 GRATE	20.00' Rt "FLWR" 18+99.18	D-14	43	d
D-14	43	e								66.5										S	5.3									24" RCP x 66.5'		D-14	43	e
D-14	43	f																												STRAIGHT HEADWALL	47.97' Lt "FLWD1" 19+17.19	D-14	43	f
D-14	43	g																												RSP		D-14	43	g
D-14	43	h																									78.0			REMOVE 24" CMP X 78.0'		D-14	43	h
D-14	43	i																												RSP		D-14	43	i
D-14	43	j																												STRAIGHT HEADWALL	69.91' Lt "GIRD1" 13+03.04	D-14	43	j
D-14	43	k								25.0										S	2.1									24" RCP x 25.0'		D-14	43	k
D-14	43	l																												G-2 INLET W/24-12 GRATE	44.00' Lt "GIRD1" 13+03.17	D-14	43	l
D-14	43	m																												RSP		D-14	43	m
D-14	43	n																												RSP		D-14	43	n
D-15	44	a																												RSP		D-15	44	a
Tot DQ-27			0.0	0.0	15.0	0.0	0.0	0.0	0.0	325.9	0.0	0.0	0.0	0.0	0.0	0.0	0.0	0.0	0.0	-	-	-	0.0	0	0.0	0.0	78.0	0.0	0.0					

(N) = NOT A SEPARATE PAY ITEM, FOR INFORMATION ONLY
PIPE JOINT TYPES:
S - STANDARD
SO- SOIL TIGHT
D - DOWNDRAIN
W - WATERTIGHT

DRAINAGE QUANTITIES
DQ-27

REVISED BY | DATE REVISED
MICHAEL MANZANO | KATHRYN WALKER
CALCULATED-DESIGNED BY | CHECKED BY
CONSULTANT FUNCTIONAL SUPERVISOR
CARL SAVAGE
STATE OF CALIFORNIA - DEPARTMENT OF TRANSPORTATION
Caltrans

LAST REVISION 12-31-13 | DATE PLOTTED => 20-MAR-2014 | TIME PLOTTED => 14:32

Dist	COUNTY	ROUTE	POST MILES TOTAL PROJECT	SHEET No.	TOTAL SHEETS
11	SD	15,76	R46.2/R46.8, R12.1/R17.7	426	1273

10-30-13
REGISTERED CIVIL ENGINEER DATE

03-24-14
PLANS APPROVAL DATE

REGISTERED PROFESSIONAL ENGINEER
KATHRYN WALKER
No. C77900
Exp. 06-30-15
CIVIL
STATE OF CALIFORNIA

THE STATE OF CALIFORNIA OR ITS OFFICERS OR AGENTS SHALL NOT BE RESPONSIBLE FOR THE ACCURACY OR COMPLETENESS OF SCANNED COPIES OF THIS PLAN SHEET.

DOKKEN ENGINEERING
5675 RUFFIN RD
SUITE 250
SAN DIEGO, CA 92123

DRAINAGE QUANTITIES

DRAINAGE PLAN SHEET No.	DRAINAGE SYSTEM No.	DRAINAGE UNIT No.	STRUCTURES (N) STRUCTURE HEIGHT	(N) MINOR CONCRETE (MINOR STRUCTURE)	(N) STRUCTURAL CONCRETE (HEADWALL)	(N) STRUCTURAL CONCRETE (JUNCTION STRUCTURE)	(N) GRATE TYPE 24-12	(N) GRATE TYPE 36R	(N) MANHOLE FRAME AND COVER	(N) 1/4" CHECKERED PLATE COVER AND FRAME	(N) GRATE CHAIN	MISCELLANEOUS IRON AND STEEL	DRAINAGE INLET MARKER	CABLE RAILING	CHAIN LINK RAILING (TYPE 7)	REMOVE INLET	REMOVE HEADWALL	(N) Conc COLLAR	18" ALTERNATIVE FLARED END SECTION	24" ALTERNATIVE FLARED END SECTION	CONCRETE (SLOPE PROTECTION)	CONCRETE (DITCH LINING)	ROCK SLOPE PROTECTION (NO. 2, METHOD B)	ROCK SLOPE PROTECTION (NO. 1, METHOD B)	ROCK SLOPE PROTECTION (LIGHT, METHOD B)	ROCK SLOPE PROTECTION (1/4 T, METHOD B)	ROCK SLOPE PROTECTION (1/2 T, METHOD B)	ROCK SLOPE PROTECTION (2 T, METHOD A)	ROCK SLOPE PROTECTION (1T, METHOD B)	ROCK SLOPE PROTECTION FABRIC (CLASS 8)	ROCK SLOPE PROTECTION FABRIC (CLASS 10)	STRUCTURE BACKFILL (SLURRY CEMENT)	DITCH EXCAVATION	MODIFY INLET	ADJUST INLET	ADJUST MANHOLE	CAP RISER	DESCRIPTION	STATION	DRAINAGE PLAN SHEET No.	DRAINAGE SYSTEM No.	DRAINAGE UNIT No.
			LF	CY	CY	CY	EA	EA	EA	EA	EA	LB	EA	LF	LF	EA	EA	EA	EA	EA	CY	CY	CY	CY	CY	CY	CY	CY	CY	SQYD	SQYD	CY	CY	EA	EA	EA	EA					
D-13	41	h	6.30	3.0			1				1	329																										G-2 INLET W/24-12 GRATE	61.50' R+ 209+40 "A"	D-13	41	h
D-13	41	i																																				24" RCP x 68.1'		D-13	41	i
D-13	41	j	4.30	2.4			1				1	329																										G-2 INLET W/24-12 GRATE	4.50' L+ 211+75 "A"	D-13	41	j
D-13	41	k	5.40	2.7			1				1	329																										G-2 INLET W/24-12 GRATE	61.50' R+ 210+10 "A"	D-13	41	k
D-13	41	l																																				24" RCP x 59.5'		D-13	41	l
D-13	42	a																							7.0					18.0								RSP		D-13	42	a
D-13	42	b			1.2																																	STRAIGHT HEADWALL	79.65' R+ 213+43.50 "A1"	D-13	42	b
D-13	42	c																																				24" RCP x 22.9'		D-13	42	c
D-13	42	d	5.20	2.6			1				1	329									2.0																	G-2 INLET W/24-12 GRATE	55.50' R+ 213+50 "A"	D-13	42	d
D-13	42	e																																				24" RCP x 58.5'		D-13	42	e
D-13	42	f	5.00	2.6			1				1	329																										G-2 INLET W/24-12 GRATE	4.50' L+ 213+60 "A"	D-13	42	f
D-14	43	a																							4.0					13.1								RSP		D-14	43	a
D-14	43	b			1.2																																	STRAIGHT HEADWALL	46.13' R+ "FLWD1" 18+99	D-14	43	b
D-14	43	c																																				24" RCP x 25.4'		D-14	43	c
D-14	43	d	6.50	2.7			2				2	640	1																									GDO INLET W/2-24-12 GRATE	20.00' R+ "FLWR" 18+99.18	D-14	43	d
D-14	43	e																																				24" RCP x 66.5'		D-14	43	e
D-14	43	f			1.2																																	STRAIGHT HEADWALL	47.97' L+ "FLWD1" 19+17	D-14	43	f
D-14	43	g																					2.0							9.4								RSP		D-14	43	g
D-14	43	h																																				REMOVE 24" CMP X 78.0'		D-14	43	h
D-14	43	i			1.2																				4.0					18.0								RSP		D-14	43	i
D-14	43	j																																				STRAIGHT HEADWALL	69.91' L+ "GIRD1" 13+03.0	D-14	43	j
D-14	43	k	6.30	3.0			1				1	329	1																									24" RCP x 25.0'		D-14	43	k
D-14	43	l																																				G-2 INLET W/24-12 GRATE	44.00' L+ "GIRD1" 13+03.1	D-14	43	l
D-14	43	m																							2.0					8.2								RSP		D-14	43	m
D-14	43	n																							2.0					8.2								RSP		D-14	43	n
D-15	44	a																							7.0					18.0								RSP		D-15	44	a
Tot DQ-28			-	19.0	4.8	0.0	-	-	-	-	-	2,614	2	0.0	0.0	0	0	-	0	0	2.0	0.0	2.0	0.0	26.0	0.0	0.0	0.0	0.0	92.9	0.0	0.0	0.0	0	0	0	0					

DRAINAGE QUANTITIES
DQ-28

STATE OF CALIFORNIA - DEPARTMENT OF TRANSPORTATION
Caltrans

CONSULTANT FUNCTIONAL SUPERVISOR: CARL SAVAGE

CALCULATED-DESIGNED BY: MICHAEL MANZANO
CHECKED BY: KATHRYN WALKER
REVISED BY
DATE REVISED

LAST REVISION 12-31-13
DATE PLOTTED => 20-MAR-2014
TIME PLOTTED => 14:32

Dist	COUNTY	ROUTE	POST MILES TOTAL PROJECT	SHEET No.	TOTAL SHEETS
11	SD	15,76	R46.2/R46.8, R12.1/R17.7	427	1273

REGISTERED CIVIL ENGINEER 10-30-13 DATE

03-24-14
PLANS APPROVAL DATE

REGISTERED PROFESSIONAL ENGINEER KATHRYN WALKER No. C77900 Exp. 06-30-15 CIVIL STATE OF CALIFORNIA

THE STATE OF CALIFORNIA OR ITS OFFICERS OR AGENTS SHALL NOT BE RESPONSIBLE FOR THE ACCURACY OR COMPLETENESS OF SCANNED COPIES OF THIS PLAN SHEET.

DOKKEN ENGINEERING
5675 RUFFIN RD
SUITE 250
SAN DIEGO, CA 92123

DRAINAGE QUANTITIES

DRAINAGE PLAN SHEET No.	DRAINAGE SYSTEM No.	DRAINAGE UNIT No.	CULVERTS: 6" PERFORATED PLASTIC PIPE UNDERDRAIN	18" SLOTTED PLASTIC PIPE	GRATED LINE DRAIN	18" ALTERNATIVE PIPE CULVERT	24" ALTERNATIVE PIPE CULVERT	60" ALTERNATIVE PIPE CULVERT	18" REINFORCED Conc PIPE	24" REINFORCED Conc PIPE	30" REINFORCED Conc PIPE	36" REINFORCED Conc PIPE	42" REINFORCED Conc PIPE	48" REINFORCED Conc PIPE	60" REINFORCED Conc PIPE	66" REINFORCED Conc PIPE	30" BITUMINOUS COATED CSP (0.109" THICK)	36" REINFORCED Conc PIPE RISER	48" BITUMINOUS COATED CSP (0.109" THICK)	(N) PIPE JOINT TYPE	(N) Max HEIGHT COVER	(N) REINFORCED Conc BOX CULVERT	STRUCTURAL Conc, BOX CULVERT	BAR REINFORCEING STEEL (BOX CULVERT)	REMOVE MUD, SAND AND DEBRIS (IN CULVERT)	ABANDON CULVERT	REMOVE CULVERT	REMOVE BOX CULVERT	SAND BACKFILL	DESCRIPTION	STATION	DRAINAGE PLAN SHEET No.	DRAINAGE SYSTEM No.	DRAINAGE UNIT No.
			LF	LF	LF	LF	LF	LF	LF	LF	LF	LF	LF	LF	LF	LF	LF	LF	LF	-	LF	LF	CY	LB	LF	EA	LF	EA	CY					
D-15	44	b																												STRAIGHT HEADWALL	83.01′ R+ 221+00 "A1"	D-15	44	b
D-15	44	c								26.3										SO	5.1									24" RCP x 26.3′		D-15	44	c
D-15	44	d																												G-2 INLET W/24-12 GRATE	55.50′ R+ 221+00 "A"	D-15	44	d
D-15	44	e								57.7										SO	3.8									24" RCP x 57.7′		D-15	44	e
D-15	44	f			20.0																									G-2 INLET W/24-12 GRATE	4.50′ L+ 221+00 "A"	D-15	44	f
D-15	44	g								54.3										SO	3.8									24" RCP x 54.3		D-15	44	g
D-15	44	h																												G-2 INLET W/24-12 GRATE	62.50′ L+ 221+00 "A"	D-15	44	h
D-15	44	i				195.8														SO	2.0									18" APC x 195.8′		D-15	44	i
D-15	44	j																												G-1 INLET W/24-12 GRATE	55.50′ R+ 219+00 "A"	D-15	44	j
D-15	44	k					96.0													S	3.3									24" APC x 96.0′		D-15	44	k
D-15	44	l																												G-2 INLET W/24-12 GRATE	4.50′ L+ 220+00 "A"	D-15	44	l
D-15	44	m					96.1													S	2.5									24" APC x 96.1′		D-15	44	m
D-15	44	n																												G-2 INLET W/24-12 GRATE	45.50′ L+ 219+00 "A"	D-15	44	n
D-15	44	o					71.0													SO	3.8									24" APC x 71.0′		D-15	44	o
D-15	44	p			20.0																									G-2 INLET W/24-12 GRATE	4.50′ L+ 221+75 "A"	D-15	44	p
D-15	44A	a																												RSP		D-15	44A	a
D-15	44A	b																												HW (TYPE A) W/ CHAIN LINK	80.46′ L+ 219+95 "A"	D-15	44A	b
D-15	44A	c									171.0									S	2.5									30" RCP x 171.0′		D-15	44A	c
D-15	44A	d																												STRAIGHT HEADWALL	90.54′ L+ 219+95 "A"	D-15	44A	d
D-15	44A	e																												RSP		D-15	44A	e
D-15	44B	a																												Conc DITCH (DITCH LINING)	21.8′ R+ "NDW4" Sta. 12+00	D-15	44B	a
D-15	45	a																												RSP		D-15	45	a
D-15	45	b																												HW (TYPE A) W/ CHAIN LINK	76.35′ R+ 224+00 "A"	D-15	45	b
D-15	45	c												19.4						SO	6.3									48" RCP x 19.4′		D-15	45	c
D-15	45	d																												G-2 INLET W/24-12 GRATE	55.50′ R+ 224+00 "A"	D-15	45	d
D-15	45	e												54.5						SO	6.0									48" RCP x 54.5′		D-15	45	e
D-15	45	f			20.0																									G-2 INLET W/24-12 GRATE	2.50′ L+ 224+00 "A"	D-15	45	f
D-15	45	g												57.5						S	4.1									48" RCP x 57.5′		D-15	45	g
D-15	45	h																												G-2 INLET W/24-12 GRATE	62.50′ L+ 224+00 "A"	D-15	45	h
D-15	45	i												10.8						S	2.0									48" RCP x 10.8′		D-15	45	i
D-15	45	j																												HW (TYPE A) W/ CHAIN LINK	74.79′ L+ 224+00 "A"	D-15	45	j
D-15	45	k																												RSP		D-15	45	k
D-15	45	m																												Conc DITCH (DITCH LINING)	77.5′ L+ "A" 222+00	D-15	45	m
D-15	45	n																									47.6			REMOVE 18" CMP		D-15	45	n
Tot	DQ-	29	0.0	0.0	60.0	195.8	263.1	0.0	0.0	138.3	171.0	0.0	0.0	142.2	0.0	0.0	0.0	0.0	0.0	-	-	-	0.0	0.0	0.0	0.0	47.6	0.0	0.0					

(N) = NOT A SEPARATE PAY ITEM, FOR INFORMATION ONLY
PIPE JOINT TYPES:
S - STANDARD
SO- SOIL TIGHT
D - DOWNDRAIN
W - WATERTIGHT

DRAINAGE QUANTITIES
DQ-29

MICHAEL MANZANO — REVISED BY
KATHRYN WALKER — DATE REVISED
CALCULATED-DESIGNED BY
CHECKED BY
CONSULTANT FUNCTIONAL SUPERVISOR: CARL SAVAGE
STATE OF CALIFORNIA - DEPARTMENT OF TRANSPORTATION
Caltrans

LAST REVISION 12-31-13 | DATE PLOTTED => 20-MAR-2014 | TIME PLOTTED => 14:32

Dist	COUNTY	ROUTE	POST MILES TOTAL PROJECT	SHEET No.	TOTAL SHEETS
11	SD	15,76	R46.2/R46.8, R12.1/R17.7	428	1273

10-30-13
REGISTERED CIVIL ENGINEER DATE

03-24-14
PLANS APPROVAL DATE

REGISTERED PROFESSIONAL ENGINEER KATHRYN WALKER No. C77900 Exp. 06-30-15 CIVIL STATE OF CALIFORNIA

THE STATE OF CALIFORNIA OR ITS OFFICERS OR AGENTS SHALL NOT BE RESPONSIBLE FOR THE ACCURACY OR COMPLETENESS OF SCANNED COPIES OF THIS PLAN SHEET.

DOKKEN ENGINEERING
5675 RUFFIN RD
SUITE 250
SAN DIEGO, CA 92123

DRAINAGE QUANTITIES

DRAINAGE PLAN SHEET No.	DRAINAGE SYSTEM No.	DRAINAGE UNIT No.	STRUCTURES: STRUCTURE HEIGHT (N)	MINOR CONCRETE (MINOR STRUCTURE)	STRUCTURAL CONCRETE (HEADWALL)	STRUCTURAL CONCRETE (JUNCTION STRUCTURE)	GRATE TYPE 24-12 (N)	GRATE TYPE 36R (N)	MANHOLE FRAME AND COVER (N)	1/4" CHECKERED PLATE COVER AND FRAME (N)	GRATE CHAIN (N)	MISCELLANEOUS IRON AND STEEL	DRAINAGE INLET MARKER	CABLE RAILING	CHAIN LINK RAILING (TYPE 7)	REMOVE INLET	REMOVE HEADWALL	Conc COLLAR (N)	18" ALTERNATIVE FLARED END SECTION	24" ALTERNATIVE FLARED END SECTION	CONCRETE (SLOPE PROTECTION)	CONCRETE (DITCH LINING)	ROCK SLOPE PROTECTION (NO. 2, METHOD B)	ROCK SLOPE PROTECTION (NO. 1, METHOD B)	ROCK SLOPE PROTECTION (LIGHT, METHOD B)	ROCK SLOPE PROTECTION (1/4 T, METHOD B)	ROCK SLOPE PROTECTION (1/2 T, METHOD B)	ROCK SLOPE PROTECTION (2T, METHOD A)	ROCK SLOPE PROTECTION (1T, METHOD B)	ROCK SLOPE PROTECTION FABRIC (CLASS 8)	ROCK SLOPE PROTECTION FABRIC (CLASS 10)	STRUCTURE BACKFILL (SLURRY CEMENT)	DITCH EXCAVATION	MODIFY INLET	ADJUST INLET	ADJUST MANHOLE	CAP RISER	DESCRIPTION	STATION	DRAINAGE PLAN SHEET No.	DRAINAGE SYSTEM No.	DRAINAGE UNIT No.
			LF	CY	CY	CY	EA	EA	EA	EA	EA	LB	EA	LF	LF	EA	EA	EA	EA	EA	CY	CY	CY	CY	CY	CY	CY	CY	CY	SQYD	SQYD	CY	CY	EA	EA	EA	EA					
D-15	44	b			1.2																																	STRAIGHT HEADWALL	83.01′ R+ 221+00 "A1"	D-15	44	b
D-15	44	c																																				24" RCP x 26.3′		D-15	44	c
D-15	44	d	6.50	3.0			1				1	329									1.7																	G-2 INLET W/24-12 GRATE	55.50′ R+ 221+00 "A"	D-15	44	d
D-15	44	e																																				24" RCP x 57.7′		D-15	44	e
D-15	44	f	6.20	2.9			1				1	329																										G-2 INLET W/24-12 GRATE	4.50′ L+ 221+00 "A"	D-15	44	f
D-15	44	g																																				24" RCP x 54.3		D-15	44	g
D-15	44	h	4.50	2.4			1				1	329									2.0																	G-2 INLET W/24-12 GRATE	62.50′ L+ 221+00 "A"	D-15	44	h
D-15	44	i																																				18" APC x 195.8′		D-15	44	i
D-15	44	j	3.50	2.1			1				1	329									2.0																	G-1 INLET W/24-12 GRATE	55.50′ R+ 219+00 "A"	D-15	44	j
D-15	44	k																																				24" APC x 96.0′		D-15	44	k
D-15	44	l	5.30	2.7			1				1	329																										G-2 INLET W/24-12 GRATE	4.50′ L+ 220+00 "A"	D-15	44	l
D-15	44	m																																				24" APC x 96.1′		D-15	44	m
D-15	44	n	4.50	2.4			1				1	329																										G-2 INLET W/24-12 GRATE	45.50′ L+ 219+00 "A"	D-15	44	n
D-15	44	o																																				24" APC x 71.0′		D-15	44	o
D-15	44	p	4.50	2.4			1				1	329																										G-2 INLET W/24-12 GRATE	4.50′ L+ 221+75 "A"	D-15	44	p
D-15	44A	a																							7.0					18.0								RSP		D-15	44A	a
D-15	44A	b			17.6										21.9																							HEADWALL (TYPE A)	80.46′ L+ 219+95 "A"	D-15	44A	b
D-15	44A	c																																				30" RCP x 171.0′		D-15	44A	c
D-15	44A	d			1.5																																	STRAIGHT HEADWALL	90.54′ L+ 219+95 "A"	D-15	44A	d
D-15	44A	e																							7.0					25.0								RSP		D-15	44A	e
D-15	44B	a																				23.6			2.0					8.2			76.8					Conc DITCH (DITCH LINING)	21.8′ R+ "NDW4" 12+00	D-15	44B	a
D-15	45	a																							16.0					33.0								RSP		D-15	45	a
D-15	45	b			27.2										38.1																							HW (TYPE A) W/ CHAIN LINK	76.35′ R+ 224+00 "A"	D-15	45	b
D-15	45	d	10.80	5.6			1				1	329									1.7																	G-2 INLET W/24-12 GRATE	55.50′ R+ 224+00 "A"	D-15	45	d
D-15	45	e																																				48" RCP x 54.5′		D-15	45	e
D-15	45	f	9.50	5.1			1				1	329																										G-2 INLET W/24-12 GRATE	2.50′ L+ 224+00 "A"	D-15	45	f
D-15	45	g																																				48" RCP x 57.5′		D-15	45	g
D-15	45	h	6.70	3.1			1				1	329									2.0																	G-2 INLET W/24-12 GRATE	62.50′ L+ 224+00 "A"	D-15	45	h
D-15	45	i																																				48" RCP x 10.8′		D-15	45	i
D-15	45	j			20.8										22.8																							HW (TYPE A) W/ CHAIN LINK	74.79′ L+ 224+00 "A"	D-15	45	j
D-15	45	k																							17.0					58.4								RSP		D-15	45	k
D-15	45	m																				7.4											24.0					Conc DITCH (DITCH LINING)	77.5′ L+ "A" 222+00	D-15	45	m
D-15	45	n																																				REMOVE 18" CMP		D-15	45	n
Tot	DQ-	30	-	31.7	68.3	0.0	-	-	-	-	-	3,290	0	0.0	82.8	0	0	-	0	0	9.4	31.0	0.0	0.0	49.0	0.0	0.0	0.0	0.0	142.6	0.0	0.0	100.8	0	0	0	0					

DRAINAGE QUANTITIES
DQ-30

STATE OF CALIFORNIA - DEPARTMENT OF TRANSPORTATION
Caltrans

CONSULTANT FUNCTIONAL SUPERVISOR: CARL SAVAGE
CALCULATED-DESIGNED BY: MICHAEL MANZANO
CHECKED BY: KATHRYN WALKER
REVISED BY
DATE REVISED

LAST REVISION 12-31-13
DATE PLOTTED => 20-MAR-2014
TIME PLOTTED => 14:32

Dist	COUNTY	ROUTE	POST MILES TOTAL PROJECT	SHEET No.	TOTAL SHEETS
11	SD	15,76	R46.2/R46.8, R12.1/R17.7	429	1273

REGISTERED CIVIL ENGINEER 10-30-13 DATE

03-24-14
PLANS APPROVAL DATE

REGISTERED PROFESSIONAL ENGINEER KATHRYN WALKER No. C77900 Exp. 06-30-15 CIVIL STATE OF CALIFORNIA

THE STATE OF CALIFORNIA OR ITS OFFICERS OR AGENTS SHALL NOT BE RESPONSIBLE FOR THE ACCURACY OR COMPLETENESS OF SCANNED COPIES OF THIS PLAN SHEET.

DOKKEN ENGINEERING
5675 RUFFIN RD
SUITE 250
SAN DIEGO, CA 92123

DRAINAGE QUANTITIES

DRAINAGE PLAN SHEET No.	DRAINAGE SYSTEM No.	DRAINAGE UNIT No.	CULVERTS: 6" PERFORATED PLASTIC PIPE UNDERDRAIN	18" SLOTTED PLASTIC PIPE	GRATED LINE DRAIN	18" ALTERNATIVE PIPE CULVERT	24" ALTERNATIVE PIPE CULVERT	60" ALTERNATIVE PIPE CULVERT	18" REINFORCED Conc PIPE	24" REINFORCED Conc PIPE	30" REINFORCED Conc PIPE	36" REINFORCED Conc PIPE	42" REINFORCED Conc PIPE	48" REINFORCED Conc PIPE	60" REINFORCED Conc PIPE	66" REINFORCED Conc PIPE	30" BITUMINOUS COATED CSP (0.109" THICK)	36" REINFORCED Conc PIPE RISER	48" BITUMINOUS COATED CSP (0.109" THICK)	(N) PIPE JOINT TYPE	(N) Max HEIGHT COVER	(N) REINFORCED Conc BOX CULVERT	STRUCTURAL Conc, BOX CULVERT	BAR REINFORCEING STEEL (BOX CULVERT)	REMOVE MUD, SAND AND DEBRIS (IN CULVERT)	ABANDON CULVERT	REMOVE CULVERT	REMOVE BOX CULVERT	SAND BACKFILL	DESCRIPTION	STATION	DRAINAGE PLAN SHEET No.	DRAINAGE SYSTEM No.	DRAINAGE UNIT No.
			LF	LF	LF	LF	LF	LF	LF	LF	LF	LF	LF	LF	LF	LF	LF	LF	LF	-	LF	LF	CY	LB	LF	EA	LF	EA	CY					
D-15	46	a																												RSP		D-15	46	a
D-15	46	b																												STRAIGHT HEADWALL	86.54′ R+ 226+00 "A1"	D-15	46	b
D-15	46	c								29.6										S	10.3									24" RCP x 29.6′		D-15	46	c
D-15	46	d																												G-2 INLET W/24-12 GRATE	55.50′ R+ 226+00 "A"	D-15	46	d
D-15	46	e								54.3										S	9.8									24" RCP x 54.3′		D-15	46	e
D-15	46	f																												G-2 INLET W/24-12 GRATE	2.50′ L+ 226+00 "A"	D-15	46	f
D-15	46	g								56.8										S	6.1									24" RCP x 56.8′		D-15	46	g
D-15	46	h																												G-2 INLET W/24-12 GRATE	61.67′ L+ 226+00 "A"	D-15	46	h
D-15	46	i				94.4														S	2.4									18" APC x 94.4′		D-15	46	i
D-15	46	j																												G-1 INLET W/24-12 GRATE	60.94′ L+ 227+00 "A"	D-15	46	j
D-15	46	k					95.6													S	6.1									24" APC x 95.6′		D-15	46	k
D-15	46	l																												G-2 INLET W/24-12 GRATE	2.50′ L+ 225+00 "A"	D-15	46	l
D-15	46	m					195.7													S	61.2									24" APC x 195.7′		D-15	46	m
D-15	46	n																												G-2 INLET W/24-12 GRATE	2.50′ L+ 228+00 "A"	D-15	46	n
D-16	47	a																												RSP		D-16	47	a
D-16	47	b																												STRAIGHT HEADWALL	87.21′ R+ 230+00 "A"	D-16	47	b
D-16	47	c								30.0										S	8.7									24" RCP x 30.0′		D-16	47	c
D-16	47	d																												G-2 INLET W/24-12 GRATE	55.50′ R+ 230+00 "A"	D-16	47	d
D-16	47	e								53.3										S	8.4									24" RCP x 53.3′		D-16	47	e
D-16	47	f																												G-2 INLET W/24-12 GRATE	2.50′ L+ 230+00 "A"	D-16	47	f
D-16	47	g								53.8										S	5.1									24" RCP x 53.8′		D-16	47	g
D-16	47	h																												G-2 INLET W/24-12 GRATE	58.59′ L+ 230+00 "A"	D-16	47	h
D-16	48	a																									40.2			REMOVE 12" CMP x 40.2′		D-16	48	a
D-16	48A	a																												Conc (DITCH LINING)	78.4′ L+ "A" Sta. 231+50	D-16	48A	a
D-16	48A	b																												Conc (DITCH LINING)	66.5′ L+ "A" Sta. 233+75	D-16	48A	b
D-16	49	a																									104.2			REMOVE (2) 24" CMP		D-16	49	a
D-16	50	a																												RSP		D-16	50	a
D-16	50	b																												STRAIGHT HEADWALL	78.98′ R+ 237+50 "A1"	D-16	50	b
D-16	50	c										22.4								S	4.6									36" RCP x 22.4′		D-16	50	c
D-16	50	d																												G-2 INLET W/24-12 GRATE	55.50′ R+ 237+50 "A"	D-16	50	d
D-16	50	e										108.0								S	4.0									36" RCP x 108.0′		D-16	50	e
Tot DQ-31			0.0	0.0	0.0	94.4	291.3	0.0	0.0	277.8	0.0	130.4	0.0	0.0	0.0	0.0	0.0	0.0	0.0	-	-	-	0.0	0.0	0.0	0.0	144.4	0.0	0.0					

(N) = NOT A SEPARATE PAY ITEM, FOR INFORMATION ONLY
PIPE JOINT TYPES:
S - STANDARD
SO- SOIL TIGHT
D - DOWNDRAIN
W - WATERTIGHT

DRAINAGE QUANTITIES
DQ-31

STATE OF CALIFORNIA - DEPARTMENT OF TRANSPORTATION
Caltrans

CONSULTANT FUNCTIONAL SUPERVISOR: CARL SAVAGE
CALCULATED-DESIGNED BY: MICHAEL MANZANO
CHECKED BY: KATHRYN WALKER
REVISED BY
DATE REVISED

LAST REVISION 12-31-13
DATE PLOTTED => 20-MAR-2014
TIME PLOTTED => 14:32

Dist	COUNTY	ROUTE	POST MILES TOTAL PROJECT	SHEET No.	TOTAL SHEETS
11	SD	15,76	R46.2/R46.8, R12.1/R17.7	430	1273

REGISTERED CIVIL ENGINEER 10-30-13 DATE

03-24-14
PLANS APPROVAL DATE

REGISTERED PROFESSIONAL ENGINEER KATHRYN WALKER No. C77900 Exp. 06-30-15 CIVIL STATE OF CALIFORNIA

THE STATE OF CALIFORNIA OR ITS OFFICERS OR AGENTS SHALL NOT BE RESPONSIBLE FOR THE ACCURACY OR COMPLETENESS OF SCANNED COPIES OF THIS PLAN SHEET.

DOKKEN ENGINEERING
5675 RUFFIN RD
SUITE 250
SAN DIEGO, CA 92123

DRAINAGE QUANTITIES

DRAINAGE PLAN SHEET No.	DRAINAGE SYSTEM No.	DRAINAGE UNIT No.	STRUCTURES: STRUCTURE HEIGHT (N)	MINOR CONCRETE (MINOR STRUCTURE) (N)	STRUCTURAL CONCRETE (HEADWALL)	STRUCTURAL CONCRETE (JUNCTION STRUCTURE)	GRATE TYPE 24-12 (N)	GRATE TYPE 36R (N)	MANHOLE FRAME AND COVER (N)	1/4" CHECKERED PLATE COVER AND FRAME (N)	GRATE CHAIN (N)	MISCELLANEOUS IRON AND STEEL	DRAINAGE INLET MARKER	CABLE RAILING	CHAIN LINK RAILING (TYPE 7)	REMOVE INLET	REMOVE HEADWALL	Conc COLLAR (N)	18" ALTERNATIVE FLARED END SECTION	24" ALTERNATIVE FLARED END SECTION	CONCRETE (SLOPE PROTECTION)	CONCRETE (DITCH LINING)	ROCK SLOPE PROTECTION (NO. 2, METHOD B)	ROCK SLOPE PROTECTION (NO. 1, METHOD B)	ROCK SLOPE PROTECTION (LIGHT, METHOD B)	ROCK SLOPE PROTECTION (1/4 T, METHOD B)	ROCK SLOPE PROTECTION (1/2 T, METHOD B)	ROCK SLOPE PROTECTION (2 T, METHOD A)	ROCK SLOPE PROTECTION (1T, METHOD B)	ROCK SLOPE PROTECTION FABRIC (CLASS 8)	ROCK SLOPE PROTECTION FABRIC (CLASS 10)	STRUCTURE BACKFILL (SLURRY CEMENT)	DITCH EXCAVATION	MODIFY INLET	ADJUST INLET	ADJUST MANHOLE	CAP RISER	DESCRIPTION	STATION	DRAINAGE PLAN SHEET No.	DRAINAGE SYSTEM No.	DRAINAGE UNIT No.
			LF	CY	CY	CY	EA	EA	EA	EA	EA	LB	EA	LF	LF	EA	EA	EA	EA	EA	CY	CY	CY	CY	CY	CY	CY	CY	CY	SQYD	SQYD	CY	CY	EA	EA	EA	EA					
D-15	46	a																							7.0					18.0								RSP		D-15	46	a
D-15	46	b			1.2																																	STRAIGHT HEADWALL	86.54′ R+ 226+00 "A1"	D-15	46	b
D-15	46	c																																				24" RCP x 29.6′		D-15	46	c
D-15	46	d	11.70	6.0			1				1	329									2.0																	G-2 INLET W/24-12 GRATE	55.50′ R+ 226+00 "A"	D-15	46	d
D-15	46	e																																				24" RCP x 54.3′		D-15	46	e
D-15	46	f	8.70	4.8			1				1	329																										G-2 INLET W/24-12 GRATE	2.50′ L+ 226+00 "A"	D-15	46	f
D-15	46	g																																				24" RCP x 56.8′		D-15	46	g
D-15	46	h	4.40	2.4			1				1	329									1.7																	G-2 INLET W/24-12 GRATE	61.67′ L+ 226+00 "A"	D-15	46	h
D-15	46	i																																				18" APC x 94.4′		D-15	46	i
D-15	46	j	3.50	2.1			1				1	329									2.0																	G-1 INLET W/24-12 GRATE	60.94′ L+ 227+00 "A"	D-15	46	j
D-15	46	k																																				24" APC x 95.6′		D-15	46	k
D-15	46	l	4.50	2.4			1				1	329																										G-2 INLET W/24-12 GRATE	2.50′ L+ 225+00 "A"	D-15	46	l
D-15	46	m																																				24" APC x 195.7′		D-15	46	m
D-15	46	n	4.50	2.4			1				1	329																										G-2 INLET W/24-12 GRATE	2.50′ L+ 228+00 "A"	D-15	46	n
D-16	47	a																							7.0					18.0								RSP		D-16	47	a
D-16	47	b			1.2																																	STRAIGHT HEADWALL	87.21′ R+ 230+00 "A"	D-16	47	b
D-16	47	c																																				24" RCP x 30.0′		D-16	47	c
D-16	47	d	10.10	5.3			1				1	329									2.0																	G-2 INLET W/24-12 GRATE	55.50′ R+ 230+00 "A"	D-16	47	d
D-16	47	e																																				24" RCP x 53.3′		D-16	47	e
D-16	47	f	7.40	3.3			1				1	329																										G-2 INLET W/24-12 GRATE	2.50′ L+ 230+00 "A"	D-16	47	f
D-16	47	g																																				24" RCP x 53.8′		D-16	47	g
D-16	47	h	3.50	2.1			1				1	329									2.0																	G-2 INLET W/24-12 GRATE	58.59′ L+ 230+00 "A"	D-16	47	h
D-16	48	a																																				REMOVE 12" CMP x 40.2′		D-16	48	a
D-16	48A	a																				5.6			2.0					8.2			18.1					Conc (DITCH LINING)	78.4′ L+ "A" Sta. 231+50	D-16	48A	a
D-16	48A	b																				5.6											18.1					Conc (DITCH LINING)	66.5′ L+ "A" Sta. 233+75	D-16	48A	b
D-16	49	a																																				REMOVE (2) 24" CMP		D-16	49	a
D-16	50	a																						11.0			11.0			37.8								RSP		D-16	50	a
D-16	50	b			2.0									13.5																								STRAIGHT HEADWALL	78.98′ R+ 237+50 "A1"	D-16	50	b
D-16	50	c																																				36" RCP x 22.4′		D-16	50	c
D-16	50	d	6.90	3.2			1				1	329									1.7																	G-2 INLET W/24-12 GRATE	55.50′ R+ 237+50 "A"	D-16	50	d
D-16	50	e																																				36" RCP x 108.0′		D-16	50	e
Tot DQ-32			-	34.0	4.4	0.0	-	-	-	-	-	3,290	0	13.5	0.0	0	0	-	0	0	11.4	11.2	0.0	11.0	16.0	0.0	11.0	0.0	0.0	82.0	0.0	0.0	36.2	0	0	0	0					

DRAINAGE QUANTITIES
DQ-32

STATE OF CALIFORNIA - DEPARTMENT OF TRANSPORTATION
Caltrans

CONSULTANT FUNCTIONAL SUPERVISOR: CARL SAVAGE
CALCULATED-DESIGNED BY: MICHAEL MANZANO
CHECKED BY: KATHRYN WALKER
REVISED BY
DATE REVISED

LAST REVISION 12-31-13
DATE PLOTTED => 20-MAR-2014
TIME PLOTTED => 14:32

Dist	COUNTY	ROUTE	POST MILES TOTAL PROJECT	SHEET No.	TOTAL SHEETS
11	SD	15,76	R46.2/R46.8, R12.1/R17.7	431	1273

10-30-13
REGISTERED CIVIL ENGINEER DATE

03-24-14
PLANS APPROVAL DATE

REGISTERED PROFESSIONAL ENGINEER KATHRYN WALKER No. C77900 Exp. 06-30-15 CIVIL STATE OF CALIFORNIA

THE STATE OF CALIFORNIA OR ITS OFFICERS OR AGENTS SHALL NOT BE RESPONSIBLE FOR THE ACCURACY OR COMPLETENESS OF SCANNED COPIES OF THIS PLAN SHEET.

DOKKEN ENGINEERING
5675 RUFFIN RD
SUITE 250
SAN DIEGO, CA 92123

DRAINAGE QUANTITIES

DRAINAGE PLAN SHEET No.	DRAINAGE SYSTEM No.	DRAINAGE UNIT No.	CULVERTS: 6" PERFORATED PLASTIC PIPE UNDERDRAIN (LF)	18" SLOTTED PLASTIC PIPE (LF)	GRATED LINE DRAIN (LF)	18" ALTERNATIVE PIPE CULVERT (LF)	24" ALTERNATIVE PIPE CULVERT (LF)	60" ALTERNATIVE PIPE CULVERT (LF)	18" REINFORCED Conc PIPE (LF)	24" REINFORCED Conc PIPE (LF)	30" REINFORCED Conc PIPE (LF)	36" REINFORCED Conc PIPE (LF)	42" REINFORCED Conc PIPE (LF)	48" REINFORCED Conc PIPE (LF)	60" REINFORCED Conc PIPE (LF)	66" REINFORCED Conc PIPE (LF)	30" BITUMINOUS COATED CSP (0.109" THICK) (LF)	36" REINFORCED Conc PIPE RISER (LF)	48" BITUMINOUS COATED CSP (0.109" THICK) (LF)	(N) PIPE JOINT TYPE (-)	(N) Max HEIGHT COVER (LF)	(N) REINFORCED Conc BOX CULVERT (LF)	STRUCTURAL Conc, BOX CULVERT (CY)	BAR REINFORCEING STEEL (BOX CULVERT) (LB)	REMOVE MUD, SAND AND DEBRIS (IN CULVERT) (LF)	ABANDON CULVERT (EA)	REMOVE CULVERT (LF)	REMOVE BOX CULVERT (EA)	SAND BACKFILL (CY)	DESCRIPTION	STATION	DRAINAGE PLAN SHEET No.	DRAINAGE SYSTEM No.	DRAINAGE UNIT No.
D-16	50	f																												G-2 INLET W/24-12 GRATE	55.50' L+ 237+50 "A"	D-16	50	f
D-16	50	g				47.0														S	2.8									18" APC x 47.0'		D-16	50	g
D-16	50	h																												G-1 INLET W/24-12 GRATE	55.50' L+ 236+50 "A"	D-16	50	h
D-16	50	i				97.1														S	4.9									18" APC x 97.1'		D-16	50	i
D-17	50	j																												G-1 INLET W/24-12 GRATE	55.50' R+ 238+50 "A"	D-17	50	j
D-16	50	k										18.0								S	1.9									36" RCP x 18.0'		D-16	50	k
D-16	50	l																												"L" HW (MOD) W/ CABLE RAIL	75.00' L+ 237+50.00 "A"	D-16	50	l
D-16	50	m																												RSP		D-16	50	m
D-16	50A	a																												RSP		D-16	50A	a
D-16	50A	b																												STRAIGHT HEADWALL	78.27' R+ 236+00 "A1"	D-16	50A	b
D-16	50A	c											22.5							W	5.1									42" RCP x 22.5'		D-16	50A	c
D-16	50A	d																												G-2 INLET W/24-12 GRATE	55.50' R+ 236+00 "A"	D-16	50A	d
D-16	50A	e											50.8							W	5.1									42" RCP x 50.8'		D-16	50A	e
D-16	50A	f																												G-2 INLET W/24-12 GRATE	1.00' R+ 236+00 "A"	D-16	50A	f
D-16	50A	g					96.0													W	3.3									24" APC x 96.0'		D-16	50A	g
D-16	50A	h			20.0																									G-2 INLET W/24-12 GRATE	0.83' L+ 235+00 "A"	D-16	50A	h
D-16	50A	i											65.7							W	3.8									42" RCP x 65.7'		D-16	50A	i
D-16	50A	j																												HW (TYPE A) W/ CABLE RAIL	65.67' L+ 236+00.00 "A"	D-16	50A	j
D-16	50A	k																												RSP		D-16	50A	k
D-17	51	a																									152.2			REMOVE (2) 24" CMP		D-17	51	a
D-17	52	a																									58.7			REMOVE 12" CMP		D-17	52	a
D-17	53	a																												RSP		D-17	53	a
D-17	53	b																												HW W/ CABLE RAIL	77.05' R+ 241+00 "A1"	D-17	53	b
D-17	53	c											20.1							W	4.1									42" RCP x 20.1'		D-17	53	c
D-17	53	d																												G-2 INLET W/24-12 GRATE	55.50' R+ 241+00 "A"	D-17	53	d
D-17	53	e											108.0							W	3.5									42" RCP x 108.0'		D-17	53	e
D-17	53	f																												G-2 INLET W/24-12 GRATE	55.50' L+ 241+00 "A"	D-17	53	f
D-17	53	g					196.0													W	3.5									24" APC x 196.0'		D-17	53	g
D-17	53	h																												G-2 INLET W/24-12 GRATE	55.50' R+ 243+00 "A"	D-17	53	h
D-17	53	i				194.9														S	2.7									18" APC x 194.9'		D-17	53	i
Tot DQ-33			0.0	0.0	20.0	339.0	292.0	0.0	0.0	0.0	0.0	18.0	267.1	0.0	0.0	0.0	0.0	0.0	0.0	-	-	-	0.0	0.0	0.0	0.0	210.9	0.0	0.0					

(N) = NOT A SEPARATE PAY ITEM, FOR INFORMATION ONLY
PIPE JOINT TYPES:
S - STANDARD
SO- SOIL TIGHT
D - DOWNDRAIN
W - WATERTIGHT

DRAINAGE QUANTITIES
DQ-33

REVISED BY | DATE REVISED
MICHAEL MANZANO | KATHRYN WALKER
CALCULATED-DESIGNED BY | CHECKED BY
CONSULTANT FUNCTIONAL SUPERVISOR: CARL SAVAGE
STATE OF CALIFORNIA - DEPARTMENT OF TRANSPORTATION
Caltrans

LAST REVISION 12-31-13 | DATE PLOTTED => 20-MAR-2014 | TIME PLOTTED => 14:32

Dist	COUNTY	ROUTE	POST MILES TOTAL PROJECT	SHEET No.	TOTAL SHEETS
11	SD	15,76	R46.2/R46.8, R12.1/R17.7	432	1273

REGISTERED CIVIL ENGINEER 10-30-13 DATE

03-24-14
PLANS APPROVAL DATE

REGISTERED PROFESSIONAL ENGINEER KATHRYN WALKER No. C77900 Exp. 06-30-15 CIVIL STATE OF CALIFORNIA

THE STATE OF CALIFORNIA OR ITS OFFICERS OR AGENTS SHALL NOT BE RESPONSIBLE FOR THE ACCURACY OR COMPLETENESS OF SCANNED COPIES OF THIS PLAN SHEET.

DOKKEN ENGINEERING
5675 RUFFIN RD
SUITE 250
SAN DIEGO, CA 92123

DRAINAGE QUANTITIES

DRAINAGE PLAN SHEET No.	DRAINAGE SYSTEM No.	DRAINAGE UNIT No.	STRUCTURES (N) STRUCTURE HEIGHT LF	(N) MINOR CONCRETE (MINOR STRUCTURE) CY	(N) STRUCTURAL CONCRETE (HEADWALL) CY	(N) STRUCTURAL CONCRETE (JUNCTION STRUCTURE) CY	(N) GRATE TYPE 24-12 EA	(N) GRATE TYPE 36R EA	(N) MANHOLE FRAME AND COVER EA	(N) 1/4" CHECKERED PLATE COVER AND FRAME EA	(N) GRATE CHAIN EA	MISCELLANEOUS IRON AND STEEL LB	DRAINAGE INLET MARKER EA	CABLE RAILING LF	CHAIN LINK RAILING (TYPE 7) LF	REMOVE INLET EA	REMOVE HEADWALL EA	(N) Conc COLLAR EA	18" ALTERNATIVE FLARED END SECTION EA	24" ALTERNATIVE FLARED END SECTION EA	CONCRETE (SLOPE PROTECTION) CY	CONCRETE (DITCH LINING) CY	ROCK SLOPE PROTECTION (NO. 2, METHOD B) CY	ROCK SLOPE PROTECTION (NO. 1, METHOD B) CY	ROCK SLOPE PROTECTION (LIGHT, METHOD B) CY	ROCK SLOPE PROTECTION (1/4 T, METHOD B) CY	ROCK SLOPE PROTECTION (1/2 T, METHOD B) CY	ROCK SLOPE PROTECTION (2T, METHOD A) CY	ROCK SLOPE PROTECTION (1T, METHOD B) CY	ROCK SLOPE PROTECTION FABRIC (CLASS 8) SQYD	ROCK SLOPE PROTECTION FABRIC (CLASS 10) SQYD	STRUCTURE BACKFILL (SLURRY CEMENT) CY	DITCH EXCAVATION CY	MODIFY INLET EA	ADJUST INLET EA	ADJUST MANHOLE EA	CAP RISER EA	DESCRIPTION	STATION	DRAINAGE PLAN SHEET No.	DRAINAGE SYSTEM No.	DRAINAGE UNIT No.
D-16	50	f	5.1	2.6			1				1	329									2.0																			G-2 INLET W/24-12 GRATE	55.50′ L+ 237+50 "A"	D-16	50	f
D-16	50	g																																						18" APC x 47.0′		D-16	50	g
D-16	50	h	3.7	1.1			1				1	329									1.7																			G-1 INLET W/24-12 GRATE	55.50′ L+ 236+50 "A"	D-16	50	h
D-16	50	i																																						18" APC x 97.1′		D-16	50	i
D-17	50	j	3.8	1.1			1				1	329									2.0																			G-1 INLET W/24-12 GRATE	55.50′ R+ 238+50 "A"	D-17	50	j
D-16	50	k																																						36" RCP x 18.0′		D-16	50	k
D-16	50	l			1.16									22.75																										"L" HW (MOD) W/ CABLE RAIL	75.00′ L+ 237+50.00 "A"	D-16	50	l
D-16	50	m																							10.0					37.8										RSP		D-16	50	m
D-16	50A	a																						15.0			50.0			67.2										RSP		D-16	50A	a
D-16	50A	b			2.34									13.5																										STRAIGHT HEADWALL	78.27′ R+ 236+00 "A1"	D-16	50A	b
D-16	50A	c																																						42" RCP x 22.5′		D-16	50A	c
D-16	50A	d	7.7	4.5			1				1	329									2.0																			G-2 INLET W/24-12 GRATE	55.50′ R+ 236+00 "A"	D-16	50A	d
D-16	50A	e																																						42" RCP x 50.8′		D-16	50A	e
D-16	50A	f	7.7	4.5			1				1	329																												G-2 INLET W/24-12 GRATE	1.00′ R+ 236+00 "A"	D-16	50A	f
D-16	50A	g																																						24" APC x 96.0′		D-16	50A	g
D-16	50A	h	4.6	3.3			1				1	329																												G-2 INLET W/24-12 GRATE	0.83′ L+ 235+00 "A"	D-16	50A	h
D-16	50A	i																																						42" RCP x 65.7′		D-16	50A	i
D-16	50A	j			20.66									27.92																										HW (TYPE A) W/ CABLE RAIL	65.67′ L+ 236+00.00 "A"	D-16	50A	j
D-16	50A	k																							13.0					29.9										RSP		D-16	50A	k
D-17	51	a																																						REMOVE (2) 24" CMP		D-17	51	a
D-17	52	a																																						REMOVE 12" CMP		D-17	52	a
D-17	53	a																						11.0		31.0				48.6										RSP		D-17	53	a
D-17	53	b			2.34									13.5																										HW W/ CABLE RAIL	77.05′ R+ 241+00 "A1"	D-17	53	b
D-17	53	c																																						42" RCP x 20.1′		D-17	53	c
D-17	53	d	6.4	4.1			1				1	329									2.0																			G-2 INLET W/24-12 GRATE	55.50′ R+ 241+00 "A"	D-17	53	d
D-17	53	e																																						42" RCP x 108.0′		D-17	53	e
D-17	53	f	5.1	3.4			1				1	329									2.0																			G-2 INLET W/24-12 GRATE	55.50′ L+ 241+00 "A"	D-17	53	f
D-17	53	g																																						24" APC x 196.0′		D-17	53	g
D-17	53	h	5.5	3.7			1				1	329									2.0																			G-2 INLET W/24-12 GRATE	55.50′ R+ 243+00 "A"	D-17	53	h
D-17	53	i																																						18" APC x 194.9′		D-17	53	i
To+ DQ-34			-	28.3	26.5	0.0	-	-	-	-	-	2,961	0	77.67	0.0	0	0	-	0	0	13.7	0.0	0.0	26.0	23.0	31.0	50.0	0.0	0.0	183.5	0.0	0.0	0.0	0	0	0	0						

REVISED BY | DATE REVISED
MICHAEL MANZANO | KATHRYN WALKER
CALCULATED-DESIGNED BY | CHECKED BY
CONSULTANT FUNCTIONAL SUPERVISOR | CARL SAVAGE
STATE OF CALIFORNIA - DEPARTMENT OF TRANSPORTATION
Caltrans

DRAINAGE QUANTITIES
DQ-34

LAST REVISION 12-31-13 | DATE PLOTTED => 20-MAR-2014 | TIME PLOTTED => 14:32

Dist	COUNTY	ROUTE	POST MILES TOTAL PROJECT	SHEET No.	TOTAL SHEETS
11	SD	15,76	R46.2/R46.8, R12.1/R17.7	433	1273

10-30-13
REGISTERED CIVIL ENGINEER DATE

03-24-14
PLANS APPROVAL DATE

REGISTERED PROFESSIONAL ENGINEER KATHRYN WALKER No. C77900 Exp. 06-30-15 CIVIL STATE OF CALIFORNIA

THE STATE OF CALIFORNIA OR ITS OFFICERS OR AGENTS SHALL NOT BE RESPONSIBLE FOR THE ACCURACY OR COMPLETENESS OF SCANNED COPIES OF THIS PLAN SHEET.

DOKKEN ENGINEERING
5675 RUFFIN RD
SUITE 250
SAN DIEGO, CA 92123

DRAINAGE QUANTITIES

DRAINAGE PLAN SHEET No.	DRAINAGE SYSTEM No.	DRAINAGE UNIT No.	CULVERTS: 6" PERFORATED PLASTIC PIPE UNDERDRAIN (LF)	18" SLOTTED PLASTIC PIPE (LF)	GRATED LINE DRAIN (LF)	18" ALTERNATIVE PIPE CULVERT (LF)	24" ALTERNATIVE PIPE CULVERT (LF)	60" ALTERNATIVE PIPE CULVERT (LF)	24" REINFORCED Conc PIPE (LF)	30" REINFORCED Conc PIPE (LF)	36" REINFORCED Conc PIPE (LF)	42" REINFORCED Conc PIPE (LF)	48" REINFORCED Conc PIPE (LF)	60" REINFORCED Conc PIPE (LF)	66" REINFORCED Conc PIPE (LF)	30" BITUMINOUS COATED CSP (0.109" THICK) (LF)	36" REINFORCED Conc PIPE RISER (LF)	48" BITUMINOUS COATED CSP (0.109" THICK) (LF)	(N) PIPE JOINT TYPE (-)	(N) Max HEIGHT COVER (LF)	(N) REINFORCED Conc BOX CULVERT (LF)	STRUCTURAL Conc, BOX CULVERT (CY)	BAR REINFORCEING STEEL (BOX CULVERT) (LB)	REMOVE MUD, SAND AND DEBRIS (IN CULVERT) (LF)	ABANDON CULVERT (EA)	REMOVE CULVERT (LF)	REMOVE BOXCULVERT (EA)	SAND BACKFILL (CY)	DESCRIPTION	STATION	DRAINAGE PLAN SHEET No.	DRAINAGE SYSTEM No.	DRAINAGE UNIT No.
D-17	53	j																											G-1 INLET W/24-12 GRATE	55.50' R+ 245+00 "A"	D-17	53	j
D-17	53	k							50.7										SO	4.3									24" RCP x 50.7		D-17	53	k
D-17	53	l			15.0																								G-2 INLET W/24-12 GRATE	2.50' R+ 243+00 "A"	D-17	53	l
D-17	53	m					76.1												SO	2.6									24" APC x 76.1'		D-17	53	m
D-17	53	n			15.0																								G-2 INLET W/24-12 GRATE	0.17' L+ 242+20 "A"	D-17	53	n
D-17	53	o					96.0												SO	4.0									24" APC x 96.0'		D-17	53	o
D-17	53	p																											G-2 INLET W/24-12 GRATE	2.50' R+ 244+00 "A"	D-17	53	p
D-17	53	q					95.9												S	2.7									24" APC x 95.9'		D-17	53	q
D-17	53	r																											G-2 INLET W/24-12 GRATE	2.50' R+ 245+00 "A"	D-17	53	r
D-17	53	s										17.5							S	1.8									42" RCP x 17.5'		D-17	53	s
D-17	53	t																											STRAIGHT HW (MOD) W/ CBL RAIL	74.50' L+ 241+00.01 "A"	D-17	53	t
D-17	53	u																											RSP		D-17	53	u
D-17	54	a																											RSP		D-17	54	a
D-17	54	b																											STRAIGHT HEADWALL	81.78' R+ 248+00 "A"	D-17	54	b
D-17	54	c							24.8										S	4.4									24" RCP x 24.8'		D-17	54	c
D-17	54	d																											G-2 INLET W/24-12 GRATE	55.50' R+ 248+00 "A"	D-17	54	d
D-17	54	e							50.7										SO	3.6									24" RCP x 50.7'		D-17	54	e
D-17	54	f																											G-2 INLET W/24-12 GRATE	2.50' R+ 248+00 "A"	D-17	54	f
D-17	54	g							54.3										SO	2.8									24" RCP x 54.3'		D-17	54	g
D-17	54	h																											G-2 INLET W/24-12 GRATE	55.50' L+ 248+00 "A"	D-17	54	h
D-17	54	i					95.9												SO	2.7									24" APC x 95.9'		D-17	54	i
D-17	54	j																											G-2 INLET W/24-12 GRATE	2.50' R+ 249+00 "A"	D-17	54	j
D-17	54	k				192.3													SO	2.8									18" APC x 192.3'		D-17	54	k
D-17	54	l																											G-1 INLET W/24-12 GRATE	55.50' R+ 250+00 "A"	D-17	54	l
D-18	55	a																											RSP		D-18	55	a
D-18	55	b																											HW (TYPE A) W/ CHAIN LINK	81.47' R+ 251+90.00 "A"	D-18	55	b
D-18	55	c									164.1								S	2.8									36" RCP x 164.1'		D-18	55	c
D-18	55	d																											HW (TYPE A) W/ CABLE RAIL	82.64' L+ 251+90.00 "A"	D-18	55	d
D-18	55	e																											RSP		D-18	55	e
D-18	55	f																								132.7			RMV (2) 36" CMP		D-18	55	f
D-18	55	g																											RSP		D-18	55	g
To+ DQ-35			0.0	0.0	30.0	192.3	363.9	0.0	180.5	0.0	164.1	17.5	0.0	0.0	0.0	0.0	0.0	0.0	-	-	-	0.0	0.0	0.0	0.0	132.7	0.0	0.0						

(N) = NOT A SEPARATE PAY ITEM, FOR INFORMATION ONLY
PIPE JOINT TYPES:
S - STANDARD
SO- SOIL TIGHT
D - DOWNDRAIN
W - WATERTIGHT

DRAINAGE QUANTITIES
DQ-35

REVISED BY | DATE REVISED
MICHAEL MANZANO | KATHRYN WALKER
CALCULATED-DESIGNED BY | CHECKED BY
CONSULTANT FUNCTIONAL SUPERVISOR: CARL SAVAGE
STATE OF CALIFORNIA - DEPARTMENT OF TRANSPORTATION
Caltrans

LAST REVISION 12-31-13
DATE PLOTTED => 20-MAR-2014
TIME PLOTTED => 14:32

Dist	COUNTY	ROUTE	POST MILES TOTAL PROJECT	SHEET No.	TOTAL SHEETS
11	SD	15,76	R46.2/R46.8, R12.1/R17.7	434	1273

REGISTERED CIVIL ENGINEER 10-30-13 DATE

03-24-14
PLANS APPROVAL DATE

REGISTERED PROFESSIONAL ENGINEER KATHRYN WALKER No. C77900 Exp. 06-30-15 CIVIL STATE OF CALIFORNIA

THE STATE OF CALIFORNIA OR ITS OFFICERS OR AGENTS SHALL NOT BE RESPONSIBLE FOR THE ACCURACY OR COMPLETENESS OF SCANNED COPIES OF THIS PLAN SHEET.

DOKKEN ENGINEERING
5675 RUFFIN RD
SUITE 250
SAN DIEGO, CA 92123

DRAINAGE QUANTITIES

DRAINAGE PLAN SHEET No.	DRAINAGE SYSTEM No.	DRAINAGE UNIT No.	STRUCTURES (N) STRUCTURE HEIGHT LF	(N) MINOR CONCRETE (MINOR STRUCTURE) CY	STRUCTURAL CONCRETE (HEAD WALL) CY	STRUCTURAL CONCRETE (JUNCTION STRUCTURE) CY	(N) GRATE TYPE 24-12 EA	(N) GRATE TYPE 36R EA	(N) MANHOLE FRAME AND COVER EA	(N) 1/4" CHECKERED PLATE COVER AND FRAME EA	(N) GRATE CHAIN EA	MISCELLANEOUS IRON AND STEEL LB	DRAINAGE INLET MARKER EA	CABLE RAILING LF	CHAIN LINK RAILING (TYPE 7) LF	REMOVE INLET EA	REMOVE HEADWALL EA	(N) Conc COLLAR EA	18" ALTERNATIVE FLARED END SECTION EA	24" ALTERNATIVE FLARED END SECTION EA	CONCRETE (SLOPE PROTECTION) CY	CONCRETE (DITCH LINING) CY	ROCK SLOPE PROTECTION (NO. 2, METHOD B) CY	ROCK SLOPE PROTECTION (NO. 1, METHOD B) CY	ROCK SLOPE PROTECTION (LIGHT, METHOD B) CY	ROCK SLOPE PROTECTION (1/4 T, METHOD B) CY	ROCK SLOPE PROTECTION (1/2 T, METHOD B) CY	ROCK SLOPE PROTECTION (2T, METHOD A) CY	ROCK SLOPE PROTECTION (1T, METHOD B) CY	ROCK SLOPE PROTECTION FABRIC (CLASS 8) SQYD	ROCK SLOPE PROTECTION FABRIC (CLASS 10) SQYD	STRUCTURE BACKFILL (SLURRY CEMENT) CY	DITCH EXCAVATION CY	MODIFY INLET EA	ADJUST INLET EA	ADJUST MANHOLE EA	CAP RISER EA	DESCRIPTION	STATION	DRAINAGE PLAN SHEET No.	DRAINAGE SYSTEM No.	DRAINAGE UNIT No.
D-17	53	j	3.50	2.1			1				1	329									1.7																		G-1 INLET W/24-12 GRATE	55.50′ R+ 245+00 "A"	D-17	53	j
D-17	53	k																																					24" RCP x 50.7		D-17	53	k
D-17	53	l	6.30	3.0			1				1	329																											G-2 INLET W/24-12 GRATE	2.50′ R+ 243+00 "A"	D-17	53	l
D-17	53	m																																					24" APC x 76.1′		D-17	53	m
D-17	53	n	4.50	2.4			1				1	329																											G-2 INLET W/24-12 GRATE	0.17′ L+ 242+20 "A"	D-17	53	n
D-17	53	o																																					24" APC x 96.0′		D-17	53	o
D-17	53	p	5.20	2.6			1				1	329																											G-2 INLET W/24-12 GRATE	2.50′ R+ 244+00 "A"	D-17	53	p
D-17	53	q																																					24" APC x 95.9′		D-17	53	q
D-17	53	r	4.50	2.4			1				1	329																											G-2 INLET W/24-12 GRATE	2.50′ R+ 245+00 "A"	D-17	53	r
D-17	53	s																																					42" RCP x 17.5′		D-17	53	s
D-17	53	t			2.8									12.0																									STRAIGHT HW(MOD) W/CBL RAIL	74.50′ L+ 241+00.01 "A"	D-17	53	t
D-17	53	u																							10.0					33.0									RSP		D-17	53	u
D-17	54	a																							7.0					18.0									RSP		D-17	54	a
D-17	54	b			1.2																																		STRAIGHT HEADWALL	81.78′ R+ 248+00 "A"	D-17	54	b
D-17	54	c																																					24" RCP x 24.8′		D-17	54	c
D-17	54	d	5.80	2.8			1				1	329									2.0																		G-2 INLET W/24-12 GRATE	55.50′ R+ 248+00 "A"	D-17	54	d
D-17	54	e																																					24" RCP x 50.7′		D-17	54	e
D-17	54	f	5.40	2.7			1				1	329																											G-2 INLET W/24-12 GRATE	2.50′ R+ 248+00 "A"	D-17	54	f
D-17	54	g																																					24" RCP x 54.3′		D-17	54	g
D-17	54	h	4.50	2.4			1				1	329									2.0																		G-2 INLET W/24-12 GRATE	55.50′ L+ 248+00 "A"	D-17	54	h
D-17	54	i																																					24" APC x 95.9′		D-17	54	i
D-17	54	j	4.50	2.4			1				1	329																											G-2 INLET W/24-12 GRATE	2.50′ R+ 249+00 "A"	D-17	54	j
D-17	54	k																																					18" APC x 192.3′		D-17	54	k
D-17	54	l	3.50	2.1			1				1	329									2.0																		G-1 INLET W/24-12 GRATE	55.50′ R+ 250+00 "A"	D-17	54	l
D-18	55	a																							9.0					23.7									RSP		D-18	55	a
D-18	55	b			21.8										27.7																								HW (TYPE A) W/ CHAIN LINK	81.47′ R+ 251+90.00 "A"	D-18	55	b
D-18	55	c																																					36" RCP x 164.1′		D-18	55	c
D-18	55	d			20.2									24.7																									HW (TYPE A) W/ CABLE RAIL	82.64′ L+ 251+90.00 "A"	D-18	55	d
D-18	55	e																							14.0					33.0									RSP		D-18	55	e
D-18	55	f																																					RMV (2) 36" CMP		D-18	55	f
D-18	55	g																							3.0					8.6									RSP		D-18	55	g
Tot DQ-36			-	24.9	46.0	0.0	-	-	-	-	-	3,290	0	36.7	27.7	0	0	-	0	0	7.7	0.0	0.0	0.0	43.0	0.0	0.0	0.0	0.0	116.3	0.0	0.0	0.0	0	0	0	0					

DRAINAGE QUANTITIES
DQ-36

STATE OF CALIFORNIA - DEPARTMENT OF TRANSPORTATION
Caltrans

CONSULTANT FUNCTIONAL SUPERVISOR: CARL SAVAGE
CALCULATED-DESIGNED BY: MICHAEL MANZANO
CHECKED BY: KATHRYN WALKER
REVISED BY
DATE REVISED

LAST REVISION 12-31-13
DATE PLOTTED => 20-MAR-2014
TIME PLOTTED => 14:32

Dist	COUNTY	ROUTE	POST MILES TOTAL PROJECT	SHEET No.	TOTAL SHEETS
11	SD	15,76	R46.2/R46.8, R12.1/R17.7	435	1273

REGISTERED CIVIL ENGINEER 10-30-13 DATE

03-24-14
PLANS APPROVAL DATE

REGISTERED PROFESSIONAL ENGINEER KATHRYN WALKER No. C77900 Exp. 06-30-15 CIVIL STATE OF CALIFORNIA

THE STATE OF CALIFORNIA OR ITS OFFICERS OR AGENTS SHALL NOT BE RESPONSIBLE FOR THE ACCURACY OR COMPLETENESS OF SCANNED COPIES OF THIS PLAN SHEET.

DOKKEN ENGINEERING
5675 RUFFIN RD
SUITE 250
SAN DIEGO, CA 92123

DRAINAGE QUANTITIES

DRAINAGE PLAN SHEET No.	DRAINAGE SYSTEM No.	DRAINAGE UNIT No.	CULVERTS: 6" PERFORATED PLASTIC PIPE UNDERDRAIN	18" SLOTTED PLASTIC PIPE	GRATED LINE DRAIN	18" ALTERNATIVE PIPE CULVERT	24" ALTERNATIVE PIPE CULVERT	60" ALTERNATIVE PIPE CULVERT	18" REINFORCED Conc PIPE	24" REINFORCED Conc PIPE	30" REINFORCED Conc PIPE	36" REINFORCED Conc PIPE	42" REINFORCED Conc PIPE	48" REINFORCED Conc PIPE	60" REINFORCED Conc PIPE	66" REINFORCED Conc PIPE	30" BITUMINOUS COATED CSP (0.109" THICK)	36" REINFORCED Conc PIPE RISER	48" BITUMINOUS COATED CSP (0.109" THICK)	(N) PIPE JOINT TYPE	(N) Max HEIGHT COVER	(N) REINFORCED Conc BOX CULVERT	STRUCTURAL Conc, BOX CULVERT	BAR REINFORCEING STEEL (BOX CULVERT)	REMOVE MUD, SAND AND DEBRIS (IN CULVERT)	ABANDON CULVERT	REMOVE CULVERT	REMOVE BOX CULVERT	SAND BACKFILL	DESCRIPTION	STATION	DRAINAGE PLAN SHEET No.	DRAINAGE SYSTEM No.	DRAINAGE UNIT No.
			LF	LF	LF	LF	LF	LF	LF	LF	LF	LF	LF	LF	LF	LF	LF	LF	LF	-	LF	LF	CY	LB	LF	EA	LF	EA	CY					
D-18	55	h																												18" AFES W/ TOE PLATE	32.59' Lt 12+12.64 "MH"	D-18	55	h
D-18	55	i				12.6														S	1.3									18" APC x 10.2'		D-18	55	i
D-18	55	j																												GD1 INLET W/ 2x24-13 GRATE	20.00' Lt 12+12.64 "MH"	D-18	55	j
D-18	55	k																												RSP	20.00' Lt 12+12.64 "MH"	D-18	55	k
D-17	55A	a																												Conc DITCH (DITCH LINING)	78.6' Lt "A" Sta. 246+00	D-17	55A	a
D-18	56	a																												RSP		D-18	56	a
D-18	56	b																												STRAIGHT HEADWALL	88.00' Rt 253+80 "A1"	D-18	56	b
D-18	56	c								31.3										S	6.6									24" RCP x 31.3'		D-18	56	c
D-18	56	d																												G-2 INLET W/24-12 GRATE	55.50' Rt 253+80 "A"	D-18	56	d
D-18	56	e								62.0										S	5.0									24" RCP x 62.0'		D-18	56	e
D-18	56	f			24.0																									G-2 INLET W/24-12 GRATE	6.30' Lt 253+80 "A"	D-18	56	f
D-18	56	g								50.7										S	3.3									24" RCP x 50.7'		D-18	56	g
D-18	56	h																												G-2 INLET W/24-12 GRATE	59.00' Lt 253+80 "A"	D-18	56	h
D-18	56	i					96.0													S	2.5									24" APC x 96.0'		D-18	56	i
D-18	56	j			24.0																									G-2 INLET W/24-12 GRATE	7.40' Lt 254+80 "A"	D-18	56	j
D-18	57	a																												RSP BASIN	89.91' Rt "A" 254+35.00	D-18	57	a
D-18	57	b																									489.3			REMOVE (7) 24" CMP		D-18	57	b
D-18	58	a																												RSP		D-18	58	a
D-18	58	b																												STRAIGHT HW W/ CABLE RAIL	96.76' Rt 261+00 "A"	D-18	58	b
D-18	58	c									32.3									S	10.8									30" RCP x 32.3'		D-18	58	c
D-18	58	d																												G-2 INLET W/24-12 GRATE	62.0' Rt 261+00 "A"	D-18	58	d
D-18	58	e									67.6									S	11.2									30" RCP x 67.6'		D-18	58	e
D-18	58	f																												G-2 INLET W/24-12 GRATE	9.0' Lt 260+96.75 "A"	D-18	58	f
D-18	58	g									50.6									S	7.3									30" RCP x 50.6'		D-18	58	g
D-18	58	h																												G-2 INLET W/24-12 GRATE	62.0' Lt 261+00 "A"	D-18	58	h
D-18	58	i				195.1														S	4.3									18" APC x 195.1'		D-18	58	i
D-19	58	j																												G-2 INLET W/24-12 GRATE	62.0' Lt 263+05 "A"	D-19	58	j
D-19	58	k				192.4														S	3.7									18" APC x 192.4'		D-19	58	k
D-19	58	l																												G-2 INLET W/24-12 GRATE	62.0' Lt 265+07 "A"	D-19	58	l
D-19	58	m				198.1														S	3.1									18" APC x 198.1'		D-19	58	m
D-19	58	n																												G-2 INLET W/24-12 GRATE	62.0' Lt 267+15 "A"	D-19	58	n
D-19	58	o				195.1														S	2.6									18" APC x 195.1'		D-19	58	o
D-19	58	p																												G-2 INLET W/24-12 GRATE	62.0' Lt 269+20 "A"	D-19	58	p
Tot DQ-37			0.0	0.0	48.0	793.3	96.0	0.0	0.0	144.0	150.5	0.0	0.0	0.0	0.0	0.0	0.0	0.0	0.0	-	-	-	0.0	0	0.0	0.0	489.3	0.0	0.0					

(N) = NOT A SEPARATE PAY ITEM, FOR INFORMATION ONLY
PIPE JOINT TYPES:
S - STANDARD
SO- SOIL TIGHT
D - DOWNDRAIN
W - WATERTIGHT

DRAINAGE QUANTITIES
DQ-37

REVISED BY | DATE REVISED
MICHAEL MANZANO | KATHRYN WALKER
CALCULATED-DESIGNED BY | CHECKED BY
CONSULTANT FUNCTIONAL SUPERVISOR: CARL SAVAGE
STATE OF CALIFORNIA - DEPARTMENT OF TRANSPORTATION
Caltrans

LAST REVISION 12-31-13 | DATE PLOTTED => 20-MAR-2014 | TIME PLOTTED => 14:32

Dist	COUNTY	ROUTE	POST MILES TOTAL PROJECT	SHEET No.	TOTAL SHEETS
11	SD	15,76	R46.2/R46.8, R12.1/R17.7	436	1273

REGISTERED CIVIL ENGINEER 10-30-13 DATE

03-24-14
PLANS APPROVAL DATE

REGISTERED PROFESSIONAL ENGINEER KATHRYN WALKER No. C77900 Exp. 06-30-15 CIVIL STATE OF CALIFORNIA

THE STATE OF CALIFORNIA OR ITS OFFICERS OR AGENTS SHALL NOT BE RESPONSIBLE FOR THE ACCURACY OR COMPLETENESS OF SCANNED COPIES OF THIS PLAN SHEET.

DOKKEN ENGINEERING
5675 RUFFIN RD
SUITE 250
SAN DIEGO, CA 92123

DRAINAGE QUANTITIES

DRAINAGE PLAN SHEET No.	DRAINAGE SYSTEM No.	DRAINAGE UNIT No.	STRUCTURES (N) STRUCTURE HEIGHT LF	(N) MINOR CONCRETE (MINOR STRUCTURE) CY	(N) STRUCTURAL CONCRETE (HEADWALL) CY	(N) STRUCTURAL CONCRETE (JUNCTION STRUCTURE) CY	(N) GRATE TYPE 24-12 EA	(N) GRATE TYPE 36R EA	(N) MANHOLE FRAME AND COVER EA	(N) 1/4" CHECKERED PLATE COVER AND FRAME EA	(N) GRATE CHAIN EA	MISCELLANEOUS IRON AND STEEL LB	DRAINAGE INLET MARKER EA	CABLE RAILING LF	CHAIN LINK RAILING (TYPE 7) LF	REMOVE INLET EA	REMOVE HEADWALL EA	(N) Conc COLLAR EA	18" ALTERNATIVE FLARED END SECTION EA	24" ALTERNATIVE FLARED END SECTION EA	CONCRETE (SLOPE PROTECTION) CY	CONCRETE (DITCH LINING) CY	ROCK SLOPE PROTECTION (NO. 2, METHOD B) CY	ROCK SLOPE PROTECTION (NO. 1, METHOD B) CY	ROCK SLOPE PROTECTION (LIGHT, METHOD B) CY	ROCK SLOPE PROTECTION (1/4 T, METHOD B) CY	ROCK SLOPE PROTECTION (1/2 T, METHOD B) CY	ROCK SLOPE PROTECTION (2T, METHOD A) CY	ROCK SLOPE PROTECTION (1T, METHOD B) CY	ROCK SLOPE PROTECTION FABRIC (CLASS 8) SQYD	ROCK SLOPE PROTECTION FABRIC (CLASS 10) SQYD	STRUCTURE BACKFILL (SLURRY CEMENT) CY	DITCH EXCAVATION CY	MODIFY INLET EA	ADJUST INLET EA	ADJUST MANHOLE EA	CAP RISER EA	DESCRIPTION	STATION	DRAINAGE PLAN SHEET No.	DRAINAGE SYSTEM No.	DRAINAGE UNIT No.
D-18	55	h																	1																							18" AFES W/ TOE PLATE	32.59' Lt 12+12.64 "MH"	D-18	55	h
D-18	55	i																																								18" APC x 10.2'		D-18	55	i
D-18	55	j	2.50	1.6							2	362	1																													GD1 INLET W/ 2x24-13 GRT	20.00' Lt 12+12.64 "MH"	D-18	55	j
D-18	55	k																							2					3.0												RSP	20.00' Lt 12+12.64 "MH"	D-18	55	k
D-17	55A	a																				21.5												69.8								Conc DITCH (DITCH LINING)	78.6' Lt "A" Sta. 246+00	D-17	55A	a
D-18	56	a																							7					18.0												RSP		D-18	56	a
D-18	56	b			1.2																																					STRAIGHT HEADWALL	88.00' Rt 253+80 "A1"	D-18	56	b
D-18	56	c																																								24" RCP x 31.3'		D-18	56	c
D-18	56	d	7.90	3.4			1				1	329									2.0																					G-2 INLET W/24-12 GRATE	55.50' Rt 253+80 "A"	D-18	56	d
D-18	56	e																																								24" RCP x 62.0'		D-18	56	e
D-18	56	f	6.10	2.9			1				1	329																														G-2 INLET W/24-12 GRATE	6.30' Lt 253+80 "A"	D-18	56	f
D-18	56	g																																								24" RCP x 50.7'		D-18	56	g
D-18	56	h	3.50	2.1			1				1	329									1.7																					G-2 INLET W/24-12 GRATE	59.00' Lt 253+80 "A"	D-18	56	h
D-18	56	i																																								24" APC x 96.0'		D-18	56	i
D-18	56	j	4.50	2.4			1				1	329																														G-2 INLET W/24-12 GRATE	7.40' Lt 254+80 "A"	D-18	56	j
D-18	57	a																						123.6			295.3			317.8												RSP BASIN	89.91' Rt "A" 254+35.00	D-18	57	a
D-18	57	b																																								REMOVE (7) 24" CMP		D-18	57	b
D-18	58	a																							10					25.0												RSP		D-18	58	a
D-18	58	b			1.5									10.0																												STRAIGHT HW W/ CABLE RAIL	96.76' Rt 261+00 "A"	D-18	58	b
D-18	58	c																																								30" RCP x 32.3'		D-18	58	c
D-18	58	d	12.60	6.4			1				1	329									1.7																					G-2 INLET W/24-12 GRATE	62.0' Rt 261+00 "A"	D-18	58	d
D-18	58	e																																								30" RCP x 67.6'		D-18	58	e
D-18	58	f	9.40	5.1			1				1	329																														G-2 INLET W/24-12 GRATE	9.0' Lt 260+96.75 "A"	D-18	58	f
D-18	58	g																																								30" RCP x 50.6'		D-18	58	g
D-18	58	h	6.10	2.9			1				1	329									1.7																					G-2 INLET W/24-12 GRATE	62.0' Lt 261+00 "A"	D-18	58	h
D-18	58	i																																								18" APC x 195.1'		D-18	58	i
D-19	58	j	5.20	2.6			1				1	329									2.0																					G-2 INLET W/24-12 GRATE	62.0' Lt 263+05 "A"	D-19	58	j
D-19	58	k																																								18" APC x 192.4'		D-19	58	k
D-19	58	l	4.70	2.5			1				1	329									2.0																					G-2 INLET W/24-12 GRATE	62.0' Lt 265+07 "A"	D-19	58	l
D-19	58	m																																								18" APC x 198.1'		D-19	58	m
D-19	58	n	4.10	2.3			1				1	329									2.0																					G-2 INLET W/24-12 GRATE	62.0' Lt 267+15 "A"	D-19	58	n
D-19	58	o																																								18" APC x 195.1'		D-19	58	o
D-19	58	p	3.80	2.2			1				1	329									2.0																					G-2 INLET W/24-12 GRATE	62.0' Lt 269+20 "A"	D-19	58	p
To+ DQ-38			-	36.4	2.7	0.0	-	-	-	-	-	3,981	1	10.0	0.0	0	0	-	1	0	15.1	21.5	0.0	123.6	19.0	0.0	295.3	0.0	0.0	363.8	0.0	0.0	69.8	0	0	0	0					

DRAINAGE QUANTITIES
DQ-38

REVISED BY | DATE REVISED
MICHAEL MANZANO | KATHRYN WALKER
CALCULATED-DESIGNED BY | CHECKED BY
CONSULTANT FUNCTIONAL SUPERVISOR
CARL SAVAGE
STATE OF CALIFORNIA - DEPARTMENT OF TRANSPORTATION
Caltrans

LAST REVISION 12-31-13 | DATE PLOTTED => 20-MAR-2014 | TIME PLOTTED => 14:32

Dist	COUNTY	ROUTE	POST MILES TOTAL PROJECT	SHEET No.	TOTAL SHEETS
11	SD	15,76	R46.2/R46.8, R12.1/R17.7	437	1273

REGISTERED CIVIL ENGINEER 10-30-13 DATE

03-24-14
PLANS APPROVAL DATE

REGISTERED PROFESSIONAL ENGINEER KATHRYN WALKER No. C77900 Exp. 06-30-15 CIVIL STATE OF CALIFORNIA

THE STATE OF CALIFORNIA OR ITS OFFICERS OR AGENTS SHALL NOT BE RESPONSIBLE FOR THE ACCURACY OR COMPLETENESS OF SCANNED COPIES OF THIS PLAN SHEET.

DOKKEN ENGINEERING
5675 RUFFIN RD
SUITE 250
SAN DIEGO, CA 92123

NOTE:

1. REMOVE MUD, SAND AND DEBRIS (RMSD) ITEMS CONSISTS AN ADDITIONAL 30 FEET TO TOTAL PIPE LENGTH.

DRAINAGE QUANTITIES

DRAINAGE PLAN SHEET No.	DRAINAGE SYSTEM No.	DRAINAGE UNIT No.	CULVERTS: 6" PERFORATED PLASTIC PIPE UNDERDRAIN LF	18" SLOTTED PLASTIC PIPE LF	GRATED LINE DRAIN LF	18" ALTERNATIVE PIPE CULVERT LF	24" ALTERNATIVE PIPE CULVERT LF	60" ALTERNATIVE PIPE CULVERT LF	18" REINFORCED Conc PIPE LF	24" REINFORCED Conc PIPE LF	30" REINFORCED Conc PIPE LF	36" REINFORCED Conc PIPE LF	42" REINFORCED Conc PIPE LF	48" REINFORCED Conc PIPE LF	60" REINFORCED Conc PIPE LF	66" REINFORCED Conc PIPE LF	30" BITUMINOUS COATED CSP (0.109" THICK) LF	36" REINFORCED Conc PIPE RISER LF	48" BITUMINOUS COATED CSP (0.109" THICK) LF	(N) PIPE JOINT TYPE -	(N) Max HEIGHT COVER LF	(N) REINFORCED Conc BOX CULVERT LF	STRUCTURAL Conc, BOX CULVERT CY	BAR REINFORCEING STEEL (BOX CULVERT) LB	REMOVE MUD, SAND AND DEBRIS (IN CULVERT) LF	ABANDON CULVERT EA	REMOVE CULVERT LF	REMOVE BOX CULVERT EA	SAND BACKFILL CY	DESCRIPTION	STATION	DRAINAGE PLAN SHEET No.	DRAINAGE SYSTEM No.	DRAINAGE UNIT No.
D-19	58	q				190.2														S	2.3									18" APC x 190.2′		D-19	58	q
D-19	58	r																												G-2 INLET W/24-12 GRATE	62.0′ L+ 259+00 "A"	D-19	58	r
D-19	58	s					198.5													S	5.4									24" APC x 198.5′		D-19	58	s
D-19	58	t																												G-2 INLET W/24-12 GRATE	9.0′ L+ 263+00 "A"	D-19	58	t
D-19	58	u					191.2													S	3.9									24" APC x 191.2′		D-19	58	u
D-19	58	v																												G-2 INLET W/24-12 GRATE	9.0′ L+ 265+00 "A"	D-19	58	v
D-19	58	w					140.2													S	4.0									24" APC x 140.2		D-19	58	w
D-19	58	x																												G-2 INLET W/24-12 GRATE	9.0′ L+ 259+52 "A"	D-19	58	x
D-19	58	y				202.0														S	3.7									18" APC x 202.0′		D-19	58	y
D-19	58	z																												G-2 INLET W/24-12 GRATE	62.0′ R+ 263+00 "A"	D-19	58	z
D-19	58	aa																												STRAIGHT HEADWALL	76.11′ R+ 261+00 "A"	D-19	58	aa
D-19	58	ab					13.7																							24" APC x 13.7′		D-19	58	ab
D-19	58A	a																												Conc (DITCH LINING)	99.7′ L+ "A" Sta. 254+36	D-19	58A	a
D-19	59	a																												RSP		D-19	59	a
D-19	59	b																												HW (TYPE A) W/ CHAIN LINK	90.35′ R+ 272+82.19 "A"	D-19	59	b
D-19	59	c													591.6					S	3.5									TPL 60" RCP x 197.2′		D-19	59	c
D-19	59	d																												HW (TYPE A) W/ CHAIN LINK	75.37′ L+ 273+88.71 "A"	D-19	59	d
D-19	59	e																												CONC APRON (TYPE B)		D-19	59	e
D-19	59A	a																												Conc DITCH (DITCH LINING)	97.0′ L+ Sta. 274+30 "A"	D-19	59A	a
D-20	60	a																												RSP		D-20	60	a
D-20	60	b																												STRAIGHT HEADWALL	98.9′ R+ 276+50 "A"	D-20	60	b
D-20	60	c								35.4										S	10.5									24" RCP x 35.4′		D-20	60	c
D-20	60	d																												G-2 INLET W/24-12 GRATE	62.00′ R+ 276+50 "A"	D-20	60	d
D-20	60	e								121.0										S	10.4									24" RCP x 121.0′		D-20	60	e
D-20	60	f																												G-2 INLET W/24-12 GRATE	62.0′ R+ 276+50 "A"	D-20	60	f
D-20	60	g				159.6														S	3.1									18" APC x 159.6′		D-20	60	g
D-20	60	h																												G-2 INLET W/24-12 GRATE	62.0′ L+ 278+18 "A"	D-20	60	h
D-20	60	i					88.3													S	3.3									24" APC x 88.3′		D-20	60	i
D-20	60	j																												G-2 INLET W/24-12 GRATE	62′ L+ 275+55 "A"	D-20	60	j
D-20	60	k								52.4										S	4.5									24" RCP x 52.4′		D-20	60	k
D-20	60	l			15.0																									G-2 INLET W/24-12 GRATE	8.7′ L+ 275+47.50 "A"	D-20	60	l
D-20	60	m					58.1													S	4.1									24" APC x 58.1′		D-20	60	m
D-20	60	n																												G-2 INLET W/24-12 GRATE	9.0′ L+ 274+85.00 "A"	D-20	60	n
D-19	60A	a																												RSP	28.6′ L+ "SDW6" Sta. 12+00	D-19	60A	a
D-19	60A	b																												RSP BASIN	92.22′ R+ "A" 272+00	D-19	60A	b
D-20	61	a																							67.7					RMSD 30" CMP, L=67.73′		D-20	61	a
Tot DQ-39			0.0	0.0	15.0	551.8	690.0	0.0	0.0	208.8	0.0	0.0	0.0	0.0	591.6	0.0	0.0	0.0	0.0	-	-	-	0.0	0.0	67.7	0.0	0.0	0.0	0.0					

(N) = NOT A SEPARATE PAY ITEM, FOR INFORMATION ONLY
PIPE JOINT TYPES:
S - STANDARD
SO- SOIL TIGHT
D - DOWNDRAIN
W - WATERTIGHT

DRAINAGE QUANTITIES
DQ-39

STATE OF CALIFORNIA - DEPARTMENT OF TRANSPORTATION
Caltrans
CONSULTANT FUNCTIONAL SUPERVISOR: CARL SAVAGE
CALCULATED-DESIGNED BY: MICHAEL MANZANO
CHECKED BY: KATHRYN WALKER
REVISED BY
DATE REVISED

LAST REVISION 12-31-13
DATE PLOTTED => 20-MAR-2014
TIME PLOTTED => 14:32

Dist	COUNTY	ROUTE	POST MILES TOTAL PROJECT	SHEET No.	TOTAL SHEETS
11	SD	15,76	R46.2/R46.8, R12.1/R17.7	438	1273

REGISTERED CIVIL ENGINEER 10-30-13 DATE

03-24-14
PLANS APPROVAL DATE

REGISTERED PROFESSIONAL ENGINEER KATHRYN WALKER No. C77900 Exp. 06-30-15 CIVIL STATE OF CALIFORNIA

THE STATE OF CALIFORNIA OR ITS OFFICERS OR AGENTS SHALL NOT BE RESPONSIBLE FOR THE ACCURACY OR COMPLETENESS OF SCANNED COPIES OF THIS PLAN SHEET.

DOKKEN ENGINEERING
5675 RUFFIN RD
SUITE 250
SAN DIEGO, CA 92123

DRAINAGE QUANTITIES

DRAINAGE PLAN SHEET No.	DRAINAGE SYSTEM No.	DRAINAGE UNIT No.	STRUCTURES (N) STRUCTURE HEIGHT LF	(N) MINOR CONCRETE (MINOR STRUCTURE) CY	STRUCTURAL CONCRETE (HEADWALL) CY	STRUCTURAL CONCRETE (JUNCTION STRUCTURE) CY	(N) GRATE TYPE 24-12 EA	(N) GRATE TYPE 36R EA	(N) MANHOLE FRAME AND COVER EA	(N) 1/4" CHECKERED PLATE COVER AND FRAME EA	(N) GRATE CHAIN EA	MISCELLANEOUS IRON AND STEEL LB	DRAINAGE INLET MARKER EA	CABLE RAILING LF	CHAIN LINK RAILING (TYPE 7) LF	REMOVE INLET EA	REMOVE HEADWALL EA	(N) Conc COLLAR EA	18" ALTERNATIVE FLARED END SECTION EA	24" ALTERNATIVE FLARED END SECTION EA	CONCRETE (SLOPE PROTECTION) CY	CONCRETE (DITCH LINING) CY	ROCK SLOPE PROTECTION (NO. 2, METHOD B) CY	ROCK SLOPE PROTECTION (NO. 1, METHOD B) CY	ROCK SLOPE PROTECTION (LIGHT, METHOD B) CY	ROCK SLOPE PROTECTION (1/4 T, METHOD B) CY	ROCK SLOPE PROTECTION (1/2 T, METHOD B) CY	ROCK SLOPE PROTECTION (2T, METHOD A) CY	ROCK SLOPE PROTECTION (1T, METHOD B) CY	ROCK SLOPE PROTECTION FABRIC (CLASS 8) SQYD	ROCK SLOPE PROTECTION FABRIC (CLASS 10) SQYD	STRUCTURE BACKFILL (SLURRY CEMENT) CY	DITCH EXCAVATION CY	MODIFY INLET EA	ADJUST INLET EA	ADJUST MANHOLE EA	CAP RISER EA	DESCRIPTION	STATION	DRAINAGE PLAN SHEET No.	DRAINAGE SYSTEM No.	DRAINAGE UNIT No.
D-19	58	q																																					18" APC x 190.2′		D-19	58	q
D-19	58	r	3.90	2.3			1				1	329									2.0																		G-2 INLET W/24-12 GRATE	62.0′ L+ 259+00 "A"	D-19	58	r
D-19	58	s																																					24" APC x 198.5′		D-19	58	s
D-19	58	t	6.40	3.0			1				1	329																											G-2 INLET W/24-12 GRATE	9.0′ L+ 263+00 "A"	D-19	58	t
D-19	58	u																																					24" APC x 191.2′		D-19	58	u
D-19	58	v	5.00	2.6			1				1	329																											G-2 INLET W/24-12 GRATE	9.0′ L+ 265+00 "A"	D-19	58	v
D-19	58	w																																					24" APC x 140.2		D-19	58	w
D-19	58	x	5.00	2.6			1				1	329																											G-2 INLET W/24-12 GRATE	9.0′ L+ 259+52 "A"	D-19	58	x
D-19	58	y																																					18" APC x 202.0′		D-19	58	y
D-19	58	z	4.00	2.3			1				1	329									2.0																		G-2 INLET W/24-12 GRATE	62.0′ R+ 263+00 "A"	D-19	58	z
D-19	58	aa			1.20																																		STRAIGHT HEADWALL	76.11′ R+ 261+00 "A"	D-19	58	aa
D-19	58	ab																																					24" APC x 13.7′		D-19	58	ab
D-19	58A	a																				121.6											395.4						Conc (DITCH LINING)	99.7′ L+ "A" Sta. 254+36	D-19	58A	a
D-19	59	a																							108.0					197.6									RSP		D-19	59	a
D-19	59	b			49.4										61.6																								HW (TYPE A) W/ CHAIN LINK	90.35′ R+ 272+82.19 "A"	D-19	59	b
D-19	59	c																														255.6							TPL 60" RCP x 197.2′		D-19	59	c
D-19	59	d			56.0										68.8																								HW (TYPE A) W/ CHAIN LINK	75.37′ L+ 273+88.71 "A"	D-19	59	d
D-19	59	e																							98.0					179.6									CONC APRON (TYPE B)		D-19	59	e
D-19	59A	a																				63.3											235.6						Conc DITCH (DITCH LINING)	97.0′ L+ Sta. 274+30 "A"	D-19	59A	a
D-20	60	a																							7.0					18.0									RSP		D-20	60	a
D-20	60	b			1.2																																		STRAIGHT HEADWALL	98.9′ R+ 276+50 "A"	D-20	60	b
D-20	60	c																																					24" RCP x 35.4′		D-20	60	c
D-20	60	d	11.90	6.1			1				1	329									1.7																		G-2 INLET W/24-12 GRATE	62.00′ R+ 276+50 "A"	D-20	60	d
D-20	60	e																																					24" RCP x 121.0′		D-20	60	e
D-20	60	f	5.30	2.7			1				1	329									1.7																		G-2 INLET W/24-12 GRATE	62.0′ R+ 276+50 "A"	D-20	60	f
D-20	60	g																																					18" APC x 159.6′		D-20	60	g
D-20	60	h	4.70	2.5			1				1	329									2.0																		G-2 INLET W/24-12 GRATE	62.0′ L+ 278+18 "A"	D-20	60	h
D-20	60	i																																					24" APC x 88.3′		D-20	60	i
D-20	60	j	4.80	2.5			1				1	329									2.0																		G-2 INLET W/24-12 GRATE	62′ L+ 275+55 "A"	D-20	60	j
D-20	60	k																																					24" RCP x 52.4′		D-20	60	k
D-20	60	l	6.50	3.0			1				1	329																											G-2 INLET W/24-12 GRATE	8.7′ L+ 275+47.50 "A"	D-20	60	l
D-20	60	m																																					24" APC x 58.1′		D-20	60	m
D-20	60	n	5.10	2.6			1				1	329	1																										G-2 INLET W/24-12 GRATE	9.0′ L+ 274+85.00 "A"	D-20	60	n
D-19	60A	a																							2.0					8.2									RSP	28.6′ L+ "SDW6" 12+00	D-19	60A	a
D-19	60A	b																							183.6					267.8									RSP BASIN	92.22′ R+ "A" 272+00	D-19	60A	b
D-20	61	a																																					RMSD 30" CMP, L=67.73′		D-20	61	a
Tot DQ-40			-	32.2	107.8	0.0	-	-	-	-	-	3,619	1	0.0	130.4	0	0	-	0	0	11.4	184.9	0.0	0.0	398.6	0.0	0.0	0.0	0.0	671.2	0.0	255.6	631.0	0	0	0	0						

DRAINAGE QUANTITIES
DQ-40

STATE OF CALIFORNIA - DEPARTMENT OF TRANSPORTATION
Caltrans

CONSULTANT FUNCTIONAL SUPERVISOR: CARL SAVAGE
CALCULATED-DESIGNED BY: MICHAEL MANZANO
CHECKED BY: KATHRYN WALKER
REVISED BY
DATE REVISED

LAST REVISION 12-31-13
DATE PLOTTED => 20-MAR-2014
TIME PLOTTED => 14:32

Dist	COUNTY	ROUTE	POST MILES TOTAL PROJECT	SHEET No.	TOTAL SHEETS
11	SD	15,76	R46.2/R46.8, R12.1/R17.7	439	1273

REGISTERED CIVIL ENGINEER 10-30-13 DATE

03-24-14
PLANS APPROVAL DATE

REGISTERED PROFESSIONAL ENGINEER KATHRYN WALKER No. C77900 Exp. 06-30-15 CIVIL STATE OF CALIFORNIA

THE STATE OF CALIFORNIA OR ITS OFFICERS OR AGENTS SHALL NOT BE RESPONSIBLE FOR THE ACCURACY OR COMPLETENESS OF SCANNED COPIES OF THIS PLAN SHEET.

DOKKEN ENGINEERING
5675 RUFFIN RD
SUITE 250
SAN DIEGO, CA 92123

DRAINAGE QUANTITIES

DRAINAGE PLAN SHEET No.	DRAINAGE SYSTEM No.	DRAINAGE UNIT No.	CULVERTS: 6" PERFORATED PLASTIC PIPE UNDERDRAIN	18" SLOTTED PLASTIC PIPE	GRATED LINE DRAIN	18" ALTERNATIVE PIPE CULVERT	24" ALTERNATIVE PIPE CULVERT	60" ALTERNATIVE PIPE CULVERT	18" REINFORCED Conc PIPE	24" REINFORCED Conc PIPE	30" REINFORCED Conc PIPE	36" REINFORCED Conc PIPE	42" REINFORCED Conc PIPE	48" REINFORCED Conc PIPE	60" REINFORCED Conc PIPE	66" REINFORCED Conc PIPE	30" BITUMINOUS COATED CSP (0.109" THICK)	36" REINFORCED Conc PIPE RISER	48" BITUMINOUS COATED CSP (0.109" THICK)	(N) PIPE JOINT TYPE	(N) Max HEIGHT COVER	(N) REINFORCED Conc BOX CULVERT	STRUCTURAL Conc, BOX CULVERT	BAR REINFORCEING STEEL (BOX CULVERT)	REMOVE MUD, SAND AND DEBRIS (IN CULVERT)	ABANDON CULVERT	REMOVE CULVERT	REMOVE BOX CULVERT	SAND BACKFILL	DESCRIPTION	STATION	DRAINAGE PLAN SHEET No.	DRAINAGE SYSTEM No.	DRAINAGE UNIT No.
			LF	LF	LF	LF	LF	LF	LF	LF	LF	LF	LF	LF	LF	LF	LF	LF	LF	-	LF	LF	CY	LB	LF	EA	LF	EA	CY					
D-20	62	a																												HW (TYPE A) W/ CABLE RAIL	104.88' Lt 282+68.08 "A"	D-20	62	a
D-20	62	b														76.3				S	5.9									66" RCP X 76.3'		D-20	62	b
D-20	62	c																												HW (TYPE A) W/ CABLE RAIL	101.10' Lt 281+91.87 "A"	D-20	62	c
D-20	62	d																												RSP		D-20	62	d
D-20	62A	a																												Conc (DITCH LINING)	97.4' Lt "A" 283+00	D-20	62A	a
D-20	63	a																												RSP		D-20	63	a
D-20	63	b																												STRAIGHT HEADWALL	82.6' Rt 284+50.3 "A"	D-20	63	b
D-20	63	c								19.9										S	5.1									24" RCP x 19.9'		D-20	63	c
D-20	63	d																												G-2 INLET W/24-12 GRATE	62.0' Rt 284+50.3 "A"	D-20	63	d
D-20	63	e					100.6													S	3.5									24" APC x 100.6'		D-20	63	e
D-21	63	f																												G-2 INLET W/24-12 GRATE	62.0' Rt 285+58 "A"	D-21	63	f
D-21	63	g					153.2													S	2.9									24" APC x 153.2'		D-21	63	g
D-21	63	h																												G-2 INLET W/24-12 GRATE	62.0' Rt 287+20 "A"	D-21	63	h
D-21	63	i					240.3													S	3.0									24" APC x 240.3'		D-21	63	i
D-21	63	j																												G-2 INLET W/24-12 GRATE	62.0' Rt 289+71.70 "A"	D-21	63	j
D-21	63	k								64.8										S	3.4									24" RCP x 64.8'		D-21	63	k
D-21	63	l																												G-2 INLET W/24-12 GRATE	4.3' Lt 289+72.50 "A"	D-21	63	l
D-21	63	m					66.6													S	3.3									24" APC x 66.6'		D-21	63	m
D-21	63	n																												G-2 INLET W/24-12 GRATE	5.0' Lt 290+43 "A"	D-21	63	n
D-21	63	o								121.0										S	3.3									24" RCP x 121.0'		D-21	63	o
D-21	63	p																												G-2 INLET W/24-12 GRATE	62.0' Lt 287+20 "A"	D-21	63	p
D-21	63	q					69.1													S	3.8									24" APC x 69.1'		D-21	63	q
D-21	63	r																												G-2 INLET W/24-12 GRATE	62.0' Rt 283+75 "A"	D-21	63	r
D-21	63	s					73.8													S	3.3									24" APC x 73.8'		D-21	63	s
D-21	63	t																												G-2 INLET W/24-12 GRATE	62.0' Rt 282+96.4 "A"	D-21	63	t
D-21	63	u				127.4														S	3.0									18" APC x 127.4'		D-21	63	u
D-21	63	v																												G-2 INLET W/24-12 GRATE	62.0' Rt 281+65 "A"	D-21	63	v
D-21	63	w				57.0														S	3.0									18" APC x 57.0		D-21	63	w
D-21	63	x																												G-2 INLET W/24-12 GRATE	62.0' Rt 281+04 "A"	D-21	63	x
D-21	63	y								121.8										S	3.4									24" RCP x 121.8'		D-21	63	y
D-21	63	z																												G-2 INLET W/24-12 GRATE	62.0' Lt 283+10 "A"	D-21	63	z
D-20	63A	a																												RSP	24.0' Rt "SDW7" Sta. 12+00	D-20	63A	a
Tot DQ-41			0.0	0.0	0.0	184.4	703.6	0.0	0.0	327.5	0.0	0.0	0.0	0.0	0.0	76.3	0.0	0.0	0.0	-	-	-	0.0	0.0	0.0	0.0	0.0	0.0	0.0					

(N) = NOT A SEPARATE PAY ITEM, FOR INFORMATION ONLY
PIPE JOINT TYPES:
S - STANDARD
SO- SOIL TIGHT
D - DOWNDRAIN
W - WATERTIGHT

DRAINAGE QUANTITIES
DQ-41

REVISED BY | DATE REVISED
MICHAEL MANZANO | KATHRYN WALKER
CALCULATED-DESIGNED BY | CHECKED BY
CONSULTANT FUNCTIONAL SUPERVISOR | CARL SAVAGE
STATE OF CALIFORNIA - DEPARTMENT OF TRANSPORTATION
Caltrans

LAST REVISION 12-31-13 | DATE PLOTTED => 20-MAR-2014 | TIME PLOTTED => 14:32

Dist	COUNTY	ROUTE	POST MILES TOTAL PROJECT	SHEET No.	TOTAL SHEETS
11	SD	15,76	R46.2/R46.8, R12.1/R17.7	440	1273

10-30-13
REGISTERED CIVIL ENGINEER DATE

03-24-14
PLANS APPROVAL DATE

REGISTERED PROFESSIONAL ENGINEER KATHRYN WALKER No. C77900 Exp. 06-30-15 CIVIL STATE OF CALIFORNIA

THE STATE OF CALIFORNIA OR ITS OFFICERS OR AGENTS SHALL NOT BE RESPONSIBLE FOR THE ACCURACY OR COMPLETENESS OF SCANNED COPIES OF THIS PLAN SHEET.

DOKKEN ENGINEERING
5675 RUFFIN RD
SUITE 250
SAN DIEGO, CA 92123

DRAINAGE QUANTITIES

DRAINAGE PLAN SHEET No.	DRAINAGE SYSTEM No.	DRAINAGE UNIT No.	STRUCTURES (N) STRUCTURE HEIGHT	(N) MINOR CONCRETE (MINOR STRUCTURE)	STRUCTURAL CONCRETE (HEADWALL)	STRUCTURAL CONCRETE (JUNCTION STRUCTURE)	(N) GRATE TYPE 24-12	(N) GRATE TYPE 36R	(N) MANHOLE FRAME AND COVER	(N) 1/4" CHECKERED PLATE COVER AND FRAME	(N) GRATE CHAIN	MISCELLANEOUS IRON AND STEEL	DRAINAGE INLET MARKER	CABLE RAILING	CHAIN LINK RAILING (TYPE 7)	REMOVE INLET	REMOVE HEADWALL	(N) Conc COLLAR	18" ALTERNATIVE FLARED END SECTION	24" ALTERNATIVE FLARED END SECTION	CONCRETE (SLOPE PROTECTION)	CONCRETE (DITCH LINING)	ROCK SLOPE PROTECTION (NO. 2, METHOD B)	ROCK SLOPE PROTECTION (NO. 1, METHOD B)	ROCK SLOPE PROTECTION (LIGHT, METHOD B)	ROCK SLOPE PROTECTION (1/4 T, METHOD B)	ROCK SLOPE PROTECTION (1/2 T, METHOD B)	ROCK SLOPE PROTECTION (2T, METHOD A)	ROCK SLOPE PROTECTION (1T, METHOD B)	ROCK SLOPE PROTECTION FABRIC (CLASS 8)	ROCK SLOPE PROTECTION FABRIC (CLASS 10)	STRUCTURE BACKFILL (SLURRY CEMENT)	DITCH EXCAVATION	MODIFY INLET	ADJUST INLET	ADJUST MANHOLE	CAP RISER	DESCRIPTION	STATION	DRAINAGE PLAN SHEET No.	DRAINAGE SYSTEM No.	DRAINAGE UNIT No.
			LF	CY	CY	CY	EA	EA	EA	EA	EA	LB	EA	LF	LF	EA	EA	EA	EA	EA	CY	CY	CY	CY	CY	CY	CY	CY	CY	SQYD	SQYD	CY	CY	EA	EA	EA	EA					
D-20	62	a			16.4									17.6																								HW (TYPE A) W/ CABLE RAIL	104.88′ L+ 282+68.08 "A"	D-20	62	a
D-20	62	b																																				66" RCP X 76.3′		D-20	62	b
D-20	62	c			51.5									47.3																								HW (TYPE A) W/ CABLE RAIL	101.10′ L+ 281+91.87 "A"	D-20	62	c
D-20	62	d																						14.0			34.0			70.2								RSP		D-20	62	d
D-20	62A	a																				5.5											18.0					Conc (DITCH LINING)	97.4′ L+ "A" 283+00	D-20	62A	a
D-20	63	a																							7.0					18.0								RSP		D-20	63	a
D-20	63	b			1.2																																	STRAIGHT HEADWALL	82.6′ R+ 284+50.3 "A"	D-20	63	b
D-20	63	c																																				24" RCP x 19.9′		D-20	63	c
D-20	63	d	6.20	4.0			1				1	329									1.7																	G-2 INLET W/24-12 GRATE	62.0′ R+ 284+50.3 "A"	D-20	63	d
D-20	63	e																																				24" APC x 100.6′		D-20	63	e
D-21	63	f	5.60	3.7			1				1	329									2.0																	G-2 INLET W/24-12 GRATE	62.0′ R+ 285+58 "A"	D-21	63	f
D-21	63	g																																				24" APC x 153.2′		D-21	63	g
D-21	63	h	5.00	3.4			1				1	329									2.0																	G-2 INLET W/24-12 GRATE	62.0′ R+ 287+20 "A"	D-21	63	h
D-21	63	i																																				24" APC x 240.3′		D-21	63	i
D-21	63	j	4.90	3.1			1				1	329									2.0																	G-2 INLET W/24-12 GRATE	62.0′ R+ 289+71.70 "A"	D-21	63	j
D-21	63	k																																				24" RCP x 64.8′		D-21	63	k
D-21	63	l	6.80	4.2			1				1	329																										G-2 INLET W/24-12 GRATE	4.3′ L+ 289+72.50 "A"	D-21	63	l
D-21	63	m																																				24" APC x 66.6′		D-21	63	m
D-21	63	n	5.00	3.4			1				1	329																										G-2 INLET W/24-12 GRATE	5.0′ L+ 290+43 "A"	D-21	63	n
D-21	63	o																																				24" RCP x 121.0′		D-21	63	o
D-21	63	p	4.80	3.3			1				1	329									2.0																	G-2 INLET W/24-12 GRATE	62.0′ L+ 287+20 "A"	D-21	63	p
D-21	63	q																																				24" APC x 69.1′		D-21	63	q
D-21	63	r	5.80	3.8			1				1	329									2.0																	G-2 INLET W/24-12 GRATE	62.0′ R+ 283+75 "A"	D-21	63	r
D-21	63	s																																				24" APC x 73.8′		D-21	63	s
D-21	63	t	5.30	3.6			1				1	329									2.0																	G-2 INLET W/24-12 GRATE	62.0′ R+ 282+96.4 "A"	D-21	63	t
D-21	63	u																																				18" APC x 127.4′		D-21	63	u
D-21	63	v	4.50	3.2			1				1	329									2.0																	G-2 INLET W/24-12 GRATE	62.0′ R+ 281+65 "A"	D-21	63	v
D-21	63	w																																				18" APC x 57.0		D-21	63	w
D-21	63	x	4.20	3.0			1				1	329									2.0																	G-2 INLET W/24-12 GRATE	62.0′ R+ 281+04 "A"	D-21	63	x
D-21	63	y																																				24" RCP x 121.8′		D-21	63	y
D-21	63	z	4.70	3.3			1				1	329									2.0																	G-2 INLET W/24-12 GRATE	62.0′ L+ 283+10 "A"	D-21	63	z
D-20	63A	a																							2.0					8.2								RSP	24.0′ R+ "SDW7" Sta. 12+00	D-20	63A	a
Tot DQ-42			-	42.0	69.1	0.0	-	-	-	-	-	3,948	0	64.9	0.0	0	0	-	0	0	19.7	5.5	0.0	14.0	9.0	0.0	34.0	0.0	0.0	96.4	0.0	0.0	18.0	0	0	0	0					

DRAINAGE QUANTITIES
DQ-42

STATE OF CALIFORNIA - DEPARTMENT OF TRANSPORTATION
Caltrans

CONSULTANT FUNCTIONAL SUPERVISOR: CARL SAVAGE

CALCULATED-DESIGNED BY: MICHAEL MANZANO
CHECKED BY: KATHRYN WALKER
REVISED BY
DATE REVISED

LAST REVISION 12-31-13
DATE PLOTTED => 20-MAR-2014
TIME PLOTTED => 14:32

Dist	COUNTY	ROUTE	POST MILES TOTAL PROJECT	SHEET No.	TOTAL SHEETS
11	SD	15,76	R46.2/R46.8, R12.1/R17.7	441	1273

REGISTERED CIVIL ENGINEER 10-30-13 DATE

03-24-14
PLANS APPROVAL DATE

REGISTERED PROFESSIONAL ENGINEER KATHRYN WALKER No. C77900 Exp. 06-30-15 CIVIL STATE OF CALIFORNIA

THE STATE OF CALIFORNIA OR ITS OFFICERS OR AGENTS SHALL NOT BE RESPONSIBLE FOR THE ACCURACY OR COMPLETENESS OF SCANNED COPIES OF THIS PLAN SHEET.

DOKKEN ENGINEERING
5675 RUFFIN RD
SUITE 250
SAN DIEGO, CA 92123

NOTE:

1. REMOVE MUD, SAND AND DEBRIS (RMSD) ITEMS CONSISTS AN ADDITIONAL 30 FEET TO TOTAL PIPE LENGTH.

DRAINAGE QUANTITIES

DRAINAGE PLAN SHEET No.	DRAINAGE SYSTEM No.	DRAINAGE UNIT No.	CULVERTS: 6" PERFORATED PLASTIC PIPE UNDERDRAIN	18" SLOTTED PLASTIC PIPE	GRATED LINE DRAIN	18" ALTERNATIVE PIPE CULVERT	24" ALTERNATIVE PIPE CULVERT	60" ALTERNATIVE PIPE CULVERT	18" REINFORCED Conc PIPE	24" REINFORCED Conc PIPE	30" REINFORCED Conc PIPE	36" REINFORCED Conc PIPE	42" REINFORCED Conc PIPE	48" REINFORCED Conc PIPE	60" REINFORCED Conc PIPE	66" REINFORCED Conc PIPE	30" BITUMINOUS COATED CSP (0.109" THICK)	36" REINFORCED Conc PIPE RISER	48" BITUMINOUS COATED CSP DOWNDRAIN (0.109" THICK)	(N) PIPE JOINT TYPE	(N) Max HEIGHT COVER	(N) REINFORCED Conc BOX CULVERT	STRUCTURAL Conc, BOX CULVERT	BAR REINFORCEING STEEL (BOX CULVERT)	REMOVE MUD, SAND AND DEBRIS (IN CULVERT)	ABANDON CULVERT	REMOVE CULVERT	REMOVE BOX CULVERT	SAND BACKFILL	DESCRIPTION	STATION	DRAINAGE PLAN SHEET No.	DRAINAGE SYSTEM No.	DRAINAGE UNIT No.
			LF	LF	LF	LF	LF	LF	LF	LF	LF	LF	LF	LF	LF	LF	LF	LF	LF	-	LF	LF	CY	LB	LF	EA	LF	EA	CY					
D-21	64	a																							87.1					RMSD 24" CMP, L=87.07′		D-21	64	a
D-21	65	a																							96.9					RMSD 24" CMP, L=96.89′		D-21	65	a
D-21	66	a																							86.2					RMSD 24" CMP, L=86.23′		D-21	66	a
D-21	66	b																							87.3					RMSD 18" CMP, L=87.28′		D-21	66	b
D-21	66	c																							83.3					RMSD 24" CMP, L=53.25′		D-21	66	c
D-21	66	d																							73.1					RMSD 30" CMP, L=73.06′′		D-21	66	d
D-21	66	e																							87.8					RMSD 12" CMP, L=87.76′		D-21	66	e
D-21	66	f																							53.6					RMSD 30" CMP, L=53.25′		D-21	66	f
D-22	67	a																												RSP		D-22	67	a
D-22	67	b																												STRAIGHT HEADWALL	85.88′ R+ 276+50 "A"	D-22	67	b
D-22	67	c								22.4										S	4.4									24" RCP x 22.4′		D-22	67	c
D-22	67	d																												G-2 INLET W/24-12 GRATE	62.0′ R+ 293+50 "A"	D-22	67	d
D-22	67	e								62.4										S	3.8									24" RCP x 62.4′		D-22	67	e
D-22	67	f																												G-2 INLET W/24-12 GRATE	2.9′ L+ 293+50 "A"	D-22	67	f
D-22	67A	a																												RSP	30.2′ L+ "SDW8" Sta. 13+20	D-22	67A	a
D-22	68	a																							46.3					RMSD 30" CSP , L=46.3′		D-22	68	a
D-22	69	a																												RSP		D-22	69	a
D-22	69	b																												STRAIGHT HW (MOD) W/CABLE RAIL		D-22	69	b
D-22	69	c															108.2			S	2.9									DBL 30" CSP x 54.1′		D-22	69	c
D-22	69	d															32.4			D	2.9									DBL 30" CSP x 16.2′		D-22	69	d
D-22	69	e																							163.7					RMSD DBL 30" CSP, L=163.68′		D-22	69	e
D-22	69	f																												Conc (DITCH LINING)	118.2′ R+ 297+00 "A"	D-22	69	f
D-22	70	a																												RSP		D-22	70	a
D-22	70	b																												STRAIGHT HEADWALL	94.3′ R+ 276+50 "A"	D-22	70	b
D-22	70	c								30.8										S	7.2									24" RCP x 30.8′		D-22	70	c
D-22	70	d																												G-2 INLET W/24-12 GRATE	62.0′ L+ 298+00 "A"	D-22	70	d
D-22	70	e								66.4										S	6.8									24" RCP x 66.4′		D-22	70	e
D-22	70	f			20.0																									G-2 INLET W/24-12 GRATE	6.85′ R+ 298+00 "A"	D-22	70	f
D-22	70	g					46.0													S	4.5									24" APC x 46.0′		D-22	70	g
Tot DQ-43			0.0	0.0	20.0	0.0	46.0	0.0	0.0	182.0	0.0	0.0	0.0	0.0	0.0	0.0	140.6	0.0	0.0	-	-	-	0.0	0.0	865.3	0.0	0.0	0.0	0.0					

(N) = NOT A SEPARATE PAY ITEM, FOR INFORMATION ONLY
PIPE JOINT TYPES:
S - STANDARD
SO- SOIL TIGHT
D - DOWNDRAIN
W - WATERTIGHT

DRAINAGE QUANTITIES
DQ-43

STATE OF CALIFORNIA - DEPARTMENT OF TRANSPORTATION
Caltrans
CONSULTANT FUNCTIONAL SUPERVISOR: CARL SAVAGE
CALCULATED-DESIGNED BY: MICHAEL MANZANO
CHECKED BY: KATHRYN WALKER
REVISED BY
DATE REVISED

LAST REVISION 12-31-13
DATE PLOTTED => 20-MAR-2014
TIME PLOTTED => 14:32

Dist	COUNTY	ROUTE	POST MILES TOTAL PROJECT	SHEET No.	TOTAL SHEETS
11	SD	15,76	R46.2/R46.8, R12.1/R17.7	442	1273

REGISTERED CIVIL ENGINEER 10-30-13 DATE

03-24-14
PLANS APPROVAL DATE

REGISTERED PROFESSIONAL ENGINEER KATHRYN WALKER No. C77900 Exp. 06-30-15 CIVIL STATE OF CALIFORNIA

THE STATE OF CALIFORNIA OR ITS OFFICERS OR AGENTS SHALL NOT BE RESPONSIBLE FOR THE ACCURACY OR COMPLETENESS OF SCANNED COPIES OF THIS PLAN SHEET.

DOKKEN ENGINEERING
5675 RUFFIN RD
SUITE 250
SAN DIEGO, CA 92123

DRAINAGE QUANTITIES

DRAINAGE PLAN SHEET No.	DRAINAGE SYSTEM No.	DRAINAGE UNIT No.	STRUCTURES (N) STRUCTURE HEIGHT LF	(N) MINOR CONCRETE (MINOR STRUCTURE) CY	STRUCTURAL CONCRETE (HEADWALL) CY	STRUCTURAL CONCRETE (JUNCTION STRUCTURE) CY	(N) GRATE TYPE 24-12 EA	(N) GRATE TYPE 36R EA	(N) MANHOLE FRAME AND COVER EA	(N) 1/4" CHECKERED PLATE COVER AND FRAME EA	(N) GRATE CHAIN EA	MISCELLANEOUS IRON AND STEEL LB	DRAINAGE INLET MARKER EA	CABLE RAILING LF	CHAIN LINK RAILING (TYPE 7) LF	REMOVE INLET EA	REMOVE HEADWALL EA	(N) Conc COLLAR EA	18" ALTERNATIVE FLARED END SECTION EA	24" ALTERNATIVE FLARED END SECTION EA	CONCRETE (SLOPE PROTECTION) CY	CONCRETE (DITCH LINING) CY	ROCK SLOPE PROTECTION (NO. 2, METHOD B) CY	ROCK SLOPE PROTECTION (NO. 1, METHOD B) CY	ROCK SLOPE PROTECTION (LIGHT, METHOD B) CY	ROCK SLOPE PROTECTION (1/4 T, METHOD B) CY	ROCK SLOPE PROTECTION (1/2 T, METHOD B) CY	ROCK SLOPE PROTECTION (2T, METHOD A) CY	ROCK SLOPE PROTECTION (1T, METHOD B) CY	ROCK SLOPE PROTECTION FABRIC (CLASS 8) SQYD	ROCK SLOPE PROTECTION FABRIC (CLASS 10) SQYD	STRUCTURE BACKFILL (SLURRY CEMENT) CY	DITCH EXCAVATION CY	MODIFY INLET EA	ADJUST INLET EA	ADJUST MANHOLE EA	CAP RISER EA	DESCRIPTION	STATION	DRAINAGE PLAN SHEET No.	DRAINAGE SYSTEM No.	DRAINAGE UNIT No.
D-21	64	a																																				RMSD 24" CMP, L=87.07′		D-21	64	a
D-21	65	a																																				RMSD 24" CMP, L=96.89′		D-21	65	a
D-21	66	a																																				RMSD 24" CMP, L=86.23′		D-21	66	a
D-21	66	b																																				RMSD 18" CMP, L=87.28′		D-21	66	b
D-21	66	c																																				RMSD 24" CMP, L=53.25′		D-21	66	c
D-21	66	d																																				RMSD 30" CMP, L=73.06′′		D-21	66	d
D-21	66	e																																				RMSD 12" CMP, L=87.76′		D-21	66	e
D-21	66	f																																				RMSD 30" CMP, L=53.25′		D-21	66	f
D-22	67	a																						7.0					18.0									RSP		D-22	67	a
D-22	67	b			1.2																																	STRAIGHT HEADWALL	85.88′ R+ 276+50 "A"	D-22	67	b
D-22	67	c																																				24" RCP x 22.4′		D-22	67	c
D-22	67	d	5.70	2.8			1				1	329									2.0																	G-2 INLET W/24-12 GRATE	62.0′ R+ 293+50 "A"	D-22	67	d
D-22	67	e																																				24" RCP x 62.4′		D-22	67	e
D-22	67	f	5.10	2.6			1				1	329																										G-2 INLET W/24-12 GRATE	2.9′ L+ 293+50 "A"	D-22	67	f
D-22	67A	a																						2.0					8.2									RSP	30.2′ L+ "SDW8" 13+20	D-22	67A	a
D-22	68	a																																				RMSD 30" CSP , L=46.3′		D-22	68	a
D-22	69	a																						16.0					83.0									RSP		D-22	69	a
D-22	69	b			2.5									15.0																								STRAIGHT HW(MOD)W/CBL RAIL		D-22	69	b
D-22	69	c																													30.9							DBL 30" CSP x 54.1′		D-22	69	c
D-22	69	d																													8.2							DBL 30" CSP DD x 16.2′		D-22	69	d
D-22	69	e																																				RMSD DBL 30" CSP, L=163.68′		D-22	69	e
D-22	69	f																				28.9										128.1						Conc (DITCH LINING)	118.2′ R+ 297+00 "A"	D-22	69	f
D-22	70	a																						7.0					18.0									RSP		D-22	70	a
D-22	70	b			1.2																																	STRAIGHT HEADWALL	94.3′ R+ 276+50 "A"	D-22	70	b
D-22	70	c																																				24" RCP x 30.8′		D-22	70	c
D-22	70	d	8.50	4.7			1				1	329									1.7																	G-2 INLET W/24-12 GRATE	62.0′ L+ 298+00 "A"	D-22	70	d
D-22	70	e																																				24" RCP x 66.4′		D-22	70	e
D-22	70	f	6.70	3.1			1				1	329																										G-2 INLET W/24-12 GRATE	6.85′ R+ 298+00 "A"	D-22	70	f
D-22	70	g																																				24" APC x 46.0′		D-22	70	g
Tot	DQ-44		-	13.2	4.9	0.0	-	-	-	-	-	1,316	0	15.0	0.0	0	0	-	0	0	3.7	28.9	0.0	0.0	32.0	0.0	0.0	0.0	0.0	127.2	0.0	39.1	128.1	0	0	0	0					

DRAINAGE QUANTITIES
DQ-44

MICHAEL MANZANO — REVISED BY
KATHRYN WALKER — DATE REVISED
CALCULATED-DESIGNED BY
CHECKED BY
CONSULTANT FUNCTIONAL SUPERVISOR
CARL SAVAGE

STATE OF CALIFORNIA - DEPARTMENT OF TRANSPORTATION
Caltrans

LAST REVISION 12-31-13 | DATE PLOTTED => 20-MAR-2014 | TIME PLOTTED => 14:32

Dist	COUNTY	ROUTE	POST MILES TOTAL PROJECT	SHEET No.	TOTAL SHEETS
11	SD	15,76	R46.2/R46.8, R12.1/R17.7	443	1273

REGISTERED CIVIL ENGINEER 10-30-13 DATE

03-24-14
PLANS APPROVAL DATE

REGISTERED PROFESSIONAL ENGINEER KATHRYN WALKER No. C77900 Exp. 06-30-15 CIVIL STATE OF CALIFORNIA

THE STATE OF CALIFORNIA OR ITS OFFICERS OR AGENTS SHALL NOT BE RESPONSIBLE FOR THE ACCURACY OR COMPLETENESS OF SCANNED COPIES OF THIS PLAN SHEET.

DOKKEN ENGINEERING
5675 RUFFIN RD
SUITE 250
SAN DIEGO, CA 92123

DRAINAGE QUANTITIES

DRAINAGE PLAN SHEET No.	DRAINAGE SYSTEM No.	DRAINAGE UNIT No.	CULVERTS: 6" PERFORATED PLASTIC PIPE UNDERDRAIN	18" SLOTTED PLASTIC PIPE	GRATED LINE DRAIN	18" ALTERNATIVE PIPE CULVERT	24" ALTERNATIVE PIPE CULVERT	60" ALTERNATIVE PIPE CULVERT	18" REINFORCED Conc PIPE	24" REINFORCED Conc PIPE	30" REINFORCED Conc PIPE	36" REINFORCED Conc PIPE	42" REINFORCED Conc PIPE	48" REINFORCED Conc PIPE	60" REINFORCED Conc PIPE	66" REINFORCED Conc PIPE	30" BITUMINOUS COATED CSP (0.109" THICK)	36" REINFORCED Conc PIPE RISER	48" BITUMINOUS COATED CSP (0.109" THICK)	(N) PIPE JOINT TYPE	(N) Max HEIGHT COVER	(N) REINFORCED Conc BOX CULVERT	STRUCTURAL Conc, BOX CULVERT	BAR REINFORCEING STEEL (BOX CULVERT)	REMOVE MUD, SAND AND DEBRIS (IN CULVERT)	ABANDON CULVERT	REMOVE CULVERT	REMOVE BOX CULVERT	SAND BACKFILL	DESCRIPTION	STATION	DRAINAGE PLAN SHEET No.	DRAINAGE SYSTEM No.	DRAINAGE UNIT No.
			LF	LF	LF	LF	LF	LF	LF	LF	LF	LF	LF	LF	LF	LF	LF	LF	LF	-	LF	LF	CY	LB	LF	EA	LF	EA	CY					
D-22	70	h																												G-2 INLET W/24-12 GRATE	7.57′ R+ 298+50 "A"	D-22	70	h
D-22	70	i				18.5														S	3.5									18" APC x 18.5′ W/ J-1 COLLAR		D-22	70	i
D-22	70	j																												G-2 INLET W/24-12 GRATE	9.0′ L+ 298+21.50 "A"	D-22	70	j
D-22	70A	a																												RSP		D-22	70A	a
D-22	70A	b																												STRAIGHT HEADWALL	93.4′ R+ 297+28 "A"	D-22	70A	b
D-22	70A	c								29.9										S	7.4									24" RCP x 29.9′		D-22	70A	c
D-22	70A	d																												G-2 INLET W/24-12 GRATE	62.0′ R+ 297+28 "A"	D-22	70A	d
D-22	70A	e								52.2										S	6.9									24" RCP x 52.2′		D-22	70A	e
D-22	70A	f			20.0																									G-2 INLET W/24-12 GRATE	5.8′ R+ 297+28 "A"	D-22	70A	f
D-22	70A	g					32.0													S	3.0									24" APC x 32.0′		D-22	70A	g
D-22	70A	h			20.0																									G-2 INLET W/24-12 GRATE	6.3′ R+ 297+64 "A"	D-22	70A	h
D-22	70A	i				66.0														S	3.5									18" APC x 66.0′		D-22	70A	i
D-22	70A	j																												G-2 INLET W/24-12 GRATE	62.0′ R+ 296+58 "A"	D-22	70A	j
D-22	71	a																												RSP		D-22	71	a
D-22	71	b																												STRAIGHT HW	106.5′ R+ 301+23 "A"	D-22	71	b
D-22	71	c								42.8										S	10.6									24" RCP x 42.8′		D-22	71	c
D-22	71	d																												G-2 INLET W/24-12 GRATE	62.0′ R+ 301+23 "A"	D-22	71	d
D-22	71	e								49.9										S	9.6									24" RCP x 49.9′		D-22	71	e
D-22	71	f																												G-2 INLET W/24-12 GRATE	9.0′ R+ 301+25 "A"	D-22	71	f
D-22	71	g								15.0										S	6.7									24" RCP x 15.0′		D-22	71	g
D-22	71	h																												G-2 INLET W/24-12 GRATE	9.0′ L+ 301+29 "A"	D-22	71	h
D-22	71	i								45.0										S	5.7									24" RCP x 45.0′		D-22	71	i
D-22	71	j																												G-1 INLET W/24-12 GRATE	54.0′ L+ 301+38.50 "A"	D-22	71	j
D-22	71	k					116.5													S	5.8									24" ACP x 116.5′		D-22	71	k
D-22	71	l																												G-2 INLET W/24-12 GRATE	9.0′ L+ 302+50.00 "A"	D-22	71	l
D-23	72	a																												RSP		D-23	72	a
D-23	72	b																												STRAIGHT HEADWALL	94.68′ R+ "A1" 304+00.00	D-23	72	b
Tot DQ-45			0.0	0.0	40.0	84.5	148.5	0.0	0.0	234.8	0.0	0.0	0.0	0.0	0.0	0.0	0.0	0.0	0.0	-	-	-	0.0	0.0	0.0	0.0	0.0	0.0	0.0					

(N) = NOT A SEPARATE PAY ITEM, FOR INFORMATION ONLY
PIPE JOINT TYPES:
S - STANDARD
SO- SOIL TIGHT
D - DOWNDRAIN
W - WATERTIGHT

DRAINAGE QUANTITIES
DQ-45

REVISED BY | DATE REVISED
MICHAEL MANZANO | KATHRYN WALKER
CALCULATED-DESIGNED BY | CHECKED BY
CONSULTANT FUNCTIONAL SUPERVISOR: CARL SAVAGE
STATE OF CALIFORNIA - DEPARTMENT OF TRANSPORTATION
Caltrans

LAST REVISION 12-31-13 | DATE PLOTTED => 20-MAR-2014 | TIME PLOTTED => 14:32

Dist	COUNTY	ROUTE	POST MILES TOTAL PROJECT	SHEET No.	TOTAL SHEETS
11	SD	15,76	R46.2/R46.8, R12.1/R17.7	444	1273

REGISTERED CIVIL ENGINEER 10-30-13 DATE

03-24-14
PLANS APPROVAL DATE

REGISTERED PROFESSIONAL ENGINEER KATHRYN WALKER No. C77900 Exp. 06-30-15 CIVIL STATE OF CALIFORNIA

THE STATE OF CALIFORNIA OR ITS OFFICERS OR AGENTS SHALL NOT BE RESPONSIBLE FOR THE ACCURACY OR COMPLETENESS OF SCANNED COPIES OF THIS PLAN SHEET.

DOKKEN ENGINEERING
5675 RUFFIN RD
SUITE 250
SAN DIEGO, CA 92123

DRAINAGE QUANTITIES

DRAINAGE PLAN SHEET No.	DRAINAGE SYSTEM No.	DRAINAGE UNIT No.	STRUCTURES: STRUCTURE HEIGHT (N)	MINOR CONCRETE (MINOR STRUCTURE) (N)	STRUCTURAL CONCRETE (HEADWALL)	STRUCTURAL CONCRETE (JUNCTION STRUCTURE)	GRATE TYPE 24-12 (N)	GRATE TYPE 36R (N)	MANHOLE FRAME AND COVER (N)	1/4" CHECKERED PLATE COVER AND FRAME (N)	GRATE CHAIN (N)	MISCELLANEOUS IRON AND STEEL	DRAINAGE INLET MARKER	CABLE RAILING	CHAIN LINK RAILING (TYPE 7)	REMOVE INLET	REMOVE HEADWALL	Conc COLLAR (N)	18" ALTERNATIVE FLARED END SECTION	24" ALTERNATIVE FLARED END SECTION	CONCRETE (SLOPE PROTECTION)	CONCRETE (DITCH LINING)	ROCK SLOPE PROTECTION (NO. 2, METHOD B)	ROCK SLOPE PROTECTION (NO. 1, METHOD B)	ROCK SLOPE PROTECTION (LIGHT, METHOD B)	ROCK SLOPE PROTECTION (1/4 T, METHOD B)	ROCK SLOPE PROTECTION (1/2 T, METHOD B)	ROCK SLOPE PROTECTION (2T, METHOD A)	ROCK SLOPE PROTECTION (1T, METHOD B)	ROCK SLOPE PROTECTION FABRIC (CLASS 8)	ROCK SLOPE PROTECTION FABRIC (CLASS 10)	STRUCTURE BACKFILL (SLURRY CEMENT)	DITCH EXCAVATION	MODIFY INLET	ADJUST INLET	ADJUST MANHOLE	CAP RISER	DESCRIPTION	STATION	DRAINAGE PLAN SHEET No.	DRAINAGE SYSTEM No.	DRAINAGE UNIT No.
			LF	CY	CY	CY	EA	EA	EA	EA	EA	LB	EA	LF	LF	EA	EA	EA	EA	EA	CY	CY	CY	CY	CY	CY	CY	CY	CY	SQYD	SQYD	CY	CY	EA	EA	EA	EA					
D-22	70	h	5.00	2.6			1				1	329																										G-2 INLET W/24-12 GRATE	7.57′ R+ 298+50 "A"	D-22	70	h
D-22	70	i																1																				18" APC x 18.5′ W/ J-1 COLL.		D-22	70	i
D-22	70	j	5.00	2.6			1				1	329																										G-2 INLET W/24-12 GRATE	9.0′ L+ 298+21.50 "A"	D-22	70	j
D-22	70A	a																							7.0					18.0								RSP		D-22	70A	a
D-22	70A	b			1.2																																	STRAIGHT HEADWALL	93.4′ R+ 297+28 "A"	D-22	70A	b
D-22	70A	c																																				24" RCP x 29.9′		D-22	70A	c
D-22	70A	d	9.40	5.1			1				1	329																										G-2 INLET W/24-12 GRATE	62.0′ R+ 297+28 "A"	D-22	70A	d
D-22	70A	e																																				24" RCP x 52.2′		D-22	70A	e
D-22	70A	f	6.60	3.1			1				1	329																										G-2 INLET W/24-12 GRATE	5.8′ R+ 297+28 "A"	D-22	70A	f
D-22	70A	g																																				24" APC x 32.0′		D-22	70A	g
D-22	70A	h	5.00	2.6			1				1	329																										G-2 INLET W/24-12 GRATE	6.3′ R+ 297+64 "A"	D-22	70A	h
D-22	70A	i																																				18" APC x 66.0′		D-22	70A	i
D-22	70A	j	4.00	2.3			1				1	329									2.0																	G-2 INLET W/24-12 GRATE	62.0′ R+ 296+58 "A"	D-22	70A	j
D-22	71	a																							7.0					18.0								RSP		D-22	71	a
D-22	71	b			1.2																																	STRAIGHT HW	106.5′ R+ 301+23 "A"	D-22	71	b
D-22	71	c																																				24" RCP x 42.8′		D-22	71	c
D-22	71	d	12.00	5.1			1				1	329									2.0																	G-2 INLET W/24-12 GRATE	62.0′ R+ 301+23 "A"	D-22	71	d
D-22	71	e																																				24" RCP x 49.9′		D-22	71	e
D-22	71	f	8.90	4.8			1				1	329																										G-2 INLET W/24-12 GRATE	9.0′ R+ 301+25 "A"	D-22	71	f
D-22	71	g																																				24" RCP x 15.0′		D-22	71	g
D-22	71	h	7.80	3.4			1				1	329																										G-2 INLET W/24-12 GRATE	9.0′ L+ 301+29 "A"	D-22	71	h
D-22	71	i																																				24" RCP x 45.0′		D-22	71	i
D-22	71	j	5.00	1.4			1				1	329																										G-1 INLET W/24-12 GRATE	54.0′ L+ 301+38.50 "A"	D-22	71	j
D-22	71	k																																				24" ACP x 116.5′		D-22	71	k
D-22	71	l	7.90	3.4			1				1	329																										G-2 INLET W/24-12 GRATE	9.0′ L+ 302+50.00 "A"	D-22	71	l
D-23	72	a																							14.0					18.0								RSP		D-23	72	a
D-23	72	b			1.2																																	STRAIGHT HEADWALL	94.68′ R+ "A1" 304+00.00	D-23	72	b
Tot DQ-46			-	36.4	3.6	0.0	-	-	-	-	-	3,619	0	0.0	0.0	0	0	-	0	0	4.0	0.0	0.0	0.0	28.0	0.0	0.0	0.0	0.0	54.0	0.0	0.0	0.0	0	0	0	0					

DRAINAGE QUANTITIES
DQ-46

STATE OF CALIFORNIA - DEPARTMENT OF TRANSPORTATION
Caltrans®

CONSULTANT FUNCTIONAL SUPERVISOR: CARL SAVAGE
CALCULATED-DESIGNED BY: MICHAEL MANZANO
CHECKED BY: KATHRYN WALKER
REVISED BY
DATE REVISED

LAST REVISION 12-31-13 | DATE PLOTTED => 20-MAR-2014 | TIME PLOTTED => 14:32

Dist	COUNTY	ROUTE	POST MILES TOTAL PROJECT	SHEET No.	TOTAL SHEETS
11	SD	15,76	R46.2/R46.8, R12.1/R17.7	445	1273

REGISTERED CIVIL ENGINEER 10-30-13 DATE

03-24-14
PLANS APPROVAL DATE

REGISTERED PROFESSIONAL ENGINEER KATHRYN WALKER No. C77900 Exp. 06-30-15 CIVIL STATE OF CALIFORNIA

THE STATE OF CALIFORNIA OR ITS OFFICERS OR AGENTS SHALL NOT BE RESPONSIBLE FOR THE ACCURACY OR COMPLETENESS OF SCANNED COPIES OF THIS PLAN SHEET.

DOKKEN ENGINEERING
5675 RUFFIN RD
SUITE 250
SAN DIEGO, CA 92123

DRAINAGE QUANTITIES

DRAINAGE PLAN SHEET No.	DRAINAGE SYSTEM No.	DRAINAGE UNIT No.	CULVERTS: 6" PERFORATED PLASTIC PIPE UNDERDRAIN (LF)	18" SLOTTED PLASTIC PIPE (LF)	GRATED LINE DRAIN (LF)	18" ALTERNATIVE PIPE CULVERT (LF)	24" ALTERNATIVE PIPE CULVERT (LF)	60" ALTERNATIVE PIPE CULVERT (LF)	18" REINFORCED Conc PIPE (LF)	24" REINFORCED Conc PIPE (LF)	48" REINFORCED Conc PIPE (LF)	30" REINFORCED Conc PIPE (LF)	36" REINFORCED Conc PIPE (LF)	42" REINFORCED Conc PIPE (LF)	48" REINFORCED Conc PIPE (LF)	60" REINFORCED Conc PIPE (LF)	66" REINFORCED Conc PIPE (LF)	30" BITUMINOUS COATED CSP (0.109" THICK) (LF)	36" REINFORCED Conc PIPE RISER (LF)	48" BITUMINOUS COATED CSP (0.109" THICK) (LF)	PIPE JOINT TYPE (N) (-)	Max HEIGHT COVER (N) (LF)	REINFORCED Conc BOX CULVERT (N) (LF)	REINFORCED Conc BOX CULVERT TYPE (-)	STRUCTURAL Conc, BOX CULVERT (CY)	BAR REINFORCEING STEEL (BOX CULVERT) (LB)	REMOVE MUD, SAND AND DEBRIS (IN CULVERT) (LF)	ABANDON CULVERT (EA)	REMOVE CULVERT (LF)	REMOVE BOX CULVERT (EA)	SAND BACKFILL (CY)	DESCRIPTION	STATION	DRAINAGE PLAN SHEET No.	DRAINAGE SYSTEM No.	DRAINAGE UNIT No.
D-23	72	c								177.4											S	11.8										24" RCP x 177.4′		D-23	72	c
D-23	72	d																														G-2 INLET W/24-12 GRATE	83.63′ L+ "A" 304+13.88	D-23	72	d
D-23	72	e							72.1												S	3.8										18" RCP x 72.1′		D-23	72	e
D-23	72	f																	4.5													OCP (Mod) W/ 36R GRATE	127.46′ L+ "A1" 304+77.27	D-23	72	f
D-23	72	g																												47.1		RMV 12" CMP		D-23	72	g
D-23	73	a																														RSP		D-23	73	a
D-23	73	b																														STRAIGHT HEADWALL	99.0′ R+ 276+50 "A"	D-23	73	b
D-23	73	c								35.6											S	10.3										24" RCP x 35.6′		D-23	73	c
D-23	73	d																														G-2 INLET W/24-12 GRATE	62′ R+ 311+30 "A"	D-23	73	d
D-23	73	e								67.5											S	9.7										24" RCP x 67.5′		D-23	73	e
D-23	73	f																														G-2 INLET W/24-12 GRATE	9.0′ L+ 311+30 "A"	D-23	73	f
D-23	73	g								42.0											S	6.1										24" RCP x 42.0′		D-23	73	g
D-23	73	h																														G-2 INLET W/24-12 GRATE	55.0′ L+ 311+30 "A"	D-23	73	h
D-23	73	i								74.1											S	3.0										24" RCP x 74.1′		D-23	73	i
D-23	73	j																														G-2 INLET W/24-12 GRATE	55.0′ L+ 310+50 "A"	D-23	73	j
D-23	73	k								54.3											S	3.2										24" RCP x 54.3′		D-23	73	k
D-23	73	l																														G-2 INLET W/24-12 GRATE	62.0′ L+ 309+91 "A"	D-23	73	l
D-23	73	m					230.3														S	3.3										24" APC x 230.3′		D-23	73	m
D-23	73	n																														G-2 INLET W/24-12 GRATE	62.0′ L+ 307+50 "A"	D-23	73	n
D-23	73	o								50.5											S	2.5										24" RCP x 50.5′		D-23	73	o
D-23	73	p																														G-2 INLET W/24-12 GRATE	9.0′ L+ 309+91 "A"	D-23	73	p
D-23	73	q								39.9											S	3.6										24" RCP x 39.9′		D-23	73	q
D-23	73	r																														G-2 INLET W/24-12 GRATE	55.0′ L+ 311+75 "A"	D-23	73	r
D-23	73	s								115.5											S	4.2										24" RCP x 115.5′		D-23	73	s
D-23	73	t																														G-2 INLET W/24-12 GRATE	9.0′ L+ 312+50 "A"	D-23	73	t
D-23	73	u								145.9																						24" RCP x 145.9′		D-23	73	u
D-23	73	v																														G-2 INLET W/24-12 GRATE	6.0′ L+ 314+00 "A"	D-23	73	v
D-23	73	w								52.4																						24" RCP x 52.4′		D-23	73	w
D-23	73	x																														G-2 INLET W/24-12 GRATE	60.2′ L+ 314+09 "A"	D-23	73	x
D-23	73	y				119.2																										18" APC x 119.2′		D-23	73	y
D-23	73	z																														G-2 INLET W/24-12 GRATE	62.0′ R+ 312+50 "A"	D-23	73	z
D-24	74	a																														RSP		D-24	74	a
D-24	74	b																														STRAIGHT HEADWALL	84.8′ R+ 315+20 "A"	D-24	74	b
D-24	74	c								27.0											S	5.6										24" RCP x 27.0′		D-24	74	c
D-24	74	d																														G-2 INLET W/24-12 GRATE	58.6′ R+ 315+20 "A"	D-24	74	d
D-24	74	e								61.1											S	3.6										24" RCP x 61.1′		D-24	74	e
D-24	74	f			20.0																											G-2 INLET W/24-12 GRATE	5.0′ L+ 315+20 "A"	D-24	74	f
D-24	74	g					36.0														S	3.3										24" APC x 36.0′		D-24	74	g
To+ DQ-47			0.0	0.0	20.0	119.2	266.3	0.0	72.1	943.2	0.0	0.0	0.0	0.0	0.0	0.0	0.0	0.0	4.5	0.0	-	-	-	0.0	0.0	0.0	0.0	0.0	47.1	0.0	0.0					

(N) = NOT A SEPARATE PAY ITEM, FOR INFORMATION ONLY
PIPE JOINT TYPES:
S - STANDARD
SO- SOIL TIGHT
D - DOWNDRAIN
W - WATERTIGHT

DRAINAGE QUANTITIES
DQ-47

STATE OF CALIFORNIA - DEPARTMENT OF TRANSPORTATION
Caltrans
CONSULTANT FUNCTIONAL SUPERVISOR: CARL SAVAGE
CALCULATED-DESIGNED BY: MICHAEL MANZANO
CHECKED BY: KATHRYN WALKER
REVISED BY
DATE REVISED

LAST REVISION 12-31-13
DATE PLOTTED => 20-MAR-2014
TIME PLOTTED => 14:32

Dist	COUNTY	ROUTE	POST MILES TOTAL PROJECT	SHEET No.	TOTAL SHEETS
11	SD	15,76	R46.2/R46.8, R12.1/R17.7	446	1273

REGISTERED CIVIL ENGINEER 10-30-13 DATE

03-24-14
PLANS APPROVAL DATE

REGISTERED PROFESSIONAL ENGINEER KATHRYN WALKER No. C77900 Exp. 06-30-15 CIVIL STATE OF CALIFORNIA

THE STATE OF CALIFORNIA OR ITS OFFICERS OR AGENTS SHALL NOT BE RESPONSIBLE FOR THE ACCURACY OR COMPLETENESS OF SCANNED COPIES OF THIS PLAN SHEET.

DOKKEN ENGINEERING
5675 RUFFIN RD
SUITE 250
SAN DIEGO, CA 92123

DRAINAGE QUANTITIES

DRAINAGE PLAN SHEET No.	DRAINAGE SYSTEM No.	DRAINAGE UNIT No.	STRUCTURES (N) STRUCTURE HEIGHT LF	MINOR CONCRETE (MINOR STRUCTURE) CY	STRUCTURAL CONCRETE (HEADWALL) CY	STRUCTURAL CONCRETE (JUNCTION STRUCTURE) CY	(N) GRATE TYPE 24-12 EA	(N) GRATE TYPE 36R EA	(N) MANHOLE FRAME AND COVER EA	(N) 1/4" CHECKERED PLATE COVER AND FRAME EA	(N) GRATE CHAIN EA	MISCELLANEOUS IRON AND STEEL LB	DRAINAGE INLET MARKER EA	CABLE RAILING LF	CHAIN LINK RAILING (TYPE 7) LF	REMOVE INLET EA	REMOVE HEADWALL EA	(N) Conc COLLAR EA	18" ALTERNATIVE FLARED END SECTION EA	24" ALTERNATIVE FLARED END SECTION EA	CONCRETE (SLOPE PROTECTION) CY	CONCRETE (DITCH LINING) CY	ROCK SLOPE PROTECTION (NO. 2, METHOD B) CY	ROCK SLOPE PROTECTION (NO. 1, METHOD B) CY	ROCK SLOPE PROTECTION (LIGHT, METHOD B) CY	ROCK SLOPE PROTECTION (1/4 T, METHOD B) CY	ROCK SLOPE PROTECTION (1/2 T, METHOD B) CY	ROCK SLOPE PROTECTION (2T, METHOD A) CY	ROCK SLOPE PROTECTION (1T, METHOD B) CY	ROCK SLOPE PROTECTION FABRIC (CLASS 8) SQYD	ROCK SLOPE PROTECTION FABRIC (CLASS 10) SQYD	STRUCTURE BACKFILL (SLURRY CEMENT) CY	DITCH EXCAVATION CY	MODIFY INLET EA	ADJUST INLET EA	ADJUST MANHOLE EA	CAP RISER EA	DESCRIPTION	STATION	DRAINAGE PLAN SHEET No.	DRAINAGE SYSTEM No.	DRAINAGE UNIT No.
D-23	72	c																																					24" RCP x 177.4′		D-23	72	c
D-23	72	d	4.30	2.4			1				1	329																											G-2 INLET W/24-12 GRATE	83.63′ L+ "A" 304+13.88	D-23	72	d
D-23	72	e																1																					18" RCP x 72.1′		D-23	72	e
D-23	72	f	4	0.5				1			1	236									2.0																		OCP (Mod) W/ 36R GRATE	127.46′ L+ "A1" 304+77.2	D-23	72	f
D-23	72	g																																					RMV 12" CMP		D-23	72	g
D-23	73	a																							7.0				18.0										RSP		D-23	73	a
D-23	73	b			1.2																																		STRAIGHT HEADWALL	99.0′ R+ 276+50 "A"	D-23	73	b
D-23	73	c																																					24" RCP x 35.6′		D-23	73	c
D-23	73	d	11.70	6.0			1				1	329									2.0																		G-2 INLET W/24-12 GRATE	62′ R+ 311+30 "A"	D-23	73	d
D-23	73	e																																					24" RCP x 67.5′		D-23	73	e
D-23	73	f	8.20	4.6			1				1	329																											G-2 INLET W/24-12 GRATE	9.0′ L+ 311+30 "A"	D-23	73	f
D-23	73	g																																					24" RCP x 42.0′		D-23	73	g
D-23	73	h	5.50	2.7			1				1	329									2.0																		G-2 INLET W/24-12 GRATE	55.0′ L+ 311+30 "A"	D-23	73	h
D-23	73	i																																					24" RCP x 74.1′		D-23	73	i
D-23	73	j	5.10	2.6			1				1	329									2.0																		G-2 INLET W/24-12 GRATE	55.0′ L+ 310+50 "A"	D-23	73	j
D-23	73	k																																					24" RCP x 54.3′		D-23	73	k
D-23	73	l	4.30	2.4			1				1	329									2.0																		G-2 INLET W/24-12 GRATE	62.0′ L+ 309+91 "A"	D-23	73	l
D-23	73	m																																					24" APC x 230.3′		D-23	73	m
D-23	73	n	4.00	2.3			1				1	329																											G-2 INLET W/24-12 GRATE	62.0′ L+ 307+50 "A"	D-23	73	n
D-23	73	o																																					24" RCP x 50.5′		D-23	73	o
D-23	73	p	5.00	2.6			1				1	329									2.0																		G-2 INLET W/24-12 GRATE	9.0′ L+ 309+91 "A"	D-23	73	p
D-23	73	q																																					24" RCP x 39.9′		D-23	73	q
D-23	73	r	4.60	2.5			1				1	329																											G-2 INLET W/24-12 GRATE	55.0′ L+ 311+75 "A"	D-23	73	r
D-23	73	s																																					24" RCP x 115.5′		D-23	73	s
D-23	73	t	6.70	3.1			1				1	329									2.0																		G-2 INLET W/24-12 GRATE	9.0′ L+ 312+50 "A"	D-23	73	t
D-23	73	u																																					24" RCP x 145.9′		D-23	73	u
D-23	73	v	7.00	3.2			1				1	329																											G-2 INLET W/24-12 GRATE	6.0′ L+ 314+00 "A"	D-23	73	v
D-23	73	w																																					24" RCP x 52.4′		D-23	73	w
D-23	73	x	4.80	2.5			1				1	329																											G-2 INLET W/24-12 GRATE	60.2′ L+ 314+09 "A"	D-23	73	x
D-23	73	y																																					18" APC x 119.2′		D-23	73	y
D-23	73	z	4.20	2.4			1				1	329									1.7																		G-2 INLET W/24-12 GRATE	62.0′ R+ 312+50 "A"	D-23	73	z
D-24	74	a																							7.0				18.0										RSP		D-24	74	a
D-24	74	b			1.2																																		STRAIGHT HEADWALL	84.8′ R+ 315+20 "A"	D-24	74	b
D-24	74	c																																					24" RCP x 27.0′		D-24	74	c
D-24	74	d	6.90	3.2			1				1	329									2.0																		G-2 INLET W/24-12 GRATE	58.6′ R+ 315+20 "A"	D-24	74	d
D-24	74	e																																					24" RCP x 61.1′		D-24	74	e
D-24	74	f	5.60	2.8			1				1	329																											G-2 INLET W/24-12 GRATE	5.0′ L+ 315+20 "A"	D-24	74	f
D-24	74	g																																					24" APC x 36.0′		D-24	74	g
To+ DQ-48			-	45.8	2.4	0.0	-	-	-	-	-	5,171	0	0.0	0.0	0	0	-	0	0	17.7	0.0	0.0	0.0	14.0	0.0	0.0	0.0	0.0	36.0	0.0	0.0	0.0	0	0	0	0					

DRAINAGE QUANTITIES
DQ-48

LAST REVISION 12-31-13 | DATE PLOTTED => 20-MAR-2014 | TIME PLOTTED => 14:32

STATE OF CALIFORNIA - DEPARTMENT OF TRANSPORTATION
Caltrans

CONSULTANT FUNCTIONAL SUPERVISOR: CARL SAVAGE
CALCULATED-DESIGNED BY: MICHAEL MANZANO
CHECKED BY: KATHRYN WALKER
REVISED BY
DATE REVISED

Dist	COUNTY	ROUTE	POST MILES TOTAL PROJECT	SHEET No.	TOTAL SHEETS
11	SD	15,76	R46.2/R46.8, R12.1/R17.7	447	1273

REGISTERED CIVIL ENGINEER 10-30-13 DATE

03-24-14
PLANS APPROVAL DATE

REGISTERED PROFESSIONAL ENGINEER KATHRYN WALKER No. C77900 Exp. 06-30-15 CIVIL STATE OF CALIFORNIA

THE STATE OF CALIFORNIA OR ITS OFFICERS OR AGENTS SHALL NOT BE RESPONSIBLE FOR THE ACCURACY OR COMPLETENESS OF SCANNED COPIES OF THIS PLAN SHEET.

DOKKEN ENGINEERING
5675 RUFFIN RD
SUITE 250
SAN DIEGO, CA 92123

DRAINAGE QUANTITIES

DRAINAGE PLAN SHEET No.	DRAINAGE SYSTEM No.	DRAINAGE UNIT No.	CULVERTS: 6" PERFORATED PLASTIC PIPE UNDERDRAIN (LF)	18" SLOTTED PLASTIC PIPE (LF)	GRATED LINE DRAIN (LF)	18" ALTERNATIVE PIPE CULVERT (LF)	24" ALTERNATIVE PIPE CULVERT (LF)	60" ALTERNATIVE PIPE CULVERT (LF)	18" REINFORCED Conc PIPE (LF)	24" REINFORCED Conc PIPE (LF)	30" REINFORCED Conc PIPE (LF)	36" REINFORCED Conc PIPE (LF)	42" REINFORCED Conc PIPE (LF)	48" REINFORCED Conc PIPE (LF)	60" REINFORCED Conc PIPE (LF)	66" REINFORCED Conc PIPE (LF)	30" BITUMINOUS COATED CSP (0.109" THICK) (LF)	36" REINFORCED Conc PIPE RISER (LF)	48" BITUMINOUS COATED CSP (0.109" THICK) (LF)	(N) PIPE JOINT TYPE (-)	(N) Max HEIGHT COVER (LF)	(N) REINFORCED Conc BOX CULVERT (LF)	STRUCTURAL Conc, BOX CULVERT (CY)	BAR REINFORCEING STEEL (BOX CULVERT) (LB)	REMOVE MUD, SAND AND DEBRIS (IN CULVERT) (LF)	ABANDON CULVERT (EA)	REMOVE CULVERT (LF)	REMOVE BOX CULVERT (EA)	SAND BACKFILL (CY)	DESCRIPTION	STATION	DRAINAGE PLAN SHEET No.	DRAINAGE SYSTEM No.	DRAINAGE UNIT No.
D-24	74	h			20.0																									G-2 INLET W/24-12 GRATE	4.1' L+ 315+60 "A"	D-24	74	h
D-24	74	i					76.0													S	3.3									24" APC x 76.0'		D-24	74	i
D-24	74	j			20.0																									G-2 INLET W/24-12 GRATE	2.0' L+ 316+40 "A"	D-24	74	j
D-24	74A	a																												RSP	28.0' R+ "SDW9" 12+00	D-24	74A	a
D-24	75	a																												RSP		D-24	75	a
D-24	75	b																												HW (TYPE A) W/ CHAIN LINK	81.99' R+ 316+94.38 "A"	D-24	75	b
D-24	75	c											18.3							S	3.5									42" RCP x 18.3' SLURRY CEMENT		D-24	75	c
D-24	75	d																												G-2 INLET W/24-12 GRATE	62.33' L+ 316+91.84 "A"	D-24	75	d
D-24	75	e											139.6							S	3.7									42" RCP x 139.6' SLURRY CMT		D-24	75	e
D-24	75	f																												HW (TYPE A) W/ CABLE RAIL	77.63' L+ 316+73.81 "A"	D-24	75	f
D-24	75	g																												RSP		D-24	75	g
D-24	75	h											85.4							S	5.3									42" RCP x 85.4' SLURRY CEMENT		D-24	75	h
D-24	75	i																4.3												JS	5.76' L+ 1316+89.20 "A"	D-24	75	i
D-24	75	j											70.9							S	5.3									42" RCP x 70.9' SLURRY CEMENT		D-24	75	j
D-24	75	k					87.3													S	4.7									24" APC x 87.3'	1.0' R+ 317+80 "A"	D-24	75	k
D-24	75	l			20.0																									G-2 INLET W/24-12 GRATE		D-24	75	l
D-24	75	m								56.6										S	3.6									24" RCP x 56.6'		D-24	75	m
D-24	75	n																												G-2 INLET W/24-12 GRATE	54.5' L+ 318+03.15 "A"	D-24	75	n
D-24	75	o																									261.6			ABN (3) 48" CSP		D-24	75	o
D-24	75	p																									87.5			RMV 18" CMP		D-24	75	p
D-23	75A	a																												Conc (DITCH LINING)	107.8' L+ "A" 309+50	D-23	75A	a
D-24	76	a																												RSP		D-24	76	a
D-24	76	b																												HW (TYPE A) W/ CABLE RAIL	180.94' L+ 218+97 "A"	D-24	76	b
D-24	76	c																				94.6	93.9	22420.0						DBL 7' x 3' RCB x 47.3'		D-24	76	c
D-24	76	d																												HW (TYPE A) W/ CABLE RAIL	207.07' L+ 219+33.44 "A"	D-24	76	d
D-24	76	e																												RSP		D-24	76	e
D-24	76A	a																												RSP BASIN	93.35' R+ "A" 318+40.00	D-24	76A	a
D-24	77	a																									71.1			REMOVE 18" APC		D-24	77	a
Tot DQ-49			0.0	0.0	60.0	0.0	163.3	0.0	0.0	56.6	0.0	0.0	314.2	0.0	0.0	0.0	0.0	4.3	0.0	-	-	-	93.9	22420.0	0.0	0.0	420.2	0.0	0.0					

(N) = NOT A SEPARATE PAY ITEM, FOR INFORMATION ONLY
PIPE JOINT TYPES:
S - STANDARD
SO- SOIL TIGHT
D - DOWNDRAIN
W - WATERTIGHT

DRAINAGE QUANTITIES
DQ-49

REVISED BY | DATE REVISED
MICHAEL MANZANO | KATHRYN WALKER
CALCULATED-DESIGNED BY | CHECKED BY
CONSULTANT FUNCTIONAL SUPERVISOR: CARL SAVAGE
STATE OF CALIFORNIA - DEPARTMENT OF TRANSPORTATION
Caltrans

LAST REVISION 12-31-13 | DATE PLOTTED => 20-MAR-2014 | TIME PLOTTED => 14:32

Dist	COUNTY	ROUTE	POST MILES TOTAL PROJECT	SHEET No.	TOTAL SHEETS
11	SD	15,76	R46.2/R46.8, R12.1/R17.7	448	1273

10-30-13
REGISTERED CIVIL ENGINEER DATE

03-24-14
PLANS APPROVAL DATE

REGISTERED PROFESSIONAL ENGINEER KATHRYN WALKER No. C77900 Exp. 06-30-15 CIVIL STATE OF CALIFORNIA

THE STATE OF CALIFORNIA OR ITS OFFICERS OR AGENTS SHALL NOT BE RESPONSIBLE FOR THE ACCURACY OR COMPLETENESS OF SCANNED COPIES OF THIS PLAN SHEET.

DOKKEN ENGINEERING
5675 RUFFIN RD
SUITE 250
SAN DIEGO, CA 92123

DRAINAGE QUANTITIES

DRAINAGE PLAN SHEET No.	DRAINAGE SYSTEM No.	DRAINAGE UNIT No.	STRUCTURES (N) STRUCTURE HEIGHT	(N) MINOR CONCRETE (MINOR STRUCTURE)	STRUCTURAL CONCRETE (HEADWALL)	STRUCTURAL CONCRETE (JUNCTION STRUCTURE)	(N) GRATE TYPE 24-12	(N) GRATE TYPE 36R	(N) MANHOLE FRAME AND COVER	(N) 1/4" CHECKERED PLATE COVER AND FRAME	(N) GRATE CHAIN	MISCELLANEOUS IRON AND STEEL	DRAINAGE INLET MARKER	CABLE RAILING	CHAIN LINK RAILING (TYPE 7)	REMOVE INLET	REMOVE HEADWALL	(N) Conc COLLAR	18" ALTERNATIVE FLARED END SECTION	24" ALTERNATIVE FLARED END SECTION	CONCRETE (SLOPE PROTECTION)	CONCRETE (DITCH LINING)	ROCK SLOPE PROTECTION (NO. 2, METHOD B)	ROCK SLOPE PROTECTION (NO. 1, METHOD B)	ROCK SLOPE PROTECTION (LIGHT, METHOD B)	ROCK SLOPE PROTECTION (1/4 T, METHOD B)	ROCK SLOPE PROTECTION (1/2 T, METHOD B)	ROCK SLOPE PROTECTION (2T, METHOD A)	ROCK SLOPE PROTECTION (1T, METHOD B)	ROCK SLOPE PROTECTION FABRIC (CLASS 8)	ROCK SLOPE PROTECTION FABRIC (CLASS 10)	STRUCTURE BACKFILL (SLURRY CEMENT)	DITCH EXCAVATION	MODIFY INLET	ADJUST INLET	ADJUST MANHOLE	CAP RISER	DESCRIPTION	STATION	DRAINAGE PLAN SHEET No.	DRAINAGE SYSTEM No.	DRAINAGE UNIT No.
			LF	CY	CY	CY	EA	EA	EA	EA	EA	LB	EA	LF	LF	EA	EA	EA	EA	EA	CY	CY	CY	CY	CY	CY	CY	CY	CY	SQYD	SQYD	CY	CY	EA	EA	EA	EA					
D-24	74	h	5.70	2.8			1				1	329																										G-2 INLET W/24-12 GRATE	4.1′ L+ 315+60 "A"	D-24	74	h
D-24	74	i																																				24" APC x 76.0′		D-24	74	i
D-24	74	j	5.20	2.6			1				1	329																										G-2 INLET W/24-12 GRATE	2.0′ L+ 316+40 "A"	D-24	74	j
D-24	74A	a																							2.0					8.2								RSP	28.0′ R+ "SDW9" 12+00	D-24	74A	a
D-24	75	a																							31.0					132.9								RSP		D-24	75	a
D-24	75	b			23.7										32.6																							HW (TYPE A) W/ CHAIN LINK	81.99′ R+ 316+94.38 "A"	D-24	75	b
D-24	75	c																														7.0						42" RCP x 18.3′ SLURRY CEMENT		D-24	75	c
D-24	75	d	8.60	4.7			1				1	329									2.0																	G-2 INLET W/24-12 GRATE	62.33′ L+ 316+91.84 "A"	D-24	75	d
D-24	75	e																														59.2						42" RCP x 139.6′ SLURRY CMNT		D-24	75	e
D-24	75	f			18.9									23.0																								HW (TYPE A) W/ CABLE RAIL	77.63′ L+ 316+73.81 "A"	D-24	75	f
D-24	75	g																							32.0					132.9								RSP		D-24	75	g
D-24	75	h																														36.2						42" RCP x 85.4′ SLURRY CEMENT		D-24	75	h
D-24	75	i	5.50			4.2			1			805																										JS	5.76′ L+ 1316+89.20 "A"	D-24	75	i
D-24	75	j																														29.3						42" RCP x 70.9′ SLURRY CEMENT		D-24	75	j
D-24	75	k																																				24" APC x 87.3′		D-24	75	k
D-24	75	l	5.2	2.6			1				1	329																										G-2 INLET W/24-12 GRATE	1.0′ R+ 317+80 "A"	D-24	75	l
D-24	75	m																																				24" RCP x 56.6′		D-24	75	m
D-24	75	n	5.1	2.6			1				1	329									2.0																	G-2 INLET W/24-12 GRATE	54.5′ L+ 318+03.15 "A"	D-24	75	n
D-24	75	o																																				ABN (3) 48" CSP		D-24	75	o
D-24	75	p																																				RMV 18" CMP		D-24	75	p
D-23	75A	a																				40.6											155.5					Conc (DITCH LINING)	107.8′ L+ "A" 309+50	D-23	75A	a
D-24	76	a																							55.0					225.3								RSP		D-24	76	a
D-24	76	b			35.2									38.5																								HW (TYPE A) W/ CABLE RAIL	180.94′ L+ 218+97 "A"	D-24	76	b
D-24	76	c																																				DBL 7′ x 3′ RCB x 47.3′		D-24	76	c
D-24	76	d			33.3									43.5																								HW (TYPE A) W/ CABLE RAIL	207.07′ L+ 219+33.44 "A"	D-24	76	d
D-24	76	e																							55.0					225.3								RSP		D-24	76	e
D-24	76A	a																					57.1				136.0			174.4								RSP BASIN	93.35′ R+ "A" 318+40.00	D-24	76A	a
D-24	77	a																																				REMOVE 18" APC		D-24	77	a
Tot	DQ-50		-	15.3	111.1	4.2	-	-	-	-	-	2,450	0	105.0	32.6	0	0	-	0	0	4.0	40.6	0.0	57.1	175.0	0.0	136.0	0.0	0.0	899.0	0.0	131.7	155.5	0	0	0	0					

DRAINAGE QUANTITIES
DQ-50

STATE OF CALIFORNIA - DEPARTMENT OF TRANSPORTATION
Caltrans

CONSULTANT FUNCTIONAL SUPERVISOR: CARL SAVAGE
CALCULATED-DESIGNED BY: MICHAEL MANZANO
CHECKED BY: KATHRYN WALKER
REVISED BY
DATE REVISED

LAST REVISION 12-31-13
DATE PLOTTED => 20-MAR-2014
TIME PLOTTED => 14:32

DRAINAGE QUANTITIES

Dist	COUNTY	ROUTE	POST MILES TOTAL PROJECT	SHEET No.	TOTAL SHEETS
11	SD	15,76	R46.2/R46.8, R12.1/R17.7	449	1273

REGISTERED CIVIL ENGINEER 10-30-13 DATE

03-24-14
PLANS APPROVAL DATE

REGISTERED PROFESSIONAL ENGINEER KATHRYN WALKER No. C77900 Exp. 06-30-15 CIVIL STATE OF CALIFORNIA

THE STATE OF CALIFORNIA OR ITS OFFICERS OR AGENTS SHALL NOT BE RESPONSIBLE FOR THE ACCURACY OR COMPLETENESS OF SCANNED COPIES OF THIS PLAN SHEET.

DOKKEN ENGINEERING
5675 RUFFIN RD
SUITE 250
SAN DIEGO, CA 92123

DRAINAGE PLAN SHEET No.	DRAINAGE SYSTEM No.	DRAINAGE UNIT No.	CULVERTS: 6" PERFORATED PLASTIC PIPE UNDERDRAIN (LF)	18" SLOTTED PLASTIC PIPE (LF)	GRATED LINE DRAIN (LF)	18" ALTERNATIVE PIPE CULVERT (LF)	24" ALTERNATIVE PIPE CULVERT (LF)	60" ALTERNATIVE PIPE CULVERT (LF)	18" REINFORCED Conc PIPE (LF)	24" REINFORCED Conc PIPE (LF)	30" REINFORCED Conc PIPE (LF)	36" REINFORCED Conc PIPE (LF)	42" REINFORCED Conc PIPE (LF)	48" REINFORCED Conc PIPE (LF)	60" REINFORCED Conc PIPE (LF)	66" REINFORCED Conc PIPE (LF)	30" BITUMINOUS COATED CSP (0.109" THICK) (LF)	36" REINFORCED Conc PIPE RISER (LF)	48" BITUMINOUS COATED CSP (0.109" THICK) (LF)	(N) PIPE JOINT TYPE (-)	(N) Max HEIGHT COVER (LF)	(N) REINFORCED Conc BOX CULVERT (LF)	REINFORCED Conc BOX CULVERT TYPE (-)	STRUCTURAL Conc, BOX CULVERT (CY)	BAR REINFORCEING STEEL (BOX CULVERT) (LB)	REMOVE MUD, SAND AND DEBRIS (IN CULVERT) (LF)	ABANDON CULVERT (EA)	REMOVE CULVERT (LF)	REMOVE BOX CULVERT (EA)	SAND BACKFILL (CY)	DESCRIPTION	STATION	DRAINAGE PLAN SHEET No.	DRAINAGE SYSTEM No.	DRAINAGE UNIT No.
D-24	78	a																													RSP		D-24	78	a
D-24	78	b																													STRAIGHT HEADWALL	94.0′ R+ 321+46.13 "A"	D-24	78	b
D-24	78	c								19.9										S	3.9										24" RCP x 19.9′		D-24	78	c
D-24	78	d																													G-2 INLET W/24-12 GRATE	72.7′ R+ 321+50 "A"	D-24	78	d
D-24	78	e								69.2										S	3.7										24" RCP x 69.2′		D-24	78	e
D-24	78	f																													G-2 INLET W/24-12 GRATE	1.0′ R+ 321+50 "A"	D-24	78	f
D-24	78	g					242.9													S	3.2										24" APC x 242.9′		D-24	78	g
D-24	78	h																													G-2 INLET W/24-12 GRATE	88.0′ R+ 324+00 "A"	D-24	78	h
D-24	78	i								143.7										S	2.4										24" RCP x 143.7′		D-24	78	i
D-24	78	j																													G-2 INLET W/24-12 GRATE	58.7′ L+ 324+00 "A"	D-24	78	j
D-24	78	k					196.1													S	2.5										24" APC x 196.1′		D-24	78	k
D-24	78	l																													G-2 INLET W/24-12 GRATE	62.0′ L+ 326+00 "A"	D-24	78	l
D-24	78	m					164.1													S	2.4										24" APC x 164.1′		D-24	78	m
D-24	78	n																													G-2 INLET W/24-12 GRATE	68.9′ L+ 327+68 "A"	D-24	78	n
D-24	78	o					128.9													S	2.6										24" APC x 128.9′		D-24	78	o
D-24	78	p																													G-2 INLET W/24-12 GRATE	54.00′ L+ 2256+24.14 "FLA"	D-24	78	p
D-24	78	q								50.0										S	3.5										24" RCP x 50.0′		D-24	78	q
D-24	78	r																													G-2 INLET W/24-12 GRATE	4.11′ L+ "FL-A" 2256+49.81	D-24	78	r
D-24	78	s		17.6																S	3.0										18" X 17.6′ SPP		D-24	78	s
D-24	78	t		37.6																S	2.8										18′ x 37.6′ SPP (MOD)		D-24	78	t
D-25	79	a																													Conc DITCH (DITCH LINING)	92.0′ L+ "A" 318+80	D-25	79	a
D-25	79	b																													Conc DITCH (DITCH LINING)	110.8′ L+ "FL-A" 2256+50	D-25	79	b
D-25	80	a																													MODIFY INLET		D-25	80	a
D-25	80	b					18.0													SO	4.3										24" APC X 18.0′		D-25	80	b
D-25	80	c																													JS	94.73′ R+ "FL-A" 2256+93.37	D-25	80	c
D-25	80	d																													TYPE OL-14 INLET, H=3.1′	39.20′ R+ "FL-A" 2256+97.41	D-25	80	d
D-25	80	e																										64.3			REMOVE 18" CSP x 64.3′		D-25	80	e
D-25	80	f																													REMOVE INLET		D-25	80	f
D-25	81	a																													G-2 INLET W/24-12 GRATE	75.00′ L+ "A" 332+48.28	D-25	81	a
D-25	81	b				109.1														SO	6.1										18" x 109.1′ APC		D-25	81	b
D-25	81	c																													TYPE OL-7 INLET, H=8.7′	157.40′ R+ "FL-A" 2259+91.80	D-25	81	c
D-25	81	d				63.1														SO	5.8										18" x 63.1′ APC		D-25	81	d
D-25	81	e																													G-2 INLET W/24-12 GRATE	96.95 R+ "FL-A" 2259+66.82	D-25	81	e
D-25	81	f				73.1														SO	4.6										18" x 73.1′ APC		D-25	81	f
D-25	81	g	61.6																												6" x 61.6′ PPUD		D-25	81	g
D-25	81	h																													G-1 INLET W/24-12 GRATE	101.38′ R+ "FL-A" 2260+54.28	D-25	81	h
D-25	81	i				83.6														S	4.5										18" x 83.6′ APC		D-25	81	i
D-25	81	j	72.0																												6" x 72.0′ PPUD		D-25	81	j
D-25	81	k																													G-1 INLET W/24-12 GRATE	101.38′ R+ "FL-A" 2261+39.78	D-25	81	k
D-25	81	l	62.5																												6" x 62.5′ PPUD		D-25	81	l
D-25	81	m					94.0													SO	3.5										24" x 94.0′ APC		D-25	81	m
D-25	81	n																													G-2 INLET W/24-12 GRATE	79.39′ L+ "A" 333+44.70	D-25	81	n
D-25	81	o	61.4																												6" x 61.4′ PPUD		D-25	81	o
To+ DQ-51			257.5	55.2	0.0	328.9	844.0	0.0	0.0	282.8	0.0	0.0	0.0	0.0	0.0	0.0	0.0	0.0	0.0	-	-	-	-	0.0	0	0.0	0.0	64.3	0.0	0.0					

(N) = NOT A SEPARATE PAY ITEM, FOR INFORMATION ONLY
PIPE JOINT TYPES:
S - STANDARD SO- SOIL TIGHT
D - DOWNDRAIN W - WATERTIGHT

DRAINAGE QUANTITIES

DQ-51

REVISED BY | DATE REVISED
MICHAEL MANZANO | KATHRYN WALKER
CALCULATED-DESIGNED BY | CHECKED BY
CONSULTANT FUNCTIONAL SUPERVISOR: CARL SAVAGE
STATE OF CALIFORNIA - DEPARTMENT OF TRANSPORTATION
Caltrans

LAST REVISION 12-31-13 | DATE PLOTTED => 20-MAR-2014 | TIME PLOTTED => 14:32

Dist	COUNTY	ROUTE	POST MILES TOTAL PROJECT	SHEET No.	TOTAL SHEETS
11	SD	15,76	R46.2/R46.8, R12.1/R17.7	450	1273

10-30-13
REGISTERED CIVIL ENGINEER DATE

03-24-14
PLANS APPROVAL DATE

REGISTERED PROFESSIONAL ENGINEER KATHRYN WALKER No. C77900 Exp. 06-30-15 CIVIL STATE OF CALIFORNIA

THE STATE OF CALIFORNIA OR ITS OFFICERS OR AGENTS SHALL NOT BE RESPONSIBLE FOR THE ACCURACY OR COMPLETENESS OF SCANNED COPIES OF THIS PLAN SHEET.

DOKKEN ENGINEERING
5675 RUFFIN RD
SUITE 250
SAN DIEGO, CA 92123

DRAINAGE QUANTITIES

DRAINAGE PLAN SHEET No.	DRAINAGE SYSTEM No.	DRAINAGE UNIT No.	STRUCTURES (N) STRUCTURE HEIGHT LF	(N) MINOR CONCRETE (MINOR STRUCTURE) CY	(N) STRUCTURAL CONCRETE (HEADWALL) CY	(N) STRUCTURAL CONCRETE (JUNCTION STRUCTURE) CY	(N) GRATE TYPE 24-12 EA	(N) GRATE TYPE 36R EA	(N) MANHOLE FRAME AND COVER EA	(N) 1/4" CHECKERED PLATE COVER AND FRAME EA	(N) GRATE CHAIN EA	MISCELLANEOUS IRON AND STEEL LB	DRAINAGE INLET MARKER EA	CABLE RAILING LF	CHAIN LINK RAILING (TYPE 7) LF	REMOVE INLET EA	REMOVE HEADWALL EA	(N) Conc COLLAR EA	18" ALTERNATIVE FLARED END SECTION EA	24" ALTERNATIVE FLARED END SECTION EA	CONCRETE (SLOPE PROTECTION) CY	CONCRETE (DITCH LINING) CY	ROCK SLOPE PROTECTION (NO. 2, METHOD B) CY	ROCK SLOPE PROTECTION (NO. 1, METHOD B) CY	ROCK SLOPE PROTECTION (LIGHT, METHOD B) CY	ROCK SLOPE PROTECTION (1/4 T, METHOD B) CY	ROCK SLOPE PROTECTION (1/2 T, METHOD B) CY	ROCK SLOPE PROTECTION (2T, METHOD A) CY	ROCK SLOPE PROTECTION (1T, METHOD B) CY	ROCK SLOPE PROTECTION FABRIC (CLASS 8) SQYD	ROCK SLOPE PROTECTION FABRIC (CLASS 10) SQYD	STRUCTURE BACKFILL (SLURRY CEMENT) CY	DITCH EXCAVATION CY	MODIFY INLET EA	ADJUST INLET EA	ADJUST MANHOLE EA	CAP RISER EA	DESCRIPTION	STATION	DRAINAGE PLAN SHEET No.	DRAINAGE SYSTEM No.	DRAINAGE UNIT No.
D-24	78	a																							7.0					18.0									RSP		D-24	78	a
D-24	78	b			1.2																																		STRAIGHT HEADWALL	94.0′ R+ 321+46.13 "A"	D-24	78	b
D-24	78	c																																					24" RCP x 19.9′		D-24	78	c
D-24	78	d	5.30	2.7			1				1	329	1								2.0																		G-2 INLET W/24-12 GRATE	72.7′ R+ 321+50 "A"	D-24	78	d
D-24	78	e																																					24" RCP x 69.2′		D-24	78	e
D-24	78	f	5.60	2.8			1				1	329	1																										G-2 INLET W/24-12 GRATE	1.0′ R+ 321+50 "A"	D-24	78	f
D-24	78	g																																					24" APC x 242.9′		D-24	78	g
D-24	78	h	4.40	2.4			1				1	329	1								2.0																		G-2 INLET W/24-12 GRATE	88.0′ R+ 324+00 "A"	D-24	78	h
D-24	78	i																																					24" RCP x 143.7′		D-24	78	i
D-24	78	j	4.50	2.4			1				1	329	1								2.0																		G-2 INLET W/24-12 GRATE	58.7′ L+ 324+00 "A"	D-24	78	j
D-24	78	k																																					24" APC x 196.1′		D-24	78	k
D-24	78	l	4.80	2.5			1				1	329	1																										G-2 INLET W/24-12 GRATE	62.0′ L+ 326+00 "A"	D-24	78	l
D-24	78	m																																					24" APC x 164.1′		D-24	78	m
D-24	78	n	6.80	3.1			1				1	329	1																										G-2 INLET W/24-12 GRATE	68.9′ L+ 327+68 "A"	D-24	78	n
D-24	78	o																																					24" APC x 128.9′		D-24	78	o
D-24	78	p	5.10	2.6			1				1	329	1																										G-2 INLET W/24-12 GRATE	54.0′ L+ 2256+24.14 "FLA"	D-24	78	p
D-24	78	q																																					24" RCP x 50.0′		D-24	78	q
D-24	78	r																																					G-2 INLET W/24-12 GRATE	4.11′ L+ "FL-A" 2256+49	D-24	78	r
D-24	78	s																																					18" X 17.6′ SPP		D-24	78	s
D-24	78	t																																					18′ x 37.6′ SPP (MOD)		D-24	78	t
D-25	79	a																				20.6			2.0					8.2			95.9						Conc DITCH (DITCH LINING)	92.0′ L+ "A" 318+80	D-25	79	a
D-25	79	b																				3.7											12.0						Conc DITCH (DITCH LINING)	110.8′ L+ "FL-A" 2256+50	D-25	79	b
D-25	80	a																																1.0					MODIFY INLET		D-25	80	a
D-25	80	b																																					24" APC X 18.0′		D-25	80	b
D-25	80	c	4.10			3.6			1			805	1																										JS	94.73′ R+ "FL-A" 2256+93	D-25	80	c
D-25	80	d	3.10	3.1						1	1	173																											TYPE OL-14 INLET, H=3.1′	39.20′ R+ "FL-A" 2256+97	D-25	80	d
D-25	80	e																																					REMOVE 18" CSP x 64.3′		D-25	80	e
D-25	80	f														1																							REMOVE INLET		D-25	80	f
D-25	81	a	5.50	2.7			1				1	329	1																										G-2 INLET W/24-12 GRATE	75.00′ L+ "A" 332+48.28	D-25	81	a
D-25	81	b																																					18" x 109.1′ APC		D-25	81	b
D-25	81	c	8.70	4.5						1	1	173	1																										TYPE OL-7 INLET, H=8.7′	157.40′ R+ "FL-A" 2259+91	D-25	81	c
D-25	81	d																																					18" x 63.1′ APC		D-25	81	d
D-25	81	e	7.80	3.4			1				1	329	1																										G-2 INLET W/24-12 GRATE	96.95 R+ "FL-A" 2259+66	D-25	81	e
D-25	81	f																																					18" x 73.1′ APC		D-25	81	f
D-25	81	g																																					6" x 61.6′ PPUD		D-25	81	g
D-25	81	h	7.70	3.4			1				1	329	1																										G-1 INLET W/24-12 GRATE	101.38′ R+ "FL-A" 2260+54	D-25	81	h
D-25	81	i																																					18" x 83.6′ APC		D-25	81	i
D-25	81	j																																					6" x 72.0′ PPUD		D-25	81	j
D-25	81	k	7.70	3.4			1				1	329	1																										G-1 INLET W/24-12 GRATE	101.38′ R+ "FL-A" 2261+39	D-25	81	k
D-25	81	l																																					6" x 62.5′ PPUD		D-25	81	l
D-25	81	m																																					24" x 94.0′ APC		D-25	81	m
D-25	81	n	6.2	2.9			1				1	329	1																										G-2 INLET W/24-12 GRATE	79.39′ L+ "A" 333+44.70	D-25	81	n
D-25	81	o																																					6" x 61.4′ PPUD		D-25	81	o
To+ DQ-52			-	41.9	1.2	3.6	-	-	-	-	-	5,099	14	0	0	1	0	-	0	0	6.0	24.3	0.0	0.0	9.0	0.0	0.0	0.0	0.0	26.2	0.0	0.0	107.9	1	0	0	0					

DRAINAGE QUANTITIES
DQ-52

REVISED BY | DATE REVISED
MICHAEL MANZANO | KATHRYN WALKER
CALCULATED-DESIGNED BY | CHECKED BY
CONSULTANT FUNCTIONAL SUPERVISOR: CARL SAVAGE
STATE OF CALIFORNIA - DEPARTMENT OF TRANSPORTATION
Caltrans

LAST REVISION 12-31-13 | DATE PLOTTED => 20-MAR-2014 | TIME PLOTTED => 14:32

Dist	COUNTY	ROUTE	POST MILES TOTAL PROJECT	SHEET No.	TOTAL SHEETS
11	SD	15,76	R46.2/R46.8, R12.1/R17.7	451	1273

REGISTERED CIVIL ENGINEER 10-30-13 DATE

03-24-14
PLANS APPROVAL DATE

REGISTERED PROFESSIONAL ENGINEER KATHRYN WALKER No. C77900 Exp. 06-30-15 CIVIL STATE OF CALIFORNIA

THE STATE OF CALIFORNIA OR ITS OFFICERS OR AGENTS SHALL NOT BE RESPONSIBLE FOR THE ACCURACY OR COMPLETENESS OF SCANNED COPIES OF THIS PLAN SHEET.

DOKKEN ENGINEERING
5675 RUFFIN RD
SUITE 250
SAN DIEGO, CA 92123

DRAINAGE QUANTITIES

DRAINAGE PLAN SHEET No.	DRAINAGE SYSTEM No.	DRAINAGE UNIT No.	CULVERTS: 6" PERFORATED PLASTIC PIPE UNDERDRAIN	18" SLOTTED PLASTIC PIPE	GRATED LINE DRAIN	18" ALTERNATIVE PIPE CULVERT	24" ALTERNATIVE PIPE CULVERT	60" ALTERNATIVE PIPE CULVERT	18" REINFORCED Conc PIPE	24" REINFORCED Conc PIPE	30" REINFORCED Conc PIPE	36" REINFORCED Conc PIPE	42" REINFORCED Conc PIPE	48" REINFORCED Conc PIPE	60" REINFORCED Conc PIPE	66" REINFORCED Conc PIPE	30" BITUMINOUS COATED CSP (0.109" THICK)	36" REINFORCED Conc PIPE RISER	48" BITUMINOUS COATED CSP (0.109" THICK)	(N) PIPE JOINT TYPE	(N) Max HEIGHT COVER	(N) REINFORCED Conc BOX CULVERT	STRUCTURAL Conc, BOX CULVERT	BAR REINFORCEING STEEL (BOX CULVERT)	REMOVE MUD, SAND AND DEBRIS (IN CULVERT)	ABANDON CULVERT	REMOVE CULVERT	REMOVE BOX CULVERT	SAND BACKFILL	DESCRIPTION	STATION	DRAINAGE PLAN SHEET No.	DRAINAGE SYSTEM No.	DRAINAGE UNIT No.
			LF	LF	LF	LF	LF	LF	LF	LF	LF	LF	LF	LF	LF	LF	LF	LF	LF	-	LF	LF	CY	LB	LF	EA		EA	CY					
D-25	81	p				51.3														W	2.2									18" x 51.4' APC		D-25	81	p
D-25	81	q																												G-2 INLET W/24-12	120.13' L+ "A" 333+80.26	D-25	81	q
D-25	81	r	94.5																											6" x 94.5' PPUD		D-25	81	r
D-25	81	s				60.8														W	4.6									18" x 60.8' APC		D-25	81	s
D-25	81	+																												G-2 INLET W/24-12	118.96' L+ "A" 334+43.82	D-25	81	+
D-25	81	u	125.8																											6" x 125.8' PPUD		D-25	81	u
D-25	81	v				60.6														W	5.6									18" x 60.6' APC		D-25	81	v
D-25	81	w																												G-2 INLET W/24-12	118.64' L+ "A" 335+07.21	D-25	81	w
D-25	81	x	122.8																											6" x 122.8' PPUD		D-25	81	x
D-25	81	y				152.2														W	5.3									18" x 152.2' APC		D-25	81	y
D-25	81	z																												G-2 INLET W/24-12	97.16' L+ "A" 336+60.27	D-25	81	z
D-25	81	aa	271.7																											6" x 271.7' PPUD		D-25	81	aa
D-25	81	ab	284.3																											6" x 284.3' PPUD		D-25	81	ab
D-25	81	ac				163.7														W	5.5									18" x 163.7' APC		D-25	81	ac
D-25	81	ad																												G-2 INLET W/24-12	151.41' R+ "FL-A" 2262+38.88	D-25	81	ad
D-25	81	ae				128.1														S	5.2									18" x 128.1' APC		D-25	81	ae
D-25	81	af																												TYPE OL-7 INLET	23.13' R+ "FL-A" 2262+04.24	D-25	81	af
D-25	81	ag				127.0														S	4.9									18" x 127.0' APC		D-25	81	ag
D-25	81	ah																												G-2 INLET W/24-12	166.44' R+ "FL-A" 2263+67.92	D-25	81	ah
D-25	81	ai	138.0																											6" x 138.0' PPUD		D-25	81	ai
D-25	81	aj				75.7														S	3.6									18" APC x 75.7'		D-25	81	aj
D-25	81	ak																												OL-10 INLET H=6.0'	94.00' R+ "FL-A" 2263+33.53	D-25	81	ak
D-25	81	al	37.0																											6" x 37.0' PPUD		D-25	81	al
D-25	81	am					118.9													W	3.2									24" x 118.9' APC		D-25	81	am
D-25	81	an																												CURB OUTLET	44.56* R+ *FL-A* 2262+61	D-25	81	an
D-25	81	ao																												TYPE OL-7 INLET, H=5.8'	80.75' L+ "A" 331+79.15	D-25	81	ao
D-25	81	ap					68.4													W	3.3									24" x 68.4' APC		D-25	81	ap
D-25	82	a																												ADJUST MANHOLE	87.71' R+ "FL-A" 2263+89.08	D-25	82	a
D-25	82	b																												ADJUST INLET	89.20' R+ "FL-A" 2263+23	D-25	82	b
D-25	82	c																												ADJUST INLET	57.60' R+ "FL-A" 2263+22.80	D-25	82	c
D-25	82	d								89.8										S	3.6									24" RCP x 89.8' w/ L-3 COLL.		D-25	82	d
D-25	82	e																												G-2 W/24-12 GRATE	27.73' L+ "FL-A" 2263+55.14	D-25	82	e
D-25	82	f		49.3																S	1.0									18" x 49.3' SPP (MOD)		D-25	82	f
D-25	82	g1							4.4											S	8.5									18" RCP x 4.4' W/J-1 COLL.		D-25	82	g1
D-25	82	g2																												G-2 INLET W/ 24-13 GRATE	26.21' L+ "FL-A" 2264+09.00	D-25	82	g2
D-25	82	g3		51.0																S	1.0									18" x 51.0' SPP (MOD)		D-25	82	g3
D-25	82	h																	23.7	S	5.1									48" CSP x 23.7',L-2 COLL.		D-25	82	h
D-25	82	i																												HW (TYPE A) (MOD) W/ CBL RAIL	35.69' L+ "FL-A" 2263+75.42	D-25	82	i
D-25	82	j																												Conc (DITCH LINING)		D-25	82	j
Tot DQ-53			1074.1	100.3	0.0	819.4	187.3	0.0	4.4	89.8	0.0	0.0	0.0	0.0	0.0	0.0	0.0	0.0	23.7	-	-	-	0.0	0	0.0	0.0	0.0	0.0	0.0					

(N) = NOT A SEPARATE PAY ITEM, FOR INFORMATION ONLY
PIPE JOINT TYPES:
S - STANDARD
D - DOWNDRAIN
W - WATERTIGHT

DRAINAGE QUANTITIES
DQ-53

STATE OF CALIFORNIA - DEPARTMENT OF TRANSPORTATION
Caltrans

CONSULTANT FUNCTIONAL SUPERVISOR: CARL SAVAGE
CALCULATED-DESIGNED BY: MICHAEL MANZANO
CHECKED BY: KATHRYN WALKER
REVISED BY
DATE REVISED

LAST REVISION 12-31-13
DATE PLOTTED => 20-MAR-2014
TIME PLOTTED => 14:32

Dist	COUNTY	ROUTE	POST MILES TOTAL PROJECT	SHEET No.	TOTAL SHEETS
11	SD	15,76	R46.2/R46.8, R12.1/R17.7	452	1273

REGISTERED CIVIL ENGINEER 10-30-13 DATE

03-24-14
PLANS APPROVAL DATE

REGISTERED PROFESSIONAL ENGINEER KATHRYN WALKER No. C77900 Exp. 06-30-15 CIVIL STATE OF CALIFORNIA

THE STATE OF CALIFORNIA OR ITS OFFICERS OR AGENTS SHALL NOT BE RESPONSIBLE FOR THE ACCURACY OR COMPLETENESS OF SCANNED COPIES OF THIS PLAN SHEET.

DOKKEN ENGINEERING
5675 RUFFIN RD
SUITE 250
SAN DIEGO, CA 92123

DRAINAGE QUANTITIES

DRAINAGE PLAN SHEET No.	DRAINAGE SYSTEM No.	DRAINAGE UNIT No.	STRUCTURES (N) STRUCTURE HEIGHT LF	MINOR CONCRETE (MINOR STRUCTURE) CY	STRUCTURAL CONCRETE (HEADWALL) CY	STRUCTURAL CONCRETE (JUNCTION STRUCTURE) CY	(N) GRATE TYPE 24-12 EA	(N) GRATE TYPE 36R EA	(N) MANHOLE FRAME AND COVER EA	(N) 1/4" CHECKERED PLATE COVER AND FRAME EA	(N) GRATE CHAIN EA	MISCELLANEOUS IRON AND STEEL LB	DRAINAGE INLET MARKER EA	CABLE RAILING LF	CHAIN LINK RAILING (TYPE 7) LF	REMOVE INLET EA	REMOVE HEADWALL EA	(N) Conc COLLAR EA	18" ALTERNATIVE FLARED END SECTION EA	24" ALTERNATIVE FLARED END SECTION EA	CONCRETE (SLOPE PROTECTION) CY	CONCRETE (DITCH LINING) CY	ROCK SLOPE PROTECTION (NO. 2, METHOD B) CY	ROCK SLOPE PROTECTION (NO. 1, METHOD B) CY	ROCK SLOPE PROTECTION (LIGHT, METHOD B) CY	ROCK SLOPE PROTECTION (1/4 T, METHOD B) CY	ROCK SLOPE PROTECTION (1/2 T, METHOD B) CY	ROCK SLOPE PROTECTION (2T, METHOD A) CY	ROCK SLOPE PROTECTION (1T, METHOD B) CY	ROCK SLOPE PROTECTION FABRIC (CLASS 8) SQYD	ROCK SLOPE PROTECTION FABRIC (CLASS 10) SQYD	STRUCTURE BACKFILL (SLURRY CEMENT) CY	DITCH EXCAVATION CY	MODIFY INLET EA	ADJUST INLET EA	ADJUST MANHOLE EA	CAP RISER EA	DESCRIPTION	STATION	DRAINAGE PLAN SHEET No.	DRAINAGE SYSTEM No.	DRAINAGE UNIT No.
D-25	81	p																																			18" x 51.4' APC		D-25	81	p
D-25	81	q	7.8	3.4			1				1	329	1																								G-2 INLET W/24-12	120.13' Lt "A" 333+80.26	D-25	81	q
D-25	81	r																																			6" x 94.5' PPUD		D-25	81	r
D-25	81	s																																			18" x 60.8' APC		D-25	81	s
D-25	81	t	7.7	3.4			1				1	329	1																								G-2 INLET W/24-12	118.96' Lt "A" 334+43.82	D-25	81	t
D-25	81	u																																			6" x 125.8' PPUD		D-25	81	u
D-25	81	v																																			18" x 60.6' APC		D-25	81	v
D-25	81	w	7.90	3.4			1				1	329	1																								G-2 INLET W/24-12	118.64' Lt "A" 335+07.21	D-25	81	w
D-25	81	x																																			6" x 122.8' PPUD		D-25	81	x
D-25	81	y																																			18" x 152.2' APC		D-25	81	y
D-25	81	z	7.60	4.1			1				1	329	1																								G-2 INLET W/24-12	97.16' Lt "A" 336+60.27	D-25	81	z
D-25	81	aa																																			6" x 271.7' PPUD		D-25	81	aa
D-25	81	ab																																			6" x 284.3' PPUD		D-25	81	ab
D-25	81	ac																																			18" x 163.7' APC		D-25	81	ac
D-25	81	ad	7.70	4.1			1				1	329	1																								G-2 INLET W/24-12	151.41' Rt "FL-A" 2262+38.8	D-25	81	ad
D-25	81	ae																																			18" x 128.1' APC		D-25	81	ae
D-25	81	af	5.50	3.1						1	1	173	1																								TYPE OL-7 INLET	23.13' Rt "FL-A" 2262+04.24	D-25	81	af
D-25	81	ag																																			18" x 127.0' APC		D-25	81	ag
D-25	81	ah	6.00	3.0			1				1	329	1																								G-2 INLET W/24-12	166.44' Rt "FL-A" 2263+67.9	D-25	81	ah
D-25	81	ai																																			6" x 138.0' PPUD		D-25	81	ai
D-25	81	aj																																			18" APC x 75.7'		D-25	81	aj
D-25	81	ak	6.00	3.0			1				1	173	1																								OL-10 INLET H=6.0'	94.00' Rt "FL-A" 2263+33.53	D-25	81	ak
D-25	81	al																																			6" x 37.0' PPUD		D-25	81	al
D-25	81	am																																			24" x 118.9' APC		D-25	81	am
D-25	81	an		0.5																																	CURB OUTLET	44.56' Rt "FL-A" 2262+61	D-25	81	an
D-25	81	ao	5.80	0.5						1	1	173	1																								TYPE OL-7 INLET, H=5.8'	80.75' Lt "A" 331+79.15	D-25	81	ao
D-25	81	ap																																			24" x 68.4' APC		D-25	81	ap
D-25	82	a																																		1	ADJUST MANHOLE	87.71' Rt "FL-A" 2263+89.08	D-25	82	a
D-25	82	b							1			805																						1		ADJUST INLET	89.20' Rt "FL-A" 2263+23	D-25	82	b
D-25	82	c							1			805																						1		ADJUST INLET	57.60' Rt "FL-A" 2263+22.80	D-25	82	c
D-25	82	d																1																			24" RCP x 89.8' w/ L-3		D-25	82	d
D-25	82	e	4.60	2.5			1				1	329	1																								G-2 W/24-12 GRATE	27.73' Lt "FL-A" 2263+55.14	D-25	82	e
D-25	82	f																																			18" x 49.3' SPP (MOD)		D-25	82	f
D-25	82	g1																																			18" RCP x 4.4' W/J-1 COLL.		D-25	82	g1
D-25	82	g2	3.70	2.2							1	191	1																								G-2 INLET W/ 24-13 GRATE	26.21' Lt "FL-A" 2264+09.00	D-25	82	g2
D-25	82	g3																																			18" x 51.0' SPP (MOD)		D-25	82	g3
D-25	82	h																1																			48" CSP x 23.7',L-2 COLL.		D-25	82	h
D-25	82	i			4.0									15.0																							HW (TYPE A) (MOD) W/ C.R.	35.69' Lt "FL-A" 2263+75.42	D-25	82	i
D-25	82	j																				14.1												45.7						Conc (DITCH LINING)		D-25	82	j
Tot	DQ-54		-	33.2	4.0	0.0	-	-	-	-	-	4623	11	15	0	0	0	-	0	0	0.0	14.1	0.0	0.0	0.0	0.0	0.0	0.0	0.0	0.0	0.0	0.0	45.7	0	2	1	0					

DRAINAGE QUANTITIES
DQ-54

STATE OF CALIFORNIA - DEPARTMENT OF TRANSPORTATION
Caltrans

CONSULTANT FUNCTIONAL SUPERVISOR: CARL SAVAGE
CALCULATED-DESIGNED BY: MICHAEL MANZANO
CHECKED BY: KATHRYN WALKER
REVISED BY
DATE REVISED

LAST REVISION 12-31-13
DATE PLOTTED => 20-MAR-2014
TIME PLOTTED => 14:32

Dist	COUNTY	ROUTE	POST MILES TOTAL PROJECT	SHEET No.	TOTAL SHEETS
11	SD	15,76	R46.2/R46.8, R12.1/R17.7	453	1273

REGISTERED CIVIL ENGINEER 10-30-13 DATE

03-24-14
PLANS APPROVAL DATE

REGISTERED PROFESSIONAL ENGINEER KATHRYN WALKER No. C77900 Exp. 06-30-15 CIVIL STATE OF CALIFORNIA

THE STATE OF CALIFORNIA OR ITS OFFICERS OR AGENTS SHALL NOT BE RESPONSIBLE FOR THE ACCURACY OR COMPLETENESS OF SCANNED COPIES OF THIS PLAN SHEET.

DOKKEN ENGINEERING
5675 RUFFIN RD
SUITE 250
SAN DIEGO, CA 92123

DRAINAGE QUANTITIES

DRAINAGE PLAN SHEET No.	DRAINAGE SYSTEM No.	DRAINAGE UNIT No.	CULVERTS: 6" PERFORATED PLASTIC PIPE UNDERDRAIN	18" SLOTTED PLASTIC PIPE	GRATED LINE DRAIN	18" ALTERNATIVE PIPE CULVERT	24" ALTERNATIVE PIPE CULVERT	60" ALTERNATIVE PIPE CULVERT	18" REINFORCED Conc PIPE	24" REINFORCED Conc PIPE	30" REINFORCED Conc PIPE	36" REINFORCED Conc PIPE	42" REINFORCED Conc PIPE	48" REINFORCED Conc PIPE	60" REINFORCED Conc PIPE	66" REINFORCED Conc PIPE	30" BITUMINOUS COATED CSP (0.109" THICK)	36" REINFORCED Conc PIPE RISER	48" BITUMINOUS COATED CSP (0.109" THICK)	(N) PIPE JOINT TYPE	(N) Max HEIGHT COVER	(N) REINFORCED Conc BOX CULVERT	STRUCTURAL Conc, BOX CULVERT	BAR REINFORCEING STEEL (BOX CULVERT)	REMOVE MUD, SAND AND DEBRIS (IN CULVERT)	ABANDON CULVERT	REMOVE CULVERT	REMOVE BOX CULVERT	SAND BACKFILL	DESCRIPTION	STATION	DRAINAGE PLAN SHEET No.	DRAINAGE SYSTEM No.	DRAINAGE UNIT No.
			LF	LF	LF	LF	LF	LF	LF	LF	LF	LF	LF	LF	LF	LF	LF	LF	LF	-	LF	LF	CY	LB	LF	EA	LF	EA	CY					
D-25	82	k																												CAP 18" CSP RISER		D-25	82	k
D-25	82	l																												REMOVE INLET, H=3.8′	19.05′ Rt "FL-A" 2263+86.34	D-25	82	l
D-25	82	m																												ADJUST INLET	19.11′ Lt "FL-A" 2263+97.55	D-25	82	m
D-25	82	n																												ADJUST INLET	19.17′ Lt "FL-A" 2265+21.32	D-25	82	n
D-25	83	a																												CAP RISER	173.53′ "A" 337+15.66	D-25	83	a
D-25	83	b																									8.8			REMOVE 18" SCSP x 8.8′		D-25	83	b
D-13	-	-																												RSP (FLOODPLAIN)	Beg 7+25-End 7+50 "LOC"	D-13	-	-
D-13	-	-																												RSP (FLOODPLAIN)	Beg 7+50-End 7+90 "LOC"	D-13	-	-
D-13	-	-																												RSP (FLOODPLAIN)	Beg 7+90-End 8+67 "LOC"	D-13	-	-
D-13	-	-																												RSP (FLOODPLAIN)	Beg 8+67-End 10+00 "LOC"	D-13	-	-
D-13	-	-																												RSP (FLOODPLAIN)	Beg 10+00-End 10+75 "LOC"	D-13	-	-
D-13, D-14	-	-																												RSP (FLOODPLAIN)	Beg 10+75-End 11+86 "LOC"	D-13, D-14	-	-
D-14	-	-																												RSP (FLOODPLAIN)	Beg 11+86-End 12+06 "LOC"	D-14	-	-
D-14	-	-																												RSP (FLOODPLAIN)	Beg 12+06-End 12+26 "LOC"	D-14	-	-
D-3, D-4	-	-																												RSP (FLOODPLAIN)	Beg 102+30-End 105+55 "A"	D-3, D-4	-	-
D-4	-	-																												RSP (FLOODPLAIN)	Beg 105+55-End 108+50 "A"	D-4	-	-
D-4	-	-																												RSP (FLOODPLAIN)	Beg 108+50-End 111+00 "A"	D-4	-	-
D-4	-	-																												RSP (FLOODPLAIN)	Beg 111+00-End 114+48 "A"	D-4	-	-
D-4, D-5	-	-																												RSP (FLOODPLAIN)	Beg 114+48-End 122+80 "A"	D-4, D-5	-	-
D-5, D-6	-	-																												RSP (FLOODPLAIN)	Beg 122+80-End 1123+85 "A"	D-5, D-6	-	-
D-5, D-6	-	-																												RSP (FLOODPLAIN)	Beg 123+85-End 130+30 "A"	D-5, D-6	-	-
D-6	-	-																												RSP (FLOODPLAIN)	Beg 130+30 End 134+50 "A"	D-6	-	-
D-6	-	-																												RSP (FLOODPLAIN)	Beg 134+50-End 137+20 "A"	D-6	-	-
D-7	-	-																												RSP (FLOODPLAIN)	Beg 137+20-End 140+50 "A"	D-7	-	-
D-7	-	-																												RSP (FLOODPLAIN)	Beg 140+50-End 144+90 "A"	D-7	-	-
D-7, D-8	-	-																												RSP (FLOODPLAIN)	Beg 144+90-End 149+90 "A"	D-7, D-8	-	-
D-8	-	-																												RSP (FLOODPLAIN)	Beg 149+90-End 151+90 "A"	D-8	-	-
D-8, D-9	-	-																												RSP (FLOODPLAIN)	Beg 151+90-End 161+95 "A"	D-8, D-9	-	-
D-9	-	-																												RSP (FLOODPLAIN)	Beg 161+95-End 169+60 "A"	D-9	-	-
D-9, D-10	-	-																												RSP (FLOODPLAIN)	Beg 169+60-End 174+00 "A"	D-9, D-10	-	-
D-16	-	-																												RSP (FLOODPLAIN)	Beg 237+76-End 242+57 "A"	D-16	-	-
D-17	-	-																												RSP (FLOODPLAIN)	Beg 242+57-End 247+40 "A"	D-17	-	-
Tot DQ-55			0.0	0.0	0.0	0.0	0.0	0.0	0.0	0.0	0.0	0.0	0.0	0.0	0.0	0.0	0.0	0.0	0.0	-	-	-	0.0	0	0.0	0.0	8.8	0.0	0.0					

(N) = NOT A SEPARATE PAY ITEM, FOR INFORMATION ONLY
PIPE JOINT TYPES:
S - STANDARD
SO- SOIL TIGHT
D - DOWNDRAIN
W - WATERTIGHT

DRAINAGE QUANTITIES
DQ-55

STATE OF CALIFORNIA - DEPARTMENT OF TRANSPORTATION
Caltrans
CONSULTANT FUNCTIONAL SUPERVISOR: CARL SAVAGE
CALCULATED-DESIGNED BY: MICHAEL MANZANO
CHECKED BY: KATHRYN WALKER
REVISED BY
DATE REVISED

LAST REVISION 12-31-13
DATE PLOTTED => 20-MAR-2014
TIME PLOTTED => 14:32

Dist	COUNTY	ROUTE	POST MILES TOTAL PROJECT	SHEET No.	TOTAL SHEETS
11	SD	15,76	R46.2/R46.8, R12.1/R17.7	454	1273

REGISTERED CIVIL ENGINEER 10-30-13 DATE

03-24-14
PLANS APPROVAL DATE

REGISTERED PROFESSIONAL ENGINEER KATHRYN WALKER No. C77900 Exp. 06-30-15 CIVIL STATE OF CALIFORNIA

THE STATE OF CALIFORNIA OR ITS OFFICERS OR AGENTS SHALL NOT BE RESPONSIBLE FOR THE ACCURACY OR COMPLETENESS OF SCANNED COPIES OF THIS PLAN SHEET.

DOKKEN ENGINEERING
5675 RUFFIN RD
SUITE 250
SAN DIEGO, CA 92123

DRAINAGE QUANTITIES

DRAINAGE PLAN SHEET No.	DRAINAGE SYSTEM No.	DRAINAGE UNIT No.	STRUCTURES (N) STRUCTURE HEIGHT LF	MINOR CONCRETE (MINOR STRUCTURE) CY	STRUCTURAL CONCRETE (HEADWALL) CY	STRUCTURAL CONCRETE (JUNCTION STRUCTURE) CY	(N) GRATE TYPE 24-12 EA	(N) GRATE TYPE 36R EA	(N) MANHOLE FRAME AND COVER EA	(N) 1/4" CHECKERED PLATE COVER AND FRAME EA	(N) GRATE CHAIN EA	MISCELLANEOUS IRON AND STEEL LB	DRAINAGE INLET MARKER EA	CABLE RAILING LF	CHAIN LINK RAILING (TYPE 7) LF	REMOVE INLET EA	REMOVE HEADWALL EA	(N) Conc COLLAR EA	18" ALTERNATIVE FLARED END SECTION EA	24" ALTERNATIVE FLARED END SECTION EA	CONCRETE (SLOPE PROTECTION) CY	CONCRETE (DITCH LINING) CY	ROCK SLOPE PROTECTION (NO. 2, METHOD B) CY	ROCK SLOPE PROTECTION (NO. 1, METHOD B) CY	ROCK SLOPE PROTECTION (LIGHT, METHOD B) CY	ROCK SLOPE PROTECTION (1/4 T, METHOD B) CY	ROCK SLOPE PROTECTION (1/2 T, METHOD B) CY	ROCK SLOPE PROTECTION (2T, METHOD A) CY	ROCK SLOPE PROTECTION (1T, METHOD B) CY	ROCK SLOPE PROTECTION FABRIC (CLASS 8) SQYD	ROCK SLOPE PROTECTION FABRIC (CLASS 10) SQYD	STRUCTURE BACKFILL (SLURRY CEMENT) CY	DITCH EXCAVATION CY	MODIFY INLET EA	ADJUST INLET EA	ADJUST MANHOLE EA	CAP RISER EA	DESCRIPTION	STATION	DRAINAGE PLAN SHEET No.	DRAINAGE SYSTEM No.	DRAINAGE UNIT No.
D-25	82	k																																	1	CAP 18" CSP RISER		D-25	82	k
D-25	82	l														1																				REMOVE INLET, H=3.8′	19.05′ R+ "FL-A" 2263+86.34	D-25	82	l
D-25	82	m																															1			ADJUST INLET	19.11′ L+ "FL-A" 2263+97.55	D-25	82	m
D-25	82	n																															1			ADJUST INLET	19.17′ L+ "FL-A" 2265+21.32	D-25	82	n
D-25	83	a																																	1	CAP RISER	173.53′ "A" 337+15.66	D-25	83	a
D-25	83	b																																		REMOVE 18" SCSP x 8.8′		D-25	83	b
D-13	-	-																					138.2			296.3				14.1							RSP (FLOODPLAIN)	Beg 7+25-End 7+50 "LOC"	D-13	-	-
D-13	-	-																					214.3			566.0				22.4							RSP (FLOODPLAIN)	Beg 7+50-End 7+90 "LOC"	D-13	-	-
D-13	-	-																					367.0			786.8				38.2							RSP (FLOODPLAIN)	Beg 7+90-End 8+67 "LOC"	D-13	-	-
D-13	-	-																					556.3			1192.8				59.1							RSP (FLOODPLAIN)	Beg 8+67-End 10+00 "LOC"	D-13	-	-
D-13	-	-																					350.7			751.9				36.6							RSP (FLOODPLAIN)	Beg 10+00-End 10+75 "LOC"	D-13	-	-
D-13, D-14	-	-																							1340.7					64.7							RSP (FLOODPLAIN)	Beg 10+75-End 11+83.8 "LOC"	D-13, D-14	-	-
D-14	-	-																					75.9						291.0	660.0							RSP (FLOODPLAIN)	Beg 11+83.8-End 12+27.8 "LOC"	D-14	-	-
	-	-																																								
D-3, D-4	-	-																					582.0			1537.0				70.7							RSP (FLOODPLAIN)	Beg 102+30-End 105+55 "A"	D-3, D-4	-	-
D-4	-	-																					508.0			1342.0				81.4							RSP (FLOODPLAIN)	Beg 105+55-End 108+50 "A"	D-4	-	-
D-4	-	-																					550.0			1452.0				88.1							RSP (FLOODPLAIN)	Beg 108+50-End 111+00 "A"	D-4	-	-
D-4	-	-																							1182.0					80.2							RSP (FLOODPLAIN)	Beg 111+00-End 114+48 "A"	D-4	-	-
D-4, D-5	-	-																							2997.0					183.0							RSP (FLOODPLAIN)	Beg 114+48-End 122+80 "A"	D-4, D-5	-	-
D-5, D-6	-	-																					189.7			501.0				24.6							RSP (FLOODPLAIN)	Beg 122+80-End 123+85 "A"	D-5, D-6	-	-
D-5, D-6	-	-																					1111.7			2935.0				159.4							RSP (FLOODPLAIN)	Beg 123+85-End 130+30 "A"	D-5, D-6	-	-
D-6	-	-																					723.9			1911.0				113.4							RSP (FLOODPLAIN)	Beg 130+30 End 134+50 "A"	D-6	-	-
D-6	-	-																					490.5			1295.0				79.3							RSP (FLOODPLAIN)	Beg 134+50-End 137+20 "A"	D-6	-	-
D-7	-	-																					661.0			1745.0				104.8							RSP (FLOODPLAIN)	Beg 137+20-End 140+50 "A"	D-7	-	-
D-7	-	-																					945.2			2495.0				156.1							RSP (FLOODPLAIN)	Beg 140+50-End 144+90 "A"	D-7	-	-
D-7, D-8	-	-																					1089.6			2876.0				183.6							RSP (FLOODPLAIN)	Beg 144+90-End 149+90 "A"	D-7, D-8	-	-
D-8	-	-																					431.7			1140.0				72.2							RSP (FLOODPLAIN)	Beg 149+90-End 151+90 "A"	D-8	-	-
D-8, D-9	-	-																					1256.6			3318.0				202.6							RSP (FLOODPLAIN)	Beg 151+90-End 161+95 "A"	D-8, D-9	-	-
D-9	-	-																					271.6			717.0				37.5							RSP (FLOODPLAIN)	Beg 161+95-End 169+60 "A"	D-9	-	-
D-9, D-10	-	-																					829.0			2189.0				111.5							RSP (FLOODPLAIN)	Beg 169+60-End 174+00 "A"	D-9, D-10	-	-
D-16	-	-																					759.4			2005.0				109.8							RSP (FLOODPLAIN)	Beg 237+76-End 242+57 "A"	D-16	-	-
D-17	-	-																					712.5			1881.0				103.6							RSP (FLOODPLAIN)	Beg 242+57-End 247+40 "A"	D-17	-	-
Tot DQ-56			-	0.0	0.0	0.0	-	-	-	-	-	0.0	0	0.0	0.0	1	0	-	0	0	0.0	0.0	12814.8	0.0	5519.7	32932.8	0.0	0.0	291.0	2856.9	0.0	0.0	0.0	0	2	0	2					

DRAINAGE QUANTITIES
DQ-56

STATE OF CALIFORNIA - DEPARTMENT OF TRANSPORTATION
Caltrans

CONSULTANT FUNCTIONAL SUPERVISOR: CARL SAVAGE
CALCULATED-DESIGNED BY: MICHAEL MANZANO
CHECKED BY: KATHRYN WALKER
REVISED BY
DATE REVISED

LAST REVISION 12-31-13
DATE PLOTTED => 20-MAR-2014
TIME PLOTTED => 14:32

Dist	COUNTY	ROUTE	POST MILES TOTAL PROJECT	SHEET No.	TOTAL SHEETS
11	SD	15,76	R46.2/R46.8, R12.1/R17.7	455	1273

REGISTERED CIVIL ENGINEER 10-30-13 DATE

03-24-14
PLANS APPROVAL DATE

REGISTERED PROFESSIONAL ENGINEER KATHRYN WALKER No. C77900 Exp. 06-30-15 CIVIL STATE OF CALIFORNIA

THE STATE OF CALIFORNIA OR ITS OFFICERS OR AGENTS SHALL NOT BE RESPONSIBLE FOR THE ACCURACY OR COMPLETENESS OF SCANNED COPIES OF THIS PLAN SHEET.

DOKKEN ENGINEERING
5675 RUFFIN RD
SUITE 250
SAN DIEGO, CA 92123

NOTE:

* FOR ADDITIONAL QUANTITIES SEE STAGE CONSTRUCTION QUANTITIES SHEETS.

** FOR ADDITIONAL QUANTITIES SEE STRUCTURE QUANTITIES SHEETS.

*** REMOVE MUD, SAND AND DEBRIS (RMSD) ITEMS CONSISTS AN ADDITIONAL 15 FEET AT CULVERT INLET AND OUTLET TO TOTAL PIPE LENGTH.

DRAINAGE QUANTITY SUMMARY

DRAINAGE PLAN SHEET No. / DRAINAGE SYSTEM No. / DRAINAGE UNIT No.	CULVERTS																									
	6" PERFORATED PLASTIC PIPE UNDERDRAIN	18" SLOTTED PLASTIC PIPE	GRATED LINE DRAIN	18" ALTERNATIVE PIPE CULVERT	24" ALTERNATIVE PIPE CULVERT	60" ALTERNATIVE PIPE CULVERT	18" REINFORCED Conc PIPE	24" REINFORCED Conc PIPE	30" REINFORCED Conc PIPE	36" REINFORCED Conc PIPE	42" REINFORCED Conc PIPE	48" REINFORCED Conc PIPE	60" REINFORCED Conc PIPE	66" REINFORCED Conc PIPE	30" BITUMINOUS COATED CSP (0.109" THICK)	36" REINFORCED Conc PIPE RISER	48" BITUMINOUS COATED CSP (0.109" THICK)	(N) PIPE JOINT TYPE	(N) Max HEIGHT COVER	(N) REINFORCED Conc BOX CULVERT	STRUCTURAL Conc, BOX CULVERT **	BAR REINFORCEING STEEL (BOX CULVERT) **	REMOVE MUD, SAND AND DEBRIS (IN CULVERT) ***	ABANDON CULVERT *	REMOVE CULVERT	REMOVE BOX CULVERT	SAND BACKFILL *
	LF	LF	LF	LF	LF	LF	LF	LF	LF	LF	LF	LF	LF	LF	LF	LF	LF	-	LF	LF	CY	LB	LF	EA	LF	EA	CY
Tot DQ-1	0.0	0.0	13.0	0.0	475.1	0.0	0.0	71.3	0.0	260.6	0.0	0.0	0.0	0.0	0.0	3.5	0.0	-	-	-	0.0	0.0	0.0	1.0	380.4	0.0	18.0
Tot DQ-3	0.0	0.0	0.0	0.0	220.0	0.0	0.0	221.8	0.0	0.0	0.0	0.0	0.0	0.0	0.0	0.0	0.0	-	-	-	0.0	0.0	282.5	0.0	117.2	0.0	0.0
Tot DQ-5	0.0	0.0	0.0	0.0	559.6	0.0	0.0	143.5	0.0	0.0	0.0	277.7	0.0	0.0	0.0	0.0	0.0	-	-	-	0.0	0.0	0.0	0.0	248.1	0.0	0.0
Tot DQ-7	0.0	0.0	15.0	0.0	1,142.9	0.0	0.0	202.6	0.0	0.0	0.0	0.0	0.0	0.0	0.0	0.0	0.0	-	-	-	131.2	30,703.0	0.0	0.0	0.0	0.0	0.0
Tot DQ-9	0.0	0.0	6.0	0.0	317.2	79.3	0.0	241.4	0.0	0.0	0.0	0.0	0.0	171.2	0.0	0.0	0.0	-	-	-	0.0	0.0	328.6	0.0	576.3	0.0	0.0
Tot DQ-11	0.0	0.0	0.0	53.8	1,054.4	0.0	0.0	243.4	153.7	161.4	0.0	0.0	0.0	0.0	0.0	6.8	0.0	-	-	-	0.0	0.0	0.0	0.0	93.8	0.0	0.0
Tot DQ-13	0.0	0.0	0.0	90.2	480.0	0.0	27.1	256.2	140.2	0.0	0.0	0.0	0.0	0.0	0.0	7.7	0.0	-	-	-	0.0	0.0	0.0	0.0	49.6	0.0	0.0
Tot DQ-15	0.0	0.0	0.0	0.0	727.6	0.0	0.0	190.8	0.0	0.0	0.0	0.0	0.0	0.0	0.0	0.0	0.0	-	-	-	95.5	19,057.0	0.0	2.0	116.6	0.0	4.2
Tot DQ-17	0.0	0.0	12.0	62.2	1,757.2	0.0	20.1	198.1	0.0	0.0	0.0	161.3	0.0	0.0	0.0	10.7	0.0	-	-	-	0.0	0.0	0.0	0.0	44.1	0.0	0.0
Tot DQ-19	0.0	0.0	0.0	56.0	697.2	0.0	0.0	244.3	435.6	170.4	0.0	0.0	0.0	0.0	0.0	0.0	0.0	-	-	-	0.0	0.0	0.0	0.0	201.5	0.0	0.0
Tot DQ-21	0.0	0.0	0.0	67.7	1,063.0	0.0	0.0	149.0	0.0	128.0	0.0	0.0	0.0	0.0	0.0	0.0	0.0	-	-	-	0.0	0.0	0.0	2.0	407.1	0.0	0.0
Tot DQ-23	0.0	0.0	10.0	227.5	694.1	0.0	0.0	256.6	0.0	21.4	0.0	0.0	0.0	0.0	0.0	0.0	0.0	-	-	-	0.0	0.0	0.0	0.0	0.0	0.0	0.0
Tot DQ-25	0.0	0.0	0.0	193.0	96.0	0.0	0.0	240.9	0.0	0.0	0.0	0.0	0.0	0.0	0.0	0.0	0.0	-	-	-	838.4	196,508.0	0.0	0.0	0.0	1.0	0.0
Tot DQ-27	0.0	0.0	15.0	0.0	0.0	0.0	0.0	325.9	0.0	0.0	0.0	0.0	0.0	0.0	0.0	0.0	0.0	-	-	-	0.0	0.0	0.0	0.0	78.0	0.0	0.0
Tot DQ-29	0.0	0.0	60.0	195.8	263.1	0.0	0.0	138.3	171.0	0.0	0.0	142.2	0.0	0.0	0.0	0.0	0.0	-	-	-	0.0	0.0	0.0	0.0	47.6	0.0	0.0
Tot DQ-31	0.0	0.0	0.0	94.4	291.3	0.0	0.0	277.8	0.0	130.4	0.0	0.0	0.0	0.0	0.0	0.0	0.0	-	-	-	0.0	0.0	0.0	0.0	144.4	0.0	0.0
Tot DQ-33	0.0	0.0	20.0	339.0	292.0	0.0	0.0	0.0	0.0	18.0	267.1	0.0	0.0	0.0	0.0	0.0	0.0	-	-	-	0.0	0.0	0.0	0.0	210.9	0.0	0.0
Tot DQ-35	0.0	0.0	30.0	192.3	363.9	0.0	0.0	180.5	0.0	164.1	17.5	0.0	0.0	0.0	0.0	0.0	0.0	-	-	-	0.0	0.0	0.0	0.0	132.7	0.0	0.0
Tot DQ-37	0.0	0.0	48.0	793.3	96.0	0.0	0.0	144.0	150.5	0.0	0.0	0.0	0.0	0.0	0.0	0.0	0.0	-	-	-	0.0	0.0	0.0	0.0	489.3	0.0	0.0
Tot DQ-39	0.0	0.0	15.0	551.8	690.0	0.0	0.0	208.8	0.0	0.0	0.0	0.0	591.6	0.0	0.0	0.0	0.0	-	-	-	0.0	0.0	67.7	0.0	0.0	0.0	0.0
Tot DQ-41	0.0	0.0	0.0	184.4	703.6	0.0	0.0	327.5	0.0	0.0	0.0	0.0	0.0	76.3	0.0	0.0	0.0	-	-	-	0.0	0.0	0.0	0.0	0.0	0.0	0.0
Tot DQ-43	0.0	0.0	20.0	0.0	46.0	0.0	0.0	182.0	0.0	0.0	0.0	0.0	0.0	0.0	140.6	0.0	0.0	-	-	-	0.0	0.0	865.3	0.0	0.0	0.0	0.0
Tot DQ-45	0.0	0.0	40.0	84.5	148.5	0.0	0.0	234.8	0.0	0.0	0.0	0.0	0.0	0.0	0.0	0.0	0.0	-	-	-	0.0	0.0	0.0	0.0	0.0	0.0	0.0
Tot DQ-47	0.0	0.0	20.0	119.2	266.3	0.0	72.1	943.2	0.0	0.0	0.0	0.0	0.0	0.0	0.0	4.5	0.0	-	-	-	0.0	0.0	0.0	0.0	47.1	0.0	0.0
Tot DQ-49	0.0	0.0	60.0	0.0	163.3	0.0	0.0	56.6	0.0	0.0	314.2	0.0	0.0	0.0	0.0	4.3	0.0	-	-	-	93.9	22,420.0	0.0	0.0	420.2	0.0	0.0
Tot DQ-51	257.5	55.2	0.0	328.9	844.0	0.0	0.0	282.8	0.0	0.0	0.0	0.0	0.0	0.0	0.0	0.0	0.0	-	-	-	0.0	0.0	0.0	0.0	64.3	0.0	0.0
Tot DQ-53	1,074.1	100.3	0.0	819.4	187.3	0.0	4.4	89.8	0.0	0.0	0.0	0.0	0.0	0.0	0.0	0.0	23.7	-	-	-	0.0	0.0	0.0	0.0	0.0	0.0	0.0
Tot DQ-55	0.0	0.0	0.0	0.0	0.0	0.0	0.0	0.0	0.0	0.0	0.0	0.0	0.0	0.0	0.0	0.0	0.0	-	-	-	0.0	0.0	0.0	0.0	8.8	0.0	0.0
TOTAL	1,331.6	155.5	384.0	4,453.4	13,639.6	79.3	123.7	6,051.9	1,051.0	1,054.3	598.8	581.2	591.6	247.5	140.6	37.5	23.7	-	-	-	1,159.0	268,688.0	1,544.1	5.0	3,877.8	1.0	22.2

(N) = NOT A SEPARATE PAY ITEM, FOR INFORMATION ONLY
PIPE JOINT TYPES:
S - STANDARD
SO- SOIL TIGHT
D - DOWNDRAIN
W - WATERTIGHT

DRAINAGE QUANTITIES
DQ-57

REVISED BY | DATE REVISED
MICHAEL MANZANO | KATHRYN WALKER
CALCULATED-DESIGNED BY | CHECKED BY
CONSULTANT FUNCTIONAL SUPERVISOR
CARL SAVAGE
STATE OF CALIFORNIA - DEPARTMENT OF TRANSPORTATION
Caltrans

LAST REVISION 12-31-13
DATE PLOTTED => 20-MAR-2014
TIME PLOTTED => 14:32

Dist	COUNTY	ROUTE	POST MILES TOTAL PROJECT	SHEET No.	TOTAL SHEETS
11	SD	15,76	R46.2/R46.8, R12.1/R17.7	456	1273

REGISTERED CIVIL ENGINEER 10-30-13 DATE

03-24-14
PLANS APPROVAL DATE

REGISTERED PROFESSIONAL ENGINEER KATHRYN WALKER No. C77900 Exp. 06-30-15 CIVIL STATE OF CALIFORNIA

THE STATE OF CALIFORNIA OR ITS OFFICERS OR AGENTS SHALL NOT BE RESPONSIBLE FOR THE ACCURACY OR COMPLETENESS OF SCANNED COPIES OF THIS PLAN SHEET.

DOKKEN ENGINEERING
5675 RUFFIN RD
SUITE 250
SAN DIEGO, CA 92123

NOTE:

* FOR ADDITIONAL QUANTITIES SEE SUMMARY OF QUANTITIES.
** FOR ADDITIONAL QUANTITIES SEE STRUCTURE QUANTITIES SHEETS.

GABION DROP STRUCTURE

SHEET	GABION 3' X 3' X 9' (CY)	3' X 3' X 6' (CY)	1.5' X 3' X 6' (CY)
DD-30	84	460	178
TOTAL	722		

SHEET PILE QUANTITIES

SHEET	STEEL SHEET PILING (SQ FT)
DD-28	2,587
TOTAL	2,587

DRAINAGE QUANTITY SUMMARY

DRAINAGE SYSTEM No. / DRAINAGE UNIT No.	STRUCTURES: (N) STRUCTURE HEIGHT (LF)	MINOR CONCRETE (MINOR STRUCTURE) (CY)	STRUCTURAL CONCRETE (HEADWALL) (CY)	STRUCTURAL CONCRETE (JUNCTION STRUCTURE) (CY)	(N) GRATE TYPE 24-12 (EA)	(N) GRATE TYPE 36R (EA)	(N) MANHOLE FRAME AND COVER (EA)	(N) 1/4" CHECKERED PLATE COVER AND FRAME (EA)	(N) GRATE CHAIN (EA)	MISCELLANEOUS IRON AND STEEL (LB)	DRAINAGE INLET MARKER (EA)	CABLE RAILING ** (LF)	CHAIN LINK RAILING (TYPE 7) ** (LF)	REMOVE INLET (EA)	REMOVE HEADWALL (EA)	(N) Conc COLLAR (EA)	18" ALTERNATIVE FLARED END SECTION (EA)	24" ALTERNATIVE FLARED END SECTION (EA)	CONCRETE (SLOPE PROTECTION) * (CY)	CONCRETE (DITCH LINING) (CY)	ROCK SLOPE PROTECTION (NO. 2, METHOD B) (CY)	ROCK SLOPE PROTECTION (NO. 1, METHOD B) (CY)	ROCK SLOPE PROTECTION (LIGHT, METHOD B) (CY)	ROCK SLOPE PROTECTION (1/4 T, METHOD B) (CY)	ROCK SLOPE PROTECTION (1/2 T, METHOD B) (CY)	ROCK SLOPE PROTECTION (2T, METHOD A) (CY)	ROCK SLOPE PROTECTION (1T, METHOD B) (CY)	ROCK SLOPE PROTECTION FABRIC (CLASS 8) (SQYD)	ROCK SLOPE PROTECTION FABRIC (CLASS 10) (SQYD)	STRUCTURE BACKFILL (SLURRY CEMENT) (CY)	DITCH EXCAVATION (CY)	MODIFY INLET (EA)	ADJUST INLET (EA)	ADJUST MANHOLE (EA)	CAP RISER (EA)
To+ DQ-2	-	36.0	0.0	7.3	-	-	-	-	-	4900	3	0.0	0.0	5	0	-	0	0	3.4	0.0	0.0	0.0	0.0	0.0	0.0	0.0	0.0	0.0	0.0	0.0	0.0	0.0	0	0	0	0
To+ DQ-4	-	17.1	18.2	0.0	-	-	-	-	-	1974	0	10.0	21.0	0	2	-	0	0	4.0	0.0	24.0	0.0	24.0	0.0	0.0	0.0	0.0	106.5	0.0	0.0	0.0	0	0	0	0
To+ DQ-6	-	21.8	25.7	0.0	-	-	-	-	-	2303	0	15.0	28.9	0	2	-	0	0	11.4	10.3	196.0	0.0	25.0	517.0	0.0	0.0	0.0	715.9	0.0	0.0	33.4	0	0	0	0
To+ DQ-8	-	34.9	63.5	0.0	-	-	-	-	-	4639	1	0.0	68.0	0	0	-	0	1	15.4	0.0	0.0	0.0	11.0	0.0	0.0	0.0	0.0	31.1	0.0	0.0	0.0	0	0	0	0
To+ DQ-10	-	18.6	106.3	4.2	-	-	-	-	-	2539	0	81.5	41.1	1	2	-	0	0	8.0	0.0	290.1	0.0	52.0	233.0	0.0	1352.7	0.0	491.2	884.8	183.6	0.0	0	0	0	0
To+ DQ-12	-	26.4	38.1	4.6	-	-	-	-	-	3433	0	23.6	21.9	0	0	-	0	0	21.7	23.2	41.0	0.0	30.0	110.0	0.0	0.0	0.0	240.5	0.0	115.1	75.6	0	0	0	0
To+ DQ-14	-	24.6	31.9	0.0	-	-	-	-	-	3526	0	45.5	0.0	0	0	-	0	0	20.2	32.4	38.0	0.0	14.0	100.0	0.0	0.0	0.0	203.0	0.0	0.0	105.3	0	0	0	0
To+ DQ-16	-	28.1	49.6	0.0	-	-	-	-	-	2961	0	78.7	0.0	0	0	-	0	0	8.0	4.3	122.0	0.0	58.0	260.0	0.0	0.0	0.0	460.6	0.0	0.0	13.8	0	0	0	0
To+ DQ-18	-	29.5	62.7	4.2	-	-	-	-	-	4088	0	54.9	29.2	0	0	-	0	0	24.4	12.7	80.0	0.0	33.0	211.0	0.0	0.0	0.0	345.0	0.0	112.2	33.5	0	0	0	0
To+ DQ-20	-	29.0	98.9	0.0	-	-	-	-	-	3290	0	63.3	64.3	0	0	-	0	0	23.6	48.5	115.0	0.0	63.0	304.0	0.0	0.0	0.0	508.0	0.0	123.6	133.0	0	0	0	0
To+ DQ-22	-	24.5	3.2	0.0	-	-	-	-	-	2961	1	12.5	0.0	2	0	-	1	0	15.4	42.1	0.0	11.0	175.9	31.0	0.0	0.0	0.0	328.1	0.0	0.0	126.3	0	0	0	0
To+ DQ-24	-	38.6	2.4	0.0	-	-	-	-	-	4935	0	0.0	0.0	0	1	-	0	0	24.0	2.4	0.0	0.0	410.0	0.0	0.0	0.0	0.0	1701.2	0.0	0.0	7.8	0	0	0	0
To+ DQ-26	-	17.9	366.2	0.0	-	-	-	-	-	2614	1	76.8	239.3	0	0	-	0	0	4.0	0.0	340.9	0.0	18.0	899.4	0.0	0.0	0.0	1173.8	0.0	0.0	0.0	0	0	0	0
To+ DQ-28	-	19.0	4.8	0.0	-	-	-	-	-	2614	2	0.0	0.0	0	0	-	0	0	2.0	0.0	2.0	0.0	26.0	0.0	0.0	0.0	0.0	92.9	0.0	0.0	0.0	0	0	0	0
To+ DQ-30	-	31.7	68.3	0.0	-	-	-	-	-	3290	0	0.0	82.8	0	0	-	0	0	9.4	31.0	0.0	0.0	49.0	0.0	0.0	0.0	0.0	142.6	0.0	0.0	100.8	0	0	0	0
To+ DQ-32	-	34.0	4.4	0.0	-	-	-	-	-	3290	0	13.5	0.0	0	0	-	0	0	11.4	11.2	0.0	11.0	16.0	0.0	11.0	0.0	0.0	82.0	0.0	0.0	36.2	0	0	0	0
To+ DQ-34	-	28.3	26.5	0.0	-	-	-	-	-	2961	0	77.67	0.0	0	0	-	0	0	13.7	0.0	0.0	26.0	23.0	31.0	50.0	0.0	0.0	183.5	0.0	0.0	0.0	0	0	0	0
To+ DQ-36	-	24.9	46.0	0.0	-	-	-	-	-	3290	0	36.7	27.7	0	0	-	0	0	7.7	0.0	0.0	0.0	43.0	0.0	0.0	0.0	0.0	116.3	0.0	0.0	0.0	0	0	0	0
To+ DQ-38	-	36.4	2.7	0.0	-	-	-	-	-	3981	1	10.0	0.0	0	0	-	1	0	15.1	21.5	0.0	123.6	19.0	0.0	295.3	0.0	0.0	363.8	0.0	0.0	69.8	0	0	0	0
To+ DQ-40	-	32.2	107.8	0.0	-	-	-	-	-	3619	1	0.0	130.4	0	0	-	0	0	11.4	184.9	0.0	0.0	398.6	0.0	0.0	0.0	0.0	671.2	0.0	255.6	631.0	0	0	0	0
To+ DQ-42	-	42.0	69.1	0.0	-	-	-	-	-	3948	0	64.9	0.0	0	0	-	0	0	19.7	5.5	0.0	14.0	9.0	0.0	34.0	0.0	0.0	96.4	0.0	0.0	18.0	0	0	0	0
To+ DQ-44	-	13.2	4.9	0.0	-	-	-	-	-	1316	0	15.0	0.0	0	0	-	0	0	3.7	28.9	0.0	0.0	32.0	0.0	0.0	0.0	0.0	127.2	0.0	39.1	128.1	0	0	0	0
To+ DQ-46	-	36.4	3.6	0.0	-	-	-	-	-	3619	0	0.0	0.0	0	0	-	0	0	4.0	0.0	0.0	0.0	28.0	0.0	0.0	0.0	0.0	54.0	0.0	0.0	0.0	0	0	0	0
To+ DQ-48	-	45.8	2.4	0.0	-	-	-	-	-	5171	0	0.0	0.0	0	0	-	0	0	17.7	0.0	0.0	0.0	14.0	0.0	0.0	0.0	0.0	36.0	0.0	0.0	0.0	0	0	0	0
To+ DQ-50	-	15.3	111.1	4.2	-	-	-	-	-	2450	0	105.0	32.6	0	0	-	0	0	4.0	40.6	0.0	57.1	175.0	0.0	136.0	0.0	0.0	899.0	0.0	131.7	155.5	0	0	0	0
To+ DQ-52	-	41.9	1.2	3.6	-	-	-	-	-	5099	14	0.0	0.0	1	0	-	0	0	6.0	24.3	0.0	0.0	9.0	0.0	0.0	0.0	0.0	26.2	0.0	0.0	107.9	1	0	0	0
To+ DQ-54	-	33.2	4.0	0.0	-	-	-	-	-	4623	11	15.0	0.0	0	0	-	0	0	0.0	14.1	0.0	0.0	0.0	0.0	0.0	0.0	0.0	0.0	0.0	0.0	45.7	0	2	1	0
To+ DQ-56	-	0.0	0.0	0.0	-	-	-	-	-	0	0	0.0	0.0	1	0	-	0	0	0.0	0.0	12814.8	0.0	5519.7	32932.8	0.0	0.0	291.0	2856.9	0.0	0.0	0.0	0	2	0	2
TOTAL	-	781.3	1323.5	28.1	-	-	-	-	-	93,434	35	799.57	787.2	10	7	-	2	1	309.3	537.9	14063.8	242.7	7275.2	35629.2	526.3	1352.7	291.0	12052.7	884.8	960.9	1821.7	1	4	1	2

DRAINAGE QUANTITIES
DQ-58

REVISED BY | DATE REVISED
MICHAEL MANZANO | KATHRYN WALKER
CALCULATED-DESIGNED BY | CHECKED BY
CARL SAVAGE
CONSULTANT FUNCTIONAL SUPERVISOR
STATE OF CALIFORNIA - DEPARTMENT OF TRANSPORTATION
Caltrans

LAST REVISION 12-31-13 | DATE PLOTTED => 20-MAR-2014 | TIME PLOTTED => 14:32

Dist	COUNTY	ROUTE	POST MILES TOTAL PROJECT	SHEET No.	TOTAL SHEETS
11	SD	15,76	R46.2/R46.8, R12.1/R17.7	457	1273

REGISTERED CIVIL ENGINEER 01-06-14 DATE

03-24-14
PLANS APPROVAL DATE

REGISTERED PROFESSIONAL ENGINEER MARK BUSH No. C60477 Exp. 06-30-14 CIVIL STATE OF CALIFORNIA

THE STATE OF CALIFORNIA OR ITS OFFICERS OR AGENTS SHALL NOT BE RESPONSIBLE FOR THE ACCURACY OR COMPLETENESS OF SCANNED COPIES OF THIS PLAN SHEET.

TETRA TECH
17885 VON KARMAN AVE
SUITE 500
IRVINE, CA 92614

NOTES:

1. FOR TRENCH BEDDING AND BACKFILL REQUIREMENTS SEE DETAIL 'A'.
2. ALL NEW MANHOLES ARE 60" PRECAST MANHOLES UNLESS NOTED OTHERWISE, SEE DETAIL 'D'.
3. SEE SPECIFICATIONS AND GRADING PLANS FOR LOCATIONS REQUIRING SETTLEMENT MONITORING. GROUND SETTLEMENT MUST OCCUR PRIOR TO SEWER LINE CONSTRUCTION. SEWER CONSTRUCTION WITHIN THESE AREAS WILL NOT COMMENCE WITHOUT DIRECTION FROM THE ENGINEER.
4. MAINTAIN ACCESS TO EXISTING MANHOLES AT ALL TIMES DURING INTERIM GRADING. ADJUST MANHOLE RIM ELEVATION TO GRADE PER DETAIL 'F'. EXISTING MANHOLE SHALL BE ABANDONED AFTER FLOW IS TRANSFERRED TO NEW SEWER MAIN.

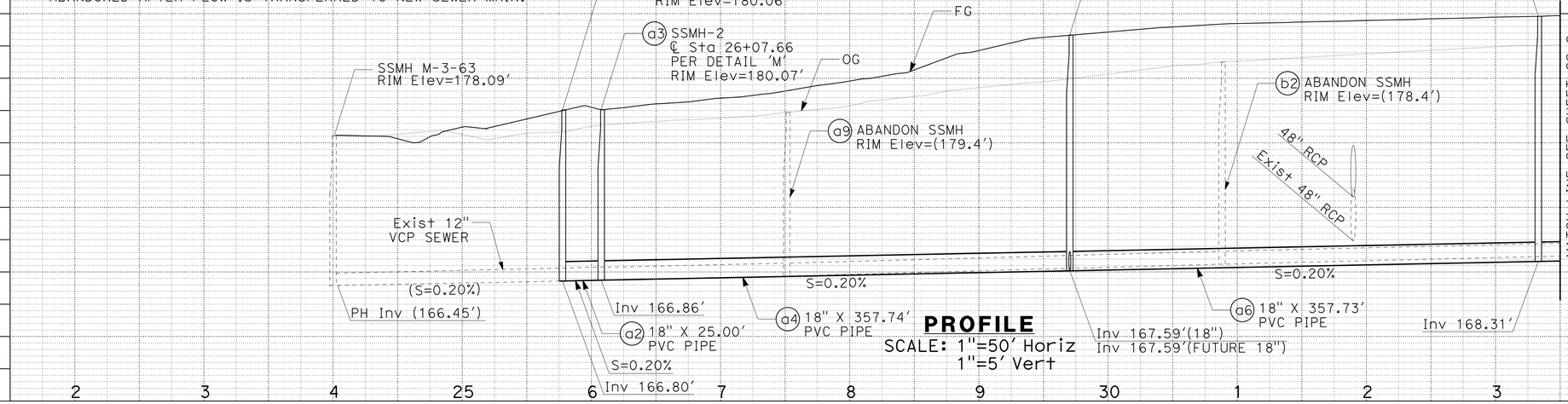

PROFILE
SCALE: 1"=50' Horiz
1"=5' Vert

NOTE:

FOR ACCURATE RIGHT OF WAY DATA, CONTACT RIGHT OF WAY ENGINEERING AT THE DISTRICT OFFICE.

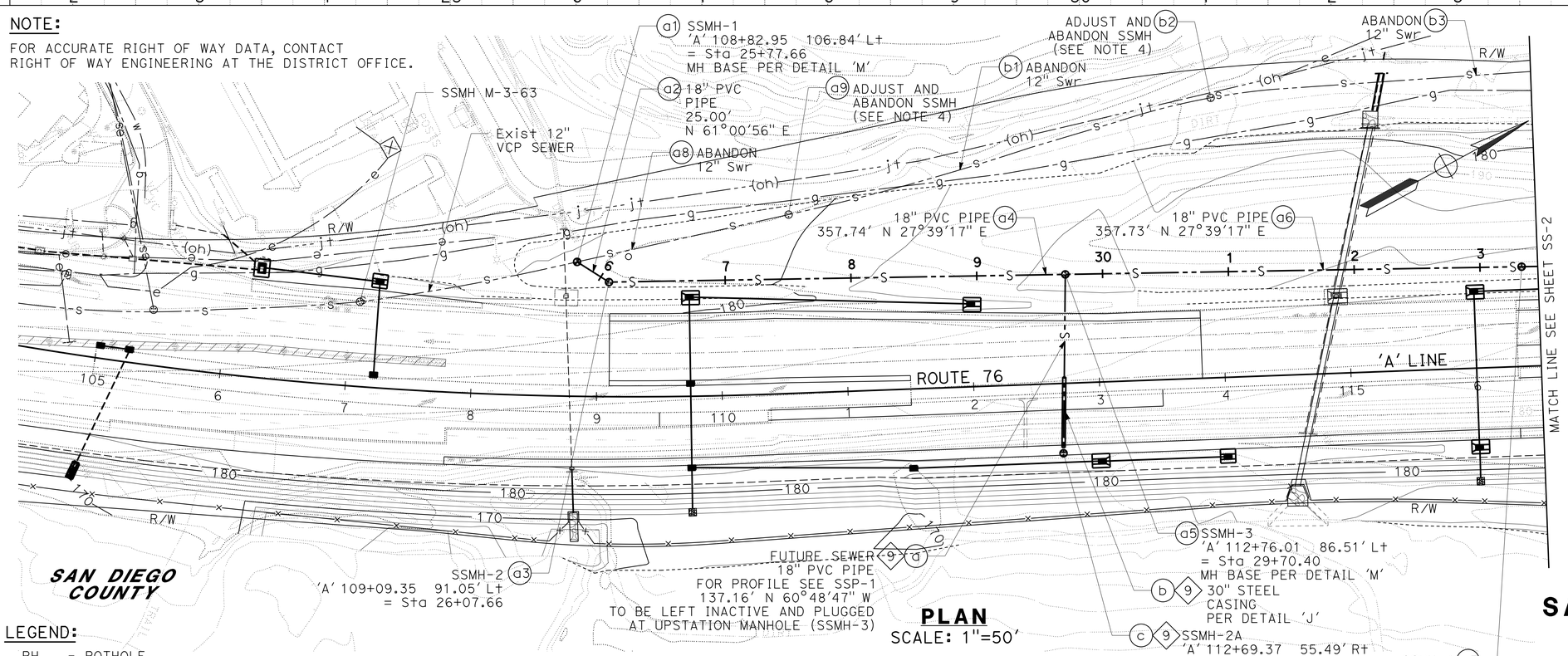

PLAN
SCALE: 1"=50'

APPROVED FOR SANITARY SEWER WORK ONLY

HYDRAULIC DATA FROM SSMH-1 TO SSMH-5				
	DIAMETER (INCH)	d/D	VELOCITY (ft/s)	SLOPE
Q PEAK-WET 2.07 CFS	18	0.46	2.61	0.0020
Q PEAK-DRY 1.43 CFS	18	0.38	2.36	0.0020

LEGEND:

PH - POTHOLE
SSMH - SANITARY SEWER MANHOLE
WAC - WILD ANIMAL CROSSING

SANITARY SEWER PLAN AND PROFILE

SCALE AS SHOWN

SS-1

REVISED BY | DATE REVISED
MOLLY JEWETT | LUANNE BEAN
CALCULATED-DESIGNED BY | CHECKED BY
CONSULTANT FUNCTIONAL SUPERVISOR: MARK BUSH
STATE OF CALIFORNIA - DEPARTMENT OF TRANSPORTATION
Caltrans

LAST REVISION 12-31-13 | DATE PLOTTED => 20-MAR-2014 | TIME PLOTTED => 14:32

Dist	COUNTY	ROUTE	POST MILES TOTAL PROJECT	SHEET No.	TOTAL SHEETS
11	SD	15,76	R46.2/R46.8, R12.1/R17.7	458	1273

REGISTERED CIVIL ENGINEER 01-06-14 DATE

03-24-14
PLANS APPROVAL DATE

REGISTERED PROFESSIONAL ENGINEER MARK BUSH No. C60477 Exp. 06-30-14 CIVIL STATE OF CALIFORNIA

THE STATE OF CALIFORNIA OR ITS OFFICERS OR AGENTS SHALL NOT BE RESPONSIBLE FOR THE ACCURACY OR COMPLETENESS OF SCANNED COPIES OF THIS PLAN SHEET.

TETRA TECH
17885 VON KARMAN AVE
SUITE 500
IRVINE, CA 92614

NOTES:

1. FOR TRENCH BEDDING AND BACKFILL REQUIREMENTS SEE DETAIL 'A'.
2. ALL NEW MANHOLES ARE 60" PRECAST MANHOLES UNLESS NOTED OTHERWISE, SEE DETAIL 'D'.
3. MAINTAIN ACCESS TO EXISTING MANHOLES AT ALL TIMES DURING INTERIM GRADING. ADJUST MANHOLE RIM ELEVATION TO GRADE PER DETAIL 'F'. EXISTING MANHOLE SHALL BE ABANDONED AFTER FLOW IS TRANSFERRED TO NEW SEWER MAIN.

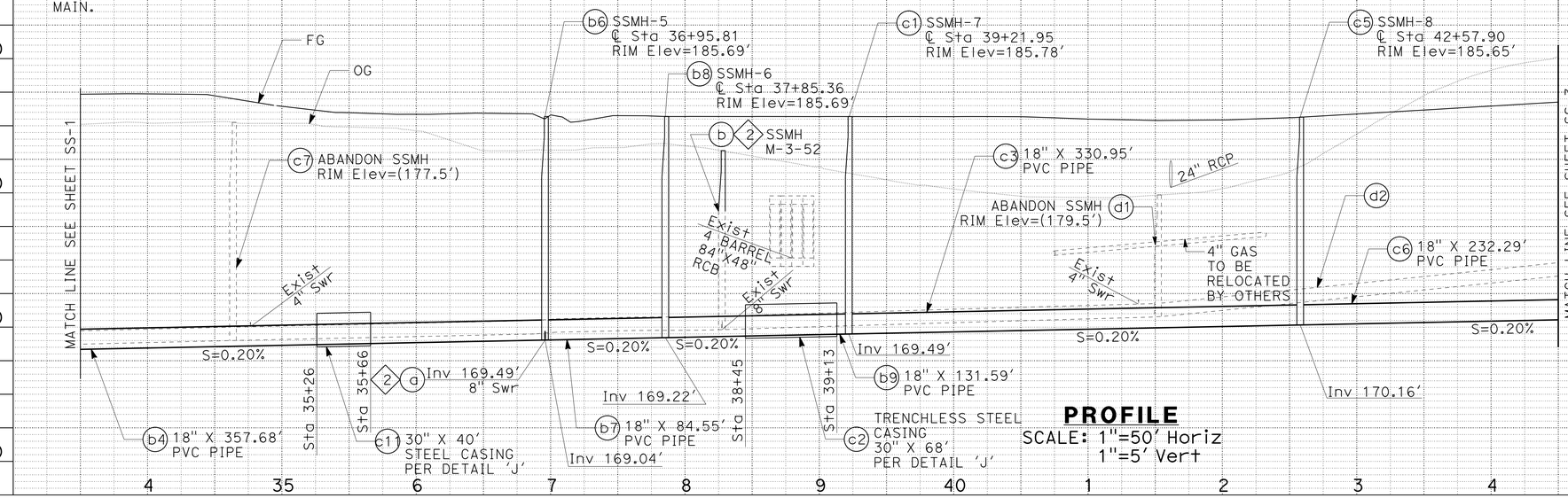

PROFILE
SCALE: 1"=50' Horiz
1"=5' Vert

BYPASSING NOTES:

MAINTAIN EXISTING SEWER FLOW AT ALL TIMES. SUBMIT PLANS FOR MAINTAINING SEWER FLOWS.

IT IS ANTICIPATED THAT TEMPORARY BYPASS PUMPING OF THE FLOW WILL BE REQUIRED. SEE PROJECT SPECIFICATIONS FOR REQUIREMENTS. THE FOLLOWING IS THE ANTICIPATED SEQUENCE:

1. CONSTRUCT MAINLINE TO SSMH-7
2. TEST PIPE AND MANHOLES
3. SET UP TEMPORARY BYPASS FROM EXISTING SSMH L-3-03 TO NEW SSMH-7
4. EXISTING LATERAL MAY BE TAKEN OUT OF SERVICE FOR ONE 8 HOUR PERIOD. CUSTOMER WILL NEED TO BE NOTIFIED TWO WEEKS IN ADVANCE. IF LATERAL CANNOT BE REINSTATED WITHIN 8 HOURS CONTRACTOR MUST BYPASS PUMP FLOWS AND MANTAIN SERVICE.
5. CONSTRUCT NEW MAIN ACROSS LOCATION OF CONFLICT TO SSMH-9
6. CONSTRUCT INTERCONNECTION AND DIVERT FLOW INTO NEW PIPE
7. REMOVE BYPASS
8. CONNECT ALL EXISTING LATERALS TO NEW SEWER MAIN
9. AFTER ALL CONSTRUCTION IS COMPLETED ABANDON INTERCONNECTION

NOTE:

FOR ACCURATE RIGHT OF WAY DATA, CONTACT RIGHT OF WAY ENGINEERING AT THE DISTRICT OFFICE.

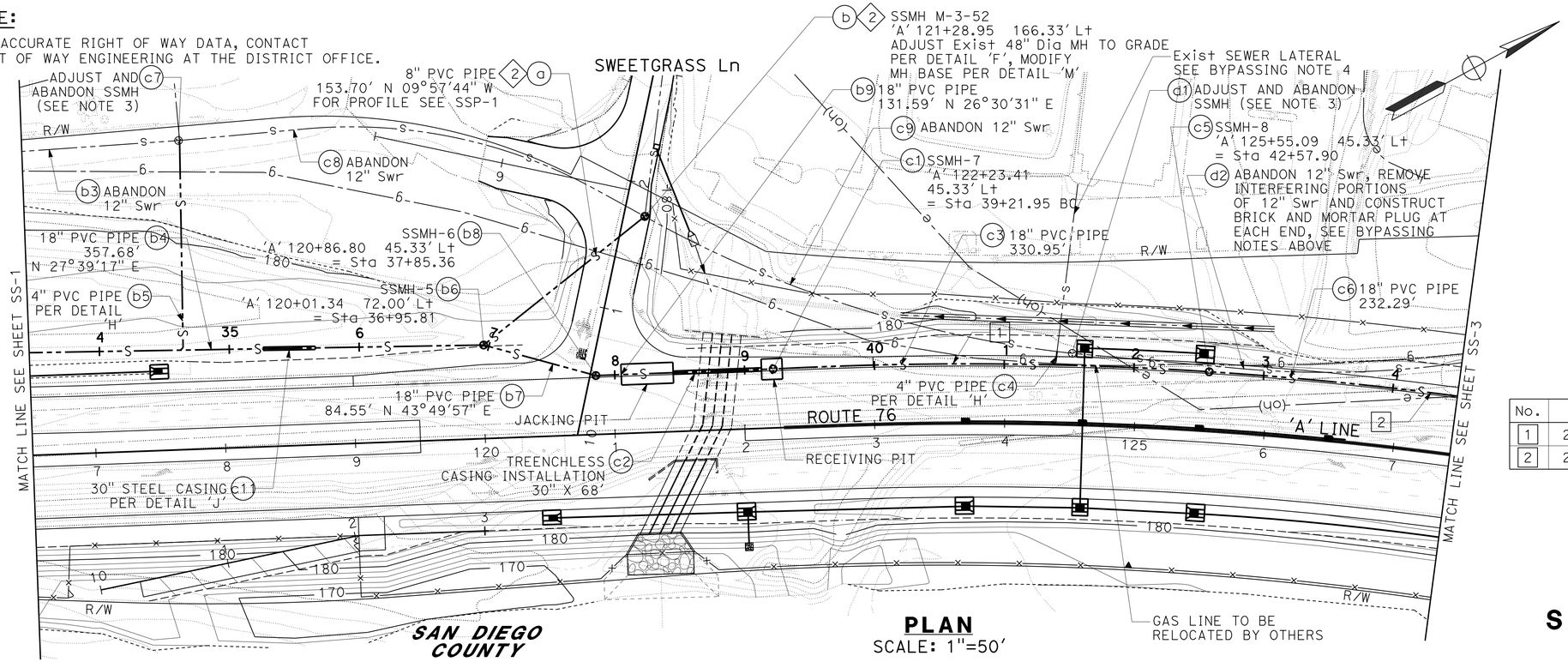

PLAN
SCALE: 1"=50'

APPROVED FOR SANITARY SEWER WORK ONLY

HYDRAULIC DATA				
FROM SSMH-1 TO SSMH-5				
	DIAMETER (INCH)	d/D	VELOCITY (ft/s)	SLOPE
Q PEAK-WET 2.07 CFS	18	0.46	2.61	0.0020
Q PEAK-DRY 1.43 CFS	18	0.38	2.36	0.0020
FROM SSMH-5 TO SSMH-11				
	DIAMETER (INCH)	d/D	VELOCITY (ft/s)	SLOPE
Q PEAK-WET 1.97 CFS	18	0.45	2.55	0.0020
Q PEAK-DRY 1.35 CFS	18	0.37	2.31	0.0020

CURVE DATA

No.	R	Δ	T	L
1	2845.53'	06°45'54"	168.18'	335.95'
2	2845.32'	04°46'51"	118.78'	237.29'

SANITARY SEWER PLAN AND PROFILE

SCALE AS SHOWN

SS-2

LAST REVISION 12-31-13 | DATE PLOTTED => 20-MAR-2014 | TIME PLOTTED => 14:33

REVISED BY | DATE REVISED | MOLLY JEWETT | LUANNE BEAN | CALCULATED-DESIGNED BY | CHECKED BY | CONSULTANT FUNCTIONAL SUPERVISOR | MARK BUSH

STATE OF CALIFORNIA - DEPARTMENT OF TRANSPORTATION

Caltrans

Dist	COUNTY	ROUTE	POST MILES TOTAL PROJECT	SHEET No.	TOTAL SHEETS
11	SD	15,76	R46.2/R46.8, R12.1/R17.7	459	1273

REGISTERED CIVIL ENGINEER 01-06-14 DATE

03-24-14
PLANS APPROVAL DATE

REGISTERED PROFESSIONAL ENGINEER MARK BUSH No. C60477 Exp. 06-30-14 CIVIL STATE OF CALIFORNIA

THE STATE OF CALIFORNIA OR ITS OFFICERS OR AGENTS SHALL NOT BE RESPONSIBLE FOR THE ACCURACY OR COMPLETENESS OF SCANNED COPIES OF THIS PLAN SHEET.

TETRA TECH
17885 VON KARMAN AVE
SUITE 500
IRVINE, CA 92614

NOTES:

1. FOR TRENCH BEDDING AND BACKFILL REQUIREMENTS SEE DETAIL 'A'.
2. ALL NEW MANHOLES ARE 60" PRECAST MANHOLES UNLESS NOTED OTHERWISE, SEE DETAIL 'D'.
3. TEMPORARY INTERCONNECTION PIPE MUST BE ABANDONED PER SPECIFICATIONS AFTER ALL SEWER MAIN CONSTRUCTION IS COMPLETED. MANHOLE OUTLETS SHALL BE PLUGGED WITH BRICK AND MORTAR PLUG.
4. MAINTAIN ACCESS TO EXISTING MANHOLES AT ALL TIMES DURING INTERIM GRADING. ADJUST MANHOLE RIM ELEVATION TO GRADE PER DETAIL 'F'. EXISTING MANHOLE SHALL BE ABANDONED AFTER FLOW IS TRANSFERRED TO NEW SEWER MAIN.

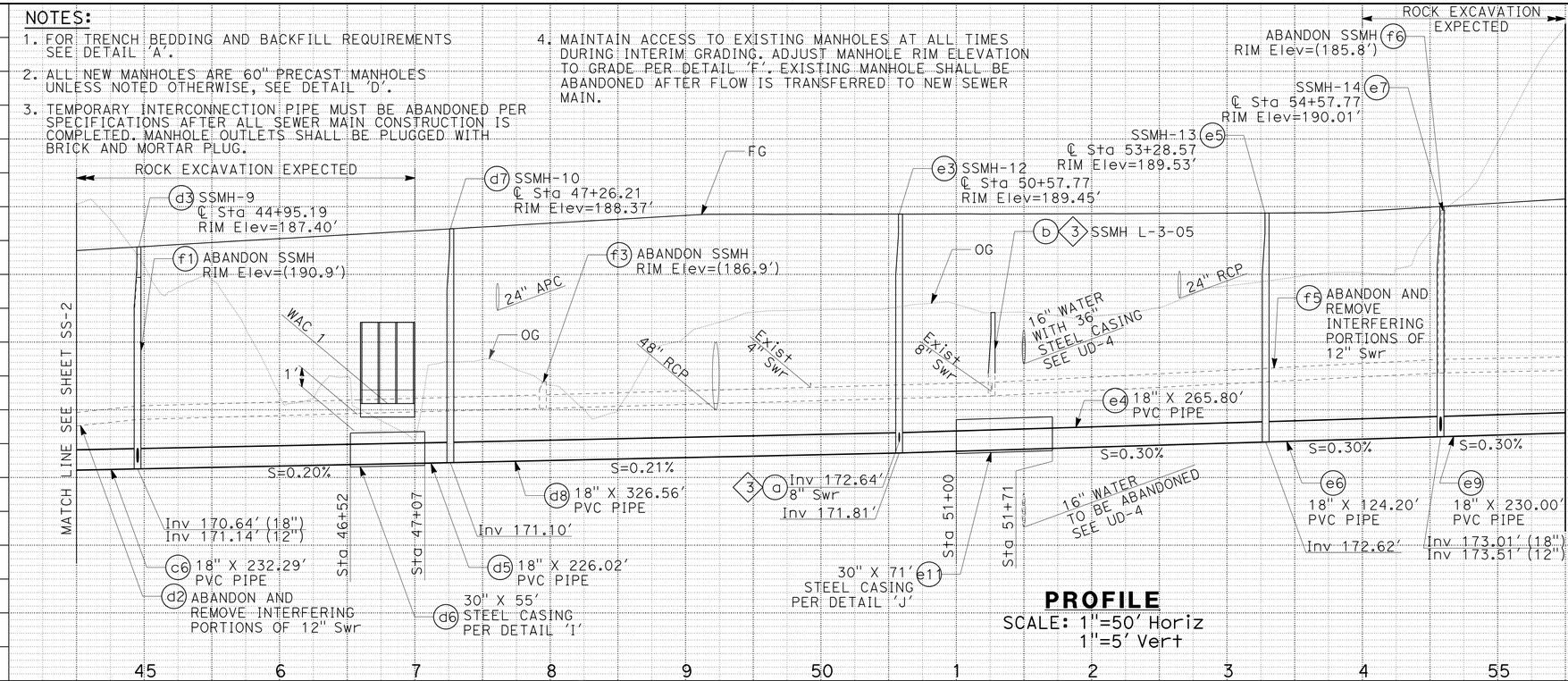

PROFILE

SCALE: 1"=50' Horiz
1"=5' Vert

BYPASSING NOTES:

MAINTAIN EXISTING SEWER FLOW AT ALL TIMES. SUBMIT PLANS FOR MAINTAINING SEWER FLOWS.

IT IS ANTICIPATED THAT TEMPORARY BYPASS PUMPING OF THE FLOW WILL BE REQUIRED. SEE PROJECT SPECIFICATIONS FOR REQUIREMENTS. THE FOLLOWING IS THE ANTICIPATED SEQUENCE:

1. CONSTRUCT MAINLINE TO SSMH-13
2. TEST PIPE AND MANHOLES
3. SET UP TEMPORARY BYPASS FROM EXISTING SSMH L-3-48 TO NEW SSMH-13
4. CONSTRUCT NEW MAIN ACROSS LOCATION OF CONFLICT TO SSMH-14
5. CONSTRUCT INTERCONNECTION AND DIVERT FLOW INTO NEW PIPE
6. REMOVE BYPASS
7. CONNECT ALL EXISTING LATERALS TO NEW SEWER MAIN
8. AFTER ALL CONSTRUCTION IS COMPLETED ABANDON INTERCONNECTION

NOTE:

FOR ACCURATE RIGHT OF WAY DATA, CONTACT RIGHT OF WAY ENGINEERING AT THE DISTRICT OFFICE.

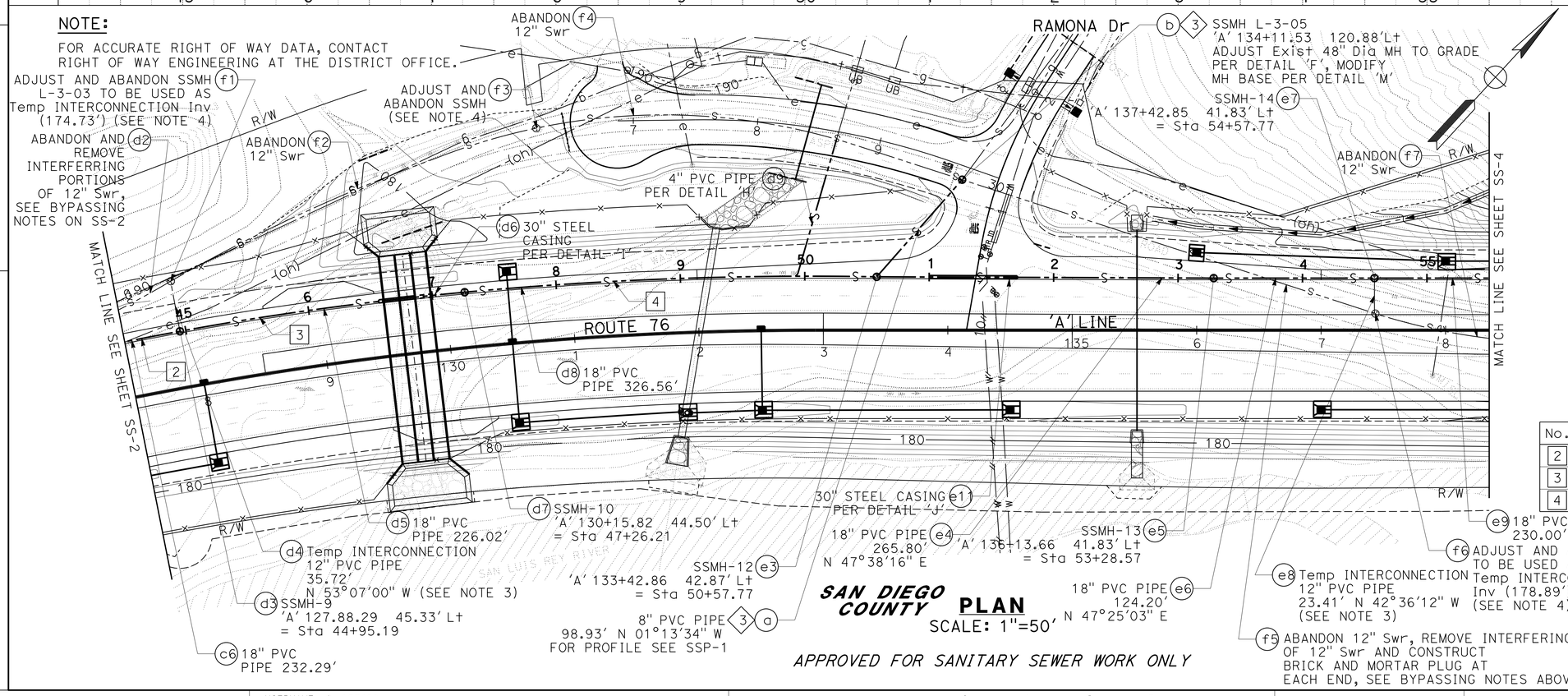

SAN DIEGO COUNTY

PLAN

SCALE: 1"=50'

APPROVED FOR SANITARY SEWER WORK ONLY

HYDRAULIC DATA				
FROM SSMH-5 TO SSMH-10				
	DIAMETER (INCH)	d/D	VELOCITY (ft/s)	SLOPE
Q PEAK-WET 1.97 CFS	18	0.45	2.55	0.0020
Q PEAK-DRY 1.35 CFS	18	0.37	2.31	0.0020
FROM SSMH-10 TO SSMH-12				
	DIAMETER (INCH)	d/D	VELOCITY (ft/s)	SLOPE
Q PEAK-WET 1.97 CFS	18	0.45	2.59	0.0021
Q PEAK-DRY 1.35 CFS	18	0.36	2.36	0.0021
FROM SSMH-12 TO SSMH-16				
	DIAMETER (INCH)	d/D	VELOCITY (ft/s)	SLOPE
Q PEAK-WET 1.96 CFS	18	0.40	2.97	0.0030
Q PEAK-DRY 1.34 CFS	18	0.33	2.69	0.0030

CURVE DATA

No.	R	Δ	T	L
2	2845.32'	04°46'51"	118.78'	237.29'
3	2845.32'	04°38'57"	115.50'	231.02'
4	3001.34'	06°19'46"	165.95'	331.56'

SANITARY SEWER PLAN AND PROFILE

SCALE AS SHOWN

SS-3

STATE OF CALIFORNIA - DEPARTMENT OF TRANSPORTATION

CONSULTANT FUNCTIONAL SUPERVISOR: MARK BUSH

CALCULATED-DESIGNED BY: MOLLY JEWETT

CHECKED BY: LUANNE BEAN

REVISED BY / DATE REVISED

LAST REVISION 10-18-13

DATE PLOTTED => 20-MAR-2014
TIME PLOTTED => 14:33

Dist	COUNTY	ROUTE	POST MILES TOTAL PROJECT	SHEET No.	TOTAL SHEETS
11	SD	15,76	R46.2/R46.8, R12.1/R17.7	460	1273

REGISTERED CIVIL ENGINEER 01-06-14 DATE

03-24-14
PLANS APPROVAL DATE

REGISTERED PROFESSIONAL ENGINEER MARK BUSH No. C60477 Exp. 06-30-14 CIVIL STATE OF CALIFORNIA

THE STATE OF CALIFORNIA OR ITS OFFICERS OR AGENTS SHALL NOT BE RESPONSIBLE FOR THE ACCURACY OR COMPLETENESS OF SCANNED COPIES OF THIS PLAN SHEET.

TETRA TECH
17885 VON KARMAN AVE
SUITE 500
IRVINE, CA 92614

NOTES:

1. FOR TRENCH BEDDING AND BACKFILL REQUIREMENTS SEE DETAIL 'A'.
2. ALL NEW MANHOLES ARE 60" PRECAST MANHOLES UNLESS NOTED OTHERWISE, SEE DETAIL 'D'.
3. MAINTAIN ACCESS TO EXISTING MANHOLES AT ALL TIMES DURING INTERIM GRADING. ADJUST MANHOLE RIM ELEVATION TO GRADE PER DETAIL 'F'. EXISTING MANHOLE SHALL BE ABANDONED AFTER FLOW IS TRANSFERRED TO NEW SEWER MAIN.

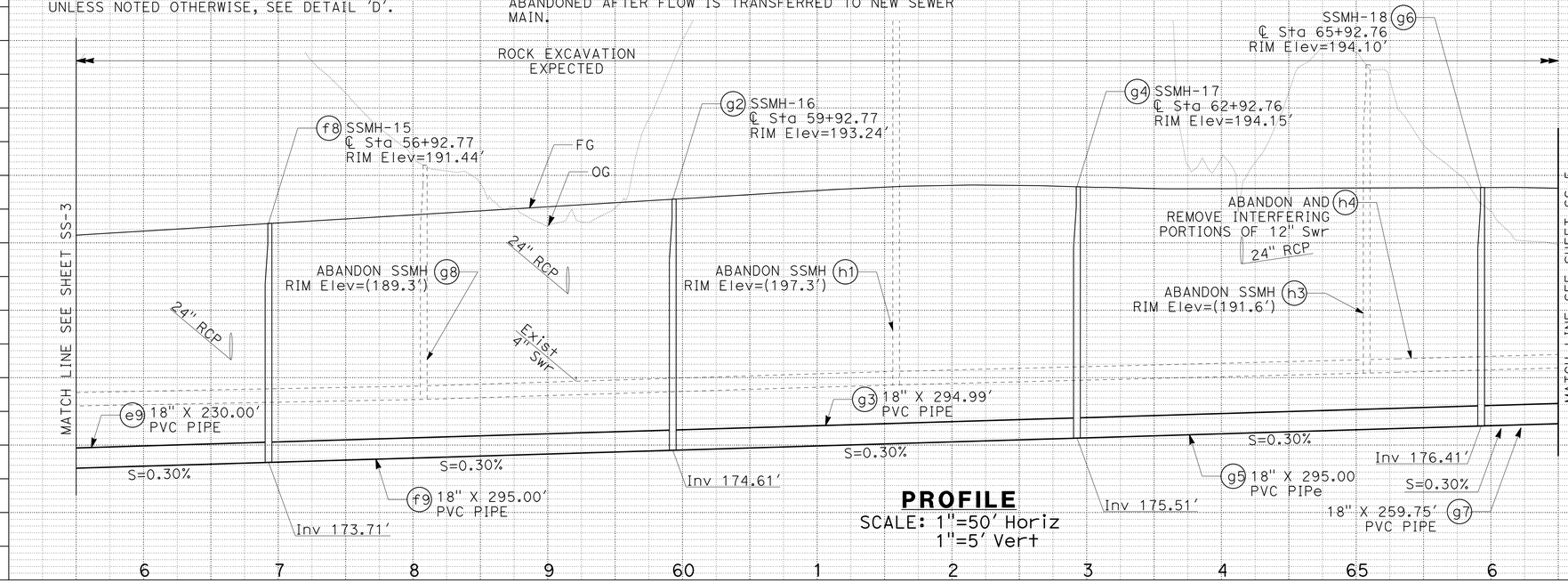

PROFILE
SCALE: 1"=50' Horiz
1"=5' Vert

BYPASSING NOTES:

MAINTAIN EXISTING SEWER FLOW AT ALL TIMES. SUBMIT PLANS FOR MAINTAINING SEWER FLOWS.

IT IS ANTICIPATED THAT TEMPORARY BYPASS PUMPING OF THE FLOW WILL BE REQUIRED. SEE PROJECT SPECIFICATIONS FOR REQUIREMENTS. THE FOLLOWING IS THE ANTICIPATED SEQUENCE:

1. CONSTRUCT MAINLINE TO SSMH-18
2. TEST PIPE AND MANHOLES
3. SET UP TEMPORARY BYPASS FROM EXISTING SSMH L-3-46 TO NEW SSMH-18
4. EXISTING LATERAL MAY BE TAKEN OUT OF SERVICE FOR ONE 8 HOUR PERIOD. CUSTOMER WILL NEED TO BE NOTIFIED TWO WEEKS IN ADVANCE. IF LATERAL CANNOT BE REINSTATED WITHIN 8 HOURS CONTRACTOR MUST BYPASS PUMP FLOWS AND MANTAIN SERVICE.
5. CONSTRUCT NEW MAIN ACROSS LOCATION OF CONFLICT TO SSMH-19
6. CONSTRUCT INTERCONNECTION AND DIVERT FLOW INTO NEW PIPE
7. REMOVE BYPASS
8. CONNECT ALL EXISTING LATERALS TO NEW SEWER MAIN
9. AFTER ALL CONSTRUCTION IS COMPLETED ABANDON INTERCONNECTION

NOTE:

FOR ACCURATE RIGHT OF WAY DATA, CONTACT RIGHT OF WAY ENGINEERING AT THE DISTRICT OFFICE.

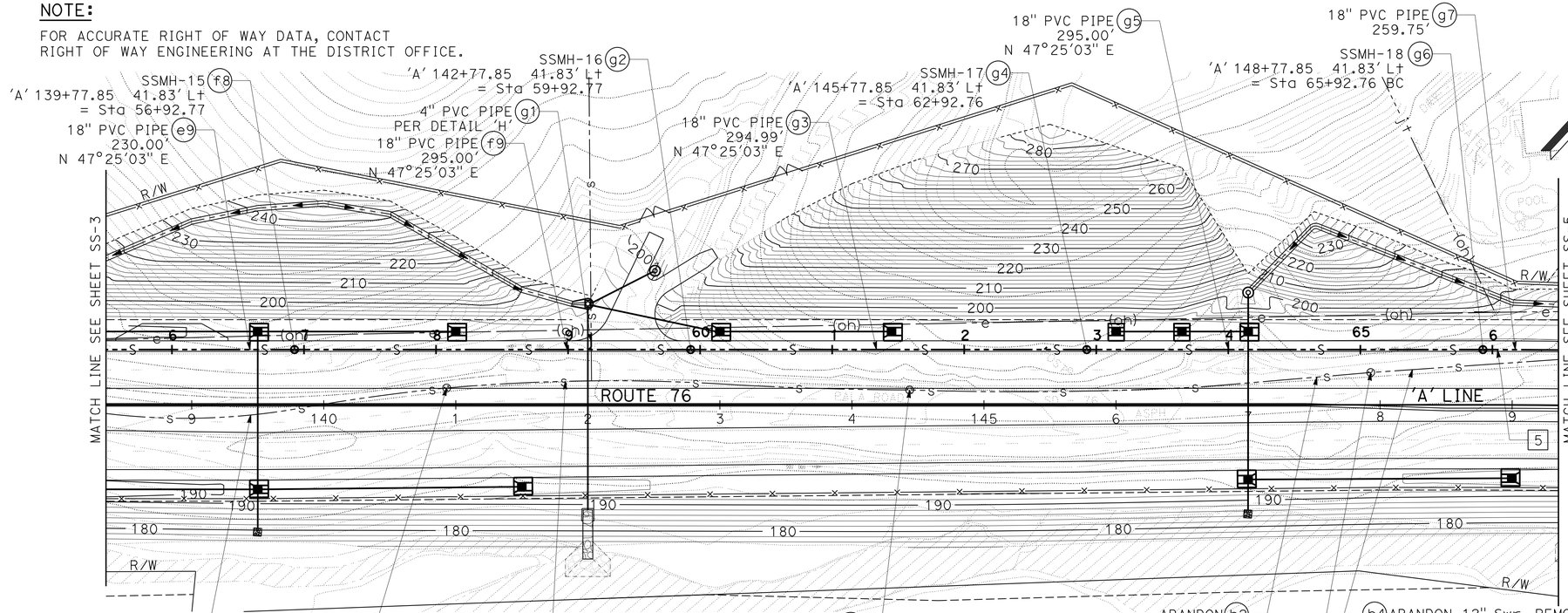

PLAN
SCALE: 1"=50'

SAN DIEGO COUNTY

APPROVED FOR SANITARY SEWER WORK ONLY

HYDRAULIC DATA				
FROM SSMH-11 TO SSMH-16				
	DIAMETER (INCH)	d/D	VELOCITY (ft/s)	SLOPE
Q PEAK-WET 1.96 CFS	18	0.40	2.97	0.0030
Q PEAK-DRY 1.34 CFS	18	0.33	2.69	0.0030
FROM SSMH-16 TO SSMH-19				
	DIAMETER (INCH)	d/D	VELOCITY (ft/s)	SLOPE
Q PEAK-WET 1.95 CFS	18	0.40	2.95	0.0030
Q PEAK-DRY 1.33 CFS	18	0.33	2.67	0.0030

CURVE DATA

No.	R	Δ	T	L
5	5041.82'	03°00'29"	132.38'	264.75'

SANITARY SEWER PLAN AND PROFILE

SCALE AS SHOWN

SS-4

REVISED BY | DATE REVISED
MOLLY JEWETT | LUANNE BEAN
CALCULATED-DESIGNED BY | CHECKED BY
CONSULTANT FUNCTIONAL SUPERVISOR: MARK BUSH
STATE OF CALIFORNIA - DEPARTMENT OF TRANSPORTATION
Caltrans

LAST REVISION 12-31-13 | DATE PLOTTED => 20-MAR-2014 | TIME PLOTTED => 14:33

Dist	COUNTY	ROUTE	POST MILES TOTAL PROJECT	SHEET No.	TOTAL SHEETS
11	SD	15,76	R46.2/R46.8, R12.1/R17.7	461	1273

REGISTERED CIVIL ENGINEER 01-06-14 DATE

03-24-14
PLANS APPROVAL DATE

REGISTERED PROFESSIONAL ENGINEER MARK BUSH No. C60477 Exp. 06-30-14 CIVIL STATE OF CALIFORNIA

THE STATE OF CALIFORNIA OR ITS OFFICERS OR AGENTS SHALL NOT BE RESPONSIBLE FOR THE ACCURACY OR COMPLETENESS OF SCANNED COPIES OF THIS PLAN SHEET.

TETRA TECH
17885 VON KARMAN AVE
SUITE 500
IRVINE, CA 92614

NOTES:

1. FOR TRENCH BEDDING AND BACKFILL REQUIREMENTS SEE DETAIL 'A'.
2. ALL NEW MANHOLES ARE 60" PRECAST MANHOLES UNLESS NOTED OTHERWISE, SEE DETAIL 'D'.
3. TEMPORARY INTERCONNECTION PIPE MUST BE ABANDONED PER SPECIFICATIONS AFTER ALL SEWER MAIN CONSTRUCTION IS COMPLETED. MANHOLE OUTLETS SHALL BE PLUGGED WITH BRICK AND MORTAR PLUG.
4. MAINTAIN ACCESS TO EXISTING MANHOLES AT ALL TIMES DURING INTERIM GRADING. ADJUST MANHOLE RIM ELEVATION TO GRADE PER DETAIL 'F'. EXISTING MANHOLE SHALL BE ABANDONED AFTER FLOW IS TRANSFERRED TO NEW SEWER MAIN.

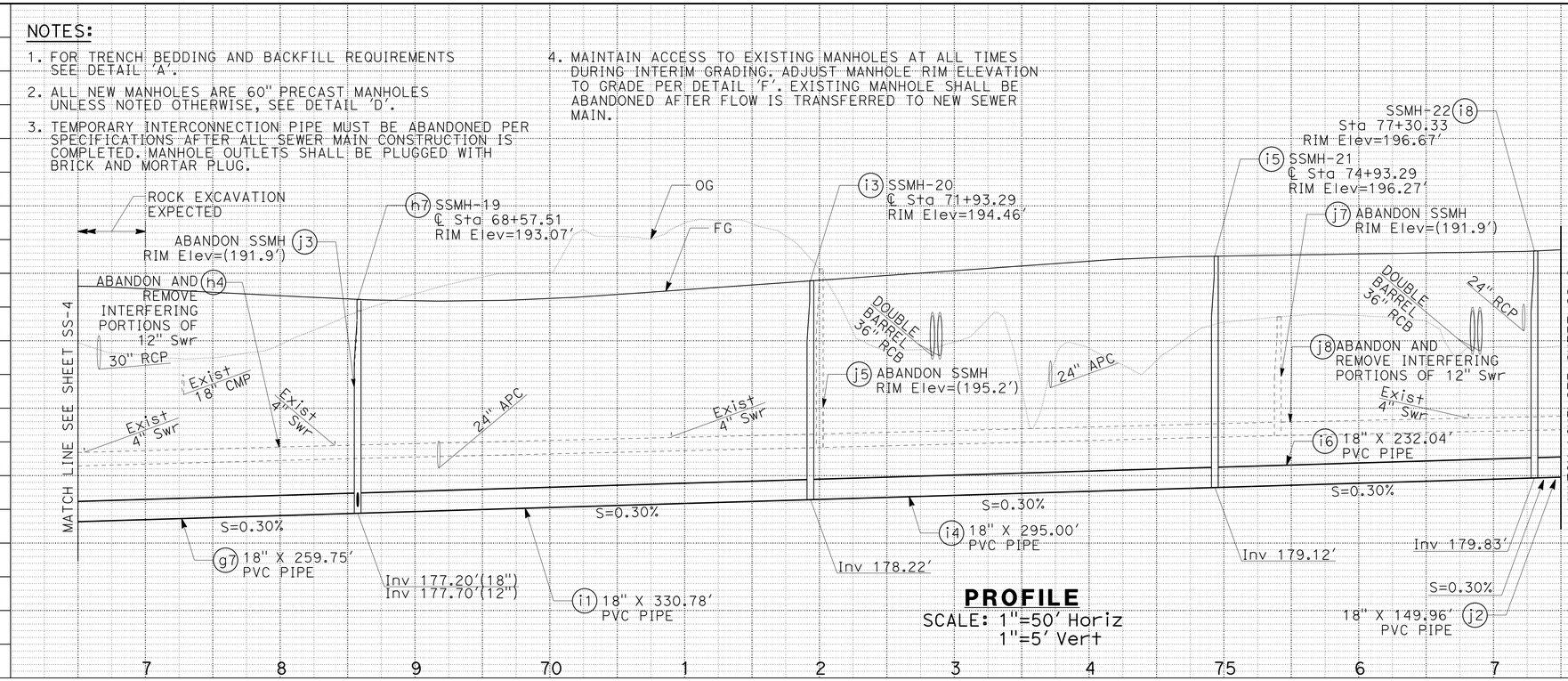

PROFILE
SCALE: 1"=50' Horiz
1"=5' Vert

BYPASSING NOTES:

MAINTAIN EXISTING SEWER FLOW AT ALL TIMES. SUBMIT PLANS FOR MAINTAINING SEWER FLOWS.

IT IS ANTICIPATED THAT TEMPORARY BYPASS PUMPING OF THE FLOW WILL BE REQUIRED. SEE PROJECT SPECIFICATIONS FOR REQUIREMENTS. THE FOLLOWING IS THE ANTICIPATED SEQUENCE:

1. CONSTRUCT MAINLINE TO SSMH-21
2. TEST PIPE AND MANHOLES
3. SET UP TEMPORARY BYPASS FROM EXISTING SSMH L-4-04 TO NEW SSMH-21
4. EXISTING LATERAL MAY BE TAKEN OUT OF SERVICE FOR ONE 8 HOUR PERIOD. CUSTOMER WILL NEED TO BE NOTIFIED TWO WEEKS IN ADVANCE. IF LATERAL CANNOT BE REINSTATED WITHIN 8 HOURS CONTRACTOR MUST BYPASS PUMP FLOWS AND MANTAIN SERVICE.
5. CONSTRUCT NEW MAIN ACROSS LOCATION OF CONFLICT TO SSMH-23
6. CONSTRUCT INTERCONNECTION AND DIVERT FLOW INTO NEW PIPE
7. REMOVE BYPASS
8. CONNECT ALL EXISTING LATERALS TO NEW SEWER MAIN
9. AFTER ALL CONSTRUCTION IS COMPLETED ABANDON INTERCONNECTION

NOTE:

FOR ACCURATE RIGHT OF WAY DATA, CONTACT RIGHT OF WAY ENGINEERING AT THE DISTRICT OFFICE.

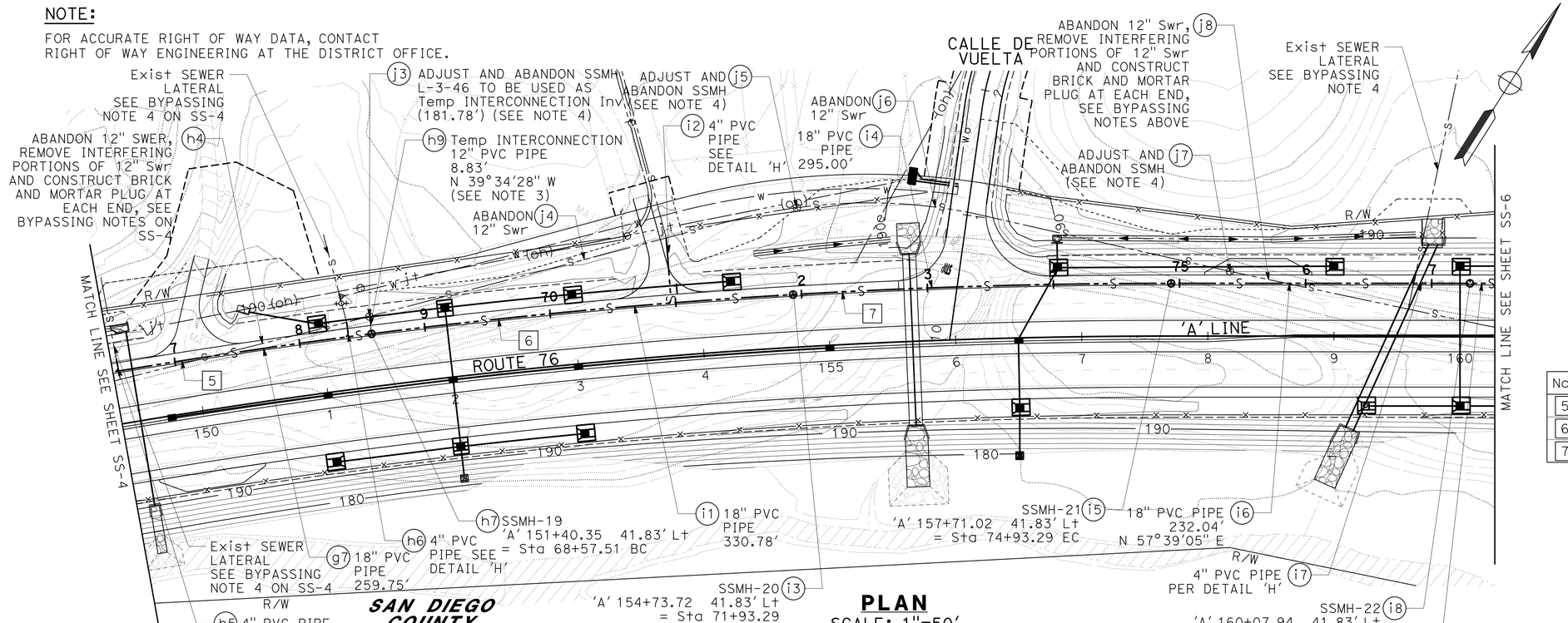

SAN DIEGO COUNTY

PLAN
SCALE: 1"=50'

APPROVED FOR SANITARY SEWER WORK ONLY

HYDRAULIC DATA				
FROM SSMH-16 TO SSMH-19				
	DIAMETER (INCH)	d/D	VELOCITY (ft/s)	SLOPE
Q PEAK-WET 1.95 CFS	18	0.40	2.95	0.0030
Q PEAK-DRY 1.33 CFS	18	0.33	2.67	0.0030
FROM SSMH-19 TO SSMH-29				
	DIAMETER (INCH)	d/D	VELOCITY (ft/s)	SLOPE
Q PEAK-WET 1.94 CFS	18	0.40	2.99	0.0030
Q PEAK-DRY 1.32 CFS	18	0.33	2.65	0.0030

CURVE DATA

No.	R	Δ	T	L
5	5041.82'	03°00'29"	132.38'	264.75'
6	5041.82'	03°48'59"	167.98'	335.78'
7	5041.82'	03°24'33"	150.05'	300.00'

SANITARY SEWER PLAN AND PROFILE
SCALE AS SHOWN

SS-5

LAST REVISION 12-31-13 | DATE PLOTTED => 20-MAR-2014 | TIME PLOTTED => 14:33

STATE OF CALIFORNIA - DEPARTMENT OF TRANSPORTATION
Caltrans
CONSULTANT FUNCTIONAL SUPERVISOR: MARK BUSH
CALCULATED-DESIGNED BY: MOLLY JEWETT
CHECKED BY: LUANNE BEAN
REVISED BY | DATE REVISED

Dist	COUNTY	ROUTE	POST MILES TOTAL PROJECT	SHEET No.	TOTAL SHEETS
11	SD	15,76	R46.2/R46.8, R12.1/R17.7	462	1273

REGISTERED CIVIL ENGINEER 01-06-14 DATE

03-24-14
PLANS APPROVAL DATE

REGISTERED PROFESSIONAL ENGINEER MARK BUSH No. C60477 Exp. 06-30-14 CIVIL STATE OF CALIFORNIA

THE STATE OF CALIFORNIA OR ITS OFFICERS OR AGENTS SHALL NOT BE RESPONSIBLE FOR THE ACCURACY OR COMPLETENESS OF SCANNED COPIES OF THIS PLAN SHEET.

TETRA TECH
17885 VON KARMAN AVE
SUITE 500
IRVINE, CA 92614

NOTES:

1. FOR TRENCH BEDDING AND BACKFILL REQUIREMENTS SEE DETAIL 'A'.
2. ALL NEW MANHOLES ARE 60" PRECAST MANHOLES UNLESS NOTED OTHERWISE, SEE DETAIL 'D'.
3. TEMPORARY INTERCONNECTION PIPE MUST BE ABANDONED PER SPECIFICATIONS AFTER ALL SEWER MAIN CONSTRUCTION IS COMPLETED. MANHOLE OUTLETS SHALL BE PLUGGED WITH BRICK AND MORTAR PLUG.
4. MAINTAIN ACCESS TO EXISTING MANHOLES AT ALL TIMES DURING INTERIM GRADING. ADJUST MANHOLE RIM ELEVATION TO GRADE PER DETAIL 'F'. EXISTING MANHOLE SHALL BE ABANDONED AFTER FLOW IS TRANSFERRED TO NEW SEWER MAIN.

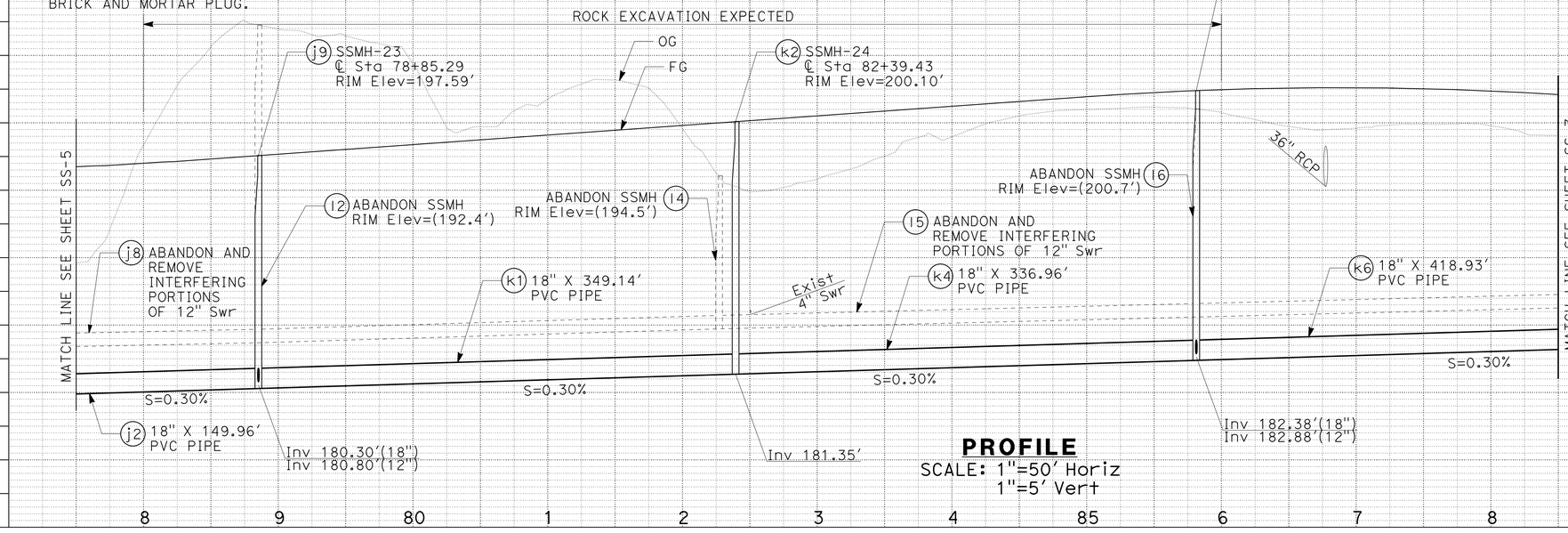

PROFILE
SCALE: 1"=50' Horiz
1"=5' Vert

BYPASSING NOTES:

MAINTAIN EXISTING SEWER FLOW AT ALL TIMES. SUBMIT PLANS FOR MAINTAINING SEWER FLOWS.

IT IS ANTICIPATED THAT TEMPORARY BYPASS PUMPING OF THE FLOW WILL BE REQUIRED. SEE PROJECT SPECIFICATIONS FOR REQUIREMENTS. THE FOLLOWING IS THE ANTICIPATED SEQUENCE:

1. CONSTRUCT MAINLINE TO SSMH-24
2. TEST PIPE AND MANHOLES
3. SET UP TEMPORARY BYPASS FROM EXISTING SSMH L-4-10 TO NEW SSMH-24
4. EXISTING LATERAL MAY BE TAKEN OUT OF SERVICE FOR ONE 8 HOUR PERIOD. CUSTOMER WILL NEED TO BE NOTIFIED TWO WEEKS IN ADVANCE. IF LATERAL CANNOT BE REINSTATED WITHIN 8 HOURS CONTRACTOR MUST BYPASS PUMP FLOWS AND MANTAIN SERVICE.
5. CONSTRUCT NEW MAIN ACROSS LOCATION OF CONFLICT TO SSMH-25
6. CONSTRUCT INTERCONNECTION AND DIVERT FLOW INTO NEW PIPE
7. REMOVE BYPASS
8. CONNECT ALL EXISTING LATERALS TO NEW SEWER MAIN
9. AFTER ALL CONSTRUCTION IS COMPLETED ABANDON INTERCONNECTION

NOTE:

FOR ACCURATE RIGHT OF WAY DATA, CONTACT RIGHT OF WAY ENGINEERING AT THE DISTRICT OFFICE.

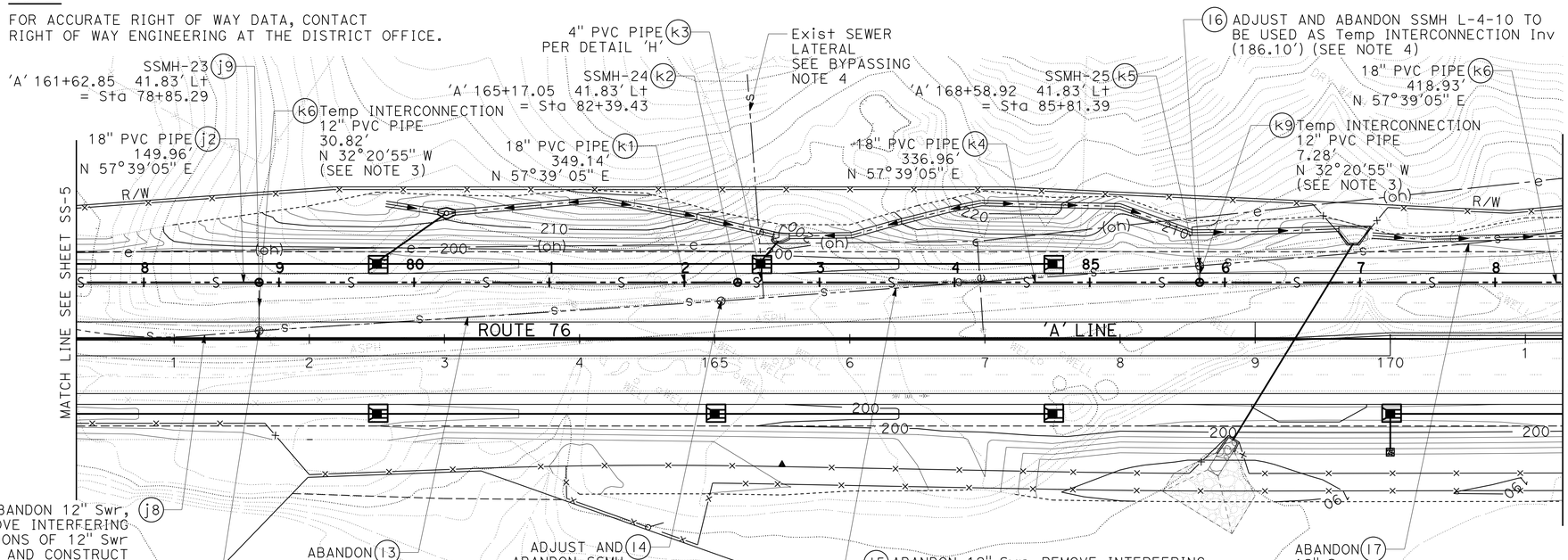

PLAN
SCALE: 1"=50'

HYDRAULIC DATA FROM SSMH-19 TO SSMH-29				
	DIAMETER (INCH)	d/D	VELOCITY (ft/s)	SLOPE
Q PEAK-WET 1.94 CFS	18	0.40	2.99	0.0030
Q PEAK-DRY 1.32 CFS	18	0.33	2.65	0.0030

APPROVED FOR SANITARY SEWER WORK ONLY

SANITARY SEWER PLAN AND PROFILE

SCALE AS SHOWN

SS-6

REVISED BY | DATE REVISED
MOLLY JEWETT | LUANNE BEAN
CALCULATED-DESIGNED BY | CHECKED BY
CONSULTANT FUNCTIONAL SUPERVISOR | MARK BUSH
STATE OF CALIFORNIA - DEPARTMENT OF TRANSPORTATION
Caltrans

LAST REVISION 12-31-13
DATE PLOTTED => 20-MAR-2014
TIME PLOTTED => 14:33

Dist	COUNTY	ROUTE	POST MILES TOTAL PROJECT	SHEET No.	TOTAL SHEETS
11	SD	15,76	R46.2/R46.8, R12.1/R17.7	463	1273

REGISTERED CIVIL ENGINEER 01-06-14 DATE

03-24-14
PLANS APPROVAL DATE

REGISTERED PROFESSIONAL ENGINEER MARK BUSH No. C60477 Exp. 06-30-14 CIVIL STATE OF CALIFORNIA

THE STATE OF CALIFORNIA OR ITS OFFICERS OR AGENTS SHALL NOT BE RESPONSIBLE FOR THE ACCURACY OR COMPLETENESS OF SCANNED COPIES OF THIS PLAN SHEET.

TETRA TECH
17885 VON KARMAN AVE
SUITE 500
IRVINE, CA 92614

NOTES:

1. FOR TRENCH BEDDING AND BACKFILL REQUIREMENTS SEE DETAIL 'A'.
2. ALL NEW MANHOLES ARE 60" PRECAST MANHOLES UNLESS NOTED OTHERWISE, SEE DETAIL 'D'.
3. TEMPORARY INTERCONNECTION PIPE MUST BE ABANDONED PER SPECIFICATIONS AFTER ALL SEWER MAIN CONSTRUCTION IS COMPLETED. MANHOLE OUTLETS SHALL BE PLUGGED WITH BRICK AND MORTAR PLUG.
4. MAINTAIN ACCESS TO EXISTING MANHOLES AT ALL TIMES DURING INTERIM GRADING. ADJUST MANHOLE RIM ELEVATION TO GRADE PER DETAIL 'F'. EXISTING MANHOLE SHALL BE ABANDONED AFTER FLOW IS TRANSFERRED TO NEW SEWER MAIN.

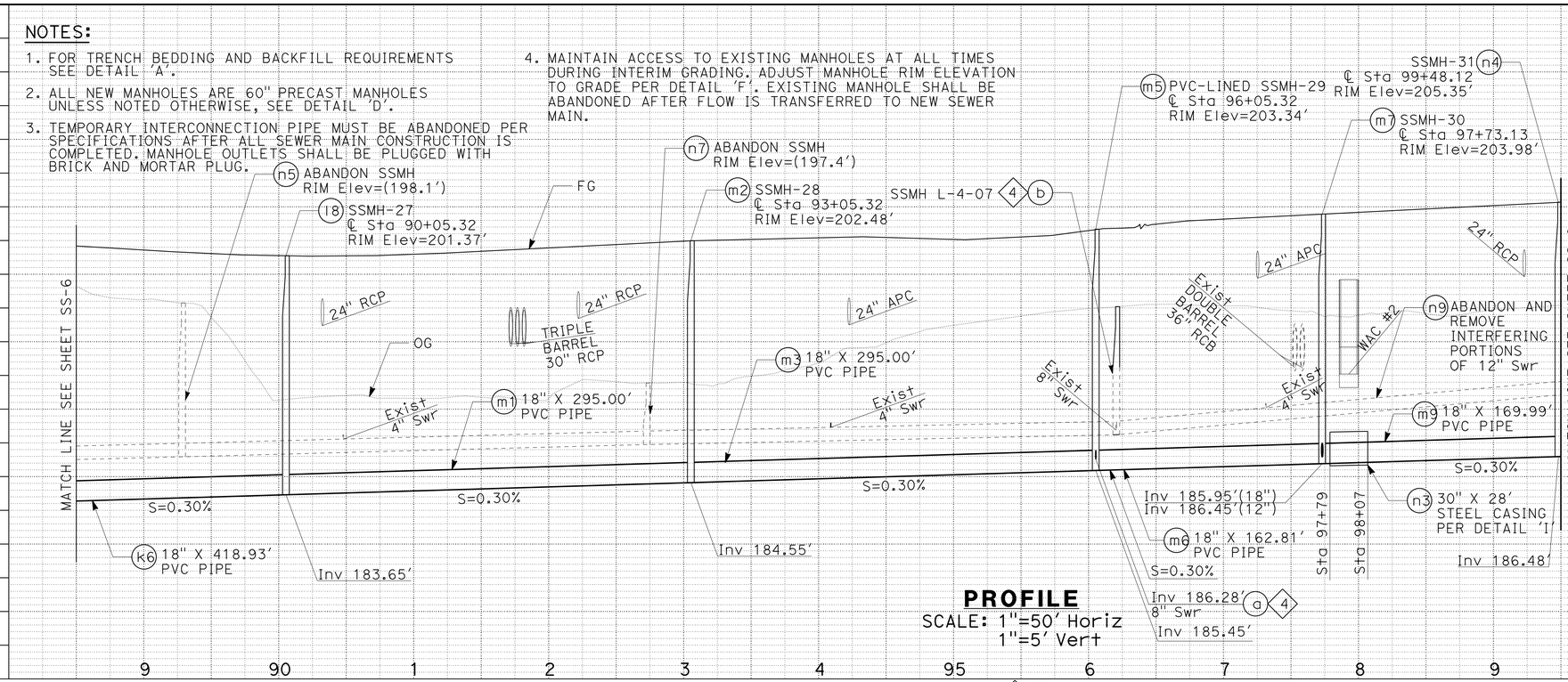

PROFILE
SCALE: 1"=50' Horiz
1"=5' Vert

BYPASSING NOTES:

MAINTAIN EXISTING SEWER FLOW AT ALL TIMES. SUBMIT PLANS FOR MAINTAINING SEWER FLOWS.

IT IS ANTICIPATED THAT TEMPORARY BYPASS PUMPING OF THE FLOW WILL BE REQUIRED. SEE PROJECT SPECIFICATIONS FOR REQUIREMENTS. THE FOLLOWING IS THE ANTICIPATED SEQUENCE:

1. CONSTRUCT MAINLINE TO SSMH-29
2. TEST PIPE AND MANHOLES
3. SET UP TEMPORARY BYPASS FROM TEMPORARY SSMH AT Sta 180+48.29 "A" 49.04' Lt TO NEW SSMH-29
4. EXISTING LATERAL MAY BE TAKEN OUT OF SERVICE FOR ONE 8 HOUR PERIOD. CUSTOMER WILL NEED TO BE NOTIFIED TWO WEEKS IN ADVANCE. IF LATERAL CANNOT BE REINSTATED WITHIN 8 HOURS CONTRACTOR MUST BYPASS PUMP FLOWS AND MANTAIN SERVICE.
5. CONSTRUCT NEW MAIN ACROSS LOCATION OF CONFLICT TO SSMH-30
6. CONSTRUCT INTERCONNECTION AND DIVERT FLOW INTO NEW PIPE
7. REMOVE BYPASS
8. CONNECT ALL EXISTING LATERALS TO NEW SEWER MAIN
9. AFTER ALL CONSTRUCTION IS COMPLETED ABANDON INTERCONNECTION

NOTE:

FOR ACCURATE RIGHT OF WAY DATA, CONTACT RIGHT OF WAY ENGINEERING AT THE DISTRICT OFFICE.

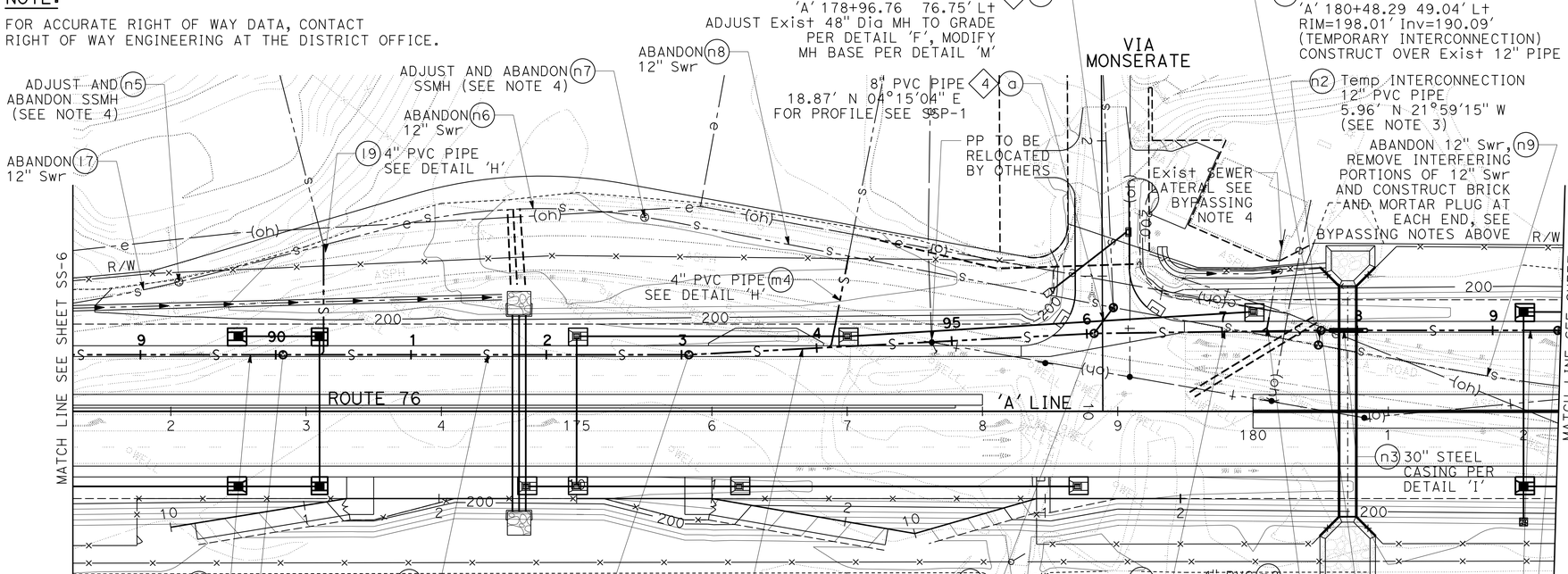

PLAN
SCALE: 1"=50'

HYDRAULIC DATA				
FROM SSMH-19 TO SSMH-29				
	DIAMETER (INCH)	d/D	VELOCITY (ft/s)	SLOPE
Q PEAK-WET 1.94 CFS	18	0.40	2.99	0.0030
Q PEAK-DRY 1.32 CFS	18	0.33	2.65	0.0030
FROM SSMH-29 TO SSMH-32				
	DIAMETER (INCH)	d/D	VELOCITY (ft/s)	SLOPE
Q PEAK-WET 1.93 CFS	18	0.40	2.97	0.0030
Q PEAK-DRY 1.31 CFS	18	0.32	2.69	0.0030

SAN DIEGO COUNTY

APPROVED FOR SANITARY SEWER WORK ONLY

SANITARY SEWER PLAN AND PROFILE

SCALE AS SHOWN

SS-7

REVISED BY | DATE REVISED
MOLLY JEWETT | LUANNE BEAN
CALCULATED-DESIGNED BY | CHECKED BY
CONSULTANT FUNCTIONAL SUPERVISOR: MARK BUSH
STATE OF CALIFORNIA - DEPARTMENT OF TRANSPORTATION
Caltrans

LAST REVISION 12-31-13 | DATE PLOTTED => 20-MAR-2014 | TIME PLOTTED => 14:33

Dist	COUNTY	ROUTE	POST MILES TOTAL PROJECT	SHEET No.	TOTAL SHEETS
11	SD	15,76	R46.2/R46.8, R12.1/R17.7	464	1273

REGISTERED CIVIL ENGINEER 01-06-14 DATE

03-24-14
PLANS APPROVAL DATE

REGISTERED PROFESSIONAL ENGINEER MARK BUSH No. C60477 Exp. 06-30-14 CIVIL STATE OF CALIFORNIA

THE STATE OF CALIFORNIA OR ITS OFFICERS OR AGENTS SHALL NOT BE RESPONSIBLE FOR THE ACCURACY OR COMPLETENESS OF SCANNED COPIES OF THIS PLAN SHEET.

TETRA TECH
17885 VON KARMAN AVE
SUITE 500
IRVINE, CA 92614

NOTES:

1. FOR TRENCH BEDDING AND BACKFILL REQUIREMENTS SEE DETAIL 'A'.
2. ALL NEW MANHOLES ARE 60" PRECAST MANHOLES UNLESS NOTED OTHERWISE, SEE DETAIL 'D'.
3. MAINTAIN ACCESS TO EXISTING MANHOLES AT ALL TIMES DURING INTERIM GRADING. ADJUST MANHOLE RIM ELEVATION TO GRADE PER DETAIL 'F'. EXISTING MANHOLE SHALL BE ABANDONED AFTER FLOW IS TRANSFERRED TO NEW SEWER MAIN.

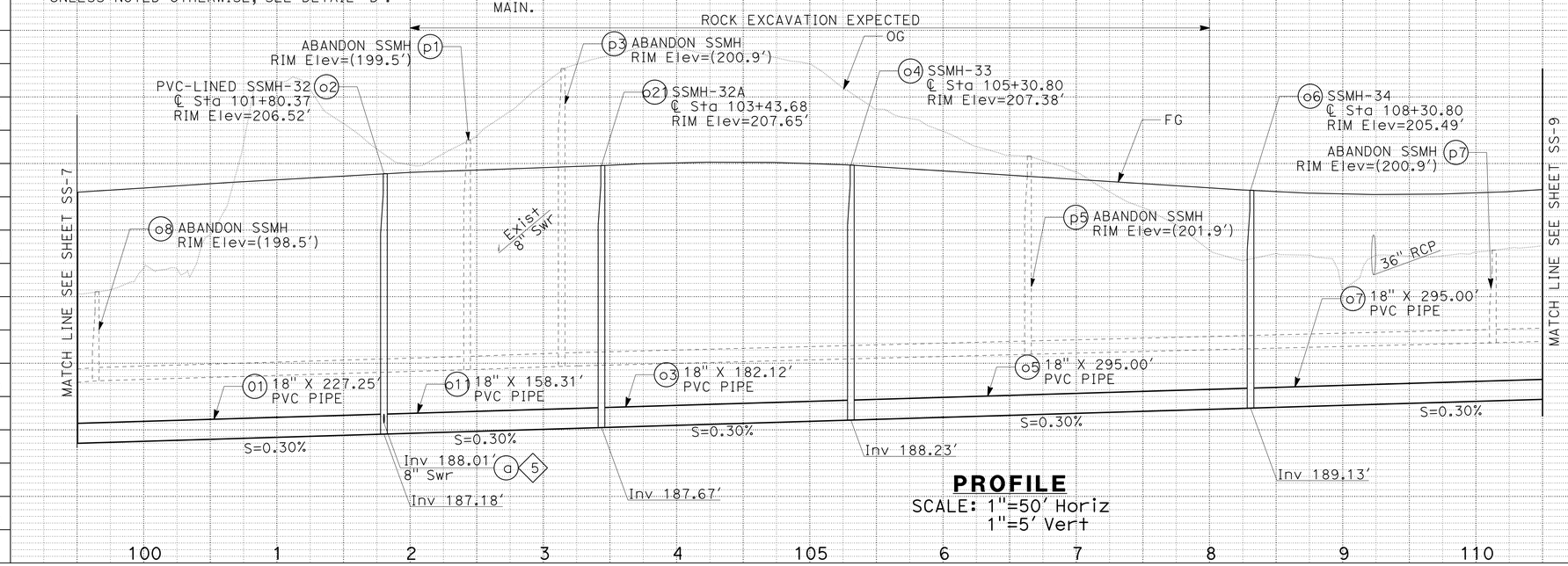

PROFILE
SCALE: 1"=50' Horiz
1"=5' Vert

NOTE:

FOR ACCURATE RIGHT OF WAY DATA, CONTACT RIGHT OF WAY ENGINEERING AT THE DISTRICT OFFICE.

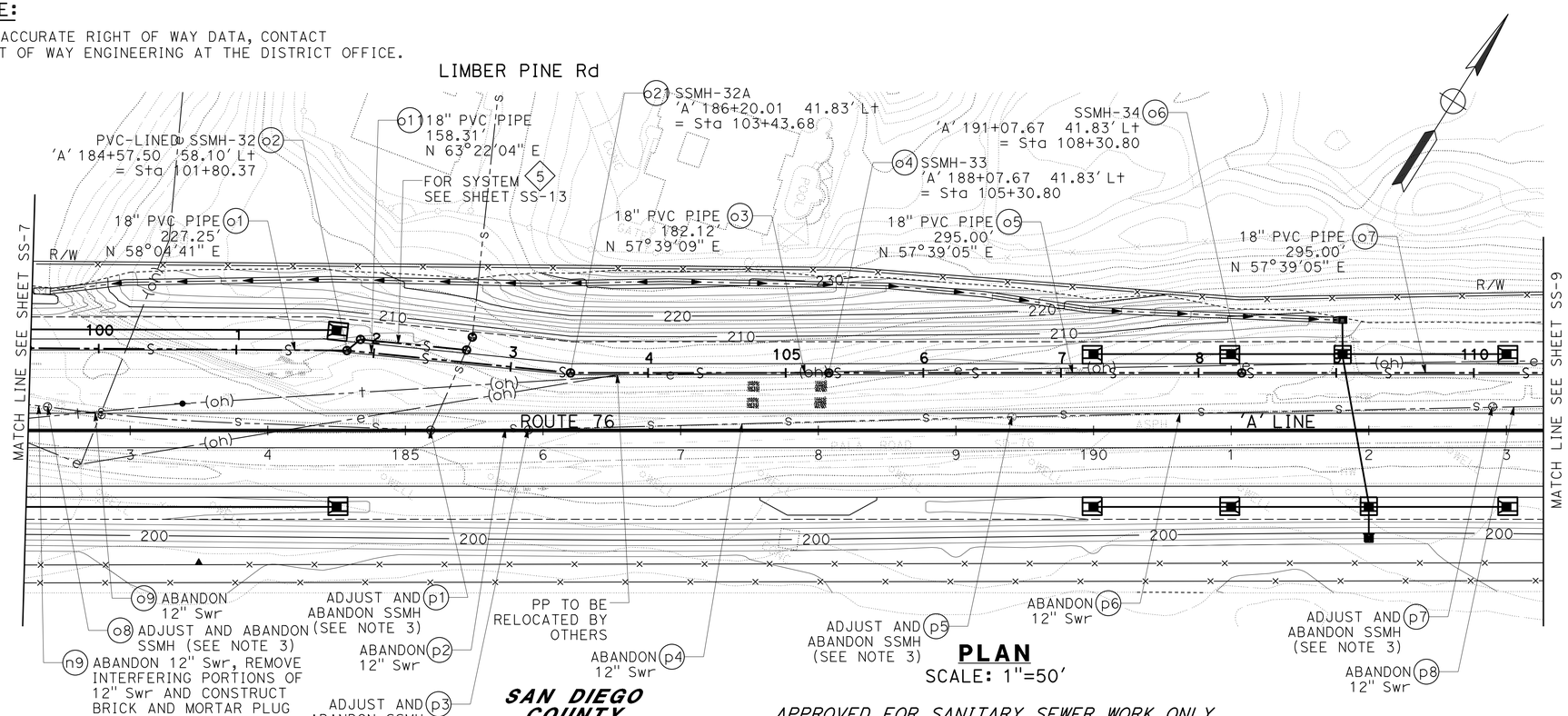

PLAN
SCALE: 1"=50'

APPROVED FOR SANITARY SEWER WORK ONLY

HYDRAULIC DATA				
FROM SSMH-29 TO SSMH-32				
	DIAMETER (INCH)	d/D	VELOCITY (ft/s)	SLOPE
Q PEAK-WET 1.93 CFS	18	0.40	2.97	0.0030
Q PEAK-DRY 1.31 CFS	18	0.32	2.69	0.0030
FROM SSMH-32 TO SSMH-36				
	DIAMETER (INCH)	d/D	VELOCITY (ft/s)	SLOPE
Q PEAK-WET 1.90 CFS	18	0.40	2.93	0.0030
Q PEAK-DRY 1.29 CFS	18	0.32	2.65	0.0030

SANITARY SEWER PLAN AND PROFILE

SCALE AS SHOWN

SS-8

REVISED BY | DATE REVISED
MOLLY JEWETT | LUANNE BEAN
CALCULATED-DESIGNED BY | CHECKED BY
CONSULTANT FUNCTIONAL SUPERVISOR | MARK BUSH
STATE OF CALIFORNIA - DEPARTMENT OF TRANSPORTATION
Caltrans

LAST REVISION 12-31-13 | DATE PLOTTED => 20-MAR-2014 | TIME PLOTTED => 14:33

Dist	COUNTY	ROUTE	POST MILES TOTAL PROJECT	SHEET No.	TOTAL SHEETS
11	SD	15,76	R46.2/R46.8, R12.1/R17.7	465	1273

REGISTERED CIVIL ENGINEER DATE 01-06-14

PLANS APPROVAL DATE 03-24-14

REGISTERED PROFESSIONAL ENGINEER MARK BUSH No. C60477 Exp. 06-30-14 CIVIL STATE OF CALIFORNIA

THE STATE OF CALIFORNIA OR ITS OFFICERS OR AGENTS SHALL NOT BE RESPONSIBLE FOR THE ACCURACY OR COMPLETENESS OF SCANNED COPIES OF THIS PLAN SHEET.

TETRA TECH
17885 VON KARMAN AVE
SUITE 500
IRVINE, CA 92614

NOTES:

1. FOR TRENCH BEDDING AND BACKFILL REQUIREMENTS SEE DETAIL 'A'.
2. ALL NEW MANHOLES ARE 60" PRECAST MANHOLES UNLESS NOTED OTHERWISE, SEE DETAIL 'D'.
3. TEMPORARY INTERCONNECTION PIPE MUST BE ABANDONED PER SPECIFICATIONS AFTER ALL SEWER MAIN CONSTRUCTION IS COMPLETED. UPSTREAM MANHOLE SHALL BE PLUGGED WITH BRICK AND MORTAR PLUG.
4. MAINTAIN ACCESS TO EXISTING MANHOLES AT ALL TIMES DURING INTERIM GRADING. ADJUST MANHOLE RIM ELEVATION TO GRADE PER DETAIL 'F'. EXISTING MANHOLE SHALL BE ABANDONED AFTER FLOW IS TRANSFERRED TO NEW SEWER MAIN.

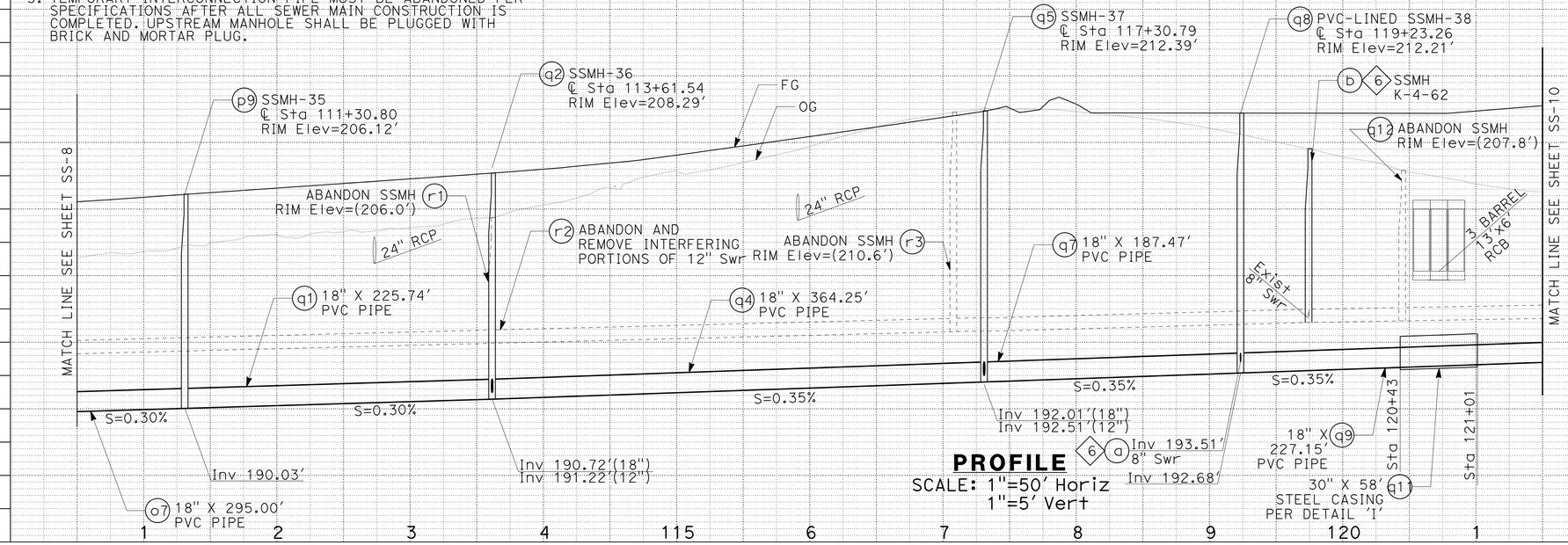

PROFILE
SCALE: 1"=50' Horiz
1"=5' Vert

BYPASSING NOTES:

MAINTAIN EXISTING SEWER FLOW AT ALL TIMES. SUBMIT PLANS FOR MAINTAINING SEWER FLOWS.

IT IS ANTICIPATED THAT TEMPORARY BYPASS PUMPING OF THE FLOW WILL BE REQUIRED. SEE PROJECT SPECIFICATIONS FOR REQUIREMENTS. THE FOLLOWING IS THE ANTICIPATED SEQUENCE:

1. CONSTRUCT MAINLINE TO SSMH-36
2. TEST PIPE AND MANHOLES
3. SET UP TEMPORARY BYPASS FROM EXISTING SSMH K-4-54 TO NEW SSMH-36
4. CONSTRUCT NEW MAIN ACROSS LOCATION OF CONFLICT TO SSMH-37
5. CONSTRUCT INTERCONNECTION AND DIVERT FLOW INTO NEW PIPE
6. REMOVE BYPASS
7. CONNECT ALL EXISTING LATERALS TO NEW SEWER MAIN
8. AFTER ALL CONSTRUCTION IS COMPLETED ABANDON INTERCONNECTION

NOTE:

FOR ACCURATE RIGHT OF WAY DATA, CONTACT RIGHT OF WAY ENGINEERING AT THE DISTRICT OFFICE.

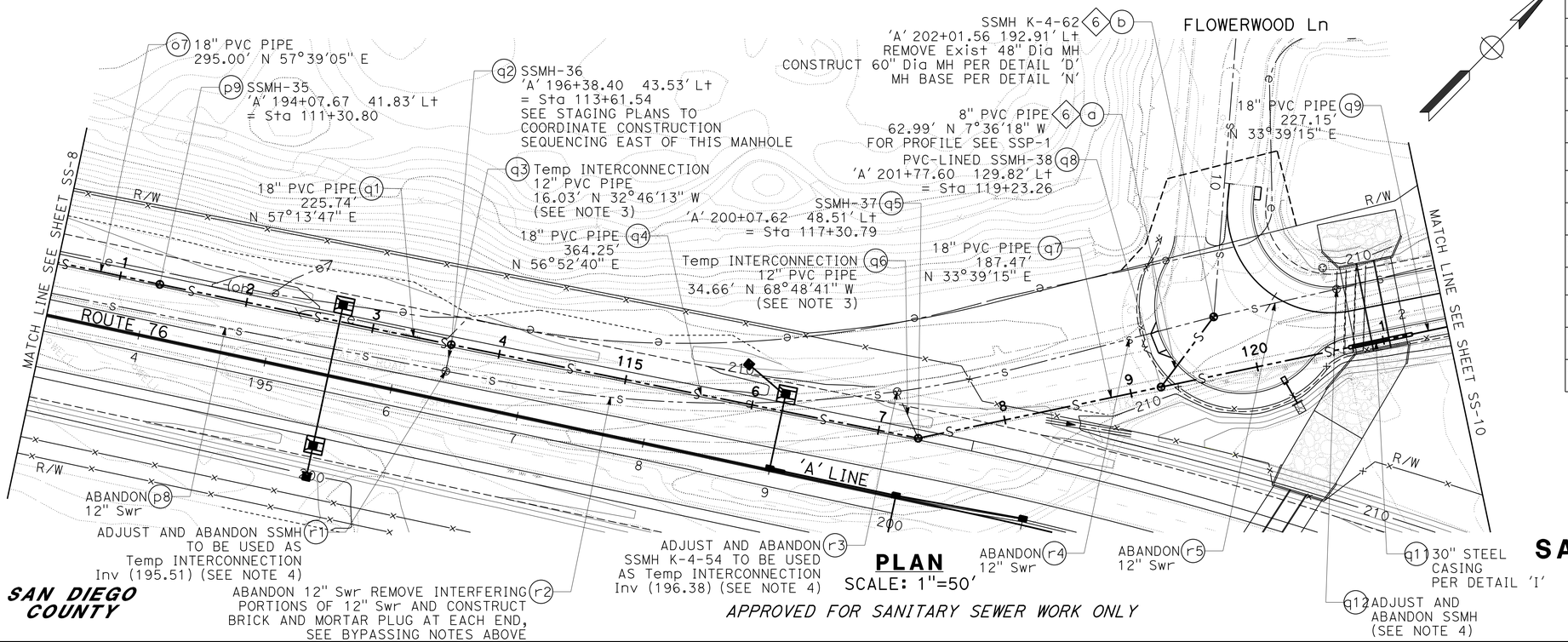

PLAN
SCALE: 1"=50'

APPROVED FOR SANITARY SEWER WORK ONLY

HYDRAULIC DATA				
FROM SSMH-32 TO SSMH-36				
	DIAMETER (INCH)	d/D	VELOCITY (ft/s)	SLOPE
Q PEAK-WET 1.90 CFS	18	0.40	2.93	0.0030
Q PEAK-DRY 1.29 CFS	18	0.32	2.65	0.0030
FROM SSMH-36 TO SSMH-38				
	DIAMETER (INCH)	d/D	VELOCITY (ft/s)	SLOPE
Q PEAK-WET 1.90 CFS	18	0.38	3.14	0.0035
Q PEAK-DRY 1.29 CFS	18	0.31	2.83	0.0035
FROM SSMH-38 TO SSMH-42				
	DIAMETER (INCH)	d/D	VELOCITY (ft/s)	SLOPE
Q PEAK-WET 1.78 CFS	18	0.37	3.05	0.0035
Q PEAK-DRY 1.18 CFS	18	0.30	2.71	0.0035

SANITARY SEWER PLAN AND PROFILE

SCALE AS SHOWN

SS-9

SAN DIEGO COUNTY

STATE OF CALIFORNIA - DEPARTMENT OF TRANSPORTATION

Caltrans

CONSULTANT FUNCTIONAL SUPERVISOR: MARK BUSH

CALCULATED-DESIGNED BY: MOLLY JEWETT

CHECKED BY: LUANNE BEAN

REVISED BY / DATE REVISED

LAST REVISION 12-31-13

DATE PLOTTED => 20-MAR-2014
TIME PLOTTED => 14:33

Dist	COUNTY	ROUTE	POST MILES TOTAL PROJECT	SHEET No.	TOTAL SHEETS
11	SD	15,76	R46.2/R46.8, R12.1/R17.7	466	1273

REGISTERED CIVIL ENGINEER 01-06-14 DATE

03-24-14
PLANS APPROVAL DATE

REGISTERED PROFESSIONAL ENGINEER MARK BUSH No. C60477 Exp. 06-30-14 CIVIL STATE OF CALIFORNIA

THE STATE OF CALIFORNIA OR ITS OFFICERS OR AGENTS SHALL NOT BE RESPONSIBLE FOR THE ACCURACY OR COMPLETENESS OF SCANNED COPIES OF THIS PLAN SHEET.

TETRA TECH
17885 VON KARMAN AVE
SUITE 500
IRVINE, CA 92614

NOTES:

1. FOR TRENCH BEDDING AND BACKFILL REQUIREMENTS SEE DETAIL 'A'.
2. ALL NEW MANHOLES ARE 60" PRECAST MANHOLES UNLESS NOTED OTHERWISE, SEE DETAIL 'D'.
3. MAINTAIN ACCESS TO EXISTING MANHOLES AT ALL TIMES DURING INTERIM GRADING. ADJUST MANHOLE RIM ELEVATION TO GRADE PER DETAIL 'F'. EXISTING MANHOLE SHALL BE ABANDONED AFTER FLOW IS TRANSFERRED TO NEW SEWER MAIN.

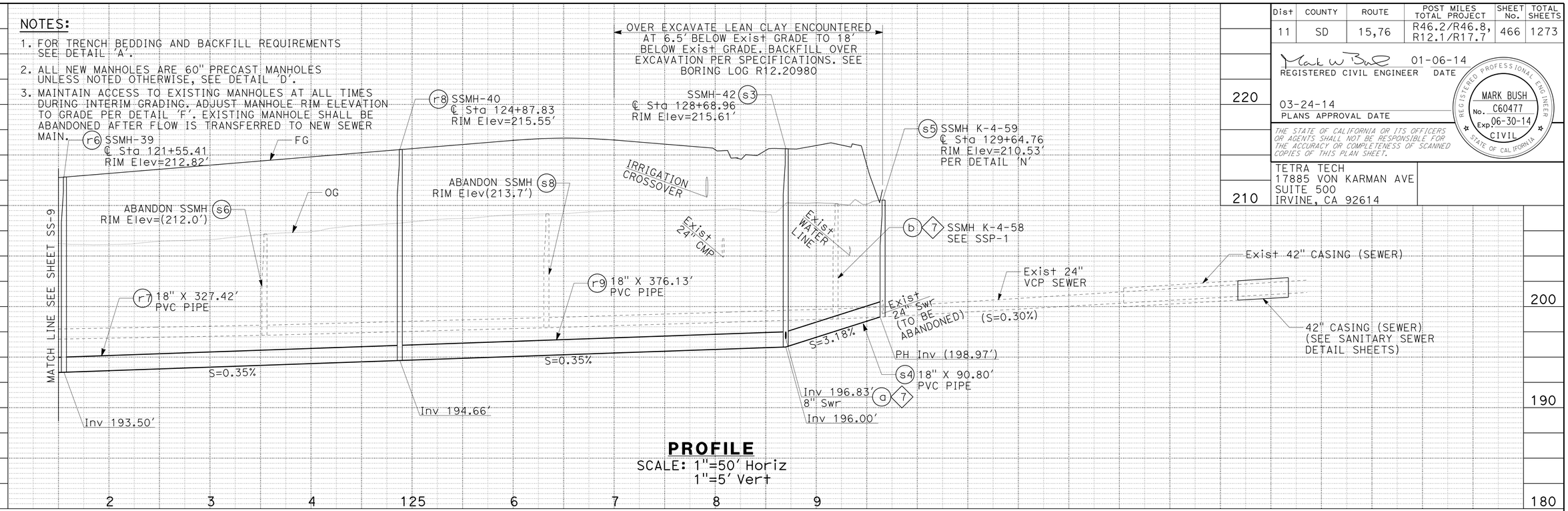

PROFILE
SCALE: 1"=50' Horiz
1"=5' Vert

NOTE:

FOR ACCURATE RIGHT OF WAY DATA, CONTACT RIGHT OF WAY ENGINEERING AT THE DISTRICT OFFICE.

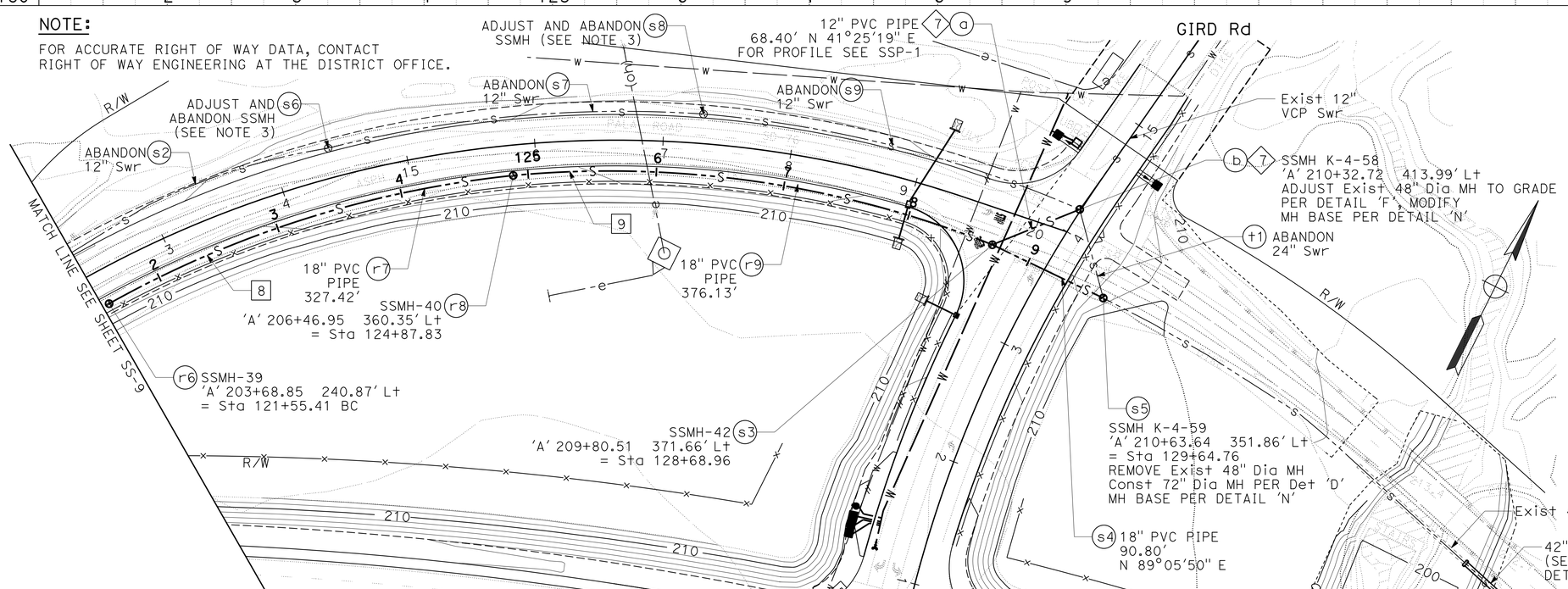

PLAN
SCALE: 1"=50'

APPROVED FOR SANITARY SEWER WORK ONLY

HYDRAULIC DATA

FROM SSMH-38 TO SSMH-42

	DIAMETER (INCH)	d/D	VELOCITY (ft/s)	SLOPE
Q PEAK-WET 1.78 CFS	18	0.37	3.05	0.0035
Q PEAK-DRY 1.18 CFS	18	0.30	2.71	0.0035

FROM SSMH-42 TO MH K-4-59

	DIAMETER (INCH)	d/D	VELOCITY (ft/s)	SLOPE
Q PEAK-WET 1.41 CFS	18	0.19	6.27	0.0318
Q PEAK-DRY 0.92 CFS	18	0.15	5.53	0.0318

CURVE DATA

No.	R	Δ	T	L
8	820.00'	23°13'40"	168.52'	332.42'
9	804.01'	27°07'17"	193.93'	381.13'

SANITARY SEWER PLAN AND PROFILE

SCALE AS SHOWN

SS-10

STATE OF CALIFORNIA - DEPARTMENT OF TRANSPORTATION
Caltrans

CONSULTANT FUNCTIONAL SUPERVISOR: MARK BUSH
CALCULATED-DESIGNED BY: MOLLY JEWETT
CHECKED BY: LUANNE BEAN
REVISED BY
DATE REVISED

LAST REVISION 12-31-13
DATE PLOTTED => 20-MAR-2014
TIME PLOTTED => 14:33

Dist	COUNTY	ROUTE	POST MILES TOTAL PROJECT	SHEET No.	TOTAL SHEETS
11	SD	15,76	R46.2/R46.8, R12.1/R17.7	467	1273

REGISTERED CIVIL ENGINEER 01-06-14 DATE

03-24-14
PLANS APPROVAL DATE

REGISTERED PROFESSIONAL ENGINEER MARK BUSH No. C60477 Exp. 06-30-14 CIVIL STATE OF CALIFORNIA

THE STATE OF CALIFORNIA OR ITS OFFICERS OR AGENTS SHALL NOT BE RESPONSIBLE FOR THE ACCURACY OR COMPLETENESS OF SCANNED COPIES OF THIS PLAN SHEET.

TETRA TECH
17885 VON KARMAN AVE
SUITE 500
IRVINE, CA 92614

NOTES:

1. FOR TRENCH BEDDING AND BACKFILL REQUIREMENTS SEE DETAIL 'A'.
2. ALL NEW MANHOLES ARE 60" PRECAST MANHOLES UNLESS NOTED OTHERWISE, SEE DETAIL 'D'.
3. MAINTAIN ACCESS TO EXISTING MANHOLES AT ALL TIMES DURING INTERIM GRADING. ADJUST MANHOLE RIM ELEVATION TO GRADE PER DETAIL 'F'. EXISTING MANHOLE SHALL BE ABANDONED AFTER FLOW IS TRANSFERRED TO NEW SEWER MAIN.

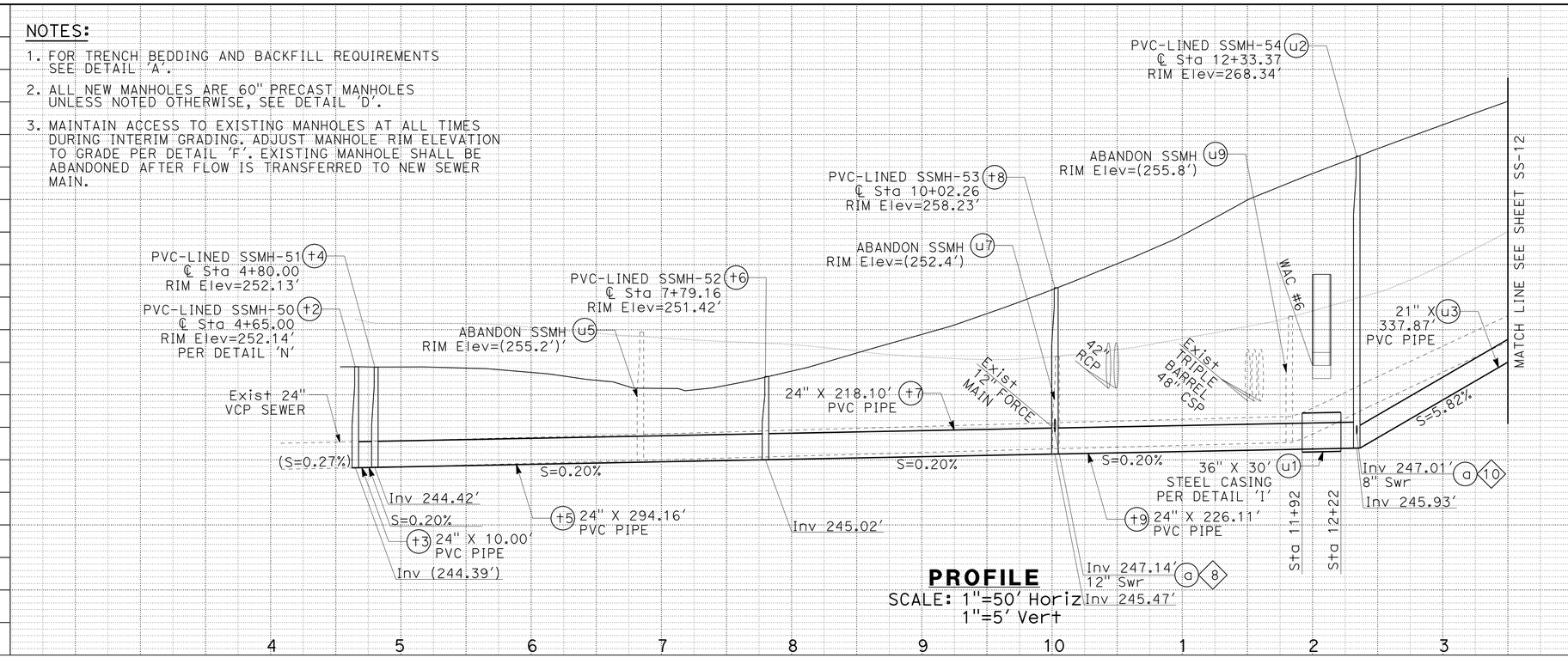

PROFILE
SCALE: 1"=50' Horiz
1"=5' Vert

NOTE:

FOR ACCURATE RIGHT OF WAY DATA, CONTACT RIGHT OF WAY ENGINEERING AT THE DISTRICT OFFICE.

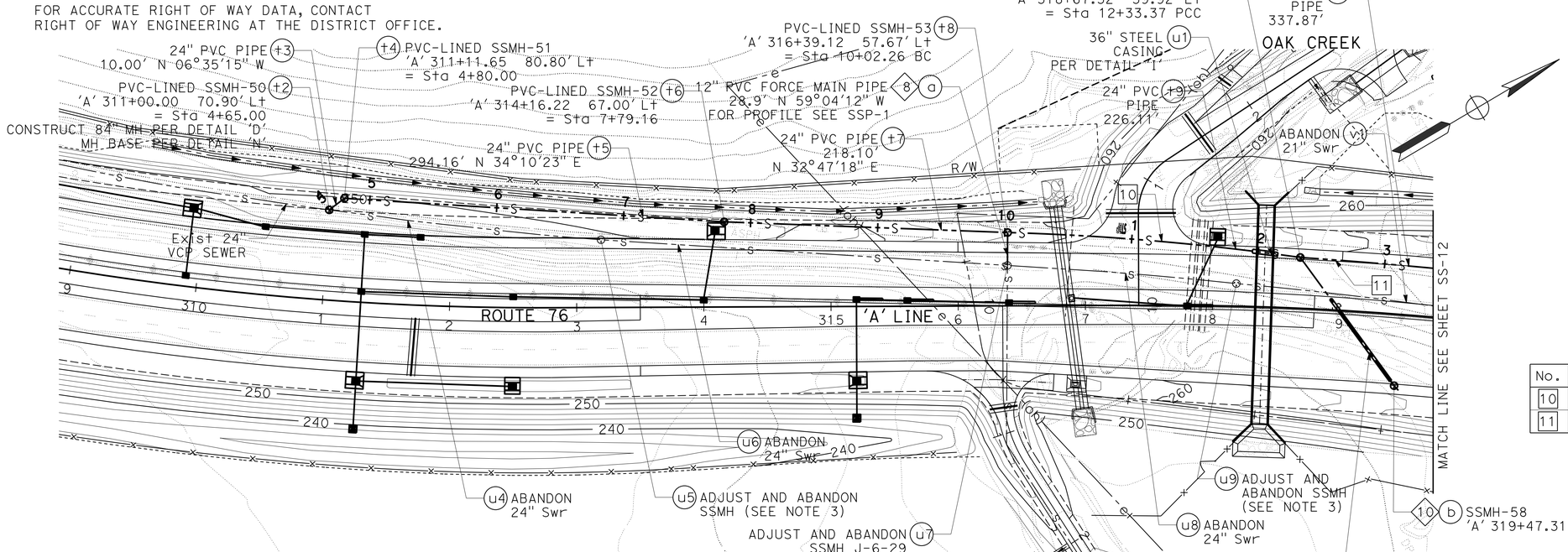

PLAN
SCALE: 1"=50'

APPROVED FOR SANITARY SEWER WORK ONLY

HYDRAULIC DATA				
FROM SSMH-50 TO SSMH-54				
	DIAMETER (INCH)	d/D	VELOCITY (ft/s)	SLOPE
Q PEAK-WET 1.41 CFS	24	0.25	2.30	0.0020
Q PEAK-DRY 0.92 CFS	24	0.20	2.06	0.0020
FROM SSMH-54 TO SSMH-55				
	DIAMETER (INCH)	d/D	VELOCITY (ft/s)	SLOPE
Q PEAK-WET 1.41 CFS	21	0.13	7.67	0.0582
Q PEAK-DRY 0.92 CFS	21	0.11	6.84	0.0582

CURVE DATA

No.	R	Δ	T	L
10	2068.07'	06°24'11"	115.68'	231.11'
11	4271.52'	04°35'57"	171.53'	342.87'

SANITARY SEWER PLAN AND PROFILE

SCALE AS SHOWN

SS-11

STATE OF CALIFORNIA - DEPARTMENT OF TRANSPORTATION
Caltrans
CONSULTANT FUNCTIONAL SUPERVISOR: MARK BUSH
CALCULATED-DESIGNED BY: MOLLY JEWETT
CHECKED BY: LUANNE BEAN
REVISED BY
DATE REVISED

LAST REVISION 12-31-13
DATE PLOTTED => 20-MAR-2014
TIME PLOTTED => 14:33

Dist	COUNTY	ROUTE	POST MILES TOTAL PROJECT	SHEET No.	TOTAL SHEETS
11	SD	15,76	R46.2/R46.8, R12.1/R17.7	468	1273

REGISTERED CIVIL ENGINEER 01-06-14 DATE

03-24-14
PLANS APPROVAL DATE

REGISTERED PROFESSIONAL ENGINEER MARK BUSH No. C60477 Exp. 06-30-14 CIVIL STATE OF CALIFORNIA

THE STATE OF CALIFORNIA OR ITS OFFICERS OR AGENTS SHALL NOT BE RESPONSIBLE FOR THE ACCURACY OR COMPLETENESS OF SCANNED COPIES OF THIS PLAN SHEET.

TETRA TECH
17885 VON KARMAN AVE
SUITE 500
IRVINE, CA 92614

NOTES:

1. FOR TRENCH BEDDING AND BACKFILL REQUIREMENTS SEE DETAIL 'A'.
2. ALL NEW MANHOLES ARE 60" PRECAST MANHOLES UNLESS NOTED OTHERWISE, SEE DETAIL 'D'.
3. MAINTAIN ACCESS TO EXISTING MANHOLES AT ALL TIMES DURING INTERIM GRADING. ADJUST MANHOLE RIM ELEVATION TO GRADE PER DETAIL 'F'. EXISTING MANHOLE SHALL BE ABANDONED AFTER FLOW IS TRANSFERRED TO NEW SEWER MAIN.

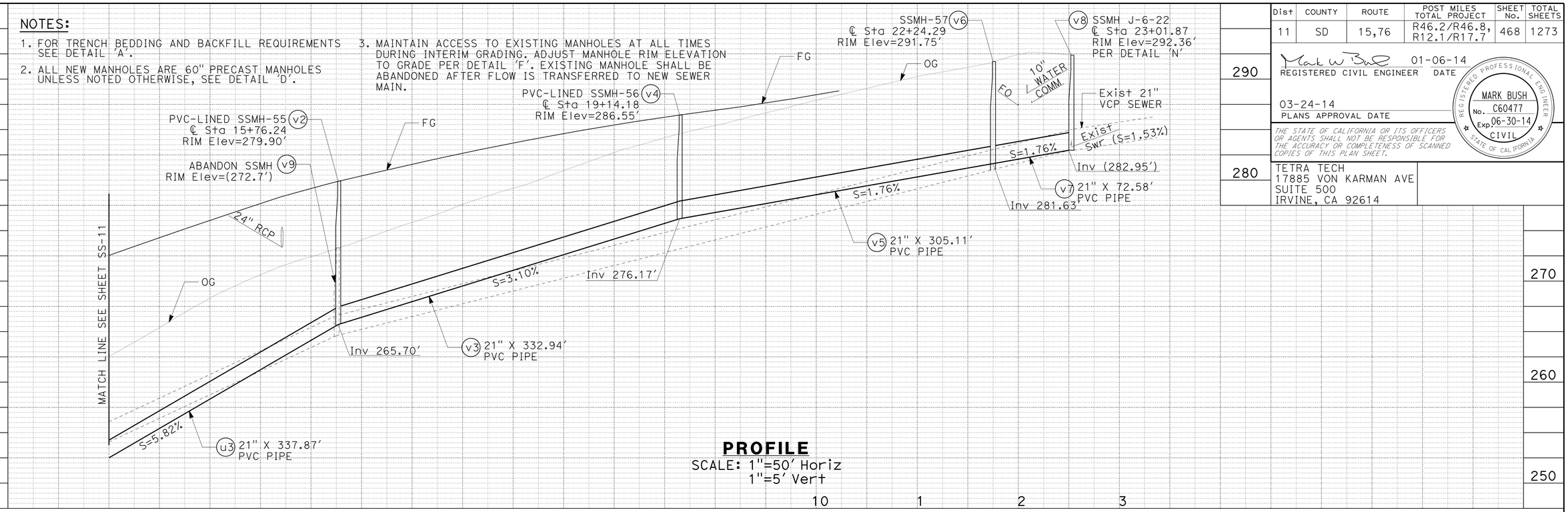

PROFILE
SCALE: 1"=50' Horiz
1"=5' Vert

NOTE:

FOR ACCURATE RIGHT OF WAY DATA, CONTACT RIGHT OF WAY ENGINEERING AT THE DISTRICT OFFICE.

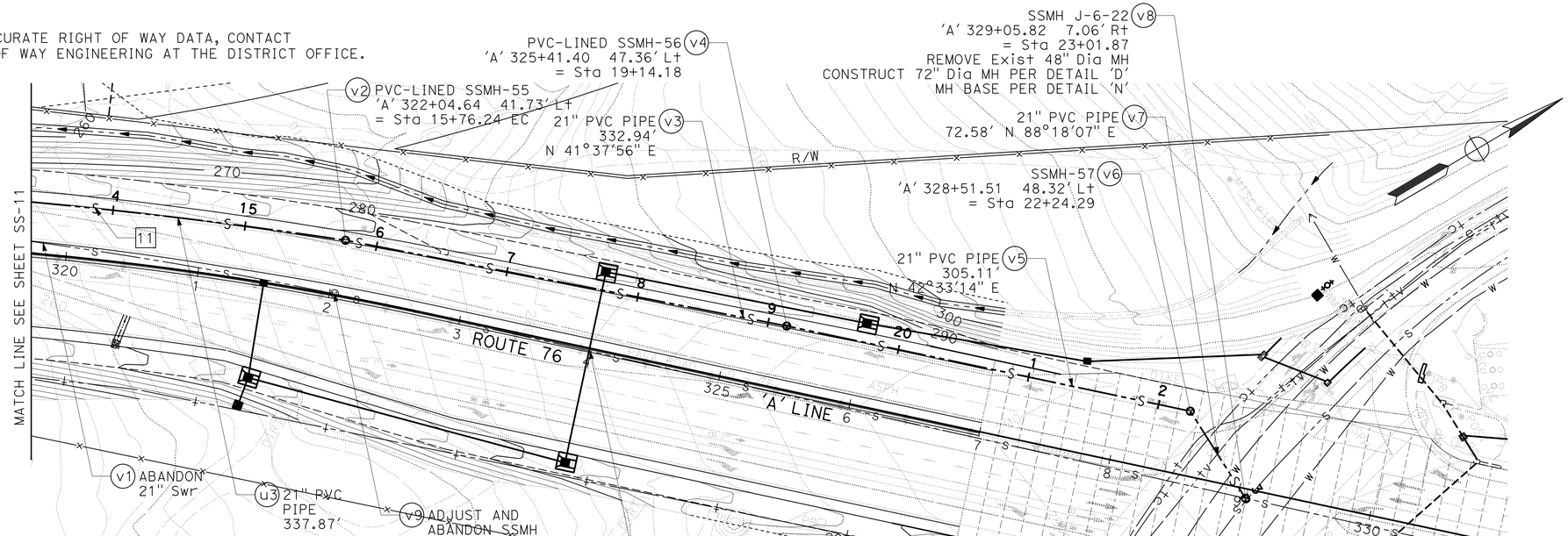

PLAN
SCALE: 1"=50'

CURVE DATA

No.	R	Δ	T	L
11	4271.52'	04°35'57"	171.53'	342.87'

APPROVED FOR SANITARY SEWER WORK ONLY

HYDRAULIC DATA

FROM SSMH-54 TO SSMH-55				
	DIAMETER (INCH)	d/D	VELOCITY (ft/s)	SLOPE
Q PEAK-WET 1.41 CFS	21	0.13	7.67	0.0582
Q PEAK-DRY 0.92 CFS	21	0.11	6.84	0.0582
FROM SSMH-55 TO SSMH-56				
	DIAMETER (INCH)	d/D	VELOCITY (ft/s)	SLOPE
Q PEAK-WET 1.41 CFS	21	0.15	6.23	0.0310
Q PEAK-DRY 0.92 CFS	21	0.12	5.63	0.0310
FROM SSMH-56 TO SSMH J-6-22				
	DIAMETER (INCH)	d/D	VELOCITY (ft/s)	SLOPE
Q PEAK-WET 1.41 CFS	21	0.18	4.99	0.0176
Q PEAK-DRY 0.92 CFS	21	0.14	4.50	0.0176

SANITARY SEWER PLAN AND PROFILE

SCALE AS SHOWN

SS-12

REVISED BY | DATE REVISED
MOLLY JEWETT | LUANNE BEAN
CALCULATED-DESIGNED BY | CHECKED BY
CONSULTANT FUNCTIONAL SUPERVISOR | MARK BUSH
STATE OF CALIFORNIA - DEPARTMENT OF TRANSPORTATION
Caltrans

LAST REVISION 12-31-13 | DATE PLOTTED => 20-MAR-2014 | TIME PLOTTED => 14:33

Dist	COUNTY	ROUTE	POST MILES TOTAL PROJECT	SHEET No.	TOTAL SHEETS
11	SD	15,76	R46.2/R46.8, R12.1/R17.7	469	1273

REGISTERED CIVIL ENGINEER 01-06-14 DATE

03-24-14
PLANS APPROVAL DATE

REGISTERED PROFESSIONAL ENGINEER MARK BUSH No. C60477 Exp. 06-30-14 CIVIL STATE OF CALIFORNIA

THE STATE OF CALIFORNIA OR ITS OFFICERS OR AGENTS SHALL NOT BE RESPONSIBLE FOR THE ACCURACY OR COMPLETENESS OF SCANNED COPIES OF THIS PLAN SHEET.

TETRA TECH
17885 VON KARMAN AVE
SUITE 500
IRVINE, CA 92614

NOTES:

1. FOR TRENCH BEDDING AND BACKFILL REQUIREMENTS SEE DETAIL 'A'.
2. ALL NEW MANHOLES ARE 60" PRECAST MANHOLES, SEE DETAIL 'D' UNLESS NOTED OTHERWISE.
3. MAINTAIN ACCESS TO EXISTING MANHOLES AT ALL TIMES DURING INTERIM GRADING. ADJUST MANHOLE RIM ELEVATION TO GRADE PER DETAIL 'F'. EXISTING MANHOLE SHALL BE ABANDONED AFTER FLOW IS TRANSFERRED TO NEW SEWER MAIN.

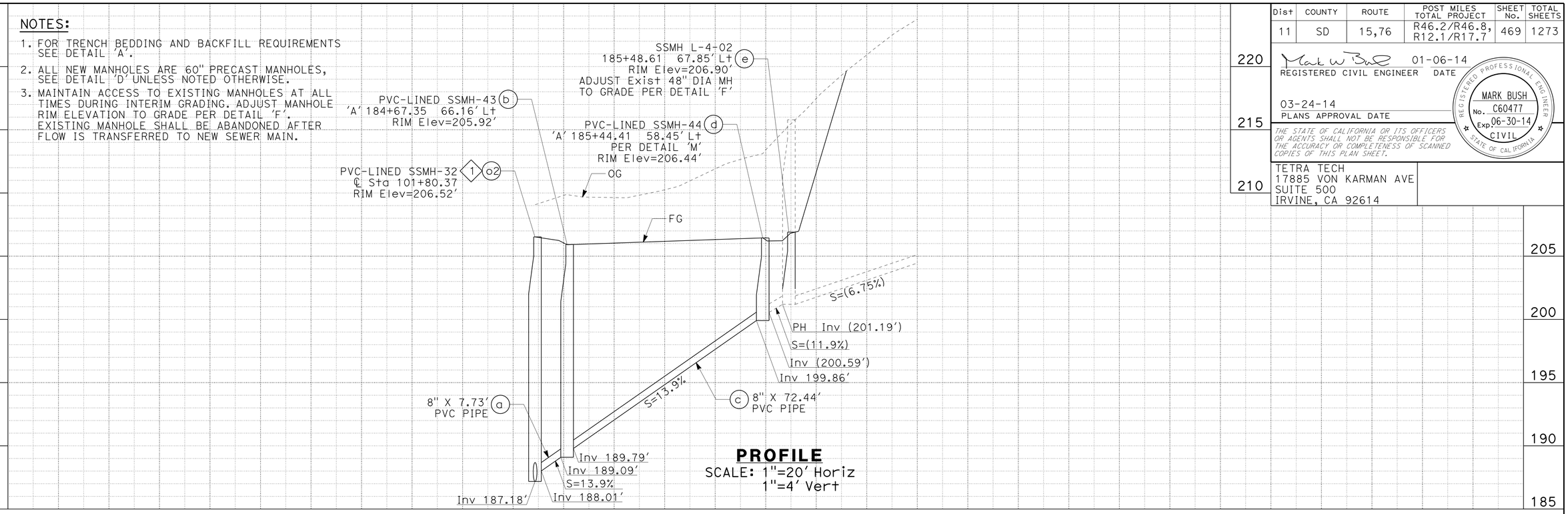

PROFILE
SCALE: 1"=20' Horiz
1"=4' Vert

NOTE:

FOR ACCURATE RIGHT OF WAY DATA, CONTACT RIGHT OF WAY ENGINEERING AT THE DISTRICT OFFICE.

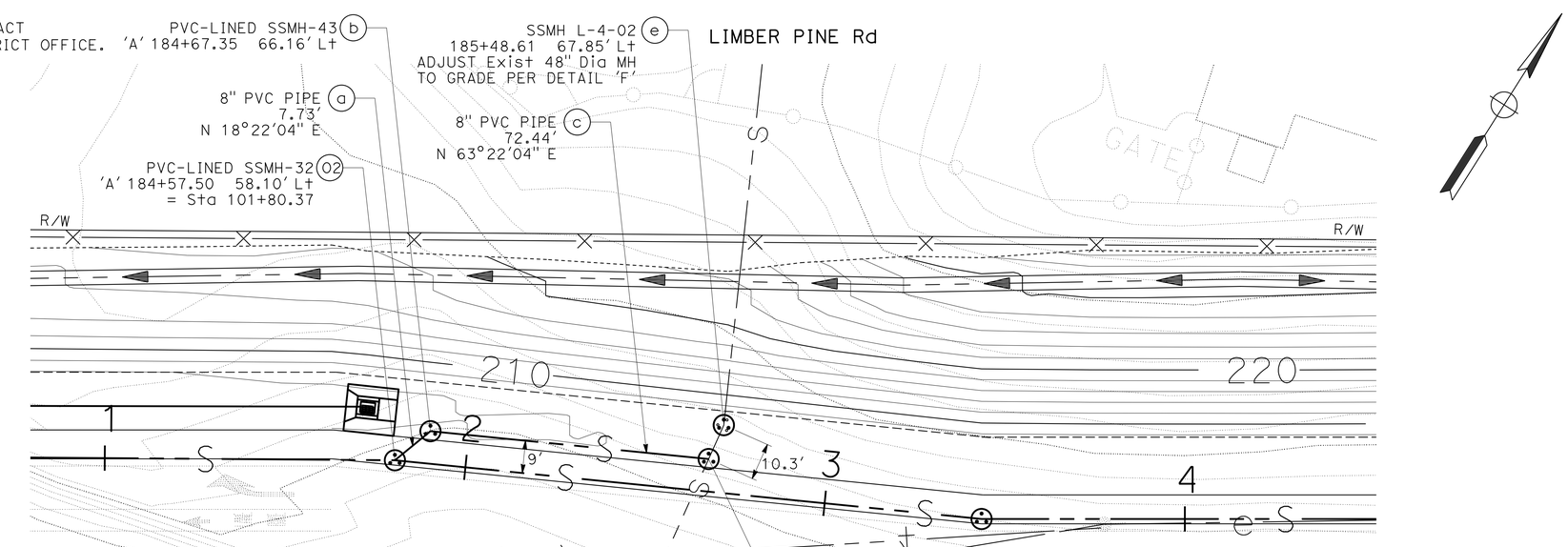

PLAN
SCALE: 1"=20'

SANITARY SEWER SYSTEM (5)

APPROVED FOR SANITARY SEWER WORK ONLY

SANITARY SEWER PLAN AND PROFILE
SCALE AS SHOWN

SS-13

STATE OF CALIFORNIA - DEPARTMENT OF TRANSPORTATION
Caltrans
CONSULTANT FUNCTIONAL SUPERVISOR: MARK BUSH
CALCULATED-DESIGNED BY: MOLLY JEWETT
CHECKED BY: LUANNE BEAN
REVISED BY
DATE REVISED

LAST REVISION 12-31-13
DATE PLOTTED => 20-MAR-2014
TIME PLOTTED => 14:33

Dist	COUNTY	ROUTE	POST MILES TOTAL PROJECT	SHEET No.	TOTAL SHEETS
11	SD	15,76	R46.2/R46.8, R12.1/R17.7	470	1273

REGISTERED CIVIL ENGINEER 01-06-14 DATE

03-24-14
PLANS APPROVAL DATE

REGISTERED PROFESSIONAL ENGINEER MARK BUSH No. C60477 Exp. 06-30-14 CIVIL STATE OF CALIFORNIA

THE STATE OF CALIFORNIA OR ITS OFFICERS OR AGENTS SHALL NOT BE RESPONSIBLE FOR THE ACCURACY OR COMPLETENESS OF SCANNED COPIES OF THIS PLAN SHEET.

TETRA TECH
17885 VON KARMAN AVE
SUITE 500
IRVINE, CA 92614

NOTES:

1. FOR TRENCH BEDDING AND BACKFILL REQUIREMENTS SEE DETAIL 'A'.
2. ALL NEW MANHOLES ARE 60" PRECAST MANHOLES UNLESS NOTED OTHERWISE, SEE DETAIL 'D'.

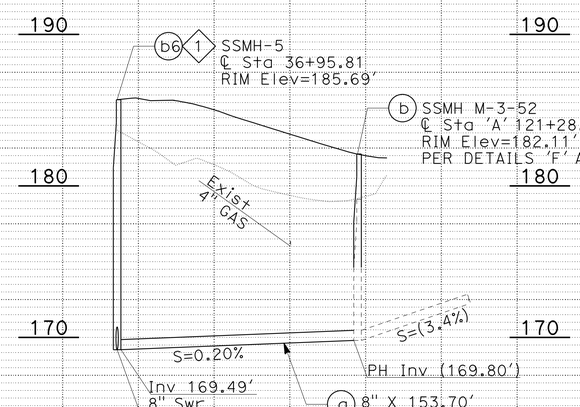

SWEETGRASS Ln SANITARY SEWER SYSTEM (SS-2) 2

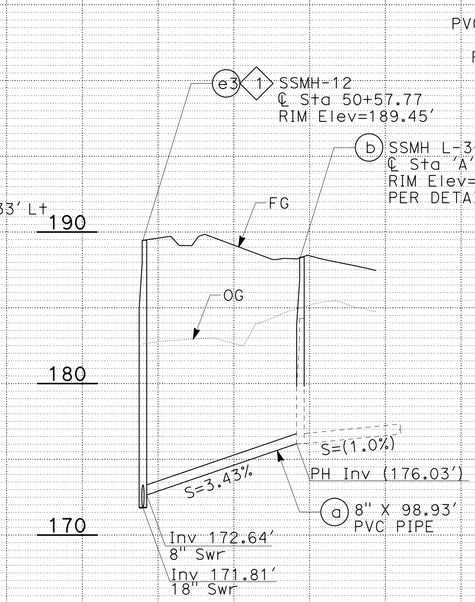

RAMONA Rd SANITARY SEWER SYSTEM (SS-3) 3

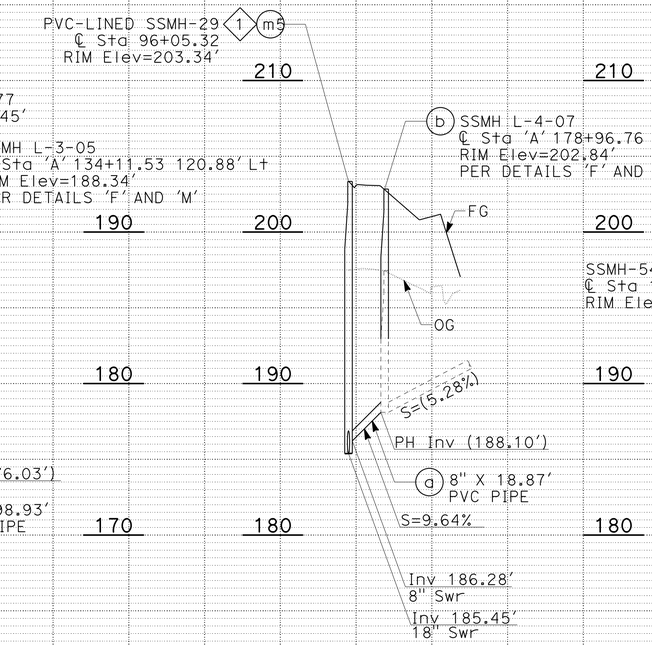

VIA MONSERATE SANITARY SEWER SYSTEM (SS-7) 4

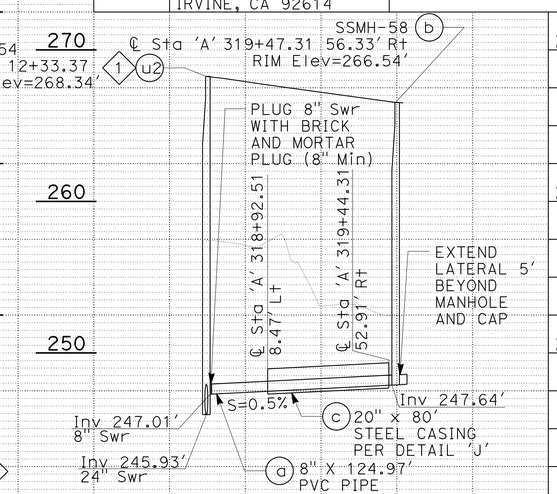

SANITARY SEWER SYSTEM (SS-11) 10

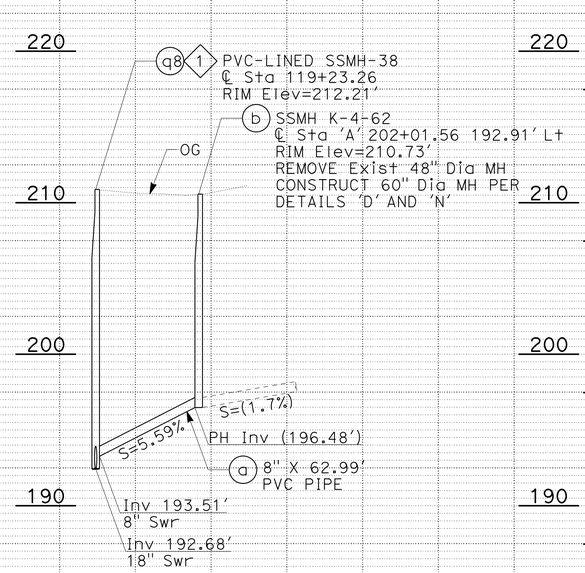

FLOWERWOOD SANITARY SEWER SYSTEM (SS-9) 6

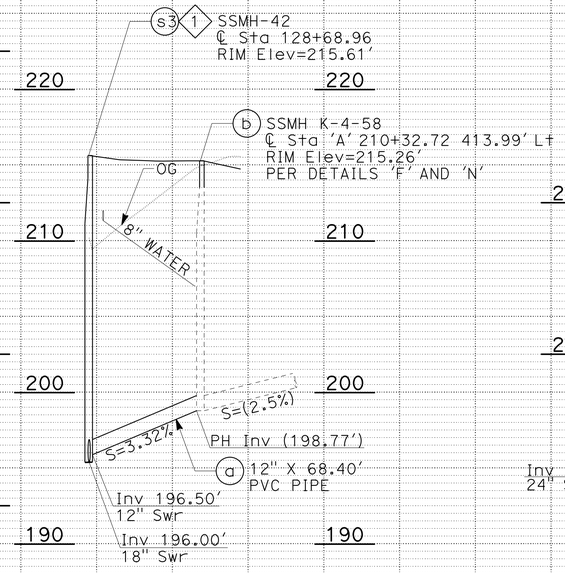

GIRD Rd SANITARY SEWER SYSTEM (SS-10) 7

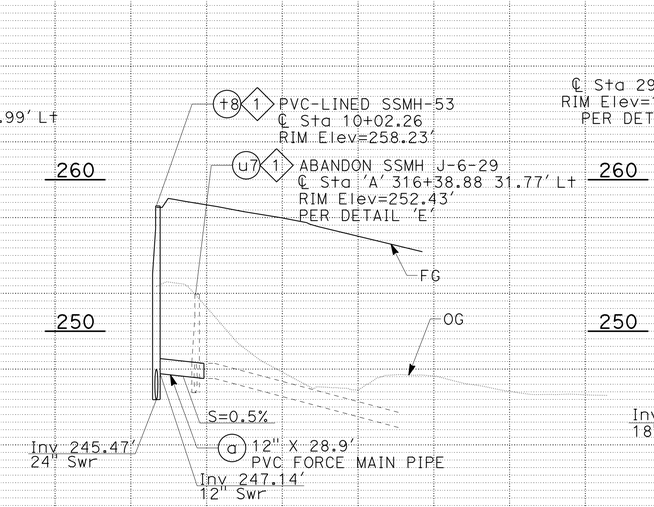

SANITARY SEWER SYSTEM (SS-11) 8

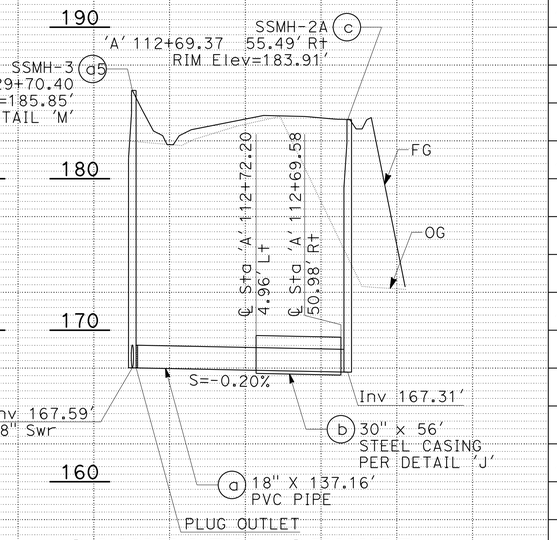

SANITARY SEWER SYSTEM (SS-1) 9

SANITARY SEWER PROFILE

SCALE: 1"=50' Horiz
1"=5' Vert

APPROVED FOR SANITARY SEWER WORK ONLY

SSP-1

STATE OF CALIFORNIA - DEPARTMENT OF TRANSPORTATION | CONSULTANT FUNCTIONAL SUPERVISOR: MARK BUSH | CALCULATED-DESIGNED BY: MOLLY JEWETT | CHECKED BY: LUANNE BEAN | REVISED BY | DATE REVISED

LAST REVISION 12-31-13 | DATE PLOTTED => 20-MAR-2014 | TIME PLOTTED => 14:33

Dist	COUNTY	ROUTE	POST MILES TOTAL PROJECT	SHEET No.	TOTAL SHEETS
11	SD	15,76	R46.2/R46.8, R12.1/R17.7	471	1273

REGISTERED CIVIL ENGINEER 01-06-14 DATE

03-24-14
PLANS APPROVAL DATE

REGISTERED PROFESSIONAL ENGINEER MARK BUSH No. C60477 Exp. 06-30-14 CIVIL STATE OF CALIFORNIA

THE STATE OF CALIFORNIA OR ITS OFFICERS OR AGENTS SHALL NOT BE RESPONSIBLE FOR THE ACCURACY OR COMPLETENESS OF SCANNED COPIES OF THIS PLAN SHEET.

TETRA TECH
17885 VON KARMAN AVE
SUITE 500
IRVINE, CA 92614

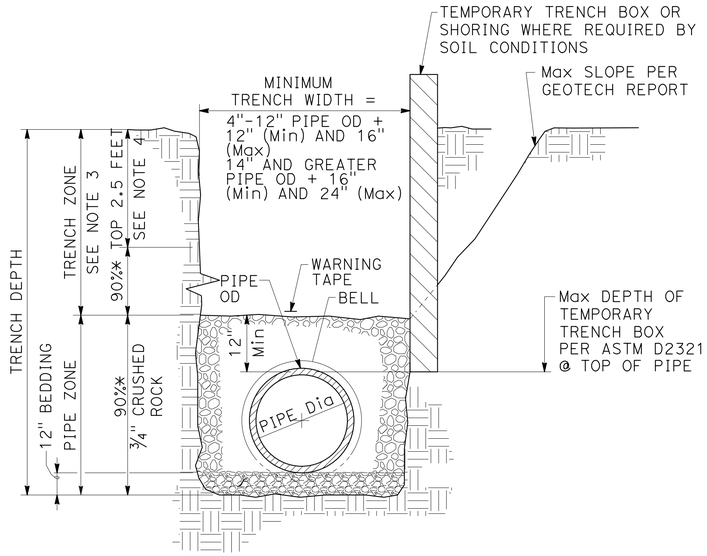

NOTES:

1. ALL PIPING SHALL BE INSTALLED IN ACCORDANCE W/ ASTM D2321 (STD PRACTICE FOR UG INSTALLATION OF PIPE FOR SEWERS & OTHER GRAVITY-FLOW APPLICATIONS.)
2. PAVING AND SUBGRADE PER TYPICAL CROSS SECTION PLANS.
3. TRENCH BACKFILL PER SPECIFICATIONS.
4. TOP 2.5 FEET SHALL BE COMPACTED TO 95% MINIMUM RELATIVE COMPACTION FOR PAVED AREAS AND 90% MINIMUM RELATIVE COMPACTION FOR UNPAVED AREAS.
5. COMPACTION BY PONDING OR JETTING IS NOT ALLOWED AT WATER AND SEWER PIPELINES AND SYSTEMS.
6. (*) INDICATES MINIMUM RELATIVE COMPACTION

DETAIL 'A'
STANDARD PIPE ZONE AND TRENCH BACKFILL

DETAIL 'B'
NOT USED

WATER & SEWER MAINS SHALL BE INSTALLED IN SEPARATE TRENCHES. SEWERS SHALL BE INSTALLED AT LEAST 10-FEET HORIZONTALLY FROM EXISTING OR NEW WATER MAINS.

PARALLEL CONSTRUCTION

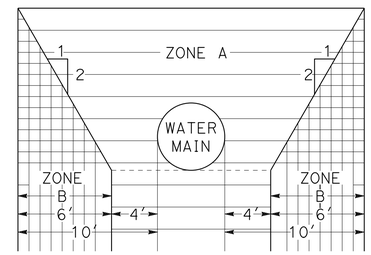

PERPENDICULAR CONSTRUCTION

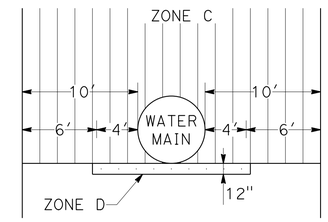

NOTES:

1. DIMENSIONS ARE FROM OUTSIDE OF WATER MAIN TO OUTSIDE OF SEWER
2. SANITARY SEWERS ARE NOT PERMITTED WITHIN ANY OF THE ABOVE INDICATED ZONES UNLESS CONSTRUCTED IN CONFORMANCE WITH THE SPECIAL REQUIREMENTS AS SHOWN BELOW.

ZONE	SPECIAL SEWER CONSTRUCTION REQUIREMENTS
A	SEWER LINES WILL NOT BE PERMITTED IN THIS ZONE WITHOUT SPECIAL WRITTEN PERMISSION FROM THE DEPARTMENT OF HEALTH.
B	RUBBER GASKETED PLASTIC PIPE.
C OR D	CONCRETE ENCASED SEWER PIPE; OR ANY SEWER PIPE WITHIN A CONTINUOUS STEEL CASING, WHICH CASING SHALL HAVE A THICKNESS OF NOT LESS THAN ONE-FOURTH INCH AND WITH ALL VOIDS BETWEEN SEWER PIPE AND CASING PRESSURE GROUTED WITH SAND CEMENT GROUT.

DETAIL 'C'
PIPE SEPARATION REQUIREMENTS

SANITARY SEWER DETAILS
NO SCALE

SSD-1

STATE OF CALIFORNIA - DEPARTMENT OF TRANSPORTATION
Caltrans

CONSULTANT FUNCTIONAL SUPERVISOR: MARK BUSH
CALCULATED-DESIGNED BY: MOLLY JEWETT
CHECKED BY: LUANNE BEAN
REVISED BY
DATE REVISED

LAST REVISION 12-31-13
DATE PLOTTED => 20-MAR-2014
TIME PLOTTED => 14:33

Dist	COUNTY	ROUTE	POST MILES TOTAL PROJECT	SHEET No.	TOTAL SHEETS
11	SD	15,76	R46.2/R46.8, R12.1/R17.7	472	1273

REGISTERED CIVIL ENGINEER 01-06-14 DATE

03-24-14
PLANS APPROVAL DATE

REGISTERED PROFESSIONAL ENGINEER MARK BUSH No. C60477 Exp. 06-30-14 CIVIL STATE OF CALIFORNIA

THE STATE OF CALIFORNIA OR ITS OFFICERS OR AGENTS SHALL NOT BE RESPONSIBLE FOR THE ACCURACY OR COMPLETENESS OF SCANNED COPIES OF THIS PLAN SHEET.

TETRA TECH
17885 VON KARMAN AVE
SUITE 500
IRVINE, CA 92614

NOTES:

1. MANHOLE FRAME SHALL BE SET IN CLASS "C" MORTAR PER SSPWC "GREENBOOK".
2. ALL PRECAST COMPONENTS SHALL BE MANUFACTURED IN ACCORDANCE WITH ASTM C-478.
3. VERTICAL WALL OF CONE SHALL BE ON THE UPSTREAM SIDE OF THE MANHOLE.
4. CONCRETE BASE SHALL BE PER SPECIFICATIONS.
5. "SAND COLLAR" MANHOLE ADAPTORS SHALL BE PROVIDED FOR ALL MH CONNECTIONS.
6. PRECAST SECTIONS SHALL BE USED WITHIN DIMENSION "A" AS REQUIRED,IN ORDER OF PREFERENCE LISTED:
   A. CONE (NOTCHED FOR PIPE IF DIMENSION "A" IS LESS THEN 3').
   B. 6" TO 18" OF 3' DIAMETER GRADE RINGS/AND/OR RISERS.
   C. "B" DIAMETER SHAFT VARIABLE HEIGHT.
7. ALL PATCHING WITHIN MANHOLE BASE SHALL BE EPOXY MORTAR.
8. FOR MANHOLES LOCATED IN HIGHWAY SHOULDER, SEE SECTION C-C.
9. PLACE CONCRETE COLLAR 2" BELOW MANHOLE FRAME. FILL AREA ABOVE BELOW-GRADE COLLAR WITH HMA WEARING SURFACE TO MATCH ADJACENT HMA.
10. MANHOLE SHELVES SHALL BE SLOPED 1" PER FOOT TO CHANNEL.
11. THE SOFFIT OF ALL LATERAL PIPES SHALL BE AT THE SAME ELEVATION AS THE MAIN PIPE SOFFIT UNLESS OTHERWISE SHOWN.
12. THE KEYLOCK JOINT BETWEEN MANHOLE SECTIONS SHALL BE SEALED WITH TWO 1¼" SQUARE BEADS OF RAM-NEK BY HENRY COMPANY, KENT-SEAL BY HAMILTON KENT, OR APPROVED EQUAL. THE MASTIC BEADS SHALL BE PLACED ON THE OUTSIDE SHOULDER OF AND IN THE GROOVE. APPLY A 6" MINIMUM WIDTH OUTSIDE JOINT WRAP, RUB'R-NEK BY HENRY COMPANY, SEAL WRAP BY SEALING SYSTEMS, INC., OR EQUAL, TO ALL SHAFT JOINTS. GRADE RING JOINTS SHALL BE MORTAR.
13. FRAME AND COVER ADJUSTMENT SHALL OCCUR USING MORTAR BETWEEN FIRST AND SECOND GRADE RINGS.
14. CONSTRUCTION OF A NEW MANHOLE OVER AN EXISTING PIPE REQUIRES THAT THE EXISTING PIPE BE SCORED AT SPRINGLINE BEFORE POURING BASE. REMOVAL OF UPPER PART OF SEWER PIPE SHALL BE DONE AFTER CONCRETE BASE HAS CURED FOR A MINIMUM OF 48 HOURS. EXISTING FLOW TO BE MAINTAINED AT ALL TIMES.
15. ALL NEW MANHOLES SHALL BE 60" IN DIAMETER UNLESS OTHERWISE NOTED ON THE PLANS. MINIMUM WALL THICKNESS SHALL BE AS FOLLOWS:

MANHOLE DIAMETER "B"	Min WALL THICKNESS "C"
60"	6"
72"	7"
84"	8"

16. WHERE PVC LINED MANHOLES ARE CALLED FOR ON THE PLANS, MANHOLES SHALL BE CONSTRUCTED WITH AN INTEGRALLY CAST PVC LINER ON PRECAST SHAFT SECTIONS, CONE SECTIONS, AND GRADE RINGS. IN ADDITION, A POLYURETHANE COATING MUST BE APPLIED TO EXPOSED CONCRETE AT THE INTERIOR OF CAST-IN-PLACE BASES. SEE NOTES 17, 18, 19, AND 20. THE FOLLOWING MANHOLES SHALL BE PVC LINED:

MANHOLE NUMBER	MANHOLE STATION	MANHOLE DIAMETER
SSMH-29	96+05.32	60"
SSMH-32	101+80.37	60"
SSMH-38	119+23.26	60"
SSMH-43	'A' 184+67.35 66.16' Lt	60"
SSMH-44	'A' 185+44.41 58.45' Lt	60"
SSMH-50	4+65.00	84"
SSMH-51	4+80.00	60"
SSMH-52	7+79.16	60"
SSMH-53	10+02.26	60"
SSMH-54	12+33.37	60"
SSMH-55	15+76.24	60"
SSMH-56	19+14.18	60"

17. INSTALLATION OF PVC LINER SHALL CONFORM TO THE REQUIREMENTS OF THE SPECIFICATIONS. USE WELDING STRIPS AT PVC JOINTS, A PREFORMED CORNER WELDING STRIP AT THE BASE JOINT AND A CONTINUOUS PREFORMED CORNER AT THE TOP GRADE RING AND FRAME JOINT TO THE SECOND GRADE RING.
18. WHERE PVC LINED MANHOLES ARE CALLED FOR ON THE PLANS, MANHOLE SHELVES SHALL BE COVERED WITH 100% SOLIDS ELASTOMERIC POLYURETHANE COATING. A PVC ANGLE STRIP SHALL BE USED FOR THE TRANSITION BETWEEN HORIZONTAL SHELF AND VERTICAL CHANNEL. ROUGHEN SURFACE OF PVC LINER AND APPLY BONDING AGENT PER POLYURETHANE LINING SYSTEM MANUFACTURER'S RECOMMENTATION (Min OF 2" OVERLAP).
19. WHERE PVC LINED MANHOLES ARE CALLED FOR ON THE PLANS, THE FRAME SHALL COMPLETELY BEAR ON THE PVC LINER. CAULK THE JOINT BETWEEN THE FRAME AND THE PREFORMED PVC CORNER AT THE TOP GRADE RING WITH SIKAFLEX 1A OR EQUAL.
20. MANHOLE POLYURETHANE COATING SYSTEM SHALL BE ENDURAFLEX, UTILITHANE OR EQUAL. EPOXY PRIMER WITH 125 MIL POLYETHYLENE FINAL COAT. LINE EXPOSED CONCRETE AT THE INTERIOR OF CAST-IN-PLACE BASE.

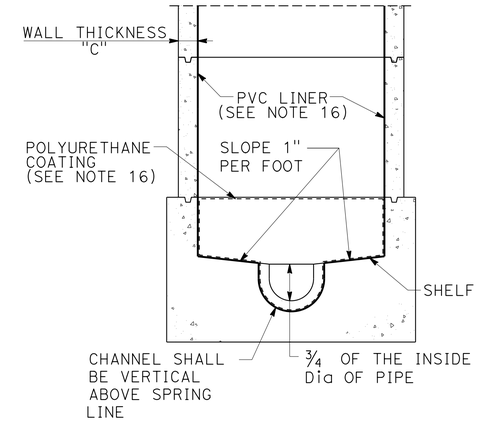

SECTION B-B

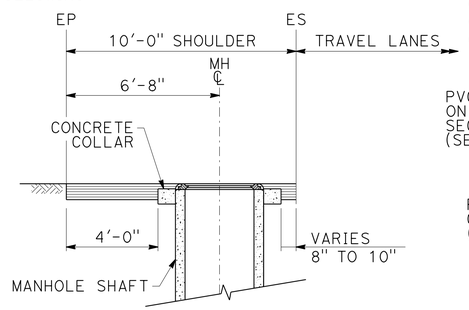

SECTION C-C
FOR MANHOLES LOCATED IN HIGHWAY SHOULDER ONLY

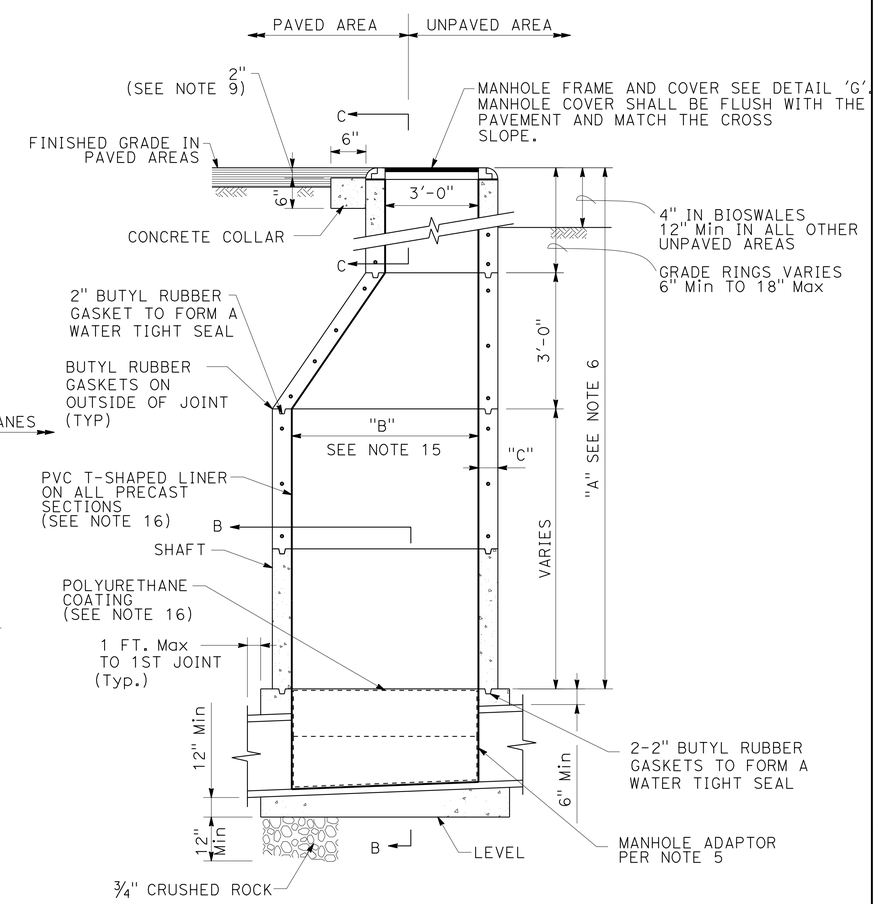

SECTION A-A

DETAIL 'D'
STANDARD PRECAST CONCRETE MANHOLE

SANITARY SEWER DETAILS
NO SCALE

SSD-2

STATE OF CALIFORNIA - DEPARTMENT OF TRANSPORTATION
Caltrans
CONSULTANT FUNCTIONAL SUPERVISOR: MARK BUSH
CALCULATED-DESIGNED BY: MOLLY JEWETT
CHECKED BY: LUANNE BEAN
REVISED BY
DATE REVISED

LAST REVISION 12-31-13
DATE PLOTTED => 20-MAR-2014
TIME PLOTTED => 14:33

Dist	COUNTY	ROUTE	POST MILES TOTAL PROJECT	SHEET No.	TOTAL SHEETS
11	SD	15,76	R46.2/R46.8, R12.1/R17.7	473	1273

REGISTERED CIVIL ENGINEER 01-06-14 DATE

03-24-14
PLANS APPROVAL DATE

REGISTERED PROFESSIONAL ENGINEER MARK BUSH No. C60477 Exp. 06-30-14 CIVIL STATE OF CALIFORNIA

THE STATE OF CALIFORNIA OR ITS OFFICERS OR AGENTS SHALL NOT BE RESPONSIBLE FOR THE ACCURACY OR COMPLETENESS OF SCANNED COPIES OF THIS PLAN SHEET.

TETRA TECH
17885 VON KARMAN AVE
SUITE 500
IRVINE, CA 92614

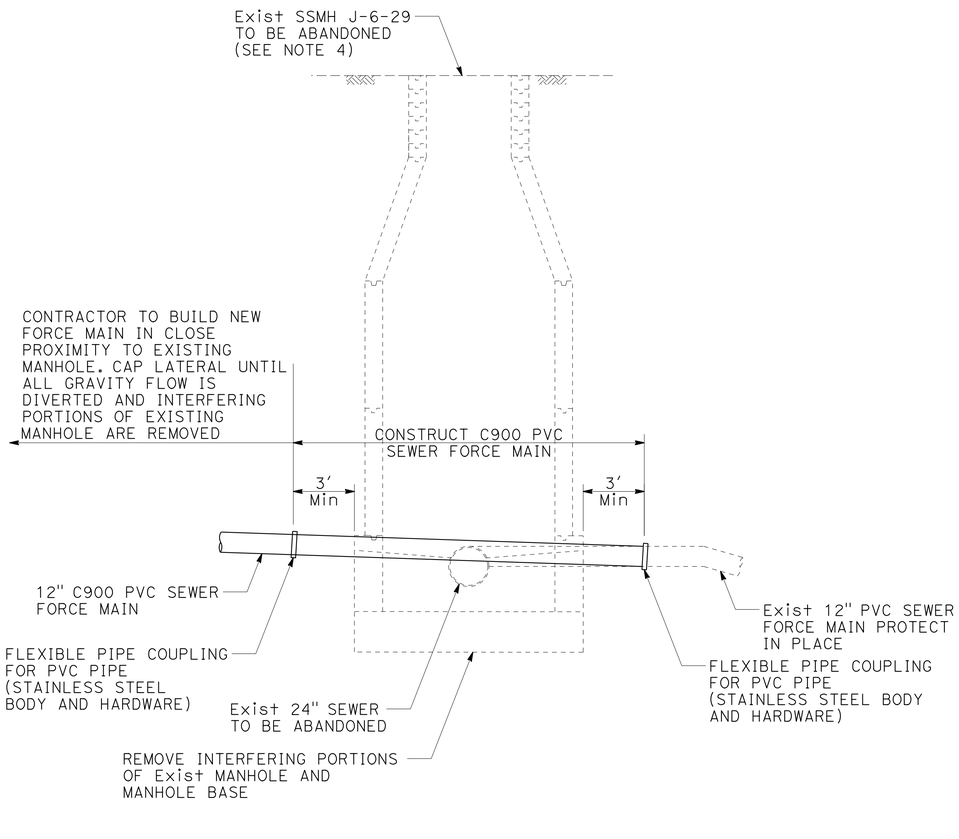

FORCE MAIN CONSTRUCTION SEQUENCE NOTES:

1. MAINTAIN EXISTING SEWER FLOW AT ALL TIMES. SUBMIT PLANS FOR MAINTAINING SEWER FLOWS.
2. FIELD LOCATE (POTHOLE) ALL UTILITY CROSSINGS AND POINTS OF CONNECTION AND VERIFY HORIZONTAL AND VERTICAL LOCATIONS, EXISTING FORCE MAIN SIZE AND PIPE MATERIAL.
3. IT IS ANTICIPATED THAT TEMPORARY BYPASS PUMPING OF THE FLOW WILL BE REQUIRED. SEE PROJECT SPECIFICATIONS FOR REQUIREMENTS. THE FOLLOWING IS THE FORCE MAIN CONNECTION CONSTRUCTION SEQUENCE:
   - A. CONSTRUCT NEW 24" PVC SEWER AND MANHOLES.
   - B. CONSTRUCT NEW 12" PVC FORCE MAIN TO WITHIN CLOSE PROXIMITY OF EXISTING SEWER MANHOLE J-6-29 AND CAP NEW FORCE MAIN UNTIL GRAVITY SEWAGE IS TRANSFERED TO NEW 24" PVC SEWER.
   - C. EXISTING 12" FORCE MAIN MAY BE TAKEN OUT OF SERVICE FOR ONE 4 HOUR PERIOD DURING NIGHTTIME WORK (11PM TO 3AM). CUSTOMERS WILL NEED TO BE NOTIFIED TWO WEEKS IN ADVANCE. IF FORCE MAIN CANNOT BE REINSTATED WITHIN 4 HOURS, THE CONTRACTOR MUST BYPASS PUMP FLOW AND MAINTAIN SERVICE.
   - D. REMOVE INTERFERING PORTIONS OF EXISTING MANHOLE AND FORCE MAIN IN ORDER TO COMPLETE CONSTRUCTION OF NEW FORCE MAIN.
   - E. REMOVE CAP ON NEW FORCE MAIN AND BUILD REMAINING PORTION OF NEW FORCE MAIN.
4. MAINTAIN ACCESS TO EXISTING MANHOLE AT ALL TIMES DURING INTERIM GRADING. ADJUST MANHOLE RIM ELEVATION TO GRADE PER DETAIL 'F'. EXISTING MANHOLE SHALL BE ABANDONED AFTER FLOW IS TRANSFERED TO NEW SEWER MAIN.

DETAIL 'E'
SEWER FORCE MAIN CONNECTION DETAIL

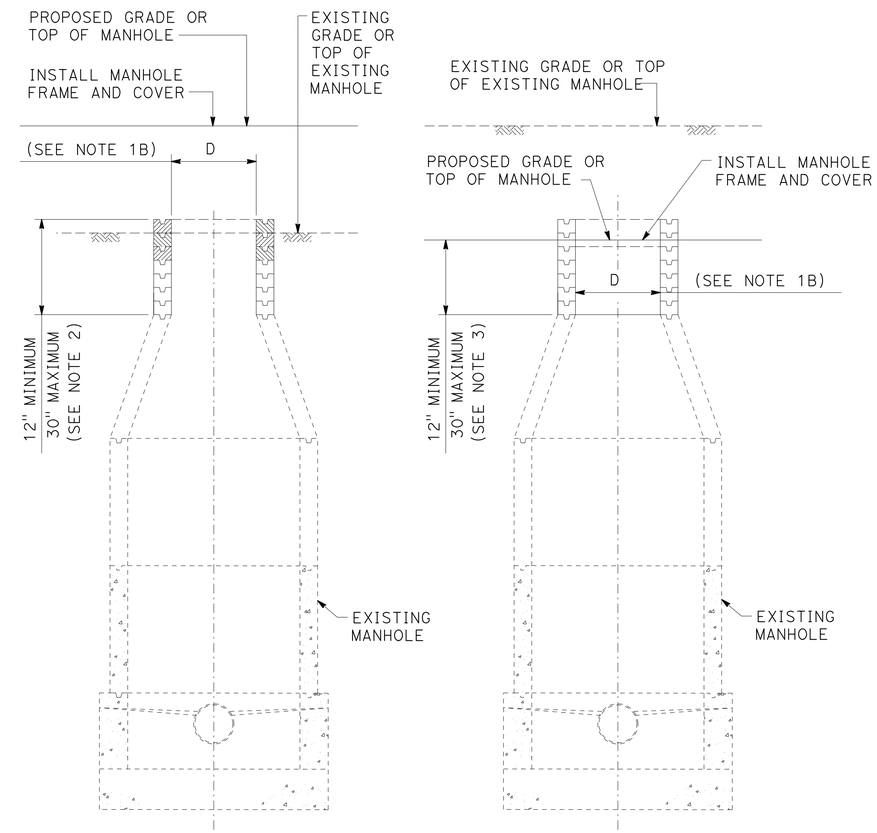

RAISING EXISTING PRECAST CONCRETE SEWER MANHOLES

LOWERING EXISTING PRECAST CONCRETE SEWER MANHOLES

NOTES: PRECAST CONCRETE SEWER MANHOLES

1. GENERAL
   - A. DIMENSION "D" SHALL BE THE SAME AS THE SIZE OF MANHOLE FRAME AND COVER TO BE USED.
   - B. THE CONTRACTOR MAY REUSE THE EXISTING MANHOLE FRAME AND COVER, UNLESS DAMAGED BY HIM DURING HIS CONSTRUCTION OPERATIONS OR WHEN OTHERWISE INDICATED ON THE PROJECT PLANS. ITEMS DAMAGED BY THE CONTRACTOR SHALL BE REPLACED WITH IDENTICAL NEW ITEMS AT NO EXPENSE TO THE AGENCY.
2. RAISING EXISTING PRECAST CONCRETE SEWER MANHOLES
   - A. PRECAST CONCRETE MANHOLES TO BE RAISED LESS THAN 3 INCHES MAY BE RAISED BY APPLYING CLASS "D" MORTAR TO THE TOP OF THE EXISTING MANHOLE, PROVIDED THE TOTAL HEIGHT OF MORTAR, EXISTING AND NEWLY APPLIED DOES NOT EXCEED 3 INCHES.
   - B. WHERE THE PRECAST CONCRETE MANHOLE IS TO BE RAISED 3 INCHES OR MORE, OR WHERE THE TOTAL HEIGHT OF MORTAR, EXISTING AND NEWLY APPLIED, WOULD EXCEED 3 INCHES, GRADE RINGS SHALL BE UTILIZED. CLASS "D" MORTAR MAY BE USED FOR FINAL ADJUSTMENT, BUT NOT MORE THAN 3 INCHES IN HEIGHT. WHERE RAISING THE MANHOLE WOULD RESULT IN THE UPPER SEGMENT OF THE SHAFT BEING MORE THAN 30 INCHES IN HEIGHT, REMOVE THE REDUCER AND THE UPPER SEGMENT OF THE SHAFT. INSTALL ADDITIONAL RINGS OR PIPE TO THE LOWER SEGMENT OF THE SHAFT AND REINSTALL THE REDUCER AND GRADE RINGS AS REQUIRED.
3. LOWERING EXISTING PRECAST CONCRETE SEWER MANHOLES
   - A. REMOVE SUFFICIENT GRADE RINGS TO LOWER THE MANHOLES AS REQUIRED. APPLY CLASS "D" MORTAR TO A HEIGHT NOT EXCEEDING 3 INCHES FOR ADJUSTMENT TO FINAL GRADE.
   - B. WHERE REMOVAL OF GRADE RINGS WOULD RESULT IN THE UPPER SEGMENT OF THE SHAFT BEING LESS THAN 12 INCHES IN HEIGHT, REMOVE THE REDUCER AND SUFFICIENT SECTIONS OF THE LOWER SEGMENT OF THE SHAFT AND REINSTALL ANY NECESSARY SEGMENT OF THE LOWER SHAFT, THE REDUCER, AND THE GRADE RINGS TO CONFORM TO THE REQUIREMENTS OF THIS PLAN.
   - C. EXISTING GRADE RINGS NEED NOT BE REMOVED IF EXISTING MORTAR IS REMOVED AND AT LEAST 1½ INCHES OF MORTAR MAY BE PLACED ON TOP OF THE EXISTING GRADE RINGS TO RESEAT THE FRAME.

DETAIL 'F'
SEWER MANHOLE ADJUSTMENT

SANITARY SEWER DETAILS
NO SCALE

SSD-3

STATE OF CALIFORNIA - DEPARTMENT OF TRANSPORTATION
Caltrans

CONSULTANT FUNCTIONAL SUPERVISOR: MARK BUSH
CALCULATED-DESIGNED BY: MOLLY JEWETT
CHECKED BY: LUANNE BEAN
REVISED BY
DATE REVISED

LAST REVISION 12-31-13
DATE PLOTTED => 20-MAR-2014
TIME PLOTTED => 14:33

Dist	COUNTY	ROUTE	POST MILES TOTAL PROJECT	SHEET No.	TOTAL SHEETS
11	SD	15,76	R46.2/R46.8, R12.1/R17.7	474	1273

REGISTERED CIVIL ENGINEER 01-06-14 DATE

03-24-14
PLANS APPROVAL DATE

REGISTERED PROFESSIONAL ENGINEER MARK BUSH No. C60477 Exp. 06-30-14 CIVIL STATE OF CALIFORNIA

THE STATE OF CALIFORNIA OR ITS OFFICERS OR AGENTS SHALL NOT BE RESPONSIBLE FOR THE ACCURACY OR COMPLETENESS OF SCANNED COPIES OF THIS PLAN SHEET.

TETRA TECH
17885 VON KARMAN AVE
SUITE 500
IRVINE, CA 92614

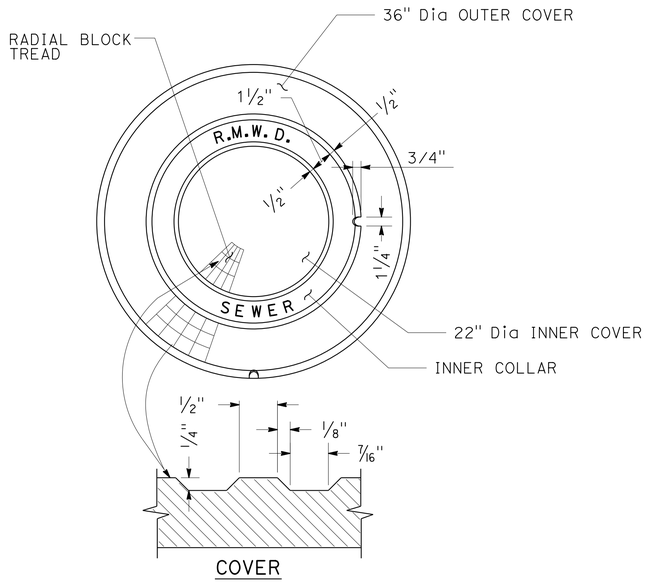

COVER

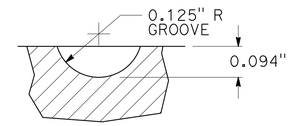

NEOPRENE O-RING GROOVE DETAIL

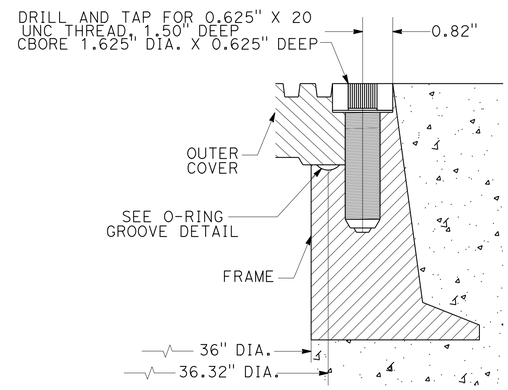

OUTER COVER TO FRAME

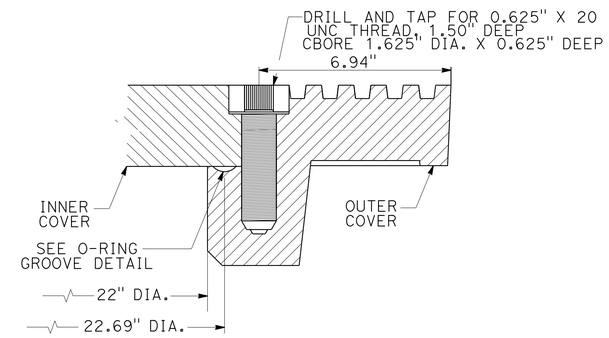

M-3B DETAIL:
INNER COVER TO OUTER COVER

LOCKING DEVICE

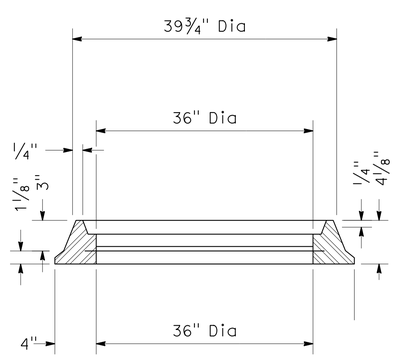

SECTION A-A

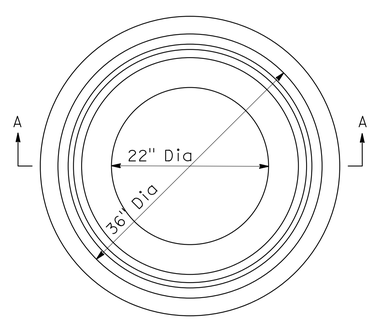

FRAME

NOTES:

1. LOCKING FRAMES AND COVERS ARE REQUIRED ON THIS PROJECT
2. 0.625" X 20 UNC THREAD, 316 STAINLESS STEEL SOCKET HEAD CAP SCREW AND 1.50" O.D. X 0.078 THICK 316 STAINLESS STEEL WASHER.
3. 0.25" NEOPRENE O-RING GASKET SHALL BE GLUED INTO MACHINED GROOVE. GLUE SHALL MEET THE REQUIREMENTS OF MIL-M-81288 (AMEND. 1).
4. BOLTDOWN PATTERNS:
   BETWEEN INNER AND OUTER COVERS INSTALL TWO (2) BOLTS AT 180 DEGREES.
   BETWEEN OUTER COVER & FRAME INSTALL FOUR (4) BOLTS AT 90 DEGREES.

DETAIL 'G'
36" MANHOLE FRAME AND TWO CONCENTRIC COVERS

SANITARY SEWER DETAILS
NO SCALE

SSD-4

STATE OF CALIFORNIA - DEPARTMENT OF TRANSPORTATION
Caltrans

CONSULTANT FUNCTIONAL SUPERVISOR: MARK BUSH
CALCULATED-DESIGNED BY: LUANNE BEAN
CHECKED BY
REVISED BY: MOLLY JEWETT
DATE REVISED

LAST REVISION 12-31-13
DATE PLOTTED => 20-MAR-2014
TIME PLOTTED => 14:33

Dist	COUNTY	ROUTE	POST MILES TOTAL PROJECT	SHEET No.	TOTAL SHEETS
11	SD	15,76	R46.2/R46.8, R12.1/R17.7	475	1273

REGISTERED CIVIL ENGINEER 01-06-14 DATE

03-24-14
PLANS APPROVAL DATE

REGISTERED PROFESSIONAL ENGINEER MARK BUSH No. C60477 Exp. 06-30-14 CIVIL STATE OF CALIFORNIA

THE STATE OF CALIFORNIA OR ITS OFFICERS OR AGENTS SHALL NOT BE RESPONSIBLE FOR THE ACCURACY OR COMPLETENESS OF SCANNED COPIES OF THIS PLAN SHEET.

TETRA TECH
17885 VON KARMAN AVE
SUITE 500
IRVINE, CA 92614

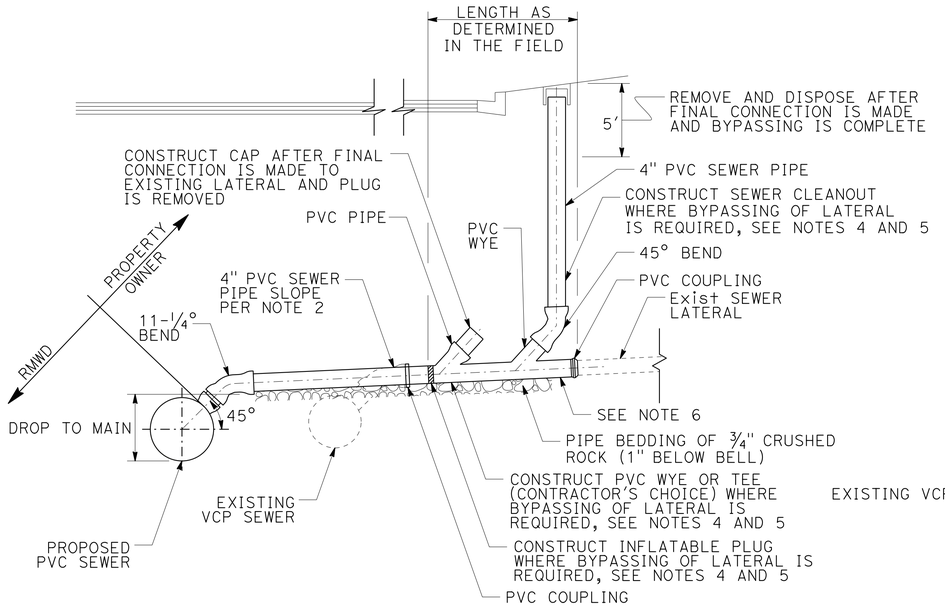

EXTEND LATERAL

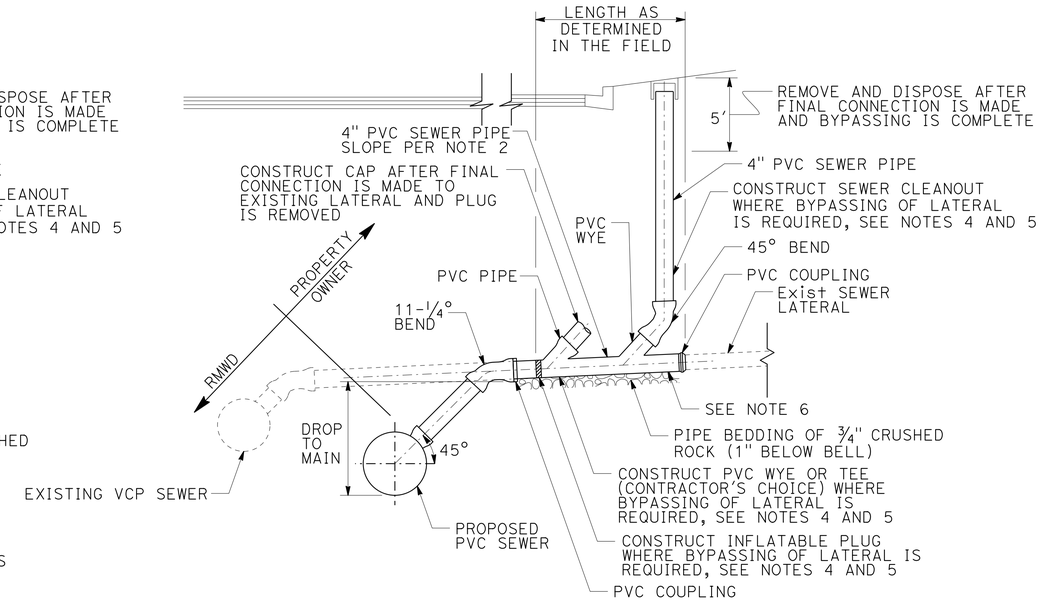

INTERCEPT LATERAL

NOTES:

1. IN NO CASE SHALL A LATERAL CONNECT TO THE SEWER MAIN DIRECTLY ON TOP OF THE PIPE.
2. SEWER LATERALS SHALL HAVE A MINIMUM SLOPE OF 2% EXCEPT FOR LATERALS SHOWN BELOW:

APPROXIMATE STATION	SLOPE (Min)
34+62	0.2%

3. ALL JOINTS ON SEWER LATERAL PIPE SHALL BE COMPRESSION TYPE OR APPROVED SOLVENT WELD.
4. CONSTRUCT SEWER CLEANOUT AND BYPASSING WYE AT THE FOLLOWING LATERAL LOCATIONS IF LATERAL CANNOT BE REINSTATED INTO SERVICE PER THE TIME LIMITATIONS SHOWN ON THE PLANS:

APPROXIMATE STATION
41+37
66+53
68+37
76+84
82+55
97+30

5. THE FOLLOWING IS THE CONSTRUCTION SEQUENCE FOR THE LATERALS WHERE BYPASSING IS REQUIRED:
   A. SET UP BYPASS FOR EXISTING SEWER MAIN.
   B. INSTALL WYE AND CLEANOUT FOR BYPASSING OF LATERAL.
   C. INSTALL INFLATABLE PLUG.
   D. BYPASS LATERAL TO NEW SEWER MAIN.
   E. CONSTRUCT NEW SEWER MAIN ACROSS LOCATION OF CONFLICT AND REMOVE INTERFERING PORTIONS OF EXISTING SEWER MAIN.
   F. CONSTRUCT NEW SEWER LATERAL AND CONNECT TO EXISTING SEWER LATERAL.
   G. REMOVE BYPASS.
6. LATERAL STATIONING IS ALONG CENTERLINE. CONTRACTOR TO VERIFY TIE-IN POINT PRIOR TO TRENCHING FOR NEW LATERAL.

DETAIL 'H'
PVC SEWER LATERAL

SANITARY SEWER DETAILS
NO SCALE

SSD-5

STATE OF CALIFORNIA - DEPARTMENT OF TRANSPORTATION
Caltrans

CONSULTANT FUNCTIONAL SUPERVISOR: MARK BUSH
CALCULATED-DESIGNED BY: MOLLY JEWETT
CHECKED BY: LUANNE BEAN
REVISED BY
DATE REVISED

LAST REVISION 12-31-13
DATE PLOTTED => 20-MAR-2014
TIME PLOTTED => 14:33

Dist	COUNTY	ROUTE	POST MILES TOTAL PROJECT	SHEET No.	TOTAL SHEETS
11	SD	15,76	R46.2/R46.8, R12.1/R17.7	476	1273

REGISTERED CIVIL ENGINEER 01-06-14 DATE

03-24-14
PLANS APPROVAL DATE

REGISTERED PROFESSIONAL ENGINEER MARK BUSH No. C60477 Exp. 06-30-14 CIVIL STATE OF CALIFORNIA

THE STATE OF CALIFORNIA OR ITS OFFICERS OR AGENTS SHALL NOT BE RESPONSIBLE FOR THE ACCURACY OR COMPLETENESS OF SCANNED COPIES OF THIS PLAN SHEET.

TETRA TECH
17885 VON KARMAN AVE
SUITE 500
IRVINE, CA 92614

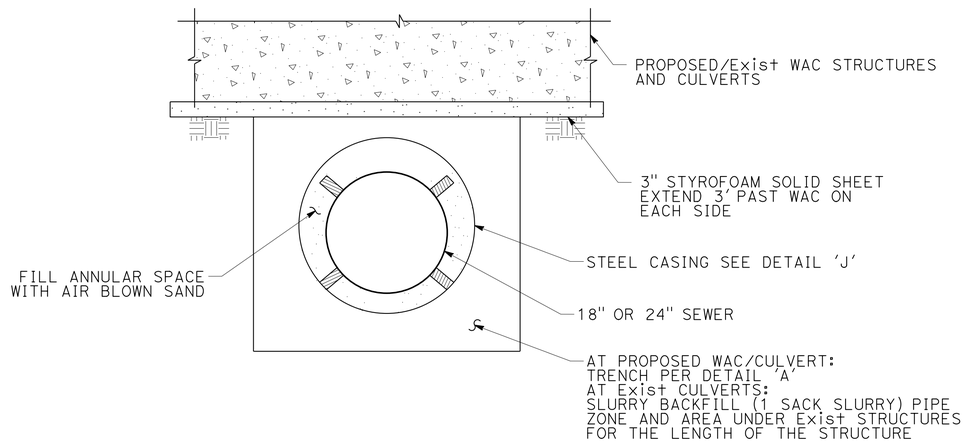

DETAIL 'I'
WAC CROSSING DETAIL

REINFORCING LAP SPLICE SCHEDULE

BAR	f'c=2500	f'c=3250	f'c=4000	f'c=5000
	L (inches)	L (inches)	L (inches)	L (inches)
3	24	21	19	17
4	32	28	25	23
5	39	35	31	28
6	47	42	37	34
7	69	60	54	49
8	78	69	62	56

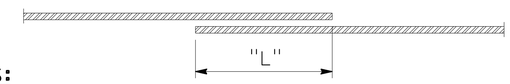

NOTES:

1. LAPS SHOWN IN THIS TABLE ARE CLASS B, CATEGORY 3 TYPE SPLICES. LAP LENGTH IS BASED UPON SMALLER OF TWO BARS BEING SPLICED WHEN NOT THE SAME SIZE.
2. INCREASE LAP LENGTHS BY A FACTOR OF 1.3 FOR HORIZONTAL REINFORCEMENT SO PLACED THAT MORE THAN 12 INCHES OF CONCRETE IS CAST IN THE MEMBER BELOW THIS REINFORCEMENT.

DETAIL 'K'
TYPICAL REBAR ENDS

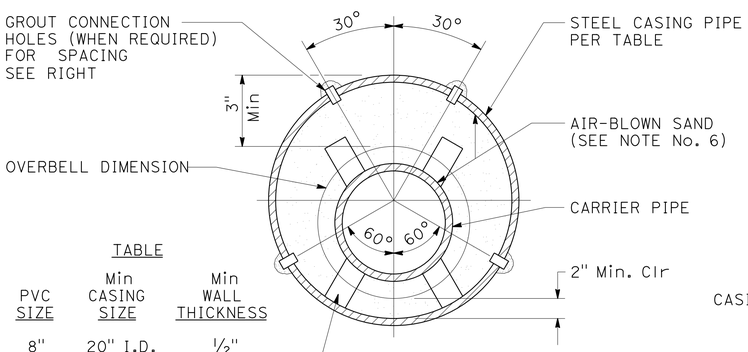

TABLE

PVC SIZE	Min CASING SIZE	Min WALL THICKNESS
8"	20" I.D.	½"
18"	30" I.D.	½"
24"	36" I.D.	½"

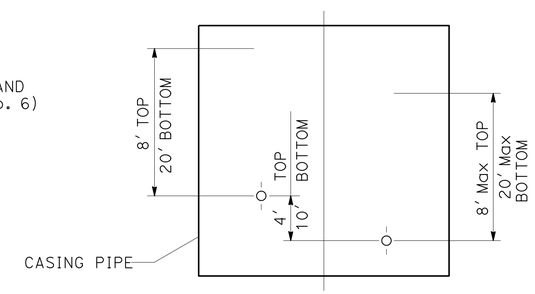

GROUT CONNECTION HOLE SPACING

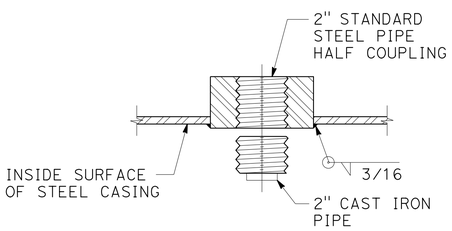

GROUT COUPLING

NOTES:

1. ALL STEEL CASING PIPE FIELD JOINTS SHALL BE WELDED FULL CIRCUMFERENCE.
2. PRESSURE GROUTING AROUND PERIFERY OF CASING IS NOT REQUIRED FOR OPEN TRENCH CONSTRUCTION. PERIFERY OF CASING (LARGER THAN 24") TO BE PRESSURE GROUTED FOR TRENCHLESS CONSTRUCTION.
3. CARRIER PIPE SHALL BE AIR TESTED PRIOR TO FILLING CASING WITH AIR-BLOWN SAND.
4. UPSTREAM AND DOWNSTREAM ELEVATIONS TO BE VERIFIED PRIOR TO FILLING CASING.
5. SPACING BETWEEN THE CASING SPACERS SHALL BE PER THE MANUFACTURERS RECOMMENDATIONS EXCEPT THAT THERE SHALL BE AT LEAST 3 CASING SPACERS PER PIPE SECTION, ONE 12" FROM EACH JOINT AND ONE CENTERED. ADDITIONALLY, ONE SPACER SHALL BE INSTALLED 12" FROM EACH END OF THE CASING.
6. UNLESS OTHERWISE NOTED ON THE PLANS, THE ANNULAR SPACE WITHIN THE CASING SHALL BE FILLED WITH AIR-BLOWN SAND.
7. BOTH ENDS OF THE CASING BETWEEN THE CASING AND CARRIER PIPE MUST BE SEALED WATERTIGHT USING A PULL-ON RUBBER END SEAL SUCH AS MODEL AC AS MANUFACTURED BY ADVANCED PRODUCTS AND SYSTEMS, INC OR APPROVED EQUAL. BANDS SHALL BE TYPE 316 STAINLESS STEEL.

DETAIL 'J'
STEEL CASING FOR SEWER PIPE

TYPE I

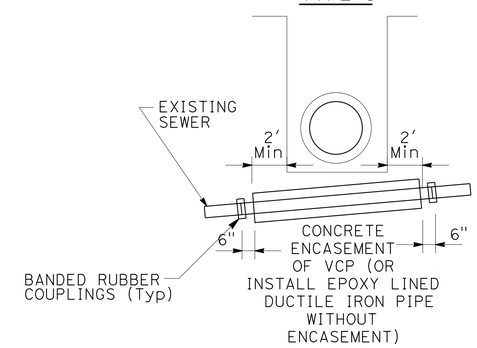

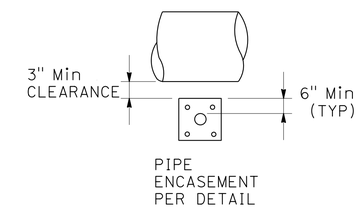

W	DEPTH OF COVER			
	0' TO 8'		8' TO 16'	
	D	BAR #	D	BAR #
3'	12"	4(13)	12"	4(13)
4'	12"	4(13)	12"	5(16)
5'	12"	4(13)	16"	5(16)
6'	12"	5(16)	16"	5(16)
7'	12"	5(16)	16"	6(19)
8'	12"	5(16)	16"	6(19)
9'	12"	6(19)	16"	8(25)
10'	12"	6(19)	16"	8(25)

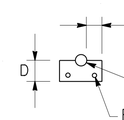

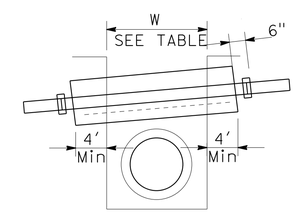

TYPE II

NOTES:

1. ( ) DENOTES METRIC SYSTEM.
2. BEAM THICKNESS FOR TYPE II BAR SIZE FOR TYPE I AND TYPE II

DETAIL 'L'
PIPE SUPPORT BEAM ACROSS TRENCH

SANITARY SEWER DETAILS
NO SCALE

SSD-6

STATE OF CALIFORNIA - DEPARTMENT OF TRANSPORTATION
Caltrans

CONSULTANT FUNCTIONAL SUPERVISOR: MARK BUSH
CALCULATED-DESIGNED BY: MOLLY JEWETT
CHECKED BY: LUANNE BEAN
REVISED BY
DATE REVISED

LAST REVISION 12-31-13
DATE PLOTTED => 20-MAR-2014
TIME PLOTTED => 14:33

Dist	COUNTY	ROUTE	POST MILES TOTAL PROJECT	SHEET No.	TOTAL SHEETS
11	SD	15,76	R46.2/R46.8, R12.1/R17.7	477	1273

REGISTERED CIVIL ENGINEER 01-06-14 DATE

03-24-14
PLANS APPROVAL DATE

REGISTERED PROFESSIONAL ENGINEER MARK BUSH No. C60477 Exp. 06-30-14 CIVIL STATE OF CALIFORNIA

THE STATE OF CALIFORNIA OR ITS OFFICERS OR AGENTS SHALL NOT BE RESPONSIBLE FOR THE ACCURACY OR COMPLETENESS OF SCANNED COPIES OF THIS PLAN SHEET.

TETRA TECH
17885 VON KARMAN AVE
SUITE 500
IRVINE, CA 92614

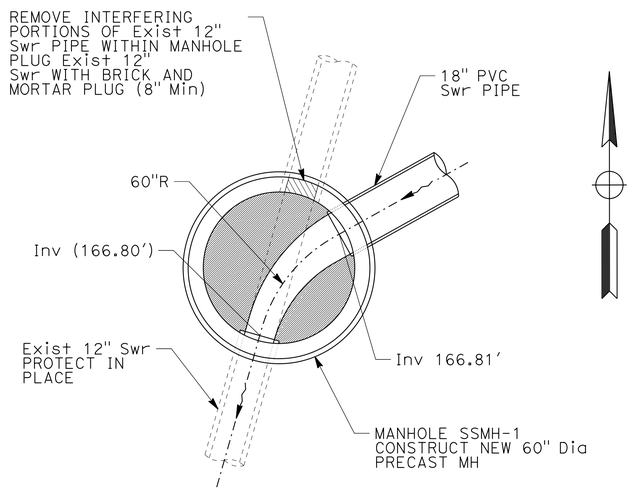

MANHOLE SSMH-1
FOR PLAN VIEW SEE SS-1

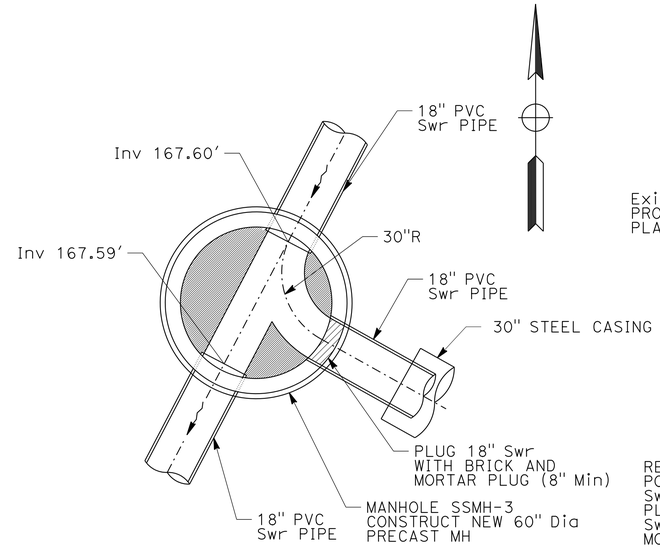

MANHOLE SSMH-3
FOR PLAN VIEW SEE SS-1

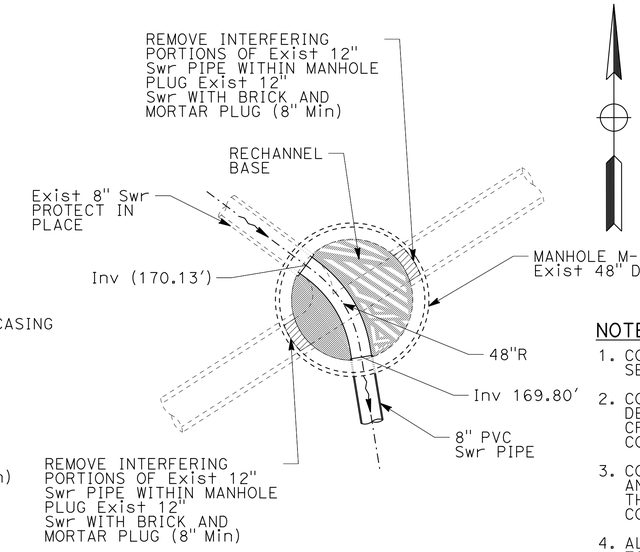

EXISTING MANHOLE M-3-52
FOR PLAN VIEW SEE SS-2

NOTES:

1. CONTRACTOR SHALL MAINTAIN OPERATION OF SEWER SERVICE AND BYPASS DURING CONSTRUCTION.
2. CONTRACTOR SHALL FIELD VERIFY LOCATION AND DEPTH OF ALL CONNECTION POINTS AND UTILITY CROSSINGS PRIOR TO THE BEGINNING OF CONSTRUCTION.
3. CONTRACTOR SHALL BE RESPONSIBLE FOR REPAIR OF ANY DAMAGE TO THE EXISTING FACILITIES CAUSED BY THE CONSTRUCTION OPERATIONS AT NO ADDITIONAL COST.
4. ALL EXISTING SEWERS, MANHOLES, AND APPURTENANCES TO BE ABANDONED SHALL BE DONE IN ACCORDANCE WITH THE SPECIAL PROVISIONS. ALL INTERFERING PORTIONS OF SEWERS, MANHOLES, AND APPURTENANCES TO BE ABANDONED SHALL BE REMOVED.
5. CONTRACTOR SHALL FOLLOW THE ORDER OF CONSTRUCTION IN THE SPECIAL PROVISIONS.
6. FOR MANHOLE WALL PENETRATION BY PVC PIPE, CONTRACTOR SHALL INSTALL TWO COMPRESSED SEGMENTED STAINLESS STEEL EPDM RUBBER "LINK SEAL" MECHANICAL SEALS BY POWER PLANTS SUPPLY COMPANY OR APPROVED EQUAL MODEL OS-316 WITH PSI NITRILE RUBBER (ONE FOR EACH WALL FACE), TYPICAL EACH PIPE PENETRATION AT ALL MANHOLES. LINK SEAL TO PROVIDE INSURANCE AGAINST ASTM B117-97 SALT SPRAY EXPOSURE TEST WITH ASTM A-316 SS BOLTS AND HARDWARE. LINK SEAL TO BE INSTALLED PER MANUFACTURER'S WRITTEN INSTRUCTIONS.

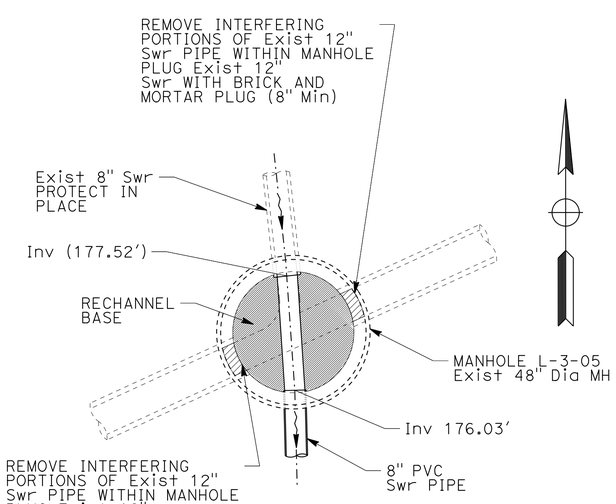

EXISTING MANHOLE L-3-05
FOR PLAN VIEW SEE SS-3

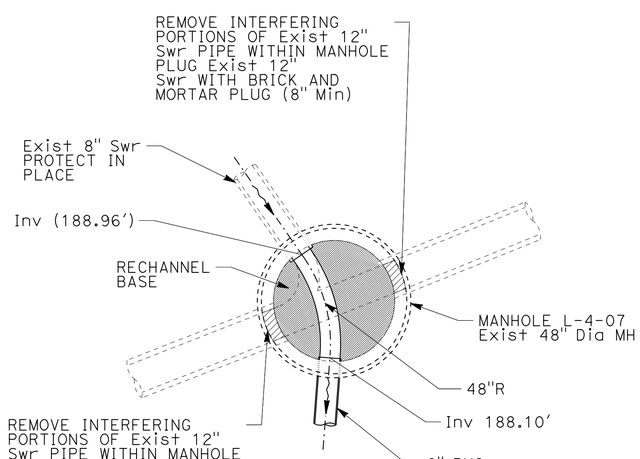

EXISTING MANHOLE L-4-07
FOR PLAN VIEW SEE SS-7

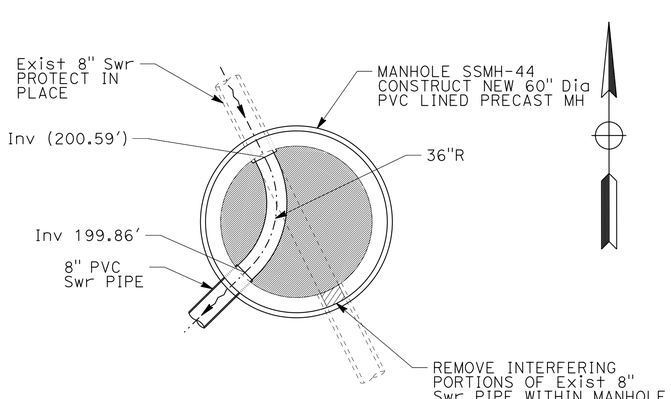

MANHOLE SSMH-44
FOR PLAN VIEW SEE SS-13

DETAIL 'M'
MANHOLE DETAILS 1

SANITARY SEWER DETAILS
NO SCALE

SSD-7

STATE OF CALIFORNIA - DEPARTMENT OF TRANSPORTATION
Caltrans®
CONSULTANT FUNCTIONAL SUPERVISOR: MARK BUSH
CALCULATED-DESIGNED BY: MOLLY JEWETT
CHECKED BY: LUANNE BEAN
REVISED BY
DATE REVISED

LAST REVISION 12-31-13
DATE PLOTTED => 20-MAR-2014
TIME PLOTTED => 14:33

Dist	COUNTY	ROUTE	POST MILES TOTAL PROJECT	SHEET No.	TOTAL SHEETS
11	SD	15,76	R46.2/R46.8, R12.1/R17.7	478	1273

REGISTERED CIVIL ENGINEER 01-06-14 DATE

03-24-14
PLANS APPROVAL DATE

REGISTERED PROFESSIONAL ENGINEER MARK BUSH No. C60477 Exp. 06-30-14 CIVIL STATE OF CALIFORNIA

THE STATE OF CALIFORNIA OR ITS OFFICERS OR AGENTS SHALL NOT BE RESPONSIBLE FOR THE ACCURACY OR COMPLETENESS OF SCANNED COPIES OF THIS PLAN SHEET.

TETRA TECH
17885 VON KARMAN AVE
SUITE 500
IRVINE, CA 92614

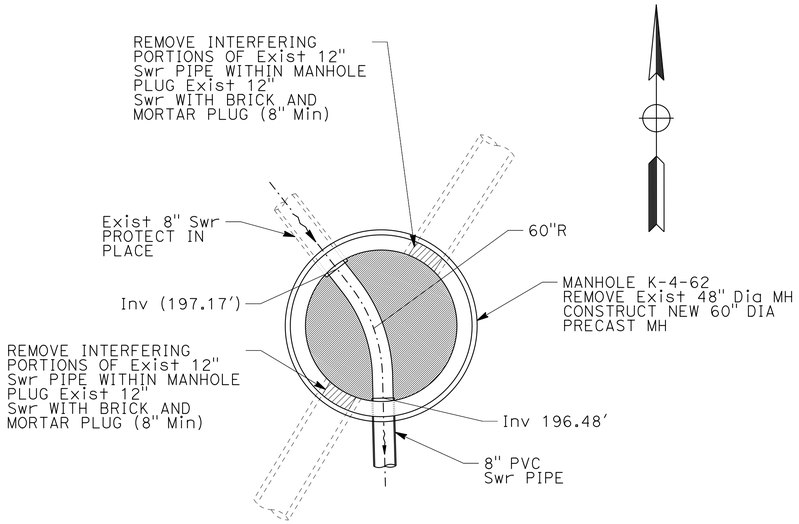

EXISTING MANHOLE K-4-62
FOR PLAN VIEW SEE SS-9

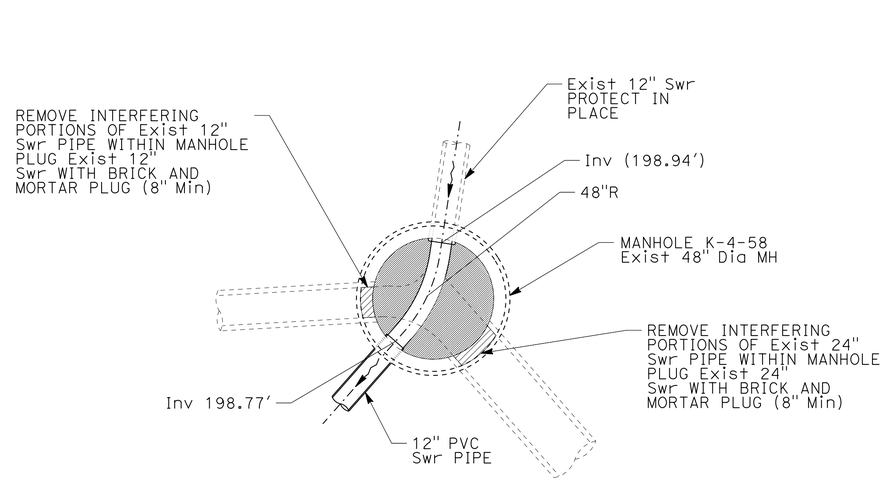

EXISTING MANHOLE K-4-58
FOR PLAN VIEW SEE SS-10

NOTES:

1. CONTRACTOR SHALL MAINTAIN OPERATION OF SEWER SERVICE AND BYPASS DURING CONSTRUCTION.
2. CONTRACTOR SHALL FIELD VERIFY LOCATION AND DEPTH OF ALL CONNECTION POINTS AND UTILITY CROSSINGS PRIOR TO THE BEGINNING OF CONSTRUCTION.
3. CONTRACTOR SHALL BE RESPONSIBLE FOR REPAIR OF ANY DAMAGE TO THE EXISTING FACILITIES CAUSED BY THE CONSTRUCTION OPERATIONS AT NO ADDITIONAL COST.
4. ALL EXISTING SEWERS, MANHOLES, AND APPURTENANCES TO BE ABANDONED SHALL BE DONE IN ACCORDANCE WITH THE SPECIAL PROVISIONS. ALL INTERFERING PORTIONS OF SEWERS, MANHOLES, AND APPURTENANCES TO BE ABANDONED SHALL BE REMOVED.
5. CONTRACTOR SHALL FOLLOW THE ORDER OF CONSTRUCTION IN THE SPECIAL PROVISIONS.
6. FOR MANHOLE WALL PENETRATION BY PVC PIPE, CONTRACTOR SHALL INSTALL TWO COMPRESSED SEGMENTED STAINLESS STEEL EPDM RUBBER "LINK SEAL" MECHANICAL SEALS BY POWER PLANTS SUPPLY COMPANY OR APPROVED EQUAL MODEL OS-316 WITH PSI NITRILE RUBBER (ONE FOR EACH WALL FACE), TYPICAL EACH PIPE PENETRATION AT ALL MANHOLES. LINK SEAL TO PROVIDE INSURANCE AGAINST ASTM B117-97 SALT SPRAY EXPOSURE TEST WITH ASTM A-316 SS BOLTS AND HARDWARE. LINK SEAL TO BE INSTALLED PER MANUFACTURER'S WRITTEN INSTRUCTIONS.

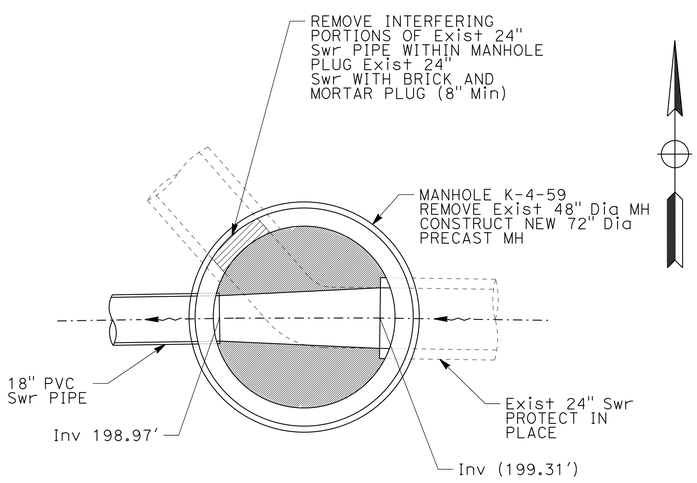

EXISTING MANHOLE K-4-59
FOR PLAN VIEW SEE SS-10

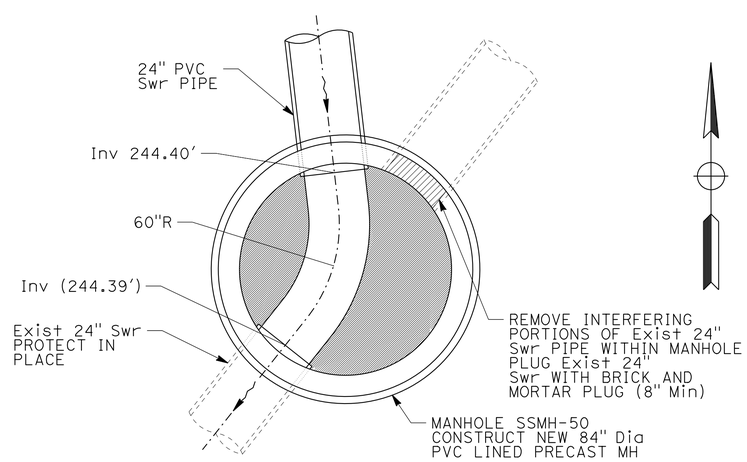

MANHOLE SSMH-50
FOR PLAN VIEW SEE SS-11

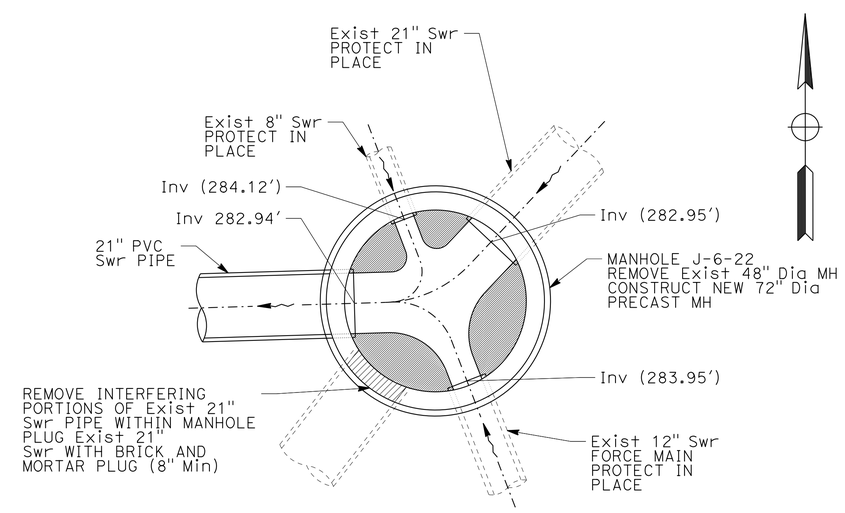

EXISTING MANHOLE J-6-22
FOR PLAN VIEW SEE SS-12

DETAIL 'N'
MANHOLE DETAILS 2

SANITARY SEWER DETAILS
NO SCALE

SSD-8

STATE OF CALIFORNIA - DEPARTMENT OF TRANSPORTATION
Caltrans
CONSULTANT FUNCTIONAL SUPERVISOR: MARK BUSH
CALCULATED-DESIGNED BY: MOLLY JEWETT
CHECKED BY: LUANNE BEAN
REVISED BY
DATE REVISED

LAST REVISION 12-31-13
DATE PLOTTED => 20-MAR-2014
TIME PLOTTED => 14:33

Dist	COUNTY	ROUTE	POST MILES TOTAL PROJECT	SHEET No.	TOTAL SHEETS
11	SD	15,76	R46.2/R46.8, R12.1/R17.7	479	1273

REGISTERED CIVIL ENGINEER 10-29-13 DATE

03-24-14
PLANS APPROVAL DATE

REGISTERED PROFESSIONAL ENGINEER JOSH STONE No. 60755 12/31/14 CIVIL STATE OF CALIFORNIA

THE STATE OF CALIFORNIA OR ITS OFFICERS OR AGENTS SHALL NOT BE RESPONSIBLE FOR THE ACCURACY OR COMPLETENESS OF SCANNED COPIES OF THIS PLAN SHEET.

DOKKEN ENGINEERING
5675 RUFFIN ROAD
SUITE 250
SAN DIEGO, CA 92123

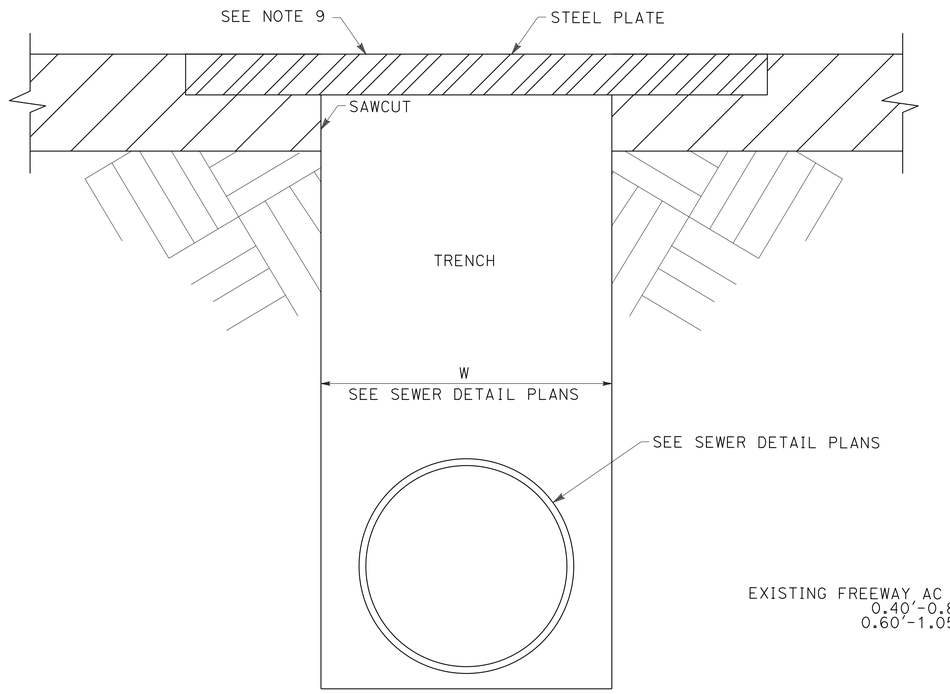

PLATING

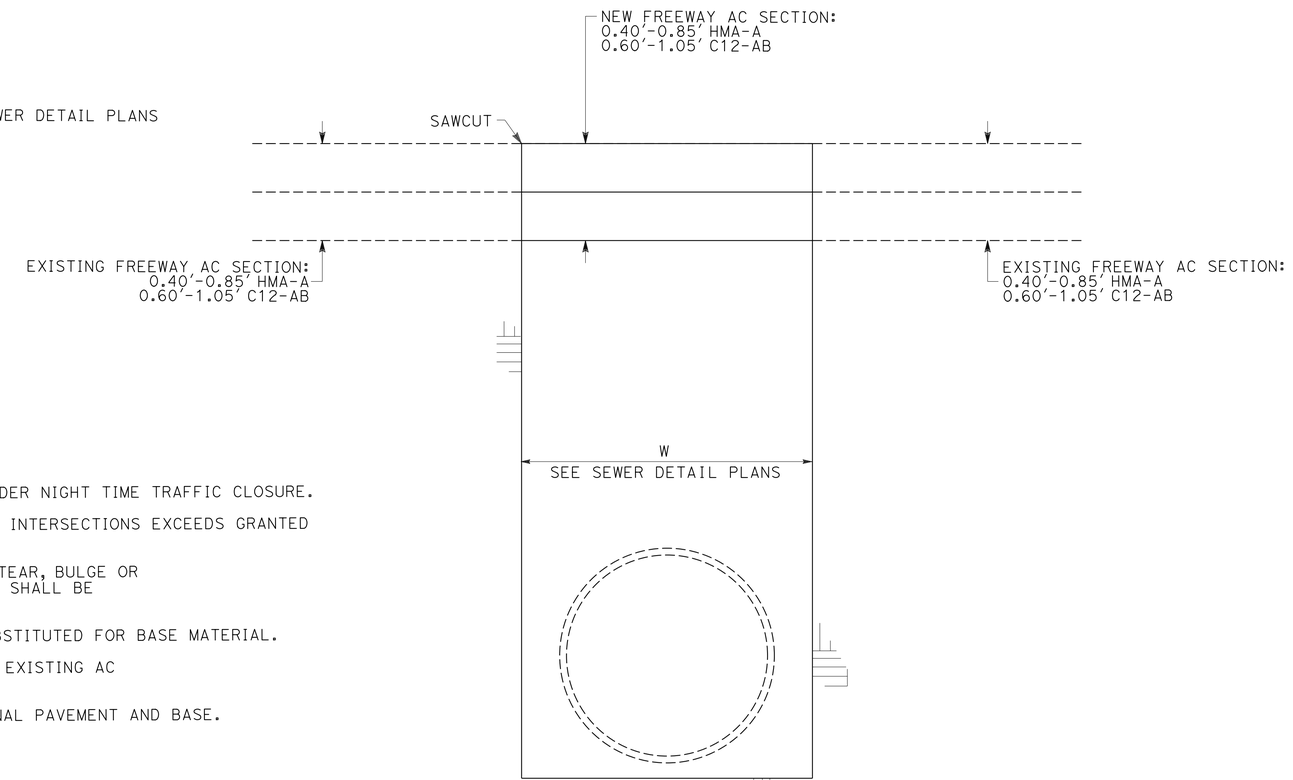

TRENCH RESURFACING

NOTES:

1. SEWER INSTALLATION ACROSS SIDESTREET INTERSECTIONS IS TO BE PERFORMED UNDER NIGHT TIME TRAFFIC CLOSURE.
2. TRENCH PLATE DETAIL IS TO BE USED IF SEWER INSTALLTION ACROSS SIDESTREET INTERSECTIONS EXCEEDS GRANTED CLOSURE PER LANE CLOSURE CHARTS, SEE TRAFFIC MANAGEMENT PLAN.
3. EXISTING AC SHALL BE SAW CUT AND REMOVED IN SUCH A MANNER SO AS NOT TO TEAR, BULGE OR DISPLACE ADJACENT PAVEMENT. EDGES SHALL BE CLEAN AND VERTICAL. ALL CUTS SHALL BE PARALLEL OR PERPENDICULAR TO STREET CENTERLINE, WHEN PRACTICAL.
4. BASE MATERIAL SHALL BE REPLACED TO DEPTH OF EXISTING BASE. AC MAY BE SUBSTITUTED FOR BASE MATERIAL.
5. A TACK COAT OF ASPHALTIC EMULSION OR PAVING ASPHALT SHALL BE APPLIED TO EXISTING AC OR PCC CONTACT SURFACES, PRIOR TO RESURFACING.
6. SLOUGHING OF TRENCH UNDER PAVEMENT SHALL BE CAUSE FOR REQUIRING ADDITIONAL PAVEMENT AND BASE.
7. FOR EXCAVATION AND BACKFILL, REFER TO Std PLAN A62D.
8. TRENCH PLATE TO BE USED IF TRENCH IS EXPOSED TO TRAFFIC.
9. STEEL PLATES USED FOR BRIDGING MUST EXTEND A MINIMUM OF 12" BEYOND THE EDGES OF THE TRENCH. PLATES SHALL BE TREATED WITH A NON SKID SURFACE AND MAINTAINED AT THE CONTRACTOR'S EXPENSE.
10. STEEL PLATE BRIDGING SHALL BE INSTALLED TO OPERATE WITH MINIMUM NOISE.
11. THE TRENCH SHALL BE ADEQUATELY SHORED, (AS MENTIONED IN SECTION 629 OF THE ENCROACHMENT PERMITS MANUAL) TO SUPPORT THE BRIDGING AND TRAFFIC LOADS.
12. TEMPORARY PAVING WITH COLD ASPHALT CONCRETE SHALL BE USED TO FEATHER THE EDGES OF THE PLATES.
13. THE MINIMAL THICKNESS OF STEEL PLATE BRIDGING IS 1-¾" FOR A GIVEN TRENCH WIDTH OF 5'-3".

SANITARY SEWER DETAILS

NO SCALE

SSD-9

REVISED BY	DATE REVISED

CALCULATED-DESIGNED BY	CHECKED BY
JENA ADDENBROOKE	JOSH STONE

CONSULTANT FUNCTIONAL SUPERVISOR: MARK BUSH

STATE OF CALIFORNIA - DEPARTMENT OF TRANSPORTATION

Caltrans

LAST REVISION 12-31-13 | DATE PLOTTED => 20-MAR-2014 | TIME PLOTTED => 14:33

Dist	COUNTY	ROUTE	POST MILES TOTAL PROJECT	SHEET No.	TOTAL SHEETS
11	SD	15,76	R46.2/R46.8, R12.1/R17.7	480	1273

REGISTERED CIVIL ENGINEER 01-06-14 DATE

03-24-14
PLANS APPROVAL DATE

REGISTERED PROFESSIONAL ENGINEER MARK BUSH No. C60477 Exp. 06-30-14 CIVIL STATE OF CALIFORNIA

THE STATE OF CALIFORNIA OR ITS OFFICERS OR AGENTS SHALL NOT BE RESPONSIBLE FOR THE ACCURACY OR COMPLETENESS OF SCANNED COPIES OF THIS PLAN SHEET.

TETRA TECH
17885 VON KARMAN AVE
SUITE 500
IRVINE, CA 92614

NOTES:

1. FOR ACCURATE RIGHT OF WAY DATA, CONTACT RIGHT OF WAY ENGINEERING AT THE DISTRICT OFFICE.
2. CONTRACTOR SHALL EXERCISE EXTREME CAUTION AND PROTECT THE EXISTING 24" VCP SEWER WHILE INSTALLING THE NEW CASING. THE EXISTING 24" VCP SEWER SHALL REMAIN IN SERVICE AT ALL TIMES.
3. CONTRACTOR SHALL FIELD VERIFY THE O.D. OF THE EXISTING 42" STEEL CASING PRIOR TO SUBMITTING STEEL CASING AND BUTT STRAP FABRICATION DRAWINGS.
4. CONTRACTOR SHALL SUBMIT A PLAN FOR SUPPORTING THE EXISTING SEWER DURING CONSTRUCTION. AT NO TIME SHALL THE CONTRACTOR EXPOSE MORE THAN 2 JOINTS. CONTRACTOR SHALL ASSUME THE EXISTING SEWER IS 24" VCP WITH 8 FOOT JOINTS. SEE NOTE 8 FOR ANTICIPATED CONSTRUCTION SEQUENCE.
5. CONTRACTOR SHALL ASSUME THE EXISTING PIPE BEDDING IS ¾" CRUSHED ROCK FOR BIDDING PURPOSES.
6. BUTT STRAP CONNECTION DETAIL 'E' SHALL BE MODIFIED BY DELETING THE CEMENT MORTAR LINING AND COATING.
7. SPLIT CASING DETAIL 'K' SHALL BE MODIFIED WITH 42" STEEL CASING (⅜" CYLINDER THICKNESS) AND 24" VCP CARRIER PIPE.
8. THE FOLLOWING IS THE ANTICIPATED SEQUENCE OF CONSTRUCTION:
   A. SUPPORT EXISTING SEWER
   B. INSTALL CASING SPACERS ON EXISTING SEWER
   C. OVER EXCAVATE EXISTING TRENCH BY 12-INCHES AND BACKFILL WITH ¾" CRUSHED ROCK
   D. INSTALL BOTTOM HALF OF 42" SPLIT CASING
   E. USE HYDRAULIC JACK TO LIFT STEEL CASING AND ENGAGE CASING SPACERS
   F. INSTALL CONCRETE DOBIES OR OTHER CONCRETE SUPPORT BLOCK UNDER 42" SPLIT CASING
   G. REMOVE HYDRAULIC JACK
   H. COMPLETE INSTALLATION OF 42" SPLIT CASING
   I. BACKFILL PIPE ZONE WITH 1-SACK SLURRY

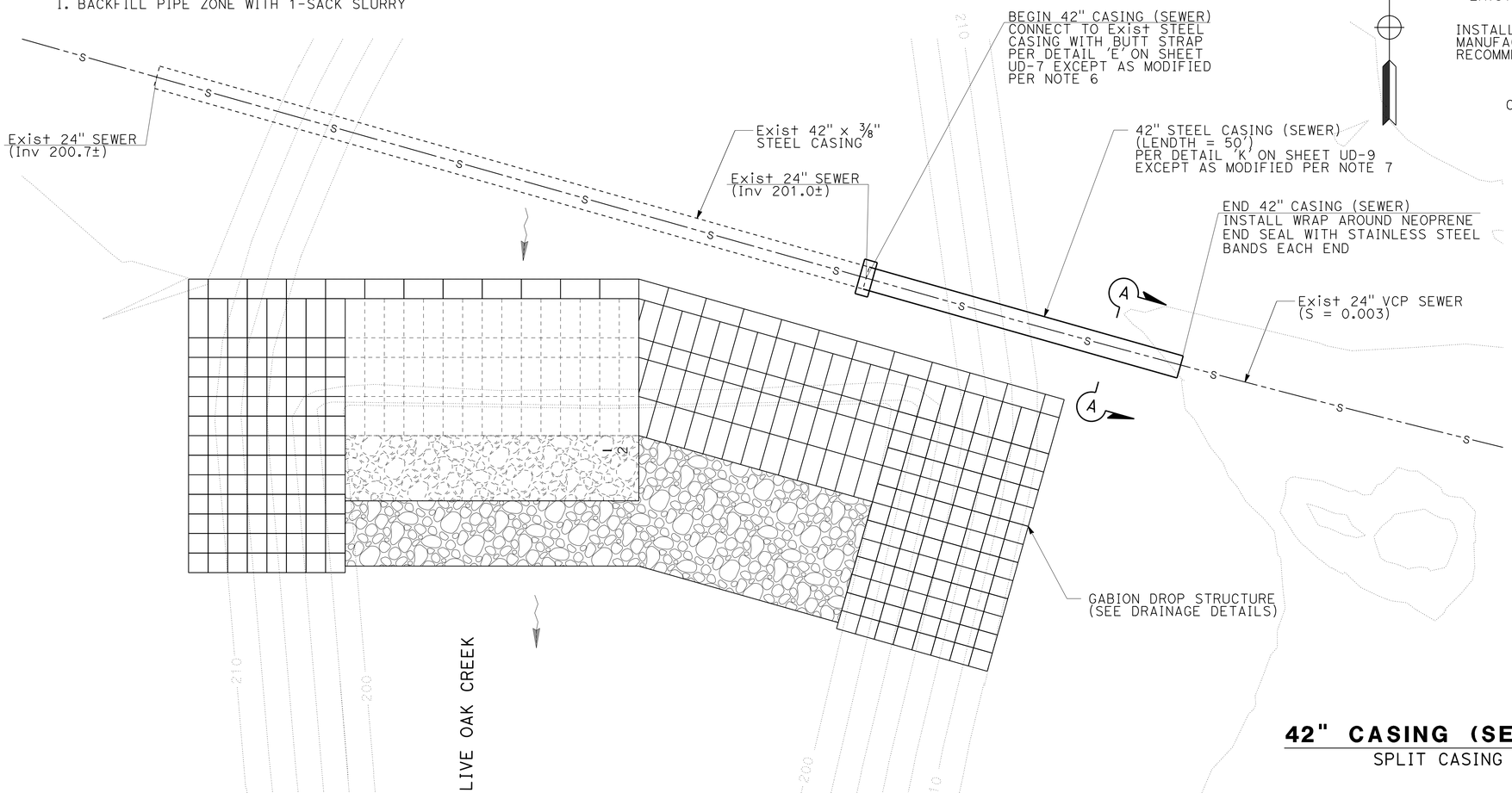

PLAN
SCALE: 1" = 10'

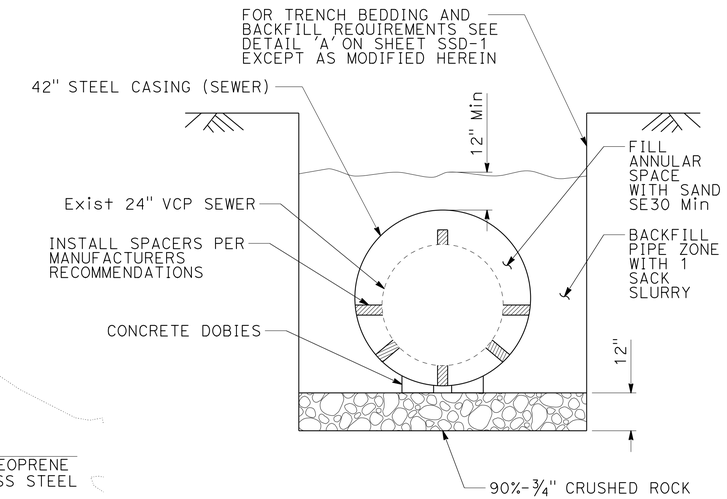

SECTION A-A
NO SCALE

42" CASING (SEWER)
SPLIT CASING

APPROVED FOR SANITARY SEWER WORK ONLY

SANITARY SEWER DETAILS

SCALE AS SHOWN

SSD-10

STATE OF CALIFORNIA - DEPARTMENT OF TRANSPORTATION
Caltrans

CONSULTANT FUNCTIONAL SUPERVISOR: MARK BUSH
CALCULATED-DESIGNED BY: MOLLY JEWETT
CHECKED BY: LUANNE BEAN
REVISED BY
DATE REVISED

LAST REVISION 12-31-13
DATE PLOTTED => 20-MAR-2014
TIME PLOTTED => 14:33

Dist	COUNTY	ROUTE	POST MILES TOTAL PROJECT	SHEET No.	TOTAL SHEETS
11	SD	15,76	R46.2/R46.8, R12.1/R17.7	481	1273

REGISTERED CIVIL ENGINEER 01-06-14 DATE

03-24-14
PLANS APPROVAL DATE

REGISTERED PROFESSIONAL ENGINEER MARK BUSH No. C60477 Exp. 06-30-14 CIVIL STATE OF CALIFORNIA

THE STATE OF CALIFORNIA OR ITS OFFICERS OR AGENTS SHALL NOT BE RESPONSIBLE FOR THE ACCURACY OR COMPLETENESS OF SCANNED COPIES OF THIS PLAN SHEET.

TETRA TECH
17885 VON KARMAN AVE
SUITE 500
IRVINE, CA 92614

SANITARY SEWER SHEET No.	SYSTEM No.	UNIT No.	ABANDON SEWER (N) 12" VCP	ABANDON SEWER (N) 21" VCP	ABANDON SEWER (N) 24" VCP	ABANDON SEWER MANHOLE	MODIFY SEWER MANHOLE	ADJUST SEWER MANHOLE (RAINBOW)	60" PRECAST PVC LINED CONCRETE MANHOLE	60" PRECAST CONCRETE MANHOLE	72" PRECAST CONCRETE MANHOLE	84" PRECAST PVC LINED CONCRETE MANHOLE	(N) HEIGHT OF MANHOLE (Inv TO RIM)	20" STEEL CASING (SEWER)	30" STEEL CASING (SEWER)	36" STEEL CASING (SEWER)	42" STEEL CASING (SEWER)	RECONNECT EXISTING SEWER LATERAL	(N) SEWER LATERAL	8" PVC SEWER PIPE (SDR 35)	12" PVC SEWER PIPE (SDR 35)	18" PVC SEWER PIPE (PS 46)	21" PVC SEWER PIPE (PS 46)	24" PVC SEWER PIPE (PS 46)	12" PVC FORCE MAIN (C-900)	TEMPORARY BYPASS	(N) PRE-GRADING CCTV INSPECTION OF EXISTING SEWER MAIN	(N) POST-GRADING CCTV INSPECTION OF EXISTING SEWER MAIN	(N) TESTING AND CCTV INSPECTION OF SEWER MAIN	TRENCHLESS CASING INSTALLATION	DESCRIPTION
			LF	LF	LF	EA	EA	EA	EA	EA	EA	EA	LF	LF	LF	LF	LF	EA	LF	LF	LF	LF	LF	LF	LF	EA	LF	LF	LF	LF	
SS-1	1	a1								1			13.3																		MANHOLE SSMH-1
	1	a2																				25.00							25.00		18" SEWER
	1	a3								1			13.2																		MANHOLE SSMH-2
	1	a4																				357.74							357.74		18" SEWER
	1	a5								1			18.3																		MANHOLE SSMH-3
	1	a6																				357.73							357.73		18" SEWER
	1	a7								1			19.0																		MANHOLE SSMH-4
	1	a8	172.3																												Exist SEWER
	1	a9				1		1																							Exist MANHOLE
	1	b1	348.2																												Exist SEWER
	1	b2				1		1																							Exist MANHOLE
	1	b3	376.2																												Exist SEWER
	9	a																				137.16							137.16		18" SEWER
	9	b													56																30" STEEL CASING
	9	c								1			17.5																		MANHOLE SSMH-2A
SS-2	1	b4																				357.68							357.68		18" SEWER
	1	b5																1	161.84												4" SEWER
	1	b6								1			16.7																		MANHOLE SSMH-5
	1	b7																				84.55							84.55		18" SEWER
	1	b8								1			16.5																		MANHOLE SSMH-6
	1	b9																				131.59							180.00		18" SEWER
	1	c1								1			16.3													1					MANHOLE SSMH-7
	1	c2																												68	30" STEEL CASING
	1	c3																				330.95							282.54		18" SEWER
	1	c4																1	10.00												4" SEWER
	1	c5								1			15.5																		MANHOLE SSMH-8
	1	c6																				232.29							232.29		18" SEWER
	1	c7				1		1																							Exist MANHOLE
	1	c8	372.9																												Exist SEWER
	1	c9	347.9																												Exist SEWER
	1	c11													40																30" STEEL CASING
	1	d1				1		1																							Exist MANHOLE
	1	d2	349.1																												Exist SEWER
	2	a																		153.70											8" SEWER
	2	b					1	1					13.2																		MODIFY Exist MANHOLE
SS-3	1	d3								1			16.8																		MANHOLE SSMH-9
	1	d4																			35.72										12" SEWER
	1	d5																				226.02							226.02		18" SEWER
	1	d6													55																30" STEEL CASING
	1	d7								1			17.3																		MANHOLE SSMH-10
	1	d8																				326.56							326.56		18" SEWER
	1	d9																1	112.90												4" SEWER
SUBTOTAL			1966.6	-	-	4	1	5	-	11	-	-	-	-	151	-	-	3	-	153.7	35.72	2567.27	-	-	-	1	-	-	-	68	

(N) = NOT A SEPARATE PAY ITEM, FOR INFORMATION ONLY

SANITARY SEWER QUANTITIES

NO SCALE

SSQ-1

MOLLY JEWETT — REVISED BY
LUANNE BEAN — DATE REVISED
CALCULATED-DESIGNED BY
CHECKED BY
CONSULTANT FUNCTIONAL SUPERVISOR
MARK BUSH
STATE OF CALIFORNIA - DEPARTMENT OF TRANSPORTATION
Caltrans

LAST REVISION 10-18-13
DATE PLOTTED => 20-MAR-2014
TIME PLOTTED => 14:33

Dist	COUNTY	ROUTE	POST MILES TOTAL PROJECT	SHEET No.	TOTAL SHEETS
11	SD	15,76	R46.2/R46.8, R12.1/R17.7	482	1273

REGISTERED CIVIL ENGINEER 01-06-14 DATE

03-24-14
PLANS APPROVAL DATE

REGISTERED PROFESSIONAL ENGINEER MARK BUSH No. C60477 Exp. 06-30-14 CIVIL STATE OF CALIFORNIA

THE STATE OF CALIFORNIA OR ITS OFFICERS OR AGENTS SHALL NOT BE RESPONSIBLE FOR THE ACCURACY OR COMPLETENESS OF SCANNED COPIES OF THIS PLAN SHEET.

TETRA TECH
17885 VON KARMAN AVE
SUITE 500
IRVINE, CA 92614

SANITARY SEWER SHEET No.	SYSTEM No.	UNIT No.	ABANDON SEWER (N) 12" VCP	ABANDON SEWER (N) 21" VCP	ABANDON SEWER (N) 24" VCP	ABANDON SEWER MANHOLE	MODIFY SEWER MANHOLE	ADJUST SEWER MANHOLE (RAINBOW)	60" PRECAST PVC LINED CONCRETE MANHOLE	60" PRECAST CONCRETE MANHOLE	72" PRECAST CONCRETE MANHOLE	84" PRECAST PVC LINED CONCRETE MANHOLE	(N) HEIGHT OF MANHOLE (Inv TO RIM)	20" STEEL CASING (SEWER)	30" STEEL CASING (SEWER)	36" STEEL CASING (SEWER)	42" STEEL CASING (SEWER)	RECONNECT EXISTING SEWER LATERAL	(N) SEWER LATERAL	8" PVC SEWER PIPE (SDR 35)	12" PVC SEWER PIPE (SDR 35)	18" PVC SEWER PIPE (PS 46)	21" PVC SEWER PIPE (PS 46)	24" PVC SEWER PIPE (PS 46)	12" PVC FORCE MAIN (C-900)	TEMPORARY BYPASS	(N) PRE-GRADING CCTV INSPECTION OF EXISTING SEWER MAIN	(N) POST-GRADING CCTV INSPECTION OF EXISTING SEWER MAIN	(N) TESTING AND CCTV INSPECTION OF SEWER MAIN	TRENCHLESS CASING INSTALLATION	DESCRIPTION
			LF	LF	LF	EA	EA	EA	EA	EA	EA	EA	LF	LF	LF	LF	LF	EA	LF	LF	LF	LF	LF	LF	LF	EA	LF	LF	LF	LF	
SS-3	1	e1																													NOT USED
	1	e2																													NOT USED
	1	e3								1			17.6																		MANHOLE SSMH-12
	1	e4																				265.80							265.80		18" SEWER
	1	e5								1			16.9													1					MANHOLE SSMH-13
	1	e6																				124.20							124.20		18" SEWER
	1	e7								1			17.0																		MANHOLE SSMH-14
	1	e8																			23.41										12" SEWER
	1	e9																				230.00							230.00		18" SEWER
	1	e11													71																30" STEEL CASING
	1	f1				1		1																							Exist MANHOLE
	1	f2	319.3																												Exist SEWER
	1	f3				1		1																							Exist MANHOLE
	1	f4	350.0																												Exist SEWER
	1	f5	349.1																												Exist SEWER
	1	f6				1		1																							Exist MANHOLE
	1	f7	353.4																												Exist SEWER
	3	a																		98.93											8" SEWER
	3	b					1	1					12.3																		MODIFY Exist MANHOLE
SS-4	1	f8								1			17.7																		MANHOLE SSMH-15
	1	f9																				295.00							295.00		18" SEWER
	1	g1																1	10.00												4" SEWER
	1	g2								1			18.6																		MANHOLE SSMH-16
	1	g3																				294.99							294.99		18" SEWER
	1	g4								1			18.6																		MANHOLE SSMH-17
	1	g5																				295.00							295.00		18" SEWER
	1	g6								1			17.7													1					MANHOLE SSMH-18
	1	g7																				259.75							259.75		18" SEWER
	1	g8				1		1																							Exist MANHOLE
	1	g9	350.9																												Exist SEWER
	1	h1				1		1																							Exist MANHOLE
	1	h2	349.8																												Exist SEWER
	1	h3				1		1																							Exist MANHOLE
	1	h4	351.1																												Exist SEWER
SS-5	1	h5																1	10.00												4" SEWER
	1	h6																1	10.00												4" SEWER
	1	h7								1			15.9																		MANHOLE SSMH-19
	1	h8																													NOT USED
	1	h9																			8.83										12" SEWER
	1	i1																				330.78							330.78		18" SEWER
	1	i2																1	10.00												4" SEWER
	1	i3								1			16.2																		MANHOLE SSMH-20
	1	i4																				295.00							295.00		18" SEWER
	1	i5								1			17.2																		MANHOLE SSMH-21
SUBTOTAL			2423.6	-	-	6	1	7	-	10	-	-	-	-	71	-	-	4	-	98.93	32.24	2390.52	-	-	-	2	-	-	-	-	

(N) = NOT A SEPARATE PAY ITEM, FOR INFORMATION ONLY

SANITARY SEWER QUANTITIES

NO SCALE

SSQ-2

STATE OF CALIFORNIA - DEPARTMENT OF TRANSPORTATION

Caltrans

CONSULTANT FUNCTIONAL SUPERVISOR: MARK BUSH

CALCULATED-DESIGNED BY: MOLLY JEWETT

CHECKED BY: LUANNE BEAN

REVISED BY

DATE REVISED

LAST REVISION 10-18-13

DATE PLOTTED => 20-MAR-2014
TIME PLOTTED => 14:33

Dist	COUNTY	ROUTE	POST MILES TOTAL PROJECT	SHEET No.	TOTAL SHEETS
11	SD	15,76	R46.2/R46.8, R12.1/R17.7	483	1273

REGISTERED CIVIL ENGINEER 01-06-14 DATE

03-24-14
PLANS APPROVAL DATE

REGISTERED PROFESSIONAL ENGINEER MARK BUSH No. C60477 Exp. 06-30-14 CIVIL STATE OF CALIFORNIA

THE STATE OF CALIFORNIA OR ITS OFFICERS OR AGENTS SHALL NOT BE RESPONSIBLE FOR THE ACCURACY OR COMPLETENESS OF SCANNED COPIES OF THIS PLAN SHEET.

TETRA TECH
17885 VON KARMAN AVE
SUITE 500
IRVINE, CA 92614

SANITARY SEWER SHEET No.	SYSTEM No.	UNIT No.	ABANDON SEWER (N) 12" VCP LF	ABANDON SEWER (N) 21" VCP LF	ABANDON SEWER (N) 24" VCP LF	ABANDON SEWER MANHOLE EA	MODIFY SEWER MANHOLE EA	ADJUST SEWER MANHOLE (RAINBOW) EA	60" PRECAST PVC LINED CONCRETE MANHOLE EA	60" PRECAST CONCRETE MANHOLE EA	72" PRECAST CONCRETE MANHOLE EA	84" PRECAST PVC LINED CONCRETE MANHOLE EA	(N) HEIGHT OF MANHOLE (Inv TO RIM) LF	20" STEEL CASING (SEWER) LF	30" STEEL CASING (SEWER) LF	36" STEEL CASING (SEWER) LF	42" STEEL CASING (SEWER) LF	RECONNECT EXISTING SEWER LATERAL EA	(N) SEWER LATERAL LF	8" PVC SEWER PIPE (SDR 35) LF	12" PVC SEWER PIPE (SDR 35) LF	18" PVC SEWER PIPE (PS 46) LF	21" PVC SEWER PIPE (PS 46) LF	24" PVC SEWER PIPE (PS 46) LF	12" PVC FORCE MAIN (C-900) LF	TEMPORARY BYPASS EA	(N) PRE-GRADING CCTV INSPECTION OF EXISTING SEWER MAIN LF	(N) POST-GRADING CCTV INSPECTION OF EXISTING SEWER MAIN LF	(N) TESTING AND CCTV INSPECTION OF SEWER MAIN LF	TRENCHLESS CASING INSTALLATION LF	DESCRIPTION
SS-5	1	i6																				232.04							232.04		18" SEWER
	1	i7																1	50.01												4" SEWER
	1	i8								1			16.8																		MANHOLE SSMH-22
	1	i9																													NOT USED
	1	j1																													NOT USED
	1	j2																				149.96							149.96		18" SEWER
	1	j3				1		1																							Exist MANHOLE
	1	j4	349.9																												Exist SEWER
	1	j5				1		1																							Exist MANHOLE
	1	j6	349.4																												Exist SEWER
	1	j7				1		1																							Exist MANHOLE
	1	j8	350.4																												Exist SEWER
SS-6	1	j9								1			17.3																		MANHOLE SSMH-23
	1	k1																				349.14							349.14		18" SEWER
	1	k2								1			18.8													1					MANHOLE SSMH-24
	1	k3																1	10.00												4" SEWER
	1	k4																				336.96							336.96		18" SEWER
	1	k5								1			20.0																		MANHOLE SSMH-25
	1	k6																				418.93							418.93		18" SEWER
	1	k7																			30.82										12" SEWER
	1	k8																													NOT USED
	1	k9																			7.28										12" SEWER
	1	l1																													NOT USED
	1	l2				1		1																							Exist MANHOLE
	1	l3	342.6																												Exist SEWER
	1	l4				1		1																							Exist MANHOLE
	1	l5	355.1																												Exist SEWER
	1	l6				1		1																							Exist MANHOLE
	1	l7	350.0																												Exist SEWER
SS-7	1	l8								1			17.7																		MANHOLE SSMH-27
	1	l9																1	10.00												4" SEWER
	1	m1																				295.00							295.00		18" SEWER
	1	m2								1			17.9																		MANHOLE SSMH-28
	1	m3																				295.00							295.00		18" SEWER
	1	m4																1	81.70												4" SEWER
	1	m5							1				18.0													1					MANHOLE SSMH-29
	1	m6																				162.81							162.81		18" SEWER
	1	m7								1			18.0																		MANHOLE SSMH-30
	1	m8																1	66.70												4" SEWER
	1	m9																				169.99							169.99		18" SEWER
	1	n1								1			7.9																		BYPASS MANHOLE
	1	n2																			5.96										12" SEWER
	1	n3													28																30" STEEL CASING
	1	n4								1			18.9																		MANHOLE SSMH-31
	1	n5				1		1																							Exist MANHOLE
	1	n6	350.9																												Exist SEWER
SUBTOTAL			2448.3	-	-	7	-	7	1	9	-	-	-	-	28	-	-	5	-	-	44.06	2409.83	-	-	-	2	-	-	-	-	

(N) = NOT A SEPARATE PAY ITEM, FOR INFORMATION ONLY

SANITARY SEWER QUANTITIES

NO SCALE

SSQ-3

STATE OF CALIFORNIA - DEPARTMENT OF TRANSPORTATION

Caltrans

CONSULTANT FUNCTIONAL SUPERVISOR: MARK BUSH

CALCULATED-DESIGNED BY: MOLLY JEWETT

CHECKED BY: LUANNE BEAN

REVISED BY

DATE REVISED

LAST REVISION 10-18-13

DATE PLOTTED => 20-MAR-2014
TIME PLOTTED => 14:33

Dist	COUNTY	ROUTE	POST MILES TOTAL PROJECT	SHEET No.	TOTAL SHEETS
11	SD	15,76	R46.2/R46.8, R12.1/R17.7	484	1273

REGISTERED CIVIL ENGINEER 01-06-14 DATE

03-24-14
PLANS APPROVAL DATE

REGISTERED PROFESSIONAL ENGINEER MARK BUSH No. C60477 Exp. 06-30-14 CIVIL STATE OF CALIFORNIA

THE STATE OF CALIFORNIA OR ITS OFFICERS OR AGENTS SHALL NOT BE RESPONSIBLE FOR THE ACCURACY OR COMPLETENESS OF SCANNED COPIES OF THIS PLAN SHEET.

TETRA TECH
17885 VON KARMAN AVE
SUITE 500
IRVINE, CA 92614

SANITARY SEWER SHEET No.	SYSTEM No.	UNIT No.	ABANDON SEWER (N) 12" VCP	ABANDON SEWER (N) 21" VCP	ABANDON SEWER (N) 24" VCP	ABANDON SEWER MANHOLE	MODIFY SEWER MANHOLE	ADJUST SEWER MANHOLE (RAINBOW)	60" PRECAST PVC LINED CONCRETE MANHOLE	60" PRECAST CONCRETE MANHOLE	72" PRECAST CONCRETE MANHOLE	84" PRECAST PVC LINED CONCRETE MANHOLE	(N) HEIGHT OF MANHOLE (Inv TO RIM)	20" STEEL CASING (SEWER)	30" STEEL CASING (SEWER)	36" STEEL CASING (SEWER)	42" STEEL CASING (SEWER)	RECONNECT EXISTING SEWER LATERAL	(N) SEWER LATERAL	8" PVC SEWER PIPE (SDR 35)	12" PVC SEWER PIPE (SDR 35)	18" PVC SEWER PIPE (PS 46)	21" PVC SEWER PIPE (PS 46)	24" PVC SEWER PIPE (PS 46)	12" PVC FORCE MAIN (C-900)	TEMPORARY BYPASS	(N) PRE-GRADING CCTV INSPECTION OF EXISTING SEWER MAIN	(N) POST-GRADING CCTV INSPECTION OF EXISTING SEWER MAIN	(N) TESTING AND CCTV INSPECTION OF SEWER MAIN	TRENCHLESS CASING INSTALLATION	DESCRIPTION
			LF	LF	LF	EA	EA	EA	EA	EA	EA	EA	LF	LF	LF	LF	LF	EA	LF	LF	LF	LF	LF	LF	LF	EA	LF	LF	LF	LF	
SS-7	1	n7				1		1																							Exist MANHOLE
	1	n8	352.8																												Exist SEWER
	1	n9	348.4																												Exist SEWER
	4	a																		18.87											8" SEWER
	4	b					1	1					14.7																		MODIFY Exist MANHOLE
SS-8	1	o1																				227.25							227.25		18" SEWER
	1	o2							1				19.3																		MANHOLE SSMH-32
	1	o3																				182.12							182.12		18" SEWER
	1	o4								1			19.2																		MANHOLE SSMH-33
	1	o5																				295.00							295.00		18" SEWER
	1	o6								1			16.4																		MANHOLE SSMH-34
	1	o7																				295.00							295.00		18" SEWER
	1	o8				1		1																							Exist MANHOLE
	1	o9	279.1																												Exist SEWER
	1	o11																				158.31							158.31		18" SEWER
	1	o21								1			20.0																		MANHOLE SSMH-33
	1	p1				1		1																							Exist MANHOLE
	1	p2	70.8																												Exist SEWER
	1	p3				1		1																							Exist MANHOLE
	1	p4	350.1																												Exist SEWER
	1	p5				1		1																							Exist MANHOLE
	1	p6	350.5																												Exist SEWER
	1	p7				1		1																							Exist MANHOLE
	1	p8	349.1																												Exist SEWER
SS-9	1	p9								1			16.1																		MANHOLE SSMH-35
	1	q1																				225.74							225.74		18" SEWER
	1	q2								1			17.6													1					MANHOLE SSMH-36
	1	q3																			16.03										12" SEWER
	1	q4																				364.25							364.25		18" SEWER
	1	q5								1			20.6																		MANHOLE SSMH-37
	1	q6																			34.66										12" SEWER
	1	q7																				187.47							187.47		18" SEWER
	1	q8							1				19.5																		MANHOLE SSMH-38
	1	q9																				227.15							227.15		18" SEWER
	1	q11													58																30" STEEL CASING
	1	q12				1		1																							Exist MANHOLE
	1	r1				1		1																							Exist MANHOLE
	1	r2	349.1																												Exist SEWER
	1	r3				1		1																							Exist MANHOLE
	1	r4	252.4																												Exist SEWER
	1	r5	97.7																												Exist SEWER
	6	a																		62.99											8" SEWER
	6	b								1																					MODIFY Exist MANHOLE
SUBTOTAL			2800	-	-	9	1	10	2	7	-	-	-	-	58	-	-	-	-	81.86	50.69	2162.29	-	-	-	1	-	-	-	-	

(N) = NOT A SEPARATE PAY ITEM, FOR INFORMATION ONLY

SANITARY SEWER QUANTITIES

NO SCALE

SSQ-4

REVISED BY | DATE REVISED

MOLLY JEWETT | LUANNE BEAN

CALCULATED-DESIGNED BY | CHECKED BY

CONSULTANT FUNCTIONAL SUPERVISOR | MARK BUSH

STATE OF CALIFORNIA - DEPARTMENT OF TRANSPORTATION

Caltrans

LAST REVISION 10-18-13 | DATE PLOTTED => 20-MAR-2014 | TIME PLOTTED => 14:33

SANITARY SEWER SHEET No.	SYSTEM No.	UNIT No.	ABANDON SEWER (N) 12" VCP	ABANDON SEWER (N) 21" VCP	ABANDON SEWER (N) 24" VCP	ABANDON SEWER MANHOLE	MODIFY SEWER MANHOLE	ADJUST SEWER MANHOLE (RAINBOW)	60" PRECAST PVC LINED CONCRETE MANHOLE	60" PRECAST CONCRETE MANHOLE	72" PRECAST CONCRETE MANHOLE	84" PRECAST PVC LINED CONCRETE MANHOLE	(N) HEIGHT OF MANHOLE (Inv TO RIM)	20" STEEL CASING (SEWER)	30" STEEL CASING (SEWER)	36" STEEL CASING (SEWER)	42" STEEL CASING (SEWER)	RECONNECT EXISTING SEWER LATERAL	(N) SEWER LATERAL	8" PVC SEWER PIPE (SDR 35)	12" PVC SEWER PIPE (SDR 35)	18" PVC SEWER PIPE (PS 46)	21" PVC SEWER PIPE (PS 46)	24" PVC SEWER PIPE (PS 46)	12" PVC FORCE MAIN (C-900)	TEMPORARY BYPASS	(N) PRE-GRADING CCTV INSPECTION OF EXISTING SEWER MAIN	(N) POST-GRADING CCTV INSPECTION OF EXISTING SEWER MAIN	(N) TESTING AND CCTV INSPECTION OF SEWER MAIN	TRENCHLESS CASING INSTALLATION	DESCRIPTION
			LF	LF	LF	EA	EA	EA	EA	EA	EA	EA	LF	LF	LF	LF	LF	EA	LF	LF	LF	LF	LF	LF	LF	EA	LF	LF	LF	LF	
SS-10	1	r6								1			19.3																		MANHOLE SSMH-39
	1	r7																				327.42							327.42		18" SEWER
	1	r8								1			20.7																		MANHOLE SSMH-40
	1	r9																				376.13							376.13		18" SEWER
	1	s1																													NOT USED
	1	s2	295.5																												Exist SEWER
	1	s3								1			19.6																		MANHOLE SSMH-42
	1	s4																				90.80							90.80		18" SEWER
	1	s5									1																				MODIFY Exist MANHOLE
	1	s6				1		1																							Exist MANHOLE
	1	s7	294.8																												Exist SEWER
	1	s8				1		1																							Exist MANHOLE
	1	s9	303.6																												Exist SEWER
	1	t1			71.4																										Exist SEWER
	7	a																			68.40										12" SEWER
	7	b					1	1																							MODIFY Exist MANHOLE
SS-11	1	t2										1	7.8																		MANHOLE SSMH-50
	1	t3																						10.00					10.00		24" SEWER
	1	t4							1				7.7																		MANHOLE SSMH-51
	1	t5																						294.16					294.16		24" SEWER
	1	t6							1				6.4																		MANHOLE SSMH-52
	1	t7																						218.10					218.10		24" SEWER
	1	t8							1				12.8																		MANHOLE SSMH-53
	1	t9																						226.11					226.11		24" SEWER
	1	u1														30															36" STEEL CASING
	1	u2							1				22.4																		MANHOLE SSMH-54
	1	u3																					337.87						337.87		21" SEWER
	1	u4			215.6																										Exist SEWER
	1	u5				1		1																							Exist MANHOLE
	1	u6			320.3																										Exist SEWER
	1	u7				1		1																							Exist MANHOLE
	1	u8			180.6																										Exist SEWER
	1	u9				1		1																							Exist MANHOLE
	1	v1		387.2																											Exist SEWER
	8	a																							28.9						12" FORCE MAIN
	10	a																		130											8" SEWER
	10	b								1			18.9																		MANHOLE SSMH-58
	10	C												80																	20" STEEL CASING
SS-12	1	v2							1				19.8																		MANHOLE SSMH-55
	1	v3																					332.94						332.94		21" SEWER
	1	v4							1				13.1																		MANHOLE SSMH-56
	1	v5																					305.11						305.11		21" SEWER
	1	v6								1			10.7																		MANHOLE SSMH-57
	1	v7																					72.58						72.58		21" SEWER
	1	v8									1																				MODIFY Exist MANHOLE
	1	v9				1		1																							Exist MANHOLE
	1	w1		701.9																											Exist SEWER
SUBTOTAL			893.9	1089.1	787.9	6	1	7	6	5	2	1	-	80	-	30	-	-	-	130	68.40	794.35	1048.5	748.37	28.9	-	-	-	-	-	

(N) = NOT A SEPARATE PAY ITEM, FOR INFORMATION ONLY

Dist	COUNTY	ROUTE	POST MILES TOTAL PROJECT	SHEET No.	TOTAL SHEETS
11	SD	15,76	R46.2/R46.8, R12.1/R17.7	485	1273

REGISTERED CIVIL ENGINEER 01-06-14 DATE

03-24-14
PLANS APPROVAL DATE

REGISTERED PROFESSIONAL ENGINEER MARK BUSH No. C60477 Exp. 06-30-14 CIVIL STATE OF CALIFORNIA

THE STATE OF CALIFORNIA OR ITS OFFICERS OR AGENTS SHALL NOT BE RESPONSIBLE FOR THE ACCURACY OR COMPLETENESS OF SCANNED COPIES OF THIS PLAN SHEET.

TETRA TECH
17885 VON KARMAN AVE
SUITE 500
IRVINE, CA 92614

SANITARY SEWER QUANTITIES

NO SCALE

SSQ-5

REVISED BY | DATE REVISED
MOLLY JEWETT | LUANNE BEAN
CALCULATED-DESIGNED BY | CHECKED BY
CONSULTANT FUNCTIONAL SUPERVISOR
MARK BUSH

STATE OF CALIFORNIA - DEPARTMENT OF TRANSPORTATION
Caltrans

LAST REVISION 10-18-13 | DATE PLOTTED => 20-MAR-2014 | TIME PLOTTED => 14:33

Dist	COUNTY	ROUTE	POST MILES TOTAL PROJECT	SHEET No.	TOTAL SHEETS
11	SD	15,76	R46.2/R46.8, R12.1/R17.7	486	1273

REGISTERED CIVIL ENGINEER 01-06-14 DATE

03-24-14
PLANS APPROVAL DATE

REGISTERED PROFESSIONAL ENGINEER MARK BUSH No. C60477 Exp. 06-30-14 CIVIL STATE OF CALIFORNIA

THE STATE OF CALIFORNIA OR ITS OFFICERS OR AGENTS SHALL NOT BE RESPONSIBLE FOR THE ACCURACY OR COMPLETENESS OF SCANNED COPIES OF THIS PLAN SHEET.

TETRA TECH
17885 VON KARMAN AVE
SUITE 500
IRVINE, CA 92614

SANITARY SEWER SHEET No.	SYSTEM No.	UNIT No.	ABANDON SEWER (N) 12" VCP	ABANDON SEWER (N) 21" VCP	ABANDON SEWER (N) 24" VCP	ABANDON SEWER MANHOLE	MODIFY SEWER MANHOLE	ADJUST SEWER MANHOLE (RAINBOW)	60" PRECAST PVC LINED CONCRETE MANHOLE	60" PRECAST CONCRETE MANHOLE	72" PRECAST CONCRETE MANHOLE	84" PRECAST PVC LINED CONCRETE MANHOLE	(N) HEIGHT OF MANHOLE (Inv TO RIM)	20" STEEL CASING (SEWER)	30" STEEL CASING (SEWER)	36" STEEL CASING (SEWER)	42" STEEL CASING (SEWER)	RECONNECT EXISTING SEWER LATERAL	(N) SEWER LATERAL	8" PVC SEWER PIPE (SDR 35)	12" PVC SEWER PIPE (SDR 35)	18" PVC SEWER PIPE (PS 46)	21" PVC SEWER PIPE (PS 46)	24" PVC SEWER PIPE (PS 46)	12" PVC FORCE MAIN (C-900)	TEMPORARY BYPASS	(N) PRE-GRADING CCTV INSPECTION OF EXISTING SEWER MAIN	(N) POST-GRADING CCTV INSPECTION OF EXISTING SEWER MAIN	(N) TESTING AND CCTV INSPECTION OF SEWER MAIN	TRENCHLESS CASING INSTALLATION	DESCRIPTION
			LF	LF	LF	EA	EA	EA	EA	EA	EA	EA	LF	LF	LF	LF	LF	EA	LF	LF	LF	LF	LF	LF	LF	EA	LF	LF	LF	LF	
SS-13	5	a																		7.73											8" SEWER
	5	b							1				10.8																		MANHOLE SSMH-43
	5	c																		72.44											8" SEWER
	5	d							1				6.6																		MANHOLE SSMH-44
	5	e					1	1					5.7																		MODIFY Exist MANHOLE
SSD-10	-	-															50														42" STEEL CASING
U-14	-	-						1																							Sta 'NWDW4' 15+35.91
U-15	-	-						1																							Sta 'A' 223+52.96
U-16	-	-						1																							Sta 'A' 231+78.23
U-17	-	-						1																							Sta 'A' 239+32.07
	-	-						1																							Sta 'A' 243+92.04
	-	-						1																							Sta 'A' 247+84.09
U-18	-	-						1																							Sta 'MH' 11+35.51
	-	-						1																							Sta 'A' 257+36.75
	-	-						1																							Sta 'A' 262+38.72
U-19	-	-						1																							Sta 'A' 269+96.86
U-23	-	-						1																							Sta 'A' 304+28.50
	-	-						1																							Sta 'A' 308+48.37
U-25	-	-						1																							Sta 'FL-A' 2257+19.88
	-	-						1																							Sta 'FL-A' 2260+55.98
	-	-						1																							Sta 'FL-A' 2263+00.63
	-	-						1																							Sta 'FL-A' 2266+08.20
U-ALL	-	-																										10,490	10,490		Exist SEWER
SUBTOTAL			-	-	-	-	1	17	2	-	-	-	-	-	-	-	50	-	-	80.17	-	-	-	-	-	-	-	-	-	-	
GRAND TOTAL			10,532.4	1089.1	787.9	32	5	53	11	42	2	1	-	80	308	30	50	12	-	544.66	231.11	10,324.26	1048.5	748.37	28.9	7	-	-	-	68	

(N) = NOT A SEPARATE PAY ITEM, FOR INFORMATION ONLY

SANITARY SEWER QUANTITIES

NO SCALE

SSQ-6

STATE OF CALIFORNIA - DEPARTMENT OF TRANSPORTATION

Caltrans

CONSULTANT FUNCTIONAL SUPERVISOR: MARK BUSH

CALCULATED-DESIGNED BY: MOLLY JEWETT

CHECKED BY: LUANNE BEAN

REVISED BY

DATE REVISED

LAST REVISION 10-18-13

DATE PLOTTED => 20-MAR-2014
TIME PLOTTED => 14:33

Dist	COUNTY	ROUTE	POST MILES TOTAL PROJECT	SHEET No.	TOTAL SHEETS
11	SD	15,76	R46.2/R46.8, R12.1/R17.7	487	1273

REGISTERED CIVIL ENGINEER 10-29-13 DATE

03-24-14
PLANS APPROVAL DATE

REGISTERED PROFESSIONAL ENGINEER JOSH STONE No. 60755 Exp. 12/31/14 CIVIL STATE OF CALIFORNIA

THE STATE OF CALIFORNIA OR ITS OFFICERS OR AGENTS SHALL NOT BE RESPONSIBLE FOR THE ACCURACY OR COMPLETENESS OF SCANNED COPIES OF THIS PLAN SHEET.

DOKKEN ENGINEERING
5675 RUFFIN RD
SUITE 250
SAN DIEGO, CA 92123

NOTES:

1. FOR ACCURATE RIGHT OF WAY DATA, CONTACT RIGHT OF WAY ENGINEERING AT THE DISTRICT OFFICE.
2. UTILITY OWNERSHIP ON THIS PROJECT:

GAS -	SAN DIEGO GAS AND ELECTRIC (SDGE)
ELECTRIC -	SAN DIEGO GAS AND ELECTRIC (SDGE)
SEWER -	RAINBOW MUNICIPAL WATER DISTRICT (RWD)
TELECOMMUNICATIONS -	AMERICAN TELEPHONE AND TELEGRAPH (AT&T)
	CROWN CASTLE (CC)
	TIME WARNER (TWC)
	TIME WARNER TELECOM (TMT)
	LEVEL 3 COMMUNICATIONS (LVL3)
WATER -	RAINBOW MUNICIPAL WATER DISTRICT (RWD)
	SAN DIEGO WATER AUTHORITY (SDCWA)

3. THE UPSIZE AND REALIGNMENT OF THE RAINBOW MUNICIPAL WATER DISTRICT SEWER MAIN FROM SOUTH MISSION ROAD TO GIRD ROAD WILL BE DESIGNED BY RAINBOW MUNICIPAL WATER DISTRICT AND SHOWN IN SANITARY SEWER RELOCATION SHEETS.

ABBREVIATIONS:

CML&C	CEMENT MORTAR LINED & COATED
kV	KILOVOLT
HPL	HIGH PRESSURE LINE
TP	TOP OF PIPE
ARV	AUTOMATIC AIR RELEASE AND VACUUM RELIEF VALVE
PXHP	POLYXYLENE HIGH PRESSURE

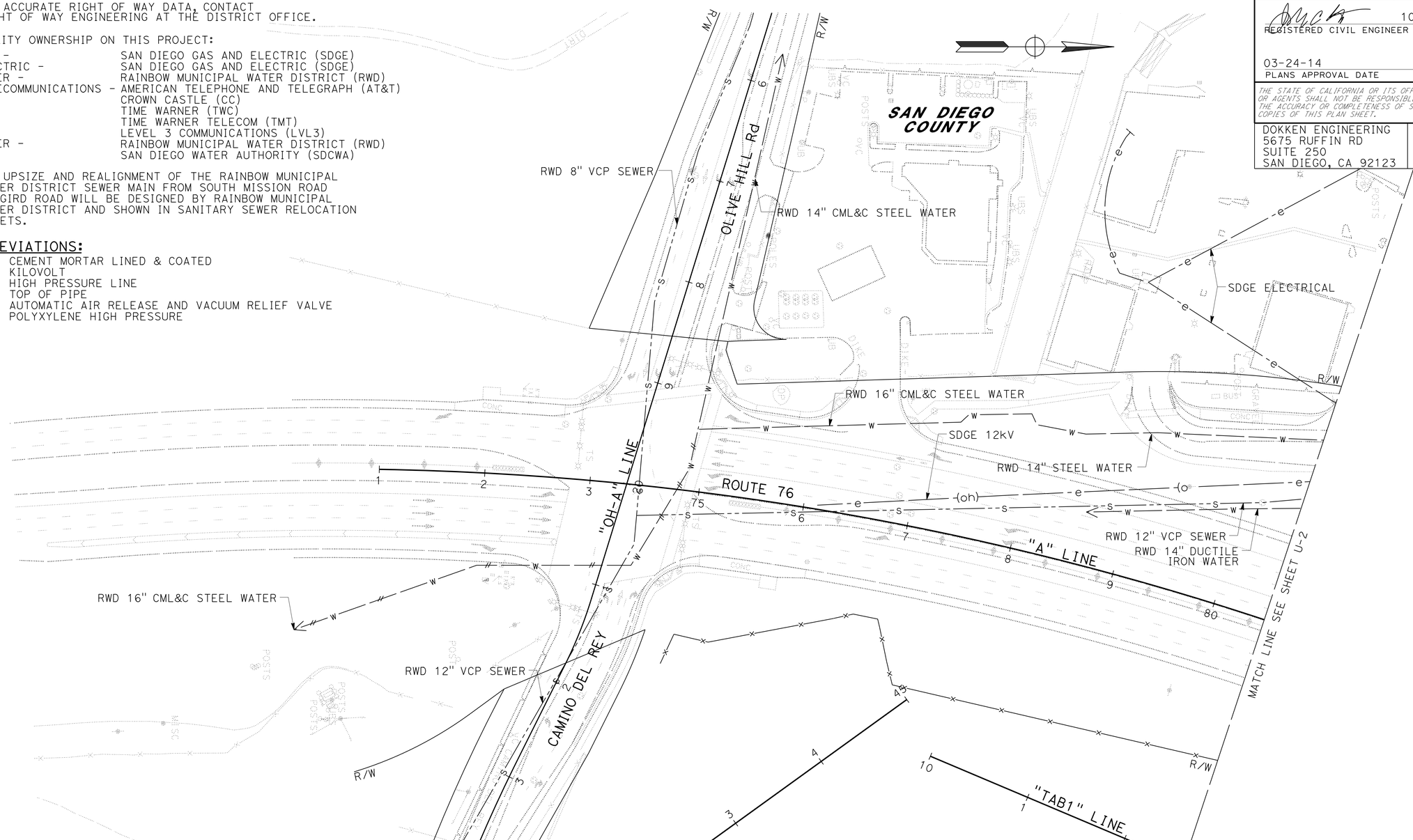

UTILITY PLAN

SCALE: 1" = 50'

U-1

APPROVED FOR UTILITY INFORMATION ONLY

STATE OF CALIFORNIA - DEPARTMENT OF TRANSPORTATION
Caltrans

CONSULTANT FUNCTIONAL SUPERVISOR: JOSH STONE
CALCULATED-DESIGNED BY: JENA ADDENBROOKE
CHECKED BY: JOSH STONE
REVISED BY
DATE REVISED

LAST REVISION 12-31-13
DATE PLOTTED => 20-MAR-2014
TIME PLOTTED => 14:33

Dist	COUNTY	ROUTE	POST MILES TOTAL PROJECT	SHEET No.	TOTAL SHEETS
11	SD	15,76	R46.2/R46.8, R12.1/R17.7	488	1273

REGISTERED CIVIL ENGINEER 10-29-13 DATE

03-24-14
PLANS APPROVAL DATE

REGISTERED PROFESSIONAL ENGINEER JOSH STONE No. 60755 Exp. 12/31/14 CIVIL STATE OF CALIFORNIA

THE STATE OF CALIFORNIA OR ITS OFFICERS OR AGENTS SHALL NOT BE RESPONSIBLE FOR THE ACCURACY OR COMPLETENESS OF SCANNED COPIES OF THIS PLAN SHEET.

DOKKEN ENGINEERING
5675 RUFFIN RD
SUITE 250
SAN DIEGO, CA 92123

NOTE:

1. FOR ACCURATE RIGHT OF WAY DATA, CONTACT RIGHT OF WAY ENGINEERING AT THE DISTRICT OFFICE.

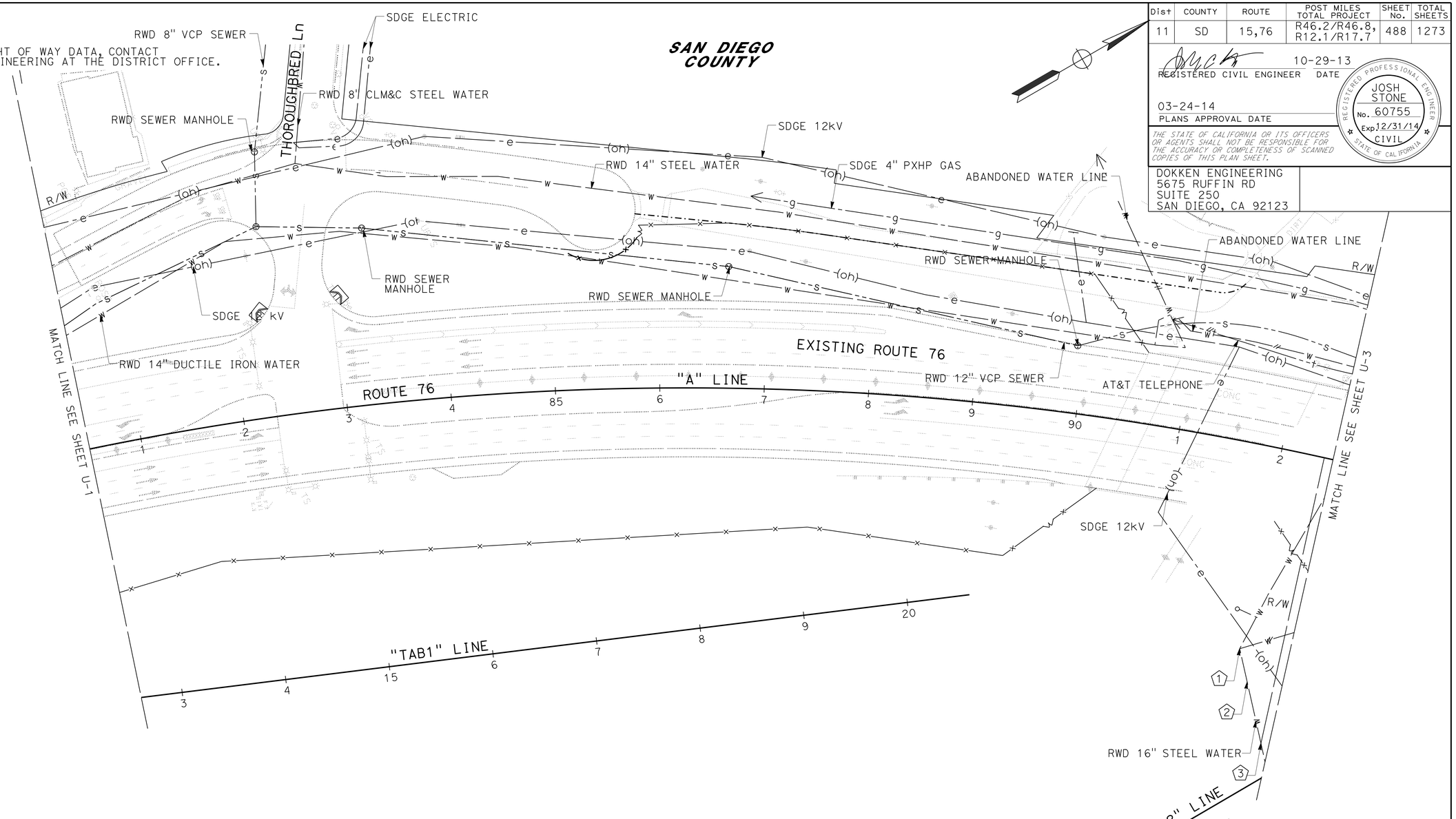

POSITIVE LOCATION INFORMATION

No. ⬠	LOCATION	ELEVATION	METHOD
1	195.9' R+ "A" 91+99.0	163.51	POTHOLING
2	225.7' R+ "A" 92+13.7	160.99	POTHOLING
3	280.2' R+ "A" 92+41.4	153.37	POTHOLING

UTILITY PLAN

SCALE: 1" = 50'

U-2

APPROVED FOR UTILITY INFORMATION ONLY

STATE OF CALIFORNIA - DEPARTMENT OF TRANSPORTATION
Caltrans

CONSULTANT FUNCTIONAL SUPERVISOR: JOSH STONE
CALCULATED-DESIGNED BY: JENA ADDENBROOKE
CHECKED BY: JOSH STONE
REVISED BY
DATE REVISED

LAST REVISION 12-31-13
DATE PLOTTED => 20-MAR-2014
TIME PLOTTED => 14:33

Dist	COUNTY	ROUTE	POST MILES TOTAL PROJECT	SHEET No.	TOTAL SHEETS
11	SD	15,76	R46.2/R46.8, R12.1/R17.7	489	1273

REGISTERED CIVIL ENGINEER 10-29-13 DATE

03-24-14
PLANS APPROVAL DATE

REGISTERED PROFESSIONAL ENGINEER JOSH STONE No. 60755 Exp. 12/31/14 CIVIL STATE OF CALIFORNIA

THE STATE OF CALIFORNIA OR ITS OFFICERS OR AGENTS SHALL NOT BE RESPONSIBLE FOR THE ACCURACY OR COMPLETENESS OF SCANNED COPIES OF THIS PLAN SHEET.

DOKKEN ENGINEERING
5675 RUFFIN RD
SUITE 250
SAN DIEGO, CA 92123

NOTE:

1. FOR ACCURATE RIGHT OF WAY DATA, CONTACT RIGHT OF WAY ENGINEERING AT THE DISTRICT OFFICE.

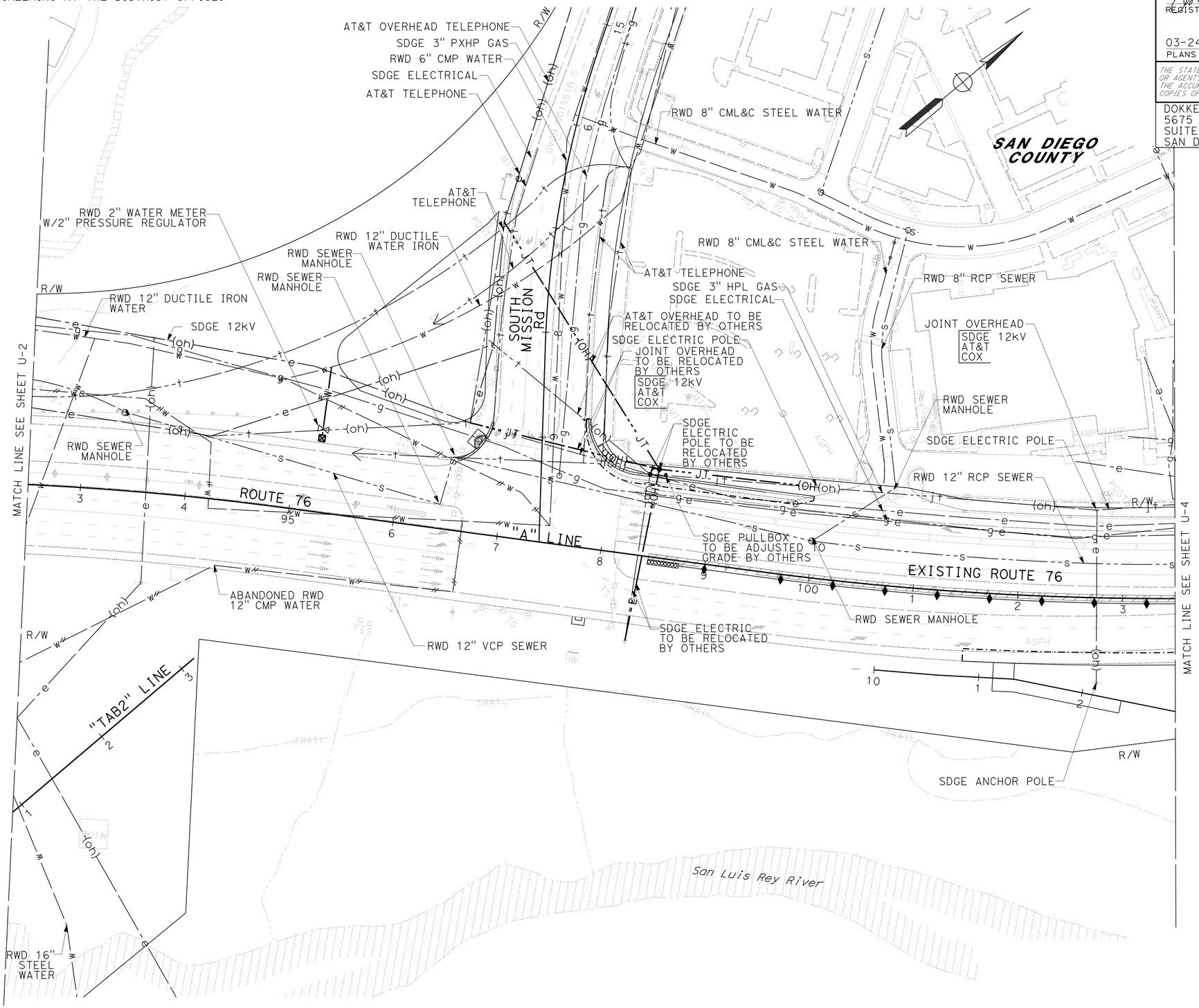

APPROVED FOR UTILITY INFORMATION ONLY

UTILITY PLAN

SCALE: 1" = 50'

U-3

STATE OF CALIFORNIA - DEPARTMENT OF TRANSPORTATION
Caltrans

CONSULTANT FUNCTIONAL SUPERVISOR: JOSH STONE
CALCULATED-DESIGNED BY: JENA ADDENBROOKE
CHECKED BY: JOSH STONE
REVISED BY
DATE REVISED

LAST REVISION 12-31-13
DATE PLOTTED => 20-MAR-2014
TIME PLOTTED => 14:33

Dist	COUNTY	ROUTE	POST MILES TOTAL PROJECT	SHEET No.	TOTAL SHEETS
11	SD	15,76	R46.2/R46.8, R12.1/R17.7	490	1273

REGISTERED CIVIL ENGINEER 10-29-13 DATE

03-24-14
PLANS APPROVAL DATE

REGISTERED PROFESSIONAL ENGINEER JOSH STONE No. 60755 Exp. 12/31/14 CIVIL STATE OF CALIFORNIA

THE STATE OF CALIFORNIA OR ITS OFFICERS OR AGENTS SHALL NOT BE RESPONSIBLE FOR THE ACCURACY OR COMPLETENESS OF SCANNED COPIES OF THIS PLAN SHEET.

DOKKEN ENGINEERING
5675 RUFFIN RD
SUITE 250
SAN DIEGO, CA 92123

NOTE:

1. FOR ACCURATE RIGHT OF WAY DATA, CONTACT RIGHT OF WAY ENGINEERING AT THE DISTRICT OFFICE.

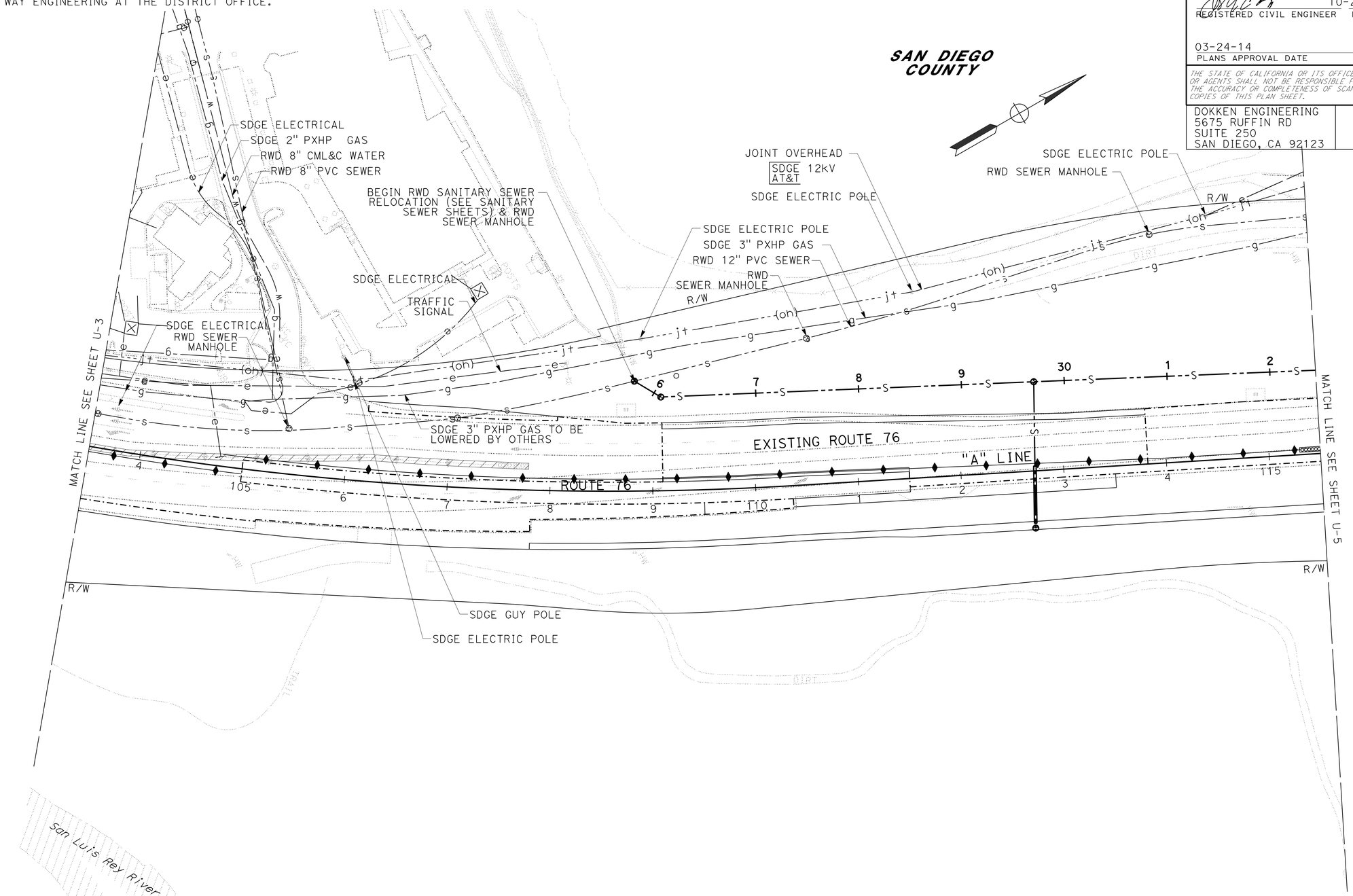

UTILITY PLAN

SCALE: 1" = 50'

U-4

APPROVED FOR UTILITY INFORMATION ONLY

STATE OF CALIFORNIA - DEPARTMENT OF TRANSPORTATION

Caltrans

CONSULTANT FUNCTIONAL SUPERVISOR: JOSH STONE

CALCULATED-DESIGNED BY: JENA ADDENBROOKE

CHECKED BY: JOSH STONE

REVISED BY

DATE REVISED

LAST REVISION 12-31-13 | DATE PLOTTED => 20-MAR-2014 | TIME PLOTTED => 14:33

BORDER LAST REVISED 7/2/2010

USERNAME => s127400
DGN FILE => 1100020489ka004.dgn

RELATIVE BORDER SCALE IS IN INCHES 0 1 2 3

UNIT 2765

PROJECT NUMBER & PHASE 11000204891

Dist	COUNTY	ROUTE	POST MILES TOTAL PROJECT	SHEET No.	TOTAL SHEETS
11	SD	15,76	R46.2/R46.8, R12.1/R17.7	491	1273

REGISTERED CIVIL ENGINEER 10-29-13 DATE

03-24-14
PLANS APPROVAL DATE

REGISTERED PROFESSIONAL ENGINEER JOSH STONE No. 60755 Exp. 12/31/14 CIVIL STATE OF CALIFORNIA

THE STATE OF CALIFORNIA OR ITS OFFICERS OR AGENTS SHALL NOT BE RESPONSIBLE FOR THE ACCURACY OR COMPLETENESS OF SCANNED COPIES OF THIS PLAN SHEET.

DOKKEN ENGINEERING
5675 RUFFIN RD
SUITE 250
SAN DIEGO, CA 92123

NOTE:

1. FOR ACCURATE RIGHT OF WAY DATA, CONTACT RIGHT OF WAY ENGINEERING AT THE DISTRICT OFFICE.

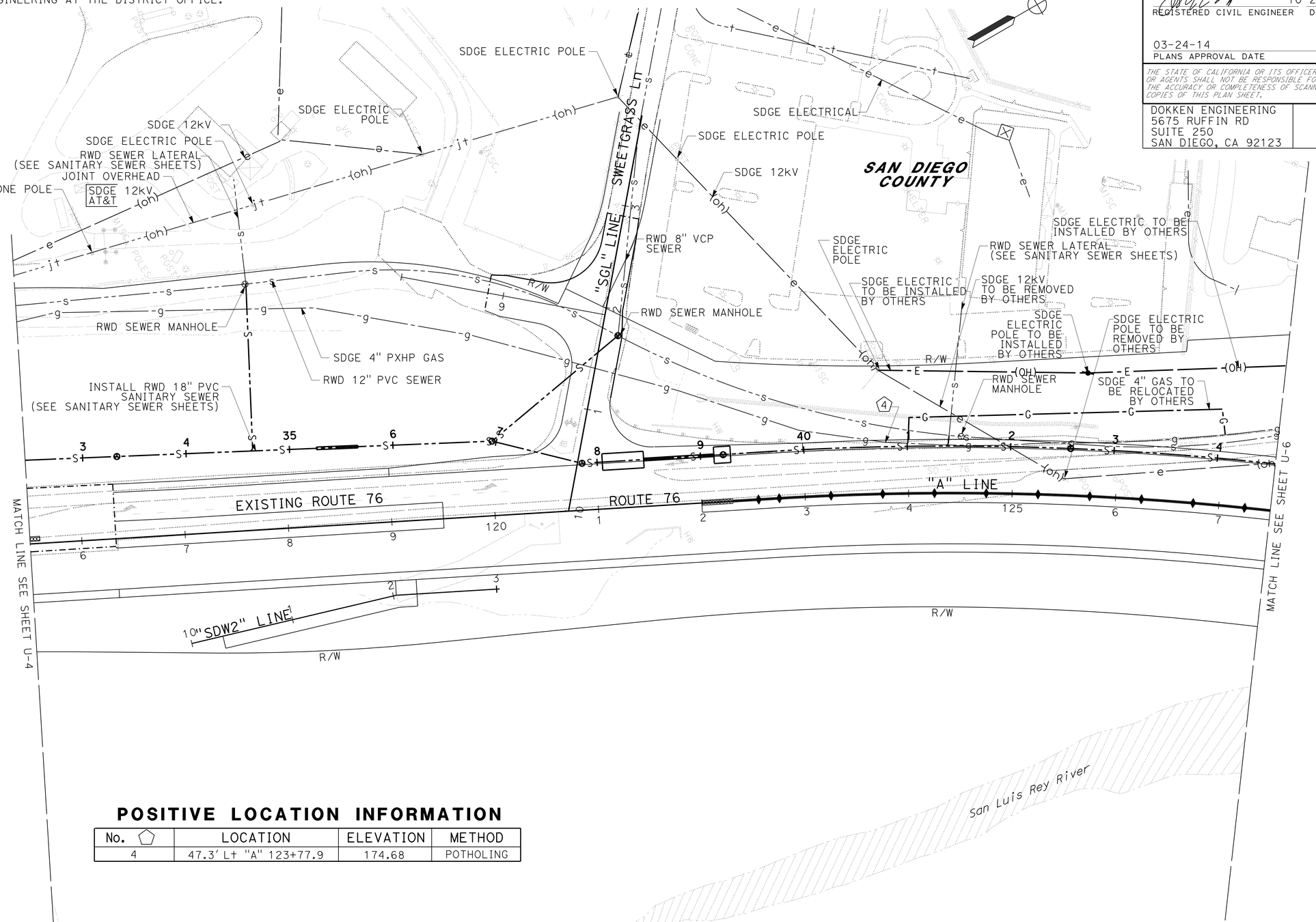

POSITIVE LOCATION INFORMATION

No. ⬠	LOCATION	ELEVATION	METHOD
4	47.3' Lt "A" 123+77.9	174.68	POTHOLING

UTILITY PLAN

SCALE: 1" = 50'

U-5

APPROVED FOR UTILITY INFORMATION ONLY

STATE OF CALIFORNIA - DEPARTMENT OF TRANSPORTATION

Caltrans

CONSULTANT FUNCTIONAL SUPERVISOR: JOSH STONE

CALCULATED-DESIGNED BY: JENA ADDENBROOKE

CHECKED BY: JOSH STONE

REVISED BY

DATE REVISED

LAST REVISION 12-31-13

DATE PLOTTED => 20-MAR-2014

TIME PLOTTED => 14:33

Dist	COUNTY	ROUTE	POST MILES TOTAL PROJECT	SHEET No.	TOTAL SHEETS
11	SD	15,76	R46.2/R46.8, R12.1/R17.7	492	1273

REGISTERED CIVIL ENGINEER 10-29-13 DATE

03-24-14
PLANS APPROVAL DATE

REGISTERED PROFESSIONAL ENGINEER JOSH STONE No. 60755 Exp. 12/31/14 CIVIL STATE OF CALIFORNIA

THE STATE OF CALIFORNIA OR ITS OFFICERS OR AGENTS SHALL NOT BE RESPONSIBLE FOR THE ACCURACY OR COMPLETENESS OF SCANNED COPIES OF THIS PLAN SHEET.

DOKKEN ENGINEERING
5675 RUFFIN RD
SUITE 250
SAN DIEGO, CA 92123

NOTE:

1. FOR ACCURATE RIGHT OF WAY DATA, CONTACT RIGHT OF WAY ENGINEERING AT THE DISTRICT OFFICE.
2. PER SECTION 5.136D OF STANDARD SPECIFICATIONS CONTRACTOR TO POTHOLE EXISTING WATER LINES PRIOR TO ANY WORK IN THE VICINITY.

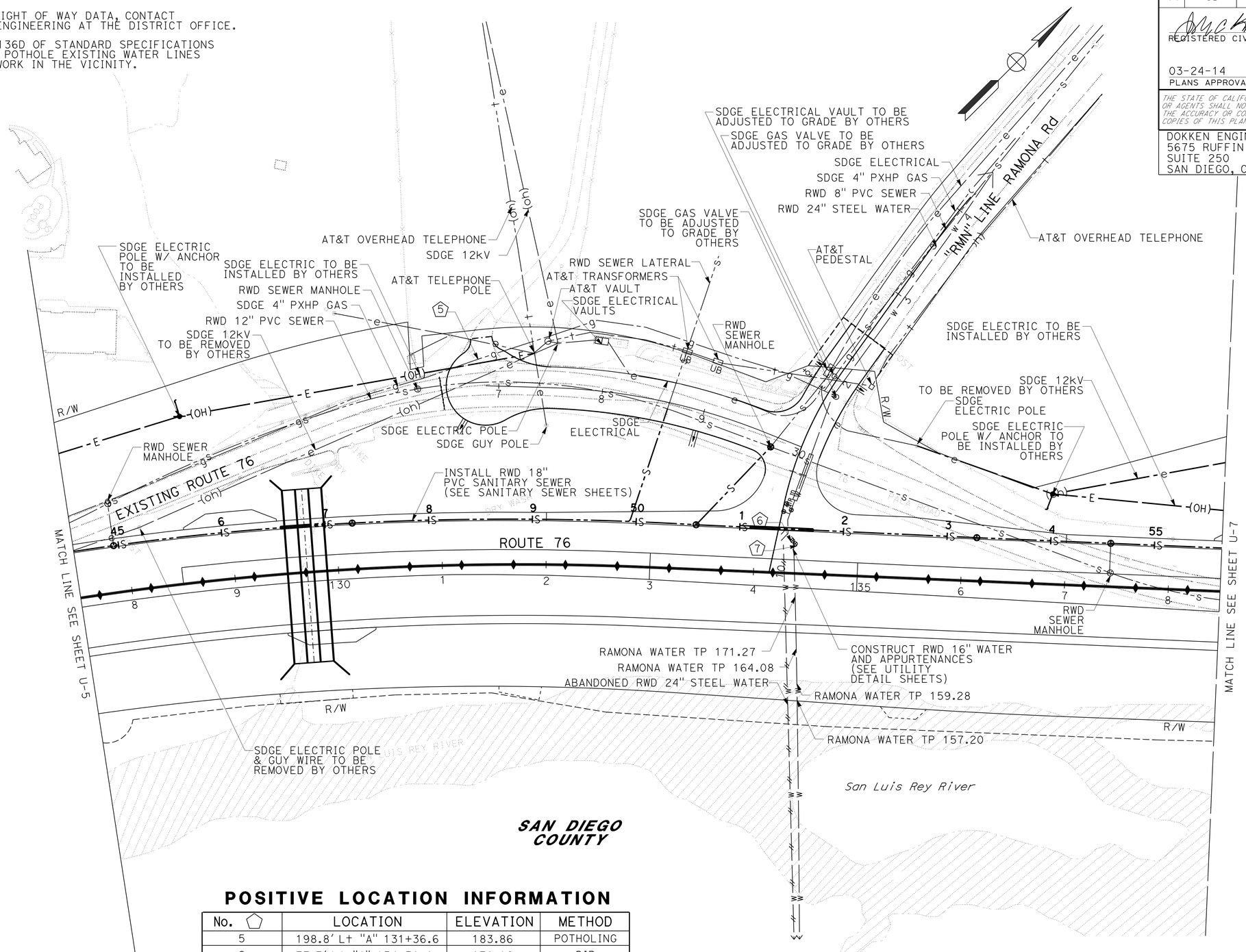

POSITIVE LOCATION INFORMATION

No. ⬠	LOCATION	ELEVATION	METHOD
5	198.8′ Lt "A" 131+36.6	183.86	POTHOLING
6	77.3′ Lt "A" 134+31.4	171.16	DIP
7	72.9′ Lt "A" 134+32.2	173.03	DIP

UTILITY PLAN

SCALE: 1" = 50′

U-6

APPROVED FOR UTILITY INFORMATION ONLY

STATE OF CALIFORNIA - DEPARTMENT OF TRANSPORTATION

Caltrans

CONSULTANT FUNCTIONAL SUPERVISOR: JOSH STONE

CALCULATED-DESIGNED BY: JENA ADDENBROOKE

CHECKED BY: JOSH STONE

REVISED BY

DATE REVISED

LAST REVISION 12-31-13

DATE PLOTTED => 20-MAR-2014

TIME PLOTTED => 14:33

Dist	COUNTY	ROUTE	POST MILES TOTAL PROJECT	SHEET No.	TOTAL SHEETS
11	SD	15,76	R46.2/R46.8, R12.1/R17.7	493	1273

REGISTERED CIVIL ENGINEER 10-29-13 DATE

03-24-14
PLANS APPROVAL DATE

REGISTERED PROFESSIONAL ENGINEER JOSH STONE No. 60755 Exp. 12/31/14 CIVIL STATE OF CALIFORNIA

THE STATE OF CALIFORNIA OR ITS OFFICERS OR AGENTS SHALL NOT BE RESPONSIBLE FOR THE ACCURACY OR COMPLETENESS OF SCANNED COPIES OF THIS PLAN SHEET.

DOKKEN ENGINEERING
5675 RUFFIN RD
SUITE 250
SAN DIEGO, CA 92123

NOTE:

1. FOR ACCURATE RIGHT OF WAY DATA, CONTACT RIGHT OF WAY ENGINEERING AT THE DISTRICT OFFICE.

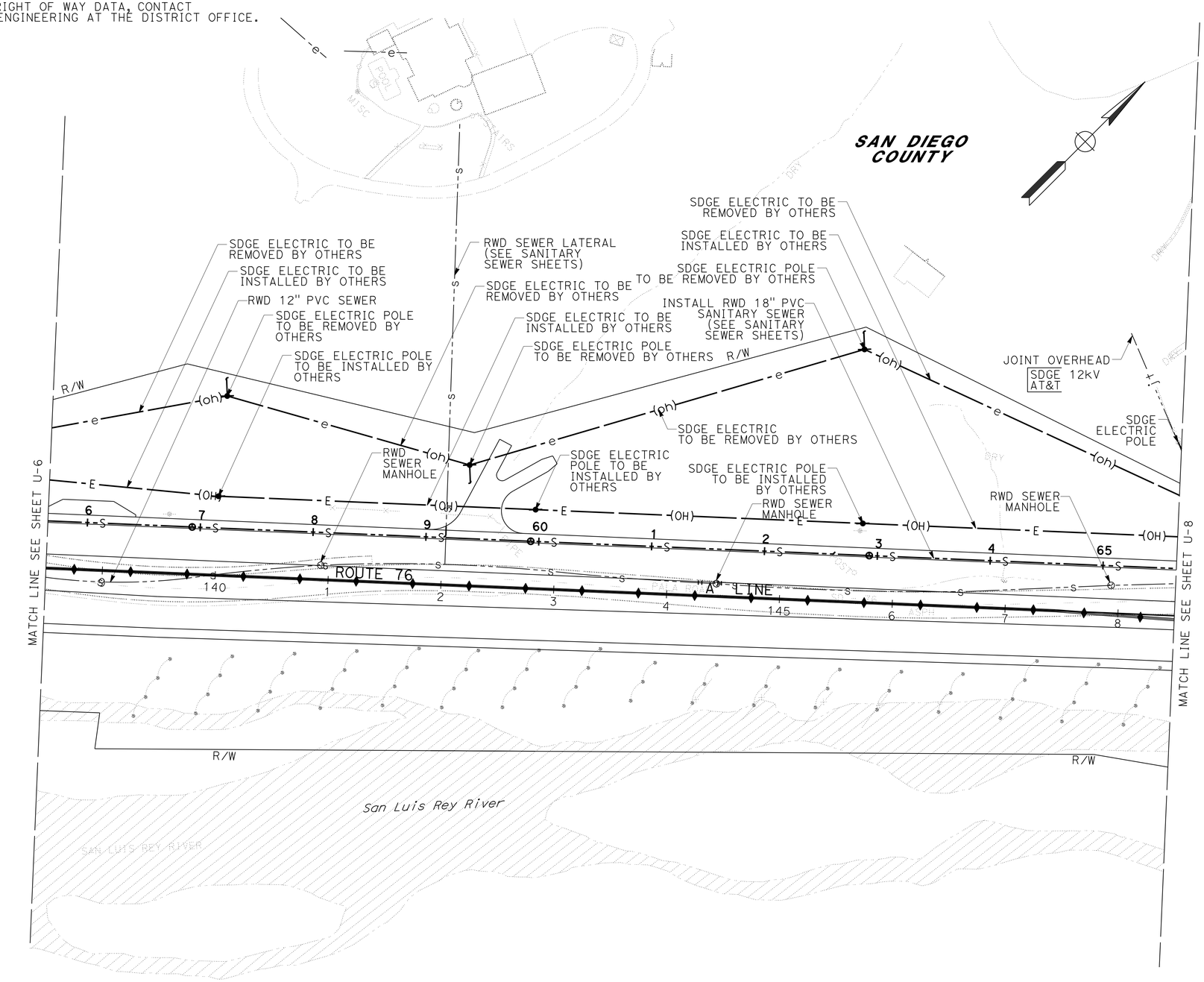

APPROVED FOR UTILITY INFORMATION ONLY

UTILITY PLAN
SCALE: 1" = 50'

U-7

STATE OF CALIFORNIA - DEPARTMENT OF TRANSPORTATION
Caltrans

CONSULTANT FUNCTIONAL SUPERVISOR: JOSH STONE
CALCULATED-DESIGNED BY: JENA ADDENBROOKE
CHECKED BY: JOSH STONE
REVISED BY
DATE REVISED

LAST REVISION 12-31-13
DATE PLOTTED => 20-MAR-2014
TIME PLOTTED => 14:33

Dist	COUNTY	ROUTE	POST MILES TOTAL PROJECT	SHEET No.	TOTAL SHEETS
11	SD	15,76	R46.2/R46.8, R12.1/R17.7	494	1273

REGISTERED CIVIL ENGINEER 10-29-13 DATE

03-24-14
PLANS APPROVAL DATE

REGISTERED PROFESSIONAL ENGINEER JOSH STONE No. 60755 Exp. 12/31/14 CIVIL STATE OF CALIFORNIA

THE STATE OF CALIFORNIA OR ITS OFFICERS OR AGENTS SHALL NOT BE RESPONSIBLE FOR THE ACCURACY OR COMPLETENESS OF SCANNED COPIES OF THIS PLAN SHEET.

DOKKEN ENGINEERING
5675 RUFFIN RD
SUITE 250
SAN DIEGO, CA 92123

NOTE:

1. FOR ACCURATE RIGHT OF WAY DATA, CONTACT RIGHT OF WAY ENGINEERING AT THE DISTRICT OFFICE.

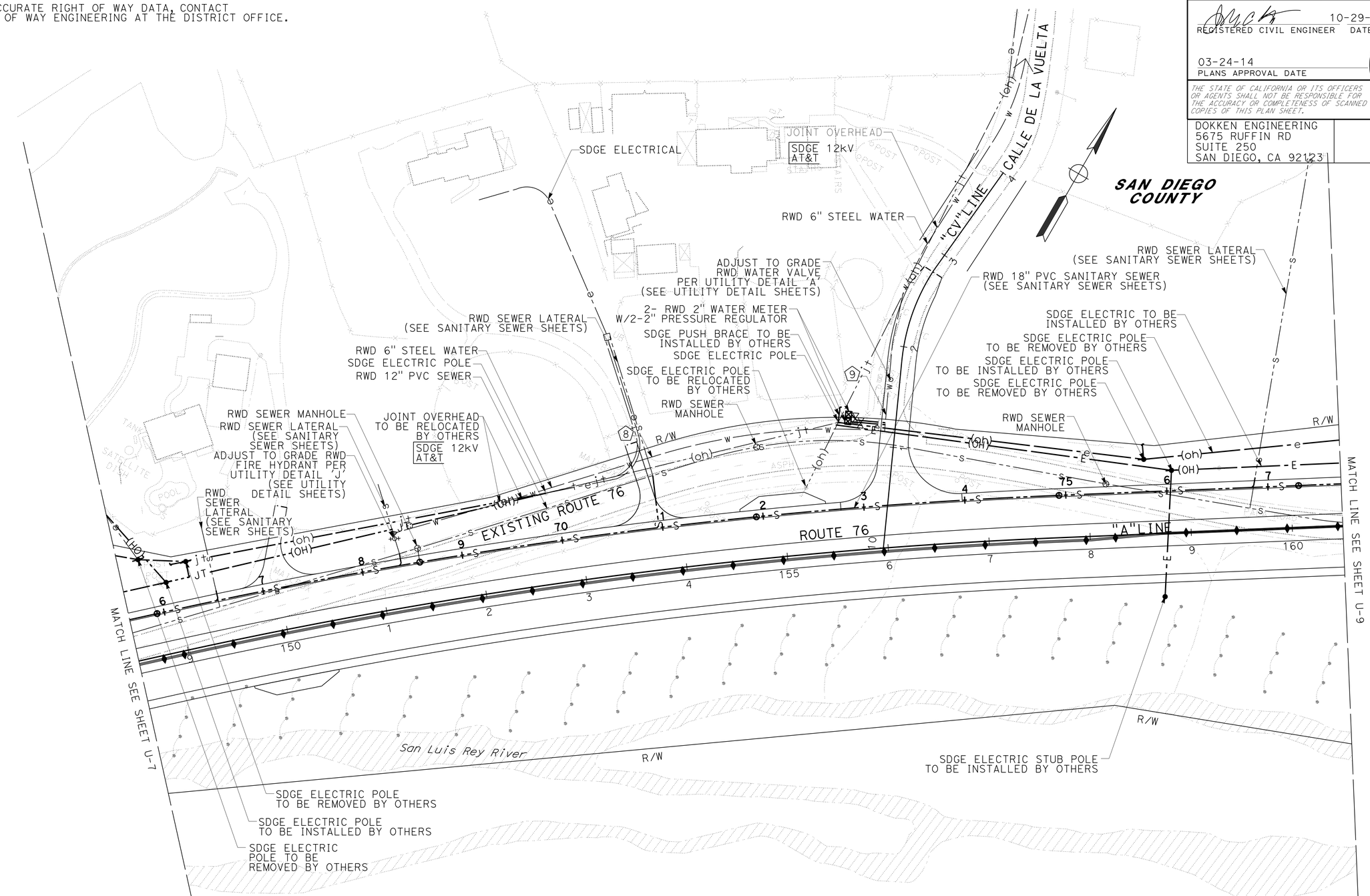

POSITIVE LOCATION INFORMATION

No. ⬠	LOCATION	ELEVATION	METHOD
8	113.9' Lt "A" 153+75.2	195.04	POTHOLING
9	132.8' Lt "A" 156+09.5	185.60	POTHOLING

APPROVED FOR UTILITY INFORMATION ONLY

UTILITY PLAN

SCALE: 1" = 50'

U-8

STATE OF CALIFORNIA - DEPARTMENT OF TRANSPORTATION
Caltrans

CONSULTANT FUNCTIONAL SUPERVISOR: JOSH STONE
CALCULATED-DESIGNED BY: JENA ADDENBROOKE
CHECKED BY: JOSH STONE
REVISED BY
DATE REVISED

LAST REVISION 12-31-13
DATE PLOTTED => 20-MAR-2014
TIME PLOTTED => 14:33

Dist	COUNTY	ROUTE	POST MILES TOTAL PROJECT	SHEET No.	TOTAL SHEETS
11	SD	15,76	R46.2/R46.8, R12.1/R17.7	495	1273

REGISTERED CIVIL ENGINEER 10-29-13 DATE

03-24-14
PLANS APPROVAL DATE

REGISTERED PROFESSIONAL ENGINEER JOSH STONE No. 60755 Exp. 12/31/14 CIVIL STATE OF CALIFORNIA

THE STATE OF CALIFORNIA OR ITS OFFICERS OR AGENTS SHALL NOT BE RESPONSIBLE FOR THE ACCURACY OR COMPLETENESS OF SCANNED COPIES OF THIS PLAN SHEET.

DOKKEN ENGINEERING
5675 RUFFIN RD
SUITE 250
SAN DIEGO, CA 92123

NOTE:

1. FOR ACCURATE RIGHT OF WAY DATA, CONTACT RIGHT OF WAY ENGINEERING AT THE DISTRICT OFFICE.

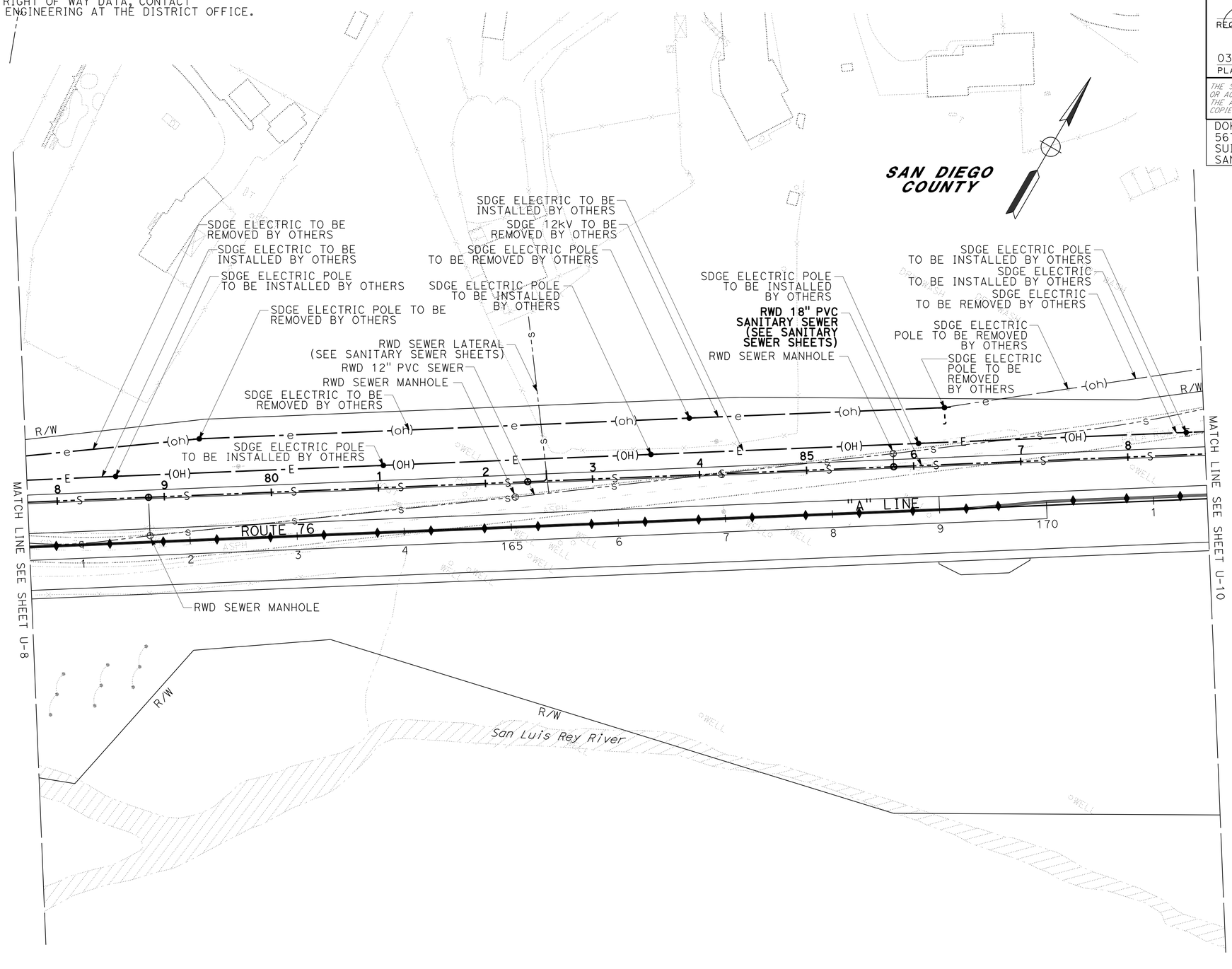

APPROVED FOR UTILITY INFORMATION ONLY

UTILITY PLAN

SCALE: 1" = 50'

U-9

STATE OF CALIFORNIA - DEPARTMENT OF TRANSPORTATION

Caltrans

CONSULTANT FUNCTIONAL SUPERVISOR: JOSH STONE

CALCULATED-DESIGNED BY: JENA ADDENBROOKE

CHECKED BY: JOSH STONE

REVISED BY

DATE REVISED

LAST REVISION 12-31-13

DATE PLOTTED => 20-MAR-2014
TIME PLOTTED => 14:33

Dist	COUNTY	ROUTE	POST MILES TOTAL PROJECT	SHEET No.	TOTAL SHEETS
11	SD	15,76	R46.2/R46.8, R12.1/R17.7	496	1273

REGISTERED CIVIL ENGINEER 10-29-13 DATE

03-24-14
PLANS APPROVAL DATE

REGISTERED PROFESSIONAL ENGINEER JOSH STONE No. 60755 Exp. 12/31/14 CIVIL STATE OF CALIFORNIA

THE STATE OF CALIFORNIA OR ITS OFFICERS OR AGENTS SHALL NOT BE RESPONSIBLE FOR THE ACCURACY OR COMPLETENESS OF SCANNED COPIES OF THIS PLAN SHEET.

DOKKEN ENGINEERING
5675 RUFFIN RD
SUITE 250
SAN DIEGO, CA 92123

NOTE:

1. FOR ACCURATE RIGHT OF WAY DATA, CONTACT RIGHT OF WAY ENGINEERING AT THE DISTRICT OFFICE.

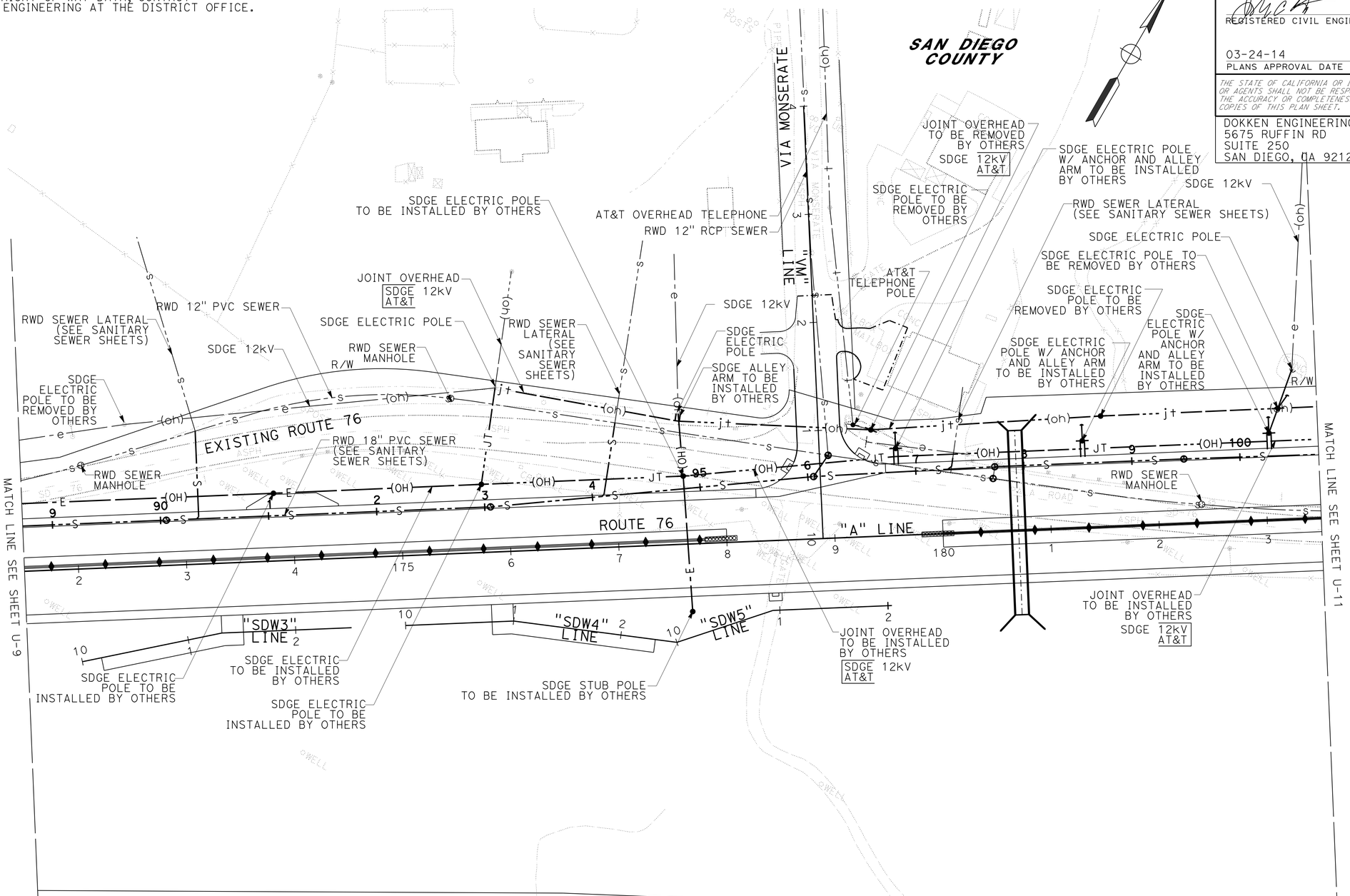

UTILITY PLAN

SCALE: 1" = 50'

U-10

APPROVED FOR UTILITY INFORMATION ONLY

STATE OF CALIFORNIA - DEPARTMENT OF TRANSPORTATION
Caltrans

CONSULTANT FUNCTIONAL SUPERVISOR: JOSH STONE
CALCULATED-DESIGNED BY: JENA ADDENBROOKE
CHECKED BY: JOSH STONE
REVISED BY
DATE REVISED

LAST REVISION 12-31-13
DATE PLOTTED => 20-MAR-2014
TIME PLOTTED => 14:33

Dist	COUNTY	ROUTE	POST MILES TOTAL PROJECT	SHEET No.	TOTAL SHEETS
11	SD	15,76	R46.2/R46.8, R12.1/R17.7	497	1273

REGISTERED CIVIL ENGINEER 10-29-13 DATE

03-24-14
PLANS APPROVAL DATE

REGISTERED PROFESSIONAL ENGINEER JOSH STONE No. 60755 Exp. 12/31/14 CIVIL STATE OF CALIFORNIA

THE STATE OF CALIFORNIA OR ITS OFFICERS OR AGENTS SHALL NOT BE RESPONSIBLE FOR THE ACCURACY OR COMPLETENESS OF SCANNED COPIES OF THIS PLAN SHEET.

DOKKEN ENGINEERING
5675 RUFFIN RD
SUITE 250
SAN DIEGO, CA 92123

NOTE:

1. FOR ACCURATE RIGHT OF WAY DATA, CONTACT RIGHT OF WAY ENGINEERING AT THE DISTRICT OFFICE.

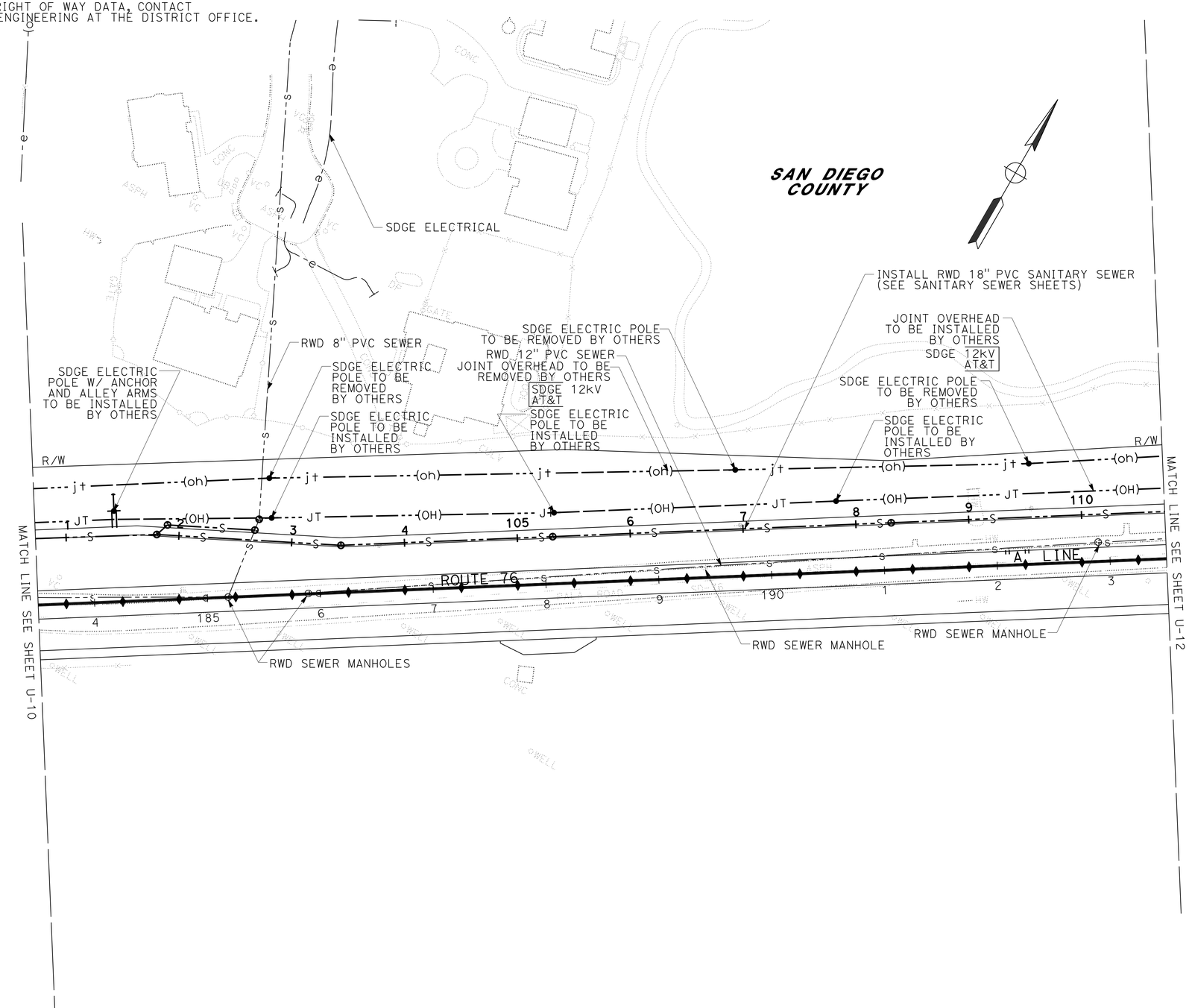

UTILITY PLAN

SCALE: 1" = 50'

U-11

APPROVED FOR UTILITY INFORMATION ONLY

STATE OF CALIFORNIA - DEPARTMENT OF TRANSPORTATION

Caltrans

CONSULTANT FUNCTIONAL SUPERVISOR: JOSH STONE

CALCULATED-DESIGNED BY: JENA ADDENBROOKE

CHECKED BY: JOSH STONE

REVISED BY

DATE REVISED

LAST REVISION 12-31-13

DATE PLOTTED => 20-MAR-2014
TIME PLOTTED => 14:33

Dist	COUNTY	ROUTE	POST MILES TOTAL PROJECT	SHEET No.	TOTAL SHEETS
11	SD	15,76	R46.2/R46.8, R12.1/R17.7	498	1273

REGISTERED CIVIL ENGINEER 10-29-13 DATE

03-24-14
PLANS APPROVAL DATE

REGISTERED PROFESSIONAL ENGINEER JOSH STONE No. 60755 Exp. 12/31/14 CIVIL STATE OF CALIFORNIA

THE STATE OF CALIFORNIA OR ITS OFFICERS OR AGENTS SHALL NOT BE RESPONSIBLE FOR THE ACCURACY OR COMPLETENESS OF SCANNED COPIES OF THIS PLAN SHEET.

DOKKEN ENGINEERING
5675 RUFFIN RD
SUITE 250
SAN DIEGO, CA 92123

NOTE:

1. FOR ACCURATE RIGHT OF WAY DATA, CONTACT RIGHT OF WAY ENGINEERING AT THE DISTRICT OFFICE.

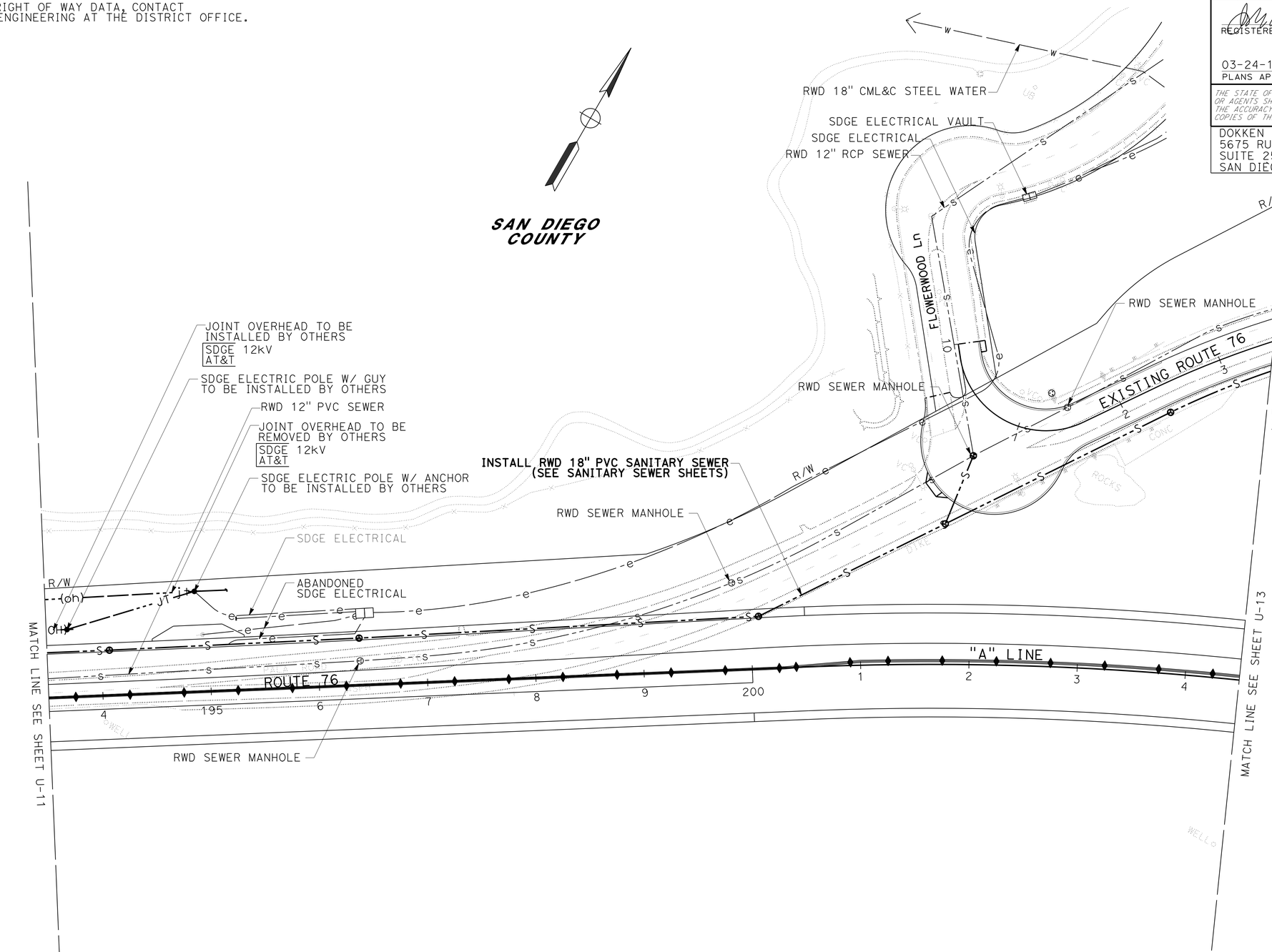

UTILITY PLAN

SCALE: 1" = 50'

U-12

APPROVED FOR UTILITY INFORMATION ONLY

STATE OF CALIFORNIA - DEPARTMENT OF TRANSPORTATION
Caltrans

CONSULTANT FUNCTIONAL SUPERVISOR: JOSH STONE
CALCULATED-DESIGNED BY: JENA ADDENBROOKE
CHECKED BY: JOSH STONE
REVISED BY
DATE REVISED

LAST REVISION 12-31-13
DATE PLOTTED => 20-MAR-2014
TIME PLOTTED => 14:33

Dist	COUNTY	ROUTE	POST MILES TOTAL PROJECT	SHEET No.	TOTAL SHEETS
11	SD	15,76	R46.2/R46.8, R12.1/R17.7	499	1273

REGISTERED CIVIL ENGINEER 10-29-13 DATE

03-24-14
PLANS APPROVAL DATE

REGISTERED PROFESSIONAL ENGINEER JOSH STONE No. 60755 Exp. 12/31/14 CIVIL STATE OF CALIFORNIA

THE STATE OF CALIFORNIA OR ITS OFFICERS OR AGENTS SHALL NOT BE RESPONSIBLE FOR THE ACCURACY OR COMPLETENESS OF SCANNED COPIES OF THIS PLAN SHEET.

DOKKEN ENGINEERING
5675 RUFFIN RD
SUITE 250
SAN DIEGO, CA 92123

NOTE:

1. FOR ACCURATE RIGHT OF WAY DATA, CONTACT RIGHT OF WAY ENGINEERING AT THE DISTRICT OFFICE.

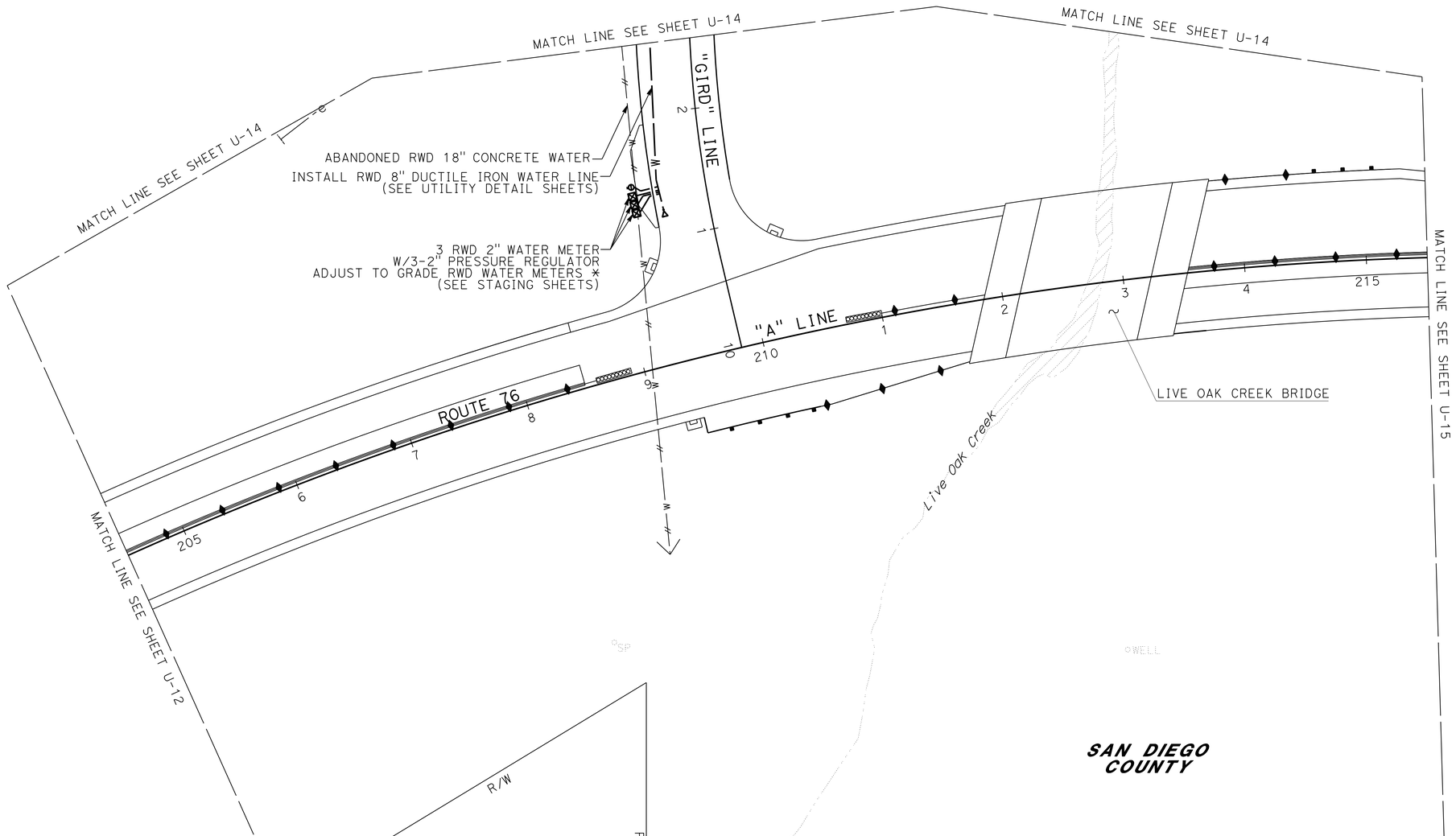

* WATER METERS ARE SUBJECT TO MULTIPLE ADJUSTMENTS TO GRADE

UTILITY PLAN

SCALE: 1" = 50'

U-13

APPROVED FOR UTILITY INFORMATION ONLY

STATE OF CALIFORNIA - DEPARTMENT OF TRANSPORTATION

Caltrans

CONSULTANT FUNCTIONAL SUPERVISOR: JOSH STONE

CALCULATED-DESIGNED BY: JENA ADDENBROOKE

CHECKED BY: JOSH STONE

REVISED BY

DATE REVISED

LAST REVISION 12-31-13

DATE PLOTTED => 20-MAR-2014
TIME PLOTTED => 14:33

Dist	COUNTY	ROUTE	POST MILES TOTAL PROJECT	SHEET No.	TOTAL SHEETS
11	SD	15,76	R46.2/R46.8, R12.1/R17.7	500	1273

REGISTERED CIVIL ENGINEER 10-29-13 DATE

03-24-14
PLANS APPROVAL DATE

REGISTERED PROFESSIONAL ENGINEER JOSH STONE No. 60755 Exp. 12/31/14 CIVIL STATE OF CALIFORNIA

THE STATE OF CALIFORNIA OR ITS OFFICERS OR AGENTS SHALL NOT BE RESPONSIBLE FOR THE ACCURACY OR COMPLETENESS OF SCANNED COPIES OF THIS PLAN SHEET.

DOKKEN ENGINEERING
5675 RUFFIN RD
SUITE 250
SAN DIEGO, CA 92123

NOTE:

1. FOR ACCURATE RIGHT OF WAY DATA, CONTACT RIGHT OF WAY ENGINEERING AT THE DISTRICT OFFICE.

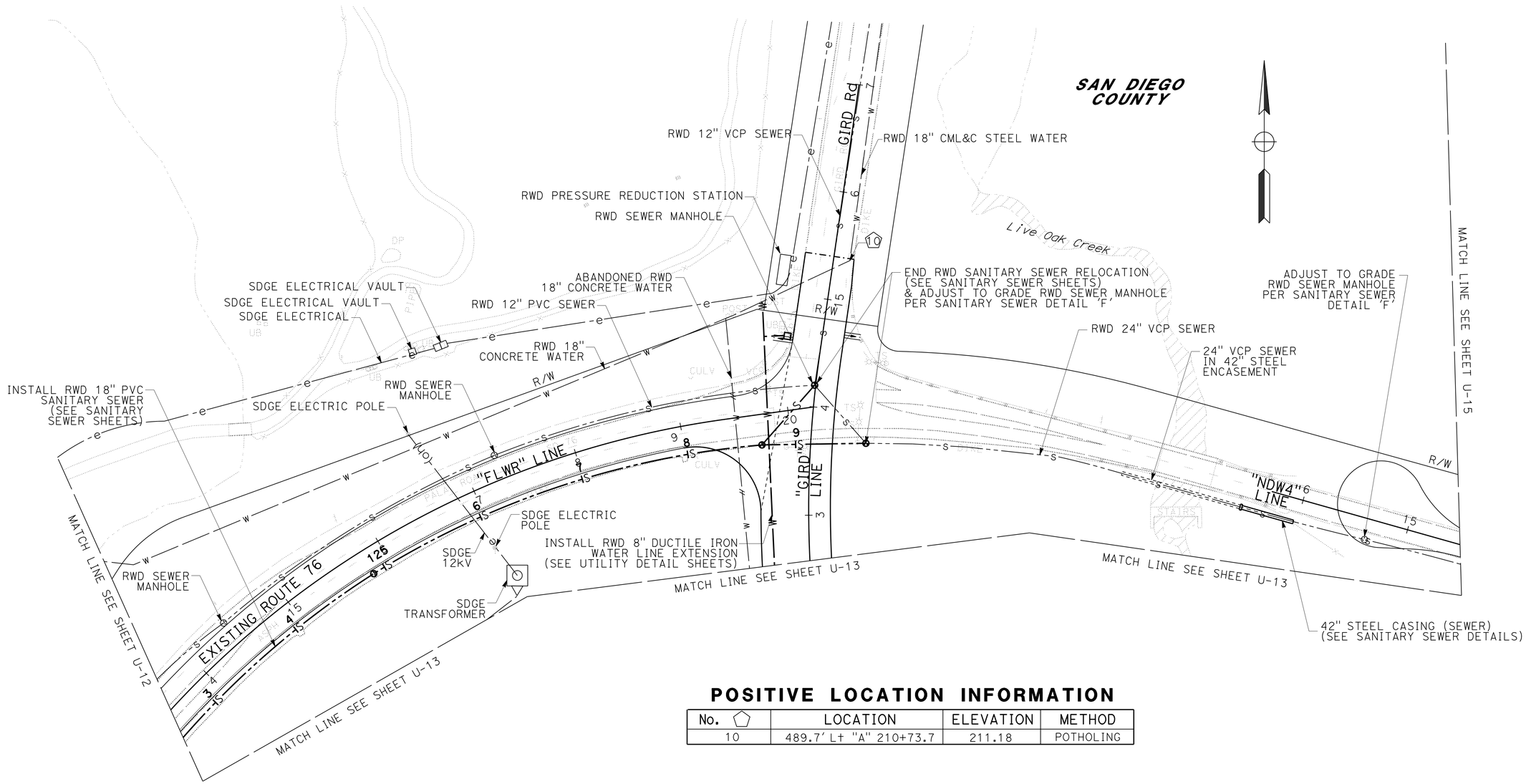

POSITIVE LOCATION INFORMATION

No. ⬠	LOCATION	ELEVATION	METHOD
10	489.7' Lt "A" 210+73.7	211.18	POTHOLING

UTILITY PLAN

SCALE: 1" = 50'

U-14

APPROVED FOR UTILITY INFORMATION ONLY

STATE OF CALIFORNIA - DEPARTMENT OF TRANSPORTATION

Caltrans

CONSULTANT FUNCTIONAL SUPERVISOR: JOSH STONE

CALCULATED-DESIGNED BY: JENA ADDENBROOKE

CHECKED BY: JOSH STONE

REVISED BY

DATE REVISED

LAST REVISION 12-31-13

DATE PLOTTED => 20-MAR-2014
TIME PLOTTED => 14:33