Dist	COUNTY	ROUTE	POST MILES TOTAL PROJECT	SHEET No.	TOTAL SHEETS
11	SD	163	8.4/9.4	201	332

REGISTERED CIVIL ENGINEER 10-10-13 DATE

09-15-14
PLANS APPROVAL DATE

REGISTERED PROFESSIONAL ENGINEER MARK M. JUGAR No. 66939 Exp. 09-30-16 CIVIL STATE OF CALIFORNIA

THE STATE OF CALIFORNIA OR ITS OFFICERS OR AGENTS SHALL NOT BE RESPONSIBLE FOR THE ACCURACY OR COMPLETENESS OF SCANNED COPIES OF THIS PLAN SHEET.

CITY OF SAN DIEGO
600 B ST, SUITE 800
SAN DIEGO, CA 92101

RICK ENGINEERING COMPANY
5620 FRIARS RD
SAN DIEGO, CA 92110
(619) 291-0707

ROADSIDE SIGN QUANTITIES

SIGN No.	CODE	SHEET No.	PANEL SIZE Horiz Vert INCH X INCH	D ft	C ft	E ft	Min POST LENGTH ft	POST SIZE 4x4	4x6	6x6	6x8	ROADSIDE SIGN ONE POST (EA)	ROADSIDE SIGN TWO POST (EA)	INSTALL SIGN (STRAP & SADDLE BRACKET METHOD) (EA)	MAST ARM MOUNTED (EA) (N)(E)	REMOVE SIGN	RELOCATE SIGN	ROADSIDE SIGN-ONE POST (WEED CONTROL MAT RUBBER)	REMARKS
1	R4-1	S-1	48 X 60	5	-	5	15			X		1							NEW SIGN
2	R89(CA)		36 X 9	-	-	-	-									1			REMOVE
	R89-3(CA)		36 X 16	-	-	-	-												REMOVE
3	R89(CA)(LT)		36 X 9	-	-	-	-									1			REMOVE
	R89-3(CA)(RT)		36 X 16	-	-	-	-												REMOVE
4	10-6L		36 X 48	-	-	-	-							1					NEW SIGN
	R89-2(2)(CA)		36 X 10	-	-	-	-												NEW SIGN
5	W4-7		48 X 48	4	-	5	14			X		1							NEW SIGN
	D11-1		24 X 18	-	-	-	-												NEW SIGN
6	G92(CA)		48 X 30	-	-	-	-									1			REMOVE
	G98-2(CA)		25 X 28	-	-	-	-												REMOVE
	M3-3		24 X 12	-	-	-	-												REMOVE
	M6-2		21 X 15	-	-	-	-												REMOVE
7	R81(CA)		12 X 8	0.7	-	3.5	11	X				1							NEW SIGN
8	W3-3		48 X 48	-	-	-	-									1			REMOVE
	W16-13P(Mod)		24 X 18	-	-	-	-												REMOVE
9	W5-1		30 X 30	-	-	-	-									1			REMOVE
10	G24-5(Mod)		96 X 110	-	-	-	-									1			REMOVE
11	W11-2		36 X 36	3	-	5	16			X		1							NEW SIGN
	W16-7P		24 X 12	-	-	-	-												NEW SIGN
	G92(CA)		48 X 30	-	-	-	-												NEW SIGN
	M3-3		24 X 12	-	-	-	-												NEW SIGN
	M6-2		21 X 15	-	-	-	-												NEW SIGN
12	R9-3A		30 X 30	-	-	-	-							1					NEW SIGN
13	R18B(CA)	S-2	36 X 36	3	-	4.5	13		X			1							NEW SIGN
14	R5-10a		42 X 30	2.5	-	4.5	13		X			1							NEW SIGN
15	W3-3		48 X 48	-	-	-	-							1					NEW SIGN
	W10-10(Mod)		24 X 18	-	-	-	-												NEW SIGN
16	W11-2		36 X 36	3	-	5	14			X		1							NEW SIGN
	W16-7P		24 X 12	-	-	-	-												NEW SIGN
	G92(CA)		48 X 30	-	-	-	-												NEW SIGN
	M3-3		24 X 12	-	-	-	-												NEW SIGN
	M6-2		21 X 15	-	-	-	-												NEW SIGN
17	R9-3A		30 X 30	-	-	-	-							1					NEW SIGN
18	R5-1		48 X 48	-	-	-	-									1			REMOVE
	R5-1A		42 X 30	-	-	-	-												REMOVE
	R6-1		54 X 18	-	-	-	-												REMOVE
19	R7-9		12 X 18	1.5	-	3.5	12	X				1							NEW SIGN
20	W11-2		36 X 36	-	-	-	-									1			REMOVE
	W16-7P		24 X 12	-	-	-	-												REMOVE
21	R3-18		30 X 30	-	-	-	-								1				NEW SIGN
22	R73-8(CA)		24 X 30	-	-	-	-								1				NEW SIGN
23	R9-3A		30 X 30	2.5	-	4.5	13		X			1							NEW SIGN
24	R4-4		36 X 30	2.5	-	4.5	13		X			1							NEW SIGN
25	W4-2(LT)		48 X 48	-	-	-	-									1			REMOVE
	R4-1		48 X 60	-	-	-	-												REMOVE
26	R3-4		30 X 30	-	-	-	-								1				NEW SIGN
27	R4-7		24 X 30	2.5	-	4.5	13		X									1	NEW SIGN
	R3-18		30 X 30	-	-	-	-												NEW SIGN
28	W1-1(RT)		48 X 48	-	-	-	-									1			REMOVE
	W13-5(35)		48 X 60	-	-	-	-												REMOVE
29	R10-6L		24 X 36	3	-	4.5	13		X			1							NEW SIGN
	R89(CA)(LT)		24 X 30	-	-	-	-												NEW SIGN
							SUBTOTAL 1					11	0	4	3	10	0	1	

NOTES: (N) = NOT A SEPARATE PAY ITEM, FOR INFORMATION ONLY. (E) = SEE ELECTRICAL PLANS FOR FURTHER INFORMATION.
EXACT LOCATION OF SIGNS AND POSTS TO BE DETERMINED BY THE ENGINEER.

SIGN QUANTITIES

SQ-1

STATE OF CALIFORNIA - DEPARTMENT OF TRANSPORTATION
Caltrans

CONSULTANT FUNCTIONAL SUPERVISOR: EDGAR A. CAMERINO

CALCULATED-DESIGNED BY: CARLOS PEREZ
CHECKED BY: MARK JUGAR

REVISED BY
DATE REVISED

LAST REVISION 04-23-14
DATE PLOTTED => 17-SEP-2014
TIME PLOTTED => 14:55

Dist	COUNTY	ROUTE	POST MILES TOTAL PROJECT	SHEET No.	TOTAL SHEETS
11	SD	163	8.4/9.4	202	332

REGISTERED CIVIL ENGINEER 10-10-13 DATE

09-15-14
PLANS APPROVAL DATE

REGISTERED PROFESSIONAL ENGINEER MARK M. JUGAR No. 66939 Exp. 09-30-16 CIVIL STATE OF CALIFORNIA

THE STATE OF CALIFORNIA OR ITS OFFICERS OR AGENTS SHALL NOT BE RESPONSIBLE FOR THE ACCURACY OR COMPLETENESS OF SCANNED COPIES OF THIS PLAN SHEET.

CITY OF SAN DIEGO
600 B ST, SUITE 800
SAN DIEGO, CA 92101

RICK ENGINEERING COMPANY
5620 FRIARS RD
SAN DIEGO, CA 92110
(619) 291-0707

ROADSIDE SIGN QUANTITIES

SIGN No.	CODE	SHEET No.	PANEL SIZE Horiz Vert INCH X INCH	D ft	C ft	E ft	Min POST LENGTH ft	POST SIZE 4x4	4x6	6x6	6x8	ROADSIDE SIGN ONE POST (EA)	ROADSIDE SIGN TWO POST (EA)	INSTALL SIGN (STRAP & SADDLE BRACKET METHOD) (EA)	MAST ARM MOUNTED (EA) (N)(E)	REMOVE SIGN	RELOCATE SIGN	ROADSIDE SIGN-ONE POST (WEED CONTROL MAT RUBBER)	REMARKS
30	R10-6R		24 X 36	3	-	4.5	13		X									1	NEW SIGN
	R89-2(2)(CA)		24 X 10	-	-	-	-												NEW SIGN
	R89-1(CA)(2)		22 X 10	-	-	-	-												NEW SIGN
31	R18B(CA)		36 X 36	3	-	4.5	13		X			1							NEW SIGN
	R7-9		12 X 18	-	-	-	-												NEW SIGN
32	R10-6R		36 X 48	-	-	-	-							1					NEW SIGN
	R89(CA)		36 X 9	-	-	-	-												NEW SIGN
33	W4-1		48 X 48	4	-	5	14			X		1							NEW SIGN
34	G21-1		72 X 60	-	-	-	-									1			REMOVE
35	R89-2(2)(CA)		36 X 10	-	-	-	-								1				NEW SIGN
36	R89-2(2)(CA)		36 X 10	-	-	-	-								1				NEW SIGN
37	R7-9		12 X 18	1.5	-	3.5	12	X				1							NEW SIGN
38	R4-4		36 X 30	2.5	-	4.5	13		X			1							NEW SIGN
39	R9-3A		30 X 30	-	-	-	-							1					NEW SIGN
40	R4-7		24 X 30	2.5	-	4.5	13		X									1	NEW SIGN
	R3-18		30 X 30	-	-	-	-												NEW SIGN
41	W4-3		48 X 48	-	-	-	-									1			REMOVE
42	R3-18		30 X 30	-	-	-	-								1				NEW SIGN
43	G24-5(Mod)		90 X 72	-	-	-	-									1			REMOVE
44	W34C		36 X 54	-	-	-	-									1			REMOVE
45	R3-7		30 X 30	2.5	-	4.5	13		X			1							NEW SIGN
46	R5-1		48 X 48	-	-	-	-									1			REMOVE
	R5-1a		42 X 30	-	-	-	-												REMOVE
	R6-1		54 X 18	-	-	-	-												REMOVE
47	R3-7(Mod)		30 X 30	-	-	-	-									1			REMOVE
48	G77-1(CA)		90 X 72	-	-	-	-									1			REMOVE
49	W3-3	S-2	48 X 48	-	-	-	-									1			REMOVE
50	R1-1		36 X 36	-	-	-	-									1			REMOVE
	R1-6		12 X 36	-	-	-	-												REMOVE
51	R1-1		36 X 36	-	-	-	-									1			REMOVE
	R1-6		12 X 36	-	-	-	-												REMOVE
52	G85-5(CA)		48 X 80	-	-	-	-									1			REMOVE
53	R5-10C		24 X 12	-	-	-	-									1			REMOVE
54	R5-1		48 X 48	-	-	-	-									1			REMOVE
	R5-1a		42 X 30	-	-	-	-												REMOVE
55	W4-1		36 X 36	-	-	-	-									1			REMOVE
	R4-1		48 X 60	-	-	-	-												REMOVE
56	W3-1		36 X 36	-	-	-	-									1			REMOVE
57	R5-1		48 X 48	4	-	5	14			X		1							NEW SIGN
	R5-1a		42 X 30	-	-	-	-												NEW SIGN
	R6-1(LT)		54 X 18	-	-	-	-												NEW SIGN
	R6-1(RT)		54 X 18	-	-	-	-												NEW SIGN
58	R5-1		48 X 48	4	-	5	14			X		1							NEW SIGN
	R5-1a		42 X 30	-	-	-	-												NEW SIGN
	R6-1(LT)		54 X 18	-	-	-	-												NEW SIGN
	R6-1(RT)		54 X 18	-	-	-	-												NEW SIGN
59	R5-10a		36 X 30	-	-	-	-									1			REMOVE
60	W3-3		48 X 48	-	-	-	-							1					NEW SIGN
	W10-10(Mod)		24 X 18	-	-	-	-												NEW SIGN
61	R5-10a		36 X 30	2.5	-	4.5	13		X			1							NEW SIGN
62	R91-1(CA)		36 X 54	4.5	-	4.5	14		X			1							NEW SIGN
63	R91-1(CA)		36 X 54	4.5	-	4.5	14		X			1							NEW SIGN
64	R91-1(CA)		36 X 54	4.5	-	4.5	14		X			1							NEW SIGN
65	R91-1(CA)		36 X 54	4.5	-	4.5	14		X			1							NEW SIGN
							SUBTOTAL 2					12	0	3	3	16	0	1	

NOTES: (N) = NOT A SEPARATE PAY ITEM, FOR INFORMATION ONLY. (E) = SEE ELECTRICAL PLANS FOR FURTHER INFORMATION.
EXACT LOCATION OF SIGNS AND POSTS TO BE DETERMINED BY THE ENGINEER.

SIGN QUANTITIES

SQ-2

REVISED BY | DATE REVISED
CARLOS PEREZ | MARK JUGAR
CALCULATED-DESIGNED BY | CHECKED BY
CONSULTANT FUNCTIONAL SUPERVISOR
EDGAR A. CAMERINO
STATE OF CALIFORNIA - DEPARTMENT OF TRANSPORTATION
Caltrans

LAST REVISION 04-23-14 | DATE PLOTTED => 17-SEP-2014 | TIME PLOTTED => 14:56

Dist	COUNTY	ROUTE	POST MILES TOTAL PROJECT	SHEET No.	TOTAL SHEETS
11	SD	163	8.4/9.4	203	332

REGISTERED CIVIL ENGINEER 10-10-13 DATE

09-15-14
PLANS APPROVAL DATE

REGISTERED PROFESSIONAL ENGINEER MARK M. JUGAR No. 66939 Exp. 09-30-16 CIVIL STATE OF CALIFORNIA

THE STATE OF CALIFORNIA OR ITS OFFICERS OR AGENTS SHALL NOT BE RESPONSIBLE FOR THE ACCURACY OR COMPLETENESS OF SCANNED COPIES OF THIS PLAN SHEET.

CITY OF SAN DIEGO
600 B ST, SUITE 800
SAN DIEGO, CA 92101

RICK ENGINEERING COMPANY
5620 FRIARS RD
SAN DIEGO, CA 92110
(619) 291-0707

ROADSIDE SIGN QUANTITIES

SIGN No.	CODE	SHEET No.	PANEL SIZE Horiz Vert INCH X INCH	D ft	C ft	E ft	Min POST LENGTH ft	POST SIZE 4x4	4x6	6x6	6x8	ROADSIDE SIGN ONE POST (EA)	TWO POST (EA)	INSTALL SIGN (STRAP & SADDLE BRACKET METHOD) (EA)	MAST ARM MOUNTED (EA) (N)(E)	REMOVE SIGN	RELOCATE SIGN	ROADSIDE SIGN-ONE POST (WEED CONTROL MAT RUBBER)	REMARKS
66	G92(CA)		48 X 30	2.5	-	4.5	13		X			1							NEW SIGN
	G28-1(163)(CA)		11 X 15	-	-	-	-												NEW SIGN
	G48(CA)		21 X 9	-	-	-	-												NEW SIGN
	G43(CA)		21 X 15	-	-	-	-												NEW SIGN
67	W11-2		36 X 36	3	-	4.5	13		X			1							NEW SIGN
	W16-7P		24 X 12	-	-	-	-												NEW SIGN
68	G92(CA)	S-2	48 X 30	-	-	-	-									1			REMOVE
	G98-2		25 X 28	-	-	-	-												REMOVE
	M3-3		24 X 12	-	-	-	-												REMOVE
	M6-2		21 X 15	-	-	-	-												REMOVE
69	R9-3A		30 X 30	-	-	-	-							1					NEW SIGN
70	R18B(CA)		36 X 36	3	-	4.5	13		X			1							NEW SIGN
71	W3-3		48 X 48	-	-	-	-									1			REMOVE
	W16-13P(Mod)		24 X 18	-	-	-	-												REMOVE
72	R4-4		36 X 30	2.5	-	4.5	13		X			1							NEW SIGN
73	R89-2(CA)		36 X 16	-	-	-	-									1			REMOVE
74	R89-2(CA)		36 X 16	-	-	-	-									1			REMOVE
75	W4-1		36 X 36	-	-	-	-									1			REMOVE
76	G77-1(CA)		90 X 72	-	-	-	-									1			REMOVE
77	G8-7(CA)		60 X 36	-	-	-	-									1			REMOVE
78	G84-2(CA)	S-3	54 X 48	4	-	5	14			X								1	NEW SIGN
79	W3-3		48 X 48	4	-	5	14			X		1							NEW SIGN
80	R4-7		24 X 30	2.5	-	3.5	12	X				1							NEW SIGN
81	R73-6		36 X 36	-	-	-	-								1				NEW SIGN
82	R3-4		30 X 30	-	-	-	-									1			REMOVE
	R4-7		48 X 60	-	-	-	-												REMOVE
83	2-SG1(Mod)		60 X 30	-	-	-	-								2				NEW SIGN
84	R4-7		24 X 30	2.5	-	3.5	12	X				1							NEW SIGN
85	R73-2		36 X 36	-	-	-	-								1				NEW SIGN
86	R9-3A		30 X 30	-	-	-	-							1			1		RELOCATE
87	R3-7(RT)		30 X 30	2.5	-	4.5	13		X			1							NEW SIGN
	R81(CA)		12 X 8	-	-	-	-												NEW SIGN
	R81B(CA)		8 X 5	-	-	-	-												NEW SIGN
88	R73-2		36 X 36	-	-	-	-								1				NEW SIGN
89	G8-22		36 X 48	4	-	4.5	14		X			1					1		RELOCATE
90	SG1(Mod)	S-4	60 X 30	-	-	-	-								1				NEW SIGN
91	R3-7		30 X 30	-	-	-	-									1			REMOVE
92	R9-3A		30 X 30	-	-	-	-							1					NEW SIGN
93	R3-7(RT)		30 X 30	2.5	-	4.5	13		X			1							NEW SIGN
94	R73-6		36 X 36	-	-	-	-								1				NEW SIGN
95	R3-4		36 X 36	-	-	-	-									1			REMOVE
96	R1-2		30 X 30	-	-	-	-									1			REMOVE
	OM1-3		18 X 18	-	-	-	-												REMOVE
97	SG1(Mod)		60 X 30	-	-	-	-								1				NEW SIGN
98	W74(CA)		48 X 48	-	-	-	-									1			REMOVE
							SUBTOTAL 3					10	0	3	8	12	2	1	
							SUBTOTAL 1					11	0	4	3	10	0	1	
							SUBTOTAL 2					12	0	3	3	16	0	1	
							TOTAL					33	0	10	14	38	2	3	

NOTES: (N) = NOT A SEPARATE PAY ITEM, FOR INFORMATION ONLY. (E) = SEE ELECTRICAL PLANS FOR FURTHER INFORMATION.
EXACT LOCATION OF SIGNS AND POSTS TO BE DETERMINED BY THE ENGINEER.

SIGN QUANTITIES

SQ-3

REVISED BY | DATE REVISED
CARLOS PEREZ | MARK JUGAR
CALCULATED-DESIGNED BY | CHECKED BY
CONSULTANT FUNCTIONAL SUPERVISOR
EDGAR A. CAMERINO
STATE OF CALIFORNIA - DEPARTMENT OF TRANSPORTATION
Caltrans

LAST REVISION 04-23-14 | DATE PLOTTED => 17-SEP-2014 | TIME PLOTTED => 14:56

Dist	COUNTY	ROUTE	POST MILES TOTAL PROJECT	SHEET No.	TOTAL SHEETS
11	SD	163	8.4/9.4	204	332

REGISTERED CIVIL ENGINEER 10-10-13 DATE

09-15-14
PLANS APPROVAL DATE

REGISTERED PROFESSIONAL ENGINEER MARK M. JUGAR No. 66939 Exp. 09-30-16 CIVIL STATE OF CALIFORNIA

THE STATE OF CALIFORNIA OR ITS OFFICERS OR AGENTS SHALL NOT BE RESPONSIBLE FOR THE ACCURACY OR COMPLETENESS OF SCANNED COPIES OF THIS PLAN SHEET.

CITY OF SAN DIEGO
600 B ST, SUITE 800
SAN DIEGO, CA 92101

RICK ENGINEERING COMPANY
5620 FRIARS RD
SAN DIEGO, CA 92110
(619) 291-0707

FURNISH ROADSIDE SIGN PANEL

SIGN No.	CODE	PANEL SIZE Horiz (INCH X INCH)	PANEL SIZE Vert (INCH X INCH)	BACKGROUND SHEETING COLOR	BACKGROUND RETRO-REFLECTIVE ASTM TYPE	LEGEND SHEETING COLOR	LEGEND REFLECTIVE ASTM TYPE	LEGEND BLACK (NON REFLECTIVE)	SIGN PANEL SINGLE SHEET ALUMINUM (SQFT) UNFRAMED 0.063"	UNFRAMED 0.080"	FRAMED 0.063"	FRAMED 0.080"	PROTECTIVE OVERLAY PREMIUM FILM	REMARKS
1	R4-1	48	60	WHITE	XI	BLACK		X		20.00			X	
4	R10-6L	36	48	WHITE	XI	BLACK		X		12.00			X	
	R89(CA)	36	9	WHITE	XI	BLACK		X	2.25				X	
5	W4-7	48	48	YELLOW	XI	BLACK		X		16.00			X	
	D11-1	24	18	GREEN	XI	WHITE	XI		3.00				X	
7	R81(CA)	12	8	WHITE	XI	BLACK		X	0.67				X	
11	W11-2	36	36	YELLOW	XI	BLACK		X	9.00				X	
	W16-7P	25	12	YELLOW	XI	BLACK		X	2.08				X	
	G92(CA)	48	30	GREEN	XI	WHITE	XI			10.00			X	
	M3-3	24	12	GREEN	XI	WHITE	XI		2.00				X	
	M6-2	21	15	GREEN	XI	WHITE	XI		2.19				X	
12	R9-3A	30	30	WHITE	XI	BLACK/RED	XI	X	6.25				X	
13	R18B(CA)	36	36	WHITE	XI	BLACK		X	9.00				X	
14	R5-10a	42	30	WHITE	XI	BLACK		X	8.75				X	
15	W3-3	48	48	YELLOW	XI	RED/BLACK/GREEN	XI	X		16.00			X	
	W10-10(Mod)	48	48	YELLOW	XI	BLACK		X		16.00			X	
16	W11-2	36	36	YELLOW	XI	BLACK		X	9.00				X	
	W16-7P	24	12	YELLOW	XI	BLACK		X	2.00				X	
	G92(CA)	48	30	GREEN	XI	WHITE	XI			10.00			X	
	M3-3	24	12	GREEN	XI	WHITE	XI		2.00				X	
	M6-2	21	15	GREEN	XI	WHITE	XI		2.19				X	
17	R9-3A	30	30	WHITE	XI	BLACK/RED	XI	X	6.25				X	
19	R7-9	12	18	WHITE	XI	RED	XI		1.50				X	
21	R3-18	30	30	WHITE	XI	BLACK/RED	XI	X	6.25				X	
22	R73-8(CA)	24	30	WHITE	XI	BLACK		X	5.00				X	
23	R9-3A	30	30	WHITE	XI	BLACK/RED	XI	X	6.25				X	
24	R4-4	36	30	WHITE	XI	BLACK		X	7.50				X	
26	R3-4	30	30	WHITE	XI	BLACK/RED	XI	X	6.25				X	
27	R4-7	24	30	WHITE	XI	BLACK		X	5.00				X	
	R3-18	30	30	WHITE	XI	BLACK/RED	XI	X	6.25				X	
31	R18B(CA)	36	36	WHITE	XI	BLACK		X	9.00				X	
	R7-9	12	18	WHITE	XI	RED	XI		1.50				X	
32	R89(CA)	36	9	WHITE	XI	BLACK		X	2.25				X	
33	W4-1	48	48	YELLOW	XI	BLACK		X		16.00			X	
35	R89(CA)	36	9	WHITE	XI	BLACK		X	2.25				X	
36	R89(CA)	36	9	WHITE	XI	BLACK		X	2.25				X	
37	R7-9	12	18	WHITE	XI	RED	XI		1.50				X	
38	R4-4	36	30	WHITE	XI	BLACK		X	7.50				X	
39	R9-3A	30	30	WHITE	XI	BLACK/RED	XI	X	6.25				X	
						SUBTOTAL 1			143.13	116.00	0.00	0.00		

SIGN QUANTITIES

SQ-4

REVISED BY | DATE REVISED
CARLOS PEREZ | MARK JUGAR
CALCULATED-DESIGNED BY | CHECKED BY
CONSULTANT FUNCTIONAL SUPERVISOR
EDGAR A. CAMERINO
STATE OF CALIFORNIA - DEPARTMENT OF TRANSPORTATION
Caltrans

LAST REVISION 04-23-14 | DATE PLOTTED => 17-SEP-2014 | TIME PLOTTED => 14:56

FURNISH ROADSIDE SIGN PANEL

SIGN No.	CODE	PANEL SIZE Horiz (INCH X INCH)	PANEL SIZE Vert (INCH X INCH)	BACKGROUND SHEETING COLOR	BACKGROUND RETRO-REFLECTIVE ASTM TYPE	LEGEND SHEETING COLOR	LEGEND REFLECTIVE ASTM TYPE	LEGEND BLACK (NON REFLECTIVE)	SIGN PANEL SINGLE SHEET ALUMINUM (SQFT) UNFRAMED 0.063"	UNFRAMED 0.080"	FRAMED 0.063"	FRAMED 0.080"	PROTECTIVE OVERLAY PREMIUM FILM	REMARKS
40	R4-7	24	30	WHITE	XI	BLACK		X	5.00				X	
	R3-18	30	30	WHITE	XI	BLACK/RED	XI	X	6.25				X	
29	R10-6L	24	36	WHITE	XI	BLACK		X	6.00				X	
	R89(CA)(Lt)	24	30	WHITE	XI	BLACK		X	5.00				X	
30	R10-6R	24	36	WHITE	XI	BLACK		X	6.00				X	
	R89(CA)(Rt)	24	30	WHITE	XI	BLACK		X	5.00				X	
	R89-1(CA)(2)	22	10	WHITE	XI	BLACK		X	1.53				X	
42	R3-18	30	30	WHITE	XI	BLACK/RED	XI	X	6.25				X	
45	R3-7	30	30	WHITE	XI	BLACK		X	6.25				X	
57	R5-1	48	48	WHITE	XI	RED	XI			16.00			X	
	R5-1a	42	30	WHITE	XI	RED	XI		8.75				X	
	R6-1(Lt)	54	18	WHITE	XI	BLACK		X		6.75			X	
	R6-1(Rt)	54	18	WHITE	XI	BLACK		X		6.75			X	
58	R5-1	48	48	WHITE	XI	RED	XI			16.00			X	
	R5-1a	42	30	WHITE	XI	RED	XI		8.75				X	
	R6-1(Lt)	54	18	WHITE	XI	BLACK		X		6.75			X	
	R6-1(Rt)	54	18	WHITE	XI	BLACK		X		6.75			X	
60	W3-3	48	48	YELLOW	XI	RED/BLACK/GREEN	XI	X		16.00			X	
	W10-10(Mod)	24	18	YELLOW	XI	BLACK		X	3.00				X	
61	R5-10a	36	30	WHITE	XI	BLACK		X	7.50				X	
62	R91-1(CA)	36	54	WHITE	XI	BLACK		X		13.50			X	
63	R91-1(CA)	36	54	WHITE	XI	BLACK		X		13.50			X	
64	R91-1(CA)	36	54	WHITE	XI	BLACK		X		13.50			X	
65	R91-1(CA)	36	54	WHITE	XI	BLACK		X		13.50			X	
66	G92(CA)	48	30	GREEN	XI	WHITE	XI			10.00			X	
	G28-1(163)(CA)	11	15	GREEN	XI	WHITE	XI		1.15				X	
	G48(CA)	21	9	WHITE	XI	BLACK		X	1.31				X	
	G43(CA)	21	15	WHITE	XI	BLACK		X	2.19				X	
67	W11-2	36	36	YELLOW	XI	BLACK		X	9.00				X	
	W16-7P	24	12	YELLOW	XI	BLACK		X	2.00				X	
69	R9-3A	30	30	WHITE	XI	BLACK/RED	XI	X	6.25				X	
70	R18B(CA)	36	36	WHITE	XI	BLACK		X	9.00				X	
72	R4-4	36	30	WHITE	XI	BLACK		X	7.50				X	
78	G84-2(CA)	54	48	GREEN	XI	WHITE	XI			18.00			X	
79	W3-3	48	48	YELLOW	XI	RED/BLACK/GREEN	XI	X		16.00			X	
80	R4-7	24	30	WHITE	XI	BLACK		X	5.00				X	
81	R73-6	36	36	WHITE	XI	BLACK		X	9.00				X	
83	SG1(Mod)	60	30	GREEN	XI	WHITE	XI			12.50			X	
	SG1(Mod)	60	30	GREEN	XI	WHITE	XI			12.50			X	
84	R4-7	24	30	WHITE	XI	BLACK		X	5.00				X	
85	R73-2	36	36	WHITE	XI	BLACK		X	9.00				X	
						SUBTOTAL 2			141.68	198.00	0.00	0.00		

Dist	COUNTY	ROUTE	POST MILES TOTAL PROJECT	SHEET No.	TOTAL SHEETS
11	SD	163	8.4/9.4	205	332

REGISTERED CIVIL ENGINEER 10-10-13 DATE

09-15-14
PLANS APPROVAL DATE

REGISTERED PROFESSIONAL ENGINEER MARK M. JUGAR No. 66939 Exp. 09-30-16 CIVIL STATE OF CALIFORNIA

THE STATE OF CALIFORNIA OR ITS OFFICERS OR AGENTS SHALL NOT BE RESPONSIBLE FOR THE ACCURACY OR COMPLETENESS OF SCANNED COPIES OF THIS PLAN SHEET.

CITY OF SAN DIEGO
600 B ST, SUITE 800
SAN DIEGO, CA 92101

RICK ENGINEERING COMPANY
5620 FRIARS RD
SAN DIEGO, CA 92110
(619) 291-0707

REVISED BY | DATE REVISED
CARLOS PEREZ | MARK JUGAR
CALCULATED-DESIGNED BY | CHECKED BY
CONSULTANT FUNCTIONAL SUPERVISOR
EDGAR A. CAMERINO

STATE OF CALIFORNIA - DEPARTMENT OF TRANSPORTATION
Caltrans

SIGN QUANTITIES
SQ-5

LAST REVISION 04-23-14 | DATE PLOTTED => 17-SEP-2014 | TIME PLOTTED => 14:56

Dist	COUNTY	ROUTE	POST MILES TOTAL PROJECT	SHEET No.	TOTAL SHEETS
11	SD	163	8.4/9.4	206	332

REGISTERED CIVIL ENGINEER 10-10-13 DATE

09-15-14
PLANS APPROVAL DATE

REGISTERED PROFESSIONAL ENGINEER MARK M. JUGAR No. 66939 Exp. 09-30-16 CIVIL STATE OF CALIFORNIA

THE STATE OF CALIFORNIA OR ITS OFFICERS OR AGENTS SHALL NOT BE RESPONSIBLE FOR THE ACCURACY OR COMPLETENESS OF SCANNED COPIES OF THIS PLAN SHEET.

CITY OF SAN DIEGO
600 B ST, SUITE 800
SAN DIEGO, CA 92101

RICK ENGINEERING COMPANY
5620 FRIARS RD
SAN DIEGO, CA 92110
(619) 291-0707

FURNISH ROADSIDE SIGN PANEL

SIGN No.	CODE	PANEL SIZE Horiz	PANEL SIZE Vert	BACKGROUND SHEETING COLOR	BACKGROUND RETRO-REFLECTIVE ASTM TYPE	LEGEND SHEETING COLOR	LEGEND REFLECTIVE ASTM TYPE	LEGEND BLACK (NON REFLECTIVE)	SIGN PANEL SINGLE SHEET ALUMINUM (SQFT) UNFRAMED 0.063"	UNFRAMED 0.080"	FRAMED 0.063"	FRAMED 0.080"	PROTECTIVE OVERLAY PREMIUM FILM	REMARKS
		INCH X INCH												
87	R3-7(Rt)	30 X 30		WHITE	XI	BLACK	XI	X	6.25				X	
	R81(CA)	12 X 8		WHITE	XI	BLACK	XI	X	0.67				X	
	R81B(CA)	8 X 5		WHITE	XI	BLACK	XI	X	0.28				X	
88	R73-2	36 X 36		WHITE	XI	BLACK	XI	X	9.00				X	
90	SG1(Mod)	60 X 30		GREEN	XI	WHITE	XI	X		12.50			X	
92	R9-3A	30 X 30		WHITE	XI	BLACK/RED	XI	X	6.25				X	
93	R3-7(Rt)	30 X 30		WHITE	XI	BLACK	XI	X	6.25				X	
94	R73-6	36 X 36		WHITE	XI	BLACK	XI	X	9.00				X	
97	SG1(Mod)	60 X 30		GREEN	XI	WHITE	XI			12.50			X	
98	SG1(Mod)	60 X 30		GREEN	XI	WHITE	XI			12.50			X	
99	SG1(Mod)	60 X 30		GREEN	XI	WHITE	XI			12.50			X	
						SUBTOTAL 3			37.70	50.00	0.00	0.00		
						SUBTOTAL 1			143.13	116.00	0.00	0.00		
						SUBTOTAL 2			141.68	198.00	0.00	0.00		
						TOTAL			322.51	364.00	0.00	0.00		

SIGN QUANTITIES

SQ-6

REVISED BY | DATE REVISED
CARLOS PEREZ | MARK JUGAR
CALCULATED-DESIGNED BY | CHECKED BY
CONSULTANT FUNCTIONAL SUPERVISOR
EDGAR A. CAMERINO
STATE OF CALIFORNIA - DEPARTMENT OF TRANSPORTATION
Caltrans

LAST REVISION 04-23-14 | DATE PLOTTED => 17-SEP-2014 TIME PLOTTED => 14:56

Dist	COUNTY	ROUTE	POST MILES TOTAL PROJECT	SHEET No.	TOTAL SHEETS
11	SD	163	8.4/9.4	207	332

REGISTERED CIVIL ENGINEER 10-10-13 DATE

09-15-14
PLANS APPROVAL DATE

REGISTERED PROFESSIONAL ENGINEER MARK M. JUGAR No. 66939 Exp. 09-30-16 CIVIL STATE OF CALIFORNIA

THE STATE OF CALIFORNIA OR ITS OFFICERS OR AGENTS SHALL NOT BE RESPONSIBLE FOR THE ACCURACY OR COMPLETENESS OF SCANNED COPIES OF THIS PLAN SHEET.

CITY OF SAN DIEGO
600 B ST, SUITE 800
SAN DIEGO, CA 92101

RICK ENGINEERING COMPANY
5620 FRIARS RD
SAN DIEGO, CA 92110
(619) 291-0707

OVERHEAD SIGN QUANTITIES

SIGN No. (X)	LOCATION	FURNISH SIGN STRUCTURE (LIGHTWEIGHT)	INSTALL SIGN STRUCTURE (LIGHTWEIGHT)	FURNISH SIGN STRUCTURE (TUBULAR)	INSTALL SIGN STRUCTURE (TUBULAR)	FURNISH SIGN STRUCTURE (TRUSS)	INSTALL SIGN STRUCTURE (TRUSS)	CIDH CONCRETE PILE SIGN FOUNDATION 36"		60"		REMOVE SIGN STRUCTURE	REMARKS
		LB	LB	LB	LB	LB	LB	FT Lt	FT Rt	FT Lt	FT Rt	EA	
1	"CMB", STA 91+33, Rt FEBT	8,080	8,080						14				
2	"R-1A", STA 477+63, Rt FSBT											1	
3	"R-1A", Sta 481+00, Rt/Lt, FSBT	22,030	22,030					16	16				
4	"SD-163", Sta 491+23, Rt FSBT			19,210	19,210						33		
5	"SD-163", Sta 500+91, Rt FSBT											1	
6	"SD-163", Sta 505+90, Rt FSBT											1	
7	"SD-163", Sta 506+00, Rt/Lt FSBT			37,380	37,380					33	33		
8	"SD-163", Sta 488+98, Rt FSBT											1	
9	"SD-163", Sta 481+91, Rt FSBT					18,610	18,610				22		
	SUBTOTAL	30,110	30,110	56,590	56,590	18,610	18,610	16	30	33	88	4	
	TOTAL	30,110	30,110	56,590	56,590	18,610	18,610	46		121		4	

FURNISH OVERHEAD SIGN PANEL

SIGN No. (X)	SIGN CODE	SHEET No.	PANEL SIZE Horiz	PANEL SIZE Vert	BACKGROUND SHEETING COLOR	BACKGROUND RETRO-REFLECTIVE ASTM TYPE	LEGEND SHEETING COLOR	LEGEND REFLECTIVE ASTM TYPE	FURNISH SIGN PANEL LAMINATED (1"-TYPE A)	FURNISH SIGN PANEL HARDWARE TYPE	FURNISH SIGN PANEL PROTECTIVE OVERLAY	(N) BACK OF PANEL PAINT*	REMARKS
			INCH	X INCH					SQFT	A-2	PREMIUM FILM	SQFT	
1	G77(CA)	S-2	120	80	GREEN	XI	WHITE	XI	40.00	X	X		
3	R3-5(Lt)	S-2	30	36	WHITE	XI	BLACK	-	10.00	X	X		
	R3-6(Lt)	S-2	30	36	WHITE	XI	BLACK	-	10.00	X	X		
	R3-5(Rt)	S-2	30	36	WHITE	XI	BLACK	-	10.00	X	X		
	R3-5(Rt)	S-2	30	36	WHITE	XI	BLACK	-	10.00	X	X		
4	G85	S-3	264	120	GREEN	XI	WHITE	XI	220.00	X	X	220.00	
7	G24(CA)	S-5	240	120	GREEN	XI	WHITE	XI	200.00	X	X	200.00	
	G24(CA)	S-5	264	120	GREEN	XI	WHITE	XI	220.00	X	X	220.00	
								TOTAL	720.00				

* PAINT BACK OF PANEL TAN COLOR = 22563
(N) - NOT A SEPARATE PAY ITEM, FOR INFORMATION ONLY

SIGN QUANTITIES
SQ-7

STATE OF CALIFORNIA - DEPARTMENT OF TRANSPORTATION
Caltrans
CONSULTANT FUNCTIONAL SUPERVISOR: EDGAR A. CAMERINO
CALCULATED-DESIGNED BY: CARLOS PEREZ
CHECKED BY: MARK JUGAR
REVISED BY
DATE REVISED

LAST REVISION 04-23-14
DATE PLOTTED => 17-SEP-2014
TIME PLOTTED => 14:56

Dist	COUNTY	ROUTE	POST MILES TOTAL PROJECT	SHEET No.	TOTAL SHEETS
11	SD	163	8.4/9.4	208	332

REGISTERED CIVIL ENGINEER 10-10-13 DATE

09-15-14
PLANS APPROVAL DATE

REGISTERED PROFESSIONAL ENGINEER EDGAR A. CAMERINO No. 58844 Exp. 06-30-15 CIVIL STATE OF CALIFORNIA

THE STATE OF CALIFORNIA OR ITS OFFICERS OR AGENTS SHALL NOT BE RESPONSIBLE FOR THE ACCURACY OR COMPLETENESS OF SCANNED COPIES OF THIS PLAN SHEET.

CITY OF SAN DIEGO
600 B ST, SUITE 800
SAN DIEGO, CA 92101

RICK ENGINEERING COMPANY
5620 FRIARS RD
SAN DIEGO, CA 92110
(619) 291-0707

GUARD RAILING

MGS No.	SHEET No.	LOCATION				LAYOUT TYPE	MIDWEST GUARDRAIL SYSTEM (7')	TRANSITION RAILING (TYPE WB)	END ANCHOR ASSEMBLY (TYPE SFT)	ALTERNATIVE FLARED TERMINAL SYSTEM	ALTERNATIVE IN-LINE TERMINAL SYSTEM	CONNECTIONS TO CONCRETE BARRIER (N)	END CAP (N)	GUARDRAIL DELINEATORS
		LINE	STATION TO	STATION FROM	SIDE		SINGLE					(TYPE A)	(TYPE TC)	(TYPE F)
							LF	EA	EA	EA	EA	EA	EA	EA
1	L-2	"R-2A"	479+09.35	479+34.27	L+	12B		1		1		1	1	3
2	L-2	"R-1A"	480+85.47	482+10.08	R+	11B	87.5		1	1				1
3	L-2	"SD-163"	482+50.00	483+12.15	L+	12B		1		1		1	1	1
4	L-2	"R-1A"	478+00.00	482+32.72	L+	11A	437.5		1		1			2
5	L-2	"R-2A"	474+01.07	474+75.60	L+	16B	37.5		1	1				1
6	L-2	"R-7A"	473+41.03	474+03.60	L+	16B	25		1	1				1
7	L-2	"R-7A"	473+41.03	474+03.57	R+	16B	25		1	1				1
8	L-3	"SD-163"	491+01.16	491+87.55	L+	16B	50		1	1				1
						TOTAL	662.5	2	6	7	1	2	2	11

TREATED WOOD WASTE

LINE	STATION FROM	STATION TO	SIDE	LB
"R-7A"	477+85.73	-	L+	6,810
"R-1A"	488+86.57	-	R+	1,270
REMOVE ROADSIDE SIGNS				6,048
			TOTAL	14,128

CONCRETE BARRIER

LINE	STATION FROM	STATION TO	SIDE	TYPE 60	TYPE 60C	Mod TYPE 60C	TYPE 60D	TYPE 60GE
				LF	LF	LF	LF	LF
"SD-163"	461+18.72	462+82.50	L+		164			
"SD-163"	462+82.50	465+65.00	L+			282		
"SD-163"	465+65.00	472+29.50	L+	652				
"SD-163"	504+95.24	507+04.76	-					210
"R-2A"	476+99.53	479+00.00	L+				210.5	
			TOTAL	652	164	282	210.5	210

REMOVE GUARDRAIL

LINE	STATION FROM	STATION TO	SIDE	LF
"R-7A"	477+85.73	-	L+	620
"R-1A"	488+86.57	-	L+	115
			TOTAL	735

COLD PLANE AC PAVEMENT

LINE	STATION FROM	STATION TO	SIDE	AREA SQYD 2" DEPTH
"KMR"	461+17.91	466+00.00	R+	510
"SD-163"	463+48.39	475+78.87	L+	2,290
"SD-163"	482+50.00	487+70.00	L+	585
"SD-163"	491+74.73	494+40.00	L+	450
"KMR"	476+22.59	479+13.31	L+	900
"KMR"	480+01.05	481+20.43	L+	495
"KMR"	476+22.59	479+13.31	R+	1,165
"KMR"	480+01.05	481+20.43	R+	555
"CMB"	85+23.13	96+28.88	R+	3,715
"CMB"	85+23.17	93+62.23	L+	3,495
"CMB"	94+36.00	96+36.59	L+	255
"CMB"	89+82.61	94+33.00	R+	495
"CMB"	92+60.62	96+33.55	L+	735
			TOTAL	15,645

MINOR CONCRETE (MISCELLANEOUS CONSTRUCTION)

LINE	STATION FROM	STATION TO	SIDE	CURB (TYPE A1-6)	CURB (TYPE A2-6)	CURB (TYPE B2-6)	CURB (TYPE X)	CURB (TYPE Y)	SIDEWALK	RIBBON GUTTER
				CY	CY	CY	CY	CY	CY	CY
"KMR"	476+22.59	478+77.23	L+				16		17	
"CMB"	85+23.15	88+99.45	-					34.5		
"CMB"	85+47.79	88+96.90	R+		21.5				18.5	
"CMB"	88+69.39	88+98.62	L+				2.5		3	
"CMB"	90+01.11	92+96.30	L+				22		24	
"CMB"	89+77.06	93+15.10	R+		20.5				19	
"CMB"	89+85.61	93+20.19	-			42				
"CMB"	94+06.25	96+12.67	L+		13.5				12	
"CMB"	93+51.25	95+94.60	R+		15.5				15.5	
"CMB"	94+04.93	96+16.85	-			20				
"KMR"	478+16.16	478+88.00	L+							8
"CMB"	93+51.25	93+68.25	L+	1.5						
			SUBTOTAL	1.5	71	62	40.5	34.5	109	8
			TOTAL	326.5						

REMOVE PORTABLE CONCRETE BARRIER (TYPE 60K)

LINE	STATION FROM	STATION TO	SIDE	LF
"SD-163"	463+90.23	465+40.00	L+	150
"R-2A"	465+40.00	469+00.00	L+	360
"R-7A"	469+00.00	474+47.42	L+	528
			TOTAL	1,038

REMOVE CONCRETE BARRIER

LINE	STATION FROM	STATION TO	SIDE	LF
"SD-163"	461+72.62	463+96.87	L+	278
"SD-163"	482+37.00	490+00.00	L+	768
"SD-163"	504+95.24	507+04.76	-	210
			TOTAL	1,256

REMOVE CRASH CUSHION

LINE	STATION FROM	STATION TO	EACH
"SD-163"	489+99.93	-	1
"R-7A"	474+47.42	-	1
		TOTAL	2

ALTERNATIVE CRASH CUSHION

LINE	STATION FROM	STATION TO	TYPE 1 OR 2
"R-7A"	472+29.57	472+64.36	1
		TOTAL	1

(N) - NOT A SEPARATE PAY ITEM, FOR INFORMATION ONLY

SUMMARY OF QUANTITIES

Q-1

STATE OF CALIFORNIA - DEPARTMENT OF TRANSPORTATION
Caltrans
CONSULTANT FUNCTIONAL SUPERVISOR: EDGAR A. CAMERINO
CALCULATED-DESIGNED BY: NICHOLAS DORNER
CHECKED BY: EDGAR CAMERINO
REVISED BY
DATE REVISED

LAST REVISION 07-15-14
DATE PLOTTED => 17-SEP-2014
TIME PLOTTED => 14:56

Dist	COUNTY	ROUTE	POST MILES TOTAL PROJECT	SHEET No.	TOTAL SHEETS
11	SD	163	8.4/9.4	209	332

REGISTERED CIVIL ENGINEER 10-10-13 DATE

09-15-14
PLANS APPROVAL DATE

REGISTERED PROFESSIONAL ENGINEER EDGAR A. CAMERINO No. 58844 Exp. 06-30-15 CIVIL STATE OF CALIFORNIA

THE STATE OF CALIFORNIA OR ITS OFFICERS OR AGENTS SHALL NOT BE RESPONSIBLE FOR THE ACCURACY OR COMPLETENESS OF SCANNED COPIES OF THIS PLAN SHEET.

CITY OF SAN DIEGO
600 B ST, SUITE 800
SAN DIEGO, CA 92101

RICK ENGINEERING COMPANY
5620 FRIARS RD
SAN DIEGO, CA 92110
(619) 291-0707

STRUCTURAL SECTION

LINE	STATION FROM	STATION TO	SIDE	AREA SF (N)	Pvmt Str TYPE	HMA (TYPE A) TON	AB (CLASS 2) CY	CEMENT TREATED BASE CY	ASPHALTIC EMULSION (FOG SEAL COAT) TON	TACK COAT TON
"R-7A"	469+00.00	477+95.76	L+	19,388	1	730	688		-	0.9
"R-7A"	471+72.96	477+90.16	R+	2,434	1	91	87		0.1	0.1
"R-7A"	469+00.00	477+43.83	L+	8,258	1	310	293		0.4	0.4
"R-7A"	469+00.00	471+72.96	R+	1,506	1	57	54		0.1	0.1
"R-1A"	477+10.52	477+95.52	L+	800	1	29	28		0.05	0.05
"R-1A"	477+10.52	490+40.00	L+	49,282	1	1,848	1,750		-	2.28
"R-1A"	477+10.52	487+70.00	R+	4,230	1	159	150		0.2	0.2
"R-1A"	477+10.52	490+40.00	L+	10,849	1	407	385		0.5	0.5
"R-1A"	487+70.00	490+40.00	R+	3,056	1	115	108		0.1	0.1
"SD-163"	459+39.56	465+40.00	L+	6,321	1	237	224		0.3	0.3
"SD-163"	459+39.56	465+40.00	L+	2,840	1	107	101		-	0.13
"SD-163"	463+48.39	465+40.00	L+	2,980	2	45	-		-	0.14
"SD-163"	482+50.00	487+70.00	L+	5,246	2	79	-		-	0.24
"SD-163"	483+37.50	484+21.13	L+	780	1	30	28		0.05	0.05
"SD-163"	490+40.00	491+74.73	L+	2,515	1	95	90		-	0.12
"SD-163"	490+40.00	494+40.00	L+	3,803	1	143	135		0.20	0.20
"SD-163"	491+74.73	494+40.00	L+	4,068	2	61	-		-	0.19
"R-2A"	465+40.00	469+00.00	L+	7,181	2	108	-		-	0.33
"R-2A"	465+40.00	469+00.00	L+	5,068	1	190	180		0.20	0.20
"R-2A"	465+40.00	475+78.87	R+	10,294	2	155	-		-	0.48
"R-2A"	475+35.00	476+20.00	L+	782	1	30	28		0.05	0.05
"R-2A"	475+78.87	480+51.80	R+	1,579	1	60	56		-	0.07
"R-2A"	469+00.00	486+47.07	L+	38,486	1	1,443	1366		-	1.78
"R-2A"	471+72.62	486+47.07	L+	12,139	1	455	431		0.55	0.55
"R-2A"	480+73.00	486+47.07	R+	2,378	1	89	85		0.1	0.1
"R-2A"	479+90.00	480+51.80	R+	881	1	33	31		0.05	0.05
"R-2A"	479+89.86	481+07.96	L+	840	1	32	30		0.05	0.05
"KMR"	461+17.75	466+00.00	R+	4,571	2	69		-	-	0.24
"KMR"	476+22.59	478+81	L+	1,395	3	26		48	-	0.06
"KMR"	476+22.59	478+81	L+	7,184	2	108		-	-	0.33
"KMR"	476+22.59	478+81	R+	8,845	2	133		-	-	0.41
"CMB"	85+23.14	93+61.89	L+	41,643	2	625		-	-	1.93
"CMB"	85+23.14	96+28.88	R+	35,180	2	528		-	-	1.63
"CMB"	85+23.14	88+69.38	L+/R+	2,188	4	55		92	-	0.1
"CMB"	85+47.79	89+10.41	R+	1,809	4	45		75	-	0.08
"CMB"	89+75.94	95+94.60	R+	11,969	4	300		500	-	0.55
"CMB"	89+82.61	94+33.00	R+	4,461	2	134		-	-	0.21
"CMB"	89+82.61	96+16.85	L+/R+	8,768	4	220		365	-	0.41
"CMB"	89+99.20	96+12.67	L+	19,972	4	500		835	-	0.92
"CMB"	92+60.62	96+33.55	L+	6,585	2	198		-	-	0.3
"CMB"	94+36.00	96+36.59	L+	2,294	2	35		-	-	0.11
TRANSFER FROM OTHER SUMMARY SHEETS:										
					ROADWAY ITEMS	29	28	-	0.30	
					TOTAL	10,140 *	6,356 *	1,914 *	3.30 *	16.70 *

* SEE "SCQ" SHEETS FOR ADDITIONAL QUANTITIES

PLACE HOT MIX ASPHALT DIKE

LINE	STATION FROM	STATION TO	SIDE	TYPE C LF	TYPE D LF	TYPE E LF	TYPE F LF	MINOR HMA TON	ASPHALTIC EMULSION (FOG SEAL COAT) TON
"R-1A"	477+10.52	478+00.00	L+			94.4		2.5	0.007
"R-1A"	476+98.37	480+85.47	R+			384.4		10	0.03
"R-1A"	480+84.02	481+86.09	L+				94.0	1.5	0.005
"R-1A"	481+86.09	482+65.96	L+	75.0				0.5	0.003
"R-1A"	482+65.96	487+50.00	L+		466.9			27.5	0.05
"R-1A"/"SD-163"	487+50.00	491+01.16	L+			349.0		9.5	0.025
"R-2A"	482+98.10	486+70.83	R+			379.6		9.5	0.027
"R-2A"	476+59.54	476+99.53	L+			40.0		1	0.004
"R-2A"	479+09.35	479+29.91	L+				20.6	0.5	0.001
"R-2A"	479+29.91	479+87.37	L+	60.0				0.5	0.002
"R-2A"	479+87.37	486+47.07	L+			538.8		14	0.038
"SD-163"	482+50.00	482+75.00	L+				26.0	0.5	0.001
"SD-163"	482+75.00	483+37.50	L+	63.4				0.5	0.002
"SD-163"	483+37.50	487+70.00	L+			436.2		11.5	0.031
"SD-163"	491+01.16	491+49.57	L+				50.0	0.5	0.002
"SD-163"	491+49.57	492+12.49	L+	63.1				0.5	0.002
"SD-163"	492+12.49	494+40.00	L+			228.1		6	0.016
"KMR"	465+77.27	472+00.00	R+			649.2		17	0.05
			TOTAL	261.5	466.9	3,099.7*	190.6	113.5 *	0.30 *

SAFETY EDGE

SHEET No.	LINE	STATION FROM	STATION TO	SIDE	(N) TOTAL THICKNESS OF SAFETY EDGE FT	(N) LENGTH SAFETY EDGE LF	HOT MIX ASPHALT (TYPE A) TON	AB (CLASS 2) CY
L-2 TO L-3	"R-1A"	482+13.08	485+35.33	R+	0.50	322.3	5.2	12
L-2	"R-2A"	472+40.13	473+98.07	L+	0.50	158.0	2.5	6
L-2	"R-2A"	474+54.90	476+59.54	L+	0.50	204.7	3.3	8
L-2	"R-2A"	480+90.24	482+98.10	R+	0.50	207.9	3.3	8
L-2	"R-7A"	472+42.38	473+38.06	R+	0.50	95.7	1.5	4
L-2	"R-7A"	472+64.36	473+38.03	L+	0.50	73.7	1.2	3
L-2	"R-7A"	474+06.60	477+90.16	R+	0.50	383.6	6.1	14
L-2	"R-7A"	474+06.60	477+43.83	L+	0.50	337.2	5.4	13
			SUBTOTAL				28.5	68

PLACE HMA (MISCELLANEOUS AREA)

LINE	STATION FROM	STATION TO	SIDE	AREA SQYD	MINOR HMA TON
"R-1A"	476+73.19	476+86.49	R+	21	2.36
"R-1A"	476+96.29	480+31.00	R+	401	45.11
"CMB"	87+68.43	88+07.06	R+	112	12.60
"CMB"	85+23.13	88+65.01	L+/R+	313	35.21
"CMB"	89+87.61	93+20.26	L+/R+	208	23.40
"CMB"	94+06.953	96+16.85	L+/R+	253	28.46
			TOTAL	1,308	147.14 *

(N) - NOT A SEPARATE PAY ITEM, FOR INFORMATION ONLY

MINOR CONCRETE (TEXTURED PAVING)

LINE	STATION FROM	STATION TO	SIDE	AREA SQFT (N)	MINOR Conc (TEXTURED PAVING) SQYD
"R-2A"	471+72.62	472+27.40	L+	1,082	120
"SD-163"	480+51.80	480+73.00	L+	516	57
"R-1A"	480+31.00	480+76.11	R+	959	107
"SD-163"	485+65.47	487+70.00	L+	3,820	424
			TOTAL		708

SUMMARY OF QUANTITIES

Q-2

STATE OF CALIFORNIA - DEPARTMENT OF TRANSPORTATION
Caltrans

CONSULTANT FUNCTIONAL SUPERVISOR: EDGAR A. CAMERINO
CALCULATED-DESIGNED BY: NICHOLAS DORNER
CHECKED BY: EDGAR CAMERINO
REVISED BY
DATE REVISED

LAST REVISION 04-25-14
DATE PLOTTED => 17-SEP-2014
TIME PLOTTED => 14:56

Dist	COUNTY	ROUTE	POST MILES TOTAL PROJECT	SHEET No.	TOTAL SHEETS
11	SD	163	8.4/9.4	210	332

REGISTERED CIVIL ENGINEER 10-10-13 DATE

09-15-14
PLANS APPROVAL DATE

REGISTERED PROFESSIONAL ENGINEER EDGAR A. CAMERINO No. 58844 Exp. 06-30-15 CIVIL STATE OF CALIFORNIA

THE STATE OF CALIFORNIA OR ITS OFFICERS OR AGENTS SHALL NOT BE RESPONSIBLE FOR THE ACCURACY OR COMPLETENESS OF SCANNED COPIES OF THIS PLAN SHEET.

CITY OF SAN DIEGO
600 B ST, SUITE 800
SAN DIEGO, CA 92101

RICK ENGINEERING COMPANY
5620 FRIARS RD
SAN DIEGO, CA 92110
(619) 291-0707

EARTHWORK

LINE	STATION FROM	STATION TO	EXCAVATION CY	EMBANKMENT (N) CY	IMPORTED BORROW CY
"SD-163"	481+00	485+00	300	250	
"R-1A"	477+00	490+00	10,231	12,603	
"R-2A"	465+50	486+25	8,231	11,518	
"R-7A"	469+00	477+50	6,780	10,236	
"CMB"	90+00	96+00	955	4,520	
		TOTAL	26,497 *	39,127 *	12,630 *

ROADWAY EXCAVATION (TYPE Y-1) (AERIALLY DEPOSITED LEAD)

LINE	STATION FROM	STATION TO	EXCAVATION CY
"SD-163"	481+00	485+00	1,600
		TOTAL	1,600

ROCK BLANKET

LINE	STATION FROM	STATION TO	SIDE	AREA SQFT
"CMB"	86+63.73	87+68.43	R+	1,278
"CMB"	87+98.43	89+09.70	R+	3,744
"KMR"	465+75.00	471+86.74	R+	10,998
		TOTAL		16,020

FENCING

STATION LINE	FROM	TO	SIDE	CL FENCE (TYPE CL-4) LF	CL FENCE (TYPE CL-6) LF	4' CL GATE (TYPE CL-6) EA	8' CL GATE (TYPE CL-6) EA
"SD-163"	461+18.72	465+65.00	L+	446			
"SD-163"	465+65.00	465+77.27	L+	13			
"KMR"	465+77.27	472+26.15	R+		685		
"KMR"	481+20.92	481+95.34	R+		63		
"KMR"	472+00.00	-	R+			1	
"KMR"	476+42.24	-	R+				1
"KMR"	490+00.00	-	R+			1	
"KMR"	492+73.86	-	R+			1	
			TOTAL	459	748	3	1

REMOVE CHAIN LINK FENCE

LINE	STATION FROM	STATION TO	SIDE	LENGTH LF
"SD-163"	461+18.72	472+26.15	L+	1,143
"KMR"	476+34.24	476+42.24	R+	8
"KMR"	480+78.85	481+95.34	R+	117
			TOTAL	1,268

REMOVE RETAINING WALL

LINE	STATION FROM	STATION TO	SIDE	CY
"SD-163"	461+18.72	463+96.87	L+	20
			TOTAL	20

MINOR CONCRETE (MINOR STRUCTURE)

LINE	STATION FROM	STATION TO	SIDE	CY
"R-2A"	479+00.00	479+09.35	L+	2.0 CY
"SD-163"	482+37.00	482+50.00	L+	1.0 CY
			TOTAL	3.0 CY **

REMOVE CONCRETE (CURB & GUTTER)

LINE	STATION FROM	STATION TO	SIDE	LF
"CMB"	85+47.79	90+24.20	R+	409
"CMB"	89+86.28	96+16.85	-	3,043
"R-7A"	-	-	L+	988
"R-1A"	-	-	L+	1,537
			TOTAL	5,977 *

REMOVE CONCRETE SIDEWALK

LINE	STATION FROM	STATION TO	SIDE	LF
"CMB"	85+47.79	90+24.20	R+	574
"CMB"	89+86.28	96+16.85	-	29
			TOTAL	603

REMOVE CONCRETE

LINE	STATION FROM	STATION TO	SIDE	CY
"R-1A"	478+60.59	482+44.00	L+	45
"CMB"	95+82.66	-	L+	0.1
			TOTAL	45.1

IRRIGATION CONDUIT

SHEET No.	LOCATION LINE	LOCATION STATION	SIDE L+	SIDE R+	Exist Irr Cond SIZE (INCH)	EXTENSION CONNECTION TYPE CB	EXTENSION CONNECTION TYPE OL	(*) PLASTIC PIPE (SUPPLY LINE) SIZE (INCH)	(N) ELECTRICAL CONDUIT FOR CNC SIZE (INCH)	CORRUGATED HIGH DENSITY POLYETHYLENE PIPE CONDUIT SIZE (INCH) 8" LENGTH (LF)	CORRUGATED HIGH DENSITY POLYETHYLENE PIPE CONDUIT SIZE (INCH) 10" LENGTH (LF)
L-2	"R-7A"	477+63	X	X	-	-	-	3"	2"	40	-
L-2	"CMB"	96+50	X	X	-	-	-	3"	(2) 2"	-	132
L-2	"R-2A"	481+47	X	X	-	-	-	3"	2"	44	-
L-2	"R-2A"	486+60	X	X	-	-	-	3"	2"	121	-
L-2	"R-1A"	482+40	X	X	-	-	-	3"	2"	60	-
									TOTAL	265	132

(N) - NOT A SEPARATE PAY ITEM, FOR INFORMATION ONLY
X - DENOTES REQUIREMENT
* - FOR QUANTITIES SEE IRRIGATION QUANTITY SHEETS

ABBREVIATIONS:
CB - COUPLING BAND
OL - OVERLAP
* SEE "SCQ" SHEETS FOR ADDITIONAL QUANTITIES
** SEE "DQ" SHEETS FOR ADDITIONAL QUANTITIES

SUMMARY OF QUANTITIES

Q-3

REVISED BY | DATE REVISED
NICHOLAS DORNER | EDGAR CAMERINO
CALCULATED-DESIGNED BY | CHECKED BY
CONSULTANT FUNCTIONAL SUPERVISOR | EDGAR A. CAMERINO
STATE OF CALIFORNIA - DEPARTMENT OF TRANSPORTATION
Caltrans

LAST REVISION 08-20-14 | DATE PLOTTED => 17-SEP-2014 | TIME PLOTTED => 14:56

Dist	COUNTY	ROUTE	POST MILES TOTAL PROJECT	SHEET No.	TOTAL SHEETS
11	SD	163	8.4/9.4	211	332

REGISTERED CIVIL ENGINEER 10-10-13 DATE

09-15-14
PLANS APPROVAL DATE

REGISTERED PROFESSIONAL ENGINEER EDGAR A. CAMERINO No. 58844 Exp. 06-30-15 CIVIL STATE OF CALIFORNIA

THE STATE OF CALIFORNIA OR ITS OFFICERS OR AGENTS SHALL NOT BE RESPONSIBLE FOR THE ACCURACY OR COMPLETENESS OF SCANNED COPIES OF THIS PLAN SHEET.

CITY OF SAN DIEGO
600 B ST, SUITE 800
SAN DIEGO, CA 92101

RICK ENGINEERING COMPANY
5620 FRIARS RD
SAN DIEGO, CA 92110
(619) 291-0707

NOTES:

1. FG AT FACE OF WALL CONTROLLED BY "R-2A".
2. FOR METAL BEAM GUARD RAILING CONNECTIONS TO WALL, SEE STANDARD PLAN A77J3
3. FOR RETAINING WALL TYPICAL CROSS SECTIONS, SEE THIS SHEET FOR SECTION A-A, SEE SHEET R-2 FOR SECTION B-B AND C-C.

STANDARD PLAN SHEET No.
DETAIL No.

CURVE DATA

No.	R	Δ	T	L
1	13032.81′	0°45′06″	85.49′	170.98′

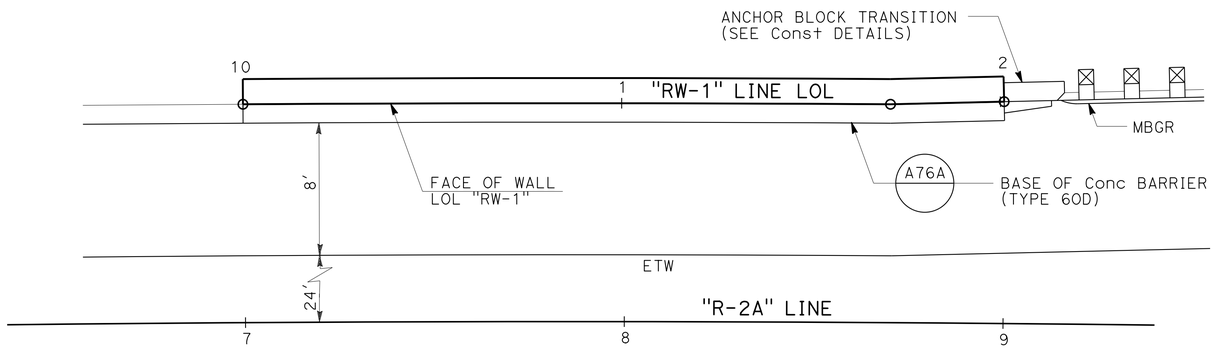

PLAN
NO SCALE

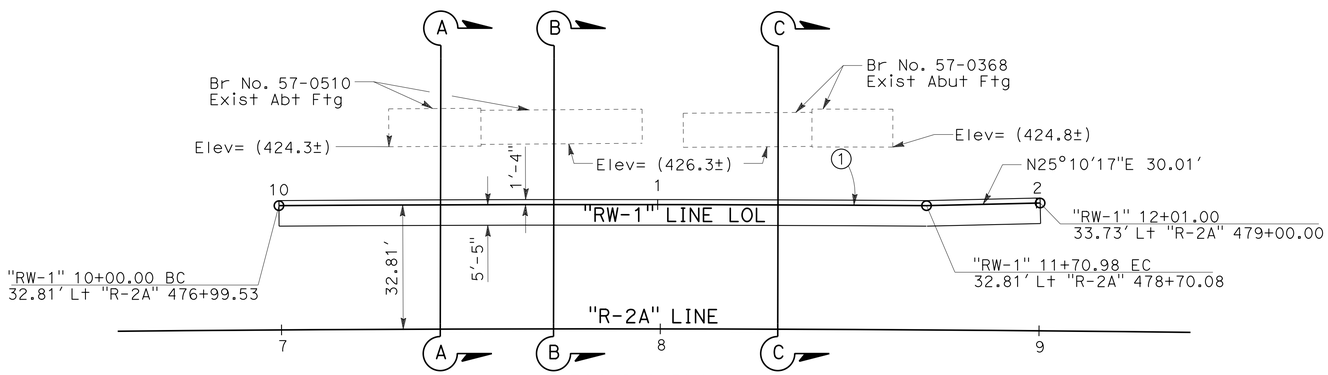

FOOTING PLAN
NO SCALE

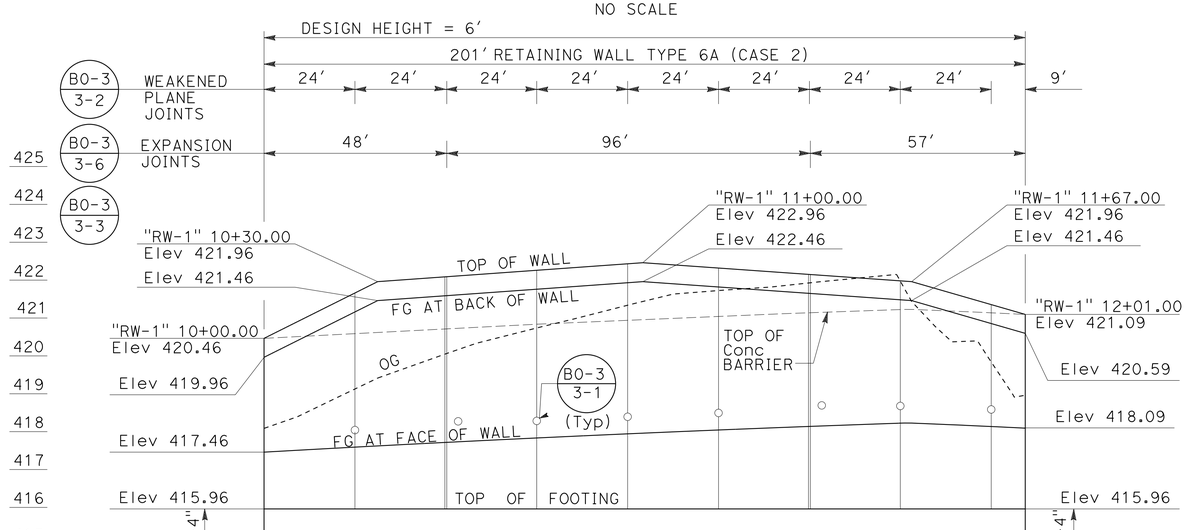

ELEVATION
SCALE: Horiz 1"=20′
Vert 1"=2′

APPROVED FOR RETAINING WALL WORK ONLY

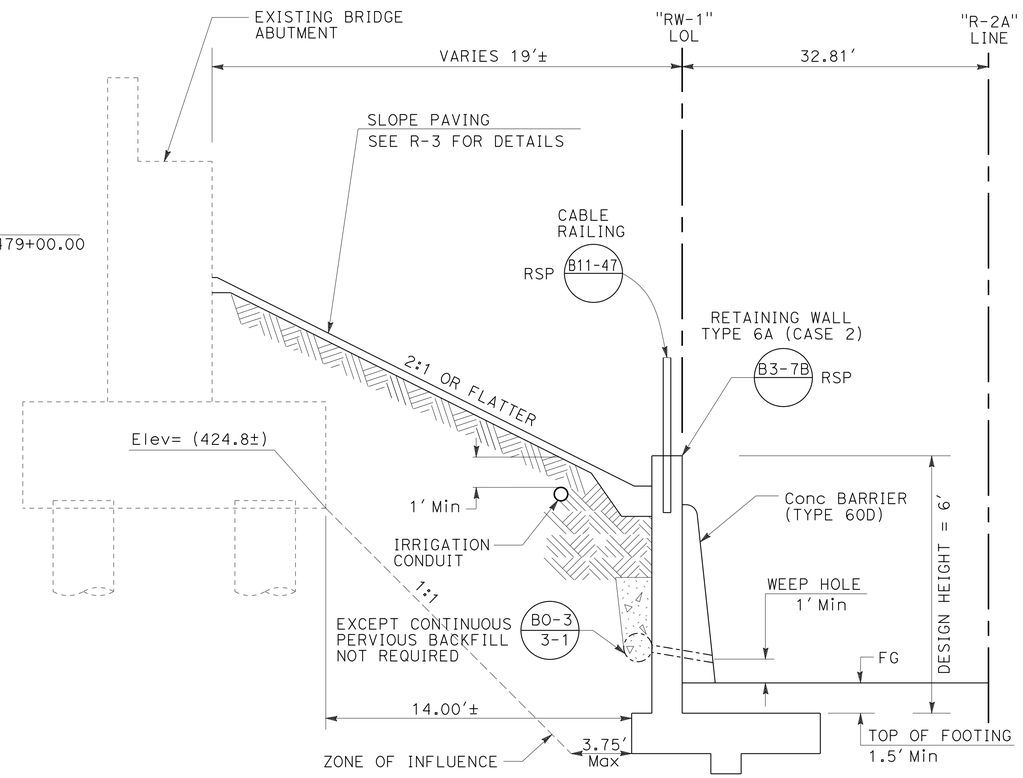

TYPICAL SECTION A-A
Sta "RW-1" 10+29.10 TO 10+53.41
Sta "RW-1" 11+40.66 TO 11+62.00
NO SCALE

RETAINING WALL PLAN "RW-1"

SCALE AS SHOWN

R-1

STATE OF CALIFORNIA - DEPARTMENT OF TRANSPORTATION
Caltrans

CONSULTANT FUNCTIONAL SUPERVISOR: EDGAR A. CAMERINO
CALCULATED-DESIGNED BY: NICHOLAS DORNER
CHECKED BY: EDGAR CAMERINO
REVISED BY
DATE REVISED

LAST REVISION 04-25-14
DATE PLOTTED => 17-SEP-2014
TIME PLOTTED => 14:56

Dist	COUNTY	ROUTE	POST MILES TOTAL PROJECT	SHEET No.	TOTAL SHEETS
11	SD	163	8.4/9.4	212	332

REGISTERED CIVIL ENGINEER 10-10-13 DATE

09-15-14
PLANS APPROVAL DATE

REGISTERED PROFESSIONAL ENGINEER
EDGAR A. CAMERINO
No. 58844
Exp. 06-30-15
CIVIL
STATE OF CALIFORNIA

THE STATE OF CALIFORNIA OR ITS OFFICERS OR AGENTS SHALL NOT BE RESPONSIBLE FOR THE ACCURACY OR COMPLETENESS OF SCANNED COPIES OF THIS PLAN SHEET.

CITY OF SAN DIEGO
600 B ST, SUITE 800
SAN DIEGO, CA 92101

RICK ENGINEERING COMPANY
5620 FRIARS RD
SAN DIEGO, CA 92110
(619) 291-0707

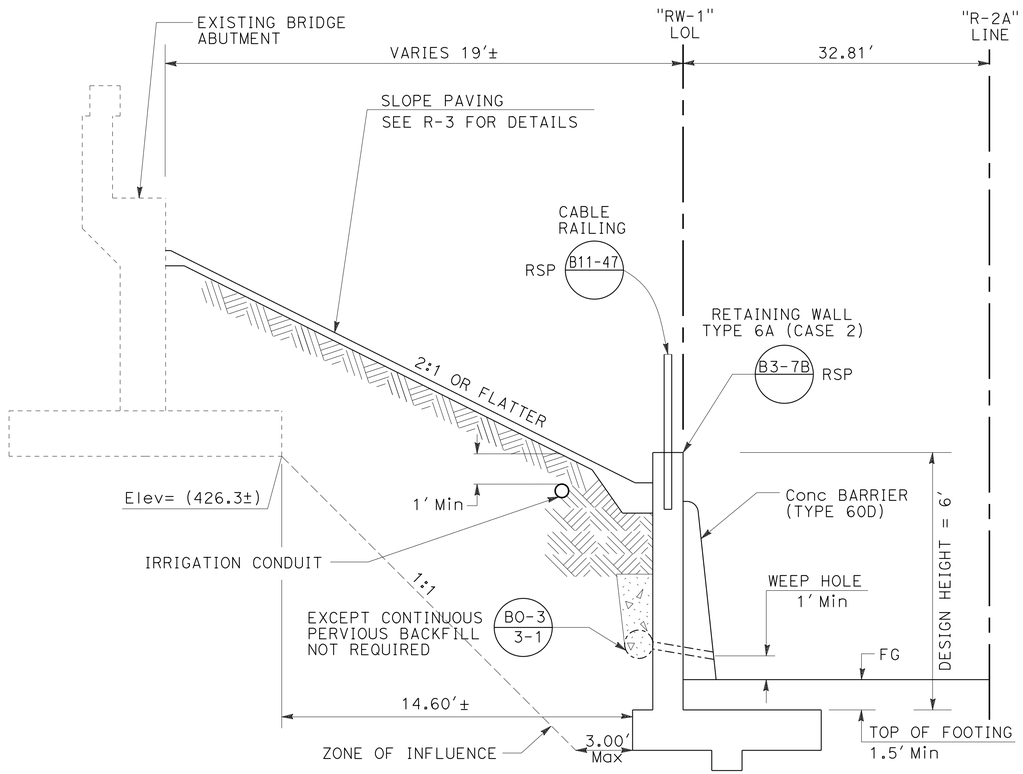

TYPICAL SECTION B-B

Sta "RW-1" 10+53.41 TO 10+95.92
NO SCALE

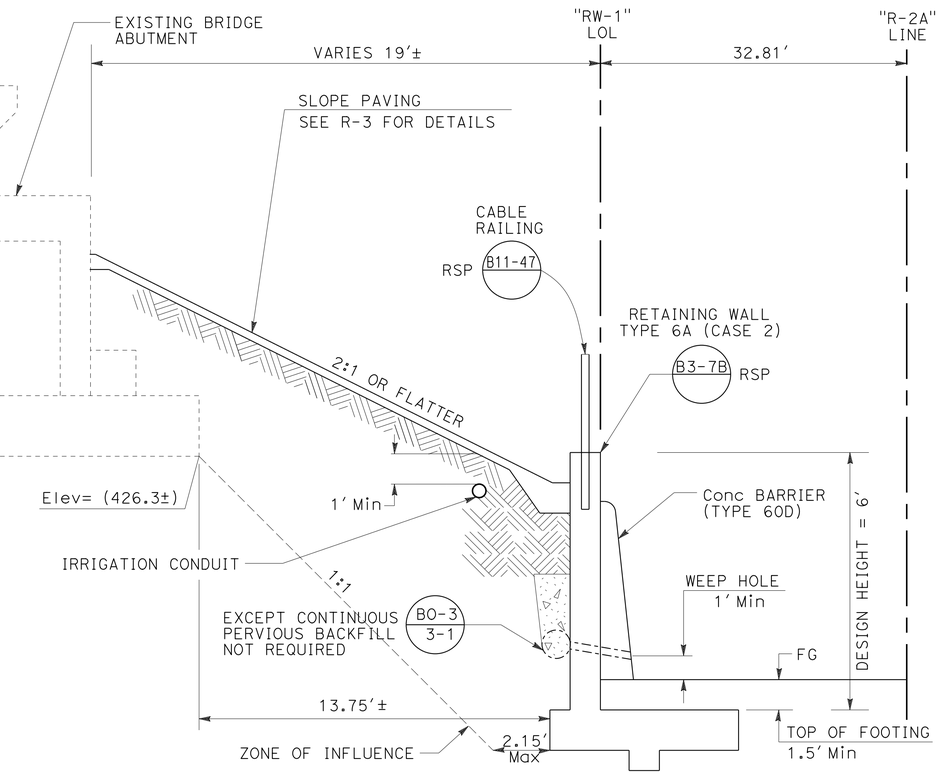

TYPICAL SECTION C-C

Sta "RW-1" 11+06.77 TO 11+40.66
NO SCALE

RETAINING WALL

LOCATION	LENGTH (N)	BAR REINFORCING STEEL	CABLE RAILING	SLOPE PAVING (CONCRETE)	STRUCTURE EXCAVATION	STRUCTURE BACKFILL	STRUCTURE CONCRETE
	LF	LB	LF	CY	CY	CY	CY
"RW-1"	201	5,245.5	201	50.5	226.1	142.5	101.4

(N) - NOT A SEPARATE PAY ITEM, FOR INFORMATION ONLY

APPROVED FOR RETAINING WALL WORK ONLY

RETAINING WALL PLAN "RW-1"

SCALE AS SHOWN

R-2

STATE OF CALIFORNIA - DEPARTMENT OF TRANSPORTATION
Caltrans

CONSULTANT FUNCTIONAL SUPERVISOR: EDGAR A. CAMERINO
CALCULATED-DESIGNED BY: NICHOLAS DORNER
CHECKED BY: EDGAR CAMERINO
REVISED BY
DATE REVISED

LAST REVISION 04-25-14
DATE PLOTTED => 17-SEP-2014
TIME PLOTTED => 14:56

Dist	COUNTY	ROUTE	POST MILES TOTAL PROJECT	SHEET No.	TOTAL SHEETS
11	SD	163	8.4/9.4	213	332

REGISTERED CIVIL ENGINEER — DATE 10-10-13

PLANS APPROVAL DATE 09-15-14

REGISTERED PROFESSIONAL ENGINEER — EDGAR A. CAMERINO No. 58844 Exp. 06-30-15 CIVIL — STATE OF CALIFORNIA

THE STATE OF CALIFORNIA OR ITS OFFICERS OR AGENTS SHALL NOT BE RESPONSIBLE FOR THE ACCURACY OR COMPLETENESS OF SCANNED COPIES OF THIS PLAN SHEET.

CITY OF SAN DIEGO
600 B ST, SUITE 800
SAN DIEGO, CA 92101

RICK ENGINEERING COMPANY
5620 FRIARS RD
SAN DIEGO, CA 92110
(619) 291-0707

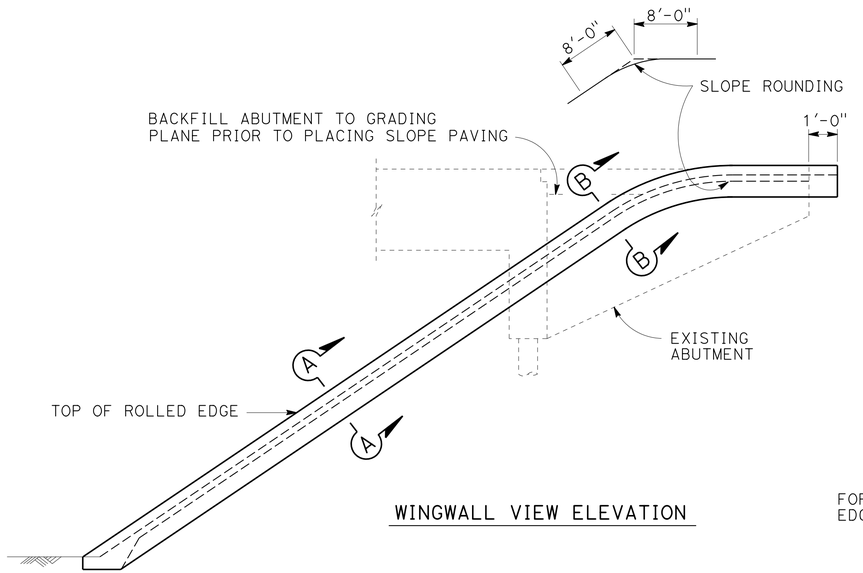

WINGWALL VIEW ELEVATION

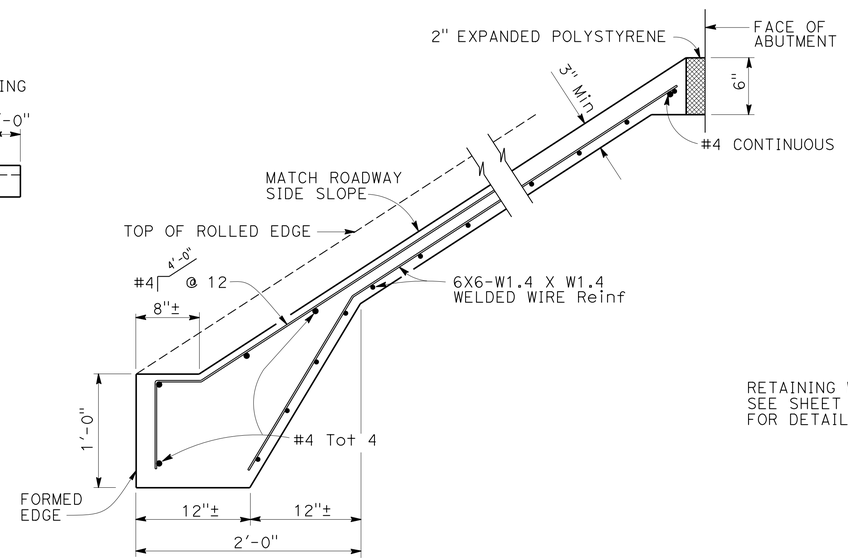

TYPICAL SECTION - CONCRETE PAVING

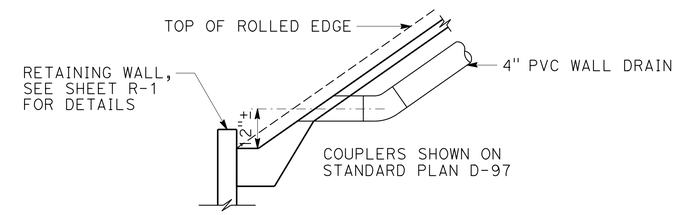

TYPICAL - OUTLET

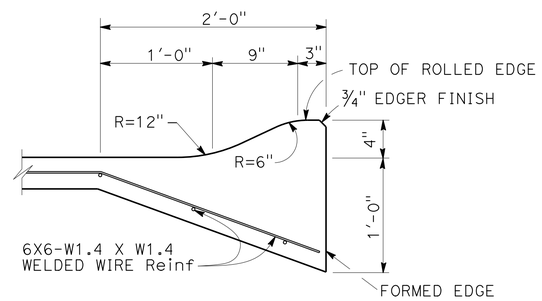

SECTION A-A

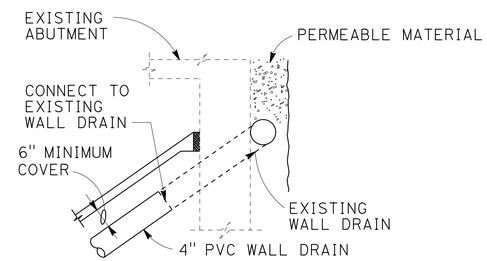

TYPICAL - DRAIN CONNECTION

DRAINAGE DETAILS

NOTE:

DRAINAGE DETAILS ARE ONLY APPLICABLE WHEN IS INDICATED ON DETAIL SHEETS. BO-3 / 3-5

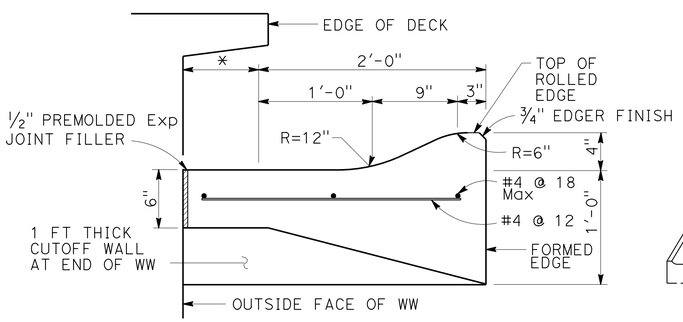

SECTION B-B

*THIS DIMENSION BECOMES ZERO WHEN EDGE OF DECK IS AT OUTSIDE FACE OF WW

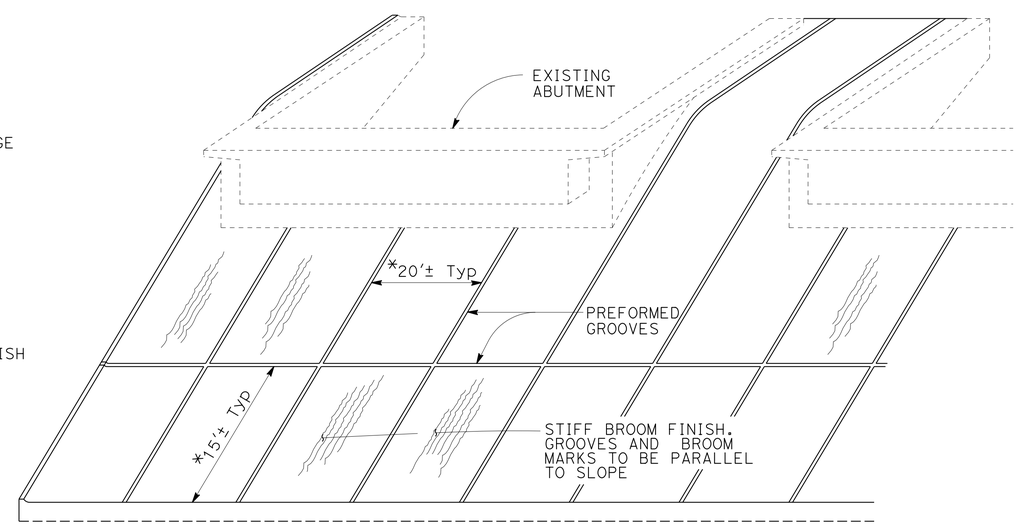

PICTORIAL VIEW OF TYPICAL INSTALLATION

*OR AS DIRECTED BY THE ENGINEER TO PROVIDE UNIFORM SPACING

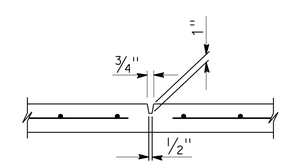

PREFORMED GROOVE

APPROVED FOR RETAINING WALL WORK ONLY

RETAINING WALL PLAN "RW-1"

NO SCALE

R-3

STATE OF CALIFORNIA - DEPARTMENT OF TRANSPORTATION

Caltrans

CONSULTANT FUNCTIONAL SUPERVISOR: EDGAR A. CAMERINO

CALCULATED-DESIGNED BY: NICHOLAS DORNER

CHECKED BY: EDGAR CAMERINO

REVISED BY

DATE REVISED

LAST REVISION 04-25-14

DATE PLOTTED => 17-SEP-2014
TIME PLOTTED => 14:56

Dist	COUNTY	ROUTE	POST MILES TOTAL PROJECT	SHEET No.	TOTAL SHEETS
11	SD	163	8.4/9.4	214	332

LICENSED LANDSCAPE ARCHITECT

09-15-14
PLANS APPROVAL DATE

LICENSED LANDSCAPE ARCHITECT
JAMES C. KUHLKEN - 2281
Signature
01-31-16
Renewal Date
10-10-13
Date
STATE OF CALIFORNIA

THE STATE OF CALIFORNIA OR ITS OFFICERS OR AGENTS SHALL NOT BE RESPONSIBLE FOR THE ACCURACY OR COMPLETENESS OF SCANNED COPIES OF THIS PLAN SHEET.

CITY OF SAN DIEGO
600 B ST, SUITE 800
SAN DIEGO, CA 92101

RICK ENGINEERING COMPANY
5620 FRIARS RD
SAN DIEGO, CA 92110
(619) 291-0707

NOTES:

1. FOR ACCURATE RIGHT OF WAY DATA, CONTACT RIGHT OF WAY ENGINEERING AT THE DISTRICT OFFICE.
2. EXISTING BACKFLOW PREVENTERS TO BE SALVAGED.
3. REMOVE WATER METER IS PAID FOR AS A SEPARATE ITEM.

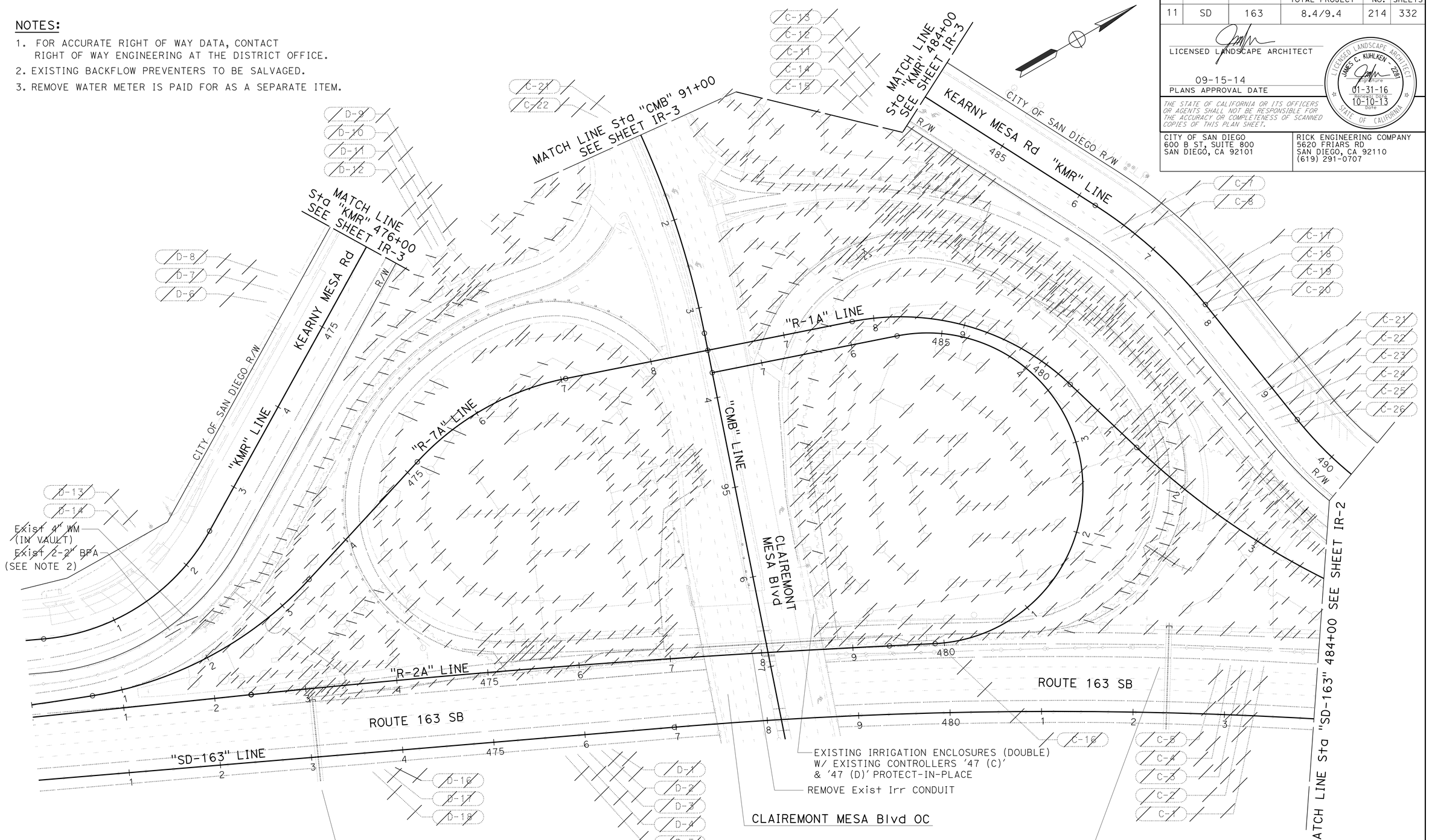

APPROVED FOR IRRIGATION REMOVAL WORK ONLY

IRRIGATION REMOVAL PLAN

SCALE: 1"= 50'

IR-1

STATE OF CALIFORNIA - DEPARTMENT OF TRANSPORTATION
Caltrans

CONSULTANT SENIOR LANDSCAPE ARCHITECT: JAMES C. KUHLKEN
CALCULATED-DESIGNED BY: TIM PRUSS
CHECKED BY: JAMES KUHLKEN
REVISED BY
DATE REVISED

LAST REVISION 04-25-14
DATE PLOTTED => 17-SEP-2014
TIME PLOTTED => 14:56

Dist	COUNTY	ROUTE	POST MILES TOTAL PROJECT	SHEET No.	TOTAL SHEETS
11	SD	163	8.4/9.4	215	332

LICENSED LANDSCAPE ARCHITECT

09-15-14
PLANS APPROVAL DATE

LICENSED LANDSCAPE ARCHITECT
JAMES C. KUHLKEN - 2281
Signature
01-31-16
Renewal Date
10-10-13
Date
STATE OF CALIFORNIA

THE STATE OF CALIFORNIA OR ITS OFFICERS OR AGENTS SHALL NOT BE RESPONSIBLE FOR THE ACCURACY OR COMPLETENESS OF SCANNED COPIES OF THIS PLAN SHEET.

CITY OF SAN DIEGO
600 B ST, SUITE 800
SAN DIEGO, CA 92101

RICK ENGINEERING COMPANY
5620 FRIARS RD
SAN DIEGO, CA 92110
(619) 291-0707

NOTE:

1. FOR ACCURATE RIGHT OF WAY DATA, CONTACT RIGHT OF WAY ENGINEERING AT THE DISTRICT OFFICE.

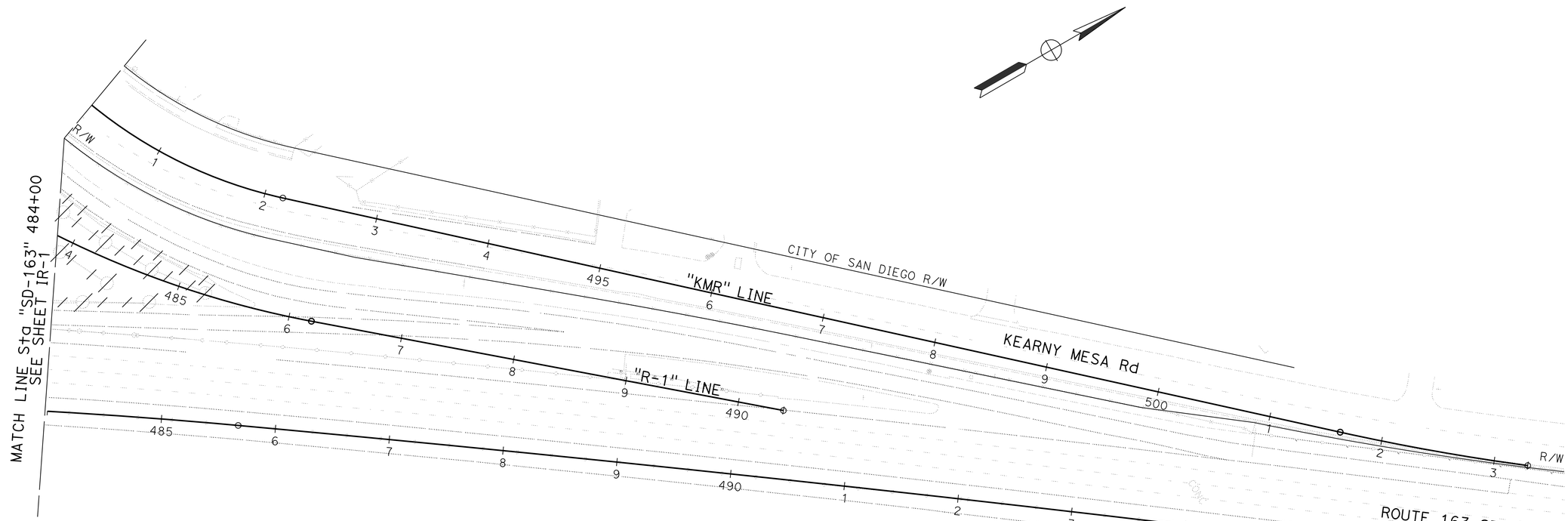

APPROVED FOR IRRIGATION REMOVAL WORK ONLY

IRRIGATION REMOVAL PLAN

SCALE: 1"= 50'

IR-2

STATE OF CALIFORNIA - DEPARTMENT OF TRANSPORTATION
Caltrans

CONSULTANT SENIOR LANDSCAPE ARCHITECT: JAMES C. KUHLKEN

CALCULATED-DESIGNED BY: TIM PRUSS
CHECKED BY: JAMES KUHLKEN

REVISED BY | DATE REVISED

LAST REVISION 04-25-14 | DATE PLOTTED => 17-SEP-2014 | TIME PLOTTED => 14:56

Dist	COUNTY	ROUTE	POST MILES TOTAL PROJECT	SHEET No.	TOTAL SHEETS
11	SD	163	8.4/9.4	216	332

LICENSED LANDSCAPE ARCHITECT

09-15-14
PLANS APPROVAL DATE

LICENSED LANDSCAPE ARCHITECT
JAMES C. KUHLKEN 2281
Signature
01-31-16
Renewal Date
10-10-13
Date
STATE OF CALIFORNIA

THE STATE OF CALIFORNIA OR ITS OFFICERS OR AGENTS SHALL NOT BE RESPONSIBLE FOR THE ACCURACY OR COMPLETENESS OF SCANNED COPIES OF THIS PLAN SHEET.

CITY OF SAN DIEGO
600 B ST, SUITE 800
SAN DIEGO, CA 92101

RICK ENGINEERING COMPANY
5620 FRIARS RD
SAN DIEGO, CA 92110
(619) 291-0707

NOTE:

1. FOR ACCURATE RIGHT OF WAY DATA, CONTACT RIGHT OF WAY ENGINEERING AT THE DISTRICT OFFICE.

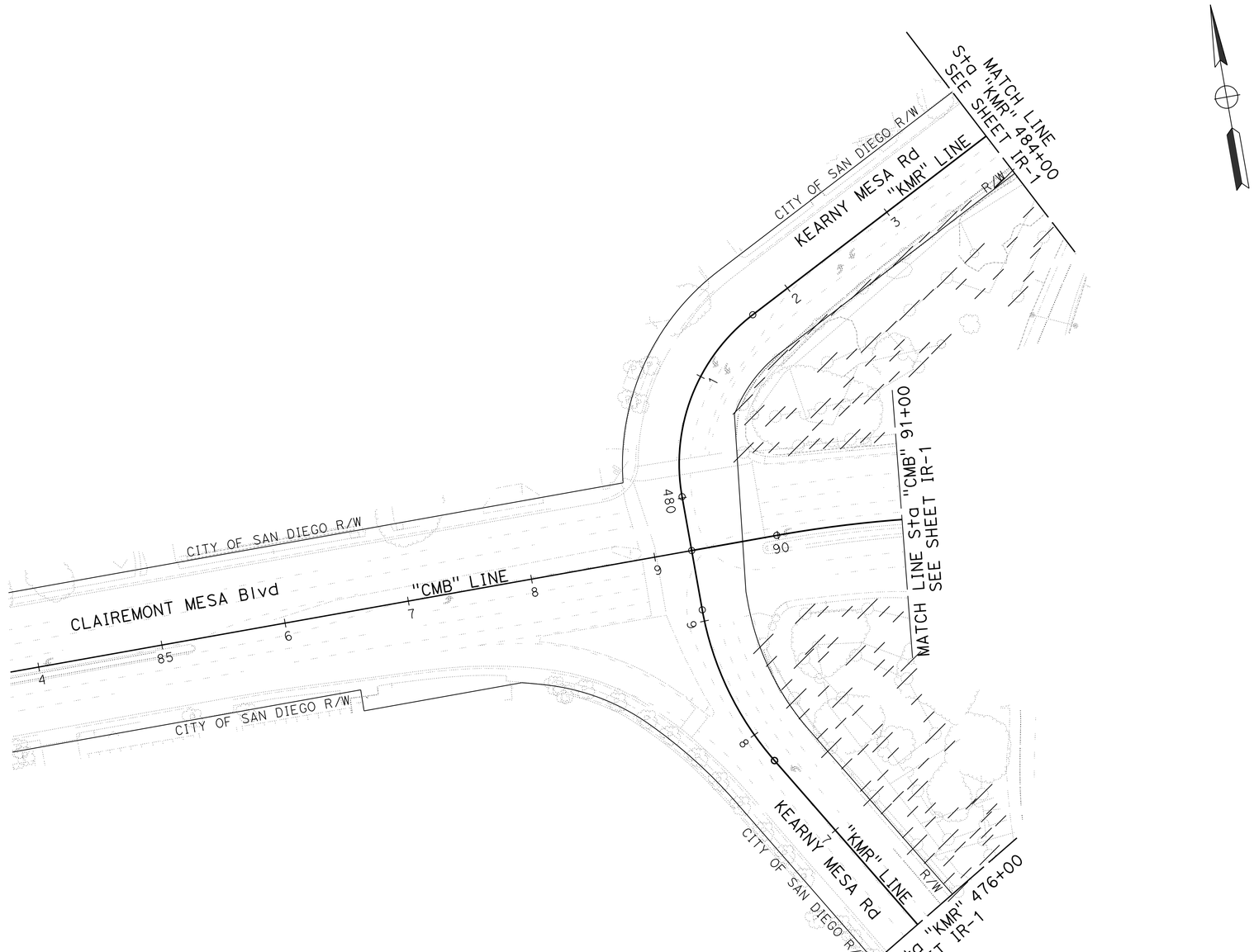

APPROVED FOR IRRIGATION REMOVAL WORK ONLY

IRRIGATION REMOVAL PLAN

SCALE: 1"= 50'

IR-3

STATE OF CALIFORNIA - DEPARTMENT OF TRANSPORTATION
Caltrans

CONSULTANT SENIOR LANDSCAPE ARCHITECT: JAMES C. KUHLKEN
CALCULATED-DESIGNED BY: TIM PRUSS
CHECKED BY: JAMES KUHLKEN
REVISED BY
DATE REVISED

LAST REVISION 04-25-14
DATE PLOTTED => 17-SEP-2014
TIME PLOTTED => 14:56

Dist	COUNTY	ROUTE	POST MILES TOTAL PROJECT	SHEET No.	TOTAL SHEETS
11	SD	163	8.4/9.4	217	332

LICENSED LANDSCAPE ARCHITECT

09-15-14
PLANS APPROVAL DATE

LICENSED LANDSCAPE ARCHITECT
JAMES C. KUHLKEN - 2281
Signature
01-31-16
Renewal Date
10-10-13
Date
STATE OF CALIFORNIA

THE STATE OF CALIFORNIA OR ITS OFFICERS OR AGENTS SHALL NOT BE RESPONSIBLE FOR THE ACCURACY OR COMPLETENESS OF SCANNED COPIES OF THIS PLAN SHEET.

CITY OF SAN DIEGO
600 B ST, SUITE 800
SAN DIEGO, CA 92101

RICK ENGINEERING COMPANY
5620 FRIARS RD
SAN DIEGO, CA 92110
(619) 291-0707

NOTES:

1. FOR ACCURATE RIGHT OF WAY DATA, CONTACT RIGHT OF WAY ENGINEERING AT THE DISTRICT OFFICE.
2. ALL IRRIGATION EQUIPMENT SIZES ARE SHOWN IN INCHES (DIAMETER NOMINAL) UNLESS OTHERWISE NOTED.
3. Exist CCU '47' IS LOCATED IN THE SOUTHEAST CORNER OF CLAIREMONT MESA BLVD AND KEARNY VILLA RD.

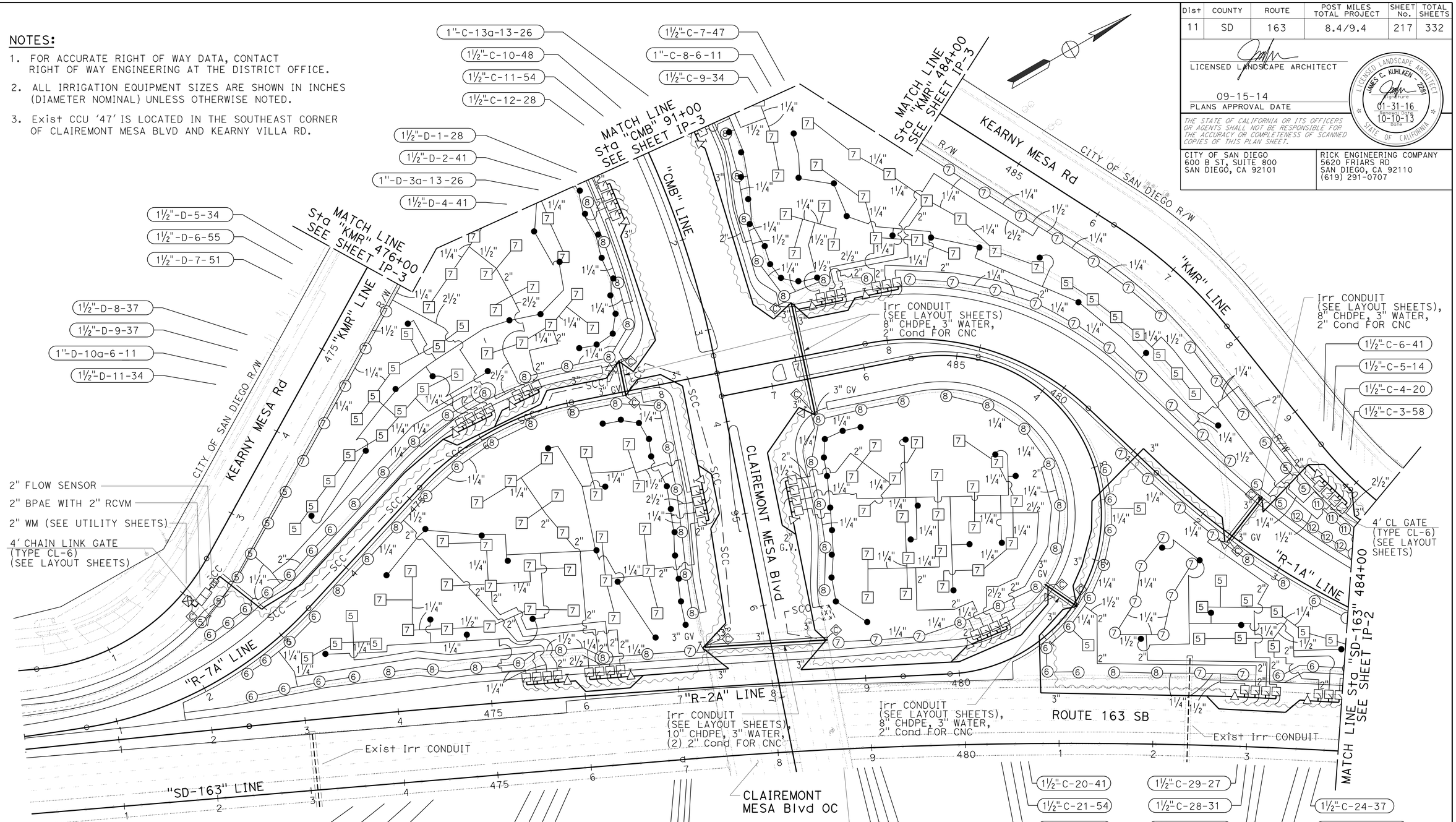

APPROVED FOR IRRIGATION WORK ONLY

IRRIGATION PLAN

SCALE: 1"= 50'

IP-1

REVISED BY	DATE REVISED
TIM PRUSS	JAMES KUHLKEN

CALCULATED-DESIGNED BY	CHECKED BY

CONSULTANT SENIOR LANDSCAPE ARCHITECT: JAMES C. KUHLKEN

STATE OF CALIFORNIA - DEPARTMENT OF TRANSPORTATION

Caltrans

LAST REVISION 04-25-14

DATE PLOTTED => 17-SEP-2014
TIME PLOTTED => 14:56

Dist	COUNTY	ROUTE	POST MILES TOTAL PROJECT	SHEET No.	TOTAL SHEETS
11	SD	163	8.4/9.4	218	332

LICENSED LANDSCAPE ARCHITECT

09-15-14
PLANS APPROVAL DATE

LICENSED LANDSCAPE ARCHITECT
JAMES C. KUHLKEN - 2281
Signature
01-31-16
Renewal Date
10-10-13
Date
STATE OF CALIFORNIA

THE STATE OF CALIFORNIA OR ITS OFFICERS OR AGENTS SHALL NOT BE RESPONSIBLE FOR THE ACCURACY OR COMPLETENESS OF SCANNED COPIES OF THIS PLAN SHEET.

CITY OF SAN DIEGO
600 B ST, SUITE 800
SAN DIEGO, CA 92101

RICK ENGINEERING COMPANY
5620 FRIARS RD
SAN DIEGO, CA 92110
(619) 291-0707

NOTES:

1. FOR ACCURATE RIGHT OF WAY DATA, CONTACT RIGHT OF WAY ENGINEERING AT THE DISTRICT OFFICE.
2. ALL IRRIGATION EQUIPMENT SIZES ARE SHOWN IN INCHES (DIAMETER NOMINAL) UNLESS OTHERWISE NOTED.

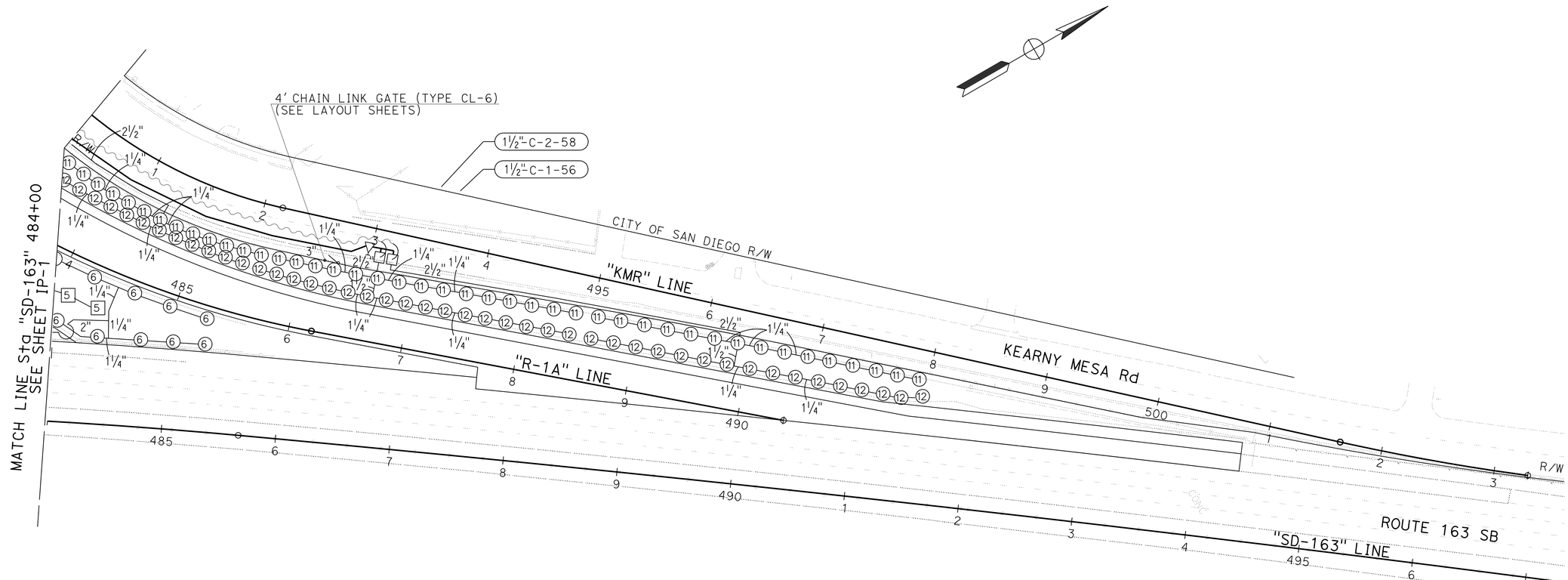

APPROVED FOR IRRIGATION WORK ONLY

IRRIGATION PLAN

SCALE: 1"= 50'

IP-2

STATE OF CALIFORNIA - DEPARTMENT OF TRANSPORTATION
Caltrans

CONSULTANT SENIOR LANDSCAPE ARCHITECT
JAMES C. KUHLKEN

CALCULATED-DESIGNED BY: TIM PRUSS
CHECKED BY: JAMES KUHLKEN
REVISED BY
DATE REVISED

LAST REVISION 04-25-14
DATE PLOTTED => 17-SEP-2014
TIME PLOTTED => 14:56

Dist	COUNTY	ROUTE	POST MILES TOTAL PROJECT	SHEET No.	TOTAL SHEETS
11	SD	163	8.4/9.4	219	332

LICENSED LANDSCAPE ARCHITECT

09-15-14
PLANS APPROVAL DATE

LICENSED LANDSCAPE ARCHITECT
JAMES C. KUHLKEN 2281
Signature
01-31-16
Renewal Date
10-10-13
Date
STATE OF CALIFORNIA

THE STATE OF CALIFORNIA OR ITS OFFICERS OR AGENTS SHALL NOT BE RESPONSIBLE FOR THE ACCURACY OR COMPLETENESS OF SCANNED COPIES OF THIS PLAN SHEET.

CITY OF SAN DIEGO
600 B ST, SUITE 800
SAN DIEGO, CA 92101

RICK ENGINEERING COMPANY
5620 FRIARS RD
SAN DIEGO, CA 92110
(619) 291-0707

NOTES:

1. FOR ACCURATE RIGHT OF WAY DATA, CONTACT RIGHT OF WAY ENGINEERING AT THE DISTRICT OFFICE.
2. ALL IRRIGATION EQUIPMENT SIZES ARE SHOWN IN INCHES (DIAMETER NOMINAL) UNLESS OTHERWISE NOTED.

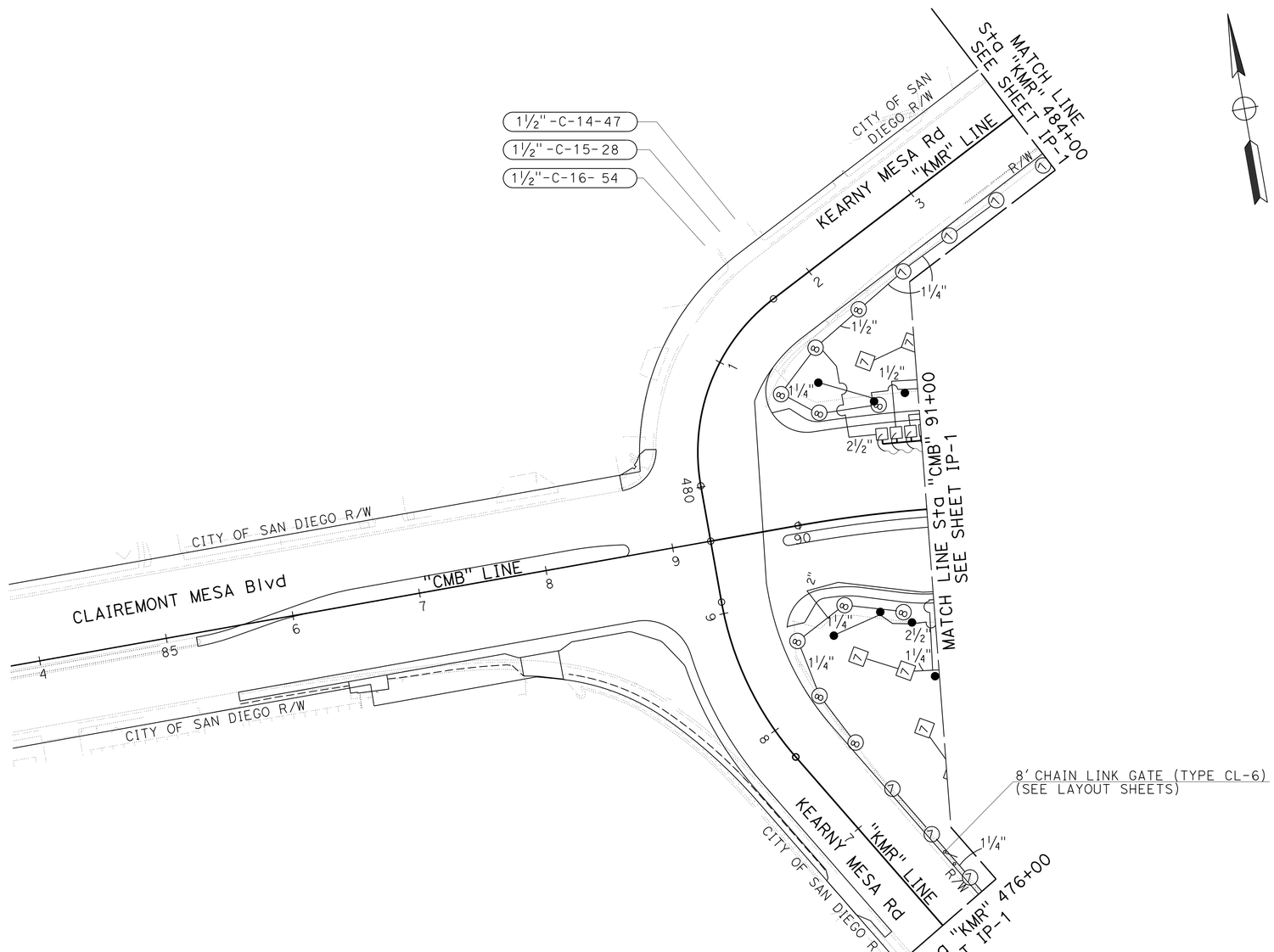

APPROVED FOR IRRIGATION WORK ONLY

IRRIGATION PLAN

SCALE: 1"= 50'

IP-3

STATE OF CALIFORNIA - DEPARTMENT OF TRANSPORTATION
Caltrans

CONSULTANT SENIOR LANDSCAPE ARCHITECT: JAMES C. KUHLKEN
CALCULATED-DESIGNED BY: TIM PRUSS
CHECKED BY: JAMES KUHLKEN
REVISED BY
DATE REVISED

LAST REVISION 04-25-14
DATE PLOTTED => 17-SEP-2014
TIME PLOTTED => 14:56

Dist	COUNTY	ROUTE	POST MILES TOTAL PROJECT	SHEET No.	TOTAL SHEETS
11	SD	163	8.4/9.4	220	332

LICENSED LANDSCAPE ARCHITECT

09-15-14
PLANS APPROVAL DATE

LICENSED LANDSCAPE ARCHITECT
JAMES C. KUHLKEN - 2281
Signature
01-31-16
Renewal Date
10-10-13
Date
STATE OF CALIFORNIA

THE STATE OF CALIFORNIA OR ITS OFFICERS OR AGENTS SHALL NOT BE RESPONSIBLE FOR THE ACCURACY OR COMPLETENESS OF SCANNED COPIES OF THIS PLAN SHEET.

CITY OF SAN DIEGO
600 B ST, SUITE 800
SAN DIEGO, CA 92101

RICK ENGINEERING COMPANY
5620 FRIARS RD
SAN DIEGO, CA 92110
(619) 291-0707

SUBTOTALS PER VALVE ON LATERAL SUPPLY SIDE OF CONTROL VALVES

DESCRIPTION		UNIT	-- EXISTING (36) STATION AUTOMATIC IRRIGATION CONTROLLER 'C' -- (29) STATIONS USED																															SUBTOTALS	UNIT	DESCRIPTION		
			C-1	C-2	C-3	C-4	C-5	C-6	C-7	C-8	C-9	C-10	C-11	C-12	C-13a	C-13b	C-14	C-15	C-16	C-17a	C-17b	C-18	C-19	C-20	C-21	C-22	C-23	C-24	C-25	C-26	C-27	C-28	C-29					
PLASTIC PIPE SUPPLY LINE	SCH 40	1"	LF	431	328	281	187	102	162	92	589	106	159	96	92	306	252	103	86	91	536	403	92	131	92	81	171	88	293	235	176	81	179	69	6,090	LF	1"	SCH 40	PLASTIC PIPE SUPPLY LINE
		1-1/4"	LF	166	227	211	16	91	73	184	92	89	186	179	21	21	---	159	---	166	---	---	136	41	149	109	137	179	51	39	46	122	135	68	3,093	LF	1-1/4"		
		1-1/2"	LF	31	32	278	283	---	---	---	---	---	---	47	81	---	---	24	81	46	---	---	46	---	---	---	---	---	---	26	---	50	26	26	1,077	LF	1-1/2"		
		2"	LF	---	---	---	---	---	152	163	---	56	131	---	---	---	---	139	---	---	---	---	---	58	179	---	129	2	59	78	181	154	219	---	1,700	LF	2"		
		2-1/2"	LF	309	9	103	---	---	---	---	---	---	---	275	---	---	---	---	---	---	---	---	---	---	---	124	---	---	---	---	---	---	---	---	820	LF	2-1/2"		
	PR 315																																					PR 315	
GSP																																						GSP	
DIP																																						DIP	
SPRINKLER SYMBOL		⑤	EA	---	---	---	7	5	---	---	---	---	---	---	---	---	---	---	---	---	---	---	---	---	---	---	---	---	---	11	---	---	2	---	25	EA	⑤	SPRINKLER SYMBOL	
		⑥	EA	---	---	---	---	---	---	---	---	---	---	---	---	---	---	---	---	---	---	---	---	---	---	---	---	---	11	---	---	---	9	---	20	EA	⑥		
		⑦	EA	---	---	---	---	---	6	7	---	5	7	8	4	---	---	---	4	3	---	---	---	5	---	8	8	3	---	---	4	7	---	2	81	EA	⑦		
		⑧	EA	---	---	---	---	---	---	---	---	---	---	---	---	---	---	7	---	5	---	---	7	---	6	---	---	3	---	---	2	---	---	2	32	EA	⑧		
		⑪	EA	15	15	16	---	---	---	---	---	---	---	---	---	---	---	---	---	---	---	---	---	---	---	---	---	---	---	---	---	---	---	---	46	EA	⑪		
		⑫	EA	16	17	16	---	---	---	---	---	---	---	---	---	---	---	---	---	---	---	---	---	---	---	---	---	---	---	---	---	---	---	---	49	EA	⑫		
		●	EA	---	---	---	---	---	---	---	11	---	---	---	---	26	21	---	---	---	8	7	---	---	---	---	---	---	---	---	---	---	---	---	73	EA	●		

DESCRIPTION		UNIT	-- EXISTING (24) STATION AUTOMATIC IRRIGATION CONTROLLER 'D' -- (21) STATIONS USED																							SUBTOTALS	UNIT	DESCRIPTION		
			D-1	D-2	D-3a	D-3b	D-4	D-5	D-6	D-7	D-8	D-9	D-10a	D-10b	D-11	D-12	D-13	D-14	D-15	D-16	D-17	D-18	D-19	D-20	D-21					
PLASTIC PIPE SUPPLY LINE	SCH 40	1"	LF	94	87	279	278	92	121	192	48	276	281	631	803	95	79	135	178	134	126	128	138	92	111	209	4,607	LF	1"	SCH 40	PLASTIC PIPE SUPPLY LINE
		1-1/4"	LF	96	44	---	---	178	59	104	122	105	109	---	---	89	56	119	47	39	87	71	117	147	216	294	2,099	LF	1-1/4"		
		1-1/2"	LF	108	---	---	---	---	---	39	44	---	---	---	---	52	81	59	---	---	---	47	74	---	---	---	504	LF	1-1/2"		
		2"	LF	---	63	---	---	93	63	35	---	108	303	---	---	---	---	---	89	163	190	136	---	216	---	---	1,459	LF	2"		
		2-1/2"	LF	---	24	---	---	---	---	83	176	---	---	---	---	---	---	11	---	---	---	---	6	---	---	---	300	LF	2-1/2"		
	PR 315																													PR 315	
GSP																														GSP	
DIP																														DIP	
SPRINKLER SYMBOL		⑤	EA	---	---	---	---	---	---	---	---	14	6	---	---	---	---	---	---	---	---	---	---	---	4	---	24	EA	⑤	SPRINKLER SYMBOL	
		⑥	EA	---	---	---	---	---	---	---	---	---	7	---	---	---	---	---	---	---	---	---	---	---	---	8	15	EA	⑥		
		⑦	EA	---	4	---	---	---	5	8	8	---	---	---	---	---	4	---	6	6	6	7	1	---	---	---	55	EA	⑦		
		⑧	EA	5	---	---	---	7	---	---	---	---	---	---	---	5	---	8	---	---	---	---	7	7	---	---	39	EA	⑧		
		⑪	EA	---	---	---	---	---	---	---	---	---	---	---	---	---	---	---	---	---	---	---	---	---	---	---	0	EA	⑪		
		⑫	EA	---	---	---	---	---	---	---	---	---	---	---	---	---	---	---	---	---	---	---	---	---	---	---	0	EA	⑫		
		●	EA	---	---	26	24	---	---	---	---	---	---	11	14	---	---	---	---	---	---	---	---	---	---	---	75	EA	●		

IRRIGATION QUANTITIES

IQ-1

LAST REVISION 04-25-14 | DATE PLOTTED => 17-SEP-2014 | TIME PLOTTED => 14:56

STATE OF CALIFORNIA - DEPARTMENT OF TRANSPORTATION
Caltrans

CONSULTANT SENIOR LANDSCAPE ARCHITECT
JAMES C. KUHLKEN

CALCULATED-DESIGNED BY TIM PRUSS
CHECKED BY JAMES KUHLKEN
REVISED BY
DATE REVISED

Dist	COUNTY	ROUTE	POST MILES TOTAL PROJECT	SHEET No.	TOTAL SHEETS
11	SD	163	8.4/9.4	221	332

LICENSED LANDSCAPE ARCHITECT

09-15-14
PLANS APPROVAL DATE

LICENSED LANDSCAPE ARCHITECT
JAMES C. KUHLKEN 2281
Signature
01-31-16
Renewal Date
10-10-13
Date
STATE OF CALIFORNIA

THE STATE OF CALIFORNIA OR ITS OFFICERS OR AGENTS SHALL NOT BE RESPONSIBLE FOR THE ACCURACY OR COMPLETENESS OF SCANNED COPIES OF THIS PLAN SHEET.

CITY OF SAN DIEGO
600 B ST, SUITE 800
SAN DIEGO, CA 92101

RICK ENGINEERING COMPANY
5620 FRIARS RD
SAN DIEGO, CA 92110
(619) 291-0707

SUBTOTALS PER PLAN SHEET ON MAIN SUPPLY SIDE OF CONTROL VALVE

DESCRIPTION			UNIT	SHEET NUMBER IP-1	IP-2	IP-3			SUBTOTALS
BPA		2" BPA	EA	1	---	---			1
BPA		ENCLOSURE	EA	1	---	---			1
BOOSTER PUMP			EA	---	---	---			---
IRRIGATION CONTROLLER		'C' STATION	EA	---	---	---			---
IRRIGATION CONTROLLER		'D' STATION	EA	---	---	---			---
IRRIGATION CONTROLLER		STATION	EA	---	---	---			---
IRRIGATION CONTROLLER	CEC	SINGLE	EXT	---	---	---			---
IRRIGATION CONTROLLER	CEC	MODIFY Exist	LS	1	---	---			1
VALVES AND ASSEMBLIES	RCV	1"	EA	9	---	---			9
VALVES AND ASSEMBLIES	RCV	1-1/2"	EA	40	2	3			45
VALVES AND ASSEMBLIES	RCV	2"	EA	1	---	---			1
VALVES AND ASSEMBLIES	GV	2"	EA	14	1	---			15
VALVES AND ASSEMBLIES	GV	3"	EA	5	---	---			5
VALVES AND ASSEMBLIES	FS	2"	EA	1	---	---			1
CONDUIT	WSP	1"	LF	---	---	---			---
PLASTIC PIPE SUPPLY LINE	SCH 40	1"	LF	---	---	---			---
PLASTIC PIPE SUPPLY LINE	SCH 40	1-1/4"	LF	---	---	---			---
PLASTIC PIPE SUPPLY LINE	SCH 40	1-1/2"	LF	---	---	---			---
PLASTIC PIPE SUPPLY LINE	SCH 40	2"	LF	---	---	---			---
PLASTIC PIPE SUPPLY LINE	SCH 40	2-1/2"	LF	---	---	---			---
PLASTIC PIPE SUPPLY LINE	SCH 40	3"	LF	---	---	---			---
PLASTIC PIPE SUPPLY LINE	PR 315	1"	LF	---	---	---			---
PLASTIC PIPE SUPPLY LINE	PR 315	1-1/2"	LF	---	---	---			---
PLASTIC PIPE SUPPLY LINE	PR 315	2"	LF	---	---	---			---
PLASTIC PIPE SUPPLY LINE	PR 315	2-1/2"	LF	---	---	---			---
PLASTIC PIPE SUPPLY LINE	PR 315	3"	LF	3,863	300	30			4,193

TOTAL QUANTITIES

TOTALS	UNIT	DESCRIPTION	
1	EA	2" BPA	BPA
1	EA	ENCLOSURE	BPA
---	EA	BOOSTER PUMP	
---	EA	STATION	IRRIGATION CONTROLLER
---	EA	STATION	IRRIGATION CONTROLLER
---	EA	STATION	IRRIGATION CONTROLLER
---	EXT	SINGLE	CEC IRRIGATION CONTROLLER
1	LS	MODIFY Exist	CEC IRRIGATION CONTROLLER
9	EA	1"	RCV VALVES AND ASSEMBLIES
45	EA	1-1/2"	RCV VALVES AND ASSEMBLIES
1	EA	2"	RCV VALVES AND ASSEMBLIES
15	EA	2"	GV VALVES AND ASSEMBLIES
5	EA	3"	GV VALVES AND ASSEMBLIES
1	EA	2"	FS VALVES AND ASSEMBLIES
10,697	LF	1"	SCH 40 PLASTIC PIPE SUPPLY LINE
5,192	LF	1-1/4"	SCH 40 PLASTIC PIPE SUPPLY LINE
1,581	LF	1-1/2"	SCH 40 PLASTIC PIPE SUPPLY LINE
3,159	LF	2"	SCH 40 PLASTIC PIPE SUPPLY LINE
1,120	LF	2-1/2"	SCH 40 PLASTIC PIPE SUPPLY LINE
---	LF	3"	SCH 40 PLASTIC PIPE SUPPLY LINE
---	LF	1"	PR 315 PLASTIC PIPE SUPPLY LINE
---	LF	1-1/2"	PR 315 PLASTIC PIPE SUPPLY LINE
---	LF	2"	PR 315 PLASTIC PIPE SUPPLY LINE
---	LF	2-1/2"	PR 315 PLASTIC PIPE SUPPLY LINE
4,193	LF	3"	PR 315 PLASTIC PIPE SUPPLY LINE
49	EA	⑤	SPRINKLER SYMBOL
35	EA	⑥	SPRINKLER SYMBOL
136	EA	⑦	SPRINKLER SYMBOL
71	EA	⑧	SPRINKLER SYMBOL
46	EA	⑪	SPRINKLER SYMBOL
49	EA	⑫	SPRINKLER SYMBOL
148	EA	●	SPRINKLER SYMBOL

TOTAL QUANTITIES SPRINKLER ASSEMBLIES

SPRINKLER SYMBOL	SPRINKLER ASSEMBLY (EA) RISER (GEAR DRIVEN)	RISER	POP-UP (GEAR DRIVEN)	POP-UP	TREE WELL
⑤ [5]	49	-	-	-	-
⑥	-	-	35	-	-
⑦ [7]	136	-	-	-	-
⑧	-	-	71	-	-
⑪	46	-	-	-	-
⑫	-	-	49	-	-
●	-	-	-	-	148
TOTALS	231	-	155	-	148

REMOVE WATER METER

LINE	STATION FROM	STATION TO	SIDE	EA
"KMR"	471+66.69	-	Rt	1
			TOTAL	1

WATER METER

LINE	STATION FROM	STATION TO	SIDE	EA
"KMR"	471+86.08	-	Rt	1
			TOTAL	1

IRRIGATION QUANTITIES

IQ-2

REVISED BY	DATE REVISED

TIM PRUSS — JAMES KUHLKEN

CALCULATED-DESIGNED BY — CHECKED BY

CONSULTANT SENIOR LANDSCAPE ARCHITECT — JAMES C. KUHLKEN

STATE OF CALIFORNIA - DEPARTMENT OF TRANSPORTATION

Caltrans

LAST REVISION 04-25-14 — DATE PLOTTED => 17-SEP-2014 — TIME PLOTTED => 14:56

Dist	COUNTY	ROUTE	POST MILES TOTAL PROJECT	SHEET No.	TOTAL SHEETS
11	SD	163	8.4/9.4	222	332

LICENSED LANDSCAPE ARCHITECT

09-15-14
PLANS APPROVAL DATE

LICENSED LANDSCAPE ARCHITECT JAMES C. KUHLKEN 2281 Signature 01-31-16 Renewal Date 10-10-13 Date STATE OF CALIFORNIA

THE STATE OF CALIFORNIA OR ITS OFFICERS OR AGENTS SHALL NOT BE RESPONSIBLE FOR THE ACCURACY OR COMPLETENESS OF SCANNED COPIES OF THIS PLAN SHEET.

CITY OF SAN DIEGO
600 B ST, SUITE 800
SAN DIEGO, CA 92101

RICK ENGINEERING COMPANY
5620 FRIARS RD
SAN DIEGO, CA 92110
(619) 291-0707

ABBREVIATIONS:

BTH - BROWN TRUNK HEIGHT

NOTE:

UNDERLINED PORTIONS OF BOTANICAL NAME INDICATE ABBREVIATIONS USED ON PLANTING PLANS

PLANT LIST AND PLANTING SPECIFICATIONS

PLANT GROUP	PLANT No.	SYMBOL	BOTANICAL NAME	COMMON NAME	SIZE	QUANTITY EACH	HOLE SIZE (INCH) Dia	HOLE SIZE (INCH) DEPTH	BASIN TYPE	IRON SULFATE oz ①	SOIL AMEND CY ①	FERTILIZER ① PLANTING	FERTILIZER ① PLT ESTB ⑤	WOOD MULCH BASIN CY ① ⑪	STAKING	PLANTING LIMITS MINIMUM DISTANCE (Ft) FROM ETW	Pvmt	FENCE	WALL	PAVED DITCH	EARTH DITCH	ON CENTER (Ft)	REMARKS
A	1		EUCALYPTUS POLYANTHEMOS	SILVER DOLLAR GUM	No.1	48	⑨	②	1	0.7	0.013	2 Pkt	4 oz	0.08	---	30	---	15	15	15	15	④	TREE
B	2		AGAVE ATTENUATA	FOX TAIL AGAVE	No.5	170	⑨	②	1	1.5	0.04	3 Pkt	4 oz	③	---	---	---	---	---	---	---	④	SHRUB
	3		COTONEASTER LACTEUS	PARNEY COTONEASTER	No.5	244	⑨	②	1	1.5	0.04	3 Pkt	4 oz	0.08	---	---	2	4	4	4	4	④	SHRUB
	4		PHORMIUM TENAX 'ATROPURPUREUM'	NEW ZEALAND FLAX	No.5	60	⑨	②	1	1.5	0.04	3 Pkt	4 oz	0.08	---	---	4	4	4	4	4	④	SHRUB
C	5		SYAGRUS ROMANZOFFIANUM	QUEEN PALM	B & B	20	⑥	⑥	1	---	0.45	⑧	⑧	③	---	30	5	10	10	10	10	④	10 FT BTH EACH PALM TREE
	6		WASHINGTONIA ROBUSTA	MEXICAN FAN PALM	B & B	15	⑥	⑥	1	---	0.45	⑧	⑧	0.25	---	30	5	10	10	10	10	④	20 FT BTH EACH PALM TREE
F	7		PELARGONIUM PELTATUM	IVY GERANIUM	FLATS	80,631	---	---	---	---	⑩	6.5 LB/ 1000 SQFT	6.5 LB/ 1000 SQFT	---	---	---	6	3	3	3	3	1	GROUNDCOVER
H	8		CARPOBROTUS EDULIS	ICE PLANT	CUTTING	488,476	---	---	---	---	---	6.5 LB/ 1000 SQFT	6.5 LB/ 1000 SQFT	---	---	---	6	6	6	6	3	1	GROUNDCOVER
K	9		ERYTHRINA SYKSEII	NCN	36" BOX	4	⑨	②	1	24	0.95	36 Pkt	32 OZ	0.25	⑥	40	15	15	15	15	15	④	TREE
	10		TIPUANA TIPU	TIPU TREE	24" BOX	11	⑨	②	1	24	0.45	27 Pkt	24 OZ	0.25	⑥	30	10	15	15	15	15	④	TREE

LEGEND:

CULTIVATION/ WOOD MULCH (WOOD CHIP)

WEED GERMINATION (WEED GERM)

APPLICABLE WHEN CIRCLED:

① - QUANTITIES SHOWN ARE "PER PLANT" UNLESS SHOWN AS SQFT OR SQYD APPLICATION RATES.
② - SUFFICIENT TO RECEIVE ROOT BALL AND AMENDMENTS IF REQUIRED.
③ - BASIN MULCH INCLUDED WITH AREA MULCH.
④ - AS SHOWN ON PLANS.
⑤ - SLOW RELEASE FERTILIZER.
⑥ - SEE STANDARD PLAN RSP H4
7 - SEE SPECIAL PROVISIONS.
⑧ - NO FERTILIZER REQUIRED AT PALMS.
⑨ - 2 X ROOTBALL SIZE.
⑩ - 4 CY PER 1000 SQFT
⑪ - WOOD MULCH IS WOOD CHIP

WOOD MULCH

SHEET	AREA MULCH CY
PP-1	211.3
PP-2	57.3
PP-3	36.1
PLANT BASINS	35.7
TOTAL	340.4

WEED GERMINATION

SHEET	SQYD
PP-1	39,111
PP-2	3,596
PP-3	2,923
TOTAL	45,630

CULTIVATION

SHEET	SQYD
PP-1	5,871
PP-2	1,209
PP-3	1,003
TOTAL	8,083

PLANT LIST
PL-1

REVISED BY | DATE REVISED
TIM PRUSS | JAMES KUHLKEN
CALCULATED-DESIGNED BY | CHECKED BY
CONSULTANT SENIOR LANDSCAPE ARCHITECT JAMES C. KUHLKEN
STATE OF CALIFORNIA - DEPARTMENT OF TRANSPORTATION Caltrans

LAST REVISION 04-25-14 | DATE PLOTTED => 17-SEP-2014 | TIME PLOTTED => 14:56

Dist	COUNTY	ROUTE	POST MILES TOTAL PROJECT	SHEET No.	TOTAL SHEETS
11	SD	163	8.4/9.4	223	332

LICENSED LANDSCAPE ARCHITECT

09-15-14
PLANS APPROVAL DATE

LICENSED LANDSCAPE ARCHITECT JAMES C. KUHLKEN 2281 Signature 01-31-16 Renewal Date 10-10-13 Date STATE OF CALIFORNIA

THE STATE OF CALIFORNIA OR ITS OFFICERS OR AGENTS SHALL NOT BE RESPONSIBLE FOR THE ACCURACY OR COMPLETENESS OF SCANNED COPIES OF THIS PLAN SHEET.

CITY OF SAN DIEGO
600 B ST, SUITE 800
SAN DIEGO, CA 92101

RICK ENGINEERING COMPANY
5620 FRIARS RD
SAN DIEGO, CA 92110
(619) 291-0707

NOTES:

1. PROVIDE 80" Min CLEARANCE FROM TREE BRANCHES TO FINISHED SIDEWALK ELEVATIONS.
2. FOR ACCURATE RIGHT OF WAY DATA, CONTACT RIGHT OF WAY ENGINEERING AT THE DISTRICT OFFICE.

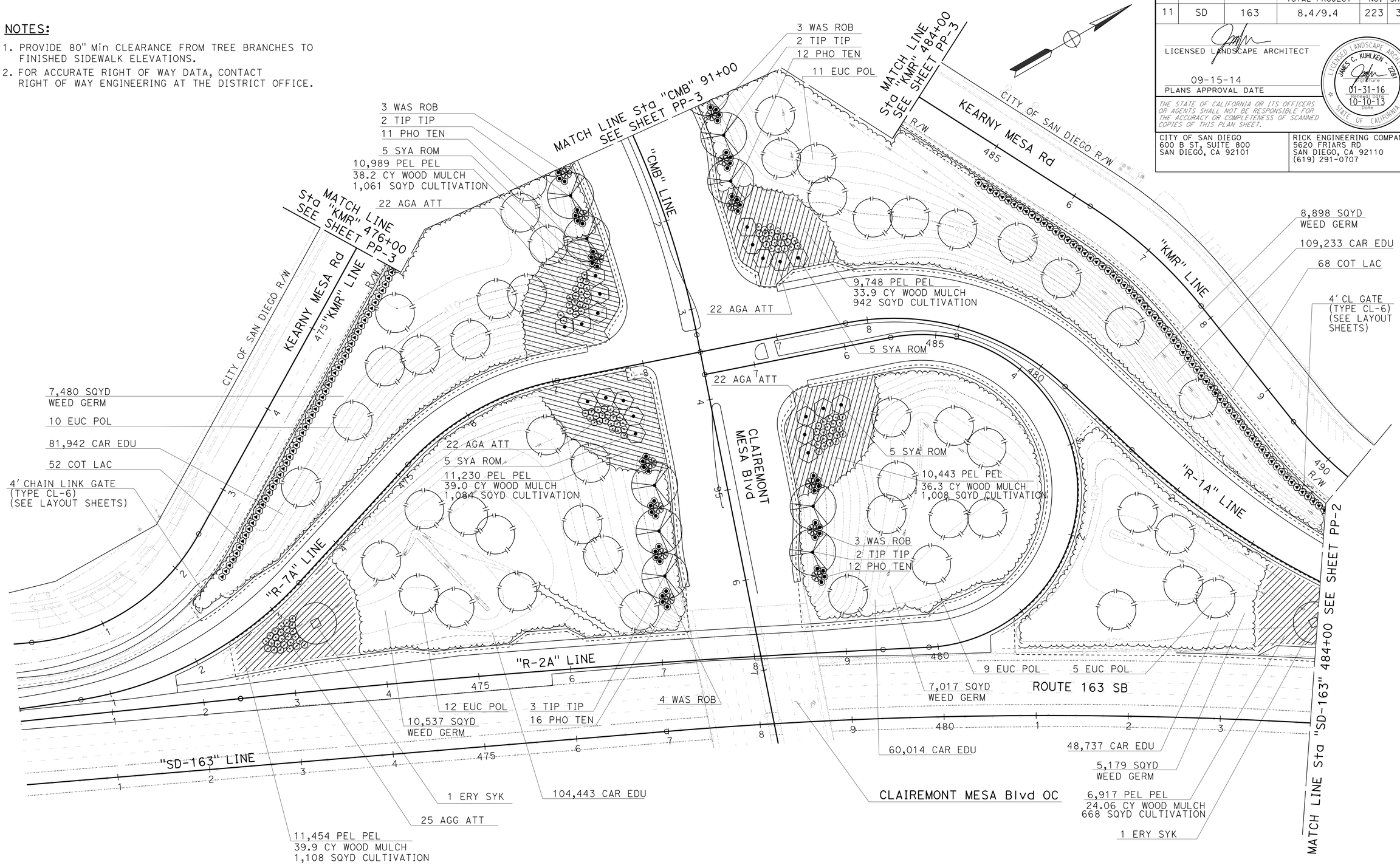

APPROVED FOR PLANTING WORK ONLY

PLANTING PLAN

SCALE: 1"= 50'

PP-1

STATE OF CALIFORNIA - DEPARTMENT OF TRANSPORTATION

Caltrans

CONSULTANT SENIOR LANDSCAPE ARCHITECT: JAMES C. KUHLKEN

CALCULATED-DESIGNED BY: TIM PRUSS
CHECKED BY: JAMES KUHLKEN
REVISED BY
DATE REVISED

LAST REVISION 04-25-14
DATE PLOTTED => 17-SEP-2014
TIME PLOTTED => 14:56

Dist	COUNTY	ROUTE	POST MILES TOTAL PROJECT	SHEET No.	TOTAL SHEETS
11	SD	163	8.4/9.4	224	332

LICENSED LANDSCAPE ARCHITECT

09-15-14
PLANS APPROVAL DATE

LICENSED LANDSCAPE ARCHITECT
JAMES C. KUHLKEN - 2281
Signature
01-31-16
Renewal Date
10-10-13
Date
STATE OF CALIFORNIA

THE STATE OF CALIFORNIA OR ITS OFFICERS OR AGENTS SHALL NOT BE RESPONSIBLE FOR THE ACCURACY OR COMPLETENESS OF SCANNED COPIES OF THIS PLAN SHEET.

CITY OF SAN DIEGO
600 B ST, SUITE 800
SAN DIEGO, CA 92101

RICK ENGINEERING COMPANY
5620 FRIARS RD
SAN DIEGO, CA 92110
(619) 291-0707

NOTE:

1. FOR ACCURATE RIGHT OF WAY DATA, CONTACT RIGHT OF WAY ENGINEERING AT THE DISTRICT OFFICE.

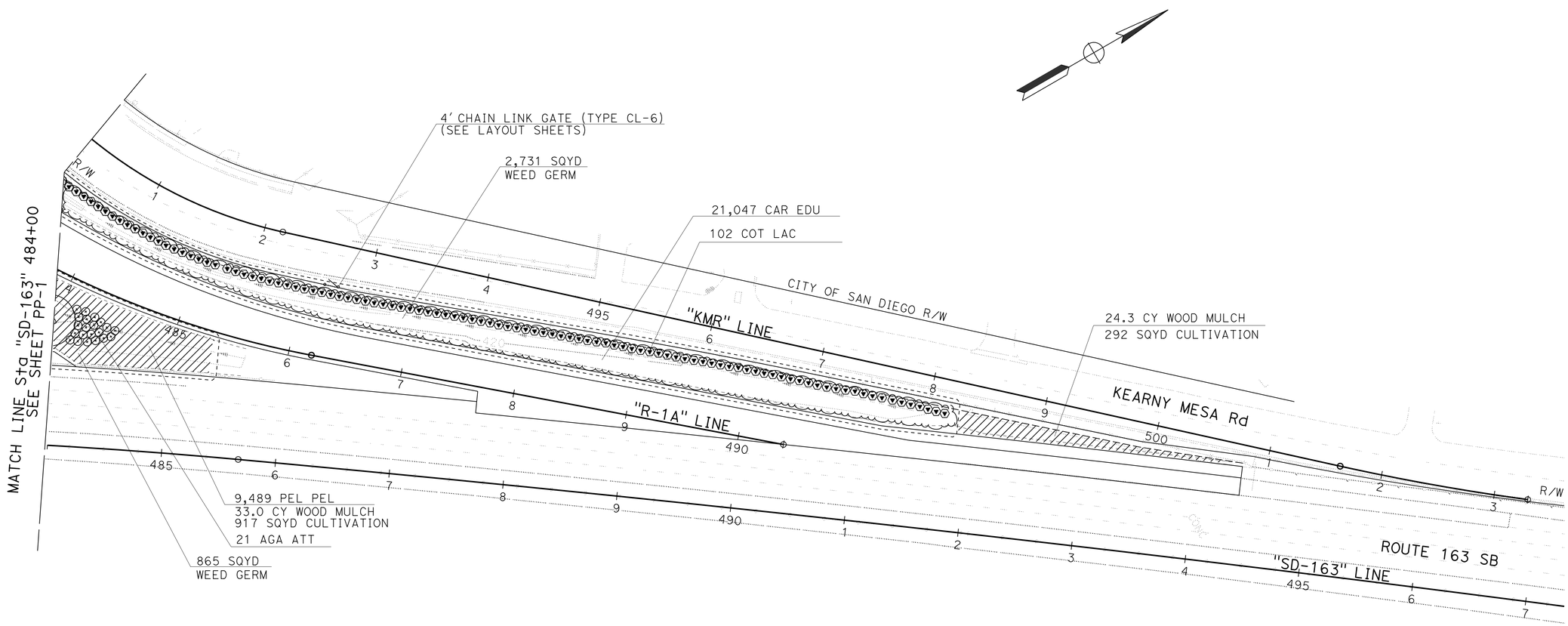

APPROVED FOR PLANTING WORK ONLY

PLANTING PLAN

SCALE: 1"= 50'

PP-2

STATE OF CALIFORNIA - DEPARTMENT OF TRANSPORTATION
Caltrans

CONSULTANT SENIOR LANDSCAPE ARCHITECT
JAMES C. KUHLKEN

CALCULATED-DESIGNED BY
CHECKED BY

REVISED BY
DATE REVISED

TIM PRUSS
JAMES KUHLKEN

LAST REVISION 04-25-14

DATE PLOTTED => 17-SEP-2014
TIME PLOTTED => 14:56

Dist	COUNTY	ROUTE	POST MILES TOTAL PROJECT	SHEET No.	TOTAL SHEETS
11	SD	163	8.4/9.4	225	332

LICENSED LANDSCAPE ARCHITECT

09-15-14
PLANS APPROVAL DATE

LICENSED LANDSCAPE ARCHITECT
JAMES C. KUHLKEN - 2281
Signature
01-31-16
(Renewal) Date
10-10-13
Date
STATE OF CALIFORNIA

THE STATE OF CALIFORNIA OR ITS OFFICERS OR AGENTS SHALL NOT BE RESPONSIBLE FOR THE ACCURACY OR COMPLETENESS OF SCANNED COPIES OF THIS PLAN SHEET.

CITY OF SAN DIEGO
600 B ST, SUITE 800
SAN DIEGO, CA 92101

RICK ENGINEERING COMPANY
5620 FRIARS RD
SAN DIEGO, CA 92110
(619) 291-0707

NOTE:

1. FOR ACCURATE RIGHT OF WAY DATA, CONTACT RIGHT OF WAY ENGINEERING AT THE DISTRICT OFFICE.

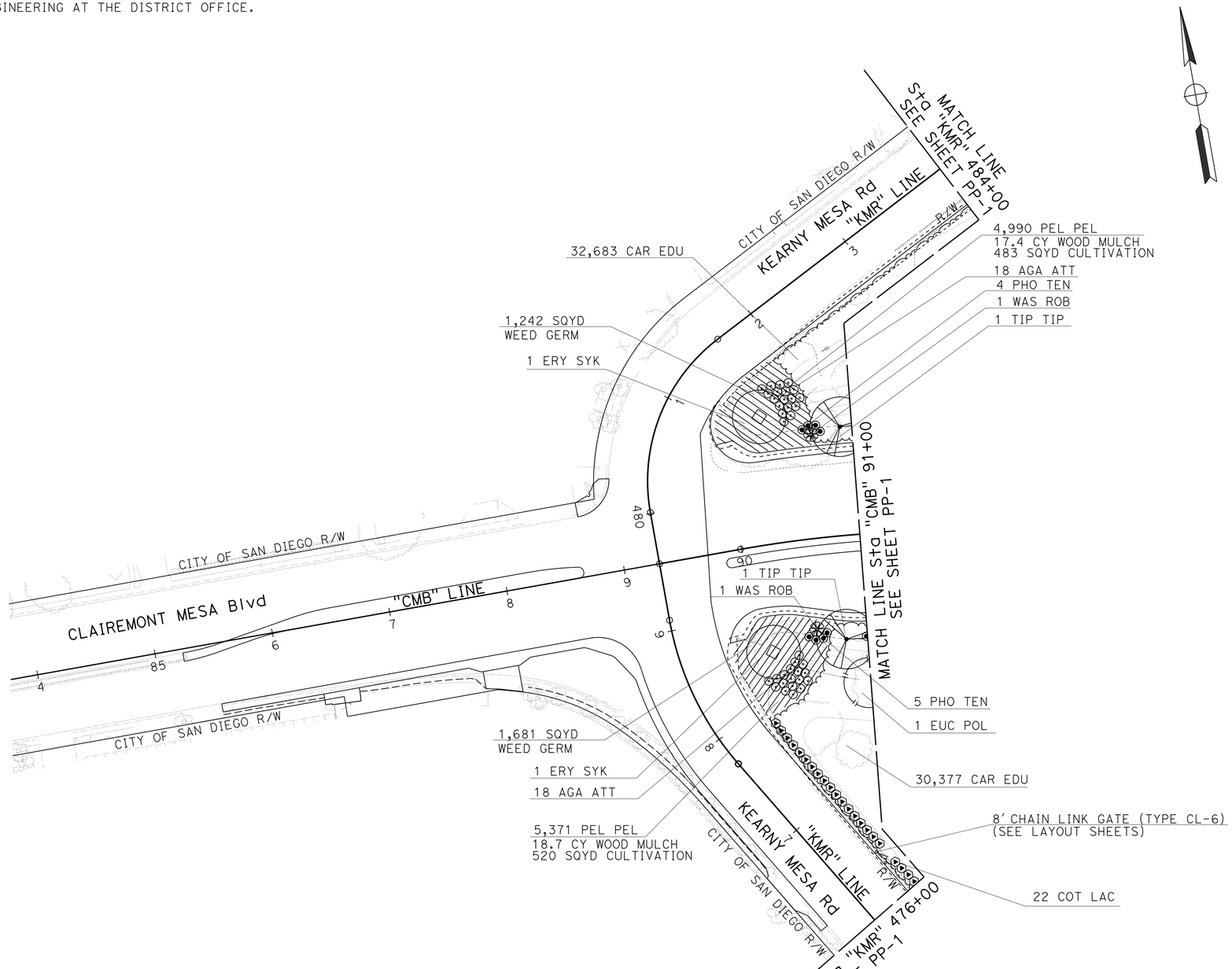

APPROVED FOR PLANTING WORK ONLY

PLANTING PLAN

SCALE: 1"= 50'

PP-3

STATE OF CALIFORNIA - DEPARTMENT OF TRANSPORTATION
Caltrans

CONSULTANT SENIOR LANDSCAPE ARCHITECT: JAMES C. KUHLKEN

CALCULATED-DESIGNED BY: TIM PRUSS
CHECKED BY: JAMES KUHLKEN

REVISED BY
DATE REVISED

LAST REVISION 04-25-14
DATE PLOTTED => 17-SEP-2014
TIME PLOTTED => 14:56

Dist	COUNTY	ROUTE	POST MILES TOTAL PROJECT	SHEET No.	TOTAL SHEETS
11	SD	163	8.4/9.4	226	332

LICENSED LANDSCAPE ARCHITECT

09-15-14
PLANS APPROVAL DATE

LICENSED LANDSCAPE ARCHITECT JAMES C. KUHLKEN 2281 Signature 01-31-16 Renewal Date 10-10-13 Date STATE OF CALIFORNIA

THE STATE OF CALIFORNIA OR ITS OFFICERS OR AGENTS SHALL NOT BE RESPONSIBLE FOR THE ACCURACY OR COMPLETENESS OF SCANNED COPIES OF THIS PLAN SHEET.

CITY OF SAN DIEGO
600 B ST, SUITE 800
SAN DIEGO, CA 92101

RICK ENGINEERING COMPANY
5620 FRIARS RD
SAN DIEGO, CA 92110
(619) 291-0707

IRRIGATION LEGEND

SYMBOL	DESCRIPTION	SPRAY PATTERN	OPERATING PRESSURE (psi)	PRESSURE COMPENSATING	PLUS/MINUS 5% ② DISCHARGE: GALLONS PER MINUTE (GPM)	DISCHARGE: GALLONS PER HOUR (GPH)	RADIUS (ft)	WIDTH x LENGTH (ft)	FLOW SHUTOFF DEVICE	INLET CONNECTION (NPT INCH)	POSITIVE-LOCKING Adj ARC STOP	BACKSPLASH PREVENTER	DIFFUSER PIN	DISTANCE CONTROL FLAP	Adj DISCHARGE	SPRINKLER ASSEMBLY – RISER: RISER TYPE	RISER MATERIAL: PLASTIC	RISER MATERIAL: GALVANIZED	RISER: SIZE (IPS INCH)	RISER: HEIGHT (INCH)	RISER: ⑦ SWING JOINT (INCH)	RISER SUPPORT	POP-UP: ⑦ SWING JOINT (INCH)	POP-UP: INLET CONNECTION (NPT INCH)	POP-UP: SPRINKLER PROTECTOR (TYPE)	POP-UP: POP-UP HEIGHT (INCH)	TREE WELL: ⑦ SWING JOINT (INCH)	REMARKS
[5]	RISER SPRINKLER ASSEMBLY (GEAR DRIVEN)	F	40	--	2.8	--	38	--	--	3/4"	--	--	X	--	--	I	X	--	3/4"	12	3/4"	--	--	--	--	--	--	⑥
⑤	RISER SPRINKLER ASSEMBLY (GEAR DRIVEN)	P	40	--	2.8	--	38	--	--	3/4"	--	--	X	--	--	I	X	--	3/4"	12	3/4"	--	--	--	--	--	--	③ ⑥
⑥	POP-UP SPRINKLER ASSEMBLY (GEAR DRIVEN)	H	40	--	2.8	--	38	--	--	3/4"	--	--	X	--	--	I	X	--	--	--	--	--	3/4"	--	1	12	--	③ ④ ⑥
[7]	RISER SPRINKLER ASSEMBLY (GEAR DRIVEN)	F	40	--	6.7	--	46	--	--	3/4"	--	--	X	--	--	I	X	--	3/4"	12	3/4"	--	--	--	--	--	--	⑥
⑦	RISER SPRINKLER ASSEMBLY (GEAR DRIVEN)	P	40	--	6.7	--	46	--	--	3/4"	--	--	X	--	--	I	X	--	3/4"	12	3/4"	--	--	--	--	--	--	③ ⑥
⑧	POP-UP SPRINKLER ASSEMBLY (GEAR DRIVEN)	H	40	--	6.7	--	46	--	--	3/4"	--	--	X	--	--	I	X	--	--	--	--	--	3/4"	--	1	12	--	③ ④ ⑥
⑪	RISER SPRINKLER ASSEMBLY (GEAR DRIVEN)	P	50	--	1.8	--	21	--	--	3/4"	--	--	X	--	--	I	X	--	3/4"	12	3/4"	--	--	--	--	--	--	③ ⑥
⑫	POP-UP SPRINKLER ASSEMBLY (GEAR DRIVEN)	P	50	--	1.8	--	21	--	--	3/4"	--	--	X	--	--	I	X	--	--	--	--	--	3/4"	--	1	12	--	③ ④ ⑥
●	TREE WELL SPRINKLER ASSEMBLY	--	30	X	0.25	--	--	--	--	1/2"	--	--	--	--	--	--	--	--	--	--	--	--	--	--	--	--	1/2"	FLOOD BUBBLER ⑧

APPLICABLE WHEN CIRCLED BELOW:

1 - SEE SPECIAL PROVISIONS.
② - IF A PRESSURE COMPENSATING DEVICE IS SPECIFIED, THE DISCHARGE AND RADII SHOWN REFLECT ITS USE.
③ - ADJUSTABLE ARC.
④ - 12" POP-UPS ADJACENT TO HARDSCAPE.
5 - SWING JOINTS REQUIRED ADJACENT TO SHOULDERS, CURBS, SIDEWALKS, AND DIKES.
⑥ - SHALL HAVE INTERNAL OR EXTERNAL CHECK VALVE.

X IN BOX DENOTES REQUIREMENT

⑦ - SEE DETAIL
⑧ - ONE PER No. 1 TREES AND 2 PER BOX TREES AND PALMS.

ABBREVIATIONS

F ——— FULL CIRCLE
H ——— HALF CIRCLE
P ——— PART CIRCLE

LEGEND:

——SCC——— Cond FOR FLOW SENSOR CABLE AND CNC FOR RCVMF

NEW VALVE CODE

XX-27(X)-XXa-XX-XX

- RCV SIZE
- IRRIGATION CLUSTER CONTROL UNIT-(CCU)
- CONTROLLER SATELLITE CONTROLLER-(SAT)
- CONTROL VALVE STATION (a/b VALVE IN PARALLEL IF APPLICABLE)
- GALLONS PER MINUTE (GPM)
- QUANTITY TYPE C-2 (Mod) SPRINKLERS

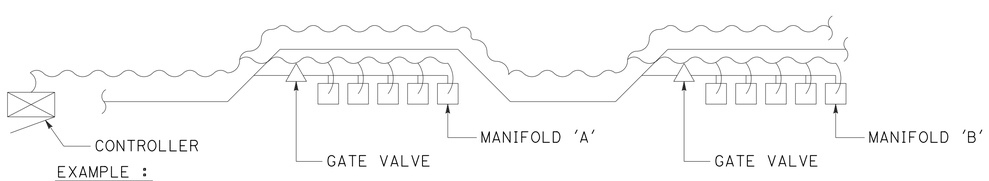

EXAMPLE :

MANIFOLD 'A' - INSTALL 5 CNC AND 1 ADDITIONAL WIRE FROM CONTROLLER TO LAST VALVE BOX IN MANIFOLD 'A'

MANIFOLD 'B' - INSTALL 5 CNC AND 1 ADDITIONAL WIRE FROM CONTROLLER TO LAST VALVE BOX IN MANIFOLD 'B'

CONTROL AND NEUTRAL CONDUCTORS

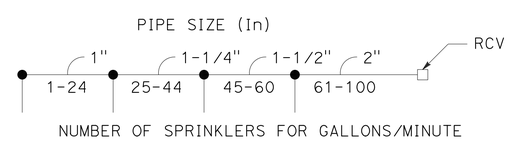

PIPE SIZING CHART
SPRINKLER TYPE C-2 Mod

NOTES:

1. ALL PROPOSED LATERAL PIPE NOT LABELLED SHALL BE 1", OR AS SHOWN ON PIPE SIZING CHARTS.
2. ALL PROPOSED GATE VALVES FOR REMOTE CONTROL VALVE MANIFOLDS SHALL BE 2" UNLESS OTHERWISE SHOWN.
3. ALL SPRINKLER HEADS, VALVES AND PLASTIC PIPE SUPPLY LINE (MAIN) AND (LATERAL) SHOWN NEAR MVP LOCATIONS ARE TO BE INSTALLED OUTSIDE OF THE PAVED MVP AREA. VALVES TO BE INSTALLED AT EXITING END OF THE MVP.
4. ALL NEW PLASTIC PIPE SUPPLY LINE (MAIN) PIPE WHICH HAS A 90 DEGREE CHANGE IN DIRECTION SHALL HAVE (2) 45 ELBOWS.
5. PULL ONE ADDITIONAL CNC WIRE FROM EACH CONTROLLER TO THE LAST VALVE BOX AT EACH VALVE MINIFOLD. (FOR FUTURE USE) SEE DETAIL.
6. ALL CNC AND FLOW SENSOR CABLE FROM RCVM'S AND FLOW SENSORS SHALL BE INSTALLED IN CONDUIT TO ICC- SAT'S.

LANDSCAPE DETAILS

NO SCALE

LD-1

REVISED BY | DATE REVISED
TIM PRUSS | JAMES KUHLKEN
CALCULATED-DESIGNED BY | CHECKED BY
CONSULTANT SENIOR LANDSCAPE ARCHITECT
JAMES C. KUHLKEN
STATE OF CALIFORNIA - DEPARTMENT OF TRANSPORTATION
Caltrans

LAST REVISION 04-25-14 | DATE PLOTTED => 17-SEP-2014 | TIME PLOTTED => 14:56

Dist	COUNTY	ROUTE	POST MILES TOTAL PROJECT	SHEET No.	TOTAL SHEETS
11	SD	163	8.4/9.4	227	332

LICENSED LANDSCAPE ARCHITECT

09-15-14
PLANS APPROVAL DATE

LICENSED LANDSCAPE ARCHITECT
JAMES C. KUHLKEN 2281
Signature
01-31-16
Renewal Date
10-10-13
Date
STATE OF CALIFORNIA

THE STATE OF CALIFORNIA OR ITS OFFICERS OR AGENTS SHALL NOT BE RESPONSIBLE FOR THE ACCURACY OR COMPLETENESS OF SCANNED COPIES OF THIS PLAN SHEET.

CITY OF SAN DIEGO
600 B ST, SUITE 800
SAN DIEGO, CA 92101

RICK ENGINEERING COMPANY
5620 FRIARS RD
SAN DIEGO, CA 92110
(619) 291-0707

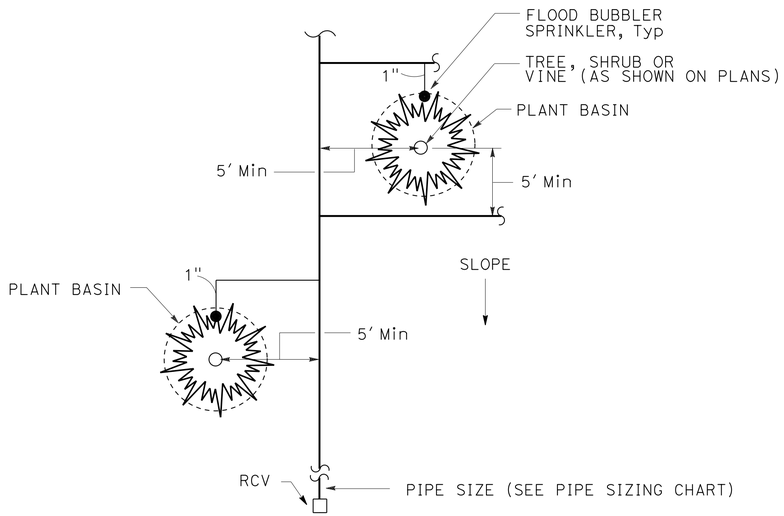

PLAN

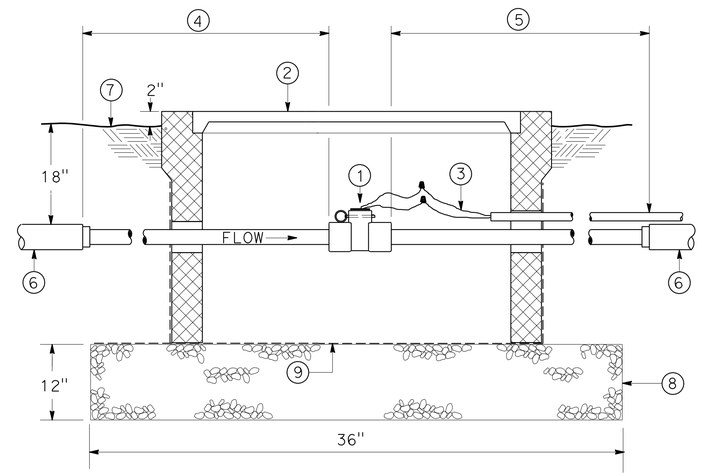

FLOW SENSOR
(Mod)

LEGEND:

1. FLOW SENSOR
2. RECTANGULAR VALVE BOX (SIZE AS REQUIRED)
3. SHIELDED FLOW SENSOR CABLE IN 1" CONDUIT WITH RCVM CONTROL WIRES TO THE IRRIGATION CONTROLLER CABINET
4. 2" PR 315 PVC PIPE - LENGTH = 10 X Dia OF SUPPLY LINE (MAIN)
5. 2" PR 315 PVC PIPE - LENGTH = 5 X Dia OF SUPPLY LINE (MAIN)
6. PR 315 PVC SUPPLY LINE (MAIN) (SIZE PER PLANS)
7. FINISHED GRADE
8. 3/4" GRAVEL OR CRUSHED ROCK
9. 1/2" MESH 18 GAUGE GALVANIZED WIRE FABRIC (COVER VALVE BOX BOTTOM AND ALL CUT-OUTS)

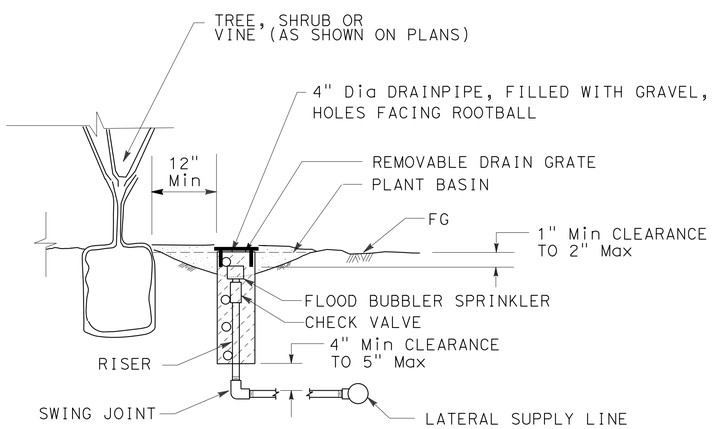

SECTION

NOTES:

1. INSTALL FLOOD BUBBLER SPRINKLER ON UPHILL SIDE OF PLANT WHEN ON SLOPE
2. INSTALL FLOOD BUBBLER WITHIN PLANT BASIN

TREE WELL SPRINKLER ASSEMBLY
(Mod)

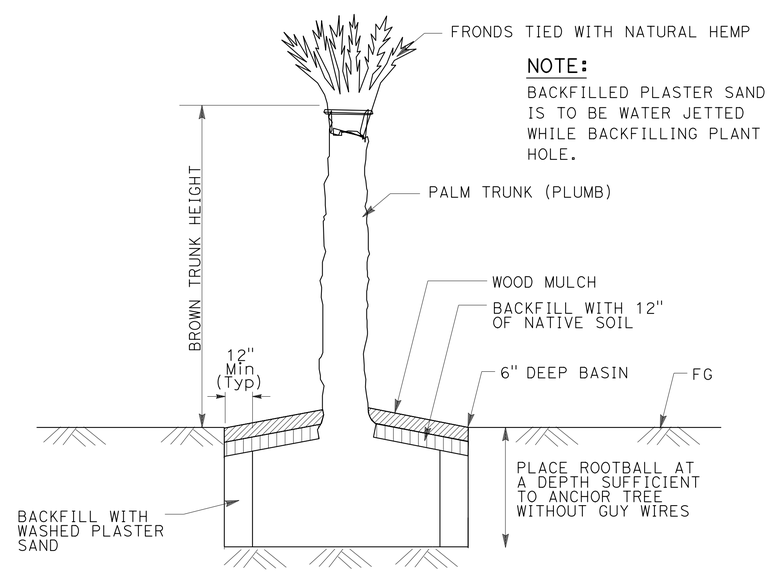

NOTE:
BACKFILLED PLASTER SAND IS TO BE WATER JETTED WHILE BACKFILLING PLANT HOLE.

PALM TREE PLANTING

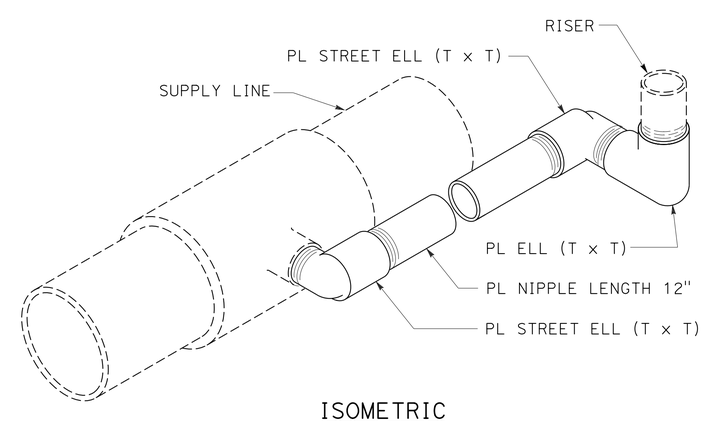

ISOMETRIC

SWING JOINT
(Mod)

LANDSCAPE DETAILS
NO SCALE

LD-2

STATE OF CALIFORNIA - DEPARTMENT OF TRANSPORTATION
Caltrans®

CONSULTANT SENIOR LANDSCAPE ARCHITECT: JAMES C. KUHLKEN
CALCULATED-DESIGNED BY: TIM PRUSS
CHECKED BY: JAMES KUHLKEN
REVISED BY
DATE REVISED

LAST REVISION 04-25-14
DATE PLOTTED => 17-SEP-2014
TIME PLOTTED => 14:56

Dist	COUNTY	ROUTE	POST MILES TOTAL PROJECT	SHEET No.	TOTAL SHEETS
11	SD	163	8.4/9.4	228	332

LICENSED LANDSCAPE ARCHITECT

09-15-14
PLANS APPROVAL DATE

LICENSED LANDSCAPE ARCHITECT
JAMES C. KUHLKEN - 2281
Signature
01-31-16
Renewal Date
10-10-13
Date
STATE OF CALIFORNIA

THE STATE OF CALIFORNIA OR ITS OFFICERS OR AGENTS SHALL NOT BE RESPONSIBLE FOR THE ACCURACY OR COMPLETENESS OF SCANNED COPIES OF THIS PLAN SHEET.

CITY OF SAN DIEGO
600 B ST, SUITE 800
SAN DIEGO, CA 92101

RICK ENGINEERING COMPANY
5620 FRIARS RD
SAN DIEGO, CA 92110
(619) 291-0707

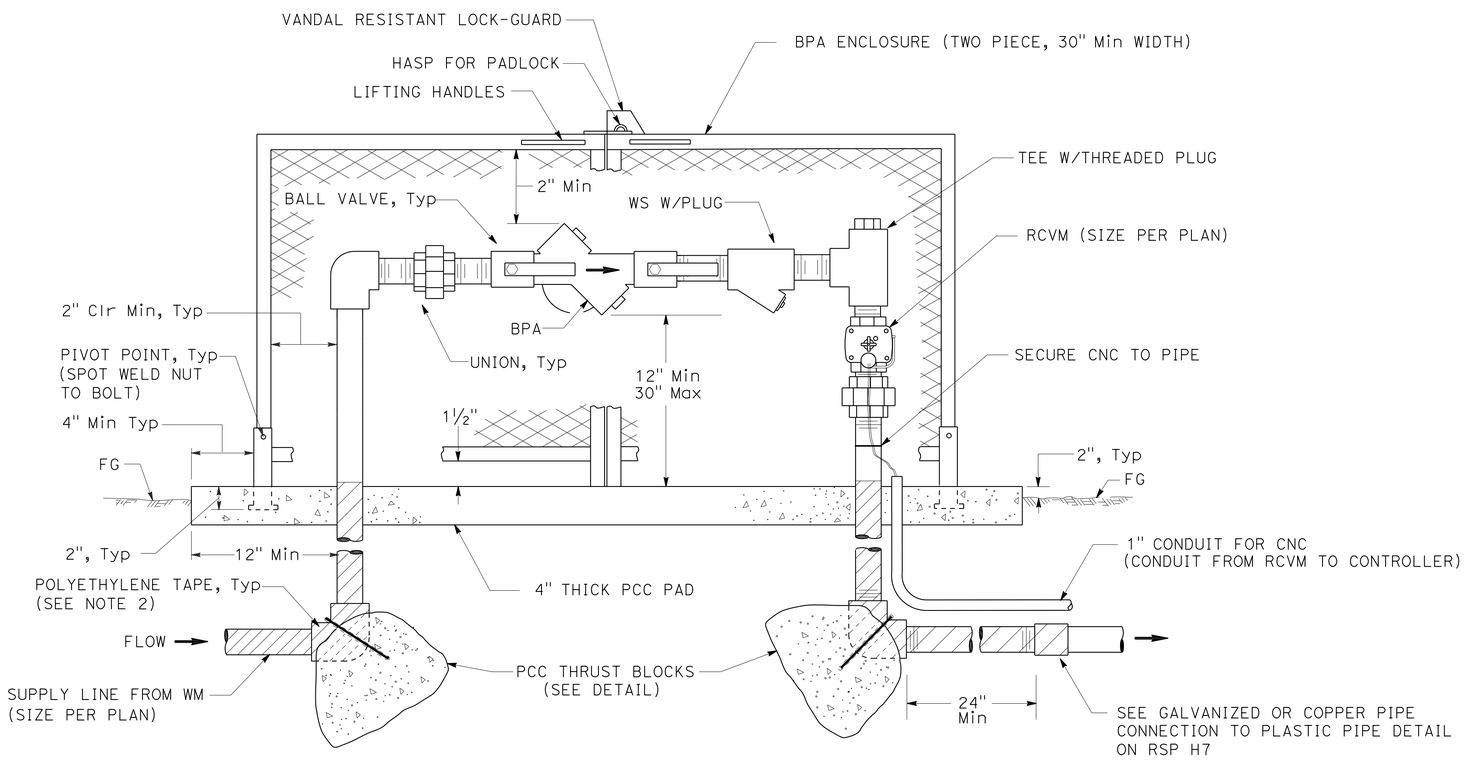

ELEVATION

NOTES:

1. WS AND FITTINGS MUST BE SAME SIZE AS BACKFLOW PREVENTER SHOWN ON PLANS.
2. BPA MUST BE CONSTRUCTED WITH COPPER PIPE FROM PLASTIC PIPE SUPPLY LINE (MAIN) THROUGH BPA TO CONNECTION TO PLASTIC PIPE AS SHOWN ON DETAIL.
3. ALL METAL IN CONTACT WITH SOIL AND PORTLAND CEMENT CONCRETE MUST BE WRAPPED WITH 2" WIDE PLASTIC BACKED ADHESIVE POLYETHYLENE TAPE 0.020" THICK WITH½" OVERLAP.

THRUST BLOCK DETAIL

INSTALLATION	TYPE FITTING	INSTALLATION	TYPE FITTING
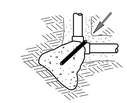	90° ELL	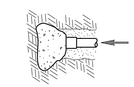	DEAD END
	BEND 45° 22.5° 11.25°		GATE VALVE
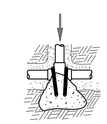	TEE	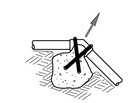	VERTICAL BEND (TYPE I) 45° 22.5° 11.25° OR
		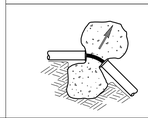	VERTICAL BEND (TYPE II) 45° 22.5° 11.25°

NOTES:

Min 1 CF PCC FOR 1½" PIPE SIZE AND SMALLER.
Min 2 CF PCC FOR 2" PIPE SIZE.
Min 3 CF PCC FOR 3" AND 4" PIPE SIZE.
USE #3 REINFORCING BAR WHERE SHOWN.

BACKFLOW PREVENTER ASSEMBLY IN ENCLOSURE (BPAE) AND REMOTE CONTROL VALVE MASTER (RCVM)

LANDSCAPE DETAILS

NO SCALE

LD-3

REVISED BY | DATE REVISED
TIM PRUSS | JAMES KUHLKEN
CALCULATED-DESIGNED BY | CHECKED BY
CONSULTANT SENIOR LANDSCAPE ARCHITECT
JAMES C. KUHLKEN
STATE OF CALIFORNIA - DEPARTMENT OF TRANSPORTATION
Caltrans

LAST REVISION 04-25-14 | DATE PLOTTED => 17-SEP-2014 | TIME PLOTTED => 14:56

Dist	COUNTY	ROUTE	POST MILES TOTAL PROJECT	SHEET No.	TOTAL SHEETS
11	SD	163	8.4/9.4	229	332

LICENSED LANDSCAPE ARCHITECT

09-15-14
PLANS APPROVAL DATE

LICENSED LANDSCAPE ARCHITECT
JAMES C. KUHLKEN 2281
Signature
01-31-16
Renewal Date
10-10-13
Date
STATE OF CALIFORNIA

THE STATE OF CALIFORNIA OR ITS OFFICERS OR AGENTS SHALL NOT BE RESPONSIBLE FOR THE ACCURACY OR COMPLETENESS OF SCANNED COPIES OF THIS PLAN SHEET.

CITY OF SAN DIEGO
600 B ST, SUITE 800
SAN DIEGO, CA 92101

RICK ENGINEERING COMPANY
5620 FRIARS RD
SAN DIEGO, CA 92110
(619) 291-0707

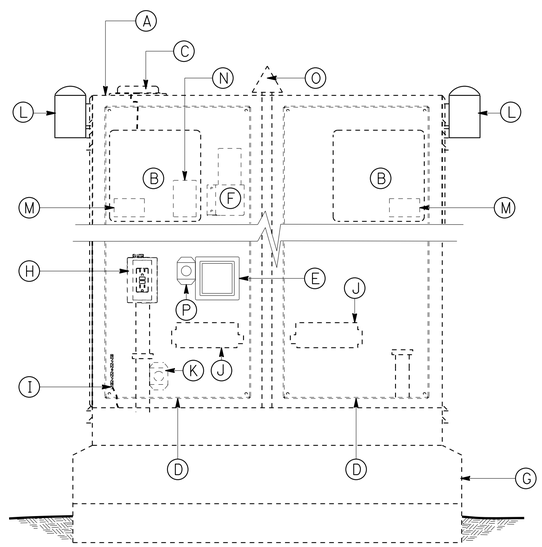

FRONT ELEVATION

LEGEND:

- Ⓐ EXISTING CONTROLLER ENCLOSURE CABINET
- Ⓑ EXISTING IRRIGATION CONTROLLER
- Ⓒ EXISTING LO PRO ANTENNA
- Ⓓ EXISTING STAINLESS STEEL BACK BOARD
- Ⓔ FLOW MONITOR WITH POWER SUPPLY
- Ⓕ EXISTING 450-470 MHZ RADIO
- Ⓖ EXISTING PCC PAD AND FOUNDATION
- Ⓗ EXISTING 2 GANG WEATHER PROOF BOX WITH GROUND FAULT PROTECTED RECEPTACLE AND ON-OFF SWITCH
- Ⓘ EXISTING GROUND CONDUCTOR
- Ⓙ EXISTING TERMINAL STRIPS FOR LOW VOLTAGE WIRE CONNECTIONS
- Ⓚ EXISTING SURGE PROTECTION
- Ⓛ RAIN SENSOR WITH STAINLESS STEEL ENCLOSURE MOUNTED TO CABINET
- Ⓜ EXISTING TRC RECEIVER CARD
- Ⓝ EXISTING TRC CONNECTOR AND CABLE KIT
- Ⓞ EXISTING TRC ANTENNA
- Ⓟ SURGE SUPPRESSOR (FLOW MONITOR)

MODIFY IRRIGATION CONTROLLER ENCLOSURE CABINET

LANDSCAPE DETAILS

NO SCALE

LD-4

STATE OF CALIFORNIA - DEPARTMENT OF TRANSPORTATION
Caltrans

CONSULTANT SENIOR LANDSCAPE ARCHITECT
JAMES C. KUHLKEN

CALCULATED-DESIGNED BY: TIM PRUSS
CHECKED BY: JAMES KUHLKEN

REVISED BY
DATE REVISED

LAST REVISION 04-25-14
DATE PLOTTED => 17-SEP-2014
TIME PLOTTED => 14:56

Dist	COUNTY	ROUTE	POST MILES TOTAL PROJECT	SHEET No.	TOTAL SHEETS
11	SD	163	8.4/9.4	230	332

REGISTERED CIVIL ENGINEER 10-10-13 DATE

09-15-14
PLANS APPROVAL DATE

REGISTERED PROFESSIONAL ENGINEER MARK M. JUGAR No. 66939 Exp. 09-30-16 CIVIL STATE OF CALIFORNIA

THE STATE OF CALIFORNIA OR ITS OFFICERS OR AGENTS SHALL NOT BE RESPONSIBLE FOR THE ACCURACY OR COMPLETENESS OF SCANNED COPIES OF THIS PLAN SHEET.

CITY OF SAN DIEGO
600 B ST, SUITE 800
SAN DIEGO, CA 92101

RICK ENGINEERING COMPANY
5620 FRIARS RD
SAN DIEGO, CA 92110
(619) 291-0707

LEGEND

P = PASSAGE DETECTION
D = DEMAND DETECTION
Q = QUEUE DETECTION
ML = MAIN LINE DETECTION
OR = OFF RAMP DETECTION
U3 = UPPER SIGNAL HEAD (3- SECTION)
L3 = LOWER SIGNAL HEAD (3- SECTION)
NWR = NO WORK REQUIRED
CS = COUNT STATION
TSO = THIS SHEET ONLY
APS = ACCESSIBLE PEDESTRIAN SIGNALS
SDG&E = SAN DIEGO GAS AND ELECTRIC COMPANY
SL = STREET LIGHTING
VDU = VIDEO DETECTION UNIT
foxx = Existing FIBER OPTIC CABLE (xx INDICATES NUMBER OF SINGLEMODE FIBERS)
OCC = OUTDOOR CATEGORY 5E CABLE
INT = INTERCONNECT

N C SL = NO CHANGE TO Exist STREET LIGHT CONDUIT

N C = NO CHANGE TO Exist CONDUIT

V = Exist SPLICE VAULT

= MODIFIED TYPE E BICYCLE LOOP DETECTOR

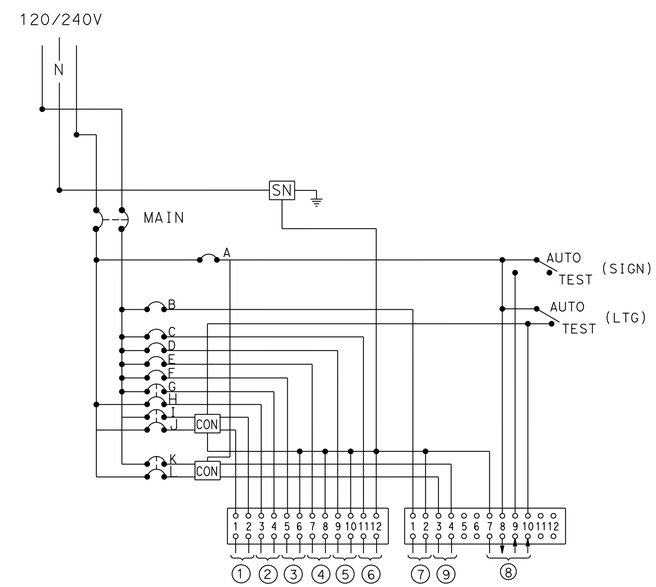

WIRING DIAGRAM "SWITCH PEDESTAL"
TYPE III BF SERVICE EQUIPMENT ENCLOSURE
USE FOR SHEET E-8
(SEE STANDARD PLANS ES-2C & ES-2E)

CIRCUIT BREAKERS

MAIN-2P-100 A

A-1P-15 A
B-1P-30 A
C-1P-15 A
D-1P-30 A
E-1P-30 A
F-1P-30 A
G, H } 2P-30 A
I, J } 2P-30 A
K, L } 2P-30 A

1 - LIGHTING
2 - CMS POWER (240 V)
3 - CMS CONTROLLER
4 - RM 1
5 - RM 2
6 - CCTV
7 - SIGNAL
8 - PEU
9 - SIGNS

ELECTRICAL LEGEND

NO SCALE

E-1

STATE OF CALIFORNIA - DEPARTMENT OF TRANSPORTATION
Caltrans

CONSULTANT FUNCTIONAL SUPERVISOR: EDGAR A. CAMERINO
CALCULATED-DESIGNED BY: CARLOS PEREZ
CHECKED BY: MARK JUGAR
REVISED BY
DATE REVISED

LAST REVISION 04-25-14
DATE PLOTTED => 17-SEP-2014
TIME PLOTTED => 14:56

Dist	COUNTY	ROUTE	POST MILES TOTAL PROJECT	SHEET No.	TOTAL SHEETS
11	SD	163	8.4/9.4	231	332

REGISTERED CIVIL ENGINEER 10-10-13 DATE

09-15-14
PLANS APPROVAL DATE

REGISTERED PROFESSIONAL ENGINEER MARK M. JUGAR No. 66939 Exp. 09-30-16 CIVIL STATE OF CALIFORNIA

THE STATE OF CALIFORNIA OR ITS OFFICERS OR AGENTS SHALL NOT BE RESPONSIBLE FOR THE ACCURACY OR COMPLETENESS OF SCANNED COPIES OF THIS PLAN SHEET.

CITY OF SAN DIEGO
600 B ST, SUITE 800
SAN DIEGO, CA 92101

RICK ENGINEERING COMPANY
5620 FRIARS RD
SAN DIEGO, CA 92110
(619) 291-0707

NOTE:

1. FOR ACCURATE RIGHT OF WAY DATA, CONTACT RIGHT OF WAY ENGINEERING AT THE DISTRICT OFFICE.

CONDUIT NOTES:

1. Exist 2" C, 2#2 (SIGNAL)
2. Exist 2" C, 2 WIRE INTERCONNECT

EXISTING TRAFFIC PHASE DIAGRAM
STEADY DEMAND SEQUENCE

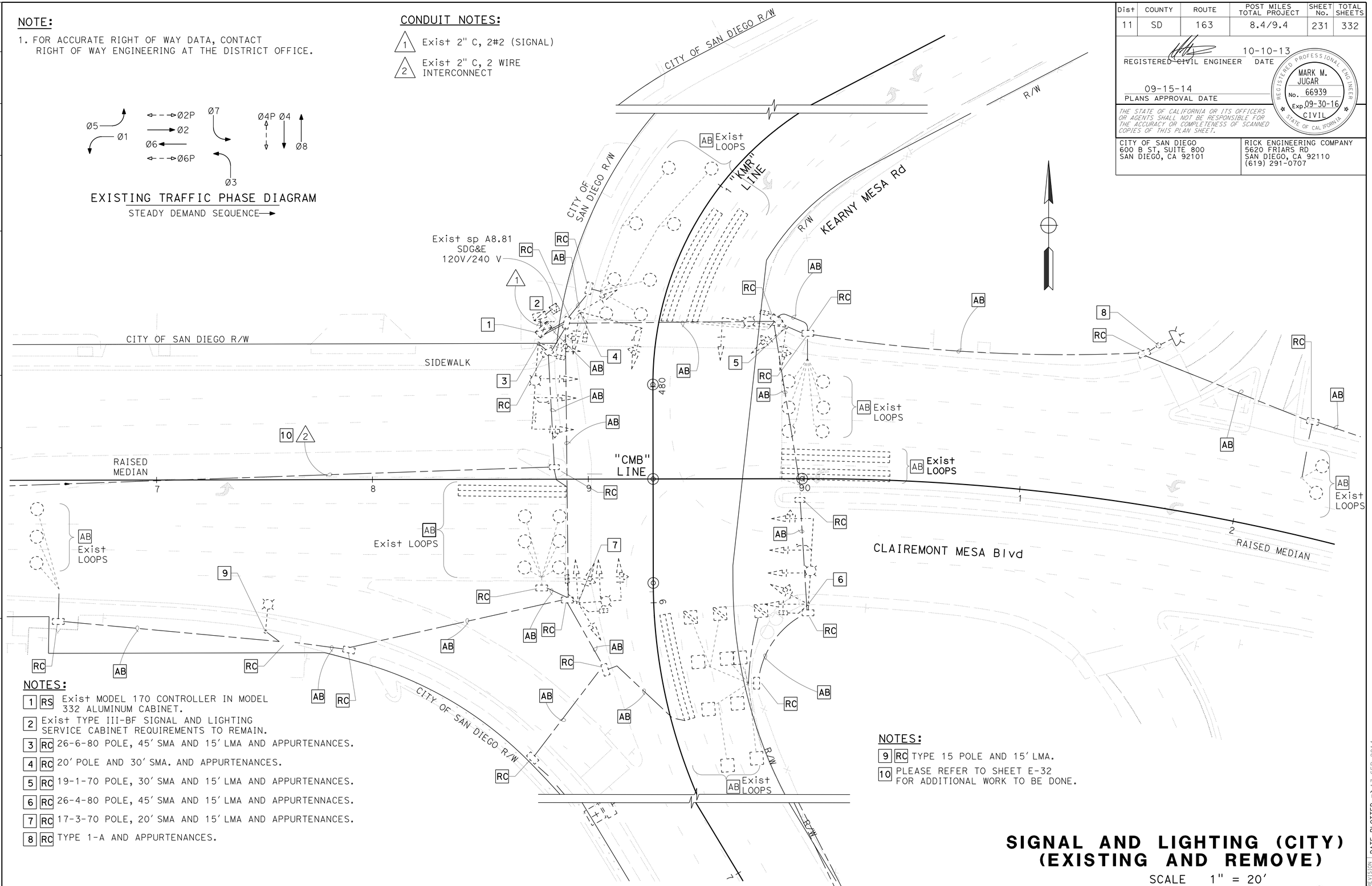

NOTES:

1 RS Exist MODEL 170 CONTROLLER IN MODEL 332 ALUMINUM CABINET.

2 Exist TYPE III-BF SIGNAL AND LIGHTING SERVICE CABINET REQUIREMENTS TO REMAIN.

3 RC 26-6-80 POLE, 45' SMA AND 15' LMA AND APPURTENANCES.

4 RC 20' POLE AND 30' SMA. AND APPURTENANCES.

5 RC 19-1-70 POLE, 30' SMA AND 15' LMA AND APPURTENANCES.

6 RC 26-4-80 POLE, 45' SMA AND 15' LMA AND APPURTENNACES.

7 RC 17-3-70 POLE, 20' SMA AND 15' LMA AND APPURTENANCES.

8 RC TYPE 1-A AND APPURTENANCES.

NOTES:

9 RC TYPE 15 POLE AND 15' LMA.

10 PLEASE REFER TO SHEET E-32 FOR ADDITIONAL WORK TO BE DONE.

APPROVED FOR ELECTRICAL WORK ONLY

SIGNAL AND LIGHTING (CITY) (EXISTING AND REMOVE)

SCALE 1" = 20'

E-2

STATE OF CALIFORNIA - DEPARTMENT OF TRANSPORTATION

Caltrans

CONSULTANT FUNCTIONAL SUPERVISOR: EDGAR A. CAMERINO

CALCULATED-DESIGNED BY: CARLOS PEREZ

CHECKED BY: MARK JUGAR

REVISED BY

DATE REVISED

LAST REVISION 04-25-14

DATE PLOTTED => 17-SEP-2014
TIME PLOTTED => 14:56

Dist	COUNTY	ROUTE	POST MILES TOTAL PROJECT	SHEET No.	TOTAL SHEETS
11	SD	163	8.4/9.4	232	332

REGISTERED CIVIL ENGINEER 10-10-13 DATE

09-15-14
PLANS APPROVAL DATE

REGISTERED PROFESSIONAL ENGINEER MARK M. JUGAR No. 66939 Exp. 09-30-16 CIVIL STATE OF CALIFORNIA

THE STATE OF CALIFORNIA OR ITS OFFICERS OR AGENTS SHALL NOT BE RESPONSIBLE FOR THE ACCURACY OR COMPLETENESS OF SCANNED COPIES OF THIS PLAN SHEET.

CITY OF SAN DIEGO
600 B ST, SUITE 800
SAN DIEGO, CA 92101

RICK ENGINEERING COMPANY
5620 FRIARS RD
SAN DIEGO, CA 92110
(619) 291-0707

NOTES:

1. INSTALL STATE-FURNISHED TYPE 170 CONTROLLER IN MODEL 332 ALUMINUM CABINET. FOUNDATION PER ES-3C. INSTALL BATTERY BACK-UP SYSTEM CABINET AND BATTERIES (SEE SHEET E-31 FOR DETAILS).
2. Exist TYPE III-BF SIGNAL AND LIGHTING SERVICE EQUIPMENT ENCLOSURE TO REMAIN. Exist 50A-1P CB (SIGNAL) TO REMAIN. Exist 30A-1P CB (LIGHTING) TO REMAIN
3. Exist SDG&E SERVICE POINT TO REMAIN
4. DETAIL U ES-7N. SEE SIGN PLANS.
5. SEE SHEET E-4 FOR POLE SCHEDULE, CONDUCTOR SCHEDULE AND DETECTOR SCHEDULE.
6. INSTALL Ø4 SIGNAL HEAD 17' ABOVE GROUND.
7. SIGNAL INTERCONNECT TO TRAFFIC CONTROLLER LOCATED AT NW CORNER OF CLAIREMONT MESA BLVD AND INDUSTRIAL PARK DRWY. FOR WORK TO BE DONE REFER TO SHEET E-32.
8. TO PULL BOX NEXT TO TRAFFIC CONTROLLER LOCATED AT NE CORNER OF CLAIREMONT MESA BLVD AND Rte 163 SB OFF RAMP. SEE SHEET E-8.
9. FOR ACCURATE RIGHT OF WAY DATA, CONTACT RIGHT OF WAY ENGINEERING AT THE DISTRICT OFFICE.

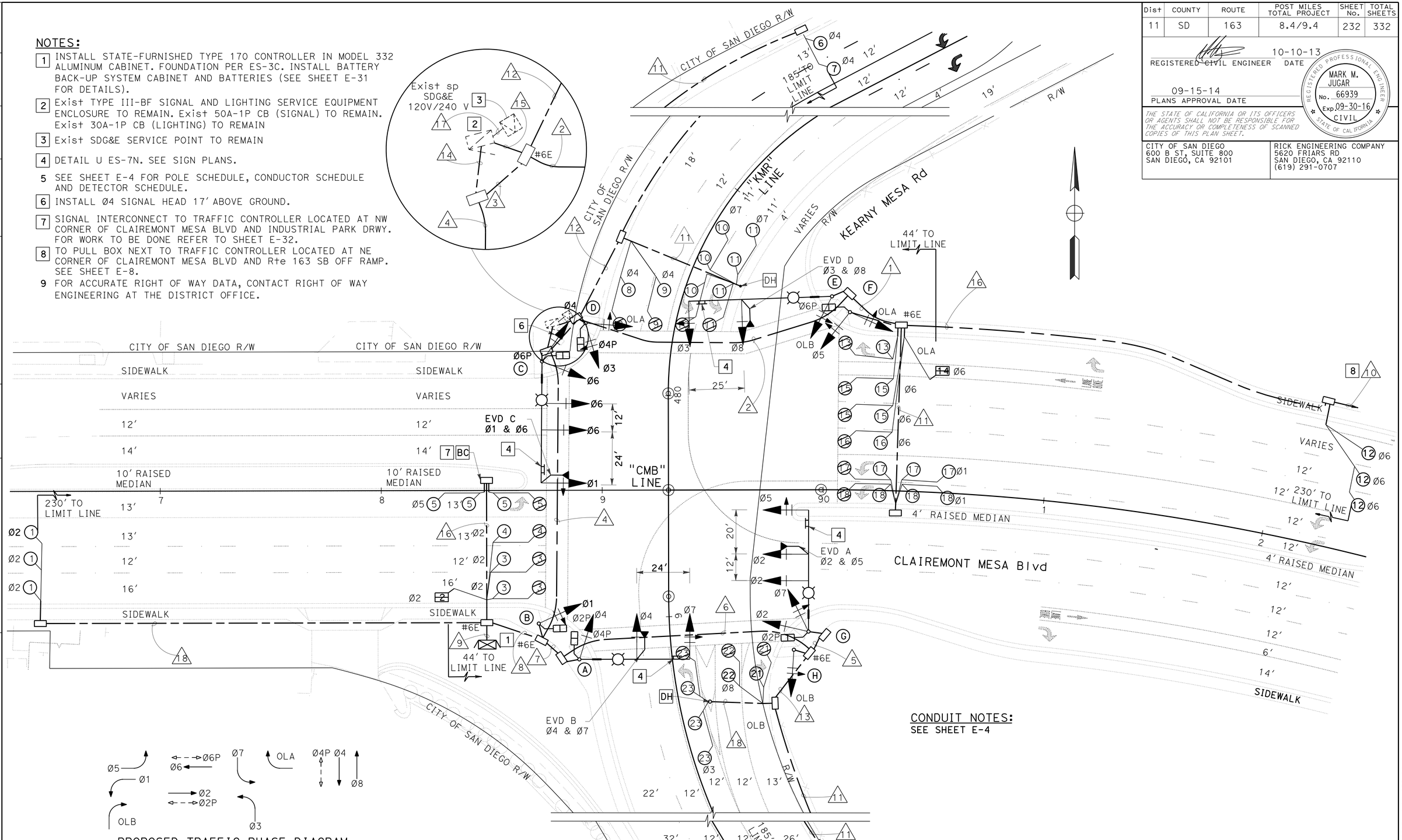

PROPOSED TRAFFIC PHASE DIAGRAM
STEADY DEMAND SEQUENCE

CONDUIT NOTES:
SEE SHEET E-4

APPROVED FOR ELECTRICAL WORK ONLY

SIGNAL AND LIGHTING (CITY)

SCALE 1" = 20'

E-3

STATE OF CALIFORNIA - DEPARTMENT OF TRANSPORTATION
Caltrans

CONSULTANT FUNCTIONAL SUPERVISOR: EDGAR A. CAMERINO
CALCULATED-DESIGNED BY: MARK JUGAR
CHECKED BY
REVISED BY
DATE REVISED

LAST REVISION 04-25-14
DATE PLOTTED => 17-SEP-2014
TIME PLOTTED => 14:56

Dist	COUNTY	ROUTE	POST MILES TOTAL PROJECT	SHEET No.	TOTAL SHEETS
11	SD	163	8.4/9.4	233	332

REGISTERED CIVIL ENGINEER 10-10-13 DATE

09-15-14
PLANS APPROVAL DATE

REGISTERED PROFESSIONAL ENGINEER MARK M. JUGAR No. 66939 Exp. 09-30-16 CIVIL STATE OF CALIFORNIA

THE STATE OF CALIFORNIA OR ITS OFFICERS OR AGENTS SHALL NOT BE RESPONSIBLE FOR THE ACCURACY OR COMPLETENESS OF SCANNED COPIES OF THIS PLAN SHEET.

CITY OF SAN DIEGO
600 B ST, SUITE 800
SAN DIEGO, CA 92101

RICK ENGINEERING COMPANY
5620 FRIARS RD
SAN DIEGO, CA 92110
(619) 291-0707

EQUIPMENT AND POLE SCHEDULE

Loc	STANDARDS TYPE	SMA	LMA	PLACEMENT DIMENSIONS A	B	SIGNAL MOUNTING AND PLACEMENT VEHICLE POLE	MAST ARM	PEDESTRIAN(APS) SIGNAL	PPB	ARROW	LUMINAIRE (INDUCTION)	REMARKS
A	29-5-100	50′	15′	6.3′	4′	SV-1-T	2-MAS	SP-1-T	Ø2	←	165 W	INSTALL EVD B Ø4 & Ø7. INSTALL M.A. MOUNTED STREET NAME SIGN: CLAIREMONT MESA Blvd
B	1-A	-	-	8.1′	5.1′	TV-1-T	-	SP-1-T	Ø4	→	-	-
C	29-5-100	55′	15′	3.0′	5.1′	SV-1-T SV-1-T	3-MAS	SP-1-T	Ø4	←	165 W	INSTALL Ø4 SIGNAL HEAD 17′ ABOVE GROUND. INSTALL EVD C Ø1 & Ø6. INSTALL M.A. MOUNTED STREET NAME SIGN: KEARNEY MESA Rd
D	1-A	-	-	0.9′	0.9′	TV-2-TB	-	SP-1-T	Ø6	→	-	-
E	61-5-100	65′	15	22.1′	5.0′	SV-1-T	2-MAS	-	-	-	165 W	INSTALL EVD D Ø3 & Ø8. INSTALL M. A. MOUNTED STREET NAME SIGN: CLAIREMONT MESA Blvd
F	1-A	-	-	16.2′	4.7′	TV-2-TB	-	SP-1-T	Ø6	←	-	-
G	29-5-100	55′	15′	12.7′	4′	SV-2-TB	3-MAS	SP-1-T	Ø2	→	165 W	INSTALL EVD A Ø2 & Ø5. INSTALL M.A. MOUNTED STREET NAME SIGN: KEARNEY MESA Rd
H	1-A	-	-	46.3′	4′	TV-1-T	-	-	-	-	-	-

DETECTOR SCHEDULE

No.	PHASE	SLOT	TERMINAL
1	2	I2U	T2-5&6
2	2	I2L	T2-7&8
3	2	I3U	T2-9&I0
4	2	I3L	T2-II&I2
5	5	JIU	T3-I&2
6	4	J6U	T4-9&I0
7	4	I6L	T4-II&I2
8	4	I7U	T6-I&2
9	4	I7L	T6-3&4
I0	7	J5U	T5-5&6
II	7	J5L	T5-7&8
I2	6	J2U	T3-5&6
I3	6	J2L	T3-7&8
I4	6	J3U	T3-9&I0
I5	6	J3L	T3-II&I2
I6	6	J4U	T5-I&2
I7	I	IIU	T2-I&2
I8	I	IIL	T2-3&4
I9	8	J6U	T5-9&I0
20	8	J6L	T5-II&I2
2I	8	J8U	T7-5&6
22	8	J8L	T7-7&8
23	3	I5U	T4-5&6
PPB	2	II2U	T8-4&COM6
PPB	6	II3U	T8-7&COM9
PPB	8	II3L	T8-8&COM9
EVA	2&5	JI2U	T9-4&COM6
EVB	4&7	JI3U	T9-7&COM9
EVC	I&6	JI2L	T9-5&COM6
EVD	3&8	JI3L	T9-8&COM9
FLASH	-	II4U	T8-I0&COMI2

CONDUCTOR SCHEDULE

AWG	PHASE	CIRCUIT	4" 1	4" 2	2-4" 3	2-4" 4	2" 5	4" 6	4" 7	2-4" 8	2-4" 9
3CSC		POLE A	- / -	- / -	- / -	- / -	- / -	- / -	1 / 2	1 / 2	1 / 2
		POLE B	- / -	- / -	- / -	- / -	- / -	- / -	- / -	1 / 1	1 / 1
		POLE C	- / -	- / -	- / -	1 / 2	- / -	- / -	- / -	1 / 2	1 / 2
		POLE D	- / -	- / -	1 / 1	1 / 1	- / -	- / -	- / -	1 / 1	1 / 1
		POLE E	- / -	- / 2	- / 2	- / 2	- / -	- / -	- / -	- / 2	- / 2
		POLE F	1 / 2	1 / 2	1 / 2	1 / 2	- / -	- / -	- / -	1 / 2	1 / 2
		POLE G	- / -	- / -	- / -	- / -	1 / 2	1 / 2	1 / 2	1 / 2	1 / 2
12CSC		POLE H	- / -	- / -	- / -	- / -	- / -	- / 1	- / 1	- / 1	- / 1
TOTAL CABLES - 3CSC / 12CSC			1 / 2	1 / 4	2 / 5	3 / 7	1 / 2	1 / 3	2 / 5	6 / 13	6 / 13
#6		SERV	-	-	-	2	-	-	-	2	2
#10		LTG	-	2	-	2	2	2	2	-	-
DLC TYPE B	1	DLC	2	2	2	2	-	-	-	2	2
	2	DLC	-	-	-	-	-	-	-	-	4
	3	DLC	-	-	-	-	-	1	1	1	1
	4	DLC	-	-	4	4	-	-	-	4	4
	5	DLC	-	-	-	-	-	-	-	-	1
	6	DLC	5	5	5	5	-	-	-	5	5
	7	DLC	-	-	2	2	-	-	-	2	2
	8	DLC	-	-	-	-	-	3	3	3	3
	OLA	DLC	1	1	1	1	-	-	-	1	1
	OLB	DLC	-	-	-	-	-	1	1	1	1
TOTAL DLC			7	8	14	14	-	5	5	19	24
INTERCONNECT CABLE - SIC			1	1	1	1	-	-	-	1	2
EVC			-	1	1	2	1	1	2	4	4
TOTAL CONDUCTORS/CABLES			11	17	23	31	6	12	15	45	51

CONDUIT NOTES:

10 — 2"C, 1 SIC

11 — 2"C, 2 DLC

12 — 2"C, 6 DLC

13 — 2"C, 5 DLC

14 — 2"C, 2#6,(SIGNAL), 2#10 (LIGHTING)

15 — 2"C, 2#10 (LIGHTING)

16 — 2"C, 1 DLC, 1 SIC

17 — Exist 1½"C, 2#4, (POWER)

18 — 2"C, 1 DLC

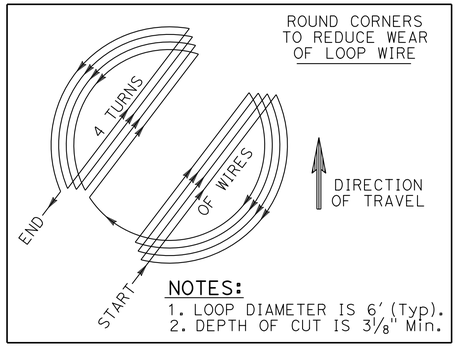

TYPE E MODIFIED LOOP SAWCUT & WINDING DETAIL

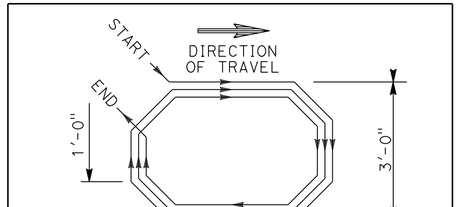

TYPE Q MODIFIED BIKE LOOP SAWCUT & WINDING DETAIL

SIGNAL AND LIGHTING (CITY)

NO SCALE

E-4

STATE OF CALIFORNIA - DEPARTMENT OF TRANSPORTATION

Caltrans

CONSULTANT FUNCTIONAL SUPERVISOR: EDGAR A. CAMERINO

CALCULATED-DESIGNED BY: CARLOS PEREZ

CHECKED BY: MARK JUGAR

REVISED BY

DATE REVISED

LAST REVISION 04-25-14 DATE PLOTTED => 17-SEP-2014 TIME PLOTTED => 14:56

Dist	COUNTY	ROUTE	POST MILES TOTAL PROJECT	SHEET No.	TOTAL SHEETS
11	SD	163	8.4/9.4	234	332

REGISTERED CIVIL ENGINEER 10-10-13 DATE

09-15-14
PLANS APPROVAL DATE

REGISTERED PROFESSIONAL ENGINEER MARK M. JUGAR No. 66939 Exp. 09-30-16 CIVIL STATE OF CALIFORNIA

THE STATE OF CALIFORNIA OR ITS OFFICERS OR AGENTS SHALL NOT BE RESPONSIBLE FOR THE ACCURACY OR COMPLETENESS OF SCANNED COPIES OF THIS PLAN SHEET.

CITY OF SAN DIEGO
600 B ST, SUITE 800
SAN DIEGO, CA 92101

RICK ENGINEERING COMPANY
5620 FRIARS RD
SAN DIEGO, CA 92110
(619) 291-0707

NOTES:

1. FOR ACCURATE RIGHT OF WAY DATA, CONTACT RIGHT OF WAY ENGINEERING AT THE DISTRICT OFFICE.

NOTES:

[1] STATE-FURNISHED MODEL 170 CONTROLLER IN MODEL 332 CABINET. INSTALL BATTERY BACK-UP SYSTEM CABINET AND BATTERIES (SEE SHEET E-31 FOR DETAILS).

[2] INSTALL VDU, VIDEO DISPLAY AND COMMUNICATIONS CARD IN CABINET.

3 FOR EQUIPMENT, POLE SCHEDULE AND CONDUCTOR SCHEDULE SEE E-6.

[4] DETAIL U ES-7N,SEE SIGN PLANS.

[5] EXISTING SERVICE EQUIPMENT ENCLOSURE 120/240 TYPE III-BF.
[RC] 2P-20A CB (LTG) AND REPLACE WITH 2P-30A CB (RM AND LTG).
[RC] 1P-1SA CB (SPARE) AND REPLACE WITH 1P-40A CB AND RELABEL "SIGNAL".

[6] FOR EVD MOUNTING SEE DETAIL "B", STD PLAN ES-4E.

7 ALL PEDESTRIAN SIGNAL HEADS SHALL BE MAN/HAND COUNTDOWN TYPE AND SHALL COMPLY ADA REQUIREMENTS. PUSH BUTTONS SHALL 2" AUDIBLE VIBRO-TACTILE AND SHALL COMPLY WITH ADA REQUIREMENTS.

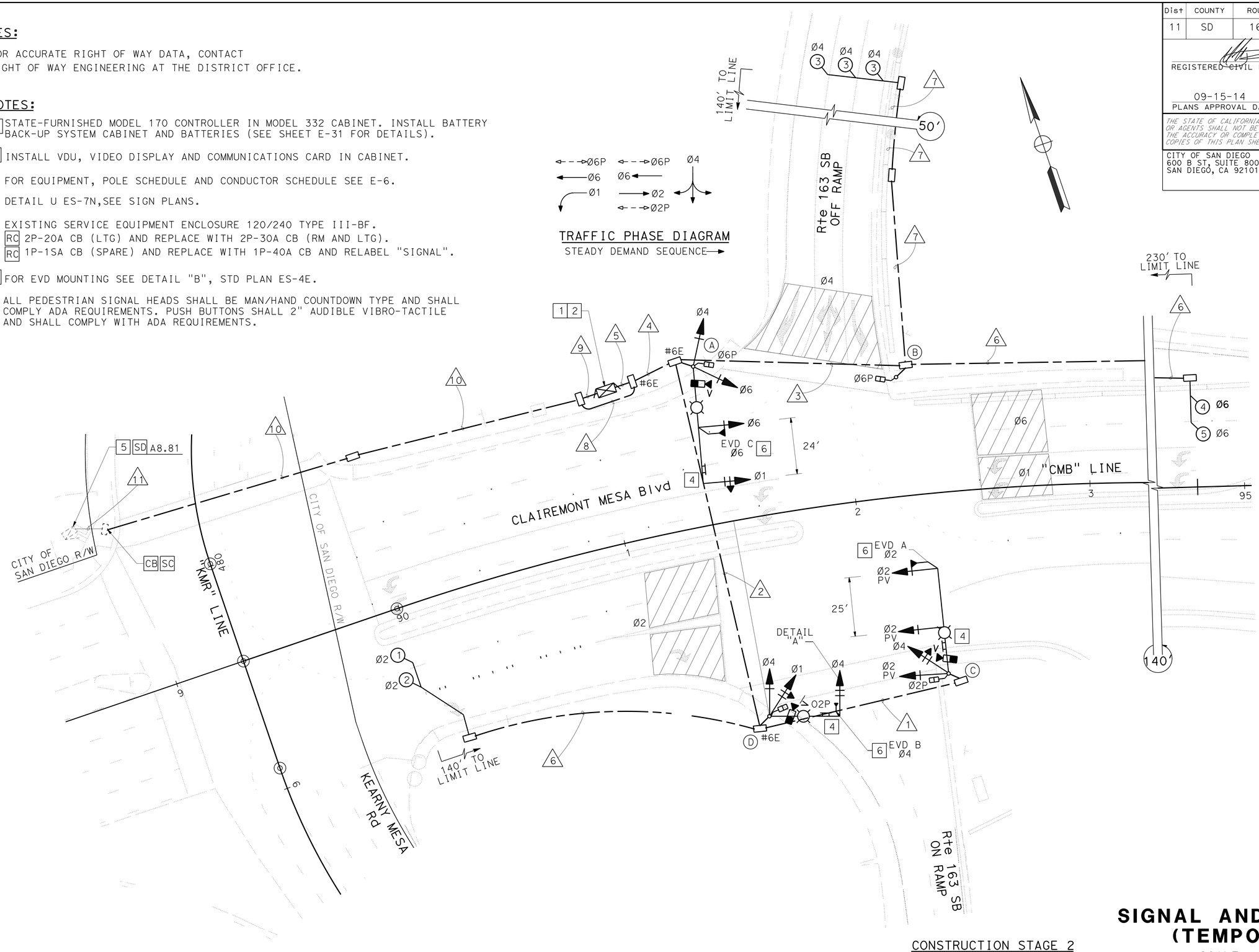

DETAIL "A"

CONSTRUCTION STAGE 2
CLAIREMONT MESA Blvd
SB RAMPS Rte 163

APPROVED FOR ELECTRICAL WORK ONLY

SIGNAL AND LIGHTING (TEMPORARY)

SCALE: 1" = 20'

E-5

STATE OF CALIFORNIA - DEPARTMENT OF TRANSPORTATION
Caltrans

CONSULTANT FUNCTIONAL SUPERVISOR: EDGAR A. CAMERINO
CALCULATED-DESIGNED BY: CARLOS PEREZ
CHECKED BY: MARK JUGAR
REVISED BY
DATE REVISED

LAST REVISION 04-25-14
DATE PLOTTED => 17-SEP-2014
TIME PLOTTED => 14:56

Dist	COUNTY	ROUTE	POST MILES TOTAL PROJECT	SHEET No.	TOTAL SHEETS
11	SD	163	8.4/9.4	235	332

REGISTERED CIVIL ENGINEER 10-10-13 DATE

09-15-14
PLANS APPROVAL DATE

REGISTERED PROFESSIONAL ENGINEER MARK M. JUGAR No. 66939 Exp. 09-30-16 CIVIL STATE OF CALIFORNIA

THE STATE OF CALIFORNIA OR ITS OFFICERS OR AGENTS SHALL NOT BE RESPONSIBLE FOR THE ACCURACY OR COMPLETENESS OF SCANNED COPIES OF THIS PLAN SHEET.

CITY OF SAN DIEGO
600 B ST, SUITE 800
SAN DIEGO, CA 92101

RICK ENGINEERING COMPANY
5620 FRIARS RD
SAN DIEGO, CA 92110
(619) 291-0707

EQUIPMENT & POLE SCHEDULE

Loc	STANDARDS			PLACEMENT DIMENSIONS		SIGNAL MOUNTING AND PLACEMENT				LUMINAIRE	REMARKS
						VEHICLE		PEDESTRIAN(APS)			
	TYPE	SMA	LMA	A	B	POLE	MAST ARM	SIGNAL	PPB		
A	29-5-100	50′	15′	STA 91+43 68.0′ LT		SV-2-TB	MAT MAS	SP-1-T	Ø6P →	235 W LED	INSTALL EVD C Ø1 &Ø6
B	1A	-	-	STA 92+23 51.0′ LT		-	-	TP-1-T	Ø6P ←	-	-
C	27-4-100	45′	15′	STA 92+33 77.0′ RT		SV-2-TC	2-MAS	SP-1-T	Ø2P →	235 W LED	INSTALL EVD A Ø2
D	19-3-100	30′	12′	STA 91+48 84.5′ RT		SV-2-TC	1-MAS-4B	SP-1-T	Ø2P ←	235 W LED	INSTALL EVD B Ø4

CONDUCTOR SCHEDULE

AWG	PHASE	CIRCUIT	3" (1)	3" (2)	3" (3)	2-3" (4)	2-3" (5)
3CSC		POLE A	- / -	- / -	- / -	1 / 2	1 / 2
		POLE B	- / -	- / -	1 / 1	1 / 1	1 / 1
		POLE C	- / 1	- / 1	- / -	- / 1	- / 1
12CSC		POLE D	- / -	1 / 1	- / -	1 / 1	1 / 1
TOTAL	CABLES	- 3CSC / 12CSC	- / 1	1 / 2	1 / 1	3 / 5	3 / 5
#10		LTG	2	2	-	2	-
#14		PEU	-	-	-	-	-
DLC TYPE B	2	DLC	-	2	-	2	2
	4	DLC	-	-	1	1	1
	6	DLC	-	-	2	2	2
	OLA	DLC	-	-	-	-	-
	OLB	DLC	-	-	-	-	-
TOTAL DLC			-	2	3	5	5
INTERCONNECT CABLE - SIC			-	-	-	-	-
EVC CABLE			1	2	-	3	3
VIDEO CABLE HARNESS			1	2	-	3	3
TOTAL CONDUCTORS/CABLES			5	11	5	21	19

CONDUIT NOTES:

(6) 2"C, 2 DLC

(7) 2"C, 1 DLC,

(8) 2"C, 2#10 (LTG)

(9) 2"C, 2#2 (SIG)

(10) 2"C, 2#10 (LTG), 2#2 (SIG)

(11) EXIST 2"C, 4#8(rm), 2#8(ltg), 3#14(peu), 2#12(tdc), ADD 2#2(SIG)

SIGNAL AND LIGHTING (TEMPORARY)

E-6

STATE OF CALIFORNIA - DEPARTMENT OF TRANSPORTATION
Caltrans

CONSULTANT FUNCTIONAL SUPERVISOR: EDGAR A. CAMERINO
CALCULATED-DESIGNED BY: CARLOS PEREZ
CHECKED BY: MARK JUGAR
REVISED BY
DATE REVISED

LAST REVISION 04-25-14
DATE PLOTTED => 17-SEP-2014
TIME PLOTTED => 14:56

Dist	COUNTY	ROUTE	POST MILES TOTAL PROJECT	SHEET No.	TOTAL SHEETS
11	SD	163	8.4/9.4	236	332

REGISTERED CIVIL ENGINEER 10-10-13 DATE

09-15-14
PLANS APPROVAL DATE

REGISTERED PROFESSIONAL ENGINEER MARK M. JUGAR No. 66939 Exp. 09-30-16 CIVIL STATE OF CALIFORNIA

THE STATE OF CALIFORNIA OR ITS OFFICERS OR AGENTS SHALL NOT BE RESPONSIBLE FOR THE ACCURACY OR COMPLETENESS OF SCANNED COPIES OF THIS PLAN SHEET.

CITY OF SAN DIEGO
600 B ST, SUITE 800
SAN DIEGO, CA 92101

RICK ENGINEERING COMPANY
5620 FRIARS RD
SAN DIEGO, CA 92110
(619) 291-0707

NOTES:

1 RS TYPE 170 CONTROLLER IN MODEL 332 ALUMINUM CABINET AND BATTERY BACK-UP SYSTEM CABINET AND BATTERIES.

2 RC 29-5-100, 50′ MAST ARM AND 15′ STREET LIGHT ARM AND EQUIPMENT.

3 RC 1A POLE AND EQUIPMENT.

4 RC 17-3-100, 20′ MAST ARM AND 15′ STREET LIGHT ARM AND EQUIPMENT.

5 RC PPB POLE AND EQUIPMENT.

6 RC 19-3-100, 30′ MAST ARM AND 15′ STREET LIGHT ARM AND EQUIPMENT.

7 RC ALL PULL BOXES AND AB ALL CONDUIT AND LOOPS UNLESS OTHERWISE NOTED.

8 PROTECT EXISTING CONDUIT IN PLACE.

9 PROTECT EXISTING PULLBOX IN PLACE.

10 SD TO REMAIN IN PLACE.

11 FOR ACCURATE RIGHT OF WAY DATA, CONTACT RIGHT OF WAY ENGINEERING AT THE DISTRICT OFFICE.

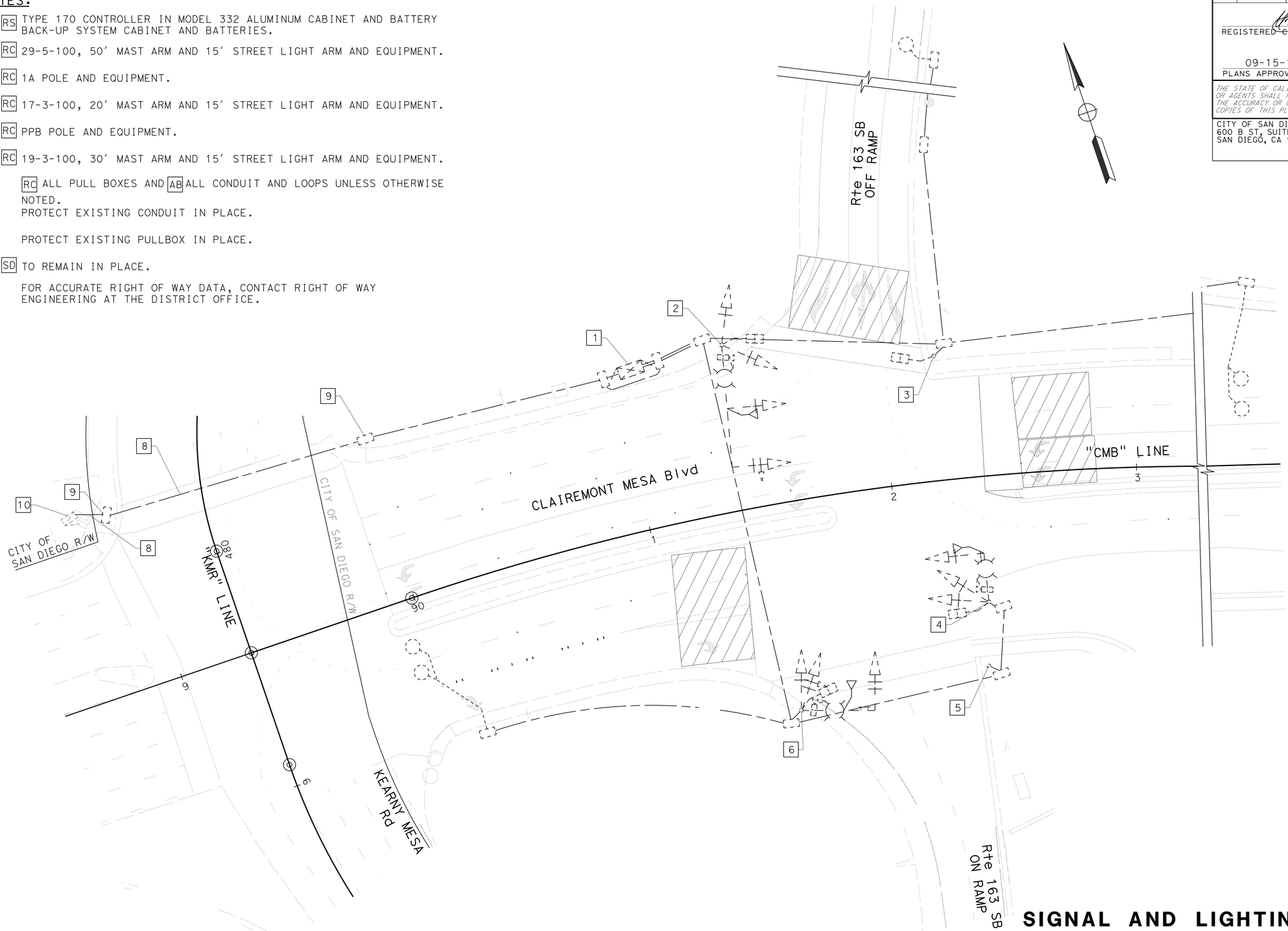

APPROVED FOR ELECTRICAL WORK ONLY

SIGNAL AND LIGHTING (TEMPORARY) (REMOVE)

SCALE: 1" = 20′

E-7

STATE OF CALIFORNIA - DEPARTMENT OF TRANSPORTATION
Caltrans

CONSULTANT FUNCTIONAL SUPERVISOR: EDGAR A. CAMERINO
CALCULATED-DESIGNED BY: CARLOS PEREZ
CHECKED BY: MARK JUGAR
REVISED BY
DATE REVISED

LAST REVISION 04-25-14
DATE PLOTTED => 17-SEP-2014
TIME PLOTTED => 14:56

Dist	COUNTY	ROUTE	POST MILES TOTAL PROJECT	SHEET No.	TOTAL SHEETS
11	SD	163	8.4/9.4	237	332

REGISTERED CIVIL ENGINEER 10-10-13 DATE

09-15-14
PLANS APPROVAL DATE

REGISTERED PROFESSIONAL ENGINEER MARK M. JUGAR No. 66939 Exp. 09-30-16 CIVIL STATE OF CALIFORNIA

THE STATE OF CALIFORNIA OR ITS OFFICERS OR AGENTS SHALL NOT BE RESPONSIBLE FOR THE ACCURACY OR COMPLETENESS OF SCANNED COPIES OF THIS PLAN SHEET.

CITY OF SAN DIEGO
600 B ST, SUITE 800
SAN DIEGO, CA 92101

RICK ENGINEERING COMPANY
5620 FRIARS RD
SAN DIEGO, CA 92110
(619) 291-0707

NOTES:

1. FOR ACCURATE RIGHT OF WAY DATA, CONTACT RIGHT OF WAY ENGINEERING AT THE DISTRICT OFFICE.
2. STATE-FURNISHED MODEL 170 CONTROLLER IN MODEL 332 CABINET. INSTALL BATTERY BACK-UP SYSTEM CABINET AND BATTERIES (SEE SHEET E-31 FOR DETAILS).
3. TYPE III-BF UNMETERED SERVICE CABINET. SEE SHEET E-1 FOR WIRING DIAGRAM "SWITCH PEDESTAL".
4. VIDEO DETECTION UNIT, COMMUNICATION CARD AND VIDEO DISPLAY IN CONTROLLER CABINET.
5. 5-SECTION OVERLAP HEAD AT 10' AND MOUNT THE PHASE 6 SIGNAL HEAD AT 17' ABOVE THE BASE PLATE.
6. SEE SHEET E-9 FOR POLE SCHEDULE AND CONDUCTOR SCHEDULE.
7. DETAIL U ES-7N. SEE SIGN PLANS
8. REMOVE ALL BREAKERS ASSOCIATED WITH EXISTING RAMP METERS FOR SB SR-163 ON-RAMP AND OFF-RAMP AND CIRCUIT BREAKERS ASSOCIATED WITH LIGHTING AT THE EXISTING TYPE III SERVICE METER EXCEPT FOR THE MAIN BREAKERS. CONNECT 2-#2 WIRES DIRECTLY TO MAIN BREAKERS AT THE EXISTING 120/240 V SERVICE LOCATED AT THE NW CORNER OF CLAIREMONT MESA BLVD AND KEARNEY MESA ROAD. SEE SHEET E-1 FOR CIRCUITRY.
9. SEE SHEET E-3 SIGNAL AND LIGHTING (CITY) AND E-9 SIGNAL AND LIGHTING FOR CONTINUITY.
10. SEE CLOSED CIRCUIT TELEVISION SYSTEM SHEET E-23 FOR CONTINUITY.
11. DISCONNECT Exist sic AT THE Exist CONTROLLER LOCATED AT THE NE CORNER OF CLAIREMONT MESA Blvd. AND KEARNEY VILLA Rd. AND AT THE Exist CONTROLLER LOCATED AT THE NW CORNER OF CLAIREMONT MESA Blvd. AND KEARNEY MESA Rd. AB Exist sic.
12. SEE SHEET E-33 ELECTRICAL SYSTEM (INTERCONNECT DETAILS) FOR CONTINUITY.

CONDUIT NOTES:

7. 2"C, 4 DLC
8. 2"C, 4 DLC, 1 SIC
9. 2"C, 1 DLC, 1 SIC
10. 2"C, 1 SIC
11. 2"C, 1 DLC
12. 2"C, 2#2 (SWITCH PEDESTAL)
13. 2"C, 2#6 (LTG), 4#6(RM), 4#14 (PEU), 2#6(CCTV), 2#10 (SIGN), 2#6(CMS CONTROLLER), 3#4(CMS 120/240V)
14. 2"C, 2#6 (SIG)
15. 2"C, 1 SIC
16. 2"C, 2#8 (LTG), 4#14 (PEU)
17. Exist 2"C, mt, ADD 1DLC
18. Exist 2"C, Exist sic, AB Exist sic.

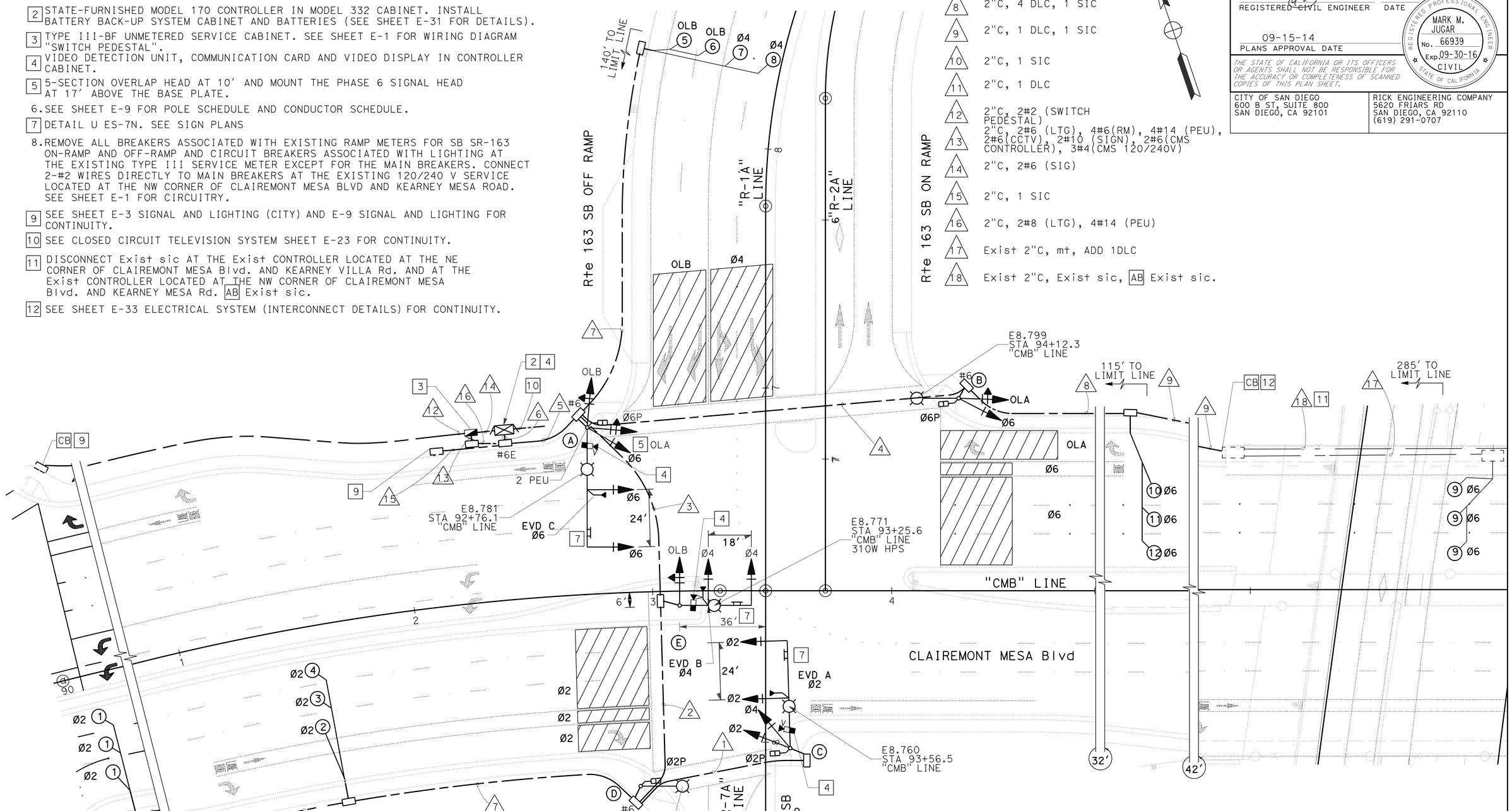

APPROVED FOR ELECTRICAL WORK ONLY

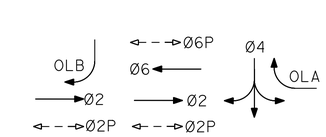

TRAFFIC PHASE DIAGRAM
STEADY DEMAND SEQUENCE

ROUTE 163 SB RAMPS
AT CLAIREMONT MESA Blvd
SIGNAL P8.797

SIGNAL AND LIGHTING

SCALE: 1" = 20'

E-8

STATE OF CALIFORNIA - DEPARTMENT OF TRANSPORTATION
Caltrans

CONSULTANT FUNCTIONAL SUPERVISOR: EDGAR A. CAMERINO
CALCULATED-DESIGNED BY: CARLOS PEREZ
CHECKED BY: MARK JUGAR
REVISED BY
DATE REVISED

LAST REVISION 09-23-13
DATE PLOTTED => 17-SEP-2014
TIME PLOTTED => 14:56

Dist	COUNTY	ROUTE	POST MILES TOTAL PROJECT	SHEET No.	TOTAL SHEETS
11	SD	163	8.4/9.4	238	332

REGISTERED CIVIL ENGINEER 10-10-13 DATE

09-15-14
PLANS APPROVAL DATE

REGISTERED PROFESSIONAL ENGINEER MARK M. JUGAR No. 66939 Exp. 09-30-16 CIVIL STATE OF CALIFORNIA

THE STATE OF CALIFORNIA OR ITS OFFICERS OR AGENTS SHALL NOT BE RESPONSIBLE FOR THE ACCURACY OR COMPLETENESS OF SCANNED COPIES OF THIS PLAN SHEET.

CITY OF SAN DIEGO
600 B ST, SUITE 800
SAN DIEGO, CA 92101

RICK ENGINEERING COMPANY
5620 FRIARS RD
SAN DIEGO, CA 92110
(619) 291-0707

EQUIPMENT AND POLE SCHEDULE (SHEET E-8)

Loc	STANDARDS TYPE	SMA	LMA	PLACEMENT DIMENSIONS A	B	SIGNAL MOUNTING AND PLACEMENT VEHICLE POLE	MAST ARM	PEDESTRIAN(APS) SIGNAL	PPB	LUMINAIRE	REMARKS
A	29-5-100	50′	15′	19.4′	5.6′	SV-2-TB SV-1-T	2-MAS	SP-1-T	Ø6 ←	235W HPS	INSTALL 2 PEU PER STANDARD DRAWING ES-7N. INSTALL VIDEO IMAGE SYSTEM. INSTALL EVD C Ø6.
B	15TS	-	15′	20.3′	5.8′	SV-1-T SV-1-T	-	SP-1-T	Ø6 →	235W HPS	INSTALL 3 SECTION HEAD FOR Ø6 17′ FROM GROUND.
C	26-4-100	45′	15	8.7′	5.7′	SV-2-TD	2-MAS	SP-1-T	Ø2 ←	235W HPS	INSTALL VIDEO IMAGE SYSTEM. INSTALL EVD A Ø2.
D	15TS	-	15	21.3′	5.9′	-	-	SP-1-T	Ø2 →	235W HPS	-
E	19-4-100	30′	15′	AS SHOWN		SV-1-T	2-MAS	-	-	235W HPS	INSTALL VIDEO IMAGE SYSTEM. INSTALL EVD B Ø4

CONDUCTOR SCHEDULE (FOR SHEET E-8)

AWG	PHASE	CIRCUIT	3" 1	4" 2	4" 3	3" 4	2-4" 5	2-4" 6
3CSC		POLE A	- / -	- / -	- / -	- / -	1 / 2	1 / 2
		POLE B	- / -	- / -	- / -	1 / 1	1 / 1	1 / 1
		POLE C	1 / 1	1 / 1	1 / 1	- / -	1 / 1	1 / 1
		POLE D	- / -	1 / 1	1 / 1	- / -	1 / 1	1 / 1
12CSC		POLE E	- / -	- / -	- / 1	- / -	- / 1	- / 1
TOTAL CABLES - 3CSC / 12CSC			1 / 1	2 / 2	2 / 3	1 / 1	4 / 6	4 / 6
#10		LTG	2	2	2	2	2	-
#14		PEU	-	-	-	-	4	4
DLC TYPE B	2	DLC	-	4	4	-	4	4
	4	DLC	-	-	-	-	2	2
	6	DLC	-	-	-	4	4	4
	OLA	DLC	-	-	-	-	-	-
	OLB	DLC	-	-	-	-	2	2
TOTAL DLC			-	4	4	4	12	12
INTERCONNECT CABLE - SIC			-	-	-	1	1	2
EVC CABLE			1	1	2	-	3	3
#6 SERVICE			-	-	-	-	-	-
VIDEO CABLE HARNESS			1	1	2	-	3	3
TOTAL CONDUCTORS/CABLES			6	12	15	9	35	34

NOTES(TSO):

1. Exist SDG&E SERVICE POINT TO REMAIN.
2. Exist TYPE III-BF SIGNAL AND LIGHTING SERVICE EQUIPMENT ENCLOSURE TO REMAIN.
3. SEE SHEET E-8 FOR CONTINUITY.

CONDUIT NOTES:

17 Exist 2"C, RC ALL CONDUCTORS, ADD 2#4 (SWITCH PEDESTAL)

SIGNAL AND LIGHTING

NO SCALE

E-9

REVISED BY | DATE REVISED
CARLOS PEREZ | MARK JUGAR
CALCULATED-DESIGNED BY | CHECKED BY
CONSULTANT FUNCTIONAL SUPERVISOR
EDGAR A. CAMERINO
STATE OF CALIFORNIA - DEPARTMENT OF TRANSPORTATION
Caltrans

LAST REVISION 04-25-14 | DATE PLOTTED => 17-SEP-2014 | TIME PLOTTED => 14:56

Dist	COUNTY	ROUTE	POST MILES TOTAL PROJECT	SHEET No.	TOTAL SHEETS
11	SD	163	8.4/9.4	239	332

REGISTERED CIVIL ENGINEER 10-10-13 DATE

09-15-14
PLANS APPROVAL DATE

REGISTERED PROFESSIONAL ENGINEER MARK M. JUGAR No. 66939 Exp. 09-30-16 CIVIL STATE OF CALIFORNIA

THE STATE OF CALIFORNIA OR ITS OFFICERS OR AGENTS SHALL NOT BE RESPONSIBLE FOR THE ACCURACY OR COMPLETENESS OF SCANNED COPIES OF THIS PLAN SHEET.

CITY OF SAN DIEGO
600 B ST, SUITE 800
SAN DIEGO, CA 92101

RICK ENGINEERING COMPANY
5620 FRIARS RD
SAN DIEGO, CA 92110
(619) 291-0707

NOTES:

1 RC TYPE 1-A AND APPURTENANCES.

2 TDC TO REMAIN.

3 SD LOCATED AT THE NW CORNER OF CLAIREMONT MESA BOULEVARD AND KEARNEY MESA ROAD. REMOVE EXISTING CIRCUIT BREAKERS AND WIRING FOR RAMP METER LOCATION 1.

4 FOR ACCURATE RIGHT OF WAY DATA, CONTACT RIGHT OF WAY ENGINEERING AT THE DISTRICT OFFICE.

5 FOR CONTINUITY SEE RAMP METERING SYSTEM LOCATION 2, E-13.

6 INSTALL FLASHING BEACON PER STANDARD PLAN ES-7S.

7 INSTALL STATE-FURNISHED TYPE 2070 CONTROLLER IN MODEL 332 ALUMINUM CABINET. FOUNDATION PER ES-3C.

8 AB EXISTING LOOPS.

CONDUIT NOTES:

1. Exist 1-1/2"C., 2 #8(rm), 2 #12(tdc), 2 #8(ltg)
2. Exist 1-1/2"C., 1 SIC(tel int) Ex. 1-1/2"C. 1 SIC (rm int)
3. 2-3"C., 2-9 CSC, 2 #12(FB), 2 #8(rm), 7-DLC
4. 2" C., 2-DLC
5. 2" C., 2#12(FB)
6. 2"C., 1 SIC(tel int) 2"C. 1 SIC (rm int)
7. 2"C., 2 #8(rm), 2 #12(tdc), 2 #8(ltg)

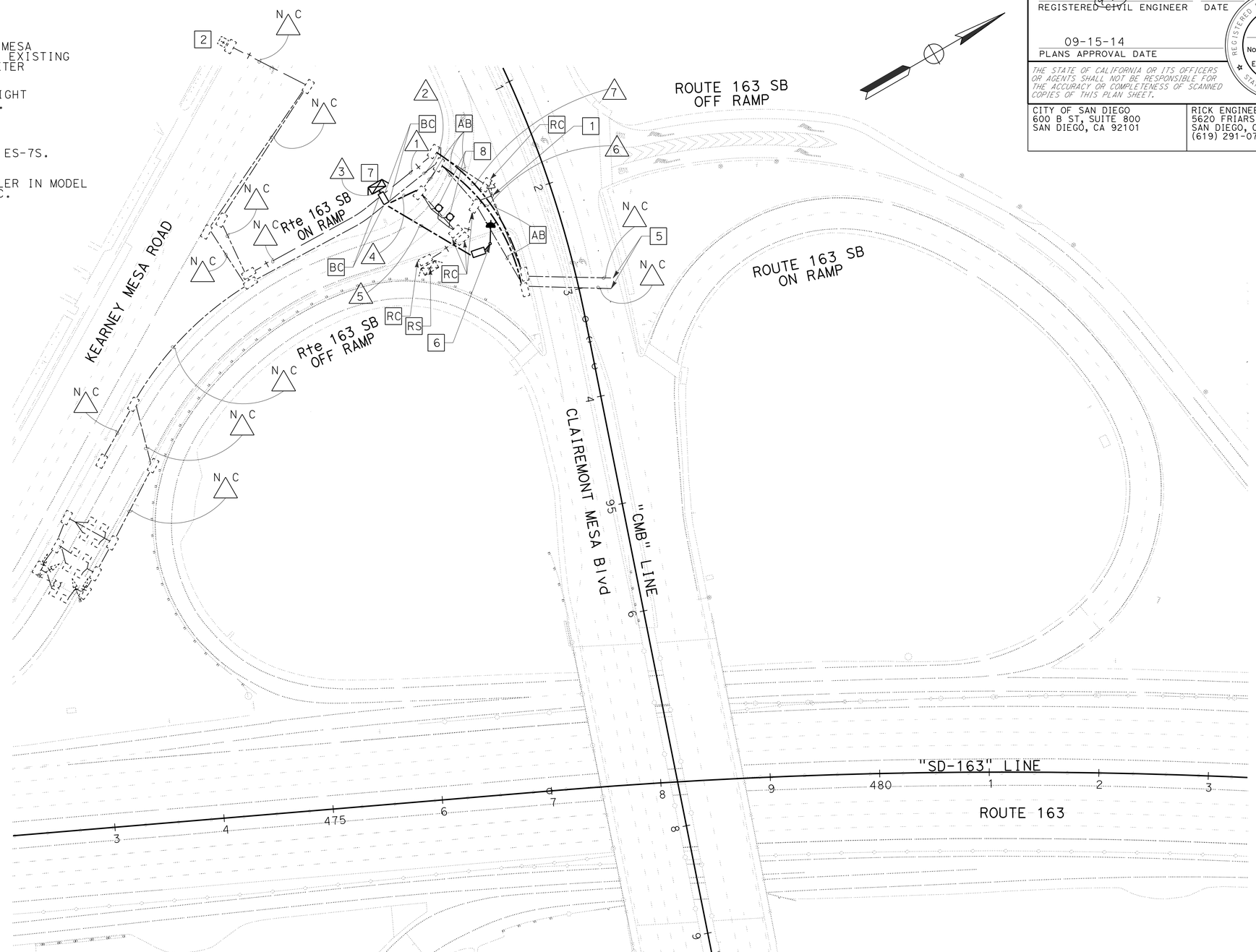

APPROVED FOR ELECTRICAL WORK ONLY

RAMP METERING SYSTEM (TEMPORARY)

SCALE: 1" = 50'

E-10

STATE OF CALIFORNIA - DEPARTMENT OF TRANSPORTATION
Caltrans

CONSULTANT FUNCTIONAL SUPERVISOR: EDGAR A. CAMERINO

CALCULATED-DESIGNED BY: JESUS CRUZ
CHECKED BY: MARK JUGAR

REVISED BY
DATE REVISED

LAST REVISION 04-25-14
DATE PLOTTED => 17-SEP-2014
TIME PLOTTED => 14:56

Dist	COUNTY	ROUTE	POST MILES TOTAL PROJECT	SHEET No.	TOTAL SHEETS
11	SD	163	8.4/9.4	240	332

REGISTERED CIVIL ENGINEER 10-10-13 DATE

09-15-14
PLANS APPROVAL DATE

REGISTERED PROFESSIONAL ENGINEER MARK M. JUGAR No. 66939 Exp. 09-30-16 CIVIL STATE OF CALIFORNIA

THE STATE OF CALIFORNIA OR ITS OFFICERS OR AGENTS SHALL NOT BE RESPONSIBLE FOR THE ACCURACY OR COMPLETENESS OF SCANNED COPIES OF THIS PLAN SHEET.

CITY OF SAN DIEGO
600 B ST, SUITE 800
SAN DIEGO, CA 92101

RICK ENGINEERING COMPANY
5620 FRIARS RD
SAN DIEGO, CA 92110
(619) 291-0707

NOTES:

1 RC TYPE 1-A AND APPURTENANCES.

2 RC TYPE 1A AND APPURTENANCES.

3 RC TYPE 15TS AND APPURTENANCES.

4 RC TDC.

5 SD LOCATED AT THE NW CORNER OF CLAIREMONT MESA BOULEVARD AND KEARNEY MESA ROAD. REMOVE EXISTING CIRCUIT BREAKERS AND WIRING FOR RAMP METER LOCATION 1.

6 RC ALL PULL BOXES.

7 AB ALL CONDUITS AND LOOPS.

8 FOR ACCURATE RIGHT OF WAY DATA, CONTACT RIGHT OF WAY ENGINEERING AT THE DISTRICT OFFICE.

9 FOR CONTINUITY SEE RAMP METERING SYSTEM LOCATION 2, E-13.

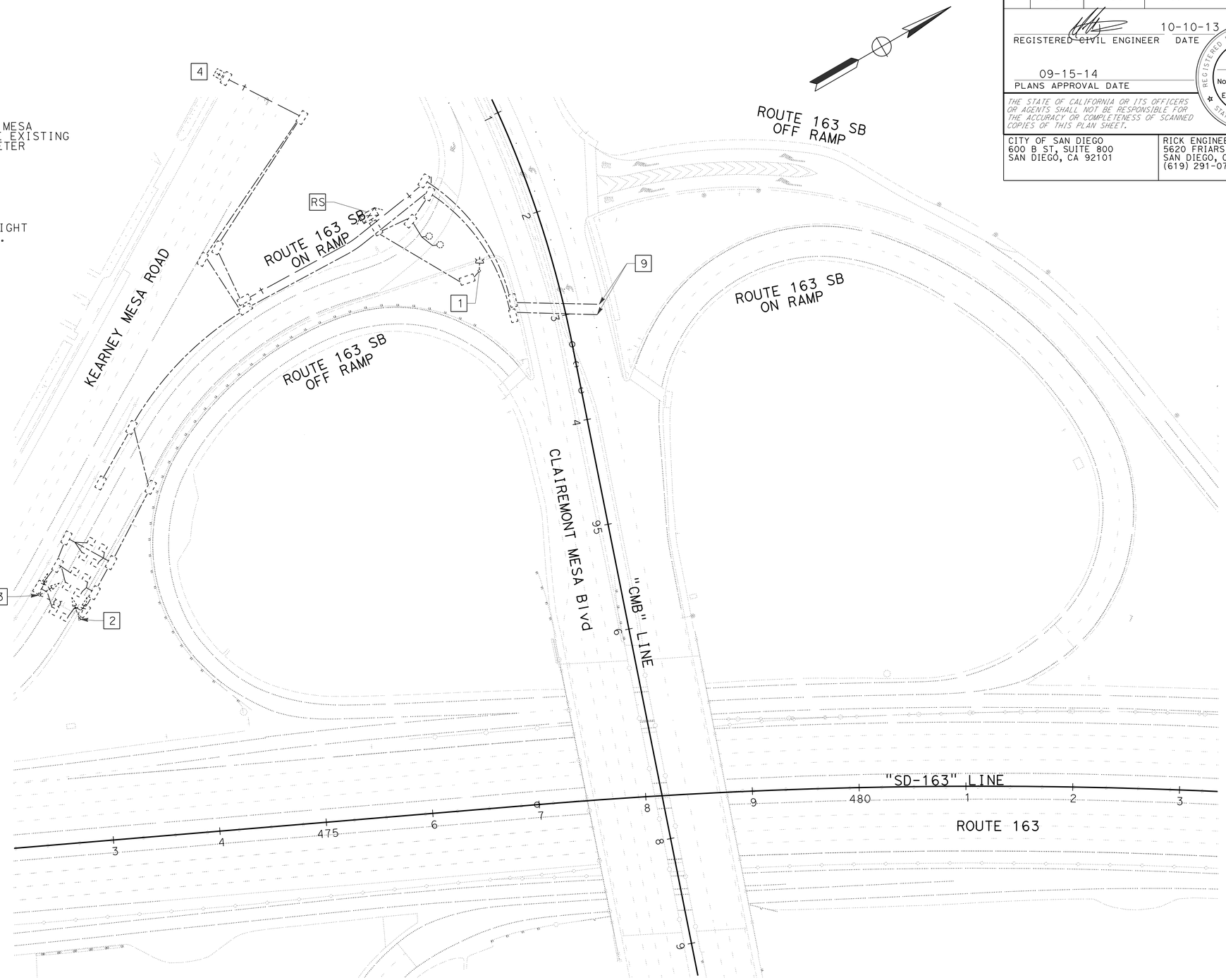

APPROVED FOR ELECTRICAL WORK ONLY

RAMP METERING SYSTEM (LOCATION 1) (TEMPORARY AND REMOVE)

SCALE: 1" = 50'

E-11

STATE OF CALIFORNIA - DEPARTMENT OF TRANSPORTATION
Caltrans

CONSULTANT FUNCTIONAL SUPERVISOR: EDGAR A. CAMERINO

CALCULATED-DESIGNED BY: JESUS CRUZ
CHECKED BY: MARK JUGAR

REVISED BY
DATE REVISED

LAST REVISION 04-25-14
DATE PLOTTED => 17-SEP-2014
TIME PLOTTED => 14:56

Dist	COUNTY	ROUTE	POST MILES TOTAL PROJECT	SHEET No.	TOTAL SHEETS
11	SD	163	8.4/9.4	241	332

REGISTERED CIVIL ENGINEER 10-10-13 DATE

09-15-14
PLANS APPROVAL DATE

REGISTERED PROFESSIONAL ENGINEER MARK M. JUGAR No. 66939 Exp. 09-30-16 CIVIL STATE OF CALIFORNIA

THE STATE OF CALIFORNIA OR ITS OFFICERS OR AGENTS SHALL NOT BE RESPONSIBLE FOR THE ACCURACY OR COMPLETENESS OF SCANNED COPIES OF THIS PLAN SHEET.

CITY OF SAN DIEGO
600 B ST, SUITE 800
SAN DIEGO, CA 92101

RICK ENGINEERING COMPANY
5620 FRIARS RD
SAN DIEGO, CA 92110
(619) 291-0707

NOTES:

1. MODEL 2070 CONTROLLER ASSEMBLY (334 CABINET). CONSTRUCT FOUNDATION PER ES-3C.
2. TYPE 1-A SEE DETAIL 'FB' ON SHEET E-15.
3. SEE CLOSED CIRCUIT TELEVISION SYSTEM ON SHEET E-23 FOR CONTINUITY.
4. SD LOCATED NW CORNER OF CLAIREMONT MESA BOULEVARD AND RTE 163 SB OFF RAMP. SEE LIGHTING AND SIGN ILLUMINATION ON SHEET E-17 FOR CONTINUITY.
5. FOR ACCURATE RIGHT OF WAY DATA, CONTACT RIGHT OF WAY ENGINEERING AT THE DISTRICT OFFICE.
6. QUEUE LOOPS SEE DETAIL 'RM1A' ON SHEET E-15.

CONDUIT NOTES:

1. 2"C, 2 DLC, 2#12 (FB)
2. 2"C, 2 DLC, 1-9CSC, 2#12 (FB)
3. 2"C, 4 DLC, 2#12(FB), 2-9CSC, 2#6(RM1)
4. 2-3"C, 6 DLC, 2-9CSC, 2#12FB), 2#6(RM1)

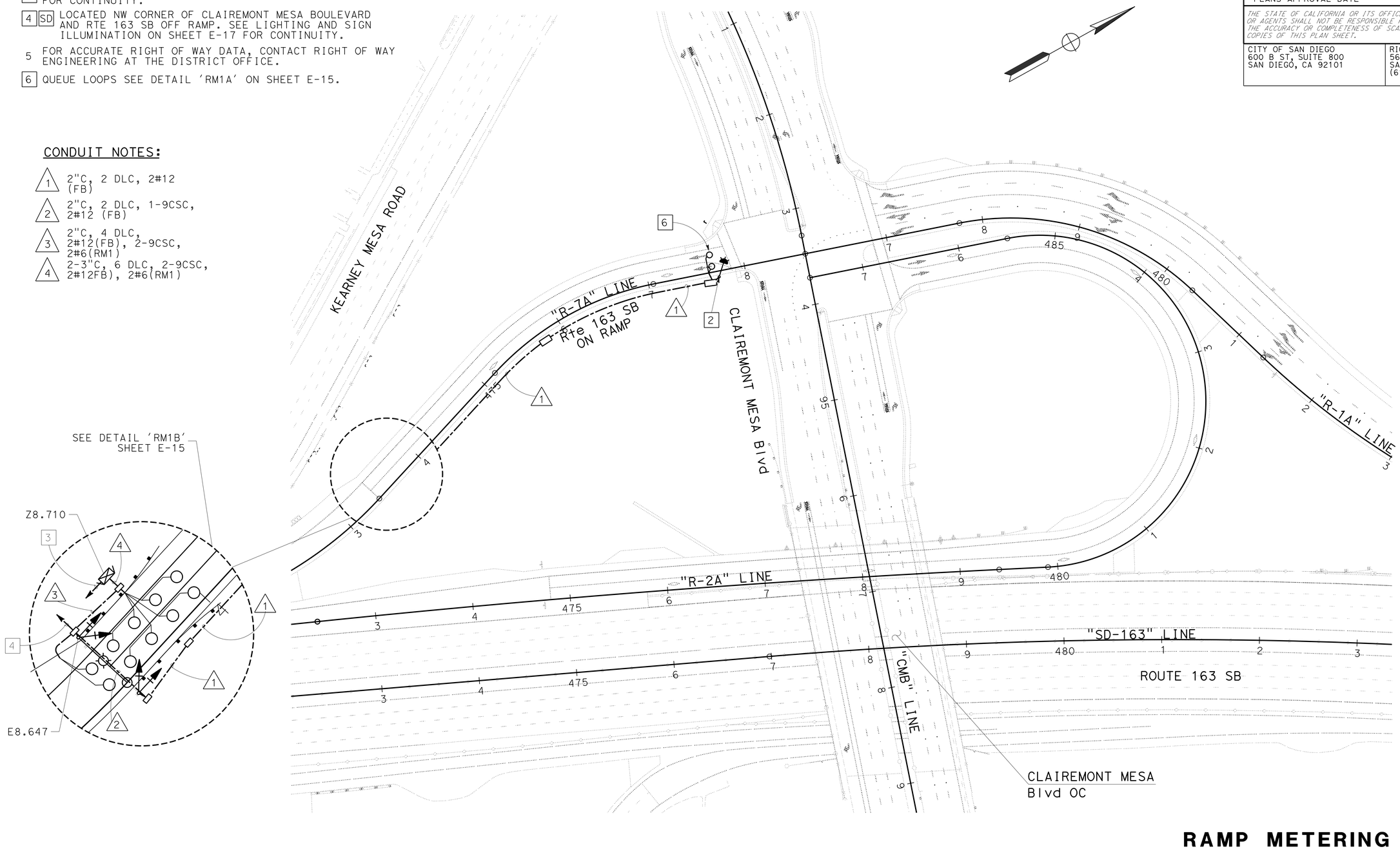

APPROVED FOR ELECTRICAL WORK ONLY

RAMP METERING SYSTEM (LOCATION 1)

SCALE: 1" = 50'

E-12

STATE OF CALIFORNIA - DEPARTMENT OF TRANSPORTATION
Caltrans

CONSULTANT FUNCTIONAL SUPERVISOR: EDGAR A. CAMERINO
CALCULATED-DESIGNED BY: JESUS CRUZ
CHECKED BY: MARK JUGAR
REVISED BY
DATE REVISED

LAST REVISION 04-25-14
DATE PLOTTED => 17-SEP-2014
TIME PLOTTED => 14:56

Dist	COUNTY	ROUTE	POST MILES TOTAL PROJECT	SHEET No.	TOTAL SHEETS
11	SD	163	8.4/9.4	242	332

REGISTERED CIVIL ENGINEER 10-10-13 DATE

09-15-14
PLANS APPROVAL DATE

REGISTERED PROFESSIONAL ENGINEER MARK M. JUGAR No. 66939 Exp. 09-30-16 CIVIL STATE OF CALIFORNIA

THE STATE OF CALIFORNIA OR ITS OFFICERS OR AGENTS SHALL NOT BE RESPONSIBLE FOR THE ACCURACY OR COMPLETENESS OF SCANNED COPIES OF THIS PLAN SHEET.

CITY OF SAN DIEGO
600 B ST, SUITE 800
SAN DIEGO, CA 92101

RICK ENGINEERING COMPANY
5620 FRIARS RD
SAN DIEGO, CA 92110
(619) 291-0707

NOTES:

1 RC TYPE 1-A AND APPURTENANCES.

2 RC TYPE 1A AND APPURTENANCES.

3 RC TYPE 15TS AND APPURTENANCES.

4 RC ALL PULL BOXES.

5 AB ALL CONDUITS AND LOOPS.

6 SD LOCATED AT THE NW CORNER OF CLAIREMONT MESA BOULEVARD AND KEARNEY MESA ROAD. SEE SHEET E-17 FOR CONTINUITY.

7 FOR ACCURATE RIGHT OF WAY DATA, CONTACT RIGHT OF WAY ENGINEERING AT THE DISTRICT OFFICE.

8 FOR CONTINUITY SEE RAMP METERING SYSTEM LOCATION 1, E-10.

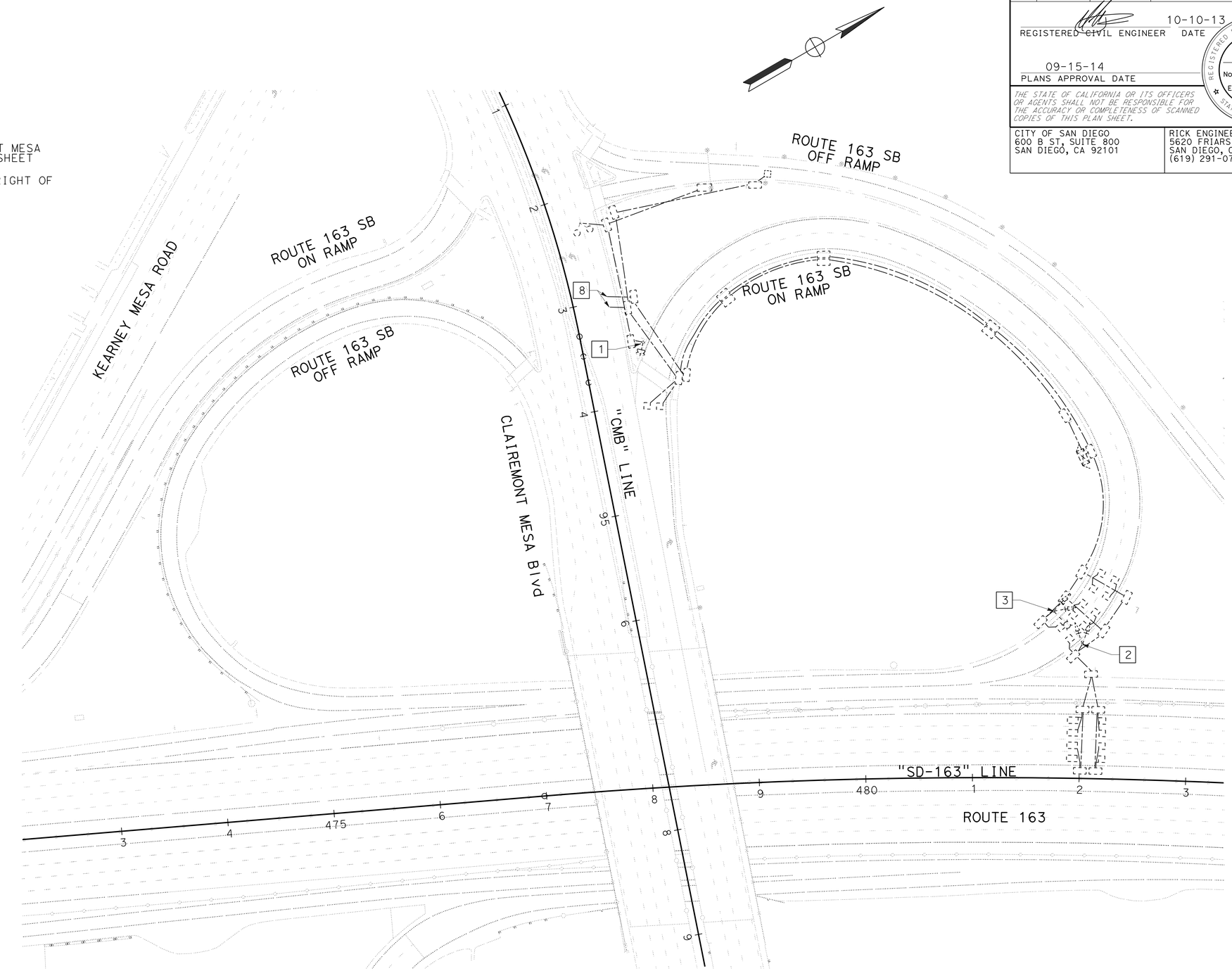

RAMP METERING SYSTEM (LOCATION 2) (EXISTING AND REMOVE)

APPROVED FOR ELECTRICAL WORK ONLY

SCALE: 1" = 50'

E-13

STATE OF CALIFORNIA - DEPARTMENT OF TRANSPORTATION
Caltrans

CONSULTANT FUNCTIONAL SUPERVISOR: EDGAR A. CAMERINO
CALCULATED-DESIGNED BY: JESUS CRUZ
CHECKED BY: MARK JUGAR
REVISED BY
DATE REVISED

LAST REVISION 04-25-14
DATE PLOTTED => 17-SEP-2014
TIME PLOTTED => 14:56

Dist	COUNTY	ROUTE	POST MILES TOTAL PROJECT	SHEET No.	TOTAL SHEETS
11	SD	163	8.4/9.4	243	332

REGISTERED CIVIL ENGINEER 10-10-13 DATE

09-15-14
PLANS APPROVAL DATE

REGISTERED PROFESSIONAL ENGINEER MARK M. JUGAR No. 66939 Exp. 09-30-16 CIVIL STATE OF CALIFORNIA

THE STATE OF CALIFORNIA OR ITS OFFICERS OR AGENTS SHALL NOT BE RESPONSIBLE FOR THE ACCURACY OR COMPLETENESS OF SCANNED COPIES OF THIS PLAN SHEET.

CITY OF SAN DIEGO
600 B ST, SUITE 800
SAN DIEGO, CA 92101

RICK ENGINEERING COMPANY
5620 FRIARS RD
SAN DIEGO, CA 92110
(619) 291-0707

NOTES:

1. MODEL 2070 CONTROLLER ASSEMBLY (334 CABINET). CONSTRUCT FOUNDATION PER ES-3C.
2. SEE DETAIL 'FB' ON SHEET E-15.
3. FOR ACCURATE RIGHT OF WAY DATA, CONTACT RIGHT OF WAY ENGINEERING AT THE DISTRICT OFFICE.
4. QUEUE LOOPS SEE DETAIL "RM2A" ON SHEET E-15.
5. FOR CONTINUITY SEE LIGTHING AND SIGN ILLUMINATION ON SHEET E-17.
6. SEE CLOSED CIRCUIT TELEVISION SYSTEM, SHEET E-23.

CONDUIT NOTES:

1. 2"C, 2#12(FB), 8 LOOP WIRES
2. 2"C, 2#12(FB), 6 DLC
3. 2"C, 8 LOOP WIRES
4. 2"C, 16 LOOP WIRES
5. 2"C, 1-12 CSC, 2#6(RM2)
6. 3"C, 10 DLC, 1-12CSC, 2#6(RM2)
7. 2-3"C, 18 DLC, 1-12CSC, 2#6(RM1), 2#12(FB)

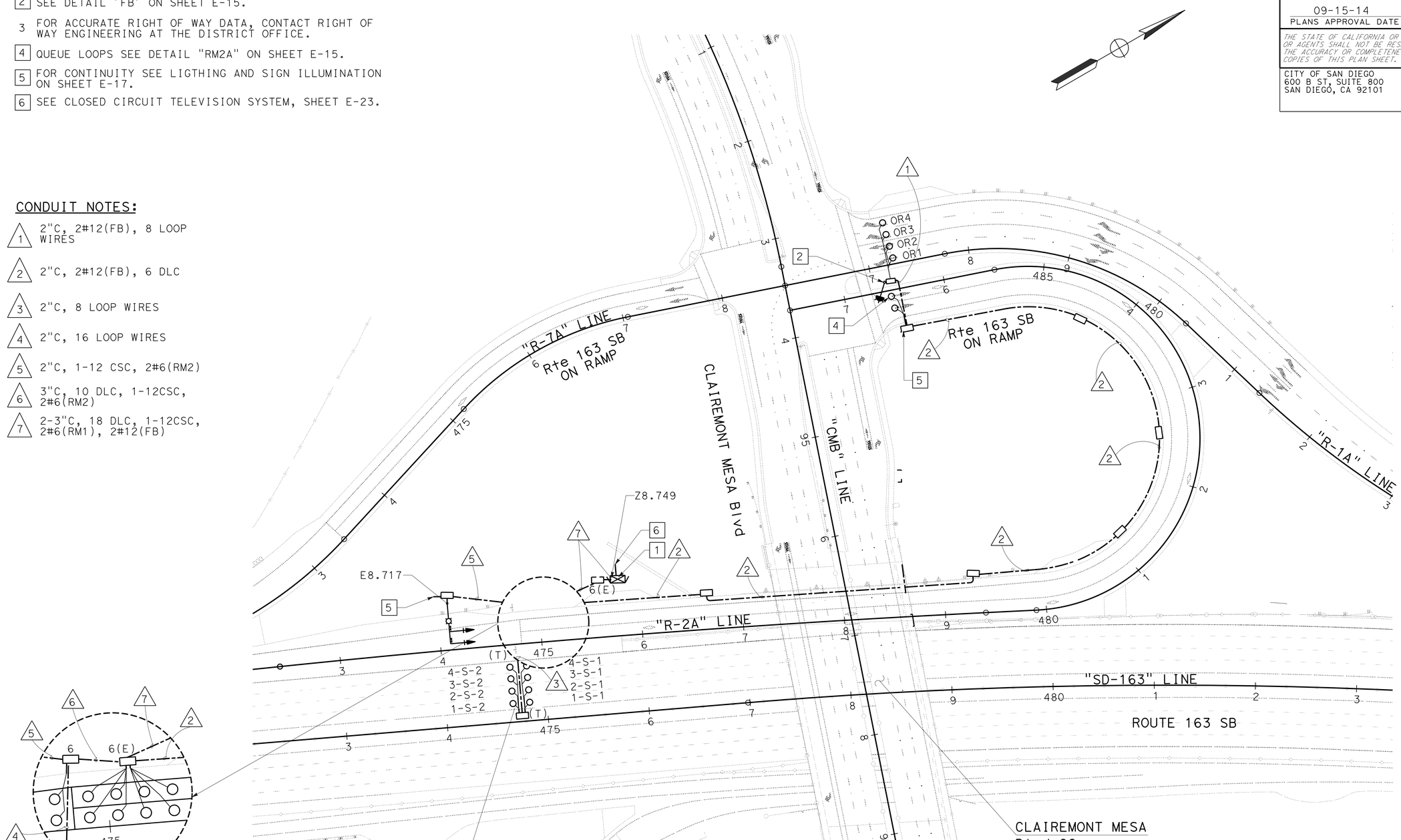

RAMP METERING SYSTEM (LOCATION 2)

SCALE: 1" = 50'

E-14

APPROVED FOR ELECTRICAL WORK ONLY

STATE OF CALIFORNIA - DEPARTMENT OF TRANSPORTATION

Caltrans

CONSULTANT FUNCTIONAL SUPERVISOR: EDGAR A. CAMERINO

CARLOS PEREZ | MARK JUGAR

CALCULATED-DESIGNED BY | CHECKED BY

REVISED BY | DATE REVISED

LAST REVISION 04-25-14 | DATE PLOTTED => 17-SEP-2014 | TIME PLOTTED => 14:56

Dist	COUNTY	ROUTE	POST MILES TOTAL PROJECT	SHEET No.	TOTAL SHEETS
11	SD	163	8.4/9.4	244	332

REGISTERED CIVIL ENGINEER 10-10-13 DATE

09-15-14
PLANS APPROVAL DATE

REGISTERED PROFESSIONAL ENGINEER MARK M. JUGAR No. 66939 Exp. 09-30-16 CIVIL STATE OF CALIFORNIA

THE STATE OF CALIFORNIA OR ITS OFFICERS OR AGENTS SHALL NOT BE RESPONSIBLE FOR THE ACCURACY OR COMPLETENESS OF SCANNED COPIES OF THIS PLAN SHEET.

CITY OF SAN DIEGO
600 B ST, SUITE 800
SAN DIEGO, CA 92101

RICK ENGINEERING COMPANY
5620 FRIARS RD
SAN DIEGO, CA 92110
(619) 291-0707

NOTES:

1. CENTER LOOPS IN EACH LANE. LIKE NUMBERED LOOPS SHALL BE CONNECTED TO SAME DLC.
2. LOCATION OF LIMIT LINE.
3. TYPE E LOOP DETECTORS.
4. SIGNAL STANDARD (R†). SEE DETAIL "A"
5. SIGNAL STANDARD (L†). SEE DETAIL "B"
6. ONE SECTION SIGNAL HEAD WITH 8" YELLOW. BACKPLATE NOT REQUIRED
7. TYPE 1-A SIGNAL STANDARD.
8. PLACE TERMINAL COMPARTMENT ON SIDE OF POLE AWAY FROM METERED TRAFFIC.
9. THREE SECTION SIGNAL HEAD, 12" RED, YELLOW AND GREEN. BACKPLATE REQUIRED.
10. THREE SECTION SIGNAL HEAD. BACKPLATE NOT REQUIRED. ALL SECTIONS SHALL BE 8".
11. ONE SECTION SIGNAL HEAD WITH 8" RED WHEN SHOWN ON PLANS.
12. SIGN PANELS. SEE SIGN PLANS.
13. SEE DETAIL "C".

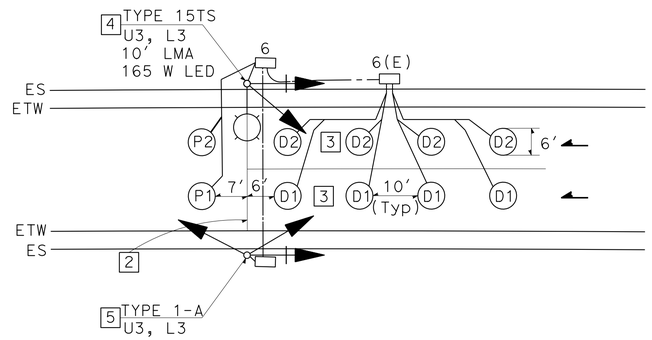

LOCATION 1
DETAIL 'RM1B'

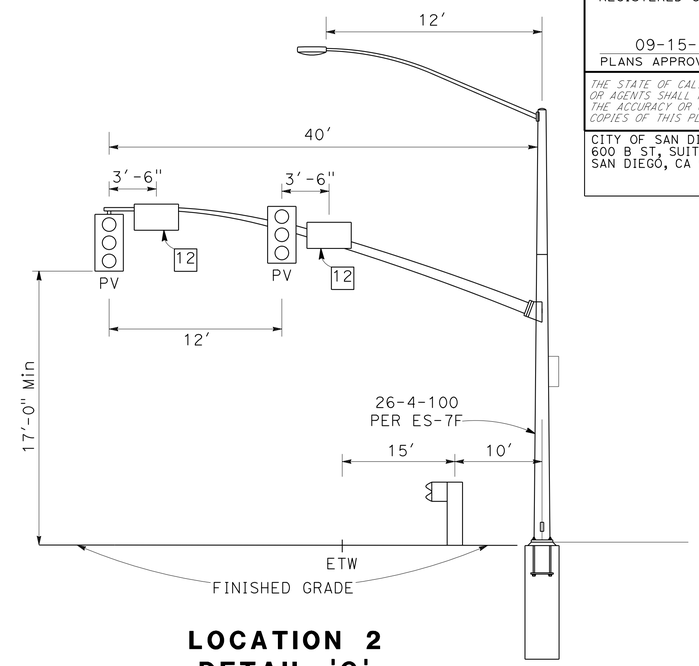

LOCATION 2
DETAIL 'C'

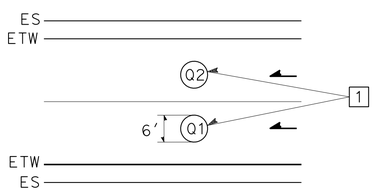

LOCATION 1
QUEUE (TYPICAL)
DETAIL 'RM1A'

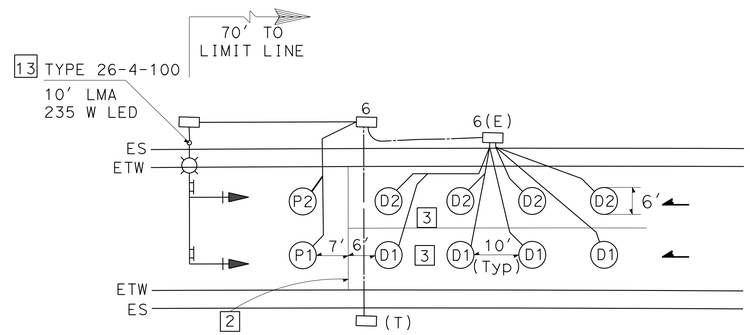

LOCATION 2
DETAIL 'RM2B'

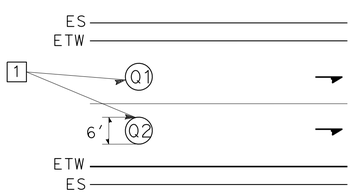

QUEUE (TYPICAL)
DETAIL 'RM2A'

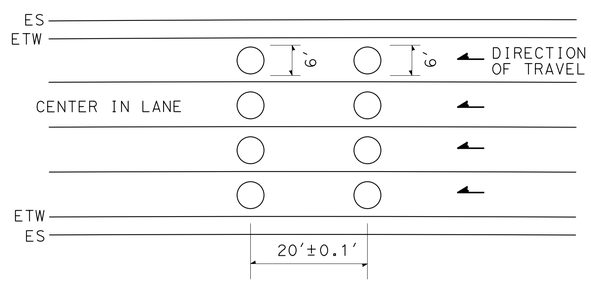

MAINLINE LOOP DETAIL
(TYPE E LOOP PLACEMENT)

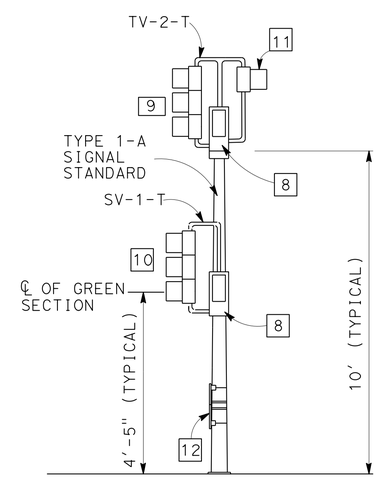

DETAIL 'B' (Lt)

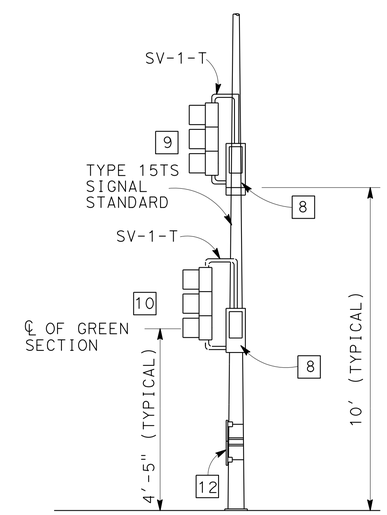

DETAIL 'A' (Rt)

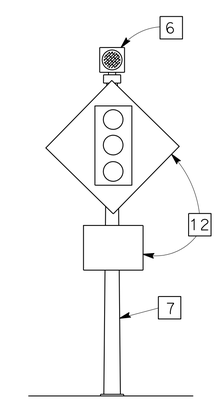

DETAIL 'FB'

RAMP METERING SYSTEM (ELECTRICAL DETAILS)

NO SCALE

APPROVED FOR ELECTRICAL WORK ONLY

E-15

STATE OF CALIFORNIA - DEPARTMENT OF TRANSPORTATION
Caltrans

CONSULTANT FUNCTIONAL SUPERVISOR: EDGAR A. CAMERINO
CALCULATED-DESIGNED BY: CARLOS PEREZ
CHECKED BY: MARK JUGAR
REVISED BY
DATE REVISED

LAST REVISION 04-25-14
DATE PLOTTED => 17-SEP-2014
TIME PLOTTED => 14:56

Dist	COUNTY	ROUTE	POST MILES TOTAL PROJECT	SHEET No.	TOTAL SHEETS
11	SD	163	8.4/9.4	245	332

REGISTERED CIVIL ENGINEER 10-10-13 DATE

09-15-14
PLANS APPROVAL DATE

REGISTERED PROFESSIONAL ENGINEER MARK M. JUGAR No. 66939 Exp. 09-30-16 CIVIL STATE OF CALIFORNIA

THE STATE OF CALIFORNIA OR ITS OFFICERS OR AGENTS SHALL NOT BE RESPONSIBLE FOR THE ACCURACY OR COMPLETENESS OF SCANNED COPIES OF THIS PLAN SHEET.

CITY OF SAN DIEGO
600 B ST, SUITE 800
SAN DIEGO, CA 92101

RICK ENGINEERING COMPANY
5620 FRIARS RD
SAN DIEGO, CA 92110
(619) 291-0707

NOTES:

1. FOR ACCURATE RIGHT OF WAY DATA, CONTACT RIGHT OF WAY ENGINEERING AT THE DISTRICT OFFICE.

CONDUIT NOTES:

N/C 1 Exist 1"C, 2#8(1tg)

2 2"C, 2#8(1tg)

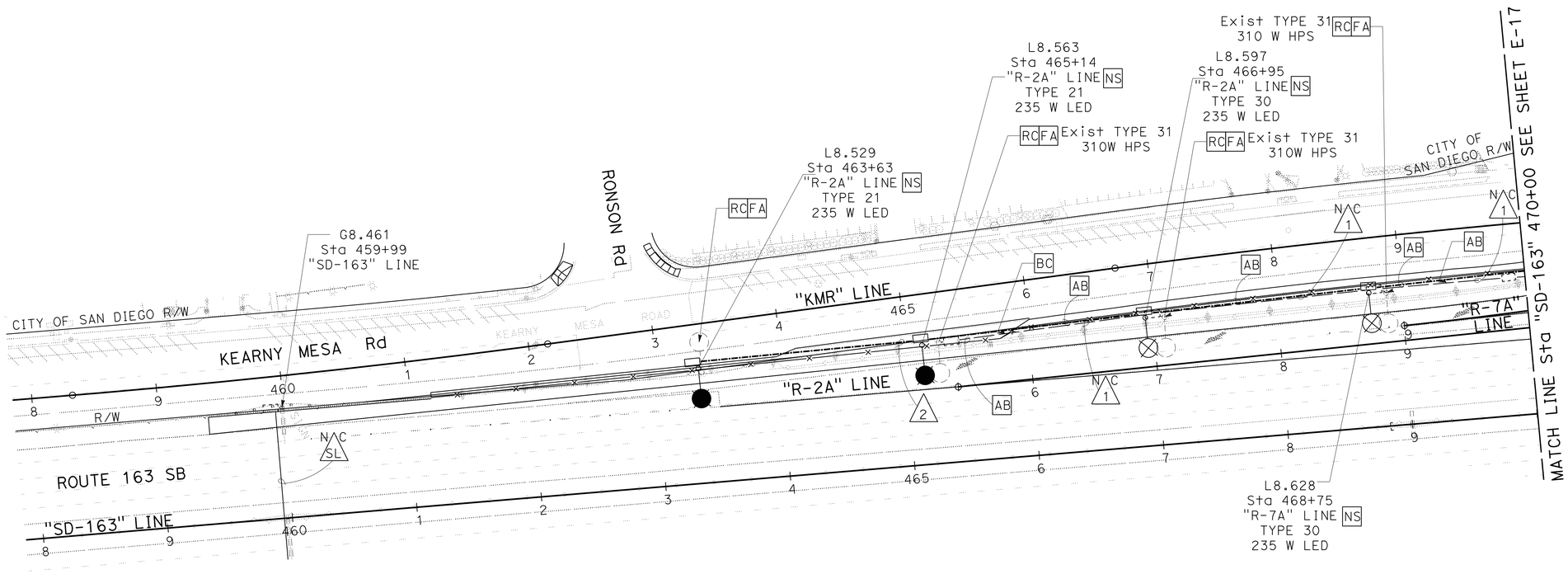

LIGHTING AND SIGN ILLUMINATION

APPROVED FOR ELECTRICAL WORK ONLY

SCALE: 1" = 50'

E-16

STATE OF CALIFORNIA - DEPARTMENT OF TRANSPORTATION

Caltrans

CONSULTANT FUNCTIONAL SUPERVISOR: EDGAR A. CAMERINO

CALCULATED-DESIGNED BY: CARLOS PEREZ

CHECKED BY: MARK JUGAR

REVISED BY

DATE REVISED

LAST REVISION 04-25-14

DATE PLOTTED => 17-SEP-2014
TIME PLOTTED => 14:56

Dist	COUNTY	ROUTE	POST MILES TOTAL PROJECT	SHEET No.	TOTAL SHEETS
11	SD	163	8.4/9.4	246	332

REGISTERED CIVIL ENGINEER 10-10-13 DATE

09-15-14
PLANS APPROVAL DATE

REGISTERED PROFESSIONAL ENGINEER MARK M. JUGAR No. 66939 Exp. 09-30-16 CIVIL STATE OF CALIFORNIA

THE STATE OF CALIFORNIA OR ITS OFFICERS OR AGENTS SHALL NOT BE RESPONSIBLE FOR THE ACCURACY OR COMPLETENESS OF SCANNED COPIES OF THIS PLAN SHEET.

CITY OF SAN DIEGO
600 B ST, SUITE 800
SAN DIEGO, CA 92101

RICK ENGINEERING COMPANY
5620 FRIARS RD
SAN DIEGO, CA 92110
(619) 291-0707

NOTES:

1. FOR ACCURATE RIGHT OF WAY DATA, CONTACT RIGHT OF WAY ENGINEERING AT THE DISTRICT OFFICE.

CONDUIT NOTES:

1. Exist 2"C, 2#6(Itg)
2. 2"C, 2#6(LTG)
3. 2"C, 2#6(RM 1), 2#8(LTG)
4. 2"C, 2#8(LTG)
5. 2"C, 2#8(LTG), 2#6(CCTV),2#6(RM 2)
6. 2"C, 2#6(CCTV
7. 2"C, 2#6(CMS CONTROLLER), 3#4(CMS 120/240V)
8. N/C Exist 1"C, 2#6(irr)
9. N/C ExIST 2"C, 2#8(sign)
10. 2"C, 2#6(LTG), 2#6(CMS CONTROLLER), 3#4(CMS 102/240V)
11. 2"C, 2#6(RM 1), 2#6(RM2), 2#6(CCTV), 2#6(LTG), 2#8(SIGN)
12. 2"C, 2#8(SIGN)

CONDUIT NOTES (CONT):

13. 2"C, 2#6(RM 1), 2#6(RM 2), 2#6(CCTV), 2#6(LTG), 2#8(SIGN)
14. 2"C, 2#6(LTG), 2#8(SIGN) 2#6(CMS CONTROLLER), 3#4(CMS 120/240V)
15. N/C Exist 2"C, 2#8(sign), 2#6(Itg), 2#6(irr)

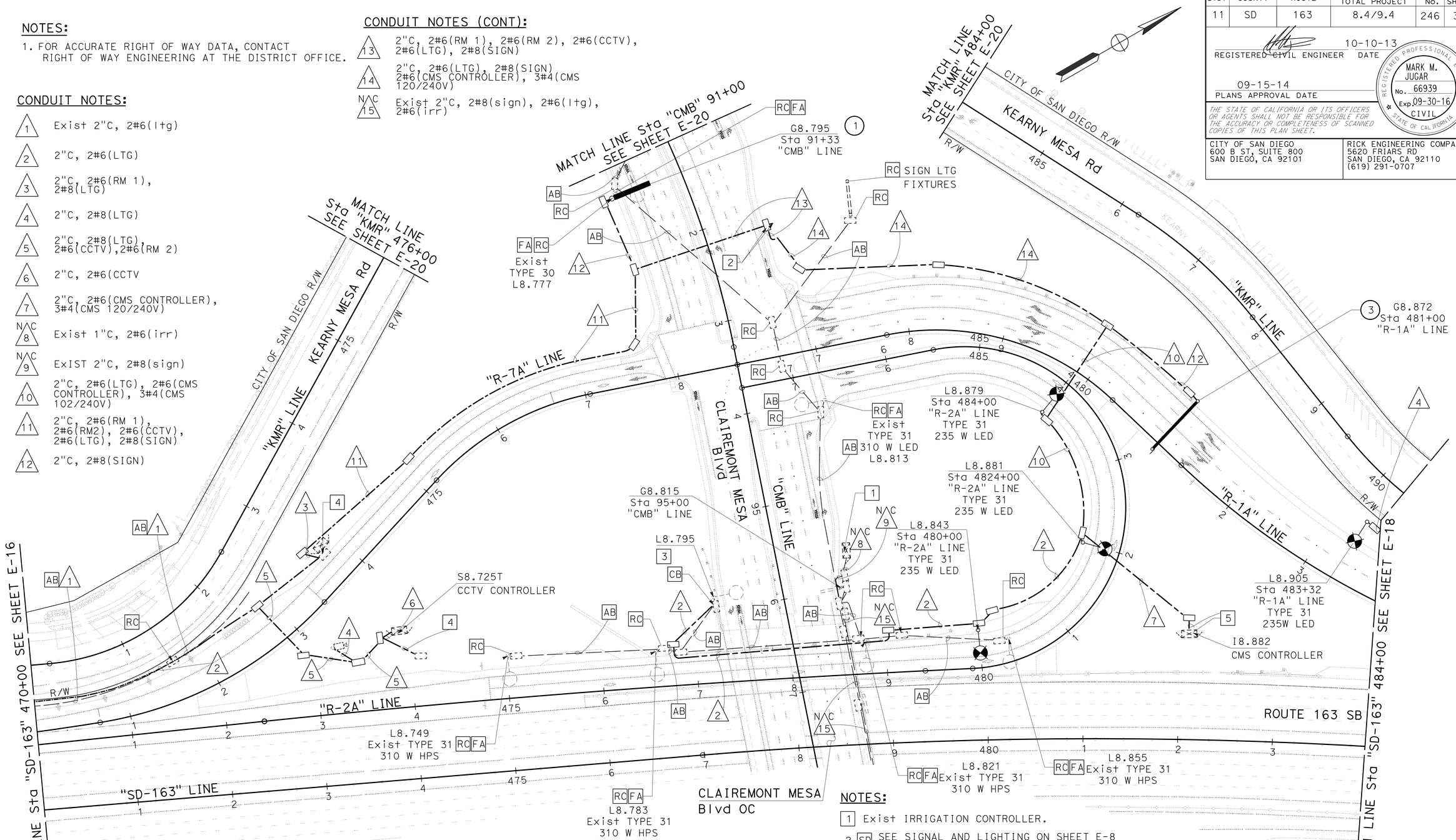

ILUMINATED SIGNS AND APPURTUNANCES				
SIGN NO.	ISL FIXTURES	VOLTAGE SERVICE	LOAD	REMARKS
1	1	240 V	87W	SEE ES-15A, ES-15C AND ES-15D OF CALTRANS STANDARD PLANS 2010(SC2A)
3	4	240 V	348W	SEE ES-15A, ES-15C AND ES-15D OF CALTRANS STANDARD PLANS 2010(SC2A)

NOTES:

1. Exist IRRIGATION CONTROLLER.
2. SD SEE SIGNAL AND LIGHTING ON SHEET E-8 FOR CONTINUITY.
3. RC 310 W HPS AND REPLACE WITH 235 LED.
4. FOR CIRCUIT CONTINUITY SEE RAMP METERING SYSTEM PLAN.
5. FOR CIRCUIT CONTINUITY SEE SHEET E-23.

APPROVED FOR ELECTRICAL WORK ONLY

LIGHTING AND SIGN ILLUMINATION

SCALE: 1" = 50'

E-17

STATE OF CALIFORNIA - DEPARTMENT OF TRANSPORTATION
Caltrans

CONSULTANT FUNCTIONAL SUPERVISOR: EDGAR A. CAMERINO
CALCULATED-DESIGNED BY: CARLOS PEREZ
CHECKED BY: MARK JUGAR
REVISED BY
DATE REVISED

LAST REVISION 04-25-14
DATE PLOTTED => 17-SEP-2014
TIME PLOTTED => 14:56

Dist	COUNTY	ROUTE	POST MILES TOTAL PROJECT	SHEET No.	TOTAL SHEETS
11	SD	163	8.4/9.4	247	332

REGISTERED CIVIL ENGINEER 10-10-13 DATE

09-15-14
PLANS APPROVAL DATE

REGISTERED PROFESSIONAL ENGINEER MARK M. JUGAR No. 66939 Exp. 09-30-16 CIVIL STATE OF CALIFORNIA

THE STATE OF CALIFORNIA OR ITS OFFICERS OR AGENTS SHALL NOT BE RESPONSIBLE FOR THE ACCURACY OR COMPLETENESS OF SCANNED COPIES OF THIS PLAN SHEET.

CITY OF SAN DIEGO
600 B ST, SUITE 800
SAN DIEGO, CA 92101

RICK ENGINEERING COMPANY
5620 FRIARS RD
SAN DIEGO, CA 92110
(619) 291-0707

NOTES:

1. FOR ACCURATE RIGHT OF WAY DATA, CONTACT RIGHT OF WAY ENGINEERING AT THE DISTRICT OFFICE.

CONDUIT NOTES:

- N/C 1 — Exist 1½" C, 2#8 (ltg)
- N/C 2 — Exist 1½" C, 2#8 (ltg), 2#10 (SIGNS)
- 3 — Exist 1½" C, 2#8 (ltg) ADD 2#10 (SIGNS)
- 4 — 2" C, 2#10 (SIGNS)
- 5 — 2" C, 2#8 (LTG)

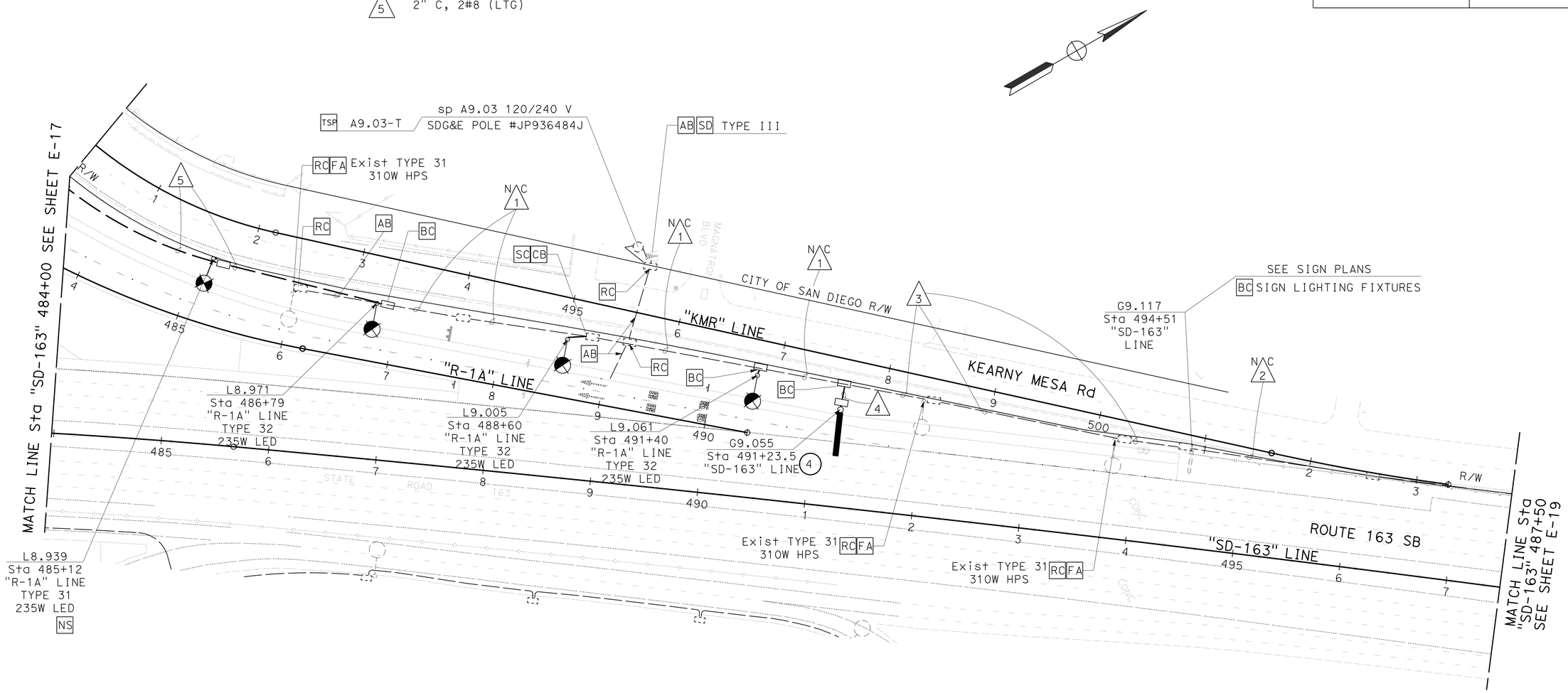

ILUMINATED SIGNS AND APPURTUNANCES				
SIGN NO.	ISL FIXTURES	VOLTAGE SERVICE	LOAD	REMARKS
4	2	240V	174W	SEE ES-15A, ES-15C AND ES-15D OF CALTRANS STANDARD PLANS 2010(SC2A)

APPROVED FOR ELECTRICAL WORK ONLY

LIGHTING AND SIGN ILLUMINATION

SCALE: 1" = 50'

E-18

STATE OF CALIFORNIA - DEPARTMENT OF TRANSPORTATION
Caltrans

CONSULTANT FUNCTIONAL SUPERVISOR: EDGAR A. CAMERINO
CALCULATED-DESIGNED BY: CARLOS PEREZ
CHECKED BY: MARK JUGAR
REVISED BY
DATE REVISED

LAST REVISION 04-25-14
DATE PLOTTED => 17-SEP-2014
TIME PLOTTED => 14:56

Dist	COUNTY	ROUTE	POST MILES TOTAL PROJECT	SHEET No.	TOTAL SHEETS
11	SD	163	8.4/9.4	248	332

REGISTERED CIVIL ENGINEER 10-10-13 DATE

09-15-14
PLANS APPROVAL DATE

REGISTERED PROFESSIONAL ENGINEER MARK M. JUGAR No. 66939 Exp. 09-30-16 CIVIL STATE OF CALIFORNIA

THE STATE OF CALIFORNIA OR ITS OFFICERS OR AGENTS SHALL NOT BE RESPONSIBLE FOR THE ACCURACY OR COMPLETENESS OF SCANNED COPIES OF THIS PLAN SHEET.

CITY OF SAN DIEGO
600 B ST, SUITE 800
SAN DIEGO, CA 92101

RICK ENGINEERING COMPANY
5620 FRIARS RD
SAN DIEGO, CA 92110
(619) 291-0707

NOTES:

1. FOR ACCURATE RIGHT OF WAY DATA, CONTACT RIGHT OF WAY ENGINEERING AT THE DISTRICT OFFICE.

CONDUIT NOTES:

N/C 1 Exist 1½" C, 2#8 (ltg), 2#10 (signs)

2 2" C, 2#10 (SIGNS)

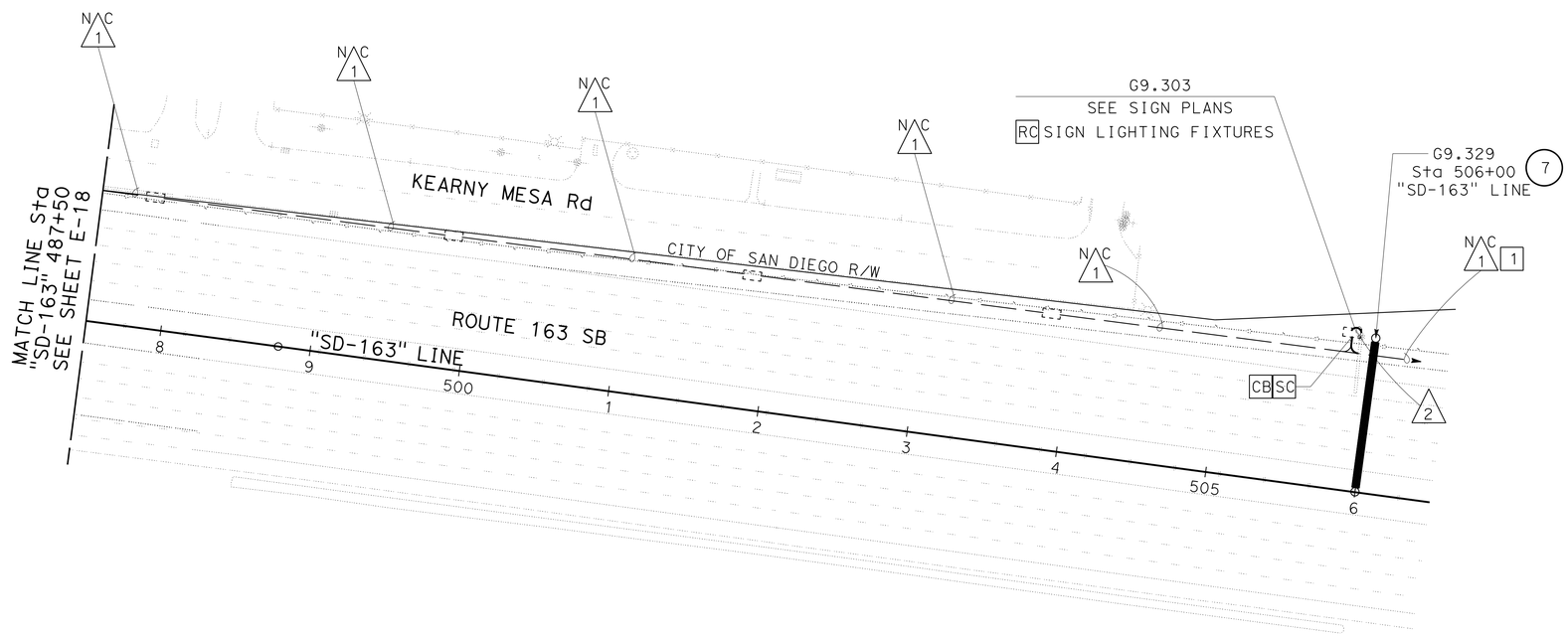

NOTES:

1 SD LOCATED NEAR SDG&E POLE #91958 APPROXIMATELY 130' NORTH. A9.35(120/240V)

ILUMINATED SIGNS AND APPURTUNANCES				
SIGN NO.	ISL FIXTURES	VOLTAGE SERVICE	LOAD	REMARKS
7	3	240V	261W	SEE ES-15A, ES-15C AND ES-15D OF CALTRANS STANDARD PLANS 2010(SC2A)

APPROVED FOR ELECTRICAL WORK ONLY

LIGHTING AND SIGN ILLUMINATION

SCALE: 1" = 50'

E-19

STATE OF CALIFORNIA - DEPARTMENT OF TRANSPORTATION
Caltrans

CONSULTANT FUNCTIONAL SUPERVISOR: EDGAR A. CAMERINO
CALCULATED-DESIGNED BY: CARLOS PEREZ
CHECKED BY: MARK JUGAR
REVISED BY
DATE REVISED

LAST REVISION 04-25-14
DATE PLOTTED => 17-SEP-2014
TIME PLOTTED => 14:56

Dist	COUNTY	ROUTE	POST MILES TOTAL PROJECT	SHEET No.	TOTAL SHEETS
11	SD	163	8.4/9.4	249	332

REGISTERED CIVIL ENGINEER 10-10-13 DATE

09-15-14
PLANS APPROVAL DATE

REGISTERED PROFESSIONAL ENGINEER MARK M. JUGAR No. 66939 Exp. 09-30-16 CIVIL STATE OF CALIFORNIA

THE STATE OF CALIFORNIA OR ITS OFFICERS OR AGENTS SHALL NOT BE RESPONSIBLE FOR THE ACCURACY OR COMPLETENESS OF SCANNED COPIES OF THIS PLAN SHEET.

CITY OF SAN DIEGO
600 B ST, SUITE 800
SAN DIEGO, CA 92101

RICK ENGINEERING COMPANY
5620 FRIARS RD
SAN DIEGO, CA 92110
(619) 291-0707

NOTES:

1. FOR ACCURATE RIGHT OF WAY DATA, CONTACT RIGHT OF WAY ENGINEERING AT THE DISTRICT OFFICE.

NOTES:

1 AB ALL CONDUIT AND RC ALL PULL BOXES.

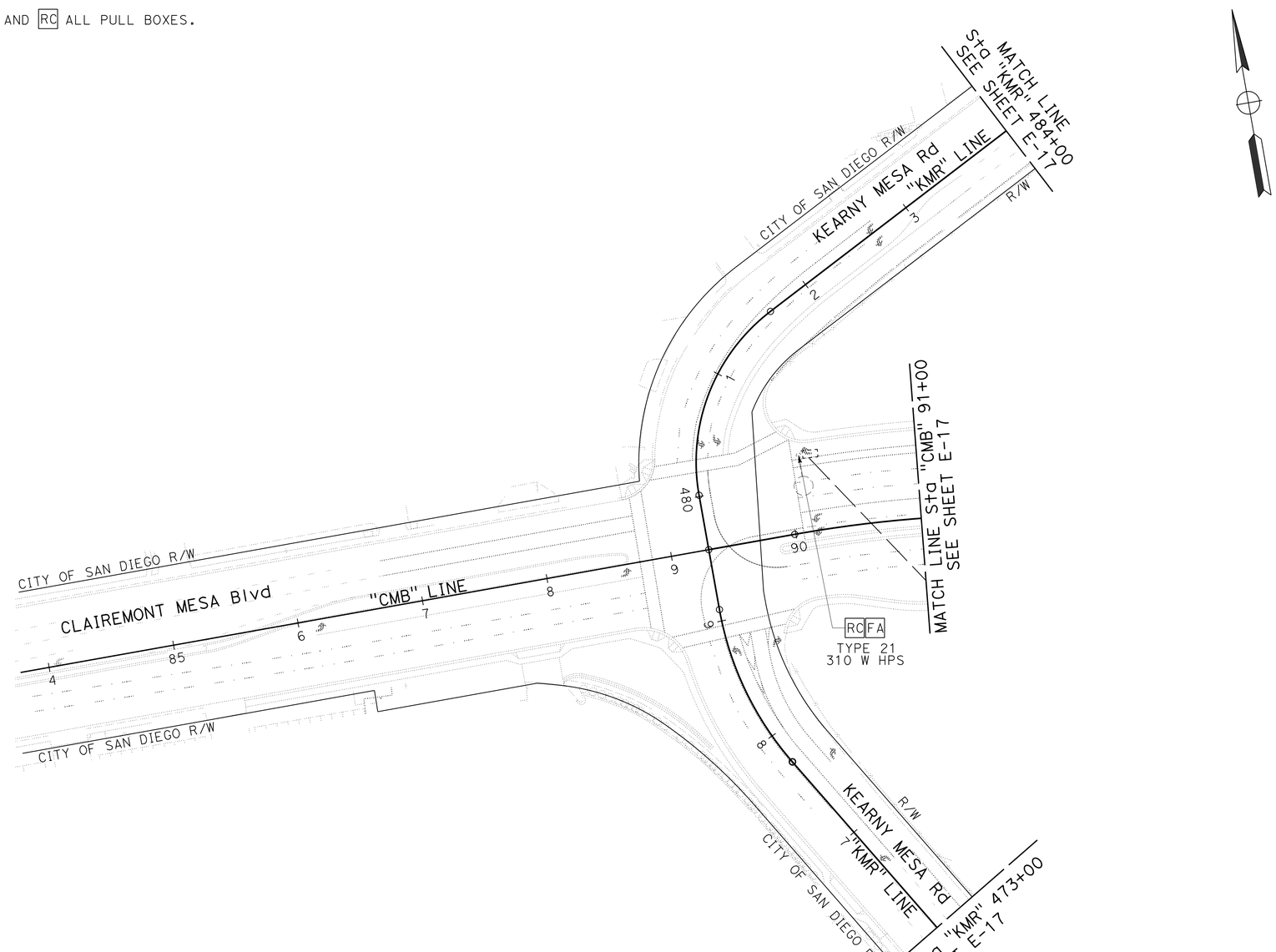

APPROVED FOR ELECTRICAL WORK ONLY

LIGHTING AND SIGN ILLUMINATION (EXISTING AND REMOVE)

SCALE: 1" = 50'

E-20

STATE OF CALIFORNIA - DEPARTMENT OF TRANSPORTATION
Caltrans

CONSULTANT FUNCTIONAL SUPERVISOR: EDGAR A. CAMERINO
CALCULATED-DESIGNED BY: MARK JUGAR
CHECKED BY:
REVISED BY:
DATE REVISED:
CARLOS PEREZ

LAST REVISION 04-25-14
DATE PLOTTED => 17-SEP-2014
TIME PLOTTED => 14:56

Dist	COUNTY	ROUTE	POST MILES TOTAL PROJECT	SHEET No.	TOTAL SHEETS
11	SD	163	8.4/9.4	250	332

REGISTERED CIVIL ENGINEER 10-10-13 DATE

09-15-14
PLANS APPROVAL DATE

REGISTERED PROFESSIONAL ENGINEER MARK M. JUGAR No. 66939 Exp. 09-30-16 CIVIL STATE OF CALIFORNIA

THE STATE OF CALIFORNIA OR ITS OFFICERS OR AGENTS SHALL NOT BE RESPONSIBLE FOR THE ACCURACY OR COMPLETENESS OF SCANNED COPIES OF THIS PLAN SHEET.

CITY OF SAN DIEGO
600 B ST, SUITE 800
SAN DIEGO, CA 92101

RICK ENGINEERING COMPANY
5620 FRIARS RD
SAN DIEGO, CA 92110
(619) 291-0707

NOTES:

1 RL Exist CCTV CONTROLLER CABINET (S8.721T). SEE E-23.

2 RL Exist TYPE CCTV 35. SEE E-23.

3 RC ALL PULL BOXES AND AB ALL CONDUIT UNLESS OTHERWISE NOTED.

4 PROTECT Exist VAULT IN PLACE.

5 FOR ACCURATE RIGHT OF WAY DATA, CONTACT RIGHT OF WAY ENGINEERING AT THE DISTRICT OFFICE.

6 SD LOCATED AT NW CORNER OF CLAIREMONT MESA BOULEVARD AND KEARNEY MESA ROAD.

7 RR CAMERA CABLE. SEE E-23.

CONDUIT NOTES:

1 Exist 2-1" C, RC 2 fo12.

N/C 2 Exist mdcs(8), 1 fo60, 1 fo84

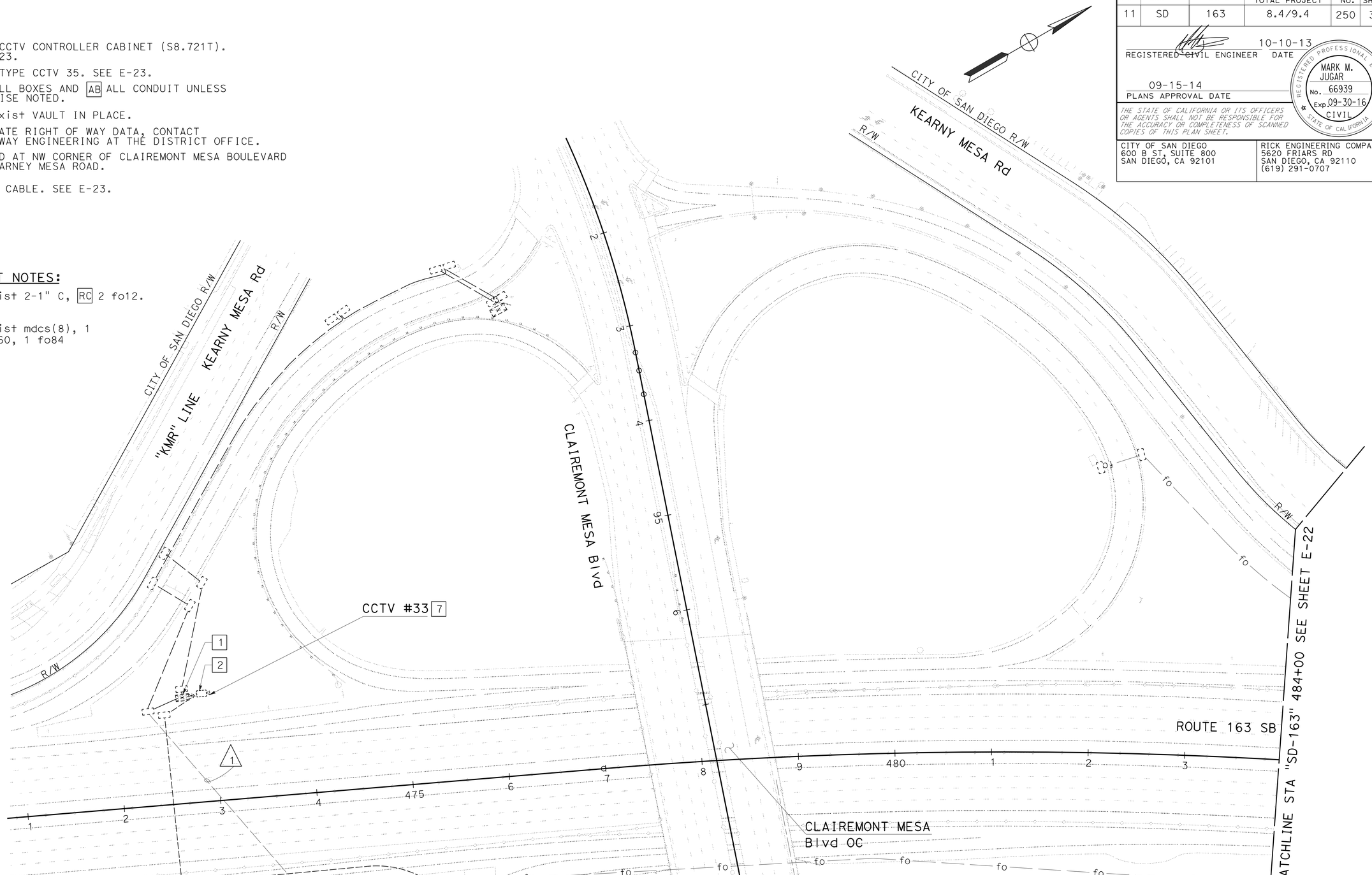

APPROVED FOR ELECTRICAL WORK ONLY

CLOSED CIRCUIT TELEVISION SYSTEM (EXISTING AND REMOVE)

SCALE: 1" = 50'

E-21

STATE OF CALIFORNIA - DEPARTMENT OF TRANSPORTATION
Caltrans

CONSULTANT FUNCTIONAL SUPERVISOR: EDGAR A. CAMERINO
CALCULATED-DESIGNED BY: CARLOS PEREZ
CHECKED BY: MARK JUGAR
REVISED BY
DATE REVISED

LAST REVISION 04-25-14
DATE PLOTTED => 17-SEP-2014
TIME PLOTTED => 14:56

Dist	COUNTY	ROUTE	POST MILES TOTAL PROJECT	SHEET No.	TOTAL SHEETS
11	SD	163	8.4/9.4	251	332

REGISTERED CIVIL ENGINEER 10-10-13 DATE

09-15-14
PLANS APPROVAL DATE

REGISTERED PROFESSIONAL ENGINEER MARK M. JUGAR No. 66939 Exp. 09-30-16 CIVIL STATE OF CALIFORNIA

THE STATE OF CALIFORNIA OR ITS OFFICERS OR AGENTS SHALL NOT BE RESPONSIBLE FOR THE ACCURACY OR COMPLETENESS OF SCANNED COPIES OF THIS PLAN SHEET.

CITY OF SAN DIEGO
600 B ST, SUITE 800
SAN DIEGO, CA 92101

RICK ENGINEERING COMPANY
5620 FRIARS RD
SAN DIEGO, CA 92110
(619) 291-0707

NOTES:

1. FOR ACCURATE RIGHT OF WAY DATA, CONTACT RIGHT OF WAY ENGINEERING AT THE DISTRICT OFFICE.

NOTES:

1 RC Exist CHANGEABLE MESSAGE SIGN MODULE (MODEL 500).

2 RC Exist CHANGEABLE MESSAGE SIGN CONTROLLER CABINET.

CONDUIT NOTES:

N/C 1 Exist MDCS(8). 1 FO60, 1 FO84

2 Exist TWO 1"C, 2 fo12.
RC 2 fo12.

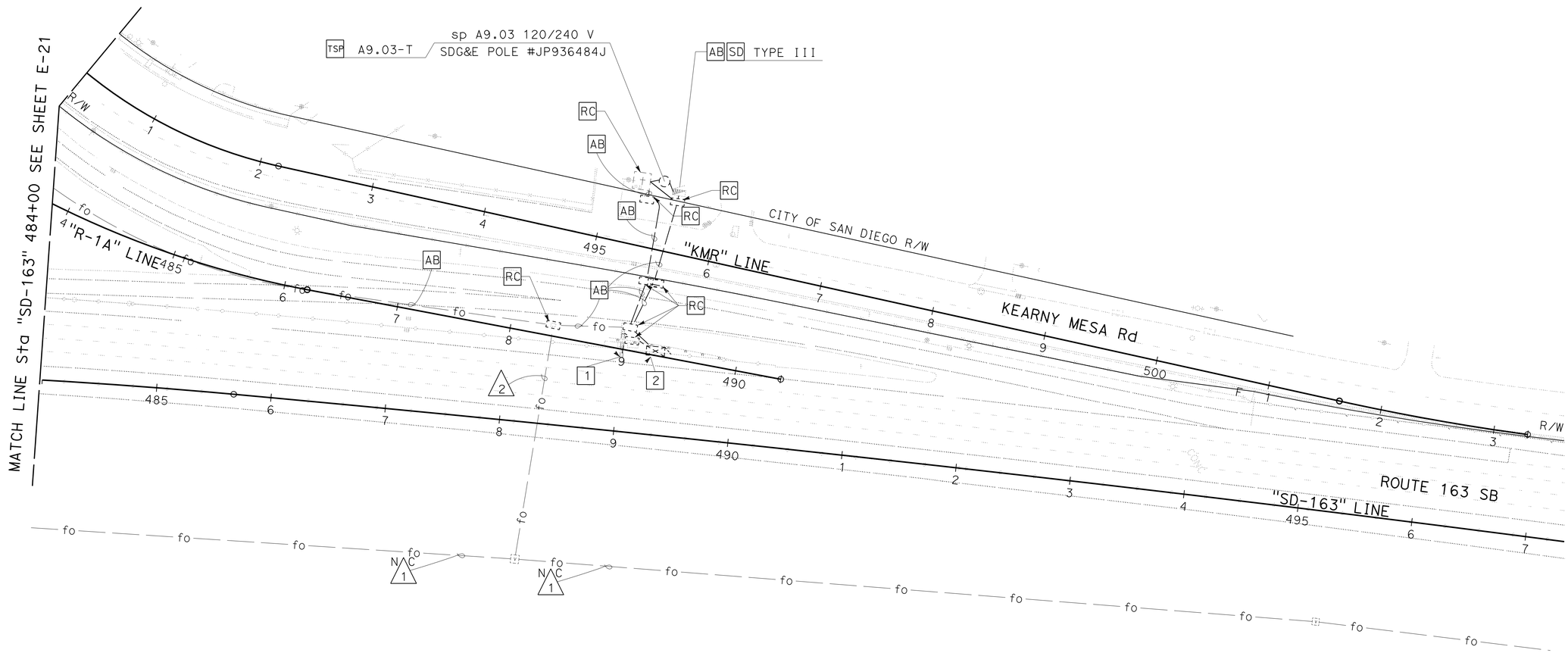

APPROVED FOR ELECTRICAL WORK ONLY

CHANGEABLE MESSAGE SIGN SYSTEM (EXISTING AND REMOVE)

SCALE: 1" = 50'

E-22

STATE OF CALIFORNIA - DEPARTMENT OF TRANSPORTATION
Caltrans

CONSULTANT FUNCTIONAL SUPERVISOR: EDGAR A. CAMERINO
CALCULATED-DESIGNED BY: CARLOS PEREZ
CHECKED BY: MARK JUGAR
REVISED BY
DATE REVISED

LAST REVISION 04-25-14
DATE PLOTTED => 17-SEP-2014
TIME PLOTTED => 14:56

Dist	COUNTY	ROUTE	POST MILES TOTAL PROJECT	SHEET No.	TOTAL SHEETS
11	SD	163	8.4/9.4	252	332

REGISTERED CIVIL ENGINEER 10-10-13 DATE

09-15-14
PLANS APPROVAL DATE

REGISTERED PROFESSIONAL ENGINEER MARK M. JUGAR No. 66939 Exp. 09-30-16 CIVIL STATE OF CALIFORNIA

THE STATE OF CALIFORNIA OR ITS OFFICERS OR AGENTS SHALL NOT BE RESPONSIBLE FOR THE ACCURACY OR COMPLETENESS OF SCANNED COPIES OF THIS PLAN SHEET.

CITY OF SAN DIEGO
600 B ST, SUITE 800
SAN DIEGO, CA 92101

RICK ENGINEERING COMPANY
5620 FRIARS RD
SAN DIEGO, CA 92110
(619) 291-0707

CONDUIT NOTES:

- △1 3"C, REUSE CAMERA CABLE
- △2 2"C, 2 FO12
- △3 2"C, 1 OCC.
- △4 2"C, 1 FO12
- △5 2"C, 2 OCC. 1 FO12
- △6 2"C, 1 FO12.
- N/C △7 Exist MDCS(8) 1 fo60, 1 fo84
- △8 EXIST 2-1"C, REMOVE Exist 2 fo12, ADD 2 FO12
- △9 2"C, 3#4(CMS-120/240V)
- △10 TWO 3"C, STATE-FURNISHED CMSC HARNESS 4 AND 5
- △11 3"C, STATE-FURNISHED CMSC HARNESS 4 AND 5
- △12 2"C, 2#6(CMS CONTROLLER)

NOTES:

1. RL TYPE CCTV 35 STATION 473+19.5 70.0' Lt "R-2" LINE.
2. RL CCTV CONTROLLER CABINET (S8.721T) STATION 473+84.7 77' Lt "R-2" LINE AS SHOWN.
3. STATE-FURNISHED CHANGEABLE MESSAGE SIGN MODULE (MODEL 500) AT STATION 481+90.2 100' Lt "SD-163" LINE.
4. STATE-FURNISHED CHANGEABLE MESSAGE SIGN CONTROLLER ASSEMBLY (MODEL 500) AT STATION 482+09.8 115' Lt "SD-163" LINE.
5. SEE SHEET E-17 FOR ELECTRICAL POWER.
6. FOR ACCURATE RIGHT OF WAY DATA, CONTACT RIGHT OF WAY ENGINEERING AT THE DISTRICT OFFICE.
7. ONE 3"C AND ONE 2"C BETWEEN FOUNDATION AND ADJACENT PULL BOXES.
8. PROTECT IN PLACE EXISTING VAULT.
9. SEE SHEET E-12 FOR CONTINUITY.
10. SEE SHEET E-8 FOR CONTINUITY.
11. SEE SHEET E-34 FOR CAMERA CABLE DETAILS.

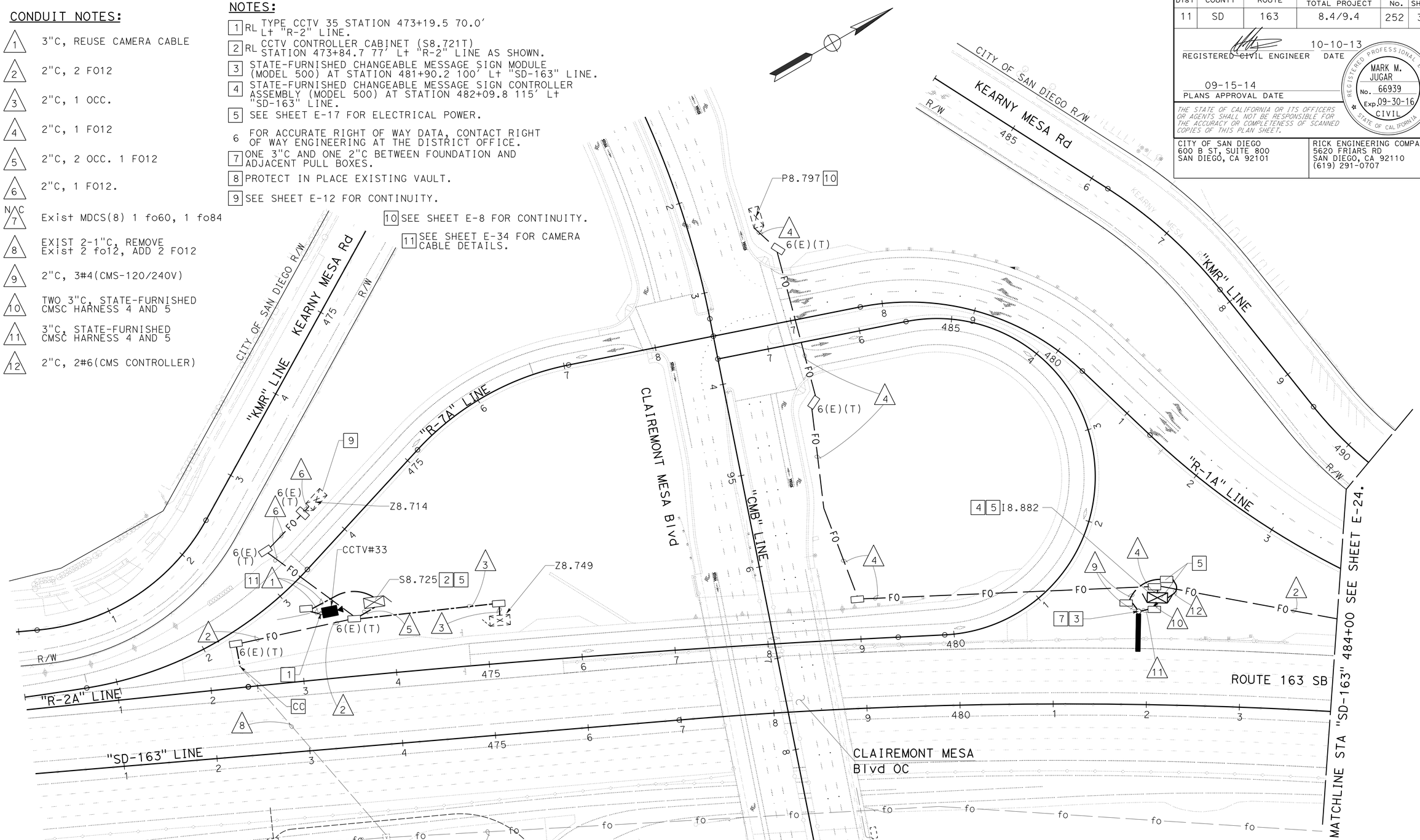

CLOSED CIRCUIT TELEVISION SYSTEM
CHANGEABLE MESSAGE SIGN SYSTEM

SCALE: 1" = 50'

APPROVED FOR ELECTRICAL WORK ONLY

E-23

STATE OF CALIFORNIA - DEPARTMENT OF TRANSPORTATION
Caltrans

CONSULTANT FUNCTIONAL SUPERVISOR: EDGAR A. CAMERINO
CALCULATED-DESIGNED BY: CARLOS PEREZ
CHECKED BY: MARK JUGAR
REVISED BY
DATE REVISED

LAST REVISION 04-25-14
DATE PLOTTED => 17-SEP-2014
TIME PLOTTED => 14:56

Dist	COUNTY	ROUTE	POST MILES TOTAL PROJECT	SHEET No.	TOTAL SHEETS
11	SD	163	8.4/9.4	253	332

REGISTERED CIVIL ENGINEER 10-10-13 DATE

09-15-14
PLANS APPROVAL DATE

REGISTERED PROFESSIONAL ENGINEER MARK M. JUGAR No. 66939 Exp. 09-30-16 CIVIL STATE OF CALIFORNIA

THE STATE OF CALIFORNIA OR ITS OFFICERS OR AGENTS SHALL NOT BE RESPONSIBLE FOR THE ACCURACY OR COMPLETENESS OF SCANNED COPIES OF THIS PLAN SHEET.

CITY OF SAN DIEGO
600 B ST, SUITE 800
SAN DIEGO, CA 92101

RICK ENGINEERING COMPANY
5620 FRIARS RD
SAN DIEGO, CA 92110
(619) 291-0707

NOTES:

1. FOR ACCURATE RIGHT OF WAY DATA, CONTACT RIGHT OF WAY ENGINEERING AT THE DISTRICT OFFICE.

CONDUIT NOTES:

1. 2" C, 2 FO12
2. Exist 2-1"C, ADD 2 FO12
3. N/C Exist MDCS(8), 1 fo60, 1 fo84

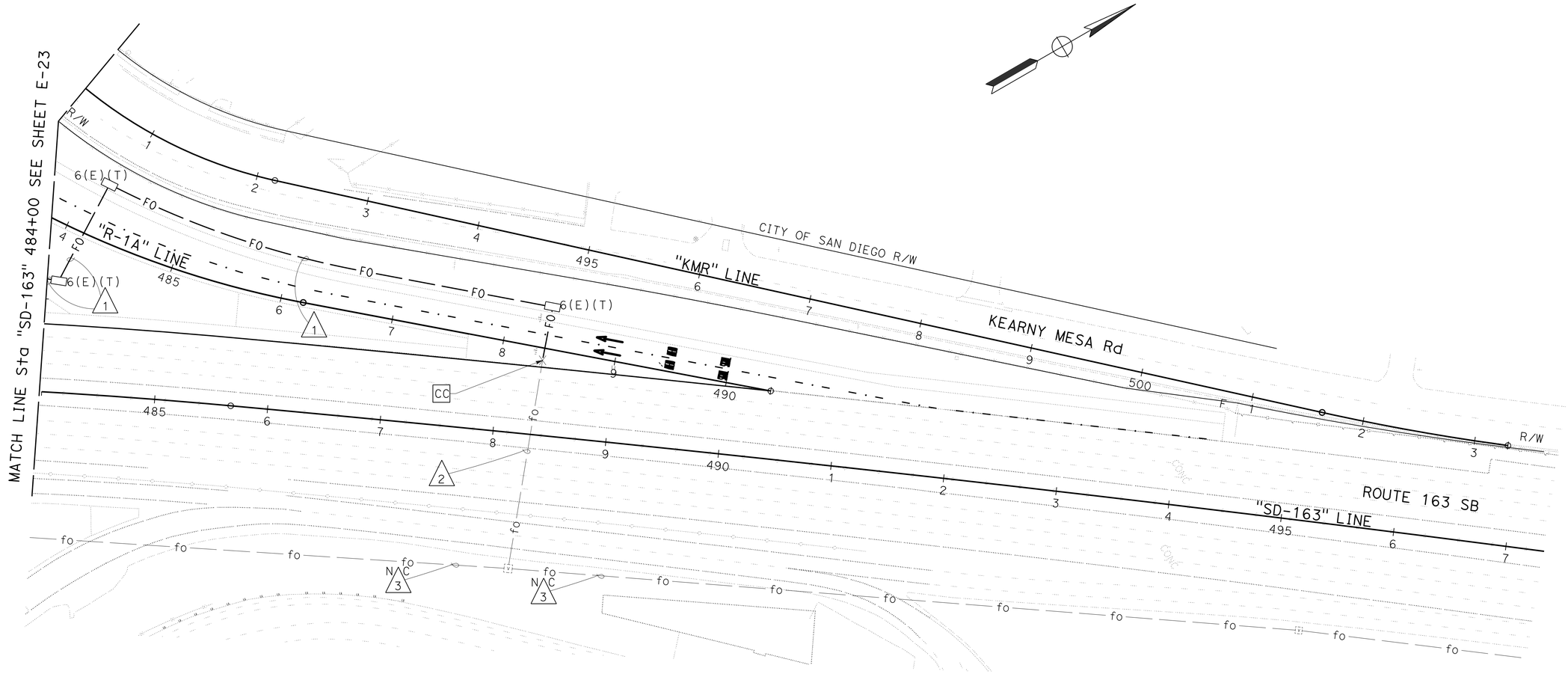

APPROVED FOR ELECTRICAL WORK ONLY

CLOSED CIRCUIT TELEVISION SYSTEM

SCALE: 1" = 50'

E-24

STATE OF CALIFORNIA - DEPARTMENT OF TRANSPORTATION
Caltrans

CONSULTANT FUNCTIONAL SUPERVISOR: EDGAR A. CAMERINO
CALCULATED-DESIGNED BY: CARLOS PEREZ
CHECKED BY: MARK JUGAR
REVISED BY
DATE REVISED

LAST REVISION 04-25-14
DATE PLOTTED => 17-SEP-2014
TIME PLOTTED => 14:57

Dist	COUNTY	ROUTE	POST MILES TOTAL PROJECT	SHEET No.	TOTAL SHEETS
11	SD	163	8.4/9.4	254	332

REGISTERED CIVIL ENGINEER 10-10-13 DATE

09-15-14
PLANS APPROVAL DATE

REGISTERED PROFESSIONAL ENGINEER MARK M. JUGAR No. 66939 Exp. 09-30-16 CIVIL STATE OF CALIFORNIA

THE STATE OF CALIFORNIA OR ITS OFFICERS OR AGENTS SHALL NOT BE RESPONSIBLE FOR THE ACCURACY OR COMPLETENESS OF SCANNED COPIES OF THIS PLAN SHEET.

CITY OF SAN DIEGO
600 B ST, SUITE 800
SAN DIEGO, CA 92101

RICK ENGINEERING COMPANY
5620 FRIARS RD
SAN DIEGO, CA 92110
(619) 291-0707

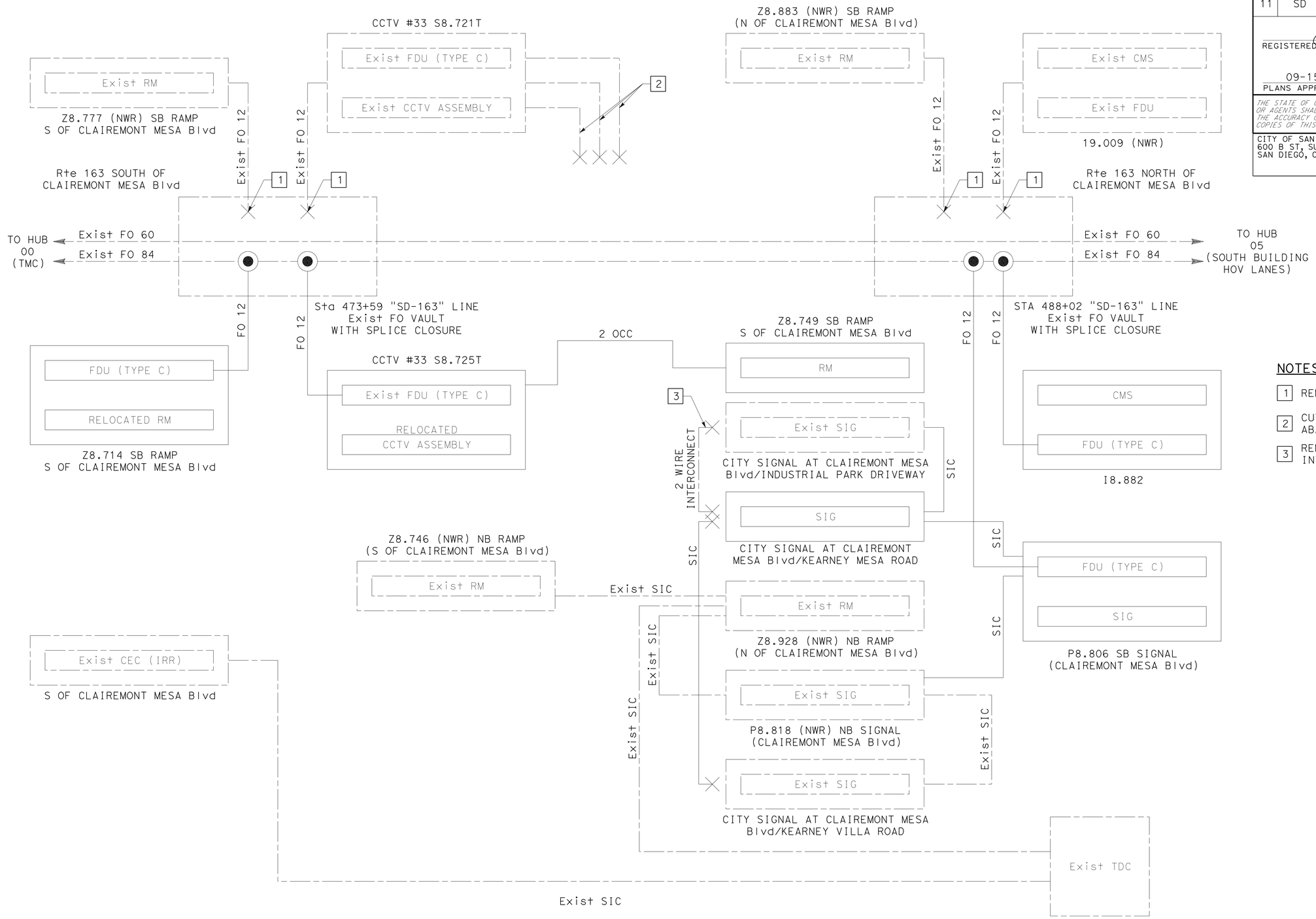

NOTES:

1. REMOVE Exist F012.
2. CUT Exist CAT-5E AND ABANDON CABLE.
3. REMOVE Exist 2 WIRE INTERCONNECT

COMMUNICATION CIRCUIT DIAGRAM

CLOSED CIRCUIT TELEVISION SYSTEM (ELECTRICAL DETAILS)

NO SCALE

APPROVED FOR ELECTRICAL WORK ONLY

E-25

STATE OF CALIFORNIA - DEPARTMENT OF TRANSPORTATION

Caltrans

CONSULTANT FUNCTIONAL SUPERVISOR: EDGAR A. CAMERINO

CALCULATED-DESIGNED BY: CARLOS PEREZ

CHECKED BY: MARK JUGAR

REVISED BY

DATE REVISED

LAST REVISION 04-25-14

DATE PLOTTED => 17-SEP-2014
TIME PLOTTED => 14:57

Dist	COUNTY	ROUTE	POST MILES TOTAL PROJECT	SHEET No.	TOTAL SHEETS
11	SD	163	8.4/9.4	255	332

REGISTERED CIVIL ENGINEER 10-10-13 DATE

09-15-14
PLANS APPROVAL DATE

REGISTERED PROFESSIONAL ENGINEER MARK M. JUGAR No. 66939 Exp. 09-30-16 CIVIL STATE OF CALIFORNIA

THE STATE OF CALIFORNIA OR ITS OFFICERS OR AGENTS SHALL NOT BE RESPONSIBLE FOR THE ACCURACY OR COMPLETENESS OF SCANNED COPIES OF THIS PLAN SHEET.

CITY OF SAN DIEGO
600 B ST, SUITE 800
SAN DIEGO, CA 92101

RICK ENGINEERING COMPANY
5620 FRIARS RD
SAN DIEGO, CA 92110
(619) 291-0707

LEGEND:

- Exist SPLICE OF TWO FIBERS.
- CUT END OF FIBER, NOT SPLICED.
- SC FEMALE CONNECTOR ON AN FDU PANEL.
- NEW SC MALE CONNECTOR ON AN SMFO PATCHCORD.
- DISCONNECT FIBER.

NWR = NO WORK REQUIRED.

COLOR CODES FOR BUFFER TUBES AND FIBERS:

1. BLUE (BL)
2. ORANGE (OR)
3. GREEN (GR)
4. BROWN (BR)
5. SLATE (SL)
6. WHITE (WT)
7. RED (RD)
8. BLACK (BL)
9. YELLOW (YL)
10. VIOLET (VL)
11. ROSE (RS)
12. AQUA (AQ)

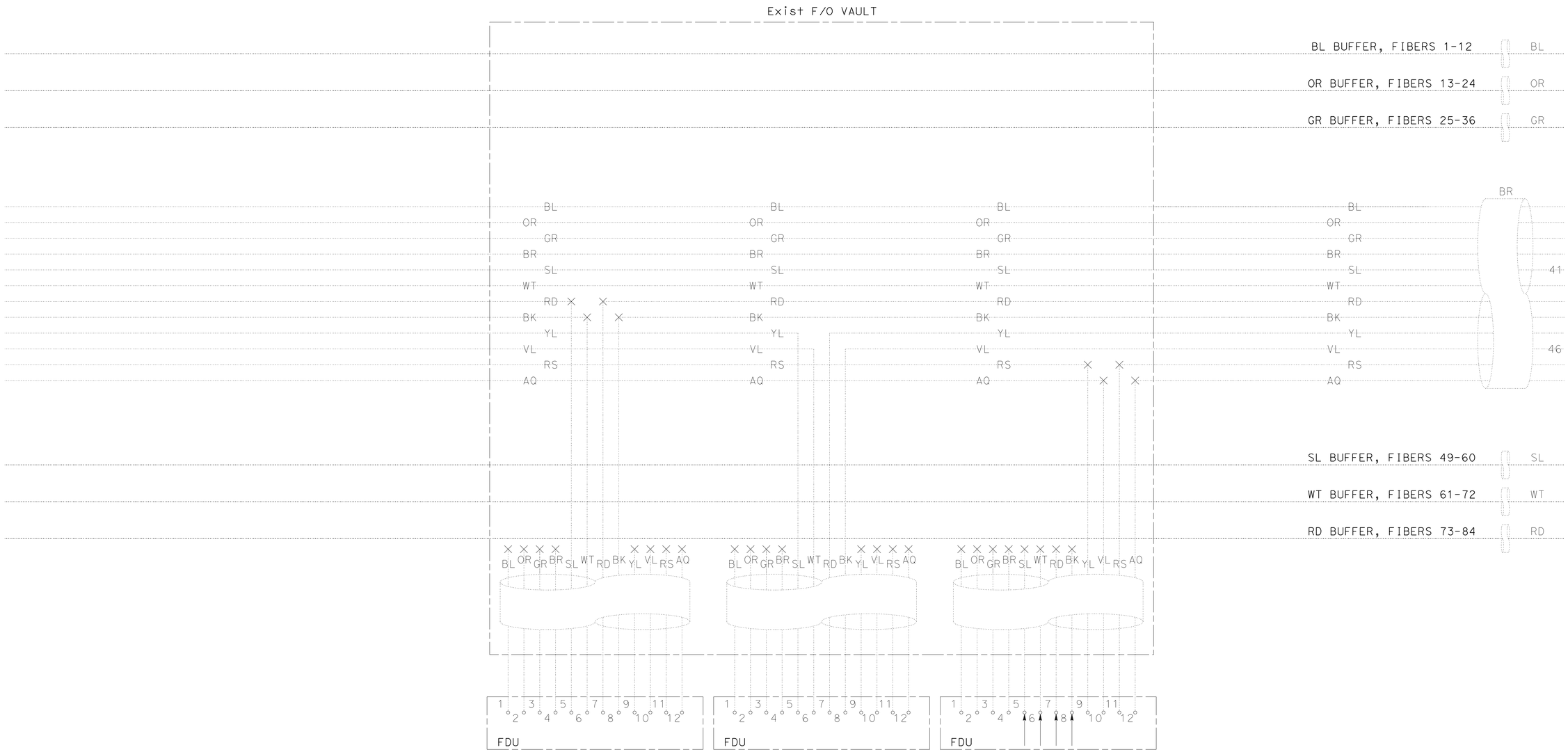

Exist F/O SPLICE DETAILS

Sta 473+59 "SD-163" LINE

CLOSED CIRCUIT TELEVISION SYSTEM (ELECTRICAL DETAILS)

NO SCALE

E-26

STATE OF CALIFORNIA - DEPARTMENT OF TRANSPORTATION

Caltrans

CONSULTANT FUNCTIONAL SUPERVISOR: EDGAR A. CAMERINO

CARLOS PEREZ — MARK JUGAR

CALCULATED-DESIGNED BY — CHECKED BY

REVISED BY — DATE REVISED

LAST REVISION 04-25-14 | DATE PLOTTED => 17-SEP-2014 | TIME PLOTTED => 14:57

Dist	COUNTY	ROUTE	POST MILES TOTAL PROJECT	SHEET No.	TOTAL SHEETS
11	SD	163	8.4/9.4	256	332

REGISTERED CIVIL ENGINEER — DATE 10-10-13

PLANS APPROVAL DATE 09-15-14

REGISTERED PROFESSIONAL ENGINEER MARK M. JUGAR No. 66939 Exp. 09-30-16 CIVIL STATE OF CALIFORNIA

THE STATE OF CALIFORNIA OR ITS OFFICERS OR AGENTS SHALL NOT BE RESPONSIBLE FOR THE ACCURACY OR COMPLETENESS OF SCANNED COPIES OF THIS PLAN SHEET.

CITY OF SAN DIEGO
600 B ST, SUITE 800
SAN DIEGO, CA 92101

RICK ENGINEERING COMPANY
5620 FRIARS RD
SAN DIEGO, CA 92110
(619) 291-0707

LEGEND:

- Exist SPLICE OF TWO FIBERS.
- CUT END OF FIBER, NOT SPLICED.
- SC FEMALE CONNECTOR ON AN FDU PANEL.
- NEW SC MALE CONNECTOR ON AN SMFO PATCHCORD.
- DISCONNECT FIBER.
- NEW SPLICE.

NWR = NO WORK REQUIRED.

COLOR CODES FOR BUFFER TUBES AND FIBERS:

1. BLUE (BL)	7. RED (RD)
2. ORANGE (OR)	8. BLACK (BL)
3. GREEN (GR)	9. YELLOW (YL)
4. BROWN (BR)	10. VIOLET (VL)
5. SLATE (SL)	11. ROSE (RS)
6. WHITE (WT)	12. AQUA (AQ)

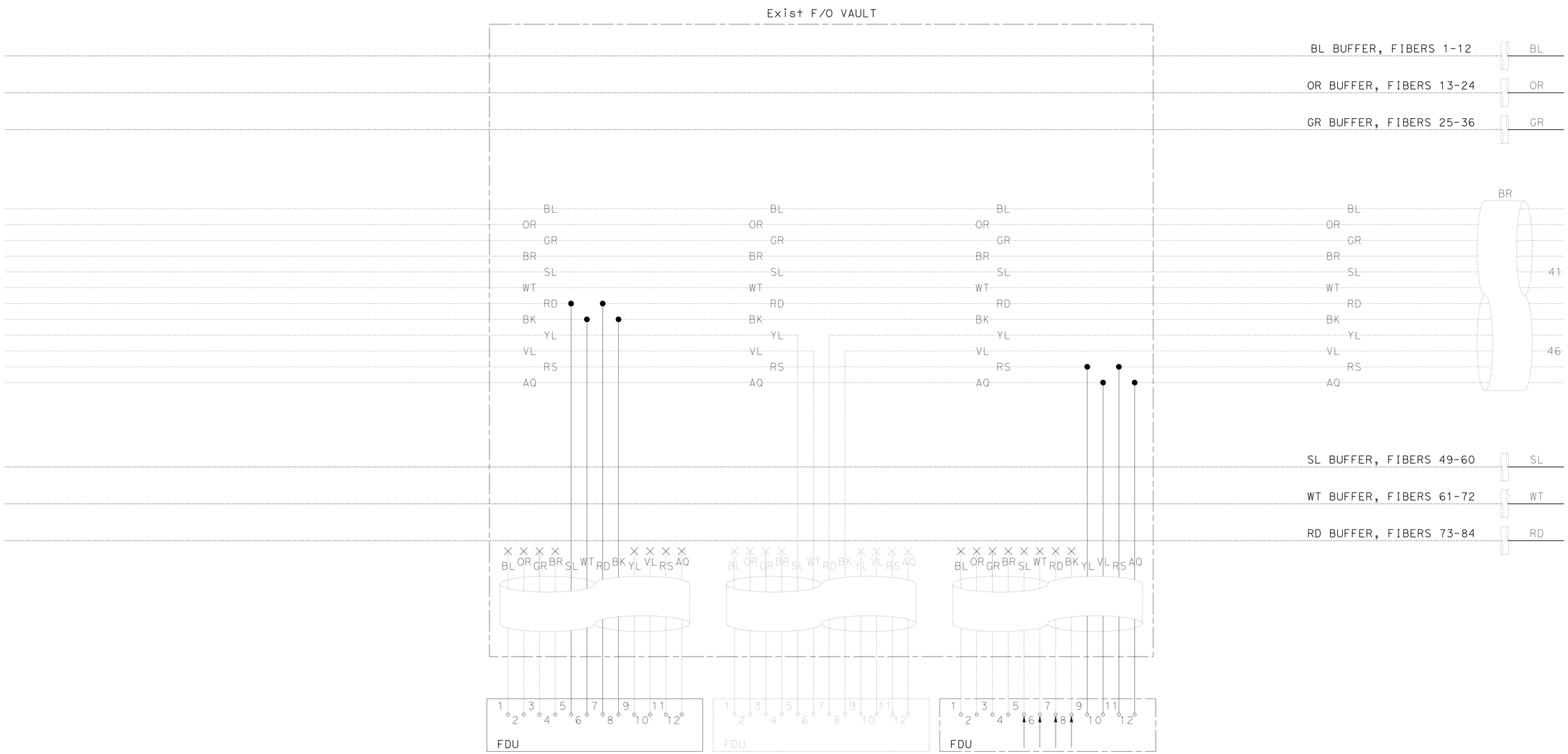

PROPOSED F/O SPLICE DETAILS

Sta 473+59 "SD-163" LINE

CLOSED CIRCUIT TELEVISION SYSTEM (ELECTRICAL DETAILS)

NO SCALE

E-27

STATE OF CALIFORNIA - DEPARTMENT OF TRANSPORTATION

Caltrans

CONSULTANT FUNCTIONAL SUPERVISOR: EDGAR A. CAMERINO

CALCULATED-DESIGNED BY: CARLOS PEREZ

CHECKED BY: MARK JUGAR

REVISED BY / DATE REVISED

LAST REVISION 04-25-14 — DATE PLOTTED => 17-SEP-2014 TIME PLOTTED => 14:57

Dist	COUNTY	ROUTE	POST MILES TOTAL PROJECT	SHEET No.	TOTAL SHEETS
11	SD	163	8.4/9.4	257	332

REGISTERED CIVIL ENGINEER 10-10-13 DATE

09-15-14
PLANS APPROVAL DATE

REGISTERED PROFESSIONAL ENGINEER MARK M. JUGAR No. 66939 Exp. 09-30-16 CIVIL STATE OF CALIFORNIA

THE STATE OF CALIFORNIA OR ITS OFFICERS OR AGENTS SHALL NOT BE RESPONSIBLE FOR THE ACCURACY OR COMPLETENESS OF SCANNED COPIES OF THIS PLAN SHEET.

CITY OF SAN DIEGO
600 B ST, SUITE 800
SAN DIEGO, CA 92101

RICK ENGINEERING COMPANY
5620 FRIARS RD
SAN DIEGO, CA 92110
(619) 291-0707

LEGEND:

- Exist SPLICE OF TWO FIBERS.
- CUT END OF FIBER, NOT SPLICED.
- SC FEMALE CONNECTOR ON AN FDU PANEL.
- NEW SC MALE CONNECTOR ON AN SMFO PATCHCORD.
- DISCONNECT FIBER.

NWR = NO WORK REQUIRED.

COLOR CODES FOR BUFFER TUBES AND FIBERS:

1. BLUE (BL)
2. ORANGE (OR)
3. GREEN (GR)
4. BROWN (BR)
5. SLATE (SL)
6. WHITE (WT)
7. RED (RD)
8. BLACK (BL)
9. YELLOW (YL)
10. VIOLET (VL)
11. ROSE (RS)
12. AQUA (AQ)

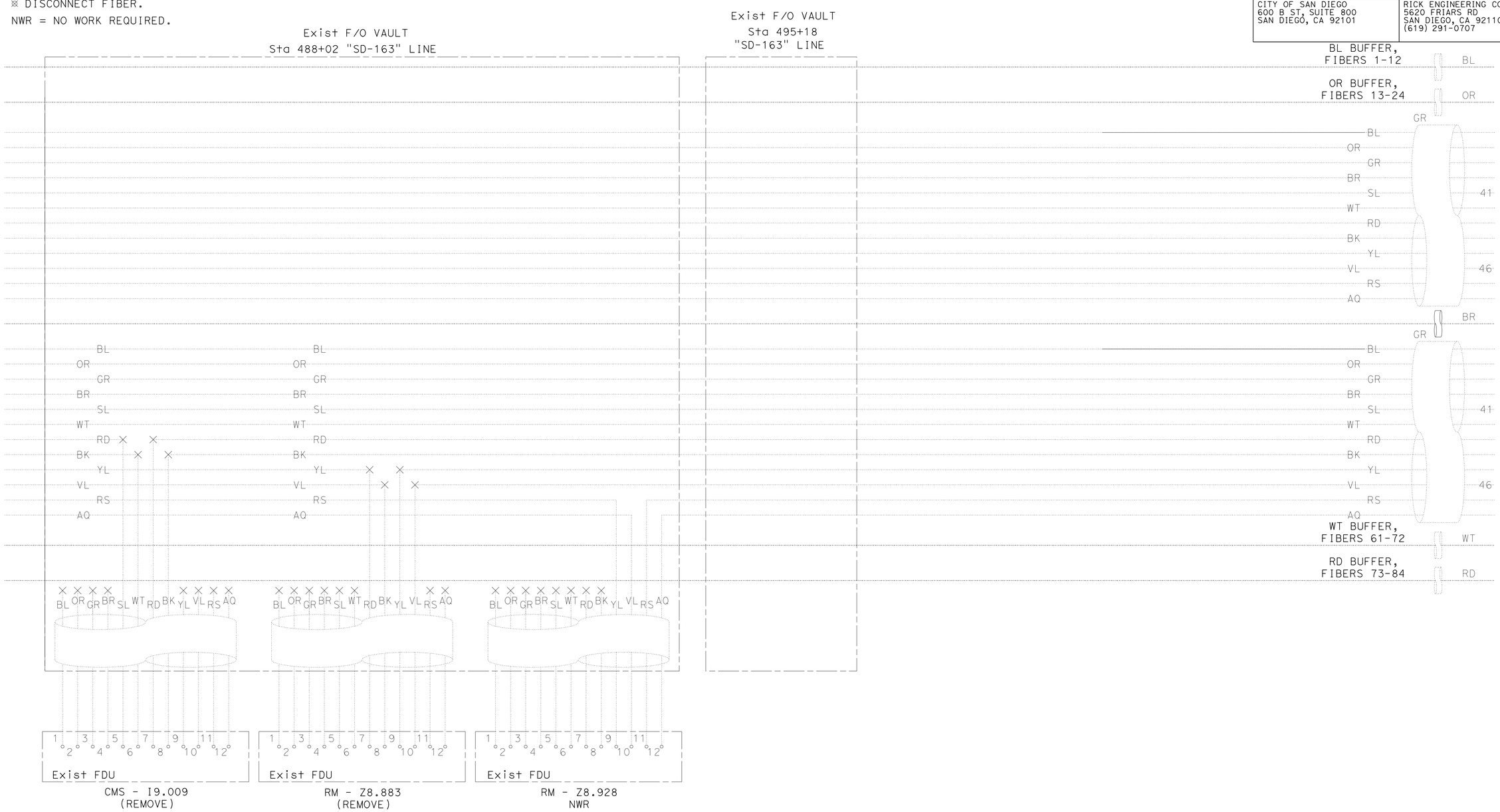

Exist FO SPLICE DETAILS

CLOSED CIRCUIT TELEVISION SYSTEM (ELECTRICAL DETAILS)

NO SCALE

E-28

STATE OF CALIFORNIA - DEPARTMENT OF TRANSPORTATION

Caltrans

CONSULTANT FUNCTIONAL SUPERVISOR: EDGAR A. CAMERINO

CALCULATED-DESIGNED BY: CARLOS PEREZ

CHECKED BY: MARK JUGAR

REVISED BY

DATE REVISED

LAST REVISION 04-25-14

DATE PLOTTED => 17-SEP-2014
TIME PLOTTED => 14:57

Dist	COUNTY	ROUTE	POST MILES TOTAL PROJECT	SHEET No.	TOTAL SHEETS
11	SD	163	8.4/9.4	258	332

REGISTERED CIVIL ENGINEER 10-10-13 DATE

09-15-14
PLANS APPROVAL DATE

REGISTERED PROFESSIONAL ENGINEER MARK M. JUGAR No. 66939 Exp. 09-30-16 CIVIL STATE OF CALIFORNIA

THE STATE OF CALIFORNIA OR ITS OFFICERS OR AGENTS SHALL NOT BE RESPONSIBLE FOR THE ACCURACY OR COMPLETENESS OF SCANNED COPIES OF THIS PLAN SHEET.

CITY OF SAN DIEGO
600 B ST, SUITE 800
SAN DIEGO, CA 92101

RICK ENGINEERING COMPANY
5620 FRIARS RD
SAN DIEGO, CA 92110
(619) 291-0707

LEGEND:

- Exist SPLICE OF TWO FIBERS.
- CUT END OF FIBER, NOT SPLICED.
- SC FEMALE CONNECTOR ON AN FDU PANEL.
- NEW SC MALE CONNECTOR ON AN SMFO PATCHCORD.
- DISCONNECT FIBER.
- NEW SPLICE.

NWR = NO WORK REQUIRED.

COLOR CODES FOR BUFFER TUBES AND FIBERS:

1. BLUE (BL)	7. RED (RD)
2. ORANGE (OR)	8. BLACK (BL)
3. GREEN (GR)	9. YELLOW (YL)
4. BROWN (BR)	10. VIOLET (VL)
5. SLATE (SL)	11. ROSE (RS)
6. WHITE (WT)	12. AQUA (AQ)

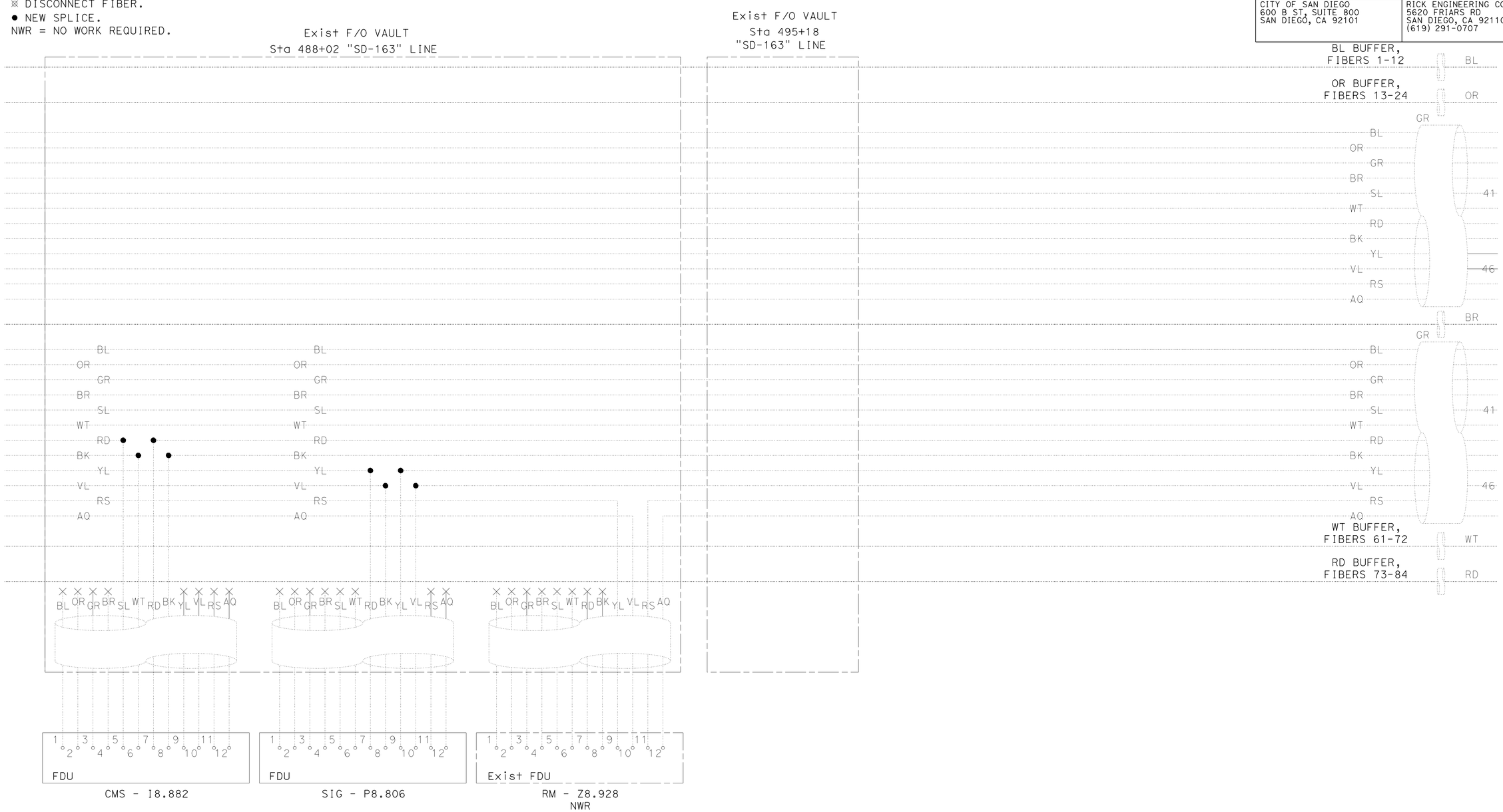

PROPOSED F/O SPLICE DETAILS

CLOSED CIRCUIT TELEVISION SYSTEM (ELECTRICAL DETAILS)

NO SCALE

E-29

STATE OF CALIFORNIA - DEPARTMENT OF TRANSPORTATION
Caltrans

CONSULTANT FUNCTIONAL SUPERVISOR: EDGAR A. CAMERINO
CALCULATED-DESIGNED BY: MARK JUGAR
CHECKED BY: CARLOS PEREZ
REVISED BY
DATE REVISED

LAST REVISION 04-25-14
DATE PLOTTED => 17-SEP-2014
TIME PLOTTED => 14:57

Dist	COUNTY	ROUTE	POST MILES TOTAL PROJECT	SHEET No.	TOTAL SHEETS
11	SD	163	8.4/9.4	259	332

REGISTERED CIVIL ENGINEER 10-10-13 DATE

09-15-14
PLANS APPROVAL DATE

REGISTERED PROFESSIONAL ENGINEER MARK M. JUGAR No. 66939 Exp. 09-30-16 CIVIL STATE OF CALIFORNIA

THE STATE OF CALIFORNIA OR ITS OFFICERS OR AGENTS SHALL NOT BE RESPONSIBLE FOR THE ACCURACY OR COMPLETENESS OF SCANNED COPIES OF THIS PLAN SHEET.

CITY OF SAN DIEGO
600 B ST, SUITE 800
SAN DIEGO, CA 92101

RICK ENGINEERING COMPANY
5620 FRIARS RD
SAN DIEGO, CA 92110
(619) 291-0707

NOTES:

1. SHELF REQUIRED FOR EQUIPMENT.
2. 12 PAIR TERMINAL BLOCK.
3. VDSL SWITCH AND VDSL CPE CONNECTION POINT.
4. BLANK PANEL TO REMAIN.

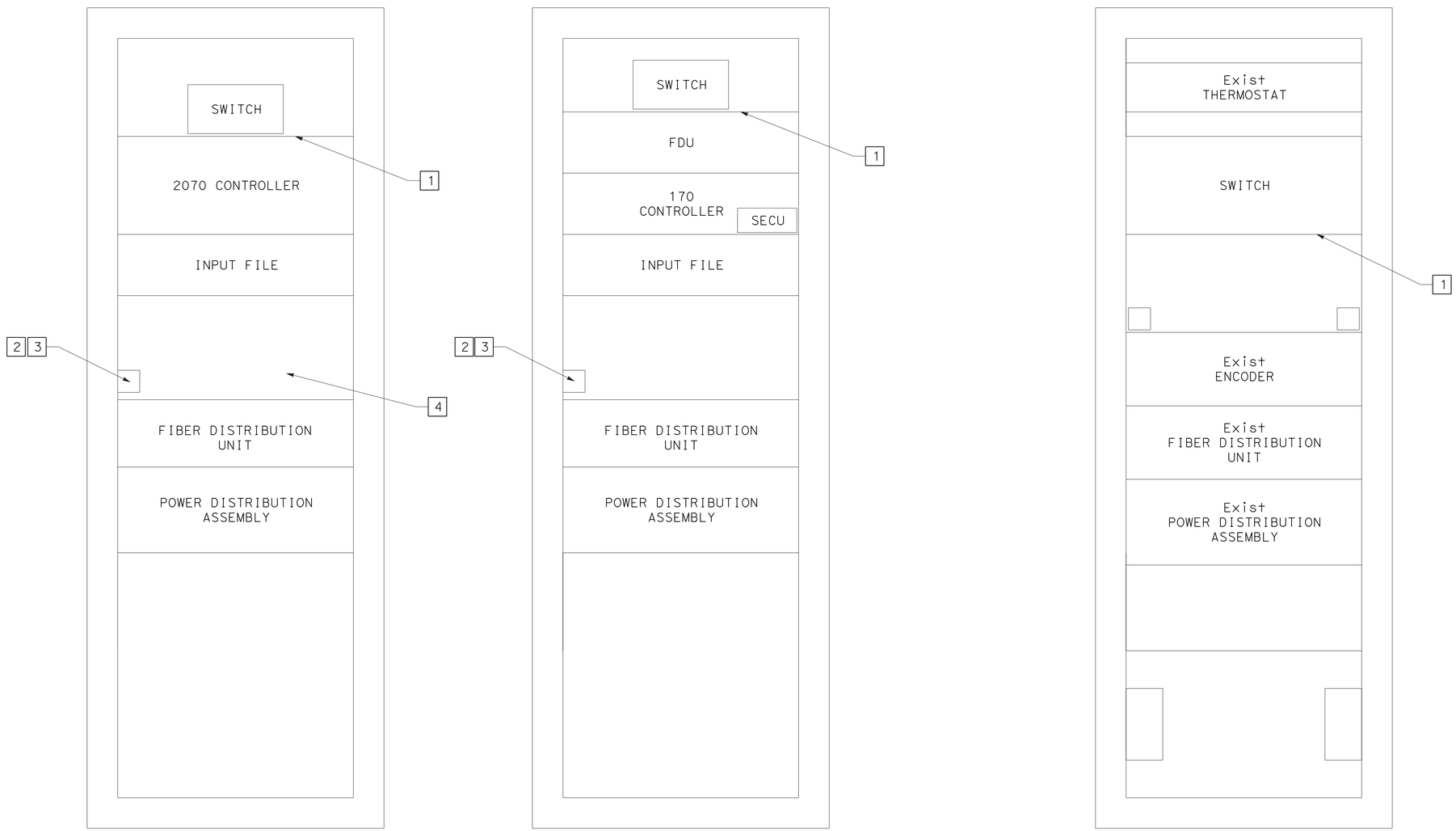

CLOSED CIRCUIT TELEVISION SYSTEM (ELECTRICAL DETAILS)

NO SCALE

E-30

STATE OF CALIFORNIA - DEPARTMENT OF TRANSPORTATION
Caltrans

CONSULTANT FUNCTIONAL SUPERVISOR: EDGAR A. CAMERINO
CALCULATED-DESIGNED BY: MARK JUGAR
CHECKED BY
REVISED BY
DATE REVISED

LAST REVISION 04-25-14
DATE PLOTTED => 17-SEP-2014
TIME PLOTTED => 14:57

Dist	COUNTY	ROUTE	POST MILES TOTAL PROJECT	SHEET No.	TOTAL SHEETS
11	SD	163	8.4/9.4	260	332

REGISTERED CIVIL ENGINEER 10-10-13 DATE

09-15-14
PLANS APPROVAL DATE

REGISTERED PROFESSIONAL ENGINEER MARK M. JUGAR No. 66939 Exp. 09-30-16 CIVIL STATE OF CALIFORNIA

THE STATE OF CALIFORNIA OR ITS OFFICERS OR AGENTS SHALL NOT BE RESPONSIBLE FOR THE ACCURACY OR COMPLETENESS OF SCANNED COPIES OF THIS PLAN SHEET.

CITY OF SAN DIEGO
600 B ST, SUITE 800
SAN DIEGO, CA 92101

RICK ENGINEERING COMPANY
5620 FRIARS RD
SAN DIEGO, CA 92110
(619) 291-0707

NOTES:

1. MOUNT THE EXTERNAL BBS CABINET TO THE MODEL 332 OR 334 CABINET WITH FOUR TO EIGHT 18-8 STAINLESS STEEL, FULLY THREADED, 3/8"-16X1", HEX HEAD BOLTS, EACH WITH TWO 18-8 STAINLESS STEEL, 1" OD, ROUND FLAT WASHERS (DESIGNED FOR 3/8" BOLTS) AND ONE STAINLESS STEEL, K-LOCK HEX NUT. OBTAIN THE ENGINEER'S APPROVAL OF THE BOLT MOUNTING LOCATIONS PRIOR TO BBS CABINET INSTALLATIONS.
2. THE ANCHOR BOLTS MUST BE 3/4" Dia X 15" WITH A 2"-90 DEGREE BEND. EXTERNAL BBS CABINET ANCHOR BOLT LOCATION MUST BE PER MANUFACTURER'S RECOMMENDATION. OBTAIN THE ENGINEER'S APPROVAL OF THE ANCHOR BOLT LOCATIONS PRIOR TO CONSTRUCTING THE FOUNDATION
3. VERIFY THE DIMENSIONS OF THE BBS CABINET AND OBTAIN THE ENGINEER'S APPROVAL OF NECESSARY CHANGES PRIOR TO CONSTRUCTING THE FOUNDATION.
4. ALL DIMENSIONS ARE NOMINAL.

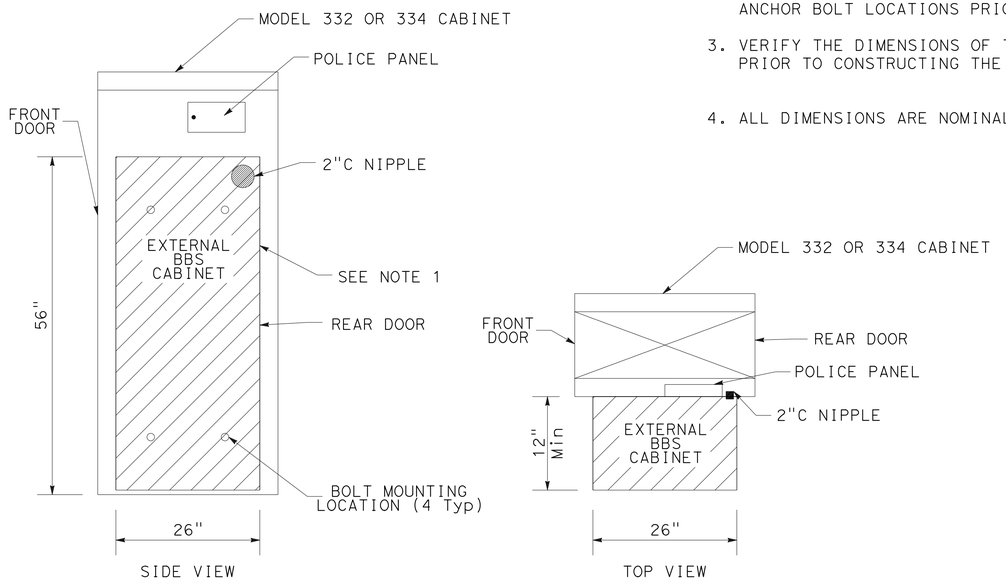

EXTERNAL BBS CABINET MOUNTED TO THE MODEL 332 OR 334 CABINET

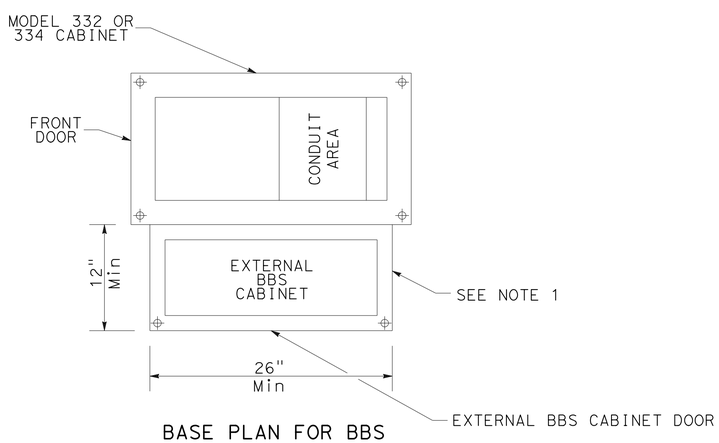

BASE PLAN FOR BBS MOUNTED TO THE MODEL 332 OR 334 CABINET

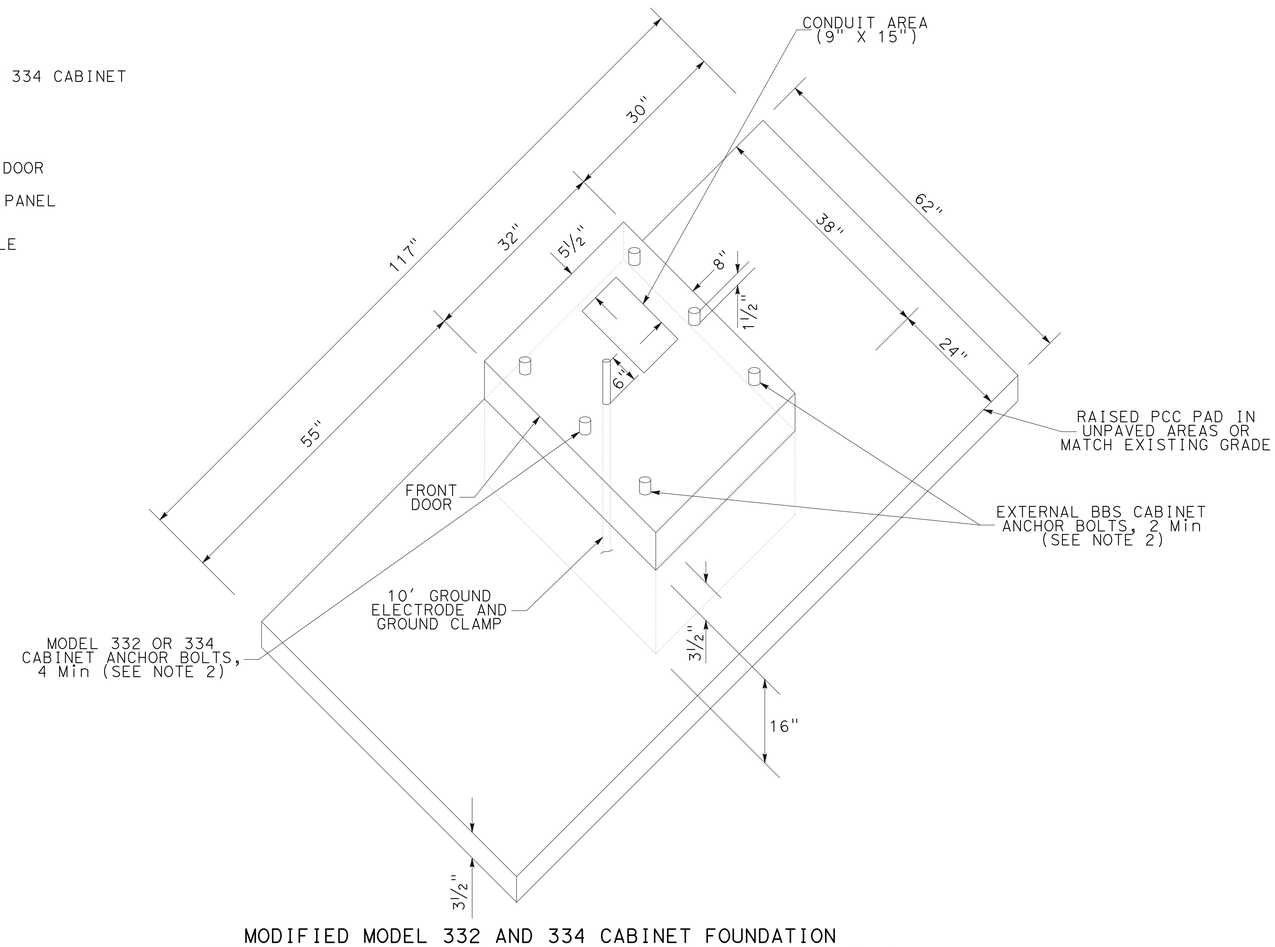

MODIFIED MODEL 332 AND 334 CABINET FOUNDATION DETAIL FOR BATTERY BACKUP SYSTEM (BBS)(FOR DIMENSIONS AND DETAIL NOT SHOWN AND ADDITIONAL NOTES, SEE STANDARD PLAN ES-3C FOR MODEL 332 AND 334 CABINETS)

ELECTRICAL SYSTEMS (BBS FOUNDATION DETAILS)

NO SCALE

E-31

STATE OF CALIFORNIA - DEPARTMENT OF TRANSPORTATION
Caltrans

CONSULTANT FUNCTIONAL SUPERVISOR: EDGAR A. CAMERINO
CALCULATED-DESIGNED BY: CARLOS PEREZ
CHECKED BY: MARK JUGAR
REVISED BY
DATE REVISED

LAST REVISION 04-25-14
DATE PLOTTED => 17-SEP-2014
TIME PLOTTED => 14:57

Dist	COUNTY	ROUTE	POST MILES TOTAL PROJECT	SHEET No.	TOTAL SHEETS
11	SD	163	8.4/9.4	261	332

REGISTERED CIVIL ENGINEER 10-10-13 DATE

09-15-14
PLANS APPROVAL DATE

REGISTERED PROFESSIONAL ENGINEER MARK M. JUGAR No. 66939 Exp. 09-30-16 CIVIL STATE OF CALIFORNIA

THE STATE OF CALIFORNIA OR ITS OFFICERS OR AGENTS SHALL NOT BE RESPONSIBLE FOR THE ACCURACY OR COMPLETENESS OF SCANNED COPIES OF THIS PLAN SHEET.

CITY OF SAN DIEGO
600 B ST, SUITE 800
SAN DIEGO, CA 92101

RICK ENGINEERING COMPANY
5620 FRIARS RD
SAN DIEGO, CA 92110
(619) 291-0707

NOTES:

1. FOR ACCURATE RIGHT OF WAY DATA, CONTACT RIGHT OF WAY ENGINEERING AT THE DISTRICT OFFICE.

CONDUIT NOTES(TSO):

1. Exist 2 1/2"C., Exist 3dlc, Exist 2 WIRE INTERCONNECT, RC Exist 2 WIRE INTERCONNECT, ADD 1 SIC
2. Exist 2"C., Exist 2dlc, Exist 2 WIRE INTERCONNECT, RC Exist 2 WIRE INTERCONNECT, ADD 1 SIC
3. Exist 2"C., Exist 2 WIRE INTERCONNECT, RC Exist 2 WIRE INTERCONNECT, ADD 1 SIC
4. Exist 2"C., Exist 6#14, Exist 2 WIRE INTERCONNECT, RC 2 WIRE INTERCONNECT, ADD 1 SIC
5. Exist 2 1/2"C., Exist 3 dlc, Exist 6#14, Exist 2#10 (lighting), Exist 1#8 (ground), Exist 2 WIRE INTERCONNECT, RC Exist 2 WIRE INTERCONNECT, ADD 1 SIC.
6. Exist 2 1/2"C., Exist 6#14, Exist 2#10 (lighting), Exist 1#8 (ground).
7. Exist 2 1/2"C., Exist 8#14, Exist 2#10 (lighting), Exist 1#8 (ground).
8. Exist 2 1/2"C., Exist 8#14, Exist 3 dlc
9. Exist 2 1/2"C., Exist 10#14, Exist 9 dlc, Exist 2 WIRE INTERCONNECT, RC Exist 2 WIRE INTERCONNECT, ADD 1 SIC
10. Exist 2"C., Exist 3dlc
11. Exist 2"C., Exist 2#10 (lighting), 1#8 (ground).
12. Exist 2"C., Exist 2#6 (power).

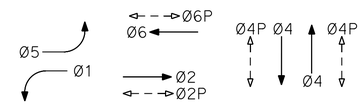

TRAFFIC PHASE DIAGRAM
STEADY DEMAND SEQUENCE

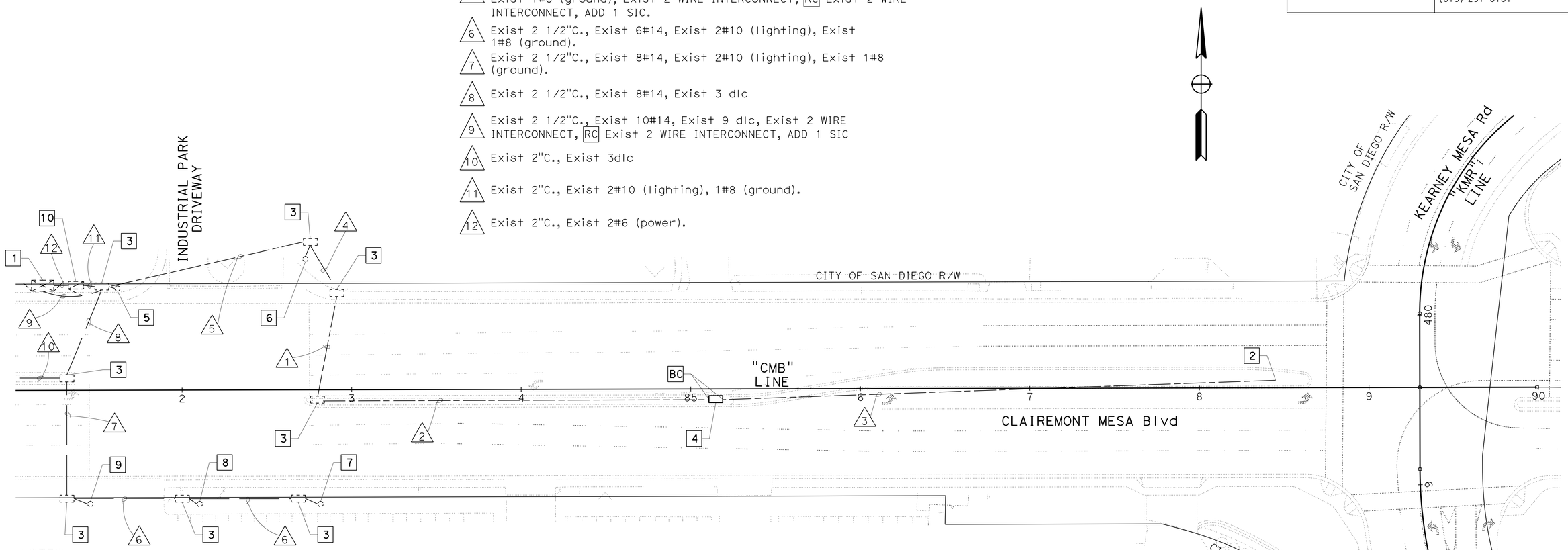

NOTES:

1. Exist TYPE 170 CONTROLLER IN TYPE R CABINET TO REMAIN. DISCONNECT Exist 2 WIRE INTERCONNECT. DISCONNECT Exist 2 WIRE INTERCONNECT AT CONTROLLER LOCATED AT THE NW CORNER OF CLAIREMONT MESA Blvd AND KEARNEY MESA Rd RC Exist 2 WIRE INTERCONNECT. CONNECT NEW SIC FOR COMMUNICATION WITH PROPOSED TRAFFIC SIGNAL CONTROLLER LOCATED AT THE SW CORNER OF CLAIREMONT MESA Blvd AND KEARNEY MESA Rd.
2. CONNECT TO PROPOSED PULL BOX AT APPROXIMATE STA 88+50. REFER TO SHEET E-3 SIGNAL AND LIGHTING (CITY) FOR CONTINUITY.
3. Exist PULL BOX TO BE PROTECTED IN PLACE.
4. RC Exist PULL BOX. INSTALL A NEW #5 PULL BOX.
5. Exist TYPE XXVI-A (MODIFIED) POLE DUAL DIRECTION, MULTI-SIGNAL MAST ARM MOUNTING INSTALLATION; 45′ AND 20′ MAST ARMS, 15′ LUMINAIRE ARM, 150W LUMINAIRE, MAT (PV), 3 MAS, SV-2-T, SP-2-T, PPB (Ø4P), PPB (Ø6P). ALL EQUIPMENT TO REMAIN.
6. Exist TYPE XV POLE; 15′ LUMINAIRE ARM, 150W LUMINAIRE, SV-2-T, SP-2-T, PPB (Ø4P), PPB (Ø6P). ALL EQUIPMENT TO REMAIN.
7. Exist TYPE XXVI-A POLE; 45′ MAST ARM, 15′ LUMINAIRE ARM, 150W LUMINAIRE, MAT (PV), 2-MAS, SV-2-T, SP-1-T, PPB (Ø2P), PPB(Ø4P). ALL EQUIPMENT TO REMAIN.
8. Exist TYPE 1-A POLE; TV-1, TP-1-T, PPB (Ø2P). ALL EQUIPMENT TO REMAIN.
9. Exist TYPE 1-A POLE; TV-2, TP-2-T, PPB (Ø2P), PPB (Ø4P). ALL EQUIPMENT TO REMAIN.
10. Exist TYPE III-BF SIGNAL AND LIGHTING SERVICE EQUIPMENT ENCLOSURE TO REMAIN. Exist 50A-1P CB (signal) TO REMAIN. Exist 30A-1P CB (lighting) TO REMAIN.

APPROVED FOR ELECTRICAL WORK ONLY

ELECTRICAL SYSTEM (INTERCONNECT DETAILS)

NO SCALE

E-32

STATE OF CALIFORNIA - DEPARTMENT OF TRANSPORTATION
Caltrans

CONSULTANT FUNCTIONAL SUPERVISOR: EDGAR A. CAMERINO
CALCULATED-DESIGNED BY: CARLOS PEREZ
CHECKED BY: MARK JUGAR
REVISED BY
DATE REVISED

LAST REVISION 04-25-14
DATE PLOTTED => 17-SEP-2014
TIME PLOTTED => 14:57

Dist	COUNTY	ROUTE	POST MILES TOTAL PROJECT	SHEET No.	TOTAL SHEETS
11	SD	163	8.4/9.4	262	332

REGISTERED CIVIL ENGINEER 10-10-13 DATE

09-15-14
PLANS APPROVAL DATE

REGISTERED PROFESSIONAL ENGINEER MARK M. JUGAR No. 66939 Exp. 09-30-16 CIVIL STATE OF CALIFORNIA

THE STATE OF CALIFORNIA OR ITS OFFICERS OR AGENTS SHALL NOT BE RESPONSIBLE FOR THE ACCURACY OR COMPLETENESS OF SCANNED COPIES OF THIS PLAN SHEET.

CITY OF SAN DIEGO
600 B ST, SUITE 800
SAN DIEGO, CA 92101

RICK ENGINEERING COMPANY
5620 FRIARS RD
SAN DIEGO, CA 92110
(619) 291-0707

NOTES:

1. FOR ACCURATE RIGHT OF WAY DATA, CONTACT RIGHT OF WAY ENGINEERING AT THE DISTRICT OFFICE.

CONDUIT NOTES(TSO):

1. Exist 2"C., Exist sic (future), RC Exist sic (future), ADD 1 SIC
2. Exist 2"C., Exist 2-cat5E, Exist sic (future), RC Exist sic (future), ADD 1 SIC
3. Exist 2"C., Exist cat5E, Exist sic (future), RC Exist sic (future), ADD 1 SIC
4. Exist 2"C., Exist cat5E, Exist sic, Exist sic (future), RC Exist sic (future), ADD 1 SIC

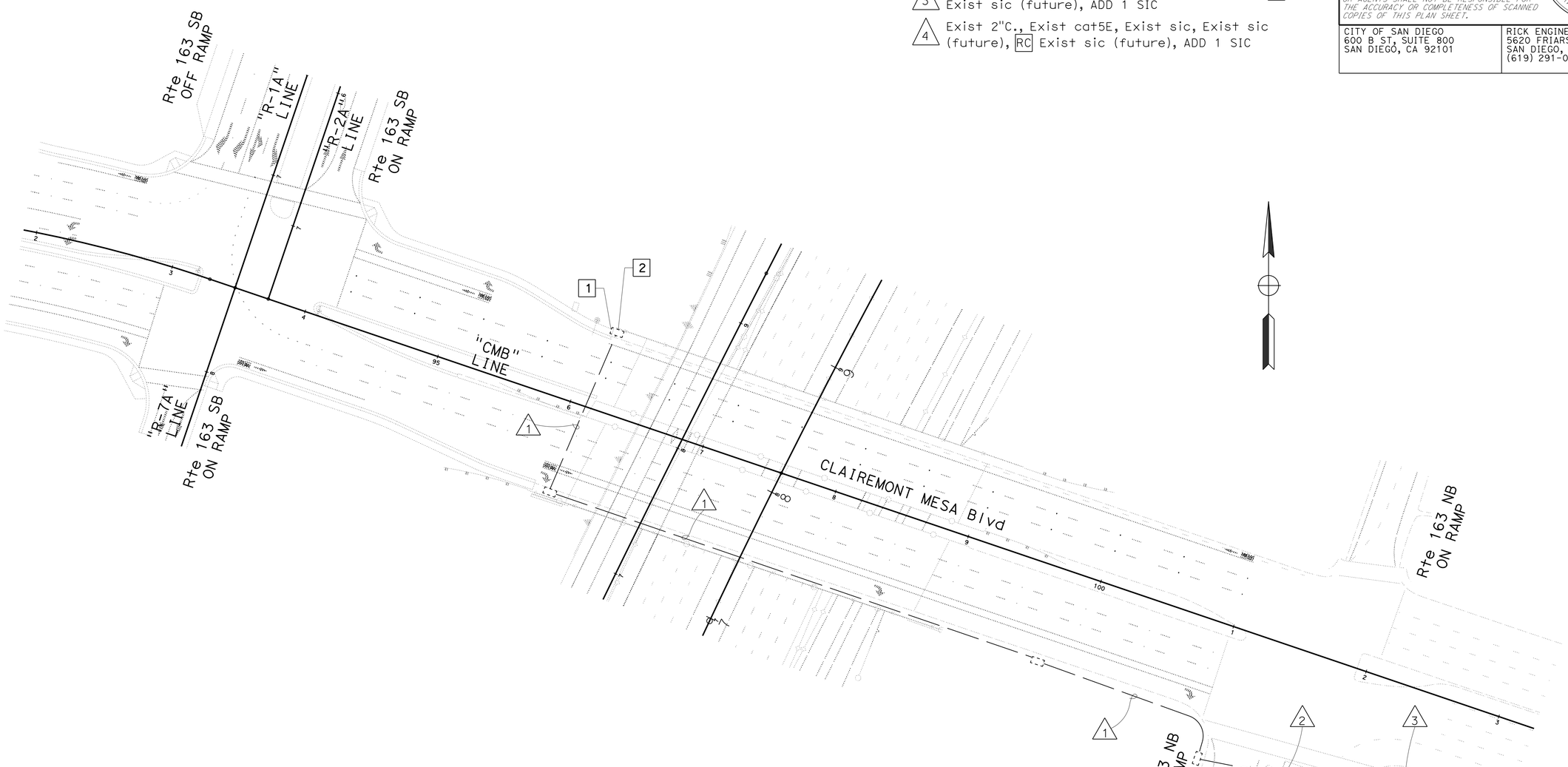

NOTES:

1. REFER TO SHEET E-8 FOR CONTINUITY.
2. RC Exist 1 sic (FUTURE).
3. Exist CONTROLLER (P8.818) LOCATED AT THE SW CORNER OF CLAIREMONT MESA Blvd AND Rte 163 NB RAMPS TO REMAIN. DISCONNECT AND RC 1 SIC (FUTURE). ADD 1 SIC FOR COMMUNICATION WITH PROPOSED TRAFFIC SIGNAL CONTROLLER TO BE LOCATED AT THE NW CORNER OF Rte 163 SB RAMPS (P8.797). REFER TO SHEET E-8 FOR ADDITIONAL DETAILS.

APPROVED FOR ELECTRICAL WORK ONLY

ELECTRICAL SYSTEM (INTERCONNECT DETAILS)

NO SCALE

E-33

STATE OF CALIFORNIA - DEPARTMENT OF TRANSPORTATION
Caltrans

CONSULTANT FUNCTIONAL SUPERVISOR: EDGAR A. CAMERINO
CALCULATED-DESIGNED BY: CARLOS PEREZ
CHECKED BY: MARK JUGAR
REVISED BY
DATE REVISED

LAST REVISION 04-25-14
DATE PLOTTED => 17-SEP-2014
TIME PLOTTED => 14:57

Dist	COUNTY	ROUTE	POST MILES TOTAL PROJECT	SHEET No.	TOTAL SHEETS
11	SD	163	8.4/9.4	263	332

REGISTERED CIVIL ENGINEER 10-10-13 DATE

09-15-14
PLANS APPROVAL DATE

REGISTERED PROFESSIONAL ENGINEER MARK M. JUGAR No. 66939 Exp. 09-30-16 CIVIL STATE OF CALIFORNIA

THE STATE OF CALIFORNIA OR ITS OFFICERS OR AGENTS SHALL NOT BE RESPONSIBLE FOR THE ACCURACY OR COMPLETENESS OF SCANNED COPIES OF THIS PLAN SHEET.

CITY OF SAN DIEGO
600 B ST, SUITE 800
SAN DIEGO, CA 92101

RICK ENGINEERING COMPANY
5620 FRIARS RD
SAN DIEGO, CA 92110
(619) 291-0707

NOTES:

1. SEE CAMERA CABLE CROSS SECTION ON THIS SHEET.
2. RJ-45 OR CONNECTOR PER VIDEO ENCODER MANUFACTURER'S REQUIREMENT.
3. PROTECT AND INSULATE CABLES/CONDUCTORS USING HEAT-SHRINK TUBING METHOD. NO SPLICES ALLOWED EXCEPT FOR POWER.
4. GROUND CAMERA CABLE AT CCTV CABINET.
5. MIn. 50" OF SLACK IS REQUIRED FROM CAMERA CABLE TO THE CONNECTORS IN CCTV CABINETS.
6. RS-422 TWO TWISTED PAIR CABLE WITH 22, 24, OR 26 AWG.
7. TO VIDEO ENCODER AT CCTV CABINET, VIDEO INPUT.
8. SEE TABLE "A" FOR CONNECTOR'S PIN ASSIGNMENT.
9. PLACE WATER TIGHT CABLE ENTRY SEAL AND WATER TIGHT SEAL RING REQUIRED FOR CONNECTOR.
10. THE CONTRACTOR SHALL VERIFY THE LENGTH OF CAMERA CABLE AT EACH LOCATION AS SHOWN IN ELECTRICAL PLANS. A SLACK OF 80" IS REQUIRED AT EACH LOCATION.
11. SEE ELECTRICAL DETAILS FOR CCTV CABINET COMPONENT DIAGRAM.
12. STRAIN RELIEF CABLE GRIP SUITABLE FOR CABLE WEIGHT AND DIAMETER.
13. CONNECT TO ADAPTER, SEE "ADAPTER DETAIL".
14. OUTSIDE JACKET OR SLEEVING REQUIRED.

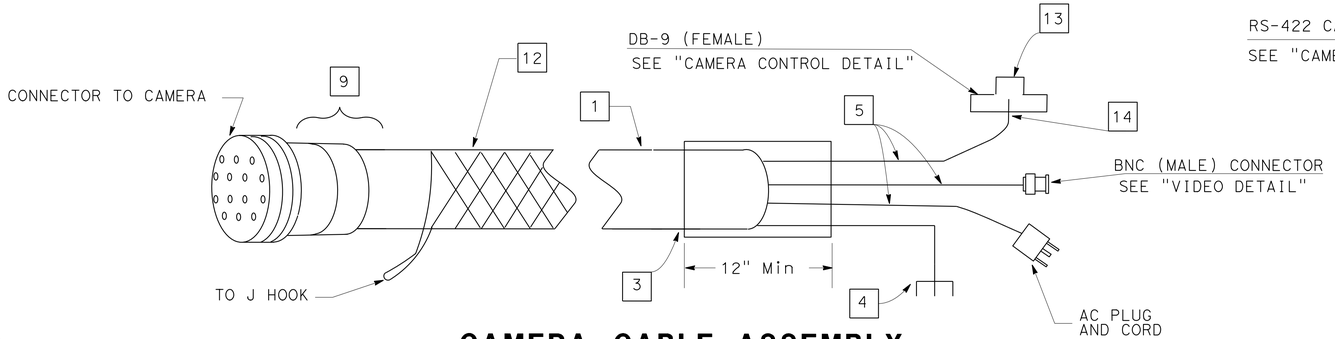

CAMERA CABLE ASSEMBLY

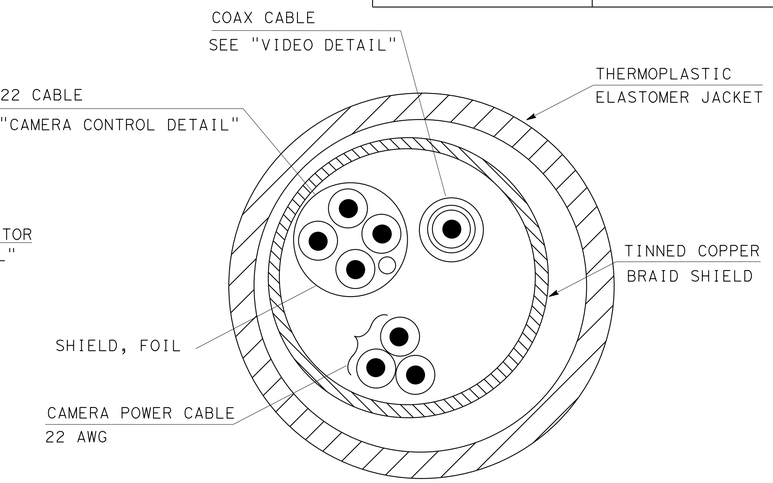

CAMERA CABLE CROSS SECTION

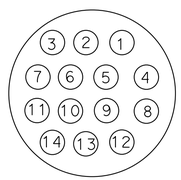

CONNECTOR TO CAMERA
(PLAN VIEW) 8

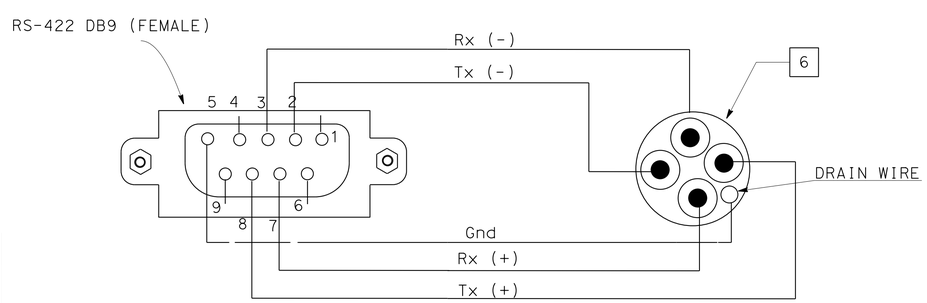

"CAMERA CONTROL DETAIL"

TABLE "A":

PIN ASSIGNMENT	
PIN	FUNCTION
1	CAMERA CONTROL RX-
2	CAMERA CONTROL RX+
3	CAMERA CONTROL TX-
4	CAMERA CONTROL TX+
5	DATA GROUND
6	CAMERA CABLE GROUND (SHIELD)
8	VIDEO SIGNAL COAX INNER CORE
9	VIDEO SIGNAL COAX SHIELD
10	CAMERA POWER,GROUND
13	CAMERA POWER,AC LOW
14	CAMERA POWER,AC HIGH

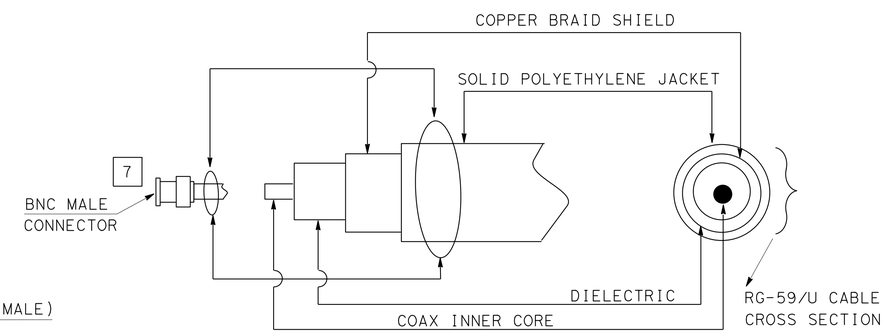

"VIDEO DETAIL"

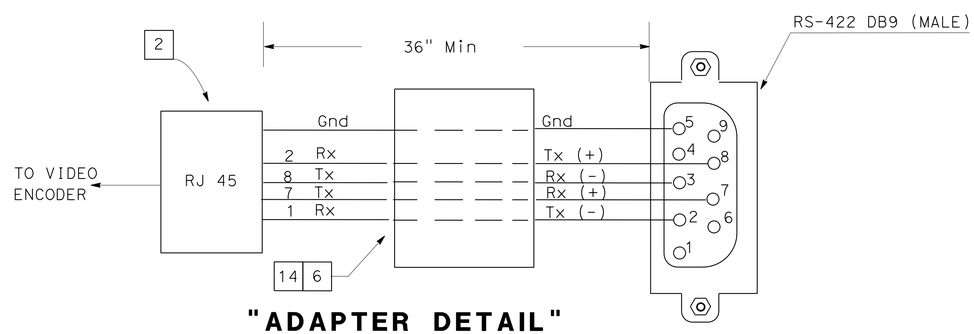

"ADAPTER DETAIL"

DB9 TO RJ 45 MODULAR ADAPTER

CLOSED CIRCUIT TELEVISION SYSTEM (ELECTRICAL DETAILS)

NO SCALE

E-34

STATE OF CALIFORNIA - DEPARTMENT OF TRANSPORTATION
Caltrans

CONSULTANT FUNCTIONAL SUPERVISOR: EDGAR A. CAMERINO
CALCULATED-DESIGNED BY: CARLOS PEREZ
CHECKED BY: MARK JUGAR
REVISED BY
DATE REVISED

LAST REVISION 04-25-14
DATE PLOTTED => 17-SEP-2014
TIME PLOTTED => 14:57

M

Maint	MAINTENANCE
Max	MAXIMUM
MB	METAL BEAM
MBB	METAL BEAM BARRIER
MBGR	METAL BEAM GUARD RAILING
Med	MEDIAN
MGS	MIDWEST GUARDRAIL SYSTEM
MH	MANHOLE
Min	MINIMUM
Misc	MISCELLANEOUS
Misc I & S	MISCELLANEOUS IRON AND STEEL
Mkr	MARKER
Mod	MODIFIED,
	MODIFY
Mon	MONUMENT
MP	METAL PLATE
MPGR	METAL PLATE GUARD RAILING
MR	MOVEMENT RATING
MSE	MECHANICALLY STABILIZED EMBANKMENT
Mt	MOUNTAIN, MOUNT
Mtl	MATERIAL
MVP	MAINTENANCE VEHICLE PULLOUT

N

N	NORTH
NB	NORTHBOUND
No.	NUMBER (MUST HAVE PERIOD)
Nos.	NUMBERS (MUST HAVE PERIOD)
NPS	NOMINAL PIPE SIZE
NS	NEAR SIDE
NSP	NEW STANDARD PLAN
NTS	NOT TO SCALE

O

Oblr	OBLITERATE
OC	OVERCROSSING
OD	OUTSIDE DIAMETER
OF	OUTSIDE FACE
OG	ORIGINAL GROUND
OGAC	OPEN GRADED ASPHALT CONCRETE
OGFC	OPEN GRADED FRICTION COURSE
OH	OVERHEAD
OHWM	ORDINARY HIGH WATER MARK
O-O	OUT TO OUT
Opp	OPPOSITE
OSD	OVERSIDE DRAIN

P

P	PAGE
PAP	PERFORATED ALUMINUM PIPE
PB	PULL BOX
PC	POINT OF CURVATURE,
	PRECAST
PCC	POINT OF COMPOUND CURVE,
	PORTLAND CEMENT CONCRETE
PCMS	PORTABLE CHANGEABLE MESSAGE SIGN
PCP	PERFORATED CONCRETE PIPE,
	PRESTRESSED CONCRETE PIPE
PCVC	POINT OF COMPOUND VERTICAL CURVE
PEC	PERMIT TO ENTER AND CONSTRUCT
Ped	PEDESTRIAN
Ped OC	PEDESTRIAN OVERCROSSING
Ped UC	PEDESTRIAN UNDERCROSSING
Perm Mtl	PERMEABLE MATERIAL

P continued

PG	PROFILE GRADE
PI	POINT OF INTERSECTION
PJP	PARTIAL JOINT PENETRATION
Pkwy	PARKWAY
ℙ,PL	PLATE
P/L	PROPERTY LINE
PM	POST MILE,
	TIME FROM NOON TO MIDNIGHT
PN	PAVING NOTCH
POC	POINT OF HORIZONTAL CURVE
POT	POINT OF TANGENT
POVC	POINT OF VERTICAL CURVE
PP	PIPE PILE,
	PLASTIC PIPE,
	POWER POLE
PPL	PREFORMED PERMEABLE LINER
PPP	PERFORATED PLASTIC PIPE
PRC	POINT OF REVERSE CURVE
PRF	PAVEMENT REINFORCING FABRIC
PRVC	POINT OF REVERSE VERTICAL CURVE
PS&E	PLANS, SPECIFICATIONS AND ESTIMATES
PS, P/S	PRESTRESSED
PSP	PERFORATED STEEL PIPE
PT	POINT OF TANGENCY
PVC	POLYVINYL CHLORIDE
Pvmt	PAVEMENT

Q

Qty	QUANTITY

R

R	RADIUS
R & D	REMOVE AND DISPOSE
R & S	REMOVE AND SALVAGE
R/C	RATE OF CHANGE
RCA	REINFORCED CONCRETE ARCH
RCB	REINFORCED CONCRETE BOX
RCP	REINFORCED CONCRETE PIPE
RCPA	REINFORCED CONCRETE PIPE ARCH
Rd	ROAD
Reinf	REINFORCED,
	REINFORCEMENT,
	REINFORCING
Rel	RELOCATE
Repl	REPLACEMENT
Ret	RETAINING
Rev	REVISED, REVISION
Rdwy	ROADWAY
RHMA	RUBBERIZED HOT MIX ASPHALT
Riv	RIVER
RM	ROAD-MIXED
RP	RADIUS POINT,
	REFERENCE POINT
RR	RAILROAD
RSP	ROCK SLOPE PROTECTION,
	REVISED STANDARD PLAN
Rt	RIGHT
Rte	ROUTE
RW	REDWOOD,
	RETAINING WALL
R/W	RIGHT OF WAY
Rwy	RAILWAY

S

S	SOUTH,
	SUPPLEMENT
SAE	STRUCTURE APPROACH EMBANKMENT
Salv	SALVAGE
SAPP	STRUCTURAL ALUMINUM PLATE PIPE
SB	SOUTHBOUND
SC	SAND CUSHION
SCSP	SLOTTED CORRUGATED STEEL PIPE
SD	STORM DRAIN
Sec	SECOND,
	SECTION
Sep	SEPARATION
SG	SUBGRADE
Shld	SHOULDER
Sht	SHEET
Sim	SIMILAR
℄	STATION LINE
SM	SELECTED MATERIAL
Spec	SPECIAL,
	SPECIFICATIONS
SPP	SLOTTED PLASTIC PIPE
SS	SLOPE STAKE
SSBM	STRAP AND SADDLE BRACKET METHOD
SSD	STRUCTURAL SECTION DRAIN
SSPA	STRUCTURAL STEEL PLATE ARCH
SSPP	STRUCTURAL STEEL PLATE PIPE
SSPPA	STRUCTURAL STEEL PLATE PIPE ARCH
SSRP	STEEL SPIRAL RIB PIPE
St	STREET
Sta	STATION
STBB	SINGLE THRIE BEAM BARRIER
Std	STANDARD
Str	STRUCTURE
Surf	SURFACING
SW	SIDEWALK,
	SOUND WALL
Swr	SEWER
Sym	SYMMETRICAL
S4S	SURFACE 4 SIDES

T

T	SEMI-TANGENT
Tan	TANGENT
TBB	THRIE BEAM BARRIER
Tbr	TIMBER
TC	TOP OF CURB
TCB	TRAFFIC CONTROL BOX
TCE	TEMPORARY CONSTRUCTION EASEMENT
Tel	TELEPHONE
Temp	TEMPORARY
TG	TOP OF GRADE
Tot	TOTAL
TP	TELEPHONE POLE
TPB	TREATED PERMEABLE BASE
TPM	TREATED PERMEABLE MATERIAL
Trans	TRANSITION

T continued

TS	TRANSVERSE,
	TRAFFIC SIGNAL,
	TUBULAR STEEL
Typ	TYPICAL

U

UC	UNDERCROSSING
UD	UNDERDRAIN
UG	UNDERGROUND
UON	UNLESS OTHERWISE NOTED
UP	UNDERPASS

V

V	VALVE,
	DESIGN SPEED
Var	VARIABLE,
	VARIES
VC	VERTICAL CURVE
VCP	VITRIFIED CLAY PIPE
Vert	VERTICAL
Via	VIADUCT
Vol	VOLUME

W

W	WEST,
	WIDTH
WB	WESTBOUND
WH	WEEP HOLE
WM	WIRE MESH
WS	WATER SURFACE
WSP	WELDED STEEL PIPE
Wt	WEIGHT
WV	WATER VALVE
WW	WINGWALL
WWLOL	WINGWALL LAYOUT LINE

X

X Sec	CROSS SECTION
Xing	CROSSING

Y

Yr	YEAR
Yrs	YEARS

Dist	COUNTY	ROUTE	POST MILES TOTAL PROJECT	SHEET No.	TOTAL SHEETS
11	SD	163	8.4/9.4	264	332

Grace M. Tsushima
REGISTERED CIVIL ENGINEER

July 19, 2013
PLANS APPROVAL DATE

REGISTERED PROFESSIONAL ENGINEER
Grace M. Tsushima
No. C49814
Exp. 9-30-14
CIVIL
STATE OF CALIFORNIA

THE STATE OF CALIFORNIA OR ITS OFFICERS OR AGENTS SHALL NOT BE RESPONSIBLE FOR THE ACCURACY OR COMPLETENESS OF SCANNED COPIES OF THIS PLAN SHEET.

TO ACCOMPANY PLANS DATED 09-15-14

UNIT OF MEASUREMENT SYMBOLS:

Some of the symbols used in the project plan quantity tables and in the Bid Item List are:

TABLE A

SYMBOL USED	DEFINITIONS
ACRE	ACRE
CF	CUBIC FOOT
CY	CUBIC YARD
EA	EACH
GAL	GALLON
LB	POUND
LF	LINEAR FOOT
SQFT	SQUARE FOOT
SQYD	SQUARE YARD
STA	100 FEET
TAB	TABLET
TON	2,000 POUNDS

Some of the symbols used in the plans other than in the project plan quantity tables are:

TABLE B

SYMBOL USED	DEFINITIONS
ksi	KIPS PER SQUARE INCH
ksf	KIPS PER SQUARE FOOT
psi	POUNDS PER SQUARE INCH
psf	POUNDS PER SQUARE FOOT
lb/ft^3, pcf	POUNDS PER CUBIC FOOT
tsf	TONS PER SQUARE FOOT
mph, MPH *	MILES PER HOUR
ø	NOMINAL DIAMETER
oz	OUNCE
lb	POUND
kip	1,000 POUNDS
cal	CALORIE
ft	FOOT OR FEET
gal	GALLON

* For use on a sign panel only

STATE OF CALIFORNIA
DEPARTMENT OF TRANSPORTATION

ABBREVIATIONS (SHEET 2 OF 2)

NO SCALE

RSP A10B DATED JULY 19, 2013 SUPERSEDES STANDARD PLAN A10B DATED MAY 20, 2011 - PAGE 2 OF THE STANDARD PLANS BOOK DATED 2010.

REVISED STANDARD PLAN RSP A10B

2010 REVISED STANDARD PLAN RSP A10B

6-7-13

Dist	COUNTY	ROUTE	POST MILES TOTAL PROJECT	SHEET No.	TOTAL SHEETS
11	SD	163	8.4/9.4	265	332

REGISTERED CIVIL ENGINEER

July 19, 2013
PLANS APPROVAL DATE

REGISTERED PROFESSIONAL ENGINEER Roberta L. McLaughlin No. C40375 Exp. 3-31-15 CIVIL STATE OF CALIFORNIA

THE STATE OF CALIFORNIA OR ITS OFFICERS OR AGENTS SHALL NOT BE RESPONSIBLE FOR THE ACCURACY OR COMPLETENESS OF SCANNED COPIES OF THIS PLAN SHEET.

TO ACCOMPANY PLANS DATED 09-15-14

EXIT RAMP NEUTRAL AREA (GORE) TREATMENT

DETAIL 36

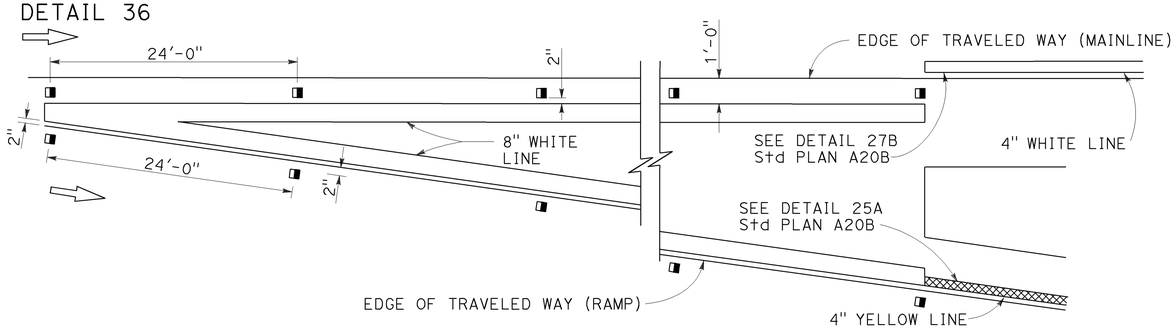

ENTRANCE RAMP NEUTRAL AREA (MERGE) TREATMENT

DETAIL 36A

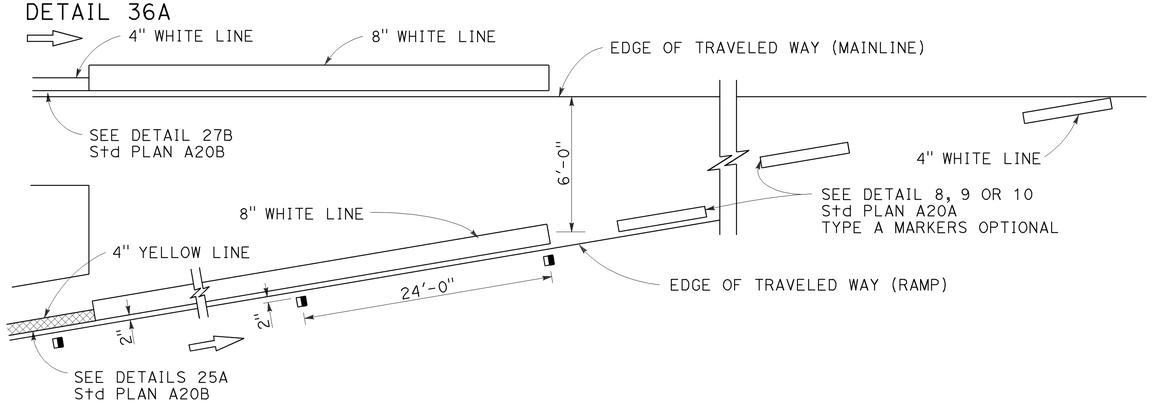

ENTRANCE RAMP NEUTRAL AREA (ACCELERATION LANE) TREATMENT

DETAIL 36B

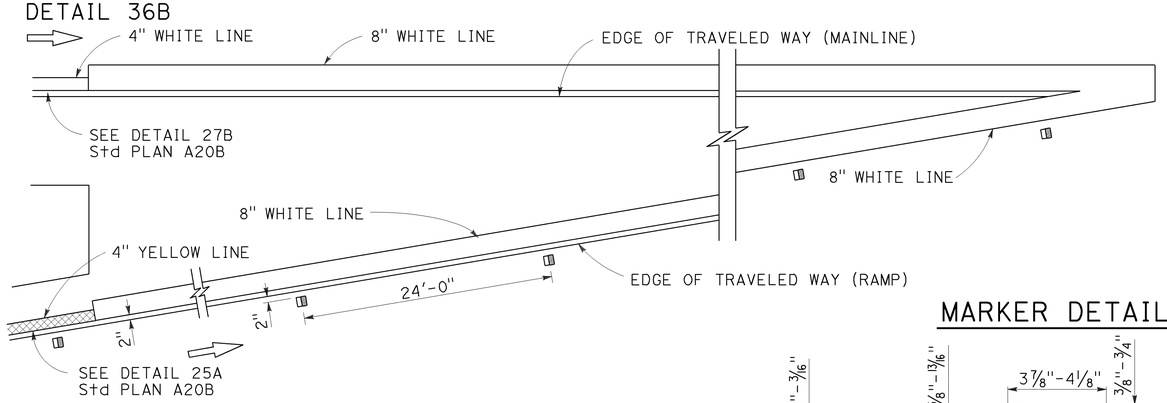

LANE DROP AT EXIT RAMPS

DETAIL 37

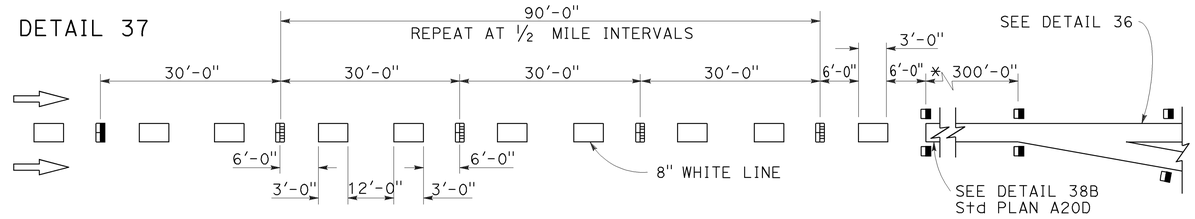

DETAIL 37A

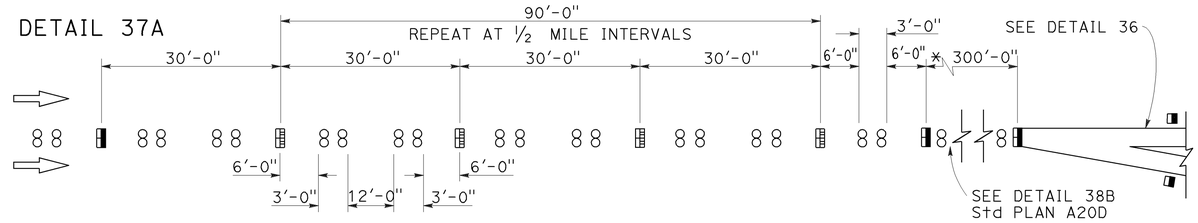

* The solid channelizing line shown may be omitted on short auxiliary lanes where weaving length is critical.

LANE DROP AT INTERSECTIONS

DETAIL 37B

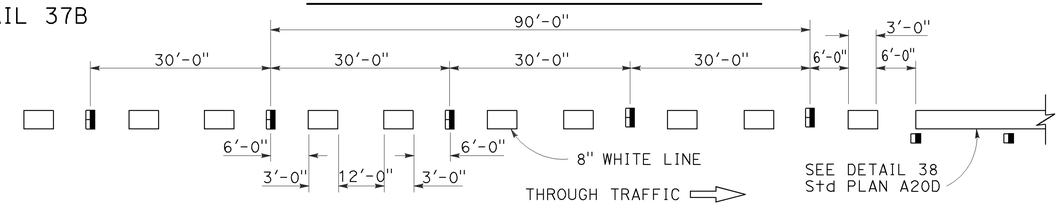

DETAIL 37C

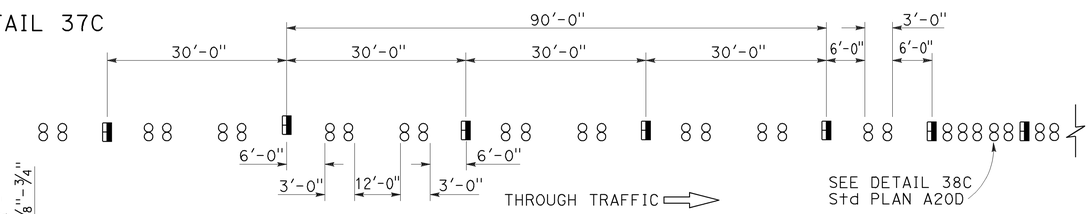

MARKER DETAILS

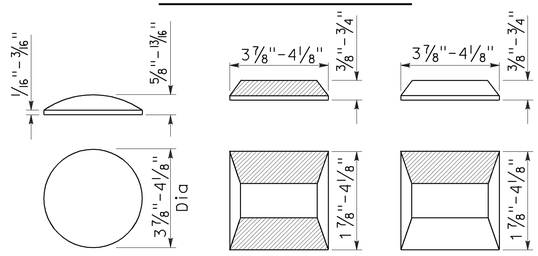

LEGEND:

MARKERS

- ○ TYPE A WHITE NON-REFLECTIVE
- ⊞ TYPE C RED-CLEAR RETROREFLECTIVE
- ◨ TYPE G ONE-WAY CLEAR RETROREFLECTIVE

STATE OF CALIFORNIA
DEPARTMENT OF TRANSPORTATION

PAVEMENT MARKERS AND TRAFFIC LINE TYPICAL DETAILS

NO SCALE

RSP A20C DATED JULY 19, 2013 SUPERSEDES STANDARD PLAN A20C DATED MAY 20, 2011 - PAGE 11 OF THE STANDARD PLANS BOOK DATED 2010.

REVISED STANDARD PLAN RSP A20C

2010 REVISED STANDARD PLAN RSP A20C

4-29-13

Dist	COUNTY	ROUTE	POST MILES TOTAL PROJECT	SHEET No.	TOTAL SHEETS
11	SD	163	8.4/9.4	266	332

REGISTERED CIVIL ENGINEER

April 20, 2012
PLANS APPROVAL DATE

REGISTERED PROFESSIONAL ENGINEER
Roberta L. McLaughlin
No. C40375
Exp. 3-31-13
CIVIL
STATE OF CALIFORNIA

THE STATE OF CALIFORNIA OR ITS OFFICERS OR AGENTS SHALL NOT BE RESPONSIBLE FOR THE ACCURACY OR COMPLETENESS OF SCANNED COPIES OF THIS PLAN SHEET.

TO ACCOMPANY PLANS DATED 09-15-14

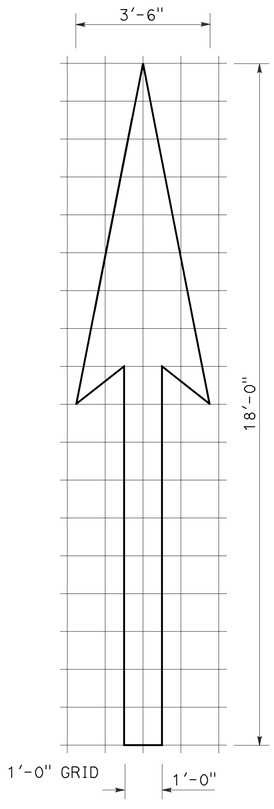

A=25 ft^2

TYPE I 18'-0" ARROW

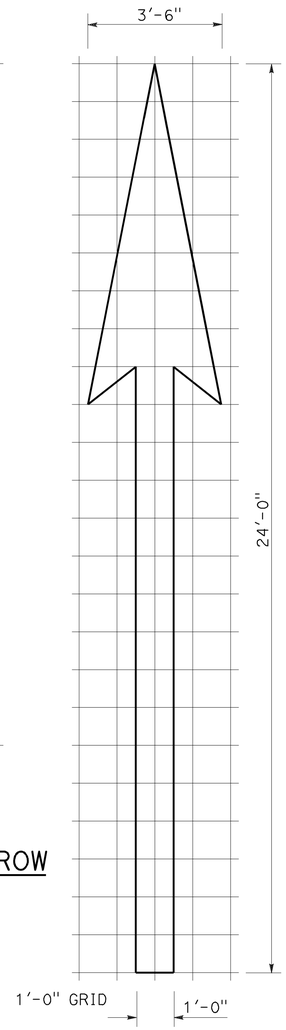

A=31 ft^2

TYPE I 24'-0" ARROW

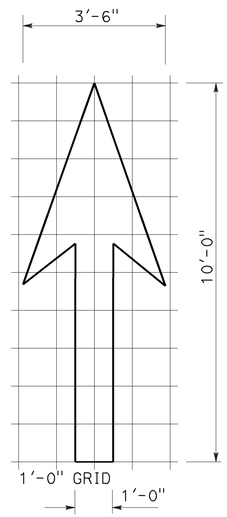

A=14 ft^2

TYPE I 10'-0" ARROW

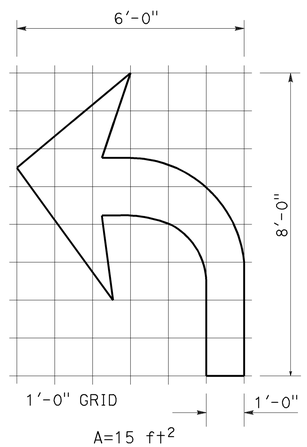

A=15 ft^2

TYPE IV (L) ARROW

(For Type IV (R) arrow, use mirror image)

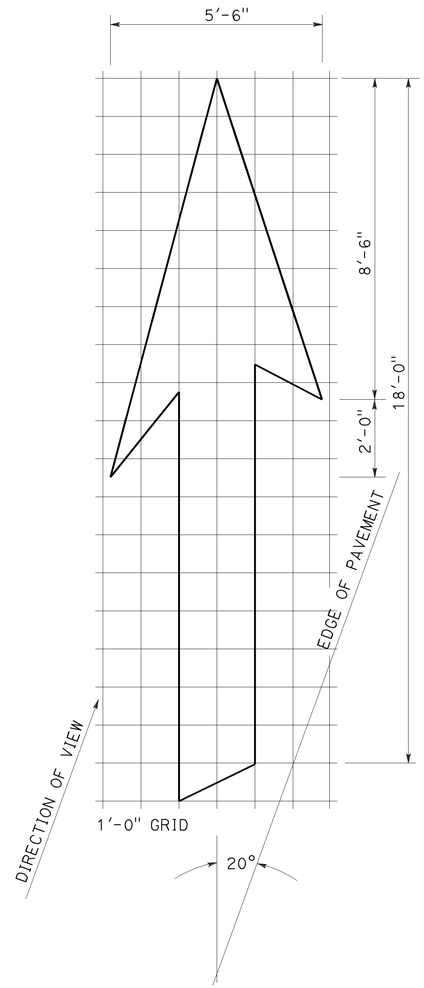

A=42 ft^2

TYPE VI ARROW

Right lane drop arrow
(For left lane, use mirror image)

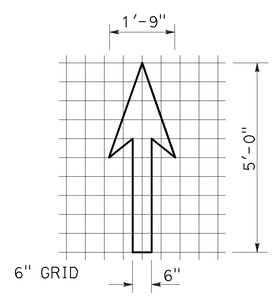

A=3.5 ft^2

BIKE LANE ARROW

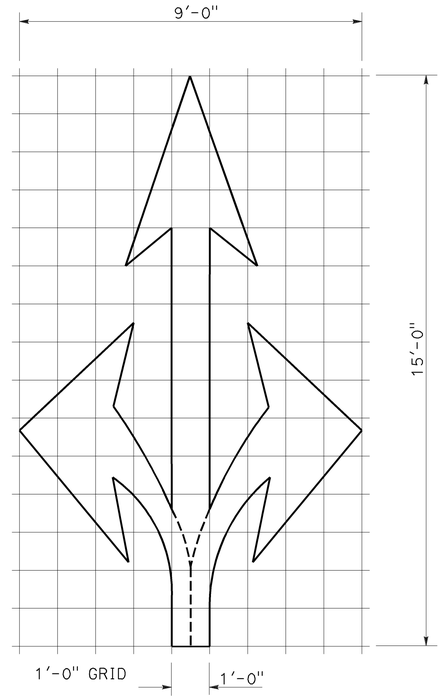

A=36 ft^2

TYPE VIII ARROW

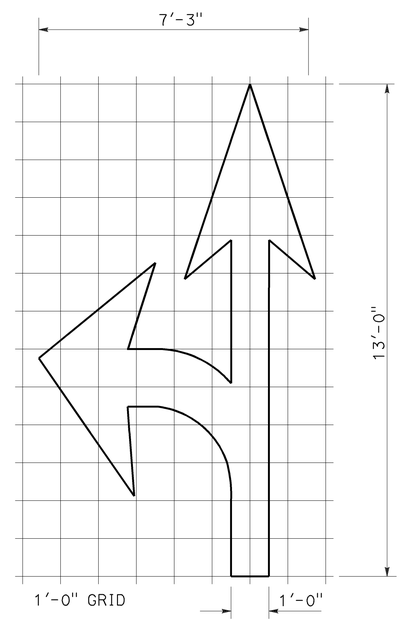

A=27 ft^2

TYPE VII (L) ARROW

(For Type VII (R) arrow, use mirror image)

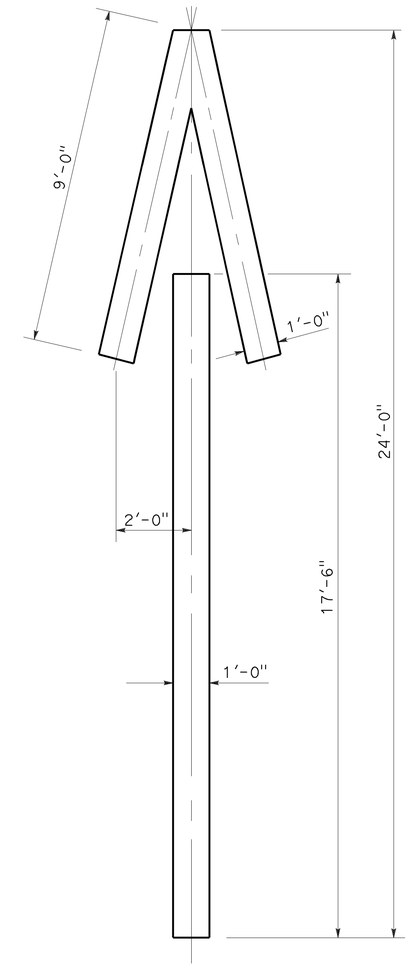

A=33 ft^2

TYPE V ARROW

NOTE:
Minor variations in dimensions may be accepted by the Engineer.

STATE OF CALIFORNIA
DEPARTMENT OF TRANSPORTATION

PAVEMENT MARKINGS ARROWS

NO SCALE

RSP A24A DATED APRIL 20, 2012 SUPERSEDES STANDARD PLAN A24A DATED MAY 20, 2011 - PAGE 13 OF THE STANDARD PLANS BOOK DATED 2010.

REVISED STANDARD PLAN RSP A24A

2010 REVISED STANDARD PLAN RSP A24A

3-14-12

Dist	COUNTY	ROUTE	POST MILES TOTAL PROJECT	SHEET No.	TOTAL SHEETS
11	SD	163	8.4/9.4	267	332

REGISTERED CIVIL ENGINEER

October 19, 2012
PLANS APPROVAL DATE

REGISTERED PROFESSIONAL ENGINEER
Roberta L. McLaughlin
No. C40375
Exp. 3-31-13
CIVIL
STATE OF CALIFORNIA

THE STATE OF CALIFORNIA OR ITS OFFICERS OR AGENTS SHALL NOT BE RESPONSIBLE FOR THE ACCURACY OR COMPLETENESS OF SCANNED COPIES OF THIS PLAN SHEET.

NOTE: TO ACCOMPANY PLANS DATED 09-15-14

Minor variations in dimensions may be accepted by the Engineer.

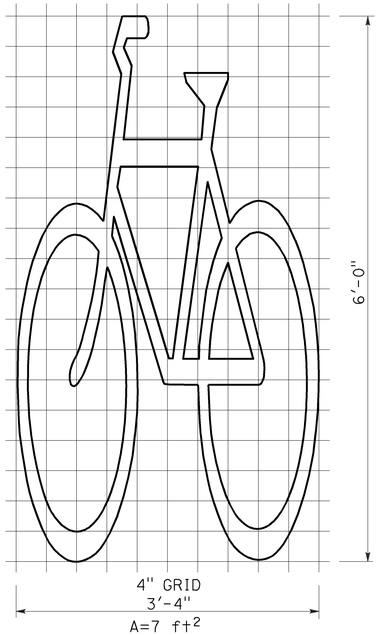

BIKE LANE SYMBOL WITHOUT PERSON

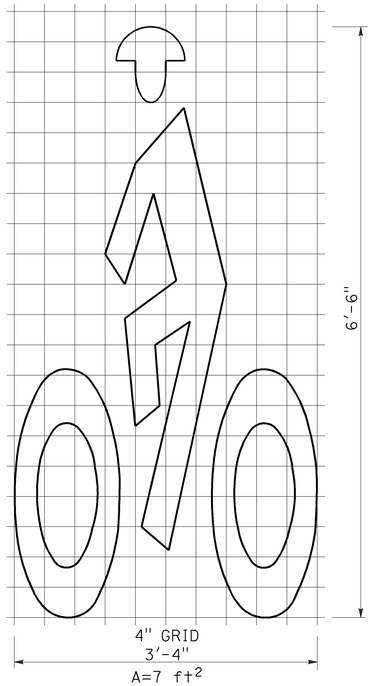

BIKE LANE SYMBOL WITH PERSON

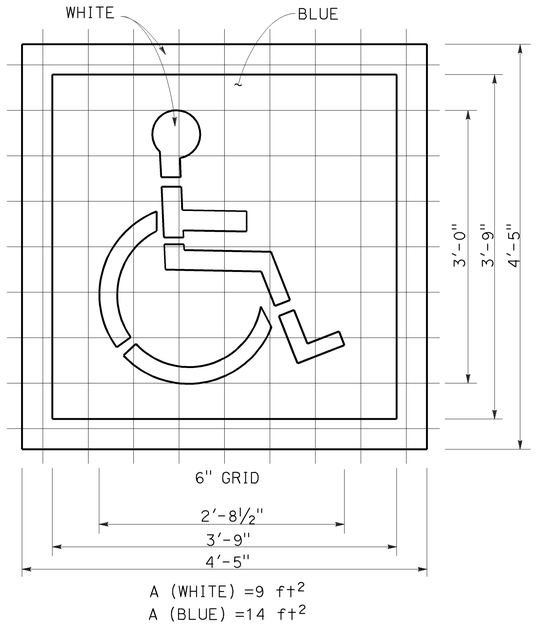

INTERNATIONAL SYMBOL OF ACCESSIBILITY (ISA) MARKING

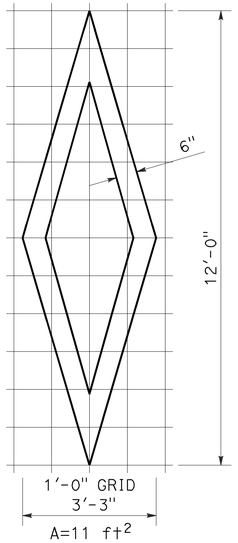

DIAMOND SYMBOL

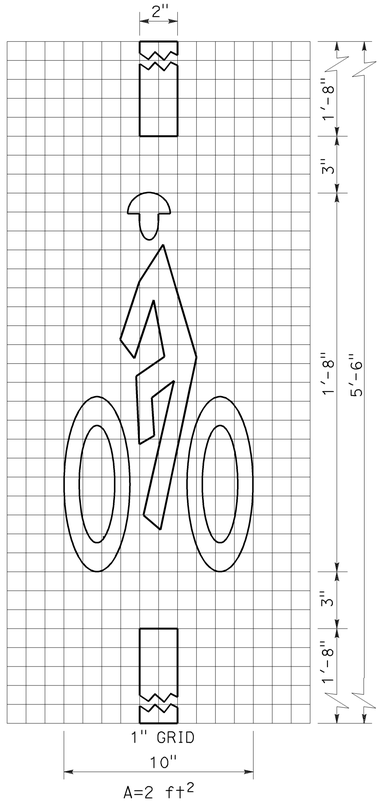

BICYCLE LOOP DETECTOR SYMBOL

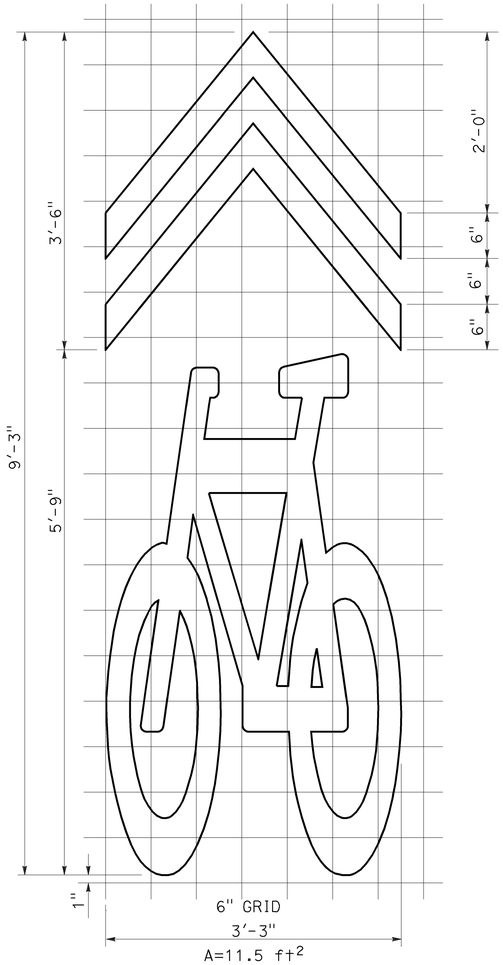

SHARED ROADWAY BICYCLE MARKING

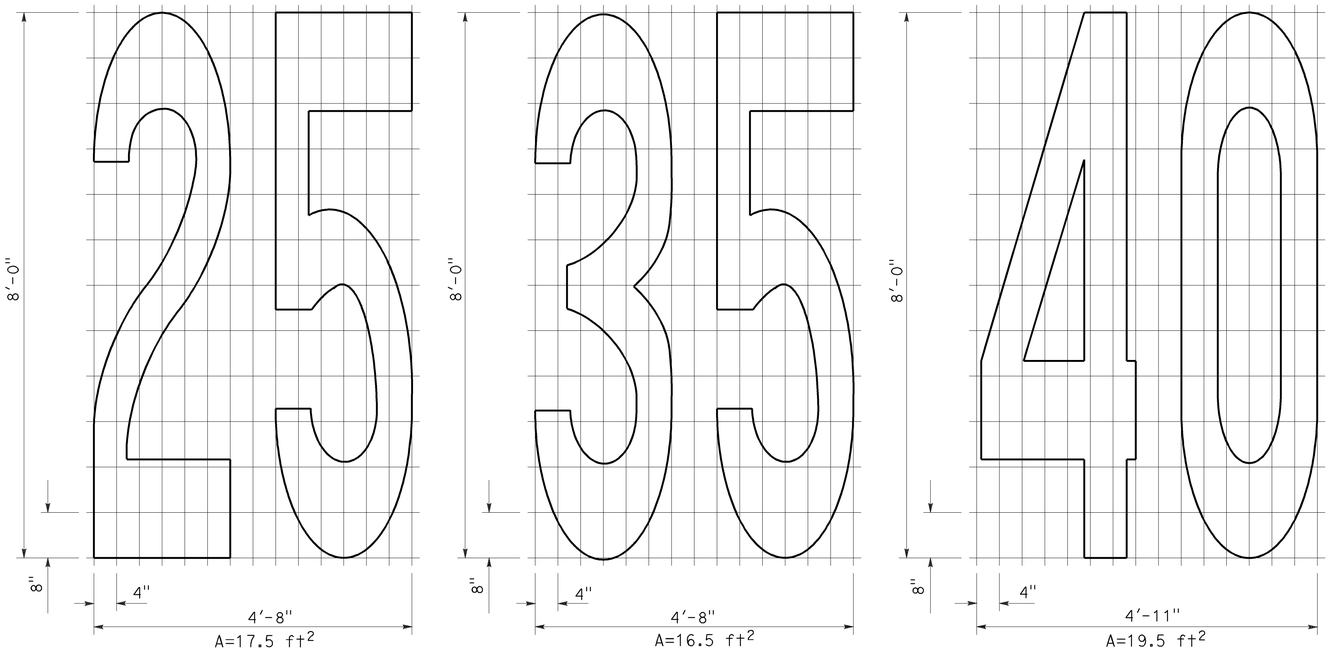

NUMERALS

STATE OF CALIFORNIA
DEPARTMENT OF TRANSPORTATION

PAVEMENT MARKINGS SYMBOLS AND NUMERALS

NO SCALE

RSP A24C DATED OCTOBER 19, 2012 SUPERSEDES STANDARD PLAN A24C DATED MAY 20, 2011 - PAGE 15 OF THE STANDARD PLANS BOOK DATED 2010.

REVISED STANDARD PLAN RSP A24C

2010 REVISED STANDARD PLAN RSP A24C

6-28-12

Dist	COUNTY	ROUTE	POST MILES TOTAL PROJECT	SHEET No.	TOTAL SHEETS
11	SD	163	8.4/9.4	268	332

REGISTERED CIVIL ENGINEER

July 20, 2012
PLANS APPROVAL DATE

REGISTERED PROFESSIONAL ENGINEER
Roberta L. McLaughlin
No. C40375
Exp. 3-31-13
CIVIL
STATE OF CALIFORNIA

THE STATE OF CALIFORNIA OR ITS OFFICERS OR AGENTS SHALL NOT BE RESPONSIBLE FOR THE ACCURACY OR COMPLETENESS OF SCANNED COPIES OF THIS PLAN SHEET.

TO ACCOMPANY PLANS DATED 09-15-14

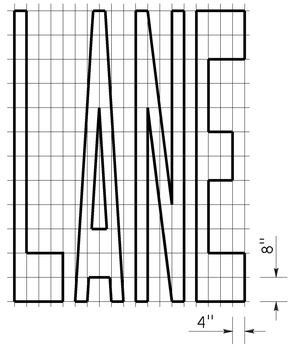

A=24 ft^2

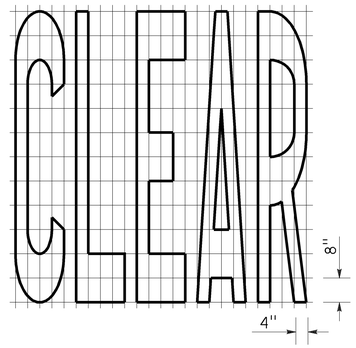

A=27 ft^2

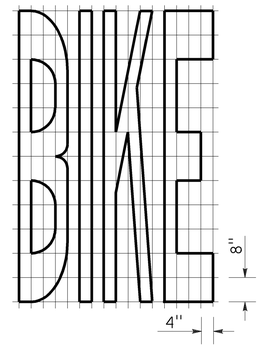

A=21 ft^2

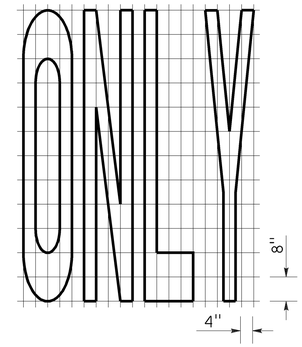

A=22 ft^2

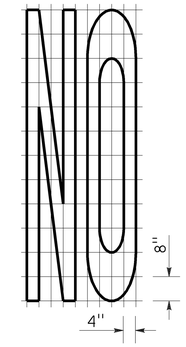

A=14 ft^2

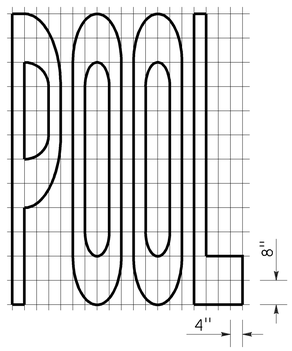

A=23 ft^2

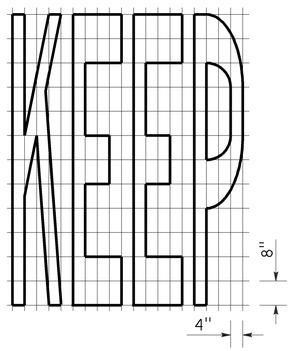

A=24 ft^2

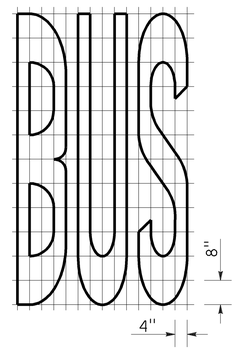

A=20 ft^2

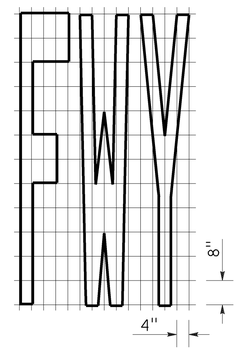

A=16 ft^2

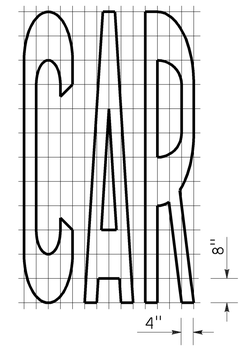

A=17 ft^2

WORD MARKINGS			
ITEM	ft^2	ITEM	ft^2
LANE	24	NO	14
POOL	23	BIKE	21
CAR	17	BUS	20
CLEAR	27	ONLY	22
KEEP	24	FWY	16

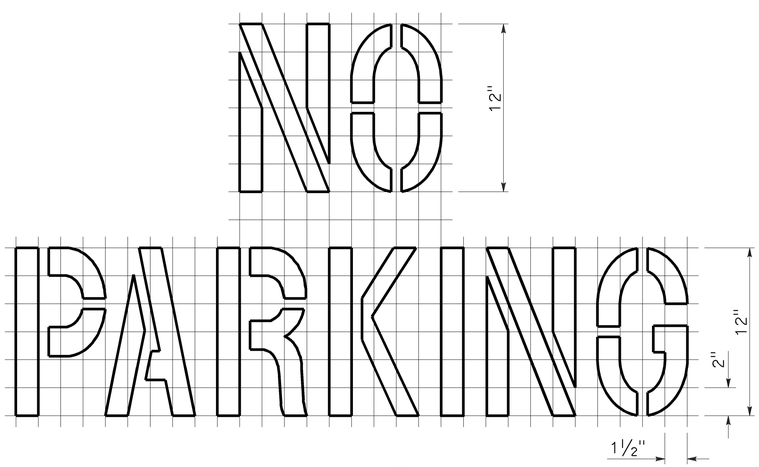

A=2 ft^2
See Notes 6 and 7

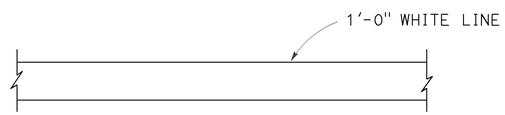

LIMIT LINE (STOP LINE)

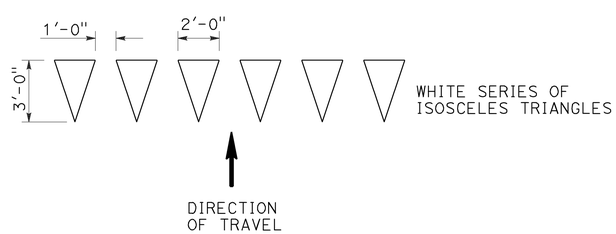

YIELD LINE

NOTES:

1. If a message consists of more than one word, it should read "UP", i.e., the first word should be nearest the driver.
2. The space between words should be at least four times the height of the characters for low speed roads, but not more than ten times the height of the characters. The space may be reduced appropriately where there is limited space because of local conditions.
3. Minor variations in dimensions may be accepted by the Engineer.
4. Portions of a letter, number or symbol may be separated by connecting segments not to exceed 2" in width.
5. The words "NO PARKING" pavement marking is to be used for parking facilities. For typical locations of markings, see Standard Plans A90A and A90B.
6. The words "NO PARKING", shall be painted in white letters no less than 1'-0" high on a contrasting background and located so that it is visible to traffic enforcement officials.

STATE OF CALIFORNIA
DEPARTMENT OF TRANSPORTATION

PAVEMENT MARKINGS
WORDS, LIMIT AND YIELD LINES

NO SCALE

RSP A24E DATED JULY 20, 2012 SUPERSEDES STANDARD PLAN A24E
DATED MAY 20, 2011 - PAGE 17 OF THE STANDARD PLANS BOOK DATED 2010.

REVISED STANDARD PLAN RSP A24E

2010 REVISED STANDARD PLAN RSP A24E

6-12-12

Dist	COUNTY	ROUTE	POST MILES TOTAL PROJECT	SHEET No.	TOTAL SHEETS
11	SD	163	8.4/9.4	269	332

REGISTERED CIVIL ENGINEER

July 20, 2012
PLANS APPROVAL DATE

REGISTERED PROFESSIONAL ENGINEER
Roberta L. McLaughlin
No. C40375
Exp. 3-31-13
CIVIL
STATE OF CALIFORNIA

THE STATE OF CALIFORNIA OR ITS OFFICERS OR AGENTS SHALL NOT BE RESPONSIBLE FOR THE ACCURACY OR COMPLETENESS OF SCANNED COPIES OF THIS PLAN SHEET.

TO ACCOMPANY PLANS DATED 09-15-14

2010 REVISED STANDARD PLAN RSP A24F

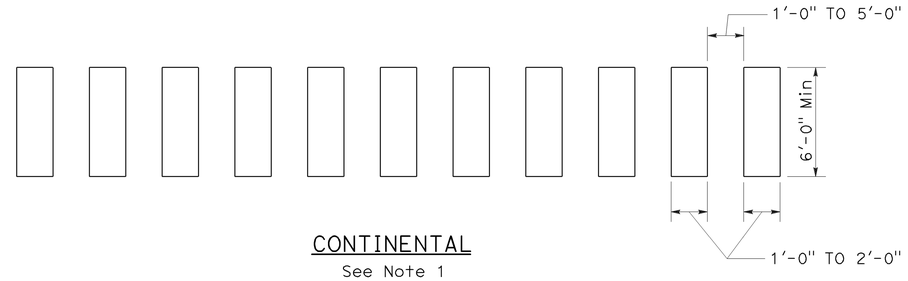

CONTINENTAL
See Note 1

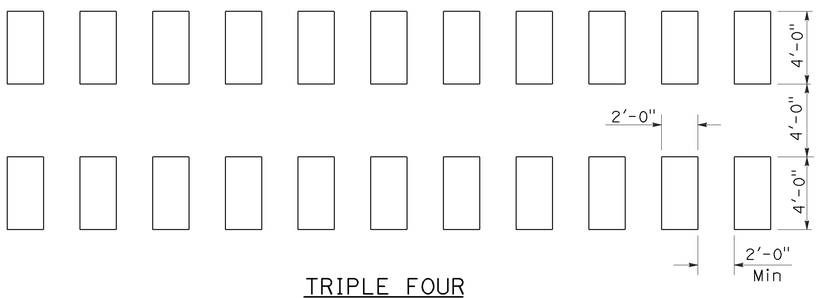

TRIPLE FOUR
See Note 1

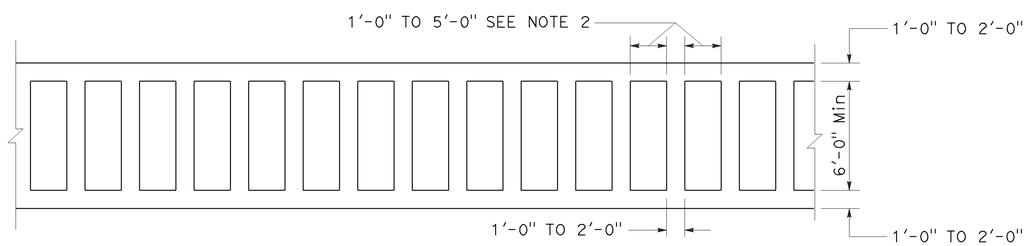

LADDER

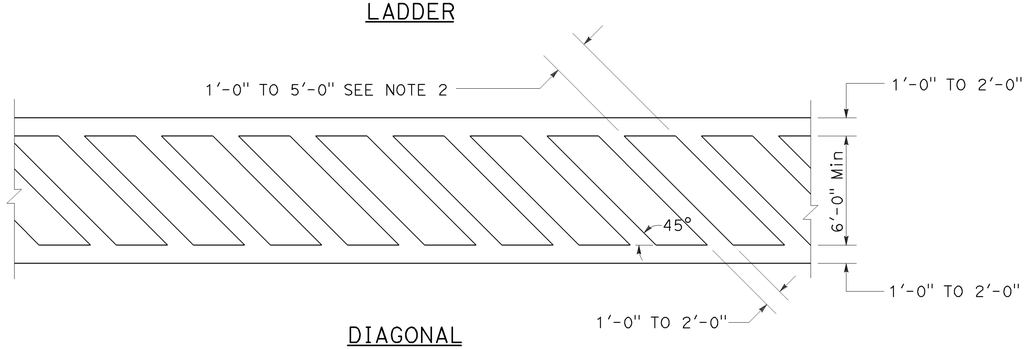

DIAGONAL

HIGHER VISIBILITY CROSSWALKS

NOTES:

1. Spaces between markings should be placed in wheel tracks of each lane.
2. Spacings not to exceed 2.5 times width of longitudinal line.
3. All crosswalk markings must be white except for those near schools must be yellow.

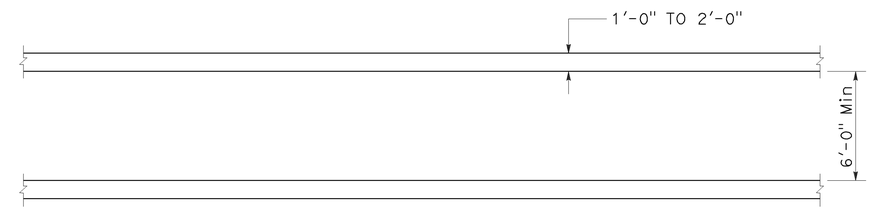

BASIC

STATE OF CALIFORNIA
DEPARTMENT OF TRANSPORTATION

PAVEMENT MARKINGS CROSSWALKS

NO SCALE

RSP A24F DATED JULY 20, 2012 SUPPLEMENTS THE STANDARD PLANS BOOK DATED 2010.

REVISED STANDARD PLAN RSP A24F

Dist	COUNTY	ROUTE	POST MILES TOTAL PROJECT	SHEET No.	TOTAL SHEETS
11	SD	163	8.4/9.4	270	332

REGISTERED CIVIL ENGINEER

July 18, 2014
PLANS APPROVAL DATE

REGISTERED PROFESSIONAL ENGINEER Carl M. Duan No. C59976 Exp. 6-30-16 CIVIL STATE OF CALIFORNIA

THE STATE OF CALIFORNIA OR ITS OFFICERS OR AGENTS SHALL NOT BE RESPONSIBLE FOR THE ACCURACY OR COMPLETENESS OF SCANNED COPIES OF THIS PLAN SHEET.

TO ACCOMPANY PLANS DATED 09-15-14

DESIGN NOTES:

Design: AASHTO LRFD Bridge Design Specifications, 4th edition with California Amendments. ACPA DESIGN DATA 1, October 2007. INDIRECT DESIGN METHOD

Soil: w Fe = 162 pcf Installation Type 1
w Fe = 168 pcf Installation Types 2 & 3
w = Unit weight of soil (pcf)
Fe = Soil-structure interaction factor

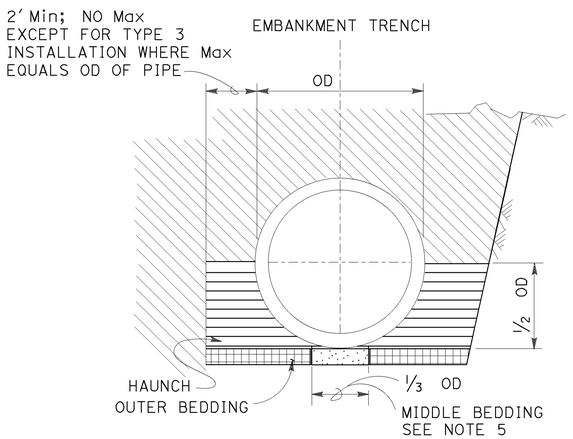

BACKFILL

LEGEND:

- ROADWAY EMBANKMENT
- STRUCTURE BACKFILL (CULVERT) FOR HAUNCH SEE NOTE 6
- STRUCTURE BACKFILL (CULVERT) FOR OUTER BEDDING SEE NOTE 6
- LOOSE BACKFILL
- STRUCTURE EXCAVATION (CULVERT)

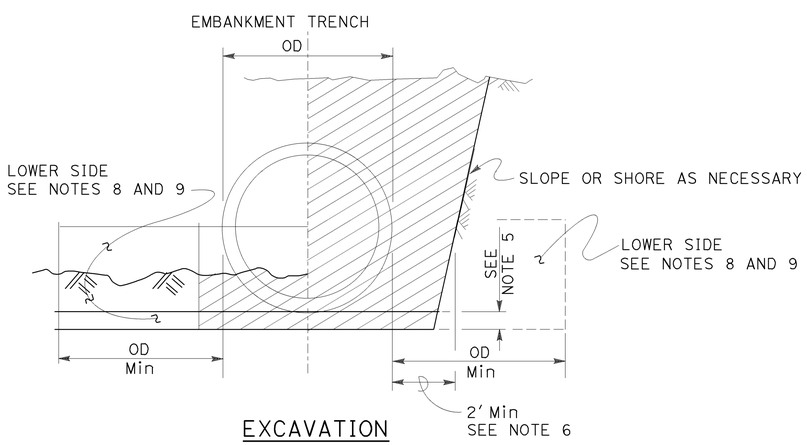

EXCAVATION

INSTALLATION TYPE 1:

The haunch and outer bedding shall be compacted to a minimum 90 percent relative compaction. In addition, the minimum sand equivalent in these areas shall be 30 and the maximum percentage passing the No. 200 sieve size shall be 12.

INSTALLATION TYPE 2:

The haunch and outer bedding shall be compacted to a minimum 90 percent relative compaction. In addition, the minimum sand equivalent in these areas shall be 25.

INSTALLATION TYPE 3:

The haunch and outer bedding shall be compacted to a minimum 85 percent relative compaction. 90 percent relative compaction will be required where the fill over the pipe is less than 4′-0″ or ½ OD. In addition, the minimum sand equivalent in these areas shall be 25 and the material shall not contain rocks, broken concrete, or other solid material exceeding 3″ in greatest dimension.

INSTALLATION TYPE 1

MINIMUM CLASS AND D-LOAD	COVER	
	60″ Dia AND SMALLER	OVER 60″ Dia TO 120″ Dia Max
CLASS II 1000D	14.9′	12.9′
CLASS III 1350D	15.0′ - 21.9′	13.0′ - 18.9′
CLASS III SPECIAL 1700D	22.0′ - 27.9′	19.0′ - 24.9′
CLASS IV 2000D	28.0′ - 32.9′	25.0′ - 29.9′
CLASS IV SPECIAL 2500D	33.0′ - 41.9′	30.0′ - 38.9′
CLASS V 3000D	42.0′ - 49.9′	39.0′ - 46.9′
CLASS V SPECIAL 3600D	50.0′ - 60.0′	47.0′ - 58.0′

INSTALLATION TYPE 2

MINIMUM CLASS AND D-LOAD	COVER	
	60″ Dia AND SMALLER	OVER 60″ Dia TO 120″ Dia Max
CLASS II 1000D	11.9′	9.9′
CLASS III 1350D	12.0′ - 15.9′	10.0′ - 14.9′
CLASS III SPECIAL 1700D	16.0′ - 20.9′	15.0′ - 19.9′
CLASS IV 2000D	21.0′ - 24.9′	20.0′ - 23.9′
CLASS IV SPECIAL 2500D	25.0′ - 31.9′	24.0′ - 30.9′
CLASS V 3000D	32.0′ - 37.9′	31.0′ - 37.9′
CLASS V SPECIAL 3600D	38.0′ - 46.0′	38.0′ - 46.0′

INSTALLATION TYPE 3

MINIMUM CLASS AND D-LOAD	COVER	
	60″ Dia AND SMALLER	OVER 60″ Dia TO 120″ Dia Max
CLASS II 1000D	8.9′	5.9′
CLASS III 1350D	9.0′ - 11.9′	6.0′ - 10.9′
CLASS III SPECIAL 1700D	12.0′ - 15.9′	11.0′ - 13.9′
CLASS IV 2000D	16.0′ - 18.9′	14.0′ - 17.9′
CLASS IV SPECIAL 2500D	19.0′ - 24.9′	18.0′ - 22.9′
CLASS V 3000D	25.0′ - 29.9′	23.0′ - 28.9′
CLASS V SPECIAL 3600D	30.0′ - 36.0′	29.0′ - 35.0′

NOTES:

1. Unless otherwise shown on the plans or specified in the special provision, the Contractor shall have the option of selecting the class of RCP and the type of installation to be used, provided the height of cover does not exceed the value shown for the RCP selected.
   Example: 24″ RCP culvert with maximum cover of 24′-0″ the options are:
   a) Class III Special or stronger with Installation Type 1.
   b) Class IV or stronger with Installation Type 2.
   c) Class IV Special or stronger with Installation Type 3.
   Cover is defined as the maximum vertical distance from top of the pipe to finished grade within the length of any given culvert.
2. The class of RCP and Installation Type selected shall be the same throughout the length of any given culvert.
3. The "length of any culvert" is defined as the culvert between:
   a) Successive drainage structure (inlets, junction boxes, headwalls, etc.).
   b) A drainage structure and the inlet or outlet end of the culvert.
   c) The inlet and outlet end of the culvert when there are no intervening drainage structures.
4. Oval and arch shaped RCP shall not be used.
5. Bedding depth: 1/25 OD Min, not less than 3″.
6. Slurry cement backfill may be substituted for backfill in the outer bedding and haunch areas. If slurry is used, the outer and middle beddings shall be omitted. Prior to installation, the soil under the middle ⅓ of the outside diameter of the pipe shall be softened by scarifying or other means to a minimum depth of 1/25 OD, but not less than 3″. Where slurry cement backfill is used, clear distance to trench wall may be reduced as set forth in the Standard Specifications.
7. Backfill shall be placed full width of excavation except where dimensions are shown for backfill width or thickness. Dimensions shown are minimum.
8. Lower side shall be suitable material as determined by the Engineer. Otherwise it shall be considered unsuitable as set forth in of the Standard Specifications. See Note 9.
9. Where the pipe is placed in a trench, if the trench walls are sloped at 5 vertical to 1 horizontal or steeper for at least 90 percent of the trench height or up to not less than 12″ from the grading plane, the firmness of the soil in the lower side need not be considered.
10. Non-reinforced precast concrete pipe sizes 3′-0″ or smaller may be placed under installation Types 1, 2 or 3.

STATE OF CALIFORNIA
DEPARTMENT OF TRANSPORTATION

EXCAVATION AND BACKFILL CONCRETE PIPE CULVERTS INDIRECT DESIGN METHOD

NO SCALE

RSP A62DA DATED JULY 18, 2014 SUPERSEDES STANDARD PLAN A62DA DATED MAY 20, 2011 - PAGE 24 OF THE STANDARD PLANS BOOK DATED 2010.

REVISED STANDARD PLAN RSP A62DA

2010 REVISED STANDARD PLAN RSP A62DA

5-13-14

Dist	COUNTY	ROUTE	POST MILES TOTAL PROJECT	SHEET No.	TOTAL SHEETS
11	SD	163	8.4/9.4	271	332

Randell D. Hiatt
REGISTERED CIVIL ENGINEER

July 19, 2013
PLANS APPROVAL DATE

REGISTERED PROFESSIONAL ENGINEER
Randell D. Hiatt
No. C50200
Exp. 6-30-15
CIVIL
STATE OF CALIFORNIA

THE STATE OF CALIFORNIA OR ITS OFFICERS OR AGENTS SHALL NOT BE RESPONSIBLE FOR THE ACCURACY OR COMPLETENESS OF SCANNED COPIES OF THIS PLAN SHEET.

TO ACCOMPANY PLANS DATED 09-15-14

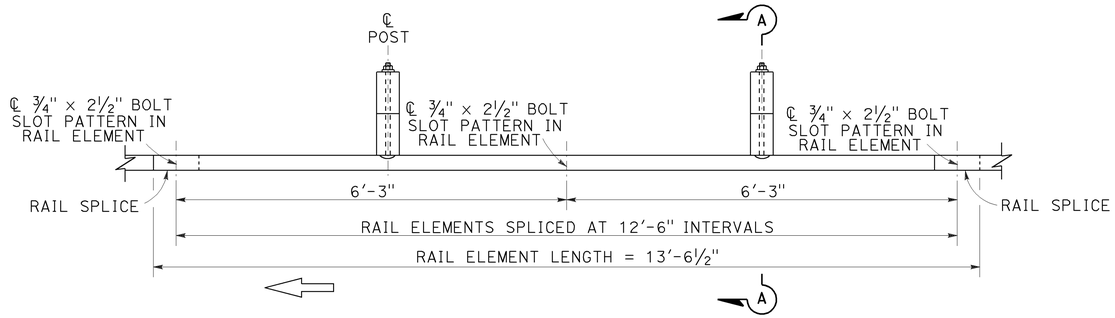

PLAN

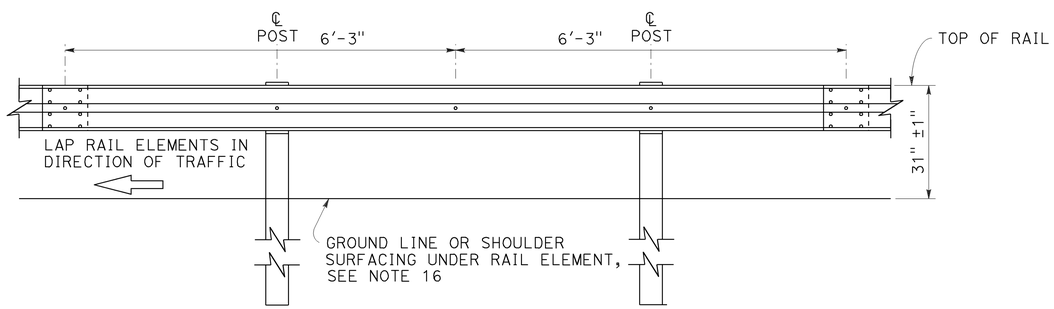

ELEVATION

MIDWEST GUARDRAIL SYSTEM WITH WOOD POST AND BLOCKS

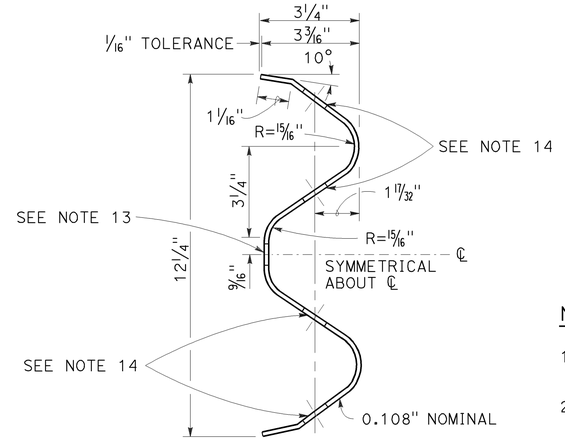

SECTION THRU RAIL ELEMENT

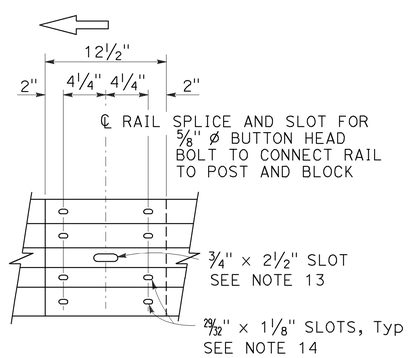

ELEVATION

RAIL ELEMENT SPLICE DETAIL

a) Connect the over lapped end of the rail elements with ⅝" ø × 1⅜" button head oval shoulder splice bolts inserted into the 29⁄32" × 1⅛" slots and bolted together with ⅝" ø recessed hex nuts. Recess of hex nut points toward rail element. A total of 8 bolts and nuts are to be used at each rail splice connection.

b) The ends of the rail elements are to be overlapped in the direction of traffic (see details).

c) Where end cap is to be attached to the end of a rail element, a total of 4 of the above described splice bolts and nuts are to be used.

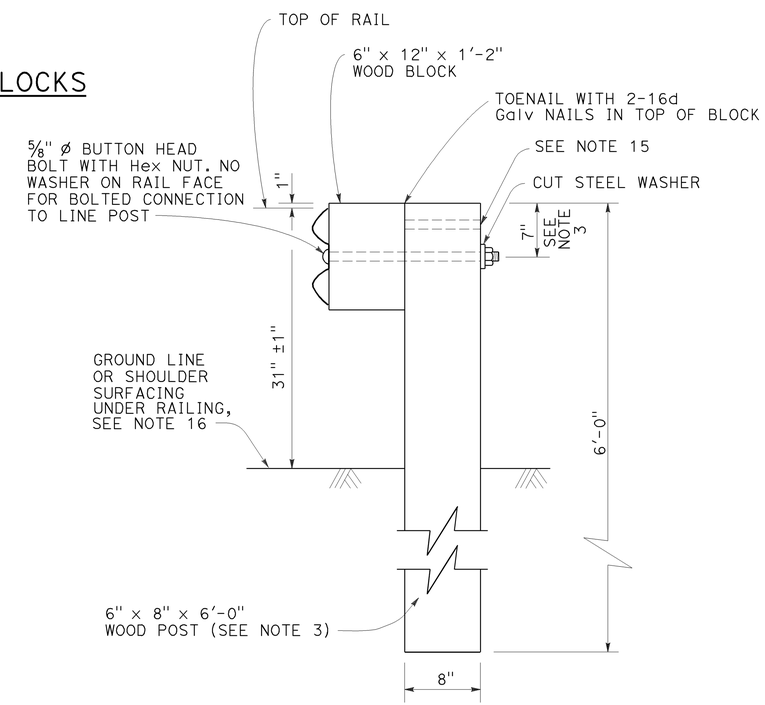

SECTION A-A

TYPICAL WOOD LINE POST INSTALLATION

See Note 4

NOTES:

1. For details of steel post installations, see Revised Standard Plan RSP A77L2.
2. For details of standard hardware used to construct MGS, see Revised Standard Plan RSP A77M1.
3. For details of wood posts and wood blocks used to construct MGS, see Revised Standard Plan RSP A77N1.
4. For additional installation details, see Revised Standard Plan RSP A77N3.
5. MGS post spacing to be 6'-3" center to center, except as otherwise noted.
6. For MGS typical layouts, see the A77P, A77Q and A77R Series of Standard Plans.
7. If railing is connected to terminal system end treatment, use 31" height terminal system end treatment.
8. For MGS end anchor details, see Revised Standard Plans RSP A77S1 and RSP A77T2.
9. For details of MGS transition to bridge railing, see Revised Standard Plan RSP A77U4.
10. For additional details of MSG connection to bridge railing, see Revised Standard Plans RSP A77U1, RSP A77U2 and RSP A77V1.
11. For MGS connection details to abutments and walls, see Revised Standard Plan RSP A77U3.
12. For typical MGS delineation and dike positioning details, see Revised Standard Plan RSP A77N4.
13. Slotted hole for bolted connection of rail element to block and post. See "Section Thru Rail Element".
14. Slotted holes for splice bolts to overlap ends of rail element. See "Section Thru Rail Element".
15. Additional hole in uppermost portion of line post is for potential future adjustments of railing height. See Revised Standard Plan RSP A77N1.
16. Install posts in soil.

STATE OF CALIFORNIA
DEPARTMENT OF TRANSPORTATION

MIDWEST GUARDRAIL SYSTEM STANDARD RAILING SECTION (WOOD POST WITH WOOD BLOCK)

NO SCALE

RSP A77L1 DATED JULY 19, 2013 SUPPLEMENTS STANDARD PLANS BOOK DATED 2010.

REVISED STANDARD PLAN RSP A77L1

2010 REVISED STANDARD PLAN RSP A77L1

Dist	COUNTY	ROUTE	POST MILES TOTAL PROJECT	SHEET No.	TOTAL SHEETS
11	SD	163	8.4/9.4	272	332

Randell D. Hiatt
REGISTERED CIVIL ENGINEER

July 19, 2013
PLANS APPROVAL DATE

REGISTERED PROFESSIONAL ENGINEER
Randell D. Hiatt
No. C50200
Exp. 6-30-15
CIVIL
STATE OF CALIFORNIA

THE STATE OF CALIFORNIA OR ITS OFFICERS OR AGENTS SHALL NOT BE RESPONSIBLE FOR THE ACCURACY OR COMPLETENESS OF SCANNED COPIES OF THIS PLAN SHEET.

TO ACCOMPANY PLANS DATED 09-15-14

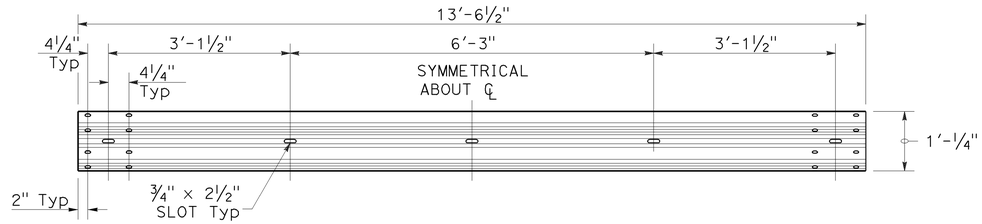

TYPICAL RAIL ELEMENT

NOTE:

1. Slotted holes for splice bolts to overlap ends of rail element.

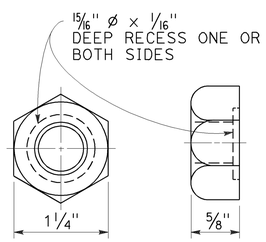

⅝" ø RECESS NUT

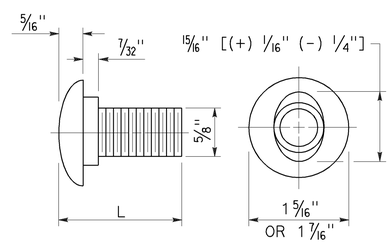

⅝" ø BUTTON HEAD BOLT

BUTTON HEAD BOLT

L	THREAD LENGTH
1⅜"	FULL THREAD LENGTH
2"	FULL THREAD LENGTH
10"	4" Min THREAD LENGTH
18"	4" Min THREAD LENGTH
20"	4" Min THREAD LENGTH
22"	4" Min THREAD LENGTH
26"	4" Min THREAD LENGTH
36"	4" Min THREAD LENGTH
** 2¾"	2" Min THREAD LENGTH
** 19"	4" Min THREAD LENGTH

** For nested rail applications.

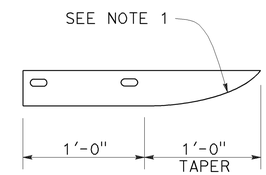

PLAN

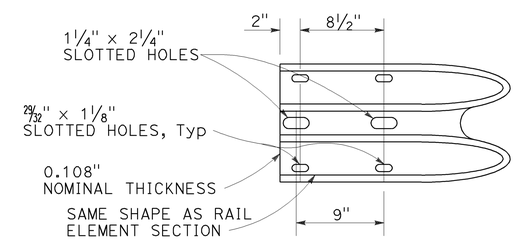

ELEVATION

END CAP
(TYPE A)

STATE OF CALIFORNIA
DEPARTMENT OF TRANSPORTATION

MIDWEST GUARDRAIL SYSTEM STANDARD HARDWARE

NO SCALE

RSP A77M1 DATED JULY 19, 2013 SUPPLEMENTS THE STANDARD PLANS BOOK DATED 2010.

REVISED STANDARD PLAN RSP A77M1

2010 REVISED STANDARD PLAN RSP A77M1

7-3-13

Dist	COUNTY	ROUTE	POST MILES TOTAL PROJECT	SHEET No.	TOTAL SHEETS
11	SD	163	8.4/9.4	273	332

Randell D. Hiatt
REGISTERED CIVIL ENGINEER

July 19, 2013
PLANS APPROVAL DATE

REGISTERED PROFESSIONAL ENGINEER
Randell D. Hiatt
No. C50200
Exp. 6-30-15
CIVIL
STATE OF CALIFORNIA

THE STATE OF CALIFORNIA OR ITS OFFICERS OR AGENTS SHALL NOT BE RESPONSIBLE FOR THE ACCURACY OR COMPLETENESS OF SCANNED COPIES OF THIS PLAN SHEET.

TO ACCOMPANY PLANS DATED 09-15-14

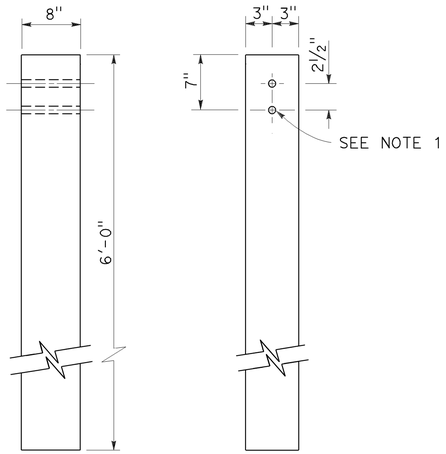

SIDE FRONT

6" x 8" WOOD POST
See Note 3

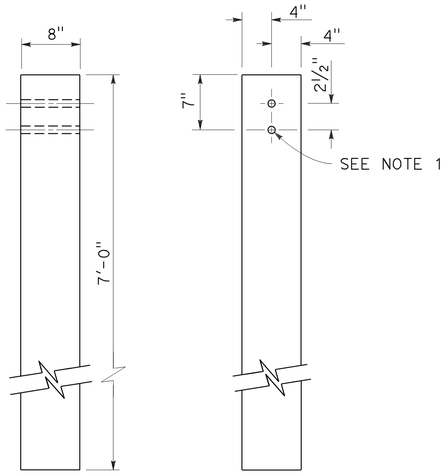

SIDE FRONT

8" x 8" WOOD POST
See Note 4

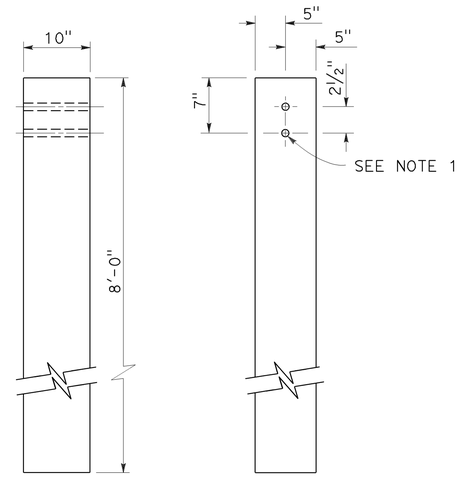

SIDE FRONT

10" x 10" WOOD POST
See Note 5

NOTES:

1. All holes in wood posts and blocks shall be ¾" Dia ± 1/16".
2. Dimensions shown for wood post are nominal.
3. This post and block combination used for standard line post sections of MGS.
4. This post and 8" x 12" block combination used for line post sections of MGS on narrow roadways.
5. This post and 8" x 12" block combination is typically used where strengthened line post sections of MGS are warranted to shield fixed objects.
6. See Revised Standard Plan RSP A77L3 for use of 6" x 8" and 8" x 8" wood blocks.

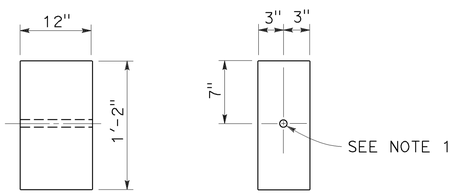

SIDE FRONT

6" x 12" WOOD BLOCK
See Note 3

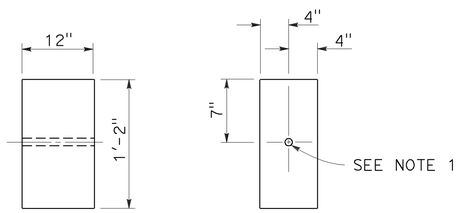

SIDE FRONT

8" x 12" WOOD BLOCK

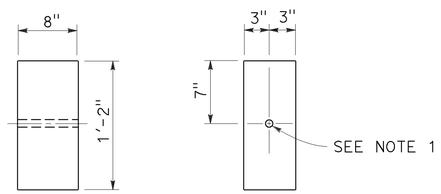

SIDE FRONT

6" x 8" WOOD BLOCK
Only for use with metal beam guard rail see Note 6

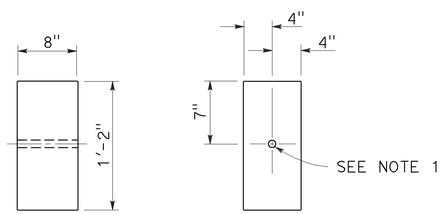

SIDE FRONT

8" x 8" WOOD BLOCK
Only for use with metal beam guard rail see Note 6

STATE OF CALIFORNIA
DEPARTMENT OF TRANSPORTATION

MIDWEST GUARDRAIL SYSTEM WOOD POST AND WOOD BLOCK DETAILS

NO SCALE

RSP A77N1 DATED JULY 19, 2013 SUPPLEMENTS THE STANDARD PLANS BOOK DATED 2010.

REVISED STANDARD PLAN RSP A77N1

2010 REVISED STANDARD PLAN RSP A77N1

7-3-13

Dist	COUNTY	ROUTE	POST MILES TOTAL PROJECT	SHEET No.	TOTAL SHEETS
11	SD	163	8.4/9.4	274	332

Randell D. Hiatt
REGISTERED CIVIL ENGINEER

November 15, 2013
PLANS APPROVAL DATE

REGISTERED PROFESSIONAL ENGINEER
Randell D. Hiatt
No. C50200
Exp. 6-30-15
CIVIL
STATE OF CALIFORNIA

THE STATE OF CALIFORNIA OR ITS OFFICERS OR AGENTS SHALL NOT BE RESPONSIBLE FOR THE ACCURACY OR COMPLETENESS OF SCANNED COPIES OF THIS PLAN SHEET.

TO ACCOMPANY PLANS DATED 09-15-14

2010 REVISED STANDARD PLAN RSP A77N3

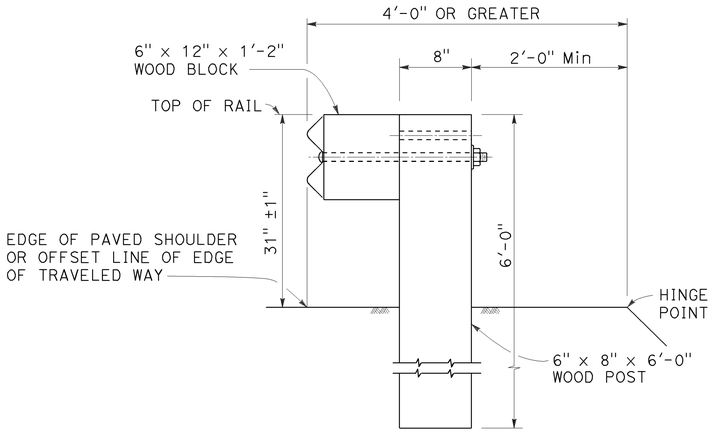

DETAIL A

TYPICAL ROADWAY INSTALLATION

See Note 1

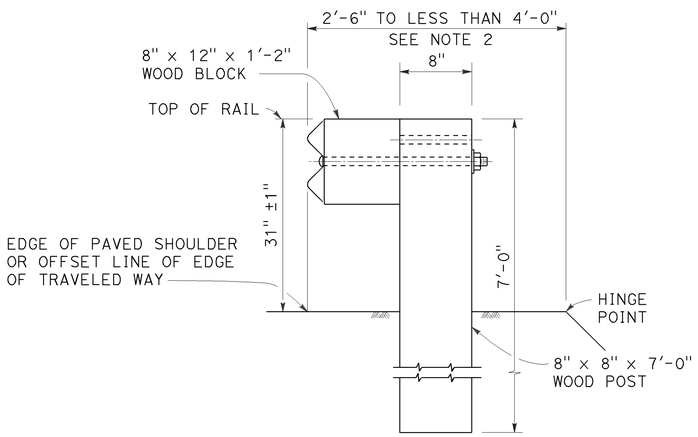

DETAIL B

NARROW ROADWAY INSTALLATION

See Note 1

POST EMBEDMENT

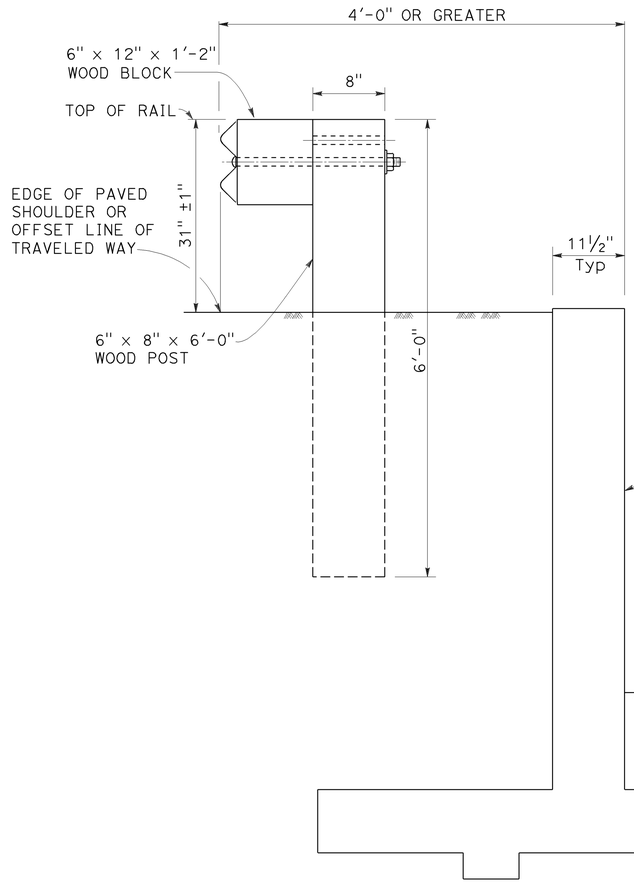

DETAIL C

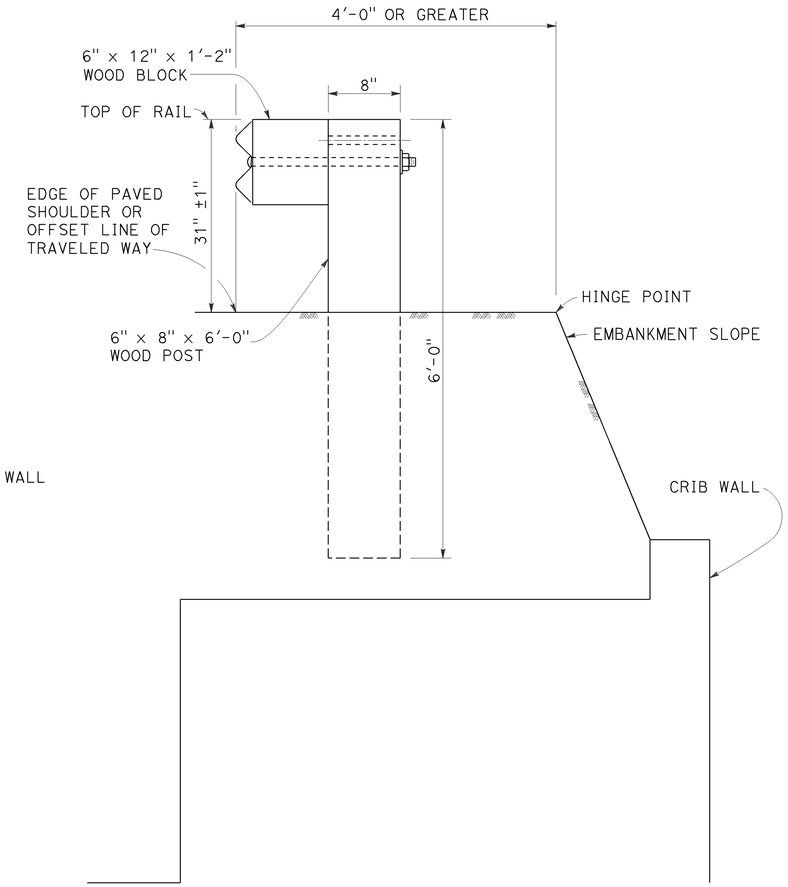

DETAIL D

INSTALLATION AT EARTH RETAINING WALLS

NOTES:

1. These installation details also applicable to steel line post installations. For Detail A, C, and D, where steel line post installations are constructed, W6 x 8.5 or W6 x 9 steel post, 6'-0" in length, with 6" x 12" x 1'-2" notched wood blocks or notched recycled plastic blocks are to be used in place of the size of wood post and wood block shown. For Detail B, where steel line post installations are constructed, W6 x 15 steel post, 8'-0" in length, with 8" x 12" x 1'-2" notched wood blocks or notched recycled plastic blocks are to be used in place of the size of wood post and wood block shown. For additional installation details, see Revised Standard Plan RSP A77L1 and RSP A77L2.
2. Where the distance between the face of the rail and the hinge point is less than 2'-6", see the Project Plans for special details.
3. For dike positioning with MGS installations, see Revised Standard Plan RSP A77N4.

STATE OF CALIFORNIA
DEPARTMENT OF TRANSPORTATION

MIDWEST GUARDRAIL SYSTEM TYPICAL LINE POST EMBEDMENT AND HINGE POINT OFFSET DETAILS

NO SCALE

RSP A77N3 DATED NOVEMBER 15, 2013 SUPERSEDES RSP A77N3
DATED JULY 19, 2013 THAT SUPPLEMENTS THE STANDARD PLANS BOOK DATED 2010.

REVISED STANDARD PLAN RSP A77N3

Dist	COUNTY	ROUTE	POST MILES TOTAL PROJECT	SHEET No.	TOTAL SHEETS
11	SD	163	8.4/9.4	275	332

Randell D. Hiatt
REGISTERED CIVIL ENGINEER

July 19, 2013
PLANS APPROVAL DATE

REGISTERED PROFESSIONAL ENGINEER
Randell D. Hiatt
No. C50200
Exp. 6-30-15
CIVIL
STATE OF CALIFORNIA

THE STATE OF CALIFORNIA OR ITS OFFICERS OR AGENTS SHALL NOT BE RESPONSIBLE FOR THE ACCURACY OR COMPLETENESS OF SCANNED COPIES OF THIS PLAN SHEET.

TO ACCOMPANY PLANS DATED 09-15-14

NOTES:

1. When necessary to place dike more than 7" in front of face of MGS, only Type C dike may be used. For dike details, see Revised Standard Plan RSP A87B.
2. For standard railing post embedment, see Revised Standard Plan RSP A77N3.
3. MGS delineation to be used where shown on the Project Plans.
4. When dike or curb is placed under MGS, the maximum height of the dike or curb shall be 6". Mountable dike should not be used. For dike and curb details, see Revised Standard Plans RSP A87A and RSP A87B.
5. For details of typical distance between the face of rail and hinge point, see Revised Standard Plan RSP A77N3.
6. For steel line posts, use 1/4 - 20 self-tapping screws in 0.22" diameter holes or 1/4" bolts in 9/32" diameter holes.

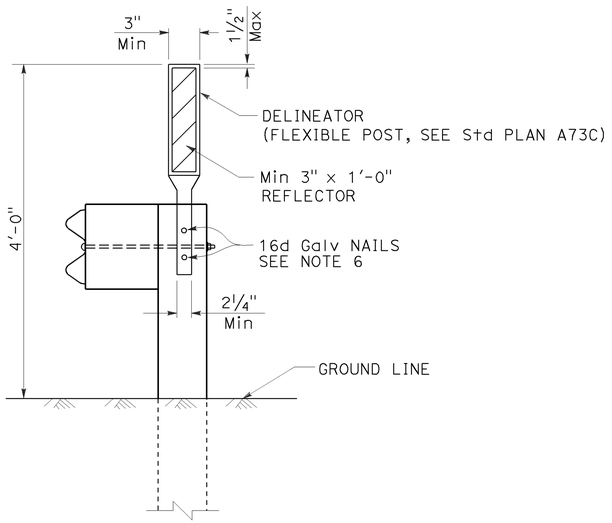

MGS DELINEATION

See Note 3

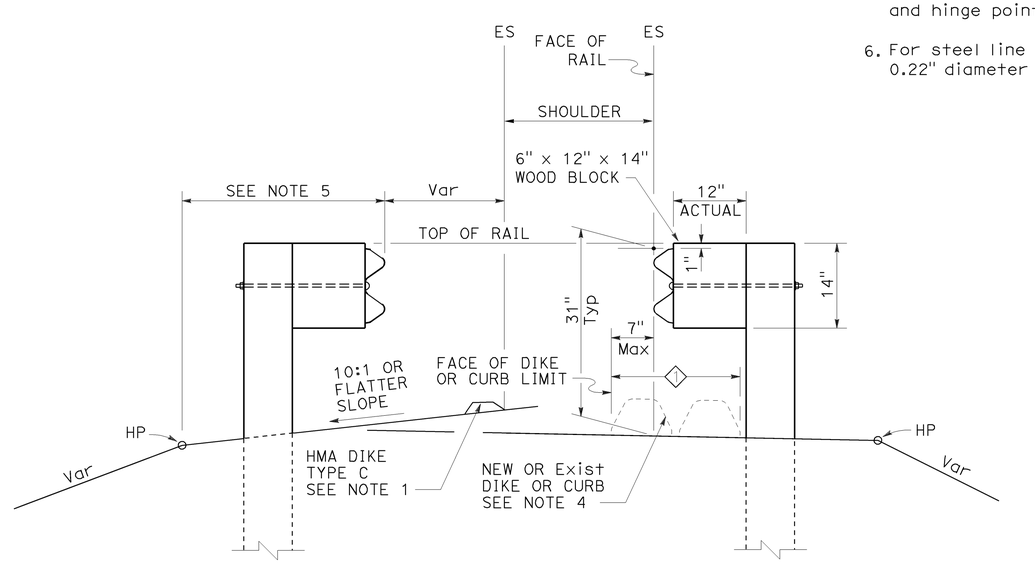

DIKE POSITIONING

See Note 1

1 PERMISSIBLE DIKE OR CURB PLACEMENT AREA

STATE OF CALIFORNIA
DEPARTMENT OF TRANSPORTATION

MIDWEST GUARDRAIL SYSTEM TYPICAL RAILING DELINEATION AND DIKE POSITIONING DETAILS

NO SCALE

RSP A77N4 DATED JULY 19, 2013 SUPPLEMENTS THE STANDARD PLANS BOOK DATED 2010.

REVISED STANDARD PLAN RSP A77N4

2010 REVISED STANDARD PLAN RSP A77N4

7-10-13

Dist	COUNTY	ROUTE	POST MILES TOTAL PROJECT	SHEET No.	TOTAL SHEETS
11	SD	163	8.4/9.4	276	332

Randell D. Hiatt
REGISTERED CIVIL ENGINEER

November 15, 2013
PLANS APPROVAL DATE

REGISTERED PROFESSIONAL ENGINEER
Randell D. Hiatt
No. C50200
Exp. 6-30-15
CIVIL
STATE OF CALIFORNIA

THE STATE OF CALIFORNIA OR ITS OFFICERS OR AGENTS SHALL NOT BE RESPONSIBLE FOR THE ACCURACY OR COMPLETENESS OF SCANNED COPIES OF THIS PLAN SHEET.

TO ACCOMPANY PLANS DATED 09-15-14

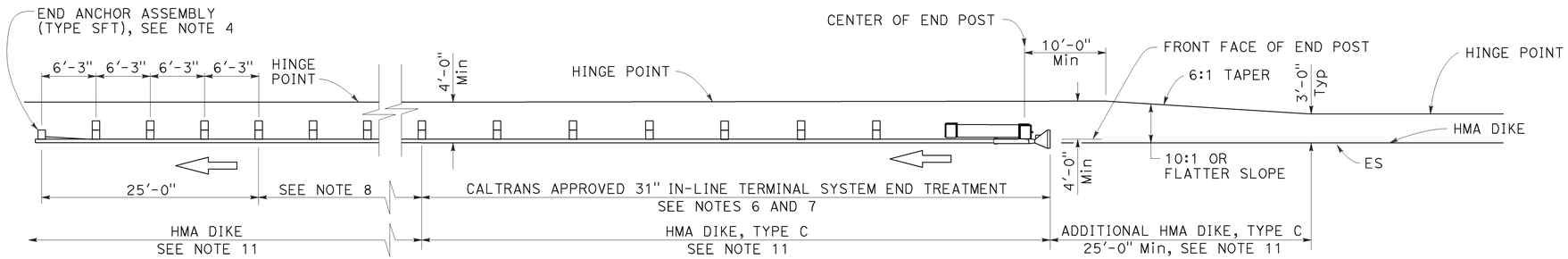

TYPE 11A LAYOUT

(Embankment MGS installation with 31" in-line end treatment at traffic approach end of railing) see Note 5

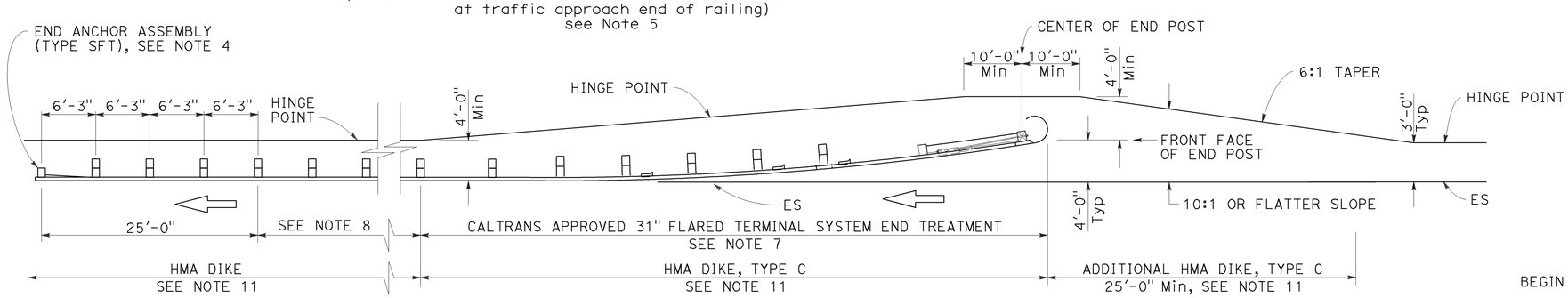

TYPE 11B LAYOUT

(Embankment MGS installation with 31" flared end treatment at traffic approach end of railing) see Note 5

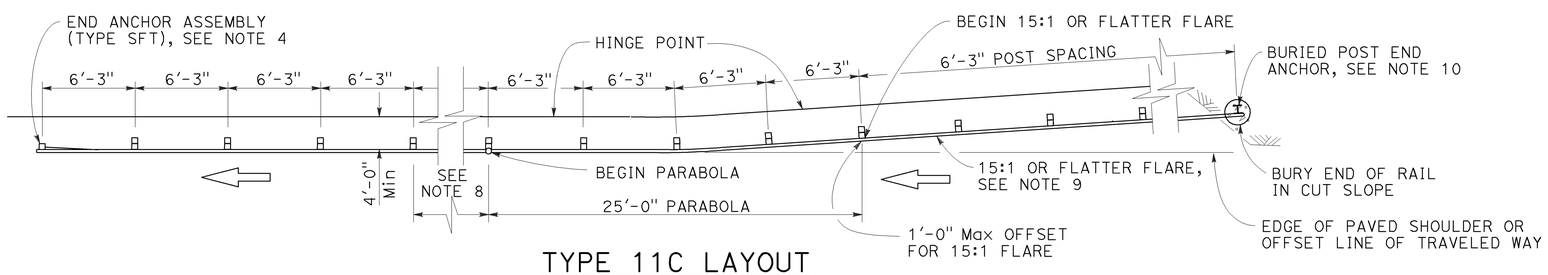

TYPE 11C LAYOUT

(Embankment MGS installation with buried end anchor treatment at traffic approach end of railing) see Notes 5 and 11

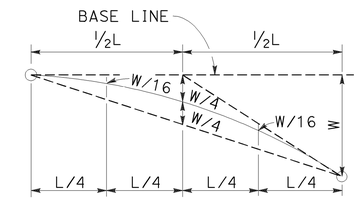

TYPICAL PARABOLIC LAYOUT

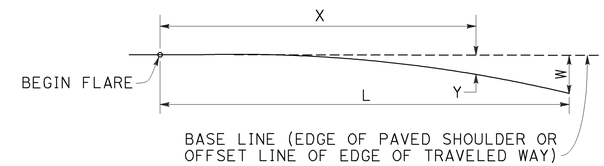

$$Y = \frac{WX^2}{L^2}$$

Y = OFFSET FROM BASE LINE
W = MAXIMUM OFFSET
X = DISTANCE ALONG BASE LINE
L = LENGTH OF FLARE

PARABOLIC FLARE OFFSETS

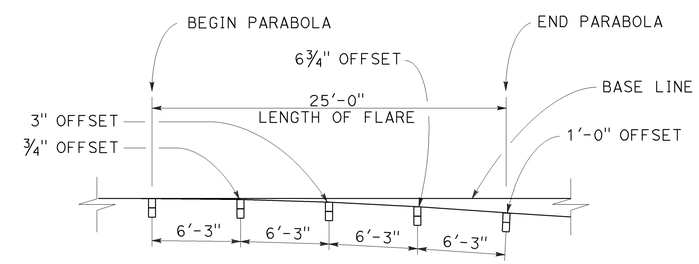

TYPICAL FLARE OFFSETS FOR 1 FOOT Max END OFFSET

NOTES:

1. Line post, blocks and hardware to be used are shown on Revised Standard Plans RSP A77L1, RSP A77L2, RSP A77M1, RSP A77N1 and RSP A77N2.
2. MGS post spacing to be 6'-3" center to center, except as otherwise noted.
3. Except as noted, line posts are 6" x 8" x 6'-0" wood with 6" x 12" x 1'-2" wood blocks. W6 x 8.5 or W6 x 9 steel posts, 6'-0" in length, with 6" x 12" x 1'-2" notched wood blocks or recycled plastic blocks may be used for 6" x 8" x 6'-0" wood post with 6" x 12" x 1'-2" wood blocks where applicable and when specified.
4. For End Anchor Assembly (Type SFT) details, see Revised Standard Plan RSP A77S1.
5. Layout Types 11A, 11B or 11C are typically used where MGS is recommended to shield embankment slopes and a crashworthy end treatment is required for only one direction of traffic.
6. 31" in-line terminal system end treatments are used where site conditions will not accommodate a flared end treatment.
7. The type of 31" terminal system end treatment to be used will be shown on the Project Plans.
8. Dependent on site conditions (embankment height and side slope), construction of additional MGS (length equal to multiples of 12'-6" with 6'-3" post spacing) may be advisable.
9. The 15:1 or flatter flare used with buried end anchors is based on the edge of the paved shoulder or offset line of edge of the traveled way. The length of MGS within the 15:1 or flatter flare is based on site conditions and should be a length equal to multiples of 12'-6".
10. For details of the buried post end anchor used with Type 11C Layout, see Revised Standard Plan RSP A77T2.
11. Where placement of dike is required with MGS installations, see Revised Standard Plan RSP A77N4 for dike positioning details.

STATE OF CALIFORNIA
DEPARTMENT OF TRANSPORTATION

MIDWEST GUARDRAIL SYSTEM TYPICAL LAYOUTS FOR EMBANKMENTS

NO SCALE

RSP A77P1 DATED NOVEMBER 15, 2013 SUPERSEDES RSP A77P1 DATED JULY 19, 2013 THAT SUPPLEMENTS THE STANDARD PLANS BOOK DATED 2010.

REVISED STANDARD PLAN RSP A77P1

2010 REVISED STANDARD PLAN RSP A77P1

10-4-13

Dist	COUNTY	ROUTE	POST MILES TOTAL PROJECT	SHEET No.	TOTAL SHEETS
11	SD	163	8.4/9.4	277	332

Randell D. Hiatt
REGISTERED CIVIL ENGINEER

July 19, 2013
PLANS APPROVAL DATE

REGISTERED PROFESSIONAL ENGINEER
Randell D. Hiatt
No. C50200
Exp. 6-30-15
CIVIL
STATE OF CALIFORNIA

THE STATE OF CALIFORNIA OR ITS OFFICERS OR AGENTS SHALL NOT BE RESPONSIBLE FOR THE ACCURACY OR COMPLETENESS OF SCANNED COPIES OF THIS PLAN SHEET.

TO ACCOMPANY PLANS DATED 09-15-14

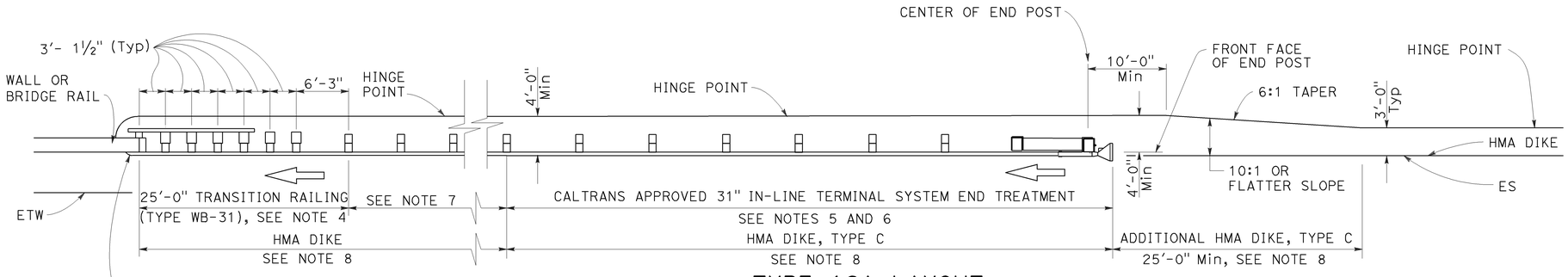

TYPE 12A LAYOUT

(MGS installation at structure approach with
31" In-line end treatment at traffic approach end of railing)
See Notes 9

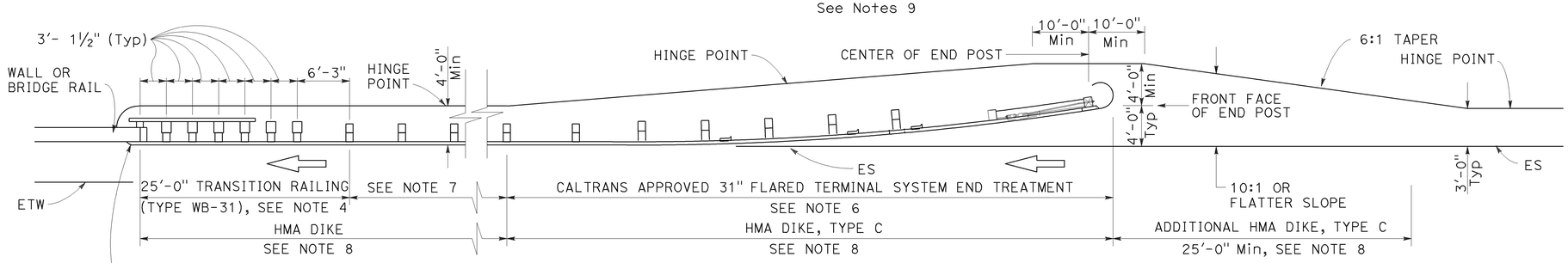

TYPE 12B LAYOUT

(MGS installation at structure approach with
31" Flared end treatment at traffic approach end of railing)
See Notes 9

NOTES:

1. Line post, blocks and hardware to be used are shown on Revised Standard Plans RSP A77L1, RSP A77L2, RSP A77M1, RSP A77N1 and RSP A77N2.
2. MGS post spacing to be 6'-3" center to center, except as otherwise noted.
3. Except as noted, line posts are 6" x 8" x 6'-0" wood with 6" x 12" x 1'-2" wood blocks. W6 x 8.5 or W6 x 9 steel posts, 6'-0" in length, with 6" x 12" x 1'-2" notched wood blocks or plastic blocks may be used for 6" x 8" x 6'-0" wood posts with 6" x 12" x 1'-2" wood blocks where applicable and when specified.
4. For Transition Railing (Type WB-31) details for Types 12A and 12B Layouts, see Revised Standard Plan RSP A77U4.
5. 31" in-line terminal system end treatments are used where site conditions will not accommodate a 31" flared end treatment.
6. The type 31" of terminal system end treatment to be used will be shown on the Project Plans.
7. Dependent on site conditions (embankment height, side slopes, or other fixed objects), it may be advisable to construct additional guard railing (a length equal to multiples of 12'-6" with 6'-3" post spacing) between the transition railing and end treatment. A 12.5 degree angle of departure can be drawn on the Project Plans from the edge of traveled way through the outer most point of the fixed object to determine the additional length of railing needed.
8. Where placement of dike is required with guard railing installations, see Revised Standard Plan RSP A77N4 for dike positioning details.
9. Type 12A or Type 12B Layouts are typically used:
   a. To the right of approaching traffic, at the end of a structure, on two-lane conventional highway where the roadbed width across the structure is less than 40 feet.
   b. To the left of approaching traffic, at the end of a structure, on two-lane conventional highway where the roadbed width across the structure is less than 40 feet.
   c. To the right of approaching traffic at the end of each structure on multilane freeways or expressways with separate adjacent or parallel bridges.
   d. To the right of approaching traffic at the end of the structure on multilane freeways or expressways with decked median on the bridge.
10. See Revised Standard Plan RSP A77Q3 for typical layout used left of approaching traffic at the ends of each structure on multilane freeways or expressways with separate adjacent or parallel bridges.
11. For additional details of typical connections to bridge rail, see Connection Detail AA on Revised Standard Plans RSP A77U1 and RSP A77U2 and Connection Detail FF on Revised Standard Plans RSP A77V1 and RSP A77V2.
12. For additional details of a typical connection to walls or abutments, see Revised Standard Plan RSP A77U3.

STATE OF CALIFORNIA
DEPARTMENT OF TRANSPORTATION

MIDWEST GUARDRAIL SYSTEM TYPICAL LAYOUTS FOR STRUCTURE APPROACH

NO SCALE

RSP A77Q1 DATED JULY 19, 2013 SUPPLEMENTS THE STANDARD PLANS BOOK DATED 2010.

REVISED STANDARD PLAN RSP A77Q1

2010 REVISED STANDARD PLAN RSP A77Q1

6-19-13

Dist	COUNTY	ROUTE	POST MILES TOTAL PROJECT	SHEET No.	TOTAL SHEETS
11	SD	163	8.4/9.4	278	332

Randell D. Hiatt
REGISTERED CIVIL ENGINEER

November 15, 2013
PLANS APPROVAL DATE

REGISTERED PROFESSIONAL ENGINEER
Randell D. Hiatt
No. C50200
Exp. 6-30-15
CIVIL
STATE OF CALIFORNIA

THE STATE OF CALIFORNIA OR ITS OFFICERS OR AGENTS SHALL NOT BE RESPONSIBLE FOR THE ACCURACY OR COMPLETENESS OF SCANNED COPIES OF THIS PLAN SHEET.

TO ACCOMPANY PLANS DATED 09-15-14

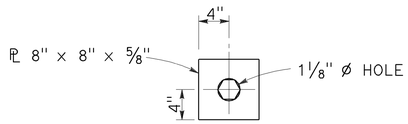

DETAIL "A"
CABLE CONNECTION
END PLATE

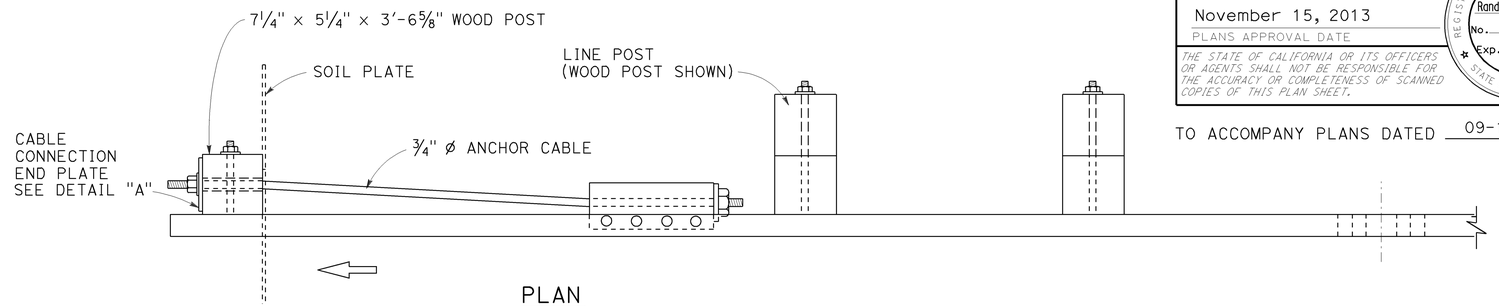

PLAN

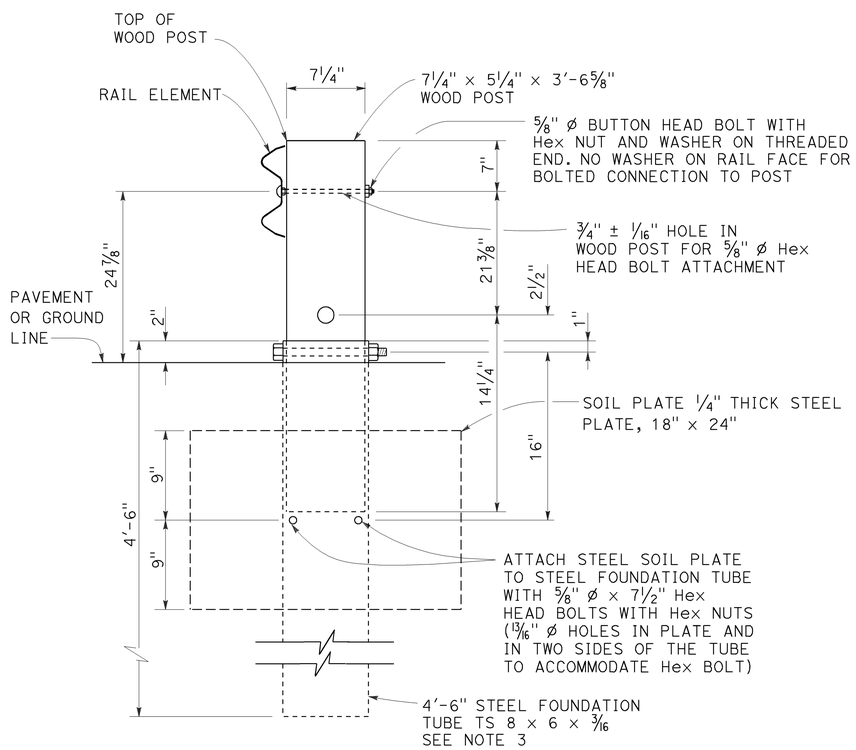

SECTION A-A

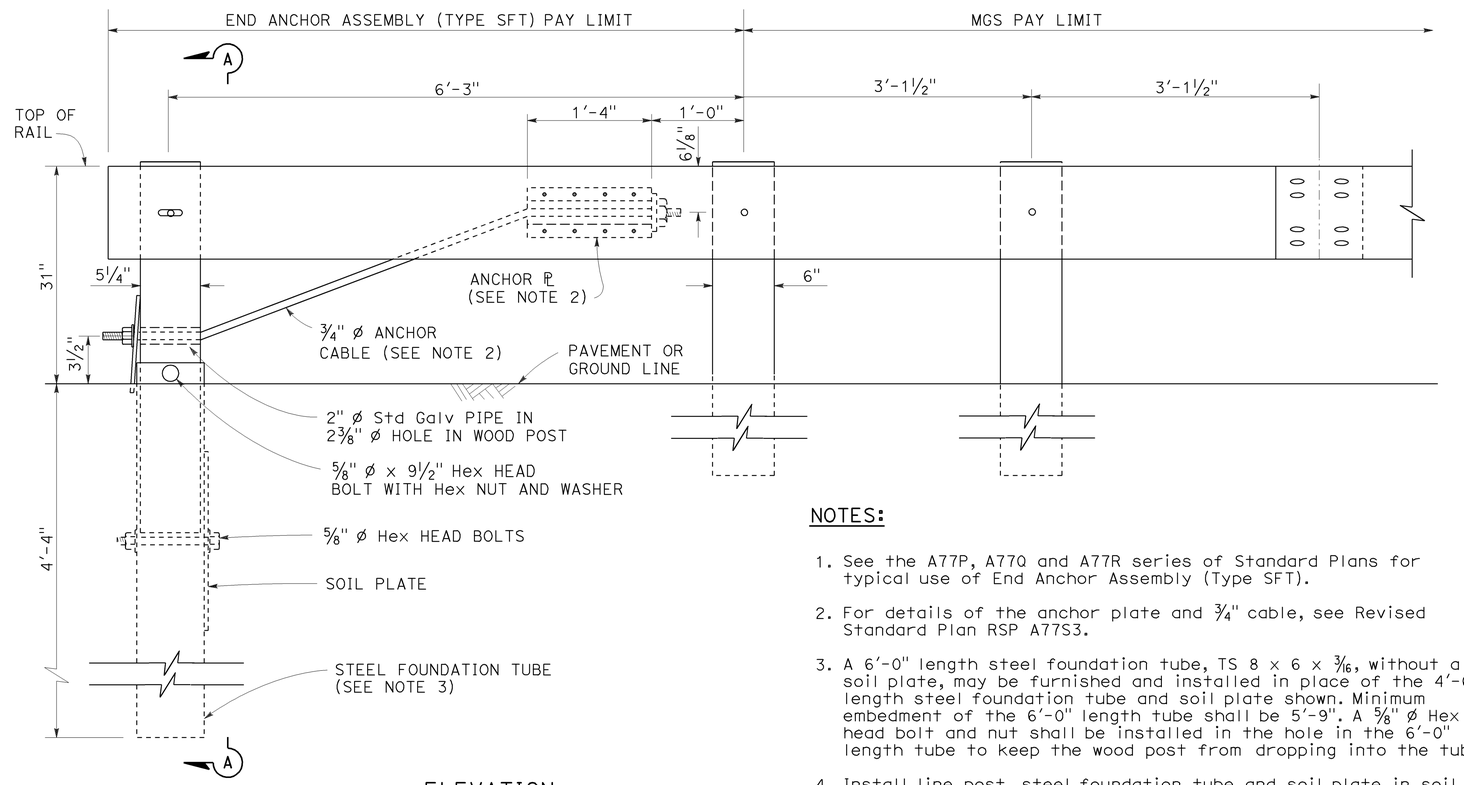

ELEVATION

END ANCHOR
ASSEMBLY (TYPE SFT)
See Note 1

NOTES:

1. See the A77P, A77Q and A77R series of Standard Plans for typical use of End Anchor Assembly (Type SFT).
2. For details of the anchor plate and 3/4" cable, see Revised Standard Plan RSP A77S3.
3. A 6'-0" length steel foundation tube, TS 8 x 6 x 3/16, without a soil plate, may be furnished and installed in place of the 4'-6" length steel foundation tube and soil plate shown. Minimum embedment of the 6'-0" length tube shall be 5'-9". A 5/8" ø Hex head bolt and nut shall be installed in the hole in the 6'-0" length tube to keep the wood post from dropping into the tube.
4. Install line post, steel foundation tube and soil plate in soil.

STATE OF CALIFORNIA
DEPARTMENT OF TRANSPORTATION

MIDWEST GUARDRAIL SYSTEM END ANCHOR ASSEMBLY (TYPE SFT)

NO SCALE

RSP A77S1 DATED NOVEMBER 15, 2013 SUPERSEDES RSP A77S1
DATED JULY 19, 2013 THAT SUPPLEMENTS THE STANDARD PLANS BOOK DATED 2010.

REVISED STANDARD PLAN RSP A77S1

2010 REVISED STANDARD PLAN RSP A77S1

10-4-13

Dist	COUNTY	ROUTE	POST MILES TOTAL PROJECT	SHEET No.	TOTAL SHEETS
11	SD	163	8.4/9.4	279	332

Randell D. Hiatt
REGISTERED CIVIL ENGINEER

July 19, 2013
PLANS APPROVAL DATE

REGISTERED PROFESSIONAL ENGINEER
Randell D. Hiatt
No. C50200
Exp. 6-30-15
CIVIL
STATE OF CALIFORNIA

THE STATE OF CALIFORNIA OR ITS OFFICERS OR AGENTS SHALL NOT BE RESPONSIBLE FOR THE ACCURACY OR COMPLETENESS OF SCANNED COPIES OF THIS PLAN SHEET.

TO ACCOMPANY PLANS DATED 09-15-14

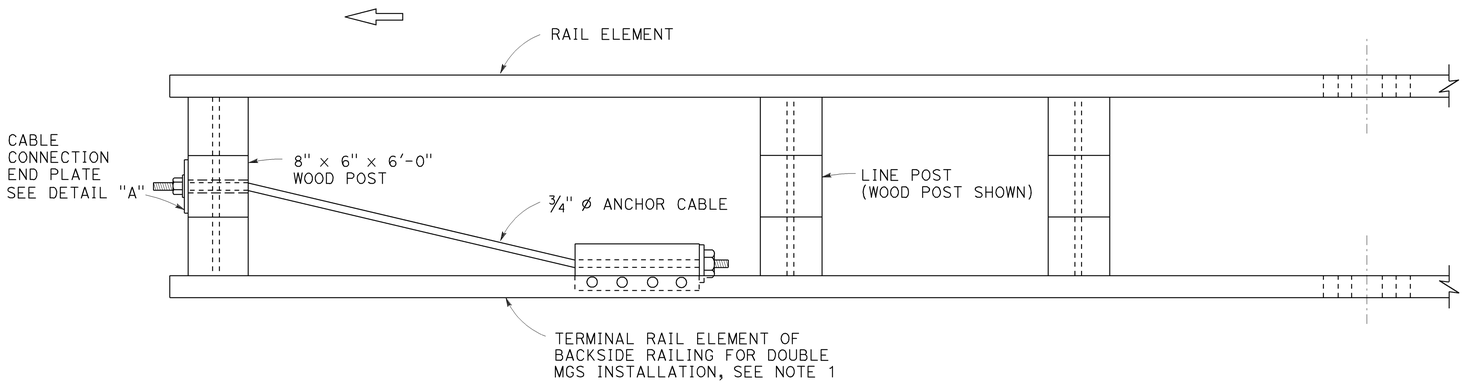

PLAN

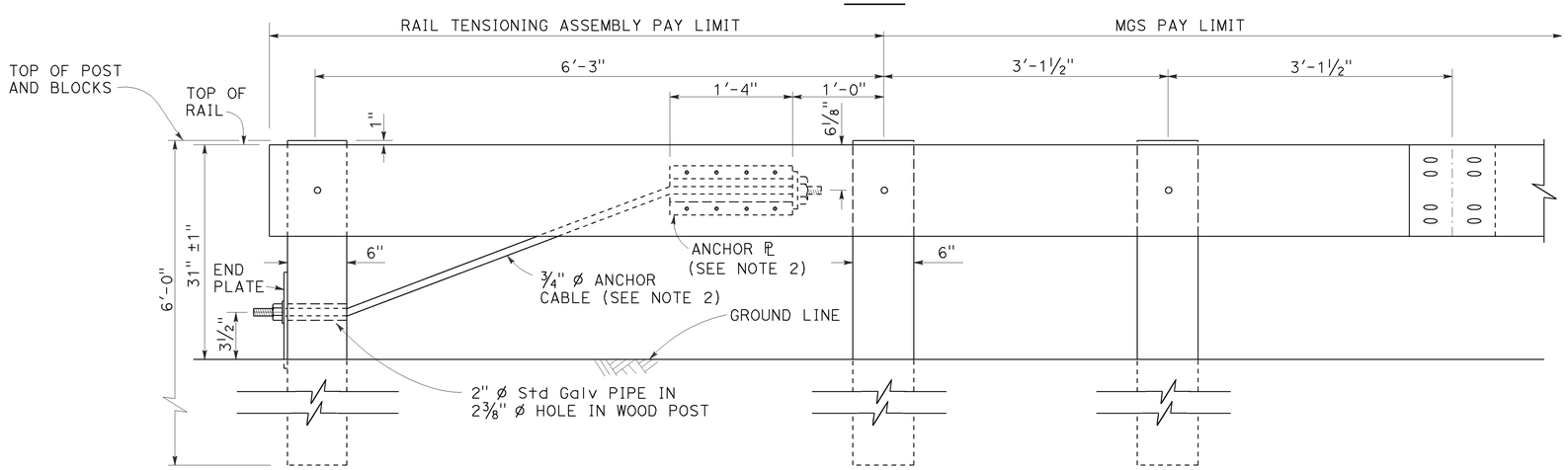

ELEVATION
RAIL TENSIONING ASSEMBLY
See Note 1

NOTES:

1. See Revised Standard Plans RSP A77Q3 and RSP A77R1 for typical use of rail tensioning assembly.
2. For details of the anchor plate and ¾" cable, see Revised Standard Plan RSP A77S3.

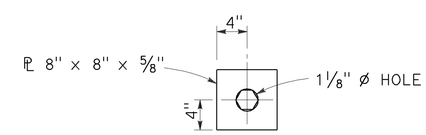

DETAIL "A"
CABLE CONNECTION END PLATE

STATE OF CALIFORNIA
DEPARTMENT OF TRANSPORTATION

MIDWEST GUARDRAIL SYSTEM RAIL TENSIONING ASSEMBLY

NO SCALE

RSP A77S2 DATED JULY 19, 2013 SUPPLEMENTS THE STANDARD PLANS BOOK DATED 2010.

REVISED STANDARD PLAN RSP A77S2

2010 REVISED STANDARD PLAN RSP A77S2

7-3-13

Dist	COUNTY	ROUTE	POST MILES TOTAL PROJECT	SHEET No.	TOTAL SHEETS
11	SD	163	8.4/9.4	280	332

Randell D. Hiatt
REGISTERED CIVIL ENGINEER

November 15, 2013
PLANS APPROVAL DATE

REGISTERED PROFESSIONAL ENGINEER
Randell D. Hiatt
No. C50200
Exp. 6-30-15
CIVIL
STATE OF CALIFORNIA

THE STATE OF CALIFORNIA OR ITS OFFICERS OR AGENTS SHALL NOT BE RESPONSIBLE FOR THE ACCURACY OR COMPLETENESS OF SCANNED COPIES OF THIS PLAN SHEET.

TO ACCOMPANY PLANS DATED 09-15-14

2010 REVISED STANDARD PLAN RSP A77S3

NOTE:

See Revised Standard Plans RSP A77S1, RSP A77S2 and RSP A77T1 for typical use of anchor cable and anchor plate.

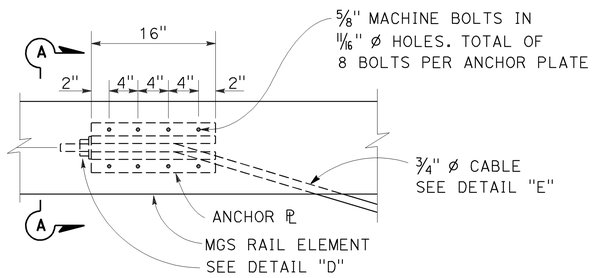

ANCHOR PLATE DETAIL
(MGS shown, TBB similar)

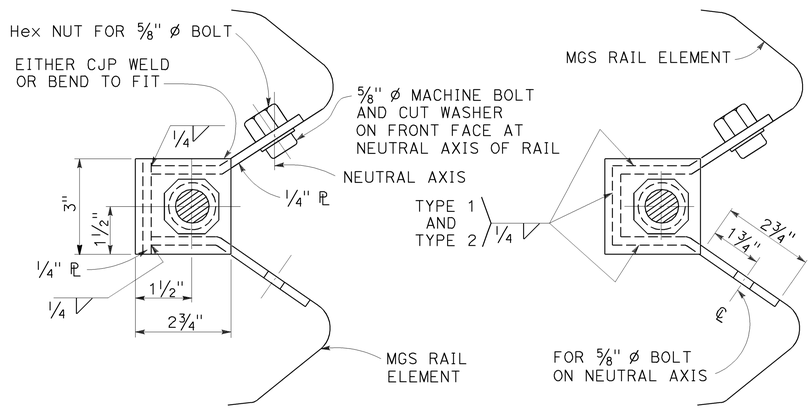

NOTE:
Dimensioning applies to both types.

SECTION A-A
(ALTERNATIVE TYPE 1)

SECTION A-A
(ALTERNATIVE TYPE 2)

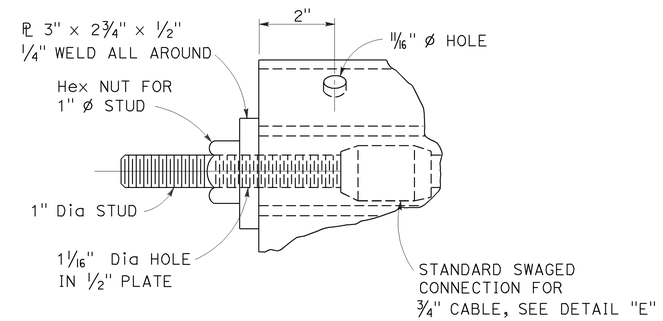

DETAIL "D"

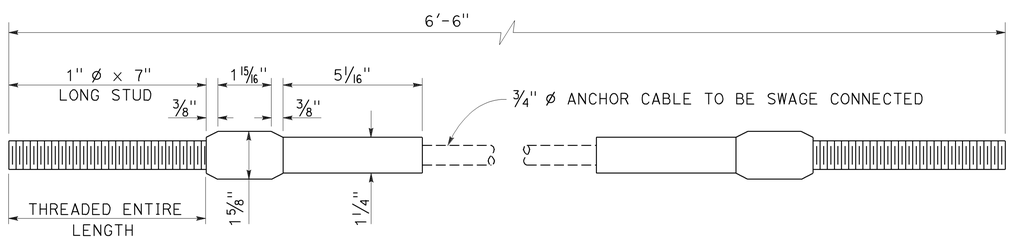

ANCHOR CABLE WITH
SWAGED FITTING AND STUD
DETAIL "E"

STATE OF CALIFORNIA
DEPARTMENT OF TRANSPORTATION

METAL RAILING ANCHOR CABLE AND ANCHOR PLATE DETAILS

NO SCALE

RSP A77S3 DATED NOVEMBER 15, 2013 SUPERSEDES RSP A77S3
DATED JULY 19, 2013 THAT SUPPLEMENTS THE STANDARD PLANS BOOK DATED 2010.

REVISED STANDARD PLAN RSP A77S3

10-4-13

Dist	COUNTY	ROUTE	POST MILES TOTAL PROJECT	SHEET No.	TOTAL SHEETS
11	SD	163	8.4/9.4	281	332

Randell D. Hiatt
REGISTERED CIVIL ENGINEER

July 19, 2013
PLANS APPROVAL DATE

REGISTERED PROFESSIONAL ENGINEER
Randell D. Hiatt
No. C50200
Exp. 6-30-15
CIVIL
STATE OF CALIFORNIA

THE STATE OF CALIFORNIA OR ITS OFFICERS OR AGENTS SHALL NOT BE RESPONSIBLE FOR THE ACCURACY OR COMPLETENESS OF SCANNED COPIES OF THIS PLAN SHEET.

TO ACCOMPANY PLANS DATED 09-15-14

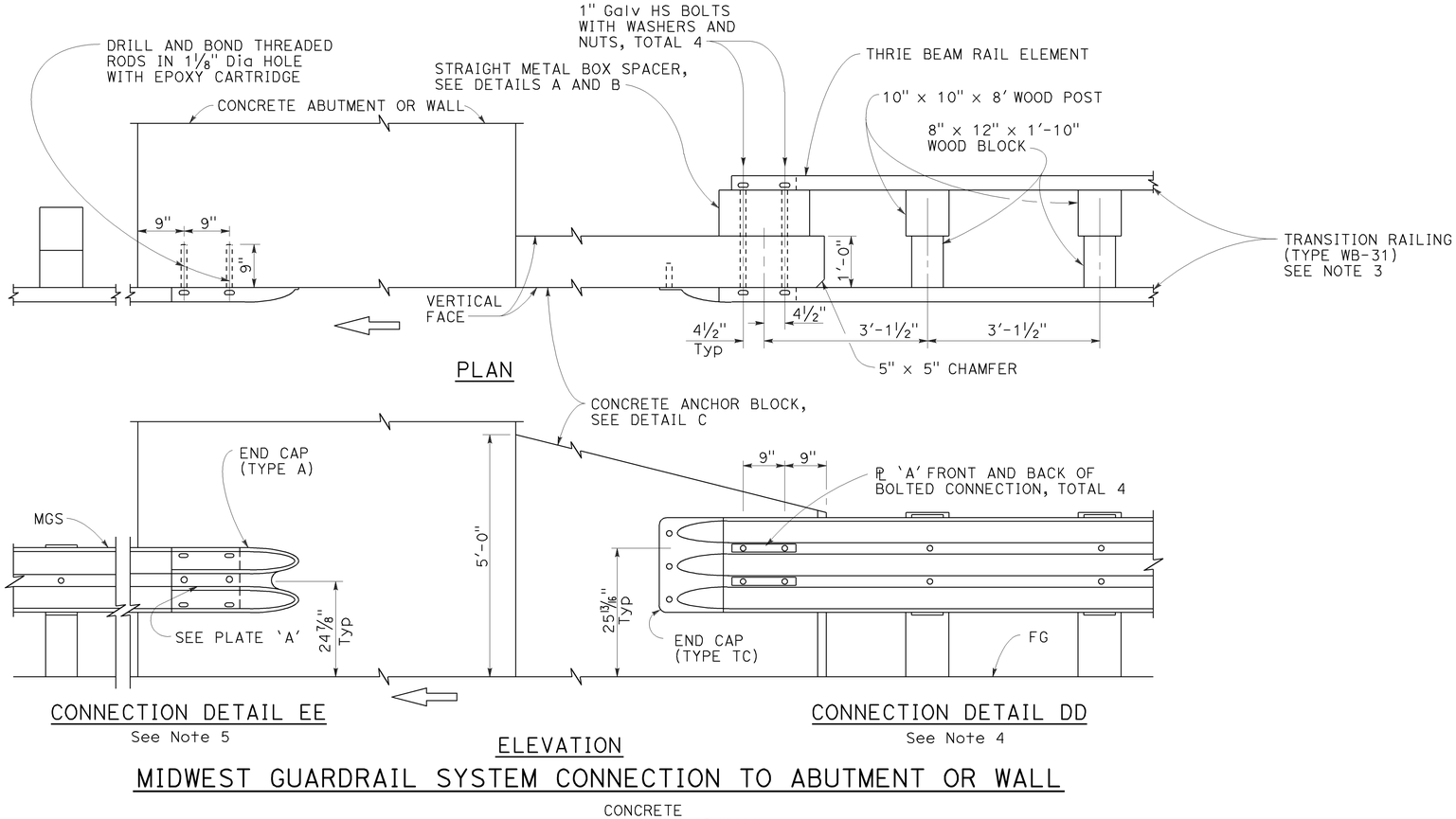

MIDWEST GUARDRAIL SYSTEM CONNECTION TO ABUTMENT OR WALL

NOTES:

1. These connection details apply to abutments and walls.
2. Additional details of posts, blocks and hardware are shown on Revised Standard Plans RSP A77M1, RSP A77N1 and RSP A77N2.
3. For additional details of Transition Railing (Type WB-31), see Revised Standard Plan RSP A77U4. Transition Railing (Type WB-31) transitions the 12 gauge MGS railing section to a heavier gage nested thrie beam railingsection which is connected to the concrete anchor block.
4. For typical use of Connection Details DD, see Layout Types 12A and 12B on Revised Standard Plan RSP A77Q1 and Layout Types 12C and 12D on Revised Standard Plan RSP A77Q2.
5. For typical use of Connection Detail EE, see Layout Type 12D on Revised Standard Plan RSP A77Q2 and Layout Type 12DD on Revised Standard Plan RSP A77Q5.

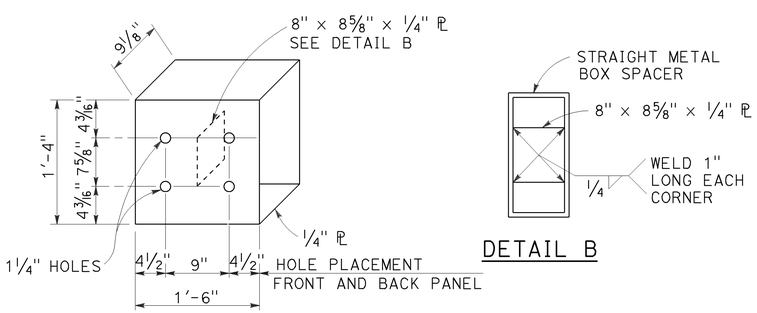

STRAIGHT METAL BOX SPACER

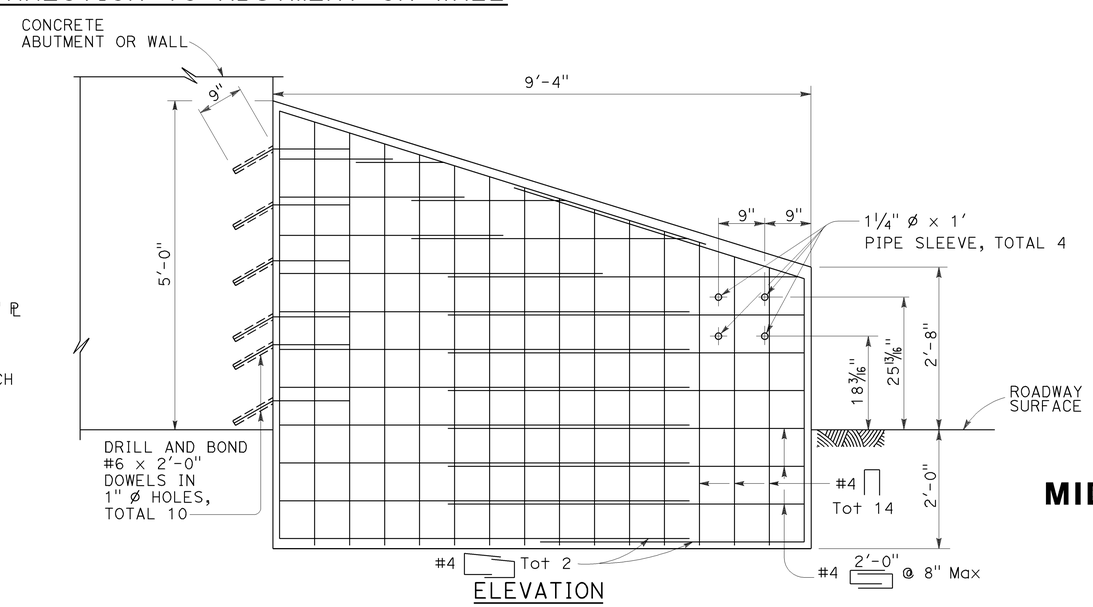

ANCHOR BLOCK FOR TRANSITION RAILING CONNECTION

DETAIL C

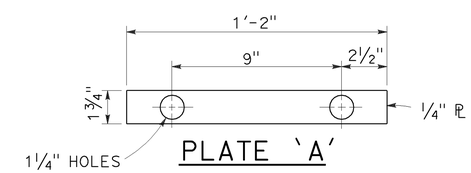

STATE OF CALIFORNIA
DEPARTMENT OF TRANSPORTATION

MIDWEST GUARDRAIL SYSTEM CONNECTIONS TO ABUTMENTS AND WALLS

NO SCALE

RSP A77U3 DATED JULY 19, 2013 SUPPLEMENTS THE STANDARD PLANS BOOK DATED 2010.

REVISED STANDARD PLAN RSP A77U3

2010 REVISED STANDARD PLAN RSP A77U3

7-8-13

Dist	COUNTY	ROUTE	POST MILES TOTAL PROJECT	SHEET No.	TOTAL SHEETS
11	SD	163	8.4/9.4	282	332

Randell D. Hiatt
REGISTERED CIVIL ENGINEER

November 15, 2013
PLANS APPROVAL DATE

REGISTERED PROFESSIONAL ENGINEER
Randell D. Hiatt
No. C50200
Exp. 6-30-15
CIVIL
STATE OF CALIFORNIA

THE STATE OF CALIFORNIA OR ITS OFFICERS OR AGENTS SHALL NOT BE RESPONSIBLE FOR THE ACCURACY OR COMPLETENESS OF SCANNED COPIES OF THIS PLAN SHEET.

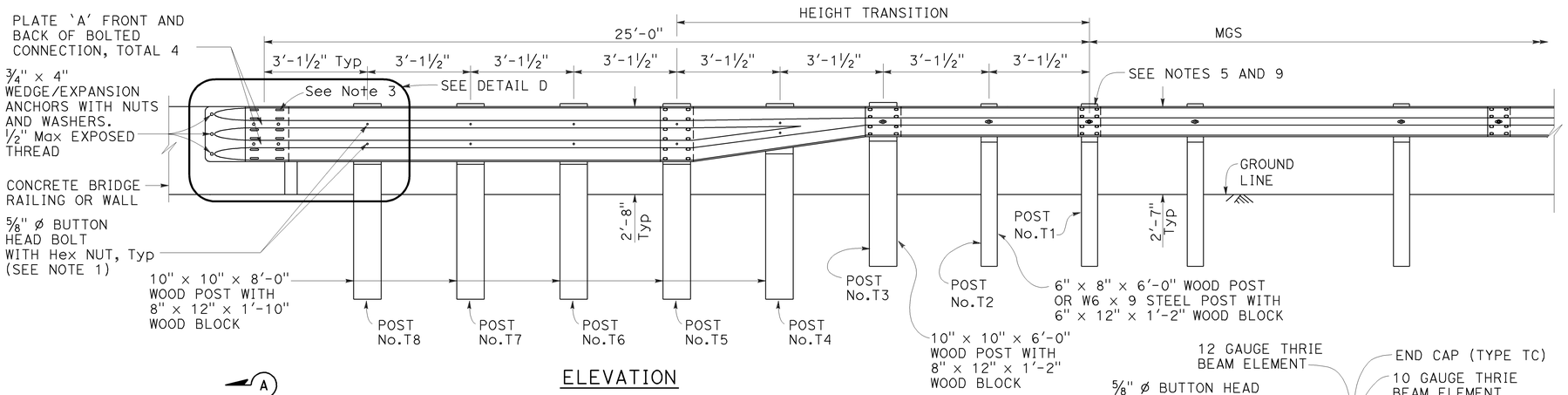

ELEVATION

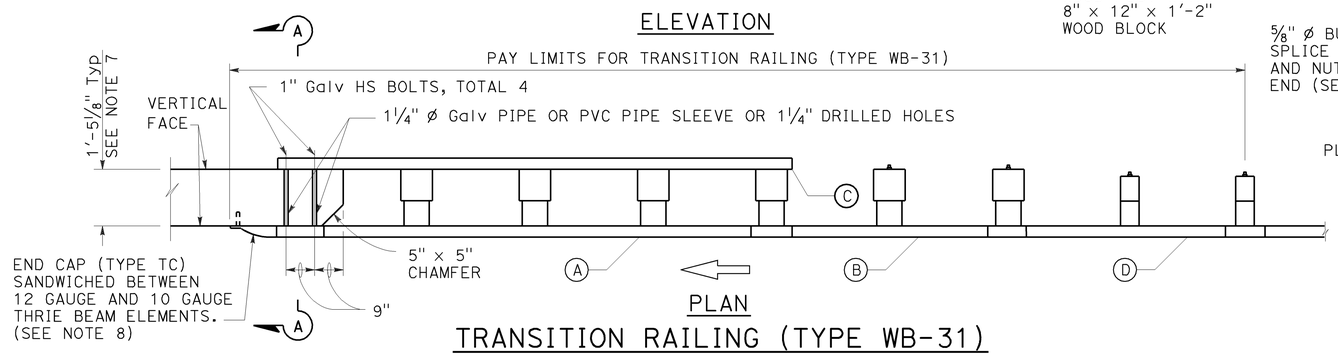

PLAN

TRANSITION RAILING (TYPE WB-31)

(No Blockout Attachment)

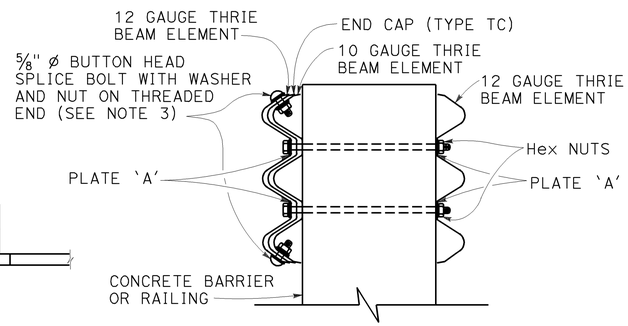

SECTION A-A

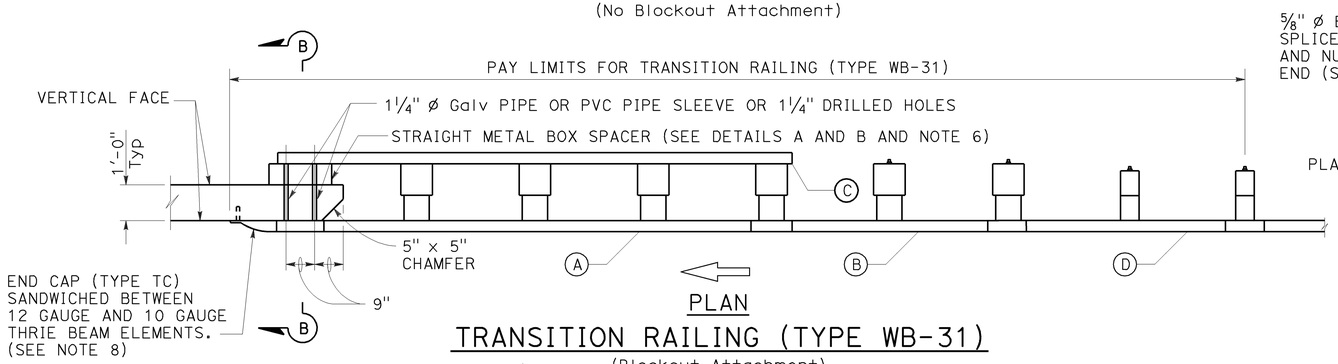

PLAN

TRANSITION RAILING (TYPE WB-31)

(Blockout Attachment)

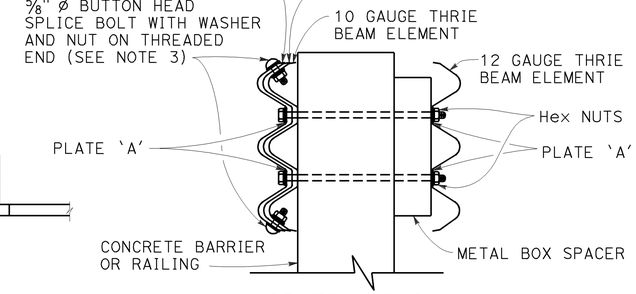

SECTION B-B

NOTES:

TO ACCOMPANY PLANS DATED 09-15-14

1. Use 5/8" ø Button head bolts and hex nuts for connections to posts. No washer on rail face for bolted connections to post.
2. The nested rail elements, end cap, and 'W' beam to thrie beam element may be spliced together prior to bolting the elements to the wood post and concrete barrier or railing.
3. Exterior splice bolt holes for rail element splices at Post No. T5 and the connection to the concrete barrier or railing shall be the standard 29/32" × 1 1/8" slot size. Interior splice bolt holes at these locations may be increased up to 1 1/4" ø. Only the top 4 and the bottom 4 splice bolts with washers and nuts are required for rail splices at Post No. T5 and the connection to the concrete barrier or railing.
4. The top elevation of Posts No. T2 through No. T7 shall not project more than 1" above the top elevation of the rail element.
5. Typically, the railing connected to Transition Railing (Type WB-31) will be either standard railing section of MGS with height transition ratio of 150:1 or a Caltrans approved 31" end treatment attached to Post No. T1.
6. The depth of the metal box spacer varies from the 9 1/8" to 1 1/2" and is dependent on the width of the concrete railing or wall. The combined dimension for the depth of the metal box spacer plus the width of railing or wall is typically 21 1/8". Where the space between the backside of the concrete railing or wall and the rear thrie beam element is less than 1 1/2", metal plates similar to Plate 'A' are to be used as spacers.
7. Where the width of the concrete railing or wall is greater than 17 1/8", wood blocks are to be used to fill the space created between the backside of Posts No. T5 through No. T8 and the rear thrie beam element. These wood blocks shall be 8" in width and 1'-2" in length. The dimension between the front thrie beam element and the rear thrie beam element is to match the width of the concrete railing or wall.
8. End cap may be installed over 12 gauge and 10 gauge thrie beam elements where transition railing is installed on the departure end of bridge railing.
9. Conform standard railing section height to 31" at Post No. T1 using height transition ratio of 150:1.

LEGEND:

(A) NESTED THRIE BEAM ELEMENTS (ONE 12 GAUGE ELEMENT NESTED OVER ONE 10 GAUGE ELEMENT).

(B) ONE ASYMMETRICAL 10 GAUGE "W" BEAM TO THRIE BEAM ELEMENT.

(C) ONE 12 GAUGE THRIE BEAM ELEMENT.

(D) ONE 10 GAUGE "W" BEAM RAIL ELEMENT (7'-3 1/2" LENGTH)

10 GAUGE = 0.138" THICK
12 GAUGE = 0.108" THICK

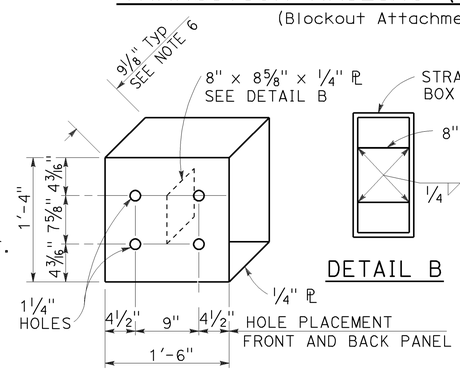

DETAIL A

STRAIGHT METAL BOX SPACER

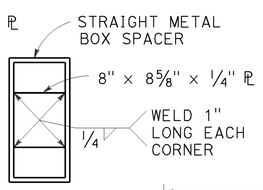

DETAIL B

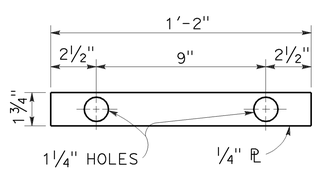

DETAIL C

PLATE 'A'

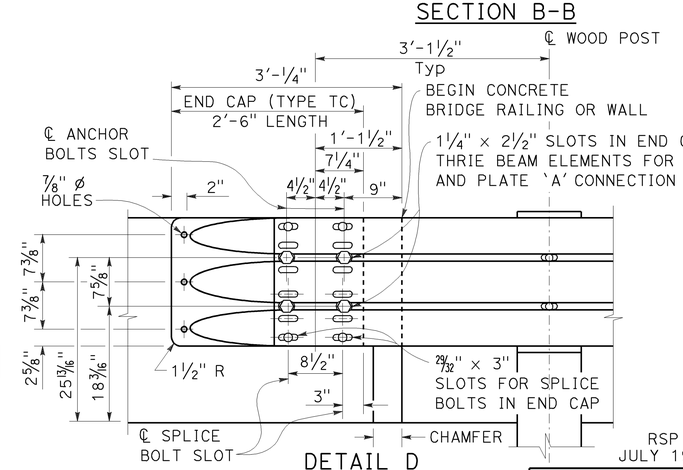

DETAIL D

STATE OF CALIFORNIA
DEPARTMENT OF TRANSPORTATION

MIDWEST GUARDRAIL SYSTEM TRANSITION RAILING (TYPE WB-31)

NO SCALE

RSP A77U4 DATED NOVEMBER 15, 2013 SUPERSEDES RSP A77U4 DATED JULY 19, 2013 THAT SUPPLEMENTS THE STANDARD PLANS BOOK DATED 2010.

REVISED STANDARD PLAN RSP A77U4

2010 REVISED STANDARD PLAN RSP A77U4

10-4-13

Dist	COUNTY	ROUTE	POST MILES TOTAL PROJECT	SHEET No.	TOTAL SHEETS
11	SD	163	8.4/9.4	283	332

REGISTERED CIVIL ENGINEER

July 18, 2014
PLANS APPROVAL DATE

REGISTERED PROFESSIONAL ENGINEER Glenn DeCou No. C34547 Exp. 9-30-15 CIVIL STATE OF CALIFORNIA

THE STATE OF CALIFORNIA OR ITS OFFICERS OR AGENTS SHALL NOT BE RESPONSIBLE FOR THE ACCURACY OR COMPLETENESS OF SCANNED COPIES OF THIS PLAN SHEET.

TO ACCOMPANY PLANS DATED 09-15-14

2010 REVISED STANDARD PLAN RSP A85

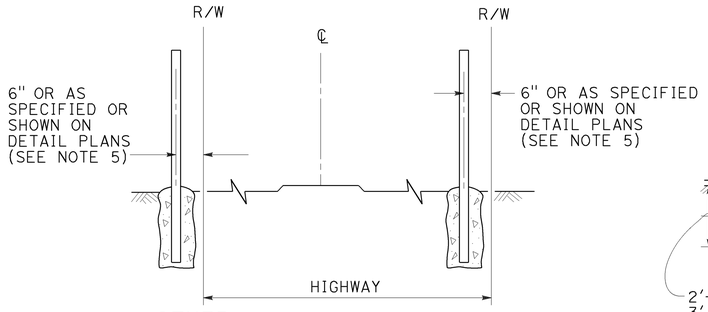

FENCE LOCATION

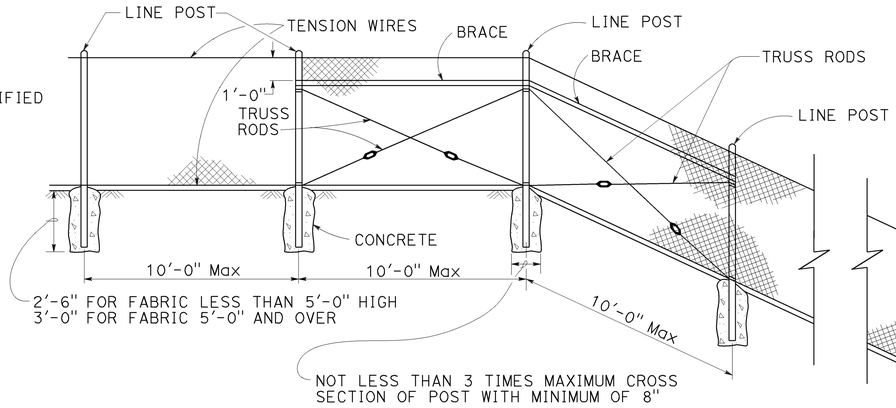

CHAIN LINK FENCE ON SHARP BREAK IN GRADE

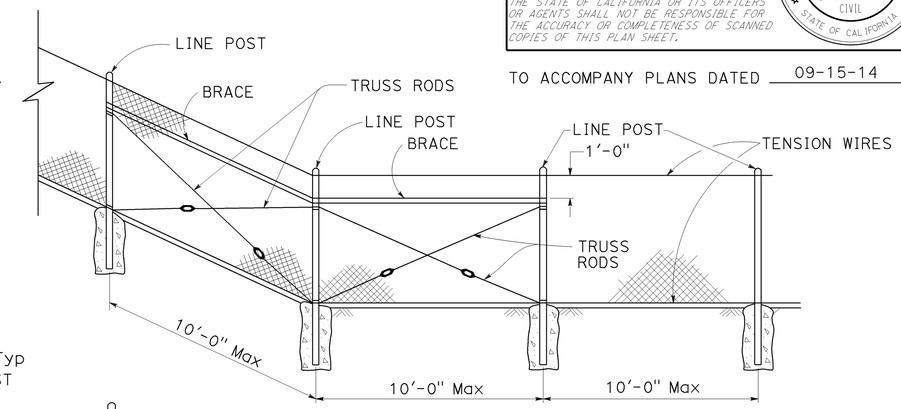

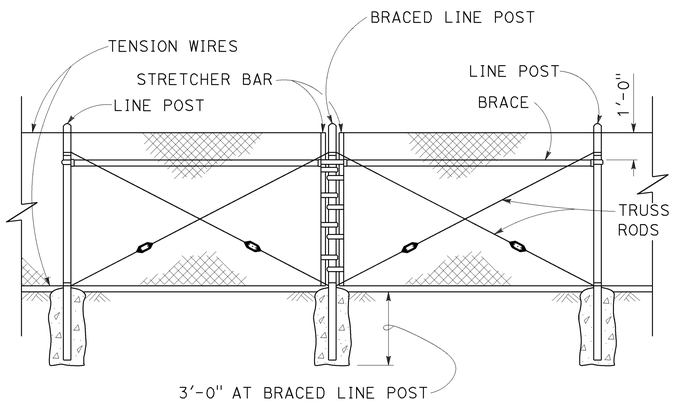

BRACED LINE POST INSTALLATION

Braced line post at intervals not exceeding 1000'

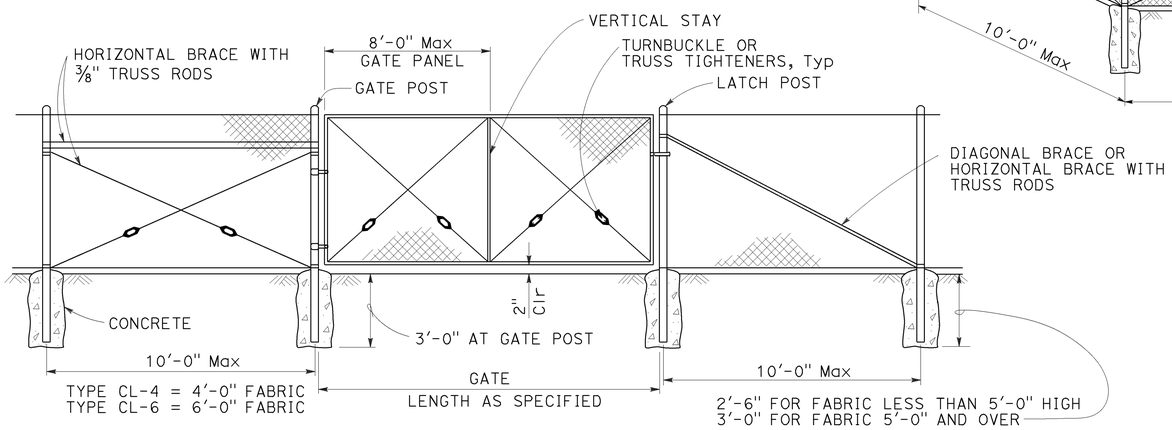

CHAIN LINK GATE INSTALLATION

GATE POST			
FENCE HEIGHT	GATE WIDTHS	ROUND OD PIPE	WEIGHT (lb/ft)
6'-0" AND LESS	UP THRU 6'-0"	2.875"	5.80
	OVER 6'-0" THRU 12'-0"	4.500"	10.80
	OVER 12'-0" THRU 18'-0"	5.563"	14.63
	OVER 18'-0" TO 24'-0" Max	6.625"	18.99
OVER 6'-0" TO 8'-0" Max	UP THRU 6'-0"	3.500"	7.58
	OVER 6'-0" THRU 12'-0"	5.563"	14.63
	OVER 12'-0" THRU 18'-0"	6.625"	18.99
	OVER 18'-0" TO 24'-0" Max	8.625"	28.58

Above post dimensions and weights are minimums. Larger sizes may be used upon approval.

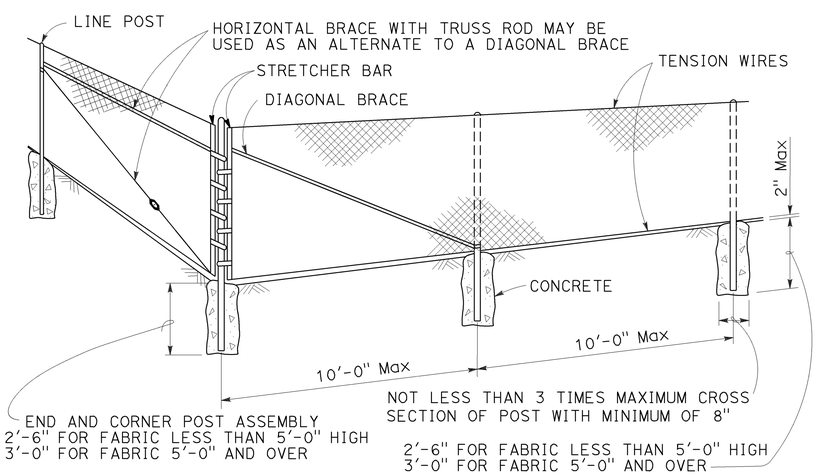

CORNER POST

NOTES:

1. The table below shows minimum sized posts and braces complying with the specifications. Larger or heavier post and brace sizes may be used upon approval.
2. Sections shown in the tables must also comply with the strength requirements and other provisions of the Specifications.
3. Other sections which comply with the strength requirements and other provisions of the Specifications may be used upon approval.
4. Options exercised shall be uniform on any one project.
5. Offset to be 2'-0" at monument locations, measured at right angles to R/W lines. Taper to achieve offset to be at least 20'-0" long.
6. See Revised Standard Plan RSP A85B for Brace, Stretcher Bar, and Truss Tightener Details.

TYPICAL MEMBER DIMENSIONS (See Notes)										
FENCE HEIGHT	LINE POSTS				END, LATCH AND CORNER POSTS		BRACES			
	ROUND OD PIPE	WEIGHT (lb/ft)	ROLL FORMED SECTION	ROLL FORMED WEIGHT (lb/ft)	ROUND OD PIPE	WEIGHT (lb/ft)	ROUND OD PIPE	WEIGHT (lb/ft)	ROLL FORMED SECTION	ROLL FORMED WEIGHT (lb/ft)
6'-0" AND LESS	1.900"	2.72	1.875" x 1.625"	1.85	2.375"	3.65	1.66"	2.27	1.625" x 1.25"	1.35
OVER 6'-0" TO 8'-0" Max	2.375"	3.65	2.25" x 1.70"	2.78	2.875"	5.80	1.66"	2.27	1.625" x 1.25"	1.35

STATE OF CALIFORNIA
DEPARTMENT OF TRANSPORTATION

CHAIN LINK FENCE

NO SCALE

RSP A85 DATED JULY 18, 2014 SUPERSEDES STANDARD PLAN A85 DATED MAY 20, 2011 - PAGE 112 OF THE STANDARD PLANS BOOK DATED 2010.

REVISED STANDARD PLAN RSP A85

7-1-14

Dist	COUNTY	ROUTE	POST MILES TOTAL PROJECT	SHEET No.	TOTAL SHEETS
11	SD	163	8.4/9.4	284	332

REGISTERED CIVIL ENGINEER

October 19, 2012
PLANS APPROVAL DATE

REGISTERED PROFESSIONAL ENGINEER Glenn DeCou No. C34547 Exp. 9-30-13 CIVIL STATE OF CALIFORNIA

THE STATE OF CALIFORNIA OR ITS OFFICERS OR AGENTS SHALL NOT BE RESPONSIBLE FOR THE ACCURACY OR COMPLETENESS OF SCANNED COPIES OF THIS PLAN SHEET.

TO ACCOMPANY PLANS DATED 09-15-14

2010 REVISED STANDARD PLAN RSP A85B

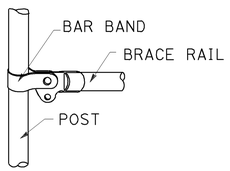

BRACE RAIL

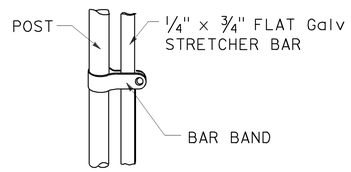

STRETCHER BAR

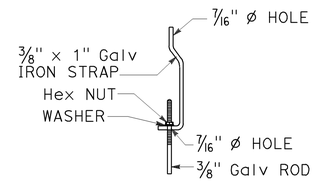

TRUSS TIGHTENER

NOTES:

1. All material for abutment connection to be galvanized.
2. The chain link fabric shall be replaced by barbed wire strands at 12" maximum centers between the double posts.
3. When the width of the culvert makes it necessary to anchor a post to the top of the culvert, a cast iron shoe or other device approved by the Engineer shall be used.
4. Fencing over stream and around headwall may also use Barbed Wire or Wire Mesh fencing with either wood post or steel post installation.
5. See Standard Plan A85 for Chain Link fence dimensions. See Standard Plan A86 for Barbed Wire and Wire Mesh fence dimensions and for wood post and steel post installation.

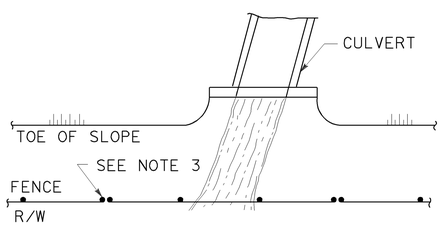

PLAN

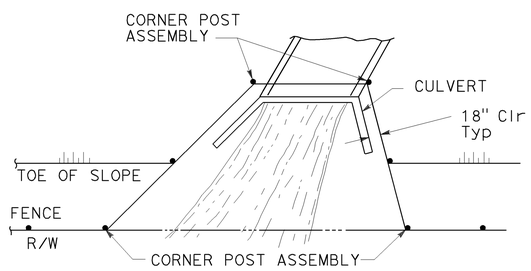

PLAN

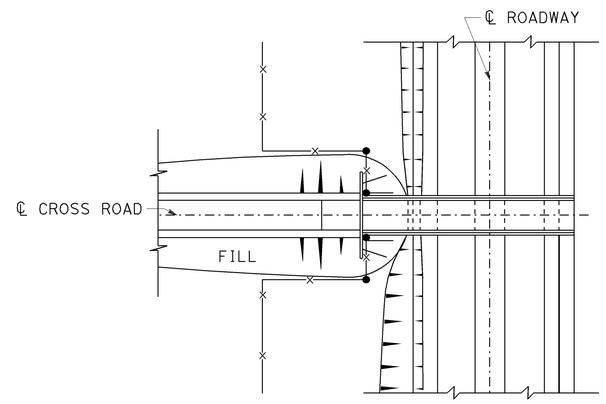

PLAN OF ROADWAY - OVERCROSSING

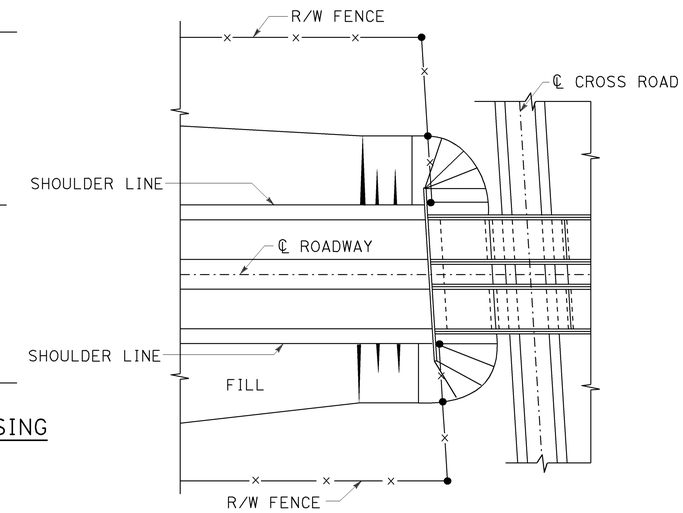

PLAN OF ROADWAY - UNDERCROSSING

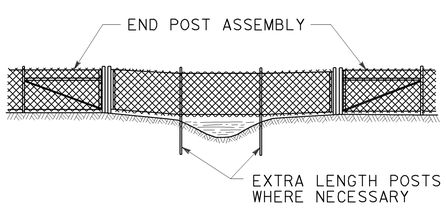

ELEVATION

INSTALLATION OVER STREAM

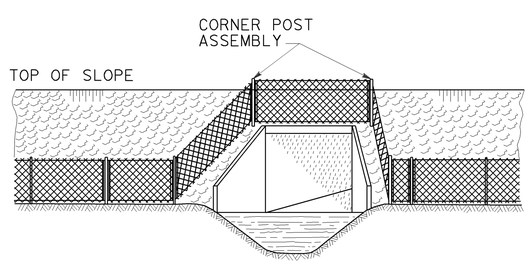

ELEVATION

INSTALLATION AROUND HEADWALL

See Note 4

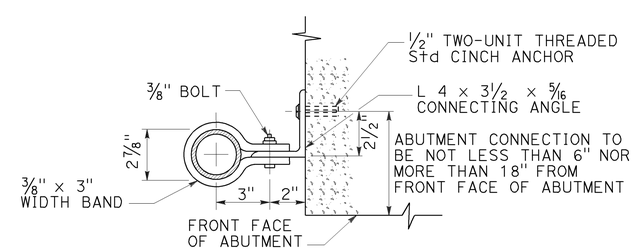

ABUTMENT CONNECTION

TYPICAL INSTALLATION AT BRIDGES

STATE OF CALIFORNIA
DEPARTMENT OF TRANSPORTATION

CHAIN LINK FENCE DETAILS

NO SCALE

RSP A85B DATED OCTOBER 19, 2012 SUPERSEDES STANDARD PLAN A85B DATED MAY 20, 2011 - PAGE 114 OF THE STANDARD PLANS BOOK DATED 2010.

REVISED STANDARD PLAN RSP A85B

7-19-12

Dist	COUNTY	ROUTE	POST MILES TOTAL PROJECT	SHEET No.	TOTAL SHEETS
11	SD	163	8.4/9.4	285	332

REGISTERED CIVIL ENGINEER

July 19, 2013
PLANS APPROVAL DATE

REGISTERED PROFESSIONAL ENGINEER Michael Janzen No. 44788 Exp. 03-31-14 CIVIL STATE OF CALIFORNIA

THE STATE OF CALIFORNIA OR ITS OFFICERS OR AGENTS SHALL NOT BE RESPONSIBLE FOR THE ACCURACY OR COMPLETENESS OF SCANNED COPIES OF THIS PLAN SHEET.

TO ACCOMPANY PLANS DATED 09-15-14

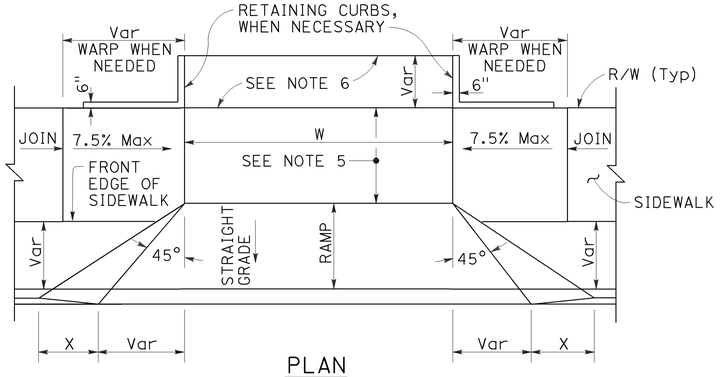

PLAN

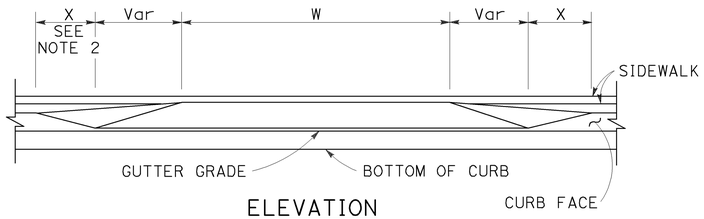

ELEVATION

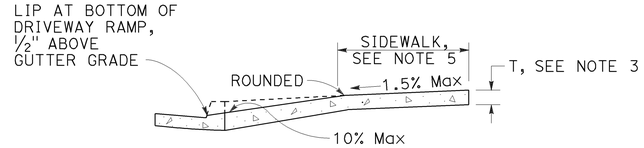

CASE A

Typical driveway, sidewalk not depressed

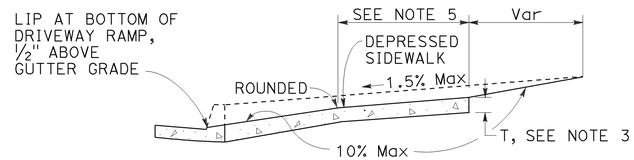

CASE B

Driveway with depressed sidewalk

SECTIONS

DRIVEWAYS

TABLE A

CURB TYPE	DIMENSIONS			
	"H1"	"H2"	"W1"	"W2"
A1-6	1'-2"	6"	7½"	1½"
A1-8	1'-4"	8"	8"	2"
A2-6	1'-0"	6"	2'-7½"	1½"
A2-8	1'-2"	8"	2'-8"	2"
A3-6	6"	5"	7¼"	1¼"
A3-8	8"	7"	7¾"	1¾"
B1-4	1'-0"	4"	7½"	2½"
B1-6	1'-2"	6"	9"	4"
B2-4	10"	4"	2'-7½"	2½"
B2-6	1'-0"	6"	2'-9"	4"
B3-4	4"	3"	7"	2"
B3-6	6"	5"	8½"	3½"
D-4	10"	4"	1'-6"	1'-1"
D-6	1'-0"	6"	2'-2"	1'-9"

CURB QUANTITIES

TYPE	CUBIC YARDS PER LINEAR FOOT
A1-6	0.02585
A1-8	0.03084
A2-6	0.05903
A2-8	0.06379
A3-6	0.01036
A3-8	0.01435
B1-4	0.02185
B1-6	0.02930
B2-4	0.05515
B2-6	0.06171
B3-4	0.00641
B3-6	0.01074
B4	0.05709
D-4	0.04083
D-6	0.06804
E	0.06661

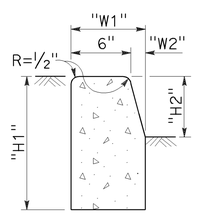

TYPE A1 CURBS

See Table A

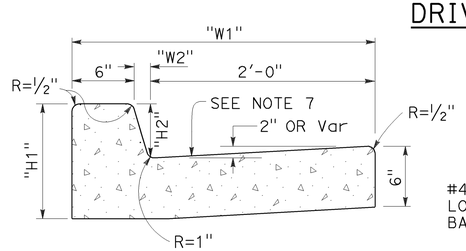

TYPE A2 CURBS

See Table A

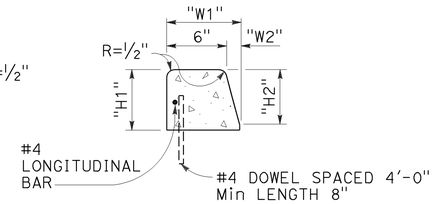

TYPE A3 CURBS

Superimposed on existing pavement
See Table A

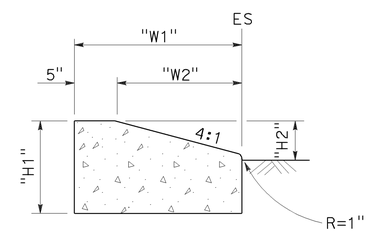

TYPE D CURBS

See Table A

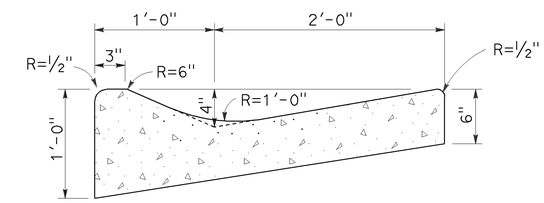

TYPE E CURB

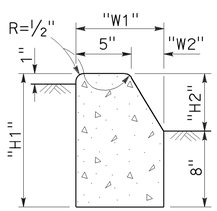

TYPE B1 CURBS

See Table A

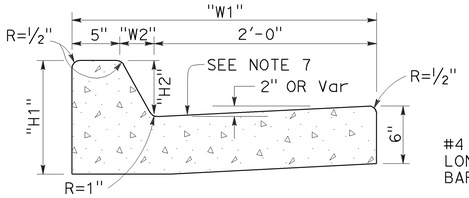

TYPE B2 CURBS

See Table A

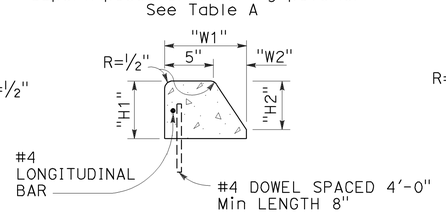

TYPE B3 CURBS

Superimposed on existing pavement
See Table A

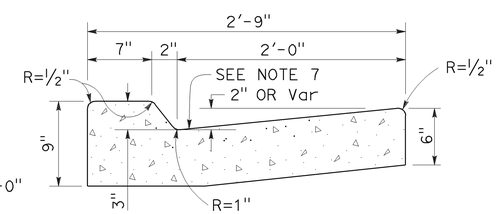

TYPE B4 CURBS

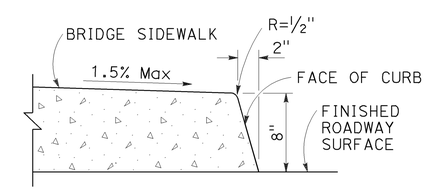

TYPE H CURB

On Bridges

CURBS

NOTES:

1. Case A driveway section typically applies.
2. X=3'-0" except for curb heights over 10" where 4:1 slopes shall be used on curb slope.
3. Sidewalk and ramp thickness "T" at driveway shall be 4" for residental and 6" for commercial.
4. Difference in slope of the driveway ramp and the slope of a line between the gutter and a point on the roadway 5'-0" from gutter line shall not exceed 15%. Reduce driveway ramp slope, not gutter slope, where required.
5. Minimum width of clear passageway for sidewalk shall be 4'-2".
6. Retaining curbs and acquisition of construction easement may be necessary for narrow sidewalks or curb heights in excess of 6".
7. Across the pedestrian route at curb ramp locations, the gutter pan slope shall not exceed 1" of depth for each 2'-0" of width.

STATE OF CALIFORNIA
DEPARTMENT OF TRANSPORTATION

CURBS AND DRIVEWAYS

NO SCALE

RSP A87A DATED JULY 19, 2013 SUPERSEDES STANDARD PLAN A87A
DATED MAY 20, 2011 - PAGE 119 OF THE STANDARD PLANS BOOK DATED 2010.

REVISED STANDARD PLAN RSP A87A

2010 REVISED STANDARD PLAN RSP A87A

7-8-13

Dist	COUNTY	ROUTE	POST MILES TOTAL PROJECT	SHEET No.	TOTAL SHEETS
11	SD	163	8.4/9.4	286	332

REGISTERED CIVIL ENGINEER

July 19, 2013
PLANS APPROVAL DATE

REGISTERED PROFESSIONAL ENGINEER
Michael Janzen
No. 44788
Exp. 03-31-14
CIVIL
STATE OF CALIFORNIA

THE STATE OF CALIFORNIA OR ITS OFFICERS OR AGENTS SHALL NOT BE RESPONSIBLE FOR THE ACCURACY OR COMPLETENESS OF SCANNED COPIES OF THIS PLAN SHEET.

TO ACCOMPANY PLANS DATED 09-15-14

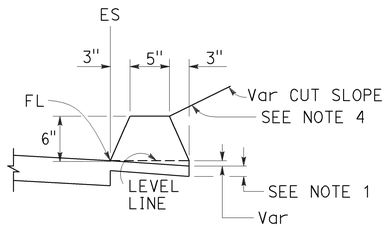

TYPE A
See Note 3

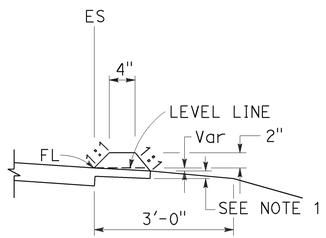

TYPE C

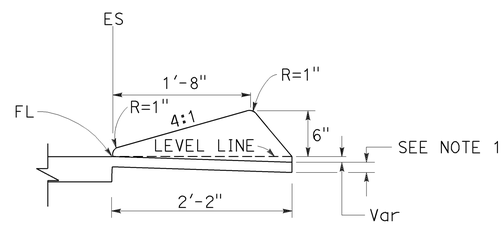

TYPE D

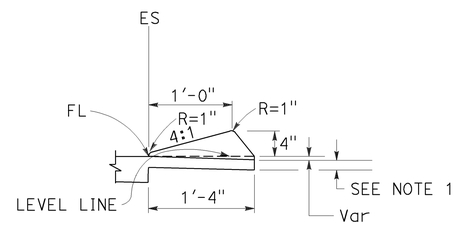

TYPE E

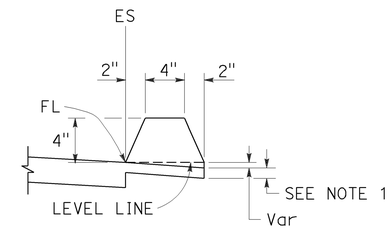

TYPE F
See Note 5

DIKES

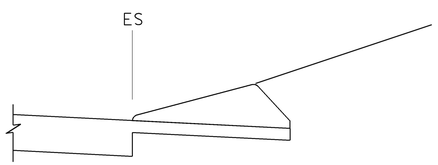

CASE C-1
Cut Slope

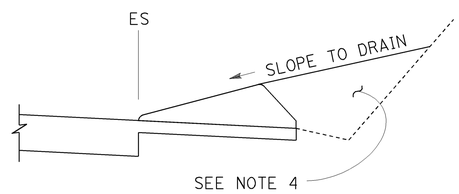

CASE C-2
Cut Slope

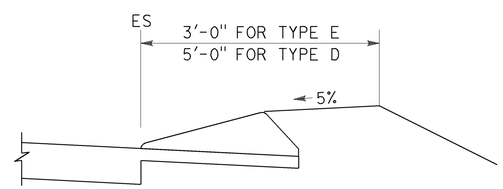

CASE F

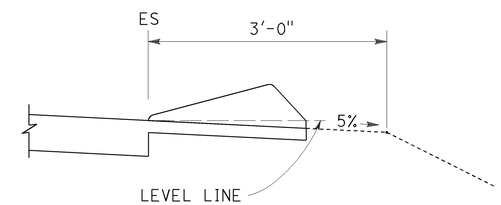

CASE R
See Note 2

TYPE D AND E BACKFILL DETAILS

NOTES:

1. For HMA shoulders only, extend top layer of HMA placed on the shoulder under dike with no joint at the ES. For projects with OGFC shoulders, do not extend OGFC under dike. See project plans for modified dike detail.
2. Case R applies to retrofit only projects where restrictive conditions do not provide enough width for Case F backfill.
3. Type A dike only to be used where restrictive slope conditions do not provide enough width to use Type D or Type E dike.
4. Fill and compact with excavated material to top of dike.
5. Use Type F dike, where dike is required with guard railing installations. See Revised Standard Plan RSP A77N4 for dike positioning details.

DIKE QUANTITIES

TYPE	CUBIC YARDS PER LINEAR FOOT
A	0.0135
C	0.0038
D	0.0293
E	0.0130
F	0.0066

Quantities based on 5% cross slope.

STATE OF CALIFORNIA
DEPARTMENT OF TRANSPORTATION

HOT MIX ASPHALT DIKES

NO SCALE

RSP A87B DATED JULY 19, 2013 SUPERSEDES STANDARD PLAN A87B DATED MAY 20, 2011 - PAGE 120 OF THE STANDARD PLANS BOOK DATED 2010.

REVISED STANDARD PLAN RSP A87B

2010 REVISED STANDARD PLAN RSP A87B

6-27-13

Dist	COUNTY	ROUTE	POST MILES TOTAL PROJECT	SHEET No.	TOTAL SHEETS
11	SD	163	8.4/9.4	287	332

REGISTERED CIVIL ENGINEER

March 21, 2014
PLANS APPROVAL DATE

REGISTERED PROFESSIONAL ENGINEER Hector David Cordova No. C41957 Exp. 3-31-14 CIVIL STATE OF CALIFORNIA

THE STATE OF CALIFORNIA OR ITS OFFICERS OR AGENTS SHALL NOT BE RESPONSIBLE FOR THE ACCURACY OR COMPLETENESS OF SCANNED COPIES OF THIS PLAN SHEET.

TO ACCOMPANY PLANS DATED 09-15-14

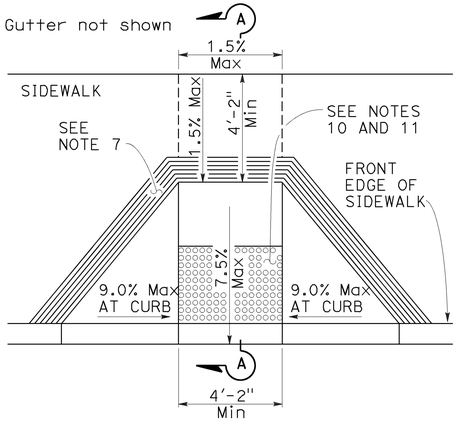

CASE A

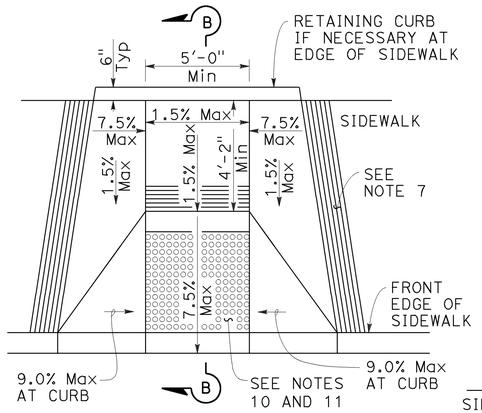

CASE B

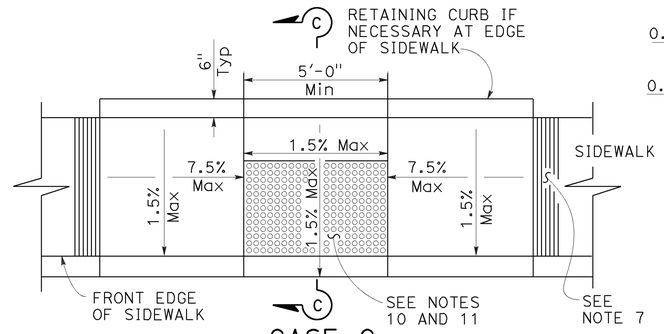

CASE C

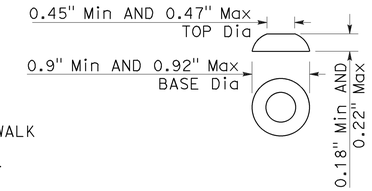

RAISED TRUNCATED DOME

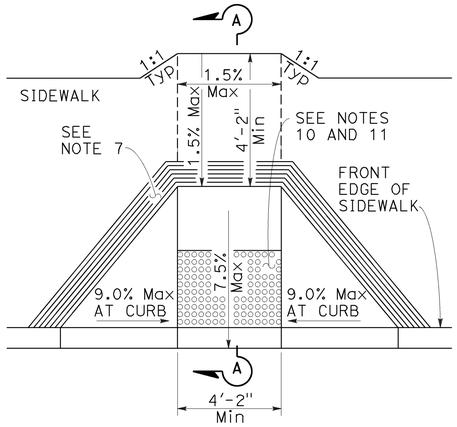

CASE D

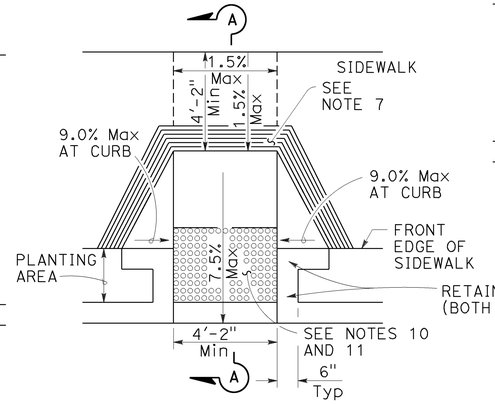

CASE E

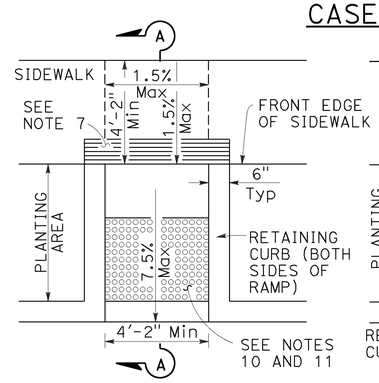

CASE F

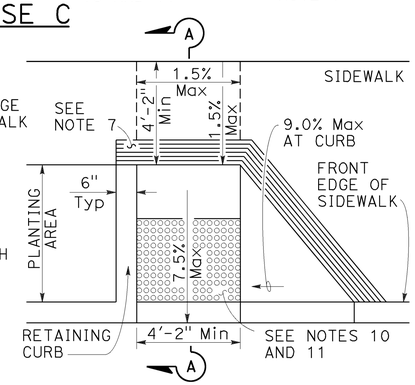

CASE G

See Note 4

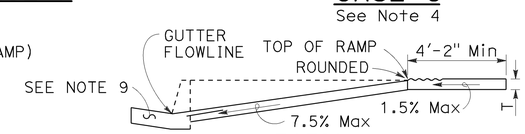

SECTION A-A

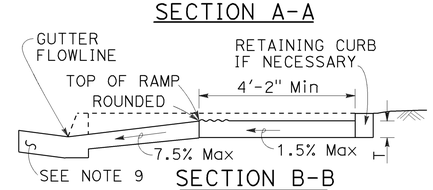

SECTION B-B

Depress entire sidewalk as required

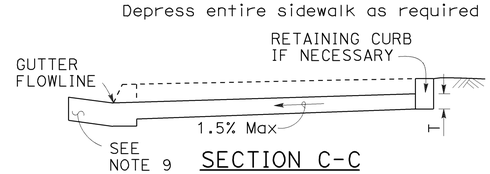

SECTION C-C

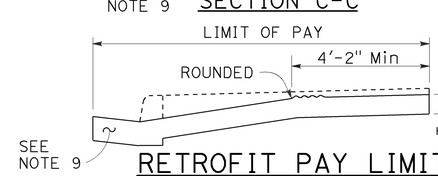

RETROFIT PAY LIMITS

Existing curb and sidewalk

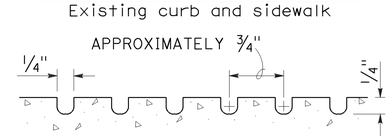

GROOVING DETAIL

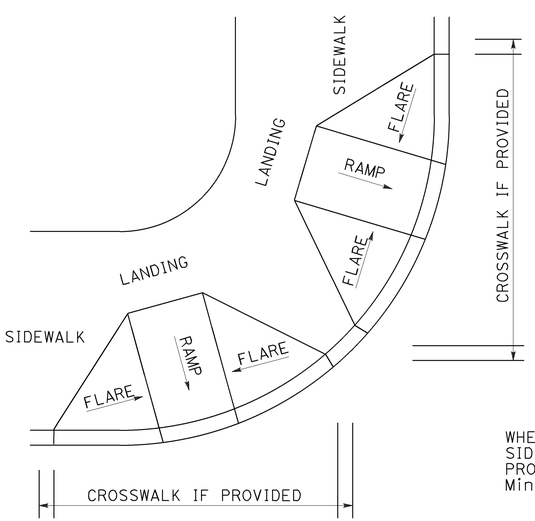

DETAIL A

TYPICAL TWO-RAMP CORNER INSTALLATION

See Note 1

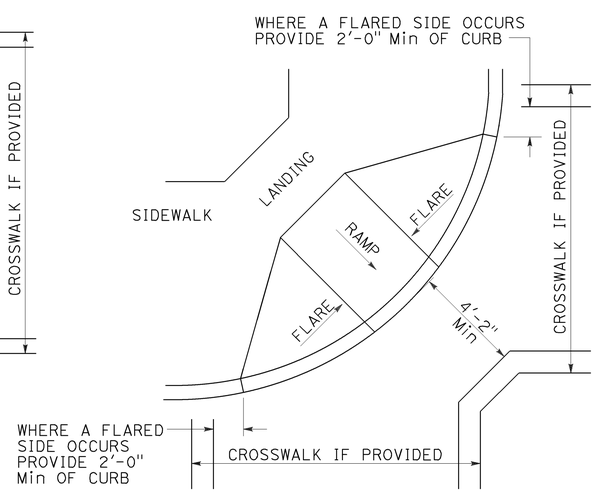

DETAIL B

TYPICAL ONE-RAMP CORNER INSTALLATION

See Notes 1 and 3

NOTES:

1. As site conditions dictate, Case A through Case G curb ramps may be used for corner installations similar to those shown in Detail A and Detail B. The case of curb ramps used in Detail A do not have to be the same. Case A through Case G curb ramps also may be used at mid block locations, as site conditions dictate.
2. If distance from curb to back of sidewalk is too short to accommodate ramp and 4'-2" platform (landing) as shown in Case A, the sidewalk may be depressed longitudinally as in Case B, or C or may be widened as in Case D.
3. When ramp is located in center of curb return, crosswalk configuration must be similar to that shown for Detail B.
4. As site conditions dictate, the retaining curb side and the flared side of the Case G ramp shall be constructed in reversed position.
5. If located on a curve, the sides of the ramp need not be parallel, but the minimum width of the ramp shall be 4'-2".
6. Side slope of ramp flares vary uniformly from a maximum of 9.0% at curb to conform with longitudinal sidewalk slope adjacent to top of the ramp, except in Case C and Case F.
7. The curb ramp shall be outlined, as shown, with a 1'-0" wide border with 1/4" grooves approximately 3/4" on center. See grooving detail.
8. Transitions from ramps and landing to walks, gutters or streets shall be flush (no lip) and free of abrupt changes.
9. Counter slopes of adjoining gutters and road surfaces immediately adjacent to and within 24 inches of the curb ramp shall not be steeper than 1:20 (5.0%). Gutter pan slope shall not exceed 1" of depth for each 2'-0" of width.
10. Curb ramps shall have a detectable warning surface that extends the full width and 3'-0" depth of the ramp. A 4'-0" wide detectable warning surface may be used on a 4'-2" wide curb ramp. Detectable Warning Surfaces shall conform to the requirements in the Standard Specifications.
11. The edge of the detectable warning surface nearest the street shall be between 6" and 8" from the gutter flowline.
12. Sidewalk and ramp thickness, "T", shall be 3 1/2" minimum.
13. Utility pull boxes, manholes, vaults and all other utility facilities within the boundaries of the curb ramp will be relocated or adjusted to grade by the owner prior to, or in conjunction with, curb ramp construction.
14. Detectable warning surface may have to be cut to allow removal of utility covers while maintaining full detectable warning width and depth.

RAISED TRUNCATED DOME PATTERN (IN-LINE)

DETECTABLE WARNING SURFACE

See Note 10

STATE OF CALIFORNIA
DEPARTMENT OF TRANSPORTATION

CURB RAMP DETAILS

NO SCALE

RSP A88A DATED MARCH 21, 2014 SUPERSEDES RSP A88A DATED JULY 19, 2013 AND STANDARD PLAN A88A DATED MAY 20, 2011 - PAGE 121 OF THE STANDARD PLANS BOOK DATED 2010.

REVISED STANDARD PLAN RSP A88A

2010 REVISED STANDARD PLAN RSP A88A

2-25-14

Dist	COUNTY	ROUTE	POST MILES TOTAL PROJECT	SHEET No.	TOTAL SHEETS
11	SD	163	8.4/9.4	288	332

REGISTERED CIVIL ENGINEER

March 21, 2014
PLANS APPROVAL DATE

REGISTERED PROFESSIONAL ENGINEER Hector David Cordova No. C41957 Exp. 3-31-14 CIVIL STATE OF CALIFORNIA

THE STATE OF CALIFORNIA OR ITS OFFICERS OR AGENTS SHALL NOT BE RESPONSIBLE FOR THE ACCURACY OR COMPLETENESS OF SCANNED COPIES OF THIS PLAN SHEET.

TO ACCOMPANY PLANS DATED 09-15-14

Gutter not shown

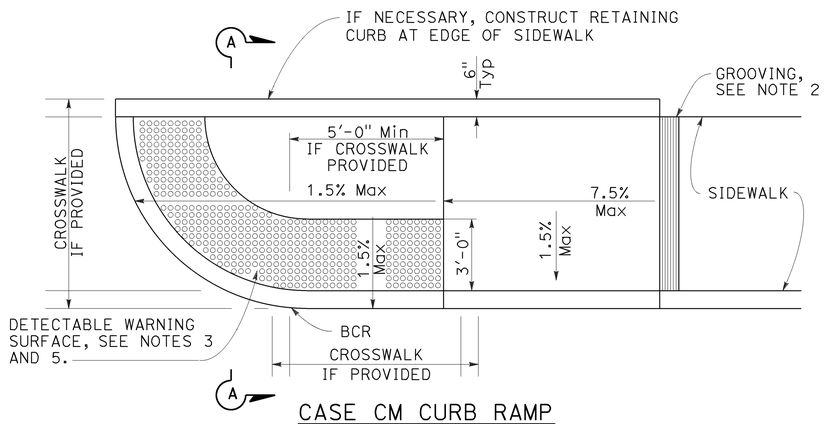

CASE CM CURB RAMP

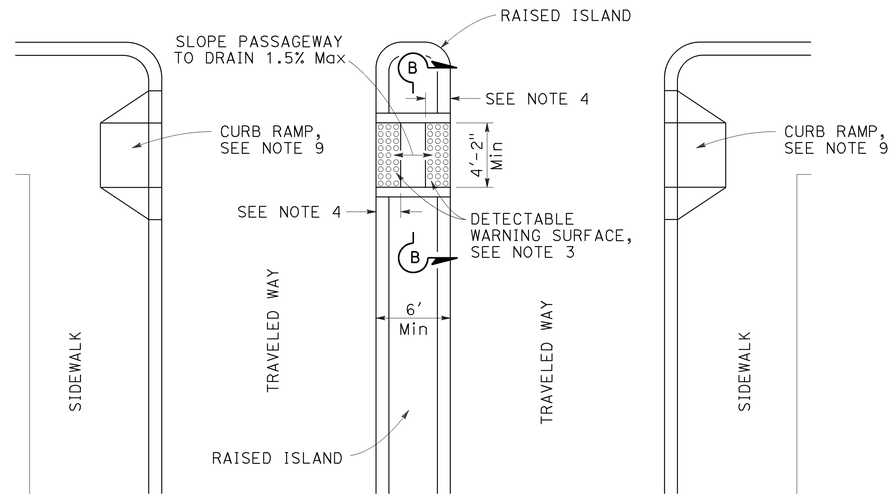

TYPE A PASSAGEWAY

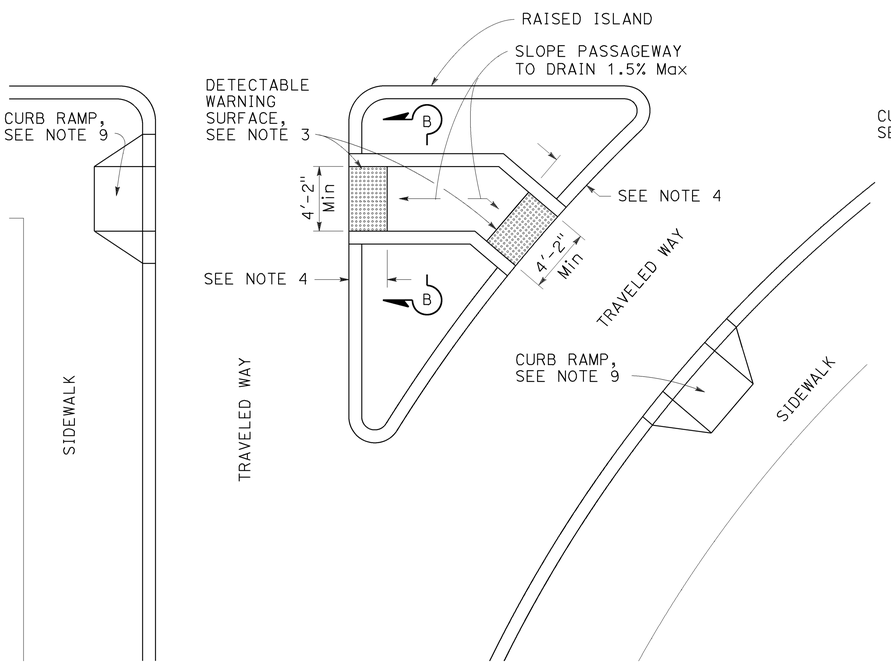

TYPE B PASSAGEWAY

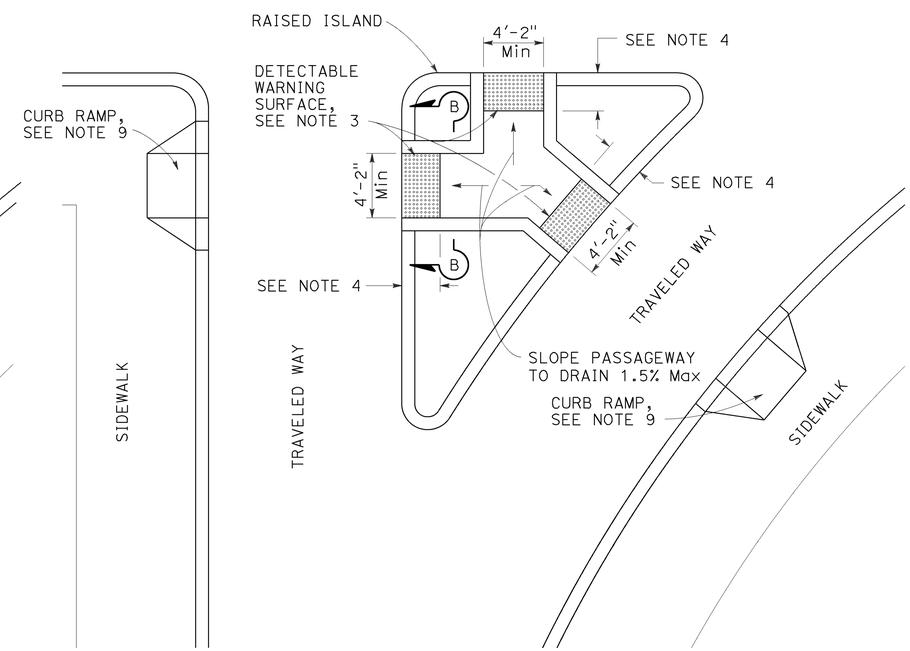

TYPE C PASSAGEWAY

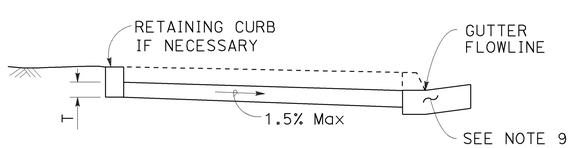

SECTION A-A

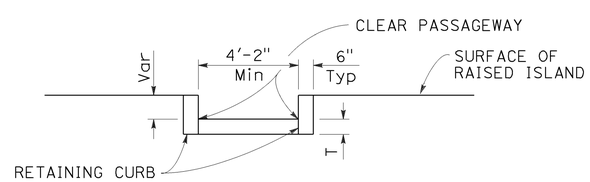

SECTION B-B

NOTES:

1. Sidewalk, ramp and passageway thickness, "T", shall be 3½" minimum.
2. For details of grooving used with Case CM curb ramp, see Revised Standard Plan RSP A88A.
3. For details of detectable warning surfaces, see Revised Standard Plan RSP A88A.
4. Where an island passageway length is greater than or equal to 6'-0", but less than 8'-0", each detectable warning surface shall extend the full width and 2'-0" depth of the passageway length. Where an island passageway length is greater than or equal to 8'-0", each detectable warning surface shall extend the full width and 3'-0" depth of the passageway length. A 4'-0" wide detectable warning surface may be used on a 4'-2" wide island passageway.
5. For Case CM curb ramp, the edge of the detectable warning surface nearest the street shall be between 6" and 8" from the gutter flowline.
6. Transitions from ramps to walks, gutters or streets shall be flush (no lip) and free of abrupt changes.
7. Utility pull boxes, manholes, vaults and all other utility facilities within the boundaries of the curb ramp will be relocated or adjusted to grade by the owner prior to, or in conjunction with, curb ramp construction.
8. Detectable warning surface may have to be cut to allow removal of utility covers while maintaining full detectable warning width and depth.
9. For additional curb ramp details, see Revised Standard Plan RSP A88A.

STATE OF CALIFORNIA
DEPARTMENT OF TRANSPORTATION

CURB RAMP AND ISLAND PASSAGEWAY DETAILS

NO SCALE

RSP A88B DATED MARCH 21, 2014 SUPERSEDES RSP A88B DATED JULY 19, 2013 AND STANDARD PLAN A88B DATED MAY 20, 2011 - PAGE 122 OF THE STANDARD PLANS BOOK DATED 2010.

REVISED STANDARD PLAN RSP A88B

2010 REVISED STANDARD PLAN RSP A88B

2-25-14

DIST	COUNTY	ROUTE	POST MILES TOTAL PROJECT	SHEET No.	TOTAL SHEETS
11	SD	163	8.4/9.4	289	332

REGISTERED CIVIL ENGINEER

November 15, 2013
PLANS APPROVAL DATE

REGISTERED PROFESSIONAL ENGINEER
Cornelis M. Hakim
No. C55610
Exp. 12-31-14
CIVIL
STATE OF CALIFORNIA

THE STATE OF CALIFORNIA OR ITS OFFICERS OR AGENTS SHALL NOT BE RESPONSIBLE FOR THE ACCURACY OR COMPLETENESS OF SCANNED COPIES OF THIS PLAN SHEET.

TO ACCOMPANY PLANS DATED 09-15-14

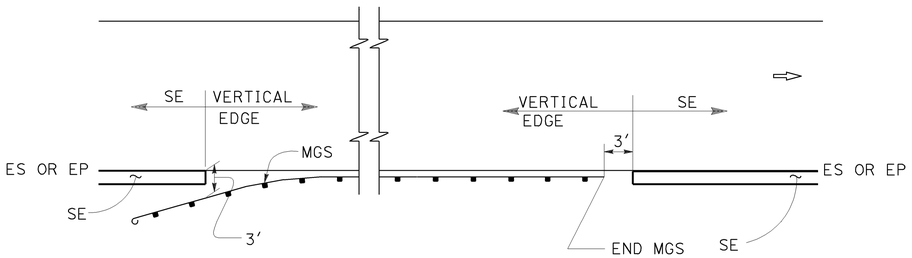

MGS

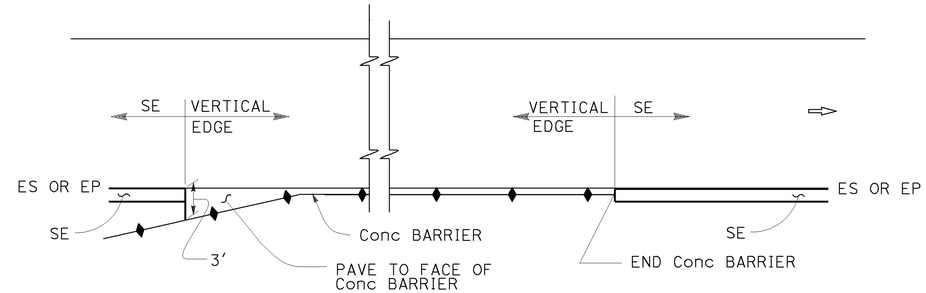

CONCRETE BARRIER

ABBREVIATIONS:

SE SAFETY EDGE

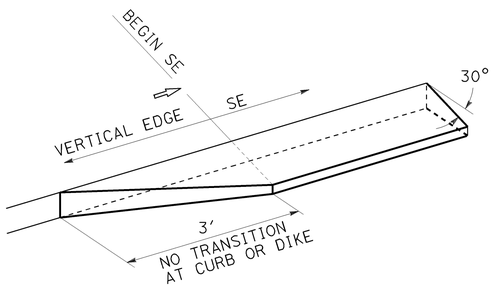

TRANSITION DETAIL
FOR CONCRETE ONLY

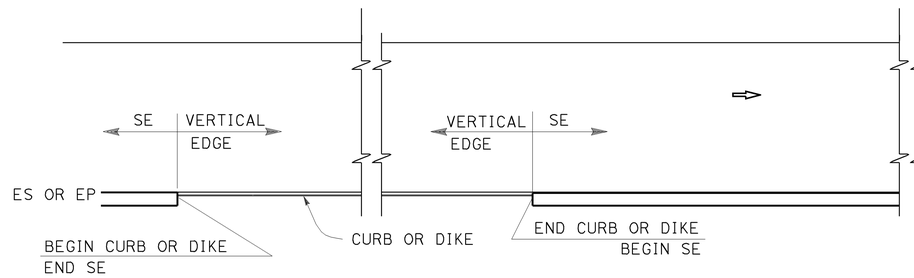

CURB OR DIKE

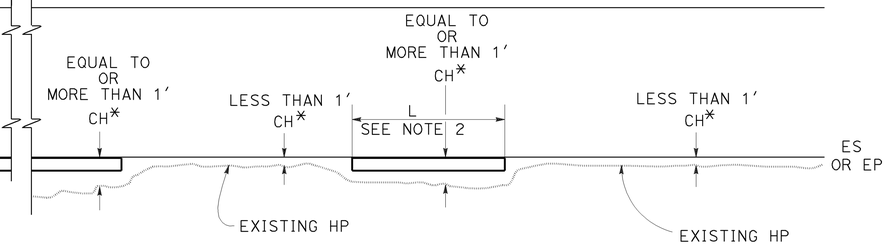

NARROW SIDE SLOPE

* CH = Distance from ES or EP to existing HP.

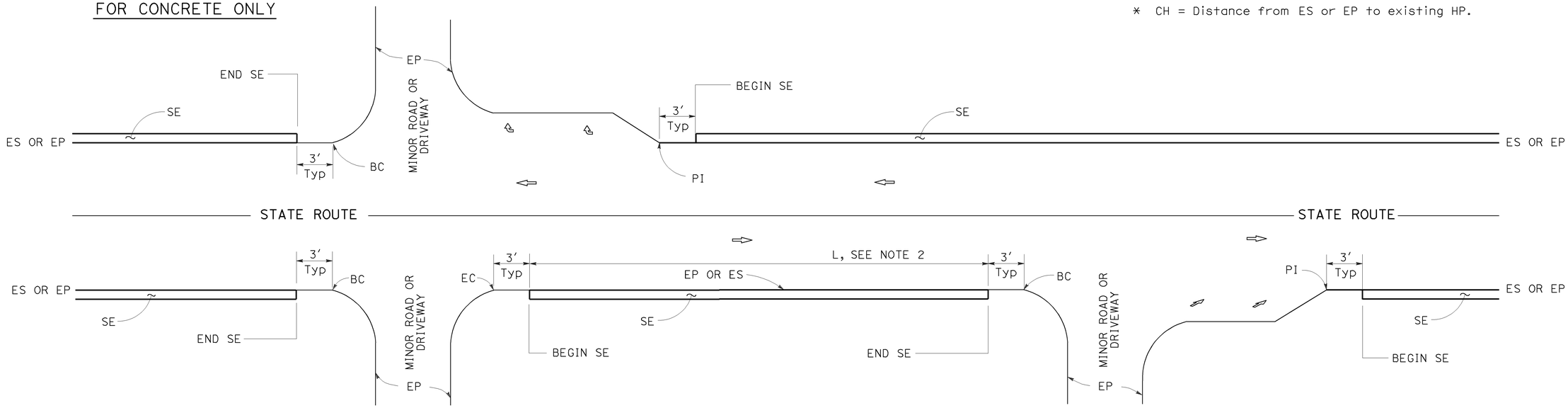

INTERSECTION

MINOR ROADWAY OR DRIVEWAY

DRIVEWAY AND INTERSECTION

NOTES:

1. For details not shown, see Revised Standard Plans RSP P75 and RSP P76.
2. Safety edge is optional when L is less than 30′.

STATE OF CALIFORNIA
DEPARTMENT OF TRANSPORTATION

PAVEMENT EDGE TREATMENTS

NO SCALE

RSP P74 DATED NOVEMBER 15, 2013 SUPERSEDES RSP P74 DATED JANUARY 20, 2012 THAT SUPPLEMENTS THE STANDARD PLANS BOOK DATED 2010.

REVISED STANDARD PLAN RSP P74

2010 REVISED STANDARD PLAN RSP P74

10-11-13

DIST	COUNTY	ROUTE	POST MILES TOTAL PROJECT	SHEET No.	TOTAL SHEETS
11	SD	163	8.4/9.4	290	332

REGISTERED CIVIL ENGINEER

November 15, 2013
PLANS APPROVAL DATE

REGISTERED PROFESSIONAL ENGINEER
Cornelis M. Hakim
No. C55610
Exp. 12-31-14
CIVIL
STATE OF CALIFORNIA

THE STATE OF CALIFORNIA OR ITS OFFICERS OR AGENTS SHALL NOT BE RESPONSIBLE FOR THE ACCURACY OR COMPLETENESS OF SCANNED COPIES OF THIS PLAN SHEET.

TO ACCOMPANY PLANS DATED 09-15-14

LEGEND:

- HMA PAVEMENT
- HMA OR CONCRETE PAVEMENT
- CONCRETE PAVEMENT

ABBREVIATIONS:

SE SAFETY EDGE
TT TOTAL THICKNESS OF SE
HW HINGE WIDTH, DISTANCE FROM ES OR EP TO HP

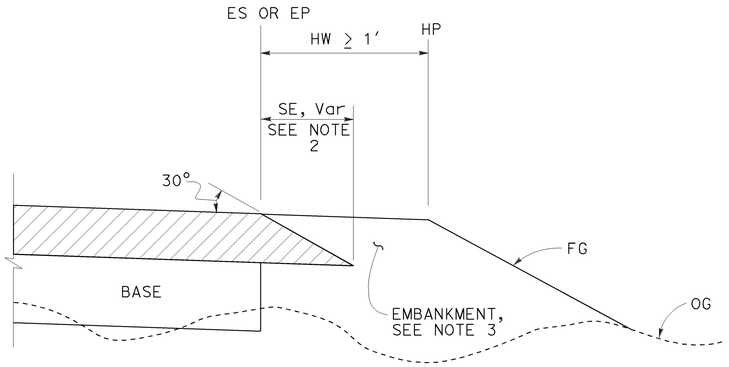

CASE K
Safety Edge - Fill Section, HW ≥ 1′

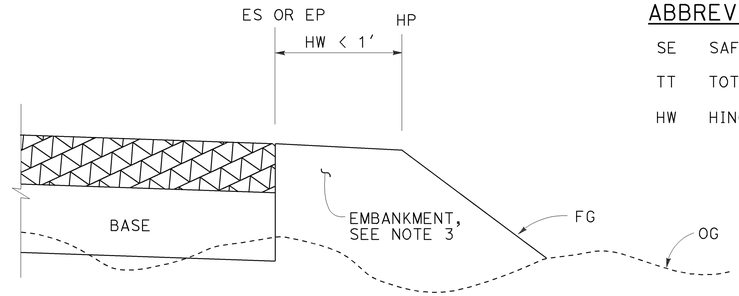

CASE L
Vertical Edge - Fill Section, HW < 1′

FILL SECTION

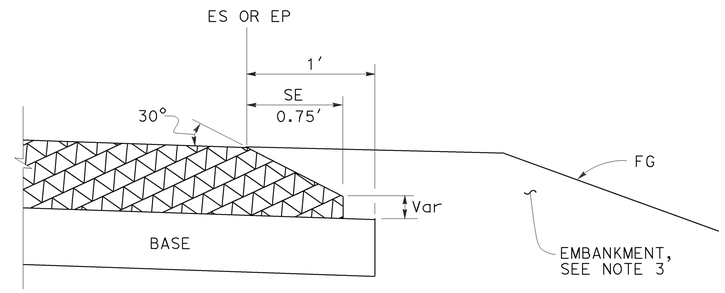

DETAIL "B"
For HMA pavement thickness more than 0.43′ or concrete pavement

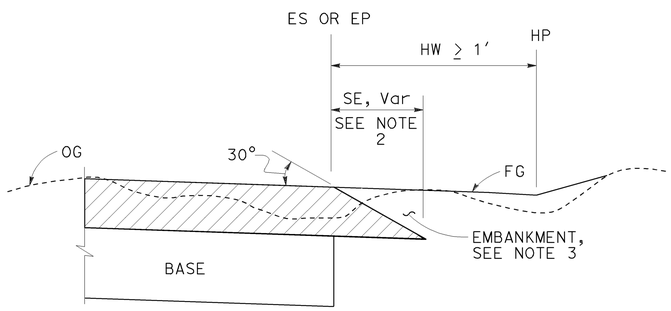

CASE M
Safety Edge - Cut Section, HW ≥ 1′

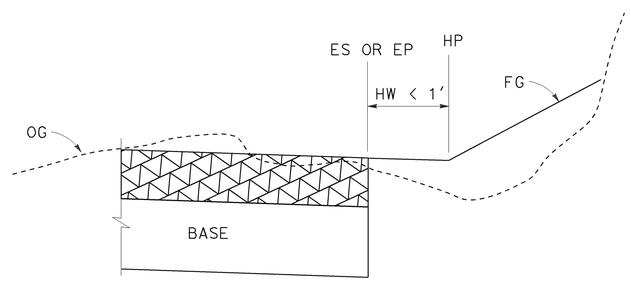

CASE N
Vertical Edge - Cut Section, HW < 1′

CUT SECTION

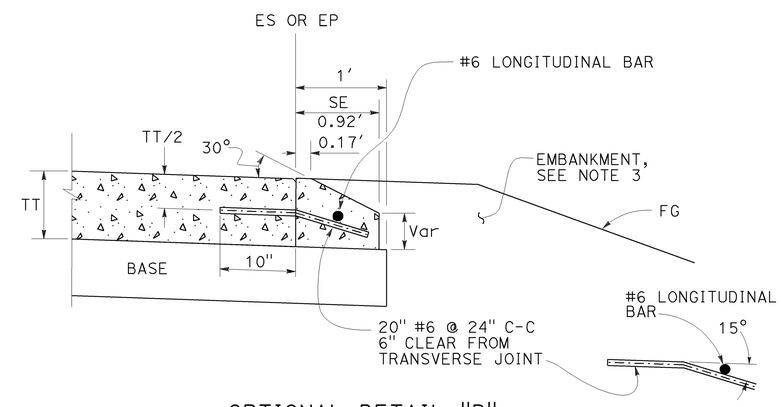

OPTIONAL DETAIL "B"
For concrete pavement
See Note 4

NOTES:

1. For limits of safety edge and vertical edge treatments, see Revised Standard Plan RSP P74
2. Details shown for HMA pavement thickness less than 0.43′. See Detail "B" for HMA pavement thickness more than 0.43′ or concrete pavement.
3. For locations and limits of embankment see project plans.
4. Safety edge transverse joint must match pavement transverse joint. End of #6 longitudinal bar must be 2" ±½" clear from transverse joint.
5. Safety edge is not needed in the area of MGS, barrier, right turn lane and acceleration lane. See Revised Standard Plan RSP P74.

STATE OF CALIFORNIA
DEPARTMENT OF TRANSPORTATION

PAVEMENT EDGE TREATMENTS-NEW CONSTRUCTION

NO SCALE

RSP P76 DATED NOVEMBER 15, 2013 SUPERSEDES RSP P76 DATED JANUARY 20, 2012 THAT SUPPLEMENTS THE STANDARD PLANS BOOK DATED 2010.

REVISED STANDARD PLAN RSP P76

2010 REVISED STANDARD PLAN RSP P76

10-4-13

TO ACCOMPANY PLANS DATED 09-15-14

Dist	COUNTY	ROUTE	POST MILES TOTAL PROJECT	SHEET No.	TOTAL SHEETS
11	SD	163	8.4/9.4	291	332

REGISTERED CIVIL ENGINEER

October 19, 2012
PLANS APPROVAL DATE

REGISTERED PROFESSIONAL ENGINEER Glenn DeCou No. C34547 Exp. 9-30-13 CIVIL STATE OF CALIFORNIA

THE STATE OF CALIFORNIA OR ITS OFFICERS OR AGENTS SHALL NOT BE RESPONSIBLE FOR THE ACCURACY OR COMPLETENESS OF SCANNED COPIES OF THIS PLAN SHEET.

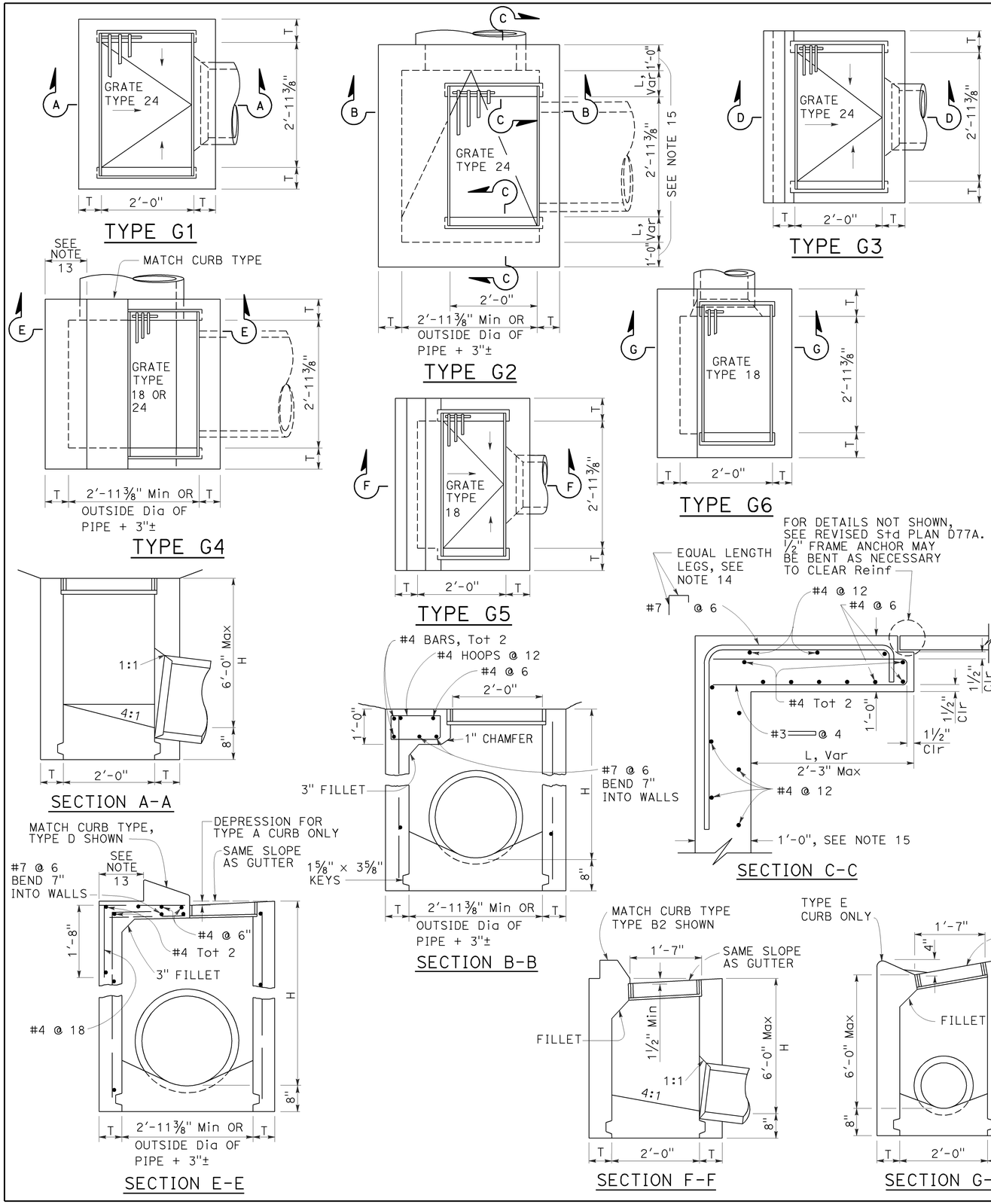

NOTES:

1. "H" is the difference in elevation between the outlet pipe flow line and the normal gutter grade line undepressed.
2. For "T" wall thickness, see Table A below.
3. Wall reinforcing not required when "H" is 8'-0" or less and the unsupported width or length is 7'-0" or less. Walls exceeding these limits shall be reinforced with #4 bars @ 1'-6" ± centers placed 1½" clear to inside of box unless otherwise shown.
4. Inlet bottom reinforcing not required. See Standard Plan D74C for alternative reinforced bottom and alternative half round bottom.
5. Steps-None required where "H" is less than 2'-6". Where "H" is 2'-6" or more, install steps with lowest rung 1'-0" above the floor and highest rung not more than 6" below top of inlet. The distance between steps shall not exceed 1'-0" and shall be uniform throughout the length of the wall. Place steps in the wall without an opening. Steps inserts may be substituted for the bar steps. Step inserts shall comply with State Industrial Safety requirements. See Standard Plan D74C for step details.
6. Details shown apply to both metal and concrete pipe.
7. Pipe(s) can be placed in any wall.
8. Curb section shall match adjacent curb.
9. Basin floors shall have wood trowel finish and a minimum slope of 12:3 from all directions toward outlet pipe.
10. Set inlet so that grate bars are parallel to direction of principal surface flow.
11. See Revised Standard Plans D77A and D77B for grate and frame details and weights of miscellaneous iron and steel.
12. See Standard Plan D78A for gutter depression details.
13. This dimenison will vary with different grates, curbs types, box width and wall thickness.
14. Bar may be rotated as necessary to clear opening. Where "L" is 6" or less, bar may be omitted.
15. Where "L" is 6" or less, wall thickness shall be as shown in Table A.
16. Cast-in-place inlets to be formed around all pipes/stubs intersecting the inlet, and concrete poured in one continuous operation. Precast inlets shall have mortared connections conforming to details for Type GCP Inlet shown on Standard Plan D75B. See Standard Specifications for mortar composition.

TABLE A

CONCRETE QUANTITIES				
TYPE	H=3'-0" TO 8'-0" (T=6")		H=8'-1" TO 20'-0" (T=8")	
	H=3'-0" (CY)	ADDITIONAL PCC PER FOOT (CY)	H=8'-1" (CY)	ADDITIONAL PCC PER FOOT (CY)
G-1	0.95	0.220	See Note A	SEE NOTE A
G-2*	1.31	0.255	3.50	0.357
G-3	1.03	0.220	See Note A	SEE NOTE A
G-4* (TYPE 24)	1.27	0.255	3.48	0.357
G-4* (TYPE 18)	1.30	0.255	3.50	0.357
G-5	1.02	0.220	SEE NOTE A	SEE NOTE A
G-6	1.04	0.220	SEE NOTE A	SEE NOTE A

TABLE BASED ON 8" FLOOR SLAB. NO DEDUCTIONS ARE TO BE MADE TO THESE QUANTITIES BECAUSE OF PIPE OPENINGS, DIFFERENT FLOOR ALTERNATIVES OR DIFFERENT CURB TYPES. * QUANTITIES FOR TYPE G-2 AND G-4 INLETS BASED ON THE MINIMUM INTERIOR DIMENSIONS.

NOTE A:

Maximum allowable height 6'-0".

STATE OF CALIFORNIA
DEPARTMENT OF TRANSPORTATION

DRAINAGE INLETS

NO SCALE

RSP D73 DATED OCTOBER 19, 2012 SUPERSEDES STANDARD PLAN D73 DATED MAY 20, 2011 - PAGE 156 OF THE STANDARD PLANS BOOK DATED 2010.

REVISED STANDARD PLAN RSP D73

2010 REVISED STANDARD PLAN RSP D73

7-19-12

Dist	COUNTY	ROUTE	POST MILES TOTAL PROJECT	SHEET No.	TOTAL SHEETS
11	SD	163	8.4/9.4	292	332

Raymond Don Tsztoo
REGISTERED CIVIL ENGINEER

April 19, 2013
PLANS APPROVAL DATE

REGISTERED PROFESSIONAL ENGINEER Raymond Don Tsztoo No. C37332 Exp. 6-30-14 CIVIL STATE OF CALIFORNIA

THE STATE OF CALIFORNIA OR ITS OFFICERS OR AGENTS SHALL NOT BE RESPONSIBLE FOR THE ACCURACY OR COMPLETENESS OF SCANNED COPIES OF THIS PLAN SHEET.

TO ACCOMPANY PLANS DATED 09-15-14

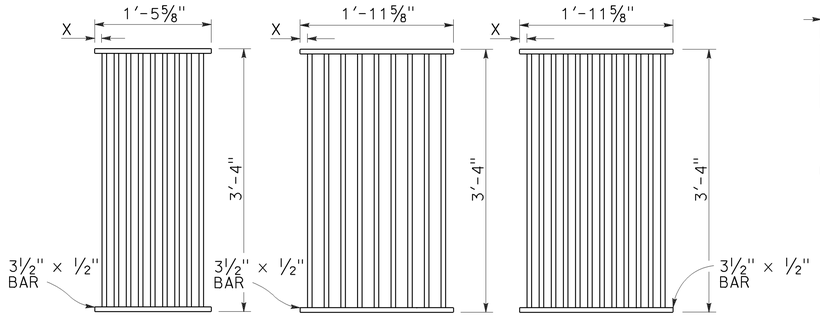

TYPE 18-9

1⅜" Clear spacing. Use within the roadbed on highways where bicycles and pedestrians are excluded.

TYPE 24-9

2" Clear spacing. Use in locations off the roadbed on all types of highways.

TYPE 24-12

1⅜" Clear spacing. Use within the roadbed on highways where bicycles and pedestrians are excluded.

RECTANGULAR GRATE DETAILS

(See table below)

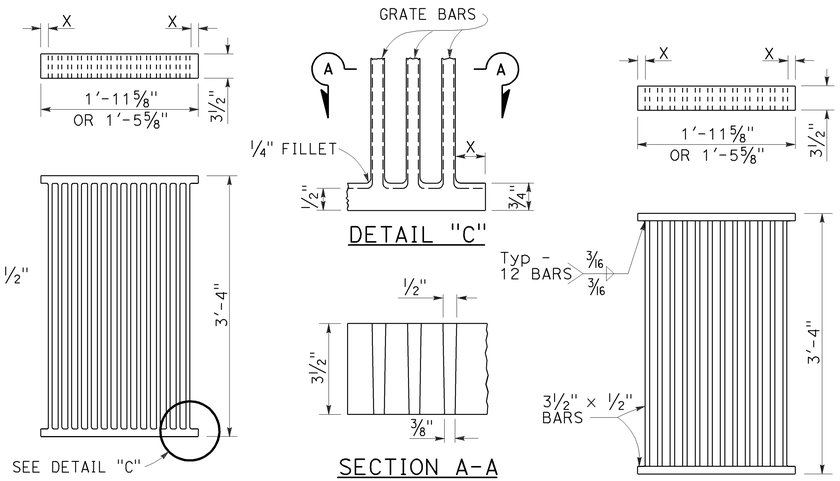

ALTERNATIVE CAST DUCTILE IRON GRATE OR CAST CARBON STEEL GRATE

ALTERNATIVE WELDED GRATE

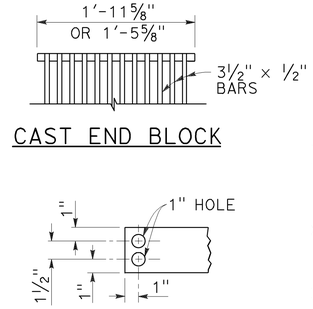

CAST END BLOCK

END OF BAR

NOTES:

1. Grate type numbers refer to approximate width of grate in inches and number of bars, respectively.
2. Contractor has the option of using cast ductile iron, cast carbon steel, welded, bolted, or cast end block grate.
3. Rounded top of bars optional on all grates.
4. Pipe inlets with a grate shall be placed so that bars parallel direction of principle surface flow.
5. Complete joint penetration butt welds may be substituted for the fillet welds on all anchors.
6. Standard square, hexagon, round or equivalent headed anchors may be substituted for the right angle hooks on the anchors shown on this plan.
7. Grate and frame weights are based on welded grates (weights of face angles, steps, protection bars, etc. are not included).
8. Connect chain to grate and frame only at locations shown on the plans. When chain is required, do not use cast ductile iron grates.

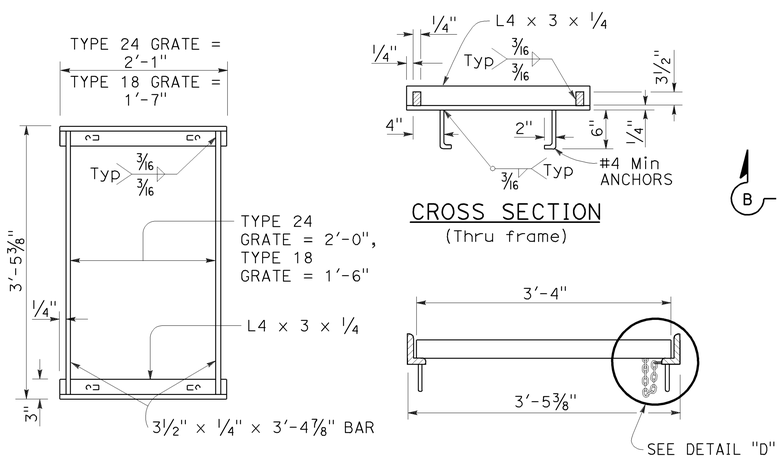

TYPICAL FRAME

CROSS SECTION
(Thru frame)

LONGITUDINAL SECTION
(Thru frame and grate)

RECTANGULAR FRAME DETAILS

(For all rectangular grates)

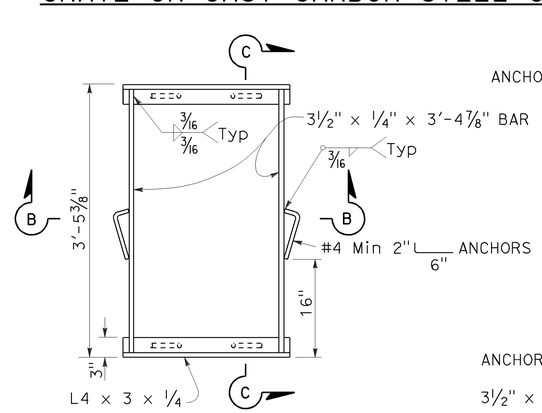

TYPICAL FRAME

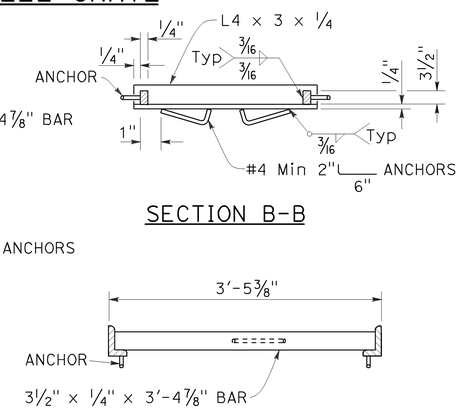

SECTION B-B

SECTION C-C

ALTERNATIVE ANCHOR FOR RECTANGULAR FRAME

(For details not shown, See Rectangular Frame Details)

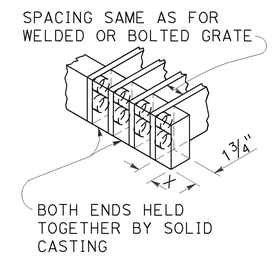

ALTERNATIVE CAST DUCTILE IRON OR CAST CARBON STEEL END BLOCK GRATE

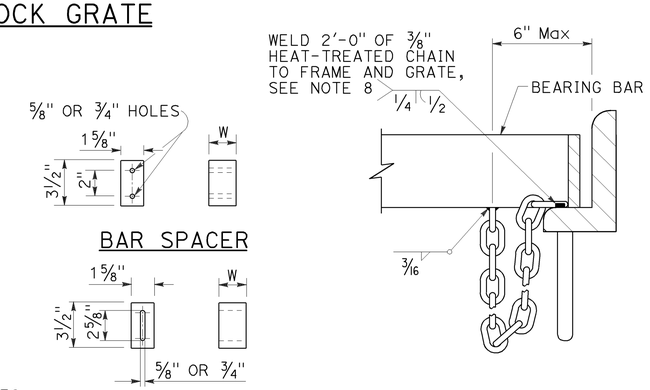

BAR SPACER

ALTERNATIVE SPACER
W = 1⅜" or 2"

DETAIL "D"
(Steel grates only)

GRATE BAR SPACING TABLE

TYPE	No. OF BARS	CLEAR BAR SPACING	X
18-9	9	1⅜"	1 1/16"
24-9	9	2"	1 9/16"
24-12	12	1⅜"	1¼"

INLET TYPE	COVER TYPE	WEIGHT LB
OS	PLATE	174
OL-7	PLATE	170
OL-10	PLATE	170
OL-14	PLATE	170
OL-21	PLATE	170
OCP	PLATE	112
OCPI	PLATE	112
OCPI	REDWOOD	42
OMP	PLATE	177
OMPI	PLATE	177

INLET TYPE	GRATE TYPE	No. OF GRATES	WEIGHT LB
GDO	24-12	2	634
GOL-7	24-12	1	326
GOL-10	24-12	1	326
GO,G1,G2,G3,G4 (TYPE 24)	24-9	1	263
	24-12	1	326
G4 (TYPE 18),G5,G6	18-9	1	249
GT1	18-9	2	498
GT2	18-9	2	498
GT3	24-12	2	652
GT4	24-12	2	652
TRASH RACK			22
GRATE CHAIN			3

BASIS FOR Misc IRON & STEEL FINAL PAY WEIGHTS FOR DRAINAGE INLETS

(See Note 7)

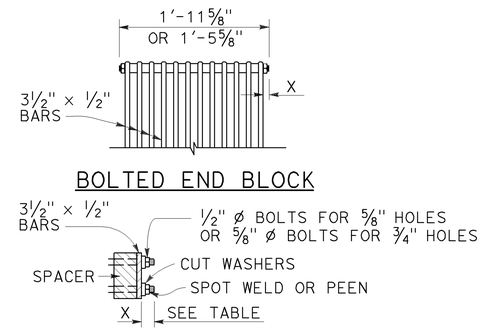

BOLTED END BLOCK

BOLTING DETAIL

ALTERNATIVE BOLTED GRATE

STATE OF CALIFORNIA
DEPARTMENT OF TRANSPORTATION

GRATE DETAILS No. 1

NO SCALE

RSP D77A DATED APRIL 19, 2013 SUPERSEDES RSP D77A DATED JULY 20, 2012 AND STANDARD PLAN D77A DATED MAY 20, 2011 - PAGE 164 OF THE STANDARD PLANS BOOK DATED 2010.

REVISED STANDARD PLAN RSP D77A

2010 REVISED STANDARD PLAN RSP D77A

4-4-13

Dist	COUNTY	ROUTE	POST MILES TOTAL PROJECT	SHEET No.	TOTAL SHEETS
11	SD	163	8.4/9.4	293	332

Raymond Don Tsztoo
REGISTERED CIVIL ENGINEER

April 19, 2013
PLANS APPROVAL DATE

REGISTERED PROFESSIONAL ENGINEER
Raymond Don Tsztoo
No. C37332
Exp. 6-30-14
CIVIL
STATE OF CALIFORNIA

THE STATE OF CALIFORNIA OR ITS OFFICERS OR AGENTS SHALL NOT BE RESPONSIBLE FOR THE ACCURACY OR COMPLETENESS OF SCANNED COPIES OF THIS PLAN SHEET.

TO ACCOMPANY PLANS DATED 09-15-14

2010 REVISED STANDARD PLAN RSP D77B

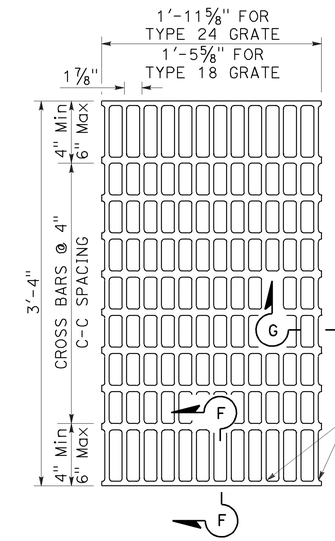

NOTES:

Bearing bars to be 3½" × ¼" bars on 1⅞" centers.

⅜"± ø Cross bars may be fillet welded, resistance welded or electroforged to bearing bars.

Weight of Type 24 grate = 141 LBS.

Weight of Type 18 grate = 107 LBS. (Type 24 grate shown).

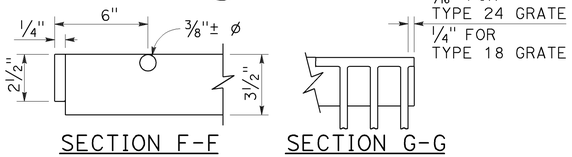

SECTION F-F SECTION G-G

TYPE 18-10 AND 24-13 GRATE

(Welded Steel)

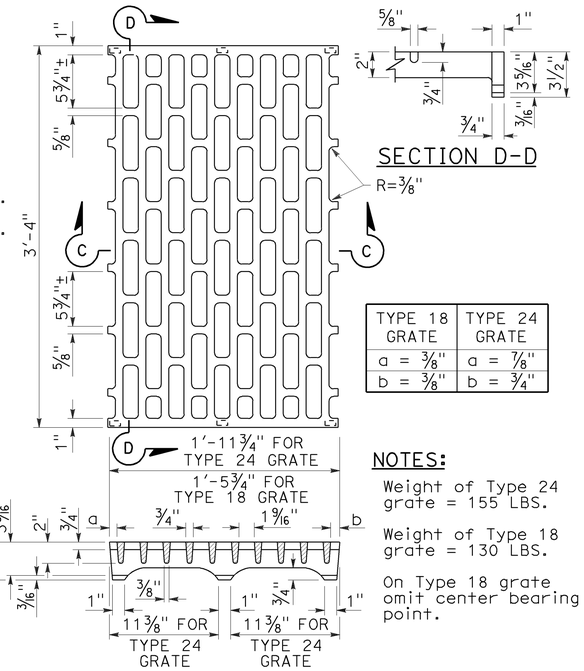

SECTION D-D

TYPE 18 GRATE	TYPE 24 GRATE
a = ⅜"	a = ⅞"
b = ⅜"	b = ¾"

NOTES:

Weight of Type 24 grate = 155 LBS.

Weight of Type 18 grate = 130 LBS.

On Type 18 grate omit center bearing point.

SECTION C-C

TYPE 18-8C AND 24-10C GRATE

(Cast ductile iron)

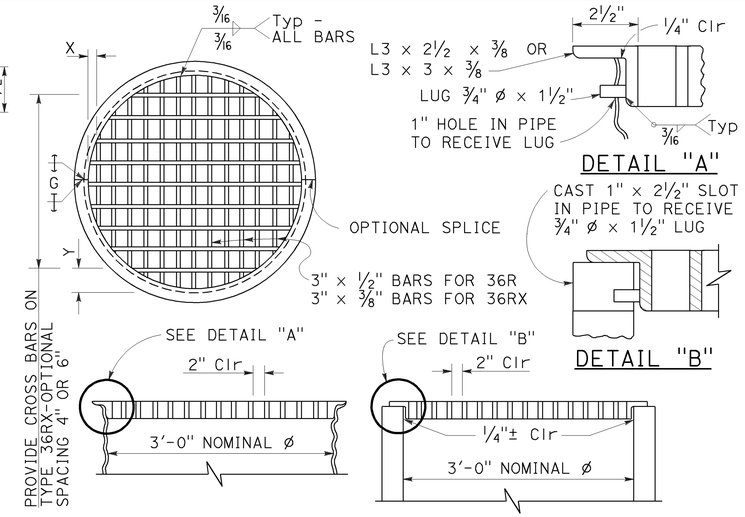

DETAIL "A"

DETAIL "B"

TYPE 36R AND 36RX GRATE DETAILS

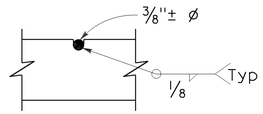

⅜"± ø Cross bars may be fillet welded, resistance welded or electroforged to bearing bars.

CROSS BAR DETAIL TYPE 36RX GRATE (WELDED STEEL)

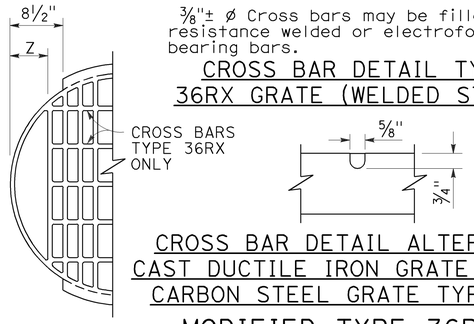

CROSS BAR DETAIL ALTERNATIVE CAST DUCTILE IRON GRATE OR CAST CARBON STEEL GRATE TYPE 36RX

MODIFIED TYPE 36R AND 36RX GRATE FOR ODI INLET

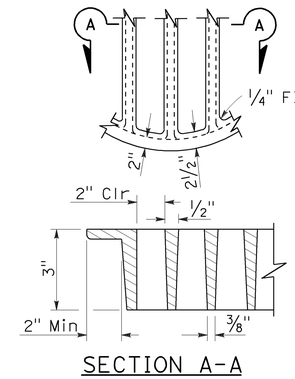

SECTION A-A

ALTERNATIVE CAST DUCTILE IRON GRATE OR CAST CARBON STEEL GRATE TYPE 36R AND 36RX

BASIS FOR Misc IRON AND STEEL FINAL PAY WEIGHTS FOR DRAINAGE INLETS

INLET TYPE	GRATE TYPE	No. OF GRATES	WEIGHT LB
GDO (SEE NOTE 4)	24-10C	2	391
	24-10S	2	456
	24-12X	2	473
	24-13	2	374
GO,GOL,G1,G2, G3,G4 (TYPE 24)	24-10C	1	202
	24-10S	1	229
	24-12X	1	239
	24-13	1	188
G4 (TYPE 18) G5,G6	18-8S	1	187
	18-9X	1	187
	18-10	1	149
GT1,GT2	18-8S	2	374
	18-9X	2	374
	18-10	2	298
GT3,GT4	24-10C	2	404
	24-10S	2	458
	24-12X	2	478
	24-13	2	376
ODI	36RX (Mod)	1	196
GMP,GCP,GCPI	36RX	1	215
ODI	36R (Mod)	1	220
GMP,GCP,GCPI	36R	1	236
TRASH RACK			22
GRATE CHAIN			3

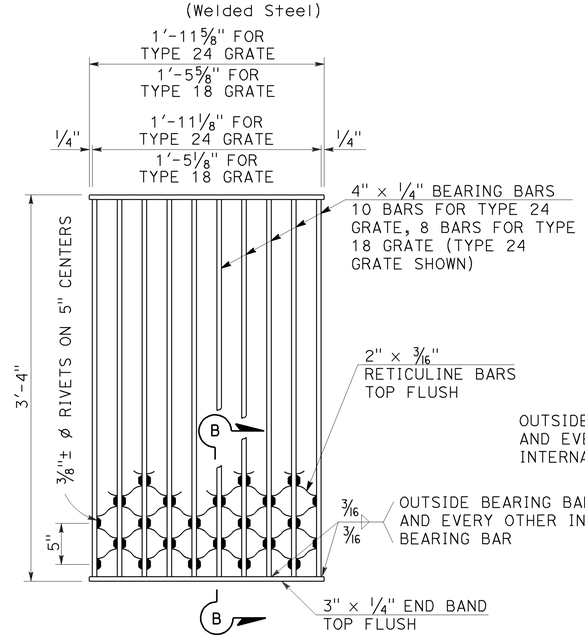

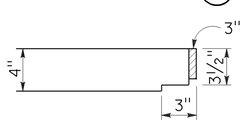

NOTES:

Weight of Type 24 grate = 182 LBS.
Weight of Type 18 grate = 145 LBS.

SECTION B-B

TYPE 18-8S AND 24-10S GRATE

(Welded Steel) Reticuline type

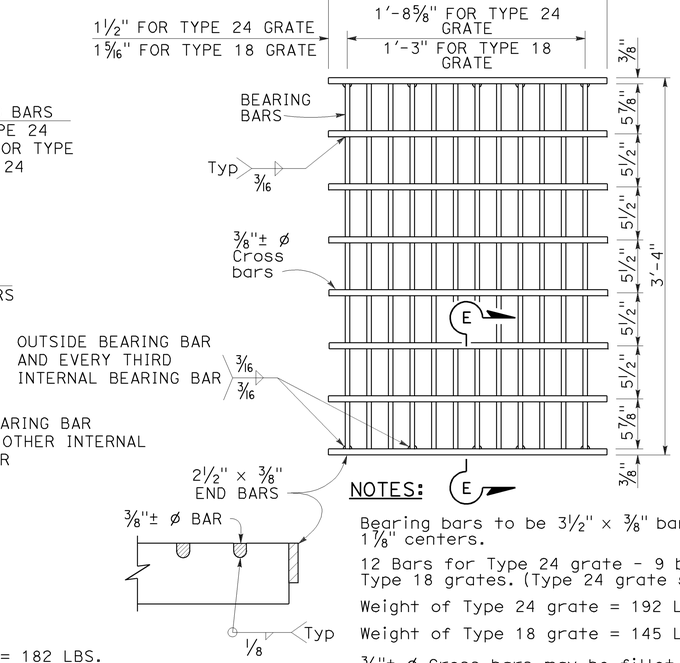

NOTES:

Bearing bars to be 3½" × ⅜" bars on 1⅞" centers.

12 Bars for Type 24 grate - 9 bars for Type 18 grates. (Type 24 grate shown).

Weight of Type 24 grate = 192 LBS.

Weight of Type 18 grate = 145 LBS.

⅜"± ø Cross bars may be fillet welded, resistance welded or electroforged to bearing bars.

SECTION E-E

TYPE 18-9X AND 24-12X GRATE

(Welded Steel)

NOTES:

1. When alternative grates are allowed - Final pay based on alternative with the lesser weight.
2. Use frame shown on Standard Plan D74A, D74B or RSP D77A as appropriate.
3. When Type 24-10S, 24-12X or 24-13 grates are used with GDO Inlets, a ¼" × 3½" × 3'-4⅞" steel bar shall be welded across the center of inlet frame to separate the individual grates.
4. See Revised Standard Plan RSP D77A for connecting chain to welded grate and frame. When chain is required, do not use cast ductile iron grate.

GRATE BAR SPACING TABLE

TYPE	No. OF BARS	CLEAR BAR SPACING	X	Y 4" SPACING	Y 6" SPACING	Z
36R	13	2"	2⅛"	-	-	-
36RX (STEEL)	15	2"	9/16"	3¾"	5¾"	-
36RX (CAST)	13	2"	2⅛"	3¾"	5¾"	-
36R Mod	12	2"	2⅛"	-	-	5"
36RX Mod (STEEL)	13	2"	9/16"	3¾"	5¾"	5 11/16"
36RX Mod (CAST)	12	2"	2⅛"	3¾"	5¾"	5"

STATE OF CALIFORNIA
DEPARTMENT OF TRANSPORTATION

GRATE DETAILS No. 2

NO SCALE

RSP D77B DATED APRIL 19, 2013 SUPERSEDES RSP D77B DATED JULY 20, 2012 AND STANDARD PLAN D77B DATED MAY 20, 2011 - PAGE 165 OF THE STANDARD PLANS BOOK DATED 2010.

REVISED STANDARD PLAN RSP D77B

4-4-13

Dist	COUNTY	ROUTE	POST MILES TOTAL PROJECT	SHEET No.	TOTAL SHEETS
11	SD	163	8.4/9.4	294	332

Gregory A. Balzer
LICENSED LANDSCAPE ARCHITECT

July 19, 2013
PLANS APPROVAL DATE

THE STATE OF CALIFORNIA OR ITS OFFICERS OR AGENTS SHALL NOT BE RESPONSIBLE FOR THE ACCURACY OR COMPLETENESS OF SCANNED COPIES OF THIS PLAN SHEET.

LICENSED LANDSCAPE ARCHITECT — Gregory A. Balzer — 2516 — 02-28-15 Renewal Date — 7-19-13 Date — STATE OF CALIFORNIA

TO ACCOMPANY PLANS DATED 09-15-14

2010 REVISED STANDARD PLAN RSP H1

A

AB	AGGREGATE BASE
ABS	ACRYLONITRILE-BUTADIENE-STYRENE
AC	ASPHALT CONCRETE
ACC	ARMOR-CLAD CONDUCTORS
Adj	ADJACENT/ADJUSTABLE
AIC	AUXILIARY IRRIGATION CONTROLLER
Alt	ALTERNATIVE
AMEND	AMENDMENT
ARV	AIR RELEASE VALVE
AUTO	AUTOMATIC
AUX	AUXILIARY
AVB	ATMOSPHERIC VACUUM BREAKER

B

B&B	BALLED AND BURLAPPED
B/B	BRASS/BRONZE
B/B/PL	BRASS/BRONZE/PLASTIC
B/PL	BRASS/PLASTIC
BFM	BONDED FIBER MATRIX
Bit Ctd	BITUMINOUS COATED
BP	BOOSTER PUMP
BPA	BACKFLOW PREVENTER ASSEMBLY
BPE	BACKFLOW PREVENTER ENCLOSURE
BV	BALL VALVE

C

C	CONDUIT
CAP	CORRUGATED ALUMINUM PIPE
CARV	COMBINATION AIR RELEASE VALVE
CB	COUPLING BAND
CCA	CAM COUPLER ASSEMBLY
CEC	CONTROLLER ENCLOSURE CABINET
CHDPE	CORRUGATED HIGH DENSITY POLYETHYLENE
CL	CHAIN LINK
CNC	CONTROL AND NEUTRAL CONDUCTORS
Conc	CONCRETE
CP	COPPER PIPE
CS	COMPOST SOCK
CSP	CORRUGATED STEEL PIPE
CST	CENTER STRIP
CV	CHECK VALVE

D

Dia	DIAMETER
DIP	DUCTILE IRON PIPE
DIT	DRIP IRRIGATION TUBING
DG	DECOMPOSED GRANITE
DN	DIAMETER NOMINAL
DVA	DRIP VALVE ASSEMBLY

E

EC	EROSION CONTROL
ECTC	EROSION CONTROL TECHNOLOGY COUNCIL
Elect	ELECTRIC/ELECTRICAL
Elev	ELEVATION
ELL	ELBOW
ENCL	ENCLOSURE
EP	EDGE OF PAVEMENT
ES	EDGE OF SHOULDER
EST	END STRIP
ESTB	ESTABLISHMENT
ETW	EDGE OF TRAVELED WAY

F

F	FULL CIRCLE
F/P	FULL/PART CIRCLE
FCV	FLOW CONTROL VALVE
FERT	FERTILIZER
FG	FINISHED GRADE
FH	FLEXIBLE HOSE
FIPT	FEMALE IRON PIPE THREAD
FIS	FERTILIZER INJECTOR SYSTEM
FL	FLOW LINE
FR	FIBER ROLL
FS	FLOW SENSOR
FSC	FLOW SENSOR CABLE
FV	FLUSH VALVE

G

Galv	GALVANIZED
GARV	GARDEN VALVE
GARVA	GARDEN VALVE ASSEMBLY
GM	GRAVEL MULCH
GPH	GALLONS PER HOUR
GPM	GALLONS PER MINUTE
GSP	GALVANIZED STEEL PIPE
GV	GATE VALVE

H

H	HALF CIRCLE
HDPE	HIGH DENSITY POLYETHYLENE
HP	HORSEPOWER/HINGE POINT
HPL	HIGH PRESSURE LINE
Hwy	HIGHWAY

I

IC	IRRIGATION CONTROLLER
ICC	IRRIGATION CONTROLLER(S) IN CONTROLLER ENCLOSURE CABINET
ID	INSIDE DIAMETER
IFS	IRRIGATION FILTRATION SYSTEM
IPS	IRON PIPE SIZE
IPT	IRON PIPE THREAD
Irr	IRRIGATION

L

L	LENGTH

M

Max	MAXIMUM
MBGR	METAL BEAM GUARD RAILING
MCV	MANUAL CONTROL VALVE
MIC	MASTER IRRIGATION CONTROLLER
Min	MINIMUM
MIPT	MALE IRON PIPE THREAD
Misc	MISCELLANEOUS
Mtl	MATERIAL
MVP	MAINTENANCE VEHICLE PULLOUT

N

NCN	NO COMMON NAME
NL	NOZZLE LINE
No.	NUMBER
NPT	NATIONAL PIPE THREAD

O

O/C	ON CENTER
OD	OUTSIDE DIAMETER
OL	OVERLAP

P

P	PART CIRCLE
PB	PULL BOX
PCC	PORTLAND CEMENT CONCRETE
PE	POLYETHYLENE
Pkt	PACKET
PL	PLASTIC
PLS	PURE LIVE SEED
PLT	PLANT/PLANTING
PLT ESTB	PLANT ESTABLISHMENT
PM	POST MILE
PR	PRESSURE RATED
PRLV	PRESSURE RELIEF VALVE
PRV	PRESSURE REGULATING VALVE
PVC	POLYVINYL CHLORIDE
Pvmt	PAVEMENT

Q

Q	QUARTER CIRCLE
QCV	QUICK COUPLING VALVE

R

R	RADIUS
RCP	REINFORCED CONCRETE PIPE
RCV	REMOTE CONTROL VALVE
RCVM	REMOTE CONTROL VALVE (MASTER)
RCVMF	REMOTE CONTROL VALVE (MASTER) W/FLOW SENSOR
RCVP	REMOTE CONTROL VALVE W/PRESSURE REGULATOR
RCW	RECYCLED WATER
RECP	ROLLED EROSION CONTROL PRODUCT
REQ	REQUIRED
RICS	REMOTE IRRIGATION CONTROL SYSTEM
R/W	RIGHT OF WAY

S

S	SLIP
SCH	SCHEDULE
SF	STATE-FURNISHED
Shld	SHOULDER
Sq	SQUARE
SST	SIDE STRIP
Sta	STATION
Std	STANDARD
SW	SIDEWALK/SOUND WALL

T

T	THIRD CIRCLE/THREAD
TLS	TRUCK LOADING STANDPIPE
TQ	THREE QUARTER CIRCLE
TRM	TURF REINFORCEMENT MAT
TT	TWO-THIRDS CIRCLE
TWSA	TREE WELL SPRINKLER ASSEMBLY
Typ	TYPICAL

U

UG	UNDERGROUND

W

W	WIDTH
W/	WITH
WM	WATER METER
WS	WYE STRAINER
WSA	WYE STRAINER ASSEMBLY
WSP	WELDED STEEL PIPE
WWM	WELDED WIRE MESH

NOTE:
For additional abbreviations, see Standard Plans A10A and A10B.

STATE OF CALIFORNIA
DEPARTMENT OF TRANSPORTATION

LANDSCAPE AND EROSION CONTROL ABBREVIATIONS

NO SCALE

RSP H1 DATED JULY 19, 2013 SUPERSEDES STANDARD PLAN H1 DATED MAY 20, 2011 - PAGE 218 OF THE STANDARD PLANS BOOK DATED 2010.

REVISED STANDARD PLAN RSP H1

Dist	COUNTY	ROUTE	POST MILES TOTAL PROJECT	SHEET No.	TOTAL SHEETS
11	SD	163	8.4/9.4	295	332

LICENSED LANDSCAPE ARCHITECT

November 15, 2013
PLANS APPROVAL DATE

LICENSED LANDSCAPE ARCHITECT — Gregory A. Balzer — 2376 — 02-28-15 Renewal Date — 11-15-13 Date — STATE OF CALIFORNIA

THE STATE OF CALIFORNIA OR ITS OFFICERS OR AGENTS SHALL NOT BE RESPONSIBLE FOR THE ACCURACY OR COMPLETENESS OF SCANNED COPIES OF THIS PLAN SHEET.

TO ACCOMPANY PLANS DATED 09-15-14

EXISTING	NEW	ITEM DESCRIPTION
		WATER METER (WM)
		BACKFLOW PREVENTER ASSEMBLY (BPA)
		BACKFLOW PREVENTER ENCLOSURE (BPE)
		BOOSTER PUMP (BP)
		TRUCK LOADING STANDPIPE (TLS)
	FS	FLOW SENSOR (FS)
		MASTER IRRIGATION CONTROLLER (MIC)
		AUXILIARY IRRIGATION CONTROLLER (AIC)
		IRRIGATION CONTROLLER (IC) IRRIGATION CONTROLLER (IC) (BATTERY) IRRIGATION CONTROLLER (IC) (SOLAR) IRRIGATION CONTROLLER (IC) (TWO WIRE) IRRIGATION CONTROLLER(S) IN CONTROLLER ENCLOSURE CABINET (ICC)
acc	ACC	ARMOR-CLAD CONDUCTORS (ACC)
cnc	CNC	CONTROL AND NEUTRAL CONDUCTORS (CNC)
		IRRIGATION CONDUIT
		EXTEND IRRIGATION CONDUIT
dip	DIP	DUCTILE IRON PIPE (SUPPLY LINE) (MAIN) (DIP)
		GALVANIZED STEEL PIPE (SUPPLY LINE) (MAIN) (GSP)
		GALVANIZED STEEL PIPE (SUPPLY LINE) (LATERAL) (GSP)
		PLASTIC PIPE (SUPPLY LINE) (MAIN)
		PLASTIC PIPE (SUPPLY LINE) (LATERAL)
cp	CP	COPPER PIPE (SUPPLY LINE)
dit	DIT	DRIP IRRIGATION TUBING
		REMOTE CONTROL VALVE (RCV) REMOTE CONTROL VALVE (MASTER) (RCVM) REMOTE CONTROL VALVE (MASTER) W/FLOW METER (RCVMF)
P	P	REMOTE CONTROL VALVE W/PRESSURE REGULATOR (RCVP)
		EXISTING MANUAL CONTROL VALVE (MCV)
	V	DRIP VALVE ASSEMBLY (DVA)
	Y	WYE STRAINER ASSEMBLY (WSA)

EXISTING	NEW	ITEM DESCRIPTION
		GATE VALVE (GV)
		BALL VALVE (BV)
		QUICK COUPLING VALVE (QCV)
		CAM COUPLER ASSEMBLY (CCA)
		GARDEN VALVE ASSEMBLY (GARVA)
		PRESSURE REGULATING VALVE (PRV)
		PRESSURE RELIEF VALVE (PRLV)
		FLOW CONTROL VALVE (FCV)
		COMBINATION AIR RELEASE VALVE (CARV)
		CHECK VALVE (CV)
		FLUSH VALVE (FV)
		EXISTING NOZZLE LINE W/TURNING UNION
		EXISTING IRRIGATION SYSTEM
		EXISTING IRRIGATION SYSTEM TO BE REMOVED
		CHAIN LINK GATE
		QUICK COUPLING VALVE W/SPRINKLER PROTECTOR
3	3	SPRINKLER W/SPRINKLER PROTECTOR
	C	CONNECT TO EXISTING SYSTEM
		CAP
		CAP EXISTING
	\\\FR\\\	FIBER ROLL
	\\\CS\\\	COMPOST SOCK

- RCV SIZE
- IRRIGATION CONTROLLER
- CONTROLLER STATION
- VALVE IN PARALLEL (IF APPLICABLE)
- GPM
- QUANTITY OF SPRINKLERS (WHEN SHOWN)

* 2½"-A-2b-40-60

VALVE CODE

* VALVE CODES FOR EXISTING VALVES ARE SHOWN IN A DASHED ENCLOSURE.

STATE OF CALIFORNIA
DEPARTMENT OF TRANSPORTATION

LANDSCAPE AND EROSION CONTROL SYMBOLS

NO SCALE

RSP H2 DATED NOVEMBER 15, 2013 SUPERSEDES RSP H2 DATED JULY 19, 2013 AND STANDARD PLAN H2 DATED MAY 20, 2011 - PAGE 219 OF THE STANDARD PLANS BOOK DATED 2010.

REVISED STANDARD PLAN RSP H2

2010 REVISED STANDARD PLAN RSP H2

10-9-13

Dist	COUNTY	ROUTE	POST MILES TOTAL PROJECT	SHEET No.	TOTAL SHEETS
11	SD	163	8.4/9.4	296	332

Gregory A. Balzer
LICENSED LANDSCAPE ARCHITECT

July 19, 2013
PLANS APPROVAL DATE

LICENSED LANDSCAPE ARCHITECT
Gregory A. Balzer 2576
09
Renewal Date
2-28-15
Renewal Date
7-19-13
Date
STATE OF CALIFORNIA

THE STATE OF CALIFORNIA OR ITS OFFICERS OR AGENTS SHALL NOT BE RESPONSIBLE FOR THE ACCURACY OR COMPLETENESS OF SCANNED COPIES OF THIS PLAN SHEET.

TO ACCOMPANY PLANS DATED 09-15-14

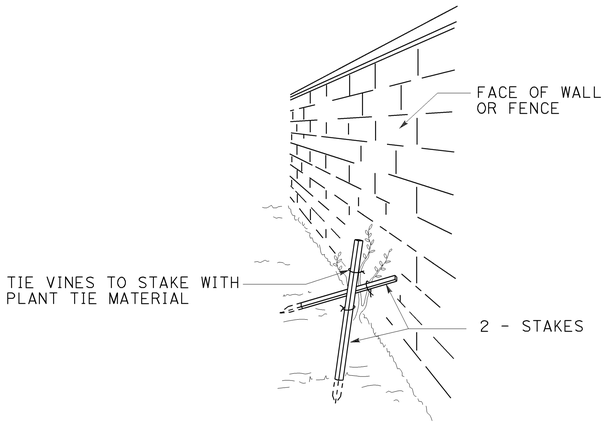

PERSPECTIVE
VINE STAKING

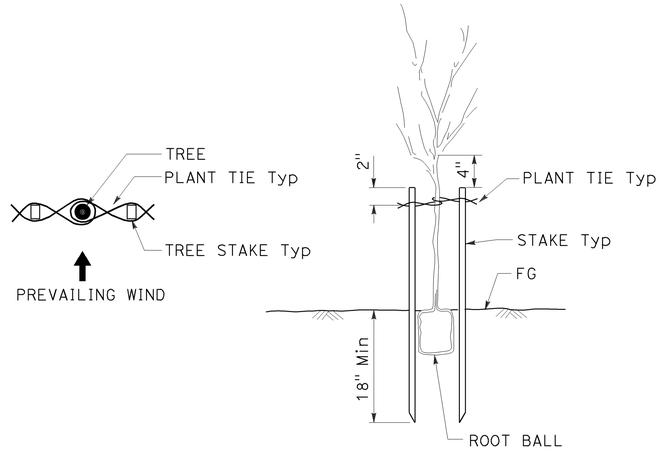

TREE STAKING

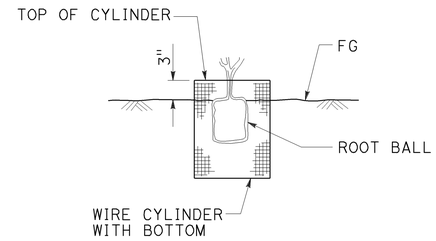

SECTION
ROOT PROTECTOR

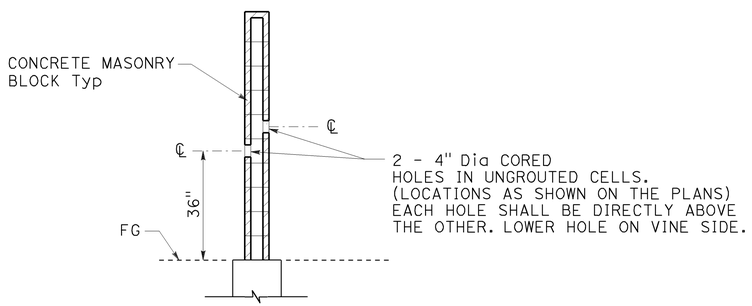

SECTION
CORE HOLE (VINE)

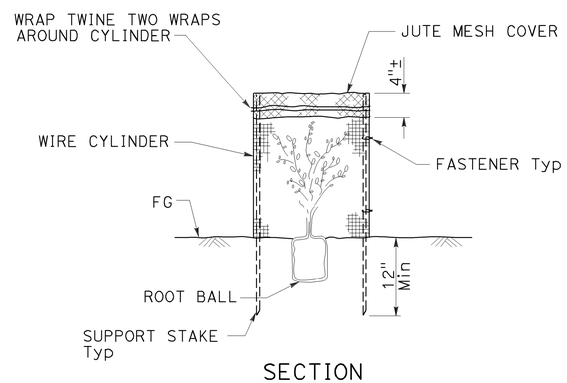

SECTION
FOLIAGE PROTECTOR

STATE OF CALIFORNIA
DEPARTMENT OF TRANSPORTATION

LANDSCAPE DETAILS

NO SCALE

RSP H4 DATED JULY 19, 2013 SUPERSEDES STANDARD PLAN H4
DATED MAY 20, 2011 - PAGE 221 OF THE STANDARD PLANS BOOK DATED 2010.

REVISED STANDARD PLAN RSP H4

2010 REVISED STANDARD PLAN RSP H4

6-28-13

Dist	COUNTY	ROUTE	POST MILES TOTAL PROJECT	SHEET No.	TOTAL SHEETS
11	SD	163	8.4/9.4	297	332

Gregory A. Balzer
LICENSED LANDSCAPE ARCHITECT

July 19, 2013
PLANS APPROVAL DATE

THE STATE OF CALIFORNIA OR ITS OFFICERS OR AGENTS SHALL NOT BE RESPONSIBLE FOR THE ACCURACY OR COMPLETENESS OF SCANNED COPIES OF THIS PLAN SHEET.

LICENSED LANDSCAPE ARCHITECT
Gregory A. Balzer 2576
Gregory A. Balzer
09 Expiration Date
2-28-15
Renewal Date
7-19-13
Date
STATE OF CALIFORNIA

TO ACCOMPANY PLANS DATED 09-15-14

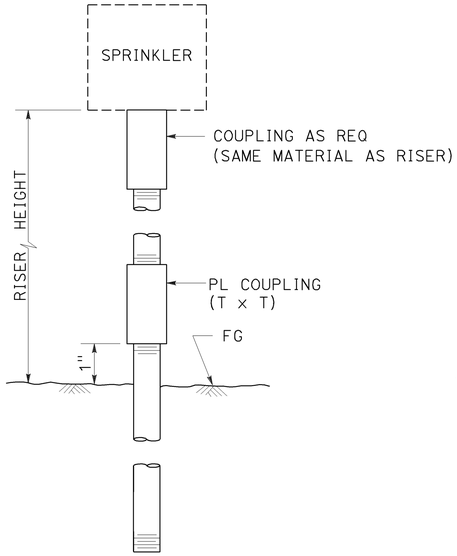

ELEVATION

RISER SPRINKLER ASSEMBLY TYPE I

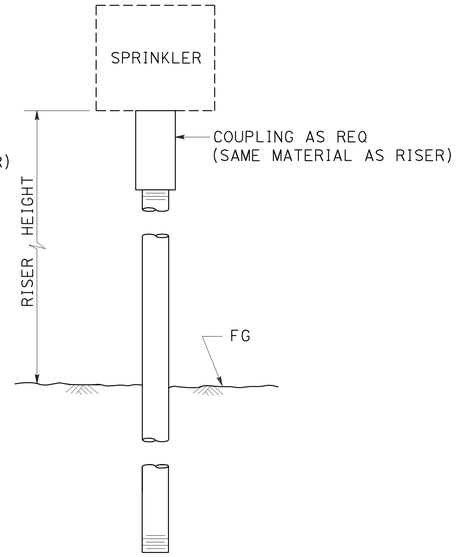

ELEVATION

RISER SPRINKLER ASSEMBLY TYPE II

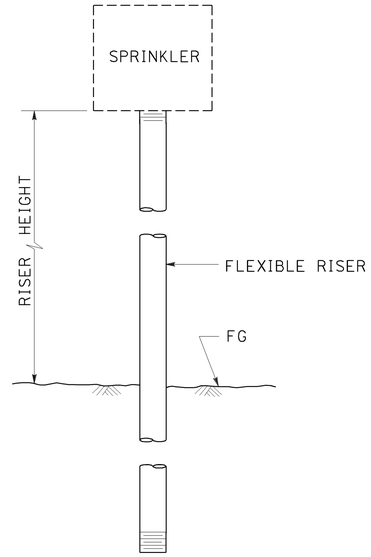

ELEVATION

RISER SPRINKLER ASSEMBLY TYPE III

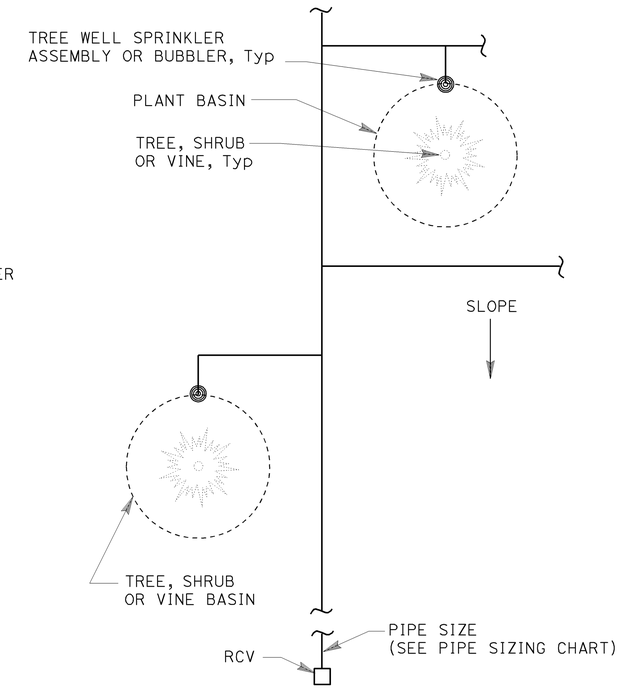

PLAN

NOTES:

1. Install tree well sprinkler assembly on up-hill side of plant when on slope.
2. Install bubbler within basin.

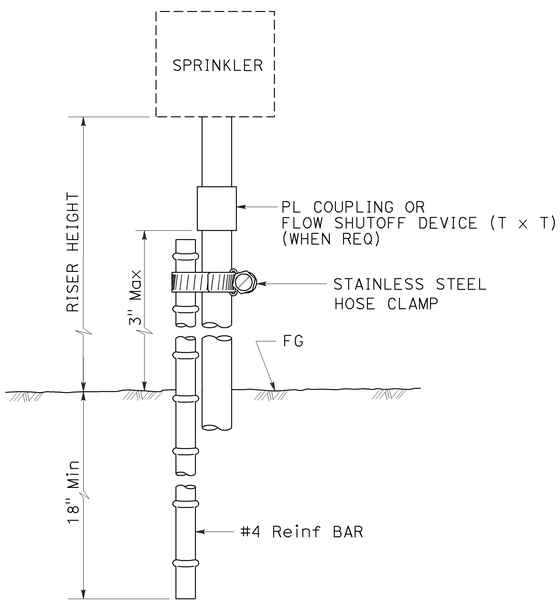

ELEVATION

RISER SPRINKLER ASSEMBLY TYPE IV

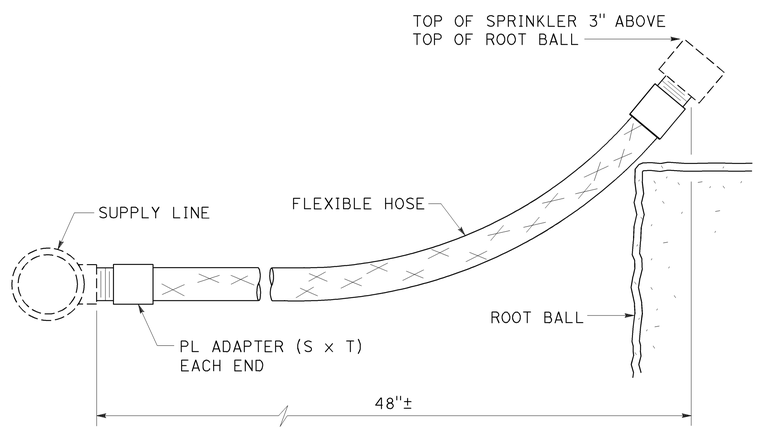

ELEVATION

RISER SPRINKLER ASSEMBLY TYPE V

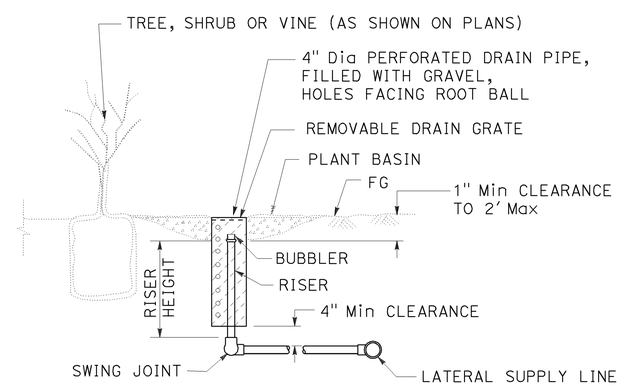

SECTION

TREE WELL SPRINKLER ASSEMBLY

STATE OF CALIFORNIA
DEPARTMENT OF TRANSPORTATION

LANDSCAPE DETAILS

NO SCALE

RSP H5 DATED JULY 19, 2013 SUPERSEDES STANDARD PLAN H5
DATED MAY 20, 2011 - PAGE 222 OF THE STANDARD PLANS BOOK DATED 2010.

REVISED STANDARD PLAN RSP H5

2010 REVISED STANDARD PLAN RSP H5

6-28-13

Dist	COUNTY	ROUTE	POST MILES TOTAL PROJECT	SHEET No.	TOTAL SHEETS
11	SD	163	8.4/9.4	298	332

LICENSED LANDSCAPE ARCHITECT

July 19, 2013
PLANS APPROVAL DATE

LICENSED LANDSCAPE ARCHITECT
Gregory A. Balzer 2576
Renewal Date 2-28-15
7-19-13
Date
STATE OF CALIFORNIA

THE STATE OF CALIFORNIA OR ITS OFFICERS OR AGENTS SHALL NOT BE RESPONSIBLE FOR THE ACCURACY OR COMPLETENESS OF SCANNED COPIES OF THIS PLAN SHEET.

TO ACCOMPANY PLANS DATED 09-15-14

2010 REVISED STANDARD PLAN RSP H6

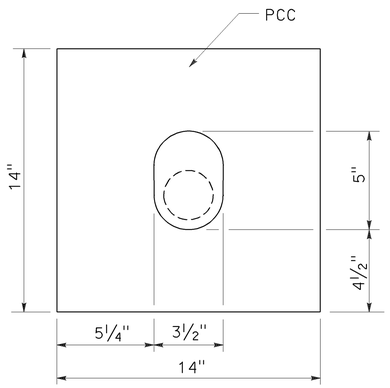

PLAN

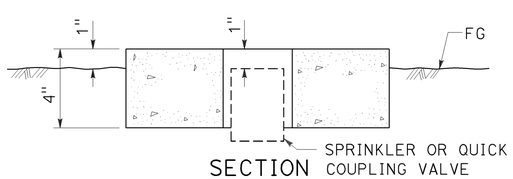

SECTION

SPRINKLER PROTECTOR TYPE I

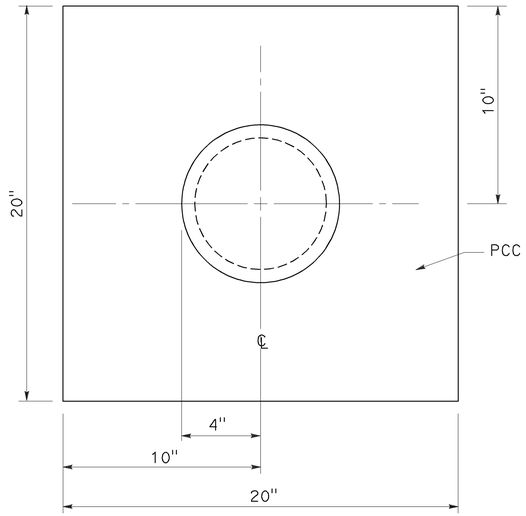

PLAN

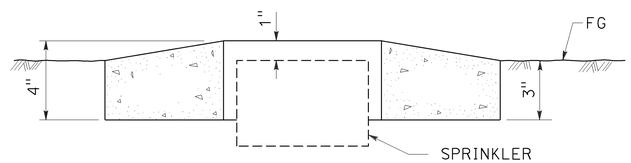

SECTION

SPRINKLER PROTECTOR TYPE II

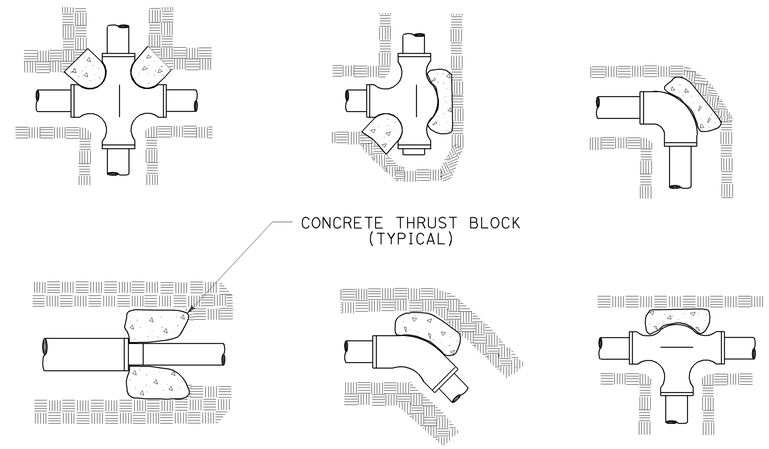

TYPICAL THRUST BLOCKS

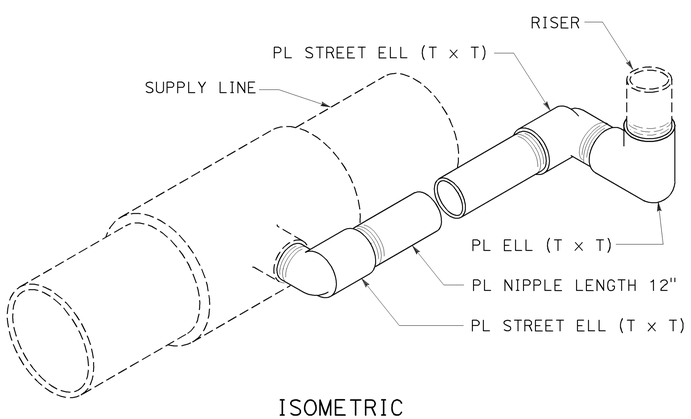

ISOMETRIC

POP-UP SPRINKLER ASSEMBLY TYPE I

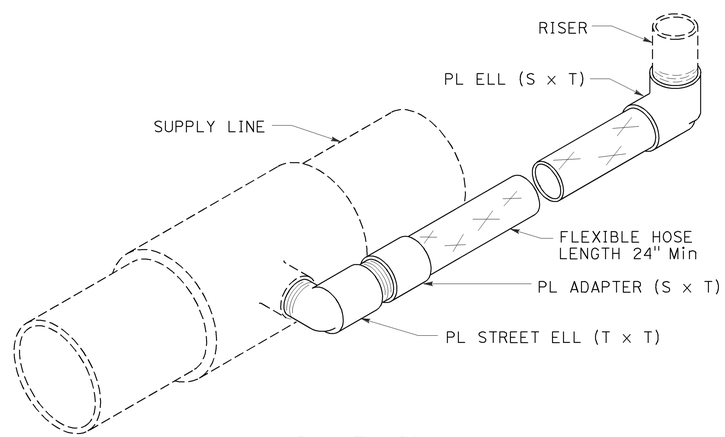

ISOMETRIC

POP-UP SPRINKLER ASSEMBLY TYPE II

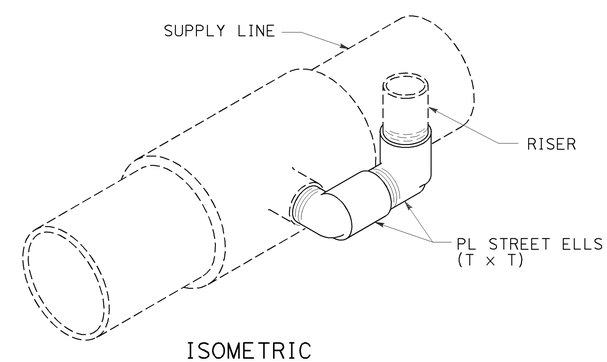

ISOMETRIC

POP-UP SPRINKLER ASSEMBLY TYPE III

STATE OF CALIFORNIA
DEPARTMENT OF TRANSPORTATION

LANDSCAPE DETAILS

NO SCALE

RSP H6 DATED JULY 19, 2013 SUPERSEDES STANDARD PLAN H6
DATED MAY 20, 2011 - PAGE 223 OF THE STANDARD PLANS BOOK DATED 2010.

REVISED STANDARD PLAN RSP H6

6-28-13

Dist	COUNTY	ROUTE	POST MILES TOTAL PROJECT	SHEET No.	TOTAL SHEETS
11	SD	163	8.4/9.4	299	332

Gregory A. Balzer
LICENSED LANDSCAPE ARCHITECT

July 19, 2013
PLANS APPROVAL DATE

THE STATE OF CALIFORNIA OR ITS OFFICERS OR AGENTS SHALL NOT BE RESPONSIBLE FOR THE ACCURACY OR COMPLETENESS OF SCANNED COPIES OF THIS PLAN SHEET.

LICENSED LANDSCAPE ARCHITECT — Gregory A. Balzer — 2516 — 2-28-15 Renewal Date — 7-19-13 Date — STATE OF CALIFORNIA

TO ACCOMPANY PLANS DATED 09-15-14

2010 REVISED STANDARD PLAN RSP H7

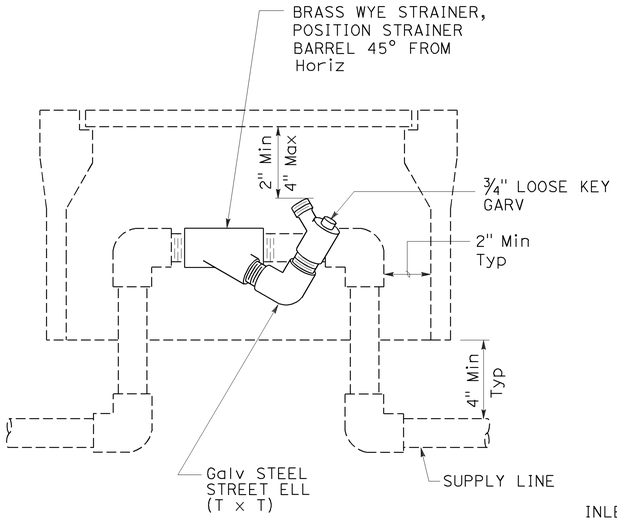

ELEVATION
WYE STRAINER ASSEMBLY

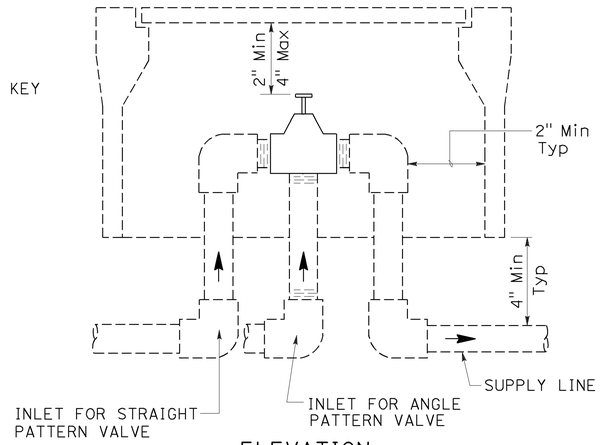

ELEVATION
VALVE

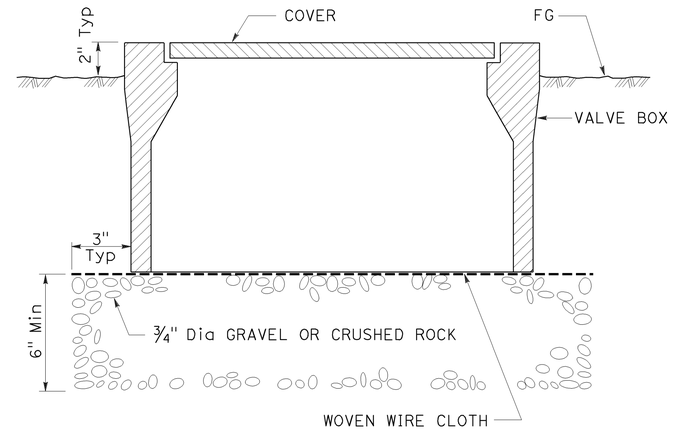

SECTION
VALVE BOX

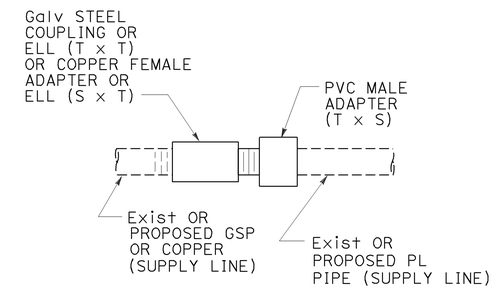

GALVANIZED OR COPPER PIPE CONNECTION TO PLASTIC PIPE

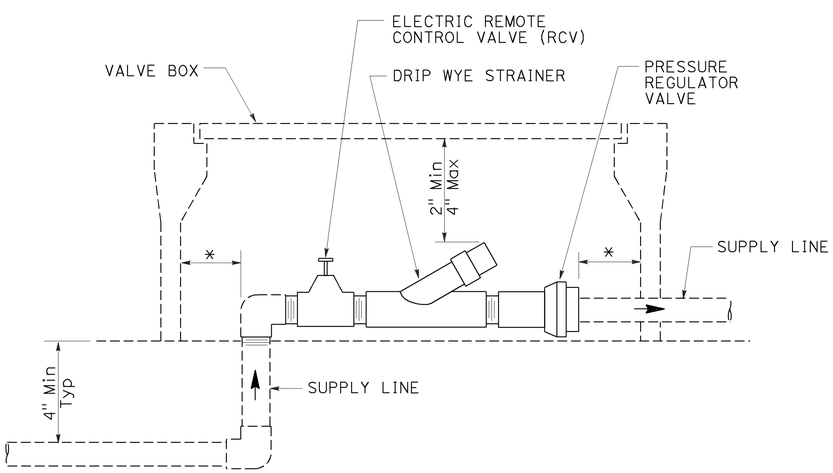

ELEVATION
DRIP VALVE ASSEMBLY

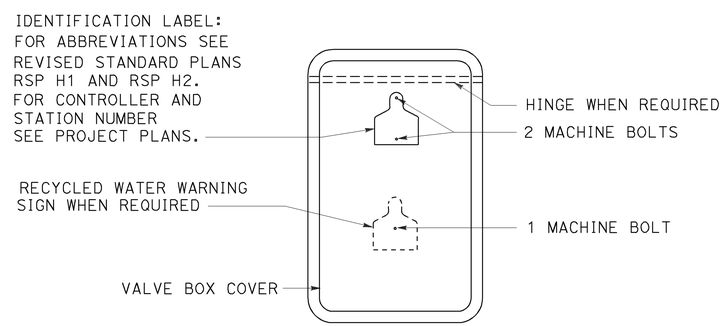

PLAN

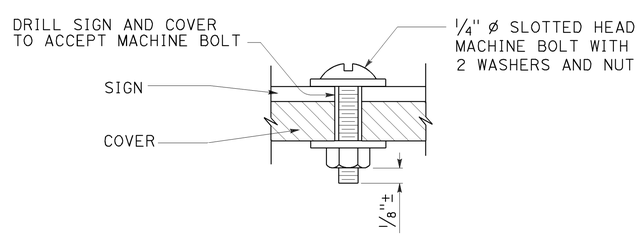

SECTION
VALVE BOX IDENTIFICATION

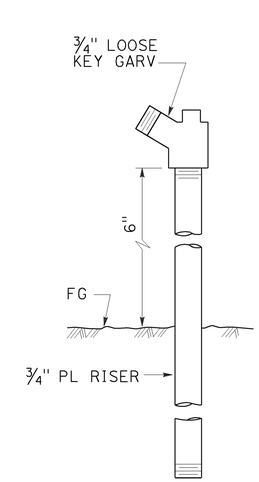

ELEVATION
GARDEN VALVE ASSEMBLY

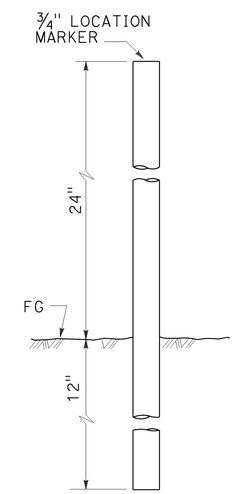

ELEVATION
LOCATION MARKER

GARDEN VALVE ASSEMBLY

STATE OF CALIFORNIA
DEPARTMENT OF TRANSPORTATION

LANDSCAPE DETAILS

NO SCALE

RSP H7 DATED JULY 19, 2013 SUPERSEDES STANDARD PLAN H7 DATED MAY 20, 2011 - PAGE 224 OF THE STANDARD PLANS BOOK DATED 2010.

REVISED STANDARD PLAN RSP H7

6-20-13

Dist	COUNTY	ROUTE	POST MILES TOTAL PROJECT	SHEET No.	TOTAL SHEETS
11	SD	163	8.4/9.4	300	332

LICENSED LANDSCAPE ARCHITECT

July 19, 2013
PLANS APPROVAL DATE

LICENSED LANDSCAPE ARCHITECT
Gregory A. Balzer 2576
Renewal Date 2-28-15
7-19-13
Date
STATE OF CALIFORNIA

THE STATE OF CALIFORNIA OR ITS OFFICERS OR AGENTS SHALL NOT BE RESPONSIBLE FOR THE ACCURACY OR COMPLETENESS OF SCANNED COPIES OF THIS PLAN SHEET.

TO ACCOMPANY PLANS DATED 09-15-14

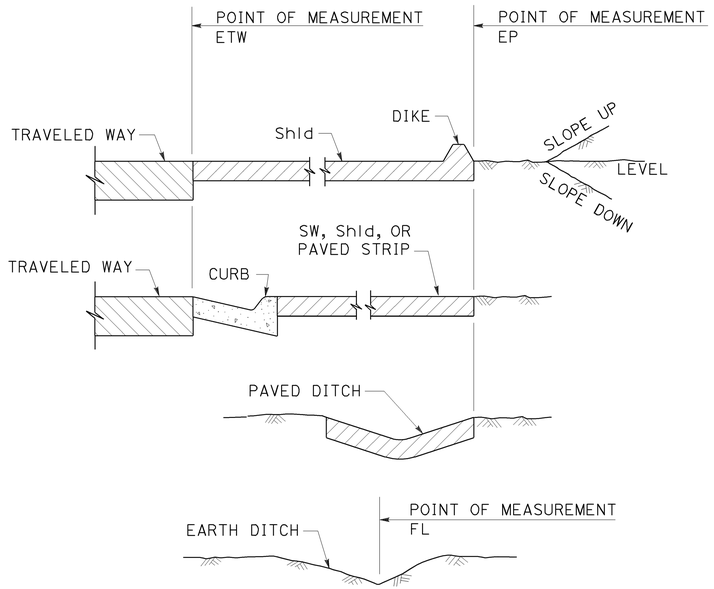

SECTION
POINTS OF MEASUREMENT

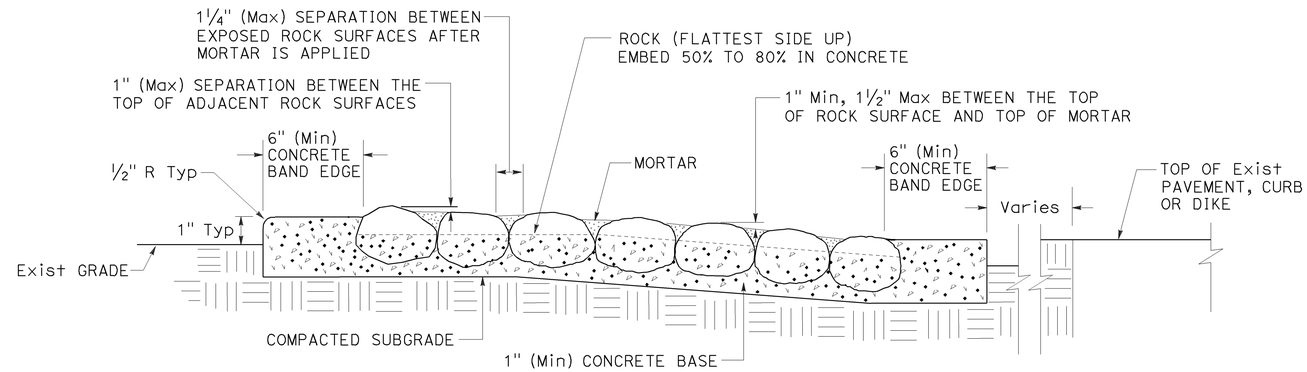

SECTION
ROCK BLANKET

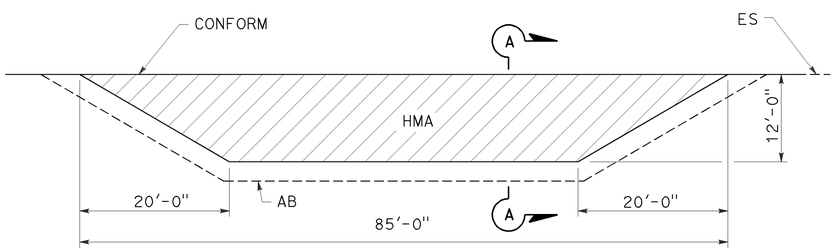

PLAN

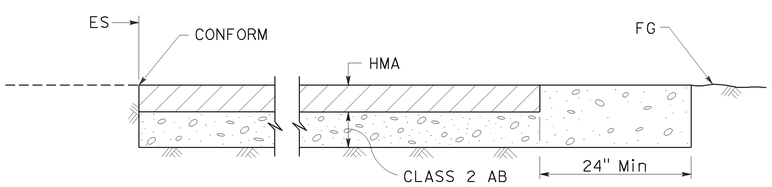

SECTION A-A
MAINTENANCE VEHICLE PULLOUT

STATE OF CALIFORNIA
DEPARTMENT OF TRANSPORTATION

LANDSCAPE DETAILS

NO SCALE

RSP H9A DATED JULY 19, 2013 SUPPLEMENTS THE STANDARD PLANS BOOK DATED 2010.

REVISED STANDARD PLAN RSP H9A

2010 REVISED STANDARD PLAN RSP H9A

6-21-13