| Dist | COUNTY | ROUTE | POST MILES TOTAL PROJECT | SHEET No. | TOTAL SHEETS |
|---|---|---|---|---|---|
| 11 | SD | 5 | R29.1/R30.5 | 601 | 1012 |

Michael M. Fordham 05-23-14
REGISTERED CIVIL ENGINEER DATE

07-21-14
PLANS APPROVAL DATE

REGISTERED PROFESSIONAL ENGINEER Michael M. Fordham No. C61341 Exp. 6-30-15 CIVIL STATE OF CALIFORNIA

*THE STATE OF CALIFORNIA OR ITS OFFICERS OR AGENTS SHALL NOT BE RESPONSIBLE FOR THE ACCURACY OR COMPLETENESS OF SCANNED COPIES OF THIS PLAN SHEET.*

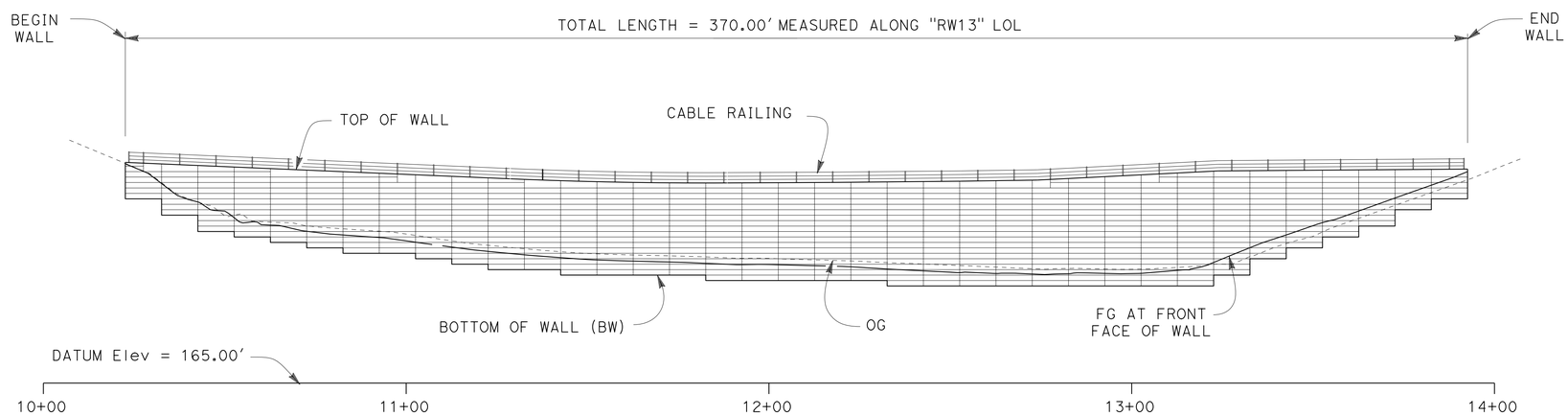


**DEVELOPED ELEVATION**
SCALE 1" = 20′

| CURVE DATA | | | | |
|---|---|---|---|---|
| No. | R | △ | T | L |
| 1 | 700.00′ | 03°04′59" | 18.84′ | 37.67′ |
| 2 | 1,000.00′ | 01°49′09" | 15.88′ | 31.45′ |

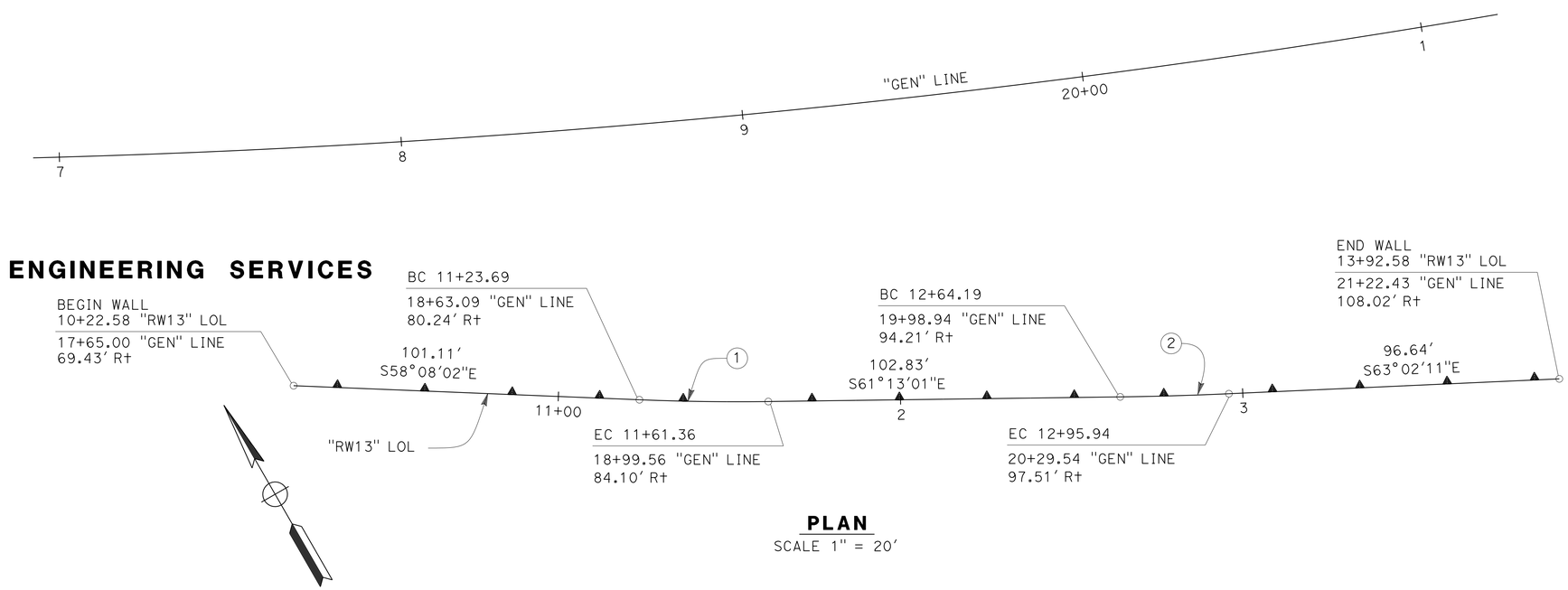


**PLAN**
SCALE 1" = 20′

NOTE: FOR GENERAL NOTES, INDEX TO PLANS, AND STANDARD PLANS, SEE INDEX TO PLANS SHEET

*APPROVED FOR RETAINING WALL WORK ONLY*

# RETAINING WALL GENERAL PLAN
**(GRE WALL)** **("RW13")**

SCALE AS SHOWN

**R3-1**

REVISED BY | DATE REVISED
MIKE FORDHAM
CALCULATED-DESIGNED BY | CHECKED BY
FUNCTIONAL SUPERVISOR
BRIAN HINMAN

STATE OF CALIFORNIA - DEPARTMENT OF TRANSPORTATION
Caltrans® ENGINEERING SERVICES

LAST REVISION 07-12-14 | DATE PLOTTED => 23-JUL-2014 | TIME PLOTTED => 14:50

| Dist | COUNTY | ROUTE | POST MILES TOTAL PROJECT | SHEET No. | TOTAL SHEETS |
|---|---|---|---|---|---|
| 11 | SD | 5 | R29.1/R30.5 | 602 | 1012 |

Michael M. Fordham 05-23-14
REGISTERED CIVIL ENGINEER DATE

07-21-14
PLANS APPROVAL DATE

REGISTERED PROFESSIONAL ENGINEER Michael M. Fordham No. C61341 Exp. 6-30-15 CIVIL STATE OF CALIFORNIA

*THE STATE OF CALIFORNIA OR ITS OFFICERS OR AGENTS SHALL NOT BE RESPONSIBLE FOR THE ACCURACY OR COMPLETENESS OF SCANNED COPIES OF THIS PLAN SHEET.*

## GENERAL NOTES

DESIGN OF REINFORCED SOIL STRUCTURE IS BASED ON THE FOLLOWING PARAMETERS:

| | | |
|---|---|---|
| SOIL PARAMETERS: | SOIL UNIT WEIGHT, $\gamma_S$= | 121 pcf |
| | SOIL FRICTION ANGLE, $\phi$= | 33° |
| | SOIL COHESION, C = | 120 psf |
| SEISMIC LOADING: | PGA = | 0.45 g |
| | Kh = | 0.15 |

GEOTECHNICAL PARAMETERS USED FOR DESIGN SHALL BE CONFIRMED BY GEOTECHNICAL ENGINEER PRIOR TO WALL CONSTRUCTION.

INTERNAL STABILITY OF WALLS:

| | |
|---|---|
| MINIMUM FACTOR OF SAFETY ON GEOGRID STRENGTH = | 1.5 |
| MINIMUM FACTOR OF SAFETY ON GEOGRID PULLOUT = | 1.5 |
| PERCENT COVERAGE OF GEOGRID = | 100% |

EXTERNAL STABILITY:

| | |
|---|---|
| MINIMUM FACTOR OF SAFETY AGAINST BASE SLIDING = | 1.5 |
| MINIMUM FACTOR OF SAFETY AGAINST OVERTURNING = | 2.0 |
| MINIMUM FACTOR OF SAFETY AGAINST SOIL BEARING OVERSTRESS = | 2.0 |
| BACKFILL SLOPE = | AS SHOWN ON SITE PLAN |

GLOBAL STABILITY (CONFIRMED BY GEOTECHNICAL ENGINEER):

| | |
|---|---|
| MINIMUM FACTOR OF SAFETY AGAINST STATIC GLOBAL STABILITY = | 1.5 |
| MINIMUM FACTOR OF SAFETY AGAINST SEISMIC GLOBAL STABILITY = | 1.1 |

## STANDARD PLANS DATED JUNE 2010

| | | |
|---|---|---|
| | A10A | ABBREVIATIONS (SHEET 1 OF 2) |
| RSP | A10B | ABBREVIATIONS (SHEET 2 OF 2) |
| | A10C | LINES AND SYMBOLS (SHEET 1 OF 3) |
| | A10D | LINES AND SYMBOLS (SHEET 2 OF 3) |
| | A10E | LINES AND SYMBOLS (SHEET 3 OF 3) |
| | B3-6 | RETAINING WALL DETAILS No. 2 |
| RSP | B11-47 | CABLE RAILING |

## PLAN SYMBOLS

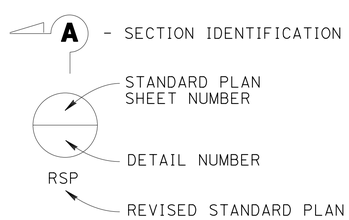


## LEGEND

GRE GEOSYNTHETIC REINFORCED EMBANKMENT

## INDEX TO RETAINING WALL PLANS


| SHEET NUMBER | DESCRIPTION |
|---|---|
| 1 | RETAINING WALL GENERAL PLAN |
| 2 | RETAINING WALL INDEX TO PLANS |
| 3 | RETAINING WALL FOUNDATION PLAN |
| 4 | RETAINING WALL STRUCTURE ELEVATION |
| 5 | RETAINING WALL DETAILS No. 1 |
| 6 | RETAINING WALL DETAILS No. 2 |
| 7 | RETAINING WALL DETAILS No. 3 |
| 8 | RETAINING WALL LOG OF TEST BORINGS |


*APPROVED FOR RETAINING WALL WORK ONLY*

# RETAINING WALL INDEX TO PLANS
**(GRE WALL)** **("RW13")**

SCALE AS SHOWN

**R3-2**

REVISED BY | DATE REVISED
MIKE FORDHAM
CALCULATED-DESIGNED BY | CHECKED BY
FUNCTIONAL SUPERVISOR
BRIAN HINMAN

STATE OF CALIFORNIA - DEPARTMENT OF TRANSPORTATION
Caltrans® ENGINEERING SERVICES

LAST REVISION 07-12-14 | DATE PLOTTED => 23-JUL-2014 | TIME PLOTTED => 14:50

| Dist | COUNTY | ROUTE | POST MILES TOTAL PROJECT | SHEET No. | TOTAL SHEETS |
|---|---|---|---|---|---|
| 11 | SD | 5 | R29.1/R30.5 | 603 | 1012 |

Michael M. Fordham 05-23-14
REGISTERED CIVIL ENGINEER DATE

07-21-14
PLANS APPROVAL DATE

REGISTERED PROFESSIONAL ENGINEER
Michael M. Fordham
No. C61341
Exp. 6-30-15
CIVIL
STATE OF CALIFORNIA

*THE STATE OF CALIFORNIA OR ITS OFFICERS OR AGENTS SHALL NOT BE RESPONSIBLE FOR THE ACCURACY OR COMPLETENESS OF SCANNED COPIES OF THIS PLAN SHEET.*

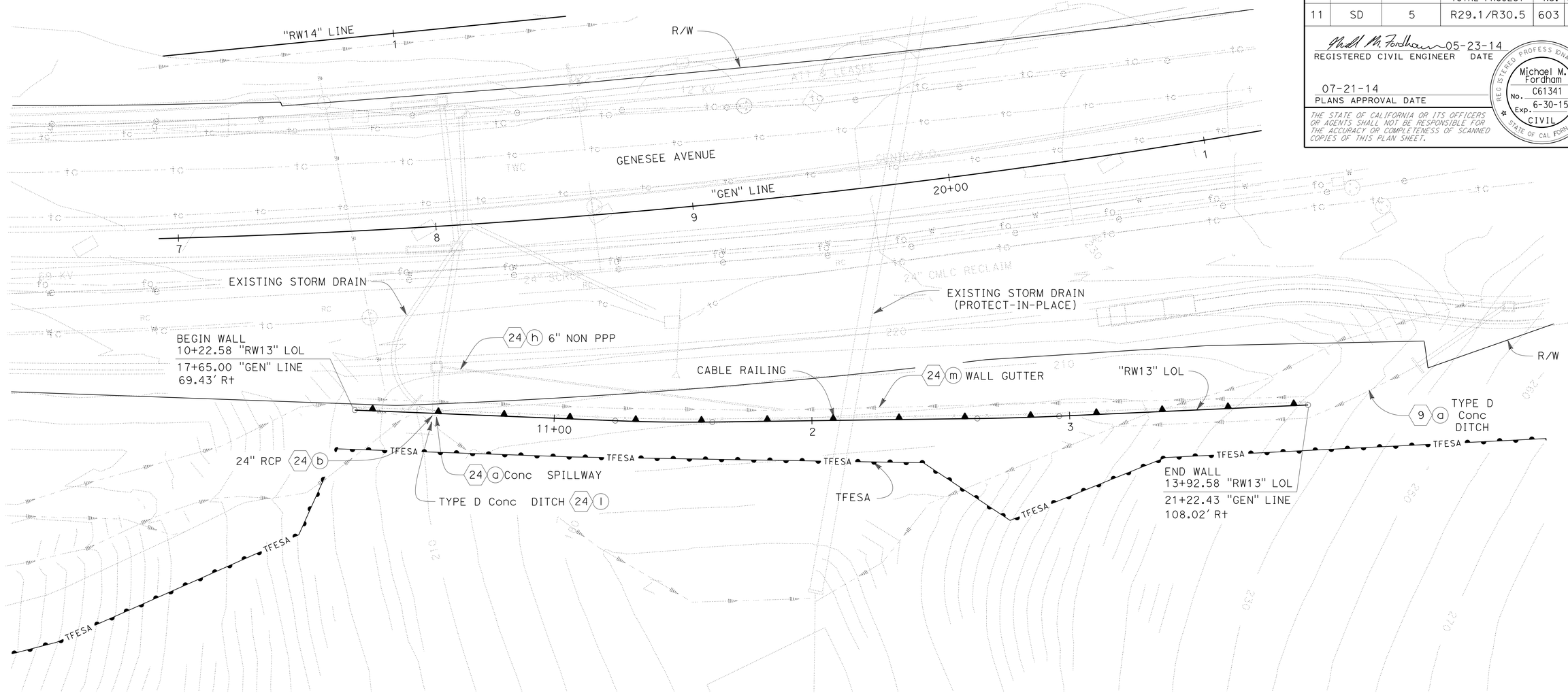


**PLAN**
SCALE 1" = 20'

## BENCHMARK

SURVEY CONTROL:

BM #1 5-29.46
2 1/4" CADT BRASS DISK
LABELED "5-29.46 1993"
N 1,903,968.24
E 6,261,597.31
Elev = 270.07'

BM #2 5-29.42
PK NAIL & WASHER
N 1,903,808.35
E 6,262,278.85
Elev = 291.79'

# RETAINING WALL FOUNDATION PLAN
**(GRE WALL)** **("RW13")**

SCALE AS SHOWN

**R3-3**

*APPROVED FOR RETAINING WALL WORK ONLY.*

REVISED BY | DATE REVISED
MIKE FORDHAM
CALCULATED-DESIGNED BY | CHECKED BY
FUNCTIONAL SUPERVISOR
BRIAN HINMAN
STATE OF CALIFORNIA - DEPARTMENT OF TRANSPORTATION
Caltrans ENGINEERING SERVICES

LAST REVISION 07-22-14 | DATE PLOTTED => 24-JUL-2014 | TIME PLOTTED => 09:05

| Dist | COUNTY | ROUTE | POST MILES TOTAL PROJECT | SHEET No. | TOTAL SHEETS |
|---|---|---|---|---|---|
| 11 | SD | 5 | R29.1/R30.5 | 604 | 1012 |

Michael M. Fordham 05-23-14
REGISTERED CIVIL ENGINEER DATE

07-21-14
PLANS APPROVAL DATE

REGISTERED PROFESSIONAL ENGINEER Michael M. Fordham No. C61341 Exp. 6-30-15 CIVIL STATE OF CALIFORNIA

*THE STATE OF CALIFORNIA OR ITS OFFICERS OR AGENTS SHALL NOT BE RESPONSIBLE FOR THE ACCURACY OR COMPLETENESS OF SCANNED COPIES OF THIS PLAN SHEET.*

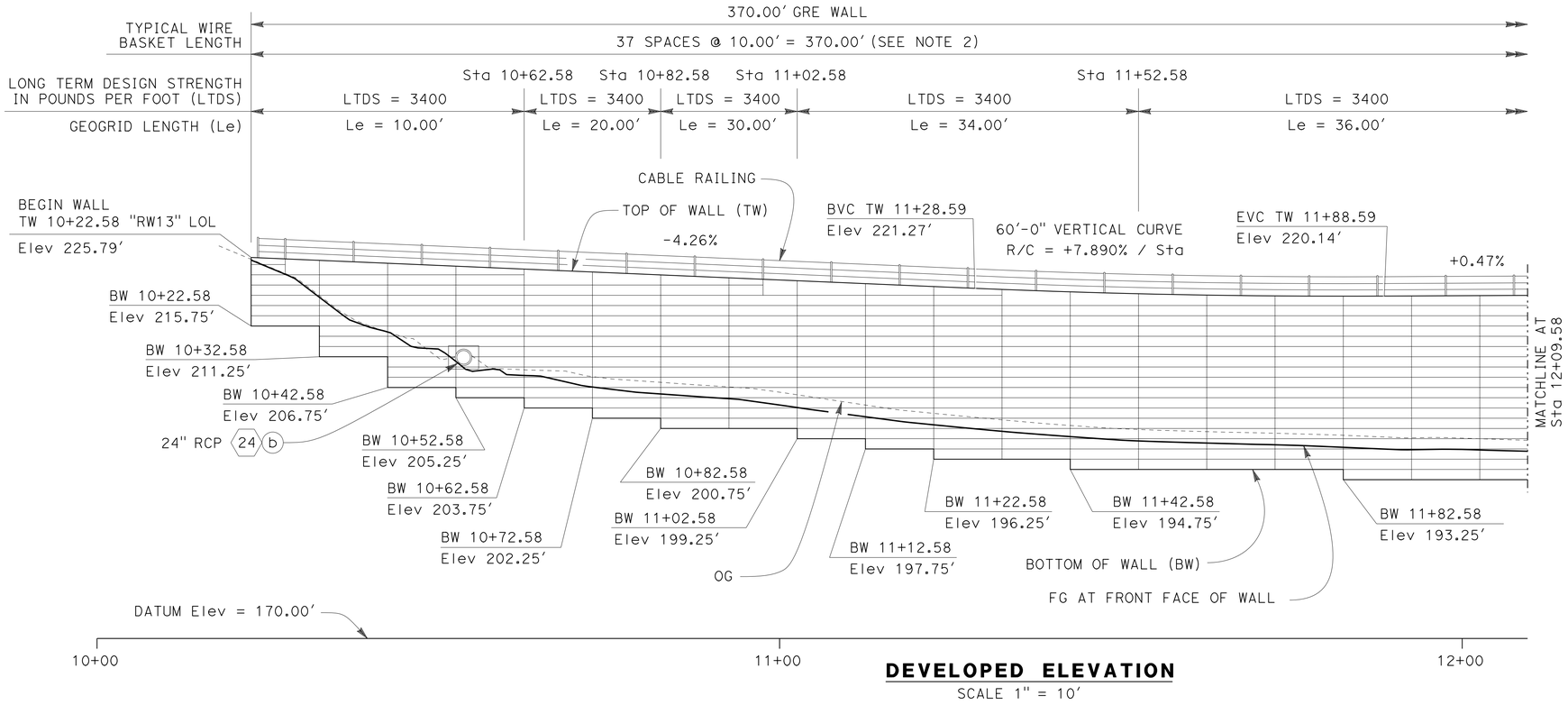


**DEVELOPED ELEVATION**
SCALE 1" = 10'

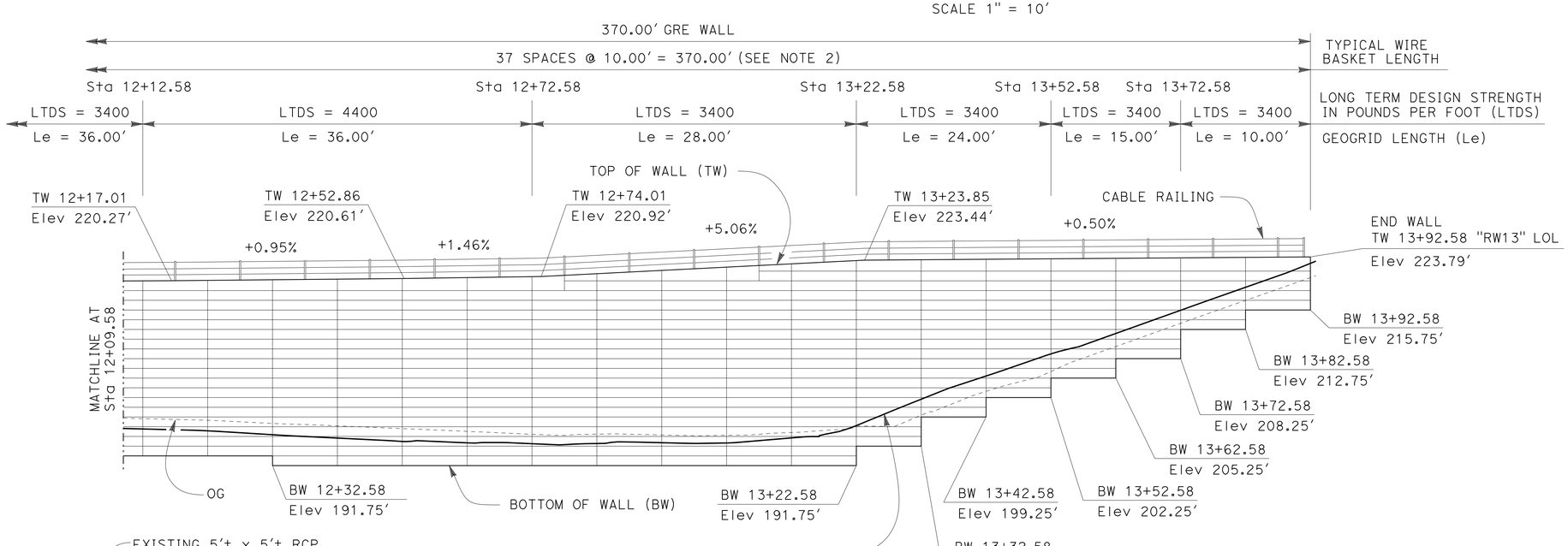


**DEVELOPED ELEVATION**
SCALE 1" = 10'

*APPROVED FOR RETAINING WALL WORK ONLY*

NOTES:

1. FOR BASKET VERTICAL SPACING, SEE FACING DETAIL ON RETAINING WALL DETAILS SHEET.
2. FOR TOP ROWS OF WIRE BASKET DETAILS, SEE WIRE BASKET INSTALLATION DETAIL ON INDEX TO PLANS SHEET.
3. FOR UTILITY OPENING DETAILS, SEE INDEX TO PLANS SHEET.

# RETAINING WALL STRUCTURE ELEVATION

**(GRE WALL)** **("RW13")**

SCALE AS SHOWN

**R3-4**

REVISED BY | DATE REVISED
MIKE FORDHAM
CALCULATED-DESIGNED BY | CHECKED BY
FUNCTIONAL SUPERVISOR
BRIAN HINMAN

STATE OF CALIFORNIA - DEPARTMENT OF TRANSPORTATION
Caltrans® ENGINEERING SERVICES

LAST REVISION 07-12-14 | DATE PLOTTED => 23-JUL-2014 | TIME PLOTTED => 14:50

| Dist | COUNTY | ROUTE | POST MILES TOTAL PROJECT | SHEET No. | TOTAL SHEETS |
|---|---|---|---|---|---|
| 11 | SD | 5 | R29.1/R30.5 | 605 | 1012 |

REGISTERED CIVIL ENGINEER 05-23-14 DATE

07-21-14
PLANS APPROVAL DATE

REGISTERED PROFESSIONAL ENGINEER Michael M. Fordham No. C61341 Exp. 6-30-15 CIVIL STATE OF CALIFORNIA

*THE STATE OF CALIFORNIA OR ITS OFFICERS OR AGENTS SHALL NOT BE RESPONSIBLE FOR THE ACCURACY OR COMPLETENESS OF SCANNED COPIES OF THIS PLAN SHEET.*

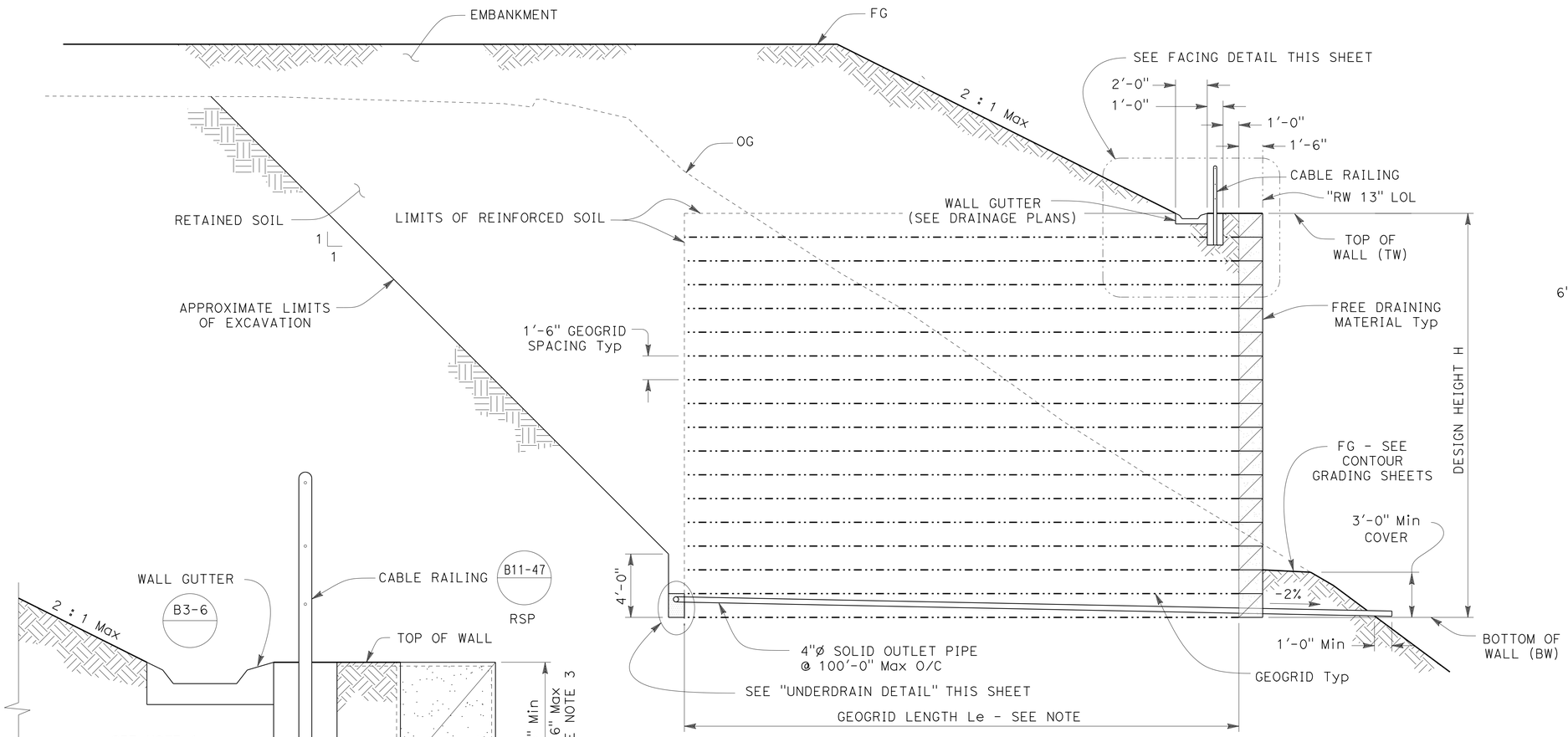


NOTE: FOR GEOGRID LENGTH LE, SEE STRUCTURE ELEVATION SHEETS

## TYPICAL SECTION

NO SCALE

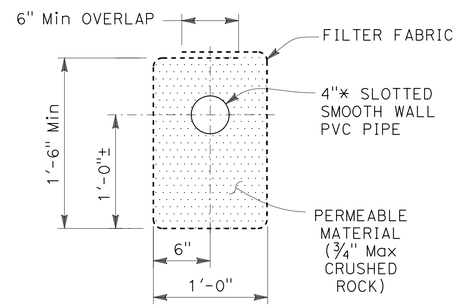


## UNDERDRAIN DETAIL

SCALE 1½" = 1'

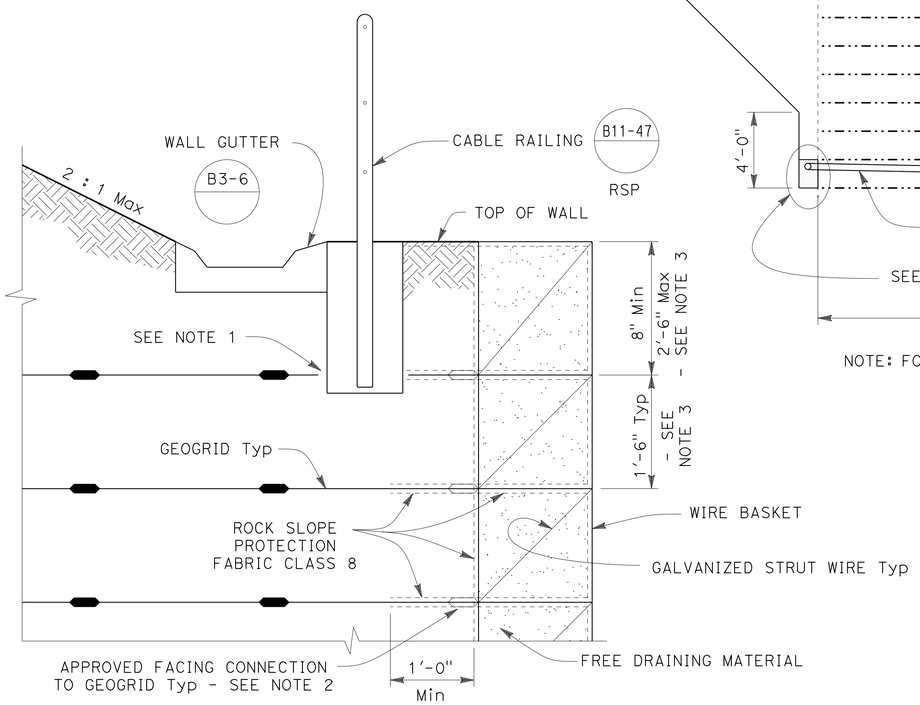


NOTES:

1. WHERE RAILING POST POCKETS INTERFERE WITH GEOGRIDS, PRECUT AFFECTED LAYER OF REINFORCEMENT. THE PRECUT DIMENSIONS MUST NOT EXCEED RAILING POST FOUNDATION DIMENSIONS BY MORE THAN 1'-0".
2. CONNECTION SHALL BE CORROSION RESISTANT
3. FOR TOP ROWS OF WIRE BASKET DETAILS, SEE WIRE BASKET INSTALLATION DETAIL ON INDEX TO PLANS SHEET

## FACING DETAIL

SCALE 1" = 1'

*APPROVED FOR RETAINING WALL WORK ONLY*

# RETAINING WALL DETAILS No. 1
**(GRE WALL)** **("RW13")**

SCALE AS SHOWN

**R3-5**

STATE OF CALIFORNIA - DEPARTMENT OF TRANSPORTATION
Caltrans® ENGINEERING SERVICES

FUNCTIONAL SUPERVISOR: BRIAN HINMAN
CALCULATED-DESIGNED BY: MIKE FORDHAM
CHECKED BY
REVISED BY
DATE REVISED

LAST REVISION 07-12-14
DATE PLOTTED => 23-JUL-2014
TIME PLOTTED => 14:50

| Dist | COUNTY | ROUTE | POST MILES TOTAL PROJECT | SHEET No. | TOTAL SHEETS |
|---|---|---|---|---|---|
| 11 | SD | 5 | R29.1/R30.5 | 606 | 1012 |

REGISTERED CIVIL ENGINEER 05-23-14 DATE

07-21-14
PLANS APPROVAL DATE

REGISTERED PROFESSIONAL ENGINEER
Michael M. Fordham
No. C61341
Exp. 6-30-15
CIVIL
STATE OF CALIFORNIA

*THE STATE OF CALIFORNIA OR ITS OFFICERS OR AGENTS SHALL NOT BE RESPONSIBLE FOR THE ACCURACY OR COMPLETENESS OF SCANNED COPIES OF THIS PLAN SHEET.*

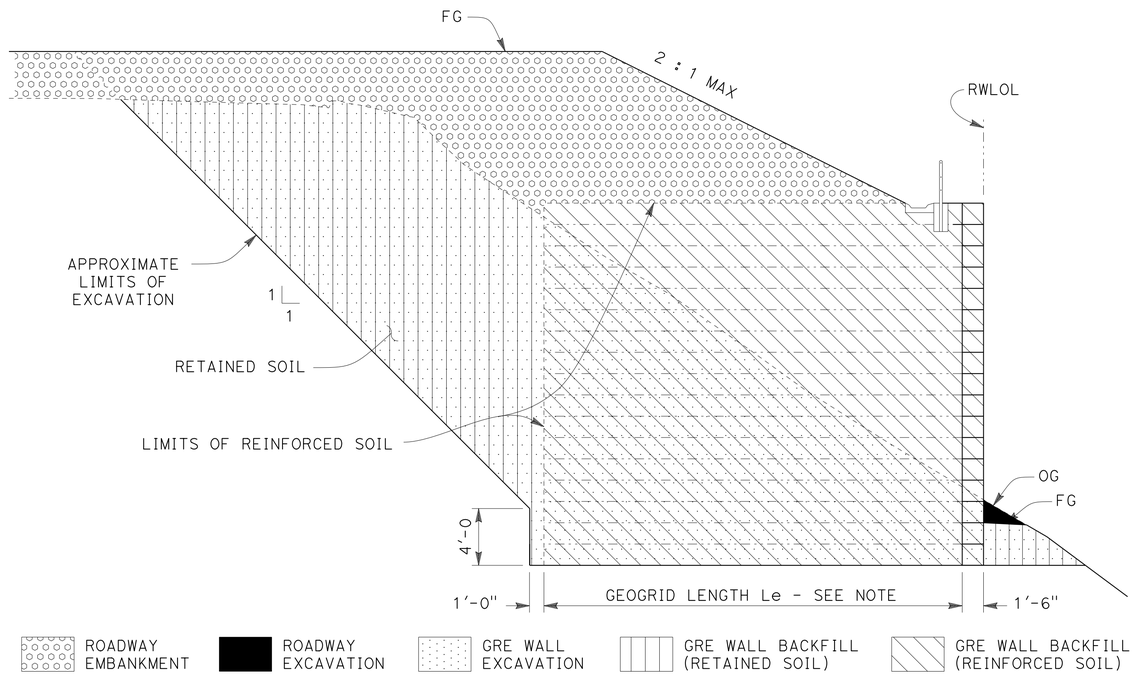


NOTE: FOR GEOGRID LENGTH Le SEE STRUCTURE ELEVATION SHEETS.

**LIMITS OF PAYMENT FOR EXCAVATION AND BACKFILL - IN FILL AND CUT**

NO SCALE

# RETAINING WALL DETAILS No. 2

**("RW13")**

**(GRE WALL)**

**R3-6**

*APPROVED FOR RETAINING WALL WORK ONLY*

SCALE AS SHOWN

STATE OF CALIFORNIA - DEPARTMENT OF TRANSPORTATION
Caltrans® ENGINEERING SERVICES

FUNCTIONAL SUPERVISOR: BRIAN HINMAN
CALCULATED-DESIGNED BY: MIKE FORDHAM
CHECKED BY
REVISED BY
DATE REVISED

LAST REVISION 07-12-14
DATE PLOTTED => 23-JUL-2014
TIME PLOTTED => 14:50

| Dist | COUNTY | ROUTE | POST MILES TOTAL PROJECT | SHEET No. | TOTAL SHEETS |
|---|---|---|---|---|---|
| 11 | SD | 5 | R29.1/R30.5 | 607 | 1012 |

REGISTERED CIVIL ENGINEER DATE 05-23-14

07-21-14
PLANS APPROVAL DATE

Michael M. Fordham
REGISTERED PROFESSIONAL ENGINEER
No. C61341
Exp. 6-30-15
CIVIL
STATE OF CALIFORNIA

*THE STATE OF CALIFORNIA OR ITS OFFICERS OR AGENTS SHALL NOT BE RESPONSIBLE FOR THE ACCURACY OR COMPLETENESS OF SCANNED COPIES OF THIS PLAN SHEET.*

## RETAINING WALL QUANTITIES (GRE WALL)

| WALL | LINE | STATION RANGE | | LENGTH | GRE WALL | CABLE RAILING | REMARKS |
|---|---|---|---|---|---|---|---|
| | | BEGIN | END | LF | SQ FT | LF | |
| 13 | "RW13" | 10+22.58 | 13+92.58 | 370.0 | 8755.0 | 370.0 | |

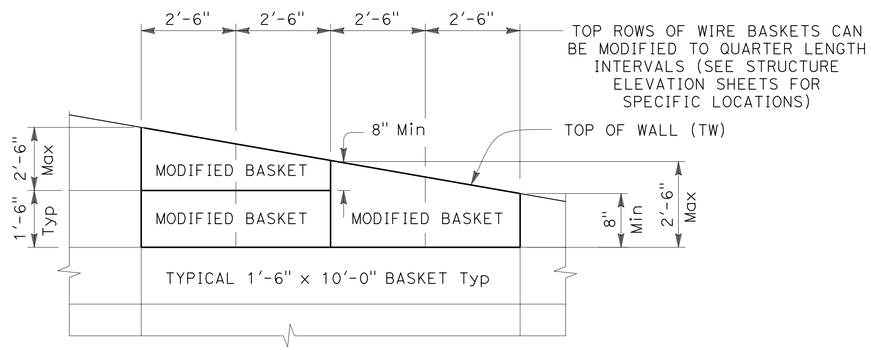


NOTE: TOP ROW OF WIRE BASKETS SHALL BE NO TALLER THAN 2'-6", AND NO SHORTER THAN 8".

**WIRE BASKET INSTALLATION DETAIL**

NO SCALE

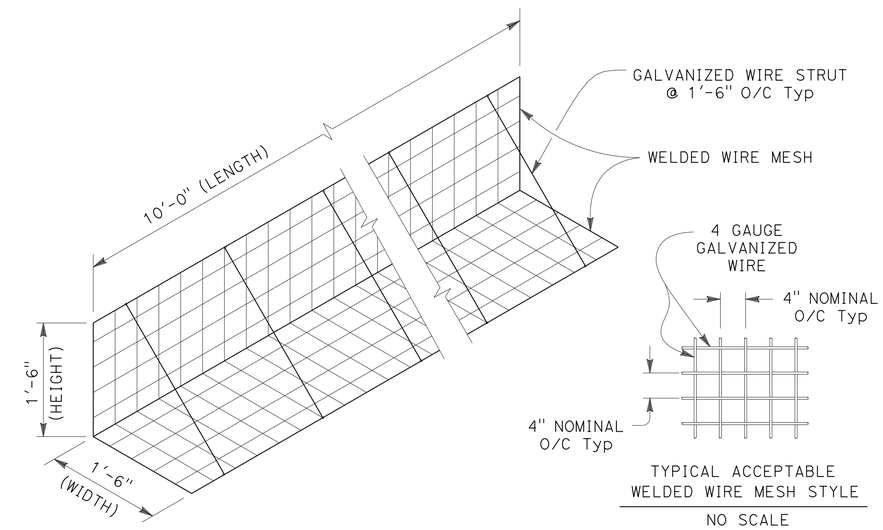


NO SCALE

**TYPICAL WIRE BASKET DETAIL**

SCALE 3/4" = 1'

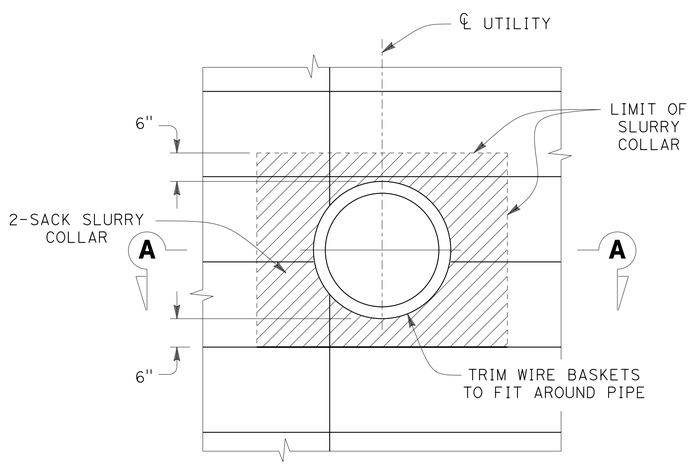


**ELEVATION**

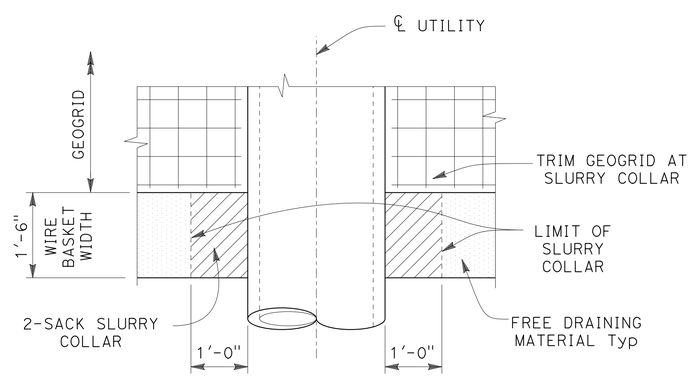


**SECTION A-A**

**UTILITY OPENING DETAILS**

SCALE 3/4" = 1'

*APPROVED FOR RETAINING WALL WORK ONLY.*

# RETAINING WALL DETAILS No. 3
**(GRE WALL)** **("RW13")**

SCALE AS SHOWN

**R3-7**

STATE OF CALIFORNIA - DEPARTMENT OF TRANSPORTATION
Caltrans ENGINEERING SERVICES

FUNCTIONAL SUPERVISOR: BRIAN HINMAN
CALCULATED-DESIGNED BY: MIKE FORDHAM
CHECKED BY
REVISED BY
DATE REVISED

LAST REVISION 07-12-14
DATE PLOTTED => 23-JUL-2014
TIME PLOTTED => 14:50

| Dist | COUNTY | ROUTE | POST MILES TOTAL PROJECT | SHEET No. | TOTAL SHEETS |
|---|---|---|---|---|---|
| 11 | SD | 5 | R29.1/R30.5 | 608 | 1012 |

Michael M. Fordham 05-23-14
REGISTERED CIVIL ENGINEER DATE

07-21-14
PLANS APPROVAL DATE

REGISTERED PROFESSIONAL ENGINEER Michael M. Fordham No. C61341 Exp. 6-30-15 CIVIL STATE OF CALIFORNIA

*THE STATE OF CALIFORNIA OR ITS OFFICERS OR AGENTS SHALL NOT BE RESPONSIBLE FOR THE ACCURACY OR COMPLETENESS OF SCANNED COPIES OF THIS PLAN SHEET.*

## BENCH MARK

5-28.41
Elev 287.78
Located at the intersection of I-5 and La Jolla Village Dr, set in sidewalk near southeast corner of La Jolla Village Dr Bridge over I-5.
NAVD 88

This LOTB sheet was prepared in accordance with the Caltrans Soil & Rock Logging, Classification, & Presentation Manual (2010 Edition).
Except the assignment of the hole identification as described in section 2.4

Note: No ground water encountered during field investigation

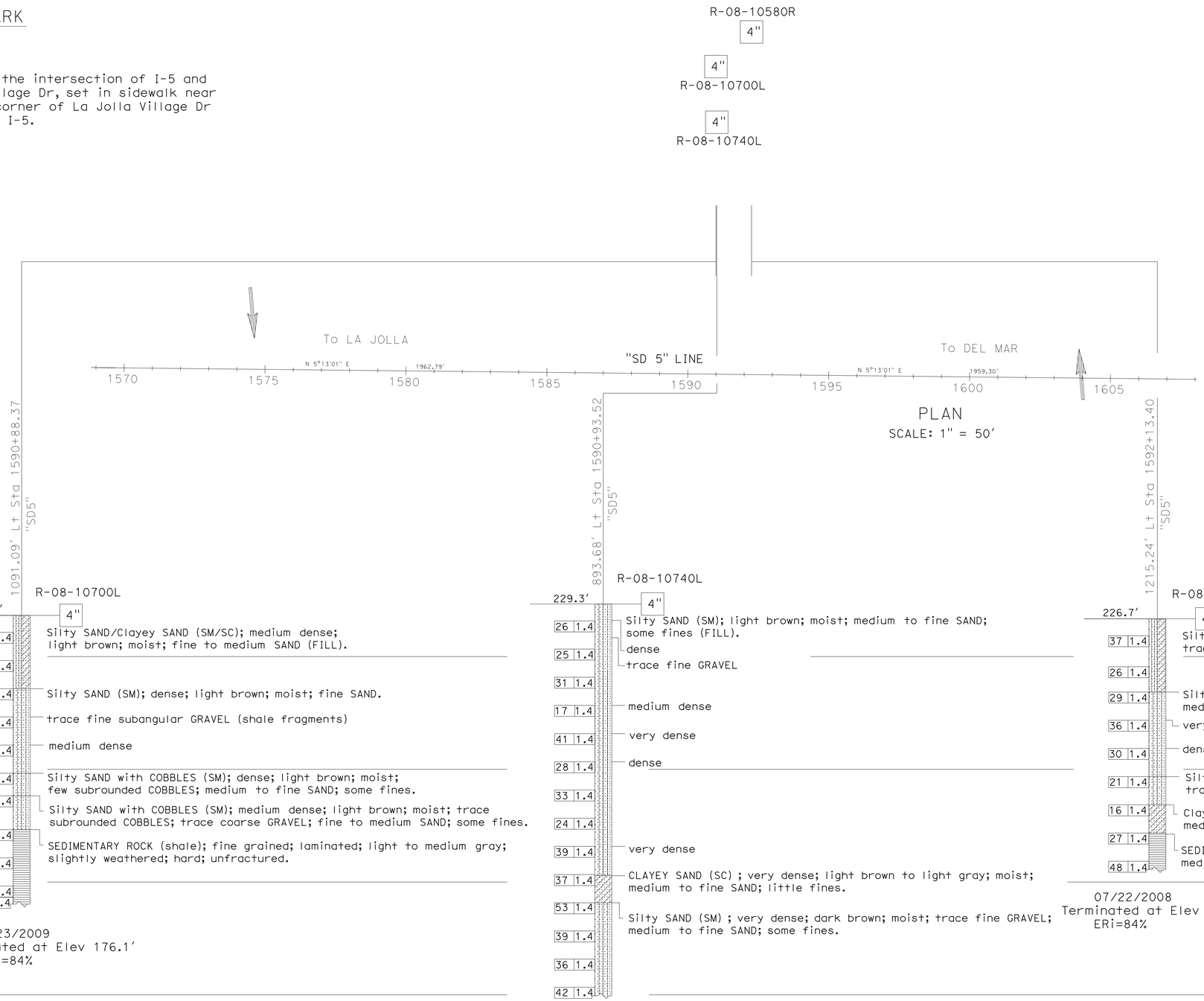


PROFILE
Horiz: 1" = 50'
Vert: 1" = 20'

# RETAINING WALL LOG OF TEST BORINGS
## (GRE WALL) ("RW13")

*APPROVED FOR RETAINING WALL WORK ONLY*

SCALE AS SHOWN

**R3-8**

STATE OF CALIFORNIA - DEPARTMENT OF TRANSPORTATION
Caltrans® ENGINEERING SERVICES

FUNCTIONAL SUPERVISOR: BRIAN HINMAN
CALCULATED-DESIGNED BY: MIKE FORDHAM
CHECKED BY
REVISED BY
DATE REVISED

LAST REVISION 07-12-14 | DATE PLOTTED => 23-JUL-2014 | TIME PLOTTED => 14:50

| Dist | COUNTY | ROUTE | POST MILES TOTAL PROJECT | SHEET No. | TOTAL SHEETS |
|---|---|---|---|---|---|
| 11 | SD | 5 | R29.1/R30.5 | 609 | 1012 |

Michael M. Fordham 05-23-14
REGISTERED CIVIL ENGINEER DATE

07-21-14
PLANS APPROVAL DATE

REGISTERED PROFESSIONAL ENGINEER Michael M. Fordham No. C61341 Exp. 6-30-15 CIVIL STATE OF CALIFORNIA

*THE STATE OF CALIFORNIA OR ITS OFFICERS OR AGENTS SHALL NOT BE RESPONSIBLE FOR THE ACCURACY OR COMPLETENESS OF SCANNED COPIES OF THIS PLAN SHEET.*

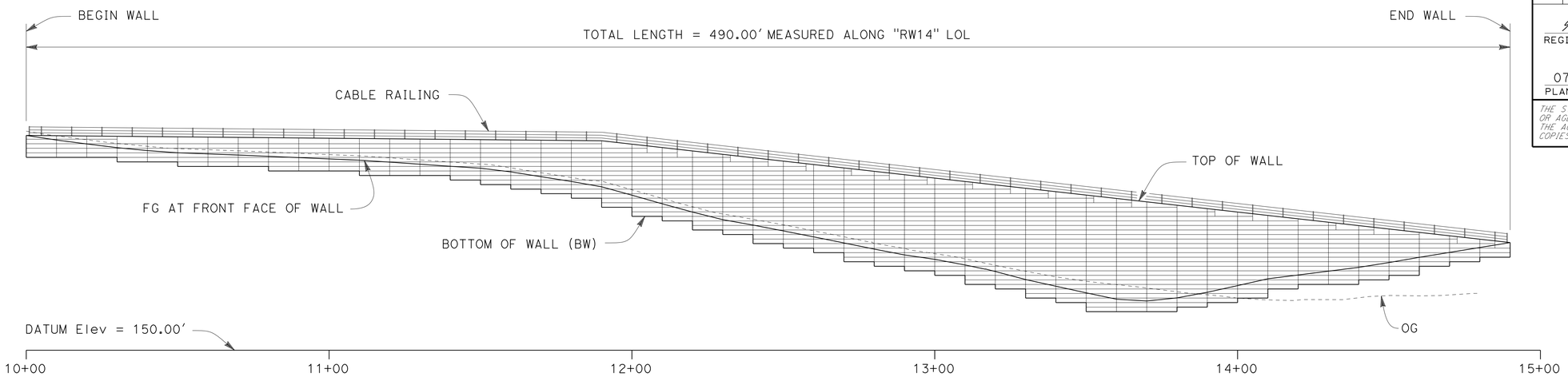


**MIRRORED DEVELOPED ELEVATION**
SCALE 1" = 20'

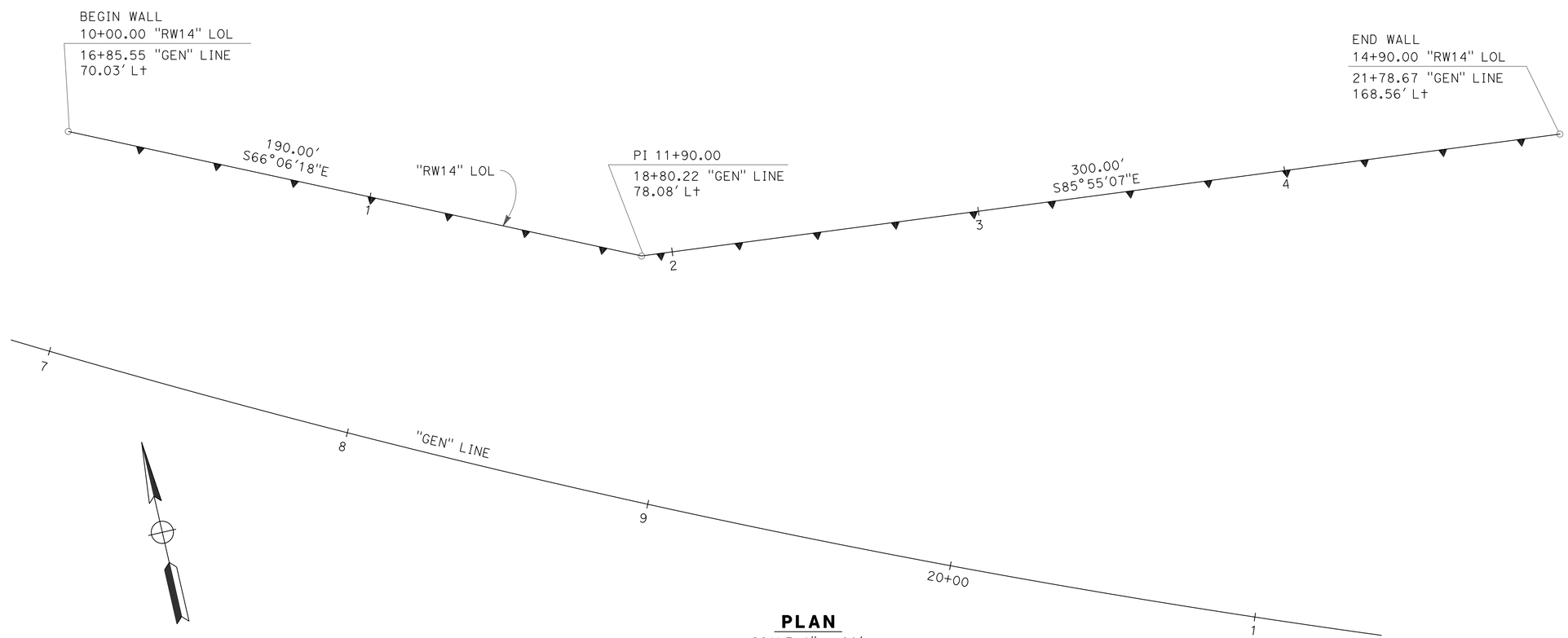


**PLAN**
SCALE 1" = 20'

NOTE: FOR GENERAL NOTES, INDEX TO PLANS, AND STANDARD PLANS, SEE INDEX TO PLANS SHEET

*APPROVED FOR RETAINING WALL WORK ONLY*

# RETAINING WALL GENERAL PLAN
**(GRE WALL)** **("RW14")**

SCALE AS SHOWN

**R4-1**

REVISED BY | DATE REVISED
MIKE FORDHAM
CALCULATED-DESIGNED BY | CHECKED BY
FUNCTIONAL SUPERVISOR
BRIAN HINMAN
STATE OF CALIFORNIA - DEPARTMENT OF TRANSPORTATION
Caltrans® ENGINEERING SERVICES

LAST REVISION 07-12-14 | DATE PLOTTED => 23-JUL-2014 | TIME PLOTTED => 14:50

| Dist | COUNTY | ROUTE | POST MILES TOTAL PROJECT | SHEET No. | TOTAL SHEETS |
|---|---|---|---|---|---|
| 11 | SD | 5 | R29.1/R30.5 | 610 | 1012 |

Michael M. Fordham 05-23-14
REGISTERED CIVIL ENGINEER DATE

07-21-14
PLANS APPROVAL DATE

REGISTERED PROFESSIONAL ENGINEER
Michael M. Fordham
No. C61341
Exp. 6-30-15
CIVIL
STATE OF CALIFORNIA

*THE STATE OF CALIFORNIA OR ITS OFFICERS OR AGENTS SHALL NOT BE RESPONSIBLE FOR THE ACCURACY OR COMPLETENESS OF SCANNED COPIES OF THIS PLAN SHEET.*

## GENERAL NOTES

DESIGN OF REINFORCED SOIL STRUCTURE IS BASED ON THE FOLLOWING PARAMETERS:

| | | |
|---|---|---|
| SOIL PARAMETERS: | SOIL UNIT WEIGHT, $\gamma_S$= | 121 pcf |
| | SOIL FRICTION ANGLE, $\phi$ = | 33° |
| | SOIL COHESION, C = | 120 psf |
| SEISMIC LOADING: | PGA = | 0.45 g |
| | Kh = | 0.15 |

GEOTECHNICAL PARAMETERS USED FOR DESIGN SHALL BE CONFIRMED BY GEOTECHNICAL ENGINEER PRIOR TO WALL CONSTRUCTION.

INTERNAL STABILITY OF WALLS:

| | |
|---|---|
| MINIMUM FACTOR OF SAFETY ON GEOGRID STRENGTH = | 1.5 |
| MINIMUM FACTOR OF SAFETY ON GEOGRID PULLOUT = | 1.5 |
| PERCENT COVERAGE OF GEOGRID = | 100% |

EXTERNAL STABILITY:

| | |
|---|---|
| MINIMUM FACTOR OF SAFETY AGAINST BASE SLIDING = | 1.5 |
| MINIMUM FACTOR OF SAFETY AGAINST OVERTURNING = | 2.0 |
| MINIMUM FACTOR OF SAFETY AGAINST SOIL BEARING OVERSTRESS = | 2.0 |
| BACKFILL SLOPE = | AS SHOWN ON SITE PLAN |

GLOBAL STABILITY (CONFIRMED BY GEOTECHNICAL ENGINEER):

| | |
|---|---|
| MINIMUM FACTOR OF SAFETY AGAINST STATIC GLOBAL STABILITY = | 1.5 |
| MINIMUM FACTOR OF SAFETY AGAINST SEISMIC GLOBAL STABILITY = | 1.1 |

## STANDARD PLANS DATED JUNE 2010

| | | |
|---|---|---|
| | A10A | ABBREVIATIONS (SHEET 1 OF 2) |
| RSP | A10B | ABBREVIATIONS (SHEET 2 OF 2) |
| | A10C | LINES AND SYMBOLS (SHEET 1 OF 3) |
| | A10D | LINES AND SYMBOLS (SHEET 2 OF 3) |
| | A10E | LINES AND SYMBOLS (SHEET 3 OF 3) |
| | B3-6 | RETAINING WALL DETAILS No. 2 |
| RSP | B11-47 | CABLE RAILING |

## PLAN SYMBOLS

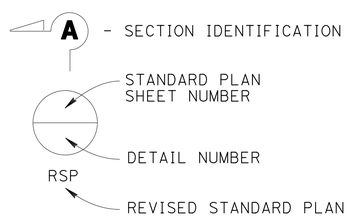


## LEGEND

GRE GEOSYNTHETIC REINFORCED EMBANKMENT

## INDEX TO RETAINING WALL PLANS


| SHEET NUMBER | DESCRIPTION |
|---|---|
| 1 | RETAINING WALL GENERAL PLAN |
| 2 | RETAINING WALL INDEX TO PLANS |
| 3 | RETAINING WALL FOUNDATION PLAN |
| 4 | RETAINING WALL STRUCTURE ELEVATION No. 1 |
| 5 | RETAINING WALL STRUCTURE ELEVATION No. 2 |
| 6 | RETAINING WALL DETAILS No. 1 |
| 7 | RETAINING WALL DETAILS No. 2 |
| 8 | RETAINING WALL DETAILS No. 3 |
| 9 | RETAINING WALL LOG OF TEST BORINGS |


*APPROVED FOR RETAINING WALL WORK ONLY*

# RETAINING WALL INDEX TO PLANS
**(GRE WALL)** **("RW14")**

SCALE AS SHOWN

**R4-2**

REVISED BY | DATE REVISED
MIKE FORDHAM
CALCULATED-DESIGNED BY | CHECKED BY
FUNCTIONAL SUPERVISOR
BRIAN HINMAN
STATE OF CALIFORNIA - DEPARTMENT OF TRANSPORTATION
Caltrans® ENGINEERING SERVICES

LAST REVISION 07-12-14 | DATE PLOTTED => 23-JUL-2014 | TIME PLOTTED => 14:50

| Dist | COUNTY | ROUTE | POST MILES TOTAL PROJECT | SHEET No. | TOTAL SHEETS |
|---|---|---|---|---|---|
| 11 | SD | 5 | R29.1/R30.5 | 611 | 1012 |

Michael M. Fordham 05-23-14
REGISTERED CIVIL ENGINEER DATE

07-21-14
PLANS APPROVAL DATE

REGISTERED PROFESSIONAL ENGINEER
Michael M. Fordham
No. C61341
Exp. 6-30-15
CIVIL
STATE OF CALIFORNIA

*THE STATE OF CALIFORNIA OR ITS OFFICERS OR AGENTS SHALL NOT BE RESPONSIBLE FOR THE ACCURACY OR COMPLETENESS OF SCANNED COPIES OF THIS PLAN SHEET.*

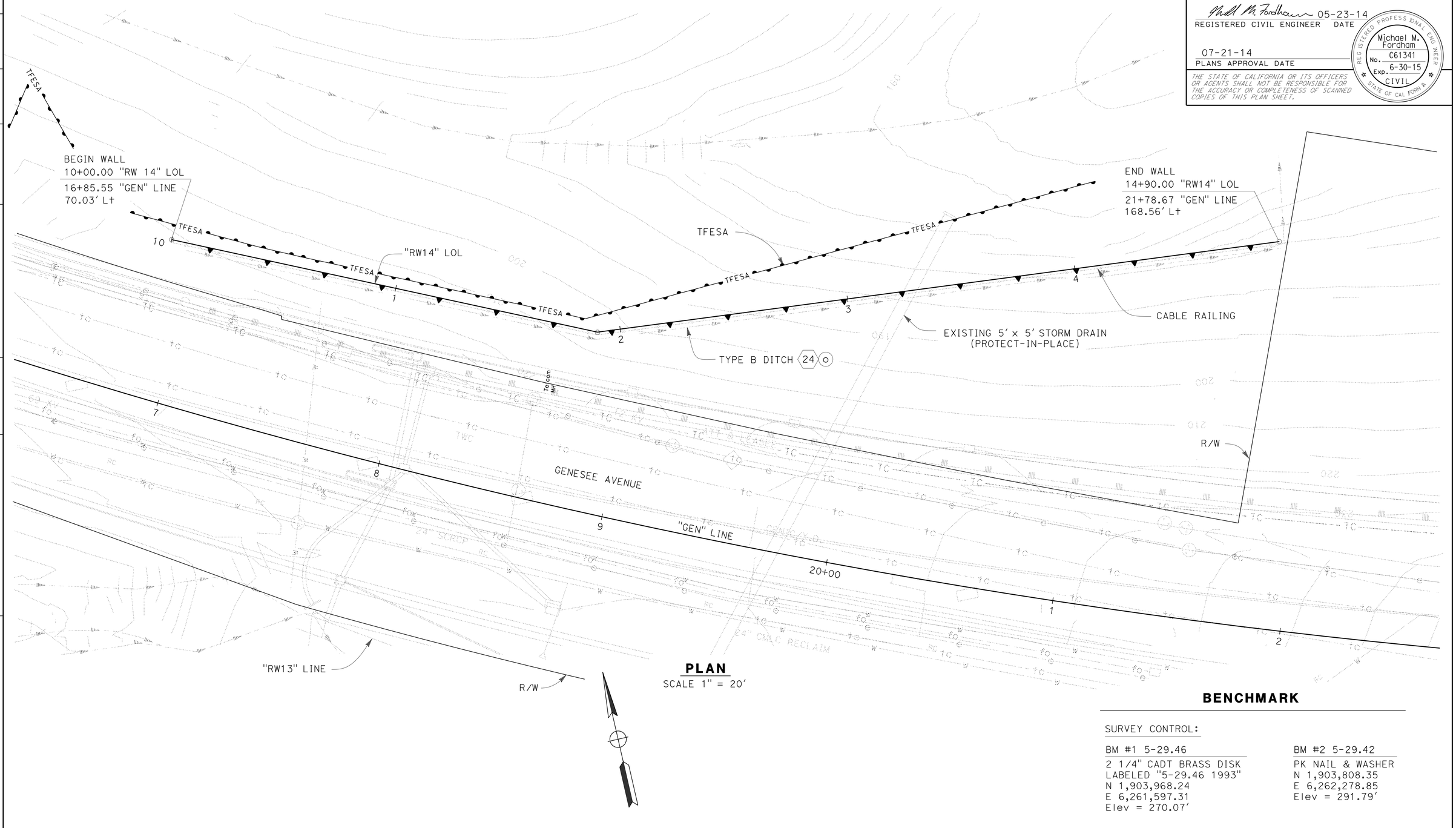


**PLAN**
SCALE 1" = 20'

## BENCHMARK

SURVEY CONTROL:

| BM #1 5-29.46 | BM #2 5-29.42 |
|---|---|
| 2 1/4" CADT BRASS DISK | PK NAIL & WASHER |
| LABELED "5-29.46 1993" | N 1,903,808.35 |
| N 1,903,968.24 | E 6,262,278.85 |
| E 6,261,597.31 | Elev = 291.79' |
| Elev = 270.07' | |

# RETAINING WALL FOUNDATION PLAN
**(GRE WALL)** **("RW14")**

SCALE AS SHOWN

**R4-3**

*APPROVED FOR RETAINING WALL WORK ONLY*

STATE OF CALIFORNIA - DEPARTMENT OF TRANSPORTATION
Caltrans ENGINEERING SERVICES

FUNCTIONAL SUPERVISOR: BRIAN HINMAN
CALCULATED-DESIGNED BY: MIKE FORDHAM
CHECKED BY
REVISED BY
DATE REVISED

LAST REVISION 07-22-14
DATE PLOTTED => 24-JUL-2014
TIME PLOTTED => 09:06

| Dist | COUNTY | ROUTE | POST MILES TOTAL PROJECT | SHEET No. | TOTAL SHEETS |
|---|---|---|---|---|---|
| 11 | SD | 5 | R29.1/R30.5 | 612 | 1012 |

REGISTERED CIVIL ENGINEER DATE 05-23-14

07-21-14
PLANS APPROVAL DATE

REGISTERED PROFESSIONAL ENGINEER Michael M. Fordham No. C61341 Exp. 6-30-15 CIVIL STATE OF CALIFORNIA

*THE STATE OF CALIFORNIA OR ITS OFFICERS OR AGENTS SHALL NOT BE RESPONSIBLE FOR THE ACCURACY OR COMPLETENESS OF SCANNED COPIES OF THIS PLAN SHEET.*

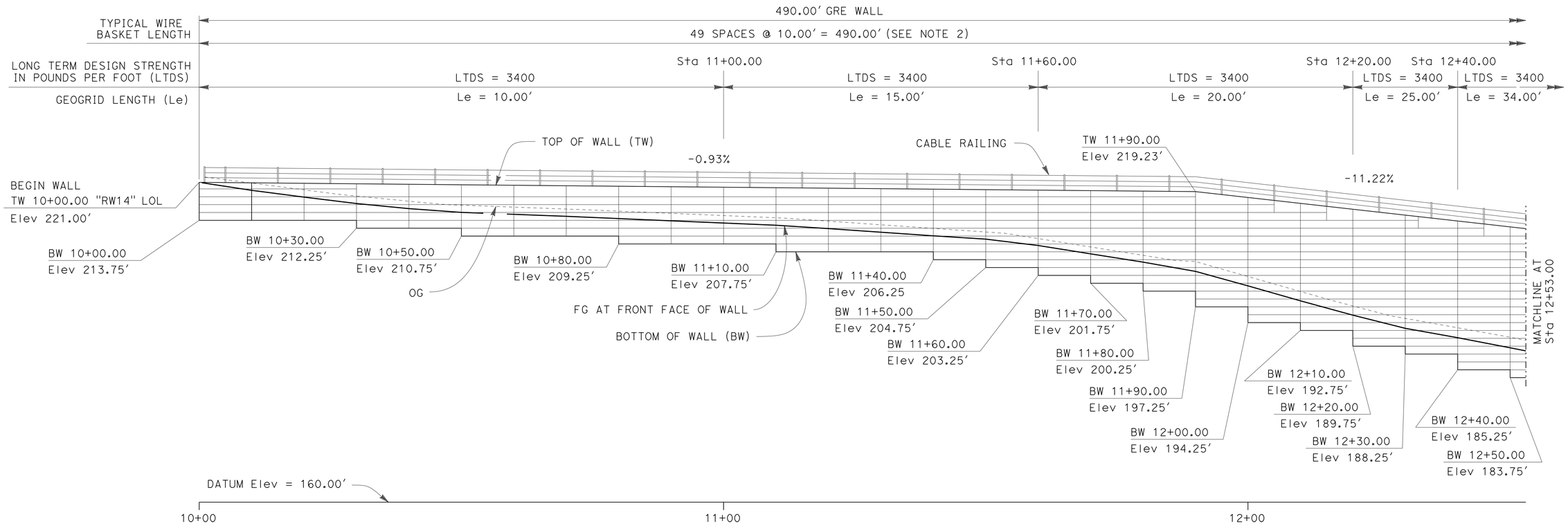


**MIRRORED DEVELOPED ELEVATION**

SCALE 1" = 10'

NOTES:

1. FOR BASKET VERTICAL SPACING, SEE FACING DETAIL ON RETAINING WALL DETAILS SHEET
2. FOR TOP ROWS OF WIRE BASKET DETAILS, SEE WIRE BASKET INSTALLATION DETAIL ON INDEX TO PLANS SHEET

*APPROVED FOR RETAINING WALL WORK ONLY*

# RETAINING WALL STRUCTURE ELEVATION No. 1 ("RW14")

**(GRE WALL)**

SCALE AS SHOWN

**R4-4**

REVISED BY | DATE REVISED

MIKE FORDHAM

CALCULATED-DESIGNED BY | CHECKED BY

FUNCTIONAL SUPERVISOR

BRIAN HINMAN

STATE OF CALIFORNIA - DEPARTMENT OF TRANSPORTATION

Caltrans ENGINEERING SERVICES

LAST REVISION 07-12-14 | DATE PLOTTED => 23-JUL-2014 | TIME PLOTTED => 14:50

| Dist | COUNTY | ROUTE | POST MILES TOTAL PROJECT | SHEET No. | TOTAL SHEETS |
|---|---|---|---|---|---|
| 11 | SD | 5 | R29.1/R30.5 | 613 | 1012 |

Michael M. Fordham 05-23-14
REGISTERED CIVIL ENGINEER DATE

07-21-14
PLANS APPROVAL DATE

REGISTERED PROFESSIONAL ENGINEER
Michael M. Fordham
No. C61341
Exp. 6-30-15
CIVIL
STATE OF CALIFORNIA

*THE STATE OF CALIFORNIA OR ITS OFFICERS OR AGENTS SHALL NOT BE RESPONSIBLE FOR THE ACCURACY OR COMPLETENESS OF SCANNED COPIES OF THIS PLAN SHEET.*

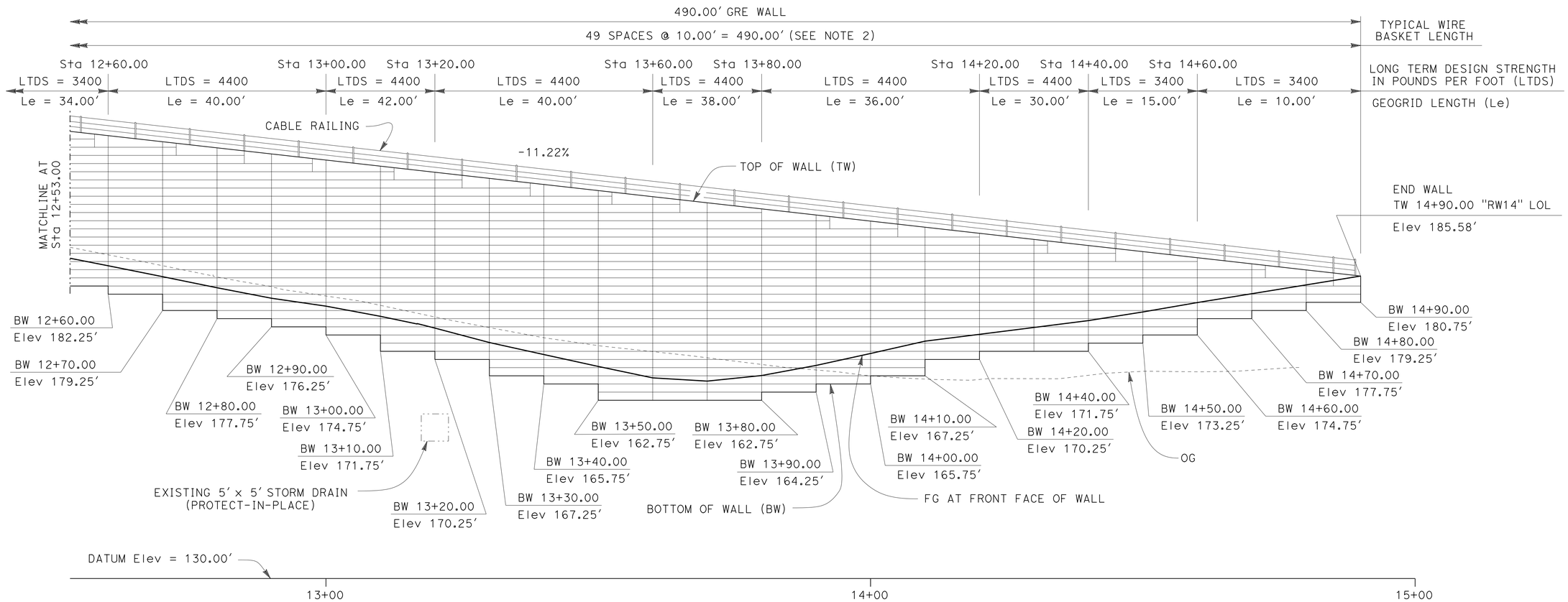


**MIRRORED DEVELOPED ELEVATION**
SCALE 1" = 10'

NOTES:

1. FOR BASKET VERTICAL SPACING, SEE FACING DETAIL ON RETAINING WALL DETAILS SHEET
2. FOR TOP ROWS OF WIRE BASKET DETAILS, SEE WIRE BASKET INSTALLATION DETAIL ON INDEX TO PLANS SHEET

*APPROVED FOR RETAINING WALL WORK ONLY*

# RETAINING WALL STRUCTURE ELEVATION No. 2
**(GRE WALL)** **("RW14")**

SCALE AS SHOWN

**R4-5**

REVISED BY | DATE REVISED
MIKE FORDHAM
CALCULATED-DESIGNED BY | CHECKED BY
FUNCTIONAL SUPERVISOR
BRIAN HINMAN
STATE OF CALIFORNIA - DEPARTMENT OF TRANSPORTATION
Caltrans® ENGINEERING SERVICES

LAST REVISION 07-12-14 | DATE PLOTTED => 23-JUL-2014 | TIME PLOTTED => 14:50

| Dist | COUNTY | ROUTE | POST MILES TOTAL PROJECT | SHEET No. | TOTAL SHEETS |
|---|---|---|---|---|---|
| 11 | SD | 5 | R29.1/R30.5 | 614 | 1012 |

REGISTERED CIVIL ENGINEER 05-23-14 DATE

07-21-14
PLANS APPROVAL DATE

*THE STATE OF CALIFORNIA OR ITS OFFICERS OR AGENTS SHALL NOT BE RESPONSIBLE FOR THE ACCURACY OR COMPLETENESS OF SCANNED COPIES OF THIS PLAN SHEET.*

REGISTERED PROFESSIONAL ENGINEER Michael M. Fordham No. C61341 Exp. 6-30-15 CIVIL STATE OF CALIFORNIA

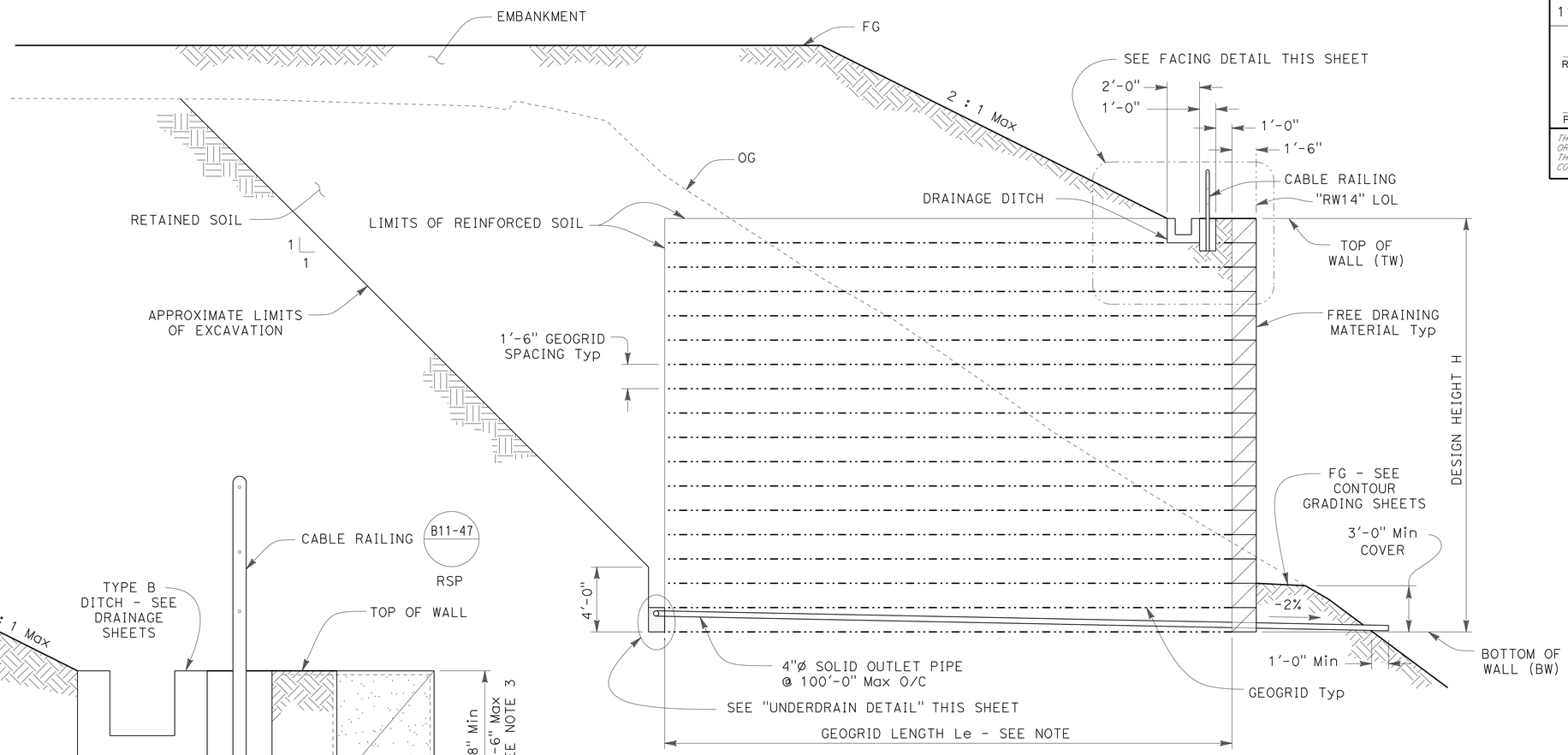


NOTE: FOR GEOGRID LENGTH LE, SEE STRUCTURE ELEVATION SHEETS

## TYPICAL SECTION

NO SCALE

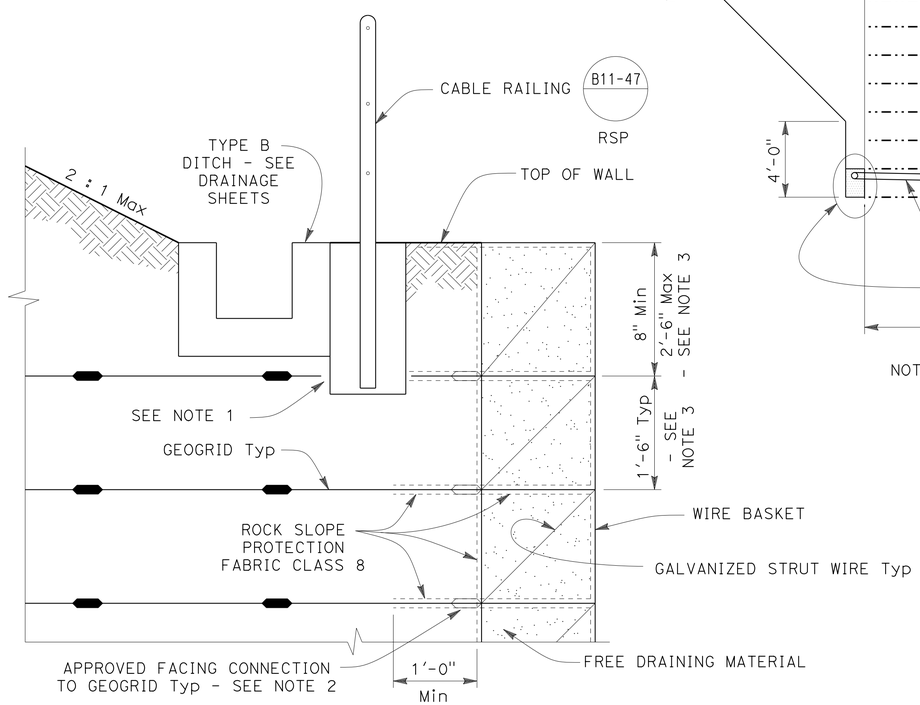


NOTES:

1. WHERE RAILING POST POCKETS INTERFERE WITH GEOGRIDS, PRECUT AFFECTED LAYER OF REINFORCEMENT. THE PRECUT DIMENSIONS MUST NOT EXCEED RAILING POST FOUNDATION DIMENSIONS BY MORE THAN 1'-0".
2. CONNECTION SHALL BE CORROSION RESISTANT
3. FOR TOP ROWS OF WIRE BASKET DETAILS, SEE WIRE BASKET INSTALLATION DETAIL ON INDEX TO PLANS SHEET

## FACING DETAIL

SCALE 1" = 1'

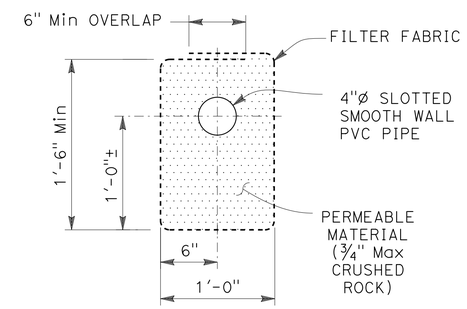


## UNDERDRAIN DETAIL

SCALE 1½" = 1'

*APPROVED FOR RETAINING WALL WORK ONLY*

# RETAINING WALL DETAILS No. 1

**(GRE WALL)** **("RW14")**

SCALE AS SHOWN

**R4-6**

STATE OF CALIFORNIA - DEPARTMENT OF TRANSPORTATION
Caltrans® ENGINEERING SERVICES

FUNCTIONAL SUPERVISOR: BRIAN HINMAN
CALCULATED-DESIGNED BY: MIKE FORDHAM
CHECKED BY
REVISED BY
DATE REVISED

LAST REVISION 07-12-14
DATE PLOTTED => 23-JUL-2014
TIME PLOTTED => 14:50

| Dist | COUNTY | ROUTE | POST MILES TOTAL PROJECT | SHEET No. | TOTAL SHEETS |
|---|---|---|---|---|---|
| 11 | SD | 5 | R29.1/R30.5 | 615 | 1012 |

REGISTERED CIVIL ENGINEER 05-23-14 DATE

07-21-14
PLANS APPROVAL DATE

REGISTERED PROFESSIONAL ENGINEER Michael M. Fordham No. C61341 Exp. 6-30-15 CIVIL STATE OF CALIFORNIA

*THE STATE OF CALIFORNIA OR ITS OFFICERS OR AGENTS SHALL NOT BE RESPONSIBLE FOR THE ACCURACY OR COMPLETENESS OF SCANNED COPIES OF THIS PLAN SHEET.*

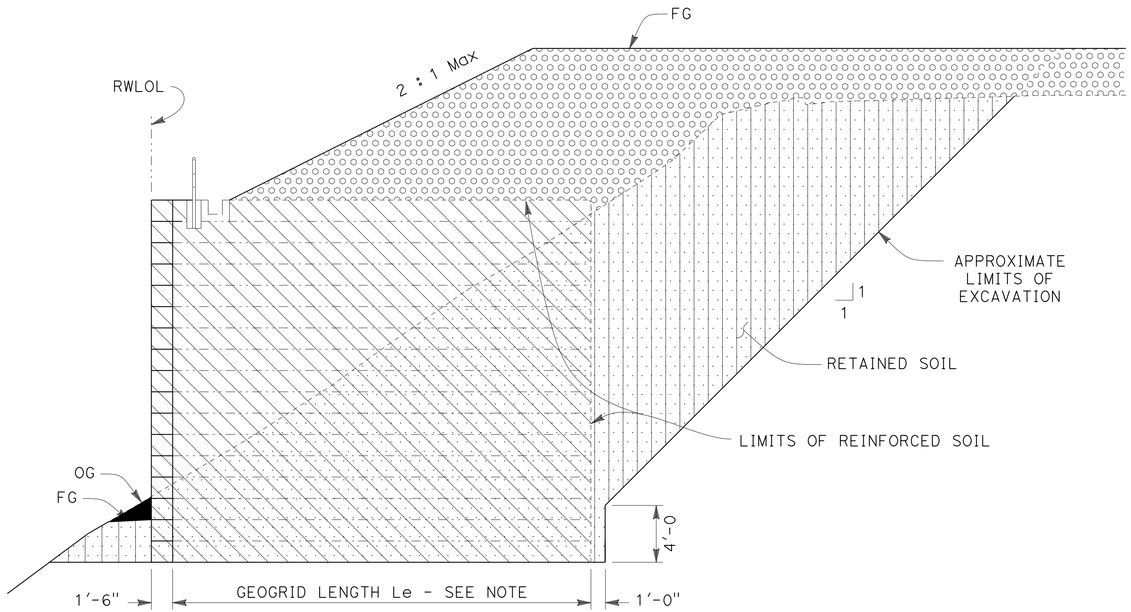


ROADWAY EMBANKMENT | ROADWAY EXCAVATION | GRE WALL EXCAVATION | GRE WALL BACKFILL (RETAINED SOIL) | GRE WALL BACKFILL (REINFORCED SOIL)

NOTE: FOR GEOGRID LENGTH Le SEE STRUCTURE ELEVATION SHEETS.

**LIMITS OF PAYMENT FOR EXCAVATION AND BACKFILL - IN FILL AND CUT**

NO SCALE

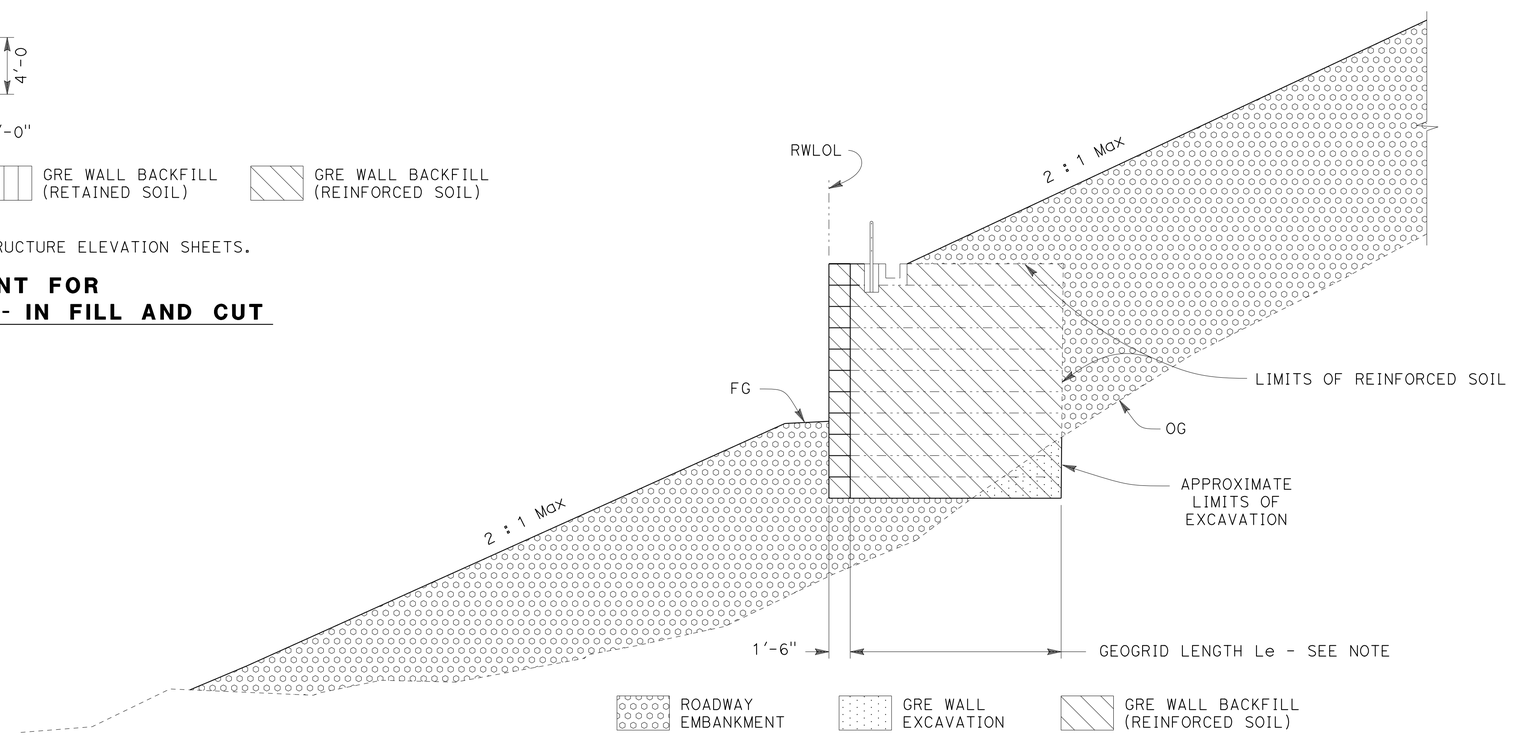


ROADWAY EMBANKMENT | GRE WALL EXCAVATION | GRE WALL BACKFILL (REINFORCED SOIL)

NOTE: FOR GEOGRID LENGTH Le SEE STRUCTURE ELEVATION SHEETS.

**LIMITS OF PAYMENT FOR EXCAVATION AND BACKFILL - IN FILL**

NO SCALE

*APPROVED FOR RETAINING WALL WORK ONLY*

# RETAINING WALL DETAILS No. 2
**(GRE WALL)** **("RW14")**

SCALE AS SHOWN

**R4-7**

STATE OF CALIFORNIA - DEPARTMENT OF TRANSPORTATION
Caltrans® ENGINEERING SERVICES

FUNCTIONAL SUPERVISOR: BRIAN HINMAN
CALCULATED-DESIGNED BY: MIKE FORDHAM
CHECKED BY
REVISED BY
DATE REVISED

LAST REVISION 07-12-14
DATE PLOTTED => 23-JUL-2014
TIME PLOTTED => 14:50

| Dist | COUNTY | ROUTE | POST MILES TOTAL PROJECT | SHEET No. | TOTAL SHEETS |
|---|---|---|---|---|---|
| 11 | SD | 5 | R29.1/R30.5 | 616 | 1012 |

Michael M. Fordham 05-23-14
REGISTERED CIVIL ENGINEER DATE

07-21-14
PLANS APPROVAL DATE

REGISTERED PROFESSIONAL ENGINEER
Michael M. Fordham
No. C61341
Exp. 6-30-15
CIVIL
STATE OF CALIFORNIA

*THE STATE OF CALIFORNIA OR ITS OFFICERS OR AGENTS SHALL NOT BE RESPONSIBLE FOR THE ACCURACY OR COMPLETENESS OF SCANNED COPIES OF THIS PLAN SHEET.*

## RETAINING WALL QUANTITIES (GRE WALL)

| WALL | LINE | STATION RANGE | | LENGTH | GRE WALL | CABLE RAILING | REMARKS |
|---|---|---|---|---|---|---|---|
| | | BEGIN | END | LF | SQ FT | LF | |
| 14 | "RW14" | 10+00.00 | 14+90.00 | 490.0 | 10,080.0 | 490.0 | |

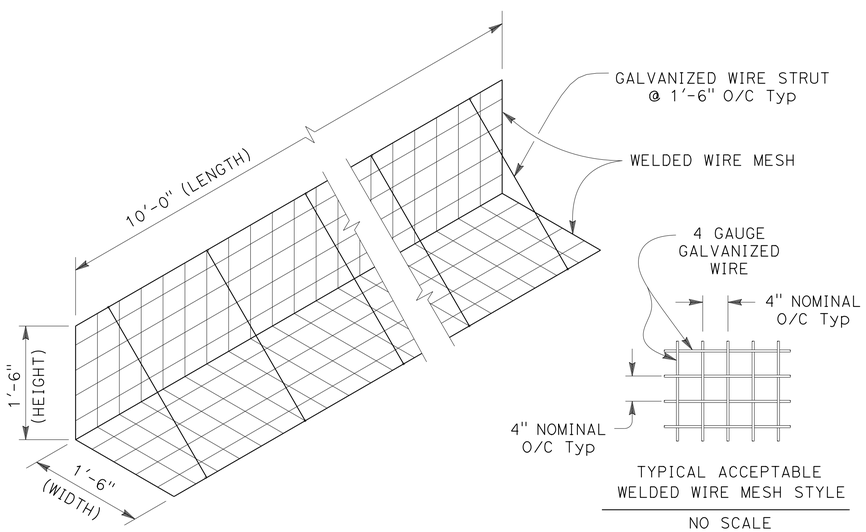


**TYPICAL WIRE BASKET DETAIL**
SCALE ¾" = 1'

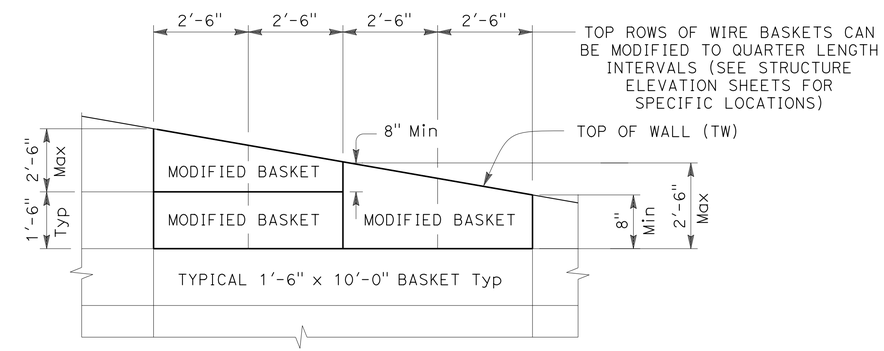


NOTE: TOP ROW OF WIRE BASKETS SHALL BE NO TALLER THAN 2'-6", AND NO SHORTER THAN 8".

**WIRE BASKET INSTALLATION DETAIL**
NO SCALE

*APPROVED FOR RETAINING WALL WORK ONLY*

# RETAINING WALL DETAILS No. 3
**(GRE WALL) ("RW14")**

SCALE AS SHOWN

**R4-8**

STATE OF CALIFORNIA - DEPARTMENT OF TRANSPORTATION
Caltrans ENGINEERING SERVICES
FUNCTIONAL SUPERVISOR: BRIAN HINMAN
CALCULATED-DESIGNED BY: MIKE FORDHAM
CHECKED BY
REVISED BY
DATE REVISED

LAST REVISION 07-12-14
DATE PLOTTED => 23-JUL-2014
TIME PLOTTED => 14:50

| Dist | COUNTY | ROUTE | POST MILES TOTAL PROJECT | SHEET No. | TOTAL SHEETS |
|---|---|---|---|---|---|
| 11 | SD | 5 | R29.1/R30.5 | 617 | 1012 |

Michael M. Fordham 05-23-14
REGISTERED CIVIL ENGINEER DATE

07-21-14
PLANS APPROVAL DATE

REGISTERED PROFESSIONAL ENGINEER Michael M. Fordham No. C61341 Exp. 6-30-15 CIVIL STATE OF CALIFORNIA

*THE STATE OF CALIFORNIA OR ITS OFFICERS OR AGENTS SHALL NOT BE RESPONSIBLE FOR THE ACCURACY OR COMPLETENESS OF SCANNED COPIES OF THIS PLAN SHEET.*

This LOTB sheet was prepared in accordance with the Caltrans Soil & Rock Logging, Classification, & Presentation Manual (2010 Edition).
Except the assignment of the hole identification as described in section 2.4

Note: No ground water encountered during field investigation

## BENCH MARK

5-28.41
Elev 287.78
Located at the intersection of I-5 and La Jolla Village Dr, set in sidewalk near southeast corner of La Jolla Village Dr Bridge over I-5.
NAVD 88

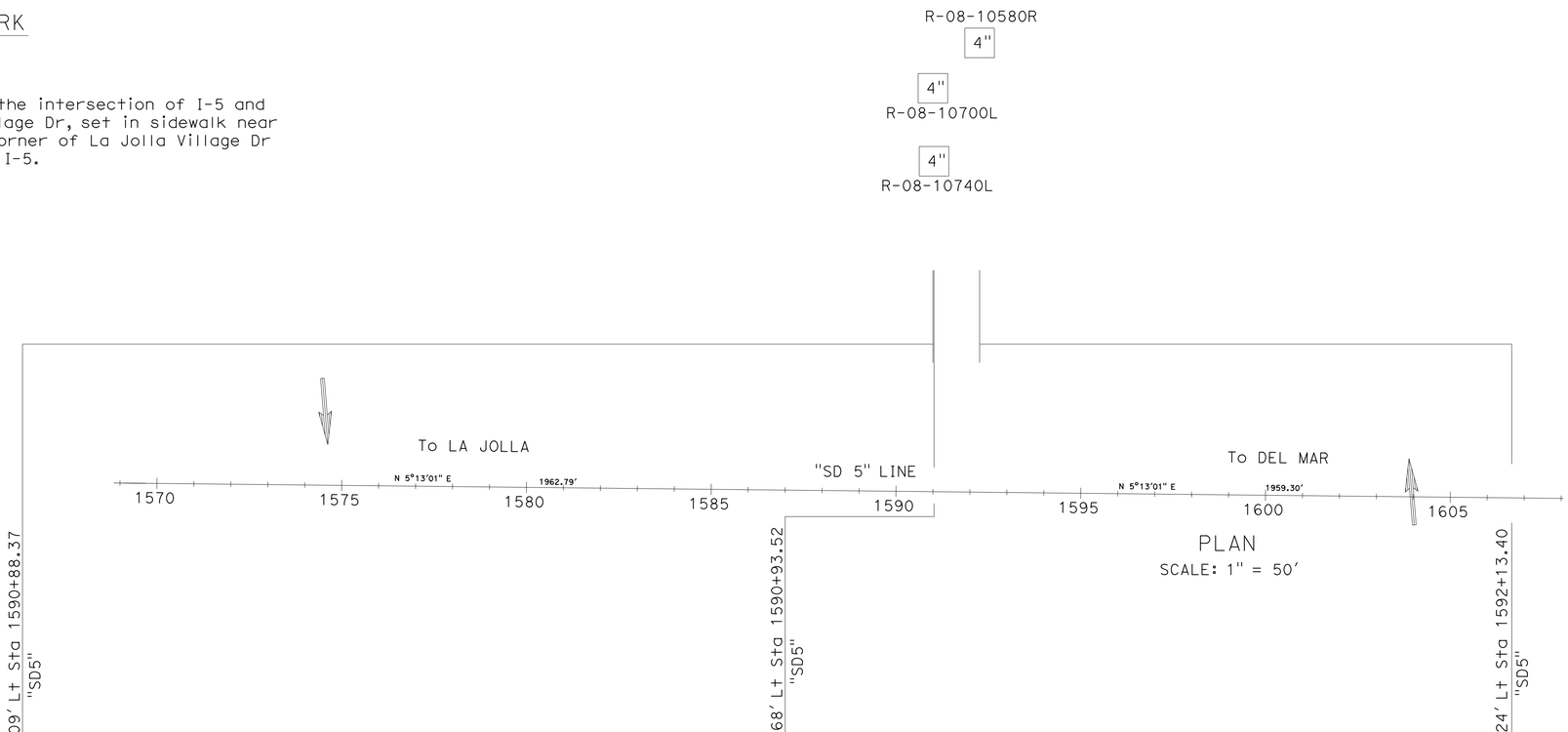


### R-08-10700L

227.3'

| Blows | Depth | Description |
|---|---|---|
| 8 | 1.4 | Silty SAND/Clayey SAND (SM/SC); medium dense; light brown; moist; fine to medium SAND (FILL). |
| 14 | 1.4 | |
| 22 | 1.4 | Silty SAND (SM); dense; light brown; moist; fine SAND. |
| 27 | 1.4 | trace fine subangular GRAVEL (shale fragments) |
| 20 | 1.4 | medium dense |
| 27 | 1.4 | Silty SAND with COBBLES (SM); dense; light brown; moist; few subrounded COBBLES; medium to fine SAND; some fines. |
| 12 | 1.4 | Silty SAND with COBBLES (SM); medium dense; light brown; moist; trace subrounded COBBLES; trace coarse GRAVEL; fine to medium SAND; some fines. |
| 33 | 1.4 | SEDIMENTARY ROCK (shale); fine grained; laminated; light to medium gray; slightly weathered; hard; unfractured. |
| 34 | 1.4 | |
| 60 | 1.4 | |
| 119 | 1.4 | |

07/23/2009
Terminated at Elev 176.1'
ERi=84%

### R-08-10740L

229.3'

| Blows | Depth | Description |
|---|---|---|
| 26 | 1.4 | Silty SAND (SM); light brown; moist; medium to fine SAND; some fines (FILL). |
| 25 | 1.4 | dense |
| 31 | 1.4 | trace fine GRAVEL |
| 17 | 1.4 | medium dense |
| 41 | 1.4 | very dense |
| 28 | 1.4 | dense |
| 33 | 1.4 | |
| 24 | 1.4 | |
| 39 | 1.4 | very dense |
| 37 | 1.4 | CLAYEY SAND (SC) ; very dense; light brown to light gray; moist; medium to fine SAND; little fines. |
| 53 | 1.4 | Silty SAND (SM) ; very dense; dark brown; moist; trace fine GRAVEL; medium to fine SAND; some fines. |
| 39 | 1.4 | |
| 36 | 1.4 | |
| 42 | 1.4 | |

07/22/2008
Terminated at Elev 159.8'
ERi=84%

### R-08-10580R

226.7'

| Blows | Depth | Description |
|---|---|---|
| 37 | 1.4 | Silty SAND/Clayey SAND (SM/SC); Stiff, dense; light brown; moist; trace fine GRAVEL; fine to medium SAND; some fines (FILL). |
| 26 | 1.4 | |
| 29 | 1.4 | Silty SAND (SM); dense; light brown; moist; trace GRAVEL; medium to fine SAND; some fines. |
| 36 | 1.4 | very dense |
| 30 | 1.4 | dense |
| 21 | 1.4 | Silty SAND with COBBLES (SM); MEDIUM dense; light brown; moist; trace subrounded COBBLES; medium to fine SAND; some fines. |
| 16 | 1.4 | Clayey SAND (SC) ; medium dense; light brown; moist; medium to fine SAND (ALLUVIUM). |
| 27 | 1.4 | SEDIMENTARY ROCK (shale); fine-grained; laminated; light to medium gray; slightly weathered; moderately soft; unfractured. |
| 48 | 1.4 | |

07/22/2008
Terminated at Elev 182.2'
ERi=84%

220
200
180
160

PROFILE
Horiz: 1" = 50'
Vert: 1" = 20'

*APPROVED FOR RETAINING WALL WORK ONLY*

# RETAINING WALL LOG OF TEST BORINGS
## (GRE WALL) ("RW14")

SCALE AS SHOWN

**R4-9**

STATE OF CALIFORNIA - DEPARTMENT OF TRANSPORTATION
Caltrans ENGINEERING SERVICES
FUNCTIONAL SUPERVISOR: BRIAN HINMAN
MIKE FORDHAM
CALCULATED-DESIGNED BY
CHECKED BY
REVISED BY
DATE REVISED

LAST REVISION 07-12-14
DATE PLOTTED => 23-JUL-2014
TIME PLOTTED => 14:50

| Dist | COUNTY | ROUTE | POST MILES TOTAL PROJECT | SHEET No. | TOTAL SHEETS |
|---|---|---|---|---|---|
| 11 | SD | 5 | R29.1/R30.5 | 618 | 1012 |

Michael M. Fordham 05-23-14
REGISTERED CIVIL ENGINEER DATE

07-21-14
PLANS APPROVAL DATE

REGISTERED PROFESSIONAL ENGINEER
Michael M. Fordham
No. C61341
Exp. 6-30-15
CIVIL
STATE OF CALIFORNIA

*THE STATE OF CALIFORNIA OR ITS OFFICERS OR AGENTS SHALL NOT BE RESPONSIBLE FOR THE ACCURACY OR COMPLETENESS OF SCANNED COPIES OF THIS PLAN SHEET.*

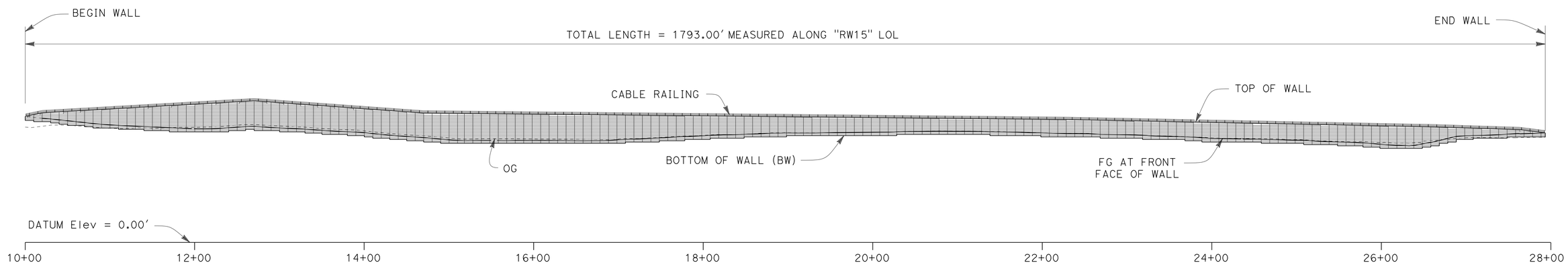


## MIRRORED DEVELOPED ELEVATION

SCALE 1" = 60′

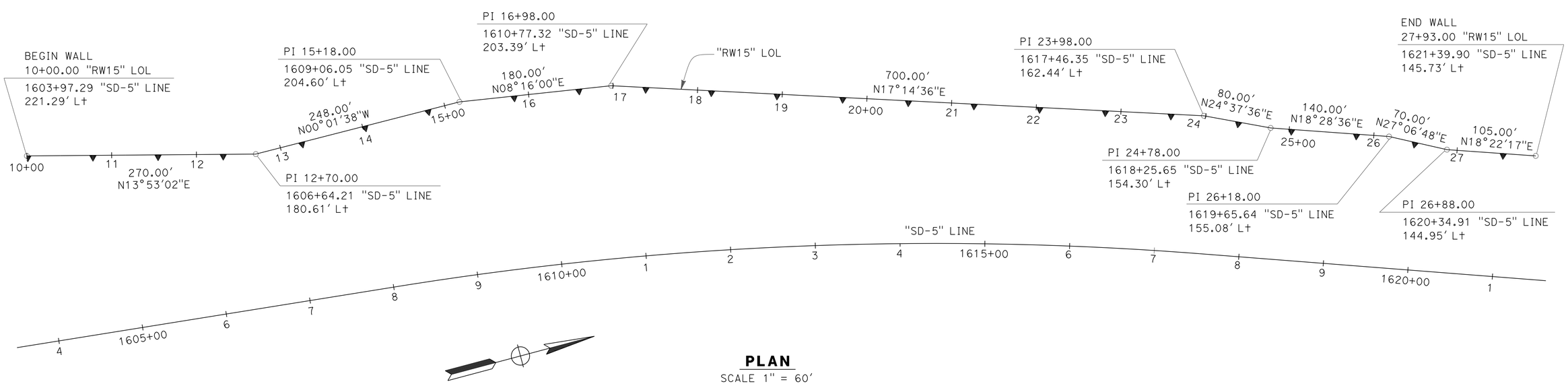


## PLAN

SCALE 1" = 60′

NOTE: FOR GENERAL NOTES, INDEX TO PLANS, AND STANDARD PLANS, SEE INDEX TO PLANS SHEET

*APPROVED FOR RETAINING WALL WORK ONLY*

# RETAINING WALL GENERAL PLAN
**(GRE WALL)** **("RW15")**

SCALE AS SHOWN

**R5-1**

REVISED BY | DATE REVISED
MIKE FORDHAM
CALCULATED-DESIGNED BY | CHECKED BY
FUNCTIONAL SUPERVISOR
BRIAN HINMAN

STATE OF CALIFORNIA - DEPARTMENT OF TRANSPORTATION
Caltrans® ENGINEERING SERVICES

LAST REVISION 07-12-14
DATE PLOTTED => 23-JUL-2014
TIME PLOTTED => 14:50

| Dist | COUNTY | ROUTE | POST MILES TOTAL PROJECT | SHEET No. | TOTAL SHEETS |
|---|---|---|---|---|---|
| 11 | SD | 5 | R29.1/R30.5 | 619 | 1012 |

Michael M. Fordham 05-23-14
REGISTERED CIVIL ENGINEER DATE

07-21-14
PLANS APPROVAL DATE

REGISTERED PROFESSIONAL ENGINEER Michael M. Fordham No. C61341 Exp. 6-30-15 CIVIL STATE OF CALIFORNIA

*THE STATE OF CALIFORNIA OR ITS OFFICERS OR AGENTS SHALL NOT BE RESPONSIBLE FOR THE ACCURACY OR COMPLETENESS OF SCANNED COPIES OF THIS PLAN SHEET.*

## GENERAL NOTES

DESIGN OF REINFORCED SOIL STRUCTURE IS BASED ON THE FOLLOWING PARAMETERS:

| | | |
|---|---|---|
| SOIL PARAMETERS: | SOIL UNIT WEIGHT, $\gamma_S$= | 121 pcf |
| | SOIL FRICTION ANGLE, $\phi$ = | 33° |
| | SOIL COHESION, C = | 120 psf |
| SEISMIC LOADING: | PGA = | 0.45 g |
| | Kh = | 0.15 |

GEOTECHNICAL PARAMETERS USED FOR DESIGN SHALL BE CONFIRMED BY GEOTECHNICAL ENGINEER PRIOR TO WALL CONSTRUCTION.

INTERNAL STABILITY OF WALLS:

| | |
|---|---|
| MINIMUM FACTOR OF SAFETY ON GEOGRID STRENGTH = | 1.5 |
| MINIMUM FACTOR OF SAFETY ON GEOGRID PULLOUT = | 1.5 |
| PERCENT COVERAGE OF GEOGRID = | 100% |

EXTERNAL STABILITY:

| | |
|---|---|
| MINIMUM FACTOR OF SAFETY AGAINST BASE SLIDING = | 1.5 |
| MINIMUM FACTOR OF SAFETY AGAINST OVERTURNING = | 2.0 |
| MINIMUM FACTOR OF SAFETY AGAINST SOIL BEARING OVERSTRESS = | 2.0 |
| BACKFILL SLOPE = | AS SHOWN ON SITE PLAN |

GLOBAL STABILITY (CONFIRMED BY GEOTECHNICAL ENGINEER):

| | |
|---|---|
| MINIMUM FACTOR OF SAFETY AGAINST STATIC GLOBAL STABILITY = | 1.5 |
| MINIMUM FACTOR OF SAFETY AGAINST SEISMIC GLOBAL STABILITY = | 1.1 |

## STANDARD PLANS DATED JUNE 2010

| | | |
|---|---|---|
| | A10A | ABBREVIATIONS (SHEET 1 OF 2) |
| RSP | A10B | ABBREVIATIONS (SHEET 2 OF 2) |
| | A10C | LINES AND SYMBOLS (SHEET 1 OF 3) |
| | A10D | LINES AND SYMBOLS (SHEET 2 OF 3) |
| | A10E | LINES AND SYMBOLS (SHEET 3 OF 3) |
| RSP | B11-47 | CABLE RAILING |

## PLAN SYMBOLS

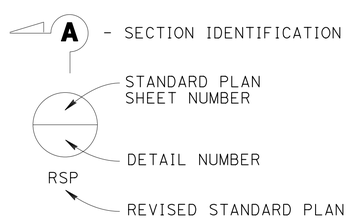


## LEGEND

GRE GEOSYNTHETIC REINFORCED EMBANKMENT

## INDEX TO RETAINING WALL PLANS


| SHEET NUMBER | DESCRIPTION |
|---|---|
| 1 | RETAINING WALL GENERAL PLAN |
| 2 | RETAINING WALL INDEX TO PLANS |
| 3 | RETAINING WALL FOUNDATION PLAN |
| 4 | RETAINING WALL STRUCTURE ELEVATION No. 1 |
| 5 | RETAINING WALL STRUCTURE ELEVATION No. 2 |
| 6 | RETAINING WALL STRUCTURE ELEVATION No. 3 |
| 7 | RETAINING WALL STRUCTURE ELEVATION No. 4 |
| 8 | RETAINING WALL DETAILS No. 1 |
| 9 | RETAINING WALL DETAILS No. 2 |
| 10 | RETAINING WALL DETAILS No. 3 |
| 11 | RETAINING WALL LOG OF TEST BORINGS |


*APPROVED FOR RETAINING WALL WORK ONLY*

# RETAINING WALL INDEX TO PLANS
(GRE WALL) ("RW15")

SCALE AS SHOWN

**R5-2**

STATE OF CALIFORNIA - DEPARTMENT OF TRANSPORTATION
Caltrans® ENGINEERING SERVICES

FUNCTIONAL SUPERVISOR: BRIAN HINMAN
CALCULATED-DESIGNED BY: MIKE FORDHAM
CHECKED BY
REVISED BY
DATE REVISED

LAST REVISION 07-12-14
DATE PLOTTED => 23-JUL-2014
TIME PLOTTED => 14:50

| Dist | COUNTY | ROUTE | POST MILES TOTAL PROJECT | SHEET No. | TOTAL SHEETS |
|---|---|---|---|---|---|
| 11 | SD | 5 | R29.1/R30.5 | 620 | 1012 |

Michael M. Fordham 05-23-14
REGISTERED CIVIL ENGINEER DATE

07-21-14
PLANS APPROVAL DATE

REGISTERED PROFESSIONAL ENGINEER
Michael M. Fordham
No. C61341
Exp. 6-30-15
CIVIL
STATE OF CALIFORNIA

*THE STATE OF CALIFORNIA OR ITS OFFICERS OR AGENTS SHALL NOT BE RESPONSIBLE FOR THE ACCURACY OR COMPLETENESS OF SCANNED COPIES OF THIS PLAN SHEET.*

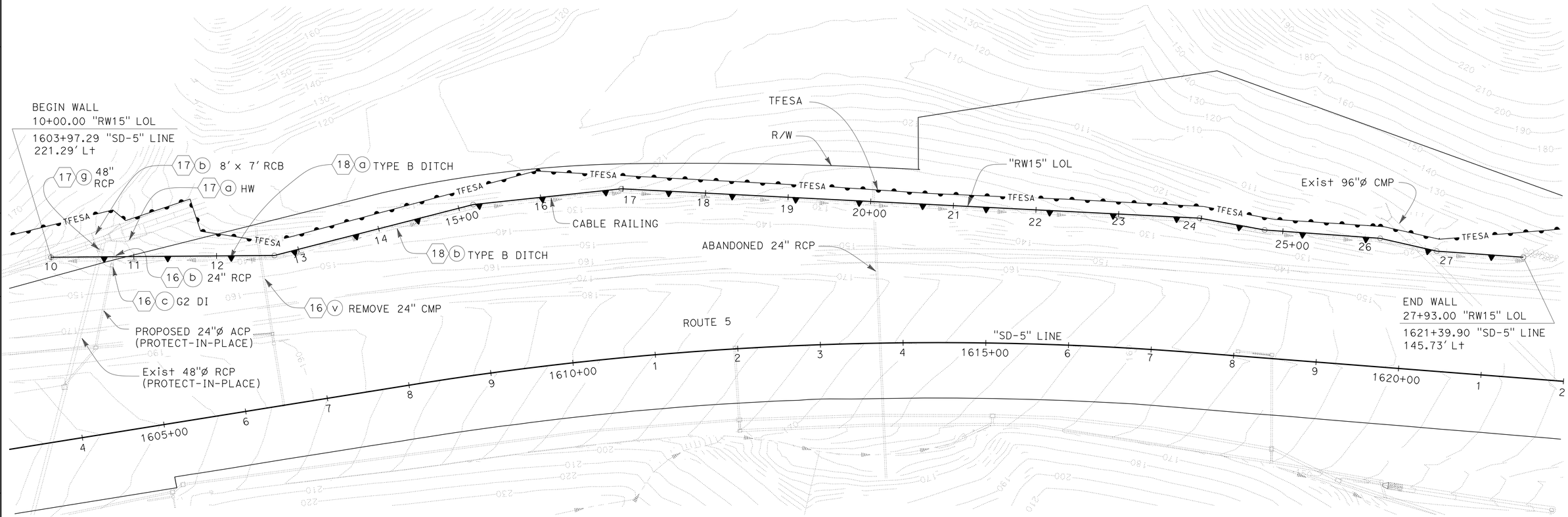


**PLAN**
SCALE 1" = 60'

## BENCHMARK

CONTROL SURVEY:

| BM #1 5-29.46 | BM #2 5-29.85 |
|---|---|
| 2 1/4" CADT BRASS DISK | 2 1/4" CADT BRASS DISK |
| LABELED "5-29.46 1993" | LABELED "5-29.85 1993" |
| N 1,903,968.24 | N 1,906,025.08 |
| E 6,261,597.31 | E 6,261,710.00 |
| Elev = 270.07' | Elev = 183.12' |

*APPROVED FOR RETAINING WALL WORK ONLY*

# RETAINING WALL FOUNDATION PLAN
**(GRE WALL)** **("RW15")**

SCALE AS SHOWN

**R5-3**

STATE OF CALIFORNIA - DEPARTMENT OF TRANSPORTATION
Caltrans® ENGINEERING SERVICES

FUNCTIONAL SUPERVISOR: BRIAN HINMAN
CALCULATED-DESIGNED BY: MIKE FORDHAM
CHECKED BY
REVISED BY
DATE REVISED

LAST REVISION 07-22-14
DATE PLOTTED => 24-JUL-2014
TIME PLOTTED => 09:06

| Dist | COUNTY | ROUTE | POST MILES TOTAL PROJECT | SHEET No. | TOTAL SHEETS |
|---|---|---|---|---|---|
| 11 | SD | 5 | R29.1/R30.5 | 621 | 1012 |

Michael M. Fordham 05-23-14
REGISTERED CIVIL ENGINEER DATE

07-21-14
PLANS APPROVAL DATE

REGISTERED PROFESSIONAL ENGINEER Michael M. Fordham No. C61341 Exp. 6-30-15 CIVIL STATE OF CALIFORNIA

*THE STATE OF CALIFORNIA OR ITS OFFICERS OR AGENTS SHALL NOT BE RESPONSIBLE FOR THE ACCURACY OR COMPLETENESS OF SCANNED COPIES OF THIS PLAN SHEET.*

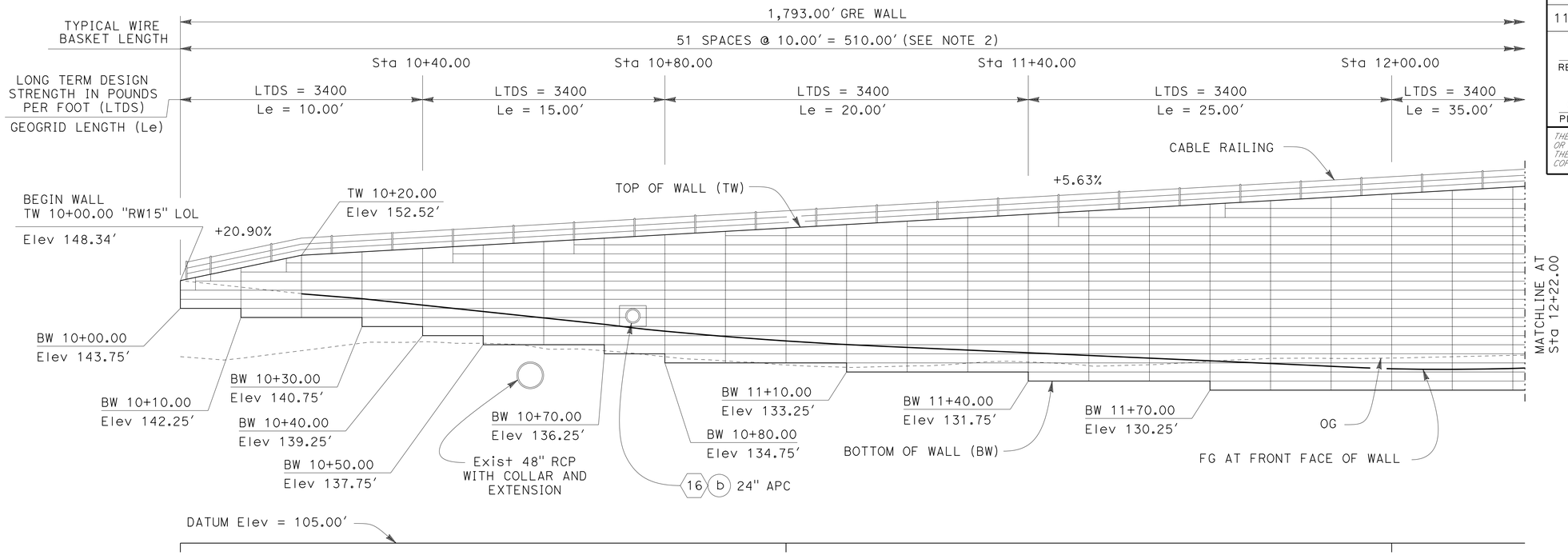


**MIRRORED DEVELOPED ELEVATION**
SCALE 1" = 10'

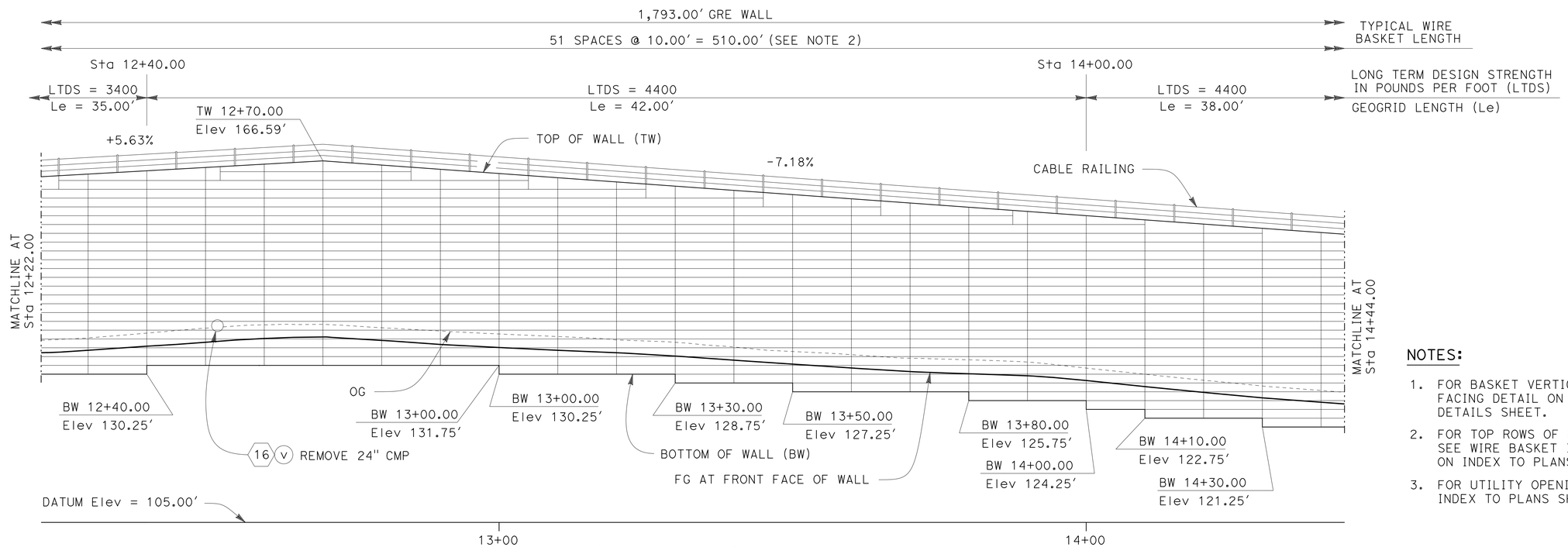


**MIRRORED DEVELOPED ELEVATION**
SCALE 1" = 10'

*APPROVED FOR RETAINING WALL WORK ONLY*

NOTES:

1. FOR BASKET VERTICAL SPACING, SEE FACING DETAIL ON RETAINING WALL DETAILS SHEET.
2. FOR TOP ROWS OF WIRE BASKET DETAILS, SEE WIRE BASKET INSTALLATION DETAIL ON INDEX TO PLANS SHEET.
3. FOR UTILITY OPENING DETAILS, SEE INDEX TO PLANS SHEET.

# RETAINING WALL STRUCTURE ELEVATION No. 1
**(GRE WALL)** **("RW15")**

SCALE AS SHOWN

**R5-4**

REVISED BY | DATE REVISED
MIKE FORDHAM
CALCULATED-DESIGNED BY | CHECKED BY
FUNCTIONAL SUPERVISOR
BRIAN HINMAN

STATE OF CALIFORNIA - DEPARTMENT OF TRANSPORTATION
Caltrans® ENGINEERING SERVICES

LAST REVISION 07-12-14 | DATE PLOTTED => 23-JUL-2014 | TIME PLOTTED => 14:50

| Dist | COUNTY | ROUTE | POST MILES TOTAL PROJECT | SHEET No. | TOTAL SHEETS |
|---|---|---|---|---|---|
| 11 | SD | 5 | R29.1/R30.5 | 622 | 1012 |

Michael M. Fordham 05-23-14
REGISTERED CIVIL ENGINEER DATE

07-21-14
PLANS APPROVAL DATE

REGISTERED PROFESSIONAL ENGINEER Michael M. Fordham No. C61341 Exp. 6-30-15 CIVIL STATE OF CALIFORNIA

*THE STATE OF CALIFORNIA OR ITS OFFICERS OR AGENTS SHALL NOT BE RESPONSIBLE FOR THE ACCURACY OR COMPLETENESS OF SCANNED COPIES OF THIS PLAN SHEET.*

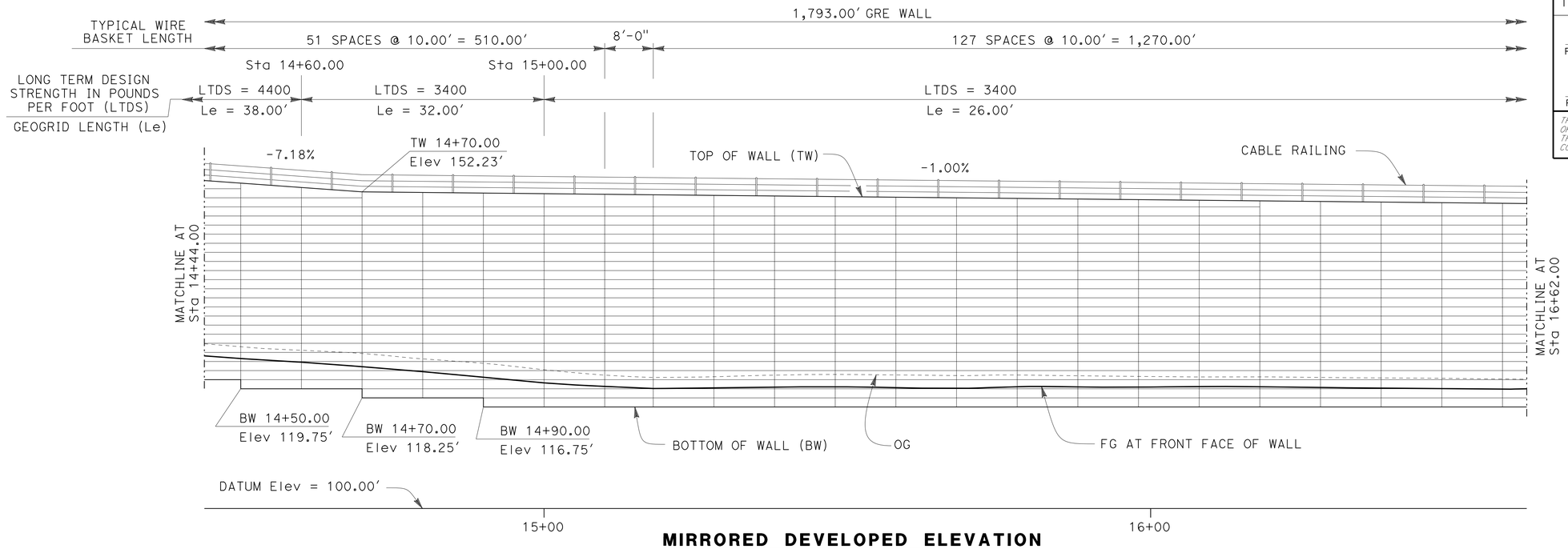


**MIRRORED DEVELOPED ELEVATION**

SCALE 1" = 10'

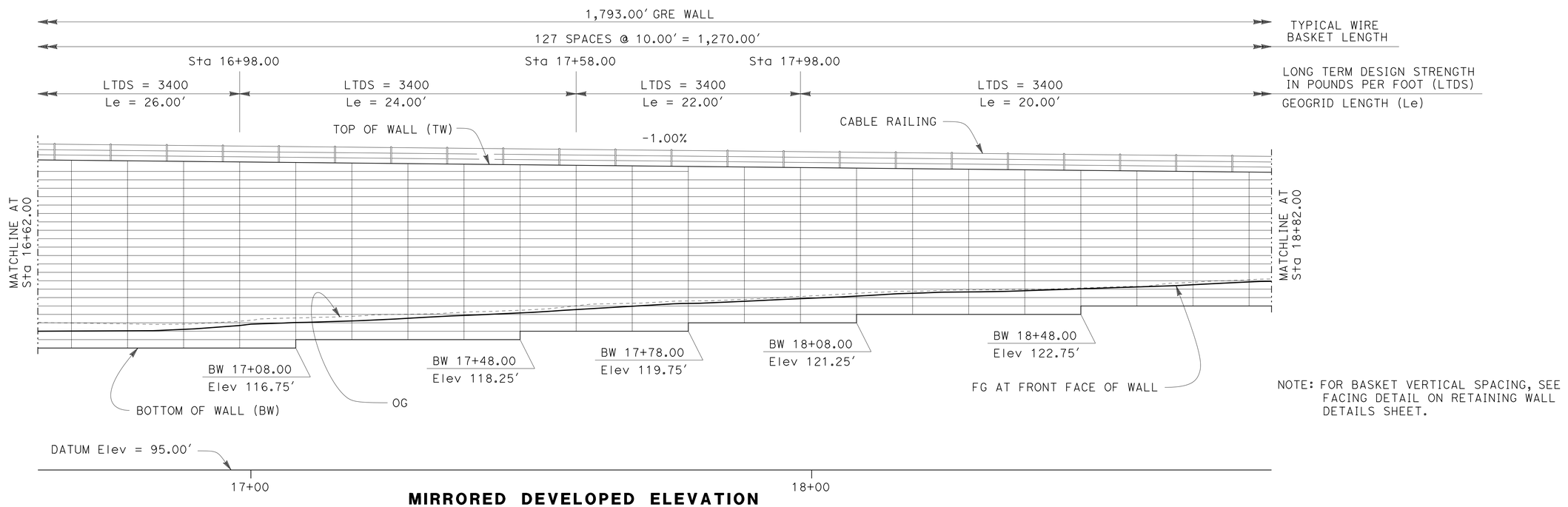


NOTE: FOR BASKET VERTICAL SPACING, SEE FACING DETAIL ON RETAINING WALL DETAILS SHEET.

**MIRRORED DEVELOPED ELEVATION**

SCALE 1" = 10'

*APPROVED FOR RETAINING WALL WORK ONLY*

# RETAINING WALL STRUCTURE ELEVATION No. 2
**(GRE WALL)** **("RW15")**

SCALE AS SHOWN

**R5-5**

REVISED BY | DATE REVISED
MIKE FORDHAM
CALCULATED-DESIGNED BY | CHECKED BY
FUNCTIONAL SUPERVISOR
BRIAN HINMAN

STATE OF CALIFORNIA - DEPARTMENT OF TRANSPORTATION
Caltrans® ENGINEERING SERVICES

LAST REVISION 07-12-14 | DATE PLOTTED => 23-JUL-2014 | TIME PLOTTED => 14:50

| Dist | COUNTY | ROUTE | POST MILES TOTAL PROJECT | SHEET No. | TOTAL SHEETS |
|---|---|---|---|---|---|
| 11 | SD | 5 | R29.1/R30.5 | 623 | 1012 |

REGISTERED CIVIL ENGINEER 05-23-14 DATE

07-21-14
PLANS APPROVAL DATE

REGISTERED PROFESSIONAL ENGINEER Michael M. Fordham No. C61341 Exp. 6-30-15 CIVIL STATE OF CALIFORNIA

*THE STATE OF CALIFORNIA OR ITS OFFICERS OR AGENTS SHALL NOT BE RESPONSIBLE FOR THE ACCURACY OR COMPLETENESS OF SCANNED COPIES OF THIS PLAN SHEET.*

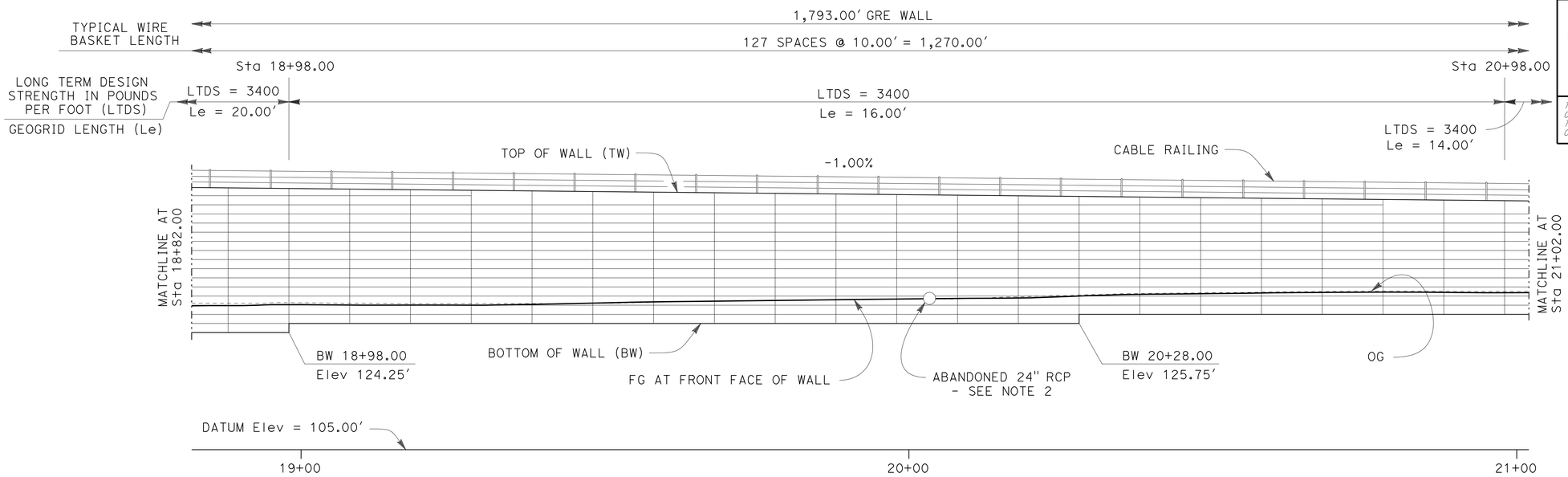


**MIRRORED DEVELOPED ELEVATION**

SCALE 1" = 10'

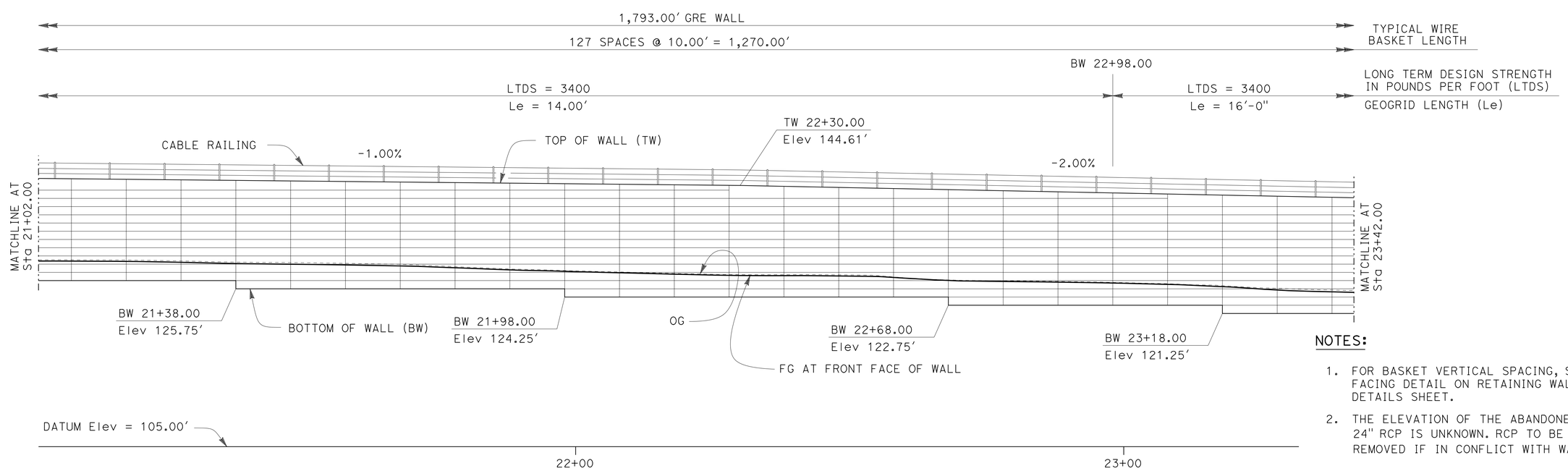


**MIRRORED DEVELOPED ELEVATION**

SCALE 1" = 10'

NOTES:

1. FOR BASKET VERTICAL SPACING, SEE FACING DETAIL ON RETAINING WALL DETAILS SHEET.
2. THE ELEVATION OF THE ABANDONED 24" RCP IS UNKNOWN. RCP TO BE REMOVED IF IN CONFLICT WITH WALL.

*APPROVED FOR RETAINING WALL WORK ONLY*

# RETAINING WALL STRUCTURE ELEVATION No. 3

**(GRE WALL)** **("RW15")**

SCALE AS SHOWN

**R5-6**

STATE OF CALIFORNIA - DEPARTMENT OF TRANSPORTATION
Caltrans® ENGINEERING SERVICES

FUNCTIONAL SUPERVISOR: BRIAN HINMAN
CALCULATED-DESIGNED BY: MIKE FORDHAM
CHECKED BY
REVISED BY
DATE REVISED

LAST REVISION 07-12-14
DATE PLOTTED => 23-JUL-2014
TIME PLOTTED => 14:50

| Dist | COUNTY | ROUTE | POST MILES TOTAL PROJECT | SHEET No. | TOTAL SHEETS |
|---|---|---|---|---|---|
| 11 | SD | 5 | R29.1/R30.5 | 624 | 1012 |

Michael M. Fordham 05-23-14
REGISTERED CIVIL ENGINEER DATE

07-21-14
PLANS APPROVAL DATE

REGISTERED PROFESSIONAL ENGINEER Michael M. Fordham No. C61341 Exp. 6-30-15 CIVIL STATE OF CALIFORNIA

*THE STATE OF CALIFORNIA OR ITS OFFICERS OR AGENTS SHALL NOT BE RESPONSIBLE FOR THE ACCURACY OR COMPLETENESS OF SCANNED COPIES OF THIS PLAN SHEET.*

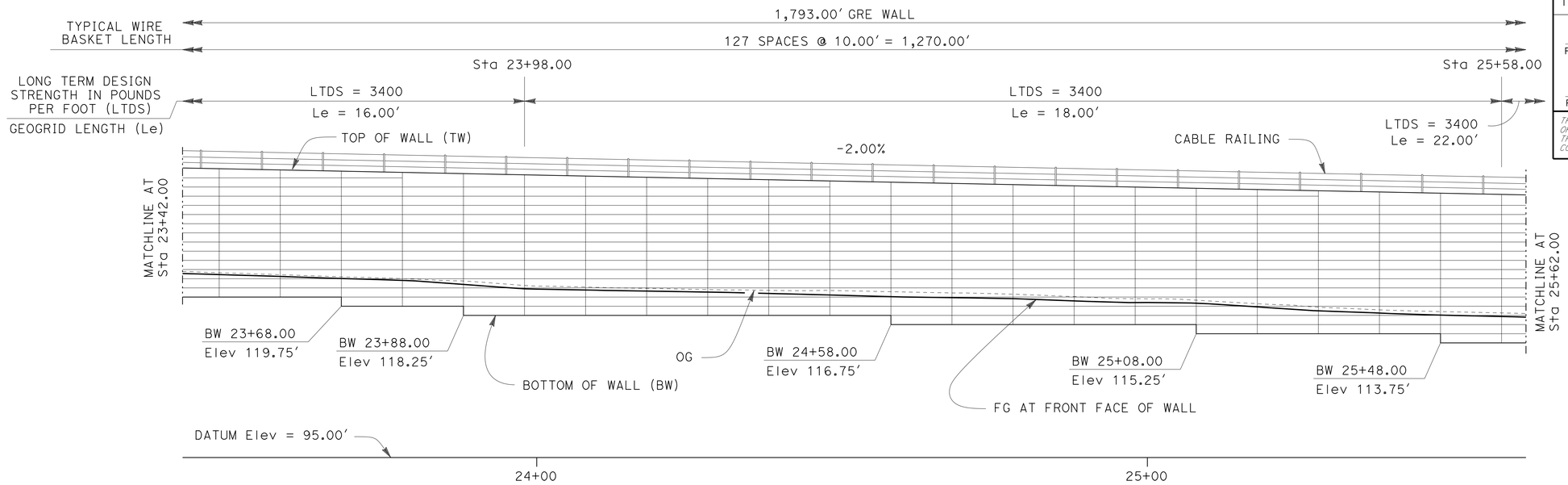


**MIRRORED DEVELOPED ELEVATION**

SCALE 1" = 10'

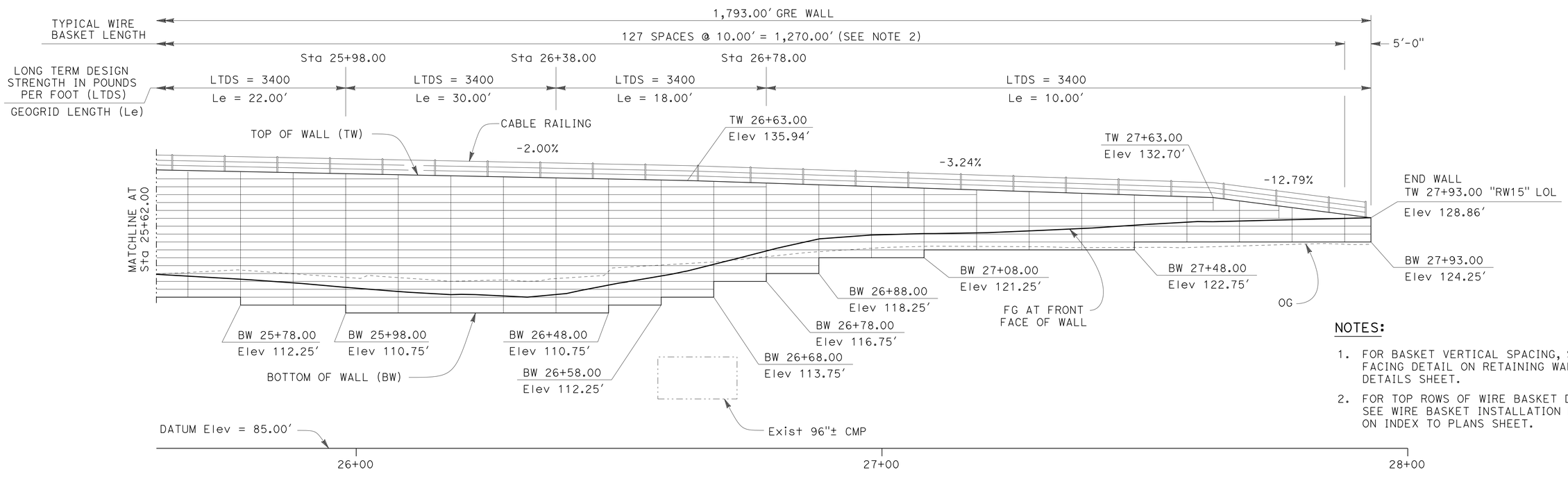


**MIRRORED DEVELOPED ELEVATION**

SCALE 1" = 10'

NOTES:

1. FOR BASKET VERTICAL SPACING, SEE FACING DETAIL ON RETAINING WALL DETAILS SHEET.
2. FOR TOP ROWS OF WIRE BASKET DETAILS, SEE WIRE BASKET INSTALLATION DETAIL ON INDEX TO PLANS SHEET.

*APPROVED FOR RETAINING WALL WORK ONLY*

# RETAINING WALL STRUCTURE ELEVATION NO. 4

**(GRE WALL)** **("RW15")**

SCALE AS SHOWN

**R5-7**

REVISED BY | DATE REVISED
MIKE FORDHAM
CALCULATED-DESIGNED BY | CHECKED BY
FUNCTIONAL SUPERVISOR
BRIAN HINMAN

STATE OF CALIFORNIA - DEPARTMENT OF TRANSPORTATION
Caltrans® ENGINEERING SERVICES

LAST REVISION 07-12-14 | DATE PLOTTED => 23-JUL-2014 | TIME PLOTTED => 14:50

| Dist | COUNTY | ROUTE | POST MILES TOTAL PROJECT | SHEET No. | TOTAL SHEETS |
|---|---|---|---|---|---|
| 11 | SD | 5 | R29.1/R30.5 | 625 | 1012 |

REGISTERED CIVIL ENGINEER 05-23-14 DATE

07-21-14
PLANS APPROVAL DATE

REGISTERED PROFESSIONAL ENGINEER Michael M. Fordham No. C61341 Exp. 6-30-15 CIVIL STATE OF CALIFORNIA

*THE STATE OF CALIFORNIA OR ITS OFFICERS OR AGENTS SHALL NOT BE RESPONSIBLE FOR THE ACCURACY OR COMPLETENESS OF SCANNED COPIES OF THIS PLAN SHEET.*

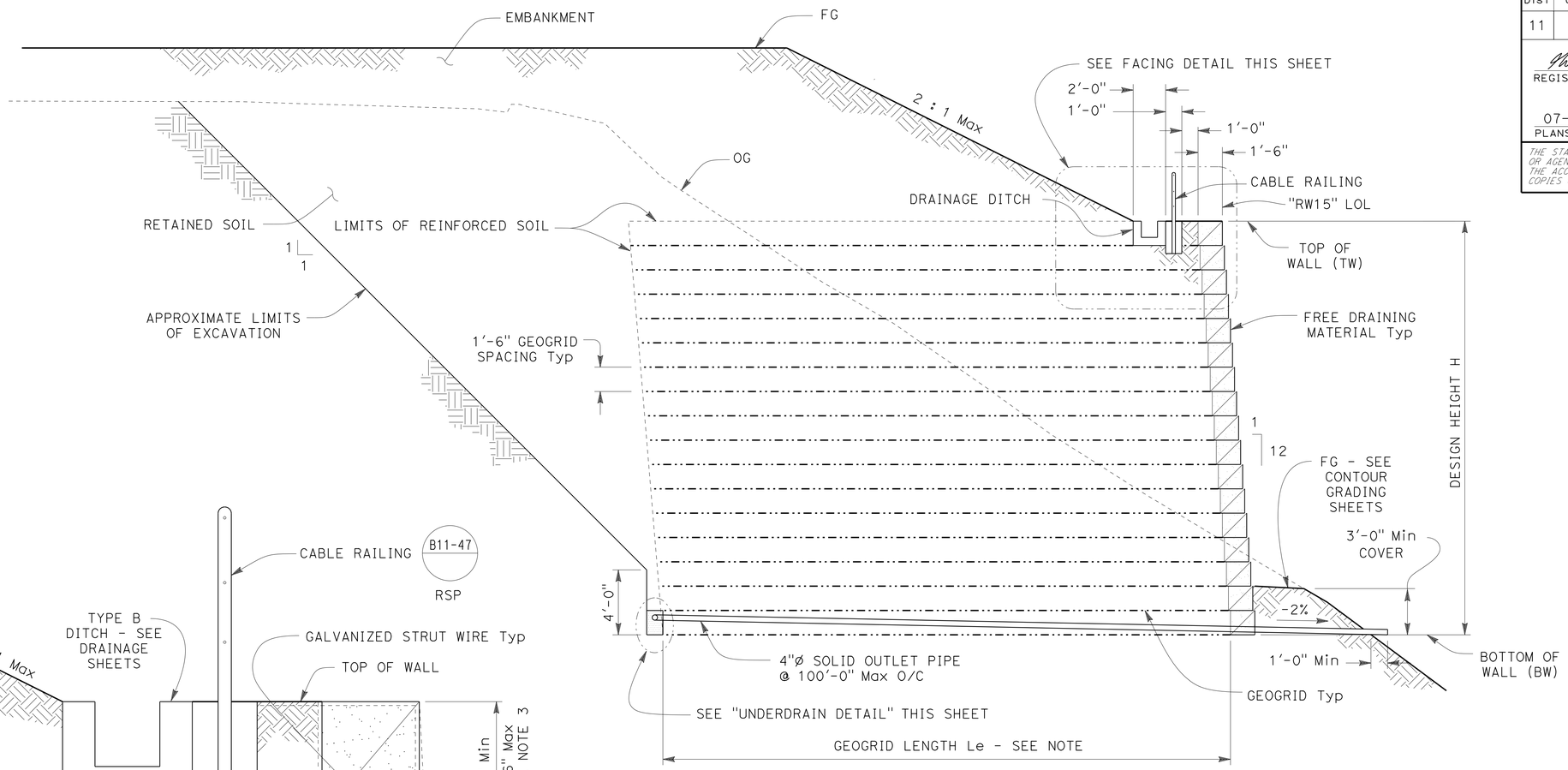


NOTE: FOR GEOGRID LENGTH Le, SEE STRUCTURE ELEVATION SHEETS

## TYPICAL SECTION

NO SCALE

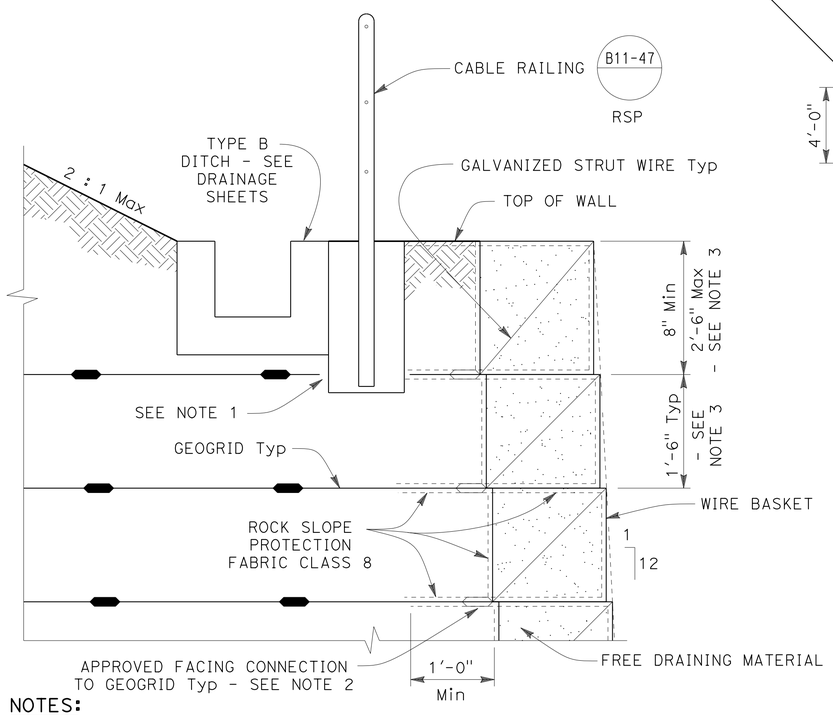


NOTES:

1. WHERE RAILING POST POCKETS INTERFERE WITH GEOGRIDS, PRECUT AFFECTED LAYER OF REINFORCEMENT. THE PRECUT DIMENSIONS MUST NOT EXCEED RAILING POST FOUNDATION DIMENSIONS BY MORE THAN 1'-0".
2. CONNECTION SHALL BE CORROSION RESISTANT.
3. FOR TOP ROWS OF WIRE BASKET DETAILS, SEE WIRE BASKET INSTALLATION DETAIL ON INDEX TO PLANS SHEET.

## FACING DETAIL

SCALE 1" = 1'

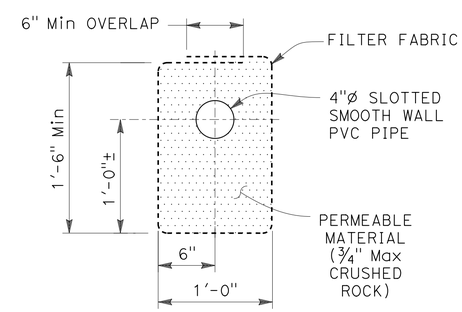


## UNDERDRAIN DETAIL

SCALE 1½" = 1'

*APPROVED FOR RETAINING WALL WORK ONLY*

# RETAINING WALL DETAILS No. 1
**(GRE WALL)** **("RW15")**

SCALE AS SHOWN

**R5-8**

STATE OF CALIFORNIA - DEPARTMENT OF TRANSPORTATION
Caltrans® ENGINEERING SERVICES

FUNCTIONAL SUPERVISOR: BRIAN HINMAN
CALCULATED-DESIGNED BY: MIKE FORDHAM
CHECKED BY
REVISED BY
DATE REVISED

LAST REVISION 07-12-14
DATE PLOTTED => 23-JUL-2014
TIME PLOTTED => 14:50

| Dist | COUNTY | ROUTE | POST MILES TOTAL PROJECT | SHEET No. | TOTAL SHEETS |
|---|---|---|---|---|---|
| 11 | SD | 5 | R29.1/R30.5 | 626 | 1012 |

REGISTERED CIVIL ENGINEER 05-23-14 DATE

07-21-14
PLANS APPROVAL DATE

REGISTERED PROFESSIONAL ENGINEER Michael M. Fordham No. C61341 Exp. 6-30-15 CIVIL STATE OF CALIFORNIA

*THE STATE OF CALIFORNIA OR ITS OFFICERS OR AGENTS SHALL NOT BE RESPONSIBLE FOR THE ACCURACY OR COMPLETENESS OF SCANNED COPIES OF THIS PLAN SHEET.*

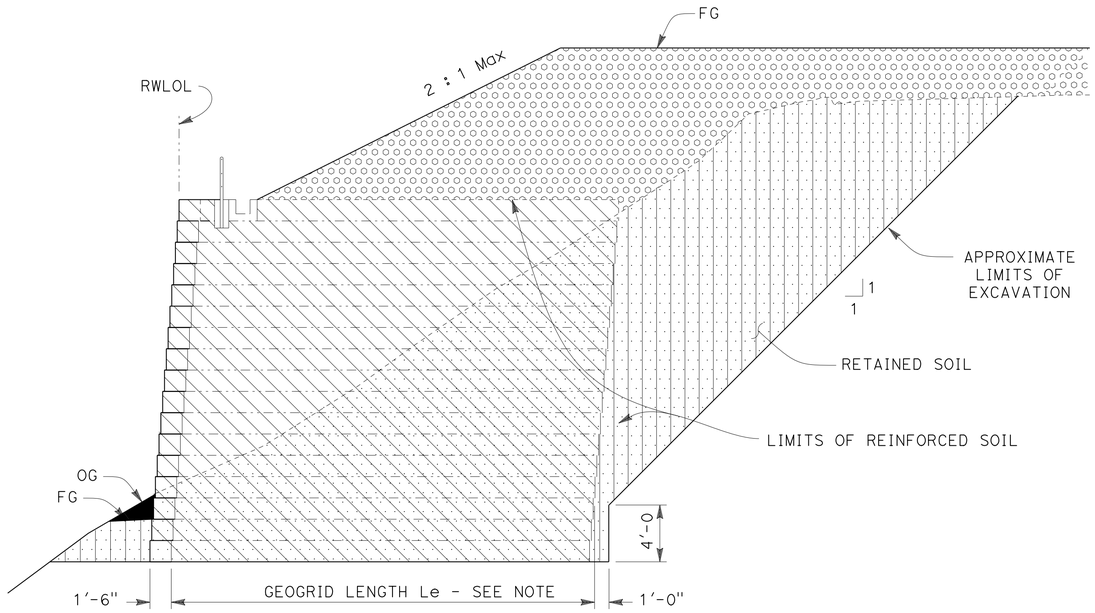


ROADWAY EMBANKMENT | ROADWAY EXCAVATION | GRE WALL EXCAVATION | GRE WALL BACKFILL (RETAINED SOIL) | GRE WALL BACKFILL (REINFORCED SOIL)

NOTE: FOR GEOGRID LENGTH Le SEE STRUCTURE ELEVATION SHEETS.

**LIMITS OF PAYMENT FOR EXCAVATION AND BACKFILL - IN FILL AND CUT**

NO SCALE

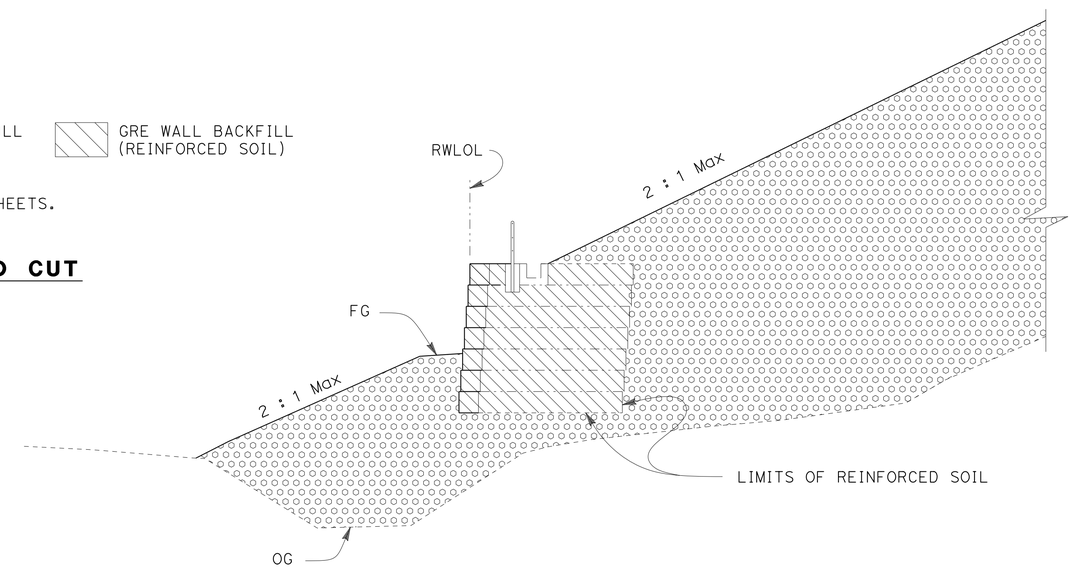


ROADWAY EMBANKMENT | GRE WALL BACKFILL (REINFORCED SOIL)

NOTE: FOR GEOGRID LENGTH Le SEE STRUCTURE ELEVATION SHEETS.

**LIMITS OF PAYMENT FOR EXCAVATION AND BACKFILL - IN FILL**

NO SCALE

*APPROVED FOR RETAINING WALL WORK ONLY*

# RETAINING WALL DETAILS No. 2
**(GRE WALL)** **("RW15")**

SCALE AS SHOWN

**R5-9**

STATE OF CALIFORNIA - DEPARTMENT OF TRANSPORTATION
Caltrans® ENGINEERING SERVICES

FUNCTIONAL SUPERVISOR: BRIAN HINMAN
CALCULATED-DESIGNED BY: MIKE FORDHAM
CHECKED BY
REVISED BY
DATE REVISED

LAST REVISION 07-12-14
DATE PLOTTED => 23-JUL-2014
TIME PLOTTED => 14:50

| Dist | COUNTY | ROUTE | POST MILES TOTAL PROJECT | SHEET No. | TOTAL SHEETS |
|---|---|---|---|---|---|
| 11 | SD | 5 | R29.1/R30.5 | 627 | 1012 |

REGISTERED CIVIL ENGINEER DATE 05-23-14

07-21-14
PLANS APPROVAL DATE

REGISTERED PROFESSIONAL ENGINEER Michael M. Fordham No. C61341 Exp. 6-30-15 CIVIL STATE OF CALIFORNIA

*THE STATE OF CALIFORNIA OR ITS OFFICERS OR AGENTS SHALL NOT BE RESPONSIBLE FOR THE ACCURACY OR COMPLETENESS OF SCANNED COPIES OF THIS PLAN SHEET.*

## RETAINING WALL QUANTITIES (GRE WALL)

| WALL | LINE | STATION RANGE | | LENGTH | GRE WALL | CABLE RAILING | REMARKS |
|---|---|---|---|---|---|---|---|
| | | BEGIN | END | LF | SQ FT | LF | |
| 15 | "RW15" | 10+00.00 | 27+93.00 | 1793.0 | 44,550.0 | 1793.0 | |

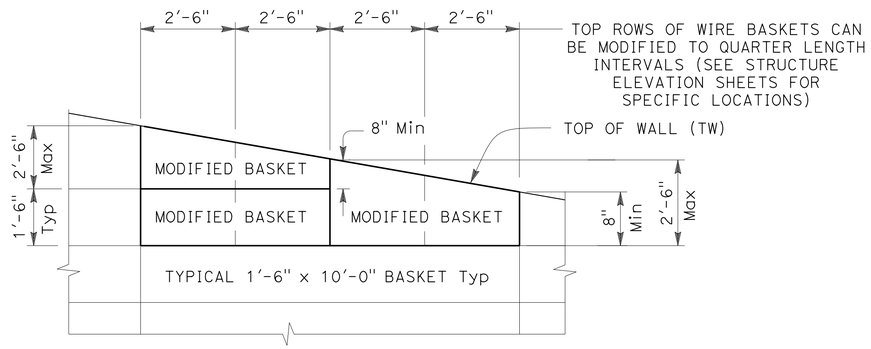


NOTE: TOP ROW OF WIRE BASKETS SHALL BE NO TALLER THAN 2'-6", AND NO SHORTER THAN 8".

### WIRE BASKET INSTALLATION DETAIL

NO SCALE

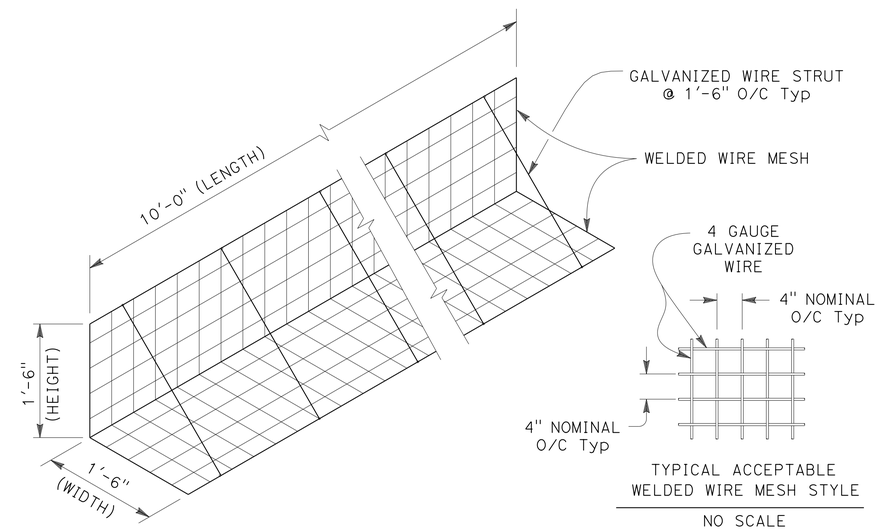


NO SCALE

### TYPICAL WIRE BASKET DETAIL

SCALE 3/4" = 1'

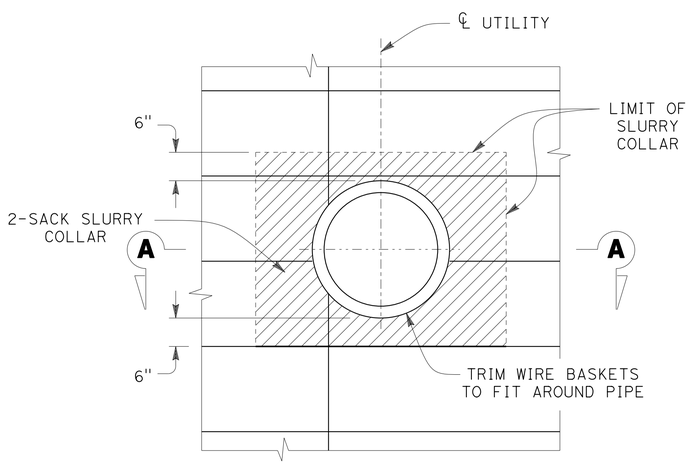


### ELEVATION

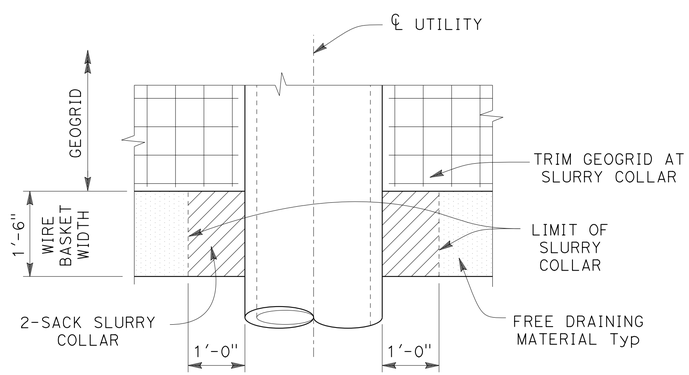


### SECTION A-A

### UTILITY OPENING DETAILS

SCALE 3/4" = 1'

*APPROVED FOR RETAINING WALL WORK ONLY*

# RETAINING WALL DETAILS No. 3
## (GRE WALL) ("RW15")

SCALE AS SHOWN

**R5-10**

STATE OF CALIFORNIA - DEPARTMENT OF TRANSPORTATION
Caltrans ENGINEERING SERVICES

FUNCTIONAL SUPERVISOR: BRIAN HINMAN
CALCULATED-DESIGNED BY: MIKE FORDHAM
CHECKED BY
REVISED BY
DATE REVISED

LAST REVISION 07-12-14
DATE PLOTTED => 23-JUL-2014
TIME PLOTTED => 14:51

| Dist | COUNTY | ROUTE | POST MILES TOTAL PROJECT | SHEET No. | TOTAL SHEETS |
|---|---|---|---|---|---|
| 11 | SD | 5 | R29.1/R30.5 | 628 | 1012 |

Michael M. Fordham 05-23-14
REGISTERED CIVIL ENGINEER DATE

07-21-14
PLANS APPROVAL DATE

REGISTERED PROFESSIONAL ENGINEER Michael M. Fordham No. C61341 Exp. 6-30-15 CIVIL STATE OF CALIFORNIA

*THE STATE OF CALIFORNIA OR ITS OFFICERS OR AGENTS SHALL NOT BE RESPONSIBLE FOR THE ACCURACY OR COMPLETENESS OF SCANNED COPIES OF THIS PLAN SHEET.*

This LOTB sheet was prepared in accordance with the Caltrans Soil & Rock Logging, Classification, & Presentation Manual (2010 Edition). Except the assignment of the hole identification as described in section 2.4

Note: No ground water encountered during field investigation

## BENCH MARK

5-28-41
Elev 287.78
Located at the intersection of I-5 and La Jolla Village Dr, set in sidewalk near southeast corner of La Jolla Village Dr Bridge over I-5.
NAVD 88

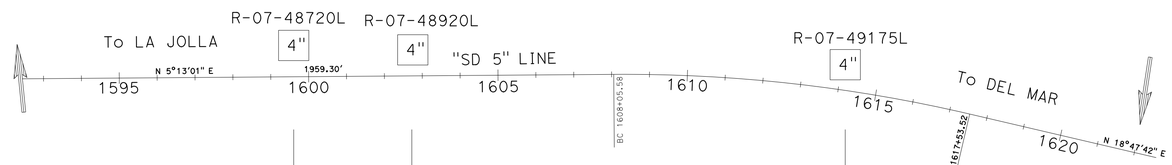


## PLAN

SCALE: 1" = 50'

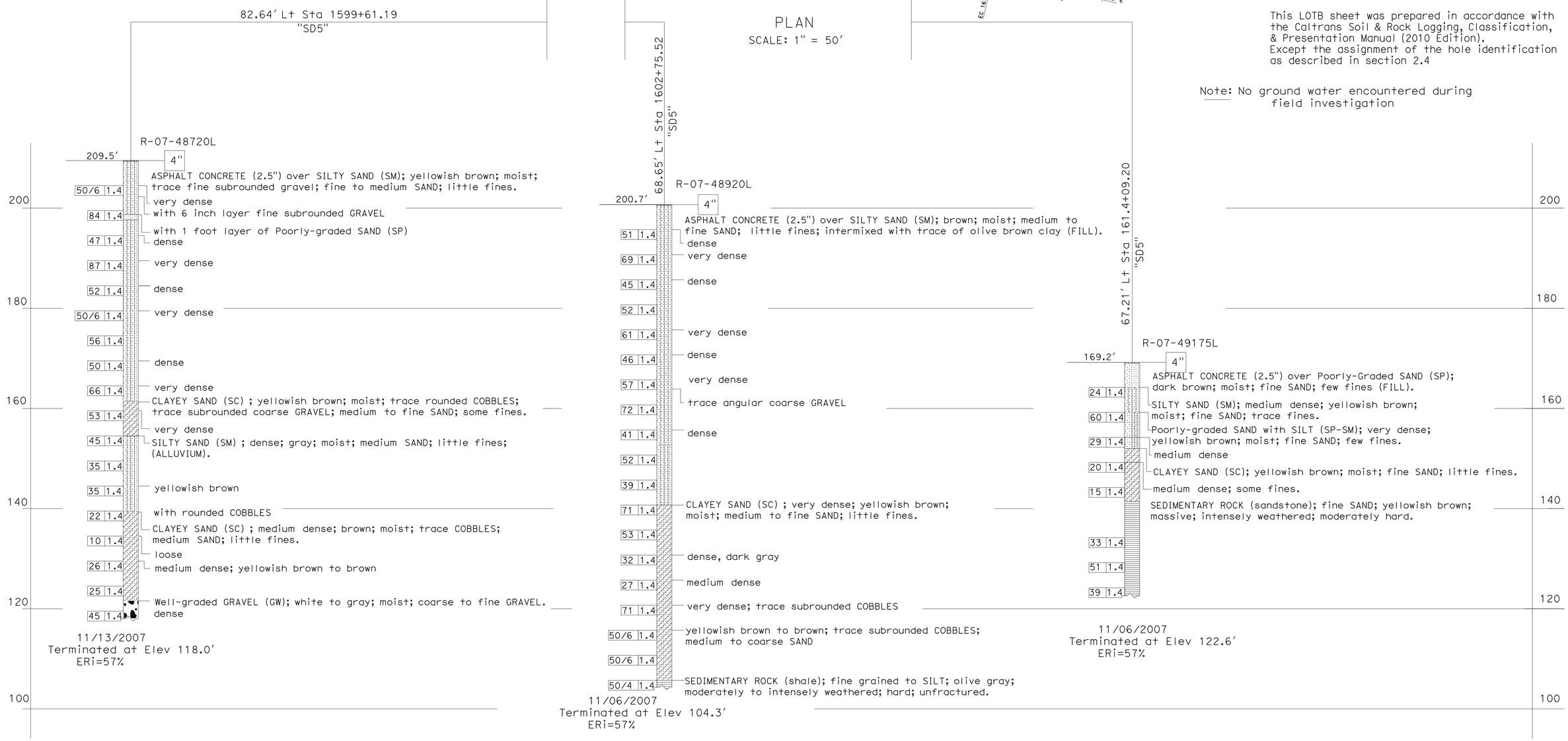


PROFILE
Horiz: 1" = 50'
Vert: 1" = 20'

*APPROVED FOR RETAINING WALL WORK ONLY*

# RETAINING WALL LOG OF TEST BORINGS
## (GRE WALL) ("RW15")

SCALE AS SHOWN

**R5-11**

REVISED BY | DATE REVISED
MIKE FORDHAM | CALCULATED-DESIGNED BY | CHECKED BY
FUNCTIONAL SUPERVISOR: BRIAN HINMAN

STATE OF CALIFORNIA - DEPARTMENT OF TRANSPORTATION
Caltrans ENGINEERING SERVICES

LAST REVISION 07-12-14 | DATE PLOTTED => 23-JUL-2014 | TIME PLOTTED => 14:51

| Dist | COUNTY | ROUTE | POST MILES TOTAL PROJECT | SHEET No. | TOTAL SHEETS |
|---|---|---|---|---|---|
| 11 | SD | 5 | R29.1/R30.5 | 629 | 1012 |

Stephen P. Warren
LICENSED LANDSCAPE ARCHITECT

07-21-14
PLANS APPROVAL DATE

LICENSED LANDSCAPE ARCHITECT
STEPHEN P. WARREN No. 3442
Stephen P. Warren
Expiration Date
10-31-14
Renewal Date
05-23-14
Date
STATE OF CALIFORNIA

*THE STATE OF CALIFORNIA OR ITS OFFICERS OR AGENTS SHALL NOT BE RESPONSIBLE FOR THE ACCURACY OR COMPLETENESS OF SCANNED COPIES OF THIS PLAN SHEET.*

# IRRIGATION LEGEND

| SYMBOL | DESCRIPTION | SPRAY PATTERN | OPERATING PRESSURE (psi) | PRESSURE COMPENSATING | PLUS/MINUS 5% ② DISCHARGE: GALLONS PER MINUTE (GPM) | GALLONS PER HOUR (GPH) | RADIUS (ft) | WIDTH x LENGTH (ft) | FLOW SHUTOFF DEVICE | INLET CONNECTION (NPT INCH) | POSITIVE-LOCKING Adj ARC STOP | BACKSPLASH PREVENTER | DIFFUSER PIN | DISTANCE CONTROL FLAP | Adj DISCHARGE | SPRINKLER ASSEMBLY: RISER: MATERIAL: TYPE | PLASTIC | GALVANIZED | SIZE (IPS INCH) | HEIGHT (INCH) | SWING JOINT ⑥ | RISER SUPPORT ⑥ | POP-UP: TYPE | INLET CONNECTION (NPT INCH) | SPRINKLER PROTECTOR (TYPE) | POP-UP HEIGHT (INCH) | TREE WELL: SWING JOINT ⑥ | REMARKS |
|---|---|---|---|---|---|---|---|---|---|---|---|---|---|---|---|---|---|---|---|---|---|---|---|---|---|---|---|---|
| 5 | GEAR DRIVEN | F | 50 | - | 3.5 | - | 40 | - | - | ¾ | - | - | X | - | - | I | X | - | ¾ | 10 | X | - | - | - | - | - | - | ③ |
| ⑤ | GEAR DRIVEN | P | 50 | - | 3.5 | - | 40 | - | - | ¾ | - | - | X | - | - | I | X | - | ¾ | 10 | X | - | - | - | - | - | - | ③⑦ |
| ⑥ | GEAR DRIVEN | P | 50 | - | 3.5 | - | 40 | - | - | ¾ | - | - | X | - | - | - | - | - | - | - | - | - | 1 | ¾ | 1 | 12 | - | ③⑦ |
| 7 | GEAR DRIVEN | F | 50 | - | 7.5 | - | 48 | - | - | ¾ | - | - | X | - | - | I | X | - | ¾ | 10 | X | X | - | - | - | - | - | ③ |
| ⑦ | GEAR DRIVEN | P | 50 | - | 7.5 | - | 48 | - | - | ¾ | - | - | X | - | - | I | X | - | ¾ | 10 | X | - | - | - | - | - | - | ③⑦ |
| ⑧ | GEAR DRIVEN | P | 50 | - | 7.5 | - | 48 | - | - | ¾ | - | - | X | - | - | - | - | - | - | - | - | - | 1 | ¾ | 1 | 12 | - | ③⑦ |
| 11 | GEAR DRIVEN | F | 50 | - | 1.8 | - | 25 | - | - | ¾ | - | - | X | - | - | I | X | - | ¾ | 10 | X | - | - | - | - | - | - | ③ |
| ⑪ | GEAR DRIVEN | P | 50 | - | 1.8 | - | 25 | - | - | ¾ | - | - | X | - | - | I | X | - | ¾ | 10 | X | - | - | - | - | - | - | ③⑦ |
| ⑫ | GEAR DRIVEN | P | 50 | - | 1.8 | - | 25 | - | - | ¾ | - | - | X | - | - | - | - | - | - | - | - | - | 1 | ¾ | 1 | 12 | - | ③⑦ |
| △ | SHRUB SPRAY | H | 30 | - | 1.8 | - | 15 | - | - | ½ | - | - | X | - | X | I | X | - | ½ | 12 | X | - | - | - | - | - | - | ⑧ |
| △ | SHRUB SPRAY | Q | 30 | - | 0.9 | - | 15 | - | - | ½ | - | - | X | - | X | I | X | - | ½ | 12 | X | - | - | - | - | - | - | ⑧ |
| ▲ | SHRUB SPRAY | H | 30 | - | 1.8 | - | 15 | - | - | ½ | - | - | X | - | X | I | X | - | ½ | - | X | - | - | - | - | 12 | - | ⑧ |
| ▲ | SHRUB SPRAY | Q | 30 | - | 0.9 | - | 15 | - | - | ½ | - | - | X | - | X | I | X | - | ½ | - | X | - | - | - | - | 12 | - | ⑧ |
| ● | FLOOD BUBBLER | - | 30 | X | 0.5 | - | - | - | - | ½ | - | - | - | - | - | - | - | - | - | - | - | - | - | - | - | - | X | ④⑨⑩⑪ |

## APPLICABLE WHEN CIRCLED BELOW:

1 - SEE SPECIAL PROVISIONS.
② - IF A PRESSURE COMPENSATING DEVICE IS SPECIFIED, THE DISCHARGE AND RADII SHOWN REFLECT ITS USE.
③ - MUST HAVE AN INTERNAL OR EXTERNAL CHECK VALVE.
④ - NON-ADJUSTABLE DISCHARGE RATE.
5 - REQUIRED ADJACENT TO SHOULDERS, CURBS, SIDEWALKS, AND DIKES.
⑥ - SEE DETAIL.

X IN BOX DENOTES REQUIREMENT

⑦ - ADJUSTABLE ARC.
⑧ - MATCHED PRECIPITATION RATE NOZZLES.
⑨ - REFER TO PIPE SIZING CHARTS.
⑩ - INSTALL ONE FLODD BUBBLER PER No. 5 SHRUB AND INSTALL TWO FLOOD BUBBLERS PER No. 15 TREE AND 24" BOX TREE.
⑪ - PRESSURE COMPENSATING

## ABBREVIATIONS:

Adj —— ADJUSTABLE
ft —— FEET
psi —— POUNDS PER SQUARE INCH

## NOTES:

1. ALL SPRINKLER HEADS, VALVES, AND PLASTIC PIPE SUPPLY LINE (MAIN) SHOWN NEAR MVP LOCATIONS ARE TO BE INSTALLED OUTSIDE OF THE PAVED MVP AREA. VALVES TO BE INSTALLED AT EXITING END OF MVP.
2. ALL NEW PLASTIC PIPE SUPPLY LINE (MAIN) PIPE WHICH HAS A 90 DEGREE CHANGE IN DIRECTION SHALL HAVE (2) 45 ELBOWS.
3. WITHIN DEPARTMENT RIGHT OF WAY, PULL ONE ADDITIONAL CNC WIRE FROM EACH CONTROLLER TO THE LAST VALVE BOX AT EACH VALVE MANIFOLD (FOR FUTURE USE), SEE DETAIL.
4. ALL IRRIGATION EQUIPMENT UTILIZING RECYCLED WATER MUST BE PURPLE IN COLOR AND/OR LABELED AS PER SAN DIEGO COUNTY DEPARTMENT OF HEALTH REQUIREMENTS.
5. NO PONDING, RUNOFF, OR OVERSPRAY OF RECYCLED WATER IS ALLOWED. ADJUST ALL SPRINKLER HEADS TO PREVENT OVERSPRAYING ONTO SIDEWALKS, STREETS, AND PRIVATE LOTS.
6. ALL SPRINKLERS ALONG BIKE PATH TO BE PLACED AT EDGE OF PAVEMENT.
7. ALL LATERAL PIPE NOT LABELED MUST BE 1 INCH, OR AS SHOWN ON PIPE SIZING CHARTS.
8. BEFORE START OF WORK, INSTALL TEMP FENCE (TYPE ESA) AT LANDSCAPE PROTECTION AREAS AS SHOWN. NO EQUIPMENT, MATERIAL STORAGE, VEHICLES OR ACCESS PATHS ARE ALLOWED WITHIN LANDSCAPE PROTECTION AREAS. LIMITED ACCESS TO LANDSCAPE PROTECTION AREAS IS ALLOWED FOR IRRIGATION CHECK AND TEST, OPERATE EXISTING IRRIGATION FACILITIES WORK, IRRIGATION REMOVAL, IRRIGATION WORK, TREE OR SHRUB PRUNNING, REMOVAL OF TRIMMINGS, AND EROSION CONTROL WORK. NOTIFY THE ENGINEER FIVE BUSINESS DAYS BEFORE PLANNED ENTRY.

SCHEDULE 40 PIPE

PIPE SIZE (INCHES)

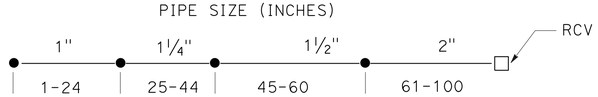


NUMBER OF HEADS @ 0.5 GPM

PIPE SIZING CHART
FLOOD BUBBLER SPRINKLER

## LEGEND:

RWWS — RECYCLED WATER WARNING SIGNS
CCCTS — BALL VALVE (CROSS CONNECTION CONTROL TEST STATION)
— RECYCLED WATER CONNECTION ASSEMBLY (RWCA) AND ENCLOSURE
R — RECYCLED WATER WARNING SIGN (FENCE OR ENCLOSURE MOUNTED)
R — RECYCLED WATER WARNING SIGN (POST MOUNTED)
---- — COPPER PIPE
M — EXISTING REMOTE CONTROL VALVE (MASTER)
— EXISTING GARDEN VALVE
TFESA — LANDSCAPE PROTECTION AREAS. (SEE NOTES).

## EXISTING VALVE CODE

(X(X)-XX)
- IRRIGATION CLUSTER CONTROL UNIT - (CCU)
- IRRIGAION SATELLITE CONTROLLER - (SAT)
- REMOTE CONTROL VALVE STATION

## NEW VALVE CODE

XX-26(X)-XX-XX
- RCV SIZE
- IRRIGATION CLUSTER CONTROL UNIT - (CCU)
- IRRIGAION SATELLITE CONTROLLER - (SAT)
- CONTROL VALVE STATION
- GALLONS PER MINUTE - (GPM)

# IRRIGATION SPRINKLER SCHEDULE
# ISS-1

STATE OF CALIFORNIA - DEPARTMENT OF TRANSPORTATION
Caltrans® LANDSCAPE ARCHITECTURE
SENIOR LANDSCAPE ARCHITECT: STEPHEN ALVAREZ
CALCULATED-DESIGNED BY: JOEL HORTIZUELA
CHECKED BY: STEVE WARREN
REVISED BY
DATE REVISED

LAST REVISION 07-14-14
DATE PLOTTED => 23-JUL-2014
TIME PLOTTED => 14:51

| Dist | COUNTY | ROUTE | POST MILES TOTAL PROJECT | SHEET No. | TOTAL SHEETS |
|---|---|---|---|---|---|
| 11 | SD | 5 | R29.1/R30.5 | 630 | 1012 |

Stephen P. Warren
LICENSED LANDSCAPE ARCHITECT

07-21-14
PLANS APPROVAL DATE

LICENSED LANDSCAPE ARCHITECT STEPHEN P. WARREN No. 3442 STATE OF CALIFORNIA
Stephen P. Warren
Registered Landscape Architect
10-31-14
Expiration Date
05-23-14
Date

*THE STATE OF CALIFORNIA OR ITS OFFICERS OR AGENTS SHALL NOT BE RESPONSIBLE FOR THE ACCURACY OR COMPLETENESS OF SCANNED COPIES OF THIS PLAN SHEET.*

## NOTES:

1. FOR ACCURATE RIGHT OF WAY DATA, CONTACT RIGHT OF WAY ENGINEERING AT THE DISTRICT OFFICE.
2. Exist Irr Conds are:
   8" CHDPE
   3" WATER
   2" Elect Cond
3. ALL OTHER Exist Irr Conds ARE PVC PIPE SIZE AS SHOWN

UNIVERSITY OF CALIFORNIA SAN DIEGO
REMOVE IRRIGATION FACILITY
(QUANTITIES ARE APPROXIMATE)

| DESCRIPTION | EA |
|---|---|
| REMOTE CONTROL VALVE | 7 |
| VALVE ASSEMBLY UNIT | 7 |
| GATE VALVE | 5 |
| GARDEN VALVE | 14 |
| QUICK COUPLER VALVE | 1 |
| DRIPPERLINE | 2,000 LF |

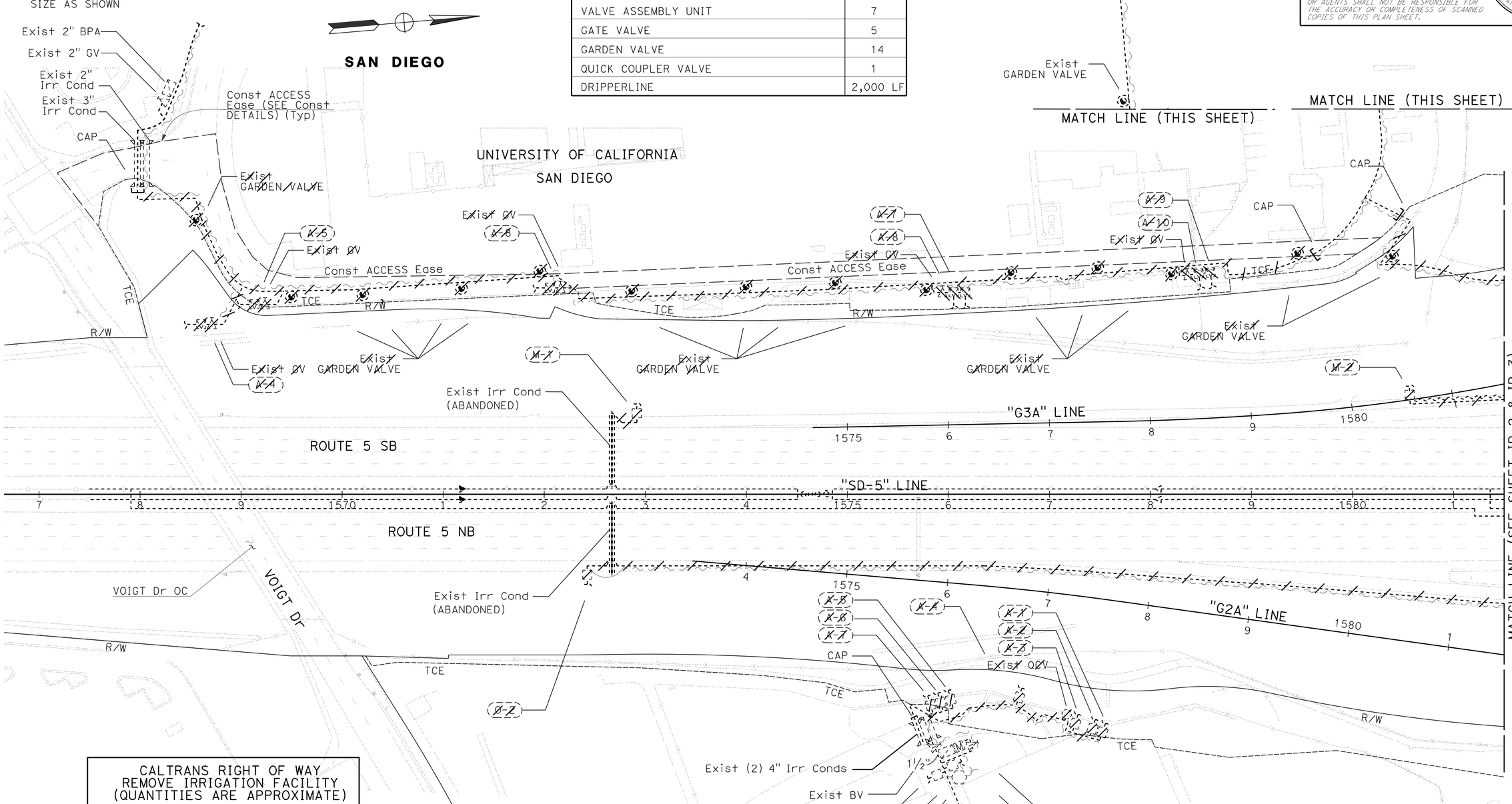


CALTRANS RIGHT OF WAY
REMOVE IRRIGATION FACILITY
(QUANTITIES ARE APPROXIMATE)

| DESCRIPTION | EA |
|---|---|
| SPRINKLERS | - |
| EMITTERS | 140 |

*APPROVED FOR IRRIGATION REMOVAL WORK ONLY*

# IRRIGATION REMOVAL PLAN

SCALE: 1"=50'

**IR-1**

| REVISED BY | DATE REVISED |
|---|---|
| JOEL HORTIZUELA | STEVE WARREN |
| CALCULATED-DESIGNED BY | CHECKED BY |
| SENIOR LANDSCAPE ARCHITECT | STEPHEN ALVAREZ |

STATE OF CALIFORNIA - DEPARTMENT OF TRANSPORTATION
Caltrans LANDSCAPE ARCHITECTURE

LAST REVISION 07-14-14
DATE PLOTTED => 23-JUL-2014
TIME PLOTTED => 14:51

| Dist | COUNTY | ROUTE | POST MILES TOTAL PROJECT | SHEET No. | TOTAL SHEETS |
|---|---|---|---|---|---|
| 11 | SD | 5 | R29.1/R30.5 | 631 | 1012 |

Stephen P. Warren
LICENSED LANDSCAPE ARCHITECT

07-21-14
PLANS APPROVAL DATE

LICENSED LANDSCAPE ARCHITECT
STEPHEN P. WARREN No. 3442
Stephen P. Warren
REGISTERED PROFESSIONAL ENGINEER
10-31-14
REGISTERED PROFESSIONAL ENGINEER
05-23-14
Date
STATE OF CALIFORNIA

*THE STATE OF CALIFORNIA OR ITS OFFICERS OR AGENTS SHALL NOT BE RESPONSIBLE FOR THE ACCURACY OR COMPLETENESS OF SCANNED COPIES OF THIS PLAN SHEET.*

**NOTE:**

FOR ACCURATE RIGHT OF WAY DATA, CONTACT RIGHT OF WAY ENGINEERING AT THE DISTRICT OFFICE.

| UNIVERSITY OF CALIFORNIA SAN DIEGO REMOVE IRRIGATION FACILITY (QUANTITIES ARE APPROXIMATE) | |
|---|---|
| DESCRIPTION | EA |
| REMOTE CONTROL VALVE | 3 |
| GATE VALVE | 2 |
| VALVE ASSEMBLY UNIT | 3 |
| GARDEN VALVE | 2 |
| DRIPPERLINE | 1,750 LF |

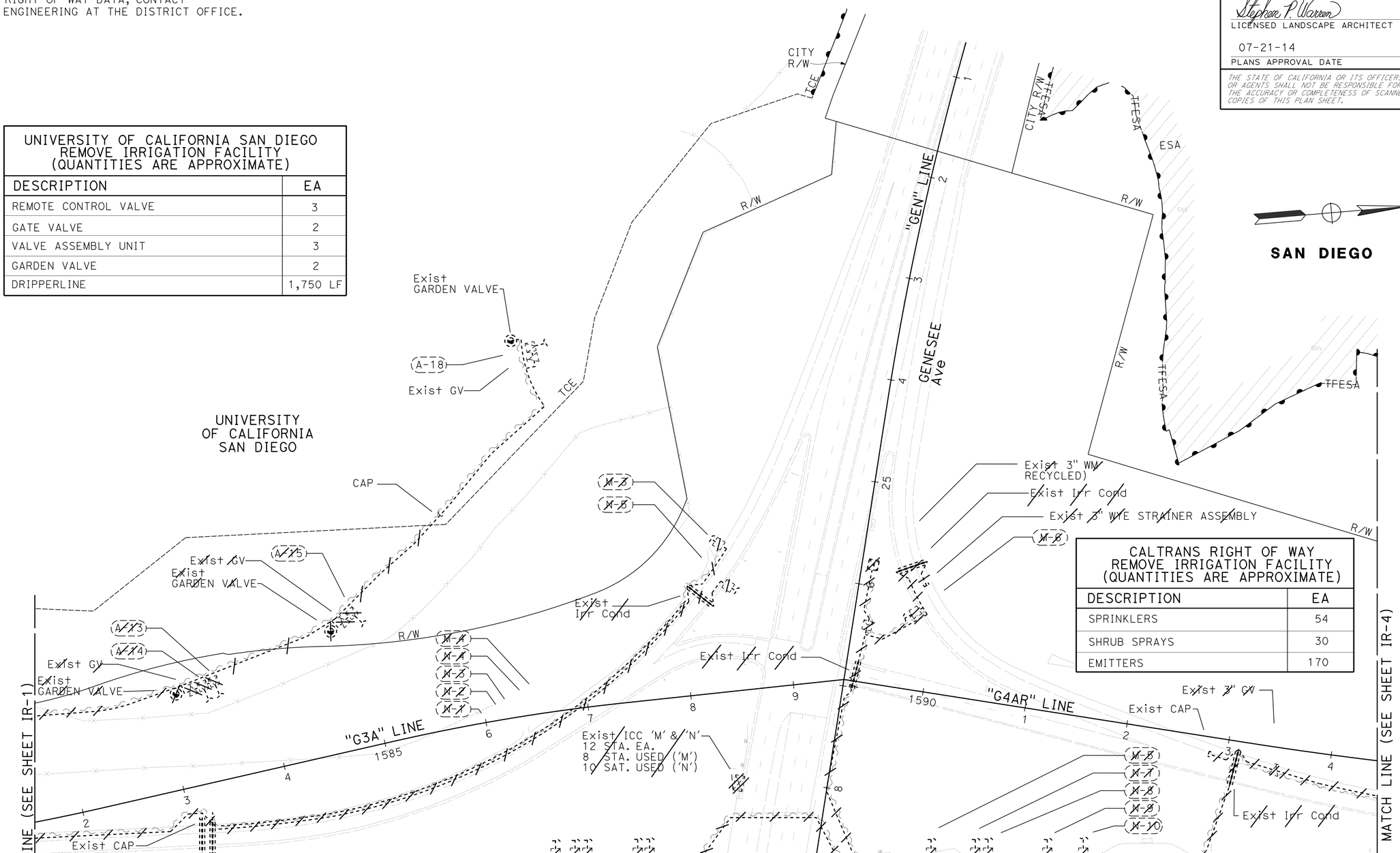


| CALTRANS RIGHT OF WAY REMOVE IRRIGATION FACILITY (QUANTITIES ARE APPROXIMATE) | |
|---|---|
| DESCRIPTION | EA |
| SPRINKLERS | 54 |
| SHRUB SPRAYS | 30 |
| EMITTERS | 170 |

# IRRIGATION REMOVAL PLAN

*APPROVED FOR IRRIGATION REMOVAL WORK ONLY*

SCALE: 1"=50'

**IR-2**

STATE OF CALIFORNIA - DEPARTMENT OF TRANSPORTATION
Caltrans® LANDSCAPE ARCHITECTURE

SENIOR LANDSCAPE ARCHITECT: STEPHEN ALVAREZ

CALCULATED-DESIGNED BY: JOEL HORTIZUELA
CHECKED BY: STEVE WARREN

REVISED BY
DATE REVISED

LAST REVISION 07-14-14
DATE PLOTTED => 23-JUL-2014
TIME PLOTTED => 14:51

| Dist | COUNTY | ROUTE | POST MILES TOTAL PROJECT | SHEET No. | TOTAL SHEETS |
|---|---|---|---|---|---|
| 11 | SD | 5 | R29.1/R30.5 | 632 | 1012 |

Stephen P. Warren
LICENSED LANDSCAPE ARCHITECT

07-21-14
PLANS APPROVAL DATE

LICENSED LANDSCAPE ARCHITECT
STEPHEN P. WARREN No. 3442
Stephen P. Warren
REGISTERED EXPIRES
10-31-14
REGISTERED DATE
05-23-14
Date
STATE OF CALIFORNIA

*THE STATE OF CALIFORNIA OR ITS OFFICERS OR AGENTS SHALL NOT BE RESPONSIBLE FOR THE ACCURACY OR COMPLETENESS OF SCANNED COPIES OF THIS PLAN SHEET.*

**NOTE:**

FOR ACCURATE RIGHT OF WAY DATA, CONTACT RIGHT OF WAY ENGINEERING AT THE DISTRICT OFFICE.

**SAN DIEGO**

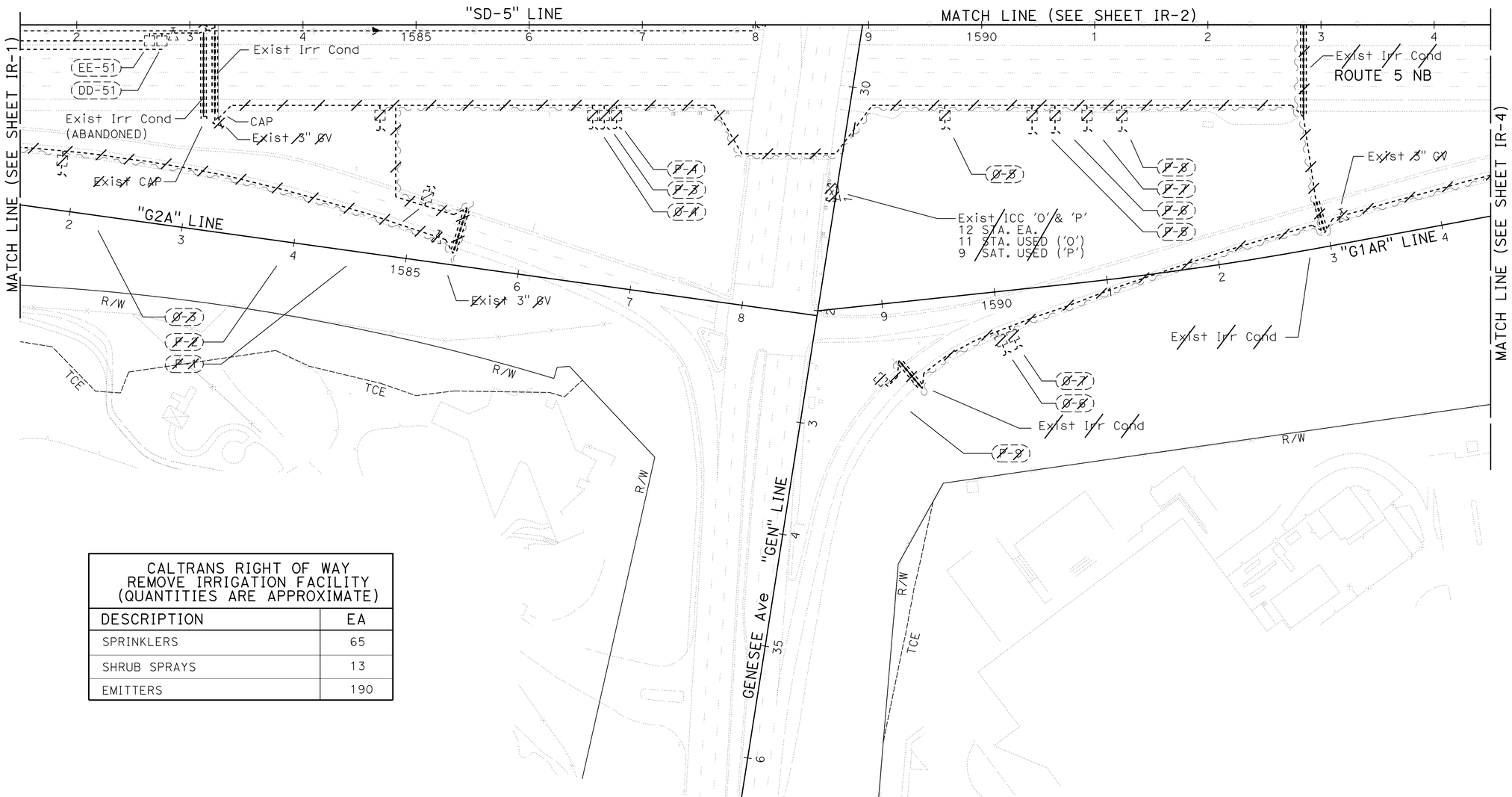


| CALTRANS RIGHT OF WAY REMOVE IRRIGATION FACILITY (QUANTITIES ARE APPROXIMATE) | |
|---|---|
| DESCRIPTION | EA |
| SPRINKLERS | 65 |
| SHRUB SPRAYS | 13 |
| EMITTERS | 190 |

*APPROVED FOR IRRIGATION REMOVAL WORK ONLY*

# IRRIGATION REMOVAL PLAN

SCALE: 1"=50'

**IR-3**

STATE OF CALIFORNIA - DEPARTMENT OF TRANSPORTATION
Caltrans LANDSCAPE ARCHITECTURE

SENIOR LANDSCAPE ARCHITECT: STEPHEN ALVAREZ
CALCULATED-DESIGNED BY: JOEL HORTIZUELA
CHECKED BY: STEVE WARREN
REVISED BY
DATE REVISED

LAST REVISION 07-14-14
DATE PLOTTED => 23-JUL-2014
TIME PLOTTED => 14:51

| Dist | COUNTY | ROUTE | POST MILES TOTAL PROJECT | SHEET No. | TOTAL SHEETS |
|---|---|---|---|---|---|
| 11 | SD | 5 | R29.1/R30.5 | 633 | 1012 |

Stephen P. Warren
LICENSED LANDSCAPE ARCHITECT

07-21-14
PLANS APPROVAL DATE

LICENSED LANDSCAPE ARCHITECT
STEPHEN P. WARREN No. 3442
Stephen P. Warren
10-31-14
05-23-14
Date
STATE OF CALIFORNIA

*THE STATE OF CALIFORNIA OR ITS OFFICERS OR AGENTS SHALL NOT BE RESPONSIBLE FOR THE ACCURACY OR COMPLETENESS OF SCANNED COPIES OF THIS PLAN SHEET.*

**NOTE:**

FOR ACCURATE RIGHT OF WAY DATA, CONTACT RIGHT OF WAY ENGINEERING AT THE DISTRICT OFFICE.

| CALTRANS RIGHT OF WAY REMOVE IRRIGATION FACILITY (QUANTITIES ARE APPROXIMATE) | |
|---|---|
| DESCRIPTION | EA |
| SPRINKLERS | 50 |
| BUBBLERS | 30 |
| EMITTERS | 143 |

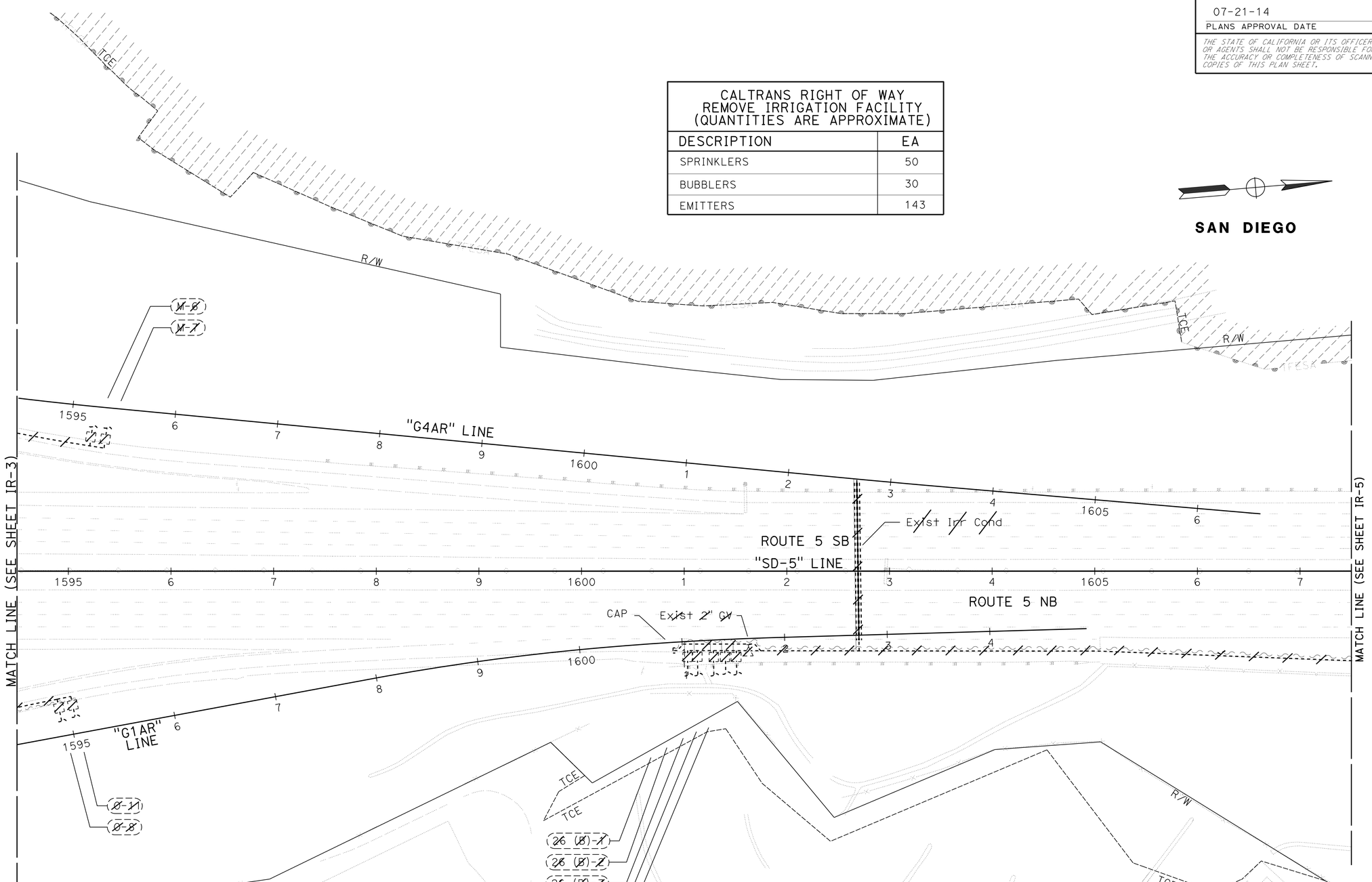


*APPROVED FOR IRRIGATION REMOVAL WORK ONLY*

# IRRIGATION REMOVAL PLAN

SCALE: 1"=50'

**IR-4**

STATE OF CALIFORNIA - DEPARTMENT OF TRANSPORTATION
Caltrans® LANDSCAPE ARCHITECTURE

SENIOR LANDSCAPE ARCHITECT: STEPHEN ALVAREZ
CALCULATED-DESIGNED BY: JOEL HORTIZUELA
CHECKED BY: STEVE WARREN
REVISED BY
DATE REVISED

LAST REVISION 07-15-14
DATE PLOTTED => 23-JUL-2014
TIME PLOTTED => 14:51

| Dist | COUNTY | ROUTE | POST MILES TOTAL PROJECT | SHEET No. | TOTAL SHEETS |
|---|---|---|---|---|---|
| 11 | SD | 5 | R29.1/R30.5 | 634 | 1012 |

Stephen P. Warren
LICENSED LANDSCAPE ARCHITECT

07-21-14
PLANS APPROVAL DATE

LICENSED LANDSCAPE ARCHITECT
STEPHEN P. WARREN No. 3442
Stephen P. Warren
10-31-14 Renewal Date
05-23-14 Date
STATE OF CALIFORNIA

*THE STATE OF CALIFORNIA OR ITS OFFICERS OR AGENTS SHALL NOT BE RESPONSIBLE FOR THE ACCURACY OR COMPLETENESS OF SCANNED COPIES OF THIS PLAN SHEET.*

**NOTE:**

FOR ACCURATE RIGHT OF WAY DATA, CONTACT
RIGHT OF WAY ENGINEERING AT THE DISTRICT OFFICE.

**SAN DIEGO**

| CALTRANS RIGHT OF WAY REMOVE IRRIGATION FACILITY (QUANTITIES ARE APPROXIMATE) | |
|---|---|
| DESCRIPTION | EA |
| SPRINKLERS | 84 |
| EMITTERS | 14 |

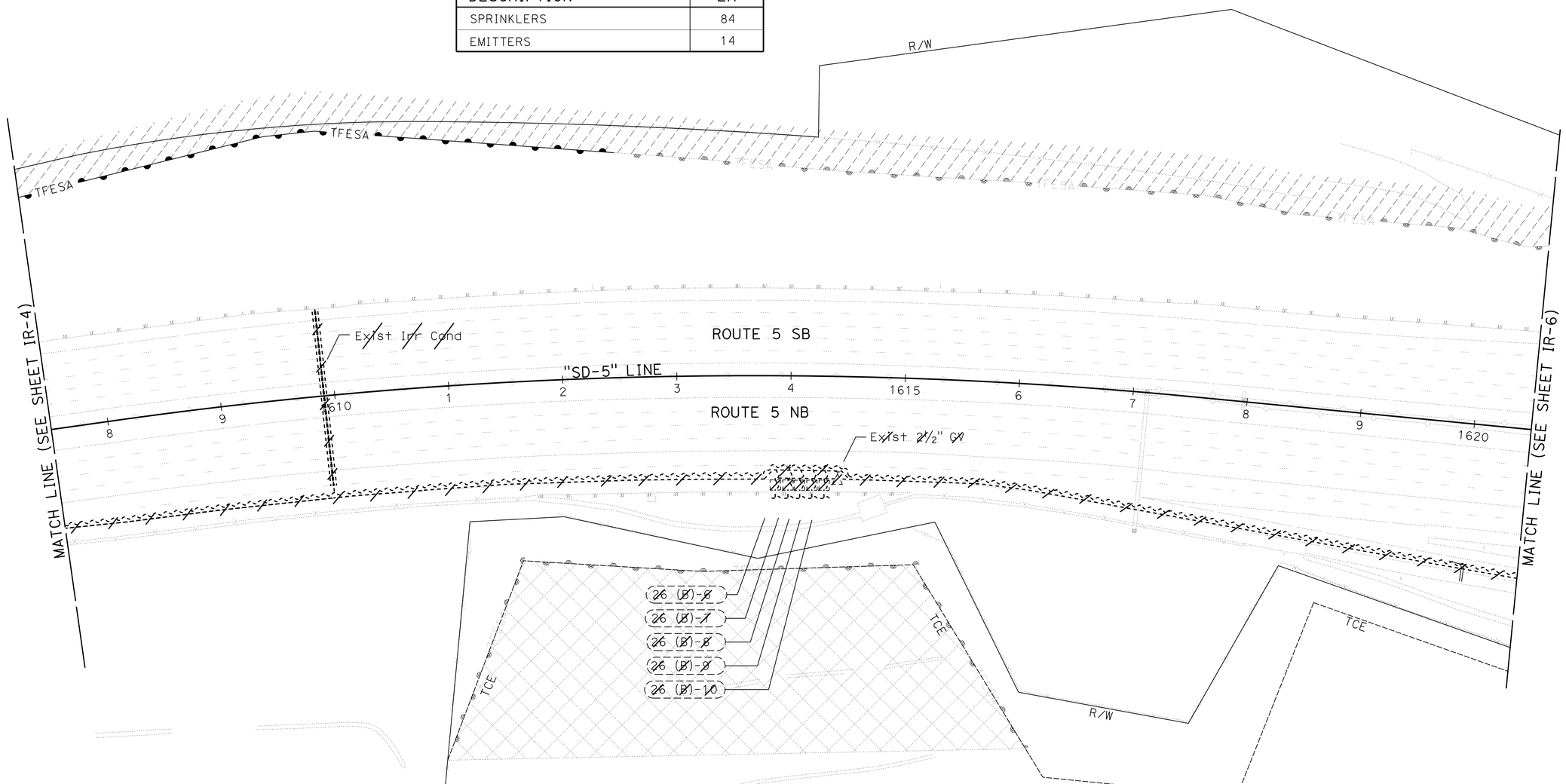


*APPROVED FOR IRRIGATION REMOVAL WORK ONLY*

# IRRIGATION REMOVAL PLAN

SCALE: 1"=50'

**IR-5**

STATE OF CALIFORNIA - DEPARTMENT OF TRANSPORTATION
Caltrans® LANDSCAPE ARCHITECTURE

SENIOR LANDSCAPE ARCHITECT: STEPHEN ALVAREZ
CALCULATED-DESIGNED BY: JOEL HORTIZUELA
CHECKED BY: STEVE WARREN
REVISED BY
DATE REVISED

LAST REVISION 07-15-14
DATE PLOTTED => 23-JUL-2014
TIME PLOTTED => 14:51

| Dist | COUNTY | ROUTE | POST MILES TOTAL PROJECT | SHEET No. | TOTAL SHEETS |
|---|---|---|---|---|---|
| 11 | SD | 5 | R29.1/R30.5 | 635 | 1012 |

Stephen P. Warren
LICENSED LANDSCAPE ARCHITECT

07-21-14
PLANS APPROVAL DATE

LICENSED LANDSCAPE ARCHITECT
STEPHEN P. WARREN No. 3442
Stephen P. Warren
10-31-14
05-23-14
STATE OF CALIFORNIA

*THE STATE OF CALIFORNIA OR ITS OFFICERS OR AGENTS SHALL NOT BE RESPONSIBLE FOR THE ACCURACY OR COMPLETENESS OF SCANNED COPIES OF THIS PLAN SHEET.*

**NOTE:**

FOR ACCURATE RIGHT OF WAY DATA, CONTACT RIGHT OF WAY ENGINEERING AT THE DISTRICT OFFICE.

| CALTRANS RIGHT OF WAY REMOVE IRRIGATION FACILITY (QUANTITIES ARE APPROXIMATE) | |
|---|---|
| DESCRIPTION | EA |
| SPRINKLERS | 43 |
| BUBBLERS | 197 |

NOTE: QUANTITIES ARE IN ADDITION TO SPRINKLERS SHOWN

SAN DIEGO

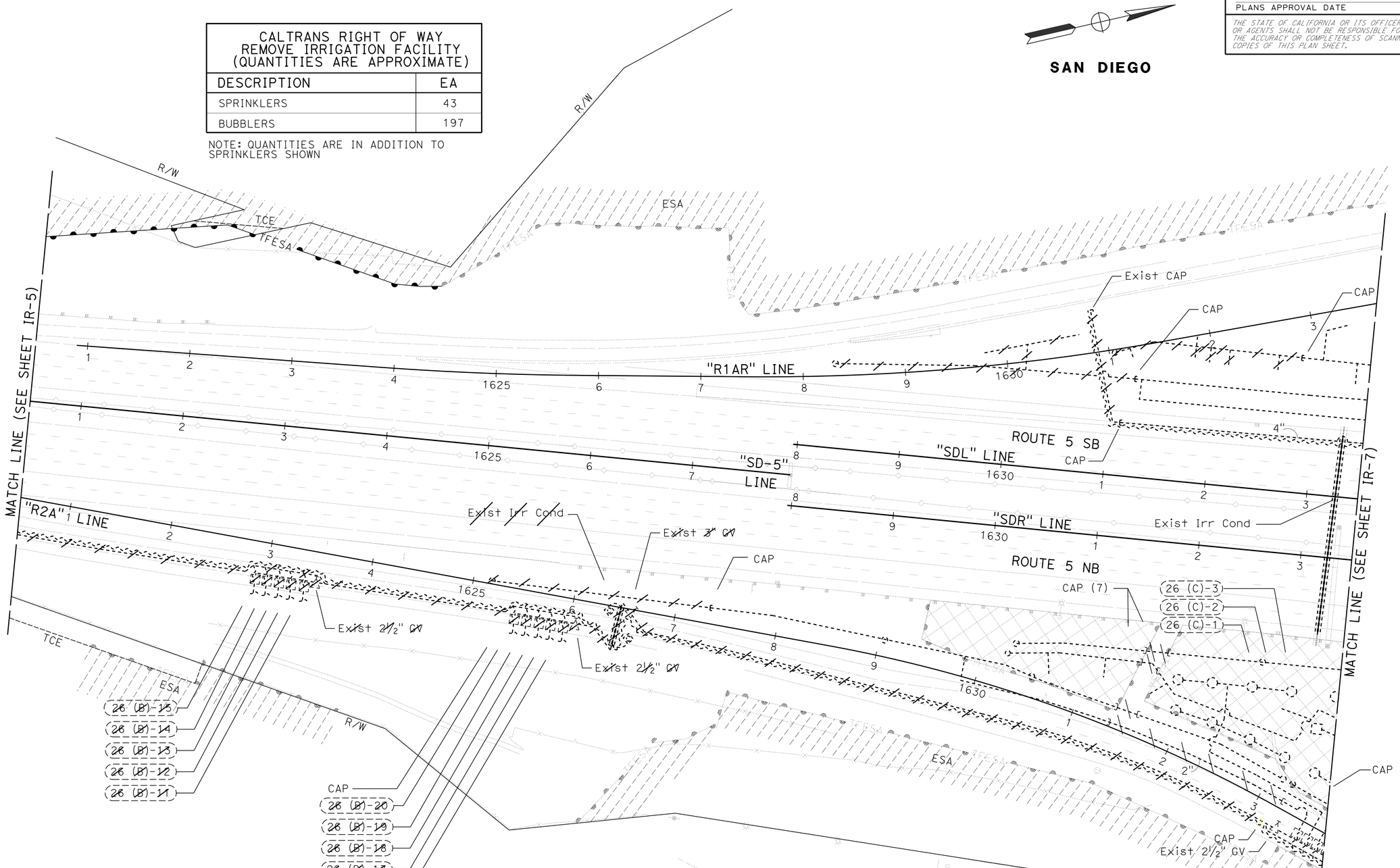


# IRRIGATION REMOVAL PLAN

SCALE: 1"=50'

**IR-6**

*APPROVED FOR IRRIGATION REMOVAL WORK ONLY*

STATE OF CALIFORNIA - DEPARTMENT OF TRANSPORTATION
Caltrans LANDSCAPE ARCHITECTURE

SENIOR LANDSCAPE ARCHITECT: STEPHEN ALVAREZ
CALCULATED-DESIGNED BY: JOEL HORTIZUELA
CHECKED BY: STEVE WARREN
REVISED BY
DATE REVISED

LAST REVISION 07-15-14
DATE PLOTTED => 23-JUL-2014
TIME PLOTTED => 14:51

| Dist | COUNTY | ROUTE | POST MILES TOTAL PROJECT | SHEET No. | TOTAL SHEETS |
|---|---|---|---|---|---|
| 11 | SD | 5 | R29.1/R30.5 | 636 | 1012 |

Stephen P. Warren
LICENSED LANDSCAPE ARCHITECT

07-21-14
PLANS APPROVAL DATE

LICENSED LANDSCAPE ARCHITECT
STEPHEN P. WARREN No. 3442
Stephen P. Warren
10-31-14
05-23-14
STATE OF CALIFORNIA

*THE STATE OF CALIFORNIA OR ITS OFFICERS OR AGENTS SHALL NOT BE RESPONSIBLE FOR THE ACCURACY OR COMPLETENESS OF SCANNED COPIES OF THIS PLAN SHEET.*

NOTES:

1. FOR ACCURATE RIGHT OF WAY DATA, CONTACT RIGHT OF WAY ENGINEERING AT THE DISTRICT OFFICE.
2. EXISTING CONTROLLER TO BE SALVAGED. EXISTING CONTROLLER TO REMAIN IN PLACE AND OPERATIONAL UNTIL NEW CONTROLLER IS INSTALLED.

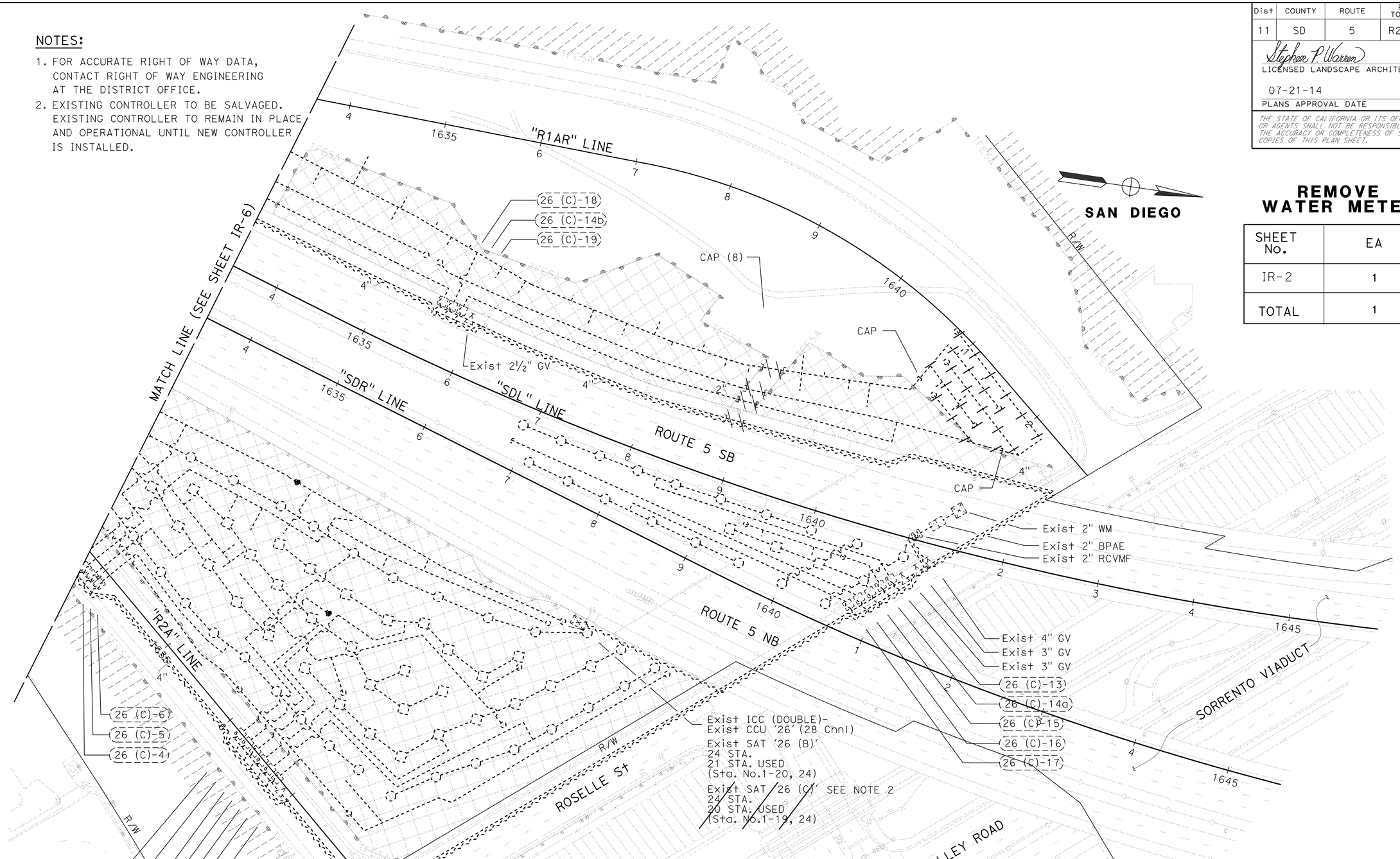


## REMOVE WATER METER

| SHEET No. | EA |
|---|---|
| IR-2 | 1 |
| TOTAL | 1 |

*APPROVED FOR IRRIGATION REMOVAL WORK ONLY*

# IRRIGATION REMOVAL PLAN

SCALE: 1"=50'

**IR-7**

STATE OF CALIFORNIA - DEPARTMENT OF TRANSPORTATION
Caltrans LANDSCAPE ARCHITECTURE

SENIOR LANDSCAPE ARCHITECT: STEPHEN ALVAREZ
CALCULATED-DESIGNED BY: JOEL HORTIZUELA
CHECKED BY: STEVE WARREN
REVISED BY / DATE REVISED

LAST REVISION 07-15-14
DATE PLOTTED => 23-JUL-2014
TIME PLOTTED => 14:51

| Dist | COUNTY | ROUTE | POST MILES TOTAL PROJECT | SHEET No. | TOTAL SHEETS |
|---|---|---|---|---|---|
| 11 | SD | 5 | R29.1/R30.5 | 637 | 1012 |

Stephen P. Warren
LICENSED LANDSCAPE ARCHITECT

07-21-14
PLANS APPROVAL DATE

LICENSED LANDSCAPE ARCHITECT STEPHEN P. WARREN No. 3442 STATE OF CALIFORNIA
Stephen P. Warren
10-31-14 REGISTRATION EXPIRATION DATE
05-23-14 Date

*THE STATE OF CALIFORNIA OR ITS OFFICERS OR AGENTS SHALL NOT BE RESPONSIBLE FOR THE ACCURACY OR COMPLETENESS OF SCANNED COPIES OF THIS PLAN SHEET.*

## NOTES:

1. FOR ACCURATE RIGHT OF WAY DATA, CONTACT RIGHT OF WAY ENGINEERING AT THE DISTRICT OFFICE.

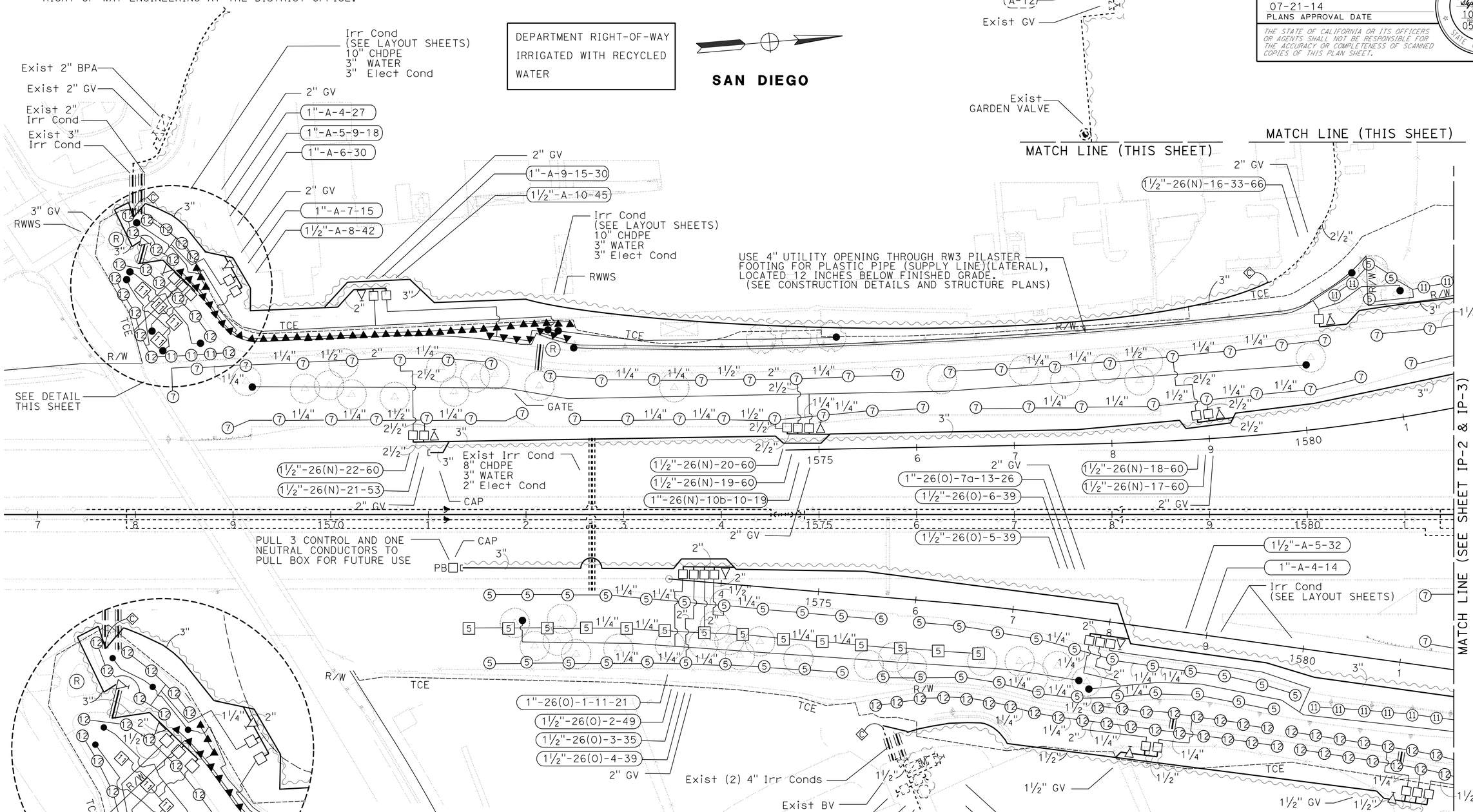


*APPROVED FOR IRRIGATION WORK ONLY*

# IRRIGATION PLAN

SCALE: 1"=50'

**IP-1**

STATE OF CALIFORNIA - DEPARTMENT OF TRANSPORTATION
Caltrans® LANDSCAPE ARCHITECTURE

SENIOR LANDSCAPE ARCHITECT: STEPHEN ALVAREZ
CALCULATED-DESIGNED BY: JOEL HORTIZUELA
CHECKED BY: STEVE WARREN
REVISED BY
DATE REVISED

LAST REVISION 07-16-14
DATE PLOTTED => 23-JUL-2014
TIME PLOTTED => 14:51

| Dist | COUNTY | ROUTE | POST MILES TOTAL PROJECT | SHEET No. | TOTAL SHEETS |
|---|---|---|---|---|---|
| 11 | SD | 5 | R29.1/R30.5 | 638 | 1012 |

Stephen P. Warren
LICENSED LANDSCAPE ARCHITECT

07-21-14
PLANS APPROVAL DATE

LICENSED LANDSCAPE ARCHITECT
STEPHEN P. WARREN No. 3442
Stephen P. Warren
10-31-14
05-23-14
STATE OF CALIFORNIA

*THE STATE OF CALIFORNIA OR ITS OFFICERS OR AGENTS SHALL NOT BE RESPONSIBLE FOR THE ACCURACY OR COMPLETENESS OF SCANNED COPIES OF THIS PLAN SHEET.*

NOTES:

1. FOR ACCURATE RIGHT OF WAY DATA, CONTACT RIGHT OF WAY ENGINEERING AT THE DISTRICT OFFICE.
2. INSTALL PLASTIC PIPE SUPPLY LINE (MAIN) AND VALVES ON WEST SIDE OF THE FENCE/BIKE PATH.

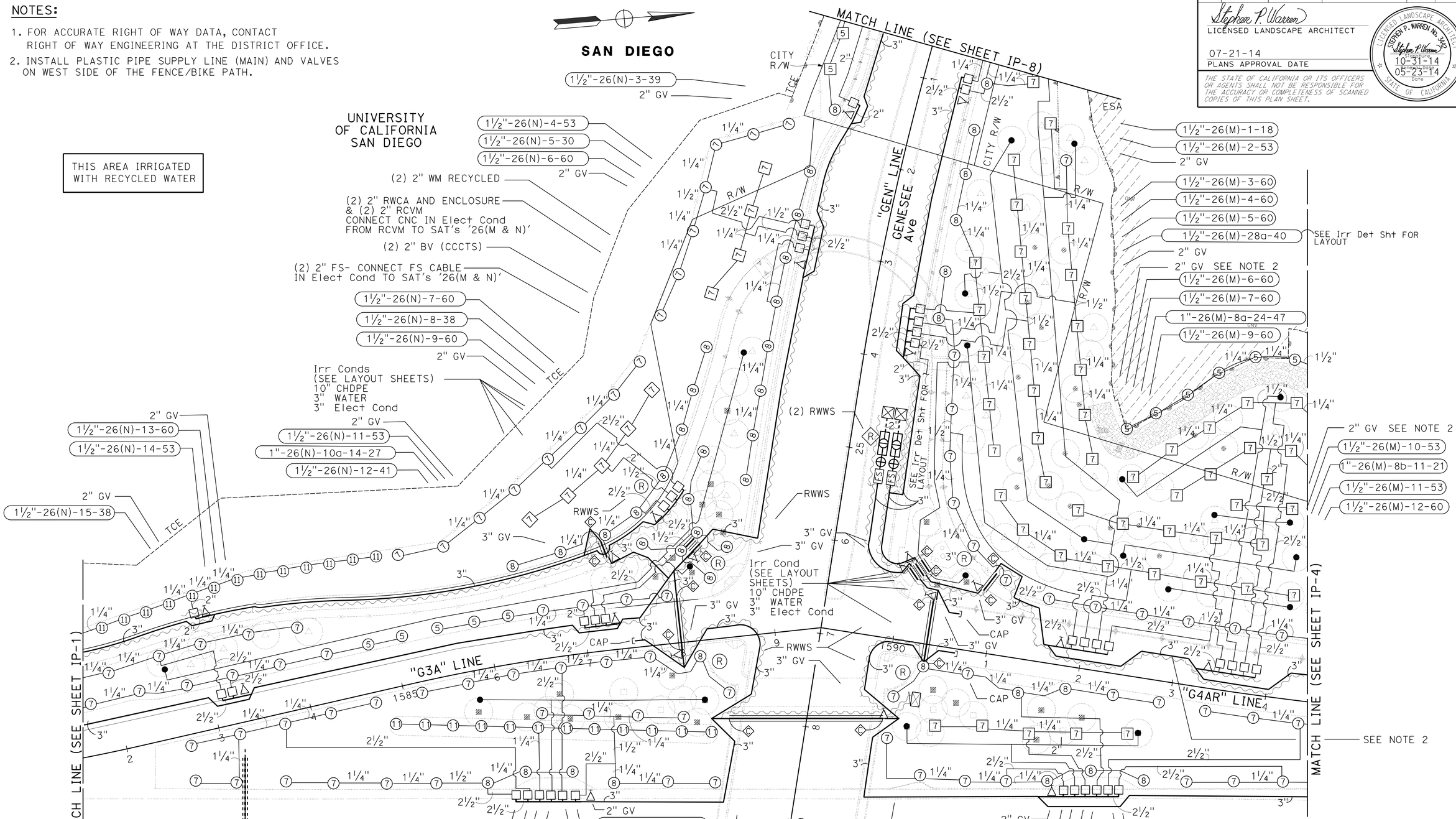


*APPROVED FOR IRRIGATION WORK ONLY*

# IRRIGATION PLAN

SCALE: 1"=50'

**IP-2**

| REVISED BY | DATE REVISED |
|---|---|
| JOEL HORTIZUELA | STEVE WARREN |

CALCULATED- DESIGNED BY
CHECKED BY

SENIOR LANDSCAPE ARCHITECT
STEPHEN ALVAREZ

STATE OF CALIFORNIA - DEPARTMENT OF TRANSPORTATION
Caltrans® LANDSCAPE ARCHITECTURE

LAST REVISION 07-15-14
DATE PLOTTED => 23-JUL-2014
TIME PLOTTED => 14:51

| Dist | COUNTY | ROUTE | POST MILES TOTAL PROJECT | SHEET No. | TOTAL SHEETS |
|---|---|---|---|---|---|
| 11 | SD | 5 | R29.1/R30.5 | 639 | 1012 |

Stephen P. Warren
LICENSED LANDSCAPE ARCHITECT

07-21-14
PLANS APPROVAL DATE

LICENSED LANDSCAPE ARCHITECT STEPHEN P. WARREN No. 3442 STATE OF CALIFORNIA
Stephen P. Warren
Registered Landscape Architect
10-31-14
Expiration Date
05-23-14
Date

*THE STATE OF CALIFORNIA OR ITS OFFICERS OR AGENTS SHALL NOT BE RESPONSIBLE FOR THE ACCURACY OR COMPLETENESS OF SCANNED COPIES OF THIS PLAN SHEET.*

**NOTE:**

FOR ACCURATE RIGHT OF WAY DATA, CONTACT RIGHT OF WAY ENGINEERING AT THE DISTRICT OFFICE.

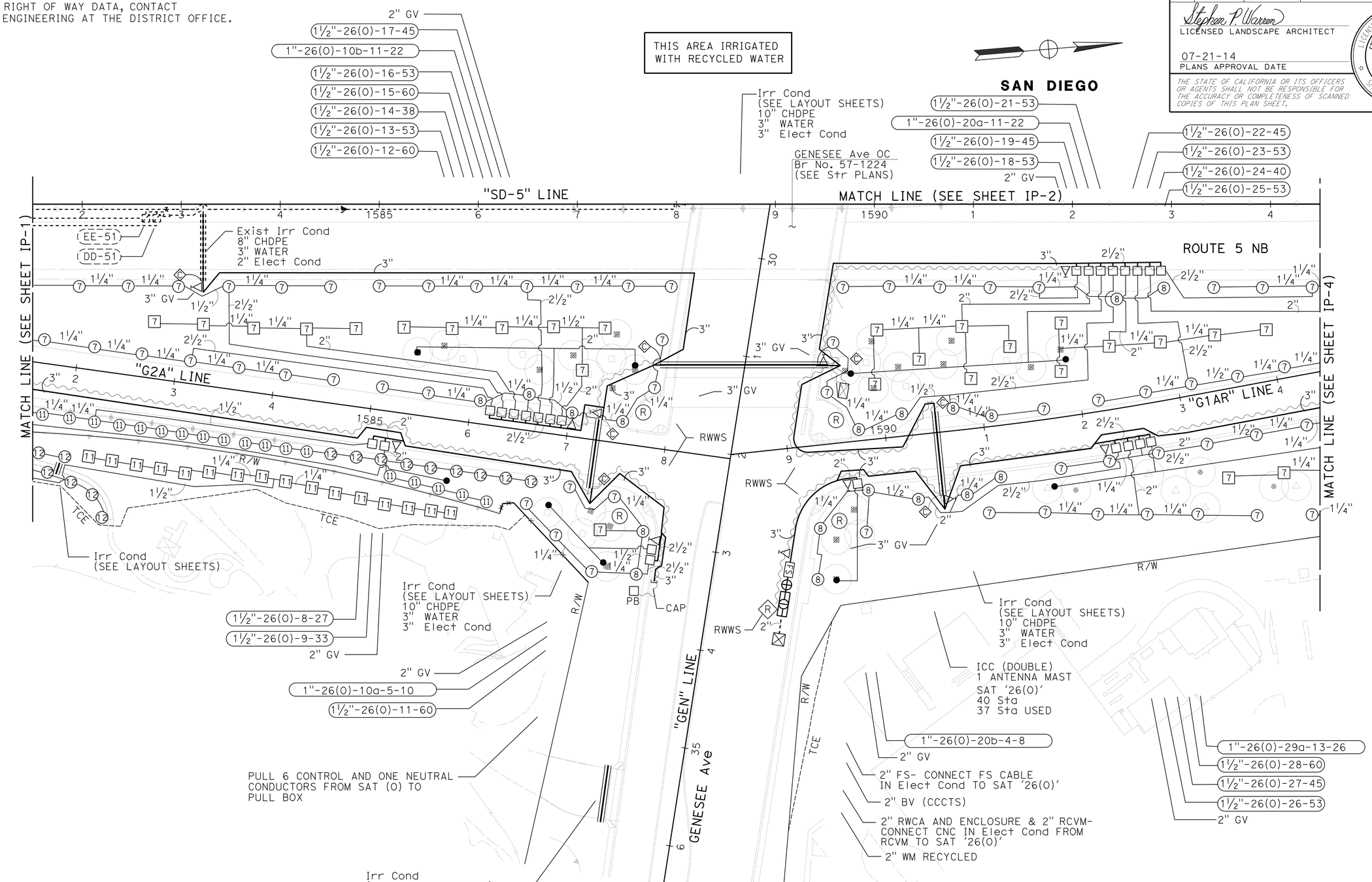


*APPROVED FOR IRRIGATION WORK ONLY*

# IRRIGATION PLAN

SCALE: 1"=50'

**IP-3**

| REVISED BY | DATE REVISED |
|---|---|
| | |

| CALCULATED-DESIGNED BY | CHECKED BY |
|---|---|
| JOEL HORTIZUELA | STEVE WARREN |

SENIOR LANDSCAPE ARCHITECT: STEPHEN ALVAREZ

STATE OF CALIFORNIA - DEPARTMENT OF TRANSPORTATION
Caltrans® LANDSCAPE ARCHITECTURE

LAST REVISION 07-15-14 | DATE PLOTTED => 23-JUL-2014 | TIME PLOTTED => 14:51

| Dist | COUNTY | ROUTE | POST MILES TOTAL PROJECT | SHEET No. | TOTAL SHEETS |
|---|---|---|---|---|---|
| 11 | SD | 5 | R29.1/R30.5 | 640 | 1012 |

Stephen P. Warren
LICENSED LANDSCAPE ARCHITECT

07-21-14
PLANS APPROVAL DATE

LICENSED LANDSCAPE ARCHITECT
STEPHEN P. WARREN No. 3442
Stephen P. Warren
REGISTRATION EXPIRES 10-31-14
REGISTRATION REVIEW 05-23-14
DATE
STATE OF CALIFORNIA

*THE STATE OF CALIFORNIA OR ITS OFFICERS OR AGENTS SHALL NOT BE RESPONSIBLE FOR THE ACCURACY OR COMPLETENESS OF SCANNED COPIES OF THIS PLAN SHEET.*

## NOTES:

1. FOR ACCURATE RIGHT OF WAY DATA, CONTACT RIGHT OF WAY ENGINEERING AT THE DISTRICT OFFICE.
2. INSTALL PLASTIC PIPE SUPPLY LINE (MAIN) AND VALVES ON WEST SIDE OF THE FENCE/BIKE PATH.
3. INSTALL PLASTIC PIPE SUPPLY LINE (MAIN) AND VALVES ON EAST SIDE OF BIKE PATH.

THIS AREA IRRIGATED WITH RECYCLED WATER

SAN DIEGO

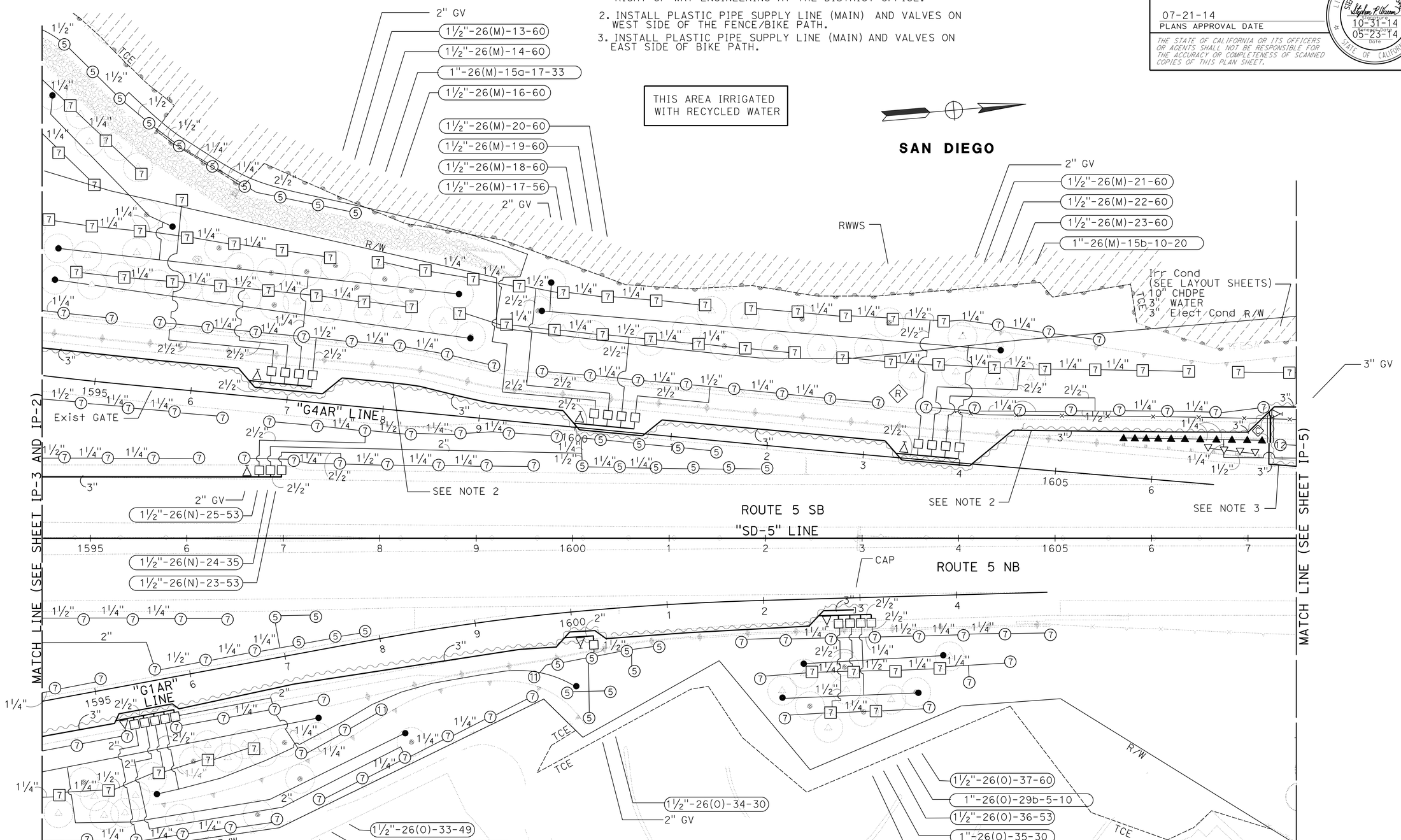


*APPROVED FOR IRRIGATION WORK ONLY*

# IRRIGATION PLAN

SCALE: 1"=50'

**IP-4**

| REVISED BY | DATE REVISED |
|---|---|
| JOEL HORTIZUELA | STEVE WARREN |

CALCULATED-DESIGNED BY: STEPHEN ALVAREZ
CHECKED BY: SENIOR LANDSCAPE ARCHITECT

STATE OF CALIFORNIA - DEPARTMENT OF TRANSPORTATION
Caltrans® LANDSCAPE ARCHITECTURE

LAST REVISION 07-15-14
DATE PLOTTED => 23-JUL-2014
TIME PLOTTED => 14:51

| Dist | COUNTY | ROUTE | POST MILES TOTAL PROJECT | SHEET No. | TOTAL SHEETS |
|---|---|---|---|---|---|
| 11 | SD | 5 | R29.1/R30.5 | 641 | 1012 |

Stephen P. Warren
LICENSED LANDSCAPE ARCHITECT

07-21-14
PLANS APPROVAL DATE

LICENSED LANDSCAPE ARCHITECT
STEPHEN P. WARREN No. 3442
Stephen P. Warren
10-31-14
05-23-14
Date
STATE OF CALIFORNIA

*THE STATE OF CALIFORNIA OR ITS OFFICERS OR AGENTS SHALL NOT BE RESPONSIBLE FOR THE ACCURACY OR COMPLETENESS OF SCANNED COPIES OF THIS PLAN SHEET.*

## NOTES:

1. FOR ACCURATE RIGHT OF WAY DATA, CONTACT RIGHT OF WAY ENGINEERING AT THE DISTRICT OFFICE.
2. INSTALL PLASTIC PIPE SUPPLY LINE (MAIN) AND VALVES ON WEST SIDE OF THE FENCE/BIKE PATH.
3. INSTALL PLASTIC PIPE SUPPLY LINE (MAIN) AND VALVES ON EAST SIDE OF BIKE PATH.

THIS AREA AT ROUTE 5 SB
IRRIGATED WITH RECYCLED WATER

SAN DIEGO

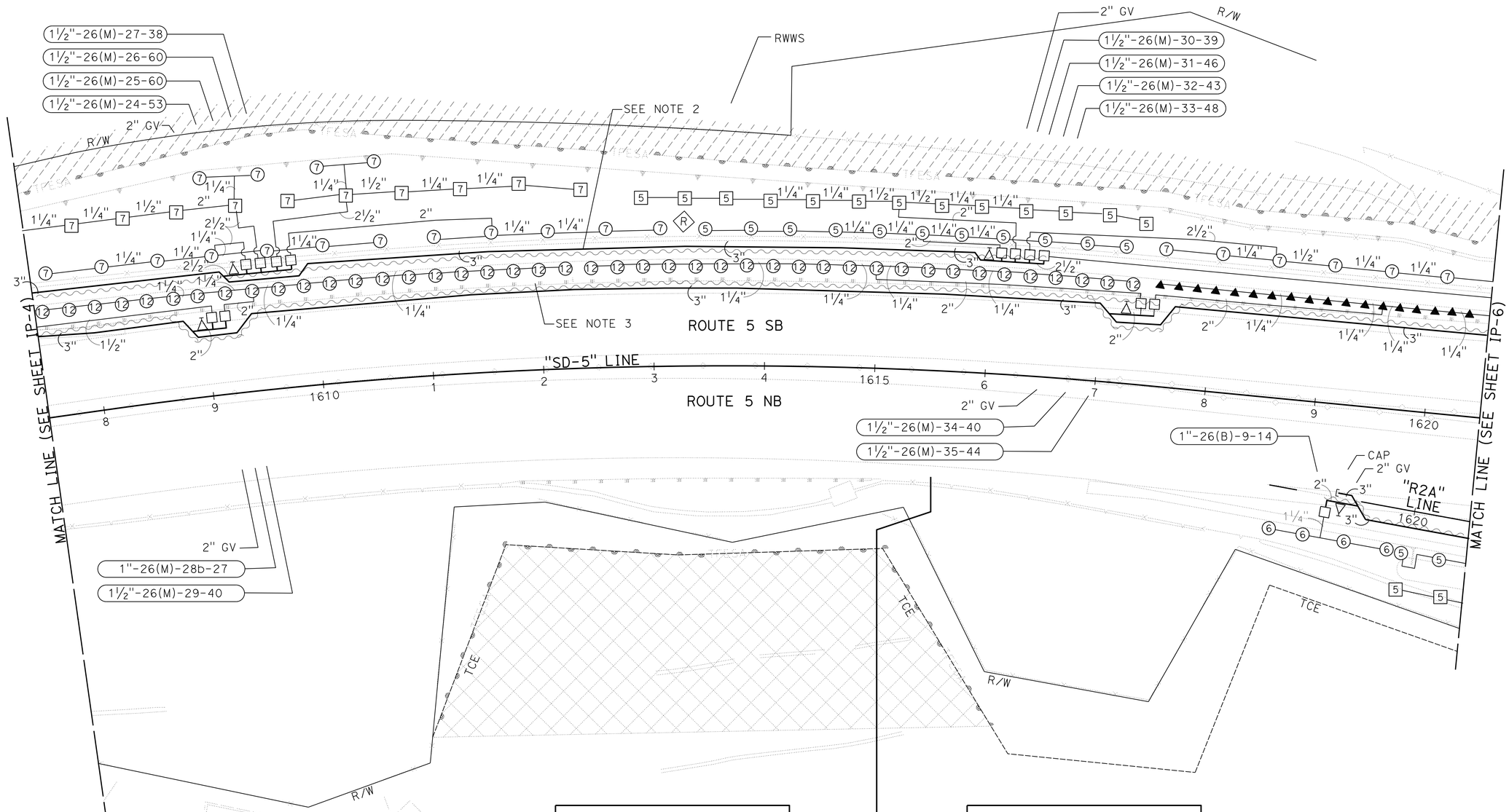


THIS AREA AT ROUTE 5 NB
IRRIGATED WITH RECYCLED WATER

THIS AREA AT ROUTE 5 NB
IRRIGATED WITH POTABLE WATER

*APPROVED FOR IRRIGATION WORK ONLY*

# IRRIGATION PLAN

SCALE: 1"=50'

**IP-5**

STATE OF CALIFORNIA - DEPARTMENT OF TRANSPORTATION
Caltrans® LANDSCAPE ARCHITECTURE

SENIOR LANDSCAPE ARCHITECT: STEPHEN ALVAREZ
CALCULATED-DESIGNED BY: JOEL HORTIZUELA
CHECKED BY: STEVE WARREN
REVISED BY
DATE REVISED

LAST REVISION 07-15-14
DATE PLOTTED => 23-JUL-2014
TIME PLOTTED => 14:51

| Dist | COUNTY | ROUTE | POST MILES TOTAL PROJECT | SHEET No. | TOTAL SHEETS |
|---|---|---|---|---|---|
| 11 | SD | 5 | R29.1/R30.5 | 642 | 1012 |

Stephen P. Warren
LICENSED LANDSCAPE ARCHITECT

07-21-14
PLANS APPROVAL DATE

*THE STATE OF CALIFORNIA OR ITS OFFICERS OR AGENTS SHALL NOT BE RESPONSIBLE FOR THE ACCURACY OR COMPLETENESS OF SCANNED COPIES OF THIS PLAN SHEET.*

LICENSED LANDSCAPE ARCHITECT
STEPHEN P. WARREN No. 3442
Stephen P. Warren
10-31-14
Expiration Date
05-23-14
Date
STATE OF CALIFORNIA

## NOTES:

1. FOR ACCURATE RIGHT OF WAY DATA, CONTACT RIGHT OF WAY ENGINEERING AT THE DISTRICT OFFICE.
2. INSTALL PLASTIC PIPE SUPPLY LINE (MAIN) AND VALVES ON EAST SIDE OF BIKE PATH.
3. INSTALL PLASTIC PIPE SUPPLY LINE (MAIN) AND VALVES ON WEST SIDE OF BIKE PATH.

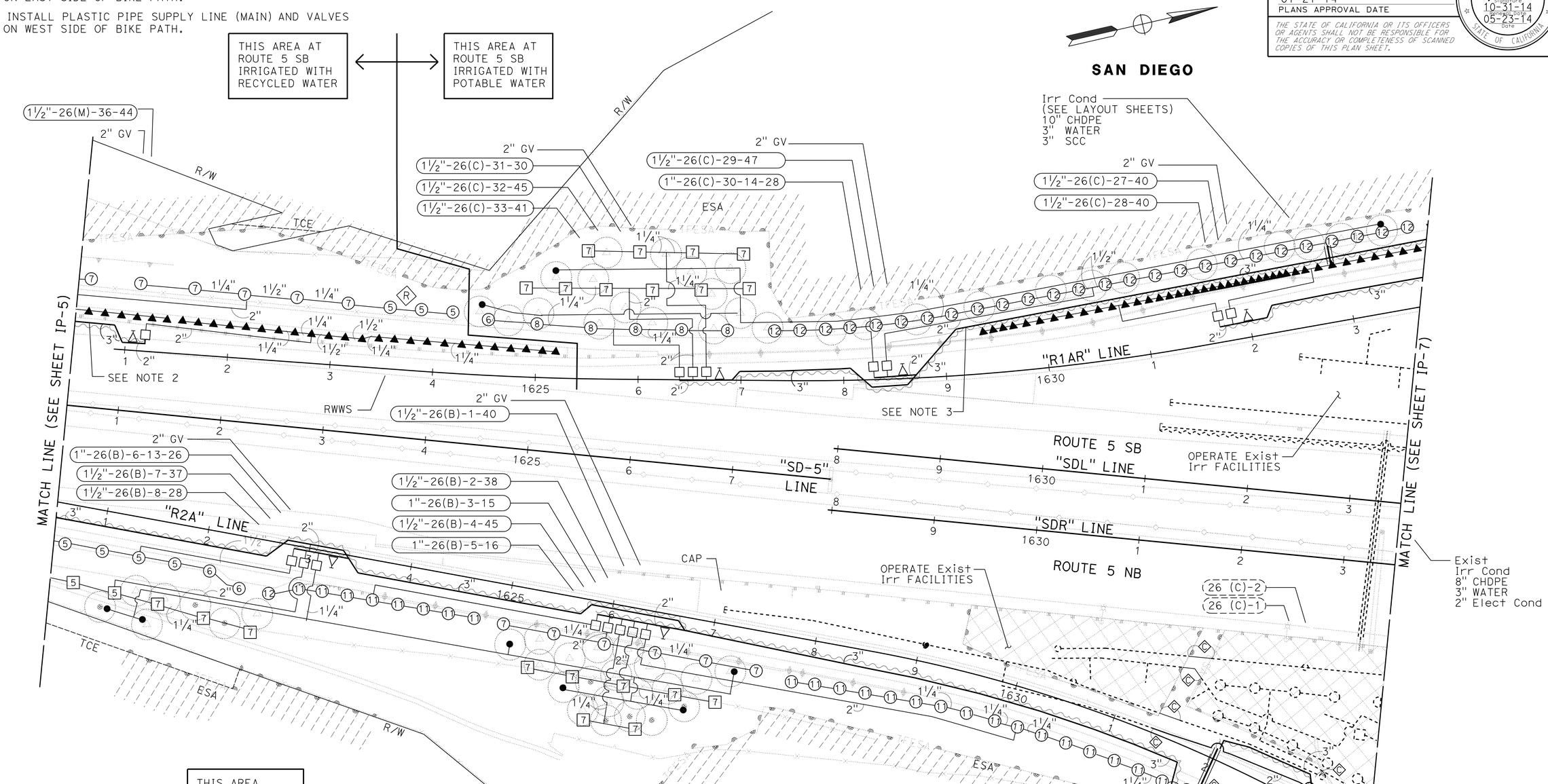


*APPROVED FOR IRRIGATION WORK ONLY*

# IRRIGATION PLAN

SCALE: 1"=50'

**IP-6**

| REVISED BY | DATE REVISED |
|---|---|
| JOEL HORTIZUELA | STEVE WARREN |

CALCULATED-DESIGNED BY
CHECKED BY

SENIOR LANDSCAPE ARCHITECT
STEPHEN ALVAREZ

STATE OF CALIFORNIA - DEPARTMENT OF TRANSPORTATION
Caltrans® LANDSCAPE ARCHITECTURE

LAST REVISION 07-15-14
DATE PLOTTED => 23-JUL-2014
TIME PLOTTED => 14:51

| Dist | COUNTY | ROUTE | POST MILES TOTAL PROJECT | SHEET No. | TOTAL SHEETS |
|---|---|---|---|---|---|
| 11 | SD | 5 | R29.1/R30.5 | 643 | 1012 |

Stephen P. Warren
LICENSED LANDSCAPE ARCHITECT

07-21-14
PLANS APPROVAL DATE

LICENSED LANDSCAPE ARCHITECT
STEPHEN P. WARREN No. 3442
Stephen P. Warren
10-31-14
EXPIRATION DATE
05-23-14
DATE
STATE OF CALIFORNIA

*THE STATE OF CALIFORNIA OR ITS OFFICERS OR AGENTS SHALL NOT BE RESPONSIBLE FOR THE ACCURACY OR COMPLETENESS OF SCANNED COPIES OF THIS PLAN SHEET.*

## NOTES:

1. FOR ACCURATE RIGHT OF WAY DATA, CONTACT RIGHT OF WAY ENGINEERING AT THE DISTRICT OFFICE.
2. INSTALL MAINLINE AND VALVES ON EAST SIDE OF BIKE PATH.
3. INSTALL MAINLINE AND VALVES ON WEST SIDE OF BIKE PATH.

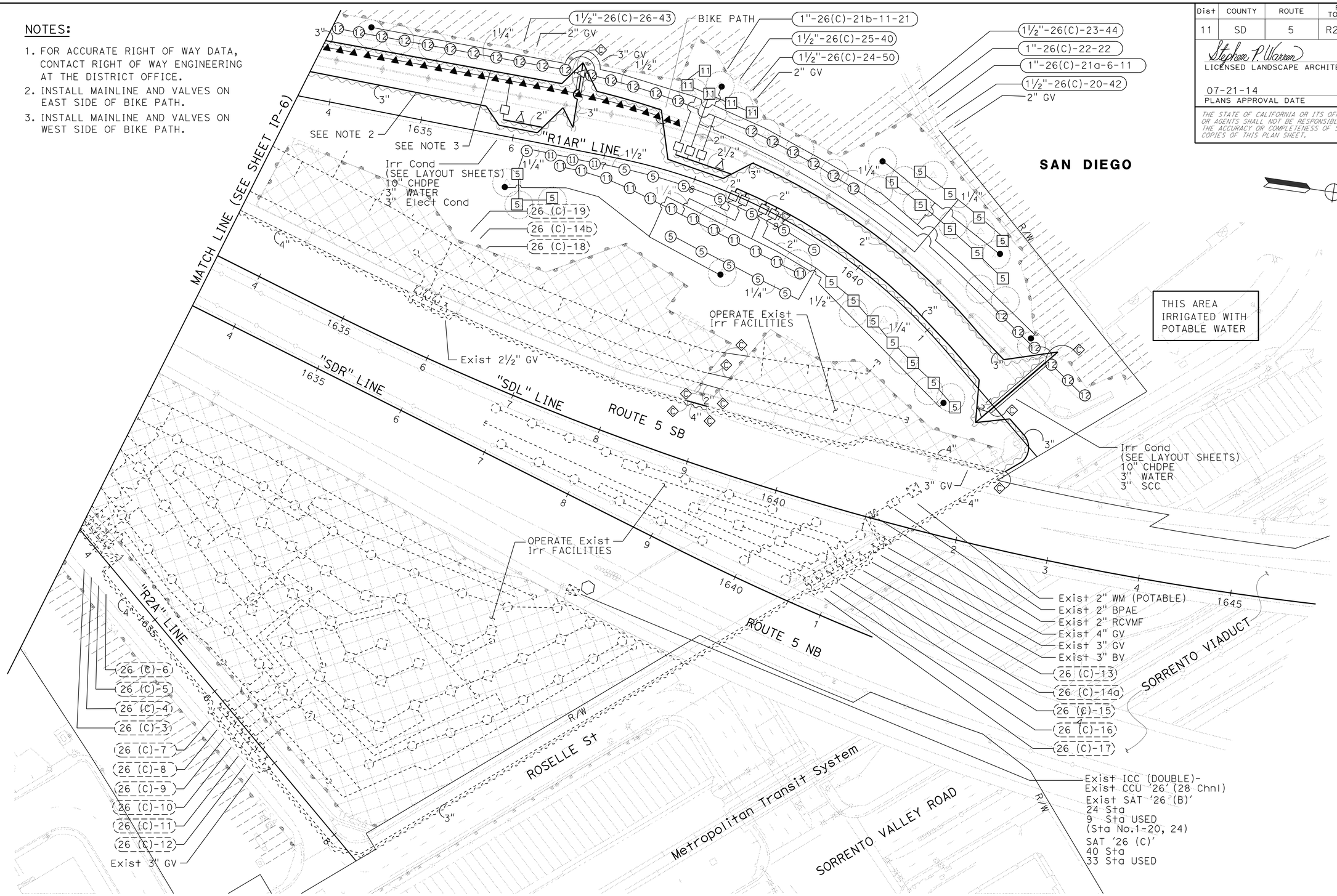


# IRRIGATION PLAN

SCALE: 1"=50'

**IP-7**

*APPROVED FOR IRRIGATION WORK ONLY*

STATE OF CALIFORNIA - DEPARTMENT OF TRANSPORTATION
Caltrans® LANDSCAPE ARCHITECTURE

SENIOR LANDSCAPE ARCHITECT: STEPHEN ALVAREZ
CALCULATED-DESIGNED BY: JOEL HORTIZUELA
CHECKED BY: STEVE WARREN
REVISED BY / DATE REVISED

LAST REVISION 07-15-14
DATE PLOTTED => 23-JUL-2014
TIME PLOTTED => 14:51

| Dist | COUNTY | ROUTE | POST MILES TOTAL PROJECT | SHEET No. | TOTAL SHEETS |
|---|---|---|---|---|---|
| 11 | SD | 5 | R29.1/R30.5 | 644 | 1012 |

Stephen P. Warren
LICENSED LANDSCAPE ARCHITECT

07-21-14
PLANS APPROVAL DATE

LICENSED LANDSCAPE ARCHITECT
STEPHEN P. WARREN No. 3442
Stephen P. Warren
10-31-14 Date
05-23-14 Date
STATE OF CALIFORNIA

*THE STATE OF CALIFORNIA OR ITS OFFICERS OR AGENTS SHALL NOT BE RESPONSIBLE FOR THE ACCURACY OR COMPLETENESS OF SCANNED COPIES OF THIS PLAN SHEET.*

NOTE:

FOR ACCURATE RIGHT OF WAY DATA, CONTACT RIGHT OF WAY ENGINEERING AT THE DISTRICT OFFICE.

THIS AREA IRRIGATED WITH RECYCLED WATER

SAN DIEGO

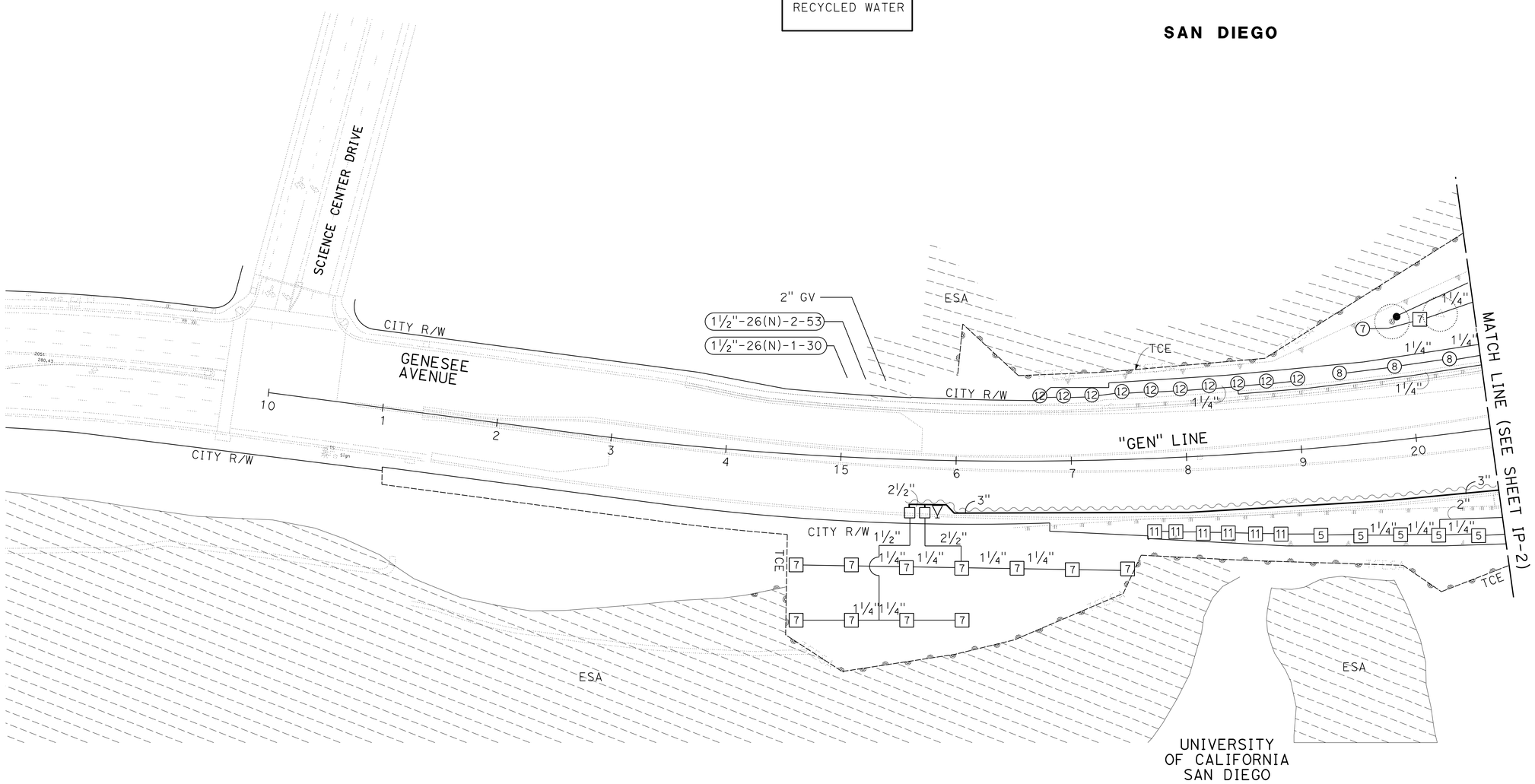


*APPROVED FOR IRRIGATION WORK ONLY*

# IRRIGATION PLAN

SCALE: 1"=50'

**IP-8**

STATE OF CALIFORNIA - DEPARTMENT OF TRANSPORTATION
Caltrans® LANDSCAPE ARCHITECTURE

SENIOR LANDSCAPE ARCHITECT: STEPHEN ALVAREZ
CALCULATED-DESIGNED BY: JOEL HORTIZUELA
CHECKED BY: STEVE WARREN
REVISED BY
DATE REVISED

LAST REVISION 07-15-14
DATE PLOTTED => 23-JUL-2014
TIME PLOTTED => 14:51

| Dist | COUNTY | ROUTE | POST MILES TOTAL PROJECT | SHEET No. | TOTAL SHEETS |
|---|---|---|---|---|---|
| 11 | SD | 5 | R29.1/R30.5 | 645 | 1012 |

Stephen P. Warren
LICENSED LANDSCAPE ARCHITECT

07-21-14
PLANS APPROVAL DATE

LICENSED LANDSCAPE ARCHITECT
STEPHEN P. WARREN No. 3442
Stephen P. Warren
10-31-14
Expiration Date
05-23-14
Date
STATE OF CALIFORNIA

*THE STATE OF CALIFORNIA OR ITS OFFICERS OR AGENTS SHALL NOT BE RESPONSIBLE FOR THE ACCURACY OR COMPLETENESS OF SCANNED COPIES OF THIS PLAN SHEET.*

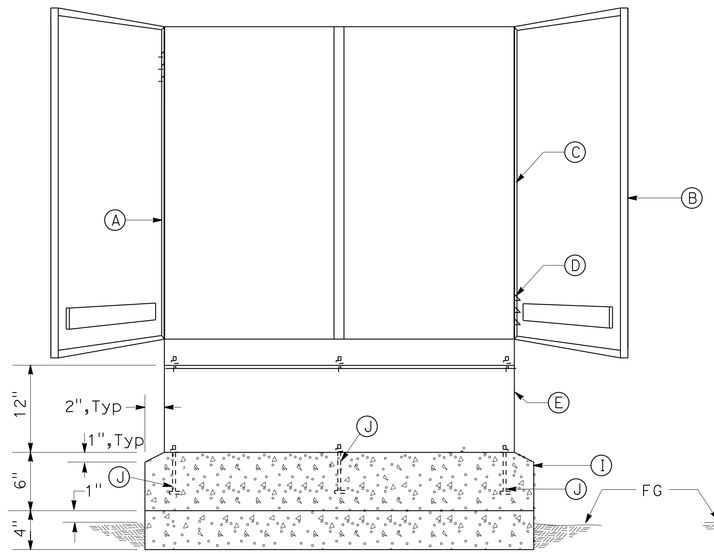


FRONT ELEVATION

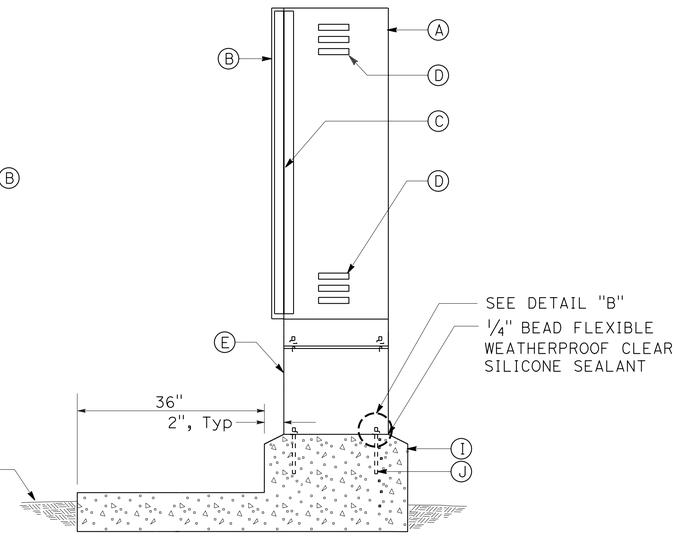


SIDE SECTION

## CABINET, SECURITY DOOR, AND FOUNDATION

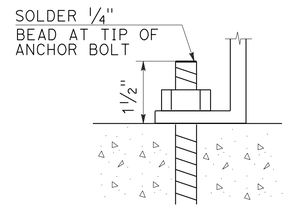


DETAIL "B"

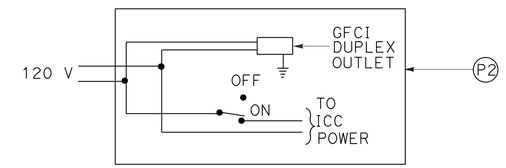


DETAIL "A"

## LEGEND:

- (A) STAINLESS STEEL CONTROLLER ENCLOSURE CABINET
- (B) DOOR WITH THREE POINT LOCKING MECHANISM, FLUSH-MOUNTED ACCESS HANDLE FOR PADLOCK, AND STORAGE FOR PLANS
- (C) CONTINUOUS STAINLESS STEEL PIANO HINGE
- (D) LOUVERS AT TOP AND BOTTOM FOR CROSS VENTILATION
- (E) 12" HIGH STAINLESS STEEL PEDESTAL (ATTACH TO ENCLOSURE CABINET)
- (F) SURGE PROTECTION FOR OMNI DIRECTIONAL ANTENNA
- (G) CAM-CLUSTER
- (H) SURGE PROTECTION
- (I) PCC PAD AND FOUNDATION
- (J) 3/8" DIAMETER, 2 3/4" LONG, WINGED STAINLESS STEEL ANCHOR BOLTS WITH WASHERS AND HEX HEAD LOCKNUTS (4 BOLTS FOR SINGLE, 6 BOLTS FOR DOUBLE)
- (K) 5/8" X 10' LONG COPPER CLAD STEEL ROD GROUND ELECTRODE AND GROUND CLAMP WITH No. 8 AWG GROUND CONDUCTOR.
- (L) SIZE 1", TYPE 3 CONDUIT FOR ELECTRICAL SERVICE (2 FOR CABINET WITH TELEPHONE SERVICE)
- (M) SIZE 1 1/2", TYPE 3 CONDUIT FOR RCVM AND FS INPUT WIRING
- (N) SIZE 3" & 2" (ONE EACH), TYPE 3 CONDUIT FOR LOW VOLTAGE WIRING
- (O) FLOW MONITOR
- (P1) 2 GANG WEATHER PROOF BOX WITH GROUND FAULT PROTECTED RECEPTACLE
- (P2) ON-OFF SWITCH, SEE DETAIL "A" ON THIS SHEET
- (Q) STAINLESS STEEL BACK BOARD (3/16" Min THICKNESS), ATTACHED TO ENCLOSURE
- (R) CIRCUIT BREAKERS
- (S) TERMINAL STRIPS FOR LOW VOLTAGE WIRE CONNECTIONS
- (T) SATELLITE IRRIGATION CONTROLLER (SAT) WITH TWO WAY RADIO CONNECTIONS (QUANTITIES SHOWN ON PLANS). EXISTING WHERE CALLED OUT ON PLAN.
- (U) 450-47 MHZ RADIO
- (V) MASTER VALVE RELAY

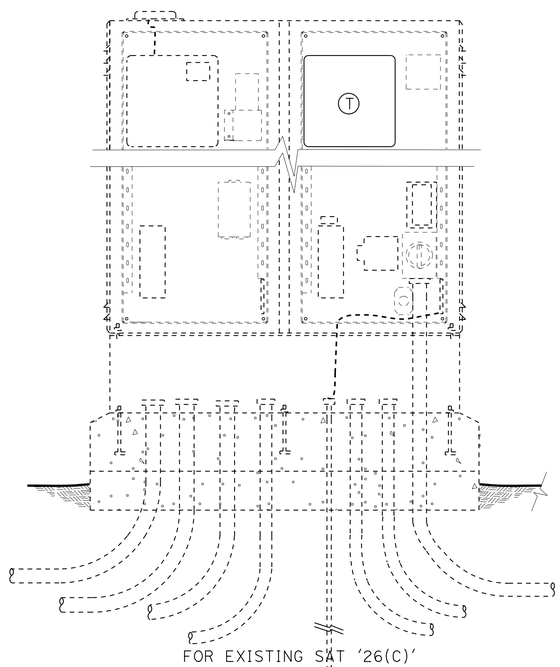


SAT LAYOUT

NOTE:
AT SATELLITE CONTROLLERS LOCATION '26(B,C)'.

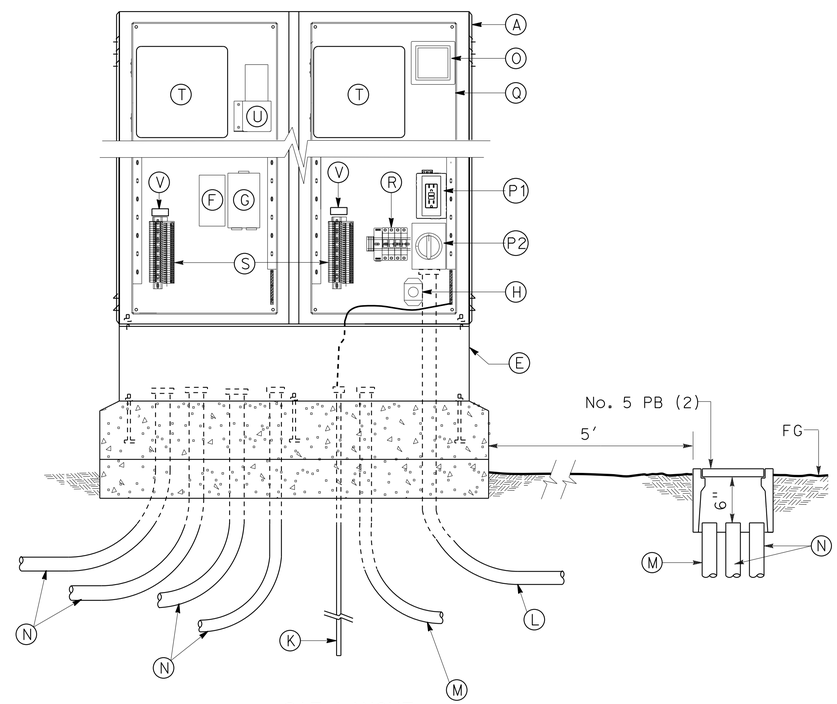


SAT LAYOUT

## IRRIGATION DOUBLE CONTROLLER ENCLOSURE CABINET LAYOUT

# IRRIGATION DETAILS

NO SCALE

**ID-1**

STATE OF CALIFORNIA - DEPARTMENT OF TRANSPORTATION
Caltrans® LANDSCAPE ARCHITECTURE

SENIOR LANDSCAPE ARCHITECT: STEPHEN ALVAREZ
CALCULATED-DESIGNED BY: JOEL HORTIZUELA
CHECKED BY: STEVE WARREN
REVISED BY
DATE REVISED

LAST REVISION 07-15-14
DATE PLOTTED => 23-JUL-2014
TIME PLOTTED => 14:51

| Dist | COUNTY | ROUTE | POST MILES TOTAL PROJECT | SHEET No. | TOTAL SHEETS |
|---|---|---|---|---|---|
| 11 | SD | 5 | R29.1/R30.5 | 646 | 1012 |

Stephen P. Warren
LICENSED LANDSCAPE ARCHITECT

07-21-14
PLANS APPROVAL DATE

LICENSED LANDSCAPE ARCHITECT
STEPHEN P. WARREN No. 3442
Stephen P. Warren
Expiration Date
10-31-14
Renewal Date
05-23-14
Date
STATE OF CALIFORNIA

*THE STATE OF CALIFORNIA OR ITS OFFICERS OR AGENTS SHALL NOT BE RESPONSIBLE FOR THE ACCURACY OR COMPLETENESS OF SCANNED COPIES OF THIS PLAN SHEET.*

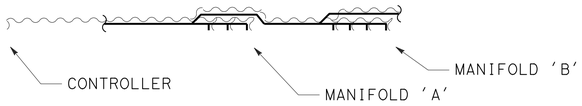


EXAMPLE:
MANIFOLD 'A' - INSTALL 4 CNC AND 1 ADDITIONAL WIRE FROM CONTROLLER TO LAST VALVE BOX IN MANIFOLD 'A'.
MANIFOLD 'B' - INSTALL 5 CNC AND 1 ADDITIONAL WIRE FROM CONTROLLER TO LAST VALVE BOX IN MANIFOLD 'B'.

## CONTROL AND NEUTRAL CONDUCTOR

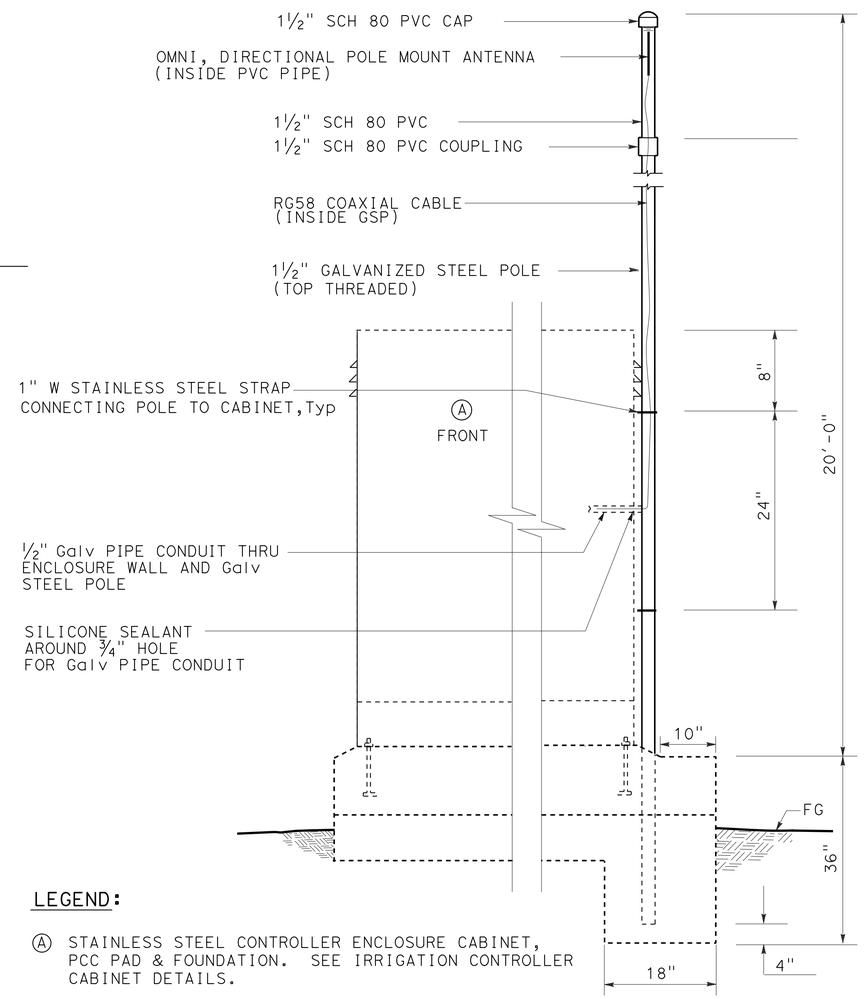


LEGEND:

Ⓐ STAINLESS STEEL CONTROLLER ENCLOSURE CABINET, PCC PAD & FOUNDATION. SEE IRRIGATION CONTROLLER CABINET DETAILS.

FRONT ELEVATION

## ANTENNA MAST

| INSTALLATION | TYPE FITTING | INSTALLATION | TYPE FITTING |
|---|---|---|---|
| 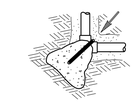 | 90° ELL | 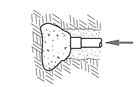 | DEAD END |
| | BEND 45° 22.5° 11.25° | | GATE VALVE |
| 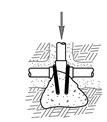 | TEE | | VERTICAL BEND (TYPE I) 45° 22.5° 11.25° OR |
| | | 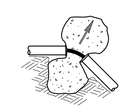 | VERTICAL BEND (TYPE II) 45° 22.5° 11.25° |

NOTES:
Min 1 CF PCC FOR 1½" PIPE SIZE AND SMALLER.
Min 2 CF PCC FOR 2" PIPE SIZE.
Min 2 CF PCC FOR 3" AND 4" PIPE SIZE.
Min 3 CF PCC FOR 6" PIPE SIZE.
Min 4 CF PCC FOR 8" PIPE SIZE.
USE #3 REINFORCING BAR WHERE SHOWN.

## THRUST BLOCKS
## (Mod)

# IRRIGATION DETAILS
NO SCALE
**ID-2**

STATE OF CALIFORNIA - DEPARTMENT OF TRANSPORTATION
Caltrans LANDSCAPE ARCHITECTURE
SENIOR LANDSCAPE ARCHITECT: STEPHEN ALVAREZ
CALCULATED-DESIGNED BY: JOEL HORTIZUELA
CHECKED BY: STEVE WARREN
REVISED BY
DATE REVISED

LAST REVISION 07-15-14
DATE PLOTTED => 23-JUL-2014
TIME PLOTTED => 14:51

| Dist | COUNTY | ROUTE | POST MILES TOTAL PROJECT | SHEET No. | TOTAL SHEETS |
|---|---|---|---|---|---|
| 11 | SD | 5 | R29.1/R30.5 | 647 | 1012 |

Stephen P. Warren
LICENSED LANDSCAPE ARCHITECT

07-21-14
PLANS APPROVAL DATE

LICENSED LANDSCAPE ARCHITECT
STEPHEN P. WARREN No. 3442
Stephen P. Warren
LICENSE EXPIRATION DATE 10-31-14
REGISTRATION EXPIRATION DATE 05-23-14
Date
STATE OF CALIFORNIA

*THE STATE OF CALIFORNIA OR ITS OFFICERS OR AGENTS SHALL NOT BE RESPONSIBLE FOR THE ACCURACY OR COMPLETENESS OF SCANNED COPIES OF THIS PLAN SHEET.*

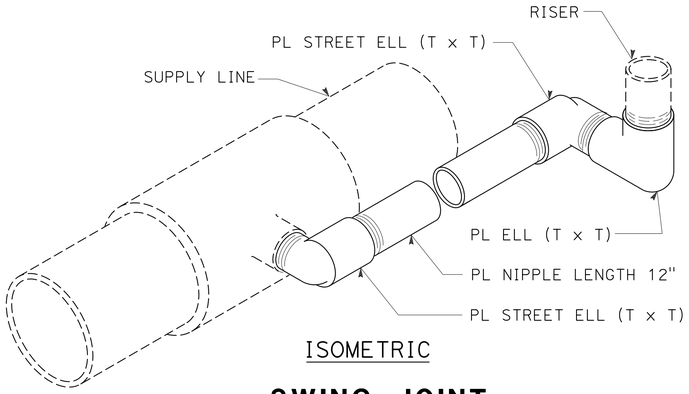


ISOMETRIC

## SWING JOINT
## (Mod)

NOTES:

1. FITTINGS, AND PIPE TO BE SAME SIZE AS COPPER SUPPLY LINE SHOWN ON PLANS.
2. ALL METAL IN CONTACT WITH SOIL AND PCC MUST BE POLYETHYLENE WRAPPED USING 2" WIDE PLASTIC BACKED ADHESIVE TAPE 0.02" THICK WITH ½" OVERLAP.
3. ASSEMBLY MATERIAL RECYCLED WATER PIPING TO BE PAINTED PURPLE BRASS.
4. UNIONS AND NIPPLES MUST BE THREADED.

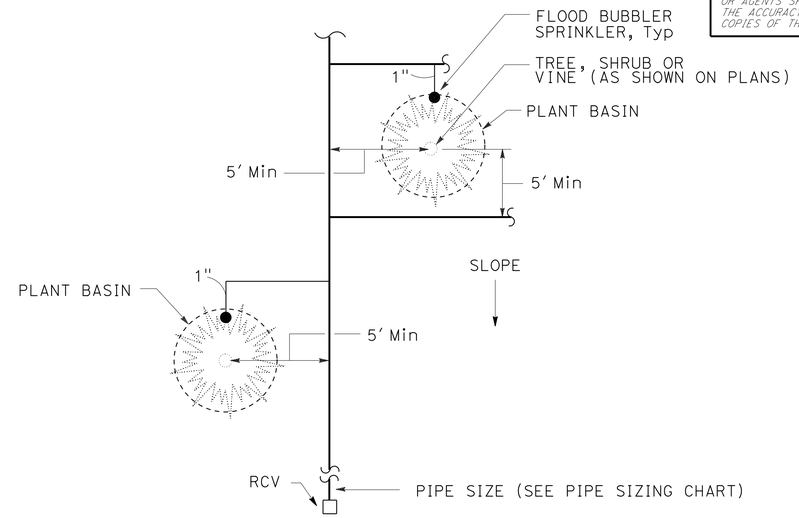


PLAN

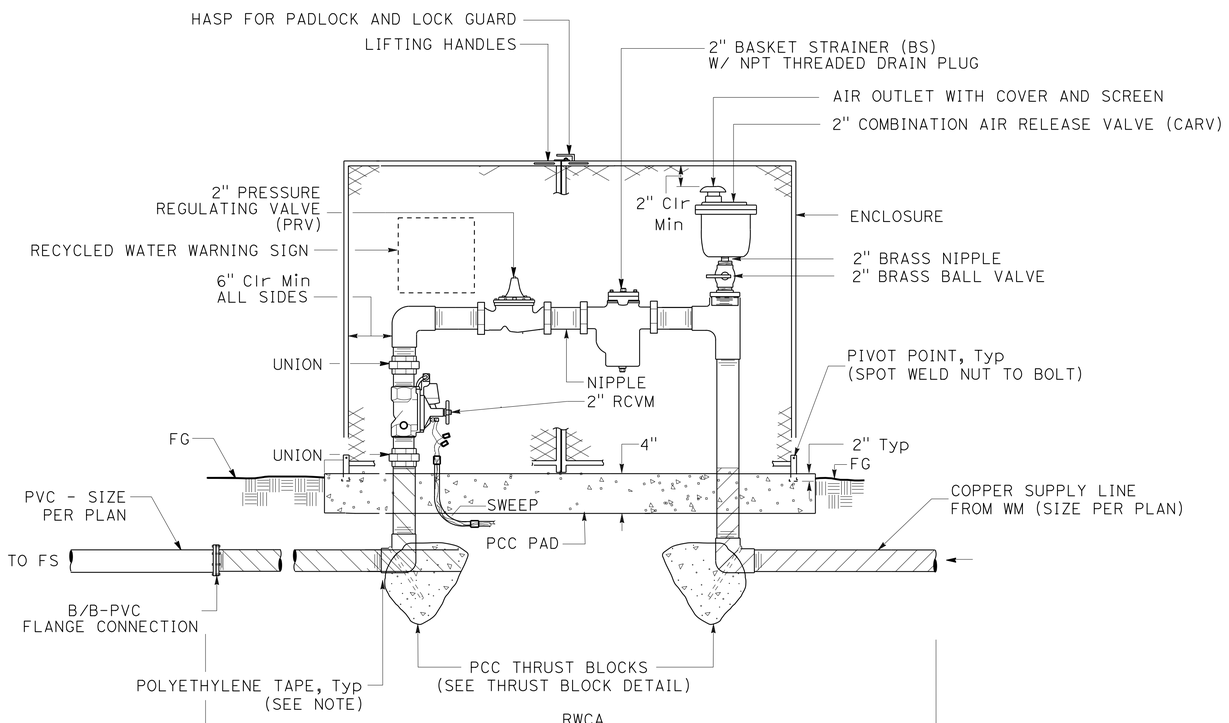


## 2" RECYCLED WATER CONNECTION ASSEMBLY (RWCA) AND ENCLOSURE

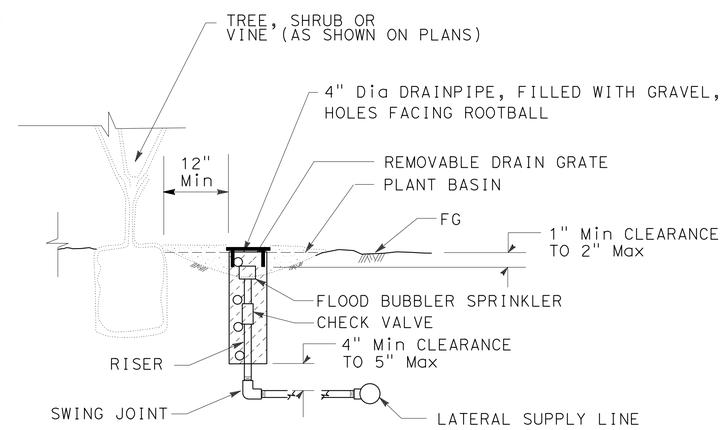


SECTION

NOTES:

1. INSTALL FLOOD BUBBLER SPRINKLER ON UPHILL SIDE OF PLANT WHEN ON SLOPE
2. INSTALL FLOOD BUBBLER WITHIN PLANT BASIN

## TREE WELL SPRINKLER ASSEMBLY
## (Mod)

# IRRIGATION DETAILS

NO SCALE

**ID-3**

STATE OF CALIFORNIA - DEPARTMENT OF TRANSPORTATION
Caltrans® LANDSCAPE ARCHITECTURE

SENIOR LANDSCAPE ARCHITECT: STEPHEN ALVAREZ
CALCULATED-DESIGNED BY: JOEL HORTIZUELA
CHECKED BY: STEVE WARREN
REVISED BY / DATE REVISED

LAST REVISION 07-15-14
DATE PLOTTED => 23-JUL-2014
TIME PLOTTED => 14:51

| Dist | COUNTY | ROUTE | POST MILES TOTAL PROJECT | SHEET No. | TOTAL SHEETS |
|---|---|---|---|---|---|
| 11 | SD | 5 | R29.1/R30.5 | 648 | 1012 |

Stephen P. Warren
LICENSED LANDSCAPE ARCHITECT

07-21-14
PLANS APPROVAL DATE

*THE STATE OF CALIFORNIA OR ITS OFFICERS OR AGENTS SHALL NOT BE RESPONSIBLE FOR THE ACCURACY OR COMPLETENESS OF SCANNED COPIES OF THIS PLAN SHEET.*

LICENSED LANDSCAPE ARCHITECT
STEPHEN P. WARREN No. 3442
Stephen P. Warren
REGISTRATION EXPIRES
10-31-14
REGISTRATION EXPIRES
05-23-14
DATE
STATE OF CALIFORNIA

NOTES:

1. A PHYSICAL SEPARATION SHALL BE PROVIDED BETWEEN ADJACENT AREAS IRRIGATED WITH RECYCLED WATER AND POTABLE WATER. SEPARATION SHALL BE PROVIDED BY DISTANCE, CONCRETE MOW STRIPS OR OTHER APPROVED METHODS.
2. ALL NOTES AND REFERENCES THIS SHEET PER COUNTY OF SAN DIEGO DEPARTMENT OF ENVIRONMENTAL HEALTH.

NOTE:

INSTALL RECYCLED WATER LINE BELOW POTABLE WATER LINE, IF NECESSARY, TO MAINTAIN MINIMUM CLEARANCE.

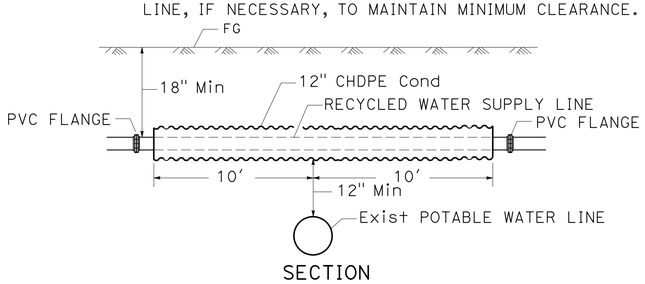


## RECYCLED WATER CONDUIT (RCWS)

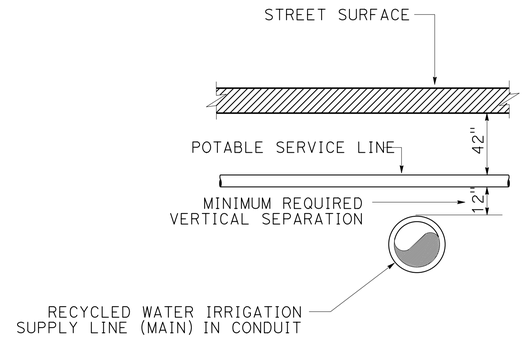


NOTE:

ALL RECYCLED WATER IRRIGATION PIPES AND CONDUITS SHALL BE PURPLE AND LABELED AS SPECIFIED IN THE "STANDARD SPECIFICATION FOR PRIVATE IRRIGATION SYSTEMS WATER DISTRICT" RULES AND REGULATIONS FOR CONSTRUCTION OF RECYCLED WATER MAINS, OCTOBER 1993.

## POTABLE SERVICE LINE CROSSING

(FOR INFORMATION ONLY. NO POTABLE SERVICE LINE CROSSINGS WITH IRRIGATION SUPPLY LINE (MAIN) ARE SHOWN ON PLANS).

NOTES:

1. THIS DETAIL IS FOR POP-UP SPRINKLER ASSEMBLY LAYOUT AT TWO PLANTERS
2. SEE IRRIGATION PLAN FOR REMAINDER OF IRRIGATION SYSTEMS

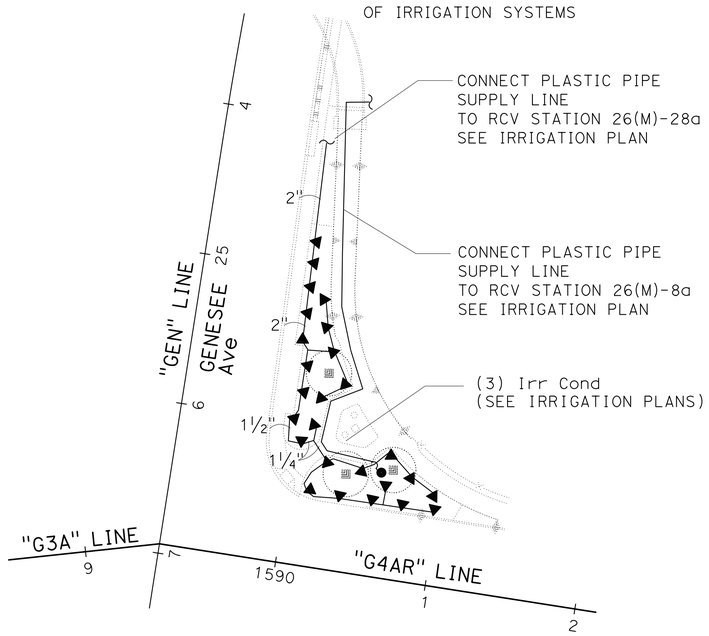


## IRRIGATION LAYOUT AT PLANTER AREA

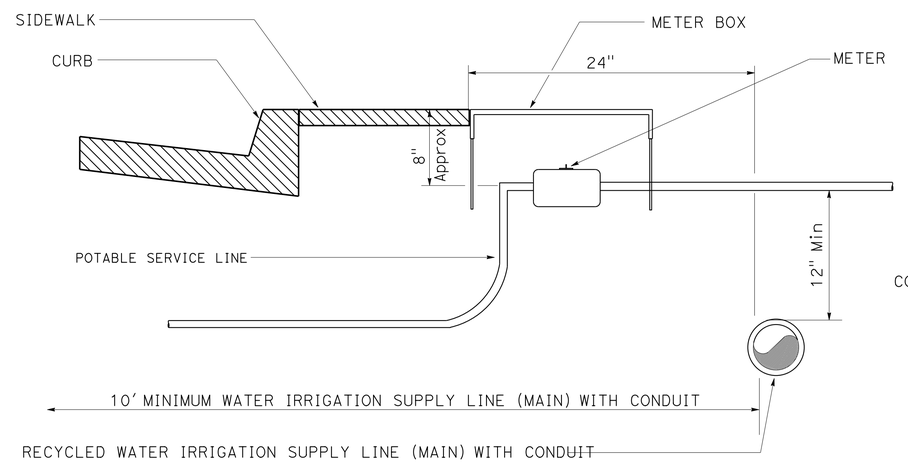


NOTE:

VERTICAL CLEARANCE OF 12" MINIMUM IS MANDATORY WHEN CROSSING PATH OF A POTABLE WATER LINE. INSTALLATION OF RECYCLED WATER IRRIGATION SUPPLY LINE (MAIN) 610 FROM BACK OF SIDEWALK WILL PROVIDE THE NECESSARY 10' HORIZONTAL CLEARANCE FROM THE POTABLE SUPPLY LINE (MAIN) IN THE STREET.

## POTABLE SERVICE LINE CROSSING

(FOR INFORMATION ONLY. NO POTABLE SERVICE LINE CROSSINGS WITH IRRIGATION SUPPLY LINE (MAIN) ARE SHOWN ON PLANS).

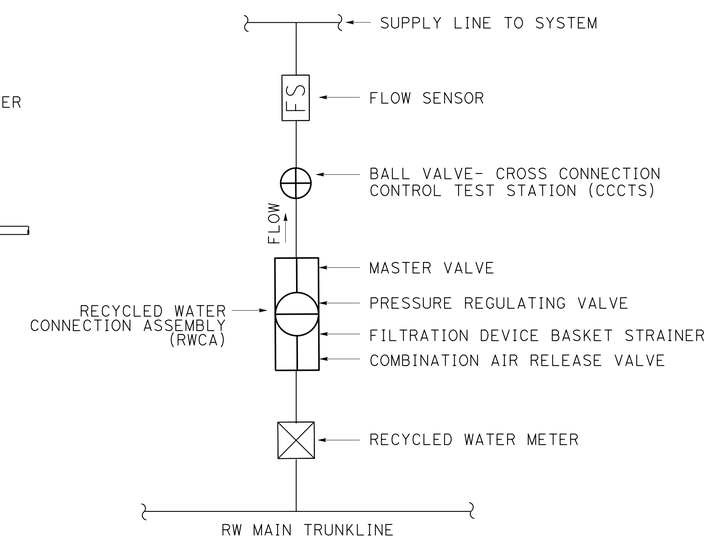


NOTES:

1. CCCTS MUST BE DOWNSTREAM OF THE RECYCLED WATER METER AFTER THE MASTER VALVE.
2. SEE IRRIGATION PLANS FOR EQUIPMENT SIZES.

## RECYCLED WATER CONNECTION CONFIGURATION

# IRRIGATION DETAILS
# ID-4

NO SCALE

STATE OF CALIFORNIA - DEPARTMENT OF TRANSPORTATION
Caltrans LANDSCAPE ARCHITECTURE
SENIOR LANDSCAPE ARCHITECT: STEPHEN ALVAREZ
CALCULATED-DESIGNED BY: JOEL HORTIZUELA
CHECKED BY: STEVE WARREN
REVISED BY
DATE REVISED

LAST REVISION 07-15-14
DATE PLOTTED => 23-JUL-2014
TIME PLOTTED => 14:51

| Dist | COUNTY | ROUTE | POST MILES TOTAL PROJECT | SHEET No. | TOTAL SHEETS |
|---|---|---|---|---|---|
| 11 | SD | 5 | R29.1/R30.5 | 649 | 1012 |

Stephen P. Warren
LICENSED LANDSCAPE ARCHITECT

07-21-14
PLANS APPROVAL DATE

LICENSED LANDSCAPE ARCHITECT
STEPHEN P. WARREN No. 3442
Stephen P. Warren
Registered Landscape Architect
10-31-14
Renewal Date Except
05-23-14
Date
STATE OF CALIFORNIA

*THE STATE OF CALIFORNIA OR ITS OFFICERS OR AGENTS SHALL NOT BE RESPONSIBLE FOR THE ACCURACY OR COMPLETENESS OF SCANNED COPIES OF THIS PLAN SHEET.*

## NOTE:

1. A CROSS-CONNECTION TEST AND COVERAGE TEST SHALL BE CONDUCTED AS DIRECTED BY THE CITY OF SAN DIEGO WATER DISTRICT AND/OR THE SAN DIEGO COUNTY DEPARTMENT OF ENVIRONMENTAL HEALTH PRIOR TO ANY USE OF RECYCLED WATER.
2. THE REQUIRED CROSS-CONNECTION CONTROL SHUTDOWN TEST SHALL BE MONITORED BY EITHER THE SAN DIEGO COUNTY DEPARTMENT OF ENVIRONMENTAL HEALTH OR STATE HEALTH.

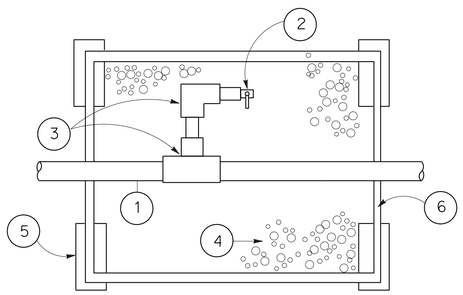


PLAN

## LEGEND:

1. MAINLINE
2. 2" BALL VALVE WITH 1/4" FEMALE THREAD

BALL VALVES SHALL HAVE A TWO PIECE BRASS OR BRONZE BODY, FULL PORT BODY, AND SHALL CONFORM TO THE FOLLOWING:

| SPECIFICATION | MINIMUM REQUIREMENT |
|---|---|
| NON SHOCK COLD WATER WORKING PRESSURE | 400 PSI |
| SEATS | TFE (TEFLON) |
| O RING SEALS | TFE (TEFLON) |

BALL VALVES SHALL BE OF THE SAME SIZE AS THE PIPELINE WHICH THE VALVES SERVE, UNLESS OTHERWISE NOTED ON THE PLANS. BALL VALVES SHALL BE INSTALLED IN A VALVE BOX.

3. PVC SCH 40 SOLVENT WELD FITTINGS
4. 3/8" Dia PEA GRAVEL SUMP (Min 1/2 CF)
5. BRICK SUPPORTS ON COMPACTED/ UNDISTURBED SUBGRADE (Min OF FOUR PER BOX)
6. PURPLE COLOR VALVE BOX AND LID

* ONLY ON TEST STATIONS DOWNSTREAM OF THE METER

## CROSS CONNECTION CONTROL TEST STATION (CCCTS)

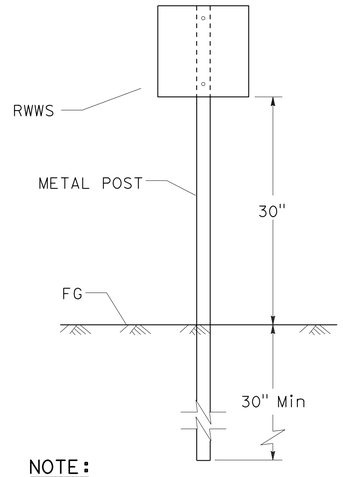

NOTE:

ATTACH RWWS TO POST WITH 6 mm Dia THEFT PROOF BOLTS.

## RECYCLED WATER WARNING SIGN (RWWS)

(POST MOUNTED)

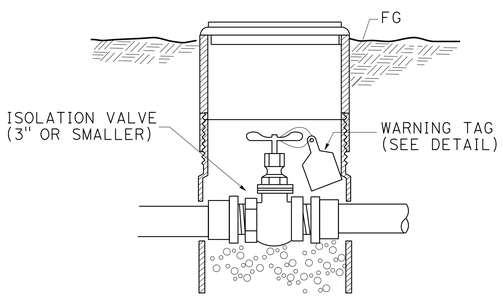


SECTION

## SIGN/TAG FOR RECYCLED WATER IRRIGATION VALVES

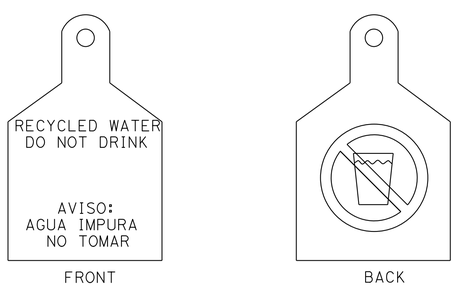


SAMPLE WARNING TAG. BACKGROUND PURPLE (PANTONE 512) WITH BLACK LETTERING

## TAG FOR RECYCLED WATER

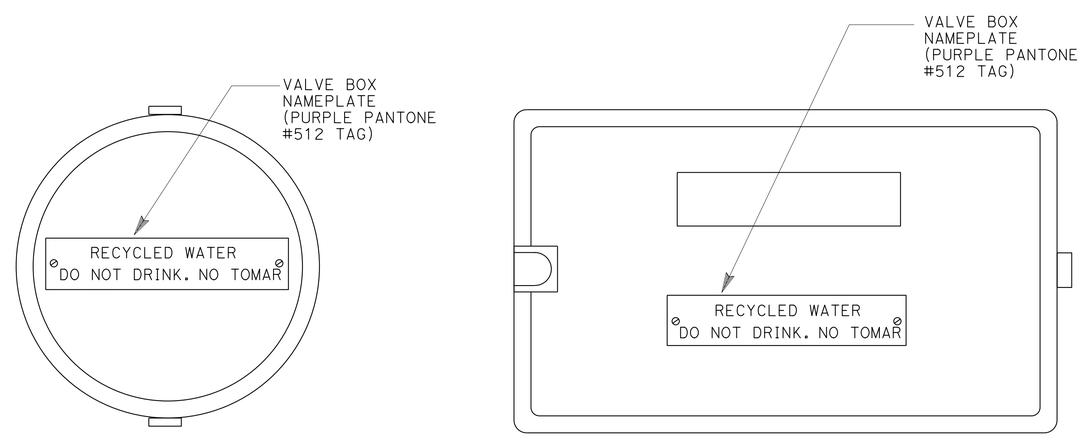


NOTE:

1. ALL RECYCLED WATER IRRIGATION BOX COVERS AND LIDS SHALL BE COLOR CODED PANTONE # 522

## SIGN/TAG FOR RECYCLED WATER IRRIGATION BOX COVERS/LID

# IRRIGATION DETAILS

NO SCALE

ID-5

STATE OF CALIFORNIA - DEPARTMENT OF TRANSPORTATION
Caltrans LANDSCAPE ARCHITECTURE
SENIOR LANDSCAPE ARCHITECT: STEPHEN ALVAREZ
CALCULATED-DESIGNED BY: JOEL HORTIZUELA
CHECKED BY: STEVE WARREN
REVISED BY
DATE REVISED

LAST REVISION 07-15-14
DATE PLOTTED => 23-JUL-2014
TIME PLOTTED => 14:51

| Dist | COUNTY | ROUTE | POST MILES TOTAL PROJECT | SHEET No. | TOTAL SHEETS |
|---|---|---|---|---|---|
| 11 | SD | 5 | R29.1/R30.5 | 650 | 1012 |

Stephen P. Warren
LICENSED LANDSCAPE ARCHITECT

07-21-14
PLANS APPROVAL DATE

LICENSED LANDSCAPE ARCHITECT
STEPHEN P. WARREN No. 3442
Stephen P. Warren
Expiration Date
10-31-14
Renewal Date
05-23-14
Date
STATE OF CALIFORNIA

*THE STATE OF CALIFORNIA OR ITS OFFICERS OR AGENTS SHALL NOT BE RESPONSIBLE FOR THE ACCURACY OR COMPLETENESS OF SCANNED COPIES OF THIS PLAN SHEET.*

## ABBREVIATIONS:

EA — EACH
DIP — DUCTILE IRON PIPE
GSP — GALVANIZED STEEL PIPE
PR — PRESSURE RATED

| DESCRIPTION | | | UNIT | VALVE NUMBER FOR Exist IC 'A' SCRIPPS (12 STATION) 1 | 2 | 3 | 4 | 5 | 6- | 12 | VALVE NUMBER FOR Exist IC 'A' UCSD (12 STATION) 1 | 2 | 3 | 4 | 5 | 6 | 7 | 8 | 9 | 10 | 11 | 12 | VALVE NUMBER FOR Exist SAT '26(B)' (24 STATION) 1 | 2 | 3 | 4 | 5 | 6 | 7 | 8 | 9 | 10- | 24 | SUBTOTALS | UNIT | DESCRIPTION | | |
|---|---|---|---|---|---|---|---|---|---|---|---|---|---|---|---|---|---|---|---|---|---|---|---|---|---|---|---|---|---|---|---|---|---|---|---|---|---|---|---|
| PLASTIC PIPE SUPPLY LINE | SCH 40 | 1 INCH | LF | 300 | 250 | 200 | 180 | 290 | - | - | - | - | - | 460 | 370 | 150 | 240 | 130 | 970 | 170 | - | - | 150 | 150 | 100 | 210 | 1550 | 180 | 280 | 110 | 285 | - | - | 6,725 | LF | 1 INCH | SCH 40 | PLASTIC PIPE SUPPLY LINE |
| | | 1¼ INCH | LF | 80 | 20 | 70 | 60 | 130 | - | - | - | - | - | 120 | - | - | 135 | 110 | 10 | 80 | - | - | 110 | - | 150 | 240 | - | 90 | - | 30 | 230 | - | - | 1,665 | LF | 1¼ INCH | | |
| | | 1½ INCH | LF | 310 | - | - | - | - | - | - | - | - | - | 20 | - | - | - | 50 | - | 140 | - | - | - | - | - | - | - | - | 180 | - | - | - | - | 700 | LF | 1½ INCH | | |
| | | 2 INCH | LF | - | - | - | - | 80 | - | - | - | - | - | - | - | - | - | - | - | - | - | - | 60 | - | 30 | - | - | 240 | - | 30 | 390 | - | - | 830 | LF | 2 INCH | | |
| | PR 315 | 2½ INCH | LF | - | - | - | - | - | - | - | - | - | - | - | - | - | - | - | - | - | - | - | - | - | 100 | - | - | - | - | - | - | - | - | 100 | LF | 2½ INCH | PR 315 | |
| | | 3 INCH | LF | - | - | - | - | - | - | - | - | - | - | - | - | - | - | - | - | - | - | - | - | - | - | - | - | - | - | - | - | - | - | - | LF | 3 INCH | | |
| | GSP | | | | | | | | EXISTING | EXISTING | EXISTING | EXISTING | EXISTING | | | | | | | | EXISTING | EXISTING | | | | | | | | | | OPEN | OPEN | | | | GSP | |
| SPRINKLER SYMBOL | | ⑤ 5 | EA | - | - | - | - | - | - | - | - | - | - | - | - | - | - | - | - | - | - | - | - | - | - | - | - | 4 | 6 | - | - | - | - | 10 | EA | ⑤ 5 | SPRINKLER SYMBOL | |
| | | ⑥ | EA | - | - | - | - | - | - | - | - | - | - | - | - | - | - | - | - | - | - | - | - | - | - | - | - | - | 2 | 4 | - | - | - | 6 | EA | ⑥ | | |
| | | ⑦ 7 | EA | - | - | - | - | - | - | - | - | - | - | - | - | - | - | - | - | - | - | - | 5 | 2 | 6 | - | - | 3 | - | - | - | - | - | 16 | EA | ⑦ 7 | | |
| | | ⑧ | EA | - | - | - | - | - | - | - | - | - | - | - | - | - | - | - | - | - | - | - | - | - | - | - | - | - | - | - | - | - | - | - | EA | ⑧ | | |
| | | ⑪ 11 | EA | 16 | - | - | - | - | - | - | - | - | - | 3 | - | 4 | - | - | - | - | - | - | - | - | - | 8 | - | - | - | - | 22 | - | - | 53 | EA | ⑪ 11 | | |
| | | ⑫ | EA | - | 11 | 9 | 8 | 18 | - | - | - | - | - | 12 | - | - | 8 | - | - | - | - | - | - | - | - | 1 | - | - | - | - | - | - | - | 67 | EA | ⑫ | | |
| | | △ | EA | - | - | - | - | - | - | - | - | - | - | - | - | - | - | - | - | - | - | - | - | - | - | - | - | - | - | - | - | - | - | - | EA | △ | | |
| | | ▲ | EA | - | - | - | - | - | - | - | - | - | - | - | - | - | - | 23 | - | 25 | - | - | - | - | - | - | - | - | - | - | - | - | - | 48 | EA | ▲ | | |
| | | ○ | EA | - | - | - | - | - | - | - | - | - | - | - | - | - | - | - | - | - | - | - | - | - | - | - | - | - | - | - | - | - | - | - | EA | ○ | | |
| | | ● | EA | - | - | - | - | - | - | - | - | - | - | - | 18 | - | - | - | 34 | - | - | - | - | - | - | - | 26 | - | - | - | - | - | - | 78 | EA | ● | | |

| DESCRIPTION | | | UNIT | VALVE OR ASSEMBLY NUMBER FOR EXISTING SAT '26(C)' (40 STATION) 1 | 2 | 3 | 4 | 5 | 6 | 7 | 8 | 9 | 10 | 11 | 12 | 13 | 14a | 14b | 15 | 16 | 17 | 18 | 19 | 20 | 21a | 21b | 22 | 23 | 24 | 25 | 26 | 27 | 28 | 29 | 30 | 31 | 32 | 33 | SUBTOTALS | UNIT | DESCRIPTION | | |
|---|---|---|---|---|---|---|---|---|---|---|---|---|---|---|---|---|---|---|---|---|---|---|---|---|---|---|---|---|---|---|---|---|---|---|---|---|---|---|---|---|---|---|
| PLASTIC PIPE SUPPLY LINE | SCH 40 | 1 INCH | LF | 30 | - | 30 | 30 | - | - | - | - | - | - | - | - | - | 30 | - | - | - | 30 | - | 170 | 800 | 1265 | 290 | 190 | 490 | 450 | 180 | 130 | 130 | 300 | 1280 | 100 | 100 | 100 | 5,935 | LF | 1 INCH | SCH 40 | PLASTIC PIPE SUPPLY LINE |
| | | 1¼ INCH | LF | - | - | - | - | - | - | - | - | - | - | - | - | - | - | - | - | - | - | - | 155 | - | - | 100 | 60 | 320 | 30 | 160 | 100 | 120 | 310 | 50 | 50 | 150 | 100 | 1,705 | LF | 1¼ INCH | | |
| | | 1½ INCH | LF | - | - | - | - | - | - | - | - | - | - | - | - | - | - | - | - | - | - | - | 60 | - | - | - | 190 | 120 | - | 20 | - | - | 30 | - | 160 | - | - | 580 | LF | 1½ INCH | | |
| | | 2 INCH | LF | 185 | - | - | - | - | - | - | - | - | - | - | - | - | - | - | - | - | 30 | - | 100 | - | - | - | 35 | 20 | 320 | 40 | 110 | 120 | 250 | - | - | 150 | 120 | 1,360 | LF | 2 INCH | | |
| | PR 315 | 2½ INCH | LF | - | - | - | - | - | - | - | - | - | - | - | - | - | - | - | - | - | - | - | - | - | - | - | - | 50 | - | - | - | - | - | - | - | - | - | 50 | LF | 2½ INCH | PR 315 | |
| | | 3 INCH | LF | - | - | - | - | - | - | - | - | - | - | - | - | - | - | - | - | - | - | - | - | - | - | - | - | - | - | - | - | - | - | - | - | - | - | - | - | LF | 3 INCH | | |
| DIP GSP | | | | EXISTING | | | | | | | | | | | | | | | | | | | | | | | | | | | | | | | | | | | | | DIP GSP | |
| SPRINKLER SYMBOL | | ⑤ 5 | EA | - | - | - | - | - | - | - | - | - | - | - | - | - | - | - | - | - | - | - | 12 | - | - | - | 11 | - | 9 | - | - | - | - | - | - | - | - | 32 | EA | ⑤ 5 | SPRINKLER SYMBOL | |
| | | ⑥ | EA | - | - | - | - | - | - | - | - | - | - | - | - | - | - | - | - | - | - | - | - | - | - | - | - | - | - | - | - | - | - | - | - | - | 1 | 1 | EA | ⑥ | | |
| | | ⑦ 7 | EA | - | - | - | - | - | - | - | - | - | - | - | - | - | - | - | - | - | - | - | - | - | - | - | - | - | - | - | - | - | - | - | 4 | 6 | - | 10 | EA | ⑦ 7 | | |
| | | ⑧ | EA | - | - | - | - | - | - | - | - | - | - | - | - | - | - | - | - | - | - | - | - | - | - | - | - | - | - | - | - | - | - | - | - | - | 5 | 5 | EA | ⑧ | | |
| | | ⑪ 11 | EA | - | - | - | - | - | - | - | - | - | - | - | - | - | - | - | - | - | - | - | - | - | - | 12 | 3 | - | 5 | - | - | - | - | - | - | - | - | 20 | EA | ⑪ 11 | | |
| | | ⑫ | EA | - | - | - | - | - | - | - | - | - | - | - | - | - | - | - | - | - | - | - | - | - | - | - | - | 28 | - | - | - | - | 26 | - | - | - | - | 54 | EA | ⑫ | | |
| | | △ | EA | - | - | - | - | - | - | - | - | - | - | - | - | - | - | - | - | - | - | - | - | - | - | - | - | - | - | - | - | - | - | - | - | - | - | - | EA | △ | | |
| | | ▲ | EA | - | - | - | - | - | - | - | - | - | - | - | - | - | - | - | - | - | - | - | - | - | - | - | - | - | - | 24 | 22 | 22 | | - | - | - | - | 68 | EA | ▲ | | |
| | | ○ | EA | - | - | - | - | - | - | - | - | - | - | - | - | - | - | - | - | - | - | - | - | - | - | - | - | - | - | - | - | - | - | - | - | - | - | - | EA | ○ | | |
| | | ● | EA | - | - | - | - | - | - | - | - | - | - | - | - | - | - | - | - | - | - | - | - | 11 | 21 | - | - | - | - | - | - | - | - | 28 | - | - | - | 60 | EA | ● | | |

# IRRIGATION QUANTITIES
# IQ-1

STATE OF CALIFORNIA - DEPARTMENT OF TRANSPORTATION
Caltrans® LANDSCAPE ARCHITECTURE

SENIOR LANDSCAPE ARCHITECT: STEPHEN ALVAREZ
CALCULATED-DESIGNED BY: JOEL HORTIZUELA
CHECKED BY: STEVE WARREN
REVISED BY
DATE REVISED

LAST REVISION 07-16-14
DATE PLOTTED => 23-JUL-2014
TIME PLOTTED => 14:51

| Dist | COUNTY | ROUTE | POST MILES TOTAL PROJECT | SHEET No. | TOTAL SHEETS |
|---|---|---|---|---|---|
| 11 | SD | 5 | R29.1/R30.5 | 651 | 1012 |

Stephen P. Warren
LICENSED LANDSCAPE ARCHITECT

07-21-14
PLANS APPROVAL DATE

LICENSED LANDSCAPE ARCHITECT
STEPHEN P. WARREN No. 3442
Stephen P. Warren
REGISTERED PROFESSIONAL ENGINEER
10-31-14
REGISTERED PROFESSIONAL ENGINEER
05-23-14
Date
STATE OF CALIFORNIA

*THE STATE OF CALIFORNIA OR ITS OFFICERS OR AGENTS SHALL NOT BE RESPONSIBLE FOR THE ACCURACY OR COMPLETENESS OF SCANNED COPIES OF THIS PLAN SHEET.*

## ABBREVIATIONS:

EA — EACH
DIP — DUCTILE IRON PIPE
GSP — GALVANIZED STEEL PIPE
PR — PRESSURE RATED

VALVE OR ASSEMBLY NUMBER FOR SAT '26(M)' (40 STATION)

| DESCRIPTION | | | UNIT | 1 | 2 | 3 | 4 | 5 | 6 | 7 | 8a | 8b | 9 | 10 | 11 | 12 | 13 | 14 | 15a | 15b | 16 | 17 | 18 | 19 | 20 | 21 | 22 | 23 | 24 | 25 | 26 | 27 | 28a | 28b | 29 | 30 | 31 | 32 | 33 | 34 | 35 | 36 | 37 | SUBTOTALS | UNIT | DESCRIPTION | | |
|---|---|---|---|---|---|---|---|---|---|---|---|---|---|---|---|---|---|---|---|---|---|---|---|---|---|---|---|---|---|---|---|---|---|---|---|---|---|---|---|---|---|---|---|---|---|---|---|---|
| PLASTIC PIPE SUPPLY LINE | SCH 40 | 1 INCH | LF | 200 | 100 | 100 | 100 | 100 | 100 | 100 | 2200 | 900 | 100 | 110 | 100 | 100 | 150 | 100 | 1265 | 1150 | 100 | 240 | 100 | 100 | 100 | 100 | 100 | 100 | 100 | 100 | 150 | 100 | 170 | 330 | 300 | 240 | 240 | 100 | 150 | 300 | 180 | 170 | | 10,545 | LF | 1 INCH | SCH 40 | PLASTIC PIPE SUPPLY LINE |
| | | 1¼ INCH | LF | 280 | 200 | 200 | 200 | 200 | 200 | 200 | 120 | - | 200 | 190 | 150 | 210 | 200 | 200 | 70 | 180 | 200 | 170 | 200 | 200 | 200 | 200 | 200 | 200 | 200 | 150 | 150 | 100 | 50 | 30 | 230 | 160 | 160 | 150 | 100 | 250 | 170 | 120 | | 6,590 | LF | 1¼ INCH | | |
| | | 1½ INCH | LF | - | - | 100 | 50 | 50 | 50 | 50 | - | - | 50 | - | - | 50 | - | 50 | - | - | 50 | 200 | 50 | 50 | 50 | 50 | 50 | 50 | 50 | 50 | 50 | - | - | 80 | - | - | 80 | 50 | 50 | - | - | 50 | | 1,410 | LF | 1½ INCH | | |
| | | 2 INCH | LF | - | - | - | - | - | - | - | - | - | - | - | 40 | - | - | - | - | - | - | - | - | - | - | - | - | - | - | 50 | - | - | - | 160 | 50 | 100 | 150 | - | 430 | 260 | 220 | 170 | | 1,630 | LF | 2 INCH | | |
| | PR 315 | 2½ INCH | LF | - | 10 | 50 | 190 | 140 | 270 | 90 | - | - | 130 | 110 | 180 | 250 | 190 | 100 | - | - | 20 | 700 | 170 | 70 | 120 | 100 | 130 | 100 | 80 | 80 | 140 | 240 | 250 | - | - | - | - | 260 | - | - | - | - | | 4,170 | LF | 2½ INCH | PR 315 | |
| | | 3 INCH | LF | - | - | - | - | - | - | - | - | - | - | - | - | - | - | - | - | - | - | - | - | - | - | - | - | - | - | - | - | - | - | - | - | - | - | - | - | - | - | - | - | | - | LF | 3 INCH | | |
| DIP GSP | | | | | | | | | | | | | | | | | | | | | | | | | | | | | | | | | | | | | | | | | | | | | | | DIP GSP | |
| DIP | | | | | | | | | | | | | | | | | | | | | | | | | | | | | | | | | | | | | | | | | | | | | | | DIP | |
| SPRINKLER SYMBOL | | ⑤ 5 | EA | - | - | - | - | - | - | - | - | - | - | - | - | - | - | - | - | - | - | 16 | - | - | - | - | - | - | - | - | - | - | - | - | - | 11 | 13 | - | 3 | - | - | - | | 43 | EA | ⑤ 5 | SPRINKLER SYMBOL | |
| | | ⑥ | EA | - | - | - | - | - | - | - | - | - | - | - | - | - | - | - | - | - | - | - | - | - | - | - | - | - | - | - | - | - | - | - | - | - | - | - | - | - | - | - | - | | - | EA | ⑥ | | |
| | | ⑦ 7 | EA | - | 3 | 5 | 8 | 8 | 6 | 8 | - | - | 8 | 7 | 7 | 8 | 8 | 8 | - | - | 8 | - | 8 | 8 | 8 | 8 | 8 | 8 | 7 | 8 | 8 | 5 | - | - | - | - | - | 7 | 5 | - | - | - | | 180 | EA | ⑦ 7 | | |
| | | ⑧ | EA | - | 4 | 3 | - | - | 2 | - | - | - | - | - | - | - | - | - | - | - | - | - | - | - | - | - | - | - | - | - | - | - | - | - | - | - | - | - | - | - | - | - | | 9 | EA | ⑧ | | |
| | | ⑪ 11 | EA | - | - | - | - | - | - | - | - | - | - | - | - | - | - | - | - | - | - | - | - | - | - | - | - | - | - | - | - | - | - | - | - | - | - | - | - | - | - | - | - | | - | EA | ⑪ 11 | | |
| | | ⑫ | EA | 10 | - | - | - | - | - | - | - | - | - | - | - | - | - | - | - | - | - | - | - | - | - | - | - | - | - | - | - | - | - | - | - | 22 | - | - | - | - | 22 | - | - | | 54 | EA | ⑫ | | |
| | | △ | EA | - | - | - | - | - | - | - | - | - | - | - | - | - | - | - | - | - | - | - | - | - | - | - | - | - | - | - | - | - | - | 4 | - | - | - | - | - | - | - | - | - | | 4 | EA | △ | | |
| | | ▲ | EA | - | - | - | - | - | - | - | - | - | - | - | - | - | - | - | - | - | - | - | - | - | - | - | - | - | - | - | - | - | - | 11 | 26 | - | - | - | - | - | - | 24 | 24 | | 85 | EA | ▲ | | |
| | | ○ | EA | - | - | - | - | - | - | - | - | - | - | - | - | - | - | - | - | - | - | - | - | - | - | - | - | - | - | - | - | - | - | - | - | - | - | - | - | - | - | - | - | | - | EA | ○ | | |
| | | ● | EA | - | - | - | - | - | - | - | 47 | 21 | - | - | - | - | - | - | 33 | 20 | - | - | - | - | - | - | - | - | - | - | - | - | - | - | - | - | - | - | - | - | - | - | - | | 121 | EA | ● | | |

VALVE OR ASSEMBLY NUMBER FOR SAT '26(N)' (40 STATION)

| DESCRIPTION | | | UNIT | 1 | 2 | 3 | 4 | 5 | 6 | 7 | 8 | 9 | 10a | 10b | 11 | 12 | 13 | 14 | 15 | 16 | 17 | 18 | 19 | 20 | 21 | 22 | 23 | 24 | 25 | 26 | 27 | 28 | 29 | 30a | 30b | 31 | 32 | 33 | 34 | 35 | 36 | 37 | SUBTOTALS | UNIT | DESCRIPTION | | |
|---|---|---|---|---|---|---|---|---|---|---|---|---|---|---|---|---|---|---|---|---|---|---|---|---|---|---|---|---|---|---|---|---|---|---|---|---|---|---|---|---|---|---|---|---|---|---|---|---|
| PLASTIC PIPE SUPPLY LINE | SCH 40 | 1 INCH | LF | 100 | 100 | 200 | 100 | 100 | 100 | 100 | 100 | 100 | 1180 | 1430 | 200 | 220 | 170 | 100 | 320 | 550 | 100 | 100 | 100 | 100 | 100 | 100 | 100 | 240 | 100 | 100 | 100 | 100 | 100 | 500 | 600 | 100 | 150 | 100 | 340 | 150 | 100 | - | 8,650 | LF | 1 INCH | SCH 40 | PLASTIC PIPE SUPPLY LINE |
| | | 1¼ INCH | LF | 50 | 200 | 100 | 200 | 50 | 200 | 200 | 100 | 200 | - | - | - | 50 | 150 | 200 | 160 | 350 | 200 | 200 | 150 | 200 | 150 | 150 | 150 | 120 | 150 | 150 | 150 | 200 | 100 | - | - | 200 | 120 | 200 | 70 | 150 | 150 | - | 5,170 | LF | 1¼ INCH | | |
| | | 1½ INCH | LF | 110 | - | - | - | 70 | 50 | 50 | - | 50 | - | - | - | - | 50 | - | - | 90 | 50 | 50 | 50 | 50 | 50 | 50 | 50 | - | 50 | 50 | 50 | - | - | - | - | - | 50 | 50 | - | - | - | - | 1,070 | LF | 1½ INCH | | |
| | | 2 INCH | LF | - | - | 160 | - | - | - | - | 80 | - | - | - | - | 10 | - | - | 10 | - | - | - | 50 | - | - | 50 | - | 340 | - | - | - | - | 100 | - | - | - | - | - | - | - | - | - | 800 | LF | 2 INCH | | |
| | PR 315 | 2½ INCH | LF | - | 70 | - | 130 | - | 120 | 220 | - | 20 | - | - | 120 | - | 10 | 100 | - | - | 10 | 90 | 50 | 10 | 10 | 80 | 80 | - | 140 | 200 | 250 | 170 | - | - | - | 100 | 80 | 130 | - | 300 | 90 | - | 2,580 | LF | 2½ INCH | PR 315 | |
| | | 3 INCH | LF | - | - | - | - | - | - | - | - | - | - | - | - | - | - | - | - | - | - | - | - | - | - | - | - | - | - | - | - | - | - | - | - | - | - | - | - | - | - | - | - | - | LF | 3 INCH | | |
| DIP GSP | | | | | | | | | | | | | | | | | | | | | | | | | | | | | | | | | | | | | | | | | | | | | | | DIP GSP | |
| DIP | | | | | | | | | | | | | | | | | | | | | | | | | | | | | | | | | | | | | | | | | | | | | | | DIP | |
| SPRINKLER SYMBOL | | ⑤ 5 | EA | - | - | 7 | - | - | - | - | - | - | - | - | - | 3 | 2 | - | 3 | - | - | - | - | - | - | - | - | 10 | - | - | - | - | - | - | - | - | - | - | - | - | - | - | 25 | EA | ⑤ 5 | SPRINKLER SYMBOL | |
| | | ⑥ | EA | - | - | - | - | - | - | - | - | - | - | - | - | - | - | - | - | - | - | - | - | - | - | - | - | - | - | - | - | - | - | - | - | - | - | - | - | - | - | - | - | - | EA | ⑥ | | |
| | | ⑦ 7 | EA | 4 | 7 | - | 7 | 4 | - | 8 | 5 | - | - | - | - | 4 | 7 | 7 | - | - | 8 | 8 | 8 | 8 | 7 | 8 | 7 | - | 7 | 7 | 7 | 4 | 5 | - | - | 4 | 6 | 7 | - | 7 | 3 | - | 164 | EA | ⑦ 7 | | |
| | | ⑧ | EA | - | - | 1 | - | - | 8 | - | - | 8 | - | - | 6 | - | - | - | - | - | - | - | - | - | - | - | - | - | - | - | - | 3 | - | - | - | 3 | 1 | 1 | - | - | 4 | - | 35 | EA | ⑧ | | |
| | | ⑪ 11 | EA | - | - | 5 | - | - | - | - | - | - | - | - | - | - | - | - | 15 | - | - | - | - | - | - | - | - | - | - | - | - | - | - | - | - | - | - | - | 12 | - | - | - | 32 | EA | ⑪ 11 | | |
| | | ⑫ | EA | - | - | - | - | - | - | - | - | - | - | - | - | - | - | - | - | - | - | - | - | - | - | - | - | - | - | - | - | - | - | - | - | - | - | - | - | - | - | - | - | - | EA | ⑫ | | |
| | | △ | EA | - | - | - | - | - | - | - | - | - | - | - | - | - | - | - | - | - | - | - | - | - | - | - | - | - | - | - | - | - | - | - | - | - | - | - | - | - | - | - | - | - | EA | △ | | |
| | | ▲ | EA | - | - | - | - | - | - | - | - | - | - | - | - | - | - | - | - | - | - | - | - | - | - | - | - | - | - | - | - | - | - | - | - | - | - | - | - | - | - | - | - | - | EA | ▲ | | |
| | | ○ | EA | - | - | - | - | - | - | - | - | - | - | - | - | - | - | - | - | - | - | - | - | - | - | - | - | - | - | - | - | - | - | - | - | - | - | - | - | - | - | - | - | - | EA | ○ | | |
| | | ● | EA | - | - | - | - | - | - | - | - | - | 29 | 19 | - | - | - | - | - | 57 | - | - | - | - | - | - | - | - | - | - | - | - | - | - | 22 | 24 | - | - | - | - | - | - | - | 151 | EA | ● | | |

# IRRIGATION QUANTITIES
# IQ-2

STATE OF CALIFORNIA - DEPARTMENT OF TRANSPORTATION
Caltrans® LANDSCAPE ARCHITECTURE

SENIOR LANDSCAPE ARCHITECT: STEPHEN ALVAREZ
CALCULATED-DESIGNED BY: JOEL HORTIZUELA
CHECKED BY: STEVE WARREN
REVISED BY / DATE REVISED

LAST REVISION 07-16-14
DATE PLOTTED => 23-JUL-2014
TIME PLOTTED => 14:51

| Dist | COUNTY | ROUTE | POST MILES TOTAL PROJECT | SHEET No. | TOTAL SHEETS |
|---|---|---|---|---|---|
| 11 | SD | 5 | R29.1/R30.5 | 652 | 1012 |

Stephen P. Warren
LICENSED LANDSCAPE ARCHITECT

07-21-14
PLANS APPROVAL DATE

LICENSED LANDSCAPE ARCHITECT
STEPHEN P. WARREN No. 3442
Stephen P. Warren
REGISTERED PROFESSIONAL ENGINEER 10-31-14
REGISTERED PROFESSIONAL ENGINEER 05-23-14
Date
STATE OF CALIFORNIA

*THE STATE OF CALIFORNIA OR ITS OFFICERS OR AGENTS SHALL NOT BE RESPONSIBLE FOR THE ACCURACY OR COMPLETENESS OF SCANNED COPIES OF THIS PLAN SHEET.*

## ABBREVIATIONS:

EA — EACH
DIP — DUCTILE IRON PIPE
GSP — GALVANIZED STEEL PIPE
PR — PRESSURE RATED

| DESCRIPTION | | UNIT | VALVE OR ASSEMBLY NUMBER FOR SAT '26(0)' (40 STATION) | | | | | | | | | | | | | | | | | | | | | | | | | | | | | | | | | | | | | | | SUBTOTALS | UNIT | DESCRIPTION | |
|---|---|---|---|---|---|---|---|---|---|---|---|---|---|---|---|---|---|---|---|---|---|---|---|---|---|---|---|---|---|---|---|---|---|---|---|---|---|---|---|---|---|---|---|---|---|---|
| | | | 1 | 2 | 3 | 4 | 5 | 6 | 7a | 7b | 8 | 9 | 10a | 10b | 11 | 12 | 13 | 14 | 15 | 16 | 17 | 18 | 19 | 20a | 20b | 21 | 22 | 23 | 24 | 25 | 26 | 27 | 28 | 29a | 29b | 30 | 31 | 32 | 33 | 34 | 35 | 36 | | | | |
| PLASTIC PIPE SUPPLY LINE | SCH 40 | 1 INCH | LF | 900 | 240 | 240 | 240 | 240 | 240 | 1240 | 700 | 300 | 420 | 200 | 450 | 150 | 100 | 100 | 100 | 100 | 100 | 70 | 100 | 200 | 460 | 200 | 100 | 100 | 100 | 170 | 100 | 150 | 100 | 100 | 1400 | 400 | 100 | 100 | 100 | 140 | 280 | 100 | 110 | 10,740 | LF | 1 INCH | SCH 40 PLASTIC PIPE SUPPLY LINE |
| | | 1¼ INCH | LF | - | 120 | 160 | 120 | 120 | 160 | - | - | 50 | - | - | - | 150 | 200 | 150 | 100 | 200 | 200 | 100 | 200 | 90 | - | - | 150 | 150 | 150 | 80 | 150 | 80 | 150 | 150 | - | - | 150 | 150 | 150 | 170 | - | 50 | 130 | 3,980 | LF | 1¼ INCH | |
| | | 1½ INCH | LF | - | - | 120 | 40 | 40 | - | - | - | 310 | - | - | - | 50 | - | 50 | - | 50 | - | 30 | 50 | - | - | - | 50 | - | 50 | 50 | 50 | - | - | 50 | - | - | - | - | 50 | - | 10 | 90 | 50 | 1,190 | LF | 1½ INCH | |
| | | 2 INCH | LF | - | 70 | 40 | 10 | 75 | 10 | - | - | - | 10 | - | - | - | - | - | 220 | - | - | 100 | - | 150 | - | - | - | 60 | - | 350 | - | 30 | 70 | 50 | - | - | 130 | 400 | - | 120 | - | - | - | 1,895 | LF | 2 INCH | |
| | PR 315 | 2½ INCH | LF | - | - | - | - | - | - | - | - | - | - | - | - | 10 | 350 | 350 | - | 10 | 130 | - | 80 | - | - | - | 270 | - | 150 | - | - | 190 | - | 10 | - | - | - | - | 50 | - | - | - | 40 | 1,640 | LF | 2½ INCH | PR 315 PLASTIC PIPE SUPPLY LINE |
| | | 3 INCH | LF | - | - | - | - | - | - | - | - | - | - | - | - | - | - | - | - | - | - | - | - | - | - | - | - | - | - | - | - | - | - | - | - | - | - | - | - | - | - | - | - | - | LF | 3 INCH | |
| DIP GSP | | | | | | | | | | | | | | | | | | | | | | | | | | | | | | | | | | | | | | | | | | | | | | DIP GSP |
| DIP | | | | | | | | | | | | | | | | | | | | | | | | | | | | | | | | | | | | | | | | | | | | | | DIP |
| SPRINKLER SYMBOL | ⑤ 5 | EA | - | 10 | 14 | 11 | 11 | 11 | - | - | - | - | - | - | - | - | - | - | - | - | - | - | - | - | - | - | - | - | 5 | - | - | - | - | - | - | - | - | - | - | 8 | - | - | 70 | EA | ⑤ 5 | SPRINKLER SYMBOL |
| | ⑥ | EA | - | - | - | - | - | - | - | - | - | - | - | - | - | - | - | - | - | - | - | - | - | - | - | - | - | - | - | - | - | - | - | - | - | - | - | - | - | - | - | - | - | - | EA | ⑥ | |
| | ⑦ 7 | EA | - | - | - | - | - | - | - | - | - | - | - | - | 6 | 8 | 7 | 5 | 4 | 7 | 6 | 5 | 6 | - | - | 3 | 6 | 7 | 3 | 7 | 1 | 6 | 8 | - | - | 6 | 6 | 7 | 6 | - | 4 | 7 | 131 | EA | ⑦ 7 | |
| | ⑧ | EA | - | - | - | - | - | - | - | - | - | - | - | - | 2 | - | - | - | 4 | - | - | 2 | - | - | - | 4 | - | - | - | - | 6 | - | - | - | - | - | - | - | - | - | - | - | - | 18 | EA | ⑧ | |
| | ⑪ 11 | EA | - | - | - | - | - | - | - | - | 15 | 9 | - | - | - | - | - | - | - | - | - | - | - | - | - | - | - | - | - | - | - | - | - | - | - | - | - | - | 1 | 1 | - | - | 26 | EA | ⑪ 11 | |
| | ⑫ | EA | - | - | - | - | - | - | - | - | - | 9 | - | - | - | - | - | - | - | - | - | - | - | - | - | - | - | - | - | - | - | - | - | - | - | - | - | - | - | - | - | - | - | 9 | EA | ⑫ | |
| | △ | EA | - | - | - | - | - | - | - | - | - | - | - | - | - | - | - | - | - | - | - | - | - | - | - | - | - | - | - | - | - | - | - | - | - | - | - | - | - | - | - | - | - | - | EA | △ | |
| | ▲ | EA | - | - | - | - | - | - | - | - | - | - | - | - | - | - | - | - | - | - | - | - | - | - | - | - | - | - | - | - | - | - | - | - | - | - | - | - | - | - | - | - | - | - | EA | ▲ | |
| | ○ | EA | - | - | - | - | - | - | - | - | - | - | - | - | - | - | - | - | - | - | - | - | - | - | - | - | - | - | - | - | - | - | - | - | - | - | - | - | - | - | - | - | - | - | EA | ○ | |
| | ● | EA | 21 | - | - | - | - | - | 26 | 35 | - | - | 10 | 22 | - | - | - | - | - | - | - | - | - | 22 | 8 | - | - | - | - | - | - | - | - | - | 26 | 10 | - | - | - | - | - | - | - | 180 | EA | ● | |

| DESCRIPTION | | UNIT | VALVE OR ASSEMBLY NUMBER FOR SAT '26(0)' (40 STATION) | | | | | | | | | | | | | | | | | | | | | | | | | | | | | | | | | | | | | | | SUBTOTALS | UNIT | DESCRIPTION | |
|---|---|---|---|---|---|---|---|---|---|---|---|---|---|---|---|---|---|---|---|---|---|---|---|---|---|---|---|---|---|---|---|---|---|---|---|---|---|---|---|---|---|---|---|---|---|---|
| | | | 37 | | | | | | | | | | | | | | | | | | | | | | | | | | | | | | | | | | | | | | | | | | | |
| PLASTIC PIPE SUPPLY LINE | SCH 40 | 1 INCH | LF | 100 | - | - | - | - | - | - | - | - | - | - | - | - | - | - | - | - | - | - | - | - | - | - | - | - | - | - | - | - | - | - | - | - | - | - | - | - | - | - | - | 100 | LF | 1 INCH | SCH 40 PLASTIC PIPE SUPPLY LINE |
| | | 1¼ INCH | LF | 150 | - | - | - | - | - | - | - | - | - | - | - | - | - | - | - | - | - | - | - | - | - | - | - | - | - | - | - | - | - | - | - | - | - | - | - | - | - | - | - | - | 150 | LF | 1¼ INCH | |
| | | 1½ INCH | LF | 50 | - | - | - | - | - | - | - | - | - | - | - | - | - | - | - | - | - | - | - | - | - | - | - | - | - | - | - | - | - | - | - | - | - | - | - | - | - | - | - | - | 50 | LF | 1½ INCH | |
| | | 2 INCH | LF | - | - | - | - | - | - | - | - | - | - | - | - | - | - | - | - | - | - | - | - | - | - | - | - | - | - | - | - | - | - | - | - | - | - | - | - | - | - | - | - | - | - | LF | 2 INCH | |
| | PR 315 | 2½ INCH | LF | 10 | - | - | - | - | - | - | - | - | - | - | - | - | - | - | - | - | - | - | - | - | - | - | - | - | - | - | - | - | - | - | - | - | - | - | - | - | - | - | - | 10 | LF | 2½ INCH | PR 315 PLASTIC PIPE SUPPLY LINE |
| | | 3 INCH | LF | - | - | - | - | - | - | - | - | - | - | - | - | - | - | - | - | - | - | - | - | - | - | - | - | - | - | - | - | - | - | - | - | - | - | - | - | - | - | - | - | - | - | LF | 3 INCH | |
| DIP GSP | | | | | | | | | | | | | | | | | | | | | | | | | | | | | | | | | | | | | | | | | | | | | | DIP GSP |
| DIP | | | | | | | | | | | | | | | | | | | | | | | | | | | | | | | | | | | | | | | | | | | | | | DIP |
| SPRINKLER SYMBOL | ⑤ 5 | EA | - | - | - | - | - | - | - | - | - | - | - | - | - | - | - | - | - | - | - | - | - | - | - | - | - | - | - | - | - | - | - | - | - | - | - | - | - | - | - | - | - | - | EA | ⑤ 5 | SPRINKLER SYMBOL |
| | ⑥ | EA | - | - | - | - | - | - | - | - | - | - | - | - | - | - | - | - | - | - | - | - | - | - | - | - | - | - | - | - | - | - | - | - | - | - | - | - | - | - | - | - | - | - | EA | ⑥ | |
| | ⑦ 7 | EA | 8 | - | - | - | - | - | - | - | - | - | - | - | - | - | - | - | - | - | - | - | - | - | - | - | - | - | - | - | - | - | - | - | - | - | - | - | - | - | - | - | - | 8 | EA | ⑦ 7 | |
| | ⑧ | EA | - | - | - | - | - | - | - | - | - | - | - | - | - | - | - | - | - | - | - | - | - | - | - | - | - | - | - | - | - | - | - | - | - | - | - | - | - | - | - | - | - | - | EA | ⑧ | |
| | ⑪ 11 | EA | - | - | - | - | - | - | - | - | - | - | - | - | - | - | - | - | - | - | - | - | - | - | - | - | - | - | - | - | - | - | - | - | - | - | - | - | - | - | - | - | - | - | EA | ⑪ 11 | |
| | ⑫ | EA | - | - | - | - | - | - | - | - | - | - | - | - | - | - | - | - | - | - | - | - | - | - | - | - | - | - | - | - | - | - | - | - | - | - | - | - | - | - | - | - | - | - | EA | ⑫ | |
| | △ | EA | - | - | - | - | - | - | - | - | - | - | - | - | - | - | - | - | - | - | - | - | - | - | - | - | - | - | - | - | - | - | - | - | - | - | - | - | - | - | - | - | - | - | EA | △ | |
| | ▲ | EA | - | - | - | - | - | - | - | - | - | - | - | - | - | - | - | - | - | - | - | - | - | - | - | - | - | - | - | - | - | - | - | - | - | - | - | - | - | - | - | - | - | - | EA | ▲ | |
| | ○ | EA | - | - | - | - | - | - | - | - | - | - | - | - | - | - | - | - | - | - | - | - | - | - | - | - | - | - | - | - | - | - | - | - | - | - | - | - | - | - | - | - | - | - | EA | ○ | |
| | ● | EA | - | - | - | - | - | - | - | - | - | - | - | - | - | - | - | - | - | - | - | - | - | - | - | - | - | - | - | - | - | - | - | - | - | - | - | - | - | - | - | - | - | - | EA | ● | |

# IRRIGATION QUANTITIES
# IQ-3

STATE OF CALIFORNIA - DEPARTMENT OF TRANSPORTATION
Caltrans® LANDSCAPE ARCHITECTURE

SENIOR LANDSCAPE ARCHITECT: STEPHEN ALVAREZ
CALCULATED-DESIGNED BY: JOEL HORTIZUELA
CHECKED BY: STEVE WARREN
REVISED BY
DATE REVISED

LAST REVISION 05-27-14
DATE PLOTTED => 23-JUL-2014
TIME PLOTTED => 14:51

| Dist | COUNTY | ROUTE | POST MILES TOTAL PROJECT | SHEET No. | TOTAL SHEETS |
|---|---|---|---|---|---|
| 11 | SD | 5 | R29.1/R30.5 | 653 | 1012 |

Stephen P. Warren
LICENSED LANDSCAPE ARCHITECT

07-21-14
PLANS APPROVAL DATE

LICENSED LANDSCAPE ARCHITECT
STEPHEN P. WARREN No. 3442
Stephen P. Warren
REGISTRATION EXPIRES
10-31-14
REGISTRATION EXPIRES
05-23-14
Date
STATE OF CALIFORNIA

*THE STATE OF CALIFORNIA OR ITS OFFICERS OR AGENTS SHALL NOT BE RESPONSIBLE FOR THE ACCURACY OR COMPLETENESS OF SCANNED COPIES OF THIS PLAN SHEET.*

## SUBTOTALS PER PLAN SHEET ON MAIN SUPPLY SIDE OF CONTROL VALVE

| DESCRIPTION | | | UNIT | SHEET NUMBER IP-1 | IP-2 | IP-3 | IP-4 | IP-5 | IP-6 | IP-7 | IP-8 | SUBTOTALS |
|---|---|---|---|---|---|---|---|---|---|---|---|---|
| 2" RWCA AND ENCLOSURE | | | EA | - | 2 | 1 | - | - | - | - | - | 3 |
| 2" WATER METER | | | EA | - | 2 | 1 | - | - | - | - | - | 3 |
| ANTENNA MAST | | | EA | - | 1 | 1 | - | - | - | - | - | 2 |
| IRRIGATION CONTROLLER | SAT | 40 STATION | EA | - | 1 | 1 | - | - | - | 1 | - | 3 |
| | | SALVAGE | EA | - | - | - | - | - | - | - | - | - |
| | SOLAR | | | | | | | | | | | |
| | CEC | DOUBLE | EA | - | 1 | 1 | - | - | - | - | - | 2 |
| | | SINGLE | EA | - | - | - | - | - | - | - | - | - |
| VALVES AND ASSEMBLIES | MVA | | | | | | | | | | | |
| | GV | 1½" INCH | EA | 2 | - | - | - | - | - | - | - | 2 |
| | | 2 INCH | EA | 8 | 12 | 6 | 7 | 5 | 6 | 3 | 1 | 48 |
| | | 3 INCH | EA | 1 | 8 | 5 | 1 | - | 1 | 2 | - | 18 |
| | RCV | 1 INCH | EA | 12 | 7 | 5 | 5 | 2 | 4 | 3 | - | 38 |
| | | 1½ INCH | EA | 14 | 31 | 19 | 20 | 11 | 12 | 5 | 2 | 114 |
| | BV (CCCTS) | 2 INCH | EA | - | 2 | 1 | - | - | - | - | - | 3 |
| | FS | 2 INCH | EA | - | 2 | 1 | - | - | - | - | - | 3 |
| CP (N) | | 2 INCH | LF | - | 20 | 10 | - | - | - | - | - | 30 |
| PLASTIC PIPE SUPPLY LINE | SCH 40 | 1 INCH | LF | - | - | - | - | - | - | - | - | - |
| | | 1¼ INCH | LF | - | - | - | - | - | - | - | - | - |
| | | 1½ INCH | LF | 580 | - | - | - | - | - | - | - | 580 |
| | | 2 INCH | LF | 50 | 10 | 10 | 10 | 20 | 60 | 20 | - | 180 |
| | CL 315 | 2½ INCH | LF | 25 | 120 | 65 | 65 | 25 | - | 10 | 10 | 320 |
| | | 3 INCH | LF | 3530 | 4330 | 2810 | 2520 | 2430 | 2320 | 1810 | 500 | 20,250 |
| | | 4 INCH | LF | - | - | - | - | - | - | 30 | - | 30 |

(N) NOT A SEPARATE PAY ITEM.
FOR INFORMATION ONLY.

## TOTAL QUANTITIES

| TOTALS | UNIT | DESCRIPTION | | |
|---|---|---|---|---|
| 3 | EA | 2" RWCA AND ENCLOSURE | | |
| 3 | EA | 2" WATER METER | | |
| 2 | EA | ANTENNA MAST | | |
| 3 | EA | 40 STATION | SAT | IRRIGATION CONTROLLER |
| - | EA | SALVAGE | | |
| | | | SOLAR | |
| 2 | EA | DOUBLE | CEC | |
| - | EA | SINGLE | | |
| | | | MVA | VALVES AND ASSEMBLIES |
| 2 | EA | 1½" INCH | GV | |
| 48 | EA | 2 INCH | | |
| 18 | EA | 3 INCH | | |
| 38 | EA | 1 INCH | RCV | |
| 114 | EA | 1½ INCH | | |
| 3 | EA | 2 INCH | BV (CCCTS) | |
| 3 | EA | 2 INCH | FS | |
| 30 | LF | 2 INCH | | CP (N) |
| 42,695 | LF | 1 INCH | SCH 40 | PLASTIC PIPE SUPPLY LINE |
| 19,260 | LF | 1¼ INCH | | |
| 5,580 | LF | 1½ INCH | | |
| 6,695 | LF | 2 INCH | | |
| 8,870 | LF | 2½ INCH | CL 315 | |
| 20,250 | LF | 3 INCH | | |
| 30 | LF | 4 INCH | | |

## RECYCLED WATER WARNING SIGN (N)

| SHEET | POST MOUNTED EA | FENCE MOUNTED EA | ASSEMBLY ENCLOSURE MOUNTED EA |
|---|---|---|---|
| IP-1 | 2 | - | - |
| IP-2 | 5 | - | 2 |
| IP-3 | 4 | - | 1 |
| IP-4 | - | 1 | - |
| IP-5 | - | 1 | - |
| IP-6 | - | 1 | - |
| IP-7 | - | - | - |
| IP-8 | - | - | - |

## TOTAL QUANTITIES SPRINKLER ASSEMBLIES

| SPRINKLER SYMBOL | SPRINKLER ASSEMBLY (EA) RISER (GEAR DRIVEN) | RISER | POP-UP (GEAR DRIVEN) | POP-UP | TREE WELL |
|---|---|---|---|---|---|
| ⑤ [5] | 180 | - | - | - | - |
| ⑥ | - | - | 7 | - | - |
| ⑦ [7] | 509 | - | - | - | - |
| ⑧ | - | - | 67 | - | - |
| ⑪ [11] | 131 | - | - | - | - |
| ⑫ | - | - | 184 | - | - |
| △ ▲ | - | 4 | - | 201 | - |
| ● | - | - | - | - | 590 |
| TOTALS | 820 | 4 | 258 | 201 | 590 |

# IRRIGATION QUANTITIES
# IQ-4

STATE OF CALIFORNIA - DEPARTMENT OF TRANSPORTATION
Caltrans® LANDSCAPE ARCHITECTURE

SENIOR LANDSCAPE ARCHITECT: STEPHEN ALVAREZ
CALCULATED-DESIGNED BY: JOEL HORTIZUELA
CHECKED BY: STEVE WARREN
REVISED BY
DATE REVISED

LAST REVISION 07-16-14
DATE PLOTTED => 23-JUL-2014
TIME PLOTTED => 14:51

| Dist | COUNTY | ROUTE | POST MILES TOTAL PROJECT | SHEET No. | TOTAL SHEETS |
|---|---|---|---|---|---|
| 11 | SD | 5 | R29.1/R30.5 | 654 | 1012 |

Stephen P. Warren
LICENSED LANDSCAPE ARCHITECT

07-21-14
PLANS APPROVAL DATE

LICENSED LANDSCAPE ARCHITECT
STEPHEN P. WARREN No. 3442
Stephen P. Warren
Registered Professional Engineer
10-31-14
Renewal Date
05-23-14
Date
STATE OF CALIFORNIA

*THE STATE OF CALIFORNIA OR ITS OFFICERS OR AGENTS SHALL NOT BE RESPONSIBLE FOR THE ACCURACY OR COMPLETENESS OF SCANNED COPIES OF THIS PLAN SHEET.*

**NOTE:**

FOR ACCURATE RIGHT OF WAY DATA, CONTACT RIGHT OF WAY ENGINEERING AT THE DISTRICT OFFICE.

**ABBREVIATIONS:**

AMEND — AMENDMENT
Dia — DIAMETER
EA — EACH
LB/LBS — POUND/POUNDS
SQFT — SQUARE FEET
SQYD — SQUARE YARD
CY — CUBIC YARD
Max — MAXIMUM
Min — MINIMUM
No. — NUMBER
Oz — OUNCE
Pkt — PACKET(S)
PLT ESTB — PLANT ESTABLISHMENT
Pvmt — PAVEMENT
R/W — RIGHT OF WAY
TRVD — TRAVELED
" — INCH
' — FOOT
W GERM — WEED GERMINATION
RTD CUT — ROOTED CUTTING(S)

**NOTES:**

1. UNDERLINED PORTIONS OF BOTANICAL NAME INDICATE ABBREVIATIONS USED ON PLANTING PLANS.

# PLANT LIST AND PLANTING SPECIFICATIONS

| PLANT GROUP | PLANT NO. | SYMBOL | BOTANICAL NAME | COMMON NAME | SIZE | QUANTITY EACH | HOLE SIZE (INCHES) DIA | HOLE SIZE (INCHES) DEPTH | BASIN TYPE | IRON SULFATE (1) | SOIL AMEND (1)(17) | (1) FERTILIZER PLANTING | (1) FERTILIZER PLT ESTB (16) | WOOD MULCH BASIN (1)(5) | STAKING | PLANTING LIMITS MINIMUM DISTANCE (FT) FROM TRVD WAY | PVMT | FENCE | WALL | PAVED | EARTH | ON CENTER (FT) | REMARKS |
|---|---|---|---|---|---|---|---|---|---|---|---|---|---|---|---|---|---|---|---|---|---|---|---|
| A | 1 | | ARTEMESIA CALIFORNICA | CALIFORNIA SAGEBRUSH | No. 1 | 2,175 | (2) | (2) | I | — | — | 1 Pkt | — | 0.03 CY | — | — | 8 | 3 | 3 | 4 | 3 | 10 | SHRUB (8)(14)(15) |
| | 2 | | BACCHARIS SAROTHROIDES | BROOM BACCHARIS | No. 1 | 2,175 | (2) | (2) | I | — | — | 1 Pkt | — | 0.03 CY | — | — | 8 | 3 | 3 | 4 | 3 | 10 | SHRUB (8)(14)(15) |
| | 3 | | BACCHARIS 'PIGEON POINT' | DWARF COYOTE BRUSH | No. 1 | 820 | (2) | (2) | I | — | — | 1 Pkt | — | (3) | — | — | 3 | 3 | 4 | 3 | 3 | 4 | SHRUB (8)(15) |
| | 4 | | ERIOGONUM FASCICULATUM | CALIFORNIA BUCKWHEAT | No. 1 | 1,088 | (2) | (2) | I | — | — | 1 Pkt | — | 0.03 CY | — | — | 3 | 3 | 4 | 3 | 3 | 3 | SHRUB (8)(15) |
| | 5 | | ENCELIA CALIFORNICA | COAST SUNFLOWER | No. 1 | 2,175 | (2) | (2) | I | — | — | 1 Pkt | — | 0.03 CY | — | — | 8 | 3 | 3 | 4 | 3 | 10 | SHRUB (8)(14)(15) |
| | 6 | ◎ | HETEROMELES ARBUTIFOLIA | TOYON | No. 1 | 265 | (2) | (2) | I | — | — | 1 Pkt | — | 0.03 CY | — | — | 8 | 6 | 6 | 6 | 6 | (4) | SHRUB (14)(15) |
| | 7 | | ISOMERIS ARBOREA | BLADDERPOD | No. 1 | 1,121 | (2) | (2) | I | — | — | 1 Pkt | — | 0.03 CY | — | — | 8 | 6 | 6 | 6 | 6 | 10 | SHRUB (8)(14)(15) |
| | 8 | ⊕ | MALOSMA LAURINA | LAUREL SUMAC | No. 1 | 549 | (2) | (2) | I | — | — | 1 Pkt | — | 0.03 CY | — | — | 8 | 6 | 6 | 6 | 6 | (4) | SHRUB (14)(15) |
| | 9 | | MIMULUS AURANTIACUS | SAN DIEGO MONKEYFLOWER | No. 1 | 2,140 | (2) | (2) | I | — | — | 1 Pkt | — | 0.03 CY | — | — | 8 | 3 | 3 | 4 | 3 | 10 | SHRUB (8)(14)(15) |
| | 10 | ● | PARTHENOCISSUS TRICUSPIDATA | BOSTON IVY | No. 1 | 151 | (19) | (2) | I | 0.25 LB | 0.0107 CY | 1 Pkt | 0.25 LB | 0.03 CY | (6) | — | — | — | — | — | — | 12 | VINE (4)(10) |
| | 11 | ▲ | PINUS TORREYANA | TORREY PINE | No. 1 | 259 | (2) | (2) | I | — | — | 1 Pkt | — | 0.03 CY | — | 30 | 25 | 20 | 22 | 20 | 22 | (4) | TREE (14)(15) |
| | 12 | ⊙ | PLATANUS RACEMOSA | WESTERN SYCAMORE | No. 1 | 16 | (2) | (2) | I | — | — | 1 Pkt | — | 0.03 CY | — | 30 | 25 | 20 | 22 | 20 | 22 | (4) | TREE (14)(15) |
| | 13 | ○ | QUERCUS AGRIFOLIA | COASTAL LIVE OAK | No. 1 | 11 | (2) | (2) | I | — | — | 1 Pkt | — | 0.03 CY | — | 30 | 25 | 20 | 22 | 20 | 22 | (4) | TREE (14)(15) |
| | 14 | ◉ | RHUS INTEGRIFOLIA | LEMONADE BERRY | No. 1 | 931 | (2) | (2) | I | — | — | 1 Pkt | — | 0.03 CY | — | — | 8 | 6 | 6 | 6 | 6 | (4) | SHRUB (14)(15) |
| | 15 | ✿ | RIBES SPECIOSUM | FUCHSIA-FLOWERED GOOSEBERRY | No. 1 | 30 | (2) | (2) | I | — | — | 1 Pkt | — | 0.03 CY | — | — | 8 | 6 | 6 | 6 | 6 | (4) | SHRUB (14)(15) |
| | 16 | ⬡ | SAMBUCCUS MEXICANA | BLUE ELDERBERRY | No. 1 | 17 | (2) | (2) | I | — | — | 1 Pkt | — | 0.03 CY | — | — | 8 | 6 | 6 | 6 | 6 | (4) | SHRUB (14)(15) |
| | 17 | ⬢ | YUCCA SCHIDIGERA | SPANISH DAGGER | No. 1 | 52 | (2) | (2) | I | — | — | 1 Pkt | — | 0.03 CY | — | — | 8 | 6 | 6 | 6 | 6 | (4) | SHRUB (14)(15) |

**APPLICABLE WHEN CIRCLED:**

(1) - QUANTITIES SHOWN ARE "PER PLANT" UNLESS SHOWN AS SQFT OR SQYD APPLICATION RATES.
(2) - SUFFICIENT TO RECEIVE ROOT BALL.
(3) - INCLUDED WITH AREA MULCH
(4) - AS SHOWN ON PLANS.
(5) - WOOD MULCH IS SHREDDED BARK MULCH
(6) - SEE STANDARD DETAIL.
(7) - SEE SPECIAL PROVISIONS.
(8) - RANDOMLY PLANTED IN GROUPS OF THREES, FIVES AND SEVENS THROUGHOUT DESIGNATED AREA.
(9) - QUANTITY IN SQYD
(10) - THREE VINES PLANTED PER PANEL BETWEEN WALL PILASTERS.
(11) - 35-40% FESTUCA RUBRA (MOLATA FESCUE).
20-25% HORDEUM BRACHYANTHERUM CALIFORNICUM (CALIFORNIA BARLEY).
20-25% HORDEUM B. BRACHYANTHERUM (CALIFORNIA BARLEY).
20-25% NASSELLA PULCHRA (PURPLE NEEDLEGRASS).
(12) - CULTIVATION
(13) - FOR SEQUENCE OF WORK FOR WETLAND PLANTINGS SEE SHEET ECL-1 EROSION CONTROL (TYPE 1).
(14) - FOR SEQUENCE OF WORK FOR COASTAL SAGE SCRUB PLANTINGS SEE SHEET ECL-1 EROSION CONTROL (TYPE 2).
(15) - PLANT SOURCE FROM SAN DIEGO AND ORANGE COUNTY ONLY.
(16) - FERTILIZER IS SLOW RELEASE
(17) - SOIL AMENDMENT IS NITROLIZED FIR BARK
(18) - WIDTH 2 X ROOTBALL
(19) - WIDTH 3 X ROOTBALL

**LEGEND:**

TFESA — LANDSCAPE PROTECTION AREA. (SEE Irr SPRINKLER SCHEDULE).
WEED GERMINATION
WOOD MULCH
EXISTING TREES TO REMAIN
WOOD MULCH
WOOD MULCH
GRAVEL MULCH

**PLANT LIST**
**PL-1**

STATE OF CALIFORNIA - DEPARTMENT OF TRANSPORTATION
Caltrans LANDSCAPE ARCHITECTURE
SENIOR LANDSCAPE ARCHITECT: STEPHEN ALVAREZ
CALCULATED-DESIGNED BY: JOEL HORTIZUELA
CHECKED BY: STEVE WARREN
REVISED BY / DATE REVISED

LAST REVISION 07-16-14
DATE PLOTTED => 23-JUL-2014
TIME PLOTTED => 14:51

| Dist | COUNTY | ROUTE | POST MILES TOTAL PROJECT | SHEET No. | TOTAL SHEETS |
|---|---|---|---|---|---|
| 11 | SD | 5 | R29.1/R30.5 | 655 | 1012 |

Stephen P. Warren
LICENSED LANDSCAPE ARCHITECT

07-21-14
PLANS APPROVAL DATE

LICENSED LANDSCAPE ARCHITECT
STEPHEN P. WARREN No. 3442
Stephen P. Warren
REGISTERED PROFESSIONAL ENGINEER
10-31-14
05-23-14
DATE
STATE OF CALIFORNIA

*THE STATE OF CALIFORNIA OR ITS OFFICERS OR AGENTS SHALL NOT BE RESPONSIBLE FOR THE ACCURACY OR COMPLETENESS OF SCANNED COPIES OF THIS PLAN SHEET.*

**NOTE:**

FOR ACCURATE RIGHT OF WAY DATA, CONTACT RIGHT OF WAY ENGINEERING AT THE DISTRICT OFFICE.

# PLANT LIST AND PLANTING SPECIFICATIONS

| PLANT GROUP | PLANT NO. | SYMBOL | BOTANICAL NAME | COMMON NAME | SIZE | QUANTITY EACH | HOLE SIZE (INCHES) DIA | HOLE SIZE (INCHES) DEPTH | BASIN TYPE | IRON SULFATE (1) | SOIL AMEND (1)(17) | (1) FERTILIZER PLANTING | (1) FERTILIZER PLT ESTB (16) | WOOD MULCH BASIN (1)(5) | STAKING | PLANTING LIMITS MINIMUM DISTANCE (FT) FROM TRVD WAY | PVMT | FENCE | WALL | PAVED DITCH | EARTH DITCH | ON CENTER (FT) | REMARKS |
|---|---|---|---|---|---|---|---|---|---|---|---|---|---|---|---|---|---|---|---|---|---|---|---|
| B | 16 | | CARISSA ARGENTEA | JADE PLANT | No. 5 | 1,743 | (2) | (2) | I | — | — | 2 Pkt | — | (3) | — | — | 3 | 3 | 3 | 3 | 3 | 3 | SUCCULENT |
| | 17 | △ | PINUS TORREYENA | TORREY PINE | No. 5 | 231 | (2) | (2) | I | — | — | 2 Pkt | — | 0.04 CY | — | 30 | 25 | 20 | 22 | 20 | 22 | (4) | TREE (14)(15) |
| | 18 | ● | QUERCUS AGRIFOLIA | COAST LIVE OAK | No. 5 | 59 | (2) | (2) | I | — | — | 2 Pkt | — | 0.04 CY | — | 30 | 25 | 20 | 22 | 20 | 22 | (4) | TREE (14)(15) |
| K | 19 | □ | PINUS TORREYENA | TORREY PINE | 24" BOX | 18 | (18) | (2) | I | — | 0.44 CY | 5 Pkt | — | 0.08 CY | (4) | 30 | 25 | 20 | 22 | 20 | 22 | (4) | TREE (7)(14)(15) |
| U | 20 | ○ | CERCIDIUM 'DESERT MUSEUM' | DESERT MUSEUM PALO VERDE | No. 15 | 15 | (2) | (2) | I | — | — | 3 Pkt | — | (3) | (6) | 30 | 25 | 20 | 22 | 20 | 22 | (4) | TREE |
| | 21 | ■ | PINUS TORREYANA | TORREY PINE | No. 15 | 61 | (2) | (2) | I | — | — | 3 Pkt | — | 0.06 CY (3) | (6) | 30 | 25 | 20 | 22 | 20 | 22 | (4) | TREE |
| H | 22 | | POPULUS FREMONTII | WESTERN COTTONWOOD | CUTTING | 36 | — | — | — | — | (4) | — | — | — | — | — | 10 | 6 | 6 | 6 | 6 | 6 | TREE (7)(8)(12)(13) |
| | 23 | | SALIX EXIGUA | SANDBAR WILLOW | CUTTING | 36 | — | — | — | — | (4) | — | — | — | — | — | 10 | 6 | 6 | 6 | 6 | 6 | TREE (7)(8)(12)(13) |
| | 24 | | SALIX GOODDINGII | BLACK WILLOW | CUTTING | 146 | — | — | — | — | (4) | — | — | — | — | — | 10 | 6 | 6 | 6 | 6 | 6 | TREE (7)(8)(12)(13) |
| | 25 | | SALIX LASIOLEPIS | ARROYO WILLOW | CUTTING | 146 | — | — | — | — | (4) | — | — | — | — | — | 10 | 6 | 6 | 6 | 6 | 6 | TREE (7)(8)(12)(13) |
| — | 26 | | SOD | MIXED NATIVE GRASS SOD | SOD | 1,920 | — | — | — | — | (4) | — | — | — | — | — | — | — | — | — | — | — | GROUND COVER (9)(11)(12)(16) |

REVISED BY | DATE REVISED
JOEL HORTIZUELA | STEVE WARREN
CALCULATED-DESIGNED BY | CHECKED BY
SENIOR LANDSCAPE ARCHITECT | STEPHEN ALVAREZ

STATE OF CALIFORNIA - DEPARTMENT OF TRANSPORTATION
Caltrans® LANDSCAPE ARCHITECTURE

**PLANT LIST**
**PL-2**

LAST REVISION 07-16-14 | DATE PLOTTED => 23-JUL-2014 | TIME PLOTTED => 14:51

| Dist | COUNTY | ROUTE | POST MILES TOTAL PROJECT | SHEET No. | TOTAL SHEETS |
|---|---|---|---|---|---|
| 11 | SD | 5 | R29.1/R30.5 | 656 | 1012 |

Stephen P. Warren
LICENSED LANDSCAPE ARCHITECT

07-21-14
PLANS APPROVAL DATE

LICENSED LANDSCAPE ARCHITECT
STEPHEN P. WARREN No. 3442
Stephen P. Warren
10-31-14
05-23-14
Date
STATE OF CALIFORNIA

*THE STATE OF CALIFORNIA OR ITS OFFICERS OR AGENTS SHALL NOT BE RESPONSIBLE FOR THE ACCURACY OR COMPLETENESS OF SCANNED COPIES OF THIS PLAN SHEET.*

**NOTE:**

FOR ACCURATE RIGHT OF WAY DATA, CONTACT RIGHT OF WAY ENGINEERING AT THE DISTRICT OFFICE.

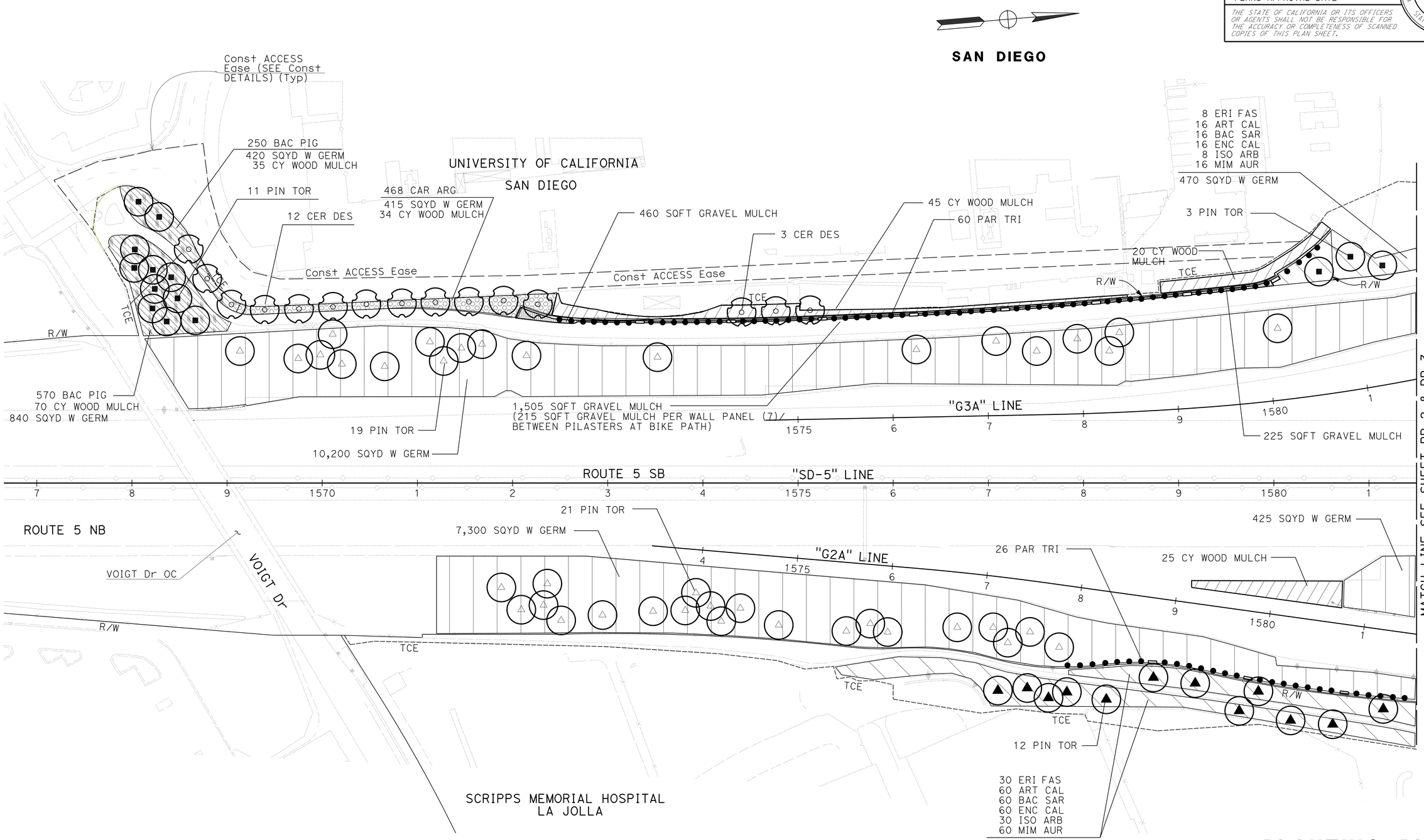


*APPROVED FOR PLANTING WORK ONLY*

# PLANTING PLAN

SCALE: 1"=50'

**PP-1**

| REVISED BY | DATE REVISED |
|---|---|
| JOEL HORTIZUELA | STEVE WARREN |
| CALCULATED-DESIGNED BY | CHECKED BY |
| SENIOR LANDSCAPE ARCHITECT | STEPHEN ALVAREZ |

STATE OF CALIFORNIA - DEPARTMENT OF TRANSPORTATION
Caltrans® LANDSCAPE ARCHITECTURE

LAST REVISION 07-16-14
DATE PLOTTED => 23-JUL-2014
TIME PLOTTED => 14:51

| Dist | COUNTY | ROUTE | POST MILES TOTAL PROJECT | SHEET No. | TOTAL SHEETS |
|---|---|---|---|---|---|
| 11 | SD | 5 | R29.1/R30.5 | 657 | 1012 |

Stephen P. Warren
LICENSED LANDSCAPE ARCHITECT

07-21-14
PLANS APPROVAL DATE

*THE STATE OF CALIFORNIA OR ITS OFFICERS OR AGENTS SHALL NOT BE RESPONSIBLE FOR THE ACCURACY OR COMPLETENESS OF SCANNED COPIES OF THIS PLAN SHEET.*

LICENSED LANDSCAPE ARCHITECT
STEPHEN P. WARREN No. 3442
Stephen P. Warren
REGISTRATION EXPIRES
10-31-14
REGISTRATION EXPIRED
05-23-14
DATE
STATE OF CALIFORNIA

**NOTE:**

FOR ACCURATE RIGHT OF WAY DATA, CONTACT RIGHT OF WAY ENGINEERING AT THE DISTRICT OFFICE.

# PLANTING PLAN

SCALE: 1"=50'

**PP-2**

*APPROVED FOR PLANTING WORK ONLY*

STATE OF CALIFORNIA - DEPARTMENT OF TRANSPORTATION
Caltrans® LANDSCAPE ARCHITECTURE

SENIOR LANDSCAPE ARCHITECT: STEPHEN ALVAREZ

CALCULATED-DESIGNED BY: JOEL HORTIZUELA
CHECKED BY: STEVE WARREN

REVISED BY
DATE REVISED

LAST REVISION 07-16-14
DATE PLOTTED => 23-JUL-2014
TIME PLOTTED => 14:51

| Dist | COUNTY | ROUTE | POST MILES TOTAL PROJECT | SHEET No. | TOTAL SHEETS |
|---|---|---|---|---|---|
| 11 | SD | 5 | R29.1/R30.5 | 658 | 1012 |

Stephen P. Warren
LICENSED LANDSCAPE ARCHITECT

07-21-14
PLANS APPROVAL DATE

*THE STATE OF CALIFORNIA OR ITS OFFICERS OR AGENTS SHALL NOT BE RESPONSIBLE FOR THE ACCURACY OR COMPLETENESS OF SCANNED COPIES OF THIS PLAN SHEET.*

LICENSED LANDSCAPE ARCHITECT
STEPHEN P. WARREN No. 3442
Stephen P. Warren
EXPIRATION DATE
10-31-14
REGISTRATION DATE
05-23-14
Date
STATE OF CALIFORNIA

**NOTE:**

FOR ACCURATE RIGHT OF WAY DATA, CONTACT
RIGHT OF WAY ENGINEERING AT THE DISTRICT OFFICE.

**SAN DIEGO**

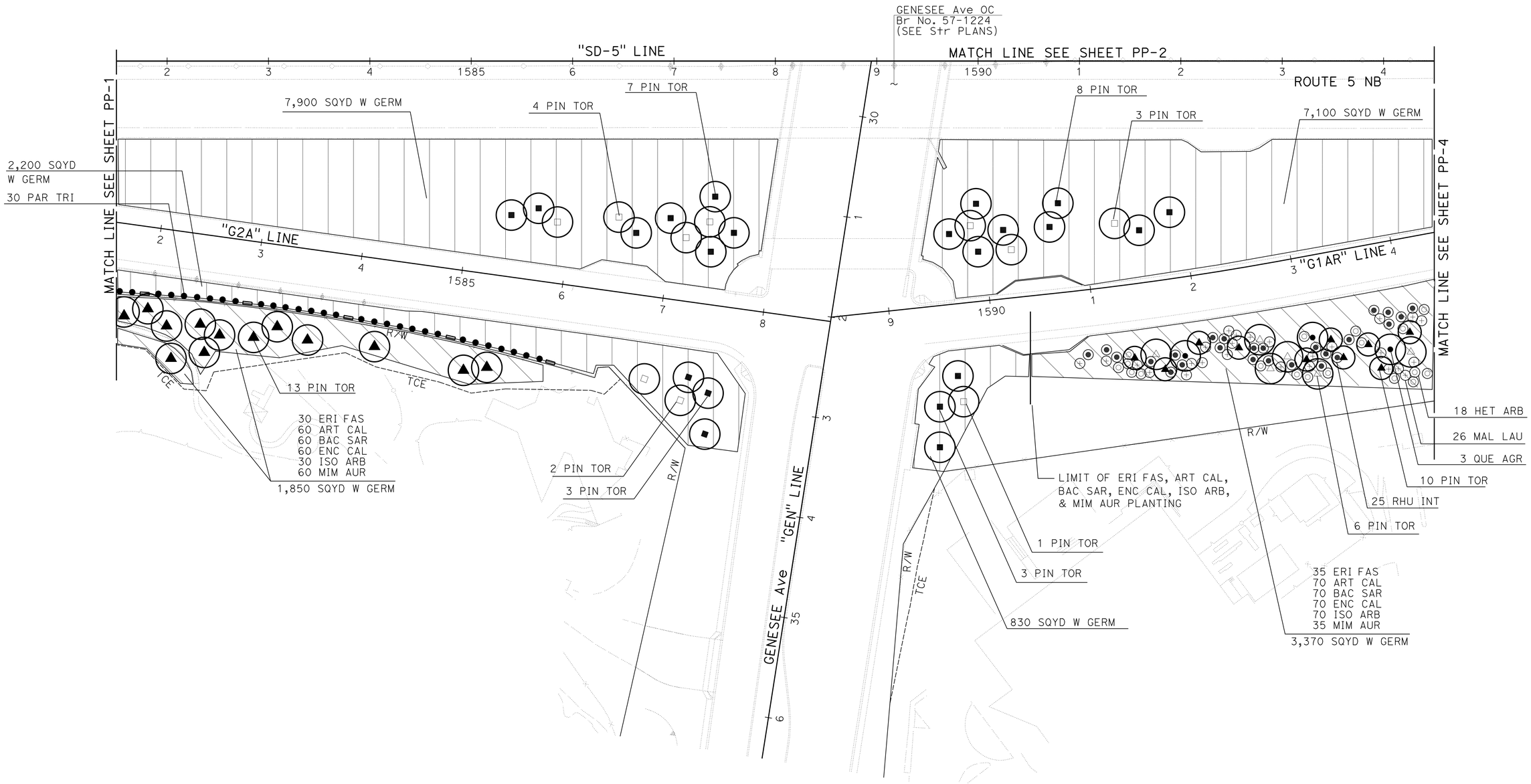


*APPROVED FOR PLANTING WORK ONLY*

# PLANTING PLAN

SCALE: 1"=50'

**PP-3**

| REVISED BY | DATE REVISED |
|---|---|
| JOEL HORTIZUELA | STEVE WARREN |
| CALCULATED-DESIGNED BY | CHECKED BY |
| SENIOR LANDSCAPE ARCHITECT | STEPHEN ALVAREZ |

STATE OF CALIFORNIA - DEPARTMENT OF TRANSPORTATION
Caltrans LANDSCAPE ARCHITECTURE

LAST REVISION 07-16-14
DATE PLOTTED => 23-JUL-2014
TIME PLOTTED => 14:51

| Dist | COUNTY | ROUTE | POST MILES TOTAL PROJECT | SHEET No. | TOTAL SHEETS |
|---|---|---|---|---|---|
| 11 | SD | 5 | R29.1/R30.5 | 659 | 1012 |

Stephen P. Warren
LICENSED LANDSCAPE ARCHITECT

07-21-14
PLANS APPROVAL DATE

*THE STATE OF CALIFORNIA OR ITS OFFICERS OR AGENTS SHALL NOT BE RESPONSIBLE FOR THE ACCURACY OR COMPLETENESS OF SCANNED COPIES OF THIS PLAN SHEET.*

LICENSED LANDSCAPE ARCHITECT
STEPHEN P. WARREN No. 3442
Stephen P. Warren
Registration Expiration Date
10-31-14
Renewal Date
05-23-14
Date
STATE OF CALIFORNIA

**NOTE:**

FOR ACCURATE RIGHT OF WAY DATA, CONTACT RIGHT OF WAY ENGINEERING AT THE DISTRICT OFFICE.

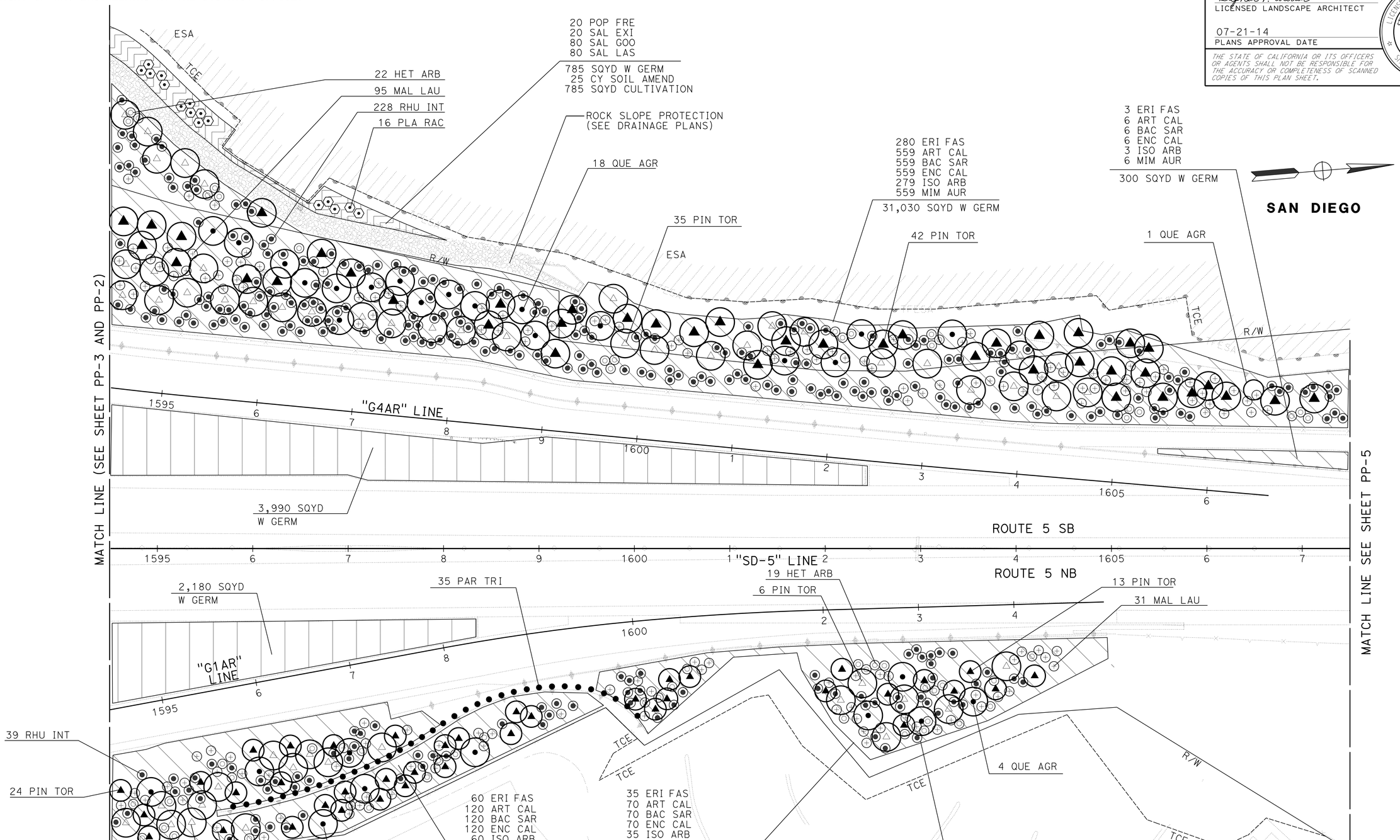


# PLANTING PLAN

SCALE: 1"=50'

**PP-4**

*APPROVED FOR PLANTING WORK ONLY*

STATE OF CALIFORNIA - DEPARTMENT OF TRANSPORTATION
Caltrans LANDSCAPE ARCHITECTURE

SENIOR LANDSCAPE ARCHITECT: STEPHEN ALVAREZ
CALCULATED-DESIGNED BY: JOEL HORTIZUELA
CHECKED BY: STEVE WARREN
REVISED BY / DATE REVISED

LAST REVISION 07-16-14
DATE PLOTTED => 23-JUL-2014
TIME PLOTTED => 14:51

| Dist | COUNTY | ROUTE | POST MILES TOTAL PROJECT | SHEET No. | TOTAL SHEETS |
|---|---|---|---|---|---|
| 11 | SD | 5 | R29.1/R30.5 | 660 | 1012 |

Stephen P. Warren
LICENSED LANDSCAPE ARCHITECT

07-21-14
PLANS APPROVAL DATE

LICENSED LANDSCAPE ARCHITECT
STEPHEN P. WARREN No. 3442
Stephen P. Warren
Expiration Date
10-31-14
Revision Date
05-23-14
Date
STATE OF CALIFORNIA

*THE STATE OF CALIFORNIA OR ITS OFFICERS OR AGENTS SHALL NOT BE RESPONSIBLE FOR THE ACCURACY OR COMPLETENESS OF SCANNED COPIES OF THIS PLAN SHEET.*

**NOTE:**

FOR ACCURATE RIGHT OF WAY DATA, CONTACT RIGHT OF WAY ENGINEERING AT THE DISTRICT OFFICE.

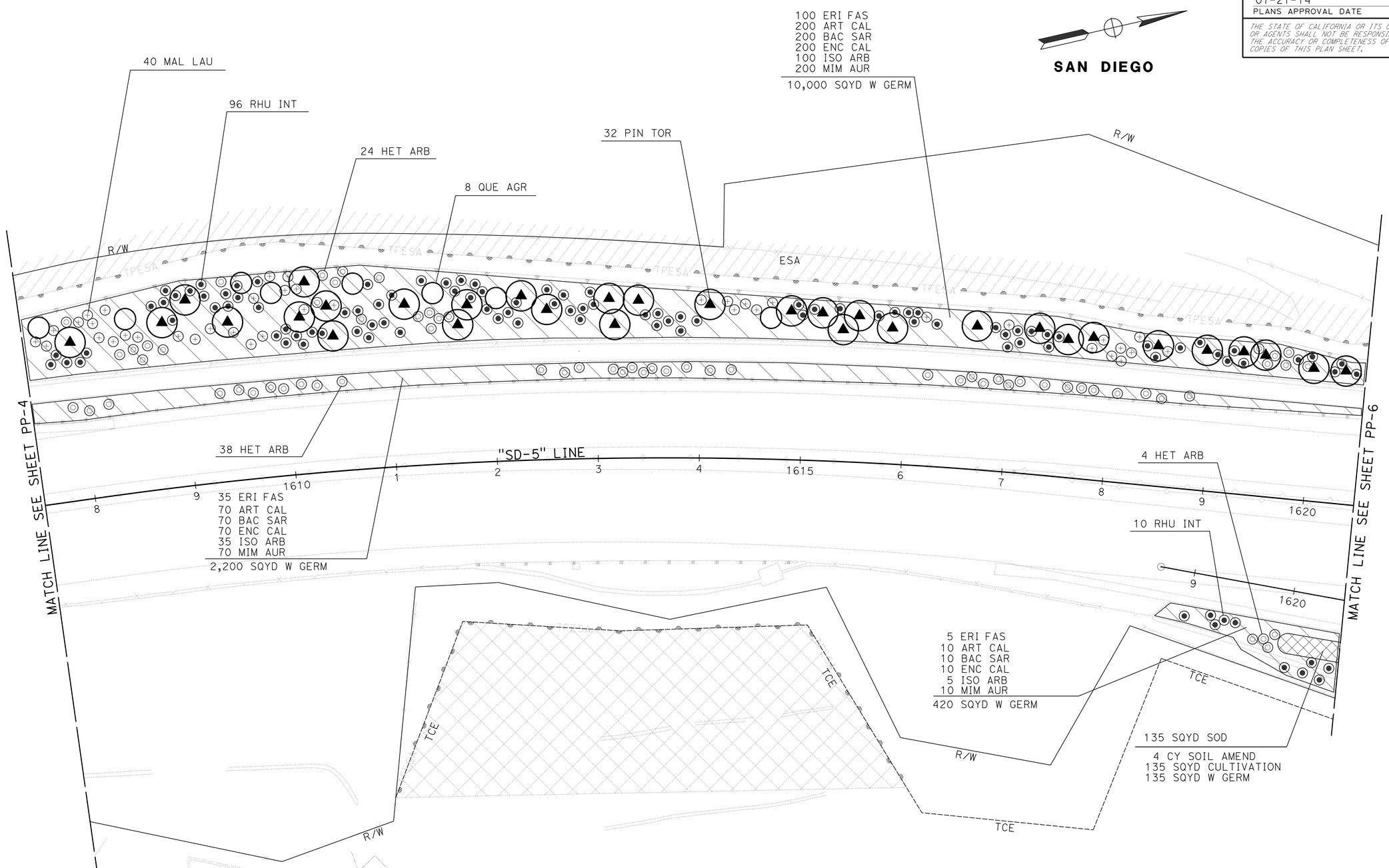


*APPROVED FOR PLANTING WORK ONLY*

# PLANTING PLAN

SCALE: 1"=50'

**PP-5**

STATE OF CALIFORNIA - DEPARTMENT OF TRANSPORTATION
Caltrans® LANDSCAPE ARCHITECTURE

SENIOR LANDSCAPE ARCHITECT: STEPHEN ALVAREZ

CALCULATED-DESIGNED BY: JOEL HORTIZUELA
CHECKED BY: STEVE WARREN

REVISED BY
DATE REVISED

LAST REVISION 07-16-14
DATE PLOTTED => 23-JUL-2014
TIME PLOTTED => 14:51

| Dist | COUNTY | ROUTE | POST MILES TOTAL PROJECT | SHEET No. | TOTAL SHEETS |
|---|---|---|---|---|---|
| 11 | SD | 5 | R29.1/R30.5 | 661 | 1012 |

Stephen P. Warren
LICENSED LANDSCAPE ARCHITECT

07-21-14
PLANS APPROVAL DATE

LICENSED LANDSCAPE ARCHITECT
STEPHEN P. WARREN No. 3442
Stephen P. Warren
Expiration Date
10-31-14
Renewal Date
05-23-14
Date
STATE OF CALIFORNIA

*THE STATE OF CALIFORNIA OR ITS OFFICERS OR AGENTS SHALL NOT BE RESPONSIBLE FOR THE ACCURACY OR COMPLETENESS OF SCANNED COPIES OF THIS PLAN SHEET.*

**NOTE:**

FOR ACCURATE RIGHT OF WAY DATA, CONTACT RIGHT OF WAY ENGINEERING AT THE DISTRICT OFFICE.

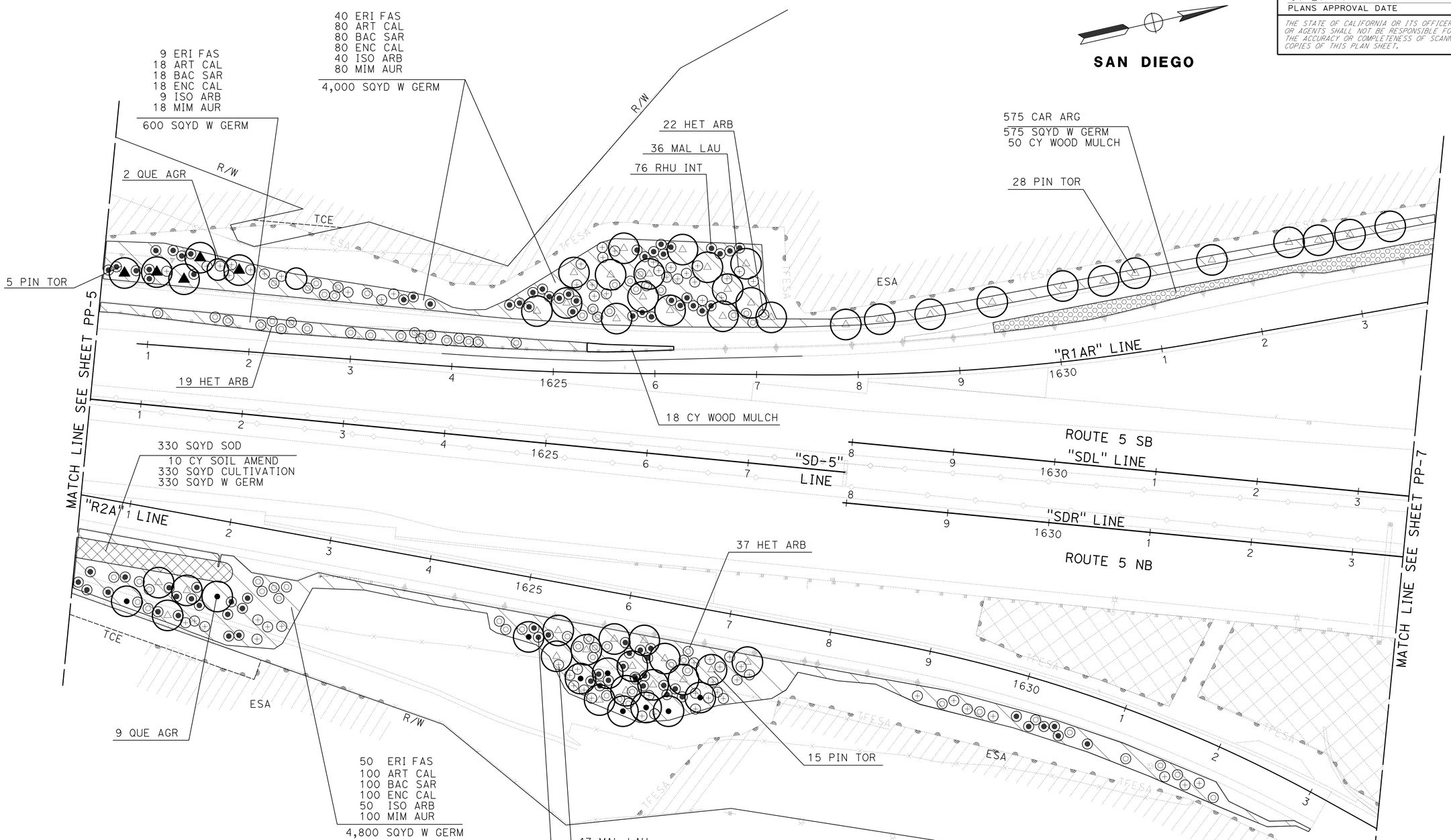


*APPROVED FOR PLANTING WORK ONLY*

# PLANTING PLAN

SCALE: 1"=50'

**PP-6**

STATE OF CALIFORNIA - DEPARTMENT OF TRANSPORTATION
Caltrans LANDSCAPE ARCHITECTURE

SENIOR LANDSCAPE ARCHITECT: STEPHEN ALVAREZ

CALCULATED-DESIGNED BY: JOEL HORTIZUELA
CHECKED BY: STEVE WARREN

REVISED BY
DATE REVISED

LAST REVISION 07-16-14
DATE PLOTTED => 23-JUL-2014
TIME PLOTTED => 14:51

| Dist | COUNTY | ROUTE | POST MILES TOTAL PROJECT | SHEET No. | TOTAL SHEETS |
|---|---|---|---|---|---|
| 11 | SD | 5 | R29.1/R30.5 | 662 | 1012 |

Stephen P. Warren
LICENSED LANDSCAPE ARCHITECT

07-21-14
PLANS APPROVAL DATE

*THE STATE OF CALIFORNIA OR ITS OFFICERS OR AGENTS SHALL NOT BE RESPONSIBLE FOR THE ACCURACY OR COMPLETENESS OF SCANNED COPIES OF THIS PLAN SHEET.*

LICENSED LANDSCAPE ARCHITECT
STEPHEN P. WARREN No. 3442
Stephen P. Warren
Signature
10-31-14
Renewal Date
05-23-14
Date
STATE OF CALIFORNIA

**NOTE:**

FOR ACCURATE RIGHT OF WAY DATA, CONTACT RIGHT OF WAY ENGINEERING AT THE DISTRICT OFFICE.

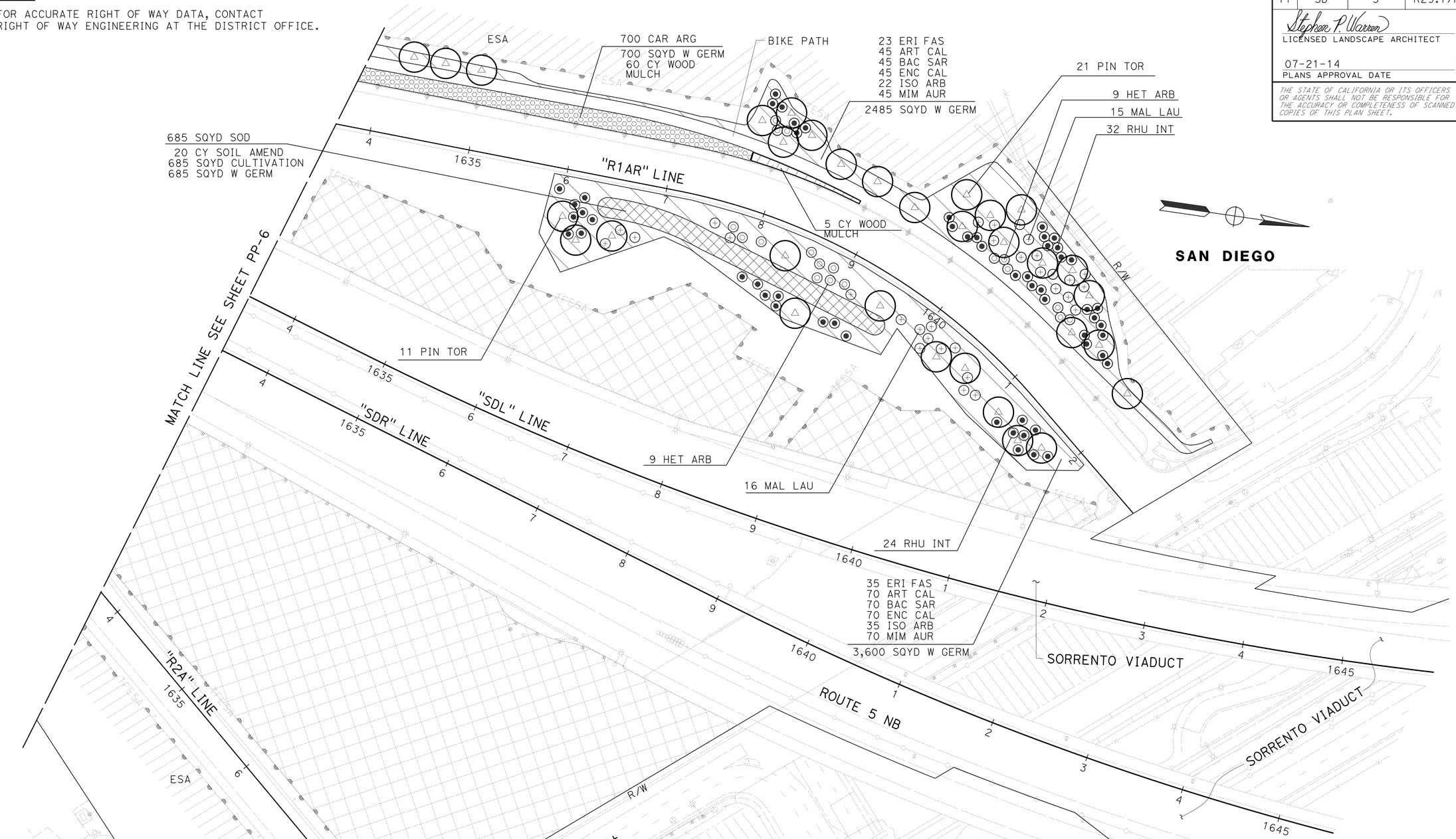


*APPROVED FOR PLANTING WORK ONLY*

# PLANTING PLAN

SCALE: 1"=50'

**PP-7**

STATE OF CALIFORNIA - DEPARTMENT OF TRANSPORTATION
Caltrans® LANDSCAPE ARCHITECTURE

SENIOR LANDSCAPE ARCHITECT: STEPHEN ALVAREZ
CALCULATED-DESIGNED BY: JOEL HORTIZUELA
CHECKED BY: STEVE WARREN
REVISED BY
DATE REVISED

LAST REVISION 07-16-14
DATE PLOTTED => 23-JUL-2014
TIME PLOTTED => 14:51

| Dist | COUNTY | ROUTE | POST MILES TOTAL PROJECT | SHEET No. | TOTAL SHEETS |
|---|---|---|---|---|---|
| 11 | SD | 5 | R29.1/R30.5 | 663 | 1012 |

Stephen P. Warren
LICENSED LANDSCAPE ARCHITECT

07-21-14
PLANS APPROVAL DATE

LICENSED LANDSCAPE ARCHITECT
STEPHEN P. WARREN No. 3442
Stephen P. Warren
Registered Professional Engineer
10-31-14
Expiration Date
05-23-14
Date
STATE OF CALIFORNIA

*THE STATE OF CALIFORNIA OR ITS OFFICERS OR AGENTS SHALL NOT BE RESPONSIBLE FOR THE ACCURACY OR COMPLETENESS OF SCANNED COPIES OF THIS PLAN SHEET.*

**NOTE:**

FOR ACCURATE RIGHT OF WAY DATA, CONTACT RIGHT OF WAY ENGINEERING AT THE DISTRICT OFFICE.

**SAN DIEGO**

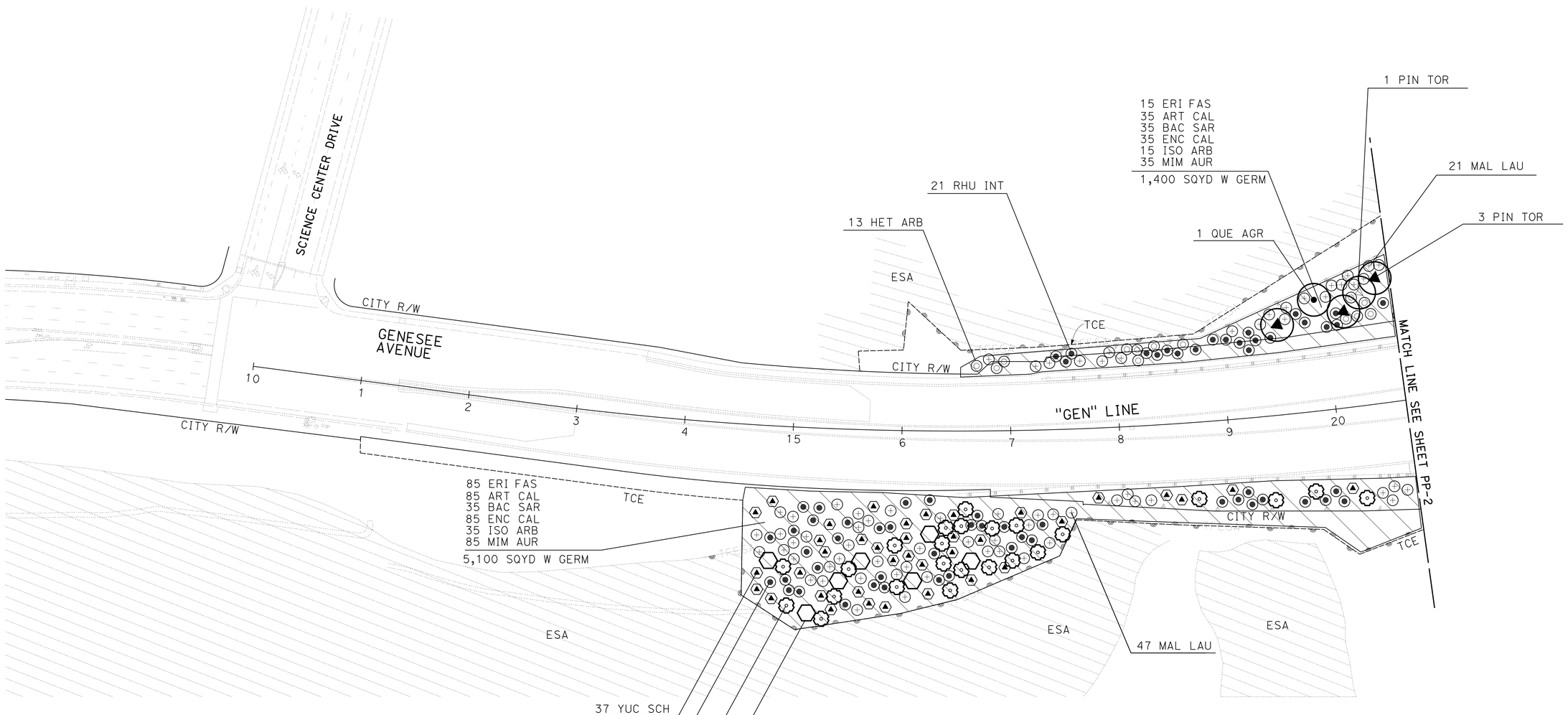


*APPROVED FOR PLANTING WORK ONLY*

# PLANTING PLAN

SCALE: 1"=50'

**PP-8**

STATE OF CALIFORNIA - DEPARTMENT OF TRANSPORTATION
Caltrans® LANDSCAPE ARCHITECTURE

SENIOR LANDSCAPE ARCHITECT: STEPHEN ALVAREZ
CALCULATED-DESIGNED BY: JOEL HORTIZUELA
CHECKED BY: STEVE WARREN
REVISED BY
DATE REVISED

LAST REVISION 07-16-14
DATE PLOTTED => 23-JUL-2014
TIME PLOTTED => 14:51

| Dist | COUNTY | ROUTE | POST MILES TOTAL PROJECT | SHEET No. | TOTAL SHEETS |
|---|---|---|---|---|---|
| 11 | SD | 5 | R29.1/R30.5 | 664 | 1012 |

Stephen P. Warren
LICENSED LANDSCAPE ARCHITECT

07-21-14
PLANS APPROVAL DATE

LICENSED LANDSCAPE ARCHITECT
STEPHEN P. WARREN No. 3442
Stephen P. Warren
Signature
10-31-14
Expiration Date
05-23-14
Date
STATE OF CALIFORNIA

*THE STATE OF CALIFORNIA OR ITS OFFICERS OR AGENTS SHALL NOT BE RESPONSIBLE FOR THE ACCURACY OR COMPLETENESS OF SCANNED COPIES OF THIS PLAN SHEET.*

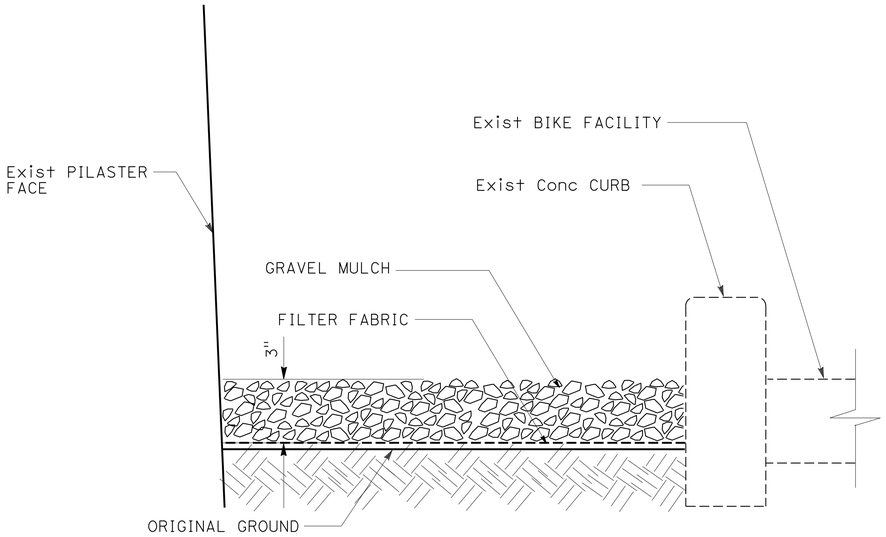


SECTION

## GRAVEL MULCH

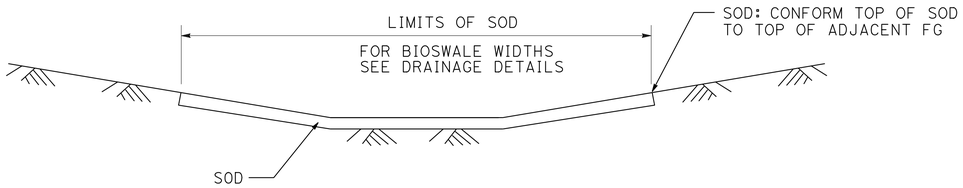


SECTION

## SOD

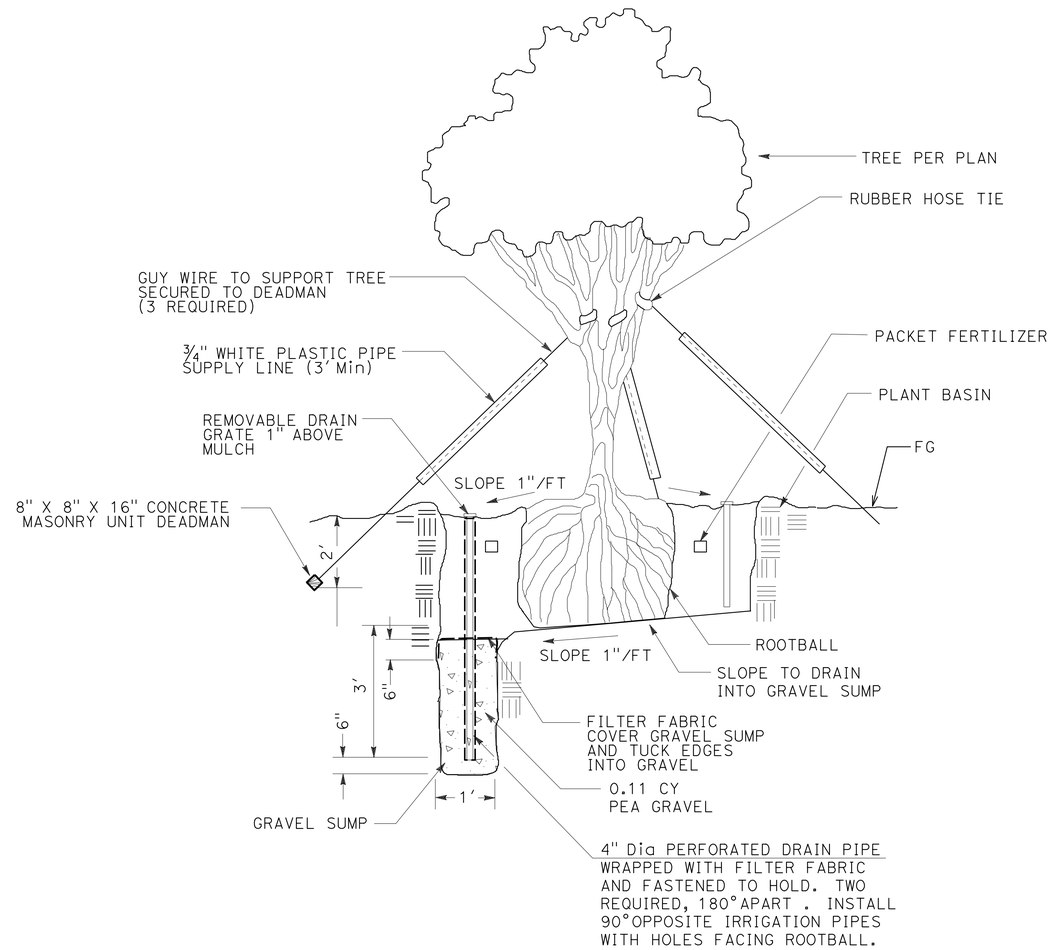


SECTION

## PREPARE HOLE AND TREE GUYING (FOR 24" BOX TREE)

# LANDSCAPE DETAILS
# LD-1

| REVISED BY | DATE REVISED |
|---|---|
| | |

| CALCULATED-DESIGNED BY | JOEL HORTIZUELA |
|---|---|
| CHECKED BY | STEVE WARREN |
| SENIOR LANDSCAPE ARCHITECT | STEPHEN ALVAREZ |

STATE OF CALIFORNIA - DEPARTMENT OF TRANSPORTATION
Caltrans® LANDSCAPE ARCHITECTURE

LAST REVISION 07-16-14 | DATE PLOTTED => 23-JUL-2014 | TIME PLOTTED => 14:51

| Dist | COUNTY | ROUTE | POST MILES TOTAL PROJECT | SHEET No. | TOTAL SHEETS |
|---|---|---|---|---|---|
| 11 | SD | 5 | R29.1/R30.5 | 665 | 1012 |

Stephen P. Warren
LICENSED LANDSCAPE ARCHITECT

07-21-14
PLANS APPROVAL DATE

LICENSED LANDSCAPE ARCHITECT
STEPHEN P. WARREN No. 3442
Stephen P. Warren
Expiration Date
10-31-14
Registered Professional Engineer
05-23-14
Date
STATE OF CALIFORNIA

*THE STATE OF CALIFORNIA OR ITS OFFICERS OR AGENTS SHALL NOT BE RESPONSIBLE FOR THE ACCURACY OR COMPLETENESS OF SCANNED COPIES OF THIS PLAN SHEET.*

# PLANTING AND LANDSCAPE QUANTITIES

| SHEET | WOOD MULCH | WEED GERMINATION | CULTIVATION | SOIL AMENDMENT | GRAVEL MULCH |
|---|---|---|---|---|---|
| | CY | SQYD | SQYD | CY | SQFT |
| PP-1 | 229 | 21,935 | — | — | 2,190 |
| PP-2 | 6 | 43,595 | 1,360 | 41 | — |
| PP-3 | — | 23,250 | — | — | — |
| PP-4 | — | 47,725 | 785 | 25 | — |
| PP-5 | — | 12,755 | 135 | 4 | — |
| PP-6 | 68 | 10,305 | 330 | 10 | — |
| PP-7 | 65 | 7,470 | 685 | 20 | — |
| PP-8 | — | 6,500 | — | — | — |
| BASIN | 411 | — | — | — | — |
| PLANT No. 10 | — | — | — | 1.6 | — |
| PLANT 24" BOX | — | — | — | 7.9 | — |
| TOTAL | 779 | 173,535 | 3,295 | 109.5 | 2,190 |

## LANDSCAPE QUANTITIES
## LQ-1

STATE OF CALIFORNIA - DEPARTMENT OF TRANSPORTATION
Caltrans® LANDSCAPE ARCHITECTURE

SENIOR LANDSCAPE ARCHITECT: STEPHEN ALVAREZ
CALCULATED-DESIGNED BY: JOEL HORTIZUELA
CHECKED BY: STEVE WARREN
REVISED BY
DATE REVISED

LAST REVISION 07-16-14
DATE PLOTTED => 23-JUL-2014
TIME PLOTTED => 14:51

| Dist | COUNTY | ROUTE | POST MILES TOTAL PROJECT | SHEET No. | TOTAL SHEETS |
|---|---|---|---|---|---|
| 11 | SD | 5 | R29.1/R30.5 | 666 | 1012 |

REGISTERED CIVIL ENGINEER DATE 05-23-14

PLANS APPROVAL DATE 07-21-14

REGISTERED PROFESSIONAL ENGINEER MICHAEL S. ROSS No. C66637 Exp. 06/30/16 CIVIL STATE OF CALIFORNIA

THE STATE OF CALIFORNIA OR ITS OFFICERS OR AGENTS SHALL NOT BE RESPONSIBLE FOR THE ACCURACY OR COMPLETENESS OF SCANNED COPIES OF THIS PLAN SHEET.

CITY OF SAN DIEGO
525 B STREET
SUITE 7
SAN DIEGO, CA 92101

KIMLEY-HORN AND ASSOCIATES, INC.
401 B STREET, SUITE 600
SAN DIEGO, CA 92101

## EROSION CONTROL (TYPE 1)

| LEGEND | SEQUENCE | ITEM | MATERIAL DESCRIPTION | MATERIAL TYPE | APPLICATION RATE | REMARKS |
|---|---|---|---|---|---|---|
| EC (TYPE1) | STEP 1 | DI PROTECTION | COMPOST SOCK | 12" Dia | | TYPE 1 COMPOST SOCK INSTALLATION |
| | | | ROLLED EROSION CONTROL PRODUCT | BLANKET TYPE 2 | | |
| | STEP 2 | SOIL AMENDMENT | SEE PLANTING PLANS | | | |
| | STEP 3 | CULTIVATE | SEE PLANTING PLANS | | | |
| | STEP 4 | IRRIGATION (VARIOUS) | SEE IRRIGATION PLANS | | | |
| | STEP 5 | WEED GERMINATION | SEE PLANTING PLANS | | | |
| | STEP 6 | PLANTING (VARIOUS) | SEE PLANTING PLANS | | | |
| | STEP 7 | HYDROSEED | FIBER | WOOD | 1500 LB/ACRE | |
| | | | TACKIFIER | PSYLLIUM | 150 LB/ACRE | |
| | | | SEED | MIX 1 | 8 LB/ACRE | |

## EROSION CONTROL (TYPE 2)

| LEGEND | SEQUENCE | ITEM | MATERIAL DESCRIPTION | MATERIAL TYPE | APPLICATION RATE | REMARKS |
|---|---|---|---|---|---|---|
| EC (TYPE2) | STEP 1 | DI PROTECTION | COMPOST SOCK | 12" Dia | | TYPE 1 COMPOST SOCK INSTALLATION |
| | | | ROLLED EROSION CONTROL PRODUCT | BLANKET TYPE 2 | | |
| | STEP 2 | COMPOST | COMPOST | MEDIUM | 68 CY/ACRE | |
| | STEP 3 | IRRIGATION (VARIOUS) | SEE IRRIGATION PLANS | | | |
| | STEP 4 | WEED GERMINATION | SEE PLANTING PLANS | | | |
| | STEP 5 | COMPOST SOCK | MESH TUBE | 8" Dia | | TYPE 2 INSTALLATION, PLACE AT 30' APART AT FACE OF SLOPE PER PLAN |
| | | | MESH TUBE | 12" Dia | | TYPE 2 INSTALLATION AT TOE OF SLOPE |
| | STEP 6 | PLANTING (VARIOUS) | SEE PLANTING PLANS | | | |
| | STEP 7 | HYDROSEED | FIBER | WOOD | 1500 LB/ACRE | |
| | | | TACKIFIER | PSYLLIUM | 150 LB/ACRE | |
| | | | SEED | MIX 2 | 28.1 LB/ACRE | |

## EROSION CONTROL (TYPE 3)

| LEGEND | SEQUENCE | ITEM | MATERIAL DESCRIPTION | MATERIAL TYPE | APPLICATION RATE | REMARKS |
|---|---|---|---|---|---|---|
| EC (TYPE3) | STEP 1 | DI PROTECTION | COMPOST SOCK | 12" Dia | | TYPE 1 COMPOST SOCK INSTALLATION |
| | | | ROLLED EROSION CONTROL PRODUCT | BLANKET TYPE 2 | | |
| | STEP 2 | COMPOST | COMPOST | MEDIUM | 68 CY/ACRE | |
| | STEP 3 | IRRIGATION (VARIOUS) | SEE IRRIGATION PLANS | | | |
| | STEP 4 | WEED GERMINATION | SEE PLANTING PLANS | | | |
| | STEP 5 | COMPOST SOCK | MESH TUBE | 8" Dia | | TYPE 2 INSTALLATION, PLACE AT 30' APART AT FACE OF SLOPE PER PLAN |
| | | | MESH TUBE | 12" Dia | | TYPE 2 INSTALLATION AT TOE OF SLOPE |
| | STEP 6 | PLANTING (VARIOUS) | SEE PLANTING PLANS | | | |
| | STEP 7 | EROSION CONTROL | FIBER | WOOD | 1500 LB/ACRE | |
| | | | TACKIFIER | PSYLLIUM | 150 LB/ACRE | |
| | | | SEED | MIX 3 | 22.5 LB/ACRE | |

### LEGEND:

- SURFACE FLOW DIRECTION
- CS — COMPOST SOCK
- DRAINAGE INLET PROTECTION

### ABBREVIATIONS:

EC (TYPE X) — EROSION CONTROL (TYPE)

*APPROVED FOR EROSION CONTROL WORK ONLY*

# EROSION CONTROL LEGEND
# ECL-1

REVISED BY | DATE REVISED
JAN ARMIN A. VIANZON | MICHAEL S. ROSS
CALCULATED-DESIGNED BY | CHECKED BY
CONSULTANT FUNCTIONAL SUPERVISOR: MICHAEL S. ROSS
STATE OF CALIFORNIA - DEPARTMENT OF TRANSPORTATION
Caltrans

LAST REVISION 07-16-14 | DATE PLOTTED => 23-JUL-2014 | TIME PLOTTED => 14:51

| Dist | COUNTY | ROUTE | POST MILES TOTAL PROJECT | SHEET No. | TOTAL SHEETS |
|---|---|---|---|---|---|
| 11 | SD | 5 | R29.1/R30.5 | 667 | 1012 |

REGISTERED CIVIL ENGINEER 05-23-14 DATE

07-21-14
PLANS APPROVAL DATE

REGISTERED PROFESSIONAL ENGINEER MICHAEL S. ROSS No. C66637 Exp. 06/30/16 CIVIL STATE OF CALIFORNIA

*THE STATE OF CALIFORNIA OR ITS OFFICERS OR AGENTS SHALL NOT BE RESPONSIBLE FOR THE ACCURACY OR COMPLETENESS OF SCANNED COPIES OF THIS PLAN SHEET.*

CITY OF SAN DIEGO
525 B STREET
SUITE 7
SAN DIEGO, CA 92101

KIMLEY-HORN AND ASSOCIATES, INC.
401 B STREET, SUITE 600
SAN DIEGO, CA 92101

## SEED-MIX 1 (WETLAND MIX)

| BOTANICAL NAME (COMMON NAME) | PERCENT GERMINATION (MINIMUM) | POUNDS PURE LIVE SEED PER ACRE (SLOPE MEASUREMENT) |
|---|---|---|
| ARTEMISIA DOUGLASIANA[1] (MUGWORT) | 20 | 1 |
| AMBROSIA PSYLOSTACHYA[1] (WESTERN RAGWEED) | 10 | 0.5 |
| BACCHARIS SALICIFOLIA[1] (MULEFAT) | 20 | 0.5 |
| CROTON CALIFORNICA[1] (CALIFORNIA CROTON) | 15 | 0.5 |
| HELIOTROPIUM CURASSAVICUM[1] (SALT HELIOTROPE) | 50 | 0.5 |
| OENOTHERA ELATA HOOKERI[1] (EVENING PRIMROSE) | 40 | 5 |
| | TOTAL | 8 |

1 SEED SOURCES FROM SAN DIEGO AND ORANGE COUNTY ONLY

## SEED-MIX 2 (COASTAL SAGE SCRUB MIX)

| BOTANICAL NAME (COMMON NAME) | PERCENT GERMINATION (MINIMUM) | POUNDS PURE LIVE SEED PER ACRE (SLOPE MEASUREMENT) |
|---|---|---|
| ARTEMISIA CALIFORNICA[1] (COASTAL SAGEBRUSH) | 45 | 0.5 |
| BACCHARIS SAROTHROIDES[1] (BROOM BACCHARIS) | 30 | 0.1 |
| ENCELIA CALIFORNICA[1] (BUSH SUNFLOWER) | 45 | 2.0 |
| ERIOGONUM FASCICULATUM[1] (CALIFORNIA BUCKWHEAT) | 15 | 5.0 |
| ERIOPHYLLUM CONFERTIFLORUM[1] (GOLDEN YARROW) | 50 | 1.5 |
| ESCHSCHOLZIA CALIFORNICA[1] (CALIFORNIA POPPY) | 60 | 3.0 |
| ISOCOMA MENZIESII v MENZIESII[1] (COAST GOLDENBUSH) | 20 | 0.5 |
| LASTHENIA CALIFORNICA[1] (GOLDFIELDS) | 35 | 2.0 |
| LOTUS SCOPARIUS[1] (DEERWEED) | 70 | 2.0 |
| LUPINUS BICOLOR[1] (PIGMY-LEAVED LUPINE) | 65 | 4.0 |
| NASELLA PULCHRA[1] PURPLE NEEDLEGRASS | 60 | 6.0 |
| SALVIA MELLIFERA[1] (BLACK SAGE) | 35 | 1.5 |
| | TOTAL | 28.1 |

1 SEED SOURCES FROM SAN DIEGO AND ORANGE COUNTY ONLY

## SEED-MIX 3 (COLOR MIX)

| BOTANICAL NAME (COMMON NAME) | PERCENT GERMINATION (MINIMUM) | POUNDS PURE LIVE SEED PER ACRE (SLOPE MEASUREMENT) |
|---|---|---|
| ERIOGONUM FASCICULATUM[1] (CALIFORNIA BUCKWHEAT) | 15 | 5.0 |
| ESCHSCHOLZIA CALIFORNICA[1] (CALIFORNIA POPPY) | 60 | 3.0 |
| ENCELIA CALIFORNICA[1] (BUSH SUNFLOWER) | 50 | 2.0 |
| HELIOTROPIUM CURASSAVICUM[1] (SALT HELIOTROPE) | 50 | 0.5 |
| LASTHENIA CALIFORNICA (GOLDFIELDS) | 35 | 2.0 |
| LUPINUS BICOLOR[1] (PIGMY-LEAVED LUPINE) | 65 | 4.0 |
| NASELLA PULCHRA[1] PURPLE NEEDLEGRASS | 60 | 6.0 |
| | TOTAL | 22.5 |

1 SEED SOURCES FROM SAN DIEGO AND ORANGE COUNTY ONLY

*APPROVED FOR EROSION CONTROL WORK ONLY*

# EROSION CONTROL LEGEND
# ECL-2

STATE OF CALIFORNIA - DEPARTMENT OF TRANSPORTATION
Caltrans

CONSULTANT FUNCTIONAL SUPERVISOR: MICHAEL S. ROSS
CALCULATED-DESIGNED BY: JAN ARMIN A. VIANZON
CHECKED BY: MICHAEL S. ROSS
REVISED BY
DATE REVISED

LAST REVISION 07-16-14
DATE PLOTTED => 23-JUL-2014
TIME PLOTTED => 14:51

| Dist | COUNTY | ROUTE | POST MILES TOTAL PROJECT | SHEET No. | TOTAL SHEETS |
|---|---|---|---|---|---|
| 11 | SD | 5 | R29.1/R30.5 | 668 | 1012 |

REGISTERED CIVIL ENGINEER 05-16-14 DATE

07-21-14
PLANS APPROVAL DATE

REGISTERED PROFESSIONAL ENGINEER MICHAEL S. ROSS No. C66637 Exp. 06/30/16 CIVIL STATE OF CALIFORNIA

*THE STATE OF CALIFORNIA OR ITS OFFICERS OR AGENTS SHALL NOT BE RESPONSIBLE FOR THE ACCURACY OR COMPLETENESS OF SCANNED COPIES OF THIS PLAN SHEET.*

CITY OF SAN DIEGO
525 B STREET
SUITE 7
SAN DIEGO, CA 92101

KIMLEY-HORN AND ASSOCIATES, INC.
401 B STREET, SUITE 600
SAN DIEGO, CA 92101

## NOTES:

1. FOR COMPLETE RIGHT OF WAY AND ACCURATE ACCESS DATA, SEE RIGHT OF WAY RECORD MAPS AT DISTRICT OFFICE.
2. FOR SLOPE RATIO INFORMATION SEE CONTOUR GRADING SHEETS.
3. REPLACE TEMPORARY WATER POLLUTION CONTROL MEASURES WITH PERMANENT EROSION CONTROL MEASURES AS SOON AS WORK IS COMPLETED IN EACH AREA TO THE EXTENT THAT THE EROSION CONTROL MEASURES WILL NOT BE DISTURBED, AND IN ACCORDANCE WITH EROSION CONTROL LEGEND SHEET.

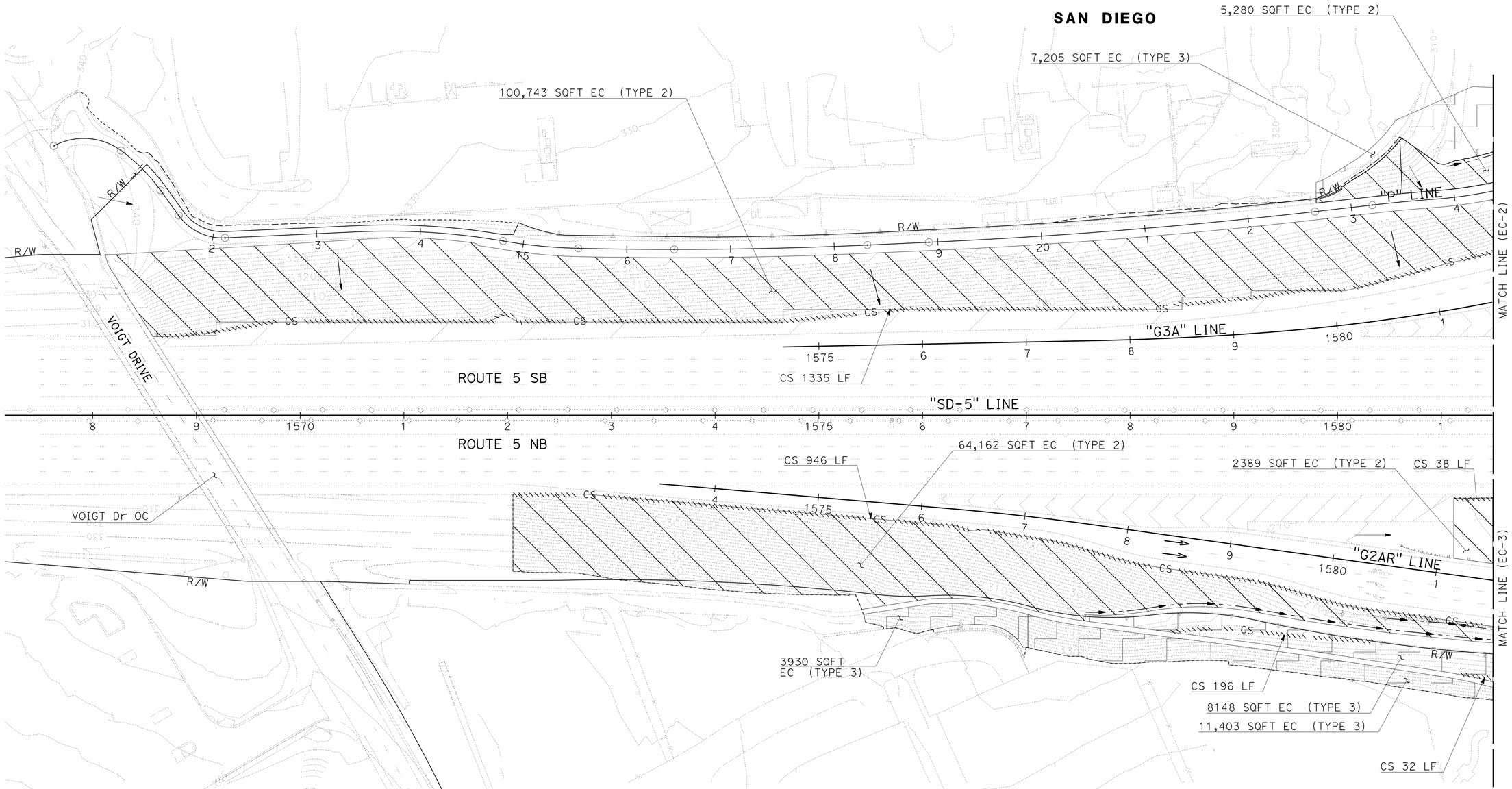


SCRIPPS MEMORIAL HOSPITAL
LA JOLLA

*APPROVED FOR EROSION CONTROL WORK ONLY*

# EROSION CONTROL PLAN

SCALE: 1" = 50'

**EC-1**

STATE OF CALIFORNIA - DEPARTMENT OF TRANSPORTATION

Caltrans

CONSULTANT FUNCTIONAL SUPERVISOR: MICHAEL S. ROSS

CALCULATED-DESIGNED BY: JAN ARMIN A. VIANZON

CHECKED BY: MICHAEL S. ROSS

REVISED BY

DATE REVISED

LAST REVISION 05-13-14

DATE PLOTTED => 23-JUL-2014
TIME PLOTTED => 14:52

| Dist | COUNTY | ROUTE | POST MILES TOTAL PROJECT | SHEET No. | TOTAL SHEETS |
|---|---|---|---|---|---|
| 11 | SD | 5 | R29.1/R30.5 | 669 | 1012 |

REGISTERED CIVIL ENGINEER 05-23-14 DATE

07-21-14
PLANS APPROVAL DATE

REGISTERED PROFESSIONAL ENGINEER MICHAEL S. ROSS No. C66637 Exp. 06/30/16 CIVIL STATE OF CALIFORNIA

*THE STATE OF CALIFORNIA OR ITS OFFICERS OR AGENTS SHALL NOT BE RESPONSIBLE FOR THE ACCURACY OR COMPLETENESS OF SCANNED COPIES OF THIS PLAN SHEET.*

CITY OF SAN DIEGO
525 B STREET
SUITE 7
SAN DIEGO, CA 92101

KIMLEY-HORN AND ASSOCIATES, INC.
401 B STREET, SUITE 600
SAN DIEGO, CA 92101

**NOTE:**

FOR ACCURATE RIGHT OF WAY DATA, CONTACT RIGHT OF WAY ENGINEERING AT THE DISTRICT OFFICE.

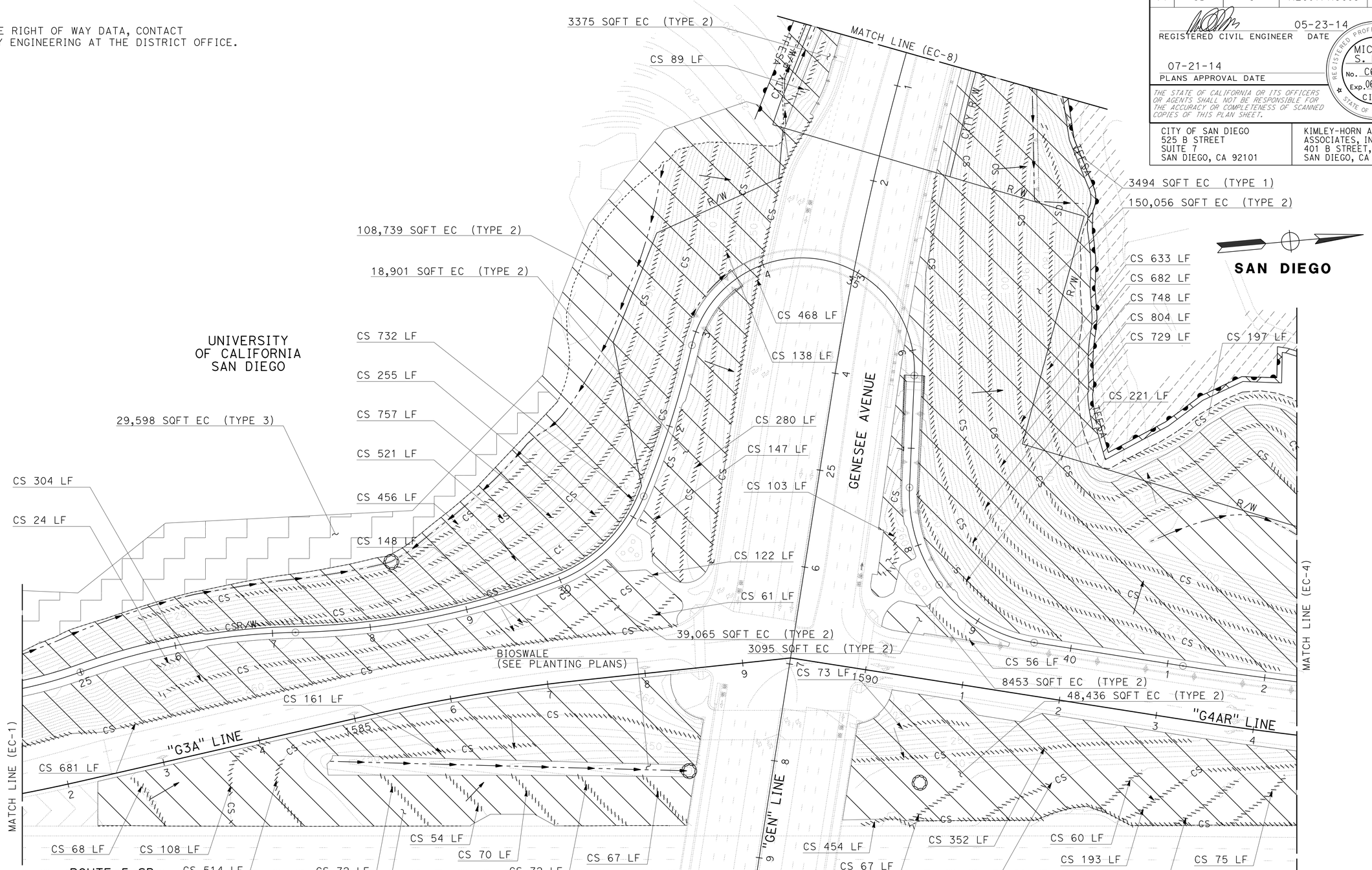


# EROSION CONTROL PLAN

SCALE: 1" = 50'

**EC-2**

*APPROVED FOR EROSION CONTROL WORK ONLY*

STATE OF CALIFORNIA - DEPARTMENT OF TRANSPORTATION

Caltrans

CONSULTANT FUNCTIONAL SUPERVISOR: MICHAEL S. ROSS

CALCULATED-DESIGNED BY: JAN ARMIN A. VIANZON

CHECKED BY: MICHAEL S. ROSS

REVISED BY

DATE REVISED

LAST REVISION 07-16-14

DATE PLOTTED => 23-JUL-2014
TIME PLOTTED => 14:52

| Dist | COUNTY | ROUTE | POST MILES TOTAL PROJECT | SHEET No. | TOTAL SHEETS |
|---|---|---|---|---|---|
| 11 | SD | 5 | R29.1/R30.5 | 670 | 1012 |

REGISTERED CIVIL ENGINEER 05-23-14 DATE

07-21-14
PLANS APPROVAL DATE

REGISTERED PROFESSIONAL ENGINEER MICHAEL S. ROSS No. C66637 Exp. 06/30/16 CIVIL STATE OF CALIFORNIA

*THE STATE OF CALIFORNIA OR ITS OFFICERS OR AGENTS SHALL NOT BE RESPONSIBLE FOR THE ACCURACY OR COMPLETENESS OF SCANNED COPIES OF THIS PLAN SHEET.*

CITY OF SAN DIEGO
525 B STREET
SUITE 7
SAN DIEGO, CA 92101

KIMLEY-HORN AND ASSOCIATES, INC.
401 B STREET, SUITE 600
SAN DIEGO, CA 92101

**NOTE:**

FOR ACCURATE RIGHT OF WAY DATA, CONTACT RIGHT OF WAY ENGINEERING AT THE DISTRICT OFFICE.

**SAN DIEGO**

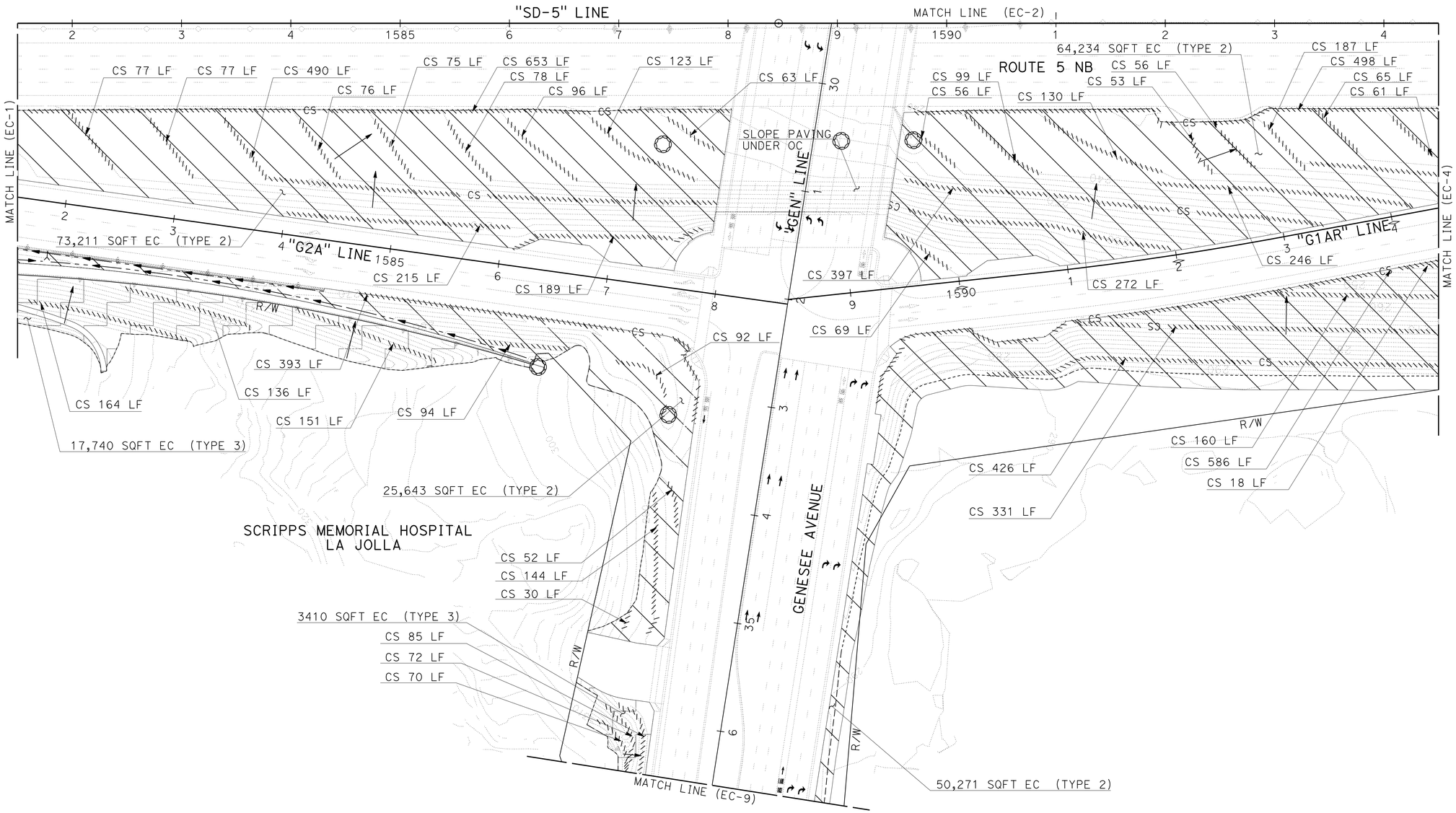


*APPROVED FOR EROSION CONTROL WORK ONLY*

# EROSION CONTROL PLAN

SCALE: 1" = 50'

**EC-3**

STATE OF CALIFORNIA - DEPARTMENT OF TRANSPORTATION

CONSULTANT FUNCTIONAL SUPERVISOR: MICHAEL S. ROSS

CALCULATED-DESIGNED BY: JAN ARMIN A. VIANZON

CHECKED BY: MICHAEL S. ROSS

REVISED BY

DATE REVISED

LAST REVISION 07-16-14

DATE PLOTTED => 23-JUL-2014
TIME PLOTTED => 14:52

| Dist | COUNTY | ROUTE | POST MILES TOTAL PROJECT | SHEET No. | TOTAL SHEETS |
|---|---|---|---|---|---|
| 11 | SD | 5 | R29.1/R30.5 | 671 | 1012 |

REGISTERED CIVIL ENGINEER 05-23-14 DATE

07-21-14
PLANS APPROVAL DATE

REGISTERED PROFESSIONAL ENGINEER MICHAEL S. ROSS No. C66637 Exp. 06/30/16 CIVIL STATE OF CALIFORNIA

*THE STATE OF CALIFORNIA OR ITS OFFICERS OR AGENTS SHALL NOT BE RESPONSIBLE FOR THE ACCURACY OR COMPLETENESS OF SCANNED COPIES OF THIS PLAN SHEET.*

CITY OF SAN DIEGO
525 B STREET
SUITE 7
SAN DIEGO, CA 92101

KIMLEY-HORN AND ASSOCIATES, INC.
401 B STREET, SUITE 600
SAN DIEGO, CA 92101

**NOTE:**

FOR ACCURATE RIGHT OF WAY DATA, CONTACT RIGHT OF WAY ENGINEERING AT THE DISTRICT OFFICE.

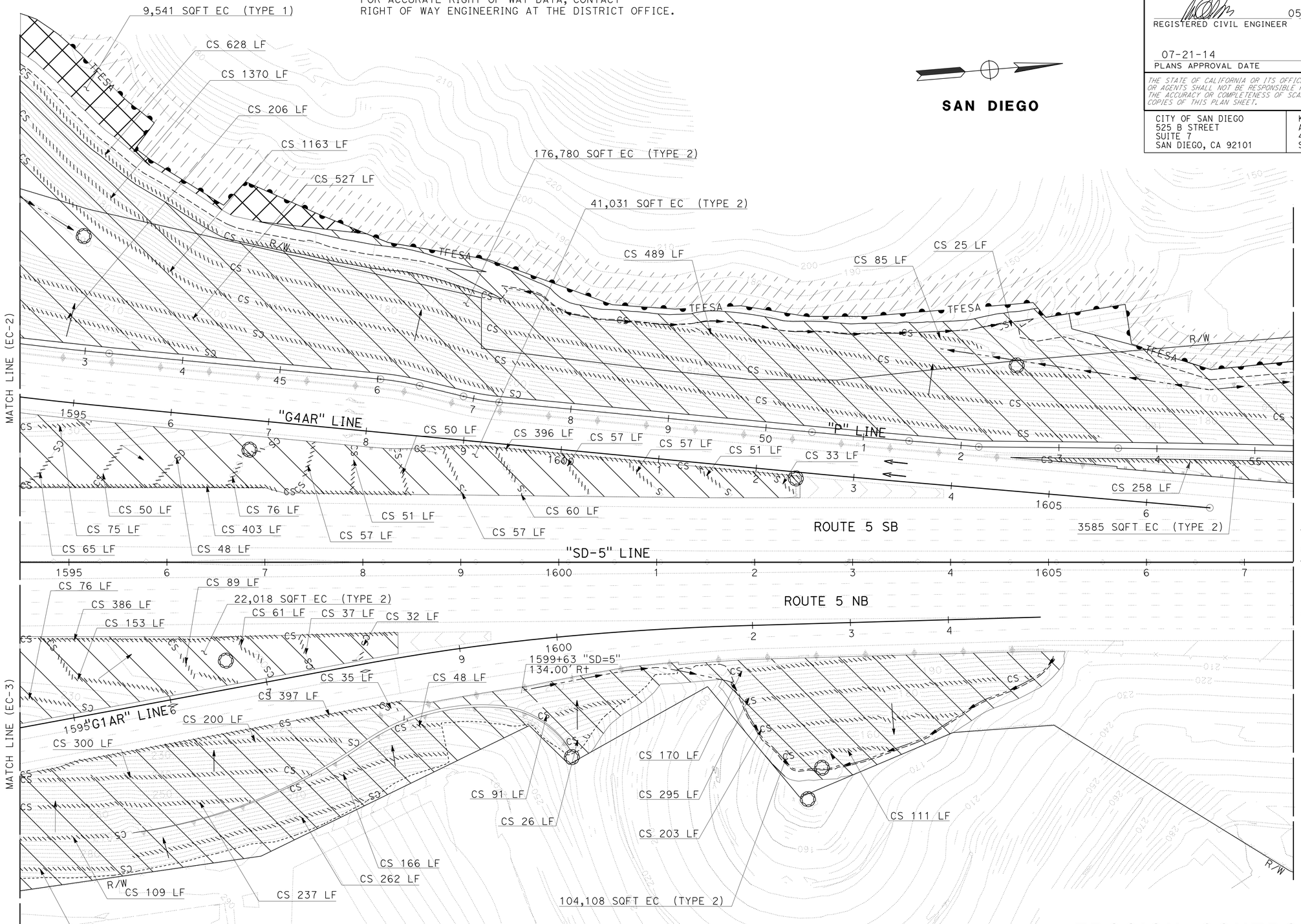


*APPROVED FOR EROSION CONTROL WORK ONLY*

# EROSION CONTROL PLAN

SCALE: 1" = 50'

**EC-4**

STATE OF CALIFORNIA - DEPARTMENT OF TRANSPORTATION

Caltrans

CONSULTANT FUNCTIONAL SUPERVISOR: MICHAEL S. ROSS

CALCULATED-DESIGNED BY: JAN ARMIN A. VIANZON

CHECKED BY: MICHAEL S. ROSS

REVISED BY

DATE REVISED

LAST REVISION 07-16-14

DATE PLOTTED => 23-JUL-2014
TIME PLOTTED => 14:52

| Dist | COUNTY | ROUTE | POST MILES TOTAL PROJECT | SHEET No. | TOTAL SHEETS |
|---|---|---|---|---|---|
| 11 | SD | 5 | R29.1/R30.5 | 672 | 1012 |

REGISTERED CIVIL ENGINEER 05-23-14 DATE

07-21-14
PLANS APPROVAL DATE

REGISTERED PROFESSIONAL ENGINEER MICHAEL S. ROSS No. C66637 Exp. 06/30/16 CIVIL STATE OF CALIFORNIA

*THE STATE OF CALIFORNIA OR ITS OFFICERS OR AGENTS SHALL NOT BE RESPONSIBLE FOR THE ACCURACY OR COMPLETENESS OF SCANNED COPIES OF THIS PLAN SHEET.*

CITY OF SAN DIEGO
525 B STREET
SUITE 7
SAN DIEGO, CA 92101

KIMLEY-HORN AND ASSOCIATES, INC.
401 B STREET, SUITE 600
SAN DIEGO, CA 92101

**NOTE:**

FOR ACCURATE RIGHT OF WAY DATA, CONTACT RIGHT OF WAY ENGINEERING AT THE DISTRICT OFFICE.

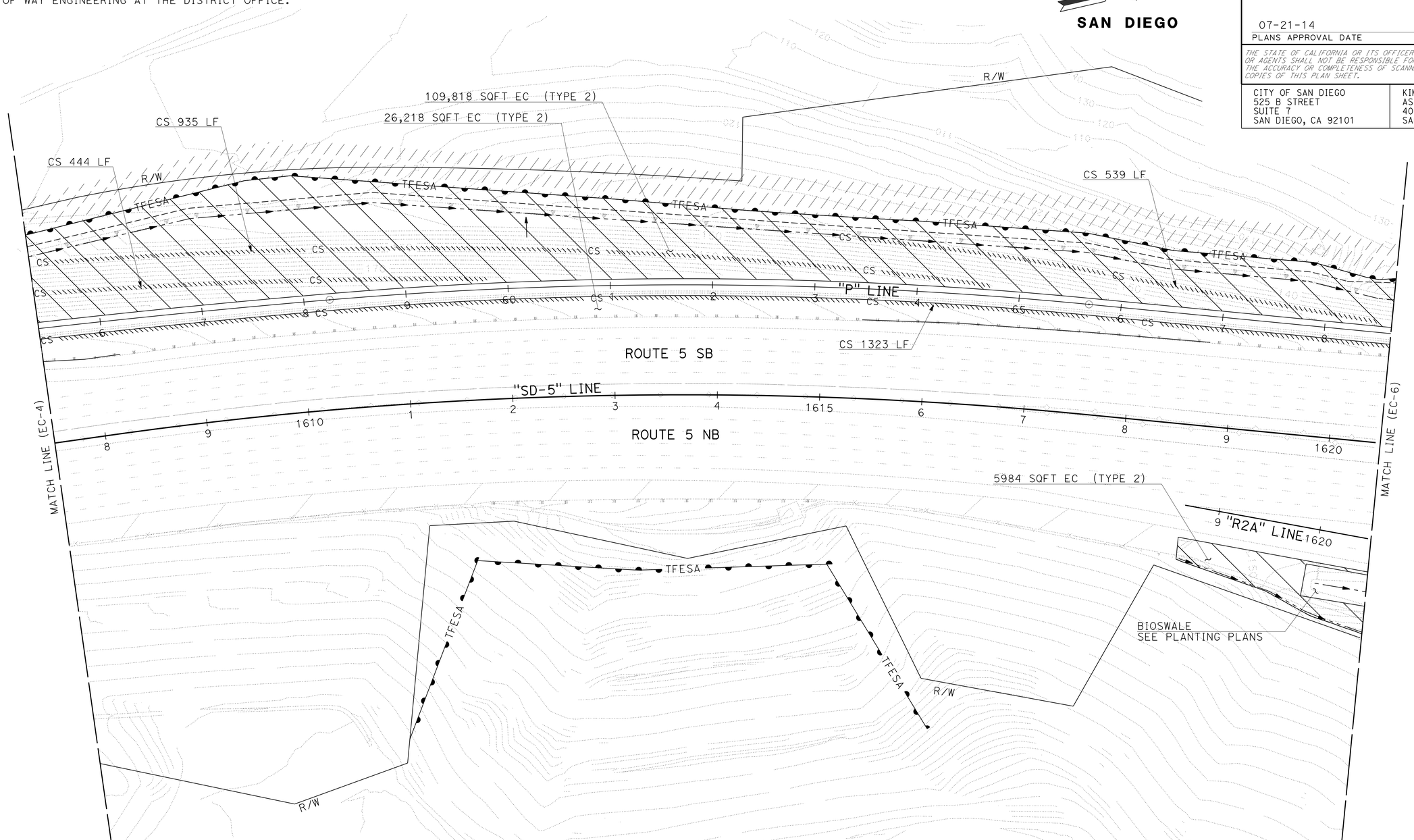


*APPROVED FOR EROSION CONTROL WORK ONLY*

# EROSION CONTROL PLAN

SCALE: 1" = 50'

**EC-5**

STATE OF CALIFORNIA - DEPARTMENT OF TRANSPORTATION

Caltrans

CONSULTANT FUNCTIONAL SUPERVISOR: MICHAEL S. ROSS

CALCULATED-DESIGNED BY: JAN ARMIN A. VIANZON

CHECKED BY: MICHAEL S. ROSS

REVISED BY

DATE REVISED

LAST REVISION 07-16-14

DATE PLOTTED => 23-JUL-2014
TIME PLOTTED => 14:52

| Dist | COUNTY | ROUTE | POST MILES TOTAL PROJECT | SHEET No. | TOTAL SHEETS |
|---|---|---|---|---|---|
| 11 | SD | 5 | R29.1/R30.5 | 673 | 1012 |

REGISTERED CIVIL ENGINEER 05-23-14 DATE

07-21-14
PLANS APPROVAL DATE

REGISTERED PROFESSIONAL ENGINEER MICHAEL S. ROSS No. C66637 Exp. 06/30/16 CIVIL STATE OF CALIFORNIA

*THE STATE OF CALIFORNIA OR ITS OFFICERS OR AGENTS SHALL NOT BE RESPONSIBLE FOR THE ACCURACY OR COMPLETENESS OF SCANNED COPIES OF THIS PLAN SHEET.*

CITY OF SAN DIEGO
525 B STREET
SUITE 7
SAN DIEGO, CA 92101

KIMLEY-HORN AND ASSOCIATES, INC.
401 B STREET, SUITE 600
SAN DIEGO, CA 92101

**NOTE:**

FOR ACCURATE RIGHT OF WAY DATA, CONTACT RIGHT OF WAY ENGINEERING AT THE DISTRICT OFFICE.

SAN DIEGO

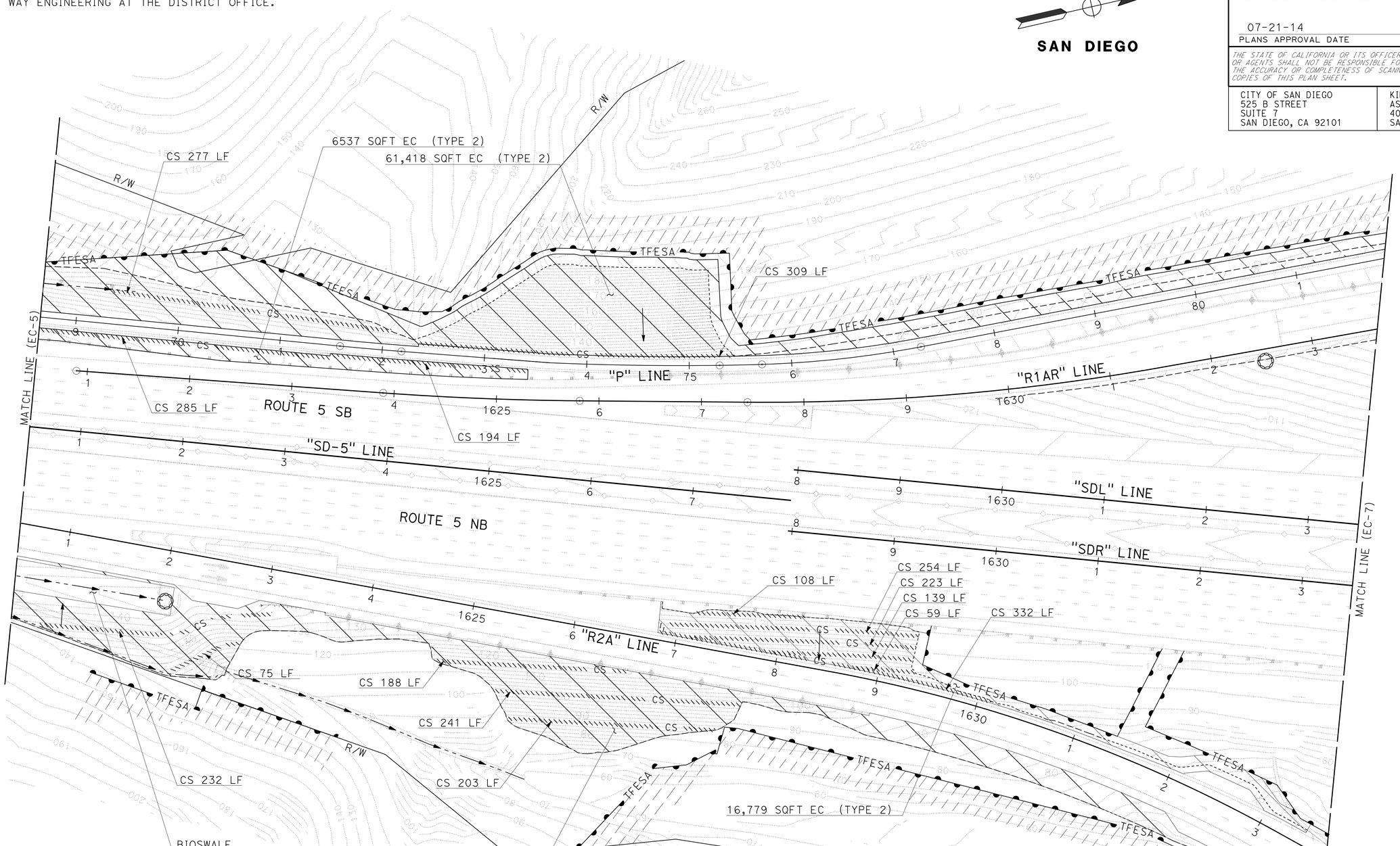


# EROSION CONTROL PLAN

*APPROVED FOR EROSION CONTROL WORK ONLY*

SCALE: 1" = 50'

**EC-6**

STATE OF CALIFORNIA - DEPARTMENT OF TRANSPORTATION

Caltrans

CONSULTANT FUNCTIONAL SUPERVISOR: MICHAEL S. ROSS

CALCULATED-DESIGNED BY: JAN ARMIN A. VIANZON

CHECKED BY: MICHAEL S. ROSS

REVISED BY | DATE REVISED

LAST REVISION 07-16-14 | DATE PLOTTED => 23-JUL-2014 | TIME PLOTTED => 14:52

| Dist | COUNTY | ROUTE | POST MILES TOTAL PROJECT | SHEET No. | TOTAL SHEETS |
|---|---|---|---|---|---|
| 11 | SD | 5 | R29.1/R30.5 | 674 | 1012 |

REGISTERED CIVIL ENGINEER 05-23-14 DATE

07-21-14
PLANS APPROVAL DATE

REGISTERED PROFESSIONAL ENGINEER MICHAEL S. ROSS No. C66637 Exp. 06/30/16 CIVIL STATE OF CALIFORNIA

*THE STATE OF CALIFORNIA OR ITS OFFICERS OR AGENTS SHALL NOT BE RESPONSIBLE FOR THE ACCURACY OR COMPLETENESS OF SCANNED COPIES OF THIS PLAN SHEET.*

CITY OF SAN DIEGO
525 B STREET
SUITE 7
SAN DIEGO, CA 92101

KIMLEY-HORN AND ASSOCIATES, INC.
401 B STREET, SUITE 600
SAN DIEGO, CA 92101

**NOTE:**

FOR ACCURATE RIGHT OF WAY DATA, CONTACT RIGHT OF WAY ENGINEERING AT THE DISTRICT OFFICE.

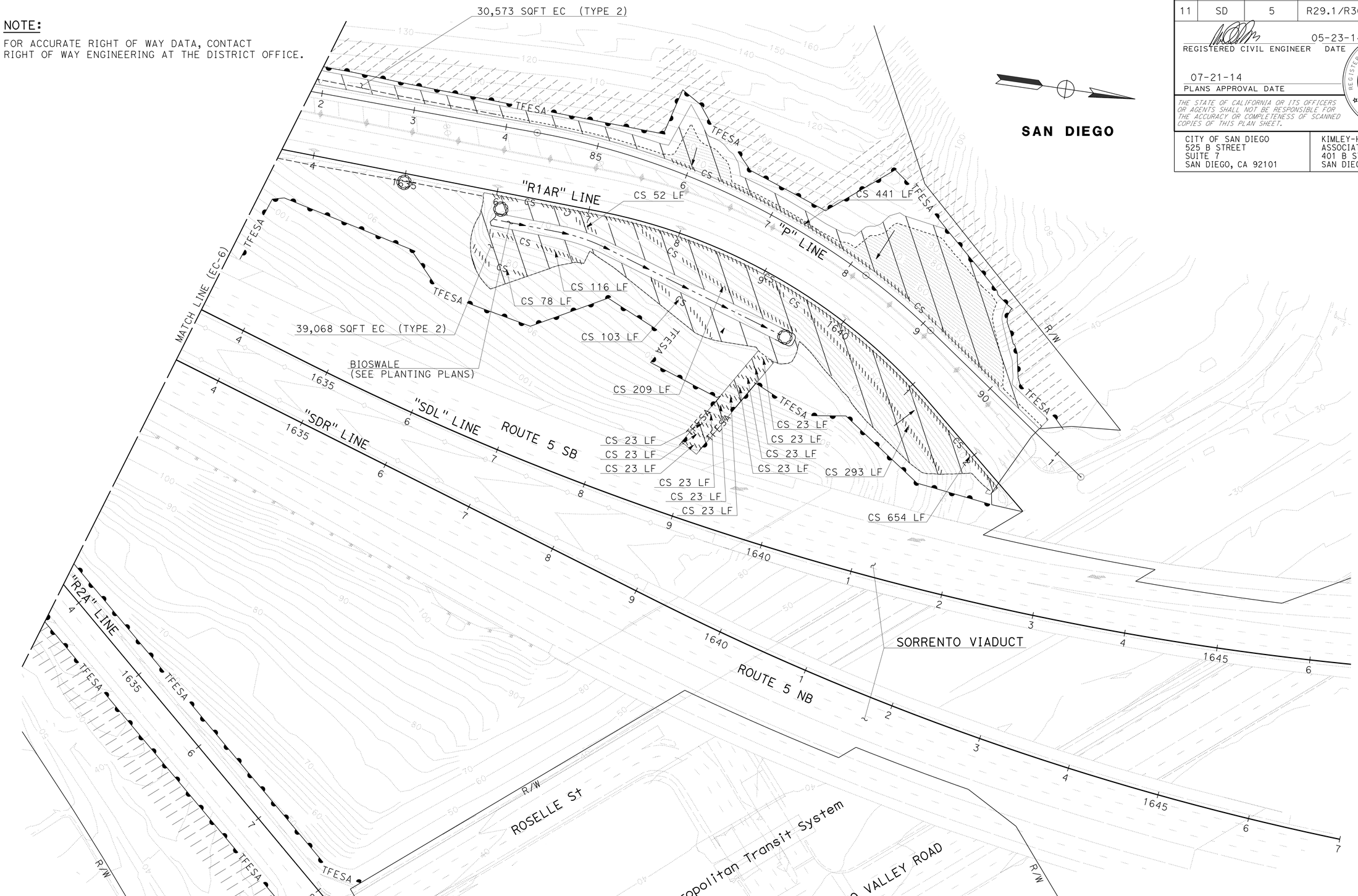


*APPROVED FOR EROSION CONTROL WORK ONLY*

# EROSION CONTROL PLAN

SCALE: 1" = 50'

**EC-7**

STATE OF CALIFORNIA - DEPARTMENT OF TRANSPORTATION

Caltrans

CONSULTANT FUNCTIONAL SUPERVISOR: MICHAEL S. ROSS

CALCULATED-DESIGNED BY: JAN ARMIN A. VIANZON

CHECKED BY: MICHAEL S. ROSS

REVISED BY

DATE REVISED

LAST REVISION 07-16-14

DATE PLOTTED => 23-JUL-2014
TIME PLOTTED => 14:52

| Dist | COUNTY | ROUTE | POST MILES TOTAL PROJECT | SHEET No. | TOTAL SHEETS |
|---|---|---|---|---|---|
| 11 | SD | 5 | R29.1/R30.5 | 675 | 1012 |

REGISTERED CIVIL ENGINEER DATE 05-23-14

PLANS APPROVAL DATE 07-21-14

REGISTERED PROFESSIONAL ENGINEER MICHAEL S. ROSS No. C66637 Exp. 06/30/16 CIVIL STATE OF CALIFORNIA

*THE STATE OF CALIFORNIA OR ITS OFFICERS OR AGENTS SHALL NOT BE RESPONSIBLE FOR THE ACCURACY OR COMPLETENESS OF SCANNED COPIES OF THIS PLAN SHEET.*

CITY OF SAN DIEGO
525 B STREET
SUITE 7
SAN DIEGO, CA 92101

KIMLEY-HORN AND ASSOCIATES, INC.
401 B STREET, SUITE 600
SAN DIEGO, CA 92101

NOTE:

FOR ACCURATE RIGHT OF WAY DATA, CONTACT RIGHT OF WAY ENGINEERING AT THE DISTRICT OFFICE.

SAN DIEGO

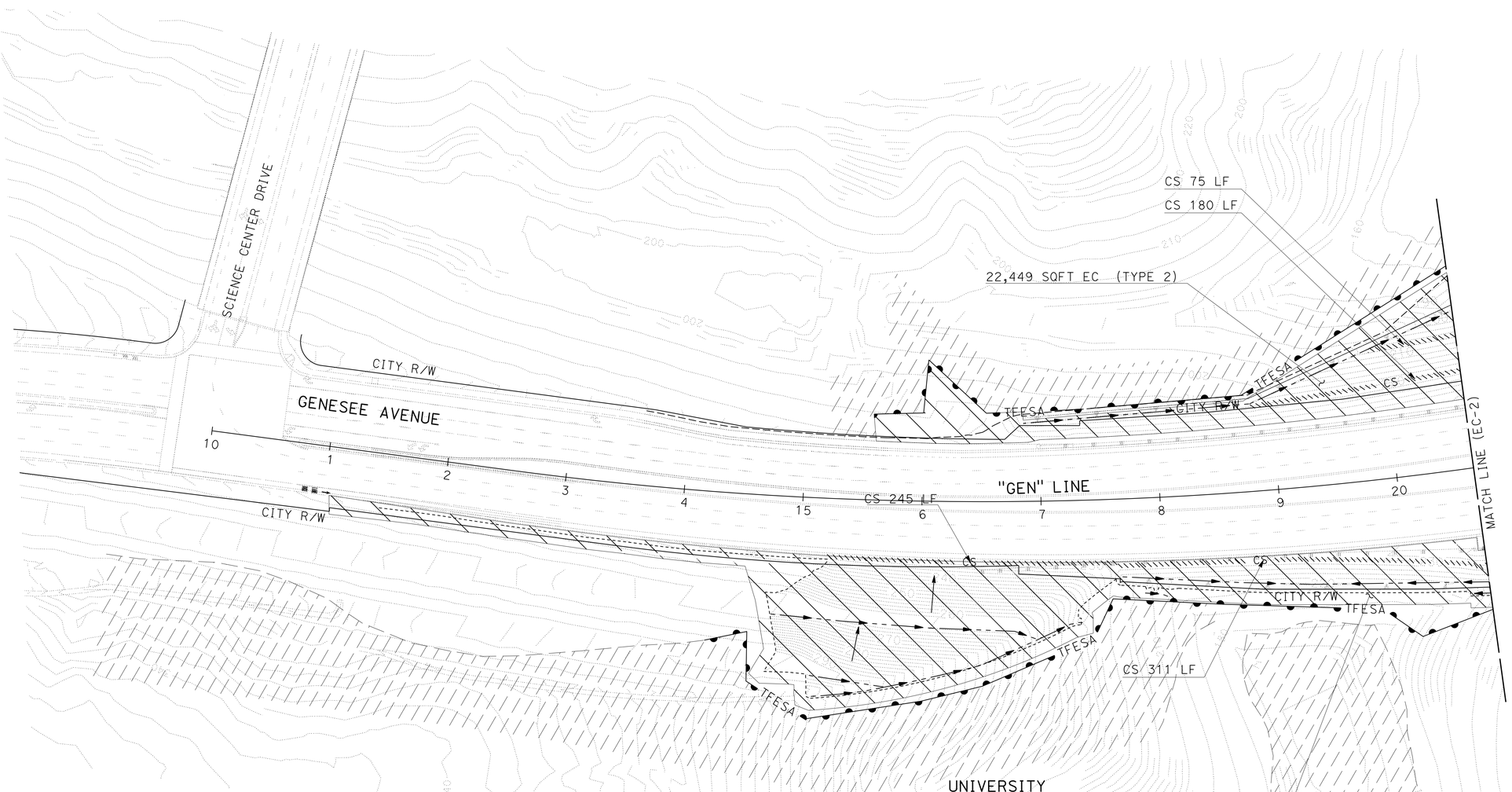


*APPROVED FOR EROSION CONTROL WORK ONLY*

# EROSION CONTROL PLAN

SCALE: 1" = 50'

**EC-8**

STATE OF CALIFORNIA - DEPARTMENT OF TRANSPORTATION

Caltrans

CONSULTANT FUNCTIONAL SUPERVISOR: MICHAEL S. ROSS

CALCULATED-DESIGNED BY: JAN ARMIN A. VIANZON

CHECKED BY: MICHAEL S. ROSS

REVISED BY

DATE REVISED

LAST REVISION 07-16-14

DATE PLOTTED => 23-JUL-2014
TIME PLOTTED => 14:52

| Dist | COUNTY | ROUTE | POST MILES TOTAL PROJECT | SHEET No. | TOTAL SHEETS |
|---|---|---|---|---|---|
| 11 | SD | 5 | R29.1/R30.5 | 676 | 1012 |

REGISTERED CIVIL ENGINEER 05-23-14 DATE

PLANS APPROVAL DATE

REGISTERED PROFESSIONAL ENGINEER MICHAEL S. ROSS No. C66637 Exp. 06/30/16 CIVIL STATE OF CALIFORNIA

*THE STATE OF CALIFORNIA OR ITS OFFICERS OR AGENTS SHALL NOT BE RESPONSIBLE FOR THE ACCURACY OR COMPLETENESS OF SCANNED COPIES OF THIS PLAN SHEET.*

CITY OF SAN DIEGO
525 B STREET
SUITE 7
SAN DIEGO, CA 92101

KIMLEY-HORN AND ASSOCIATES, INC.
401 B STREET, SUITE 600
SAN DIEGO, CA 92101

**NOTE:**

FOR ACCURATE RIGHT OF WAY DATA, CONTACT RIGHT OF WAY ENGINEERING AT THE DISTRICT OFFICE.

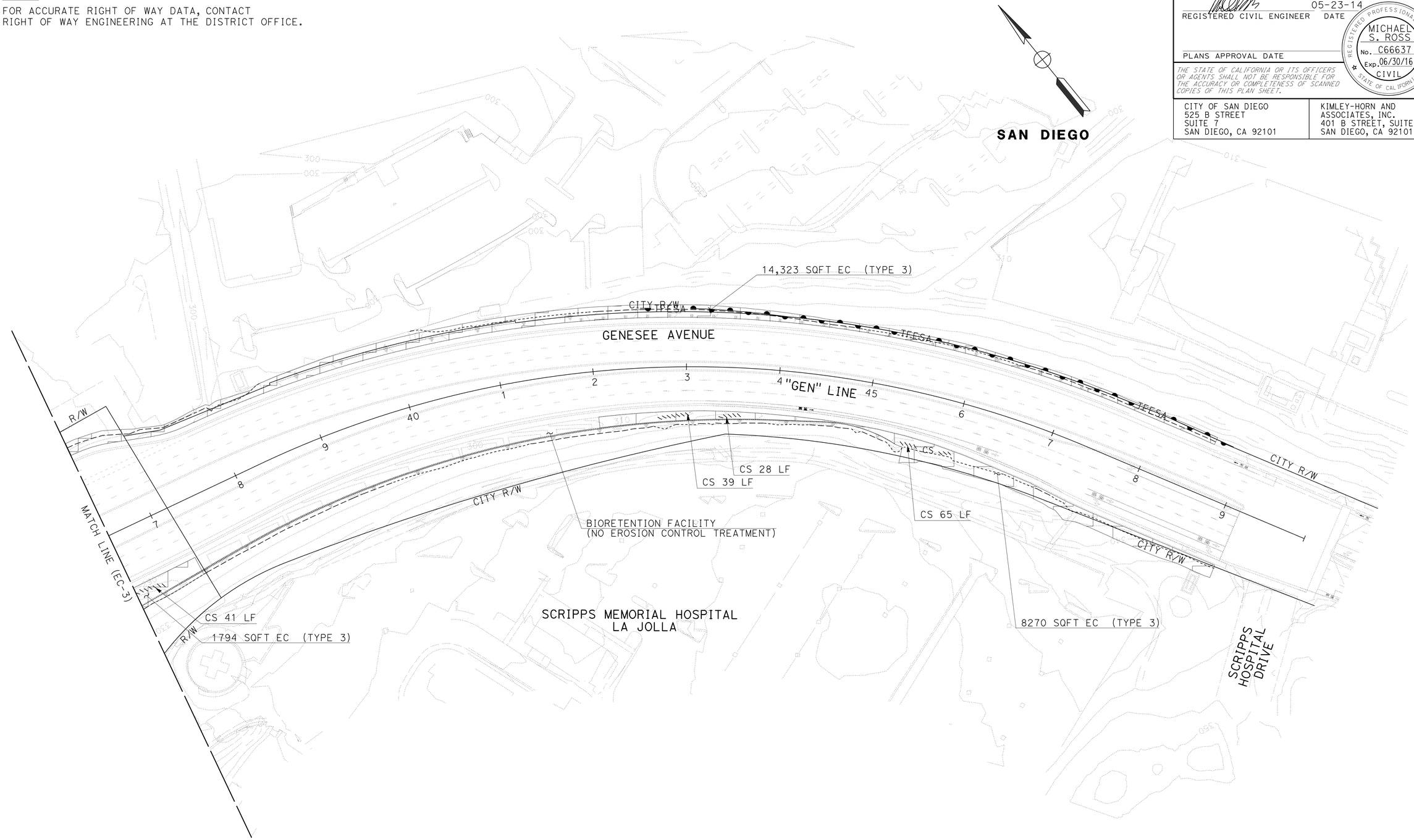


*APPROVED FOR EROSION CONTROL WORK ONLY*

# EROSION CONTROL PLAN

SCALE: 1" = 50'

**EC-9**

STATE OF CALIFORNIA - DEPARTMENT OF TRANSPORTATION

Caltrans

CONSULTANT FUNCTIONAL SUPERVISOR: MICHAEL S. ROSS

CALCULATED-DESIGNED BY: JAN ARMIN A. VIANZON

CHECKED BY: MICHAEL S. ROSS

REVISED BY

DATE REVISED

LAST REVISION 07-16-14

DATE PLOTTED => 23-JUL-2014
TIME PLOTTED => 14:52

| Dist | COUNTY | ROUTE | POST MILES TOTAL PROJECT | SHEET No. | TOTAL SHEETS |
|---|---|---|---|---|---|
| 11 | SD | 5 | R29.1/R30.5 | 677 | 1012 |

REGISTERED CIVIL ENGINEER 05-23-14 DATE

07-21-14
PLANS APPROVAL DATE

REGISTERED PROFESSIONAL ENGINEER MICHAEL S. ROSS No. C66637 Exp. 06/30/16 CIVIL STATE OF CALIFORNIA

*THE STATE OF CALIFORNIA OR ITS OFFICERS OR AGENTS SHALL NOT BE RESPONSIBLE FOR THE ACCURACY OR COMPLETENESS OF SCANNED COPIES OF THIS PLAN SHEET.*

CITY OF SAN DIEGO
525 B STREET
SUITE 7
SAN DIEGO, CA 92101

KIMLEY-HORN AND ASSOCIATES, INC.
401 B STREET, SUITE 600
SAN DIEGO, CA 92101

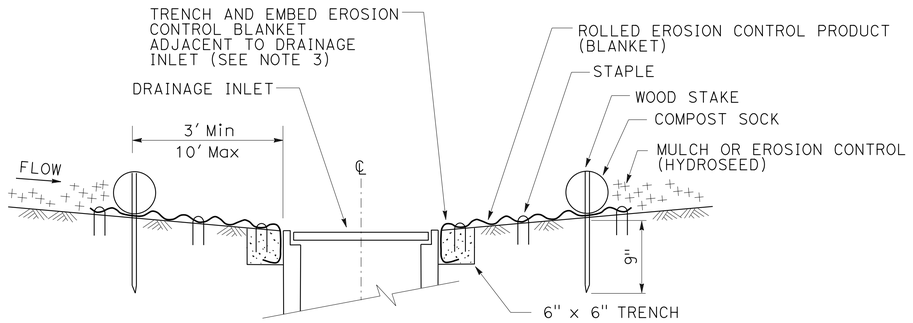


SECTION A-A

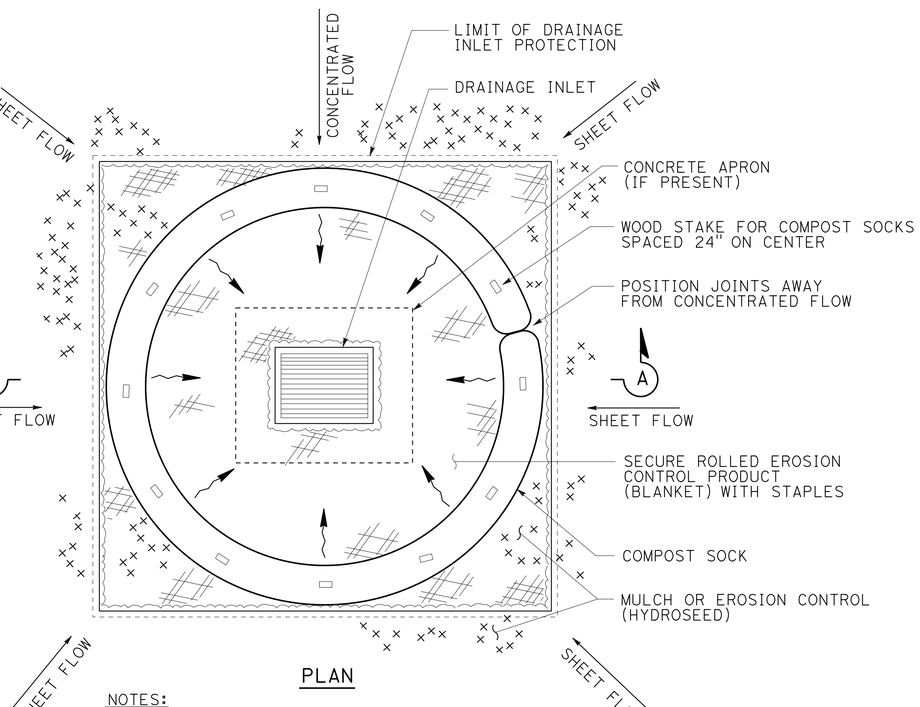


PLAN

NOTES:

1. DIMENSIONS MAY VARY TO FIT FIELD CONDITIONS.
2. SECTION A-A DETAIL SHOWS ROLLED EROSION CONTROL PRODUCT (BLANKET) INSTALLATION WHEN THERE IS NO CONCRETE APRON ON THE DRAINAGE INLET.
3. FOR INSTALLATION LOCATIONS WITH A CONCRETE APRON, POSITION THE ROLLED EROSION CONTROL (BLANKET) AT THE OUTSIDE EDGE OF THE APRON AND SECURE IN TRENCH.
4. ROLLED EROSION CONTROL PRODUCT (BLANKET) IS NOT REQUIRED IF THE AREA ADJACENT TO THE DRAINAGE INLET IS VEGETATED.
5. DO NOT USE ROLLED EROSION CONTROL PRODUCT (BLANKET) ON TOP OF AREAS COVERED BY SOD PLANTINGS.

## DRAINAGE INLET PROTECTION

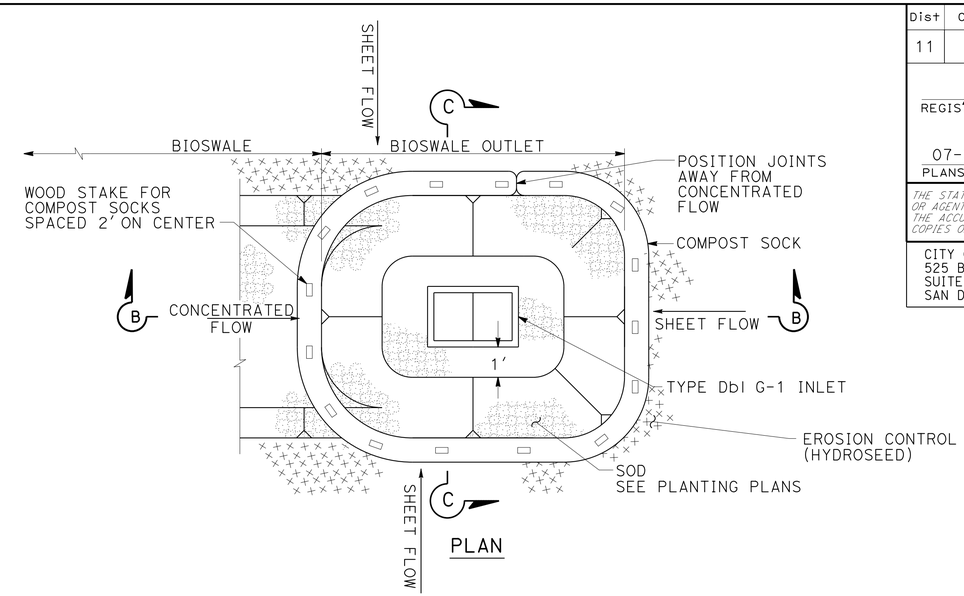


PLAN

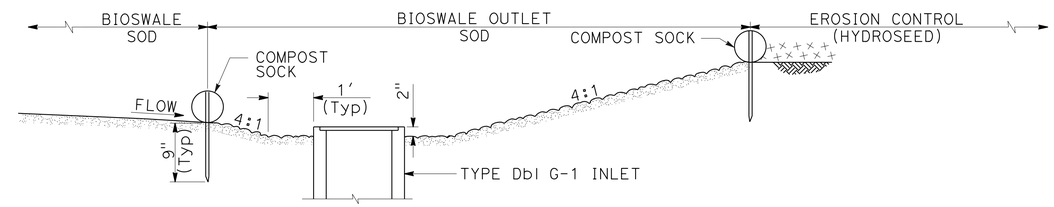


SECTION B-B

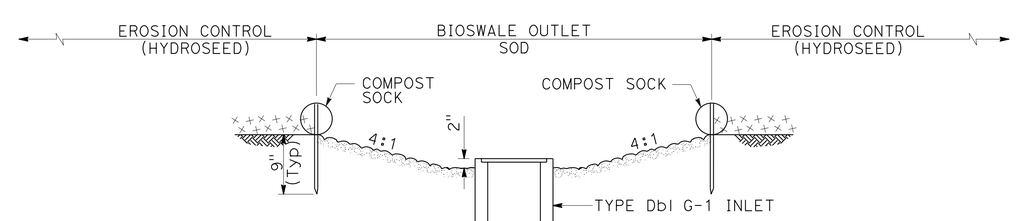


SECTION C-C

NOTES:

1. DIMENSIONS MAY VARY TO FIT FIELD CONDITIONS.
2. SEE DRAINAGE PLAN, PROFILE, AND DETAIL SHEETS FOR ADDITIONAL INFORMATION NOT SHOWN.
3. SEE PLANTING PLAN SHEETS FOR ADDITITONAL INFORMATION NOT SHOWN.

## DRAINAGE INLET PROTECTION

(AT BIOSWALE OUTLET)

# EROSION CONTROL DETAILS

NO SCALE

**ECD-1**

STATE OF CALIFORNIA - DEPARTMENT OF TRANSPORTATION
Caltrans

CONSULTANT FUNCTIONAL SUPERVISOR: MICHAEL S. ROSS
CALCULATED-DESIGNED BY: JAN ARMIN A. VIANZON
CHECKED BY: MICHAEL S. ROSS
REVISED BY
DATE REVISED

LAST REVISION 07-16-14
DATE PLOTTED => 23-JUL-2014
TIME PLOTTED => 14:52

| Dist | COUNTY | ROUTE | POST MILES TOTAL PROJECT | SHEET No. | TOTAL SHEETS |
|---|---|---|---|---|---|
| 11 | SD | 5 | R29.1/R30.5 | 678 | 1012 |

REGISTERED CIVIL ENGINEER 05-23-14 DATE

07-21-14
PLANS APPROVAL DATE

REGISTERED PROFESSIONAL ENGINEER MICHAEL S. ROSS No. C66637 Exp. 06/30/16 CIVIL STATE OF CALIFORNIA

*THE STATE OF CALIFORNIA OR ITS OFFICERS OR AGENTS SHALL NOT BE RESPONSIBLE FOR THE ACCURACY OR COMPLETENESS OF SCANNED COPIES OF THIS PLAN SHEET.*

CITY OF SAN DIEGO
525 B STREET
SUITE 7
SAN DIEGO, CA 92101

KIMLEY-HORN AND ASSOCIATES, INC.
401 B STREET, SUITE 600
SAN DIEGO, CA 92101

# EROSION CONTROL SUMMARY OF QUANTITIES

| SHEET | EROSION CONTROL (HYDROSEED) | | | COMPOST SOCK | | DRAINAGE INLET PROTECTION | COMPOST |
|---|---|---|---|---|---|---|---|
| | (TYPE 1) (N) | (TYPE 2) (N) | (TYPE 3) (N) | 8" Dia | 12" Dia | | |
| | SQFT | SQFT | SQFT | LF | LF | EA | SQFT |
| EC-1 | | 172,574 | 30,686 | 228 | 2319 | | 203,260 |
| EC-2 | 3,494 | 442,669 | 29,598 | 10,402 | 1603 | 3 | 472,267 |
| EC-3 | | 213,359 | 21,150 | 5275 | 2130 | 5 | 234,509 |
| EC-4 | 9,541 | 347,522 | | 8096 | 1840 | 8 | 347,522 |
| EC-5 | | 142,020 | | 1918 | 1323 | | 142,020 |
| EC-6 | | 135,647 | | 2308 | 811 | 2 | 135,647 |
| EC-7 | | 69,641 | | 1081 | 1095 | 3 | 69,641 |
| EC-8 | | 78,829 | | 566 | 245 | | 78,829 |
| EC-9 | | | 24,387 | 173 | | | 24,387 |
| SUBTOTAL | 13,035 | 1,602,261 | 105,821 | 30,047 | 11,366 | | |
| TOTAL | 1,721,117 | | | 41,413 | | 21 | 1,708,082 |

(N) NOT A SEPARATE PAY ITEM, FOR INFORMATION ONLY

# EROSION CONTROL QUANTITIES
# ECQ-1

STATE OF CALIFORNIA - DEPARTMENT OF TRANSPORTATION
Caltrans

CONSULTANT FUNCTIONAL SUPERVISOR: MICHAEL S. ROSS
CALCULATED-DESIGNED BY: JAN ARMIN A. VIANZON
CHECKED BY: MICHAEL S. ROSS
REVISED BY
DATE REVISED

LAST REVISION 07-16-14
DATE PLOTTED => 23-JUL-2014
TIME PLOTTED => 14:52

| Dist | COUNTY | ROUTE | POST MILES TOTAL PROJECT | SHEET No. | TOTAL SHEETS |
|---|---|---|---|---|---|
| 11 | SD | 5 | R29.1/R30.5 | 679 | 1012 |

REGISTERED CIVIL ENGINEER 05-23-14 DATE

07-21-14
PLANS APPROVAL DATE

REGISTERED PROFESSIONAL ENGINEER JON M. COLLINS No. C62090 Exp. 09/30/15 CIVIL STATE OF CALIFORNIA

*THE STATE OF CALIFORNIA OR ITS OFFICERS OR AGENTS SHALL NOT BE RESPONSIBLE FOR THE ACCURACY OR COMPLETENESS OF SCANNED COPIES OF THIS PLAN SHEET.*

CITY OF SAN DIEGO
525 B STREET
SUITE 7
SAN DIEGO, CA 92101

KIMLEY-HORN AND ASSOCIATES, INC.
401 B STREET, SUITE 600
SAN DIEGO, CA 92101

## LEGEND:

- [V] = FIBER OPTIC VAULT SEE DETAILS (E-31)
- = FIBER OPTIC TRENCH DELINEATOR
- [HUB] = EXISTING HUB CABINET
- —FO— = MDCS FOR FO CABLE
- = 10′ POULSEN KIPP LIGHT SEE E-16 FOR DETAILS
- B = 45" BOLLARD LIGHT SEE E-17 FOR DETAILS
- = STEPLIGHT SEE E-18 AND E-19 FOR DETAILS
- = 16′ KIM LIGHTING ALTITUDE
- = POULSEN SKOT WALL LIGHT SEE E-18 AND E-19 FOR DETAILS
- = UP LIGHT SEE E-17 FOR DETAILS
- T # = TEMPORARY CONDUIT CALLOUT
- N C = EXISTING CONDUIT NO CHANGE
- X = CIRCUIT NUMBER

## ABBREVIATIONS:

| | | |
|---|---|---|
| AT&T | = | TELEPHONE SERVICE PROVIDER |
| ALT | = | ALTERNATING |
| cctv | = | EXISTING CLOSED CIRCUIT TELEVISION |
| CEC | = | COMMUNICATION EQUIPMENT CABINET |
| Ckt | = | CIRCUITS |
| CON | = | CONTACTOR |
| D | = | DEMAND DETECTION |
| FC | = | FOOT CANDLE |
| FDU | = | FIBER DISTRIBUTION UNIT |
| fo | = | EXISTING FIBER OPTIC |
| FOXX | = | FIBER OPTIC CABLE: XX DENOTES NUMBER OF SINGLEMODE FIBERS |
| HUB | = | COMMUNICATION CENTRAL LOCATION |
| ICC | = | IRRIGATION CONTROLLER CABINET |
| L2 | = | LOWER SIGNAL HEAD (2 SECTION) |
| L3 | = | LOWER SIGNAL HEAD (3 SECTION) |
| MDCS(X) | = | MULTIDUCT CONDUIT SYSTEM: (X = No. OF DUCTS) |
| mdcs | = | EXISTING MULTIDUCT CONDUIT SYSTEM |
| MA | = | MAST ARM |
| mas | = | EXISTING MAST ARM SIGNAL |
| MT | = | EMPTY CONDUIT WITH PULL TAPE |
| OCC | = | OUTDOOR CATEGORY 6 CABLE |
| OR | = | OFF RAMP DETECTION |
| PX | = | PASSAGE DETECTION (X DENOTES # OF LOOPS) |
| Q | = | QUEUE DETECTION |
| S | = | SIGN ILLUMINATION |
| S/F | = | STATE FURNISHED |
| SDG&E | = | SAN DIEGO GAS AND ELECTRIC COMPANY |
| SMFO | = | SINGLEMODE FIBER OPTIC |
| Std L | = | LEFT SIGNAL Std |
| Std M | = | SIGNAL Std WITH SMA |
| Std R | = | RIGHT SIGNAL Std |
| U3 | = | UPPER SIGNAL HEAD (3 SECTION) |
| VCH | = | VIDEO CABLE HARNESS |
| VLTG | = | VOLTAGE |

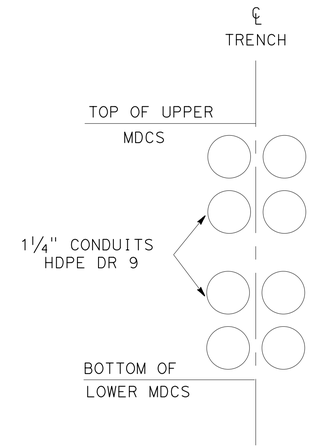


**MDCS (Typ)**
MDCS(8) SHOWN

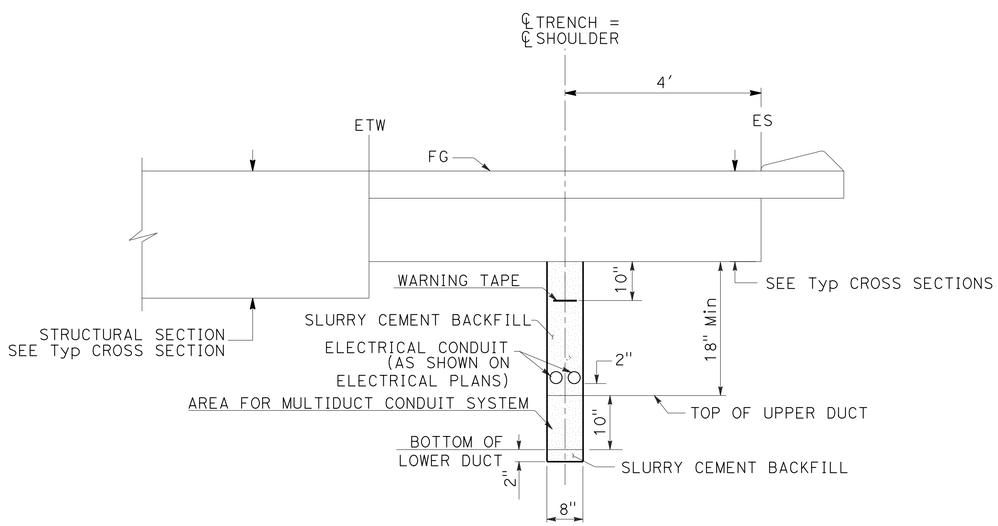


**TRENCH IN SHOULDER**
**FOR MULTIDUCT CONDUIT SYSTEM**

MOUNTING HEIGHT 30′

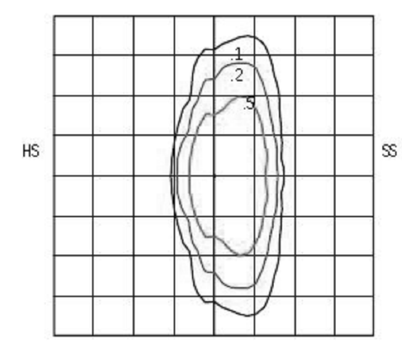


ISOFOOTCANDLE CURVE
CITY STREET LIGHTS
GE LED LIGHT

*APPROVED FOR ELECTRICAL WORK ONLY*

NO SCALE

# LIGHTING AND SIGN ILLUMINATION

**E-1**

STATE OF CALIFORNIA - DEPARTMENT OF TRANSPORTATION
Caltrans

CONSULTANT FUNCTIONAL SUPERVISOR: JON COLLINS
CALCULATED-DESIGNED BY: JOHN KISSINGER
CHECKED BY: JON COLLINS
REVISED BY
DATE REVISED

LAST REVISION 07-16-14
DATE PLOTTED => 23-JUL-2014
TIME PLOTTED => 14:52

| Dist | COUNTY | ROUTE | POST MILES TOTAL PROJECT | SHEET No. | TOTAL SHEETS |
|---|---|---|---|---|---|
| 11 | SD | 5 | R29.1/R30.5 | 680 | 1012 |

REGISTERED CIVIL ENGINEER 05-23-14 DATE

07-21-14
PLANS APPROVAL DATE

REGISTERED PROFESSIONAL ENGINEER JON M. COLLINS No. C62090 Exp. 09/30/15 CIVIL STATE OF CALIFORNIA

*THE STATE OF CALIFORNIA OR ITS OFFICERS OR AGENTS SHALL NOT BE RESPONSIBLE FOR THE ACCURACY OR COMPLETENESS OF SCANNED COPIES OF THIS PLAN SHEET.*

CITY OF SAN DIEGO
525 B STREET
SUITE 7
SAN DIEGO, CA 92101

KIMLEY-HORN AND ASSOCIATES, INC.
401 B STREET, SUITE 600
SAN DIEGO, CA 92101

NOTES: (THIS SHEET ONLY)

1 - RS LIGHTING STANDARD (UNIVERSITY CALIFORNIA SAN DIEGO)

2 - SEE SHEET E-16 FOR POULSEN KIPP LIGHT AND LAYOUT DETAIL.

3 - FOR ACCURATE RIGHT OF WAY DATA, CONTACT RIGHT OF WAY ENGINEERING AT THE DISTRICT OFFICE.

CONDUIT NOTES: (THIS SHEET ONLY)

1 - 2"C, 2#8 (S)
2 - 2"C, 2#8 (S), 2 #8 (Ltg)
3 - 2"C, 2#8 (Ltg)
4 - Exist 1½" C, 2#8 (Ltg)
RC 2#8 (Ltg), ADD 2#8 (Ltg), 2#8 (S)
5 - 2"C, 2#6 (BIKE FACILITY)
6 - 2"C, 4#6 (BIKE FACILITY)
7 - 2"C, 6#6 (BIKE FACILITY)
8 - 2"C, 8#6 (BIKE FACILITY)

## LIGHTING AND SIGN ILLUMINATION

| SIGN No. | QUANTITY OF 85 W ISL | VOLTAGE AND LOAD | REMARKS |
|---|---|---|---|
| 2-1 | 2 | 480 V 174 W | SEE E-14 FOR TYPE SC4A CONTROL |
| 2-2 | 4 | 480 V 348 W | SEE E-14 FOR TYPE SC4A CONTROL |

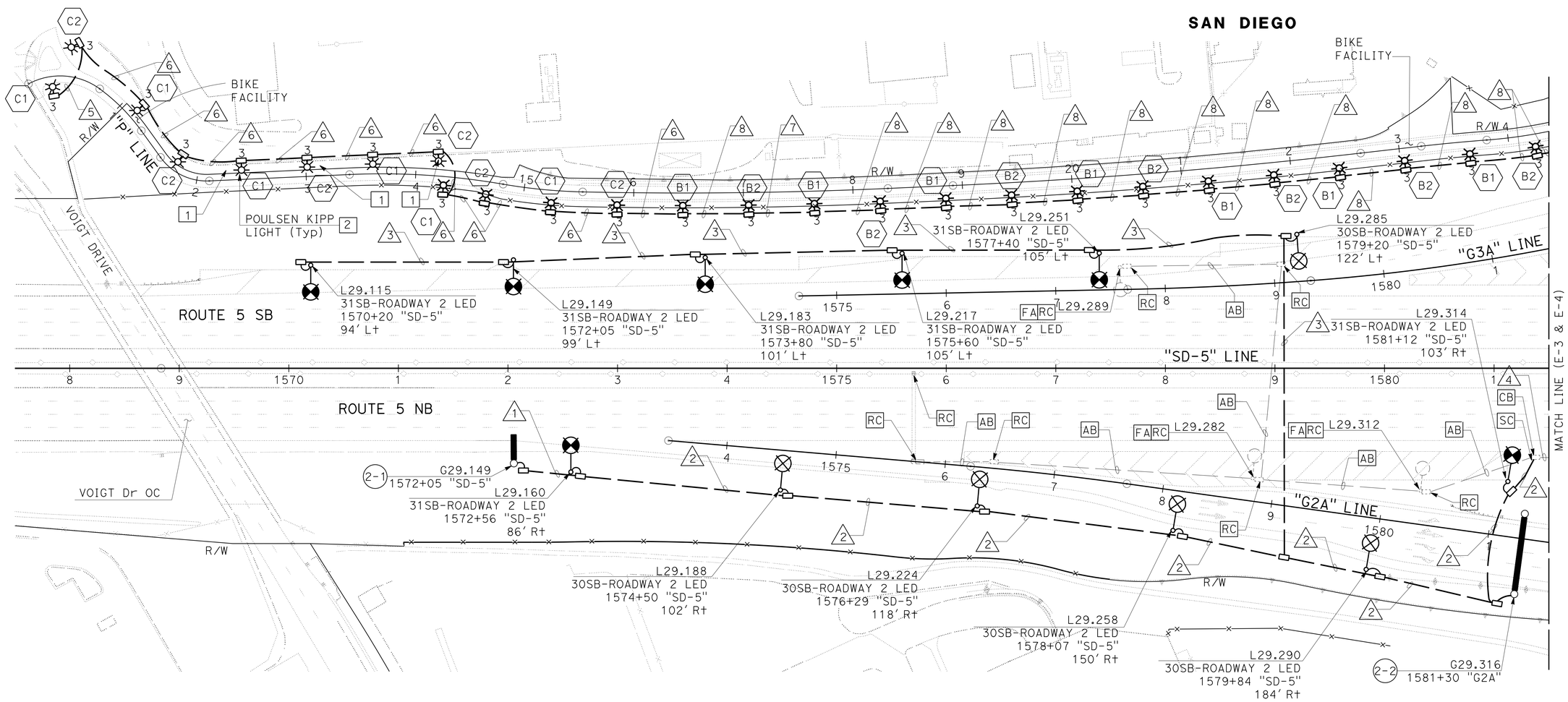


# LIGHTING AND SIGN ILLUMINATION
# LIGHTING (BIKE FACILITY)

*APPROVED FOR ELECTRICAL WORK ONLY*

SCALE: 1"=50'

**E-2**

STATE OF CALIFORNIA - DEPARTMENT OF TRANSPORTATION
Caltrans

CONSULTANT FUNCTIONAL SUPERVISOR: JON COLLINS
CALCULATED-DESIGNED BY: JOHN KISSINGER
CHECKED BY: JON COLLINS
REVISED BY
DATE REVISED

LAST REVISION 07-17-14
DATE PLOTTED => 23-JUL-2014
TIME PLOTTED => 14:52

| Dist | COUNTY | ROUTE | POST MILES TOTAL PROJECT | SHEET No. | TOTAL SHEETS |
|---|---|---|---|---|---|
| 11 | SD | 5 | R29.1/R30.5 | 681 | 1012 |

REGISTERED CIVIL ENGINEER 05-23-14 DATE

07-21-14
PLANS APPROVAL DATE

REGISTERED PROFESSIONAL ENGINEER JON M. COLLINS No. C62090 Exp. 09/30/15 CIVIL STATE OF CALIFORNIA

*THE STATE OF CALIFORNIA OR ITS OFFICERS OR AGENTS SHALL NOT BE RESPONSIBLE FOR THE ACCURACY OR COMPLETENESS OF SCANNED COPIES OF THIS PLAN SHEET.*

CITY OF SAN DIEGO
525 B STREET
SUITE 7
SAN DIEGO, CA 92101

KIMLEY-HORN AND ASSOCIATES, INC.
401 B STREET, SUITE 600
SAN DIEGO, CA 92101

## CONDUIT NOTES: (THIS SHEET ONLY)

1 - 2"C, 2#8 (S)
2 - 2"C, 4#4 (L+g-CITY)
3 - 2"C, 2#8 (L+g-CITY)
4 - 2"C, 2#6 (BIKE FACILITY)
5 - 3"C, 12#6 (BIKE FACILITY)
6 - 2"C, 6#6 (BIKE FACILITY)
7 - 2"C, 2#8 (BIKE FACILITY)
8 - 3"C, MT, CONDUCTORS BY SDG&E
9 - 2"C, 2#4 (L+g-CITY)
10 - 2"C, MT (L+g-FUTURE)
11 - 2"C, 6#6 (BIKE PATH) 3#14 (PEU)
12 - 2"C, 2#8 (ICC-SB)
13 - 2"C, 2#6 (L+g-CITY)
14 - 2"C, 2#8 (L+g-CITY)
15 - 2"C, 10#6 (BIKE FACILITY)
16 - 2"C, 8#6 (BIKE FACILITY)

## ILLUMINATED SIGN AND APPURTENANCES

| SIGN No. | QUANTITY OF 85 W ISL | VOLTAGE AND LOAD | REMARKS |
|---|---|---|---|
| 3-1 | 4 | 480 V 348 W | SEE E-14 FOR TYPE SC4A CONTROL |

## NOTES: (THIS SHEET ONLY)

1 - CONNECT 2#8 (ICC) IN CABINET. CABINET PER LANDSCAPE DETAILS.
2 - ADD 2#8 (ICC) IN 1" CONDUIT. CONDUIT PER LANDSCAPE DETAILS.
3 - INSTALL PHOTOELECTRIC CONTROLS TYPE II.
4 - SEE SHEET E-16 FOR POULSEN KIPP LIGHT AND LAYOUT DETAIL.
5 - SEE INSTALLATION DETAILS ON SHEET E-38.
6 - SEE SHEET E-15 FOR CONDUIT PLACEMENT IN GENESEE Ave OC.
7 - SEE ELECTRICAL DETAILS FOR CIRCUIT DIAGRAM.
8 - PROVIDE 50 FEET OF CABLE SLACK, FOR EACH CONDUCTOR IN PULL BOX TO NEXT UTILITY TRANSFORMER.
9 - CONDUITS TO ENTER PER SDG&E REQUIREMENTS.
10 - LABEL EACH CONDUCTOR AS "HOT" - SDG&E CONDUCTORS FOR CITY LIGHTING CIRCUIT AND COIL 50' OF CABLE SLACK, FOR EACH CONDUCTOR.
11 - SEE PEDESTRIAN OC LIGHTING LAYOUT DETAIL ON E-19.

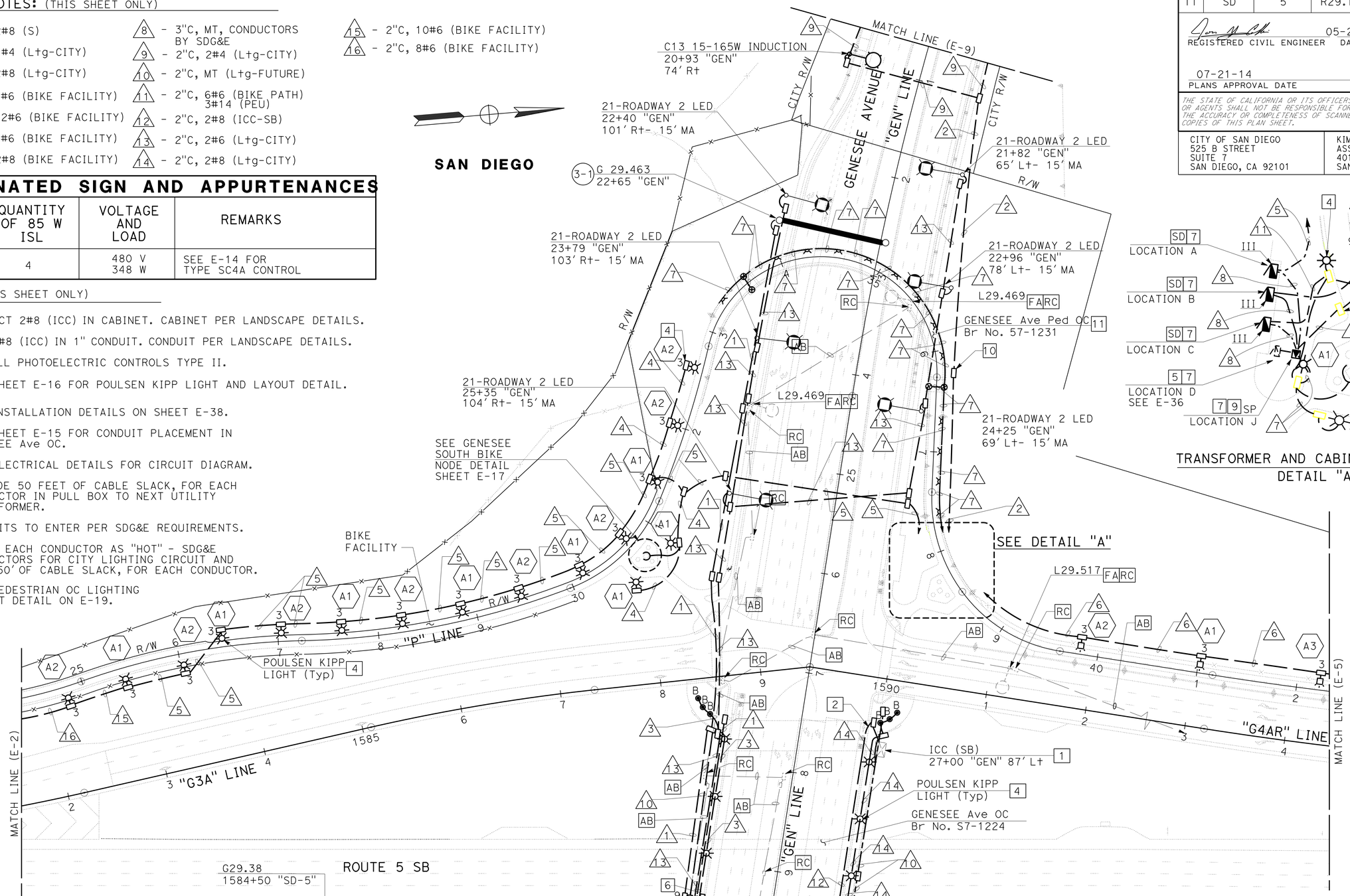


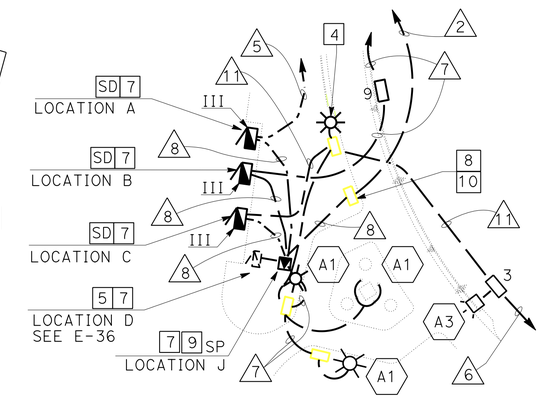


TRANSFORMER AND CABINETS LAYOUT
DETAIL "A"

NOTE:
FOR ACCURATE RIGHT OF WAY DATA, CONTACT RIGHT OF WAY ENGINEERING AT THE DISTRICT OFFICE.

# LIGHTING AND SIGN ILLUMINATION
# ELECTRICAL SERVICE (IRRIGATION)
# LIGHTING (CITY STREET)
# LIGHTING (BIKE FACILITY)

*APPROVED FOR ELECTRICAL WORK ONLY*

SCALE: 1"=50'

E-3

STATE OF CALIFORNIA - DEPARTMENT OF TRANSPORTATION
Caltrans
CONSULTANT FUNCTIONAL SUPERVISOR: JON COLLINS
CALCULATED-DESIGNED BY: JOHN KISSINGER
CHECKED BY: JON COLLINS
REVISED BY / DATE REVISED

LAST REVISION DATE PLOTTED => 23-JUL-2014
07-17-14 TIME PLOTTED => 14:52

| Dist | COUNTY | ROUTE | POST MILES TOTAL PROJECT | SHEET No. | TOTAL SHEETS |
|---|---|---|---|---|---|
| 11 | SD | 5 | R29.1/R30.5 | 682 | 1012 |

REGISTERED CIVIL ENGINEER DATE 05-23-14

PLANS APPROVAL DATE 07-21-14

REGISTERED PROFESSIONAL ENGINEER JON M. COLLINS No. C62090 Exp. 09/30/15 CIVIL STATE OF CALIFORNIA

*THE STATE OF CALIFORNIA OR ITS OFFICERS OR AGENTS SHALL NOT BE RESPONSIBLE FOR THE ACCURACY OR COMPLETENESS OF SCANNED COPIES OF THIS PLAN SHEET.*

CITY OF SAN DIEGO
525 B STREET
SUITE 7
SAN DIEGO, CA 92101

KIMLEY-HORN AND ASSOCIATES, INC.
401 B STREET, SUITE 600
SAN DIEGO, CA 92101

**SAN DIEGO**

NOTES: (THIS SHEET ONLY)

1. SEE ELECTRICAL DETAILS FOR CIRCUIT DIAGRAM.
2. ADD 2#8 (ICC-NB) IN 1" CONDUIT. CONDUIT PER LANDSCAPE DETAILS.
3. CONNECT 2#8 (ICC) IN CABINET. CABINET PER LANDSCAPE DETAILS.
4. SEE SHEET E-16 FOR POULSEN KIPP LIGHT AND LAYOUT DETAIL.
5. INSTALL PHOTOELECTRIC CONTROLS TYPE II.
6. SEE SHEET E-15 FOR CONDUIT PLACEMENT IN GENESEE Ave OC.
7. SEE WIRING DIAGRAM "E" ON SHEET E-12.
8. FOR ACCURATE RIGHT OF WAY DATA, CONTACT RIGHT OF WAY ENGINEERING AT THE DISTRICT OFFICE.

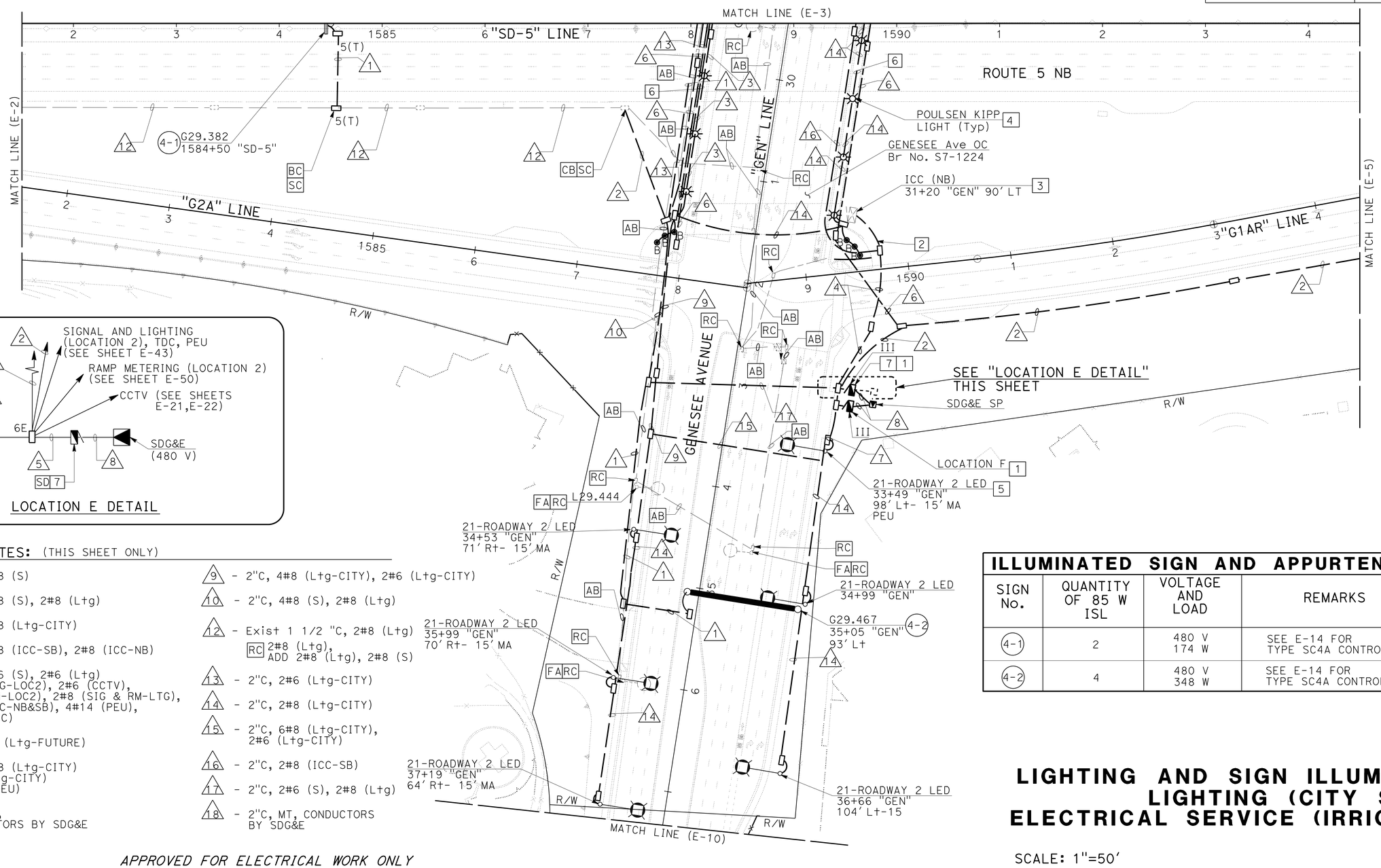


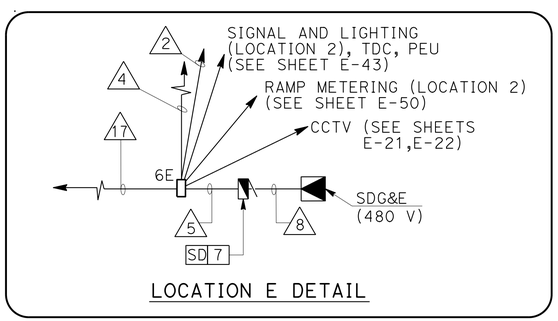


LOCATION E DETAIL

CONDUIT NOTES: (THIS SHEET ONLY)

1. 2"C, 2#8 (S)
2. 2"C, 2#8 (S), 2#8 (Ltg)
3. 2"C, 2#8 (Ltg-CITY)
4. 2"C, 2#8 (ICC-SB), 2#8 (ICC-NB)
5. 3"C, 2#6 (S), 2#6 (Ltg) 2#6 (SIG-LOC2), 2#6 (CCTV), 2#2 (RM-LOC2), 2#8 (SIG & RM-LTG), 4#8 (ICC-NB&SB), 4#14 (PEU), 2#8 (TDC)
6. 2"C, MT (Ltg-FUTURE)
7. 2"C, 6#8 (Ltg-CITY) 2#6 (Ltg-CITY) 3#14 (PEU)
8. 3"C, MT, CONDUCTORS BY SDG&E
9. 2"C, 4#8 (Ltg-CITY), 2#6 (Ltg-CITY)
10. 2"C, 4#8 (S), 2#8 (Ltg)
12. Exist 1 1/2 "C, 2#8 (Ltg) RC 2#8 (Ltg), ADD 2#8 (Ltg), 2#8 (S)
13. 2"C, 2#6 (Ltg-CITY)
14. 2"C, 2#8 (Ltg-CITY)
15. 2"C, 6#8 (Ltg-CITY), 2#6 (Ltg-CITY)
16. 2"C, 2#8 (ICC-SB)
17. 2"C, 2#6 (S), 2#8 (Ltg)
18. 2"C, MT, CONDUCTORS BY SDG&E

| ILLUMINATED SIGN AND APPURTENANCES | | | |
|---|---|---|---|
| SIGN No. | QUANTITY OF 85 W ISL | VOLTAGE AND LOAD | REMARKS |
| 4-1 | 2 | 480 V 174 W | SEE E-14 FOR TYPE SC4A CONTROL |
| 4-2 | 4 | 480 V 348 W | SEE E-14 FOR TYPE SC4A CONTROL |

*APPROVED FOR ELECTRICAL WORK ONLY*

# LIGHTING AND SIGN ILLUMINATION
# LIGHTING (CITY STREET)
# ELECTRICAL SERVICE (IRRIGATION)

SCALE: 1"=50'

**E-4**

STATE OF CALIFORNIA - DEPARTMENT OF TRANSPORTATION
Caltrans
CONSULTANT FUNCTIONAL SUPERVISOR: JON COLLINS
CALCULATED-DESIGNED BY: JOHN KISSINGER
CHECKED BY: JON COLLINS
REVISED BY
DATE REVISED

LAST REVISION 07-17-14
DATE PLOTTED => 23-JUL-2014
TIME PLOTTED => 14:52

| Dist | COUNTY | ROUTE | POST MILES TOTAL PROJECT | SHEET No. | TOTAL SHEETS |
|---|---|---|---|---|---|
| 11 | SD | 5 | R29.1/R30.5 | 683 | 1012 |

REGISTERED CIVIL ENGINEER 05-23-14 DATE

07-21-14
PLANS APPROVAL DATE

REGISTERED PROFESSIONAL ENGINEER JON M. COLLINS No. C62090 Exp. 09/30/15 CIVIL STATE OF CALIFORNIA

*THE STATE OF CALIFORNIA OR ITS OFFICERS OR AGENTS SHALL NOT BE RESPONSIBLE FOR THE ACCURACY OR COMPLETENESS OF SCANNED COPIES OF THIS PLAN SHEET.*

CITY OF SAN DIEGO
525 B STREET
SUITE 7
SAN DIEGO, CA 92101

KIMLEY-HORN AND ASSOCIATES, INC.
401 B STREET, SUITE 600
SAN DIEGO, CA 92101

NOTES: (THIS SHEET ONLY)

1 - SEE CONSTRUCTION DETAILS INSTALLATION (Conc BARRIER TYPE 60C)

2 - RC EXISTING SIGN LIGHTING FIXTURE

3 - FOR ACCURATE RIGHT OF WAY DATA, CONTACT RIGHT OF WAY ENGINEERING AT THE DISTRICT OFFICE.

CONDUIT NOTES: (THIS SHEET ONLY)

1 - 2"C, 2#6 (S)
2 - 2"C, 2#6 (S), 2#6 (Ltg)
3 - 2"C, 2#6 (Ltg)
4 - 2"C, 6#6 (BIKE FACILITY)
5 - Exist 2"C, 2#6 (Ltg)

## ILLUMINATED SIGN AND APPURTENANCES

| SIGN No. | QUANTITY OF 85 W ISL | VOLTAGE AND LOAD | REMARKS |
|---|---|---|---|
| 5-1 | 4 | 480 V 348 W | SEE E-14 FOR TYPE SC4A CONTROL |
| 5-2 | 4 | 480 V 348 W | SEE E-14 FOR TYPE SC4A CONTROL |
| 5-3 | 2 | 480 V 174 W | SEE E-14 FOR TYPE SC4A CONTROL |

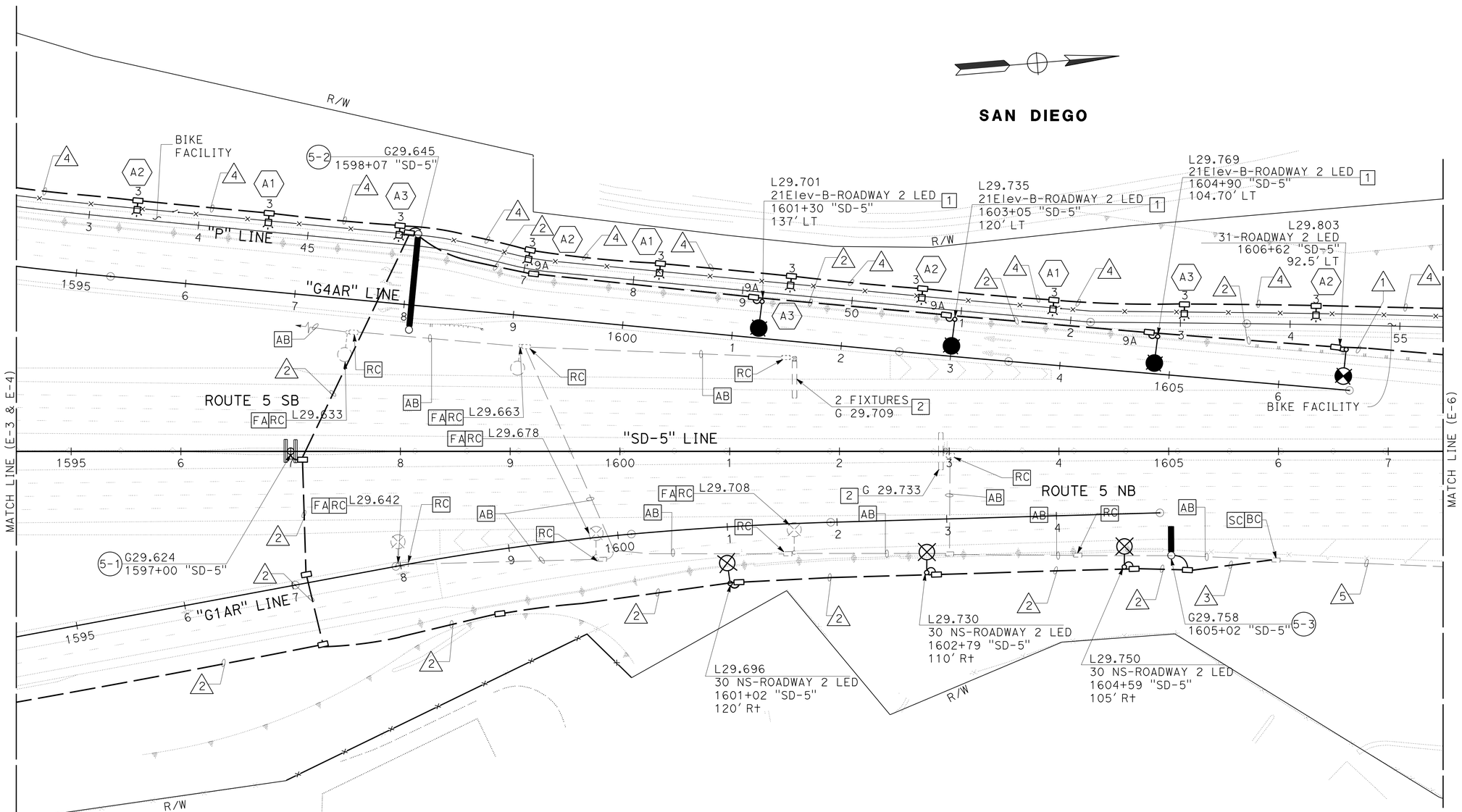


*APPROVED FOR ELECTRICAL WORK ONLY*

# LIGHTING AND SIGN ILLUMINATION
# LIGHTING (BIKE FACILITY)

SCALE: 1"=50'

**E-5**

STATE OF CALIFORNIA - DEPARTMENT OF TRANSPORTATION
Caltrans

CONSULTANT FUNCTIONAL SUPERVISOR: JON COLLINS
CALCULATED-DESIGNED BY: JOHN KISSINGER
CHECKED BY: JON COLLINS
REVISED BY
DATE REVISED

LAST REVISION 07-17-14
DATE PLOTTED => 23-JUL-2014
TIME PLOTTED => 14:52

| Dist | COUNTY | ROUTE | POST MILES TOTAL PROJECT | SHEET No. | TOTAL SHEETS |
|---|---|---|---|---|---|
| 11 | SD | 5 | R29.1/R30.5 | 684 | 1012 |

REGISTERED CIVIL ENGINEER 05-23-14 DATE

07-21-14
PLANS APPROVAL DATE

REGISTERED PROFESSIONAL ENGINEER JON M. COLLINS No. C62090 Exp. 09/30/15 CIVIL STATE OF CALIFORNIA

*THE STATE OF CALIFORNIA OR ITS OFFICERS OR AGENTS SHALL NOT BE RESPONSIBLE FOR THE ACCURACY OR COMPLETENESS OF SCANNED COPIES OF THIS PLAN SHEET.*

CITY OF SAN DIEGO
525 B STREET
SUITE 7
SAN DIEGO, CA 92101

KIMLEY-HORN AND ASSOCIATES, INC.
401 B STREET, SUITE 600
SAN DIEGO, CA 92101

**NOTES:** (THIS SHEET ONLY)

1 - RC EXISTING SIGN LIGHTING FIXTURE

2 - FOR ACCURATE RIGHT OF WAY DATA, CONTACT RIGHT OF WAY ENGINEERING AT THE DISTRICT OFFICE.

**CONDUIT NOTES:** (THIS SHEET ONLY)

1 - Exist 2"C, 2#6 (Ltg)

2 - 2"C, MT

3 - 2"C, 2#6(ILtg), 2#8 (S)

4 - 2"C, 2#6 (BIKE FACILITY)

5 - 2"C, 4#6 (BIKE FACILITY)

6 - 2"C, 6#6 (BIKE FACILITY)

7 - Exist 2"C, 2#6 (Ltg) ADD 2#8 (S)

8 - 2"C, 2#6 (S)

9 - Exist 2"C, 2#6 (Ltg) 2#8 (S)

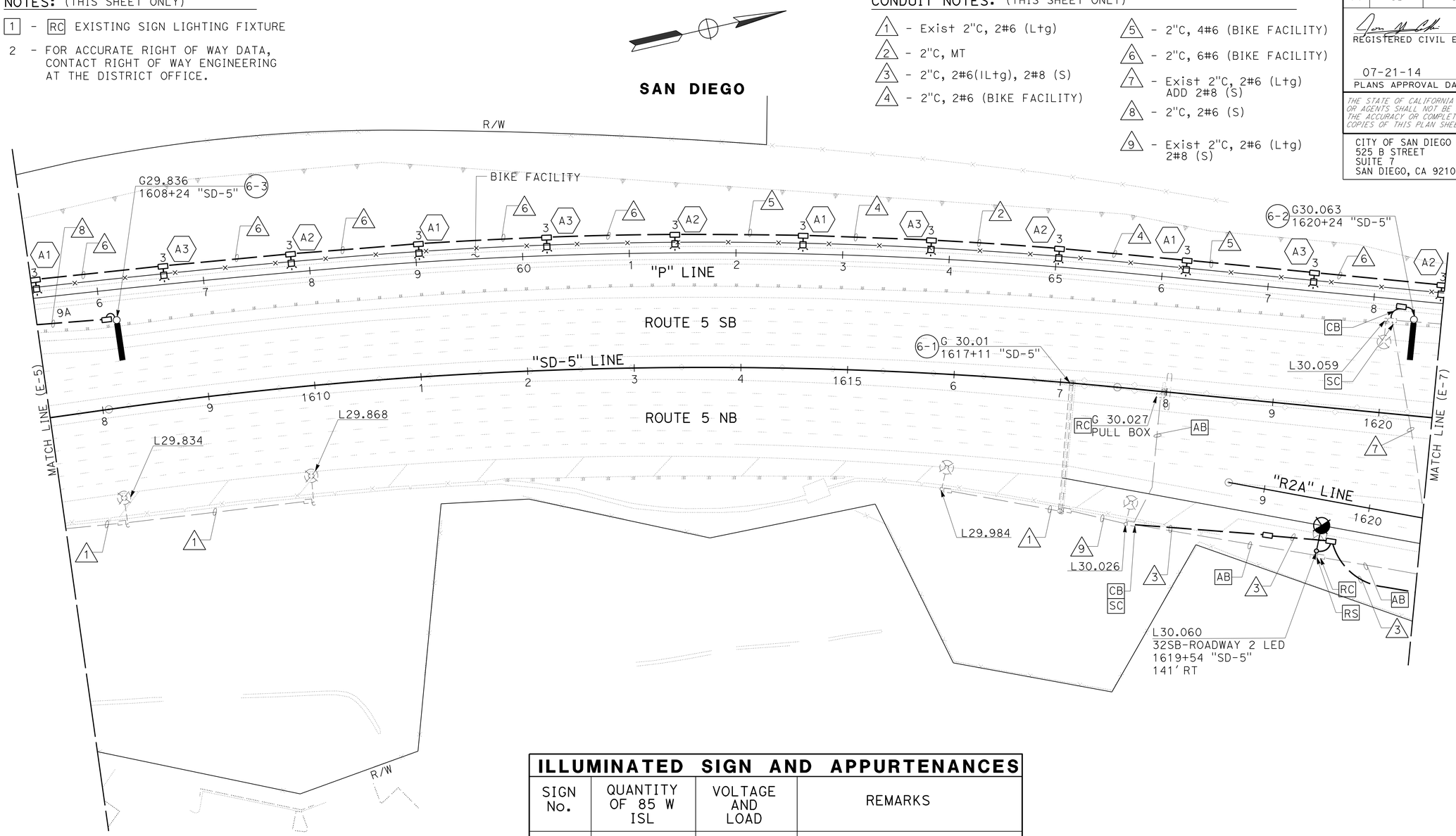


## ILLUMINATED SIGN AND APPURTENANCES

| SIGN No. | QUANTITY OF 85 W ISL | VOLTAGE AND LOAD | REMARKS |
|---|---|---|---|
| 6-1 | Exist (3) | 480 V 348 W | |
| 6-2 | 2 | 480 V 174 W | SEE E-14 FOR TYPE SC4A CONTROL |
| 6-3 | 2 | 480 V 174 W | SEE E-14 FOR TYPE SC4A CONTROL |

*APPROVED FOR ELECTRICAL WORK ONLY*

# LIGHTING AND SIGN ILLUMINATION
# LIGHTING (BIKE FACILITY)

SCALE: 1"=50'

**E-6**

STATE OF CALIFORNIA - DEPARTMENT OF TRANSPORTATION

Caltrans

CONSULTANT FUNCTIONAL SUPERVISOR: JON COLLINS

CALCULATED-DESIGNED BY: JOHN KISSINGER

CHECKED BY: JON COLLINS

REVISED BY

DATE REVISED

LAST REVISION 07-17-14

DATE PLOTTED => 23-JUL-2014
TIME PLOTTED => 14:52

| Dist | COUNTY | ROUTE | POST MILES TOTAL PROJECT | SHEET No. | TOTAL SHEETS |
|---|---|---|---|---|---|
| 11 | SD | 5 | R29.1/R30.5 | 685 | 1012 |

REGISTERED CIVIL ENGINEER 05-23-14 DATE

07-21-14
PLANS APPROVAL DATE

REGISTERED PROFESSIONAL ENGINEER JON M. COLLINS No. C62090 Exp. 09/30/15 CIVIL STATE OF CALIFORNIA

*THE STATE OF CALIFORNIA OR ITS OFFICERS OR AGENTS SHALL NOT BE RESPONSIBLE FOR THE ACCURACY OR COMPLETENESS OF SCANNED COPIES OF THIS PLAN SHEET.*

CITY OF SAN DIEGO
525 B STREET
SUITE 7
SAN DIEGO, CA 92101

KIMLEY-HORN AND ASSOCIATES, INC.
401 B STREET, SUITE 600
SAN DIEGO, CA 92101

**NOTE:**

FOR ACCURATE RIGHT OF WAY DATA, CONTACT RIGHT OF WAY ENGINEERING AT THE DISTRICT OFFICE.

**CONDUIT NOTES:** (THIS SHEET ONLY)

1. - 2"C, 2#8 (S), 2#6 (Ltg)
2. - 2"C, 6#6 (BIKE FACILITY)
3. N C - Exist 2"C, 2#8 (S)
4. N C - Exist 2"C, 2#6 (Ltg), 2#8 (S), 2#8 (TMS)
5. N C - Exist 2"C, 2#8 (TMS)
6. - Exist 2"C, 2#6 (Ltg) ADD 2#8 (S)
7. - Exist 2"C, 2#6 (Ltg), 2#8 (TMS) ADD 2#8 (S)
8. - Exist 2"C, ADD 2#6 (Ltg)
9. - 2"C, 2#6 (Ltg)

**SAN DIEGO**

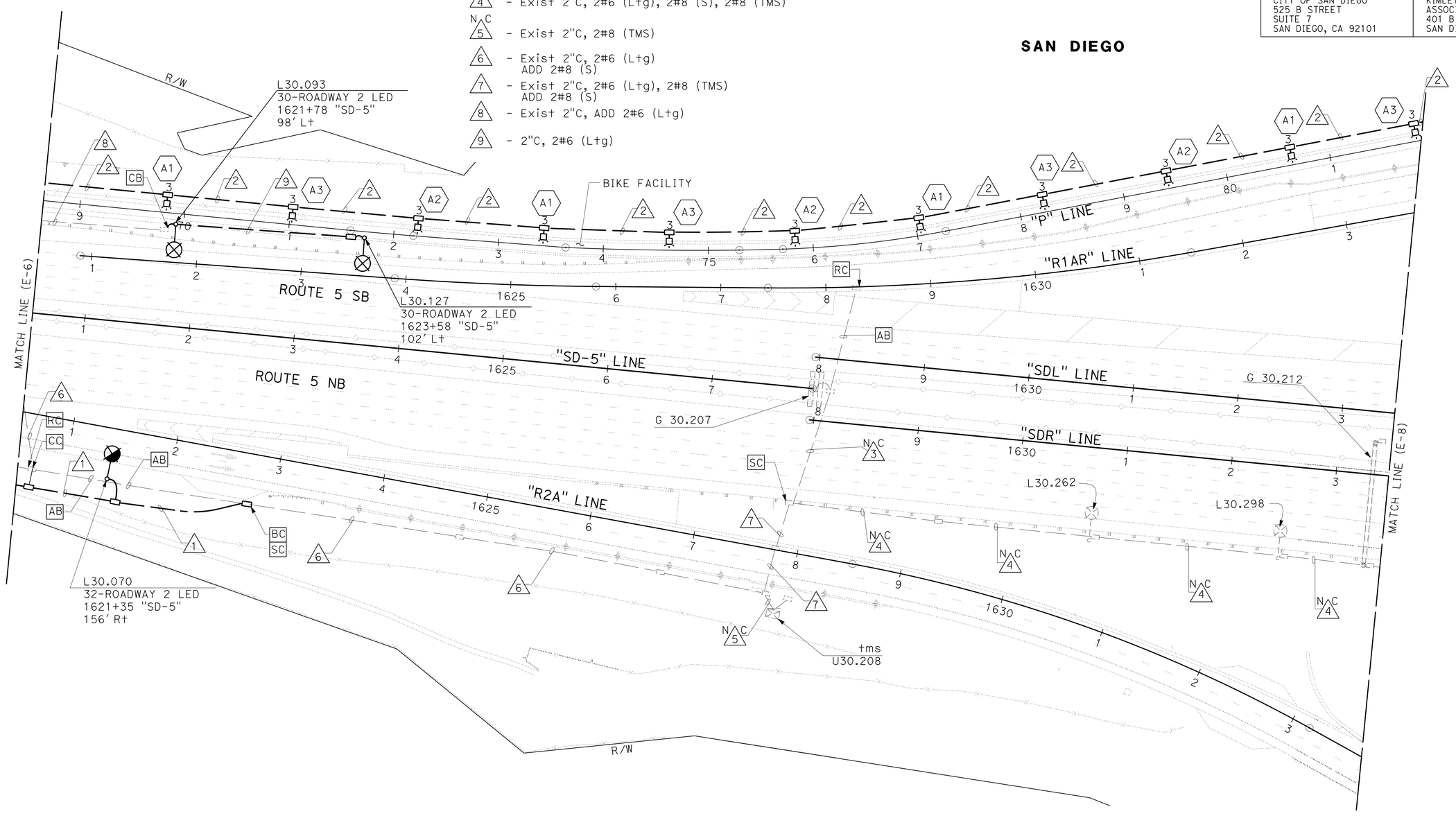


*APPROVED FOR ELECTRICAL WORK ONLY*

# LIGHTING AND SIGN ILLUMINATION
# LIGHTING (BIKE FACILITY)

SCALE: 1"=50'

**E-7**

STATE OF CALIFORNIA - DEPARTMENT OF TRANSPORTATION

Caltrans

CONSULTANT FUNCTIONAL SUPERVISOR: JON COLLINS

CALCULATED-DESIGNED BY: JOHN KISSINGER

CHECKED BY: JON COLLINS

REVISED BY

DATE REVISED

LAST REVISION 07-17-14

DATE PLOTTED => 23-JUL-2014
TIME PLOTTED => 14:52

| Dist | COUNTY | ROUTE | POST MILES TOTAL PROJECT | SHEET No. | TOTAL SHEETS |
|---|---|---|---|---|---|
| 11 | SD | 5 | R29.1/R30.5 | 686 | 1012 |

REGISTERED CIVIL ENGINEER 05-23-14 DATE

07-21-14
PLANS APPROVAL DATE

REGISTERED PROFESSIONAL ENGINEER JON M. COLLINS No. C62090 Exp. 09/30/15 CIVIL STATE OF CALIFORNIA

*THE STATE OF CALIFORNIA OR ITS OFFICERS OR AGENTS SHALL NOT BE RESPONSIBLE FOR THE ACCURACY OR COMPLETENESS OF SCANNED COPIES OF THIS PLAN SHEET.*

CITY OF SAN DIEGO
525 B STREET
SUITE 7
SAN DIEGO, CA 92101

KIMLEY-HORN AND ASSOCIATES, INC.
401 B STREET, SUITE 600
SAN DIEGO, CA 92101

**NOTES:** (THIS SHEET ONLY)

1 - SEE ELECTRICAL DETAILS FOR CIRCUIT DIAGRAM.

2 - SEE INSTALLATION DETAILS ON E-52.

3 - SEE CIRCUIT DIAGRAM LOCATION "H" FOR SPLICE/CIRCUIT CHANGE DETAILS

4 - INSTALL PHOTOELECTRIC CONTROLS TYPE II.

5 - FOR ACCURATE RIGHT OF WAY DATA, CONTACT RIGHT OF WAY ENGINEERING AT THE DISTRICT OFFICE.

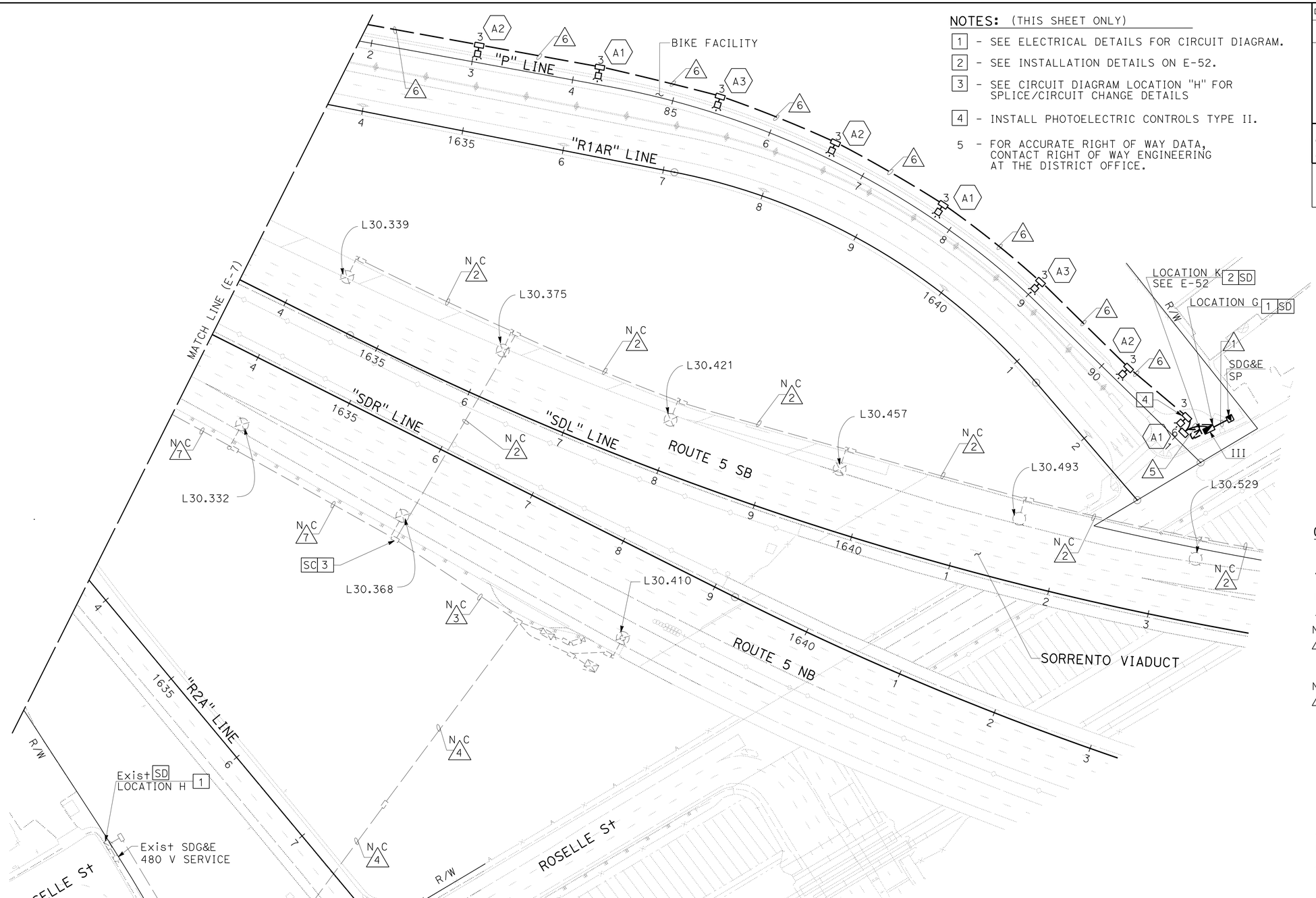


SAN DIEGO

**CONDUIT NOTES:** (THIS SHEET ONLY)

1 - 3"C, MT, CONDUCTORS BY SDG&E

N C 2 - Exist 2"C, 2#6 (Ltg)

N C 3 - Exist 3"C, 2#6 (Ltg)
2#8 (S)
2#8 (TMS)
4#14 (PEU)

N C 4 - Exist 3"C, 2#6 (Ltg)
2#8 (CCTV)
2#8 (S)
2#8 (TMS)
2#10 (CEC)
4#14 (PEU)

5 - 2"C, 4#6 (BIKE FACILITY)
3#14 (PEU)

6 - 2"C, 6#6 (BIKE FACILITY)

N C 7 - Exist 2"C, 2#8 (S)
2#8 (TMS)
2#6 (Ltg)

*APPROVED FOR ELECTRICAL WORK ONLY*

# LIGHTING AND SIGN ILLUMINATION
# LIGHTING (BIKE FACILITY)

SCALE: 1"=50'

**E-8**

STATE OF CALIFORNIA - DEPARTMENT OF TRANSPORTATION
Caltrans

CONSULTANT FUNCTIONAL SUPERVISOR: JON COLLINS
CALCULATED-DESIGNED BY: JOHN KISSINGER
CHECKED BY: JON COLLINS
REVISED BY
DATE REVISED

LAST REVISION 07-17-14
DATE PLOTTED => 23-JUL-2014
TIME PLOTTED => 14:52

| Dist | COUNTY | ROUTE | POST MILES TOTAL PROJECT | SHEET No. | TOTAL SHEETS |
|---|---|---|---|---|---|
| 11 | SD | 5 | R29.1/R30.5 | 687 | 1012 |

REGISTERED CIVIL ENGINEER 05-23-14 DATE

07-21-14
PLANS APPROVAL DATE

REGISTERED PROFESSIONAL ENGINEER JON M. COLLINS No. C62090 Exp. 09/30/15 CIVIL STATE OF CALIFORNIA

*THE STATE OF CALIFORNIA OR ITS OFFICERS OR AGENTS SHALL NOT BE RESPONSIBLE FOR THE ACCURACY OR COMPLETENESS OF SCANNED COPIES OF THIS PLAN SHEET.*

CITY OF SAN DIEGO
525 B STREET
SUITE 7
SAN DIEGO, CA 92101

KIMLEY-HORN AND ASSOCIATES, INC.
401 B STREET, SUITE 600
SAN DIEGO, CA 92101

**NOTES:** (THIS SHEET ONLY)

1 - INSTALL CONDUIT AND PULL BOXES IN BACK OF SIDEWALK.

2 - INSTALL PHOTOELECTRIC CONTROLS TYPE III, PER STANDARD SPECIFICATIONS.

3 - FOR ISOFOOT CANDLE DIAGRAM FOR 165W INDUCTION LIGHTING REFER TO SHEET E-1.

4 - FOR ACCURATE RIGHT OF WAY DATA, CONTACT RIGHT OF WAY ENGINEERING AT THE DISTRICT OFFICE.

**CONDUIT NOTES:** (THIS SHEET ONLY)

1 - 2"C, 2#4 (Ltg-CITY)

**SAN DIEGO**

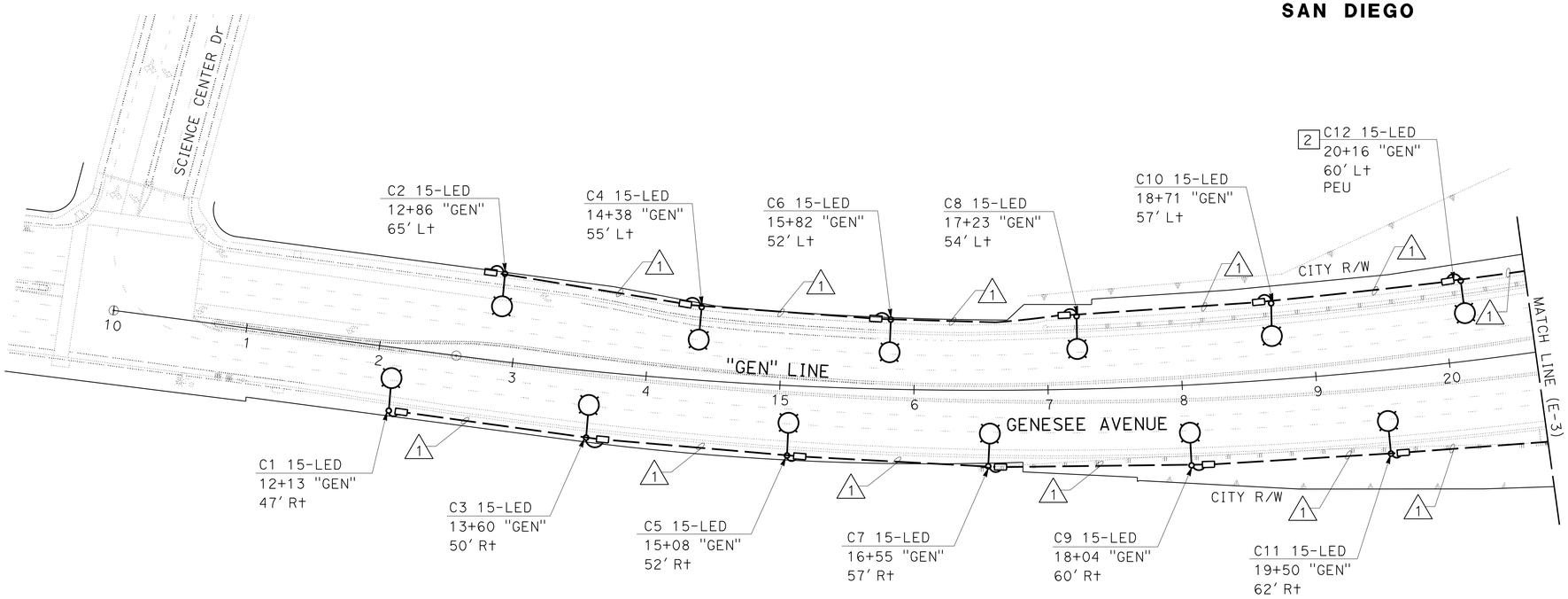


*APPROVED FOR ELECTRICAL WORK ONLY*

SCALE: 1"=50'

# LIGHTING
## (CITY STREET)

**E-9**

STATE OF CALIFORNIA - DEPARTMENT OF TRANSPORTATION

Caltrans

CONSULTANT FUNCTIONAL SUPERVISOR: JON COLLINS

CALCULATED-DESIGNED BY: JOHN KISSINGER

CHECKED BY: JON COLLINS

REVISED BY

DATE REVISED

LAST REVISION 07-17-14 | DATE PLOTTED => 23-JUL-2014 | TIME PLOTTED => 14:52

| Dist | COUNTY | ROUTE | POST MILES TOTAL PROJECT | SHEET No. | TOTAL SHEETS |
|---|---|---|---|---|---|
| 11 | SD | 5 | R29.1/R30.5 | 688 | 1012 |

REGISTERED CIVIL ENGINEER 05-23-14 DATE

07-21-14
PLANS APPROVAL DATE

REGISTERED PROFESSIONAL ENGINEER JON M. COLLINS No. C62090 Exp. 09/30/15 CIVIL STATE OF CALIFORNIA

*THE STATE OF CALIFORNIA OR ITS OFFICERS OR AGENTS SHALL NOT BE RESPONSIBLE FOR THE ACCURACY OR COMPLETENESS OF SCANNED COPIES OF THIS PLAN SHEET.*

CITY OF SAN DIEGO
525 B STREET
SUITE 7
SAN DIEGO, CA 92101

KIMLEY-HORN AND ASSOCIATES, INC.
401 B STREET, SUITE 600
SAN DIEGO, CA 92101

## NOTES: (THIS SHEET ONLY)

1 - SEE ELECTRICAL DETAILS FOR CIRCUIT DIAGRAM.

2 - CONDUIT TO ENTER PER SDG&E REQUIREMENTS.

3 - PROVIDE 50 FEET OF SLACK, FOR EACH CONDUCTOR, IN PULL BOX NEXT TO UTILITY TRANSFORMER.

4 - INSTALL PHOTOELECTRIC CONTROLS TYPE III, PER STANDARD SPECIFICATIONS.

5 - INSTALL CONDUIT AND PULL BOXES IN BACK OF SIDEWALK.

6 - FOR ISOFOOT CANDLE DIAGRAM FOR 165W INDUCTION LIGHTING REFER TO SHEET E-1.

7 - SEE ELECTRICAL DETAILS FOR FOUNDATION, SEE SHEET E-66.

8 - FOR ACCURATE RIGHT OF WAY DATA, CONTACT RIGHT OF WAY ENGINEERING AT THE DISTRICT OFFICE.

## CONDUIT NOTES: (THIS SHEET ONLY)

1 - 2"C, 4#6 (Ltg-CITY)

2 - 2"C, 2#6 (Ltg-CITY)

SAN DIEGO

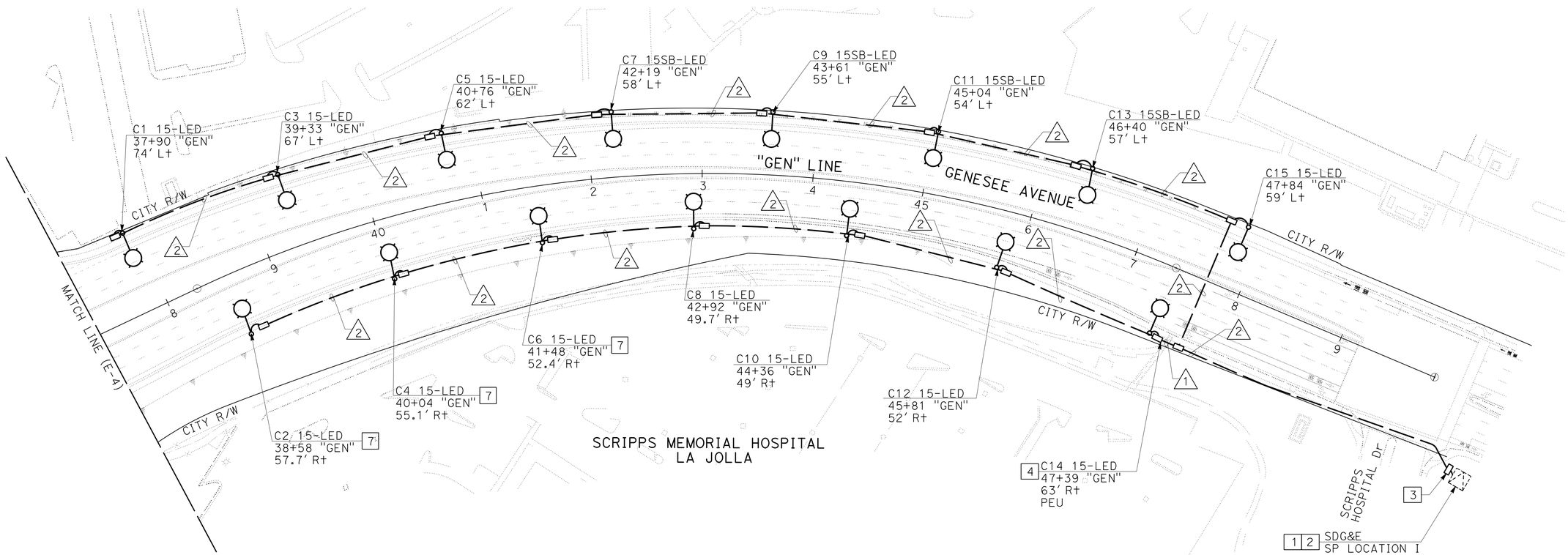


# LIGHTING
## (CITY STREET)

*APPROVED FOR ELECTRICAL WORK ONLY*

SCALE: 1"=50'

**E-10**

STATE OF CALIFORNIA - DEPARTMENT OF TRANSPORTATION
Caltrans

CONSULTANT FUNCTIONAL SUPERVISOR: JON COLLINS
CALCULATED-DESIGNED BY: JOHN KISSINGER
CHECKED BY: JON COLLINS
REVISED BY
DATE REVISED

LAST REVISION 07-17-14
DATE PLOTTED => 23-JUL-2014
TIME PLOTTED => 14:52

| Dist | COUNTY | ROUTE | POST MILES TOTAL PROJECT | SHEET No. | TOTAL SHEETS |
|---|---|---|---|---|---|
| 11 | SD | 5 | R29.1/R30.5 | 689 | 1012 |

REGISTERED CIVIL ENGINEER 05-23-14 DATE

07-21-14
PLANS APPROVAL DATE

REGISTERED PROFESSIONAL ENGINEER JON M. COLLINS No. C62090 Exp. 09/30/15 CIVIL STATE OF CALIFORNIA

*THE STATE OF CALIFORNIA OR ITS OFFICERS OR AGENTS SHALL NOT BE RESPONSIBLE FOR THE ACCURACY OR COMPLETENESS OF SCANNED COPIES OF THIS PLAN SHEET.*

CITY OF SAN DIEGO
525 B STREET
SUITE 7
SAN DIEGO, CA 92101

KIMLEY-HORN AND ASSOCIATES, INC.
401 B STREET, SUITE 600
SAN DIEGO, CA 92101

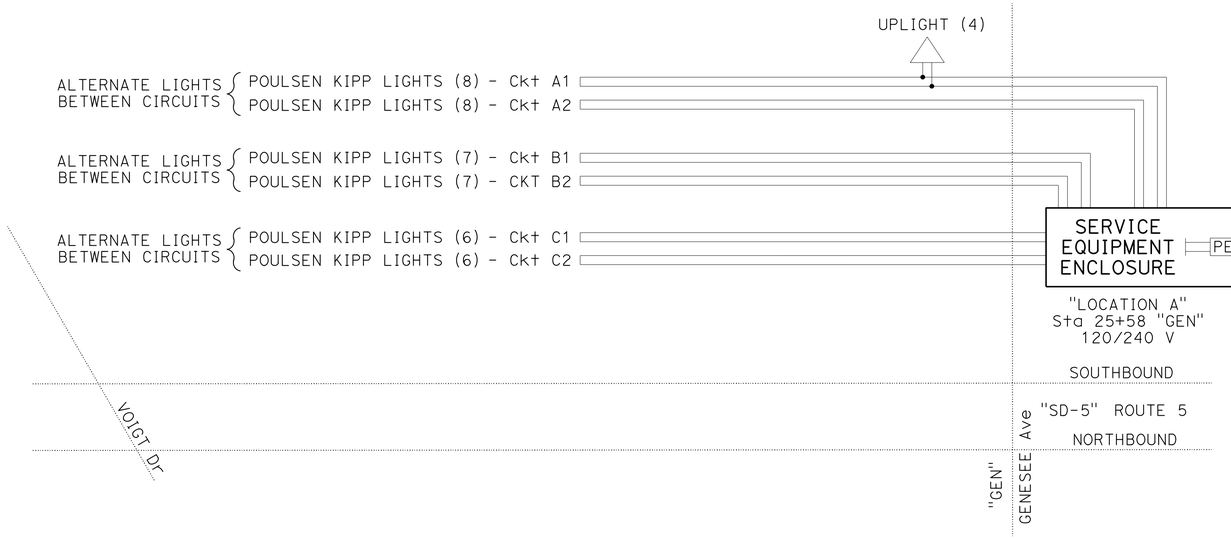


SERVICE EQUIPMENT ENCLOSURE TYPE III-BF.
SEE SHEET E-59 FOR WIRING DIAGRAM.

CIRCUIT DIAGRAM - LOCATION "A"

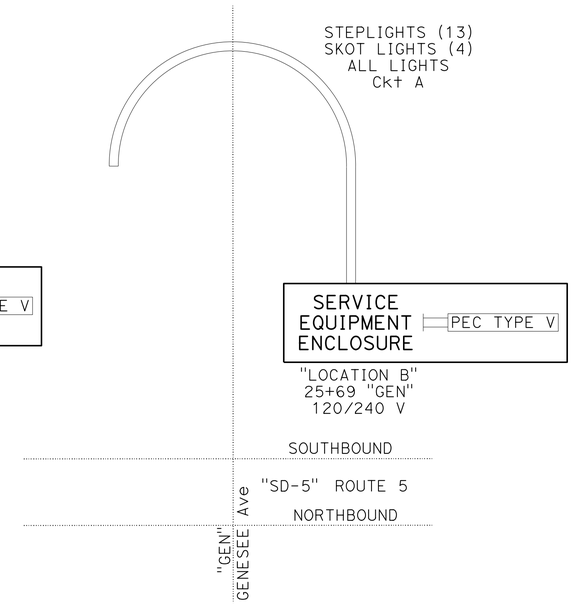


SERVICE EQUIPMENT ENCLOSURE TYPE III-BF.
SEE SHEET E-60 FOR WIRING DIAGRAM.

CIRCUIT DIAGRAM - LOCATION "B"

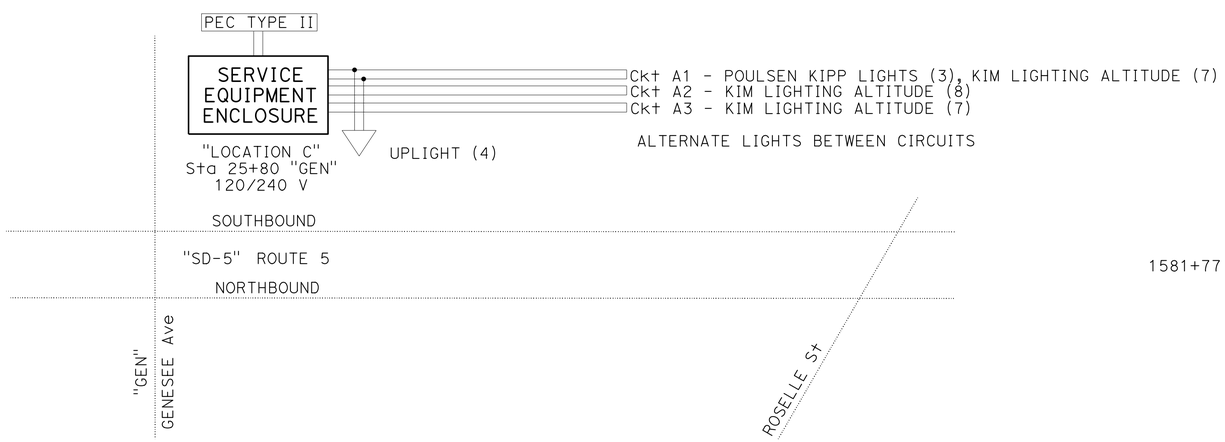


SERVICE EQUIPMENT ENCLOSURE TYPE III-BF.
SEE SHEET E-61 FOR WIRING DIAGRAM.

CIRCUIT DIAGRAM - LOCATION "C"

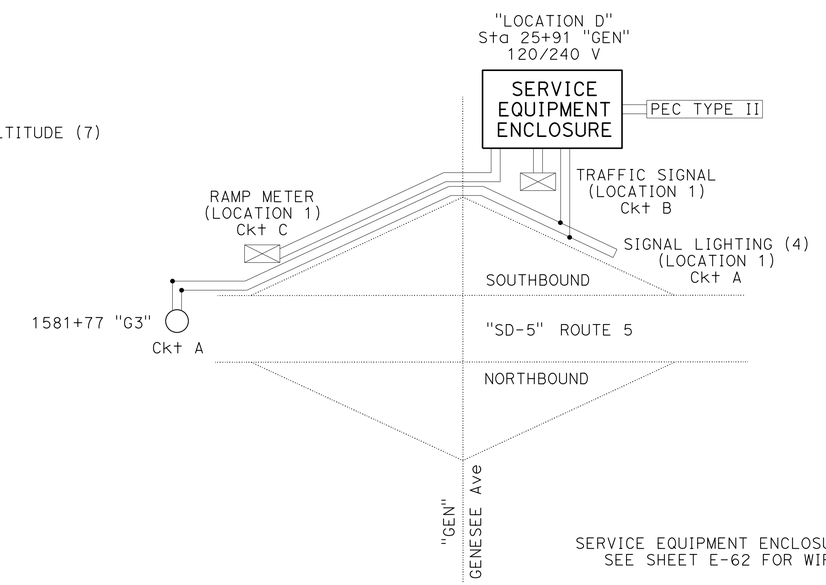


SERVICE EQUIPMENT ENCLOSURE TYPE III-BF.
SEE SHEET E-62 FOR WIRING DIAGRAM.

CIRCUIT DIAGRAM - LOCATION "D"

# LIGHTING (BIKE FACILITY) SIGNAL AND LIGHTING (ELECTRICAL DETAILS)

# E-11

*APPROVED FOR ELECTRICAL WORK ONLY*

NO SCALE

STATE OF CALIFORNIA - DEPARTMENT OF TRANSPORTATION
Caltrans

CONSULTANT FUNCTIONAL SUPERVISOR: JON COLLINS
CALCULATED-DESIGNED BY: JOHN KISSINGER
CHECKED BY: JON COLLINS
REVISED BY
DATE REVISED

LAST REVISION 07-17-14
DATE PLOTTED => 23-JUL-2014
TIME PLOTTED => 14:52

| Dist | COUNTY | ROUTE | POST MILES TOTAL PROJECT | SHEET No. | TOTAL SHEETS |
|---|---|---|---|---|---|
| 11 | SD | 5 | R29.1/R30.5 | 690 | 1012 |

REGISTERED CIVIL ENGINEER 05-23-14 DATE

PLANS APPROVAL DATE 07-21-14

REGISTERED PROFESSIONAL ENGINEER JON M. COLLINS No. C62090 Exp. 09/30/15 CIVIL STATE OF CALIFORNIA

*THE STATE OF CALIFORNIA OR ITS OFFICERS OR AGENTS SHALL NOT BE RESPONSIBLE FOR THE ACCURACY OR COMPLETENESS OF SCANNED COPIES OF THIS PLAN SHEET.*

CITY OF SAN DIEGO
525 B STREET
SUITE 7
SAN DIEGO, CA 92101

KIMLEY-HORN AND ASSOCIATES, INC.
401 B STREET, SUITE 600
SAN DIEGO, CA 92101

## CIRCUIT BREAKERS

MAIN-2P-100 A

| | | | |
|---|---|---|---|
| A | 1P-15 A | J, K | 2P-30 A |
| B | 1P-20 A | | |
| C | 1P-30 A | L, M | 2P-30 A |
| D | 1P-50 A | | |
| E | 1P-20 A | N, O | 2P-30 A |
| F | 1P-30 A SPARE | | |
| G | 1P-15 A | | |
| H | 1P-15 A | | |

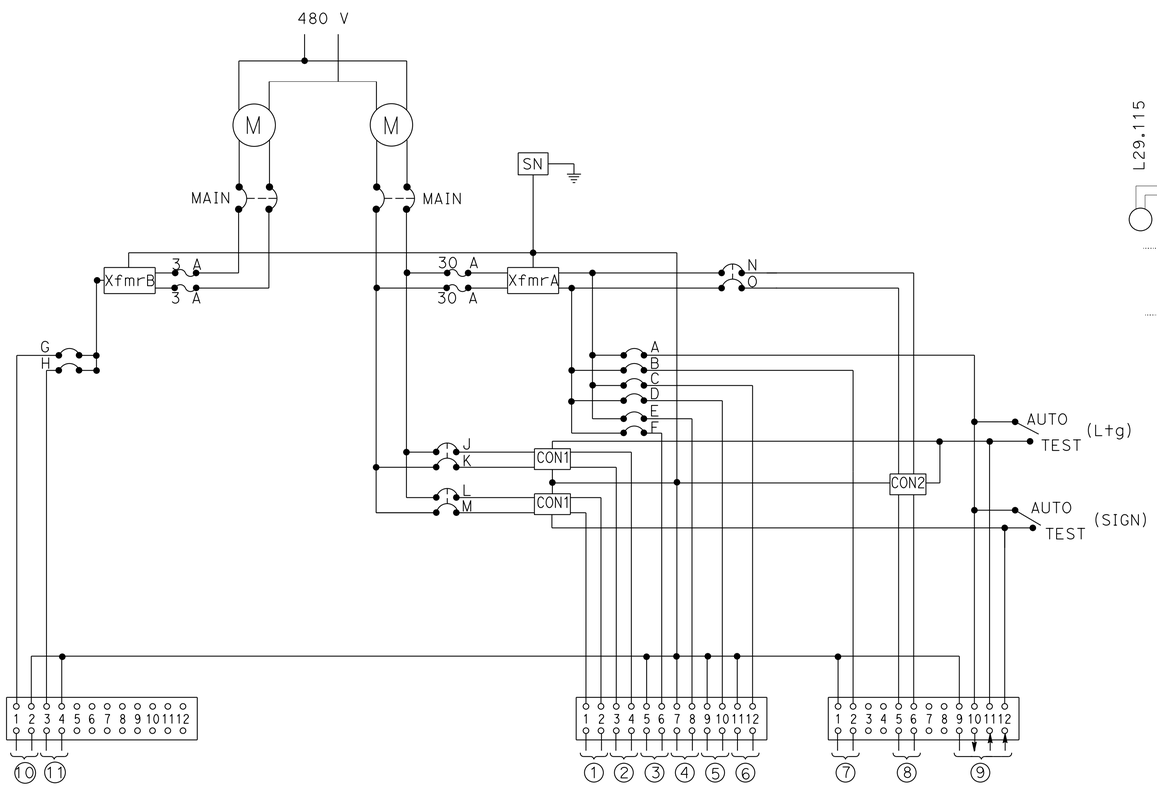


XfmrA = 480/240/120 V - 10 kVA TRANSFORMER
XfmrB = 480/120 V - 1 kVA TRANSFORMER
CON1 = 30A, 2P, NO CONTACTOR
CON2 = 60A, 2P, NO CONTACTOR

1 - SIGN
2 - LIGHTING
3 - SPARE
4 - CCTV #48
5 - SIGNAL (LOCATION 2)
6 - RAMP METER (LOCATION 2)
7 - TDC
8 - SIGNAL AND RAMP LIGHTING
9 - PEU
10 - ICC (NB)
11 - ICC (SB)

## WIRING DIAGRAM "E"

(MODIFIED TYPE III-CF EQUIPMENT ENCLOSURE
SEE ES-2C & ES-2F)
SIGNAL AND LIGHTING (LOCATION 2)
RAMP METERING SYSTEM (LOCATION 2)
ELECTRIC SERVICE (IRRIGATION)

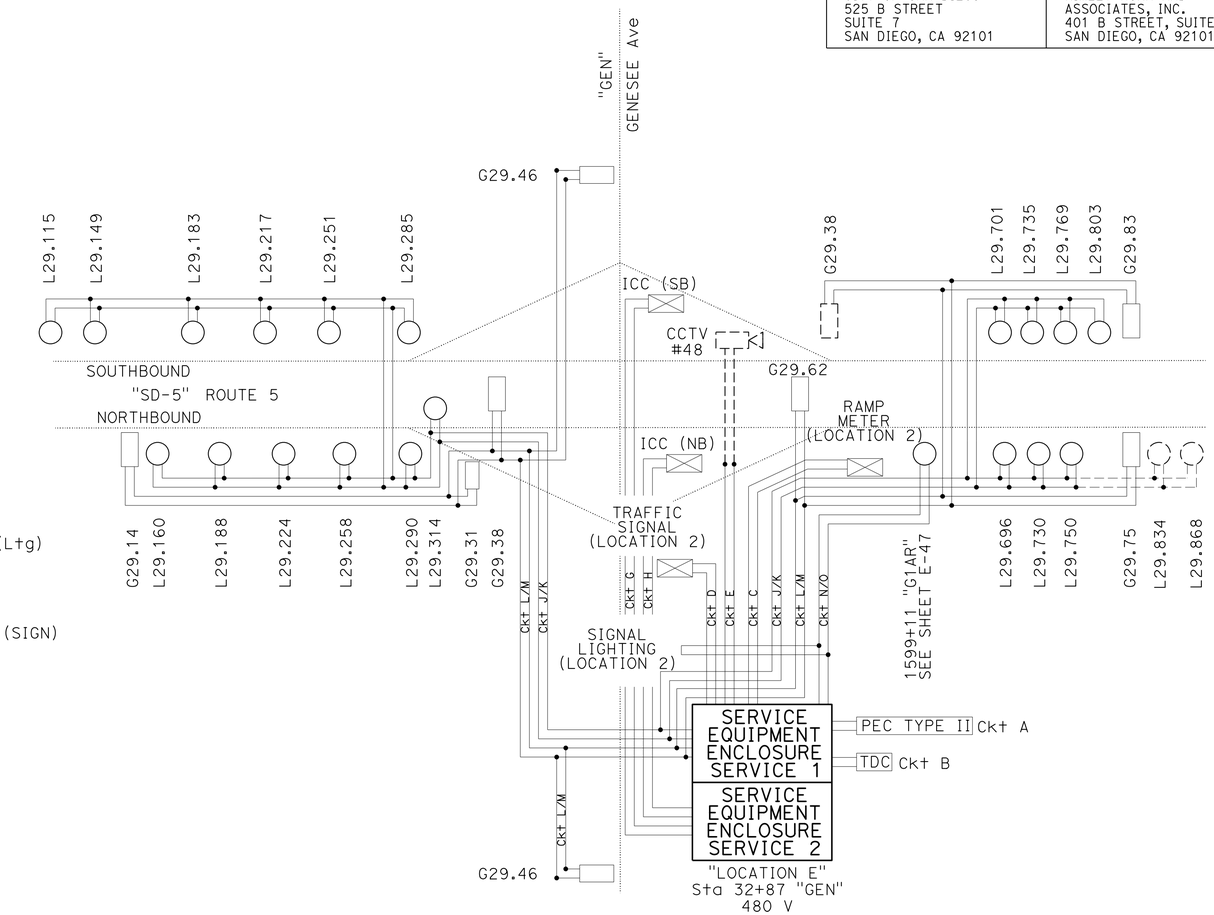


## CIRCUIT DIAGRAM - LOCATION "E"

SEE WIRING DIAGRAM "E" ON THIS SHEET

*APPROVED FOR ELECTRICAL WORK ONLY*

NO SCALE

# LIGHTING AND SIGN ILLUMINATION (ELECTRICAL DETAILS)

**E-12**

STATE OF CALIFORNIA - DEPARTMENT OF TRANSPORTATION
Caltrans

CONSULTANT FUNCTIONAL SUPERVISOR: JON COLLINS
CALCULATED-DESIGNED BY: JOHN KISSINGER
CHECKED BY: JON COLLINS
REVISED BY
DATE REVISED

LAST REVISION 07-17-14
DATE PLOTTED => 23-JUL-2014
TIME PLOTTED => 14:52

| Dist | COUNTY | ROUTE | POST MILES TOTAL PROJECT | SHEET No. | TOTAL SHEETS |
|---|---|---|---|---|---|
| 11 | SD | 5 | R29.1/R30.5 | 691 | 1012 |

REGISTERED CIVIL ENGINEER 05-23-14 DATE

07-21-14
PLANS APPROVAL DATE

REGISTERED PROFESSIONAL ENGINEER JON M. COLLINS No. C62090 Exp. 09/30/15 CIVIL STATE OF CALIFORNIA

*THE STATE OF CALIFORNIA OR ITS OFFICERS OR AGENTS SHALL NOT BE RESPONSIBLE FOR THE ACCURACY OR COMPLETENESS OF SCANNED COPIES OF THIS PLAN SHEET.*

CITY OF SAN DIEGO
525 B STREET
SUITE 7
SAN DIEGO, CA 92101

KIMLEY-HORN AND ASSOCIATES, INC.
401 B STREET, SUITE 600
SAN DIEGO, CA 92101

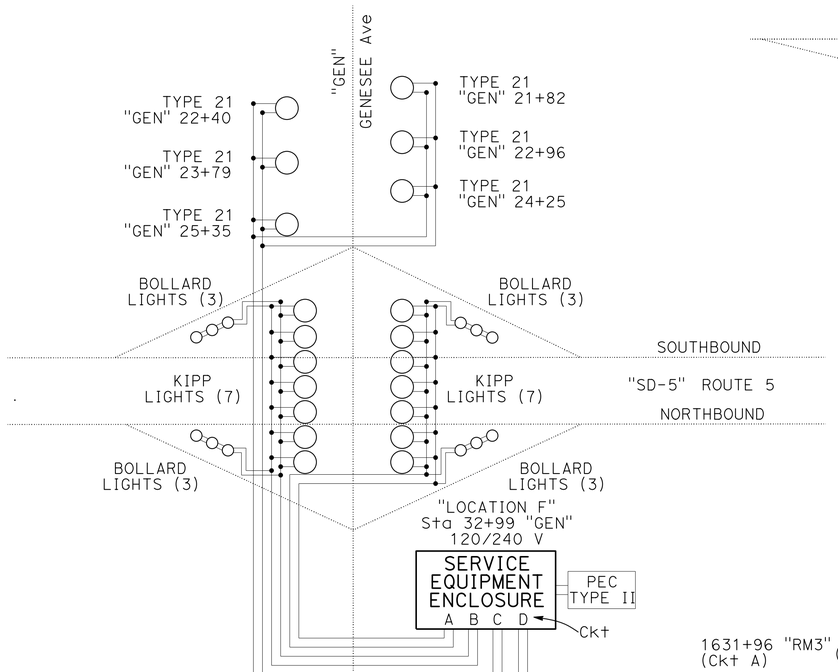


SERVICE EQUIPMENT ENCLOSURE TYPE III-BF.
SEE SHEET E-63 FOR WIRING DIAGRAM.

CIRCUIT DIAGRAM - LOCATION "F"

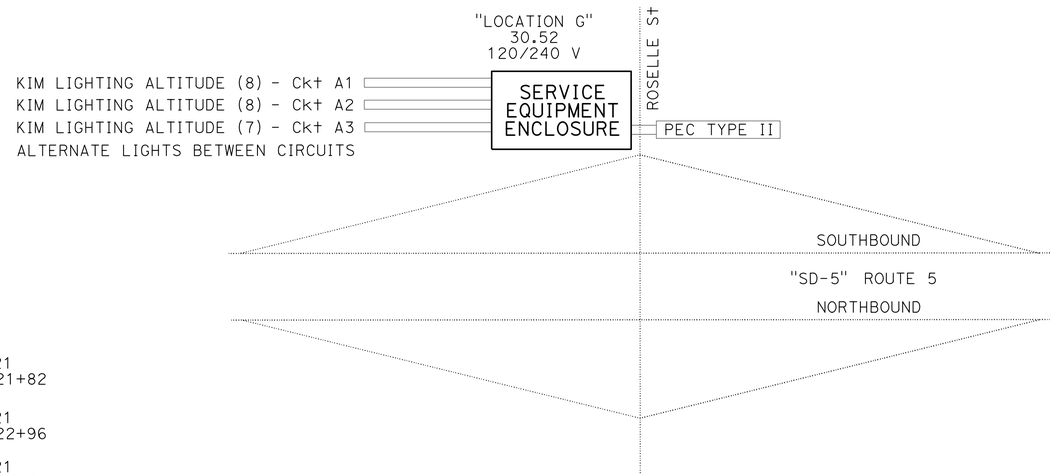


SERVICE EQUIPMENT ENCLOSURE TYPE III-BF.
SEE SHEET E-64 FOR WIRING DIAGRAM.

CIRCUIT DIAGRAM - LOCATION "G"

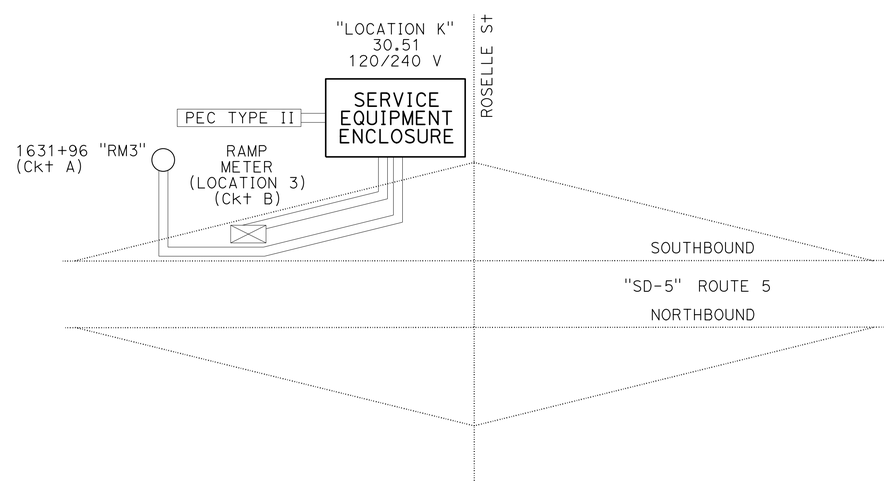


CIRCUIT DIAGRAM - LOCATION "K"

SERVICE EQUIPMENT ENCLOSURE TYPE III-BF
SEE SHEET E-65 FOR WIRING DIAGRAM.

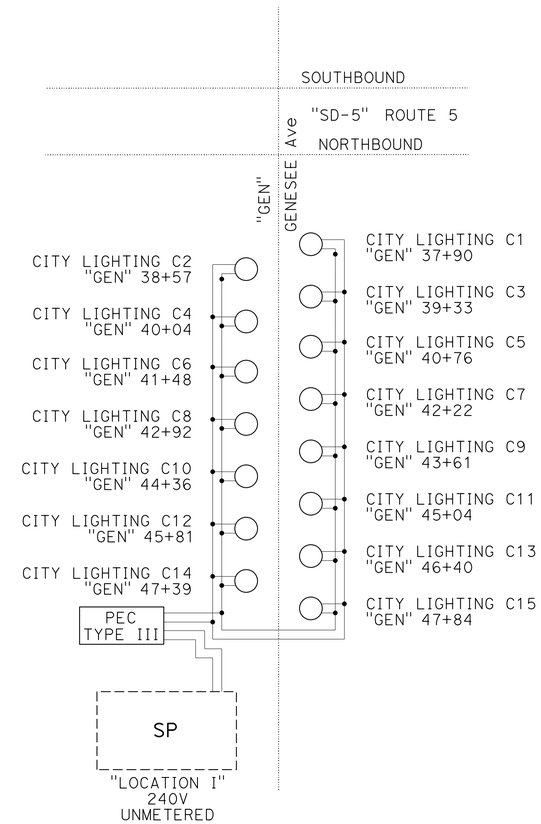


CIRCUIT DIAGRAM - LOCATION "I"

*APPROVED FOR ELECTRICAL WORK ONLY*

# LIGHTING (CITY STREET)
# LIGHTING (BIKE FACILITY)
# RAMP METERING SYSTEM (LOCATION 3)
# (ELECTRICAL DETAILS)

NO SCALE

**E-13**

STATE OF CALIFORNIA - DEPARTMENT OF TRANSPORTATION
Caltrans

CONSULTANT FUNCTIONAL SUPERVISOR: JON COLLINS
CALCULATED-DESIGNED BY: JOHN KISSINGER
CHECKED BY: JON COLLINS
REVISED BY
DATE REVISED

LAST REVISION 07-17-14
DATE PLOTTED => 23-JUL-2014
TIME PLOTTED => 14:52

| Dist | COUNTY | ROUTE | POST MILES TOTAL PROJECT | SHEET No. | TOTAL SHEETS |
|---|---|---|---|---|---|
| 11 | SD | 5 | R29.1/R30.5 | 692 | 1012 |

REGISTERED CIVIL ENGINEER 05-23-14 DATE

07-21-14
PLANS APPROVAL DATE

REGISTERED PROFESSIONAL ENGINEER JON M. COLLINS No. C62090 Exp. 09/30/15 CIVIL STATE OF CALIFORNIA

*THE STATE OF CALIFORNIA OR ITS OFFICERS OR AGENTS SHALL NOT BE RESPONSIBLE FOR THE ACCURACY OR COMPLETENESS OF SCANNED COPIES OF THIS PLAN SHEET.*

CITY OF SAN DIEGO
525 B STREET
SUITE 7
SAN DIEGO, CA 92101

KIMLEY-HORN AND ASSOCIATES, INC.
401 B STREET, SUITE 600
SAN DIEGO, CA 92101

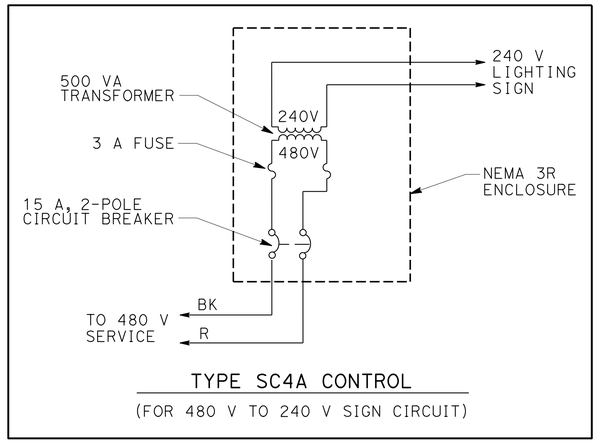


TYPE SC4A CONTROL

(FOR 480 V TO 240 V SIGN CIRCUIT)

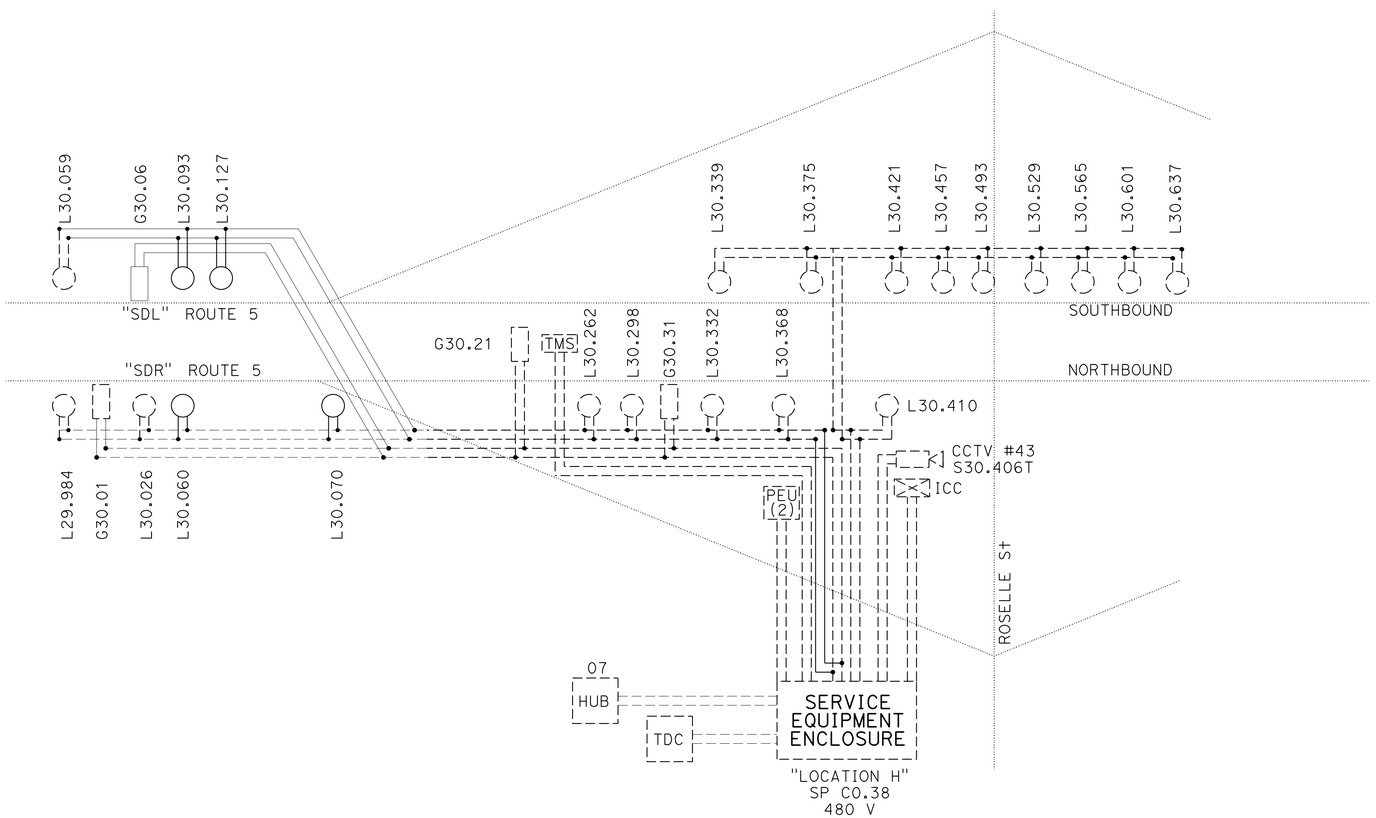


Exist SERVICE EQUIPMENT ENCLOSURE

CIRCUIT DIAGRAM - LOCATION "H"

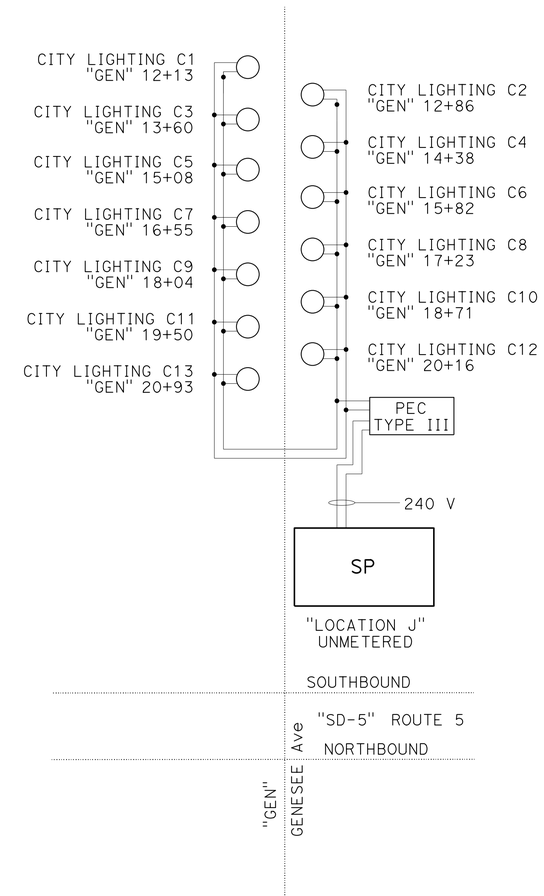


CIRCUIT DIAGRAM - LOCATION "J"

# LIGHTING AND SIGN ILLUMINATION
# LIGHTING (CITY STREET)
# (ELECTRICAL DETAILS)

*APPROVED FOR ELECTRICAL WORK ONLY*

NO SCALE

**E-14**

STATE OF CALIFORNIA - DEPARTMENT OF TRANSPORTATION
Caltrans

CONSULTANT FUNCTIONAL SUPERVISOR: JON COLLINS
CALCULATED-DESIGNED BY: JOHN KISSINGER
CHECKED BY: JON COLLINS
REVISED BY
DATE REVISED

LAST REVISION 07-17-14
DATE PLOTTED => 23-JUL-2014
TIME PLOTTED => 14:52

| Dist | COUNTY | ROUTE | POST MILES TOTAL PROJECT | SHEET No. | TOTAL SHEETS |
|---|---|---|---|---|---|
| 11 | SD | 5 | R29.1/R30.5 | 693 | 1012 |

REGISTERED CIVIL ENGINEER 05-23-14 DATE

07-21-14
PLANS APPROVAL DATE

REGISTERED PROFESSIONAL ENGINEER JON M. COLLINS No. C62090 Exp. 09/30/15 CIVIL STATE OF CALIFORNIA

*THE STATE OF CALIFORNIA OR ITS OFFICERS OR AGENTS SHALL NOT BE RESPONSIBLE FOR THE ACCURACY OR COMPLETENESS OF SCANNED COPIES OF THIS PLAN SHEET.*

CITY OF SAN DIEGO
525 B STREET
SUITE 7
SAN DIEGO, CA 92101

KIMLEY-HORN AND ASSOCIATES, INC.
401 B STREET, SUITE 600
SAN DIEGO, CA 92101

## NOTE:

ALL LOOPS SHOWN ARE PREFORMED.

## CONDUIT NOTES:

1. - 2"C, (SEE LIGHTING CITY STREET)
2. - 2"C, (SEE LIGHTING AND SIGN ILLUMINATION)
3. - 2"C, (SEE SIGNAL AND LIGHTING)
4. - 2"C, (SEE ELECTRIC SERVICE - IRRIGATION)
5. - 2"C, (SEE CCTV SYSTEM)

## LEGEND:

XX-XX — STANDARD PLAN SHEET NUMBER
XX — DETAIL NUMBER OR PULLBOX SIZE

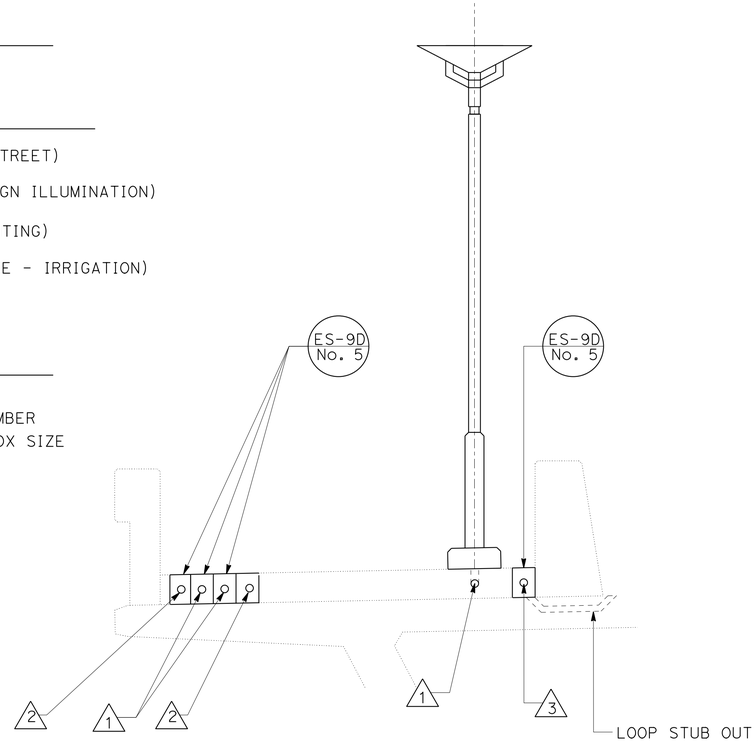


SOUTHERN SIDEWALK - GENESEE Ave OC
FACING WEST

GENESEE Ave
FACING WEST

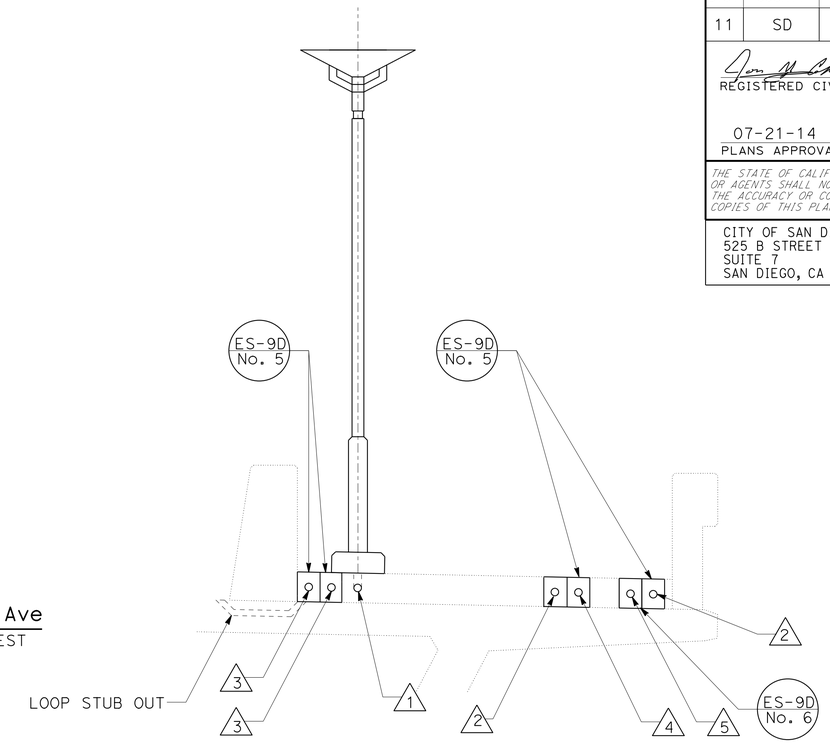


NORTHERN SIDEWALK - GENESEE Ave OC
FACING WEST

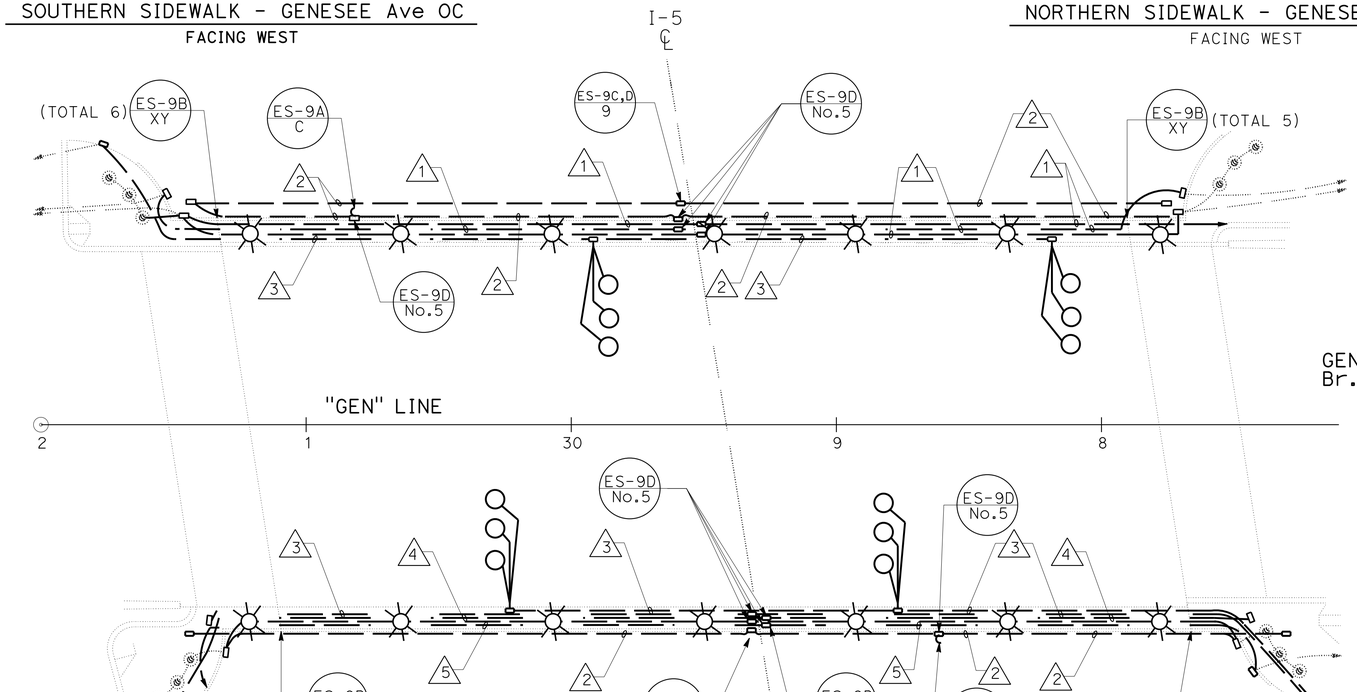


GENESEE Ave OC
Br. No. 57-1224

SAN DIEGO

*APPROVED FOR ELECTRICAL WORK ONLY*

NO SCALE

# BRIDGE ELECTRICAL

**E-15**

STATE OF CALIFORNIA - DEPARTMENT OF TRANSPORTATION
Caltrans

CONSULTANT FUNCTIONAL SUPERVISOR: JON COLLINS
CALCULATED-DESIGNED BY: JOHN KISSINGER
CHECKED BY: JON COLLINS
REVISED BY
DATE REVISED

LAST REVISION 07-17-14
DATE PLOTTED => 23-JUL-2014
TIME PLOTTED => 14:52

| Dist | COUNTY | ROUTE | POST MILES TOTAL PROJECT | SHEET No. | TOTAL SHEETS |
|---|---|---|---|---|---|
| 11 | SD | 5 | R29.1/R30.5 | 694 | 1012 |

REGISTERED CIVIL ENGINEER 05-23-14 DATE

07-21-14
PLANS APPROVAL DATE

REGISTERED PROFESSIONAL ENGINEER JON M. COLLINS No. C62090 Exp. 09/30/15 CIVIL STATE OF CALIFORNIA

*THE STATE OF CALIFORNIA OR ITS OFFICERS OR AGENTS SHALL NOT BE RESPONSIBLE FOR THE ACCURACY OR COMPLETENESS OF SCANNED COPIES OF THIS PLAN SHEET.*

CITY OF SAN DIEGO
525 B STREET
SUITE 7
SAN DIEGO, CA 92101

KIMLEY-HORN AND ASSOCIATES, INC.
401 B STREET, SUITE 600
SAN DIEGO, CA 92101

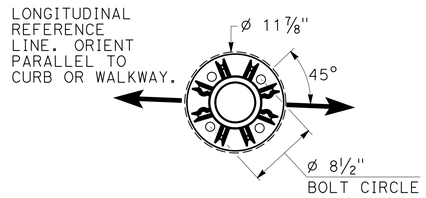


BASE PLATE DETAIL

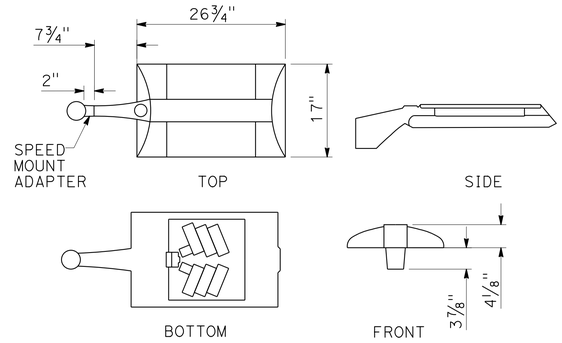


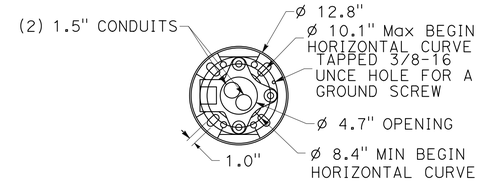


BASE PLATE DETAIL

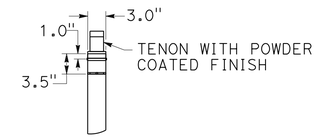


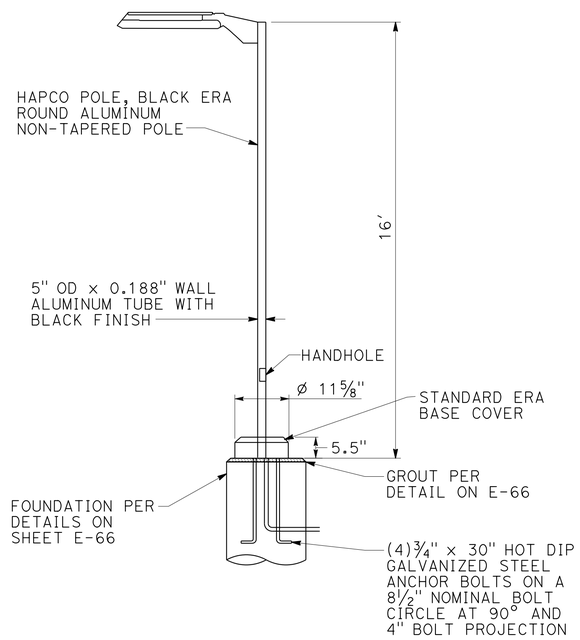


KIM LIGHTING ALTITUDE

96 W LED (TYPE 1)

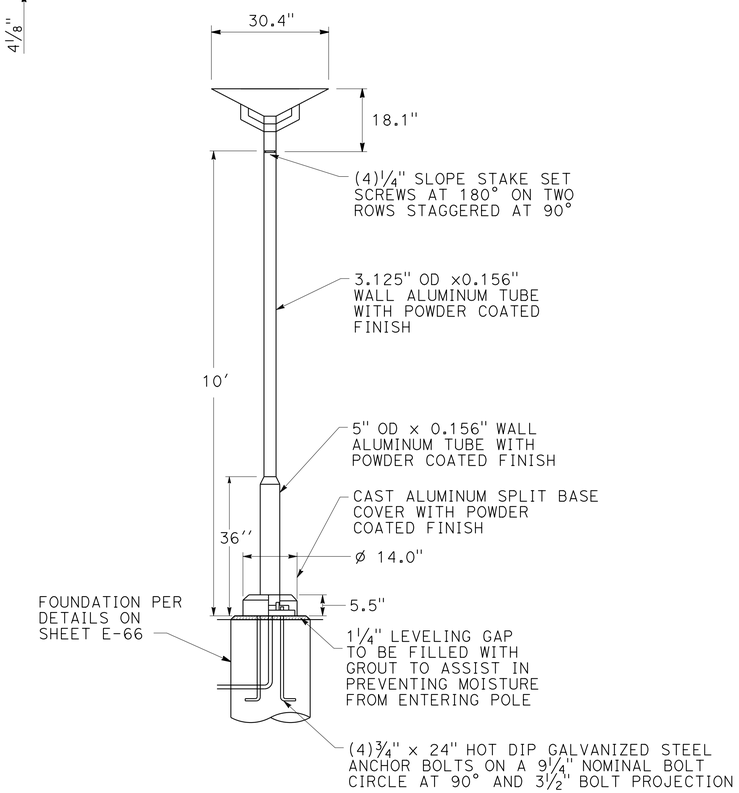


POULSEN KIPP LIGHT POLE DETAILS

60 W LED
(GROUND MOUNTED)

NOTES: (THIS SHEET ONLY)

1. SEE STRUCTURAL PLANS AND DETAILS FOR THE GENESEE Ave OC FOR INFORMATION ON INSTALLING LIGHT POLES ON THE BRIDGE SIDEWALK.

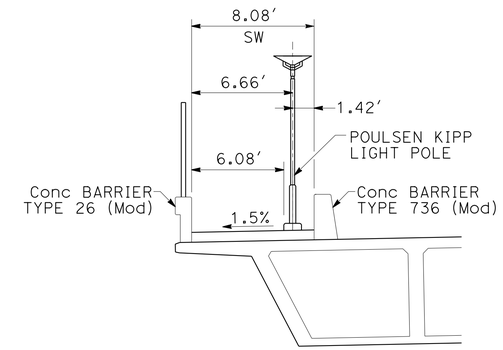


BRIDGE LIGHTING DETAIL

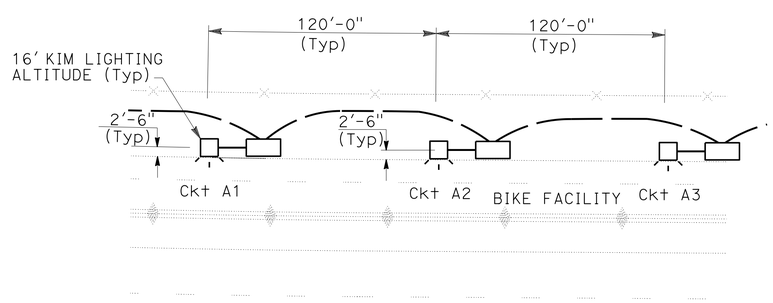


KIM LIGHTING ALTITUDE LAYOUT DETAIL FOR BIKE FACILITY

"P" Sta 39+80 TO Sta 90+20

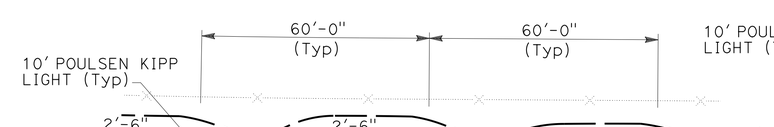


POULSEN KIPP LIGHTING LAYOUT DETAIL FOR BIKE FACILITY

"P" Sta 10+00 TO Sta 14+30
"P" Sta 26+30 to Sta 32+70

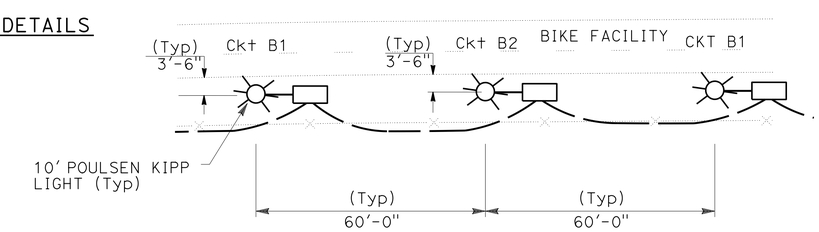


POULSEN KIPP LIGHTING LAYOUT DETAIL FOR BIKE FACILITY

"P" Sta 14+30 TO Sta 26+30

*APPROVED FOR ELECTRICAL WORK ONLY*

# LIGHTING (CITY STREET)
# LIGHTING (BIKE FACILITY)
# (ELECTRICAL DETAILS)

NO SCALE

**E-16**

| REVISED BY | DATE REVISED |
|---|---|
| JOHN KISSINGER | JON COLLINS |

CALCULATED-DESIGNED BY / CHECKED BY

CONSULTANT FUNCTIONAL SUPERVISOR: JON COLLINS

STATE OF CALIFORNIA - DEPARTMENT OF TRANSPORTATION

LAST REVISION 07-17-14 | DATE PLOTTED => 23-JUL-2014 | TIME PLOTTED => 14:52

| Dist | COUNTY | ROUTE | POST MILES TOTAL PROJECT | SHEET No. | TOTAL SHEETS |
|---|---|---|---|---|---|
| 11 | SD | 5 | R29.1/R30.5 | 695 | 1012 |

REGISTERED CIVIL ENGINEER 05-23-14 DATE

07-21-14
PLANS APPROVAL DATE

REGISTERED PROFESSIONAL ENGINEER JON M. COLLINS No. C62090 Exp. 09/30/15 CIVIL STATE OF CALIFORNIA

*THE STATE OF CALIFORNIA OR ITS OFFICERS OR AGENTS SHALL NOT BE RESPONSIBLE FOR THE ACCURACY OR COMPLETENESS OF SCANNED COPIES OF THIS PLAN SHEET.*

CITY OF SAN DIEGO
525 B STREET
SUITE 7
SAN DIEGO, CA 92101

KIMLEY-HORN AND ASSOCIATES, INC.
401 B STREET, SUITE 600
SAN DIEGO, CA 92101

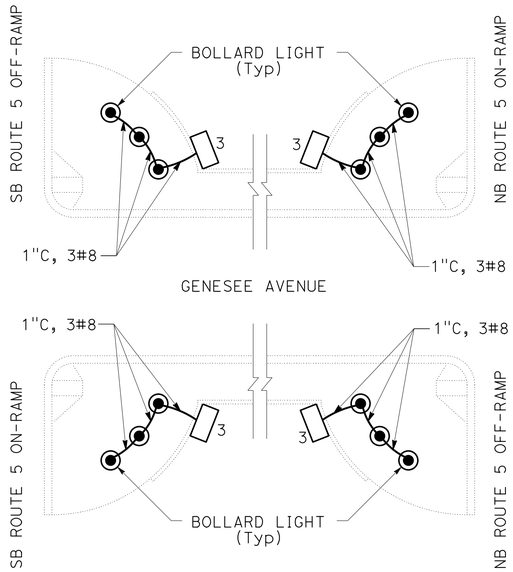


BOLLARD LIGHT LOCATION DETAIL
(PEDESTRIAN NODES)

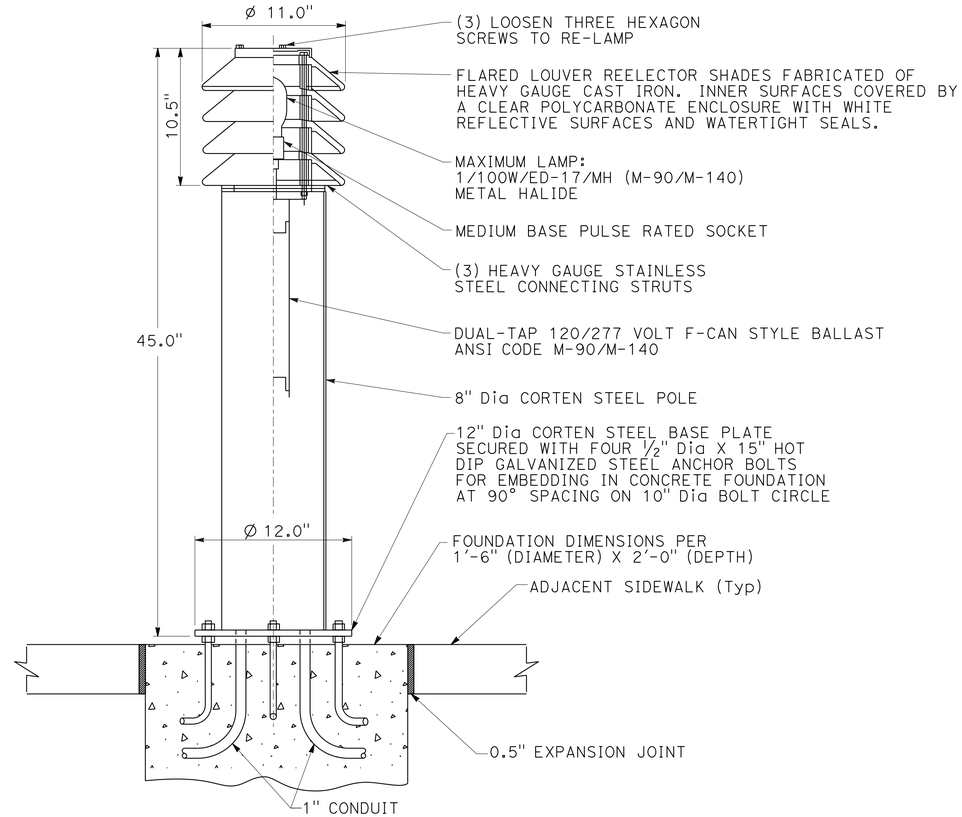


**BOLLARD LIGHT**

BOLLARD LIGHT FIXTURE DETAIL
100 W

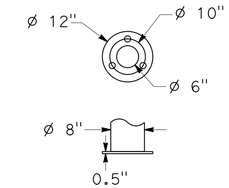


BASE PLATE DETAIL

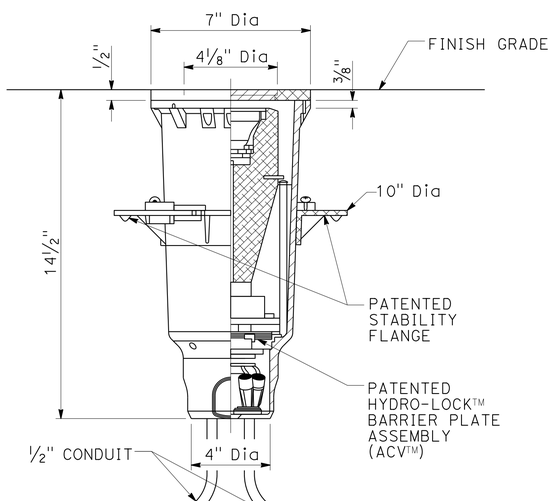


SIDE VIEW

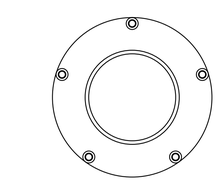

FACEPLATE

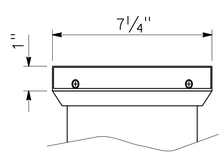


TOP SIDE VIEW

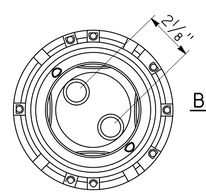


BOTTOM VIEW

UPLIGHT DETAIL
15 W

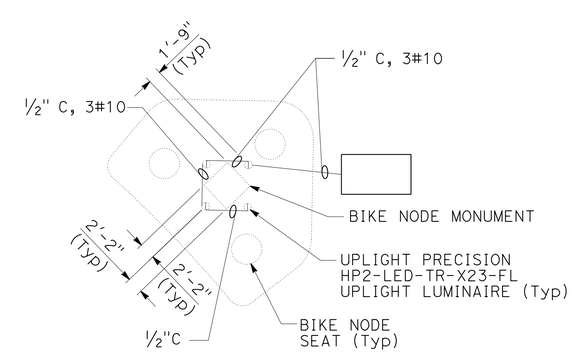


GENESEE SOUTH BIKE NODE DETAIL
(SOUTH OF GENESEE Ave)

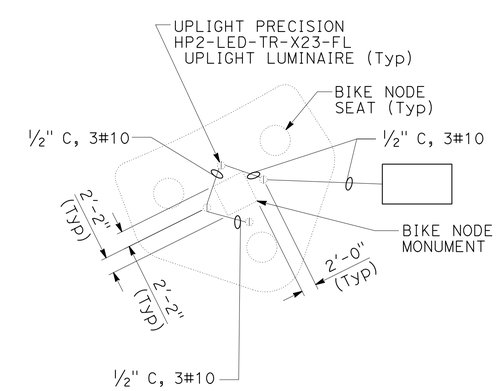


GENESEE NORTH BIKE NODE DETAIL
(NORTH OF GENESEE Ave)

**UPLIGHT**

*APPROVED FOR ELECTRICAL WORK ONLY*

NO SCALE

# LIGHTING (CITY STREET)
# LIGHTING (BIKE FACILITY)
# (ELECTRICAL DETAILS)

**E-17**

| REVISED BY | DATE REVISED |
|---|---|
| JOHN KISSINGER | JON COLLINS |

CALCULATED-DESIGNED BY / CHECKED BY

CONSULTANT FUNCTIONAL SUPERVISOR: JON COLLINS

STATE OF CALIFORNIA - DEPARTMENT OF TRANSPORTATION

Caltrans

LAST REVISION 07-17-14 | DATE PLOTTED => 23-JUL-2014 | TIME PLOTTED => 14:52

| Dist | COUNTY | ROUTE | POST MILES TOTAL PROJECT | SHEET No. | TOTAL SHEETS |
|---|---|---|---|---|---|
| 11 | SD | 5 | R29.1/R30.5 | 696 | 1012 |

REGISTERED CIVIL ENGINEER 05-23-14 DATE

07-21-14
PLANS APPROVAL DATE

REGISTERED PROFESSIONAL ENGINEER
JON M. COLLINS
No. C62090
Exp. 09/30/15
CIVIL
STATE OF CALIFORNIA

*THE STATE OF CALIFORNIA OR ITS OFFICERS OR AGENTS SHALL NOT BE RESPONSIBLE FOR THE ACCURACY OR COMPLETENESS OF SCANNED COPIES OF THIS PLAN SHEET.*

CITY OF SAN DIEGO
525 B STREET
SUITE 7
SAN DIEGO, CA 92101

KIMLEY-HORN AND ASSOCIATES, INC.
401 B STREET, SUITE 600
SAN DIEGO, CA 92101

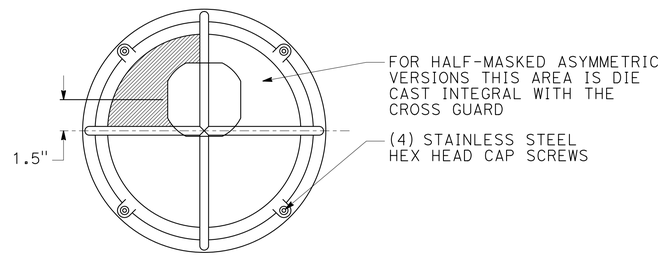


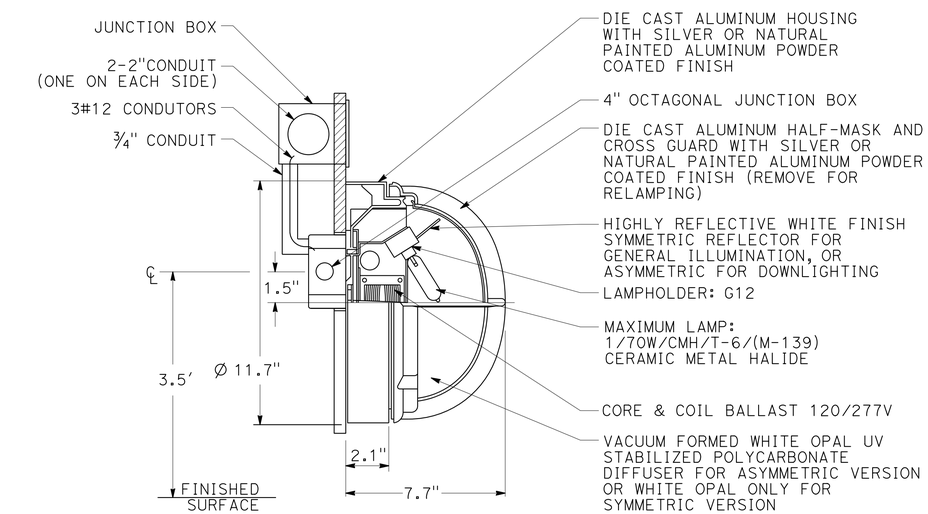


SKOT WALL LIGHT DETAILS

70 W

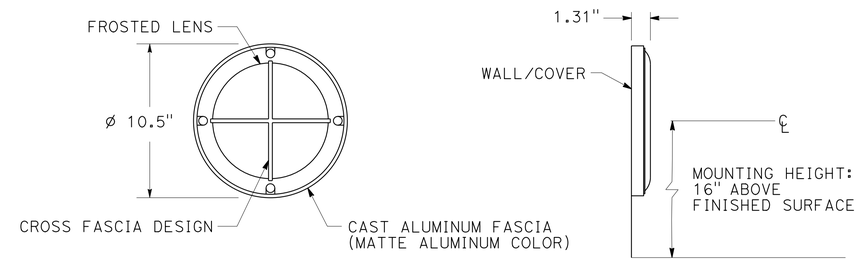


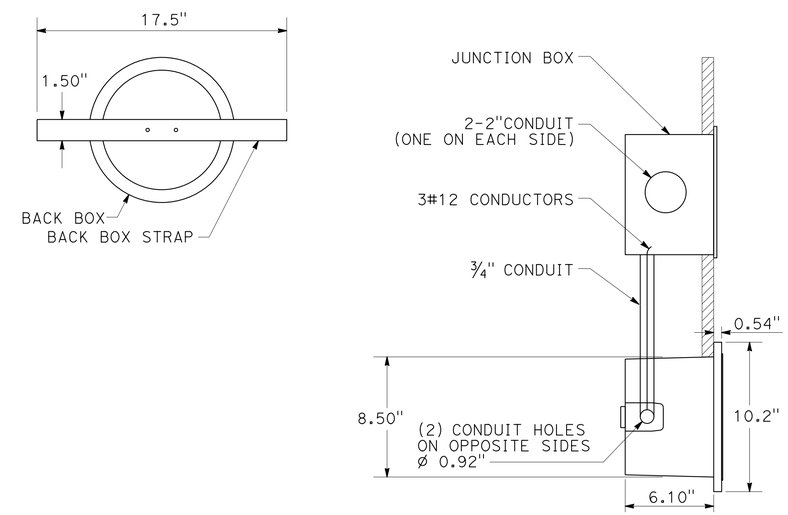


STEPLIGHT DETAILS

70 W

*APPROVED FOR ELECTRICAL WORK ONLY*

# LIGHTING (BIKE FACILITY) (ELECTRICAL DETAILS)

NO SCALE

**E-18**

STATE OF CALIFORNIA - DEPARTMENT OF TRANSPORTATION
Caltrans

CONSULTANT FUNCTIONAL SUPERVISOR: JON COLLINS
CALCULATED-DESIGNED BY: JOHN KISSINGER
CHECKED BY: JON COLLINS
REVISED BY
DATE REVISED

LAST REVISION 07-17-14
DATE PLOTTED => 23-JUL-2014
TIME PLOTTED => 14:52

| Dist | COUNTY | ROUTE | POST MILES TOTAL PROJECT | SHEET No. | TOTAL SHEETS |
|---|---|---|---|---|---|
| 11 | SD | 5 | R29.1/R30.5 | 697 | 1012 |

REGISTERED CIVIL ENGINEER 05-23-14 DATE

07-21-14
PLANS APPROVAL DATE

REGISTERED PROFESSIONAL ENGINEER
JON M. COLLINS
No. C62090
Exp. 09/30/15
CIVIL
STATE OF CALIFORNIA

*THE STATE OF CALIFORNIA OR ITS OFFICERS OR AGENTS SHALL NOT BE RESPONSIBLE FOR THE ACCURACY OR COMPLETENESS OF SCANNED COPIES OF THIS PLAN SHEET.*

CITY OF SAN DIEGO
525 B STREET
SUITE 7
SAN DIEGO, CA 92101

KIMLEY-HORN AND ASSOCIATES, INC.
401 B STREET, SUITE 600
SAN DIEGO, CA 92101

**SAN DIEGO**

NOTES:

1- SEE LIGHTING DETAILS AND STRUCTURAL PLANS FOR ADDITIONAL INFORMATION ON INSTALLATION AND PLACEMENT OF SKOT WALL LIGHTS AND STEPLIGHTS.

2- ALL DIMENSIONS ARE MEASURED ALONG THE FRONT FACE OF THE BARRIER.

3- FOR ACCURATE RIGHT OF WAY DATA, CONTACT RIGHT OF WAY ENGINEERING AT THE DISTRICT OFFICE.

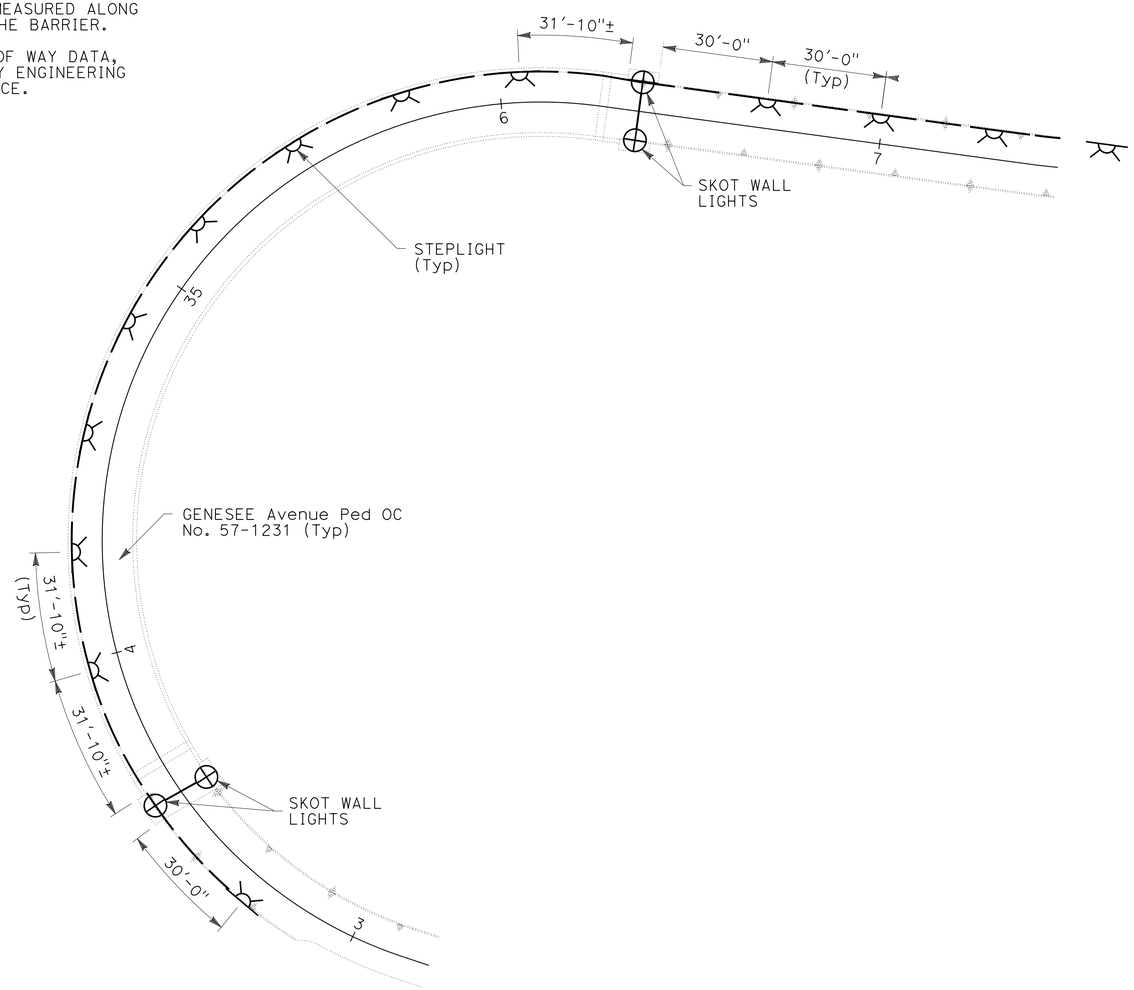


PEDESTRIAN OC LIGHTING LAYOUT DETAIL

*APPROVED FOR ELECTRICAL WORK ONLY*

NO SCALE

# LIGHTING (BIKE FACILITY) (ELECTRICAL DETAILS)

**E-19**

STATE OF CALIFORNIA - DEPARTMENT OF TRANSPORTATION
Caltrans

CONSULTANT FUNCTIONAL SUPERVISOR: JON COLLINS
CALCULATED-DESIGNED BY: JOHN KISSINGER
CHECKED BY: JON COLLINS
REVISED BY
DATE REVISED

LAST REVISION 07-17-14
DATE PLOTTED => 23-JUL-2014
TIME PLOTTED => 14:52

| Dist | COUNTY | ROUTE | POST MILES TOTAL PROJECT | SHEET No. | TOTAL SHEETS |
|---|---|---|---|---|---|
| 11 | SD | 5 | R29.1/R30.5 | 698 | 1012 |

REGISTERED CIVIL ENGINEER 05-23-14 DATE

PLANS APPROVAL DATE 07-21-14

REGISTERED PROFESSIONAL ENGINEER JON M. COLLINS No. C62090 Exp. 09/30/15 CIVIL STATE OF CALIFORNIA

*THE STATE OF CALIFORNIA OR ITS OFFICERS OR AGENTS SHALL NOT BE RESPONSIBLE FOR THE ACCURACY OR COMPLETENESS OF SCANNED COPIES OF THIS PLAN SHEET.*

CITY OF SAN DIEGO
525 B STREET
SUITE 7
SAN DIEGO, CA 92101

KIMLEY-HORN AND ASSOCIATES, INC.
401 B STREET, SUITE 600
SAN DIEGO, CA 92101

NOTE:

FOR ACCURATE RIGHT OF WAY DATA, CONTACT RIGHT OF WAY ENGINEERING AT THE DISTRICT OFFICE.

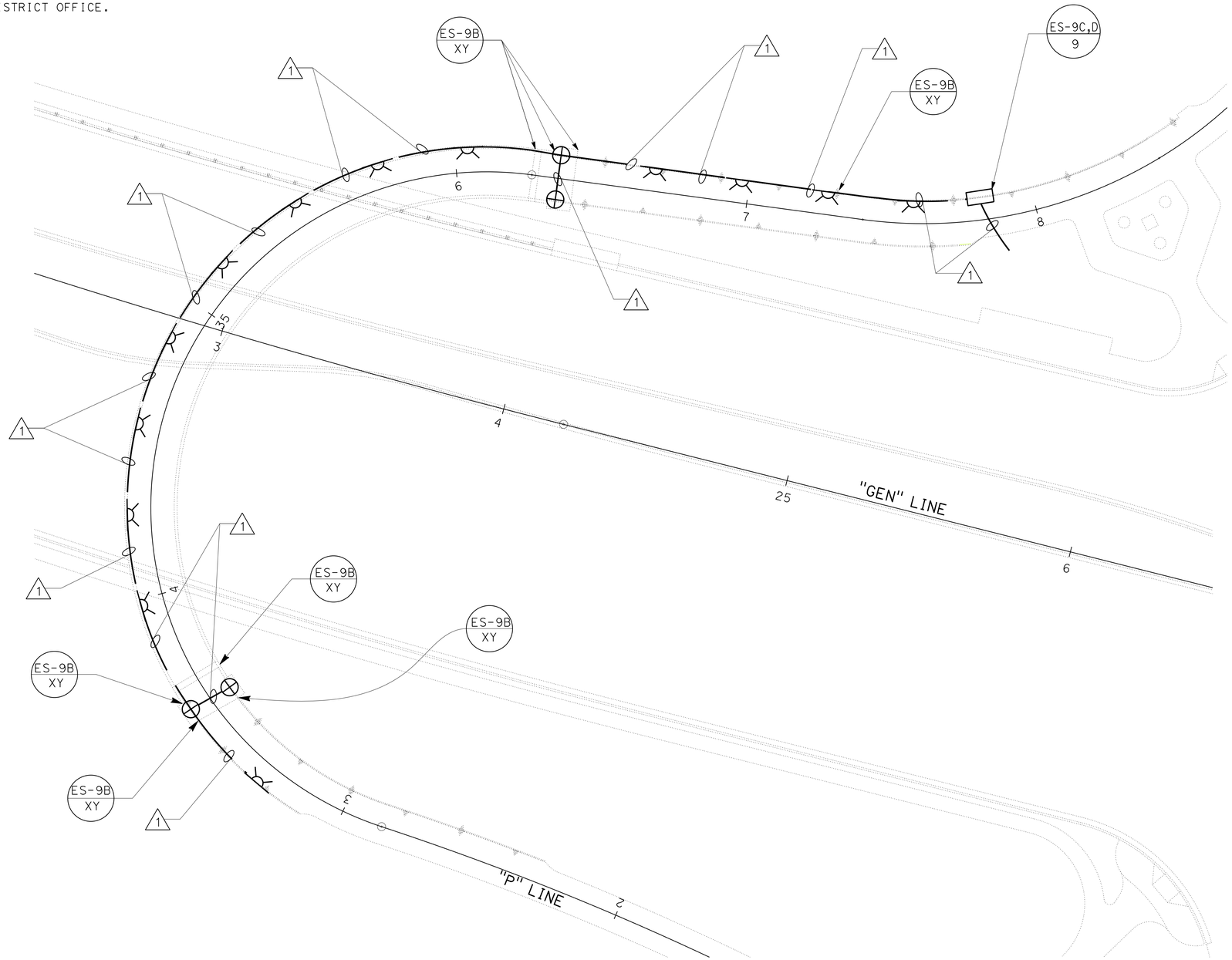


SAN DIEGO

CONDUIT NOTES:

1 - 2"C, (SEE LIGHTING AND SIGN ILLUMINATION)

LEGEND:

XX-XX — STANDARD PLAN SHEET NUMBER
XX — DETAIL NUMBER OR PULLBOX SIZE

PLAN
GENESEE Ave POC
Br No. 57-1231

*APPROVED FOR ELECTRICAL WORK ONLY*

# BRIDGE ELECTRICAL

SCALE: 1"=20'

**E-20**

STATE OF CALIFORNIA - DEPARTMENT OF TRANSPORTATION

Caltrans

CONSULTANT FUNCTIONAL SUPERVISOR: JON COLLINS

CALCULATED-DESIGNED BY: JOHN KISSINGER

CHECKED BY: JON COLLINS

REVISED BY

DATE REVISED

LAST REVISION 07-17-14

DATE PLOTTED => 23-JUL-2014
TIME PLOTTED => 14:52

| Dist | COUNTY | ROUTE | POST MILES TOTAL PROJECT | SHEET No. | TOTAL SHEETS |
|---|---|---|---|---|---|
| 11 | SD | 5 | R29.1/R30.5 | 699 | 1012 |

REGISTERED CIVIL ENGINEER 05-23-14 DATE

07-21-14
PLANS APPROVAL DATE

REGISTERED PROFESSIONAL ENGINEER JON M. COLLINS No. C62090 Exp. 09/30/15 CIVIL STATE OF CALIFORNIA

*THE STATE OF CALIFORNIA OR ITS OFFICERS OR AGENTS SHALL NOT BE RESPONSIBLE FOR THE ACCURACY OR COMPLETENESS OF SCANNED COPIES OF THIS PLAN SHEET.*

CITY OF SAN DIEGO
525 B STREET
SUITE 7
SAN DIEGO, CA 92101

KIMLEY-HORN AND ASSOCIATES, INC.
401 B STREET, SUITE 600
SAN DIEGO, CA 92101

**SAN DIEGO**

## CONDUIT NOTES:
(THIS SHEET ONLY)

1 - MDCS(2), 1 FO12

2 - Exist 1"C, 1 fo12, RC 1fo12, ADD 1 FO12

3 - 3"C, CAMERA CABLE

N 4 C - Exist 2"C, 2#6(CCTV)

5 - 2"C, 2#6(CCTV)

6 - 2"C, 3 OCC

7 - 2"C, 1 FO12

## NOTES: (THIS SHEET ONLY)

1 - REFER TO SHEET E-15 FOR CONDUIT PLACEMENT IN GENESEE Ave BRIDGE.

2 - 6(E)(T) PULL BOX, EXTEND PULL BOX 2" Min. BELOW BOTTOM OF CONDUIT. CONDUIT BENDS SHALL BE AT AN ANGLE OF 22.5°. PULL BOX COVER SHALL BE MARKED AS 'FIBER OPTIC'.

3 - FOR ACCURATE RIGHT OF WAY DATA, CONTACT RIGHT OF WAY ENGINEERING AT THE DISTRICT OFFICE.

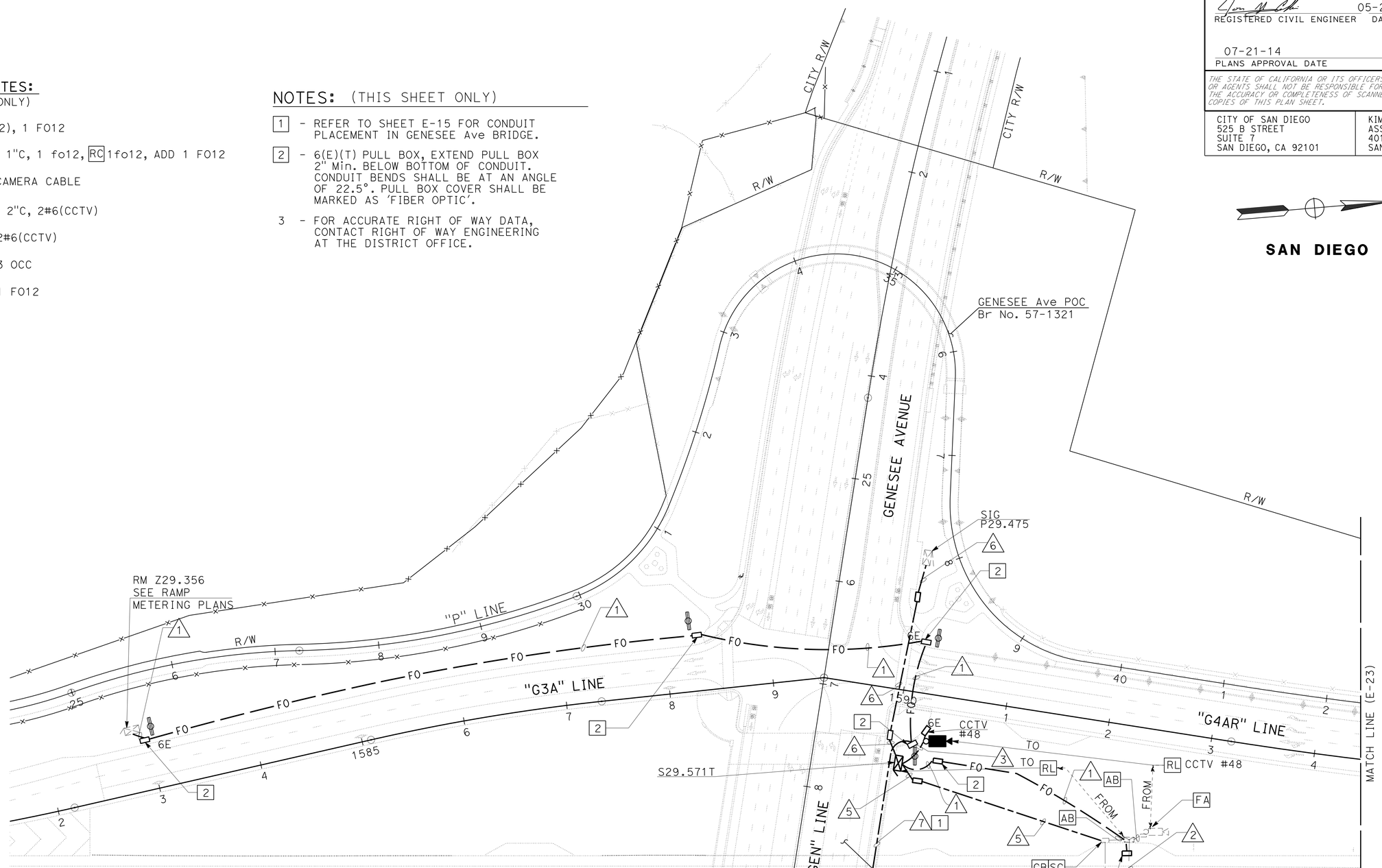


# CLOSED CIRCUIT TELEVISION SYSTEM

*APPROVED FOR ELECTRICAL WORK ONLY*

SCALE: 1"=50'

**E-21**

STATE OF CALIFORNIA - DEPARTMENT OF TRANSPORTATION
Caltrans

CONSULTANT FUNCTIONAL SUPERVISOR: JON COLLINS
CALCULATED-DESIGNED BY: JOHN KISSINGER
CHECKED BY: JON COLLINS
REVISED BY
DATE REVISED

LAST REVISION 07-17-14
DATE PLOTTED => 23-JUL-2014
TIME PLOTTED => 14:52

| Dist | COUNTY | ROUTE | POST MILES TOTAL PROJECT | SHEET No. | TOTAL SHEETS |
|---|---|---|---|---|---|
| 11 | SD | 5 | R29.1/R30.5 | 700 | 1012 |

REGISTERED CIVIL ENGINEER 05-23-14 DATE

07-21-14
PLANS APPROVAL DATE

REGISTERED PROFESSIONAL ENGINEER JON M. COLLINS No. C62090 Exp. 09/30/15 CIVIL STATE OF CALIFORNIA

*THE STATE OF CALIFORNIA OR ITS OFFICERS OR AGENTS SHALL NOT BE RESPONSIBLE FOR THE ACCURACY OR COMPLETENESS OF SCANNED COPIES OF THIS PLAN SHEET.*

CITY OF SAN DIEGO
525 B STREET
SUITE 7
SAN DIEGO, CA 92101

KIMLEY-HORN AND ASSOCIATES, INC.
401 B STREET, SUITE 600
SAN DIEGO, CA 92101

## CONDUIT NOTES:
(THIS SHEET ONLY)

1. MDCS(2), 1 FO12
2. Exist 1"C, 1 fo12, RC 1 fo12, ADD 1 FO12
3. MDCS(2), 2 FO12
4. MDCS(8), 1 FO72, 1 FO12
5. Exist 2"C, ADD 2 FO12, REMOVE 1 fo12
6. 2"C, 1 FO12
7. 2"C, 2#6 (CCTV)
8. N C Exist 2"C, 2#6 (cctv)

## NOTES: (THIS SHEET ONLY)

1. REFER TO SHEET E-15 FOR CONDUIT PLACEMENT IN GENESEE Ave BRIDGE.
2. 6(E)(T) PULL BOX, EXTEND PULL BOX 2" Min. BELOW BOTTOM OF CONDUIT. CONDUIT BENDS SHALL BE AT AN ANGLE OF 22.5°. PULL BOX COVER SHALL BE MARKED AS 'FIBER OPTIC'
3. SEE SIGNAL AND LIGHTING PLANS FOR INSTALLATION DETAILS
4. SEE INSTALLATION DETAILS ON SHEET E-4
5. FOR ACCURATE RIGHT OF WAY DATA, CONTACT RIGHT OF WAY ENGINEERING AT THE DISTRICT OFFICE.

SAN DIEGO

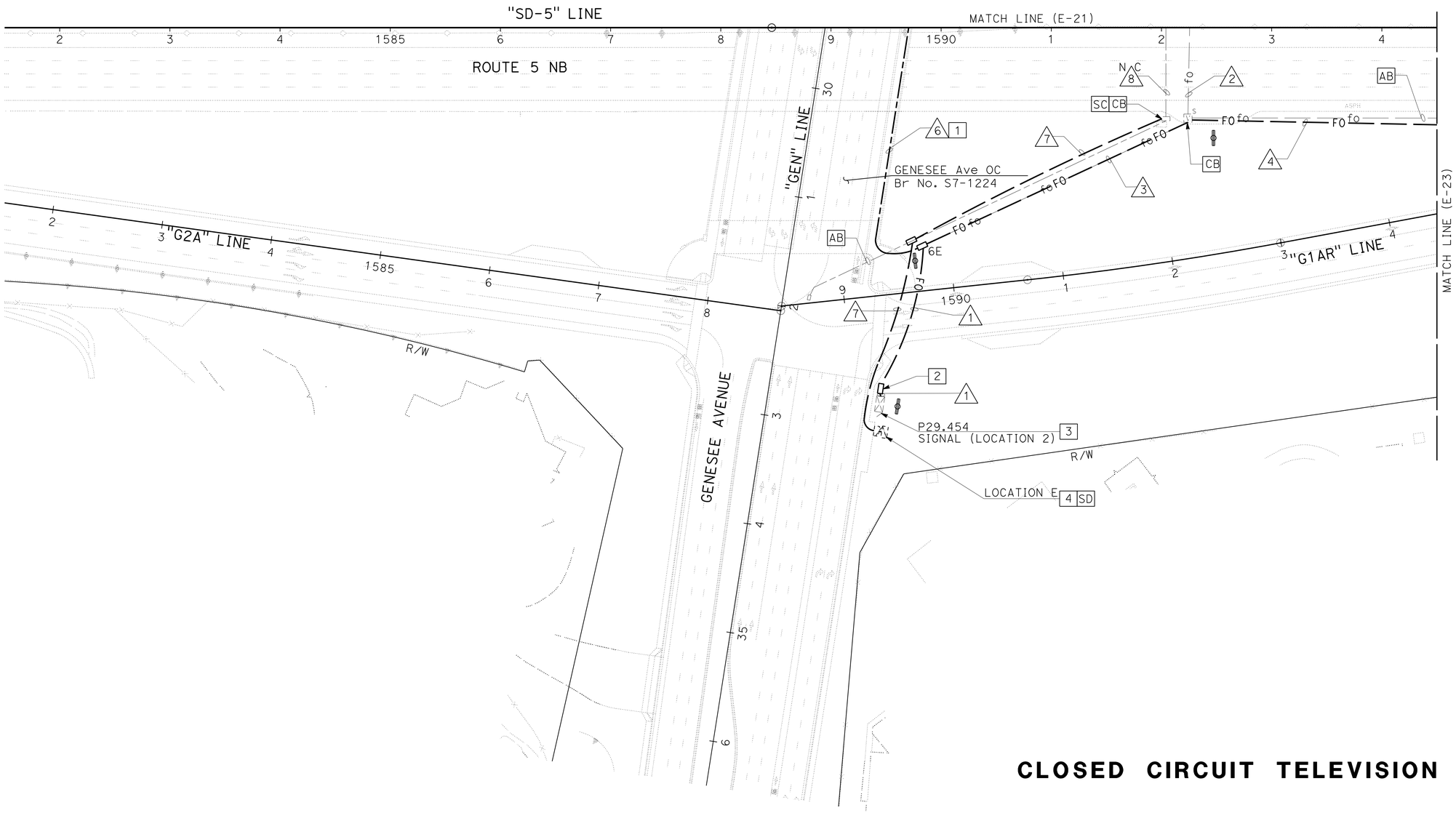


APPROVED FOR ELECTRICAL WORK ONLY

SCALE: 1"=50'

# CLOSED CIRCUIT TELEVISION SYSTEM

E-22

STATE OF CALIFORNIA - DEPARTMENT OF TRANSPORTATION
Caltrans

CONSULTANT FUNCTIONAL SUPERVISOR: JON COLLINS
CALCULATED-DESIGNED BY: JOHN KISSINGER
CHECKED BY: JON COLLINS
REVISED BY
DATE REVISED

LAST REVISION 07-17-14
DATE PLOTTED => 23-JUL-2014
TIME PLOTTED => 14:52