DIST	COUNTY	ROUTE	POST MILES TOTAL PROJECT	SHEET NO.	TOTAL SHEETS
10	Mer	99	0.0/4.6	501	607

REGISTERED CIVIL ENGINEER

October 5, 2007
PLANS APPROVAL DATE

REGISTERED PROFESSIONAL ENGINEER Efthymios Delis No. C51434 Exp. 6-30-08 CIVIL STATE OF CALIFORNIA

The State of California or its officers or agents shall not be responsible for the accuracy or completeness of electronic copies of this plan sheet.

To accompany plans dated 11-1-10

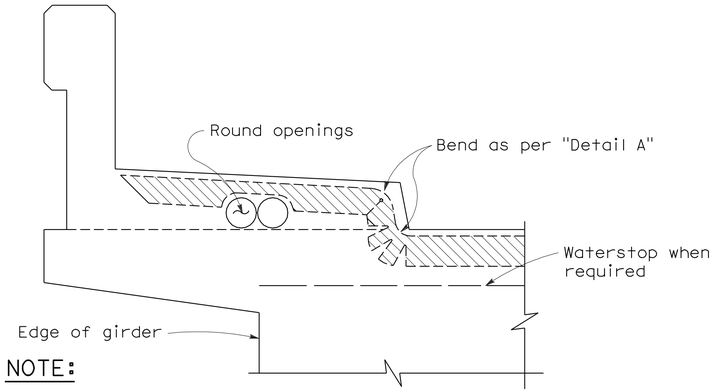

NOTE:

Type "B" seal shown. Type "A" seals to comform to the general path of seal shown, cuts for bending not required. Bend Type "A" seals 3" up into curb or barrier rail on only the low end of the seal.

CONCRETE BARRIER AND SIDEWALK

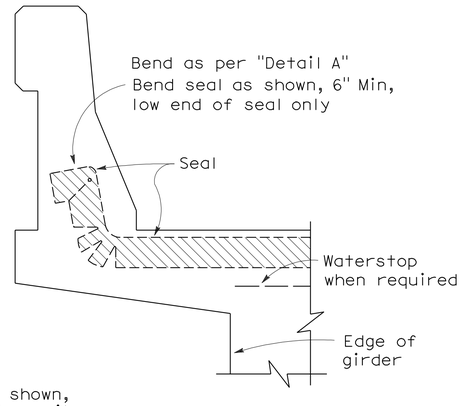

CONCRETE BARRIER

JOINT SEALS DETAILS

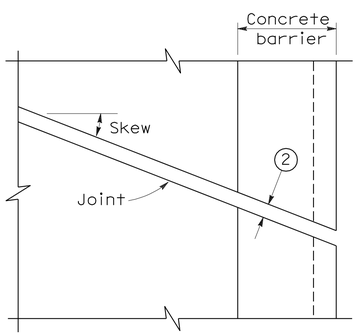

PLAN OF JOINT (SKEW ≤ 20°)

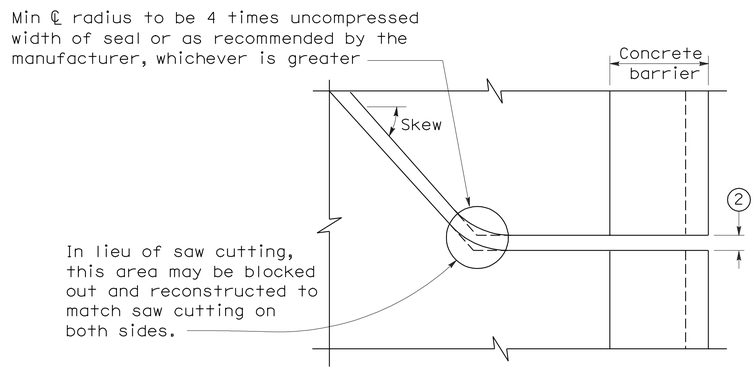

PLAN OF JOINT (SKEW > 20°)

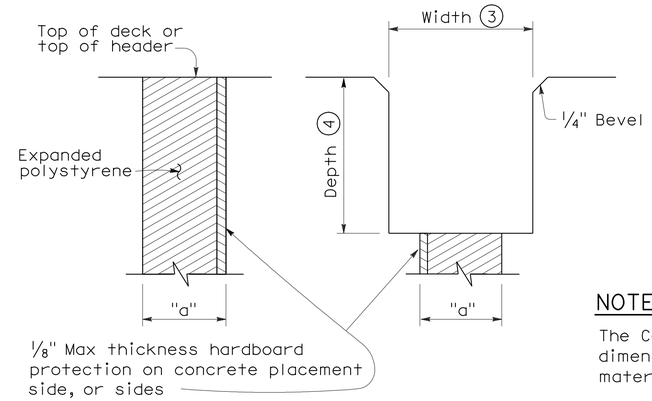

FORMING DETAIL SAWCUT DETAIL

NOTE:

The Contractor shall verify all controlling field dimensions before ordering or fabricatiing any material.

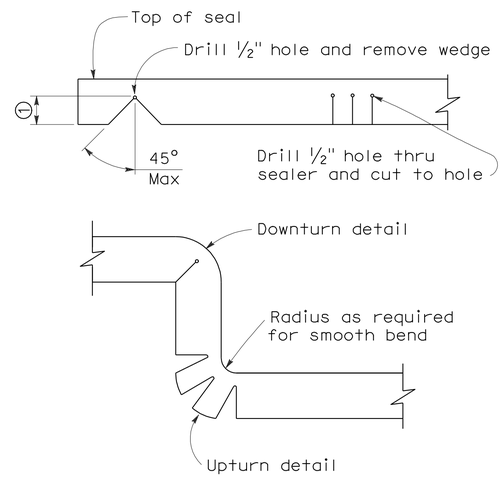

DETAIL A

NOTES:

1. Make smooth cuts from the bottom of seal to 1½" clear of top leaving at least one complete cell between the top of the cut and top of the seal. When necessary cut back of seal to clear conduit and round openings.
2. Opening in barrier to match width of sawn deck joint.
3. Sawcut groove widths shall be as ordered by the Engineer.
4. Depth of sawcut: Type A - Depth to be 2" minimum.
   Type B - Depth to be equal to or greater than the depth of seal measured along the contact surface, when compressed to minimum width position (W_2) plus dimensions shown.
5. MR (movement rating) as shown on other plan sheets.
6. Other depths must be approved by the Engineer.

DIMENSIONS "a" OF JOINT REQUIRED

Movement Rating (MR) 5	Bridge Type	"a" Dimension Deck Concrete Placed		
		Winter	Fall-Spring	Summer
2"	All except CIP/PS	1½"	1¼"	¾"
	CIP/PS	1¼"	1"	½"
1½"	All except CIP/PS	1¼"	1"	½"
	CIP/PS	1"	¾"	½"
1"	All except CIP/PS	1"	¾"	½"
	CIP/PS	¾"	½"	½"
½"	All except CIP/PS	¾"	¾"	½"
	CIP/PS	½"	½"	½"

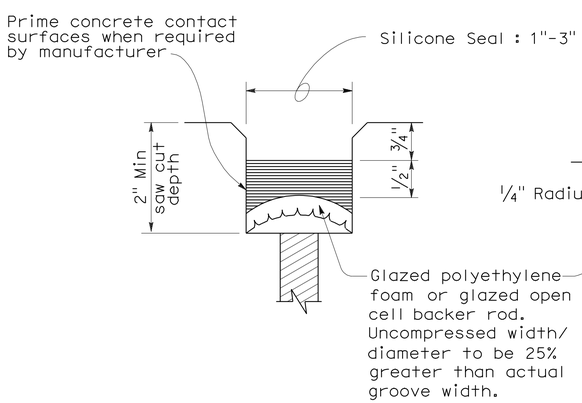

TYPE A SEAL

Movement rating : Silicone = 1" Max

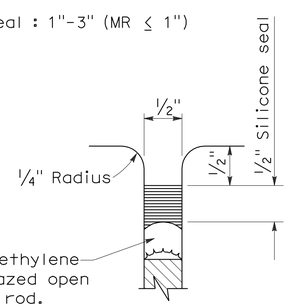

TYPE AL SEAL

Longitudinal joints only

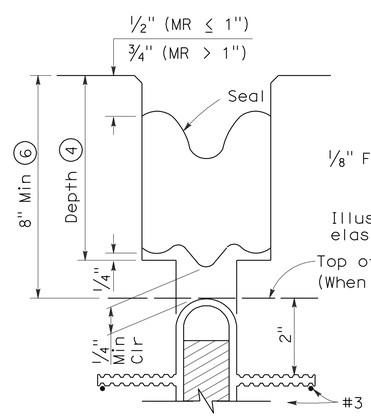

TYPE B JOINT SEAL
IN MINIMUM WIDTH POSITION (W_2)

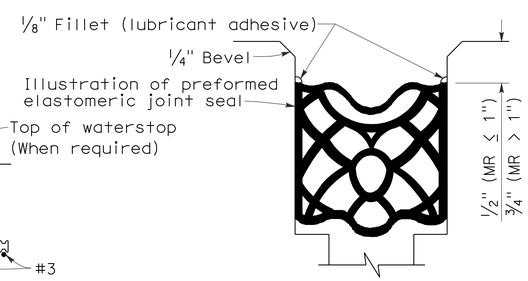

TYPE B SEAL

Movement Rating ≤ 2"

STATE OF CALIFORNIA
DEPARTMENT OF TRANSPORTATION

JOINT SEALS (MAXIMUM MOVEMENT RATING = 2")

NO SCALE

RSP B6-21 DATED OCTOBER 5, 2007 SUPERSEDES STANDARD PLAN B6-21 DATED MAY 1, 2006 - PAGE 258 OF THE STANDARD PLANS BOOK DATED MAY 2006.

REVISED STANDARD PLAN RSP B6-21

2006 REVISED STANDARD PLAN RSP B6-21

5-8-07

DIST	COUNTY	ROUTE	POST MILES TOTAL PROJECT	SHEET NO.	TOTAL SHEETS
10	Mer	99	0.0/4.6	502	607

REGISTERED ELECTRICAL ENGINEER

October 5, 2007
PLANS APPROVAL DATE

REGISTERED PROFESSIONAL ENGINEER Jeffery G. McRae No. E14512 Exp. 6-30-08 ELECTRICAL STATE OF CALIFORNIA

The State of California or its officers or agents shall not be responsible for the accuracy or completeness of electronic copies of this plan sheet.

To accompany plans dated 11-1-10

ELECTROLIERS

STANDARD TYPES
15, 15D
15 STRUCTURE
21, 21D STRUCTURE
30
31
32
35
36-20A

High mast light pole

Double Arm lighting standard

Existing electrolier

Electrolier foundation (Future installation)

NOTES:

1. Luminaires shall be 310 W HPS when installed on Type 21, 21D, 30, 31, 32, 35 and 36-20A Standards, unless otherwise specified. Luminaires shall be 200 W HPS when installed on other type standards or poles, unless otherwise specified.
2. Luminaires shall be the cutoff type, ANSI Type Ⅲ medium cutoff lighting distribution, unless otherwise specified.
3. Variations noted adjacent to symbol on project plans.

Electrolier (see project notes or project plans)

Luminaire on wood pole

STANDARD NOTES:

- AB — Abandon. If applied to conduit, remove conductors.
- BC — Install pull box in existing conduit run.
- BP — Pedestrian barricade, type as indicated on plan.
- CB — Install conduit into existing pull box.
- CC — Connect new and existing conduit. Remove existing conductors and install conductors as indicated.
- CF — Conduit to remain for future use. Remove conductors. Install pull wire or rope.
- DH — Detector handhole.
- FA — Foundation to be abandoned.
- IS — Install sign on signal mast arm.
- NS — No slip base on standard.
- PEC — Photoelectric control.
- PEU — Photoelectric unit.
- RC — Equipment or material to be removed and become the property of the Contractor.
- RE — Remove electrolier, fuses and ballast. Tape ends of conductors.
- RL — Relocate equipment.
- RR — Remove and reuse equipment.
- RS — Remove and salvage equipment.
- SC — Splice new to existing conductors.
- SD — Service disconnect.
- SF — Standard to remain for future use. Remove luminaire, pole conductors, fuses and ballast.
- TSP — Telephone service point.

ABBREVIATIONS AND EQUIPMENT DESIGNATIONS

PROPOSED	EXISTING	
BBS	bbs	Battery backup system
BC	bc	Bolt circle
C	C	Conduit
CCTV	cctv	Closed circuit television
CKT	ckt	Circuit
CMS	cms	Changeable message sign
DLC	dlc	Loop detector lead-in cable
EMS	ems	Extinguishable message sign
EVC	evc	Emergency vehicle cable
EVD	evd	Emergency vehicle detector
FB	fb	Flashing beacon
FBCA	fbca	Flashing beacon control assembly
FBS	fbs	Flashing beacon with slip base
FO	fo	Fiber optic
G	G	Ground (Equipment Grounding Conductor)
GFCI	GFCI	Ground fault circuit interrupt
HAR	har	Highway advisory radio
HEX	hex	Hexagonal
HPS	hps	High pressure sodium
IISNS	iisns	Internally illuminated street name sign
ISL	isl	Induction sign lighting
LED	led	Light emitting diode
LMA	lma	Luminaire mast arm
LPS	lps	Low pressure sodium
LTG	ltg	Lighting
LUM	lum	Luminaire
MAT	mat	Mast arm mounting vehicle signal faces, top attachment
MAS	mas	Mast arm mounting vehicle signal faces, side attachment
MAS-4A	mas-4A	Mast arm mounting vehicle signal faces, side attachment - 4 signal section
MAS-4B	mas-4B	
MAS-4C	mas-4C	
MAS-5A	mas-5A	Mast arm mounting vehicle signal faces, side attachment - 5 signal section
MAS-5B	mas-5B	
MC	mc	Mercury contactor
M/M	m/m	Multiple to multiple transformer
MT	mt	Conduit with pull wire or rope only
MTG	mtg	Mounting
	mv	Mercury vapor lighting fixture
N	N	Neutral (Grounded Conductor)
NC	NC	Normally closed
NO	NO	Normally open
PB	pb	Pull box
PEC	pec	Photoelectric control (Type Ⅰ, Ⅱ, Ⅲ, Ⅳ or Ⅴ as shown)
PED	ped	Pedestrian
PEU	peu	Photoelectric unit
PPB	ppb	Pedestrian push button
RL		Relocated equipment
RM	rm	Ramp metering
SB	sb	Slip base
SIC	sic	Signal interconnect cable
SIG	sig	Signal
SMA	sma	Signal mast arm
SNS	sns	Street name sign
SP	sp	Service point
TDC	tdc	Telephone demarcation cabinet
TMS	tms	Traffic monitoring station
TOS	tos	Traffic Operations System
VEH	veh	Vehicle
XFMR	xfmr	Transformer
COMM	comm	Communication
RWIS	rwis	Roadway weather information system

SOFFIT AND WALL MOUNTED LUMINAIRES

Pendant, 70 W HPS unless otherwise specified.

Flush, 70 W HPS unless otherwise specified.

Wall surface, 70 W HPS unless otherwise specified.

Existing soffit or wall luminaire to remain unmodified.

Existing soffit or wall luminaire to be modified as specified.

NOTE:

Arrow indicates "street side" of luminaire.

STATE OF CALIFORNIA
DEPARTMENT OF TRANSPORTATION

ELECTRICAL SYSTEMS (SYMBOLS AND ABBREVIATIONS)

NO SCALE

RSP ES-1A DATED OCTOBER 5, 2007 SUPERSEDES STANDARD PLAN ES-1A DATED MAY 1, 2006 - PAGE 400 OF THE STANDARD PLANS BOOK DATED MAY 2006.

REVISED STANDARD PLAN RSP ES-1A

2006 REVISED STANDARD PLAN RSP ES-1A

DIST	COUNTY	ROUTE	POST MILES TOTAL PROJECT	SHEET NO.	TOTAL SHEETS
10	Mer	99	0.0/4.6	503	607

REGISTERED ELECTRICAL ENGINEER

October 5, 2007
PLANS APPROVAL DATE

REGISTERED PROFESSIONAL ENGINEER Jeffery G. McRae No. E14512 Exp. 6-30-08 ELECTRICAL STATE OF CALIFORNIA

The State of California or its officers or agents shall not be responsible for the accuracy or completeness of electronic copies of this plan sheet.

To accompany plans dated 11-1-10

CONDUIT

PROPOSED	EXISTING	
		Lighting Conduit, unless otherwise indicated or noted
		Traffic signal conduit
C	c	Communication conduit
T	t	Telephone conduit
F	f	Fire alarm conduit
FO	fo	Fiber optic conduit
		Conduit termination (RSP ES-9A C)
R	r	Conduit riser in/on structure or service pole

SERVICE EQUIPMENT

PROPOSED	EXISTING	
OH	oh	Overhead lines
U	U	Wood pole "U" indicates utility owned
		Pole guy with anchor
		Utility transformer - ground mounted
III		Service equipment enclosure type
		Service equipment enclosure door indicates front of enclosure
T	t	Telephone demarcation cabinet

POLE-MOUNTED SERVICE DESIGNATION

Type of installation

TYPE H SERVICE - 28'-10" ← Pole height above grade

ILLUMINATED OVERHEAD SIGN

PROPOSED	EXISTING	
		Overhead sign - Single post
		Overhead sign - Two post
		Overhead sign - Mounted on structure
		Overhead sign with electrolier

SIGNAL EQUIPMENT

PROPOSED	EXISTING	
		Pedestrian signal face
		Pedestrian push button post
		Pedestrian barricade
		Vehicle signal face (with backplate, 3-Section: red, yellow and green)
		Vehicle signal face with angle visors
PV	PV	Modifications of basic symbols: "L" indicates all non-arrow sections louvered "LG" indicates louvered green section only "PV" indicates 12" programmed visibility sections "8" indicates all 8" sections (only when specified)
		Type 15TS and Vehicle signal face
		Vehicle signal face with red, yellow and green left arrow sections
		Vehicle signal face with red and yellow sections and up green arrow
		Vehicle signal face (5 Section) with red, yellow and green sections and yellow and green right arrows
		Type 1 Standard and attached vehicle signal faces
		Standard with signal mast arm only and attached vehicle signal faces and internally illuminated street name sign
		Type 33 Standard, Left-turn vehicle signal face and sign
		Standard with luminaire and signal mast arms and attached vehicle signal faces
		Cantilever flashing beacon Type 9 Frame, with a sign unless otherwise specified or indicated
		Type 15-FBS Standard with two vehicle signal face sections with lens, backplate and visor with a sign
R	Y	Flashing beacon. One vehicle signal face section with lens, backplate and visor. "R" indicates red indication, "Y" indicates yellow indication
		Controller assembly. Door indicates front of cabinet

SIGNAL EQUIPMENT Cont

PROPOSED	EXISTING	
		Guard post
		Type 1 Standard with "Meter On" sign
		Emergency Vehicle detector

NOTES:

1. All signal sections shall be 12" unless shown otherwise.
2. Signal heads shall be provided with backplates unless shown otherwise.
3. Signal indication shall be LED.

STATE OF CALIFORNIA
DEPARTMENT OF TRANSPORTATION

ELECTRICAL SYSTEMS (SYMBOLS AND ABBREVIATIONS)

NO SCALE

RSP ES-1B DATED OCTOBER 5, 2007 SUPERCEDES STANDARD PLAN ES-1B DATED MAY 1, 2006 - PAGE 401 OF THE STANDARD PLANS BOOK DATED MAY 2006.

REVISED STANDARD PLAN RSP ES-1B

2006 REVISED STANDARD PLAN RSP ES-1B

DIST	COUNTY	ROUTE	POST MILES TOTAL PROJECT	SHEET NO.	TOTAL SHEETS
10	Mer	99	0.0/4.6	504	607

REGISTERED ELECTRICAL ENGINEER

October 5, 2007
PLANS APPROVAL DATE

REGISTERED PROFESSIONAL ENGINEER Jeffery G. McRae No. E14512 Exp. 6-30-08 ELECTRICAL STATE OF CALIFORNIA

The State of California or its officers or agents shall not be responsible for the accuracy or completeness of electronic copies of this plan sheet.

To accompany plans dated 11-1-10

2006 REVISED STANDARD PLAN RSP ES-1C

EQUIPMENT IDENTIFICATION

ILLUMINATED SIGN IDENTIFICATION NUMBER:

Sign No. 12345 — Sign number - Place on post or structure

10 ISL SCI 1.0

- 1.0 — Transformer rating (kVA)
- SCI — Lighting control type
- ISL — Number and type of fixtures

Do NOT place on standard or structure

ELECTROLIER OR EQUIPMENT IDENTIFICATION NUMBER:

12345 - 15'-0"

- 15'-0" — Mast arm length, if shown. Do not place on standard or structure.
- 12345 — Equipment number - Place on standard or structure. Existing equipment numbers are shown in parenthesis

CONDUIT AND CONDUCTOR IDENTIFICATION:

1½"C, 2#10, 15#14, 2 DLC

- 2#10, 15#14, 2 DLC — Number and size of conductors and cables
- 1½"C — Size of conduit in inches

Ø1, Ø2, Ø2P, etc.	Traffic phase identification for signal faces, detectors and phase diagrams
1 2 3	Project note numbers
A B C	Equipment description, installation or item numbers
1 2 3	Conduit run numbers

SIGNAL AND LIGHTING STANDARD (TYPICAL DESIGNATION):

19A - 3 - 100

- 100 — Wind velocity = 100 mph
- 3 — Case 3 arm loading
- 19A — Standard type
- Standard Plan sheet number
- Detail number or letter

MISCELLANEOUS EQUIPMENT

PROPOSED	EXISTING	
CMS	cms	Changeable message sign
		Closed circuit television camera
		Highway advisory radio pole and antenna
EMS	ems	Extinguishable message sign
M V	m v	Detection device M = Microwave sensor V = Video image sensor

WIRING DIAGRAM LEGEND

P	Pole
CB	Circuit breaker
A	Ampere
V	Volt
M	Metered
UM	Unmetered
NB	Neutral bus
GB	Ground bus
G	Equipment grounding conductor
N	Grounded conductor (Neutral)

- External conductor
- Conductor or bus
- Tie point
- Contactor coil
- Contactor, Contact NO
- Terminal blocks
- Contactor, Contact NC
- Enclosure bond
- Grounding electrode
- Circuit breaker
- Receptacle

PULL BOXES

PROPOSED	EXISTING	
		Pull box-No. 5 unless otherwise indicated or noted.
3	9A(21)	Pull box-Additional designations or descriptions

3 = No. 3½ pull box
5 = No. 5 pull box
6 = No. 6 pull box
7 = No. 7 (Ceiling pull box)
8 = No. 8 (Pendant soffit pull box)
9 = No. 9 pull box
9A = No. 9A pull box

(C) = Communications pull box
(E) = Pull box with extension
(S) = Sprinkler control pull box
(21) = Anchor bolts and conduit for future installation of Type 21 Standard
(T) = Traffic pull box

VEHICLE DETECTORS

5 J 9 U

- U = Upper, L = Lower
- Slot number in input file
- Input file (I or J)
- Phase

PROPOSED	EXISTING	
		Type A detector loop. Outline of sawcut shown.
		Type B detector loop. Outline of sawcut shown.
		Type C detector loop. Outline of sawcut shown.
		Type D detector loop. Outline of sawcut shown.
		Type E detector loop. Outline of sawcut shown.
		Type Q detector loop. Outline of sawcut shown.
		Magnetic detector
DH	dh	Detector handhole
		Microwave or video detection zone

STATE OF CALIFORNIA
DEPARTMENT OF TRANSPORTATION

ELECTRICAL SYSTEMS (SYMBOLS AND ABBREVIATIONS)

NO SCALE

RSP ES-1C DATED OCTOBER 5, 2007 SUPERCEDES STANDARD PLAN ES-1C DATED MAY 1, 2006 - PAGE 402 OF THE STANDARD PLANS BOOK DATED MAY 2006.

REVISED STANDARD PLAN RSP ES-1C

DIST	COUNTY	ROUTE	POST MILES TOTAL PROJECT	SHEET NO.	TOTAL SHEETS
10	Mer	99	0.0/4.6	505	607

REGISTERED ELECTRICAL ENGINEER

October 5, 2007
PLANS APPROVAL DATE

REGISTERED PROFESSIONAL ENGINEER
Jeffery G. McRae
No. E14512
Exp. 6-30-08
ELECTRICAL
STATE OF CALIFORNIA

The State of California or its officers or agents shall not be responsible for the accuracy or completeness of electronic copies of this plan sheet.

To accompany plans dated 11-1-10

2006 REVISED STANDARD PLAN RSP ES-2C

NOTES-TYPE III SERVICE EQUIPMENT ENCLOSURES:

1. Service equipment enclosure and metering equipment shall meet the requirements of the service utility. The meter area shall have a sealable, lockable, weathertight cover that can be removed without the use of tools.

2. Service equipment enclosures shall be factory wired and conform to NEMA standards.

3. Dimensions of service equipment enclosures shall meet the requirements of the service utility.

4. The dead front panels on Type III service equipment enclosures shall have a continuous stainless steel or aluminum piano hinge. The panel in front of the breakers shall be secured with a latch or captive screws. No live parts shall be mounted on the dead front panel.

5. The exterior door shall have provisions for padlocking. The padlock hole shall be a minimum diameter of 7/16".

6. Enclosures housing transformers of more than one kVA shall have effective screened ventilation louver of not less than 50 square inches. Screen shall be stainless steel No. 304, with a No. 10 size mesh. Framed screen shall be secured with at least four bolts.

7. Fasteners on the exterior of the enclosure shall be vandal-resistant and shall not be removable from the exterior. Exterior screws, nuts, bolts and washers shall be stainless steel.

8. Landing lugs for incoming service conductors shall be compatible with either copper or aluminum conductors sized to suit the conductors shown on the plan. Landing lugs shall be copper or tin-plated aluminum. Neutral bus shall be rated for 125 A and be suitable for copper or aluminum conductors unless otherwise specified. The terminal shall include but not be limited to:

   a) Incoming terminals (landing lugs)
   b) Neutral lugs
   c) Solid neutral terminal strip

9. At least 6 standard single pole circuit breaker spaces, 3/4" nominal, shall be provided for branch circuits. Circuit breaker interiors shall be copper. Interiors of enclosure shall accept plug-in or cable-in/cable-out circuit breakers.

10. Control wiring shall be 600 V, 14 stranded machine tool wire. Where subject to flexing, 19 strand wire shall be used.

11. Main bus shall be rated for 125 A and shall be tin-plated copper.

12. A plastic laminated wiring diagram shall be provided with brass mounting eyelets and attached to the inside of the enclosure and the wiring diagram shall be affixed to the interior with a UL or ETL approved method.

13. An engraved phenolic nameplate on the dead front panel indicating the function of each circuit or device shall be installed with stainless steel rivets or stainless steel screws:

    a) Adjacent to the breaker or device with character size a minimum of 1/8".

    b) At the top of the exterior door panel indicating State system number, voltage level and number of phases with character size a minimum of 3/16".

14. The plan shows the approximate location of devices within the enclosure. Components may be rearranged, however, the "working" clearances within the service equipment enclosure shall be maintained.

15. In unpaved areas a raised portland cement concrete pad 2'-0" x 4" x width of foundation shall be constructed in front of new service equipment enclosure installation. Pad shall be set to elevation of foundation.

16. Foundation shall extend 2" minimum beyond edge of service equipment enclosure.

17. Internal bus, where shown, is typical only. Alternative design of proposed service equipment enclosure shall be submitted to the Engineer for approval.

18. Plug-in circuit breakers may be mounted in the vertical or horizontal position. Cable-in/cable-out circuit breakers shall be mounted in the vertical position.

19. Type III-AF and Type III-BF service equipment enclosures shall have the meter viewing windows located on the front side of the service equipment enclosures.

20. Type III-AR and Type III-BR service equipment enclosures shall be similarly constructed as Type III-AF and Type III-BF respectively, except the meter viewing windows shall be located on the back side of the service equipment enclosures.

21. Minimum clearance shall be required for front and back of service equipment enclosure per National Electrical Code, Article 110.26, "Spaces About Electric Equipment (600 Volts, Nominal, or Less)."

STATE OF CALIFORNIA
DEPARTMENT OF TRANSPORTATION

ELECTRICAL SYSTEMS (SERVICE EQUIPMENT NOTES TYPE III SERIES)

NO SCALE

RSP ES-2C DATED OCTOBER 5, 2007 SUPERCEDES STANDARD PLAN ES-2C
DATED MAY 1, 2006 - PAGE 405 OF THE STANDARD PLANS BOOK DATED MAY 2006.

REVISED STANDARD PLAN RSP ES-2C

DIST	COUNTY	ROUTE	POST MILES TOTAL PROJECT	SHEET NO.	TOTAL SHEETS
10	Mer	99	0.0/4.6	506	607

REGISTERED ELECTRICAL ENGINEER

October 5, 2007
PLANS APPROVAL DATE

REGISTERED PROFESSIONAL ENGINEER Jeffery G. McRae No. E14512 Exp. 6-30-08 ELECTRICAL STATE OF CALIFORNIA

The State of California or its officers or agents shall not be responsible for the accuracy or completeness of electronic copies of this plan sheet.

To accompany plans dated 11-1-10

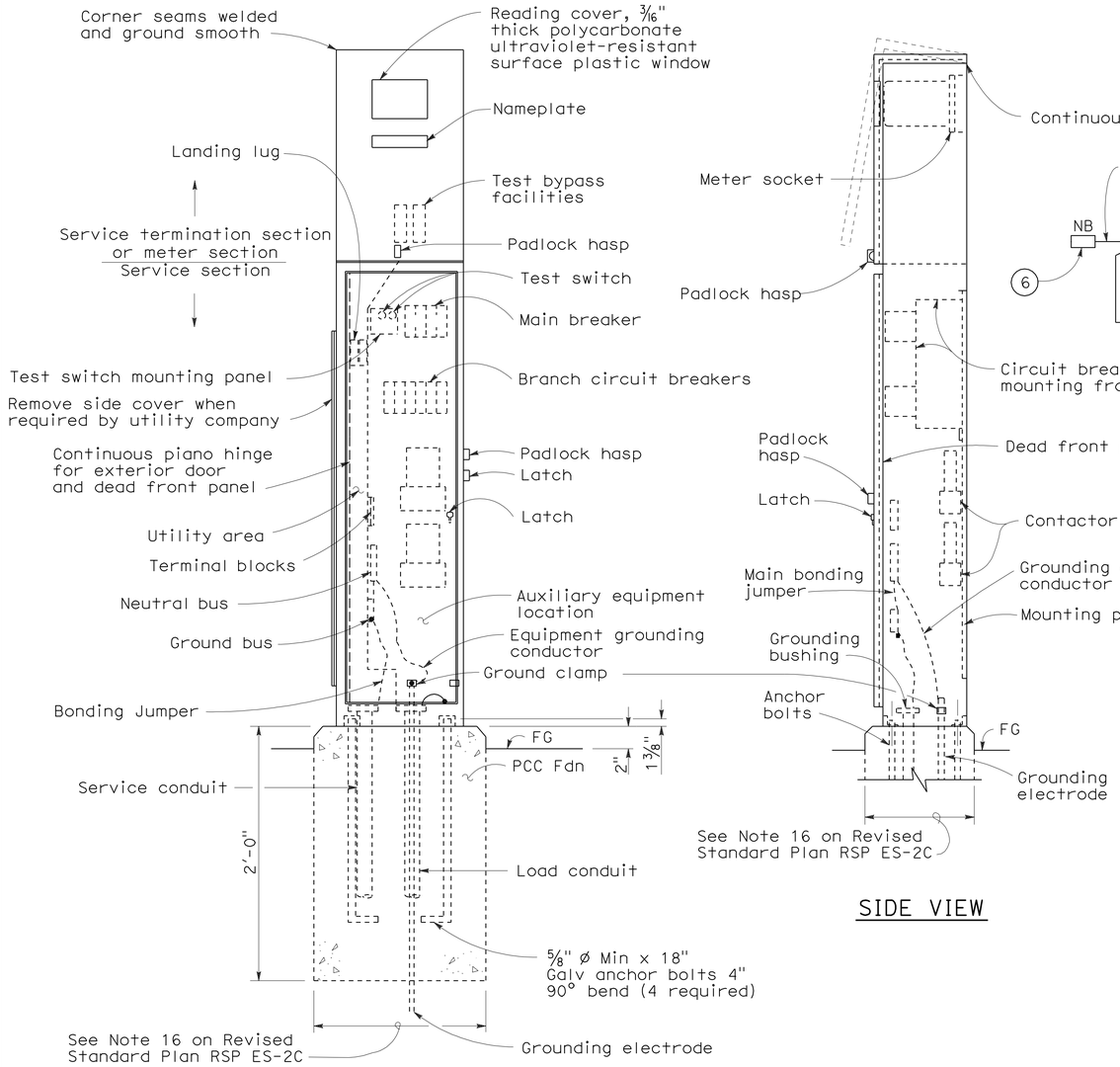

TYPE III-AF SERVICE EQUIPMENT ENCLOSURE (TYPICAL)

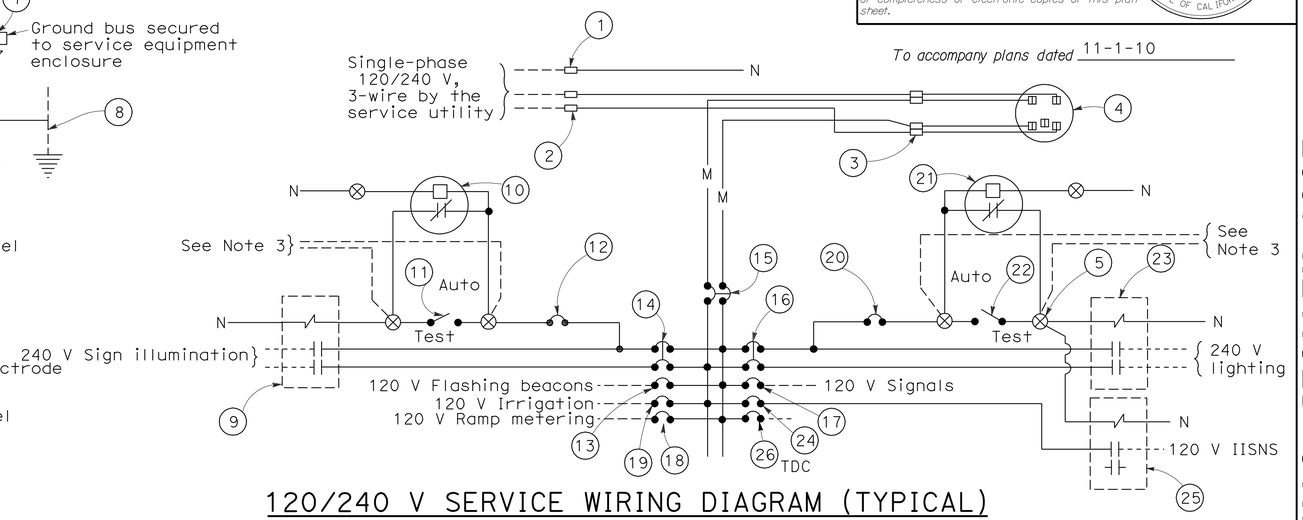

120/240 V SERVICE WIRING DIAGRAM (TYPICAL)

TYPE III-A SERVICE (120/240 V) EQUIPMENT LEGEND

ITEM No.	COMPONENT	NAME PLATE DESCRIPTION	ITEM No.	COMPONENT	NAME PLATE DESCRIPTION
1	Neutral lug		14	30 A, 240 V, 2P, CB	Sign Illumination
2	Landing lug (Note 6)		15	100 A, 240 V, 2P, CB	Main Breaker
3	Test bypass facility		16	30 A, 240 V, 2P, CB	Lighting
4	Meter socket and support		17	50 A, 120 V, 1P, CB	Signals
5	Terminal blocks		18	30 A, 120 V, 1P, CB	Ramp Metering
6	Neutral bus		19	20 A, 120 V, 1P, CB	Irrigation
7	Ground bus		20	15 A, 120 V, 1P, CB	Lighting Control
8	Grounding electrode		21	Photoelectric unit (Note 7)	
9	30 A, 2PNO Contactor	Sign Illumination	22	15 A, 1P, Test switch	Lighting Test Switch
10	Photoelectric unit (Note 7)		23	60 A, 2PNO Contactor	Lighting
11	15 A, 1P, Test switch	Sign Illumination Test Switch	24	15 A, 120 V, 1P, CB	IISNS
12	15 A, 120 V, 1P, CB	Sign Illumination Control	25	30 A, 2PNO Contactor	IISNS
13	15 A, 120 V, 1P, CB	Flashing Beacon	26	20 A, 120 V, 1P, CB	Telephone Demarcation Cabinet

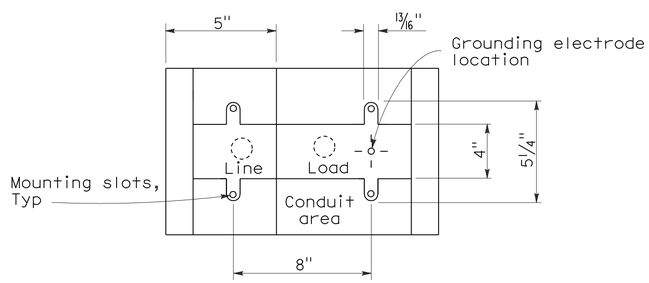

BASE FOR TYPE III-A SERVICE EQUIPMENT ENCLOSURE

NOTES: (FOR SERVICE EQUIPMENT ENCLOSURE)

1. Voltage ratings of service equipment shall conform to the service voltages indicated on the plans.
2. Unless otherwise indicated on the plans, service equipment items shall be provided for each service equipment enclosure as shown.
3. Connect to remote test switch mounted on lighting standards, sign post or structure when required.
4. Items No. 1 and 6 shall be isolated from the service equipment enclosure.
5. Meter sockets shall be 5 clip type.
6. The landing lug shall be suitable for multiple conductors.
7. Type V photoelectric control shall be used unless otherwise indicated on the plans.

STATE OF CALIFORNIA
DEPARTMENT OF TRANSPORTATION

ELECTRICAL SYSTEMS (SERVICE EQUIPMENT AND TYPICAL WIRING DIAGRAM, TYPE III-A SERIES)

NO SCALE

RSP ES-2D DATED OCTOBER 5, 2007 SUPERCEDES STANDARD PLAN ES-2D DATED MAY 1, 2006 - PAGE 406 OF THE STANDARD PLANS BOOK DATED MAY 2006.

REVISED STANDARD PLAN RSP ES-2D

2006 REVISED STANDARD PLAN RSP ES-2D

7-10-07

DIST	COUNTY	ROUTE	POST MILES TOTAL PROJECT	SHEET NO.	TOTAL SHEETS
10	Mer	99	0.0/4.6	507	607

REGISTERED ELECTRICAL ENGINEER

October 5, 2007
PLANS APPROVAL DATE

REGISTERED PROFESSIONAL ENGINEER
Jeffery G. McRae
No. E14512
Exp. 6-30-08
ELECTRICAL
STATE OF CALIFORNIA

The State of California or its officers or agents shall not be responsible for the accuracy or completeness of electronic copies of this plan sheet.

To accompany plans dated 11-1-10

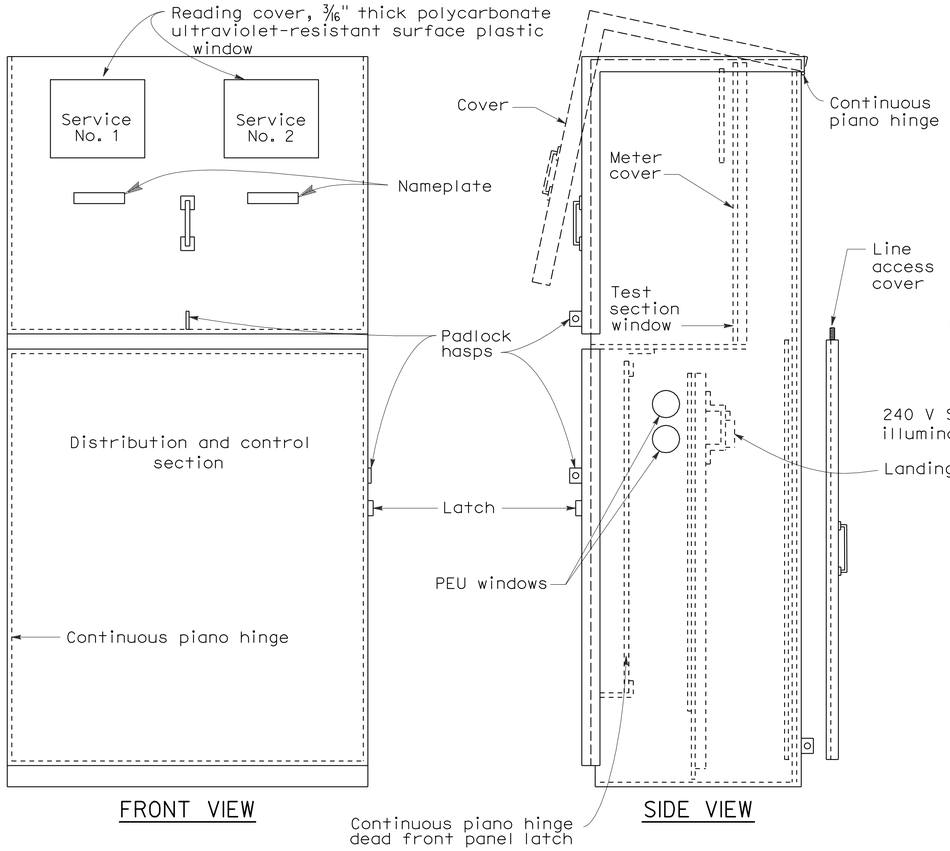

TYPE III-CF SERVICE EQUIPMENT ENCLOSURE WITH PROVISIONS FOR TWO 100 A METERS (TYPICAL)

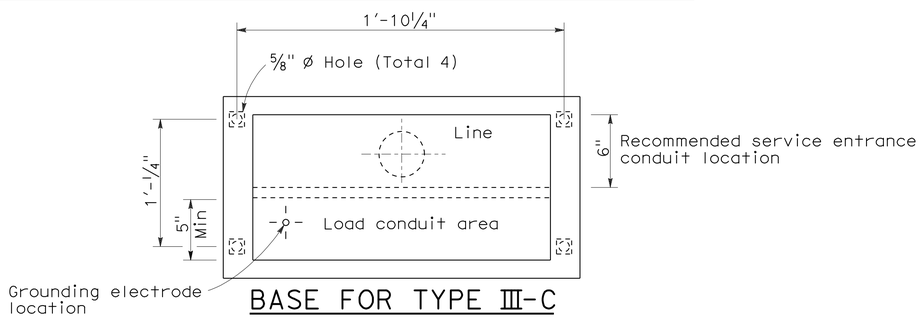

BASE FOR TYPE III-C SERVICE EQUIPMENT ENCLOSURE

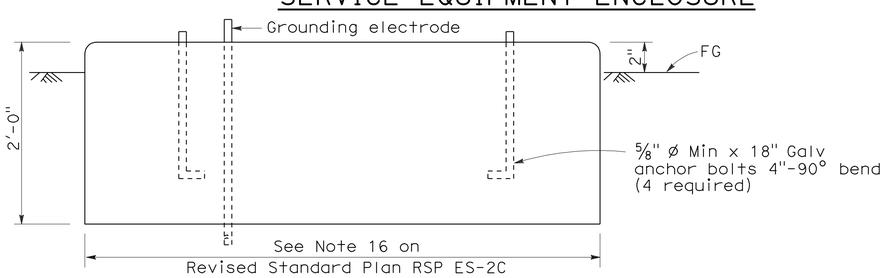

FOUNDATION DETAIL

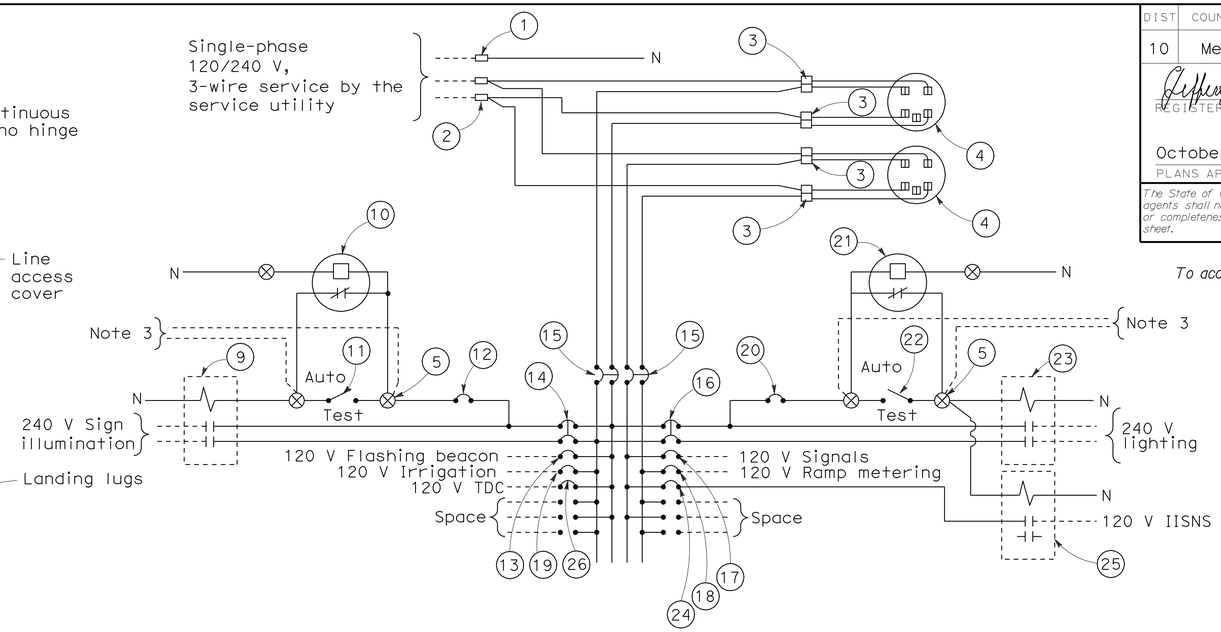

120/240 V SERVICE WIRING DIAGRAM (TYPICAL)

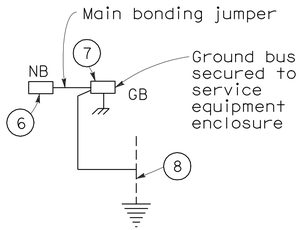

TYPE III-C SERVICE (120/240 V) EQUIPMENT LEGEND

ITEM No.	COMPONENT	NAME PLATE DESCRIPTION	ITEM No.	COMPONENT	NAME PLATE DESCRIPTION
1	Neutral lug		14	30 A, 240 V, 2P, CB	Sign Illumination
2	Landing lug (Note 6)		15	100 A, 240 V, 2P, CB	Main Breaker
3	Test bypass facility		16	30 A, 240 V, 2P, CB	Lighting
4	Meter socket and support		17	50 A, 120 V, 1P, CB	Signals
5	Terminal blocks		18	30 A, 120 V, 1P, CB	Ramp Metering
6	Neutral bus		19	20 A, 120 V, 1P, CB	Irrigation
7	Ground bus		20	15 A, 120 V, 1P, CB	Lighting Control
8	Grounding electrode		21	Photoelectric unit (Note 7)	
9	30 A, 2PNO, Contactor	Sign Illumination	22	15 A, 1P, Test switch	Lighting Control
10	Photoelectric unit (Note 7)		23	60 A, 2PNO Contactor	Lighting
11	15 A, 1P, Test switch	Sign Illumination Test Switch	24	15 A, 120 V, 1P, CB	IISNS
12	15 A, 120 V, 1P, CB	Sign Illumination Control	25	30 A, 2PNO Contactor	IISNS
13	15 A, 120 V, 1P, CB	Flashing Beacon	26	20 A, 120 V, 1P, CB	Telephone Demarcation Cabinet

NOTES: (FOR SERVICE EQUIPMENT ENCLOSURE)

1. Voltage ratings of service equipment shall conform to the service voltages indicated on the plans.
2. Unless otherwise indicated on the plans, service equipment items shall be provided for each service equipment enclosure as shown.
3. Connect to remote test switch mounted on lighting standards, sign post or structure when required.
4. Items No. 1 and 6 shall be isolated from the service equipment enclosure.
5. Meter sockets shall be 5 clip type.
6. The landing lug shall be suitable for multiple conductors.
7. Type V photoelectric control shall be used unless otherwise indicated on the plans.

STATE OF CALIFORNIA
DEPARTMENT OF TRANSPORTATION

ELECTRICAL SYSTEMS (SERVICE EQUIPMENT AND TYPICAL WIRING DIAGRAM TYPE III-C SERIES)

NO SCALE

RSP ES-2F DATED OCTOBER 5, 2007 SUPERCEDES STANDARD PLAN ES-2F DATED MAY 1, 2006 - PAGE 408 OF THE STANDARD PLANS BOOK DATED MAY 2006.

REVISED STANDARD PLAN RSP ES-2F

2006 REVISED STANDARD PLAN RSP ES-2F

8-17-07

DIST	COUNTY	ROUTE	POST MILES TOTAL PROJECT	SHEET NO.	TOTAL SHEETS
10	Mer	99	0.0/4.6	508	607

REGISTERED ELECTRICAL ENGINEER

October 5, 2007
PLANS APPROVAL DATE

REGISTERED PROFESSIONAL ENGINEER Jeffery G. McRae No. E14512 Exp. 6-30-08 ELECTRICAL STATE OF CALIFORNIA

The State of California or its officers or agents shall not be responsible for the accuracy or completeness of electronic copies of this plan sheet.

To accompany plans dated 11-1-10

LOOP INSTALLATION PROCEDURE

1. Loops shall be centered in lanes.
2. Saw slots in pavement for loop conductors as shown in details.
3. Distance between side of loop and a lead-in saw cut from adjacent detectors shall be 2'-0" minimum. Distance between lead-in saw cuts shall be 6" minimum.
4. Bottom of saw slot shall be smooth with no sharp edges.
5. Slots shall be washed until clean, blown out and thoroughly dried before installing loop conductors.
6. Adjacent loops on the same sensor unit channel shall be wound in opposite directions.
7. Identify and tag loop circuit pairs in the pull box with loop number, start (S) and finish (F) of conductor. Identify and tag lead-in-cable with sensor number and phase.
8. Install loop conductor in slot using a 3/16" to 1/4" thick wood paddle. Hold loop conductors with wood paddles (at the bottom of the sawed slot) during sealant placement.
9. No more than 2 twisted pairs shall be installed in one sawed slot.
10. Allow additional 5'-0" of slack length of conductor for the lead-in run to pull box.
11. The additional length of each conductor for each loop shall be twisted together into a pair (6 turns per 3'-4" minimum) before being placed in the slot and conduit leading to pull box.
12. Test each loop circuit for continuity, circuit resistance and insulation resistance at the pull box before filling slots.
13. Fill slots as shown in details.
14. Splice loop conductors to lead-in-cable. Splices shall be soldered.
15. End of lead-in-cable and Type 2 loop conductor shall be waterproofed prior to installing in conduit to prevent moisture from entering the cable.
16. Lead-in-cable shall not be spliced between the pull box and the controller cabinet terminals.
17. Test each loop circuit for continuity, circuit resistance and insulation resistance at the controller cabinet location.
18. Where loop conductors are not to be spliced to a lead-in-cable, the ends of the conductors shall be taped and waterproofed with electrical insulating coating.

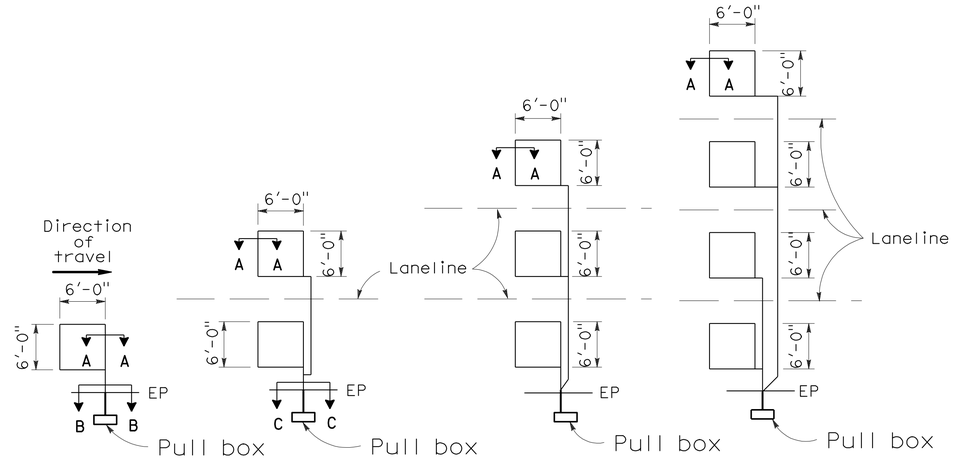

TYPE 1A INSTALLATION | TYPE 2A INSTALLATION | TYPE 3A INSTALLATION | TYPE 4A INSTALLATION

SAWCUT DETAILS

(Type A loop detector configurations illustrated)

1. 1A thru 4A = 1 Type A loop configuration in each lane.
2. 1B thru 4B = 1 Type B loop configuration in each lane.
3. 1C = 1 Type C loop configuration entering lanes as required.
4. 1D thru 4D = 1 Type D loop configuration in each lane.
5. 1E thru 4E = 1 Type E loop configuration in each lane.
6. 1Q thru 4Q = 1 Type Q loop configuration in each lane. (Use Type A, B, C, D, E or Q loop detector configurations only when specified or shown on plans)

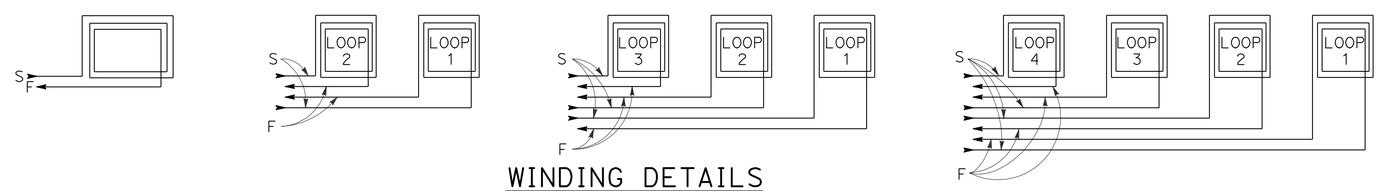

WINDING DETAILS

See Notes 6 and 7

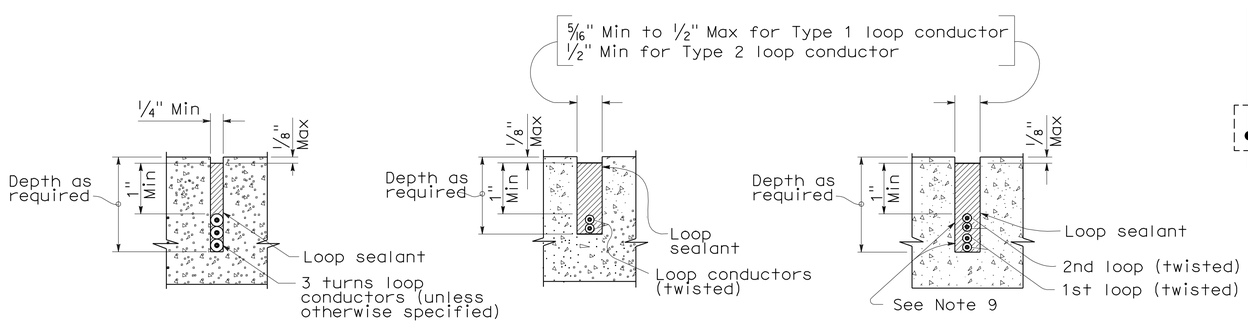

SECTION A-A | SECTION B-B | SECTION C-C

SLOT DETAILS - TYPE 1 AND TYPE 2 LOOP CONDUCTOR

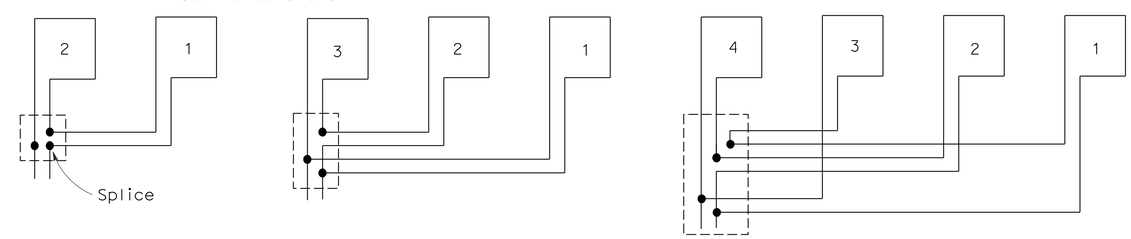

TYPICAL LOOP CONNECTIONS

(Dashed lines represent the pull box)

STATE OF CALIFORNIA
DEPARTMENT OF TRANSPORTATION

ELECTRICAL SYSTEMS (DETECTORS)

NO SCALE

RSP ES-5A DATED OCTOBER 5, 2007 SUPERCEDES STANDARD PLAN ES-5A DATED MAY 1, 2006 - PAGE 423 OF THE STANDARD PLANS BOOK DATED MAY 2006.

REVISED STANDARD PLAN RSP ES-5A

2006 REVISED STANDARD PLAN RSP ES-5A

8-17-07

DIST	COUNTY	ROUTE	POST MILES TOTAL PROJECT	SHEET NO.	TOTAL SHEETS
10	Mer	99	0.0/4.6	509	607

REGISTERED CIVIL ENGINEER

October 5, 2007
PLANS APPROVAL DATE

REGISTERED PROFESSIONAL ENGINEER
Stanley P. Johnson
No. C57793
Exp. 3-31-08
CIVIL
STATE OF CALIFORNIA

The State of California or its officers or agents shall not be responsible for the accuracy or completeness of electronic copies of this plan sheet.

To accompany plans dated 11-1-10

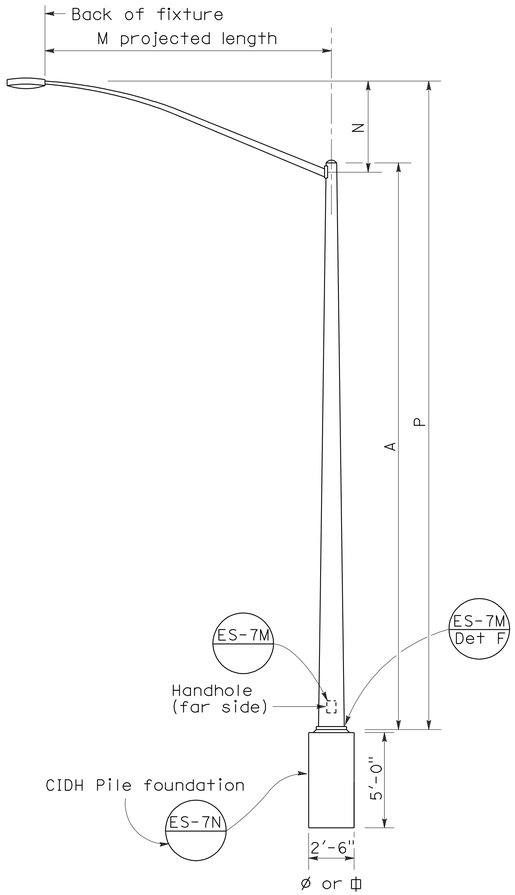

ELEVATION
TYPE 15 AND TYPE 21

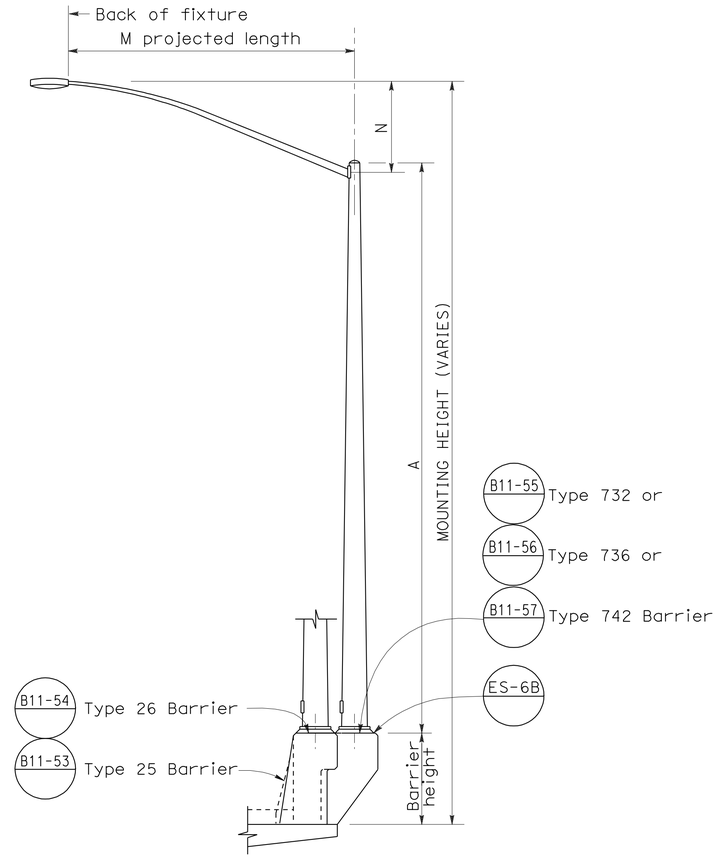

ELEVATION
TYPE 15 AND TYPE 21 BARRIER RAIL MOUNTED

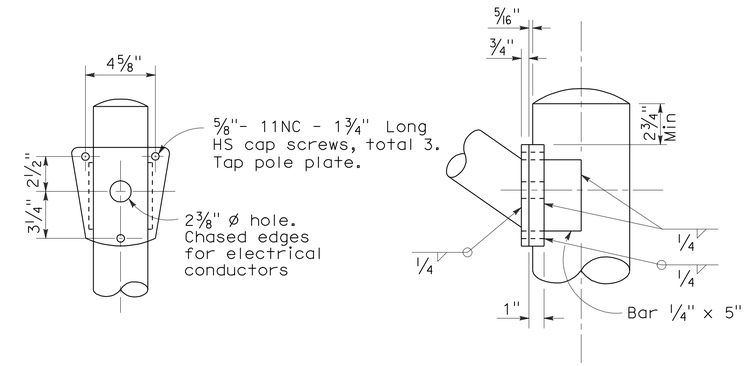

DETAIL R
LUMINAIRE ARM CONNECTION

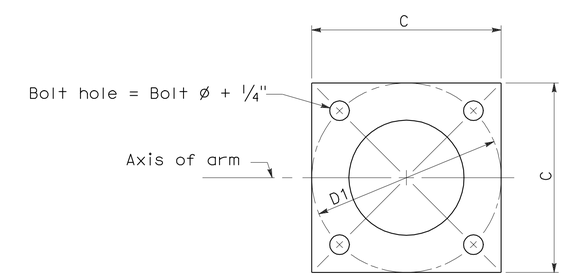

BASE PLATE

POLE TYPE	POLE DATA				BASE PLATE DATA				LUMINAIRE ARM
	A Height	Min OD Base	Min OD Top	Wall Thickness	C	D1 Bolt Circle	Thickness	Anchor Bolts Size	
15	30'	8"	3 7/8"	0.1196"	1'-0"	1'-0"	1"	1" ø x 3'-0" x 4"*	6' - 15' [12']
21	35'	8 5/8"	3 7/8"	0.1196"	1'-0"	1'-0"	1"	1 1/4"ø x 3'-0" x 4"*	6' - 15' [12']

* For barrier rail bolts, see Standard Plan ES-6B.

LUMINAIRE ARM DATA					
M Projected Length	N Rise	Min OD At Pole	Nominal Thickness	P Type 15	P Type 21
6'-0"	2'-0"±	3 1/4"	0.1196"	31'-6"±	36'-6"±
8'-0"	2'-6"±	3 1/2"	0.1196"	32'-0"±	37'-0"±
10'-0"	3'-3"±	3 7/8"	0.1196"	32'-9"±	37'-9"±
12'-0"	4'-3"±	3 7/8"	0.1196"	33'-9"±	38'-9"±
15'-0"	4'-9"±	4 1/4"	0.1196"	34'-3"±	39'-3"±

NOTES:

1. ☐ Indicates arm length to be used unless otherwise noted on the plans.
2. For Type 15-SB, use Type 15 standard with Type 30 slip base plate details, see Standard Plan ES-6F.
3. For additional notes, see Standard Plan ES-7M and ES-7N.

STATE OF CALIFORNIA
DEPARTMENT OF TRANSPORTATION

ELECTRICAL SYSTEMS (LIGHTING STANDARD TYPES 15 AND 21)

NO SCALE

RSP ES-6A DATED OCTOBER 5, 2007 SUPERCEDES STANDARD PLAN ES-6A DATED MAY 1, 2006 - PAGE 427 OF THE STANDARD PLANS BOOK DATED MAY 2006.

REVISED STANDARD PLAN RSP ES-6A

2006 REVISED STANDARD PLAN RSP ES-6A

7-10-07

DIST	COUNTY	ROUTE	POST MILES TOTAL PROJECT	SHEET NO.	TOTAL SHEETS
10	Mer	99	0.0/4.6	510	607

REGISTERED CIVIL ENGINEER

January 18, 2008
PLANS APPROVAL DATE

REGISTERED PROFESSIONAL ENGINEER
Stanley P. Johnson
No. C57793
Exp. 03-31-08
CIVIL
STATE OF CALIFORNIA

The State of California or its officers or agents shall not be responsible for the accuracy or completeness of electronic copies of this plan sheet.

To accompany plans dated 11-1-10

LUMINAIRE ARM DATA

PROJECTED LENGTH	THICKNESS	MINIMUM OD @ POLE	MOUNTING HEIGHT
* 6'-0"	0.1196"	3¼"	36'-9"±
8'-0"		3½"	37'-3"±
10'-0"		3¾"	38'-0"±
12'-0"		3¾"	39'-0"±
15'-0"		4¼"	39'-6"±
** 20'-0"	0.1793"	5"	37'-0"±

* Type 30 - arm length 6'-0" - 15'-0" maximum
** Type 31 - arm lengths 20'-0"

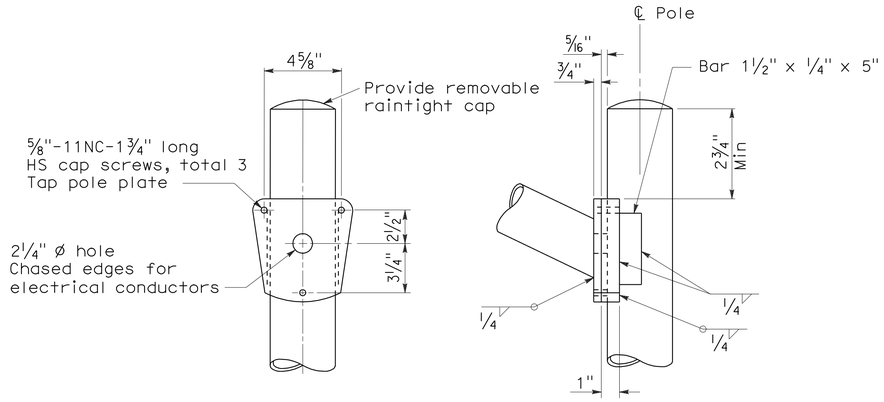

DETAIL A - TYPE 30

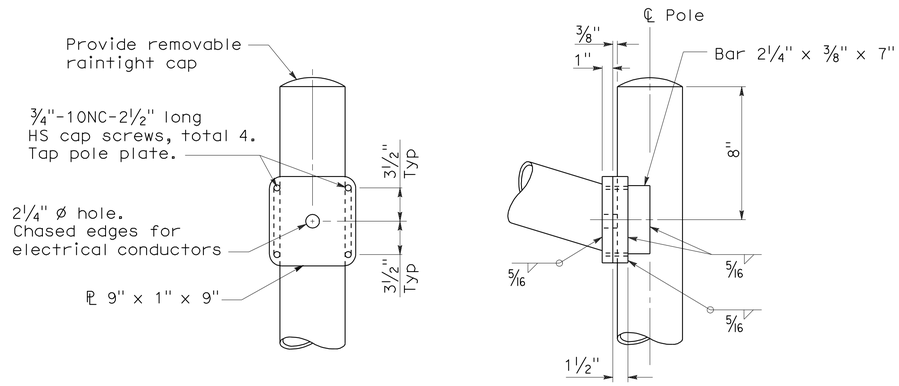

DETAIL A - TYPE 31

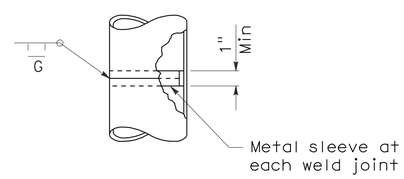

POLE SPLICE

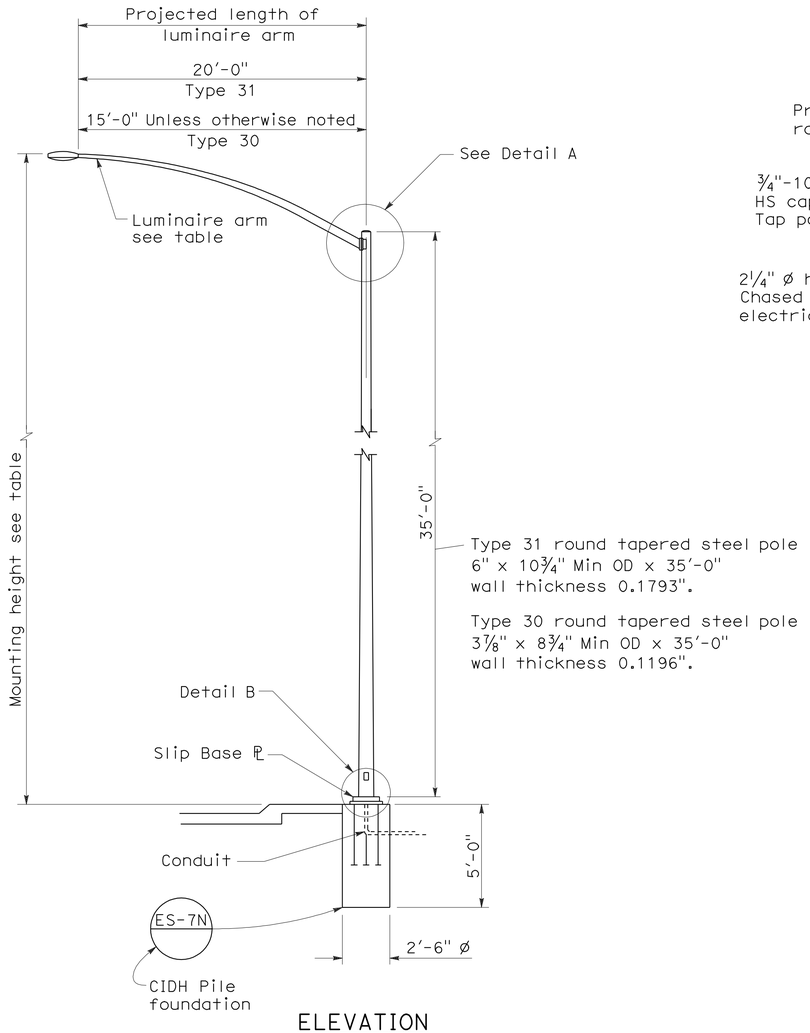

ELEVATION

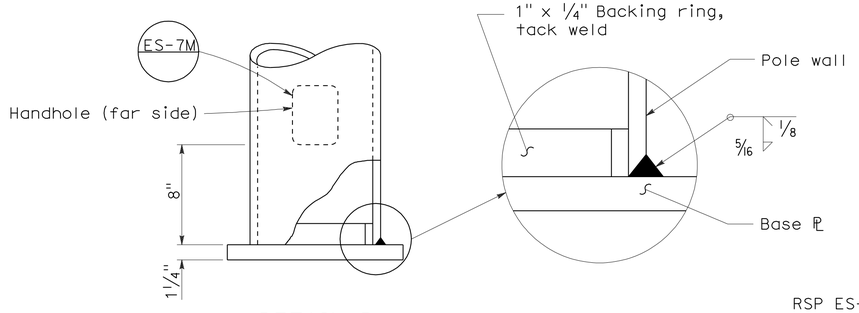

DETAIL B

NOTES:

1. Sheet steel shall have a minimum yield of 48,000 psi.
2. For slip base details see Standard Plan ES-6F.
3. For Type 30 fixed base use Type 15 base plate, and foundation shown on Revised Standard Plan RSP ES-6A. Use 1¼" Dia x 3'-6" x 4" anchor bolts.
4. For Type 31 fixed base use Type 32 base plate, anchor bolts and foundation on Standard Plan ES-6G.
5. Handhole shall be located on downstream side of traffic unless noted otherwise on plans.
6. For additional general notes refer to Standard Plan ES-7M.

STATE OF CALIFORNIA
DEPARTMENT OF TRANSPORTATION

ELECTRICAL SYSTEMS (LIGHTING STANDARD TYPES 30 AND 31)

NO SCALE

RSP ES-6E DATED JANUARY 18, 2008 SUPERCEDES STANDARD PLAN ES-6E DATED MAY 1, 2006 - PAGE 430 OF THE STANDARD PLANS BOOK DATED MAY 2006.

REVISED STANDARD PLAN RSP ES-6E

2006 REVISED STANDARD PLAN RSP ES-6E

11-19-07

DIST	COUNTY	ROUTE	POST MILES TOTAL PROJECT	SHEET NO.	TOTAL SHEETS
10	Mer	99	0.0/4.6	511	607

REGISTERED CIVIL ENGINEER

October 5, 2007
PLANS APPROVAL DATE

REGISTERED PROFESSIONAL ENGINEER
Stanley P. Johnson
No. C57793
Exp. 3-31-08
CIVIL
STATE OF CALIFORNIA

The State of California or its officers or agents shall not be responsible for the accuracy or completeness of electronic copies of this plan sheet.

To accompany plans dated 11-1-10

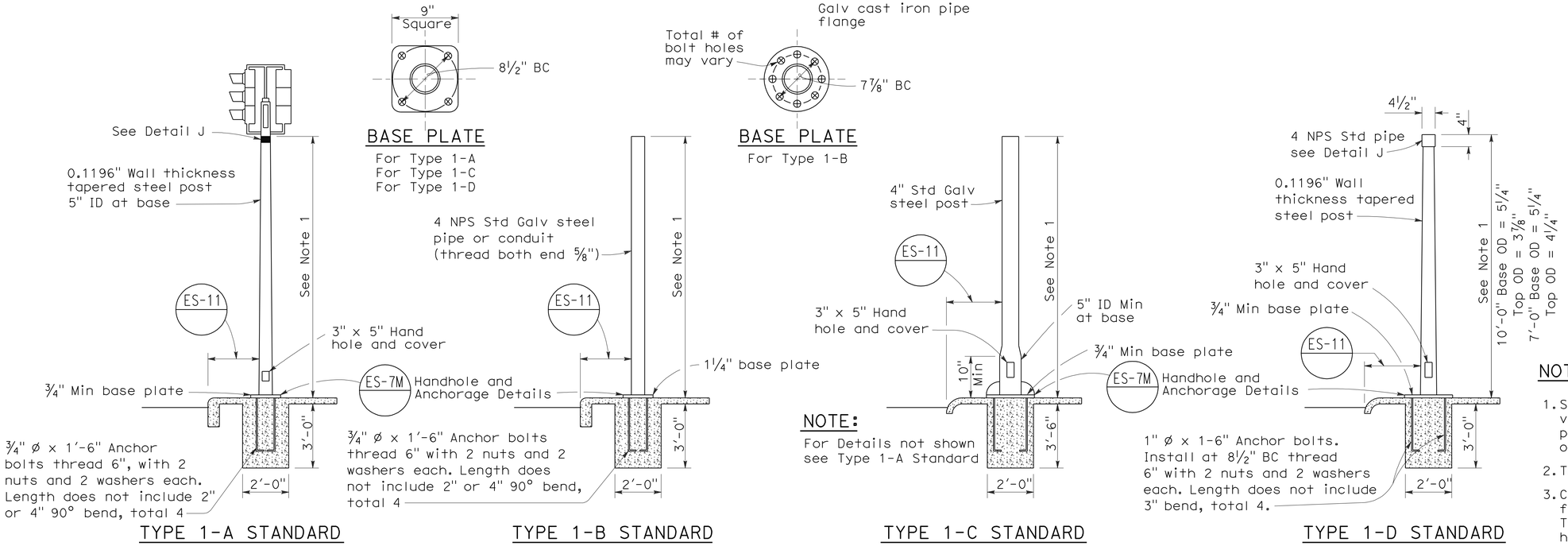

TYPE 1 SIGNAL STANDARDS

NOTES:

1. Standards shall be 10'-0" ± 2" for vehicle signals and 7'-0" ± 2" for pedestrian signals unless otherwise noted on plans.
2. Top of standards shall be 4½" OD.
3. Conduits shall extend 2" maximum above finished surface of foundation and for Types 1-A, 1-C and 1-D shall be sloped toward handhole.
4. Anchor bolts shall be bonded to conduit or grounding conductor.
5. Conduit between standard and adjacent pull box shall be 2" minimum.
6. Paint numbers on roadway side facing traffic when electrolier or post is left of direction of traffic.

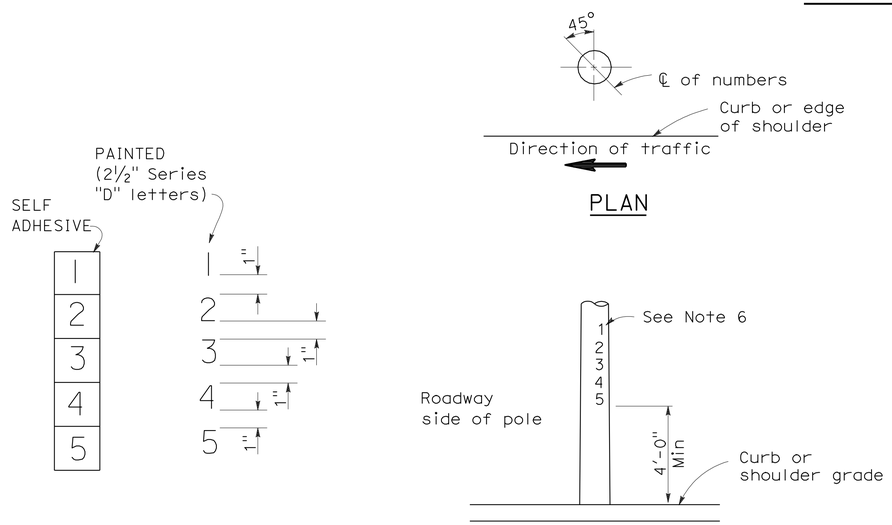

NUMBER DETAIL

TYPICAL NUMBER FORMAT

LOCATION OF EQUIPMENT NUMBERS ON STANDARDS AND POSTS

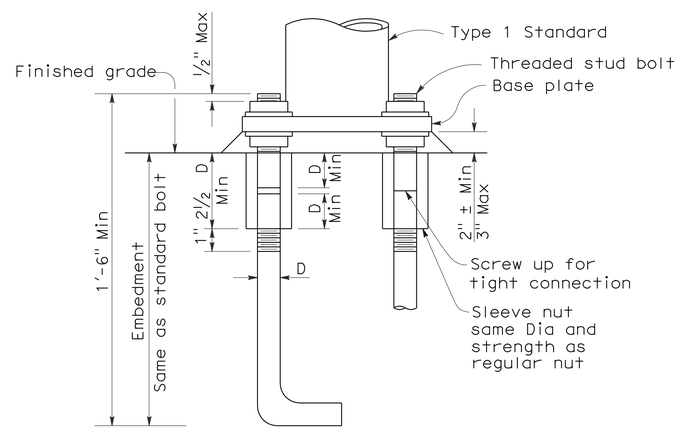

ANCHOR BOLTS WITH SLEEVE NUTS

Sleeve nuts to be used only when shown or specified on Project Plans

D = Diameter of anchor bolt

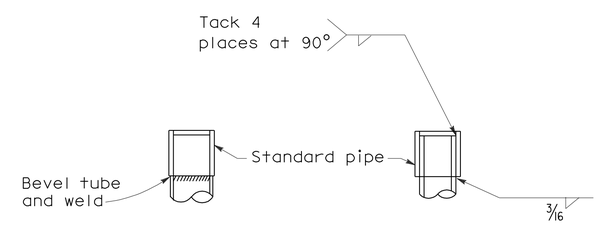

DETAIL J

Tube may be inserted into pipe or butted as required

STATE OF CALIFORNIA
DEPARTMENT OF TRANSPORTATION

ELECTRICAL SYSTEMS (SIGNAL AND LIGHTING STANDARD TYPE 1 STANDARD AND EQUIPMENT NUMBERING)

NO SCALE

RSP ES-7B DATED OCTOBER 5, 2007 SUPERCEDES STANDARD PLAN ES-7B DATED MAY 1, 2006 - PAGE 438 OF THE STANDARD PLANS BOOK DATED MAY 2006.

REVISED STANDARD PLAN RSP ES-7B

2006 REVISED STANDARD PLAN RSP ES-7B

7-10-07

DIST	COUNTY	ROUTE	POST MILES TOTAL PROJECT	SHEET NO.	TOTAL SHEETS
10	Mer	99	0.0/4.6	512	607

REGISTERED CIVIL ENGINEER

November 17, 2006
PLANS APPROVAL DATE

REGISTERED PROFESSIONAL ENGINEER Stanley P. Johnson No. C57793 Exp. 03-31-08 CIVIL STATE OF CALIFORNIA

The State of California or its officers or agents shall not be responsible for the accuracy or completeness of electronic copies of this plan sheet.

To accompany plans dated 11-1-10

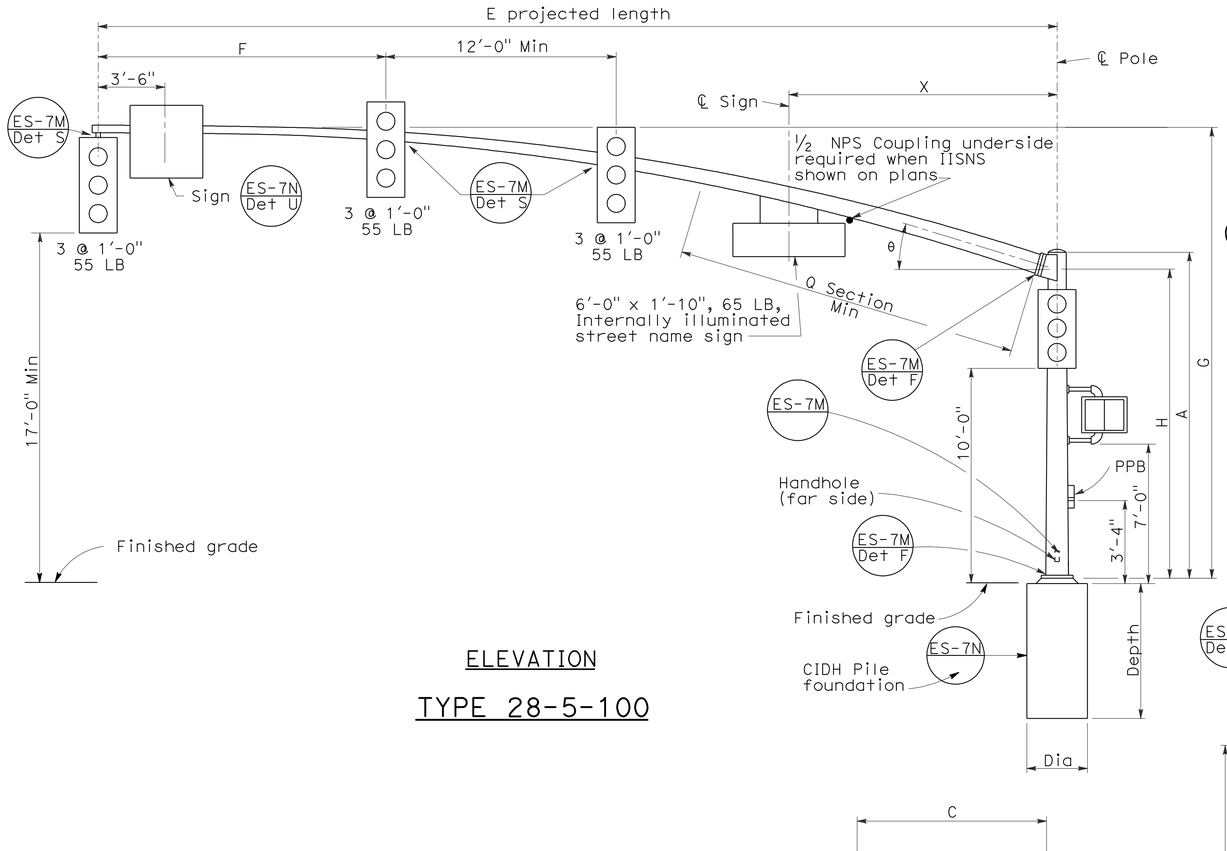

ELEVATION

TYPE 28-5-100

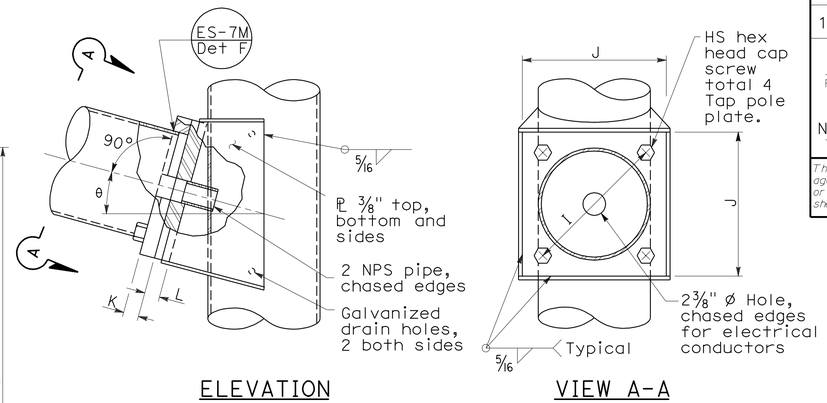

ELEVATION

VIEW A-A

SIGNAL ARM CONNECTION DETAILS

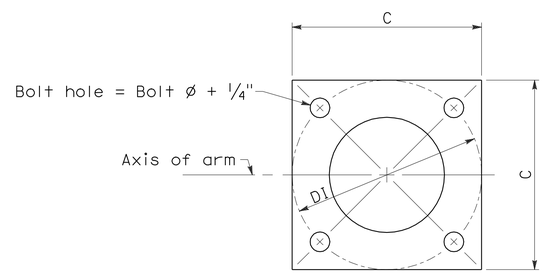

BASE PLATE

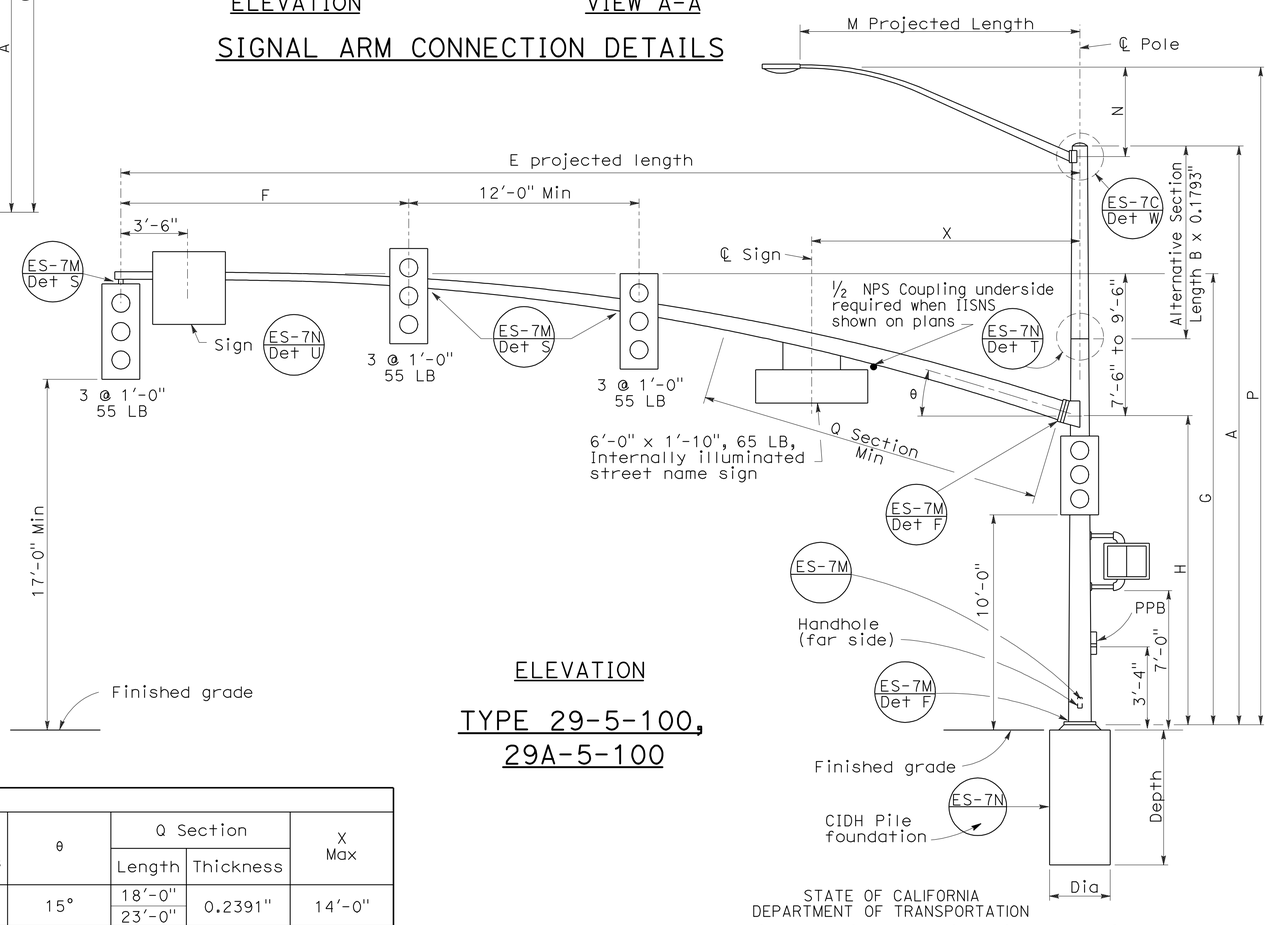

ELEVATION

TYPE 29-5-100, 29A-5-100

LUMINAIRE ARM DATA					
M Projected Length	N Rise	Min OD at Pole	Thickness	P Mounting Height 30'-0" Pole	P Mounting Height 35'-0" Pole
6'-0"	2'-0"±	3¼"	0.1196"	31'-6"±	36'-6"±
8'-0"	2'-6"±	3½"		32'-0"±	37'-0"±
10'-0"	3'-3"±	3⅞"		32'-9"±	37'-9"±
12'-0"	4'-3"±			33'-9"±	38'-9"±
15'-0"	4'-9"±	4¼"		34'-3"±	39'-3"±

SIGNAL ARM DATA														
E Projected Length	F Min Spacing	G Mounting Height	H	Min OD at Pole	Thickness	I Bolt Circle	HS Cap Screws	J Plate Size	K Arm ℄ Thickness	L Pole ℄ Thickness	θ	Q Section Length	Q Section Thickness	X Max
50'-0"	15'-0"	23'-7"± to 25'-7"±	16'-0"	11 7/16"	0.1793"	16"	1½"-6NC-3¼"	1'-4"	1¾"	1¾"	15°	18'-0"	0.2391"	14'-0"
55'-0"				1'-¼"								23'-0"		

POLE DATA									BASE PLATE DATA							CIDH PILE FOUNDATION		
Pole Type	Load Case	Wind Velocity mph	A Height	Min OD Base	Min OD Top	Thickness	Alternative Section B Length	Alternative Section Bottom	Alternative Section Top	C	DI Bolt Circle	Thickness	Anchor Bolts Size	Luminaire Arm	Signal Arm	Dia	Depth	Reinforced
28-5-100	5	100	17'-0"	14"	11 11/16"	0.3125"	None			21"	21"	1¾"	2" ø x 42" x 6"	None	50'-0", 55'-0"	3'-0"	9'-2"	Yes
29-5-100			30'-0"		9⅞"		10'-0"	11¼"	9⅞"					6'-15' [15'-0"]				
29A-5-100			35'-0"		9 3/16"		15'-0"		9 3/16"	23"	23"							

[ ] Indicates arm length to be used unless otherwise noted on plans.

STATE OF CALIFORNIA
DEPARTMENT OF TRANSPORTATION

ELECTRICAL SYSTEMS (SIGNAL AND LIGHTING STANDARD CASE 5 ARM LOADING WIND VELOCITY=100 MPH ARM LENGTHS 50' TO 55')

NO SCALE

RSP ES-7G DATED NOVEMBER 17, 2006 SUPERSEDES STANDARD PLAN ES-7G DATED MAY 1, 2006 - PAGE 443 OF THE STANDARD PLANS BOOK DATED MAY 2006.

REVISED STANDARD PLAN RSP ES-7G

2006 REVISED STANDARD PLAN RSP ES-7G

5-15-06

DIST	COUNTY	ROUTE	POST MILES TOTAL PROJECT	SHEET NO.	TOTAL SHEETS
10	Mer	99	0.0/4.6	513	607

REGISTERED ELECTRICAL ENGINEER

October 5, 2007
PLANS APPROVAL DATE

REGISTERED PROFESSIONAL ENGINEER
Jeffery G. McRae
No. E14512
Exp. 6-30-08
ELECTRICAL
STATE OF CALIFORNIA

The State of California or its officers or agents shall not be responsible for the accuracy or completeness of electronic copies of this plan sheet.

To accompany plans dated 11-1-10

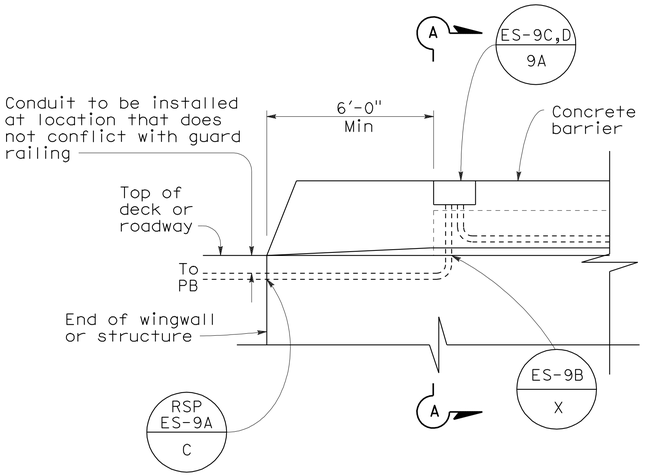

SIDEVIEW

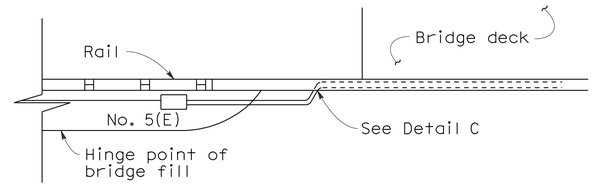

TOP VIEW

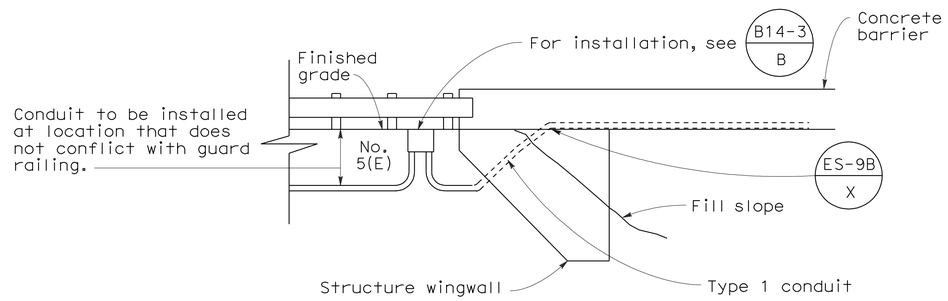

SIDE VIEW
DETAIL I
CONDUIT TERMINATION

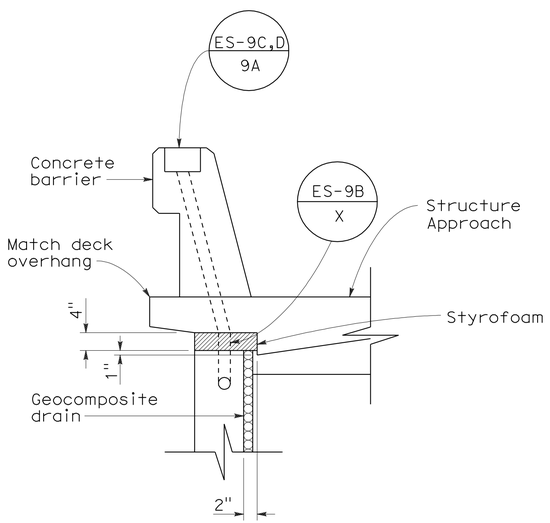

SECTION A-A

DETAIL A
CONDUIT TERMINATION

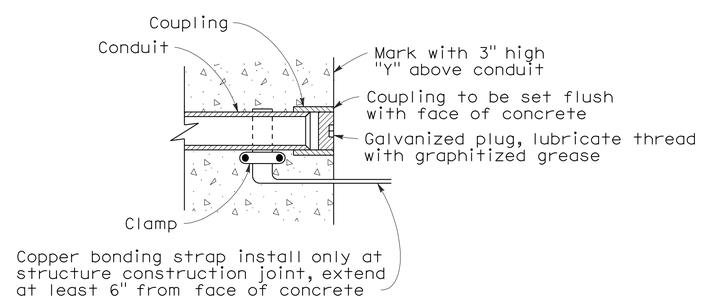

DETAIL C
CONDUIT TERMINATION

STATE OF CALIFORNIA
DEPARTMENT OF TRANSPORTATION

ELECTRICAL SYSTEMS (ELECTRICAL DETAILS STRUCTURE INSTALLATIONS)

NO SCALE

RSP ES-9A DATED OCTOBER 5, 2007 SUPERCEDES STANDARD PLAN ES-9A
DATED MAY 1, 2006 - PAGE 454 OF THE STANDARD PLANS BOOK DATED MAY 2006.

REVISED STANDARD PLAN RSP ES-9A

2006 REVISED STANDARD PLAN RSP ES-9A

DIST	COUNTY	ROUTE	POST MILES TOTAL PROJECT	SHEET NO.	TOTAL SHEETS
10	Mer	99	0.0/4.6	514	607

REGISTERED ELECTRICAL ENGINEER

October 5, 2007
PLANS APPROVAL DATE

REGISTERED PROFESSIONAL ENGINEER Jeffery G. McRae No. E14512 Exp. 6-30-08 ELECTRICAL STATE OF CALIFORNIA

The State of California or its officers or agents shall not be responsible for the accuracy or completeness of electronic copies of this plan sheet.

To accompany plans dated 11-1-10

2006 REVISED STANDARD PLAN RSP ES-9C

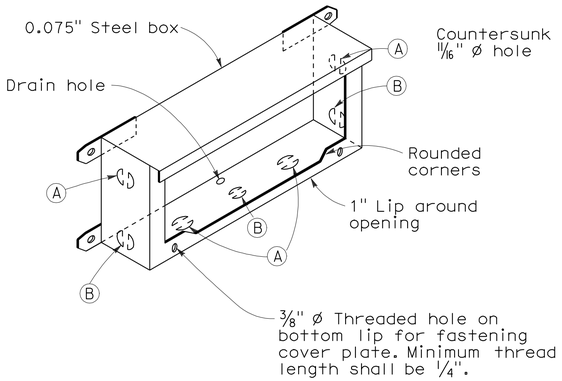

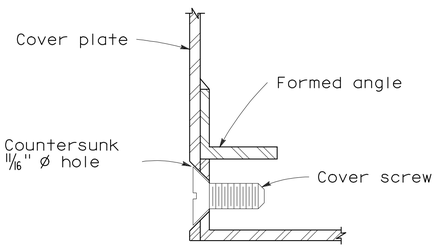

DETAIL J

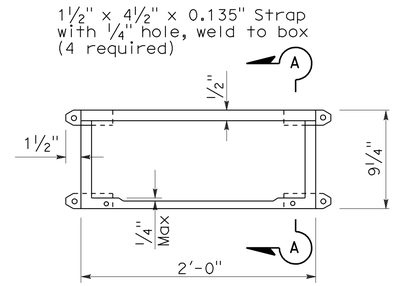

PLAN

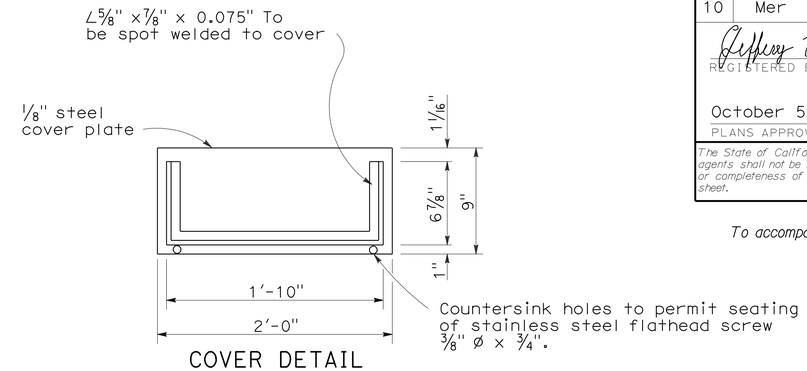

COVER DETAIL

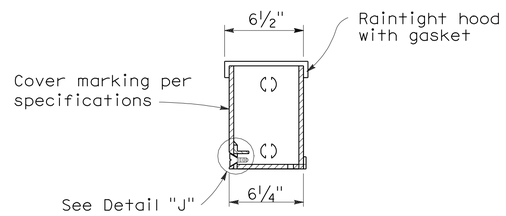

SECTION A-A

INSTALLATION NOTE:

Box shall be parallel to top of railing. Close cover box during pouring with 1/4" plywood of sufficient size to provide 1:1 chamfer on 3 sides of cover. Upper edge of plywood shall fit against lower edge of raintight hood.

No. 9 STRUCTURE PULL BOX

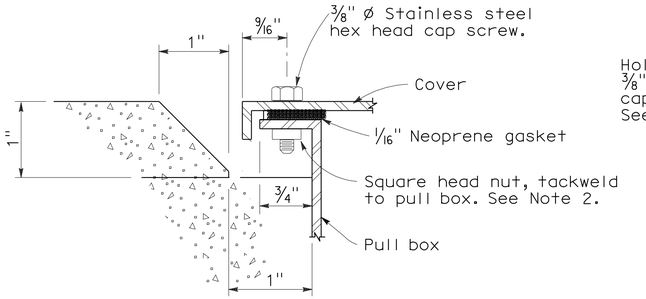

SECTION C-C

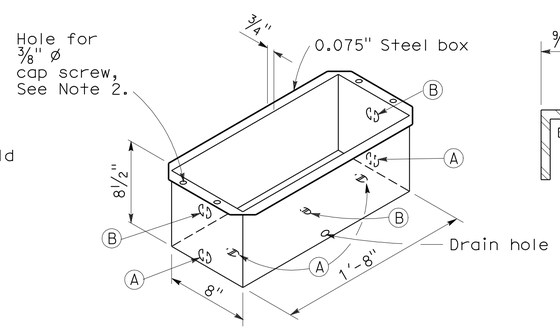

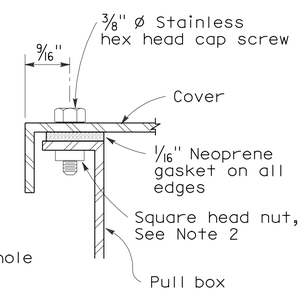

DETAIL A

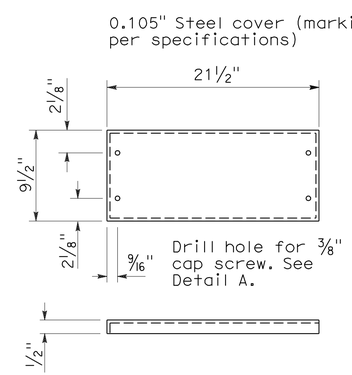

COVER DETAIL

NOTES: No. 9 and 9A Pull Box

1. Corner joints shall be lapped and secured by spot welding or riveting.
2. Where cap screws are used to attach cover to box, either of the following methods of providing adequate threading may be used:
   a. Tack weld square nut to bottom of flange (Total 4), or
   b. Tack weld a 1/4" x 5/8" x 8" bar beneath flange (Total 2).
3. Pound knockouts flat after punching.
4. Multiple size knockouts shall not be permitted.
5. Pull box covers shall be marked as shown on Standard Plan ES-8.

No. 9A STRUCTURE PULL BOX

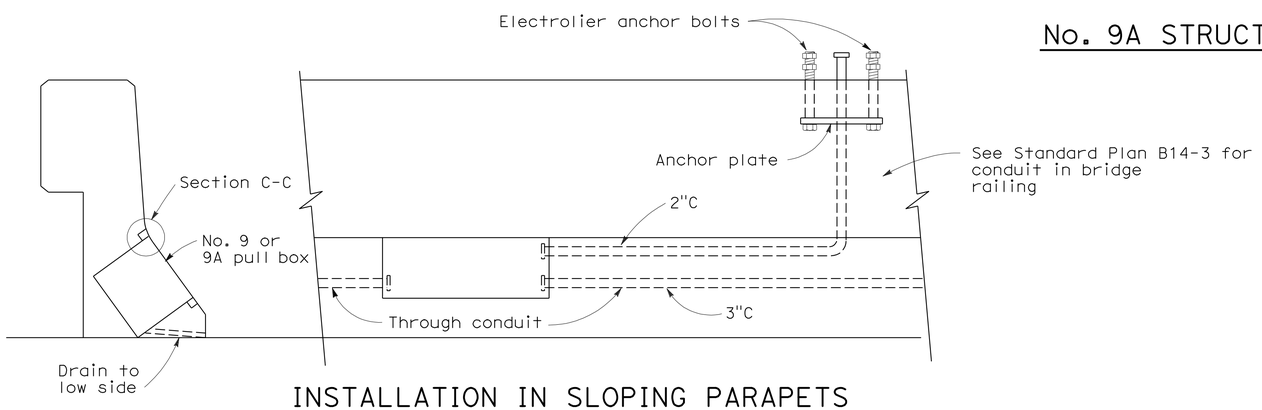

INSTALLATION IN SLOPING PARAPETS

For reinforcement in area of electrolier, see railing sheets. For electrolier anchor bolts, see Standard Plan ES-6B.

KNOCKOUT SCHEDULE
No. 9 AND 9A PULL BOX

(A) 2"C, 1 each end, 2 on bottom.

(B) 3"C, 1 each end, 1 on bottom.

STATE OF CALIFORNIA
DEPARTMENT OF TRANSPORTATION

ELECTRICAL SYSTEMS (ELECTRICAL DETAILS STRUCTURE INSTALLATIONS)

NO SCALE

RSP ES-9C DATED OCTOBER 5, 2007 SUPERCEDES STANDARD PLAN ES-9C DATED MAY 1, 2006 - PAGE 456 OF THE STANDARD PLANS BOOK DATED MAY 2006.

REVISED STANDARD PLAN RSP ES-9C

7-26-07

DIST	COUNTY	ROUTE	POST MILES TOTAL PROJECT	SHEET NO.	TOTAL SHEETS
10	Mer	99	0.0/4.6	515	607

REGISTERED ELECTRICAL ENGINEER

October 5, 2007
PLANS APPROVAL DATE

REGISTERED PROFESSIONAL ENGINEER
Jeffery G. McRae
No. E14512
Exp. 6-30-08
ELECTRICAL
STATE OF CALIFORNIA

The State of California or its officers or agents shall not be responsible for the accuracy or completeness of electronic copies of this plan sheet.

To accompany plans dated 11-1-10

NOTES: (FOR LIGHTING AND SIGN ILLUMINATION CONTROL)

1. The ballast voltages of lighting fixtures and luminaires shall match line service voltages.
2. Voltage rating of photoelectric controls shall conform to the service voltage indicated on the plans.
3. Terminal strip shall be provided for wiring to fixtures.
4. Type SC1A, SC2A, SC3A controls are similar to Types SC1, SC2 and SC3 controls respectively except test switch and wiring are not required.

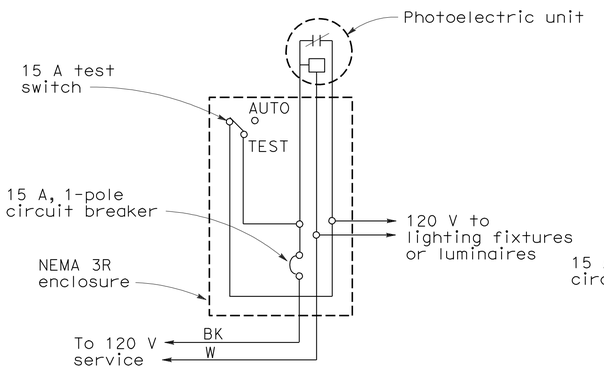

TYPE LC1 CONTROL

For 120 V unswitched circuit with no more than 800 W load.

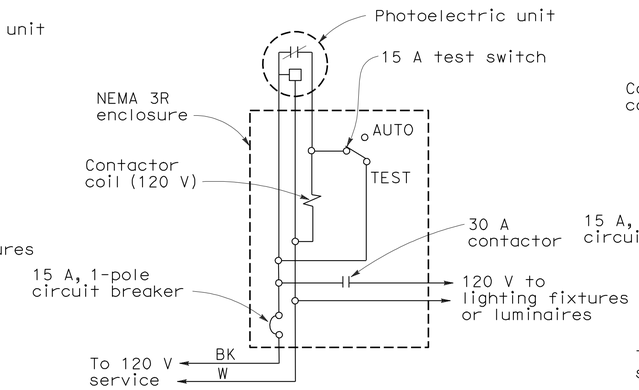

TYPE LC2 CONTROL

For 120 V unswitched circuit

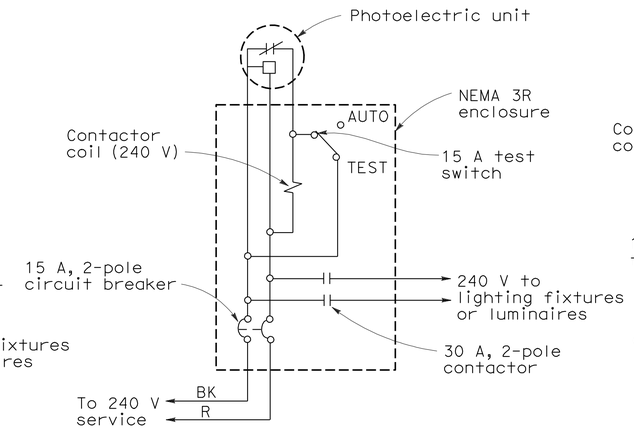

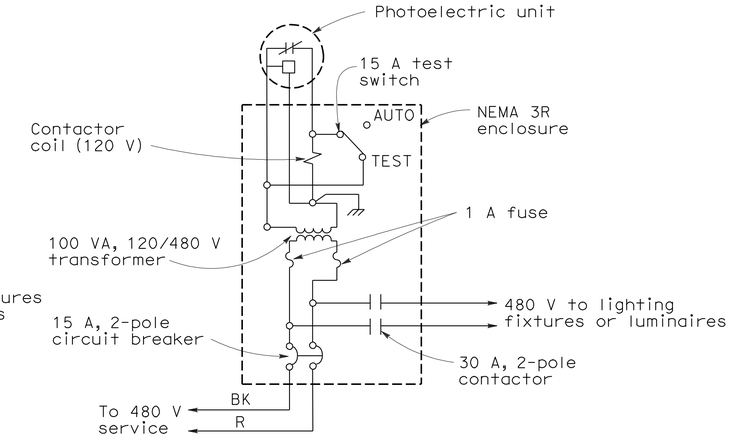

TYPE LC3 CONTROL

For 240 V and 480 V unswitched circuits

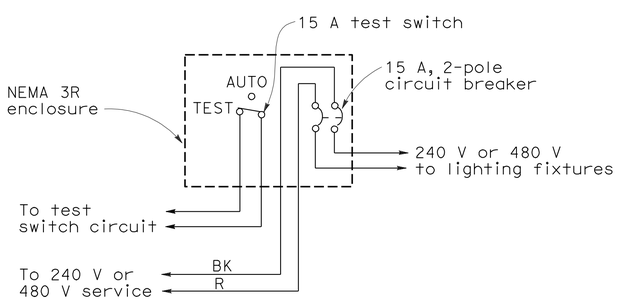

TYPE SC1 CONTROL

For 240 V or 480 V switched circuit, see Note 4 for Type SC1A

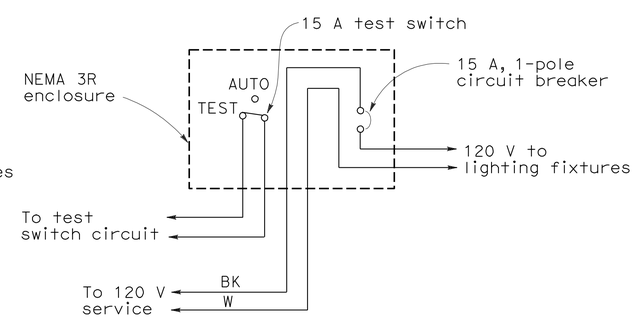

TYPE SC2 CONTROL

For 120 V switched circuit, see Note 4 for Type SC2A

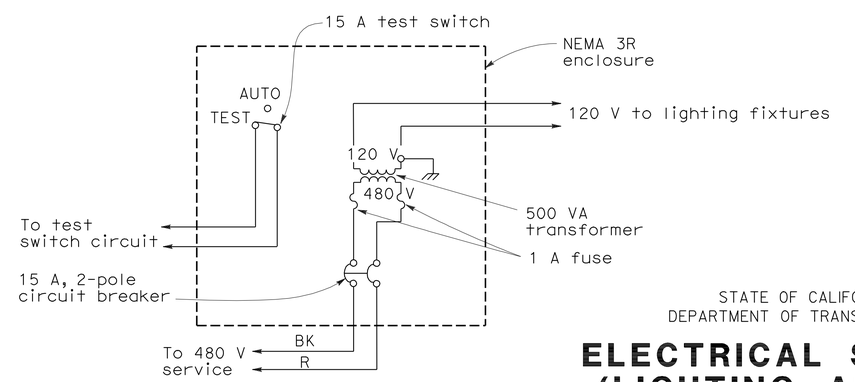

TYPE SC3 CONTROL

For 480 V switched sign circuit, see Note 4 for Type SC3A

STATE OF CALIFORNIA
DEPARTMENT OF TRANSPORTATION

ELECTRICAL SYSTEMS (LIGHTING AND SIGN ILLUMINATION CONTROL)

NO SCALE

RSP ES-15D DATED OCTOBER 5, 2007 SUPERCEDES STANDARD PLAN ES-15D DATED MAY 1, 2006 - PAGE 472 OF THE STANDARD PLANS BOOK DATED MAY 2006.

REVISED STANDARD PLAN RSP ES-15D

2006 REVISED STANDARD PLAN RSP ES-15D

9-10-07

DIST	COUNTY	ROUTE	KILOMETER POST TOTAL PROJECT	SHEET NO.	TOTAL SHEETS
10	Mer	99	0.0/4.6	516	607

Javid Amirazodi 3-23-10
REGISTERED ENGINEER-ELECTRICAL DATE

11-1-10
PLANS APPROVAL DATE

REGISTERED PROFESSIONAL ENGINEER
J. AMIRAZODI
No. 17509
Exp. 6-30-11
ELEC
STATE OF CALIFORNIA

The State of California or its officers or agents shall not be responsible for the accuracy or completeness of electronic copies of this plan sheet.

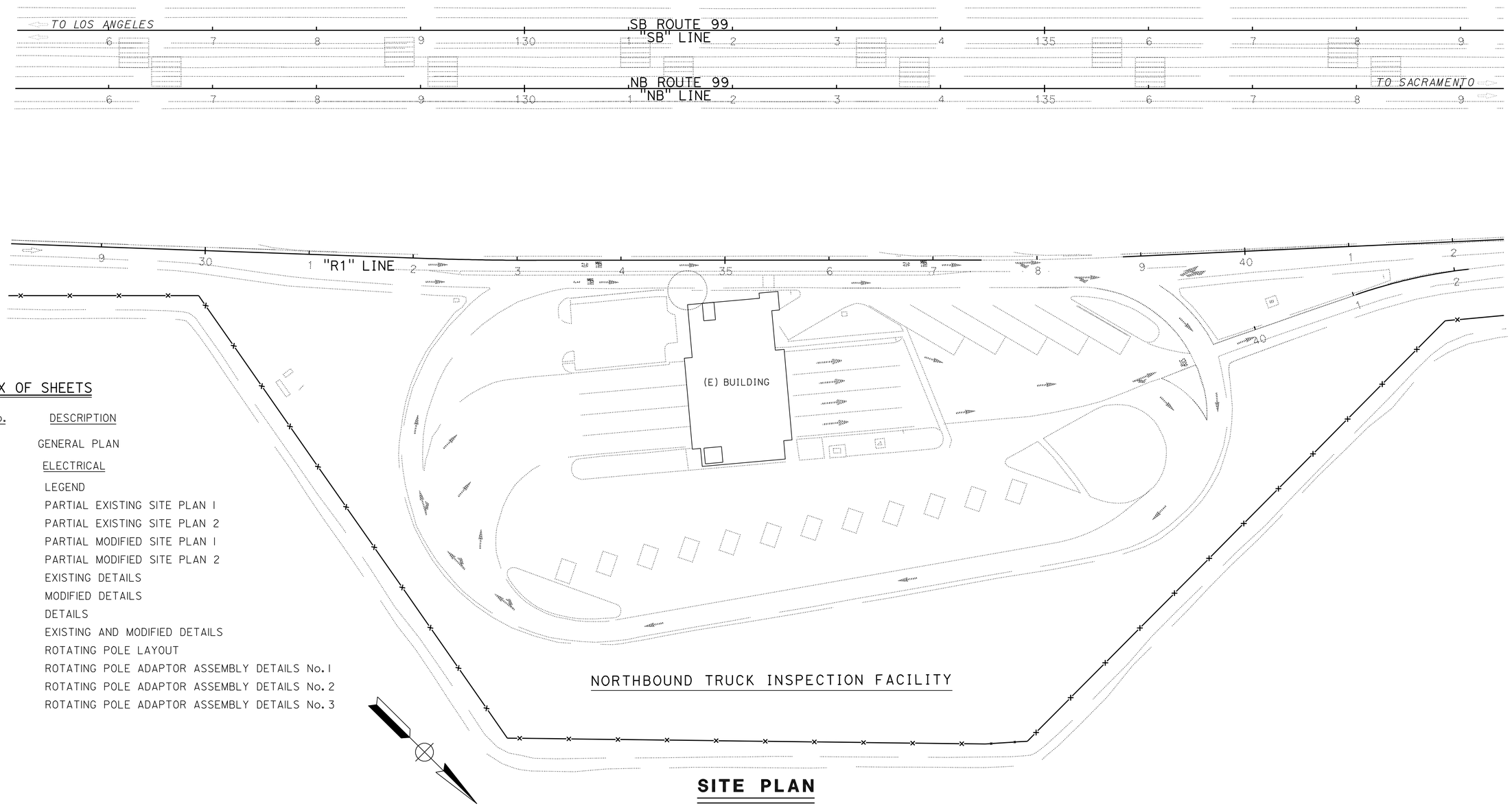

INDEX OF SHEETS

SHEET No.	DESCRIPTION
GP	GENERAL PLAN
	ELECTRICAL
EE-1	LEGEND
EE-2	PARTIAL EXISTING SITE PLAN 1
EE-3	PARTIAL EXISTING SITE PLAN 2
EE-4	PARTIAL MODIFIED SITE PLAN 1
EE-5	PARTIAL MODIFIED SITE PLAN 2
EE-6	EXISTING DETAILS
EE-7	MODIFIED DETAILS
EE-8	DETAILS
EE-9	EXISTING AND MODIFIED DETAILS
EE-10	ROTATING POLE LAYOUT
EE-11	ROTATING POLE ADAPTOR ASSEMBLY DETAILS No. 1
EE-12	ROTATING POLE ADAPTOR ASSEMBLY DETAILS No. 2
EE-13	ROTATING POLE ADAPTOR ASSEMBLY DETAILS No. 3

SITE PLAN

SCALE 1" = 50'-0"

DESIGN SUPERVISOR
DESIGN ENGINEER

	BY	CHECKED
DESIGN	Javid Amirazodi	Jesse Sandhu
DETAILS	Javid Amirazodi	Jesse Sandhu
QUANTITIES	Javid Amirazodi	Jesse Sandhu

STATE OF CALIFORNIA
DEPARTMENT OF TRANSPORTATION

DIVISION OF ENGINEERING SERVICES
ELECTRICAL-MECHANICAL-WATER AND WASTEWATER DESIGN

BRIDGE NO. 39W0001
KM POST

CHOWCHILLA TRUCK INSPECTION FACILITY
GENERAL PLAN

SHEET GP

DS OSD 2139A (4/89)
FILE NO.:
FILE => gp.dgn
DATE PLOTTED => 03-NOV-2010 TIME PLOTTED => 13:29

ORIGINAL SCALE IN INCHES FOR REDUCED PLANS 0 1 2 3

CU 10223
EA 415801

DISREGARD PRINTS BEARING EARLIER REVISION DATES
REVISION DATES (PRELIMINARY STAGE ONLY) 3/23/10
SHEET OF

USERNAME => friemord DATE PLOTTED => 03-NOV-2010 TIME PLOTTED => 13:29

VI=1

Dist	COUNTY	ROUTE	POST MILES TOTAL PROJECT	SHEET No.	TOTAL SHEETS
10	Mer	99	0.0/4.6	517	607

REGISTERED ELECTRICAL ENGINEER — 3-23-10 DATE

REGISTERED PROFESSIONAL ENGINEER J. AMIRAZODI No. 17509 Exp. 6-30-11 ELEC STATE OF CALIFORNIA

11-1-10
PLANS APPROVAL DATE

The State of California or its officers or agents shall not be responsible for the accuracy or completeness of electronic copies of this plan sheet.

GRAPHIC SYMBOLS FOR ELECTRICAL WIRING AND LAYOUT DIAGRAMS

SYMBOL	DESCRIPTION
	POLE-TOP ELECTROLIER
	POLE-ARM ELECTROLIER
CEILING WALL	
S -S	SURFACE FLUORESCENT, METAL HALIDE OR SODIUM VAPOR FIXTURE
R -R	RECESSED FLUORESCENT, METAL HALIDE, OR SODIUM VAPOR FIXTURE
X -X	EXIT LIGHT
	SURFACE OR PENDANT INDIVIDUAL FLUORESCENT FIXTURE
R	RECESSED INDIVIDUAL FLUORESCENT FIXTURE
	SURFACE OR PENDANT CONTINUOUS ROW FLUORESCENT FIXTURES

NOTE: A LOWER CASE LETTER NEAR GRAPHIC LIGHTING FIXTURE SYMBOL DENOTES THAT FIXTURE IS CONTROLLED BY A SIMILARLY MARKED SWITCH, AN ALPHA-NUMERIC SYMBOL NEAR GRAPHIC LIGHTING FIXTURE SYMBOL DENOTES FIXTURE TYPE, (I=INCANDESCENT, F=FLUORESCENT, MH=METAL HALIDE, H=HIGH PRESSURE SODIUM VAPOR), DESIGN TYPE, NUMBER OF LAMPS AND WATTAGE.

EXAMPLE : (4) F 2 - 2 x 32
- 32 WATT LAMPS
- 2 LAMPS
- DESIGN TYPE
- FLUORESCENT
- NUMBER OF FIXTURES

B -B	BLANK OUTLET
J -J	JUNCTION BOX
D	DROP CORD
	SINGLE RECEPTACLE OUTLET
	DUPLEX RECEPTACLE OUTLET
(GFCI)	DUPLEX RECEPTACLE OUTLET (WITH GFCI)
(GFCI) WP	DUPLEX RECEPTACLE OUTLET, WEATHERPROOF (WITH GFCI)
	SINGLE, SPECIAL PURPOSE RECEPTACLE OUTLET
	DUPLEX, SPECIAL PURPOSE RECEPTACLE OUTLET
R	RANGE OUTLET
C	CLOCK HANGER RECEPTACLE
F	FAN HANGER RECEPTACLE
	FLOOR SINGLE RECEPTACLE OUTLET
	FLOOR DUPLEX RECEPTACLE OUTLET
	FLOOR SPECIAL PURPOSE OUTLET
	FLOOR RADIO OUTLET
	FLOOR TELEPHONE OUTLET
	MULTI-FLOOR OUTLET, 2 OR MORE GANG
	MULTI-OUTLET ASSEMBLY
S	SINGLE POLE SWITCH
S_2	DOUBLE POLE SWITCH
S_3	THREE WAY SWITCH
S_4	FOUR WAY SWITCH
S_D	AUTOMATIC DOOR
S_K	KEY OPERATED SWITCH
S_P	SWITCH AND PILOT LIGHT
S_{MC}	MOMENTARY CONTACT SWITCH
S_{RC}	REMOTE CONTROL SWITCH
S_{WP}	WEATHERPROOF SWITCH
S_F	FAN SWITCH
S_L	LIGHT SWITCH
S_H	HEATER SWITCH
S_{VS}	VARIABLE SPEED MOTOR CONTROL SWITCH
S_{CHLF}	TWO SWITCHES, ONE SWITCH FOR LIGHT AND FAN AND TIMER SWITCH FOR HEAT LAMP

SYMBOL	DESCRIPTION
S_1	OCCUPANCY SENSOR WALL SWITCH, SINGLE LEVEL
S_2	OCCUPANCY SENSOR WALL SWITCH, BILEVEL
S_M	MOTION SENSOR SWITCH
S_T	MANUAL MOTOR STARTING SWITCH, THERMAL OVERLOAD TYPE
S_{HP}	MANUAL MOTOR STARTING SWITCH, WITHOUT OVERLOAD ELEMENT
T_S	TIMER SWITCH
S	SWITCH AND SINGLE RECEPTACLE
S	SWITCH AND DUPLEX RECEPTACLE
C	HAND DRYER NOZZLE
H	HAND DRYER
	RADIO OUTLET
	TELEPHONE OUTLET
	SOUND SYSTEM LOUD SPEAKER OUTLET
	PUSHBUTTON
L	PUSHBUTTON STATION, NC, WITH LOCKING DEVICE FOR OPEN
	PUSHBUTTON STATION MOTOR CONTROL
	BUZZER
	BELL
	COMBINATION BELL-BUZZER
T	THERMOSTAT
PS	PRESSURE SWITCH
R	CONTROL RELAY
FS	FLOW SWITCH
PEC	PHOTOELECTRIC CELL
R	RADIO OUTLET
TV	TELEVISION OUTLET
M	MICROPHONE OUTLET
	FLUSH-MOUNTED PANELBOARD AND CABINET
	SURFACE-MOUNTED PANELBOARD AND CABINET
	LIGHTING PANEL
	POWER PANEL
	COMBINATION LIGHTING AND POWER
MC	MOTOR CONTROLLER
	DISCONNECT SWITCH
	CONDUIT CONCEALED IN CEILING OR WALL
	CONDUIT CONCEALED IN FLOOR
	CONDUIT EXPOSED
	CROSS-LINES INDICATE NUMBER OF #12 AWG CONDUCTORS. LONGER CROSS-LINE INDICATES 1#12 AWG (G) FOR EQUIPMENT GROUNDING CONDUCTOR. NO CROSS-LINE INDICATES 2#12 WITH 1#12 (G) UNLESS OTHERWISE NOTED. ALL CONDUIT 1/2" UNLESS OTHERWISE NOTED.
A1, A2	HOMERUN TO PANELBOARD, ARROWS INDICATE NUMBER OF CIRCUITS, LETTER DENOTES PANEL-BOARD, NUMERAL DENOTES CIRCUIT.
SM	SURFACE METAL RACEWAY

(2) 1/2"C, PVC, 2#12
- CONDUCTOR INFO (PER CONDUIT)
- CONDUIT TYPE
- CONDUIT SIZE
- NUMBER OF CONDUITS (NO NUMBER INDICATES ONE CONDUIT)

MC	CONDUIT, RIGID STEEL, UNDERGROUND
PVC	CONDUIT, POLYVINYL CHLORIDE, UNDERGROUND
	CONDUIT, FLEXIBLE
	CONDUIT, TURN UP
	CONDUIT, TURN DOWN
	CONDUIT SEAL, EXPLOSION-PROOF
	CONDUIT, EXPANSION JOINT
	ADAPTER, ONE TYPE CONDUIT TO ANOTHER
	POLE

SYMBOL	DESCRIPTION
OC	OCCUPANCY SENSOR
H	HEAT DETECTOR
S	SMOKE DETECTOR
P	MANUAL PULL STATION
AV	AUDIO/VISUAL ALARM DEVICE
G	GLASS BREAK DISCRIMINATOR
C	MAGNETIC CONTACT SWITCH-PEDESTRIAN DOOR
C	MAGNETIC CONTACT SWITCH-VEHICLE DOOR
K	KEYPAD FOR ALARM SYSTEM
W	COMBINATION DETECTOR (MICROWAVE/PASSIVE INFRARED)
(T)	NO. 5 PULL BOX, UNLESS OTHERWISE NOTED. (T) INDICATES TRAFFIC RATED PULL BOX
CHLF	COMBINATION HEAT, LIGHT AND FAN UNIT
A / EE-2	SECTION/ELEVATION LETTER; SHEET NUMBER
1 / EE-2	DETAIL NUMBER; SHEET NUMBER

REMODEL WORK

SYMBOL	DESCRIPTION
	EXISTING FLUORESCENT FIXTURE-TO REMAIN
	EXISTING FLUORESCENT FIXTURE-REMOVE
	EXISTING INCANDESCENT FIXTURE-TO REMAIN
	EXISTING INCANDESCENT FIXTURE-REMOVE
	EXISTING OUTLET-TO REMAIN
	EXISTING RECEPTACLE OUTLET-TO REMAIN
	EXISTING RECEPTACLE OUTLET-REMOVE
-E-E-	EXISTING CONDUIT AND CONDUCTORS-TO REMAIN UNLESS OTHERWISE NOTED
-**-	EXISTING CONDUIT AND CONDUCTORS-REMOVE
S	EXISTING SWITCH-TO REMAIN
	EXISTING SWITCH-REMOVE
J	EXISTING JUNCTION BOX-TO REMAIN
	EXISTING JUNCTION BOX-REMOVE

STANDARD NOTES

AB	ABANDON, IF APPLIED TO CONDUIT, REMOVE CONDUCTORS.
BC	INSTALL PULL BOX IN EXISTING CONDUIT RUN.
CB	INSTALL CONDUIT INTO EXISTING PULL BOX.
CC	CONNECT NEW AND EXISTING CONDUIT. REMOVE EXISTING CONDUCTORS AND INSTALL CONDUCTORS AS INDICATED.
CF	CONDUIT TO REMAIN FOR FUTURE USE. REMOVE CONDUCTORS, INSTALL PULL ROPE AND PLUG.
FA	REMOVE FOUNDATION ABOVE GRADE AND ABANDON FOUNDATION BELOW GRADE.
RL	RELOCATE EQUIPMENT.
RLD	RELOCATED EQUIPMENT.
SC	SPLICE NEW TO EXISTING CONDUCTORS.

STANDARD PLANS

DATED MAY, 2006

- RSP ES-5A, ES-5B, ES-5D
- RSP ES-6A
- ES-6B
- RSP ES-7G
- ES-7M
- ES-8
- ES-7N
- ES-13A

GRAPHIC SYMBOLS FOR ELECTRICAL DIAGRAMS

SYMBOL	DESCRIPTION
	CIRCUIT BREAKER, SINGLE POLE
	CIRCUIT BREAKER, DOUBLE POLE
	CIRCUIT BREAKER, THREE POLE
GFCI	CIRCUIT BREAKER, WITH GROUND FAULT CIRCUIT INTERRUPTER
	CONTACT, NORMALLY OPEN
	CONTACT, NORMALLY CLOSED
	CONTACT, NORMALLY CLOSED, TIME DELAY CLOSING ON DE-ENERGIZING
	CONTACT, NORMALLY OPEN, TIME DELAY OPENING ON DE-ENERGIZING
	CONTACT, NORMALLY OPEN, TIME DELAY CLOSING ON ENERGIZING
	CONTACT, NORMALLY CLOSED, TIME DELAY OPENING ON ENERGIZING
	CONTACT, SINGLE POLE DOUBLE-THROW
	OPERATING COIL
	LIQUID LEVEL ACTUATED SWITCH, NORMALLY CLOSED
	LIQUID LEVEL ACTUATED SWITCH, NORMALLY OPEN
	PRESSURE ACTUATED SWITCH, NORMALLY CLOSED
	PRESSURE ACTUATED SWITCH, NORMALLY OPEN
	FLOW ACTUATED SWITCH, NORMALLY CLOSED
	FLOW ACTUATED SWITCH, NORMALLY OPEN
	TEMPERATURE ACTUATED SWITCH, NORMALLY CLOSED
	TEMPERATURE ACTUATED SWITCH, NORMALLY OPEN
	LIMIT SWITCH, NORMALLY CLOSED
	LIMIT SWITCH, NORMALLY OPEN
	PUSHBUTTON SWITCH, NORMALLY CLOSED
	PUSHBUTTON SWITCH, NORMALLY OPEN
	SWITCH, SINGLE-POLE
	SWITCH, SINGLE-POLE, DOUBLE-THROW
	SWITCH, DOUBLE-POLE
	SWITCH, DOUBLE-POLE, DOUBLE-THROW
	SWITCH, SINGLE-POLE, 3-POSITION
	THERMAL OVERLOAD
	FUSE
	RESISTOR
	VARIABLE RESISTOR
	TRANSFORMER WINDING
	GROUNDING ELECTRODE
	ENCLOSURE BOND
A	PILOT LIGHT (A=AMBER, G=GREEN, R=RED)
G	GENERATOR
M	MOTOR
F	FAN MOTOR

PROJECT NOTES

A. SEPARATE GROUNDED (NEUTRAL) CONDUCTOR SHALL BE USED FOR EACH 120-VOLT CIRCUIT.

B. HOMERUNS TO PANELBOARDS SHALL BE INSTALLED AS SHOWN ON THE PLANS. HOMERUNS SHALL NOT BE COMBINED.

C. A SINGLE INSULATED EQUIPMENT GROUNDING CONDUCTOR (SIZED AS REQUIRED) SHALL BE INSTALLED IN EACH CONDUIT RUN.

ABBREVIATIONS

A	AMPERES
A/C	AIR CONDITIONING UNIT
ACS	AIR COMPRESSOR STARTER
AI	ANALOG INPUT
AL	ALARM LIGHT
AO	ANALOG OUTPUT
AVI	AUTOMATIC VEHICLE IDENTIFICATION
BD	BUILDING DISCONNECT
BRK	BREAKER
C	CONDUIT
CB	CIRCUIT BREAKER
CKT	CIRCUIT
CMS	CHANGEABLE MESSAGE SIGN
CSW	CURRENT SWITCH
DI	DIGITAL INPUT
DLC	DETECTOR LOOP CABLE
DP	DUPLEX PLUG RECEPTACLE
DS	DOOR SWITCH
(E)	EXISTING
EF	EXHAUST FAN
EMS	EXTINGUISHABLE MESSAGE SIGN
F	FUSE
FL	FAILURE LIGHT
FLA	FLASHER
FLEX	FLEXIBLE CONDUIT
FLS	FLOW SWITCH
FR	FAILURE RESET
FS	FLOAT SWITCH
G	GROUND
GFCI	GROUND FAULT CIRCUIT INTERRUPTER
GRS	GALVANIZED RIGID STEEL
IR	INDUCTION RELAY
JB	JUNCTION BOX
L	LIGHT
LC	LIGHTING CONTACTOR
LCP	LIGHTING CONTROL PANEL
LD	LIGHT DISCONNECT
LL	LIQUID LEVEL RELAY
LLC	LIQUID LEVEL CONTROLLER
LP	LIGHT PANEL
LS	LIGHT SWITCH
LT	LIGHT TRANSFORMER
LTO	LIGHT TRANSFORMER OVERLOAD
MB	MAIN BREAKER
MC	METALLIC CONDUIT
MCP	MOTOR CIRCUIT PROTECTOR
MCC	MOTOR CONTROL CENTER
MSB	MAIN SWITCHBOARD
MT	EMPTY CONDUIT
NB	NORTH BOUND
NC	NORMALLY CLOSED
NO	NORMALLY OPEN
NSW	NEUTRAL SWITCHING BREAKER
OL	OVERLOAD
P	POLE
PB	PULL BOX
PB	PUSHBUTTON
PFR	**PHASE FAILURE RELAY** DISCONNECT
PFRD	
PEC	PHOTOELECTRIC CELL
PL	PILOT LIGHT
PS	PRESSURE SWITCH
PTS	POWER TRANSFER SWITCH
PVC	POLYVINYL CHLORIDE
RES	RESISTOR
RTB	RADIO TERMINAL BOARD
SB	SOUTH BOUND
SD	SERVICE DISCONNECT
SFR	SEAL FAILURE RELAY
SL	SUMP LIGHT
SPR	STANDBY POWER RECEPTACLE
SS	SCREENED SHIELDED TRANSMISSION CABLE
STC	
SV	SOLENOID VALVE
T	TRANSFORMER
TB	TERMINAL BLOCK
TDR	TIME DELAY RELAY
TGLS	TOGGLE SWITCH
TM	TIME METER
TOT	TOTAL
TS	TIMER SWITCH
TSW	TEST SWITCH
TTB	TELEPHONE TERMINAL BOARD
TYP	TYPICAL
V	VOLT
W	WATT
WIM	WEIGH IN MOTION
WSB	WEIGH STATION BYPASS

	BY	CHECKED
DESIGN	Javid Amirazodi	Jesse Sandhu
DETAILS	Javid Amirazodi	Jesse Sandhu
QUANTITIES	Javid Amirazodi	Jesse Sandhu

STATE OF CALIFORNIA DEPARTMENT OF TRANSPORTATION

DIVISION OF ENGINEERING SERVICES
ELECTRICAL-MECHANICAL-WATER AND WASTEWATER DESIGN

BRIDGE NO. 39W0001
POST MILE

CHOWCHILLA TRUCK INSPECTION FACILITY

LEGEND

SHEET EE-1

DOES SD Imperial Rev. 9/02

ORIGINAL SCALE IN INCHES FOR REDUCED PLANS 0 1 2 3

CU 10223
EA 415801

DISREGARD PRINTS BEARING EARLIER REVISION DATES → 3/18/09 5/18/09 6/12/09 3/23/10

REVISION DATES (PRELIMINARY STAGE ONLY) SHEET OF

24-NOV-2010 09:30

ee_01.dgn

Dist	COUNTY	ROUTE	POST MILES TOTAL PROJECT	SHEET No.	TOTAL SHEETS
10	Mer	99	0.0/4.6	518	607

REGISTERED ELECTRICAL ENGINEER — 3-23-10 DATE

REGISTERED PROFESSIONAL ENGINEER J. AMIRAZODI No. 17509 Exp. 6-30-11 ELEC STATE OF CALIFORNIA

11-1-10
PLANS APPROVAL DATE

The State of California or its officers or agents shall not be responsible for the accuracy or completeness of electronic copies of this plan sheet.

Notes:

1. *Remove pull box and patch cavity to match surrounding surface.*
2. *3"C, 2#4, 1#8G (bare) to D19 via gutter under Panelboard D.*
3. *1½"C, one telephone cable, one control cable to WSB Control Cabinet. Abandon conduit and pull back cables to pull box located at "R-1" Line, Station 36+00 for reuse. For exact location of WSB Control Cabinet, see sheet EE-6.*
4. *1½"C, one telephone cable, one control cable to Office Area.*
5. *3"C, MT to gutter under Panelboard C.*
6. *Existing electrolier consists of Type 15 lighting standard and 208 V, 200 W luminaire. Remove anchor bolts and foundation up to depth of at least one foot below grade. Backfill resulting hole to match surrounding surface. Relocate electrolier. Exact location of the electrolier shall be as directed by the Engineer.*

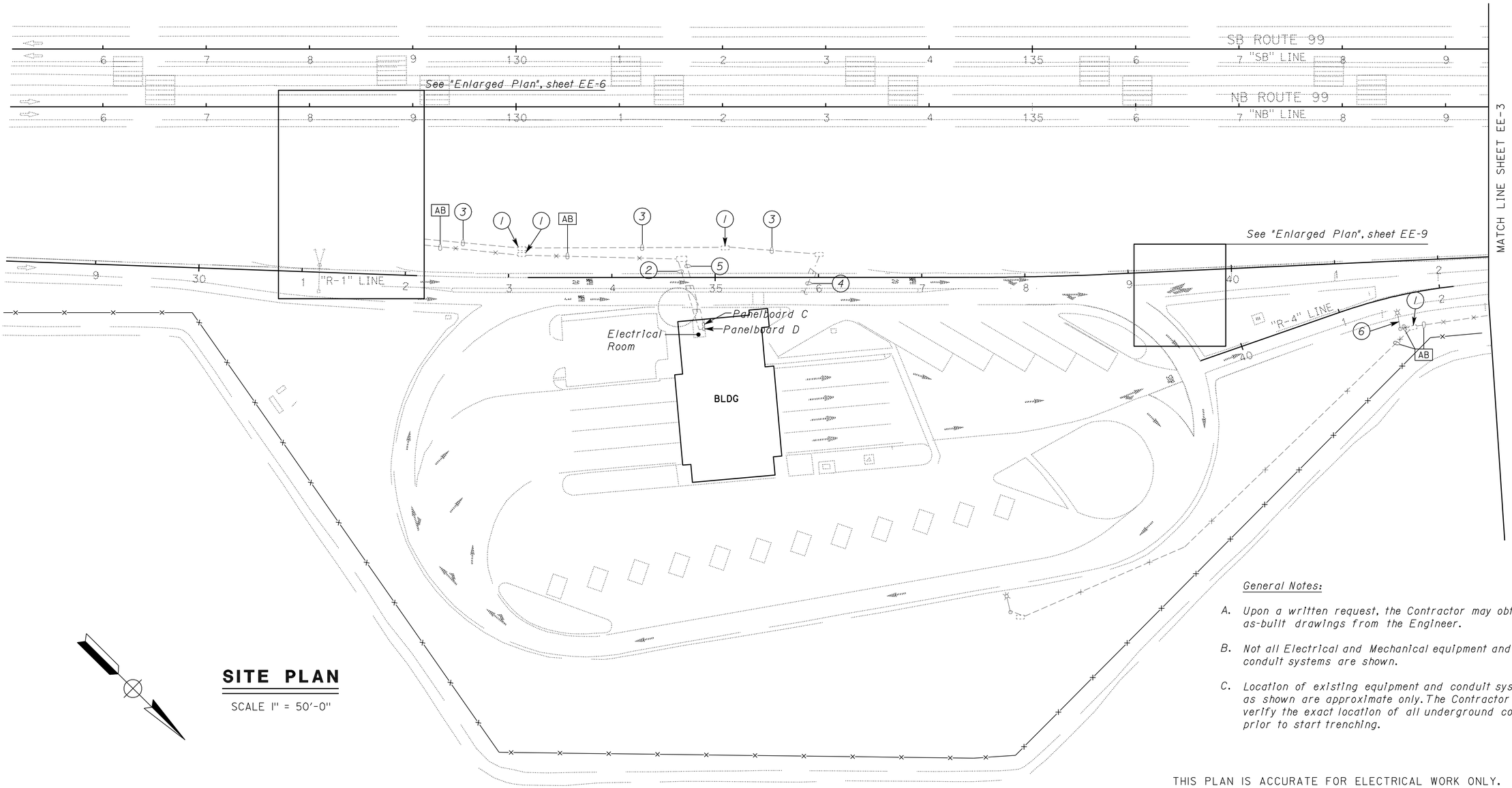

SITE PLAN

SCALE 1" = 50'-0"

General Notes:

A. *Upon a written request, the Contractor may obtain as-built drawings from the Engineer.*

B. *Not all Electrical and Mechanical equipment and conduit systems are shown.*

C. *Location of existing equipment and conduit systems as shown are approximate only. The Contractor shall verify the exact location of all underground conduits prior to start trenching.*

THIS PLAN IS ACCURATE FOR ELECTRICAL WORK ONLY.

	BY	CHECKED
DESIGN	Javid Amirazodi	Jesse Sandhu
DETAILS	Javid Amirazodi	Jesse Sandhu
QUANTITIES	Javid Amirazodi	Jesse Sandhu

STATE OF CALIFORNIA
DEPARTMENT OF TRANSPORTATION

DIVISION OF ENGINEERING SERVICES
ELECTRICAL-MECHANICAL-WATER AND WASTEWATER DESIGN

BRIDGE NO. 39W0001
POST MILE

CHOWCHILLA TRUCK INSPECTION FACILITY

PARTIAL EXISTING SITE PLAN I

SHEET **EE-2**

DOES SD Imperial Rev. 9/02

ORIGINAL SCALE IN INCHES FOR REDUCED PLANS 0 1 2 3

CU 10223
EA 415801

DISREGARD PRINTS BEARING EARLIER REVISION DATES → 3/18/09 5/18/09 6/12/09 3/23/10

REVISION DATES (PRELIMINARY STAGE ONLY) SHEET OF

24-NOV-2010 09:30

ee_02.dgn

Dist	COUNTY	ROUTE	POST MILES TOTAL PROJECT	SHEET No.	TOTAL SHEETS
10	Mer	99	0.0/4.6	519	607

Jarid Amirazodi 3-23-10
REGISTERED ELECTRICAL ENGINEER DATE

REGISTERED PROFESSIONAL ENGINEER J. AMIRAZODI No. 17509 Exp. 6-30-11 ELEC STATE OF CALIFORNIA

11-1-10
PLANS APPROVAL DATE

The State of California or its officers or agents shall not be responsible for the accuracy or completeness of electronic copies of this plan sheet.

General Notes:

A. *Upon a written request, the Contractor may obtain as-built drawings from the Engineer.*

B. *Not all Electrical and Mechanical equipment and conduit systems are shown.*

C. *Location of existing equipment and conduit systems as shown are approximate only. The Contractor shall verify the location of all underground conduits prior to start trenching.*

Notes:

(1) *Existing electrolier consists of Type 15 lighting standard and 208 V, 310 W luminaire. Remove anchor bolts and foundation up to depth of at least one foot below grade. Backfill resulting hole to match surrounding surface. Relocate electrolier to Station 161+80.*

(2) *Remove pull box and patch cavity to match surrounding surface.*

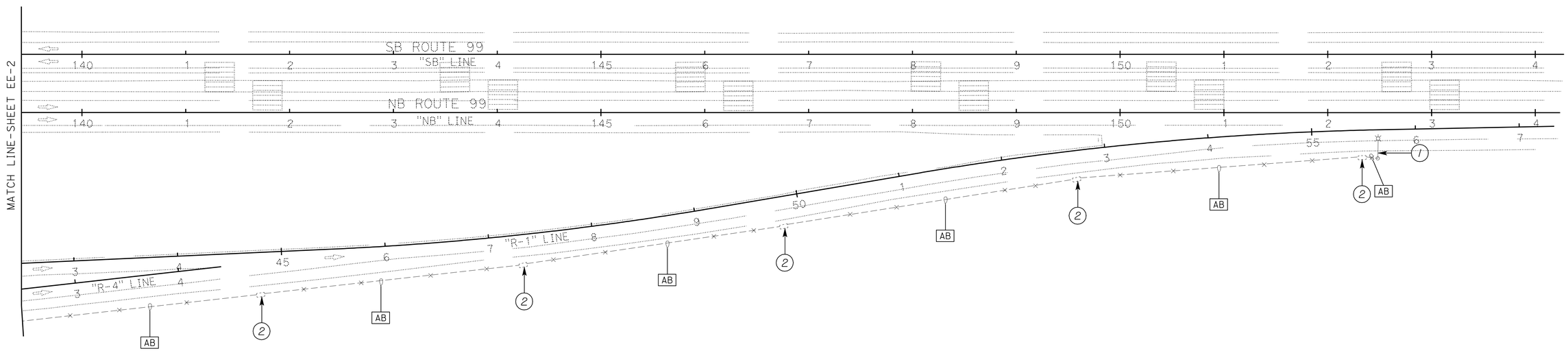

SITE PLAN

SCALE 1" = 50'-0"

THIS PLAN IS ACCURATE FOR ELECTRICAL WORK ONLY.

	BY	CHECKED
DESIGN	Javid Amirazodi	Jesse Sandhu
DETAILS	Javid Amirazodi	Jesse Sandhu
QUANTITIES	Javid Amirazodi	Jesse Sandhu

STATE OF CALIFORNIA
DEPARTMENT OF TRANSPORTATION

DIVISION OF ENGINEERING SERVICES
ELECTRICAL-MECHANICAL-WATER AND WASTEWATER DESIGN

BRIDGE NO. 39W0001
POST MILE

CHOWCHILLA TRUCK INSPECTION FACILITY

PARTIAL EXISTING SITE PLAN 2

SHEET **EE-3**

DOES SD Imperial Rev. 9/02

ORIGINAL SCALE IN INCHES FOR REDUCED PLANS 0 1 2 3

CU 10223
EA 415801

DISREGARD PRINTS BEARING EARLIER REVISION DATES → 3/20/09 5/28/09 6/22/09 3/23/10

REVISION DATES (PRELIMINARY STAGE ONLY) SHEET OF

24-NOV-2010 10:26

ee_03.dgn

Dist	COUNTY	ROUTE	POST MILES TOTAL PROJECT	SHEET No.	TOTAL SHEETS
10	Mer	99	0.0/4.6	520	607

REGISTERED ELECTRICAL ENGINEER — 3-23-10 DATE

REGISTERED PROFESSIONAL ENGINEER J. AMIRAZODI No. 17509 Exp. 6-30-11 ELEC STATE OF CALIFORNIA

11-1-10
PLANS APPROVAL DATE

The State of California or its officers or agents shall not be responsible for the accuracy or completeness of electronic copies of this plan sheet.

Notes:

1. 1½"C, 2*4, 1*8G.
2. 1"C, MC, 2*8, 1*8G.
3. 1½"C. Reinstall the existing one telephone cable and one control cable in new conduit.
4. (E) 1½"C, one telephone cable, one control cable to (E) Office Area.
5. (E) 3"C, 2*4, 1*8G (bare) to D19 via (E) gutter under (E) Panelboard D.
6. Existing Panelboard C, is Square D, Type NQOD442M225, 208/120 V, three phase, four wire with 225 ampere main circuit breaker. Provide one 80-ampere, 2-pole circuit breaker in spaces 32-34 to feed Type III-AF Subpanel Service Equipment Enclosure. Update Panelboard C directory.
7. (E) 3"C. Install 3*2, 1*8G to C32-34 via (E) gutter under (E) Panelboard C.
8. See E-4 sheet.
9. Relocated electrolier with new CIDH (Cast-In-Drilled Hole) pile foundation, anchor bolts, washer, nuts, and other needed equipment for proper installation and operation of electrolier. For installation details, see sheet RSP ES-6A of Standard Plans May 2006.
10. 1½"C, 2*4, 1*6G.

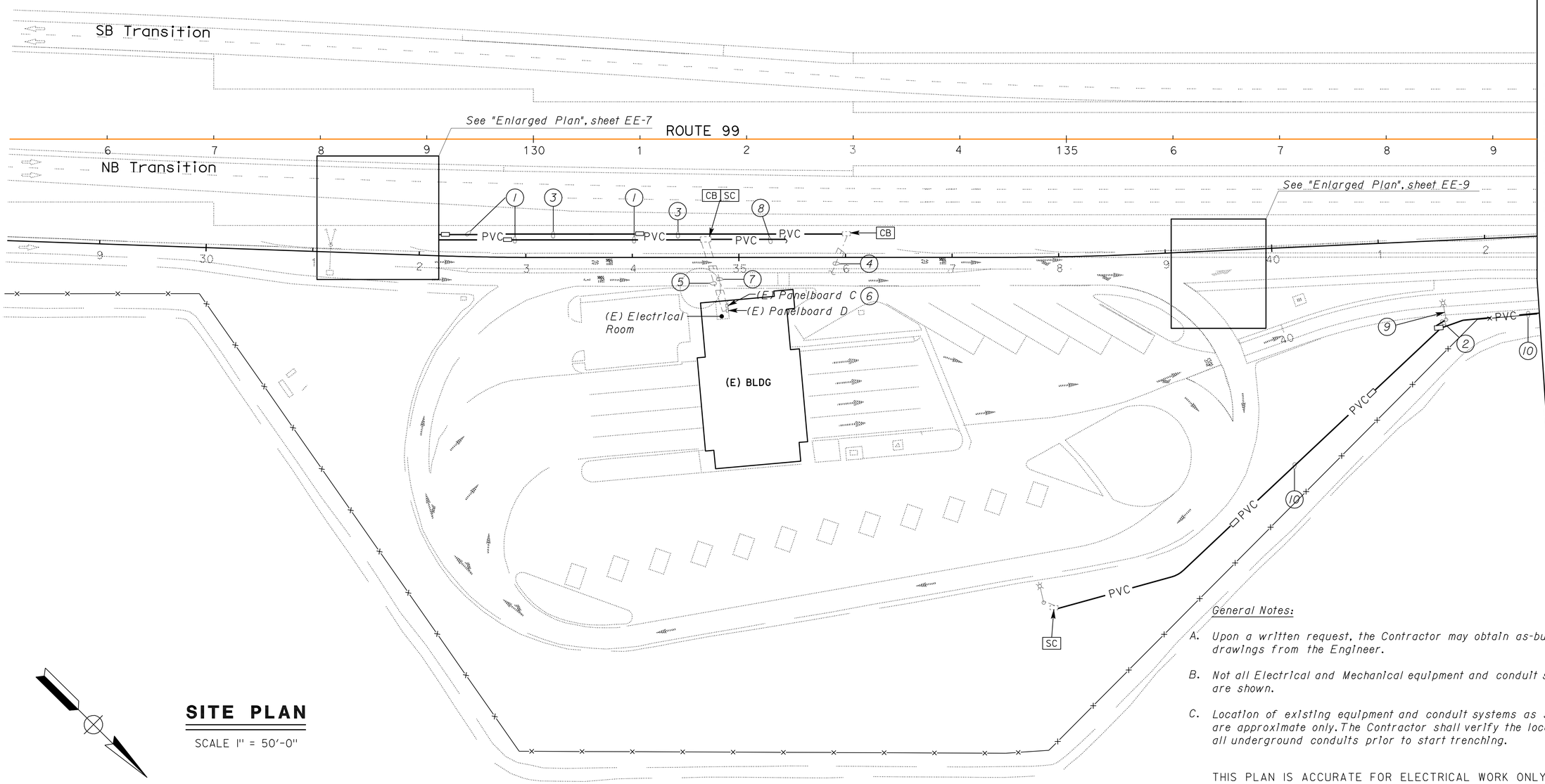

SITE PLAN

SCALE 1" = 50'-0"

General Notes:

A. Upon a written request, the Contractor may obtain as-built drawings from the Engineer.

B. Not all Electrical and Mechanical equipment and conduit systems are shown.

C. Location of existing equipment and conduit systems as shown are approximate only. The Contractor shall verify the location of all underground conduits prior to start trenching.

THIS PLAN IS ACCURATE FOR ELECTRICAL WORK ONLY.

	BY	CHECKED
DESIGN	David Amirazodi	Jesse Sandhu
DETAILS	David Amirazodi	Jesse Sandhu
QUANTITIES	David Amirazodi	Jesse Sandhu

STATE OF CALIFORNIA DEPARTMENT OF TRANSPORTATION

DIVISION OF ENGINEERING SERVICES
ELECTRICAL-MECHANICAL-WATER AND WASTEWATER DESIGN

BRIDGE NO. 39W0001
POST MILE

CHOWCHILLA TRUCK INSPECTION FACILITY

PARTIAL MODIFIED SITE PLAN I

SHEET **EE-4**

DOES SD Imperial Rev. 9/02

ORIGINAL SCALE IN INCHES FOR REDUCED PLANS 0 1 2 3

CU 10223
EA 415801

DISREGARD PRINTS BEARING EARLIER REVISION DATES → 3/18/09 5/18/09 6/12/09 3/23/10

REVISION DATES (PRELIMINARY STAGE ONLY) SHEET OF

24-NOV-2010 10:26

ee_04.dgn

Dist	COUNTY	ROUTE	POST MILES TOTAL PROJECT	SHEET No.	TOTAL SHEETS
10	Mer	99	0.0/4.6	521	607

REGISTERED ELECTRICAL ENGINEER — 3-23-10 DATE

REGISTERED PROFESSIONAL ENGINEER J. AMIRAZODI No. 17509 Exp. 6-30-11 ELEC STATE OF CALIFORNIA

11-1-10
PLANS APPROVAL DATE

The State of California or its officers or agents shall not be responsible for the accuracy or completeness of electronic copies of this plan sheet.

General Notes:

A. *Upon a written request, the Contractor may obtain as-built drawings from the Engineer.*

B. *Not all Electrical and Mechanical equipment and conduit systems are shown.*

C. *Location of existing equipment and conduit systems as shown are approximate only. The Contractor shall verify the location of all underground conduits prior to start trenching.*

Notes:

(1) *Relocated electrolier with new CIDH (Cast-In-Drilled Hole) pile foundation, anchor bolts, washers, nuts and other needed equipment for proper installation and operation of electrolier. For installation details, see sheet RSP ES-6A of the Standard Plans May 2006.*

(2) *1½"C, 2#4, 1#6G.*

(3) *1"C, MC, 2#8, 1#8G.*

(4) *Install grounding electrode inside the pull box and connect equipment grounding conductors to the grounding electrode using grounding clamps.*

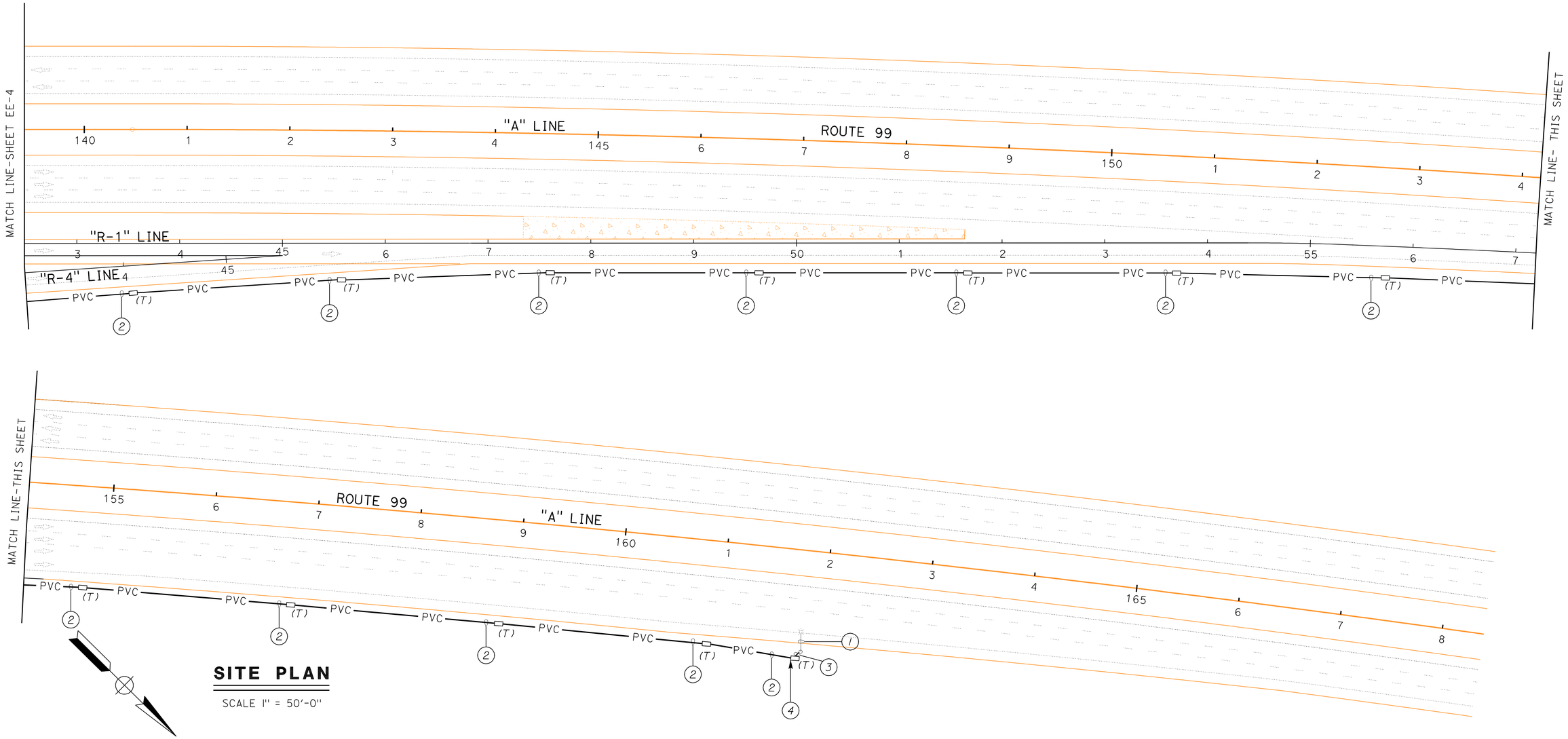

SITE PLAN

SCALE 1" = 50'-0"

THIS PLAN IS ACCURATE FOR ELECTRICAL WORK ONLY.

DESIGN	BY Javid Amirazodi	CHECKED Jesse Sandhu	
DETAILS	BY Javid Amirazodi	CHECKED Jesse Sandhu	
QUANTITIES	BY Javid Amirazodi	CHECKED Jesse Sandhu	

STATE OF CALIFORNIA
DEPARTMENT OF TRANSPORTATION

DIVISION OF ENGINEERING SERVICES
ELECTRICAL-MECHANICAL-WATER AND WASTEWATER DESIGN

BRIDGE NO. 39W0001
POST MILE

CHOWCHILLA TRUCK INSPECTION FACILITY

PARTIAL MODIFIED SITE PLAN 2

SHEET **EE-5**

DOES SD Imperial Rev. 9/02

ORIGINAL SCALE IN INCHES FOR REDUCED PLANS 0 1 2 3

CU 10223
EA 415801

DISREGARD PRINTS BEARING EARLIER REVISION DATES → REVISION DATES (PRELIMINARY STAGE ONLY) 3/18/09 5/28/09 6/12/09 3/23/10

SHEET OF

24-NOV-2010 09:30

ee_05.dgn

Dist	COUNTY	ROUTE	POST MILES TOTAL PROJECT	SHEET No.	TOTAL SHEETS
10	Mer	99	0.0/4.6	522	607

Javid Amirazodi 3-23-10
REGISTERED ELECTRICAL ENGINEER DATE

REGISTERED PROFESSIONAL ENGINEER J. AMIRAZODI No. 17509 Exp. 6-30-11 ELEC STATE OF CALIFORNIA

11-1-10
PLANS APPROVAL DATE

The State of California or its officers or agents shall not be responsible for the accuracy or completeness of electronic copies of this plan sheet.

Notes:

1. *Remove pull box and patch cavity to match surrounding surface.*
2. *2"C, 4 DLC, one DLC (spare), 4 STC cables, 3 antenna cables. Abandon conduit and pull back cables for reuse.*
3. *Relocate WSB Control Cabinet and all equipment inside. Record cable terminations prior to removal.*
4. *Remove and dispose existing WSB rotating pole. Remove anchor bolts and foundation up to depth of at least 3 feet below grade. Backfill resulting hole to match surrounding surface.*
5. *1½"C, one telephone cable, one control cable. Abandon conduit and pull back cables to pull box located at Station 36+00 for reuse in new conduit route.*
6. *Remove pull boxes on WSB Control Cabinet pad, remove WSB Control Cabinet pad and patch cavities to match surrounding surface.*
7. *Salvage AVI antenna and reinstall on new WSB rotating pole. Salvage antenna cable from antenna to the pull box adjacent to the pole for reuse.*
8. *Salvage antenna and reinstall on the new WSB rotating pole. Salvage antenna cable from antenna to the pull box adjacent to the pole for reuse.*

General Notes:

A. *Upon a written request, the Contractor may obtain as-built drawings from the Engineer.*

B. *Not all Electrical and Mechanical equipment and conduit systems are shown.*

C. *Location of existing equipment and conduit systems as shown are approximate only. The Contractor shall verify the location of all underground conduits prior to start trenching.*

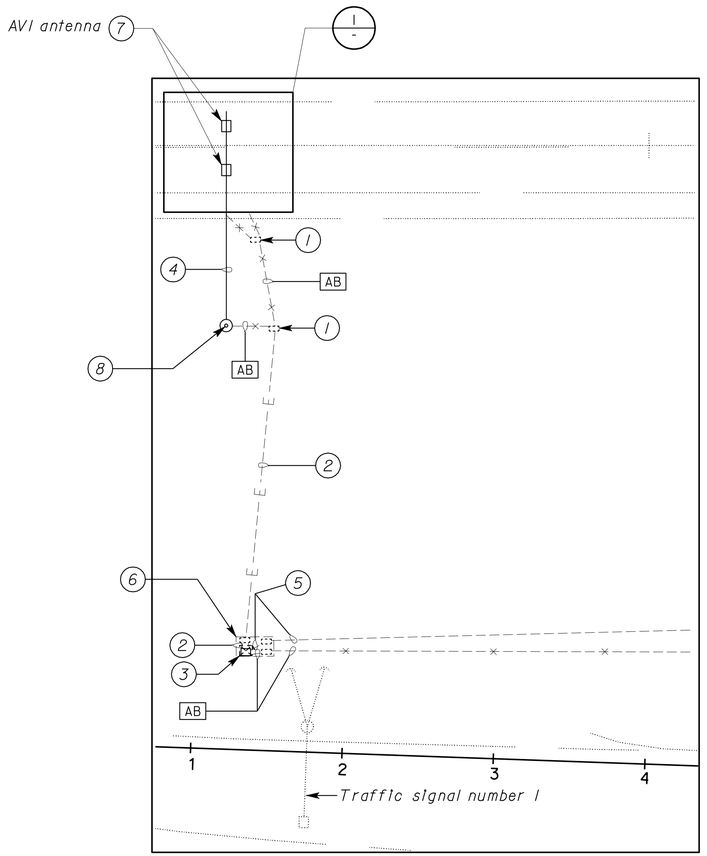

ENLARGED PLAN
SCALE 1" = 20'-0"

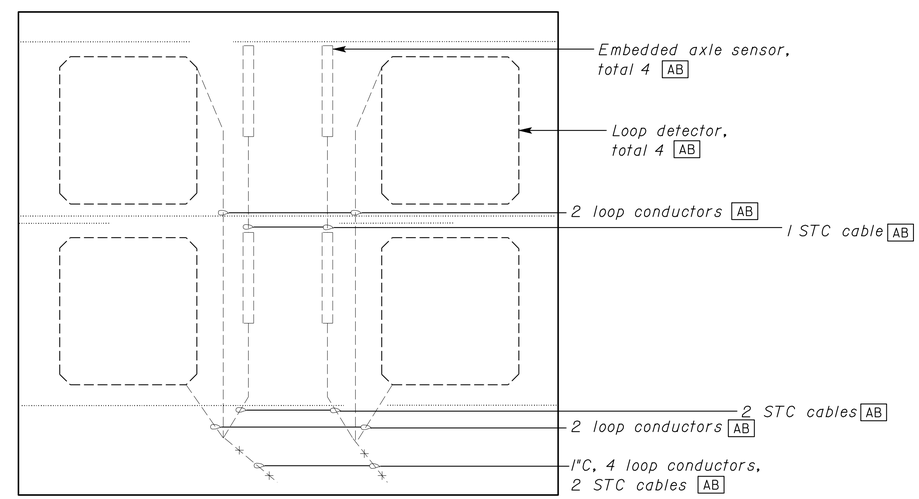

1 LOOP DETECTOR LAYOUT
SCALE 1" = 5'-0"

THIS PLAN IS ACCURATE FOR ELECTRICAL WORK ONLY.

	BY	CHECKED
DESIGN	Javid Amirazodi	Jesse Sandhu
DETAILS	Javid Amirazodi	Jesse Sandhu
QUANTITIES	Javid Amirazodi	Jesse Sandhu

STATE OF CALIFORNIA
DEPARTMENT OF TRANSPORTATION

DIVISION OF ENGINEERING SERVICES
ELECTRICAL-MECHANICAL-WATER AND WASTEWATER DESIGN

BRIDGE NO. 39W0001
POST MILE

CHOWCHILLA TRUCK INSPECTION FACILITY

EXISTING DETAILS

SHEET **EE-6**

DOES SD Imperial Rev. 9/02

ORIGINAL SCALE IN INCHES FOR REDUCED PLANS 0 1 2 3

CU 10223
EA 415801

DISREGARD PRINTS BEARING EARLIER REVISION DATES →

REVISION DATES (PRELIMINARY STAGE ONLY) 3/30/09 5/29/09 6/29/09 3/23/10

SHEET OF

24-NOV-2010 09:30

ee_06.dgn

Dist	COUNTY	ROUTE	POST MILES TOTAL PROJECT	SHEET No.	TOTAL SHEETS
10	Mer	99	0.0/4.6	523	607

Jarid Amirazodi 3-23-10
REGISTERED ELECTRICAL ENGINEER DATE

REGISTERED PROFESSIONAL ENGINEER J. AMIRAZODI No. 17509 Exp. 6-30-11 ELEC STATE OF CALIFORNIA

11-1-10
PLANS APPROVAL DATE

The State of California or its officers or agents shall not be responsible for the accuracy or completeness of electronic copies of this plan sheet.

Notes:

1. 2"C. Reinstall the salvaged 4 DLC, one DLC (spare), 4 STC cables in the new conduit and rewire.
2. 2"C. Reinstall the salvaged 3 antenna cables in the new conduit and rewire.
3. 2"C. Reinstall the salvaged 4 DLC, one DLC (spare), 4 STC and 3 antenna cables in the new conduit and rewire.
4. Relocated existing WSB Control Cabinet and all equipment inside.
5. WSB rotating pole. For details, see SES-1 to SES-4.
6. 1½"C, 2#4, 1#8G.
7. 1½"C. Reinstall the salvaged one telephone cable and one control cable and rewire.
8. Relocated WSB Control Cabinet and new pad. For detail, see A/EE-8 B/EE-8.
9. 3"C, MT.
10. No.6 pull box.
11. WSB rotating pole.
12. Relocated antenna, mount on top of pole and rewire.

General Notes:

A. Upon a written request, the Contractor may obtain as-built drawings from the Engineer.

B. Not all Electrical and Mechanical equipment and conduit systems are shown.

C. Location of existing equipment and conduit systems as shown are approximate only. The Contractor shall verify the location of all underground conduits prior to start trenching.

D. Location of loop detectors and embedded axle sensors shall be as recommended by the embedded axle sensor manufacturer.

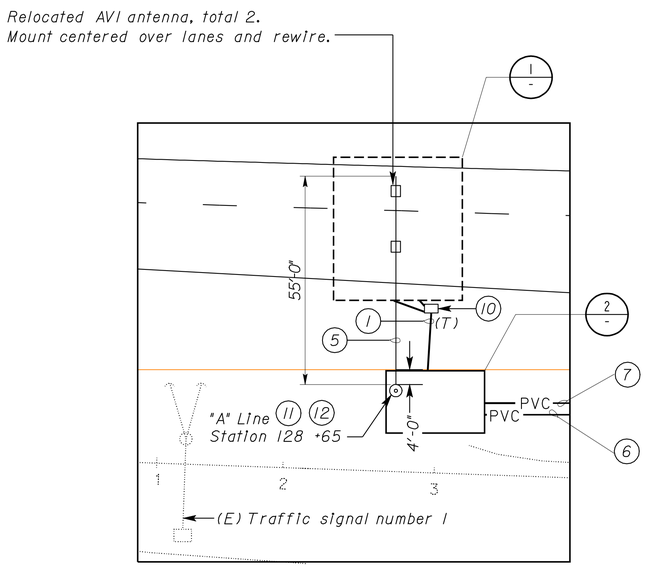

ENLARGED PLAN

SCALE 1" = 20'-0"

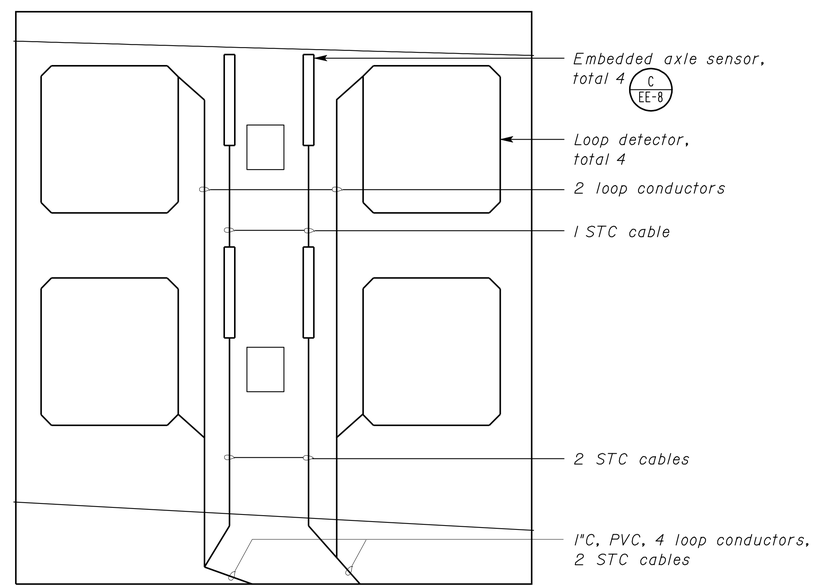

1 LOOP DETECTOR LAYOUT

SCALE 1" = 5'-0"

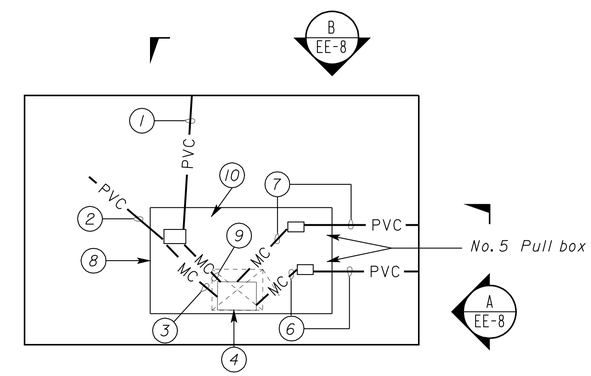

2 EQUIPMENT LAYOUT

SCALE 1" = 5'-0"

THIS PLAN IS ACCURATE FOR ELECTRICAL WORK ONLY.

	BY	CHECKED
DESIGN	Javid Amirazodi	Jesse Sandhu
DETAILS	Javid Amirazodi	Jesse Sandhu
QUANTITIES	Javid Amirazodi	Jesse Sandhu

STATE OF CALIFORNIA
DEPARTMENT OF TRANSPORTATION

DIVISION OF ENGINEERING SERVICES
ELECTRICAL-MECHANICAL-WATER AND WASTEWATER DESIGN

BRIDGE NO. 39W0001
POST MILE

CHOWCHILLA TRUCK INSPECTION FACILITY
MODIFIED DETAILS

SHEET EE-7

DOES SD Imperial Rev. 9/02

ORIGINAL SCALE IN INCHES FOR REDUCED PLANS 0 1 2 3

CU 10223
EA 415801

DISREGARD PRINTS BEARING EARLIER REVISION DATES → 3/20/09 5/28/09 6/12/09 3/23/10

REVISION DATES (PRELIMINARY STAGE ONLY) SHEET OF

24-NOV-2010 09:30

ee_07.dgn

Dist	COUNTY	ROUTE	POST MILES TOTAL PROJECT	SHEET No.	TOTAL SHEETS
10	Mer	99	0.0/4.6	524	607

Javid Amirazodi 3-23-10
REGISTERED ELECTRICAL ENGINEER DATE

REGISTERED PROFESSIONAL ENGINEER J. AMIRAZODI No. 17509 Exp. 6-30-11 ELEC STATE OF CALIFORNIA

11-1-10
PLANS APPROVAL DATE

The State of California or its officers or agents shall not be responsible for the accuracy or completeness of electronic copies of this plan sheet.

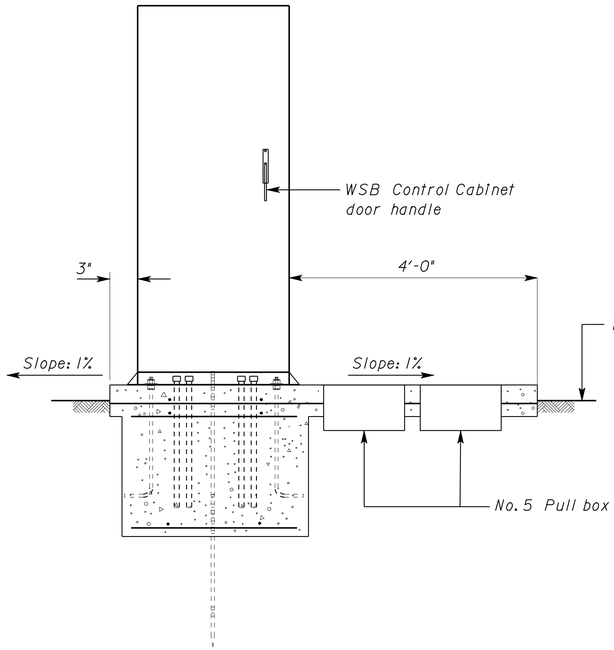

A ELEVATION
NO SCALE

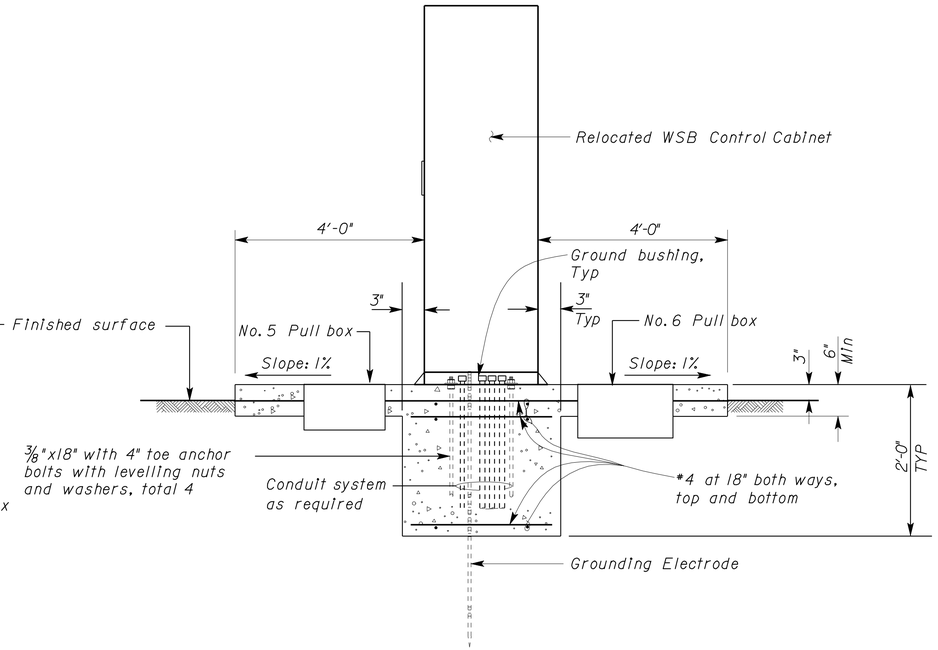

B ELEVATION
NO SCALE

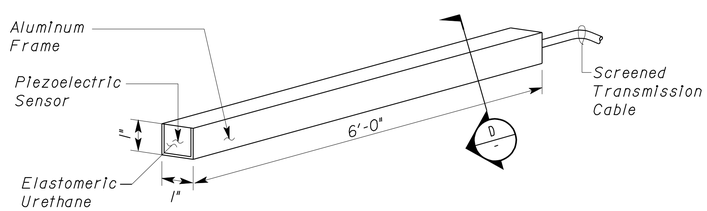

C EMBEDDED AXLE SENSOR
NO SCALE

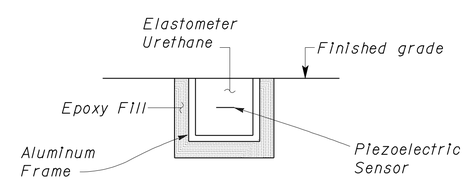

D SECTION
NO SCALE

THIS PLAN IS ACCURATE FOR ELECTRICAL WORK ONLY.

	BY	CHECKED
DESIGN	Javid Amirazodi	Jesse Sandhu
DETAILS	Javid Amirazodi	Jesse Sandhu
QUANTITIES	Javid Amirazodi	Jesse Sandhu

STATE OF CALIFORNIA DEPARTMENT OF TRANSPORTATION

DIVISION OF ENGINEERING SERVICES
ELECTRICAL-MECHANICAL-WATER AND WASTEWATER DESIGN

BRIDGE NO. 39W0001
POST MILE

CHOWCHILLA TRUCK INSPECTION FACILITY

DETAILS

SHEET **EE-8**

DOES SD Imperial Rev. 9/02

ORIGINAL SCALE IN INCHES FOR REDUCED PLANS 0 1 2 3

CU 10223
EA 415801

DISREGARD PRINTS BEARING EARLIER REVISION DATES →

REVISION DATES (PRELIMINARY STAGE ONLY) 3/18/09 5/28/09 6/12/09 3/23/10

SHEET OF

24-NOV-2010 09:30

ee_08.dgn

Dist	COUNTY	ROUTE	POST MILES TOTAL PROJECT	SHEET No.	TOTAL SHEETS
10	Mer	99	0.0/4.6	525	607

Jarid Amirazodi 3-23-10
REGISTERED ELECTRICAL ENGINEER DATE

REGISTERED PROFESSIONAL ENGINEER J. AMIRAZODI No. 17509 Exp. 6-30-11 ELEC STATE OF CALIFORNIA

11-1-10
PLANS APPROVAL DATE

The State of California or its officers or agents shall not be responsible for the accuracy or completeness of electronic copies of this plan sheet.

Notes:

1. EMS No. 2 on top of 5" diameter pipe, relocate EMS and pipe. Remove anchor bolts and foundation up to depth of at least 1 foot below grade. Backfill resulting hole to match surrounding surface.
2. 1"C, MC, one cable with 8 conductors (EMS No. 2 control). Abandon conduit and pull back cable from EMS No. 2 for reuse. Record cable termination prior to this removal.
3. ½"C, MC, 2*8 (light pole power), 1*8G.
4. 1"C, PVC, 2*10 (EMS No. 2 power), 1*10G, 2*8 (light pole power), 1*8G.
5. 1"C, PVC, one cable with 8 conductors (CMS No. 2 control).
6. Splice loop conductors to existing loop detector lead-in cables inside existing pull box.
7. Relocated EMS No. 2 and pipe. See Detail 1 this sheet.
8. 1"C, MC. Reinstall existing (EMS No. 2 control) cable and rewire.
9. 1"C, MC, 2*10, (EMS No. 2 power), 1*10G
10. Existing ½" C, MC, 2*8 (light pole power), 1*8G.
11. Existing 1"C, PVC, 2*10 (EMS *2 power), 1*10G, 2*8 (light pole power), 1*8G to ground rod inside the existing pull box.
12. Existing 1"C, PVC, one cable with 8 conductors (EMS No. 2 control).

General Notes:

A. Upon a written request, the Contractor may obtain as-built drawings from the Engineer.

B. Not all Electrical and Mechanical equipment and conduit systems are shown.

C. Location of existing equipment and conduit systems as shown are approximate only. The Contractor shall verify the location of all underground conduits prior to start trenching.

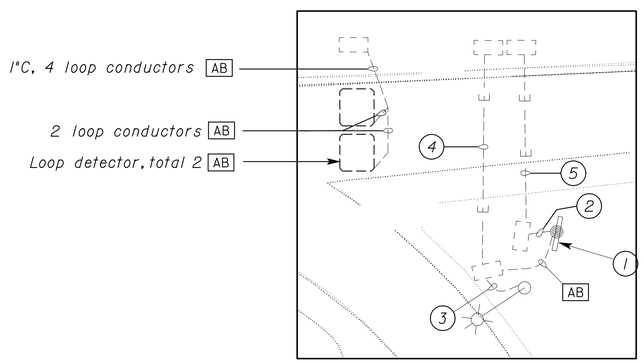

EXISTING

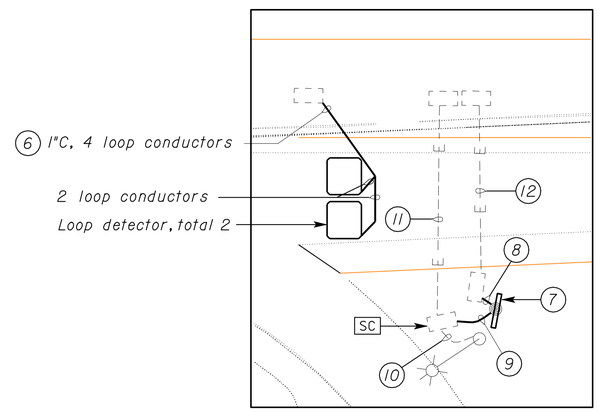

MODIFIED

ENLARGED PLAN
SCALE 1" = 20'-0"

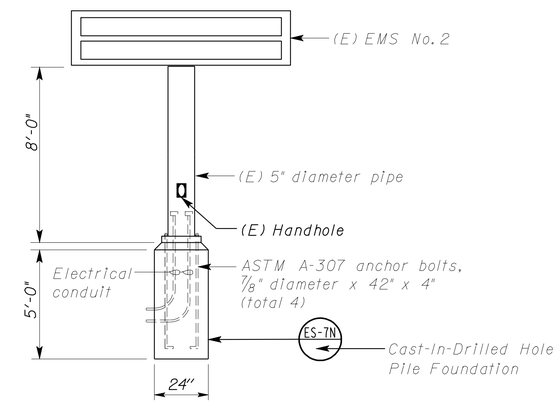

1 EMS No. 2 DETAIL
NO SCALE

THIS PLAN IS ACCURATE FOR ELECTRICAL WORK ONLY.

	BY	CHECKED
DESIGN	Javid Amirazodi	Jesse Sandhu
DETAILS	Javid Amirazodi	Jesse Sandhu
QUANTITIES	Javid Amirazodi	Jesse Sandhu

STATE OF CALIFORNIA
DEPARTMENT OF TRANSPORTATION

DIVISION OF ENGINEERING SERVICES
ELECTRICAL-MECHANICAL-WATER AND WASTEWATER DESIGN

BRIDGE NO. 39W0001
POST MILE

CHOWCHILLA TRUCK INSPECTION FACILITY
EXISTING AND MODIFIED DETAILS

SHEET EE-9

DOES SD Imperial Rev. 9/02

ORIGINAL SCALE IN INCHES FOR REDUCED PLANS 0 1 2 3

CU 10223
EA 415801

DISREGARD PRINTS BEARING EARLIER REVISION DATES
REVISION DATES (PRELIMINARY STAGE ONLY) 3/18/09 5/18/09 6/18/09 3/23/10
SHEET OF

24-NOV-2010 09:30
ee_09.dgn

DIST	COUNTY	ROUTE	POST MILES TOTAL PROJECT	SHEET No	TOTAL SHEETS
10	Mer	99	0.0/4.6	526	607

REGISTERED CIVIL ENGINEER — DATE 04-13-10

11-1-10
PLANS APPROVAL DATE

REGISTERED PROFESSIONAL ENGINEER — Larry Wu — No. C57035 — Exp. 6-30-11 — CIVIL — STATE OF CALIFORNIA

The State of California or its officers or agents shall not be responsible for the accuracy or completeness of electronic copies of this plan sheet.

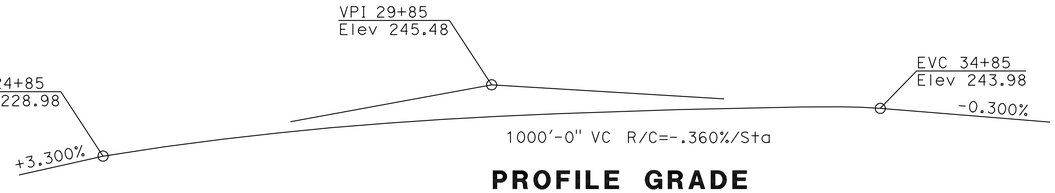

PROFILE GRADE

NO SCALE

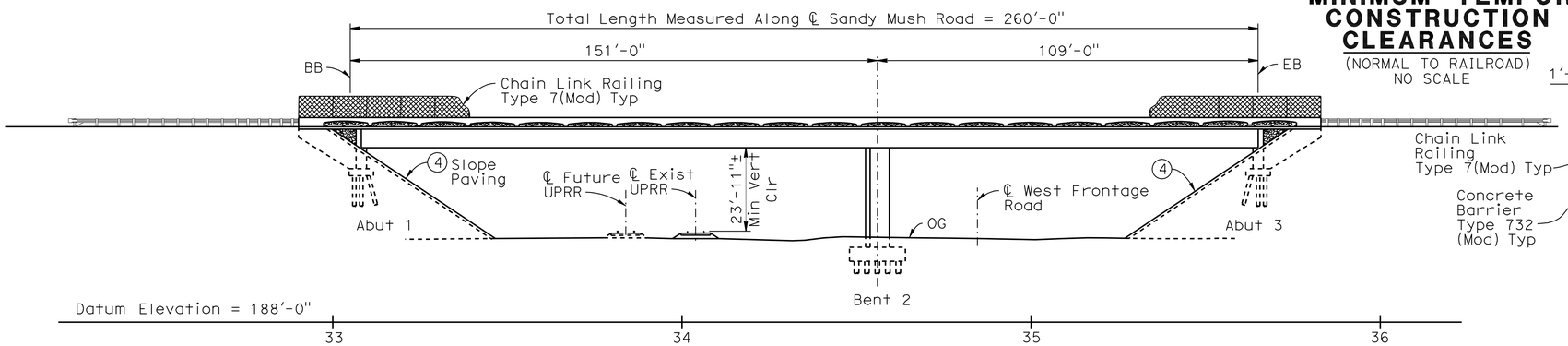

ELEVATION

1"=20'-0"

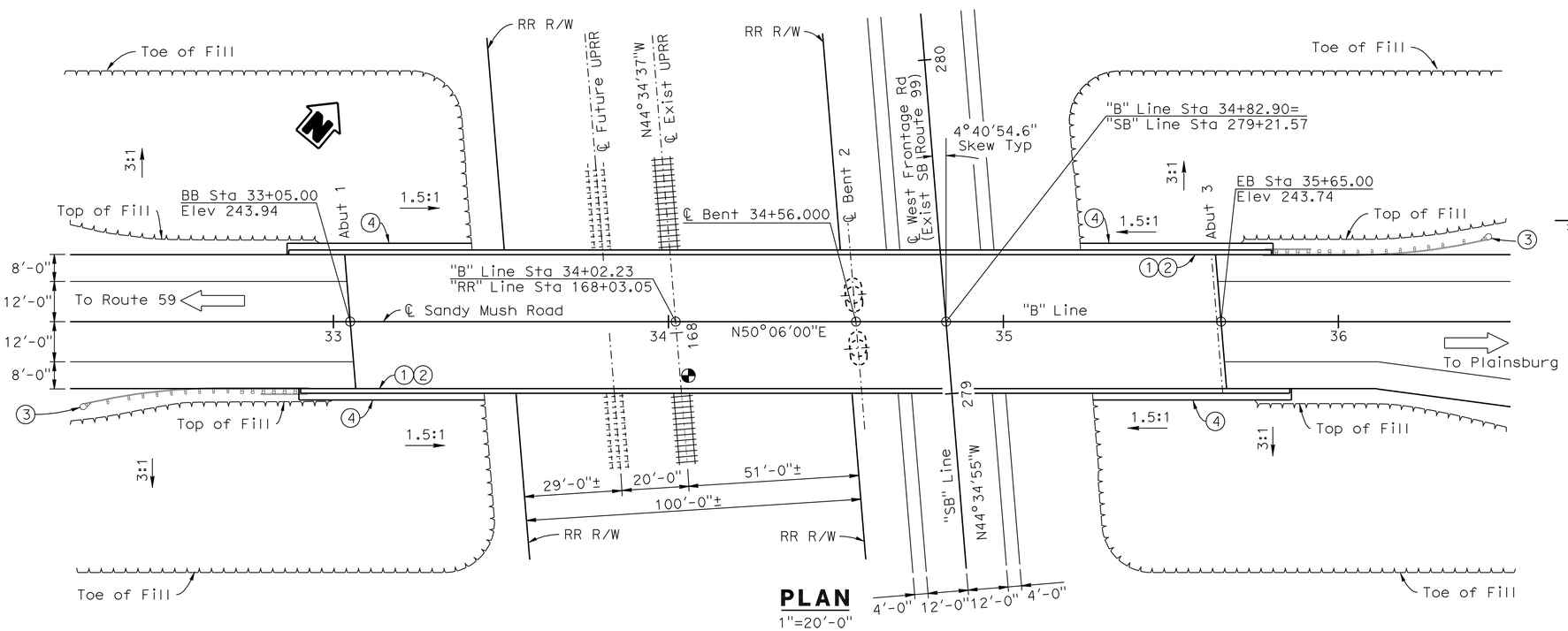

PLAN

1"=20'-0"

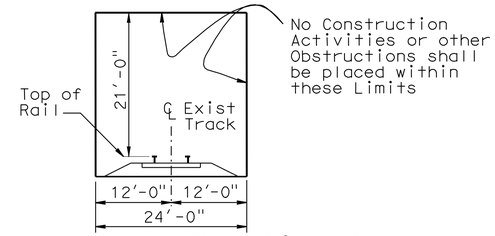

MINIMUM TEMPORARY CONSTRUCTION CLEARANCES

(NORMAL TO RAILROAD)
NO SCALE

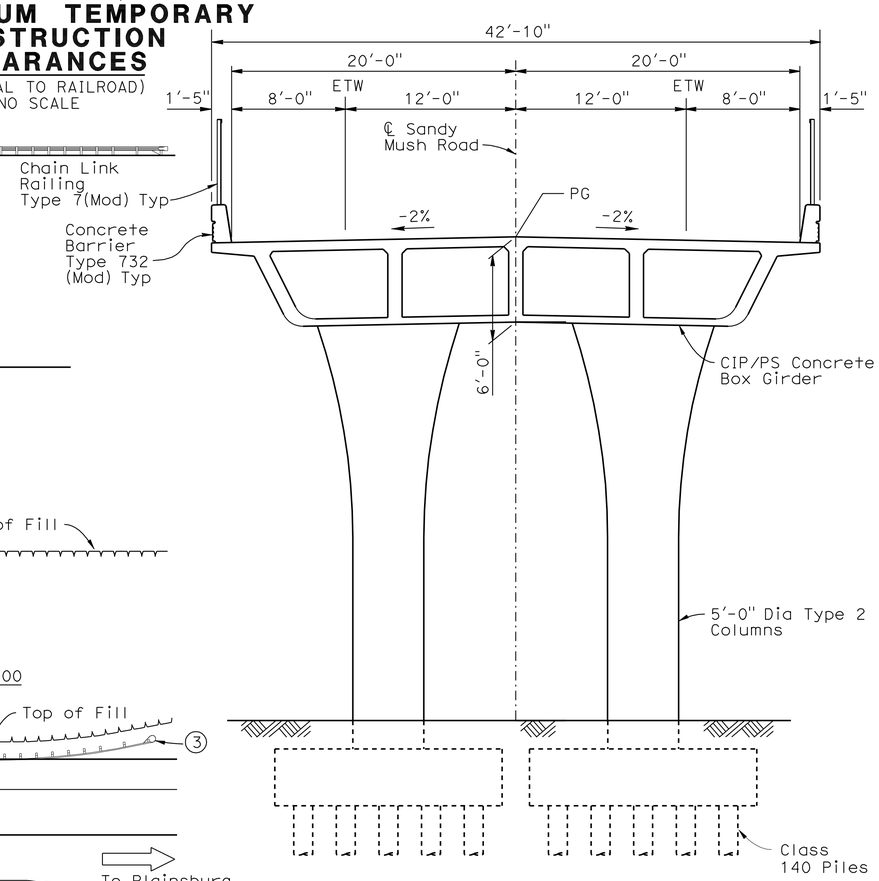

TYPICAL SECTION

3/16"=1'-0"

NOTES:

1. Paint "SANDY MUSH OVERHEAD"
2. Paint "BR. NO. 39-0236"
3. Metal Beam Guard Rail, see "Road Plans"
4. See "SLOPE PAVING-FULL SLOPE" sheet

◐ Indicates location of Min vertical clearance

For "General Notes", "Index to Plans", "Standard Plans", "Quantities", and "Pile Data", see "INDEX TO PLANS " sheet.

DANIEL T. ADAMS
DESIGN ENGINEER

	BY	CHECKED
DESIGN	L. Wu	J. Szabo
DETAILS	G. Hallstrom	J. Szabo
QUANTITIES	A. McPhee	J. Delgado

LOAD & RESISTANCE FACTOR DESIGN — LIVE LOADING: HL93 AND PERMIT DESIGN VEHICLE
LAYOUT — BY L. Wu — CHECKED J. Szabo
SPECIFICATIONS — BY M. Kopsa — PLANS AND SPECS COMPARED M. Kopsa

STATE OF CALIFORNIA
DEPARTMENT OF TRANSPORTATION

DIVISION OF ENGINEERING SERVICES
STRUCTURE DESIGN
DESIGN BRANCH 10

BRIDGE NO. 39-0236
POST MILE 3.4

SANDY MUSH OVERHEAD
GENERAL PLAN

STRUCTURES DESIGN GENERAL PLAN SHEET (ENGLISH) (REV. 10/25/05)

ORIGINAL SCALE IN INCHES FOR REDUCED PLANS 0 1 2 3

CU 10
EA 415801

DISREGARD PRINTS BEARING EARLIER REVISION DATES

REVISION DATES: 06-15-07 | 09-14-07 | 1-31-08 | 6-05-08 | 3-13-09 | 7-15-09 | 3-08-10 | 4-07-10

SHEET 1 OF 20

FILE => 390236agp01.dgn

STRUCTURES DESIGN GENERAL PLAN SHEET (ENGLISH) (REV.07-24-06)

USERNAME => trlenard DATE PLOTTED => 03-NOV-2010 TIME PLOTTED => 14:00

DIST	COUNTY	ROUTE	POST MILES TOTAL PROJECT	SHEET No	TOTAL SHEETS
10	Mer	99	0.0/4.6	527	607

REGISTERED CIVIL ENGINEER — DATE 04-13-10

11-1-10
PLANS APPROVAL DATE

REGISTERED PROFESSIONAL ENGINEER — Larry Wu — No. C57035 — Exp. 6-30-11 — CIVIL — STATE OF CALIFORNIA

The State of California or its officers or agents shall not be responsible for the accuracy or completeness of electronic copies of this plan sheet.

INDEX TO PLANS

SHEET NO.	TITLE
1.	GENERAL PLAN
2.	INDEX TO PLANS
3.	DECK CONTOURS
4.	FOUNDATION PLAN
5.	ABUTMENT LAYOUT
6.	ABUTMENT DETAILS No.1
7.	ABUTMENT DETAILS No.2
8.	BENT LAYOUT
9.	BENT DETAILS NO.1
10.	BENT DETAILS NO.2
11.	TYPICAL SECTION
12.	GIRDER LAYOUT
13.	GIRDER REINFORCEMENT
14.	ARCHITECTURE DETAILS
15.	CHAIN LINK RAILING TYPE 7 (MOD)
16.	SLOPE PAVING
17.	LOG OF TEST BORINGS, 1 OF 4
18.	LOG OF TEST BORINGS, 2 OF 4
19.	LOG OF TEST BORINGS, 3 OF 4
20.	LOG OF TEST BORINGS, 4 OF 4

STANDARD PLANS DATED MAY 2006

	A10A	ACRONYMS AND ABBREVIATIONS (SHEET 1 OF 2)
	A10B	ACRONYMS AND ABBREVIATIONS (SHEET 2 OF 2)
	A10C	SYMBOLS (SHEET 1 OF 2)
	A10D	SYMBOLS (SHEET 2 OF 2)
	A62C	LIMITS OF PAYMENT FOR EXCAVATION AND BACKFILL-BRIDGE
	BO-1	BRIDGE DETAILS
	BO-3	BRIDGE DETAILS
	BO-5	BRIDGE DETAILS
	BO-13	BRIDGE DETAILS
	B2-5	PILE DETAILS CLASS 90 AND CLASS 140
RSP	B6-21	JOINT SEALS (MAXIMUM MOVEMENT RATING = 2")
	B7-1	BOX GIRDER DETAILS
	B8-5	CAST-IN-PLACE PRESTRESSED GIRDER DETAILS
	B11-55	CONCRETE BARRIER TYPE 732

STANDARD PLAN SHEET NO.

DETAIL NO.

PILE DATA TABLE

B2-5

Location	Pile Type	Nominal Resistance		Design Tip Elevations(ft)	Specified Tip Elevations(ft)	Nominal Driving Resistance Req'd
		Compression	Tension			
Abut 1	Class 140 Alternate X	280 kips	0	183.0	183.0	280 Kips
Bent 2	Class 140 Alternate X	270 kips	80 Kips	183.0 (a) 180.0 (b) 198.0 (c)	180.0	270 Kips
Abut 3	Class 140 Alternate X	280 kips	0	183.0	183.0	280 Kips

NOTE: Design tip elevations are controlled by: (a) Compression (Strength Limit)
(b) Compression (Extreme Limit)
(c) Tension (Extreme Limit)

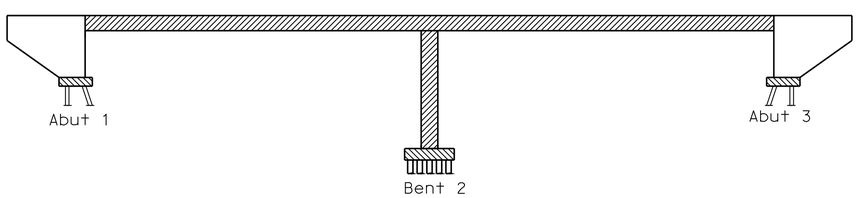

Structural Concrete, Bridge

Structural Concrete, Bridge Footing

Structural Concrete, Bridge (4000 psi @ 28 days)

CONCRETE STRENGTH AND TYPE LIMITS

No Scale

GENERAL NOTES
LOAD AND RESISTANCE FACTOR DESIGN

DESIGN: AASHTO LRFD BRIDGE DESIGN SPECIFICATIONS, 4th Edition and the CALTRANS Amendments, preface dated Dec. 2008.

SEISMIC DESIGN: Caltrans Seismic Design Criteria (SDC) Version 1.4, July, 2006

DEAD LOAD: Includes 35 Psf for future wearing surface.

LIVE LOADING: HL93 and permit design load.

SEISMIC LOADING: CALTRANS SDC ARS Curve for Soil Profile Type D (M = 6.5±0.25), (Peak Rock Acceleration = 0.2 g).

REINFORCED CONCRETE: f_y = 60 ksi
f'_c = 3600 psi, unless otherwise noted
n = 8

See "Prestressing Notes" on "GIRDER LAYOUT" sheet.

QUANTITIES

STRUCTURE EXCAVATION (BRIDGE)	408	CY
STRUCTURE BACKFILL (BRIDGE)	264	CY
FURNISH PILING (CLASS 140) (ALTERNATIVE X)	2,034	LF
DRIVE PILE (CLASS 140) (ALTERNATIVE X)	58	EA
PRESTRESSING CAST-IN-PLACE CONCRETE	LUMP	SUM
STRUCTURAL CONCRETE, BRIDGE FOOTING	93	CY
STRUCTURAL CONCRETE, BRIDGE	970	CY
COBBLESTONE TEXTURE	170	SQFT
JOINT SEAL (MR 2")	87	LF
BAR REINFORCING STEEL (BRIDGE)	216,500	LB
PREPARE AND STAIN CONCRETE	900	SQFT
8" PERFORATED STEEL PIPE UNDERDRAIN (.064" THICK)	85	LF
PERMEABLE MATERIAL (BRIDGE)	16	CY
8" CORRUGATED STEEL PIPE DOWNDRAIN (.064" THICK)	180	LF
SLOPE PAVING (EXPOSED AGGREGATE)	4,400	SQFT
CHAIN LINK RAILING (TYPE 7 MODIFIED)	600	LF
CONCRETE BARRIER (TYPE 732 MODIFIED)	600	LF

	BY	CHECKED
DESIGN	L. Wu	J. Szabo
DETAILS	Y. Tang	J. Szabo
QUANTITIES	A. McPhee	J. Delgado

STATE OF CALIFORNIA
DEPARTMENT OF TRANSPORTATION

DIVISION OF ENGINEERING SERVICES
STRUCTURE DESIGN
DESIGN BRANCH 10

BRIDGE NO. 39-0236
POST MILE 3.4

SANDY MUSH OVERHEAD
INDEX TO PLANS

STRUCTURES DESIGN DETAIL SHEET (ENGLISH) (REV. 10/25/05)

ORIGINAL SCALE IN INCHES FOR REDUCED PLANS 0 1 2 3

CU 10
EA 415801

DISREGARD PRINTS BEARING EARLIER REVISION DATES

REVISION DATES: 1-31-08, 3-17-09, 8-26-09, 11-10-09, 3-08-10, 4-13-10

SHEET 2 OF 20

FILE => 390236aitp02.dgn

USERNAME => friehard DATE PLOTTED => 03-NOV-2010 TIME PLOTTED => 14:00

DIST	COUNTY	ROUTE	POST MILES TOTAL PROJECT	SHEET No	TOTAL SHEETS
10	Mer	99	0.0/4.6	528	607

REGISTERED CIVIL ENGINEER 04-13-10 DATE

11-1-10
PLANS APPROVAL DATE

REGISTERED PROFESSIONAL ENGINEER Larry Wu No. C57035 Exp. 6-30-11 CIVIL STATE OF CALIFORNIA

The State of California or its officers or agents shall not be responsible for the accuracy or completeness of electronic copies of this plan sheet.

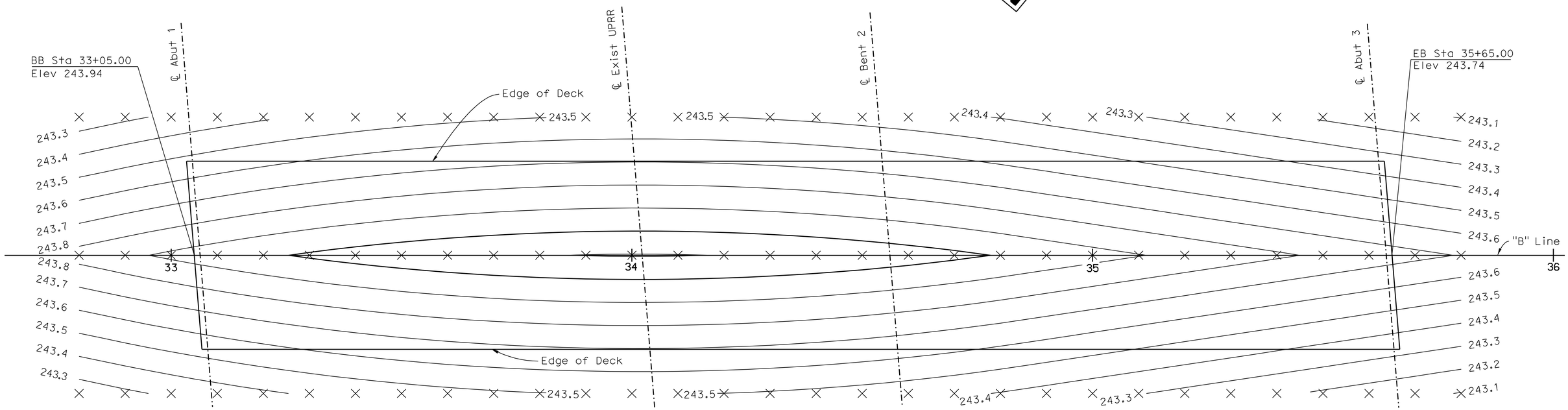

DECK CONTOURS

3/32 "=1'-0"

NOTES:

1. x - 10'-0" intervals along station line.
2. Contour intervals = 0.1'.
3. Contours do not include camber.

DESIGN	BY L. Wu	CHECKED J. Szabo
DETAILS	BY Y. Tang	CHECKED J. Szabo
QUANTITIES	BY A. McPhee	CHECKED J. Delgado

STATE OF CALIFORNIA
DEPARTMENT OF TRANSPORTATION

DIVISION OF ENGINEERING SERVICES
STRUCTURE DESIGN
DESIGN BRANCH 10

BRIDGE NO. 39-0236
POST MILE 3.4

SANDY MUSH OVERHEAD
DECK CONTOURS

STRUCTURES DESIGN DETAIL SHEET (ENGLISH) (REV. 10/25/05)

ORIGINAL SCALE IN INCHES FOR REDUCED PLANS 0 1 2 3

CU 10
EA 415801

DISREGARD PRINTS BEARING EARLIER REVISION DATES

REVISION DATES: 1-18-08 6-04-08

SHEET 3 OF 20

FILE => 390236ddc03.dgn

USERNAME => trlenord DATE PLOTTED => 03-NOV-2010 TIME PLOTTED => 14:00

DIST	COUNTY	ROUTE	POST MILES TOTAL PROJECT	SHEET No	TOTAL SHEETS
10	Mer	99	0.0/4.6	529	607

REGISTERED CIVIL ENGINEER — DATE 04-13-10

11-1-10
PLANS APPROVAL DATE

The State of California or its officers or agents shall not be responsible for the accuracy or completeness of electronic copies of this plan sheet.

REGISTERED PROFESSIONAL ENGINEER — Larry Wu — No. C57035 — Exp. 6-30-11 — CIVIL — STATE OF CALIFORNIA

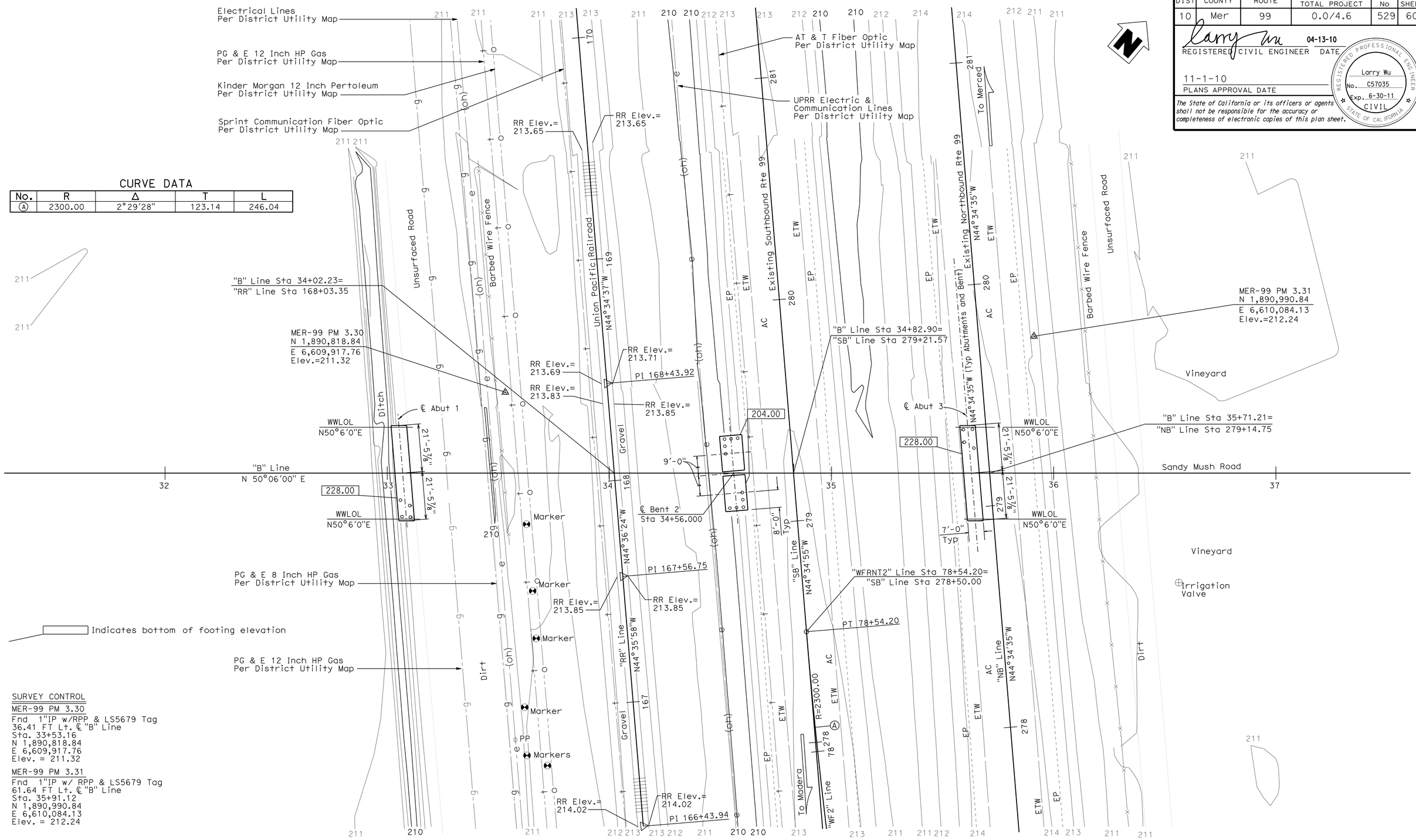

CURVE DATA

No.	R	Δ	T	L
Ⓐ	2300.00	2°29'28"	123.14	246.04

SURVEY CONTROL

MER-99 PM 3.30
Fnd 1"IP w/RPP & LS5679 Tag
36.41 FT Lt. ℄ "B" Line
Sta. 33+53.16
N 1,890,818.84
E 6,609,917.76
Elev. = 211.32

MER-99 PM 3.31
Fnd 1"IP w/ RPP & LS5679 Tag
61.64 FT Lt. ℄ "B" Line
Sta. 35+91.12
N 1,890,990.84
E 6,610,084.13
Elev. = 212.24

PRELIMINARY INVESTIGATION SECTION

SCALE	VERT.DATUM NAVD29	PHOTOGRAMMETRY AS OF: X			
1"=20'	HORZ.DATUM NAD83 (1991.35)	SURVEYED	BY District	CHECKED	BY C.Fassett 09/2007
ALIGNMENT TIES Dist. Traverse Sheet		DRAFTED	BY T.Zolnikova 09/2007	CHECKED	BY M.Licha 09/2007

	BY	CHECKED
DESIGN	L. Wu	J. Szabo
DETAILS	Y. Tang	J. Szabo
QUANTITIES	A. McPhee	J. Delgado

STATE OF CALIFORNIA
DEPARTMENT OF TRANSPORTATION

DIVISION OF ENGINEERING SERVICES
STRUCTURE DESIGN
DESIGN BRANCH 10

BRIDGE NO. 39-0236
POST MILE 0.0/4.6

SANDY MUSH OVERHEAD
FOUNDATION PLAN

STRUCTURES FOUNDATION PLAN SHEET (ENGLISH) (REV. 10/25/05)

ORIGINAL SCALE IN INCHES FOR REDUCED PLANS 0 1 2 3

CU 10
EA 415801

DISREGARD PRINTS BEARING EARLIER REVISION DATES

REVISION DATES: 12-1-07 03-17-09

SHEET 4 OF 20

FILE => 390236efdp104.dgn

USERNAME => trienard DATE PLOTTED => 03-NOV-2010 TIME PLOTTED => 14:00

DIST	COUNTY	ROUTE	POST MILES TOTAL PROJECT	SHEET No	TOTAL SHEETS
10	Mer	99	0.0/4.6	530	607

REGISTERED CIVIL ENGINEER 04-13-10 DATE

11-1-10
PLANS APPROVAL DATE

REGISTERED PROFESSIONAL ENGINEER Larry Wu No. C57035 Exp. 6-30-11 CIVIL STATE OF CALIFORNIA

The State of California or its officers or agents shall not be responsible for the accuracy or completeness of electronic copies of this plan sheet.

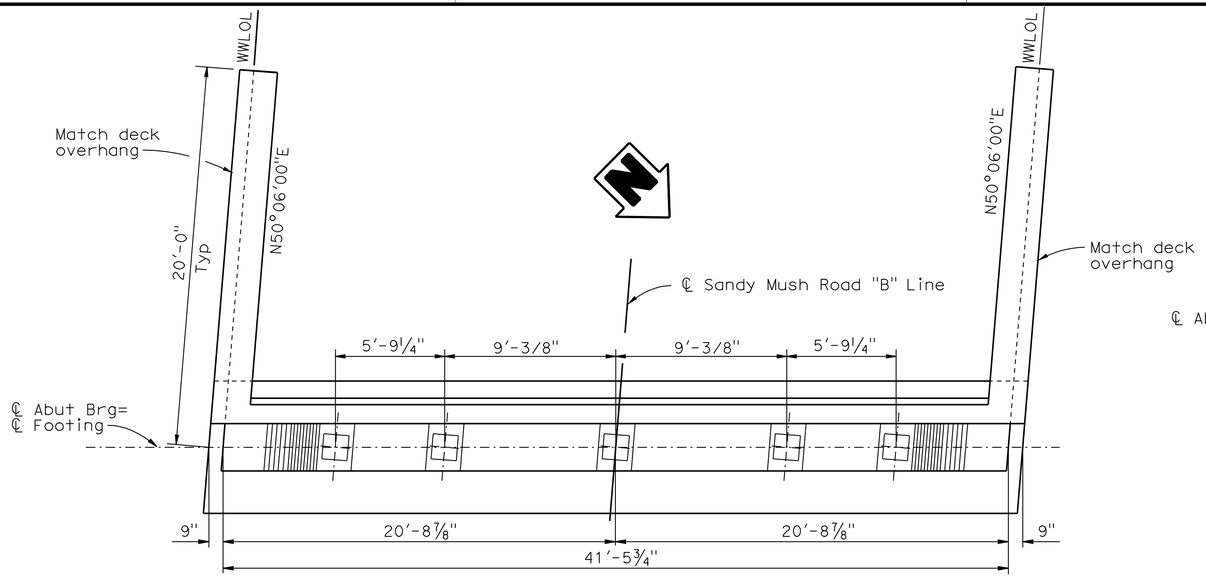

PLAN

¼"=1'-0"

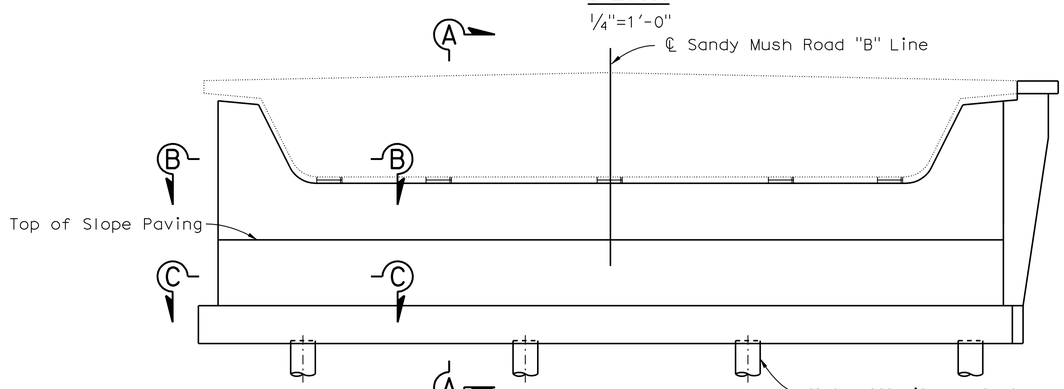

NOTE: Abut 1 shown, Abut 3 sililar.

ELEVATION

¼"=1'-0"

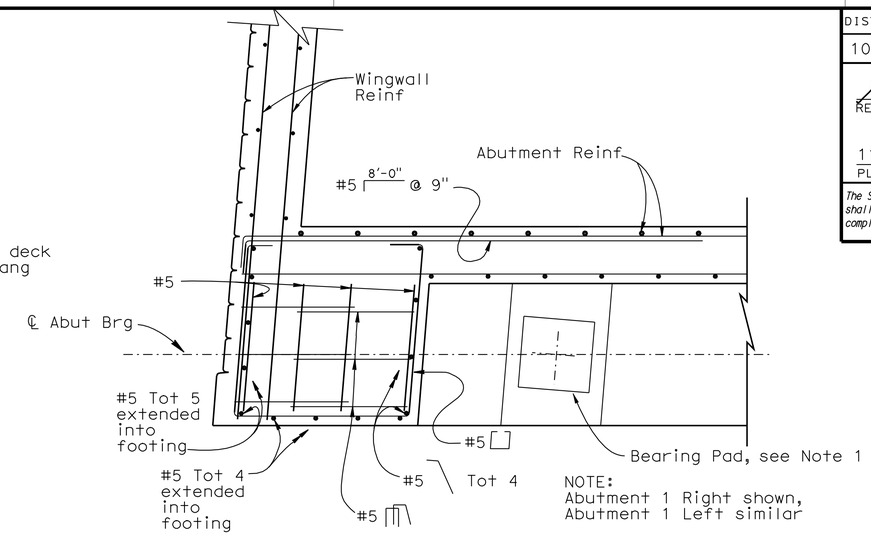

SECTION B-B

¾"=1'-0"

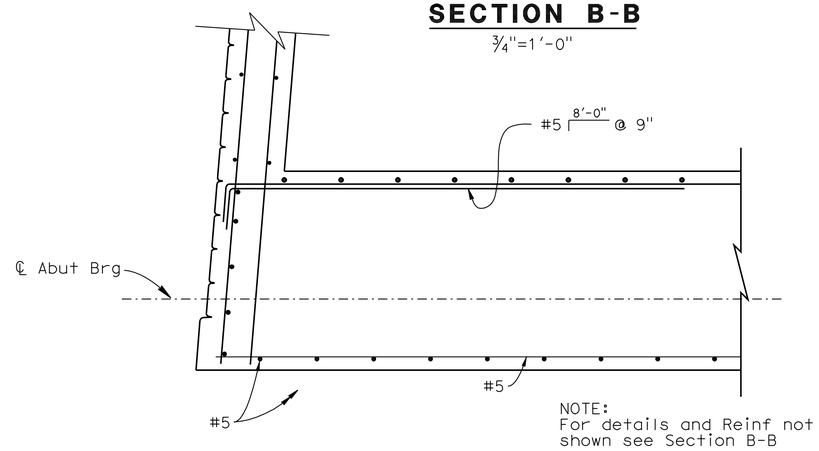

SECTION C-C

¾"=1'-0"

LEGEND:

⊕ Indicates vertical concrete pile

⊕ Indicates battered concrete pile at 1:3

NOTES:

1. Bearing pads shall be 16" x 16" x 2" (elastomer only) steel reinforced elastomeric bearings pads Tot 5, for details see "ABUTMENT DETAILS NO. 1" sheet.
2. For Section A-A, see "ABUTMENT DETAILS NO. 1" sheet.

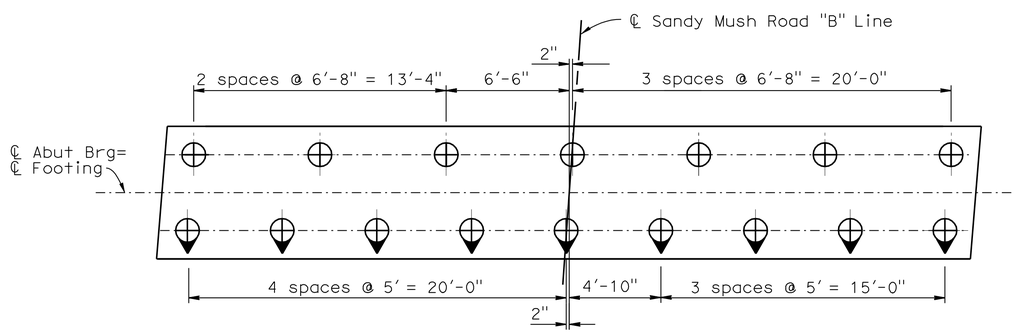

PILE LAYOUT - ABUTMENT 1

¼"=1'-0"

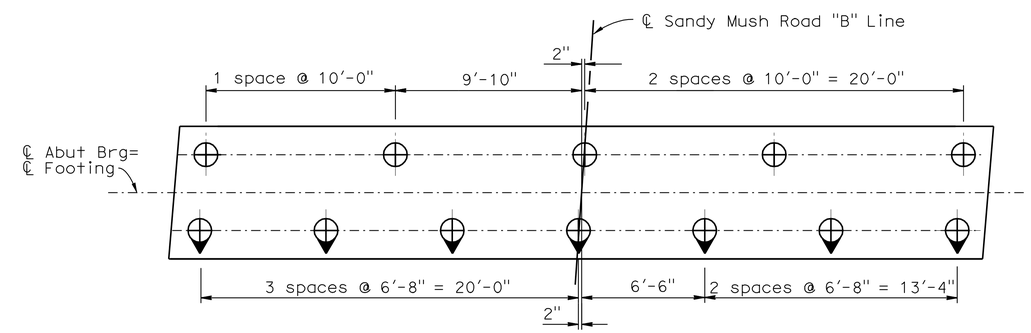

PILE LAYOUT - ABUTMENT 3

¼"=1'-0"

	BY	CHECKED
DESIGN	L. Wu	J. Szabo
DETAILS	Y. Tang	J. Szabo
QUANTITIES	A. McPhee	J. Delgado

STATE OF CALIFORNIA
DEPARTMENT OF TRANSPORTATION

DIVISION OF ENGINEERING SERVICES
STRUCTURE DESIGN
DESIGN BRANCH 10

BRIDGE NO. 39-0236
POST MILE 3.4

SANDY MUSH OVERHEAD
ABUTMENT LAYOUT

STRUCTURES DESIGN DETAIL SHEET (ENGLISH) (REV. 10/25/05)

ORIGINAL SCALE IN INCHES FOR REDUCED PLANS 0 1 2 3

CU 10
EA 415801

DISREGARD PRINTS BEARING EARLIER REVISION DATES

REVISION DATES: 12-4-07, 2-8-08, 2-15-08, 3-17-09, 4-07-10

SHEET 5 OF 20

FILE => 390236fa_lo05.dgn

USERNAME => trlenard DATE PLOTTED => 03-NOV-2010 TIME PLOTTED => 14:00

DIST	COUNTY	ROUTE	POST MILES TOTAL PROJECT	SHEET No	TOTAL SHEETS
10	Mer	99	0.0/4.6	531	607

REGISTERED CIVIL ENGINEER 04-13-10 DATE

11-1-10
PLANS APPROVAL DATE

REGISTERED PROFESSIONAL ENGINEER Larry Wu No. C57035 Exp. 6-30-11 CIVIL STATE OF CALIFORNIA

The State of California or its officers or agents shall not be responsible for the accuracy or completeness of electronic copies of this plan sheet.

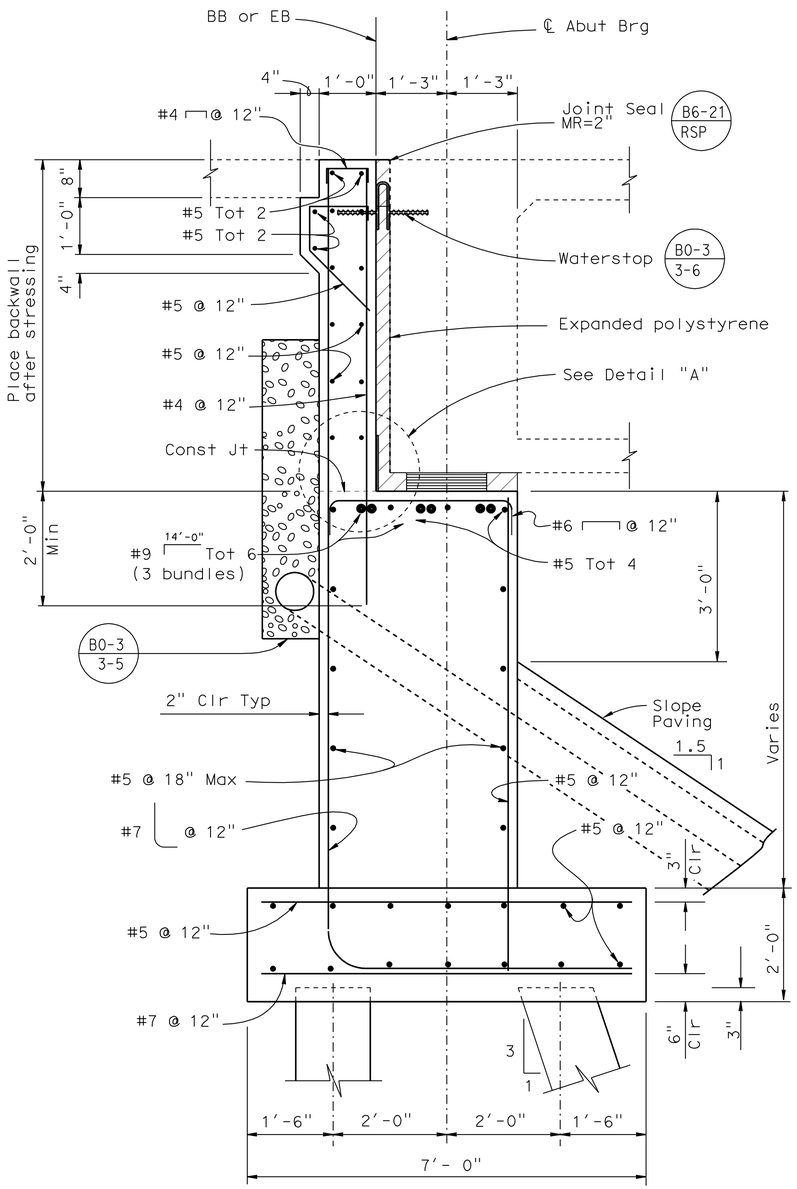

SECTION A-A

3/4"=1'-0"

NOTE:

For location of Section A-A, see "Abutment Layout" sheet.

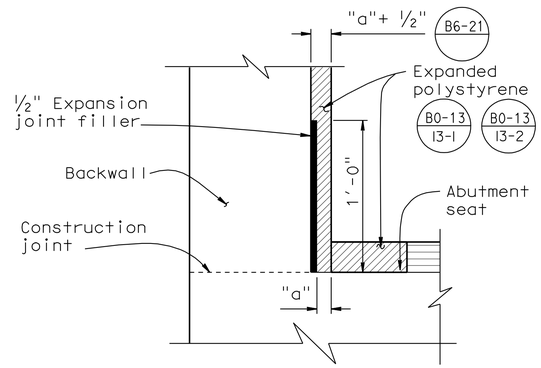

DETAIL "A"

No Scale

For "a" dimension, see "Joint Seal Assembly (Maximum Movement Rating = 4")" sheet.

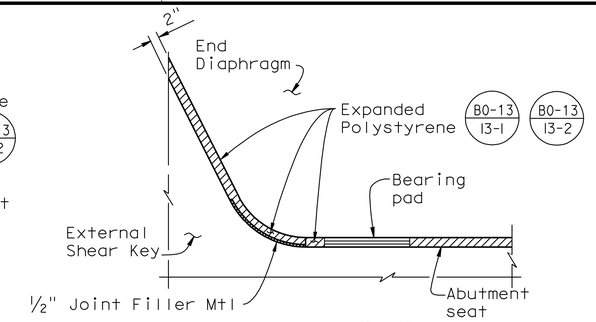

DETAIL "B"

No Scale

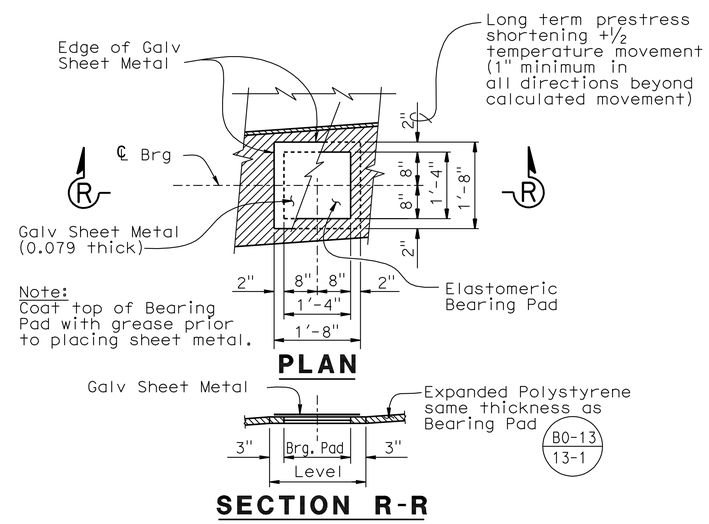

BEARING PAD DETAIL

No Scale

Details typical at all bearing pads

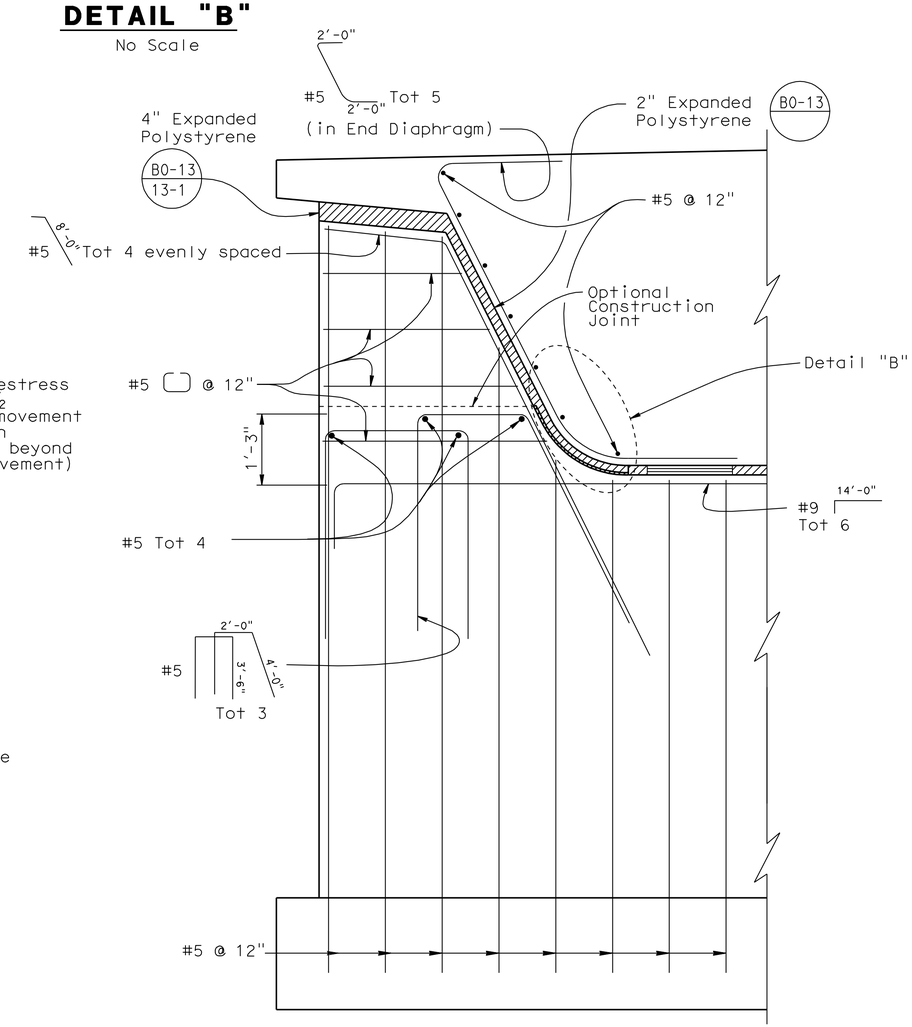

PART ELEVATION

3/4"=1'-0"

DESIGN	BY L. Wu	CHECKED J. Szabo	
DETAILS	BY Y.Tang	CHECKED J. Szabo	
QUANTITIES	BY A. McPhee	CHECKED J. Delgado	

STATE OF CALIFORNIA
DEPARTMENT OF TRANSPORTATION

DIVISION OF ENGINEERING SERVICES
STRUCTURE DESIGN
DESIGN BRANCH 10

BRIDGE NO. 39-0236
POST MILE 3.4

SANDY MUSH OVERHEAD
ABUTMENT DETAILS NO. 1

STRUCTURES DESIGN DETAIL SHEET (ENGLISH) (REV. 10/25/05)

ORIGINAL SCALE IN INCHES FOR REDUCED PLANS 0 1 2 3

CU 10
EA 415801

DISREGARD PRINTS BEARING EARLIER REVISION DATES

REVISION DATES: ~~11-29-07~~ 3-17-09

SHEET 6 OF 20

FILE => 390236fadt06.dgn

USERNAME => trlehard DATE PLOTTED => 03-NOV-2010 TIME PLOTTED => 14:00

DIST	COUNTY	ROUTE	POST MILES TOTAL PROJECT	SHEET No	TOTAL SHEETS
10	Mer	99	0.0/4.6	532	607

REGISTERED CIVIL ENGINEER — DATE 04-13-10

11-1-10
PLANS APPROVAL DATE

REGISTERED PROFESSIONAL ENGINEER — Larry Wu — No. C57035 — Exp. 6-30-11 — CIVIL — STATE OF CALIFORNIA

The State of California or its officers or agents shall not be responsible for the accuracy or completeness of electronic copies of this plan sheet.

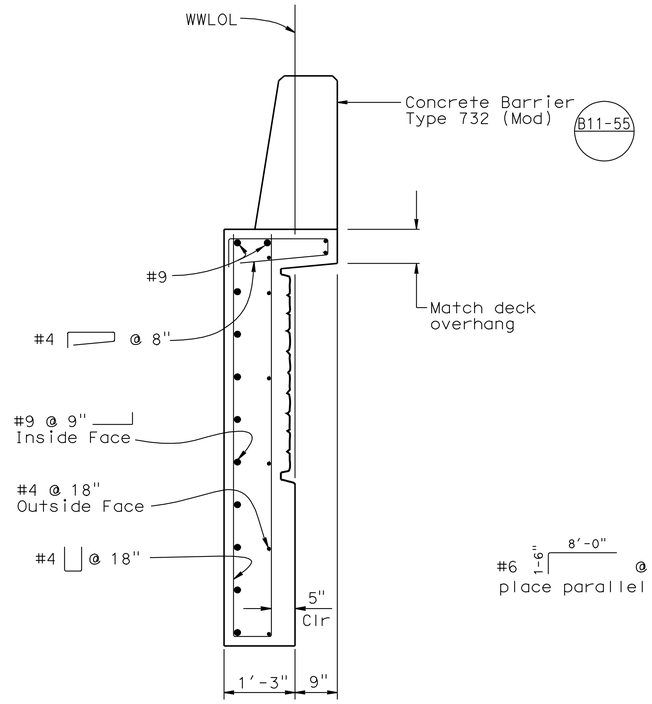

SECTION D-D

3/4"=1'-0"

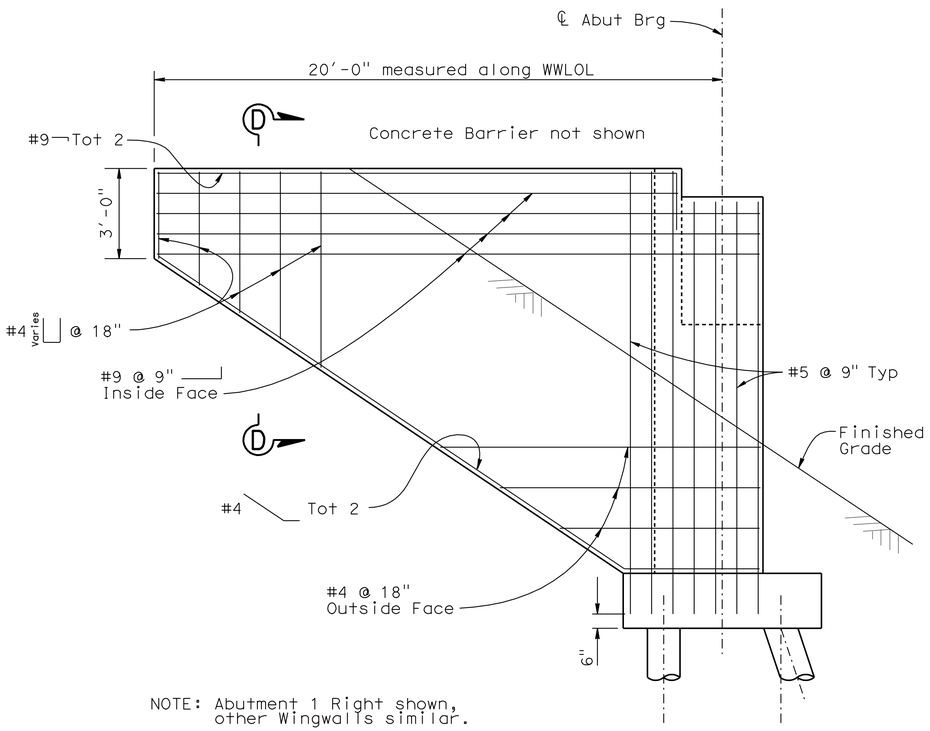

NOTE: Abutment 1 Right shown, other Wingwalls similar.

WINGWALL ELEVATION

3/8"=1'-0"

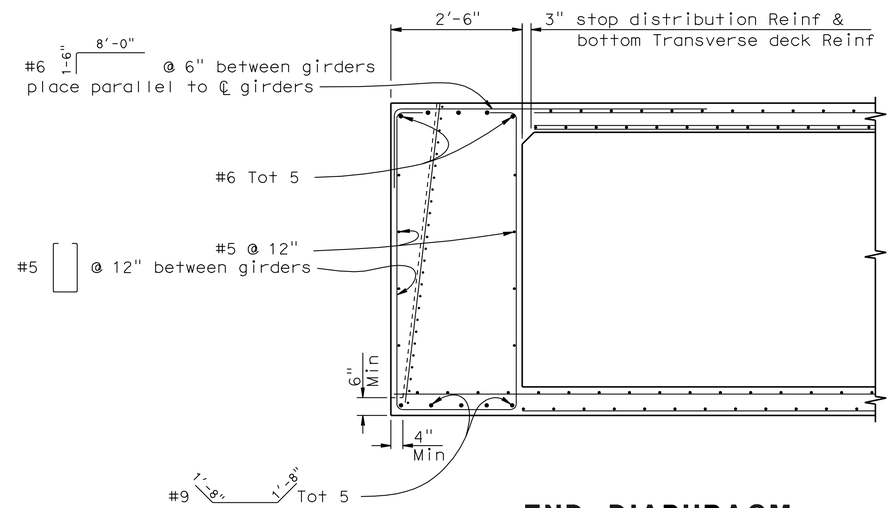

END DIAPHRAGM

3/4"=1'-0"

DESIGN	BY L. Wu	CHECKED J. Szabo	
DETAILS	BY Y. Tang	CHECKED J. Szabo	
QUANTITIES	BY A. McPhee	CHECKED J. Delgado	

STATE OF CALIFORNIA
DEPARTMENT OF TRANSPORTATION

DIVISION OF ENGINEERING SERVICES
STRUCTURE DESIGN
DESIGN BRANCH 10

BRIDGE NO. 39-0236
POST MILE 3.4

SANDY MUSH OVERHEAD
ABUTMENT DETAILS NO. 2

STRUCTURES DESIGN DETAIL SHEET (ENGLISH) (REV. 10/25/05)

ORIGINAL SCALE IN INCHES FOR REDUCED PLANS 0 1 2 3

CU 10
EA 415801

DISREGARD PRINTS BEARING EARLIER REVISION DATES → 2-6-08 5-17-09

REVISION DATES

SHEET 7 OF 20

FILE => 390236fadt07.dgn

USERNAME => trlenard DATE PLOTTED => 03-NOV-2010 TIME PLOTTED => 14:01

DIST	COUNTY	ROUTE	POST MILES TOTAL PROJECT	SHEET No	TOTAL SHEETS
10	Mer	99	0.0/4.6	533	607

REGISTERED CIVIL ENGINEER 04-13-10 DATE

11-1-10
PLANS APPROVAL DATE

REGISTERED PROFESSIONAL ENGINEER Larry Wu No. C57035 Exp. 6-30-11 CIVIL STATE OF CALIFORNIA

The State of California or its officers or agents shall not be responsible for the accuracy or completeness of electronic copies of this plan sheet.

NOTES:

1. For Section A-A and Section B-B, see "BENT DETAILS NO. 2" sheet.
2. Place stirrups normal to ℄ Bent and space along ℄ Bent.
3. Place 3'-0" hook on each end of top bars of each bundle as shown in "Elevation".
4. Use service splices for bent cap main bars.
5. For column and footing details, see "BENT DETAILS NO. 1" sheet.

Indicates bundled rebar

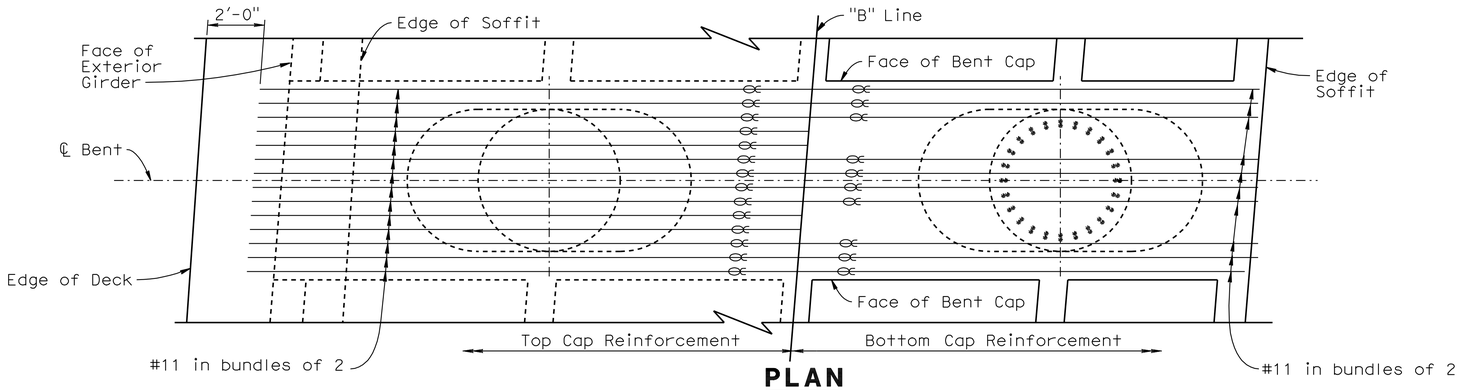

PLAN
3/8"=1'-0"

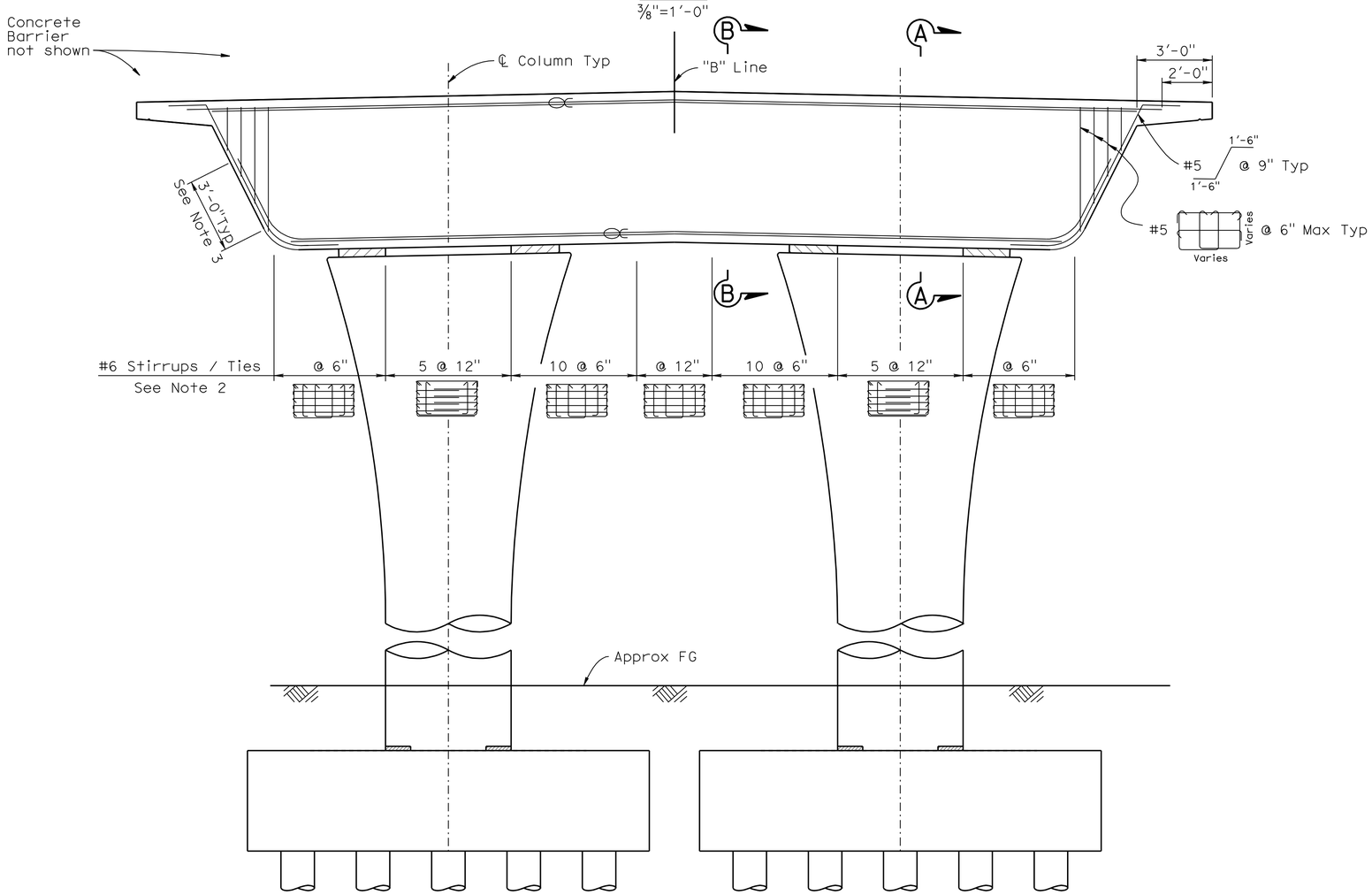

ELEVATION
3/8"=1'-0"

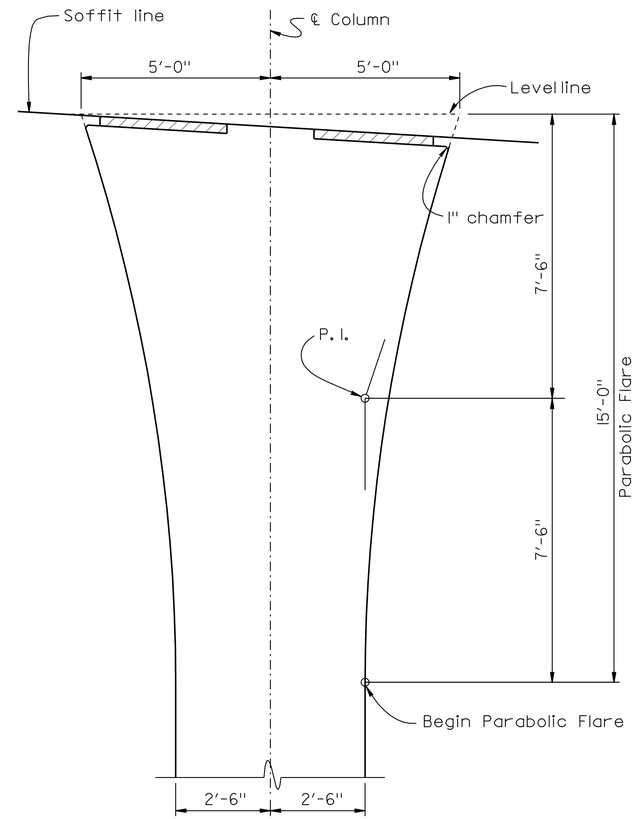

COLUMN GEOMETRICS
No Scale

	BY	CHECKED
DESIGN	L.Wu	J. Szabo
DETAILS	Y. Tang	J. Szabo
QUANTITIES	A. McPhee	J. Delgado

STATE OF CALIFORNIA
DEPARTMENT OF TRANSPORTATION

DIVISION OF ENGINEERING SERVICES
STRUCTURE DESIGN
DESIGN BRANCH 10

BRIDGE NO. 39-0236
POST MILE 3.4

SANDY MUSH OVERHEAD
BENT LAYOUT

STRUCTURES DESIGN DETAIL SHEET (ENGLISH) (REV. 10/25/05)

ORIGINAL SCALE IN INCHES FOR REDUCED PLANS 0 1 2 3

CU 10
EA 415801

DISREGARD PRINTS BEARING EARLIER REVISION DATES

REVISION DATES: 12-4-07

SHEET 8 OF 20

FILE => 390236hb_1o08.dgn

USERNAME => trlenard DATE PLOTTED => 03-NOV-2010 TIME PLOTTED => 14:01

DIST	COUNTY	ROUTE	POST MILES TOTAL PROJECT	SHEET No	TOTAL SHEETS
10	Mer	99	0.0/4.6	534	607

REGISTERED CIVIL ENGINEER 04-13-10 DATE

11-1-10
PLANS APPROVAL DATE

REGISTERED PROFESSIONAL ENGINEER Larry Wu No. C57035 Exp. 6-30-11 CIVIL STATE OF CALIFORNIA

The State of California or its officers or agents shall not be responsible for the accuracy or completeness of electronic copies of this plan sheet.

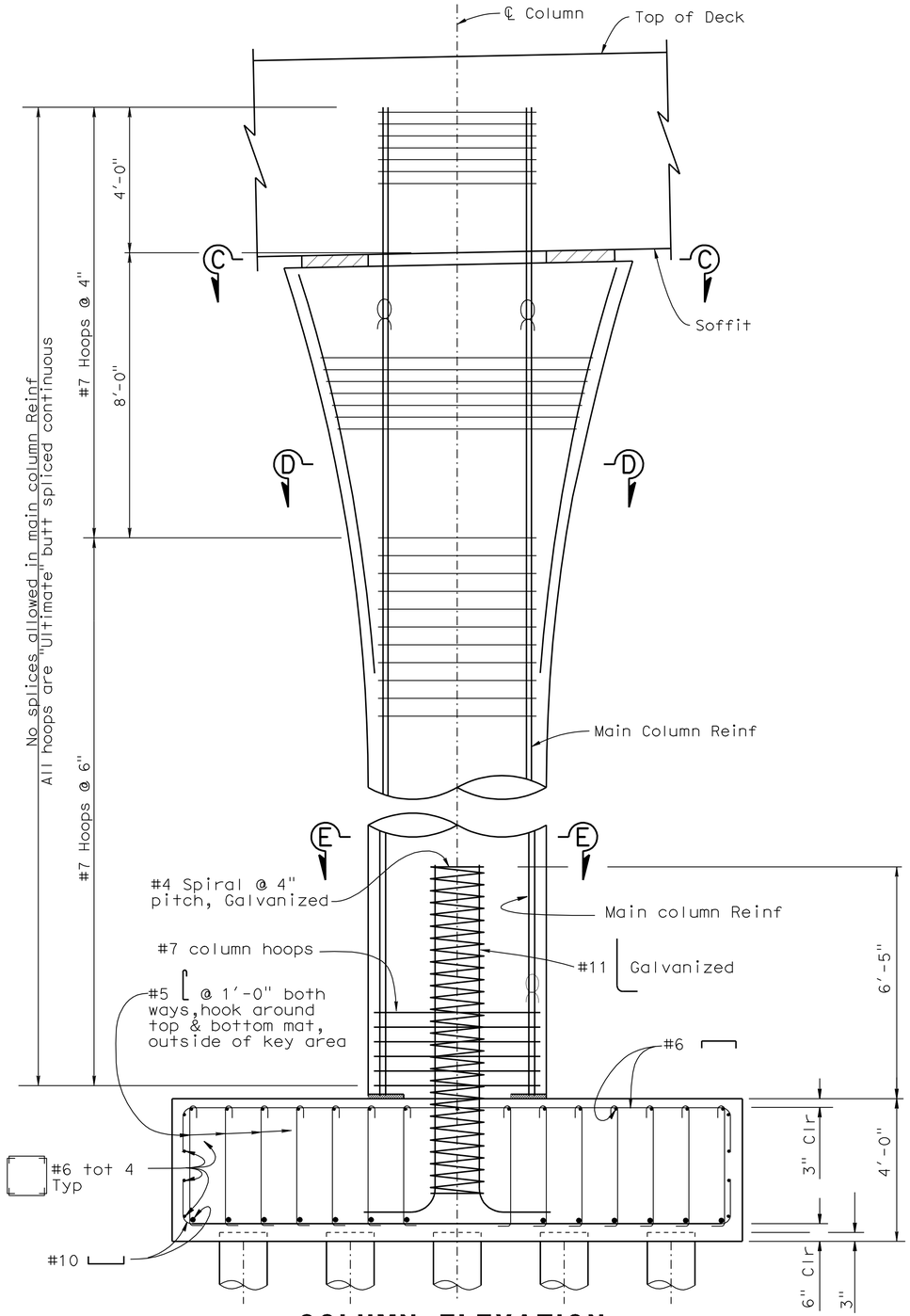

COLUMN ELEVATION

½"=1'-0"

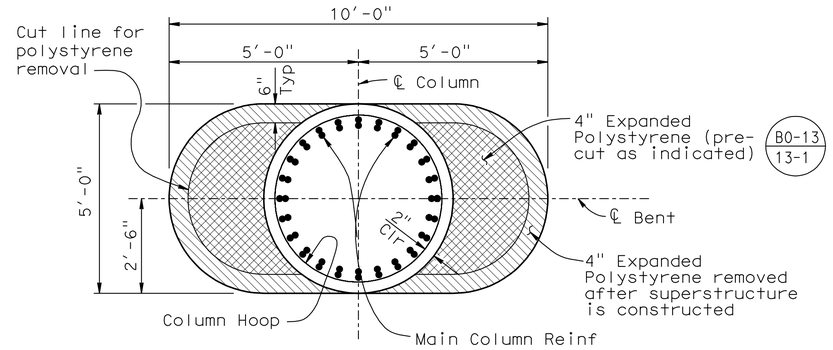

SECTION C-C

½"=1'-0"

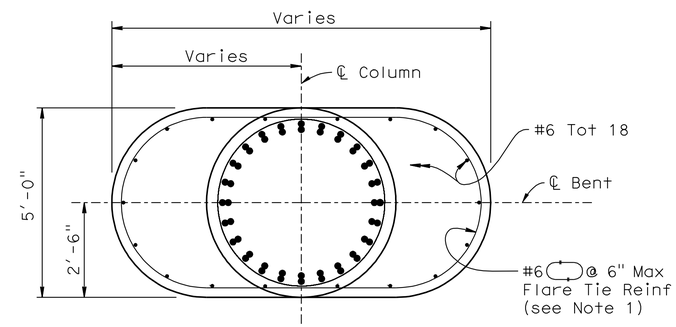

SECTION D-D

½"=1'-0"

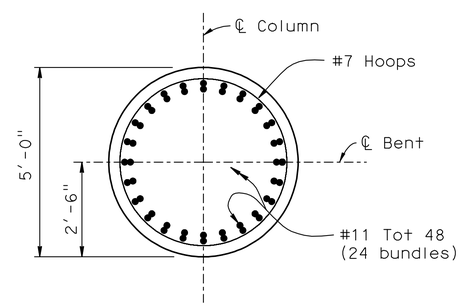

SECTION E-E

½"=1'-0"

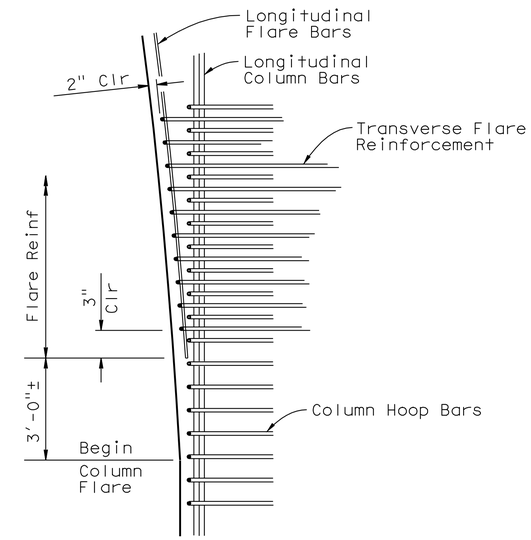

COLUMN FLARE HOOP AND TIE DETAIL

NO SCALE

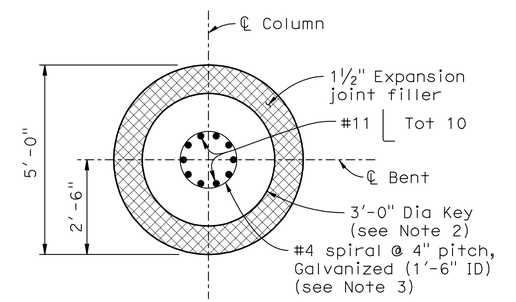

COLUMN-FOOTING KEY DETAIL

½"=1'-0"

NOTES:

1. Splice Flare Tie Reinforcement with mechanical couplers. Stagger location of couplers.
2. Key area shall be roughened to ¼" amplitude.
3. Spiral may be discontinuous at top of footing reinforcement.

Indicates bundled rebar

DESIGN	BY L.Wu	CHECKED J. Szabo	
DETAILS	BY Y. Tang	CHECKED J. Szabo	
QUANTITIES	BY A. McPhee	CHECKED J. Delgado	

STATE OF CALIFORNIA
DEPARTMENT OF TRANSPORTATION

DIVISION OF ENGINEERING SERVICES
STRUCTURE DESIGN
DESIGN BRANCH 10

BRIDGE NO. 39-0236
POST MILE 3.4

SANDY MUSH OVERHEAD
BENT DETAILS NO. 1

STRUCTURES DESIGN DETAIL SHEET (ENGLISH) (REV. 10/25/05)

ORIGINAL SCALE IN INCHES FOR REDUCED PLANS 0 1 2 3

CU 10
EA 415801

DISREGARD PRINTS BEARING EARLIER REVISION DATES 12-4-07 8-26-09

REVISION DATES

SHEET 9 OF 20

FILE => 390236hbdt09.dgn

USERNAME => trlenard DATE PLOTTED => 03-NOV-2010 TIME PLOTTED => 14:01

DIST	COUNTY	ROUTE	POST MILES TOTAL PROJECT	SHEET No	TOTAL SHEETS
10	Mer	99	0.0/4.6	535	607

REGISTERED CIVIL ENGINEER — DATE 04-13-10

11-1-10
PLANS APPROVAL DATE

REGISTERED PROFESSIONAL ENGINEER — Larry Wu — No. C57035 — Exp. 6-30-11 — CIVIL — STATE OF CALIFORNIA

The State of California or its officers or agents shall not be responsible for the accuracy or completeness of electronic copies of this plan sheet.

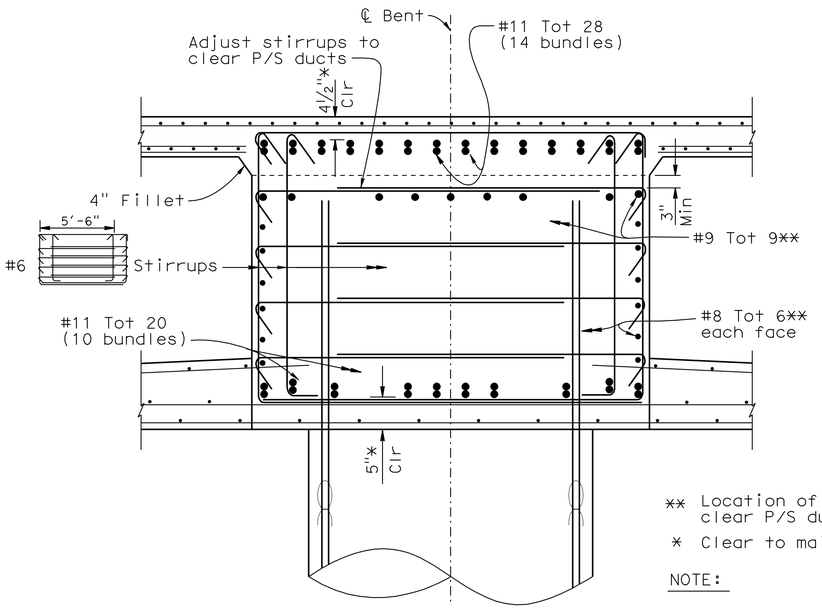

** Location of Reinf may be adjusted to clear P/S ducts

* Clear to main cap Reinf

NOTE:

For location of Section A-A and Section B-B, see "BENT LAYOUT" sheet.

SECTION A-A

3/4"=1'-0"

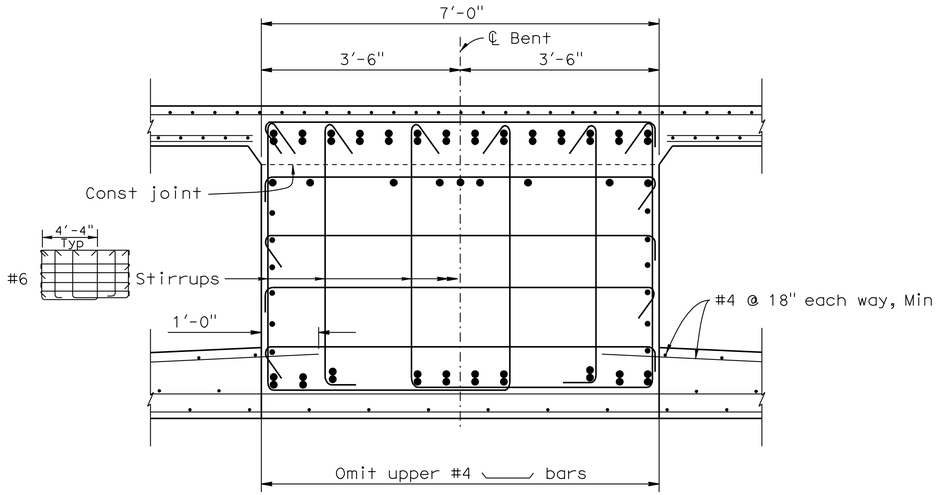

SECTION B-B

3/4"=1'-0"

NOTE: For details not shown, see Section A-A

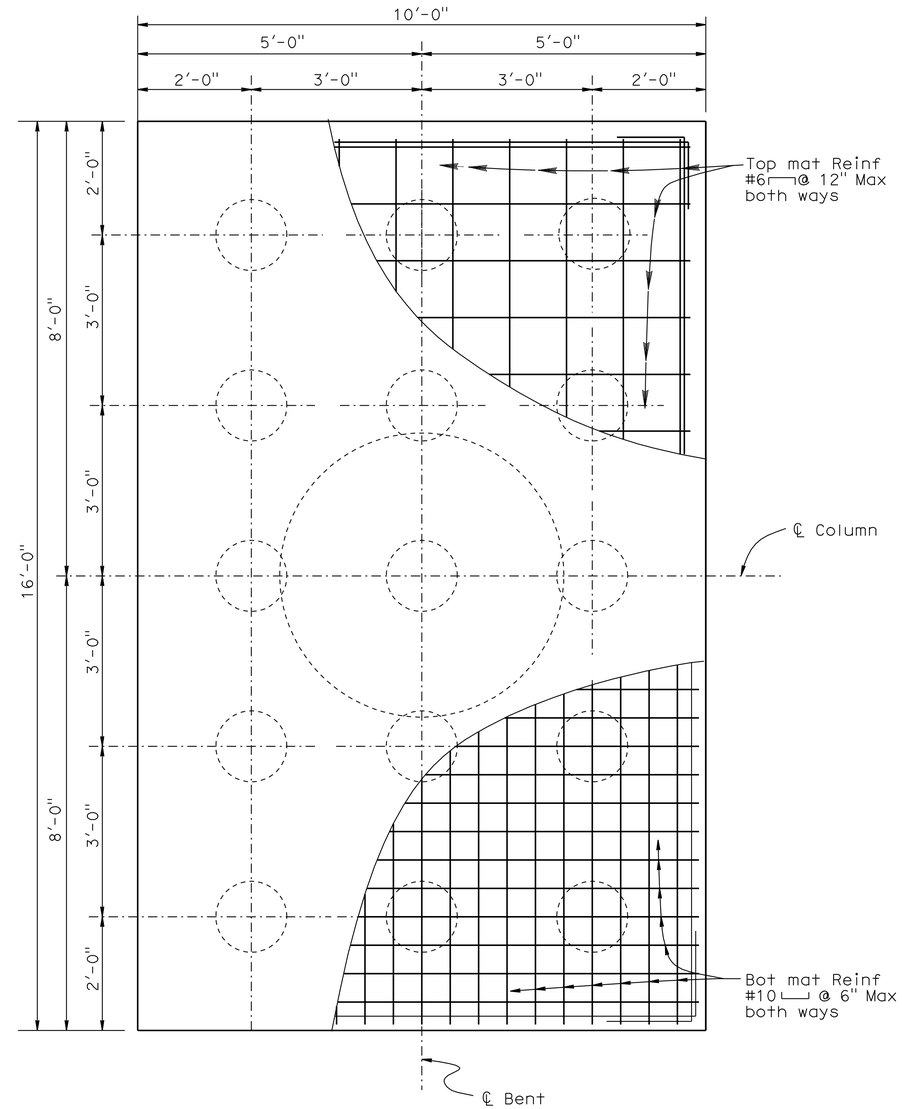

FOOTING PLAN

3/4"=1'-0"

DESIGN	BY L.Wu	CHECKED J. Szabo	
DETAILS	BY Y. Tang	CHECKED J. Szabo	
QUANTITIES	BY A. McPhee	CHECKED J. Delgado	

STATE OF CALIFORNIA
DEPARTMENT OF TRANSPORTATION

DIVISION OF ENGINEERING SERVICES
STRUCTURE DESIGN
DESIGN BRANCH 10

BRIDGE NO. 39-0236
POST MILE 3.4

SANDY MUSH OVERHEAD
BENT DETAILS NO. 2

STRUCTURES DESIGN DETAIL SHEET (ENGLISH) (REV. 10/25/05)

ORIGINAL SCALE IN INCHES FOR REDUCED PLANS 0 1 2 3

CU 10
EA 415801

DISREGARD PRINTS BEARING EARLIER REVISION DATES

REVISION DATES: 12-4-07 3-11-09 7-15-09

SHEET 10 OF 20

FILE => 390236hbdt10.dgn

USERNAME => rtrenard DATE PLOTTED => 03-NOV-2010 TIME PLOTTED => 14:01

DIST	COUNTY	ROUTE	POST MILES TOTAL PROJECT	SHEET No	TOTAL SHEETS
10	Mer	99	0.0/4.6	536	607

REGISTERED CIVIL ENGINEER 04-13-10 DATE

11-1-10
PLANS APPROVAL DATE

REGISTERED PROFESSIONAL ENGINEER Larry Wu No. C57035 Exp. 6-30-11 CIVIL STATE OF CALIFORNIA

The State of California or its officers or agents shall not be responsible for the accuracy or completeness of electronic copies of this plan sheet.

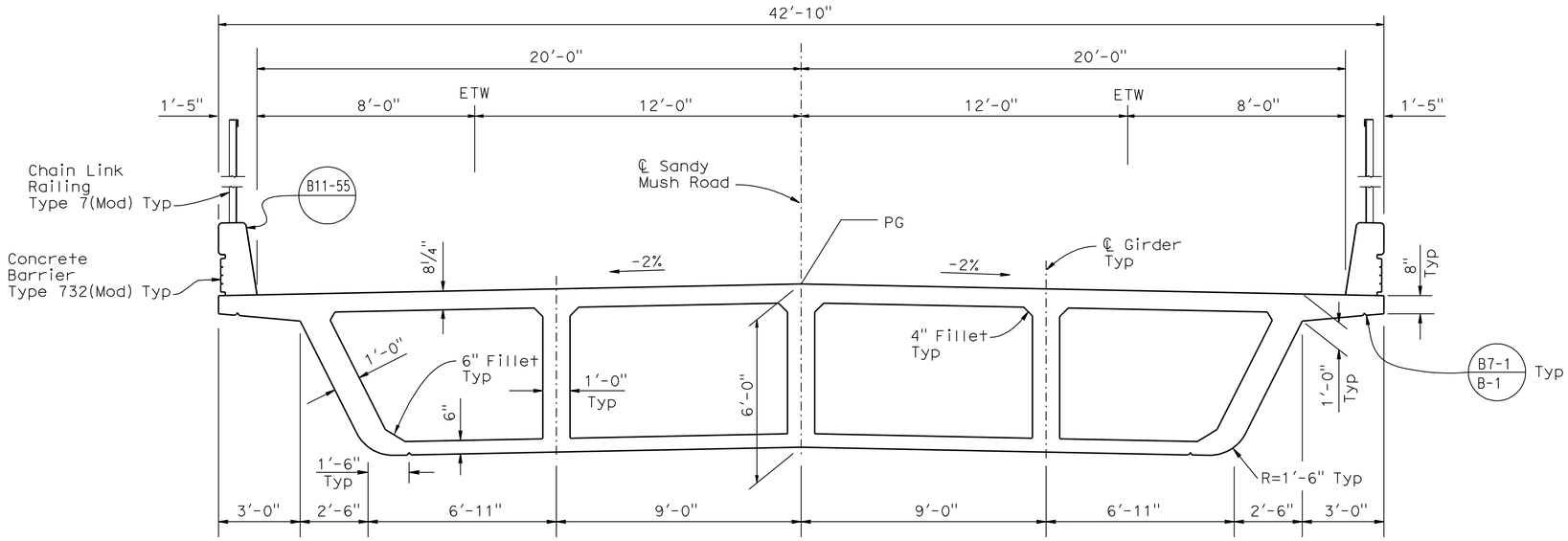

TYPICAL SECTION

3/8"=1'-0"

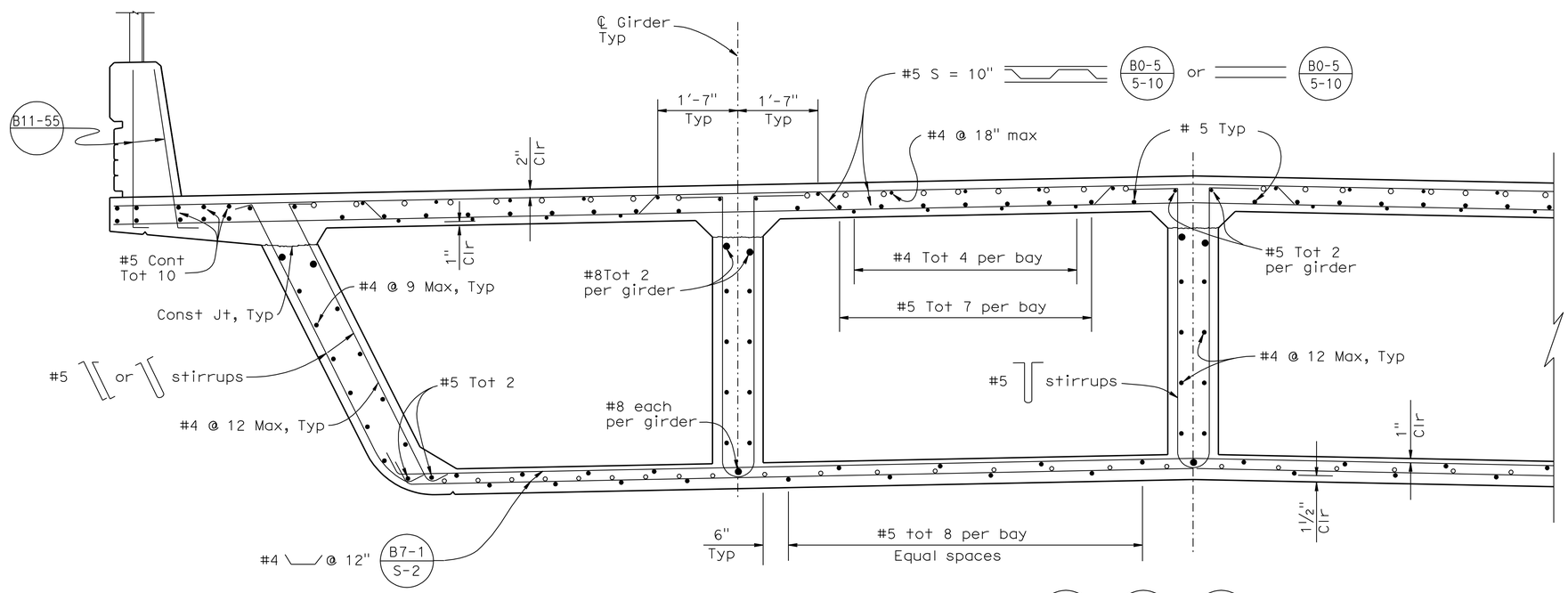

PART TYPICAL SECTION

3/4"=1'-0"

B0-5 B7-1 B8-5

o Indicates top & bottom slab additional Reinf, see "GIRDER REINFORCEMENT" sheet

DESIGN	BY L. Wu	CHECKED J. Szabo	
DETAILS	BY Y. Tang	CHECKED J. Szabo	
QUANTITIES	BY A. McPhee	CHECKED J. Delgado	

STATE OF CALIFORNIA DEPARTMENT OF TRANSPORTATION

DIVISION OF ENGINEERING SERVICES STRUCTURE DESIGN DESIGN BRANCH 10

BRIDGE NO. 39-0236
POST MILE 3.4

SANDY MUSH OVERHEAD
TYPICAL SECTION

STRUCTURES DESIGN DETAIL SHEET (ENGLISH) (REV. 10/25/05)

ORIGINAL SCALE IN INCHES FOR REDUCED PLANS 0 1 2 3

CU 10
EA 415801

DISREGARD PRINTS BEARING EARLIER REVISION DATES 11-29-07 8-26-09 3-02-10

REVISION DATES

SHEET 11 OF 20

FILE => 390236kts11.dgn

USERNAME => trlenard DATE PLOTTED => 03-NOV-2010 TIME PLOTTED => 14:01

DIST	COUNTY	ROUTE	POST MILES TOTAL PROJECT	SHEET No	TOTAL SHEETS
10	Mer	99	0.0/4.6	537	607

REGISTERED CIVIL ENGINEER — DATE 04-13-10

11-1-10
PLANS APPROVAL DATE

The State of California or its officers or agents shall not be responsible for the accuracy or completeness of electronic copies of this plan sheet.

REGISTERED PROFESSIONAL ENGINEER — Larry Wu — No. C57035 — Exp. 6-30-11 — CIVIL — STATE OF CALIFORNIA

PRESTRESSING NOTES

270 KSI Low Relaxation Strand:

P_{jack} = 10950 kips

Anchor Set = 3/8 in

Total Number of Girders = 5

Distribution of prestress force (Pjack) between girders shall not exceed the ratio of 3:2. Maximum final force variation between girders shall not exceed 725 kips.

Concrete: f'_c = 4000 psi @ 28 days

f'_{ci} = 3500 psi @ time of stressing

Contractor shall submit elongation calculations based on initial stress at

⊠ = 0.906 times jacking stress.

One end stressing shall be performed from the long-span end only.
The design is based on μ = 0.15, k = 0.0002/ft.

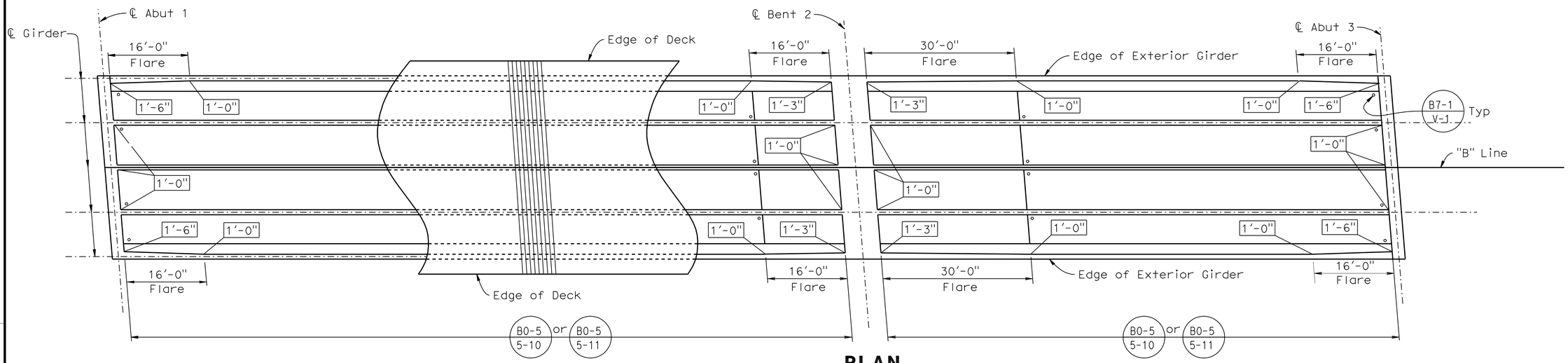

PLAN

3/32"=1'-0"

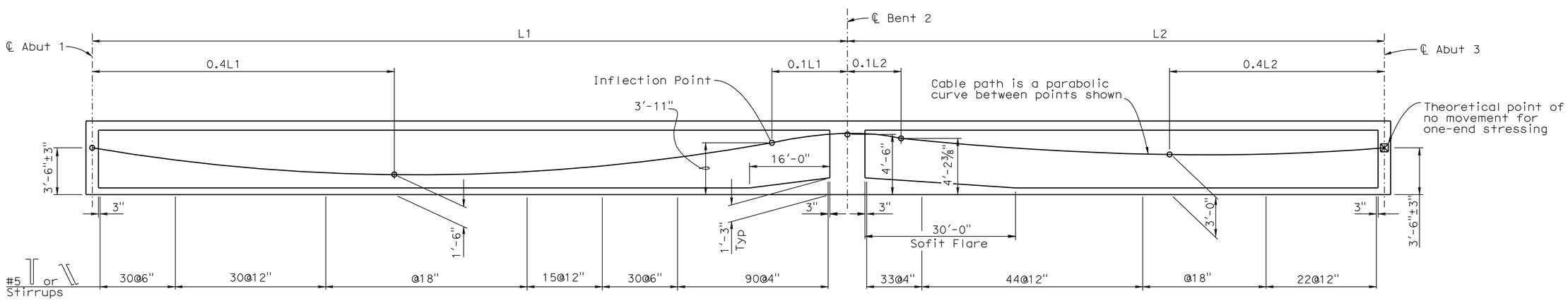

LOGITUDINAL SECTION

Horiz 3/32"=1'-0"
Vert 1/4"=1'-0"

LEGEND:

Indicates Girder stem width

⊠ Indicates point of no movement

	BY	CHECKED
DESIGN	L. Wu	J. Szabo
DETAILS	Y. Tang	J. Szabo
QUANTITIES	A. McPhee	J. Delgado

STATE OF CALIFORNIA
DEPARTMENT OF TRANSPORTATION

DIVISION OF ENGINEERING SERVICES
STRUCTURE DESIGN
DESIGN BRANCH 10

BRIDGE NO. 39-0236
POST MILE 3.4

SANDY MUSH OVERHEAD
GIRDER LAYOUT

STRUCTURES DESIGN DETAIL SHEET (ENGLISH) (REV. 10/25/05)

ORIGINAL SCALE IN INCHES FOR REDUCED PLANS 0 1 2 3

CU 10
EA 415801

DISREGARD PRINTS BEARING EARLIER REVISION DATES

REVISION DATES: 1-16-08 3-18-09 7-15-09

SHEET 12 OF 20

FILE => 3902361g_lo12.dgn

USERNAME => friehard DATE PLOTTED => 03-NOV-2010 TIME PLOTTED => 14:01

DIST	COUNTY	ROUTE	POST MILES TOTAL PROJECT	SHEET No	TOTAL SHEETS
10	Mer	99	0.0/4.6	538	607

REGISTERED CIVIL ENGINEER — DATE 04-13-10

11-1-10
PLANS APPROVAL DATE

REGISTERED PROFESSIONAL ENGINEER — Larry Wu — No. C57035 — Exp. 6-30-11 — CIVIL — STATE OF CALIFORNIA

The State of California or its officers or agents shall not be responsible for the accuracy or completeness of electronic copies of this plan sheet.

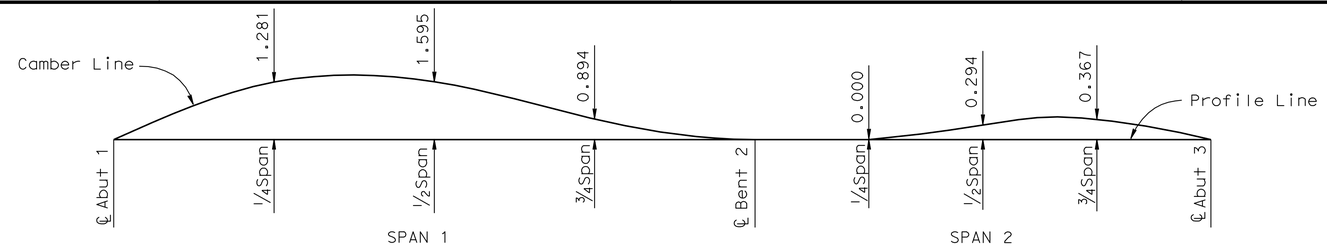

Note: Camber shown does not include allowance for falsework settlement. Camber values are shown in inches.

CAMBER DIAGRAM

No Scale

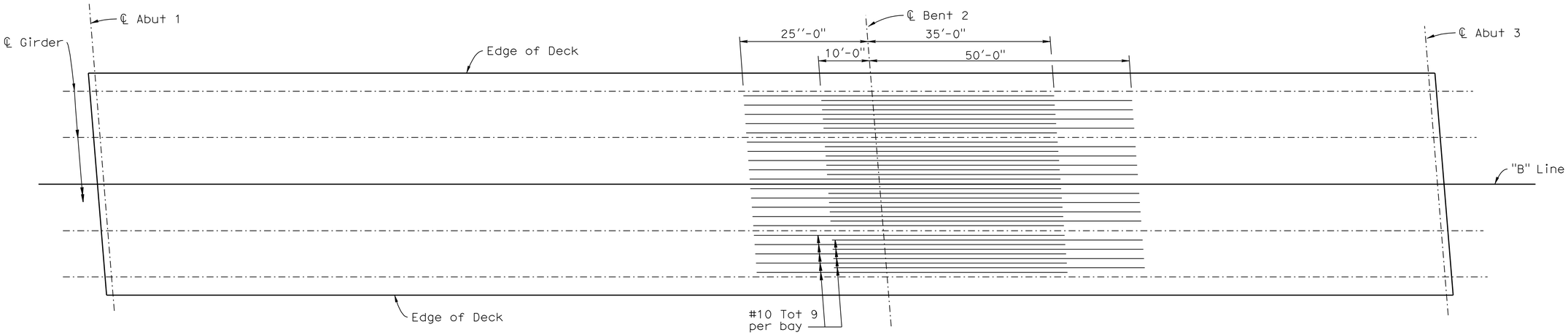

ADDITIONAL TOP LONGITUDINAL REINFORCEMENT

3/32"=1'-0"

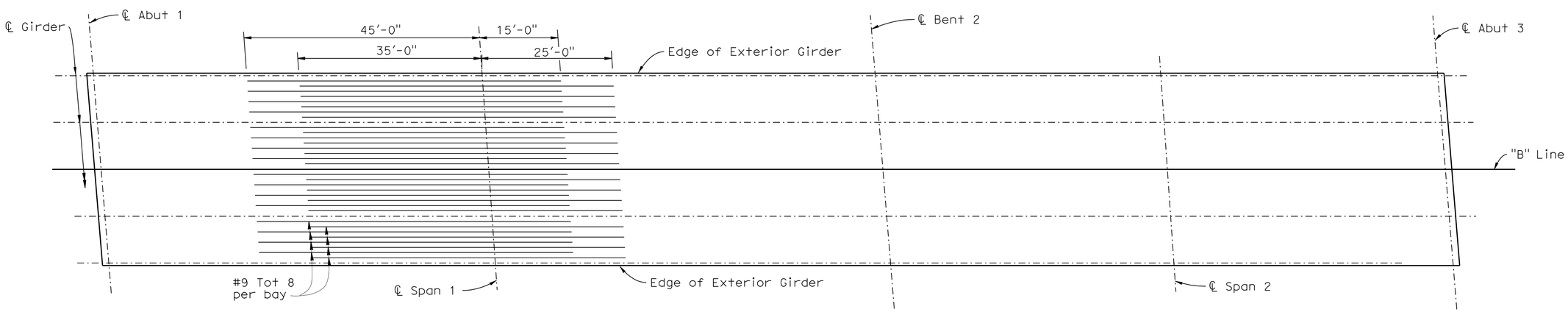

ADDITIONAL BOTTOM LONGITUDINAL REINFORCEMENT

3/32"=1'-0"

DESIGN	BY L. Wu	CHECKED J. Szabo	
DETAILS	BY Y. Tang	CHECKED J. Szabo	
QUANTITIES	BY A. McPhee	CHECKED J. Delgado	

STATE OF CALIFORNIA
DEPARTMENT OF TRANSPORTATION

DIVISION OF ENGINEERING SERVICES
STRUCTURE DESIGN
DESIGN BRANCH 10

BRIDGE NO. 39-0236
POST MILE 3.4

SANDY MUSH OVERHEAD GIRDER REINFORCEMENT

STRUCTURES DESIGN DETAIL SHEET (ENGLISH) (REV. 10/25/05)

ORIGINAL SCALE IN INCHES FOR REDUCED PLANS 0 1 2 3

CU 10
EA 415801

DISREGARD PRINTS BEARING EARLIER REVISION DATES

REVISION DATES: 1-16-08 1-15-09

SHEET 13 OF 20

FILE => 390236ogir_rf13.dgn

USERNAME => trlenard DATE PLOTTED => 03-NOV-2010 TIME PLOTTED => 14:01

DIST	COUNTY	ROUTE	POST MILES TOTAL PROJECT	SHEET No	TOTAL SHEETS
10	Mer	99	0.0/4.6	539	607

REGISTERED CIVIL ENGINEER — DATE 04-13-10

11-1-10
PLANS APPROVAL DATE

REGISTERED PROFESSIONAL ENGINEER — Larry Wu — No. C57035 — Exp. 6-30-11 — CIVIL — STATE OF CALIFORNIA

The State of California or its officers or agents shall not be responsible for the accuracy or completeness of electronic copies of this plan sheet.

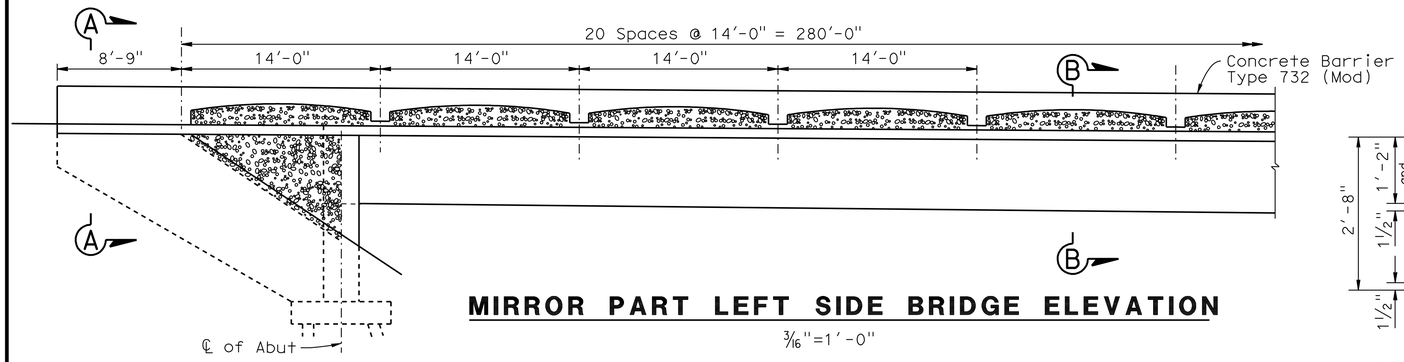

MIRROR PART LEFT SIDE BRIDGE ELEVATION

3/16"=1'-0"

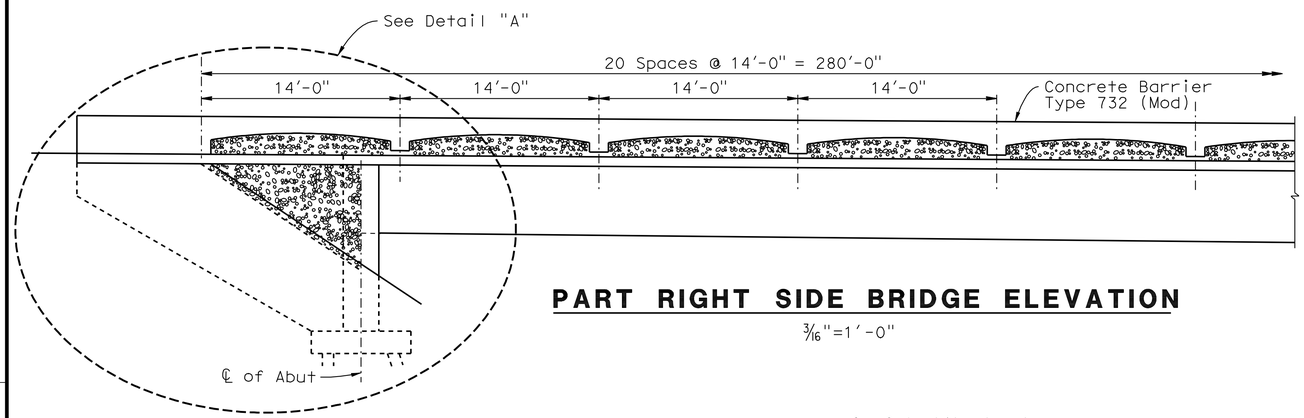

PART RIGHT SIDE BRIDGE ELEVATION

3/16"=1'-0"

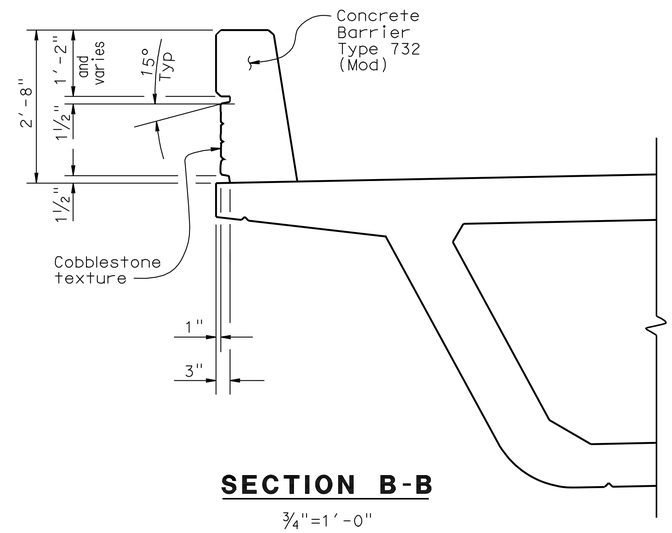

SECTION B-B

3/4"=1'-0"

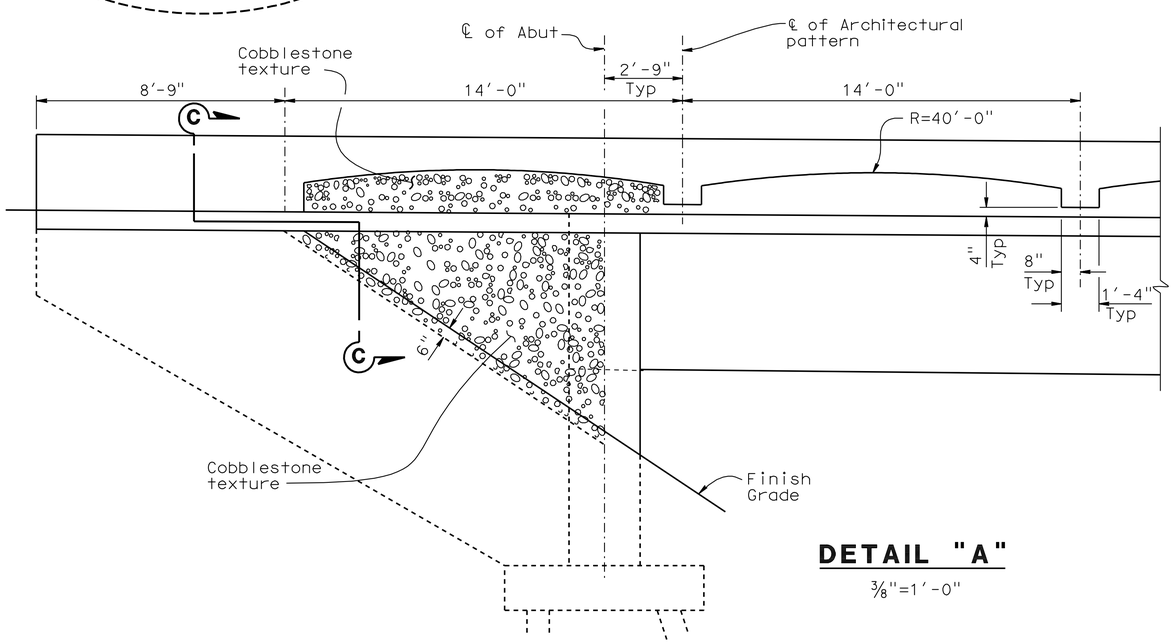

DETAIL "A"

3/8"=1'-0"

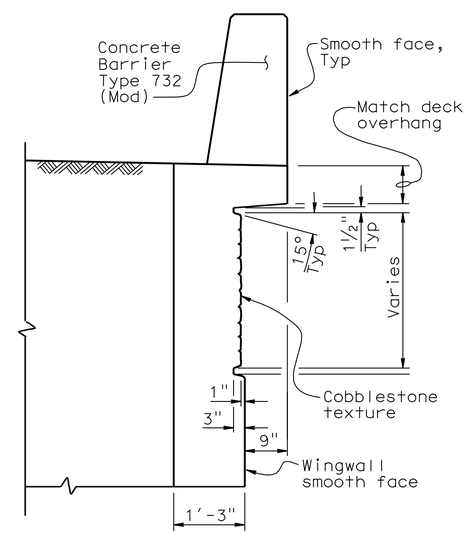

SECTION C-C

3/4"=1'-0"

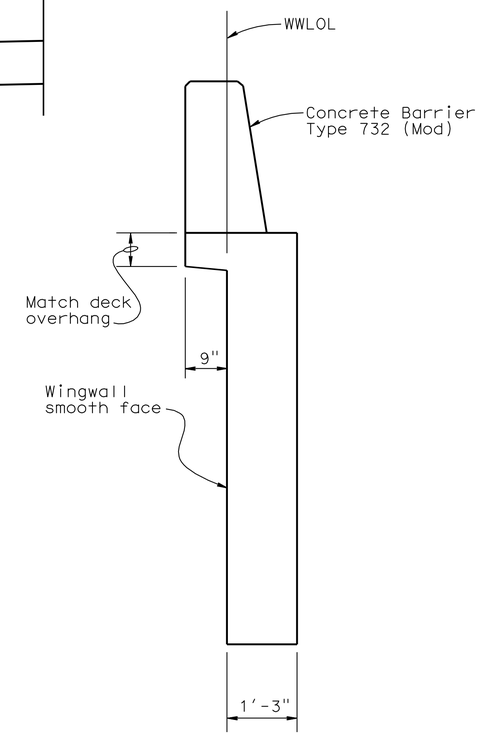

SECTION A-A

3/4"=1'-0"

NOTES:
Prepare and stain concrete for all cobblestone texture surface.

DESIGN	BY L. Wu	CHECKED X. Szabo	
DETAILS	BY Y. Tang	CHECKED X. Szabo	
QUANTITIES	BY X. McPhee	CHECKED X. Delgado	

STATE OF CALIFORNIA
DEPARTMENT OF TRANSPORTATION

DIVISION OF ENGINEERING SERVICES
STRUCTURE DESIGN
DESIGN BRANCH 10

BRIDGE NO. 39-0236
POST MILE 3.4

SANDY MUSH OVERHEAD
ARCHITECTURE DETAILS

STRUCTURES DESIGN DETAIL SHEET (ENGLISH) (REV. 10/25/05)

ORIGINAL SCALE IN INCHES FOR REDUCED PLANS 0 1 2 3

CU 10
EA 415801

DISREGARD PRINTS BEARING EARLIER REVISION DATES → 12-18-07 7-15-09 8-26-09

REVISION DATES

SHEET 14 OF 20

FILE => 390236s_ardt14.dgn

USERNAME => trmikes1 DATE PLOTTED => 05-NOV-2010 TIME PLOTTED => 08:29

DIST	COUNTY	ROUTE	POST MILES TOTAL PROJECT	SHEET No	TOTAL SHEETS
10	Mer	99	0.0/4.6	540	607

REGISTERED CIVIL ENGINEER 04-13-10 DATE

11-1-10
PLANS APPROVAL DATE

The State of California or its officers or agents shall not be responsible for the accuracy or completeness of electronic copies of this plan sheet.

REGISTERED PROFESSIONAL ENGINEER Larry Wu No. C57035 Exp. 6-30-11 CIVIL STATE OF CALIFORNIA

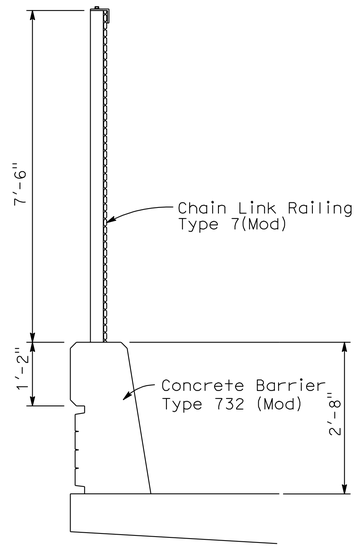

TYPICAL SECTION
No Scale

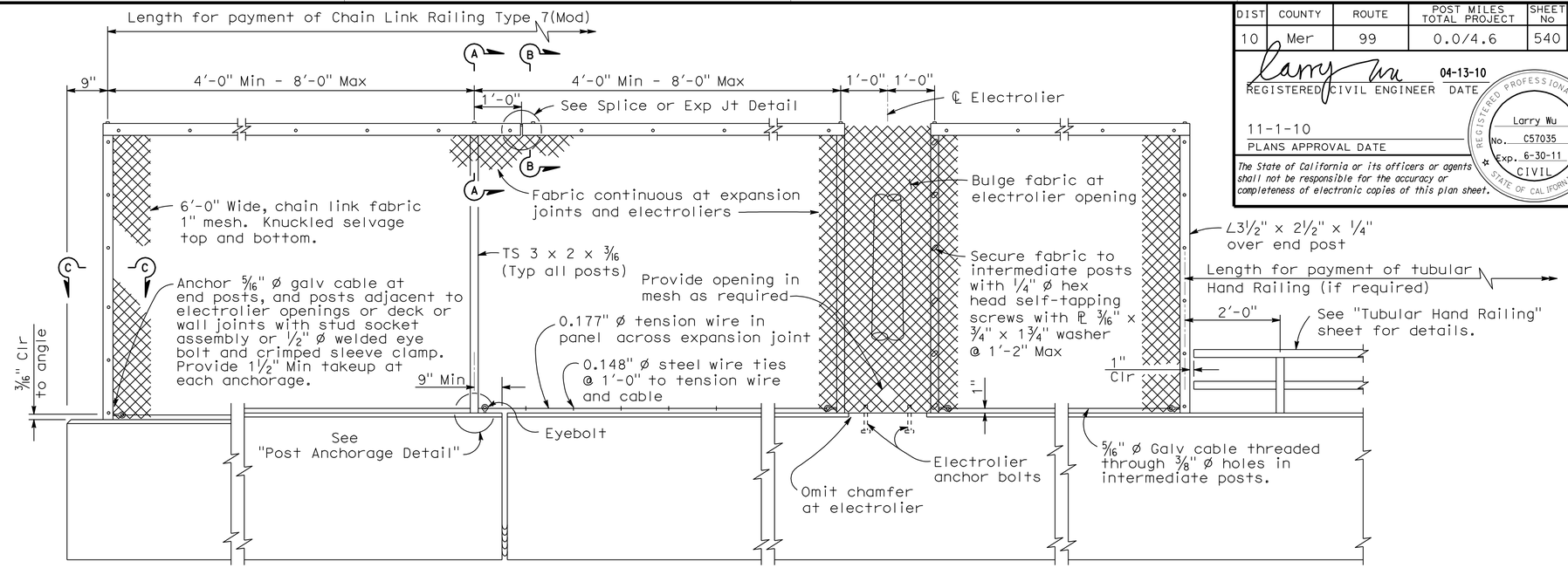

ELEVATION
No Scale

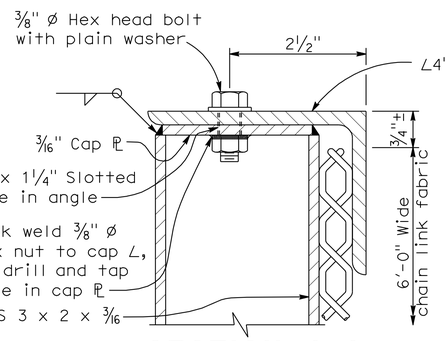

SECTION A-A
No Scale

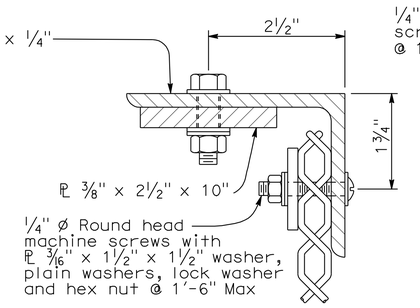

SECTION B-B
No Scale

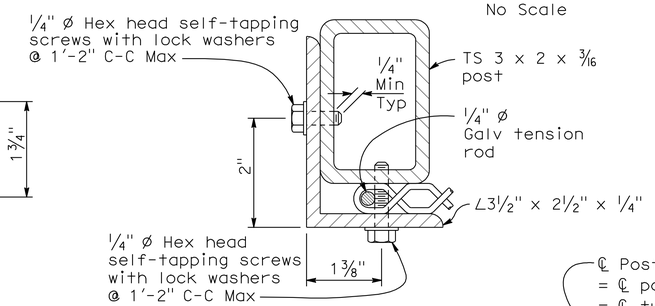

SECTION C-C
No Scale

NOTES:

1. Railing assembly except chain link fabric to be galvanized after fabrication.
2. Posts shall be vertical.
3. Railing shall conform to horizontal and vertical alignment. When railing is placed on a curved horizontal alignment with radius of 148'-0" or less, thread the 5/16" ø cable through 3/8" ø welded eye rods embedded 4" into the top of the concrete parapet and equally spaced to limit the midordinate distance between the 5/16" ø cable and the curve to 1" maximum. Horizontal angle shall be bent to conform to horizontal alignment if radius is 148'-0" or less and may be on 10'-0" chords if radius is over 148'-0"
4. Horizontal angle shall be continuous over not less than two intermediate posts, except that a shorter length is permitted at expansion joints, electroliers and other rail discontinuities.
5. When rail is on slope, place fabric parallel to slope.
6. Alternative details may be submitted by Contractor for Engineer's approval.
7. For details and reinforcement not shown see Standatd Plan B11-55.
8. See Project Plans for limits of Chain Link Railing Type 7 (Mod).
9. Provide thimbles at all cable loops.
10. Expansion joint same dimension as expansion joint in deck or wall. Increase slotted hole length and splice bar length correspondingly.

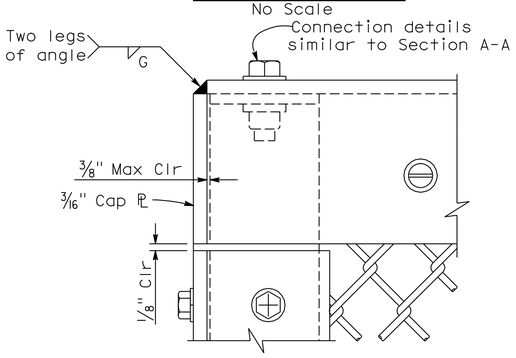

END POST ELEVATION
No Scale

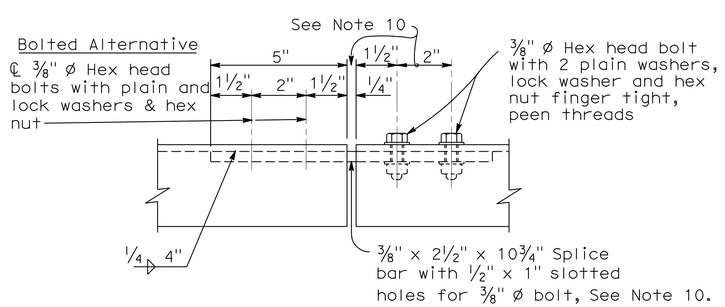

SPLICE OR EXPANSION JOINT DETAIL
No Scale

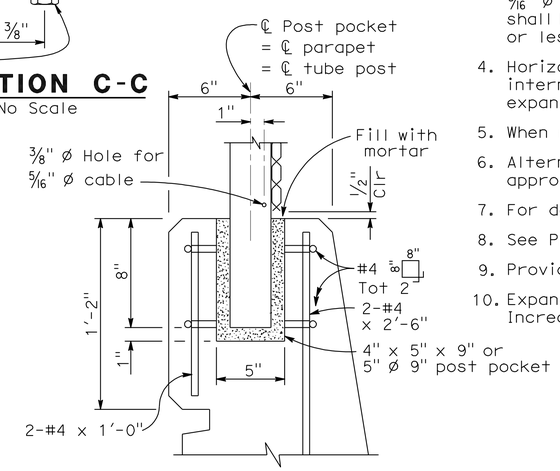

POST ANCHORAGE DETAIL
No Scale

DESIGN	BY L. Wu	CHECKED J. Szabo	
DETAILS	BY Y. Tang	CHECKED J. Szabo	
QUANTITIES	BY A. McPhee	CHECKED J. Delgado	

STATE OF CALIFORNIA DEPARTMENT OF TRANSPORTATION

DIVISION OF ENGINEERING SERVICES STRUCTURE DESIGN DESIGN BRANCH 10

BRIDGE NO. 39-0236
POST MILE 3.4

SANDY MUSH OVERHEAD
CHAIN LINK RAILING TYPE 7(MOD)

STRUCTURES DESIGN DETAIL SHEET (ENGLISH) (REV. 10/25/05)

ORIGINAL SCALE IN INCHES FOR REDUCED PLANS 0 1 2 3

CU 10
EA 415801

DISREGARD PRINTS BEARING EARLIER REVISION DATES 3-03-10

REVISION DATES

SHEET 15 OF 20

FILE => 390236schnlk15.dgn

USERNAME => trlenard DATE PLOTTED => 03-NOV-2010 TIME PLOTTED => 14:01

RELEASED 10-30-97

DIST.	COUNTY	ROUTE	POST MILES TOTAL PROJECT	SHEET NO.	TOTAL SHEETS
10	Mer	99	0.0/4.6	541	607

REGISTERED ENGINEER - CIVIL 04-13-10

11-1-10
PLANS APPROVAL DATE

REGISTERED PROFESSIONAL ENGINEER Larry Wu No. C57035 Exp. 6-30-11 CIVIL STATE OF CALIFORNIA

The State of California or its officers or agents shall not be responsible for the accuracy or completeness of electronic copies of this plan sheet.

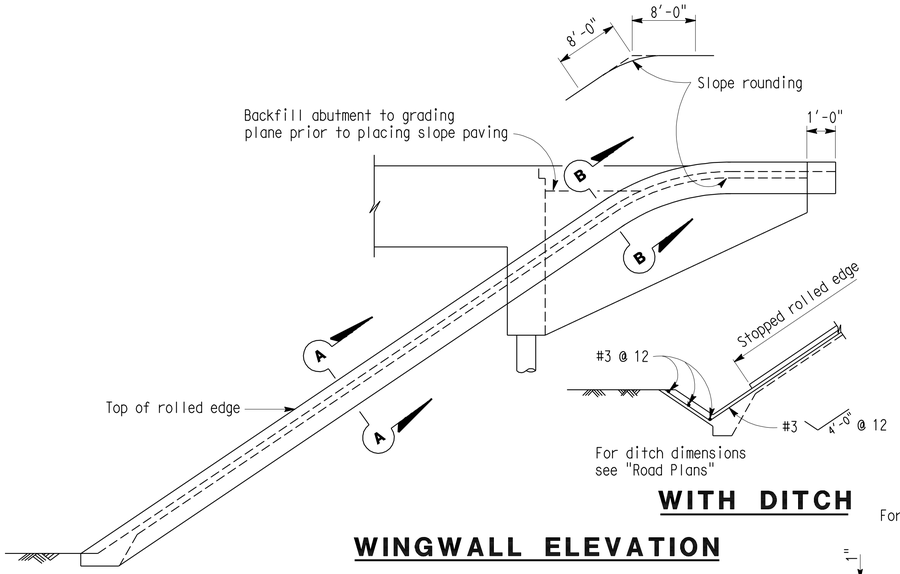

WITH DITCH

WINGWALL ELEVATION

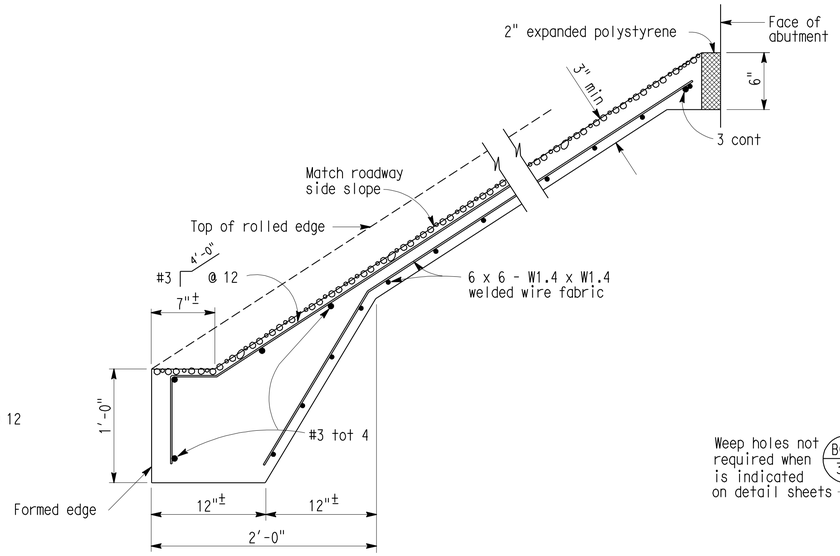

1 TYPICAL SECTION - CONCRETE PAVING

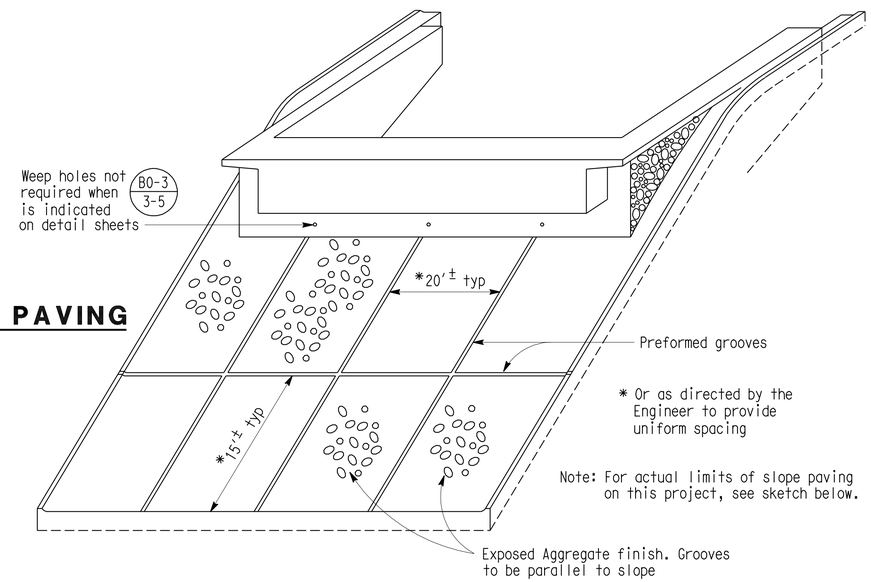

* Or as directed by the Engineer to provide uniform spacing

Note: For actual limits of slope paving on this project, see sketch below.

PICTORIAL VIEW OF TYPICAL INSTALLATION 1

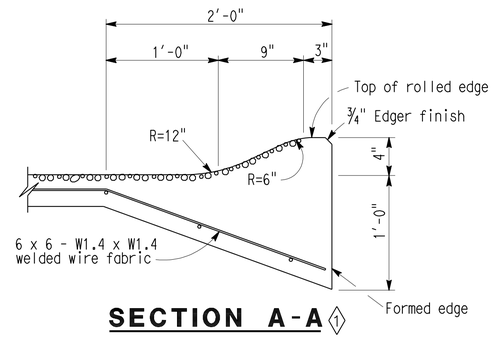

SECTION A-A 1

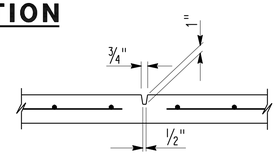

PREFORMED GROOVE

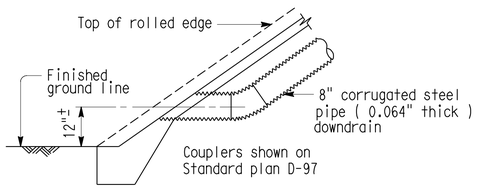

TYPICAL - NO CURB

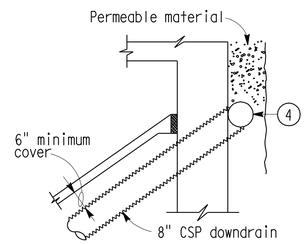

TYPICAL - DRAIN CONNECTION

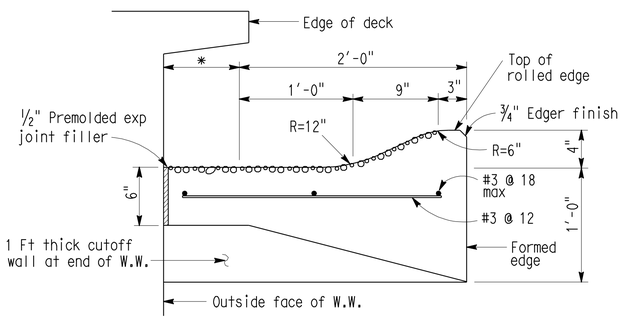

SECTION B-B 1

* This dimension becomes zero when edge of deck is at outside face of W.W.

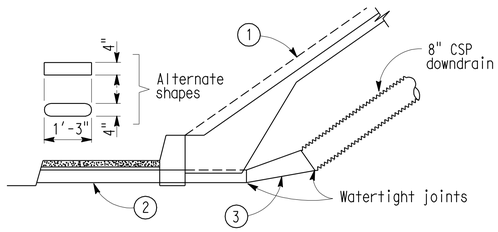

TYPICAL - WITH SIDEWALK

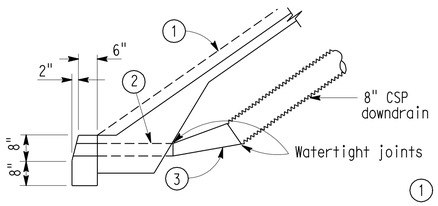

TYPICAL - WITH CURB

DRAINAGE DETAILS

Note: Drainage details are only applicable when is indicated on detail sheets. B0-3 / 3-5

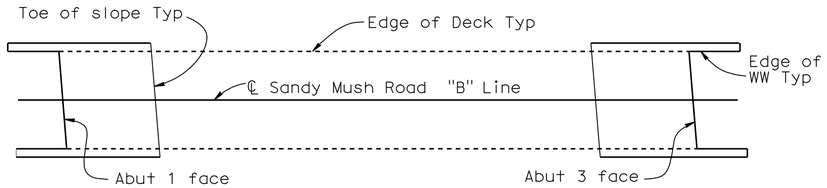

LIMITS OF SLOPE PAVING & DRAINAGE LAYOUT

1. Top of rolled edge
2. Conduit: 0.064" galv corrugated steel or 0.109" smooth galv steel
3. Taper: { 0.064" galv corrugated steel or 0.109" smooth galv steel
4. 8" perforated steel pipe (0.064" thick) underdrain behind abutment. Connect to downdrain as shown on limits of Slope Paving & Drainage layout.

SPECIAL DETAILS

REVISED STANDARD DRAWING

FILE NO. XS 22-11	DESIGN	BY	CHECKED	APPROVAL RECOMMENDED BY
DESIGN DATE 3/89	DETAILS	BY R. YEE	CHECKED	DESIGN SUPERVISOR
	SUBMITTED BY C.W. PURKISS			

1 Revised Detail

STATE OF CALIFORNIA DEPARTMENT OF TRANSPORTATION

DIVISION OF STRUCTURES STRUCTURE DESIGN

BRIDGE NO. 39-0236
POST MILE 3.4

SANDY MUSH OVERHEAD
SLOPE PAVING - FULL SLOPE

DS OSD 2147A (CADD 7/97)

ORIGINAL SCALE IN INCHES FOR REDUCED PLANS 0 1 2 3

CU 10
EA 415801

DISREGARD PRINTS BEARING EARLIER REVISION DATES

REVISION DATES (PRELIMINARY STAGE ONLY) 1-30-08 7-16-09

SHEET 16 OF 20

FILE => 390236ss_lp16.dgn

XS2211.DGN VI-1

USERNAME => trmikesl DATE PLOTTED => 04-NOV-2010 TIME PLOTTED => 06:44

DIST	COUNTY	ROUTE	POST MILES TOTAL PROJECT	SHEET No	TOTAL SHEETS
10	Mer	99	0.0/4.6	542	607

CERTIFIED ENGINEERING GEOLOGIST — 11-2-09 DATE

11-1-10
PLANS APPROVAL DATE

REGISTERED PROFESSIONAL GEOLOGIST — Xing Zheng No. 2130 Exp. 3-31-11 CERTIFIED ENGINEERING GEOLOGIST — STATE OF CALIFORNIA

The State of California or its officers or agents shall not be responsible for the accuracy or completeness of electronic copies of this plan sheet.

This LOTB sheet was prepared in accordance with the Caltrans Soil & Rock Logging, Classification, & Presentation Manual (June 2007).

BENCH MARK

BM : Mer-99 Elev : 212.24′
PM 3.31

Fnd 1" IP w/RPP & LS 5679 Tag
61.64′ Lt C/L "B" Line
Sta 35+91.12
N 1,890,990.84
E 6,610,084.13
NAVD 29

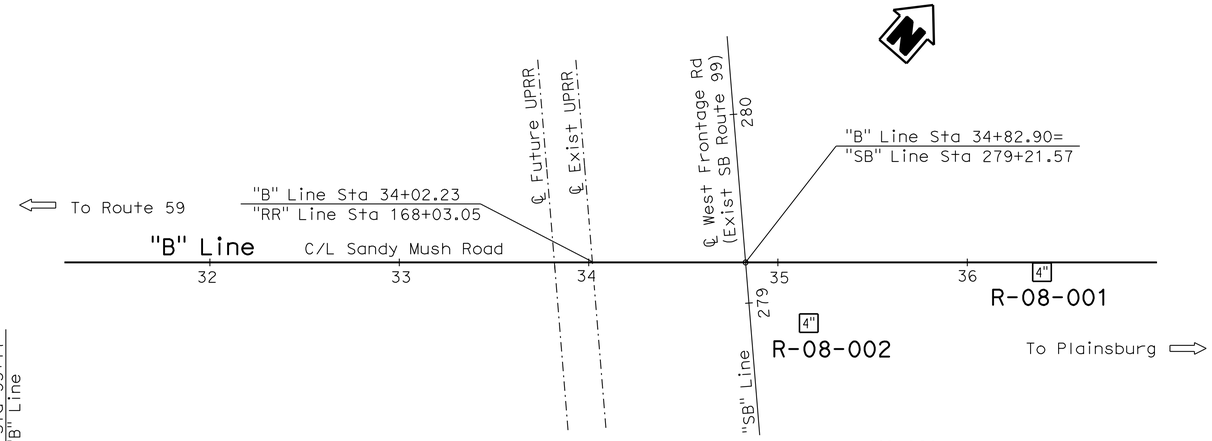

PLAN
1"=40′

Notes:

1. SPT N Values shown on the Log of Test Boring (LOTB) sheet are actual values recorded in the field.
2. PP = Pocket Penetrometer Test (tsf).
3. Groundwater was not measured.

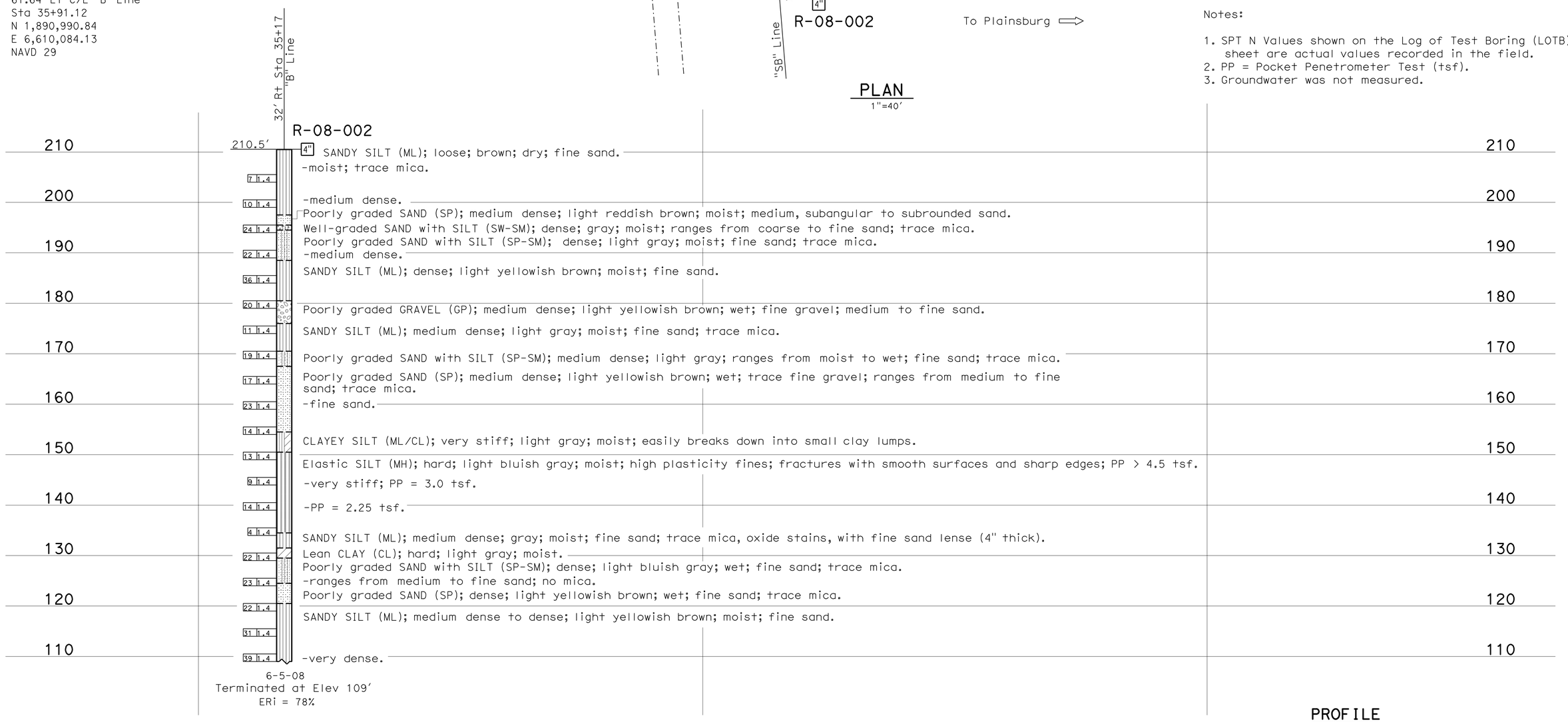

PROFILE
HOR. 1"=10′
VER. 1"=10′

ENGINEERING SERVICES	GEOTECHNICAL SERVICES	STATE OF CALIFORNIA DEPARTMENT OF TRANSPORTATION	DIVISION OF ENGINEERING SERVICES STRUCTURE DESIGN DESIGN BRANCH	BRIDGE NO. 39-0236 / POST MILES 3.4	SANDY MUSH OVERHEAD LOG OF TEST BORINGS 1 OF 4
FUNCTIONAL SUPERVISOR NAME: R. Buell	DRAWN BY: W. Tang 08/09 / CHECKED BY: J. Martin	FIELD INVESTIGATION BY: X. Zheng	CU 10 EA 415801		

OGS CIVIL LOG OF TEST BORINGS SHEET — ORIGINAL SCALE IN INCHES FOR REDUCED PLANS 0 1 2 3 — DISREGARD PRINTS BEARING EARLIER REVISION DATES — REVISION DATES 09-16-09 09-23-09 10-19-09 — SHEET 17 OF 20

FILE => 390236zltb17.dgn

USERNAME => trmikesl DATE PLOTTED => 04-NOV-2010 TIME PLOTTED => 06:44

DIST	COUNTY	ROUTE	POST MILES TOTAL PROJECT	SHEET No	TOTAL SHEETS
10	Mer	99	0.0/4.6	543	607

CERTIFIED ENGINEERING GEOLOGIST — 11-2-09 DATE

REGISTERED PROFESSIONAL GEOLOGIST — Xing Zheng No. 2130 Exp. 3-31-11 CERTIFIED ENGINEERING GEOLOGIST — STATE OF CALIFORNIA

11-1-10
PLANS APPROVAL DATE

The State of California or its officers or agents shall not be responsible for the accuracy or completeness of electronic copies of this plan sheet.

This LOTB sheet was prepared in accordance with the Caltrans Soil & Rock Logging, Classification, & Presentation Manual (June 2007).

FOR PLAN VIEW, SEE
"LOG OF TEST BORINGS 1 OF 4"

PROFILE
HOR. 1"=10'
VER. 1"=10'

ENGINEERING SERVICES		GEOTECHNICAL SERVICES	STATE OF CALIFORNIA DEPARTMENT OF TRANSPORTATION	DIVISION OF ENGINEERING SERVICES STRUCTURE DESIGN DESIGN BRANCH	BRIDGE NO. 39-0236 POST MILES 3.4	SANDY MUSH OVERHEAD LOG OF TEST BORINGS 2 OF 4
FUNCTIONAL SUPERVISOR NAME: R. Buell	DRAWN BY: W. Tang 08/09 CHECKED BY: J. Martin	FIELD INVESTIGATION BY: X. Zheng				

OGS CIVIL LOG OF TEST BORINGS SHEET

ORIGINAL SCALE IN INCHES FOR REDUCED PLANS 0 1 2 3

CU 10
EA 415801

DISREGARD PRINTS BEARING EARLIER REVISION DATES → 09-16-09 09-23-09 10-19-09

REVISION DATES

SHEET 18 OF 20

FILE => 390236zltb18.dgn

USERNAME => trmikesl DATE PLOTTED => 04-NOV-2010 TIME PLOTTED => 06:45

DIST	COUNTY	ROUTE	POST MILES TOTAL PROJECT	SHEET No	TOTAL SHEETS
10	Mer	99	0.0/4.6	544	607

CERTIFIED ENGINEERING GEOLOGIST — 11-2-09 DATE

11-1-10
PLANS APPROVAL DATE

REGISTERED PROFESSIONAL GEOLOGIST — Xing Zheng No. 2130 Exp. 3-31-11 — CERTIFIED ENGINEERING GEOLOGIST — STATE OF CALIFORNIA

The State of California or its officers or agents shall not be responsible for the accuracy or completeness of electronic copies of this plan sheet.

REFERENCE: CALTRANS SOIL & ROCK LOGGING, CLASSIFICATION, AND PRESENTATION MANUAL (JUNE 2007)

CEMENTATION

Description	Criteria
Weak	Crumbles or breaks with handling or little finger pressure.
Moderate	Crumbles or breaks with considerable finger pressure.
Strong	Will not crumble or break with finger pressure.

CONSISTENCY OF COHESIVE SOILS

Description	Unconfined Compressive Strength (tsf)	Pocket Penetrometer Measurement (tsf)	Torvane Measurement (tsf)	Field Approximation
Very Soft	< 0.25	< 0.25	< 0.12	Easily penetrated several inches by fist
Soft	0.25 to 0.50	0.25 to 0.50	0.12 to 0.25	Easily penetrated several inches by thumb
Medium Stiff	0.50 to 1.0	0.50 to 1.0	0.25 to 0.50	Penetrated several inches by thumb with moderate effort
Stiff	1 to 2	1 to 2	0.50 to 1.0	Readily indented by thumb but penetrated only with great effort
Very Stiff	2 to 4	2 to 4	1.0 to 2.0	Readily indented by thumbnail
Hard	> 4.0	> 4.0	> 2.0	Indented by thumbnail with difficulty

BOREHOLE IDENTIFICATION

Symbol	Hole Type	Description
Size	A	Auger Boring
Size	R P	Rotary drilled boring Rotary percussion boring (air)
Size	R	Rotary drilled diamond core
Size	HD HA	Hand driven (1-inch soil tube) Hand Auger
●	D	Dynamic Cone Penetration Boring
▲	CPT	Cone Penetration Test (ASTM D 5778-95)
⬚	O	Other

Note: Size in inches.

PLASTICITY OF FINE-GRAINED SOILS

Description	Criteria
Nonplastic	A 1/8-inch thread cannot be rolled at any water content.
Low	The thread can barely be rolled and the lump cannot be formed when drier than the plastic limit.
Medium	The thread is easy to roll and not much time is required to reach the plastic limit. The thread cannot be rerolled after reaching the plastic limit. The lump crumbles when drier than the plastic limit.
High	It takes considerable time rolling and kneading to reach the plastic limit. The thread can be rerolled several times after reaching the plastic limit. The lump can be formed without crumbling when drier than the plastic limit.

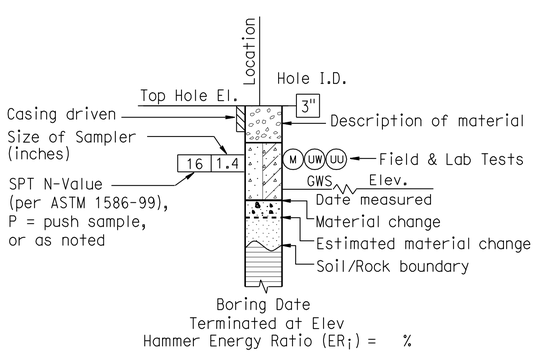

ROTARY BORING

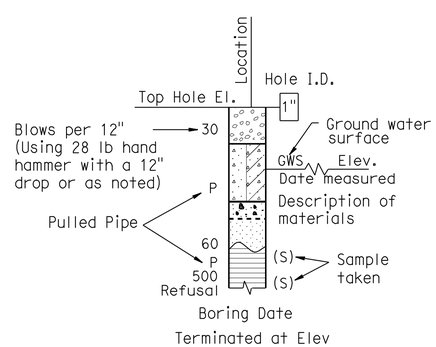

HAND BORING

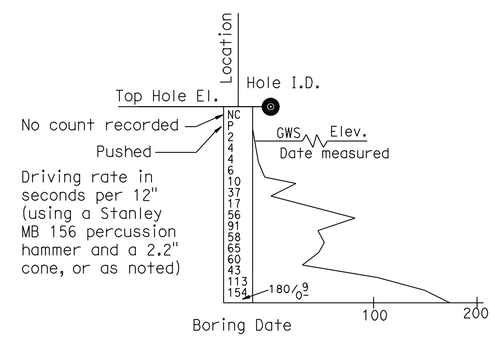

DYNAMIC CONE PENETRATION BORING

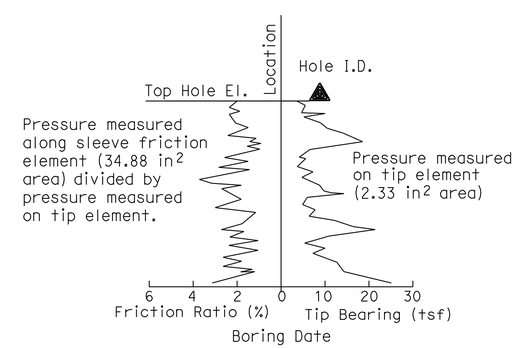

CONE PENETRATION TEST (CPT) SOUNDING

ENGINEERING SERVICES	GEOTECHNICAL SERVICES	STATE OF CALIFORNIA DEPARTMENT OF TRANSPORTATION	DIVISION OF ENGINEERING SERVICES STRUCTURE DESIGN DESIGN BRANCH	BRIDGE NO. 39-0236 POST MILE 3.4	SANDY MUSH OVERHEAD LOG OF TEST BORINGS 3 OF 4
	PREPARED BY: I.G-Remmen 11/09				

GS LOTB SOIL LEGEND

ORIGINAL SCALE IN INCHES FOR REDUCED PLANS 0 1 2 3

CU 10
EA 415801

DISREGARD PRINTS BEARING EARLIER REVISION DATES

REVISION DATES

SHEET 19 OF 20

FILE => 390236zltb19.dgn

USERNAME => ttmirkes1 DATE PLOTTED => 04-NOV-2010 TIME PLOTTED => 06:45

REFERENCE: CALTRANS SOIL & ROCK LOGGING, CLASSIFICATION, AND PRESENTATION MANUAL (JUNE 2007)

DIST	COUNTY	ROUTE	POST MILES TOTAL PROJECT	SHEET No	TOTAL SHEETS
10	Mer	99	0.0/4.6	545	607

CERTIFIED ENGINEERING GEOLOGIST — 11-2-09 DATE

11-1-10
PLANS APPROVAL DATE

REGISTERED PROFESSIONAL GEOLOGIST — Xing Zheng No. 2130 Exp. 3-31-11 CERTIFIED ENGINEERING GEOLOGIST — STATE OF CALIFORNIA

The State of California or its officers or agents shall not be responsible for the accuracy or completeness of electronic copies of this plan sheet.

GROUP SYMBOLS AND NAMES

Graphic/Symbol	Group Names
GW	Well-graded GRAVEL Well-graded GRAVEL with SAND
GP	Poorly graded GRAVEL Poorly graded GRAVEL with SAND
GW-GM	Well-graded GRAVEL with SILT Well-graded GRAVEL with SILT and SAND
GW-GC	Well-graded GRAVEL with CLAY (or SILTY CLAY) Well-graded GRAVEL with CLAY and SAND (or SILTY CLAY and SAND)
GP-GM	Poorly graded GRAVEL with SILT Poorly graded GRAVEL with SILT and SAND
GP-GC	Poorly graded GRAVEL with CLAY (or SILTY CLAY) Poorly graded GRAVEL with CLAY and SAND (or SILTY CLAY and SAND)
GM	SILTY GRAVEL SILTY GRAVEL with SAND
GC	CLAYEY GRAVEL CLAYEY GRAVEL with SAND
GC-GM	SILTY, CLAYEY GRAVEL SILTY, CLAYEY GRAVEL with SAND
SW	Well-graded SAND Well-graded SAND with GRAVEL
SP	Poorly graded SAND Poorly graded SAND with GRAVEL
SW-SM	Well-graded SAND with SILT Well-graded SAND with SILT and GRAVEL
SW-SC	Well-graded SAND with CLAY (or SILTY CLAY) Well-graded SAND with CLAY and GRAVEL (or SILTY CLAY and GRAVEL)
SP-SM	Poorly graded SAND with SILT Poorly graded SAND with SILT and GRAVEL
SP-SC	Poorly graded SAND with CLAY (or SILTY CLAY) Poorly graded SAND with CLAY and GRAVEL (or SILTY CLAY and GRAVEL)
SM	SILTY SAND SILTY SAND with GRAVEL
SC	CLAYEY SAND CLAYEY SAND with GRAVEL
SC-SM	SILTY, CLAYEY SAND SILTY, CLAYEY SAND with GRAVEL
PT	PEAT
	COBBLES COBBLES and BOULDERS BOULDERS

Graphic/Symbol	Group Names
CL	Lean CLAY Lean CLAY with SAND Lean CLAY with GRAVEL SANDY lean CLAY SANDY lean CLAY with GRAVEL GRAVELLY lean CLAY GRAVELLY lean CLAY with SAND
CL-ML	SILTY CLAY SILTY CLAY with SAND SILTY CLAY with GRAVEL SANDY SILTY CLAY SANDY SILTY CLAY with GRAVEL GRAVELLY SILTY CLAY GRAVELLY SILTY CLAY with SAND
ML	SILT SILT with SAND SILT with GRAVEL SANDY SILT SANDY SILT with GRAVEL GRAVELLY SILT GRAVELLY SILT with SAND
OL	ORGANIC lean CLAY ORGANIC lean CLAY with SAND ORGANIC lean CLAY with GRAVEL SANDY ORGANIC lean CLAY SANDY ORGANIC lean CLAY with GRAVEL GRAVELLY ORGANIC lean CLAY GRAVELLY ORGANIC lean CLAY with SAND
OL	ORGANIC SILT ORGANIC SILT with SAND ORGANIC SILT with GRAVEL SANDY ORGANIC SILT SANDY ORGANIC SILT with GRAVEL GRAVELLY ORGANIC SILT GRAVELLY ORGANIC SILT with SAND
CH	Fat CLAY Fat CLAY with SAND Fat CLAY with GRAVEL SANDY fat CLAY SANDY fat CLAY with GRAVEL GRAVELLY fat CLAY GRAVELLY fat CLAY with SAND
MH	Elastic SILT Elastic SILT with SAND Elastic SILT with GRAVEL SANDY elastic SILT SANDY elastic SILT with GRAVEL GRAVELLY elastic SILT GRAVELLY elastic SILT with SAND
OH	ORGANIC fat CLAY ORGANIC fat CLAY with SAND ORGANIC fat CLAY with GRAVEL SANDY ORGANIC fat CLAY SANDY ORGANIC fat CLAY with GRAVEL GRAVELLY ORGANIC fat CLAY GRAVELLY ORGANIC fat CLAY with SAND
OH	ORGANIC elastic SILT ORGANIC elastic SILT with SAND ORGANIC elastic SILT with GRAVEL SANDY ORGANIC elastic SILT SANDY ORGANIC elastic SILT with GRAVEL GRAVELLY ORGANIC elastic SILT GRAVELLY ORGANIC elastic SILT with SAND
OL/OH	ORGANIC SOIL ORGANIC SOIL with SAND ORGANIC SOIL with GRAVEL SANDY ORGANIC SOIL SANDY ORGANIC SOIL with GRAVEL GRAVELLY ORGANIC SOIL GRAVELLY ORGANIC SOIL with SAND

FIELD AND LABORATORY TESTING

- (C) Consolidation (ASTM D 2435)
- (CL) Collapse Potential (ASTM D 5333)
- (CP) Compaction Curve (CTM 216)
- (CR) Corrosivity Testing (CTM 643, CTM 422, CTM 417)
- (CU) Consolidated Undrained Triaxial (ASTM D 4767)
- (DS) Direct Shear (ASTM D 3080)
- (EI) Expansion Index (ASTM D 4829)
- (M) Moisture Content (ASTM D 2216)
- (OC) Organic Content-% (ASTM D 2974)
- (P) Permeability (CTM 220)
- (PA) Particle Size Analysis (ASTM D 422)
- (PI) Plasticity Index (AASHTO T 90) Liquid Limit (AASHTO T 89)
- (PL) Point Load Index (ASTM D 5731)
- (PM) Pressure Meter
- (PP) Pocket Penetrometer
- (R) R-Value (CTM 301)
- (SE) Sand Equivalent (CTM 217)
- (SG) Specific Gravity (AASHTO T 100)
- (SL) Shrinkage Limit (ASTM D 427)
- (SW) Swell Potential (ASTM D 4546)
- (TV) Pocket Torvane
- (UC) Unconfined Compression-Soil (ASTM D 2166) Unconfined Compression-Rock (ASTM D 2938)
- (UU) Unconsolidated Undrained Triaxial (ASTM D 2850)
- (UW) Unit Weight (ASTM D 4767)
- (VS) Vane Shear (AASHTO T 223)

APPARENT DENSITY OF COHESIONLESS SOILS

Description	SPT N_{60} (Blows / 12 inches)
Very loose	0 - 4
Loose	5 - 10
Medium Dense	11 - 30
Dense	31 - 50
Very Dense	> 50

MOISTURE

Description	Criteria
Dry	Absence of moisture, dusty, dry to the touch
Moist	Damp but no visible water
Wet	Visible free water, usually soil is below water table

PERCENT OR PROPORTION OF SOILS

Description	Criteria
Trace	Particles are present but estimated to be less than 5%
Few	5 to 10%
Little	15 to 25%
Some	30 to 45%
Mostly	50 to 100%

PARTICLE SIZE

Description		Size
Boulder		> 12"
Cobble		3" to 12"
Gravel	Coarse	3/4" to 3"
	Fine	No. 4 to 3/4"
Sand	Coarse	No. 10 to No. 4
	Medium	No. 40 to No. 10
	Fine	No. 200 to No. 40

ENGINEERING SERVICES

GEOTECHNICAL SERVICES
PREPARED BY: I.G-Remmen 11/09

STATE OF CALIFORNIA DEPARTMENT OF TRANSPORTATION

DIVISION OF ENGINEERING SERVICES STRUCTURE DESIGN
DESIGN BRANCH

BRIDGE NO. 39-0236
POST MILE 3.4

SANDY MUSH OVERHEAD
LOG OF TEST BORINGS 4 OF 4

GS LOTB SOIL LEGEND

ORIGINAL SCALE IN INCHES FOR REDUCED PLANS 0 1 2 3

CU 10
EA 415801

DISREGARD PRINTS BEARING EARLIER REVISION DATES

REVISION DATES

SHEET 20 OF 20

FILE => 390236zltb20.dgn

USERNAME => rtmikes1 DATE PLOTTED => 04-NOV-2010 TIME PLOTTED => 06:45

DIST	COUNTY	ROUTE	POST MILES TOTAL PROJECT	SHEET No	TOTAL SHEETS
10	Mer	99	0.0/4.6	546	607

REGISTERED CIVIL ENGINEER — DATE 04-13-10

11-1-10
PLANS APPROVAL DATE

The State of California or its officers or agents shall not be responsible for the accuracy or completeness of electronic copies of this plan sheet.

REGISTERED PROFESSIONAL ENGINEER — Larry Wu — No. C57035 — Exp. 6-30-11 — CIVIL — STATE OF CALIFORNIA

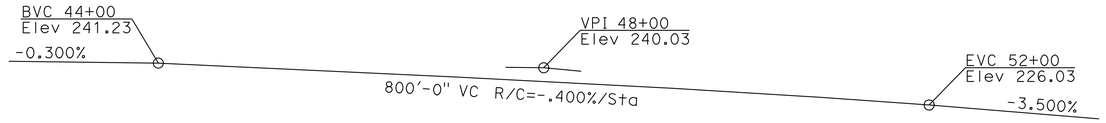

PROFILE GRADE

NO SCALE

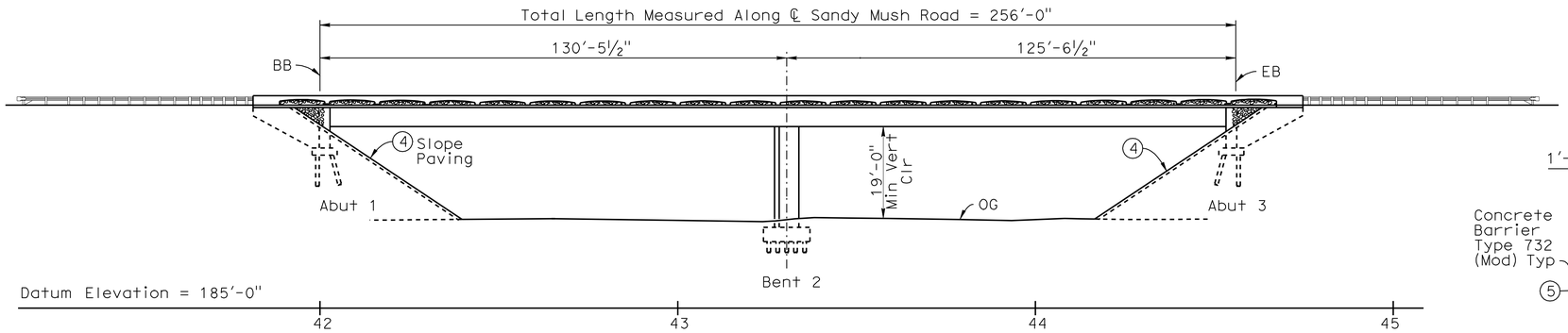

ELEVATION

1"=20'-0"

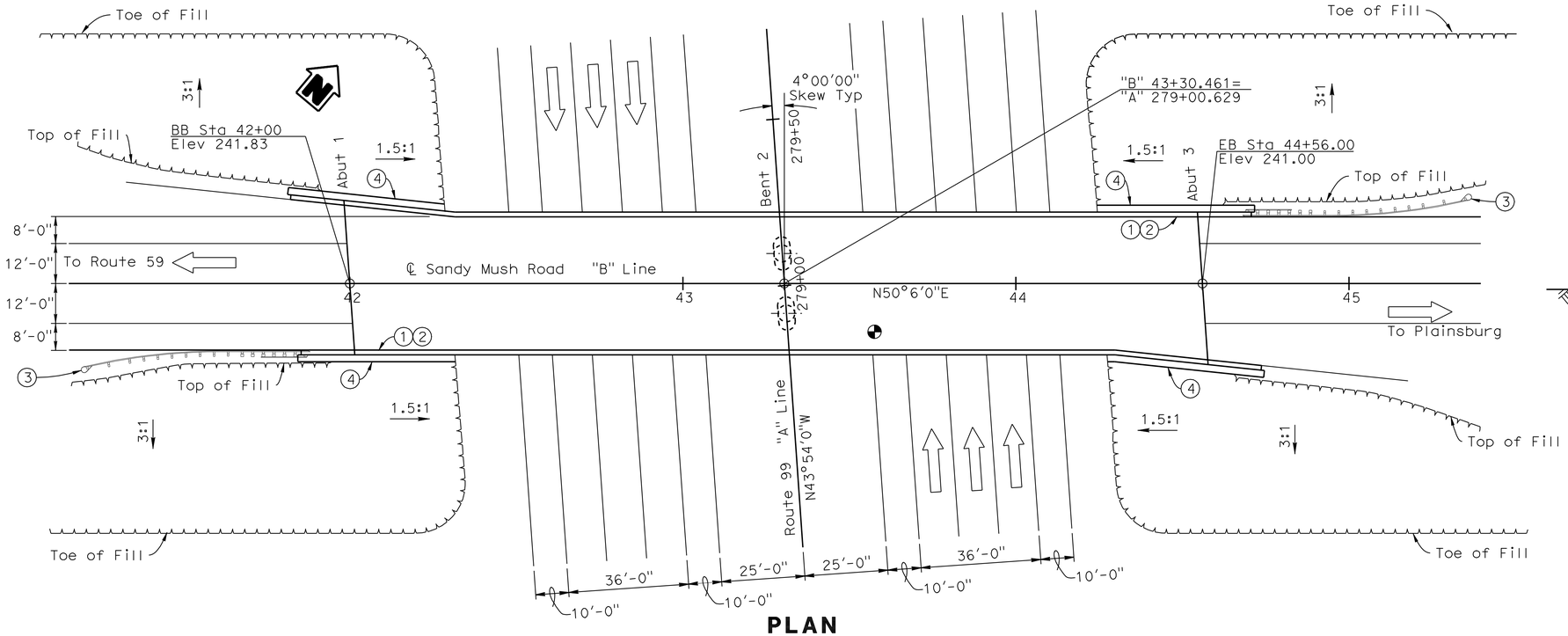

PLAN

1"=20'-0"

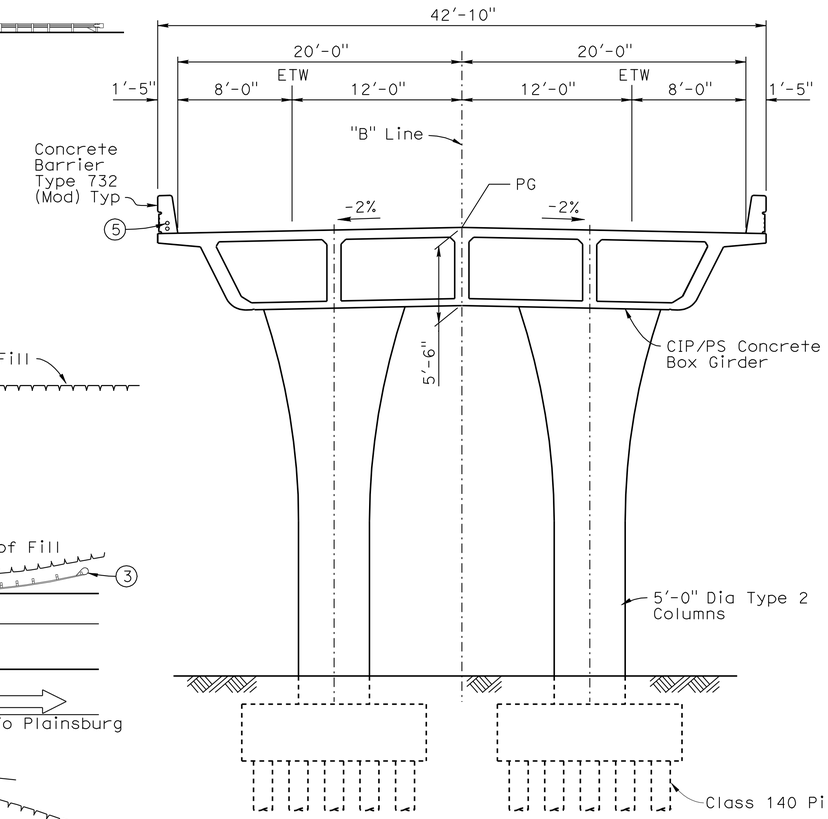

TYPICAL SECTION

3/16"=1'-0"

NOTES:

1. Paint "PLAINSBURG OVERCROSSING"
2. Paint "BR. NO. 39-0237"
3. Metal Beam Guard Rail, see "Roadway Plans"
4. See "SLOPE PAVING-FULL SLOPE" sheet
5. 2-2"Ø Electrical conduits, see "Roadway Plans"

◐ Indicates location of Min vertical clearance

For "General Notes", "Index to Plans", "Standard Plans", "Quantities", and "Pile Data", see "INDEX TO PLANS" Sheet.

DANIEL T. ADAMS
DESIGN ENGINEER

	BY	CHECKED
DESIGN	L. Wu	M. Vo
DETAILS	G. Hallstrom	M. Vo
QUANTITIES	J. Delgado	J. Szabo

LOAD & RESISTANCE FACTOR DESIGN — LIVE LOADING: HL93 AND PERMIT DESIGN VEHICLE

	BY	CHECKED
LAYOUT	L. Wu	M. Vo
SPECIFICATIONS	M. Kopsa	PLANS AND SPECS COMPARED M. Kopsa

STATE OF CALIFORNIA
DEPARTMENT OF TRANSPORTATION

DIVISION OF ENGINEERING SERVICES
STRUCTURE DESIGN
DESIGN BRANCH 10

BRIDGE NO. 39-0237
POST MILE 3.4

PLAINSBURG OVERCROSSING
GENERAL PLAN

STRUCTURES DESIGN GENERAL PLAN SHEET (ENGLISH) (REV. 10/25/05)

ORIGINAL SCALE IN INCHES FOR REDUCED PLANS 0 1 2 3

CU 10
EA 415801

DISREGARD PRINTS BEARING EARLIER REVISION DATES

REVISION DATES: 06-06-07 11-26-07 12-14-07 3-23-09 7-14-09 3-05-10 4-07-10

SHEET 1 OF 19

FILE => 390237agp01.dgn

STRUCTURES DESIGN GENERAL PLAN SHEET (ENGLISH) (REV.07-24-06)

USERNAME => trmikes1 DATE PLOTTED => 04-NOV-2010 TIME PLOTTED => 06:45

DIST	COUNTY	ROUTE	POST MILES TOTAL PROJECT	SHEET No	TOTAL SHEETS
10	Mer	99	0.0/4.6	547	607

REGISTERED CIVIL ENGINEER 04-13-10 DATE

11-1-10
PLANS APPROVAL DATE

REGISTERED PROFESSIONAL ENGINEER Larry Wu No. C57035 Exp. 6-30-11 CIVIL STATE OF CALIFORNIA

The State of California or its officers or agents shall not be responsible for the accuracy or completeness of electronic copies of this plan sheet.

INDEX TO PLANS

Sheet No.	Title
1.	GENERAL PLAN
2.	INDEX TO PLANS
3.	DECK CONTOURS
4.	FOUNDATION PLAN
5.	ABUTMENT 1 LAYOUT
6.	ABUTMENT 3 LAYOUT
7.	ABUTMENT DETAILS NO. 1
8.	ABUTMENT DETAILS NO. 2
9.	BENT LAYOUT
10.	BENT DETAILS NO. 1
11.	BENT DETAILS NO. 2
12.	TYPICAL SECTION
13.	GIRDER LAYOUT
14.	GIRDER REINFORCEMENT
15.	ARCHITECTURE DETAILS
16.	SLOPE PAVING
17.	LOG OF TEST BORINGS, 1 OF 3
18.	LOG OF TEST BORINGS, 2 OF 3
19.	LOG OF TEST BORINGS, 3 OF 3

PILE DATA TABLE

B2-5

Location	Pile Type	Nominal Resistance		Design Tip Elevations(ft)	Specified Tip Elevations(ft)	Nominal Driving Resistance Req'd
		Compression	Tension			
Abut 1	Class 140 Alternate X	280 kips	0	178.0	178.0	280 Kips
Bent 2	Class 140 Alternate X	270 kips	60 Kips	182.0 (a) 180.0 (b) 201.0 (c)	180.0	270 Kips
Abut 3	Class 140 Alternate X	280 kips	0	178.0	178.0	280 Kips

NOTE: Design tip elevations are controlled by: (a) Compression (Strength Limit)
(b) Compression (Extreme Limit)
(c) Tension (Extreme Limit)

STANDARD PLANS DATED MAY 2006

	A10A	ACRONYMS AND ABBREVIATIONS (SHEET 1 OF 2)
	A10B	ACRONYMS AND ABBREVIATIONS (SHEET 2 OF 2)
	A10C	SYMBOLS (SHEET 1 OF 2)
	A10D	SYMBOLS (SHEET 2 OF 2)
	A62C	LIMITS OF PAYMENT FOR EXCAVATION AND BACKFILL-BRIDGE
	BO-1	BRIDGE DETAILS
	BO-3	BRIDGE DETAILS
	BO-5	BRIDGE DETAILS
	BO-13	BRIDGE DETAILS
	B2-5	PILE DETAILS CLASS 90 AND CLASS 140
RSP	B6-21	JOINT SEALS (MAXIMUM MOVEMENT RATING = 2")
	B7-1	BOX GIRDER DETAILS
	B8-5	CAST-IN-PLACE PRESTRESSED GIRDER DETAILS
	B11-55	CONCRETE BARRIER TYPE 732
	B14-3	COMMUNICATION AND SPRINKLER CONTROL CONDUITS (CONDUIT LESS THAN 4")

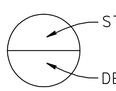

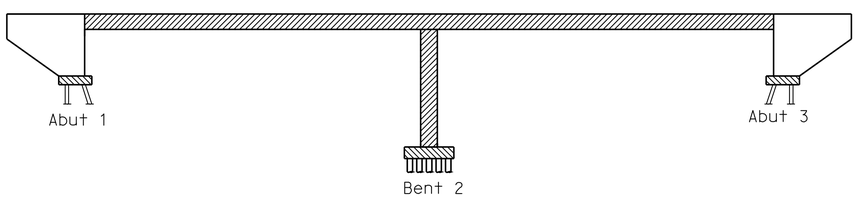

CONCRETE STRENGTH AND TYPE LIMITS

No Scale

GENERAL NOTES
LOAD AND RESISTANCE FACTOR DESIGN

DESIGN: AASHTO LRFD BRIDGE DESIGN SPECIFICATIONS, 4th Edition and the CALTRANS Amendments, preface dated Dec. 2008.

SEISMIC DESIGN: Caltrans Seismic Design Criteria (SDC) Version 1.4, July, 2006

DEAD LOAD: Includes 35 Psf for future wearing surface.

LIVE LOADING: HL93 and permit design load.

SEISMIC LOADING: CALTRANS SDC ARS Curve for Soil Profile Type D (M = 6.5±0.25), (Peak Rock Acceleration = 0.2 g).

REINFORCED CONCRETE: f_y = 60 ksi
f'_c = 3600 psi, unless otherwise noted
n = 8

See "Prestressing Notes" on "GIRDER LAYOUT" sheet.

QUANTITIES

STRUCTURE EXCAVATION (BRIDGE)	412	CY
STRUCTURE BACKFILL (BRIDGE)	277	CY
FURNISH PILING (CLASS 140) (ALTERNATIVE X)	2,038	LF
DRIVE PILE (CLASS 140) (ALTERNATIVE X)	54	EA
PRESTRESSING CAST-IN-PLACE CONCRETE	LUMP	SUM
STRUCTURAL CONCRETE, BRIDGE FOOTING	98	CY
STRUCTURAL CONCRETE, BRIDGE	935	CY
COBBLESTONE TEXTURE	190	SQFT
JOINT SEAL (MR 2")	92	LF
BAR REINFORCING STEEL (BRIDGE)	220,000	LB
PREPARE AND STAIN CONCRETE	950	SQFT
8" PERFORATED STEEL PIPE UNDERDRAIN (.064" THICK)	90	LF
PERMEABLE MATERIAL (BRIDGE)	16	CY
8" CORRUGATED STEEL PIPE DOWNDRAIN (.064" THICK)	155	LF
SLOPE PAVING (EXPOSED AGGREGATE)	4,500	SQFT
CONCRETE BARRIER (TYPE 732 MODIFIED)	592	LF

	BY	CHECKED
DESIGN	L. Wu	M. Vo
DETAILS	G. Hallstrom	M. Vo
QUANTITIES	J. Delgado	J. Szabo

STATE OF CALIFORNIA
DEPARTMENT OF TRANSPORTATION

DIVISION OF ENGINEERING SERVICES
STRUCTURE DESIGN
DESIGN BRANCH 10

BRIDGE NO. 39-0237
POST MILE 3.4

PLAINSBURG OVERCROSSING
INDEX TO PLANS

STRUCTURES DESIGN DETAIL SHEET (ENGLISH) (REV. 10/25/05)

ORIGINAL SCALE IN INCHES FOR REDUCED PLANS 0 1 2 3

CU 10
EA 415801

DISREGARD PRINTS BEARING EARLIER REVISION DATES

REVISION DATES: 11-26-07, 12-14-07, 3-25-09, 7-14-09, 4-13-10

SHEET 2 OF 19

FILE => 390237aitp02.dgn

USERNAME => trmikest DATE PLOTTED => 04-NOV-2010 TIME PLOTTED => 06:46

DIST	COUNTY	ROUTE	POST MILES TOTAL PROJECT	SHEET No	TOTAL SHEETS
10	Mer	99	0.0/4.6	548	607

REGISTERED CIVIL ENGINEER 04-13-10 DATE

11-1-10
PLANS APPROVAL DATE

REGISTERED PROFESSIONAL ENGINEER
Larry Wu
No. C57035
Exp. 6-30-11
CIVIL
STATE OF CALIFORNIA

The State of California or its officers or agents shall not be responsible for the accuracy or completeness of electronic copies of this plan sheet.

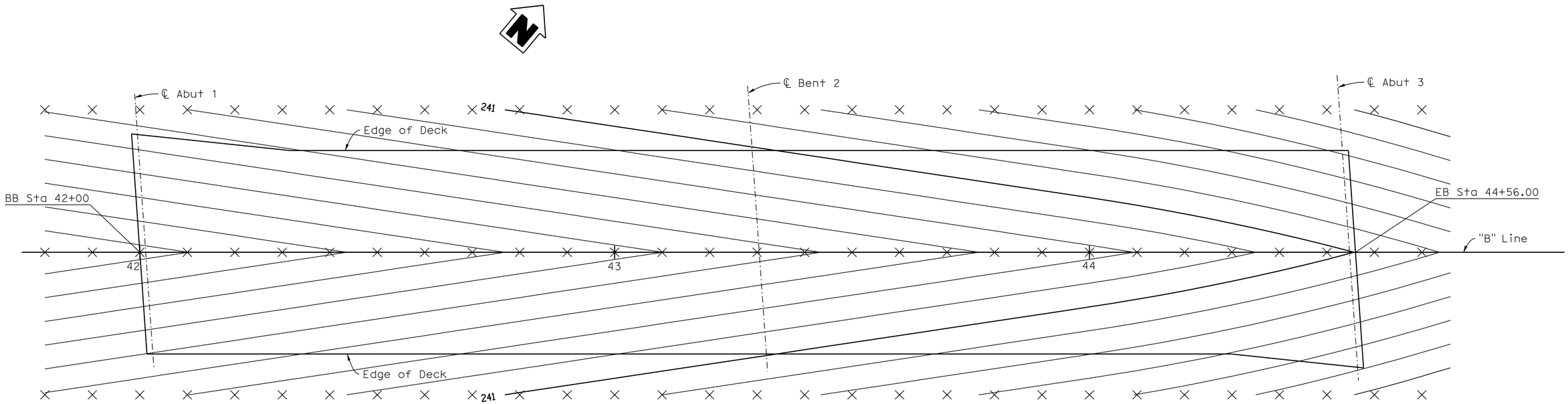

DECK CONTOURS

3/32"=1'-0"

NOTES:

1. x - 10'-0" intervals along station line.
2. Contour intervals = 0.1'.
3. Contours do not include camber.

	BY	CHECKED
DESIGN	L. Wu	M. Vo
DETAILS	G. Hallstrom	M. Vo
QUANTITIES	J. Delgado	J. Szabo

STATE OF CALIFORNIA
DEPARTMENT OF TRANSPORTATION

DIVISION OF ENGINEERING SERVICES
STRUCTURE DESIGN
DESIGN BRANCH 10

BRIDGE NO. 39-0237
POST MILE 3.4

PLAINSBURG OVERCROSSING
DECK CONTOURS

STRUCTURES DESIGN DETAIL SHEET (ENGLISH) (REV. 10/25/05)

ORIGINAL SCALE IN INCHES FOR REDUCED PLANS 0 1 2 3

CU 10
EA 415801

DISREGARD PRINTS BEARING EARLIER REVISION DATES

REVISION DATES: 12-04-07

SHEET 3 OF 19

FILE => 390237ddc03.dgn

USERNAME => trmikest DATE PLOTTED => 04-NOV-2010 TIME PLOTTED => 06:46

DIST	COUNTY	ROUTE	POST MILES TOTAL PROJECT	SHEET No	TOTAL SHEETS
10	Mer	99	0.0/4.6	549	607

REGISTERED CIVIL ENGINEER 04-13-10 DATE

11-1-10
PLANS APPROVAL DATE

REGISTERED PROFESSIONAL ENGINEER Larry Wu No. C57035 Exp. 6-30-11 CIVIL STATE OF CALIFORNIA

The State of California or its officers or agents shall not be responsible for the accuracy or completeness of electronic copies of this plan sheet.

CURVE DATA

No.	R	Δ	T	L
Ⓐ	3000.00	3°11′29"	83.57	167.10
Ⓑ	6000.00	6°26′0"	337.20	673.70
Ⓒ	6076.85	1°33′14"	82.41	164.82
Ⓓ	3000.00	3°11′29"	83.57	167.10

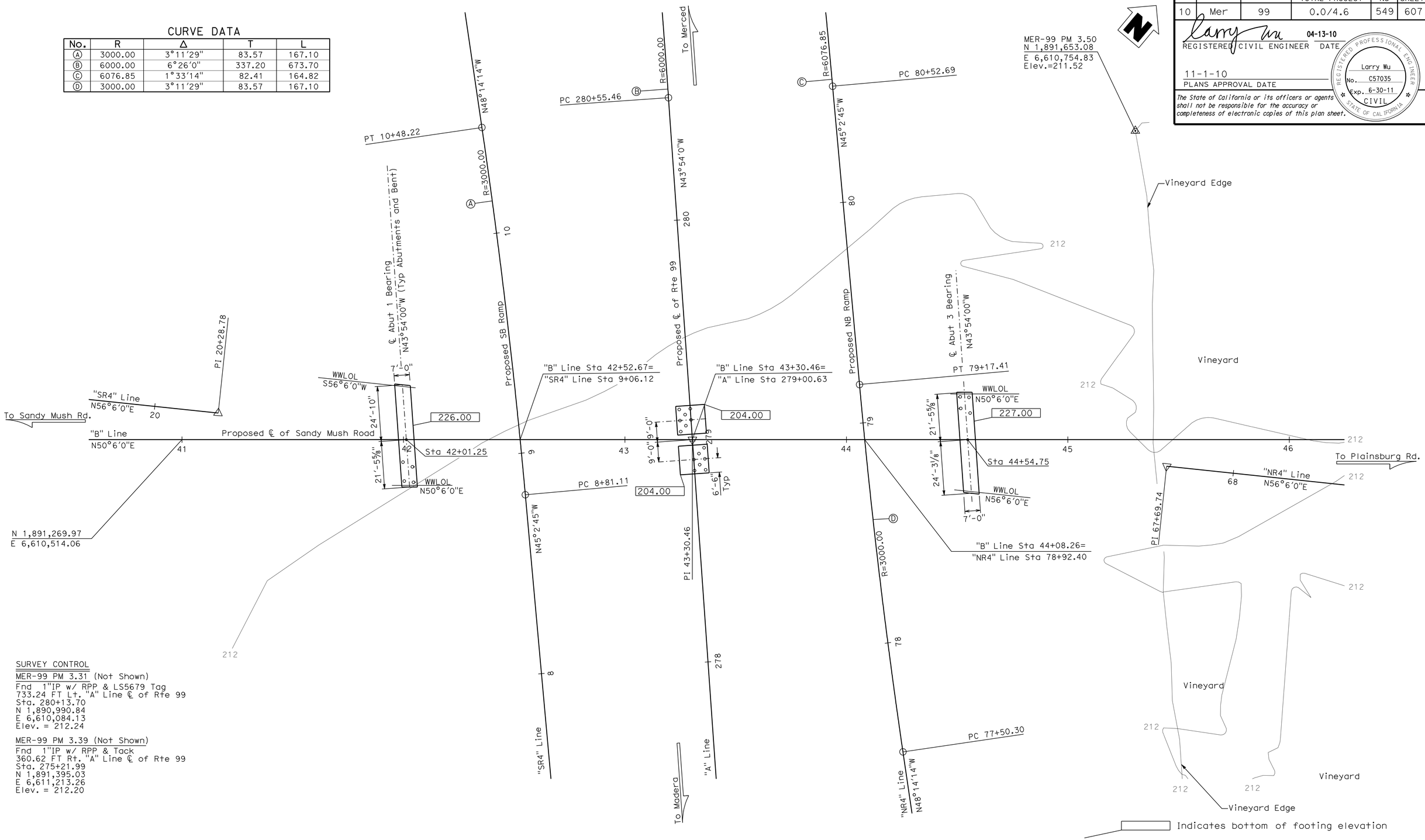

SURVEY CONTROL

MER-99 PM 3.31 (Not Shown)
Fnd 1"IP w/ RPP & LS5679 Tag
733.24 FT Lt. "A" Line ℄ of Rte 99
Sta. 280+13.70
N 1,890,990.84
E 6,610,084.13
Elev. = 212.24

MER-99 PM 3.39 (Not Shown)
Fnd 1"IP w/ RPP & Tack
360.62 FT Rt. "A" Line ℄ of Rte 99
Sta. 275+21.99
N 1,891,395.03
E 6,611,213.26
Elev. = 212.20

PRELIMINARY INVESTIGATION SECTION

SCALE	VERT.DATUM NAVD29	PHOTOGRAMMETRY AS OF: X			
1"=20′	HORZ.DATUM NAD83(92)	SURVEYED	BY District	CHECKED	BY M.Licha 09/2007
ALIGNMENT TIES Dist. Traverse Sheet		DRAFTED	BY T.Marchenko 09/2007	CHECKED	BY T.Zolnikova 09/2007

DESIGN	BY L. Wu	CHECKED M. Vo
DETAILS	BY G. Hallstrom	CHECKED M. Vo
QUANTITIES	BY J. Delgado	CHECKED XJ. Szabo

STATE OF CALIFORNIA
DEPARTMENT OF TRANSPORTATION

DIVISION OF ENGINEERING SERVICES
STRUCTURE DESIGN
DESIGN BRANCH 10

BRIDGE NO. 39-0237
POST MILE 3.4

PLAINSBURG OVERCROSSING
FOUNDATION PLAN

STRUCTURES FOUNDATION PLAN SHEET (ENGLISH) (REV. 10/25/05)

ORIGINAL SCALE IN INCHES FOR REDUCED PLANS 0 1 2 3

CU 10
EA 415801

DISREGARD PRINTS BEARING EARLIER REVISION DATES

REVISION DATES 10/15/07 11/29/07 12/28/07 03/24/09 04/07/10

SHEET 4 OF 19

FILE => 390237efdp104.dgn

USERNAME => trmikesl DATE PLOTTED => 04-NOV-2010 TIME PLOTTED => 06:46

DIST	COUNTY	ROUTE	POST MILES TOTAL PROJECT	SHEET No	TOTAL SHEETS
10	Mer	99	0.0/4.6	550	607

REGISTERED CIVIL ENGINEER — DATE: 04-13-10

11-1-10
PLANS APPROVAL DATE

The State of California or its officers or agents shall not be responsible for the accuracy or completeness of electronic copies of this plan sheet.

REGISTERED PROFESSIONAL ENGINEER — Larry Wu — No. C57035 — Exp. 6-30-11 — CIVIL — STATE OF CALIFORNIA

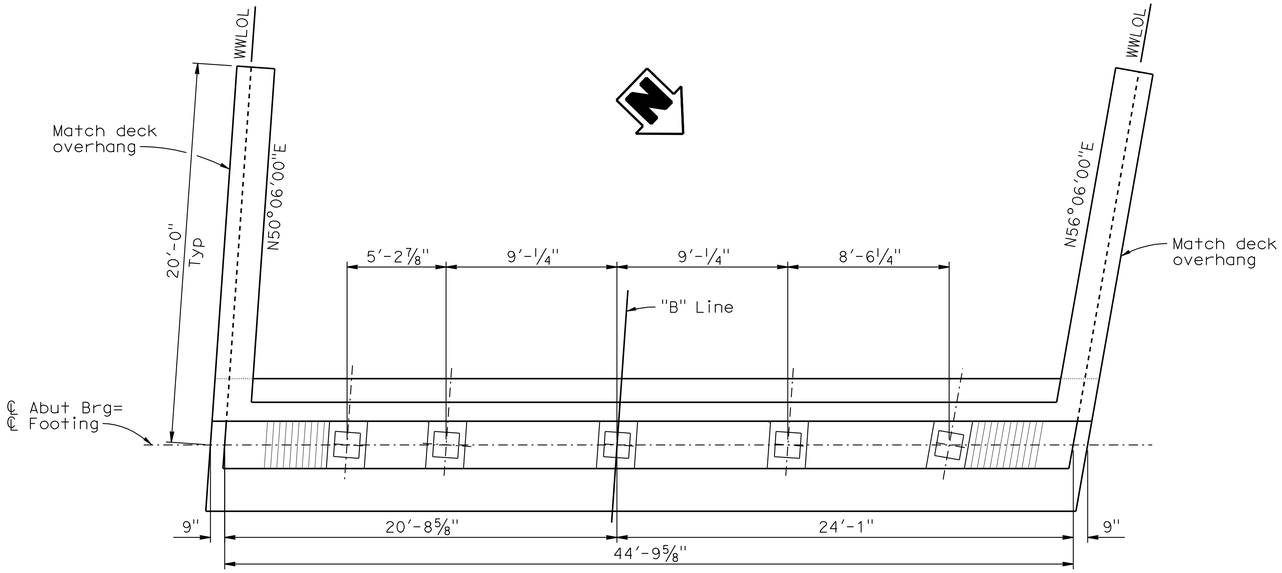

PLAN
¼"=1'-0"

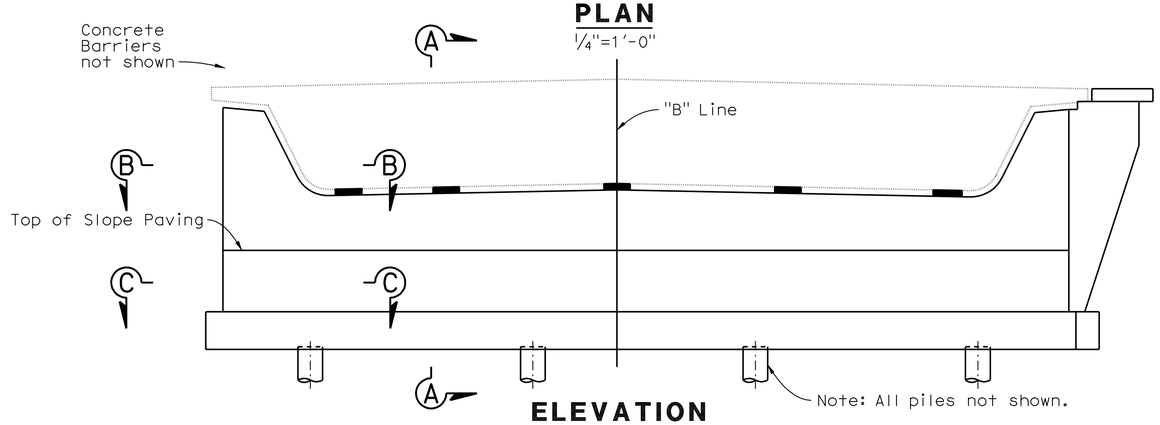

ELEVATION
¼"=1'-0"

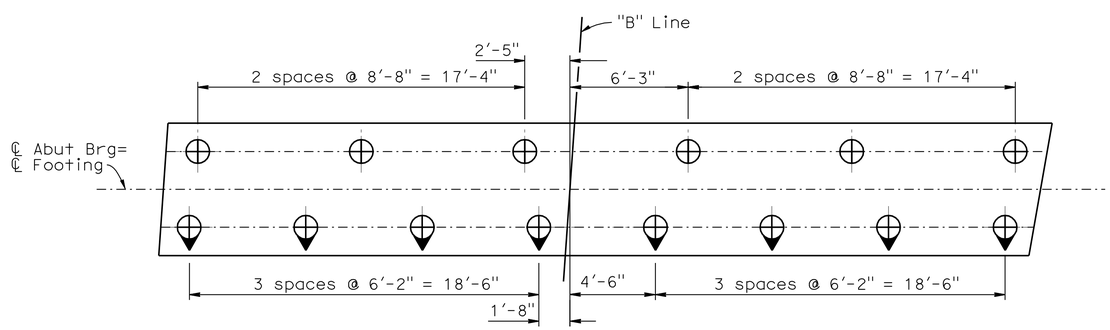

PILE LAYOUT
¼"=1'-0"

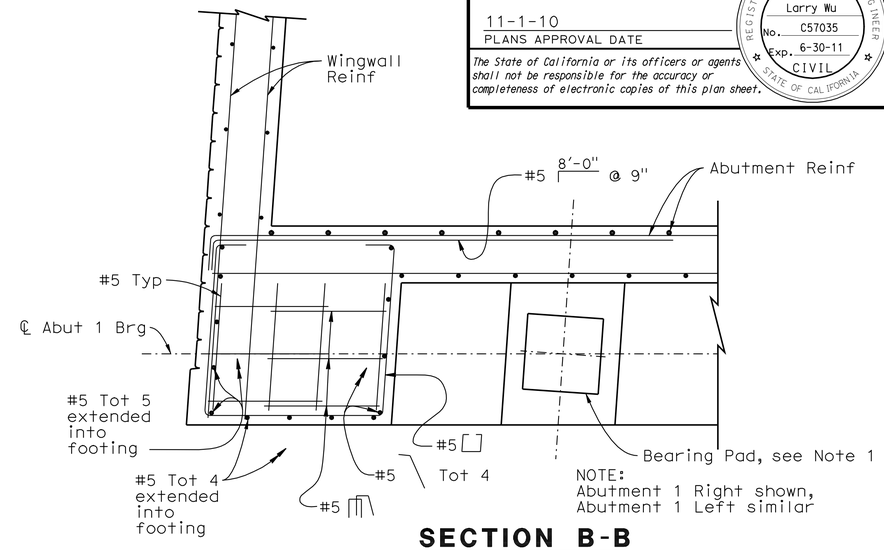

SECTION B-B
¾"=1'-0"

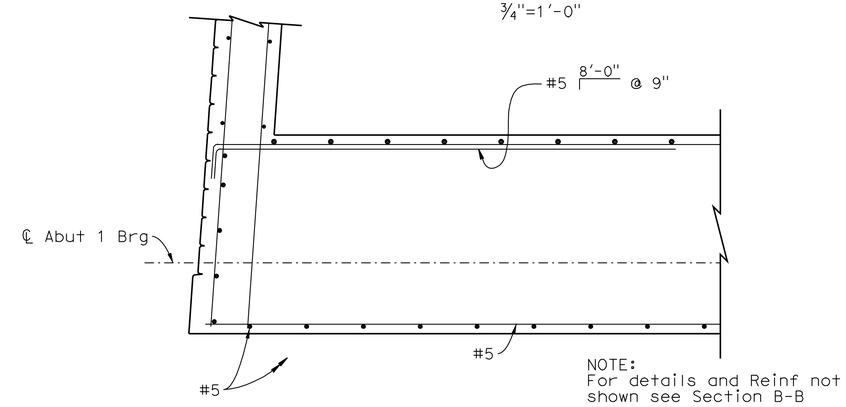

SECTION C-C
¾"=1'-0"

LEGEND:

- Indicates vertical concrete pile
- Indicates battered concrete pile at 1:3

NOTES:

1. Bearing pads shall be 16" x 16" x 2" (elastomer only) steel reinforced elastomeric bearings pads Tot 5, for details see "ABUTMENT DETAILS NO. 1" sheet.
2. For Section A-A, see "ABUTMENT DETAILS NO. 1" sheet.

	BY	CHECKED
DESIGN	L. Wu	M. Vo
DETAILS	G. Hallstrom	M. Vo
QUANTITIES	J. Delgado	J. Szabo

STATE OF CALIFORNIA
DEPARTMENT OF TRANSPORTATION

DIVISION OF ENGINEERING SERVICES
STRUCTURE DESIGN
DESIGN BRANCH 10

BRIDGE NO. 39-0237
POST MILE 3.4

PLAINSBURG OVERCROSSING
ABUTMENT 1 LAYOUT

STRUCTURES DESIGN DETAIL SHEET (ENGLISH) (REV. 10/25/05)

ORIGINAL SCALE IN INCHES FOR REDUCED PLANS 0 1 2 3

CU 10
EA 415801

DISREGARD PRINTS BEARING EARLIER REVISION DATES — REVISION DATES: ~~12-10-07~~ ~~2-19-08~~ 4-07-10

SHEET 5 OF 19

FILE => 390237fa01_1o05.dgn

USERNAME => trmikes1 DATE PLOTTED => 04-NOV-2010 TIME PLOTTED => 06:46

DIST	COUNTY	ROUTE	POST MILES TOTAL PROJECT	SHEET No	TOTAL SHEETS
10	Mer	99	0.0/4.6	551	607

REGISTERED CIVIL ENGINEER — DATE 04-13-10

11-1-10
PLANS APPROVAL DATE

The State of California or its officers or agents shall not be responsible for the accuracy or completeness of electronic copies of this plan sheet.

REGISTERED PROFESSIONAL ENGINEER — Larry Wu — No. C57035 — Exp. 6-30-11 — CIVIL — STATE OF CALIFORNIA

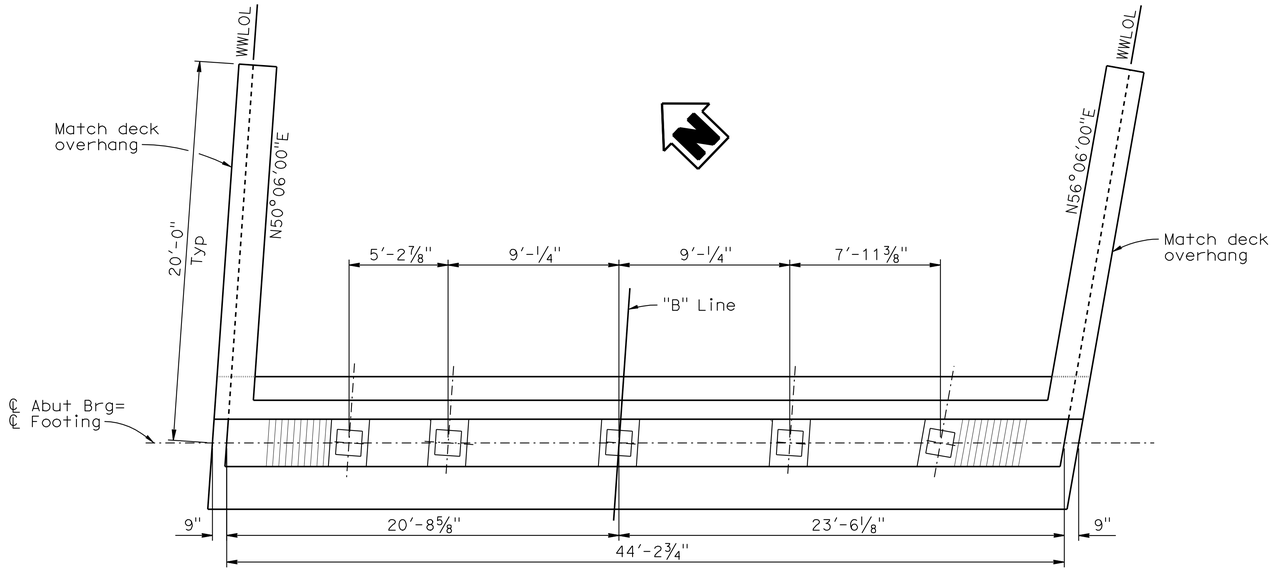

PLAN
¼"=1'-0"

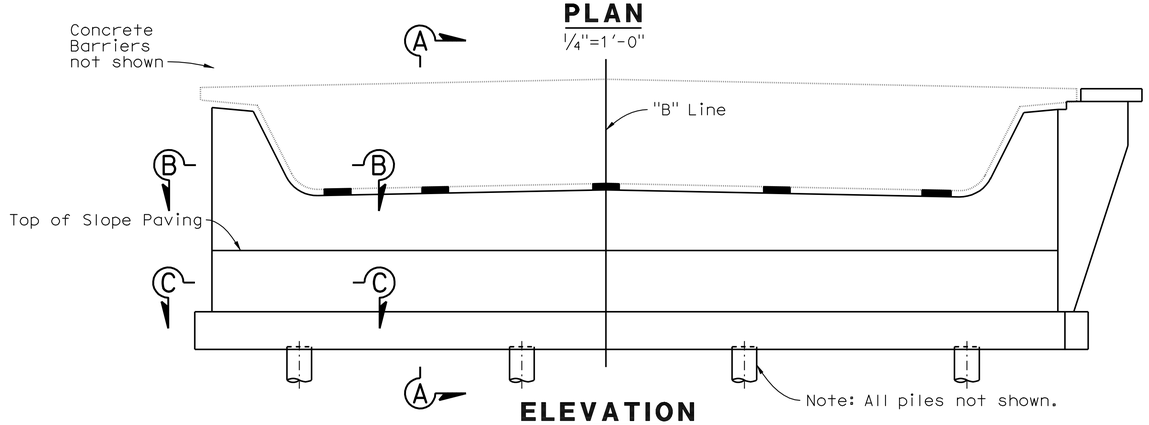

ELEVATION
¼"=1'-0"

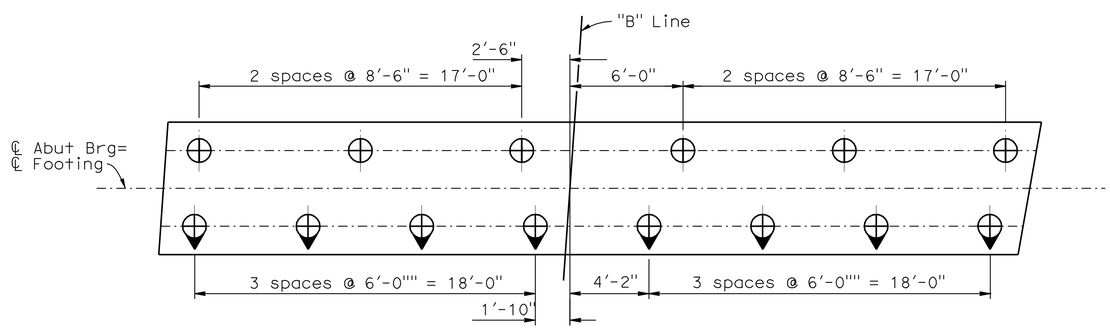

PILE LAYOUT
¼"=1'-0"

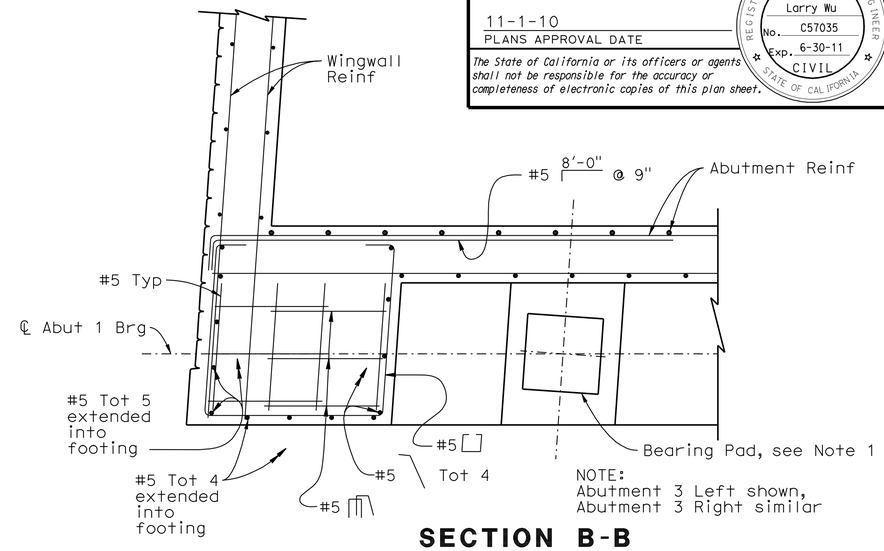

SECTION B-B
¾"=1'-0"

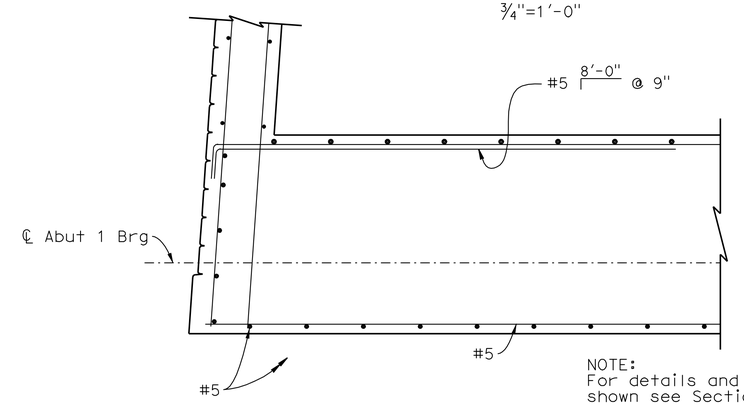

SECTION C-C
¾"=1'-0"

LEGEND:

⊕ Indicates vertical concrete pile

⊕ Indicates battered concrete pile at 1:3

NOTES:

1. Bearing pads shall be 16" x 16" x 2" (elastomer only) steel reinforced elastomeric bearings pads Tot 5, for details see "ABUTMENT DETAILS NO. 1" sheet.
2. For Section A-A, see "ABUTMENT DETAILS NO. 1" sheet.

	BY	CHECKED
DESIGN	L. Wu	M. Vo
DETAILS	G. Hallstrom	M. Vo
QUANTITIES	J. Delgado	J. Szabo

STATE OF CALIFORNIA
DEPARTMENT OF TRANSPORTATION

DIVISION OF ENGINEERING SERVICES
STRUCTURE DESIGN
DESIGN BRANCH 10

BRIDGE NO. 39-0237
POST MILE 3.4

PLAINSBURG OVERCROSSING
ABUTMENT 3 LAYOUT

STRUCTURES DESIGN DETAIL SHEET (ENGLISH) (REV. 10/25/05)

ORIGINAL SCALE IN INCHES FOR REDUCED PLANS 0 1 2 3

CU 10
EA 415801

DISREGARD PRINTS BEARING EARLIER REVISION DATES — REVISION DATES: 12-10-07, 12-14-07, 2-19-08, 4-07-10

SHEET 6 OF 19

FILE => 390237fa03_1o06.dgn

USERNAME => trmikes1 DATE PLOTTED => 04-NOV-2010 TIME PLOTTED => 06:46

DIST	COUNTY	ROUTE	POST MILES TOTAL PROJECT	SHEET No	TOTAL SHEETS
10	Mer	99	0.0/4.6	552	607

REGISTERED CIVIL ENGINEER 04-13-10 DATE

11-1-10
PLANS APPROVAL DATE

The State of California or its officers or agents shall not be responsible for the accuracy or completeness of electronic copies of this plan sheet.

REGISTERED PROFESSIONAL ENGINEER Larry Wu No. C57035 Exp. 6-30-11 CIVIL STATE OF CALIFORNIA

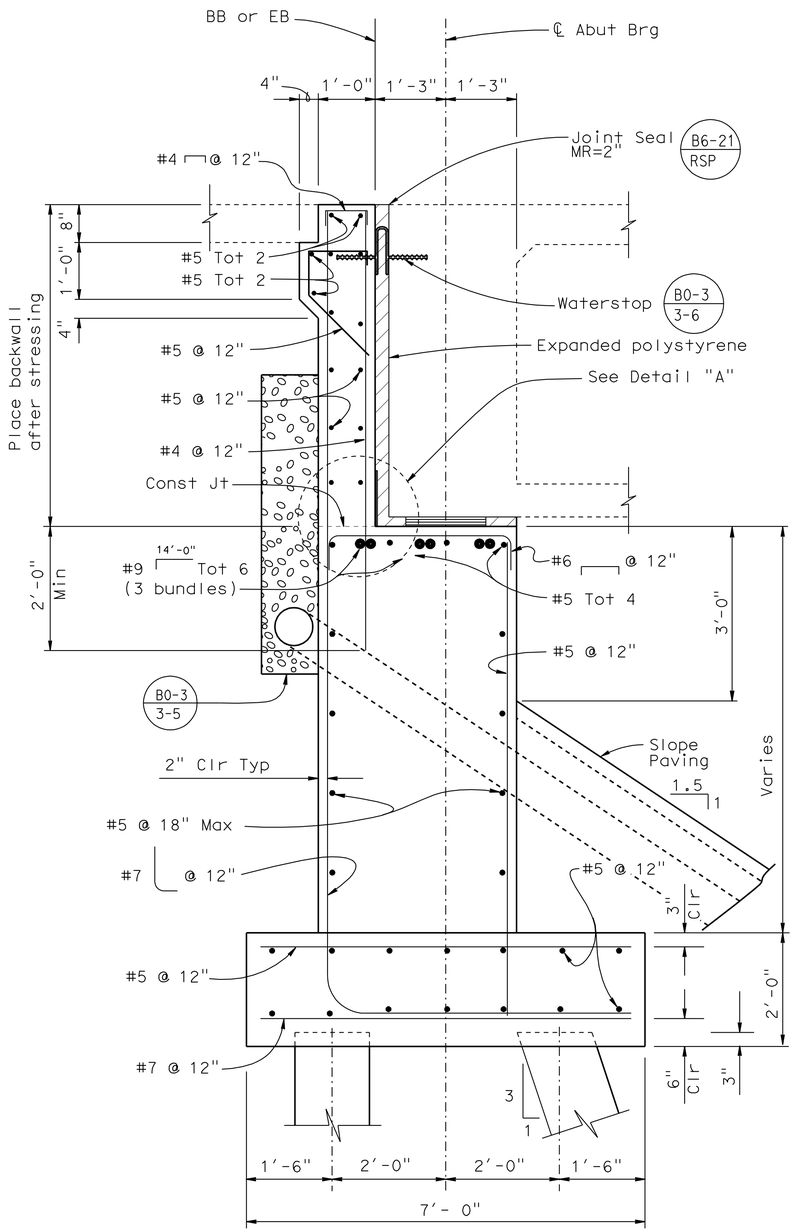

SECTION A-A

¾"=1'-0"

NOTES:

1. For location of Section A-A, see "ABUTMENT LAYOUT" sheet.

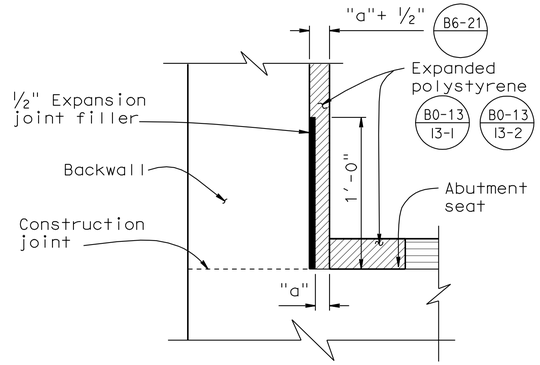

DETAIL "A"

No Scale

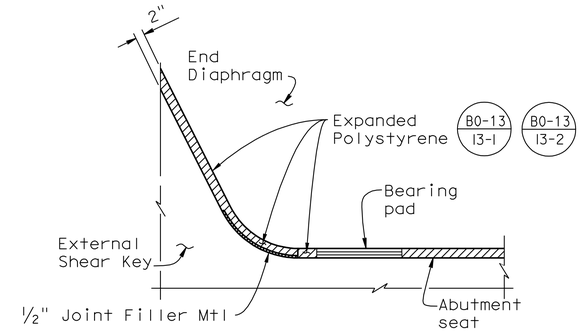

DETAIL "B"

No Scale

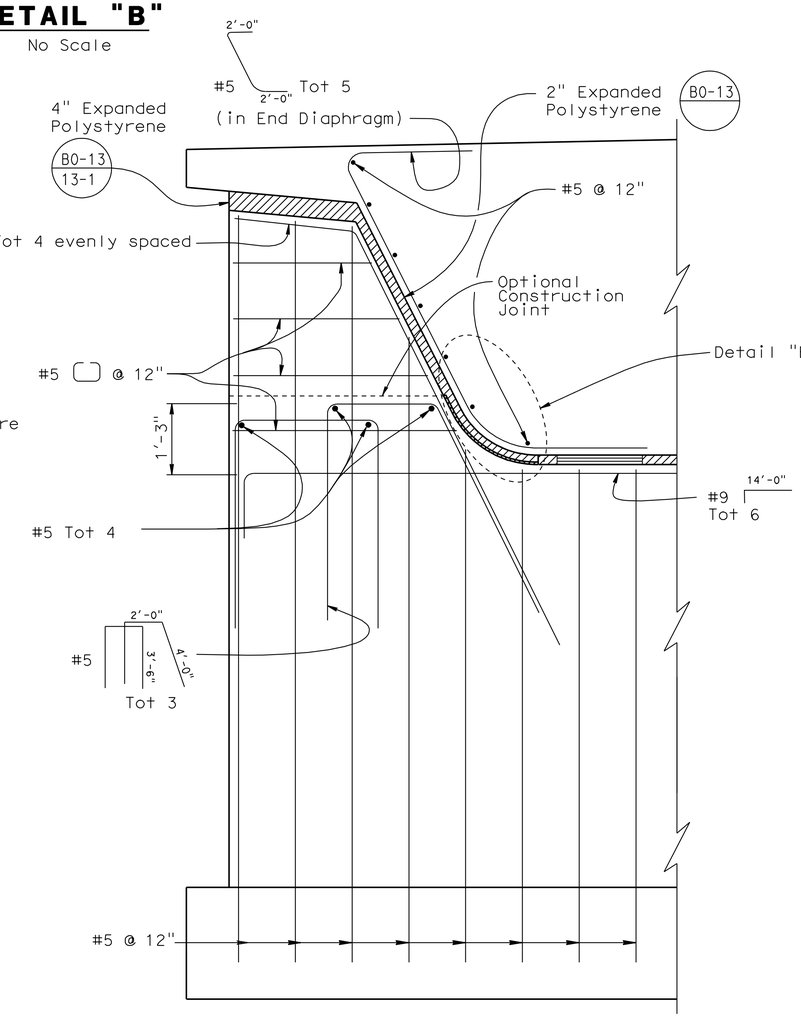

PART ELEVATION

¾"=1'-0"

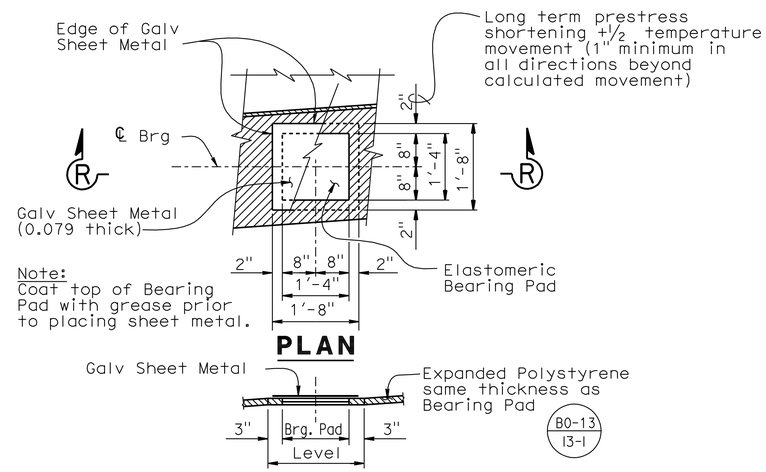

BEARING PAD DETAIL

No Scale

Details typical at all bearing pads

DESIGN	BY L. Wu	CHECKED M. Vo	
DETAILS	BY G. Hallstrom	CHECKED M. Vo	
QUANTITIES	BY J. Delgado	CHECKED J. Szabo	

STATE OF CALIFORNIA DEPARTMENT OF TRANSPORTATION

DIVISION OF ENGINEERING SERVICES STRUCTURE DESIGN DESIGN BRANCH 10

BRIDGE NO. 39-0237
POST MILE 3.4

PLAINSBURG OVERCROSSING
ABUTMENT DETAILS NO. 1

STRUCTURES DESIGN DETAIL SHEET (ENGLISH) (REV. 10/25/05)

ORIGINAL SCALE IN INCHES FOR REDUCED PLANS 0 1 2 3

CU 10
EA 415801

DISREGARD PRINTS BEARING EARLIER REVISION DATES

REVISION DATES: 12-06-07, 12-14-07, 2-19-08, 3-23-09

SHEET 7 OF 19

FILE => 390237fadt07.dgn

USERNAME => trmikest DATE PLOTTED => 04-NOV-2010 TIME PLOTTED => 06:46

DIST	COUNTY	ROUTE	POST MILES TOTAL PROJECT	SHEET No	TOTAL SHEETS
10	Mer	99	0.0/4.6	553	607

REGISTERED CIVIL ENGINEER 04-13-10 DATE

11-1-10
PLANS APPROVAL DATE

REGISTERED PROFESSIONAL ENGINEER Larry Wu No. C57035 Exp. 6-30-11 CIVIL STATE OF CALIFORNIA

The State of California or its officers or agents shall not be responsible for the accuracy or completeness of electronic copies of this plan sheet.

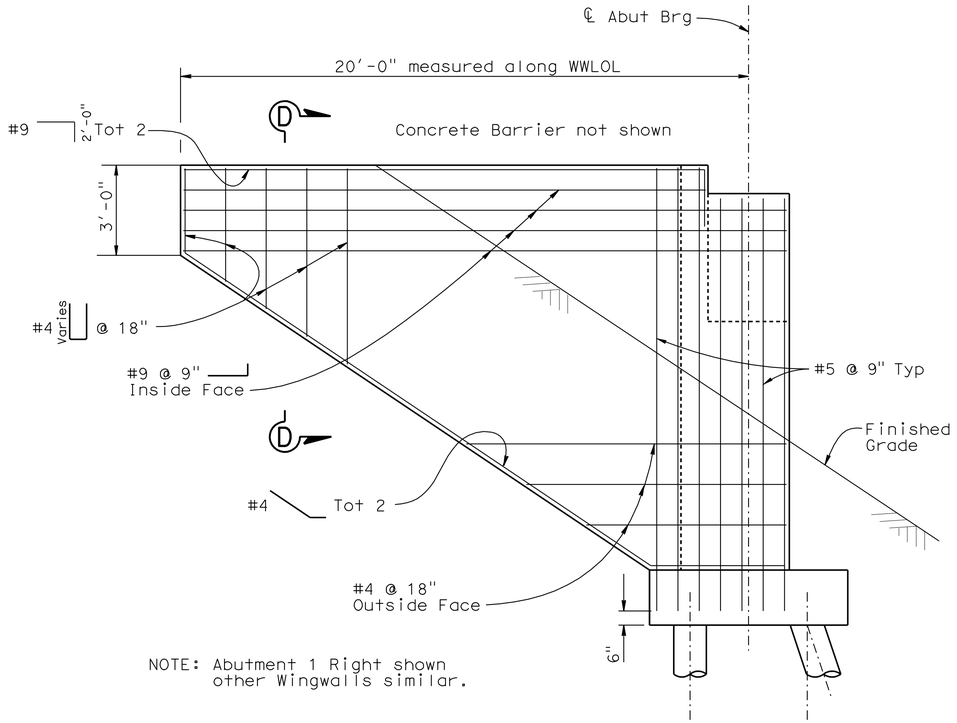

NOTE: Abutment 1 Right shown
other Wingwalls similar.

WINGWALL ELEVATION

3/8"=1'-0"

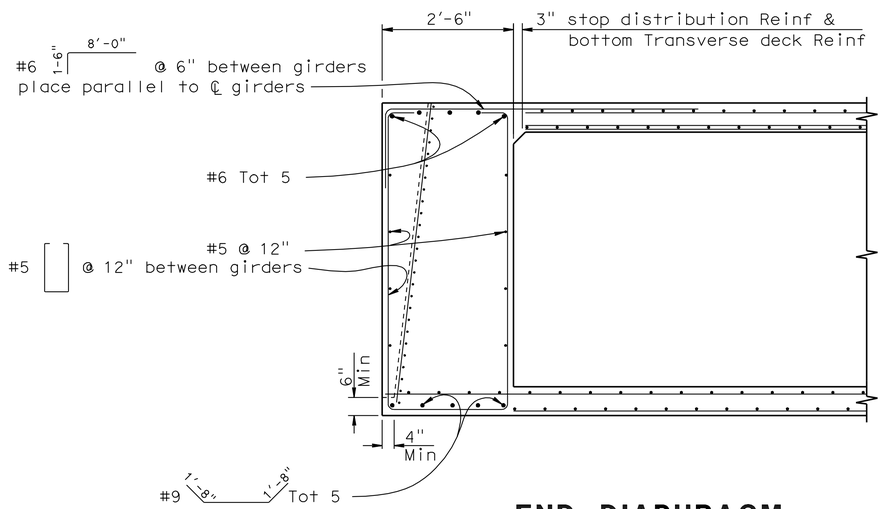

END DIAPHRAGM

3/4"=1'-0"

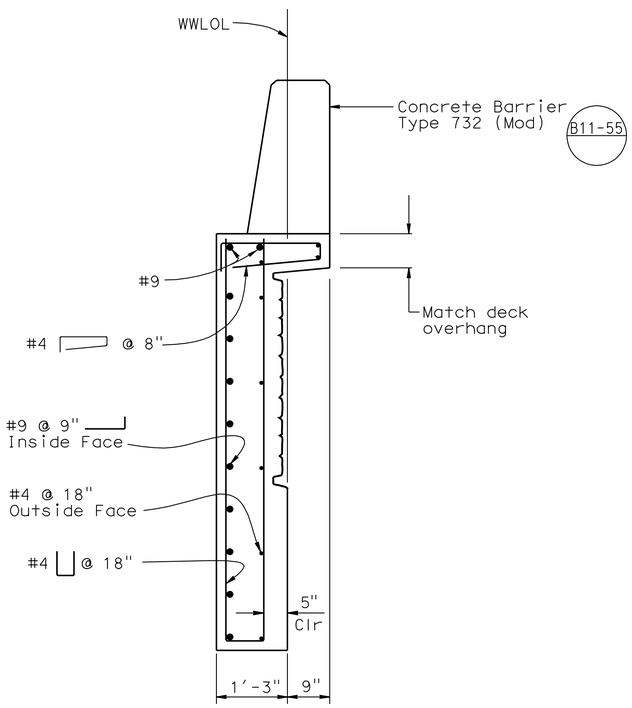

SECTION D-D

3/4"=1'-0"

DESIGN	BY L. Wu	CHECKED M. Vo
DETAILS	BY G. Hallstrom	CHECKED M. Vo
QUANTITIES	BY J. Delgado	CHECKED J. Szabo

STATE OF CALIFORNIA
DEPARTMENT OF TRANSPORTATION

DIVISION OF ENGINEERING SERVICES
STRUCTURE DESIGN
DESIGN BRANCH 10

BRIDGE NO. 39-0237
POST MILE 3.4

PLAINSBURG OVERCROSSING
ABUTMENT DETAILS NO. 2

STRUCTURES DESIGN DETAIL SHEET (ENGLISH) (REV. 10/25/05)

ORIGINAL SCALE IN INCHES FOR REDUCED PLANS 0 1 2 3

CU 10
EA 415801

DISREGARD PRINTS BEARING EARLIER REVISION DATES

REVISION DATES: 12-12-07 12-14-07 2-19-08 3-23-09

SHEET 8 OF 19

FILE => 390237fadt08.dgn

USERNAME => trmikesl DATE PLOTTED => 04-NOV-2010 TIME PLOTTED => 06:46

DIST	COUNTY	ROUTE	POST MILES TOTAL PROJECT	SHEET No	TOTAL SHEETS
10	Mer	99	0.0/4.6	554	607

REGISTERED CIVIL ENGINEER 04-13-10 DATE

11-1-10
PLANS APPROVAL DATE

REGISTERED PROFESSIONAL ENGINEER Larry Wu No. C57035 Exp. 6-30-11 CIVIL STATE OF CALIFORNIA

The State of California or its officers or agents shall not be responsible for the accuracy or completeness of electronic copies of this plan sheet.

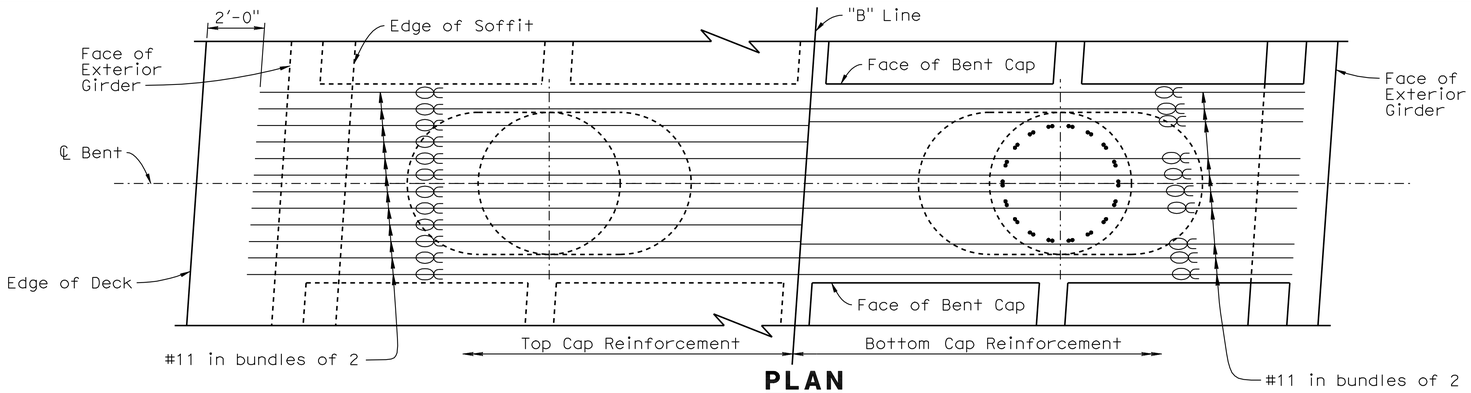

PLAN
3/8"=1'-0"

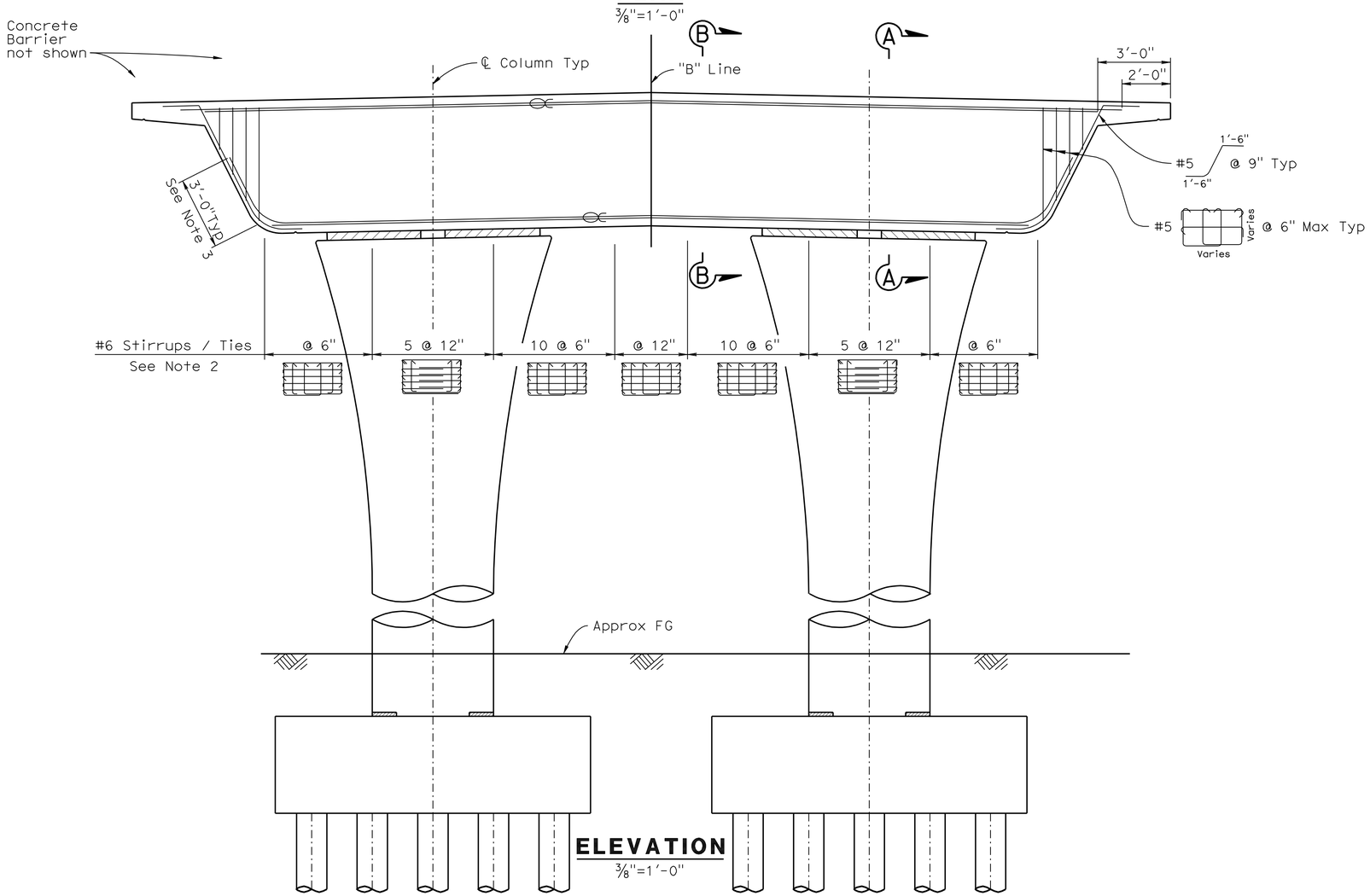

ELEVATION
3/8"=1'-0"

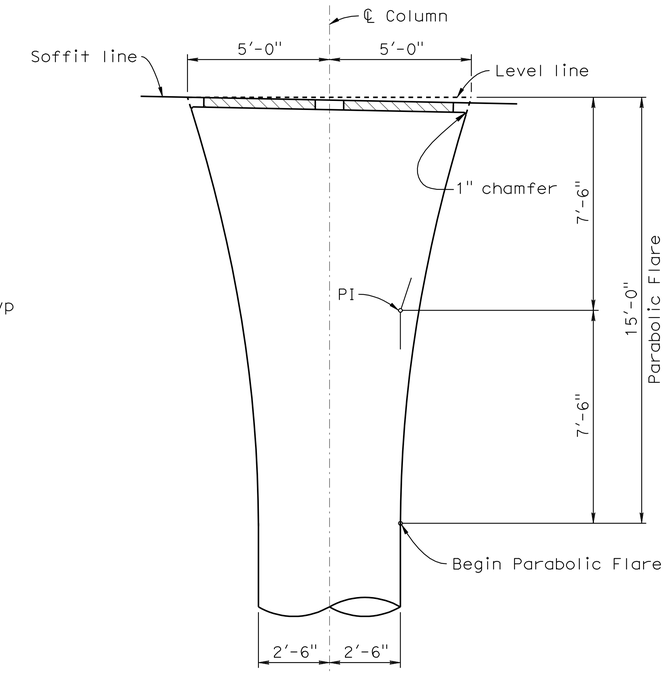

COLUMN GEOMETRICS
3/8"=1'-0"

NOTES:

1. For Section A-A and Section B-B, see "BENT DETAILS NO. 2" sheet.
2. Place stirrups normal to ℄ Bent and space along ℄ Bent.
3. Place 3'-0" hook on each end of top bars of each bundle as shown in "Elevation".
4. Use service splices for bent cap main bars.
5. For column and footing details, see "BENT DETAILS NO. 1" sheet.

Indicates bundled rebar

	BY	CHECKED
DESIGN	L. Wu	M. Vo
DETAILS	G. Hallstrom	M. Vo
QUANTITIES	J. Delgado	J. Szabo

STATE OF CALIFORNIA
DEPARTMENT OF TRANSPORTATION

DIVISION OF ENGINEERING SERVICES
STRUCTURE DESIGN
DESIGN BRANCH 10

BRIDGE NO. 39-0237
POST MILE 3.4

PLAINSBURG OVERCROSSING
BENT LAYOUT

STRUCTURES DESIGN DETAIL SHEET (ENGLISH) (REV. 10/25/05)

ORIGINAL SCALE IN INCHES FOR REDUCED PLANS 0 1 2 3

CU 10
EA 415801

DISREGARD PRINTS BEARING EARLIER REVISION DATES

REVISION DATES: 11-26-07 12-11-07 12-14-07 7-14-09

SHEET 9 OF 19

FILE => 390237hb_lo09.dgn

USERNAME => trmikest DATE PLOTTED => 04-NOV-2010 TIME PLOTTED => 06:47

DIST	COUNTY	ROUTE	POST MILES TOTAL PROJECT	SHEET No	TOTAL SHEETS
10	Mer	99	0.0/4.6	555	607

REGISTERED CIVIL ENGINEER 04-13-10 DATE

11-1-10
PLANS APPROVAL DATE

REGISTERED PROFESSIONAL ENGINEER Larry Wu No. C57035 Exp. 6-30-11 CIVIL STATE OF CALIFORNIA

The State of California or its officers or agents shall not be responsible for the accuracy or completeness of electronic copies of this plan sheet.

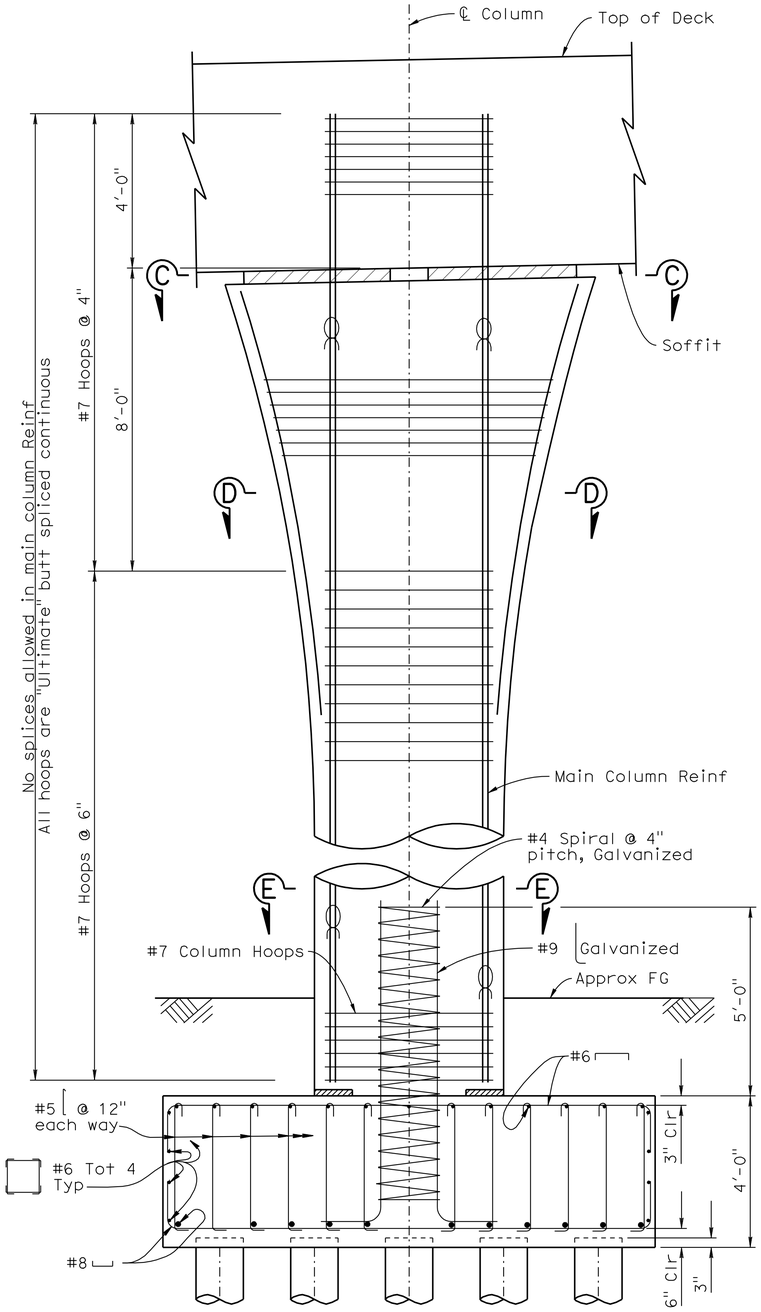

COLUMN ELEVATION

½"=1'-0"

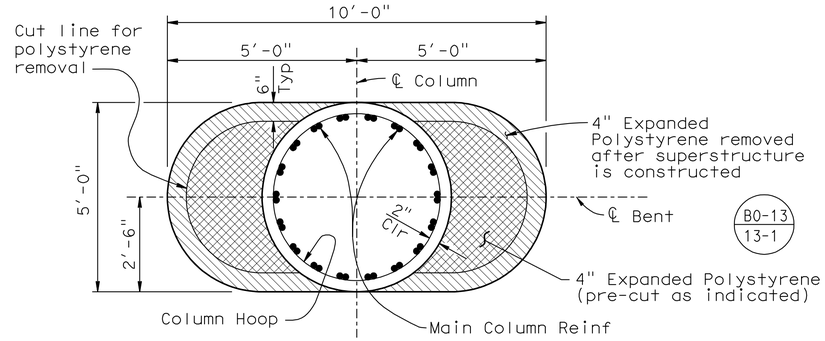

SECTION C-C

½"=1'-0"

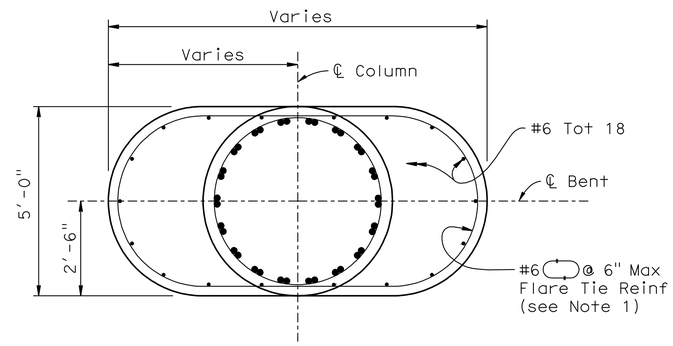

SECTION D-D

½"=1'-0"

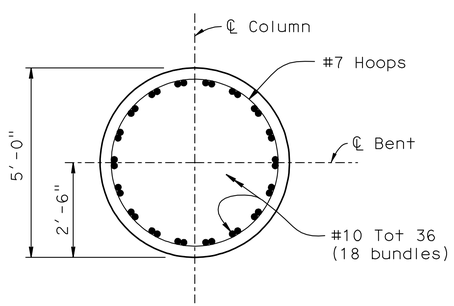

SECTION E-E

½"=1'-0"

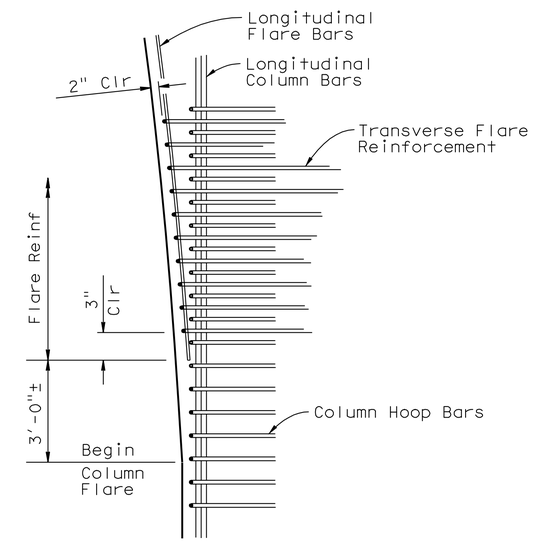

COLUMN FLARE HOOP AND TIE DETAIL

NO SCALE

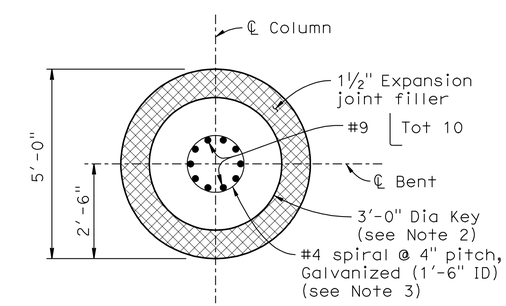

COLUMN-FOOTING KEY DETAIL

½"=1'-0"

NOTES:

1. Splice Flare Tie Reinforcement with mechanical couplers. Stagger location of couplers.
2. Key area shall be roughened to ¼" amplitude.
3. Spiral may be discontinuous at top of footing reinforcement.

Indicates bundled rebar

DESIGN	BY L. Wu	CHECKED M. Vo	
DETAILS	BY G. Hallstrom	CHECKED M. Vo	
QUANTITIES	BY J. Delgado	CHECKED J. Szabo	

STATE OF CALIFORNIA
DEPARTMENT OF TRANSPORTATION

DIVISION OF ENGINEERING SERVICES
STRUCTURE DESIGN
DESIGN BRANCH 10

BRIDGE NO. 39-0237
POST MILE 3.4

PLAINSBURG OVERCROSSING
BENT DETAILS NO. 1

STRUCTURES DESIGN DETAIL SHEET (ENGLISH) (REV. 10/25/05)

ORIGINAL SCALE IN INCHES FOR REDUCED PLANS 0 1 2 3

CU 10
EA 415801

DISREGARD PRINTS BEARING EARLIER REVISION DATES

REVISION DATES: 11-29-07 12-11-07 12-14-07 3-23-09 7-14-09

SHEET 10 OF 19

FILE => 390237hbdt10.dgn

USERNAME => ttmirkes| DATE PLOTTED => 04-NOV-2010 TIME PLOTTED => 06:47

DIST	COUNTY	ROUTE	POST MILES TOTAL PROJECT	SHEET No	TOTAL SHEETS
10	Mer	99	0.0/4.6	556	607

REGISTERED CIVIL ENGINEER 04-13-10 DATE

11-1-10
PLANS APPROVAL DATE

REGISTERED PROFESSIONAL ENGINEER Larry Wu No. C57035 Exp. 6-30-11 CIVIL STATE OF CALIFORNIA

The State of California or its officers or agents shall not be responsible for the accuracy or completeness of electronic copies of this plan sheet.

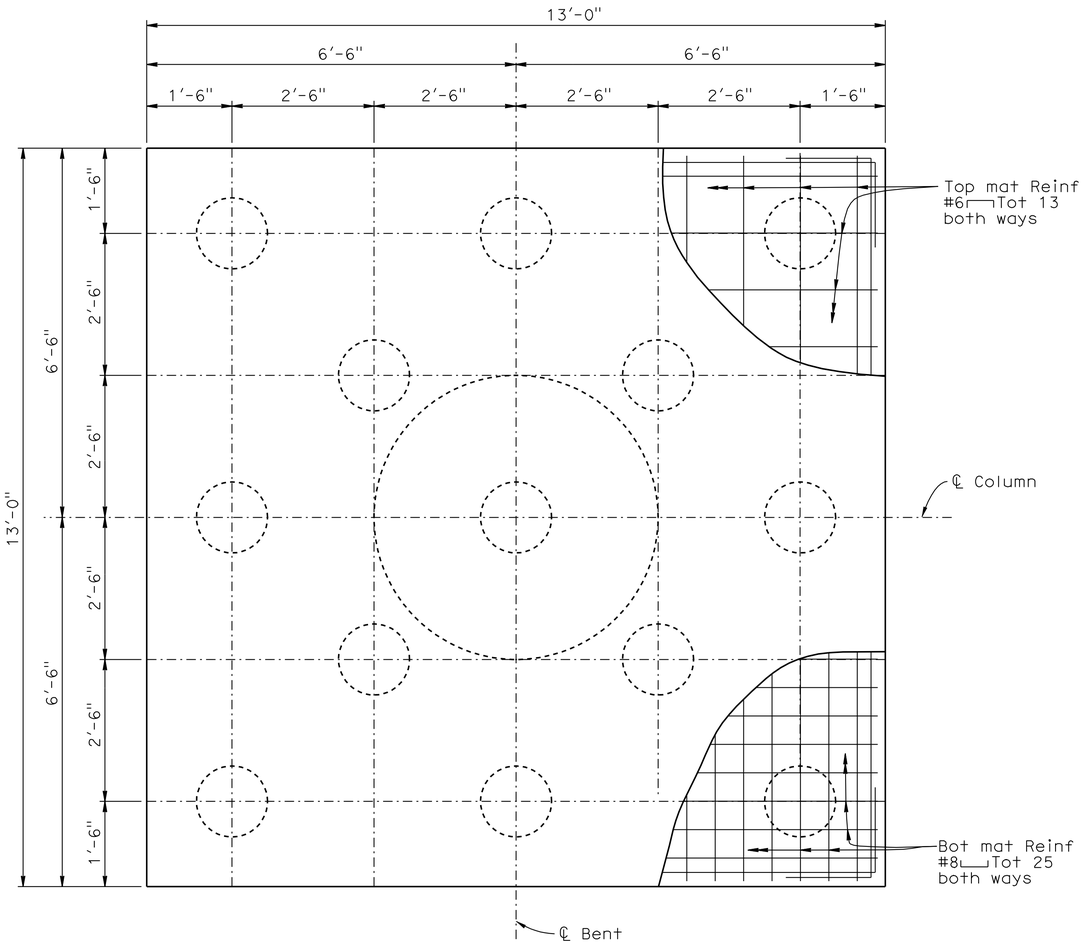

FOOTING PLAN

3/4"=1'-0"

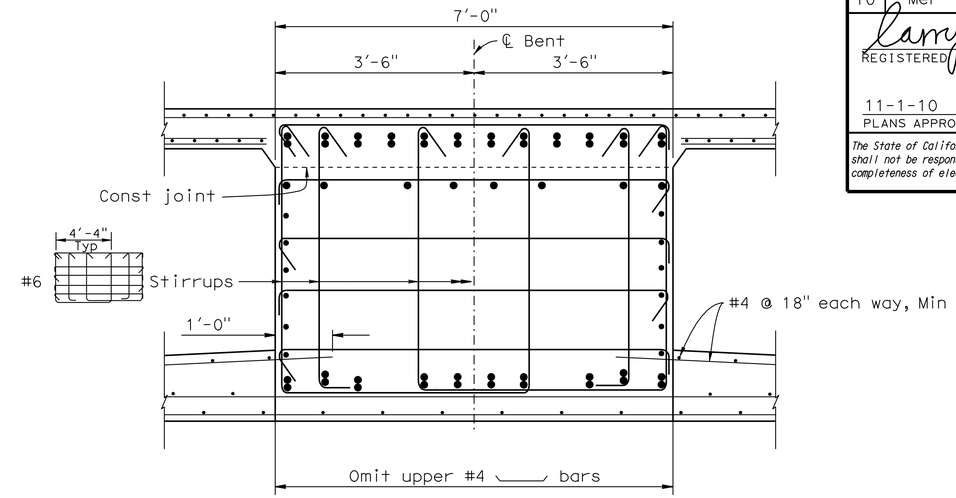

SECTION B-B

3/4"=1'-0"

NOTE: For details not shown, see Section A-A

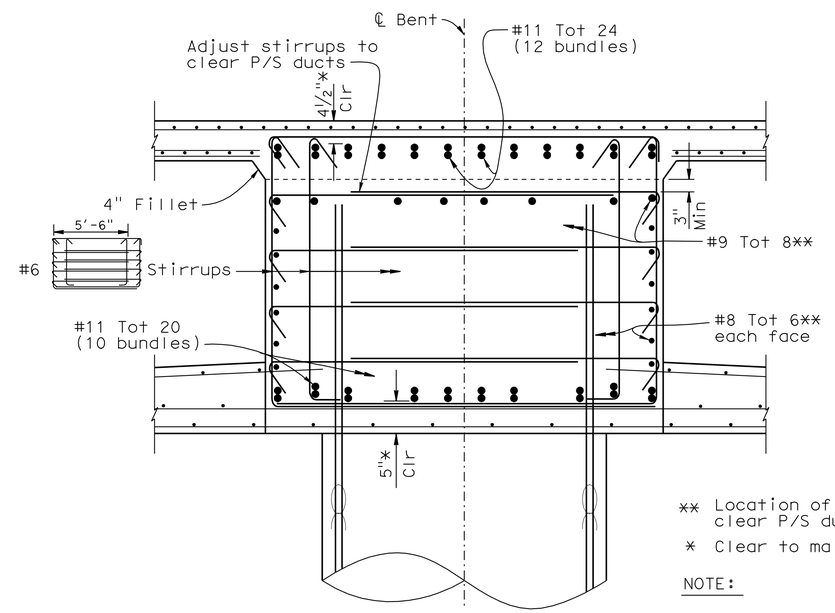

SECTION A-A

3/4"=1'-0"

** Location of Reinf may be adjusted to clear P/S ducts

* Clear to main cap Reinf

NOTE:

For location of Section A-A and Section B-B, see "BENT LAYOUT" sheet.

DESIGN	BY L. Wu	CHECKED M. Vo	
DETAILS	BY G. Hallstrom	CHECKED M. Vo	
QUANTITIES	BY J. Delgado	CHECKED J. Szabo	

STATE OF CALIFORNIA DEPARTMENT OF TRANSPORTATION

DIVISION OF ENGINEERING SERVICES STRUCTURE DESIGN DESIGN BRANCH 10

BRIDGE NO. 39-0237 POST MILE 3.4

PLAINSBURG OVERCROSSING

BENT DETAILS NO. 2

STRUCTURES DESIGN DETAIL SHEET (ENGLISH) (REV. 10/25/05)

ORIGINAL SCALE IN INCHES FOR REDUCED PLANS 0 1 2 3

CU 10
EA 415801

DISREGARD PRINTS BEARING EARLIER REVISION DATES

REVISION DATES 11-30-07 12-11-07 12-13-07

SHEET 11 OF 19

FILE => 390237hbdt11.dgn

USERNAME => trmikest DATE PLOTTED => 04-NOV-2010 TIME PLOTTED => 06:47

DIST	COUNTY	ROUTE	POST MILES TOTAL PROJECT	SHEET No	TOTAL SHEETS
10	Mer	99	0.0/4.6	557	607

REGISTERED CIVIL ENGINEER 04-13-10 DATE

11-1-10
PLANS APPROVAL DATE

REGISTERED PROFESSIONAL ENGINEER Larry Wu No. C57035 Exp. 6-30-11 CIVIL STATE OF CALIFORNIA

The State of California or its officers or agents shall not be responsible for the accuracy or completeness of electronic copies of this plan sheet.

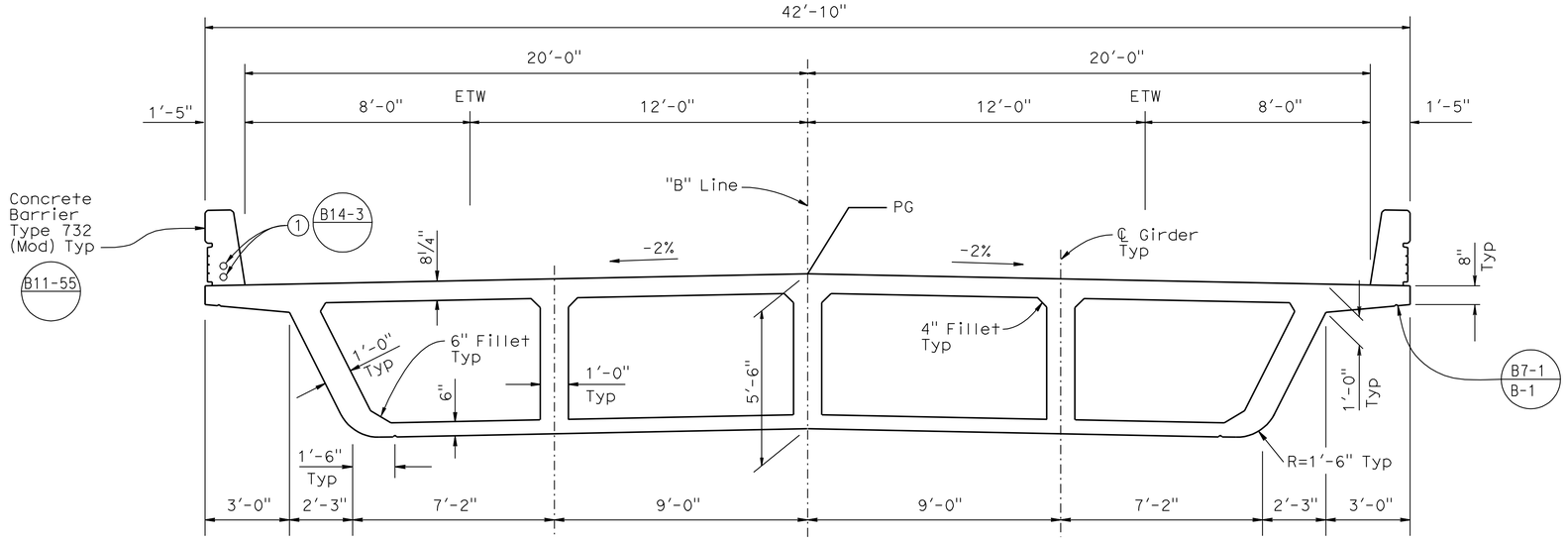

NOTES:

1. 2-2"ø Electrical conduits, see "Roadway Plans"

TYPICAL SECTION

3/8"=1'-0"

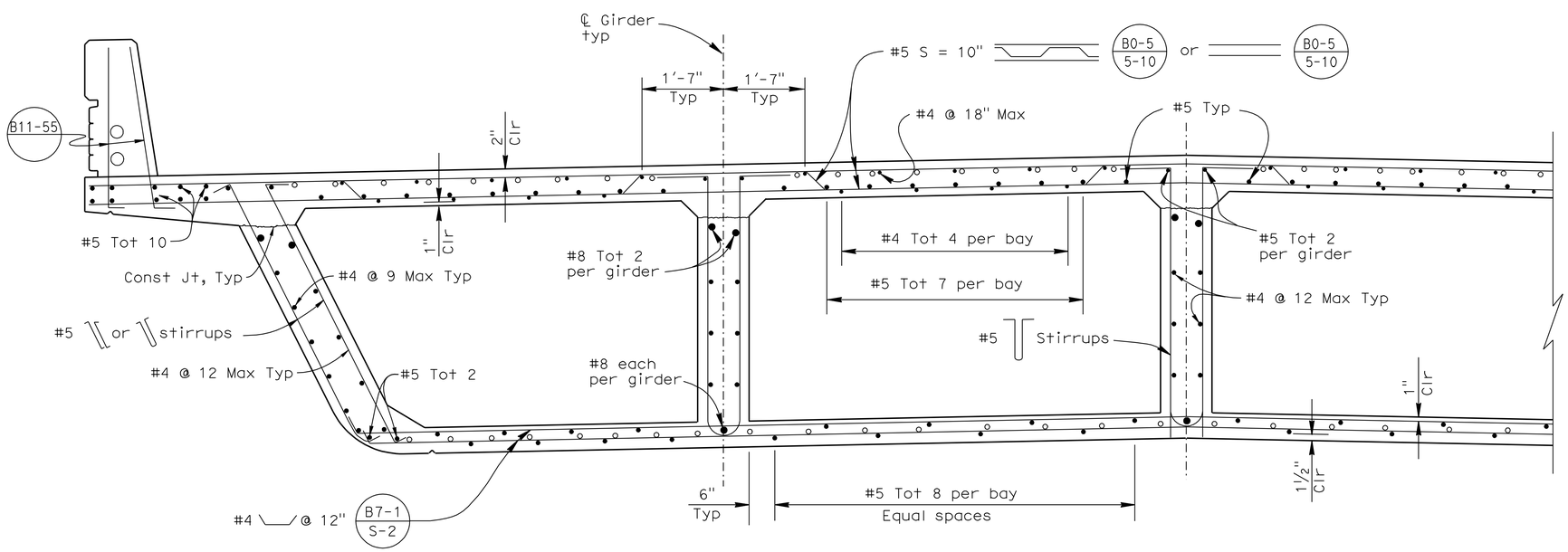

PART TYPICAL SECTION

B0-5 B7-1 B8-5

3/4"=1'-0"

o Indicates top & bottom slab additional Reinf, see "GIRDER REINFORCEMENT" sheet.

	BY	CHECKED
DESIGN	L. Wu	M. Vo
DETAILS	G. Hallstrom	M. Vo
QUANTITIES	J. Delgado	J. Szabo

STATE OF CALIFORNIA
DEPARTMENT OF TRANSPORTATION

DIVISION OF ENGINEERING SERVICES
STRUCTURE DESIGN
DESIGN BRANCH 10

BRIDGE NO. 39-0237
POST MILE 3.4

PLAINSBURG OVERCROSSING
TYPICAL SECTION

STRUCTURES DESIGN DETAIL SHEET (ENGLISH) (REV. 10/25/05)

ORIGINAL SCALE IN INCHES FOR REDUCED PLANS 0 1 2 3

CU 10
EA 415801

DISREGARD PRINTS BEARING EARLIER REVISION DATES

REVISION DATES: 11-26-07 12-05-07 12-11-07 12-13-07 3-23-09 8-26-09 4-07-10

SHEET 12 OF 19

FILE => 390237kts12.dgn

USERNAME => trmikest DATE PLOTTED => 04-NOV-2010 TIME PLOTTED => 06:47

DIST	COUNTY	ROUTE	POST MILES TOTAL PROJECT	SHEET No	TOTAL SHEETS
10	Mer	99	0.0/4.6	558	607

REGISTERED CIVIL ENGINEER 04-13-10 DATE

11-1-10
PLANS APPROVAL DATE

REGISTERED PROFESSIONAL ENGINEER Larry Wu No. C57035 Exp. 6-30-11 CIVIL STATE OF CALIFORNIA

The State of California or its officers or agents shall not be responsible for the accuracy or completeness of electronic copies of this plan sheet.

PRESTRESSING NOTES

270 KSI Low Relaxation Strand:

P_{jack} = 8350 kips

Anchor Set = 3/8 in

Total Number of Girders = 5

Distribution of prestress force (Pjack) between girders shall not exceed the ratio of 3:2. Maximum final force variation between girders shall not exceed 725 kips.

Concrete: f'_c = 4000 psi @ 28 days

f'_{ci} = 3500 psi @ time of stressing

Contractor shall submit elongation calculations based on initial stress at

⊠ = .887 times jacking stress.

One end stressing shall be performed from the long-span end only.
The design is based on μ = 0.15, k = 0.0002/ft.

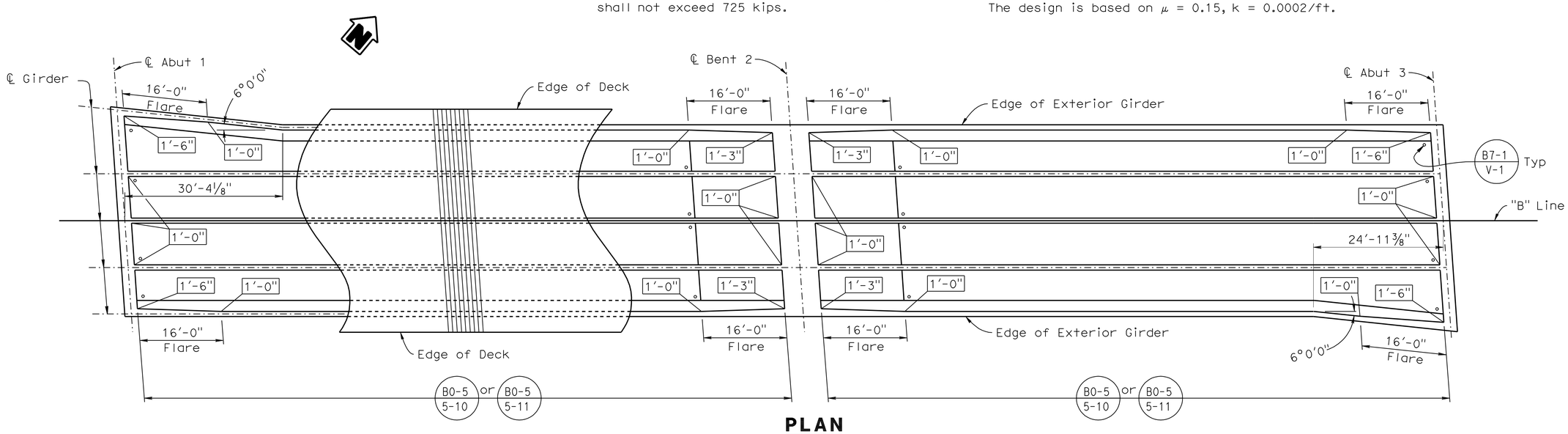

PLAN

3/32"=1'-0"

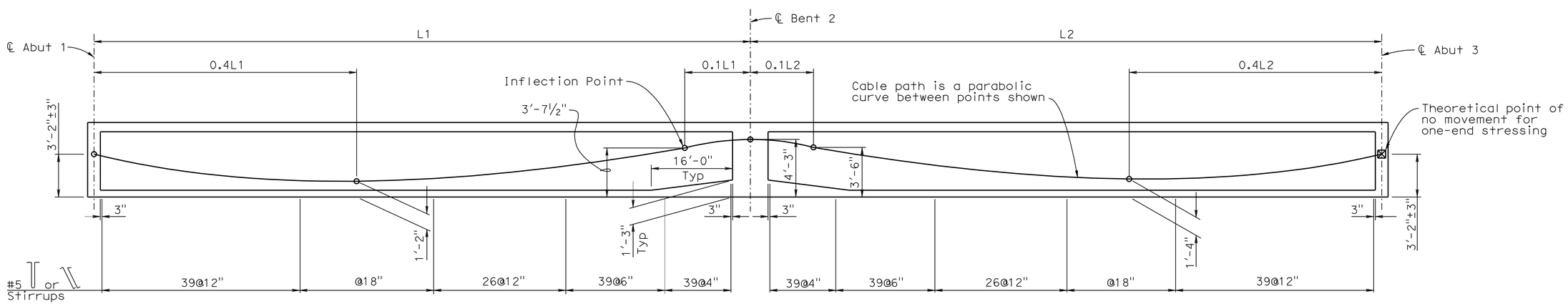

LOGITUDINAL SECTION

Horiz 3/32"=1'-0"
Vert 1/4"=1'-0"

LEGEND:

Indicates Girder stem width

⊠ Indicates point of no movement

	BY	CHECKED
DESIGN	L. Wu	M. Vo
DETAILS	G. Hallstrom	M. Vo
QUANTITIES	J. Delgado	J. Szabo

STATE OF CALIFORNIA
DEPARTMENT OF TRANSPORTATION

DIVISION OF ENGINEERING SERVICES
STRUCTURE DESIGN
DESIGN BRANCH 10

BRIDGE NO. 39-0237
POST MILE 3.4

PLAINSBURG OVERCROSSING
GIRDER LAYOUT

STRUCTURES DESIGN DETAIL SHEET (ENGLISH) (REV. 10/25/05)

ORIGINAL SCALE IN INCHES FOR REDUCED PLANS 0 1 2 3

CU 10
EA 415801

DISREGARD PRINTS BEARING EARLIER REVISION DATES

REVISION DATES: 12-04-07 12-11-07 3-23-09 3-03-10

SHEET 13 OF 19

FILE => 3902371g_lo13.dgn

USERNAME => trmikest DATE PLOTTED => 04-NOV-2010 TIME PLOTTED => 06:47

DIST	COUNTY	ROUTE	POST MILES TOTAL PROJECT	SHEET No	TOTAL SHEETS
10	Mer	99	0.0/4.6	559	607

REGISTERED CIVIL ENGINEER 04-13-10 DATE

11-1-10
PLANS APPROVAL DATE

REGISTERED PROFESSIONAL ENGINEER Larry Wu No. C57035 Exp. 6-30-11 CIVIL STATE OF CALIFORNIA

The State of California or its officers or agents shall not be responsible for the accuracy or completeness of electronic copies of this plan sheet.

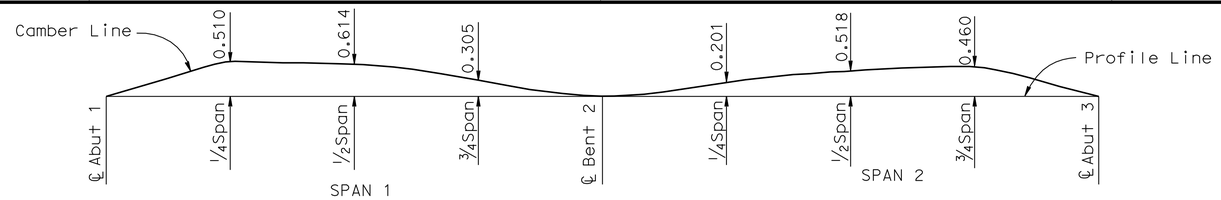

Note: Camber shown does not include allowance for falsework settlement. Camber values are shown in inches.

CAMBER DIAGRAM

No Scale

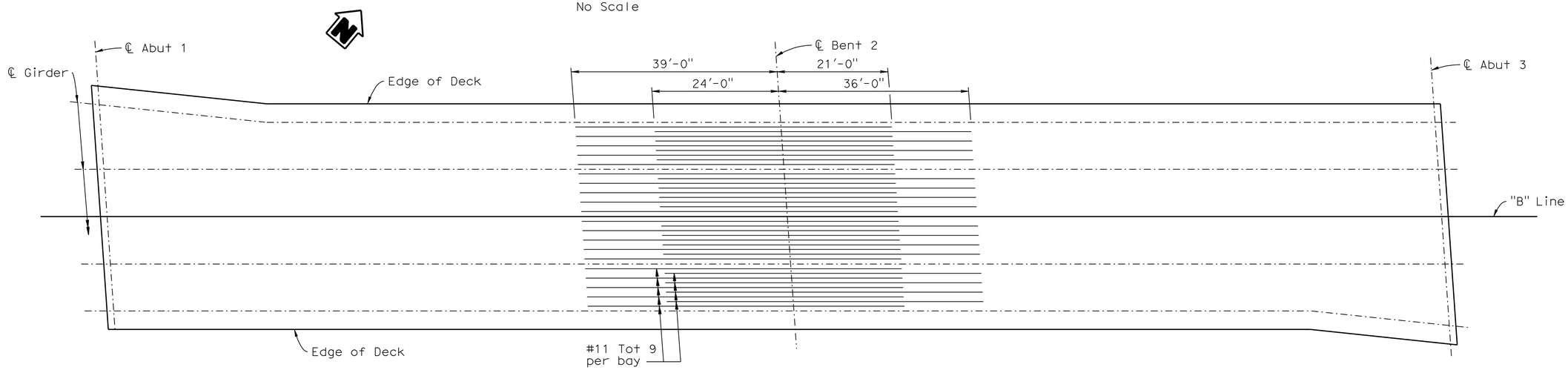

ADDITIONAL TOP LONGITUDINAL REINFORCEMENT

3/32"=1'-0"

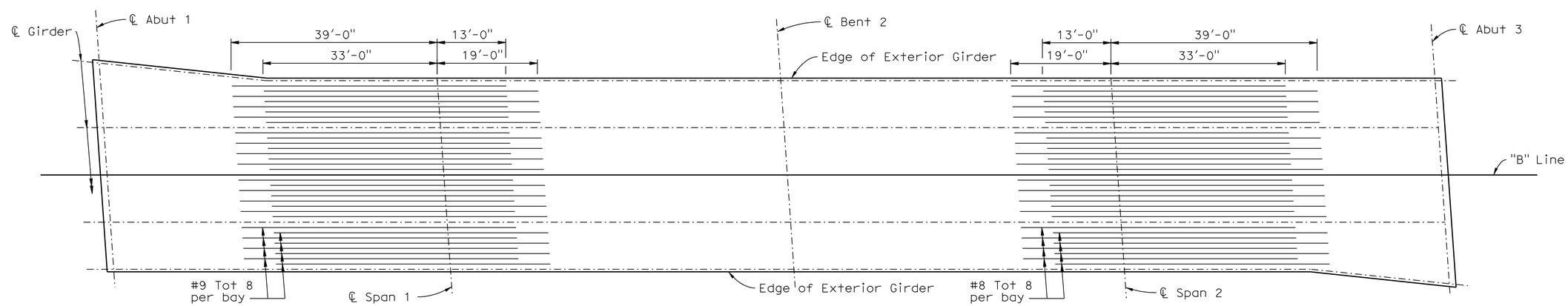

ADDITIONAL BOTTOM LONGITUDINAL REINFORCEMENT

3/32"=1'-0"

	BY	CHECKED
DESIGN	L. Wu	M. Vo
DETAILS	G. Hallstrom	M. Vo
QUANTITIES	J. Delgado	J. Szabo

STATE OF CALIFORNIA
DEPARTMENT OF TRANSPORTATION

DIVISION OF ENGINEERING SERVICES
STRUCTURE DESIGN
DESIGN BRANCH 10

BRIDGE NO. 39-0237
POST MILE 3.4

PLAINSBURG OVERCROSSING
GIRDER REINFORCEMENT

STRUCTURES DESIGN DETAIL SHEET (ENGLISH) (REV. 10/25/05)

ORIGINAL SCALE IN INCHES FOR REDUCED PLANS 0 1 2 3

CU 10
EA 415801

DISREGARD PRINTS BEARING EARLIER REVISION DATES

REVISION DATES: 12-04-07, 12-11-07, 3-23-09, 7-14-09

SHEET 14 OF 19

FILE => 390237ogir_rf14.dgn

USERNAME => trmikesl DATE PLOTTED => 04-NOV-2010 TIME PLOTTED => 06:47

DIST	COUNTY	ROUTE	POST MILES TOTAL PROJECT	SHEET No	TOTAL SHEETS
10	Mer	99	0.0/4.6	560	607

REGISTERED CIVIL ENGINEER — DATE 04-13-10

11-1-10
PLANS APPROVAL DATE

REGISTERED PROFESSIONAL ENGINEER — Larry Wu — No. C57035 — Exp. 6-30-11 — CIVIL — STATE OF CALIFORNIA

The State of California or its officers or agents shall not be responsible for the accuracy or completeness of electronic copies of this plan sheet.

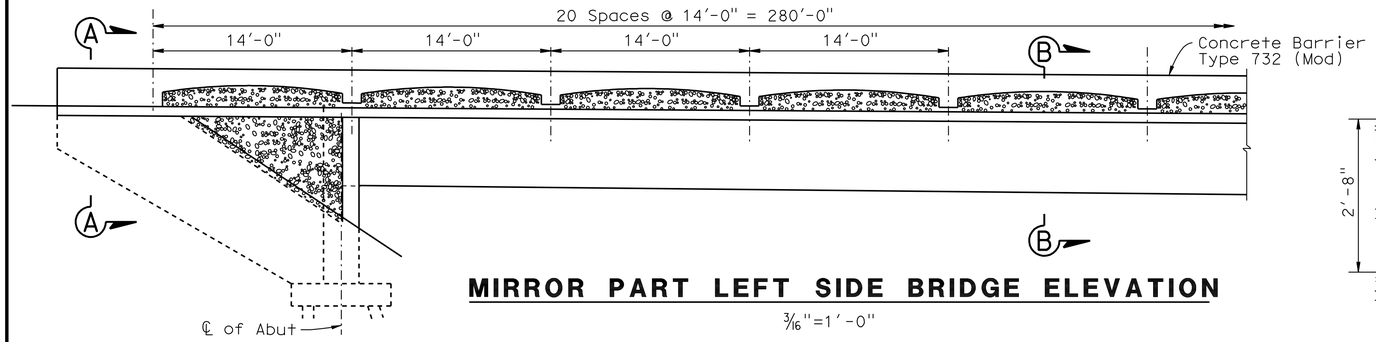

MIRROR PART LEFT SIDE BRIDGE ELEVATION

3/16"=1'-0"

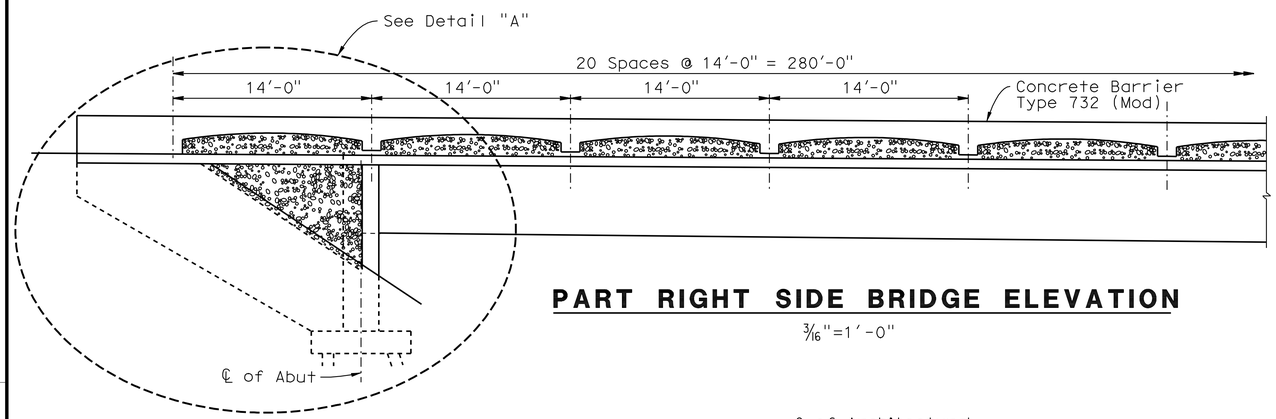

PART RIGHT SIDE BRIDGE ELEVATION

3/16"=1'-0"

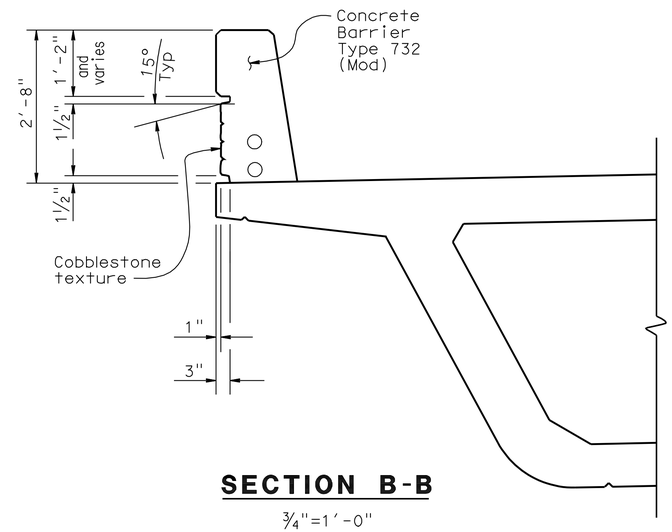

SECTION B-B

3/4"=1'-0"

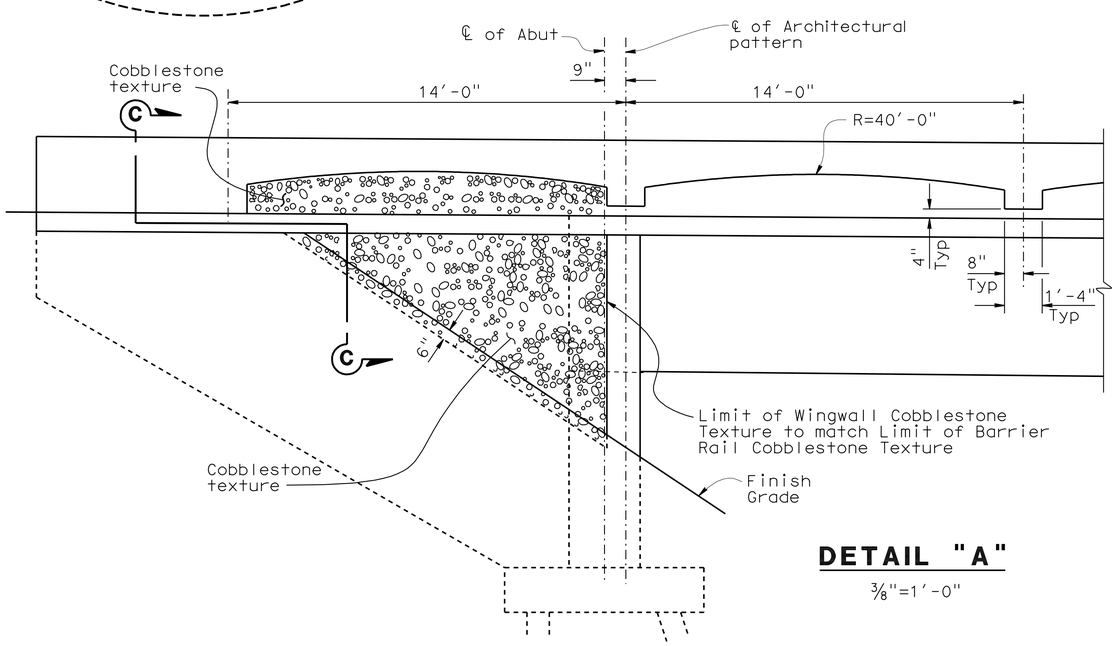

DETAIL "A"

3/8"=1'-0"

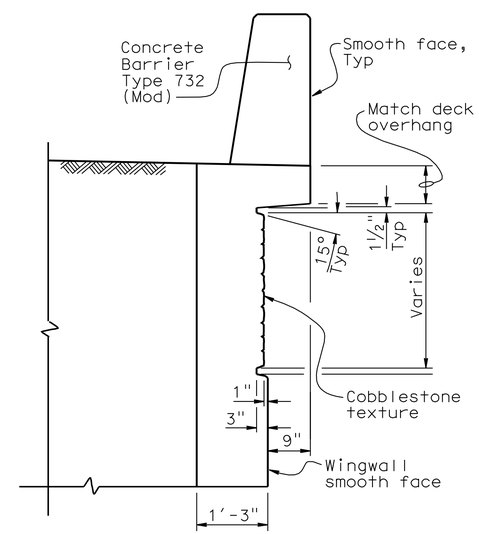

SECTION C-C

3/4"=1'-0"

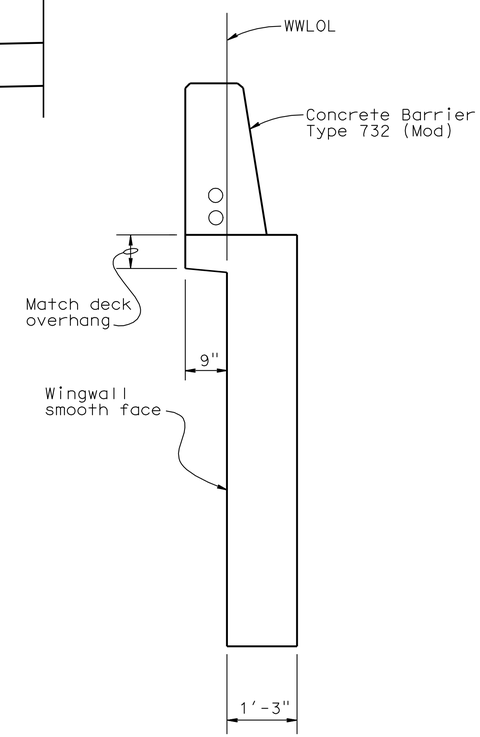

SECTION A-A

3/4"=1'-0"

NOTE:
Prepare and stain concrete for all cobblestone texture surface.

	BY	CHECKED
DESIGN	L. Wu	M. Vo
DETAILS	G. Hallstrom	M. Vo
QUANTITIES	J. Delgado	J. Szabo

STATE OF CALIFORNIA
DEPARTMENT OF TRANSPORTATION

DIVISION OF ENGINEERING SERVICES
STRUCTURE DESIGN
DESIGN BRANCH 10

BRIDGE NO. 39-0237
POST MILE 3.4

PLAINSBURG OVERCROSSING
ARCHITECTURE DETAILS

STRUCTURES DESIGN DETAIL SHEET (ENGLISH) (REV. 10/25/05)

ORIGINAL SCALE IN INCHES FOR REDUCED PLANS 0 1 2 3

CU 10
EA 415801

DISREGARD PRINTS BEARING EARLIER REVISION DATES

REVISION DATES: 12-28-07 3-23-09 1-15-09 4-07-10

SHEET 15 OF 19

FILE => 390237s_ardt15.dgn

USERNAME => trmikes1 DATE PLOTTED => 04-NOV-2010 TIME PLOTTED => 06:48

RELEASED 10-30-97

DIST.	COUNTY	ROUTE	POST MILES TOTAL PROJECT	SHEET NO.	TOTAL SHEETS
10	Mer	99	0.0/4.6	561	607

REGISTERED ENGINEER - CIVIL 04-13-10

11-1-10
PLANS APPROVAL DATE

REGISTERED PROFESSIONAL ENGINEER Larry Wu No. C57035 Exp. 6-30-11 CIVIL STATE OF CALIFORNIA

The State of California or its officers or agents shall not be responsible for the accuracy or completeness of electronic copies of this plan sheet.

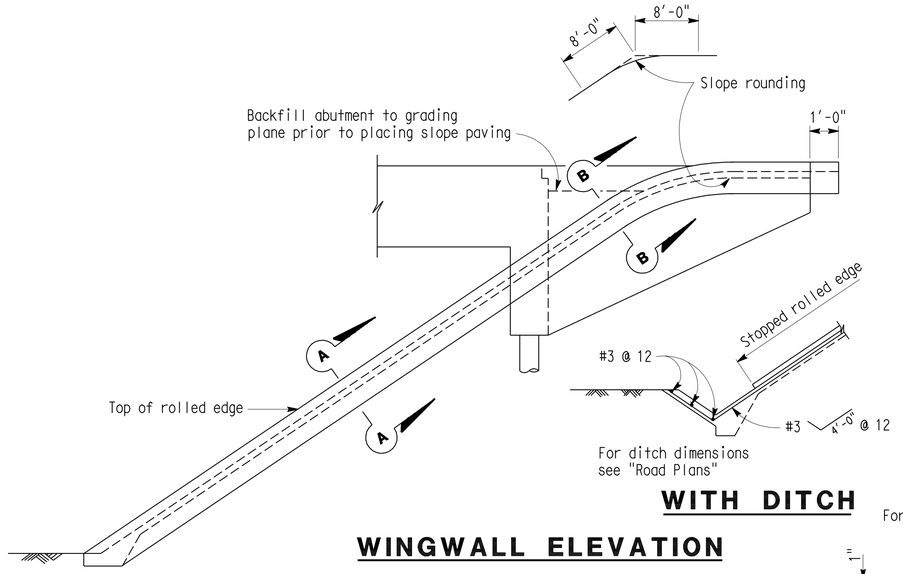

WITH DITCH

WINGWALL ELEVATION

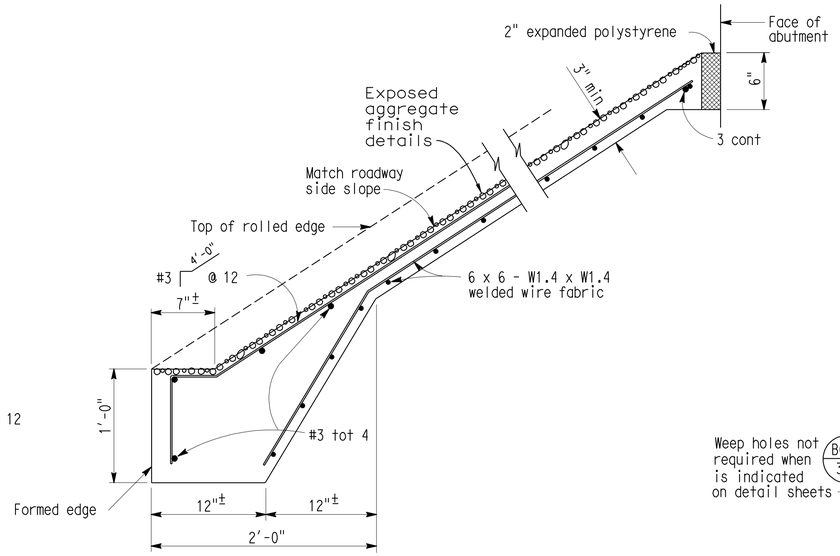

1 TYPICAL SECTION - CONCRETE PAVING

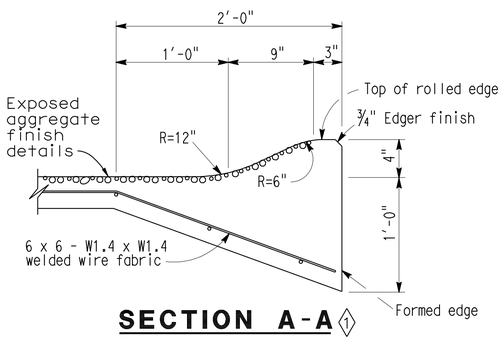

SECTION A-A 1

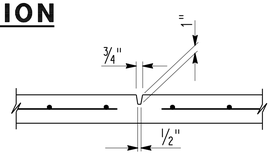

PREFORMED GROOVE

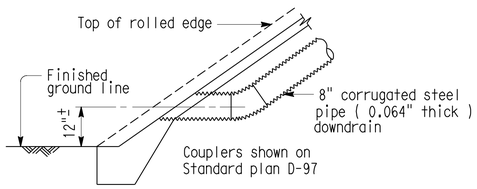

TYPICAL - NO CURB

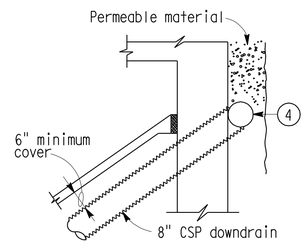

TYPICAL - DRAIN CONNECTION

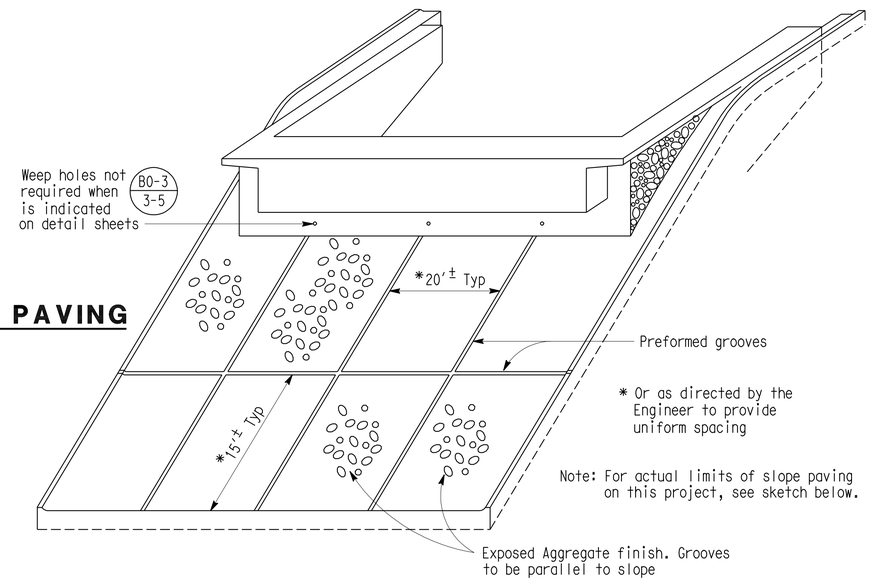

* Or as directed by the Engineer to provide uniform spacing

Note: For actual limits of slope paving on this project, see sketch below.

PICTORIAL VIEW OF TYPICAL INSTALLATION 1

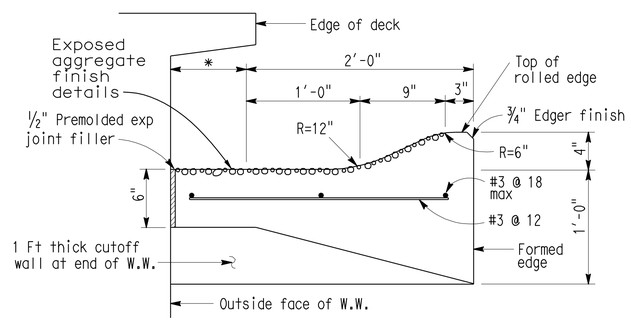

SECTION B-B 1

* This dimension becomes zero when edge of deck is at outside face of W.W.

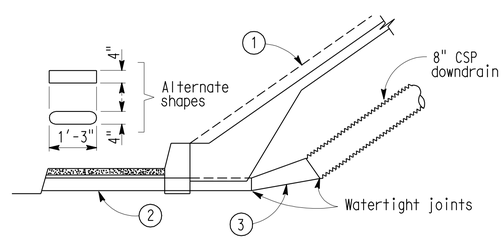

TYPICAL - WITH SIDEWALK

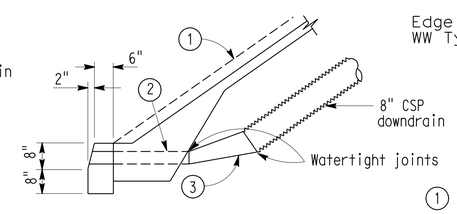

TYPICAL - WITH CURB

DRAINAGE DETAILS

Note: Drainage details are only applicable when is indicated on detail sheets. B0-3 / 3-5

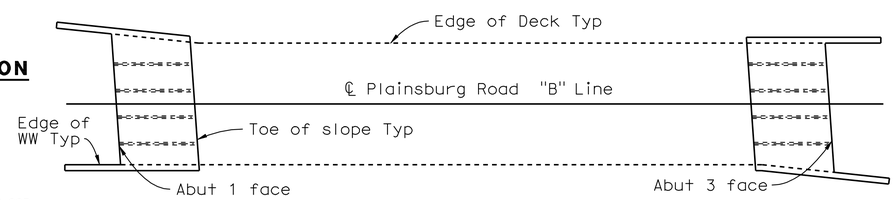

LIMITS OF SLOPE PAVING & DRAINAGE LAYOUT

1. Top of rolled edge
2. Conduit: 0.064" galv corrugated steel or 0.109" smooth galv steel
3. Taper: { 0.064" galv corrugated steel or 0.109" smooth galv steel
4. 8" perforated steel pipe (0.064" thick) underdrain behind abutment. Connect to downdrain as shown on limits of Slope Paving & Drainage layout.

SPECIAL DETAILS
NO SCALE

REVISED STANDARD DRAWING

FILE NO. XS 22-11	DESIGN	BY	CHECKED	APPROVAL RECOMMENDED BY
DESIGN DATE 3/89	DETAILS	BY R. YEE	CHECKED	DESIGN SUPERVISOR
	SUBMITTED BY C.W. PURKISS			

1 Revised Detail

STATE OF CALIFORNIA DEPARTMENT OF TRANSPORTATION

DIVISION OF STRUCTURES STRUCTURE DESIGN 10

BRIDGE NO. 39-0237
POST MILE 3.4

PLAINSBURG OVERCROSSING
SLOPE PAVING - FULL SLOPE

DS OSD 2147A (CADD 7/97)

ORIGINAL SCALE IN INCHES FOR REDUCED PLANS 0 1 2 3

CU 10
EA 415801

DISREGARD PRINTS BEARING EARLIER REVISION DATES

REVISION DATES (PRELIMINARY STAGE ONLY) 11-30-07 12-13-07 2-19-08

SHEET 16 OF 19

FILE => 390237ss_lp16.dgn

XS2211.DGN

USERNAME => trmikesl DATE PLOTTED => 04-NOV-2010 TIME PLOTTED => 06:48

DIST	COUNTY	ROUTE	POST MILES TOTAL PROJECT	SHEET No	TOTAL SHEETS
10	Mer	99	0.0/4.6	562	607

CERTIFIED ENGINEERING GEOLOGIST — 11-2-09 DATE

REGISTERED PROFESSIONAL GEOLOGIST — Xing Zheng — No. 2130 — Exp. 3-31-11 — CERTIFIED ENGINEERING GEOLOGIST — STATE OF CALIFORNIA

11-1-10
PLANS APPROVAL DATE

The State of California or its officers or agents shall not be responsible for the accuracy or completeness of electronic copies of this plan sheet.

This LOTB sheet was prepared in accordance with the Caltrans Soil & Rock Logging, Classification, & Presentation Manual (June 2007).

BENCH MARK

BM : Mer-99 Elev : 211.52′
PM 3.50

N 1,891,653.08
E 6,610,754.83
NAVD 29

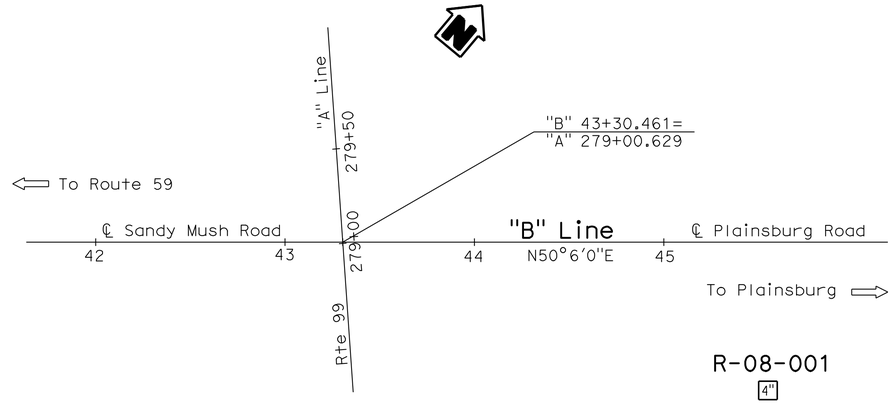

PLAN

1"=40′

Notes:

1. SPT N Values shown on the Log of Test Boring (LOTB) sheet are actual values recorded in the field.
2. PP = Pocket Penetrometer Test (tsf).
3. Groundwater was not measured.

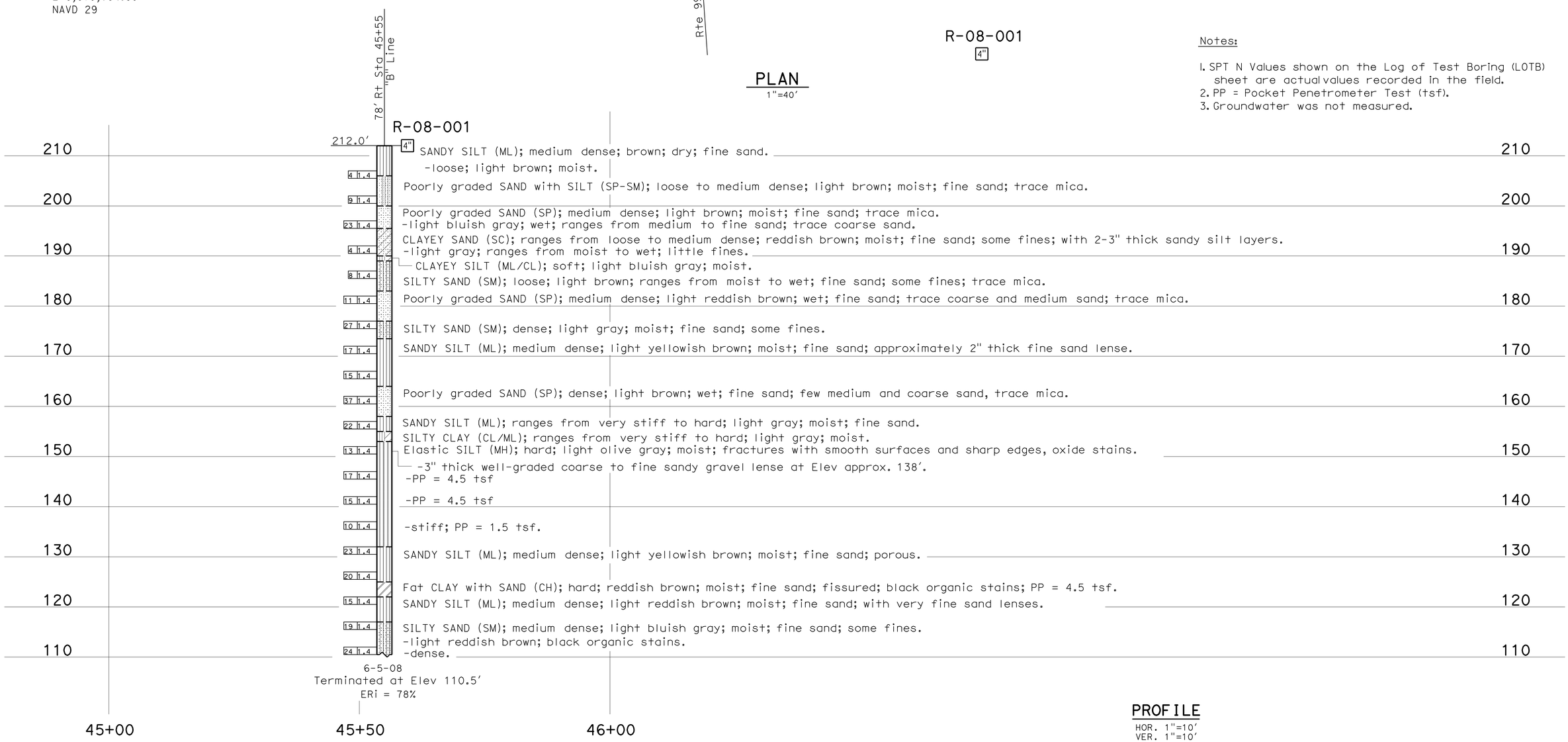

PROFILE

HOR. 1"=10′
VER. 1"=10′

ENGINEERING SERVICES	GEOTECHNICAL SERVICES	STATE OF CALIFORNIA DEPARTMENT OF TRANSPORTATION	DIVISION OF ENGINEERING SERVICES STRUCTURE DESIGN DESIGN BRANCH	BRIDGE NO. 39-0237 POST MILES 3.4	PLAINSBURG OVERCROSSING LOG OF TEST BORINGS 1 OF 3
FUNCTIONAL SUPERVISOR NAME: R. Buell	DRAWN BY: W. Tang 09/09 CHECKED BY: J. Martin	FIELD INVESTIGATION BY: X. Zheng			

OGS CIVIL LOG OF TEST BORINGS SHEET

ORIGINAL SCALE IN INCHES FOR REDUCED PLANS 0 1 2 3

CU 10
EA 415801

DISREGARD PRINTS BEARING EARLIER REVISION DATES → 09-14-09 09-25-09 10-19-09

REVISION DATES

SHEET 17 OF 19

FILE => 390237zltb17.dgn

USERNAME => trmikesl DATE PLOTTED => 04-NOV-2010 TIME PLOTTED => 07:19

DIST	COUNTY	ROUTE	POST MILES TOTAL PROJECT	SHEET No	TOTAL SHEETS
10	Mer	99	0.0/4.6	563	607

CERTIFIED ENGINEERING GEOLOGIST — DATE 11-2-09

REGISTERED PROFESSIONAL GEOLOGIST — Xing Zheng — No. 2130 — Exp. 3-31-11 — CERTIFIED ENGINEERING GEOLOGIST — STATE OF CALIFORNIA

11-1-10
PLANS APPROVAL DATE

The State of California or its officers or agents shall not be responsible for the accuracy or completeness of electronic copies of this plan sheet.

REFERENCE: CALTRANS SOIL & ROCK LOGGING, CLASSIFICATION, AND PRESENTATION MANUAL (JUNE 2007)

CEMENTATION

Description	Criteria
Weak	Crumbles or breaks with handling or little finger pressure.
Moderate	Crumbles or breaks with considerable finger pressure.
Strong	Will not crumble or break with finger pressure.

CONSISTENCY OF COHESIVE SOILS

Description	Unconfined Compressive Strength (tsf)	Pocket Penetrometer Measurement (tsf)	Torvane Measurement (tsf)	Field Approximation
Very Soft	< 0.25	< 0.25	< 0.12	Easily penetrated several inches by fist
Soft	0.25 to 0.50	0.25 to 0.50	0.12 to 0.25	Easily penetrated several inches by thumb
Medium Stiff	0.50 to 1.0	0.50 to 1.0	0.25 to 0.50	Penetrated several inches by thumb with moderate effort
Stiff	1 to 2	1 to 2	0.50 to 1.0	Readily indented by thumb but penetrated only with great effort
Very Stiff	2 to 4	2 to 4	1.0 to 2.0	Readily indented by thumbnail
Hard	> 4.0	> 4.0	> 2.0	Indented by thumbnail with difficulty

BOREHOLE IDENTIFICATION

Symbol	Hole Type	Description
Size	A	Auger Boring
Size	R P	Rotary drilled boring Rotary percussion boring (air)
Size	R	Rotary drilled diamond core
Size	HD HA	Hand driven (1-inch soil tube) Hand Auger
●	D	Dynamic Cone Penetration Boring
▲	CPT	Cone Penetration Test (ASTM D 5778-95)
⬚	O	Other

Note: Size in inches.

PLASTICITY OF FINE-GRAINED SOILS

Description	Criteria
Nonplastic	A 1/8-inch thread cannot be rolled at any water content.
Low	The thread can barely be rolled and the lump cannot be formed when drier than the plastic limit.
Medium	The thread is easy to roll and not much time is required to reach the plastic limit. The thread cannot be rerolled after reaching the plastic limit. The lump crumbles when drier than the plastic limit.
High	It takes considerable time rolling and kneading to reach the plastic limit. The thread can be rerolled several times after reaching the plastic limit. The lump can be formed without crumbling when drier than the plastic limit.

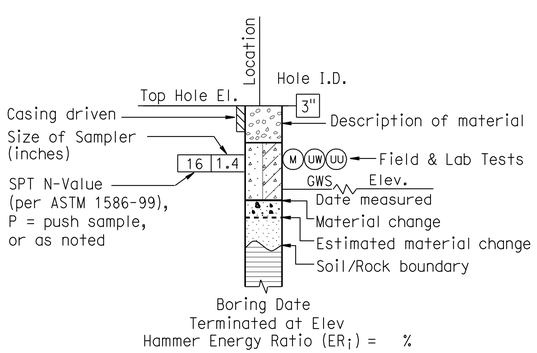

ROTARY BORING

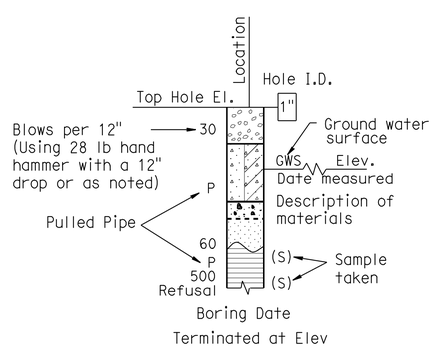

HAND BORING

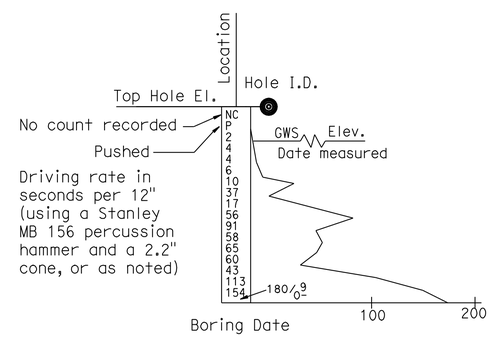

DYNAMIC CONE PENETRATION BORING

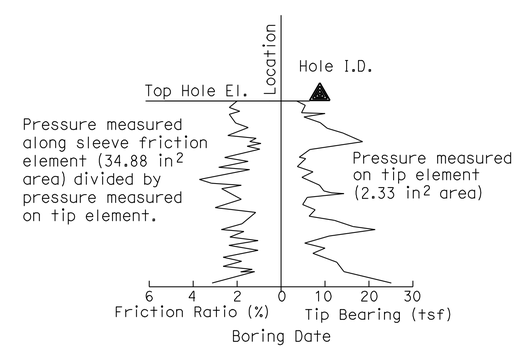

CONE PENETRATION TEST (CPT) SOUNDING

ENGINEERING SERVICES	GEOTECHNICAL SERVICES	STATE OF CALIFORNIA DEPARTMENT OF TRANSPORTATION	DIVISION OF ENGINEERING SERVICES STRUCTURE DESIGN DESIGN BRANCH	BRIDGE NO. 39-0237 / POST MILE 3.4	PLAINSBURG OVERCROSSING LOG OF TEST BORINGS 2 OF 3
	PREPARED BY: I.G-Remmen 11/09				

GS LOTB SOIL LEGEND

ORIGINAL SCALE IN INCHES FOR REDUCED PLANS 0 1 2 3

CU 10
EA 415801

DISREGARD PRINTS BEARING EARLIER REVISION DATES

REVISION DATES

SHEET 18 OF 19

FILE => 390237zltb18.dgn

USERNAME => ttmirkes1 DATE PLOTTED => 04-NOV-2010 TIME PLOTTED => 07:19

REFERENCE: CALTRANS SOIL & ROCK LOGGING, CLASSIFICATION, AND PRESENTATION MANUAL (JUNE 2007)

DIST	COUNTY	ROUTE	POST MILES TOTAL PROJECT	SHEET No	TOTAL SHEETS
10	Mer	99	0.0/4.6	564	607

CERTIFIED ENGINEERING GEOLOGIST — 11-2-09 DATE

11-1-10
PLANS APPROVAL DATE

REGISTERED PROFESSIONAL GEOLOGIST — Xing Zheng No. 2130 Exp. 3-31-11 — CERTIFIED ENGINEERING GEOLOGIST — STATE OF CALIFORNIA

The State of California or its officers or agents shall not be responsible for the accuracy or completeness of electronic copies of this plan sheet.

GROUP SYMBOLS AND NAMES

Graphic/Symbol	Group Names
GW	Well-graded GRAVEL Well-graded GRAVEL with SAND
GP	Poorly graded GRAVEL Poorly graded GRAVEL with SAND
GW-GM	Well-graded GRAVEL with SILT Well-graded GRAVEL with SILT and SAND
GW-GC	Well-graded GRAVEL with CLAY (or SILTY CLAY) Well-graded GRAVEL with CLAY and SAND (or SILTY CLAY and SAND)
GP-GM	Poorly graded GRAVEL with SILT Poorly graded GRAVEL with SILT and SAND
GP-GC	Poorly graded GRAVEL with CLAY (or SILTY CLAY) Poorly graded GRAVEL with CLAY and SAND (or SILTY CLAY and SAND)
GM	SILTY GRAVEL SILTY GRAVEL with SAND
GC	CLAYEY GRAVEL CLAYEY GRAVEL with SAND
GC-GM	SILTY, CLAYEY GRAVEL SILTY, CLAYEY GRAVEL with SAND
SW	Well-graded SAND Well-graded SAND with GRAVEL
SP	Poorly graded SAND Poorly graded SAND with GRAVEL
SW-SM	Well-graded SAND with SILT Well-graded SAND with SILT and GRAVEL
SW-SC	Well-graded SAND with CLAY (or SILTY CLAY) Well-graded SAND with CLAY and GRAVEL (or SILTY CLAY and GRAVEL)
SP-SM	Poorly graded SAND with SILT Poorly graded SAND with SILT and GRAVEL
SP-SC	Poorly graded SAND with CLAY (or SILTY CLAY) Poorly graded SAND with CLAY and GRAVEL (or SILTY CLAY and GRAVEL)
SM	SILTY SAND SILTY SAND with GRAVEL
SC	CLAYEY SAND CLAYEY SAND with GRAVEL
SC-SM	SILTY, CLAYEY SAND SILTY, CLAYEY SAND with GRAVEL
PT	PEAT
	COBBLES COBBLES and BOULDERS BOULDERS

Graphic/Symbol	Group Names
CL	Lean CLAY Lean CLAY with SAND Lean CLAY with GRAVEL SANDY lean CLAY SANDY lean CLAY with GRAVEL GRAVELLY lean CLAY GRAVELLY lean CLAY with SAND
CL-ML	SILTY CLAY SILTY CLAY with SAND SILTY CLAY with GRAVEL SANDY SILTY CLAY SANDY SILTY CLAY with GRAVEL GRAVELLY SILTY CLAY GRAVELLY SILTY CLAY with SAND
ML	SILT SILT with SAND SILT with GRAVEL SANDY SILT SANDY SILT with GRAVEL GRAVELLY SILT GRAVELLY SILT with SAND
OL	ORGANIC lean CLAY ORGANIC lean CLAY with SAND ORGANIC lean CLAY with GRAVEL SANDY ORGANIC lean CLAY SANDY ORGANIC lean CLAY with GRAVEL GRAVELLY ORGANIC lean CLAY GRAVELLY ORGANIC lean CLAY with SAND
OL	ORGANIC SILT ORGANIC SILT with SAND ORGANIC SILT with GRAVEL SANDY ORGANIC SILT SANDY ORGANIC SILT with GRAVEL GRAVELLY ORGANIC SILT GRAVELLY ORGANIC SILT with SAND
CH	Fat CLAY Fat CLAY with SAND Fat CLAY with GRAVEL SANDY fat CLAY SANDY fat CLAY with GRAVEL GRAVELLY fat CLAY GRAVELLY fat CLAY with SAND
MH	Elastic SILT Elastic SILT with SAND Elastic SILT with GRAVEL SANDY elastic SILT SANDY elastic SILT with GRAVEL GRAVELLY elastic SILT GRAVELLY elastic SILT with SAND
OH	ORGANIC fat CLAY ORGANIC fat CLAY with SAND ORGANIC fat CLAY with GRAVEL SANDY ORGANIC fat CLAY SANDY ORGANIC fat CLAY with GRAVEL GRAVELLY ORGANIC fat CLAY GRAVELLY ORGANIC fat CLAY with SAND
OH	ORGANIC elastic SILT ORGANIC elastic SILT with SAND ORGANIC elastic SILT with GRAVEL SANDY ORGANIC elastic SILT SANDY ORGANIC elastic SILT with GRAVEL GRAVELLY ORGANIC elastic SILT GRAVELLY ORGANIC elastic SILT with SAND
OL/OH	ORGANIC SOIL ORGANIC SOIL with SAND ORGANIC SOIL with GRAVEL SANDY ORGANIC SOIL SANDY ORGANIC SOIL with GRAVEL GRAVELLY ORGANIC SOIL GRAVELLY ORGANIC SOIL with SAND

FIELD AND LABORATORY TESTING

- (C) Consolidation (ASTM D 2435)
- (CL) Collapse Potential (ASTM D 5333)
- (CP) Compaction Curve (CTM 216)
- (CR) Corrosivity Testing (CTM 643, CTM 422, CTM 417)
- (CU) Consolidated Undrained Triaxial (ASTM D 4767)
- (DS) Direct Shear (ASTM D 3080)
- (EI) Expansion Index (ASTM D 4829)
- (M) Moisture Content (ASTM D 2216)
- (OC) Organic Content-% (ASTM D 2974)
- (P) Permeability (CTM 220)
- (PA) Particle Size Analysis (ASTM D 422)
- (PI) Plasticity Index (AASHTO T 90) Liquid Limit (AASHTO T 89)
- (PL) Point Load Index (ASTM D 5731)
- (PM) Pressure Meter
- (PP) Pocket Penetrometer
- (R) R-Value (CTM 301)
- (SE) Sand Equivalent (CTM 217)
- (SG) Specific Gravity (AASHTO T 100)
- (SL) Shrinkage Limit (ASTM D 427)
- (SW) Swell Potential (ASTM D 4546)
- (TV) Pocket Torvane
- (UC) Unconfined Compression-Soil (ASTM D 2166) Unconfined Compression-Rock (ASTM D 2938)
- (UU) Unconsolidated Undrained Triaxial (ASTM D 2850)
- (UW) Unit Weight (ASTM D 4767)
- (VS) Vane Shear (AASHTO T 223)

APPARENT DENSITY OF COHESIONLESS SOILS

Description	SPT N_{60} (Blows / 12 inches)
Very loose	0 - 4
Loose	5 - 10
Medium Dense	11 - 30
Dense	31 - 50
Very Dense	> 50

MOISTURE

Description	Criteria
Dry	Absence of moisture, dusty, dry to the touch
Moist	Damp but no visible water
Wet	Visible free water, usually soil is below water table

PERCENT OR PROPORTION OF SOILS

Description	Criteria
Trace	Particles are present but estimated to be less than 5%
Few	5 to 10%
Little	15 to 25%
Some	30 to 45%
Mostly	50 to 100%

PARTICLE SIZE

Description		Size
Boulder		> 12"
Cobble		3" to 12"
Gravel	Coarse	3/4" to 3"
	Fine	No. 4 to 3/4"
Sand	Coarse	No. 10 to No. 4
	Medium	No. 40 to No. 10
	Fine	No. 200 to No. 40

ENGINEERING SERVICES

GEOTECHNICAL SERVICES
PREPARED BY: I.G-Remmen 11/09

STATE OF CALIFORNIA
DEPARTMENT OF TRANSPORTATION

DIVISION OF ENGINEERING SERVICES
STRUCTURE DESIGN
DESIGN BRANCH

BRIDGE NO. 39-0237
POST MILE 3.4

PLAINSBURG OVERCROSSING
LOG OF TEST BORINGS 3 OF 3

GS LOTB SOIL LEGEND

ORIGINAL SCALE IN INCHES FOR REDUCED PLANS 0 1 2 3

CU 10
EA 415801

DISREGARD PRINTS BEARING EARLIER REVISION DATES

REVISION DATES

SHEET 19 OF 19

FILE => 390237zltb19.dgn

USERNAME => rtmikes1 DATE PLOTTED => 04-NOV-2010 TIME PLOTTED => 07:19

DIST	COUNTY	ROUTE	POST MILES TOTAL PROJECT	SHEET No	TOTAL SHEETS
10	Mer	99	0.0/4.6	565	607

REGISTERED CIVIL ENGINEER 04-13-10 DATE

11-1-10
PLANS APPROVAL DATE

The State of California or its officers or agents shall not be responsible for the accuracy or completeness of electronic copies of this plan sheet.

REGISTERED PROFESSIONAL ENGINEER Larry Wu No. C57035 Exp. 6-30-11 CIVIL STATE OF CALIFORNIA

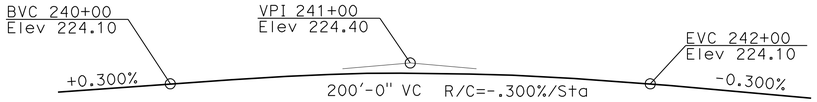

PROFILE GRADE

NO SCALE

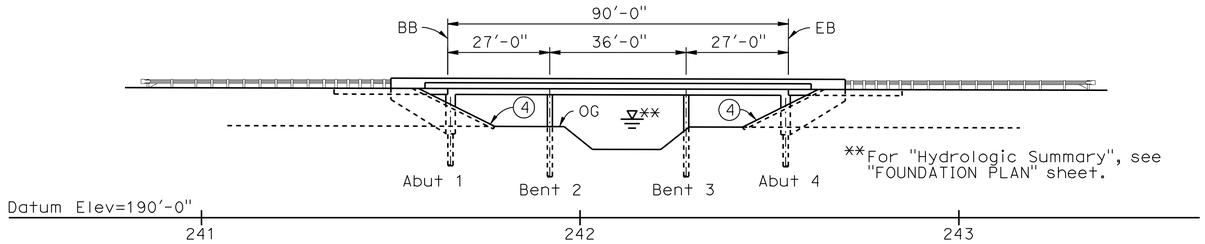

ELEVATION

1"=20'-0"

QUANTITIES

STRUCTURE EXCAVATION (BRIDGE)	220	CY
STRUCTURE BACKFILL (BRIDGE)	117	CY
FURNISH PILING (CLASS 90) (ALTERNATIVE X)	795	LF
DRIVE PILE (CLASS 90) (ALTERNATIVE X)	32	EA
FURNISH 15" PRECAST PRESTRESSED CONCRETE PILING	1,157	LF
DRIVE 15" PRECAST PRESTRESSED CONCRETE PILE	36	EA
STRUCTURAL CONCRETE, BRIDGE	800	CY
STRUCTURAL CONCRETE, APPROACH SLAB (TYPE N)	249	CY
JOINT SEAL (MR 1/2")	236	LF
BAR REINFORCING STEEL (BRIDGE)	165,000	LB
CONCRETE BARRIER (TYPE 732)	466	LF

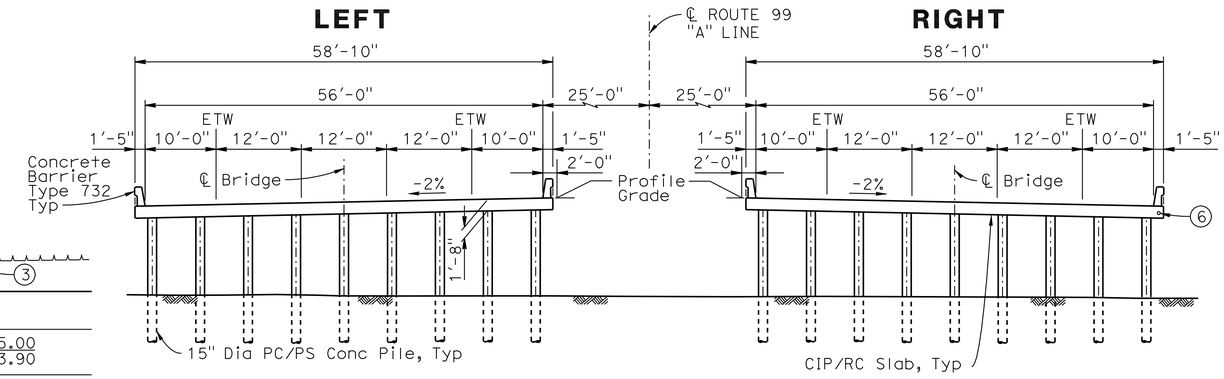

TYPICAL SECTION

3/32"=1'-0"

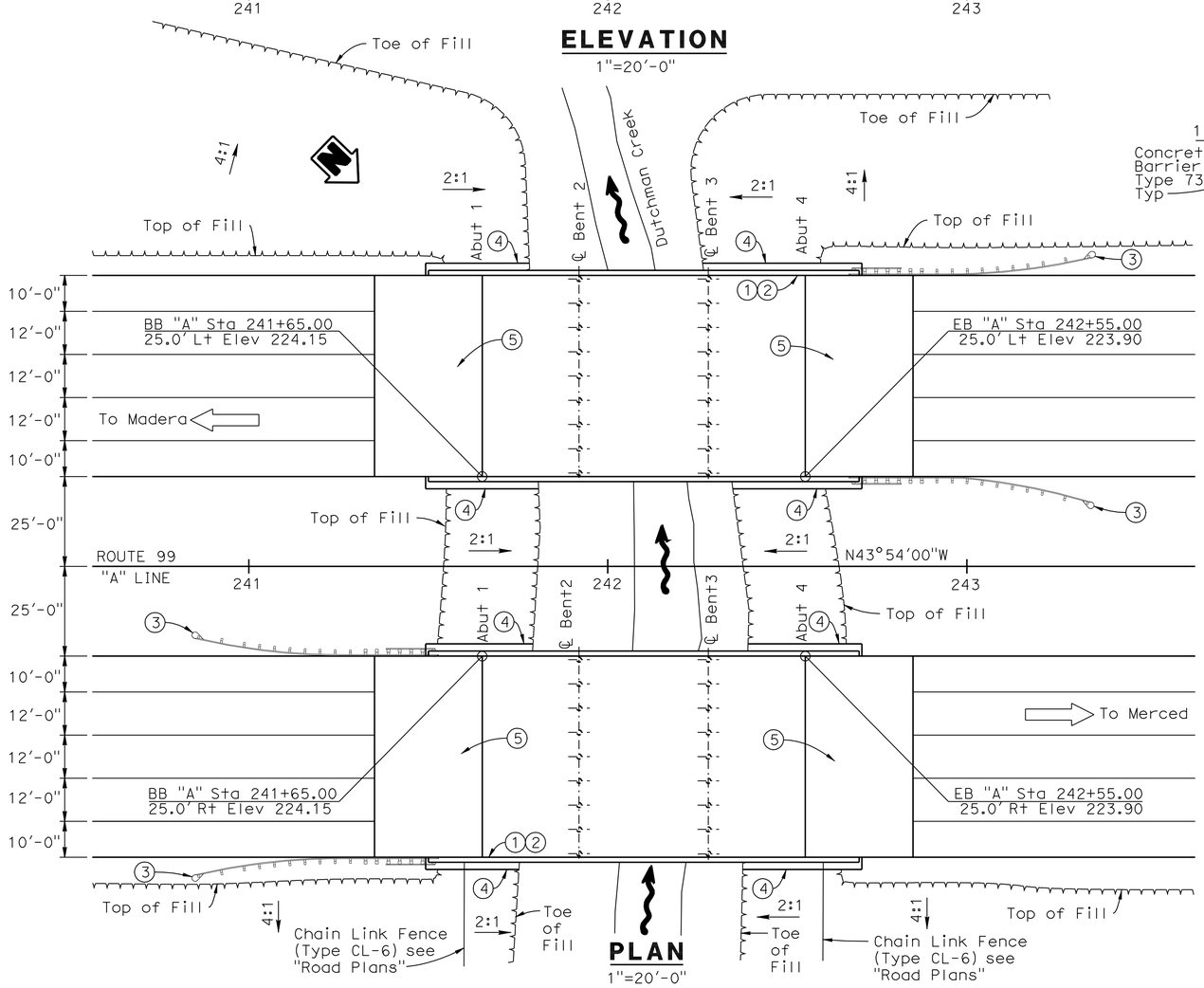

PLAN

1"=20'-0"

INDEX TO PLANS

Sheet No.	Title
1.	GENERAL PLAN
2.	GENERAL NOTES
3.	DECK CONTOURS
4.	FOUNDATION PLAN
5.	ABUTMENT DETAILS
6.	TYPICAL SECTION
7.	SLAB REINFORCEMENT
8.	SLAB REINFORCEMENT DETAILS
9.	SLAB BRIDGE PILE DETAILS
10.	STRUCTURE APPROACH TYPE N(30D)
11.	STRUCTURE APPROACH DRAINAGE DETAILS
12.	LOG OF TEST BORINGS, 1 OF 4
13.	LOG OF TEST BORINGS, 2 OF 4
14.	LOG OF TEST BORINGS, 3 OF 4
15.	LOG OF TEST BORINGS, 4 OF 4

NOTES:

1. Paint "DUTCHMAN CREEK BRIDGE L/R"
2. Paint "BR. NO. 39-0238L/R"
3. Metal Beam Guard Rail, see "Roadway Plans"
4. Rock Slope Protection, see "Roadway Plans"
5. Approach Slab TYPE N(30D)
6. 4" Communication Conduit, see "Roadway Plans"

For "General Notes", "Standard Plans", and "Pile Data", see "GENERAL NOTES" Sheet.

DANIEL T. ADAMS
DESIGN ENGINEER

	BY	CHECKED		
DESIGN	L. Wu	A. McPhee	LOAD & RESISTANCE FACTOR DESIGN	LIVE LOADING: HL93 AND PERMIT DESIGN VEHICLE
DETAILS	G. Hallstrom	A. McPhee	LAYOUT: L. Wu	CHECKED A. McPhee
QUANTITIES	J. Szabo	F. Chen	SPECIFICATIONS: M. Kopsa	PLANS AND SPECS COMPARED M. Kopsa

STATE OF CALIFORNIA
DEPARTMENT OF TRANSPORTATION

DIVISION OF ENGINEERING SERVICES
STRUCTURE DESIGN
DESIGN BRANCH 10

BRIDGE NO. 39-0238R/L
POST MILE 2.7

DUTCHMAN CREEK BRIDGE
GENERAL PLAN

STRUCTURES DESIGN GENERAL PLAN SHEET (ENGLISH) (REV. 10/25/05)

ORIGINAL SCALE IN INCHES FOR REDUCED PLANS 0 1 2 3

CU 10
EA 415801

DISREGARD PRINTS BEARING EARLIER REVISION DATES

REVISION DATES: 06-18-07 11-14-07 06-04-08 3-23-09 7-15-09 3-05-10 4-13-10

SHEET 1 OF 15

FILE => 390238rlagp01.dgn

STRUCTURES DESIGN GENERAL PLAN SHEET (ENGLISH) (REV.07-24-06)

USERNAME => trmikes1 DATE PLOTTED => 04-NOV-2010 TIME PLOTTED => 07:20

DIST	COUNTY	ROUTE	POST MILES TOTAL PROJECT	SHEET No	TOTAL SHEETS
10	Mer	99	0.0/4.6	566	607

Larry Wu 04-13-10
REGISTERED CIVIL ENGINEER DATE

11-1-10
PLANS APPROVAL DATE

REGISTERED PROFESSIONAL ENGINEER Larry Wu No. C57035 Exp. 6-30-11 CIVIL STATE OF CALIFORNIA

The State of California or its officers or agents shall not be responsible for the accuracy or completeness of electronic copies of this plan sheet.

PILE DATA TABLE

B2-5

Location	Pile Type	Nominal Resistance		Design Tip Elevations (ft)	Specified Tip Elevations (ft)	Nominal Driving Resistance Req'd.
		Compression	Tension			
Abut 1	Class 90 Alternate X	180 kips	N/A	191.3	191.3	180 kips
Bent 2	PC/PS * Concrete Pile	240 kips	0	189.7 (a) 197.0 (b)	189.7	260 kips (2)
Bent 3	PC/PS * Concrete Pile	240 kips	0	189.7 (a) 197.0 (b)	189.7	260 kips (2)
Abut 4	Class 90 Alternate X	180 kips	N/A	191.3	191.3	180 kips

NOTE: 1. Design tip elevations are controlled by: (a) Compression (Strength Limit)
(b) Compression (Extreme Limit)

2. The Nominal Driving Resistance Required is the result of additional resistance from unsuitable soil layers. Unsuitable; scourable soil layers at Bent 2 and Bent 3 extend to Elevation 205.2 ft.

* See "SLAB BRIDGE PILE DETAILS" sheet.

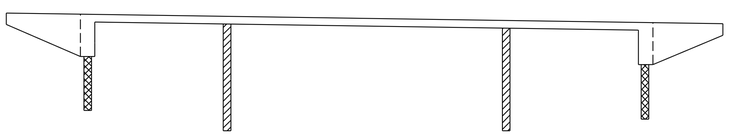

Structural Concrete, Bridge.
PC/PS Concrete Pile
Class 90 Concrete Pile

B2-5

CONCRETE STRENGTH AND TYPE LIMITS

No Scale

GENERAL NOTES
LOAD AND RESISTANCE FACTOR DESIGN

DESIGN: AASHTO LRFD BRIDGE DESIGN SPECIFICATIONS, 4th Edition and the CALTRANS Amendments, preface dated Dec. 2008.

SEISMIC DESIGN: Caltrans Seismic Design Criteria (SDC) Version 1.4, July, 2006

DEAD LOAD: Includes 35 Psf for future wearing surface.

LIVE LOADING: HL93 and permit design load.

SEISMIC LOADING: CALTRANS SDC ARS Curve for Soil Profile Type D (M = 6.5±0.25), (Peak Rock Acceleration = 0.2 g)

REINFORCED CONCRETE:
f_y = 60 ksi
f'_c = 3600 psi, unless otherwise noted
n = 8

STANDARD PLANS DATED MAY 2006

	A10A	ACRONYMS AND ABBREVIATIONS (SHEET 1 OF 2)
	A10B	ACRONYMS AND ABBREVIATIONS (SHEET 2 OF 2)
	A10C	SYMBOLS (SHEET 1 OF 2)
	A10D	SYMBOLS (SHEET 2 OF 2)
	A62C	LIMITS OF PAYMENT FOR EXCAVATION AND BACKFILL-BRIDGE
	BO-1	BRIDGE DETAILS
	B2-5	PILE DETAILS CLASS 90 AND CLASS140
RSP	B6-21	JOINT SEALS (MAXIMUM MOVEMENT RATING = 2")
	B11-55	CONCRETE BARRIER TYPE 732

STANDARD PLAN SHEET NO.
DETAIL NO.

DESIGN	BY L. Wu	CHECKED A. McPhee	
DETAILS	BY G. Hallstrom	CHECKED A. McPhee	
QUANTITIES	BY J. Szabo	CHECKED F. Chen	

STATE OF CALIFORNIA
DEPARTMENT OF TRANSPORTATION

DIVISION OF ENGINEERING SERVICES
STRUCTURE DESIGN
DESIGN BRANCH 10

BRIDGE NO. 39-0238R/L
POST MILE 2.7

DUTCHMAN CREEK BRIDGE
GENERAL NOTES

STRUCTURES DESIGN DETAIL SHEET (ENGLISH) (REV. 10/25/05)

ORIGINAL SCALE IN INCHES FOR REDUCED PLANS 0 1 2 3

CU 10
EA 415801

DISREGARD PRINTS BEARING EARLIER REVISION DATES

REVISION DATES: 11-14-07, 5-29-08, 3-23-09, 7-15-09, 3-03-10

SHEET 2 OF 15

FILE => 390238rlaitp02.dgn

USERNAME => trmikesl DATE PLOTTED => 04-NOV-2010 TIME PLOTTED => 07:20

DIST	COUNTY	ROUTE	POST MILES TOTAL PROJECT	SHEET No	TOTAL SHEETS
10	Mer	99	0.0/4.6	567	607

REGISTERED CIVIL ENGINEER — DATE: 04-13-10

11-1-10
PLANS APPROVAL DATE

REGISTERED PROFESSIONAL ENGINEER — Larry Wu — No. C57035 — Exp. 6-30-11 — CIVIL — STATE OF CALIFORNIA

The State of California or its officers or agents shall not be responsible for the accuracy or completeness of electronic copies of this plan sheet.

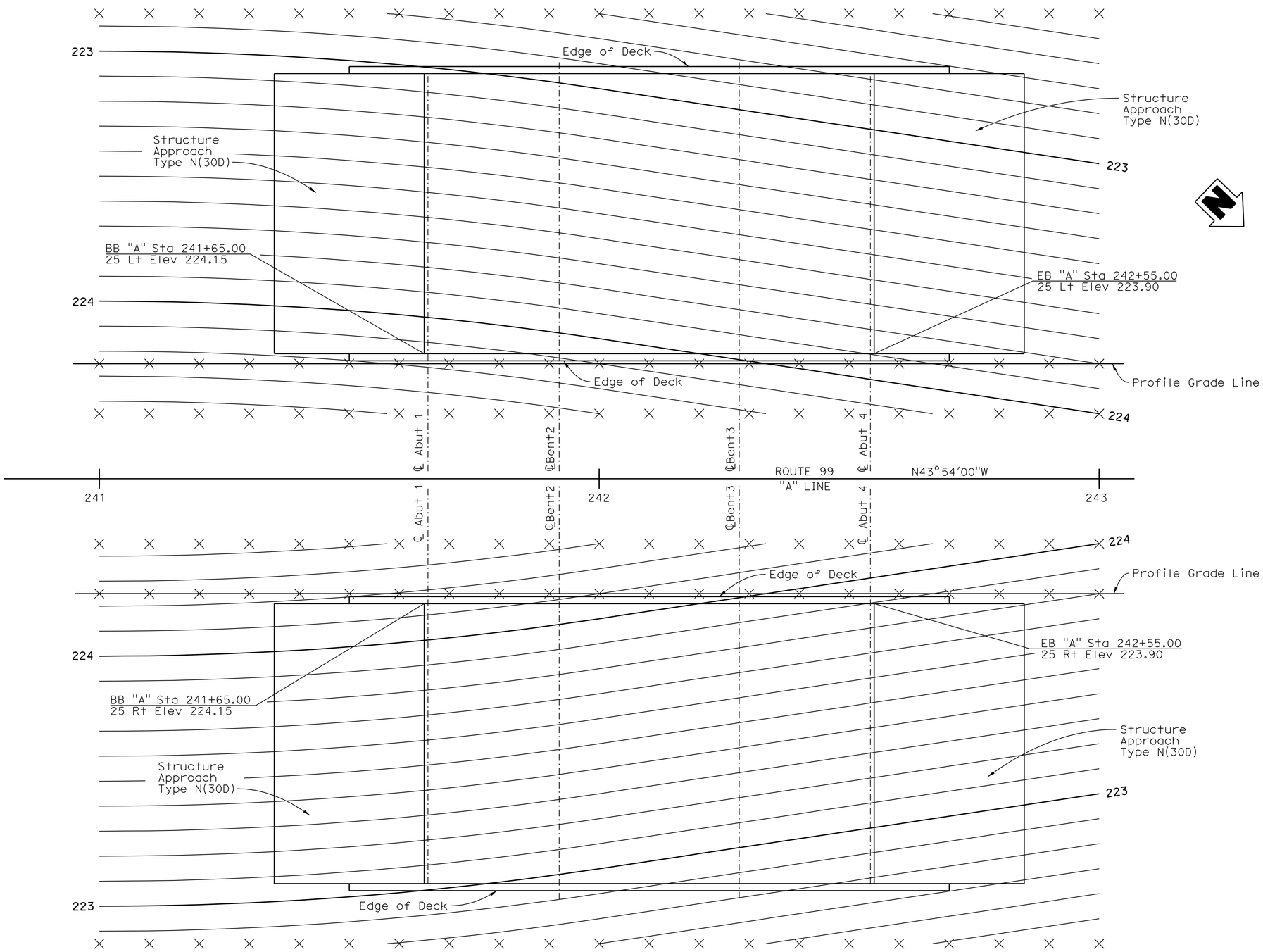

PLAN

3/32"=1'-0"

NOTES:

1. x - 10' intervals along station line.
2. Contour intervals = 0.1'.
3. Contours do not include camber.

	BY	CHECKED
DESIGN	L. Wu	A. McPhee
DETAILS	G. Hallstrom	A. McPhee
QUANTITIES	J.Szabo	F. Chen

STATE OF CALIFORNIA
DEPARTMENT OF TRANSPORTATION

DIVISION OF ENGINEERING SERVICES
STRUCTURE DESIGN
DESIGN BRANCH 10

BRIDGE NO. 39-0238R/L
POST MILE 2.7

DUTCHMAN CREEK BRIDGE
DECK CONTOURS

STRUCTURES DESIGN DETAIL SHEET (ENGLISH) (REV. 10/25/05)

ORIGINAL SCALE IN INCHES FOR REDUCED PLANS 0 1 2 3

CU 10
EA 415801

DISREGARD PRINTS BEARING EARLIER REVISION DATES

REVISION DATES: 11-15-07

SHEET 3 OF 15

FILE => 390238r1ddc03.dgn

USERNAME => trmikest DATE PLOTTED => 04-NOV-2010 TIME PLOTTED => 07:20

DIST	COUNTY	ROUTE	POST MILES TOTAL PROJECT	SHEET No	TOTAL SHEETS
10	Mer	99	0.0/4.6	568	607

REGISTERED CIVIL ENGINEER — DATE: 04-13-10

11-1-10
PLANS APPROVAL DATE

The State of California or its officers or agents shall not be responsible for the accuracy or completeness of electronic copies of this plan sheet.

REGISTERED PROFESSIONAL ENGINEER — Larry Wu — No. C57035 — Exp. 6-30-11 — CIVIL — STATE OF CALIFORNIA

HYDROLOGIC SUMMARY

DRAINAGE AREA: _____SQUARE MILES

	DESIGN FLOOD	BASE FLOOD	OVERTOPPING FLOOD
FREQUENCY (YEARS)	50	100	N/A
DISCHARGE (CUBIC FEET PER SECOND)	2500	2800	N/A
WATER SURFACE ELEV. AT BRIDGE (FEET)	219.13	219.57	N/A

FLOOD PLAIN DATA ARE BASED UPON INFORMATION AVAILABLE WHEN THE PLANS WERE PREPARED AND ARE SHOWN TO MEET FEDERAL REQUIREMENTS. THE ACCURACY OF SAID INFORMATION IS NOT WARRANTED BY THE STATE AND INTERESTED OR AFFECTED PARTIES SHOULD MAKE THEIR OWN INVESTIGATIONS.

SURVEY CONTROL

MER-99 PM 2.00
Fnd 1"IP w/ RPP & LS5679 Tag
8.85 FT Lt. ℄ Proposed Rte 99
Sta. 240+18.97
N 1,888,614.73
E 6,613,376.04
Elev. = 215.19

MER-99 PM 2.69
Fnd 1"IP w/ RPP & LS5679 Tag
32.75 FT Rt. ℄ Proposed Rte 99
Sta. 242+62.11
N 1,888,818.77
E 6,613,237.42
Elev. = 216.04

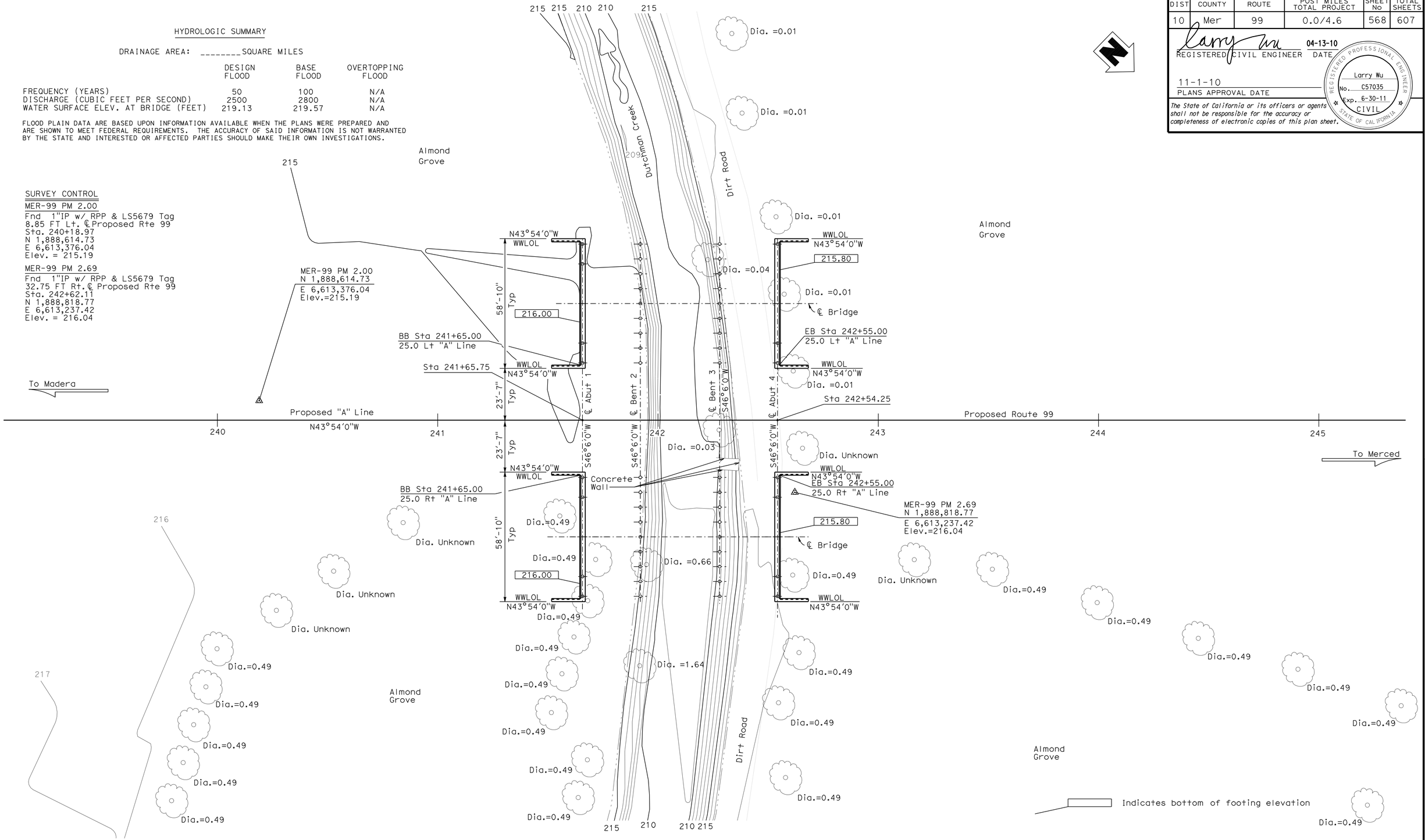

PRELIMINARY INVESTIGATION SECTION							
SCALE 1"=20'	VERT.DATUM NGVD29	PHOTOGRAMMETRY AS OF: X					
	HORZ.DATUM NAD83 (1991.35)	SURVEYED	BY District	CHECKED	BY M.Licha	09/2007	
ALIGNMENT TIES Dist.Traverse Sheet		DRAFTED	BY T.Zolnikova 09/2007	CHECKED	BY M.Licha	08/2007	

	BY	CHECKED
DESIGN	L. Wu	A. McPhee
DETAILS	G. Hallstrom	A. McPhee
QUANTITIES	J. Szabo	F. Chen

STATE OF CALIFORNIA
DEPARTMENT OF TRANSPORTATION

DIVISION OF ENGINEERING SERVICES
STRUCTURE DESIGN
DESIGN BRANCH 10

BRIDGE NO. 39-0238R/L
POST MILE 2.7

DUTCHMAN CREEK BRIDGE
FOUNDATION PLAN

STRUCTURES FOUNDATION PLAN SHEET (ENGLISH) (REV. 10/25/05)

ORIGINAL SCALE IN INCHES FOR REDUCED PLANS 0 1 2 3

CU 10
EA 415801

DISREGARD PRINTS BEARING EARLIER REVISION DATES

REVISION DATES: 09-11-07 11-16-07 05-29-08 03-24-09 07-16-09 04-07-10

SHEET 4 OF 15

FILE => 390238rlefdp104.dgn

USERNAME => trmikest DATE PLOTTED => 04-NOV-2010 TIME PLOTTED => 07:20

DIST	COUNTY	ROUTE	POST MILES TOTAL PROJECT	SHEET No	TOTAL SHEETS
10	Mer	99	0.0/4.6	569	607

REGISTERED CIVIL ENGINEER 04-13-10 DATE

11-1-10
PLANS APPROVAL DATE

REGISTERED PROFESSIONAL ENGINEER Larry Wu No. C57035 Exp. 6-30-11 CIVIL STATE OF CALIFORNIA

The State of California or its officers or agents shall not be responsible for the accuracy or completeness of electronic copies of this plan sheet.

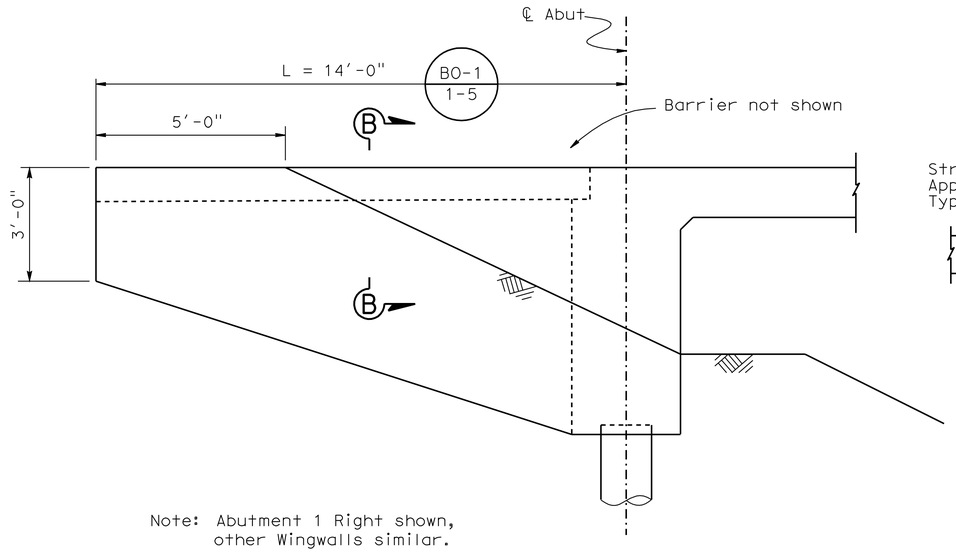

Note: Abutment 1 Right shown, other Wingwalls similar.

WINGWALL ELEVATION

½" = 1'-0"

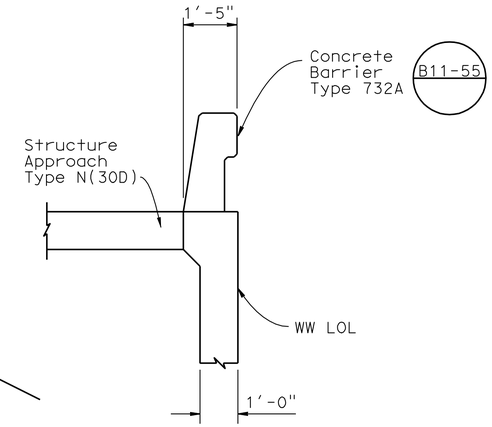

SECTION B-B

½" = 1'-0"

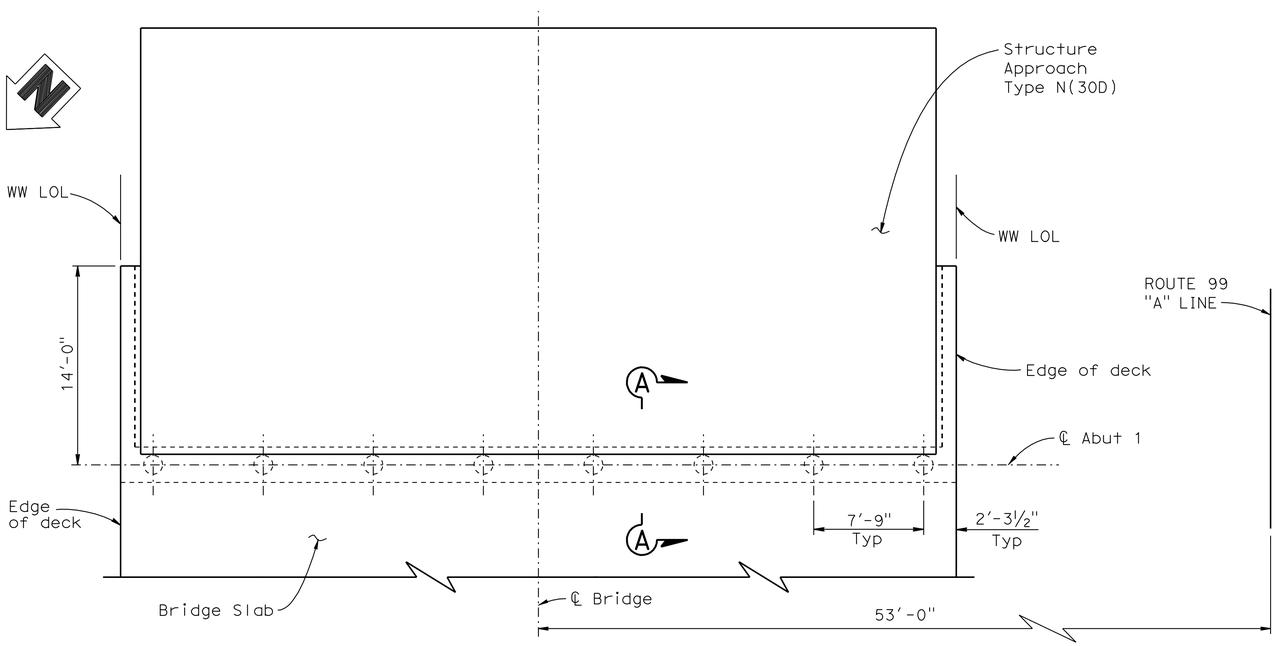

PLAN

3/16"=1'-0"

Note: Abutment 1 shown, Abutment 4 similar.

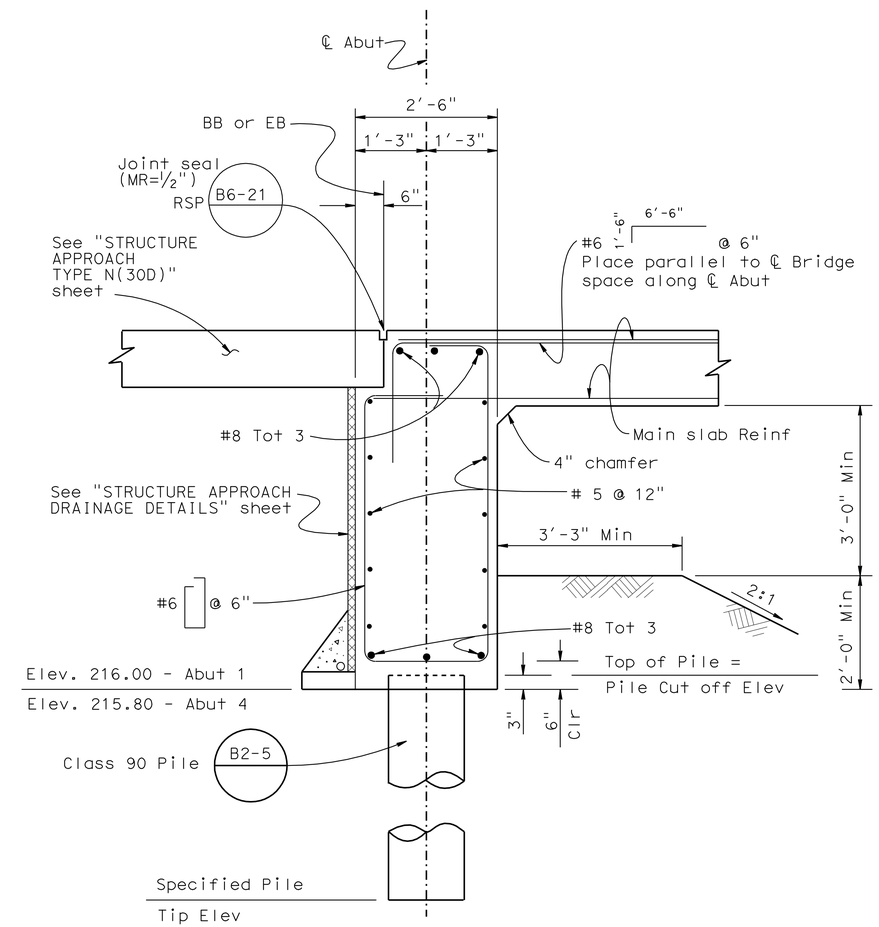

SECTION A-A

¾"=1'-0"

DESIGN	BY L. Wu	CHECKED A. McPhee	
DETAILS	BY G. Hallstrom	CHECKED A. McPhee	
QUANTITIES	BY J. Szabo	CHECKED F. Chen	

STATE OF CALIFORNIA
DEPARTMENT OF TRANSPORTATION

DIVISION OF ENGINEERING SERVICES
STRUCTURE DESIGN
DESIGN BRANCH 10

BRIDGE NO. 39-0238R/L
POST MILE 2.7

DUTCHMAN CREEK BRIDGE
ABUTMENT DETAILS

STRUCTURES DESIGN DETAIL SHEET (ENGLISH) (REV. 10/25/05)

ORIGINAL SCALE IN INCHES FOR REDUCED PLANS 0 1 2 3

CU 10
EA 415801

DISREGARD PRINTS BEARING EARLIER REVISION DATES

REVISION DATES: 11-15-07 5-29-08 3-24-09 7-15-09

SHEET 5 OF 15

FILE => 390238r1fadt05.dgn

USERNAME => trmikes1 DATE PLOTTED => 04-NOV-2010 TIME PLOTTED => 07:20

DIST	COUNTY	ROUTE	POST MILES TOTAL PROJECT	SHEET No	TOTAL SHEETS
10	Mer	99	0.0/4.6	570	607

REGISTERED CIVIL ENGINEER 04-13-10 DATE

11-1-10
PLANS APPROVAL DATE

REGISTERED PROFESSIONAL ENGINEER Larry Wu No. C57035 Exp. 6-30-11 CIVIL STATE OF CALIFORNIA

The State of California or its officers or agents shall not be responsible for the accuracy or completeness of electronic copies of this plan sheet.

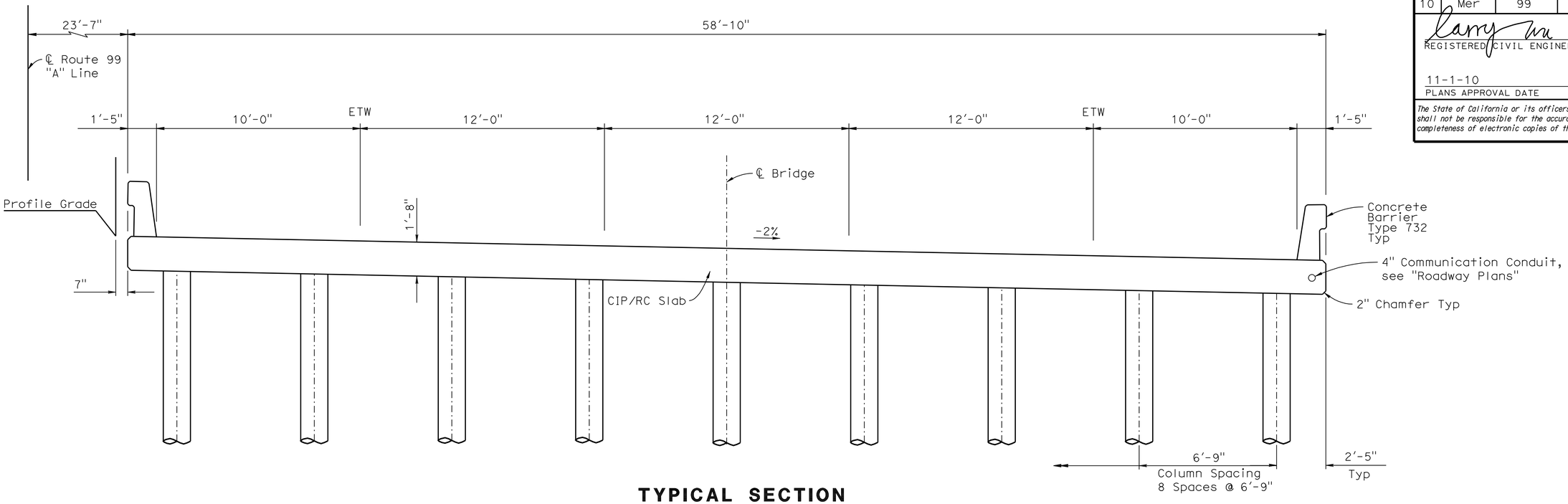

TYPICAL SECTION

3/8" = 1'-0"

NOTE: Right Bridge shown, Left Bridge similar.

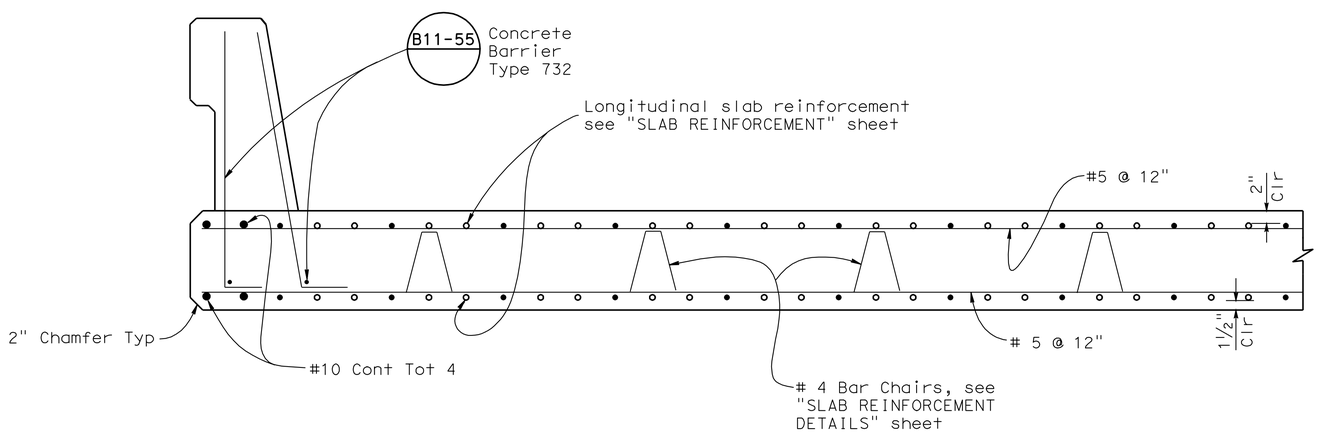

PART TYPICAL SECTION

1" = 1'-0"

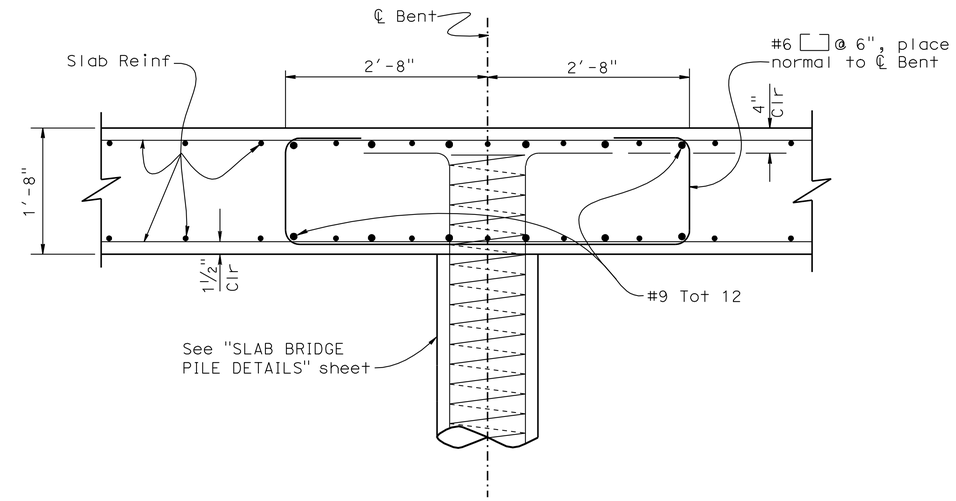

COLUMN ELEVATION

1" = 1'-0"

	BY	CHECKED
DESIGN	L. Wu	A. McPhee
DETAILS	G. Hallstrom	A. McPhee
QUANTITIES	J. Szabo	F. Chen

STATE OF CALIFORNIA
DEPARTMENT OF TRANSPORTATION

DIVISION OF ENGINEERING SERVICES
STRUCTURE DESIGN
DESIGN BRANCH 10

BRIDGE NO. 39-0238R/L
POST MILE 2.7

DUTCHMAN CREEK BRIDGE
TYPICAL SECTION

STRUCTURES DESIGN DETAIL SHEET (ENGLISH) (REV. 10/25/05)

ORIGINAL SCALE IN INCHES FOR REDUCED PLANS 0 1 2 3

CU 10
EA 415801

DISREGARD PRINTS BEARING EARLIER REVISION DATES

REVISION DATES: 11-16-07 5-29-08 3-24-09 7-15-09

SHEET 6 OF 15

FILE => 390238rlkts06.dgn

USERNAME => trmikest DATE PLOTTED => 04-NOV-2010 TIME PLOTTED => 07:20

DIST	COUNTY	ROUTE	POST MILES TOTAL PROJECT	SHEET No	TOTAL SHEETS
10	Mer	99	0.0/4.6	571	607

REGISTERED CIVIL ENGINEER 04-13-10 DATE

11-1-10
PLANS APPROVAL DATE

REGISTERED PROFESSIONAL ENGINEER Larry Wu No. C57035 Exp. 6-30-11 CIVIL STATE OF CALIFORNIA

The State of California or its officers or agents shall not be responsible for the accuracy or completeness of electronic copies of this plan sheet.

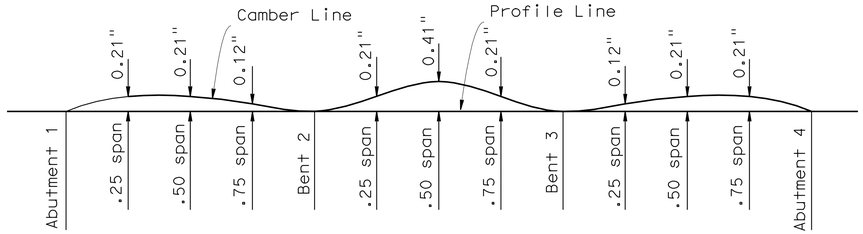

Does not include allowance for falsework settlement

CAMBER DIAGRAM

no scale

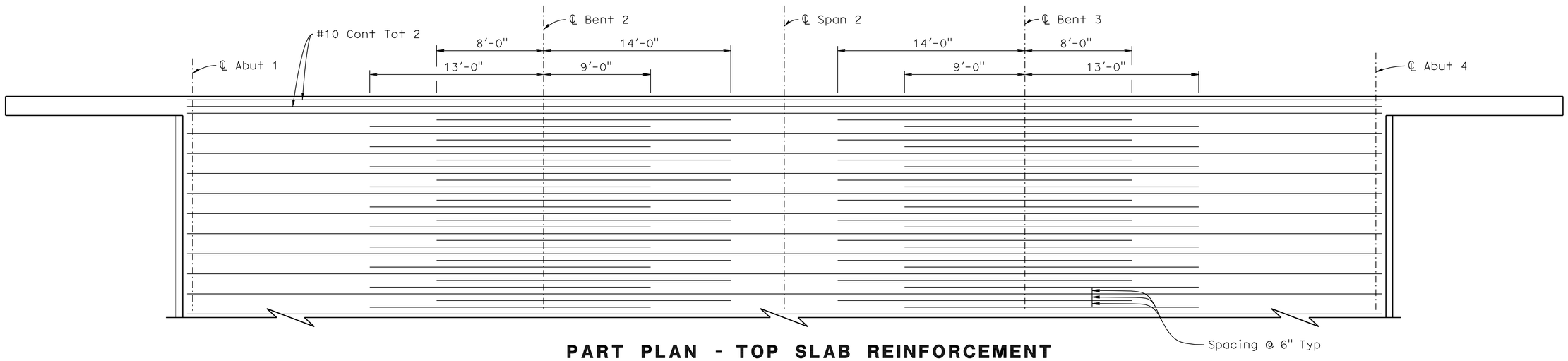

PART PLAN - TOP SLAB REINFORCEMENT

1/4" = 1'-0"

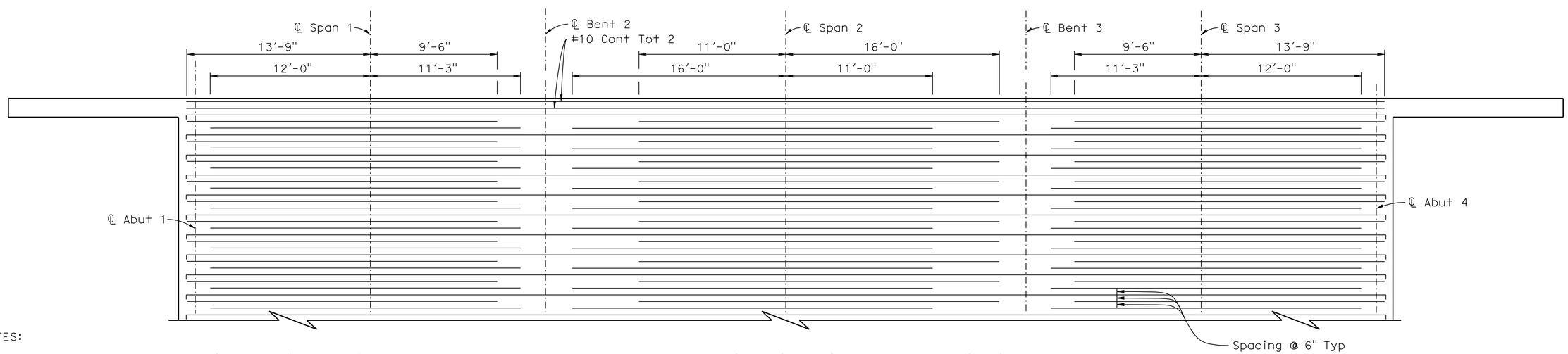

NOTES:

1. All reinforcement symmetrical (staggered) about ℄ Span 2.
2. All reinforcement #8 unless otherwise noted.
3. No lap splices allowed in top & bottom reinforcement.

PART PLAN - BOTTOM SLAB REINFORCEMENT

1/4" = 1'-0"

	BY	CHECKED
DESIGN	L. Wu	A. McPhee
DETAILS	G. Hallstrom	A. McPhee
QUANTITIES	J. Szabo	F. Chen

STATE OF CALIFORNIA
DEPARTMENT OF TRANSPORTATION

DIVISION OF ENGINEERING SERVICES
STRUCTURE DESIGN
DESIGN BRANCH 10

BRIDGE NO. 39-0238R/L
POST MILE 2.7

DUTCHMAN CREEK BRIDGE
SLAB REINFORCEMENT

STRUCTURES DESIGN DETAIL SHEET (ENGLISH) (REV. 10/25/05)

ORIGINAL SCALE IN INCHES FOR REDUCED PLANS 0 1 2 3

CU 10
EA 415801

DISREGARD PRINTS BEARING EARLIER REVISION DATES

REVISION DATES: 11-20-07 3-24-09 7-15-09

SHEET 7 OF 15

FILE => 390238r10s1b_rf07.dgn

USERNAME => trmikest DATE PLOTTED => 04-NOV-2010 TIME PLOTTED => 07:21

DIST	COUNTY	ROUTE	POST MILES TOTAL PROJECT	SHEET No	TOTAL SHEETS
10	Mer	99	0.0/4.6	572	607

REGISTERED CIVIL ENGINEER 04-13-10 DATE

11-1-10
PLANS APPROVAL DATE

REGISTERED PROFESSIONAL ENGINEER Larry Wu No. C57035 Exp. 6-30-11 CIVIL STATE OF CALIFORNIA

The State of California or its officers or agents shall not be responsible for the accuracy or completeness of electronic copies of this plan sheet.

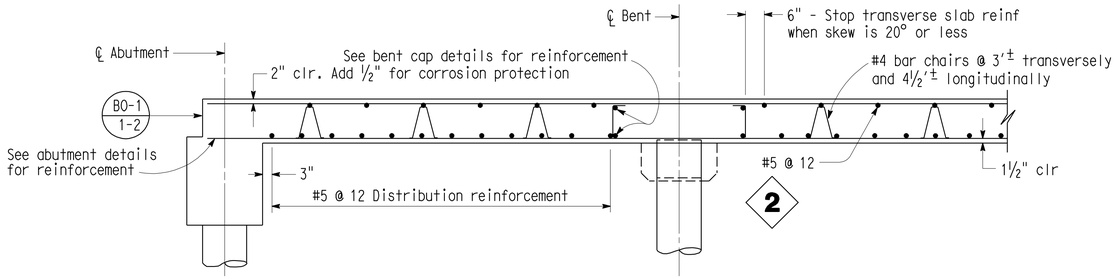

LONGITUDINAL SECTION

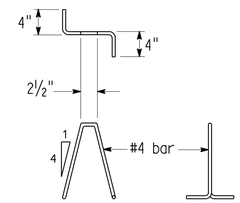

BAR CHAIR DETAIL

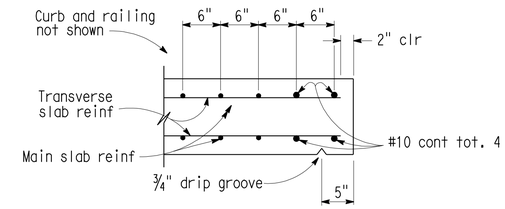

EDGE OF SLAB DETAILS

BAR SPLICE LENGTH								
Bar size	#4	#5	#6	#7	#8	#9	#10	#11
All bars, except top bars in spans over 24'	23"	28"	34"	39"	45"	68"	76"	85"
Top bars in spans over 24'	23"	28"	34"	53"	60"	77"	97"	120"

Reinforcement notes:

Splices in top main bars to be located near center of span.
Splices in bottom main bars to be located near bent.
Spacing of all transverse bars is measured along ℄ roadway.
Skew 0° to 20°: Place all transverse bars parallel to bent.
Skew over 20°: Place transverse slab bars perpendicular to ℄ bridge. See details at right and below.

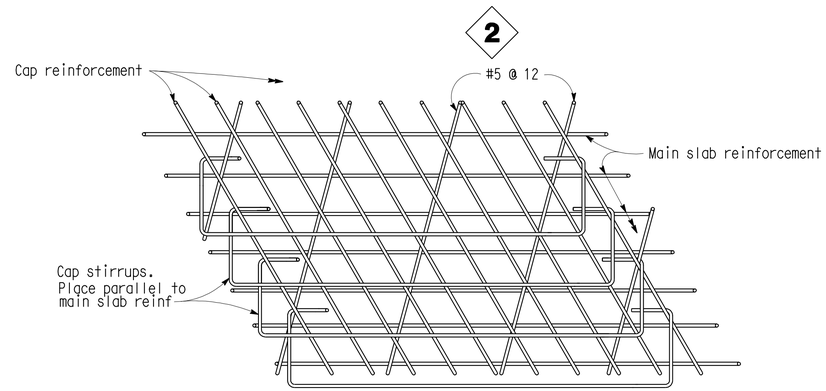

TOP SLAB REINFORCEMENT AT BENT

Note: View for main span over 24'.
Bar placement similar for spans under 24'

1

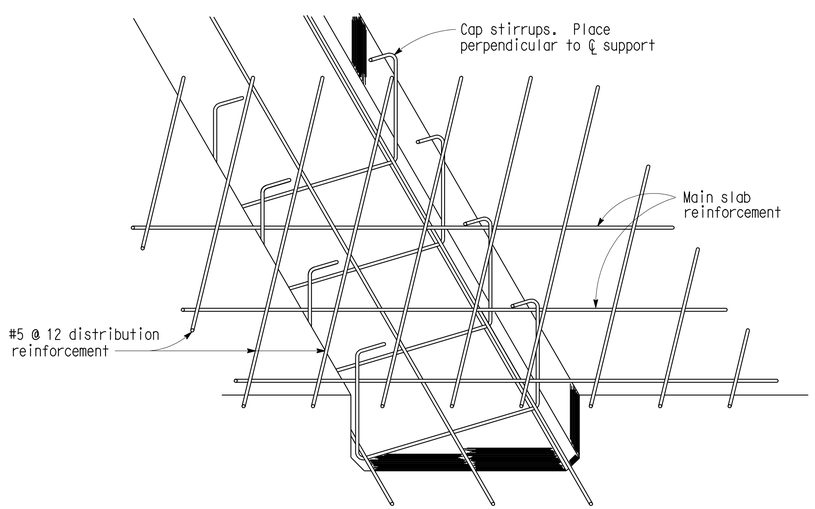

DROPPED CAP

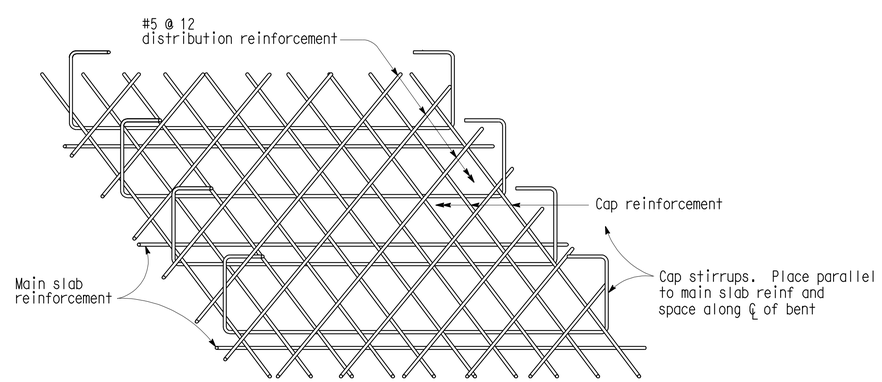

FLUSH CAP

BOTTOM SLAB REINFORCEMENT AT BENT

SPECIAL DETAILS

REVISED STANDARD DRAWING

FILE NO. XS 12-55	DESIGN	BY L.Y. LEE	CHECKED T. FARNAN	APPROVAL RECOMMENDED BY
DESIGN DATE 8/86	DETAILS	BY R. YEE	CHECKED T. FARNAN	DESIGN SUPERVISOR
	SUBMITTED BY R.S. WATANABE			

1 Deleted General Notes
2 Revised Details

STATE OF CALIFORNIA
DEPARTMENT OF TRANSPORTATION

DIVISION OF ENGINEERING SERVICES
STRUCTURE DESIGN
DESIGN BRANCH 10

BRIDGE NO. 39-0238R/L
POST MILE 2.7

DUTCHMAN CREEK BRIDGE
SLAB REINFORCEMENT DETAILS

DS OSD 2147A (CADD 7/97)

ORIGINAL SCALE IN INCHES FOR REDUCED PLANS 0 1 2 3

CU 10
EA 415801

DISREGARD PRINTS BEARING EARLIER REVISION DATES

REVISION DATES: ~~11-19-07~~ 3-24-09

SHEET 8 OF 15

FILE => 390238rlosib_rfdt08.dgn

USERNAME => trmikesl DATE PLOTTED => 04-NOV-2010 TIME PLOTTED => 07:21

DIST	COUNTY	ROUTE	POST MILES TOTAL PROJECT	SHEET No	TOTAL SHEETS
10	Mer	99	0.0/4.6	573	607

REGISTERED CIVIL ENGINEER — DATE 04-13-10

11-1-10
PLANS APPROVAL DATE

REGISTERED PROFESSIONAL ENGINEER — Larry Wu — No. C57035 — Exp. 6-30-11 — CIVIL — STATE OF CALIFORNIA

The State of California or its officers or agents shall not be responsible for the accuracy or completeness of electronic copies of this plan sheet.

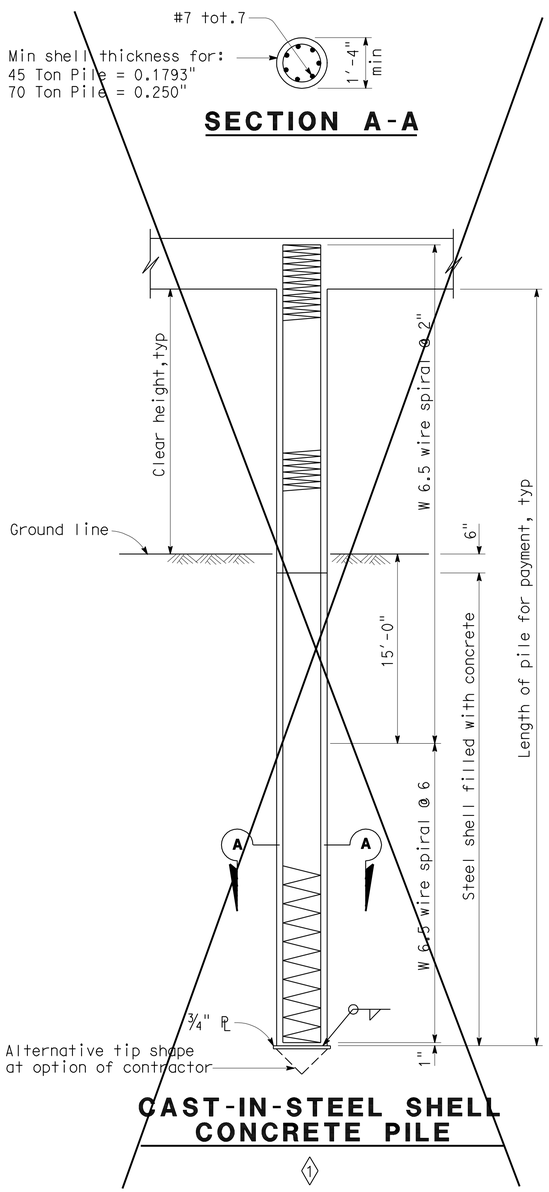

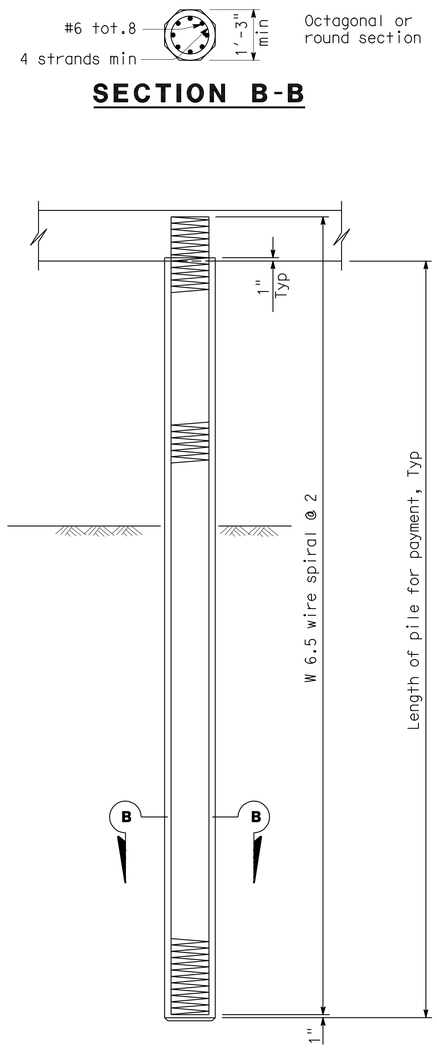

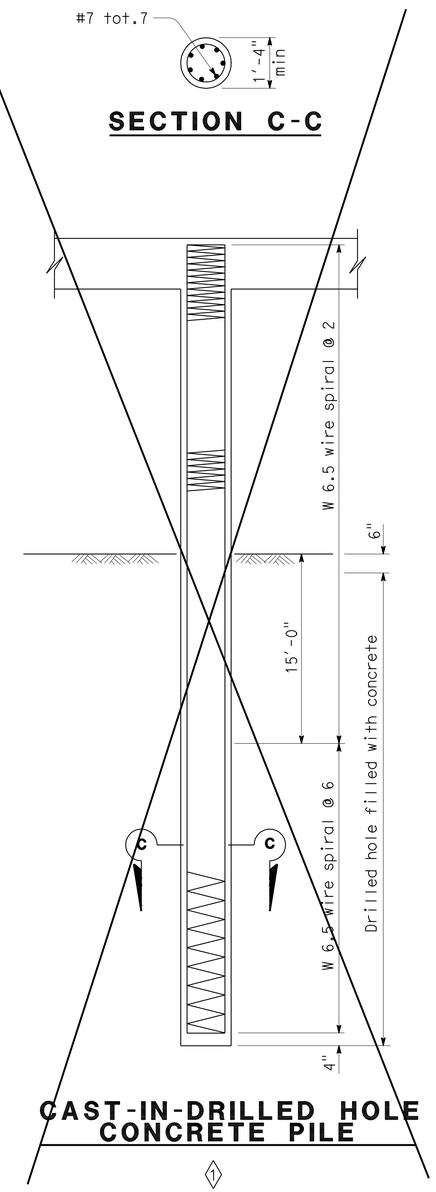

NOTES:

1. Design service level loading is 70 tons or less as noted.
2. Maximum size of aggregate is 1".
3. For the prestressed concrete pile:
   A. The prestress force after all losses shall provide 700 psi minimum stress and shall not be less than 130 kips.
   B. The concrete strength shall not be less than 6000 psi at 28 days.
4. No splices allowed in the longitudinal reinforcement within the "clear height " or within 10' below the ground line.

SPECIAL DETAILS

REVISED STANDARD DRAWING

FILE NO. XS 12-55.1 — DESIGN BY JIM H. GATES — CHECKED STEVE MCBRIDE — APPROVAL RECOMMENDED BY
DESIGN DATE 2/89 — DETAILS BY R. YEE — CHECKED R.A. ROGERSON — DESIGN SUPERVISOR
SUBMITTED BY R.A. ROGERSON

1 Does Not Apply

STATE OF CALIFORNIA
DEPARTMENT OF TRANSPORTATION

DIVISION OF ENGINEERING SERVICES
STRUCTURE DESIGN
DESIGN BRANCH 10

BRIDGE NO. 39-0238R/L
POST MILE 2.7

DUTCHMAN CREEK BRIDGE
SLAB BRIDGE PILE DETAILS

DS OSD 2147A (CADD 7/97)

ORIGINAL SCALE IN INCHES FOR REDUCED PLANS 0 1 2 3

CU 10
EA 415801

DISREGARD PRINTS BEARING EARLIER REVISION DATES

REVISION DATES: 11-19-07, 3-24-09

SHEET 9 OF 15

FILE => 390238rlppdt09.dgn

USERNAME => trmikes1 DATE PLOTTED => 04-NOV-2010 TIME PLOTTED => 07:21

DIST	COUNTY	ROUTE	POST MILES TOTAL PROJECT	SHEET No	TOTAL SHEETS
10	Mer	99	0.0/4.6	574	607

REGISTERED CIVIL ENGINEER — DATE 04-13-10

11-1-10
PLANS APPROVAL DATE

The State of California or its officers or agents shall not be responsible for the accuracy or completeness of electronic copies of this plan sheet.

REGISTERED PROFESSIONAL ENGINEER — Larry Wu No. C57035 Exp. 6-30-11 CIVIL — STATE OF CALIFORNIA

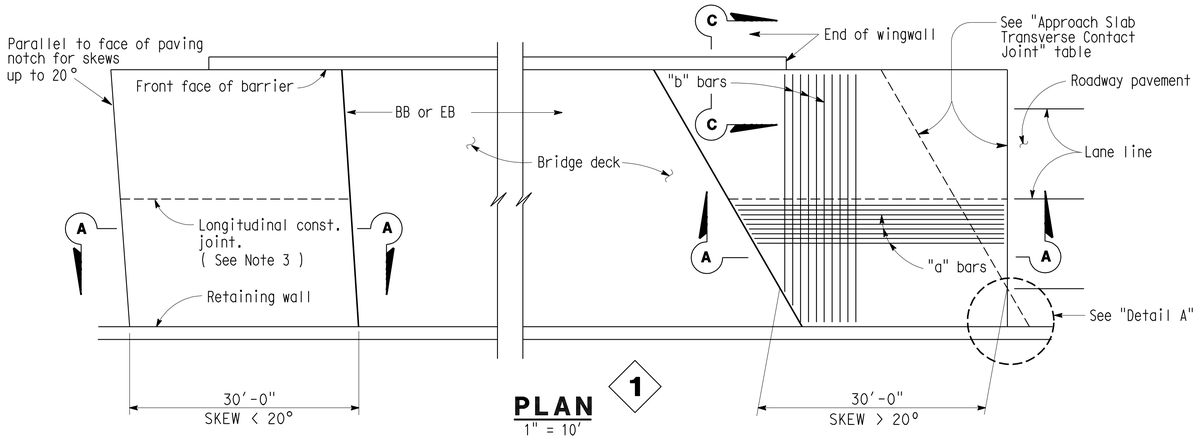

PLAN 1
1" = 10'

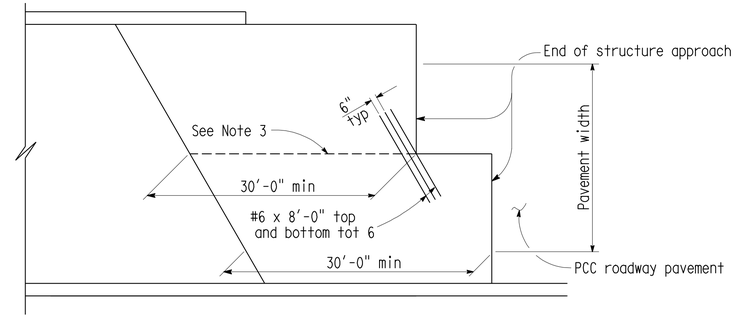

STRUCTURE APPROACH - END STAGGER DETAIL
No Scale

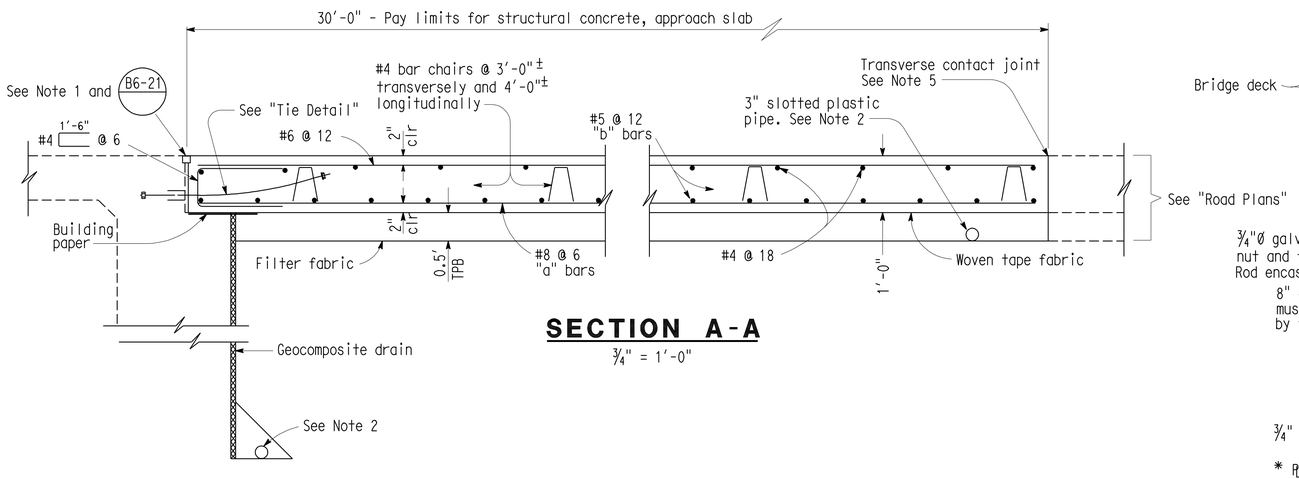

SECTION A-A
¾" = 1'-0"

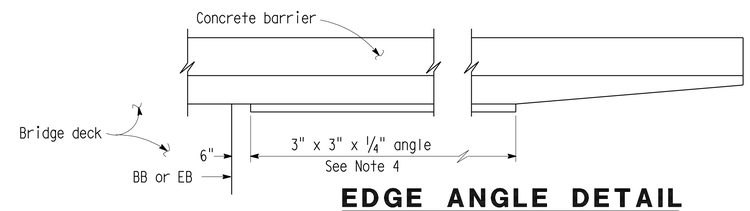

EDGE ANGLE DETAIL
½" = 1'-0"

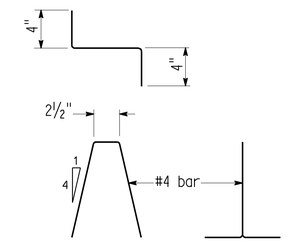

BAR CHAIR DETAIL
1½" = 1'-0"

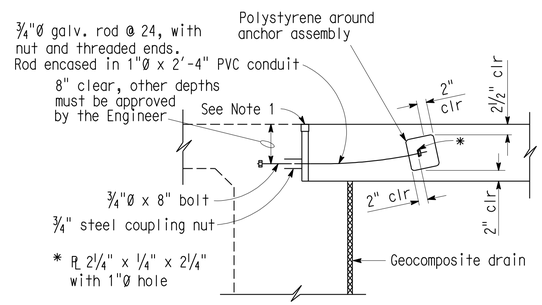

TIE DETAIL
¾" = 1'-0"

APPROACH SLAB TRANSVERSE CONTACT JOINT		
APPROACH SKEW	WITH AC ROADWAY PAVEMENT	WITH PCC ROADWAY PAVEMENT
< 20°	Parallel to face of paving notch	Parallel to face of paving notch
20° - 45°	Parallel to face of P N use (Detail A)	Stagger lines 24' to 36' apart
> 45°	Parallel to face of P N use (Detail A)	Stagger at each lane line

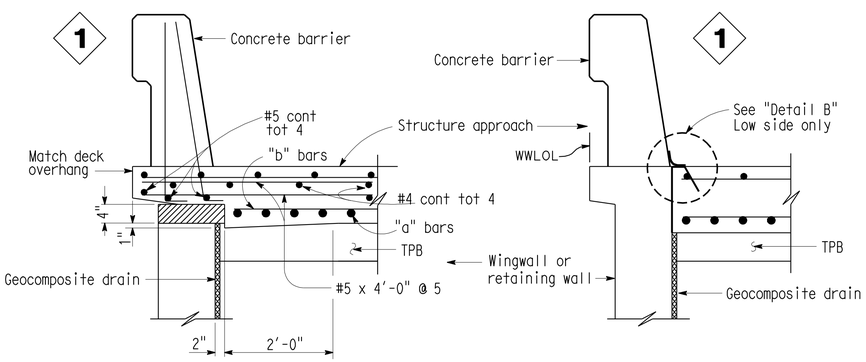

TYPE E-1 TYPE E-2

SECTION C-C
¾" = 1'-0"
(Type E-1 to be used, unless otherwise shown on plans)

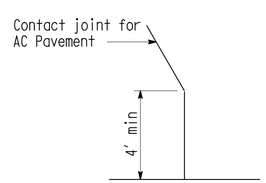

DETAIL A
No Scale

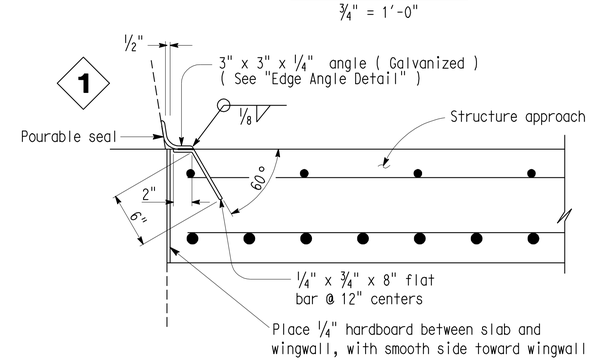

DETAIL B
1½" = 1'-0"

NOTES:

1. For details not noted or shown, see Structure Plans.
2. For drainage details, see "Structure Approach Drainage Details" sheet.
3. Longitudinal construction joints,when permitted by the Engineer, shall be located on lane lines.
4. End angle at beginning of barrier transition, end of wingwall or end of structure approach, as applicable
5. For transverse contact joint with new PCC paving, refer to Standard Plan A35-A.
6. At the contractor's option, approach slab transverse reinforcement may be placed parallel to paving notch. Spacing of transverse reinforcement is measured along ℄ roadway.

Polystyrene to be removed.

SPECIAL DETAILS

REVISED STANDARD DRAWING

FILE NO. XS 22-24	DESIGN	BY M. TRAFFALIS	CHECKED E. THORKILDSEN	APPROVAL RECOMMENDED BY
DESIGN DATE 8/92	DETAILS	BY R. YEE	CHECKED E. THORKILDSEN	DESIGN SUPERVISOR
	SUBMITTED BY M. HA			

1 Revised details

STATE OF CALIFORNIA DEPARTMENT OF TRANSPORTATION

DIVISION OF ENGINEERING SERVICES STRUCTURE DESIGN DESIGN BRANCH 10

BRIDGE NO. 39-0238R/L
POST MILE 2.7

DUTCHMAN CREEK BRIDGE
STRUCTURE APPROACH TYPE N(30D)

DS OSD 2147A (CADD 7/97)

ORIGINAL SCALE IN INCHES FOR REDUCED PLANS 0 1 2 3

CU 10
EA 415801

DISREGARD PRINTS BEARING EARLIER REVISION DATES 11-19-07

REVISION DATES

SHEET 10 OF 15

FILE => 390238rlssa10.dgn

USERNAME => trmikesl DATE PLOTTED => 04-NOV-2010 TIME PLOTTED => 07:21

DIST	COUNTY	ROUTE	POST MILES TOTAL PROJECT	SHEET No	TOTAL SHEETS
10	Mer	99	0.0/4.6	575	607

REGISTERED CIVIL ENGINEER 04-13-10 DATE

11-1-10
PLANS APPROVAL DATE

REGISTERED PROFESSIONAL ENGINEER Larry Wu No. C57035 Exp. 6-30-11 CIVIL STATE OF CALIFORNIA

The State of California or its officers or agents shall not be responsible for the accuracy or completeness of electronic copies of this plan sheet.

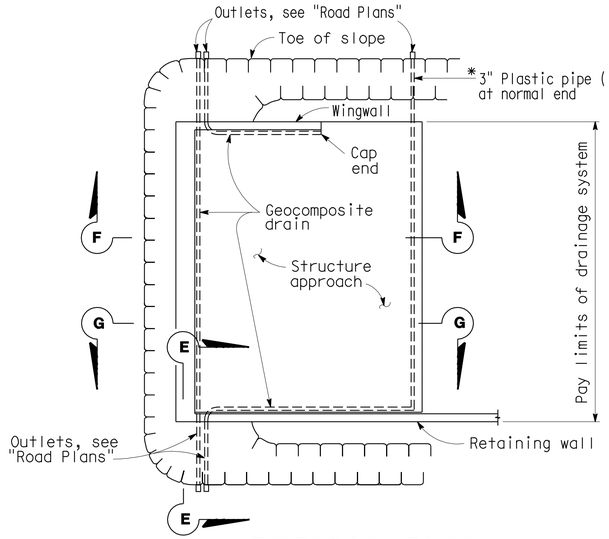

TYPICAL PLAN

1" = 10'

* For pipe layout at staggered end, see "Detail B."

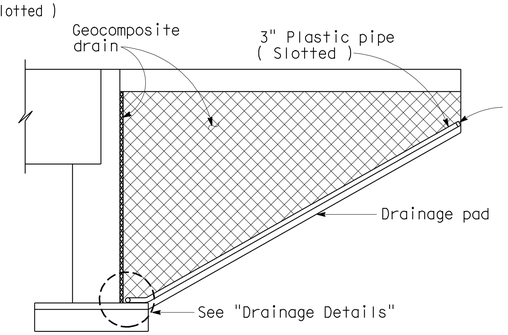

CANTILEVER WINGWALL
SECTION F-F

1/4" = 1'-0"

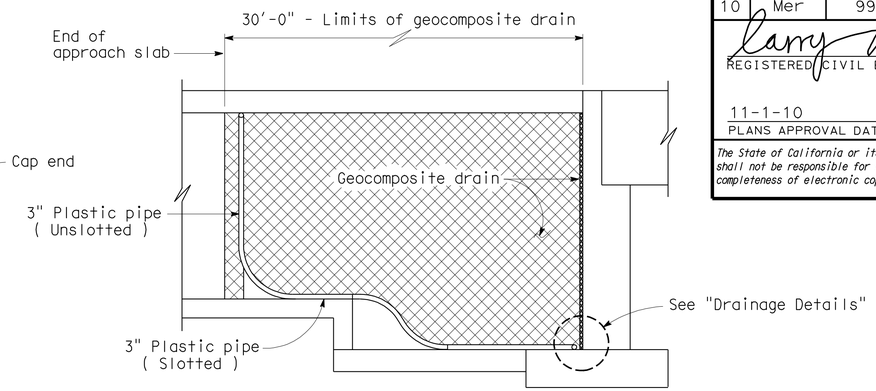

RETAINING WALL WINGWALL
SECTION G-G

1/4" = 1'-0"

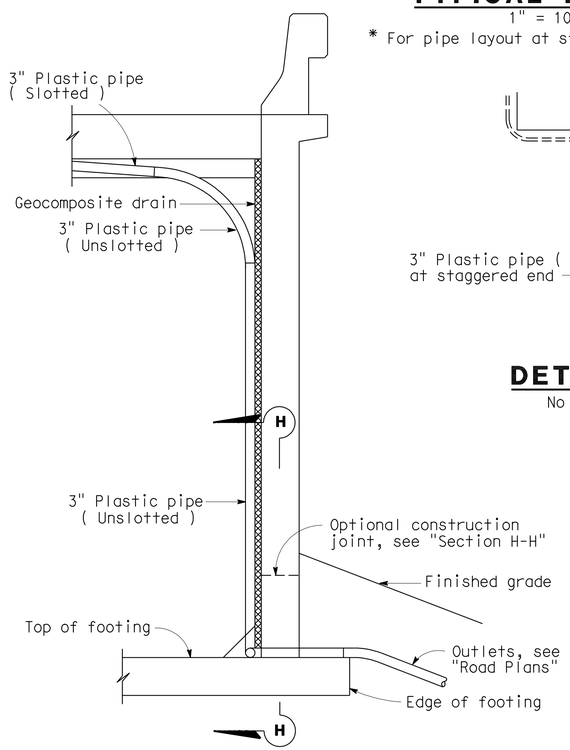

SECTION E-E

1/2" = 1'-0"

Note: Bends and junctions in 3" plastic pipe are 30" radius min.

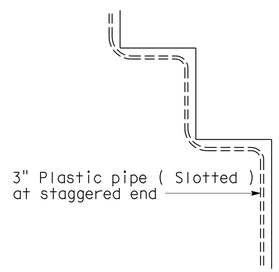

DETAIL B

No Scale

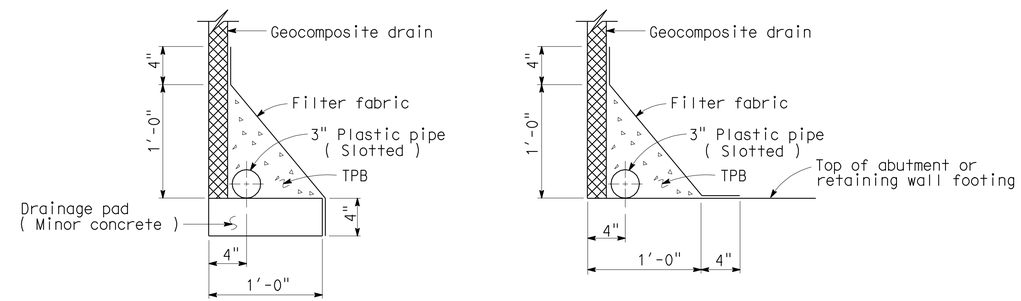

WITHOUT FOOTING **WITH FOOTING**

DRAINAGE DETAILS

1 1/2" = 1'-0"

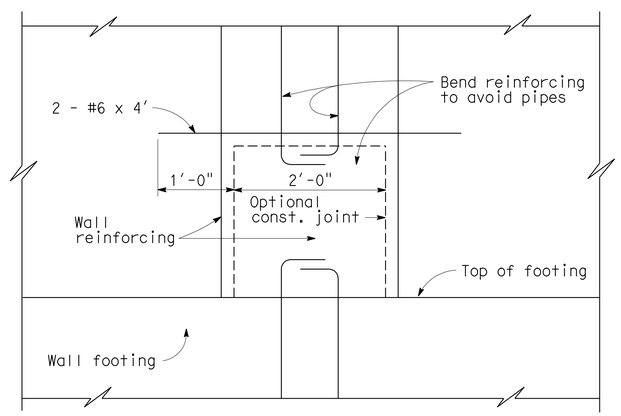

SECTION H-H

1" = 1'-0"

STANDARD DRAWING				
FILE NO. XS 22-17	DESIGN	BY M. TRAFFALIS	CHECKED E. THORKILDSEN	APPROVAL RECOMMENDED BY
DESIGN DATE 8/92	DETAILS	BY R. YEE	CHECKED E. THORKILDSEN	DESIGN SUPERVISOR
	SUBMITTED BY M. HA			

STATE OF CALIFORNIA
DEPARTMENT OF TRANSPORTATION

DIVISION OF ENGINEERING SERVICES
STRUCTURE DESIGN
DESIGN BRANCH 10

BRIDGE NO. 39-0238R/L
POST MILE 2.7

DUTCHMAN CREEK BRIDGE
STRUCTURE APPROACH DRAINAGE DETAILS

DS OSD 2147A (CADD 7/97)

ORIGINAL SCALE IN INCHES FOR REDUCED PLANS 0 1 2 3

CU 10
EA 415801

DISREGARD PRINTS BEARING EARLIER REVISION DATES 11-20-07

REVISION DATES

SHEET 11 OF 15

FILE => 390238rlssadd11.dgn

USERNAME => rtmikes1 DATE PLOTTED => 04-NOV-2010 TIME PLOTTED => 07:21

DIST	COUNTY	ROUTE	POST MILES TOTAL PROJECT	SHEET No	TOTAL SHEETS
10	Mer	99	0.0/4.6	576	607

CERTIFIED ENGINEERING GEOLOGIST 11-2-09

11-1-10
PLANS APPROVAL DATE

PROFESSIONAL GEOLOGIST Xing Zheng No. 2130 Exp. 3-31-11 CERTIFIED ENGINEERING GEOLOGIST STATE OF CALIFORNIA

The State of California or its officers or agents shall not be responsible for the accuracy or completeness of electronic copies of this plan sheet.

This LOTB sheet was prepared in accordance with the Caltrans Soil & Rock Logging; Classification; & Presentation Manual (June 2007).

BENCH MARK

BM : Mer-99 Elev : 216.04′
PM 2.69

Fnd 1" IP w/RPP & LS 5679 Tag
32.75′ Rt C/L Proposed Rte 99
Sta 242+62.11
N 1;888;818.77
E 6;613;237.42
NGVD 29

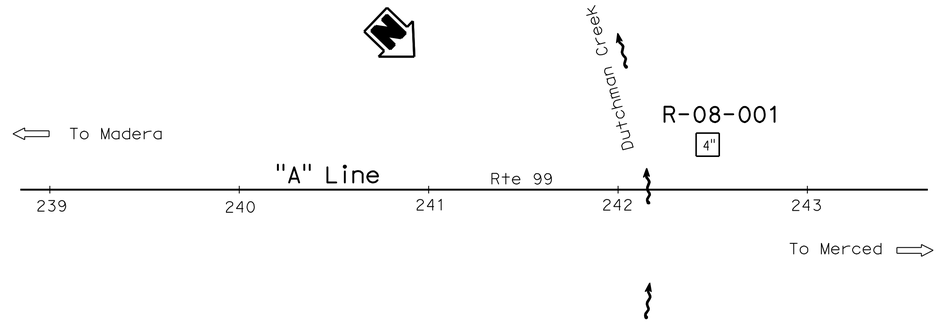

PLAN
1"=40′

Notes:

1. SPT N Values shown on the Log of Test Boring (LOTB) sheet are actual values recorded in the field.
2. PP = Pocket Penetrometer Test (tsf).
3. Groundwater was not measured.

95′ Rt Sta 239+50.00 "A" Line

R-08-002

216.5′

4" Poorly graded GRAVEL with SILT and SAND (GP-GM); dense; light bluish gray; dry; subangular gravel; some fine sand; (Road Base).

SANDY SILT (ML); dense; light brown; moist; few fine gravel; fine sand; gypsum stringers.
-light reddish brown.

-medium dense.

SILTY SAND (SM); dense; light olive gray; moist; fine sand; some fines; abundant mica.
-light reddish brown; medium to fine sand; little fines.

Poorly graded SAND (SP); medium dense; light gray; wet; coarse to medium; subangular to subrounded sand.
-light reddish brown; medium sand.
-light gray; coarse to medium sand.

SILTY SAND (SM); dense; light olive gray; moist; fine sand; some fines.

SANDY SILT (ML); medium dense; light reddish brown; moist; fine sand; abundant mica.

SILTY SAND (SM); medium dense; light gray; moist; coarse to fine sand; some fines; porous.

SANDY SILT (ML); medium dense; light gray; moist; fine sand; trace organics.
-very moist.

SILTY SAND (SM); medium dense; light gray; wet; fine sand; some fines; abundant mica.
CLAYEY SILT with SAND (ML/CL); stiff; light reddish brown and light yellowish brown; moist; little fine sand; trace organics.
Poorly graded SAND (SP); medium dense; light bluish gray; ranges from moist to wet; fine sand; abundant mica.

Elastic SILT (MH); hard; light olive gray; moist; medium to high plasticity.
-PP=4.5 tsf

-stiff; PP=1.25-1.5 tsf.
-very stiff.
-PP=2.75 tsf

37	1.4
14	1.4
25	1.4
16	1.4
22	1.4
23	1.4
9	1.4
19	1.4
13	1.4
19	1.4
16	1.4
13	1.4
20	1.4
9	1.4
10	1.4
10	1.4

5-28-08
Terminated at Elev 135.0′
ERi = 82%

220 210 200 190 180 170 160 150 140 130

239+00 239+50 240+00

PROFILE
HOR. 1" = 10′
VER. 1" = 10′

ENGINEERING SERVICES	GEOTECHNICAL SERVICES	STATE OF CALIFORNIA DEPARTMENT OF TRANSPORTATION	DIVISION OF ENGINEERING SERVICES STRUCTURE DESIGN DESIGN BRANCH	BRIDGE NO. 39-0238R/L POST MILES 2.7	DUTCHMAN CREEK BRIDGE LOG OF TEST BORINGS 1 OF 4
FUNCTIONAL SUPERVISOR NAME: R. Buell	DRAWN BY: C. Christian/W. Tang 09/09 CHECKED BY: J. Martin	FIELD INVESTIGATION BY: X. ZHENG			

OGS CIVIL LOG OF TEST BORINGS SHEET

ORIGINAL SCALE IN INCHES FOR REDUCED PLANS 0 1 2 3

CU 10
EA 415801

DISREGARD PRINTS BEARING EARLIER REVISION DATES

REVISION DATES: 09-15-09 09-23-09 10-19-09

SHEET 12 OF 15

FILE => 390238zltb12.dgn

USERNAME => trmikesl DATE PLOTTED => 04-NOV-2010 TIME PLOTTED => 07:22

DIST	COUNTY	ROUTE	POST MILES TOTAL PROJECT	SHEET No	TOTAL SHEETS
10	Mer	99	0.0/4.6	577	607

CERTIFIED ENGINEERING GEOLOGIST 11-2-09

PROFESSIONAL GEOLOGIST Xing Zheng No. 2130 Exp. 3-31-11 CERTIFIED ENGINEERING GEOLOGIST STATE OF CALIFORNIA

11-1-10
PLANS APPROVAL DATE

The State of California or its officers or agents shall not be responsible for the accuracy or completeness of electronic copies of this plan sheet.

This LOTB sheet was prepared in accordance with the Caltrans Soil & Rock Logging; Classification; & Presentation Manual (June 2007).

FOR PLAN VIEW; SEE
"LOG OF TEST BORINGS 1 OF 4"

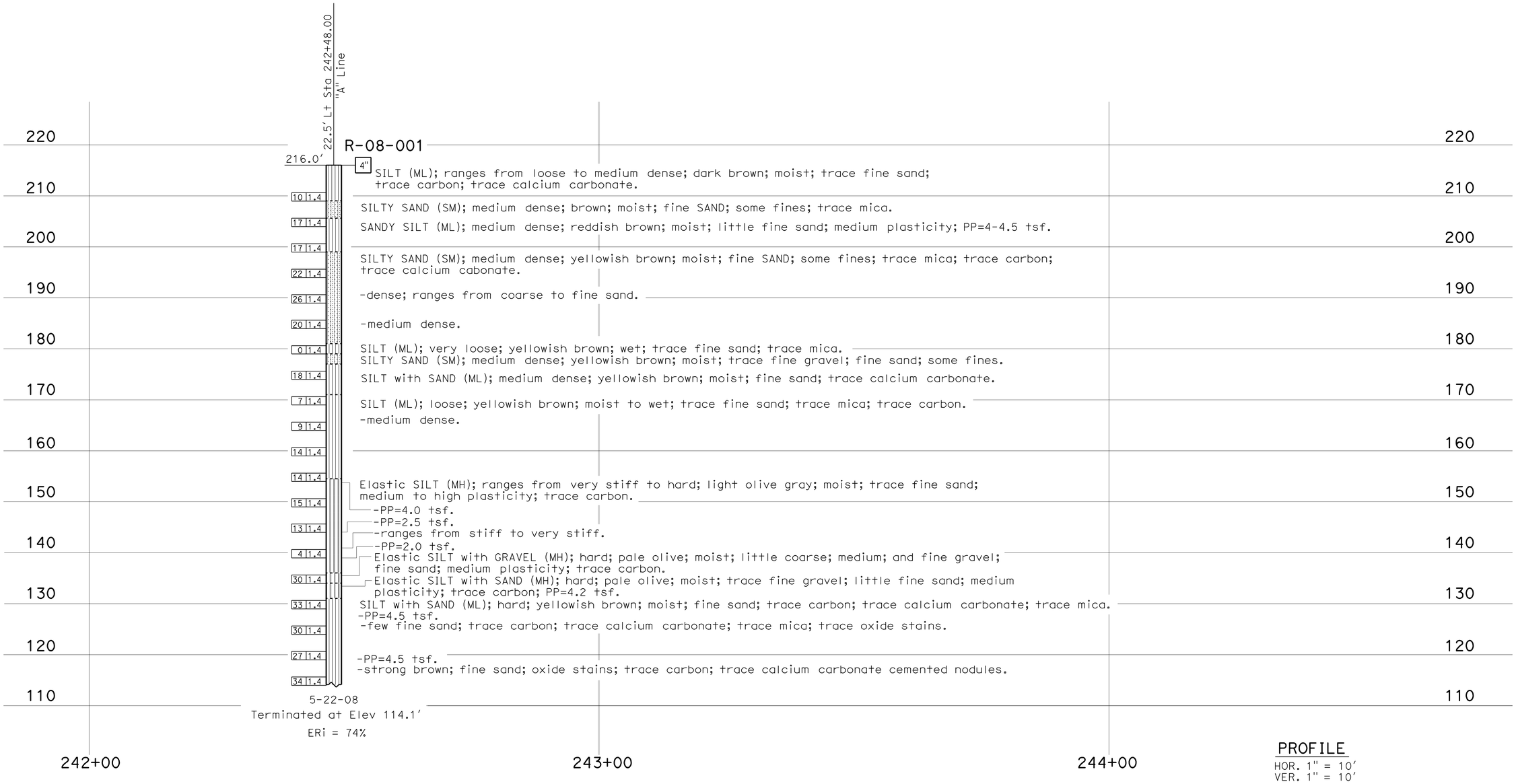

PROFILE
HOR. 1" = 10'
VER. 1" = 10'

ENGINEERING SERVICES	GEOTECHNICAL SERVICES	STATE OF CALIFORNIA DEPARTMENT OF TRANSPORTATION	DIVISION OF ENGINEERING SERVICES STRUCTURE DESIGN DESIGN BRANCH	BRIDGE NO. 39-0238R/L POST MILES 2.7	DUTCHMAN CREEK BRIDGE LOG OF TEST BORINGS 2 OF 4
FUNCTIONAL SUPERVISOR NAME: R. Buell	DRAWN BY: C. Christian/W. Tang 09/09 CHECKED BY: J. Martin	FIELD INVESTIGATION BY: J. Thorne			

OGS CIVIL LOG OF TEST BORINGS SHEET

ORIGINAL SCALE IN INCHES FOR REDUCED PLANS 0 1 2 3

CU 10
EA 415801

DISREGARD PRINTS BEARING EARLIER REVISION DATES → 09-15-09 09-25-09 10-19-09

REVISION DATES

SHEET 13 OF 15

FILE => 390238zltb13.dgn

USERNAME => trmikesl DATE PLOTTED => 04-NOV-2010 TIME PLOTTED => 07:22

Zheng-Xing 11-2-09
CERTIFIED ENGINEERING GEOLOGIST

11-1-10
PLANS APPROVAL DATE

PROFESSIONAL GEOLOGIST Xing Zheng No. 2130 Exp. 3-31-11 CERTIFIED ENGINEERING GEOLOGIST STATE OF CALIFORNIA

The State of California or its officers or agents shall not be responsible for the accuracy or completeness of electronic copies of this plan sheet.

REFERENCE: CALTRANS SOIL & ROCK LOGGING; CLASSIFICATION; AND PRESENTATION MANUAL (JUNE 2007)

CEMENTATION

Description	Criteria
Weak	Crumbles or breaks with handling or little finger pressure.
Moderate	Crumbles or breaks with considerable finger pressure.
Strong	Will not crumble or break with finger pressure.

CONSISTENCY OF COHESIVE SOILS

Description	Unconfined Compressive Strength (tsf)	Pocket Penetrometer Measurement (tsf)	Torvane Measurement (tsf)	Field Approximation
Very Soft	< 0.25	< 0.25	< 0.12	Easily penetrated several inches by fist
Soft	0.25 to 0.50	0.25 to 0.50	0.12 to 0.25	Easily penetrated several inches by thumb
Medium Stiff	0.50 to 1.0	0.50 to 1.0	0.25 to 0.50	Penetrated several inches by thumb with moderate effort
Stiff	1 to 2	1 to 2	0.50 to 1.0	Readily indented by thumb but penetrated only with great effort
Very Stiff	2 to 4	2 to 4	1.0 to 2.0	Readily indented by thumbnail
Hard	> 4.0	> 4.0	> 2.0	Indented by thumbnail with difficulty

BOREHOLE IDENTIFICATION

Symbol	Hole Type	Description
Size	A	Auger Boring
Size	R P	Rotary drilled boring Rotary percussion boring (air)
Size	R	Rotary drilled diamond core
Size	HD HA	Hand driven (1-inch soil tube) Hand Auger
●	D	Dynamic Cone Penetration Boring
▲	CPT	Cone Penetration Test (ASTM D 5778-95)
⬚	O	Other

Note: Size in inches.

PLASTICITY OF FINE-GRAINED SOILS

Description	Criteria
Nonplastic	A 1/8-inch thread cannot be rolled at any water content.
Low	The thread can barely be rolled and the lump cannot be formed when drier than the plastic limit.
Medium	The thread is easy to roll and not much time is required to reach the plastic limit. The thread cannot be rerolled after reaching the plastic limit. The lump crumbles when drier than the plastic limit.
High	It takes considerable time rolling and kneading to reach the plastic limit. The thread can be rerolled several times after reaching the plastic limit. The lump can be formed without crumbling when drier than the plastic limit.

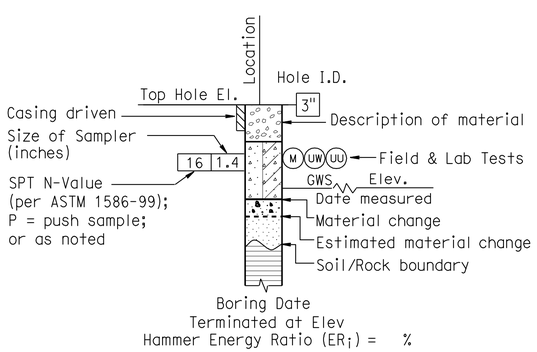

ROTARY BORING

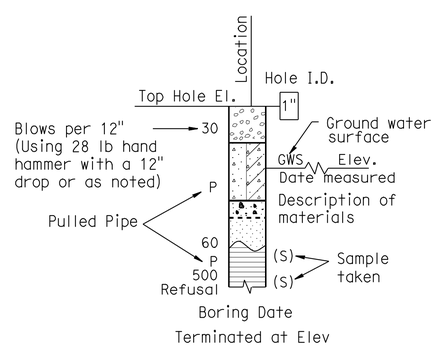

HAND BORING

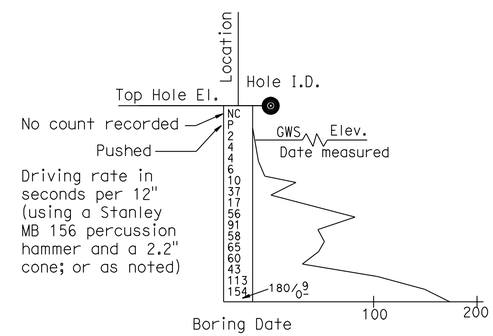

DYNAMIC CONE PENETRATION BORING

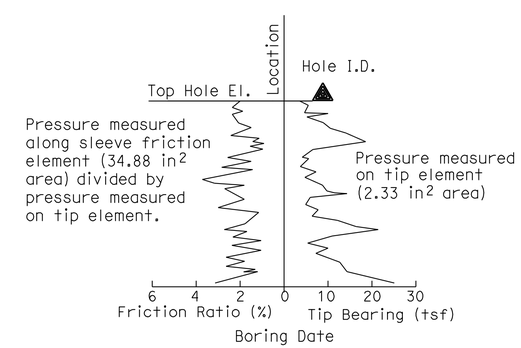

CONE PENETRATION TEST (CPT) SOUNDING

REFERENCE: CALTRANS SOIL & ROCK LOGGING, CLASSIFICATION, AND PRESENTATION MANUAL (JUNE 2007)

DIST	COUNTY	ROUTE	POST MILES TOTAL PROJECT	SHEET No	TOTAL SHEETS
10	Mer	99	0.0/4.6	579	607

CERTIFIED ENGINEERING GEOLOGIST 11-2-09

11-1-10
PLANS APPROVAL DATE

PROFESSIONAL GEOLOGIST Xing Zheng No. 2130 Exp. 3-31-11 CERTIFIED ENGINEERING GEOLOGIST STATE OF CALIFORNIA

The State of California or its officers or agents shall not be responsible for the accuracy or completeness of electronic copies of this plan sheet.

GROUP SYMBOLS AND NAMES

Graphic/Symbol	Group Names	Graphic/Symbol	Group Names
GW	Well-graded GRAVEL Well-graded GRAVEL with SAND	CL	Lean CLAY Lean CLAY with SAND Lean CLAY with GRAVEL SANDY lean CLAY SANDY lean CLAY with GRAVEL GRAVELLY lean CLAY GRAVELLY lean CLAY with SAND
GP	Poorly graded GRAVEL Poorly graded GRAVEL with SAND		
GW-GM	Well-graded GRAVEL with SILT Well-graded GRAVEL with SILT and SAND	CL-ML	SILTY CLAY SILTY CLAY with SAND SILTY CLAY with GRAVEL SANDY SILTY CLAY SANDY SILTY CLAY with GRAVEL GRAVELLY SILTY CLAY GRAVELLY SILTY CLAY with SAND
GW-GC	Well-graded GRAVEL with CLAY (or SILTY CLAY) Well-graded GRAVEL with CLAY and SAND (or SILTY CLAY and SAND)		
GP-GM	Poorly graded GRAVEL with SILT Poorly graded GRAVEL with SILT and SAND	ML	SILT SILT with SAND SILT with GRAVEL SANDY SILT SANDY SILT with GRAVEL GRAVELLY SILT GRAVELLY SILT with SAND
GP-GC	Poorly graded GRAVEL with CLAY (or SILTY CLAY) Poorly graded GRAVEL with CLAY and SAND (or SILTY CLAY and SAND)		
GM	SILTY GRAVEL SILTY GRAVEL with SAND	OL	ORGANIC lean CLAY ORGANIC lean CLAY with SAND ORGANIC lean CLAY with GRAVEL SANDY ORGANIC lean CLAY SANDY ORGANIC lean CLAY with GRAVEL GRAVELLY ORGANIC lean CLAY GRAVELLY ORGANIC lean CLAY with SAND
GC	CLAYEY GRAVEL CLAYEY GRAVEL with SAND		
GC-GM	SILTY, CLAYEY GRAVEL SILTY, CLAYEY GRAVEL with SAND	OL	ORGANIC SILT ORGANIC SILT with SAND ORGANIC SILT with GRAVEL SANDY ORGANIC SILT SANDY ORGANIC SILT with GRAVEL GRAVELLY ORGANIC SILT GRAVELLY ORGANIC SILT with SAND
SW	Well-graded SAND Well-graded SAND with GRAVEL		
SP	Poorly graded SAND Poorly graded SAND with GRAVEL	CH	Fat CLAY Fat CLAY with SAND Fat CLAY with GRAVEL SANDY fat CLAY SANDY fat CLAY with GRAVEL GRAVELLY fat CLAY GRAVELLY fat CLAY with SAND
SW-SM	Well-graded SAND with SILT Well-graded SAND with SILT and GRAVEL		
SW-SC	Well-graded SAND with CLAY (or SILTY CLAY) Well-graded SAND with CLAY and GRAVEL (or SILTY CLAY and GRAVEL)	MH	Elastic SILT Elastic SILT with SAND Elastic SILT with GRAVEL SANDY elastic SILT SANDY elastic SILT with GRAVEL GRAVELLY elastic SILT GRAVELLY elastic SILT with SAND
SP-SM	Poorly graded SAND with SILT Poorly graded SAND with SILT and GRAVEL		
SP-SC	Poorly graded SAND with CLAY (or SILTY CLAY) Poorly graded SAND with CLAY and GRAVEL (or SILTY CLAY and GRAVEL)	OH	ORGANIC fat CLAY ORGANIC fat CLAY with SAND ORGANIC fat CLAY with GRAVEL SANDY ORGANIC fat CLAY SANDY ORGANIC fat CLAY with GRAVEL GRAVELLY ORGANIC fat CLAY GRAVELLY ORGANIC fat CLAY with SAND
SM	SILTY SAND SILTY SAND with GRAVEL		
SC	CLAYEY SAND CLAYEY SAND with GRAVEL	OH	ORGANIC elastic SILT ORGANIC elastic SILT with SAND ORGANIC elastic SILT with GRAVEL SANDY ORGANIC elastic SILT SANDY ORGANIC elastic SILT with GRAVEL GRAVELLY ORGANIC elastic SILT GRAVELLY ORGANIC elastic SILT with SAND
SC-SM	SILTY, CLAYEY SAND SILTY, CLAYEY SAND with GRAVEL		
PT	PEAT	OL/OH	ORGANIC SOIL ORGANIC SOIL with SAND ORGANIC SOIL with GRAVEL SANDY ORGANIC SOIL SANDY ORGANIC SOIL with GRAVEL GRAVELLY ORGANIC SOIL GRAVELLY ORGANIC SOIL with SAND
	COBBLES COBBLES and BOULDERS BOULDERS		

FIELD AND LABORATORY TESTING

- (C) Consolidation (ASTM D 2435)
- (CL) Collapse Potential (ASTM D 5333)
- (CP) Compaction Curve (CTM 216)
- (CR) Corrosivity Testing (CTM 643, CTM 422, CTM 417)
- (CU) Consolidated Undrained Triaxial (ASTM D 4767)
- (DS) Direct Shear (ASTM D 3080)
- (EI) Expansion Index (ASTM D 4829)
- (M) Moisture Content (ASTM D 2216)
- (OC) Organic Content-% (ASTM D 2974)
- (P) Permeability (CTM 220)
- (PA) Particle Size Analysis (ASTM D 422)
- (PI) Plasticity Index (AASHTO T 90) Liquid Limit (AASHTO T 89)
- (PL) Point Load Index (ASTM D 5731)
- (PM) Pressure Meter
- (PP) Pocket Penetrometer
- (R) R-Value (CTM 301)
- (SE) Sand Equivalent (CTM 217)
- (SG) Specific Gravity (AASHTO T 100)
- (SL) Shrinkage Limit (ASTM D 427)
- (SW) Swell Potential (ASTM D 4546)
- (TV) Pocket Torvane
- (UC) Unconfined Compression-Soil (ASTM D 2166) Unconfined Compression-Rock (ASTM D 2938)
- (UU) Unconsolidated Undrained Triaxial (ASTM D 2850)
- (UW) Unit Weight (ASTM D 4767)
- (VS) Vane Shear (AASHTO T 223)

APPARENT DENSITY OF COHESIONLESS SOILS

Description	SPT N_{60} (Blows / 12 inches)
Very loose	0 - 4
Loose	5 - 10
Medium Dense	11 - 30
Dense	31 - 50
Very Dense	> 50

MOISTURE

Description	Criteria
Dry	Absence of moisture, dusty, dry to the touch
Moist	Damp but no visible water
Wet	Visible free water, usually soil is below water table

PERCENT OR PROPORTION OF SOILS

Description	Criteria
Trace	Particles are present but estimated to be less than 5%
Few	5 to 10%
Little	15 to 25%
Some	30 to 45%
Mostly	50 to 100%

PARTICLE SIZE

Description		Size
Boulder		> 12"
Cobble		3" to 12"
Gravel	Coarse	3/4" to 3"
	Fine	No. 4 to 3/4"
Sand	Coarse	No. 10 to No. 4
	Medium	No. 40 to No. 10
	Fine	No. 200 to No. 40

ENGINEERING SERVICES

GEOTECHNICAL SERVICES
PREPARED BY: I.G-Remmen 11/09

STATE OF CALIFORNIA DEPARTMENT OF TRANSPORTATION

DIVISION OF ENGINEERING SERVICES STRUCTURE DESIGN
DESIGN BRANCH

BRIDGE NO. 39-0238R/L
POST MILE 2.7

DUTCHMAN CREEK BRIDGE
LOG OF TEST BORINGS 4 OF 4

GS LOTB SOIL LEGEND

ORIGINAL SCALE IN INCHES FOR REDUCED PLANS 0 1 2 3

CU 10
EA 415801

DISREGARD PRINTS BEARING EARLIER REVISION DATES

REVISION DATES

SHEET 15 OF 15

FILE => 390238zltb15.dgn

USERNAME => ttmikes1 DATE PLOTTED => 04-NOV-2010 TIME PLOTTED => 07:22

DIST.	COUNTY	ROUTE	POST MILES—TOTAL PROJECT	SHEET No.	TOTAL SHEETS
10	Mer	99	2.4/5.0	46	47

CHIEF, OFFICE OF STRUCTURES DESIGN — REGISTERED CIVIL ENGINEER NUMBER 11428

DATE APPROVED October 20, 1986

REGISTERED PROFESSIONAL ENGINEER — J E ROBERTS — No. 11428 — Exp. 12-31-86 — CIVIL — STATE OF CALIFORNIA

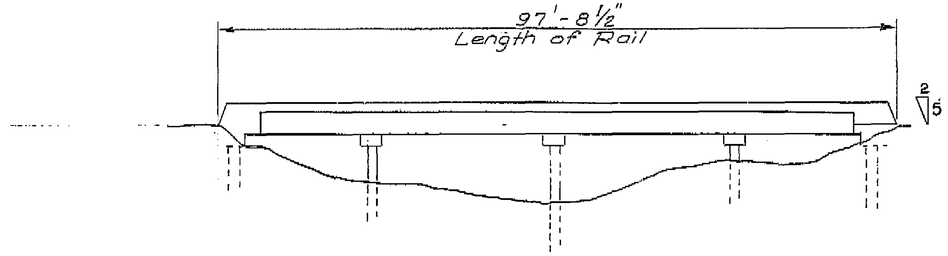

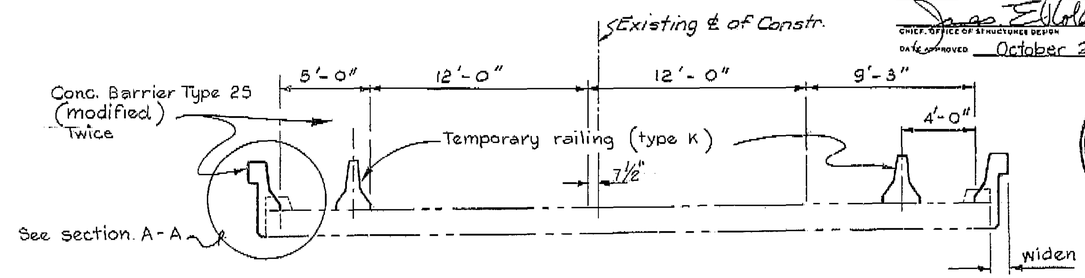

TYPICAL SECTION
Scale : 1/4" = 1'-0"

To accompany plans dated 11-1-10

BRIDGE REMOVAL

As-Built General Plan sheet is considered an informational document only. As such, the State of California registration seal with signature, license number and registration certificate expiration date confirm that this is a true and accurate copy of the original document. This drawing is available and presented only for the convenience of any bidder, contractor or other interested party.

DIST.	COUNTY	ROUTE	POST MILES-TOTAL PROJECT	Sheet No.	Total Sheets
10	Mer	99	0.0/4.6	580	607

REGISTERED CIVIL ENGINEER — DATE 04-13-10

NOTE: A COPY OF THIS GENERAL PLAN IS AVAILABLE AT OFFICE OF STRUCTURE MAINTENANCE AND INVESTIGATIONS, SACRAMENTO, CALIFORNIA — CU: 10 EA: 415801 — BRIDGE NO. 39-0001R — SHEET 1 OF 1

REGISTERED PROFESSIONAL ENGINEER — Larry Wu — No. C57035 — Exp. 6-30-11 — CIVIL — STATE OF CALIFORNIA

QUANTITIES

BRIDGE REMOVAL, LOCATION A — LUMP SUM

AS BUILT PLANS
Contract No. 10-264524
Date Completed 5-26-87
Document No.

ELEVATION
Scale : 1" = 10'-0"

Notes
- For reinf. not shown see sheet : Approach slab & Barrier details
- Left side Barrier shown right side Barrier similar

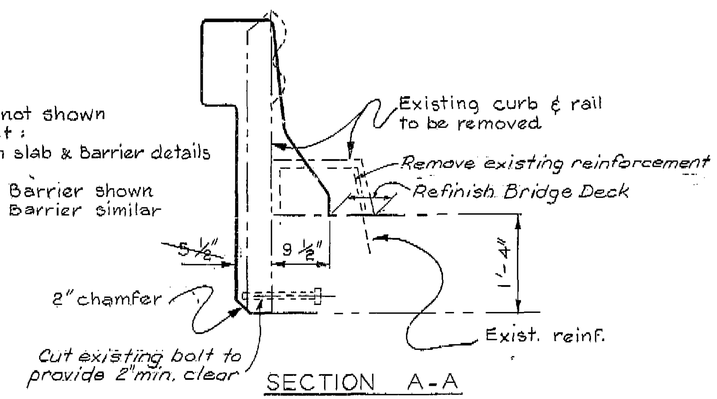

SECTION A-A
Scale : 1" = 1'-0"

INDEX TO PLAN

SHEET	TITLE
1	General Plan
2	Approach Slab & Barrier Details

STANDARD PLANS dated July 1984
B11-53 Concrete Barrier type 25
B6-21 Joint Seals

GENERAL NOTES

Design : Bridge Design Specifications (1983 AASHTO with Interims and Caltrans Supplement)
Cast-in-place Concrete : Load factor design
Reinforced concrete : f'c = 3250 psi
Reinforcing steel : fy = 60,000 psi, n = 9

AS BUILT
CORRECTIONS BY O.H. HUTCHINSON
CONTRACT NO. 10-264524
DATE 5-26-87
E.A. 3-25-88

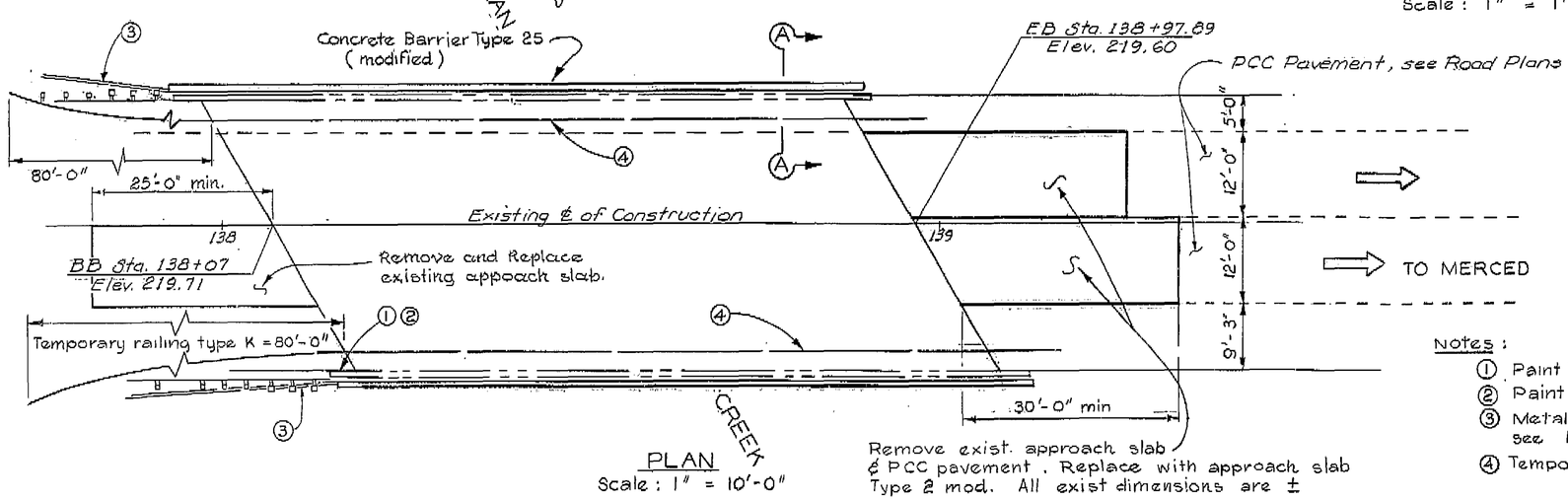

PLAN
Scale : 1" = 10'-0"

APPROXIMATE QUANTITIES

TEMPORARY RAILING (TYPE K)	360	LF
BRIDGE REMOVAL (PORTION)	LUMP	SUM
JOINT SEAL (TYPE A)	28	LF

FINAL PAY QUANTITIES

REPLACE STRUCTURAL CONCRETE, APPROACH SLAB	30	CY
CONCRETE BARRIER (TYPE 25)	200	LF

NOTE:
THE CONTRACTOR SHALL VERIFY ALL CONTROLLING FIELD DIMENSIONS BEFORE ORDERING OR FABRICATING ANY MATERIAL.

Standard Plan Sheet No.
Detail No.

Notes :
1. Paint "Dutchman Creek Bridge"
2. Paint "Bridge NO 39-01R"
3. Metal Beam Guard Rail see Road Plan.
4. Temporary railing (type K)

46

Submitted by — Structure Engineer — Registered Civil Engineer Number 12171 — 11/4/85
Approval Recommended by — Branch Authority — Registered Civil Engineer Number 13528 — 10/8/86

	By	Checked	LOAD FACTOR DESIGN	
DESIGN	Mohsen Sultan 10/85	M. L. Tandy 10/85		
DETAILS	S. Nguyen 10/85	M. L. Tandy 10/85	LAYOUT	S. Nguyen
QUANTITIES	Mohsen Sultan 10/85	M. L. Tandy 10/85	SPECIFICATIONS	Kevin Flock SE979

Checked M. L. Tandy 10/85 — Chief, Office of Structures Design — R. Mikesell

State of CALIFORNIA DEPARTMENT OF TRANSPORTATION

STRUCTURES - DESIGN 3
Mohsen Sultan 40063
PROJECT ENGINEER — REGISTERED CIVIL ENGINEER NO.

BRIDGE NO. 39-01R
POST MILE 2.62

APPROACH SLAB & BARRIER MODIFICATION
DUTCHMAN CREEK BRIDGE (WIDEN)
GENERAL PLAN

ORIGINAL SCALE IN INCHES FOR REDUCED PLANS 0 1 2 3

CU 10-200
WO 264521

Disregard prints bearing earlier revision dates

REVISION DATES (PRELIMINARY STAGE ONLY) 10/1/85 11/4/85 12/18/85 10/8/86

SHEET 1 OF 2

DS D328 04 31078

FILENAME => DutchmanCreek.tif

DIST	COUNTY	ROUTE	POST MILES TOTAL PROJECT	SHEET No	TOTAL SHEETS
10	Mer	99	0.0/4.6	581	607

REGISTERED CIVIL ENGINEER 04-13-10 DATE

11-1-10
PLANS APPROVAL DATE

REGISTERED PROFESSIONAL ENGINEER Larry Wu No. C57035 Exp. 6-30-11 CIVIL STATE OF CALIFORNIA

The State of California or its officers or agents shall not be responsible for the accuracy or completeness of electronic copies of this plan sheet.

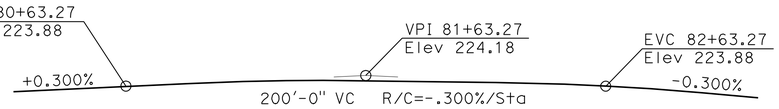

PROFILE GRADE

NO SCALE

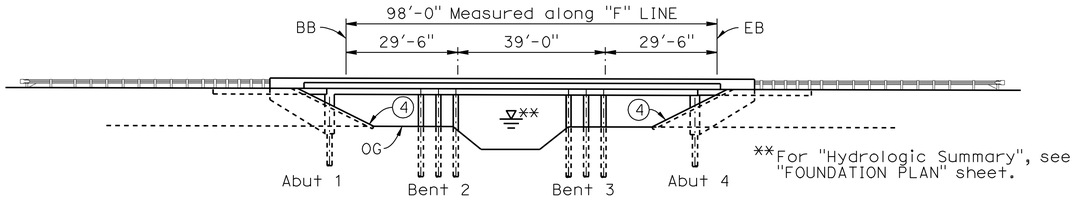

NOTE: Not all piles shown at Piers for clarity.

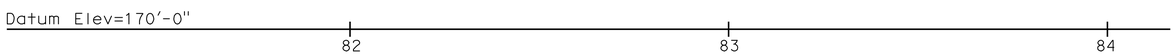

ELEVATION

1"=20'-0"

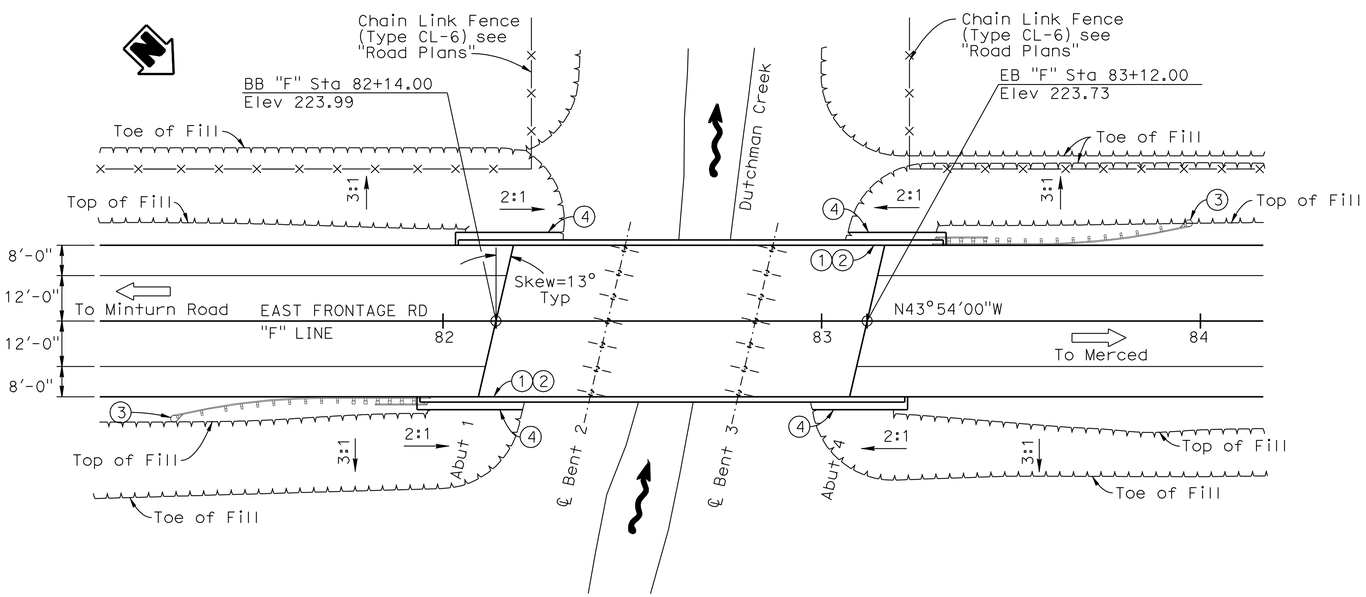

PLAN

1"=20'-0"

QUANTITIES

STRUCTURE EXCAVATION (BRIDGE)	94	CY
STRUCTURE BACKFILL (BRIDGE)	47	CY
FURNISH PILING (CLASS 90) (ALTERNATIVE X)	274	LF
DRIVE PILE (CLASS 90) (ALTERNATIVE X)	12	EA
FURNISH 15" PRECAST PRESTRESSED CONCRETE PILING	474	LF
DRIVE 15" PRECAST PRESTRESSED CONCRETE PILE	14	EA
STRUCTURAL CONCRETE, BRIDGE	316	CY
BAR REINFORCING STEEL (BRIDGE)	64,500	LB
CONCRETE BARRIER (TYPE 732)	249	LF

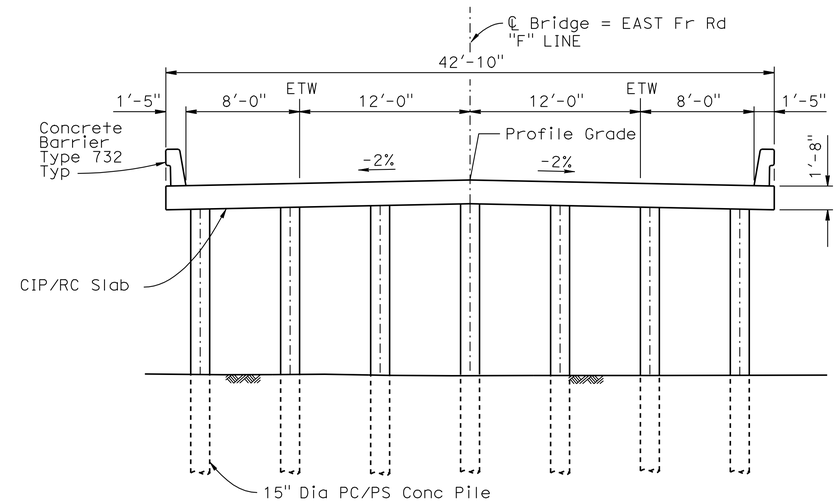

TYPICAL SECTION

3/16"=1'-0"

INDEX TO PLANS

Sheet No.	Title
1.	GENERAL PLAN
2.	DECK CONTOURS
3.	FOUNDATION PLAN
4.	ABUTMENT DETAILS
5.	GEOCOMPOSITE DRAIN DETAILS
6.	TYPICAL SECTION & BENT DETAILS
7.	SLAB REINFORCEMENT
8.	SLAB REINFORCEMENT DETAILS
9.	SLAB BRIDGE PILE DETAILS
10.	LOG OF TEST BORINGS, 1 OF 3
11.	LOG OF TEST BORINGS, 2 OF 3
12.	LOG OF TEST BORINGS, 3 OF 3

For "General Notes", "Standard Plans", and "Pile Data", see "DECK CONTOURS" Sheet.

NOTES:

1. Paint "DUTCHMAN CREEK BRIDGE (EAST FRONTAGE ROAD)"
2. Paint "BR. NO. 39-0239"
3. Metal Beam Guard Rail, see "Roadway Plans"
4. Rock Slope Protection, see "Roadway Plans"

DANIEL T. ADAMS
DESIGN ENGINEER

	BY	CHECKED
DESIGN	L. Wu	A. McPhee
DETAILS	G. Hallstrom	A. McPhee
QUANTITIES	F. Chen	M. Vo

LOAD & RESISTANCE FACTOR DESIGN — LIVE LOADING: HL93 AND PERMIT DESIGN VEHICLE

	BY	CHECKED
LAYOUT	L. Wu	A. McPhee
SPECIFICATIONS	M. Kopsa	PLANS AND SPECS COMPARED M. Kopsa

STATE OF CALIFORNIA
DEPARTMENT OF TRANSPORTATION

DIVISION OF ENGINEERING SERVICES
STRUCTURE DESIGN
DESIGN BRANCH 10

BRIDGE NO. 39-0239
POST MILE 2.7

DUTCHMAN CREEK BRIDGE (EAST FRONTAGE ROAD)
GENERAL PLAN

STRUCTURES DESIGN GENERAL PLAN SHEET (ENGLISH) (REV. 10/25/05)

ORIGINAL SCALE IN INCHES FOR REDUCED PLANS 0 1 2 3

CU 10
EA 415801

DISREGARD PRINTS BEARING EARLIER REVISION DATES

REVISION DATES: 06-21-07 03-06-07 3-24-09 7-16-09 3-05-10 4-13-10

SHEET 1 OF 12

FILE => 390239agp01.dgn

STRUCTURES DESIGN GENERAL PLAN SHEET (ENGLISH) (REV.07-24-06)

USERNAME => trmikes1 DATE PLOTTED => 04-NOV-2010 TIME PLOTTED => 07:22

DIST	COUNTY	ROUTE	POST MILES TOTAL PROJECT	SHEET No	TOTAL SHEETS
10	Mer	99	0.0/4.6	582	607

REGISTERED CIVIL ENGINEER 04-13-10 DATE

11-1-10
PLANS APPROVAL DATE

REGISTERED PROFESSIONAL ENGINEER Larry Wu No. C57035 Exp. 6-30-11 CIVIL STATE OF CALIFORNIA

The State of California or its officers or agents shall not be responsible for the accuracy or completeness of electronic copies of this plan sheet.

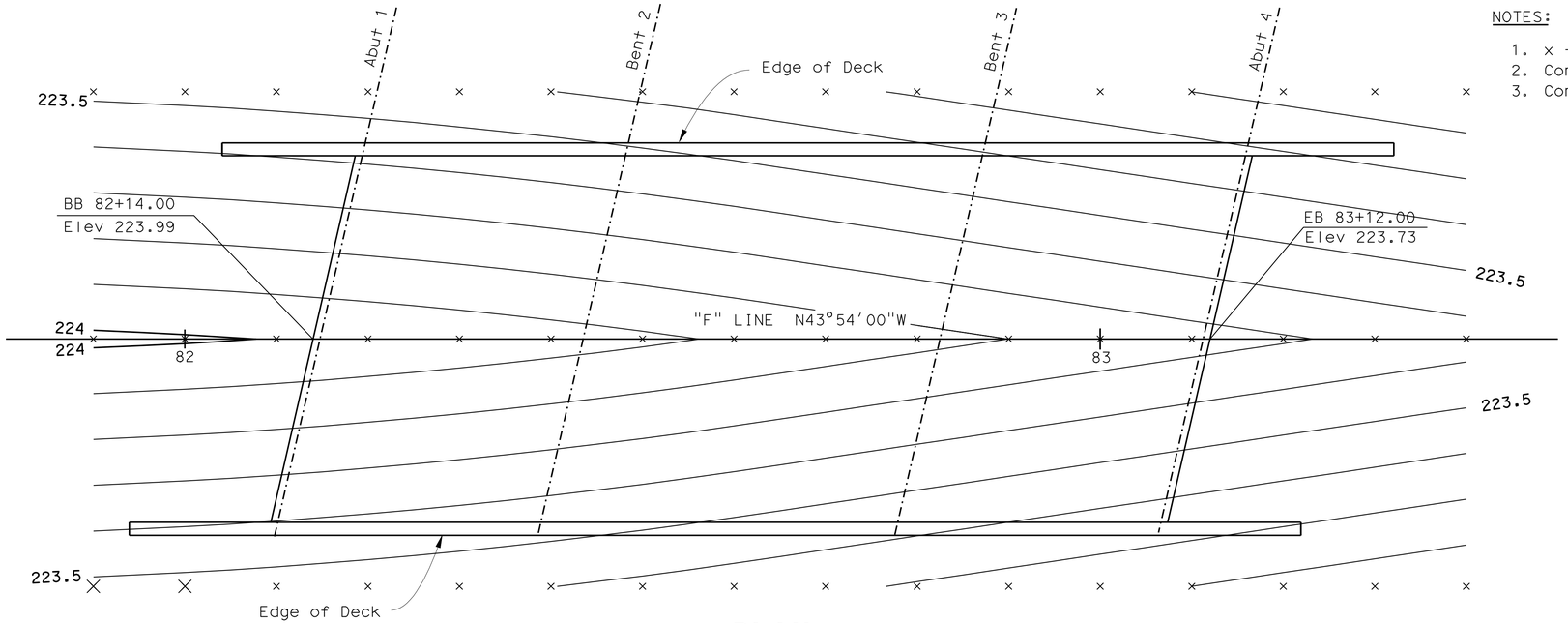

PLAN

1/8"=1'-0"

NOTES:

1. x - 10' intervals along station line.
2. Contour intervals = 0.1'.
3. Contours do not include camber.

GENERAL NOTES
LOAD AND RESISTANCE FACTOR DESIGN

DESIGN: AASHTO LRFD BRIDGE DESIGN SPECIFICATIONS, 4th Edition and the CALTRANS Amendments, preface dated Dec. 2008.

SEISMIC DESIGN: Caltrans Seismic Design Criteria (SDC) Version 1.4, July, 2006

DEAD LOAD: Includes 35 Psf for future wearing surface.

LIVE LOADING: HL93 and permit design load.

SEISMIC LOADING: CALTRANS SDC ARS Curve for Soil Profile Type D (M = 6.5±0.25), (Peak Rock Acceleration = 0.2 g).

REINFORCED CONCRETE: f_y = 60 ksi
f'_c = 3600 psi, unless otherwise noted
n = 8

PILE DATA TABLE

B2-5

Location	Pile Type	Nominal Resistance		Design Tip Elevations (ft)	Specified Tip Elevations (ft)	Nominal Driving Resistance Req'd.
		Compression	Tension			
Abut 1	Class 90 Alternate X	180 kips	N/A	193.5	193.5	180 kips
Bent 2	PC/PS * Concrete Pile	250 kips	0	188.2 (a) 195.5 (b)	188.2	270 kips (2)
Bent 3	PC/PS * Concrete Pile	250 kips	0	188.2 (a) 195.5 (b)	188.2	270 kips (2)
Abut 4	Class 90 Alternate X	180 kips	N/A	193.5	193.5	180 kips

NOTE: 1. Design tip elevations are controlled by: (a) Compression (Strength Limit)
(b) Compression (Extreme Limit)

2. The Nominal Driving Resistance Required is the result of additional resistance from unsuitable soil layers. Unsuitable; scourable soil layers at Bent 2 and Bent 3 extend to Elevation 205.8 ft.

* See "SLAB BRIDGE PILE DETAILS" sheet.

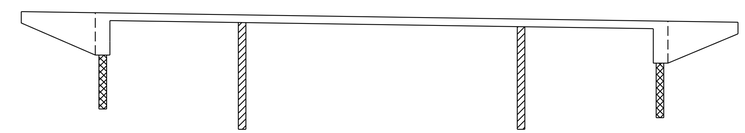

Structural Concrete, Bridge.
PC/PS Concrete Pile
Class 90 Concrete Pile

B2-5

CONCRETE STRENGTH AND TYPE LIMITS

No Scale

STANDARD PLANS DATED MAY 2006

A10A	ACRONYMS AND ABBREVIATIONS (SHEET 1 OF 2)
A10B	ACRONYMS AND ABBREVIATIONS (SHEET 2 OF 2)
A10C	SYMBOLS (SHEET 1 OF 2)
A10D	SYMBOLS (SHEET 2 OF 2)
A62C	LIMITS OF PAYMENT FOR EXCAVATION AND BACKFILL-BRIDGE
B0-1	BRIDGE DETAILS
B2-5	PILE DETAILS CLASS 90 AND CLASS 140
B11-55	CONCRETE BARRIER TYPE 732

STANDARD PLAN SHEET NO.
DETAIL NO.

	BY	CHECKED
DESIGN	L.Wu	A. McPhee
DETAILS	D.Wooten	A. McPhee
QUANTITIES	F. Chen	M. Vo

STATE OF CALIFORNIA
DEPARTMENT OF TRANSPORTATION

DIVISION OF ENGINEERING SERVICES
STRUCTURE DESIGN
DESIGN BRANCH 10

BRIDGE NO. 39-0239
POST MILE 2.7

DUTCHMAN CREEK BRIDGE (EAST FRONTAGE ROAD)
DECK CONTOURS

STRUCTURES DESIGN DETAIL SHEET (ENGLISH) (REV. 10/25/05)

ORIGINAL SCALE IN INCHES FOR REDUCED PLANS 0 1 2 3

CU 10
EA 415801

DISREGARD PRINTS BEARING EARLIER REVISION DATES

REVISION DATES: 2-21-08 6-06-08 3-24-09 3-05-10 4-07-10

SHEET 2 OF 12

FILE => 390239ddc02.dgn

USERNAME => trmikesl DATE PLOTTED => 04-NOV-2010 TIME PLOTTED => 07:42

DIST	COUNTY	ROUTE	POST MILES TOTAL PROJECT	SHEET No	TOTAL SHEETS
10	Mer	99	0.0/4.6	583	607

REGISTERED CIVIL ENGINEER 04-13-10 DATE

11-1-10
PLANS APPROVAL DATE

REGISTERED PROFESSIONAL ENGINEER LARRY WU No. C57035 Exp. 6-30-09 CIVIL STATE OF CALIFORNIA

The State of California or its officers or agents shall not be responsible for the accuracy or completeness of electronic copies of this plan sheet.

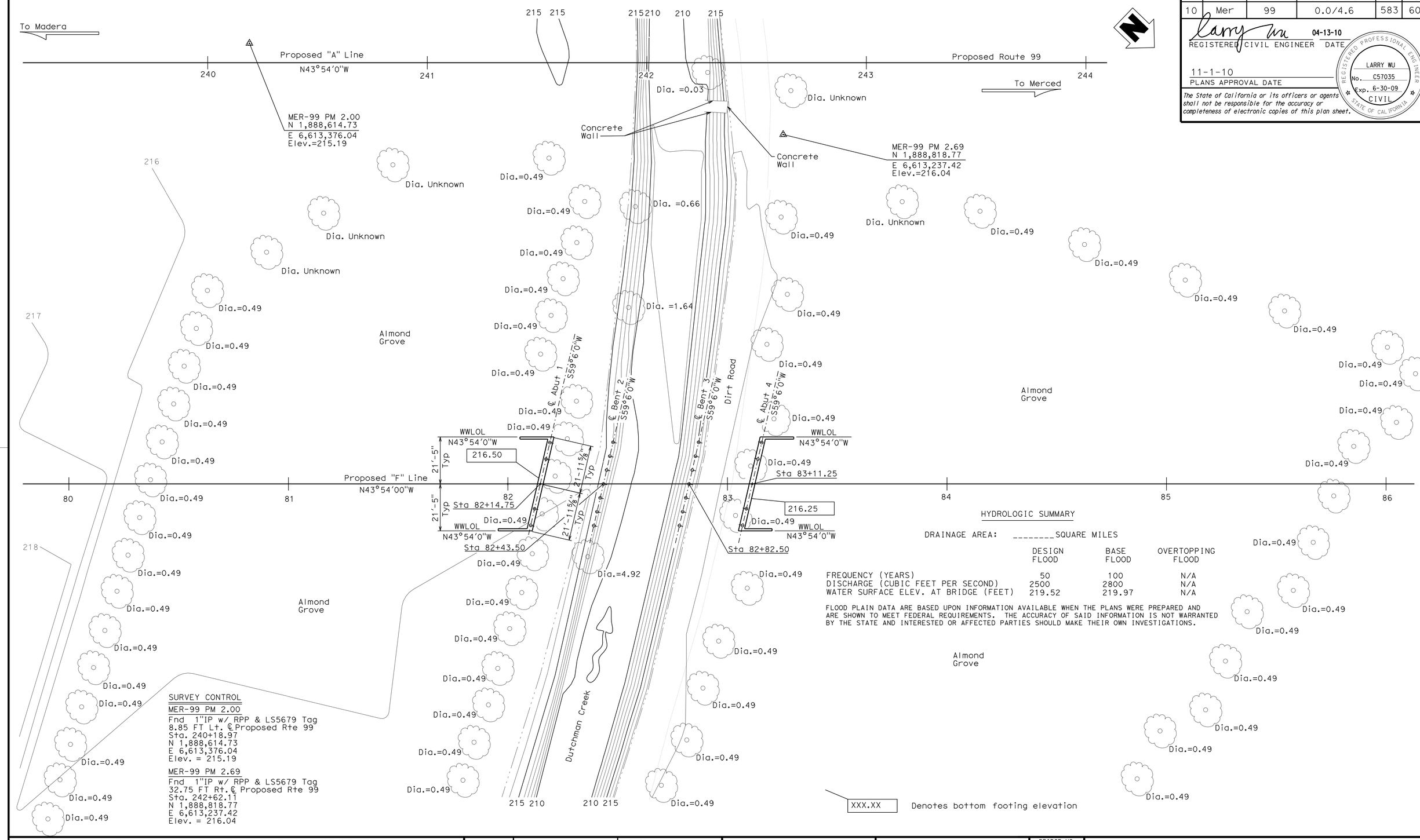

HYDROLOGIC SUMMARY

DRAINAGE AREA: _____SQUARE MILES

	DESIGN FLOOD	BASE FLOOD	OVERTOPPING FLOOD
FREQUENCY (YEARS)	50	100	N/A
DISCHARGE (CUBIC FEET PER SECOND)	2500	2800	N/A
WATER SURFACE ELEV. AT BRIDGE (FEET)	219.52	219.97	N/A

FLOOD PLAIN DATA ARE BASED UPON INFORMATION AVAILABLE WHEN THE PLANS WERE PREPARED AND ARE SHOWN TO MEET FEDERAL REQUIREMENTS. THE ACCURACY OF SAID INFORMATION IS NOT WARRANTED BY THE STATE AND INTERESTED OR AFFECTED PARTIES SHOULD MAKE THEIR OWN INVESTIGATIONS.

SURVEY CONTROL

MER-99 PM 2.00
Fnd 1"IP w/ RPP & LS5679 Tag
8.85 FT Lt. ℄ Proposed Rte 99
Sta. 240+18.97
N 1,888,614.73
E 6,613,376.04
Elev. = 215.19

MER-99 PM 2.69
Fnd 1"IP w/ RPP & LS5679 Tag
32.75 FT Rt. ℄ Proposed Rte 99
Sta. 242+62.11
N 1,888,818.77
E 6,613,237.42
Elev. = 216.04

PRELIMINARY INVESTIGATION SECTION

SCALE	VERT.DATUM NGVD29	PHOTOGRAMMETRY AS OF: X			
1"=20'	HORZ.DATUM NAD83 (1991.35)	SURVEYED	BY District	CHECKED	BY M.Licha 09/2007
ALIGNMENT TIES Dist.Traverse Sheet		DRAFTED	BY T.Zolnikova 09/2007	CHECKED	BY M.Licha 08/2007

DESIGN	BY L. Wu	CHECKED A. McPhee
DETAILS	BY G. Hallstrom	CHECKED A. McPhee
QUANTITIES	BY F. Chen	CHECKED M. Vo

STATE OF CALIFORNIA
DEPARTMENT OF TRANSPORTATION

DIVISION OF ENGINEERING SERVICES
STRUCTURE DESIGN
DESIGN BRANCH 10

BRIDGE NO. 39-0239
POST MILE 2.7

DUTCHMAN CREEK BRIDGE (EAST FRONTAGE ROAD)
FOUNDATION PLAN

STRUCTURES FOUNDATION PLAN SHEET (ENGLISH) (REV. 10/25/05)

ORIGINAL SCALE IN INCHES FOR REDUCED PLANS 0 1 2 3

CU 10
EA 415801

DISREGARD PRINTS BEARING EARLIER REVISION DATES

REVISION DATES 08-11-07 02-21-08 06-26-08 03-24-09

SHEET 3 OF 12

FILE => 390239efp103.dgn

USERNAME => tfmikes1 DATE PLOTTED => 04-NOV-2010 TIME PLOTTED => 07:42

DIST	COUNTY	ROUTE	POST MILES TOTAL PROJECT	SHEET No	TOTAL SHEETS
10	Mer	99	0.0/4.6	584	607

REGISTERED CIVIL ENGINEER 04-13-10 DATE

11-1-10
PLANS APPROVAL DATE

REGISTERED PROFESSIONAL ENGINEER Larry Wu No. C57035 Exp. 6-30-11 CIVIL STATE OF CALIFORNIA

The State of California or its officers or agents shall not be responsible for the accuracy or completeness of electronic copies of this plan sheet.

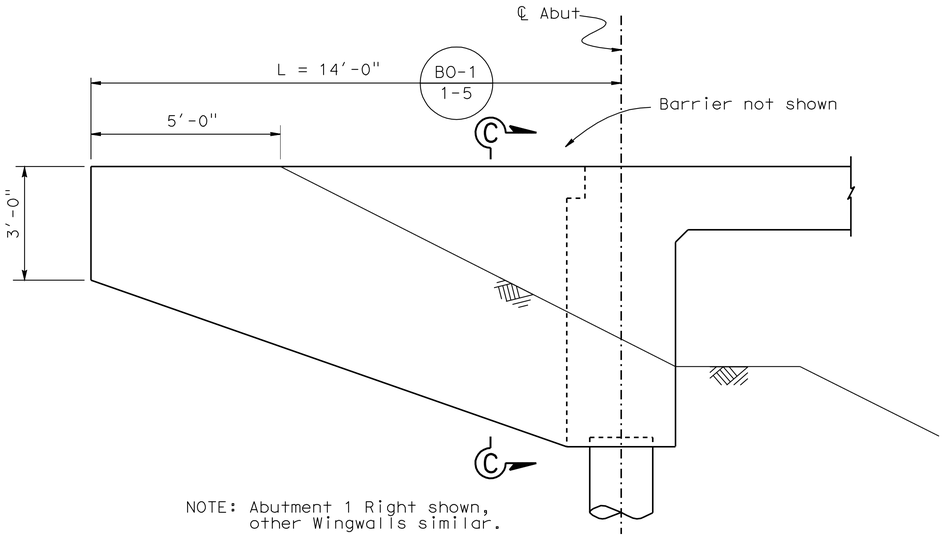

WINGWALL ELEVATION

½" = 1'-0"

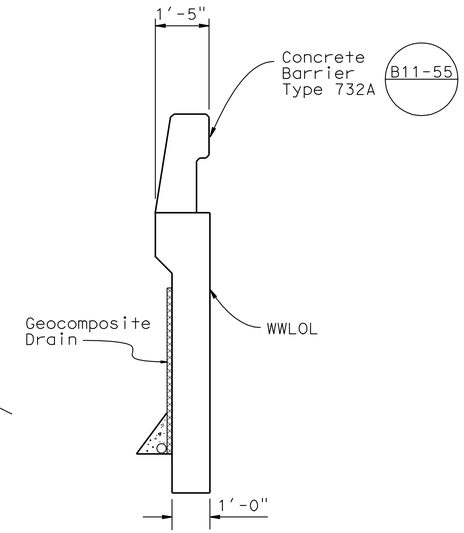

SECTION C-C

½" = 1'-0"

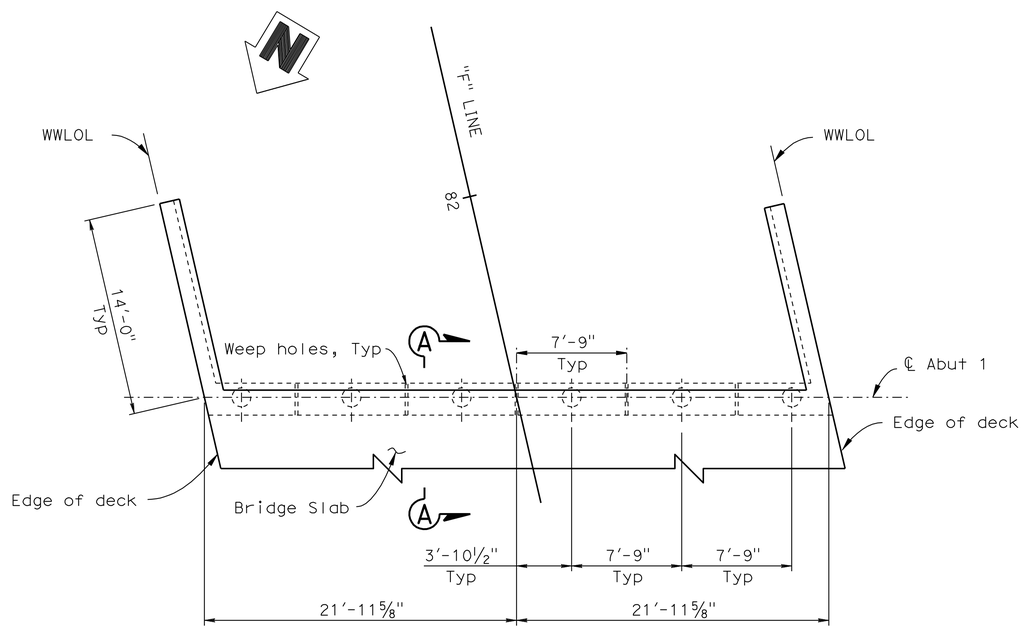

PLAN

3/16"=1'-0"

NOTE: Abutment 1 shown,
Abutment 4 similar.

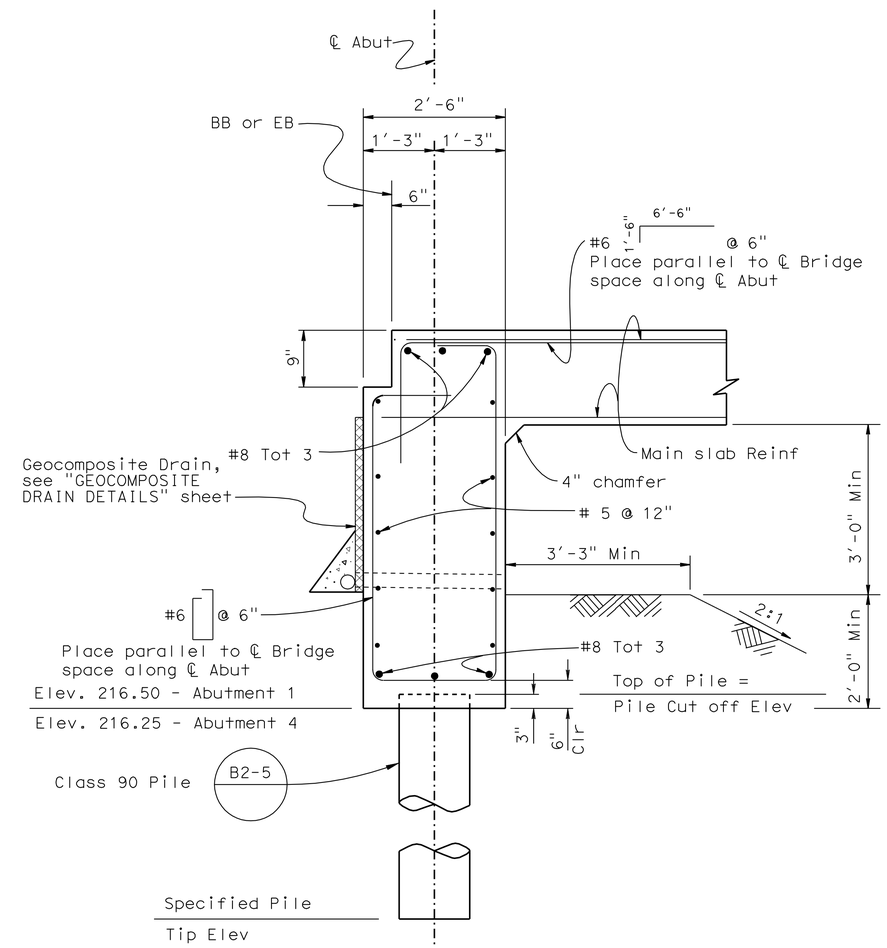

SECTION A-A

¾"=1'-0"

DESIGN	BY L.Wu	CHECKED A. McPhee	
DETAILS	BY D.Wooten	CHECKED A. McPhee	
QUANTITIES	BY F. Chen	CHECKED M. Vo	

STATE OF CALIFORNIA
DEPARTMENT OF TRANSPORTATION

DIVISION OF ENGINEERING SERVICES
STRUCTURE DESIGN
DESIGN BRANCH 10

BRIDGE NO. 39-0239
POST MILE 2.7

DUTCHMAN CREEK BRIDGE (EAST FRONTAGE ROAD)
ABUTMENT DETAILS

STRUCTURES DESIGN DETAIL SHEET (ENGLISH) (REV. 10/25/05)

ORIGINAL SCALE IN INCHES FOR REDUCED PLANS 0 1 2 3

CU 10
EA 415801

DISREGARD PRINTS BEARING EARLIER REVISION DATES

REVISION DATES: 2-25-08 6-25-08 3-24-09 7-16-09

SHEET 4 OF 12

FILE => 390239fadt04.dgn

USERNAME => trmikesl DATE PLOTTED => 04-NOV-2010 TIME PLOTTED => 07:42

DIST	COUNTY	ROUTE	POST MILES TOTAL PROJECT	SHEET No	TOTAL SHEETS
10	Mer	99	0.0/4.6	585	607

REGISTERED CIVIL ENGINEER — DATE 04-13-10

11-1-10
PLANS APPROVAL DATE

REGISTERED PROFESSIONAL ENGINEER — Larry Wu — No. C57035 — Exp. 6-30-11 — CIVIL — STATE OF CALIFORNIA

The State of California or its officers or agents shall not be responsible for the accuracy or completeness of electronic copies of this plan sheet.

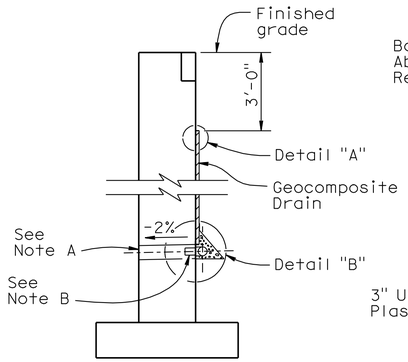

WALL SECTION

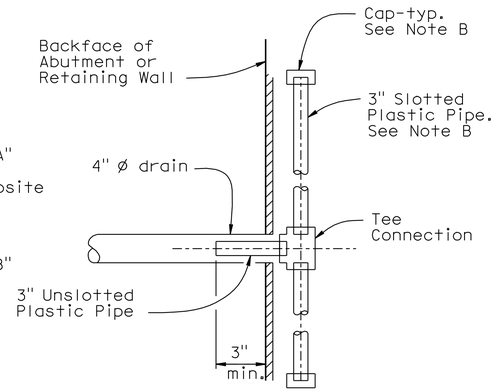

SECTION A-A

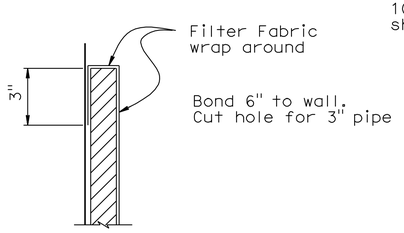

DETAIL "A"

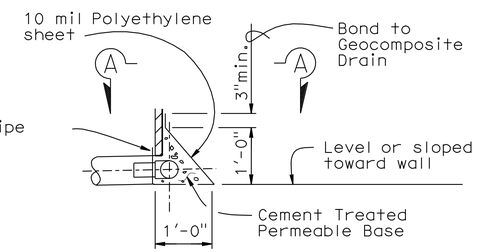

DETAIL "B"

WEEP HOLE AND GEOCOMPOSITE DRAIN

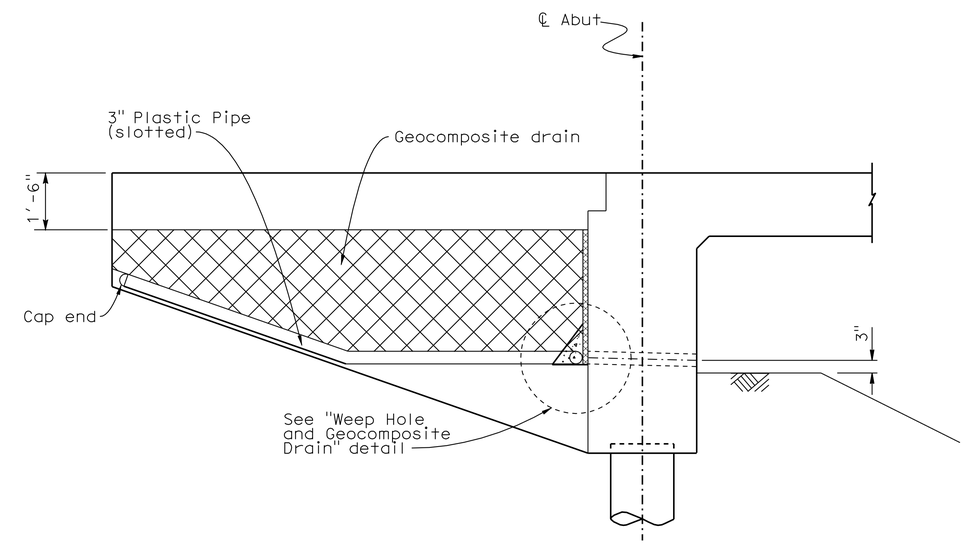

WINGWALL ELEVATION

½" = 1'-0"

Notes:

A. 4" ø drains at intermediate sag points and at 25' max center to center (9' c-c for Type 3 and 9'-3" c-c for Type 4 retaining walls).
For walls adjacent to sidewalks or curbs, provide 4" cast iron or asbestos cement pipe under the sidewalk to discharge through curb face.
Exposed wall drains shall be located 3"± above finished grade.

B. Geocomposite drain, cement treated permeable base, and 3"ø slotted plastic pipe continuous behind retaining wall or abutment. Cap ends of pipe. Provide "Tee" connection at each 4" ø drain.

C. Connect the low end of plastic pipe to the main outlet pipe as applicable.

	BY	CHECKED
DESIGN	L.Wu	A. McPhee
DETAILS	D.Wooten	A. McPhee
QUANTITIES	F. Chen	M. Vo

STATE OF CALIFORNIA
DEPARTMENT OF TRANSPORTATION

DIVISION OF ENGINEERING SERVICES
STRUCTURE DESIGN
DESIGN BRANCH 10

BRIDGE NO. 39-0239
POST MILE 2.7

DUTCHMAN CREEK BRIDGE (EAST FRONTAGE ROAD)
GEOCOMPOSITE DRAIN DETAILS

STRUCTURES DESIGN DETAIL SHEET (ENGLISH) (REV. 10/25/05)

ORIGINAL SCALE IN INCHES FOR REDUCED PLANS 0 1 2 3

CU 10
EA 415801

DISREGARD PRINTS BEARING EARLIER REVISION DATES

REVISION DATES: 8-26-09

SHEET 5 OF 12

FILE => 390239fadt05.dgn

USERNAME => frmikesl DATE PLOTTED => 04-NOV-2010 TIME PLOTTED => 07:42

DIST	COUNTY	ROUTE	POST MILES TOTAL PROJECT	SHEET No	TOTAL SHEETS
10	Mer	99	0.0/4.6	586	607

REGISTERED CIVIL ENGINEER — DATE 04-13-10

11-1-10
PLANS APPROVAL DATE

REGISTERED PROFESSIONAL ENGINEER — Larry Wu — No. C57035 — Exp. 6-30-11 — CIVIL — STATE OF CALIFORNIA

The State of California or its officers or agents shall not be responsible for the accuracy or completeness of electronic copies of this plan sheet.

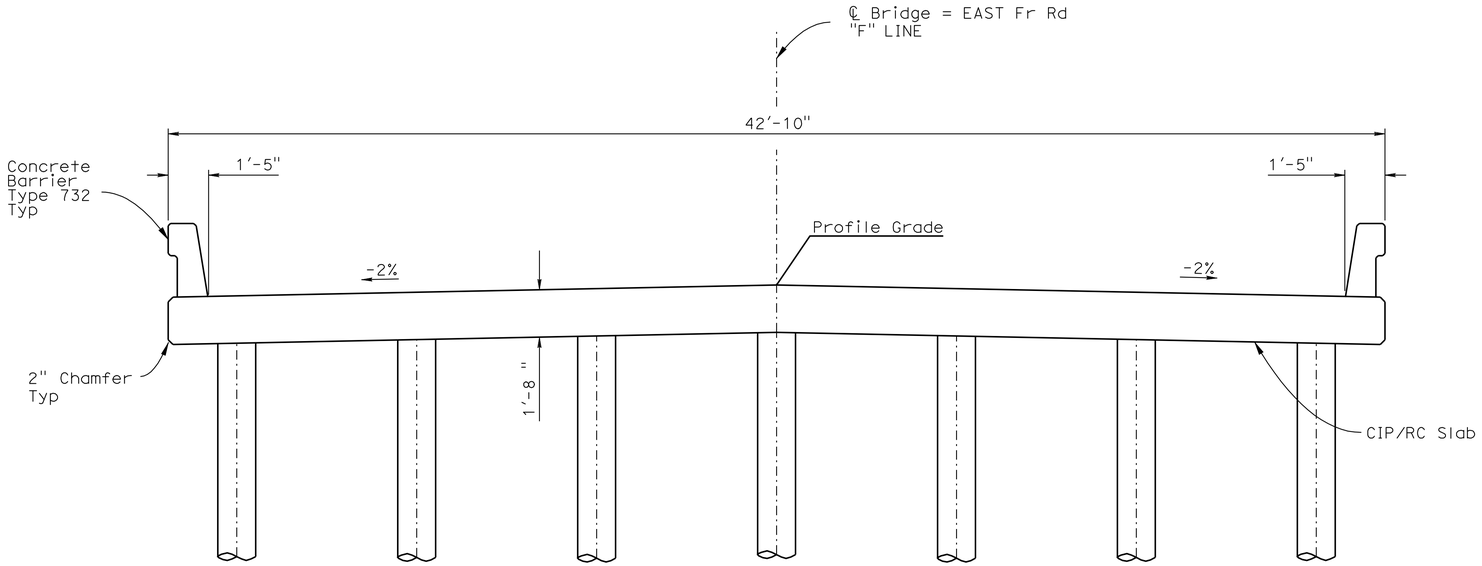

TYPICAL SECTION

3/8" = 1'-0"

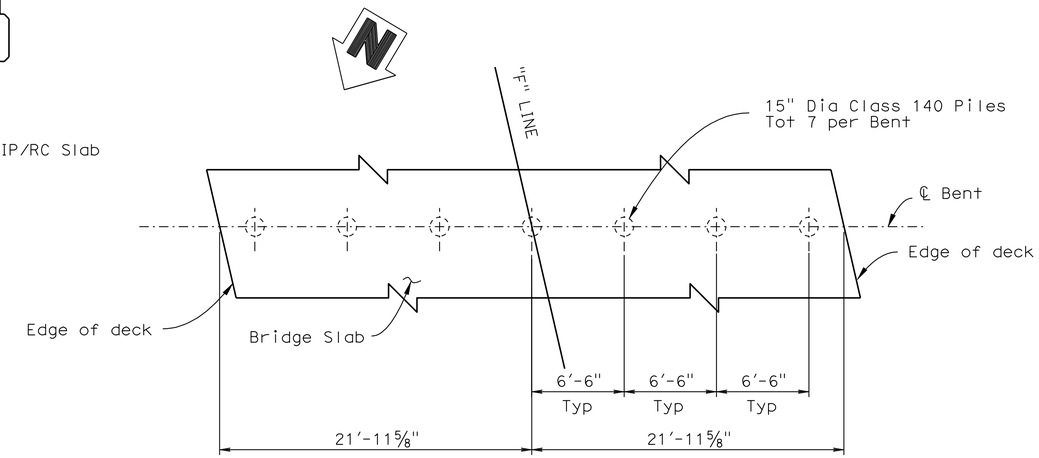

PLAN - BENT

3/16"=1'-0"

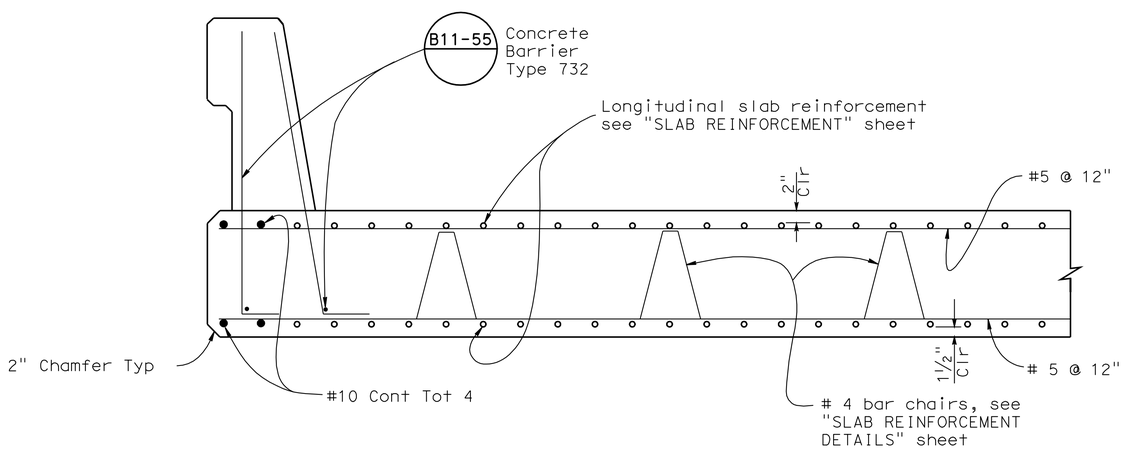

PART TYPICAL SECTION

1" = 1'-0"

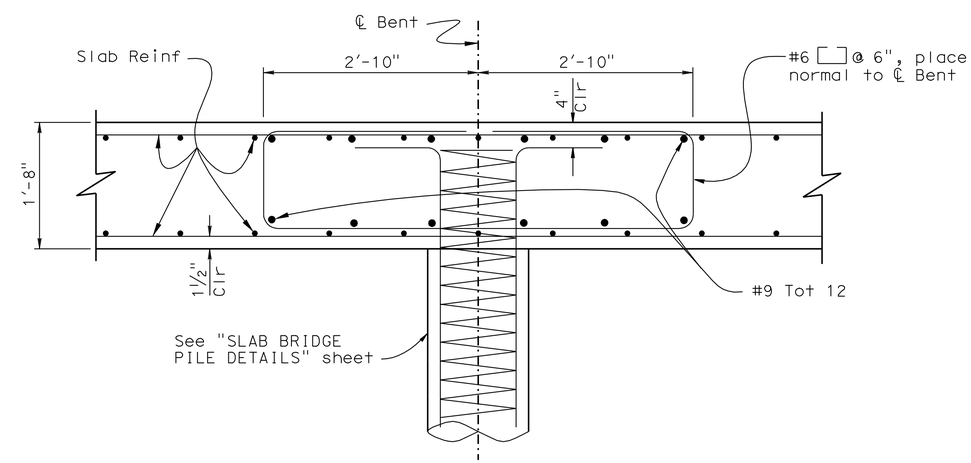

TYPICAL SECTION - BENT CAP

1" = 1'-0"

	BY	CHECKED
DESIGN	L.Wu	A. McPhee
DETAILS	D.Wooten	A. McPhee
QUANTITIES	F. Chen	M. Vo

STATE OF CALIFORNIA
DEPARTMENT OF TRANSPORTATION

DIVISION OF ENGINEERING SERVICES
STRUCTURE DESIGN
DESIGN BRANCH 10

BRIDGE NO. 39-0239
POST MILE 2.7

DUTCHMAN CREEK BRIDGE (EAST FRONTAGE ROAD)
TYPICAL SECTION & BENT DETAILS

STRUCTURES DESIGN DETAIL SHEET (ENGLISH) (REV. 10/25/05)

ORIGINAL SCALE IN INCHES FOR REDUCED PLANS 0 1 2 3

CU 10
EA 415801

DISREGARD PRINTS BEARING EARLIER REVISION DATES

REVISION DATES: 2-21-08 6-05-08 3-24-09

SHEET 6 OF 12

FILE => 390239kts06.dgn

USERNAME => trmikesl DATE PLOTTED => 04-NOV-2010 TIME PLOTTED => 07:43

DIST	COUNTY	ROUTE	POST MILES TOTAL PROJECT	SHEET No	TOTAL SHEETS
10	Mer	99	0.0/4.6	587	607

REGISTERED CIVIL ENGINEER — DATE 04-13-10

11-1-10
PLANS APPROVAL DATE

REGISTERED PROFESSIONAL ENGINEER — Larry Wu — No. C57035 — Exp. 6-30-11 — CIVIL — STATE OF CALIFORNIA

The State of California or its officers or agents shall not be responsible for the accuracy or completeness of electronic copies of this plan sheet.

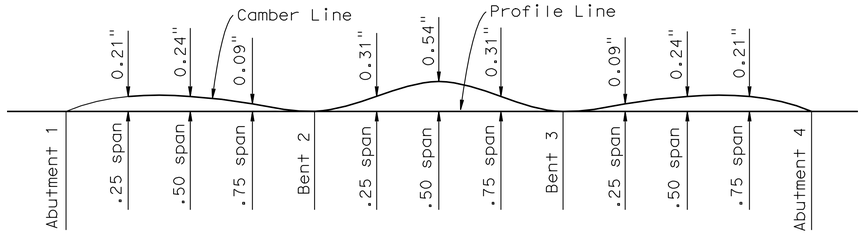

Does not include allowance for falsework settlement

CAMBER DIAGRAM

no scale

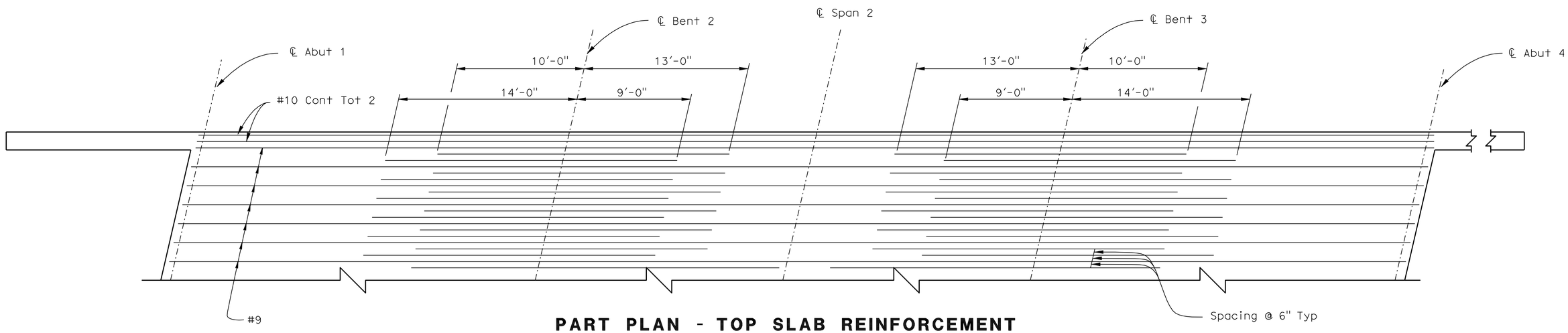

PART PLAN - TOP SLAB REINFORCEMENT

1/4" = 1'-0"

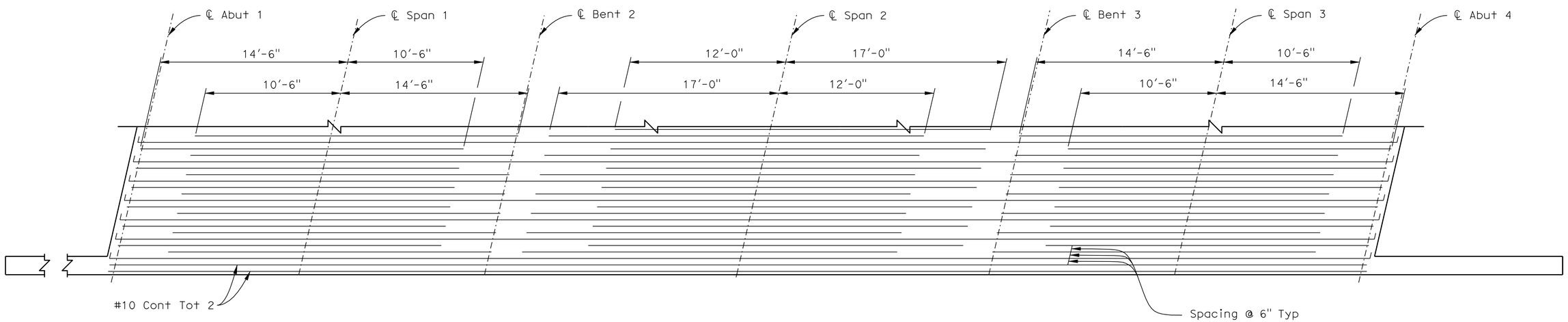

NOTES:

1. All reinforcement symmetrical (staggered) about ℄ Span 2.
2. All reinforcement #8 unless otherwise noted.
3. No lap splices allowed in top & bottom reinforcement.

PART PLAN - BOTTOM SLAB REINFORCEMENT

1/4" = 1'-0"

	BY	CHECKED
DESIGN	L.Wu	A. McPhee
DETAILS	D.Wooten	A. McPhee
QUANTITIES	F. Chen	M. Vo

STATE OF CALIFORNIA
DEPARTMENT OF TRANSPORTATION

DIVISION OF ENGINEERING SERVICES
STRUCTURE DESIGN
DESIGN BRANCH 10

BRIDGE NO. 39-0239
POST MILE 2.7

DUTCHMAN CREEK BRIDGE (EAST FRONTAGE ROAD)
SLAB REINFORCEMENT

STRUCTURES DESIGN DETAIL SHEET (ENGLISH) (REV. 10/25/05)

ORIGINAL SCALE IN INCHES FOR REDUCED PLANS 0 1 2 3

CU 10
EA 415801

DISREGARD PRINTS BEARING EARLIER REVISION DATES

REVISION DATES: 2-24-08 3-24-09 7-16-09

SHEET 7 OF 12

FILE => 390239osib_rf07.dgn

USERNAME => frmikest DATE PLOTTED => 04-NOV-2010 TIME PLOTTED => 07:43

RELEASED 11-20-97

DIST.	COUNTY	ROUTE	POST MILES TOTAL PROJECT	SHEET NO.	TOTAL SHEETS
10	Mer	99	0.0/4.6	588	607

REGISTERED ENGINEER - CIVIL 04-13-10

11-1-10
PLANS APPROVAL DATE

REGISTERED PROFESSIONAL ENGINEER LARRY WU No. C057035 Exp. 6-30-11 CIVIL STATE OF CALIFORNIA

The State of California or its officers or agents shall not be responsible for the accuracy or completeness of electronic copies of this plan sheet.

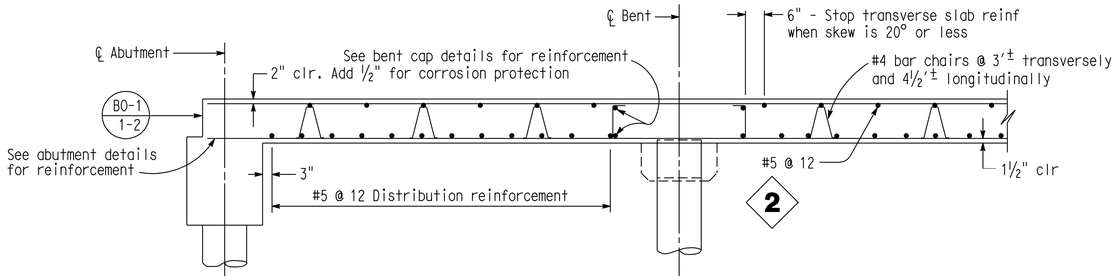

LONGITUDINAL SECTION

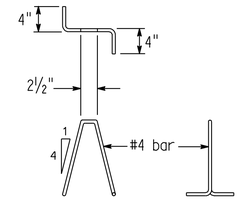

BAR CHAIR DETAIL

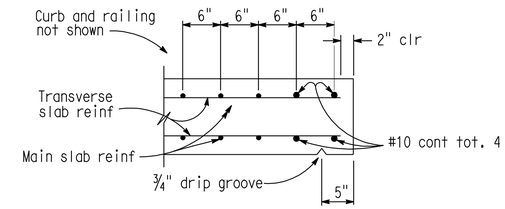

EDGE OF SLAB DETAILS

BAR SPLICE LENGTH								
Bar size	#4	#5	#6	#7	#8	#9	#10	#11
All bars, except top bars in spans over 24'	23"	28"	34"	39"	45"	68"	76"	85"
Top bars in spans over 24'	23"	28"	34"	53"	60"	77"	97"	120"

Reinforcement notes:

Splices in top main bars to be located near center of span.
Splices in bottom main bars to be located near bent.
Spacing of all transverse bars is measured along ℄ roadway.
Skew 0° to 20°: Place all transverse bars parallel to bent.
Skew over 20°: Place transverse slab bars perpendicular to ℄ bridge. See details at right and below.

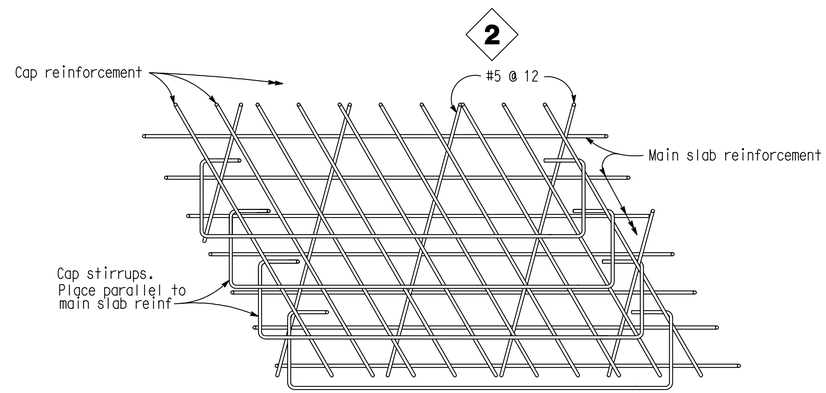

TOP SLAB REINFORCEMENT AT BENT

Note: View for main span over 24'.
Bar placement similar for spans under 24'

1

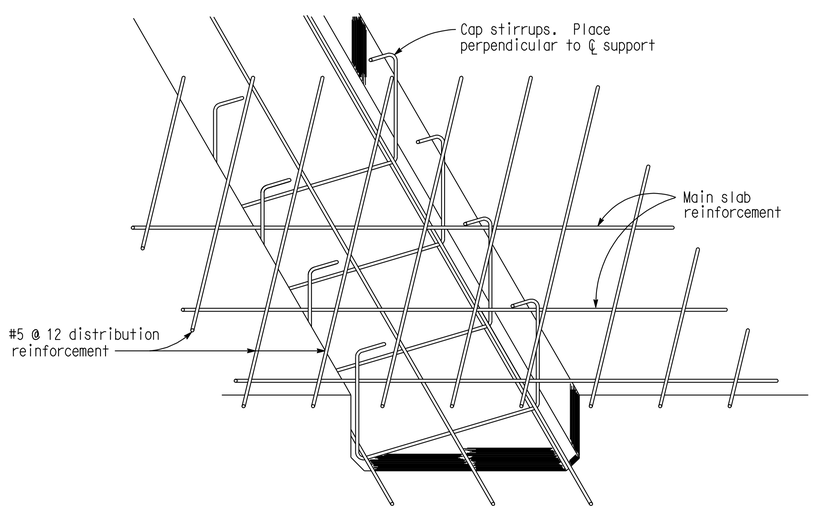

DROPPED CAP

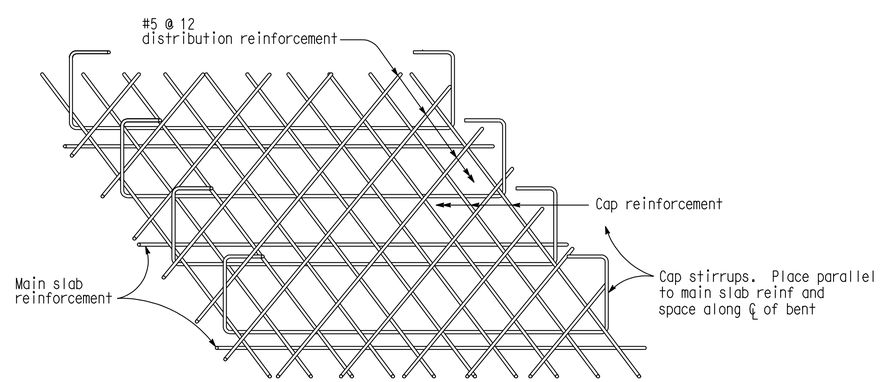

FLUSH CAP

BOTTOM SLAB REINFORCEMENT AT BENT

SPECIAL DETAILS

REVISED STANDARD DRAWING

FILE NO. XS 12-55	DESIGN BY L.Y. LEE	CHECKED T. FARNAN	APPROVAL RECOMMENDED BY
DESIGN DATE 8/86	DETAILS BY R. YEE	CHECKED T. FARNAN	DESIGN SUPERVISOR
	SUBMITTED BY R.S. WATANABE		

1 Deleted General Notes
2 Revised Details

STATE OF CALIFORNIA
DEPARTMENT OF TRANSPORTATION

DIVISION OF STRUCTURES
STRUCTURE DESIGN 10

BRIDGE NO. 39-0239
POST MILE 2.7

DUTCHMAN CREEK BRIDGE (EAST FRONTAGE ROAD)
SLAB REINFORCEMENT DETAILS

DS OSD 2147A (CADD 7/97)

ORIGINAL SCALE IN INCHES FOR REDUCED PLANS 0 1 2 3

CU 10
EA 415801

DISREGARD PRINTS BEARING EARLIER REVISION DATES → 2-24-08 3-24-09

REVISION DATES (PRELIMINARY STAGE ONLY) SHEET 8 OF 12

FILE => 390239oslb_rfdt08.dgn

XS1255.DGN VI-1

USERNAME => trmikesl DATE PLOTTED => 04-NOV-2010 TIME PLOTTED => 07:43

DIST	COUNTY	ROUTE	POST MILES TOTAL PROJECT	SHEET No	TOTAL SHEETS
10	Mer	99	0.0/4.6	589	607

REGISTERED CIVIL ENGINEER — DATE 04-13-10

11-1-10
PLANS APPROVAL DATE

REGISTERED PROFESSIONAL ENGINEER — Larry Wu — No. C57035 — Exp. 6-30-11 — CIVIL — STATE OF CALIFORNIA

The State of California or its officers or agents shall not be responsible for the accuracy or completeness of electronic copies of this plan sheet.

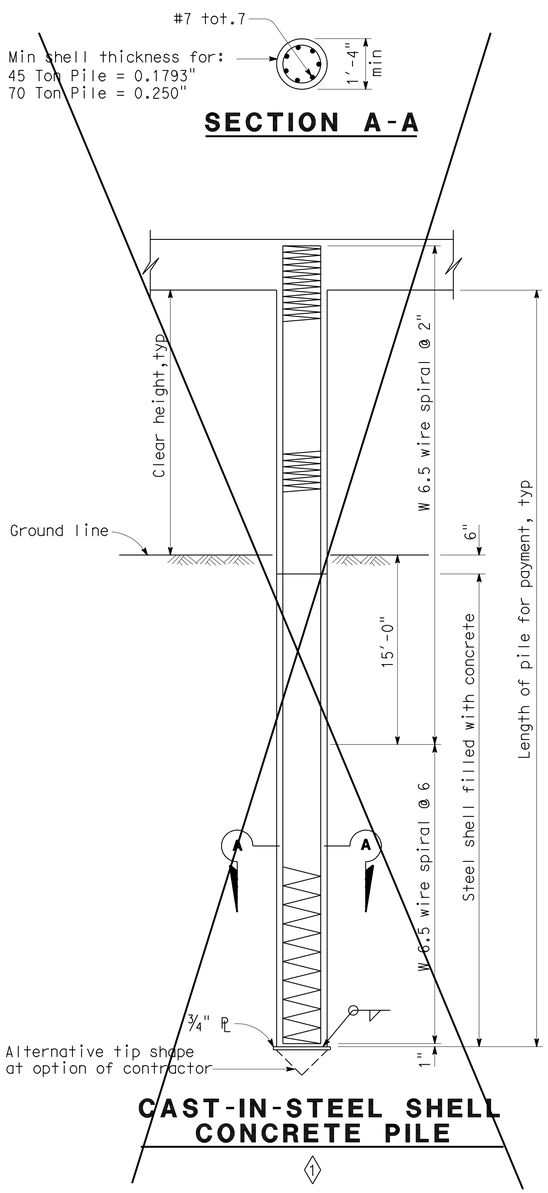

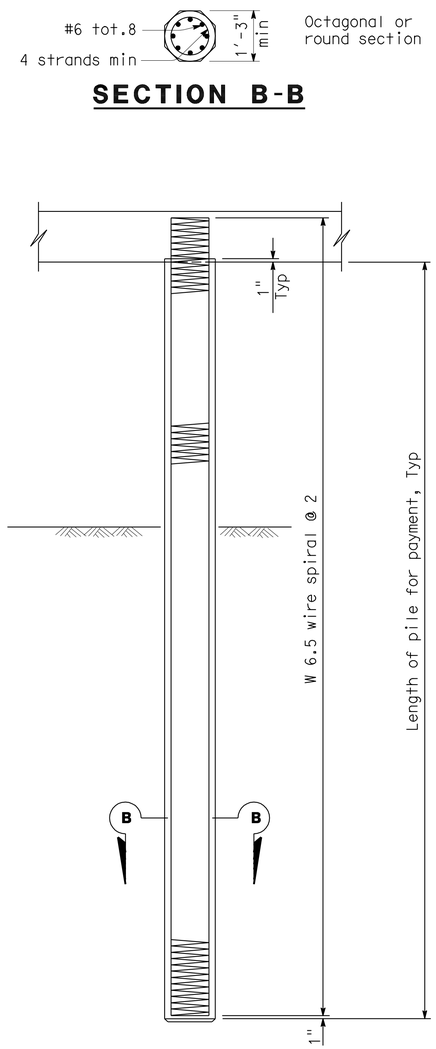

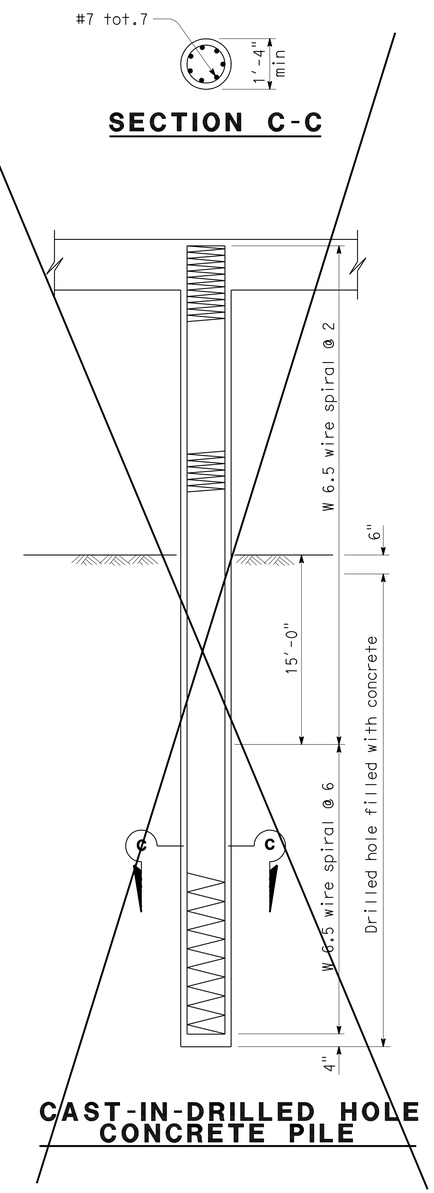

NOTES:

1. Design service level loading is 70 tons or less as noted.
2. Maximum size of aggregate is 1".
3. For the prestressed concrete pile:
   A. The prestress force after all losses shall provide 700 psi minimum stress and shall not be less than 130 kips.
   B. The concrete strength shall not be less than 6000 psi at 28 days.
4. No splices allowed in the longitudinal reinforcement within the "clear height " or within 10' below the ground line.

SPECIAL DETAILS

REVISED STANDARD DRAWING

FILE NO. XS 12-55.1	DESIGN	BY JIM H. GATES	CHECKED STEVE MCBRIDE
DESIGN DATE 2/89	DETAILS	BY R. YEE	CHECKED R.A. ROGERSON
	SUBMITTED BY	R.A. ROGERSON	

APPROVAL RECOMMENDED BY — DESIGN SUPERVISOR

1 Does Not Apply

STATE OF CALIFORNIA
DEPARTMENT OF TRANSPORTATION

DIVISION OF ENGINEERING SERVICES
STRUCTURE DESIGN
DESIGN BRANCH 10

BRIDGE NO. 39-0239
POST MILE 2.7

DUTCHMAN CREEK BRIDGE (EAST FRONTAGE ROAD)
SLAB BRIDGE PILE DETAILS

DS OSD 2147A (CADD 7/97)

ORIGINAL SCALE IN INCHES FOR REDUCED PLANS 0 1 2 3

CU 10
EA 415801

DISREGARD PRINTS BEARING EARLIER REVISION DATES

REVISION DATES: 2-24-08 3-24-09

SHEET 9 OF 12

FILE => 390239ppdt09.dgn

USERNAME => frmikest DATE PLOTTED => 04-NOV-2010 TIME PLOTTED => 07:43

DIST	COUNTY	ROUTE	POST MILES TOTAL PROJECT	SHEET No	TOTAL SHEETS
10	Mer	99	0.0/4.6	590	607

CERTIFIED ENGINEERING GEOLOGIST — 11-2-09 DATE

REGISTERED PROFESSIONAL GEOLOGIST — Xing Zheng — No. 2130 — Exp. 3-31-11 — CERTIFIED ENGINEERING GEOLOGIST — STATE OF CALIFORNIA

11-1-10
PLANS APPROVAL DATE

The State of California or its officers or agents shall not be responsible for the accuracy or completeness of electronic copies of this plan sheet.

This LOTB sheet was prepared in accordance with the Caltrans Soil & Rock Logging, Classification, & Presentation Manual (June 2007).

BENCH MARK

BM : Mer-99 Elev : 216.04′
PM 2.69

Fnd 1" IP w/RPP & LS 5679 Tag
32.75′ Rt C/L Proposed Rte 99
Sta 242+62.11
N 1,888,818.77
E 6,613,237.42
NGVD 29

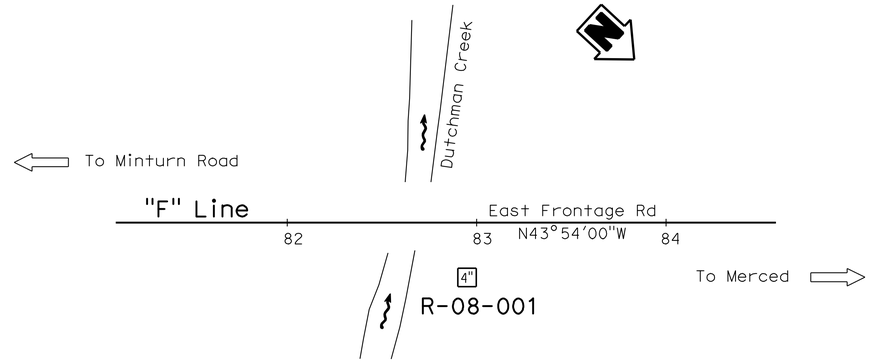

PLAN
1"=40′

Notes:

1. SPT N Values shown on the Log of Test Boring (LOTB) sheet are actual values recorded in the field.
2. PP = Pocket Penetrometer Test (tsf).
3. Groundwater was not measured.

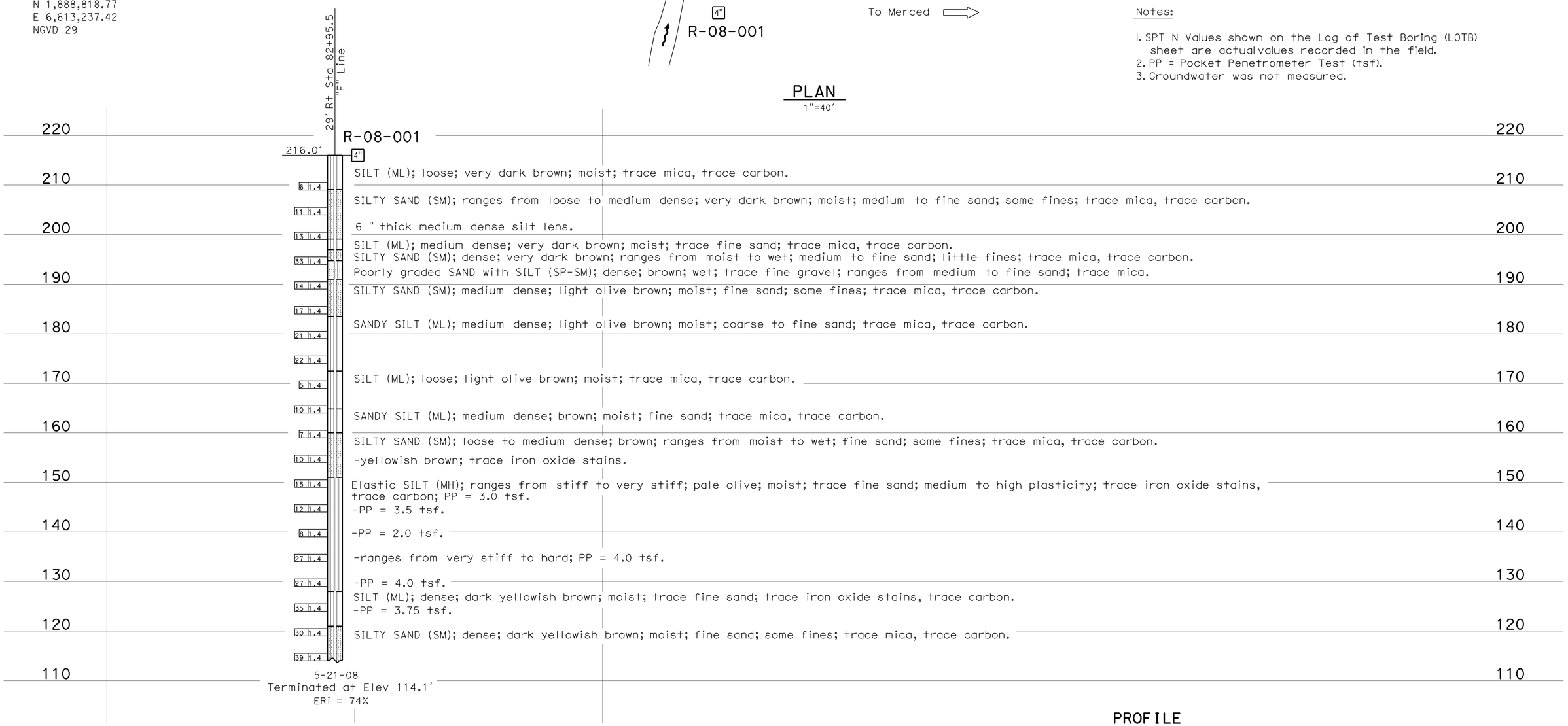

PROFILE
HOR. 1"=10′
VER. 1"=10′

ENGINEERING SERVICES	GEOTECHNICAL SERVICES	STATE OF CALIFORNIA DEPARTMENT OF TRANSPORTATION	DIVISION OF ENGINEERING SERVICES STRUCTURE DESIGN DESIGN BRANCH	BRIDGE NO. 39-0239 / POST MILES 2.7	DUTCHMAN CREEK BRIDGE (EAST FRONTAGE ROAD) LOG OF TEST BORINGS 1 OF 3
FUNCTIONAL SUPERVISOR NAME: R. Buell	DRAWN BY: W. Tang 08/09 CHECKED BY: J. Martin	FIELD INVESTIGATION BY: J. Thorne	CU 10 EA 415801	DISREGARD PRINTS BEARING EARLIER REVISION DATES → 09-16-09 09-25-09 10-19-09	SHEET 10 OF 12

OGS CIVIL LOG OF TEST BORINGS SHEET — ORIGINAL SCALE IN INCHES FOR REDUCED PLANS 0 1 2 3

FILE => 390239zltb10.dgn

USERNAME => trmikest DATE PLOTTED => 04-NOV-2010 TIME PLOTTED => 07:43

DIST	COUNTY	ROUTE	POST MILES TOTAL PROJECT	SHEET No	TOTAL SHEETS
10	Mer	99	0.0/4.6	591	607

CERTIFIED ENGINEERING GEOLOGIST — 11-2-09 DATE

11-1-10
PLANS APPROVAL DATE

REGISTERED PROFESSIONAL GEOLOGIST — Xing Zheng No. 2130 Exp. 3-31-11 CERTIFIED ENGINEERING GEOLOGIST — STATE OF CALIFORNIA

The State of California or its officers or agents shall not be responsible for the accuracy or completeness of electronic copies of this plan sheet.

REFERENCE: CALTRANS SOIL & ROCK LOGGING, CLASSIFICATION, AND PRESENTATION MANUAL (JUNE 2007)

CEMENTATION

Description	Criteria
Weak	Crumbles or breaks with handling or little finger pressure.
Moderate	Crumbles or breaks with considerable finger pressure.
Strong	Will not crumble or break with finger pressure.

CONSISTENCY OF COHESIVE SOILS

Description	Unconfined Compressive Strength (tsf)	Pocket Penetrometer Measurement (tsf)	Torvane Measurement (tsf)	Field Approximation
Very Soft	< 0.25	< 0.25	< 0.12	Easily penetrated several inches by fist
Soft	0.25 to 0.50	0.25 to 0.50	0.12 to 0.25	Easily penetrated several inches by thumb
Medium Stiff	0.50 to 1.0	0.50 to 1.0	0.25 to 0.50	Penetrated several inches by thumb with moderate effort
Stiff	1 to 2	1 to 2	0.50 to 1.0	Readily indented by thumb but penetrated only with great effort
Very Stiff	2 to 4	2 to 4	1.0 to 2.0	Readily indented by thumbnail
Hard	> 4.0	> 4.0	> 2.0	Indented by thumbnail with difficulty

BOREHOLE IDENTIFICATION

Symbol	Hole Type	Description
Size	A	Auger Boring
Size	R P	Rotary drilled boring Rotary percussion boring (air)
Size	R	Rotary drilled diamond core
Size	HD HA	Hand driven (1-inch soil tube) Hand Auger
●	D	Dynamic Cone Penetration Boring
▲	CPT	Cone Penetration Test (ASTM D 5778-95)
⬚	O	Other

Note: Size in inches.

PLASTICITY OF FINE-GRAINED SOILS

Description	Criteria
Nonplastic	A 1/8-inch thread cannot be rolled at any water content.
Low	The thread can barely be rolled and the lump cannot be formed when drier than the plastic limit.
Medium	The thread is easy to roll and not much time is required to reach the plastic limit. The thread cannot be rerolled after reaching the plastic limit. The lump crumbles when drier than the plastic limit.
High	It takes considerable time rolling and kneading to reach the plastic limit. The thread can be rerolled several times after reaching the plastic limit. The lump can be formed without crumbling when drier than the plastic limit.

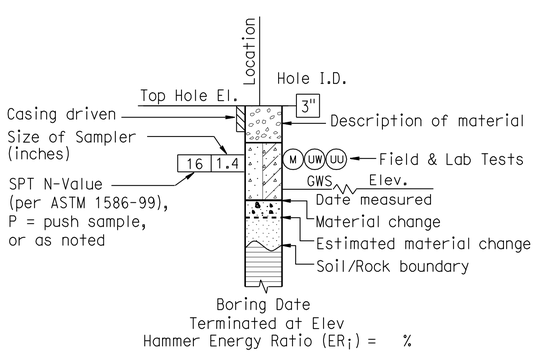

ROTARY BORING

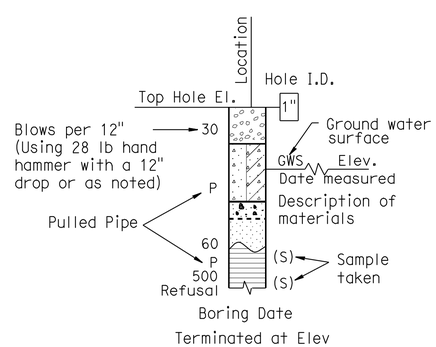

HAND BORING

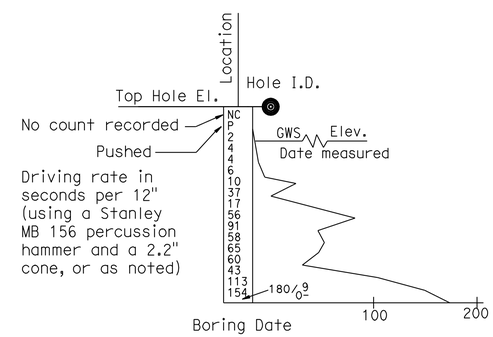

DYNAMIC CONE PENETRATION BORING

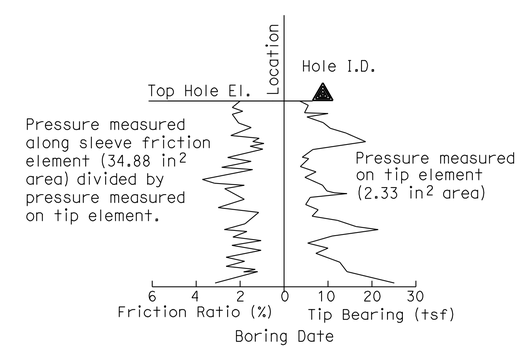

CONE PENETRATION TEST (CPT) SOUNDING

ENGINEERING SERVICES	GEOTECHNICAL SERVICES	STATE OF CALIFORNIA DEPARTMENT OF TRANSPORTATION	DIVISION OF ENGINEERING SERVICES STRUCTURE DESIGN DESIGN BRANCH	BRIDGE NO. 39-0239 / POST MILE 2.7	DUTCHMAN CREEK BRIDGE (EAST FRONTAGE ROAD) LOG OF TEST BORINGS 2 OF 3
	PREPARED BY: I. G-Remmen 11/09				

GS LOTB SOIL LEGEND

ORIGINAL SCALE IN INCHES FOR REDUCED PLANS 0 1 2 3

CU 10
EA 415801

DISREGARD PRINTS BEARING EARLIER REVISION DATES

REVISION DATES

SHEET 11 OF 12

FILE => 390239zltb11.dgn

USERNAME => trmikes1 DATE PLOTTED => 04-NOV-2010 TIME PLOTTED => 07:43

REFERENCE: CALTRANS SOIL & ROCK LOGGING, CLASSIFICATION, AND PRESENTATION MANUAL (JUNE 2007)

DIST	COUNTY	ROUTE	POST MILES TOTAL PROJECT	SHEET No	TOTAL SHEETS
10	Mer	99	0.0/4.6	592	607

CERTIFIED ENGINEERING GEOLOGIST — 11-2-09 DATE

11-1-10
PLANS APPROVAL DATE

REGISTERED PROFESSIONAL GEOLOGIST — Xing Zheng — No. 2130 — Exp. 3-31-11 — CERTIFIED ENGINEERING GEOLOGIST — STATE OF CALIFORNIA

The State of California or its officers or agents shall not be responsible for the accuracy or completeness of electronic copies of this plan sheet.

GROUP SYMBOLS AND NAMES

Graphic/Symbol	Group Names
GW	Well-graded GRAVEL Well-graded GRAVEL with SAND
GP	Poorly graded GRAVEL Poorly graded GRAVEL with SAND
GW-GM	Well-graded GRAVEL with SILT Well-graded GRAVEL with SILT and SAND
GW-GC	Well-graded GRAVEL with CLAY (or SILTY CLAY) Well-graded GRAVEL with CLAY and SAND (or SILTY CLAY and SAND)
GP-GM	Poorly graded GRAVEL with SILT Poorly graded GRAVEL with SILT and SAND
GP-GC	Poorly graded GRAVEL with CLAY (or SILTY CLAY) Poorly graded GRAVEL with CLAY and SAND (or SILTY CLAY and SAND)
GM	SILTY GRAVEL SILTY GRAVEL with SAND
GC	CLAYEY GRAVEL CLAYEY GRAVEL with SAND
GC-GM	SILTY, CLAYEY GRAVEL SILTY, CLAYEY GRAVEL with SAND
SW	Well-graded SAND Well-graded SAND with GRAVEL
SP	Poorly graded SAND Poorly graded SAND with GRAVEL
SW-SM	Well-graded SAND with SILT Well-graded SAND with SILT and GRAVEL
SW-SC	Well-graded SAND with CLAY (or SILTY CLAY) Well-graded SAND with CLAY and GRAVEL (or SILTY CLAY and GRAVEL)
SP-SM	Poorly graded SAND with SILT Poorly graded SAND with SILT and GRAVEL
SP-SC	Poorly graded SAND with CLAY (or SILTY CLAY) Poorly graded SAND with CLAY and GRAVEL (or SILTY CLAY and GRAVEL)
SM	SILTY SAND SILTY SAND with GRAVEL
SC	CLAYEY SAND CLAYEY SAND with GRAVEL
SC-SM	SILTY, CLAYEY SAND SILTY, CLAYEY SAND with GRAVEL
PT	PEAT
	COBBLES COBBLES and BOULDERS BOULDERS

Graphic/Symbol	Group Names
CL	Lean CLAY Lean CLAY with SAND Lean CLAY with GRAVEL SANDY lean CLAY SANDY lean CLAY with GRAVEL GRAVELLY lean CLAY GRAVELLY lean CLAY with SAND
CL-ML	SILTY CLAY SILTY CLAY with SAND SILTY CLAY with GRAVEL SANDY SILTY CLAY SANDY SILTY CLAY with GRAVEL GRAVELLY SILTY CLAY GRAVELLY SILTY CLAY with SAND
ML	SILT SILT with SAND SILT with GRAVEL SANDY SILT SANDY SILT with GRAVEL GRAVELLY SILT GRAVELLY SILT with SAND
OL	ORGANIC lean CLAY ORGANIC lean CLAY with SAND ORGANIC lean CLAY with GRAVEL SANDY ORGANIC lean CLAY SANDY ORGANIC lean CLAY with GRAVEL GRAVELLY ORGANIC lean CLAY GRAVELLY ORGANIC lean CLAY with SAND
OL	ORGANIC SILT ORGANIC SILT with SAND ORGANIC SILT with GRAVEL SANDY ORGANIC SILT SANDY ORGANIC SILT with GRAVEL GRAVELLY ORGANIC SILT GRAVELLY ORGANIC SILT with SAND
CH	Fat CLAY Fat CLAY with SAND Fat CLAY with GRAVEL SANDY fat CLAY SANDY fat CLAY with GRAVEL GRAVELLY fat CLAY GRAVELLY fat CLAY with SAND
MH	Elastic SILT Elastic SILT with SAND Elastic SILT with GRAVEL SANDY elastic SILT SANDY elastic SILT with GRAVEL GRAVELLY elastic SILT GRAVELLY elastic SILT with SAND
OH	ORGANIC fat CLAY ORGANIC fat CLAY with SAND ORGANIC fat CLAY with GRAVEL SANDY ORGANIC fat CLAY SANDY ORGANIC fat CLAY with GRAVEL GRAVELLY ORGANIC fat CLAY GRAVELLY ORGANIC fat CLAY with SAND
OH	ORGANIC elastic SILT ORGANIC elastic SILT with SAND ORGANIC elastic SILT with GRAVEL SANDY ORGANIC elastic SILT SANDY ORGANIC elastic SILT with GRAVEL GRAVELLY ORGANIC elastic SILT GRAVELLY ORGANIC elastic SILT with SAND
OL/OH	ORGANIC SOIL ORGANIC SOIL with SAND ORGANIC SOIL with GRAVEL SANDY ORGANIC SOIL SANDY ORGANIC SOIL with GRAVEL GRAVELLY ORGANIC SOIL GRAVELLY ORGANIC SOIL with SAND

FIELD AND LABORATORY TESTING

- (C) Consolidation (ASTM D 2435)
- (CL) Collapse Potential (ASTM D 5333)
- (CP) Compaction Curve (CTM 216)
- (CR) Corrosivity Testing (CTM 643, CTM 422, CTM 417)
- (CU) Consolidated Undrained Triaxial (ASTM D 4767)
- (DS) Direct Shear (ASTM D 3080)
- (EI) Expansion Index (ASTM D 4829)
- (M) Moisture Content (ASTM D 2216)
- (OC) Organic Content-% (ASTM D 2974)
- (P) Permeability (CTM 220)
- (PA) Particle Size Analysis (ASTM D 422)
- (PI) Plasticity Index (AASHTO T 90) Liquid Limit (AASHTO T 89)
- (PL) Point Load Index (ASTM D 5731)
- (PM) Pressure Meter
- (PP) Pocket Penetrometer
- (R) R-Value (CTM 301)
- (SE) Sand Equivalent (CTM 217)
- (SG) Specific Gravity (AASHTO T 100)
- (SL) Shrinkage Limit (ASTM D 427)
- (SW) Swell Potential (ASTM D 4546)
- (TV) Pocket Torvane
- (UC) Unconfined Compression-Soil (ASTM D 2166) Unconfined Compression-Rock (ASTM D 2938)
- (UU) Unconsolidated Undrained Triaxial (ASTM D 2850)
- (UW) Unit Weight (ASTM D 4767)
- (VS) Vane Shear (AASHTO T 223)

APPARENT DENSITY OF COHESIONLESS SOILS

Description	SPT N_{60} (Blows / 12 inches)
Very loose	0 - 4
Loose	5 - 10
Medium Dense	11 - 30
Dense	31 - 50
Very Dense	> 50

MOISTURE

Description	Criteria
Dry	Absence of moisture, dusty, dry to the touch
Moist	Damp but no visible water
Wet	Visible free water, usually soil is below water table

PERCENT OR PROPORTION OF SOILS

Description	Criteria
Trace	Particles are present but estimated to be less than 5%
Few	5 to 10%
Little	15 to 25%
Some	30 to 45%
Mostly	50 to 100%

PARTICLE SIZE

Description		Size
Boulder		> 12"
Cobble		3" to 12"
Gravel	Coarse	3/4" to 3"
	Fine	No. 4 to 3/4"
Sand	Coarse	No. 10 to No. 4
	Medium	No. 40 to No. 10
	Fine	No. 200 to No. 40

ENGINEERING SERVICES

GEOTECHNICAL SERVICES
PREPARED BY: I. G-Remmen 11/09

STATE OF CALIFORNIA
DEPARTMENT OF TRANSPORTATION

DIVISION OF ENGINEERING SERVICES
STRUCTURE DESIGN
DESIGN BRANCH

BRIDGE NO. 39-0239
POST MILE 2.7

DUTCHMAN CREEK BRIDGE (EAST FRONTAGE ROAD)
LOG OF TEST BORINGS 3 OF 3

GS LOTB SOIL LEGEND

ORIGINAL SCALE IN INCHES FOR REDUCED PLANS 0 1 2 3

CU 10
EA 415801

DISREGARD PRINTS BEARING EARLIER REVISION DATES

REVISION DATES

SHEET 12 OF 12

FILE => 390239zltb12.dgn

USERNAME => ttmikes1 DATE PLOTTED => 04-NOV-2010 TIME PLOTTED => 07:44

DIST	COUNTY	ROUTE	POST MILES TOTAL PROJECT	SHEET No	TOTAL SHEETS
10	Mer	99	0.0/4.6	593	607

REGISTERED CIVIL ENGINEER 04-13-10 DATE

11-1-10
PLANS APPROVAL DATE

The State of California or its officers or agents shall not be responsible for the accuracy or completeness of electronic copies of this plan sheet.

REGISTERED PROFESSIONAL ENGINEER Larry Wu No. C57035 Exp. 6-30-11 CIVIL STATE OF CALIFORNIA

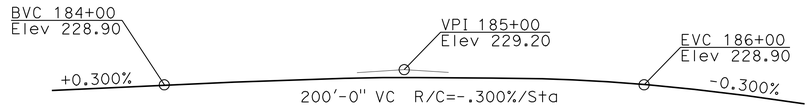

PROFILE GRADE

NO SCALE

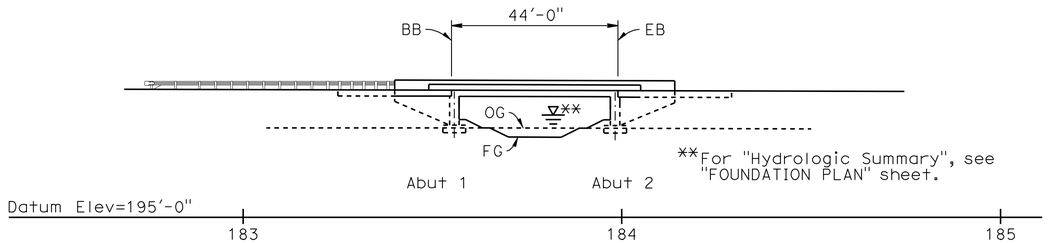

ELEVATION

1"=20'-0"

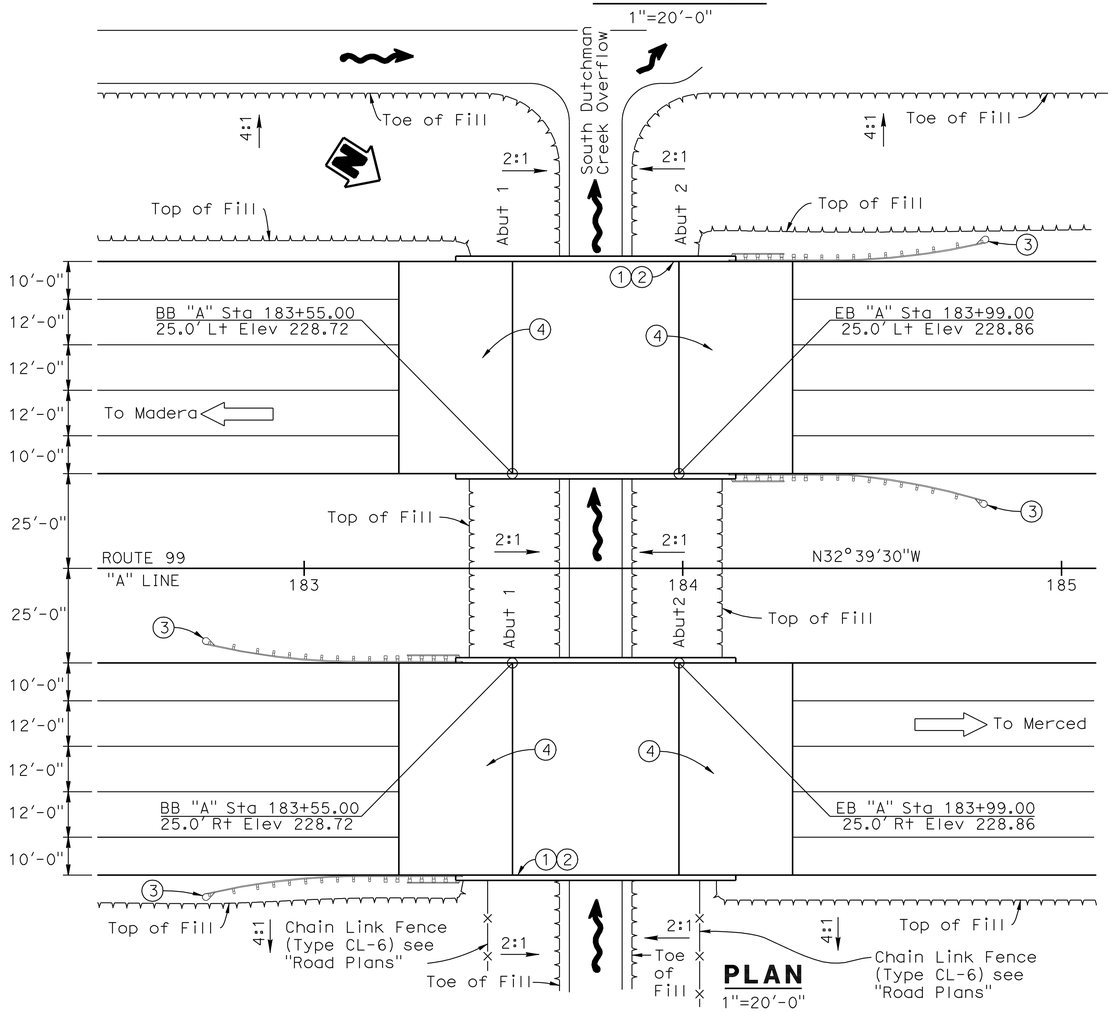

PLAN

1"=20'-0"

QUANTITIES

STRUCTURE EXCAVATION (BRIDGE)	185	CY
STRUCTURE BACKFILL (BRIDGE)	290	CY
STRUCTURAL CONCRETE, BRIDGE FOOTING	108	CY
STRUCTURAL CONCRETE, BRIDGE	575	CY
STRUCTURAL CONCRETE, APPROACH SLAB (TYPE N)	249	CY
JOINT SEAL (MR 1/2")	236	LF
BAR REINFORCING STEEL (BRIDGE)	107,500	LB
CONCRETE BARRIER (TYPE 732)	282	LF

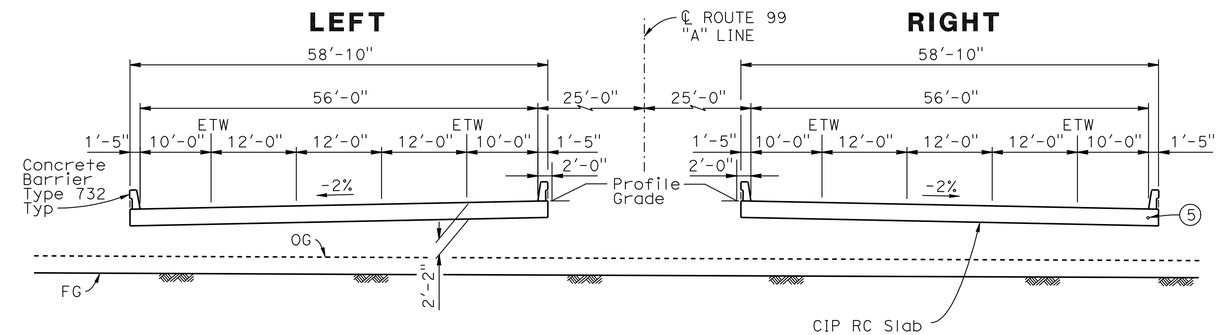

TYPICAL SECTION

3/32"=1'-0"

INDEX TO PLANS

Sheet No.	Title
1.	GENERAL PLAN
2.	GENERAL NOTES
3.	DECK CONTOURS
4.	FOUNDATION PLAN
5.	ABUTMENT DETAILS
6.	TYPICAL SECTION
7.	SLAB REINFORCEMENT
8.	SLAB REINFORCEMENT DETAILS
9.	STRUCTURE APPROACH TYPE N(30D)
10.	STRUCTURE APPROACH DRAINAGE DETAILS
11.	LOG OF TEST BORINGS, 1 OF 4
12.	LOG OF TEST BORINGS, 2 OF 4
13.	LOG OF TEST BORINGS, 3 OF 4
14.	LOG OF TEST BORINGS, 4 OF 4

NOTES:

1. Paint "SOUTH DUTCHMAN CREEK BRIDGE L/R"
2. Paint "BR. NO. 39-0240L/R
3. Metal Beam Guard Rail, see "Roadway Plans"
4. Approach Slab TYPE N(30D)
5. 4" Communication Conduit, see "Roadway Plans"

For "General Notes", "Standard Plans", and "Spread Footing Data", see "GENERAL NOTES" Sheet.

DANIEL T. ADAMS
DESIGN ENGINEER

	BY	CHECKED		
DESIGN	L. Wu	A. McPhee	LOAD & RESISTANCE FACTOR DESIGN	LIVE LOADING: HL93 AND PERMIT DESIGN VEHICLE
DETAILS	G. Hallstrom	A. McPhee	LAYOUT: L. Wu	CHECKED A. McPhee
QUANTITIES	J. Szabo	F. Chen	SPECIFICATIONS: M. Kopsa	PLANS AND SPECS COMPARED M. Kopsa

STATE OF CALIFORNIA
DEPARTMENT OF TRANSPORTATION

DIVISION OF ENGINEERING SERVICES
STRUCTURE DESIGN
DESIGN BRANCH

BRIDGE NO. 39-0240R/L
POST MILE 1.6

SOUTH DUTCHMAN CREEK BRIDGE
GENERAL PLAN

CU 10
EA 415801

ORIGINAL SCALE IN INCHES FOR REDUCED PLANS 0 1 2 3

DISREGARD PRINTS BEARING EARLIER REVISION DATES

REVISION DATES: 06-22-07 2-19-08 6-04-08 8-26-09 3-05-10 4-13-10

SHEET 1 OF 14

STRUCTURES DESIGN GENERAL PLAN SHEET (ENGLISH) (REV. 10/25/05)

FILE => 390240rlagp01.dgn

STRUCTURES DESIGN GENERAL PLAN SHEET (ENGLISH) (REV.07-24-06)

USERNAME => trmikes1 DATE PLOTTED => 04-NOV-2010 TIME PLOTTED => 07:44

DIST	COUNTY	ROUTE	POST MILES TOTAL PROJECT	SHEET No	TOTAL SHEETS
10	Mer	99	0.0/4.6	594	607

REGISTERED CIVIL ENGINEER 04-13-10 DATE

11-1-10
PLANS APPROVAL DATE

REGISTERED PROFESSIONAL ENGINEER Larry Wu No. C57035 Exp. 6-30-11 CIVIL STATE OF CALIFORNIA

The State of California or its officers or agents shall not be responsible for the accuracy or completeness of electronic copies of this plan sheet.

SPREAD FOOTING DATA TABLE

SUPPORT LOCATION	WORKING STRESS DESIGN (WSD)		LOAD AND RESISTANCE FACTOR DESIGN (LRFD)		
			SERVICE	STRENGTH	EXTREME
	Permissible Gross Contact Stress (Settlement) (ksf)	Allowable Gross Bearing Capacity (ksf)	Permissible Net Contact Stress (ksf)	Factored Gross Nominal Bearing Resistance ϕ_b=0.45 (ksf)	Factored Gross Nominal Bearing Resistance ϕ_b=1.0 (ksf)
Abut 1	7.1	4.4	N/A	N/A	N/A
Abut 2	7.1	4.4	N/A	N/A	N/A

Structural Concrete, Bridge.
Structural Concrete, Bridge Footing.

CONCRETE STRENGTH AND TYPE LIMITS

No Scale

GENERAL NOTES
LOAD AND RESISTANCE FACTOR DESIGN

DESIGN: AASHTO LRFD BRIDGE DESIGN SPECIFICATIONS, 4th Edition and the CALTRANS Amendments, preface dated Dec. 2008.

SEISMIC DESIGN: Caltrans Seismic Design Criteria (SDC) Version 1.4, July, 2006

DEAD LOAD: Includes 35 Psf for future wearing surface.

LIVE LOADING: HL93 and permit design load.

SEISMIC LOADING: CALTRANS SDC ARS Curve for Soil Profile Type D (M = 6.5±0.25), (Peak Rock Acceleration = 0.2 g).

REINFORCED CONCRETE:
f_y = 60 ksi
f'_c = 3600 psi, unless otherwise noted
n = 8

STANDARD PLANS DATED MAY 2006

	A10A	ACRONUMS AND ABBREVIATIONS (SHEET 1 OF 2)
	A10B	ACRONYMS AND ABBREVIATIONS (SHEET 2 OF 2)
	A10C	SYMBOLS (SHEET 1 OF 2)
	A10C	SYMBOLS (SHEET 2 OF 2)
	A62C	LIMITS OF PAYMENT FOR EXCAVATION AND BACKFILL-BRIDGE
	BO-1	BRIDGE DETAILS
RSP	B6-21	JOINT SEALS (MAXIMUM MOVEMENT RATING = 2")
	B11-55	CONCRETE BARRIER TYPE 732

STANDARD PLAN SHEET NO.
DETAIL NO.

DESIGN	BY L. Wu	CHECKED A.McPhee	
DETAILS	BY G. Hallstrom	CHECKED A.McPhee	
QUANTITIES	BY J. Szabo	CHECKED F. Chen	

STATE OF CALIFORNIA
DEPARTMENT OF TRANSPORTATION

DIVISION OF ENGINEERING SERVICES
STRUCTURE DESIGN
DESIGN BRANCH 10

BRIDGE NO. 39-0240R/L
POST MILE 1.6

SOUTH DUTCHMAN CREEK BRIDGE
GENERAL NOTES

STRUCTURES DESIGN DETAIL SHEET (ENGLISH) (REV. 10/25/05)

ORIGINAL SCALE IN INCHES FOR REDUCED PLANS 0 1 2 3

CU 10
EA 415801

DISREGARD PRINTS BEARING EARLIER REVISION DATES

REVISION DATES: 02-19-08, 3-24-08, 3-03-10, 4-07-10

SHEET 2 OF 14

FILE => 390240rlaitp02.dgn

USERNAME => trmikesi DATE PLOTTED => 04-NOV-2010 TIME PLOTTED => 07:44

DIST	COUNTY	ROUTE	POST MILES TOTAL PROJECT	SHEET No	TOTAL SHEETS
10	Mer	99	0.0/4.6	595	607

REGISTERED CIVIL ENGINEER — DATE 04-13-10

11-1-10
PLANS APPROVAL DATE

REGISTERED PROFESSIONAL ENGINEER — Larry Wu — No. C57035 — Exp. 6-30-11 — CIVIL — STATE OF CALIFORNIA

The State of California or its officers or agents shall not be responsible for the accuracy or completeness of electronic copies of this plan sheet.

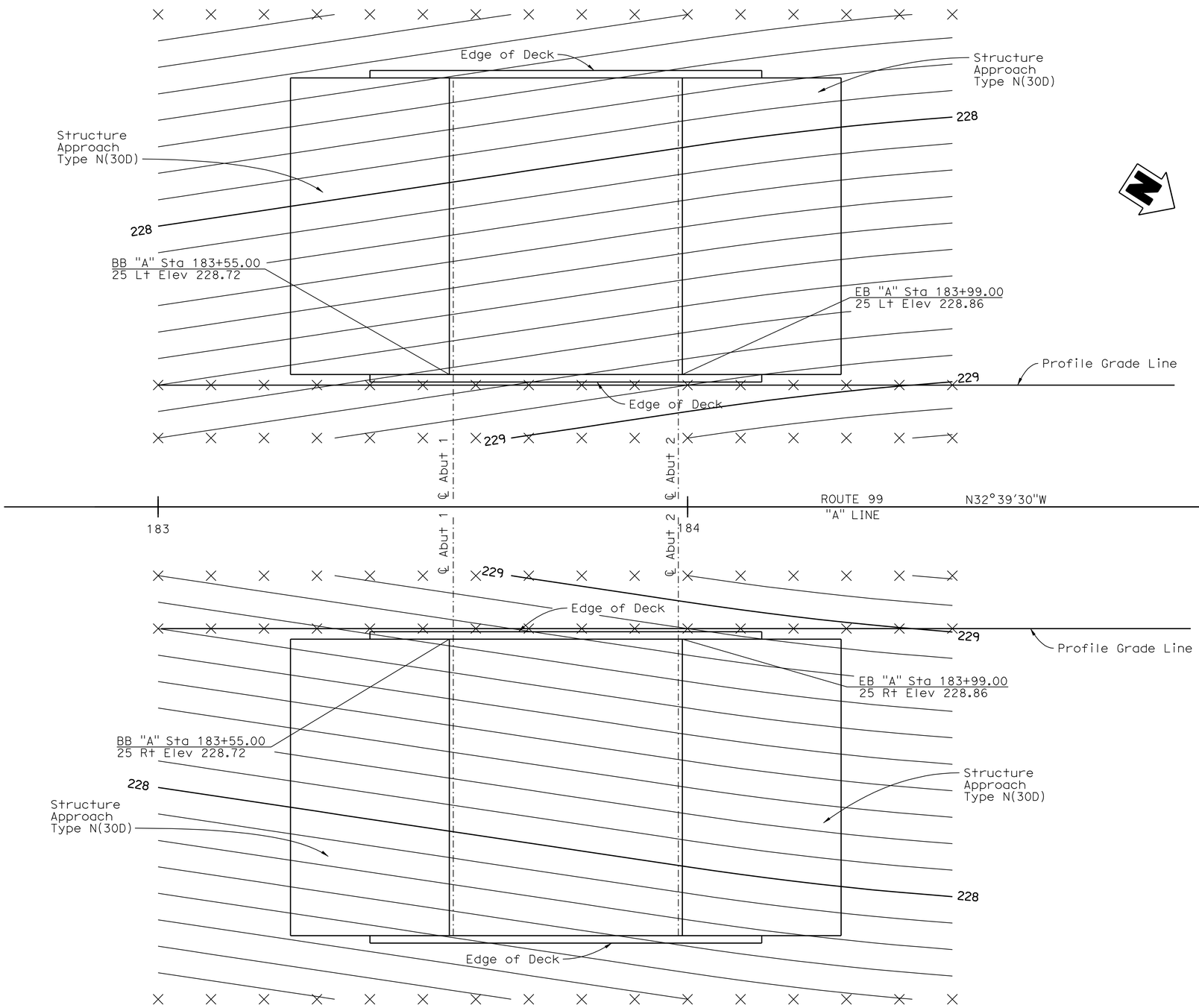

PLAN

3/32"=1'-0"

NOTES:

1. x - 10' intervals along station line.
2. Contour intervals = 0.1'.
3. Contours do not include camber.

	BY	CHECKED
DESIGN	L. Wu	A.McPhee
DETAILS	G. Hallstrom	A.McPhee
QUANTITIES	J. Szabo	F. Chen

STATE OF CALIFORNIA
DEPARTMENT OF TRANSPORTATION

DIVISION OF ENGINEERING SERVICES
STRUCTURE DESIGN
DESIGN BRANCH 10

BRIDGE NO. 39-0240R/L
POST MILE 1.6

SOUTH DUTCHMAN CREEK BRIDGE
DECK CONTOURS

STRUCTURES DESIGN DETAIL SHEET (ENGLISH) (REV. 10/25/05)

ORIGINAL SCALE IN INCHES FOR REDUCED PLANS 0 1 2 3

CU 10
EA 415801

DISREGARD PRINTS BEARING EARLIER REVISION DATES

REVISION DATES: 02-19-08

SHEET 3 OF 14

FILE => 390240r1ddc03.dgn

USERNAME => trmikes1 DATE PLOTTED => 04-NOV-2010 TIME PLOTTED => 07:44

DIST	COUNTY	ROUTE	POST MILES TOTAL PROJECT	SHEET No	TOTAL SHEETS
10	Mer	99	0.0/4.6	596	607

REGISTERED CIVIL ENGINEER 04-13-10 DATE

11-1-10
PLANS APPROVAL DATE

REGISTERED PROFESSIONAL ENGINEER LARRY WU No. C57035 Exp. 6-30-11 CIVIL STATE OF CALIFORNIA

The State of California or its officers or agents shall not be responsible for the accuracy or completeness of electronic copies of this plan sheet.

CURVE DATA

No.	R	Δ	T	L
Ⓐ	20,000.00	11°55'30"	2088.85	4162.61

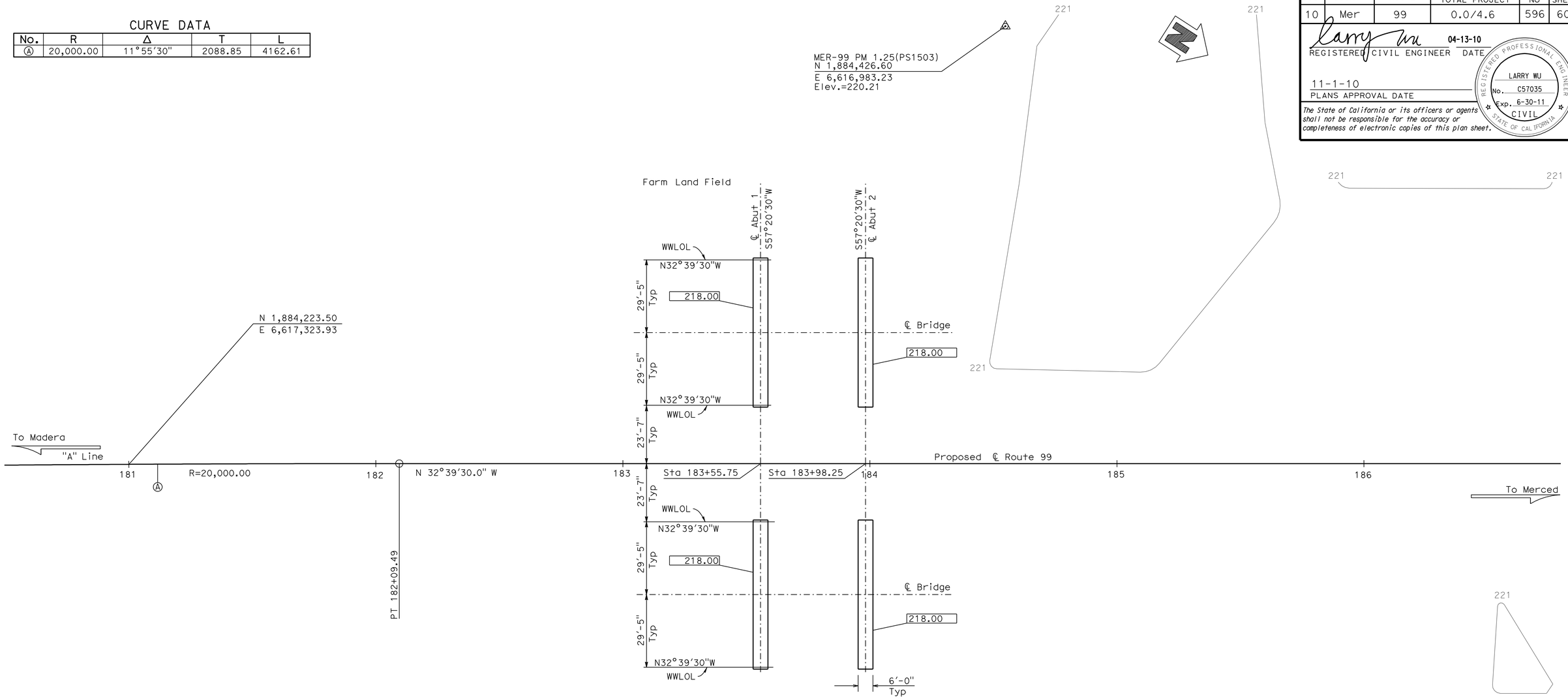

MER-99 PM 1.38 (Not Shown)
Fnd 1"IP w/ RPP & LS5679 Tag
339.66 FT Rt.℄ Proposed Rte 99
Sta. 185+22.92
N 1,884,762.69
E 6,617,381.42
Elev. = 222.15

MER-99 PM 1.25
Fnd 1"IP w/ RPP & LS5679 Tag
176.95 FT Lt.℄ Proposed Rte 99
Sta. 184+54.84
N 1,884,426.60
E 6,616,983.23
Elev. = 220.21

HYDROLOGIC SUMMARY

DRAINAGE AREA: _____SQUARE MILES

	DESIGN FLOOD	BASE FLOOD	OVERTOPPING FLOOD
FREQUENCY (YEARS)	50	100	N/A
DISCHARGE (CUBIC FEET PER SECOND)	230	250	N/A
WATER SURFACE ELEV. AT BRIDGE (FEET)	223.26	223.35	N/A

FLOOD PLAIN DATA ARE BASED UPON INFORMATION AVAILABLE WHEN THE PLANS WERE PREPARED AND ARE SHOWN TO MEET FEDERAL REQUIREMENTS. THE ACCURACY OF SAID INFORMATION IS NOT WARRANTED BY THE STATE AND INTERESTED OR AFFECTED PARTIES SHOULD MAKE THEIR OWN INVESTIGATIONS.

Indicates bottom of footing elevation

PRELIMINARY INVESTIGATION SECTION

SCALE	VERT.DATUM NAVD29	PHOTOGRAMMETRY AS OF: X			
1"=20'	HORZ.DATUM NAD83 (92)	SURVEYED	BY District	CHECKED	BY M.Licha 09/2007
ALIGNMENT TIES Dist. Traverse Sheet		DRAFTED	BY T.Marchenko 09/2007	CHECKED	BY T.Zolnikova 09/2007

DESIGN	BY L. Wu	CHECKED A.McPhee
DETAILS	BY G. Hallstrom	CHECKED A.McPhee
QUANTITIES	BY J. Szabo	CHECKED F. Chen

STATE OF CALIFORNIA
DEPARTMENT OF TRANSPORTATION

DIVISION OF ENGINEERING SERVICES
STRUCTURE DESIGN
DESIGN BRANCH 10

BRIDGE NO. 39-0240R/L
POST MILE 1.6

SOUTH DUTCHMAN CREEK BRIDGE
FOUNDATION PLAN

STRUCTURES FOUNDATION PLAN SHEET (ENGLISH) (REV. 10/25/05)

ORIGINAL SCALE IN INCHES FOR REDUCED PLANS 0 1 2 3

CU 10
EA 415801

DISREGARD PRINTS BEARING EARLIER REVISION DATES

REVISION DATES 10/15/07 02/29/08 06/24/08 03/24/09

SHEET 4 OF 14

FILE => 390240rlefdpl04.dgn

USERNAME => trmikkel DATE PLOTTED => 04-NOV-2010 TIME PLOTTED => 07:45

DIST	COUNTY	ROUTE	POST MILES TOTAL PROJECT	SHEET No	TOTAL SHEETS
10	Mer	99	0.0/4.6	597	607

REGISTERED CIVIL ENGINEER — DATE: 04-13-10

11-1-10
PLANS APPROVAL DATE

REGISTERED PROFESSIONAL ENGINEER — Larry Wu — No. C57035 — Exp. 6-30-11 — CIVIL — STATE OF CALIFORNIA

The State of California or its officers or agents shall not be responsible for the accuracy or completeness of electronic copies of this plan sheet.

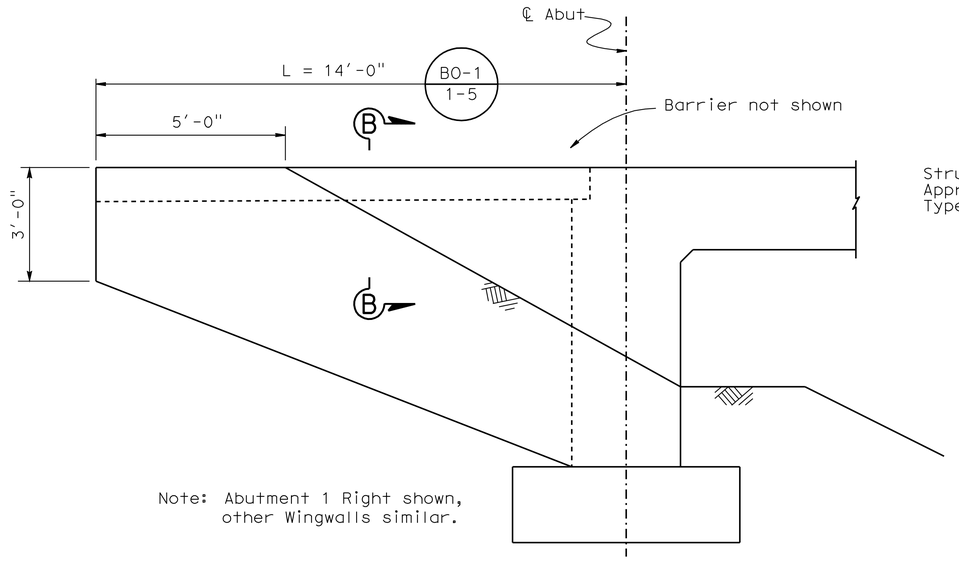

Note: Abutment 1 Right shown, other Wingwalls similar.

WINGWALL ELEVATION

½" = 1'-0"

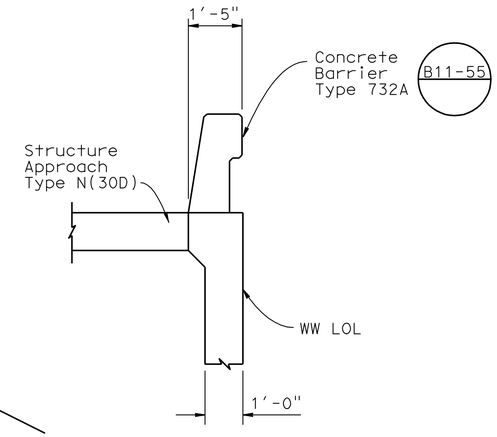

SECTION B-B

½" = 1'-0"

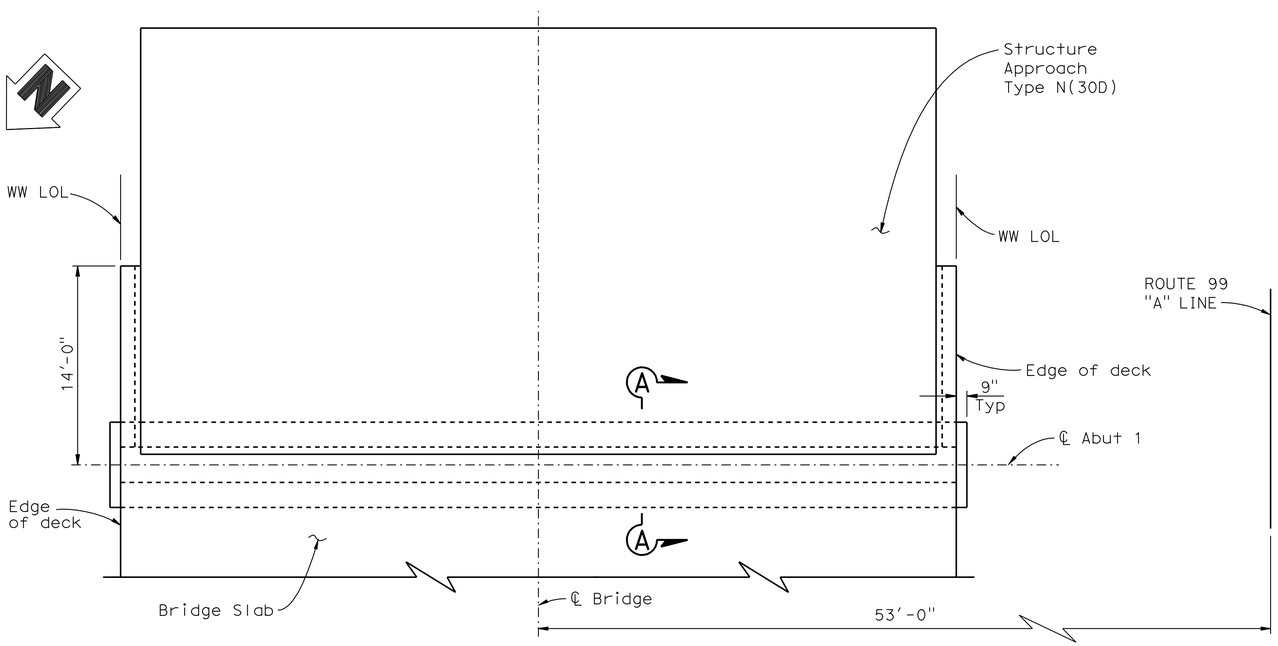

Note: Abutment 1 Right shown, Abutment 2 similar.

PLAN

3/16"=1'-0"

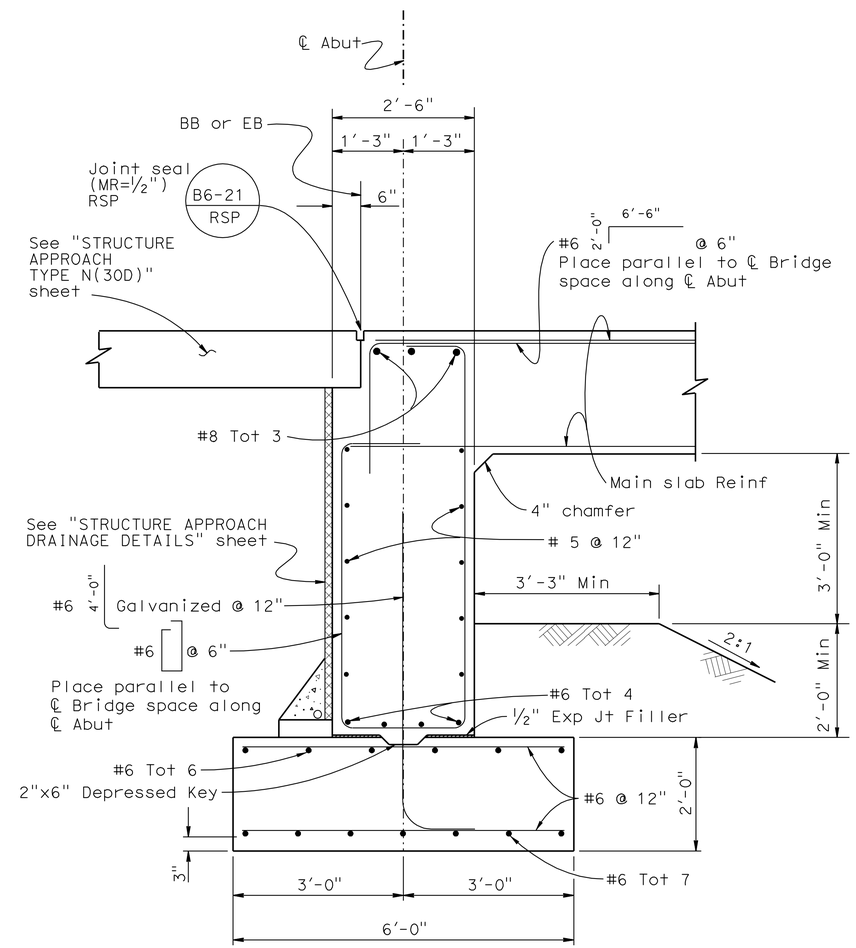

SECTION A-A

¾"=1'-0"

DESIGN	BY L. Wu	CHECKED A.McPhee	
DETAILS	BY G. Hallstrom	CHECKED A.McPhee	
QUANTITIES	BY J. Szabo	CHECKED F. Chen	

STATE OF CALIFORNIA
DEPARTMENT OF TRANSPORTATION

DIVISION OF ENGINEERING SERVICES
STRUCTURE DESIGN
DESIGN BRANCH 10

BRIDGE NO. 39-0240R/L
POST MILE 1.6

SOUTH DUTCHMAN CREEK BRIDGE
ABUTMENT DETAILS

STRUCTURES DESIGN DETAIL SHEET (ENGLISH) (REV. 10/25/05)

ORIGINAL SCALE IN INCHES FOR REDUCED PLANS 0 1 2 3

CU 10
EA 415801

DISREGARD PRINTS BEARING EARLIER REVISION DATES

REVISION DATES: 02-20-08 6-04-08 3-25-09

SHEET 5 OF 14

FILE => 390240rlfadt05.dgn

USERNAME => trmikes! DATE PLOTTED => 04-NOV-2010 TIME PLOTTED => 07:45

DIST	COUNTY	ROUTE	POST MILES TOTAL PROJECT	SHEET No	TOTAL SHEETS
10	Mer	99	0.0/4.6	598	607

REGISTERED CIVIL ENGINEER 04-13-10 DATE

11-1-10
PLANS APPROVAL DATE

REGISTERED PROFESSIONAL ENGINEER Larry Wu No. C57035 Exp. 6-30-11 CIVIL STATE OF CALIFORNIA

The State of California or its officers or agents shall not be responsible for the accuracy or completeness of electronic copies of this plan sheet.

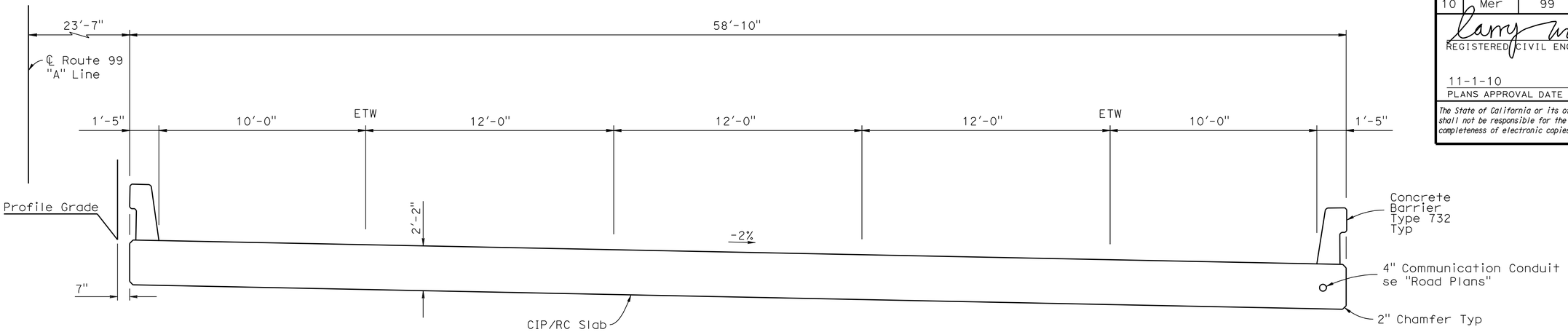

TYPICAL SECTION

3/8" = 1'-0"

NOTE: Right Bridge shown, Left Bridge similar.

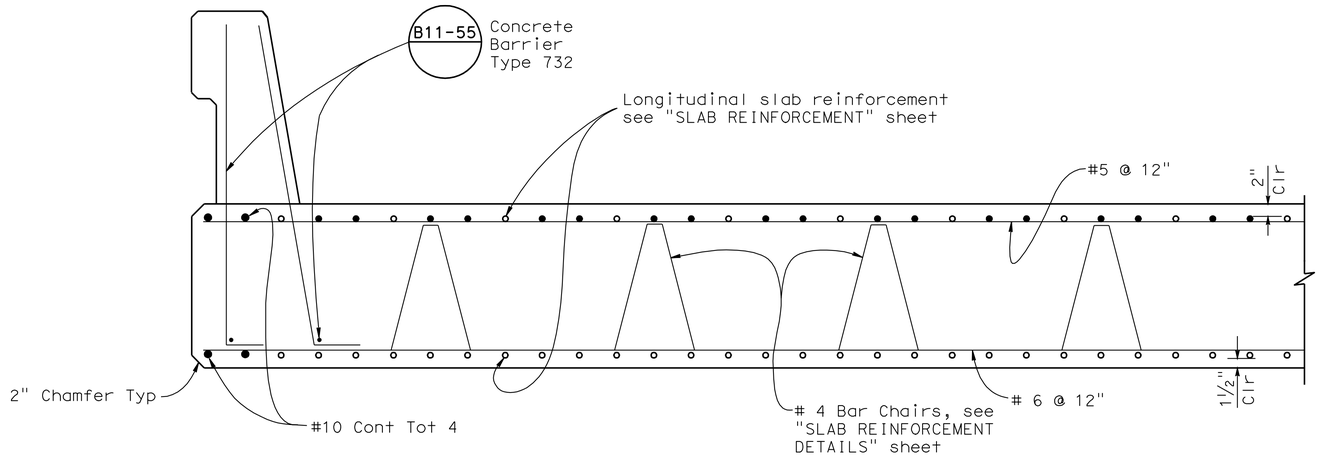

PART TYPICAL SECTION

1" = 1'-0"

DESIGN	BY L. Wu	CHECKED A.McPhee
DETAILS	BY G. Hallstrom	CHECKED A.McPhee
QUANTITIES	BY J. Szabo	CHECKED F. Chen

STATE OF CALIFORNIA
DEPARTMENT OF TRANSPORTATION

DIVISION OF ENGINEERING SERVICES
STRUCTURE DESIGN
DESIGN BRANCH 10

BRIDGE NO. 39-0240R/L
POST MILE 1.6

SOUTH DUTCHMAN CREEK BRIDGE
TYPICAL SECTION

STRUCTURES DESIGN DETAIL SHEET (ENGLISH) (REV. 10/25/05)

ORIGINAL SCALE IN INCHES FOR REDUCED PLANS 0 1 2 3

CU 10
EA 415801

DISREGARD PRINTS BEARING EARLIER REVISION DATES

REVISION DATES: 02-20-08 3-25-09

SHEET 6 OF 14

FILE => 390240rlkts06.dgn

USERNAME => trmikesl DATE PLOTTED => 04-NOV-2010 TIME PLOTTED => 07:45

DIST	COUNTY	ROUTE	POST MILES TOTAL PROJECT	SHEET No	TOTAL SHEETS
10	Mer	99	0.0/4.6	599	607

REGISTERED CIVIL ENGINEER 04-13-10 DATE

11-1-10
PLANS APPROVAL DATE

REGISTERED PROFESSIONAL ENGINEER Larry Wu No. C57035 Exp. 6-30-11 CIVIL STATE OF CALIFORNIA

The State of California or its officers or agents shall not be responsible for the accuracy or completeness of electronic copies of this plan sheet.

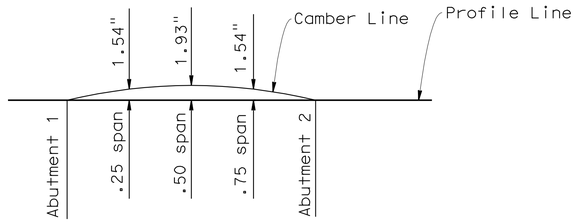

Does not include allowance for falsework settlement

CAMBER DIAGRAM

no scale

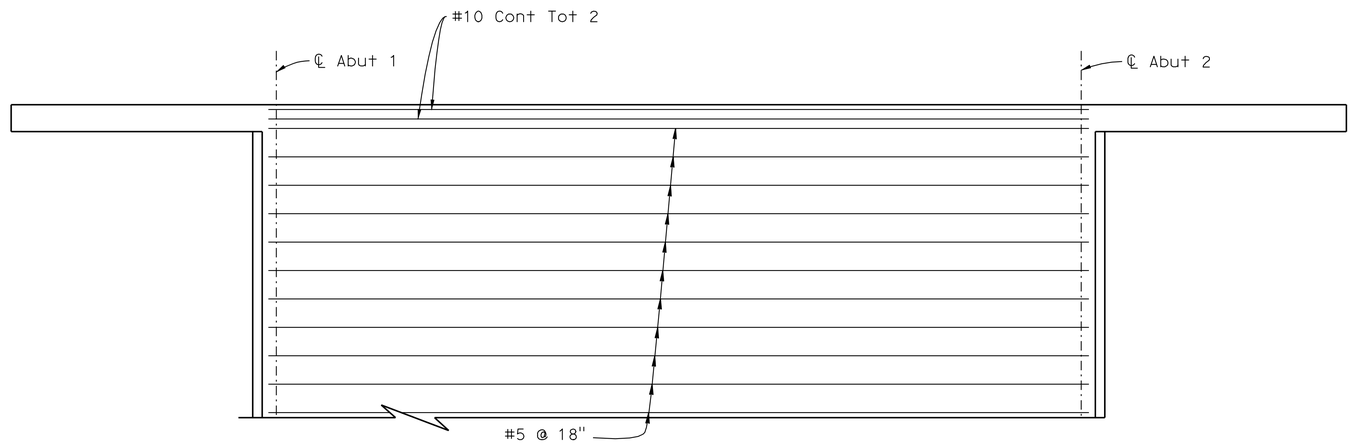

PART PLAN - TOP SLAB REINFORCEMENT

1/4" = 1'-0"

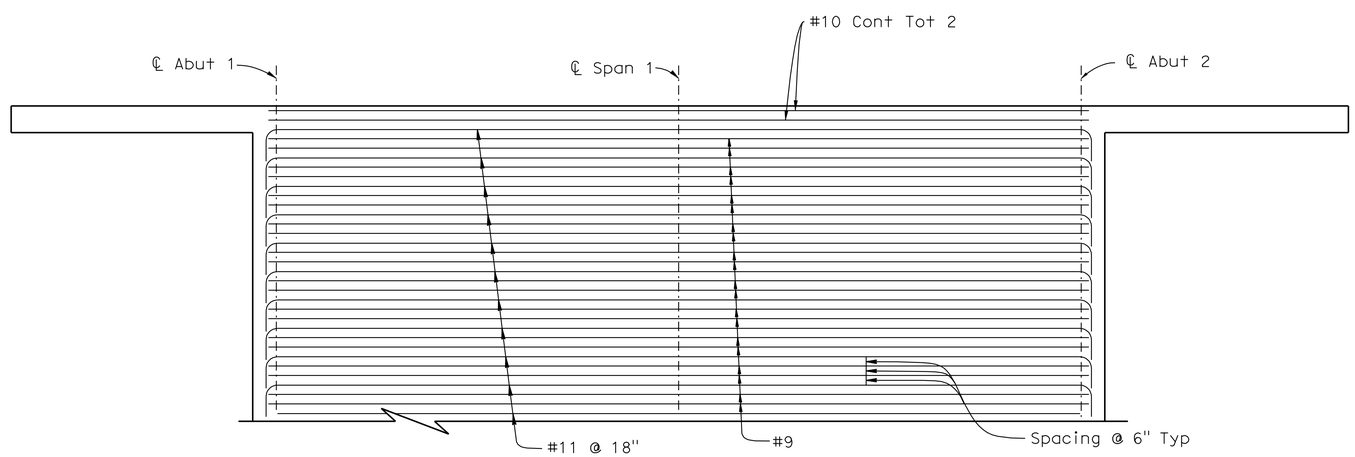

PART PLAN - BOTTOM SLAB REINFORCEMENT

1/4" = 1'-0"

NOTES:

1. No lap splices allowed in top & bottom Reinforcement.

	BY	CHECKED
DESIGN	L. Wu	A.McPhee
DETAILS	G. Hallstrom	A.McPhee
QUANTITIES	J. Szabo	F. Chen

STATE OF CALIFORNIA
DEPARTMENT OF TRANSPORTATION

DIVISION OF ENGINEERING SERVICES
STRUCTURE DESIGN
DESIGN BRANCH 10

BRIDGE NO. 39-0240R/L
POST MILE 1.6

SOUTH DUTCHMAN CREEK BRIDGE
SLAB REINFORCEMENT

STRUCTURES DESIGN DETAIL SHEET (ENGLISH) (REV. 10/25/05)

ORIGINAL SCALE IN INCHES FOR REDUCED PLANS 0 1 2 3

CU 10
EA 415801

DISREGARD PRINTS BEARING EARLIER REVISION DATES

REVISION DATES: 02-20-08 3-25-09

SHEET 7 OF 14

FILE => 390240rloslb_rf07.dgn

USERNAME => trmikesl DATE PLOTTED => 04-NOV-2010 TIME PLOTTED => 07:45

DIST	COUNTY	ROUTE	POST MILES TOTAL PROJECT	SHEET No	TOTAL SHEETS
10	Mer	99	0.0/4.6	600	607

REGISTERED CIVIL ENGINEER 04-13-10 DATE

11-1-10
PLANS APPROVAL DATE

REGISTERED PROFESSIONAL ENGINEER Larry Wu No. C57035 Exp. 6-30-11 CIVIL STATE OF CALIFORNIA

The State of California or its officers or agents shall not be responsible for the accuracy or completeness of electronic copies of this plan sheet.

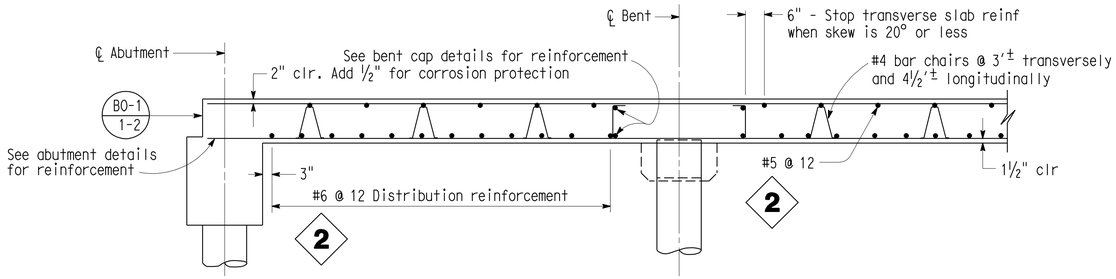

LONGITUDINAL SECTION

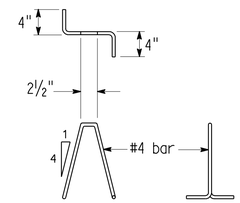

BAR CHAIR DETAIL

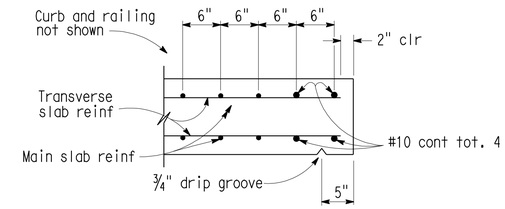

EDGE OF SLAB DETAILS

BAR SPLICE LENGTH								
Bar size	#4	#5	#6	#7	#8	#9	#10	#11
All bars, except top bars in spans over 24'	23"	28"	34"	39"	45"	68"	76"	85"
Top bars in spans over 24'	23"	28"	34"	53"	60"	77"	97"	120"

Reinforcement notes:

Splices in top main bars to be located near center of span.
Splices in bottom main bars to be located near bent.
Spacing of all transverse bars is measured along ℄ roadway.
Skew 0° to 20°: Place all transverse bars parallel to bent.
Skew over 20°: Place transverse slab bars perpendicular to ℄ bridge. See details at right and below.

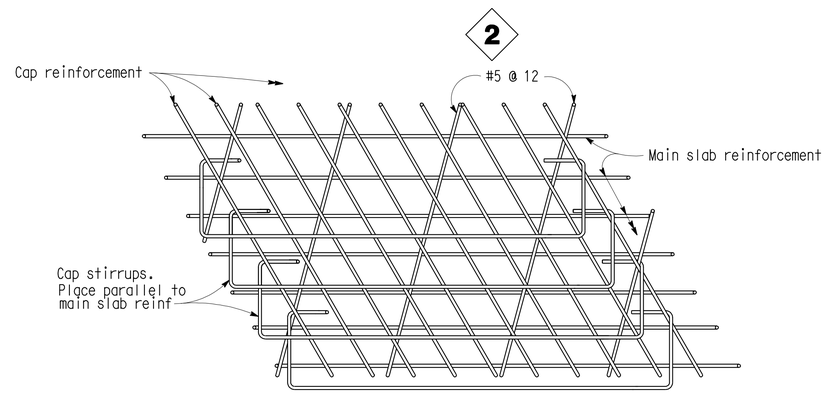

1

TOP SLAB REINFORCEMENT AT BENT

Note: View for main span over 24'.
Bar placement similar for spans under 24'

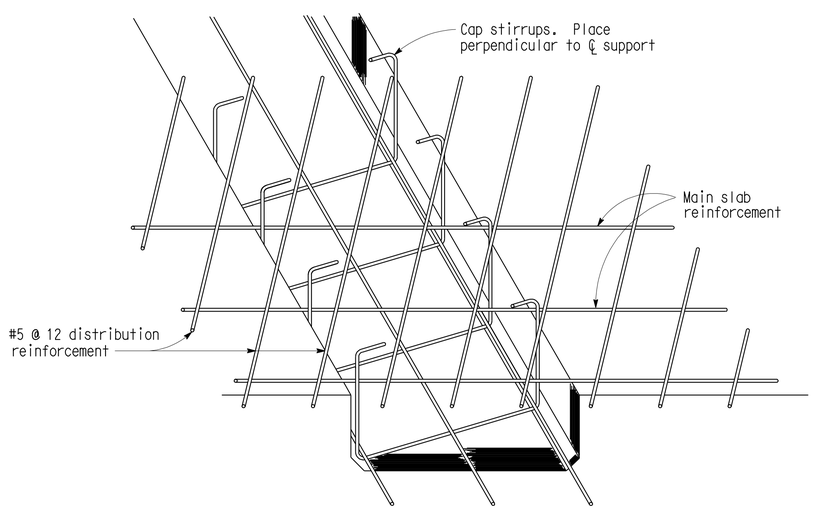

DROPPED CAP

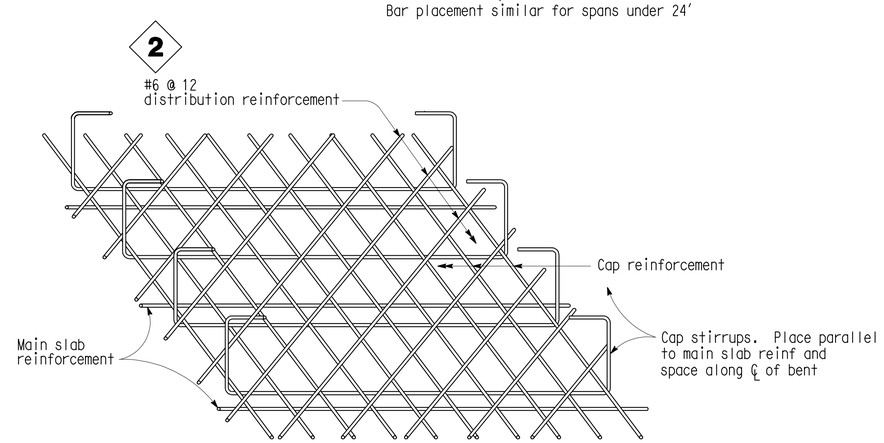

FLUSH CAP

BOTTOM SLAB REINFORCEMENT AT BENT

SPECIAL DETAILS

REVISED STANDARD DRAWING

FILE NO. XS 12-55	DESIGN BY L.Y. LEE	CHECKED T. FARNAN	APPROVAL RECOMMENDED BY
DESIGN DATE 8/86	DETAILS BY R. YEE	CHECKED T. FARNAN	DESIGN SUPERVISOR
	SUBMITTED BY R.S. WATANABE		

1 Deleted General Notes
2 Revised Details

STATE OF CALIFORNIA
DEPARTMENT OF TRANSPORTATION

DIVISION OF ENGINEERING SERVICES
STRUCTURE DESIGN
DESIGN BRANCH 10

BRIDGE NO. 39-0240R/L
POST MILE 1.6

SOUTH DUTCHMAN CREEK BRIDGE
SLAB REINFORCEMENT DETAILS

DS OSD 2147A (CADD 7/97)

ORIGINAL SCALE IN INCHES FOR REDUCED PLANS 0 1 2 3

CU 10
EA 415801

DISREGARD PRINTS BEARING EARLIER REVISION DATES

REVISION DATES: 02-20-08 6-04-08

SHEET 8 OF 14

FILE => 390240rlosib_rfdt08.dgn

USERNAME => trmikesl DATE PLOTTED => 04-NOV-2010 TIME PLOTTED => 07:45

DIST	COUNTY	ROUTE	POST MILES TOTAL PROJECT	SHEET No	TOTAL SHEETS
10	Mer	99	0.0/4.6	601	607

REGISTERED CIVIL ENGINEER 04-13-10 DATE

11-1-10
PLANS APPROVAL DATE

The State of California or its officers or agents shall not be responsible for the accuracy or completeness of electronic copies of this plan sheet.

REGISTERED PROFESSIONAL ENGINEER Larry Wu No. C57035 Exp. 6-30-11 CIVIL STATE OF CALIFORNIA

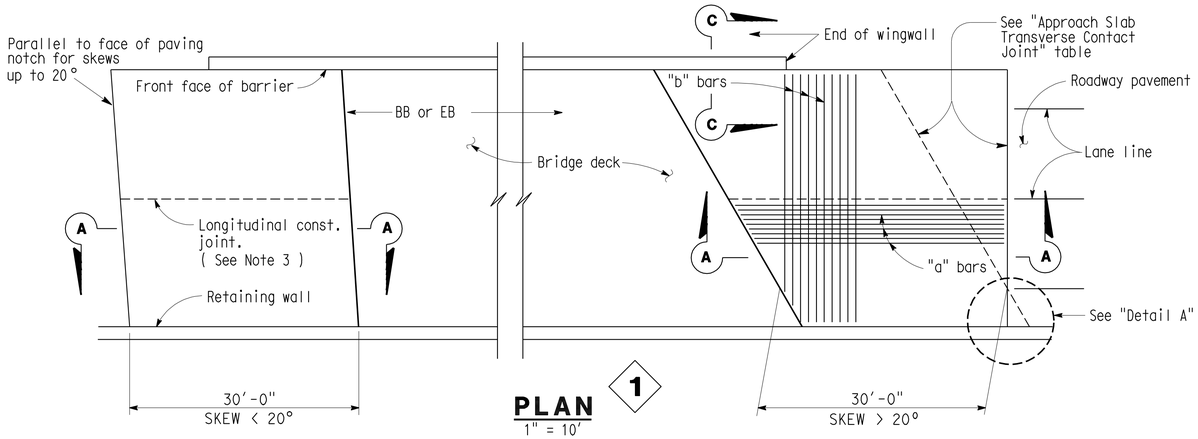

PLAN 1
1" = 10'

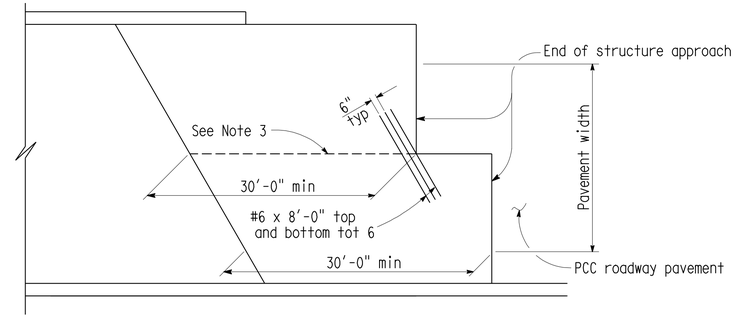

STRUCTURE APPROACH - END STAGGER DETAIL
No Scale

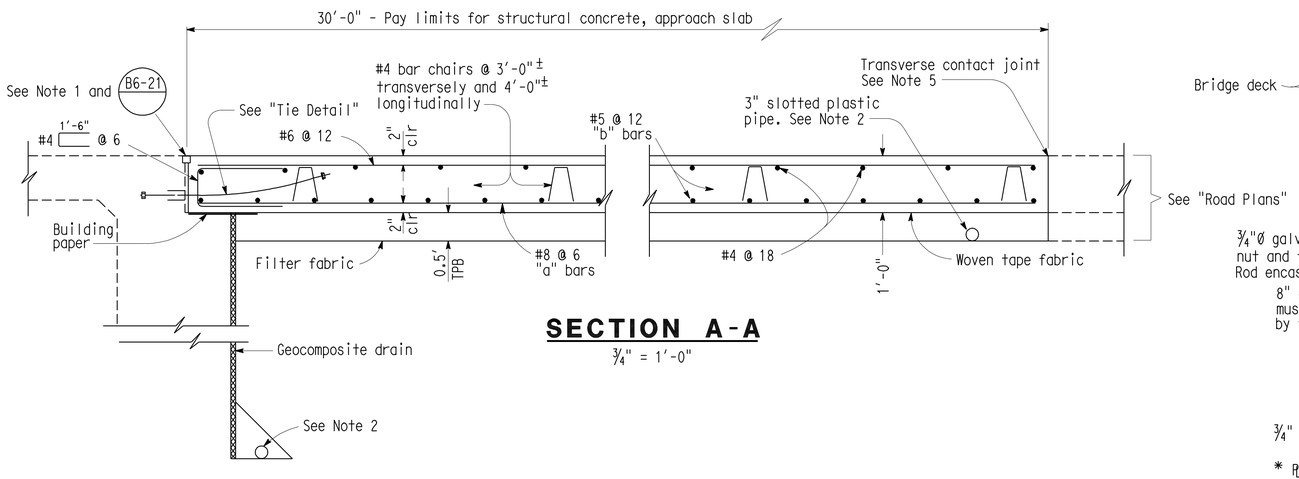

SECTION A-A
¾" = 1'-0"

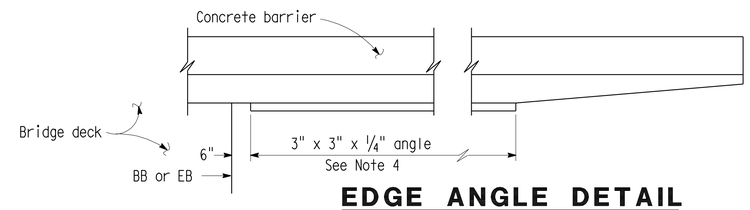

EDGE ANGLE DETAIL
½" = 1'-0"

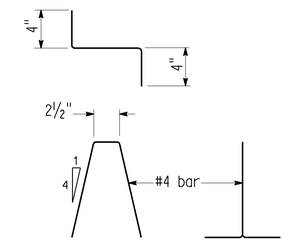

BAR CHAIR DETAIL
1½" = 1'-0"

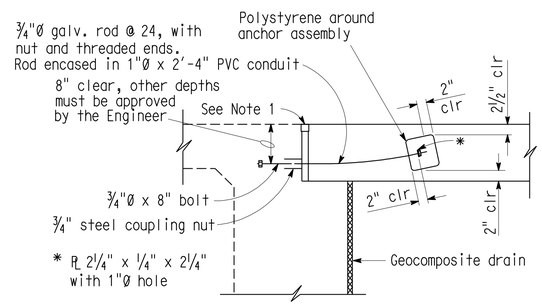

TIE DETAIL
¾" = 1'-0"

APPROACH SLAB TRANSVERSE CONTACT JOINT		
APPROACH SKEW	WITH AC ROADWAY PAVEMENT	WITH PCC ROADWAY PAVEMENT
< 20°	Parallel to face of paving notch	Parallel to face of paving notch
20° - 45°	Parallel to face of P N use (Detail A)	Stagger lines 24' to 36' apart
> 45°	Parallel to face of P N use (Detail A)	Stagger at each lane line

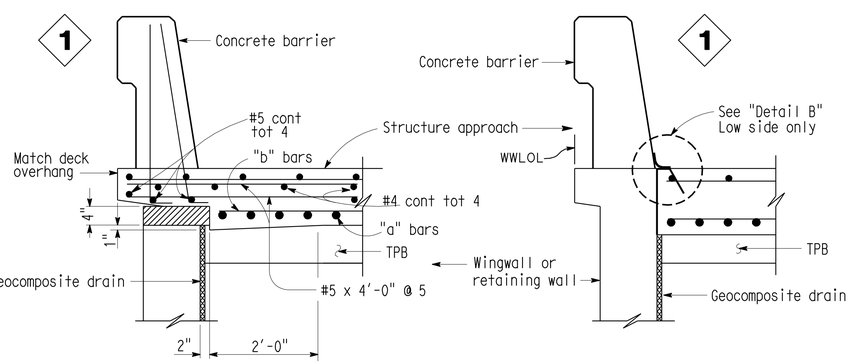

TYPE E-1 TYPE E-2

SECTION C-C
¾" = 1'-0"
(Type E-1 to be used, unless otherwise shown on plans)

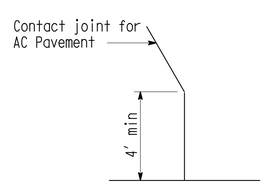

DETAIL A
No Scale

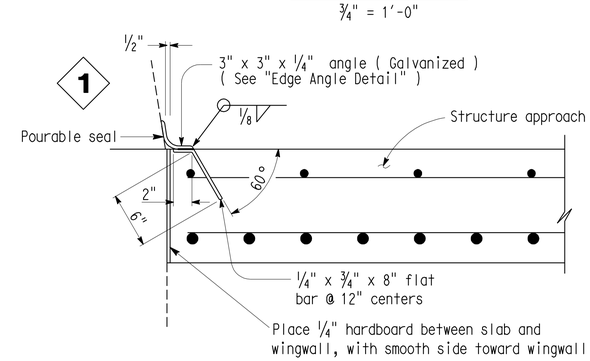

DETAIL B
1½" = 1'-0"

NOTES:

1. For details not noted or shown, see Structure Plans.
2. For drainage details, see "Structure Approach Drainage Details" sheet.
3. Longitudinal construction joints,when permitted by the Engineer, shall be located on lane lines.
4. End angle at beginning of barrier transition, end of wingwall or end of structure approach, as applicable
5. For transverse contact joint with new PCC paving, refer to Standard Plan A35-A.
6. At the contractor's option, approach slab transverse reinforcement may be placed parallel to paving notch. Spacing of transverse reinforcement is measured along ℄ roadway.

Polystyrene to be removed.

SPECIAL DETAILS

REVISED STANDARD DRAWING

FILE NO. XS 22-24	DESIGN	BY M. TRAFFALIS	CHECKED E. THORKILDSEN	APPROVAL RECOMMENDED BY
DESIGN DATE 8/92	DETAILS	BY R. YEE	CHECKED E. THORKILDSEN	DESIGN SUPERVISOR
	SUBMITTED BY M. HA			

1 Revised details

STATE OF CALIFORNIA DEPARTMENT OF TRANSPORTATION

DIVISION OF ENGINEERING SERVICES STRUCTURE DESIGN DESIGN BRANCH 10

BRIDGE NO. 39-0240R/L POST MILE 1.6

SOUTH DUTCHMAN CREEK BRIDGE
STRUCTURE APPROACH TYPE N(30D)

DS OSD 2147A (CADD 7/97)

ORIGINAL SCALE IN INCHES FOR REDUCED PLANS 0 1 2 3

CU 10
EA 415801

DISREGARD PRINTS BEARING EARLIER REVISION DATES 02-20-08

REVISION DATES

SHEET 9 OF 14

FILE => 390240rlssa09.dgn

USERNAME => trmikes1 DATE PLOTTED => 04-NOV-2010 TIME PLOTTED => 07:45

DIST	COUNTY	ROUTE	POST MILES TOTAL PROJECT	SHEET No	TOTAL SHEETS
10	Mer	99	0.0/4.6	602	607

REGISTERED CIVIL ENGINEER 04-13-10 DATE

11-1-10
PLANS APPROVAL DATE

REGISTERED PROFESSIONAL ENGINEER Larry Wu No. C57035 Exp. 6-30-11 CIVIL STATE OF CALIFORNIA

The State of California or its officers or agents shall not be responsible for the accuracy or completeness of electronic copies of this plan sheet.

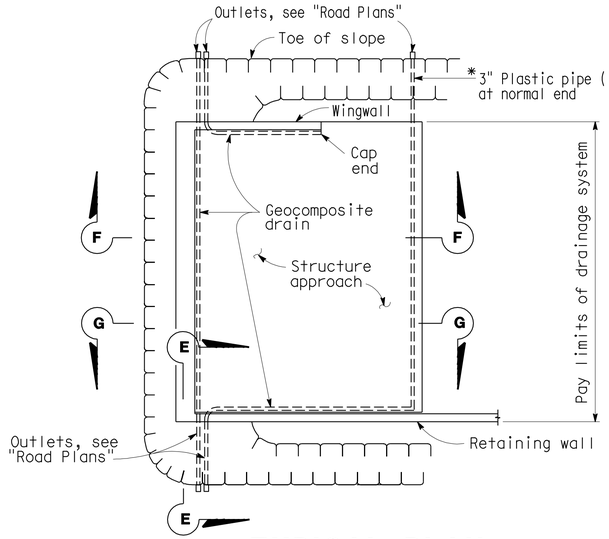

TYPICAL PLAN

1" = 10'

* For pipe layout at staggered end, see "Detail B."

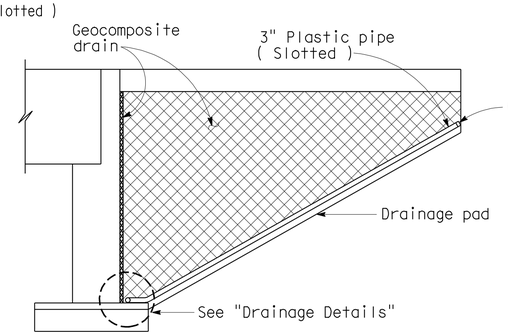

CANTILEVER WINGWALL SECTION F-F

1/4" = 1'-0"

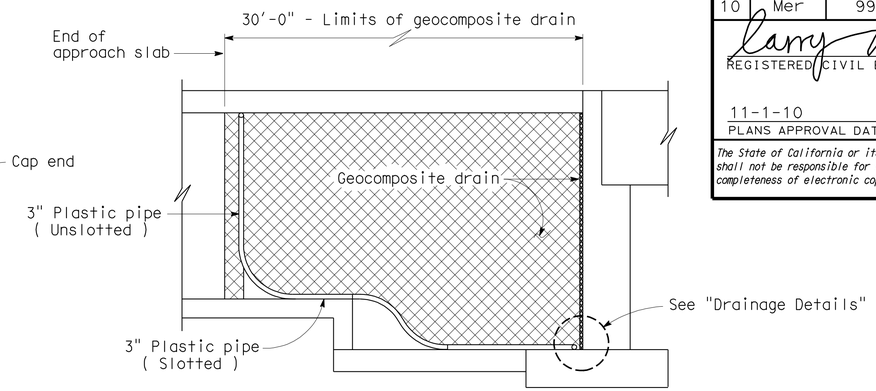

RETAINING WALL WINGWALL SECTION G-G

1/4" = 1'-0"

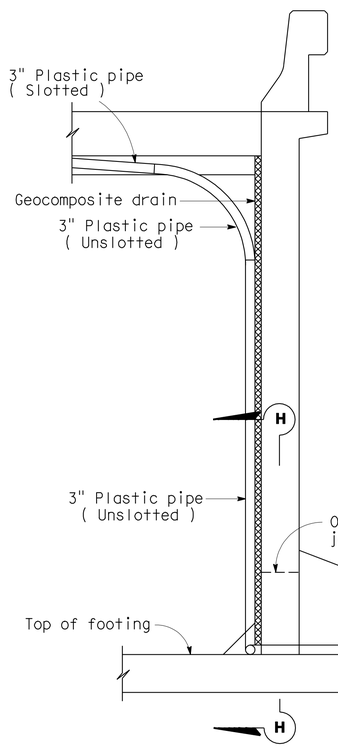

SECTION E-E

1/2" = 1'-0"

Note: Bends and junctions in 3" plastic pipe are 30" radius min.

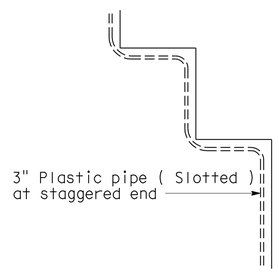

DETAIL B

No Scale

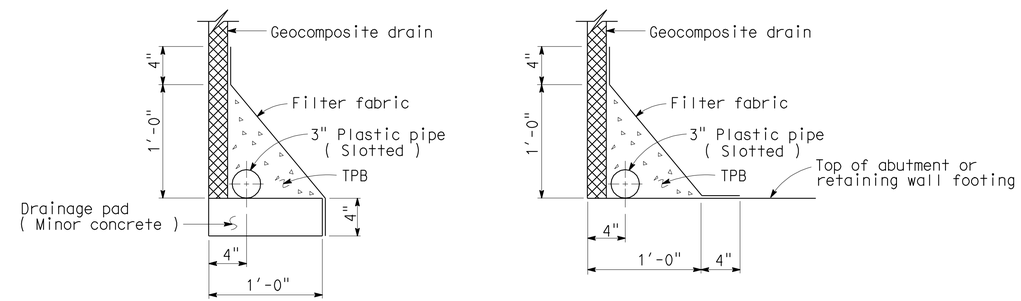

WITHOUT FOOTING WITH FOOTING

DRAINAGE DETAILS

1 1/2" = 1'-0"

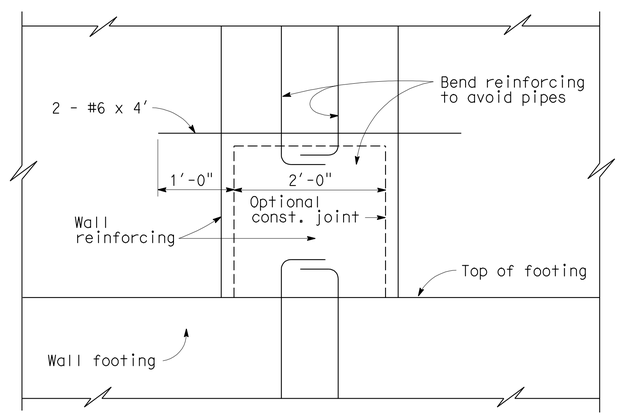

SECTION H-H

1" = 1'-0"

STANDARD DRAWING

FILE NO. XS 22-17	DESIGN	BY M. TRAFFALIS	CHECKED E. THORKILDSEN	APPROVAL RECOMMENDED BY
DESIGN DATE 8/92	DETAILS	BY R. YEE	CHECKED E. THORKILDSEN	DESIGN SUPERVISOR
	SUBMITTED BY M. HA			

STATE OF CALIFORNIA DEPARTMENT OF TRANSPORTATION

DIVISION OF ENGINEERING SERVICES STRUCTURE DESIGN DESIGN BRANCH 10

BRIDGE NO. 39-0240R/L POST MILE 1.6

SOUTH DUTCHMAN CREEK BRIDGE
STRUCTURE APPROACH DRAINAGE DETAILS

DS OSD 2147A (CADD 7/97)

ORIGINAL SCALE IN INCHES FOR REDUCED PLANS 0 1 2 3

CU 10
EA 415801

DISREGARD PRINTS BEARING EARLIER REVISION DATES

REVISION DATES 02-20-08

SHEET 10 OF 14

FILE => 390240rlssadd10.dgn

USERNAME => rtmikes1 DATE PLOTTED => 04-NOV-2010 TIME PLOTTED => 07:46

DIST	COUNTY	ROUTE	POST MILES TOTAL PROJECT	SHEET No	TOTAL SHEETS
10	Mer	99	0.0/4.6	603	607

CERTIFIED ENGINEERING GEOLOGIST — 11-2-09 DATE

REGISTERED PROFESSIONAL GEOLOGIST — Xing Zheng — No. 2130 — Exp. 3-31-11 — CERTIFIED ENGINEERING GEOLOGIST — STATE OF CALIFORNIA

11-1-10
PLANS APPROVAL DATE

The State of California or its officers or agents shall not be responsible for the accuracy or completeness of electronic copies of this plan sheet.

This LOTB sheet was prepared in accordance with the Caltrans Soil & Rock Logging, Classification, & Presentation Manual (June 2007).

BENCH MARK

BM : Mer-99 Elev : 220.20′
PM 1.25

Fnd 1" IP w/RPP & LS 5679 Tag
176.95′ Lt C/L Proposed Rte 99
Sta 184+54.84
N 1,884,426.60
E 6,616,983.23
NAVD 29

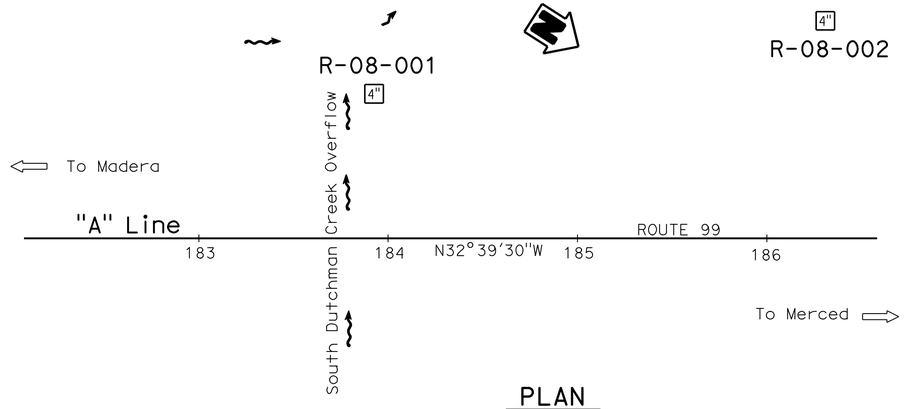

PLAN
1"=40′

Notes:

1. SPT N Values shown on the Log of Test Boring (LOTB) sheet are actual values recorded in the field.
2. PP = Pocket Penetrometer Test (tsf).
3. Groundwater was not measured.

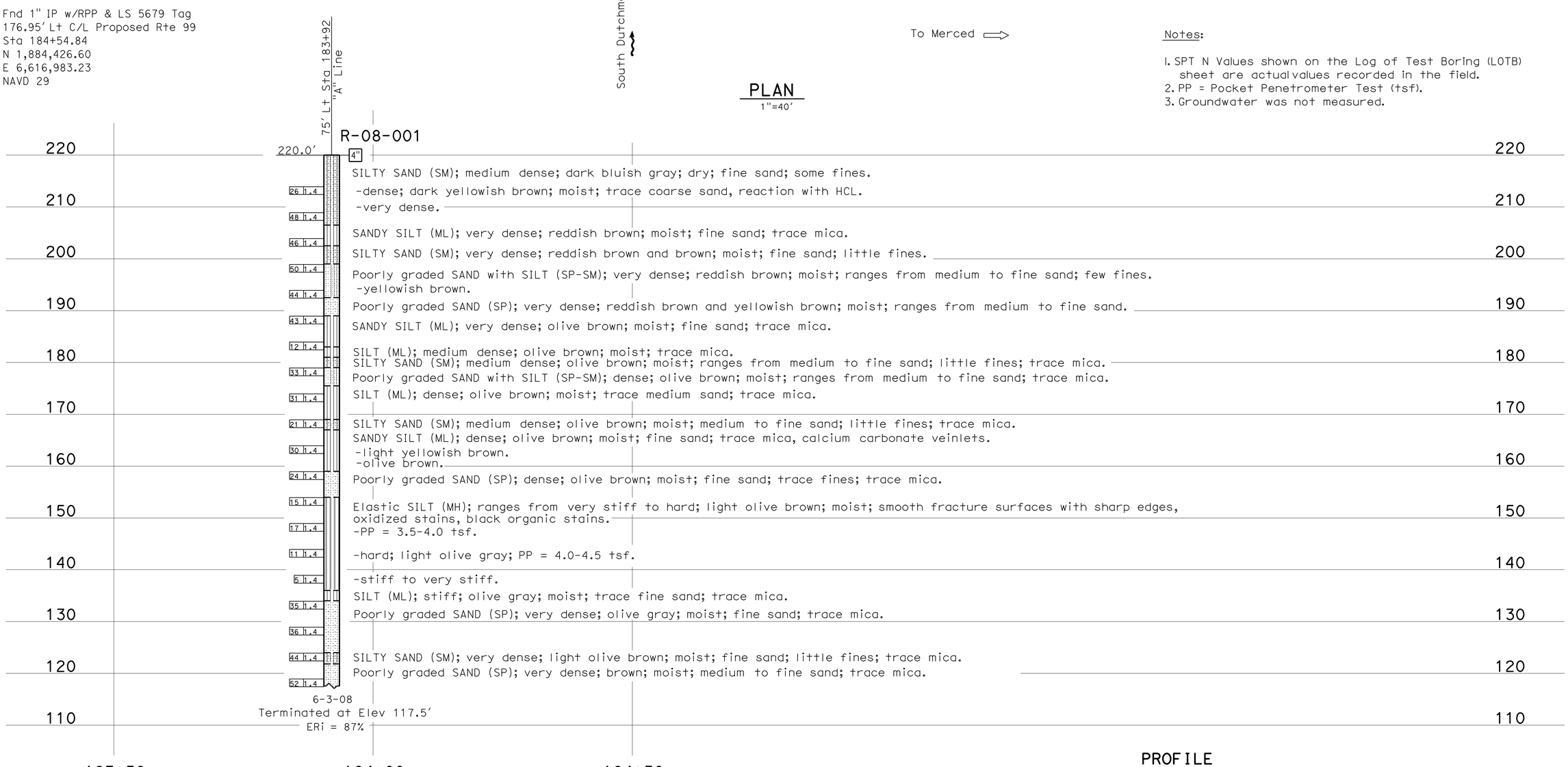

PROFILE
HOR. 1"=10′
VER. 1"=10′

ENGINEERING SERVICES		GEOTECHNICAL SERVICES	STATE OF CALIFORNIA DEPARTMENT OF TRANSPORTATION	DIVISION OF ENGINEERING SERVICES STRUCTURE DESIGN DESIGN BRANCH	BRIDGE NO. 39-0240R/L	SOUTH DUTCHMAN CREEK BRIDGE
FUNCTIONAL SUPERVISOR	DRAWN BY: W. Tang 09/09	FIELD INVESTIGATION BY:			POST MILES 1.6	LOG OF TEST BORINGS 1 OF 4
NAME: R. Buell	CHECKED BY: J. Martin	L. Sepulveda				
OGS CIVIL LOG OF TEST BORINGS SHEET		ORIGINAL SCALE IN INCHES FOR REDUCED PLANS 0 1 2 3	CU 10 EA 415801	DISREGARD PRINTS BEARING EARLIER REVISION DATES	REVISION DATES 09-16-09 09-25-09 10-5-09 10-19-09	SHEET 11 OF 14

FILE => 390240zltb11.dgn

USERNAME => trmikest DATE PLOTTED => 04-NOV-2010 TIME PLOTTED => 07:46

DIST	COUNTY	ROUTE	POST MILES TOTAL PROJECT	SHEET No	TOTAL SHEETS
10	Mer	99	0.0/4.6	604	607

CERTIFIED ENGINEERING GEOLOGIST — 11-2-09 DATE

11-1-10
PLANS APPROVAL DATE

REGISTERED PROFESSIONAL GEOLOGIST — Xing Zheng — No. 2130 — Exp. 3-31-11 — CERTIFIED ENGINEERING GEOLOGIST — STATE OF CALIFORNIA

The State of California or its officers or agents shall not be responsible for the accuracy or completeness of electronic copies of this plan sheet.

This LOTB sheet was prepared in accordance with the Caltrans Soil & Rock Logging, Classification, & Presentation Manual (June 2007).

FOR PLAN VIEW, SEE
"LOG OF TEST BORINGS 1 OF 4"

115' Lt Sta 186+31
"A" Line

R-08-002

194.0'

4"

SANDY SILT (ML); loose; brown; ranges from dry to moist; fine sand.
-dense; light brown; moist; weak cementation; reaction with HCL.
SILTY SAND (SM); medium dense; light brown; moist; ranges from coarse to fine sand; some fines; mica.
-6" thick fine rounded GRAVELLY SAND lense.
SANDY SILT (ML); medium dense; light gray; moist; fine sand.
CLAYEY SAND (SC); medium dense; light gray; moist; fine sand; trace coarse sand; little fines.
SILTY SAND (SM); medium dense; light yellowish brown; moist; fine sand; some fines.
-dense; light reddish brown; ranges from medium to fine sand; little fines.
Well-graded SAND (SW); very dense; light reddish brown; moist; ranges from coarse to fine sand; trace fines.
SILTY SAND (SM); very dense; light gray; moist; ranges from coarse to fine sand; some fines.
Poorly graded SAND (SP); very dense; light reddish brown; moist; ranges from medium to fine sand; trace fines.
SILTY SAND (SM); very dense; light gray; moist; ranges from coarse to fine sand; trace fines.
SANDY SILT (ML); very dense; light olive gray; moist; fine sand with trace coarse sand; black organic stains.
SANDY SILT (ML); loose; light yellowish brown; ranges from moist to wet; fine sand.
-medium dense; moist; weak cementation.
-dense; light reddish brown.
SILTY SAND (SM); medium dense; light yellowish brown; moist; fine sand; some fines.
SANDY SILT (ML); medium dense; light yellowish brown; moist; fine sand; oxide stains.
SILT (ML); very stiff; light gray; moist.
Elastic SILT (MH); hard; light olive gray; moist; smooth fracture surfaces with sharp edges, black organic stains; PP = 4.5 tsf.
-PP > 4.5 tsf.
-PP > 4.5 tsf.
SILT with SAND (ML); hard; gray; moist; fine sand.
Poorly graded SAND (SP); dense; light gray; wet; ranges from medium to fine sand.
SILT (ML); hard; gray mottled with light reddish brown; moist; trace fine sand.
Poorly graded SAND (SP); very dense; light reddish brown; wet; medium, subangular to subrounded sand.
Well-graded SAND (SW); very dense; light yellowish brown; moist; ranges from coarse to fine, subangular sand; strong clay binder.
SANDY SILT (ML); very dense; light yellowish brown; moist; fine sand.
Well-graded SAND (SW); very dense; reddish brown; moist; ranges from coarse to fine, subangular to subrounded sand; strong clay binder.

Blows	Hammer
33	1.4
19	1.4
19	1.4
31	1.4
45	1.4
50	1.4
60	1.4
5	1.4
17	1.4
14	1.4
25	1.4
15	1.4
15	1.4
13	1.4
11	1.4
5	1.4
23	1.4
25	1.4
38	1.4
61	1.4
60/5"	1.4
56	1.4

6-3-08
Terminated at Elev 82.5'
ERi = 78%

200 190 180 170 160 150 140 130 120 110 100 90 80

186+00 186+50 187+00

PROFILE
HOR. 1"=10'
VER. 1"=10'

ENGINEERING SERVICES	GEOTECHNICAL SERVICES	STATE OF CALIFORNIA DEPARTMENT OF TRANSPORTATION	DIVISION OF ENGINEERING SERVICES STRUCTURE DESIGN DESIGN BRANCH	BRIDGE NO. 39-0240R/L POST MILES 1.6	SOUTH DUTCHMAN CREEK BRIDGE LOG OF TEST BORINGS 2 OF 4
FUNCTIONAL SUPERVISOR NAME: R. Buell	DRAWN BY: W. Tang 09/09 CHECKED BY: J. Martin	FIELD INVESTIGATION BY: X. Zheng	CU 10 EA 415801		

OGS CIVIL LOG OF TEST BORINGS SHEET

ORIGINAL SCALE IN INCHES FOR REDUCED PLANS 0 1 2 3

DISREGARD PRINTS BEARING EARLIER REVISION DATES → REVISION DATES: ~~03-16-09~~ ~~03-25-09~~ 10-19-09

SHEET 12 OF 14

FILE => 390240zltb12.dgn

USERNAME => trmikest DATE PLOTTED => 04-NOV-2010 TIME PLOTTED => 07:46

DIST	COUNTY	ROUTE	POST MILES TOTAL PROJECT	SHEET No	TOTAL SHEETS
10	Mer	99	0.0/4.6	605	607

CERTIFIED ENGINEERING GEOLOGIST — 11-2-09 DATE

REGISTERED PROFESSIONAL GEOLOGIST — Xing Zheng No. 2130 Exp. 3-31-11 CERTIFIED ENGINEERING GEOLOGIST — STATE OF CALIFORNIA

11-1-10
PLANS APPROVAL DATE

The State of California or its officers or agents shall not be responsible for the accuracy or completeness of electronic copies of this plan sheet.

REFERENCE: CALTRANS SOIL & ROCK LOGGING, CLASSIFICATION, AND PRESENTATION MANUAL (JUNE 2007)

CEMENTATION

Description	Criteria
Weak	Crumbles or breaks with handling or little finger pressure.
Moderate	Crumbles or breaks with considerable finger pressure.
Strong	Will not crumble or break with finger pressure.

CONSISTENCY OF COHESIVE SOILS

Description	Unconfined Compressive Strength (tsf)	Pocket Penetrometer Measurement (tsf)	Torvane Measurement (tsf)	Field Approximation
Very Soft	< 0.25	< 0.25	< 0.12	Easily penetrated several inches by fist
Soft	0.25 to 0.50	0.25 to 0.50	0.12 to 0.25	Easily penetrated several inches by thumb
Medium Stiff	0.50 to 1.0	0.50 to 1.0	0.25 to 0.50	Penetrated several inches by thumb with moderate effort
Stiff	1 to 2	1 to 2	0.50 to 1.0	Readily indented by thumb but penetrated only with great effort
Very Stiff	2 to 4	2 to 4	1.0 to 2.0	Readily indented by thumbnail
Hard	> 4.0	> 4.0	> 2.0	Indented by thumbnail with difficulty

BOREHOLE IDENTIFICATION

Symbol	Hole Type	Description
Size	A	Auger Boring
Size	R P	Rotary drilled boring Rotary percussion boring (air)
Size	R	Rotary drilled diamond core
Size	HD HA	Hand driven (1-inch soil tube) Hand Auger
●	D	Dynamic Cone Penetration Boring
▲	CPT	Cone Penetration Test (ASTM D 5778-95)
⬚	O	Other

Note: Size in inches.

PLASTICITY OF FINE-GRAINED SOILS

Description	Criteria
Nonplastic	A 1/8-inch thread cannot be rolled at any water content.
Low	The thread can barely be rolled and the lump cannot be formed when drier than the plastic limit.
Medium	The thread is easy to roll and not much time is required to reach the plastic limit. The thread cannot be rerolled after reaching the plastic limit. The lump crumbles when drier than the plastic limit.
High	It takes considerable time rolling and kneading to reach the plastic limit. The thread can be rerolled several times after reaching the plastic limit. The lump can be formed without crumbling when drier than the plastic limit.

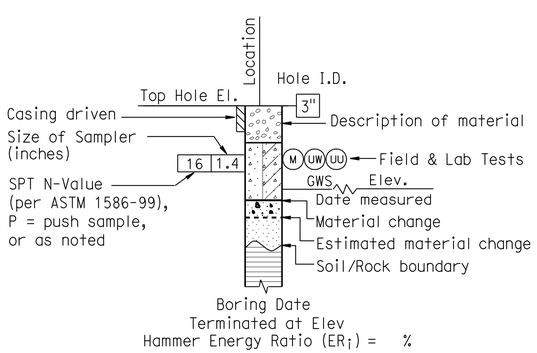

ROTARY BORING

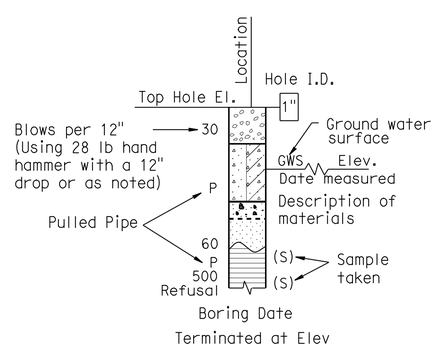

HAND BORING

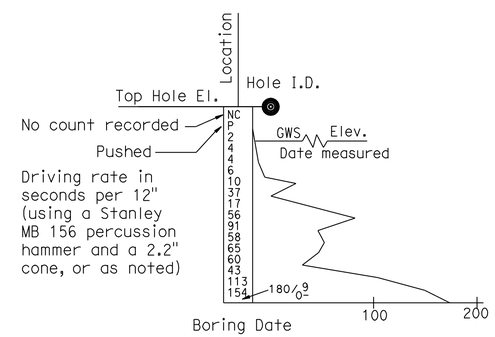

DYNAMIC CONE PENETRATION BORING

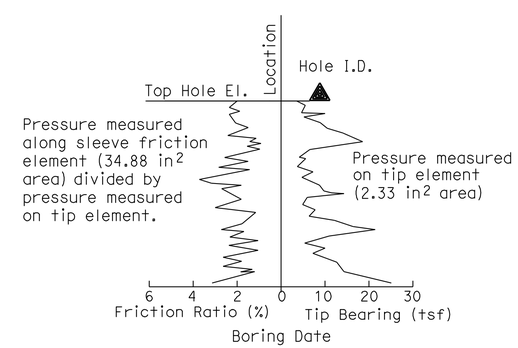

CONE PENETRATION TEST (CPT) SOUNDING

ENGINEERING SERVICES	GEOTECHNICAL SERVICES	STATE OF CALIFORNIA DEPARTMENT OF TRANSPORTATION	DIVISION OF ENGINEERING SERVICES STRUCTURE DESIGN DESIGN BRANCH	BRIDGE NO. 39-0240R/L POST MILE 1.6	SOUTH DUTCHMAN CREEK BRIDGE LOG OF TEST BORINGS 3 OF 4
	PREPARED BY: I.G-Remmen 11-09				

GS LOTB SOIL LEGEND

ORIGINAL SCALE IN INCHES FOR REDUCED PLANS 0 1 2 3

CU 10
EA 415801

DISREGARD PRINTS BEARING EARLIER REVISION DATES

REVISION DATES

SHEET 13 OF 14

FILE => 390240zltb13.dgn

USERNAME => ttmirkes1 DATE PLOTTED => 04-NOV-2010 TIME PLOTTED => 07:46

REFERENCE: CALTRANS SOIL & ROCK LOGGING, CLASSIFICATION, AND PRESENTATION MANUAL (JUNE 2007)

DIST	COUNTY	ROUTE	POST MILES TOTAL PROJECT	SHEET No	TOTAL SHEETS
10	Mer	99	0.0/4.6	606	607

CERTIFIED ENGINEERING GEOLOGIST — 11-2-09 DATE

11-1-10
PLANS APPROVAL DATE

REGISTERED PROFESSIONAL GEOLOGIST — Xing Zheng No. 2130 Exp. 3-31-11 — CERTIFIED ENGINEERING GEOLOGIST — STATE OF CALIFORNIA

The State of California or its officers or agents shall not be responsible for the accuracy or completeness of electronic copies of this plan sheet.

GROUP SYMBOLS AND NAMES

Graphic/Symbol	Group Names	Graphic/Symbol	Group Names
GW	Well-graded GRAVEL Well-graded GRAVEL with SAND	CL	Lean CLAY Lean CLAY with SAND Lean CLAY with GRAVEL SANDY lean CLAY SANDY lean CLAY with GRAVEL GRAVELLY lean CLAY GRAVELLY lean CLAY with SAND
GP	Poorly graded GRAVEL Poorly graded GRAVEL with SAND		
GW-GM	Well-graded GRAVEL with SILT Well-graded GRAVEL with SILT and SAND	CL-ML	SILTY CLAY SILTY CLAY with SAND SILTY CLAY with GRAVEL SANDY SILTY CLAY SANDY SILTY CLAY with GRAVEL GRAVELLY SILTY CLAY GRAVELLY SILTY CLAY with SAND
GW-GC	Well-graded GRAVEL with CLAY (or SILTY CLAY) Well-graded GRAVEL with CLAY and SAND (or SILTY CLAY and SAND)		
GP-GM	Poorly graded GRAVEL with SILT Poorly graded GRAVEL with SILT and SAND	ML	SILT SILT with SAND SILT with GRAVEL SANDY SILT SANDY SILT with GRAVEL GRAVELLY SILT GRAVELLY SILT with SAND
GP-GC	Poorly graded GRAVEL with CLAY (or SILTY CLAY) Poorly graded GRAVEL with CLAY and SAND (or SILTY CLAY and SAND)		
GM	SILTY GRAVEL SILTY GRAVEL with SAND	OL	ORGANIC lean CLAY ORGANIC lean CLAY with SAND ORGANIC lean CLAY with GRAVEL SANDY ORGANIC lean CLAY SANDY ORGANIC lean CLAY with GRAVEL GRAVELLY ORGANIC lean CLAY GRAVELLY ORGANIC lean CLAY with SAND
GC	CLAYEY GRAVEL CLAYEY GRAVEL with SAND		
GC-GM	SILTY, CLAYEY GRAVEL SILTY, CLAYEY GRAVEL with SAND	OL	ORGANIC SILT ORGANIC SILT with SAND ORGANIC SILT with GRAVEL SANDY ORGANIC SILT SANDY ORGANIC SILT with GRAVEL GRAVELLY ORGANIC SILT GRAVELLY ORGANIC SILT with SAND
SW	Well-graded SAND Well-graded SAND with GRAVEL		
SP	Poorly graded SAND Poorly graded SAND with GRAVEL	CH	Fat CLAY Fat CLAY with SAND Fat CLAY with GRAVEL SANDY fat CLAY SANDY fat CLAY with GRAVEL GRAVELLY fat CLAY GRAVELLY fat CLAY with SAND
SW-SM	Well-graded SAND with SILT Well-graded SAND with SILT and GRAVEL		
SW-SC	Well-graded SAND with CLAY (or SILTY CLAY) Well-graded SAND with CLAY and GRAVEL (or SILTY CLAY and GRAVEL)	MH	Elastic SILT Elastic SILT with SAND Elastic SILT with GRAVEL SANDY elastic SILT SANDY elastic SILT with GRAVEL GRAVELLY elastic SILT GRAVELLY elastic SILT with SAND
SP-SM	Poorly graded SAND with SILT Poorly graded SAND with SILT and GRAVEL		
SP-SC	Poorly graded SAND with CLAY (or SILTY CLAY) Poorly graded SAND with CLAY and GRAVEL (or SILTY CLAY and GRAVEL)	OH	ORGANIC fat CLAY ORGANIC fat CLAY with SAND ORGANIC fat CLAY with GRAVEL SANDY ORGANIC fat CLAY SANDY ORGANIC fat CLAY with GRAVEL GRAVELLY ORGANIC fat CLAY GRAVELLY ORGANIC fat CLAY with SAND
SM	SILTY SAND SILTY SAND with GRAVEL		
SC	CLAYEY SAND CLAYEY SAND with GRAVEL	OH	ORGANIC elastic SILT ORGANIC elastic SILT with SAND ORGANIC elastic SILT with GRAVEL SANDY ORGANIC elastic SILT SANDY ORGANIC elastic SILT with GRAVEL GRAVELLY ORGANIC elastic SILT GRAVELLY ORGANIC elastic SILT with SAND
SC-SM	SILTY, CLAYEY SAND SILTY, CLAYEY SAND with GRAVEL		
PT	PEAT	OL/OH	ORGANIC SOIL ORGANIC SOIL with SAND ORGANIC SOIL with GRAVEL SANDY ORGANIC SOIL SANDY ORGANIC SOIL with GRAVEL GRAVELLY ORGANIC SOIL GRAVELLY ORGANIC SOIL with SAND
	COBBLES COBBLES and BOULDERS BOULDERS		

FIELD AND LABORATORY TESTING

- (C) Consolidation (ASTM D 2435)
- (CL) Collapse Potential (ASTM D 5333)
- (CP) Compaction Curve (CTM 216)
- (CR) Corrosivity Testing (CTM 643, CTM 422, CTM 417)
- (CU) Consolidated Undrained Triaxial (ASTM D 4767)
- (DS) Direct Shear (ASTM D 3080)
- (EI) Expansion Index (ASTM D 4829)
- (M) Moisture Content (ASTM D 2216)
- (OC) Organic Content-% (ASTM D 2974)
- (P) Permeability (CTM 220)
- (PA) Particle Size Analysis (ASTM D 422)
- (PI) Plasticity Index (AASHTO T 90) Liquid Limit (AASHTO T 89)
- (PL) Point Load Index (ASTM D 5731)
- (PM) Pressure Meter
- (PP) Pocket Penetrometer
- (R) R-Value (CTM 301)
- (SE) Sand Equivalent (CTM 217)
- (SG) Specific Gravity (AASHTO T 100)
- (SL) Shrinkage Limit (ASTM D 427)
- (SW) Swell Potential (ASTM D 4546)
- (TV) Pocket Torvane
- (UC) Unconfined Compression-Soil (ASTM D 2166) Unconfined Compression-Rock (ASTM D 2938)
- (UU) Unconsolidated Undrained Triaxial (ASTM D 2850)
- (UW) Unit Weight (ASTM D 4767)
- (VS) Vane Shear (AASHTO T 223)

APPARENT DENSITY OF COHESIONLESS SOILS

Description	SPT N_{60} (Blows / 12 inches)
Very loose	0 - 4
Loose	5 - 10
Medium Dense	11 - 30
Dense	31 - 50
Very Dense	> 50

MOISTURE

Description	Criteria
Dry	Absence of moisture, dusty, dry to the touch
Moist	Damp but no visible water
Wet	Visible free water, usually soil is below water table

PERCENT OR PROPORTION OF SOILS

Description	Criteria
Trace	Particles are present but estimated to be less than 5%
Few	5 to 10%
Little	15 to 25%
Some	30 to 45%
Mostly	50 to 100%

PARTICLE SIZE

Description		Size
Boulder		> 12"
Cobble		3" to 12"
Gravel	Coarse	3/4" to 3"
	Fine	No. 4 to 3/4"
Sand	Coarse	No. 10 to No. 4
	Medium	No. 40 to No. 10
	Fine	No. 200 to No. 40

ENGINEERING SERVICES

GEOTECHNICAL SERVICES
PREPARED BY: I.G-Remmen 11-09

STATE OF CALIFORNIA
DEPARTMENT OF TRANSPORTATION

DIVISION OF ENGINEERING SERVICES
STRUCTURE DESIGN
DESIGN BRANCH

BRIDGE NO. 39-0240R/L
POST MILE 1.6

SOUTH DUTCHMAN CREEK BRIDGE
LOG OF TEST BORINGS 4 OF 4

GS LOTB SOIL LEGEND

ORIGINAL SCALE IN INCHES FOR REDUCED PLANS 0 1 2 3

CU 10
EA 415801

DISREGARD PRINTS BEARING EARLIER REVISION DATES

REVISION DATES

SHEET 14 OF 14

FILE => 390240zltb14.dgn

USERNAME => trmikes1 DATE PLOTTED => 04-NOV-2010 TIME PLOTTED => 07:46

ROUTE 99 REVISIONS			
REV #	DESCRIPTION	BY	DATE
	SB MEDIAN ACCELERATION LANE	RTH	7/10/92

DIST.	COUNTY	ROUTE	TOTAL PROJECT	NO.	SHEETS
10	Mer	99	0.0/2.4	34	39

REGISTERED CIVIL ENGINEER 8/12/91 DATE

4-20-92 PLANS APPROVAL DATE

G.S. INENAGA No. 12078 Exp. 3/31/93 CIVIL STATE OF CALIFORNIA

MARK THOMAS & CO.,INC.
530 BERCUT DRIVE, SUITE C
SACRAMENTO, CA 95814

PROFILE

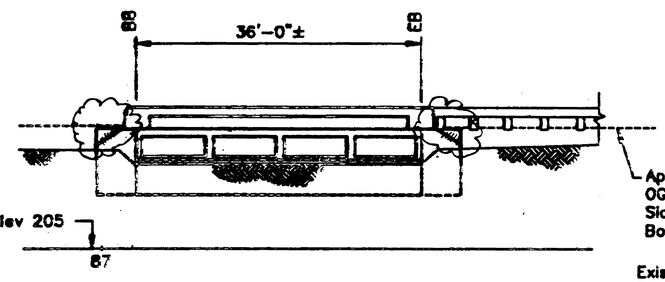

ELEVATION

1"=10'-0"

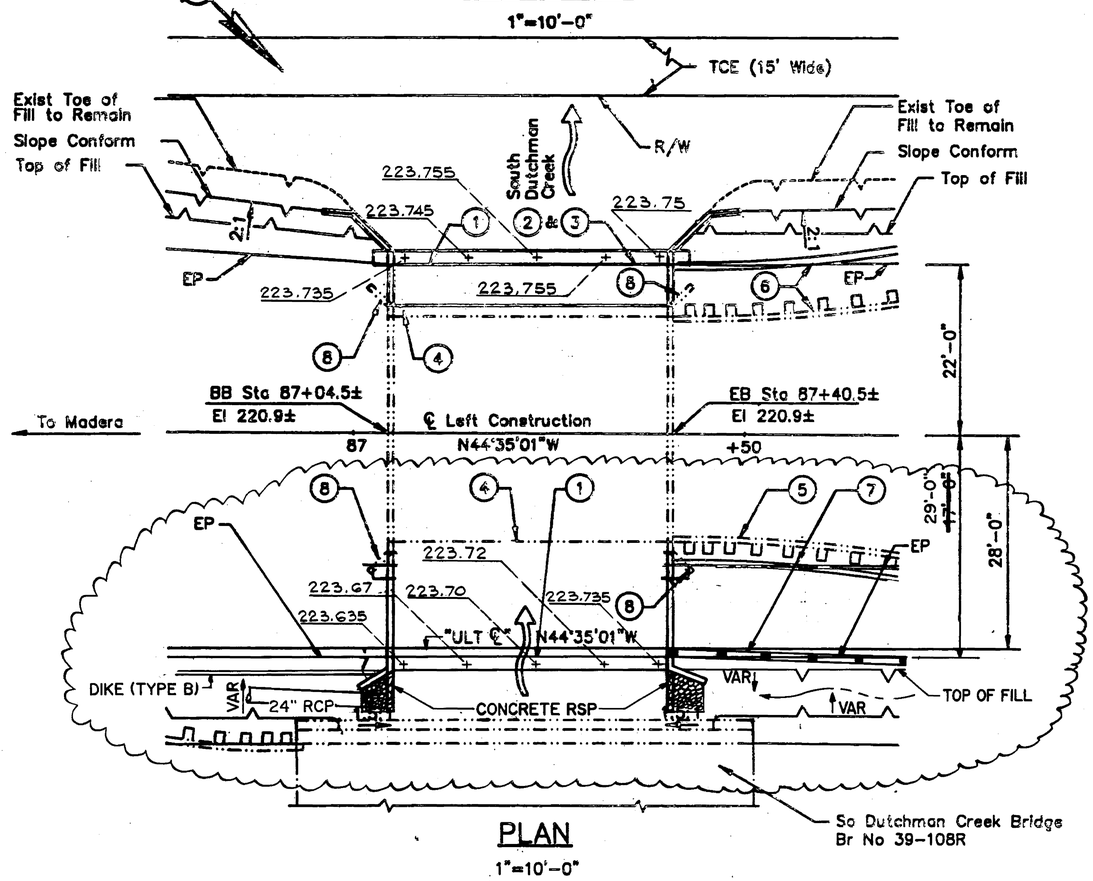

So Dutchman Creek Bridge
Br No 39-108R

PLAN

1"=10'-0"

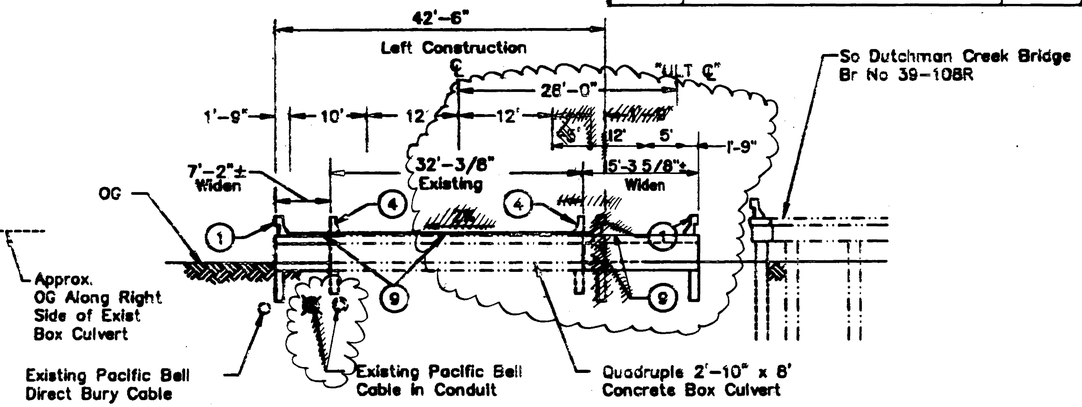

So Dutchman Creek Bridge
Br No 39-108R

TYPICAL SECTION

1"=10'-0"

APPROXIMATE QUANTITIES

BRIDGE REMOVAL (PORTION), LOCATION B	LUMP SUM	
REFINISH BRIDGE DECK	102	SQFT
12" NEOPRENE STRIP	25	LF
DRILL AND BOND DOWEL	112	LF

FINAL PAY QUANTITIES

CLASS A CONCRETE (BOX CULVERT)	78 ~~64~~ 34,020	CY
BAR REINFORCING STEEL (BRIDGE)	~~15,000~~ 9,000	LB
CONCRETE BARRIER (TYPE 25)	80	LF

QUANTITIES

BRIDGE REMOVAL, LOCATION B — LUMP SUM

BRIDGE REMOVAL

As-Built General Plan sheet is considered an informational document only. As such, the State of California registration seal with signature, license number and registration certificate expiration date confirm that this is a true and accurate copy of the original document. This drawing is available and presented only for the convenience of any bidder, contractor or other interested party.

DIST.	COUNTY	ROUTE	POST MILES-TOTAL PROJECT	Sheet No.	Total Sheets
10	Mer	99	0.0/4.6	607	607

REGISTERED CIVIL ENGINEER — 04-13-10 DATE

NOTE: A COPY OF THIS GENERAL PLAN IS AVAILABLE AT OFFICE OF STRUCTURE MAINTENANCE AND INVESTIGATIONS, SACRAMENTO, CALIFORNIA

CU: 10 EA: 415801 — BRIDGE NO. 39-0108L — SHEET 1 OF 1

REGISTERED PROFESSIONAL ENGINEER Larry Wu No. C57035 Exp. 6-30-11 CIVIL STATE OF CALIFORNIA

To accompany plans dated 11-1-10

AS BUILT

CORRECTIONS BY C.A. MALONEY/C.W.
CONTRACT NO. 10-380404
DATE 9-9-93 / 12-2-93

Index to Plans

Sheet Number	Description
1	General Plan
2	Foundation plan
3	Typical Section
4	Miscellaneous Details
5	Log of Test Borings
6	As Built Log of Test Borings

Notes

1. Concrete Barrier (Type 25)
2. Paint "So Dutchman Creek Bridge"
3. Paint "Bridge No. 39-108L"
4. Remove Concrete Barrier
   Refinish Bridge Deck
5. Salvage MBGR, See Road Plans
6. Reconstruct MBGR, See Road Plans
7. ~~Single~~ Double BB, See Road Plans
8. Remove Culvert Wingwall (All)
9. Cold Plane 0.35' AC on Existing Bridge and Overlay 0.35' AC Across Entire Bridge (See Detail 1, Miscellaneous Details & Road Plans)

TBM ELEV. 218.93
ORANGE PAINT ON SPTC CULVERT
MIDDLE TOP OF WALL SOUTH OF
LEFT BRIDGE

Standard Plans Dated January 1988

A62-A	Excavation & Backfill Miscellaneous
A62-E	Excavation and Backfill Details Reinforced Concrete Box & Arch Culverts
D81	Double Box Culvert
D83	Box Culvert Miscellaneous Details
D84	Box Culvert Wingwalls
B0-3	Bridge Details
B11-53	Concrete Barrier Type 25

Legend

- Indicates Existing Structure
- Indicates Structure to be Constructed
- D84 — Standard or Plan Sheet No
- Detail No

Notes:
- For general notes see "Box Culvert Miscellaneous Details" sheet D83 of the standard plans.
- The contractor shall verify all controlling field dimensions before ordering or fabricating any material.
- B.B. & E.B. have been determined by field surveys.

DESIGN OVERSIGHT 11-19-91 SIGN OFF DATE	DESIGN	By Robert Himes	Checked Jeffrey Wing	LOAD FACTOR DESIGN	LIVE LOADING: HS20-44 AND ALTERNATIVE AND PERMIT DESIGN LOAD
	DETAILS	By Jeffrey Wing	Checked Robert Himes	LAYOUT By Robert Himes	Checked Jeffrey Wing
	QUANTITIES	By Robert Himes	Checked Jeffrey Wing	SPECIFICATIONS By Po Chen	PLANS AND SPECS COMPARED Robert Himes

PREPARED FOR THE STATE OF CALIFORNIA DEPARTMENT OF TRANSPORTATION

Robert A. Himes, Project Engineer

BRIDGE NO. 39-108L — POST MILE 1.65

SO DUTCHMAN CREEK — LT BRIDGE (WIDEN)

GENERAL PLAN

ORIGINAL SCALE IS IN INCHES FOR REDUCED PLANS 0 1 2 3

CU 10200
EA 380401

DISREGARD PRINTS BEARING EARLIER REVISION DATES

REVISION DATES (PRELIMINARY STAGE ONLY)

SHEET 1 OF 6

FILENAME => SoDutchmanCreekLt.tif