Dist	COUNTY	ROUTE	POST MILES TOTAL PROJECT	SHEET No.	TOTAL SHEETS
10	Mer	99	0.0/4.6	1	607

STATE OF CALIFORNIA

DEPARTMENT OF TRANSPORTATION

PROJECT PLANS FOR CONSTRUCTION ON

STATE HIGHWAY

IN MERCED COUNTY
NEAR CHOWCHILLA
FROM CHOWCHILLA RIVER BRIDGE
TO BUCHANAN HOLLOW ROAD

INDEX OF PLANS

SHEET No.	DESCRIPTION
1	TITLE AND LOCATION MAP
2-10	TYPICAL CROSS SECTIONS
11	KEY MAP AND LINE INDEX
12-52	LAYOUTS
53-113	PROFILES AND SUPERELEVATION DIAGRAM
114-132	CONSTRUCTION DETAILS
133-173	DRAINAGE AND CONTOUR GRADING PLAN
174-235	DRAINAGE PROFILES, DETAILS AND QUANTITIES
236-269	UTILITY PLANS
270-271	CONSTRUCTION AREA SIGNS AND CONSTRUCTION PROJECT FUNDING IDENTIFICATION SIGN
272-280	STAGE CONSTRUCTION
281-326	TRAFFIC HANDLING PLANS AND DETOUR PLAN
321-326	TRAFFIC HANDALING QUANTITIES
327	DETOUR PLAN AND QUANTITIES
328-390	PAVEMENT DELINEATION PLANS AND SIGN PLANS, DETAILS AND QUANTITIES
391-400	SUMMARY OF QUANTITIES
400A-400Q	PLANT LIST
401-446	ELECTRICAL PLANS
447-515	REVISED AND NEW STANDARD PLANS

STRUCTURE PLANS

516-525E	CHOWCHILLA TRUCK INSPECTION FACILITY
526-545	SANDY MUSH OVERHEAD Br No, 39-0236
546-564	PLAINSBURG OVERCROSSING Vr. No. 39-0237
565-580	DUTCHMAN CREEK BRIDGE Br No. 39-0238 R/L
581-592	DUTCHMAN CREEK BRIDGE (EAST FRONTAGE ROAD) Br No. 39-0239
593-607	SOUTH DUTCHMAN CREEK BRIDGE Br No. 39-0240 R/L

2

THE STANDARD PLANS LIST APPLICABLE TO THIS CONTRACT IS INCLUDED IN THE NOTICE TO BIDDERS AND SPECIAL PROVISIONS BOOK.

TO BE SUPPLEMENTED BY STANDARD PLANS DATED MAY 2006

LOCATION MAP

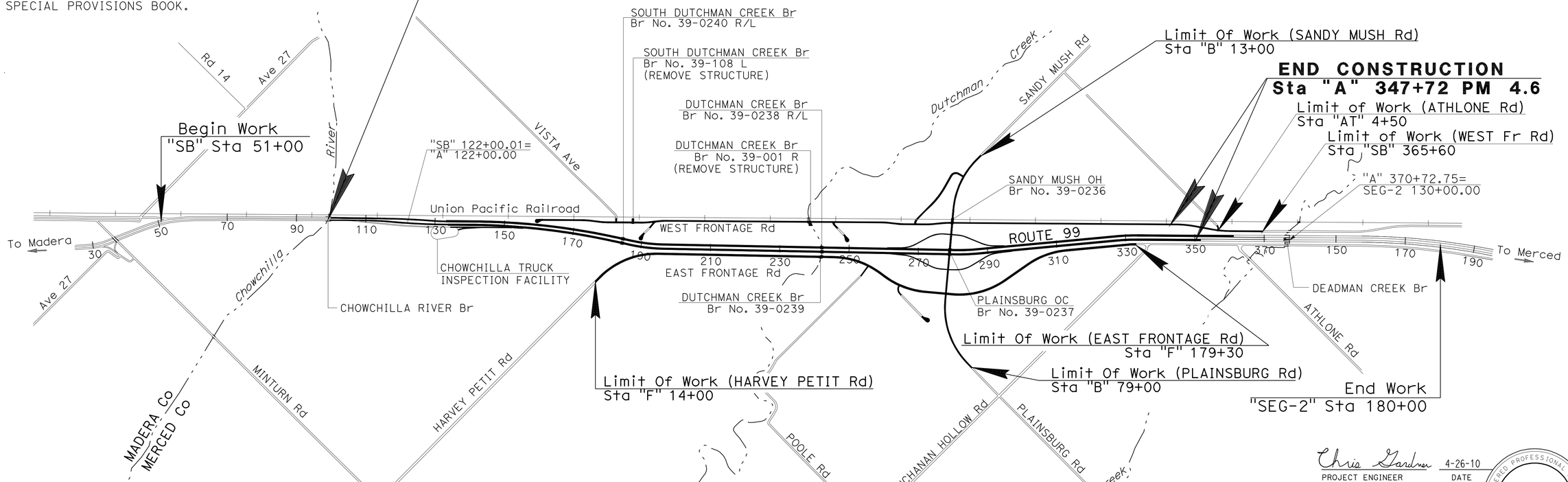

NO SCALE

THE CONTRACTOR SHALL POSSESS THE CLASS (OR CLASSES) OF LICENSE AS SPECIFIED IN THE "NOTICE TO BIDDERS."

2 **REVISED PER ADDENDUM No. 2 DATED MAY 9, 2012**

Chris Gardner 4-26-10
PROJECT ENGINEER DATE
REGISTERED CIVIL ENGINEER

November 1, 2010
PLANS APPROVAL DATE

REGISTERED PROFESSIONAL ENGINEER
CHRIS GARDNER
No. C60348
Exp. 6-30-10
CIVIL
STATE OF CALIFORNIA

THE STATE OF CALIFORNIA OR ITS OFFICERS OR AGENTS SHALL NOT BE RESPONSIBLE FOR THE ACCURACY OR COMPLETENESS OF SCANNED COPIES OF THIS PLAN SHEET.

CONTRACT No.	10-415804
PROJECT ID	1000000431

PROJECT MANAGER: PETER JEMERIGBE
DESIGN ENGINEER: CHRISTOPHER L. GARDNER

LAST REVISION 04-22-10
DATE PLOTTED => 09-MAY-2012
TIME PLOTTED => 08:42

Dist	COUNTY	ROUTE	POST MILES TOTAL PROJECT	SHEET No.	TOTAL SHEETS
10	Mer	99	0.0/4.6	2	607

Chris Gardner 4-26-10
REGISTERED CIVIL ENGINEER DATE

11-1-10
PLANS APPROVAL DATE

REGISTERED PROFESSIONAL ENGINEER CHRIS GARDNER No. C60348 Exp. 6-30-10 CIVIL STATE OF CALIFORNIA

THE STATE OF CALIFORNIA OR ITS OFFICERS OR AGENTS SHALL NOT BE RESPONSIBLE FOR THE ACCURACY OR COMPLETENESS OF SCANNED COPIES OF THIS PLAN SHEET.

NOTES:

1. DIMENSIONS OF THE PAVEMENT STRUCTURES (STRUCTURAL SECTIONS) ARE SUBJECT TO TOLERANCES SPECIFIED IN THE STANDARD SPECIFICATIONS.
2. SUPERELEVATION AS SHOWN OR AS DIRECTED BY THE ENGINEER.
3. FOR LOCATION AND TYPE OF HMA DIKE, DTBB, CB, MBGR AND CURBS SEE LAYOUT SHEETS, SUMMARY OF QUANTITIES, AND CONSTRUCTION DETAIL SHEETS.
4. SEE LAYOUT SHEETS FOR LOCATION OF FENCE AND MBGR.
5. SEE CONSTRUCTION DETAIL SHEETS AND SUMMARY OF QUANTITIES FOR RUMBLE STRIP.
6. SEE DRAINAGE SHEETS FOR EARTH GUTTER DETAILS.
7. CROSS SLOPE CORRECTION "SB" LINE FROM Sta 108+25.00 TO 118+50.00 AND "T-1" LINE FROM Sta 18+50.00 TO 30+00.00.
8. LONGITUDINAL CONTRACTION JOINT AT ETW.

DESIGN DESIGNATION

ADT (2033)	71,900
DHV (2033)	7,000
D	55%
T	19%

LEGEND:

REMOVE Exist Pvmt (Rdwy Exc)

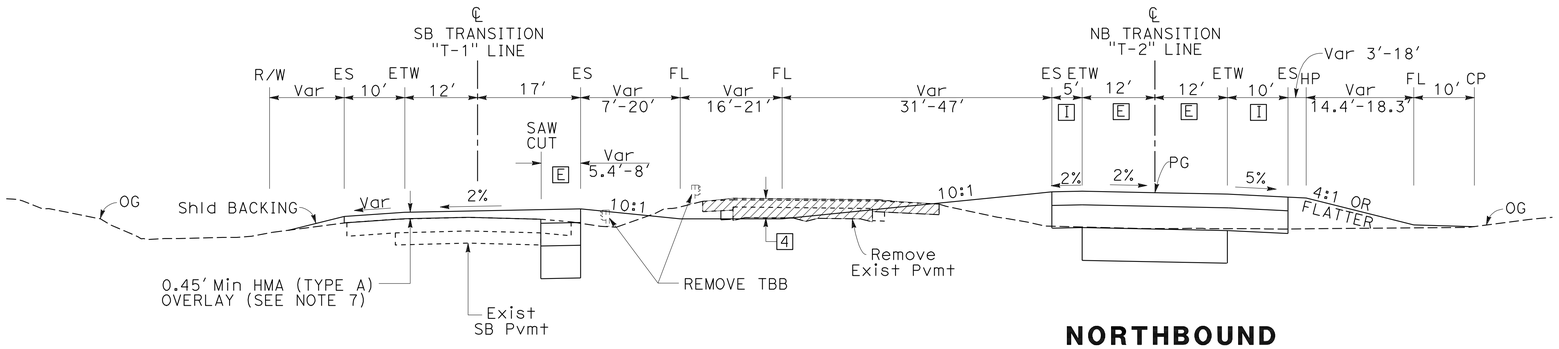

SOUTHBOUND
Sta "T-1" 19+75.23 TO 22+00.02

NORTHBOUND
Sta "T-2" 19+71.79 TO 22+02.21

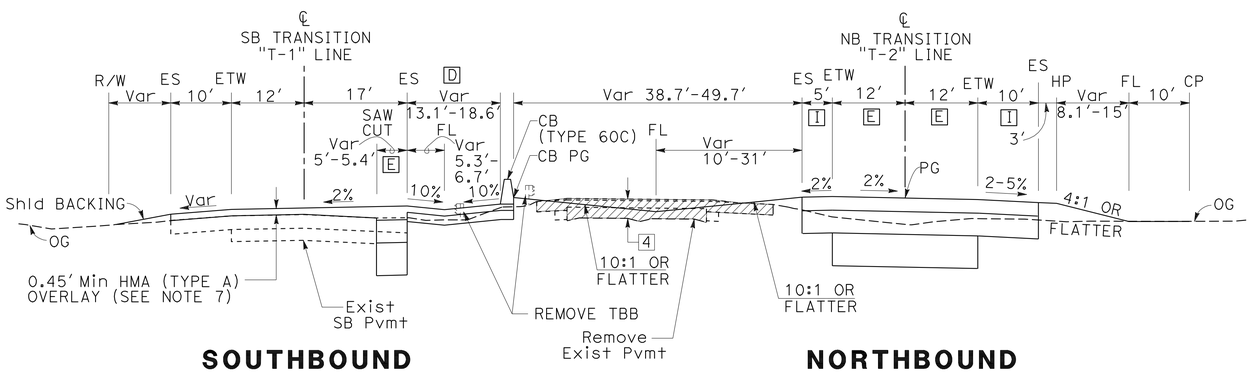

SOUTHBOUND
Sta "T-1" 18+50.00 TO 19+75.23

NORTHBOUND
Sta "T-2" 17+30.48 TO 19+71.79

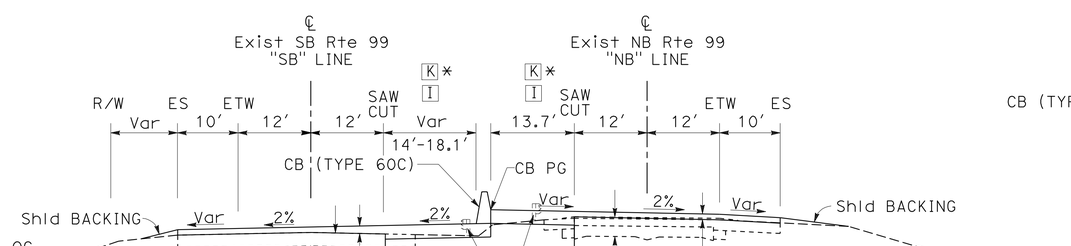

SOUTHBOUND
Sta "SB" 99+96.20 TO 118+50.00
* Sta "SB" 99+96.20 TO 101+00.00

NORTHBOUND
Sta "NB" 99+79.10 TO 111+24.80
* Sta "NB" 99+79.10 TO 101+00.00

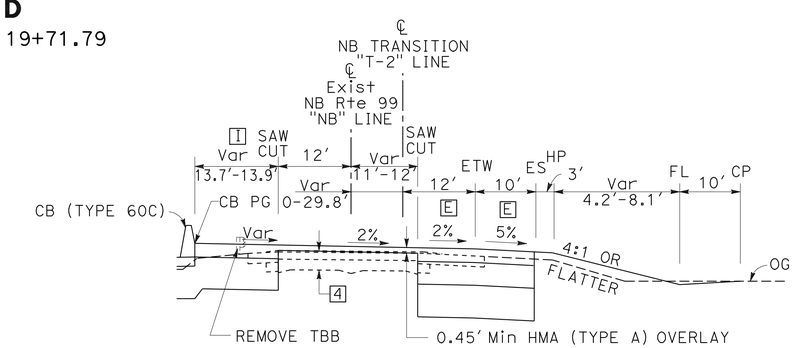

NORTHBOUND
Sta "T-2" 11+24.80 TO 17+30.48
Sta "NB" 111+24.80 TO 117+29.53

2 STRUCTURAL SECTION

A ~~1.15' JPCP~~ 1.00 CRCP
0.25' HMA (TYPE A)
0.70' CI 4 AS
0.65' LTS

B 0.85' JPCP
0.25' HMA (TYPE A)
0.50' CI 4 AS
0.65' LTS

C 0.50' HMA (TYPE A)
0.80' CI 2 AB
1.10' CI 4 AS

D 0.35' HMA (TYPE A)
0.50' CI 2 AB

E 0.75' HMA (TYPE A)
1.25' CI 2 AB
1.80' CI 4 AS

F 1.00' CI 2 AB

G 0.40' HMA (TYPE A)
1.35' CI 2 AB

H 0.20' HMA (TYPE A)
0.80' CI 2 AB

I 0.75' HMA (TYPE A)
1.25' CI 2 AB

J 0.30' HMA (TYPE A)
1.00' CI 2 AB

K 1.20' HMA (TYPE A)

Exist STRUCTURAL SECTION

"R-1" LINE Sta 12+62 TO 53+00
1 0.85' PCC
0.5' ACB
0.7' AS

"R-4" LINE Sta 40+17 TO 45+54
2 0.45' HMA
0.7' AB
0.9' AS

"SB" LINE Sta 99+92 TO 346+50
"SB" LINE Sta 356+50 TO 364+60
"SB" & "NB" LINE SHOULDERS
3 0.7'-1.0' HMA
Var AB

"NB" LINE Sta 99+79 TO 226+14
4 0.08' RHMA-O
0.4' HMA
0.58'-0.75' PCC

"NB" LINE Sta 226+14 TO 337+61
5 0.25' HMA
PRF
0.1' HMA
0.67' CRACKED PCC SLAB
0.33' CTB

2 REVISED PER ADDENDUM No. 2 DATED MAY 9, 2012

TYPICAL CROSS SECTIONS

NO SCALE

X-1

REVISED BY	DATE REVISED
CHRIS GARDNER	ANONH SENGMANY
CALCULATED-DESIGNED BY	CHECKED BY
FUNCTIONAL SUPERVISOR	BORIS AYAVIRI

STATE OF CALIFORNIA - DEPARTMENT OF TRANSPORTATION
Caltrans 06-DESIGN

LAST REVISION 04-26-10 | DATE PLOTTED => 04-MAY-2012 | TIME PLOTTED => 12:37

Dist	COUNTY	ROUTE	POST MILES TOTAL PROJECT	SHEET No.	TOTAL SHEETS
10	Mer	99	0.0/4.6	4	607

Chris Gardner 4-26-10
REGISTERED CIVIL ENGINEER DATE

11-1-10
PLANS APPROVAL DATE

REGISTERED PROFESSIONAL ENGINEER CHRIS GARDNER No. C60348 Exp. 6-30-10 CIVIL STATE OF CALIFORNIA

THE STATE OF CALIFORNIA OR ITS OFFICERS OR AGENTS SHALL NOT BE RESPONSIBLE FOR THE ACCURACY OR COMPLETENESS OF SCANNED COPIES OF THIS PLAN SHEET.

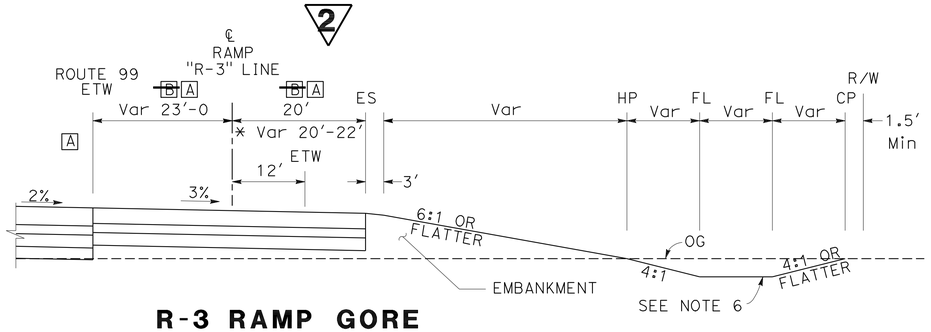

R-3 RAMP GORE

Sta "R-3" 51+63.43 TO 58+39.23
* Sta "R-3" 57+38.89 TO 58+39.23

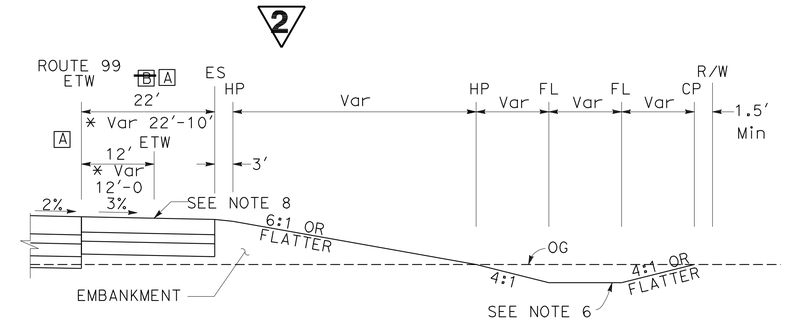

R-3 RAMP AUXILARY LANE AND LANE DROP

Sta "A" 155+38.34 TO 166+50.0
* Sta "A" 160+50.00 TO 166+50.0

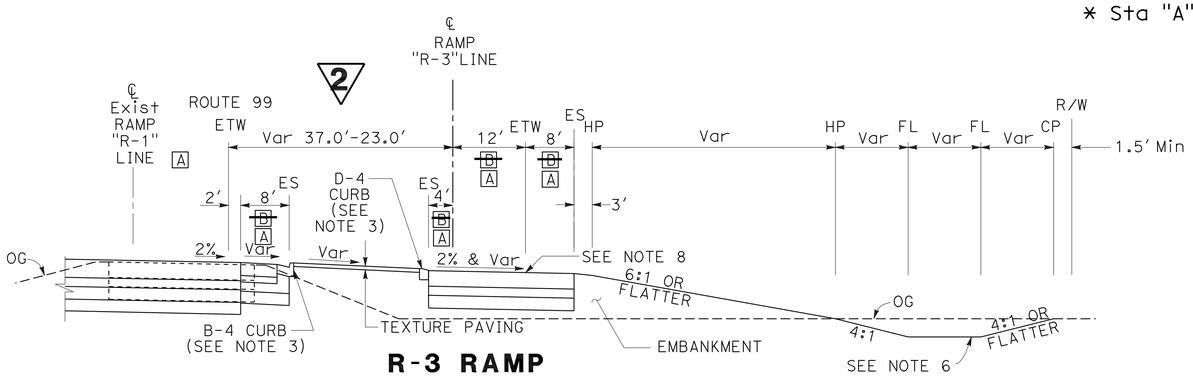

R-3 RAMP

Sta "R-3" 46+82.43 TO 51+63.43

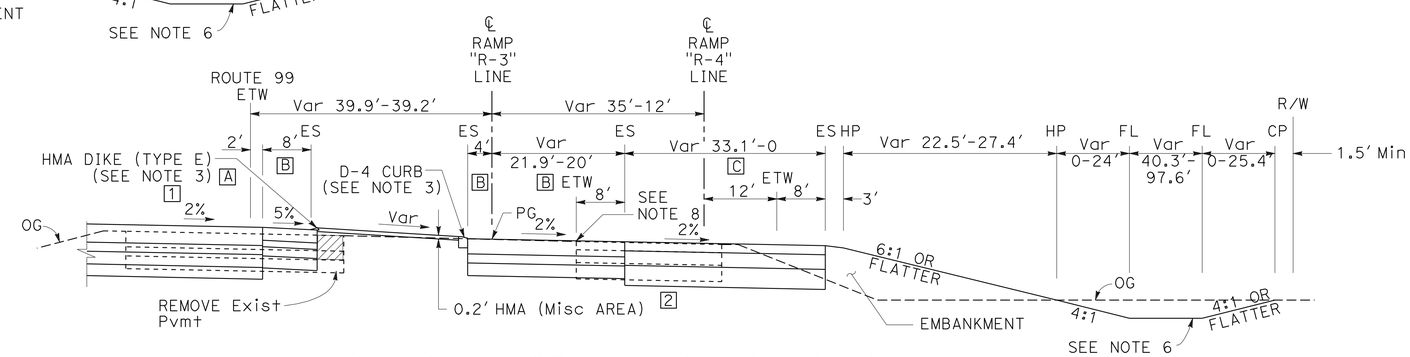

R-4 RAMP GORE AND TRANSITION

Sta "R-3" 41+52.10 TO 46+82.43
Sta "R-4" 42+06.55 TO 45+54.90

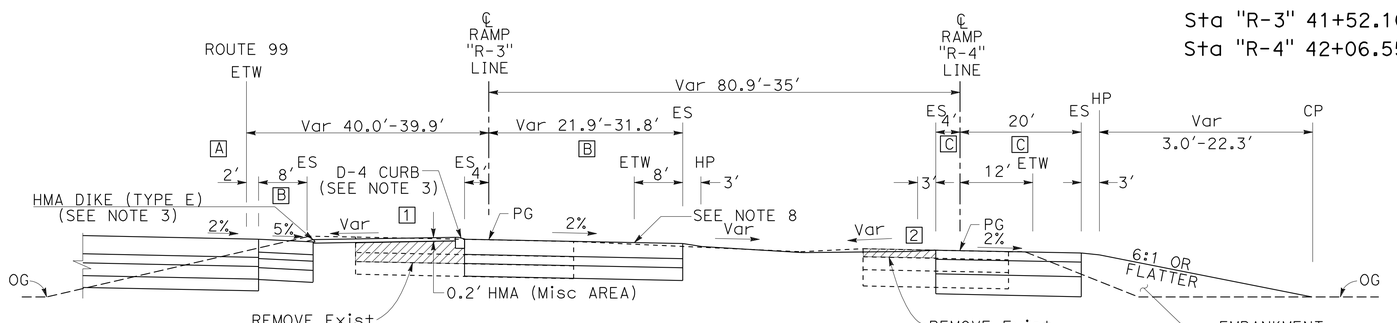

WEIGH STATION ON-RAMPS

Sta "R-3" 39+17.58 TO 41+52.10
Sta "R-4" 40+17.84 TO 42+06.55

2 REVISED PER ADDENDUM No. 2 DATED MAY 9, 2012

TYPICAL CROSS SECTIONS

NO SCALE

X-3

STATE OF CALIFORNIA - DEPARTMENT OF TRANSPORTATION
06-DESIGN
Caltrans®

FUNCTIONAL SUPERVISOR: BORIS AYAVIRI
CALCULATED-DESIGNED BY: CHRIS GARDNER
CHECKED BY: ANONH SENGMANY
REVISED BY
DATE REVISED

LAST REVISION 04-26-10 | DATE PLOTTED => 04-MAY-2012 | TIME PLOTTED => 12:50

Dist	COUNTY	ROUTE	POST MILES TOTAL PROJECT	SHEET No.	TOTAL SHEETS
10	Mer	99	0.0/4.6	13	607

Chris Gardner 4-26-10
REGISTERED CIVIL ENGINEER DATE

11-1-10
PLANS APPROVAL DATE

REGISTERED PROFESSIONAL ENGINEER CHRIS GARDNER No. C60348 Exp. 6-30-10 CIVIL STATE OF CALIFORNIA

THE STATE OF CALIFORNIA OR ITS OFFICERS OR AGENTS SHALL NOT BE RESPONSIBLE FOR THE ACCURACY OR COMPLETENESS OF SCANNED COPIES OF THIS PLAN SHEET.

NOTE:

FOR ACCURATE RIGHT OF WAY AND ACCESS DATA, CONTACT RIGHT OF WAY ENGINEERING AT THE DISTRICT OFFICE.

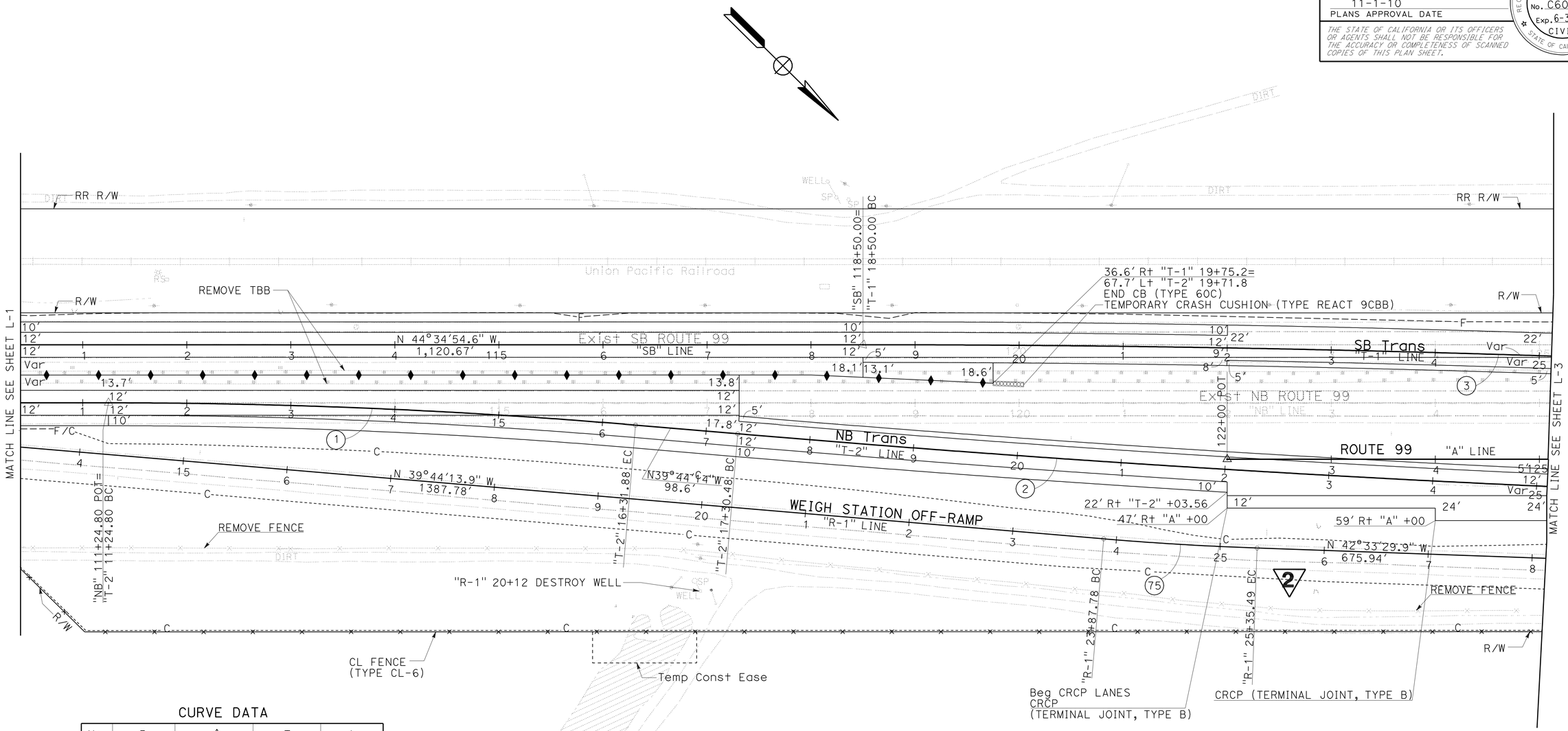

CURVE DATA

No.	R	Δ	T	L
1	6000'	4°50'32.3"	253.69'	507.08'
2	20,000'	4°50'46.0"	846.31'	1691.61'
3	20,000'	3°42'45.0"	648.18'	1295.91'
75	3000'	2°49'16.0"	73.87'	147.71'

2 **REVISED PER ADDENDUM No. 2 DATED MAY 9, 2012**

LAYOUT
SCALE: 1" = 50'
L-2

STATE OF CALIFORNIA - DEPARTMENT OF TRANSPORTATION
Caltrans
06-DESIGN

FUNCTIONAL SUPERVISOR: BORIS AYAVIRI
CALCULATED-DESIGNED BY: CHRIS GARDNER
CHECKED BY: ANONH SENGMANY
REVISED BY
DATE REVISED

LAST REVISION 04-26-10
DATE PLOTTED => 04-MAY-2012
TIME PLOTTED => 12:50

Dist	COUNTY	ROUTE	POST MILES TOTAL PROJECT	SHEET No.	TOTAL SHEETS
10	Mer	99	0.0/4.6	14	607

Chris Gardner 4-26-10
REGISTERED CIVIL ENGINEER DATE

11-1-10
PLANS APPROVAL DATE

REGISTERED PROFESSIONAL ENGINEER CHRIS GARDNER No. C60348 Exp. 6-30-10 CIVIL STATE OF CALIFORNIA

THE STATE OF CALIFORNIA OR ITS OFFICERS OR AGENTS SHALL NOT BE RESPONSIBLE FOR THE ACCURACY OR COMPLETENESS OF SCANNED COPIES OF THIS PLAN SHEET.

NOTE:

FOR ACCURATE RIGHT OF WAY AND ACCESS DATA, CONTACT RIGHT OF WAY ENGINEERING AT THE DISTRICT OFFICE.

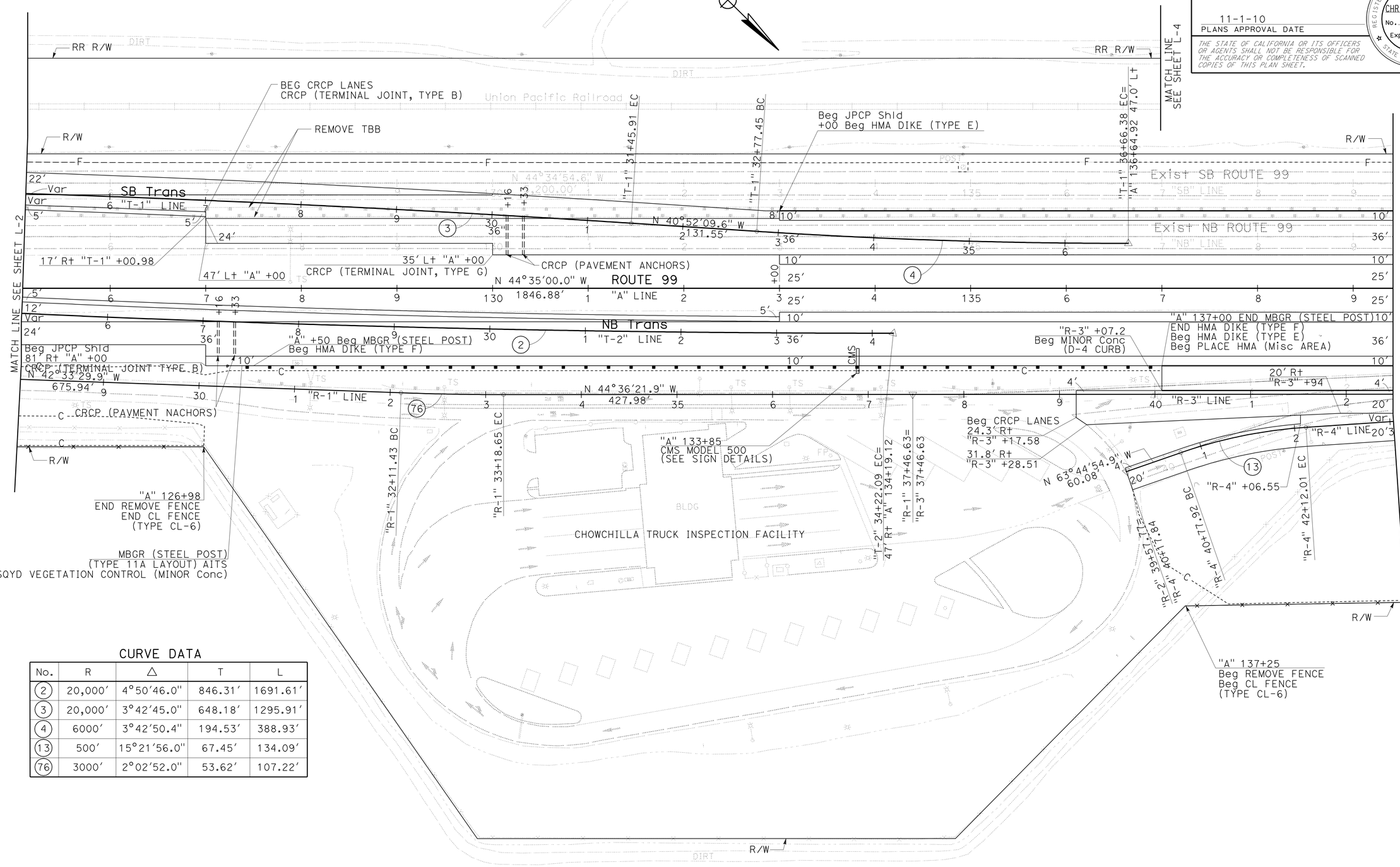

CURVE DATA

No.	R	Δ	T	L
2	20,000′	4°50′46.0″	846.31′	1691.61′
3	20,000′	3°42′45.0″	648.18′	1295.91′
4	6000′	3°42′50.4″	194.53′	388.93′
13	500′	15°21′56.0″	67.45′	134.09′
76	3000′	2°02′52.0″	53.62′	107.22′

2 **REVISED PER ADDENDUM No. 2 DATED MAY 9, 2012**

LAYOUT

SCALE: 1" = 50′

L-3

STATE OF CALIFORNIA - DEPARTMENT OF TRANSPORTATION
Caltrans
06-DESIGN

FUNCTIONAL SUPERVISOR: BORIS AYAVIRI
CALCULATED-DESIGNED BY: CHRIS GARDNER
CHECKED BY: ANONH SENGMANY
REVISED BY
DATE REVISED

LAST REVISION 04-26-10 | DATE PLOTTED => 04-MAY-2012 | TIME PLOTTED => 12:50

BORDER LAST REVISED 4/11/2008 | RELATIVE BORDER SCALE IS IN INCHES 0 1 2 3 | USERNAME => s119571 | DGN FILE => a41580ea003.add | CU 06254 | EA 415801

Dist	COUNTY	ROUTE	POST MILES TOTAL PROJECT	SHEET No.	TOTAL SHEETS
10	Mer	99	0.0/4.6	18	607

Chris Gardner 06-28-10
REGISTERED CIVIL ENGINEER DATE

11-1-10
PLANS APPROVAL DATE

REGISTERED PROFESSIONAL ENGINEER CHRIS GARDNER No. C60348 Exp. 6-30-12 CIVIL STATE OF CALIFORNIA

THE STATE OF CALIFORNIA OR ITS OFFICERS OR AGENTS SHALL NOT BE RESPONSIBLE FOR THE ACCURACY OR COMPLETENESS OF SCANNED COPIES OF THIS PLAN SHEET.

NOTE:

FOR ACCURATE RIGHT OF WAY AND ACCESS DATA, CONTACT RIGHT OF WAY ENGINEERING AT THE DISTRICT OFFICE.

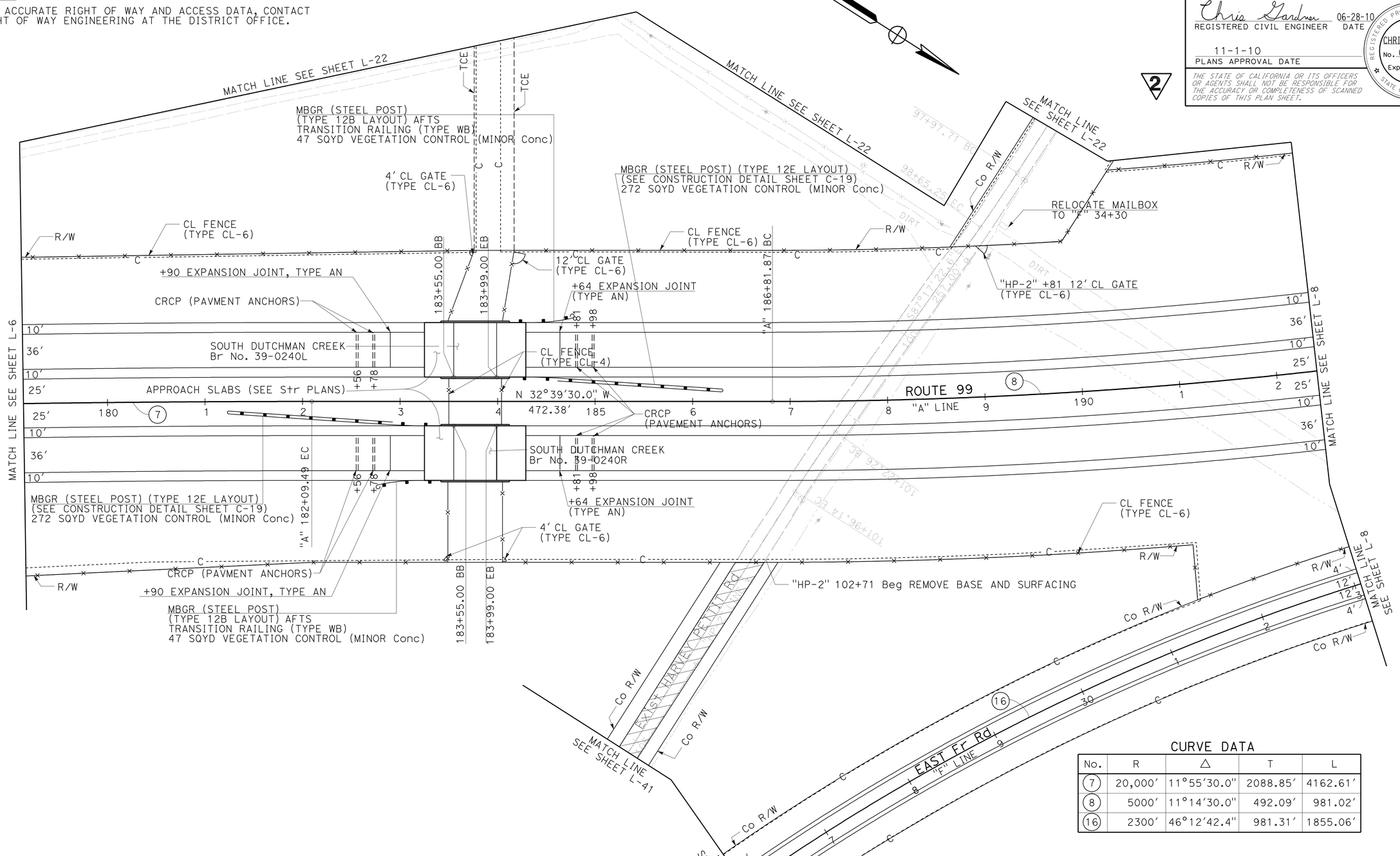

CURVE DATA

No.	R	△	T	L
7	20,000′	11°55′30.0"	2088.85′	4162.61′
8	5000′	11°14′30.0"	492.09′	981.02′
16	2300′	46°12′42.4"	981.31′	1855.06′

2 REVISED PER ADDENDUM No. 2 DATED MAY 9, 2012

LAYOUT
SCALE: 1" = 50′

L-7

STATE OF CALIFORNIA - DEPARTMENT OF TRANSPORTATION
Caltrans® 06-DESIGN

FUNCTIONAL SUPERVISOR: BORIS AYAVIRI
CALCULATED-DESIGNED BY: CHRIS GARDNER
CHECKED BY: ANONH SENGMANY
REVISED BY
DATE REVISED

LAST REVISION 06-28-10
DATE PLOTTED => 04-MAY-2012
TIME PLOTTED => 12:37

BORDER LAST REVISED 4/11/2008
RELATIVE BORDER SCALE IS IN INCHES 0 1 2 3
USERNAME => s119571
DGN FILE => a41580ea007.add
CU 06254
EA 415801

NOTE:
FOR ACCURATE RIGHT OF WAY AND ACCESS DATA, CONTACT RIGHT OF WAY ENGINEERING AT THE DISTRICT OFFICE.

Dist	COUNTY	ROUTE	POST MILES TOTAL PROJECT	SHEET No.	TOTAL SHEETS
10	Mer	99	0.0/4.6	22	607

Chris Gardner 4-26-10
REGISTERED CIVIL ENGINEER DATE

11-1-10
PLANS APPROVAL DATE

REGISTERED PROFESSIONAL ENGINEER CHRIS GARDNER No. C60348 Exp. 6-30-10 CIVIL STATE OF CALIFORNIA

THE STATE OF CALIFORNIA OR ITS OFFICERS OR AGENTS SHALL NOT BE RESPONSIBLE FOR THE ACCURACY OR COMPLETENESS OF SCANNED COPIES OF THIS PLAN SHEET.

2

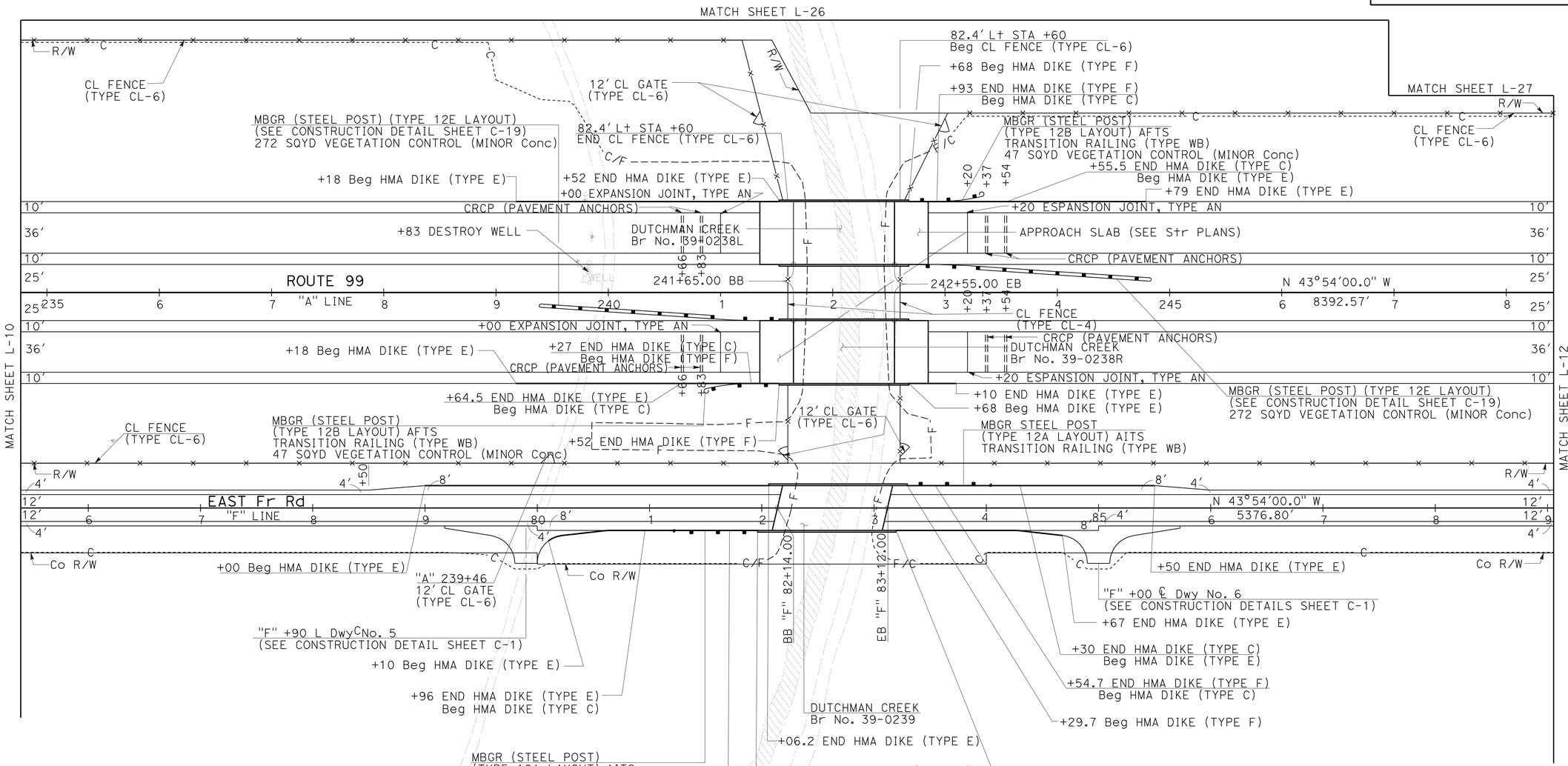

SCALE: 1" = 50'

LAYOUT

2 **REVISED PER ADDENDUM No. 2 DATED MAY 9, 2012 L-11**

REVISED BY | DATE REVISED
CALCULATED-DESIGNED BY: CHRIS GARDNER | CHECKED BY: ANONH SENGMANY
FUNCTIONAL SUPERVISOR: BORIS AYAVIRI

STATE OF CALIFORNIA - DEPARTMENT OF TRANSPORTATION
Caltrans 06-DESIGN

LAST REVISION 04-26-10 | DATE PLOTTED => 04-MAY-2012 | TIME PLOTTED => 12:37

NOTE:
FOR ACCURATE RIGHT OF WAY AND ACCESS DATA, CONTACT RIGHT OF WAY ENGINEERING AT THE DISTRICT OFFICE.

Dist	COUNTY	ROUTE	POST MILES TOTAL PROJECT	SHEET No.	TOTAL SHEETS
10	Mer	99	0.0/4.6	30	607

Chris Gardner 4-26-10
REGISTERED CIVIL ENGINEER DATE

11-1-10
PLANS APPROVAL DATE

REGISTERED PROFESSIONAL ENGINEER CHRIS GARDNER No. C60348 Exp. 6-30-10 CIVIL STATE OF CALIFORNIA

THE STATE OF CALIFORNIA OR ITS OFFICERS OR AGENTS SHALL NOT BE RESPONSIBLE FOR THE ACCURACY OR COMPLETENESS OF SCANNED COPIES OF THIS PLAN SHEET.

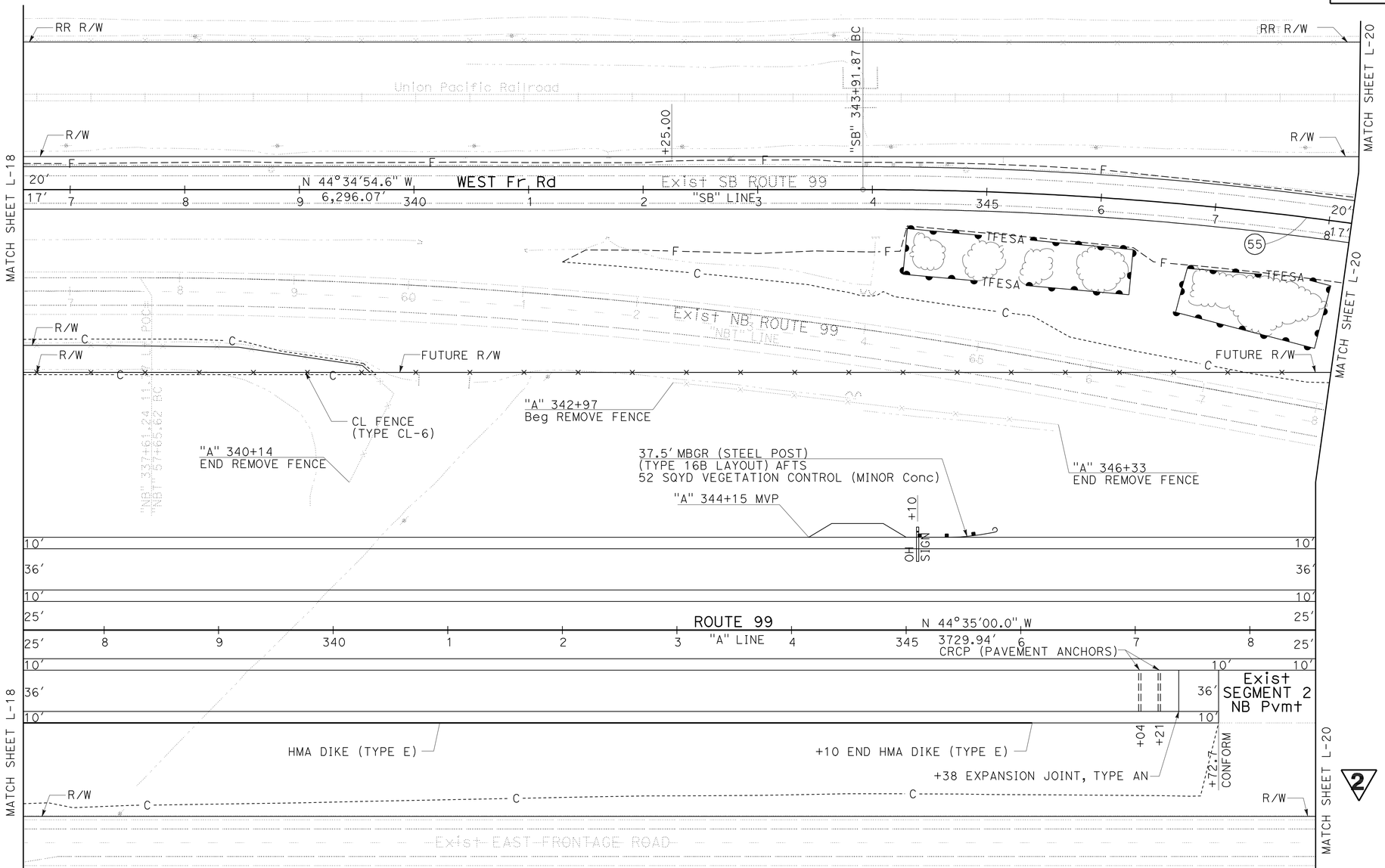

CURVE DATA

No.	R	Δ	T	L
55	3100'	10°09'37.6"	275.59'	549.73'

2 REVISED PER ADDENDUM No. 2 DATED MAY 9, 2012

SCALE: 1" = 50'

LAYOUT L-19

STATE OF CALIFORNIA - DEPARTMENT OF TRANSPORTATION
Caltrans
06-DESIGN

FUNCTIONAL SUPERVISOR: BORIS AYAVIRI
CALCULATED-DESIGNED BY: CHRIS GARDNER
CHECKED BY: ANONH SENGMANY
REVISED BY
DATE REVISED

LAST REVISION 04-26-10
DATE PLOTTED => 04-MAY-2012
TIME PLOTTED => 12:38

NOTE:
FOR ACCURATE RIGHT OF WAY AND ACCESS DATA, CONTACT RIGHT OF WAY ENGINEERING AT THE DISTRICT OFFICE.

Dist	COUNTY	ROUTE	POST MILES TOTAL PROJECT	SHEET No.	TOTAL SHEETS
10	Mer	99	0.0/4.6	32	607

Chris Gardner 4-26-10
REGISTERED CIVIL ENGINEER DATE

11-1-10
PLANS APPROVAL DATE

REGISTERED PROFESSIONAL ENGINEER
CHRIS GARDNER
No. C60348
Exp. 6-30-10
CIVIL
STATE OF CALIFORNIA

THE STATE OF CALIFORNIA OR ITS OFFICERS OR AGENTS SHALL NOT BE RESPONSIBLE FOR THE ACCURACY OR COMPLETENESS OF SCANNED COPIES OF THIS PLAN SHEET.

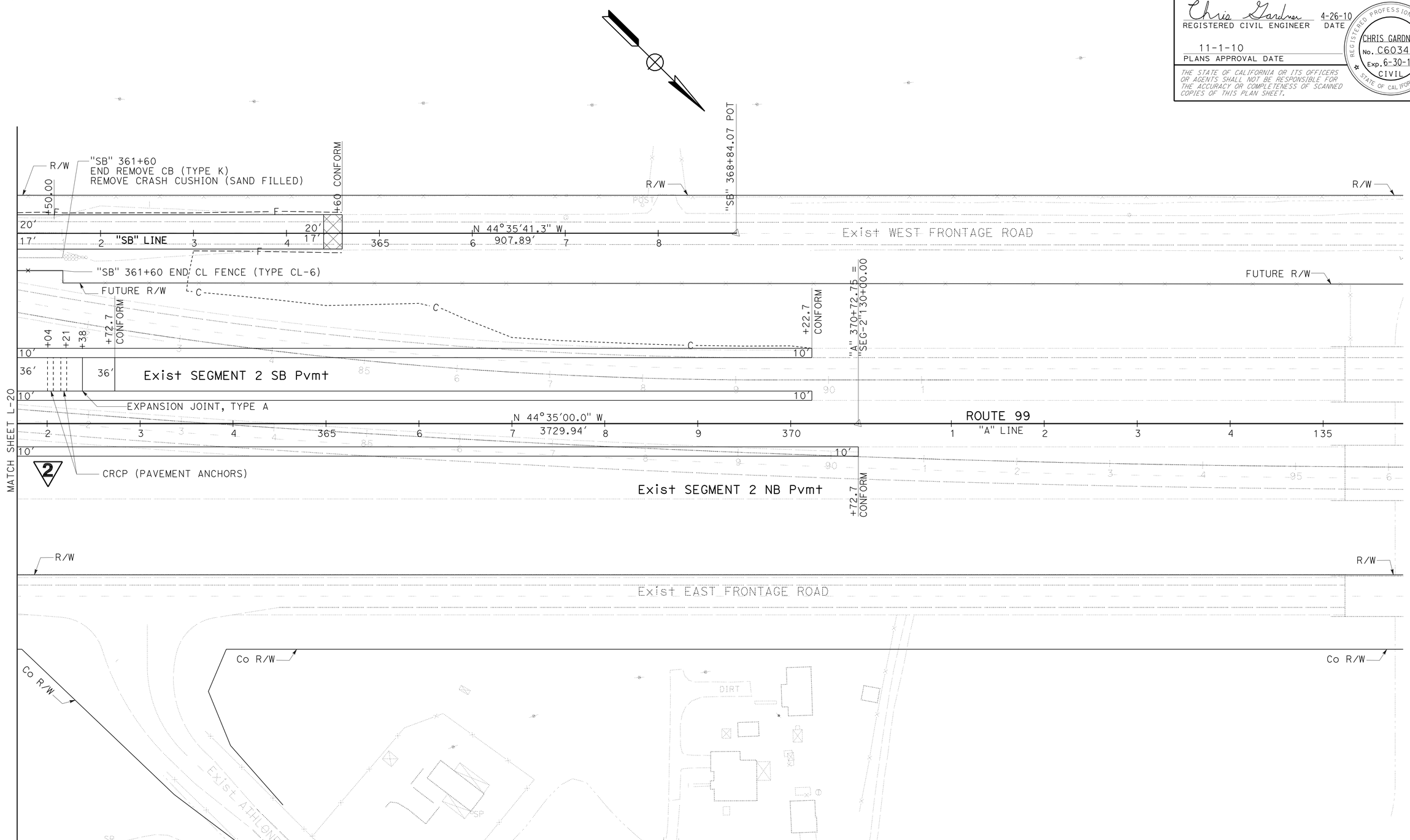

SCALE: 1" = 50'

LAYOUT
L-21

2 **REVISED PER ADDENDUM No. 2 DATED MAY 9, 2012**

STATE OF CALIFORNIA - DEPARTMENT OF TRANSPORTATION
Caltrans
06-DESIGN

FUNCTIONAL SUPERVISOR: BORIS AYAVIRI
CALCULATED-DESIGNED BY: CHRIS GARDNER
CHECKED BY: ANONH SENGMANY
REVISED BY
DATE REVISED

LAST REVISION 04-26-10
DATE PLOTTED => 04-MAY-2012
TIME PLOTTED => 11:30

Dist	COUNTY	ROUTE	POST MILES TOTAL PROJECT	SHEET No.	TOTAL SHEETS
10	Mer	99	0.0/4.6	234	607

Chris Gardner 06-28-10
REGISTERED CIVIL ENGINEER DATE

11-1-10
PLANS APPROVAL DATE

REGISTERED PROFESSIONAL ENGINEER CHRIS GARDNER No. C60348 Exp. 6-30-12 CIVIL STATE OF CALIFORNIA

THE STATE OF CALIFORNIA OR ITS OFFICERS OR AGENTS SHALL NOT BE RESPONSIBLE FOR THE ACCURACY OR COMPLETENESS OF SCANNED COPIES OF THIS PLAN SHEET.

2

IRRIGATION CROSSOVERS

LOCATION		SIDE		CONDUIT TYPE (1)	(N)	(N)
LINE	STATION	R†	L†	SIZE (INCH) 8 / LENGTH (LF)	WATER LINE CROSSOVER SIZE (INCH)	SPRINKLER CONTROL CROSSOVER SIZE (INCH)
"A"	275+90	X	X	166	3	2½
"A"	282+90	X	X	166	3	2½
"B"	41+70	X	X	52	3	2½
"B"	44+90	X	X	52	3	1½
"NR-1"	76+50	-	-	40	2½	1½
"NR-2"	81+50	-	-	40	2½	1½
"SR-1"	82+50	-	-	40	2½	1½
"SR-2"	77+50	-	-	40	3	3
TOTAL				596		

(N) - NOT A SEPARATE PAY ITEM FOR INFORMATION ONLY
X - DENOTES REQUIREMENT

CONDUIT TYPE

(Applicable when circled below and shown under the 'CONDUIT TYPE' column heading)

(1) BITUMINOUS COATED CORRUGATED STEEL PIPE (0.064 INCH THICK)
2 CORRUGATED STEEL PIPE (0.064 INCH THICK)
3 CORRUGATED HIGH DENSITY POLYETHYLENE PIPE
4 ALTERNATIVE CONDUIT

3" PLASTIC PIPE (EDGE DRAIN OUTLET)

LINE	LOCATION	LENGTH (LF)
"A"	SOUTH DUTCHMAN CREEK BRIDGE NORTHBOUND	350
"A"	SOUTH DUTCHMAN CREEK BRIDGE SOUTHBOUND	350
"A"	DUTCHMAN CREEK BRIDGE NORTHBOUND	400
"A"	DUTCHMAN CREEK BRIDGE SOUTHBOUND	400
"F"	DUTCHMAN CREEK BRIDGE EAST FRONTAGE Rd	300
	TOTAL	1,800

CAST-IN-PLACE REINFORCED CONCRETE SINGLE BOX CULVERT

DESCRIPTION	LOCATION	BAR Reinf STEEL (BOX CULVERT)	BAR Reinf STEEL (WINGWALL)	STRUCTURAL CONCRETE, BOX CULVERT	STRUCTURAL CONCRETE, WINGWALL	CABLE RAILING	10" CSP (.064" THICK)	(N) Str Exc	(N) Str Bkf	(N) Str Exc (Culv)	(N) Str Bkf (Culv)
		LB	LB	CY	CY	LF	LF	CY	CY	CY	CY
SINGLE RCB (10' x 6')	"A" 335+00.00	48,470		177.2			80			310	350
WINGWALL TYPE "A"	"A" 335+00.00 R†		1,410		27.9	59		78	61		
WINGWALL TYPE "A"	"A" 335+00.00 L†		1,310		25.9	59		78	61		
	TOTAL	48,470	2,720	177.2	53.8	118	80				

(N) NOT A SEPARATE PAY ITEM, FOR INFORMATION ONLY.

2 REVISED PER ADDENDUM No. 2 DATED MAY 9, 2012

DRAINAGE QUANTITIES
DQ-15

REVISED BY | DATE REVISED
ANONH SENGMANY | MARIO JARAMILLO
CALCULATED-DESIGNED BY | CHECKED BY
FUNCTIONAL SUPERVISOR
BORIS AYAVIRI

STATE OF CALIFORNIA - DEPARTMENT OF TRANSPORTATION
Caltrans
06-DESIGN

LAST REVISION 06-28-10 | DATE PLOTTED => 04-MAY-2012 TIME PLOTTED => 11:30

Dist	COUNTY	ROUTE	POST MILES TOTAL PROJECT	SHEET No.	TOTAL SHEETS
10	Mer	99	0.0/4.6	392	607

Chris Gardner 4-26-10
REGISTERED CIVIL ENGINEER DATE

11-1-10
PLANS APPROVAL DATE

REGISTERED PROFESSIONAL ENGINEER CHRIS GARDNER No. C60348 Exp. 6-30-10 CIVIL STATE OF CALIFORNIA

THE STATE OF CALIFORNIA OR ITS OFFICERS OR AGENTS SHALL NOT BE RESPONSIBLE FOR THE ACCURACY OR COMPLETENESS OF SCANNED COPIES OF THIS PLAN SHEET.

2

STRUCTURAL SECTION

LOCATION	HOT MIX ASPHALT (TYPE A)	CLASS 2 AGGREGATE BASE	CLASS 4 AGGREGATE SUBBASE	CONTINUOUSLY REINFORCED CONCRETE PAVEMENT	JOINTED PLAIN CONCRETE PAVEMENT	LIME STABILIZED SOIL	LIME	ASPHALTIC EMULSION (CURING SEAL)	TACK COAT
	TON	CY	CY	CY	CY	SY	TON	TON	TON
"A" LINE Rte 99	51,366.3	8,701.4	52,369.0	64,038.6	10,884.9	235,420	3,168	147.1	75.9
"B" LINE	5,763.0	10,760.5							2.8
"C" LINE	1,669.5	3,133.7							1.6
"F" LINE	13,832.4	28,408.5							5.8
"WF-1" LINE	2,7613.3	4,271.5							2.2
"WF-2" LINE	2,099.6	3,838.2							1.0
"SB" LINE	11,296.1	1,524.1							17.0
"NB" LINE	2,070.1	718.7							1.4
"T-1" LINE	1,950.7	1,045.1	1,281.3						1.5
"T-2" LINE	3,681.1	2,756.6	2,774.5						2.4
"R-3" LINE	1,315.3		1,316.6	2,633.2		7,900	106	4.9	2.4
"R-4" LINE	507.0	406.0	558.2						0.4
"NR-1" LINE	1,778.3	1,329.3	1,946.3		201.3	710	10	0.4	1.6
"NR-2" LINE	1,996.6	1,426.1	2,176.9		367.2	1,300	17	0.8	1.8
"SR-1" LINE	1,664.8	1,238.4	1,821.3		201.4	710	10	0.4	1.6
"SR-2" LINE	1,912.6	1,358.8	2,084.4		367.3	1,300	17	0.8	1.9
"V" LINE	75.7								0.2
"HP-2" LINE	292.6	494.2							0.2
"P-2" LINE	506.2	487.1							0.7
"P-3" LINE	692.8	1,142.1							0.7
"AT" LINE	99.0								0.2
"SM-2" DETOUR	378.6	945.4							0.1
HMA Misc AREA	1,154.5	641.0							
HMA DIKE	382.2								
TOTAL	109,246.3	74,626.5	66,328.5	66,671.8	12,022.1	247,340	3,328	154.4	123.4

PLACE HOT MIX ASPHALT (MISCELLANEOUS AREA)

LOCATION	SHEET No.	AREA	HOT MIX ASPHALT (TYPE A)*	CLASS 2 AGGREGATE BASE **	DESCRIPTION
		SQYD	TON	CY	
SHEET DQ-16		517.4	85.4		DRAINAGE
R+ "A" 137+00 TO R+ "A" 140+29	L-3 TO L-4	2,031.5	270.6		PAVED GORE AREA
R+ "A" 278+90 TO R+ "A" 279+80	L-14	369.0	86.0	61.5	HMA PAD
L+ "A" 278+15 TO L+ "A" 280+15	L-14	394.0	91.8	65.7	HMA PAD
L+ "B" 17+10.1	L-41	308.1	41.0	33.9	Dwy-1
R+ "F" 34+84.5	L-8	345.4	46.0	38.0	Dwy-2
R+ "F" 57+00	L-9	286.0	38.1	31.5	Dwy-3
R+ "F" 65+00	L-10	271.7	36.2	29.9	Dwy-4
R+ "F" 79+90	L-11	260.7	34.7	28.7	Dwy-5
R+ "F" 85+00	L-11	260.7	34.7	28.7	Dwy-6
R+ "F" 97+80.6	L-12	257.4	34.3	28.3	Dwy-7
L+ "F" 105+85.5	L-32	101.4	13.5	11.1	Dwy-8
R+ "F" 125+84.5	L-33	251.1	33.4	27.6	Dwy-9
R+ "F" 143+86	L-34	260.7	34.7	28.7	Dwy-10
R+ "C" 21+00	L-35	198.9	26.5	21.9	Dwy-11
R+ "WF-2" 67+00	L-28	300.2	40.0	33.0	Dwy-12
L+ "F" 143+70	L-34	260.7	34.7	28.7	Dwy-13
L+ "F" 125+00	L-33, L-38	257.4	34.3	28.3	Dwy-14
R+ "F" 92+50.0	L-12	257.4	34.3	28.3	Dwy-15
R+ "A" 213+00	L-9	86.7	17.3	14.4	CMS/MVP
L+ "SR-2" 67+33.4	L-13	87.4	17.5	14.6	MVP
L+ "A" 270+00	L-13	86.7	17.3	14.4	MVP
R+ "A" 275+00	L-14	86.7	17.3	14.4	MVP
R+ "A" 283+00	L-14	87.8	17.5	14.6	MVP
L+ "A" 285+00	L-15	85.7	17.1	14.3	MVP
R+ "A" 324+00	L-17	86.7	17.3	14.4	MVP
L+ "A" 344+15	L-19	86.7	17.3	14.4	CMS/MVP
TOTAL		7,884.1	* 1,188.8	** 641.0	

* QUANTITY INCLUDED IN HMA, STRUCTURAL SECTION QUANTITIES TABLE.
** QUANTITY INCLUDED IN CI 2 AB, STRUCTURAL SECTION QUANTITIES TABLE.

2 **REVISED PER ADDENDUM No. 2 DATED MAY 9, 2012**

SUMMARY OF QUANTITIES
Q-2

STATE OF CALIFORNIA - DEPARTMENT OF TRANSPORTATION
Caltrans
06-DESIGN

FUNCTIONAL SUPERVISOR: BORIS AYAVIRI
CALCULATED-DESIGNED BY: CHRIS GARDNER
CHECKED BY: ANONH SENGMANY
REVISED BY
DATE REVISED

LAST REVISION 04-26-10 | DATE PLOTTED => 04-MAY-2012 | TIME PLOTTED => 12:43

Dist	COUNTY	ROUTE	POST MILES TOTAL PROJECT	SHEET No.	TOTAL SHEETS
10	Mer	99	0.0/4.6	393A	607

Chris Gardner 4-26-10
REGISTERED CIVIL ENGINEER DATE

11-1-10
PLANS APPROVAL DATE

REGISTERED PROFESSIONAL ENGINEER CHRIS GARDNER No. C60348 Exp. 6-30-10 CIVIL STATE OF CALIFORNIA

THE STATE OF CALIFORNIA OR ITS OFFICERS OR AGENTS SHALL NOT BE RESPONSIBLE FOR THE ACCURACY OR COMPLETENESS OF SCANNED COPIES OF THIS PLAN SHEET.

CRCP TERMINAL JOINTS, EXPANSION JOINTS AND PAVEMENT ANCHORS

LAYOUT SHEET No.	LOCATION	CRCP TERMINAL JOINTS TYPE B LF	CRCP EXPANSION JOINTS TYPE AN LF	CRCP PAVEMENT ANCHORS LF	JOINT SEAL (MR 1½") LF
L-2	"A" 122+00 NORTHBOUND	12			
	"A" 124+00 NORTHBOUND	12			
L-3	"A" 127+00 NORTHBOUND	12			
	"A" 127+00 SOUTHBOUND	24			
	"A" 127+16 NORTHBOUND			38	
	"A" 127+33 NORTHBOUND			38	
	"A" 130+00 NORTHBOUND	12			
	"A" 130+16 SOUTHBOUND			38	
	"A" 130+33 SOUTHBOUND			38	
L-7	"A" 182+56 NORTHBOUND			38	
	"A" 182+56 SOUTHBOUND			38	
	"A" 182+73 NORTHBOUND			38	
	"A" 182+73 SOUTHBOUND			38	
	"A" 182+90 NORTHBOUND		38		38
	"A" 182+90 SOUTHBOUND		38		38
	"A" 184+64 NORTHBOUND		38		38
	"A" 184+64 SOUTHBOUND		38		38
	"A" 184+81 NORTHBOUND			38	
	"A" 184+81 SOUTHBOUND			38	
	"A" 184+98 NORTHBOUND			38	
	"A" 184+98 SOUTHBOUND			38	
L-11	"A" 240+66 NORTHBOUND			38	
	"A" 240+66 SOUTHBOUND			38	
	"A" 240+83 NORTHBOUND			38	
	"A" 240+83 SOUTHBOUND			38	
	"A" 241+00 NORTHBOUND		38		38
	"A" 241+00 SOUTHBOUND		38		38
	"A" 243+20 NORTHBOUND		38		38
	"A" 243+20 SOUTHBOUND		38		38
	"A" 243+37 NORTHBOUND			38	
	"A" 243+37 SOUTHBOUND			38	
	"A" 243+54 NORTHBOUND			38	
	"A" 243+54 SOUTHBOUND			38	
L-19	"A" 347+04 NORTHBOUND			38	
	"A" 347+21 NORTHBOUND			38	
	"A" 347+38 NORTHBOUND		38		38
L-21	"A" 362+04 SOUTHBOUND			38	
	"A" 362+21 SOUTHBOUND			38	
	"A" 362+38 SOUTHBOUND		38		38
TOTAL		72	380	912	380

2 ADDED PER ADDENDUM No. 2 DATED MAY 9, 2012

SUMMARY OF QUANTITIES
Q-3A

STATE OF CALIFORNIA - DEPARTMENT OF TRANSPORTATION
Caltrans 06-DESIGN

FUNCTIONAL SUPERVISOR: BORIS AYAVIRI
CALCULATED-DESIGNED BY: CHRIS GARDNER
CHECKED BY: ANONH SENGMANY
REVISED BY
DATE REVISED

LAST REVISION 04-26-10
DATE PLOTTED => 04-MAY-2012
TIME PLOTTED => 12:43

Dist	COUNTY	ROUTE	POST MILES TOTAL PROJECT	SHEET No.	TOTAL SHEETS
10	Mer	99	0.0/4.6	400A	607

Edward A. Hibbs
LICENSED LANDSCAPE ARCHITECT

11-1-10
PLANS APPROVAL DATE

LICENSED LANDSCAPE ARCHITECT — Edward A. Hibbs No. 1480 — Expiration Date 02/28/14 — Renewal Date 02/14/12 — Date — STATE OF CALIFORNIA

THE STATE OF CALIFORNIA OR ITS OFFICERS OR AGENTS SHALL NOT BE RESPONSIBLE FOR THE ACCURACY OR COMPLETENESS OF SCANNED COPIES OF THIS PLAN SHEET.

2

ABBREVIATIONS

AMEND	AMENDMENT	NCN	NO COMMON NAME
B & B	BALLED AND BURLAPPED	No.	NUMBER
CF	CUBIC FEET	Oz	OUNCE
CY	CUBIC YARD	Pkt	PACKET
Dia	DIAMETER	Pvmt	PAVEMENT
EA	EACH	PLT ESTB	PLANT ESTABLISHMENT
ETW	EDGE OF TRAVELED WAY	R/W	RIGHT OF WAY
Ft	FOOT/FEET	SQFT	SQUARE FEET
LB	POUNDS(S)	SQYD	SQUARE YARD
Max	MAXIMUM	SF	STATE FURNISHED
Min	MINIMUM		

PLANT LIST AND PLANTING SPECIFICATIONS

PLANT GROUP	PLANT No.	SYMBOL	BOTANICAL NAME	COMMON NAME	SIZE	QUANTITY EACH	HOLE SIZE (INCH) Dia	HOLE SIZE (INCH) DEPTH	BASIN TYPE	IRON SULFATE	SOIL AMEND (1)	COMMERCIAL FERTILIZER (1) PLANTING	COMMERCIAL FERTILIZER (1) PLT ESTB	BASIN MULCH	STAKING	PLANTING LIMITS MINIMUM DISTANCE (Ft) FROM ETW	Pvmt	FENCE	WALL	PAVED DITCH	EARTH DITCH	ON CENTER (Ft)	REMARKS
A	1		CISTUS X PULVERULENTUS 'SUNSET'	SUNSET ROCKROSE	No. 1	291	(8)	(2)	II	—	1/4 CF	1 Pkt	1/4 LB	1 CF	—	-	6	6	6	6	6	6.5	SHRUB (SPRINKLER TYPE ●)
	2		FREMONTODENDRON 'CALIFORNIA GLORY'	FLANNEL BUSH	No. 1	32	(8)	(2)	II	—	1/4 CF	1 Pkt	1/4 LB	1 CF	—	-	15	10	10	10	12	(4)	SHRUB (SPRINKLER TYPE ●)
	3		LAGERSTROEMIA INDICA TRI 'MUSKOGEE'	CRAPE MYRTLE - LAVENDER	No. 1	4	(8)	(2)	II (10)	—	1/4 CF	1 Pkt	1/4 LB	1 CF	—	30	-	15	15	15	17	(4)	SHRUB (SEE DETAIL ON SHEET LD-3)
	4		LAGERSTROEMIA INDICA TRI 'NATCHEZ'	CRAPE MYRTLE - WHITE	No. 1	4	(8)	(2)	II (10)	—	1/4 CF	1 Pkt	1/4 LB	1 CF	—	30	-	15	15	15	17	(4)	SHRUB (SEE DETAIL ON SHEET LD-3)
	5		LAGERSTROEMIA INDICA TRI 'TUSCARORA'	CRAPE MYRTLE - PINK	No. 1	4	(8)	(2)	II (10)	—	1/4 CF	1 Pkt	1/4 LB	1 CF	—	30	-	15	15	15	17	(4)	SHRUB (SEE DETAIL ON SHEET LD-3)
	6		PITTOSPORUM TOBIRA 'VARIGATA	VARIGATED TOBIRA	No. 1	681	(8)	(2)	II	—	1/4 CF	1 Pkt	1/4 LB	1 CF	—	-	10	10	10	10	12	10	SHRUB (SPRINKLER TYPE ●)
	7		ROSA BANKSIAE 'LUTEA'	BANKS' YELLOW ROSE	No. 1	138	(8)	(2)	II	—	1/4 CF	1 Pkt	1/4 LB	1 CF	—	-	15	15	-	13	8	10	SHRUB (SPRINKLER TYPE ●)
	8		SALVIA 'BEE'S BLISS'	BEE'S BLISS SALVIA	No. 1	196	(8)	(2)	II	—	1/4 CF	1 Pkt	1/4 LB	1 CF	—	-	8	8	8	8	8	10	SHRUB (SPRINKLER TYPE ●)
B	9		CEDRUS DEODORA	DEODAR CEDAR	No. 5	75	(8)	(2)	II	—	1 CF	3 Pkt	3/8 LB	1 CF	(9)	40	-	30	30	30	32	(4)	TREE (SPRINKLER TYPE ○)
	10		CHILOPSIS LINEARIS	DESERT WILLOW	No. 5	71	(8)	(2)	II	—	1 CF	3 Pkt	3/8 LB	1 CF	—	-	20	15	15	15	17	20	SHRUB (SPRINKLER TYPE ◑)
	11		LAGERSTROEMIA IND. 'WATERMELON RED'	CRAPE MYRTLE	No. 5	40	(8)	(2)	II	—	1 CF	3 Pkt	3/8 LB	1 CF	—	30	-	15	15	15	17	(4)	SHRUB (SPRINKLER TYPE ◑)
	12		LIQUIDAMBAR STYRACIFLUA 'BURGUNDY'	AMERICAN SWEET GUM	No. 5	36	(8)	(2)	II	—	1 CF	3 Pkt	3/8 LB	1 CF	(9)	30	-	15	15	15	17	(4)	TREE (SPRINKLER TYPE ○)
	13		PISTACHE CHINENSIS 'KEITH DAVEY'	CHINESE PISTACHE	No. 5	136	(8)	(2)	II	—	1 CF	3 Pkt	3/8 LB	1 CF	(9)	40	-	20	20	20	22	(4)	TREE (SPRINKLER TYPE ○)
	14		QUERCUS LOBATA	VALLEY OAK	No. 5	53	(8)	(2)	II	—	1 CF	3 Pkt	3/8 LB	1 CF	(9)	30	-	20	20	20	22	(4)	TREE (SPRINKLER TYPE ○)
	15		RHUS LANCEA	AFRICAN SUMAC	No. 5	299	(8)	(2)	II	—	1 CF	3 Pkt	3/8 LB	1 CF	—	-	20	15	15	15	17	(4)	SHRUB (SPRINKLER TYPE ◑)
	16		ROBINIA AMBIGUA 'IDAHOENSIS'	IDAHO LOCUST	No. 5	46	(8)	(2)	II	—	1 CF	3 Pkt	3/8 LB	1 CF	(9)	30	15	15	10	10	12	(4)	TREE (SPRINKLER TYPE ○)

APPLICABLE WHEN CIRCLED:

(1)- QUANTITIES SHOWN ARE "PER PLANT" UNLESS SHOWN AS SQFT OR SQYD APPLICATION RATES
(2)- SUFFICIENT TO RECEIVE ROOT BALL
3 - DOES NOT APPLY TO MULCH AREAS
(4)- AS SHOWN ON PLANS
5 - UNLESS OTHERWISE SHOWN ON PLANS
6 - SEE DETAIL
7 - SEE SPECIAL PROVISIONS
(8)- TWICE THE ROOTBALL DIAMETER
(9)- REQUIRED
(10)- BASIN AREA EQUIVALENT TO 36 INCHES IN DIAMETER

LEGEND:

MULCH AREAS (404 CY/ACRE)

ROADSIDE CLEARING AND PLT ESTB LIMITS (Typ)

NOTE:

UNDERLINED PORTIONS OF BOTANICAL NAME INDICATE ABBREVIATIONS USED ON PLANTING PLANS.

2 **ADDED PER ADDENDUM No. 2 DATED MAY 9, 2012**

SCALE: 1"=50'

PLANT LIST PL-1

STATE OF CALIFORNIA - DEPARTMENT OF TRANSPORTATION
Caltrans® LANDSCAPE ARCHITECTURE
SENIOR LANDSCAPE ARCHITECT: BRAD COLE
CALCULATED-DESIGNED BY: ED HIBBS
CHECKED BY: KEVIN GALLO
REVISED BY / DATE REVISED

LAST REVISION 02-14-12
DATE PLOTTED => 04-MAY-2012
TIME PLOTTED => 10:42

Dist	COUNTY	ROUTE	POST MILES TOTAL PROJECT	SHEET No.	TOTAL SHEETS
10	Mer	99	0.0/4.6	400B	607

Edward A. Hibbs
LICENSED LANDSCAPE ARCHITECT

11-1-10
PLANS APPROVAL DATE

LICENSED LANDSCAPE ARCHITECT
Edward A. Hibbs No. 1
Expiration Date 02/28/14
Renewal Date 02/14/12
Date
STATE OF CALIFORNIA

THE STATE OF CALIFORNIA OR ITS OFFICERS OR AGENTS SHALL NOT BE RESPONSIBLE FOR THE ACCURACY OR COMPLETENESS OF SCANNED COPIES OF THIS PLAN SHEET.

NOTE:

FOR ACCURATE RIGHT OF WAY DATA, CONTACT
RIGHT OF WAY ENGINEERING AT THE DISTRICT OFFICE.

2

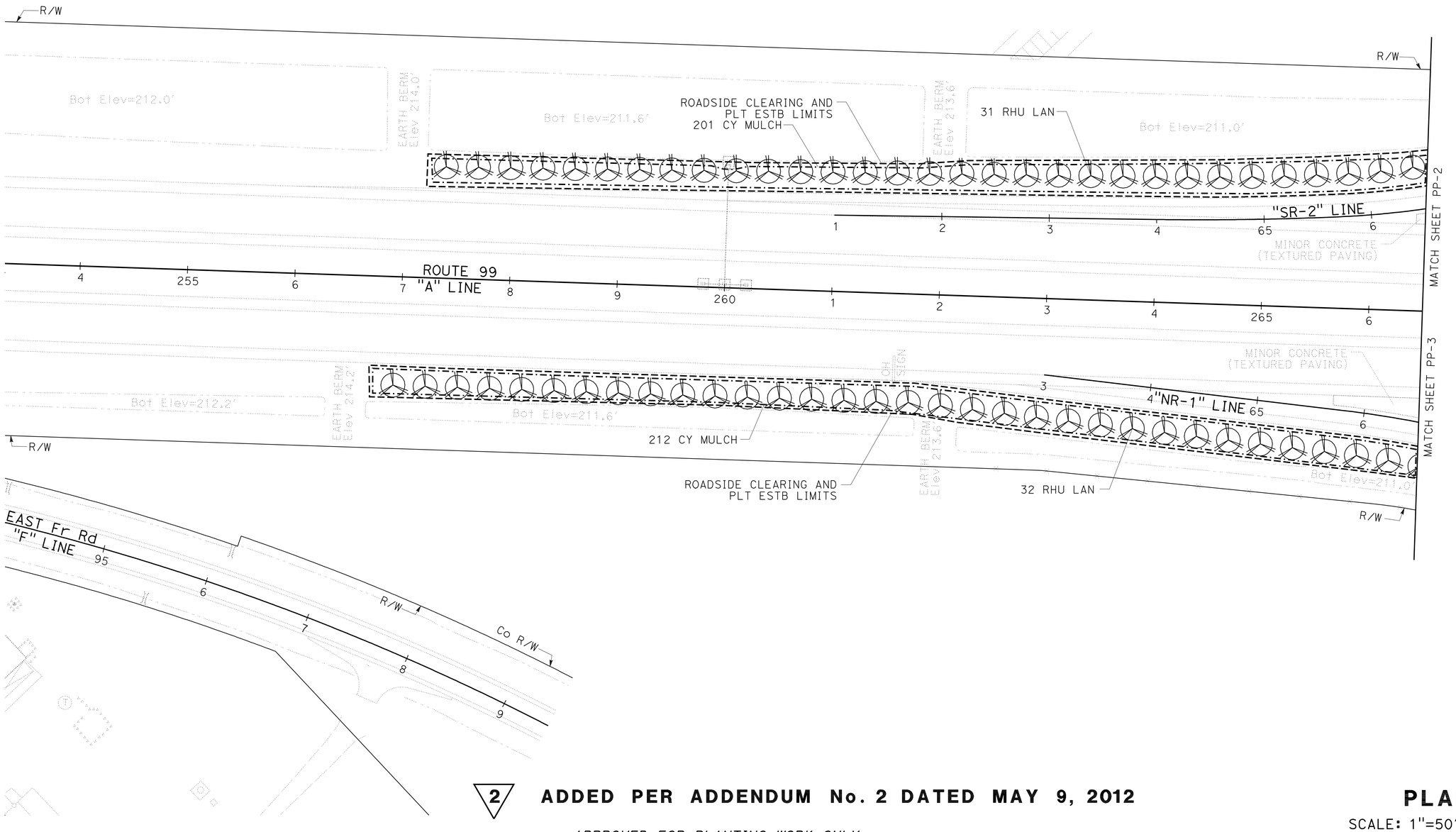

2 **ADDED PER ADDENDUM No. 2 DATED MAY 9, 2012**

APPROVED FOR PLANTING WORK ONLY

PLANTING PLAN
SCALE: 1"=50'
PP-1

STATE OF CALIFORNIA - DEPARTMENT OF TRANSPORTATION
Caltrans® LANDSCAPE ARCHITECTURE

SENIOR LANDSCAPE ARCHITECT: BRAD COLE
CALCULATED-DESIGNED BY: ED HIBBS
CHECKED BY: KEVIN GALLO
REVISED BY
DATE REVISED

LAST REVISION 02-14-12
DATE PLOTTED => 04-MAY-2012
TIME PLOTTED => 10:42

Dist	COUNTY	ROUTE	POST MILES TOTAL PROJECT	SHEET No.	TOTAL SHEETS
10	Mer	99	0.0/4.6	400C	607

Edward A. Hibbs
LICENSED LANDSCAPE ARCHITECT

11-1-10
PLANS APPROVAL DATE

LICENSED LANDSCAPE ARCHITECT
41580 A. HIBBS No. 1
Edward A. Hibbs
Expiration Date
02/28/14
Renewal Date
02/14/12
Date
STATE OF CALIFORNIA

THE STATE OF CALIFORNIA OR ITS OFFICERS OR AGENTS SHALL NOT BE RESPONSIBLE FOR THE ACCURACY OR COMPLETENESS OF SCANNED COPIES OF THIS PLAN SHEET.

NOTE:

FOR ACCURATE RIGHT OF WAY DATA, CONTACT RIGHT OF WAY ENGINEERING AT THE DISTRICT OFFICE.

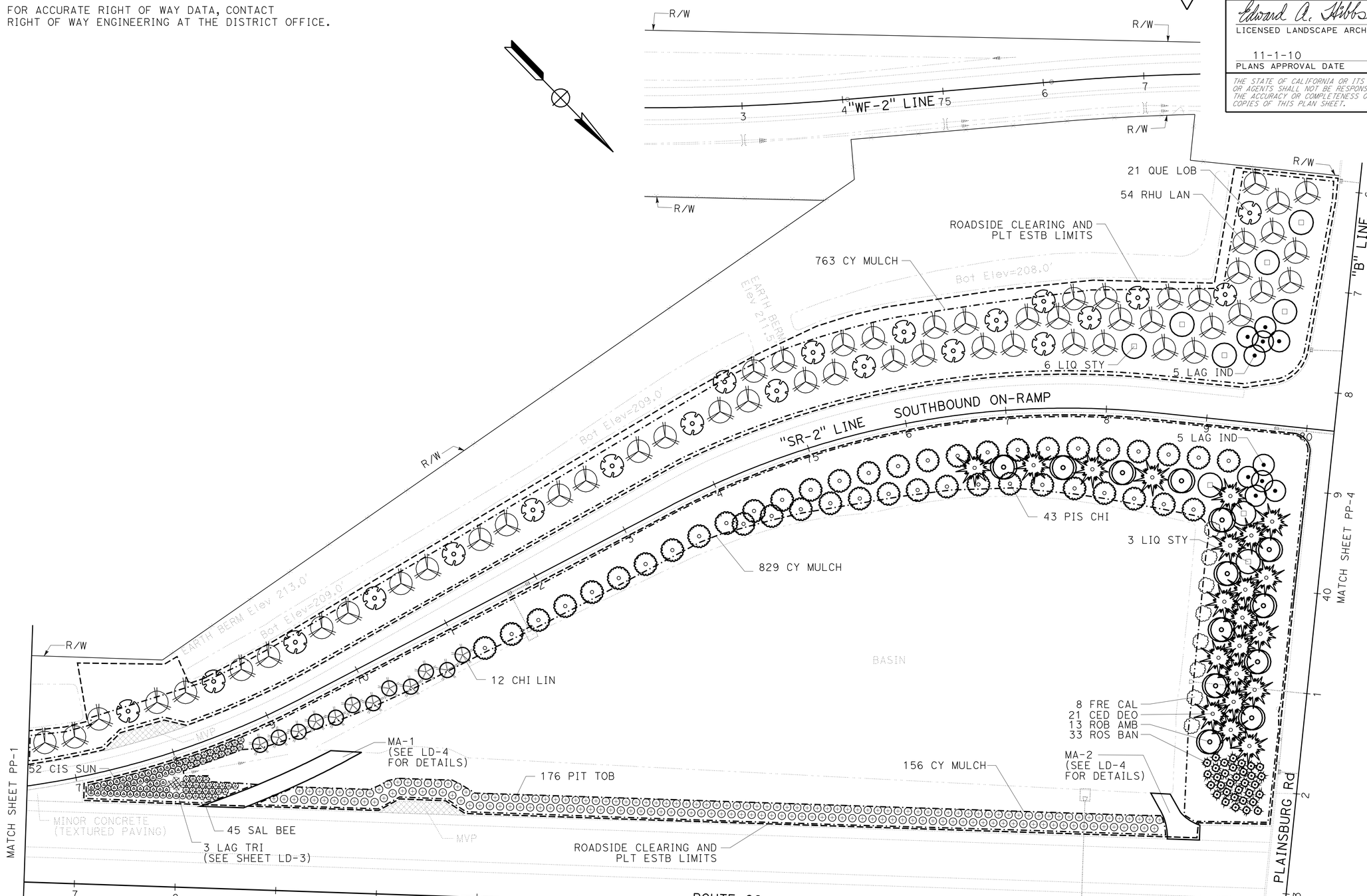

2 **ADDED PER ADDENDUM No. 2 DATED MAY 9, 2012**

APPROVED FOR PLANTING WORK ONLY

PLANTING PLAN PP-2

SCALE: 1"=50'

STATE OF CALIFORNIA - DEPARTMENT OF TRANSPORTATION
Caltrans® LANDSCAPE ARCHITECTURE

SENIOR LANDSCAPE ARCHITECT: BRAD COLE
CALCULATED-DESIGNED BY: ED HIBBS
CHECKED BY: KEVIN GALLO
REVISED BY
DATE REVISED

LAST REVISION 02-14-12
DATE PLOTTED => 04-MAY-2012
TIME PLOTTED => 10:42

Dist	COUNTY	ROUTE	POST MILES TOTAL PROJECT	SHEET No.	TOTAL SHEETS
10	Mer	99	0.0/4.6	400D	607

Edward A. Hibbs
LICENSED LANDSCAPE ARCHITECT

11-1-10
PLANS APPROVAL DATE

LICENSED LANDSCAPE ARCHITECT
EDWARD A. HIBBS No. 1480
Edward A. Hibbs
Expiration Date 02/28/14
Renewal Date 02/14/12
Date
STATE OF CALIFORNIA

THE STATE OF CALIFORNIA OR ITS OFFICERS OR AGENTS SHALL NOT BE RESPONSIBLE FOR THE ACCURACY OR COMPLETENESS OF SCANNED COPIES OF THIS PLAN SHEET.

NOTE:

FOR ACCURATE RIGHT OF WAY DATA, CONTACT
RIGHT OF WAY ENGINEERING AT THE DISTRICT OFFICE.

2

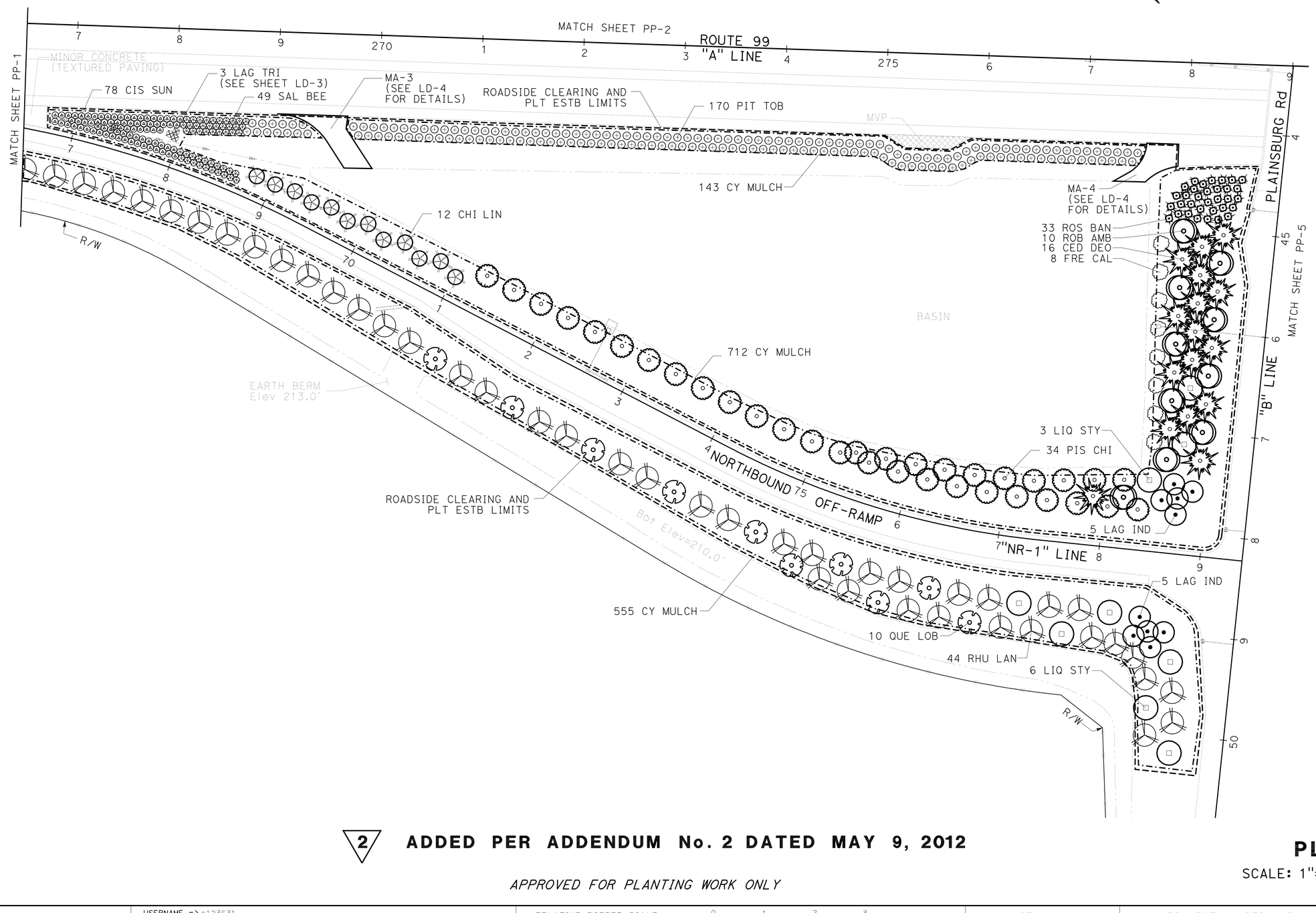

2 **ADDED PER ADDENDUM No. 2 DATED MAY 9, 2012**

APPROVED FOR PLANTING WORK ONLY

PLANTING PLAN PP-3

SCALE: 1"=50'

STATE OF CALIFORNIA - DEPARTMENT OF TRANSPORTATION
Caltrans® LANDSCAPE ARCHITECTURE

SENIOR LANDSCAPE ARCHITECT: BRAD COLE
CALCULATED-DESIGNED BY: ED HIBBS
CHECKED BY: KEVIN GALLO
REVISED BY
DATE REVISED

LAST REVISION 02-14-12
DATE PLOTTED => 04-MAY-2012
TIME PLOTTED => 10:42

Dist	COUNTY	ROUTE	POST MILES TOTAL PROJECT	SHEET No.	TOTAL SHEETS
10	Mer	99	0.0/4.6	400E	607

Edward A. Hibbs
LICENSED LANDSCAPE ARCHITECT

11-1-10
PLANS APPROVAL DATE

LICENSED LANDSCAPE ARCHITECT
EDWARD A. HIBBS No. 1480
Edward A. Hibbs
Expiration Date 02/28/14
Renewal Date 02/14/12
Date
STATE OF CALIFORNIA

THE STATE OF CALIFORNIA OR ITS OFFICERS OR AGENTS SHALL NOT BE RESPONSIBLE FOR THE ACCURACY OR COMPLETENESS OF SCANNED COPIES OF THIS PLAN SHEET.

2

NOTE:

FOR ACCURATE RIGHT OF WAY DATA, CONTACT
RIGHT OF WAY ENGINEERING AT THE DISTRICT OFFICE.

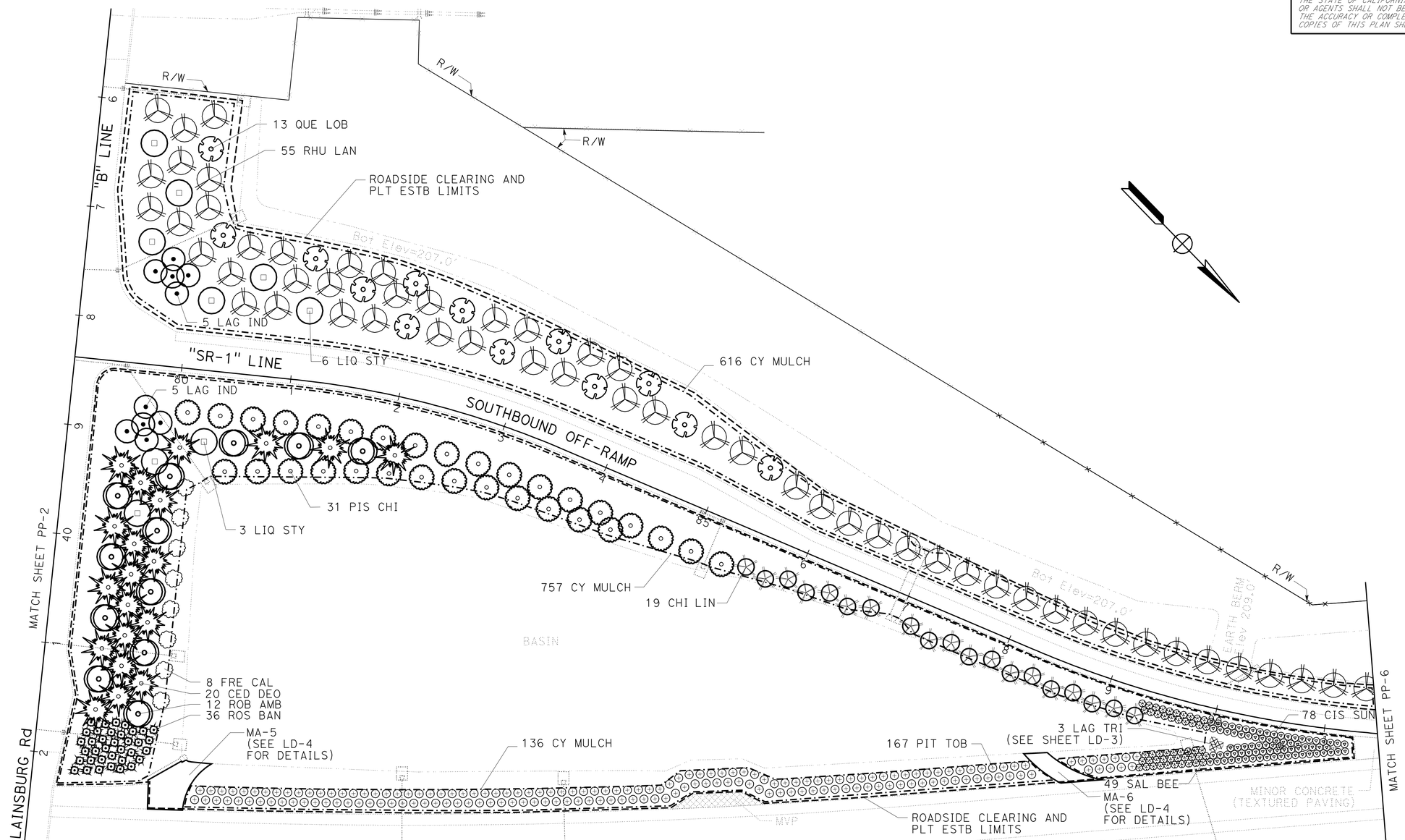

2 **ADDED PER ADDENDUM No. 2 DATED MAY 9, 2012**

APPROVED FOR PLANTING WORK ONLY

PLANTING PLAN PP-4

SCALE: 1"=50'

STATE OF CALIFORNIA - DEPARTMENT OF TRANSPORTATION
Caltrans® LANDSCAPE ARCHITECTURE

SENIOR LANDSCAPE ARCHITECT: BRAD COLE
CALCULATED-DESIGNED BY: ED HIBBS
CHECKED BY: KEVIN GALLO
REVISED BY
DATE REVISED

LAST REVISION 02-14-12
DATE PLOTTED => 04-MAY-2012
TIME PLOTTED => 10:43

Dist	COUNTY	ROUTE	POST MILES TOTAL PROJECT	SHEET No.	TOTAL SHEETS
10	Mer	99	0.0/4.6	400F	607

Edward A. Hibbs
LICENSED LANDSCAPE ARCHITECT

11-1-10
PLANS APPROVAL DATE

LICENSED LANDSCAPE ARCHITECT
Edward A. Hibbs No. 1480
Expiration Date 02/28/14
Renewal Date 02/14/12
Date
STATE OF CALIFORNIA

THE STATE OF CALIFORNIA OR ITS OFFICERS OR AGENTS SHALL NOT BE RESPONSIBLE FOR THE ACCURACY OR COMPLETENESS OF SCANNED COPIES OF THIS PLAN SHEET.

NOTE:

FOR ACCURATE RIGHT OF WAY DATA, CONTACT RIGHT OF WAY ENGINEERING AT THE DISTRICT OFFICE.

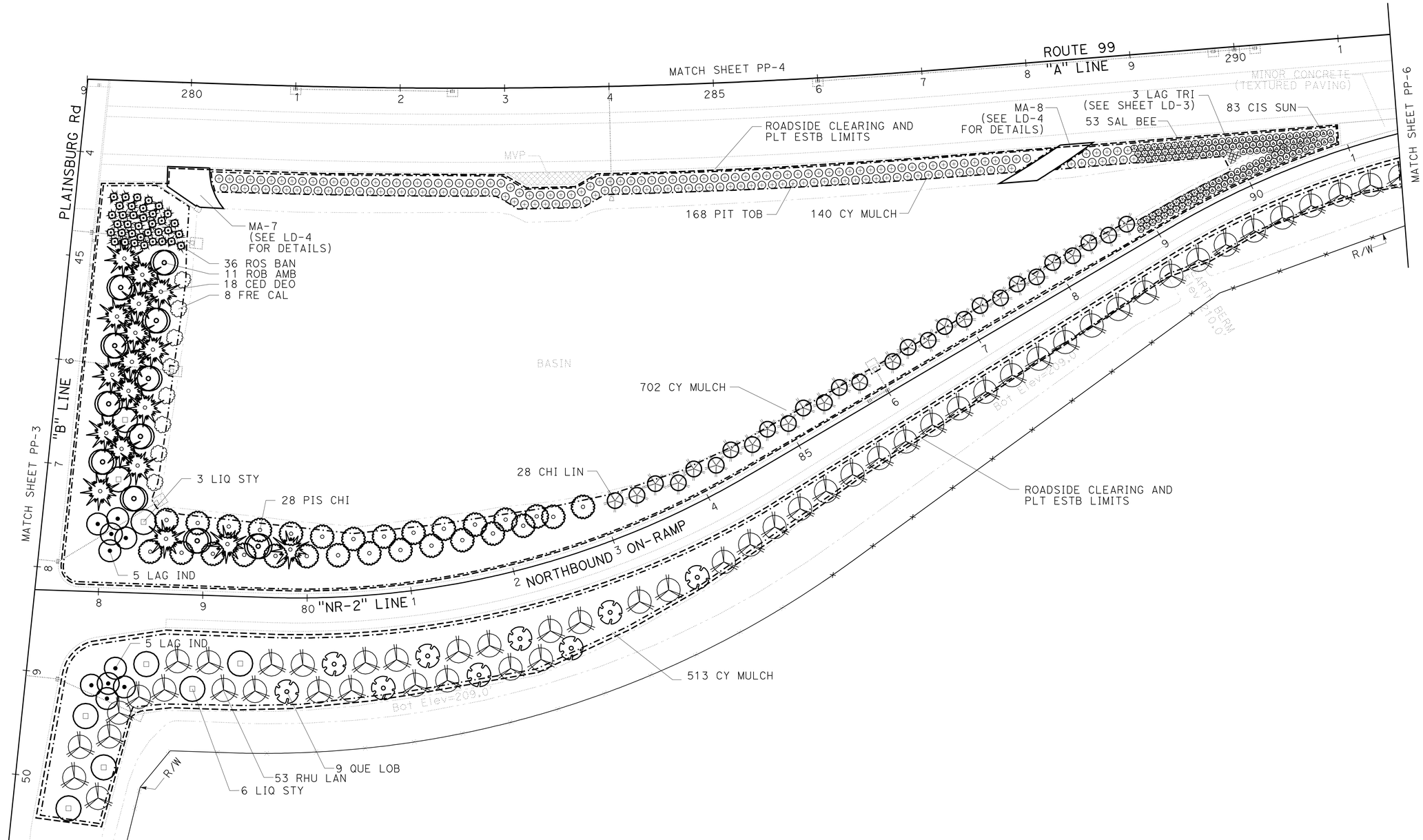

2 **ADDED PER ADDENDUM No. 2 DATED MAY 9, 2012**

APPROVED FOR PLANTING WORK ONLY

PLANTING PLAN PP-5

SCALE: 1"=50'

STATE OF CALIFORNIA - DEPARTMENT OF TRANSPORTATION
Caltrans® LANDSCAPE ARCHITECTURE

SENIOR LANDSCAPE ARCHITECT: BRAD COLE
CALCULATED-DESIGNED BY: ED HIBBS
CHECKED BY: KEVIN GALLO
REVISED BY
DATE REVISED

LAST REVISION 02-14-12
DATE PLOTTED => 04-MAY-2012
TIME PLOTTED => 10:43

Dist	COUNTY	ROUTE	POST MILES TOTAL PROJECT	SHEET No.	TOTAL SHEETS
10	Mer	99	0.0/4.6	400G	607

Edward A. Hibbs
LICENSED LANDSCAPE ARCHITECT

11-1-10
PLANS APPROVAL DATE

LICENSED LANDSCAPE ARCHITECT
Edward A. Hibbs No. 1480
Expiration Date 02/28/14
Renewal Date 02/14/12
Date
STATE OF CALIFORNIA

THE STATE OF CALIFORNIA OR ITS OFFICERS OR AGENTS SHALL NOT BE RESPONSIBLE FOR THE ACCURACY OR COMPLETENESS OF SCANNED COPIES OF THIS PLAN SHEET.

NOTE:

FOR ACCURATE RIGHT OF WAY DATA, CONTACT
RIGHT OF WAY ENGINEERING AT THE DISTRICT OFFICE.

2

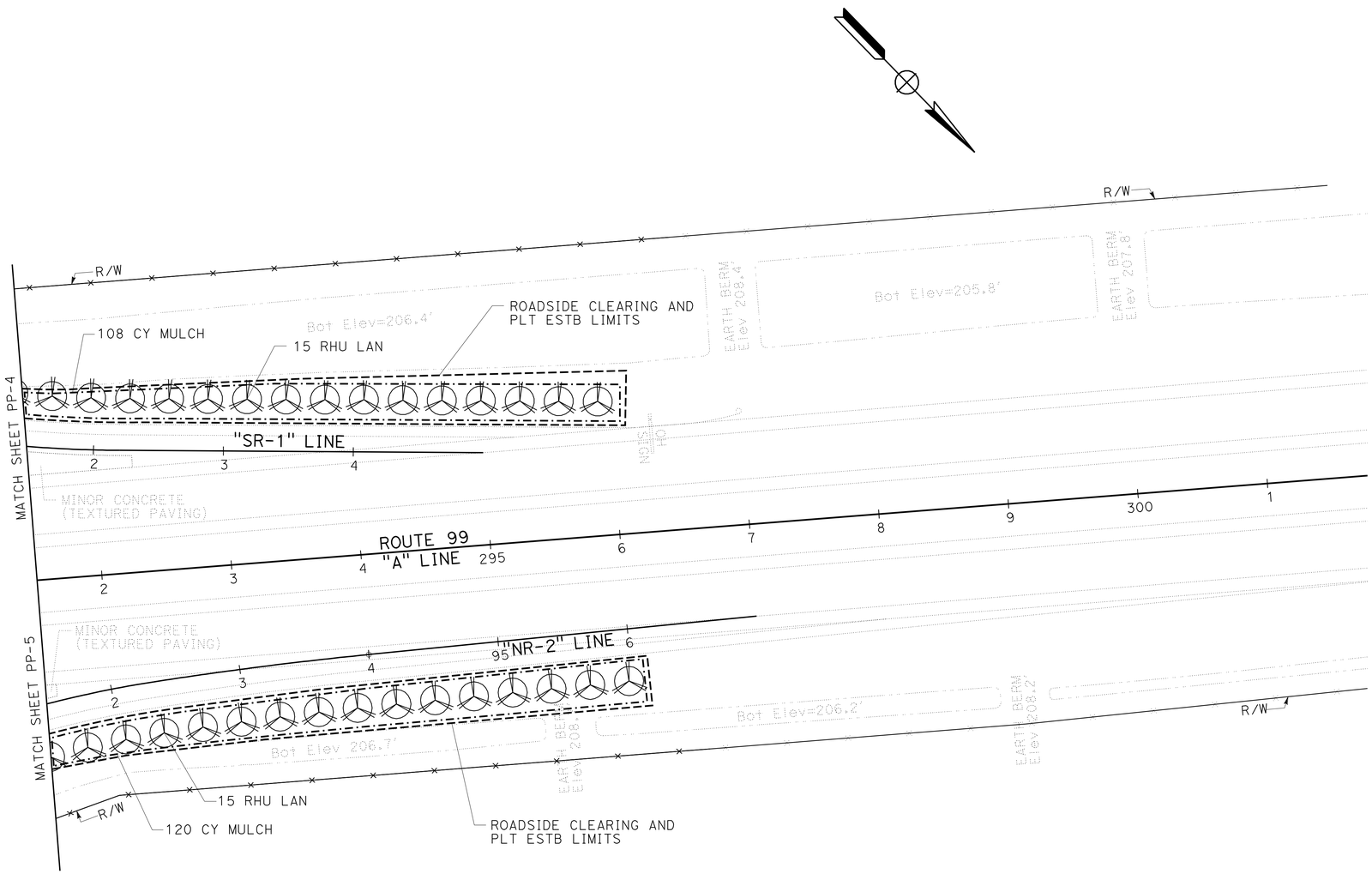

2 **ADDED PER ADDENDUM No. 2 DATED MAY 9, 2012**

APPROVED FOR PLANTING WORK ONLY

PLANTING PLAN PP-6

SCALE: 1"=50'

STATE OF CALIFORNIA - DEPARTMENT OF TRANSPORTATION
Caltrans® LANDSCAPE ARCHITECTURE

SENIOR LANDSCAPE ARCHITECT: BRAD COLE
CALCULATED-DESIGNED BY: ED HIBBS
CHECKED BY: KEVIN GALLO
REVISED BY
DATE REVISED

LAST REVISION 02-14-12
DATE PLOTTED => 04-MAY-2012
TIME PLOTTED => 10:43

Dist	COUNTY	ROUTE	POST MILES TOTAL PROJECT	SHEET No.	TOTAL SHEETS
10	Mer	99	0.0/4.6	400H	607

Edward A. Hibbs
LICENSED LANDSCAPE ARCHITECT

11-1-10
PLANS APPROVAL DATE

LICENSED LANDSCAPE ARCHITECT
EDWARD A. HIBBS No. 1
Edward A. Hibbs
Expiration Date
02/28/14
Renewal Date
02/14/12
Date
STATE OF CALIFORNIA

THE STATE OF CALIFORNIA OR ITS OFFICERS OR AGENTS SHALL NOT BE RESPONSIBLE FOR THE ACCURACY OR COMPLETENESS OF SCANNED COPIES OF THIS PLAN SHEET.

2

NOTE:

1. FOR ACCURATE RIGHT OF WAY DATA, CONTACT RIGHT OF WAY ENGINEERING AT THE DISTRICT OFFICE.
2. IRRIGATION CONTROLLER ENCLOSURE CABINET FOR FIELD UNIT 'B' SHALL BE INSTALLED PER STANDARD PLAN H10 EXCEPT THAT CONCRETE PAD IS DELETED AND CONCRETE FOUNDATION IS INTEGRAL WITH WELL CONCRETE SLAB. SEE WELL AND ELECTRICAL SHEETS.

LEGEND:

● 2 SPRINKLERS (TYPE C-2 Mod-10) (SEE LD-2 FOR DETAILS)

[W] WELL

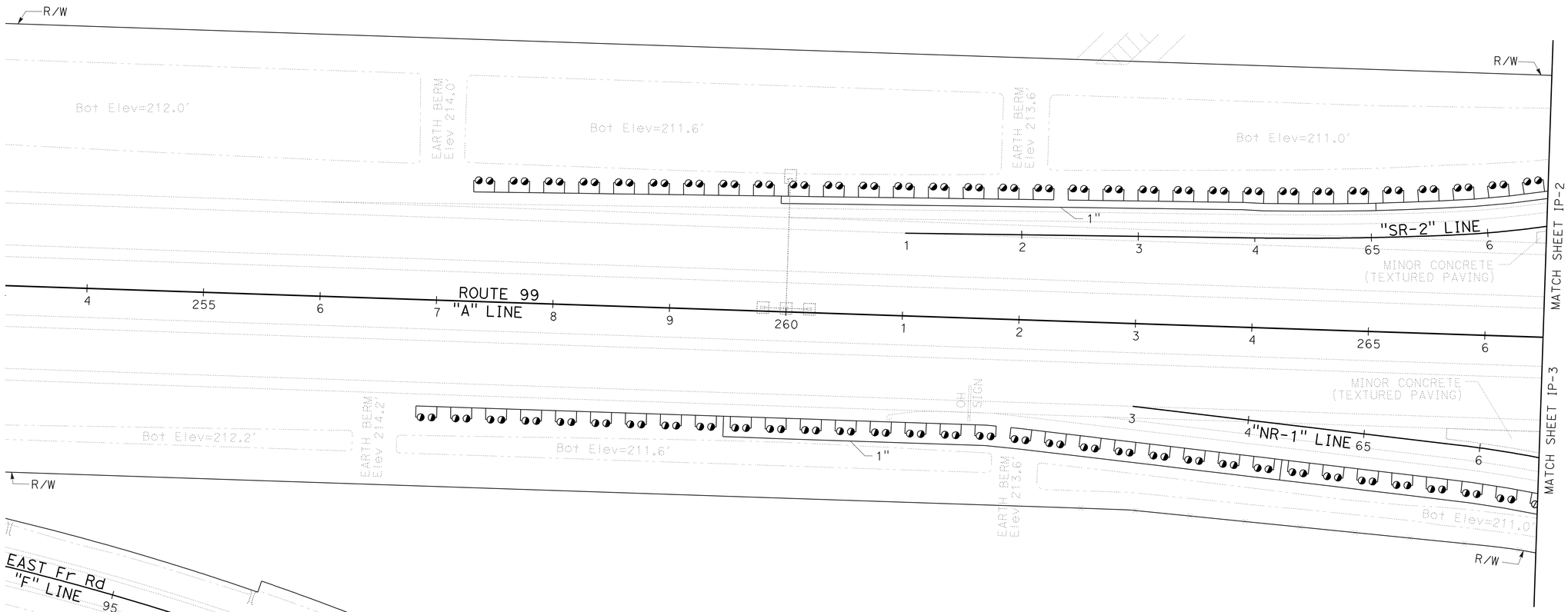

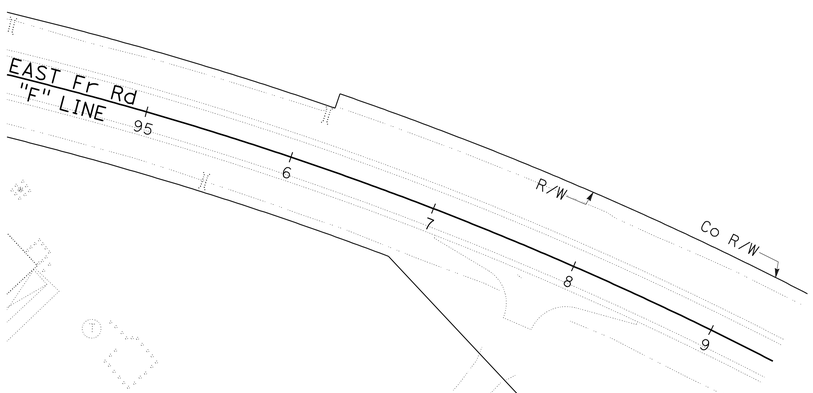

2 **ADDED PER ADDENDUM No. 2 DATED MAY 9, 2012**

APPROVED FOR IRRIGATION WORK ONLY

IRRIGATION PLAN
SCALE: 1"=50'
IP-1

STATE OF CALIFORNIA - DEPARTMENT OF TRANSPORTATION
Caltrans® LANDSCAPE ARCHITECTURE

SENIOR LANDSCAPE ARCHITECT: BRAD COLE
CALCULATED-DESIGNED BY: ED HIBBS
CHECKED BY: KEVIN GALLO
REVISED BY
DATE REVISED

LAST REVISION 02-14-12
DATE PLOTTED => 04-MAY-2012
TIME PLOTTED => 10:43

Dist	COUNTY	ROUTE	POST MILES TOTAL PROJECT	SHEET No.	TOTAL SHEETS
10	Mer	99	0.0/4.6	400I	607

Edward A. Hibbs
LICENSED LANDSCAPE ARCHITECT

11-1-10
PLANS APPROVAL DATE

LICENSED LANDSCAPE ARCHITECT
EDWARD A. HIBBS No. 1
Edward A. Hibbs
Expiration Date
02/28/14
Renewal Date
02/14/12
Date
STATE OF CALIFORNIA

THE STATE OF CALIFORNIA OR ITS OFFICERS OR AGENTS SHALL NOT BE RESPONSIBLE FOR THE ACCURACY OR COMPLETENESS OF SCANNED COPIES OF THIS PLAN SHEET.

NOTE:

FOR ACCURATE RIGHT OF WAY DATA, CONTACT RIGHT OF WAY ENGINEERING AT THE DISTRICT OFFICE.

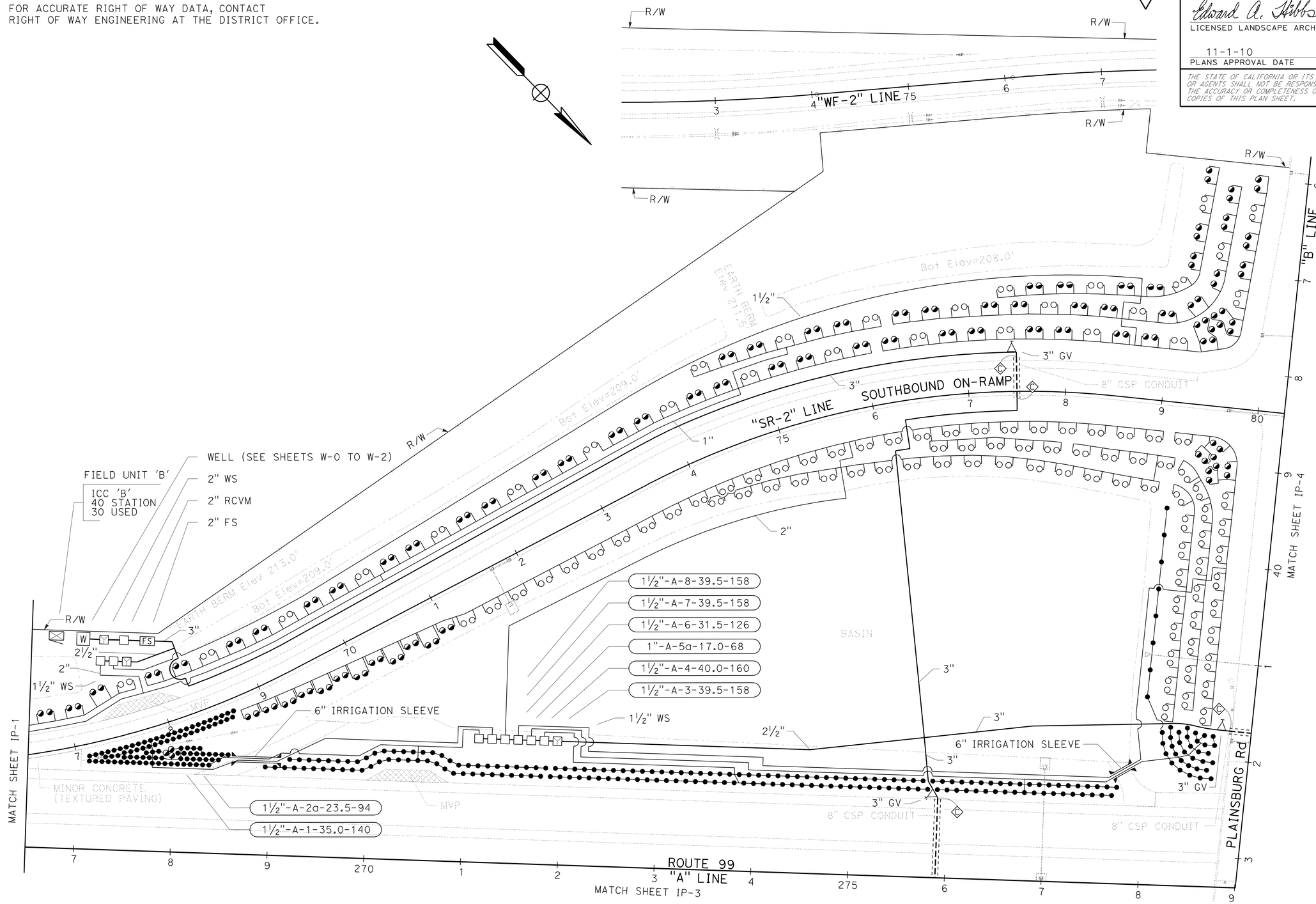

2 **ADDED PER ADDENDUM No. 2 DATED MAY 9, 2012**

APPROVED FOR IRRIGATION WORK ONLY

IRRIGATION PLAN IP-2

SCALE: 1"=50'

STATE OF CALIFORNIA - DEPARTMENT OF TRANSPORTATION
Caltrans® LANDSCAPE ARCHITECTURE

SENIOR LANDSCAPE ARCHITECT: BRAD COLE
CALCULATED-DESIGNED BY: ED HIBBS
CHECKED BY: KEVIN GALLO
REVISED BY
DATE REVISED

LAST REVISION 02-14-12
DATE PLOTTED => 04-MAY-2012
TIME PLOTTED => 10:43

Dist	COUNTY	ROUTE	POST MILES TOTAL PROJECT	SHEET No.	TOTAL SHEETS
10	Mer	99	0.0/4.6	400J	607

Edward A. Hibbs
LICENSED LANDSCAPE ARCHITECT

11-1-10
PLANS APPROVAL DATE

LICENSED LANDSCAPE ARCHITECT
Edward A. Hibbs No. 1480
Expiration Date 02/28/14
Renewal Date 02/14/12
Date
STATE OF CALIFORNIA

THE STATE OF CALIFORNIA OR ITS OFFICERS OR AGENTS SHALL NOT BE RESPONSIBLE FOR THE ACCURACY OR COMPLETENESS OF SCANNED COPIES OF THIS PLAN SHEET.

NOTE:

FOR ACCURATE RIGHT OF WAY DATA, CONTACT
RIGHT OF WAY ENGINEERING AT THE DISTRICT OFFICE.

2

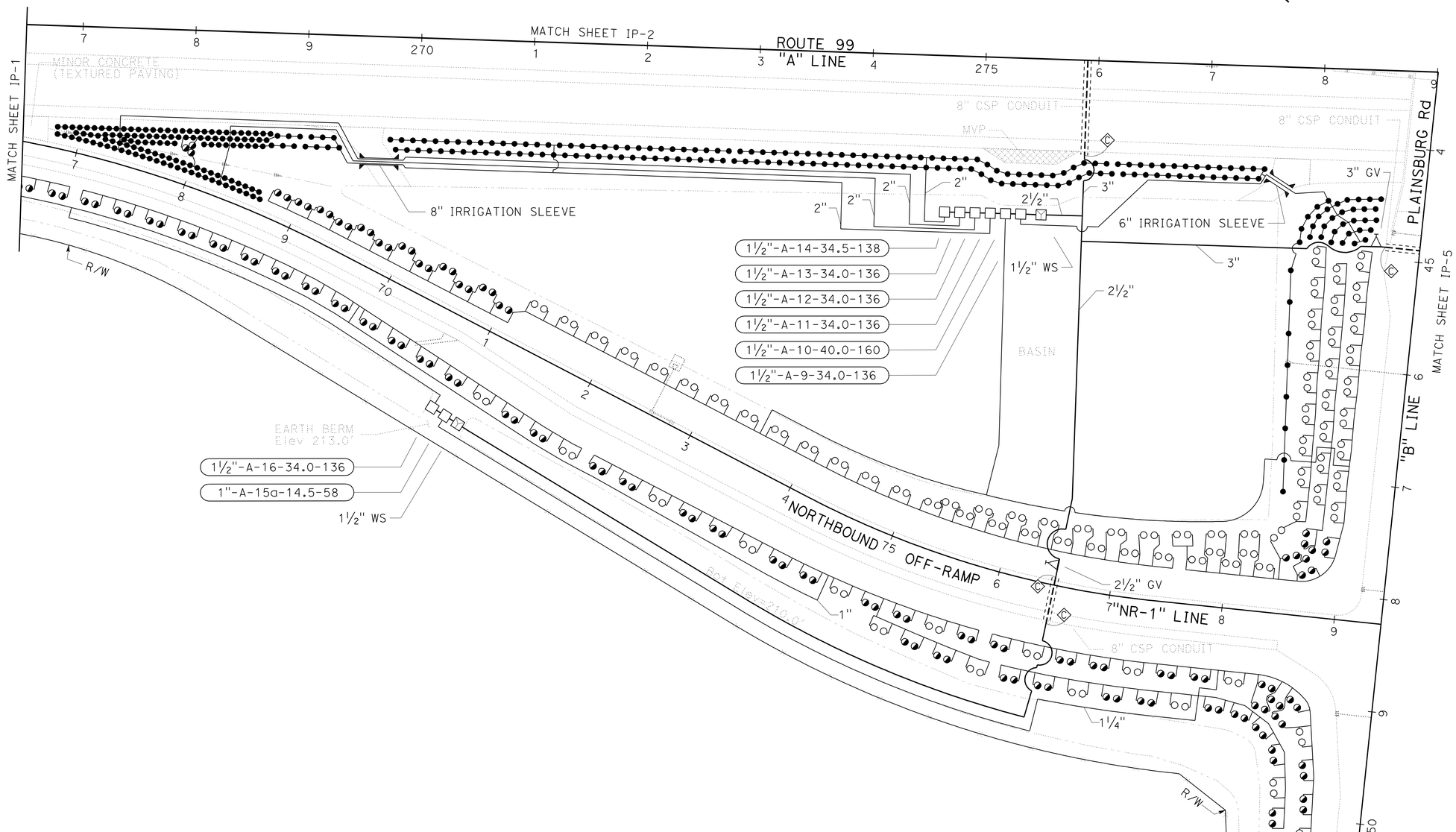

2 **ADDED PER ADDENDUM No. 2 DATED MAY 9, 2012**

APPROVED FOR IRRIGATION WORK ONLY

IRRIGATION PLAN
SCALE: 1"=50'

IP-3

REVISED BY | DATE REVISED
ED HIBBS | KEVIN GALLO
CALCULATED-DESIGNED BY | CHECKED BY
SENIOR LANDSCAPE ARCHITECT
BRAD COLE

STATE OF CALIFORNIA - DEPARTMENT OF TRANSPORTATION
Caltrans® LANDSCAPE ARCHITECTURE

LAST REVISION 02-14-12 | DATE PLOTTED => 04-MAY-2012 | TIME PLOTTED => 10:43

Dist	COUNTY	ROUTE	POST MILES TOTAL PROJECT	SHEET No.	TOTAL SHEETS
10	Mer	99	0.0/4.6	400K	607

Edward A. Hibbs
LICENSED LANDSCAPE ARCHITECT

11-1-10
PLANS APPROVAL DATE

LICENSED LANDSCAPE ARCHITECT
EDWARD A. HIBBS No. 1480
Edward A. Hibbs
Expiration Date 02/28/14
Renewal Date 02/14/12
Date
STATE OF CALIFORNIA

THE STATE OF CALIFORNIA OR ITS OFFICERS OR AGENTS SHALL NOT BE RESPONSIBLE FOR THE ACCURACY OR COMPLETENESS OF SCANNED COPIES OF THIS PLAN SHEET.

2

NOTE:

FOR ACCURATE RIGHT OF WAY DATA, CONTACT
RIGHT OF WAY ENGINEERING AT THE DISTRICT OFFICE.

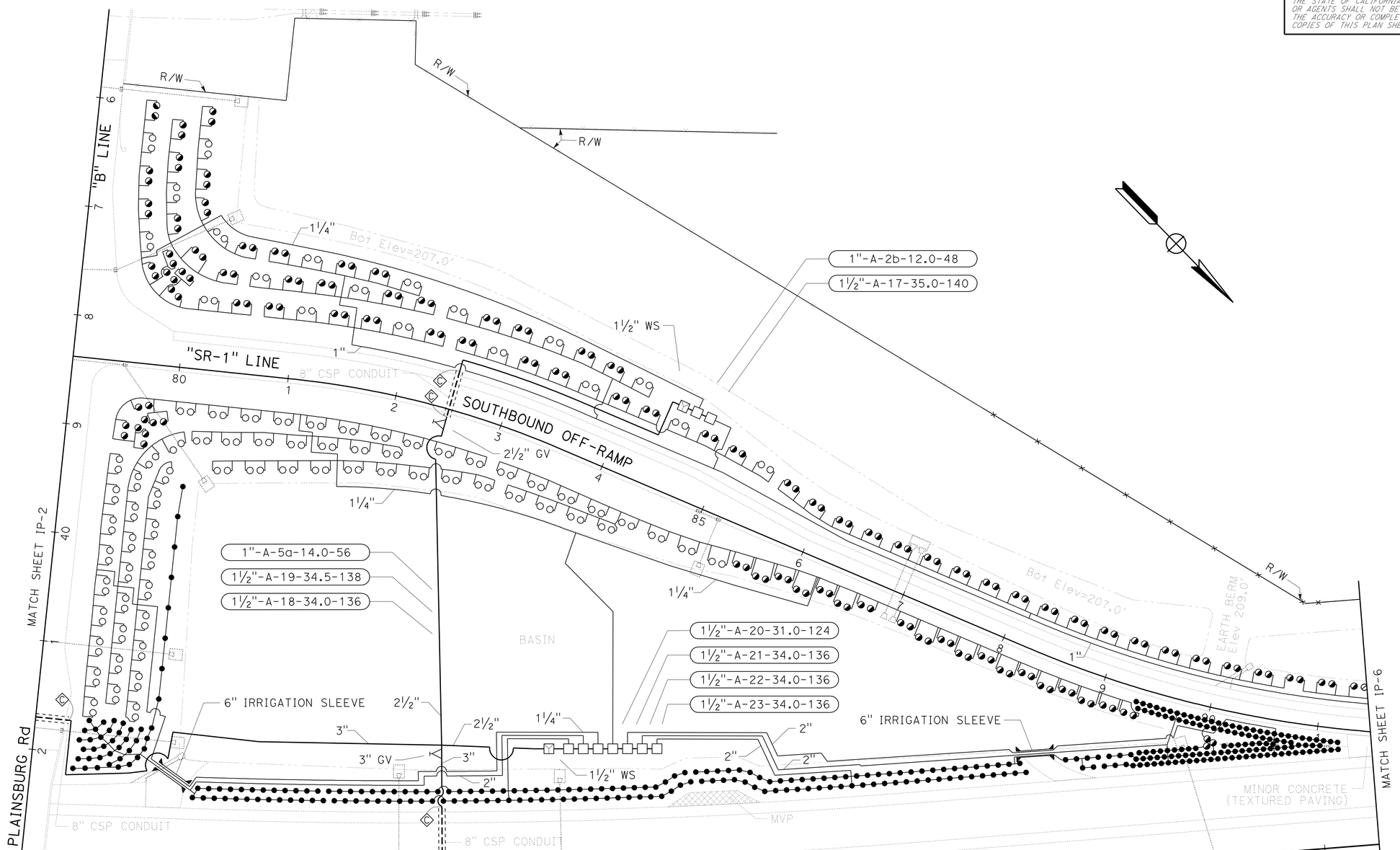

2 **ADDED PER ADDENDUM No. 1 DATED MAY 9, 2012**

APPROVED FOR IRRIGATION WORK ONLY

IRRIGATION PLAN
SCALE: 1" = 50'

IP-4

STATE OF CALIFORNIA - DEPARTMENT OF TRANSPORTATION
Caltrans® LANDSCAPE ARCHITECTURE

SENIOR LANDSCAPE ARCHITECT: BRAD COLE
CALCULATED-DESIGNED BY: ED HIBBS
CHECKED BY: KEVIN GALLO
REVISED BY
DATE REVISED

LAST REVISION 02-14-12
DATE PLOTTED => 04-MAY-2012
TIME PLOTTED => 11:30

Dist	COUNTY	ROUTE	POST MILES TOTAL PROJECT	SHEET No.	TOTAL SHEETS
10	Mer	99	0.0/4.6	400L	607

Edward A. Hibbs
LICENSED LANDSCAPE ARCHITECT

11-1-10
PLANS APPROVAL DATE

LICENSED LANDSCAPE ARCHITECT
Edward A. Hibbs No. 1480
Expiration Date 02/28/14
Renewal Date 02/14/12
Date
STATE OF CALIFORNIA

THE STATE OF CALIFORNIA OR ITS OFFICERS OR AGENTS SHALL NOT BE RESPONSIBLE FOR THE ACCURACY OR COMPLETENESS OF SCANNED COPIES OF THIS PLAN SHEET.

NOTE:

FOR ACCURATE RIGHT OF WAY DATA, CONTACT
RIGHT OF WAY ENGINEERING AT THE DISTRICT OFFICE.

2

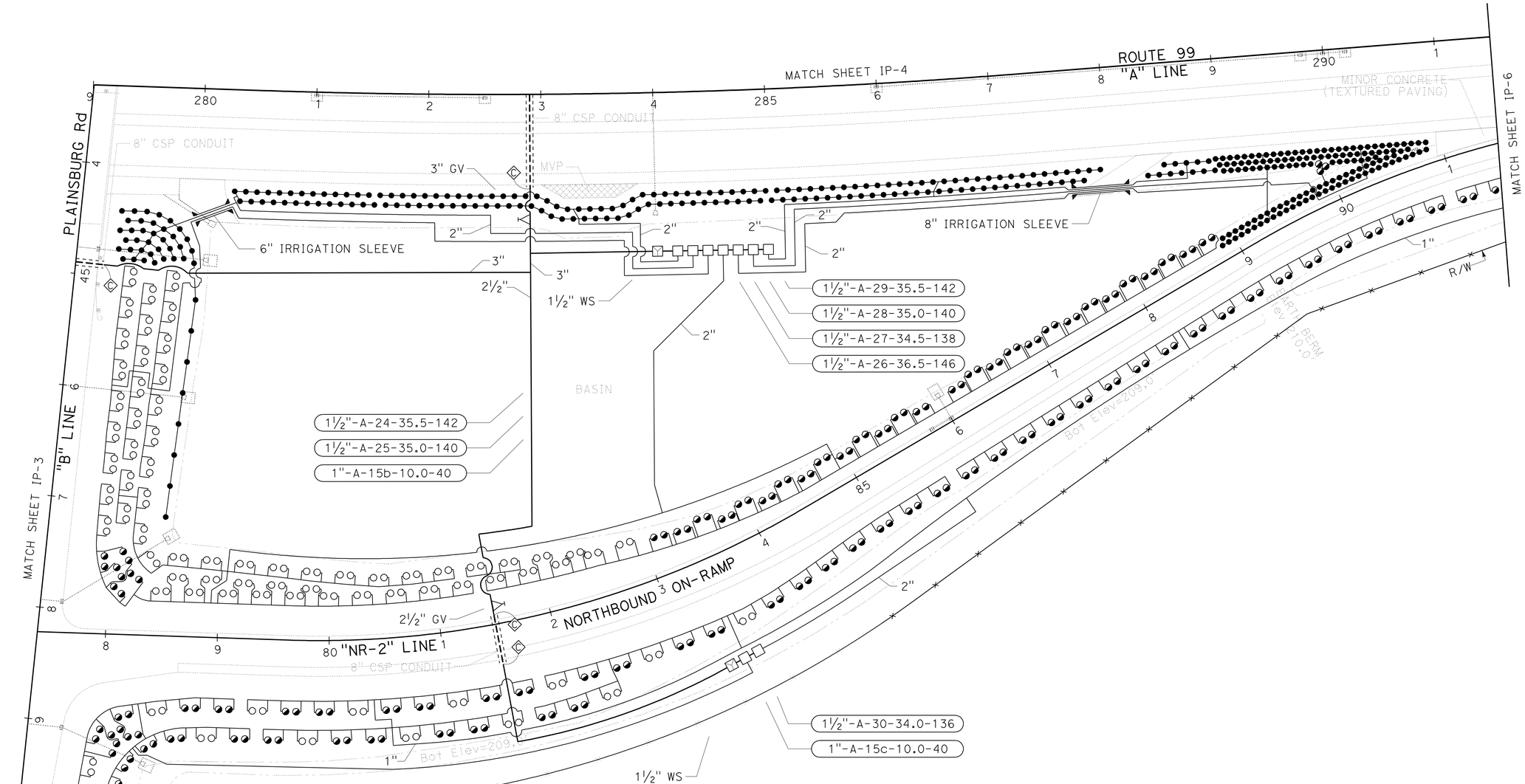

2 **ADDED PER ADDENDUM No. 1 DATED MAY 9, 2012**

APPROVED FOR IRRIGATION WORK ONLY

IRRIGATION PLAN

SCALE: 1" = 50'

IP-5

STATE OF CALIFORNIA - DEPARTMENT OF TRANSPORTATION
Caltrans® LANDSCAPE ARCHITECTURE

SENIOR LANDSCAPE ARCHITECT: BRAD COLE
CALCULATED-DESIGNED BY: ED HIBBS
CHECKED BY: KEVIN GALLO
REVISED BY
DATE REVISED

LAST REVISION 02-14-12
DATE PLOTTED => 04-MAY-2012
TIME PLOTTED => 14:12

Dist	COUNTY	ROUTE	POST MILES TOTAL PROJECT	SHEET No.	TOTAL SHEETS
10	Mer	99	0.0/4.6	400M	607

Edward A. Hibbs
LICENSED LANDSCAPE ARCHITECT

11-1-10
PLANS APPROVAL DATE

LICENSED LANDSCAPE ARCHITECT
Edward A. Hibbs No. 1480
Expiration Date 02/28/14
Renewal Date 02/14/12
Date
STATE OF CALIFORNIA

THE STATE OF CALIFORNIA OR ITS OFFICERS OR AGENTS SHALL NOT BE RESPONSIBLE FOR THE ACCURACY OR COMPLETENESS OF SCANNED COPIES OF THIS PLAN SHEET.

NOTE:

FOR ACCURATE RIGHT OF WAY DATA, CONTACT
RIGHT OF WAY ENGINEERING AT THE DISTRICT OFFICE.

2

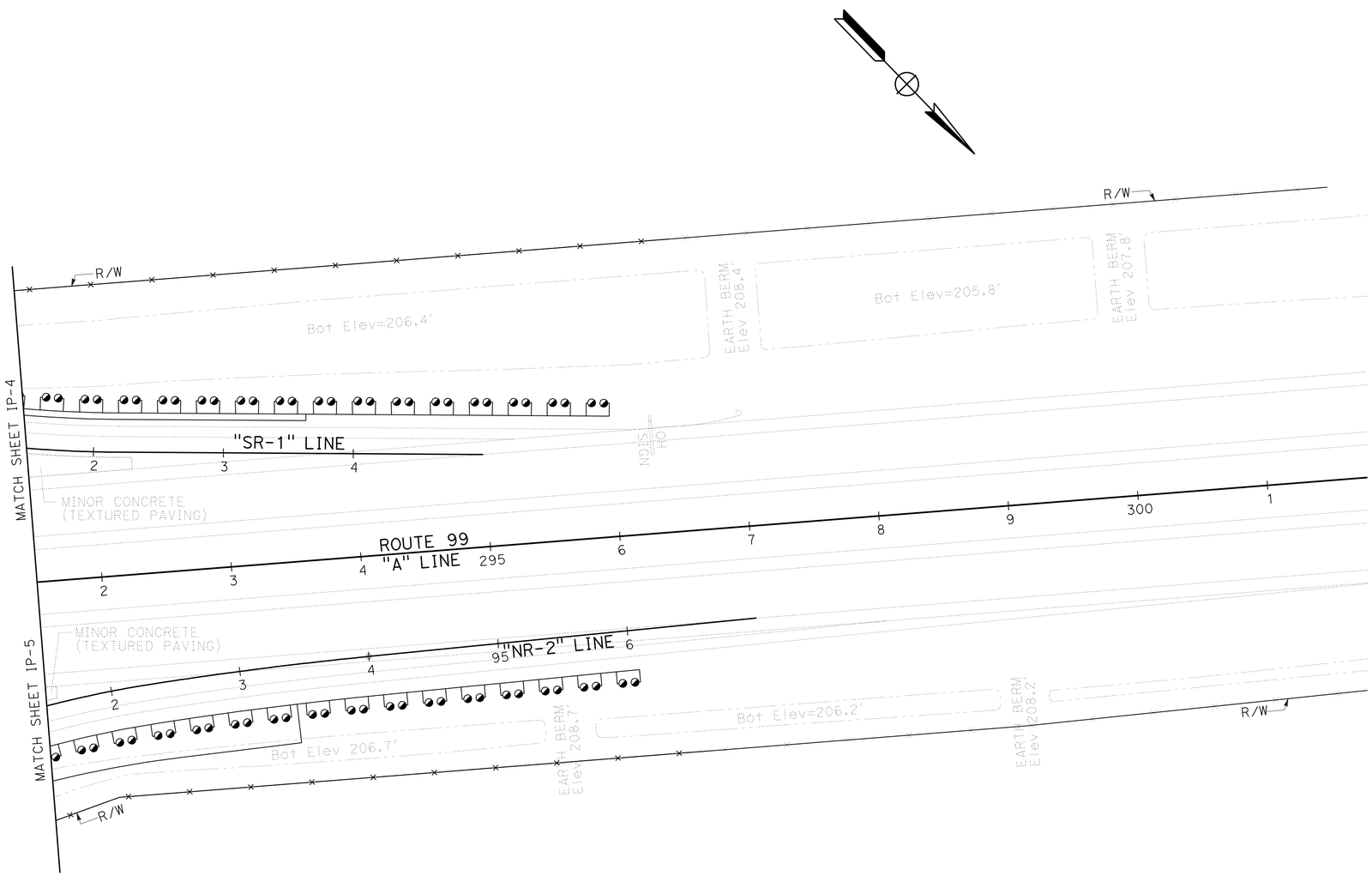

2 **ADDED PER ADDENDUM No. 1 DATED MAY 9, 2012**

APPROVED FOR IRRIGATION WORK ONLY

IRRIGATION PLAN
IP-6

SCALE: 1" = 50'

STATE OF CALIFORNIA - DEPARTMENT OF TRANSPORTATION
Caltrans® LANDSCAPE ARCHITECTURE

SENIOR LANDSCAPE ARCHITECT: BRAD COLE
CALCULATED-DESIGNED BY: ED HIBBS
CHECKED BY: KEVIN GALLO
REVISED BY
DATE REVISED

LAST REVISION 02-14-12
DATE PLOTTED => 04-MAY-2012
TIME PLOTTED => 14:12

Dist	COUNTY	ROUTE	POST MILES TOTAL PROJECT	SHEET No.	TOTAL SHEETS
10	Mer	99	0.0/4.6	400N	607

Edward A. Hibbs
LICENSED LANDSCAPE ARCHITECT

11-1-10
PLANS APPROVAL DATE

LICENSED LANDSCAPE ARCHITECT
Edward A. Hibbs No. 1480
Expiration Date 02/28/14
Renewal Date 02/14/12
Date
STATE OF CALIFORNIA

THE STATE OF CALIFORNIA OR ITS OFFICERS OR AGENTS SHALL NOT BE RESPONSIBLE FOR THE ACCURACY OR COMPLETENESS OF SCANNED COPIES OF THIS PLAN SHEET.

2

SPRINKLER SCHEDULE

SYMBOL	TYPE	DESCRIPTION	SPRAY PATTERN	OPERATING PRESSURE (PSI)	PRESSURE COMPENSATING	PLUS/MINUS 5% ② DISCHARGE GALLONS PER MINUTE (GPM)	GALLONS PER HOUR (GPH)	RADIUS (F+)	WIDTH x LENGTH (F+)	MATERIAL	INLET CONNECTION (NPT INCH)	POSITIVE-LOCKING Adj ARC STOP	BACKSPLASH PREVENTER	DIFFUSER PIN	DISTANCE CONTROL FLAP	Adj DISCHARGE	RISER TYPE	RISER MATERIAL PLASTIC	GALVANIZED	SIZE (IPS INCH)	HEIGHT (INCH)	FLOW SHUTOFF DEVICE	SWING JOINT (TYPE)	RISER SUPPORT	SPRINKLER PROTECTOR (TYPE)	REMARKS
●	C-2 Mod-10	ROOT WATERING FLOOD BUBBLER	-	30	X	.25	-	-	-	PL	½	-	-	-	-	-	-	-	-	½	-	-	I	-	-	SEE DETAIL (SHEET LD-2) (2 PER PLANT) ⑦ ⑧
◕	C-2 Mod-18	ROOT WATERING FLOOD BUBBLER	-	30	X	.25	-	-	-	PL	½	-	-	-	-	-	-	X	-	½	-	-	I	-	-	SEE DETAIL (SHEET LD-2) (2 PER PLANT) ⑦ ⑧
○	C-2 Mod-36	ROOT WATERING FLOOD BUBBLER	-	30	X	.25	-	-	-	PL	½	-	-	-	-	-	-	X	-	½	-	-	I	-	-	SEE DETAIL (SHEET LD-2) (2 PER PLANT) ⑦ ⑧

X IN BOX DENOTES REQUIREMENT

APPLICABLE WHEN CIRCLED BELOW:

1 - SEE SPECIAL PROVISIONS.
② - IF A PRESSURE COMPENSATING DEVICE IS SPECIFIED, THE DISCHARGE AND RADII SHOWN REFLECT ITS USE.
3 - ARC STOP SHALL BE FITTED WITH A NUT AND BOLT.
4 - VINYL-COATED CAST IRON HOUSING.
5 - SWING JOINTS REQUIRED ADJACENT TO SHOULDERS, CURBS, SIDEWALKS, AND DIKES.
6 - UNLESS OTHERWISE SHOWN ON PLANS.
⑦ - SAND SOCK.
⑧ - CHECK VALVE.

ABBREVIATIONS:

F — FULL CIRCLE
P — PART CIRCLE
F/P — FULL/PART CIRCLE
Q — QUARTER CIRCLE
T — THIRD CIRCLE
H — HALF CIRCLE
TT — TWO THIRD CIRCLE
TQ — THREE QUARTER CIRCLE
CST — CENTER STRIP
SST — SIDE STRIP
ELL — ELBOW
EST — END STRIP
F+ — FEET/FOOT
GPM — GALLONS PER MINUTE
GPH — GALLONS PER HOUR
Adj — ADJUSTABLE
PL — PLASTIC
B/B — BRASS/BRONZE
B/PL — BRASS/PLASTIC
B/B/PL — BRASS/BRONZE/PLASTIC
NPT — NATIONAL PIPE THREAD
IPS — IRON PIPE SIZE
PSI — POUNDS PER SQUARE INCH

IRRIGATION SLEEVE

LOCATION		PVC PLASTIC PIPE SCH 40	
SHEET	STATION	SIZE (INCH) 6	8
		LENGTH (LF)	
IP-2	268+85	50	-
	277+82	25	-
IP-3	269+66	-	35
	277+63	25	-
IP-4	280+39	35	-
	288+42	35	-
IP-5	280+11	35	-
	287+93	-	50
SUB-TOTAL		205	85
TOTAL		290	

LATERAL PIPE SIZING CHART

NO. SPRINKLERS BY TYPE C-2 Mod	PIPE SIZE (*)
≤ 39	¾"
≤ 63	1"
≤102	1¼"
≤ 142	1½"
≤ 200	2"

(*) UNLESS DESIGNATED OTHERWISE ON PLANS

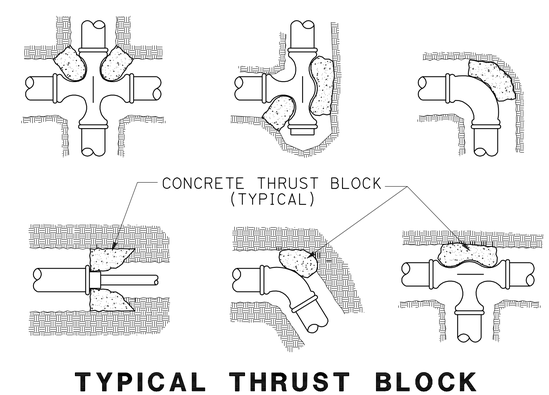

TYPICAL THRUST BLOCK

2 **ADDED PER ADDENDUM No. 1 DATED MAY 9, 2012**

LANDSCAPE DETAILS
NO SCALE
LD-1

STATE OF CALIFORNIA - DEPARTMENT OF TRANSPORTATION
Caltrans® LANDSCAPE ARCHITECTURE
SENIOR LANDSCAPE ARCHITECT: BRAD COLE
CALCULATED-DESIGNED BY: KEVIN GALLO
CHECKED BY: ED HIBBS
REVISED BY
DATE REVISED

LAST REVISION 02-14-12
DATE PLOTTED => 04-MAY-2012
TIME PLOTTED => 14:12

Dist	COUNTY	ROUTE	POST MILES TOTAL PROJECT	SHEET No.	TOTAL SHEETS
10	Mer	99	0.0/4.6	4000	607

Edward A. Hibbs
LICENSED LANDSCAPE ARCHITECT

11-1-10
PLANS APPROVAL DATE

LICENSED LANDSCAPE ARCHITECT — Edward A. Hibbs No. 1480 — Expiration Date 02/28/14 — Renewal Date 02/14/12 — Date — STATE OF CALIFORNIA

THE STATE OF CALIFORNIA OR ITS OFFICERS OR AGENTS SHALL NOT BE RESPONSIBLE FOR THE ACCURACY OR COMPLETENESS OF SCANNED COPIES OF THIS PLAN SHEET.

NOTE:
PROVIDE 1" HOLE IN SIDE OF PPP TO ACCOMMODATE SWING JOINT CONNECTION TO ELL

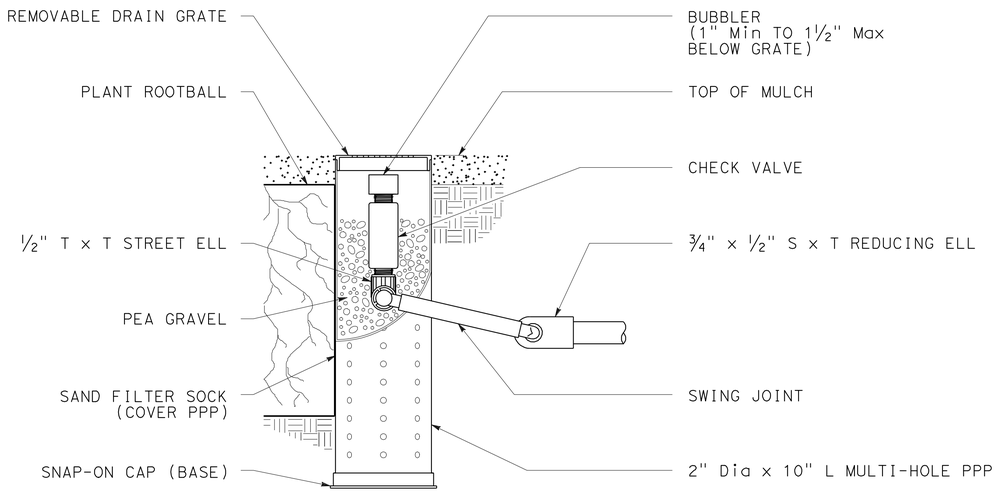

SECTION DETAIL "A"

SPRINKLER (TYPE C-2 Mod-10)

2

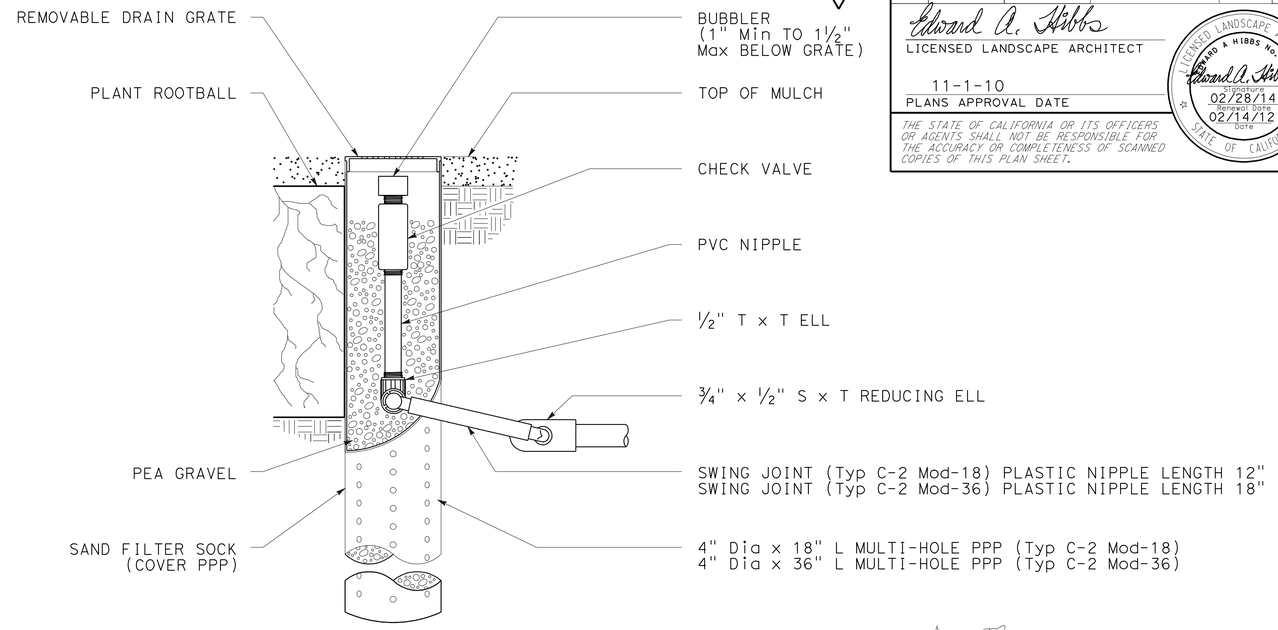

SECTION DETAIL "B"

SPRINKLER (TYPE C-2 Mod-18 and TYPE C-2 Mod-36)

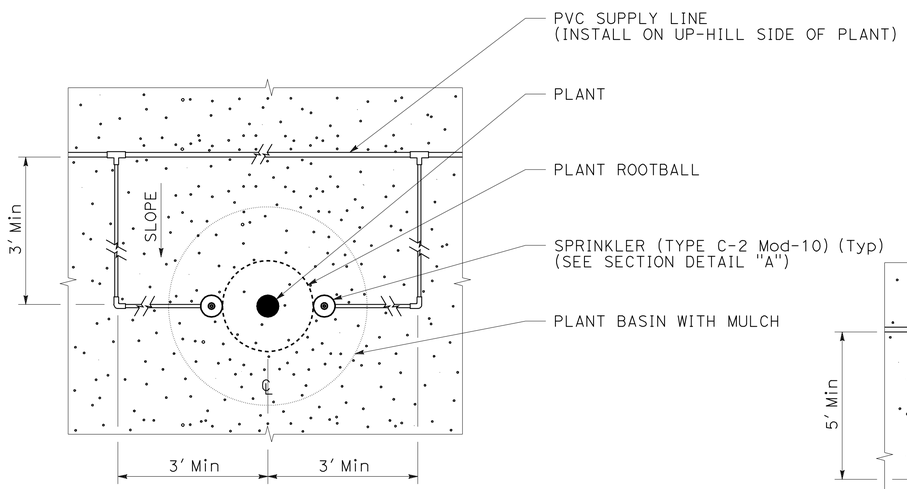

NOTE: EACH SYMBOL ON PLAN (●) REPRESENTS 2 SPRINKLERS AS NOTED ABOVE

PLAN "A"

SPRINKLER (TYPE C-2 Mod-10) (●)

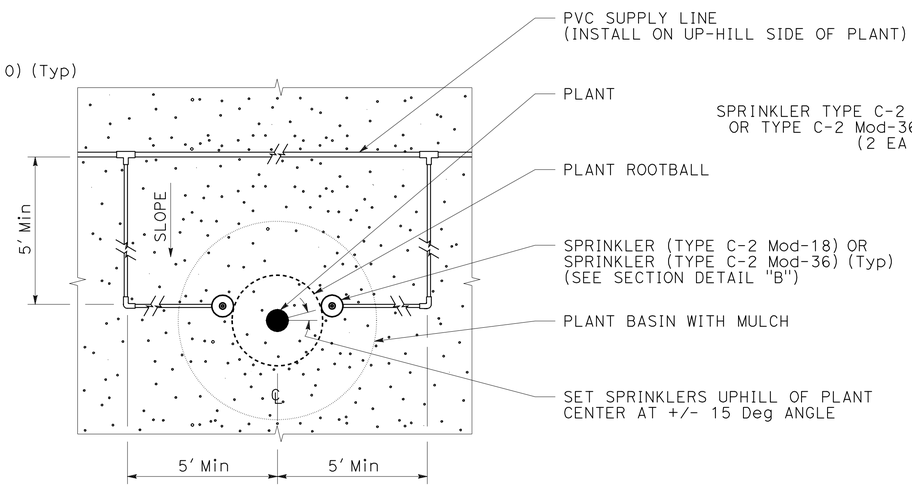

PLAN "B"

SPRINKLER (TYPE C-2 Mod-18 and TYPE C-2 Mod-36)

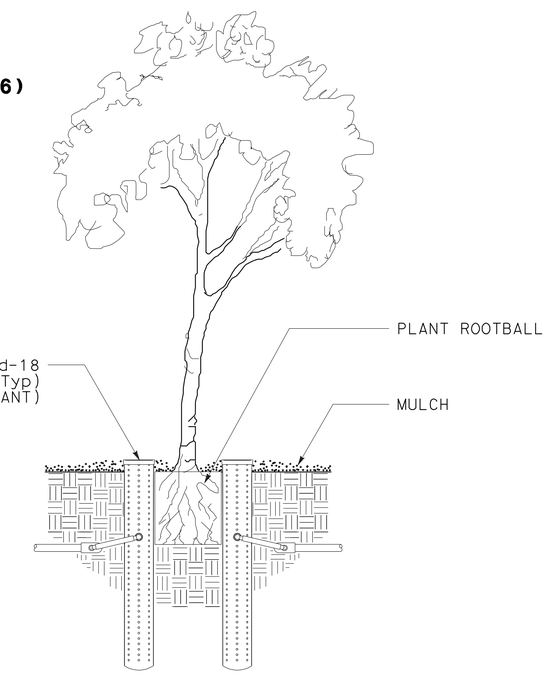

ELEVATION

2 **ADDED PER ADDENDUM No. 1 DATED MAY 9, 2012**

LANDSCAPE DETAILS

NO SCALE

LD-2

STATE OF CALIFORNIA - DEPARTMENT OF TRANSPORTATION
Caltrans® LANDSCAPE ARCHITECTURE

SENIOR LANDSCAPE ARCHITECT: BRAD COLE
CALCULATED-DESIGNED BY: ED HIBBS
CHECKED BY: KEVIN GALLO
REVISED BY
DATE REVISED

LAST REVISION 02-14-12
DATE PLOTTED => 04-MAY-2012
TIME PLOTTED => 14:17

Dist	COUNTY	ROUTE	POST MILES TOTAL PROJECT	SHEET No.	TOTAL SHEETS
10	Mer	99	0.0/4.6	400P	607

Edward A. Hibbs
LICENSED LANDSCAPE ARCHITECT

11-1-10
PLANS APPROVAL DATE

LICENSED LANDSCAPE ARCHITECT — Edward A. Hibbs No. 1480 — Expiration Date 02/28/14 — Renewal Date 02/14/12 — Date — STATE OF CALIFORNIA

THE STATE OF CALIFORNIA OR ITS OFFICERS OR AGENTS SHALL NOT BE RESPONSIBLE FOR THE ACCURACY OR COMPLETENESS OF SCANNED COPIES OF THIS PLAN SHEET.

2

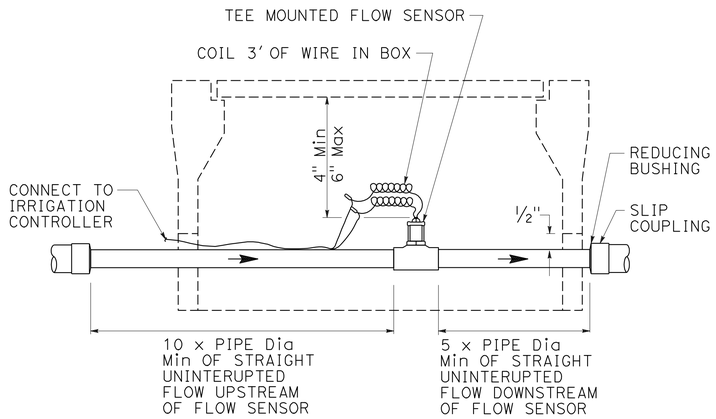

SECTION

FLOW SENSOR

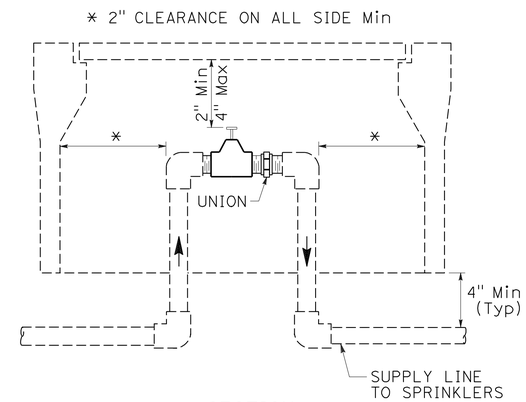

SECTION

VALVE

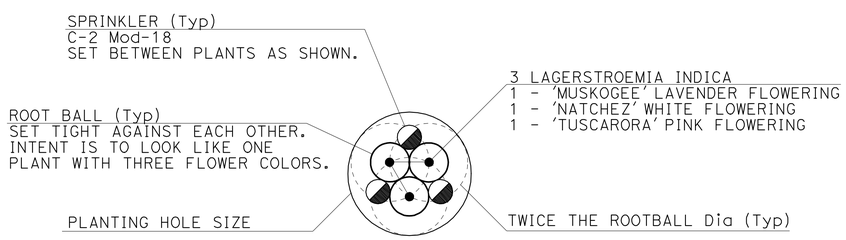

NOTE: EACH SYMBOL ON PLAN ( ) REPRESENTS 3 PLANTS AS NOTED ABOVE AND EACH PLANT MUST BE TAGGED WITH FULL BOTANICAL NAME

PLAN VIEW

LAGERSTROEMIA INDICA TRI DETAIL ( )

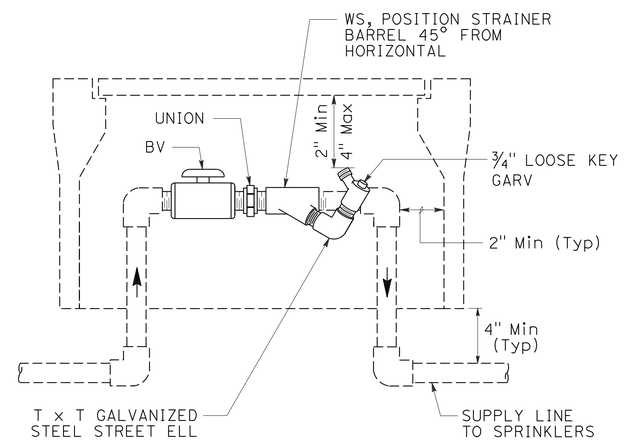

SECTION

WYE STRAINER

2 **ADDED PER ADDENDUM No. 2 DATED MAY 9, 2012**

LANDSCAPE DETAILS

NO SCALE

LD-3

STATE OF CALIFORNIA - DEPARTMENT OF TRANSPORTATION
Caltrans® LANDSCAPE ARCHITECTURE
SENIOR LANDSCAPE ARCHITECT: BRAD COLE
CALCULATED-DESIGNED BY: KEVIN GALLO
CHECKED BY: ED HIBBS
REVISED BY
DATE REVISED

LAST REVISION 02-14-12
DATE PLOTTED => 04-MAY-2012
TIME PLOTTED => 11:05

Dist	COUNTY	ROUTE	POST MILES TOTAL PROJECT	SHEET No.	TOTAL SHEETS
10	Mer	99	0.0/4.6	400Q	607

2

Edward A. Hibbs
LICENSED LANDSCAPE ARCHITECT

11-1-10
PLANS APPROVAL DATE

LICENSED LANDSCAPE ARCHITECT
EDWARD A. HIBBS No. 1480
Edward A. Hibbs
Expiration Date
02/28/14
Renewal Date
02/14/12
Date
STATE OF CALIFORNIA

THE STATE OF CALIFORNIA OR ITS OFFICERS OR AGENTS SHALL NOT BE RESPONSIBLE FOR THE ACCURACY OR COMPLETENESS OF SCANNED COPIES OF THIS PLAN SHEET.

NOTES:

1. REDWOOD SHALL BE ROUGH CONSTRUCTION HEART GRADE
2. NAILS TO BE HOT DIPPED GALVANIZED
3. ANGLES ARE APPROXIMATE
4. HEADER = HEADER BOARD
5. HEADER AND CLASS 2 AB SHALL CONFORM TO ES

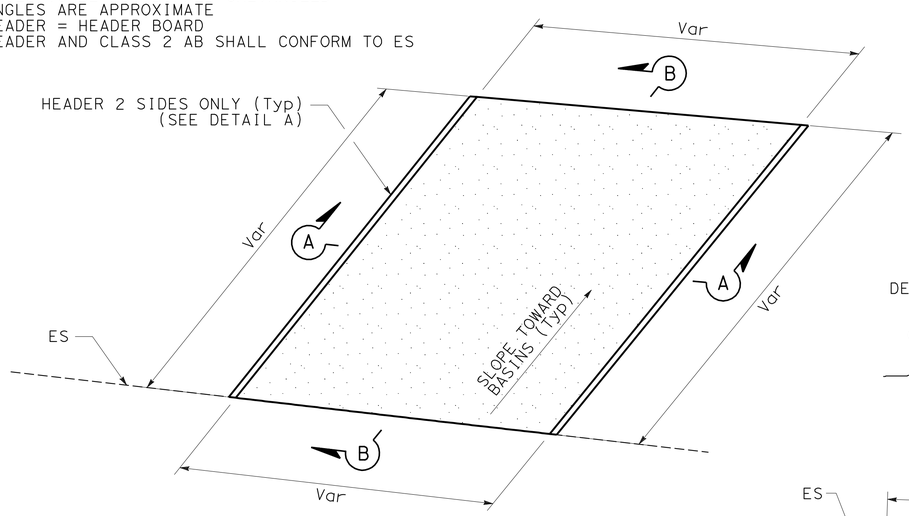

TYPICAL PLAN DIAGRAM

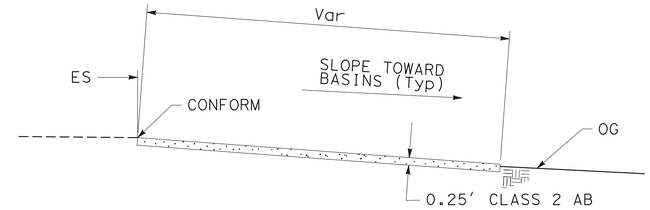

ELEVATION B-B

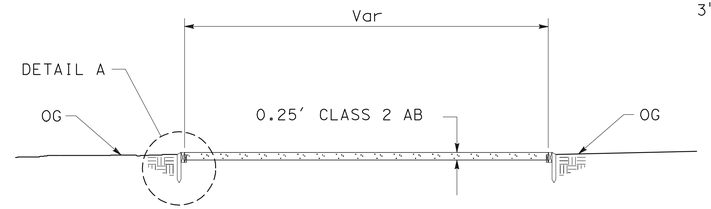

ELEVATION A-A

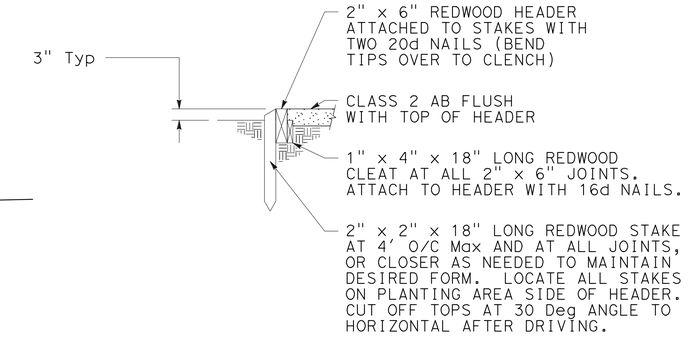

DETAIL A

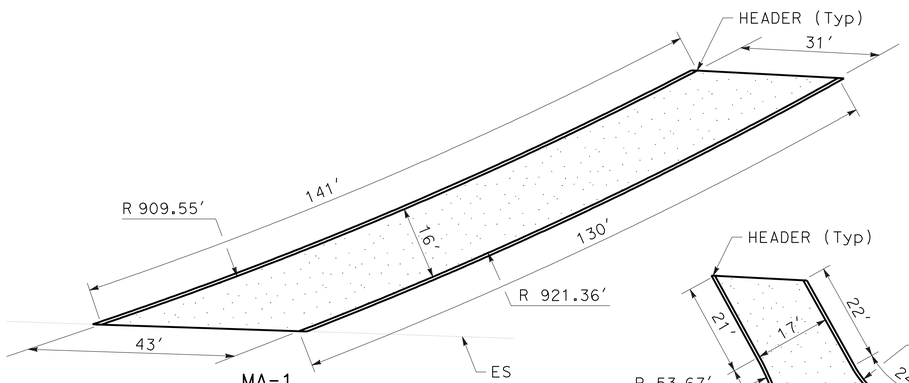

MA-1

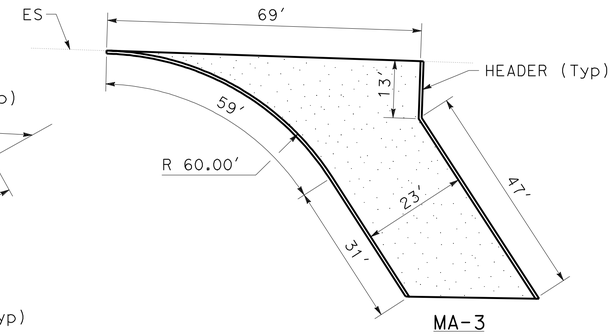

MA-3

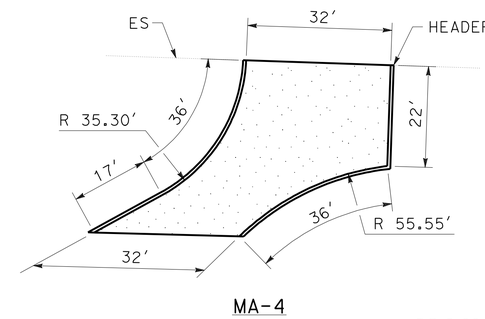

MA-4

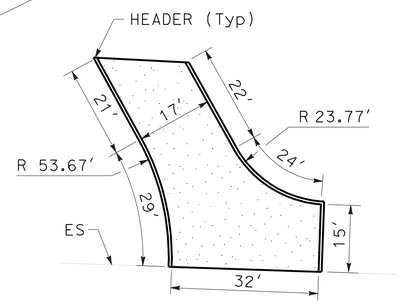

MA-2

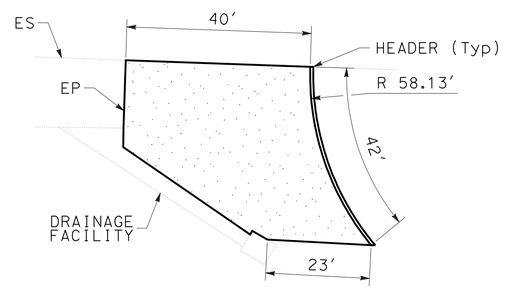

MA-7

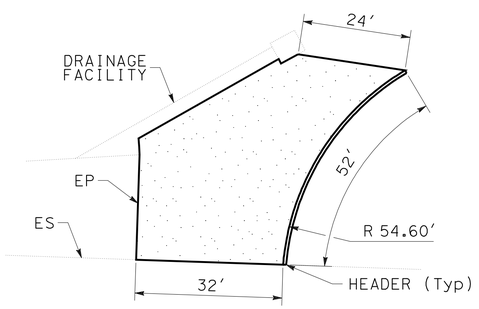

MA-5

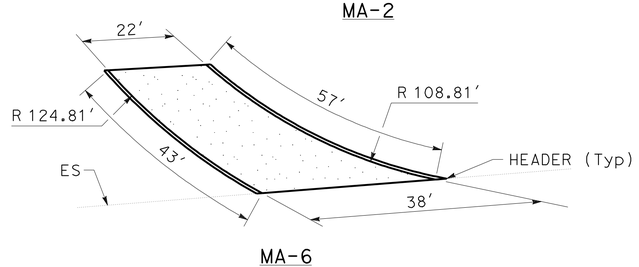

MA-6

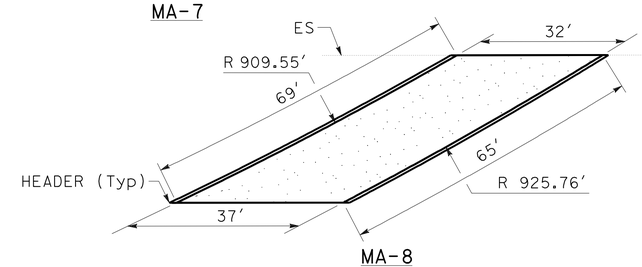

MA-8

MAINTENANCE ACCESS

MAINTENANCE ACCESS	AREA (N)	CLASS 2 AB (N)	HEADER (N)
	SF	CY	LF
MA-1	2164	20.1	271
MA-2	1094	10.2	111
MA-3	1616	15.0	150
MA-4	1239	11.5	111
MA-5	1538	14.3	52
MA-6	769	7.2	100
MA-7	1412	13.1	42
MA-8	1085	10.1	134
	TOTAL	101.5	971

(N) NOT A SEPARATE PAY ITEM, FOR INFORMATION ONLY. PART OF HIGHWAY PLANTING

MA PLANS

MAINTENANCE ACCESS

2 **ADDED PER ADDENDUM No. 2 DATED MAY 9, 2012**

LANDSCAPE DETAILS

NO SCALE

LD-4

REVISED BY | DATE REVISED
ED HIBBS | KEVIN GALLO
CALCULATED-DESIGNED BY | CHECKED BY
SENIOR LANDSCAPE ARCHITECT
BRAD COLE

STATE OF CALIFORNIA - DEPARTMENT OF TRANSPORTATION
Caltrans® LANDSCAPE ARCHITECTURE

LAST REVISION 02-14-12 | DATE PLOTTED => 04-MAY-2012 | TIME PLOTTED => 11:05

Dist	COUNTY	ROUTE	POST MILES TOTAL PROJECT	SHEET No.	TOTAL SHEETS
10	Mer	99	0.0/4.6	401	607

2

Paul Matos 04-20-10
REGISTERED ELECTRICAL ENGINEER

11-1-10
PLANS APPROVAL DATE

REGISTERED PROFESSIONAL ENGINEER PAUL MATOS No. 18757 Exp. 6/30/11 ELECTRICAL STATE OF CALIFORNIA

THE STATE OF CALIFORNIA OR ITS OFFICERS OR AGENTS SHALL NOT BE RESPONSIBLE FOR THE ACCURACY OR COMPLETENESS OF SCANNED COPIES OF THIS PLAN SHEET.

NOTES: (FOR SHEETS E-1 TO E-24)

1 120/208 V, 1Ø, 3-WIRE, TYPE III-AF SUB PANEL SERVICE EQUIPMENT ENCLOSURE WITH THE FOLLOWING CIRCUIT BREAKERS:

CTID No. 10390990000620T

AMPERES	VOLTS	POLES	NAME PLATE	METER	PHOTOELECTRIC CONTROL TYPE
70	208	2	MAIN BREAKER	-	-
40	208	2	CMS	-	-
30	120	1	334C (CMS)	-	-
30	120	1	334C (CCTV)	-	-
30	120	1	334C (TMS)	-	-
30	120	1	334C (FIBER)	-	-
-	-	6	SPACE	-	-

2 120/240 V, 1Ø, 3-WIRE, TYPE III-AF SERVICE EQUIPMENT ENCLOSURE WITH THE FOLLOWING CIRCUIT BREAKERS:

CTID No. 10390990001660T

AMPERES	VOLTS	POLES	NAME PLATE	METER	PHOTOELECTRIC CONTROL TYPE
100	240	2	MAIN BREAKER	YES	-
30	120	1	334C (TMS)	YES	-
30	120	1	SPARE	YES	-
-	-	6	SPACE	-	-

3 120/240 V, 1Ø, 3-WIRE, TYPE III-AF SERVICE EQUIPMENT ENCLOSURE WITH THE FOLLOWING CIRCUIT BREAKERS:

CTID No. 10390990002220T

AMPERES	VOLTS	POLES	NAME PLATE	METER	PHOTOELECTRIC CONTROL TYPE
100	240	2	MAIN BREAKER	YES	-
30	120	1	334C (TMS)	YES	-
30	120	1	SPARE	YES	-
-	-	6	SPACE	-	-

4 120/240 V, 1Ø, 3-WIRE, TYPE III-AF SERVICE EQUIPMENT ENCLOSURE WITH THE FOLLOWING CIRCUIT BREAKERS:

CTID No. 10390990004280T

AMPERES	VOLTS	POLES	NAME PLATE	METER	PHOTOELECTRIC CONTROL TYPE
100	240	2	MAIN BREAKER	YES	-
30	120	1	334C (TMS)	YES	-
30	120	1	334C (CCTV)	YES	-
20	120	1	WMS	YES	-
30	120	1	SPARE	YES	-
-	-	6	SPACE	-	-

5 120/240 V, 1Ø, 3-WIRE, TYPE III-CF SERVICE EQUIPMENT ENCLOSURE WITH THE FOLLOWING CIRCUIT BREAKERS:

CTID No. 10390990003380T

AMPERES	VOLTS	POLES	NAME PLATE	METER	PHOTOELECTRIC CONTROL TYPE
100	240	2	MAIN BREAKER	YES	-
20	240	2	334C (TMS CKT 1)	YES	-
20	240	2	334C (TMS CKT 2)	YES	-
30	120	1	SPARE	YES	-
-	-	6	SPACE	-	-

CTID No. 10390990003380L

AMPERES	VOLTS	POLES	NAME PLATE	METER	PHOTOELECTRIC CONTROL TYPE
100	240	2	MAIN BREAKER	YES	-
20	240	2	STREET LIGHTING	YES	V
15	120	1	LIGHTING CONTROL	YES	V
20	240	2	HIGHWAY LIGHTING CKT 1	YES	III
20	240	2	HIGHWAY LIGHTING CKT 2	YES	III
20	240	2	SIGN LIGHTING	YES	-
20	240	2	SPARE	YES	-
-	-	6	SPACE	-	-

6 Exist 120/240 V, 1Ø, 3-WIRE, TYPE III-AF SERVICE EQUIPMENT ENCLOSURE WITH THE FOLLOWING CIRCUIT BREAKERS:

CTID No. 10390990004620T

AMPERES	VOLTS	POLES	NAME PLATE	METER	PHOTOELECTRIC CONTROL TYPE
100	240	2	MAIN BREAKER	YES	-
30	120	1	334C (FIBER)	YES	-
30	120	1	334C (TMS)*	YES	-
30	120	1	SPARE	YES	-
-	-	6	SPACE	-	-

* ADD CIRCUIT BREAKER AND NAME PLATE

7 120/240 V, 3Ø, 4-WIRE, TYPE III-DF SERVICE EQUIPMENT ENCLOSURE WITH THE FOLLOWING CIRCUIT BREAKERS:

CTID No. 10390990003380G

AMPERES	VOLTS	POLES	NAME PLATE	METER	PHOTOELECTRIC CONTROL TYPE
100	240	3	MAIN BREAKER	YES	-
60	240	3	TRANSFORMER PRIMARY	YES	-
30	480	3	TRANSFORMER SECONDARY	YES	-
30	480	3	WELL PUMP	YES	-
-	-	6	SPACE	-	-

8 PULL BOX PER PG&E REQUIREMENTS.

9 MODEL 334 CABINET WITH CCTV EQUIPMENT.

10 STATE-FURNISHED MODEL 170 CONTROLLER ASSEMBLY FOR CMS SYSTEM.

11 CCTV CAMERA TO BE MOUNTED ON TOP OF CMS STRUCTURE WITH TYPE CCTV 10 POLE EXTENSION, REFER TO STANDARD PLAN ES-16B AND ON SHEET SES-8.

12 STATE-FURNISHED MODEL 2070 CONTROLLER ASSEMBLY FOR TMS SYSTEM.

13 WEATHER MONITORING STATION, SEE DETAILS ON SHEET SES-5.

14 SEE DETAIL D ON SHEET E-36 FOR LOOP DETECTOR DESIGNATION.

15 MODEL 334 CABINET MODIFIED WITH FIBER OPTIC EQUIPMENT, SEE DETAILS ON SHEET E-31.

16 SPLICE VAULT, SEE DETAILS ON SHEET E-32 AND E-33.

17 TYPE 40 CCTV STANDARD, REFER TO STANDARD PLAN ES-16A AND ON SHEET SES-8.

18 SEE DETAIL A ON SHEET E-36 FOR CONDUIT INSTALLATION DETAIL.

19 THE CONTRACTOR SHALL COORDINATE WITH PG&E FOR DISCONNECTING EXISTING SERVICE. RC EXISTING TYPE H SERVICE RISER.

20 COMMUNICATION PULL BOX, SEE DETAILS ON SHEET E-32 AND E-34.

21 SEE DETAIL B ON SHEET E-36 FOR CONDUIT INSTALLATION DETAIL.

22 MVDS ON TYPE 40 VDS STANDARD. VDS STANDARD SHALL BE INSTALLED A MINIMUM OF 30 FEET FROM EDGE OF TRAVELED WAY. SEE DETAILS ON SHEETS SES-6, SES-7, E-36 AND E-37.

23 120/240 V, 1Ø, 3-WIRE, TYPE III-AF SERVICE EQUIPMENT ENCLOSURE WITH THE FOLLOWING CIRCUIT BREAKERS:

CTID No. 10390990002820T

AMPERES	VOLTS	POLES	NAME PLATE	METER	PHOTOELECTRIC CONTROL TYPE
100	240	2	MAIN BREAKER	YES	-
30	120	1	334C (TMS)	YES	-
30	120	1	SPARE	YES	-
-	-	6	SPACE	-	-

24 INSTALL 1.5 kVA, 120/240 V SUBMERSIBLE STEP DOWN TRANSFORMER IN PULL BOX FOR MODEL 334 CABINET.

25 TO Exist PANEL BOARD C, SEE EE-4 SHEETS.

26 IRRIGATION WELL SYSTEM, FOR ELECTRICAL DETAILS SEE EE SHEETS.

27 ICC, SEE IRRIGATION PLANS FOR INSTALLATION.

28 15 kVA, 3Ø, 240/480 V STEP UP TRANSFORMER, SEE DETAIL A ON SHEET E-14.

29. ALL TYPE 15 ELECTROLIERS SHALL HAVE A SLIP BASE PLATE.

30. ALL FIBER OPTIC CONDUIT SHALL BE INSTALLED AS SHOWN ON DETAIL B, SHEET E-34, UNLESS OTHERWISE NOTED.

LEGEND:

PROPOSED	EXISTING	
V	(V)	SPLICE VAULT
W		WMS
IWPCE		IRRIGATION WELL PUMP CONTROL ENCLOSURE

ABBREVIATIONS:

MVDS	MICROWAVE VEHICLE DETECTION SYSTEM
PG&E	PACIFIC GAS AND ELECTRIC
CTID	CALTRANS IDENTIFICATION
HDPE	HIGH DENSITY POLYETHELENE
WMS	WEATHER MONITORING STATION
AT&T	AMERICAN TELEPHONE AND TELEGRAPH
VDS	VEHICLE DETECTION SYSTEM
PV	PHOTOVOLTAIC
IWPCE	IRRIGATION WELL PUMP CONTROL ENCLOSURE

2 **REVISED PER ADDENDUM No. 2 DATED MAY 9, 2012**

THIS PLAN IS ACCURATE FOR ELECTRICAL WORK ONLY.

FIBER OPTIC SYSTEM
ELECTRIC SERVICE (IRRIGATION)
TRAFFIC MONITORING STATION
CHANGEABLE MESSAGE SIGN SYSTEM
CLOSED CIRCUIT TELEVISION SYSTEM
WEATHER MONITORING STATION
MICROWAVE VEHICLE DETECTION SYSTEM

NO SCALE

E-1

STATE OF CALIFORNIA - DEPARTMENT OF TRANSPORTATION
Caltrans® ELECTRICAL DESIGN

FUNCTIONAL SUPERVISOR: ALI BAKHDOUD
CALCULATED-DESIGNED BY: PAUL MATOS
CHECKED BY: RAJPREET SINGH
REVISED BY
DATE REVISED

LAST REVISION 04-26-10 | DATE PLOTTED => 04-MAY-2012 | TIME PLOTTED => 11:05

Dist	COUNTY	ROUTE	POST MILES TOTAL PROJECT	SHEET No.	TOTAL SHEETS
10	Mer	99	0.0/4.6	414	607

Paul Matos 04-20-10
REGISTERED ELECTRICAL ENGINEER

11-1-10
PLANS APPROVAL DATE

REGISTERED PROFESSIONAL ENGINEER PAUL MATOS No. 18757 Exp. 6/30/11 ELECTRICAL STATE OF CALIFORNIA

THE STATE OF CALIFORNIA OR ITS OFFICERS OR AGENTS SHALL NOT BE RESPONSIBLE FOR THE ACCURACY OR COMPLETENESS OF SCANNED COPIES OF THIS PLAN SHEET.

2

NOTES:

1. FOR NOTES AND SCHEDULES, SEE SHEET E-1.
2. FOR ACCURATE RIGHT OF WAY AND ACCESS DATA, CONTACT RIGHT OF WAY ENGINEERING AT THE DISTRICT OFFICE.

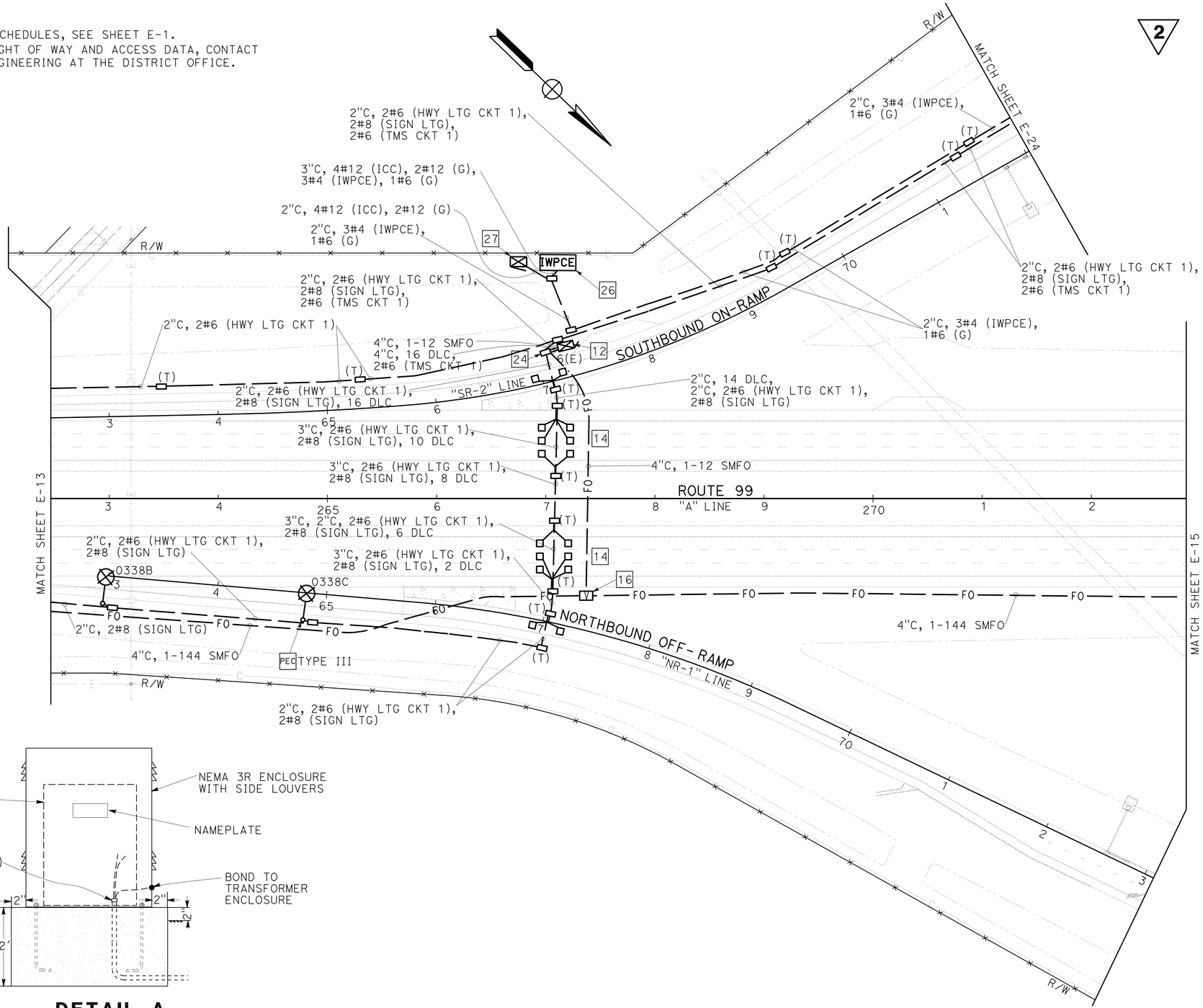

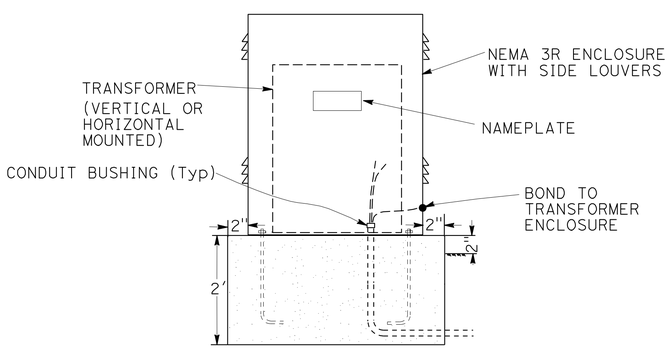

DETAIL A
NO SCALE

2 **REVISED PER ADDENDUM No. 2 DATED MAY 9, 2012**

THIS PLAN IS ACCURATE FOR ELECTRICAL WORK ONLY.

ELECTRIC SERVICE (IRRIGATION)
TRAFFIC MONITORING STATION (LOCATION 5)
LIGHTING AND SIGN ILLUMINATION
FIBER OPTIC SYSTEM

SCALE: 1" = 50'

E-14

STATE OF CALIFORNIA - DEPARTMENT OF TRANSPORTATION
Caltrans ELECTRICAL DESIGN

FUNCTIONAL SUPERVISOR: ALI BAKHDOUD
CALCULATED-DESIGNED BY: PAUL MATOS
CHECKED BY: RAJPREET SINGH
REVISED BY
DATE REVISED

LAST REVISION 04-20-10 | DATE PLOTTED => 04-MAY-2012 | TIME PLOTTED => 11:06

Dist	COUNTY	ROUTE	POST MILES TOTAL PROJECT	SHEET No.	TOTAL SHEETS
10	Mer	99	0.0/4.6	424	607

Paul Matos 04-20-10
REGISTERED ELECTRICAL ENGINEER

11-1-10
PLANS APPROVAL DATE

REGISTERED PROFESSIONAL ENGINEER PAUL MATOS No. 18757 Exp. 6/30/11 ELECTRICAL STATE OF CALIFORNIA

THE STATE OF CALIFORNIA OR ITS OFFICERS OR AGENTS SHALL NOT BE RESPONSIBLE FOR THE ACCURACY OR COMPLETENESS OF SCANNED COPIES OF THIS PLAN SHEET.

NOTES:

1. FOR NOTES AND SCHEDULES, SEE SHEET E-1.
2. FOR ACCURATE RIGHT OF WAY AND ACCESS DATA, CONTACT RIGHT OF WAY ENGINEERING AT THE DISTRICT OFFICE.

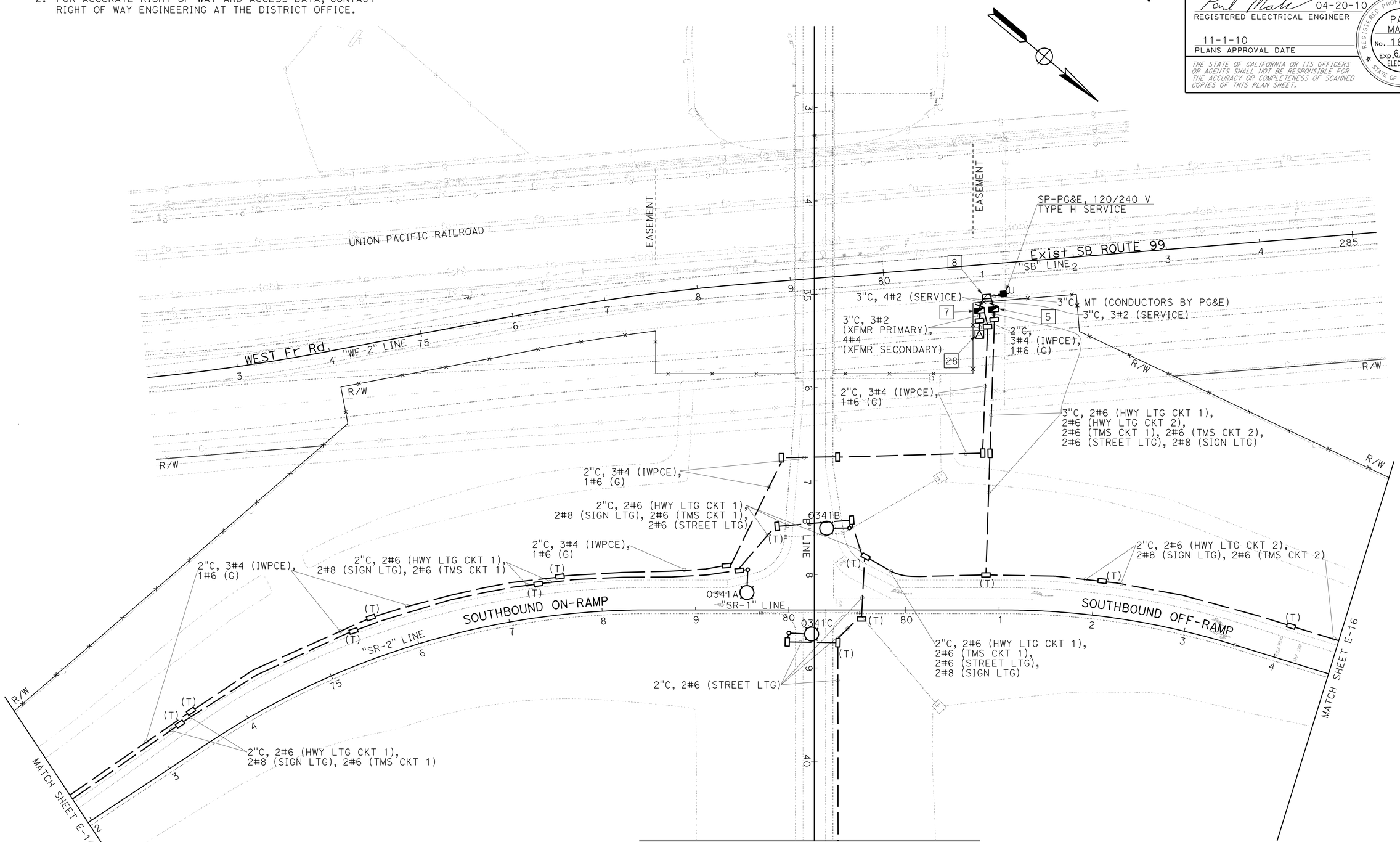

2 **REVISED PER ADDENDUM No. 2 DATED MAY 9, 2012**

THIS PLAN IS ACCURATE FOR ELECTRICAL WORK ONLY.

LIGHTING AND SIGN ILLUMINATION ELECTRIC SERVICE (IRRIGATION) E-24

SCALE: 1" = 50'

STATE OF CALIFORNIA - DEPARTMENT OF TRANSPORTATION
Caltrans® ELECTRICAL DESIGN

FUNCTIONAL SUPERVISOR: ALI BAKHDOUD
CALCULATED-DESIGNED BY: RAJPREET SINGH
CHECKED BY: PAUL MATOS
REVISED BY
DATE REVISED

LAST REVISION 04-20-10
DATE PLOTTED => 04-MAY-2012
TIME PLOTTED => 11:06

Dist	COUNTY	ROUTE	POST MILES TOTAL PROJECT	SHEET No.	TOTAL SHEETS
10	Mer	99	0.0/4.6	473A	607

REGISTERED CIVIL ENGINEER

April 20, 2012
PLANS APPROVAL DATE

REGISTERED PROFESSIONAL ENGINEER
Florante E. Bautista
No. C54859
Exp. 6-30-12
CIVIL
STATE OF CALIFORNIA

The State of California or its officers or agents shall not be responsible for the accuracy or completeness of electronic copies of this plan sheet.

2 ADDED PER ADDENDUM No. 2 DATED MAY 9, 2012

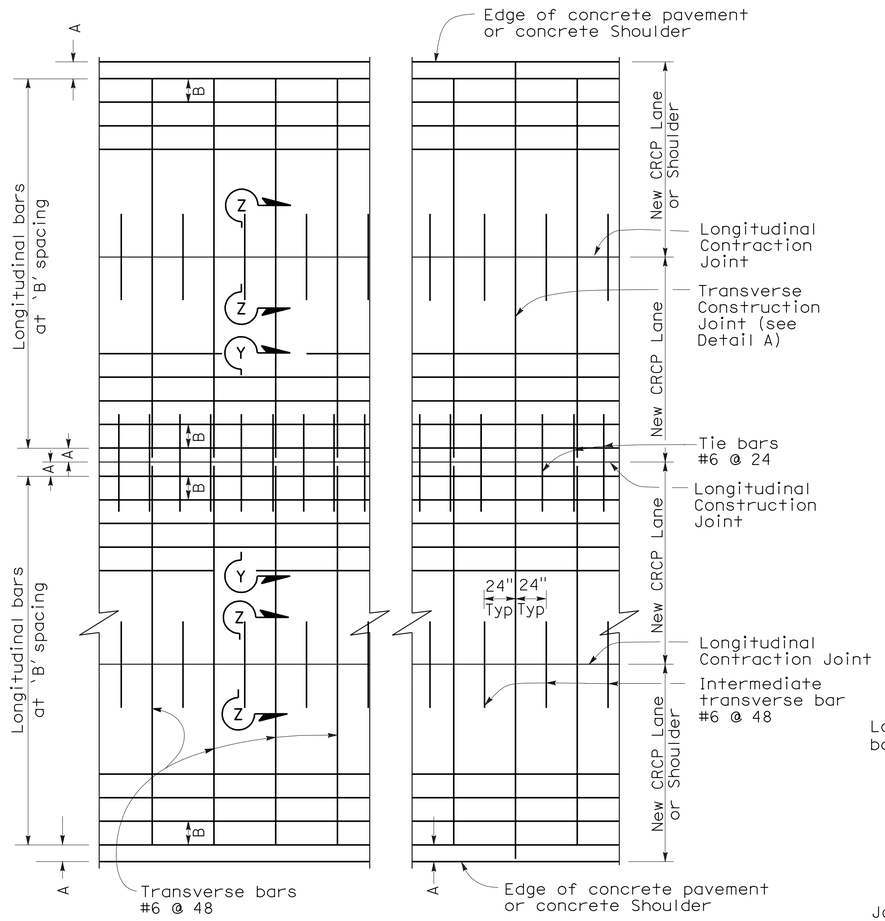

PLAN

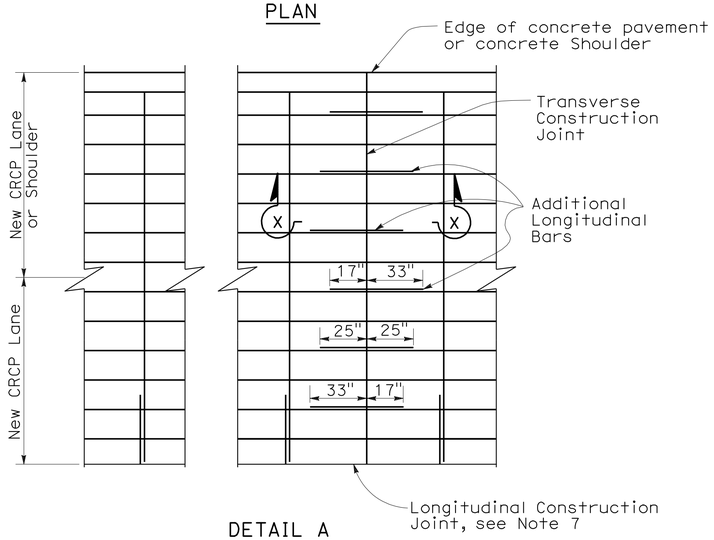

DETAIL A

ADDITIONAL LONGITUDINAL BARS AT TRANSVERSE CONSTRUCTION JOINT

TABLE No. 1 LONGITUDINAL BAR REINFORCEMENT						
SLAB THICKNESS AND BAR SIZE		FIRST SPACING AT EDGE OR JOINT	REGULAR BARS	ADDITIONAL BARS AT TRANSVERSE CONSTRUCTION JOINT		Clr
D	BAR SIZE	SPACING A	SPACING B	SPACING 2 x B	LENGTH L	X
.80′	#6	3" TO 4"	7.5"	15"	50"	4"
.85′	#6	3" TO 4"	7.0"	14"	50"	4"
.90′	#6	3" TO 4"	6.5"	13"	50"	4"
.95′	#6	3" TO 4"	6.25"	12.5"	50"	4"
1.00′	#6	3" TO 4"	6.0"	12"	50"	6"
1.05′	#6	3" TO 4"	5.75"	11.5"	50"	6"
1.10′	#6	3" TO 4"	5.5"	11"	50"	6"

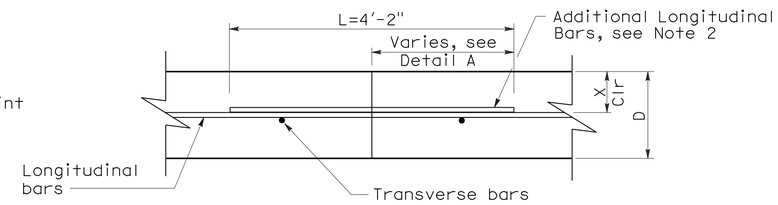

SECTION X-X

TRANSVERSE CONSTRUCTION JOINT

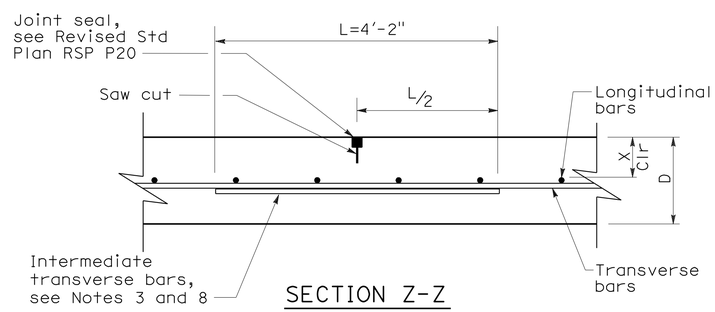

SECTION Z-Z

LONGITUDINAL CONTRACTION JOINT

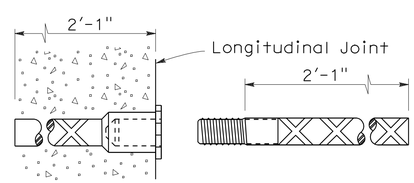

TIE BAR SPLICE DETAIL

Splice Coupler

NOTES:

To accompany plans dated 11-1-10

1. Place tie bar in the same plane as transverse bars.
2. Place additional longitudinal bars in the same horizontal plane as the longitudinal bars.
3. Place tie bars and intermediate transvese bars parallel to transverse bars.
4. Joint seals at longitudinal construction joints shall conform to the details shown on Standard Plan P20 for Type C joint.
5. Intermediate transverse bar spacing shall be equal to transverse bar spacing.
6. Reinforcing bar splices shall be a minimum of 25".
7. Additional longitudinal bars symmetrical about longitudinal construction joint.
8. Place Intermediate transverse bar in the same plane as transverse bars.

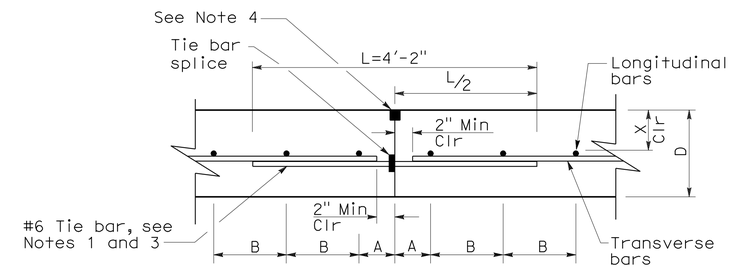

SECTION Y-Y

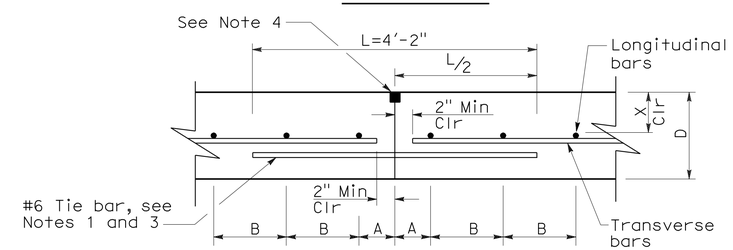

ALTERNATE

LONGITUDINAL CONSTRUCTION JOINT

STATE OF CALIFORNIA
DEPARTMENT OF TRANSPORTATION

CONTINUOUSLY REINFORCED CONCRETE PAVEMENT

NO SCALE

RNSP P4 DATED APRIL 20, 2012 SUPERSEDES RNSP P4 DATED JUNE 5, 2009 AND NSP P4 DATED MAY 15, 2009 THAT SUPPLEMENTS THE STANDARD PLANS BOOK DATED MAY 2006.

REVISED NEW STANDARD PLAN RNSP P4

2006 REVISED NEW STANDARD PLAN RNSP P4

2-22-12

DIST	COUNTY	ROUTE	POST MILES TOTAL PROJECT	SHEET NO.	TOTAL SHEETS
10	Mer	99	0.0/4.6	479A	607

William K. Farnbach
REGISTERED CIVIL ENGINEER

June 5, 2009
PLANS APPROVAL DATE

REGISTERED PROFESSIONAL ENGINEER
William K. Farnbach
No. 49042
Exp. 09-30-10
STATE OF CALIFORNIA

The State of California or its officers or agents shall not be responsible for the accuracy or completeness of electronic copies of this plan sheet.

To accompany plans dated 11-1-10

2006 NEW STANDARD PLAN NSP P31A

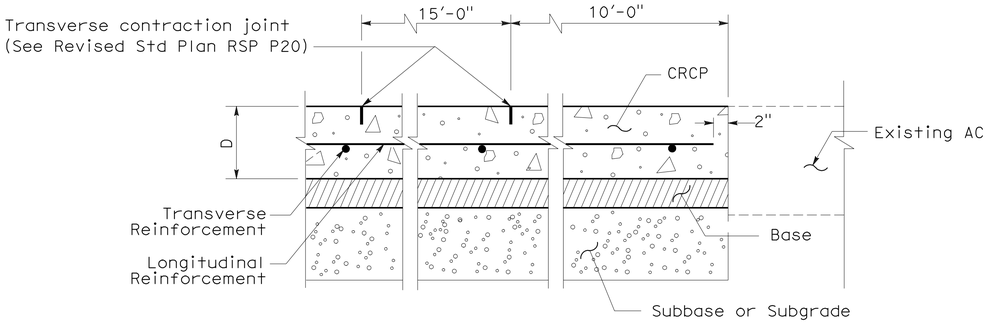

TERMINAL JOINT TYPE A

(For Existing AC)

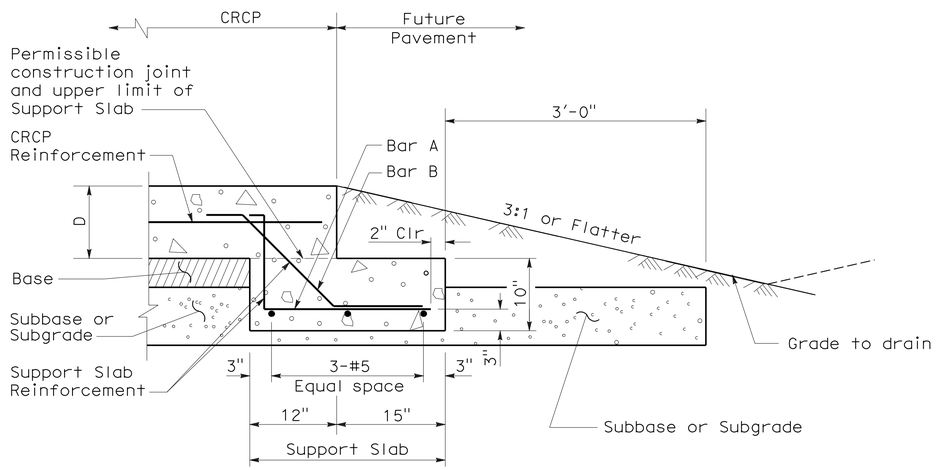

TERMINAL JOINT TYPE B

(For Future Pavement)

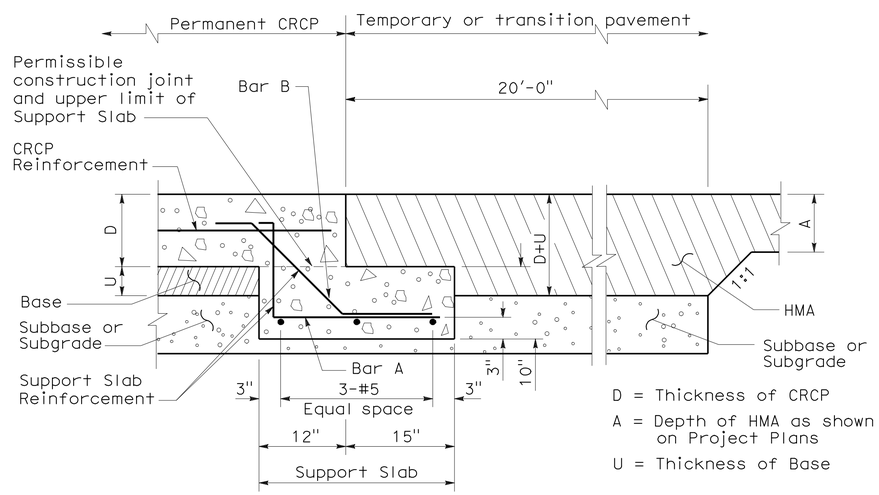

D = Thickness of CRCP

A = Depth of HMA as shown on Project Plans

U = Thickness of Base

TERMINAL JOINT TYPE C

(For Temporary HMA Pavement)

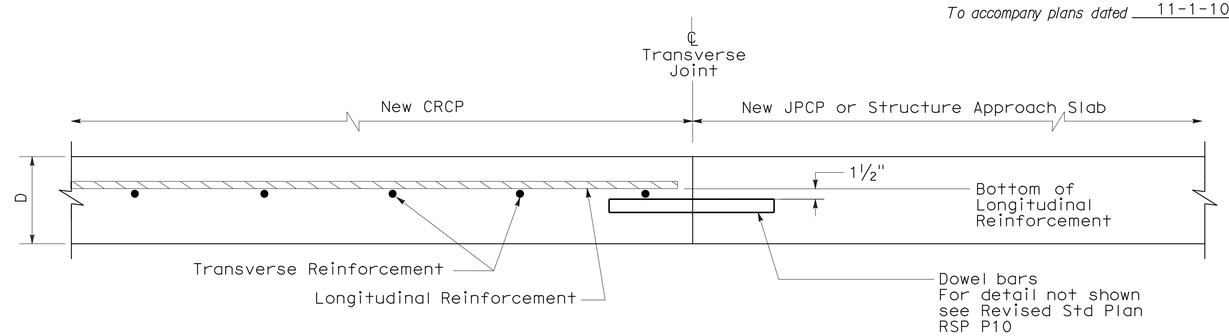

TERMINAL JOINT TYPE E

(For New JPCP or Structure Appproach Slabs)

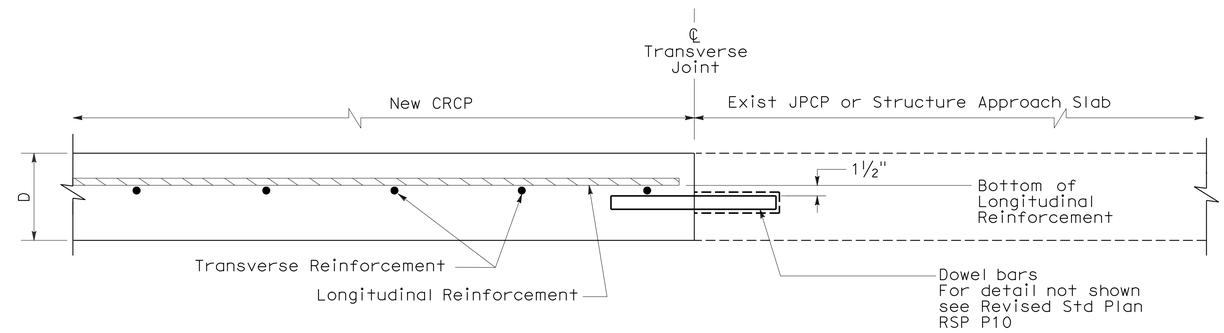

TERMINAL JOINT TYPE D

(For Existing JPCP or Structure Appproach Slabs)

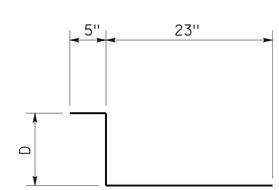

BAR "A" (#5)

AT 12" C-C

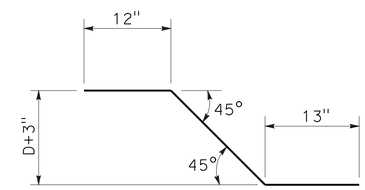

BAR "B" (#5)

AT 12" C-C

2 ADDED PER ADDENDUM No. 2 DATED MAY 9, 2012

STATE OF CALIFORNIA
DEPARTMENT OF TRANSPORTATION

CONTINUOUSLY REINFORCED CONCRETE PAVEMENT-TERMINAL JOINT DETAILS

NO SCALE

NSP P31A DATED JUNE 5, 2009 SUPPLEMENTS THE STANDARD PLANS BOOK DATED MAY 2006.

NEW STANDARD PLAN NSP P31A

5-19-09

Dist	COUNTY	ROUTE	POST MILES TOTAL PROJECT	SHEET No.	TOTAL SHEETS
10	Mer	99	0.0/4.6	479B	607

REGISTERED CIVIL ENGINEER

April 20, 2012
PLANS APPROVAL DATE

REGISTERED PROFESSIONAL ENGINEER — Florante E. Bautista — No. C54859 — Exp. 6-30-12 — CIVIL — STATE OF CALIFORNIA

The State of California or its officers or agents shall not be responsible for the accuracy or completeness of electronic copies of this plan sheet.

To accompany plans dated 11-1-10

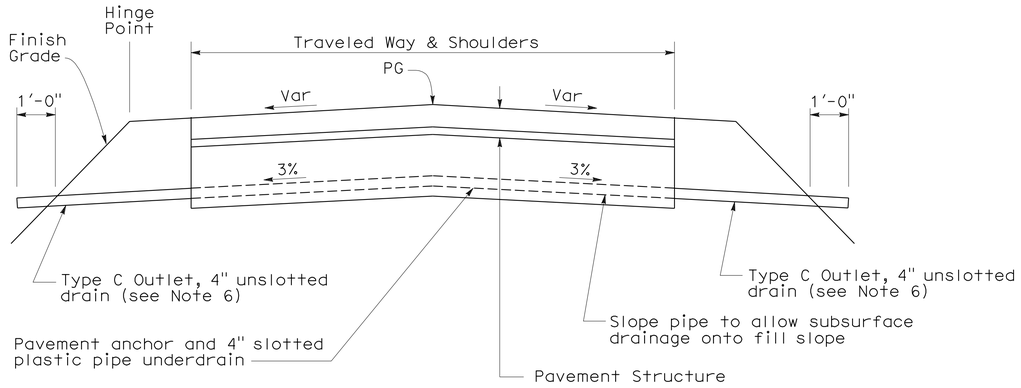

PAVEMENT ANCHOR PROFILE

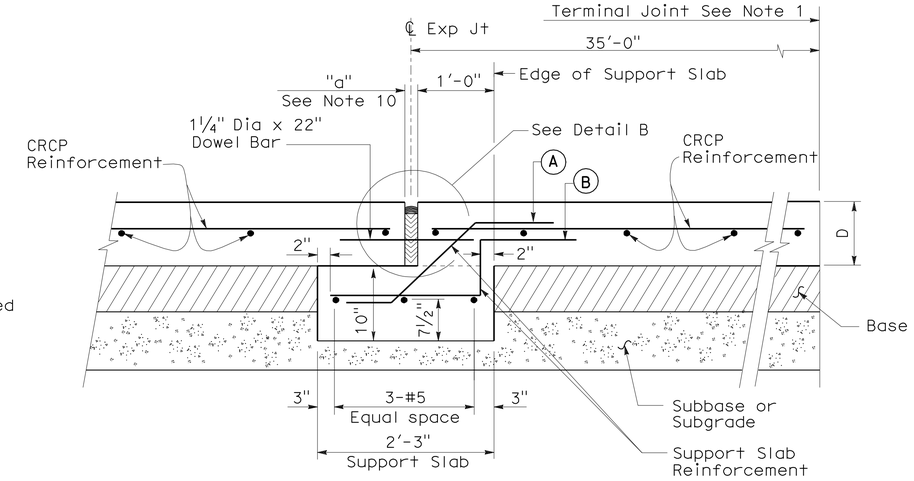

EXPANSION JOINT TYPE AN

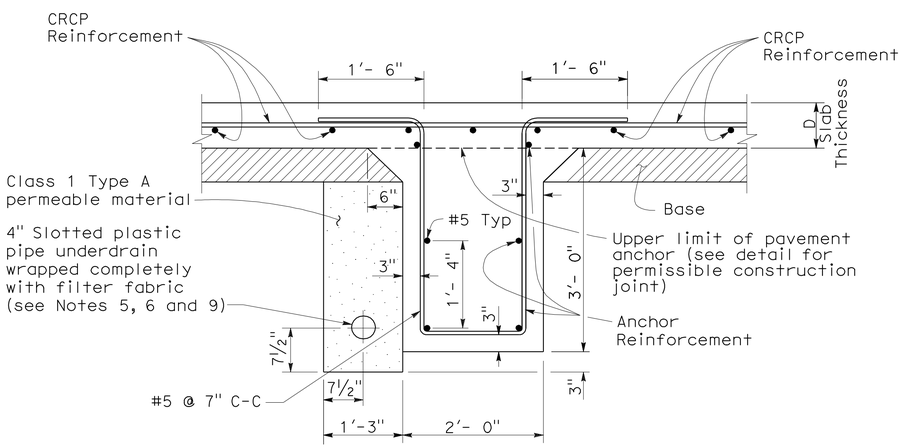

PAVEMENT ANCHOR

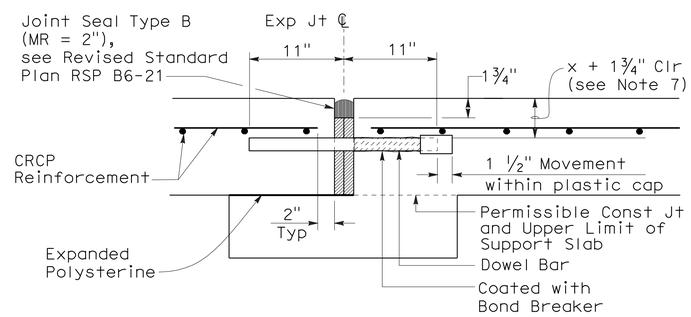

DETAIL B

(For layout, tolerances, and other details not shown, see Revised Standard Plan RSP P10.)

NOTES:

1. For the locations of the terminal joints, expansion joints and pavement anchors, see project plans.
2. The CRCP shall continue across the pavement anchor and expansion joints as shown.
3. Details of reinforcement, tie bars, and longitudinal joints (and if necessary, transverse construction joints) are shown on Revised New Standard Plan RNSP P4.
4. Transverse construction joints are not allowed within 20'-0" of the pavement anchor.
5. When placing pipe through concrete barrier, use 4" unslotted plastic pipe wrapped completely with 9/16" polystyrene.
6. See Standard Plan D99B for details not shown.
7. See Revised New Standard Plan RNSP P4 for "x".
8. D = thickness of CRCP
9. Place the 4" Slotted Plastic Pipe on the high side of the longitudinal grade.
10. See Revised Standard Plan RSP B6-21 for "a".

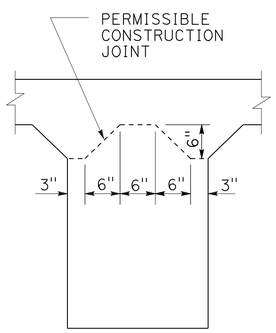

PAVEMENT ANCHOR DETAIL SHOWING PERMISSIBLE CONSTRUCTION JOINT

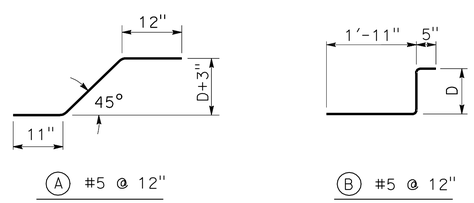

REINFORCEMENT DETAIL

2 ADDED PER ADDENDUM No. 2 DATED MAY 9, 2012

STATE OF CALIFORNIA
DEPARTMENT OF TRANSPORTATION

CONTINUOUSLY REINFORCED CONCRETE PAVEMENT- EXPANSION JOINT AND ANCHOR DETAILS

NO SCALE

RNSP P31B DATED APRIL 20, 2012 SUPERSEDES NSP P31B DATED JUNE 5, 2009 THAT SUPPLEMENTS THE STANDARD PLANS BOOK DATED MAY 2006

REVISED NEW STANDARD PLAN RNSP P31B

2006 REVISED NEW STANDARD PLAN RNSP P31B

2-22-12

DIST	COUNTY	ROUTE	POST MILES TOTAL PROJECT	SHEET NO.	TOTAL SHEETS
10	Mer	99	0.0/4.6	490A	607

Gregory A. Balzer
LICENSED LANDSCAPE ARCHITECT

June 5, 2009
PLANS APPROVAL DATE

The State of California or its officers or agents shall not be responsible for the accuracy or completeness of electronic copies of this plan sheet.

LICENSED LANDSCAPE ARCHITECT Gregory A. Balzer 2576 STATE OF CALIFORNIA
9-10 Expiration Date
2-28-11 Renewal Date
5-14-09 Date

To accompany plans dated 11-1-10

2006 REVISED STANDARD PLAN RSP H7

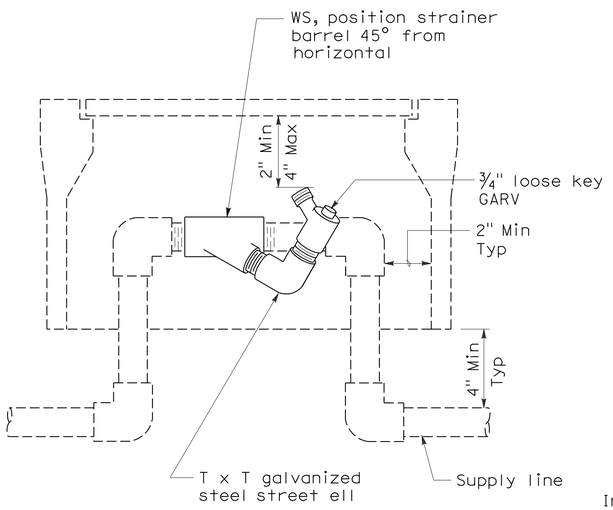

ELEVATION
WYE STRAINER

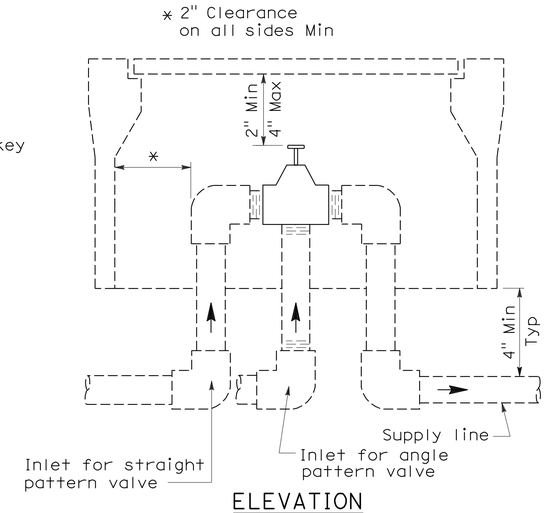

ELEVATION
VALVE

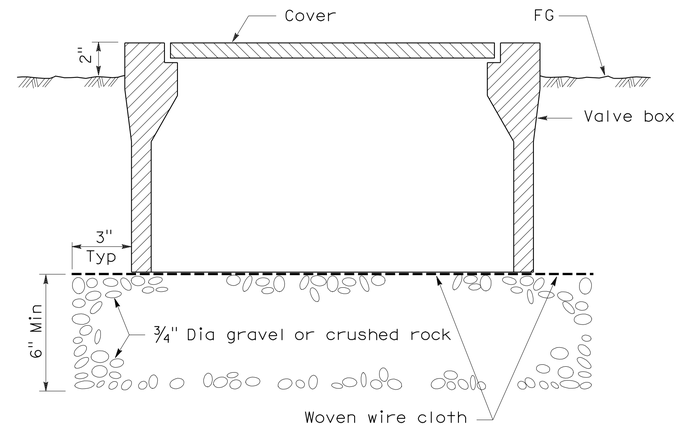

SECTION
VALVE BOX

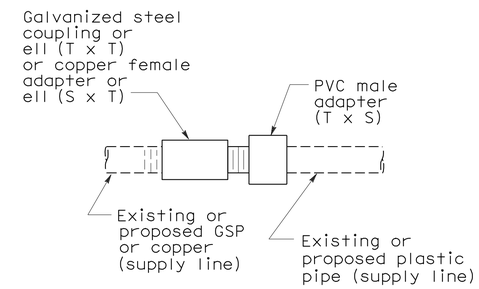

PLAN
GALVANIZED OR COPPER PIPE CONNECTION TO PLASTIC PIPE

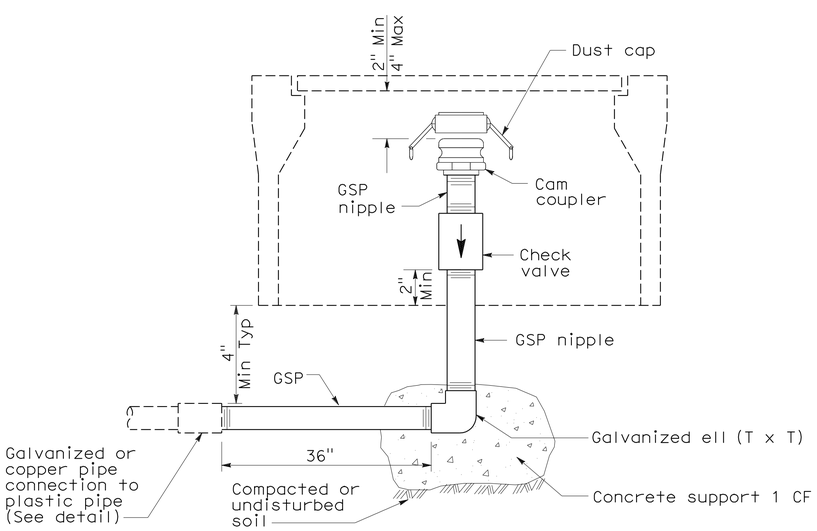

ELEVATION
CAM COUPLER ASSEMBLY

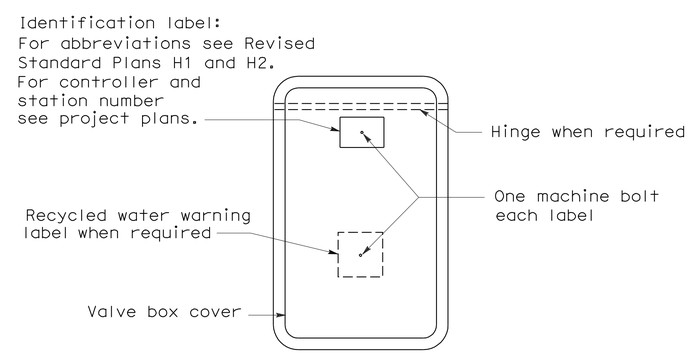

PLAN

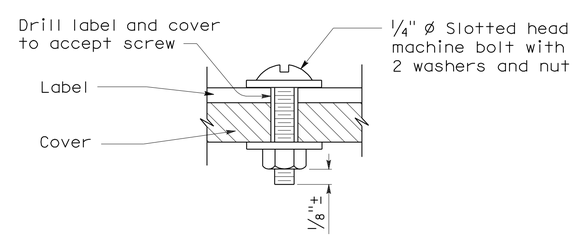

SECTION
VALVE BOX IDENTIFICATION

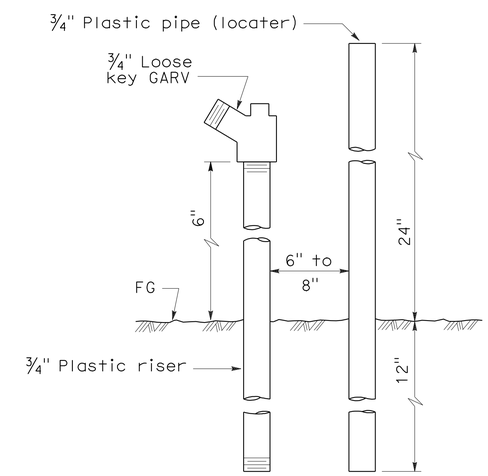

ELEVATION
FLUSH VALVE

STATE OF CALIFORNIA
DEPARTMENT OF TRANSPORTATION

PLANTING AND IRRIGATION DETAILS

NO SCALE

2 **ADDED PER ADDENDUM No. 2 DATED MAY 9, 2012**

RSP H7 DATED JUNE 5, 2009 SUPERSEDES STANDARD PLAN H7
DATED MAY 1, 2006 - PAGE 207 OF THE STANDARD PLANS BOOK DATED MAY 2006.

REVISED STANDARD PLAN RSP H7

5-28-09

DIST.	COUNTY	ROUTE	POST MILES TOTAL PROJECT	SHEET NO.	TOTAL SHEETS
10	Mer	99	0.0/4.6	525A	607

REGISTERED ELECTRICAL ENGINEER — 2-24-12 DATE

REGISTERED PROFESSIONAL ENGINEER — IMRAN SAEED — No. E 18781 — Exp. 6-30-13 — ELEC — STATE OF CALIFORNIA

11-1-10
PLANS APPROVAL DATE

The State of California or its officers or agents shall not be responsible for the accuracy or completeness of electronic copies of this plan sheet.

Irrigation Well Pump Control Enclosure

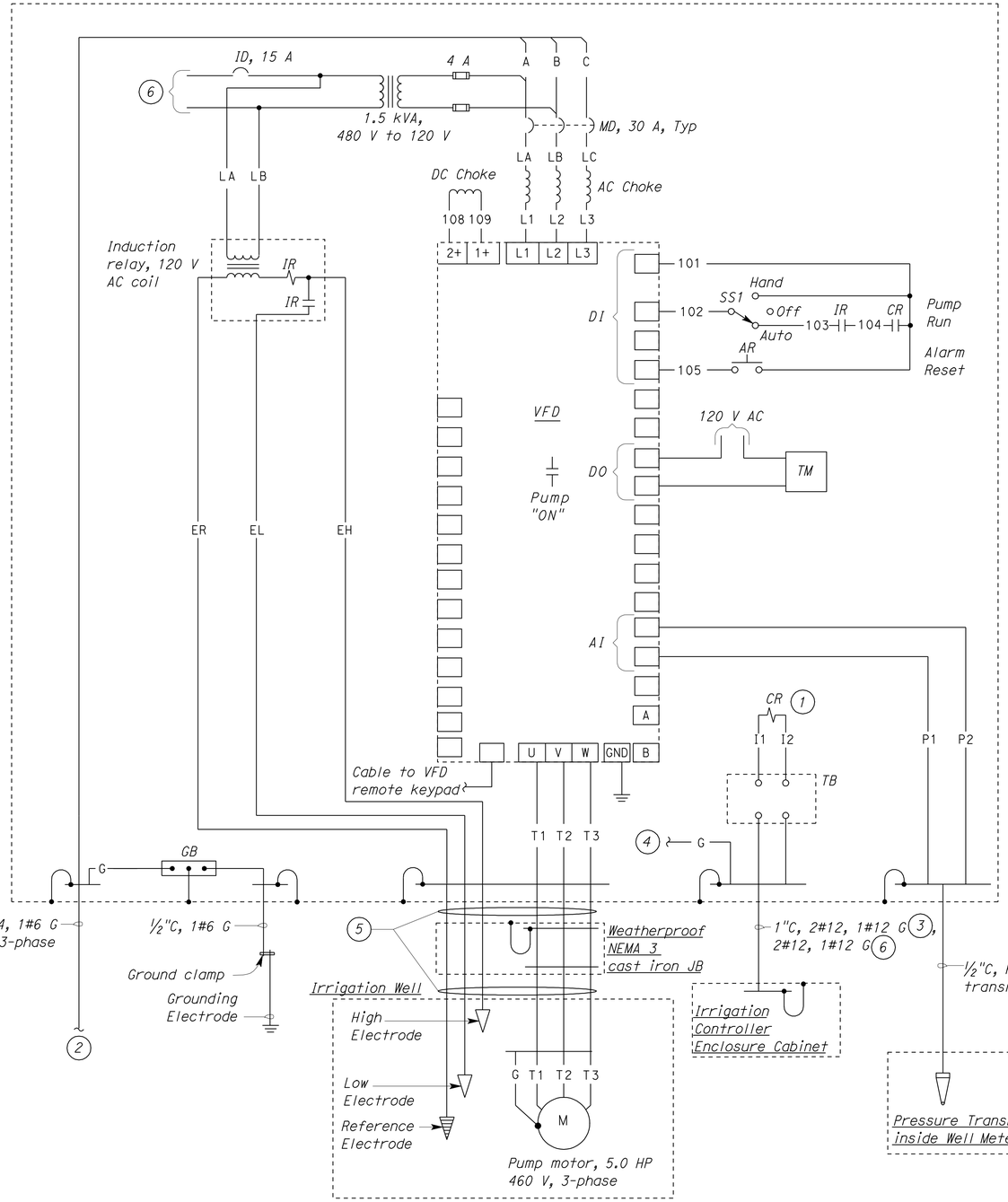

CONTROL SCHEMATIC

THIS DRAWING APPROVED FOR ELECTRICAL WORK ONLY.

General Notes:

A. *For location of irrigation well pump, irrigation well and pump control enclosure and Irrigation Controller Enclosure Cabinet, see Irrigation plans and Water plans.*

B. *Pull boxes between irrigation well and pump control enclosure and irrigation controller, if any, are not shown.*

2

Notes:

1. *Pump control relay, 24 Volts AC coil.*
2. *To Service Equipment Enclosure. For continuation, see Electrical sheet E-14 and E-24.*
3. *To master valve/pump start terminals inside the Irrigation Controller Enclosure Cabinet.*
4. *Connect to ground bus.*
5. *Well pump motor cables integrated with equipment grounding and 3#12 for electrodes.*
6. *120 V AC power for the Irrigation Controller Enclosure Cabinet, and time meter.*

LEGEND

- CIRCUIT BREAKER, SINGLE-POLE
- CIRCUIT BREAKER, THREE-POLE
- FUSE
- TRANSFORMER WINDING/INDUCTOR
- CONTACT, NORMALLY OPEN
- OPERATING COIL
- SWITCH, SINGLE-POLE, 3-POSITION
- PUSHBUTTON SWITCH, NORMALLY OPEN
- GROUNDING ELECTRODE

ABBREVIATIONS

A	AMPERES
AC	ALTERNATING CURRENT
AI	ANALOG INPUT
AR	ALARM RESET
C	CONDUIT
CR	CONTROL RELAY
DC	DIRECT CURRENT
DI	DIGITAL INPUT
DO	DIGITAL OUTPUT
G	GROUND
GB	GROUND BUS
GND	GROUND
HP	HORSEPOWER
ID	IRRIGATION CONTROLLER ENCLOSURE CABINET POWER DISCONNECT
IR	INDUCTION RELAY
JB	JUNCTION BOX
M	MOTOR
MD	MAIN DISCONNECT
SS	SELECTOR SWITCH
TB	TERMINAL BLOCK
TM	TIME METER
TYP	TYPICAL
V	VOLT
VFD	VARIABLE FREQUENCY DRIVE

2 **ADDED PER ADDENDUM No. 2 DATED MAY 9, 2012**

DESIGN SUPERVISOR — Allan M. Fonseca — DESIGN ENGINEER

	BY	CHECKED
DESIGN	Inam U. Maher	Imran Saeed
DETAILS	Kathi Andreasen	Inam U. Maher
QUANTITIES	Inam U. Maher	Imran Saeed

STATE OF CALIFORNIA
DEPARTMENT OF TRANSPORTATION

DIVISION OF ENGINEERING SERVICES
ELECTRICAL-MECHANICAL-WATER AND WASTEWATER DESIGN

BRIDGE NO.
POST MILE 0.0/4.6

PLAINSBURG IRRIGATION WELL
IRRIGATION WELL PUMP CONTROL DETAILS

SHEET **EE-10**

TAEMWW Imperial Rev. 7/10

ORIGINAL SCALE IN INCHES FOR REDUCED PLANS 0 1 2 3

UNIT 3597
PROJECT NUMBER & PHASE 10000004311
EA 415801

DISREGARD PRINTS BEARING EARLIER REVISION DATES → 2/10/12 2/10/12 2/28/12 3/1/12

REVISION DATES (PRELIMINARY STAGE ONLY) SHEET OF

07-MAY-2012 10:57

ee_01.add

DIST.	COUNTY	ROUTE	POST MILES TOTAL PROJECT	SHEET NO.	TOTAL SHEETS
10	Mer	99	0.0/4.6	525B	607

REGISTERED ELECTRICAL ENGINEER — 2-24-12 DATE

REGISTERED PROFESSIONAL ENGINEER — IMRAN SAEED — No. E 18781 — Exp. 6-30-13 — ELEC — STATE OF CALIFORNIA

11-1-10
PLANS APPROVAL DATE

The State of California or its officers or agents shall not be responsible for the accuracy or completeness of electronic copies of this plan sheet.

2

IRRIGATION WELL INFORMATION AND EQUIPMENT SCHEDULE

IRRIGATION WELL PUMP					IRRIGATION WELL PUMP CONTROL ENCLOSURE								REFERENCE SHEET
LOCATION	EQUIPMENT	SPEED (RPM)	HP	VOLTS	MAIN DISCONNECT	CONTROL	RATING (HP)	INPUT REACTOR RATING	INPUT VOLTS	OUTPUT VOLTS	CONTROLS	OPTION	
Route 99	Submersible Well Pump	3,450	5.0	460/3 Ø	30 A/3 P	VFD	7.5	7.5 HP	460/3 Ø	460/3 Ø	4-20 Milli Amps	External Readout	E-14, E-24

General Notes:

A. Name Plates with 1/8" letter for items with abbreviations as shown in the Elevation detail.

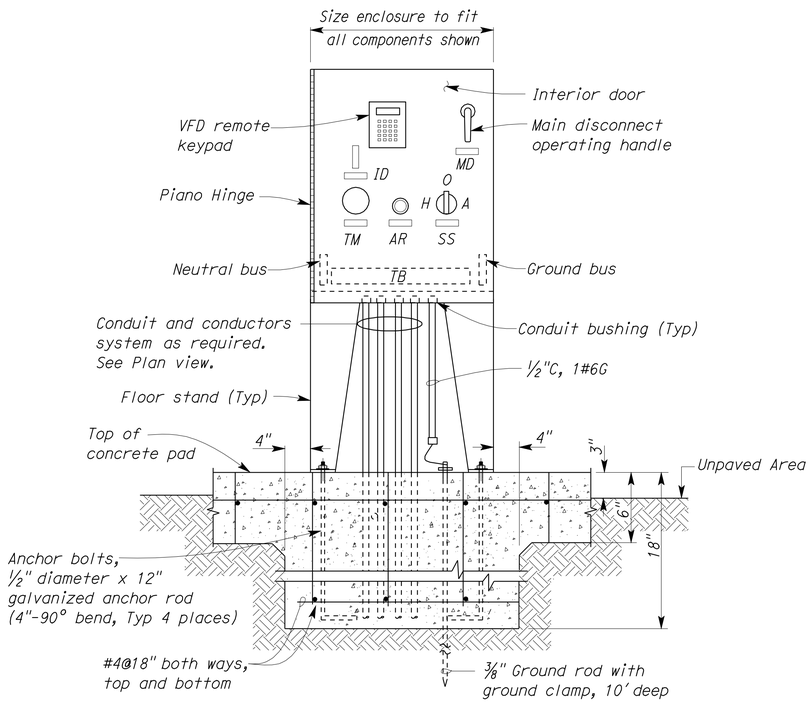

ELEVATION

NO SCALE

(Exterior weatherproof door not shown)

2 **ADDED PER ADDENDUM No. 2 DATED MAY 9, 2012**

THIS DRAWING APPROVED FOR ELECTRICAL WORK ONLY.

	BY	CHECKED
DESIGN	Inam U. Maher	Imran Saeed
DETAILS	Kathi Andreasen	Inam U. Maher
QUANTITIES	Inam U. Maher	Imran Saeed

STATE OF CALIFORNIA
DEPARTMENT OF TRANSPORTATION

DIVISION OF ENGINEERING SERVICES
ELECTRICAL-MECHANICAL-WATER AND WASTEWATER DESIGN

BRIDGE NO.
POST MILE 0.0/4.6

PLAINSBURG IRRIGATION WELL

IRRIGATION WELL ELECTRICAL DETAILS

SHEET **EE-2**

TAEMWW Imperial Rev. 7/10

ORIGINAL SCALE IN INCHES FOR REDUCED PLANS 0 1 2 3

UNIT 3597
PROJECT NUMBER & PHASE 10000004311
EA 415801

DISREGARD PRINTS BEARING EARLIER REVISION DATES → 2/8/12 2/24/12 3/7/12

REVISION DATES (PRELIMINARY STAGE ONLY) SHEET OF

04-MAY-2012 12:49

ee_02.add

DIST.	COUNTY	ROUTE	POST MILES TOTAL PROJECT	SHEET NO.	TOTAL SHEETS
10	Mer	99	0.0/4.6	525C	607

REGISTERED CIVIL ENGINEER — DATE 1-13-12

REGISTERED PROFESSIONAL ENGINEER — JEROME R. MARCOTTE — No. C 36844 — Exp. 06/30/12 — CIVIL — STATE OF CALIFORNIA

11-1-10
PLANS APPROVAL DATE

The State of California or its officers or agents shall not be responsible for the accuracy or completeness of electronic copies of this plan sheet.

2

ABBREVIATIONS

AB	AGGREGATE BASE
AC	ASPHALT CONCRETE
ACP	ASBESTOS CONCRETE PIPE
AVC	AIR VOLUME CONTROLLER
B	BUNG
Bldg	BUILDING
C	CONDUIT
C-C	CENTER TO CENTER
CI	CAST-IRON
CL	CHAIN LINK
CMP	CORRUGATED METAL PIPE
Conc	CONCRETE
COTF	CLEANOUT TO FLOOR
COTG	CLEANOUT TO GRADE
CSD	COMMUNITY SERVICES DISTRICT
DBH	DIAMETER AT BREAST HEIGHT
DI	DRAINAGE INLET
Dia	DIAMETER
DP	DRAIN PIPE
E	ELECTRICAL
(E)	EXISTING
EG	EXISTING GRADE
EL	ELEVATION
EP	EDGE OF PAVEMENT
FF	FINISH FLOOR
FG	FINISH GRADE
FL	FLOW LINE
FOC	FACE OF CONCRETE
FS	FLOAT SWITCH
ft	FEET
Galv	GALVANIZED
gpm	GALLONS PER MINUTE
GSP	GALVANIZED STEEL PIPE
HF	HOSE FAUCET
H	HEIGHT
HDPE	HIGH DENSITY POLYETHYLENE
HP	HORSEPOWER
Hz	HERTZ
ID	INSIDE DIAMETER
IE	INVERT ELEVATION
in	INCHES
JB	JUNCTION BOX
lbs	POUNDS
L/S	LANDSCAPE
Max	MAXIMUM
MBV	MOTORIZED BALL VALVE
MH	MANHOLE
Min	MINIMUM
NHT	NATIONAL HOSE THREAD
O.C.	ON CENTER
OD	OUTSIDE DIAMETER
OG	ORIGINAL GROUND
P/L	PROPERTY LINE
PCC	PORTLAND CEMENT CONCRETE
PG	PRESSURE GAUGE
PRV	PRESSURE REGULATING VALVE
PS	PRESSURE SWITCH
psi	POUNDS PER SQUARE INCH
PVC	POLYVINYL CHLORIDE
R	RADIUS
RCP	REINFORCED CONCRETE PIPE
RCVM	REMOTE CONTROL VALVE MASTER
RPM	REVOLUTIONS PER MINUTE
RT	RIGHT
R/W	RIGHT-OF-WAY
S	SLOPE
Sch	SCHEDULE
SD	STORM DRAIN
SP	SEWAGE PIPE
sq	SQUARE
Sta	STATION
TBM	TEMPORARY BENCHMARK
TOC	TOP OF CURB, CONCRETE
Tot	TOTAL
Typ	TYPICAL
V	VOLT
VCP	VITRIFIED CLAY PIPE
W	WATER
W/O	WITHOUT
WP	WEATHERPROOF
WSP	WELDED STEEL PIPE

LEGEND

S	SANITARY SEWER
D	DRAIN
RD	RETURN DRAIN
V	VENT
W	WATER
FM	FORCE MAIN
L	LEACH LINES
7 / SS-5	DETAIL / SHEET NUMBER
99.00	NEW GRADE IN FEET
X (100.00)	EXISTING SPOT GRADE IN FEET
	SURFACE DRAINAGE
	ABANDON (E)
	BENCHMARK ELEVATION
℄	CENTERLINE
ø	DIAMETER
	SECTION / ELEVATION LETTER / SHEET NUMBER
	TREE

GENERAL WORK NOTES

The Contractor shall verify all controlling field dimensions and conditions before ordering or fabricating any materials.

The Contractor shall verify exact location of all underground facilities and utilities prior to start of construction.

No 90° bends allowed on drain or sewer pipe.

Typical Installation

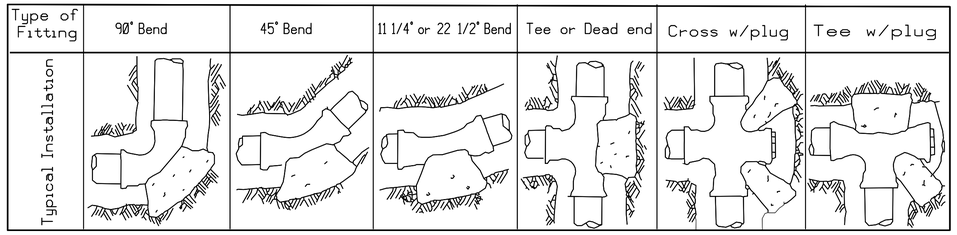

THRUST BLOCK BEARING AREA (SQ. FT.)

Type of Fitting / Size of Pipe	90° Bend	45° Bend	11 1/4° or 22 1/2° Bend	Tee or Dead end	Tee w/ Plug	Cross w/ plug
4"	2	1	1	2	2	2
6"	4	4	2	4	4	4
8"	7	4	2	5	7	7
10"	12	6	3	8	12	12
12"	16	10	5	12	16	16
14"	20	12	6	14	20	20
16"	27	15	8	18	27	27
18"	45	25	13	32	45	45
24"	65	35	18	46	65	65

PIPE FITTINGS AND VALVES

- CAP, THREADED
- ELBOW, TURNED DOWN
- FLEXIBLE CONNECTOR
- REDUCER, CONCENTRIC
- REDUCER, ECCENTRIC
- PRESSURE GAUGE (WITH VALVE AND SNUBBER)
- UNION
- UNION, INSULATING
- VALVE, BALL
- VALVE, CHECK
- VALVE, GATE
- VALVE, SAFETY RELIEF
- VALVE, PRESSURE REDUCING
- WATER METER

2 **ADDED PER ADDENDUM No. 2 DATED MAY 9, 2012**

	BY	CHECKED
DESIGN	Laurie Vasquez	Don Hansen
DETAILS	J. R. Stangl	Laurie Vasquez
QUANTITIES	Laurie Vasquez	Don Hansen

STATE OF CALIFORNIA DEPARTMENT OF TRANSPORTATION

DIVISION OF ENGINEERING SERVICES
ELECTRICAL-MECHANICAL-WATER AND WASTEWATER DESIGN

BRIDGE NO.
POST MILE 0.0/4.6

PLAINSBURG IRRIGATION WELL

NOTES, LEGENDS & ABBREVIATIONS

SHEET **W-0**

TAEMWW Imperial Rev. 7/10

ORIGINAL SCALE IN INCHES FOR REDUCED PLANS 0 1 2 3

UNIT 3616
PROJECT NUMBER & PHASE 10000004311
EA 415801

DISREGARD PRINTS BEARING EARLIER REVISION DATES → 12-16-11 12-21-11 1-13-12 2-22-12

REVISION DATES (PRELIMINARY STAGE ONLY) SHEET OF

04-MAY-2012 12:49

w_0.dgn

DIST.	COUNTY	ROUTE	POST MILES TOTAL PROJECT	SHEET NO.	TOTAL SHEETS
10	Mer	99	0.0/4.6	525D	607

REGISTERED CIVIL ENGINEER — DATE 1-13-12

REGISTERED PROFESSIONAL ENGINEER — JEROME R. MARCOTTE — No. C 36844 — Exp. 06/30/12 — CIVIL — STATE OF CALIFORNIA

11-1-10
PLANS APPROVAL DATE

The State of California or its officers or agents shall not be responsible for the accuracy or completeness of electronic copies of this plan sheet.

2

Notes:

1. Install pipe restraints as needed.

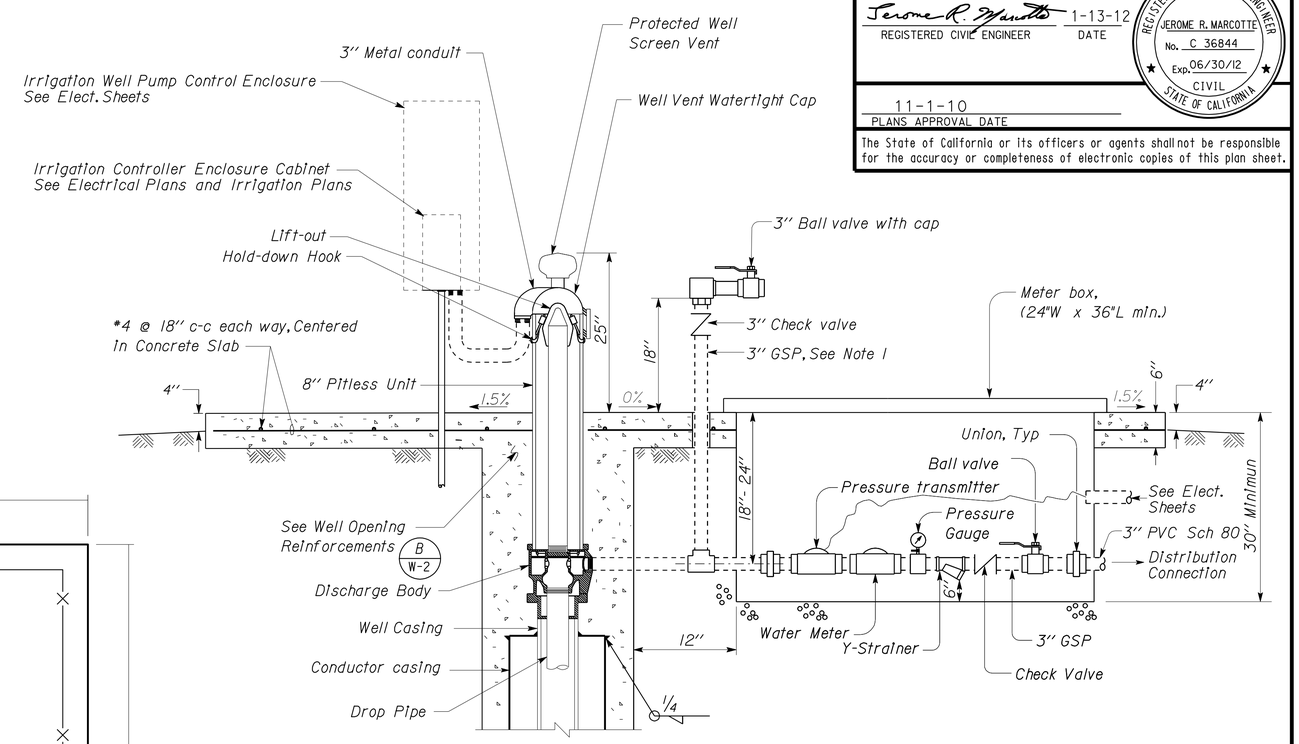

A WATER WELL HEAD

NO SCALE

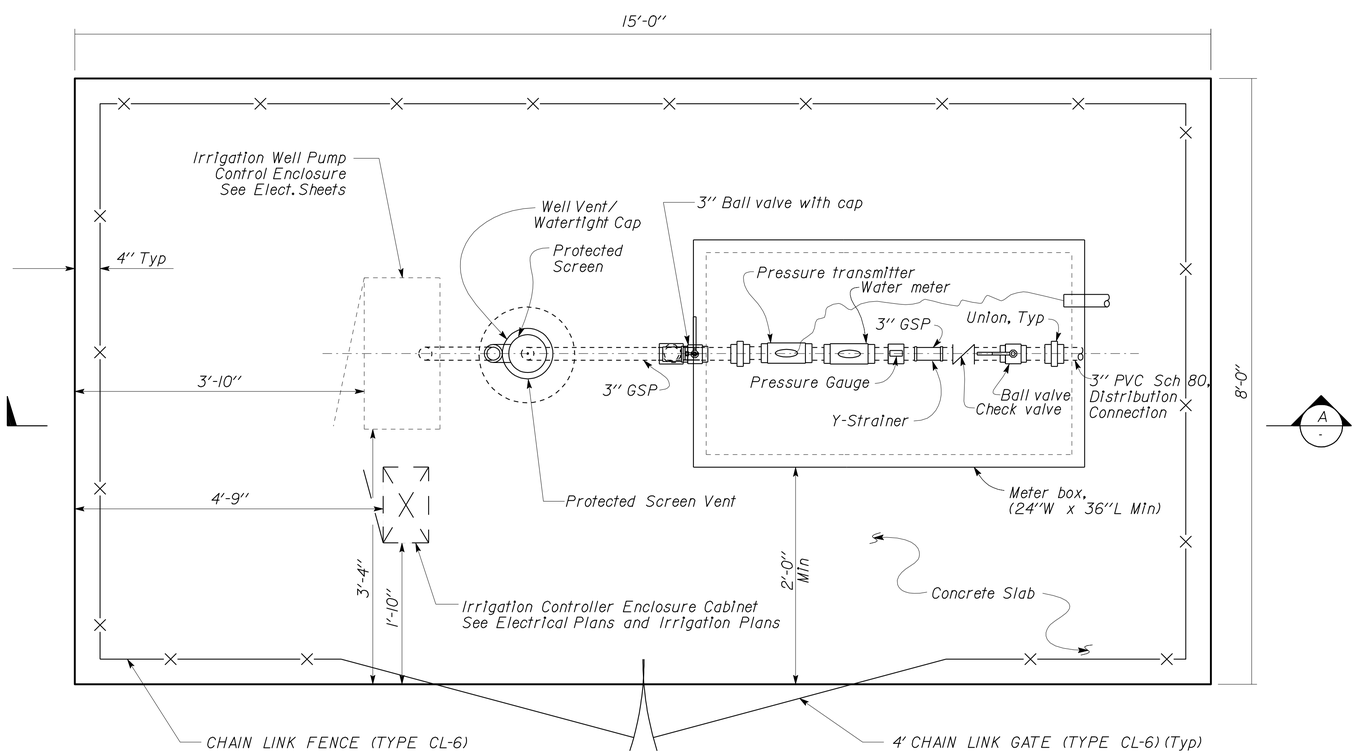

WATER WELL PLAN

NO SCALE

2 **ADDED PER ADDENDUM No. 2 DATED MAY 9, 2012**

DESIGN SUPERVISOR	DESIGN	BY Laurie Vasquez	CHECKED Don Hansen
DESIGN ENGINEER	DETAILS	BY J. R. Stangl	CHECKED Laurie Vasquez
	QUANTITIES	BY Laurie Vasquez	CHECKED Don Hansen

STATE OF CALIFORNIA DEPARTMENT OF TRANSPORTATION

DIVISION OF ENGINEERING SERVICES
ELECTRICAL-MECHANICAL-WATER AND WASTEWATER DESIGN

BRIDGE NO.
POST MILE R4.6/R10.5

PLAINSBURG IRRIGATION WELL

IRRIGATION WATER SUPPLY PLAN

SHEET W-1

TAEMWW Imperial Rev. 7/10

ORIGINAL SCALE IN INCHES FOR REDUCED PLANS 0 1 2 3

UNIT 3616
PROJECT NUMBER & PHASE 10000004311
EA 415701

DISREGARD PRINTS BEARING EARLIER REVISION DATES → REVISION DATES (PRELIMINARY STAGE ONLY) 12-13-11 12-16-11 12-21-11 1-13-12 2-22-12

SHEET OF

04-MAY-2012 12:50

w_1.dgn

DIST.	COUNTY	ROUTE	POST MILES TOTAL PROJECT	SHEET NO.	TOTAL SHEETS
10	Mer	99	0.0/4.6	525E	607

2

Jerome R. Marcotte 1-13-12
REGISTERED CIVIL ENGINEER DATE

REGISTERED PROFESSIONAL ENGINEER
JEROME R. MARCOTTE
No. C 36844
Exp. 06/30/12
CIVIL
STATE OF CALIFORNIA

11-1-10
PLANS APPROVAL DATE

The State of California or its officers or agents shall not be responsible for the accuracy or completeness of electronic copies of this plan sheet.

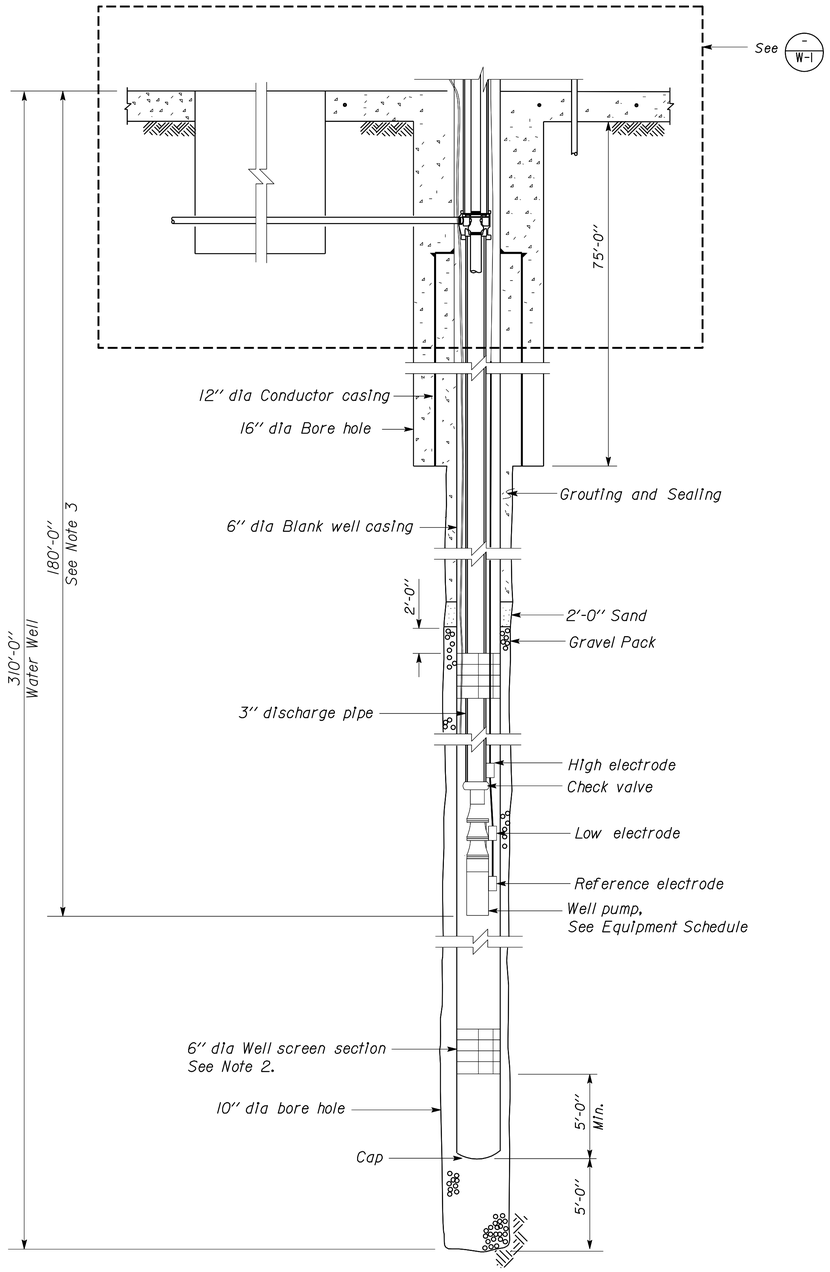

A WATER WELL - ELEVATION

EQUIPMENT SCHEDULE

EQUIPMENT	SPEED (RPM)	HP	VOLTS	PHASE	PUMPING RATE (GPM)	TOTAL DYNAMIC HEAD (Ft.)
SUBMERSIBLE WELL PUMP	3450	5	460	3	30 40 50	330 340 350

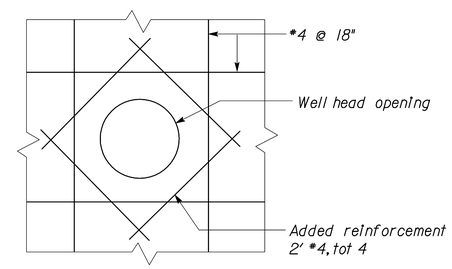

B WELL OPENING REINFORCEMENT

NO SCALE

Notes:

1. Actual depth of well may vary. For bidding purposes, use depth shown.

2. Exact locations and lengths of well screen sections must be field determined. For bidding purposes use 194 ft.- 259 ft. and 286 ft.- 300 ft. For a total of 79 feet of screen.

3. Actual depth of well pump must be determined from well testing data. For bidding purposes, use depth shown.

4. Electrodes locations shown are arbitrary only. Exact locations to be determined by well pump Installer and the Engineer.

2 ADDED PER ADDENDUM No. 2 DATED MAY 9, 2012

DESIGN	BY Laurie Vasquez	CHECKED Don Hansen	
DETAILS	BY J. R. Stangl	CHECKED Laurie Vasquez	
QUANTITIES	BY Laurie Vasquez	CHECKED Don Hansen	

STATE OF CALIFORNIA
DEPARTMENT OF TRANSPORTATION

DIVISION OF ENGINEERING SERVICES
ELECTRICAL-MECHANICAL-WATER AND WASTEWATER DESIGN

BRIDGE NO.
POST MILE 0.0/4.6

PLAINSBURG IRRIGATION WELL
WATER WELL DETAILS

SHEET W-2

TAEMWW Imperial Rev. 7/10

ORIGINAL SCALE IN INCHES FOR REDUCED PLANS 0 1 2 3

UNIT 3616
PROJECT NUMBER & PHASE 10000004311
EA 415801

DISREGARD PRINTS BEARING EARLIER REVISION DATES →
REVISION DATES (PRELIMINARY STAGE ONLY) 12-12-11 12-16-11 12-21-11 1-13-12 2-22-12
SHEET OF

04-MAY-2012 12:50
w_2.dgn