DIST	COUNTY	ROUTE	POST MILES TOTAL PROJECT	SHEET No	TOTAL SHEETS
10	Mer	99	R4.6/R10.5	601	751

REGISTERED CIVIL ENGINEER 07-31-09 DATE

10-11-10
PLANS APPROVAL DATE

REGISTERED PROFESSIONAL ENGINEER G. SCHUSTER No. C 63897 Exp. 09-30-10 CIVIL STATE OF CALIFORNIA

The State of California or its officers or agents shall not be responsible for the accuracy or completeness of electronic copies of this plan sheet.

PRESTRESSING NOTES

270 KSI Low Relaxation Strand:

P_{jack} = 10 000 kips

Anchor Set = 3/8 in

Total Number of Girders = 5

Distribution of prestress force (Pjack) between girders shall not exceed the ratio of 3:2. Maximum final force variation between girders shall not exceed 725 kips.

Concrete: f'_c = 4000 psi @ 28 days

f'_{ci} = 3500 psi @ time of stressing

Contractor shall submit elongation calculations based on initial stress at

⊠ = 0.868 times jacking stress.

One end stressing shall be performed from the long-span end only.
The design is based on μ = 0.15, k = 0.0002/ft.

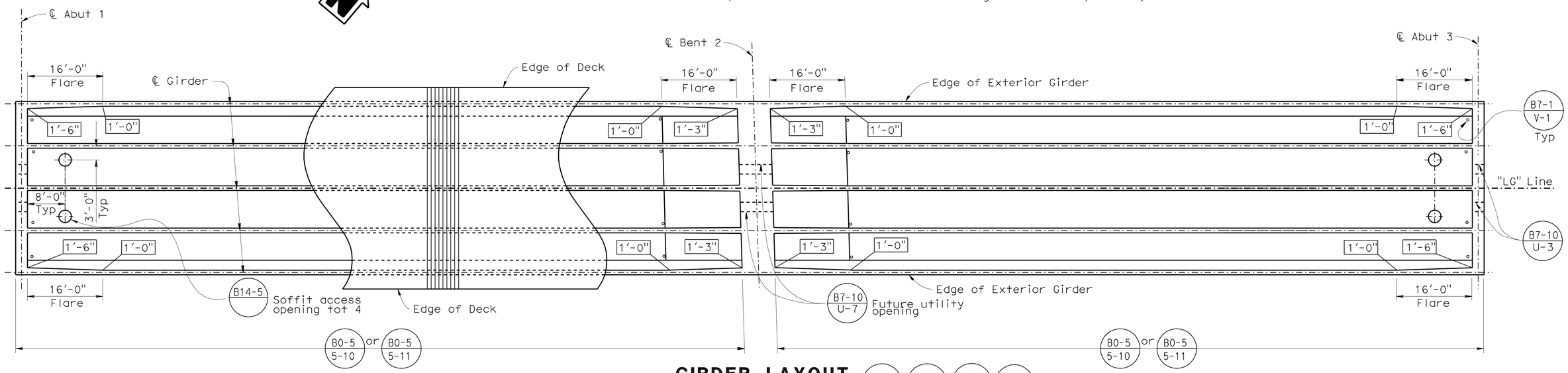

GIRDER LAYOUT

3/32"=1'-0"

B0-5 B7-1 B7-10 B14-5

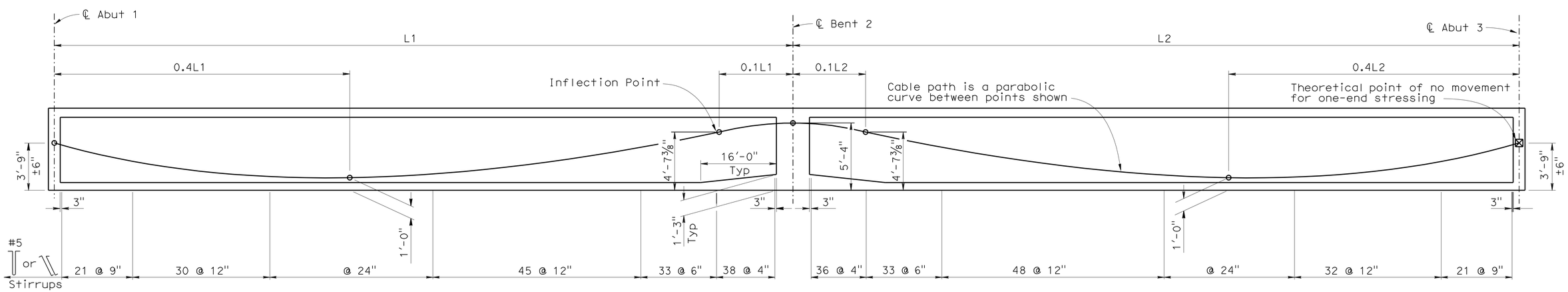

GIRDER ELEVATION

Horiz 3/32"=1'-0"
Vert 1/4"=1'-0"

LEGEND:

Indicates Girder stem width Exterior girders shall be flared to only inside

⊠ Indicates point of no movement

DESIGN	BY P. Hong	CHECKED C. Siegenthaler	
DETAILS	BY T. Cotton/S. Jiang	CHECKED C. Siegenthaler	
QUANTITIES	BY C. Siegenthaler	CHECKED G. M. Souza	

STATE OF CALIFORNIA DEPARTMENT OF TRANSPORTATION

DIVISION OF ENGINEERING SERVICES STRUCTURE DESIGN DESIGN BRANCH 5

BRIDGE NO. 39-0233
POST MILE 6.89

LE GRAND OVERCROSSING
GIRDER LAYOUT

ORIGINAL SCALE IN INCHES FOR REDUCED PLANS 0 1 2 3

CU 10
EA 415701

DISREGARD PRINTS BEARING EARLIER REVISION DATES

REVISION DATES: 02-26-08 06-24-09 09-05-08 05-26-08 08-18-08 08-25-08 09-12-08 09-24-08 12-11-08

SHEET 12 OF 22

STRUCTURES DESIGN DETAIL SHEET (ENGLISH) (REV. 10/25/05)

FILE => 39-0233-1-g_lyt.dgn

USERNAME => trlenard DATE PLOTTED => 11-OCT-2010 TIME PLOTTED => 12:30

DIST	COUNTY	ROUTE	POST MILES TOTAL PROJECT	SHEET No	TOTAL SHEETS
10	Mer	99	R4.6/R10.5	602	751

REGISTERED CIVIL ENGINEER 07-31-09 DATE

10-11-10
PLANS APPROVAL DATE

REGISTERED PROFESSIONAL ENGINEER G. SCHUSTER No. C 63897 Exp. 09-30-10 CIVIL STATE OF CALIFORNIA

The State of California or its officers or agents shall not be responsible for the accuracy or completeness of electronic copies of this plan sheet.

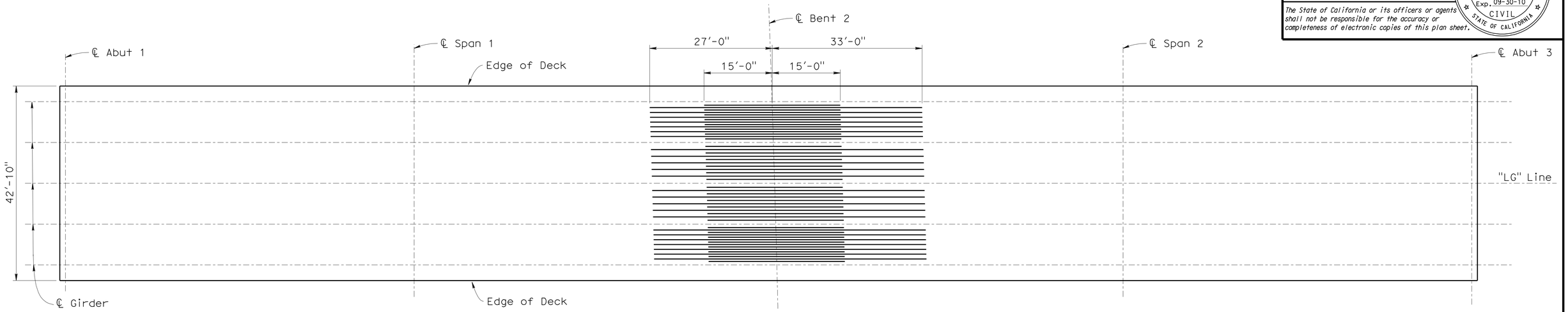

ADDITIONAL TOP LONGITUDINAL REINFORCEMENT

3/32" = 1'-0"

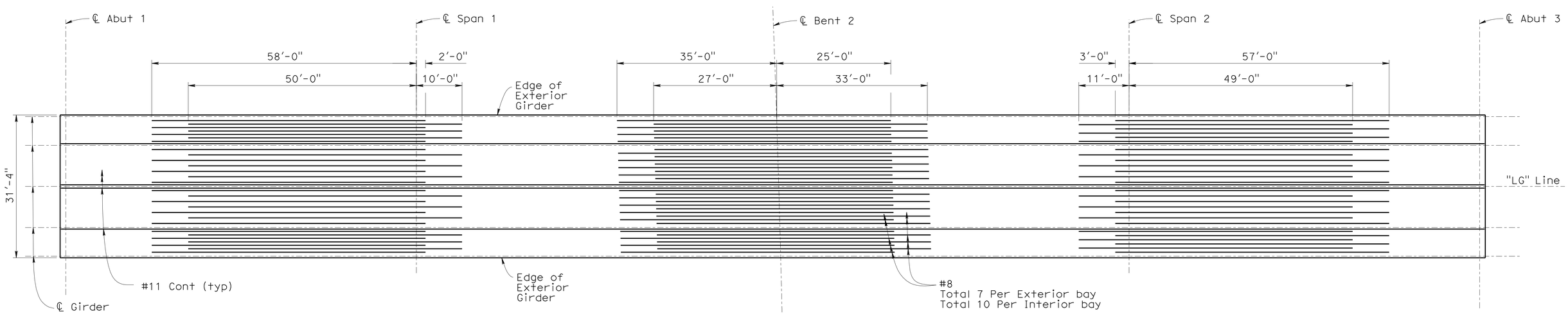

Note:

All bars are #10 except where noted.

All bars shall be evenly spaced.

ADDITIONAL BOTTOM LONGITUDINAL REINFORCEMENT

3/32" = 1'-0"

	BY	CHECKED
DESIGN	P. Hong	C. Siegenthaler
DETAILS	T. Cotton/A. Chen	C. Siegenthaler
QUANTITIES	C. Siegenthaler	G. M. Souza

ORIGINAL SCALE IN INCHES FOR REDUCED PLANS 0 1 2 3

STATE OF CALIFORNIA
DEPARTMENT OF TRANSPORTATION

DIVISION OF ENGINEERING SERVICES
STRUCTURE DESIGN
DESIGN BRANCH 5

CU 10
EA 415701

BRIDGE NO. 39-0233
POST MILE 6.89

LE GRAND OVERCROSSING
ADDITIONAL SLAB REINFORCEMENT

DISREGARD PRINTS BEARING EARLIER REVISION DATES → 8-14-08

REVISION DATES

SHEET 13 OF 22

STRUCTURES DESIGN DETAIL SHEET (ENGLISH) (REV. 10/25/05)

FILE => 39-0233-m-asr.dgn

USERNAME => trlenard DATE PLOTTED => 11-OCT-2010 TIME PLOTTED => 12:30

DIST	COUNTY	ROUTE	POST MILES TOTAL PROJECT	SHEET No	TOTAL SHEETS
10	Mer	99	R4.6/R10.5	603	751

REGISTERED CIVIL ENGINEER 07-31-09 DATE

10-11-10
PLANS APPROVAL DATE

REGISTERED PROFESSIONAL ENGINEER G. SCHUSTER No. C 63897 Exp. 09-30-10 CIVIL STATE OF CALIFORNIA

The State of California or its officers or agents shall not be responsible for the accuracy or completeness of electronic copies of this plan sheet.

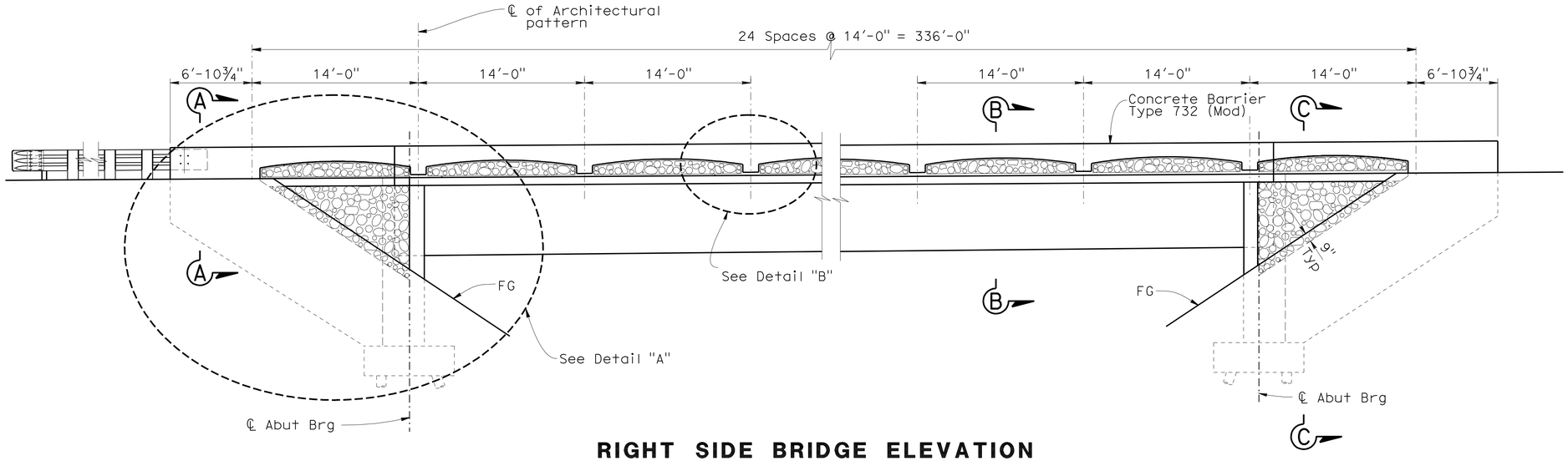

RIGHT SIDE BRIDGE ELEVATION

3/16"=1'-0"

Left side similar

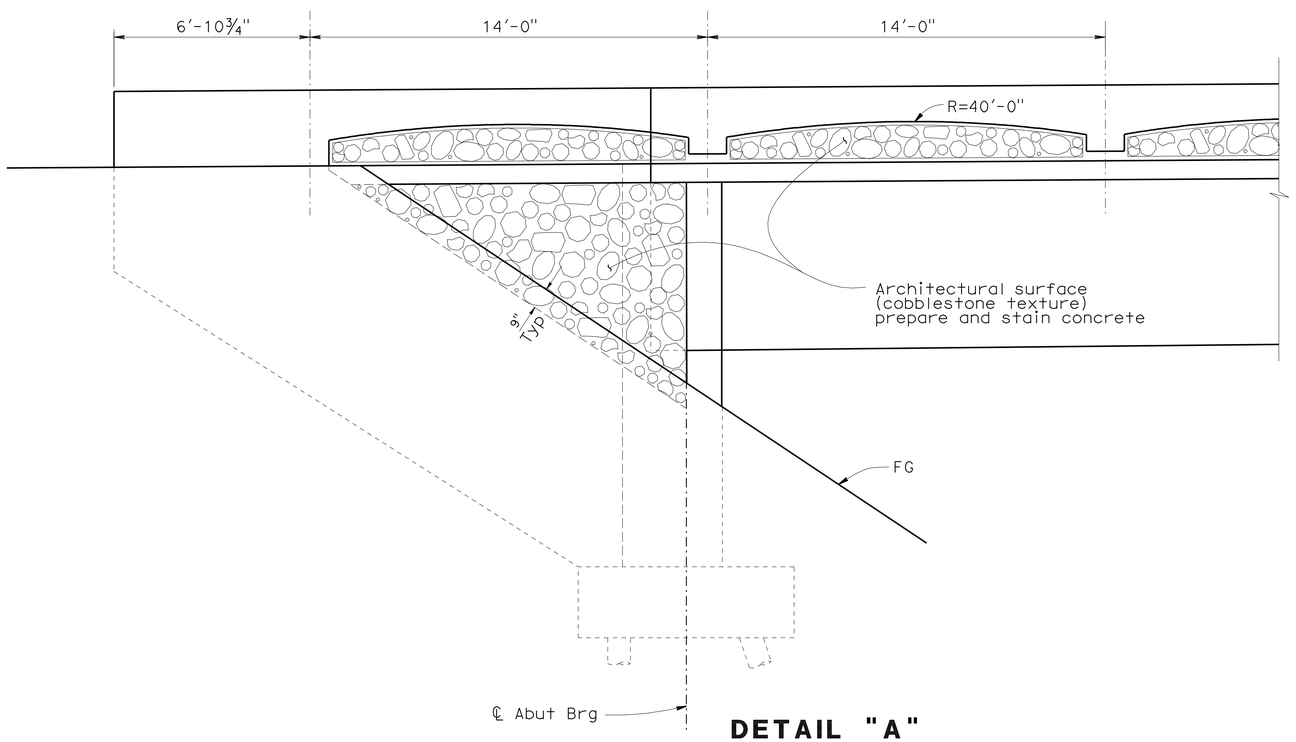

DETAIL "A"

3/8"=1'-0"

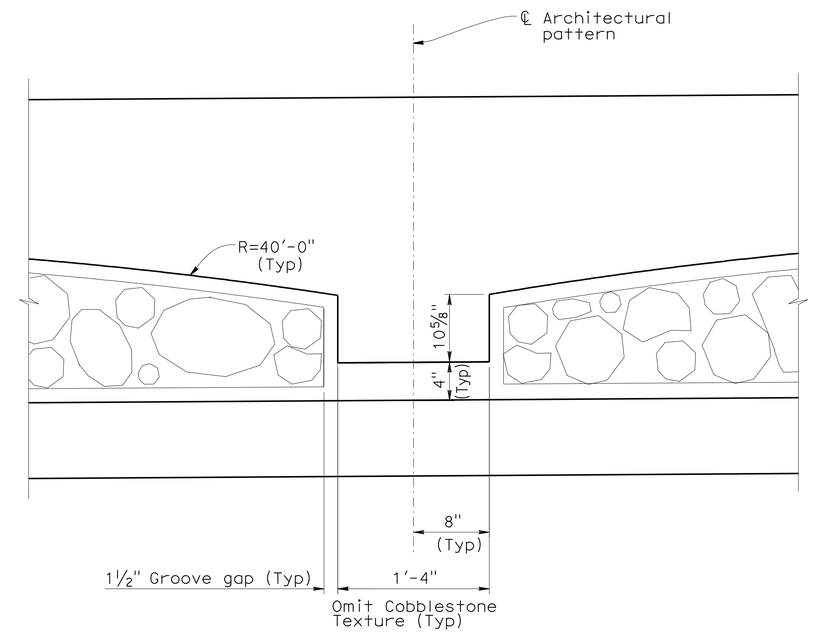

DETAIL "B"

1½"=1'-0"

* Dimensions may vary with roadway cross slope and with certain thickness of surfacing. See Road Plans.

DESIGN	BY P. Hong	CHECKED C. Siegenthaler	
DETAILS	BY T. Cotton/S. Jiang/GS	CHECKED C. Siegenthaler	
QUANTITIES	BY C. Siegenthaler	CHECKED G. M. Souza	

ORIGINAL SCALE IN INCHES FOR REDUCED PLANS 0 1 2 3

STATE OF CALIFORNIA DEPARTMENT OF TRANSPORTATION

DIVISION OF ENGINEERING SERVICES STRUCTURE DESIGN DESIGN BRANCH 5

CU 10
EA 415701

BRIDGE NO. 39-0233
POST MILE 6.89

LE GRAND OVERCROSSING
ARCHITECTURE DETAILS 1

DISREGARD PRINTS BEARING EARLIER REVISION DATES

REVISION DATES: 02-26-08 08-26-08 09-03-08 09-03-08 10-06-08 10-11-08 12-11-08 02-18-09 02-24-09 06-24-09

SHEET 14 OF 22

STRUCTURES DESIGN DETAIL SHEET (ENGLISH) (REV. 10/25/05)

FILE => 39-0233-s-ardt01.dgn

USERNAME => trlenard DATE PLOTTED => 11-OCT-2010 TIME PLOTTED => 12:30

DIST	COUNTY	ROUTE	POST MILES TOTAL PROJECT	SHEET No	TOTAL SHEETS
10	Mer	99	R4.6/R10.5	604	751

REGISTERED CIVIL ENGINEER 07-31-09 DATE

10-11-10
PLANS APPROVAL DATE

REGISTERED PROFESSIONAL ENGINEER G. SCHUSTER No. C 63897 Exp. 09-30-10 CIVIL STATE OF CALIFORNIA

The State of California or its officers or agents shall not be responsible for the accuracy or completeness of electronic copies of this plan sheet.

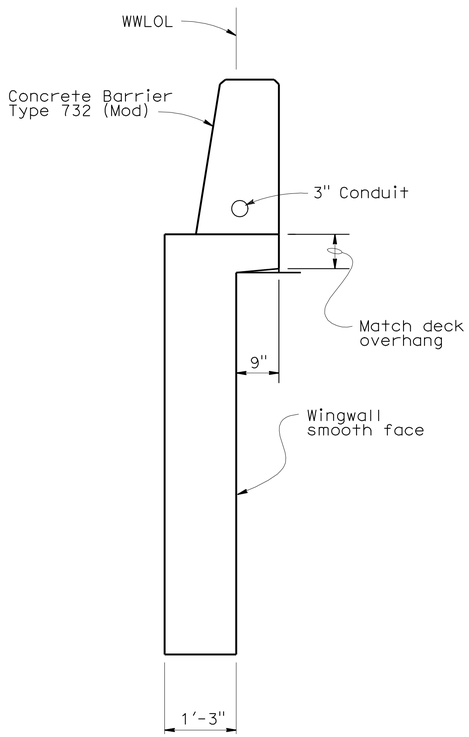

SECTION A-A

¾"=1'-0"

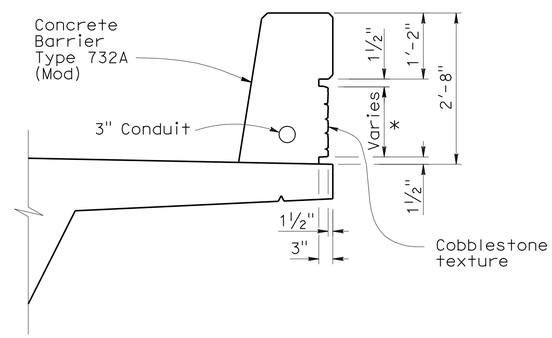

SECTION B-B

¾"=1'-0"

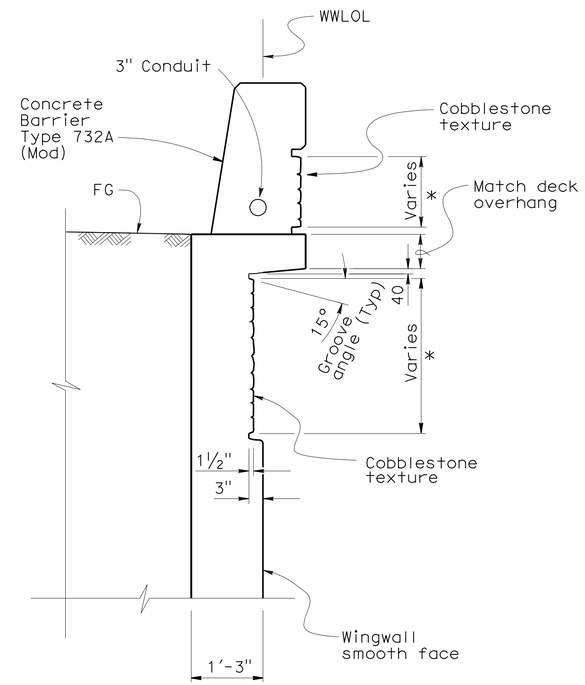

SECTION C-C

¾"=1'-0"

* Limits of Architectural Surface (Cobblestone texture) prepare and stain concrete

Dimensions may vary with roadway cross slope and with certain thickness of surfacing, See Road Plans.

	BY	CHECKED
DESIGN	P. Hong	C. Siegenthaler
DETAILS	T. Cotton	C. Siegenthaler
QUANTITIES	C. Siegenthaler	G. M. Souza

ORIGINAL SCALE IN INCHES FOR REDUCED PLANS 0 1 2 3

STATE OF CALIFORNIA
DEPARTMENT OF TRANSPORTATION

DIVISION OF ENGINEERING SERVICES
STRUCTURE DESIGN
DESIGN BRANCH 5

CU 10
EA 415701

BRIDGE NO. 39-0233
POST MILE 6.89

LE GRAND OVERCROSSING
ARCHITECTURE DETAILS 2

DISREGARD PRINTS BEARING EARLIER REVISION DATES

REVISION DATES: 08-28-08, 09-05-08, 09-16-08, 09-24-08, 10-21-08, 12-11-08, 02-18-09, 4-16-09, 06-24-09

SHEET 15 OF 22

STRUCTURES DESIGN DETAIL SHEET (ENGLISH) (REV. 10/25/05)

FILE => 39-0233-s-ardt02.dgn

USERNAME => trlenard DATE PLOTTED => 11-OCT-2010 TIME PLOTTED => 12:30

RELEASED 10-30-97

DIST	COUNTY	ROUTE	POST MILES TOTAL PROJECT	SHEET No	TOTAL SHEETS
10	Mer	99	R4.6/R10.5	605	751

REGISTERED CIVIL ENGINEER — DATE 07-31-09

10-11-10
PLANS APPROVAL DATE

REGISTERED PROFESSIONAL ENGINEER — G. SCHUSTER — No. C 63897 — Exp. 09-30-10 — CIVIL — STATE OF CALIFORNIA

The State of California or its officers or agents shall not be responsible for the accuracy or completeness of electronic copies of this plan sheet.

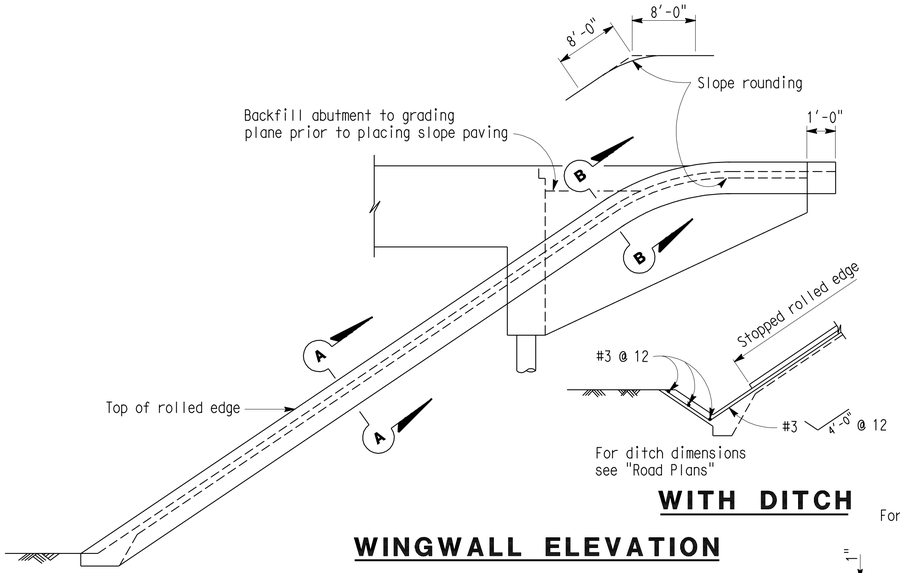

WITH DITCH

WINGWALL ELEVATION

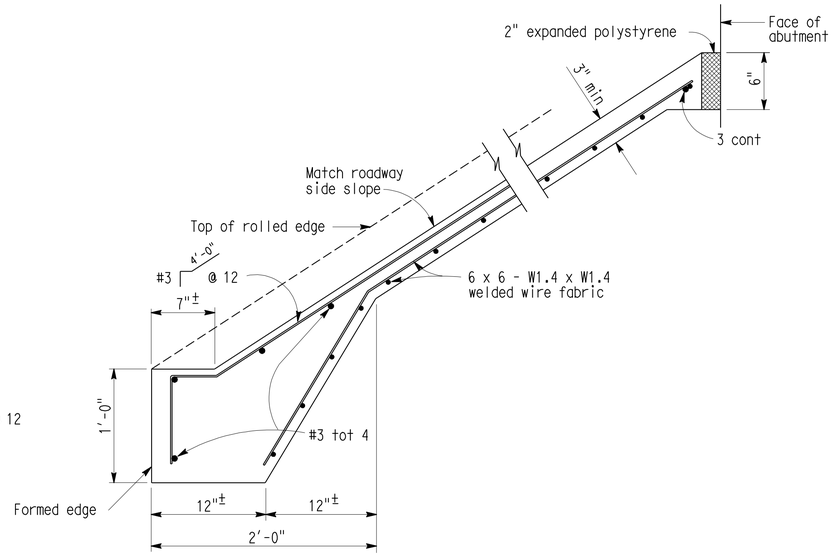

TYPICAL SECTION - CONCRETE PAVING

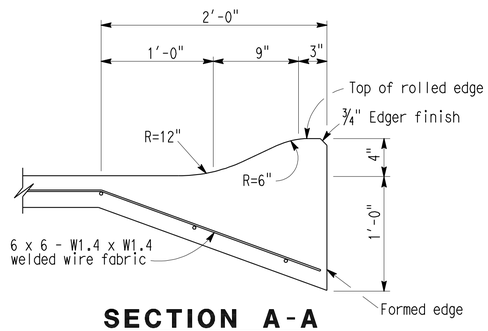

SECTION A-A

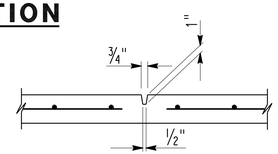

PREFORMED GROOVE

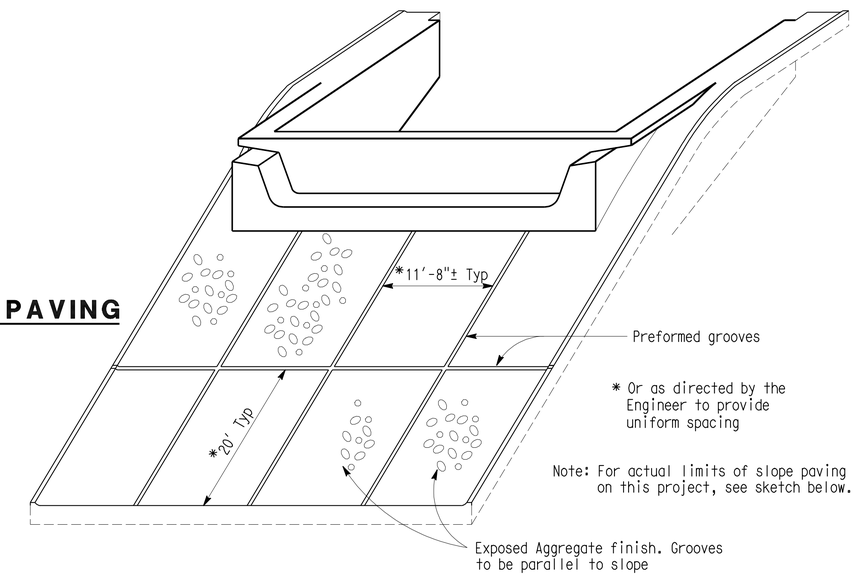

* Or as directed by the Engineer to provide uniform spacing

Note: For actual limits of slope paving on this project, see sketch below.

PICTORIAL VIEW OF TYPICAL INSTALLATION 1

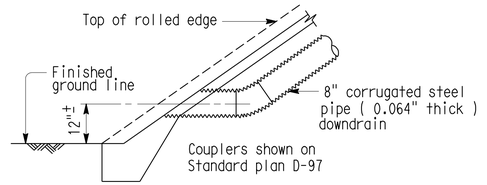

TYPICAL - NO CURB

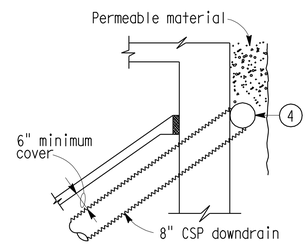

TYPICAL - DRAIN CONNECTION

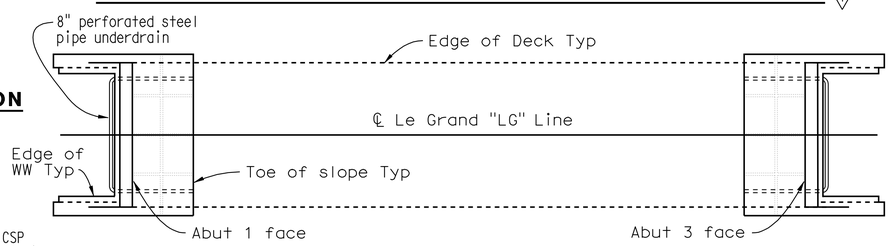

LIMITS OF SLOPE PAVING & DRAINAGE LAYOUT

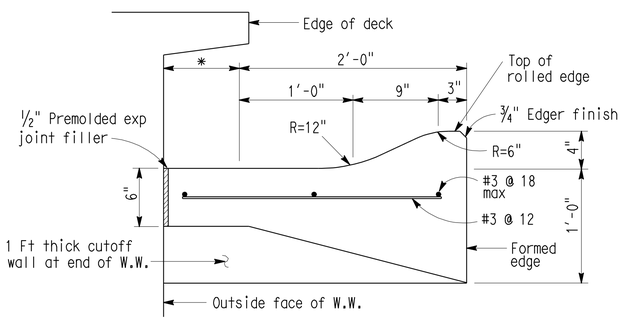

SECTION B-B

* This dimension becomes zero when edge of deck is at outside face of W.W.

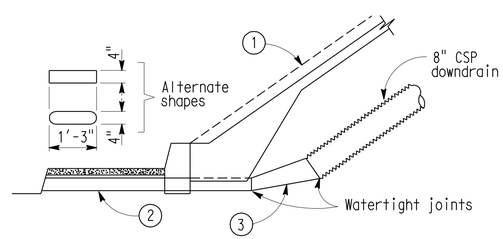

TYPICAL - WITH SIDEWALK

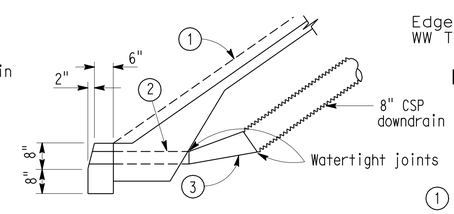

TYPICAL - WITH CURB

DRAINAGE DETAILS

Note: Drainage details are only applicable when is indicated on detail sheets. (B0-3 / 3-5)

1. Top of rolled edge
2. Conduit: 0.064" galv corrugated steel or 0.109" smooth galv steel
3. Taper: { 0.064" galv corrugated steel or 0.109" smooth galv steel
4. 8" perforated steel pipe (0.064" thick) underdrain behind abutment. Connect to downdrain as shown on Limits of Slope Paving & Drainage Layout.

NO SCALE

STANDARD DRAWING

FILE NO. XS 22-11 — DESIGN BY — CHECKED
DESIGN DATE MOD — DETAILS BY R. YEE — CHECKED
SUBMITTED BY C.W. PURKISS
APPROVAL RECOMMENDED BY — DESIGN SUPERVISOR

1 Revised Detail

STATE OF CALIFORNIA
DEPARTMENT OF TRANSPORTATION

DIVISION OF STRUCTURES
STRUCTURE DESIGN

BRIDGE NO. 39-0233
POST MILE 6.89

LE GRAND OVERCROSSING
SLOPE PAVING - FULL SLOPE

DS OSD 2147A (CADD 7/97)

ORIGINAL SCALE IN INCHES FOR REDUCED PLANS 0 1 2 3

CU 10
EA 415701

DISREGARD PRINTS BEARING EARLIER REVISION DATES

REVISION DATES: 2-26-08 10-26-08 10-31-08 12-11-08 12-24-08 03-19-09

SHEET 16 OF 22

FILE => 39-0233-s-slop.dgn

USERNAME => Trlenard DATE PLOTTED => 11-OCT-2010 TIME PLOTTED => 12:30

DIST	COUNTY	ROUTE	POST MILES TOTAL PROJECT	SHEET No	TOTAL SHEETS
10	Mer	99	R4.6/R10.5	606	751

Xing Zheng 5-13-09
CERTIFIED ENGINEERING GEOLOGIST

10-11-10
PLANS APPROVAL DATE

The State of California or its officers or agents shall not be responsible for the accuracy or completeness of electronic copies of this plan sheet.

PROFESSIONAL GEOLOGIST Xing Zheng No. 2130 Exp. 3-31-11 CERTIFIED ENGINEERING GEOLOGIST STATE OF CALIFORNIA

This LOTB sheet was prepared in accordance with the Caltrans Soil & Rock Logging, Classification, & Presentation Manual (June 2007).

BENCH MARK

SURVEY CONTROL

MER-99 PM 7.00

Fnd 1" IP w/Yellow Plug
916.72' Lt " A" Line Rte 99
Sta 231+77.34
N 1,904,484.25
E 6,596,800.15
Elev = 192.39'

MER-99-1015

Fnd 1" IP w/ RPP & LS5679 Tag
108.43' Rt "A" LIne Rte 99
Sta 220+28.71
N 1,904,605.94
E 6,598,258.70
Elev = 195.96'

NGVD 29

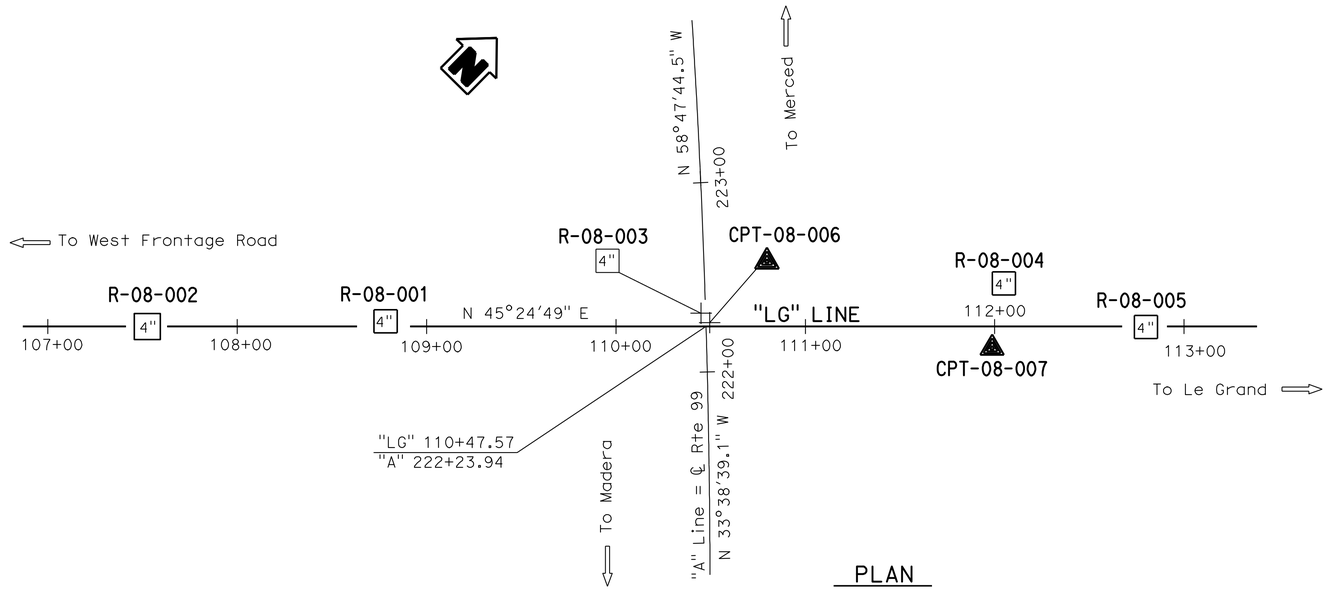

PLAN
1" = 40'

Notes:

1. CME-75 Truck Mounted rig (C# 5677) with automatic hammer was used to obtain SPT samples in Borings R-08-001 and R-08-002. CME-750 Truck Mounted rig (C# 6463) with automatic hammer was used to obtain SPT samples in Boring R-08-003. Acker MP8 Truck Mounted rig (C# 0398) with automatic hammer was used to obtain SPT samples in Boring R-08-004. CME-85 Truck Mounted rig (C# 7388) with automatic hammer was used to obtain SPT samples in Boring R-08-005.
2. pp= Pocket Penetrometer Test (tsf).

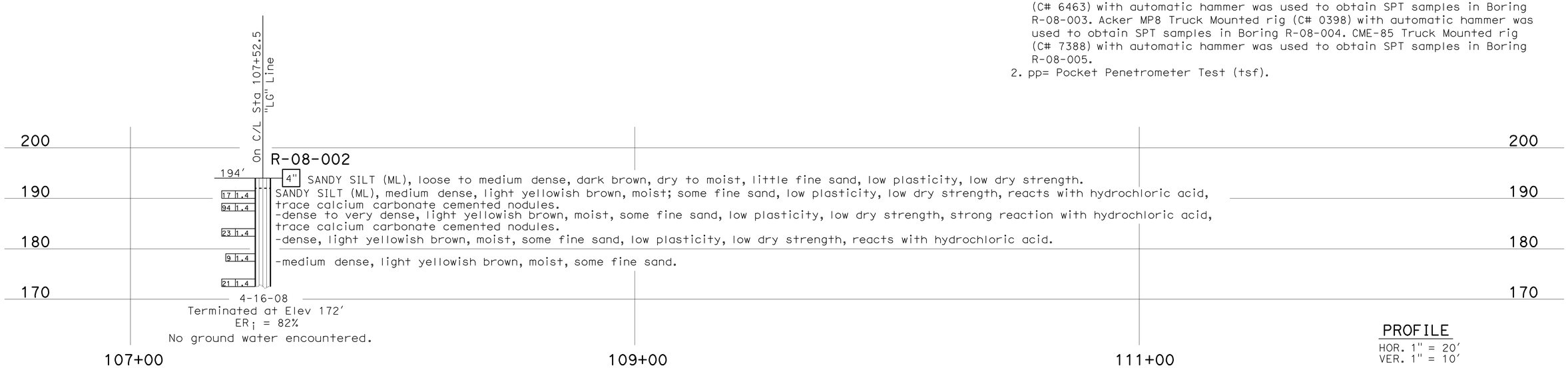

PROFILE
HOR. 1" = 20'
VER. 1" = 10'

ENGINEERING SERVICES	GEOTECHNICAL SERVICES	STATE OF CALIFORNIA DEPARTMENT OF TRANSPORTATION	DIVISION OF ENGINEERING SERVICES STRUCTURE DESIGN DESIGN BRANCH	BRIDGE NO. 39-0233 POST MILES 6.89	LE GRAND OVERCROSSING LOG OF TEST BORINGS 1 OF 6
FUNCTIONAL SUPERVISOR NAME: R. Buell	DRAWN BY: F. Nguyen 01/09 CHECKED BY: J. Thorne	FIELD INVESTIGATION BY: X. Zheng			

OGS CIVIL LOG OF TEST BORINGS SHEET

ORIGINAL SCALE IN INCHES FOR REDUCED PLANS 0 1 2 3

CU 10
EA 415701

DISREGARD PRINTS BEARING EARLIER REVISION DATES

REVISION DATES: 02-11-09 02-24-09 03-11-09 04-29-09 05-06-09

SHEET 17 OF 22

FILE => 39-0233-z-lotb1of6.dgn

USERNAME => triehard DATE PLOTTED => 11-OCT-2010 TIME PLOTTED => 12:30

DIST	COUNTY	ROUTE	POST MILES TOTAL PROJECT	SHEET No	TOTAL SHEETS
10	Mer	99	R4.6/R10.5	607	751

Zheng, Xing 5-13-09
CERTIFIED ENGINEERING GEOLOGIST

10-11-10
PLANS APPROVAL DATE

PROFESSIONAL GEOLOGIST Xing Zheng No. 2130 Exp. 3-31-11 CERTIFIED ENGINEERING GEOLOGIST STATE OF CALIFORNIA

The State of California or its officers or agents shall not be responsible for the accuracy or completeness of electronic copies of this plan sheet.

This LOTB sheet was prepared in accordance with the Caltrans Soil & Rock Logging, Classification, & Presentation Manual (June 2007).

FOR PLAN VIEW, SEE
"LOG OF TEST BORINGS 1 OF 6"

3.0' Lt Sta 108+78.5
"LG" Line

R-08-001

194'

4" SANDY SILT (ML), loose to medium dense, dark gray, dry to moist, little fine sand, strong reaction with hydrochloric acid, trace mica.

21 ⅊.4

55 ⅊.4 -grading to very dense, yellowish brown, moist, weak to moderate cementation, strong reaction with hydrochloric acid, calcium carbonate cemented nodules, trace mica.

10 ⅊.4 -grading to medium dense, light yellowish brown mottled with reddish brown, moist to wet.

10 ⅊.4 CLAYEY SAND (SC), medium dense, gray mottled with reddish brown, moist, fine sand, little fines, interbedded with approx. 6" thick clayey medium sand lens, trace mica.

10 ⅊.4 CLAYEY SILT with SAND (ML/CL), medium dense, light yellowish brown mottled with light reddish brown, moist to wet, little fine sand, low plasticity, trace gypsum stringers.

26 ⅊.4 (UU) CLAYEY SILT with SAND (ML/CL), very stiff, gray and light reddish brown, moist, little fine sand, low to medium plasticity, trace gypsum stringers, trace mica, few organic matter, porous, little trace burrows.

26 ⅊.4 SANDY SILT (ML), dense, light yellowish brown, moist to wet, fine sand, low plasticity.

23 ⅊.4 SILTY SAND (SM), dense, light yellowish brown, moist to wet, fine sand, few medium to coarse sand, little fines, trace black organic stringers.

15 ⅊.4 Poorly graded SAND with GRAVEL (SP), medium dense, light gray, wet, little fine subangular to subrounded gravel, medium to fine sand, trace mica.

23 ⅊.4 CLAYEY SILT with SAND (ML/CL), medium dense, gray, wet, little fine sand, trace mica.

11 ⅊.4 Poorly graded SAND (SP), dense, light gray, wet, medium sand, few fine to coarse sand, trace mica.

34 ⅊.4 SILTY SAND (SM), dense, gray, wet, coarse to fine sand, some fines.

15 ⅊.4 Lean CLAY (CL), very stiff to hard, grayish brown, moist, pp = 4.0 tsf.
(UU) CLAYEY SILT (ML/CL), hard, grayish brown, moist, low to medium plasticity.

24 ⅊.4 Alternating SILTY SAND and CLAYEY SILT (SM/ML), medium dense to dense/hard, grayish brown, moist, fine sand, low to medium plasticity, few mica, pp> 4.5 tsf.

14 ⅊.4 (UU)

23 ⅊.4 SANDY CLAYEY SILT (ML/CL), very stiff to hard, light yellowish brown, moist, fine sand, low plasticity, low dry strength, with fine sand lenses, few mica, trace organics, porous, pp = 3.25 to >4.5 tsf.

19 ⅊.4 (UU)

46 ⅊.4 CLAYEY SILT (ML/CL), hard, gray, moist, low to medium plasticity, few organic matter.

18 ⅊.4 CLAYEY SAND (SC), medium dense to dense, light yellowish brown, moist to wet, fine sand, some low plasticity fines, few mica.

29 ⅊.4 SILTY SAND (SM), dense, light yellowish brown, moist, fine sand, some fines, trace mica.

28 ⅊.4 Poorly graded SAND (SP), dense, light gray, wet, fine SAND, trace mica.

33 ⅊.4 (UU) CLAYEY SILT (ML/CL), hard, olive gray, moist, low plasticity, pp >4.5 tsf.

49 ⅊.4 (UU)

47 ⅊.4 Poorly graded SAND (SP), dense, light gray, moist to wet, fine sand, weak cementation, trace organic stringers.

34 ⅊.4 SILTY SAND (SM), dense, light yellowish brown, moist, fine sand, some fines, weak cementation.

4-16-08
Terminated at Elev 72'
ER¡ = 82%
Ground water was not measured.

200 190 180 170 160 150 140 130 120 110 100 90 80 70

108+00 110+00 112+00

PROFILE
HOR. 1" = 20'
VER. 1" = 10'

ENGINEERING SERVICES	GEOTECHNICAL SERVICES	STATE OF CALIFORNIA DEPARTMENT OF TRANSPORTATION	DIVISION OF ENGINEERING SERVICES STRUCTURE DESIGN	BRIDGE NO. 39-0233	LE GRAND OVERCROSSING
FUNCTIONAL SUPERVISOR	DRAWN BY: F. Nguyen 01/09	FIELD INVESTIGATION BY:	DESIGN BRANCH	POST MILES 6.89	LOG OF TEST BORINGS 2 OF 6
NAME: R. Buell	CHECKED BY: J. Thorne	X. Zheng			

OGS CIVIL LOG OF TEST BORINGS SHEET

ORIGINAL SCALE IN INCHES FOR REDUCED PLANS 0 1 2 3

CU 10
EA 415701

DISREGARD PRINTS BEARING EARLIER REVISION DATES

REVISION DATES: 02-11-09 02-24-09 03-13-09 04-29-09 05-06-09

SHEET 18 OF 22

FILE => 39-0233-z-lotb2of6.dgn

USERNAME => trlenard DATE PLOTTED => 11-OCT-2010 TIME PLOTTED => 12:30

DIST	COUNTY	ROUTE	POST MILES TOTAL PROJECT	SHEET No	TOTAL SHEETS
10	Mer	99	R4.6/R10.5	608	751

CERTIFIED ENGINEERING GEOLOGIST 5-13-09

10-11-10
PLANS APPROVAL DATE

PROFESSIONAL GEOLOGIST Xing Zheng No. 2130 Exp. 3-31-11 CERTIFIED ENGINEERING GEOLOGIST STATE OF CALIFORNIA

The State of California or its officers or agents shall not be responsible for the accuracy or completeness of electronic copies of this plan sheet.

This LOTB sheet was prepared in accordance with the Caltrans Soil & Rock Logging, Classification, & Presentation Manual (June 2007).

FOR PLAN VIEW, SEE
"LOG OF TEST BORINGS 1 OF 6"

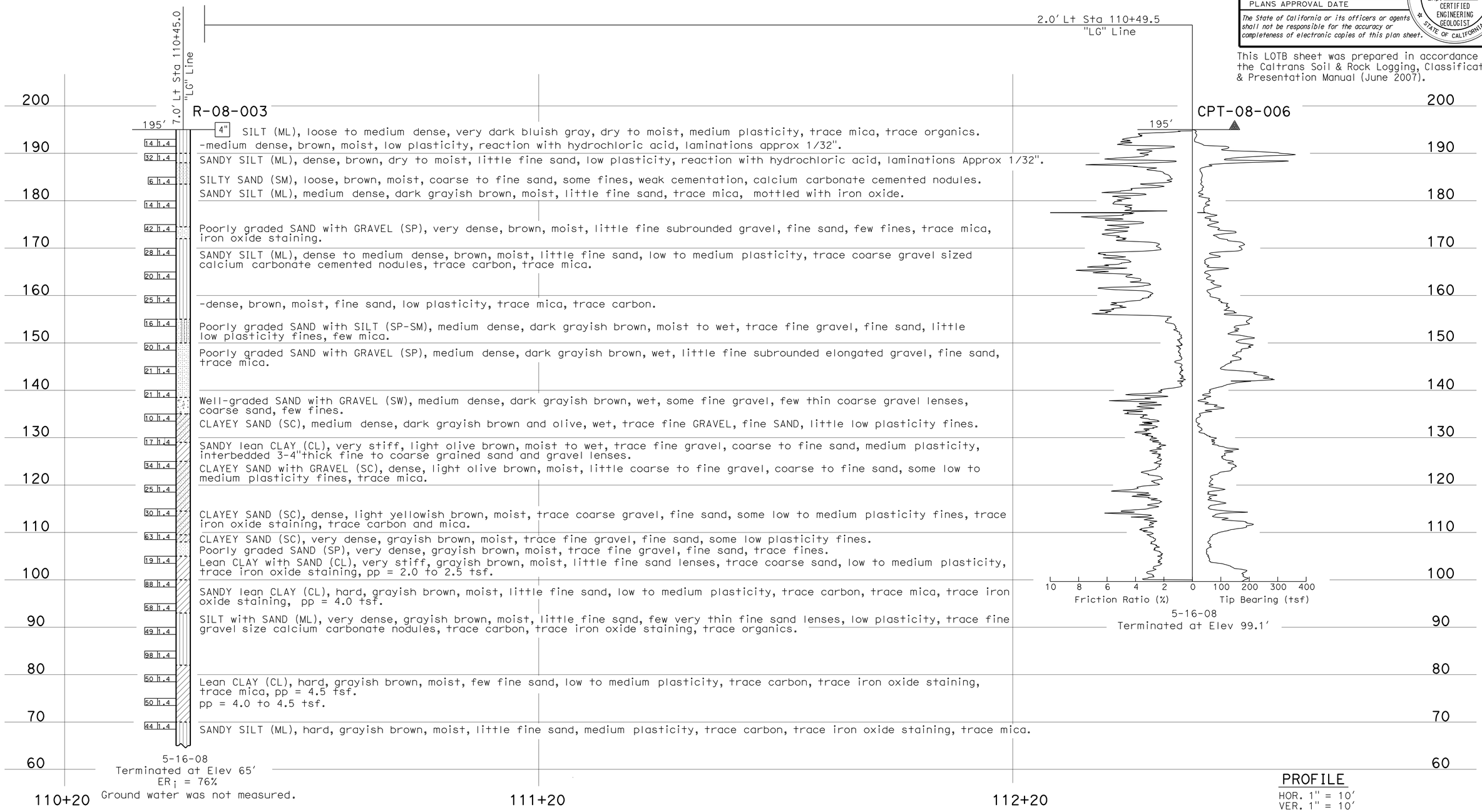

ENGINEERING SERVICES	GEOTECHNICAL SERVICES	STATE OF CALIFORNIA DEPARTMENT OF TRANSPORTATION	DIVISION OF ENGINEERING SERVICES STRUCTURE DESIGN	BRIDGE NO. 39-0233	LE GRAND OVERCROSSING
FUNCTIONAL SUPERVISOR	DRAWN BY: F. Nguyen 01/09	FIELD INVESTIGATION BY:	DESIGN BRANCH	POST MILES 6.89	LOG OF TEST BORINGS 3 OF 6
NAME: R. Buell	CHECKED BY: J. Thorne	J. Thorne			

OGS CIVIL LOG OF TEST BORINGS SHEET

ORIGINAL SCALE IN INCHES FOR REDUCED PLANS 0 1 2 3

CU 10
EA 415701

DISREGARD PRINTS BEARING EARLIER REVISION DATES

REVISION DATES: 02-11-09 02-24-09 03-19-09 04-29-09 05-06-09

SHEET 19 OF 22

FILE => 39-0233-z-lotb3of6.dgn

USERNAME => friehard DATE PLOTTED => 11-OCT-2010 TIME PLOTTED => 12:30

DIST	COUNTY	ROUTE	POST MILES TOTAL PROJECT	SHEET No	TOTAL SHEETS
10	Mer	99	R4.6/R10.5	609	751

Zheng, Xing 5-13-09
CERTIFIED ENGINEERING GEOLOGIST

10-11-10
PLANS APPROVAL DATE

PROFESSIONAL GEOLOGIST Xing Zheng No. 2130 Exp. 3-31-11 CERTIFIED ENGINEERING GEOLOGIST STATE OF CALIFORNIA

The State of California or its officers or agents shall not be responsible for the accuracy or completeness of electronic copies of this plan sheet.

This LOTB sheet was prepared in accordance with the Caltrans Soil & Rock Logging, Classification, & Presentation Manual (June 2007).

FOR PLAN VIEW, SEE
"LOG OF TEST BORINGS 1 OF 6"

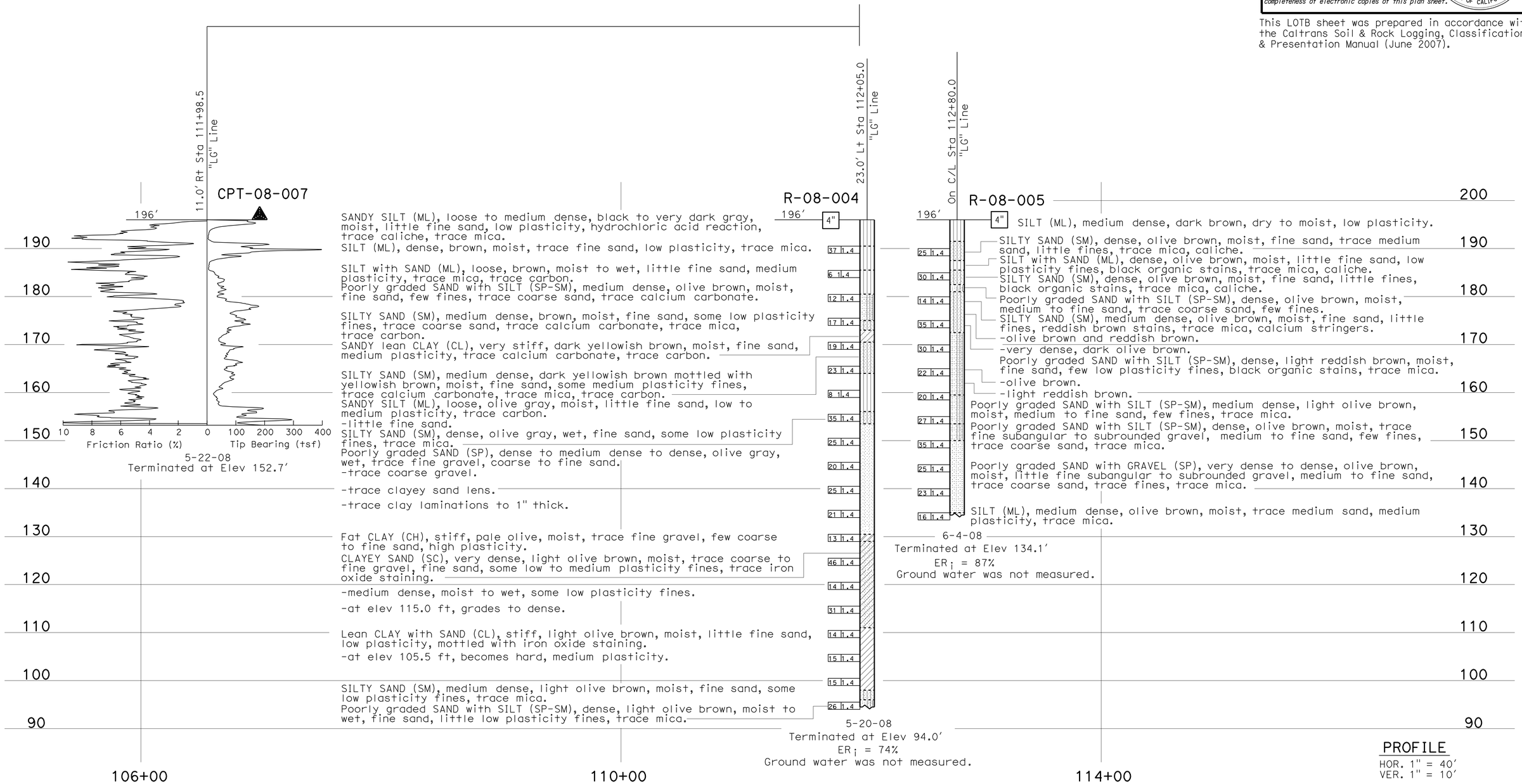

PROFILE
HOR. 1" = 40'
VER. 1" = 10'

ENGINEERING SERVICES	GEOTECHNICAL SERVICES	STATE OF CALIFORNIA DEPARTMENT OF TRANSPORTATION	DIVISION OF ENGINEERING SERVICES STRUCTURE DESIGN DESIGN BRANCH	BRIDGE NO. 39-0233 POST MILES 6.89	LE GRAND OVERCROSSING LOG OF TEST BORINGS 4 OF 6
FUNCTIONAL SUPERVISOR NAME: R. Buell	DRAWN BY: F. Nguyen 01/09 CHECKED BY: J. Thorne	FIELD INVESTIGATION BY: J. Kaump			

OGS CIVIL LOG OF TEST BORINGS SHEET

ORIGINAL SCALE IN INCHES FOR REDUCED PLANS 0 1 2 3

CU 10
EA 415701

DISREGARD PRINTS BEARING EARLIER REVISION DATES → 02-11-09 02-24-09 03-13-09 04-29-09 05-06-09

SHEET 20 OF 22

FILE => 39-0233-z-lotb4of6.dgn

USERNAME => trlenard DATE PLOTTED => 11-OCT-2010 TIME PLOTTED => 12:30

DIST	COUNTY	ROUTE	POST MILES TOTAL PROJECT	SHEET No	TOTAL SHEETS
10	Mer	99	R4.6/R10.5	610	751

Zheng, Xing 5-13-09
CERTIFIED ENGINEERING GEOLOGIST

10-11-10
PLANS APPROVAL DATE

PROFESSIONAL GEOLOGIST Xing Zheng No. 2130 Exp. 3-31-11 CERTIFIED ENGINEERING GEOLOGIST STATE OF CALIFORNIA

The State of California or its officers or agents shall not be responsible for the accuracy or completeness of electronic copies of this plan sheet.

REFERENCE: CALTRANS SOIL & ROCK LOGGING, CLASSIFICATION, AND PRESENTATION MANUAL (JUNE 2007)

CEMENTATION

Description	Criteria
Weak	Crumbles or breaks with handling or little finger pressure.
Moderate	Crumbles or breaks with considerable finger pressure.
Strong	Will not crumble or break with finger pressure.

CONSISTENCY OF COHESIVE SOILS

Description	Unconfined Compressive Strength (tsf)	Pocket Penetrometer Measurement (tsf)	Torvane Measurement (tsf)	Field Approximation
Very Soft	< 0.25	< 0.25	< 0.12	Easily penetrated several inches by fist
Soft	0.25 to 0.50	0.25 to 0.50	0.12 to 0.25	Easily penetrated several inches by thumb
Medium Stiff	0.50 to 1.0	0.50 to 1.0	0.25 to 0.50	Penetrated several inches by thumb with moderate effort
Stiff	1 to 2	1 to 2	0.50 to 1.0	Readily indented by thumb but penetrated only with great effort
Very Stiff	2 to 4	2 to 4	1.0 to 2.0	Readily indented by thumbnail
Hard	> 4.0	> 4.0	> 2.0	Indented by thumbnail with difficulty

BOREHOLE IDENTIFICATION

Symbol	Hole Type	Description
Size	A	Auger Boring
Size	R P	Rotary drilled boring Rotary percussion boring (air)
Size	R	Rotary drilled diamond core
Size	HD HA	Hand driven (1-inch soil tube) Hand Auger
●	D	Dynamic Cone Penetration Boring
▲	CPT	Cone Penetration Test (ASTM D 5778-95)
⬚	O	Other

Note: Size in inches.

PLASTICITY OF FINE-GRAINED SOILS

Description	Criteria
Nonplastic	A 1/8-inch thread cannot be rolled at any water content.
Low	The thread can barely be rolled and the lump cannot be formed when drier than the plastic limit.
Medium	The thread is easy to roll and not much time is required to reach the plastic limit. The thread cannot be rerolled after reaching the plastic limit. The lump crumbles when drier than the plastic limit.
High	It takes considerable time rolling and kneading to reach the plastic limit. The thread can be rerolled several times after reaching the plastic limit. The lump can be formed without crumbling when drier than the plastic limit.

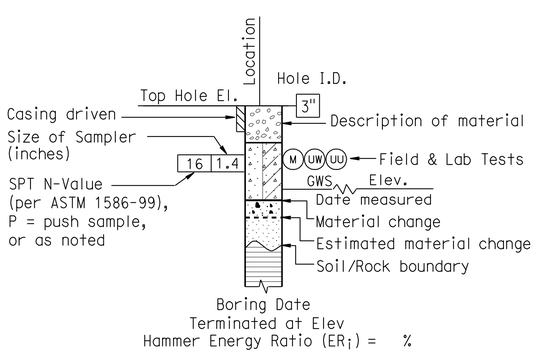

ROTARY BORING

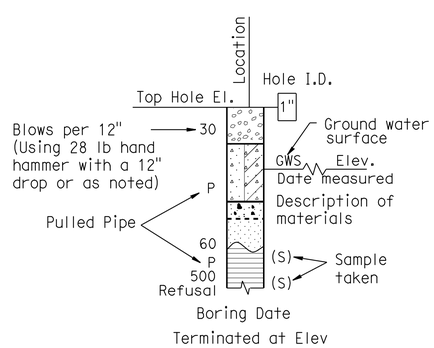

HAND BORING

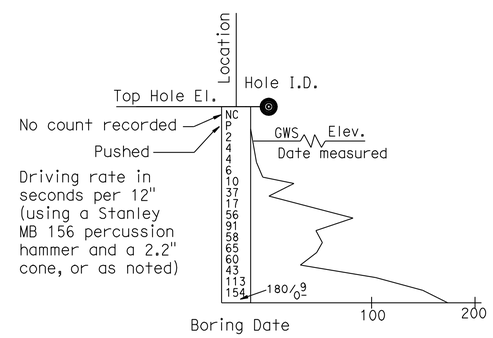

DYNAMIC CONE PENETRATION BORING

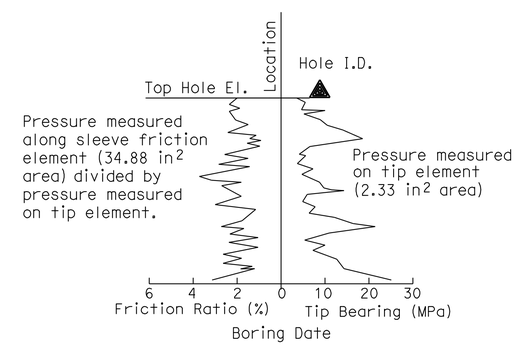

CONE PENETRATION TEST (CPT) SOUNDING

ENGINEERING SERVICES	GEOTECHNICAL SERVICES	STATE OF CALIFORNIA DEPARTMENT OF TRANSPORTATION	DIVISION OF ENGINEERING SERVICES STRUCTURE DESIGN DESIGN BRANCH	BRIDGE NO. 39-0233 POST MILE 6.89	LE GRAND OVERCROSSING LOG OF TEST BORINGS 5 OF 6
	PREPARED BY: F. Nguyen 01/09				

GS LOTB SOIL LEGEND

ORIGINAL SCALE IN INCHES FOR REDUCED PLANS 0 1 2 3

CU 10
EA 415701

DISREGARD PRINTS BEARING EARLIER REVISION DATES 03-11-09 05-06-09

REVISION DATES

SHEET 21 OF 22

FILE => 39-0233-z-lotb5of6.dgn

USERNAME => trlenard DATE PLOTTED => 11-OCT-2010 TIME PLOTTED => 12:31

REFERENCE: CALTRANS SOIL & ROCK LOGGING, CLASSIFICATION, AND PRESENTATION MANUAL (JUNE 2007)

DIST	COUNTY	ROUTE	POST MILES TOTAL PROJECT	SHEET No	TOTAL SHEETS
10	Mer	99	R4.6/R10.5	611	751

CERTIFIED ENGINEERING GEOLOGIST 5-13-09

PROFESSIONAL GEOLOGIST Xing Zheng No. 2130 Exp. 3-31-11 CERTIFIED ENGINEERING GEOLOGIST STATE OF CALIFORNIA

10-11-10
PLANS APPROVAL DATE

The State of California or its officers or agents shall not be responsible for the accuracy or completeness of electronic copies of this plan sheet.

GROUP SYMBOLS AND NAMES

Graphic/Symbol	Group Names	Graphic/Symbol	Group Names
GW	Well-graded GRAVEL Well-graded GRAVEL with SAND	CL	Lean CLAY Lean CLAY with SAND Lean CLAY with GRAVEL SANDY lean CLAY SANDY lean CLAY with GRAVEL GRAVELLY lean CLAY GRAVELLY lean CLAY with SAND
GP	Poorly graded GRAVEL Poorly graded GRAVEL with SAND		
GW-GM	Well-graded GRAVEL with SILT Well-graded GRAVEL with SILT and SAND	CL-ML	SILTY CLAY SILTY CLAY with SAND SILTY CLAY with GRAVEL SANDY SILTY CLAY SANDY SILTY CLAY with GRAVEL GRAVELLY SILTY CLAY GRAVELLY SILTY CLAY with SAND
GW-GC	Well-graded GRAVEL with CLAY (or SILTY CLAY) Well-graded GRAVEL with CLAY and SAND (or SILTY CLAY and SAND)		
GP-GM	Poorly graded GRAVEL with SILT Poorly graded GRAVEL with SILT and SAND	ML	SILT SILT with SAND SILT with GRAVEL SANDY SILT SANDY SILT with GRAVEL GRAVELLY SILT GRAVELLY SILT with SAND
GP-GC	Poorly graded GRAVEL with CLAY (or SILTY CLAY) Poorly graded GRAVEL with CLAY and SAND (or SILTY CLAY and SAND)		
GM	SILTY GRAVEL SILTY GRAVEL with SAND	OL	ORGANIC lean CLAY ORGANIC lean CLAY with SAND ORGANIC lean CLAY with GRAVEL SANDY ORGANIC lean CLAY SANDY ORGANIC lean CLAY with GRAVEL GRAVELLY ORGANIC lean CLAY GRAVELLY ORGANIC lean CLAY with SAND
GC	CLAYEY GRAVEL CLAYEY GRAVEL with SAND		
GC-GM	SILTY, CLAYEY GRAVEL SILTY, CLAYEY GRAVEL with SAND	OL	ORGANIC SILT ORGANIC SILT with SAND ORGANIC SILT with GRAVEL SANDY ORGANIC SILT SANDY ORGANIC SILT with GRAVEL GRAVELLY ORGANIC SILT GRAVELLY ORGANIC SILT with SAND
SW	Well-graded SAND Well-graded SAND with GRAVEL		
SP	Poorly graded SAND Poorly graded SAND with GRAVEL	CH	Fat CLAY Fat CLAY with SAND Fat CLAY with GRAVEL SANDY fat CLAY SANDY fat CLAY with GRAVEL GRAVELLY fat CLAY GRAVELLY fat CLAY with SAND
SW-SM	Well-graded SAND with SILT Well-graded SAND with SILT and GRAVEL		
SW-SC	Well-graded SAND with CLAY (or SILTY CLAY) Well-graded SAND with CLAY and GRAVEL (or SILTY CLAY and GRAVEL)	MH	Elastic SILT Elastic SILT with SAND Elastic SILT with GRAVEL SANDY elastic SILT SANDY elastic SILT with GRAVEL GRAVELLY elastic SILT GRAVELLY elastic SILT with SAND
SP-SM	Poorly graded SAND with SILT Poorly graded SAND with SILT and GRAVEL		
SP-SC	Poorly graded SAND with CLAY (or SILTY CLAY) Poorly graded SAND with CLAY and GRAVEL (or SILTY CLAY and GRAVEL)	OH	ORGANIC fat CLAY ORGANIC fat CLAY with SAND ORGANIC fat CLAY with GRAVEL SANDY ORGANIC fat CLAY SANDY ORGANIC fat CLAY with GRAVEL GRAVELLY ORGANIC fat CLAY GRAVELLY ORGANIC fat CLAY with SAND
SM	SILTY SAND SILTY SAND with GRAVEL		
SC	CLAYEY SAND CLAYEY SAND with GRAVEL	OH	ORGANIC elastic SILT ORGANIC elastic SILT with SAND ORGANIC elastic SILT with GRAVEL SANDY ORGANIC elastic SILT SANDY ORGANIC elastic SILT with GRAVEL GRAVELLY ORGANIC elastic SILT GRAVELLY ORGANIC elastic SILT with SAND
SC-SM	SILTY, CLAYEY SAND SILTY, CLAYEY SAND with GRAVEL		
PT	PEAT	OL/OH	ORGANIC SOIL ORGANIC SOIL with SAND ORGANIC SOIL with GRAVEL SANDY ORGANIC SOIL SANDY ORGANIC SOIL with GRAVEL GRAVELLY ORGANIC SOIL GRAVELLY ORGANIC SOIL with SAND
	COBBLES COBBLES and BOULDERS BOULDERS		

FIELD AND LABORATORY TESTING

- (C) Consolidation (ASTM D 2435)
- (CL) Collapse Potential (ASTM D 5333)
- (CP) Compaction Curve (CTM 216)
- (CR) Corrosivity Testing (CTM 643, CTM 422, CTM 417)
- (CU) Consolidated Undrained Triaxial (ASTM D 4767)
- (DS) Direct Shear (ASTM D 3080)
- (EI) Expansion Index (ASTM D 4829)
- (M) Moisture Content (ASTM D 2216)
- (OC) Organic Content-% (ASTM D 2974)
- (P) Permeability (CTM 220)
- (PA) Particle Size Analysis (ASTM D 422)
- (PI) Plasticity Index (AASHTO T 90) Liquid Limit (AASHTO T 89)
- (PL) Point Load Index (ASTM D 5731)
- (PM) Pressure Meter
- (PP) Pocket Penetrometer
- (R) R-Value (CTM 301)
- (SE) Sand Equivalent (CTM 217)
- (SG) Specific Gravity (AASHTO T 100)
- (SL) Shrinkage Limit (ASTM D 427)
- (SW) Swell Potential (ASTM D 4546)
- (TV) Pocket Torvane
- (UC) Unconfined Compression-Soil (ASTM D 2166) Unconfined Compression-Rock (ASTM D 2938)
- (UU) Unconsolidated Undrained Triaxial (ASTM D 2850)
- (UW) Unit Weight (ASTM D 4767)
- (VS) Vane Shear (AASHTO T 223)

APPARENT DENSITY OF COHESIONLESS SOILS

Description	SPT N_{60} (Blows / 12 inches)
Very loose	0 - 4
Loose	5 - 10
Medium Dense	11 - 30
Dense	31 - 50
Very Dense	> 50

MOISTURE

Description	Criteria
Dry	Absence of moisture, dusty, dry to the touch
Moist	Damp but no visible water
Wet	Visible free water, usually soil is below water table

PERCENT OR PROPORTION OF SOILS

Description	Criteria
Trace	Particles are present but estimated to be less than 5%
Few	5 to 10%
Little	15 to 25%
Some	30 to 45%
Mostly	50 to 100%

PARTICLE SIZE

Description		Size
Boulder		> 12"
Cobble		3" to 12"
Gravel	Coarse	3/4" to 3"
	Fine	No. 4 to 3/4"
Sand	Coarse	No. 10 to No. 4
	Medium	No. 40 to No. 10
	Fine	No. 200 to No. 40

ENGINEERING SERVICES

GEOTECHNICAL SERVICES
PREPARED BY: F. Nguyen 01/09

STATE OF CALIFORNIA DEPARTMENT OF TRANSPORTATION

DIVISION OF ENGINEERING SERVICES STRUCTURE DESIGN
DESIGN BRANCH

BRIDGE NO. 39-0233
POST MILE 6.89

LE GRAND OVERCROSSING
LOG OF TEST BORINGS 6 OF 6

GS LOTB SOIL LEGEND

ORIGINAL SCALE IN INCHES FOR REDUCED PLANS 0 1 2 3

CU 10
EA 415701

DISREGARD PRINTS BEARING EARLIER REVISION DATES 03-11-09 05-06-09

REVISION DATES

SHEET 22 OF 22

FILE => 39-0233-z-lotb6of6.dgn

USERNAME => friehard DATE PLOTTED => 11-OCT-2010 TIME PLOTTED => 12:31

DIST	COUNTY	ROUTE	POST MILES TOTAL PROJECT	SHEET No	TOTAL SHEETS
10	Mer	99	R4.6/R10.5	612	751

REGISTERED CIVIL ENGINEER 07-31-09 DATE

10-11-10
PLANS APPROVAL DATE

REGISTERED PROFESSIONAL ENGINEER G. SCHUSTER No. C 63897 Exp. 09-30-10 CIVIL STATE OF CALIFORNIA

The State of California or its officers or agents shall not be responsible for the accuracy or completeness of electronic copies of this plan sheet.

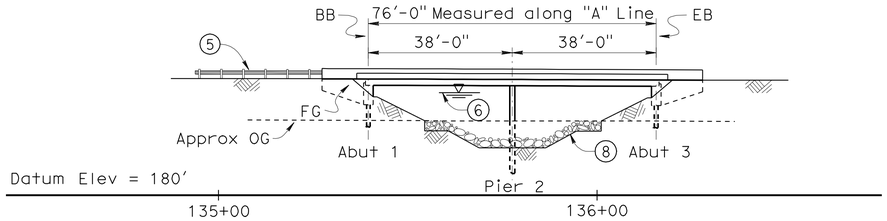

ELEVATION

1" = 20'

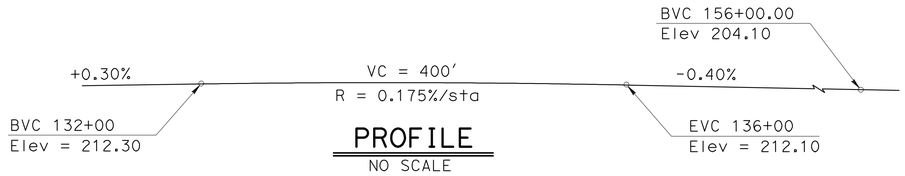

PROFILE

NO SCALE

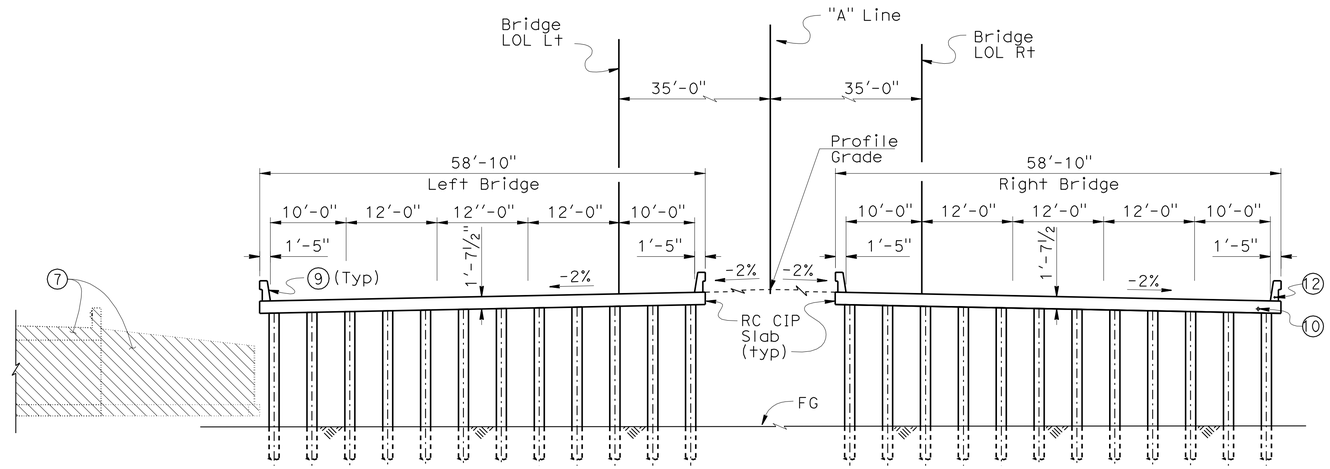

TYPICAL SECTION

1" = 10'-0"

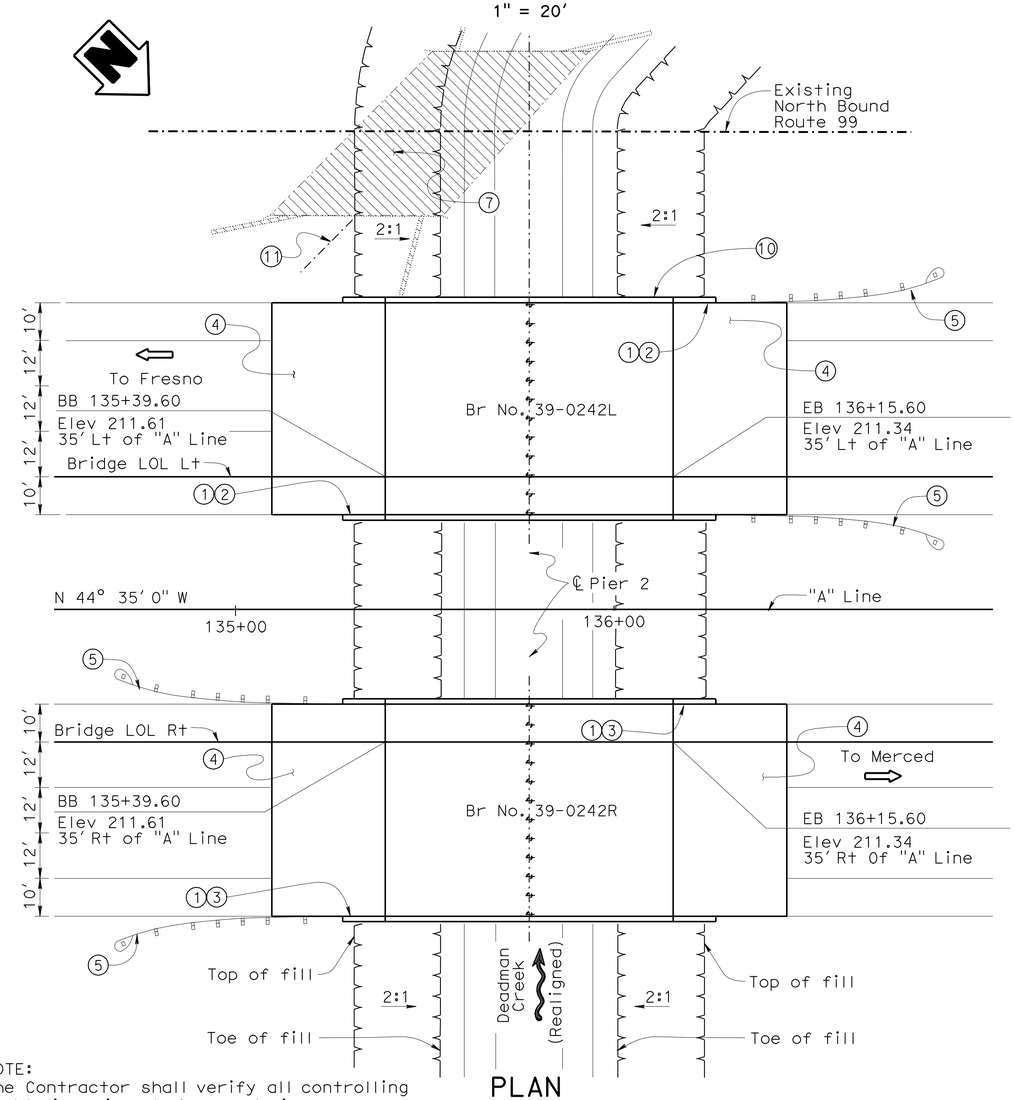

PLAN

1" = 20'

NOTE:
The Contractor shall verify all controlling field dimensions before ordering or fabricating any materials.

Legend:

1. Paint "Deadman Creek Bridge".
2. Paint Bridge No. 39-0242L.
3. Paint Bridge No. 39-0242R.
4. Structure Approach Type N(30D)
5. Metal Beam Guard Rail, see "Road Plan"
6. For Hydrologic Summary, see "Foundation Plan"
7. Remove existing bridge 39-0002R, see "Bridge Removal" sheet in "Deadman Creek Bridge West Frontage Road Plan Set.

   Existing bridge 39-0002L to remain as future west frontage road, see "Barrier Modification" sheet in "Deadman Creek Bridge West Frontage Road Plan Set.
8. RSP, see "Road Plans"
9. Concrete Barrier Type 732
10. 4" Ø Communication Conduit for fiber optic in slab, see "Road Plans".
11. ℄ Existing Deadman Creek, to be realigned see "Road Plans".
12. Place 2" Conduit in Barrier Rail, see "Road plans".

Indicates bridge removal

Indicates existing structure

Note: For "General Notes", "Index Plans", "Standard Plans", "Quantities", See "Index To Plans" sheet.

x Gary Blakesley
DESIGN ENGINEER

	BY	CHECKED
DESIGN	G. Schuster	N. Terzis
DETAILS	G. S/T. C/S. J/A. C	N. Terzis
QUANTITIES	T. Cotton	N. Terzis

LOAD & RESISTANCE FACTOR DESIGN — LIVE LOADING: HL93 W/"LOW-BOY"; PERMIT DESIGN VEHICLE

	BY	CHECKED
LAYOUT	G. Schuster	N. Terzis
SPECIFICATIONS	Aiman Abdel-Malak	PLANS AND SPECS COMPARED

STATE OF CALIFORNIA
DEPARTMENT OF TRANSPORTATION

DIVISION OF ENGINEERING SERVICES
STRUCTURE DESIGN
DESIGN BRANCH 5

BRIDGE NO. 39-0242L/R
POST MILE 5.22

DEADMAN CREEK BRIDGE L/R
GENERAL PLAN

ORIGINAL SCALE IN INCHES FOR REDUCED PLANS 0 1 2 3

CU 10
EA 415701

DISREGARD PRINTS BEARING EARLIER REVISION DATES

REVISION DATES: 11-01-07, 03-04-08, 12-22-08, 12-24-08, 2-18-09, 2-23-09, 9-16-09, 06-23-08, 07-11-08

SHEET 1 OF 15

STRUCTURES DESIGN GENERAL PLAN SHEET (ENGLISH) (REV.07-24-06)

FILE => 39-0242lr-a-gp.dgn

USERNAME => trlenard DATE PLOTTED => 11-OCT-2010 TIME PLOTTED => 12:31

DIST	COUNTY	ROUTE	POST MILES TOTAL PROJECT	SHEET No	TOTAL SHEETS
10	Mer	99	R4.6/R10.5	613	751

REGISTERED CIVIL ENGINEER 07-31-09 DATE

10-11-10
PLANS APPROVAL DATE

REGISTERED PROFESSIONAL ENGINEER G. SCHUSTER No. C 63897 Exp. 09-30-10 CIVIL STATE OF CALIFORNIA

The State of California or its officers or agents shall not be responsible for the accuracy or completeness of electronic copies of this plan sheet.

GENERAL NOTES
LOAD AND RESISTANCE FACTOR DESIGN

DESIGN: AASHTO LRFD Bridge Design Specifications, Third Edition with 2005 & 2006 Interim Revisions and Caltrans Amendments 03.06.01

SEISMIC DESIGN: Caltrans Seismic Design Criteria (SDC) Version 1.4, June, 2006

DEAD LOAD: Includes 35 Psf for future wearing surface.

LIVE LOADING: HL93 Alternative loading and "Low-Boy" permit design vehicle

SEISMIC LOADING: Caltrans SDC ARS curve for soil profile type D (M = 6.5 ± 0.25), (Peak Rock Acceleration = 0.2g)

REINFORCED CONCRETE: f_y = 60 ksi
f'_c = 3.6 ksi
n = 8

QUANTITIES

STRUCTURE EXCAVATION (BRIDGE)	170	CY
STRUCTURE BACKFILL (BRIDGE)	100	CY
FURNISH PILING (CLASS 90)	1,294	LF
DRIVE PILE (CLASS 90)	36	EA
FURNISH 16" CAST-IN-STEEL SHELL CONCRETE PILING	1,692	LF
DRIVE 16" CAST-IN-STEEL SHELL CONCRETE PILE	24	EA
STRUCTURAL CONCRETE, BRIDGE	690	CY
STRUCTURAL CONCRETE, APPROACH SLAB (TYPE N)	260	CY
JOINT SEAL (MR1/2")	235	LF
BAR REINFORCING STEEL (BRIDGE)	143,500	LB
CONCRETE BARRIER (TYPE 732)	394	LF

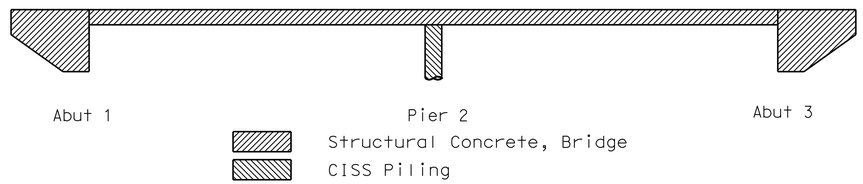

CONCRETE STRENGTH AND TYPE LIMITS
No Scale

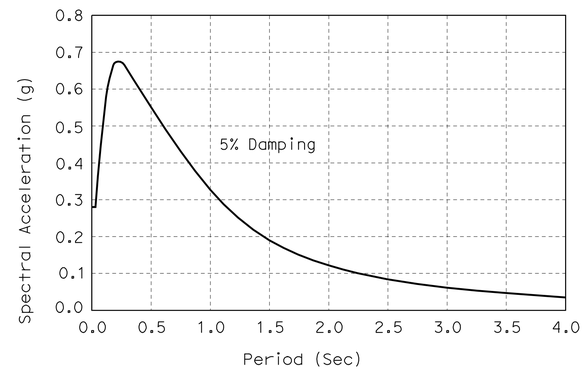

SOIL PROFILE TYPE D: Mw = 6.5, PBA = 0.2g
No Scale

INDEX TO PLANS

Sheet No.	Title
1.	GENERAL PLAN
2.	INDEX TO PLANS
3.	DECK CONTOURS LEFT
4.	DECK CONTOURS RIGHT
5.	FOUNDATION PLAN
6.	ABUTMENT LAYOUT
7.	PIER DETAILS
8.	TYPICAL SECTION
9.	SLAB REINFORCEMENT DETAILS
10.	STRUCTURE APPROACH TYPE N(30D)
11.	STRUCTURE APPROACH DRAINAGE DETAILS
12.	LOG OF TEST BORINGS 1 OF 4
13.	LOG OF TEST BORINGS 2 OF 4
14.	LOG OF TEST BORINGS 3 OF 4
15.	LOG OF TEST BORINGS 4 OF 4

PILE DATA TABLE (B2-5)

Support Location	Pile Type	Nominal Resistance (kips)		Design Tip Elevations (ft)	Specified Tip Elevations (ft)	Nominal Driving Resistance (kips)
		Compression	Tension			
Abut 1	Class 90	180	0	168.0 (1) 169.0 (2)	168.0	180
Pier 2	CISS NPS 16x0.500	280	0	139.0 (1) 156.0 (2)	139.0	280
Abut 3	Class 90	180	0	168.0 (1) 169.0 (2)	168.0	180

NOTE: Design tip elevations are controlled by the following demands: (1) Compression, (2) Lateral.

STANDARD PLANS DATED MAY 2006

A10A	ACRONYMS AND ABBREVIATIONS (A-L)
A10B	ACRONYMS AND ABBREVIATIONS (M-Z)
A10C	SYMBOLS (SHEET 1 OF 2)
A10D	SYMBOLS (SHEET 2 OF 2)
A62C	LIMITS OF PAYMENT FOR EXCAVATION AND BACKFILL-BRIDGE
BO-1	BRIDGE DETAILS
B2-5	PILE DETAILS CLASS 90 AND CLASS 140
RSP B6-21	JOINT SEALS (MAXIMUM MOVEMENT RATING = 2")
B11-55	CONCRETE BARRIER TYPE 732
B14-3	COMMUNICATION AND SPRINKLER CONTROL CONDUITS (CONDUIT LESS THAN 4")

STANDARD PLAN SHEET NO.
DETAIL NO.

	BY	CHECKED
DESIGN	G. Schuster	N. Terzis
DETAILS	G. Souza/S. Jiang	N. Terzis
QUANTITIES	T. Cotton	N. Terzis

ORIGINAL SCALE IN INCHES FOR REDUCED PLANS 0 1 2 3

STATE OF CALIFORNIA DEPARTMENT OF TRANSPORTATION

DIVISION OF ENGINEERING SERVICES STRUCTURE DESIGN DESIGN BRANCH 5

CU 10
EA 415701

BRIDGE NO. 39-0242L/R
POST MILE 5.22

DEADMAN CREEK BRIDGE L/R
INDEX TO PLANS

DISREGARD PRINTS BEARING EARLIER REVISION DATES

REVISION DATES: 11-14-07 06-24-08 12-22-08 01-23-09 01-26-09 02-19-09 02-26-09 03-19-09 7-29-08 8-11-09

SHEET 2 OF 15

STRUCTURES DESIGN DETAIL SHEET (ENGLISH) (REV. 10/25/05)

FILE => 39-0242lr-a-itp.dgn

USERNAME => trlenard DATE PLOTTED => 11-OCT-2010 TIME PLOTTED => 12:31

DIST	COUNTY	ROUTE	POST MILES TOTAL PROJECT	SHEET No	TOTAL SHEETS
10	Mer	99	R4.6/R10.5	614	751

REGISTERED CIVIL ENGINEER 07-31-09 DATE

10-11-10
PLANS APPROVAL DATE

REGISTERED PROFESSIONAL ENGINEER G. SCHUSTER No. C 63897 Exp. 09-30-10 CIVIL STATE OF CALIFORNIA

The State of California or its officers or agents shall not be responsible for the accuracy or completeness of electronic copies of this plan sheet.

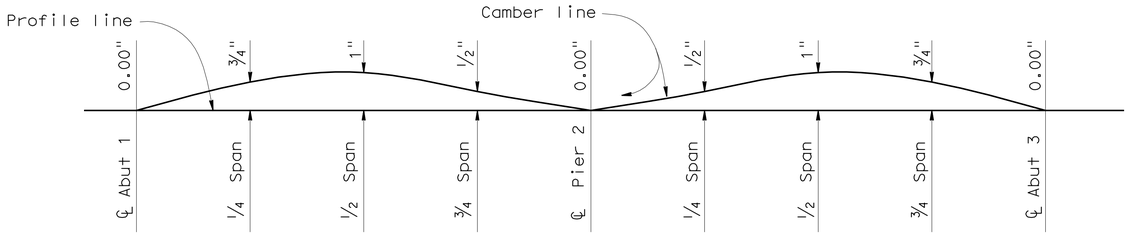

Note:
Does not include allowance for false work settlement.

CAMBER DIAGRAM

no scale

Notes:

× = 10′ interval along station line.

Contours do not include camber.

Contour interval = 0.1′

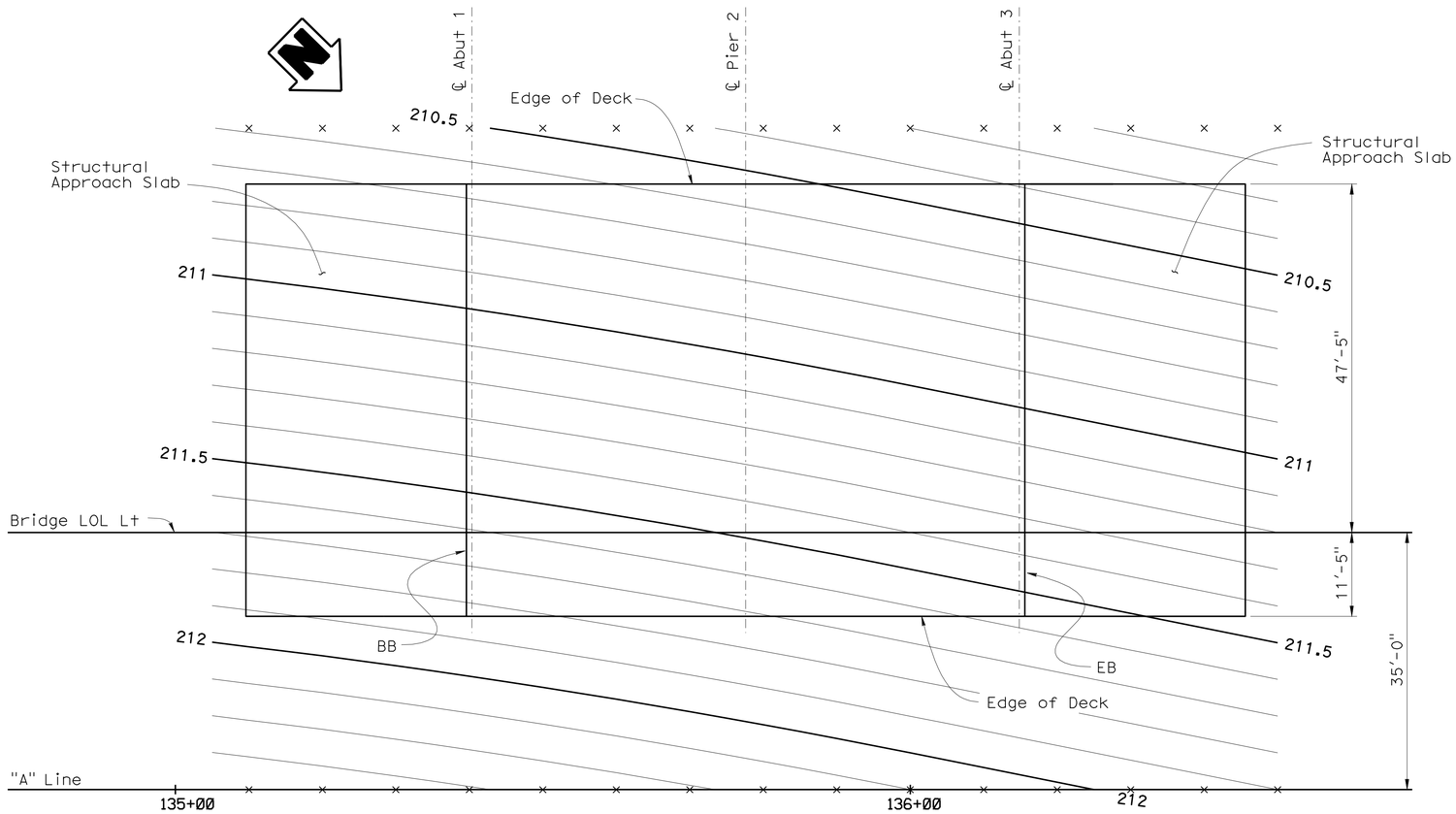

DECK CONTOURS

1" = 10′-0"

	BY	CHECKED
DESIGN	G. Schuster	N. Terzis
DETAILS	G. M. Souza/S. Jiang	N. Terzis
QUANTITIES	T. Cotton	N. Terzis

STATE OF CALIFORNIA
DEPARTMENT OF TRANSPORTATION

DIVISION OF ENGINEERING SERVICES
STRUCTURE DESIGN
DESIGN BRANCH 5

BRIDGE NO. 39-0242L/R
POST MILE 5.22

DEADMAN CREEK BRIDGE L/R
DECK CONTOURS (LEFT)

ORIGINAL SCALE IN INCHES FOR REDUCED PLANS 0 1 2 3

CU 10
EA 415701

DISREGARD PRINTS BEARING EARLIER REVISION DATES

REVISION DATES: 03-27-08 04-29-08 06-19-08 06-12-08 01-27-09

SHEET 3 OF 15

STRUCTURES DESIGN DETAIL SHEET (ENGLISH) (REV. 10/25/05)

FILE => 39-0242lr-d-dc01.dgn

USERNAME => friehard DATE PLOTTED => 11-OCT-2010 TIME PLOTTED => 12:31

DIST	COUNTY	ROUTE	POST MILES TOTAL PROJECT	SHEET No	TOTAL SHEETS
10	Mer	99	R4.6/R10.5	615	751

REGISTERED CIVIL ENGINEER 07-31-09 DATE

10-11-10
PLANS APPROVAL DATE

REGISTERED PROFESSIONAL ENGINEER G. SCHUSTER No. C 63897 Exp. 09-30-10 CIVIL STATE OF CALIFORNIA

The State of California or its officers or agents shall not be responsible for the accuracy or completeness of electronic copies of this plan sheet.

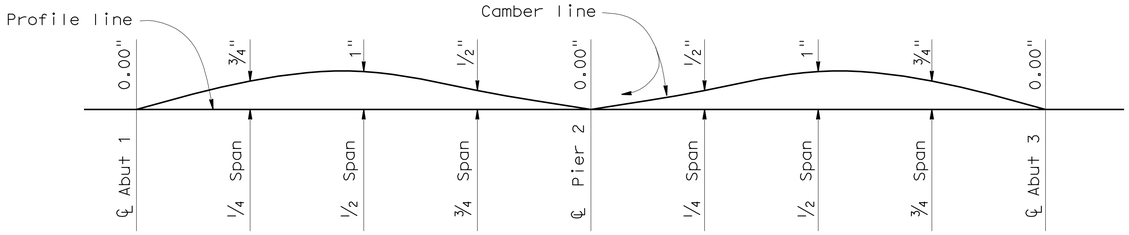

Note:
Does not include allowance for false work settlement.

CAMBER DIAGRAM

no scale

Notes:

× = 10′ interval along station line.

Contours do not include camber.

Contour interval = 0.1′

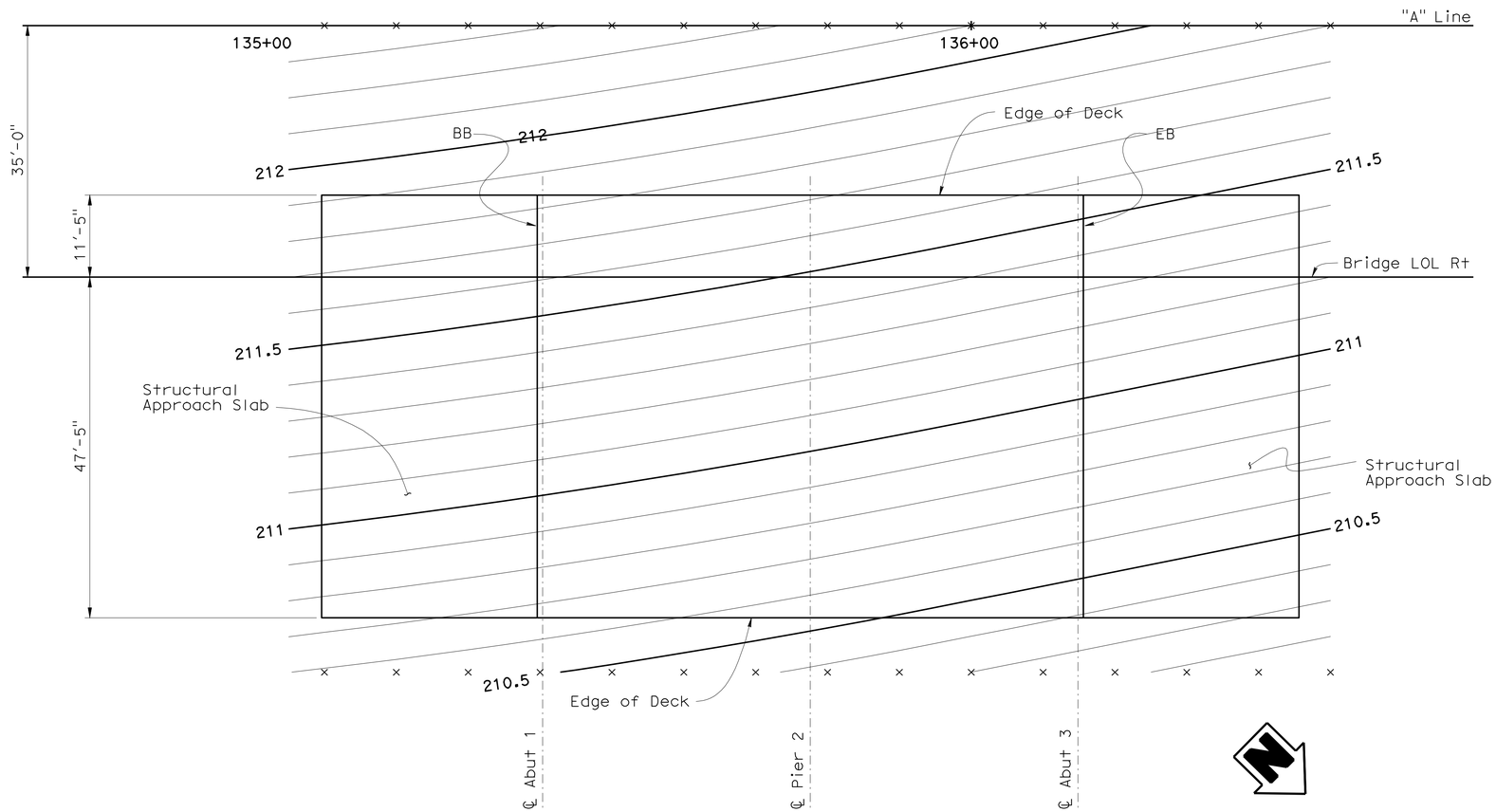

DECK CONTOURS

1" = 10′-0"

DESIGN	BY G. Schuster	CHECKED N. Terzis	
DETAILS	BY G. M. Souza/S. Jiang	CHECKED N. Terzis	
QUANTITIES	BY T. Cotton	CHECKED N. Terzis	

ORIGINAL SCALE IN INCHES FOR REDUCED PLANS 0 1 2 3

STATE OF CALIFORNIA
DEPARTMENT OF TRANSPORTATION

DIVISION OF ENGINEERING SERVICES
STRUCTURE DESIGN
DESIGN BRANCH 5

CU 10
EA 415701

BRIDGE NO. 39-0242L/R
POST MILE 5.22

DEADMAN CREEK BRIDGE L/R
DECK CONTOURS (RIGHT)

DISREGARD PRINTS BEARING EARLIER REVISION DATES

REVISION DATES: 03-21-08, 04-22-08, 06-10-08, 06-12-08, 7-24-08, 01-27-09

SHEET 4 OF 15

STRUCTURES DESIGN DETAIL SHEET (ENGLISH) (REV. 10/25/05)

FILE => 39-0242lr-d-dc02.dgn

USERNAME => friehard DATE PLOTTED => 11-OCT-2010 TIME PLOTTED => 12:31

DIST	COUNTY	ROUTE	POST MILES TOTAL PROJECT	SHEET No	TOTAL SHEETS
10	Mer	99	R4.6/R10.5	616	751

REGISTERED CIVIL ENGINEER 07-31-09 DATE

10-11-10
PLANS APPROVAL DATE

The State of California or its officers or agents shall not be responsible for the accuracy or completeness of electronic copies of this plan sheet.

REGISTERED PROFESSIONAL ENGINEER G. SCHUSTER No. C 63897 Exp. 09-30-10 CIVIL STATE OF CALIFORNIA

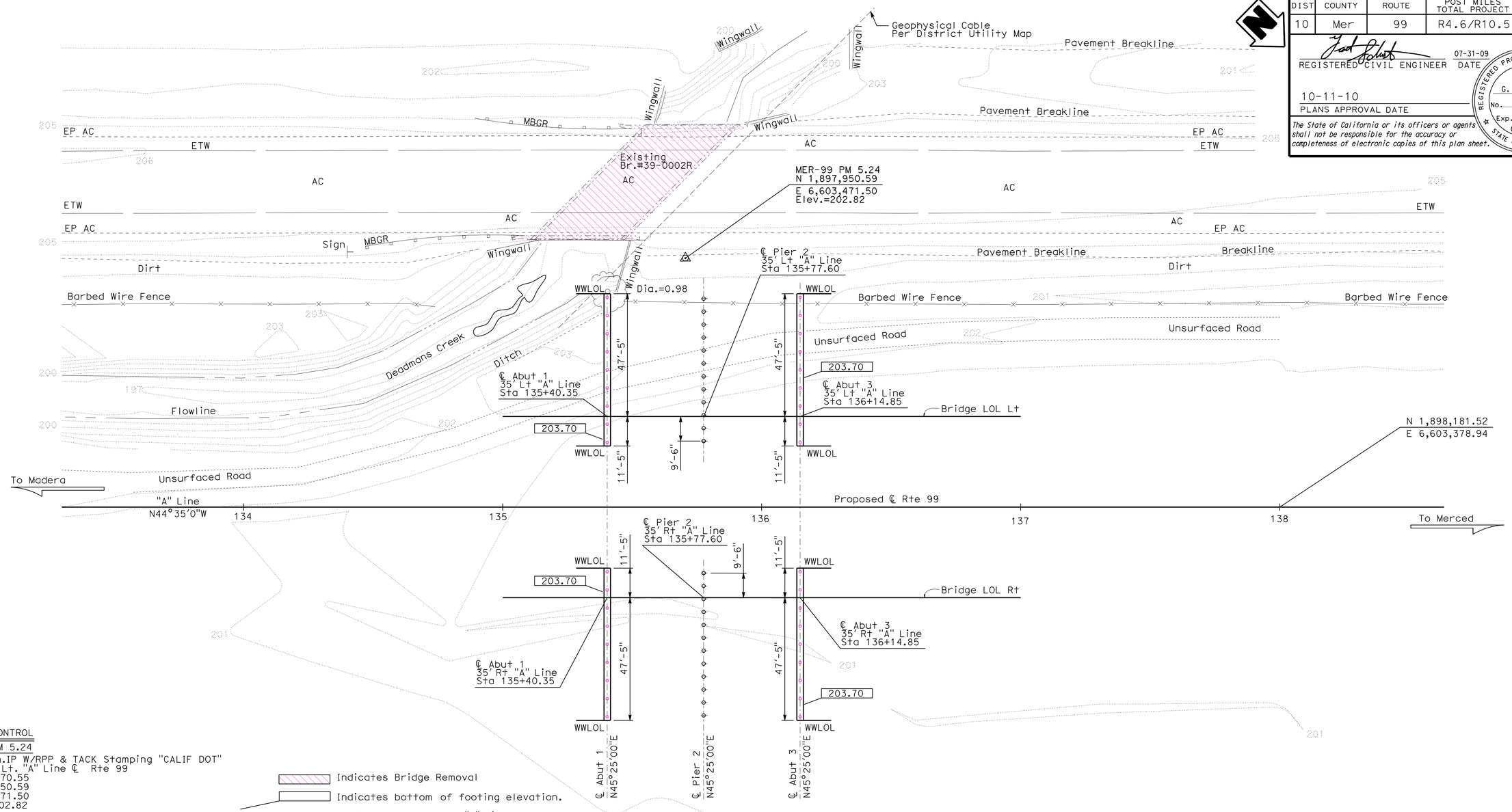

SURVEY CONTROL

MER-99 PM 5.24
Fnd 1 in.IP W/RPP & TACK Stamping "CALIF DOT"
96.18 Ft Lt. "A" Line ℄ Rte 99
Sta. 135+70.55
N 1,897,950.59
E 6,603,471.50
Elev. = 202.82

MER-99 1041 (Not Shown)
Fnd 1 in IP w/RPP & LS5679 TAG
227.36 Ft Lt."A" Line ℄ Rte 99
Sta. 131+97.42
N 1,897,592.75
E 6,603,639.98
Elev. = 203.25

Indicates Bridge Removal

Indicates bottom of footing elevation.

WWLOL are parallel to "A" Line

HYDROLOGIC SUMMARY

DRAINAGE AREA: 50 SQUARE MILES

	DESIGN FLOOD	BASE FLOOD
FREQUENCY (YEARS)	50	100
DISCHARGE (CFS)	1200	1900
WATER SURFACE ELEVATION		
RT STRUCTURE	206.2	208.6
LT STRUCTURE	206.1	208.6

FLOOD PLAIN DATA ARE BASED UPON INFORMATION AVAILABLE WHEN THE PLANS WERE PREPARED AND ARE SHOWN TO MEET FEDERAL REQUIREMENTS. THE ACCURACY OF SAID INFORMATION IS NOT WARRANTED BY THE STATE AND INTERESTED OR AFFECTED PARTIES SHOULD MAKE THEIR OWN INVESTIGATIONS.

PRELIMINARY INVESTIGATION SECTION

SCALE	VERT.DATUM NGVD 29	PHOTOGRAMMETRY AS OF: X			
1"=20'	HORZ.DATUM NAD83 (1991.35)	SURVEYED	BY District	CHECKED	BY J.Pallares 11/2007
ALIGNMENT TIES Dist.Traverse Sheet		DRAFTED	BY T.Marchenko 11/2007	CHECKED	BY T.Zolnikova 11/2007

	BY	CHECKED
DESIGN	G. Schuster	N. Terzis
DETAILS	G. S/S. J/A. C	N. Terzis
QUANTITIES	T. Cotton	N. Terzis

STATE OF CALIFORNIA
DEPARTMENT OF TRANSPORTATION

DIVISION OF ENGINEERING SERVICES
STRUCTURE DESIGN
DESIGN BRANCH 5

BRIDGE NO. 39-0242L/R
POST MILE 5.22

DEADMAN CREEK BRIDGE L/R
FOUNDATION PLAN

STRUCTURES FOUNDATION PLAN SHEET (ENGLISH) (REV. 10/25/05)

ORIGINAL SCALE IN INCHES FOR REDUCED PLANS 0 1 2 3

CU 10
EA 415701

DISREGARD PRINTS BEARING EARLIER REVISION DATES

REVISION DATES: 03-25-08 04-21-08 06-12-08 06-12-08 07-01-08 07-10-08 12-22-08 01-27-09

SHEET 5 OF 15

FILE => 39-0242lr-e-fp.dgn

USERNAME => friehard DATE PLOTTED => 11-OCT-2010 TIME PLOTTED => 12:31

DIST	COUNTY	ROUTE	POST MILES TOTAL PROJECT	SHEET No	TOTAL SHEETS
10	Mer	99	R4.6/R10.5	617	751

REGISTERED CIVIL ENGINEER 07-31-09 DATE

10-11-10
PLANS APPROVAL DATE

REGISTERED PROFESSIONAL ENGINEER G. SCHUSTER No. C 63897 Exp. 09-30-10 CIVIL STATE OF CALIFORNIA

The State of California or its officers or agents shall not be responsible for the accuracy or completeness of electronic copies of this plan sheet.

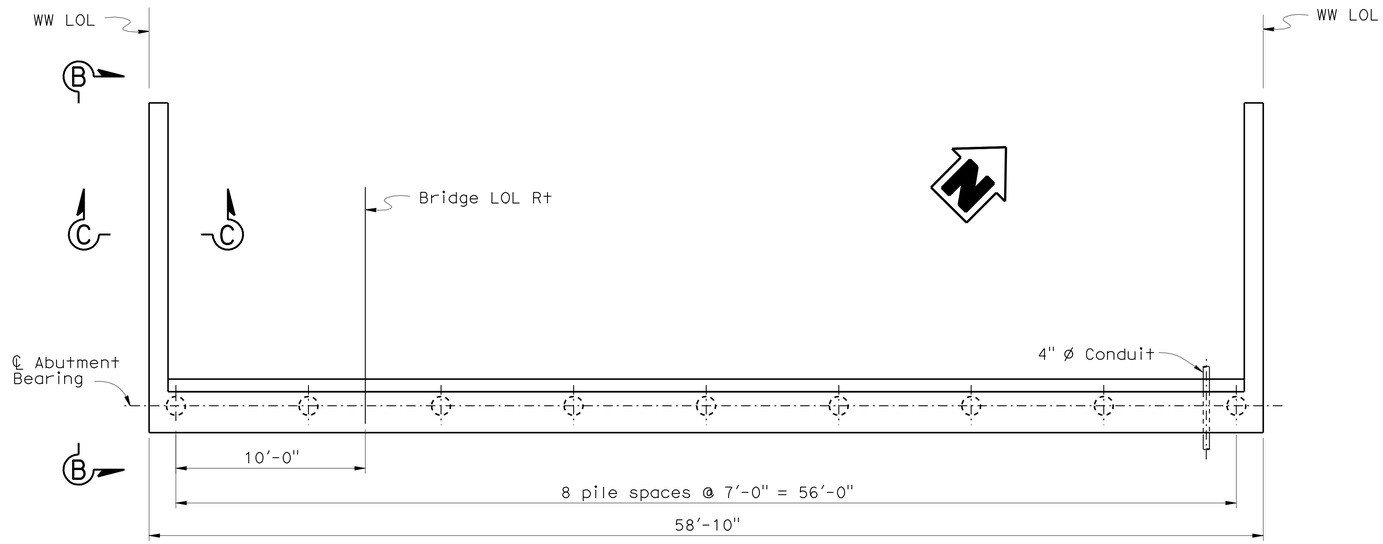

PLAN
1/4" =1'-0"

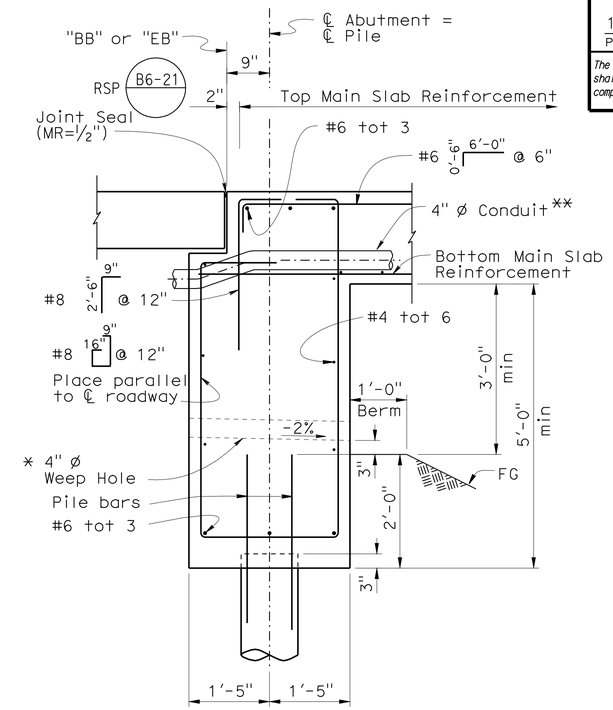

SECTION A-A
3/4" =1'-0"

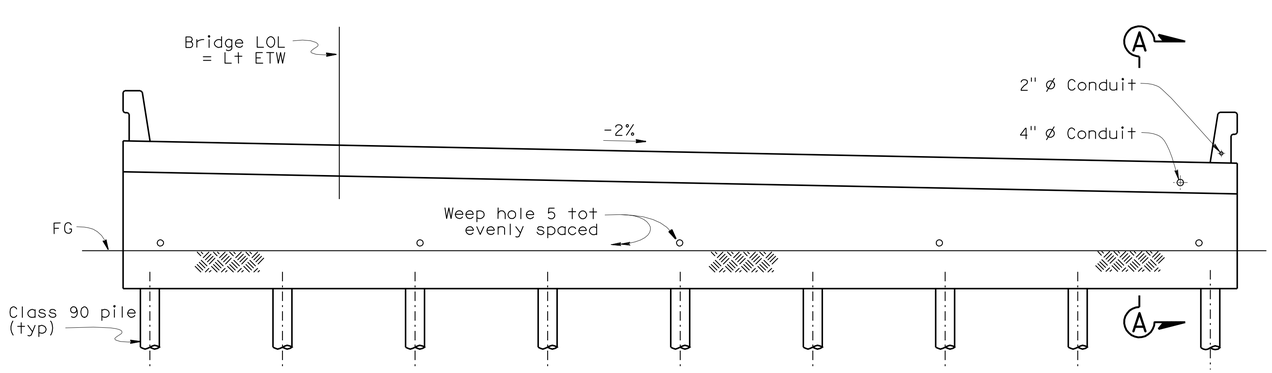

ELEVATION
1/4" =1'-0"

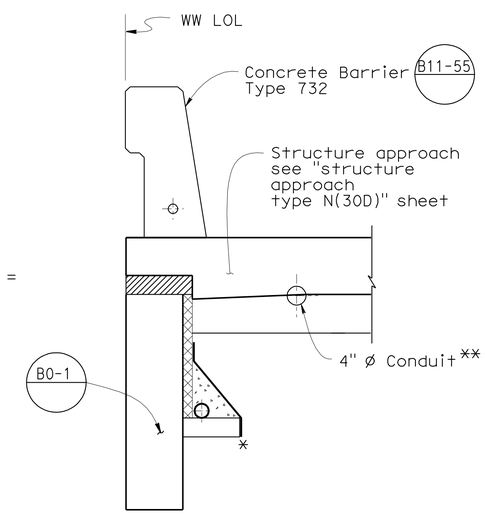

SECTION C-C
3/4" =1'-0"

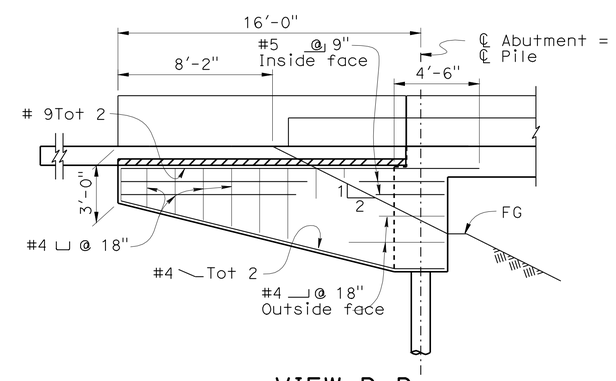

VIEW B-B
1/4" =1'-0"

ABUTMENT 3 RIGHT
Abutment 1 Lt, 3 Lt, 1 Rt similar

For drainage details see "Structure Approach Drainage Details" sheet

Notes:

* See "Structure Approach Drainage Details" sheet

** Place 4" ø Communication conduit in Right Abutment only

	BY	CHECKED
DESIGN	G. Schuster	N. Terzis
DETAILS	S. Jiang\A. Chen	N. Terzis
QUANTITIES	T. Cotton	N. Terzis

ORIGINAL SCALE IN INCHES FOR REDUCED PLANS 0 1 2 3

STATE OF CALIFORNIA DEPARTMENT OF TRANSPORTATION

DIVISION OF ENGINEERING SERVICES STRUCTURE DESIGN DESIGN BRANCH 5

CU 10
EA 415701

BRIDGE NO. 39-0242L/R
POST MILE 5.22

DEADMAN CREEK BRIDGE L/R
ABUTMENT LAYOUT

DISREGARD PRINTS BEARING EARLIER REVISION DATES

REVISION DATES 01-21-09 06-24-09 8-06-09 06-03-08 06-10-08 06-17-08 07-10-08 09-04-08 12-22-08

SHEET 6 OF 15

STRUCTURES DESIGN DETAIL SHEET (ENGLISH) (REV. 10/25/05)

FILE => 39-0242lr-f-abutlyt.dgn

USERNAME => trlenard DATE PLOTTED => 11-OCT-2010 TIME PLOTTED => 12:31

DIST	COUNTY	ROUTE	POST MILES TOTAL PROJECT	SHEET No	TOTAL SHEETS
10	Mer	99	R4.6/R10.5	618	751

REGISTERED CIVIL ENGINEER 07-31-09 DATE

10-11-10
PLANS APPROVAL DATE

REGISTERED PROFESSIONAL ENGINEER G. SCHUSTER No. C 63897 Exp. 09-30-10 CIVIL STATE OF CALIFORNIA

The State of California or its officers or agents shall not be responsible for the accuracy or completeness of electronic copies of this plan sheet.

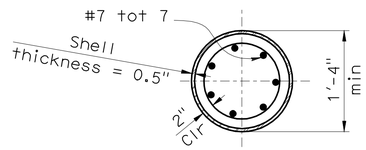

SECTION B-B
1" = 1'-0"

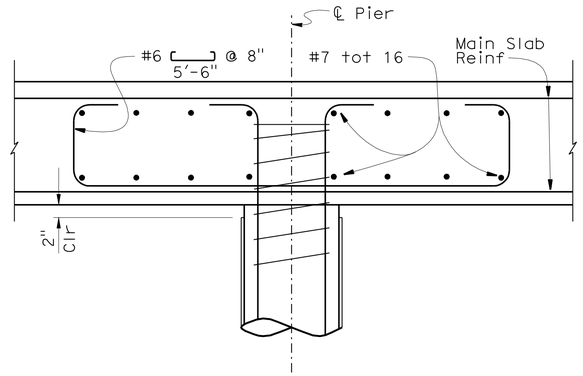

DETAIL "A"
1" = 1'-0"

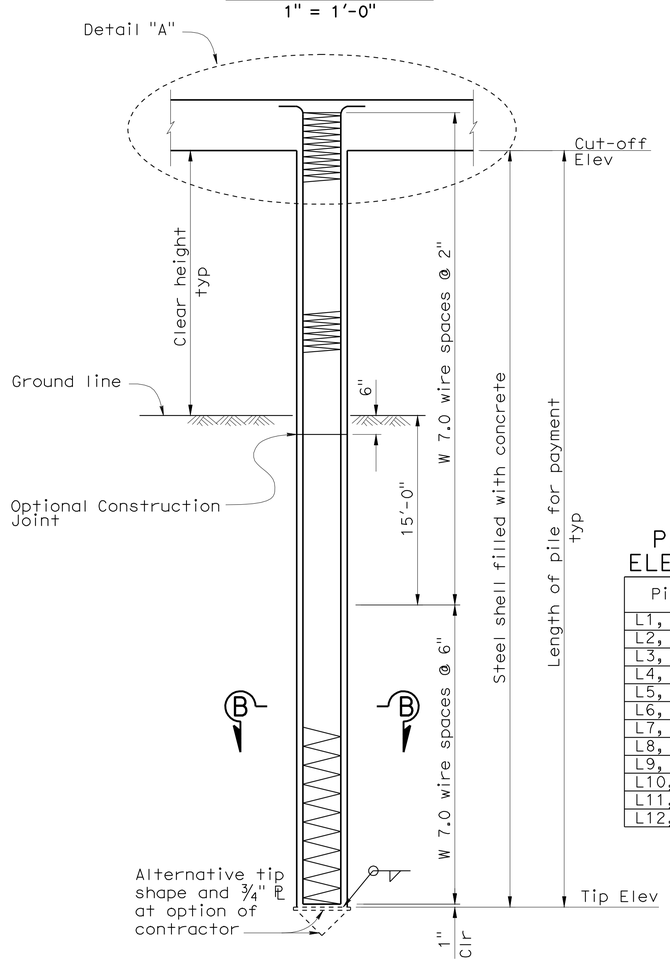

CAST-IN-STEEL SHELL CONCRETE PILE

SECTION A-A
½" = 1'-0"

PILE CUT-OFF ELEVATION TABLE

Pile	Cut-off Elevation (ft)
L1, R12	208.95
L2, R11	209.05
L3, R10	209.15
L4, R9	209.25
L5, R8	209.35
L6, R7	209.45
L7, R6	209.55
L8, R5	209.65
L9, R4	209.75
L10, R3	209.85
L11, R2	209.95
L12, R1	210.05

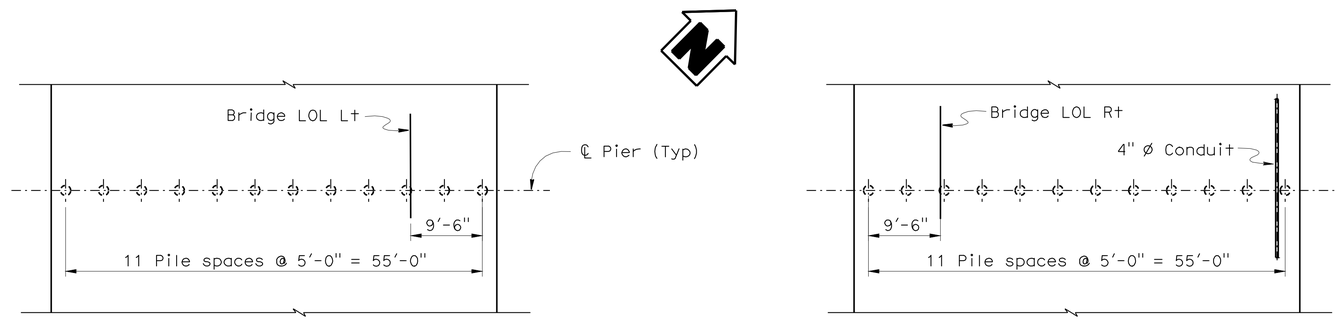

PLAN
1" = 10'-0"

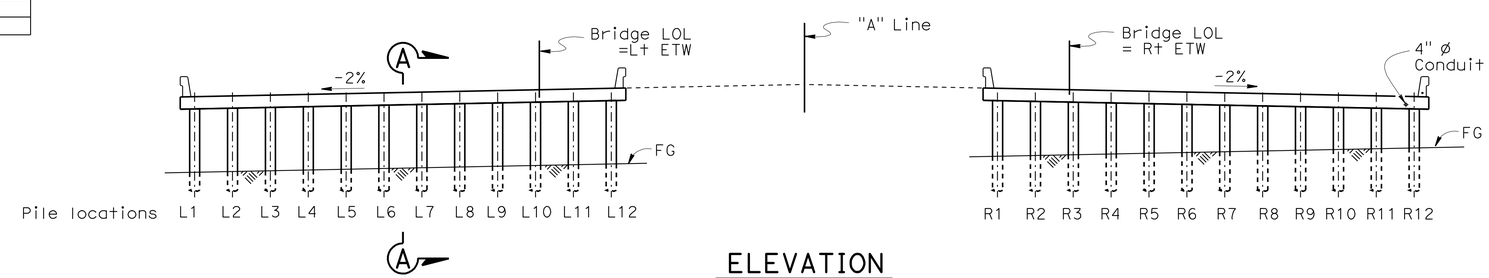

ELEVATION
1" = 10'-0"

	BY	CHECKED
DESIGN	G. Schuster	N. Terzis
DETAILS	S. Jiang\A.C.\G.M.S.	N. Terzis
QUANTITIES	T. Cotton	N. Terzis

STATE OF CALIFORNIA
DEPARTMENT OF TRANSPORTATION

DIVISION OF ENGINEERING SERVICES
STRUCTURE DESIGN
DESIGN BRANCH 5

BRIDGE NO. 39-0242L/R
POST MILE 5.22

DEADMAN CREEK BRIDGE L/R
PIER DETAILS

ORIGINAL SCALE IN INCHES FOR REDUCED PLANS 0 1 2 3

CU 10
EA 415701

DISREGARD PRINTS BEARING EARLIER REVISION DATES

REVISION DATES: 03-19-08 02-25-09 04-02-09 06-12-08 07-11-08 07-14-08 09-05-08 12-22-08 01-22-09

SHEET 7 OF 15

STRUCTURES DESIGN DETAIL SHEET (ENGLISH) (REV. 10/25/05)

FILE => 39-0242lr-1-pierdt.dgn

USERNAME => trlenord DATE PLOTTED => 11-OCT-2010 TIME PLOTTED => 12:31

DIST	COUNTY	ROUTE	POST MILES TOTAL PROJECT	SHEET No	TOTAL SHEETS
10	Mer	99	R4.6/R10.5	619	751

REGISTERED CIVIL ENGINEER 07-31-09 DATE

10-11-10
PLANS APPROVAL DATE

REGISTERED PROFESSIONAL ENGINEER G. SCHUSTER No. C 63897 Exp. 09-30-10 CIVIL STATE OF CALIFORNIA

The State of California or its officers or agents shall not be responsible for the accuracy or completeness of electronic copies of this plan sheet.

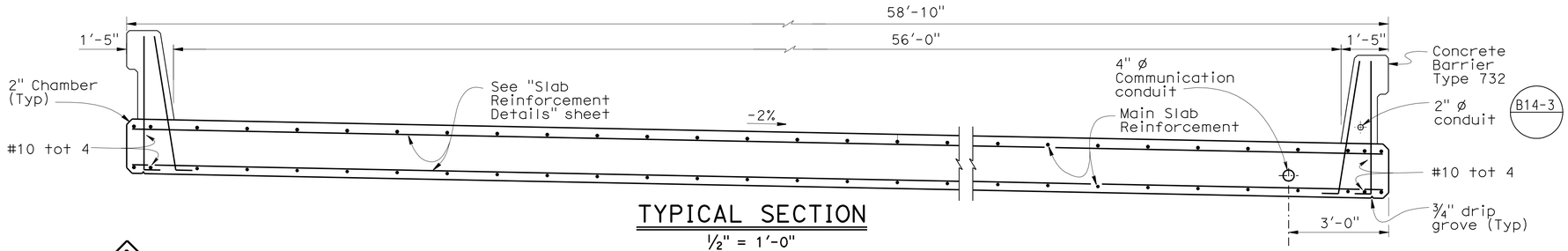

TYPICAL SECTION

1/2" = 1'-0"

Right structure shown, Left structure similar

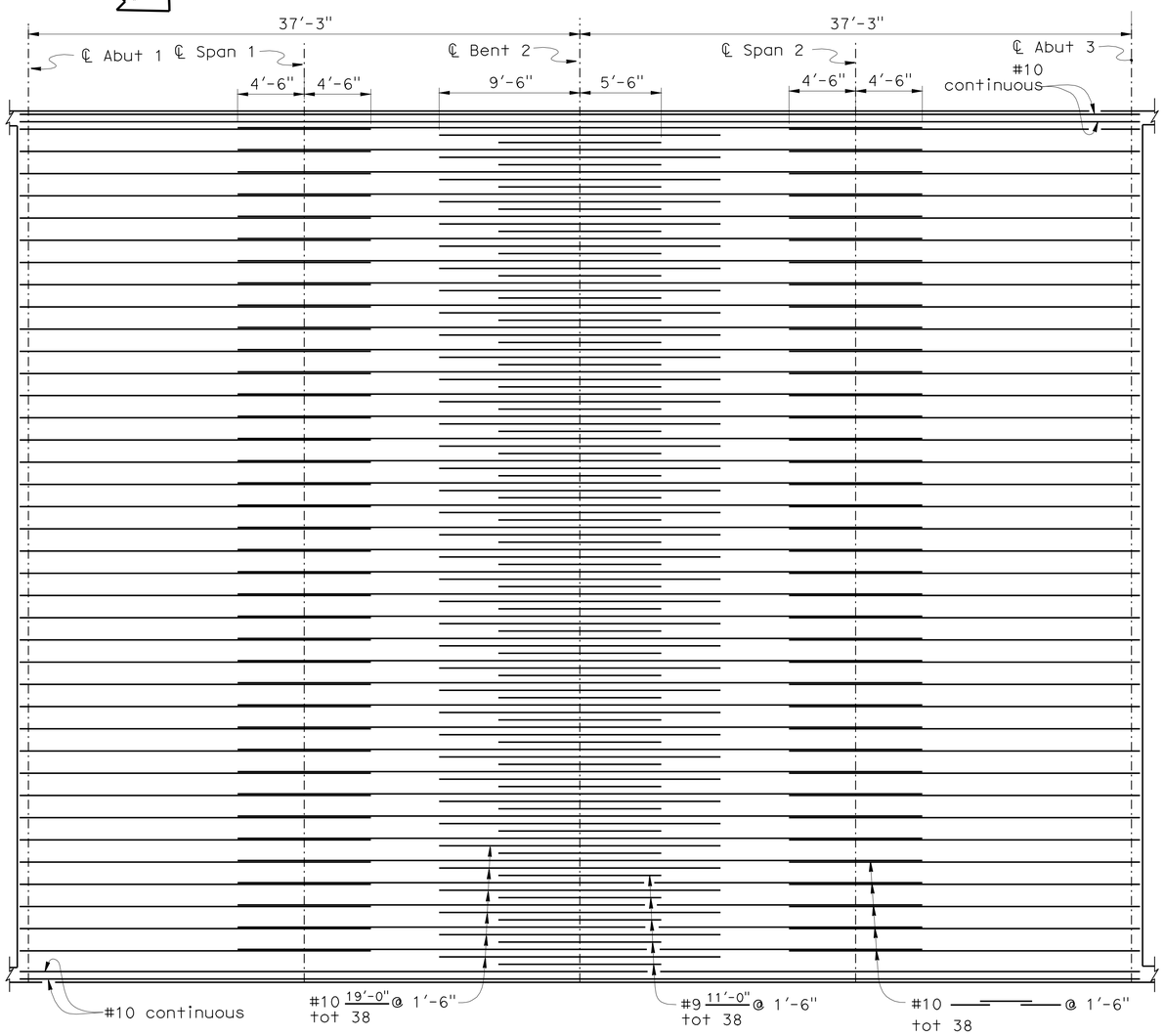

TOP SLAB REINFORCEMENT

1" = 5'-0"

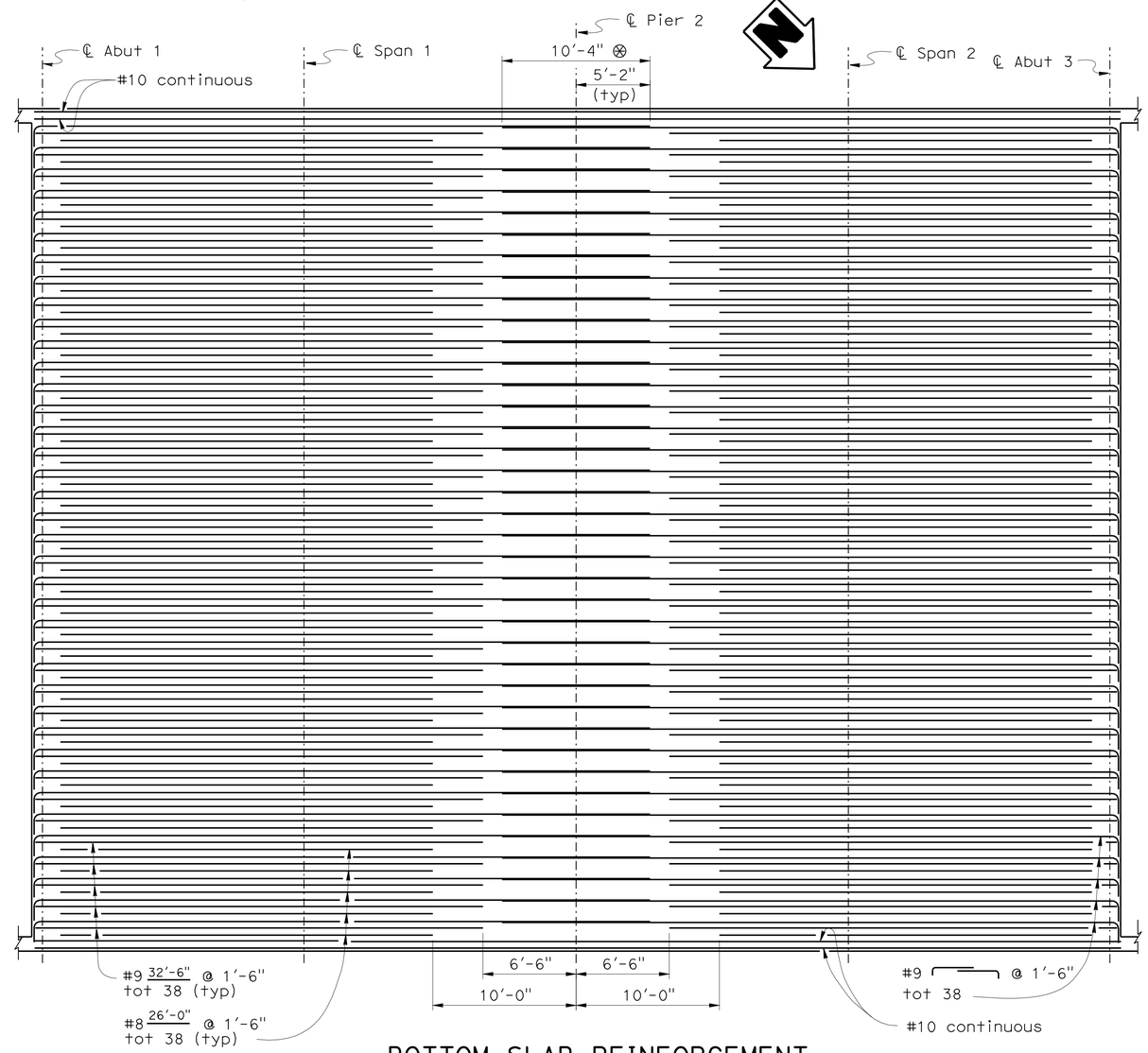

⊗ Minimum length, splice may be longer

BOTTOM SLAB REINFORCEMENT

1" = 5'-0"

	BY	CHECKED
DESIGN	G. Schuster	N. Terzis
DETAILS	S. Jiang/A. Chen	N. Terzis
QUANTITIES	T. Cotton	N. Terzis

STATE OF CALIFORNIA
DEPARTMENT OF TRANSPORTATION

DIVISION OF ENGINEERING SERVICES
STRUCTURE DESIGN
DESIGN BRANCH 5

BRIDGE NO. 39-0242L/R
POST MILE 5.22

DEADMAN CREEK BRIDGE L/R
TYPICAL SECTION

ORIGINAL SCALE IN INCHES FOR REDUCED PLANS 0 1 2 3

CU 10
EA 415701

DISREGARD PRINTS BEARING EARLIER REVISION DATES

REVISION DATES: 03-03-08 03-12-08 04-04-08 05-09-08 06-18-08 06-23-08 07-10-08 09-06-08 02-25-09

SHEET 8 OF 15

USERNAME => ttrenord DATE PLOTTED => 11-OCT-2010 TIME PLOTTED => 12:32

DIST	COUNTY	ROUTE	POST MILES TOTAL PROJECT	SHEET No	TOTAL SHEETS
10	Mer	99	R4.6/R10.5	620	751

REGISTERED CIVIL ENGINEER 07-31-09 DATE

10-11-10
PLANS APPROVAL DATE

The State of California or its officers or agents shall not be responsible for the accuracy or completeness of electronic copies of this plan sheet.

REGISTERED PROFESSIONAL ENGINEER G. SCHUSTER No. C 63897 Exp. 09-30-10 CIVIL STATE OF CALIFORNIA

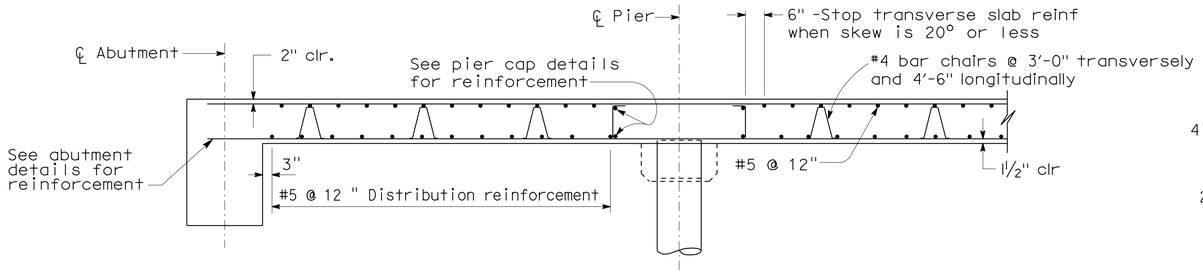

LONGITUDINAL SECTION

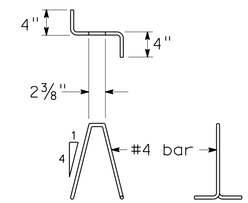

BAR CHAIR DETAIL

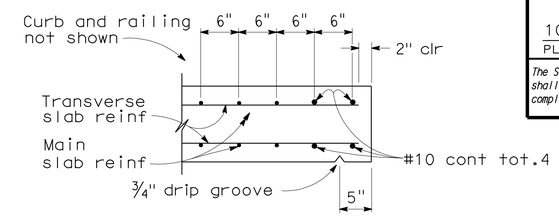

EDGE OF SLAB DETAILS

BAR SPLICE LENGTH (Inch)								
Bar size	#4	#5	#6	#7	#8	#9	#10	#11
All bars,except top bars in spans over 23′	23	28	34	39	45	68	76	85
Top bars in spans over 23′	23	28	34	53	60	77	97	120

REINFORCEMENT NOTES:

Splices in top main bars to be located near center of span.
Splices in bottom main bars to be located near pier.
Spacing of all transverse bars is measured along ℄ roadway.
Skew 0°to 20°: Place all transverse bars parallel to pier.
Skew over 20°: Place transverse slab bars perpendicular to ℄ bridge.See details at right and below.

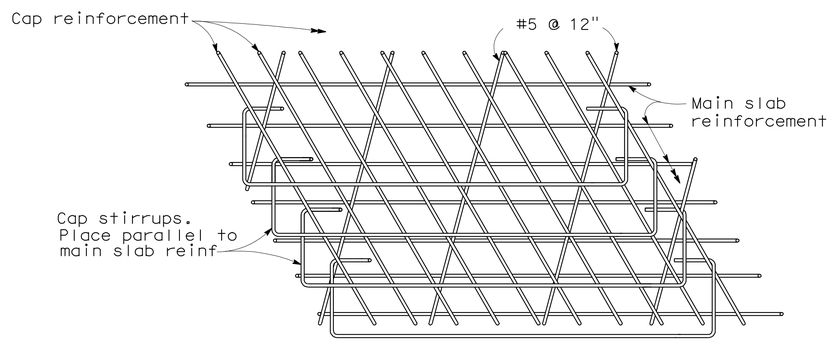

TOP SLAB REINFORCEMENT AT PIER

Note: View for main span over 23′.
Bar placement similar for spans under 23′.

GENERAL NOTES
LOAD AND RESISTANCE FACTOR DESIGN

DESIGN: AASHTO LRFD Bridge Design Specifications, Third Edition with 2005 & 2006 Interim Revisions and Caltrans Amendments 03.06.01

DEAD LOAD: Includes 35 Psf for future wearing surface.

LIVE LOADING: HL93 Alternative loading and "Low-Boy" permit design vehicle

REINFORCED CONCRETE: f_y = 60 ksi
f'_c = 3.6 ksi
n = 8

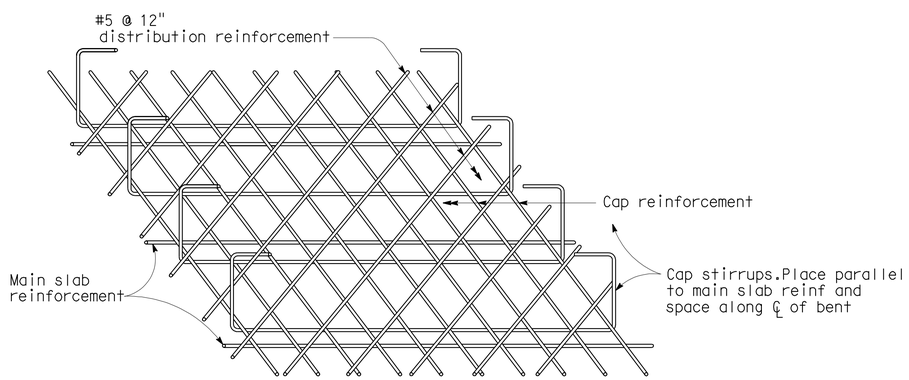

FLUSH CAP

BOTTOM SLAB REINFORCEMENT AT PIER

SPECIAL DETAILS
NO SCALE

DESIGN	BY G. Schuster	CHECKED N. Terzis	
DETAILS	BY S. Jiang/T.C.	CHECKED N. Terzis	
QUANTITIES	BY T. Cotton	CHECKED N. Terzis	

ORIGINAL SCALE IN INCHES FOR REDUCED PLANS 0 1 2 3

STATE OF CALIFORNIA
DEPARTMENT OF TRANSPORTATION

DIVISION OF ENGINEERING SERVICES
STRUCTURE DESIGN
DESIGN BRANCH 5

CU 10
EA 415701

BRIDGE NO. 39-0242L/R
POST MILE 5.22

DEADMAN CREEK BRIDGE L/R
SLAB REINFORCEMENT DETAILS

DISREGARD PRINTS BEARING EARLIER REVISION DATES

REVISION DATES: 06-18-08 6-24-08 12-22-08 01-27-09

SHEET 9 OF 15

STRUCTURES DESIGN DETAIL SHEET (ENGLISH) (REV. 10/25/05)

FILE => 39-0242lr-o-slab-rfdt.dgn

USERNAME => trlenord DATE PLOTTED => 11-OCT-2010 TIME PLOTTED => 12:32

DIST	COUNTY	ROUTE	POST MILES TOTAL PROJECT	SHEET No	TOTAL SHEETS
10	Mer	99	R4.6/R10.5	621	751

REGISTERED CIVIL ENGINEER 07-31-09 DATE

10-11-10
PLANS APPROVAL DATE

REGISTERED PROFESSIONAL ENGINEER G. SCHUSTER No. C 63897 Exp. 09-30-10 CIVIL STATE OF CALIFORNIA

The State of California or its officers or agents shall not be responsible for the accuracy or completeness of electronic copies of this plan sheet.

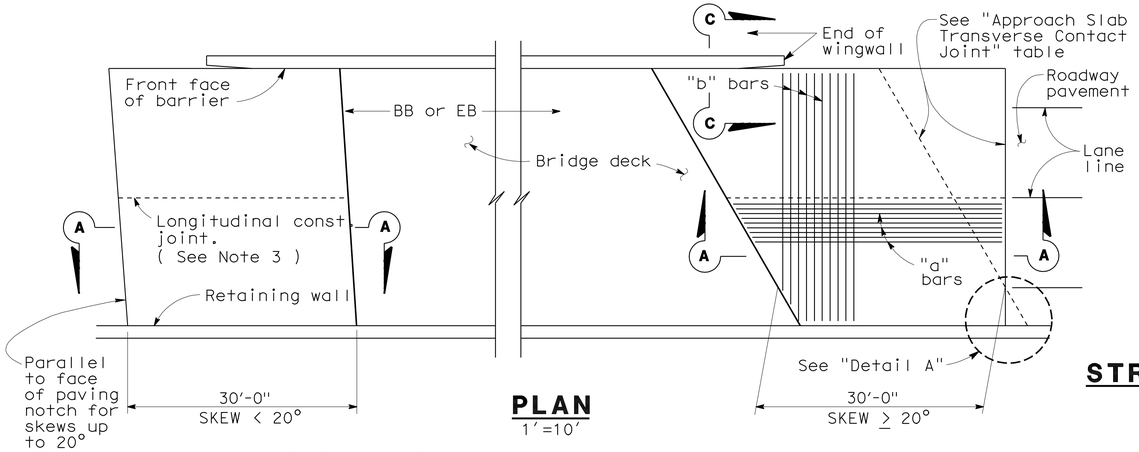

PLAN
1"=10'

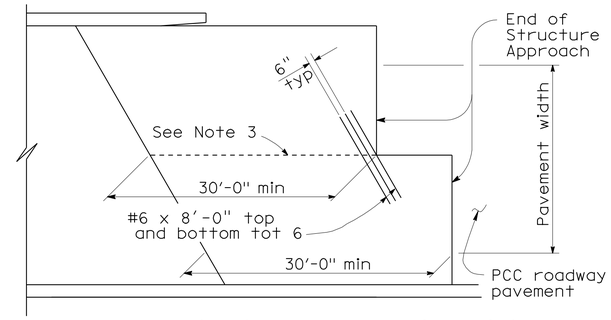

STRUCTURE APPROACH - END STAGGER DETAIL
No Scale

APPROACH SLAB TRANSVERSE CONTACT JOINT		
APPROACH SKEW	WITH AC ROADWAY PAVEMENT	WITH PCC ROADWAY PAVEMENT
< 20°	Parallel to face of paving notch	Parallel to face of paving notch
20°- 45°	Parallel to face of P N use (Detail A)	Stagger lines 24' to 36' apart
> 45°	Parallel to face of P N use (Detail A)	Stagger at each lane line

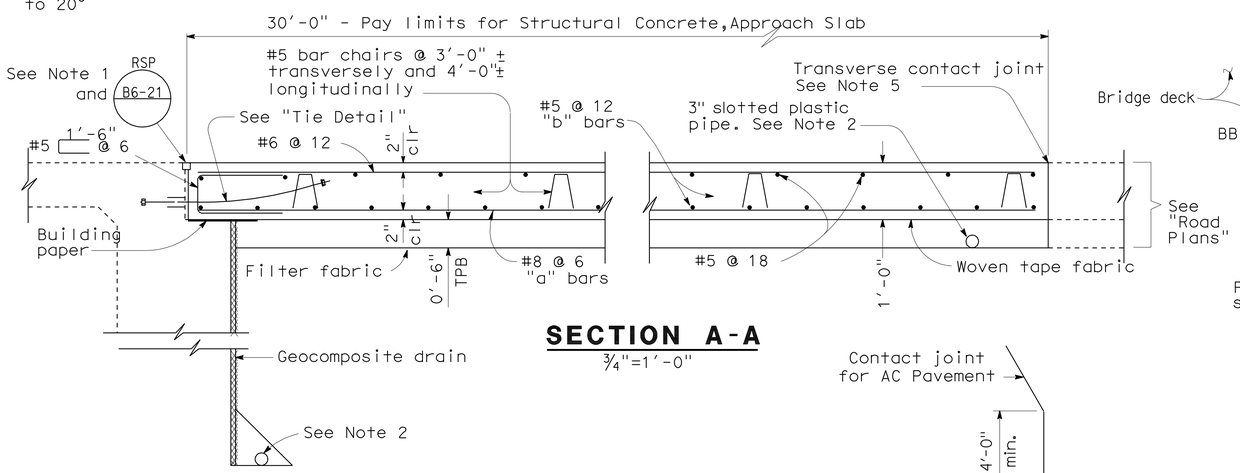

SECTION A-A
¾"=1'-0"

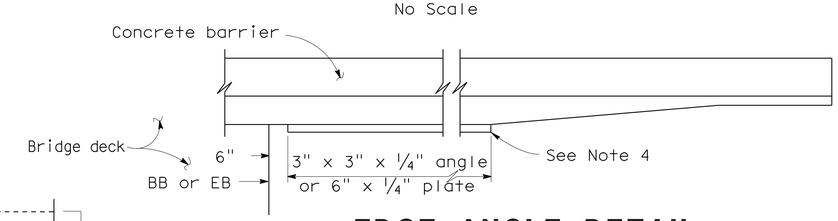

EDGE ANGLE DETAIL
½"=1'-0"

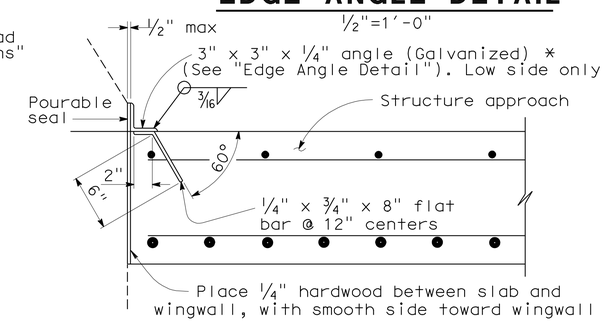

*(TO BE USED WITH TYPE 25 OR TYPE 27 CONCRETE BARRIER)

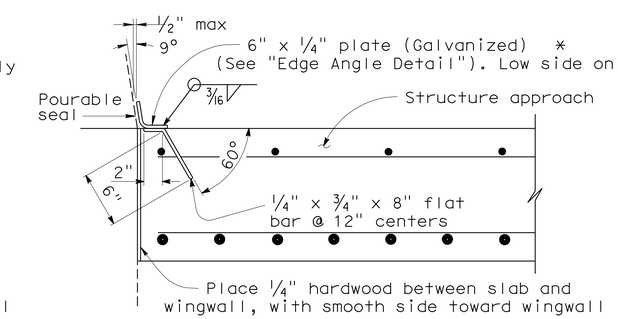

*(TO BE USED WITH TYPE 732 OR TYPE 736 CONCRETE BARRIER)

DETAIL B
1½"=1'-0"

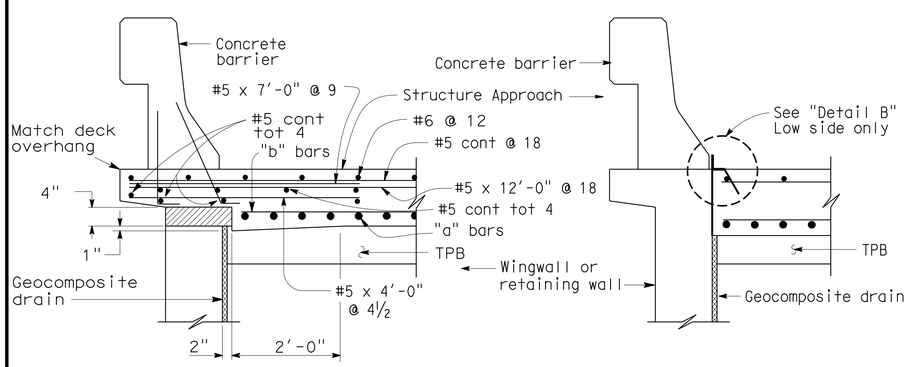

TYPE E-1 TYPE E-2

SECTION C-C
¾"=1'-0"

(Type E-1 to be used,unless otherwise shown on plans)

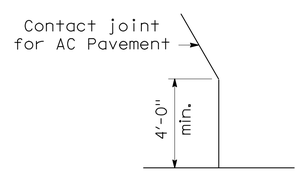

DETAIL A
No Scale

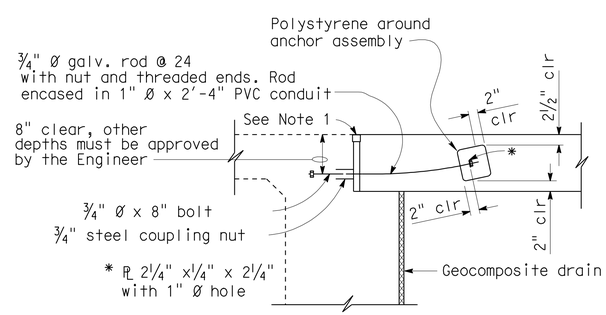

TIE DETAIL
¾"=1'-0"

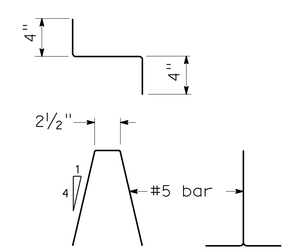

BAR CHAIR DETAIL
1½"=1'-0"

NOTES:

1. For details not noted or shown,see Structure Plans.
2. For drainage details,see "Structure Approach Drainage Details" sheet.
3. Longitudinal construction joints,when permitted by the Engineer,shall be located on lane lines.
4. End angle or plate at beginning of barrier transition, end of wingwall or end of structure approach, as applicable.
5. For transverse contact joint with new PCC paving, refer to Standard Plan P10.
6. At the contractor's option,approach slab transverse reinforcement may be placed parallel to paving notch. Spacing of transverse reinforcement is measured along ℄ roadway.

Polystyrene to be removed.

STANDARD DRAWING

FILE NO. xs3-180e

APPROVED BY M. Ha (RESPONSIBLE TECHNICAL SPECIALIST) — APPROVAL DATE 8-12-08

RELEASED BY O. Alcantara (RESPONSIBLE OFFICE CHIEF) — RELEASE DATE 8-12-08

STATE OF CALIFORNIA DEPARTMENT OF TRANSPORTATION

DIVISION OF ENGINEERING SERVICES STRUCTURE DESIGN DESIGN BRANCH 5

BRIDGE NO. 39-0242L/R

POST MILE 5.22

DEADMAN CREEK BRIDGE L/R
STRUCTURE APPROACH TYPE N(30D)

DS OSD 2147A (ENGLISH STANDARD DRAWING "XS" BORDER REV. 01/11/08)

ORIGINAL SCALE IN INCHES FOR REDUCED PLANS 0 1 2 3

CU 10
EA 415701

DISREGARD PRINTS BEARING EARLIER REVISION DATES

REVISION DATES

SHEET 10 OF 15

FILE => 39-0242lr-s-sap30s.dgn

USERNAME => trlenard DATE PLOTTED => 11-OCT-2010 TIME PLOTTED => 12:43

DIST	COUNTY	ROUTE	POST MILES TOTAL PROJECT	SHEET No	TOTAL SHEETS
10	Mer	99	R4.6/R10.5	622	751

REGISTERED CIVIL ENGINEER 07-31-09 DATE

10-11-10
PLANS APPROVAL DATE

REGISTERED PROFESSIONAL ENGINEER G. SCHUSTER No. C 63897 Exp. 09-30-10 CIVIL STATE OF CALIFORNIA

The State of California or its officers or agents shall not be responsible for the accuracy or completeness of electronic copies of this plan sheet.

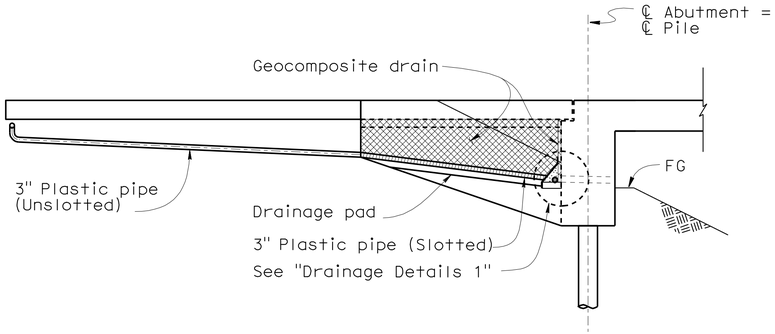

CANTILEVER WINGWALL

SECTION F-F

1/4" =1'-0"

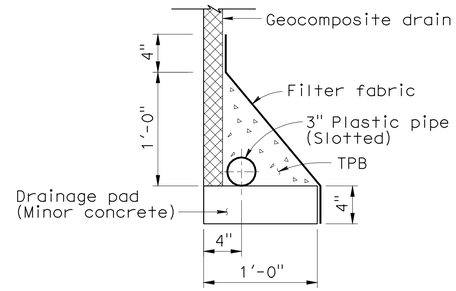

WITHOUT FOOTING

DRAINAGE DETAIL 1

1 1/2" =1'-0"

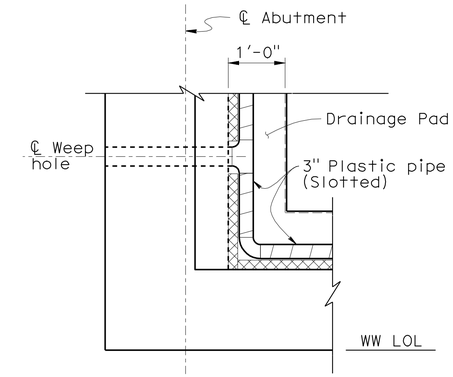

DRAINAGE DETAIL 2

3/4" =1'-0"

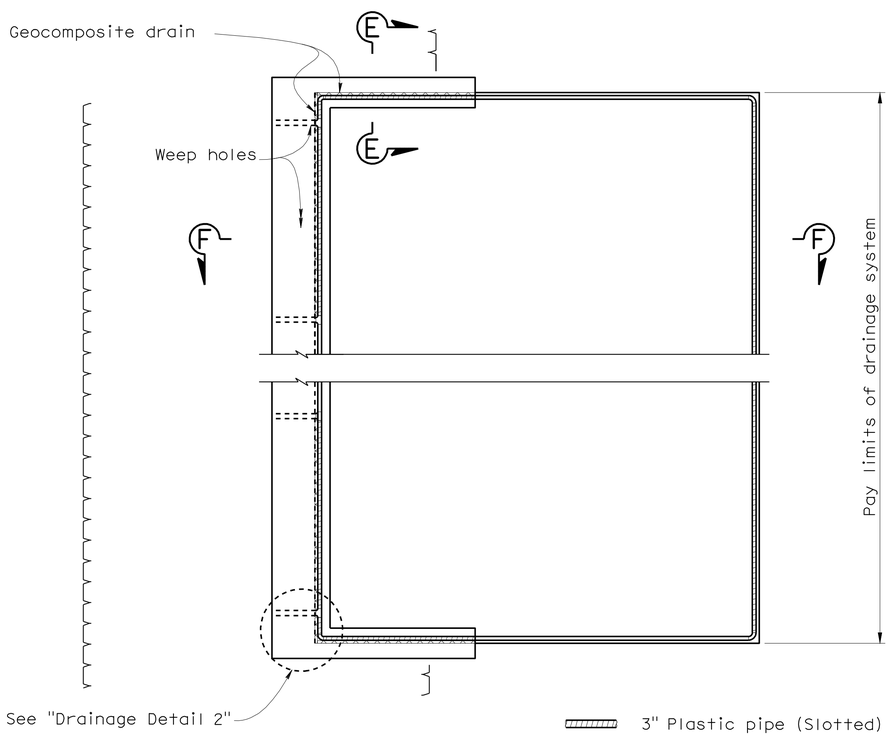

TYPICAL PLAN

1"=5'-0"

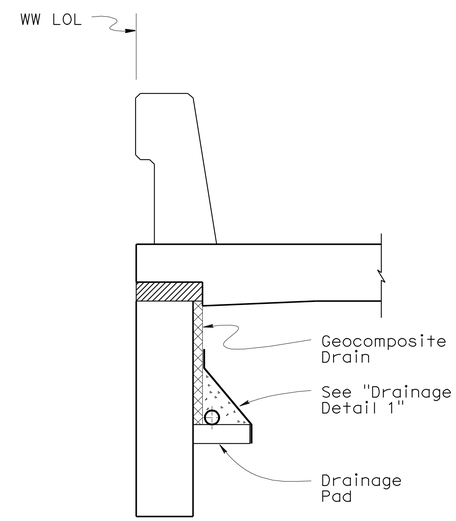

SECTION E-E

3/4" =1'-0"

DESIGN	BY G. Schuster	CHECKED N. Terzis	
DETAILS	BY A. Chen/S. Jiang/T. Cotton	CHECKED N. Terzis	
QUANTITIES	BY T. Cotton	CHECKED N. Terzis	

STATE OF CALIFORNIA
DEPARTMENT OF TRANSPORTATION

DIVISION OF ENGINEERING SERVICES
STRUCTURE DESIGN
DESIGN BRANCH 5

BRIDGE NO. 39-0242L/R
POST MILE 5.22

DEADMAN CREEK BRIDGE L/R
STRUCTURE APPROACH DRAINAGE DETAILS

ORIGINAL SCALE IN INCHES FOR REDUCED PLANS 0 1 2 3

CU 10
EA 415701

DISREGARD PRINTS BEARING EARLIER REVISION DATES

REVISION DATES: 6-11-08 6-16-08 6-23-08 7-16-08 8-07-08

SHEET 11 OF 15

STRUCTURES DESIGN DETAIL SHEET (ENGLISH) (REV. 10/25/05)

FILE => 39-0242lr-s-sapdd.dgn

USERNAME => trlenard DATE PLOTTED => 11-OCT-2010 TIME PLOTTED => 12:44

DIST	COUNTY	ROUTE	POST MILES TOTAL PROJECT	SHEET No	TOTAL SHEETS
10	Mer	99	R4.6/R10.5	623	751

Zheng, Xing 5-13-09
CERTIFIED ENGINEERING GEOLOGIST

10-11-10
PLANS APPROVAL DATE

The State of California or its officers or agents shall not be responsible for the accuracy or completeness of electronic copies of this plan sheet.

PROFESSIONAL GEOLOGIST Xing Zheng No. 2130 Exp. 3-31-11 CERTIFIED ENGINEERING GEOLOGIST STATE OF CALIFORNIA

This LOTB sheet was prepared in accordance with the Caltrans Soil & Rock Logging, Classification, & Presentation Manual (June 2007).

BENCH MARK

SURVEY CONTROL

MER-99 PM 5.24

Fnd 1" IP W/RPP & TACK Stamping "CALIF DOT"
96.18' Lt "A" Line ℄ Rte 99
Sta 135+70.55
N 1,897,950.59
E 6,603,471.50
Elev = 202.82

MER-99 1041

Fnd 1" IP w/RPP & LS5679 TAG
227.36' Lt "A" Line ℄ Rte 99
Sta 131+97.42
N 1,897,592.75
E 6,603,639.98
Elev = 203.25
NGVD 29

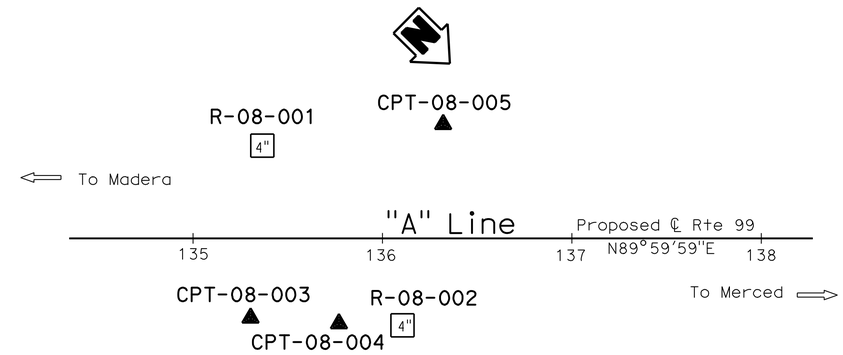

PLAN
1" = 40'

Notes:

1. CME-75 Truck Mounted rig (C# 5677) with automatic hammer was used to obtain SPT samples in Borings R-08-001 and R-08-002.
2. pp= Pocket Penetrometer Test (tsf).

PROFILE
HOR. 1" = 10'
VER. 1" = 10'

ENGINEERING SERVICES	GEOTECHNICAL SERVICES	STATE OF CALIFORNIA DEPARTMENT OF TRANSPORTATION	DIVISION OF ENGINEERING SERVICES STRUCTURE DESIGN DESIGN BRANCH	BRIDGE NO. 39-0242L/R	DEADMAN CREEK BRIDGE L/R
FUNCTIONAL SUPERVISOR NAME: R. Buell	DRAWN BY: F. Nguyen 01/09 CHECKED BY: J. Thorne	FIELD INVESTIGATION BY: X. Zheng		POST MILES 5.22	LOG OF TEST BORINGS 1 OF 4
OGS CIVIL LOG OF TEST BORINGS SHEET	ORIGINAL SCALE IN INCHES FOR REDUCED PLANS 0 1 2 3		CU 10 EA 415701	DISREGARD PRINTS BEARING EARLIER REVISION DATES	REVISION DATES 02-18-09 02-23-09 03-13-09 05-06-09 SHEET 12 OF 15

FILE => 39-0242lr-z-lotb1of4.dgn

USERNAME => trhenard DATE PLOTTED => 11-OCT-2010 TIME PLOTTED => 12:44

DIST	COUNTY	ROUTE	POST MILES TOTAL PROJECT	SHEET No	TOTAL SHEETS
10	Mer	99	R4.6/R10.5	624	751

Zheng, Xing 5-13-09
CERTIFIED ENGINEERING GEOLOGIST

10-11-10
PLANS APPROVAL DATE

PROFESSIONAL GEOLOGIST Xing Zheng No. 2130 Exp. 3-31-11 CERTIFIED ENGINEERING GEOLOGIST STATE OF CALIFORNIA

The State of California or its officers or agents shall not be responsible for the accuracy or completeness of electronic copies of this plan sheet.

This LOTB sheet was prepared in accordance with the Caltrans Soil & Rock Logging, Classification, & Presentation Manual (June 2007).

FOR PLAN VIEW, SEE
"LOG OF TEST BORINGS 1 OF 4"

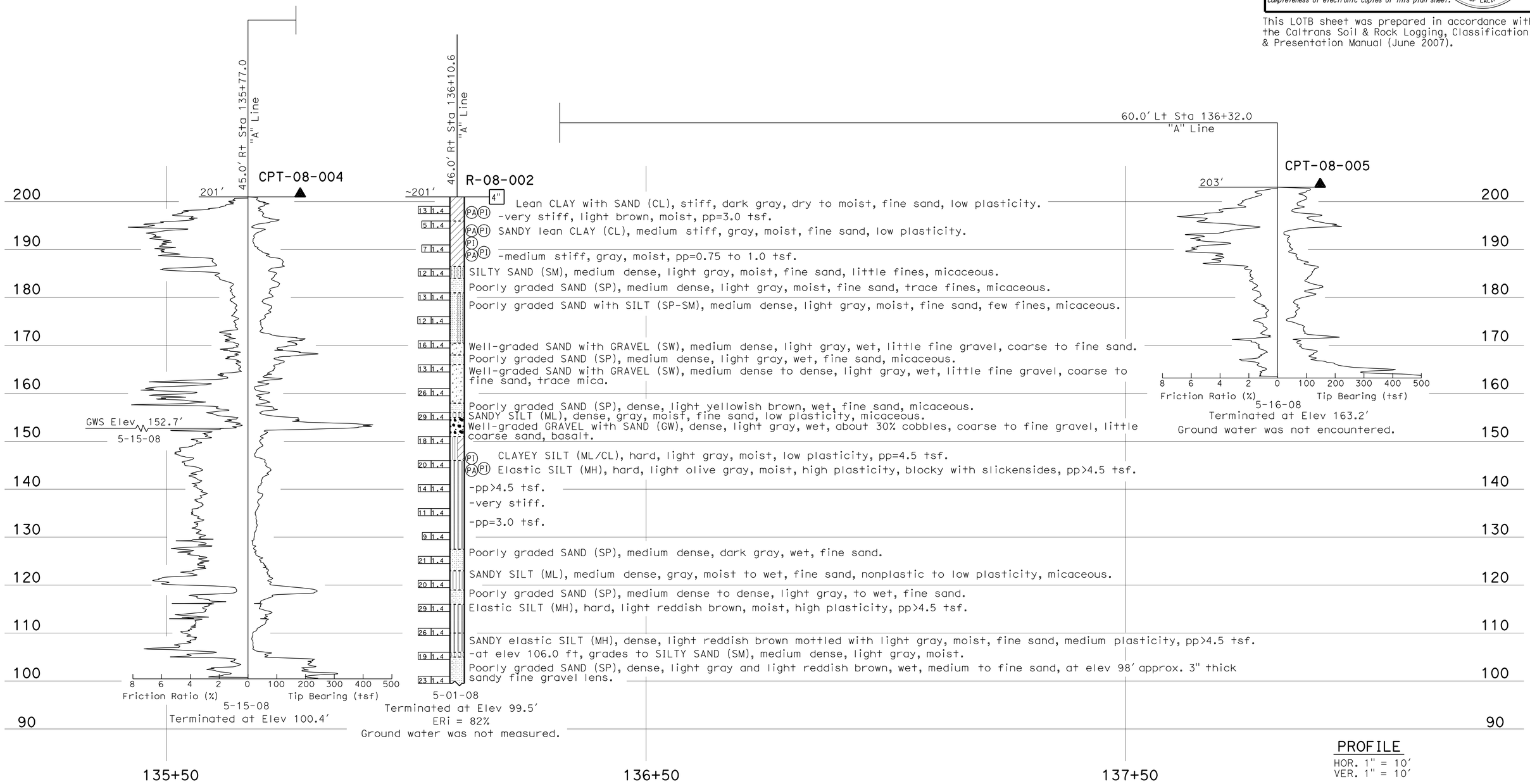

ENGINEERING SERVICES	GEOTECHNICAL SERVICES	STATE OF CALIFORNIA DEPARTMENT OF TRANSPORTATION	DIVISION OF ENGINEERING SERVICES STRUCTURE DESIGN DESIGN BRANCH	BRIDGE NO. 39-0242L/R	DEADMAN CREEK BRIDGE L/R
FUNCTIONAL SUPERVISOR	DRAWN BY: F. Nguyen 01/09	FIELD INVESTIGATION BY:		POST MILES 5.22	LOG OF TEST BORINGS 2 OF 4
NAME: R. Buell	CHECKED BY: J. Thorne	X. Zheng			

OGS CIVIL LOG OF TEST BORINGS SHEET

ORIGINAL SCALE IN INCHES FOR REDUCED PLANS 0 1 2 3

CU 10
EA 415701

DISREGARD PRINTS BEARING EARLIER REVISION DATES

REVISION DATES: 02-18-09 02-24-09 03-13-09 05-06-09

SHEET 13 OF 15

FILE => 39-0242lr-z-lotb2of4.dgn

USERNAME => friehard DATE PLOTTED => 11-OCT-2010 TIME PLOTTED => 12:44

DIST	COUNTY	ROUTE	POST MILES TOTAL PROJECT	SHEET No	TOTAL SHEETS
10	Mer	99	R4.6/R10.5	625	751

Zheng, Xing 5-13-09
CERTIFIED ENGINEERING GEOLOGIST

10-11-10
PLANS APPROVAL DATE

PROFESSIONAL GEOLOGIST Xing Zheng No. 2130 Exp. 3-31-11 CERTIFIED ENGINEERING GEOLOGIST STATE OF CALIFORNIA

The State of California or its officers or agents shall not be responsible for the accuracy or completeness of electronic copies of this plan sheet.

REFERENCE: CALTRANS SOIL & ROCK LOGGING, CLASSIFICATION, AND PRESENTATION MANUAL (JUNE 2007)

CEMENTATION

Description	Criteria
Weak	Crumbles or breaks with handling or little finger pressure.
Moderate	Crumbles or breaks with considerable finger pressure.
Strong	Will not crumble or break with finger pressure.

CONSISTENCY OF COHESIVE SOILS

Description	Unconfined Compressive Strength (tsf)	Pocket Penetrometer Measurement (tsf)	Torvane Measurement (tsf)	Field Approximation
Very Soft	< 0.25	< 0.25	< 0.12	Easily penetrated several inches by fist
Soft	0.25 to 0.50	0.25 to 0.50	0.12 to 0.25	Easily penetrated several inches by thumb
Medium Stiff	0.50 to 1.0	0.50 to 1.0	0.25 to 0.50	Penetrated several inches by thumb with moderate effort
Stiff	1 to 2	1 to 2	0.50 to 1.0	Readily indented by thumb but penetrated only with great effort
Very Stiff	2 to 4	2 to 4	1.0 to 2.0	Readily indented by thumbnail
Hard	> 4.0	> 4.0	> 2.0	Indented by thumbnail with difficulty

BOREHOLE IDENTIFICATION

Symbol	Hole Type	Description
Size	A	Auger Boring
Size	R P	Rotary drilled boring Rotary percussion boring (air)
Size	R	Rotary drilled diamond core
Size	HD HA	Hand driven (1-inch soil tube) Hand Auger
●	D	Dynamic Cone Penetration Boring
▲	CPT	Cone Penetration Test (ASTM D 5778-95)
⬚	O	Other

Note: Size in inches.

PLASTICITY OF FINE-GRAINED SOILS

Description	Criteria
Nonplastic	A 1/8-inch thread cannot be rolled at any water content.
Low	The thread can barely be rolled and the lump cannot be formed when drier than the plastic limit.
Medium	The thread is easy to roll and not much time is required to reach the plastic limit. The thread cannot be rerolled after reaching the plastic limit. The lump crumbles when drier than the plastic limit.
High	It takes considerable time rolling and kneading to reach the plastic limit. The thread can be rerolled several times after reaching the plastic limit. The lump can be formed without crumbling when drier than the plastic limit.

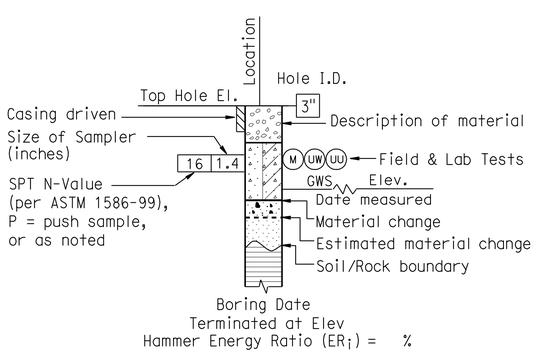

ROTARY BORING

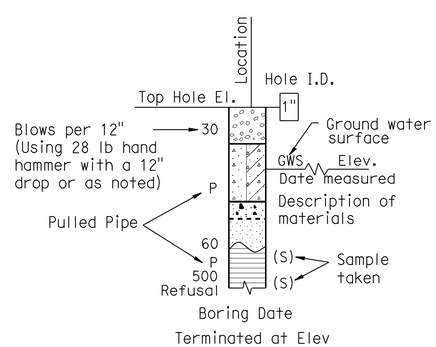

HAND BORING

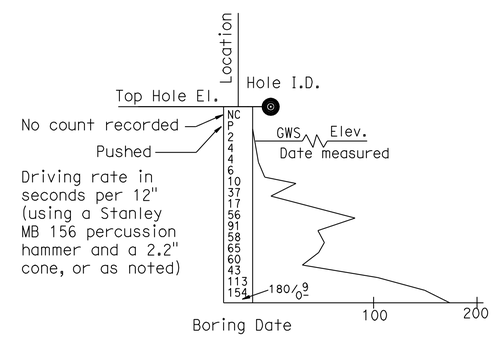

DYNAMIC CONE PENETRATION BORING

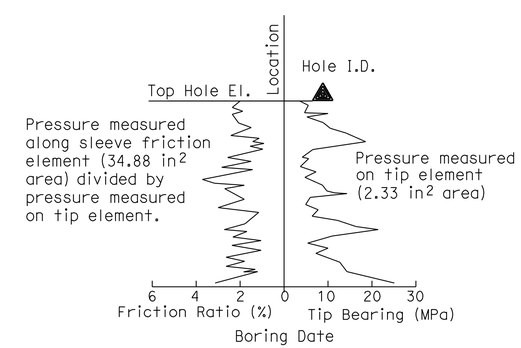

CONE PENETRATION TEST (CPT) SOUNDING

ENGINEERING SERVICES	GEOTECHNICAL SERVICES	STATE OF CALIFORNIA DEPARTMENT OF TRANSPORTATION	DIVISION OF ENGINEERING SERVICES STRUCTURE DESIGN DESIGN BRANCH	BRIDGE NO. 39-0242L/R	DEADMAN CREEK BRIDGE L/R
	PREPARED BY: F. Nguyen 01/09			POST MILE 5.22	LOG OF TEST BORINGS 3 OF 4

GS LOTB SOIL LEGEND

ORIGINAL SCALE IN INCHES FOR REDUCED PLANS 0 1 2 3

CU 10
EA 415701

DISREGARD PRINTS BEARING EARLIER REVISION DATES 03-13-09

REVISION DATES

SHEET 14 OF 15

FILE => 39-0242lr-z-lotb3of4.dgn

USERNAME => trlenard DATE PLOTTED => 11-OCT-2010 TIME PLOTTED => 12:44

REFERENCE: CALTRANS SOIL & ROCK LOGGING, CLASSIFICATION, AND PRESENTATION MANUAL (JUNE 2007)

DIST	COUNTY	ROUTE	POST MILES TOTAL PROJECT	SHEET No	TOTAL SHEETS
10	Mer	99	R4.6/R10.5	626	751

CERTIFIED ENGINEERING GEOLOGIST 5-13-09

10-11-10
PLANS APPROVAL DATE

PROFESSIONAL GEOLOGIST Xing Zheng No. 2130 Exp. 3-31-11 CERTIFIED ENGINEERING GEOLOGIST STATE OF CALIFORNIA

The State of California or its officers or agents shall not be responsible for the accuracy or completeness of electronic copies of this plan sheet.

GROUP SYMBOLS AND NAMES

Graphic/Symbol	Group Names	Graphic/Symbol	Group Names
GW	Well-graded GRAVEL Well-graded GRAVEL with SAND	CL	Lean CLAY Lean CLAY with SAND Lean CLAY with GRAVEL SANDY lean CLAY SANDY lean CLAY with GRAVEL GRAVELLY lean CLAY GRAVELLY lean CLAY with SAND
GP	Poorly graded GRAVEL Poorly graded GRAVEL with SAND		
GW-GM	Well-graded GRAVEL with SILT Well-graded GRAVEL with SILT and SAND	CL-ML	SILTY CLAY SILTY CLAY with SAND SILTY CLAY with GRAVEL SANDY SILTY CLAY SANDY SILTY CLAY with GRAVEL GRAVELLY SILTY CLAY GRAVELLY SILTY CLAY with SAND
GW-GC	Well-graded GRAVEL with CLAY (or SILTY CLAY) Well-graded GRAVEL with CLAY and SAND (or SILTY CLAY and SAND)		
GP-GM	Poorly graded GRAVEL with SILT Poorly graded GRAVEL with SILT and SAND	ML	SILT SILT with SAND SILT with GRAVEL SANDY SILT SANDY SILT with GRAVEL GRAVELLY SILT GRAVELLY SILT with SAND
GP-GC	Poorly graded GRAVEL with CLAY (or SILTY CLAY) Poorly graded GRAVEL with CLAY and SAND (or SILTY CLAY and SAND)		
GM	SILTY GRAVEL SILTY GRAVEL with SAND	OL	ORGANIC lean CLAY ORGANIC lean CLAY with SAND ORGANIC lean CLAY with GRAVEL SANDY ORGANIC lean CLAY SANDY ORGANIC lean CLAY with GRAVEL GRAVELLY ORGANIC lean CLAY GRAVELLY ORGANIC lean CLAY with SAND
GC	CLAYEY GRAVEL CLAYEY GRAVEL with SAND		
GC-GM	SILTY, CLAYEY GRAVEL SILTY, CLAYEY GRAVEL with SAND	OL	ORGANIC SILT ORGANIC SILT with SAND ORGANIC SILT with GRAVEL SANDY ORGANIC SILT SANDY ORGANIC SILT with GRAVEL GRAVELLY ORGANIC SILT GRAVELLY ORGANIC SILT with SAND
SW	Well-graded SAND Well-graded SAND with GRAVEL		
SP	Poorly graded SAND Poorly graded SAND with GRAVEL	CH	Fat CLAY Fat CLAY with SAND Fat CLAY with GRAVEL SANDY fat CLAY SANDY fat CLAY with GRAVEL GRAVELLY fat CLAY GRAVELLY fat CLAY with SAND
SW-SM	Well-graded SAND with SILT Well-graded SAND with SILT and GRAVEL		
SW-SC	Well-graded SAND with CLAY (or SILTY CLAY) Well-graded SAND with CLAY and GRAVEL (or SILTY CLAY and GRAVEL)	MH	Elastic SILT Elastic SILT with SAND Elastic SILT with GRAVEL SANDY elastic SILT SANDY elastic SILT with GRAVEL GRAVELLY elastic SILT GRAVELLY elastic SILT with SAND
SP-SM	Poorly graded SAND with SILT Poorly graded SAND with SILT and GRAVEL		
SP-SC	Poorly graded SAND with CLAY (or SILTY CLAY) Poorly graded SAND with CLAY and GRAVEL (or SILTY CLAY and GRAVEL)	OH	ORGANIC fat CLAY ORGANIC fat CLAY with SAND ORGANIC fat CLAY with GRAVEL SANDY ORGANIC fat CLAY SANDY ORGANIC fat CLAY with GRAVEL GRAVELLY ORGANIC fat CLAY GRAVELLY ORGANIC fat CLAY with SAND
SM	SILTY SAND SILTY SAND with GRAVEL		
SC	CLAYEY SAND CLAYEY SAND with GRAVEL	OH	ORGANIC elastic SILT ORGANIC elastic SILT with SAND ORGANIC elastic SILT with GRAVEL SANDY ORGANIC elastic SILT SANDY ORGANIC elastic SILT with GRAVEL GRAVELLY ORGANIC elastic SILT GRAVELLY ORGANIC elastic SILT with SAND
SC-SM	SILTY, CLAYEY SAND SILTY, CLAYEY SAND with GRAVEL		
PT	PEAT	OL/OH	ORGANIC SOIL ORGANIC SOIL with SAND ORGANIC SOIL with GRAVEL SANDY ORGANIC SOIL SANDY ORGANIC SOIL with GRAVEL GRAVELLY ORGANIC SOIL GRAVELLY ORGANIC SOIL with SAND
	COBBLES COBBLES and BOULDERS BOULDERS		

FIELD AND LABORATORY TESTING

- (C) Consolidation (ASTM D 2435)
- (CL) Collapse Potential (ASTM D 5333)
- (CP) Compaction Curve (CTM 216)
- (CR) Corrosivity Testing (CTM 643, CTM 422, CTM 417)
- (CU) Consolidated Undrained Triaxial (ASTM D 4767)
- (DS) Direct Shear (ASTM D 3080)
- (EI) Expansion Index (ASTM D 4829)
- (M) Moisture Content (ASTM D 2216)
- (OC) Organic Content-% (ASTM D 2974)
- (P) Permeability (CTM 220)
- (PA) Particle Size Analysis (ASTM D 422)
- (PI) Plasticity Index (AASHTO T 90) Liquid Limit (AASHTO T 89)
- (PL) Point Load Index (ASTM D 5731)
- (PM) Pressure Meter
- (PP) Pocket Penetrometer
- (R) R-Value (CTM 301)
- (SE) Sand Equivalent (CTM 217)
- (SG) Specific Gravity (AASHTO T 100)
- (SL) Shrinkage Limit (ASTM D 427)
- (SW) Swell Potential (ASTM D 4546)
- (TV) Pocket Torvane
- (UC) Unconfined Compression-Soil (ASTM D 2166) Unconfined Compression-Rock (ASTM D 2938)
- (UU) Unconsolidated Undrained Triaxial (ASTM D 2850)
- (UW) Unit Weight (ASTM D 4767)
- (VS) Vane Shear (AASHTO T 223)

APPARENT DENSITY OF COHESIONLESS SOILS

Description	SPT N_{60} (Blows / 12 inches)
Very loose	0 - 4
Loose	5 - 10
Medium Dense	11 - 30
Dense	31 - 50
Very Dense	> 50

MOISTURE

Description	Criteria
Dry	Absence of moisture, dusty, dry to the touch
Moist	Damp but no visible water
Wet	Visible free water, usually soil is below water table

PERCENT OR PROPORTION OF SOILS

Description	Criteria
Trace	Particles are present but estimated to be less than 5%
Few	5 to 10%
Little	15 to 25%
Some	30 to 45%
Mostly	50 to 100%

PARTICLE SIZE

Description		Size
Boulder		> 12"
Cobble		3" to 12"
Gravel	Coarse	3/4" to 3"
	Fine	No. 4 to 3/4"
Sand	Coarse	No. 10 to No. 4
	Medium	No. 40 to No. 10
	Fine	No. 200 to No. 40

ENGINEERING SERVICES

GEOTECHNICAL SERVICES
PREPARED BY: F. Nguyen 01/09

STATE OF CALIFORNIA DEPARTMENT OF TRANSPORTATION

DIVISION OF ENGINEERING SERVICES STRUCTURE DESIGN
DESIGN BRANCH

BRIDGE NO. 39-0242L/R
POST MILE 5.22

DEADMAN CREEK BRIDGE L/R
LOG OF TEST BORINGS 4 OF 4

GS LOTB SOIL LEGEND

ORIGINAL SCALE IN INCHES FOR REDUCED PLANS 0 1 2 3

CU 10
EA 415701

DISREGARD PRINTS BEARING EARLIER REVISION DATES 03-13-09

REVISION DATES

SHEET 15 OF 15

FILE => 39-0242lr-z-lotb4of4.dgn

USERNAME => friehard DATE PLOTTED => 11-OCT-2010 TIME PLOTTED => 12:44

DIST	COUNTY	ROUTE	POST MILES TOTAL PROJECT	SHEET No	TOTAL SHEETS
10	Mer	99	R4.6/R10.5	627	751

REGISTERED CIVIL ENGINEER 07-31-09 DATE

10-11-10
PLANS APPROVAL DATE

REGISTERED PROFESSIONAL ENGINEER G. SCHUSTER No. C 63897 Exp. 09-30-10 CIVIL STATE OF CALIFORNIA

The State of California or its officers or agents shall not be responsible for the accuracy or completeness of electronic copies of this plan sheet.

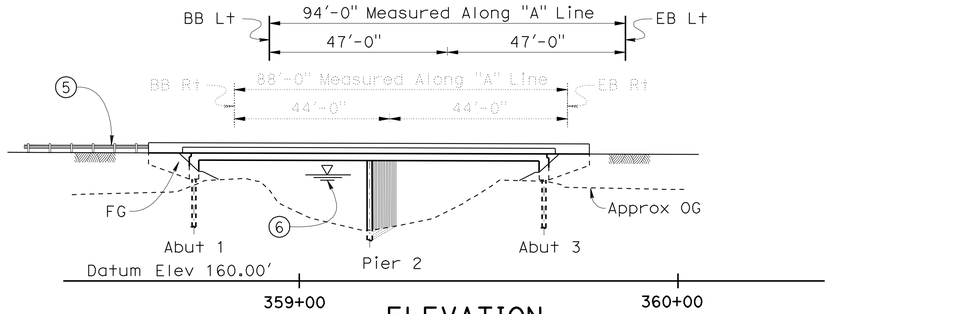

ELEVATION

1" = 20'-0"

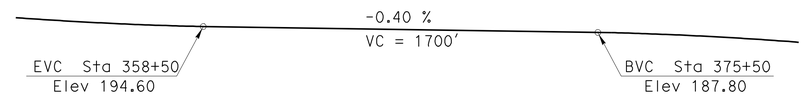

PROFILE GRADE

No Scale

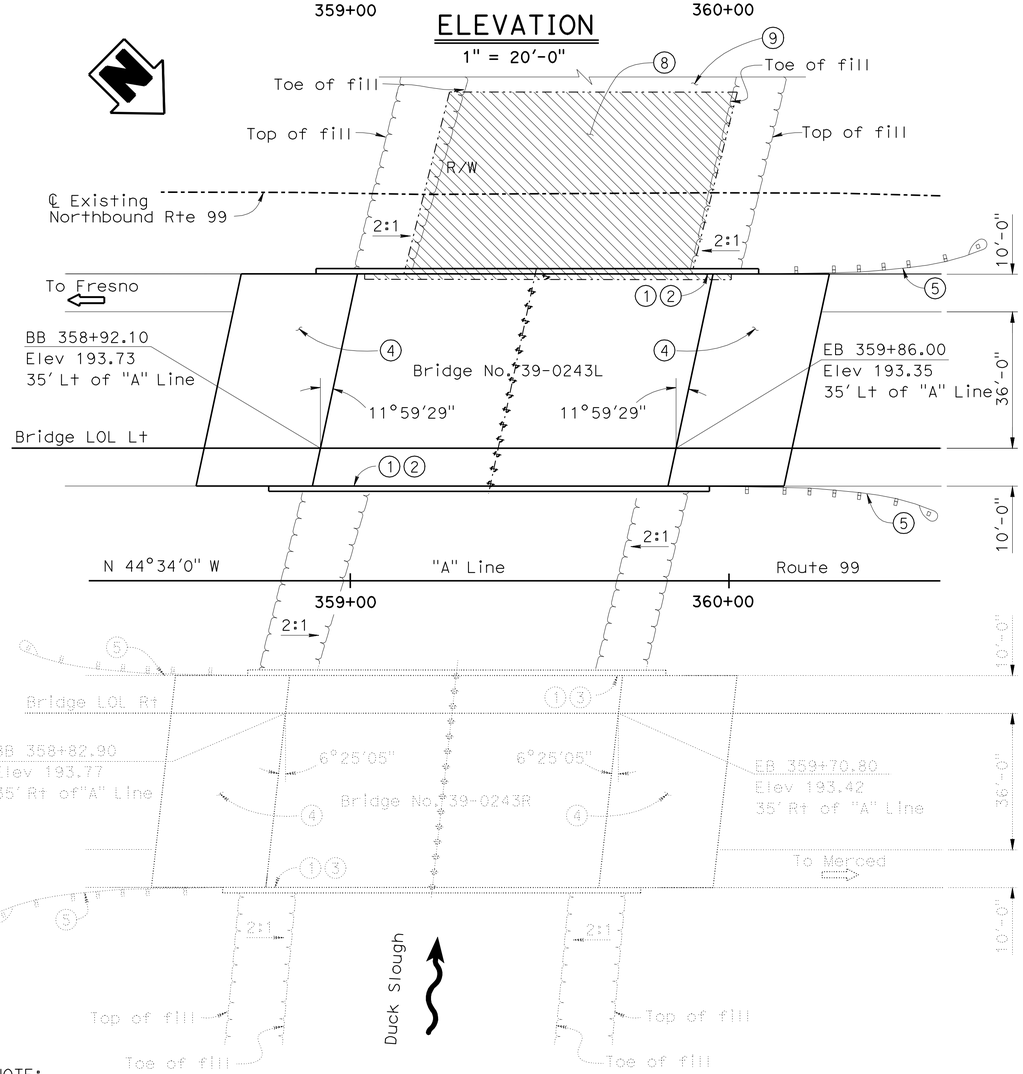

NOTE:
The Contractor shall verify all controlling field dimensions before ordering or fabricating any materials.

PLAN

1" = 20'-0"

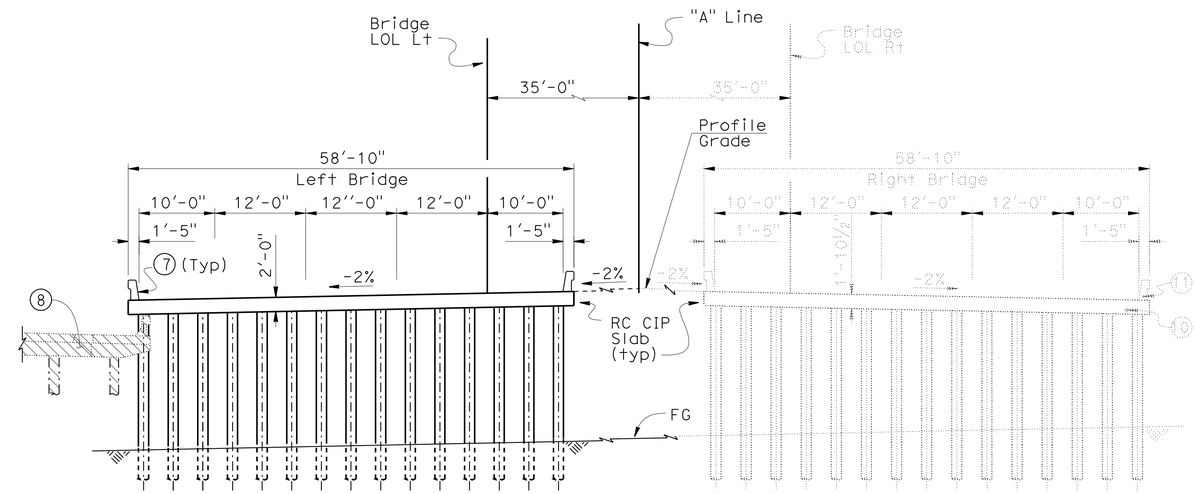

TYPICAL SECTION

1" = 10'-0"

Legend:

1. Paint "Duck Slough Bridge".
2. Paint Bridge No. 390243L.
3. Paint Bridge No. 390243R.
4. Structure Approach Type N(30D).
5. Metal Beam Guard Rail, see "Road Plan".
6. For Hydrologic Summary, see "Foundation Plan".
7. Concrete Barrier Type 732.
8. Partial removal of existing Bridge 39-0004, see "Partial Bridge Removal" sheet in Duck Slough Bridge West Frontage Road" plan set.
9. Portion of existing bridge 39-0004 to remain as future West Frontage Road, see "Barrier Modifications" sheet in "Duck Slough Bridge West Frontage Road" plan set.
10. 4" ø Communication Conduit for fiber optic in slab, see "Road Plans".
11. Place 2" Conduit in Barrier Rail, see "Road Plans".

Indicate Partial bridge removal

Indicate existing structure

Note: For "General Notes", "Index Plans", "Standard Plans", "Quantities", See "Index To Plans" sheet.

x Gary Blakesley
DESIGN ENGINEER

	BY	CHECKED
DESIGN	G. Schuster	N. Terzis
DETAILS	A.C / G.S / S.J / T.C.	N. Terzis
QUANTITIES	N. Terzis	S. Jiang

LOAD & RESISTANCE FACTOR DESIGN — LIVE LOADING: HL93 W/"LOW-BOY"; PERMIT DESIGN VEHICLE

	BY	CHECKED
LAYOUT	G. Schuster	N. Terzis
SPECIFICATIONS	Aiman Abdel-Malak	PLANS AND SPECS COMPARED

STATE OF CALIFORNIA
DEPARTMENT OF TRANSPORTATION

DIVISION OF ENGINEERING SERVICES
STRUCTURE DESIGN
DESIGN BRANCH 5

BRIDGE NO. 39-0243L
POST MILE 9.43

DUCK SLOUGH BRIDGE LEFT
GENERAL PLAN

ORIGINAL SCALE IN INCHES FOR REDUCED PLANS 0 1 2 3

CU 10
EA 415701

DISREGARD PRINTS BEARING EARLIER REVISION DATES

REVISION DATES: 01-21-09 2-19-09 05-01-09 06-01-09 6-11-09 07-14-08 08-08-08 09-05-08 12-19-08

SHEET 1 OF 16

STRUCTURES DESIGN GENERAL PLAN SHEET (ENGLISH) (REV.07-24-06)

FILE => 39-0243l-a-gp.dgn

USERNAME => rrmikest DATE PLOTTED => 19-OCT-2010 TIME PLOTTED => 08:15

DIST	COUNTY	ROUTE	POST MILES TOTAL PROJECT	SHEET No	TOTAL SHEETS
10	Mer	99	R4.6/R10.5	628	751

REGISTERED CIVIL ENGINEER 07-31-09 DATE

10-11-10
PLANS APPROVAL DATE

REGISTERED PROFESSIONAL ENGINEER G. SCHUSTER No. C 63897 Exp. 09-30-10 CIVIL STATE OF CALIFORNIA

The State of California or its officers or agents shall not be responsible for the accuracy or completeness of electronic copies of this plan sheet.

GENERAL NOTES
LOAD AND RESISTANCE FACTOR DESIGN

DESIGN: AASHTO LRFD Bridge Design Specifications, Third Edition with 2005 & 2006 Interim Revisions and Caltrans Amendments 03.06.01

SEISMIC DESIGN: Caltrans Seismic Design Criteria (SDC) Version 1.4, June, 2006

DEAD LOAD: Includes 35 Psf for future wearing surface.

LIVE LOADING: HL93 Alternative loading and "Low-Boy" permit design vehicle

SEISMIC LOADING: Caltrans SDC ARS curve for soil profile type D (M = 6.5 ± 0.25), (Peak Rock Acceleration = 0.2g)

REINFORCED CONCRETE:
f_y = 60 ksi
f'_c = 3.6 ksi
n = 8

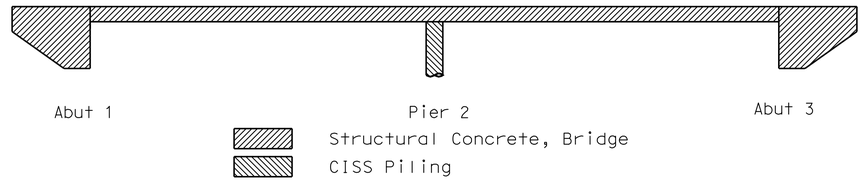

CONCRETE STRENGTH AND TYPE LIMITS
No Scale

QUANTITIES

STRUCTURE EXCAVATION (BRIDGE)	110	CY
STRUCTURE BACKFILL (BRIDGE)	52	CY
FURNISH PILING (CLASS 90)	879	LF
DRIVE PILE (CLASS 90)	20	EA
FURNISH 16" CAST-IN-STEEL SHELL CONCRETE PILING	1,219	LF
DRIVE 16" CAST-IN-STEEL SHELL CONCRETE PILE	15	EA
STRUCTURAL CONCRETE, BRIDGE	490	CY
STRUCTURAL CONCRETE, APPROACH SLAB (TYPE N)	130	CY
JOINT SEAL (MR½")	120	LF
BAR REINFORCING STEEL (BRIDGE)	94,000	LB
CONCRETE BARRIER (TYPE 732)	233	LF

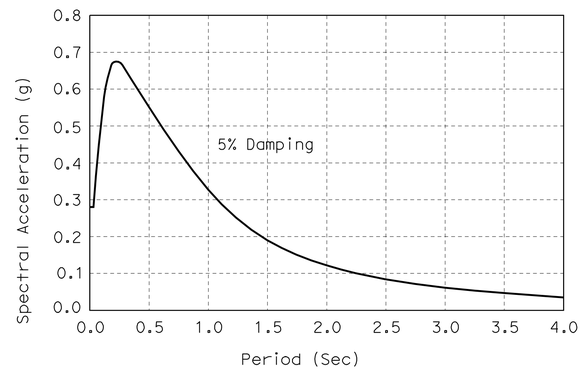

SOIL PROFILE TYPE D: Mw = 6.5, PBA = 0.2g
No Scale

INDEX TO PLANS

Sheet No. Title

1. GENERAL PLAN
2. INDEX TO PLANS
3. DECK CONTOURS
4. FOUNDATION PLAN
5. ABUTMENT LAYOUT
6. PIER DETAILS
7. TYPICAL SECTION
8. SLAB REINFORCEMENT DETAILS NO. 1
9. SLAB REINFORCEMENT DETAILS NO. 2
10. STRUCTURE APPROACH TYPE N(30D)
11. STRUCTURE APPROACH DRAINAGE DETAILS
12. LOG OF TEST BORINGS 1 OF 5
13. LOG OF TEST BORINGS 2 OF 5
14. LOG OF TEST BORINGS 3 OF 5
15. LOG OF TEST BORINGS 4 OF 5
16. LOG OF TEST BORINGS 5 OF 5

PILE DATA TABLE (B2-5)

Support Location	Pile Type	Nominal Resistance (kips)		Design Tip Elevations (ft)	Specified Tip Elevations (ft)	Nominal Driving Resistance (kips)
		Compression	Tension			
Abut 1	Class 90	180	0	142.0 (1) 155.0 (2)	142.0	180
Pier 2	CISS NPS 16x0.500	280	0	110.0 (1) 135.0 (2)	110.0	280
Abut 3	Class 90	180	0	142.0 (1) 155.0 (2)	142.0	180

NOTE: Design tip elevations are controlled by the following demands: (1) Compression, (2) Lateral.

STANDARD PLANS DATED MAY 2006

A10A	ACRONYMS AND ABBREVIATIONS (A-L)
A10B	ACRONYMS AND ABBREVIATIONS (M-Z)
A10C	SYMBOLS (SHEET 1 OF 2)
A10D	SYMBOLS (SHEET 2 OF 2)
A62C	LIMITS OF PAYMENT FOR EXCAVATION AND BACKFILL-BRIDGE
BO-1	BRIDGE DETAILS
B2-5	PILE DETAILS CLASS 90 AND CLASS 140
RSP B6-21	JOINT SEALS (MAXIMUM MOVEMENT RATING = 2")
B11-55	CONCRETE BARRIER TYPE 732
B14-3	COMMUNICATION AND SPRINKLER CONTROL CONDUITS (CONDUIT LESS THAN 4")

STANDARD PLAN SHEET NO.
DETAIL NO.

	BY	CHECKED
DESIGN	G. Schuster	N. Terzis
DETAILS	G. Souza/S. Jiang	N. Terzis
QUANTITIES	N. Terzis	S. Jiang

STATE OF CALIFORNIA
DEPARTMENT OF TRANSPORTATION

DIVISION OF ENGINEERING SERVICES
STRUCTURE DESIGN
DESIGN BRANCH 5

BRIDGE NO. 39-0243L
POST MILE 9.43

DUCK SLOUGH BRIDGE LEFT
INDEX TO PLANS

ORIGINAL SCALE IN INCHES FOR REDUCED PLANS 0 1 2 3

CU 10
EA 415701

DISREGARD PRINTS BEARING EARLIER REVISION DATES

REVISION DATES: 11-14-07 03-14-08 6-14-08 7-29-08 8-11-08 01-22-09 01-26-09 2-13-09 2-25-09

SHEET 2 OF 16

STRUCTURES DESIGN DETAIL SHEET (ENGLISH) (REV. 10/25/05)

FILE => 39-0243l-a-itp.dgn

USERNAME => trlenard DATE PLOTTED => 11-OCT-2010 TIME PLOTTED => 12:44

DIST	COUNTY	ROUTE	POST MILES TOTAL PROJECT	SHEET No	TOTAL SHEETS
10	Mer	99	R4.6/R10.5	629	751

REGISTERED CIVIL ENGINEER 07-31-09 DATE

10-11-10
PLANS APPROVAL DATE

REGISTERED PROFESSIONAL ENGINEER G. SCHUSTER No. C 63897 Exp. 09-30-10 CIVIL STATE OF CALIFORNIA

The State of California or its officers or agents shall not be responsible for the accuracy or completeness of electronic copies of this plan sheet.

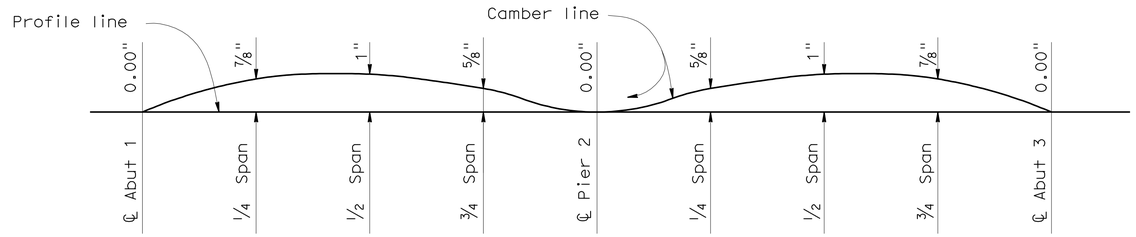

Note:

Does not include allowance for false work settlement.

CAMBER DIAGRAM

no scale

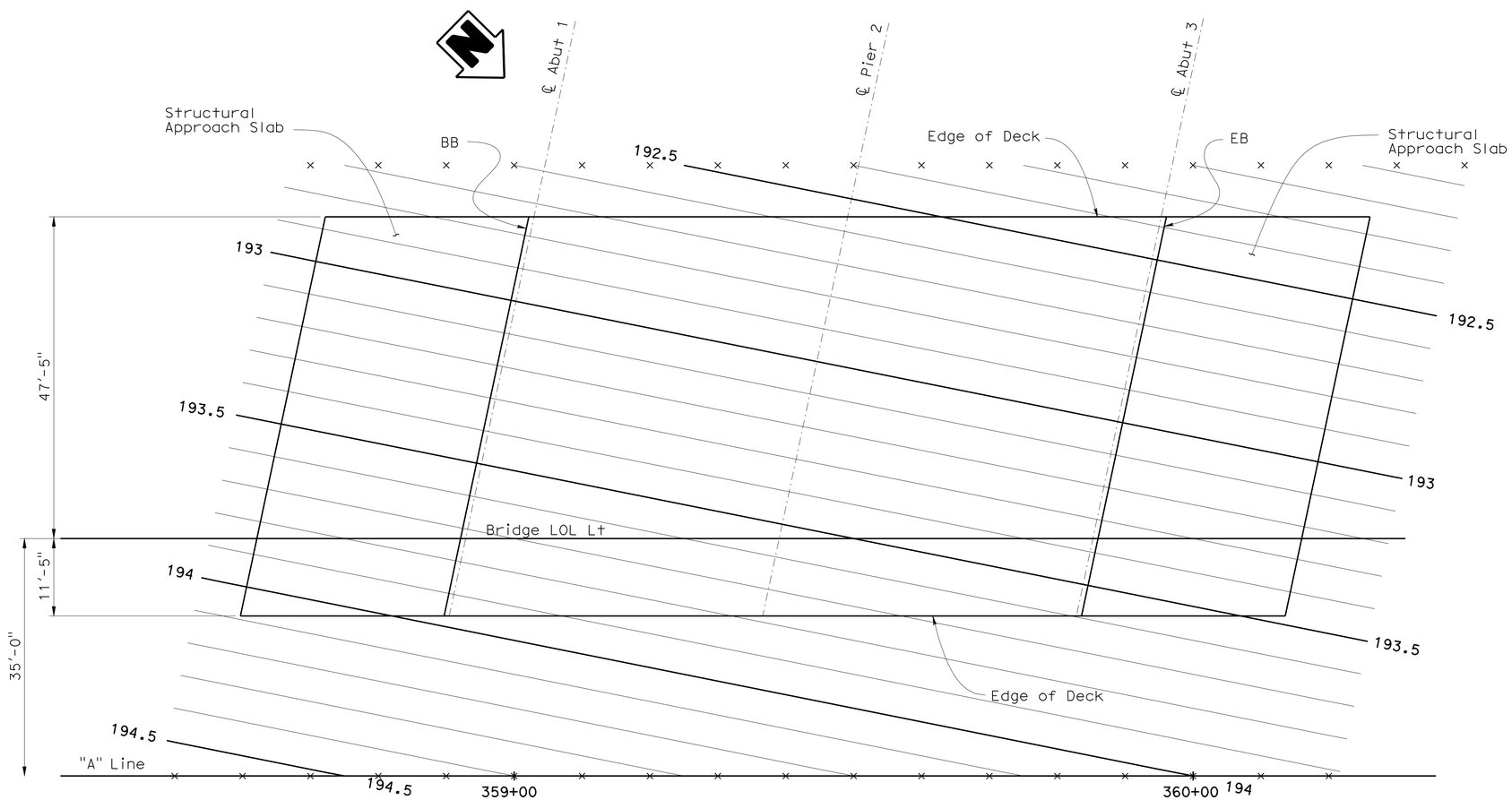

DECK CONTOURS

1" = 10'-0"

Notes:

× = 10' interval along station line.

Contours do not include camber.

Contour interval = 0.1'

DESIGN	BY G. Schuster	CHECKED N. Terzis	
DETAILS	BY G. M. Souza/S. Jiang	CHECKED N. Terzis	
QUANTITIES	BY N. Terzis	CHECKED S. Jiang	

ORIGINAL SCALE IN INCHES FOR REDUCED PLANS 0 1 2 3

STATE OF CALIFORNIA
DEPARTMENT OF TRANSPORTATION

DIVISION OF ENGINEERING SERVICES
STRUCTURE DESIGN
DESIGN BRANCH 5

CU 10
EA 415701

BRIDGE NO. 39-0243L
POST MILE 9.43

DUCK SLOUGH BRIDGE LEFT
DECK CONTOURS

DISREGARD PRINTS BEARING EARLIER REVISION DATES

REVISION DATES: 04-02-08 04-24-08 06-16-08 07-11-08 07-31-08 08-22-08 10-16-08 01-21-09 6-11-09

SHEET 3 OF 16

STRUCTURES DESIGN DETAIL SHEET (ENGLISH) (REV. 10/25/05)

FILE => 39-0243l-d-dc01.dgn

USERNAME => trlenard DATE PLOTTED => 11-OCT-2010 TIME PLOTTED => 12:44

DIST	COUNTY	ROUTE	POST MILES TOTAL PROJECT	SHEET No	TOTAL SHEETS
10	Mer	99	R4.6/R10.5	630	751

REGISTERED CIVIL ENGINEER 07-31-09 DATE

10-11-10
PLANS APPROVAL DATE

REGISTERED PROFESSIONAL ENGINEER G. SCHUSTER No. C 63897 Exp. 09-30-10 CIVIL STATE OF CALIFORNIA

The State of California or its officers or agents shall not be responsible for the accuracy or completeness of electronic copies of this plan sheet.

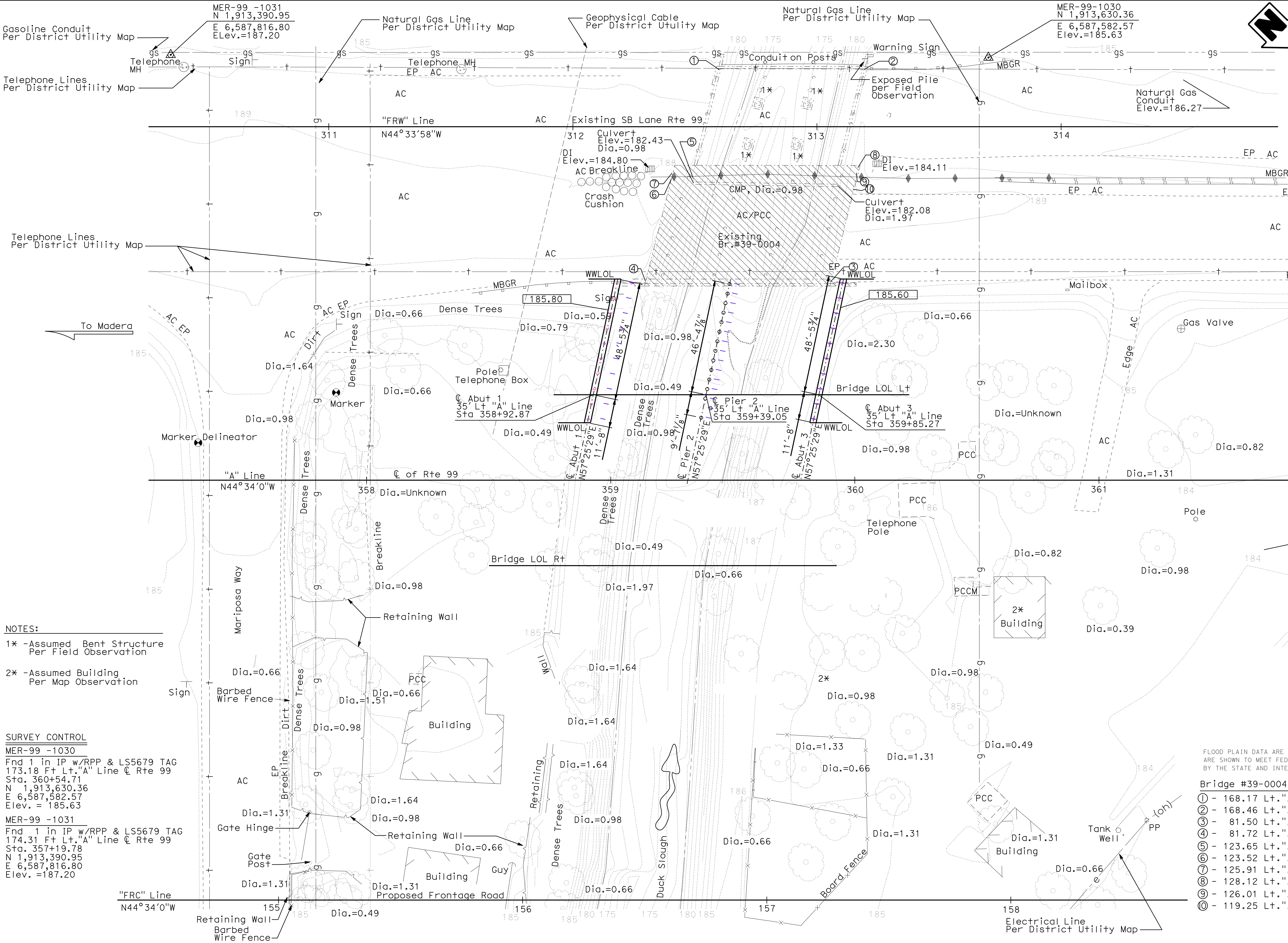

Indicates Bridge Removal

Indicates bottom of footing elevation.

WWLOL are parallel to "A" Line

NOTES:

1* -Assumed Bent Structure Per Field Observation

2* -Assumed Building Per Map Observation

SURVEY CONTROL

MER-99 -1030
Fnd 1 in IP w/RPP & LS5679 TAG
173.18 Ft Lt."A" Line ℄ Rte 99
Sta. 360+54.71
N 1,913,630.36
E 6,587,582.57
Elev. = 185.63

MER-99 -1031
Fnd 1 in IP w/RPP & LS5679 TAG
174.31 Ft Lt."A" Line ℄ Rte 99
Sta. 357+19.78
N 1,913,390.95
E 6,587,816.80
Elev. =187.20

HYDROLOGIC SUMMARY

DRAINAGE AREA: 144 SQUARE MILES

	DESIGN FLOOD	BASE FLOOD
FREQUENCY (YEARS)	50	100
DISCHARGE (CFS)	3000	3600
WATER SURFACE ELEVATION		
RT STRUCTURE	186.5	187.9
LT STRUCTURE	186.1	187.4

FLOOD PLAIN DATA ARE BASED UPON INFORMATION AVAILABLE WHEN THE PLANS WERE PREPARED AND ARE SHOWN TO MEET FEDERAL REQUIREMENTS. THE ACCURACY OF SAID INFORMATION IS NOT WARRANTED BY THE STATE AND INTERESTED OR AFFECTED PARTIES SHOULD MAKE THEIR OWN INVESTIGATIONS.

Bridge #39-0004LR Location

① - 168.17 Lt."A" Line ℄ Rte 99, Sta.359+44.56, Elev.=187.59 ±
② - 168.46 Lt."A" Line ℄ Rte 99, Sta.360+3.98, Elev.=187.18 ±
③ - 81.50 Lt."A" Line ℄ Rte 99, Sta.359+90.17, Elev.=188.61 ±
④ - 81.72 Lt."A" Line ℄ Rte 99, Sta.359+14.11, Elev.=188.83 ±
⑤ - 123.65 Lt."A" Line ℄ Rte 99, Sta.359+33.84, Elev.=189.14 ±
⑥ - 123.52 Lt."A" Line ℄ Rte 99, Sta.359+24.85, Elev.=189.13 ±
⑦ - 125.91 Lt."A" Line ℄ Rte 99, Sta.359+25.11, Elev.=188.06 ±
⑧ - 128.12 Lt."A" Line ℄ Rte 99, Sta.360+1.24, Elev.=187.44 ±
⑨ - 126.01 Lt."A" Line ℄ Rte 99, Sta.360+0.71, Elev.=187.78 ±
⑩ - 119.25 Lt."A" Line ℄ Rte 99, Sta.359+99.27, Elev.=189.25 ±

PRELIMINARY INVESTIGATION SECTION

SCALE	VERT.DATUM NGVD 29	PHOTOGRAMMETRY AS OF: X			
1"=20'	HORZ.DATUM NAD 83 1991.35	SURVEYED	BY District	CHECKED	BY J.Pallares 12/2007
ALIGNMENT TIES Dist.Traverse Sheet		DRAFTED	BY T.Marchenko 11/2007	CHECKED	BY T.Zolnikova 12/2007

	BY	CHECKED
DESIGN	G. Schuster	N. Terzis
DETAILS	G. M. Souza/S. Jiang/T. C.	N. Terzis
QUANTITIES	N. Terzis	S. Jiang

STATE OF CALIFORNIA
DEPARTMENT OF TRANSPORTATION

DIVISION OF ENGINEERING SERVICES
STRUCTURE DESIGN
DESIGN BRANCH 5

BRIDGE NO. 39-0243L
POST MILE 9.43

DUCK SLOUGH BRIDGE LEFT
FOUNDATION PLAN

STRUCTURES FOUNDATION PLAN SHEET (ENGLISH) (REV. 10/25/05)

ORIGINAL SCALE IN INCHES FOR REDUCED PLANS 0 1 2 3

CU 10
EA 415701

DISREGARD PRINTS BEARING EARLIER REVISION DATES

REVISION DATES: 03-25-08, 04-21-08, 06-06-08, 07-11-08, 07-23-08, 07-31-08, 08-26-08, 12-11-08, 01-28-09, 05-01-09

SHEET 4 OF 16

FILE => 39-0243l-e-fp.dgn

USERNAME => trlenard DATE PLOTTED => 11-OCT-2010 TIME PLOTTED => 12:44

DIST	COUNTY	ROUTE	POST MILES TOTAL PROJECT	SHEET No	TOTAL SHEETS
10	Mer	99	R4.6/R10.5	631	751

REGISTERED CIVIL ENGINEER 07-31-09 DATE

10-11-10
PLANS APPROVAL DATE

The State of California or its officers or agents shall not be responsible for the accuracy or completeness of electronic copies of this plan sheet.

REGISTERED PROFESSIONAL ENGINEER G. SCHUSTER No. C 63897 Exp. 09-30-10 CIVIL STATE OF CALIFORNIA

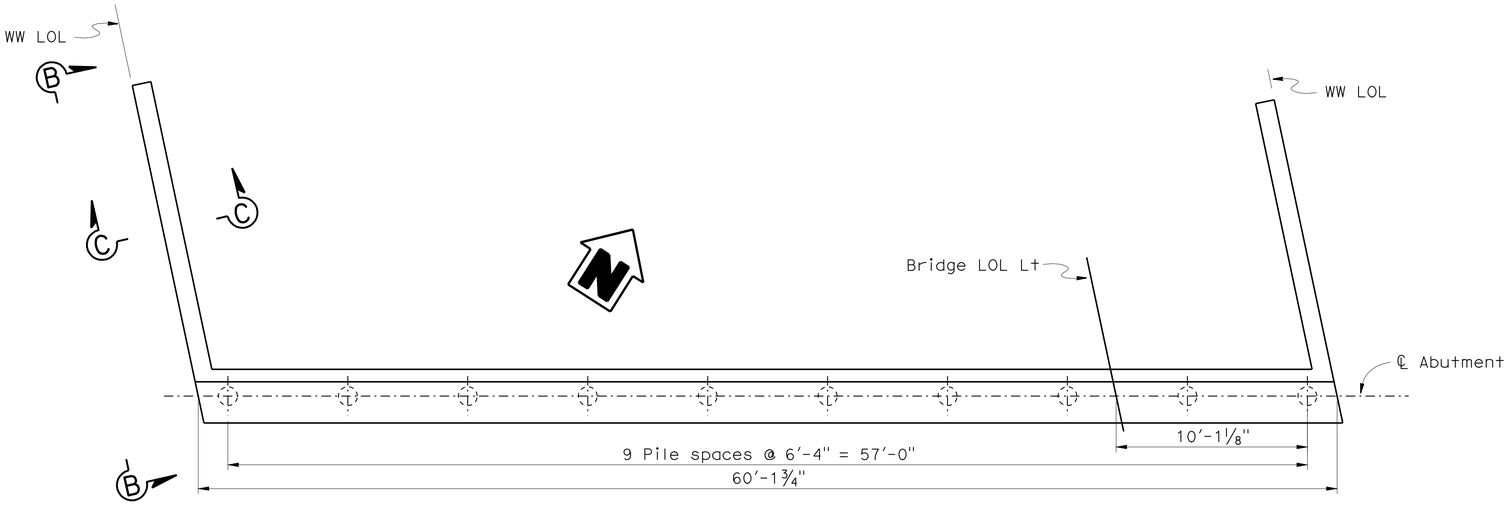

PLAN
1/4" =1'-0"

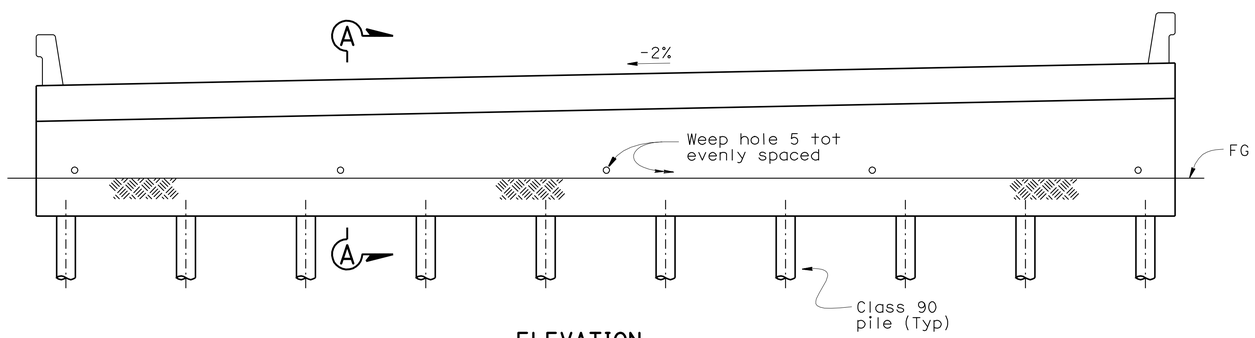

ELEVATION
1/4" =1'-0"

ABUTMENT 3
Note: Abutment 1 similar

For drainage details see "Structure Approach Drainage Details" sheet

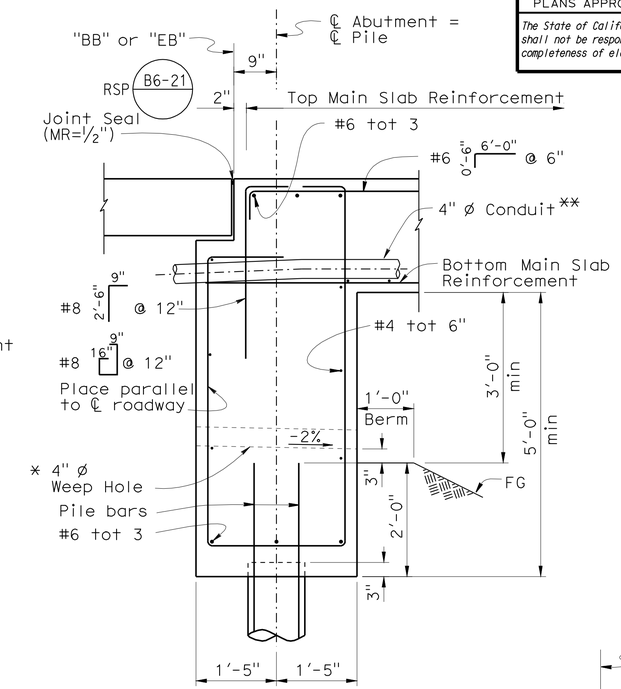

SECTION A-A
3/4" =1'-0"

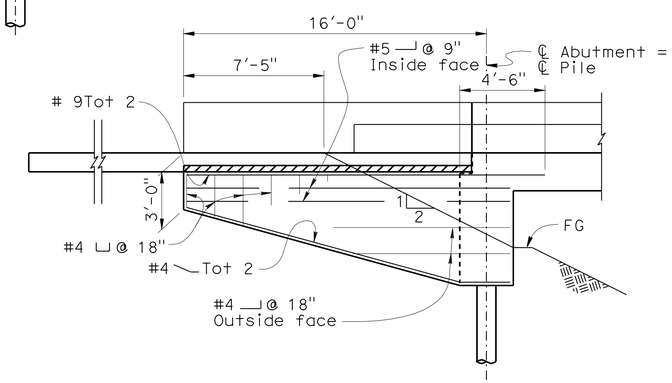

VIEW B-B
1/4" =1'-0"

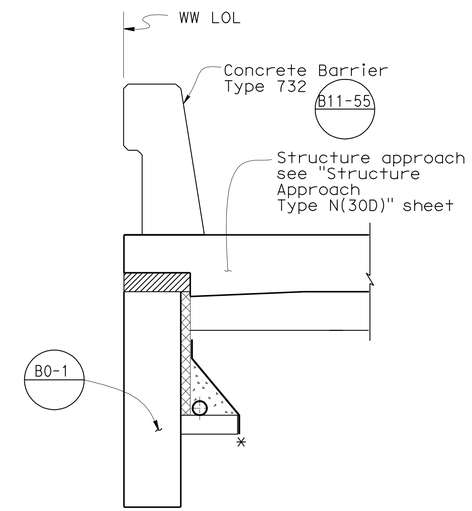

SECTION C-C
3/4" =1'-0"

Notes:

* See "Structure Approach Drainage Details" sheet

** Place 4" ø Communication conduit in Right Abutment only

DESIGN	BY G. Schuster	CHECKED N. Terzis	
DETAILS	BY S. Jiang/A. Chen/T. Cotton	CHECKED N. Terzis	
QUANTITIES	BY N. Terzis	CHECKED S. Jiang	

ORIGINAL SCALE IN INCHES FOR REDUCED PLANS 0 1 2 3

STATE OF CALIFORNIA
DEPARTMENT OF TRANSPORTATION

DIVISION OF ENGINEERING SERVICES
STRUCTURE DESIGN
DESIGN BRANCH 5

CU 10
EA 415701

BRIDGE NO. 39-0243L
POST MILE 9.43

DUCK SLOUGH BRIDGE LEFT
ABUTMENT LAYOUT

DISREGARD PRINTS BEARING EARLIER REVISION DATES

REVISION DATES: 02-21-08 12-21-08 2-11-09 6-11-09 06-26-09 8-06-09 08-01-08 09-05-08 12-11-08

SHEET 5 OF 16

STRUCTURES DESIGN DETAIL SHEET (ENGLISH) (REV. 10/25/05)

FILE => 39-0243l-f-abutlyt.dgn

USERNAME => trlenard DATE PLOTTED => 11-OCT-2010 TIME PLOTTED => 12:45

DIST	COUNTY	ROUTE	POST MILES TOTAL PROJECT	SHEET No	TOTAL SHEETS
10	Mer	99	R4.6/R10.5	632	751

REGISTERED CIVIL ENGINEER 07-31-09 DATE

10-11-10
PLANS APPROVAL DATE

REGISTERED PROFESSIONAL ENGINEER G. SCHUSTER No. C 63897 Exp. 09-30-10 CIVIL STATE OF CALIFORNIA

The State of California or its officers or agents shall not be responsible for the accuracy or completeness of electronic copies of this plan sheet.

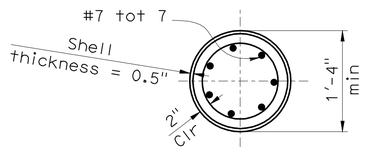

SECTION B-B
1" = 1'-0"

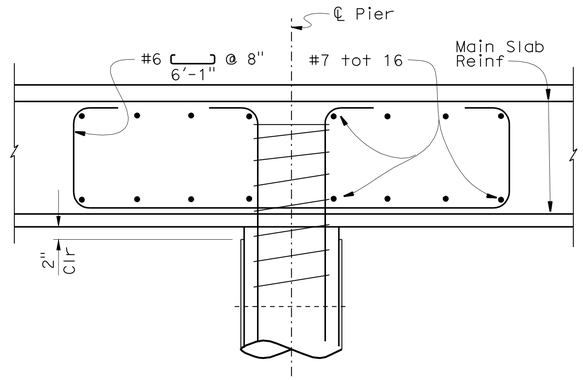

DETAIL "A"
1" = 1'-0"

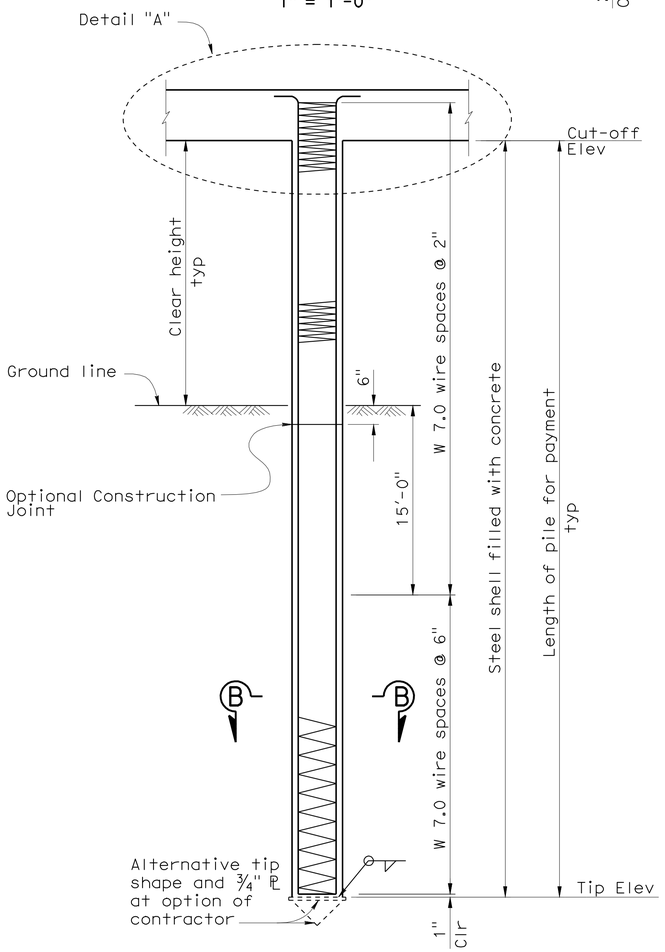

CAST-IN-STEEL SHELL CONCRETE PILE

SECTION A-A
½" = 1'-0"

PILE CUT-OFF ELEVATION TABLE

Pile	Cut-off Elevation (ft)
L1	190.71
L2	190.79
L3	190.88
L4	190.96
L5	191.04
L6	191.12
L7	191.20
L8	191.28
L9	191.37
L10	191.45
L11	191.53
L12	191.61
L13	191.69
L14	191.77
L15	191.85

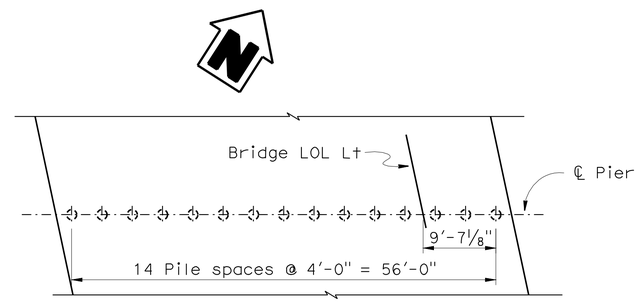

PLAN
1" = 10'-0"

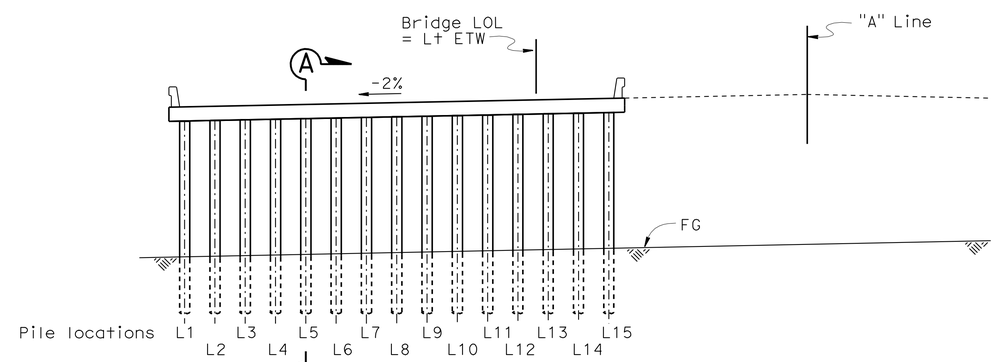

ELEVATION
1" = 10'-0"

DESIGN	BY G. Schuster	CHECKED N. Terzis	
DETAILS	BY S. Jiang/G. M. Souza/T.C	CHECKED N. Terzis	
QUANTITIES	BY N. Terzis	CHECKED S. Jiang	

STATE OF CALIFORNIA
DEPARTMENT OF TRANSPORTATION

DIVISION OF ENGINEERING SERVICES
STRUCTURE DESIGN
DESIGN BRANCH 5

BRIDGE NO. 39-0243L
POST MILE 9.43

DUCK SLOUGH BRIDGE LEFT
PIER DETAILS

ORIGINAL SCALE IN INCHES FOR REDUCED PLANS 0 1 2 3

CU 10
EA 415701

DISREGARD PRINTS BEARING EARLIER REVISION DATES

REVISION DATES: 03-19-08 04-02-09 05-01-09 6-11-09 07-14-09 09-04-09 12-19-08 01-28-09 02-25-09

SHEET 6 OF 16

STRUCTURES DESIGN DETAIL SHEET (ENGLISH) (REV. 10/25/05)

FILE => 39-0243l-i-pierdt.dgn

USERNAME => trlenard DATE PLOTTED => 11-OCT-2010 TIME PLOTTED => 12:45

DIST	COUNTY	ROUTE	POST MILES TOTAL PROJECT	SHEET No	TOTAL SHEETS
10	Mer	99	R4.6/R10.5	633	751

REGISTERED CIVIL ENGINEER 07-31-09 DATE

10-11-10
PLANS APPROVAL DATE

REGISTERED PROFESSIONAL ENGINEER G. SCHUSTER No. C 63897 Exp. 09-30-10 CIVIL STATE OF CALIFORNIA

The State of California or its officers or agents shall not be responsible for the accuracy or completeness of electronic copies of this plan sheet.

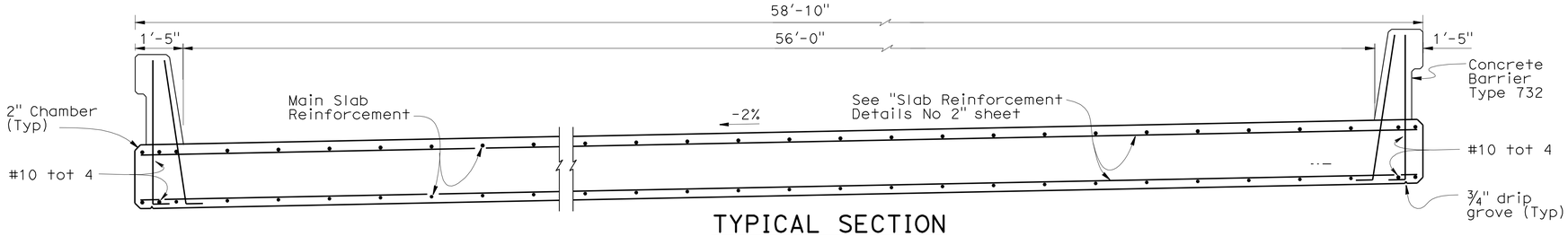

TYPICAL SECTION

½" = 1'-0"

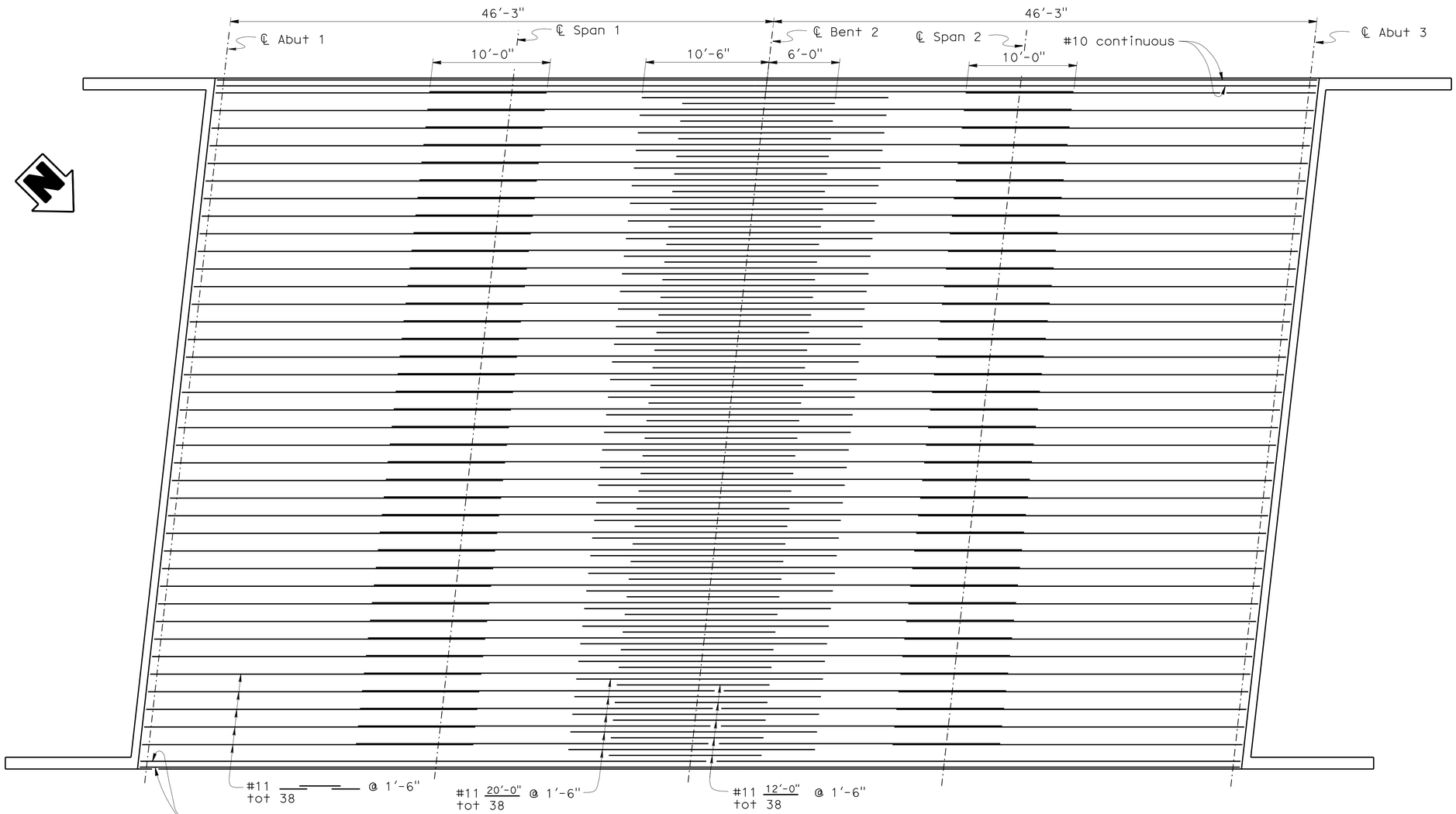

TOP SLAB REINFORCEMENT

1" = 5'-0"

	BY	CHECKED
DESIGN	G. Schuster	N. Terzis
DETAILS	S. Jiang/T Cotton	N. Terzis
QUANTITIES	N. Terzis	S. Jiang

ORIGINAL SCALE IN INCHES FOR REDUCED PLANS 0 1 2 3

STATE OF CALIFORNIA DEPARTMENT OF TRANSPORTATION

DIVISION OF ENGINEERING SERVICES STRUCTURE DESIGN DESIGN BRANCH 5

CU 10
EA 415701

BRIDGE NO. 39-0243L
POST MILE 9.43

DUCK SLOUGH BRIDGE LEFT
TYPICAL SECTION

DISREGARD PRINTS BEARING EARLIER REVISION DATES

REVISION DATES: 06-01-09 | 6-15-09 | 05-09-08 | 07-31-08 | 09-06-08 | 11-20-08 | 12-02-08 | 12-19-08 | 02-25-09

SHEET 7 OF 16

STRUCTURES DESIGN DETAIL SHEET (ENGLISH) (REV. 10/25/05)

FILE => 39-0243I-k_ts.dgn

USERNAME => trlenard DATE PLOTTED => 11-OCT-2010 TIME PLOTTED => 12:45

DIST	COUNTY	ROUTE	POST MILES TOTAL PROJECT	SHEET No	TOTAL SHEETS
10	Mer	99	R4.6/R10.5	634	751

REGISTERED CIVIL ENGINEER 07-31-09 DATE

10-11-10
PLANS APPROVAL DATE

REGISTERED PROFESSIONAL ENGINEER G. SCHUSTER No. C 63897 Exp. 09-30-10 CIVIL STATE OF CALIFORNIA

The State of California or its officers or agents shall not be responsible for the accuracy or completeness of electronic copies of this plan sheet.

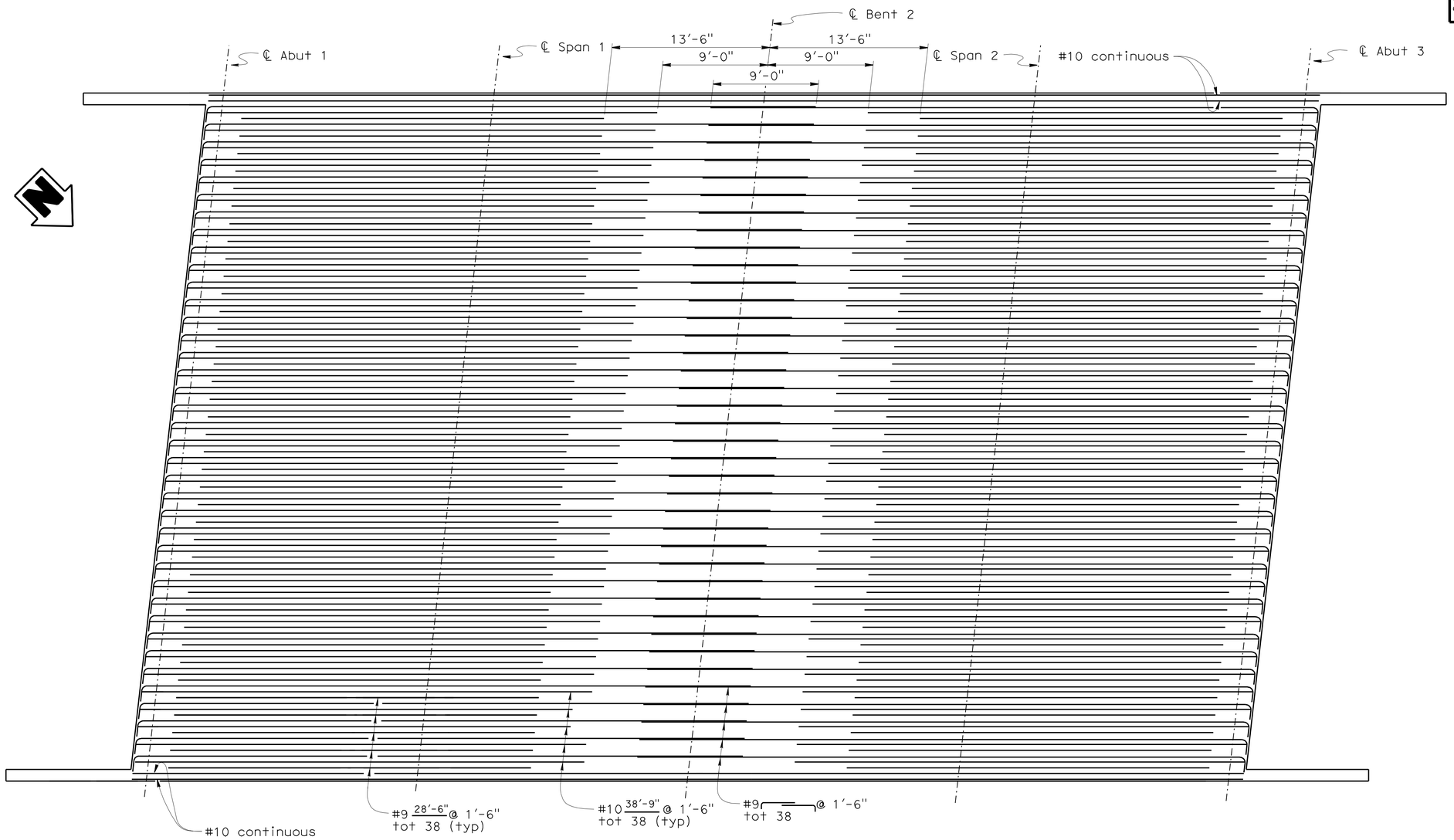

BOTTOM SLAB REINFORCEMENT

1" = 5'-0"

DESIGN	BY G. Schuster	CHECKED N. Terzis	
DETAILS	BY S. Jiang/T Cotton	CHECKED N. Terzis	
QUANTITIES	BY N. Terzis	CHECKED S. Jiang	

ORIGINAL SCALE IN INCHES FOR REDUCED PLANS 0 1 2 3

STATE OF CALIFORNIA
DEPARTMENT OF TRANSPORTATION

DIVISION OF ENGINEERING SERVICES
STRUCTURE DESIGN
DESIGN BRANCH 5

CU 10
EA 415701

BRIDGE NO. 39-0243L
POST MILE 9.43

DUCK SLOUGH BRIDGE LEFT
SLAB REINFORCEMENT DETAILS NO. 1

DISREGARD PRINTS BEARING EARLIER REVISION DATES

REVISION DATES: 06-01-09

SHEET 8 OF 16

STRUCTURES DESIGN DETAIL SHEET (ENGLISH) (REV. 10/25/05)

FILE => 39-0243l-k-slab-rf.dgn

USERNAME => trlehard DATE PLOTTED => 11-OCT-2010 TIME PLOTTED => 12:45

DIST	COUNTY	ROUTE	POST MILES TOTAL PROJECT	SHEET No	TOTAL SHEETS
10	Mer	99	R4.6/R10.5	635	751

REGISTERED CIVIL ENGINEER 07-31-09 DATE

10-11-10
PLANS APPROVAL DATE

REGISTERED PROFESSIONAL ENGINEER G. SCHUSTER No. C 63897 Exp. 09-30-10 CIVIL STATE OF CALIFORNIA

The State of California or its officers or agents shall not be responsible for the accuracy or completeness of electronic copies of this plan sheet.

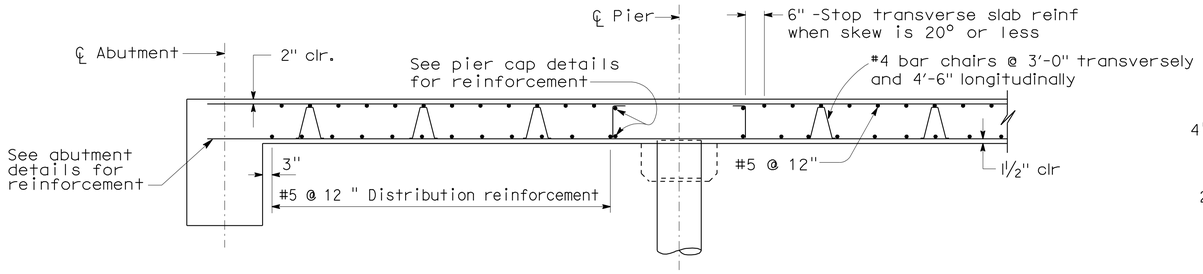

LONGITUDINAL SECTION

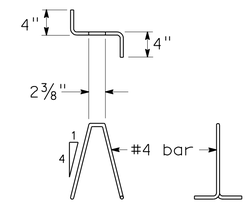

BAR CHAIR DETAIL

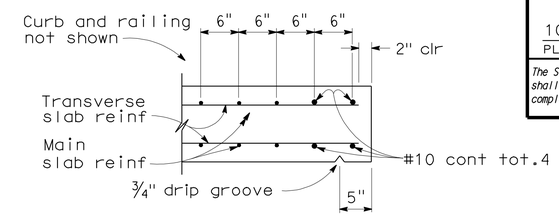

EDGE OF SLAB DETAILS

BAR SPLICE LENGTH (Inch)								
Bar size	#4	#5	#6	#7	#8	#9	#10	#11
All bars, except top bars in spans over 23'	23	28	34	39	45	68	76	85
Top bars in spans over 23'	23	28	34	53	60	77	97	120

REINFORCEMENT NOTES:

Splices in top main bars to be located near center of span.
Splices in bottom main bars to be located near pier.
Spacing of all transverse bars is measured along ℄ roadway.
Skew 0° to 20°: Place all transverse bars parallel to pier.
Skew over 20°: Place transverse slab bars perpendicular to ℄ bridge. See details at right and below.

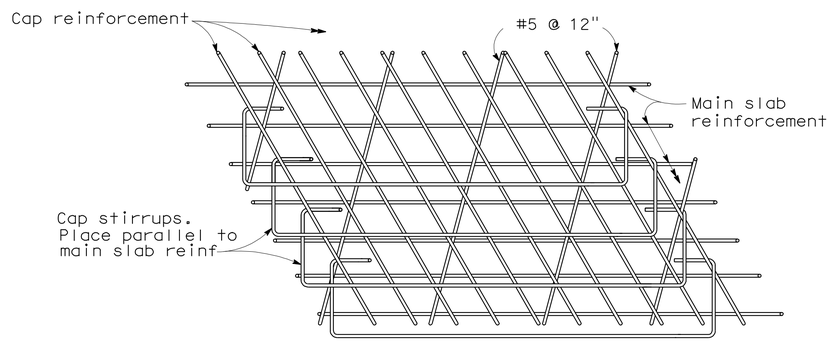

TOP SLAB REINFORCEMENT AT PIER

Note: View for main span over 23'.
Bar placement similar for spans under 23'.

GENERAL NOTES
LOAD AND RESISTANCE FACTOR DESIGN

DESIGN: AASHTO LRFD Bridge Design Specifications, Third Edition with 2005 & 2006 Interim Revisions and Caltrans Amendments 03.06.01

DEAD LOAD: Includes 35 Psf for future wearing surface.

LIVE LOADING: HL93 Alternative loading and "Low-Boy" permit design vehicle

REINFORCED CONCRETE: f_y = 60 ksi
f'_c = 3.6 ksi
n = 8

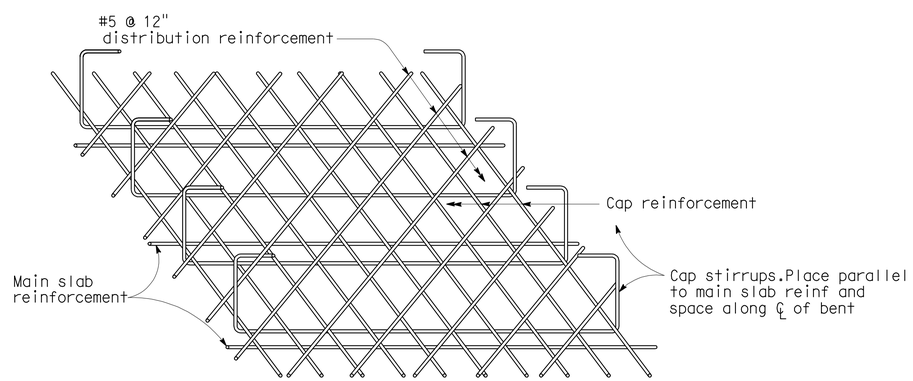

FLUSH CAP

BOTTOM SLAB REINFORCEMENT AT PIER

SPECIAL DETAILS
NO SCALE

DESIGN	BY G. Schuster	CHECKED N. Terzis	
DETAILS	BY S. Jiang/T. Cotton	CHECKED N. Terzis	
QUANTITIES	BY N. Terzis	CHECKED S. Jiang	

STATE OF CALIFORNIA
DEPARTMENT OF TRANSPORTATION

DIVISION OF ENGINEERING SERVICES
STRUCTURE DESIGN
DESIGN BRANCH 5

BRIDGE NO. 39-0243L
POST MILE 9.43

DUCK SLOUGH BRIDGE LEFT
SLAB REINFORCEMENT DETAILS NO. 2

ORIGINAL SCALE IN INCHES FOR REDUCED PLANS 0 1 2 3

CU 10
EA 415701

DISREGARD PRINTS BEARING EARLIER REVISION DATES

REVISION DATES: 06-18-08 06-24-08 07-11-08 12-19-08 01-28-09 02-25-09

SHEET 9 OF 16

STRUCTURES DESIGN DETAIL SHEET (ENGLISH) (REV. 10/25/05)

FILE => 39-0243l-o-slab-rfdt.dgn

USERNAME => trlenard DATE PLOTTED => 11-OCT-2010 TIME PLOTTED => 12:45

DIST	COUNTY	ROUTE	POST MILES TOTAL PROJECT	SHEET No	TOTAL SHEETS
10	Mer	99	R4.6/R10.5	636	751

REGISTERED CIVIL ENGINEER 07-31-09 DATE

10-11-10
PLANS APPROVAL DATE

REGISTERED PROFESSIONAL ENGINEER G. SCHUSTER No. C 63897 Exp. 09-30-10 CIVIL STATE OF CALIFORNIA

The State of California or its officers or agents shall not be responsible for the accuracy or completeness of electronic copies of this plan sheet.

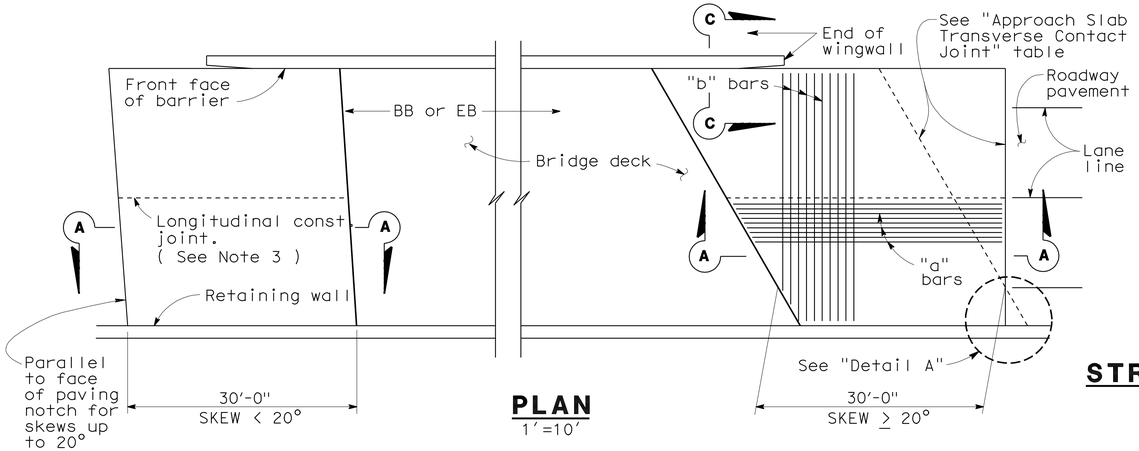

PLAN
1"=10'

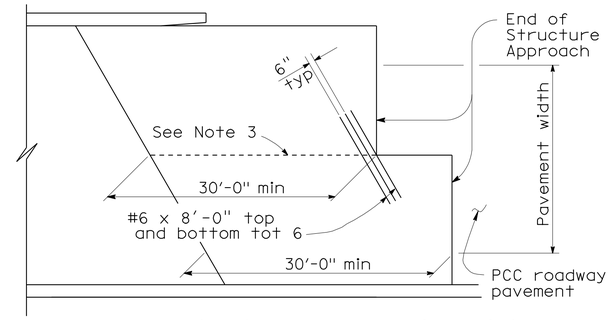

STRUCTURE APPROACH - END STAGGER DETAIL
No Scale

APPROACH SLAB TRANSVERSE CONTACT JOINT		
APPROACH SKEW	WITH AC ROADWAY PAVEMENT	WITH PCC ROADWAY PAVEMENT
< 20°	Parallel to face of paving notch	Parallel to face of paving notch
20°- 45°	Parallel to face of P N use (Detail A)	Stagger lines 24' to 36' apart
> 45°	Parallel to face of P N use (Detail A)	Stagger at each lane line

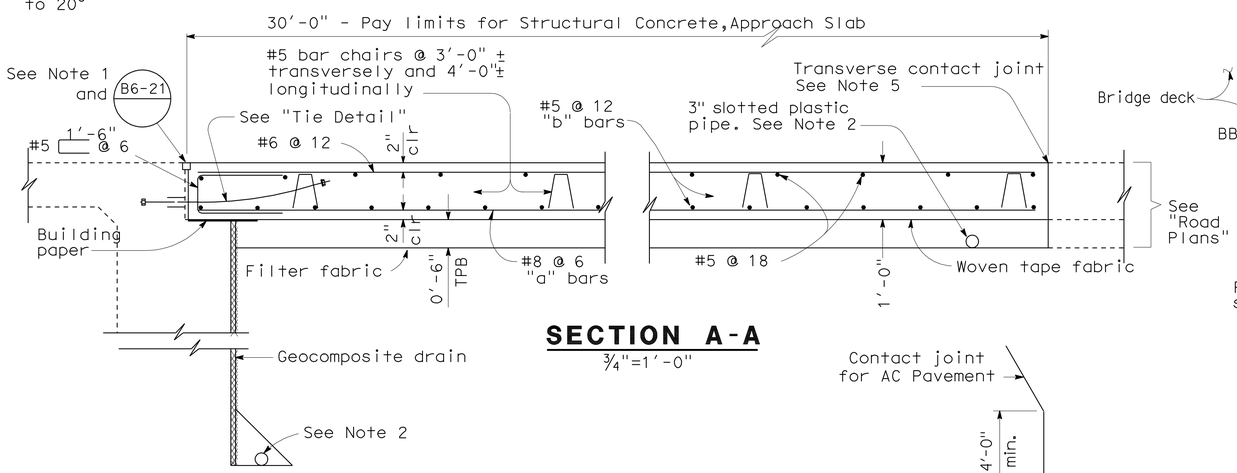

SECTION A-A
¾"=1'-0"

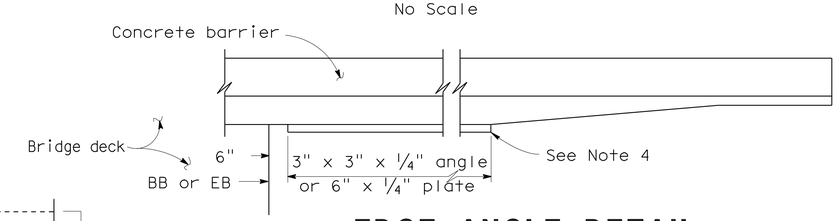

EDGE ANGLE DETAIL
½"=1'-0"

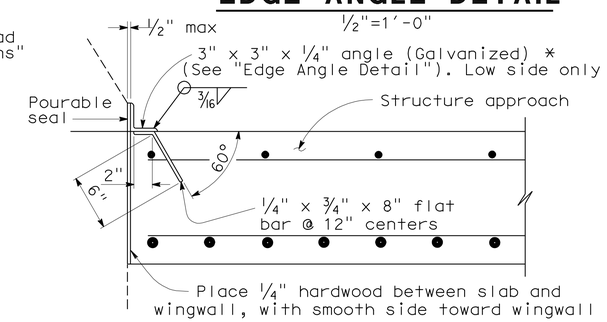

*(TO BE USED WITH TYPE 25 OR TYPE 27 CONCRETE BARRIER)

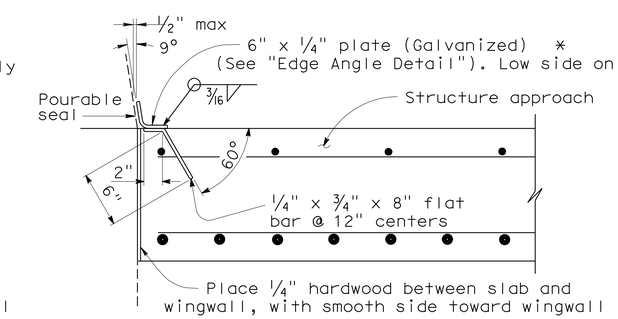

*(TO BE USED WITH TYPE 732 OR TYPE 736 CONCRETE BARRIER)

DETAIL B
1½"=1'-0"

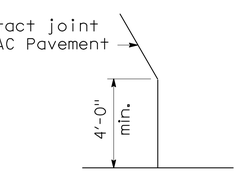

DETAIL A
No Scale

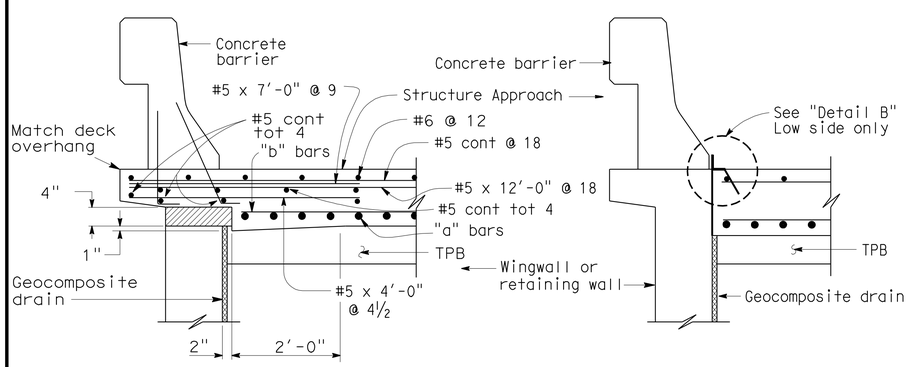

TYPE E-1 TYPE E-2

SECTION C-C
¾"=1'-0"

(Type E-1 to be used, unless otherwise shown on plans)

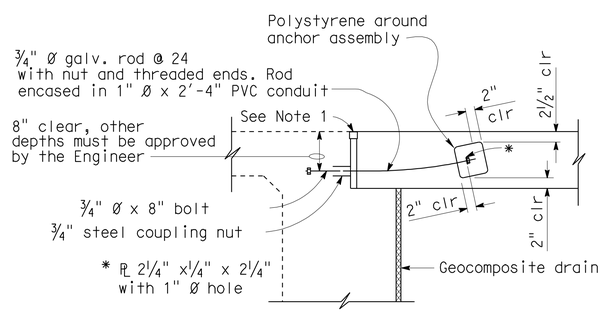

TIE DETAIL
¾"=1'-0"

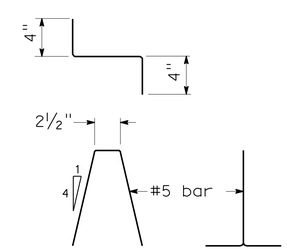

BAR CHAIR DETAIL
1½"=1'-0"

NOTES:

1. For details not noted or shown, see Structure Plans.
2. For drainage details, see "Structure Approach Drainage Details" sheet.
3. Longitudinal construction joints, when permitted by the Engineer, shall be located on lane lines.
4. End angle or plate at beginning of barrier transition, end of wingwall or end of structure approach, as applicable.
5. For transverse contact joint with new PCC paving, refer to Standard Plan P10.
6. At the contractor's option, approach slab transverse reinforcement may be placed parallel to paving notch. Spacing of transverse reinforcement is measured along ℄ roadway.

Polystyrene to be removed.

STANDARD DRAWING

FILE NO. xs3-180e

APPROVED BY M. Ha (RESPONSIBLE TECHNICAL SPECIALIST) — APPROVAL DATE 8-12-08

RELEASED BY O. Alcantara (RESPONSIBLE OFFICE CHIEF) — RELEASE DATE 8-12-08

STATE OF CALIFORNIA DEPARTMENT OF TRANSPORTATION

DIVISION OF ENGINEERING SERVICES STRUCTURE DESIGN DESIGN BRANCH 5

BRIDGE NO. 39-0243L

POST MILE 9.43

DUCK SLOUGH BRIDGE LEFT
STRUCTURE APPROACH TYPE N(30D)

DS OSD 2147A (ENGLISH STANDARD DRAWING "XS" BORDER REV. 01/11/08)

ORIGINAL SCALE IN INCHES FOR REDUCED PLANS 0 1 2 3

CU 10
EA 415701

DISREGARD PRINTS BEARING EARLIER REVISION DATES 2-10-09

REVISION DATES

SHEET 10 OF 16

FILE => 39-0243l-s-sap30s.dgn

USERNAME => trlenard DATE PLOTTED => 11-OCT-2010 TIME PLOTTED => 12:45

DIST	COUNTY	ROUTE	POST MILES TOTAL PROJECT	SHEET No	TOTAL SHEETS
10	Mer	99	R4.6/R10.5	637	751

REGISTERED CIVIL ENGINEER 07-31-09 DATE

10-11-10
PLANS APPROVAL DATE

REGISTERED PROFESSIONAL ENGINEER G. SCHUSTER No. C 63897 Exp. 09-30-10 CIVIL STATE OF CALIFORNIA

The State of California or its officers or agents shall not be responsible for the accuracy or completeness of electronic copies of this plan sheet.

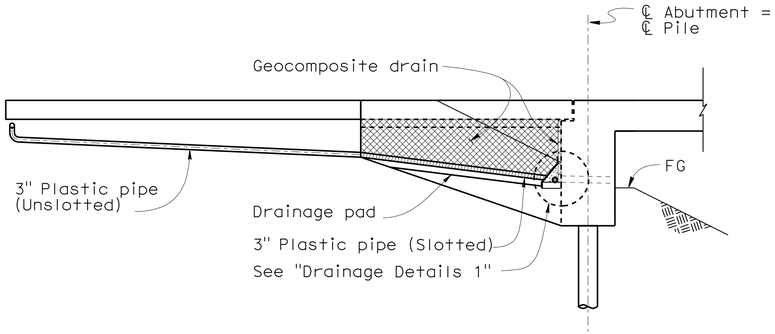

CANTILEVER WINGWALL

SECTION F-F

1/4" =1'-0"

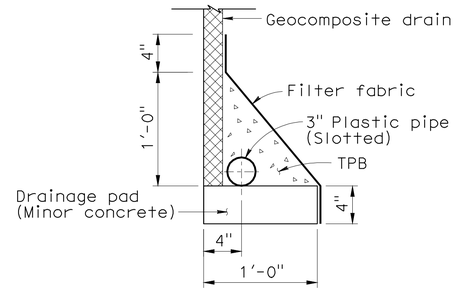

WITHOUT FOOTING

DRAINAGE DETAIL 1

1 1/2" =1'-0"

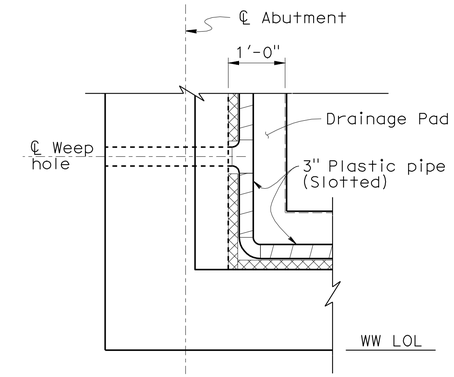

DRAINAGE DETAIL 2

3/4" =1'-0"

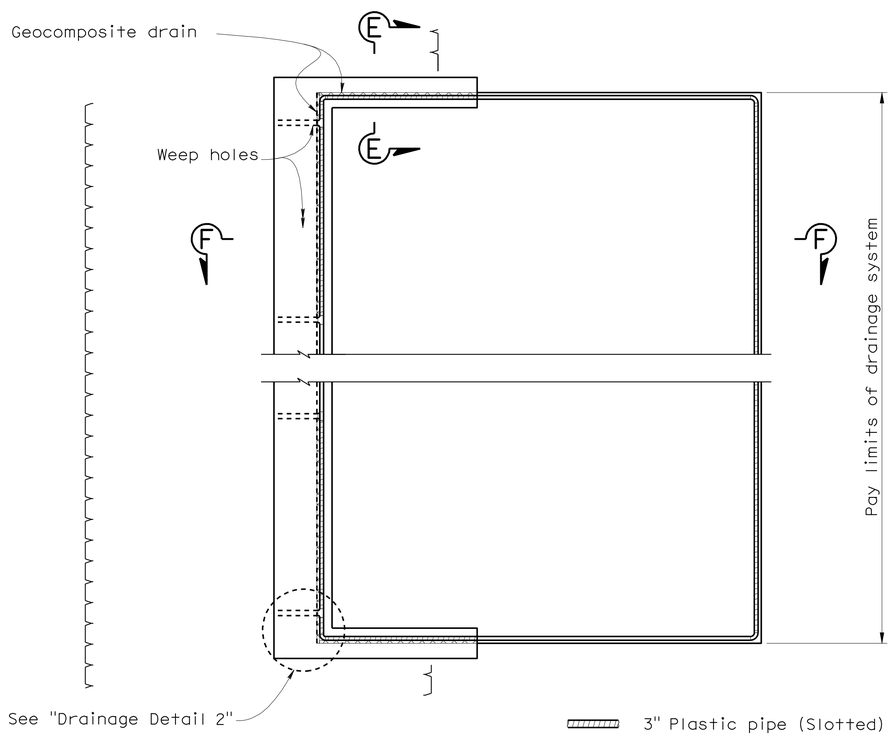

TYPICAL PLAN

1"=5'-0"

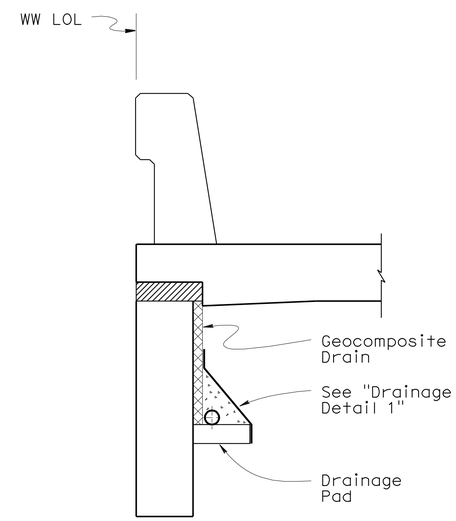

SECTION E-E

3/4" =1'-0"

DESIGN	BY G. Schuster	CHECKED N. Terzis	
DETAILS	BY A. Chen/S. Jiang	CHECKED N. Terzis	
QUANTITIES	BY N. Terzis	CHECKED S. Jiang	

STATE OF CALIFORNIA
DEPARTMENT OF TRANSPORTATION

DIVISION OF ENGINEERING SERVICES
STRUCTURE DESIGN
DESIGN BRANCH 5

BRIDGE NO. 39-0243L
POST MILE 9.43

DUCK SLOUGH BRIDGE LEFT
STRUCTURE APPROACH DRAINAGE DETAILS

ORIGINAL SCALE IN INCHES FOR REDUCED PLANS 0 1 2 3

CU 10
EA 415701

DISREGARD PRINTS BEARING EARLIER REVISION DATES 11-26-07 8-07-08

REVISION DATES

SHEET 11 OF 16

STRUCTURES DESIGN DETAIL SHEET (ENGLISH) (REV. 10/25/05)

FILE => 39-0243l-s-sapdd.dgn

USERNAME => trlenard DATE PLOTTED => 11-OCT-2010 TIME PLOTTED => 12:45

DIST	COUNTY	ROUTE	POST MILES TOTAL PROJECT	SHEET No	TOTAL SHEETS
10	Mer	99	R4.6/R10.5	638	751

Xing Zheng 4-29-09
CERTIFIED ENGINEERING GEOLOGIST

10-11-10
PLANS APPROVAL DATE

PROFESSIONAL GEOLOGIST Xing Zheng No. 2130 Exp. 3-31-11 CERTIFIED ENGINEERING GEOLOGIST STATE OF CALIFORNIA

The State of California or its officers or agents shall not be responsible for the accuracy or completeness of electronic copies of this plan sheet.

This LOTB sheet was prepared in accordance with the Caltrans Soil & Rock Logging, Classification, & Presentation Manual (June 2007).

BENCH MARK

SURVEY CONTROL

MER-99 PM 5.24

Fnd 1" IP W/RPP & TACK Stamping "CALIF DOT"
96.18′ Lt "A" Line ℄ Rte 99
Sta 135+70.55
N 1,897,950.59
E 6,603,471.50
Elev = 202.82

MER-99 1041 (Not Shown)

Fnd 1" IP w/RPP & LS5679 TAG
227.36′ Lt "A" Line ℄ Rte 99
Sta 131+97.42
N 1,897,592.75
E 6,603,639.98
Elev = 203.25
NGVD 29

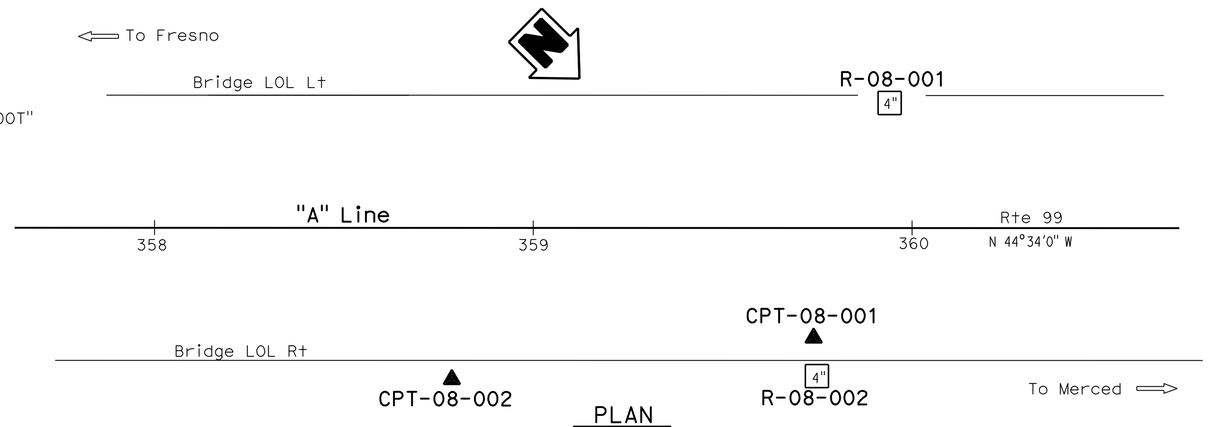

PLAN
1" = 20′

Notes:

1. CME-75 Truck Mounted rig (C# 5677) with automatic hammer was used to obtain SPT samples in Borings R-08-001 and R-08-002.
2. SPT N values shown on the Log of Test boring (LOTB) sheet are actual values recorded in the field.
3. pp= Pocket Penetrometer Test (Tsf).

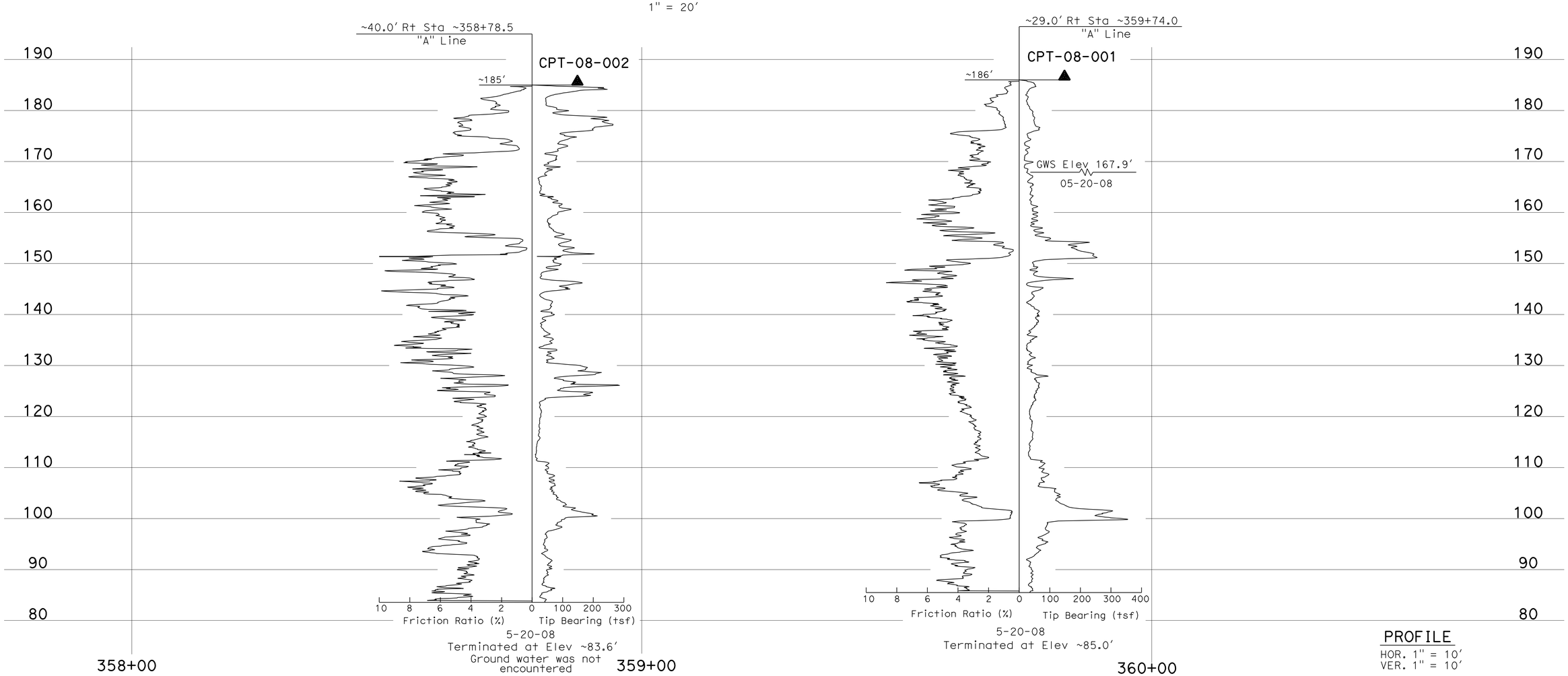

PROFILE
HOR. 1" = 10′
VER. 1" = 10′

ENGINEERING SERVICES	GEOTECHNICAL SERVICES	STATE OF CALIFORNIA DEPARTMENT OF TRANSPORTATION	DIVISION OF ENGINEERING SERVICES STRUCTURE DESIGN	BRIDGE NO. 39-0243L	DUCK SLOUGH BRIDGE LEFT
FUNCTIONAL SUPERVISOR	DRAWN BY: F. Nguyen 01/09	FIELD INVESTIGATION BY:	DESIGN BRANCH	POST MILES 9.43	LOG OF TEST BORINGS 1 OF 5
NAME: R. Buell	CHECKED BY: J. Thorne	X. Zheng			

OGS CIVIL LOG OF TEST BORINGS SHEET

ORIGINAL SCALE IN INCHES FOR REDUCED PLANS 0 1 2 3

CU 10
EA 415701

DISREGARD PRINTS BEARING EARLIER REVISION DATES

REVISION DATES: 02-18-09 02-27-09 03-13-09 04-16-09 04-22-09

SHEET 12 OF 16

FILE => 39-0243l-z-lotb1of5.dgn

USERNAME => trienard DATE PLOTTED => 11-OCT-2010 TIME PLOTTED => 12:45

DIST	COUNTY	ROUTE	POST MILES TOTAL PROJECT	SHEET No	TOTAL SHEETS
10	Mer	99	R4.6/R10.5	639	751

Zheng Xing 4-29-09
CERTIFIED ENGINEERING GEOLOGIST

10-11-10
PLANS APPROVAL DATE

PROFESSIONAL GEOLOGIST Xing Zheng No. 2130 Exp. 3-31-11 CERTIFIED ENGINEERING GEOLOGIST STATE OF CALIFORNIA

The State of California or its officers or agents shall not be responsible for the accuracy or completeness of electronic copies of this plan sheet.

This LOTB sheet was prepared in accordance with the Caltrans Soil & Rock Logging, Classification, & Presentation Manual (June 2007).

FOR PLAN VIEW, SEE
"LOG OF TEST BORINGS 1 OF 5"

~39.0' Rt Sta ~359+75.0
"A" Line

R-08-002

~185'

4"

Lean CLAY with SAND (CL), stiff, dark brown, moist, fine sand, medium plasticity, medium to high dry strength, medium toughness.
-light reddish brown, pp=1.25 to 1.75 tsf.
-light yellowish brown, low plasticity.
SILTY CLAYEY SAND (SM/SC), medium dense, light reddish brown, moist to wet, fine sand, little fines, low plasticity, low dry strength, low toughness.
-light gray.
CLAYEY SAND (SC), medium dense, gray, moist, fine sand, medium plasticity.
SILTY CLAY (CL/ML), stiff, light gray and light reddish brown, moist, little fine sand, medium plasticity, and medium sand lenses, pp=1.5 tsf.
SILTY SAND (SM), medium dense, light gray, moist, fine sand, little fines, low plasticity.
Poorly graded SAND (SP), medium dense, light gray, moist to wet, fine sand.
Elastic SILT (MH), hard, light reddish brown, moist, high plasticity, medium dry strength, medium toughness, pp>4.5 tsf.
Poorly graded SAND (SP), medium dense, light gray, wet, fine sand.
SANDY SILT (ML), medium dense, light gray, moist, fine sand.
-light reddish brown, medium plasticity, with fine sand lenses.
-light gray.
SILTY SAND (SM), medium dense, light reddish brown and light gray, moist, fine sand, medium plasticity, laminated, trace organics.
CLAYEY SAND (SC), medium dense, light gray, moist, fine sand, few medium to coarse grained sand, some fines.
Elastic SILT (MH), hard, light olive gray, moist, high plasticity, medium dry strength, fractures are observed, fractures with smooth surfaces and slickensides, trace organics, pp>4.5 tsf.
-very stiff, pp=2 to 2.75 tsf.
CLAYEY SAND (SC), dense, light gray, moist to wet, fine sand, some fines.
Poorly graded SAND (SP), medium dense, light gray, wet, fine sand.
Well-graded SAND with GRAVEL (SW), dense, light gray, wet, fine subangular and subrounded gravel, coarse and fine subangular and subrounded sand, grading to fine gravel at Elev approx. 97.5'.
Elastic SILT (MH), hard, light reddish brown, moist, high plasticity, medium dry strength, at Elev approx. 92.0'; 6" thick silty fine sand lens, pp>4.5 tsf.
CLAYEY SAND (SC), medium dense, light reddish brown, moist to wet, fine sand, some fines, medium plasticity.
SILTY SAND (SM), medium dense, light gray, wet, fine sand; little fines, clay laminations at Elev approx. 80.5'; 6" thick, coarse sand and fine gravel lens.
CLAYEY SILT with SAND (ML/CL), very stiff, light reddish brown, moist, little fine sand, medium plasticity, medium dry strength, medium toughness, at Elev approx. 74.0'; about 6" thick, fine sand lens, pp = 2.5 to 3 tsf.
Elastic SILT (MH), hard, light reddish brown, moist, high plasticity, trace organics, pp>4.5 tsf.
CLAYEY SILT (ML/CL), stiff, light reddish brown, moist, little fine sand, medium plasticity.

4-22-08
Terminated at Elev 63.5'
ERi=82%
Ground water was not measured.

190 180 170 160 150 140 130 120 110 100 90 80 70 60

359+50 360+50 361+50

PROFILE
HOR. 1" = 10'
VER. 1" = 10'

ENGINEERING SERVICES	GEOTECHNICAL SERVICES	STATE OF CALIFORNIA DEPARTMENT OF TRANSPORTATION	DIVISION OF ENGINEERING SERVICES STRUCTURE DESIGN DESIGN BRANCH	BRIDGE NO. 39-0243L POST MILES 9.43	DUCK SLOUGH BRIDGE LEFT LOG OF TEST BORINGS 2 OF 5
FUNCTIONAL SUPERVISOR NAME: R. Buell	DRAWN BY: F. Nguyen 01/09 CHECKED BY: J. Thorne	FIELD INVESTIGATION BY: X. Zheng			

OGS CIVIL LOG OF TEST BORINGS SHEET

ORIGINAL SCALE IN INCHES FOR REDUCED PLANS 0 1 2 3

CU 10
EA 415701

DISREGARD PRINTS BEARING EARLIER REVISION DATES

REVISION DATES: 02-18-09 02-27-09 03-13-09 04-14-09 04-22-09 04-29-09

SHEET 13 OF 16

FILE => 39-0243l-z-lotb2of5.dgn

USERNAME => trlenard DATE PLOTTED => 11-OCT-2010 TIME PLOTTED => 12:45

DIST	COUNTY	ROUTE	POST MILES TOTAL PROJECT	SHEET No	TOTAL SHEETS
10	Mer	99	R4.6/R10.5	640	751

Zheng Xing 4-29-09
CERTIFIED ENGINEERING GEOLOGIST

10-11-10
PLANS APPROVAL DATE

PROFESSIONAL GEOLOGIST Xing Zheng No. 2130 Exp. 3-31-11 CERTIFIED ENGINEERING GEOLOGIST STATE OF CALIFORNIA

The State of California or its officers or agents shall not be responsible for the accuracy or completeness of electronic copies of this plan sheet.

This LOTB sheet was prepared in accordance with the Caltrans Soil & Rock Logging, Classification, & Presentation Manual (June 2007).

FOR PLAN VIEW, SEE
"LOG OF TEST BORINGS 1 OF 5"

~33.0' Lt Sta ~359+94.0 "A" Line

R-08-001

~185'

4"

SANDY lean CLAY (CL), stiff, dark gray, moist, fine sand, low to medium plasticity, medium dry strength.

6 1.4 -light brown, low plasticity, strong reaction with hydrochloric acid, porous, pp = 1.25 tsf.

5 1.4 SILTY SAND with GRAVEL (SM), loose, brown, wet, fine gravel, fine sand, low plasticity, rootlets.

11 1.4 SANDY lean CLAY (CL), very stiff and hard, gray, moist, fine sand, medium plasticity, high dry strength, medium toughness, pp = 3 to 4.5 tsf.

9 1.4 Poorly graded SAND with CLAY (SP-SC), medium dense, gray, wet, medium to fine sand, few fines.

Poorly graded SAND (SP), medium dense, gray, wet, medium sand.

8 1.4 SILTY CLAY (CL/ML), hard, gray, moist, medium plasticity, pp = 4.25 tsf.

CLAYEY SILT (ML/CL), stiff, gray, moist, little fine sand, low plasticity, low dry strength, low toughness, pp = 1.5 tsf.

14 1.4 SILTY SAND (SM), medium dense, gray, wet, fine sand, little fines.

18 1.4 SANDY SILT (ML), medium dense, gray, wet, fine sand.

CLAYEY SILT (ML/CL), stiff, yellowish brown, dry and moist, little fine sand, low plasticity, burrows and porous, pp = 1.75 to 2 tsf.

19 1.4 CLAYEY SAND (SC), medium dense, light yellowish brown, moist to wet, trace coarse grained sand, medium to fine sand, little fines.

15 1.4 CLAYEY SILT (ML/CL), very stiff, light yellowish brown, moist, little fine sand, low to medium plasticity, medium dry strength, pp=3.5 tsf.

11 1.4 SANDY SILT (ML), medium dense, light yellowish brown, moist, fine sand.

10 1.4 SILT (ML), medium dense, light yellowish brown and light gray and light reddish brown, moist, trace fine sand.

11 1.4 CLAYEY SAND (SC), medium dense, gray and dark gray, wet, coarse to fine sand, little fines, sand grading from fine grained to coarse grained, clay content increases with depth.

17 1.4 SANDY lean CLAY (CL), stiff, light olive gray, moist, fine sand, low plasticity.

Elastic SILT (MH), hard, olive gray, moist, high plasticity, fissured, with smooth fracture surfaces and sharp edges, slickensided, pp>4.5 tsf.

15 1.4

12 1.4 -at Elev 115.0', very stiff, pp = 3 tsf.

CLAYEY SILT (ML/CL), very stiff, light yellowish brown, moist, medium plasticity, silt increases with depth and grades to very fine grained sand, pp=3 tsf.

58 1.4 SILTY CLAYEY SAND (SM/SC), medium dense, gray, moist to wet, fine sand, some fines, low to medium plasticity, iron oxide staining, trace burrows and porous, black laminations.

22 1.4 SILTY SAND (SM), dense, gray, wet, fine sand, trace coarse grained sand, some fines, weak to moderate cementation.

Poorly graded SAND (SP), medium dense, gray, wet, fine sand.

28 1.4 -at Elev 97.5', grades to Well-graded SAND (SW), medium dense, gray, wet, coarse to fine sand.

CLAYEY SILT (ML/CL), hard, light reddish brown, moist, some fine sand, medium plasticity, low toughness, pp = 4.5 tsf.

13 1.4 SILTY CLAY (CL/ML), hard, light brown, moist, some fine sand.

-at Elev 93.0', Poorly graded SAND (SP), medium dense, fine grained.

33 1.4 CLAYEY SILT (ML/CL), hard, light gray and light reddish brown, moist, little fine sand, medium plasticity, few mica, trace organics, pp>4.5 tsf.

13 1.4

4-21-08
Terminated at Elev 83.5'
ERi = 82%
Ground water was not measured.

190 180 170 160 150 140 130 120 110 100 90 80

359+50 361+00 362+00

PROFILE
HOR. 1" = 10'
VER. 1" = 10'

ENGINEERING SERVICES	GEOTECHNICAL SERVICES	STATE OF CALIFORNIA DEPARTMENT OF TRANSPORTATION	DIVISION OF ENGINEERING SERVICES STRUCTURE DESIGN DESIGN BRANCH	BRIDGE NO. 39-0243L POST MILES 9.43	DUCK SLOUGH BRIDGE LEFT LOG OF TEST BORINGS 3 OF 5
FUNCTIONAL SUPERVISOR NAME: R. Buell	DRAWN BY: F. Nguyen 01/09 CHECKED BY: J. Thorne	FIELD INVESTIGATION BY: X. Zheng			

OGS CIVIL LOG OF TEST BORINGS SHEET

ORIGINAL SCALE IN INCHES FOR REDUCED PLANS 0 1 2 3

CU 10
EA 415701

DISREGARD PRINTS BEARING EARLIER REVISION DATES

REVISION DATES: 02-18-09 02-27-09 03-13-09 04-18-09 04-22-09

SHEET 14 OF 16

FILE => 39-0243l-z-lotb3of5.dgn

USERNAME => trlenard DATE PLOTTED => 11-OCT-2010 TIME PLOTTED => 12:45

REFERENCE: CALTRANS SOIL & ROCK LOGGING, CLASSIFICATION, AND PRESENTATION MANUAL (JUNE 2007)

Zheng Xing 4-29-09
CERTIFIED ENGINEERING GEOLOGIST

10-11-10
PLANS APPROVAL DATE

PROFESSIONAL GEOLOGIST Xing Zheng No. 2130 Exp. 3-31-11 CERTIFIED ENGINEERING GEOLOGIST STATE OF CALIFORNIA

The State of California or its officers or agents shall not be responsible for the accuracy or completeness of electronic copies of this plan sheet.

CEMENTATION

Description	Criteria
Weak	Crumbles or breaks with handling or little finger pressure.
Moderate	Crumbles or breaks with considerable finger pressure.
Strong	Will not crumble or break with finger pressure.

CONSISTENCY OF COHESIVE SOILS

Description	Unconfined Compressive Strength (tsf)	Pocket Penetrometer Measurement (tsf)	Torvane Measurement (tsf)	Field Approximation
Very Soft	< 0.25	< 0.25	< 0.12	Easily penetrated several inches by fist
Soft	0.25 to 0.50	0.25 to 0.50	0.12 to 0.25	Easily penetrated several inches by thumb
Medium Stiff	0.50 to 1.0	0.50 to 1.0	0.25 to 0.50	Penetrated several inches by thumb with moderate effort
Stiff	1 to 2	1 to 2	0.50 to 1.0	Readily indented by thumb but penetrated only with great effort
Very Stiff	2 to 4	2 to 4	1.0 to 2.0	Readily indented by thumbnail
Hard	> 4.0	> 4.0	> 2.0	Indented by thumbnail with difficulty

BOREHOLE IDENTIFICATION

Symbol	Hole Type	Description
Size	A	Auger Boring
Size	R P	Rotary drilled boring Rotary percussion boring (air)
Size	R	Rotary drilled diamond core
Size	HD HA	Hand driven (1-inch soil tube) Hand Auger
●	D	Dynamic Cone Penetration Boring
▲	CPT	Cone Penetration Test (ASTM D 5778-95)
⬚	O	Other

Note: Size in inches.

PLASTICITY OF FINE-GRAINED SOILS

Description	Criteria
Nonplastic	A 1/8-inch thread cannot be rolled at any water content.
Low	The thread can barely be rolled and the lump cannot be formed when drier than the plastic limit.
Medium	The thread is easy to roll and not much time is required to reach the plastic limit. The thread cannot be rerolled after reaching the plastic limit. The lump crumbles when drier than the plastic limit.
High	It takes considerable time rolling and kneading to reach the plastic limit. The thread can be rerolled several times after reaching the plastic limit. The lump can be formed without crumbling when drier than the plastic limit.

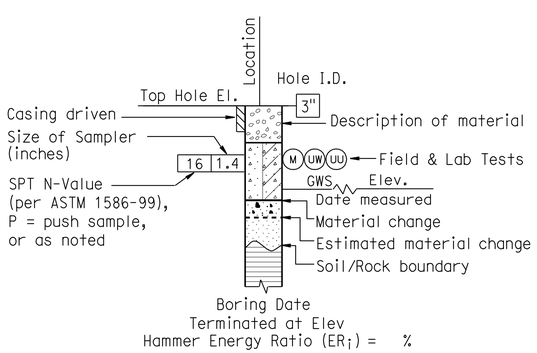

ROTARY BORING

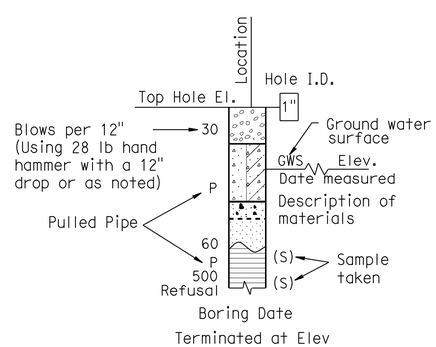

HAND BORING

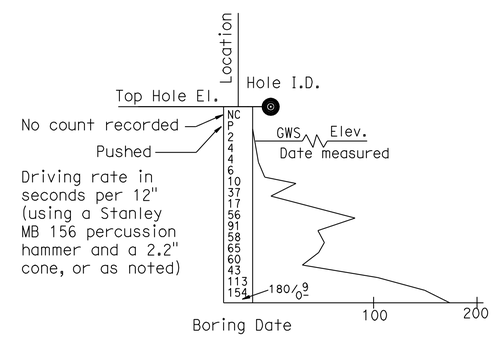

DYNAMIC CONE PENETRATION BORING

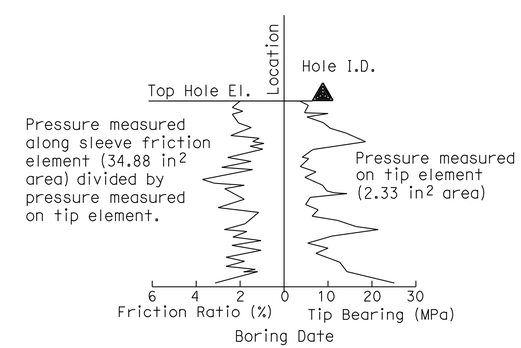

CONE PENETRATION TEST (CPT) SOUNDING

ENGINEERING SERVICES	GEOTECHNICAL SERVICES	STATE OF CALIFORNIA DEPARTMENT OF TRANSPORTATION	DIVISION OF ENGINEERING SERVICES STRUCTURE DESIGN DESIGN BRANCH	BRIDGE NO. 39-0243L / POST MILE 9.43	DUCK SLOUGH BRIDGE LEFT
	PREPARED BY: F. Nguyen 01/09				LOG OF TEST BORINGS 4 OF 5

GS LOTB SOIL LEGEND

ORIGINAL SCALE IN INCHES FOR REDUCED PLANS 0 1 2 3

CU 10
EA 415701

DISREGARD PRINTS BEARING EARLIER REVISION DATES 03-13-09

REVISION DATES

SHEET 15 OF 16

FILE => 39-0243l-z-lotb4of5.dgn

USERNAME => trlenard DATE PLOTTED => 11-OCT-2010 TIME PLOTTED => 13:03

REFERENCE: CALTRANS SOIL & ROCK LOGGING, CLASSIFICATION, AND PRESENTATION MANUAL (JUNE 2007)

DIST	COUNTY	ROUTE	POST MILES TOTAL PROJECT	SHEET No	TOTAL SHEETS
10	Mer	99	R4.6/R10.5	642	751

CERTIFIED ENGINEERING GEOLOGIST 4-29-09

PROFESSIONAL GEOLOGIST Xing Zheng No. 2130 Exp. 3-31-11 CERTIFIED ENGINEERING GEOLOGIST STATE OF CALIFORNIA

10-11-10
PLANS APPROVAL DATE

The State of California or its officers or agents shall not be responsible for the accuracy or completeness of electronic copies of this plan sheet.

GROUP SYMBOLS AND NAMES

Graphic/Symbol	Group Names	Graphic/Symbol	Group Names
GW	Well-graded GRAVEL Well-graded GRAVEL with SAND	CL	Lean CLAY Lean CLAY with SAND Lean CLAY with GRAVEL SANDY lean CLAY SANDY lean CLAY with GRAVEL GRAVELLY lean CLAY GRAVELLY lean CLAY with SAND
GP	Poorly graded GRAVEL Poorly graded GRAVEL with SAND		
GW-GM	Well-graded GRAVEL with SILT Well-graded GRAVEL with SILT and SAND	CL-ML	SILTY CLAY SILTY CLAY with SAND SILTY CLAY with GRAVEL SANDY SILTY CLAY SANDY SILTY CLAY with GRAVEL GRAVELLY SILTY CLAY GRAVELLY SILTY CLAY with SAND
GW-GC	Well-graded GRAVEL with CLAY (or SILTY CLAY) Well-graded GRAVEL with CLAY and SAND (or SILTY CLAY and SAND)		
GP-GM	Poorly graded GRAVEL with SILT Poorly graded GRAVEL with SILT and SAND	ML	SILT SILT with SAND SILT with GRAVEL SANDY SILT SANDY SILT with GRAVEL GRAVELLY SILT GRAVELLY SILT with SAND
GP-GC	Poorly graded GRAVEL with CLAY (or SILTY CLAY) Poorly graded GRAVEL with CLAY and SAND (or SILTY CLAY and SAND)		
GM	SILTY GRAVEL SILTY GRAVEL with SAND	OL	ORGANIC lean CLAY ORGANIC lean CLAY with SAND ORGANIC lean CLAY with GRAVEL SANDY ORGANIC lean CLAY SANDY ORGANIC lean CLAY with GRAVEL GRAVELLY ORGANIC lean CLAY GRAVELLY ORGANIC lean CLAY with SAND
GC	CLAYEY GRAVEL CLAYEY GRAVEL with SAND		
GC-GM	SILTY, CLAYEY GRAVEL SILTY, CLAYEY GRAVEL with SAND	OL	ORGANIC SILT ORGANIC SILT with SAND ORGANIC SILT with GRAVEL SANDY ORGANIC SILT SANDY ORGANIC SILT with GRAVEL GRAVELLY ORGANIC SILT GRAVELLY ORGANIC SILT with SAND
SW	Well-graded SAND Well-graded SAND with GRAVEL		
SP	Poorly graded SAND Poorly graded SAND with GRAVEL	CH	Fat CLAY Fat CLAY with SAND Fat CLAY with GRAVEL SANDY fat CLAY SANDY fat CLAY with GRAVEL GRAVELLY fat CLAY GRAVELLY fat CLAY with SAND
SW-SM	Well-graded SAND with SILT Well-graded SAND with SILT and GRAVEL		
SW-SC	Well-graded SAND with CLAY (or SILTY CLAY) Well-graded SAND with CLAY and GRAVEL (or SILTY CLAY and GRAVEL)	MH	Elastic SILT Elastic SILT with SAND Elastic SILT with GRAVEL SANDY elastic SILT SANDY elastic SILT with GRAVEL GRAVELLY elastic SILT GRAVELLY elastic SILT with SAND
SP-SM	Poorly graded SAND with SILT Poorly graded SAND with SILT and GRAVEL		
SP-SC	Poorly graded SAND with CLAY (or SILTY CLAY) Poorly graded SAND with CLAY and GRAVEL (or SILTY CLAY and GRAVEL)	OH	ORGANIC fat CLAY ORGANIC fat CLAY with SAND ORGANIC fat CLAY with GRAVEL SANDY ORGANIC fat CLAY SANDY ORGANIC fat CLAY with GRAVEL GRAVELLY ORGANIC fat CLAY GRAVELLY ORGANIC fat CLAY with SAND
SM	SILTY SAND SILTY SAND with GRAVEL		
SC	CLAYEY SAND CLAYEY SAND with GRAVEL	OH	ORGANIC elastic SILT ORGANIC elastic SILT with SAND ORGANIC elastic SILT with GRAVEL SANDY ORGANIC elastic SILT SANDY ORGANIC elastic SILT with GRAVEL GRAVELLY ORGANIC elastic SILT GRAVELLY ORGANIC elastic SILT with SAND
SC-SM	SILTY, CLAYEY SAND SILTY, CLAYEY SAND with GRAVEL		
PT	PEAT	OL/OH	ORGANIC SOIL ORGANIC SOIL with SAND ORGANIC SOIL with GRAVEL SANDY ORGANIC SOIL SANDY ORGANIC SOIL with GRAVEL GRAVELLY ORGANIC SOIL GRAVELLY ORGANIC SOIL with SAND
	COBBLES COBBLES and BOULDERS BOULDERS		

FIELD AND LABORATORY TESTING

- (C) Consolidation (ASTM D 2435)
- (CL) Collapse Potential (ASTM D 5333)
- (CP) Compaction Curve (CTM 216)
- (CR) Corrosivity Testing (CTM 643, CTM 422, CTM 417)
- (CU) Consolidated Undrained Triaxial (ASTM D 4767)
- (DS) Direct Shear (ASTM D 3080)
- (EI) Expansion Index (ASTM D 4829)
- (M) Moisture Content (ASTM D 2216)
- (OC) Organic Content-% (ASTM D 2974)
- (P) Permeability (CTM 220)
- (PA) Particle Size Analysis (ASTM D 422)
- (PI) Plasticity Index (AASHTO T 90) Liquid Limit (AASHTO T 89)
- (PL) Point Load Index (ASTM D 5731)
- (PM) Pressure Meter
- (PP) Pocket Penetrometer
- (R) R-Value (CTM 301)
- (SE) Sand Equivalent (CTM 217)
- (SG) Specific Gravity (AASHTO T 100)
- (SL) Shrinkage Limit (ASTM D 427)
- (SW) Swell Potential (ASTM D 4546)
- (TV) Pocket Torvane
- (UC) Unconfined Compression-Soil (ASTM D 2166) Unconfined Compression-Rock (ASTM D 2938)
- (UU) Unconsolidated Undrained Triaxial (ASTM D 2850)
- (UW) Unit Weight (ASTM D 4767)
- (VS) Vane Shear (AASHTO T 223)

APPARENT DENSITY OF COHESIONLESS SOILS

Description	SPT N_{60} (Blows / 12 inches)
Very loose	0 - 4
Loose	5 - 10
Medium Dense	11 - 30
Dense	31 - 50
Very Dense	> 50

MOISTURE

Description	Criteria
Dry	Absence of moisture, dusty, dry to the touch
Moist	Damp but no visible water
Wet	Visible free water, usually soil is below water table

PERCENT OR PROPORTION OF SOILS

Description	Criteria
Trace	Particles are present but estimated to be less than 5%
Few	5 to 10%
Little	15 to 25%
Some	30 to 45%
Mostly	50 to 100%

PARTICLE SIZE

Description		Size
Boulder		> 12"
Cobble		3" to 12"
Gravel	Coarse	3/4" to 3"
	Fine	No. 4 to 3/4"
Sand	Coarse	No. 10 to No. 4
	Medium	No. 40 to No. 10
	Fine	No. 200 to No. 40

ENGINEERING SERVICES

GEOTECHNICAL SERVICES

PREPARED BY: F. Nguyen 01/09

STATE OF CALIFORNIA DEPARTMENT OF TRANSPORTATION

DIVISION OF ENGINEERING SERVICES STRUCTURE DESIGN

DESIGN BRANCH

BRIDGE NO. 39-0243L

POST MILE 9.43

DUCK SLOUGH BRIDGE LEFT

LOG OF TEST BORINGS 5 OF 5

GS LOTB SOIL LEGEND

ORIGINAL SCALE IN INCHES FOR REDUCED PLANS 0 1 2 3

CU 10
EA 415701

DISREGARD PRINTS BEARING EARLIER REVISION DATES 03-13-09

REVISION DATES

SHEET 16 OF 16

FILE => 39-0243l-z-lotb5of5.dgn

USERNAME => friehard DATE PLOTTED => 11-OCT-2010 TIME PLOTTED => 13:03

DIST	COUNTY	ROUTE	POST MILES TOTAL PROJECT	SHEET No	TOTAL SHEETS
10	Mer	99	R4.6/R10.5	643	751

REGISTERED CIVIL ENGINEER — DATE 07-31-09

10-11-10
PLANS APPROVAL DATE

REGISTERED PROFESSIONAL ENGINEER — G. SCHUSTER — No. C 63897 — Exp. 09-30-10 — CIVIL — STATE OF CALIFORNIA

The State of California or its officers or agents shall not be responsible for the accuracy or completeness of electronic copies of this plan sheet.

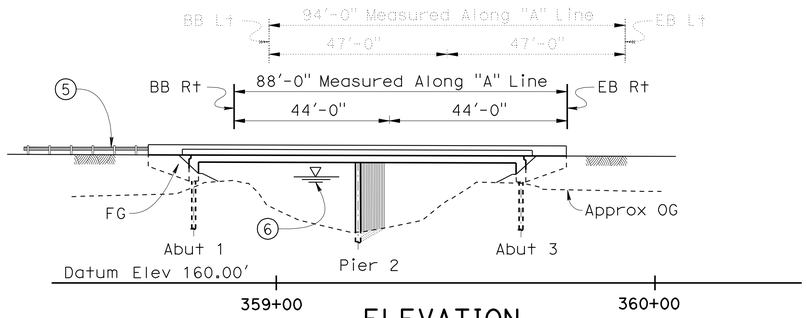

ELEVATION

1" = 20'-0"

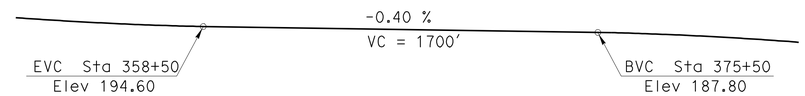

PROFILE GRADE

No Scale

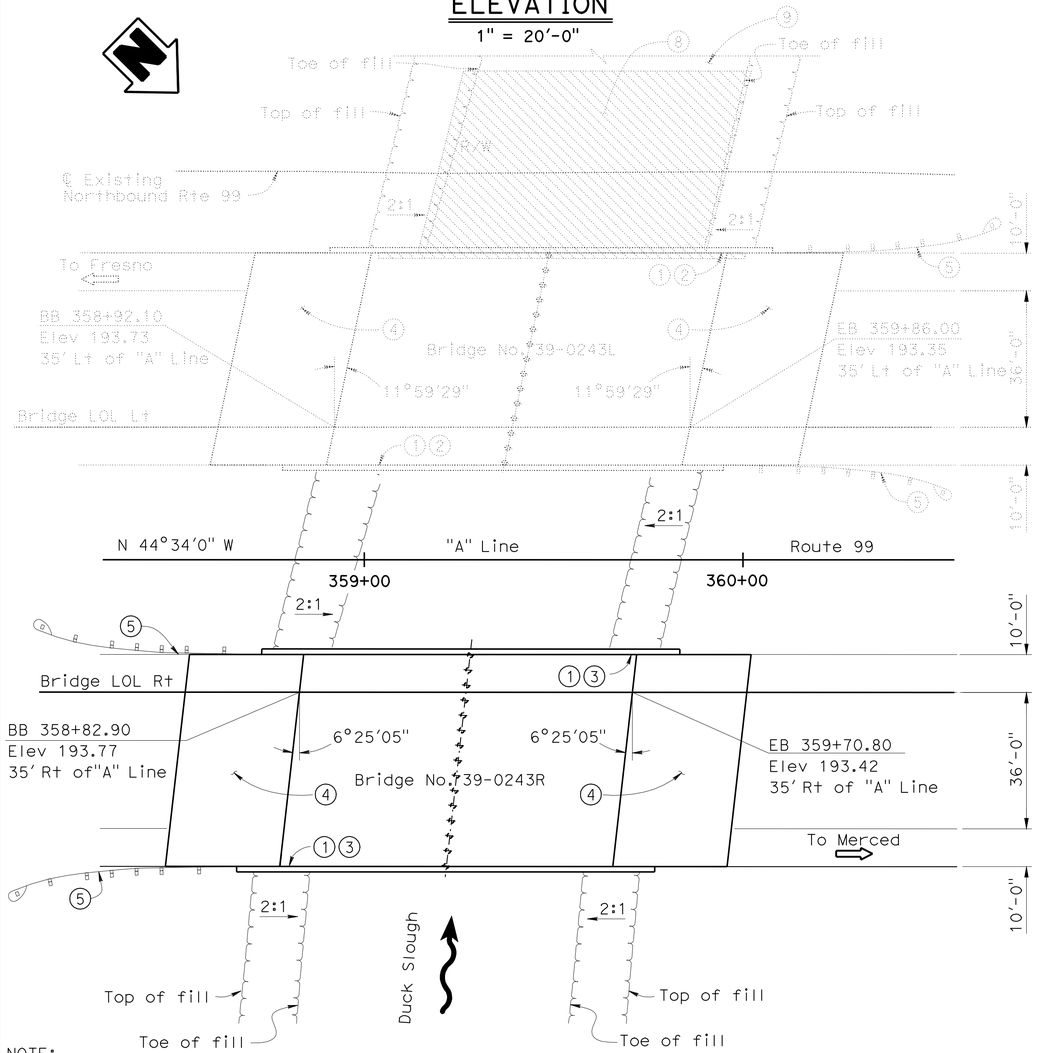

NOTE:
The Contractor shall verify all controlling field dimensions before ordering or fabricating any materials.

PLAN

1" = 20'-0"

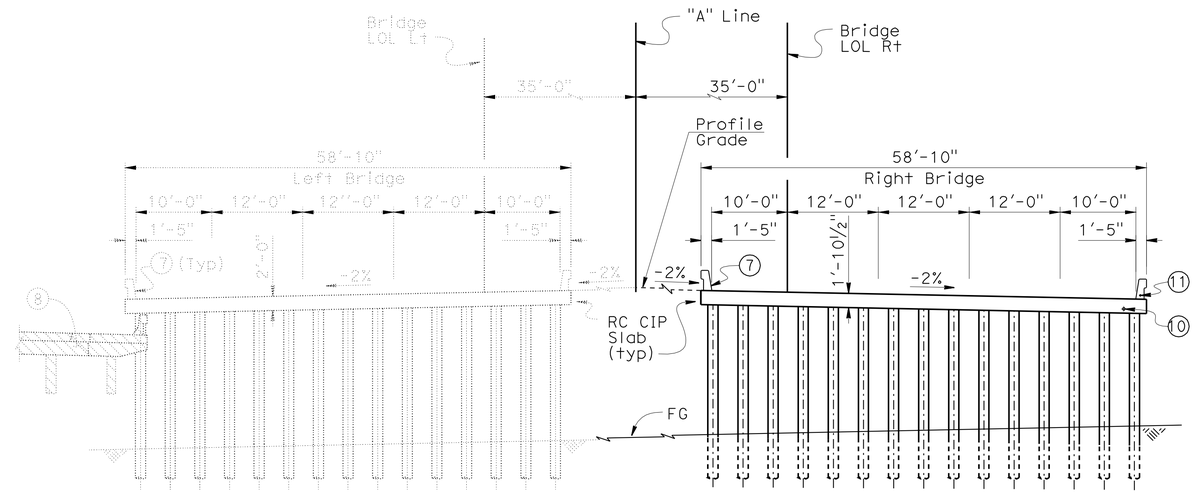

TYPICAL SECTION

1" = 10'-0"

Legend:

1. Paint "Duck Slough Bridge".
2. Paint Bridge No. 390243L.
3. Paint Bridge No. 390243R.
4. Structure Approach Type N(30D).
5. Metal Beam Guard Rail, see "Road Plan".
6. For Hydrologic Summary, see "Foundation Plan".
7. Concrete Barrier Type 732.
8. Partial removal of existing Bridge 39-0004, see "Partial Bridge Removal" sheet in Duck Slough Bridge West Frontage Road" plan set.
9. Portion of existing bridge 39-0004 to remain as future West Frontage Road, see "Barrier Modifications" sheet in "Duck Slough Bridge West Frontage Road" plan set.
10. 4" ø Communication Conduit for fiber optic in slab, see "Road Plans".
11. Place 2" Conduit in Barrier Rail, see "Road Plans".

Note: For "General Notes", "Index Plans", "Standard Plans", "Quantities", See "Index To Plans" sheet.

Indicate Partial bridge removal

Indicate existing structure

x Gary Blakesley
DESIGN ENGINEER

	BY	CHECKED
DESIGN	G. Schuster	N. Terzis
DETAILS	A.C / G.S / S.J / T.C.	N. Terzis
QUANTITIES	N. Terzis	S. Jiang

LOAD & RESISTANCE FACTOR DESIGN — LIVE LOADING: HL93 W/"LOW-BOY"; PERMIT DESIGN VEHICLE

	BY	CHECKED
LAYOUT	G. Schuster	N. Terzis
SPECIFICATIONS	Aiman Abdel-Malak	PLANS AND SPECS COMPARED

ORIGINAL SCALE IN INCHES FOR REDUCED PLANS 0 1 2 3

STATE OF CALIFORNIA
DEPARTMENT OF TRANSPORTATION

DIVISION OF ENGINEERING SERVICES
STRUCTURE DESIGN
DESIGN BRANCH 5

CU 10
EA 415701

BRIDGE NO. 39-0243R
POST MILE 9.43

DUCK SLOUGH BRIDGE RIGHT
GENERAL PLAN

DISREGARD PRINTS BEARING EARLIER REVISION DATES

REVISION DATES: 12-11-07 2-19-09 05-04-09 05-18-09 06-06-08 07-11-08 08-09-08 09-05-08 12-19-08

SHEET 1 OF 16

STRUCTURES DESIGN GENERAL PLAN SHEET (ENGLISH) (REV.07-24-06)

FILE => 39-0243r-a-gp.dgn

USERNAME => trlenard DATE PLOTTED => 11-OCT-2010 TIME PLOTTED => 13:03

DIST	COUNTY	ROUTE	POST MILES TOTAL PROJECT	SHEET No	TOTAL SHEETS
10	Mer	99	R4.6/R10.5	644	751

REGISTERED CIVIL ENGINEER 07-31-09 DATE

10-11-10
PLANS APPROVAL DATE

REGISTERED PROFESSIONAL ENGINEER G. SCHUSTER No. C 63897 Exp. 09-30-10 CIVIL STATE OF CALIFORNIA

The State of California or its officers or agents shall not be responsible for the accuracy or completeness of electronic copies of this plan sheet.

GENERAL NOTES
LOAD AND RESISTANCE FACTOR DESIGN

DESIGN: AASHTO LRFD Bridge Design Specifications, Third Edition with 2005 & 2006 Interim Revisions and Caltrans Amendments 03.06.01

SEISMIC DESIGN: Caltrans Seismic Design Criteria (SDC) Version 1.4, June, 2006

DEAD LOAD: Includes 35 Psf for future wearing surface.

LIVE LOADING: HL93 Alternative loading and "Low-Boy" permit design vehicle

SEISMIC LOADING: Caltrans SDC ARS curve for soil profile type D (M = 6.5 ± 0.25), (Peak Rock Acceleration = 0.2g)

REINFORCED CONCRETE:
f_y = 60 ksi
f'_c = 3.6 ksi
n = 8

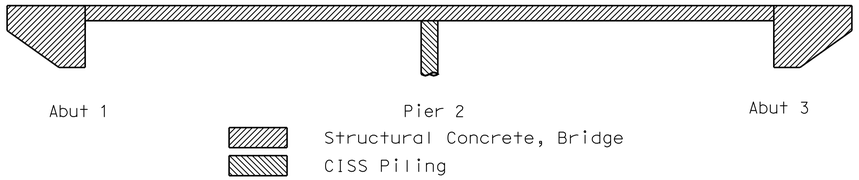

CONCRETE STRENGTH AND TYPE LIMITS
No Scale

QUANTITIES

STRUCTURE EXCAVATION (BRIDGE)	110	CY
STRUCTURE BACKFILL (BRIDGE)	50	CY
FURNISH PILING (CLASS 90)	879	LF
DRIVE PILE (CLASS 90)	20	EA
FURNISH 16" CAST-IN-STEEL SHELL CONCRETE PILING	1,220	LF
DRIVE 16" CAST-IN-STEEL SHELL CONCRETE PILE	15	EA
STRUCTURAL CONCRETE, BRIDGE	440	CY
STRUCTURAL CONCRETE, APPROACH SLAB (TYPE N)	130	CY
JOINT SEAL (MR½")	118	LF
BAR REINFORCING STEEL (BRIDGE)	84,000	LB
CONCRETE BARRIER (TYPE 732)	221	LF

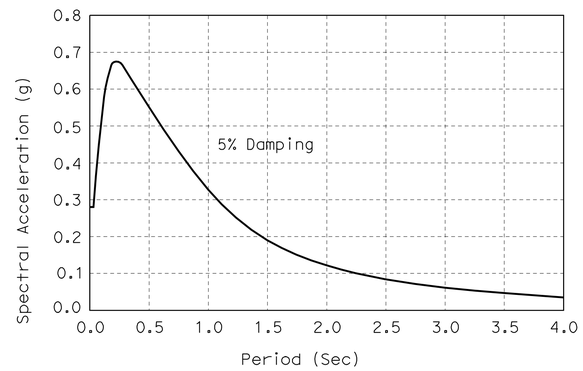

SOIL PROFILE TYPE D: Mw = 6.5, PBA = 0.2g
No Scale

INDEX TO PLANS

Sheet No. Title

1. GENERAL PLAN
2. INDEX TO PLANS
3. DECK CONTOURS
4. FOUNDATION PLAN
5. ABUTMENT LAYOUT
6. PIER DETAILS
7. TYPICAL SECTION
8. SLAB REINFORCEMENT DETAILS NO. 1
9. SLAB REINFORCEMENT DETAILS NO. 2
10. STRUCTURE APPROACH TYPE N(30D)
11. STRUCTURE APPROACH DRAINAGE DETAILS
12. LOG OF TEST BORINGS 1 OF 5
13. LOG OF TEST BORINGS 2 OF 5
14. LOG OF TEST BORINGS 3 OF 5
15. LOG OF TEST BORINGS 4 OF 5
16. LOG OF TEST BORINGS 5 OF 5

PILE DATA TABLE (B2-5)

Support Location	Pile Type	Nominal Resistance (kips)		Design Tip Elevations (ft)	Specified Tip Elevations (ft)	Nominal Driving Resistance (kips)
		Compression	Tension			
Abut 1	Class 90	180	0	142.0 (1) 155.0 (2)	142.0	180
Pier 2	CISS NPS 16x0.500	280	0	110.0 (1) 135.0 (2)	110.0	280
Abut 3	Class 90	180	0	142.0 (1) 155.0 (2)	142.0	180

NOTE: Design tip elevations are controlled by the following demands: (1) Compression, (2) Lateral.

STANDARD PLANS DATED MAY 2006

	A10A	ACRONYMS AND ABBREVIATIONS (A-L)
	A10B	ACRONYMS AND ABBREVIATIONS (M-Z)
	A10C	SYMBOLS (SHEET 1 OF 2)
	A10D	SYMBOLS (SHEET 2 OF 2)
	A62C	LIMITS OF PAYMENT FOR EXCAVATION AND BACKFILL-BRIDGE
	BO-1	BRIDGE DETAILS
	B2-5	PILE DETAILS CLASS 90 AND CLASS 140
RSP	B6-21	JOINT SEALS (MAXIMUM MOVEMENT RATING = 2")
	B11-55	CONCRETE BARRIER TYPE 732
	B14-3	COMMUNICATION AND SPRINKLER CONTROL CONDUITS (CONDUIT LESS THAN 4")

STANDARD PLAN SHEET NO.
DETAIL NO.

	BY	CHECKED
DESIGN	G. Schuster	N. Terzis
DETAILS	G. Souza/S. Jiang	N. Terzis
QUANTITIES	N. Terzis	S. Jiang

STATE OF CALIFORNIA
DEPARTMENT OF TRANSPORTATION

DIVISION OF ENGINEERING SERVICES
STRUCTURE DESIGN
DESIGN BRANCH 5

BRIDGE NO. 39-0243R
POST MILE 9.43

DUCK SLOUGH BRIDGE RIGHT
INDEX TO PLANS

ORIGINAL SCALE IN INCHES FOR REDUCED PLANS 0 1 2 3

CU 10
EA 415701

DISREGARD PRINTS BEARING EARLIER REVISION DATES

REVISION DATES: 11-14-07 03-19-09 6-14-09 7-29-09 8-11-09 01-22-09 01-26-09 2-19-09 2-25-09

SHEET 2 OF 16

STRUCTURES DESIGN DETAIL SHEET (ENGLISH) (REV. 10/25/05)

FILE => 39-0243r-a-itp.dgn

USERNAME => trlenard DATE PLOTTED => 11-OCT-2010 TIME PLOTTED => 13:03

DIST	COUNTY	ROUTE	POST MILES TOTAL PROJECT	SHEET No	TOTAL SHEETS
10	Mer	99	R4.6/R10.5	645	751

REGISTERED CIVIL ENGINEER 07-31-09 DATE

10-11-10
PLANS APPROVAL DATE

REGISTERED PROFESSIONAL ENGINEER G. SCHUSTER No. C 63897 Exp. 09-30-10 CIVIL STATE OF CALIFORNIA

The State of California or its officers or agents shall not be responsible for the accuracy or completeness of electronic copies of this plan sheet.

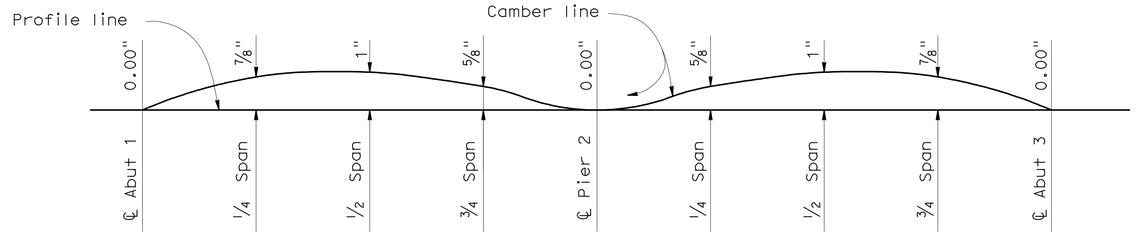

Note:

Does not include allowance for false work settlement.

CAMBER DIAGRAM

no scale

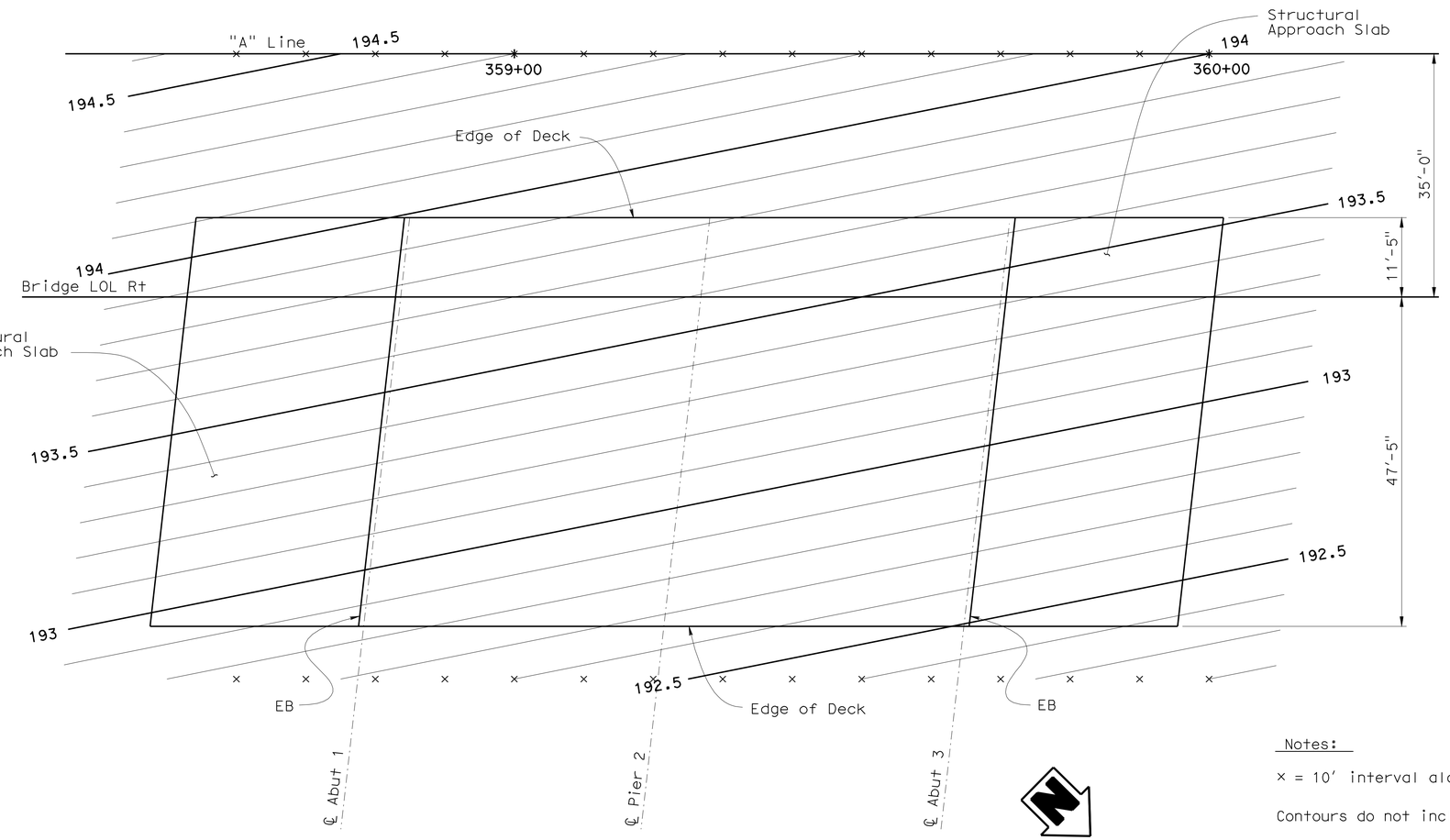

Notes:

× = 10′ interval along station line.

Contours do not include camber.

Contour interval = 0.1′

DECK CONTOURS

1" = 10′-0"

	BY	CHECKED
DESIGN	G. Schuster	N. Terzis
DETAILS	G. M. Souza/S. Jiang	N. Terzis
QUANTITIES	N. Terzis	S. Jiang

STATE OF CALIFORNIA
DEPARTMENT OF TRANSPORTATION

DIVISION OF ENGINEERING SERVICES
STRUCTURE DESIGN
DESIGN BRANCH 5

BRIDGE NO. 39-0243R
POST MILE 9.43

DUCK SLOUGH BRIDGE RIGHT
DECK CONTOURS (RIGHT)

ORIGINAL SCALE IN INCHES FOR REDUCED PLANS 0 1 2 3

CU 10
EA 415701

DISREGARD PRINTS BEARING EARLIER REVISION DATES

REVISION DATES: 04-02-08 04-23-08 06-10-08 07-14-08 07-31-08 08-22-08 10-16-08 01-27-09

SHEET 3 OF 16

STRUCTURES DESIGN DETAIL SHEET (ENGLISH) (REV. 10/25/05)

FILE => 39-0243r-d-dc02.dgn

USERNAME => trienard DATE PLOTTED => 11-OCT-2010 TIME PLOTTED => 13:03

DIST	COUNTY	ROUTE	POST MILES TOTAL PROJECT	SHEET No	TOTAL SHEETS
10	Mer	99	R4.6/R10.5	646	751

REGISTERED CIVIL ENGINEER 07-31-09 DATE

10-11-10
PLANS APPROVAL DATE

REGISTERED PROFESSIONAL ENGINEER G. SCHUSTER No. C 63897 Exp. 09-30-10 CIVIL STATE OF CALIFORNIA

The State of California or its officers or agents shall not be responsible for the accuracy or completeness of electronic copies of this plan sheet.

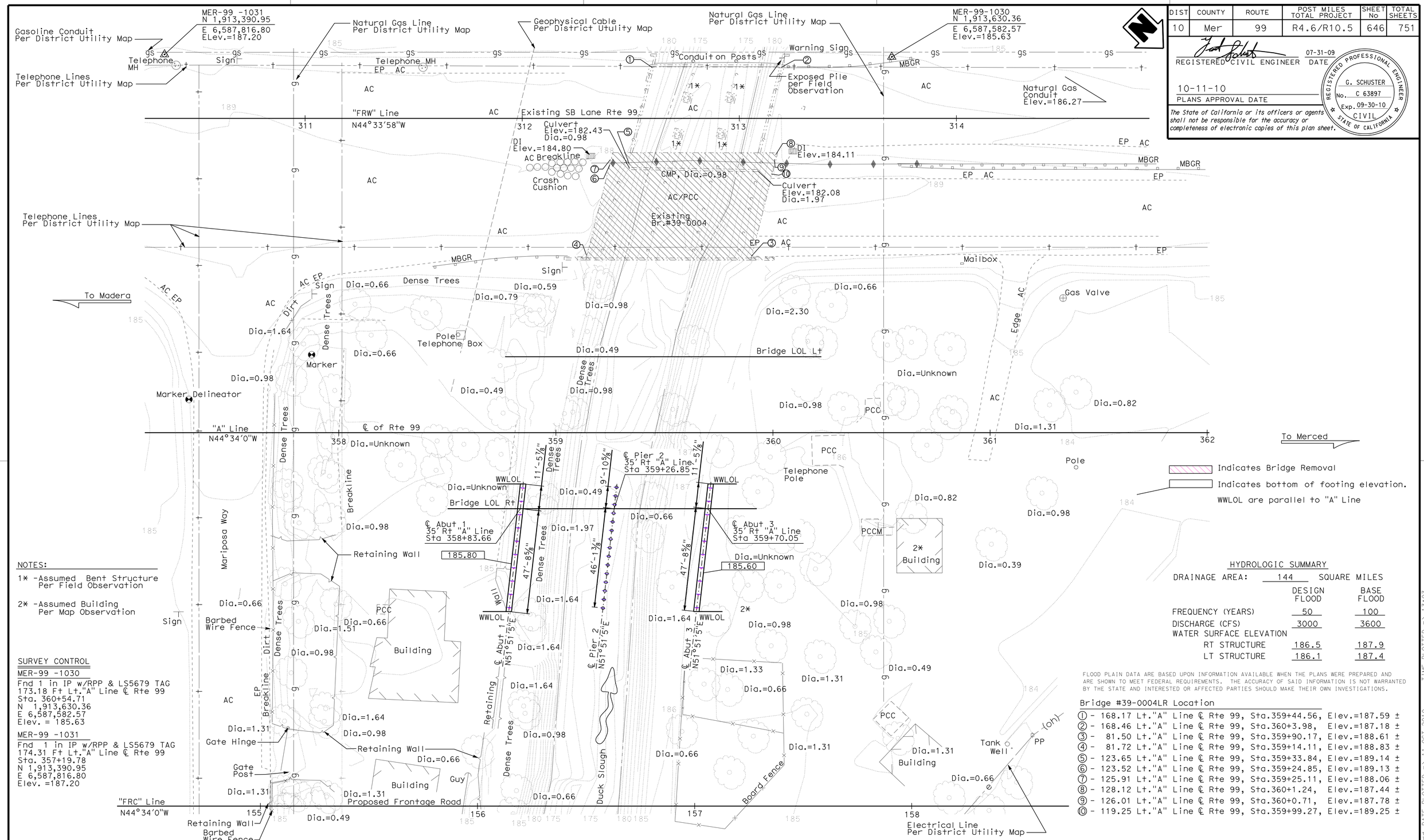

NOTES:

1* -Assumed Bent Structure Per Field Observation

2* -Assumed Building Per Map Observation

SURVEY CONTROL

MER-99 -1030
Fnd 1 in IP w/RPP & LS5679 TAG
173.18 Ft Lt."A" Line ℄ Rte 99
Sta. 360+54.71
N 1,913,630.36
E 6,587,582.57
Elev. = 185.63

MER-99 -1031
Fnd 1 in IP w/RPP & LS5679 TAG
174.31 Ft Lt."A" Line ℄ Rte 99
Sta. 357+19.78
N 1,913,390.95
E 6,587,816.80
Elev. =187.20

HYDROLOGIC SUMMARY

DRAINAGE AREA: 144 SQUARE MILES

	DESIGN FLOOD	BASE FLOOD
FREQUENCY (YEARS)	50	100
DISCHARGE (CFS)	3000	3600
WATER SURFACE ELEVATION		
RT STRUCTURE	186.5	187.9
LT STRUCTURE	186.1	187.4

FLOOD PLAIN DATA ARE BASED UPON INFORMATION AVAILABLE WHEN THE PLANS WERE PREPARED AND ARE SHOWN TO MEET FEDERAL REQUIREMENTS. THE ACCURACY OF SAID INFORMATION IS NOT WARRANTED BY THE STATE AND INTERESTED OR AFFECTED PARTIES SHOULD MAKE THEIR OWN INVESTIGATIONS.

Bridge #39-0004LR Location

① - 168.17 Lt."A" Line ℄ Rte 99, Sta.359+44.56, Elev.=187.59 ±
② - 168.46 Lt."A" Line ℄ Rte 99, Sta.360+3.98, Elev.=187.18 ±
③ - 81.50 Lt."A" Line ℄ Rte 99, Sta.359+90.17, Elev.=188.61 ±
④ - 81.72 Lt."A" Line ℄ Rte 99, Sta.359+14.11, Elev.=188.83 ±
⑤ - 123.65 Lt."A" Line ℄ Rte 99, Sta.359+33.84, Elev.=189.14 ±
⑥ - 123.52 Lt."A" Line ℄ Rte 99, Sta.359+24.85, Elev.=189.13 ±
⑦ - 125.91 Lt."A" Line ℄ Rte 99, Sta.359+25.11, Elev.=188.06 ±
⑧ - 128.12 Lt."A" Line ℄ Rte 99, Sta.360+1.24, Elev.=187.44 ±
⑨ - 126.01 Lt."A" Line ℄ Rte 99, Sta.359+0.71, Elev.=187.78 ±
⑩ - 119.25 Lt."A" Line ℄ Rte 99, Sta.359+99.27, Elev.=189.25 ±

PRELIMINARY INVESTIGATION SECTION

SCALE	VERT.DATUM NGVD 29	PHOTOGRAMMETRY AS OF: X			
1"=20'	HORZ.DATUM NAD 83 1991.35	SURVEYED	BY District	CHECKED	BY J.Pallares 12/2007
ALIGNMENT TIES Dist.Traverse Sheet		DRAFTED	BY T.Marchenko 11/2007	CHECKED	BY T.Zolnikova 12/2007

	BY	CHECKED
DESIGN	G. Schuster	N. Terzis
DETAILS	G. M. Souza/S. Jiang/T.C.	N. Terzis
QUANTITIES	N. Terzis	S. Jiang

STATE OF CALIFORNIA
DEPARTMENT OF TRANSPORTATION

DIVISION OF ENGINEERING SERVICES
STRUCTURE DESIGN
DESIGN BRANCH 5

BRIDGE NO. 39-0243R
POST MILE 9.43

DUCK SLOUGH BRIDGE RIGHT
FOUNDATION PLAN

STRUCTURES FOUNDATION PLAN SHEET (ENGLISH) (REV. 10/25/05)

ORIGINAL SCALE IN INCHES FOR REDUCED PLANS 0 1 2 3

CU 10
EA 415701

DISREGARD PRINTS BEARING EARLIER REVISION DATES

REVISION DATES: 03-26-08 05-04-09 07-11-08 07-24-08 07-31-08 08-26-08 12-11-08 01-26-09 05-04-09

SHEET 4 OF 16

FILE => 39-0243r-e-fp.dgn

USERNAME => trlenard DATE PLOTTED => 11-OCT-2010 TIME PLOTTED => 13:03

DIST	COUNTY	ROUTE	POST MILES TOTAL PROJECT	SHEET No	TOTAL SHEETS
10	Mer	99	R4.6/R10.5	647	751

REGISTERED CIVIL ENGINEER 07-31-09 DATE

REGISTERED PROFESSIONAL ENGINEER G. SCHUSTER No. C 63897 Exp. 09-30-10 CIVIL STATE OF CALIFORNIA

10-11-10
PLANS APPROVAL DATE

The State of California or its officers or agents shall not be responsible for the accuracy or completeness of electronic copies of this plan sheet.

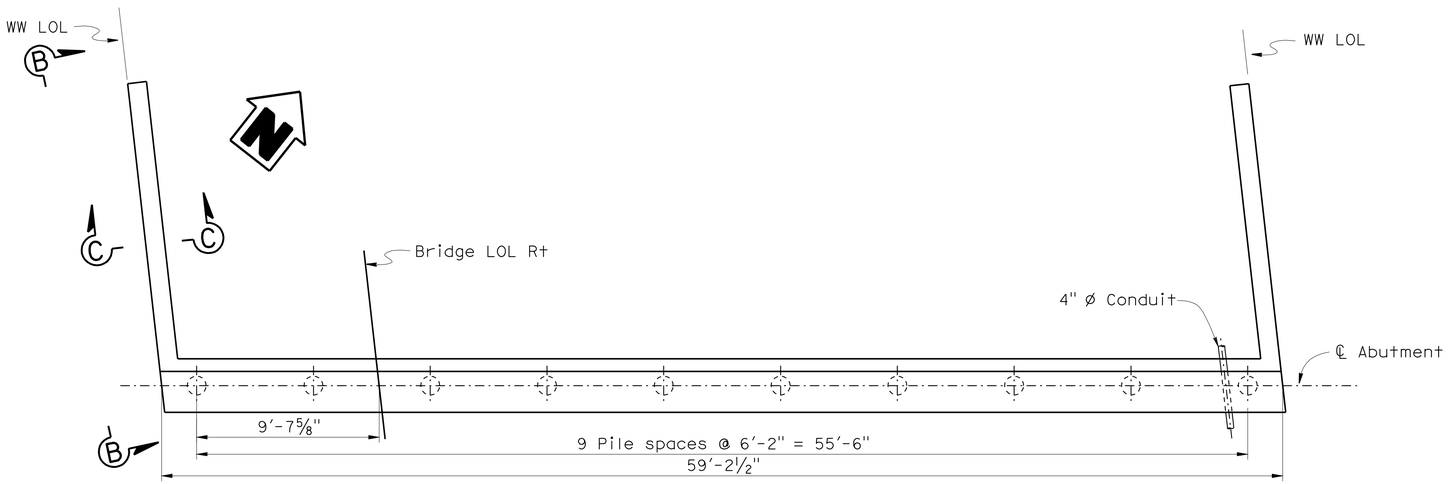

PLAN
¼" =1'-0"

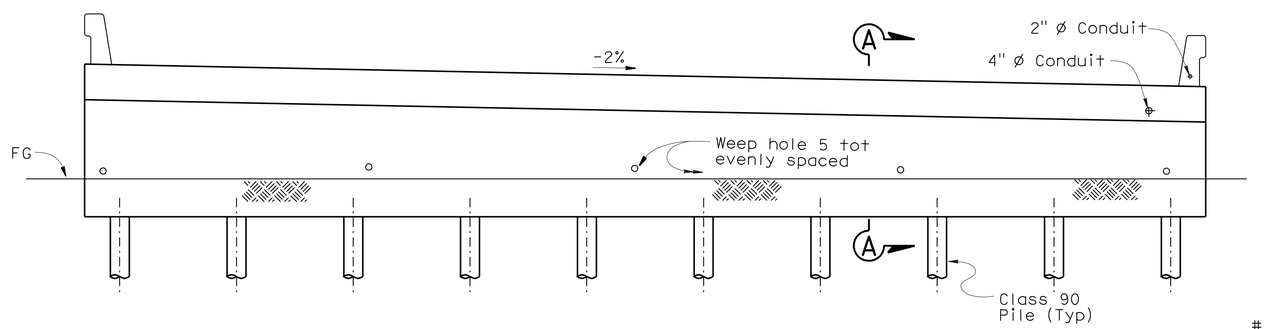

ELEVATION
¼" =1'-0"

ABUTMENT 3
Note: Abutment 1 similar

For drainage details see "Structure Approach Drainage Details" sheet

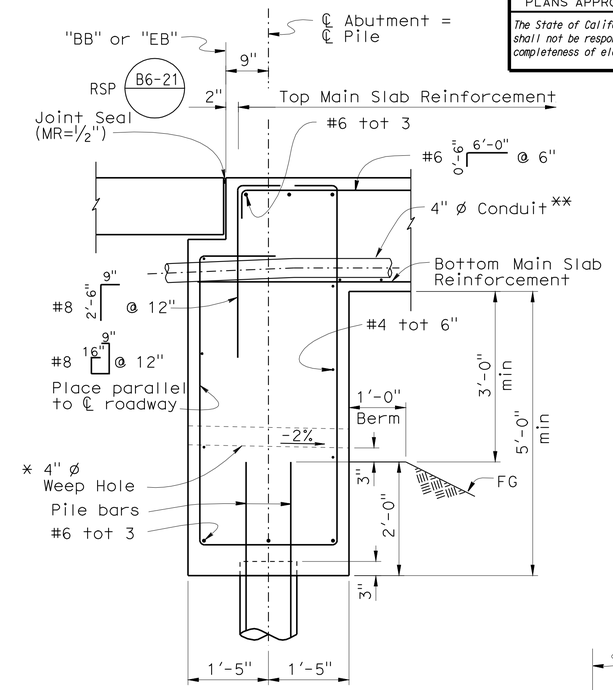

SECTION A-A
¾" =1'-0"

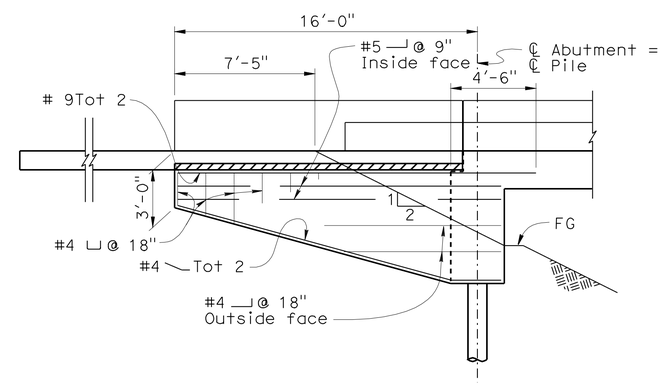

VIEW B-B
¼" =1'-0"

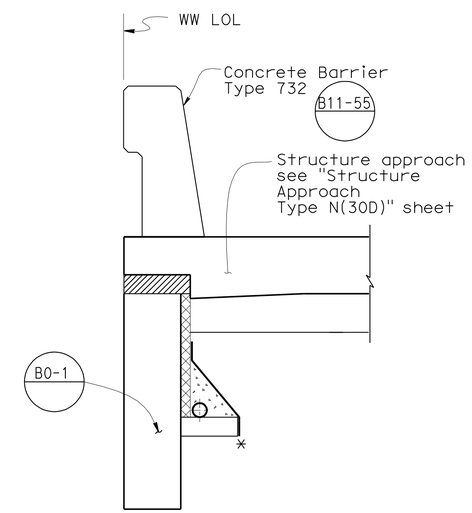

SECTION C-C
¾" =1'-0"

Notes:

* See "Structure Approach Drainage Details" sheet

** Place 4" Ø Communication conduit in Right Abutment only

DESIGN	BY G. Schuster	CHECKED N. Terzis	
DETAILS	BY S. Jiang\A. Chen/T. Cotton	CHECKED N. Terzis	
QUANTITIES	BY N. Terzis	CHECKED S. Jiang	

ORIGINAL SCALE IN INCHES FOR REDUCED PLANS 0 1 2 3

STATE OF CALIFORNIA
DEPARTMENT OF TRANSPORTATION

DIVISION OF ENGINEERING SERVICES
STRUCTURE DESIGN
DESIGN BRANCH 5

CU 10
EA 415701

BRIDGE NO. 39-0243R
POST MILE 9.43

DUCK SLOUGH BRIDGE RIGHT
ABUTMENT LAYOUT

DISREGARD PRINTS BEARING EARLIER REVISION DATES

REVISION DATES: 02-21-08 12-21-08 2-11-09 05-04-09 06-26-09 7-29-09 8-06-09 09-06-08 12-11-08

SHEET 5 OF 16

STRUCTURES DESIGN DETAIL SHEET (ENGLISH) (REV. 10/25/05)

FILE => 39-0243r-f-abutlyt.dgn

USERNAME => trlenard DATE PLOTTED => 11-OCT-2010 TIME PLOTTED => 13:03

DIST	COUNTY	ROUTE	POST MILES TOTAL PROJECT	SHEET No	TOTAL SHEETS
10	Mer	99	R4.6/R10.5	648	751

REGISTERED CIVIL ENGINEER 07-31-09 DATE

10-11-10
PLANS APPROVAL DATE

REGISTERED PROFESSIONAL ENGINEER G. SCHUSTER No. C 63897 Exp. 09-30-10 CIVIL STATE OF CALIFORNIA

The State of California or its officers or agents shall not be responsible for the accuracy or completeness of electronic copies of this plan sheet.

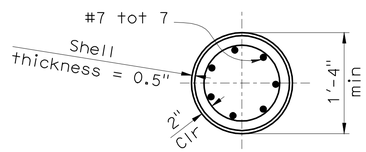

SECTION B-B
1" = 1'-0"

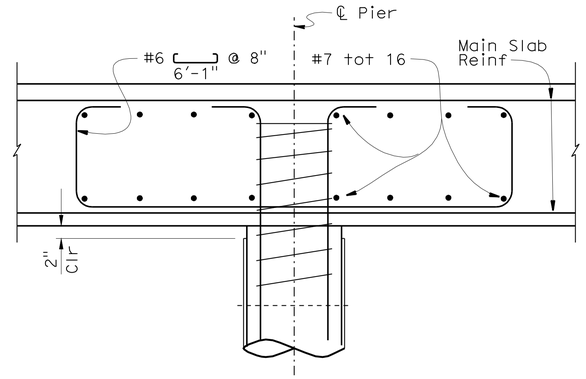

DETAIL "A"
1" = 1'-0"

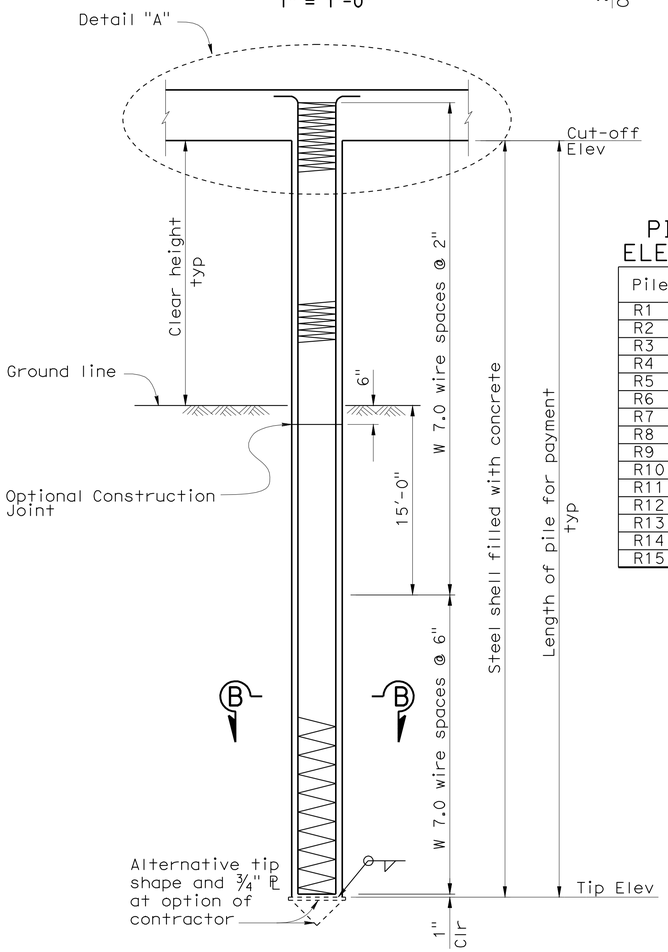

CAST-IN-STEEL SHELL CONCRETE PILE

SECTION A-A
½" = 1'-0"

PILE CUT-OFF ELEVATION TABLE

Pile	Cut-off Elevation (ft)
R1	191.91
R2	191.83
R3	191.76
R4	191.68
R5	191.60
R6	191.52
R7	191.44
R8	191.37
R9	191.29
R10	191.21
R11	191.13
R12	191.06
R13	190.98
R14	190.90
R15	190.82

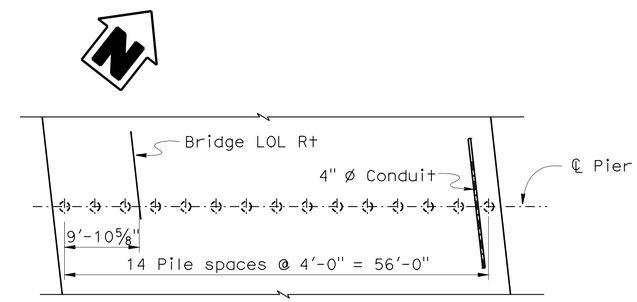

PLAN
1" = 10'-0"

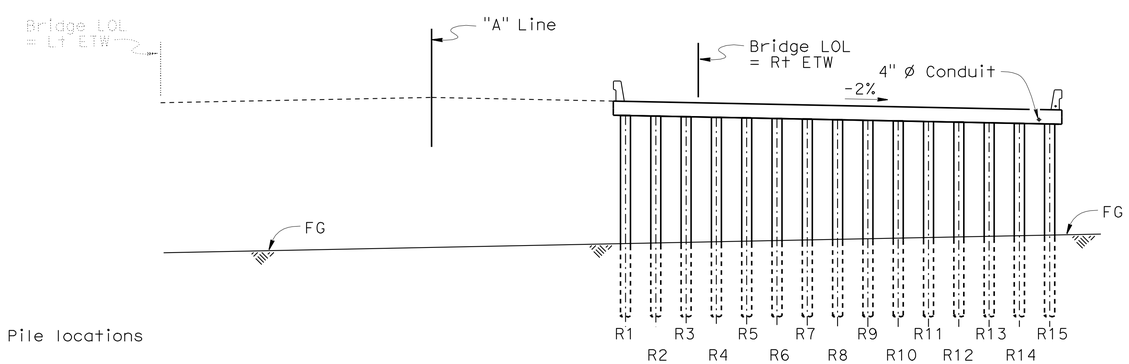

Pile locations

ELEVATION
1" = 10'-0"

	BY	CHECKED
DESIGN	G. Schuster	N. Terzis
DETAILS	S. Jiang/G. M. Souza/T.C	N. Terzis
QUANTITIES	N. Terzis	S. Jiang

ORIGINAL SCALE IN INCHES FOR REDUCED PLANS 0 1 2 3

STATE OF CALIFORNIA
DEPARTMENT OF TRANSPORTATION

DIVISION OF ENGINEERING SERVICES
STRUCTURE DESIGN
DESIGN BRANCH 5

CU 10
EA 415701

BRIDGE NO. 39-0243R
POST MILE 9.43

DUCK SLOUGH BRIDGE RIGHT
PIER DETAILS

DISREGARD PRINTS BEARING EARLIER REVISION DATES

REVISION DATES: 03-19-08 04-02-09 05-18-09 06-06-08 07-11-08 09-26-08 12-19-08 01-28-09 02-25-09

SHEET 6 OF 16

STRUCTURES DESIGN DETAIL SHEET (ENGLISH) (REV. 10/25/05)

FILE => 39-0243r-i-pierdt.dgn

USERNAME => trlenard DATE PLOTTED => 11-OCT-2010 TIME PLOTTED => 13:04

DIST	COUNTY	ROUTE	POST MILES TOTAL PROJECT	SHEET No	TOTAL SHEETS
10	Mer	99	R4.6/R10.5	649	751

REGISTERED CIVIL ENGINEER 07-31-09 DATE

10-11-10
PLANS APPROVAL DATE

REGISTERED PROFESSIONAL ENGINEER G. SCHUSTER No. C 63897 Exp. 09-30-10 CIVIL STATE OF CALIFORNIA

The State of California or its officers or agents shall not be responsible for the accuracy or completeness of electronic copies of this plan sheet.

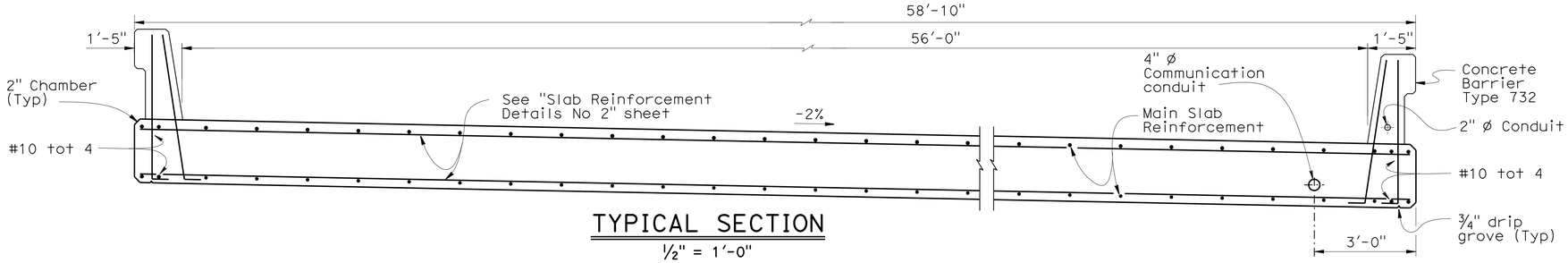

TYPICAL SECTION

1/2" = 1'-0"

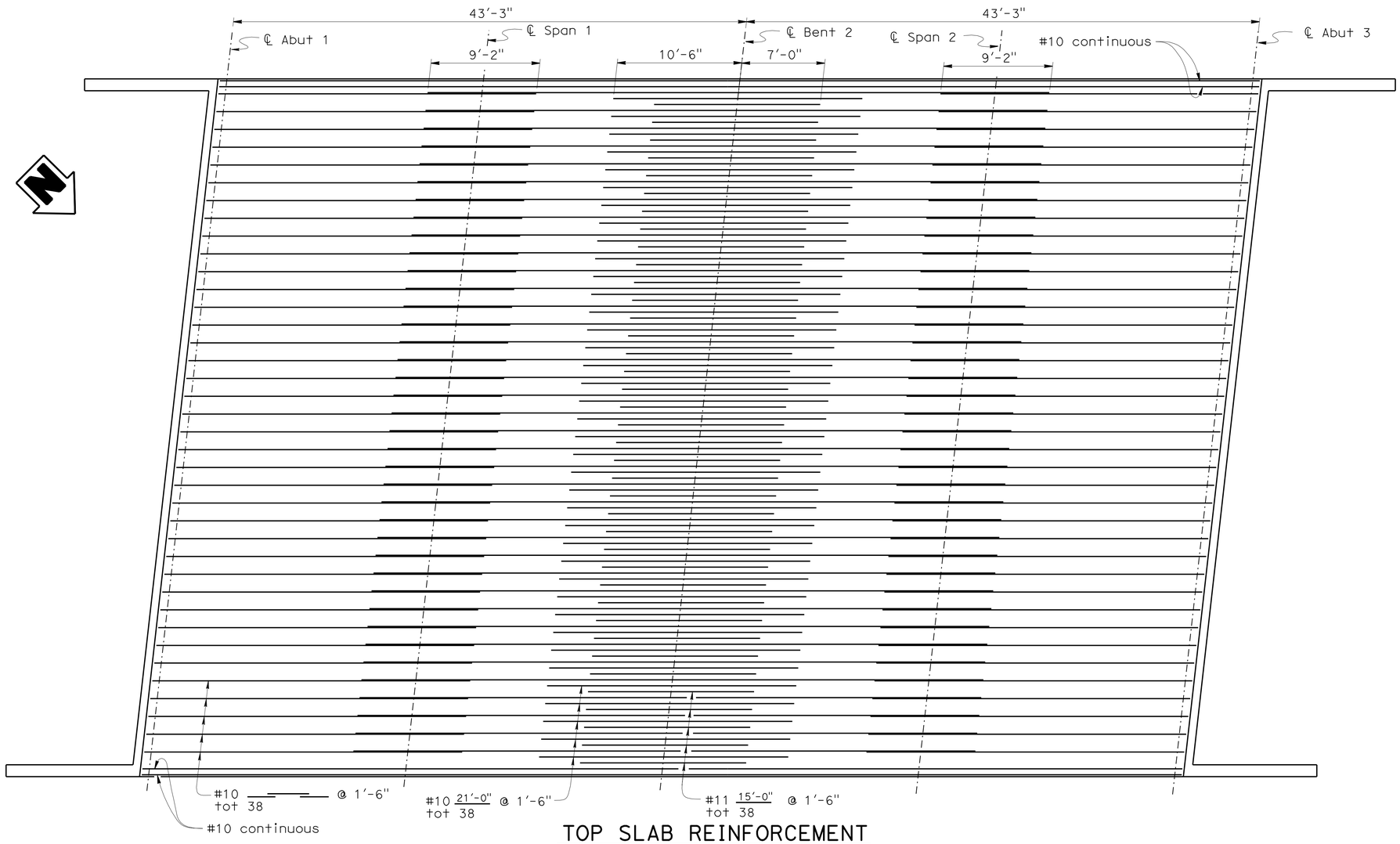

TOP SLAB REINFORCEMENT

1" = 5'-0"

DESIGN	BY G. Schuster	CHECKED N. Terzis	
DETAILS	BY S. Jiang	CHECKED N. Terzis	
QUANTITIES	BY N. Terzis	CHECKED S. Jiang	

ORIGINAL SCALE IN INCHES FOR REDUCED PLANS 0 1 2 3

STATE OF CALIFORNIA
DEPARTMENT OF TRANSPORTATION

DIVISION OF ENGINEERING SERVICES
STRUCTURE DESIGN
DESIGN BRANCH 5

CU 10
EA 415701

BRIDGE NO. 39-0243R
POST MILE 9.43

DUCK SLOUGH BRIDGE RIGHT
TYPICAL SECTION

DISREGARD PRINTS BEARING EARLIER REVISION DATES

REVISION DATES: 03-06-08 03-12-08 04-12-08 05-09-08 07-31-08 09-05-08 11-20-08 12-02-08 12-19-08 02-25-09

SHEET 7 OF 16

USERNAME => trlenard DATE PLOTTED => 11-OCT-2010 TIME PLOTTED => 13:04

STRUCTURES DESIGN DETAIL SHEET (ENGLISH) (REV. 10/25/05)

FILE => 39-0243r-k_ts.dgn

DIST	COUNTY	ROUTE	POST MILES TOTAL PROJECT	SHEET No	TOTAL SHEETS
10	Mer	99	R4.6/R10.5	650	751

REGISTERED CIVIL ENGINEER 07-31-09 DATE

10-11-10
PLANS APPROVAL DATE

REGISTERED PROFESSIONAL ENGINEER G. SCHUSTER No. C 63897 Exp. 09-30-10 CIVIL STATE OF CALIFORNIA

The State of California or its officers or agents shall not be responsible for the accuracy or completeness of electronic copies of this plan sheet.

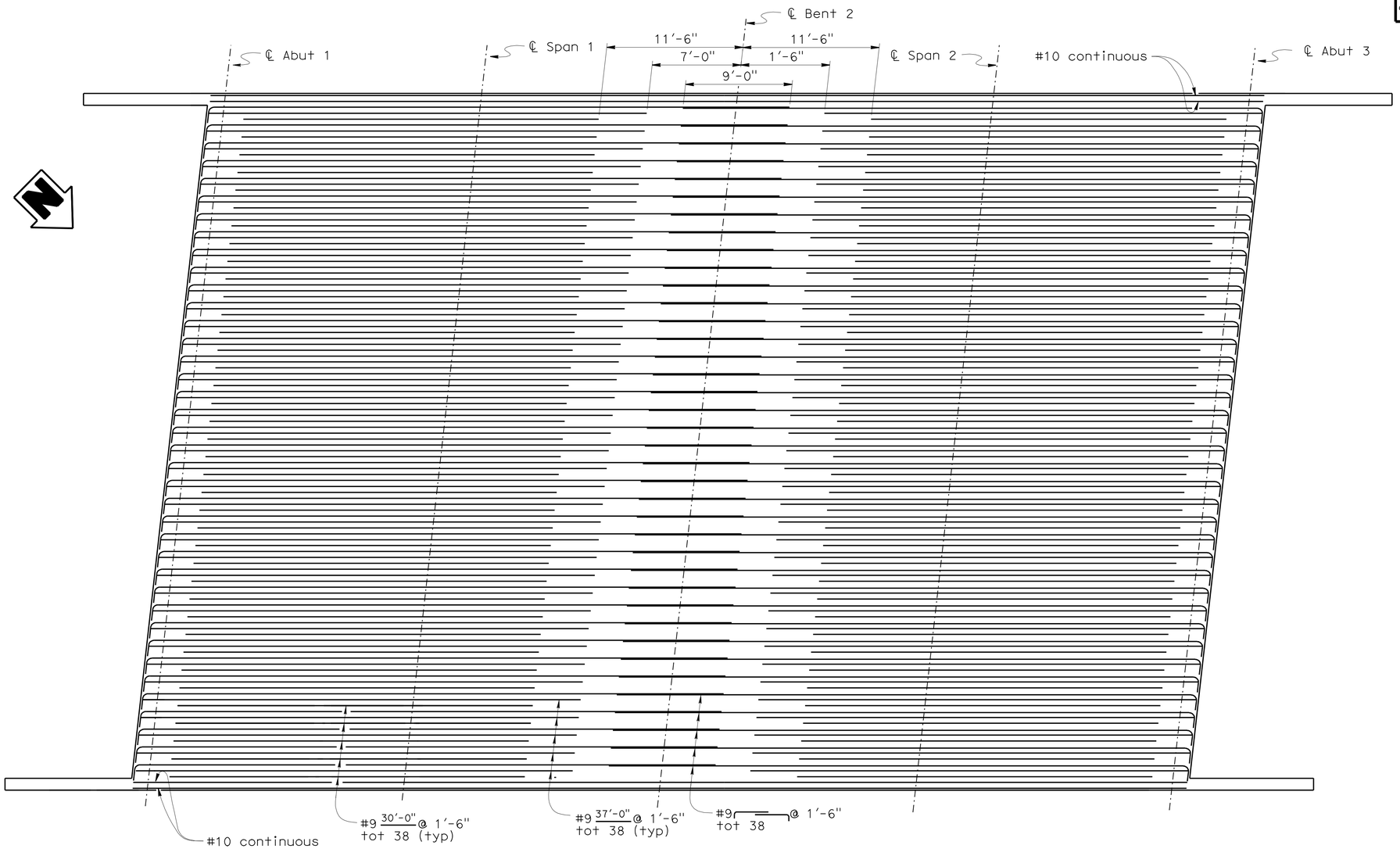

BOTTOM SLAB REINFORCEMENT

1" = 5'-0"

	BY	CHECKED
DESIGN	G. Schuster	N. Terzis
DETAILS	S. Jiang	N. Terzis
QUANTITIES	N. Terzis	S. Jiang

ORIGINAL SCALE IN INCHES FOR REDUCED PLANS 0 1 2 3

STATE OF CALIFORNIA
DEPARTMENT OF TRANSPORTATION

DIVISION OF ENGINEERING SERVICES
STRUCTURE DESIGN
DESIGN BRANCH 5

CU 10
EA 415701

BRIDGE NO. 39-0243R
POST MILE 9.43

DUCK SLOUGH BRIDGE RIGHT
SLAB REINFORCEMENT DETAILS NO. 1

DISREGARD PRINTS BEARING EARLIER REVISION DATES

REVISION DATES: 5-09-08 7-11-08 7-29-08 12-02-08 12-19-08

SHEET 8 OF 16

STRUCTURES DESIGN DETAIL SHEET (ENGLISH) (REV. 10/25/05)

FILE => 39-0243r-k-slab-rf.dgn

USERNAME => trienard DATE PLOTTED => 11-OCT-2010 TIME PLOTTED => 13:04

DIST	COUNTY	ROUTE	POST MILES TOTAL PROJECT	SHEET No	TOTAL SHEETS
10	Mer	99	R4.6/R10.5	651	751

REGISTERED CIVIL ENGINEER 07-31-09 DATE

10-11-10
PLANS APPROVAL DATE

REGISTERED PROFESSIONAL ENGINEER G. SCHUSTER No. C 63897 Exp. 09-30-10 CIVIL STATE OF CALIFORNIA

The State of California or its officers or agents shall not be responsible for the accuracy or completeness of electronic copies of this plan sheet.

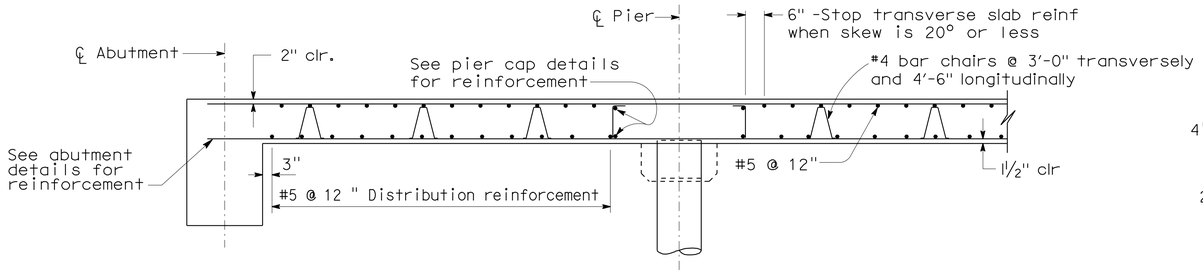

LONGITUDINAL SECTION

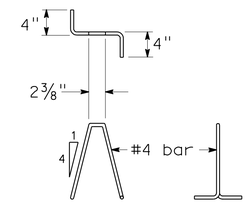

BAR CHAIR DETAIL

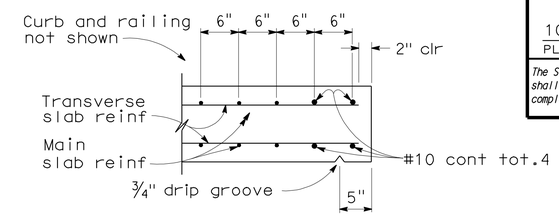

EDGE OF SLAB DETAILS

BAR SPLICE LENGTH (Inch)								
Bar size	#4	#5	#6	#7	#8	#9	#10	#11
All bars, except top bars in spans over 23'	23	28	34	39	45	68	76	85
Top bars in spans over 23'	23	28	34	53	60	77	97	120

REINFORCEMENT NOTES:

Splices in top main bars to be located near center of span.
Splices in bottom main bars to be located near pier.
Spacing of all transverse bars is measured along ℄ roadway.
Skew 0° to 20°: Place all transverse bars parallel to pier.
Skew over 20°: Place transverse slab bars perpendicular to ℄ bridge. See details at right and below.

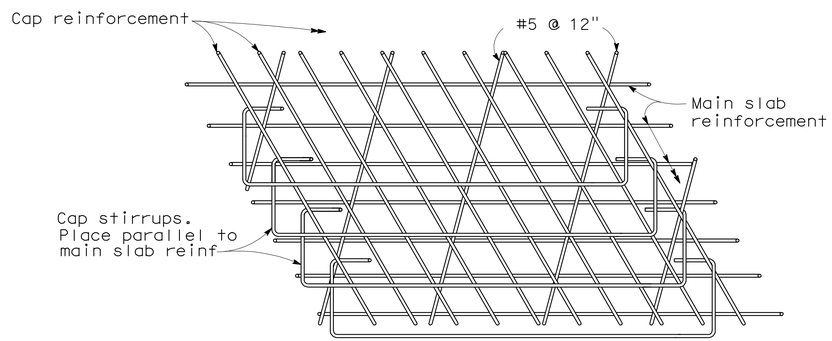

TOP SLAB REINFORCEMENT AT PIER

Note: View for main span over 23'.
Bar placement similar for spans under 23'.

GENERAL NOTES
LOAD AND RESISTANCE FACTOR DESIGN

DESIGN: AASHTO LRFD Bridge Design Specifications, Third Edition with 2005 & 2006 Interim Revisions and Caltrans Amendments 03.06.01

DEAD LOAD: Includes 35 Psf for future wearing surface.

LIVE LOADING: HL93 Alternative loading and "Low-Boy" permit design vehicle

REINFORCED CONCRETE: f_y = 60 ksi
f'_c = 3.6 ksi
n = 8

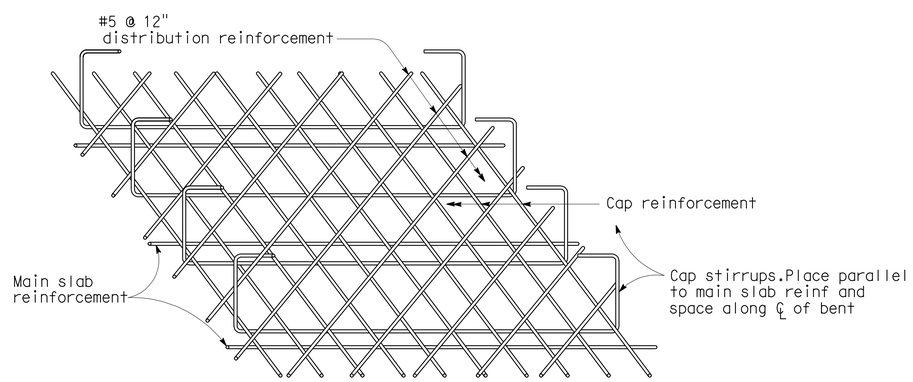

FLUSH CAP

BOTTOM SLAB REINFORCEMENT AT PIER

SPECIAL DETAILS
NO SCALE

DESIGN	BY G. Schuster	CHECKED N. Terzis	
DETAILS	BY S. Jiang/T.C.	CHECKED N. Terzis	
QUANTITIES	BY N. Terzis	CHECKED S. Jiang	

ORIGINAL SCALE IN INCHES FOR REDUCED PLANS 0 1 2 3

STATE OF CALIFORNIA
DEPARTMENT OF TRANSPORTATION

DIVISION OF ENGINEERING SERVICES
STRUCTURE DESIGN
DESIGN BRANCH 5

CU 10
EA 415701

BRIDGE NO. 39-0243R
POST MILE 9.43

DUCK SLOUGH BRIDGE RIGHT
SLAB REINFORCEMENT DETAILS NO. 2

DISREGARD PRINTS BEARING EARLIER REVISION DATES

REVISION DATES: 06-18-08 06-24-08 07-11-08 12-19-08 01-28-09 02-25-09

SHEET 9 OF 16

STRUCTURES DESIGN DETAIL SHEET (ENGLISH) (REV. 10/25/05)

FILE => 39-0243r-o-slab-rfdt.dgn

USERNAME => trlenard DATE PLOTTED => 11-OCT-2010 TIME PLOTTED => 13:04

DIST	COUNTY	ROUTE	POST MILES TOTAL PROJECT	SHEET No	TOTAL SHEETS
10	Mer	99	R4.6/R10.5	652	751

REGISTERED CIVIL ENGINEER 07-31-09 DATE

10-11-10
PLANS APPROVAL DATE

REGISTERED PROFESSIONAL ENGINEER G. SCHUSTER No. C 63897 Exp. 09-30-10 CIVIL STATE OF CALIFORNIA

The State of California or its officers or agents shall not be responsible for the accuracy or completeness of electronic copies of this plan sheet.

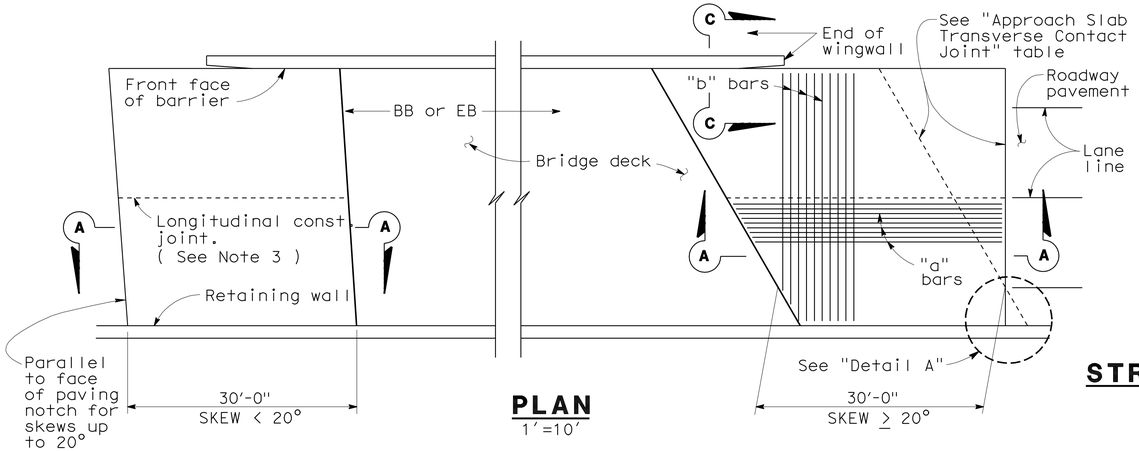

PLAN
1"=10'

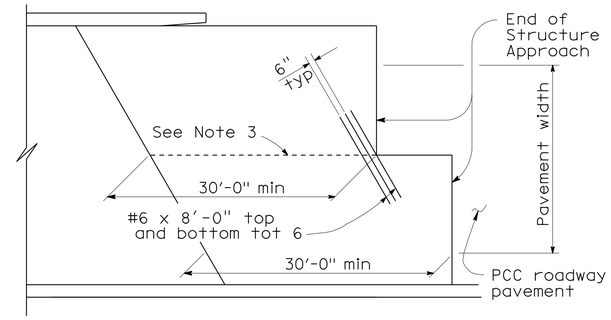

STRUCTURE APPROACH - END STAGGER DETAIL
No Scale

APPROACH SLAB TRANSVERSE CONTACT JOINT		
APPROACH SKEW	WITH AC ROADWAY PAVEMENT	WITH PCC ROADWAY PAVEMENT
< 20°	Parallel to face of paving notch	Parallel to face of paving notch
20°- 45°	Parallel to face of P N use (Detail A)	Stagger lines 24' to 36' apart
> 45°	Parallel to face of P N use (Detail A)	Stagger at each lane line

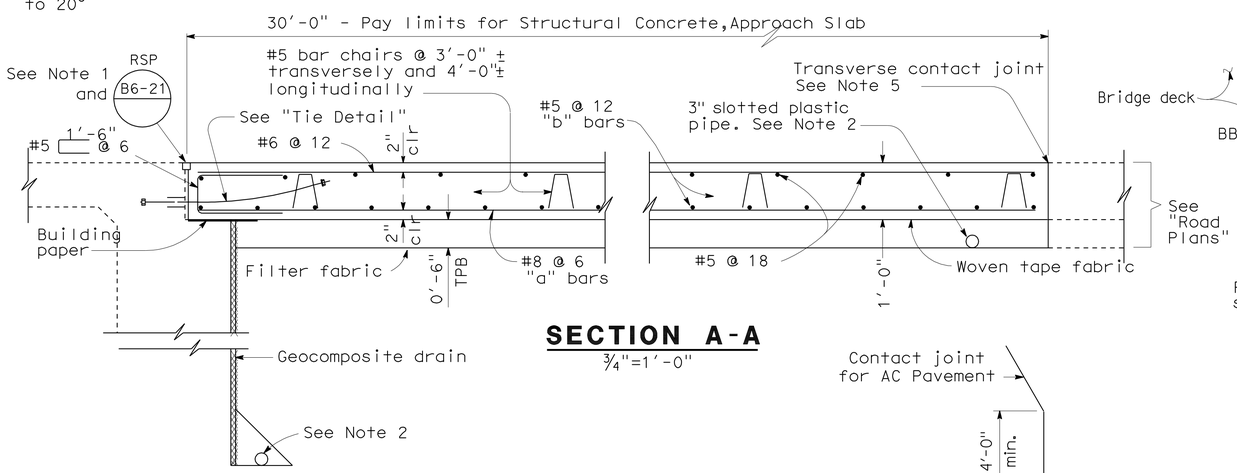

SECTION A-A
¾"=1'-0"

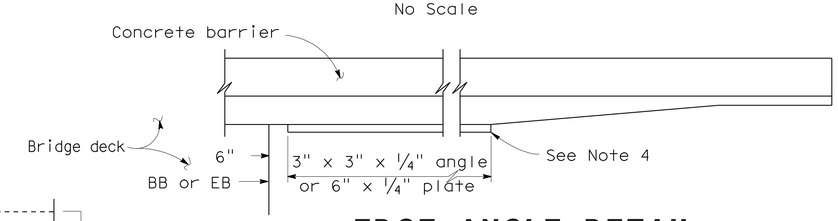

EDGE ANGLE DETAIL
½"=1'-0"

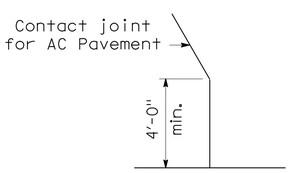

DETAIL A
No Scale

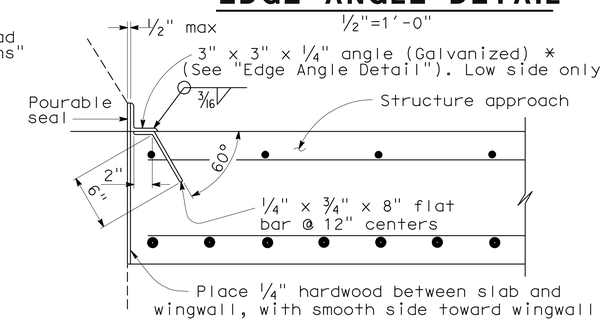

***(TO BE USED WITH TYPE 25 OR TYPE 27 CONCRETE BARRIER)**

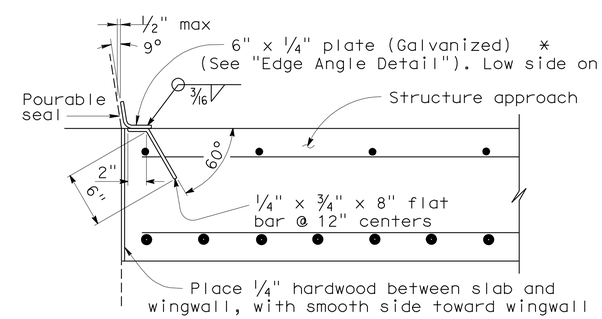

***(TO BE USED WITH TYPE 732 OR TYPE 736 CONCRETE BARRIER)**

DETAIL B
1½"=1'-0"

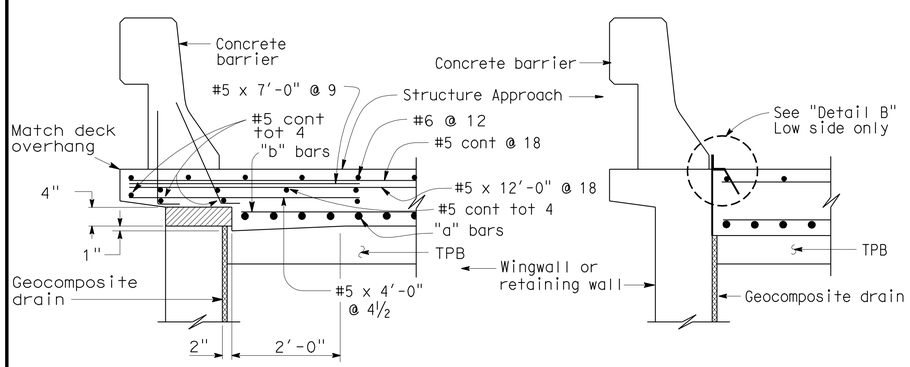

TYPE E-1 **TYPE E-2**

SECTION C-C
¾"=1'-0"

(Type E-1 to be used, unless otherwise shown on plans)

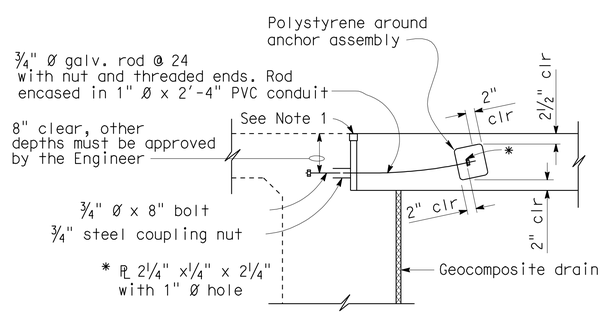

TIE DETAIL
¾"=1'-0"

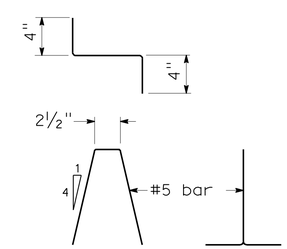

BAR CHAIR DETAIL
1½"=1'-0"

NOTES:

1. For details not noted or shown, see Structure Plans.
2. For drainage details, see "Structure Approach Drainage Details" sheet.
3. Longitudinal construction joints, when permitted by the Engineer, shall be located on lane lines.
4. End angle or plate at beginning of barrier transition, end of wingwall or end of structure approach, as applicable.
5. For transverse contact joint with new PCC paving, refer to Standard Plan P10.
6. At the contractor's option, approach slab transverse reinforcement may be placed parallel to paving notch. Spacing of transverse reinforcement is measured along ℄ roadway.

Polystyrene to be removed.

STANDARD DRAWING

FILE NO. xs3-180e

APPROVED BY M. Ha (RESPONSIBLE TECHNICAL SPECIALIST) — APPROVAL DATE 8-12-08

RELEASED BY O. Alcantara (RESPONSIBLE OFFICE CHIEF) — RELEASE DATE 8-12-08

STATE OF CALIFORNIA DEPARTMENT OF TRANSPORTATION

DIVISION OF ENGINEERING SERVICES STRUCTURE DESIGN DESIGN BRANCH 5

BRIDGE NO. 39-0243R

POST MILE 9.43

DUCK SLOUGH BRIDGE RIGHT
STRUCTURE APPROACH TYPE N(30D)

DS OSD 2147A (ENGLISH STANDARD DRAWING "XS" BORDER REV. 01/11/08)

ORIGINAL SCALE IN INCHES FOR REDUCED PLANS 0 1 2 3

CU 10
EA 415701

DISREGARD PRINTS BEARING EARLIER REVISION DATES — REVISION DATES 7-16-09 7-29-09

SHEET 10 OF 16

FILE => 39-0243r-s-sap30s.dgn

USERNAME => trlenard DATE PLOTTED => 11-OCT-2010 TIME PLOTTED => 13:04

DIST	COUNTY	ROUTE	POST MILES TOTAL PROJECT	SHEET No	TOTAL SHEETS
10	Mer	99	R4.6/R10.5	653	751

REGISTERED CIVIL ENGINEER 07-31-09 DATE

10-11-10
PLANS APPROVAL DATE

REGISTERED PROFESSIONAL ENGINEER G. SCHUSTER No. C 63897 Exp. 09-30-10 CIVIL STATE OF CALIFORNIA

The State of California or its officers or agents shall not be responsible for the accuracy or completeness of electronic copies of this plan sheet.

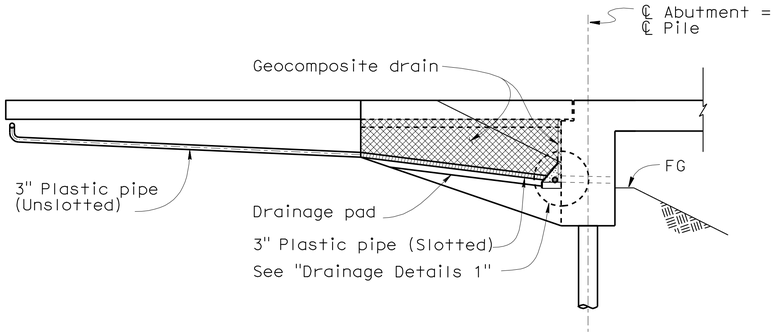

CANTILEVER WINGWALL

SECTION F-F

1/4" =1'-0"

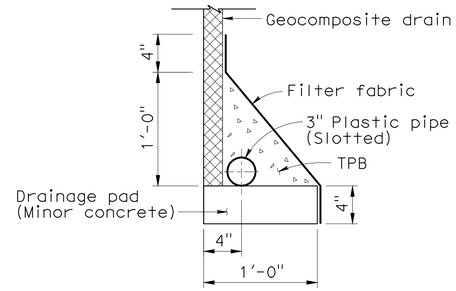

WITHOUT FOOTING

DRAINAGE DETAIL 1

1 1/2" =1'-0"

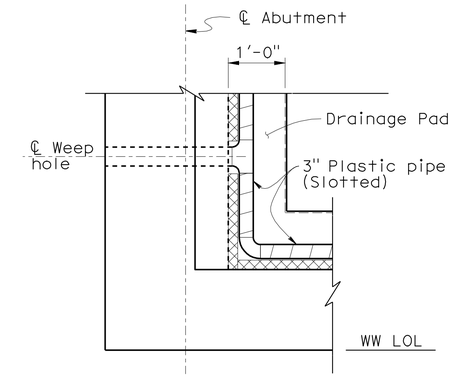

DRAINAGE DETAIL 2

3/4" =1'-0"

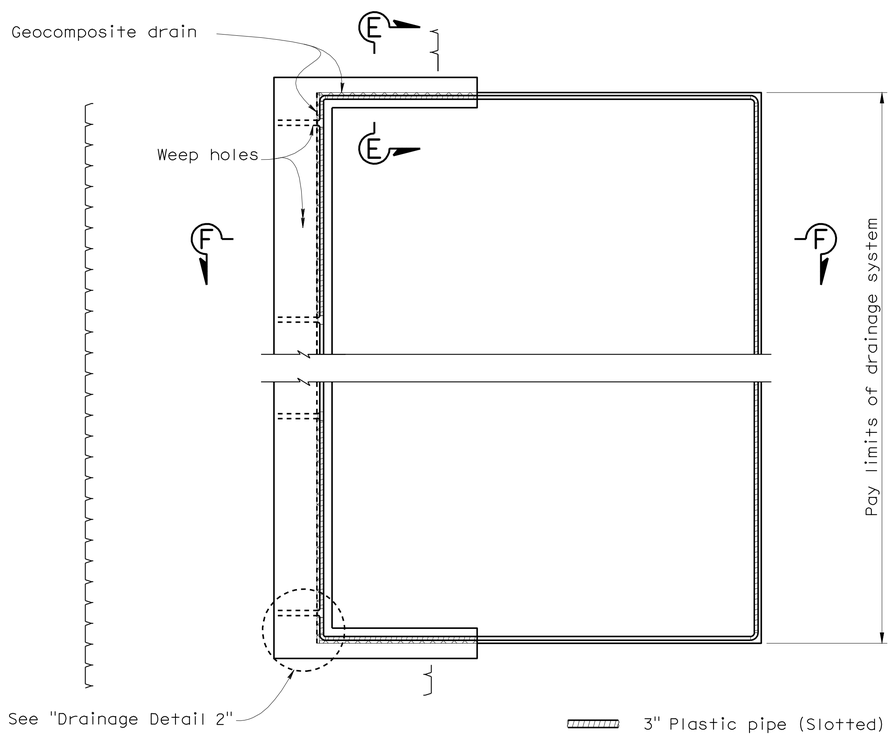

TYPICAL PLAN

1"=5'-0"

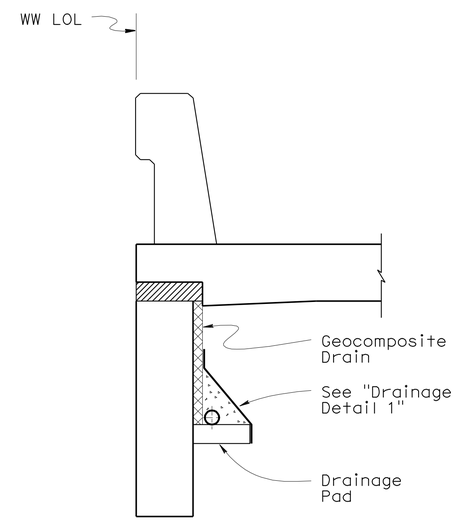

SECTION E-E

3/4" =1'-0"

DESIGN	BY G. Schuster	CHECKED N. Terzis	
DETAILS	BY A. Chen/S. Jiang	CHECKED N. Terzis	
QUANTITIES	BY N. Terzis	CHECKED S. Jiang	

STATE OF CALIFORNIA
DEPARTMENT OF TRANSPORTATION

DIVISION OF ENGINEERING SERVICES
STRUCTURE DESIGN
DESIGN BRANCH 5

BRIDGE NO. 39-0243R
POST MILE 9.43

DUCK SLOUGH BRIDGE RIGHT
STRUCTURE APPROACH DRAINAGE DETAILS

ORIGINAL SCALE IN INCHES FOR REDUCED PLANS 0 1 2 3

CU 10
EA 415701

DISREGARD PRINTS BEARING EARLIER REVISION DATES 11-26-07 8-07-08

REVISION DATES

SHEET 11 OF 16

STRUCTURES DESIGN DETAIL SHEET (ENGLISH) (REV. 10/25/05)

FILE => 39-0243r-s-sapdd.dgn

USERNAME => trlenard DATE PLOTTED => 11-OCT-2010 TIME PLOTTED => 13:04

DIST	COUNTY	ROUTE	POST MILES TOTAL PROJECT	SHEET No	TOTAL SHEETS
10	Mer	99	R4.6/R10.5	654	751

CERTIFIED ENGINEERING GEOLOGIST 4-29-09

10-11-10
PLANS APPROVAL DATE

PROFESSIONAL GEOLOGIST Xing Zheng No. 2130 Exp. 3-31-11 CERTIFIED ENGINEERING GEOLOGIST STATE OF CALIFORNIA

The State of California or its officers or agents shall not be responsible for the accuracy or completeness of electronic copies of this plan sheet.

This LOTB sheet was prepared in accordance with the Caltrans Soil & Rock Logging, Classification, & Presentation Manual (June 2007).

BENCH MARK

SURVEY CONTROL

MER-99 PM 5.24

Fnd 1" IP W/RPP & TACK Stamping "CALIF DOT"
96.18′ Lt "A" Line ℄ Rte 99
Sta 135+70.55
N 1,897,950.59
E 6,603,471.50
Elev = 202.82

MER-99 1041 (Not Shown)

Fnd 1" IP w/RPP & LS5679 TAG
227.36′ Lt "A" Line ℄ Rte 99
Sta 131+97.42
N 1,897,592.75
E 6,603,639.98
Elev = 203.25
NGVD 29

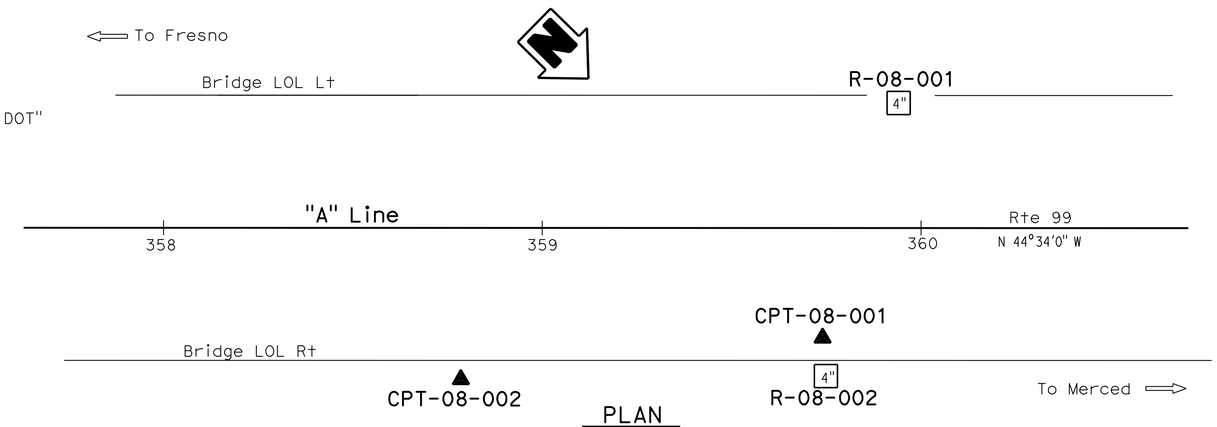

PLAN
1" = 20′

Notes:

1. CME-75 Truck Mounted rig (C# 5677) with automatic hammer was used to obtain SPT samples in Borings R-08-001 and R-08-002.
2. SPT N values shown on the Log of Test boring (LOTB) sheet are actual values recorded in the field.
3. pp= Pocket Penetrometer Test (Tsf).

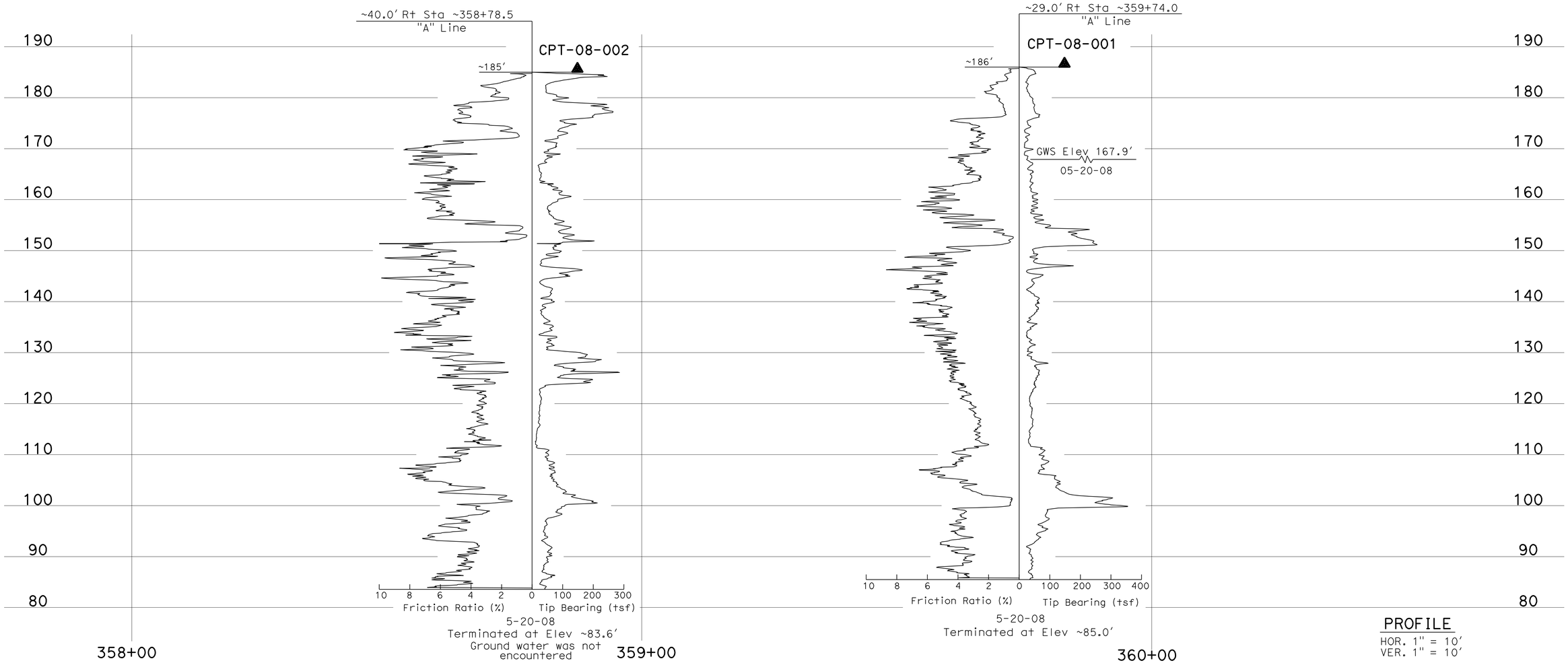

PROFILE
HOR. 1" = 10′
VER. 1" = 10′

ENGINEERING SERVICES	GEOTECHNICAL SERVICES	STATE OF CALIFORNIA DEPARTMENT OF TRANSPORTATION	DIVISION OF ENGINEERING SERVICES STRUCTURE DESIGN DESIGN BRANCH	BRIDGE NO. 39-0243R POST MILES 9.43	DUCK SLOUGH BRIDGE RIGHT LOG OF TEST BORINGS 1 OF 5
FUNCTIONAL SUPERVISOR NAME: R. Buell	DRAWN BY: F. Nguyen 01/09 CHECKED BY: J. Thorne	FIELD INVESTIGATION BY: X. Zheng			

OGS CIVIL LOG OF TEST BORINGS SHEET

ORIGINAL SCALE IN INCHES FOR REDUCED PLANS 0 1 2 3

CU 10
EA 415701

DISREGARD PRINTS BEARING EARLIER REVISION DATES

REVISION DATES: 02-18-09 02-27-09 03-13-09 04-14-09 04-22-09

SHEET 12 OF 16

FILE => 39-0243r-z-lotb1of5.dgn

USERNAME => friehard DATE PLOTTED => 11-OCT-2010 TIME PLOTTED => 13:04

DIST	COUNTY	ROUTE	POST MILES TOTAL PROJECT	SHEET No	TOTAL SHEETS
10	Mer	99	R4.6/R10.5	655	751

Zheng Xing 4-29-09
CERTIFIED ENGINEERING GEOLOGIST

10-11-10
PLANS APPROVAL DATE

PROFESSIONAL GEOLOGIST Xing Zheng No. 2130 Exp. 3-31-11 CERTIFIED ENGINEERING GEOLOGIST STATE OF CALIFORNIA

The State of California or its officers or agents shall not be responsible for the accuracy or completeness of electronic copies of this plan sheet.

This LOTB sheet was prepared in accordance with the Caltrans Soil & Rock Logging, Classification, & Presentation Manual (June 2007).

FOR PLAN VIEW, SEE
"LOG OF TEST BORINGS 1 OF 5"

~39.0' Rt Sta ~359+75.0
"A" Line

R-08-002

~185'

4"

Lean CLAY with SAND (CL), stiff, dark brown, moist, fine sand, medium plasticity, medium to high dry strength, medium toughness.
-light reddish brown, pp=1.25 to 1.75 tsf.
-light yellowish brown, low plasticity.
SILTY CLAYEY SAND (SM/SC), medium dense, light reddish brown, moist to wet, fine sand, little fines, low plasticity, low dry strength, low toughness.
-light gray.
CLAYEY SAND (SC), medium dense, gray, moist, fine sand, medium plasticity.
SILTY CLAY (CL/ML), stiff, light gray and light reddish brown, moist, little fine sand, medium plasticity, and medium sand lenses, pp=1.5 tsf.
SILTY SAND (SM), medium dense, light gray, moist, fine sand, little fines, low plasticity.
Poorly graded SAND (SP), medium dense, light gray, moist to wet, fine sand.
Elastic SILT (MH), hard, light reddish brown, moist, high plasticity, medium dry strength, medium toughness, pp>4.5 tsf.
Poorly graded SAND (SP), medium dense, light gray, wet, fine sand.
SANDY SILT (ML), medium dense, light gray, moist, fine sand.
-light reddish brown, medium plasticity, with fine sand lenses.
-light gray.
SILTY SAND (SM), medium dense, light reddish brown and light gray, moist, fine sand, medium plasticity, laminated, trace organics.
CLAYEY SAND (SC), medium dense, light gray, moist, fine sand, few medium to coarse grained sand, some fines.
Elastic SILT (MH), hard, light olive gray, moist, high plasticity, medium dry strength, fractures are observed, fractures with smooth surfaces and slickensides, trace organics, pp>4.5 tsf.
-very stiff, pp=2 to 2.75 tsf.
CLAYEY SAND (SC), dense, light gray, moist to wet, fine sand, some fines.
Poorly graded SAND (SP), medium dense, light gray, wet, fine sand.
Well-graded SAND with GRAVEL (SW), dense, light gray, wet, fine subangular and subrounded gravel, coarse and fine subangular and subrounded sand, grading to fine gravel at Elev approx. 97.5'.
Elastic SILT (MH), hard, light reddish brown, moist, high plasticity, medium dry strength, at Elev approx. 92.0'; 6" thick silty fine sand lens, pp>4.5 tsf.
CLAYEY SAND (SC), medium dense, light reddish brown, moist to wet, fine sand, some fines, medium plasticity.
SILTY SAND (SM), medium dense, light gray, wet, fine sand; little fines, clay laminations at Elev approx. 80.5'; 6" thick, coarse sand and fine gravel lens.
CLAYEY SILT with SAND (ML/CL), very stiff, light reddish brown, moist, little fine sand, medium plasticity, medium dry strength, medium toughness, at Elev approx. 74.0'; about 6" thick, fine sand lens, pp = 2.5 to 3 tsf.
Elastic SILT (MH), hard, light reddish brown, moist, high plasticity, trace organics, pp>4.5 tsf.
CLAYEY SILT (ML/CL), stiff, light reddish brown, moist, little fine sand, medium plasticity.

4-22-08
Terminated at Elev 63.5'
ERi=82%
Ground water was not measured.

PROFILE
HOR. 1" = 10'
VER. 1" = 10'

ENGINEERING SERVICES	GEOTECHNICAL SERVICES	STATE OF CALIFORNIA DEPARTMENT OF TRANSPORTATION	DIVISION OF ENGINEERING SERVICES STRUCTURE DESIGN DESIGN BRANCH	BRIDGE NO. 39-0243R POST MILES 9.43	DUCK SLOUGH BRIDGE RIGHT LOG OF TEST BORINGS 2 OF 5
FUNCTIONAL SUPERVISOR NAME: R. Buell	DRAWN BY: F. Nguyen 01/09 CHECKED BY: J. Thorne	FIELD INVESTIGATION BY: X. Zheng			

OGS CIVIL LOG OF TEST BORINGS SHEET

ORIGINAL SCALE IN INCHES FOR REDUCED PLANS 0 1 2 3

CU 10
EA 415701

DISREGARD PRINTS BEARING EARLIER REVISION DATES

REVISION DATES: 02-18-09 02-27-09 03-13-09 04-14-09 04-22-09 04-29-09

SHEET 13 OF 16

FILE => 39-0243r-z-lotb2of5.dgn

USERNAME => trlenard DATE PLOTTED => 11-OCT-2010 TIME PLOTTED => 13:04

DIST	COUNTY	ROUTE	POST MILES TOTAL PROJECT	SHEET No	TOTAL SHEETS
10	Mer	99	R4.6/R10.5	656	751

CERTIFIED ENGINEERING GEOLOGIST 4-29-09

10-11-10
PLANS APPROVAL DATE

PROFESSIONAL GEOLOGIST Xing Zheng No. 2130 Exp. 3-31-11 CERTIFIED ENGINEERING GEOLOGIST STATE OF CALIFORNIA

The State of California or its officers or agents shall not be responsible for the accuracy or completeness of electronic copies of this plan sheet.

This LOTB sheet was prepared in accordance with the Caltrans Soil & Rock Logging, Classification, & Presentation Manual (June 2007).

FOR PLAN VIEW, SEE
"LOG OF TEST BORINGS 1 OF 5"

~33.0' Lt Sta ~359+94.0 "A" Line

R-08-001

~185'

4"

SANDY lean CLAY (CL), stiff, dark gray, moist, fine sand, low to medium plasticity, medium dry strength.

6 1.4 -light brown, low plasticity, strong reaction with hydrochloric acid, porous, pp = 1.25 tsf.

5 1.4 SILTY SAND with GRAVEL (SM), loose, brown, wet, fine gravel, fine sand, low plasticity, rootlets.

11 1.4 SANDY lean CLAY (CL), very stiff and hard, gray, moist, fine sand, medium plasticity, high dry strength, medium toughness, pp = 3 to 4.5 tsf.

9 1.4 Poorly graded SAND with CLAY (SP-SC), medium dense, gray, wet, medium to fine sand, few fines.

Poorly graded SAND (SP), medium dense, gray, wet, medium sand.

8 1.4 SILTY CLAY (CL/ML), hard, gray, moist, medium plasticity, pp = 4.25 tsf.

CLAYEY SILT (ML/CL), stiff, gray, moist, little fine sand, low plasticity, low dry strength, low toughness, pp = 1.5 tsf.

14 1.4 SILTY SAND (SM), medium dense, gray, wet, fine sand, little fines.

18 1.4 SANDY SILT (ML), medium dense, gray, wet, fine sand.

CLAYEY SILT (ML/CL), stiff, yellowish brown, dry and moist, little fine sand, low plasticity, burrows and porous, pp = 1.75 to 2 tsf.

19 1.4 CLAYEY SAND (SC), medium dense, light yellowish brown, moist to wet, trace coarse grained sand, medium to fine sand, little fines.

15 1.4 CLAYEY SILT (ML/CL), very stiff, light yellowish brown, moist, little fine sand, low to medium plasticity, medium dry strength, pp=3.5 tsf.

11 1.4 SANDY SILT (ML), medium dense, light yellowish brown, moist, fine sand.

10 1.4 SILT (ML), medium dense, light yellowish brown and light gray and light reddish brown, moist, trace fine sand.

11 1.4 CLAYEY SAND (SC), medium dense, gray and dark gray, wet, coarse to fine sand, little fines, sand grading from fine grained to coarse grained, clay content increases with depth.

17 1.4 SANDY lean CLAY (CL), stiff, light olive gray, moist, fine sand, low plasticity.

Elastic SILT (MH), hard, olive gray, moist, high plasticity, fissured, with smooth fracture surfaces and sharp edges, slickensided, pp>4.5 tsf.

15 1.4

12 1.4 -at Elev 115.0', very stiff, pp = 3 tsf.

CLAYEY SILT (ML/CL), very stiff, light yellowish brown, moist, medium plasticity, silt increases with depth and grades to very fine grained sand, pp=3 tsf.

38 1.4 SILTY CLAYEY SAND (SM/SC), medium dense, gray, moist to wet, fine sand, some fines, low to medium plasticity, iron oxide staining, trace burrows and porous, black laminations.

22 1.4 SILTY SAND (SM), dense, gray, wet, fine sand, trace coarse grained sand, some fines, weak to moderate cementation.

Poorly graded SAND (SP), medium dense, gray, wet, fine sand.

28 1.4 -at Elev 97.5', grades to Well-graded SAND (SW), medium dense, gray, wet, coarse to fine sand.

CLAYEY SILT (ML/CL), hard, light reddish brown, moist, some fine sand, medium plasticity, low toughness, pp = 4.5 tsf.

13 1.4 SILTY CLAY (CL/ML), hard, light brown, moist, some fine sand.

-at Elev 93.0', Poorly graded SAND (SP), medium dense, fine grained.

33 1.4 CLAYEY SILT (ML/CL), hard, light gray and light reddish brown, moist, little fine sand, medium plasticity, few mica, trace organics, pp>4.5 tsf.

13 1.4

4-21-08
Terminated at Elev 83.5'
ERi = 82%
Ground water was not measured.

190 180 170 160 150 140 130 120 110 100 90 80

359+50 361+00 362+00

PROFILE
HOR. 1" = 10'
VER. 1" = 10'

ENGINEERING SERVICES	GEOTECHNICAL SERVICES	STATE OF CALIFORNIA DEPARTMENT OF TRANSPORTATION	DIVISION OF ENGINEERING SERVICES STRUCTURE DESIGN DESIGN BRANCH	BRIDGE NO. 39-0243R POST MILES 9.43	DUCK SLOUGH BRIDGE RIGHT LOG OF TEST BORINGS 3 OF 5
FUNCTIONAL SUPERVISOR NAME: R. Buell	DRAWN BY: F. Nguyen 01/09 CHECKED BY: J. Thorne	FIELD INVESTIGATION BY: X. Zheng			

OGS CIVIL LOG OF TEST BORINGS SHEET

ORIGINAL SCALE IN INCHES FOR REDUCED PLANS 0 1 2 3

CU 10
EA 415701

DISREGARD PRINTS BEARING EARLIER REVISION DATES

REVISION DATES: 02-18-09 02-27-09 03-13-09 04-18-09 04-22-09

SHEET 14 OF 16

FILE => 39-0243r-z-lotb3of5.dgn

USERNAME => trrenford DATE PLOTTED => 11-OCT-2010 TIME PLOTTED => 13:04

DIST	COUNTY	ROUTE	POST MILES TOTAL PROJECT	SHEET No	TOTAL SHEETS
10	Mer	99	R4.6/R10.5	657	751

Zheng Xing 4-29-09
CERTIFIED ENGINEERING GEOLOGIST

10-11-10
PLANS APPROVAL DATE

PROFESSIONAL GEOLOGIST Xing Zheng No. 2130 Exp. 3-31-11 CERTIFIED ENGINEERING GEOLOGIST STATE OF CALIFORNIA

The State of California or its officers or agents shall not be responsible for the accuracy or completeness of electronic copies of this plan sheet.

REFERENCE: CALTRANS SOIL & ROCK LOGGING, CLASSIFICATION, AND PRESENTATION MANUAL (JUNE 2007)

CEMENTATION

Description	Criteria
Weak	Crumbles or breaks with handling or little finger pressure.
Moderate	Crumbles or breaks with considerable finger pressure.
Strong	Will not crumble or break with finger pressure.

CONSISTENCY OF COHESIVE SOILS

Description	Unconfined Compressive Strength (tsf)	Pocket Penetrometer Measurement (tsf)	Torvane Measurement (tsf)	Field Approximation
Very Soft	< 0.25	< 0.25	< 0.12	Easily penetrated several inches by fist
Soft	0.25 to 0.50	0.25 to 0.50	0.12 to 0.25	Easily penetrated several inches by thumb
Medium Stiff	0.50 to 1.0	0.50 to 1.0	0.25 to 0.50	Penetrated several inches by thumb with moderate effort
Stiff	1 to 2	1 to 2	0.50 to 1.0	Readily indented by thumb but penetrated only with great effort
Very Stiff	2 to 4	2 to 4	1.0 to 2.0	Readily indented by thumbnail
Hard	> 4.0	> 4.0	> 2.0	Indented by thumbnail with difficulty

BOREHOLE IDENTIFICATION

Symbol	Hole Type	Description
Size	A	Auger Boring
Size	R P	Rotary drilled boring Rotary percussion boring (air)
Size	R	Rotary drilled diamond core
Size	HD HA	Hand driven (1-inch soil tube) Hand Auger
●	D	Dynamic Cone Penetration Boring
▲	CPT	Cone Penetration Test (ASTM D 5778-95)
⬚	O	Other

Note: Size in inches.

PLASTICITY OF FINE-GRAINED SOILS

Description	Criteria
Nonplastic	A 1/8-inch thread cannot be rolled at any water content.
Low	The thread can barely be rolled and the lump cannot be formed when drier than the plastic limit.
Medium	The thread is easy to roll and not much time is required to reach the plastic limit. The thread cannot be rerolled after reaching the plastic limit. The lump crumbles when drier than the plastic limit.
High	It takes considerable time rolling and kneading to reach the plastic limit. The thread can be rerolled several times after reaching the plastic limit. The lump can be formed without crumbling when drier than the plastic limit.

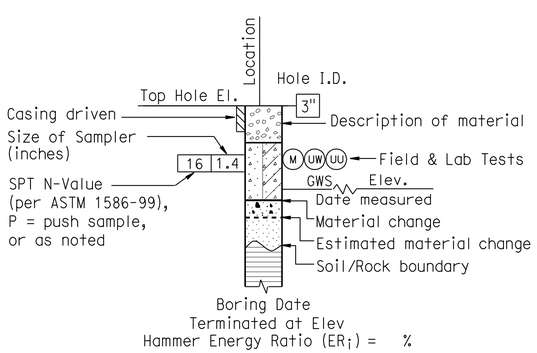

ROTARY BORING

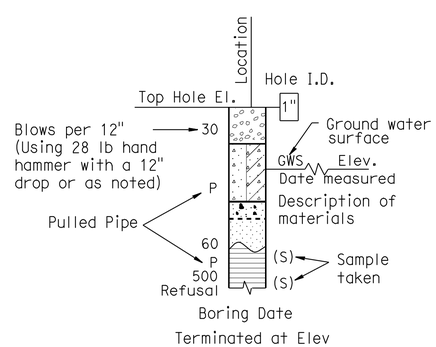

HAND BORING

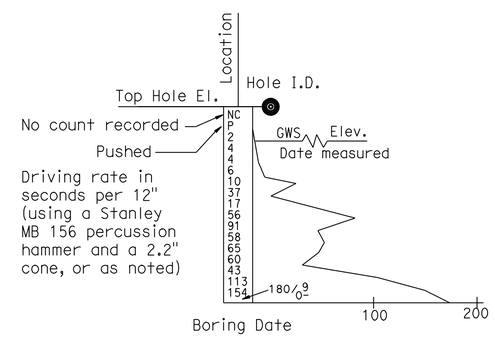

DYNAMIC CONE PENETRATION BORING

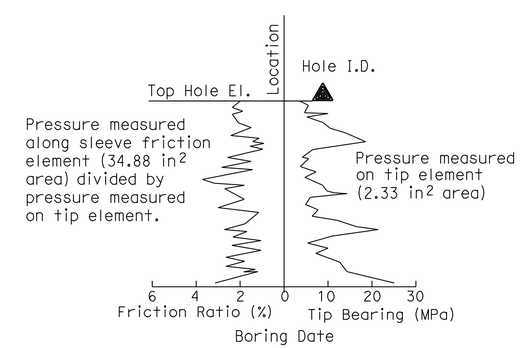

CONE PENETRATION TEST (CPT) SOUNDING

ENGINEERING SERVICES	GEOTECHNICAL SERVICES	STATE OF CALIFORNIA DEPARTMENT OF TRANSPORTATION	DIVISION OF ENGINEERING SERVICES STRUCTURE DESIGN DESIGN BRANCH	BRIDGE NO. 39-0243R / POST MILE 9.43	DUCK SLOUGH BRIDGE RIGHT
	PREPARED BY: F. Nguyen 01/09				LOG OF TEST BORINGS 4 OF 5

GS LOTB SOIL LEGEND

ORIGINAL SCALE IN INCHES FOR REDUCED PLANS 0 1 2 3

CU 10
EA 415701

DISREGARD PRINTS BEARING EARLIER REVISION DATES 03-13-09

REVISION DATES

SHEET 15 OF 16

FILE => 39-0243r-z-lotb4of5.dgn

USERNAME => trlenard DATE PLOTTED => 11-OCT-2010 TIME PLOTTED => 13:04

REFERENCE: CALTRANS SOIL & ROCK LOGGING, CLASSIFICATION, AND PRESENTATION MANUAL (JUNE 2007)

DIST	COUNTY	ROUTE	POST MILES TOTAL PROJECT	SHEET No	TOTAL SHEETS
10	Mer	99	R4.6/R10.5	658	751

CERTIFIED ENGINEERING GEOLOGIST 4-29-09

10-11-10
PLANS APPROVAL DATE

PROFESSIONAL GEOLOGIST Xing Zheng No. 2130 Exp. 3-31-11 CERTIFIED ENGINEERING GEOLOGIST STATE OF CALIFORNIA

The State of California or its officers or agents shall not be responsible for the accuracy or completeness of electronic copies of this plan sheet.

GROUP SYMBOLS AND NAMES

Graphic/Symbol	Group Names	Graphic/Symbol	Group Names
GW	Well-graded GRAVEL Well-graded GRAVEL with SAND	CL	Lean CLAY Lean CLAY with SAND Lean CLAY with GRAVEL SANDY lean CLAY SANDY lean CLAY with GRAVEL GRAVELLY lean CLAY GRAVELLY lean CLAY with SAND
GP	Poorly graded GRAVEL Poorly graded GRAVEL with SAND		
GW-GM	Well-graded GRAVEL with SILT Well-graded GRAVEL with SILT and SAND	CL-ML	SILTY CLAY SILTY CLAY with SAND SILTY CLAY with GRAVEL SANDY SILTY CLAY SANDY SILTY CLAY with GRAVEL GRAVELLY SILTY CLAY GRAVELLY SILTY CLAY with SAND
GW-GC	Well-graded GRAVEL with CLAY (or SILTY CLAY) Well-graded GRAVEL with CLAY and SAND (or SILTY CLAY and SAND)		
GP-GM	Poorly graded GRAVEL with SILT Poorly graded GRAVEL with SILT and SAND	ML	SILT SILT with SAND SILT with GRAVEL SANDY SILT SANDY SILT with GRAVEL GRAVELLY SILT GRAVELLY SILT with SAND
GP-GC	Poorly graded GRAVEL with CLAY (or SILTY CLAY) Poorly graded GRAVEL with CLAY and SAND (or SILTY CLAY and SAND)		
GM	SILTY GRAVEL SILTY GRAVEL with SAND	OL	ORGANIC lean CLAY ORGANIC lean CLAY with SAND ORGANIC lean CLAY with GRAVEL SANDY ORGANIC lean CLAY SANDY ORGANIC lean CLAY with GRAVEL GRAVELLY ORGANIC lean CLAY GRAVELLY ORGANIC lean CLAY with SAND
GC	CLAYEY GRAVEL CLAYEY GRAVEL with SAND		
GC-GM	SILTY, CLAYEY GRAVEL SILTY, CLAYEY GRAVEL with SAND	OL	ORGANIC SILT ORGANIC SILT with SAND ORGANIC SILT with GRAVEL SANDY ORGANIC SILT SANDY ORGANIC SILT with GRAVEL GRAVELLY ORGANIC SILT GRAVELLY ORGANIC SILT with SAND
SW	Well-graded SAND Well-graded SAND with GRAVEL		
SP	Poorly graded SAND Poorly graded SAND with GRAVEL	CH	Fat CLAY Fat CLAY with SAND Fat CLAY with GRAVEL SANDY fat CLAY SANDY fat CLAY with GRAVEL GRAVELLY fat CLAY GRAVELLY fat CLAY with SAND
SW-SM	Well-graded SAND with SILT Well-graded SAND with SILT and GRAVEL		
SW-SC	Well-graded SAND with CLAY (or SILTY CLAY) Well-graded SAND with CLAY and GRAVEL (or SILTY CLAY and GRAVEL)	MH	Elastic SILT Elastic SILT with SAND Elastic SILT with GRAVEL SANDY elastic SILT SANDY elastic SILT with GRAVEL GRAVELLY elastic SILT GRAVELLY elastic SILT with SAND
SP-SM	Poorly graded SAND with SILT Poorly graded SAND with SILT and GRAVEL		
SP-SC	Poorly graded SAND with CLAY (or SILTY CLAY) Poorly graded SAND with CLAY and GRAVEL (or SILTY CLAY and GRAVEL)	OH	ORGANIC fat CLAY ORGANIC fat CLAY with SAND ORGANIC fat CLAY with GRAVEL SANDY ORGANIC fat CLAY SANDY ORGANIC fat CLAY with GRAVEL GRAVELLY ORGANIC fat CLAY GRAVELLY ORGANIC fat CLAY with SAND
SM	SILTY SAND SILTY SAND with GRAVEL		
SC	CLAYEY SAND CLAYEY SAND with GRAVEL	OH	ORGANIC elastic SILT ORGANIC elastic SILT with SAND ORGANIC elastic SILT with GRAVEL SANDY ORGANIC elastic SILT SANDY ORGANIC elastic SILT with GRAVEL GRAVELLY ORGANIC elastic SILT GRAVELLY ORGANIC elastic SILT with SAND
SC-SM	SILTY, CLAYEY SAND SILTY, CLAYEY SAND with GRAVEL		
PT	PEAT	OL/OH	ORGANIC SOIL ORGANIC SOIL with SAND ORGANIC SOIL with GRAVEL SANDY ORGANIC SOIL SANDY ORGANIC SOIL with GRAVEL GRAVELLY ORGANIC SOIL GRAVELLY ORGANIC SOIL with SAND
	COBBLES COBBLES and BOULDERS BOULDERS		

FIELD AND LABORATORY TESTING

- (C) Consolidation (ASTM D 2435)
- (CL) Collapse Potential (ASTM D 5333)
- (CP) Compaction Curve (CTM 216)
- (CR) Corrosivity Testing (CTM 643, CTM 422, CTM 417)
- (CU) Consolidated Undrained Triaxial (ASTM D 4767)
- (DS) Direct Shear (ASTM D 3080)
- (EI) Expansion Index (ASTM D 4829)
- (M) Moisture Content (ASTM D 2216)
- (OC) Organic Content-% (ASTM D 2974)
- (P) Permeability (CTM 220)
- (PA) Particle Size Analysis (ASTM D 422)
- (PI) Plasticity Index (AASHTO T 90) Liquid Limit (AASHTO T 89)
- (PL) Point Load Index (ASTM D 5731)
- (PM) Pressure Meter
- (PP) Pocket Penetrometer
- (R) R-Value (CTM 301)
- (SE) Sand Equivalent (CTM 217)
- (SG) Specific Gravity (AASHTO T 100)
- (SL) Shrinkage Limit (ASTM D 427)
- (SW) Swell Potential (ASTM D 4546)
- (TV) Pocket Torvane
- (UC) Unconfined Compression-Soil (ASTM D 2166) Unconfined Compression-Rock (ASTM D 2938)
- (UU) Unconsolidated Undrained Triaxial (ASTM D 2850)
- (UW) Unit Weight (ASTM D 4767)
- (VS) Vane Shear (AASHTO T 223)

APPARENT DENSITY OF COHESIONLESS SOILS

Description	SPT N_{60} (Blows / 12 inches)
Very loose	0 - 4
Loose	5 - 10
Medium Dense	11 - 30
Dense	31 - 50
Very Dense	> 50

MOISTURE

Description	Criteria
Dry	Absence of moisture, dusty, dry to the touch
Moist	Damp but no visible water
Wet	Visible free water, usually soil is below water table

PERCENT OR PROPORTION OF SOILS

Description	Criteria
Trace	Particles are present but estimated to be less than 5%
Few	5 to 10%
Little	15 to 25%
Some	30 to 45%
Mostly	50 to 100%

PARTICLE SIZE

Description		Size
Boulder		> 12"
Cobble		3" to 12"
Gravel	Coarse	3/4" to 3"
	Fine	No. 4 to 3/4"
Sand	Coarse	No. 10 to No. 4
	Medium	No. 40 to No. 10
	Fine	No. 200 to No. 40

ENGINEERING SERVICES

GEOTECHNICAL SERVICES

PREPARED BY: F. Nguyen 01/09

STATE OF CALIFORNIA DEPARTMENT OF TRANSPORTATION

DIVISION OF ENGINEERING SERVICES STRUCTURE DESIGN

DESIGN BRANCH

BRIDGE NO. 39-0243R

POST MILE 9.43

DUCK SLOUGH BRIDGE RIGHT

LOG OF TEST BORINGS 5 OF 5

GS LOTB SOIL LEGEND

ORIGINAL SCALE IN INCHES FOR REDUCED PLANS 0 1 2 3

CU 10
EA 415701

DISREGARD PRINTS BEARING EARLIER REVISION DATES 03-13-09

REVISION DATES

SHEET 16 OF 16

FILE => 39-0243r-z-lotb5of5.dgn

USERNAME => friehard DATE PLOTTED => 11-OCT-2010 TIME PLOTTED => 13:05

DIST	COUNTY	ROUTE	POST MILES TOTAL PROJECT	SHEET No	TOTAL SHEETS
10	Mer	99	R4.6/R10.5	659	751

REGISTERED CIVIL ENGINEER 07-31-09 DATE

10-11-10
PLANS APPROVAL DATE

REGISTERED PROFESSIONAL ENGINEER G. SCHUSTER No. C 63897 Exp. 09-30-10 CIVIL STATE OF CALIFORNIA

The State of California or its officers or agents shall not be responsible for the accuracy or completeness of electronic copies of this plan sheet.

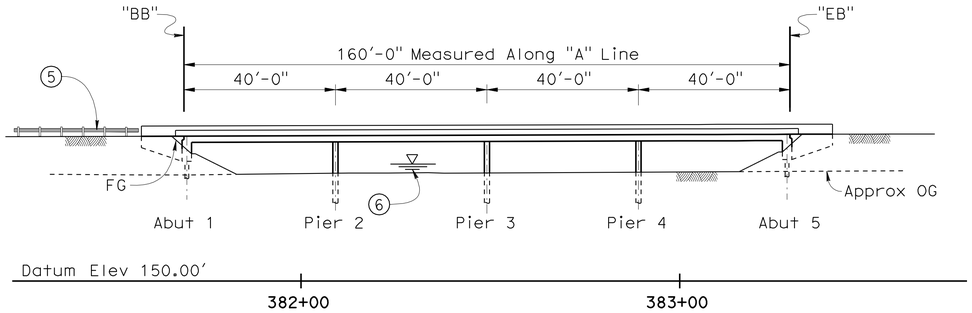

ELEVATION
1" = 20'-0"

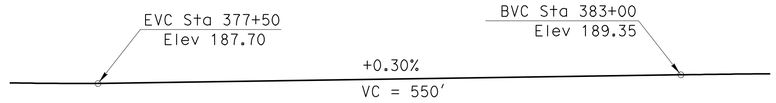

PROFILE GRADE
No Scale

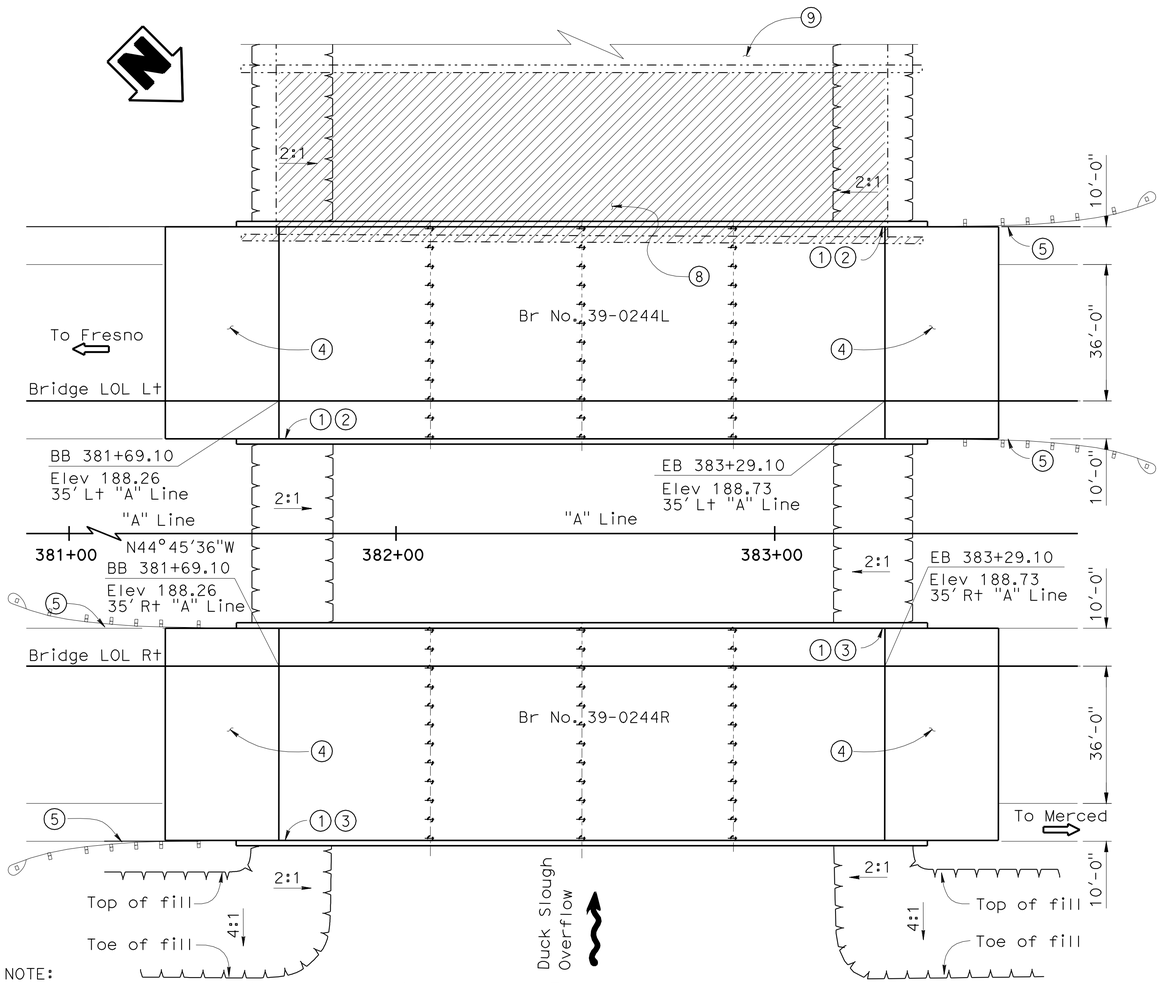

NOTE:
The Contractor shall verify all controlling field dimensions before ordering or fabricating any materials.

PLAN
1" = 20'-0"

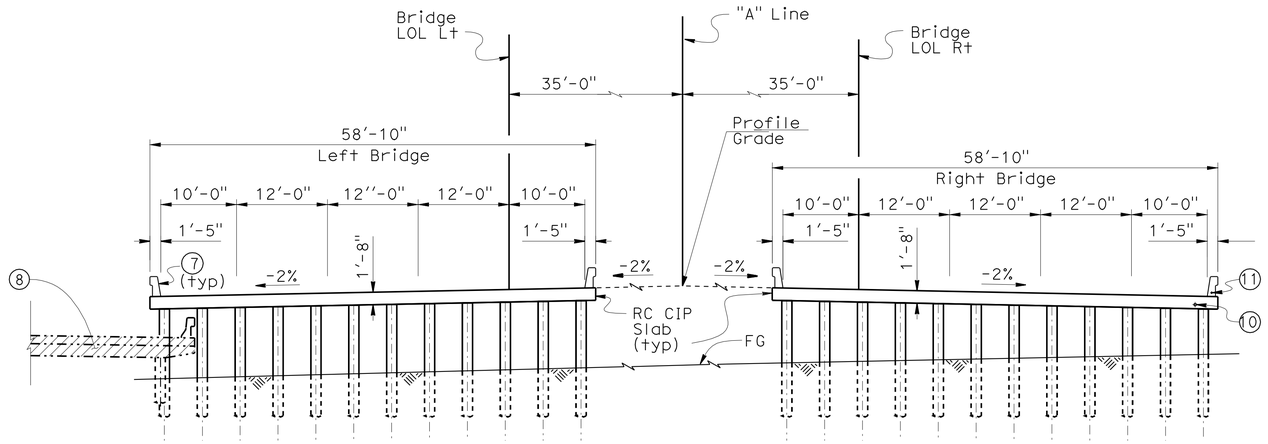

TYPICAL SECTION
1" = 10'-0"

Legend:

1. Paint "Duck Slough Overflow".
2. Paint Bridge No. 390244L.
3. Paint Bridge No. 390244R.
4. Structure Approach Type N(30D).
5. Metal Beam Guard Rail, see "Road Plan".
6. For Hydrologic Summary, see "Foundation Plan".
7. Concrete Barrier Type 732.
8. Partial removal of existing Bridge 39-0005, see "Partial Bridge Removal" sheet in Duck Slough Overflow Bridge West Frontage Road" plan set.
9. Portion of existing bridge 39-0005 to remain as future West Frontage Road, see "Barrier Modifications" sheet in "Duck Slough Overflow Bridge West Frontage Road" plan set.
10. 4" Ø Communication Conduit for fiber optic in slab. see "Road Plans".
11. Place 2" Ø Conduit in Barrier Rail, see "Road Plans".

Indicate Partial bridge removal

Indicate existing structure

Note: For "General Notes", "Index Plans", "Standard Plans", "Quantities", See "Index To Plans" sheet.

x Gary Blakesley
DESIGN ENGINEER

	BY	CHECKED
DESIGN	G. Schuster	C. Siegenthaler
DETAILS	A.C./G.S./S.J./T.C.	C. Siegenthaler
QUANTITIES	A. Chen	N. Terzis

LOAD & RESISTANCE FACTOR DESIGN — LIVE LOADING: HL93 W/"LOW-BOY"; PERMIT DESIGN VEHICLE

	BY	CHECKED
LAYOUT	G. Schuster	C. Siegenthaler
SPECIFICATIONS	Aiman Abdel-Malak	PLANS AND SPECS COMPARED

ORIGINAL SCALE IN INCHES FOR REDUCED PLANS 0 1 2 3

STATE OF CALIFORNIA
DEPARTMENT OF TRANSPORTATION

DIVISION OF ENGINEERING SERVICES
STRUCTURE DESIGN
DESIGN BRANCH 5

CU 10
EA 415701

BRIDGE NO. 39-0244L/R
POST MILE 9.86

DUCK SLOUGH OVERFLOW BRIDGE L/R
GENERAL PLAN

DISREGARD PRINTS BEARING EARLIER REVISION DATES

REVISION DATES: 01-09-08 02-15-08 04-18-08 4-24-08 06-06-08 07-18-08 07-21-08 09-04-08 01-27-09

SHEET 1 OF 18

STRUCTURES DESIGN GENERAL PLAN SHEET (ENGLISH) (REV.07-24-06)

FILE => 39-0244lr-a-gp.dgn

USERNAME => trmikesl DATE PLOTTED => 19-OCT-2010 TIME PLOTTED => 08:30

DIST	COUNTY	ROUTE	POST MILES TOTAL PROJECT	SHEET No	TOTAL SHEETS
10	Mer	99	R4.6/R10.5	660	751

REGISTERED CIVIL ENGINEER 07-31-09 DATE

10-11-10
PLANS APPROVAL DATE

REGISTERED PROFESSIONAL ENGINEER G. SCHUSTER No. C 63897 Exp. 09-30-10 CIVIL STATE OF CALIFORNIA

The State of California or its officers or agents shall not be responsible for the accuracy or completeness of electronic copies of this plan sheet.

GENERAL NOTES
LOAD AND RESISTANCE FACTOR DESIGN

DESIGN: AASHTO LRFD Bridge Design Specifications, Third Edition with 2005 & 2006 Interim Revisions and Caltrans Amendments 03.06.01

SEISMIC DESIGN: Caltrans Seismic Design Criteria (SDC) Version 1.4, June, 2006

DEAD LOAD: Includes 35 Psf for future wearing surface.

LIVE LOADING: HL93 Alternative loading and "Low-Boy" permit design vehicle

SEISMIC LOADING: Caltrans SDC ARS curve for soil profile type D (M = 6.5 ± 0.25), (Peak Rock Acceleration = 0.2g)

REINFORCED CONCRETE:
f_y = 60 ksi
f'_c = 3.6 ksi
n = 8

QUANTITIES

STRUCTURE EXCAVATION (BRIDGE)	200	CY
STRUCTURE BACKFILL (BRIDGE)	105	CY
FURNISH PILING (CLASS 90)	1,156	LF
DRIVE PILE (CLASS 90)	36	EA
FURNISH 16" CAST-IN-STEEL SHELL CONCRETE PILING	4,714	LF
DRIVE 16" CAST-IN-STEEL SHELL CONCRETE PILE	72	EA
STRUCTURAL CONCRETE, BRIDGE	1,320	CY
STRUCTURAL CONCRETE, APPROACH SLAB (TYPE N)	260	CY
JOINT SEAL (MR 1")	236	LF
BAR REINFORCING STEEL (BRIDGE)	299,500	LB
CONCRETE BARRIER (TYPE 732)	730	LF

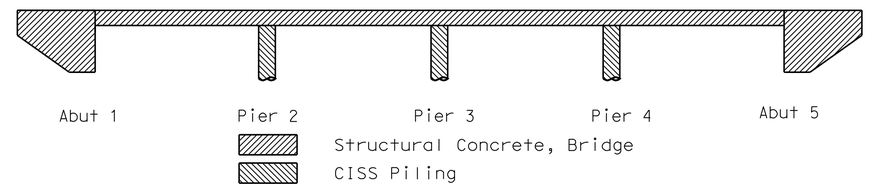

CONCRETE STRENGTH AND TYPE LIMITS
No Scale

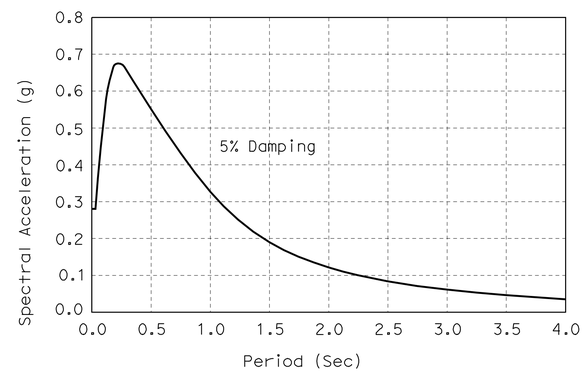

SOIL PROFILE TYPE D: Mw = 6.5, PBA = 0.2g
No Scale

INDEX TO PLANS

Sheet No.	Title
1.	GENERAL PLAN
2.	INDEX TO PLANS
3.	DECK CONTOURS (LEFT)
4.	DECK CONTOURS (RIGHT)
5.	FOUNDATION PLAN
6.	ABUTMENT LAYOUT
7.	PIER DETAILS
8.	TYPICAL SECTION
9.	SLAB REINFORCEMENT DETAILS NO. 1
10.	SLAB REINFORCEMENT DETAILS NO. 2
11.	STRUCTURE APPROACH TYPE N(30D)
12.	STRUCTURE APPROACH DRAINAGE DETAILS
13.	LOG OF TEST BORINGS 1 OF 6
14.	LOG OF TEST BORINGS 2 OF 6
15.	LOG OF TEST BORINGS 3 OF 6
16.	LOG OF TEST BORINGS 4 OF 6
17.	LOG OF TEST BORINGS 5 OF 6
18.	LOG OF TEST BORINGS 6 OF 6

PILE DATA TABLE (B2-5)

Support Location	Pile Type	Nominal Resistance (kips)		Design Tip Elevations (ft)	Specified Tip Elevations (ft)	Nominal Driving Resistance (kips)
		Compression	Tension			
Abut 1	Class 90	180	0	149.0 (1) 140.0 (2)	149.0	180
Pier 2	CISS NPS 16x0.500	280	0	121.0 (1) 139.0 (2)	121.0	280
Pier 3	CISS NPS 16x0.500	280	0	121.0 (1) 139.0 (2)	121.0	280
Pier 4	CISS NPS 16x0.500	280	0	121.0 (1) 139.0 (2)	121.0	280
Abut 5	Class 90	180	0	149.0 (1) 140.0 (2)	149.0	180

NOTE: Design tip elevations are controlled by the following demands: (1) Compression, (2) Lateral.

STANDARD PLANS DATED MAY 2006

A10A	ACRONYMS AND ABBREVIATIONS (A-L)
A10B	ACRONYMS AND ABBREVIATIONS (M-Z)
A10C	SYMBOLS (SHEET 1 OF 2)
A10D	SYMBOLS (SHEET 2 OF 2)
A62C	LIMITS OF PAYMENT FOR EXCAVATION AND BACKFILL-BRIDGE
BO-1	BRIDGE DETAILS
B2-5	PILE DETAILS CLASS 90 AND CLASS 140
RSP B6-21	JOINT SEALS (MAXIMUM MOVEMENT RATING = 2")
B11-55	CONCRETE BARRIER TYPE 732
B14-3	COMMUNICATION AND SPRINKLER CONTROL CONDUITS (CONDUIT LESS THAN 4")

STANDARD PLAN SHEET NO.
DETAIL NO.

	BY	CHECKED
DESIGN	G. Schuster	C. Siegenthaler
DETAILS	G. M. Souza/S. Jiang	C. Siegenthaler
QUANTITIES	A. Chen	N. Terzis

STATE OF CALIFORNIA
DEPARTMENT OF TRANSPORTATION

DIVISION OF ENGINEERING SERVICES
STRUCTURE DESIGN
DESIGN BRANCH 5

BRIDGE NO. 39-0244L/R
POST MILE 9.86

DUCK SLOUGH OVERFLOW BRIDGE L/R
INDEX TO PLANS

ORIGINAL SCALE IN INCHES FOR REDUCED PLANS 0 1 2 3

CU 10
EA 415701

DISREGARD PRINTS BEARING EARLIER REVISION DATES

REVISION DATES: 11-14-08, 06-24-08, 08-22-08, 12-22-08, 01-23-09, 01-26-09, 02-19-09, 02-25-09, 7-29-09, 8-11-09

SHEET 2 OF 18

STRUCTURES DESIGN DETAIL SHEET (ENGLISH) (REV. 10/25/05)

FILE => 39-0244lr-a-ltp.dgn

USERNAME => ttmirkes! DATE PLOTTED => 19-OCT-2010 TIME PLOTTED => 08:31

DIST	COUNTY	ROUTE	POST MILES TOTAL PROJECT	SHEET No	TOTAL SHEETS
10	Mer	99	R4.6/R10.5	661	751

REGISTERED CIVIL ENGINEER 07-31-09 DATE

10-11-10
PLANS APPROVAL DATE

REGISTERED PROFESSIONAL ENGINEER G. SCHUSTER No. C 63897 Exp. 09-30-10 CIVIL STATE OF CALIFORNIA

The State of California or its officers or agents shall not be responsible for the accuracy or completeness of electronic copies of this plan sheet.

Notes:

× = 10′ interval along station line.

Contours do not include camber.

Contour interval = 0.1′

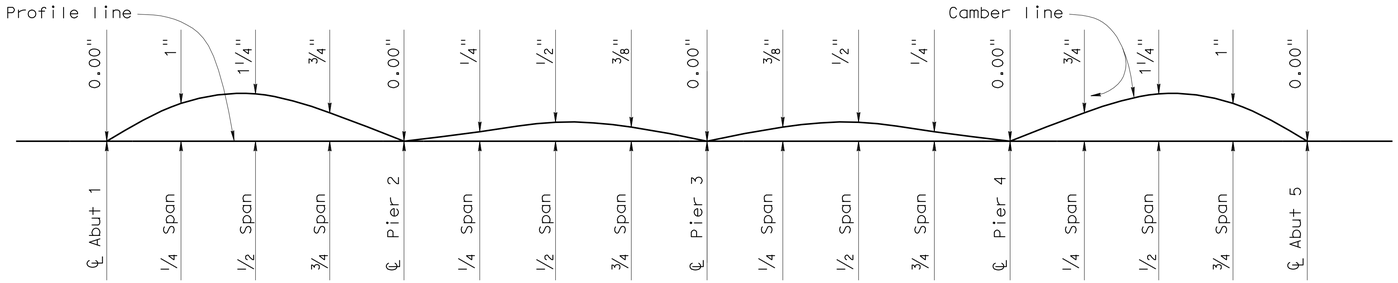

Note:
Does not include allowance for false work settlement.

CAMBER DIAGRAM

no scale

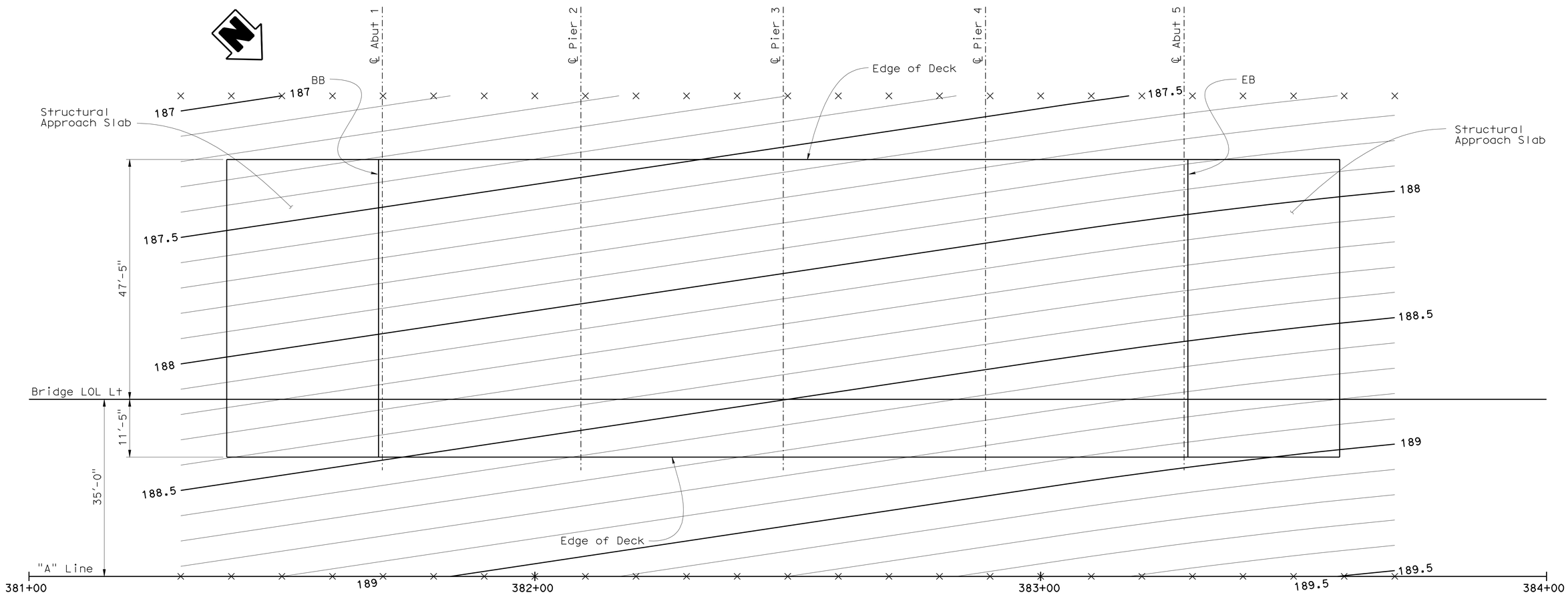

DECK CONTOURS

1" = 10′-0"

DESIGN	BY G. Schuster	CHECKED C. Siegenthaler	
DETAILS	BY G. M. Souza/S. Jiang	CHECKED C. Siegenthaler	
QUANTITIES	BY A. Chen	CHECKED N. Terzis	

ORIGINAL SCALE IN INCHES FOR REDUCED PLANS 0 1 2 3

STATE OF CALIFORNIA
DEPARTMENT OF TRANSPORTATION

DIVISION OF ENGINEERING SERVICES
STRUCTURE DESIGN
DESIGN BRANCH 5

CU 10
EA 415701

BRIDGE NO. 39-0244L/R
POST MILE 9.86

DUCK SLOUGH OVERFLOW BRIDGE L/R
DECK CONTOURS (LEFT)

DISREGARD PRINTS BEARING EARLIER REVISION DATES

REVISION DATES: 04-01-08 04-24-08 07-22-08 08-22-08 10-16-08 01-27-09

SHEET 3 OF 18

STRUCTURES DESIGN DETAIL SHEET (ENGLISH) (REV. 10/25/05)

FILE => 39-0244lr-d-dc01.dgn

USERNAME => ttmikes1 DATE PLOTTED => 19-OCT-2010 TIME PLOTTED => 08:31

DIST	COUNTY	ROUTE	POST MILES TOTAL PROJECT	SHEET No	TOTAL SHEETS
10	Mer	99	R4.6/R10.5	662	751

REGISTERED CIVIL ENGINEER 07-31-09 DATE

10-11-10
PLANS APPROVAL DATE

REGISTERED PROFESSIONAL ENGINEER G. SCHUSTER No. C 63897 Exp. 09-30-10 CIVIL STATE OF CALIFORNIA

The State of California or its officers or agents shall not be responsible for the accuracy or completeness of electronic copies of this plan sheet.

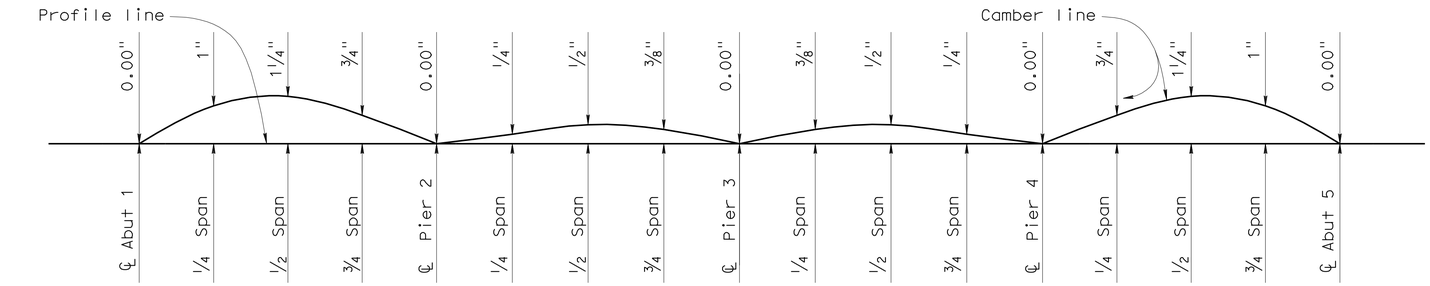

Note:
Does not include allowance for false work settlement.

CAMBER DIAGRAM

no scale

Notes:

× = 10′ interval along station line.

Contours do not include camber.

Contour interval = 0.1′

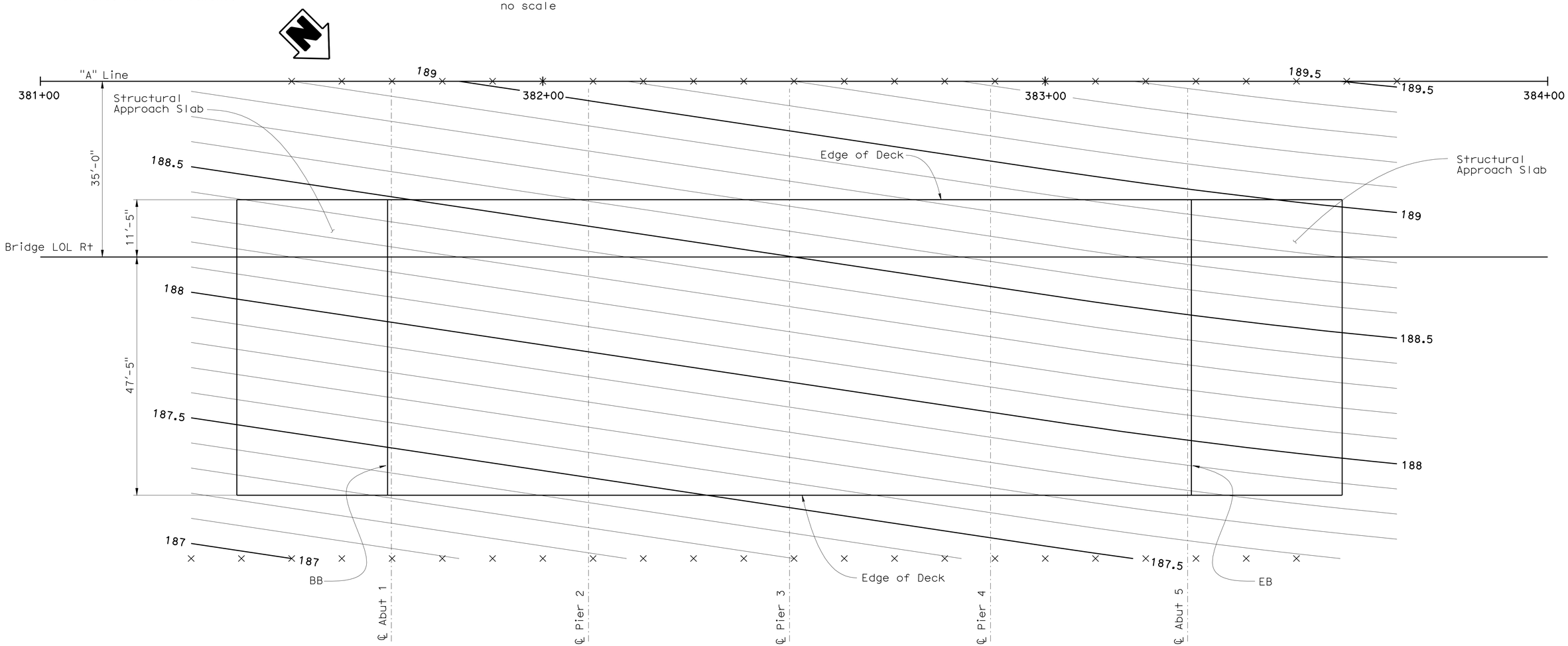

DECK CONTOURS

1" = 10′-0"

	BY	CHECKED
DESIGN	G. Schuster	C. Siegenthaler
DETAILS	G. M. Souza/S. Jiang	C. Siegenthaler
QUANTITIES	A. Chen	N. Terzis

ORIGINAL SCALE IN INCHES FOR REDUCED PLANS 0 1 2 3

STATE OF CALIFORNIA
DEPARTMENT OF TRANSPORTATION

DIVISION OF ENGINEERING SERVICES
STRUCTURE DESIGN
DESIGN BRANCH 5

CU 10
EA 415701

BRIDGE NO. 39-0244L/R
POST MILE 9.86

DUCK SLOUGH OVERFLOW BRIDGE L/R
DECK CONTOURS (RIGHT)

DISREGARD PRINTS BEARING EARLIER REVISION DATES

REVISION DATES: 04-01-08 04-24-08 07-22-08 08-22-08 10-15-08 01-27-09

SHEET 4 OF 18

USERNAME => trmikest DATE PLOTTED => 19-OCT-2010 TIME PLOTTED => 08:31

STRUCTURES DESIGN DETAIL SHEET (ENGLISH) (REV. 10/25/05)

FILE => 39-0244lr-d-dc02.dgn

DIST	COUNTY	ROUTE	POST MILES TOTAL PROJECT	SHEET No	TOTAL SHEETS
10	Mer	99	R4.6/R10.5	663	751

REGISTERED CIVIL ENGINEER 07-31-09 DATE

10-11-10
PLANS APPROVAL DATE

REGISTERED PROFESSIONAL ENGINEER G. SCHUSTER No. C 63897 Exp. 09-30-10 CIVIL STATE OF CALIFORNIA

The State of California or its officers or agents shall not be responsible for the accuracy or completeness of electronic copies of this plan sheet.

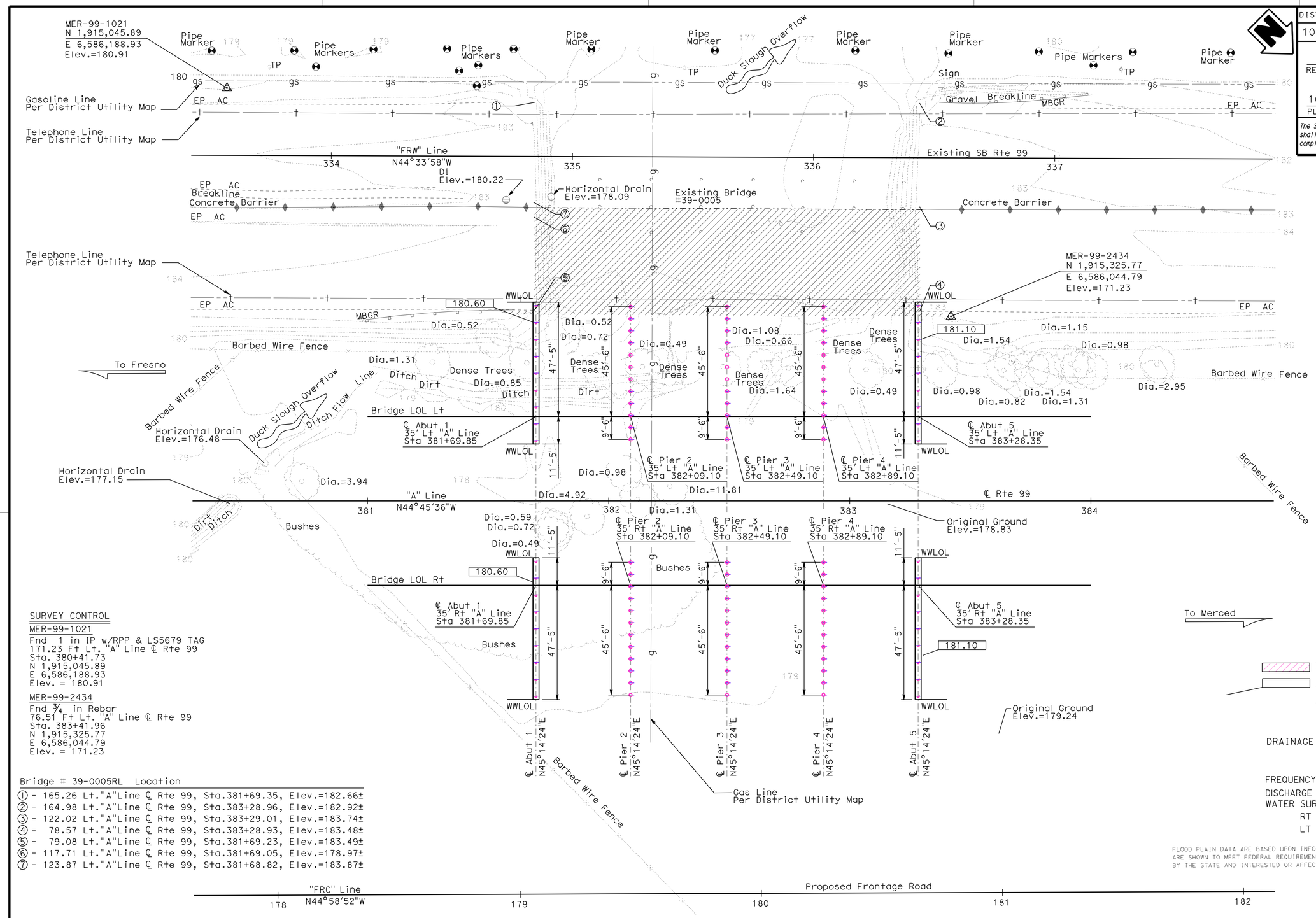

SURVEY CONTROL

MER-99-1021
Fnd 1 in IP w/RPP & LS5679 TAG
171.23 Ft Lt. "A" Line ℄ Rte 99
Sta. 380+41.73
N 1,915,045.89
E 6,586,188.93
Elev. = 180.91

MER-99-2434
Fnd ¾ in Rebar
76.51 Ft Lt. "A" Line ℄ Rte 99
Sta. 383+41.96
N 1,915,325.77
E 6,586,044.79
Elev. = 171.23

Bridge # 39-0005RL Location

① - 165.26 Lt."A"Line ℄ Rte 99, Sta.381+69.35, Elev.=182.66±
② - 164.98 Lt."A"Line ℄ Rte 99, Sta.383+28.96, Elev.=182.92±
③ - 122.02 Lt."A"Line ℄ Rte 99, Sta.383+29.01, Elev.=183.74±
④ - 78.57 Lt."A"Line ℄ Rte 99, Sta.383+28.93, Elev.=183.48±
⑤ - 79.08 Lt."A"Line ℄ Rte 99, Sta.381+69.23, Elev.=183.49±
⑥ - 117.71 Lt."A"Line ℄ Rte 99, Sta.381+69.05, Elev.=178.97±
⑦ - 123.87 Lt."A"Line ℄ Rte 99, Sta.381+68.82, Elev.=183.87±

Indicates Bridge Removal
Indicates bottom of footing elevation.
WWLOL are parallel to "A" Line

HYDROLOGIC SUMMARY

DRAINAGE AREA: 50 SQUARE MILES

	DESIGN FLOOD	BASE FLOOD
FREQUENCY (YEARS)	50	100
DISCHARGE (CFS)	2500	3500
WATER SURFACE ELEVATION		
RT STRUCTURE	183.4	183.4
LT STRUCTURE	183.4	183.4

FLOOD PLAIN DATA ARE BASED UPON INFORMATION AVAILABLE WHEN THE PLANS WERE PREPARED AND ARE SHOWN TO MEET FEDERAL REQUIREMENTS. THE ACCURACY OF SAID INFORMATION IS NOT WARRANTED BY THE STATE AND INTERESTED OR AFFECTED PARTIES SHOULD MAKE THEIR OWN INVESTIGATIONS.

PRELIMINARY INVESTIGATION SECTION

SCALE	VERT.DATUM NGVD 29	PHOTOGRAMMETRY AS OF: X		
1"=20'	HORZ.DATUM NAD 83 1991.35	SURVEYED	BY District	CHECKED BY J.Pallares 12/2007
ALIGNMENT TIES Dist. Traverse Sheet		DRAFTED	BY T.Marchenko 12/2007	CHECKED BY T.Zolnikova 12/2007

DESIGN	BY G. Schuster	CHECKED C. Siegenthaler
DETAILS	BY G. M. Souza/S. Jiang/T. C.	CHECKED C. Siegenthaler
QUANTITIES	BY A. Chen	CHECKED N. Terzis

STATE OF CALIFORNIA
DEPARTMENT OF TRANSPORTATION

DIVISION OF ENGINEERING SERVICES
STRUCTURE DESIGN
DESIGN BRANCH 5

BRIDGE NO. 39-0244L/R
POST MILE 9.86

DUCK SLOUGH OVERFLOW BRIDGE L/R
FOUNDATION PLAN

STRUCTURES FOUNDATION PLAN SHEET (ENGLISH) (REV. 10/25/05)

ORIGINAL SCALE IN INCHES FOR REDUCED PLANS 0 1 2 3

CU 10
EA 415701

DISREGARD PRINTS BEARING EARLIER REVISION DATES

REVISION DATES: 03-26-08 04-24-08 04-24-08 06-04-08 08-21-08 07-21-09 09-16-09

SHEET 5 OF 18

FILE => 39-0244lr-e-fp.dgn

USERNAME => trmikesl DATE PLOTTED => 19-OCT-2010 TIME PLOTTED => 08:31

DIST	COUNTY	ROUTE	POST MILES TOTAL PROJECT	SHEET No	TOTAL SHEETS
10	Mer	99	R4.6/R10.5	664	751

REGISTERED CIVIL ENGINEER 07-31-09 DATE

10-11-10
PLANS APPROVAL DATE

REGISTERED PROFESSIONAL ENGINEER G. SCHUSTER No. C 63897 Exp. 09-30-10 CIVIL STATE OF CALIFORNIA

The State of California or its officers or agents shall not be responsible for the accuracy or completeness of electronic copies of this plan sheet.

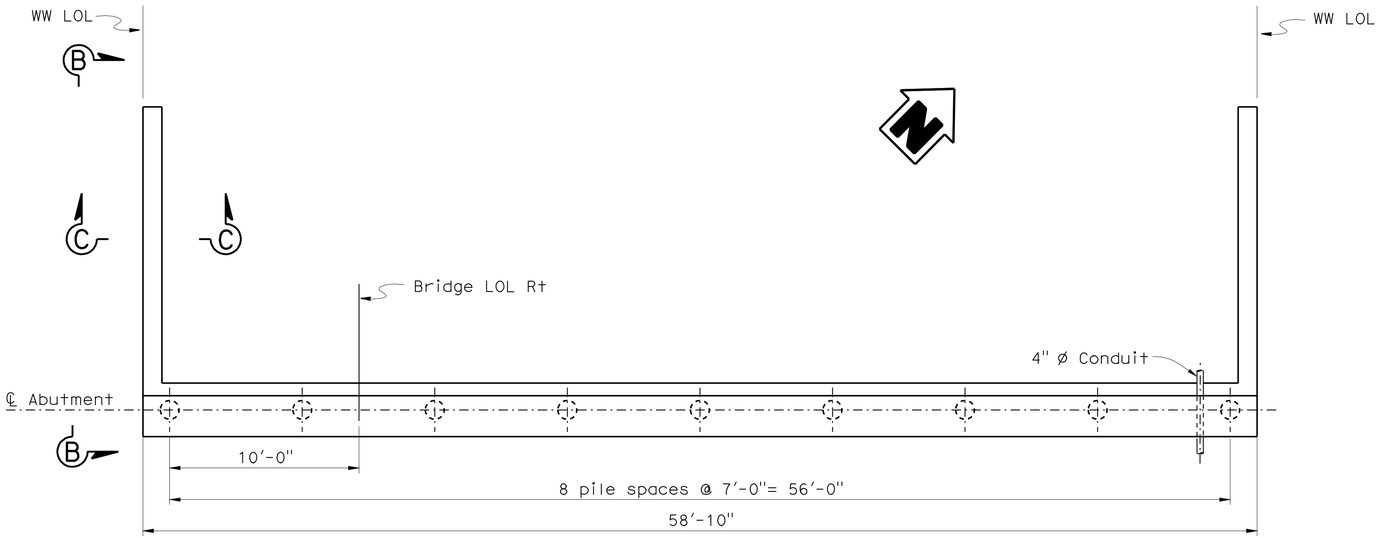

PLAN
1/4" =1'-0"

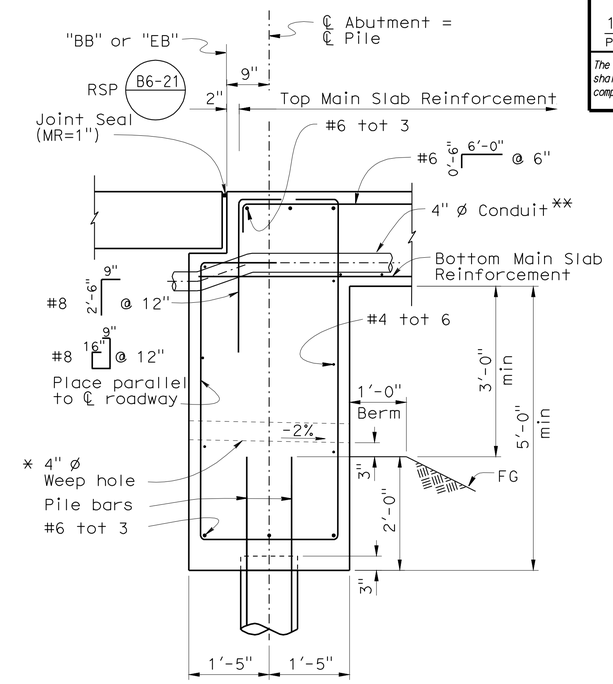

SECTION A-A
3/4" =1'-0"

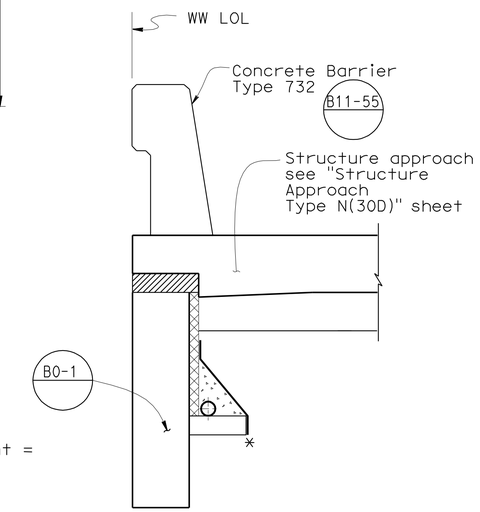

SECTION C-C
3/4" =1'-0"

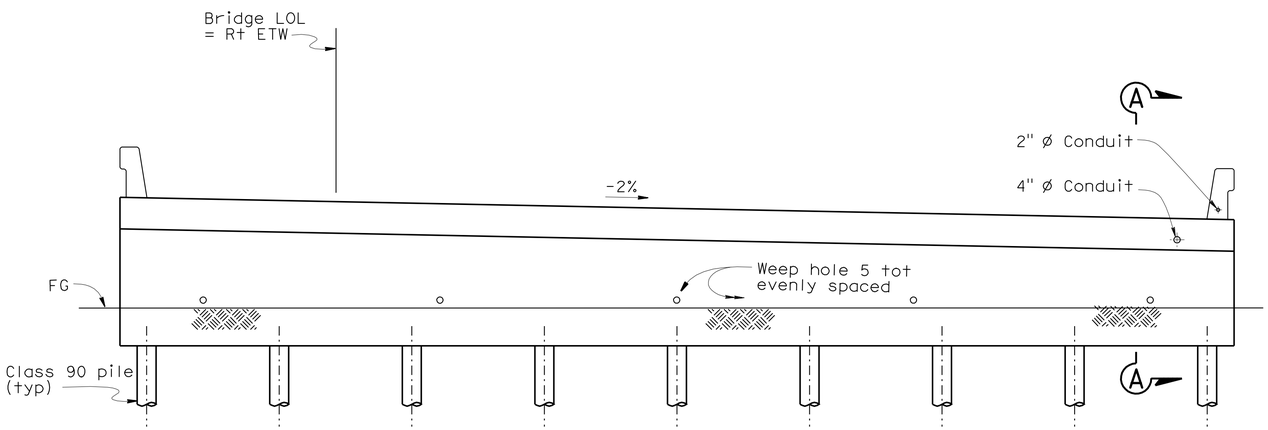

ELEVATION
1/4" =1'-0"

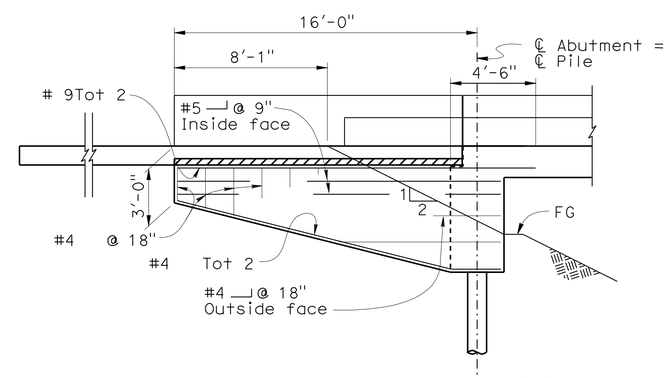

VIEW B-B
1/4" =1'-0"

ABUTMENT 5 RIGHT
Abutment 1 Lt, 5 Lt, 1Rt similar
For drainage details see "Structure Approach Drainage Details" sheet

Notes:
* See "Structure Approach Drainage Details" sheet
** Place 4" ø Communication conduit in Right Abutment only

	BY	CHECKED
DESIGN	G. Schuster	C. Siegenthaler
DETAILS	S. Jiang/A. Chen/G.S.	C. Siegenthaler
QUANTITIES	A. Chen	N. Terzis

STATE OF CALIFORNIA
DEPARTMENT OF TRANSPORTATION

DIVISION OF ENGINEERING SERVICES
STRUCTURE DESIGN
DESIGN BRANCH 5

BRIDGE NO. 39-0244L/R
POST MILE 9.86

DUCK SLOUGH OVERFLOW BRIDGE L/R
ABUTMENT LAYOUT

ORIGINAL SCALE IN INCHES FOR REDUCED PLANS 0 1 2 3

CU 10
EA 415701

DISREGARD PRINTS BEARING EARLIER REVISION DATES

REVISION DATES: 02-22-08 2-11-09 06-26-09 7-29-09 8-06-09 09-04-08 10-16-08 12-22-08 01-22-08

SHEET 6 OF 18

USERNAME => ttrmikes| DATE PLOTTED => 19-OCT-2010 TIME PLOTTED => 08:31

STRUCTURES DESIGN DETAIL SHEET (ENGLISH) (REV. 10/25/05)

FILE => 39-0244lr-f-abutlyt.dgn

DIST	COUNTY	ROUTE	POST MILES TOTAL PROJECT	SHEET No	TOTAL SHEETS
10	Mer	99	R4.6/R10.5	665	751

REGISTERED CIVIL ENGINEER 07-31-09 DATE

10-11-10
PLANS APPROVAL DATE

REGISTERED PROFESSIONAL ENGINEER G. SCHUSTER No. C 63897 Exp. 09-30-10 CIVIL STATE OF CALIFORNIA

The State of California or its officers or agents shall not be responsible for the accuracy or completeness of electronic copies of this plan sheet.

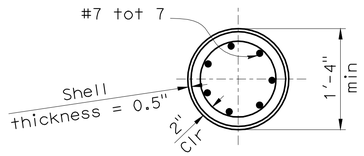

SECTION B-B
1" = 1'-0"

PILE CUT-OFF ELEVATION TABLE

Cut-off Elevation (ft)			
Pile	Pier 2	Pier 3	Pier 4
L1, R12	185.80	185.92	186.04
L2, R11	185.90	186.02	186.14
L3, R10	186.00	186.12	186.24
L4, R9	186.10	186.22	186.34
L5, R8	186.20	186.32	186.44
L6, R7	186.30	186.42	186.54
L7, R6	186.40	186.52	186.64
L8, R5	186.50	186.62	186.74
L9, R4	186.60	186.72	186.84
L10, R3	186.70	186.82	186.94
L11, R2	186.80	186.92	187.04
L12, R1	186.90	187.02	187.14

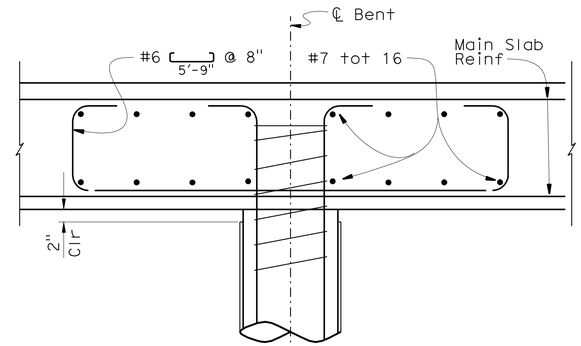

DETAIL "A"
1" = 1'-0"

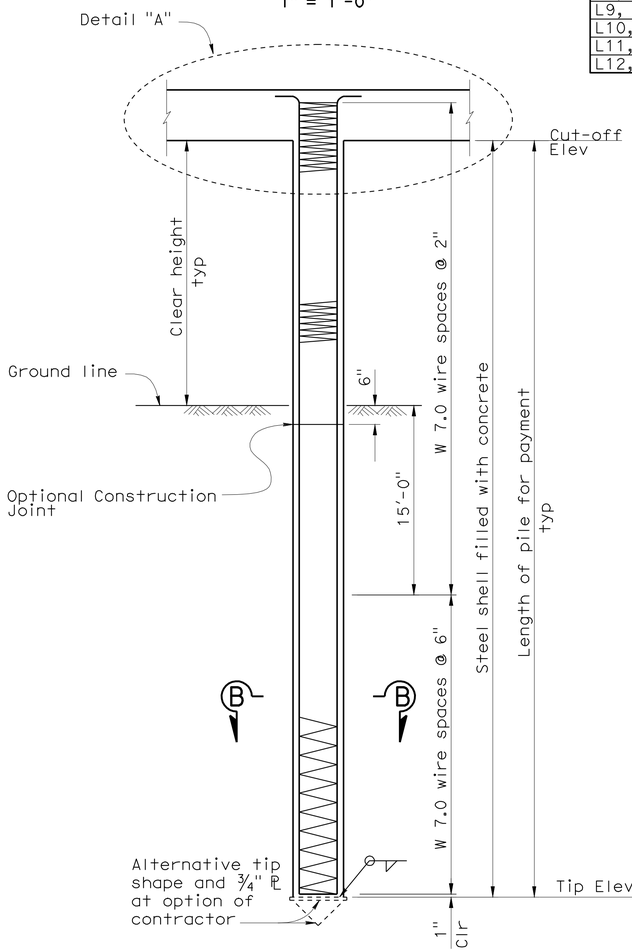

CAST-IN-STEEL SHELL CONCRETE PILE

SECTION A-A
½" = 1'-0"

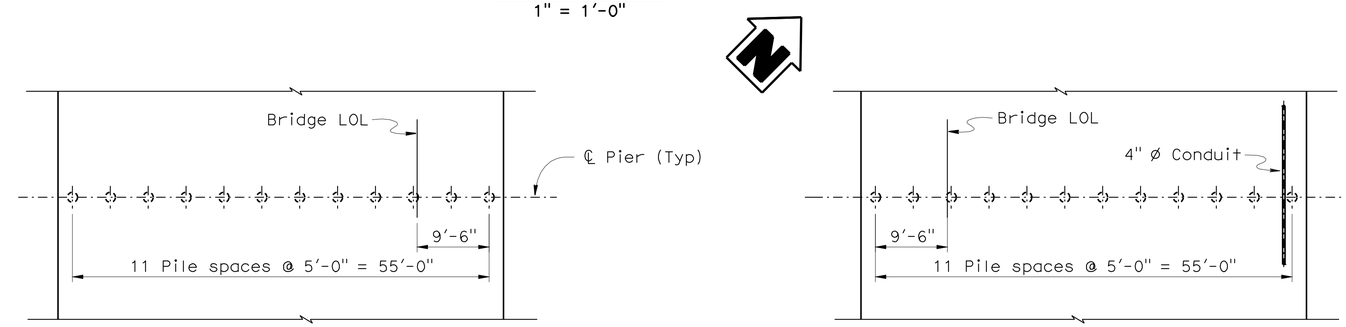

PLAN
1" = 10'-0"

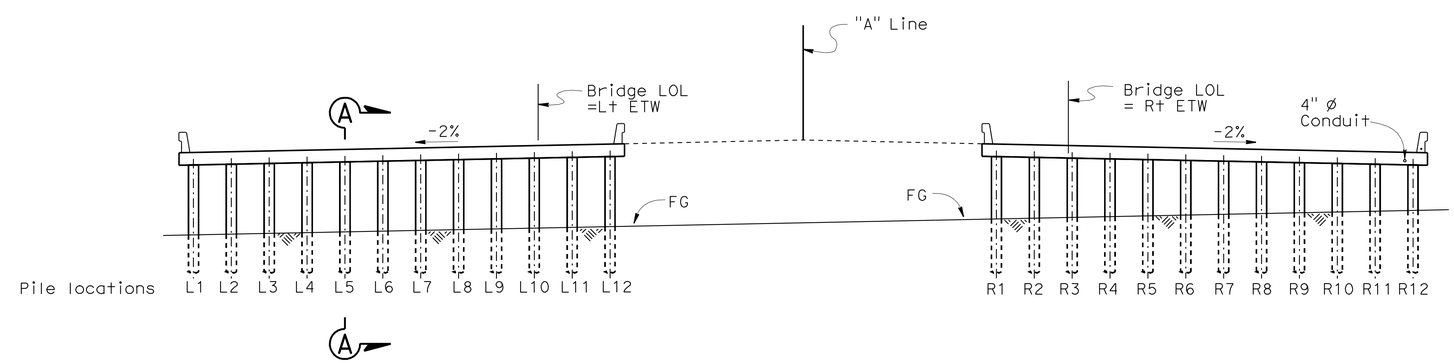

ELEVATION
1" = 10'-0"

DESIGN	BY G. Schuster	CHECKED C. Siegenthaler	
DETAILS	BY S. Jiang / G.M.S./T.C.	CHECKED C. Siegenthaler	
QUANTITIES	BY A. Chen	CHECKED N. Terzis	

ORIGINAL SCALE IN INCHES FOR REDUCED PLANS 0 1 2 3

STATE OF CALIFORNIA DEPARTMENT OF TRANSPORTATION

DIVISION OF ENGINEERING SERVICES STRUCTURE DESIGN DESIGN BRANCH 5

CU 10
EA 415701

BRIDGE NO. 39-0244L/R
POST MILE 9.86

DUCK SLOUGH OVERFLOW BRIDGE L/R
PIER DETAILS

DISREGARD PRINTS BEARING EARLIER REVISION DATES

REVISION DATES: 03-13-08 04-02-09 05-23-08 06-04-08 09-04-08 11-18-08 12-22-08 07-22-09 02-26-09

SHEET 7 OF 18

STRUCTURES DESIGN DETAIL SHEET (ENGLISH) (REV. 10/25/05)

FILE => 39-0244lr-1-pierdt.dgn

USERNAME => ttmirkes1 DATE PLOTTED => 19-OCT-2010 TIME PLOTTED => 08:31

DIST	COUNTY	ROUTE	POST MILES TOTAL PROJECT	SHEET No	TOTAL SHEETS
10	Mer	99	R4.6/R10.5	666	751

REGISTERED CIVIL ENGINEER 07-31-09 DATE

10-11-10
PLANS APPROVAL DATE

REGISTERED PROFESSIONAL ENGINEER G. SCHUSTER No. C 63897 Exp. 09-30-10 CIVIL STATE OF CALIFORNIA

The State of California or its officers or agents shall not be responsible for the accuracy or completeness of electronic copies of this plan sheet.

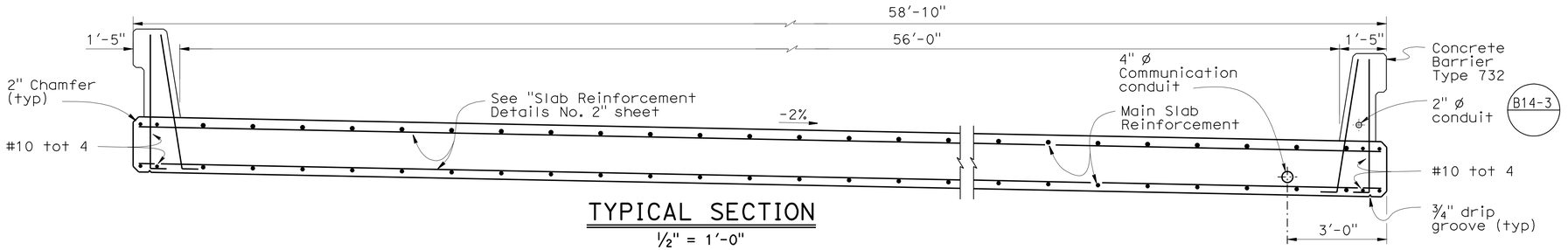

TYPICAL SECTION

1/2" = 1'-0"

Right structure shown, Left structure similar

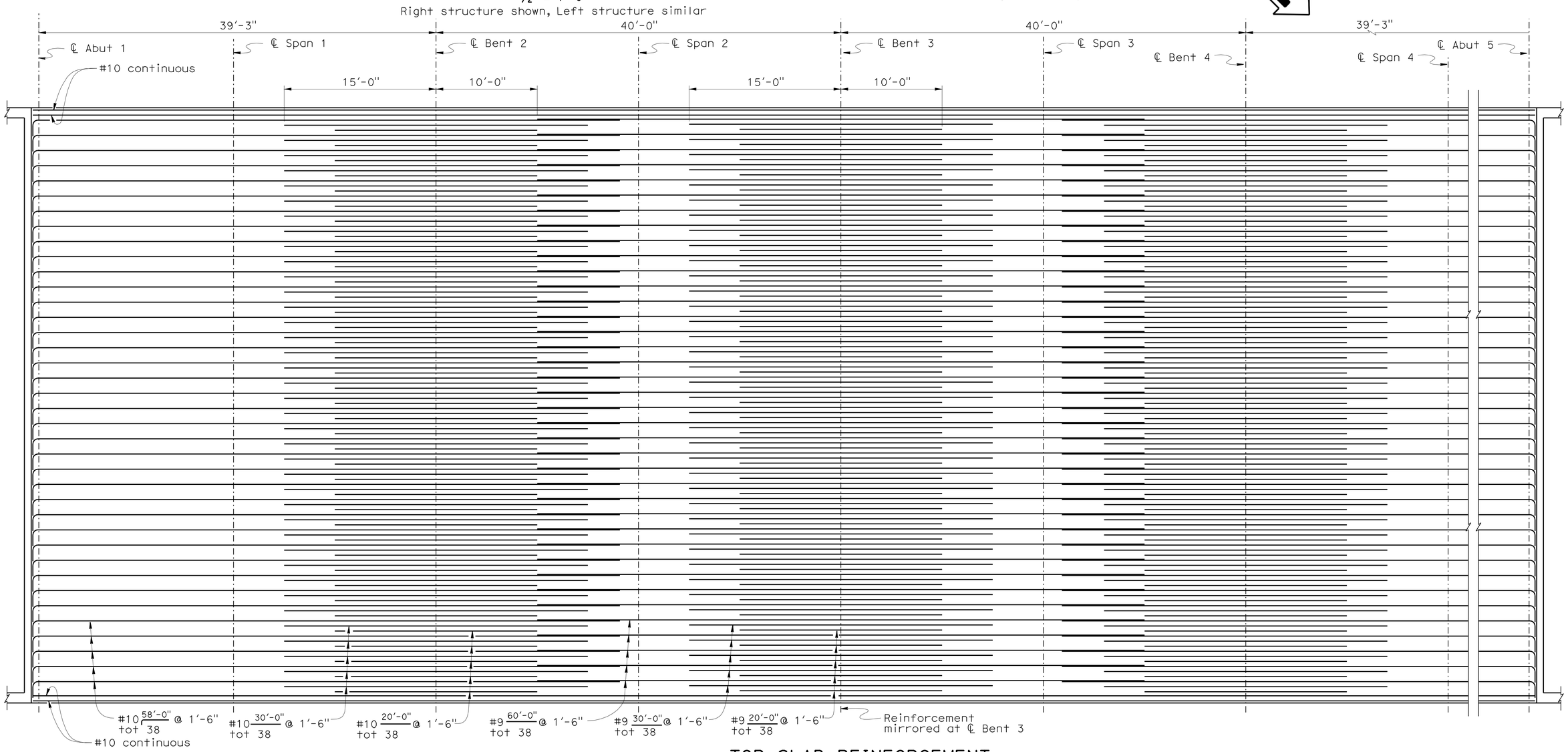

TOP SLAB REINFORCEMENT

1" = 5'-0"

	BY	CHECKED
DESIGN	G. Schuster	C. Siegenthaler
DETAILS	S. Jiang	C. Siegenthaler
QUANTITIES	A. Chen	N. Terzis

ORIGINAL SCALE IN INCHES FOR REDUCED PLANS 0 1 2 3

STATE OF CALIFORNIA DEPARTMENT OF TRANSPORTATION

DIVISION OF ENGINEERING SERVICES STRUCTURE DESIGN DESIGN BRANCH 5

CU 10
EA 415701

BRIDGE NO. 39-0244L/R
POST MILE 9.86

DUCK SLOUGH OVERFLOW BRIDGE L/R

TYPICAL SECTION

DISREGARD PRINTS BEARING EARLIER REVISION DATES

REVISION DATES: 03-06-08 03-06-08 04-12-08 05-02-08 07-22-08 08-26-08 09-04-08 10-15-08 12-22-08 02-25-09

SHEET 8 OF 18

STRUCTURES DESIGN DETAIL SHEET (ENGLISH) (REV. 10/25/05)

FILE => 39-0244lr-k_ts.dgn

USERNAME => trmikes1 DATE PLOTTED => 19-OCT-2010 TIME PLOTTED => 08:32

DIST	COUNTY	ROUTE	POST MILES TOTAL PROJECT	SHEET No	TOTAL SHEETS
10	Mer	99	R4.6/R10.5	667	751

REGISTERED CIVIL ENGINEER 07-31-09 DATE

10-11-10
PLANS APPROVAL DATE

REGISTERED PROFESSIONAL ENGINEER G. SCHUSTER No. C 63897 Exp. 09-30-10 CIVIL STATE OF CALIFORNIA

The State of California or its officers or agents shall not be responsible for the accuracy or completeness of electronic copies of this plan sheet.

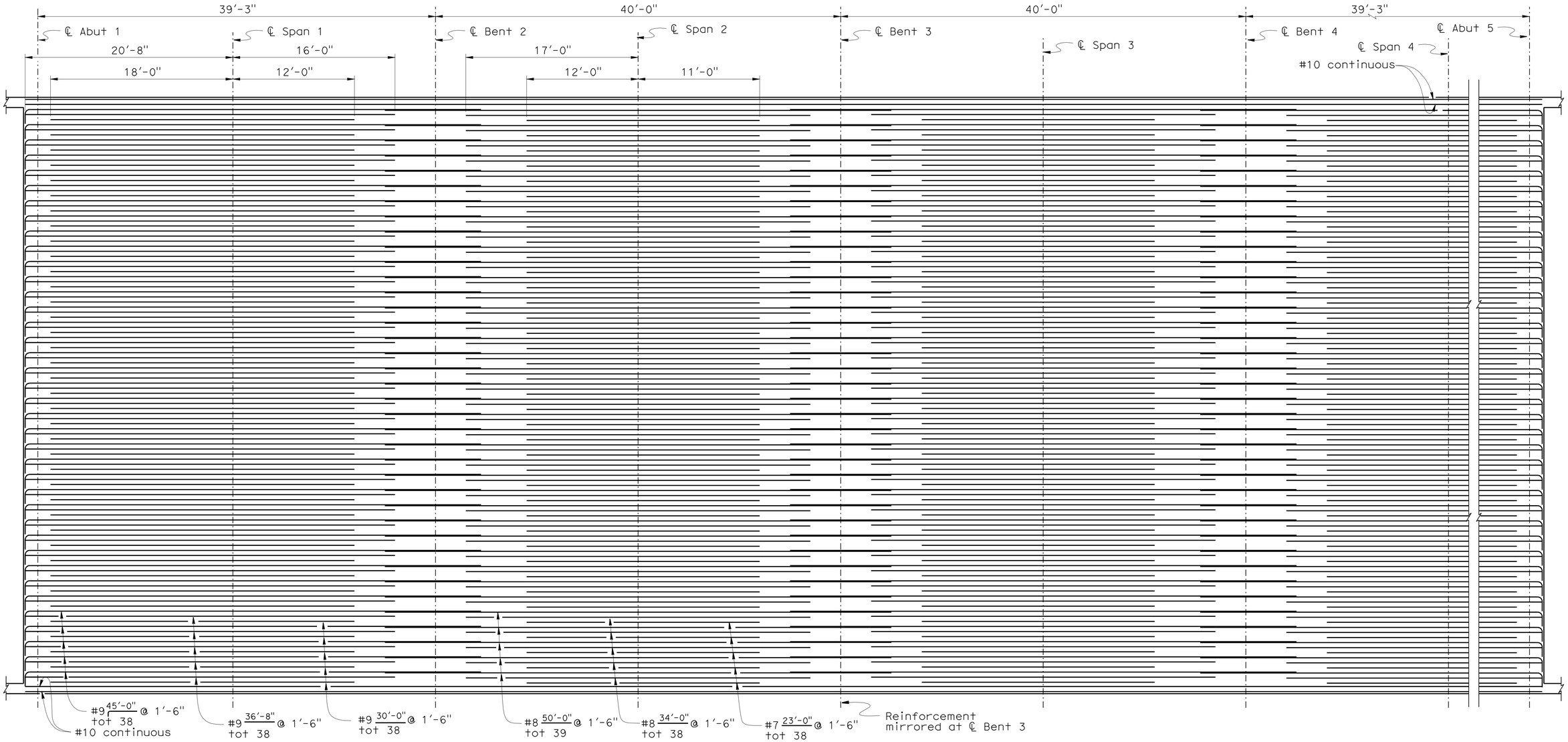

BOTTOM SLAB REINFORCEMENT

1" = 5'-0"

	BY	CHECKED
DESIGN	G. Schuster	C. Siegenthaler
DETAILS	S. Jiang	C. Siegenthaler
QUANTITIES	A. Chen	N. Terzis

ORIGINAL SCALE IN INCHES FOR REDUCED PLANS 0 1 2 3

STATE OF CALIFORNIA DEPARTMENT OF TRANSPORTATION

DIVISION OF ENGINEERING SERVICES STRUCTURE DESIGN DESIGN BRANCH 5

CU 10
EA 415701

BRIDGE NO. 39-0244L/R
POST MILE 9.86

DUCK SLOUGH OVERFLOW BRIDGE L/R
SLAB REINFORCEMENT DETAILS NO. 1

DISREGARD PRINTS BEARING EARLIER REVISION DATES

REVISION DATES 5-01-08 7-28-08 8-15-08 8-20-08

SHEET 9 OF 18

STRUCTURES DESIGN DETAIL SHEET (ENGLISH) (REV. 10/25/05)

FILE => 39-0244lr-o-slab-rfdt01.dgn

USERNAME => trmikes DATE PLOTTED => 19-OCT-2010 TIME PLOTTED => 08:32

DIST	COUNTY	ROUTE	POST MILES TOTAL PROJECT	SHEET No	TOTAL SHEETS
10	Mer	99	R4.6/R10.5	668	751

REGISTERED CIVIL ENGINEER 07-31-09 DATE

10-11-10
PLANS APPROVAL DATE

REGISTERED PROFESSIONAL ENGINEER G. SCHUSTER No. C 63897 Exp. 09-30-10 CIVIL STATE OF CALIFORNIA

The State of California or its officers or agents shall not be responsible for the accuracy or completeness of electronic copies of this plan sheet.

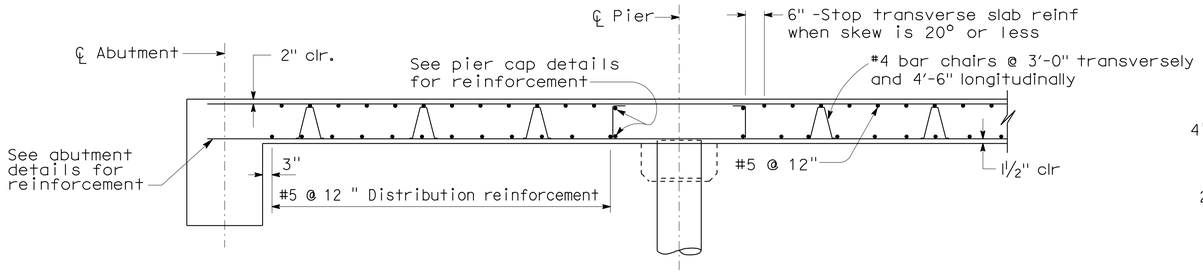

LONGITUDINAL SECTION

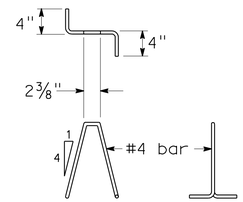

BAR CHAIR DETAIL

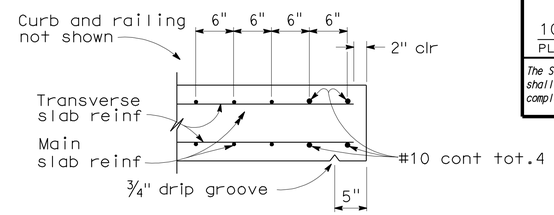

EDGE OF SLAB DETAILS

BAR SPLICE LENGTH (Inch)								
Bar size	#4	#5	#6	#7	#8	#9	#10	#11
All bars, except top bars in spans over 23'	23	28	34	39	45	68	76	85
Top bars in spans over 23'	23	28	34	53	60	77	97	120

REINFORCEMENT NOTES:

Splices in top main bars to be located near center of span.
Splices in bottom main bars to be located near pier.
Spacing of all transverse bars is measured along ℄ roadway.
Skew 0° to 20°: Place all transverse bars parallel to pier.
Skew over 20°: Place transverse slab bars perpendicular to ℄ bridge. See details at right and below.

GENERAL NOTES
LOAD AND RESISTANCE FACTOR DESIGN

DESIGN: AASHTO LRFD Bridge Design Specifications, Third Edition with 2005 & 2006 Interim Revisions and Caltrans Amendments 03.06.01

DEAD LOAD: Includes 35 Psf for future wearing surface.

LIVE LOADING: HL93 Alternative loading and "Low-Boy" permit design vehicle

REINFORCED CONCRETE: f_y = 60 ksi
f'_c = 3.6 ksi
n = 8

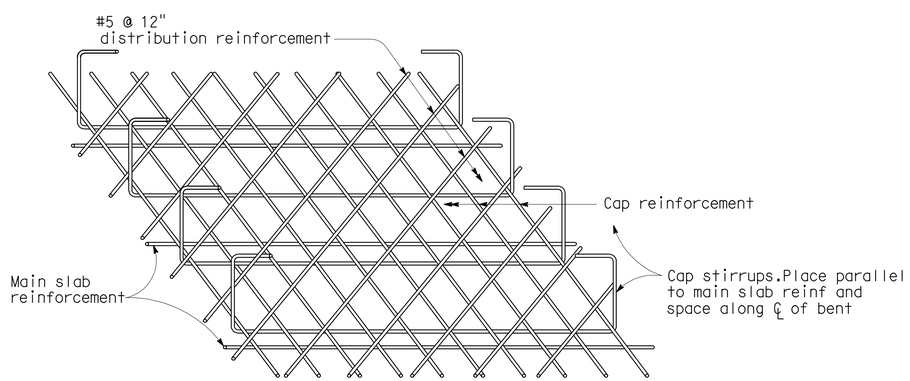

FLUSH CAP

BOTTOM SLAB REINFORCEMENT AT PIER

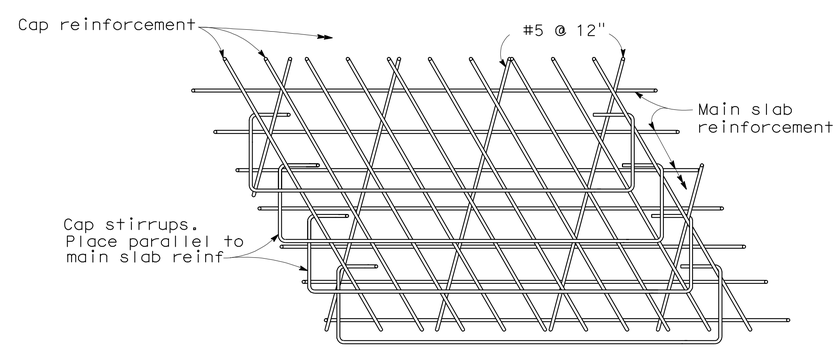

TOP SLAB REINFORCEMENT AT PIER

Note: View for main span over 23'.
Bar placement similar for spans under 23'.

SPECIAL DETAILS
NO SCALE

DESIGN	BY G. Schuster	CHECKED C. Siegenthaler	
DETAILS	BY S. Jiang/T.C.	CHECKED C. Siegenthaler	
QUANTITIES	BY A. Chen	CHECKED N. Terzis	

ORIGINAL SCALE IN INCHES FOR REDUCED PLANS 0 1 2 3

STATE OF CALIFORNIA
DEPARTMENT OF TRANSPORTATION

DIVISION OF ENGINEERING SERVICES
STRUCTURE DESIGN
DESIGN BRANCH 5

CU 10
EA 415701

BRIDGE NO. 39-0244L/R
POST MILE 9.86

DUCK SLOUGH OVERFLOW BRIDGE L/R
SLAB REINFORCEMENT DETAILS NO. 2

DISREGARD PRINTS BEARING EARLIER REVISION DATES → 06-18-08 06-24-08 10-15-08 01-28-09 02-25-09

REVISION DATES

SHEET 10 OF 18

STRUCTURES DESIGN DETAIL SHEET (ENGLISH) (REV. 10/25/05)

FILE => 39-0244lr-o-slab-rfdt02.dgn

USERNAME => trmikesl DATE PLOTTED => 19-OCT-2010 TIME PLOTTED => 08:32

DIST	COUNTY	ROUTE	POST MILES TOTAL PROJECT	SHEET No	TOTAL SHEETS
10	Mer	99	R4.6/R10.5	669	751

REGISTERED CIVIL ENGINEER 07-31-09 DATE

10-11-10
PLANS APPROVAL DATE

REGISTERED PROFESSIONAL ENGINEER G. SCHUSTER No. C 63897 Exp. 09-30-10 CIVIL STATE OF CALIFORNIA

The State of California or its officers or agents shall not be responsible for the accuracy or completeness of electronic copies of this plan sheet.

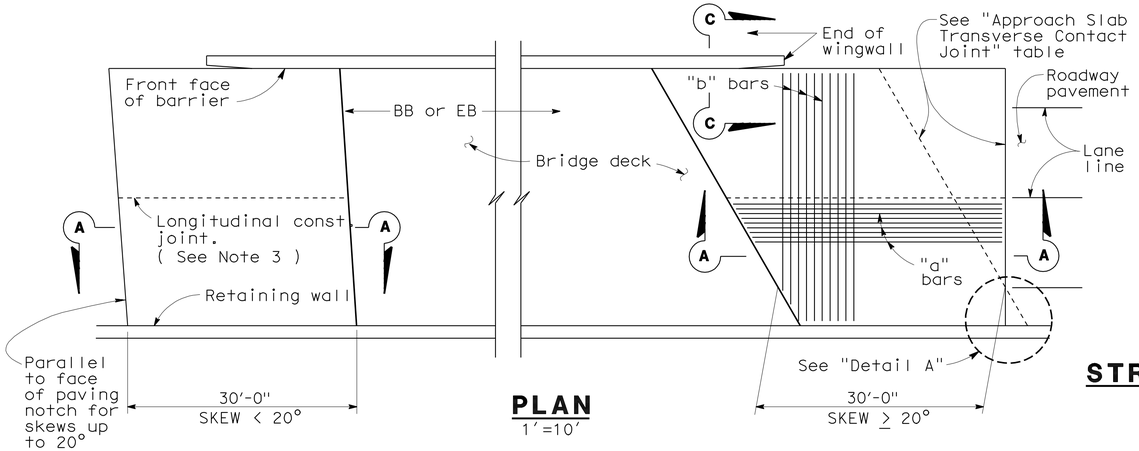

PLAN
1'=10'

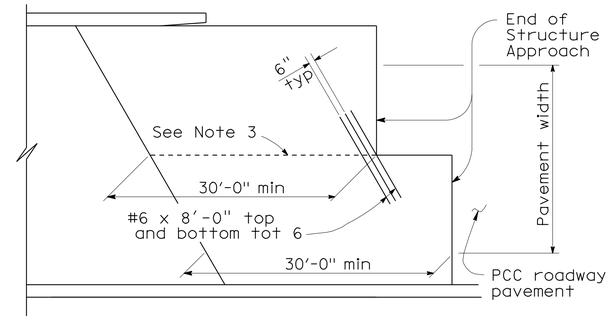

STRUCTURE APPROACH - END STAGGER DETAIL
No Scale

APPROACH SLAB TRANSVERSE CONTACT JOINT		
APPROACH SKEW	WITH AC ROADWAY PAVEMENT	WITH PCC ROADWAY PAVEMENT
< 20°	Parallel to face of paving notch	Parallel to face of paving notch
20°- 45°	Parallel to face of P N use (Detail A)	Stagger lines 24' to 36' apart
> 45°	Parallel to face of P N use (Detail A)	Stagger at each lane line

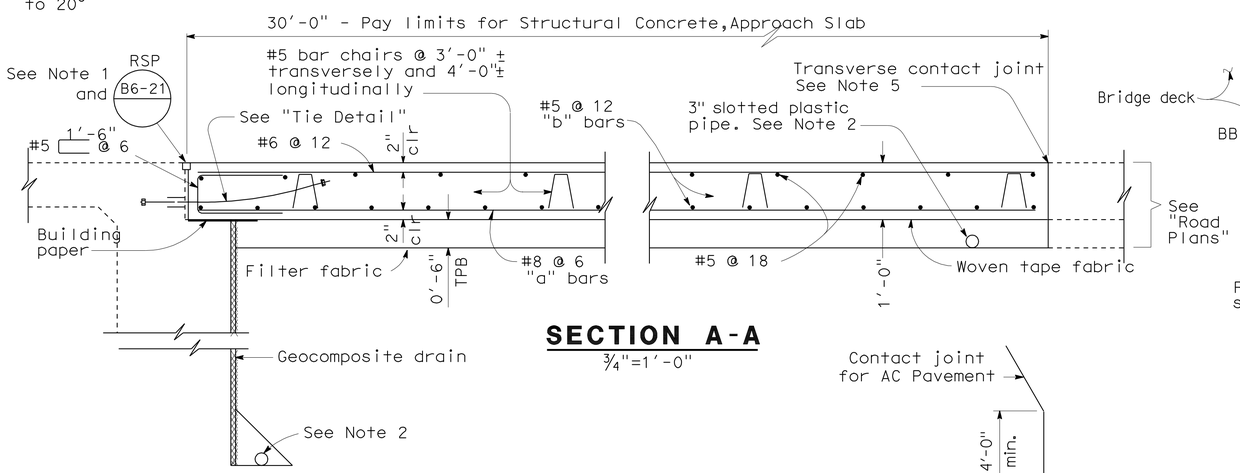

SECTION A-A
¾"=1'-0"

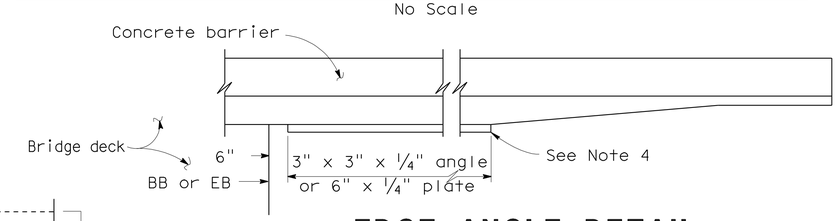

EDGE ANGLE DETAIL
½"=1'-0"

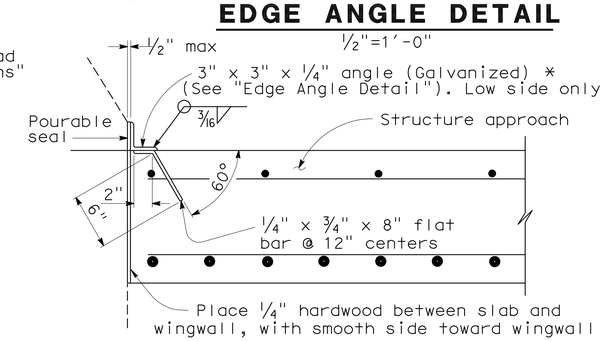

*(TO BE USED WITH TYPE 25 OR TYPE 27 CONCRETE BARRIER)

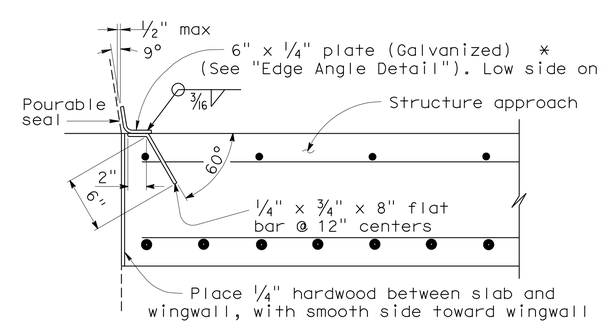

*(TO BE USED WITH TYPE 732 OR TYPE 736 CONCRETE BARRIER)

DETAIL B
1½"=1'-0"

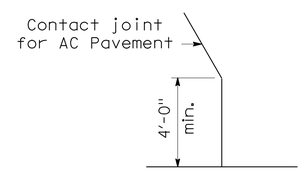

DETAIL A
No Scale

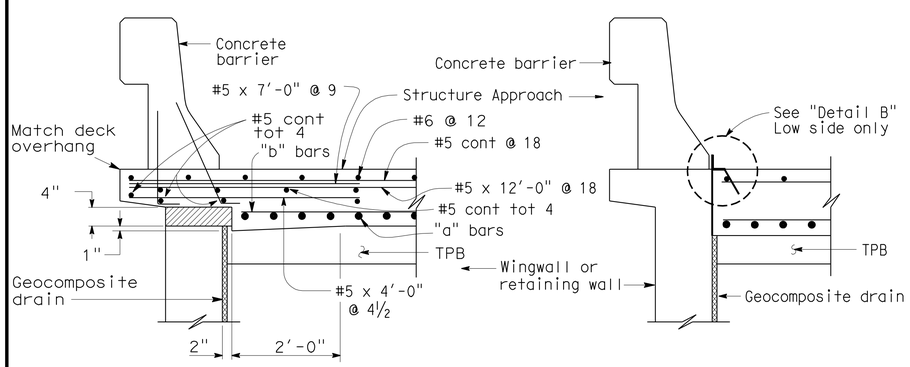

TYPE E-1 TYPE E-2

SECTION C-C
¾"=1'-0"

(Type E-1 to be used, unless otherwise shown on plans)

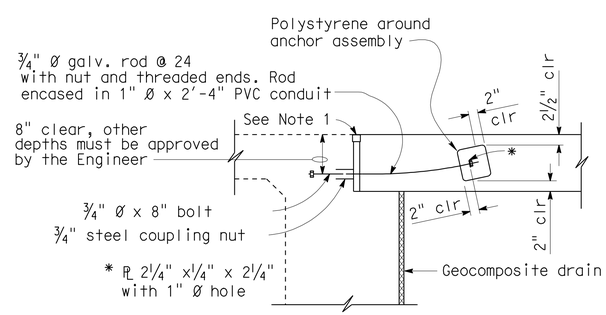

TIE DETAIL
¾"=1'-0"

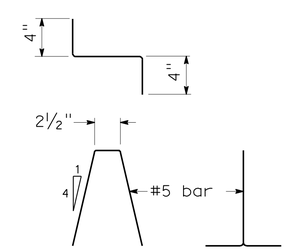

BAR CHAIR DETAIL
1½"=1'-0"

NOTES:

1. For details not noted or shown, see Structure Plans.
2. For drainage details, see "Structure Approach Drainage Details" sheet.
3. Longitudinal construction joints, when permitted by the Engineer, shall be located on lane lines.
4. End angle or plate at beginning of barrier transition, end of wingwall or end of structure approach, as applicable.
5. For transverse contact joint with new PCC paving, refer to Standard Plan P10.
6. At the contractor's option, approach slab transverse reinforcement may be placed parallel to paving notch. Spacing of transverse reinforcement is measured along ℄ roadway.

Polystyrene to be removed.

STANDARD DRAWING

FILE NO. xs3-180e

APPROVED BY M. Ha (RESPONSIBLE TECHNICAL SPECIALIST) — APPROVAL DATE 8-12-08

RELEASED BY O. Alcantara (RESPONSIBLE OFFICE CHIEF) — RELEASE DATE 8-12-08

STATE OF CALIFORNIA DEPARTMENT OF TRANSPORTATION

DIVISION OF ENGINEERING SERVICES STRUCTURE DESIGN DESIGN BRANCH 5

BRIDGE NO. 39-0244L/R

POST MILE 9.86

DUCK SLOUGH OVERFLOW BRIDGE L/R
STRUCTURE APPROACH TYPE N(30D)

DS OSD 2147A (ENGLISH STANDARD DRAWING "XS" BORDER REV. 01/11/08)

ORIGINAL SCALE IN INCHES FOR REDUCED PLANS 0 1 2 3

CU 10
EA 415701

DISREGARD PRINTS BEARING EARLIER REVISION DATES 2-10-09

REVISION DATES

SHEET 11 OF 18

FILE => 39-0244lr-s-sap30s.dgn

USERNAME => trmikest DATE PLOTTED => 19-OCT-2010 TIME PLOTTED => 08:32

DIST	COUNTY	ROUTE	POST MILES TOTAL PROJECT	SHEET No	TOTAL SHEETS
10	Mer	99	R4.6/R10.5	670	751

REGISTERED CIVIL ENGINEER 07-31-09 DATE

10-11-10
PLANS APPROVAL DATE

REGISTERED PROFESSIONAL ENGINEER G. SCHUSTER No. C 63897 Exp. 09-30-10 CIVIL STATE OF CALIFORNIA

The State of California or its officers or agents shall not be responsible for the accuracy or completeness of electronic copies of this plan sheet.

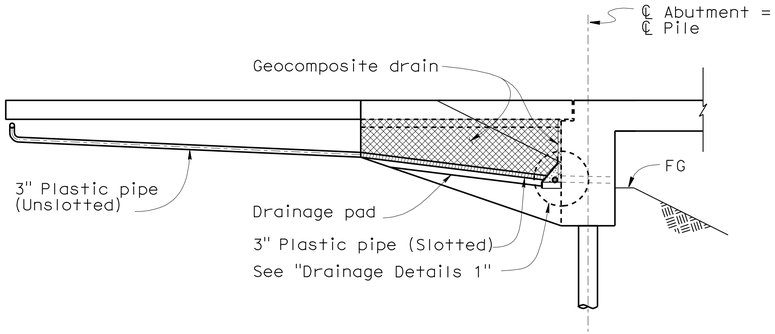

CANTILEVER WINGWALL

SECTION F-F
1/4" =1'-0"

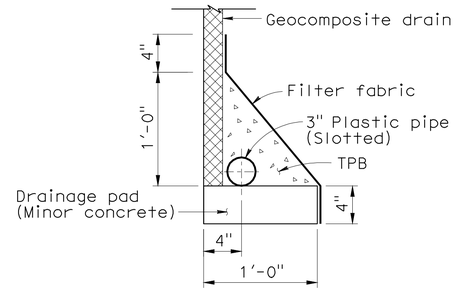

WITHOUT FOOTING

DRAINAGE DETAIL 1
1 1/2" =1'-0"

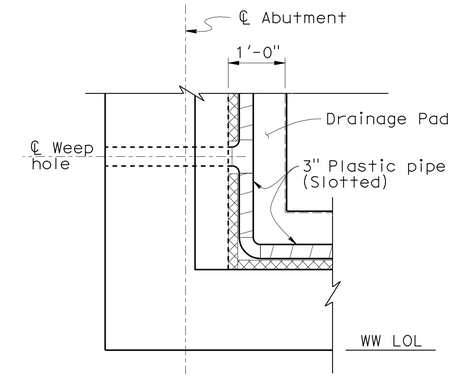

DRAINAGE DETAIL 2
3/4" =1'-0"

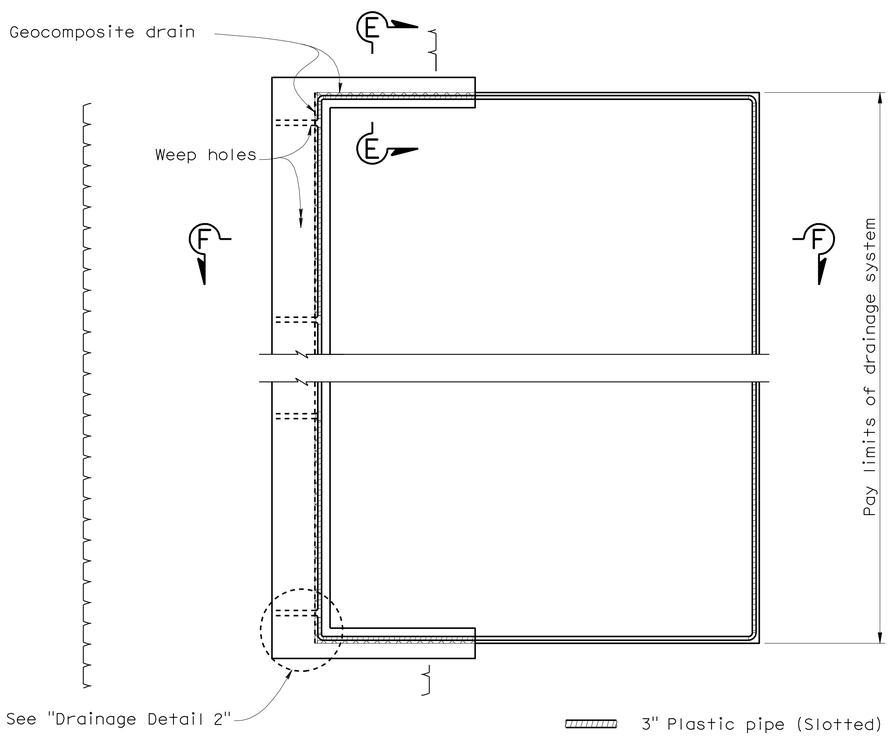

TYPICAL PLAN
1"=5'-0"

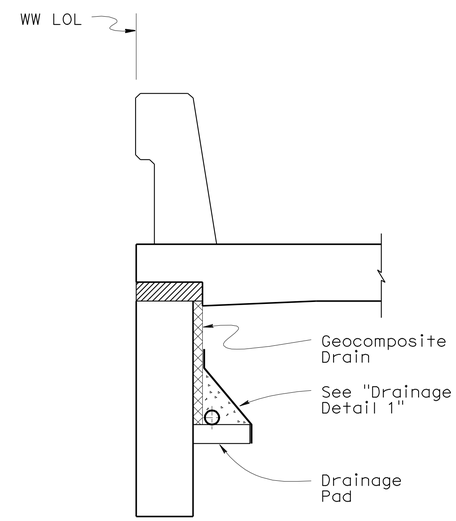

SECTION E-E
3/4" =1'-0"

DESIGN	BY G. Schuster	CHECKED C. Siegenthaler	
DETAILS	BY A. Chen/S. Jiang	CHECKED C. Siegenthaler	
QUANTITIES	BY A. Chen	CHECKED N. Terzis	

STATE OF CALIFORNIA DEPARTMENT OF TRANSPORTATION

DIVISION OF ENGINEERING SERVICES STRUCTURE DESIGN DESIGN BRANCH 5

BRIDGE NO. 39-0244L/R
POST MILE 9.86

DUCK SLOUGH OVERFLOW BRIDGE L/R
STRUCTURE APPROACH DRAINAGE DETAILS

ORIGINAL SCALE IN INCHES FOR REDUCED PLANS 0 1 2 3

CU 10
EA 415701

DISREGARD PRINTS BEARING EARLIER REVISION DATES → 6-11-08 8-07-08

REVISION DATES

SHEET 12 OF 18

STRUCTURES DESIGN DETAIL SHEET (ENGLISH) (REV. 10/25/05)

FILE => 39-0244lr-s-sapdd.dgn

USERNAME => trmikest DATE PLOTTED => 19-OCT-2010 TIME PLOTTED => 08:32

DIST	COUNTY	ROUTE	POST MILES TOTAL PROJECT	SHEET No	TOTAL SHEETS
10	Mer	99	R4.6/R10.5	671	751

CERTIFIED ENGINEERING GEOLOGIST 4-29-09

10-11-10
PLANS APPROVAL DATE

The State of California or its officers or agents shall not be responsible for the accuracy or completeness of electronic copies of this plan sheet.

PROFESSIONAL GEOLOGIST Xing Zheng No. 2130 Exp. 3-31-11 CERTIFIED ENGINEERING GEOLOGIST STATE OF CALIFORNIA

This LOTB sheet was prepared in accordance with the Caltrans Soil & Rock Logging, Classification, & Presentation Manual (June 2007).

BENCH MARK

SURVEY CONTROL

MER-99 PM 5.24

Fnd 1" IP W/RPP & TACK Stamping
"CALIF DOT" 96.18′ Lt "A" Line ℄ Rte 99
Sta 135+70.55
N 1,897,950.59
E 6,603,471.50
Elev = 202.82

MER-99 1041

Fnd 1" IP w/RPP & LS5679 TAG
227.36′ Lt "A" Line ℄ Rte 99
Sta. 131+97.42
N 1,897,592.75
E 6,603,639.98
Elev = 203.25′
Datum NGVD 29

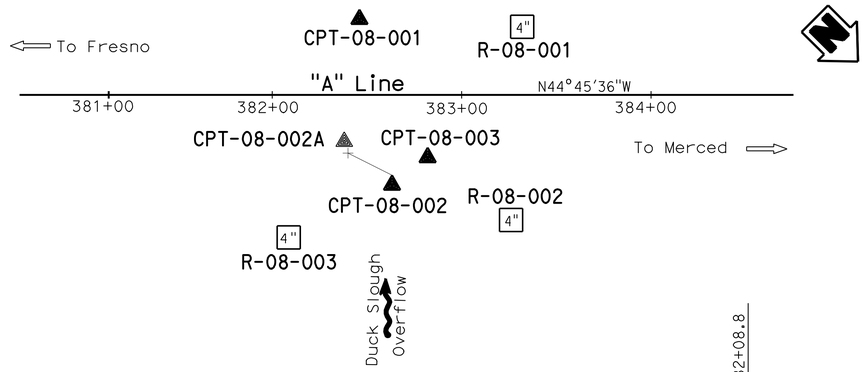

PLAN
1" = 40′

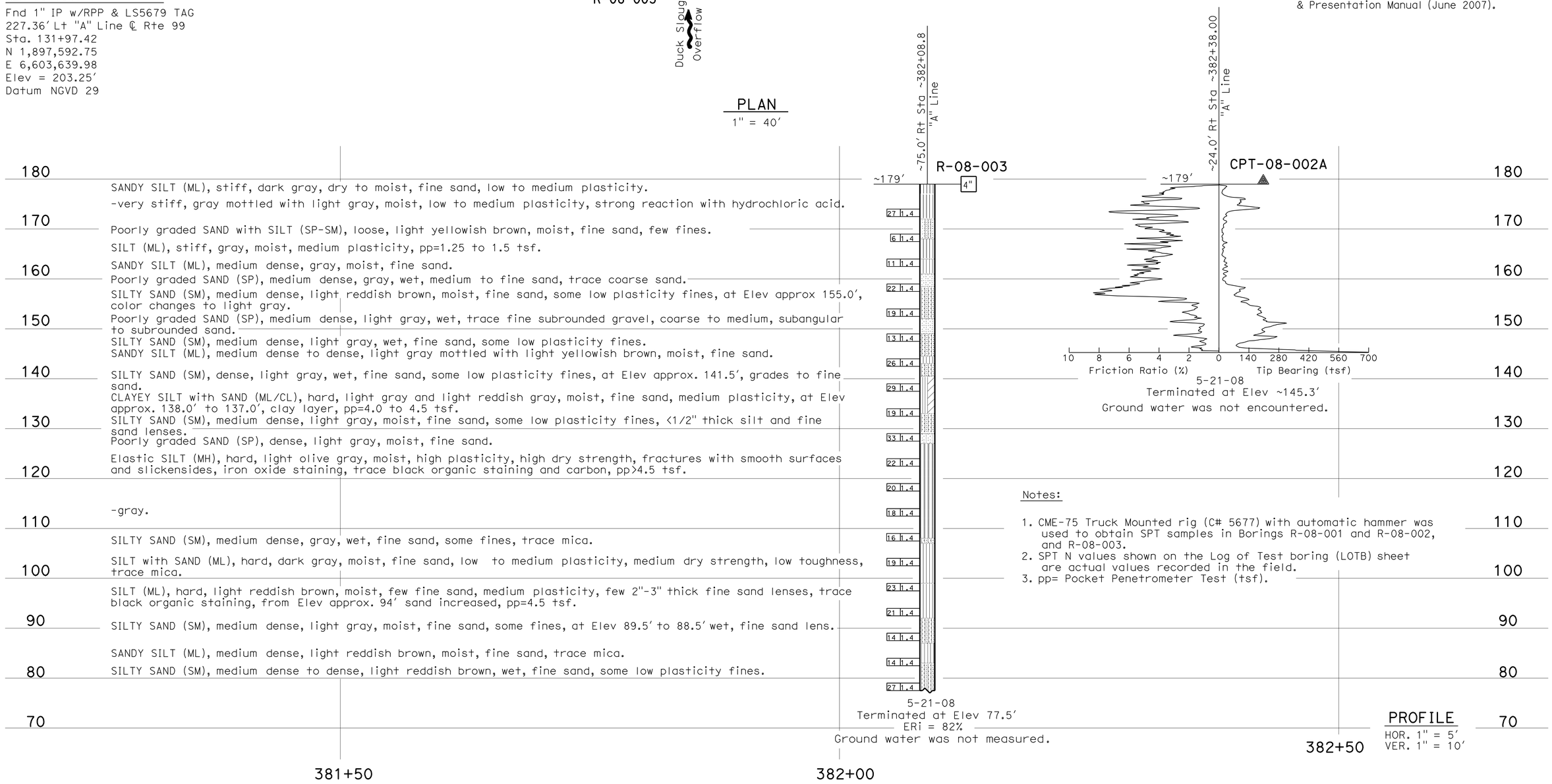

Notes:

1. CME-75 Truck Mounted rig (C# 5677) with automatic hammer was used to obtain SPT samples in Borings R-08-001 and R-08-002, and R-08-003.
2. SPT N values shown on the Log of Test boring (LOTB) sheet are actual values recorded in the field.
3. pp= Pocket Penetrometer Test (tsf).

PROFILE
HOR. 1" = 5′
VER. 1" = 10′

ENGINEERING SERVICES		GEOTECHNICAL SERVICES	STATE OF CALIFORNIA DEPARTMENT OF TRANSPORTATION	DIVISION OF ENGINEERING SERVICES STRUCTURE DESIGN DESIGN BRANCH	BRIDGE NO. 39-0244L/R POST MILES 9.86	DUCK SLOUGH OVERFLOW BRIDGE L/R
FUNCTIONAL SUPERVISOR NAME: R. Buell	DRAWN BY: F. Nguyen 01/09 CHECKED BY: J. Thorne	FIELD INVESTIGATION BY: X. Zheng				LOG OF TEST BORINGS 1 OF 6

OGS CIVIL LOG OF TEST BORINGS SHEET

ORIGINAL SCALE IN INCHES FOR REDUCED PLANS 0 1 2 3

CU 10
EA 415701

DISREGARD PRINTS BEARING EARLIER REVISION DATES

REVISION DATES: 02-24-09 02-25-09 03-13-09 04-22-09

SHEET 13 OF 18

FILE => 39-0244lr-z-lotb1of6.dgn

USERNAME => trmikes1 DATE PLOTTED => 19-OCT-2010 TIME PLOTTED => 08:32

DIST	COUNTY	ROUTE	POST MILES TOTAL PROJECT	SHEET No	TOTAL SHEETS
10	Mer	99	R4.6/R10.5	672	751

Zheng Xing 4-29-09
CERTIFIED ENGINEERING GEOLOGIST

10-11-10
PLANS APPROVAL DATE

PROFESSIONAL GEOLOGIST Xing Zheng No. 2130 Exp. 3-31-11 CERTIFIED ENGINEERING GEOLOGIST STATE OF CALIFORNIA

The State of California or its officers or agents shall not be responsible for the accuracy or completeness of electronic copies of this plan sheet.

This LOTB sheet was prepared in accordance with the Caltrans Soil & Rock Logging, Classification, & Presentation Manual (June 2007).

FOR PLAN VIEW, SEE
"LOG OF TEST BORINGS 1 OF 6"

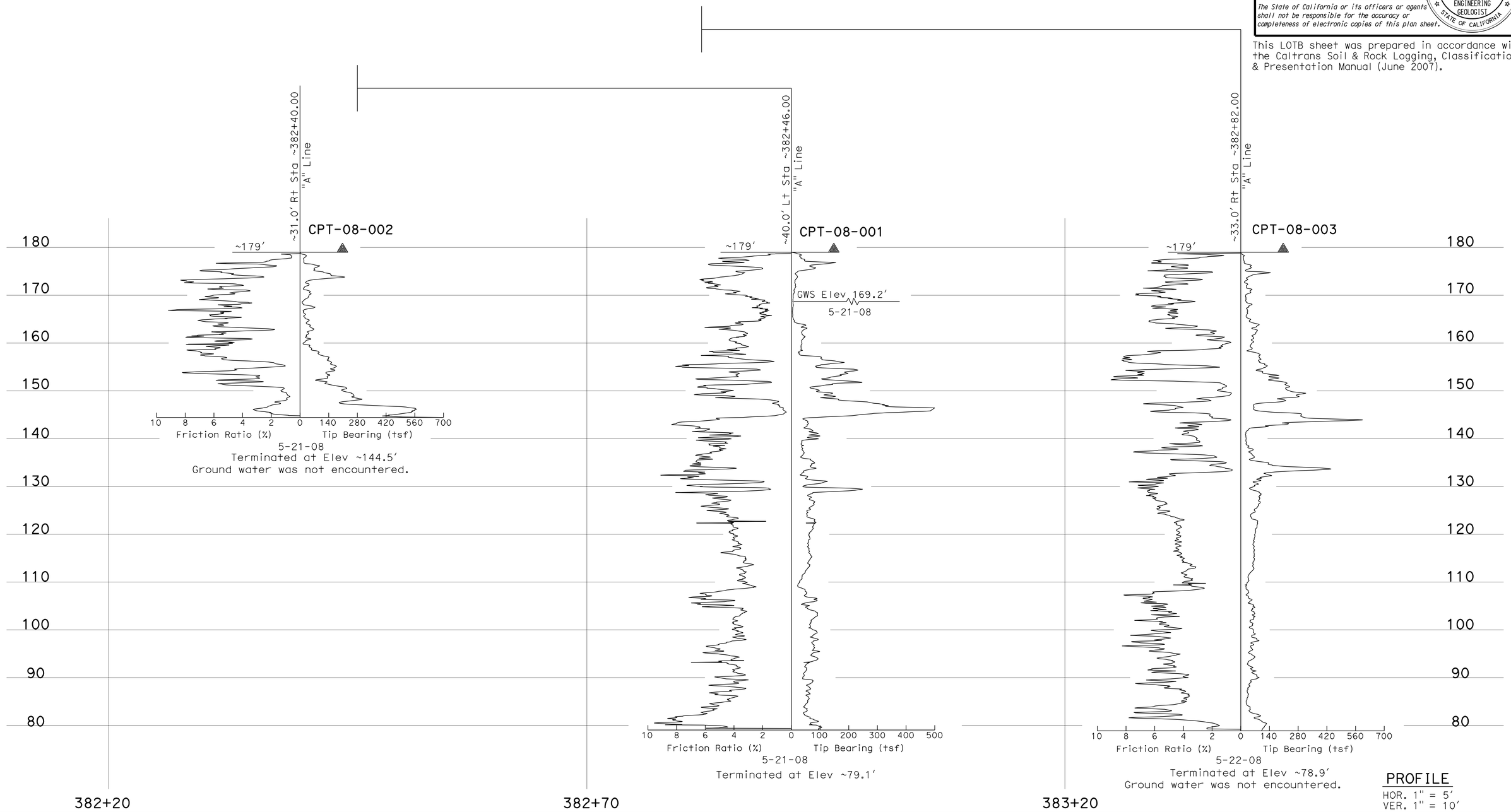

PROFILE
HOR. 1" = 5'
VER. 1" = 10'

ENGINEERING SERVICES	GEOTECHNICAL SERVICES	STATE OF CALIFORNIA DEPARTMENT OF TRANSPORTATION	DIVISION OF ENGINEERING SERVICES STRUCTURE DESIGN DESIGN BRANCH	BRIDGE NO. 39-0244L/R POST MILES 9.86	DUCK SLOUGH OVERFLOW BRIDGE L/R
FUNCTIONAL SUPERVISOR NAME: R. Buell	DRAWN BY: F. Nguyen 01/09 CHECKED BY: J. Thorne	FIELD INVESTIGATION BY: X. Zheng			LOG OF TEST BORINGS 2 OF 6

OGS CIVIL LOG OF TEST BORINGS SHEET

ORIGINAL SCALE IN INCHES FOR REDUCED PLANS 0 1 2 3

CU 10
EA 415701

DISREGARD PRINTS BEARING EARLIER REVISION DATES → 02-24-09 03-11-09 04-22-09

REVISION DATES

SHEET 14 OF 18

FILE => 39-0244lr-z-lotb2of6.dgn

USERNAME => trmikest DATE PLOTTED => 19-OCT-2010 TIME PLOTTED => 08:33

DIST	COUNTY	ROUTE	POST MILES TOTAL PROJECT	SHEET No	TOTAL SHEETS
10	Mer	99	R4.6/R10.5	673	751

Zheng Xing 4-29-09
CERTIFIED ENGINEERING GEOLOGIST

10-11-10
PLANS APPROVAL DATE

The State of California or its officers or agents shall not be responsible for the accuracy or completeness of electronic copies of this plan sheet.

PROFESSIONAL GEOLOGIST Xing Zheng No. 2130 Exp. 3-31-11 CERTIFIED ENGINEERING GEOLOGIST STATE OF CALIFORNIA

This LOTB sheet was prepared in accordance with the Caltrans Soil & Rock Logging, Classification, & Presentation Manual (June 2007).

FOR PLAN VIEW, SEE
"LOG OF TEST BORINGS 1 OF 6"

~66.0' Rt Sta ~383+26.10 "A" Line

R-08-002

~179'

4"

180 — 170 — 160 — 150 — 140 — 130 — 120 — 110 — 100 — 90 — 80 — 70 — 60

23 1.4 — SILT with SAND (ML), stiff, dark brown, dry to moist, fine sand, low to medium plasticity, strong reaction with hydrochloric acid.
SANDY SILT (ML), dense, light brown, moist, fine sand, low plasticity, reaction with hydrochloric acid.

16 1.4 — SILTY SAND (SM), dense, light brown, moist, fine sand, some low plasticity fines, slight reaction with hydrochloric acid, porous.
SANDY SILT (ML), very stiff to hard, gray, moist, fine sand, medium plasticity, pp = 3.5 to 4.5 tsf.

6 1.4 — SILTY SAND (SM), loose, gray mottled with pale brown, moist, fine sand, some fines.
SILT (ML), loose, light gray mottled with white, moist, low plasticity, strong reaction with hydrochloric acid.

13 1.4 — SILTY SAND (SM), medium dense, light reddish brown mottled with white, moist to wet, fine sand, some low plasticity fines, strong reaction with hydrochloric acid.
Poorly graded SAND (SP), medium dense, light reddish brown, moist, fine sand, weak cementation.

35 1.4 — SILTY SAND (SM), medium dense to dense, light yellowish brown, moist, fine sand, little fines, weak cementation, trace gypsum, trace carbon, porous.
SILT (ML), hard, light gray, moist, low plasticity, trace carbon, porous, pp>4.5 tsf.

39 1.4 — -medium plasticity.

16 1.4 — Poorly graded SAND (SP), loose, light gray, wet, coarse to fine sand, trace gravel.
-grading to fine sand.
-grading to fine to very fine sand.

6 1.4 — Poorly graded SAND with SILT (SP-SM), loose, light gray, wet, fine sand, few fines.

12 1.4 — Poorly graded GRAVEL with SAND (GP), medium dense, light gray, wet, fine subangular to subrounded gravel, some coarse to fine sand.
SANDY SILT (ML), very stiff to hard, light olive gray, moist to wet, fine sand, low to medium plasticity, about 1/2 " thick fine to coarse sand lenses, pp = 3.5 to 4.5 tsf.

21 1.4 — Elastic SILT (MH), hard, light olive gray, moist, high plasticity, high dry strength, pp = 4.5 tsf.

16 1.4 — -pp>4.5 tsf.

15 1.4 — -pp>4.5 tsf.

12 1.4 — SANDY SILT (ML), medium dense, gray, moist, fine sand, low plasticity.

15 1.4

19 1.4 — -light reddish brown, medium plasticity.

22 1.4

21 1.4 — SILT (ML), hard, light reddish brown, moist, medium plasticity, high dry strength, low to medium toughness, pp>4.5 tsf.

23 1.4 — SILTY SAND (SM), dense, light reddish brown and light gray, moist to wet, fine sand, little fines, few mica, silt decrease with depth.

12 1.4 — Poorly graded SAND with SILT (SP-SM), medium dense, light gray, wet, fine sand, few fines, trace mica.
Poorly graded SAND (SP), medium dense, light gray, wet, fine sand, trace mica.

27 1.4 — SILT (ML), very stiff, light reddish brown, moist, medium plasticity, medium dry strength, medium toughness, pp = 2.0 to 2.5 tsf.

22 1.4

74 1.4 — Poorly graded GRAVEL with SAND (GP), very dense, light gray, wet, coarse to fine subangular to subrounded elongated gravel, some coarse to medium sand.

5-20-08
Terminated at Elev 57.5'
ERi = 82%
Ground water was not measured.

383+00 — 384+00 — 385+00

PROFILE
HOR. 1" = 10'
VER. 1" = 10'

ENGINEERING SERVICES	GEOTECHNICAL SERVICES	STATE OF CALIFORNIA DEPARTMENT OF TRANSPORTATION	DIVISION OF ENGINEERING SERVICES STRUCTURE DESIGN DESIGN BRANCH	BRIDGE NO. 39-0244L/R	DUCK SLOUGH OVERFLOW BRIDGE L/R
FUNCTIONAL SUPERVISOR	DRAWN BY: F. Nguyen 01/09	FIELD INVESTIGATION BY:		POST MILES 9.86	LOG OF TEST BORINGS 3 OF 6
NAME: R. Buell	CHECKED BY: J. Thorne	X. Zheng			

OGS CIVIL LOG OF TEST BORINGS SHEET

ORIGINAL SCALE IN INCHES FOR REDUCED PLANS 0 1 2 3

CU 10
EA 415701

DISREGARD PRINTS BEARING EARLIER REVISION DATES → 02-24-09 02-27-09 03-13-09 04-22-09

REVISION DATES

SHEET 15 OF 18

FILE => 39-0244lr-z-lotb3of6.dgn

USERNAME => trmikes1 DATE PLOTTED => 19-OCT-2010 TIME PLOTTED => 08:33

DIST	COUNTY	ROUTE	POST MILES TOTAL PROJECT	SHEET No	TOTAL SHEETS
10	Mer	99	R4.6/R10.5	674	751

Zheng Xing 4-29-09
CERTIFIED ENGINEERING GEOLOGIST

10-11-10
PLANS APPROVAL DATE

PROFESSIONAL GEOLOGIST Xing Zheng No. 2130 Exp. 3-31-11 CERTIFIED ENGINEERING GEOLOGIST STATE OF CALIFORNIA

The State of California or its officers or agents shall not be responsible for the accuracy or completeness of electronic copies of this plan sheet.

This LOTB sheet was prepared in accordance with the Caltrans Soil & Rock Logging, Classification, & Presentation Manual (June 2007).

FOR PLAN VIEW, SEE
"LOG OF TEST BORINGS 1 OF 6"

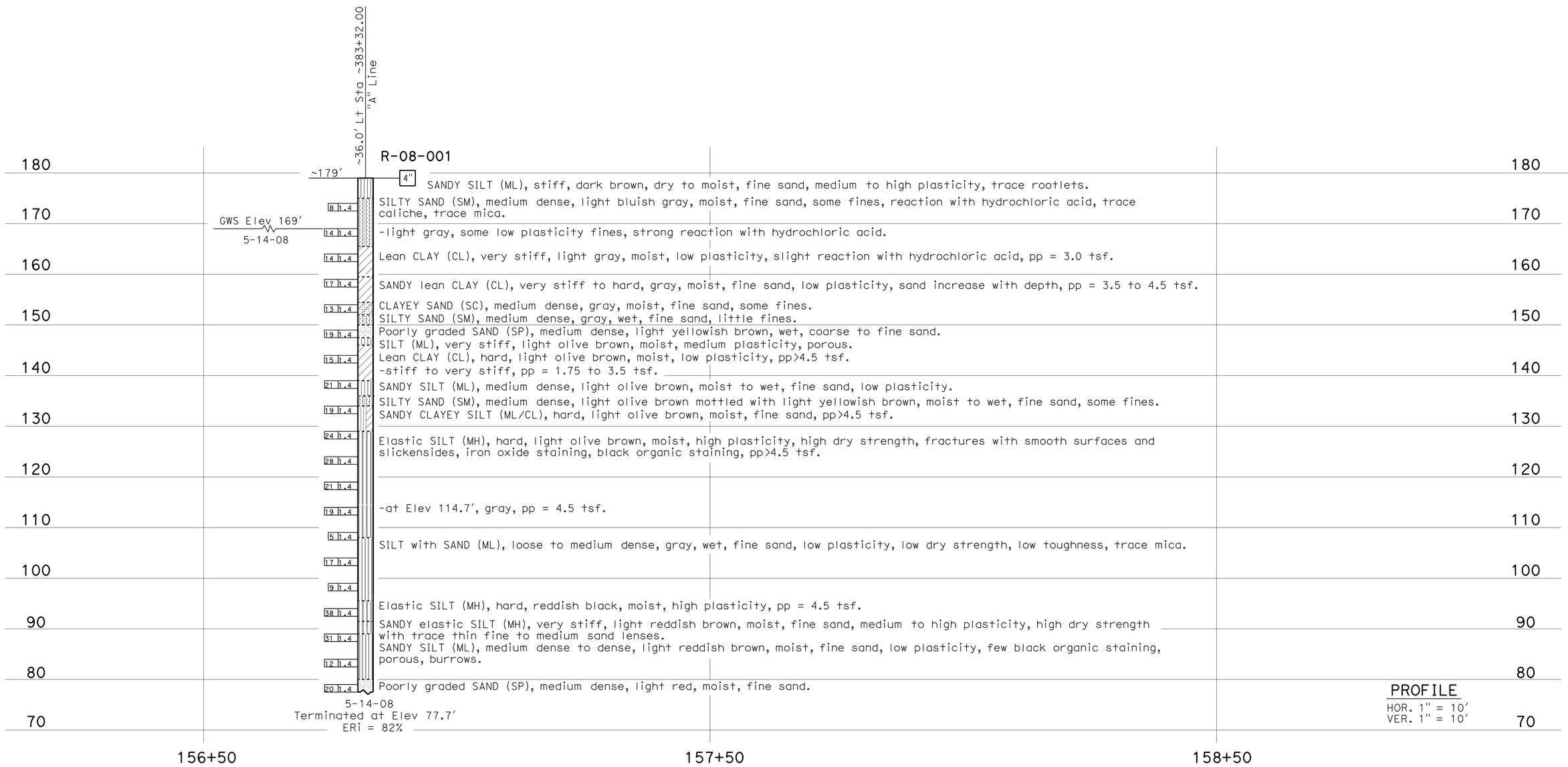

ENGINEERING SERVICES	GEOTECHNICAL SERVICES	STATE OF CALIFORNIA DEPARTMENT OF TRANSPORTATION	DIVISION OF ENGINEERING SERVICES STRUCTURE DESIGN	BRIDGE NO. 39-0244L/R	DUCK SLOUGH OVERFLOW BRIDGE L/R
FUNCTIONAL SUPERVISOR	DRAWN BY: F. Nguyen 01/09	FIELD INVESTIGATION BY:	DESIGN BRANCH	POST MILES 9.86	LOG OF TEST BORINGS 4 OF 6
NAME: R. Buell	CHECKED BY: J. Thorne	X. Zheng			

OGS CIVIL LOG OF TEST BORINGS SHEET

ORIGINAL SCALE IN INCHES FOR REDUCED PLANS 0 1 2 3

CU 10
EA 415701

DISREGARD PRINTS BEARING EARLIER REVISION DATES

REVISION DATES: 02-24-09 02-24-09 03-13-09 04-22-09

SHEET 16 OF 18

FILE => 39-0244lr-z-lotb4of6.dgn

USERNAME => trmikesl DATE PLOTTED => 19-OCT-2010 TIME PLOTTED => 08:33

DIST	COUNTY	ROUTE	POST MILES TOTAL PROJECT	SHEET No	TOTAL SHEETS
10	Mer	99	R4.6/R10.5	675	751

Zheng Xing 4-29-09
CERTIFIED ENGINEERING GEOLOGIST

10-11-10
PLANS APPROVAL DATE

PROFESSIONAL GEOLOGIST Xing Zheng No. 2130 Exp. 3-31-11 CERTIFIED ENGINEERING GEOLOGIST STATE OF CALIFORNIA

The State of California or its officers or agents shall not be responsible for the accuracy or completeness of electronic copies of this plan sheet.

REFERENCE: CALTRANS SOIL & ROCK LOGGING, CLASSIFICATION, AND PRESENTATION MANUAL (JUNE 2007)

CEMENTATION

Description	Criteria
Weak	Crumbles or breaks with handling or little finger pressure.
Moderate	Crumbles or breaks with considerable finger pressure.
Strong	Will not crumble or break with finger pressure.

CONSISTENCY OF COHESIVE SOILS

Description	Unconfined Compressive Strength (tsf)	Pocket Penetrometer Measurement (tsf)	Torvane Measurement (tsf)	Field Approximation
Very Soft	< 0.25	< 0.25	< 0.12	Easily penetrated several inches by fist
Soft	0.25 to 0.50	0.25 to 0.50	0.12 to 0.25	Easily penetrated several inches by thumb
Medium Stiff	0.50 to 1.0	0.50 to 1.0	0.25 to 0.50	Penetrated several inches by thumb with moderate effort
Stiff	1 to 2	1 to 2	0.50 to 1.0	Readily indented by thumb but penetrated only with great effort
Very Stiff	2 to 4	2 to 4	1.0 to 2.0	Readily indented by thumbnail
Hard	> 4.0	> 4.0	> 2.0	Indented by thumbnail with difficulty

BOREHOLE IDENTIFICATION

Symbol	Hole Type	Description
Size	A	Auger Boring
Size	R P	Rotary drilled boring Rotary percussion boring (air)
Size	R	Rotary drilled diamond core
Size	HD HA	Hand driven (1-inch soil tube) Hand Auger
●	D	Dynamic Cone Penetration Boring
▲	CPT	Cone Penetration Test (ASTM D 5778-95)
⬚	O	Other

Note: Size in inches.

PLASTICITY OF FINE-GRAINED SOILS

Description	Criteria
Nonplastic	A 1/8-inch thread cannot be rolled at any water content.
Low	The thread can barely be rolled and the lump cannot be formed when drier than the plastic limit.
Medium	The thread is easy to roll and not much time is required to reach the plastic limit. The thread cannot be rerolled after reaching the plastic limit. The lump crumbles when drier than the plastic limit.
High	It takes considerable time rolling and kneading to reach the plastic limit. The thread can be rerolled several times after reaching the plastic limit. The lump can be formed without crumbling when drier than the plastic limit.

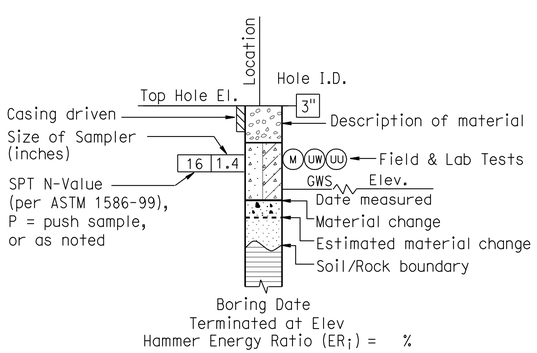

ROTARY BORING

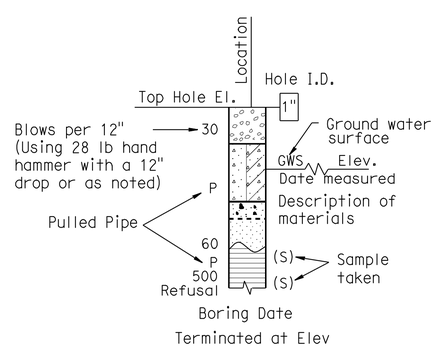

HAND BORING

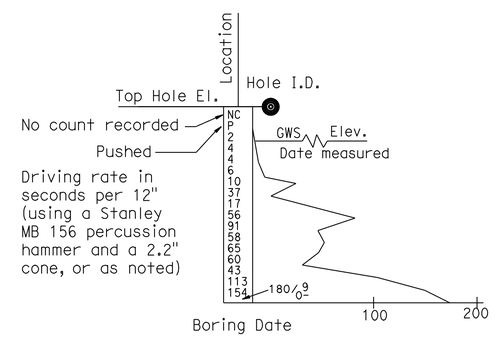

DYNAMIC CONE PENETRATION BORING

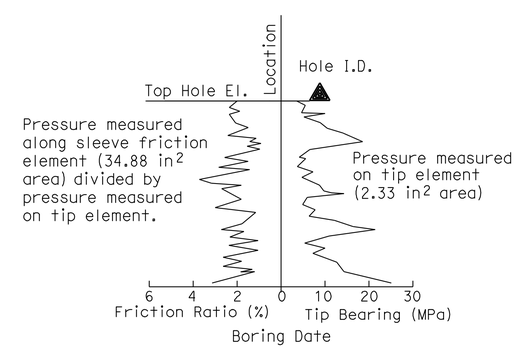

CONE PENETRATION TEST (CPT) SOUNDING

ENGINEERING SERVICES	GEOTECHNICAL SERVICES	STATE OF CALIFORNIA DEPARTMENT OF TRANSPORTATION	DIVISION OF ENGINEERING SERVICES STRUCTURE DESIGN DESIGN BRANCH	BRIDGE NO. 39-0244L/R POST MILE 9.86	DUCK SLOUGH OVERFLOW BRIDGE L/R LOG OF TEST BORINGS 5 OF 6
	PREPARED BY: F. Nguyen 01/09				

GS LOTB SOIL LEGEND

ORIGINAL SCALE IN INCHES FOR REDUCED PLANS 0 1 2 3

CU 10
EA 415701

DISREGARD PRINTS BEARING EARLIER REVISION DATES 03-13-09

REVISION DATES

SHEET 17 OF 18

FILE => 39-0244lr-z-lotb5of6.dgn

USERNAME => ttmirkes1 DATE PLOTTED => 19-OCT-2010 TIME PLOTTED => 08:33

REFERENCE: CALTRANS SOIL & ROCK LOGGING, CLASSIFICATION, AND PRESENTATION MANUAL (JUNE 2007)

DIST	COUNTY	ROUTE	POST MILES TOTAL PROJECT	SHEET No	TOTAL SHEETS
10	Mer	99	R4.6/R10.5	676	751

Zheng Xing 4-29-09
CERTIFIED ENGINEERING GEOLOGIST

10-11-10
PLANS APPROVAL DATE

PROFESSIONAL GEOLOGIST Xing Zheng No. 2130 Exp. 3-31-11 CERTIFIED ENGINEERING GEOLOGIST STATE OF CALIFORNIA

The State of California or its officers or agents shall not be responsible for the accuracy or completeness of electronic copies of this plan sheet.

GROUP SYMBOLS AND NAMES

Graphic/Symbol	Group Names	Graphic/Symbol	Group Names
GW	Well-graded GRAVEL Well-graded GRAVEL with SAND	CL	Lean CLAY Lean CLAY with SAND Lean CLAY with GRAVEL SANDY lean CLAY SANDY lean CLAY with GRAVEL GRAVELLY lean CLAY GRAVELLY lean CLAY with SAND
GP	Poorly graded GRAVEL Poorly graded GRAVEL with SAND		
GW-GM	Well-graded GRAVEL with SILT Well-graded GRAVEL with SILT and SAND	CL-ML	SILTY CLAY SILTY CLAY with SAND SILTY CLAY with GRAVEL SANDY SILTY CLAY SANDY SILTY CLAY with GRAVEL GRAVELLY SILTY CLAY GRAVELLY SILTY CLAY with SAND
GW-GC	Well-graded GRAVEL with CLAY (or SILTY CLAY) Well-graded GRAVEL with CLAY and SAND (or SILTY CLAY and SAND)		
GP-GM	Poorly graded GRAVEL with SILT Poorly graded GRAVEL with SILT and SAND	ML	SILT SILT with SAND SILT with GRAVEL SANDY SILT SANDY SILT with GRAVEL GRAVELLY SILT GRAVELLY SILT with SAND
GP-GC	Poorly graded GRAVEL with CLAY (or SILTY CLAY) Poorly graded GRAVEL with CLAY and SAND (or SILTY CLAY and SAND)		
GM	SILTY GRAVEL SILTY GRAVEL with SAND	OL	ORGANIC lean CLAY ORGANIC lean CLAY with SAND ORGANIC lean CLAY with GRAVEL SANDY ORGANIC lean CLAY SANDY ORGANIC lean CLAY with GRAVEL GRAVELLY ORGANIC lean CLAY GRAVELLY ORGANIC lean CLAY with SAND
GC	CLAYEY GRAVEL CLAYEY GRAVEL with SAND		
GC-GM	SILTY, CLAYEY GRAVEL SILTY, CLAYEY GRAVEL with SAND	OL	ORGANIC SILT ORGANIC SILT with SAND ORGANIC SILT with GRAVEL SANDY ORGANIC SILT SANDY ORGANIC SILT with GRAVEL GRAVELLY ORGANIC SILT GRAVELLY ORGANIC SILT with SAND
SW	Well-graded SAND Well-graded SAND with GRAVEL		
SP	Poorly graded SAND Poorly graded SAND with GRAVEL	CH	Fat CLAY Fat CLAY with SAND Fat CLAY with GRAVEL SANDY fat CLAY SANDY fat CLAY with GRAVEL GRAVELLY fat CLAY GRAVELLY fat CLAY with SAND
SW-SM	Well-graded SAND with SILT Well-graded SAND with SILT and GRAVEL		
SW-SC	Well-graded SAND with CLAY (or SILTY CLAY) Well-graded SAND with CLAY and GRAVEL (or SILTY CLAY and GRAVEL)	MH	Elastic SILT Elastic SILT with SAND Elastic SILT with GRAVEL SANDY elastic SILT SANDY elastic SILT with GRAVEL GRAVELLY elastic SILT GRAVELLY elastic SILT with SAND
SP-SM	Poorly graded SAND with SILT Poorly graded SAND with SILT and GRAVEL		
SP-SC	Poorly graded SAND with CLAY (or SILTY CLAY) Poorly graded SAND with CLAY and GRAVEL (or SILTY CLAY and GRAVEL)	OH	ORGANIC fat CLAY ORGANIC fat CLAY with SAND ORGANIC fat CLAY with GRAVEL SANDY ORGANIC fat CLAY SANDY ORGANIC fat CLAY with GRAVEL GRAVELLY ORGANIC fat CLAY GRAVELLY ORGANIC fat CLAY with SAND
SM	SILTY SAND SILTY SAND with GRAVEL		
SC	CLAYEY SAND CLAYEY SAND with GRAVEL	OH	ORGANIC elastic SILT ORGANIC elastic SILT with SAND ORGANIC elastic SILT with GRAVEL SANDY ORGANIC elastic SILT SANDY ORGANIC elastic SILT with GRAVEL GRAVELLY ORGANIC elastic SILT GRAVELLY ORGANIC elastic SILT with SAND
SC-SM	SILTY, CLAYEY SAND SILTY, CLAYEY SAND with GRAVEL		
PT	PEAT	OL/OH	ORGANIC SOIL ORGANIC SOIL with SAND ORGANIC SOIL with GRAVEL SANDY ORGANIC SOIL SANDY ORGANIC SOIL with GRAVEL GRAVELLY ORGANIC SOIL GRAVELLY ORGANIC SOIL with SAND
	COBBLES COBBLES and BOULDERS BOULDERS		

FIELD AND LABORATORY TESTING

- (C) Consolidation (ASTM D 2435)
- (CL) Collapse Potential (ASTM D 5333)
- (CP) Compaction Curve (CTM 216)
- (CR) Corrosivity Testing (CTM 643, CTM 422, CTM 417)
- (CU) Consolidated Undrained Triaxial (ASTM D 4767)
- (DS) Direct Shear (ASTM D 3080)
- (EI) Expansion Index (ASTM D 4829)
- (M) Moisture Content (ASTM D 2216)
- (OC) Organic Content-% (ASTM D 2974)
- (P) Permeability (CTM 220)
- (PA) Particle Size Analysis (ASTM D 422)
- (PI) Plasticity Index (AASHTO T 90) Liquid Limit (AASHTO T 89)
- (PL) Point Load Index (ASTM D 5731)
- (PM) Pressure Meter
- (PP) Pocket Penetrometer
- (R) R-Value (CTM 301)
- (SE) Sand Equivalent (CTM 217)
- (SG) Specific Gravity (AASHTO T 100)
- (SL) Shrinkage Limit (ASTM D 427)
- (SW) Swell Potential (ASTM D 4546)
- (TV) Pocket Torvane
- (UC) Unconfined Compression-Soil (ASTM D 2166) Unconfined Compression-Rock (ASTM D 2938)
- (UU) Unconsolidated Undrained Triaxial (ASTM D 2850)
- (UW) Unit Weight (ASTM D 4767)
- (VS) Vane Shear (AASHTO T 223)

APPARENT DENSITY OF COHESIONLESS SOILS

Description	SPT N_{60} (Blows / 12 inches)
Very loose	0 - 4
Loose	5 - 10
Medium Dense	11 - 30
Dense	31 - 50
Very Dense	> 50

MOISTURE

Description	Criteria
Dry	Absence of moisture, dusty, dry to the touch
Moist	Damp but no visible water
Wet	Visible free water, usually soil is below water table

PERCENT OR PROPORTION OF SOILS

Description	Criteria
Trace	Particles are present but estimated to be less than 5%
Few	5 to 10%
Little	15 to 25%
Some	30 to 45%
Mostly	50 to 100%

PARTICLE SIZE

Description		Size
Boulder		> 12"
Cobble		3" to 12"
Gravel	Coarse	3/4" to 3"
	Fine	No. 4 to 3/4"
Sand	Coarse	No. 10 to No. 4
	Medium	No. 40 to No. 10
	Fine	No. 200 to No. 40

ENGINEERING SERVICES

GEOTECHNICAL SERVICES
PREPARED BY: F. Nguyen 01/09

STATE OF CALIFORNIA DEPARTMENT OF TRANSPORTATION

DIVISION OF ENGINEERING SERVICES STRUCTURE DESIGN
DESIGN BRANCH

BRIDGE NO. 39-0244L/R
POST MILE 9.86

DUCK SLOUGH OVERFLOW BRIDGE L/R
LOG OF TEST BORINGS 6 OF 6

GS LOTB SOIL LEGEND

ORIGINAL SCALE IN INCHES FOR REDUCED PLANS 0 1 2 3

CU 10
EA 415701

DISREGARD PRINTS BEARING EARLIER REVISION DATES 03-13-09

REVISION DATES

SHEET 18 OF 18

FILE => 39-0244lr-z-lotb6of6.dgn

USERNAME => trmikesl DATE PLOTTED => 19-OCT-2010 TIME PLOTTED => 08:33

DIST	COUNTY	ROUTE	POST MILES TOTAL PROJECT	SHEET No	TOTAL SHEETS
10	Mer	99	R4.6/R10.5	677	751

REGISTERED CIVIL ENGINEER 07-31-09 DATE

10-11-10
PLANS APPROVAL DATE

REGISTERED PROFESSIONAL ENGINEER G. SCHUSTER No. C 63897 Exp. 09-30-10 CIVIL STATE OF CALIFORNIA

The State of California or its officers or agents shall not be responsible for the accuracy or completeness of electronic copies of this plan sheet.

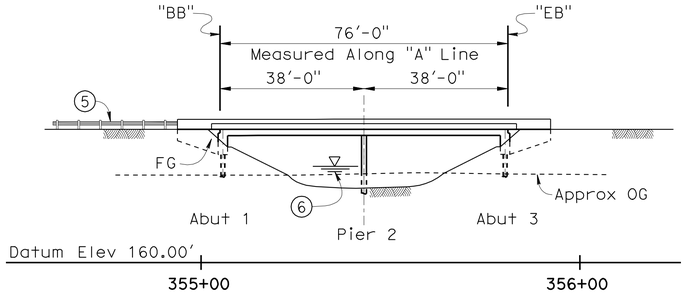

ELEVATION

1" = 20'-0"

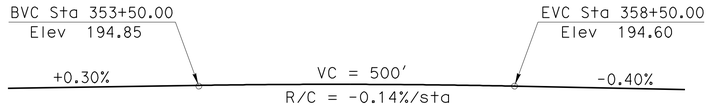

PROFILE GRADE

No Scale

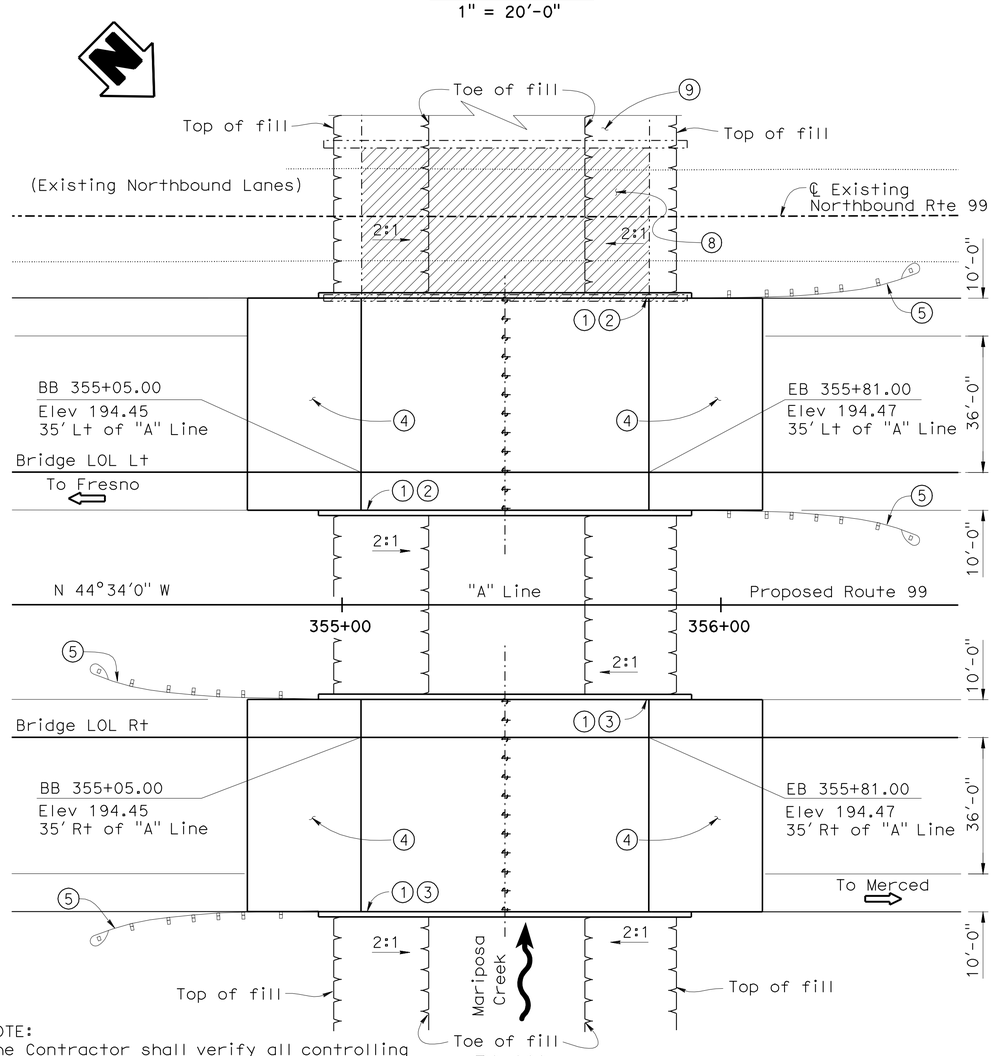

NOTE:
The Contractor shall verify all controlling field dimensions before ordering or fabricating any materials.

PLAN

1" = 20'-0"

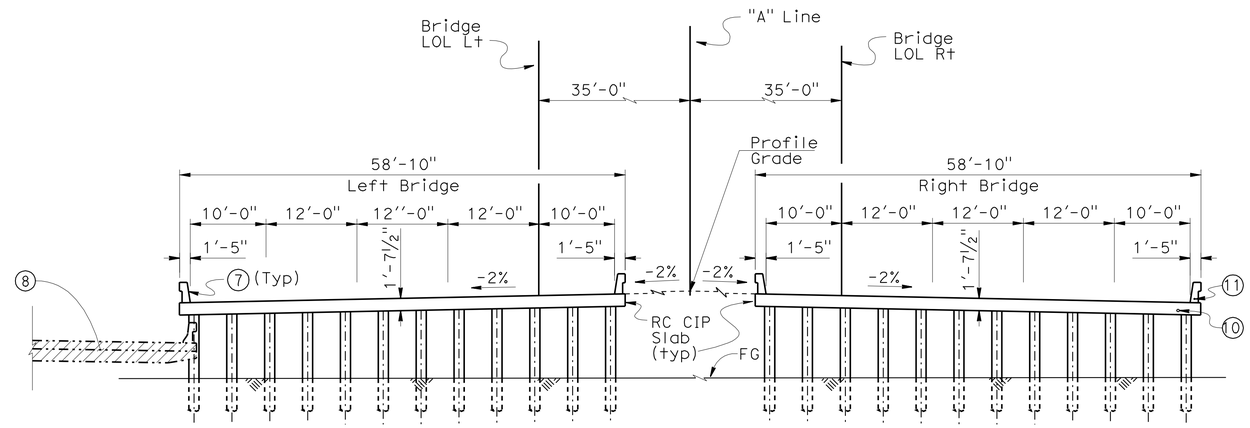

TYPICAL SECTION

1" = 10'-0"

Legend:

1. Paint "Mariposa Creek Bridge".
2. Paint Bridge No. 390245L.
3. Paint Bridge No. 390245R.
4. Structure Approach Type N(30D).
5. Metal Beam Guard Rail, see "Road Plan".
6. For Hydrologic Summary, see "Foundation Plan".
7. Concrete Barrier Type 732.
8. Partial removal of existing Bridge 39-0081, see "Partial Bridge Removal" sheet in Mariposa Creek Bridge West Frontage Road" plan set.
9. Portion of existing bridge 39-0081 to remain as future West Frontage Road, see "Barrier Modifications" sheet in "Mariposa Creek Bridge West Frontage Road" plan set.
10. 4" Ø Communication Conduit for fiber optic in slab, see "Road Plans".
11. Place 2" Conduit in Barrier Rail, see "Road Plans".

Note: For "General Notes", "Index Plans", "Standard Plans", "Quantities", See "Index To Plans" sheet.

Indicate Partial bridge removal

Indicate existing structure

x Gary Blakesley
DESIGN ENGINEER

	BY	CHECKED
DESIGN	G. Schuster	C. Siegenthaler
DETAILS	A. C/G. S/S. J//T. C.	C. Siegenthaler
QUANTITIES	S. Jiang	N. Terzis

LOAD & RESISTANCE FACTOR DESIGN — LIVE LOADING: HL93 W/"LOW-BOY"; PERMIT DESIGN VEHICLE

	BY	CHECKED
LAYOUT	G. Schuster	C. Siegenthaler
SPECIFICATIONS	Aiman Abdel-Malak	PLANS AND SPECS COMPARED

STATE OF CALIFORNIA
DEPARTMENT OF TRANSPORTATION

DIVISION OF ENGINEERING SERVICES
STRUCTURE DESIGN
DESIGN BRANCH 5

BRIDGE NO. 39-0245L/R
POST MILE 9.35

MARIPOSA CREEK BRIDGE L/R
GENERAL PLAN

ORIGINAL SCALE IN INCHES FOR REDUCED PLANS 0 1 2 3

CU 10
EA 415701

DISREGARD PRINTS BEARING EARLIER REVISION DATES

REVISION DATES: 01-4-08 02-04-09 2-11-09 06-03-08 07-18-08 09-10-08 08-26-08 12-22-08 01-28-09

SHEET 1 OF 14

USERNAME => trlenard DATE PLOTTED => 11-OCT-2010 TIME PLOTTED => 13:17

STRUCTURES DESIGN GENERAL PLAN SHEET (ENGLISH) (REV.07-24-06)

FILE => 39-0245lr-a-gp.dgn

DIST	COUNTY	ROUTE	POST MILES TOTAL PROJECT	SHEET No	TOTAL SHEETS
10	Mer	99	R4.6/R10.5	678	751

REGISTERED CIVIL ENGINEER 07-31-09 DATE

10-11-10
PLANS APPROVAL DATE

REGISTERED PROFESSIONAL ENGINEER G. SCHUSTER No. C 63897 Exp. 09-30-10 CIVIL STATE OF CALIFORNIA

The State of California or its officers or agents shall not be responsible for the accuracy or completeness of electronic copies of this plan sheet.

GENERAL NOTES
LOAD AND RESISTANCE FACTOR DESIGN

DESIGN: AASHTO LRFD Bridge Design Specifications, Third Edition with 2005 & 2006 Interim Revisions and Caltrans Amendments 03.06.01

SEISMIC DESIGN: Caltrans Seismic Design Criteria (SDC) Version 1.4, June, 2006

DEAD LOAD: Includes 35 Psf for future wearing surface.

LIVE LOADING: HL93 Alternative loading and "Low-Boy" permit design vehicle

SEISMIC LOADING: Caltrans SDC ARS curve for soil profile type D (M = 6.5 ± 0.25), (Peak Rock Acceleration = 0.2g)

REINFORCED CONCRETE:
f_y = 60 ksi
f'_c = 3.6 ksi
n = 8

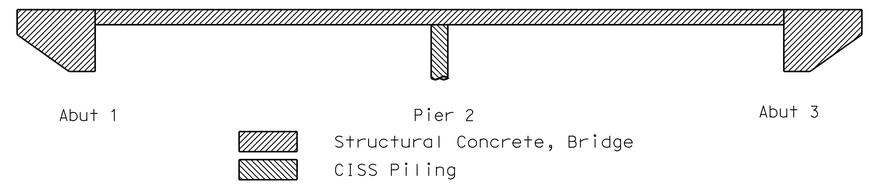

CONCRETE STRENGTH AND TYPE LIMITS
No Scale

QUANTITIES

STRUCTURE EXCAVATION (BRIDGE)	220	CY
STRUCTURE BACKFILL (BRIDGE)	100	CY
FURNISH PILING (CLASS 90)	1,514	LF
DRIVE PILE (CLASS 90)	36	EA
FURNISH 16" CAST-IN-STEEL SHELL CONCRETE PILING	1,620	LF
DRIVE 16" CAST-IN-STEEL SHELL CONCRETE PILE	24	EA
STRUCTURAL CONCRETE, BRIDGE	690	CY
STRUCTURAL CONCRETE, APPROACH SLAB (TYPE N)	260	CY
JOINT SEAL (MR1/2")	236	LF
BAR REINFORCING STEEL (BRIDGE)	146,000	LB
CONCRETE BARRIER (TYPE 732)	394	LF

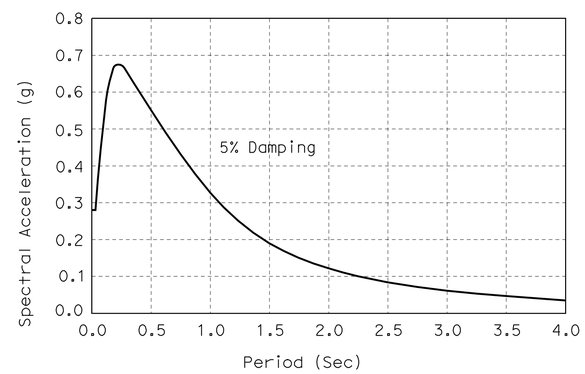

SOIL PROFILE TYPE D: Mw = 6.5, PBA = 0.2g
No Scale

INDEX TO PLANS

Sheet No.	Title
1.	GENERAL PLAN
2.	INDEX TO PLANS
3.	DECK CONTOURS LEFT
4.	DECK CONTOURS RIGHT
5.	FOUNDATION PLAN
6.	ABUTMENT LAYOUT
7.	PIER DETAILS
8.	TYPICAL SECTION
9.	SLAB REINFORCEMENT DETAILS
10.	STRUCTURE APPROACH TYPE N(30D)
11.	STRUCTURE APPROACH DRAINAGE DETAILS
12.	LOG OF TEST BORINGS 1 OF 3
13.	LOG OF TEST BORINGS 2 OF 3
14	LOG OF TEST BORINGS 3 OF 3

PILE DATA TABLE (B2-5)

Support Location	Pile Type	Nominal Resistance (kips)		Design Tip Elevations (ft)	Specified Tip Elevations (ft)	Nominal Driving Resistance (kips)
		Compression	Tension			
Abut 1	Class 90	180	0	145.0 (1) 152.0 (2)	145.0	180
Pier 2	CISS NPS 16x0.500	280	0	125.0 (1) 137.0 (2)	125.0	280
Abut 3	Class 90	180	0	145.0 (1) 152.0 (2)	145.0	180

NOTE: Design tip elevations are controlled by the following demands: (1) Compression, (2) Lateral.

STANDARD PLANS DATED MAY 2006

A10A	ACRONYMS AND ABBREVIATIONS (A-L)
A10B	ACRONYMS AND ABBREVIATIONS (M-Z)
A10C	SYMBOLS (SHEET 1 OF 2)
A10D	SYMBOLS (SHEET 2 OF 2)
A62C	LIMITS OF PAYMENT FOR EXCAVATION AND BACKFILL-BRIDGE
BO-1	BRIDGE DETAILS
B2-5	PILE DETAILS CLASS 90 AND CLASS 140
RSP B6-21	JOINT SEALS (MAXIMUM MOVEMENT RATING = 2")
B11-55	CONCRETE BARRIER TYPE 732
B14-3	COMMUNICATION AND SPRINKLER CONTROL CONDUITS (CONDUIT LESS THAN 4")

STANDARD PLAN SHEET NO.
DETAIL NO.

	BY	CHECKED
DESIGN	G. Schuster	C. Siegenthaler
DETAILS	G. M. Souza/S. Jiang	C. Siegenthaler
QUANTITIES	S. Jiang	N. Terzis

STATE OF CALIFORNIA
DEPARTMENT OF TRANSPORTATION

DIVISION OF ENGINEERING SERVICES
STRUCTURE DESIGN
DESIGN BRANCH 5

BRIDGE NO. 39-0245L/R
POST MILE 9.35

MARIPOSA CREEK BRIDGE L/R
INDEX TO PLANS

ORIGINAL SCALE IN INCHES FOR REDUCED PLANS 0 1 2 3

CU 10
EA 415701

DISREGARD PRINTS BEARING EARLIER REVISION DATES
REVISION DATES: 11-14-07, 7-29-09, 8-11-09, 08-22-08, 01-23-09, 01-26-09, 02-19-09, 02-25-09, 03-19-09

SHEET 2 OF 14

STRUCTURES DESIGN DETAIL SHEET (ENGLISH) (REV. 10/25/05)

FILE => 39-0245lr-a-itp.dgn

USERNAME => trienard DATE PLOTTED => 11-OCT-2010 TIME PLOTTED => 13:17

DIST	COUNTY	ROUTE	POST MILES TOTAL PROJECT	SHEET No	TOTAL SHEETS
10	Mer	99	R4.6/R10.5	679	751

REGISTERED CIVIL ENGINEER 07-31-09 DATE

10-11-10
PLANS APPROVAL DATE

REGISTERED PROFESSIONAL ENGINEER G. SCHUSTER No. C 63897 Exp. 09-30-10 CIVIL STATE OF CALIFORNIA

The State of California or its officers or agents shall not be responsible for the accuracy or completeness of electronic copies of this plan sheet.

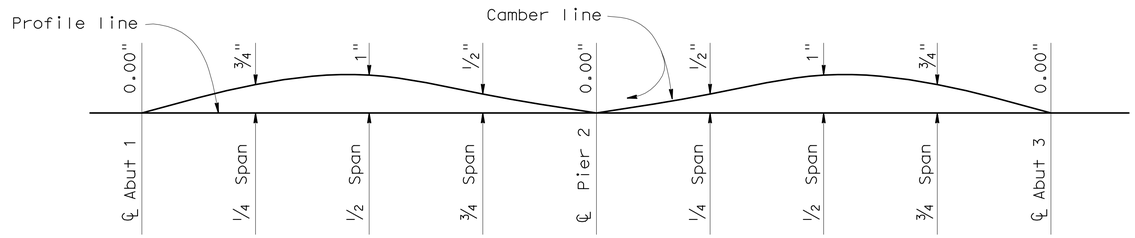

Note:
Does not include allowance for false work settlement.

CAMBER DIAGRAM

no scale

Notes:

X = 10′ interval along station line.

Contours do not include camber.

Contour interval = 0.1′

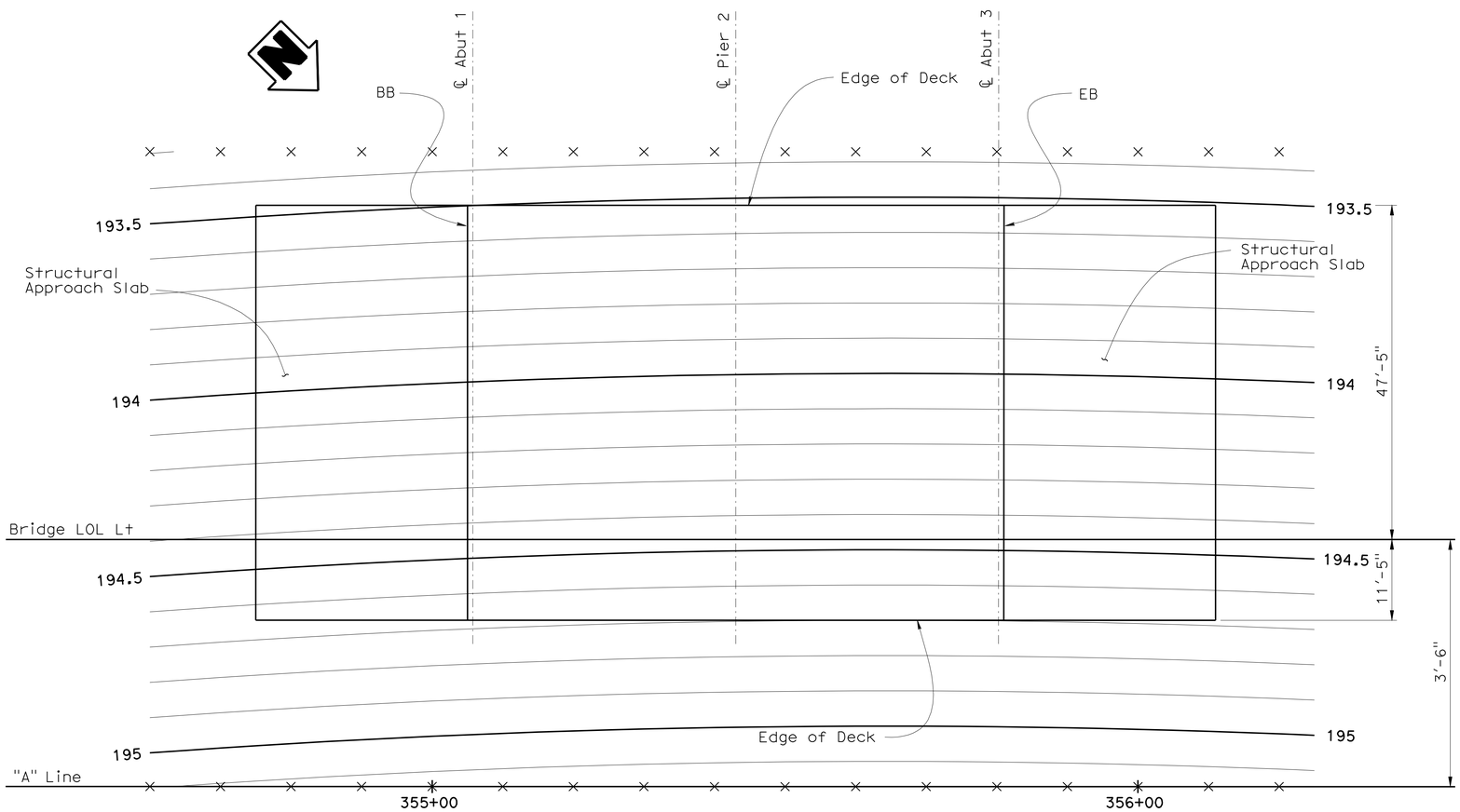

DECK CONTOURS

1" = 10′-0"

DESIGN	BY G. Schuster	CHECKED C. Siegenthaler	
DETAILS	BY G. M. Souza/S. Jiang	CHECKED C. Siegenthaler	
QUANTITIES	BY S. Jiang	CHECKED N. Terzis	

ORIGINAL SCALE IN INCHES FOR REDUCED PLANS 0 1 2 3

STATE OF CALIFORNIA
DEPARTMENT OF TRANSPORTATION

DIVISION OF ENGINEERING SERVICES
STRUCTURE DESIGN
DESIGN BRANCH 5

CU 10
EA 415701

BRIDGE NO. 39-0245L/R
POST MILE 9.35

MARIPOSA CREEK BRIDGE L/R
DECK CONTOURS (LEFT)

DISREGARD PRINTS BEARING EARLIER REVISION DATES

REVISION DATES: 04-04-08 04-25-08 06-10-08 07-11-08 07-24-08 08-22-08 01-28-09

SHEET 3 OF 14

STRUCTURES DESIGN DETAIL SHEET (ENGLISH) (REV. 10/25/05)

FILE => 39-0245lr-d-dc01.dgn

USERNAME => trlenard DATE PLOTTED => 11-OCT-2010 TIME PLOTTED => 13:18

DIST	COUNTY	ROUTE	POST MILES TOTAL PROJECT	SHEET No	TOTAL SHEETS
10	Mer	99	R4.6/R10.5	680	751

REGISTERED CIVIL ENGINEER 07-31-09 DATE

10-11-10
PLANS APPROVAL DATE

REGISTERED PROFESSIONAL ENGINEER G. SCHUSTER No. C 63897 Exp. 09-30-10 CIVIL STATE OF CALIFORNIA

The State of California or its officers or agents shall not be responsible for the accuracy or completeness of electronic copies of this plan sheet.

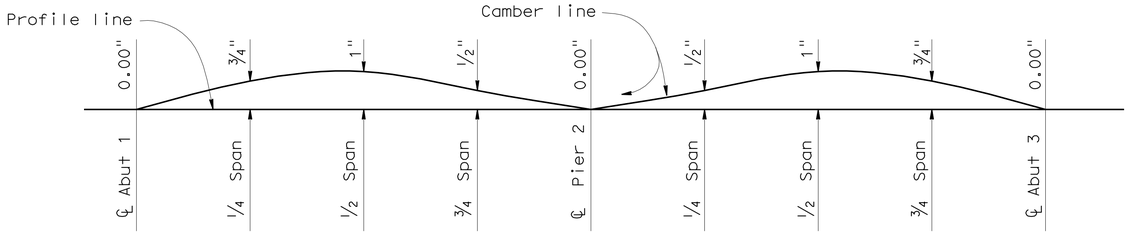

Note:
Does not include allowance for false work settlement.

CAMBER DIAGRAM

no scale

Notes:

X = 10′ interval along station line.

Contours do not include camber.

Contour interval = 0.1′

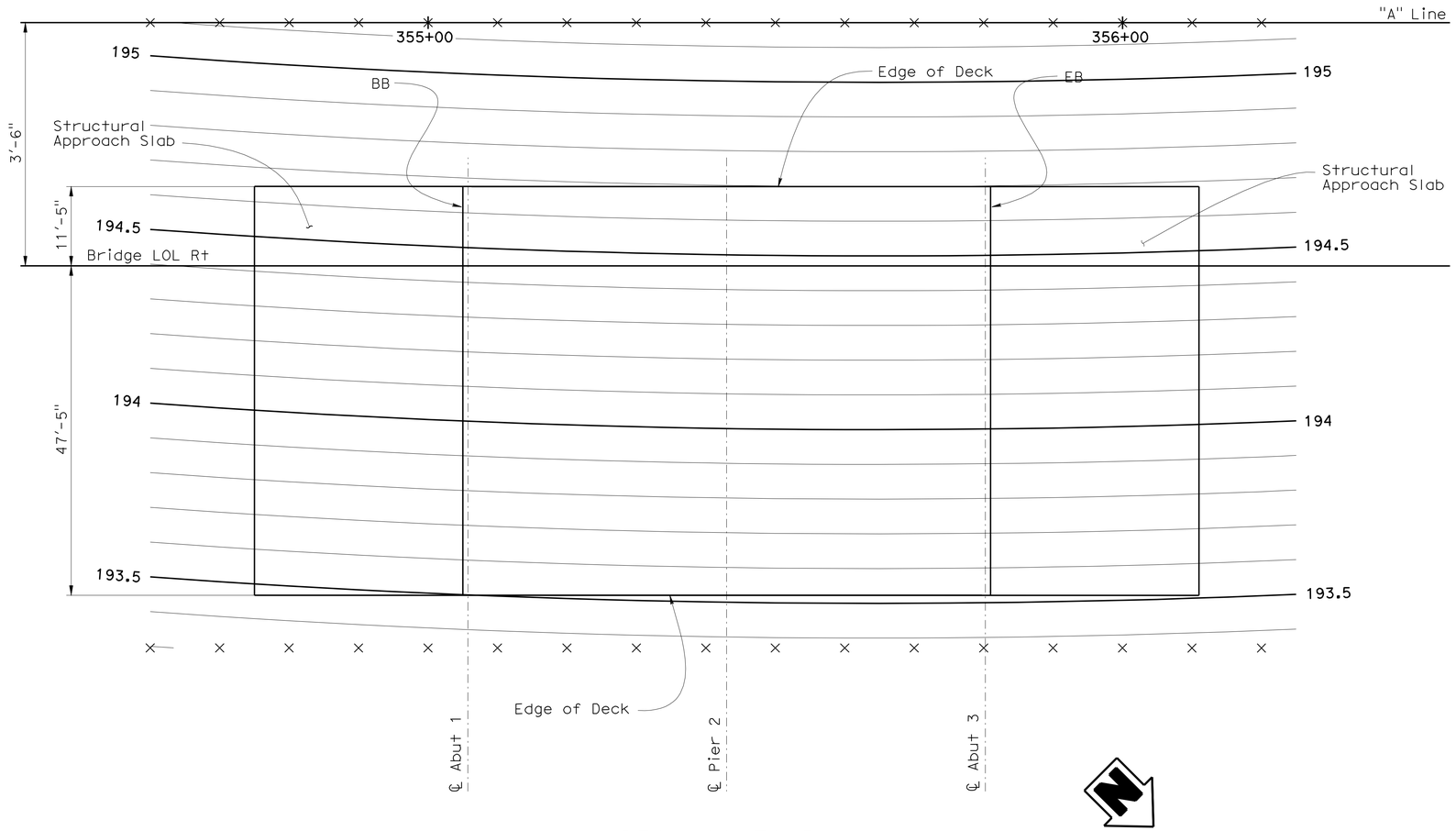

DECK CONTOURS

1" = 10′-0"

DESIGN	BY G. Schuster	CHECKED C. Siegenthaler	
DETAILS	BY G. M. Souza/S. Jiang	CHECKED C. Siegenthaler	
QUANTITIES	BY S. Jiang	CHECKED N. Terzis	

STATE OF CALIFORNIA
DEPARTMENT OF TRANSPORTATION

DIVISION OF ENGINEERING SERVICES
STRUCTURE DESIGN
DESIGN BRANCH 5

BRIDGE NO. 39-0245L/R
POST MILE 9.35

MARIPOSA CREEK BRIDGE L/R
DECK CONTOURS (RIGHT)

ORIGINAL SCALE IN INCHES FOR REDUCED PLANS 0 1 2 3

CU 10
EA 415701

DISREGARD PRINTS BEARING EARLIER REVISION DATES

REVISION DATES: 04-01-08 04-25-08 06-10-08 07-11-08 07-24-08 08-22-08 01-28-09

SHEET 4 OF 14

USERNAME => tfriehard DATE PLOTTED => 11-OCT-2010 TIME PLOTTED => 13:18

STRUCTURES DESIGN DETAIL SHEET (ENGLISH) (REV. 10/25/05)

FILE => 39-0245lr-d-dc02.dgn

DIST	COUNTY	ROUTE	POST MILES TOTAL PROJECT	SHEET No	TOTAL SHEETS
10	Mer	99	R4.6/R10.5	681	751

REGISTERED CIVIL ENGINEER 07-31-09 DATE

10-11-10
PLANS APPROVAL DATE

REGISTERED PROFESSIONAL ENGINEER G. SCHUSTER No. C 63897 Exp. 09-30-10 CIVIL STATE OF CALIFORNIA

The State of California or its officers or agents shall not be responsible for the accuracy or completeness of electronic copies of this plan sheet.

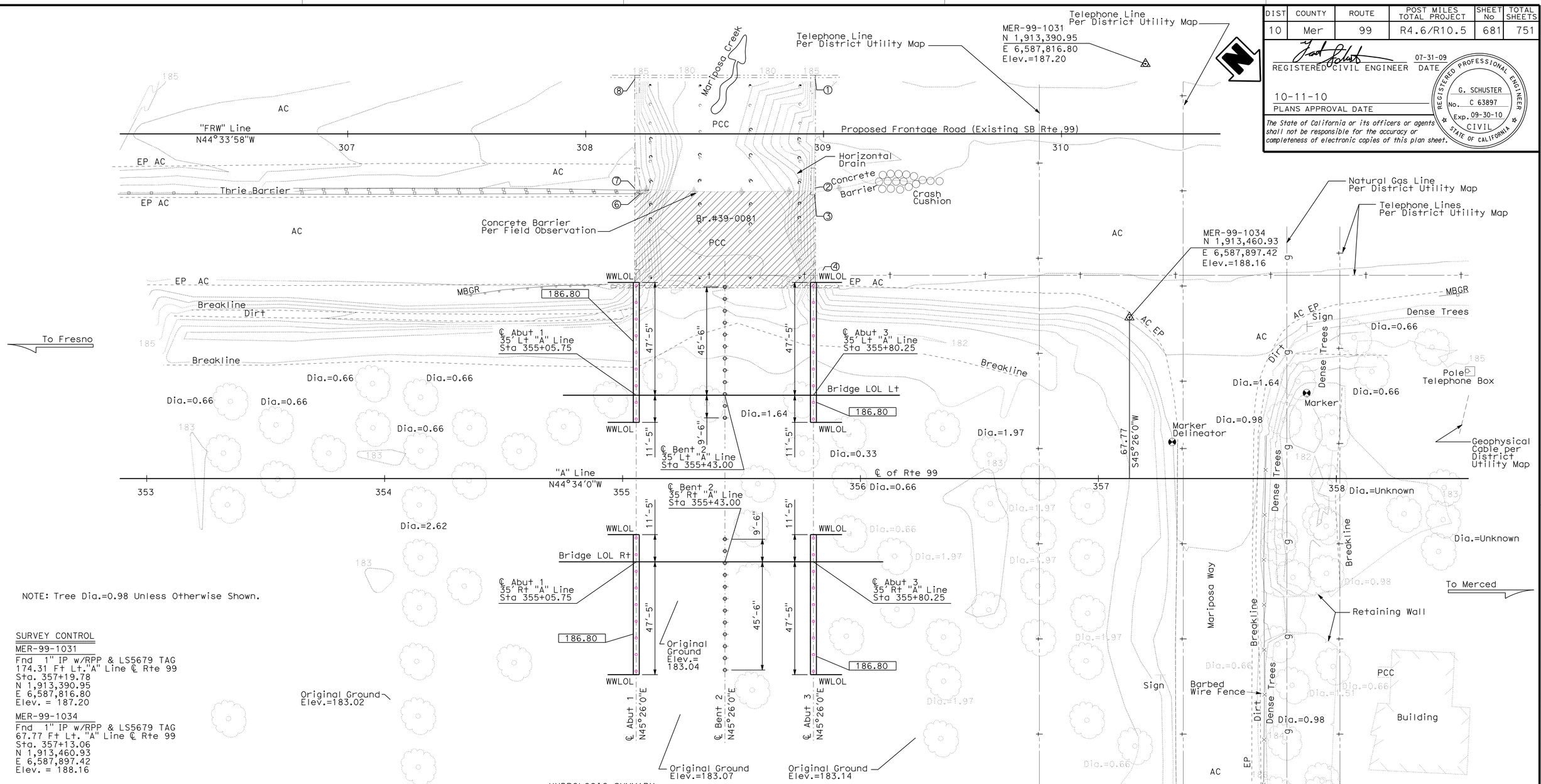

NOTE: Tree Dia.=0.98 Unless Otherwise Shown.

SURVEY CONTROL

MER-99-1031
Fnd 1" IP w/RPP & LS5679 TAG
174.31 Ft Lt."A" Line ℄ Rte 99
Sta. 357+19.78
N 1,913,390.95
E 6,587,816.80
Elev. = 187.20

MER-99-1034
Fnd 1" IP w/RPP & LS5679 TAG
67.77 Ft Lt. "A" Line ℄ Rte 99
Sta. 357+13.06
N 1,913,460.93
E 6,587,897.42
Elev. = 188.16

Bridge # 39-0081 Location

① - 23.23 Ft Lt. "FRW" Line Proposed Frontage Rd, Sta.308+96.50, Elev.=188.37 ±
② - 22.73 Ft Rt. "FRW" Line Proposed Frontage Rd, Sta.308+96.24, Elev.=189.45 ±
③ - 25.26 Ft Rt. "FRW" Line Proposed Frontage Rd, Sta.308+96.15, Elev.=189.51 ±
④ - 63.21 Ft Rt. "FRW" Line Proposed Frontage Rd, Sta.308+96.42, Elev.=189.09 ±
⑤ - 63.29 Ft Rt. "FRW" Line Proposed Frontage Rd, Sta.308+20.71, Elev.=189.05 ±
⑥ - 25.11 Ft Rt. "FRW" Line Proposed Frontage Rd, Sta.308+22.96, Elev.=189.41 ±
⑦ - 22.92 Ft Rt. "FRW" Line Proposed Frontage Rd, Sta.308+20.64, Elev.=189.34 ±
⑧ - 23.15 Ft Lt. "FRW" Line Proposed Frontage Rd, Sta.308+20.70, Elev.=188.26 ±

HYDROLOGIC SUMMARY

DRAINAGE AREA: 50 SQUARE MILES

	DESIGN FLOOD	BASE FLOOD
FREQUENCY (YEARS)	50	100
DISCHARGE (CFS)	1200	1900
WATER SURFACE ELEVATION		
RT STRUCTURE	206.2	208.6
LT STRUCTURE	206.1	208.6

Indicates Bridge Removal
Indicates bottom of footing elevation.
WWLOL are parallel to "A" Line

FLOOD PLAIN DATA ARE BASED UPON INFORMATION AVAILABLE WHEN THE PLANS WERE PREPARED AND ARE SHOWN TO MEET FEDERAL REQUIREMENTS. THE ACCURACY OF SAID INFORMATION IS NOT WARRANTED BY THE STATE AND INTERESTED OR AFFECTED PARTIES SHOULD MAKE THEIR OWN INVESTIGATIONS.

PRELIMINARY INVESTIGATION SECTION

SCALE	VERT.DATUM NGVD 29	PHOTOGRAMMETRY AS OF: X			
1"=20'	HORZ.DATUM NAD 83 (1991.35)	SURVEYED	BY District	CHECKED	BY J.Pallares 12/2007
ALIGNMENT TIES Dist. Traverse Sheet		DRAFTED	BY T.Marchenko 12/2007	CHECKED	BY T.Zolnikova 12/2007

DESIGN	BY G. Schuster	CHECKED C. Siegenthaler	
DETAILS	BY G. M. Souza/S. Jiang/T.C.	CHECKED C. Siegenthaler	
QUANTITIES	BY S. Jiang	CHECKED N. Terzis	

STATE OF CALIFORNIA
DEPARTMENT OF TRANSPORTATION

DIVISION OF ENGINEERING SERVICES
STRUCTURE DESIGN
DESIGN BRANCH 5

CU 10
EA 415701

BRIDGE NO. 39-0245L/R
POST MILE 9.35

MARIPOSA CREEK BRIDGE L/R
FOUNDATION PLAN

STRUCTURES FOUNDATION PLAN SHEET (ENGLISH) (REV. 10/25/05)

ORIGINAL SCALE IN INCHES FOR REDUCED PLANS 0 1 2 3

DISREGARD PRINTS BEARING EARLIER REVISION DATES

REVISION DATES: 03-26-08 04-21-08 06-13-08 08-21-08 08-28-08 10-13-08 12-11-08 01-28-09 02-09-09 09-16-09

SHEET 5 OF 14

FILE => 39-0245lr-e-fp.dgn

USERNAME => trlenard DATE PLOTTED => 11-OCT-2010 TIME PLOTTED => 13:33

DIST	COUNTY	ROUTE	POST MILES TOTAL PROJECT	SHEET No	TOTAL SHEETS
10	Mer	99	R4.6/R10.5	682	751

REGISTERED CIVIL ENGINEER 07-31-09 DATE

10-11-10
PLANS APPROVAL DATE

The State of California or its officers or agents shall not be responsible for the accuracy or completeness of electronic copies of this plan sheet.

REGISTERED PROFESSIONAL ENGINEER G. SCHUSTER No. C 63897 Exp. 09-30-10 CIVIL STATE OF CALIFORNIA

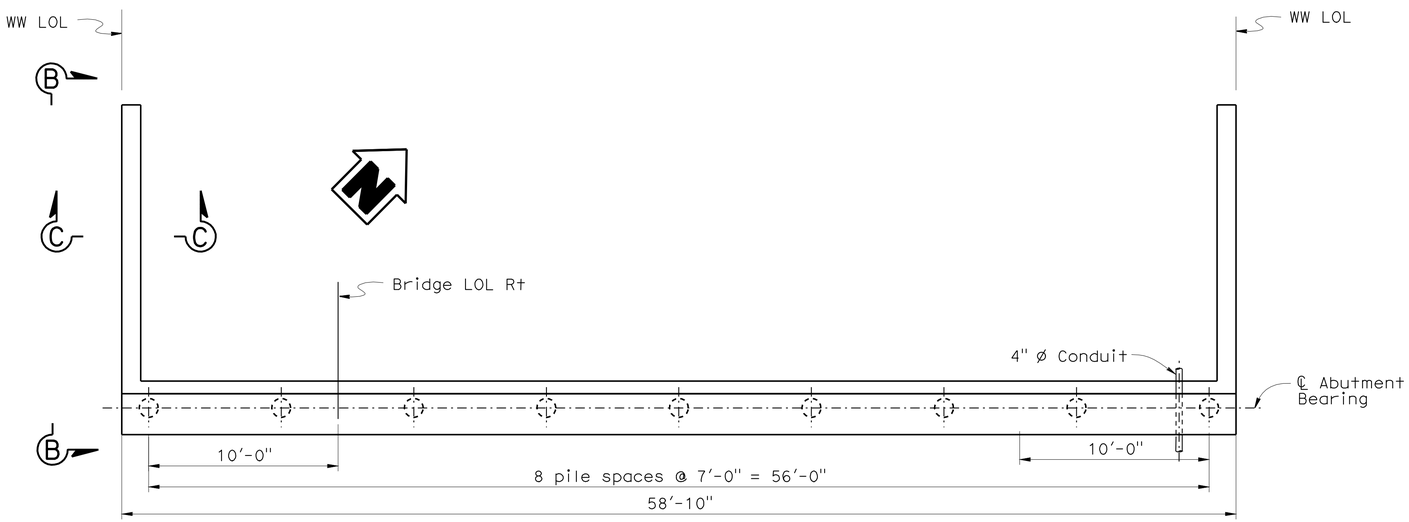

PLAN
1/4" =1'-0"

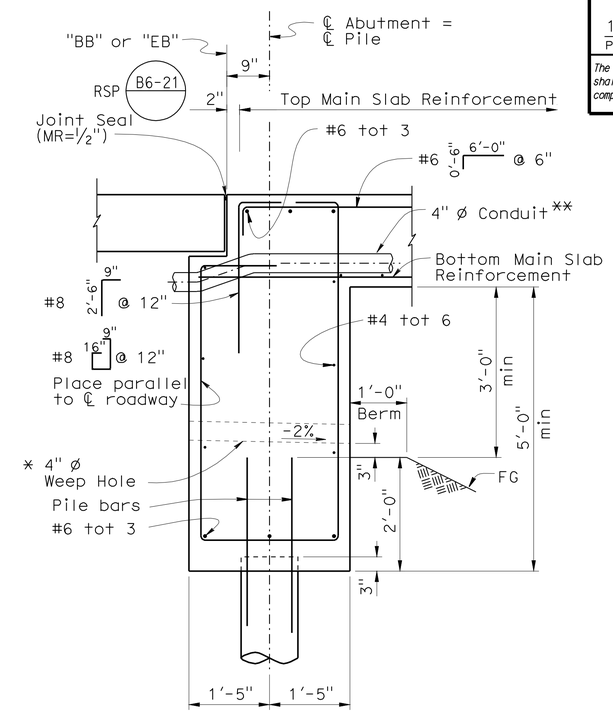

SECTION A-A
3/4" =1'-0"

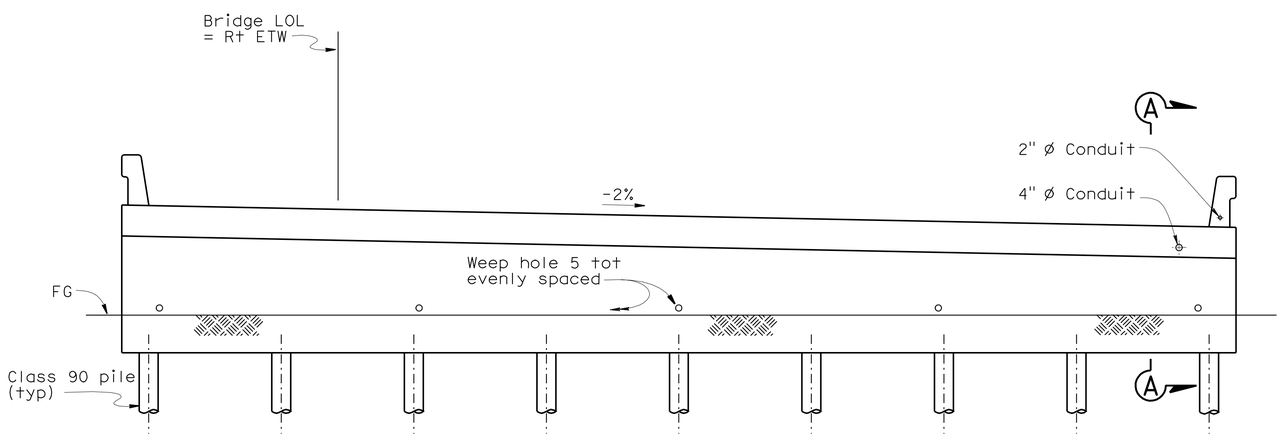

ELEVATION
1/4" =1'-0"

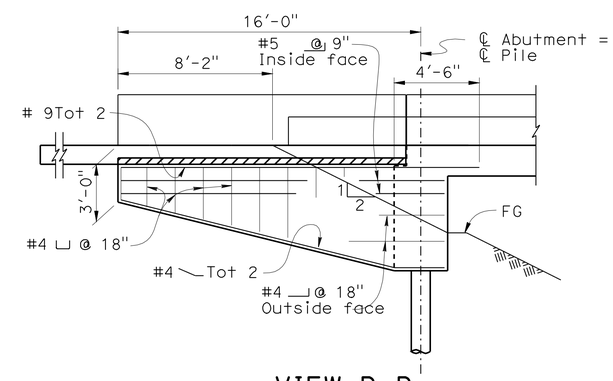

VIEW B-B
1/4" =1'-0"

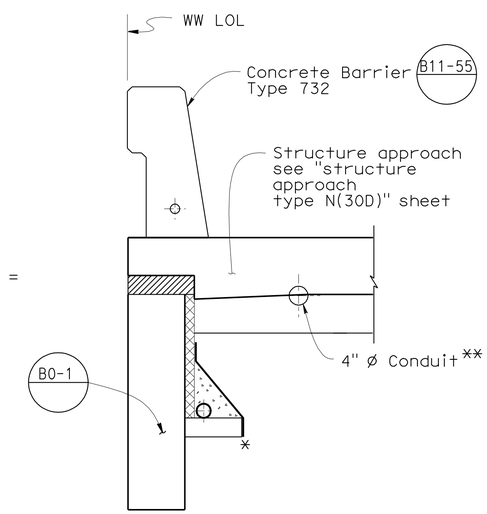

SECTION C-C
3/4" =1'-0"

ABUTMENT 3 RIGHT

Abutment 1 Lt, 3 Lt, 1 Rt similar

For drainage details see "Structure Approach Drainage Details" sheet

Notes:

* See "Structure Approach Drainage Details" sheet

** Place 4" ø Communication conduit in Right Abutment only

	BY	CHECKED
DESIGN	G. Schuster	C. Siegenthaler
DETAILS	S. Jiang\A.C.\G.M.S	C. Siegenthaler
QUANTITIES	S. Jiang	N. Terzis

ORIGINAL SCALE IN INCHES FOR REDUCED PLANS 0 1 2 3

STATE OF CALIFORNIA DEPARTMENT OF TRANSPORTATION

DIVISION OF ENGINEERING SERVICES STRUCTURE DESIGN
DESIGN BRANCH 5

CU 10
EA 415701

BRIDGE NO. 39-0245L/R
POST MILE 9.35

MARIPOSA CREEK BRIDGE L/R
ABUTMENT LAYOUT

DISREGARD PRINTS BEARING EARLIER REVISION DATES

REVISION DATES: 02-24-08 11-13-08 12-11-08 01-28-09 2-11-09 07-11-09 7-29-09 8-06-09 10-12-09

SHEET 6 OF 14

STRUCTURES DESIGN DETAIL SHEET (ENGLISH) (REV. 10/25/05)

FILE => 39-0245lr-f-abutlyt.dgn

USERNAME => trlenard DATE PLOTTED => 11-OCT-2010 TIME PLOTTED => 13:33

DIST	COUNTY	ROUTE	POST MILES TOTAL PROJECT	SHEET No	TOTAL SHEETS
10	Mer	99	R4.6/R10.5	683	751

REGISTERED CIVIL ENGINEER 07-31-09 DATE

10-11-10
PLANS APPROVAL DATE

REGISTERED PROFESSIONAL ENGINEER G. SCHUSTER No. C 63897 Exp. 09-30-10 CIVIL STATE OF CALIFORNIA

The State of California or its officers or agents shall not be responsible for the accuracy or completeness of electronic copies of this plan sheet.

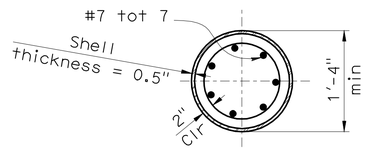

SECTION B-B
1" = 1'-0"

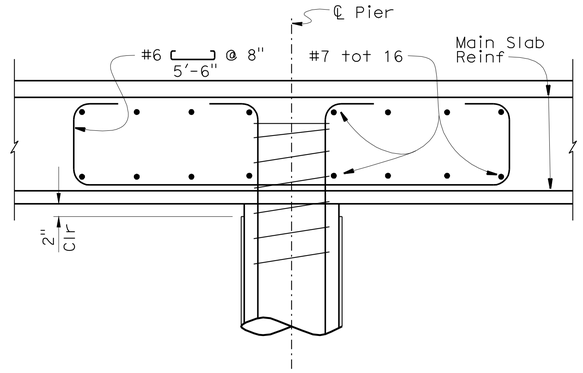

DETAIL "A"
1" = 1'-0"

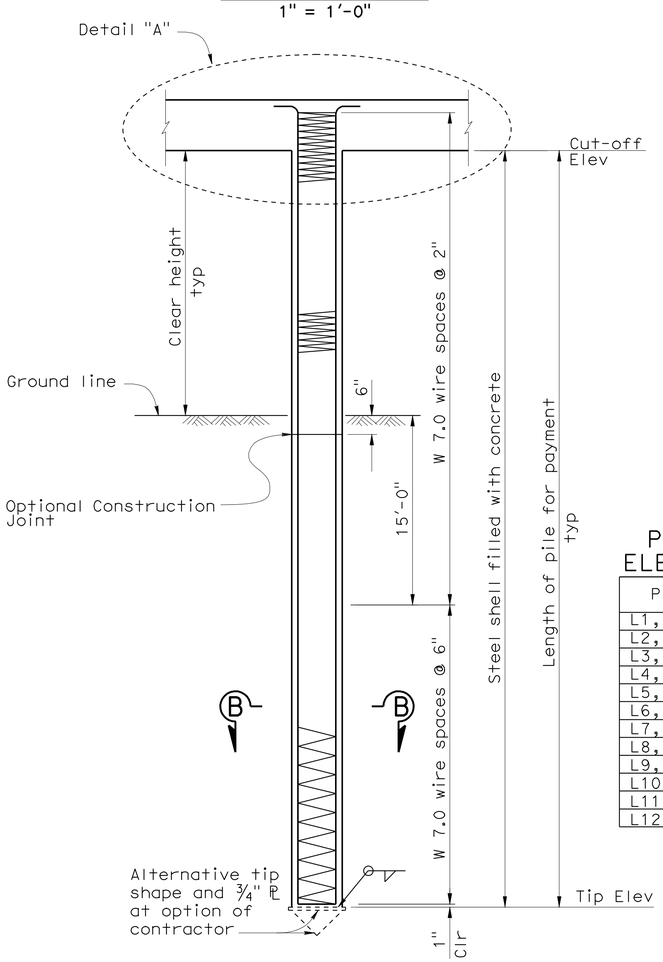

CAST-IN-STEEL SHELL CONCRETE PILE

SECTION A-A
½" = 1'-0"

PILE CUT-OFF ELEVATION TABLE

Pile	Cut-off Elevation (ft)
L1, R12	191.94
L2, R11	192.04
L3, R10	192.14
L4, R9	192.24
L5, R8	192.34
L6, R7	192.44
L7, R6	192.54
L8, R5	192.64
L9, R4	192.74
L10, R3	192.84
L11, R2	192.94
L12, R1	193.04

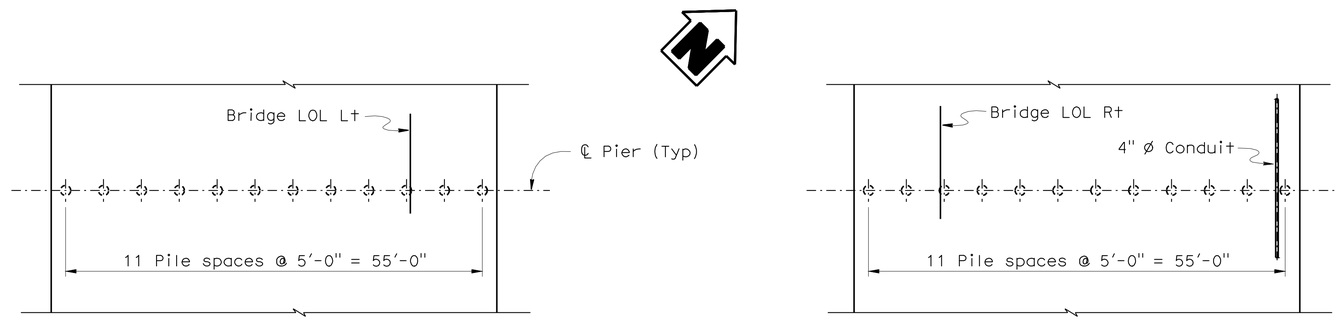

PLAN
1" = 10'-0"

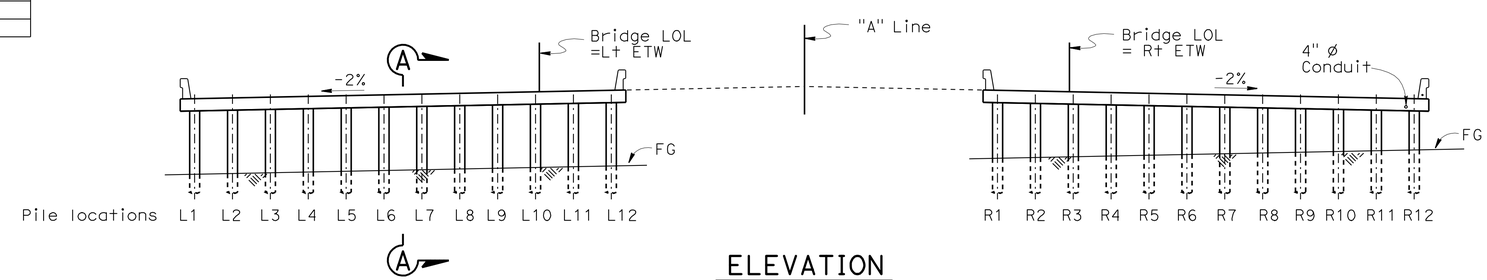

ELEVATION
1" = 10'-0"

DESIGN	BY G. Schuster	CHECKED C. Siegenthaler	
DETAILS	BY S. Jiang\G. M. Souza/T.C.	CHECKED C. Siegenthaler	
QUANTITIES	BY S. Jiang	CHECKED N. Terzis	

ORIGINAL SCALE IN INCHES FOR REDUCED PLANS 0 1 2 3

STATE OF CALIFORNIA DEPARTMENT OF TRANSPORTATION

DIVISION OF ENGINEERING SERVICES STRUCTURE DESIGN DESIGN BRANCH 5

BRIDGE NO. 39-0245L/R
POST MILE 9.35

MARIPOSA CREEK BRIDGE L/R
PIER DETAILS

CU 10
EA 415701

DISREGARD PRINTS BEARING EARLIER REVISION DATES

REVISION DATES: 03-19-08 2-19-09 02-26-09 04-02-09 09-05-08 11-13-08 12-22-08 01-28-09 02-04-09

SHEET 7 OF 14

USERNAME => trienord DATE PLOTTED => 11-OCT-2010 TIME PLOTTED => 13:33

STRUCTURES DESIGN DETAIL SHEET (ENGLISH) (REV. 10/25/05)

FILE => 39-0245lr-1-pierdt.dgn

DIST	COUNTY	ROUTE	POST MILES TOTAL PROJECT	SHEET No	TOTAL SHEETS
10	Mer	99	R4.6/R10.5	684	751

REGISTERED CIVIL ENGINEER 07-31-09 DATE

10-11-10
PLANS APPROVAL DATE

REGISTERED PROFESSIONAL ENGINEER G. SCHUSTER No. C 63897 Exp. 09-30-10 CIVIL STATE OF CALIFORNIA

The State of California or its officers or agents shall not be responsible for the accuracy or completeness of electronic copies of this plan sheet.

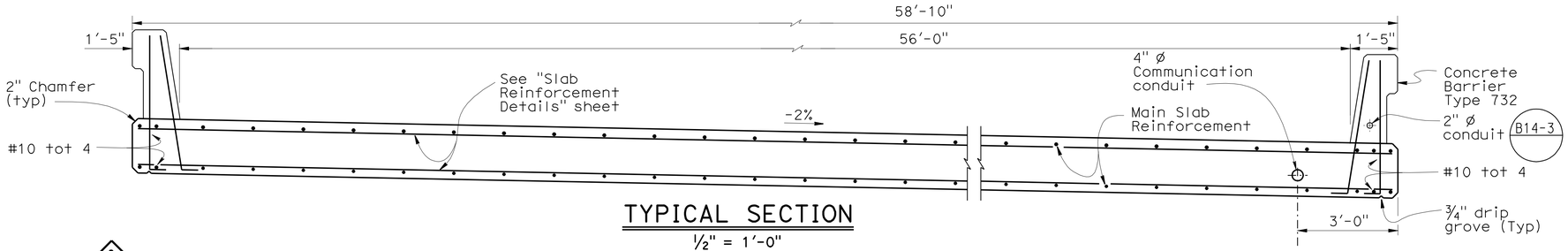

TYPICAL SECTION

1/2" = 1'-0"

Right structure shown, Left structure similar

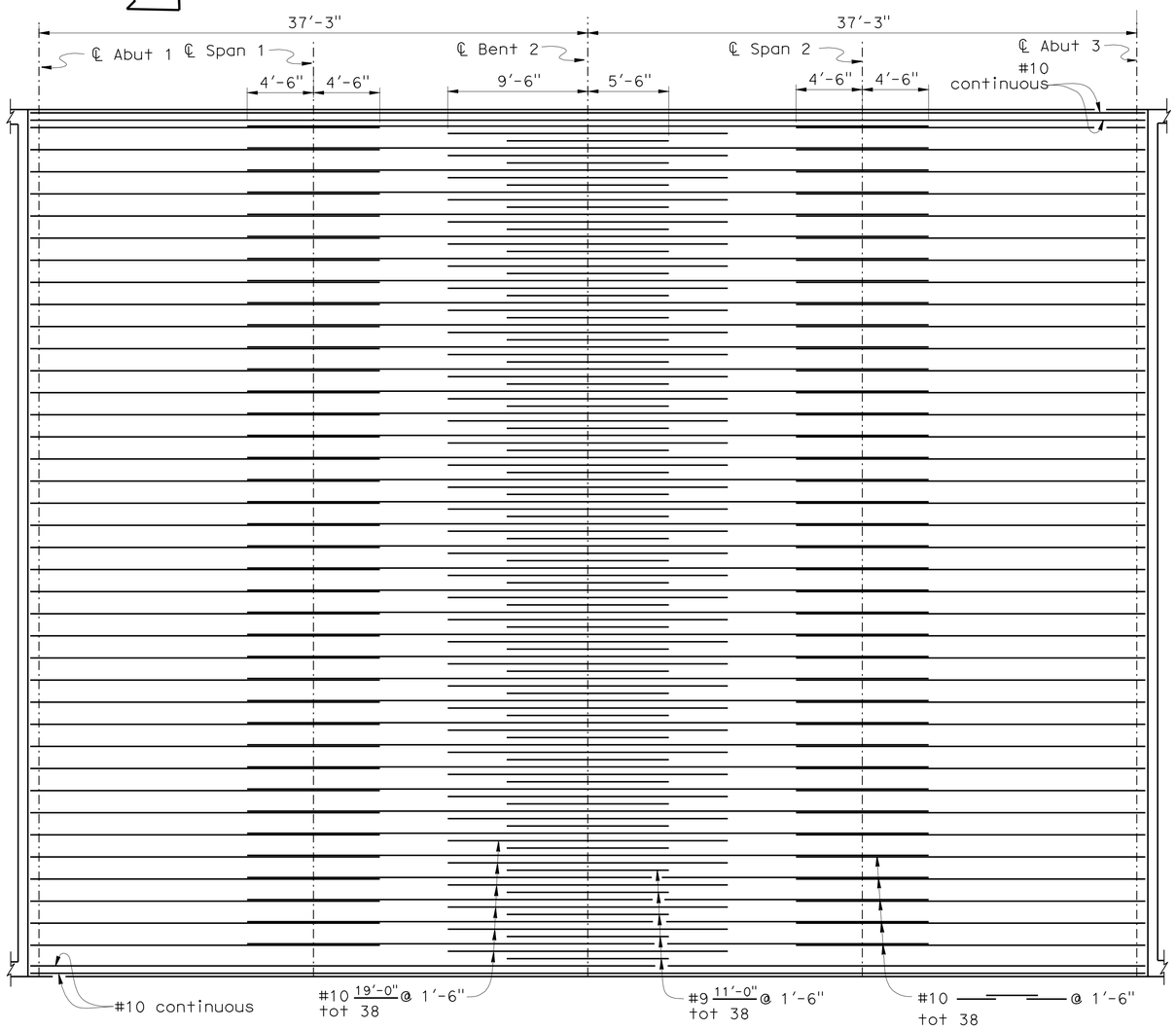

TOP SLAB REINFORCEMENT

1" = 5'-0"

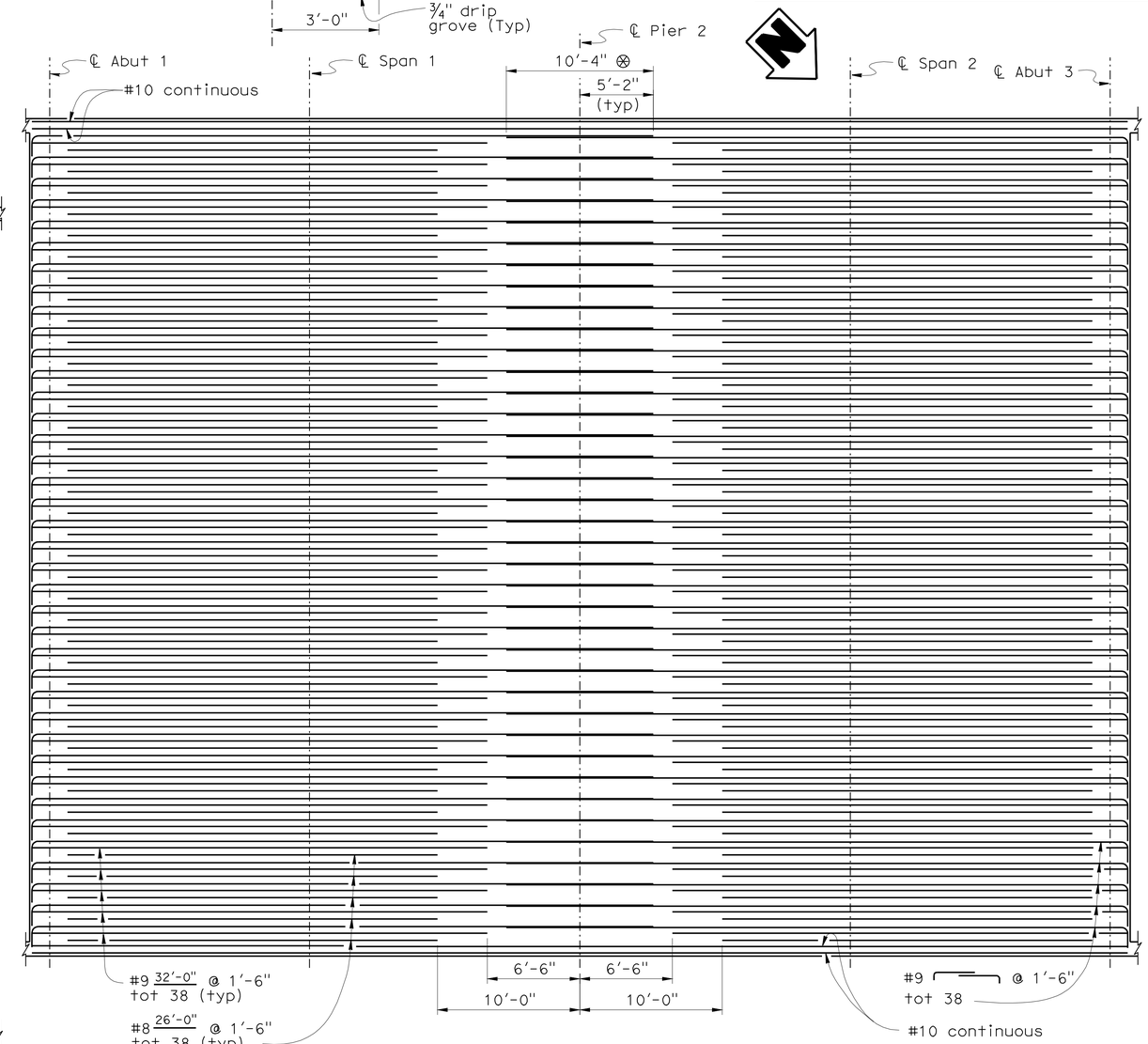

BOTTOM SLAB REINFORCEMENT

1" = 5'-0"

⊗ Minimum length, splice may be longer

DESIGN	BY G. Schuster	CHECKED C. Siegenthaler	
DETAILS	BY S. Jiang/G. M. Souza	CHECKED C. Siegenthaler	
QUANTITIES	BY S. Jiang	CHECKED N. Terzis	

ORIGINAL SCALE IN INCHES FOR REDUCED PLANS 0 1 2 3

STATE OF CALIFORNIA DEPARTMENT OF TRANSPORTATION

DIVISION OF ENGINEERING SERVICES STRUCTURE DESIGN DESIGN BRANCH 5

CU 10
EA 415701

BRIDGE NO. 39-0245L/R
POST MILE 9.35

MARIPOSA CREEK BRIDGE L/R
TYPICAL SECTION

DISREGARD PRINTS BEARING EARLIER REVISION DATES

REVISION DATES: 03-03-08, 03-12-08, 05-08-08, 07-11-08, 07-22-08, 09-05-08, 12-22-08

SHEET 8 OF 14

USERNAME => ttrenord DATE PLOTTED => 11-OCT-2010 TIME PLOTTED => 13:33

STRUCTURES DESIGN DETAIL SHEET (ENGLISH) (REV. 10/25/05)

FILE => 39-0245lr-k-ts.dgn

DIST	COUNTY	ROUTE	POST MILES TOTAL PROJECT	SHEET No	TOTAL SHEETS
10	Mer	99	R4.6/R10.5	685	751

REGISTERED CIVIL ENGINEER 07-31-09 DATE

10-11-10
PLANS APPROVAL DATE

REGISTERED PROFESSIONAL ENGINEER G. SCHUSTER No. C 63897 Exp. 09-30-10 CIVIL STATE OF CALIFORNIA

The State of California or its officers or agents shall not be responsible for the accuracy or completeness of electronic copies of this plan sheet.

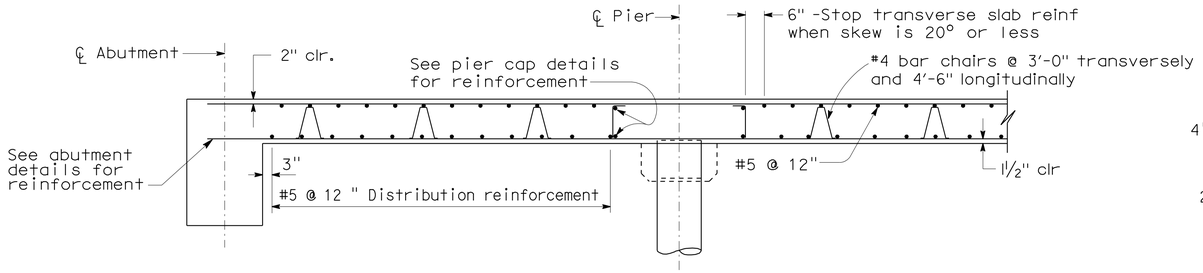

LONGITUDINAL SECTION

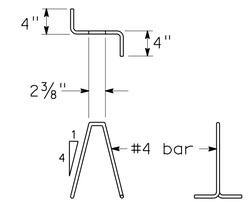

BAR CHAIR DETAIL

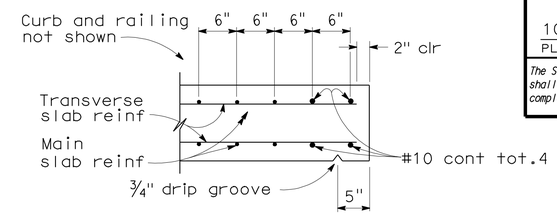

EDGE OF SLAB DETAILS

BAR SPLICE LENGTH (Inch)								
Bar size	#4	#5	#6	#7	#8	#9	#10	#11
All bars, except top bars in spans over 23'	23	28	34	39	45	68	76	85
Top bars in spans over 23'	23	28	34	53	60	77	97	120

REINFORCEMENT NOTES:

Splices in top main bars to be located near center of span.
Splices in bottom main bars to be located near pier.
Spacing of all transverse bars is measured along ℄ roadway.
Skew 0° to 20°: Place all transverse bars parallel to pier.
Skew over 20°: Place transverse slab bars perpendicular to ℄ bridge. See details at right and below.

GENERAL NOTES
LOAD AND RESISTANCE FACTOR DESIGN

DESIGN: AASHTO LRFD Bridge Design Specifications, Third Edition with 2005 & 2006 Interim Revisions and Caltrans Amendments 03.06.01

DEAD LOAD: Includes 35 Psf for future wearing surface.

LIVE LOADING: HL93 Alternative loading and "Low-Boy" permit design vehicle

REINFORCED CONCRETE: f_y = 60 ksi
f'_c = 3.6 ksi
n = 8

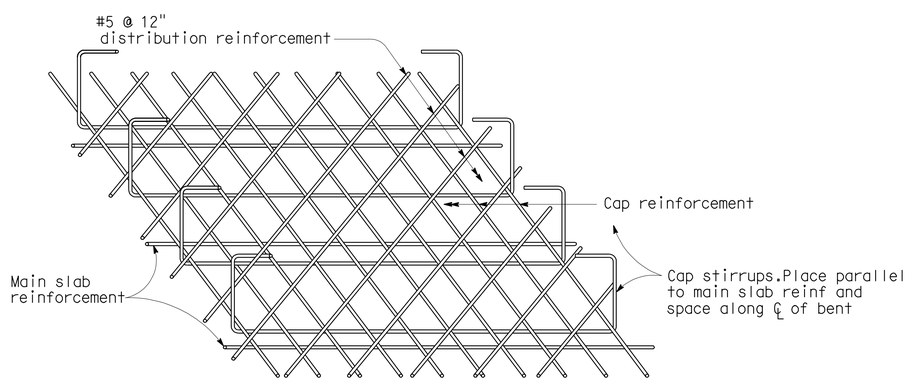

FLUSH CAP

BOTTOM SLAB REINFORCEMENT AT PIER

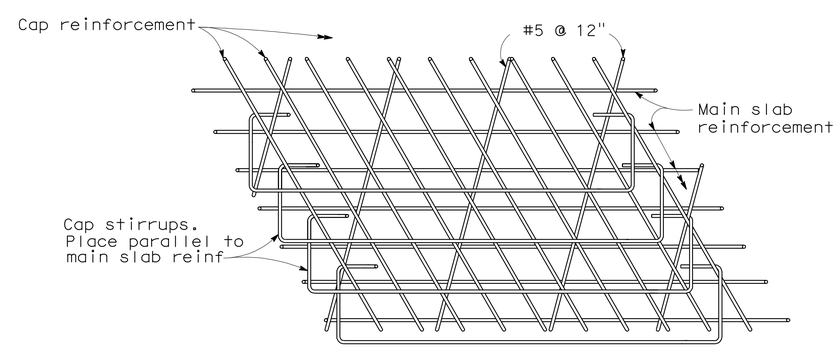

TOP SLAB REINFORCEMENT AT PIER

Note: View for main span over 23'.
Bar placement similar for spans under 23'.

SPECIAL DETAILS
NO SCALE

	BY	CHECKED
DESIGN	G. Schuster	C. Siegenthaler
DETAILS	S. Jiang/T.C.	C. Siegenthaler
QUANTITIES	S. Jiang	N. Terzis

ORIGINAL SCALE IN INCHES FOR REDUCED PLANS 0 1 2 3

STATE OF CALIFORNIA
DEPARTMENT OF TRANSPORTATION

DIVISION OF ENGINEERING SERVICES
STRUCTURE DESIGN
DESIGN BRANCH 5

CU 10
EA 415701

BRIDGE NO. 39-0245L/R
POST MILE 9.35

MARIPOSA CREEK BRIDGE L/R
SLAB REINFORCEMENT DETAILS

DISREGARD PRINTS BEARING EARLIER REVISION DATES

REVISION DATES: 06-16-08 06-24-08 10-15-08 01-28-09 02-25-09

SHEET 9 OF 14

FILE => 39-0245lr-o-slab-rfdt.dgn

USERNAME => trienard DATE PLOTTED => 11-OCT-2010 TIME PLOTTED => 13:34

STRUCTURES DESIGN DETAIL SHEET (ENGLISH) (REV. 10/25/05)

DIST	COUNTY	ROUTE	POST MILES TOTAL PROJECT	SHEET No	TOTAL SHEETS
10	Mer	99	R4.6/R10.5	686	751

REGISTERED CIVIL ENGINEER 07-31-09 DATE

10-11-10
PLANS APPROVAL DATE

REGISTERED PROFESSIONAL ENGINEER G. SCHUSTER No. C 63897 Exp. 09-30-10 CIVIL STATE OF CALIFORNIA

The State of California or its officers or agents shall not be responsible for the accuracy or completeness of electronic copies of this plan sheet.

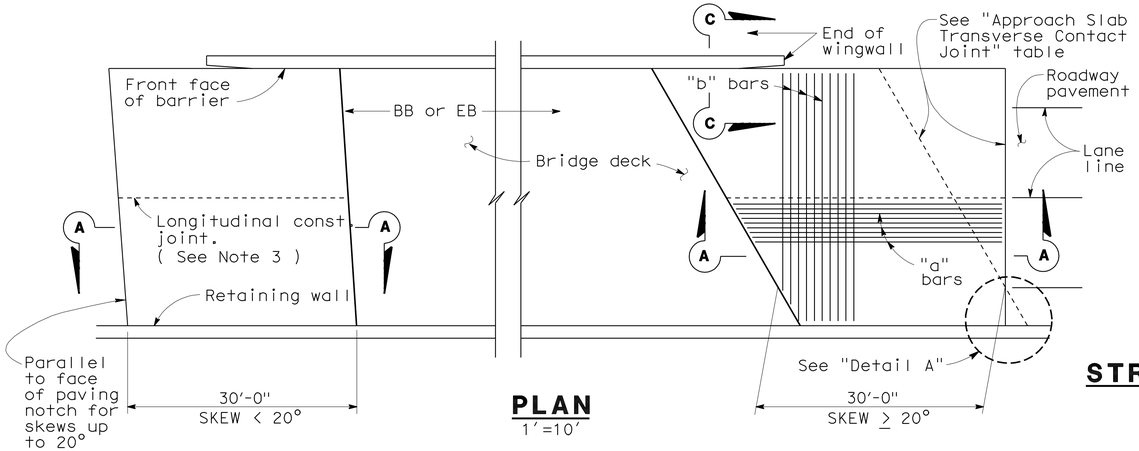

PLAN
1'=10'

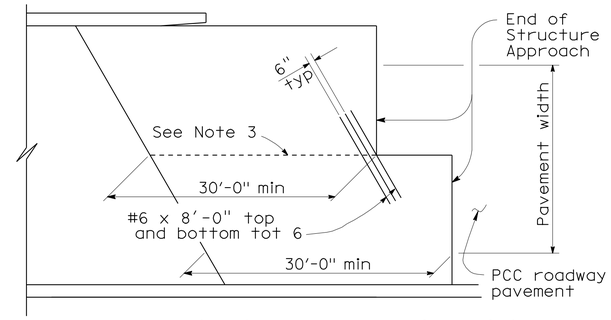

STRUCTURE APPROACH - END STAGGER DETAIL
No Scale

APPROACH SLAB TRANSVERSE CONTACT JOINT		
APPROACH SKEW	WITH AC ROADWAY PAVEMENT	WITH PCC ROADWAY PAVEMENT
< 20°	Parallel to face of paving notch	Parallel to face of paving notch
20°- 45°	Parallel to face of P N use (Detail A)	Stagger lines 24' to 36' apart
> 45°	Parallel to face of P N use (Detail A)	Stagger at each lane line

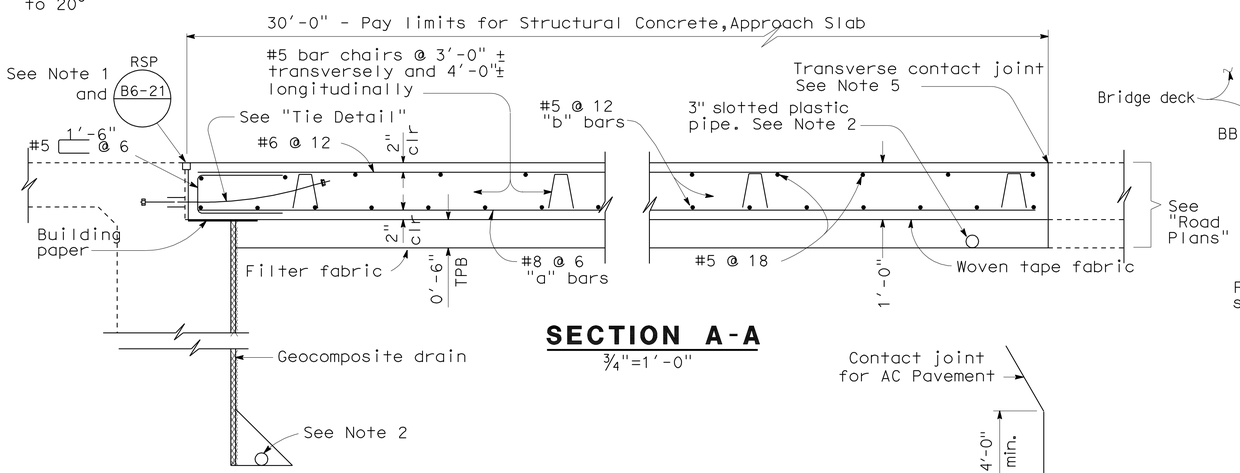

SECTION A-A
¾"=1'-0"

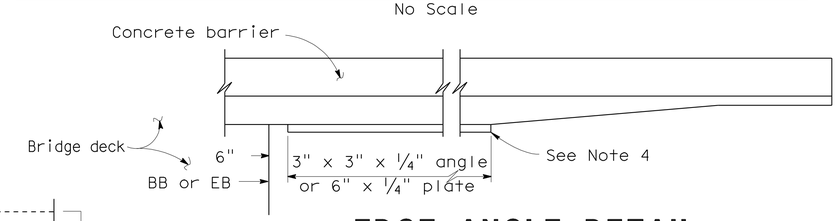

EDGE ANGLE DETAIL
½"=1'-0"

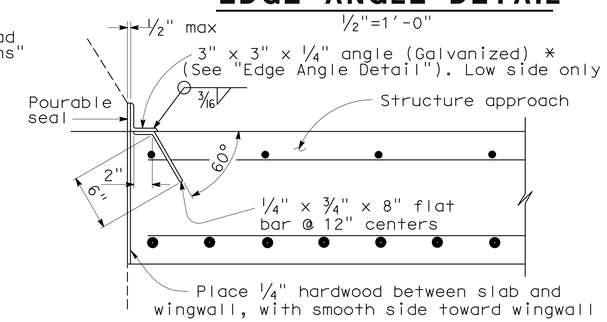

*(TO BE USED WITH TYPE 25 OR TYPE 27 CONCRETE BARRIER)

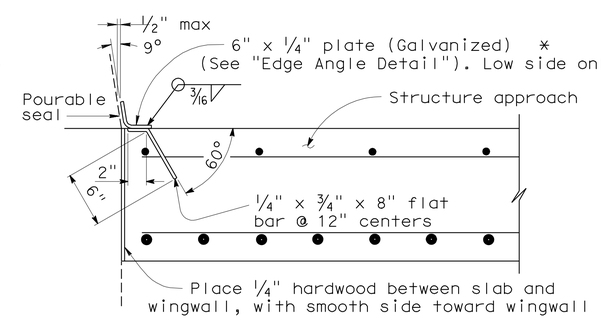

*(TO BE USED WITH TYPE 732 OR TYPE 736 CONCRETE BARRIER)

DETAIL B
1½"=1'-0"

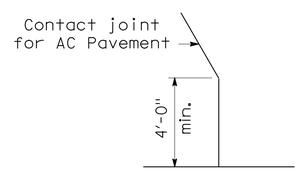

DETAIL A
No Scale

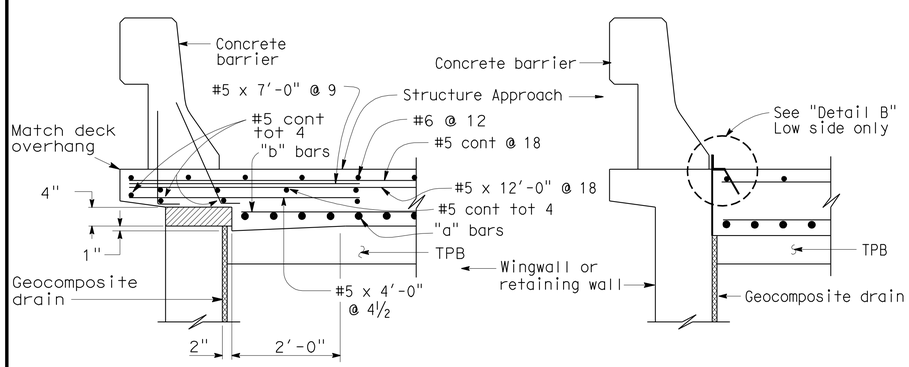

TYPE E-1 TYPE E-2

SECTION C-C
¾"=1'-0"

(Type E-1 to be used, unless otherwise shown on plans)

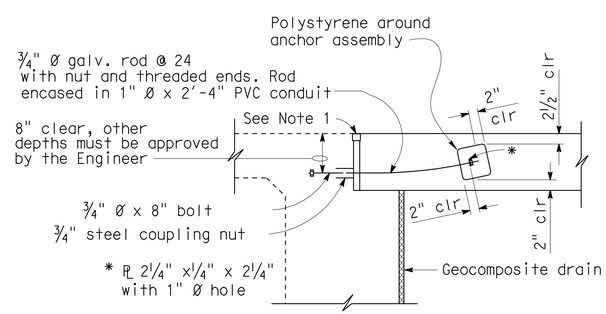

TIE DETAIL
¾"=1'-0"

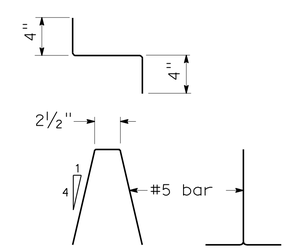

BAR CHAIR DETAIL
1½"=1'-0"

NOTES:

1. For details not noted or shown, see Structure Plans.
2. For drainage details, see "Structure Approach Drainage Details" sheet.
3. Longitudinal construction joints, when permitted by the Engineer, shall be located on lane lines.
4. End angle or plate at beginning of barrier transition, end of wingwall or end of structure approach, as applicable.
5. For transverse contact joint with new PCC paving, refer to Standard Plan P10.
6. At the contractor's option, approach slab transverse reinforcement may be placed parallel to paving notch. Spacing of transverse reinforcement is measured along ℄ roadway.

Polystyrene to be removed.

STANDARD DRAWING							
FILE NO. xs3-180e	APPROVED BY M. Ha (RESPONSIBLE TECHNICAL SPECIALIST)	RELEASED BY O. Alcantara (RESPONSIBLE OFFICE CHIEF)	DESIGN	BY G. Schuster	CHECKED C. Siegenthaler	STATE OF CALIFORNIA DEPARTMENT OF TRANSPORTATION	DIVISION OF ENGINEERING SERVICES STRUCTURE DESIGN DESIGN BRANCH 5
	APPROVAL DATE 8-12-08	RELEASE DATE 8-12-08	DETAILS	BY	CHECKED C. Siegenthaler		
			QUANTITIES	BY S. Jiang	CHECKED N. Terzis		

BRIDGE NO. 39-0245L/R
POST MILE 9.35

MARIPOSA CREEK BRIDGE L/R
STRUCTURE APPROACH TYPE N(30D)

CU 10
EA 415701

DS OSD 2147A (ENGLISH STANDARD DRAWING "XS" BORDER REV. 01/11/08)

ORIGINAL SCALE IN INCHES FOR REDUCED PLANS 0 1 2 3

DISREGARD PRINTS BEARING EARLIER REVISION DATES 7-16-09 7-29-09

REVISION DATES

SHEET 10 OF 14

STRUCTURES DESIGN DETAIL SHEET (ENGLISH) (REV. 10/25/05)

FILE => 39-0245lr-s-sap30s.dgn

USERNAME => trlenard DATE PLOTTED => 11-OCT-2010 TIME PLOTTED => 13:34

DIST	COUNTY	ROUTE	POST MILES TOTAL PROJECT	SHEET No	TOTAL SHEETS
10	Mer	99	R4.6/R10.5	687	751

REGISTERED CIVIL ENGINEER 07-31-09 DATE

10-11-10
PLANS APPROVAL DATE

REGISTERED PROFESSIONAL ENGINEER G. SCHUSTER No. C 63897 Exp. 09-30-10 CIVIL STATE OF CALIFORNIA

The State of California or its officers or agents shall not be responsible for the accuracy or completeness of electronic copies of this plan sheet.

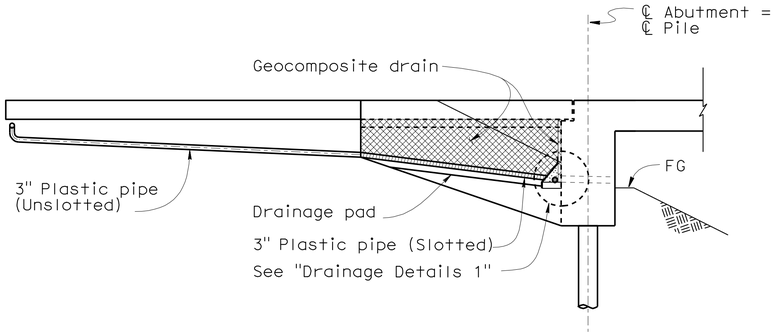

CANTILEVER WINGWALL

SECTION F-F
1/4" =1'-0"

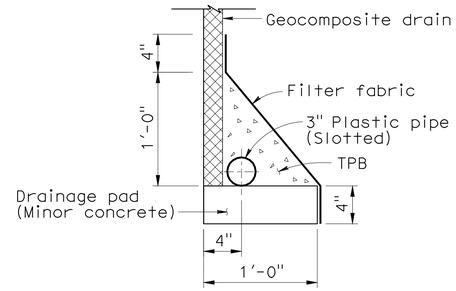

WITHOUT FOOTING

DRAINAGE DETAIL 1
1 1/2" =1'-0"

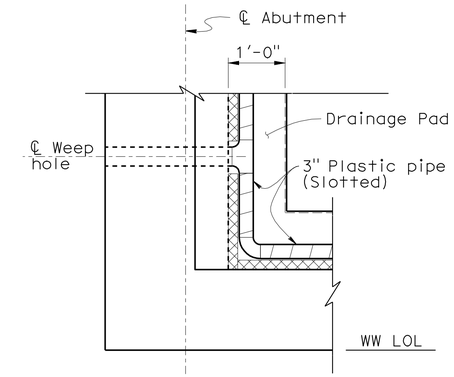

DRAINAGE DETAIL 2
3/4" =1'-0"

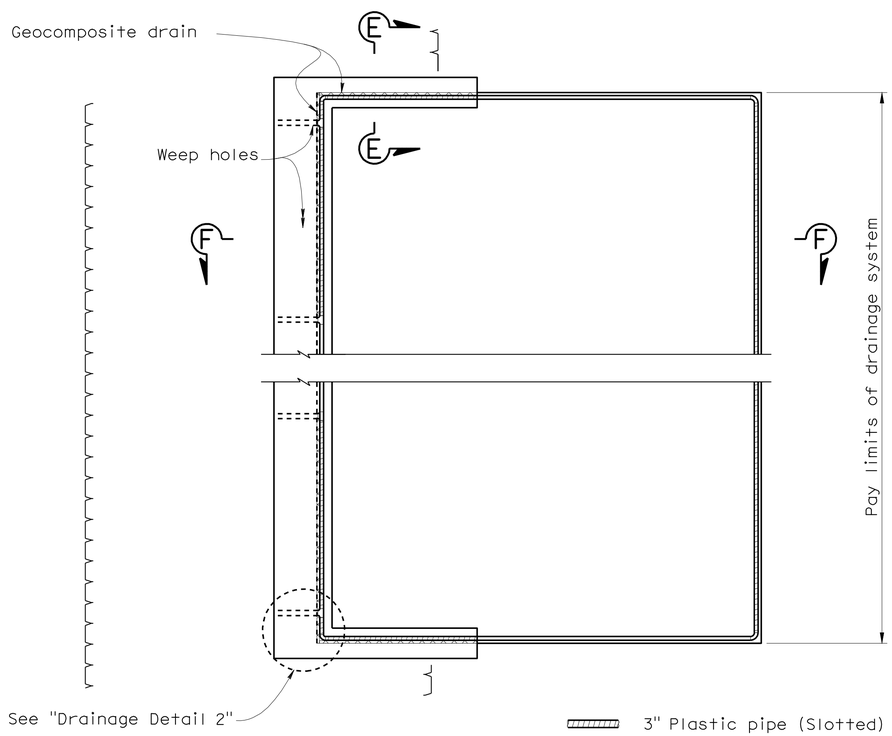

TYPICAL PLAN
1"=5'-0"

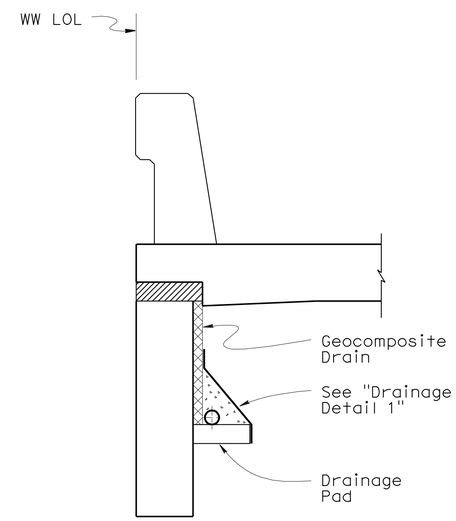

SECTION E-E
3/4" =1'-0"

DESIGN	BY G. Schuster	CHECKED C. Siegenthaler	
DETAILS	BY A. Chen/S. Jiang	CHECKED C. Siegenthaler	
QUANTITIES	BY S. Jiang	CHECKED N. Terzis	

STATE OF CALIFORNIA DEPARTMENT OF TRANSPORTATION

DIVISION OF ENGINEERING SERVICES STRUCTURE DESIGN DESIGN BRANCH 5

BRIDGE NO. 39-0245L/R
POST MILE 9.35

MARIPOSA CREEK BRIDGE L/R
STRUCTURE APPROACH DRAINAGE DETAILS

ORIGINAL SCALE IN INCHES FOR REDUCED PLANS 0 1 2 3

CU 10
EA 415701

DISREGARD PRINTS BEARING EARLIER REVISION DATES → 6-11-08 7-11-08 8-07-08

REVISION DATES

SHEET 11 OF 14

STRUCTURES DESIGN DETAIL SHEET (ENGLISH) (REV. 10/25/05)

FILE => 39-0245lr-s-sapdd.dgn

USERNAME => trlenard DATE PLOTTED => 11-OCT-2010 TIME PLOTTED => 13:34

DIST	COUNTY	ROUTE	POST MILES TOTAL PROJECT	SHEET No	TOTAL SHEETS
10	Mer	99	R4.6/R10.5	688	751

CERTIFIED ENGINEERING GEOLOGIST 4-29-09

10-11-10
PLANS APPROVAL DATE

The State of California or its officers or agents shall not be responsible for the accuracy or completeness of electronic copies of this plan sheet.

PROFESSIONAL GEOLOGIST Xing Zheng No. 2130 Exp. 3-31-11 CERTIFIED ENGINEERING GEOLOGIST STATE OF CALIFORNIA

This LOTB sheet was prepared in accordance with the Caltrans Soil & Rock Logging, Classification, & Presentation Manual (June 2007).

BENCH MARK

SURVEY CONTROL

MER-99-1031

Fnd 1" IP w/RPP & LS5679 TAG
174.31' Lt"A" Line ℄ Rte 99
Sta 357+19.74
N 1,913,390.95
E 6,587,816.85
Elev = 187.20

MER-99-1034

Fnd 1" IP w/RPP & LS5679 Tag
67.77' Rt"A" LIne ℄ Rte 99
Sta 357+13.06
N 1,913,460.93
E 6,587,897.42
Elev = 188.16
NGVD 29

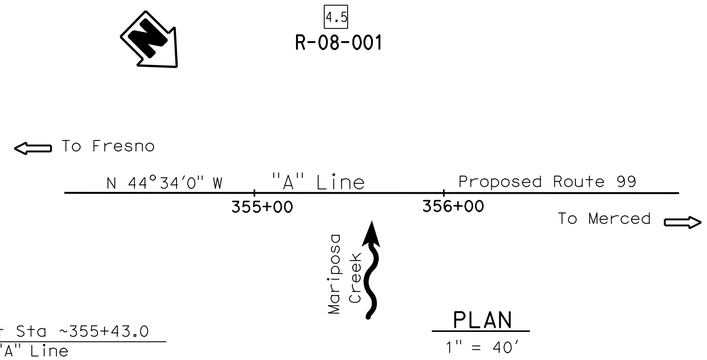

PLAN
1" = 40'

Notes:
1. CS 2000 Truck Mounted rig (C# 8435) with automatic hammer was used to obtain SPT samples in Borings R-08-001.
2. SPT N values shown on the Log of Test Borings (LOTB) sheet are the actual values recorded in the field.
3. pp= Pocket Penetrometer Test (tsf).

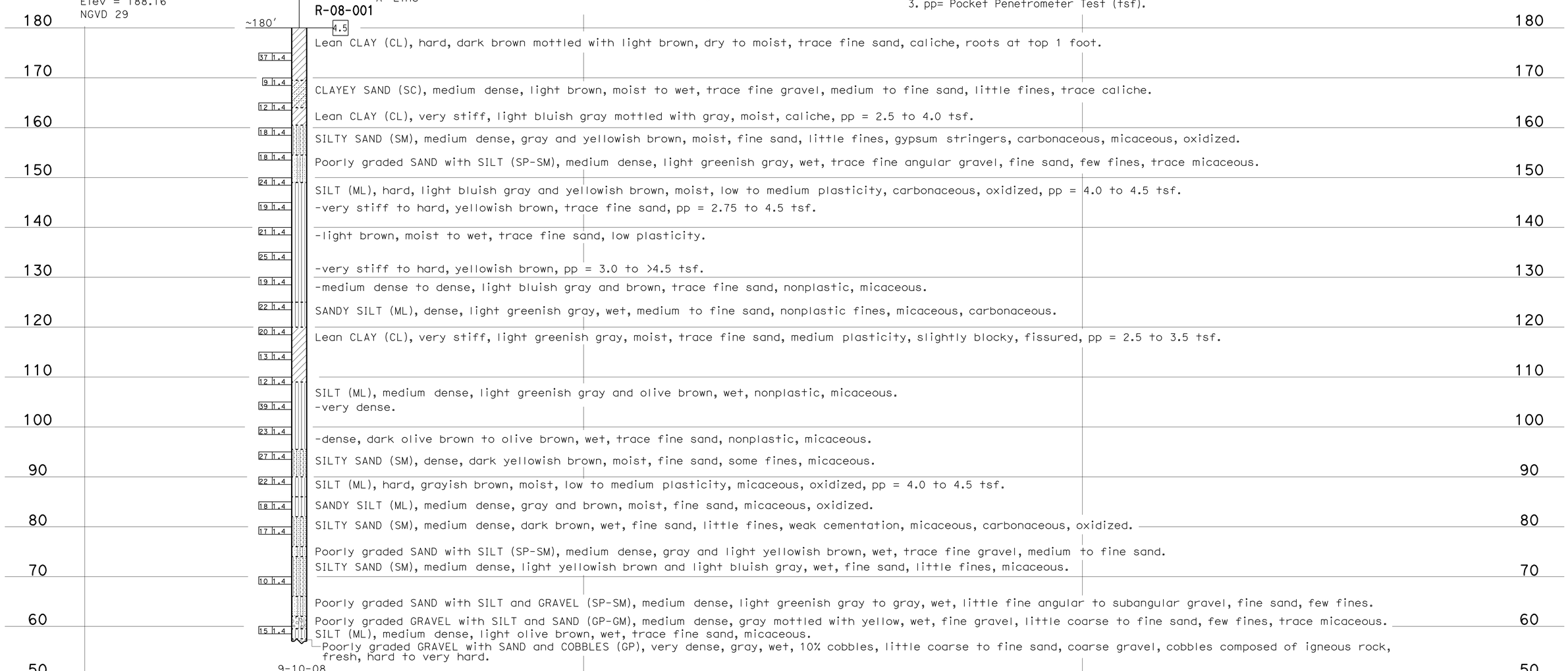

9-10-08
Terminated at Elev 57.0'
Hammer Efficiency Ratio (ERi) = 84%
Ground water was not measured.

PROFILE
HOR. 1" = 10'
VER. 1" = 10'

ENGINEERING SERVICES	GEOTECHNICAL SERVICES	STATE OF CALIFORNIA DEPARTMENT OF TRANSPORTATION	DIVISION OF ENGINEERING SERVICES STRUCTURE DESIGN DESIGN BRANCH	BRIDGE NO. 39-0245L/R	MARIPOSA CREEK BRIDGE L/R
FUNCTIONAL SUPERVISOR NAME: R. Buell	DRAWN BY: F. Nguyen 02/09 CHECKED BY: J. Thorne	FIELD INVESTIGATION BY: A. Barrie	CU 10 EA 415701	POST MILES 9.35	LOG OF TEST BORINGS 1 OF 3

OGS CIVIL LOG OF TEST BORINGS SHEET

ORIGINAL SCALE IN INCHES FOR REDUCED PLANS 0 1 2 3

DISREGARD PRINTS BEARING EARLIER REVISION DATES

REVISION DATES 02-24-09 03-12-09 04-24-09 04-29-09

SHEET 12 OF 14

FILE => 39-0245lr-z-lotb1of3.dgn

USERNAME => trlenard DATE PLOTTED => 11-OCT-2010 TIME PLOTTED => 13:34

DIST	COUNTY	ROUTE	POST MILES TOTAL PROJECT	SHEET No	TOTAL SHEETS
10	Mer	99	R4.6/R10.5	689	751

Zheng Xing 4-29-09
CERTIFIED ENGINEERING GEOLOGIST

10-11-10
PLANS APPROVAL DATE

PROFESSIONAL GEOLOGIST Xing Zheng No. 2130 Exp. 3-31-11 CERTIFIED ENGINEERING GEOLOGIST STATE OF CALIFORNIA

The State of California or its officers or agents shall not be responsible for the accuracy or completeness of electronic copies of this plan sheet.

REFERENCE: CALTRANS SOIL & ROCK LOGGING, CLASSIFICATION, AND PRESENTATION MANUAL (JUNE 2007)

CEMENTATION

Description	Criteria
Weak	Crumbles or breaks with handling or little finger pressure.
Moderate	Crumbles or breaks with considerable finger pressure.
Strong	Will not crumble or break with finger pressure.

CONSISTENCY OF COHESIVE SOILS

Description	Unconfined Compressive Strength (tsf)	Pocket Penetrometer Measurement (tsf)	Torvane Measurement (tsf)	Field Approximation
Very Soft	< 0.25	< 0.25	< 0.12	Easily penetrated several inches by fist
Soft	0.25 to 0.50	0.25 to 0.50	0.12 to 0.25	Easily penetrated several inches by thumb
Medium Stiff	0.50 to 1.0	0.50 to 1.0	0.25 to 0.50	Penetrated several inches by thumb with moderate effort
Stiff	1 to 2	1 to 2	0.50 to 1.0	Readily indented by thumb but penetrated only with great effort
Very Stiff	2 to 4	2 to 4	1.0 to 2.0	Readily indented by thumbnail
Hard	> 4.0	> 4.0	> 2.0	Indented by thumbnail with difficulty

BOREHOLE IDENTIFICATION

Symbol	Hole Type	Description
Size	A	Auger Boring
Size	R P	Rotary drilled boring Rotary percussion boring (air)
Size	R	Rotary drilled diamond core
Size	HD HA	Hand driven (1-inch soil tube) Hand Auger
●	D	Dynamic Cone Penetration Boring
▲	CPT	Cone Penetration Test (ASTM D 5778-95)
⬚	O	Other

Note: Size in inches.

PLASTICITY OF FINE-GRAINED SOILS

Description	Criteria
Nonplastic	A 1/8-inch thread cannot be rolled at any water content.
Low	The thread can barely be rolled and the lump cannot be formed when drier than the plastic limit.
Medium	The thread is easy to roll and not much time is required to reach the plastic limit. The thread cannot be rerolled after reaching the plastic limit. The lump crumbles when drier than the plastic limit.
High	It takes considerable time rolling and kneading to reach the plastic limit. The thread can be rerolled several times after reaching the plastic limit. The lump can be formed without crumbling when drier than the plastic limit.

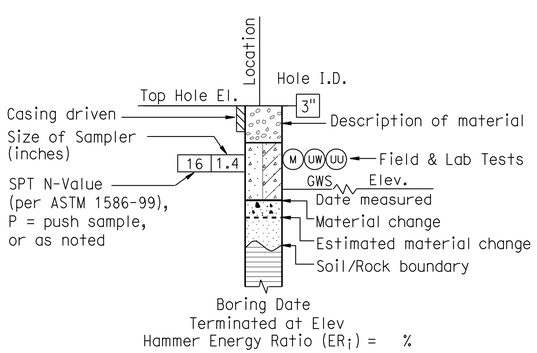

ROTARY BORING

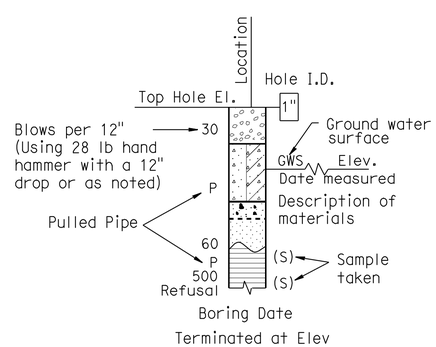

HAND BORING

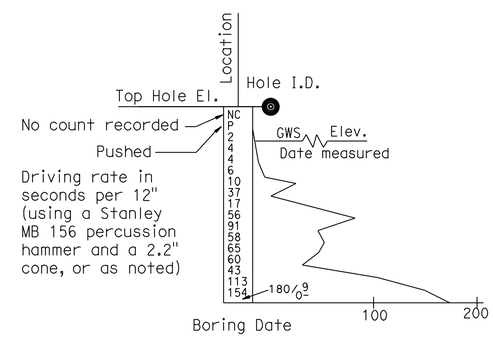

DYNAMIC CONE PENETRATION BORING

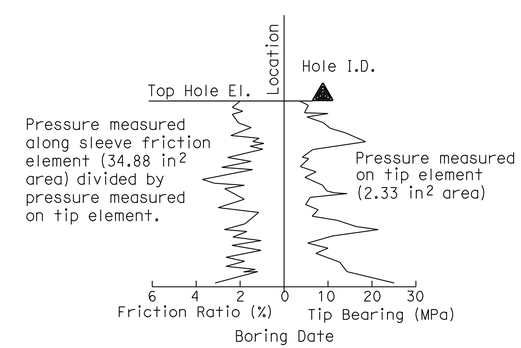

CONE PENETRATION TEST (CPT) SOUNDING

ENGINEERING SERVICES	GEOTECHNICAL SERVICES	STATE OF CALIFORNIA DEPARTMENT OF TRANSPORTATION	DIVISION OF ENGINEERING SERVICES STRUCTURE DESIGN DESIGN BRANCH	BRIDGE NO. 39-0245L/R	MARIPOSA CREEK BRIDGE L/R
	PREPARED BY: F. Nguyen 02/09			POST MILE 9.35	LOG OF TEST BORINGS 2 OF 3

GS LOTB SOIL LEGEND

ORIGINAL SCALE IN INCHES FOR REDUCED PLANS 0 1 2 3

CU 10
EA 415701

DISREGARD PRINTS BEARING EARLIER REVISION DATES 03-17-09

REVISION DATES

SHEET 13 OF 14

FILE => 39-0245lr-z-lotb2of3.dgn

USERNAME => tfrlenard DATE PLOTTED => 11-OCT-2010 TIME PLOTTED => 13:34

REFERENCE: CALTRANS SOIL & ROCK LOGGING, CLASSIFICATION, AND PRESENTATION MANUAL (JUNE 2007)

DIST	COUNTY	ROUTE	POST MILES TOTAL PROJECT	SHEET No	TOTAL SHEETS
10	Mer	99	R4.6/R10.5	690	751

Zheng, Xing 4-29-09
CERTIFIED ENGINEERING GEOLOGIST

10-11-10
PLANS APPROVAL DATE

PROFESSIONAL GEOLOGIST Xing Zheng No. 2130 Exp. 3-31-11 CERTIFIED ENGINEERING GEOLOGIST STATE OF CALIFORNIA

The State of California or its officers or agents shall not be responsible for the accuracy or completeness of electronic copies of this plan sheet.

GROUP SYMBOLS AND NAMES

Graphic/Symbol	Group Names
GW	Well-graded GRAVEL Well-graded GRAVEL with SAND
GP	Poorly graded GRAVEL Poorly graded GRAVEL with SAND
GW-GM	Well-graded GRAVEL with SILT Well-graded GRAVEL with SILT and SAND
GW-GC	Well-graded GRAVEL with CLAY (or SILTY CLAY) Well-graded GRAVEL with CLAY and SAND (or SILTY CLAY and SAND)
GP-GM	Poorly graded GRAVEL with SILT Poorly graded GRAVEL with SILT and SAND
GP-GC	Poorly graded GRAVEL with CLAY (or SILTY CLAY) Poorly graded GRAVEL with CLAY and SAND (or SILTY CLAY and SAND)
GM	SILTY GRAVEL SILTY GRAVEL with SAND
GC	CLAYEY GRAVEL CLAYEY GRAVEL with SAND
GC-GM	SILTY, CLAYEY GRAVEL SILTY, CLAYEY GRAVEL with SAND
SW	Well-graded SAND Well-graded SAND with GRAVEL
SP	Poorly graded SAND Poorly graded SAND with GRAVEL
SW-SM	Well-graded SAND with SILT Well-graded SAND with SILT and GRAVEL
SW-SC	Well-graded SAND with CLAY (or SILTY CLAY) Well-graded SAND with CLAY and GRAVEL (or SILTY CLAY and GRAVEL)
SP-SM	Poorly graded SAND with SILT Poorly graded SAND with SILT and GRAVEL
SP-SC	Poorly graded SAND with CLAY (or SILTY CLAY) Poorly graded SAND with CLAY and GRAVEL (or SILTY CLAY and GRAVEL)
SM	SILTY SAND SILTY SAND with GRAVEL
SC	CLAYEY SAND CLAYEY SAND with GRAVEL
SC-SM	SILTY, CLAYEY SAND SILTY, CLAYEY SAND with GRAVEL
PT	PEAT
	COBBLES COBBLES and BOULDERS BOULDERS

Graphic/Symbol	Group Names
CL	Lean CLAY Lean CLAY with SAND Lean CLAY with GRAVEL SANDY lean CLAY SANDY lean CLAY with GRAVEL GRAVELLY lean CLAY GRAVELLY lean CLAY with SAND
CL-ML	SILTY CLAY SILTY CLAY with SAND SILTY CLAY with GRAVEL SANDY SILTY CLAY SANDY SILTY CLAY with GRAVEL GRAVELLY SILTY CLAY GRAVELLY SILTY CLAY with SAND
ML	SILT SILT with SAND SILT with GRAVEL SANDY SILT SANDY SILT with GRAVEL GRAVELLY SILT GRAVELLY SILT with SAND
OL	ORGANIC lean CLAY ORGANIC lean CLAY with SAND ORGANIC lean CLAY with GRAVEL SANDY ORGANIC lean CLAY SANDY ORGANIC lean CLAY with GRAVEL GRAVELLY ORGANIC lean CLAY GRAVELLY ORGANIC lean CLAY with SAND
OL	ORGANIC SILT ORGANIC SILT with SAND ORGANIC SILT with GRAVEL SANDY ORGANIC SILT SANDY ORGANIC SILT with GRAVEL GRAVELLY ORGANIC SILT GRAVELLY ORGANIC SILT with SAND
CH	Fat CLAY Fat CLAY with SAND Fat CLAY with GRAVEL SANDY fat CLAY SANDY fat CLAY with GRAVEL GRAVELLY fat CLAY GRAVELLY fat CLAY with SAND
MH	Elastic SILT Elastic SILT with SAND Elastic SILT with GRAVEL SANDY elastic SILT SANDY elastic SILT with GRAVEL GRAVELLY elastic SILT GRAVELLY elastic SILT with SAND
OH	ORGANIC fat CLAY ORGANIC fat CLAY with SAND ORGANIC fat CLAY with GRAVEL SANDY ORGANIC fat CLAY SANDY ORGANIC fat CLAY with GRAVEL GRAVELLY ORGANIC fat CLAY GRAVELLY ORGANIC fat CLAY with SAND
OH	ORGANIC elastic SILT ORGANIC elastic SILT with SAND ORGANIC elastic SILT with GRAVEL SANDY ORGANIC elastic SILT SANDY ORGANIC elastic SILT with GRAVEL GRAVELLY ORGANIC elastic SILT GRAVELLY ORGANIC elastic SILT with SAND
OL/OH	ORGANIC SOIL ORGANIC SOIL with SAND ORGANIC SOIL with GRAVEL SANDY ORGANIC SOIL SANDY ORGANIC SOIL with GRAVEL GRAVELLY ORGANIC SOIL GRAVELLY ORGANIC SOIL with SAND

FIELD AND LABORATORY TESTING

- (C) Consolidation (ASTM D 2435)
- (CL) Collapse Potential (ASTM D 5333)
- (CP) Compaction Curve (CTM 216)
- (CR) Corrosivity Testing (CTM 643, CTM 422, CTM 417)
- (CU) Consolidated Undrained Triaxial (ASTM D 4767)
- (DS) Direct Shear (ASTM D 3080)
- (EI) Expansion Index (ASTM D 4829)
- (M) Moisture Content (ASTM D 2216)
- (OC) Organic Content-% (ASTM D 2974)
- (P) Permeability (CTM 220)
- (PA) Particle Size Analysis (ASTM D 422)
- (PI) Plasticity Index (AASHTO T 90) Liquid Limit (AASHTO T 89)
- (PL) Point Load Index (ASTM D 5731)
- (PM) Pressure Meter
- (PP) Pocket Penetrometer
- (R) R-Value (CTM 301)
- (SE) Sand Equivalent (CTM 217)
- (SG) Specific Gravity (AASHTO T 100)
- (SL) Shrinkage Limit (ASTM D 427)
- (SW) Swell Potential (ASTM D 4546)
- (TV) Pocket Torvane
- (UC) Unconfined Compression-Soil (ASTM D 2166) Unconfined Compression-Rock (ASTM D 2938)
- (UU) Unconsolidated Undrained Triaxial (ASTM D 2850)
- (UW) Unit Weight (ASTM D 4767)
- (VS) Vane Shear (AASHTO T 223)

APPARENT DENSITY OF COHESIONLESS SOILS

Description	SPT N_{60} (Blows / 12 inches)
Very loose	0 - 4
Loose	5 - 10
Medium Dense	11 - 30
Dense	31 - 50
Very Dense	> 50

MOISTURE

Description	Criteria
Dry	Absence of moisture, dusty, dry to the touch
Moist	Damp but no visible water
Wet	Visible free water, usually soil is below water table

PERCENT OR PROPORTION OF SOILS

Description	Criteria
Trace	Particles are present but estimated to be less than 5%
Few	5 to 10%
Little	15 to 25%
Some	30 to 45%
Mostly	50 to 100%

PARTICLE SIZE

Description		Size
Boulder		> 12"
Cobble		3" to 12"
Gravel	Coarse	3/4" to 3"
	Fine	No. 4 to 3/4"
Sand	Coarse	No. 10 to No. 4
	Medium	No. 40 to No. 10
	Fine	No. 200 to No. 40

ENGINEERING SERVICES

GEOTECHNICAL SERVICES
PREPARED BY: F. Nguyen 02/09

STATE OF CALIFORNIA DEPARTMENT OF TRANSPORTATION

DIVISION OF ENGINEERING SERVICES STRUCTURE DESIGN
DESIGN BRANCH

BRIDGE NO. 39-0245L/R
POST MILE 9.35

MARIPOSA CREEK BRIDGE L/R
LOG OF TEST BORINGS 3 OF 3

GS LOTB SOIL LEGEND

ORIGINAL SCALE IN INCHES FOR REDUCED PLANS 0 1 2 3

CU 10
EA 415701

DISREGARD PRINTS BEARING EARLIER REVISION DATES 03-17-09

REVISION DATES

SHEET 14 OF 14

FILE => 39-0245lr-z-lotb3of3.dgn

USERNAME => friehard DATE PLOTTED => 11-OCT-2010 TIME PLOTTED => 13:34

DIST	COUNTY	ROUTE	POST MILES TOTAL PROJECT	SHEET No	TOTAL SHEETS
10	Mer	99	R4.6/R10.5	691	751

REGISTERED CIVIL ENGINEER 07-31-09 DATE

10-11-10
PLANS APPROVAL DATE

REGISTERED PROFESSIONAL ENGINEER G. SCHUSTER No. C 63897 Exp. 09-30-10 CIVIL STATE OF CALIFORNIA

The State of California or its officers or agents shall not be responsible for the accuracy or completeness of electronic copies of this plan sheet.

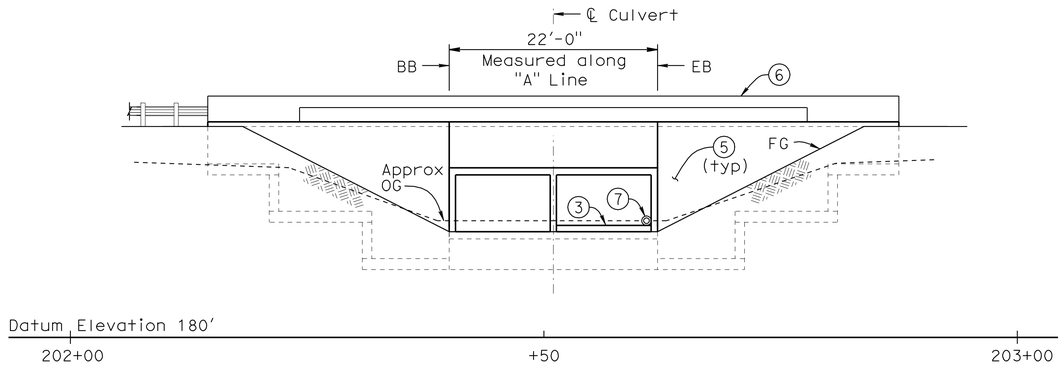

ELEVATION

1/8" = 1'-0"

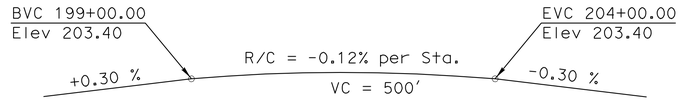

PROFILE GRADE

no scale

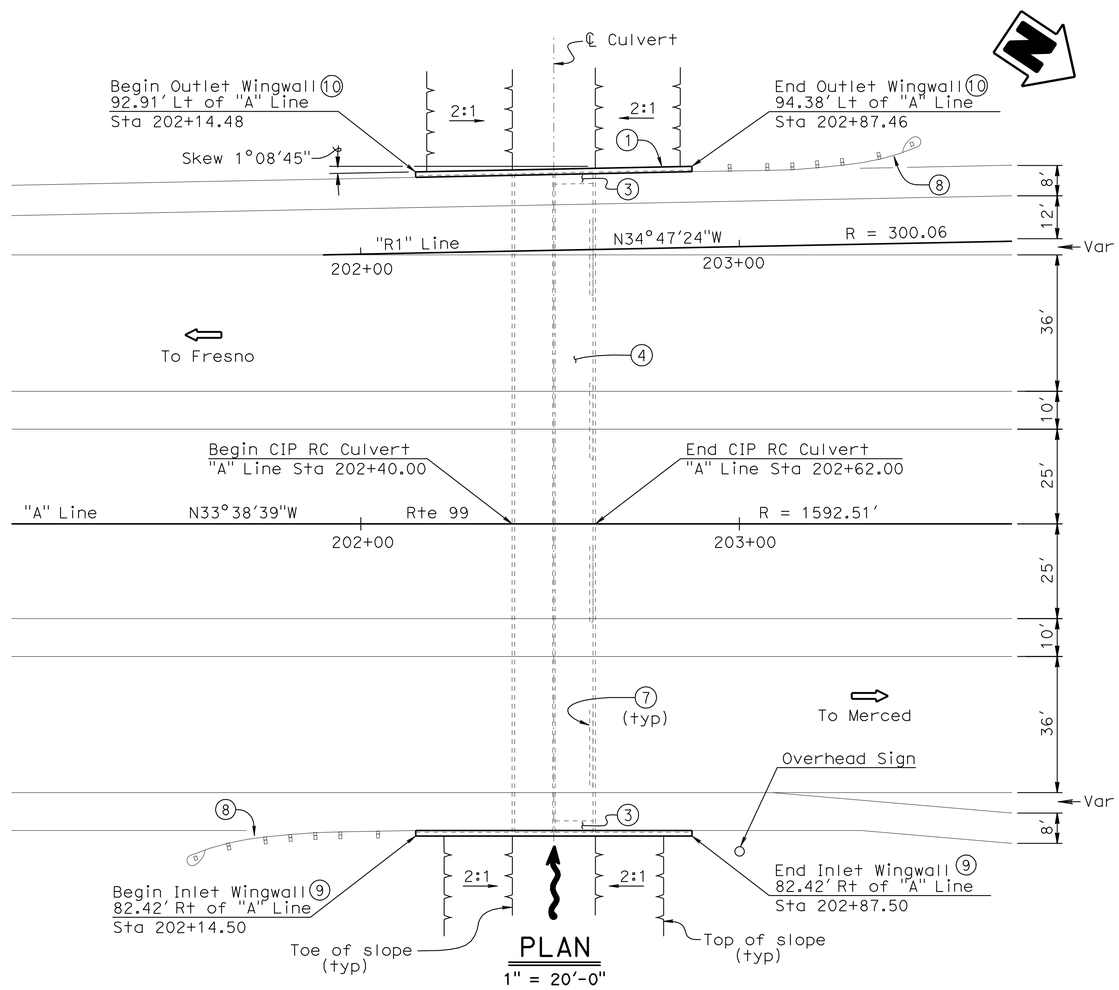

PLAN

1" = 20'-0"

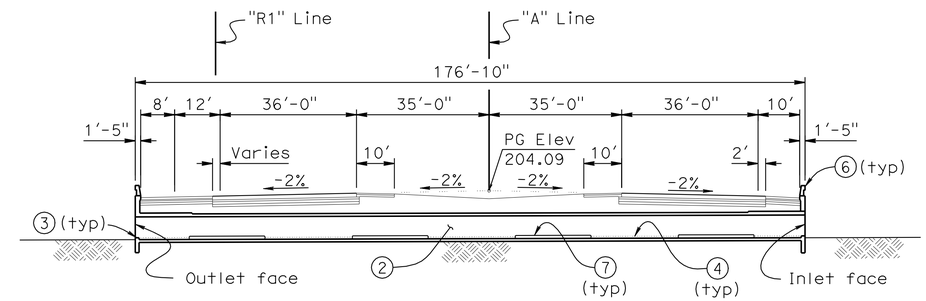

TYPICAL SECTION ROADWAY

1" = 20'-0"

Notes:

1. Paint Br No. 39-0247
2. DBL 10' x 6' RCB with 10' max cover and flat invert
3. Increase invert thickness by 6" for first and lost 1' of north cell
4. Place 6" layer of gravel on invert between raised portion of invert, see "Road Plans"
5. Box culvert wing wall (Type B)
6. Concrete Barrier Type 732A
7. Four sections of 10" x 20' CMP. Anchor at equal intervals to culvert floor. Openings of both ends of all CMP sections shall be narrowed to 6" Ø, see "Road Plans"
8. MBGR, see "Road Plans"
9. Inlet wingwall parallel to "A" Line
10. Outlet wingwall parallel to "R1" Line

Note: For "General Notes", "Index Plans", "Standard Plans", "Quantities", See "Index To Plans" sheet.

x Gary Blakesley
DESIGN ENGINEER

	BY	CHECKED			
DESIGN	G. Schuster	N. Terzis	LOAD & RESISTANCE FACTOR DESIGN	LIVE LOADING: HL93 W/"LOW-BOY";	
DETAILS	G. M. Souza/S. Jiang	C. Siegenthaler	LAYOUT	G. Schuster	N. Terzis
QUANTITIES	N. Terzis	C. Siegenthaler	SPECIFICATIONS	Aiman Abdel-Malak	PLANS AND SPECS COMPARED

STATE OF CALIFORNIA
DEPARTMENT OF TRANSPORTATION

DIVISION OF ENGINEERING SERVICES
STRUCTURE DESIGN
DESIGN BRANCH 5

BRIDGE NO. 39-0247
POST MILE 6.49

BOX CULVERT @ MP 6.49
GENERAL PLAN

ORIGINAL SCALE IN INCHES FOR REDUCED PLANS 0 1 2 3

CU 10
EA 415701

DISREGARD PRINTS BEARING EARLIER REVISION DATES

REVISION DATES: 07-21-08 07-23-08 07-30-08 7-31-08 2-11-09 2-23-09

SHEET 1 OF 4

USERNAME => friehard DATE PLOTTED => 11-OCT-2010 TIME PLOTTED => 13:35

STRUCTURES DESIGN GENERAL PLAN SHEET (ENGLISH) (REV.07-24-06)

FILE => 39-0247-a-gp.dgn

DIST	COUNTY	ROUTE	POST MILES TOTAL PROJECT	SHEET No	TOTAL SHEETS
10	Mer	99	R4.6/R10.5	692	751

REGISTERED CIVIL ENGINEER 07-31-09 DATE

10-11-10
PLANS APPROVAL DATE

REGISTERED PROFESSIONAL ENGINEER G. SCHUSTER No. C 63897 Exp. 09-30-10 CIVIL STATE OF CALIFORNIA

The State of California or its officers or agents shall not be responsible for the accuracy or completeness of electronic copies of this plan sheet.

GENERAL NOTES

For Culvert General Notes, Design Notes, and Construction Notes see 2006 Standard Plan D82 "Cast-in-Place Reinforced Concrete Box Culvert Miscellaneous Details"

For Culvert details not shown see 2006 Standard Plan D81 "Cast-in-Place Reinforced Concrete Double Box Culvert"

For Wingwall notes and details not shown see 2006 Standard Plan D84 "Box Culvert Wingwalls Types A, B and C"

REINFORCED CONCRETE:

f_y = 60 ksi

f'_c = 3.6 ksi

n = 8

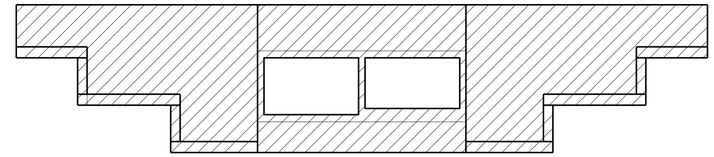

Structural Concrete, Box Culvert

CONCRETE STRENGTH AND TYPE LIMITS

No Scale

QUANTITIES

STRUCTURAL CONCRETE (BOX CULVERT)	400	CY
BAR REINFORCING STEEL (BOX CULVERT)	83,000	LB
CONCRETE BARRIER (TYPE 732A)	146	LF

INDEX TO PLANS

Sheet No.	Title
1.	GENERAL PLAN
2.	INDEX TO PLANS
3.	WINGWALL LAYOUT
4.	BOX CULVERT DETAILS

STANDARD PLANS DATED MAY 2006

A10A	ACRONYMS AND ABBREVIATIONS (A-L)
A10B	ACRONYMS AND ABBREVIATIONS (M-Z)
A10C	SYMBOLS (SHEET 1 OF 2)
A10D	SYMBOLS (SHEET 2 OF 2)
A62A	EXCAVATION AND BACKFILL MISCELLANEOUS DETAILS
A62B	LIMITS OF PAYMENT FOR EXCAVATION AND BACKFILL - BRIDGE SURCHARGE AND WALL
A62E	EXCAVATION AND BACKFILL CAST-IN-PLACE REINFORCED CONCRETE BOX AND ARCH CULVERTS
B0-3	BRIDGE DETAILS
B3-8	RETAINING WALL DETAILS No. 1
D81	CAST-IN-PLACE REINFORCED CONCRETE DOUBLE BOX CULVERT
D82	CAST-IN-PLACE REINFORCED CONCRETE BOX CULVERT MISCELLANEOUS DETAILS
D84	BOX CULVERT WINGWALLS TYPES A, B AND C
D88	CONSTRUCTION LOADS ON CULVERTS

STANDARD PLAN SHEET NO.

DETAIL NO.

	BY	CHECKED
DESIGN	G. Schuster	N. Terzis
DETAILS	S. Jiang	C. Siegenthaler
QUANTITIES	N. Terzis	C. Siegenthaler

STATE OF CALIFORNIA DEPARTMENT OF TRANSPORTATION

DIVISION OF ENGINEERING SERVICES STRUCTURE DESIGN DESIGN BRANCH 5

BRIDGE NO. 39-0247
POST MILE 6.49

BOX CULVERT @ MP 6.49
INDEX TO PLANS

ORIGINAL SCALE IN INCHES FOR REDUCED PLANS 0 1 2 3

CU 10
EA 415701

DISREGARD PRINTS BEARING EARLIER REVISION DATES

REVISION DATES: 2-05-09 2-11-09 4-16-09 7-29-09 8-12-09

SHEET 2 OF 4

USERNAME => trlenard DATE PLOTTED => 11-OCT-2010 TIME PLOTTED => 13:35

STRUCTURES DESIGN DETAIL SHEET (ENGLISH) (REV. 10/25/05)

FILE => 39-0247-a-itp.dgn

DIST	COUNTY	ROUTE	POST MILES TOTAL PROJECT	SHEET No	TOTAL SHEETS
10	Mer	99	R4.6/R10.5	693	751

REGISTERED CIVIL ENGINEER 07-31-09 DATE

10-11-10
PLANS APPROVAL DATE

REGISTERED PROFESSIONAL ENGINEER G. SCHUSTER No. C 63897 Exp. 09-30-10 CIVIL STATE OF CALIFORNIA

The State of California or its officers or agents shall not be responsible for the accuracy or completeness of electronic copies of this plan sheet.

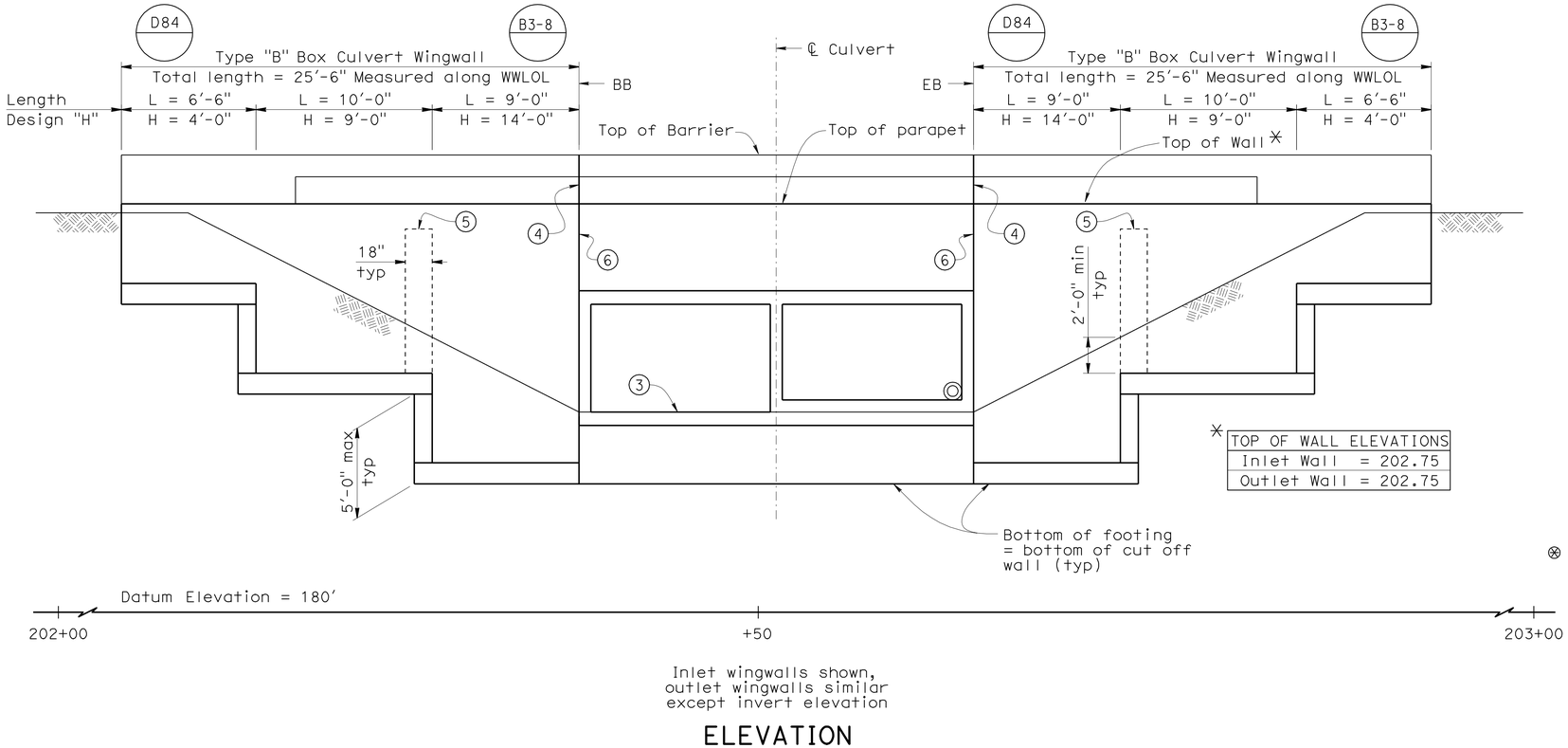

✳ TOP OF WALL ELEVATIONS
Inlet Wall = 202.75
Outlet Wall = 202.75

Inlet wingwalls shown, outlet wingwalls similar except invert elevation

ELEVATION

1/4" = 1'-0"

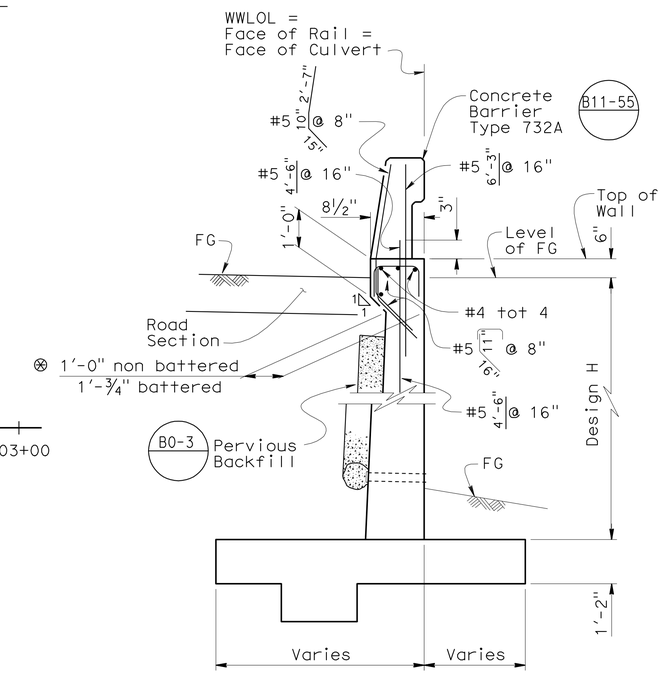

TYPICAL SECTION

1/2" = 1'-0"

⊗ Stem thickness @ base of haunch battered wingwall shown for H=9' and 4' wingwall is not battered

For reinforcement and dimensions not shown see std plans

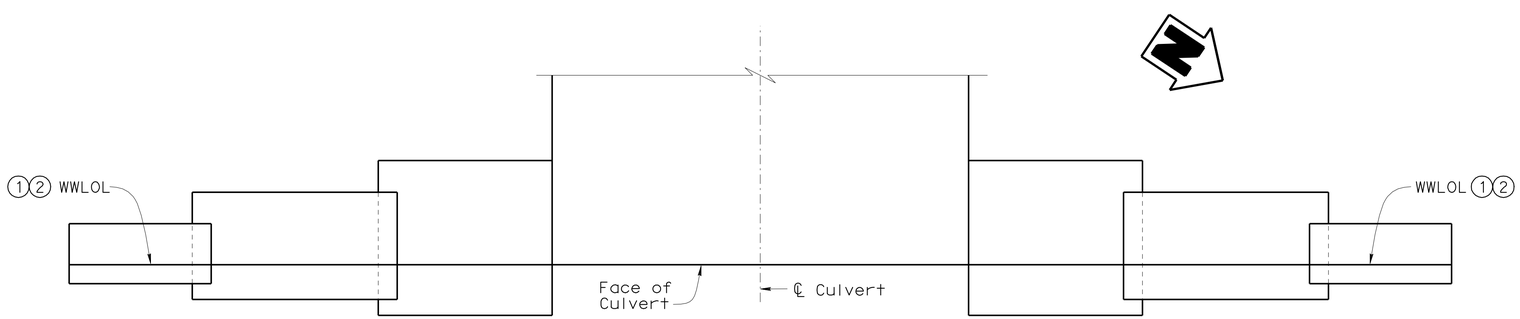

Inlet wingwall footings shown, outlet wingwall footings similar

PLAN

1/4" = 1'-0"

Notes:

1. For wingwall layout line, see "General Plan"
2. Inlet wingwall parallel to "A" Line
   Outlet wingwall parallel to "R1" Line
3. For invert elevations, see "Culvert Details" sheet
4. Concrete rail shall be discontinuous at BB and EB
5. Flare non-battered wall to match battered wall
6. Place 1/2" expansion joint filler
7. For culvert dimensions, see "Culvert Details" sheet

	BY	CHECKED
DESIGN	G. Schuster	N. Terzis
DETAILS	G. M. Souza/S. Jiang	C. Siegenthaler
QUANTITIES	N. Terzis	C. Siegenthaler

ORIGINAL SCALE IN INCHES FOR REDUCED PLANS 0 1 2 3

STATE OF CALIFORNIA
DEPARTMENT OF TRANSPORTATION

DIVISION OF ENGINEERING SERVICES
STRUCTURE DESIGN
DESIGN BRANCH 5

CU 10
EA 415701

BRIDGE NO. 39-0247
POST MILE 6.49

BOX CULVERT @ MP 6.49
WINGWALL LAYOUT

DISREGARD PRINTS BEARING EARLIER REVISION DATES

REVISION DATES: 07-22-08 07-31-08 1-31-08 2-11-09 9-16-09

SHEET 3 OF 4

USERNAME => trlenard DATE PLOTTED => 11-OCT-2010 TIME PLOTTED => 13:35

STRUCTURES DESIGN DETAIL SHEET (ENGLISH) (REV. 10/25/05)

FILE => 39-0247-e-lyt.dgn

DIST	COUNTY	ROUTE	POST MILES TOTAL PROJECT	SHEET No	TOTAL SHEETS
10	Mer	99	R4.6/R10.5	694	751

REGISTERED CIVIL ENGINEER 07-31-09 DATE

10-11-10
PLANS APPROVAL DATE

REGISTERED PROFESSIONAL ENGINEER G. SCHUSTER No. C 63897 Exp. 09-30-10 CIVIL STATE OF CALIFORNIA

The State of California or its officers or agents shall not be responsible for the accuracy or completeness of electronic copies of this plan sheet.

Modify standard plans for addition of type 732A rail

- Increase roof thickness @ inlet and outlet reinforcement shown in roof is in addition to reinforcement shown on standard plans "f" bars in thickened roof section shall be #7
- Increase height and section of parapet reinforcement shown in parapet replaces reinforcement shown on standard plan

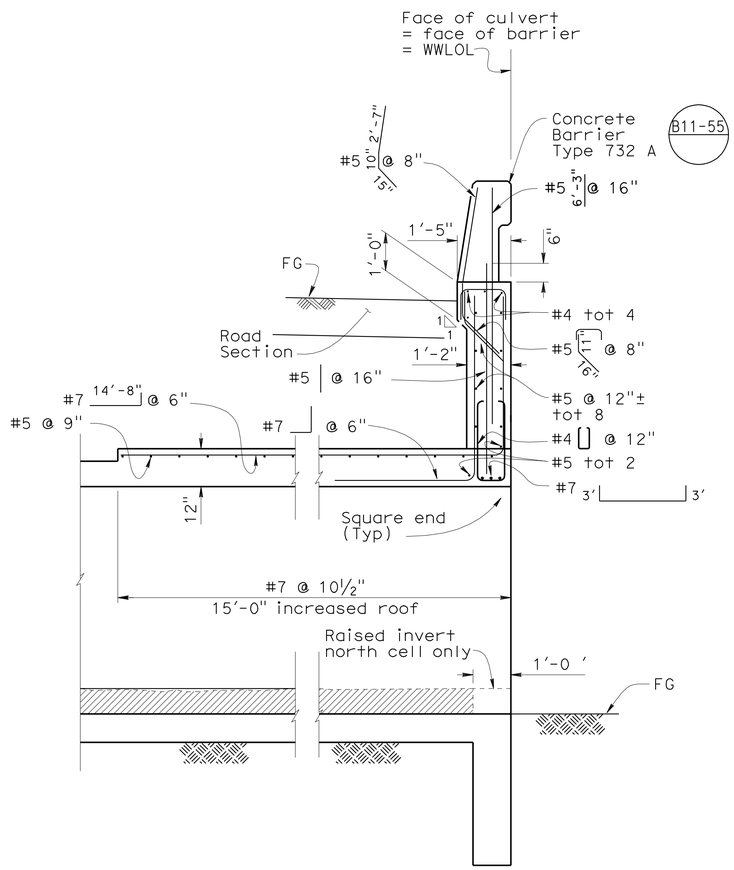

SECTION A-A

½" = 1'-0"

Place 6" layer of gravel (in north cell only)

Inlet portion shown outlet portion similar for Reinforcement and dimensions not shown see standard plans

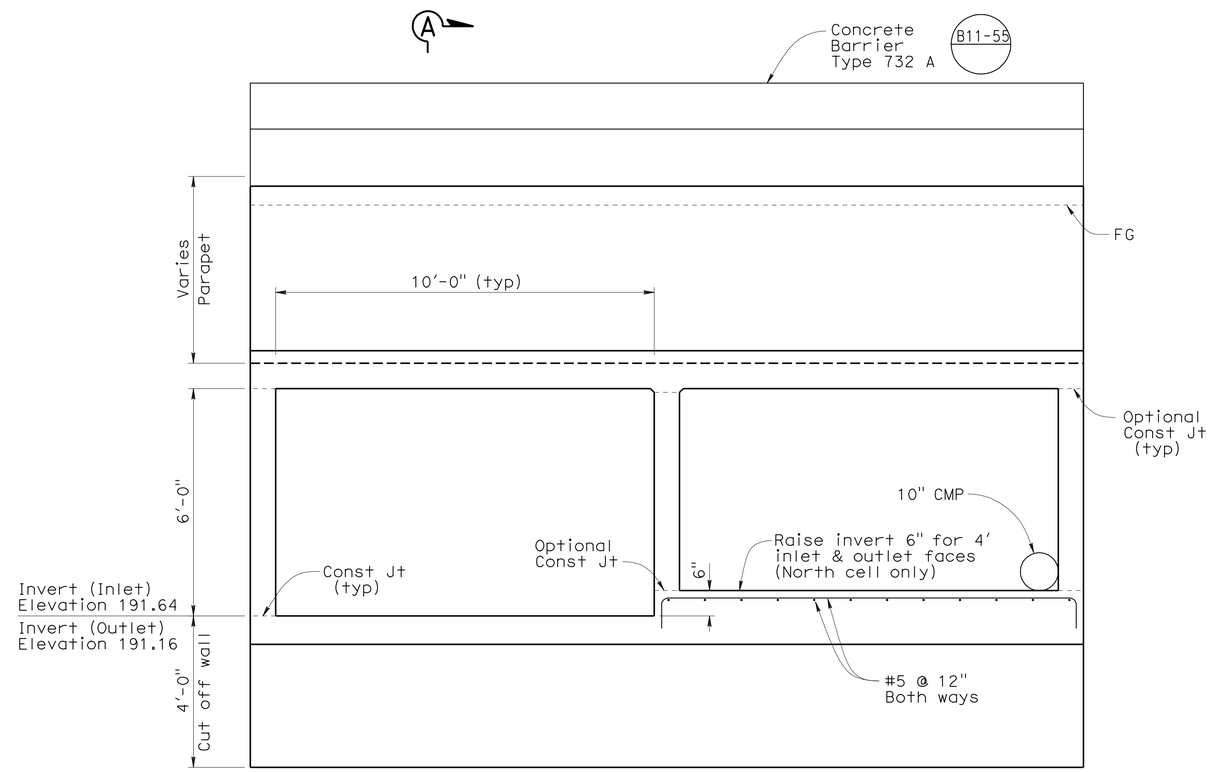

TYPICAL SECTION

½" = 1'-0"

D81 D82 D84

DESIGN	BY G. Schuster	CHECKED N. Terzis	
DETAILS	BY G. M. Souza/S. Jiang	CHECKED C. Siegenthaler	
QUANTITIES	BY N. Terzis	CHECKED C. Siegenthaler	

ORIGINAL SCALE IN INCHES FOR REDUCED PLANS 0 1 2 3

STATE OF CALIFORNIA DEPARTMENT OF TRANSPORTATION

DIVISION OF ENGINEERING SERVICES STRUCTURE DESIGN DESIGN BRANCH 5

CU 10
EA 415701

BRIDGE NO. 39-0247
POST MILE 6.49

BOX CULVERT @ MP 6.49

DETAILS

DISREGARD PRINTS BEARING EARLIER REVISION DATES

REVISION DATES 07-22-08 8-01-08 2-05-09

SHEET 4 OF 4

STRUCTURES DESIGN DETAIL SHEET (ENGLISH) (REV. 10/25/05)

FILE => 39-0247-f-dt.dgn

USERNAME => trlenard DATE PLOTTED => 11-OCT-2010 TIME PLOTTED => 13:35

DIST	COUNTY	ROUTE	POST MILES TOTAL PROJECT	SHEET No	TOTAL SHEETS
10	Mer	99	R4.6/R10.5	695	751

REGISTERED CIVIL ENGINEER 07-31-09 DATE

10-11-10
PLANS APPROVAL DATE

REGISTERED PROFESSIONAL ENGINEER G. SCHUSTER No. C 63897 Exp. 09-30-10 CIVIL STATE OF CALIFORNIA

The State of California or its officers or agents shall not be responsible for the accuracy or completeness of electronic copies of this plan sheet.

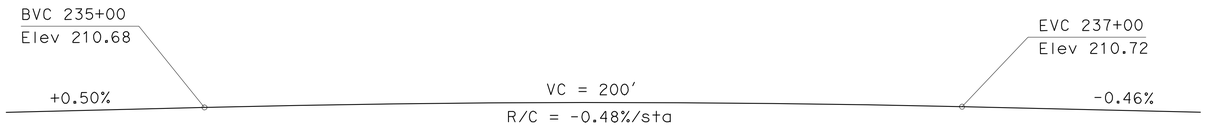

PROFILE
NO SCALE

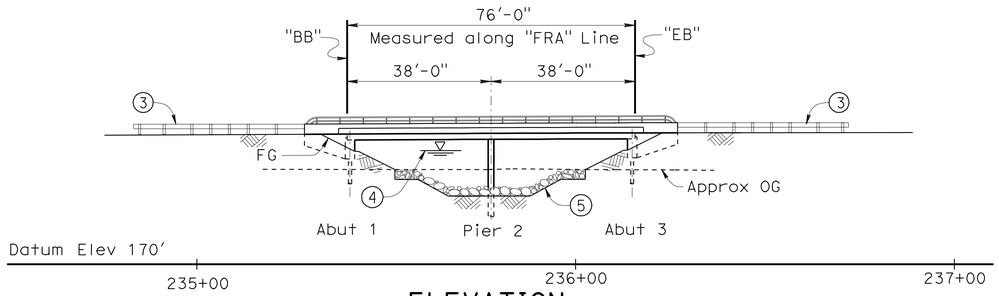

ELEVATION
1" = 20'

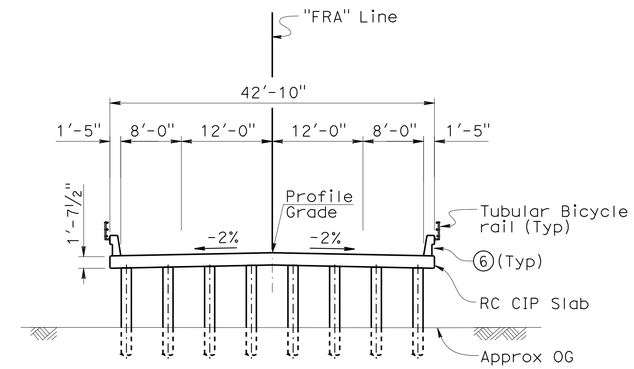

TYPICAL SECTION
1" = 10'

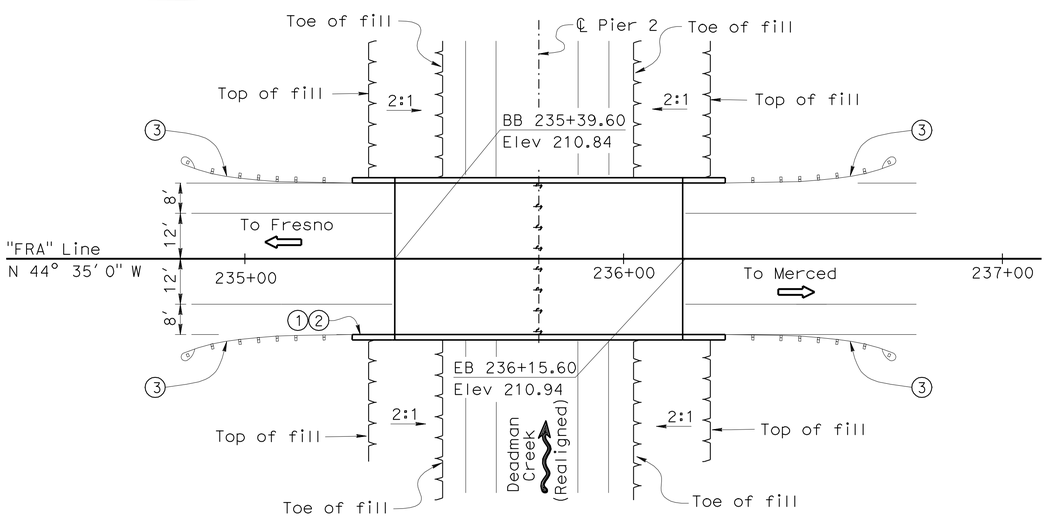

PLAN
1" = 20'

LEGEND:

1. Paint "Deadman Creek Bridge"
2. Paint Bridge No. 39C0373
3. Metal Beam Guard Rail, See "Road Plan"
4. For Hydrologic Summary, See "Foundation Plan"
5. RSP, See "Road Plan"
6. Concrete Barrier Type 732 (Mod)

Note: For "General Notes", "Index Plans", "Standard Plans", "Quantities", See "Index To Plans" sheet.

NOTE:
THE CONTRACTOR SHALL VERIFY ALL CONTROLLING FIELD DIMENSIONS BEFORE ORDERING OR FABRICATING ANY MATERIAL.

x Gary Blakesley
DESIGN ENGINEER

	BY	CHECKED
DESIGN	G. Schuster	N. Terzis
DETAILS	G. Souza/T. Cotton/S. J	N. Terzis
QUANTITIES	C. Siegenthaler	N. Terzis

LOAD & RESISTANCE FACTOR DESIGN — LIVE LOADING: HL93 W/"LOW-BOY"; PERMIT DESIGN VEHICLE

	BY	CHECKED
LAYOUT	G. Schuster	N. Terzis
SPECIFICATIONS	Aiman Abdel-Malak	PLANS AND SPECS COMPARED

STATE OF CALIFORNIA
DEPARTMENT OF TRANSPORTATION

DIVISION OF ENGINEERING SERVICES
STRUCTURE DESIGN
DESIGN BRANCH 5

BRIDGE NO. 39C0373
POST MILE 5.22

DEADMAN CREEK BRIDGE
EAST FRONTAGE ROAD
GENERAL PLAN

ORIGINAL SCALE IN INCHES FOR REDUCED PLANS 0 1 2 3

CU 10
EA 415701

DISREGARD PRINTS BEARING EARLIER REVISION DATES

REVISION DATES: 11-06-07, 9-16-09, 02-14-08, 04-14-08, 04-23-08, 06-12-08, 12-12-08, 1-23-09, 2-19-09

SHEET 1 OF 14

STRUCTURES DESIGN GENERAL PLAN SHEET (ENGLISH) (REV.07-24-06)

FILE => 39c0373-a-gp.dgn

USERNAME => trlenard DATE PLOTTED => 11-OCT-2010 TIME PLOTTED => 13:35

DIST	COUNTY	ROUTE	POST MILES TOTAL PROJECT	SHEET No	TOTAL SHEETS
10	Mer	99	R4.6/R10.5	696	751

REGISTERED CIVIL ENGINEER 07-31-09 DATE

10-11-10
PLANS APPROVAL DATE

REGISTERED PROFESSIONAL ENGINEER G. SCHUSTER No. C 63897 Exp. 09-30-10 CIVIL STATE OF CALIFORNIA

The State of California or its officers or agents shall not be responsible for the accuracy or completeness of electronic copies of this plan sheet.

GENERAL NOTES
LOAD AND RESISTANCE FACTOR DESIGN

DESIGN: AASHTO LRFD Bridge Design Specifications, Third Edition with 2005 & 2006 Interim Revisions and Caltrans Amendments 03.06.01

SEISMIC DESIGN: Caltrans Seismic Design Criteria (SDC) Version 1.4, June, 2006

DEAD LOAD: Includes 35 Psf for future wearing surface.

LIVE LOADING: HL93 Alternative loading and "Low-Boy" permit design vehicle

SEISMIC LOADING: Caltrans SDC ARS curve for soil profile type D (M = 6.5 ± 0.25), (Peak Rock Acceleration = 0.2g)

REINFORCED CONCRETE:
f_y = 60 ksi
f'_c = 3.6 ksi
n = 8

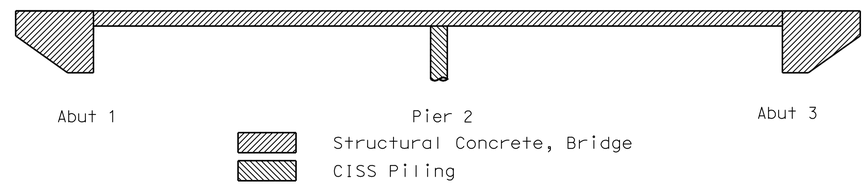

CONCRETE STRENGTH AND TYPE LIMITS
No Scale

INDEX TO PLANS

Sheet No.	Title
1.	GENERAL PLAN
2.	INDEX TO PLANS
3.	DECK CONTOURS
4.	FOUNDATION PLAN
5.	ABUTMENT LAYOUT
6.	PIER DETAILS
7.	TYPICAL SECTION
8.	SLAB REINFORCEMENT DETAILS
9.	ABUTMENT DRAINAGE DETAILS
10.	TUBULAR BICYCLE RAILING
11.	LOG OF TEST BORINGS 1 OF 4
12.	LOG OF TEST BORINGS 2 OF 4
13.	LOG OF TEST BORINGS 3 OF 4
14.	LOG OF TEST BORINGS 4 OF 4

QUANTITIES

STRUCTURE EXCAVATION (BRIDGE)	65	CY
STRUCTURE BACKFILL (BRIDGE)	40	CY
FURNISH PILING (CLASS 90)	504	LF
DRIVE PILE (CLASS 90)	14	EA
FURNISH 16" CAST-IN-STEEL SHELL CONCRETE PILING	561	LF
DRIVE 16" CAST-IN-STEEL SHELL CONCRETE PILE	8	EA
STRUCTURAL CONCRETE, BRIDGE	245	CY
BAR REINFORCING STEEL (BRIDGE)	55,000	LB
TUBULAR BICYCLE RAILING	197	LF
CONCRETE BARRIER (TYPE 732 MODIFIED)	197	LF

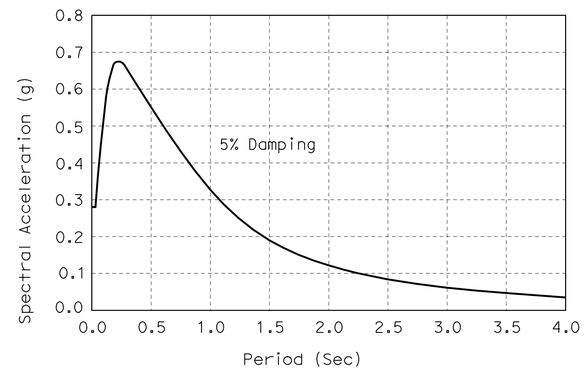

SOIL PROFILE TYPE D: Mw = 6.5, PBA = 0.2g
No Scale

PILE DATA TABLE (B2-5)

Support Location	Pile Type	Nominal Resistance (kips)		Design Tip Elevations (ft)	Specified Tip Elevations (ft)	Nominal Driving Resistance (kips)
		Compression	Tension			
Abut 1	Class 90	180	0	168.0 (1) 169.0 (2)	168.0	180
Pier 2	CISS NPS 16x0.500	280	0	139.0 (1) 156.0 (2)	139.0	280
Abut 3	Class 90	180	0	168.0 (1) 169.0 (2)	168.0	180

NOTE: Design tip elevations are controlled by the following demands: (1) Compression, (2) Lateral.

STANDARD PLANS DATED MAY 2006

A10A	ACRONYMS AND ABBREVIATIONS (A-L)
A10B	ACRONYMS AND ABBREVIATIONS (M-Z)
A10C	SYMBOLS (SHEET 1 OF 2)
A10D	SYMBOLS (SHEET 2 OF 2)
A62C	LIMITS OF PAYMENT FOR EXCAVATION AND BACKFILL-BRIDGE
BO-1	BRIDGE DETAILS
B2-5	PILE DETAILS CLASS 90 AND CLASS 140
B11-55	CONCRETE BARRIER TYPE 732

STANDARD PLAN SHEET NO.
DETAIL NO.

	BY	CHECKED
DESIGN	G. Schuster	N. Terzis
DETAILS	G. Souza/S. Jiang	N. Terzis
QUANTITIES	C. Siegenthaler	N. Terzis

STATE OF CALIFORNIA
DEPARTMENT OF TRANSPORTATION

DIVISION OF ENGINEERING SERVICES
STRUCTURE DESIGN
DESIGN BRANCH 5

BRIDGE NO. 39C0373
POST MILE 5.22

DEADMAN CREEK BRIDGE
EAST FRONTAGE ROAD
INDEX TO PLANS

ORIGINAL SCALE IN INCHES FOR REDUCED PLANS 0 1 2 3

CU 10
EA 415701

DISREGARD PRINTS BEARING EARLIER REVISION DATES

REVISION DATES: 11-11-07 06-24-08 12-12-08 01-23-09 01-26-09 02-19-09 02-26-09 03-19-09 06-24-09 8-11-09

SHEET 2 OF 14

STRUCTURES DESIGN DETAIL SHEET (ENGLISH) (REV. 10/25/05)

FILE => 39c0373-a-itp.dgn

USERNAME => tlenard DATE PLOTTED => 11-OCT-2010 TIME PLOTTED => 13:35

DIST	COUNTY	ROUTE	POST MILES TOTAL PROJECT	SHEET No	TOTAL SHEETS
10	Mer	99	R4.6/R10.5	697	751

REGISTERED CIVIL ENGINEER 07-31-09 DATE

10-11-10
PLANS APPROVAL DATE

REGISTERED PROFESSIONAL ENGINEER G. SCHUSTER No. C 63897 Exp. 09-30-10 CIVIL STATE OF CALIFORNIA

The State of California or its officers or agents shall not be responsible for the accuracy or completeness of electronic copies of this plan sheet.

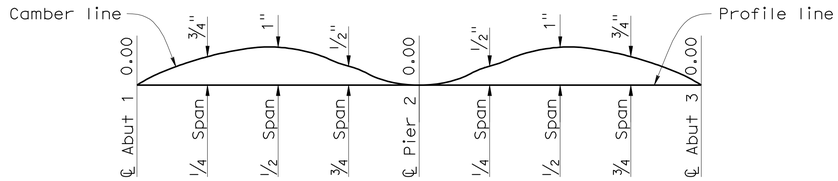

Note: Does not include allowance for falsework settlement.

CAMBER DIAGRAM

no scale

Notes:

× = 10′ interval along station line.

Contours do not include camber.

Contour interval = 0.1′

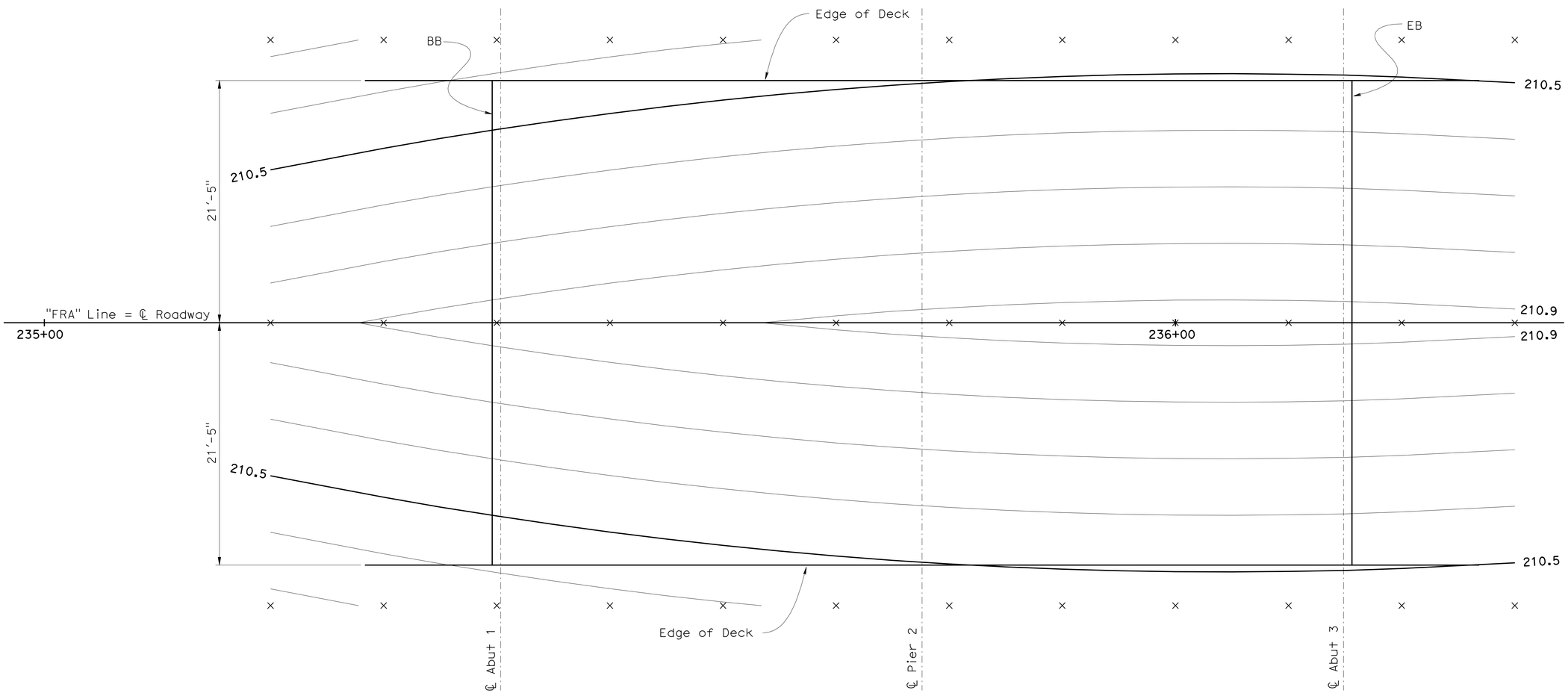

DECK CONTOURS

1" = 5′-0"

	BY	CHECKED
DESIGN	G. Schuster	N. Terzis
DETAILS	G. M. Souza/S. Jiang	N. Terzis
QUANTITIES	C. Siegenthaler	N. Terzis

ORIGINAL SCALE IN INCHES FOR REDUCED PLANS 0 1 2 3

STATE OF CALIFORNIA
DEPARTMENT OF TRANSPORTATION

DIVISION OF ENGINEERING SERVICES
STRUCTURE DESIGN
DESIGN BRANCH 5

CU 10
EA 415701

BRIDGE NO. 39C0373
POST MILE 5.22

DEADMAN CREEK BRIDGE
EAST FRONTAGE ROAD
DECK CONTOURS

DISREGARD PRINTS BEARING EARLIER REVISION DATES

REVISION DATES: 03-24-08 04-24-08 1-27-09

SHEET 3 OF 14

STRUCTURES DESIGN DETAIL SHEET (ENGLISH) (REV. 10/25/05)

FILE => 39C0373-d-dc.dgn

USERNAME => friehard DATE PLOTTED => 11-OCT-2010 TIME PLOTTED => 13:35

DIST	COUNTY	ROUTE	POST MILES TOTAL PROJECT	SHEET No	TOTAL SHEETS
10	Mer	99	R4.6/R10.5	698	751

REGISTERED CIVIL ENGINEER 07-31-09 DATE

10-11-10
PLANS APPROVAL DATE

REGISTERED PROFESSIONAL ENGINEER G. SCHUSTER No. C 63897 Exp. 09-30-10 CIVIL STATE OF CALIFORNIA

The State of California or its officers or agents shall not be responsible for the accuracy or completeness of electronic copies of this plan sheet.

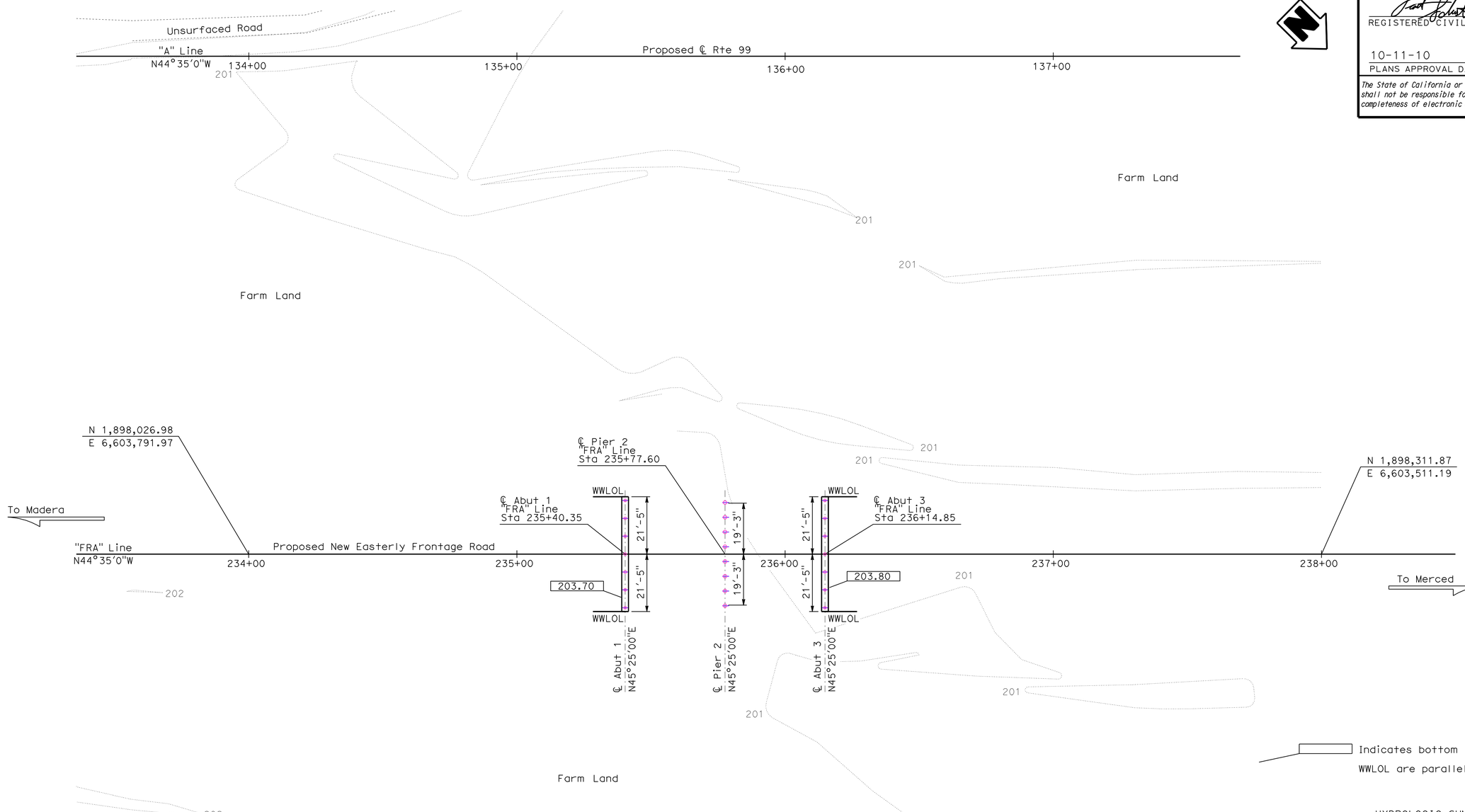

Indicates bottom of footing elevation.

WWLOL are parallel to "FRA" Line

SURVEY CONTROL

MER-99 PM 5.24(Not Shown)

Fnd 1 in.IP W/RPP & TACK Stamping "CALIF DOT"
96.18 Ft Lt. "A" Line ℄ Rte 99
Sta. 135+70.55
N 1,897,950.59
E 6,603,471.50
Elev. = 202.82

MER-99 1041 (Not Shown)

Fnd 1 in IP w/RPP & LS5679 TAG
227.36 Ft Lt."A" Line ℄ Rte 99
Sta. 131+97.42
N 1,897,592.75
E 6,603,639.98
Elev. = 203.25

HYDROLOGIC SUMMARY

DRAINAGE AREA: 50 SQUARE MILES

	DESIGN FLOOD	BASE FLOOD
FREQUENCY (YEARS)	50	100
DISCHARGE (CFS)	1200	1900
WATER SURFACE ELEVATION	206.2	208.7

FLOOD PLAIN DATA ARE BASED UPON INFORMATION AVAILABLE WHEN THE PLANS WERE PREPARED AND ARE SHOWN TO MEET FEDERAL REQUIREMENTS. THE ACCURACY OF SAID INFORMATION IS NOT WARRANTED BY THE STATE AND INTERESTED OR AFFECTED PARTIES SHOULD MAKE THEIR OWN INVESTIGATIONS.

DEADMAN CREEK BRIDGE
EAST FRONTAGE ROAD
FOUNDATION PLAN

PRELIMINARY INVESTIGATION SECTION

SCALE	VERT.DATUM NGVD 29	PHOTOGRAMMETRY AS OF: X			
1"=20'	HORZ.DATUM NAD 83 (1991.35)	SURVEYED	BY District	CHECKED	BY J.Pallares 11/2007
ALIGNMENT TIES Dist. Traverse Sheet		DRAFTED	BY T.Marchenko 11/2007	CHECKED	BY T.Zolnikova 11/2007

	BY	CHECKED
DESIGN	G. Schuster	N. Terzis
DETAILS	G. M. Souza/S. Jiang	N. Terzis
QUANTITIES	C. Siegenthaler	N. Terzis

STATE OF CALIFORNIA
DEPARTMENT OF TRANSPORTATION

DIVISION OF ENGINEERING SERVICES
STRUCTURE DESIGN
DESIGN BRANCH 5

BRIDGE NO. 39C0373
POST MILE 5.22

STRUCTURES FOUNDATION PLAN SHEET (ENGLISH) (REV. 10/25/05)

ORIGINAL SCALE IN INCHES FOR REDUCED PLANS 0 1 2 3

CU 10
EA 415701

DISREGARD PRINTS BEARING EARLIER REVISION DATES

REVISION DATES: 03-26-08 04-24-08 06-12-08 08-28-08 12-12-08 07-29-09

SHEET 4 OF 14

FILE => 39c0373-e-fp.dgn

USERNAME => trlenard DATE PLOTTED => 11-OCT-2010 TIME PLOTTED => 13:35

DIST	COUNTY	ROUTE	POST MILES TOTAL PROJECT	SHEET No	TOTAL SHEETS
10	Mer	99	R4.6/R10.5	699	751

REGISTERED CIVIL ENGINEER 07-31-09 DATE

10-11-10
PLANS APPROVAL DATE

REGISTERED PROFESSIONAL ENGINEER G. SCHUSTER No. C 63897 Exp. 09-30-10 CIVIL STATE OF CALIFORNIA

The State of California or its officers or agents shall not be responsible for the accuracy or completeness of electronic copies of this plan sheet.

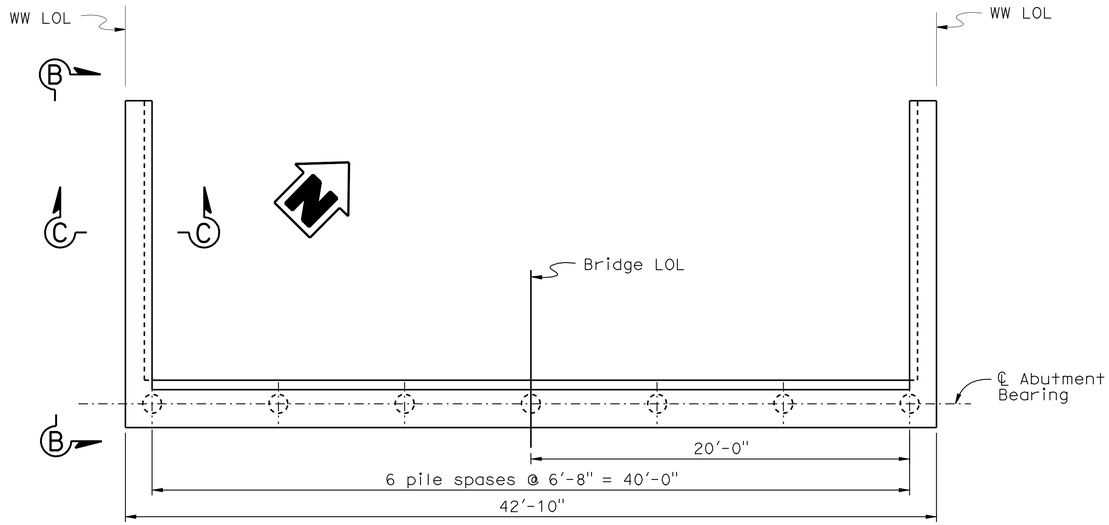

PLAN
1/4" =1'-0"

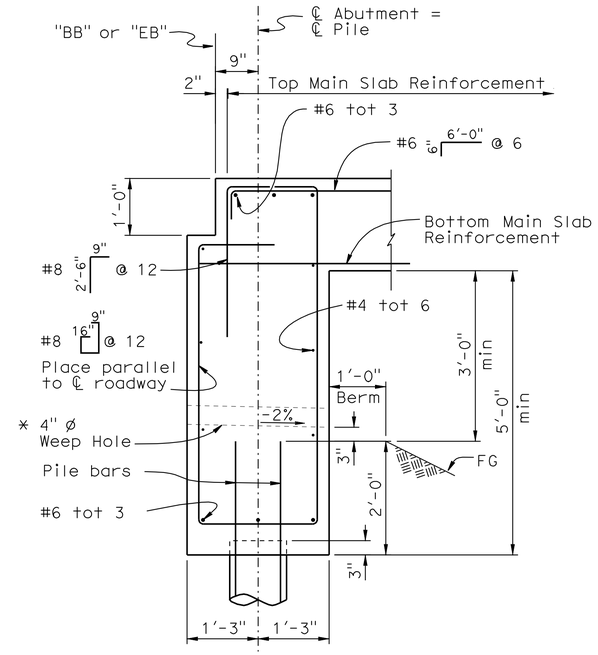

* See "Abutment Drainage Details" sheet

SECTION A-A
3/4" =1'-0"

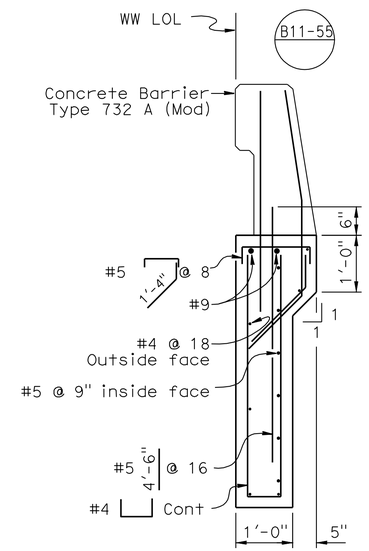

SECTION C-C
3/4" =1'-0"

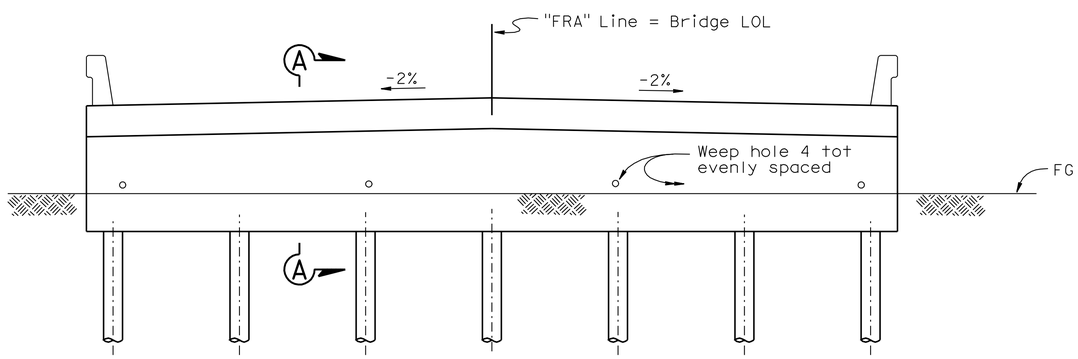

ELEVATION
1/4" =1'-0"

ABUTMENT 3
Abutment 1 Similar

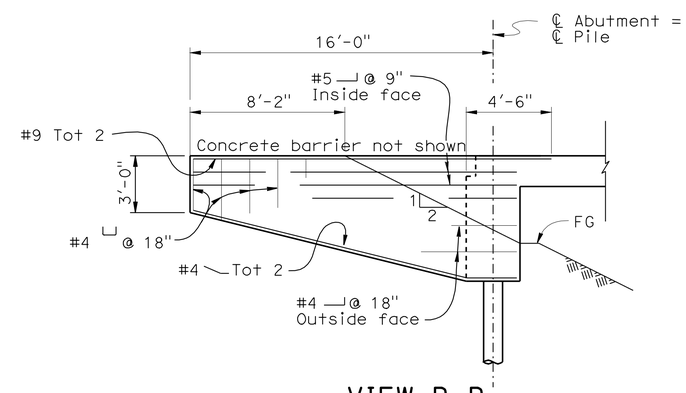

VIEW B-B
1/4" =1'-0"

Note:
For drainage details see
"Abutment Drainage Details" sheet

DESIGN	BY G. Schuster	CHECKED N. Terzis	
DETAILS	BY S. Jiang\A. Chen	CHECKED N. Terzis	
QUANTITIES	BY C. Siegenthaler	CHECKED N. Terzis	

ORIGINAL SCALE IN INCHES FOR REDUCED PLANS 0 1 2 3

STATE OF CALIFORNIA
DEPARTMENT OF TRANSPORTATION

DIVISION OF ENGINEERING SERVICES
STRUCTURE DESIGN
DESIGN BRANCH 5

CU 10
EA 415701

BRIDGE NO. 39C0373
POST MILE 5.22

DISREGARD PRINTS BEARING EARLIER REVISION DATES

REVISION DATES: 02-21-08 9-16-09 06-04-08 06-11-08 12-11-08 02-19-09 04-16-09 06-24-09 8-06-09

SHEET 5 OF 14

DEADMAN CREEK BRIDGE
EAST FRONTAGE ROAD
ABUTMENT LAYOUT

STRUCTURES DESIGN DETAIL SHEET (ENGLISH) (REV. 10/25/05)

FILE => 39c0373-f-abutlyt.dgn

USERNAME => trienard DATE PLOTTED => 11-OCT-2010 TIME PLOTTED => 13:35

DIST	COUNTY	ROUTE	POST MILES TOTAL PROJECT	SHEET No	TOTAL SHEETS
10	Mer	99	R4.6/R10.5	700	751

REGISTERED CIVIL ENGINEER 07-31-09 DATE

10-11-10
PLANS APPROVAL DATE

REGISTERED PROFESSIONAL ENGINEER G. SCHUSTER No. C 63897 Exp. 09-30-10 CIVIL STATE OF CALIFORNIA

The State of California or its officers or agents shall not be responsible for the accuracy or completeness of electronic copies of this plan sheet.

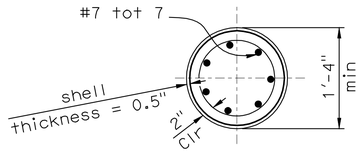

SECTION B-B
1" = 1'-0"

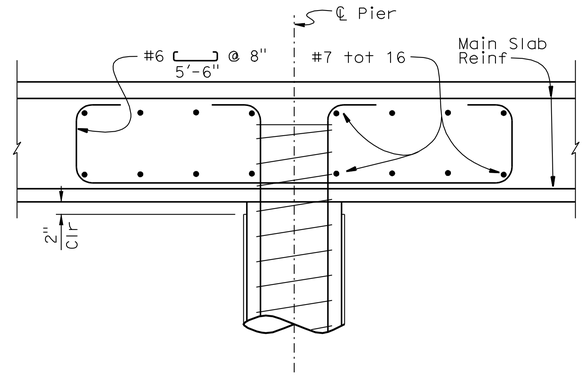

DETAIL "A"
1" = 1'-0"

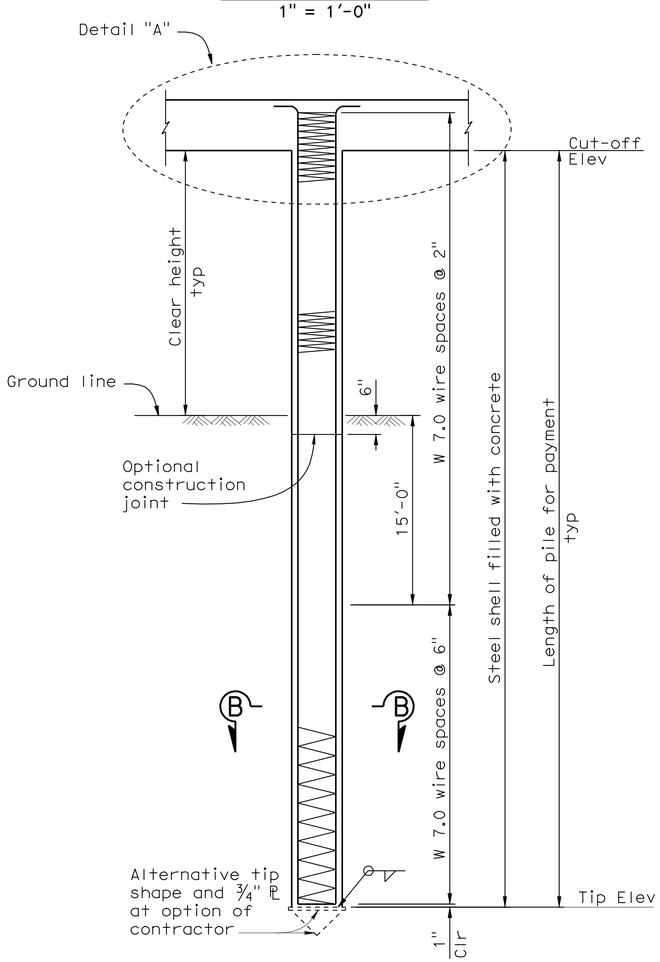

CAST-IN-STEEL SHELL CONCRETE PILE

SECTION A-A
½" = 1'-0"

PILE CUT-OFF ELEVATION TABLE

Pile	Cut-off Elevation (ft)
1	208.91
2	209.02
3	209.13
4	209.24
5	209.24
6	209.13
7	209.02
8	208.91

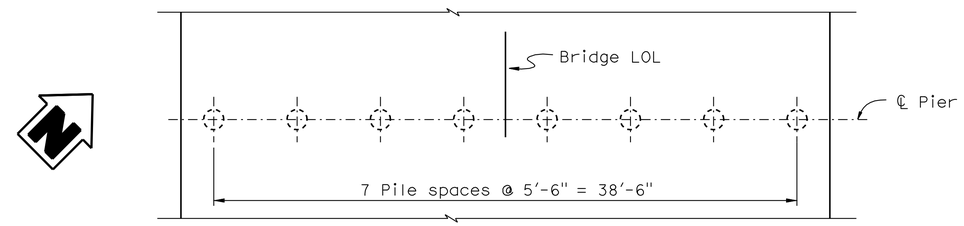

PLAN
1" = 5'-0"

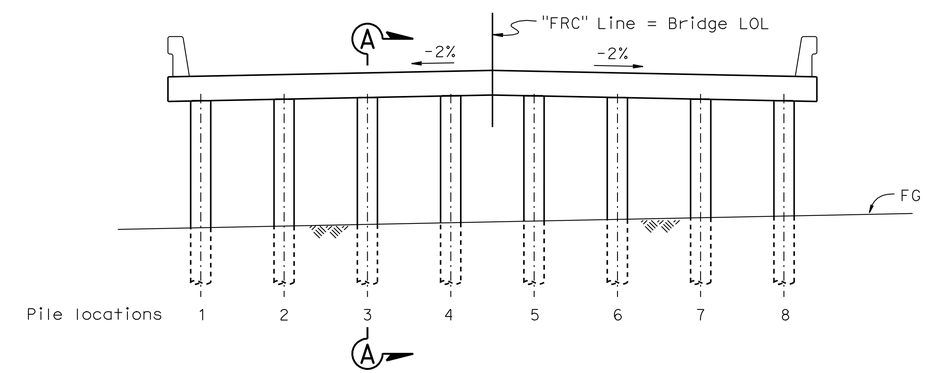

ELEVATION
1" = 5'-0"

DESIGN	BY G. Schuster	CHECKED N. Terzis	
DETAILS	BY S. Jiang/G. M. Souza	CHECKED N. Terzis	
QUANTITIES	BY C. Siegenthaler	CHECKED N. Terzis	

STATE OF CALIFORNIA
DEPARTMENT OF TRANSPORTATION

DIVISION OF ENGINEERING SERVICES
STRUCTURE DESIGN
DESIGN BRANCH 5

BRIDGE NO. 39C0373
POST MILE 5.22

DEADMAN CREEK BRIDGE
EAST FRONTAGE ROAD
PIER DETAILS

ORIGINAL SCALE IN INCHES FOR REDUCED PLANS 0 1 2 3

CU 10
EA 415701

DISREGARD PRINTS BEARING EARLIER REVISION DATES

REVISION DATES: 03-19-08 04-02-09 06-04-08 06-12-08 08-22-08 12-16-08 1-21-09 2-19-09 2-25-09

SHEET 6 OF 14

STRUCTURES DESIGN DETAIL SHEET (ENGLISH) (REV. 10/25/05)

FILE => 39C0373-i-pierdt.dgn

USERNAME => friehard DATE PLOTTED => 11-OCT-2010 TIME PLOTTED => 13:35