DIST	COUNTY	ROUTE	KILOMETER POST TOTAL PROJECT	SHEET No	TOTAL SHEETS
10	Mer	140	58.7/60.5	301	384

M. Van De Pol
REGISTERED CIVIL ENGINEER 9-30-08 DATE

3-2-09
PLANS APPROVAL DATE

REGISTERED PROFESSIONAL ENGINEER M. Van De Pol No. C35610 Exp. 9-30-09 CIVIL STATE OF CALIFORNIA

The State of California or its officers or agents shall not be responsible for the accuracy or completeness of electronic copies of this plan sheet.

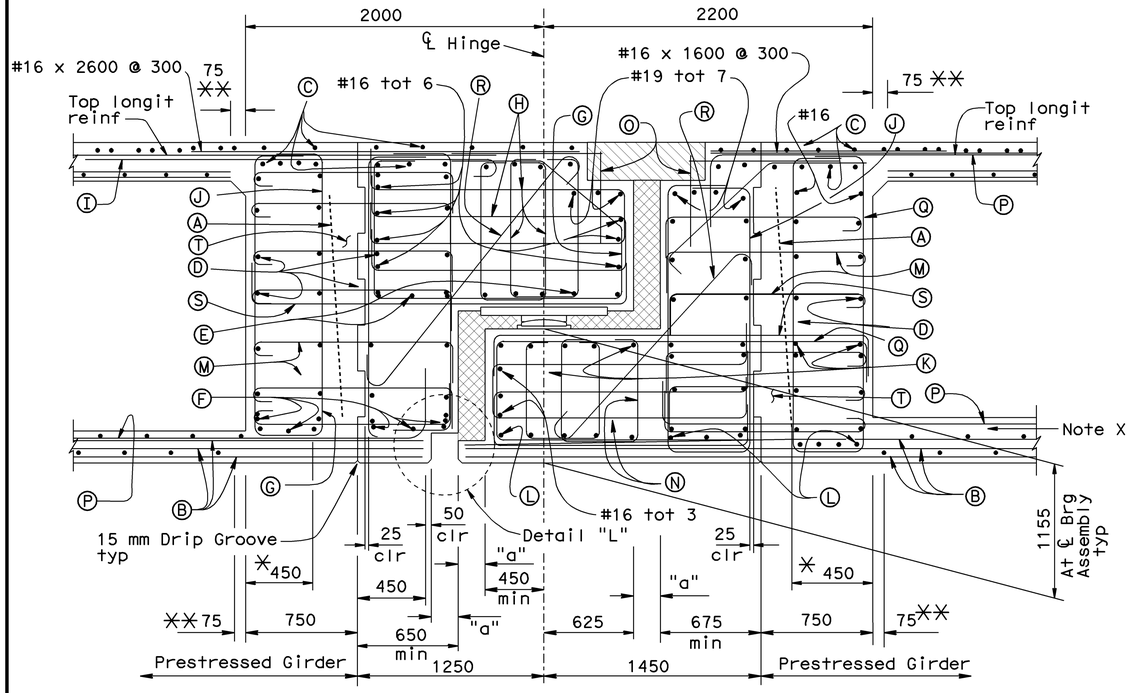

SECTION A-A

1:20

LEGEND:

- Ⓐ Grillage - #13 @ 100 each way Grillage to be 25 mm max clr from PS Anchor. Extend 150 mm beyond Recess for anchorage
- Ⓑ Extend bottom longit reinf
- Ⓒ #19 tot 29 - Extend to EOD
- Ⓓ #16 typ. to hold total 4 per
- Ⓔ #19 tot 6 or 450 typ
- Ⓕ #19 450 typ tot 7
- Ⓖ #22 Varies @ 200
- Ⓗ #16 @ 300 Note Z
- Ⓘ #19 2700 @ 450 Note Z
- Ⓙ #22 @ 200
- Ⓚ #19 tot 9 or 450 typ
- Ⓛ #19 450 typ tot 12
- Ⓜ #19 @ 300 Horiz one per key Note Z
- Ⓝ #16 @ 300 Note Z
- Ⓞ #16 1600 610 @ 300 Adjust to Clear Pin
- Ⓟ #19 2440 @ 200 Note Z
- Ⓠ #22 610 1675 @ 200
- Ⓡ #22 @ 200 Hook may be Rotated
- Ⓢ #22 @ 200
- Ⓣ PS Blockout, see B8-5

NOTES:

For location of Sections A-A, B-B and C-C see "Hinge Layout" sheet

Reinforcement Adjustments may be made, as approved by the Engineer. Reinforcement may be bundled in conflict areas

✳ Minimum in front of Prestress Anchor Plate

✳✳ Limits of & Distribution B0-5 / 5-10 or B0-5 / 5-11

and Limits of B7-1 / S-2

Note Z:
Head Bars may be Substituted for Hooked Bars, as Approved by the Engineer

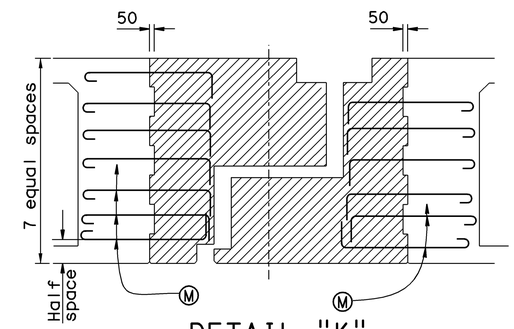

DETAIL "K"

NO SCALE

NOTES:
Indicates cast-in-place concrete to be placed after supporting side of hinge is constructed and bearing assemblies are properly positioned. Concrete to be same strength as cast-in-place prestressed concrete. Falsework shall remain in place a minimum of ten days after the last pour and until concrete has attained a strength of at least 35 MPa

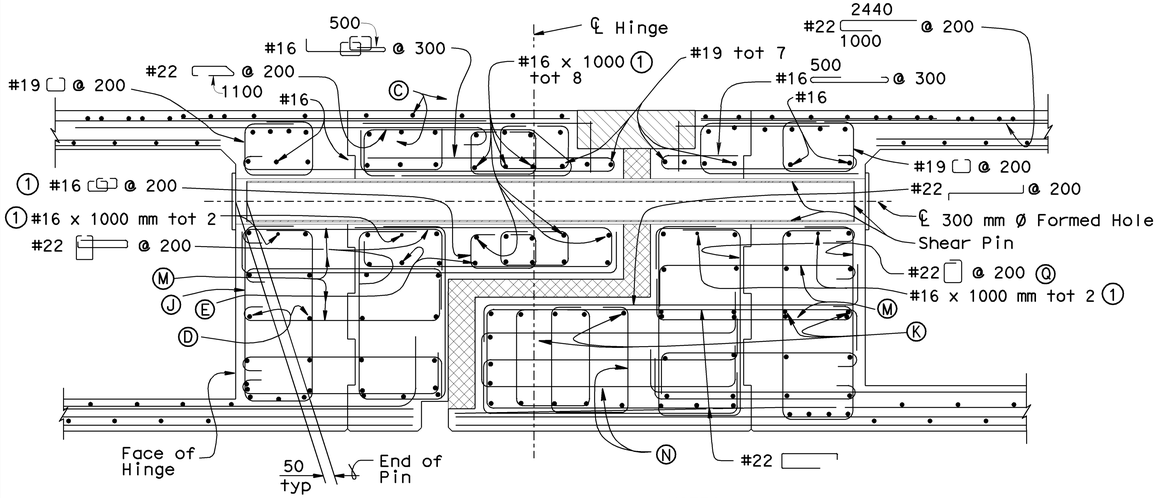

① Centered about ℄ Pin

SECTION C-C

1:20

NOTES:
For Reinforcement not Shown, see "Section A-A"

For Pin Details, see "Hinge Details No. 1" Sheet

Note X
For additional soffit reinforcement, see "Typical Section No. 1" and "Girder Layout No. 2" sheets

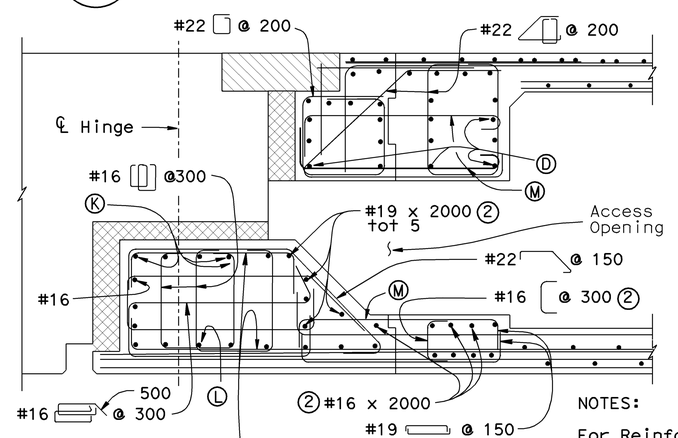

SECTION B-B

1:20

NOTES:

For Reinforcement not Shown, see "Section A-A"

② Centered about ℄ Access Opening

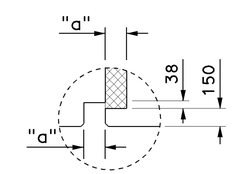

DETAIL "L"

NO SCALE

NOTES:
"a" = thickness of Expanded Polystyrene. For dimension "a" see "Hinge Joint Seal Details" sheet

Caltrans Metric

	BY		CHECKED	
DESIGN	M. VAN DE POL	04-03	P. NORBOE	12-05
DETAILS	M. VAN DE POL	04-03	P. NORBOE	12-05
QUANTITIES	M. VAN DE POL	11-05	P. NORBOE	12-05

STATE OF CALIFORNIA
DEPARTMENT OF TRANSPORTATION

DIVISION OF ENGINEERING SERVICES
STRUCTURE DESIGN
DESIGN BRANCH 9

BRIDGE NO. 39-0044
KILOMETER POST 59.66

BRADLEY OVERHEAD (REPLACE)
HINGE DETAILS No. 2

ALL DIMENSIONS ARE IN MILLIMETERS UNLESS OTHERWISE SHOWN

ORIGINAL SCALE IN MILLIMETERS FOR REDUCED PLANS 0 10 20 30 40 50 60 70 80 90 100

CU 10
EA 3A66U1

DISREGARD PRINTS BEARING EARLIER REVISION DATES

REVISION DATES 6-8-03 12-6-05

SHEET 64 OF 94

FILE => 39-0044-n-hngdt02.dgn

STRUCTURES DESIGN DETAIL SHEET (METRIC) (REV.03-17-04)

USERNAME => trmortok DATE PLOTTED => 04-MAR-2009 TIME PLOTTED => 16:00

DIST	COUNTY	ROUTE	KILOMETER POST TOTAL PROJECT	SHEET No	TOTAL SHEETS
10	Mer	140	58.7/60.5	302	384

REGISTERED CIVIL ENGINEER 9-30-08 DATE

3-2-09
PLANS APPROVAL DATE

REGISTERED PROFESSIONAL ENGINEER M. Van De Pol No. C35610 Exp. 9-30-09 CIVIL STATE OF CALIFORNIA

The State of California or its officers or agents shall not be responsible for the accuracy or completeness of electronic copies of this plan sheet.

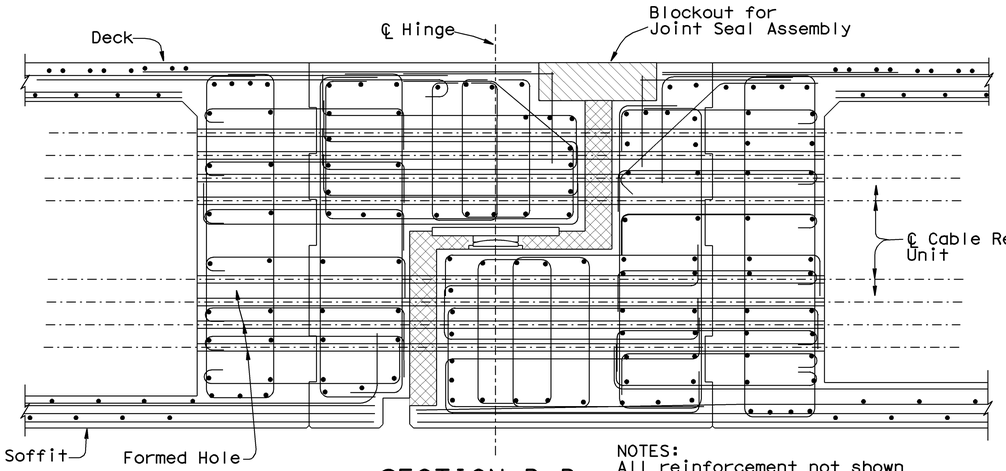

SECTION D-D
1:20

NOTES:
All reinforcement not shown
For details, see "Section A-A" on "Hinge Details No. 2" sheet
Bearing Plates not shown

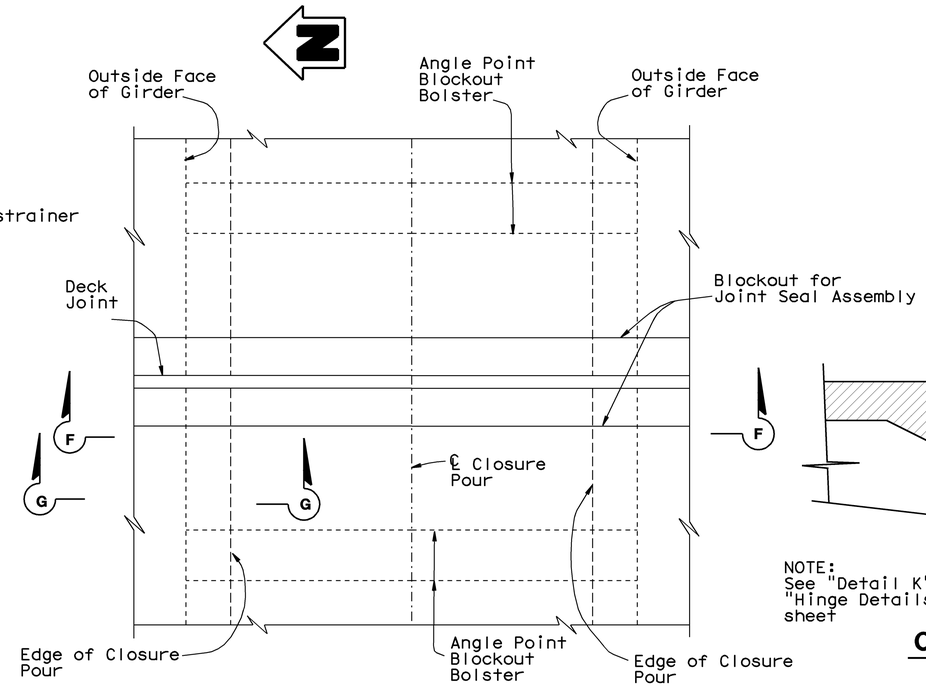

PLAN - DECK JOINT
At Closure Pour
No Scale

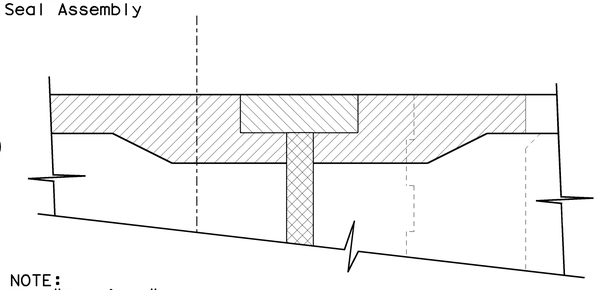

NOTE:
See "Detail K" on "Hinge Details No. 2" sheet

CLOSURE POUR DETAIL
No Scale

NOTES:
Indicates cast-in-place concrete to be placed with Deck Closure Pour. Concrete to be same strength grade as cast-in-place prestressed concrete.

NOTES:

For location of Sections D-D and E-E see "Hinge Layout" sheet

For additional details, see "Hinge Joint Seal Details" sheet

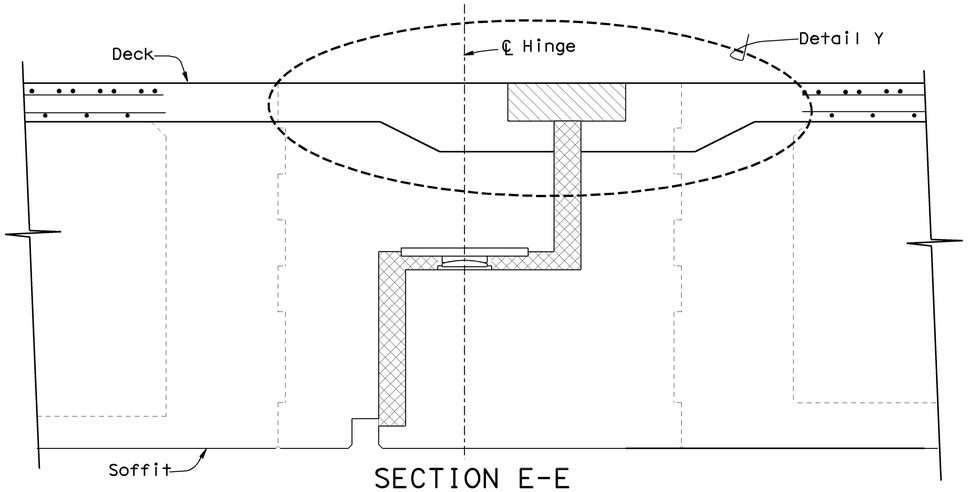

SECTION E-E
1:20

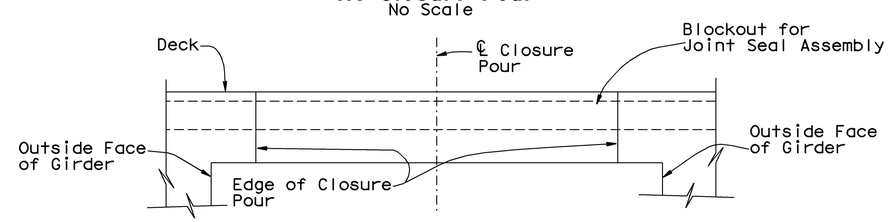

SECTION F-F
No Scale

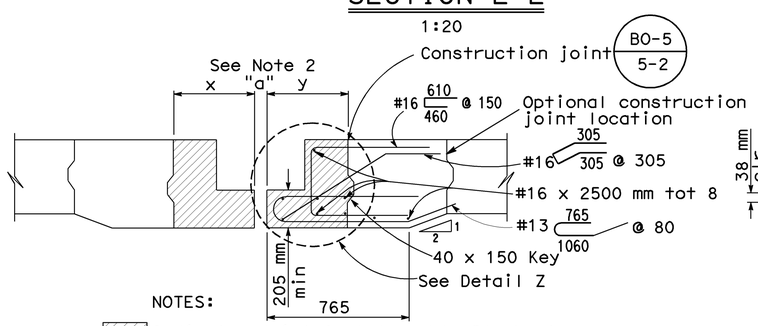

NOTES:
Indicates Joint Seal Assembly Blockout
Typical Slab Reinf not Shown

DETAIL Y
No Scale

Note 2:
x is greater than or equal to y

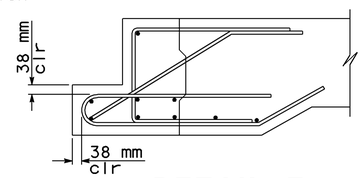

DETAIL Z
No Scale

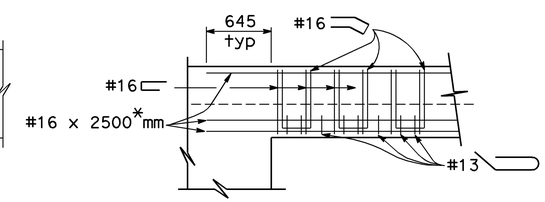

SECTION G-G
No Scale

NOTES:
Reinf shown is in addition to slab reinf
* Reinf may be spliced, as approved by the Engineer

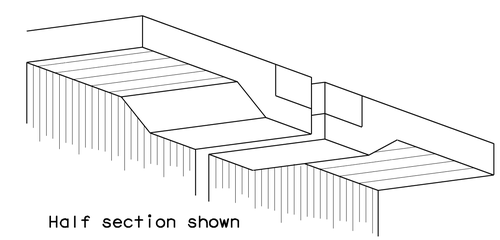

CLOSURE POUR AT HINGE
No Scale

Caltrans Metric

	BY		CHECKED	
DESIGN	M. VAN DE POL	04-03	P. NORBOE	12-05
DETAILS	M. VAN DE POL	04-03	P. NORBOE	12-05
QUANTITIES	M. VAN DE POL	11-05	P. NORBOE	12-05

STATE OF CALIFORNIA
DEPARTMENT OF TRANSPORTATION

DIVISION OF ENGINEERING SERVICES
STRUCTURE DESIGN
DESIGN BRANCH 9

BRIDGE NO. 39-0044
KILOMETER POST 59.66

BRADLEY OVERHEAD (REPLACE)
HINGE DETAILS No. 3

ALL DIMENSIONS ARE IN MILLIMETERS UNLESS OTHERWISE SHOWN

ORIGINAL SCALE IN MILLIMETERS FOR REDUCED PLANS 0 10 20 30 40 50 60 70 80 90 100

CU 10
EA 3A66U1

DISREGARD PRINTS BEARING EARLIER REVISION DATES
REVISION DATES 5-8-03 12-6-05

SHEET 65 OF 94

FILE => 39-0044-n-hngdt03.dgn

STRUCTURES DESIGN DETAIL SHEET (METRIC) (REV.03-17-04)

USERNAME => ttrmorlok DATE PLOTTED => 04-MAR-2009 TIME PLOTTED => 16:00

DIST	COUNTY	ROUTE	KILOMETER POST TOTAL PROJECT	SHEET No	TOTAL SHEETS
10	Mer	140	58.7/60.5	303	384

REGISTERED CIVIL ENGINEER 9-30-08 DATE

3-2-09
PLANS APPROVAL DATE

The State of California or its officers or agents shall not be responsible for the accuracy or completeness of electronic copies of this plan sheet.

REGISTERED PROFESSIONAL ENGINEER M. Van De Pol No. C35610 Exp. 9-30-09 CIVIL STATE OF CALIFORNIA

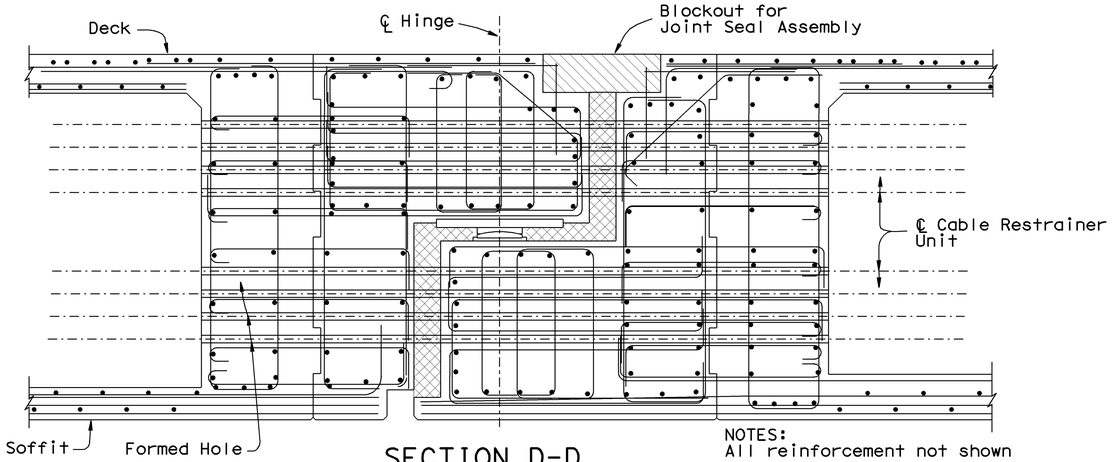

SECTION D-D
1:20

NOTES:
All reinforcement not shown
For details, see "Section A-A" on "Hinge Details No. 2" sheet
Restrainer Bearing Plates not shown

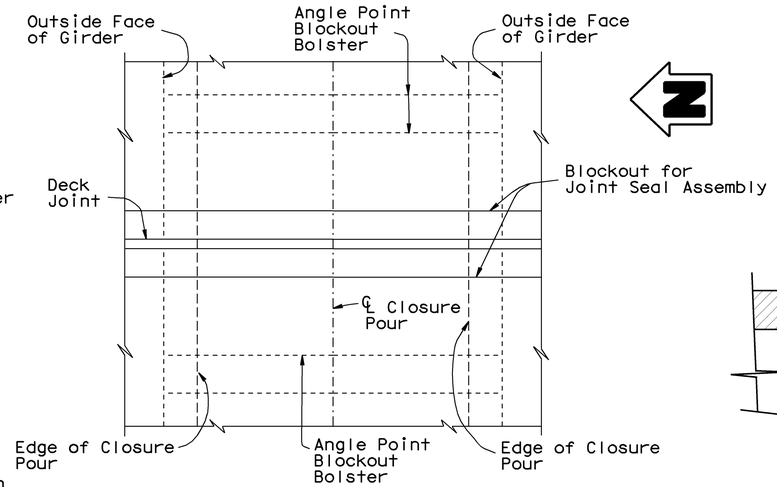

PLAN - DECK JOINT
At Closure Pour
No Scale

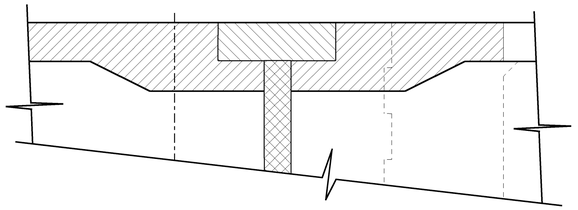

CLOSURE POUR DETAIL
No Scale

NOTES:
See "Detail K" on "Hinge Details No. 2" sheet

Indicates cast-in-place concrete to be placed with Closure Pour

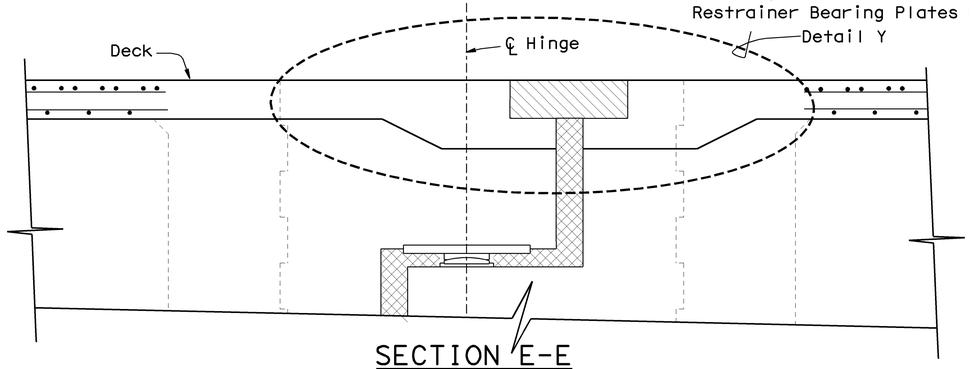

SECTION E-E
1:20

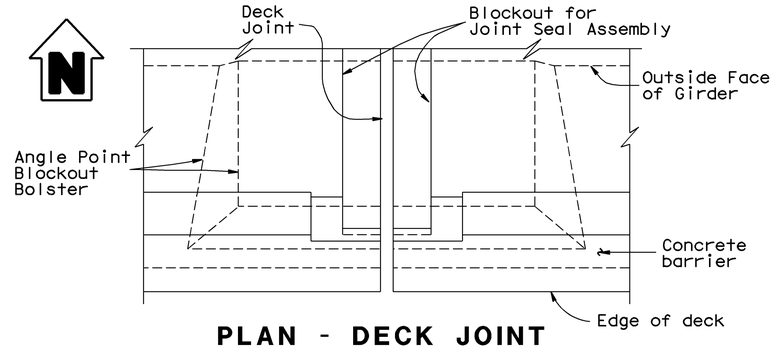

PLAN - DECK JOINT
At Deck Overhang
No Scale

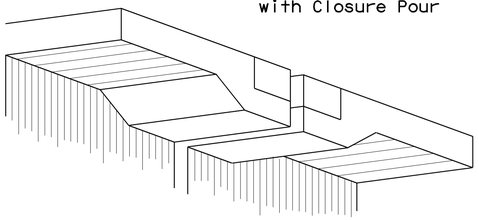

CLOSURE POUR AT HINGE
No Scale

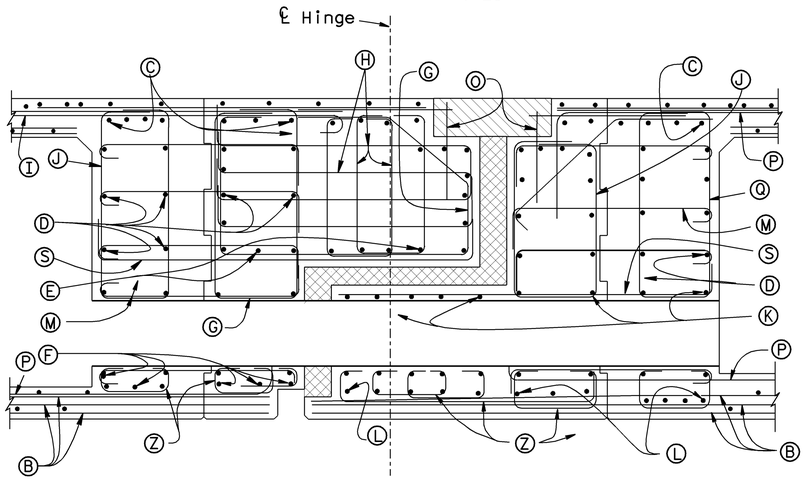

SECTION F-F
No Scale

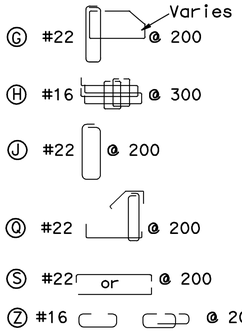

For Additional Reinforcement Details, see "Section A-A" and "Legend" on "Hinge Details No. 2" Sheet

Typical Utility Opeing Reinf not Shown

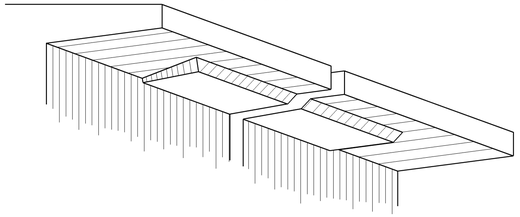

DECK OVERHANG AT HINGE
No Scale

NOTES:
For Location of "Section D-D", "Section E-E" and "Section F-F", see "Hinge Layout" Sheet

For Additional Details, see "Hinge Joint Seal Details" Sheet

For Blockout Details, see "Hinge Details No. 3" Sheet

For Reinforecment not shown, see "Section A-A" on "Hinge Details No. 2" Sheet

Caltrans Metric

	BY		CHECKED	
DESIGN	M. VAN DE POL	04-03	P. NORBOE	12-05
DETAILS	M. VAN DE POL	04-03	P. NORBOE	12-05
QUANTITIES	M. VAN DE POL	11-05	P. NORBOE	12-05

STATE OF CALIFORNIA
DEPARTMENT OF TRANSPORTATION

DIVISION OF ENGINEERING SERVICES
STRUCTURE DESIGN
DESIGN BRANCH 9

BRIDGE NO. 39-0044
KILOMETER POST 59.66

BRADLEY OVERHEAD (REPLACE)
HINGE DETAILS No. 4

ALL DIMENSIONS ARE IN MILLIMETERS UNLESS OTHERWISE SHOWN

ORIGINAL SCALE IN MILLIMETERS FOR REDUCED PLANS 0 10 20 30 40 50 60 70 80 90 100

CU 10
EA 3A66U1

DISREGARD PRINTS BEARING EARLIER REVISION DATES

REVISION DATES: 5-5-08 12-6-05

SHEET 66 OF 94

FILE => 39-0044-n-hngdt04.dgn

STRUCTURES DESIGN DETAIL SHEET (METRIC) (REV.03-17-04)

USERNAME => trmorlok DATE PLOTTED => 04-MAR-2009 TIME PLOTTED => 16:00

RELEASED 4-20-98

DIST.	COUNTY	ROUTE	KILOMETER POST TOTAL PROJECT	SHEET NO.	TOTAL SHEETS
10	Mer	140	58.7/60.5	304	384

Caltrans Metric

M. Van De Pol 9-30-08
REGISTERED ENGINEER - CIVIL

3-2-09
PLANS APPROVAL DATE

The State of California or its officers or agents shall not be responsible for the accuracy or completeness of electronic copies of this plan sheet.

REGISTERED PROFESSIONAL ENGINEER M. VAN DE POL No. C35610 Exp. 9-30-09 CIVIL STATE OF CALIFORNIA

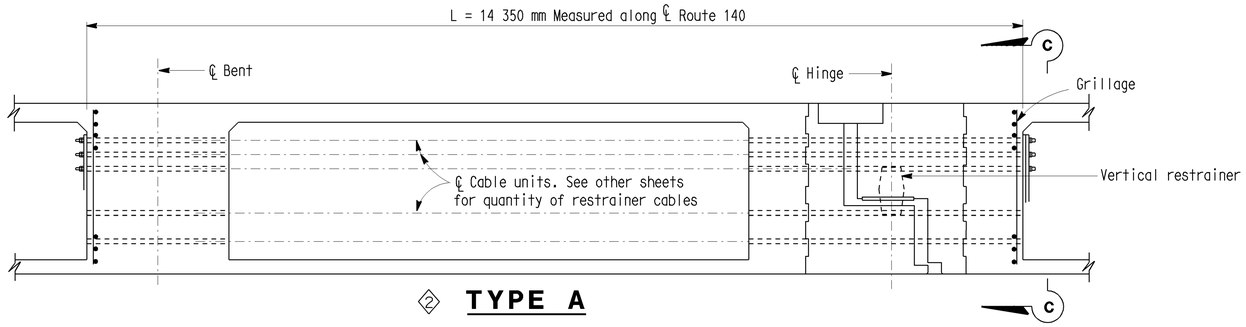

② TYPE A

LONGITUDINAL HINGE RESTRAINER

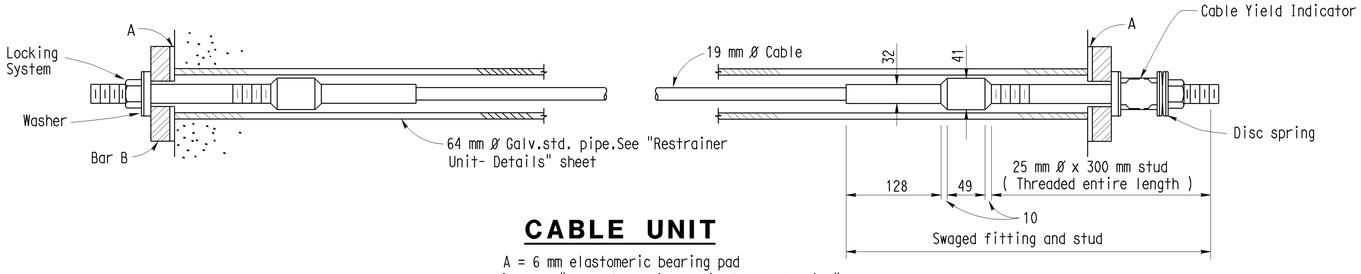

CABLE UNIT

A = 6 mm elastomeric bearing pad
For Details see "Cable Restrainer Unit-Type 2 Details" sheet

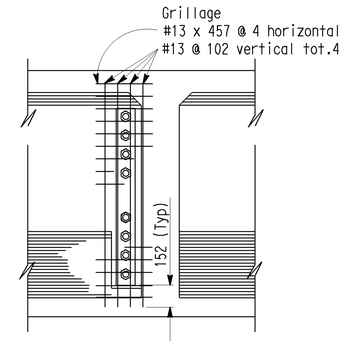

SECTION C-C

NOTES:

Restrainer units to be on tangent alignment.

Anchor nuts shall not be set until 30 days following completion of prestressing for supported frame, allowing for thermal expansion and concrete creep and shrinkage

See other sheets for location and number of longitudinal and vertical hinge restrainers, and table of joint openings.

Contractor may install restrainers in horizontal arrangement with approval of the Engineer. The location shall be in the middle 1/3 depth of the structure.

An alternative is to place restrainers in two horizontal layers, equally located above and below the mid structure depth. The number of restrainers in each layer shall not differ by more than one.

All restrainer unit anchor nut sets shall occur during the same day, or as approved by the Engineer

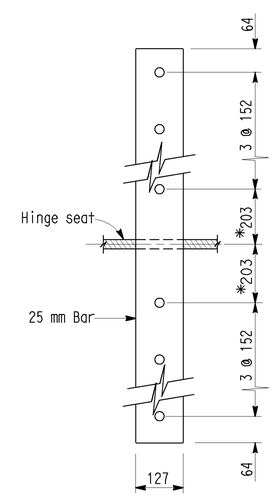

NOTE:
* Dimension may be adjusted to clear reinforcement

② DETAIL - BAR B

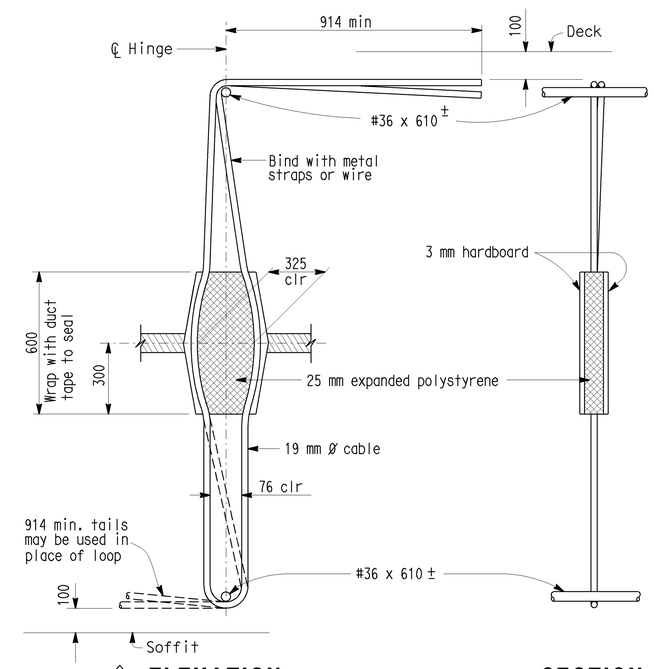

② ELEVATION SECTION

VERTICAL RESTRAINER

SPECIAL DETAILS
NO SCALE

ALL DIMENSIONS ARE IN MILLIMETERS UNLESS OTHERWISE SHOWN

STANDARD DRAWING

FILE NO. XS 12-53.1	DESIGN BY S. SAHS	CHECKED R.J. ZELINSKI	APPROVAL RECOMMENDED BY	
DRAWING DATE Revised	DETAILS BY R. YEE	CHECKED R.J. ZELINSKI	DESIGN SUPERVISOR	
	SUBMITTED BY R.J. ZELINSKI			

① Deleted Notes ③ Revised Detail
② Revised Table

STATE OF CALIFORNIA
DEPARTMENT OF TRANSPORTATION

DIVISION OF STRUCTURES
STRUCTURE DESIGN 9

CU 10
EA 3A66U1

BRIDGE NO. 39-0044
KILOMETER POST 59.66

BRADLEY OVERHEAD (REPLACE)

CABLE RESTRAINER UNIT - TYPE 2

DISREGARD PRINTS BEARING EARLIER REVISION DATES 08-12-03 12-6-05

REVISION DATES (PRELIMINARY STAGE ONLY)

SHEET 67 OF 94

DS OSD 2147A (METRIC) (REV. 2/25/97)

ORIGINAL SCALE IN MILLIMETERS FOR REDUCED PLANS 0 10 20 30 40 50 60 70 80 90 100

USERNAME => trmariak 39-0044-n-hngre01.dgn XS12531.DGN

DATE PLOTTED => 04-MAR-2009 TIME PLOTTED => 16:01

RELEASED 4-20-98

DIST.	COUNTY	ROUTE	KILOMETER POST TOTAL PROJECT	SHEET NO.	TOTAL SHEETS
10	Mer	140	58.7/60.5	305	384

Caltrans Metric

M. Van De Pol 9-30-08
REGISTERED ENGINEER - CIVIL

3-2-09
PLANS APPROVAL DATE

REGISTERED PROFESSIONAL ENGINEER M. VAN DE POL No. C35610 Exp. 9-30-09 CIVIL STATE OF CALIFORNIA

The State of California or its officers or agents shall not be responsible for the accuracy or completeness of electronic copies of this plan sheet.

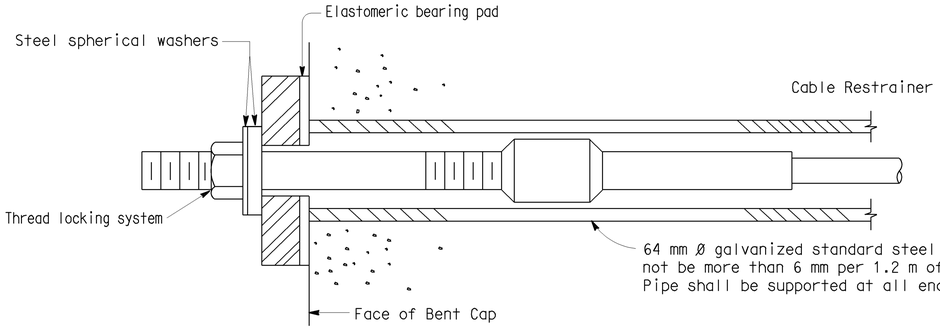

BENT SIDE
Fixed Side ◇1 ◇3

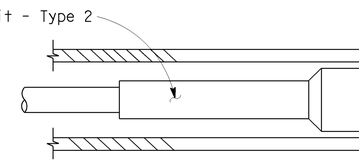

CABLE UNIT

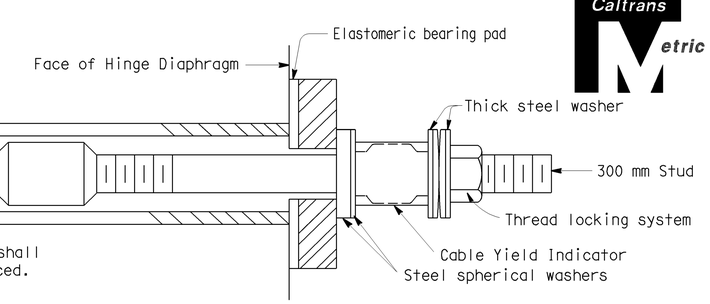

HINGE SIDE ◇1 ◇3
Adjustment Side

DISC SPRINGS AND WASHERS ◇2
"All dimensions in mm, except as noted"

	DISC SPRING					STEEL SPHERICAL WASHER			THICK WASHER		
L*(m)	ID	OD	t	H	COLOR CODE	ID	OD	Nom thick.	ID	OD	t**
11.6 - 14.7	31	63	2.5	4.5	YELLOW	33	64	13	29	57	6.3

*For length L (m), see "Cable Restrainer Unit - Type 2" sheet **Minimum value

NOTE: All OD and ID dimensions for washers and disc springs shall meet the dimensional tolerances for harden steel washers, ASTM F436

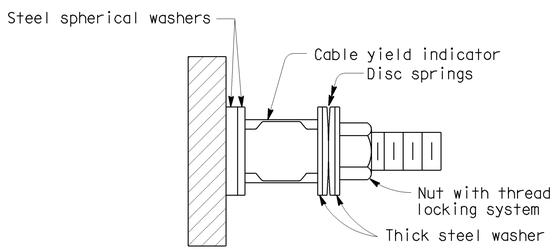

ADJUSTMENT END
◇1

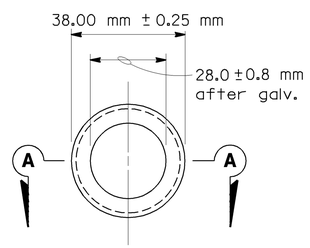

END VIEW

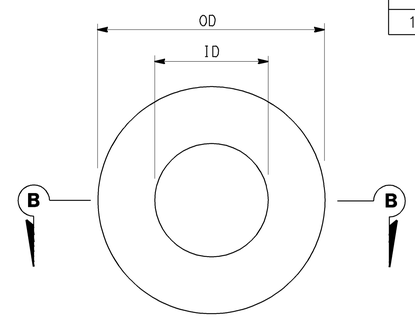

PLAN

RESTRAINER UNIT INSTALLATION PROCEDURE
◇1

1. Install Cable Yield Indicator, spherical washers, disc springs, nut and washers on the hinge side of restrainers as shown in "Adjustment End" detail. Disc springs shall be installed front to front as shown in "Disc Spring" detail.
2. Place only nut, washer and thread locking system on bent side of restrainers. Place thread locking system on bent side stud prior to installing nut and washers, and prior to setting the cable.
3. Tighten nut on the cable from the adjustment end of restrainer until the disc springs collapse and there is no disc gap remaining between the discs. The cable should be approximately straight with no sag.
4. Place thread locking system on hinge side stud after tightening the cable, but before backing off the nut. Back off the nut at hinge side a distance equal to maximum additional amount that the hinge joint is expected to open, relative to existing ambient conditions, as shown on the plans for movement rating.

NOTE: If the cable needs to be secured from turning while tightening, use double nut locking technique on the stud to protect the threads.

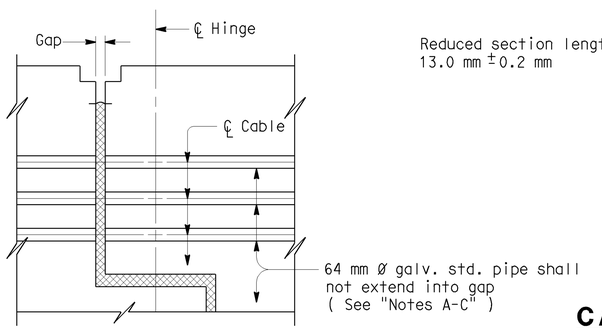

HINGE DETAIL

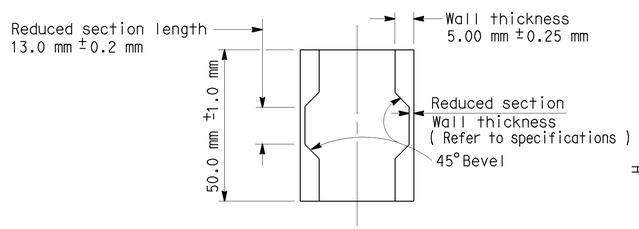

SECTION A-A

CABLE YIELD INDICATOR
All dimensions are before galvanizing except as noted.

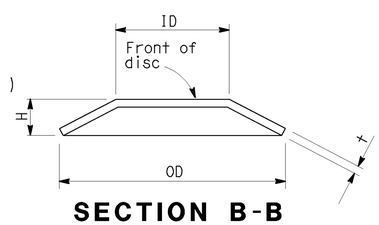

SECTION B-B
(Single spring)

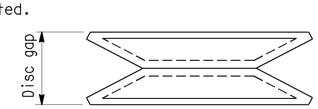

AS INSTALLED ON STUD

DISC SPRING
Note: For dimensions not shown, see table

NOTES:

A. The ends of pipe shall be covered or capped to prevent concrete and debris from entering the pipe until hinge concrete is placed.

B. Care should be taken to align the pipes on each side of the hinge.

C. All ends of pipes must be flush with or slightly recessed from the concrete. The inside edges of the pipes must be smooth to prevent fraying of cables.

SPECIAL DETAILS
NO SCALE
ALL DIMENSIONS ARE IN MILLIMETERS UNLESS OTHERWISE SHOWN

STANDARD DRAWING

FILE NO. XS 12-53.1	DESIGN BY S. SAHS	CHECKED R.J. ZELINSKI	APPROVAL RECOMMENDED BY
DRAWING DATE Revised	DETAILS BY R. YEE	CHECKED R.J. ZELINSKI	DESIGN SUPERVISOR
	SUBMITTED BY R.J. ZELINSKI		

◇1 Deleted Notes ◇3 Revised Detail
◇2 Revised Table

STATE OF CALIFORNIA
DEPARTMENT OF TRANSPORTATION

DIVISION OF STRUCTURES
STRUCTURE DESIGN 9

BRIDGE NO. 39-0044
KILOMETER POST 59.66

BRADLEY OVERHEAD (REPLACE)
CABLE RESTRAINER UNIT - TYPE 2 DETAILS

DS OSD 2147A (METRIC) (REV. 2/25/97)

ORIGINAL SCALE IN MILLIMETERS FOR REDUCED PLANS 0 10 20 30 40 50 60 70 80 90 100

CU 10
EA 3A66U1

DISREGARD PRINTS BEARING EARLIER REVISION DATES 08-12-03

REVISION DATES (PRELIMINARY STAGE ONLY)

SHEET 68 OF 94

USERNAME => trmariak 39-0044-n-hngre02.dgn XS12531.DGN

DATE PLOTTED => 04-MAR-2009 TIME PLOTTED => 16:01

RELEASED 4-27-99

DIST.	COUNTY	ROUTE	KILOMETER POST TOTAL PROJECT	SHEET NO.	TOTAL SHEETS
10	Mer	140	58.7/60.5	306	384

Caltrans Metric

M. Van De Pol 9-30-08
REGISTERED ENGINEER - CIVIL

3-2-09
PLANS APPROVAL DATE

The State of California or its officers or agents shall not be responsible for the accuracy or completeness of electronic copies of this plan sheet.

REGISTERED PROFESSIONAL ENGINEER M. VAN DE POL No. C 35610 Exp. 9-30-09 CIVIL STATE OF CALIFORNIA

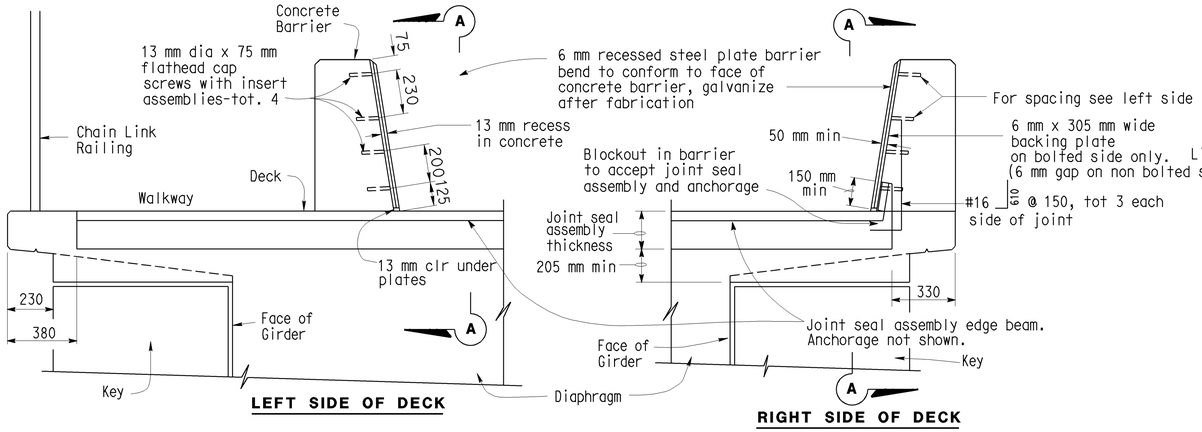

SEAL INSTALLATION

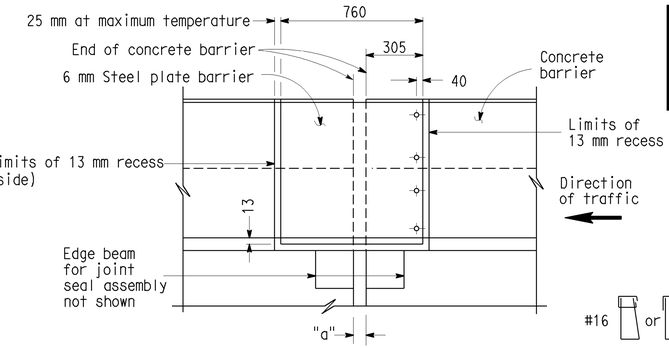

ELEVATION A-A

Joint Information			"a" Dimension (mm)		
Location	Movement Rating (MR)	Skew	Winter	Summer	Spring & Fall
Abut 1	115 mm	00°00'00"	65	50	35
Abut 8	115 mm	00°00'00"	65	50	35

For added information, see "Abutment Details" and "Structure Approach Details" sheets

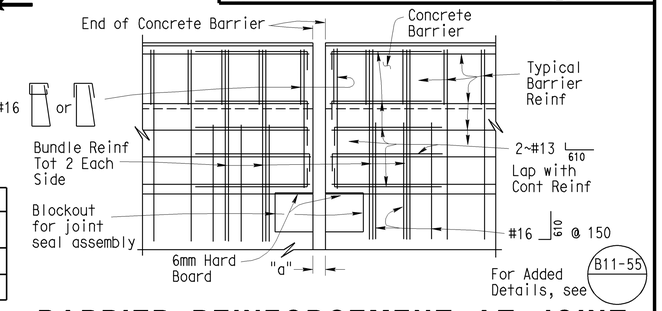

BARRIER REINFORCEMENT AT JOINT

Reinf Shown in Addition to Standard Plan Reinf

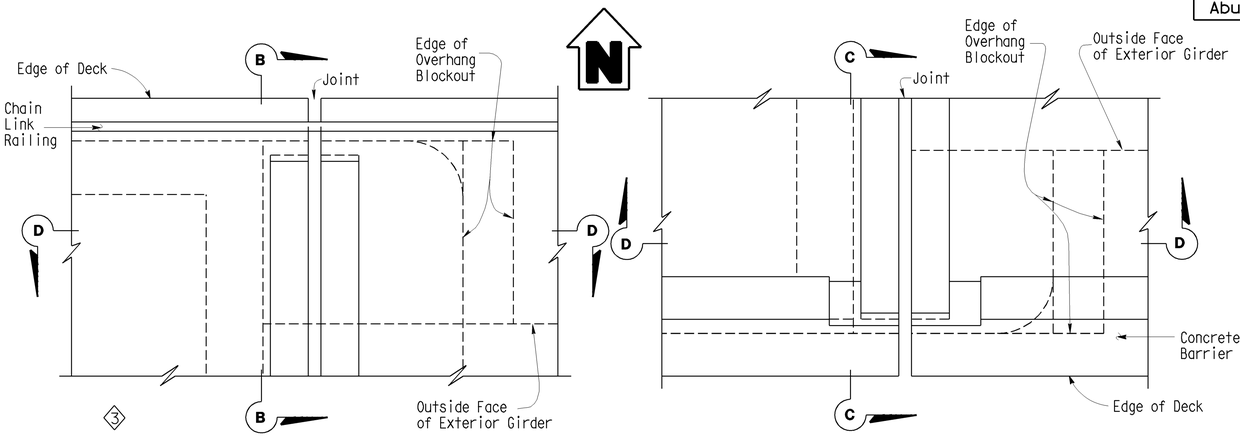

PLANS - DECK JOINT

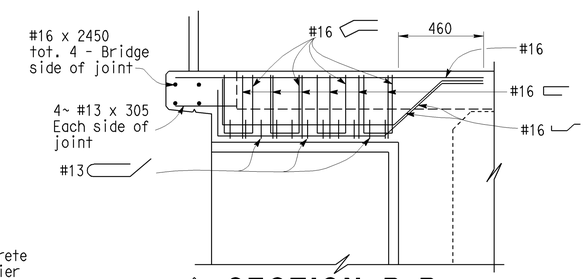

SECTION B-B

Overhang Bolster Reinforcement shown. For Reinforcement not shown, see "Typical Section No. 1" Sheet

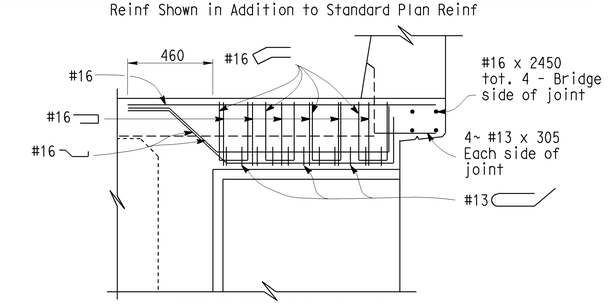

SECTION C-C

Overhang Bolster Reinforcement shown. For Reinforcement not shown, see "Typical Section No. 1" Sheet

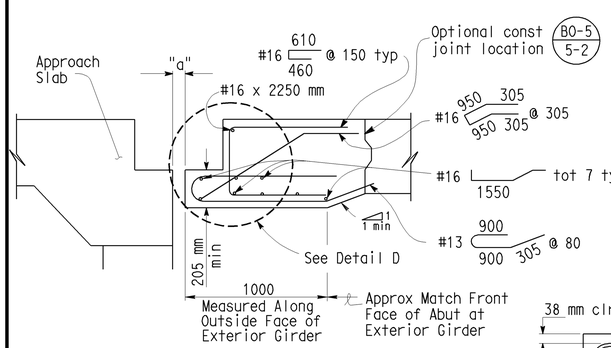

SECTION D-D

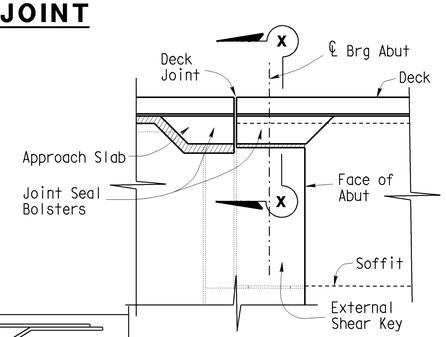

PART ELEVATION

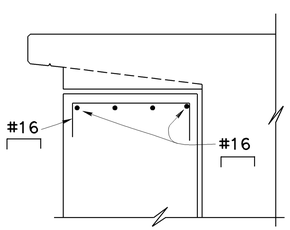

SECTION X-X

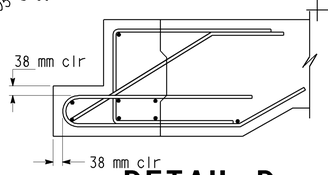

DETAIL D

BLOCKOUT AT SHEAR KEY

NOTE:
For additional details, see "Abutment Details" sheets

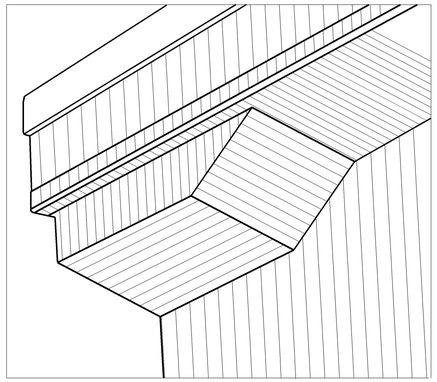

Superstructure Only

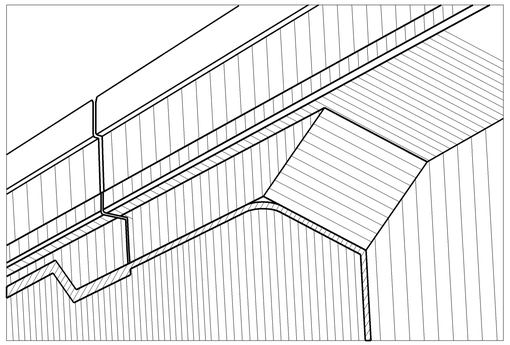

Superstructure and Substructure

DECK OVERHANG AT ABUTMENT

NOTE:
South side shown, North side similar

NO SCALE

ALL DIMENSIONS ARE IN MILLIMETERS UNLESS OTHERWISE SHOWN

STANDARD DRAWING

FILE NO. XS 12-79	DESIGN BY DICK BARLOW	CHECKED R. LACALLE	APPROVAL RECOMMENDED BY	
DRAWING DATE REVISED	DETAILS BY R. YEE	CHECKED R. LACALLE	DESIGN SUPERVISOR	
	SUBMITTED BY			

1 Deleted Details 3 Added Detail
2 Revised Details

STATE OF CALIFORNIA
DEPARTMENT OF TRANSPORTATION

DIVISION OF STRUCTURES
STRUCTURE DESIGN 9

BRIDGE NO. 39-0044
KILOMETER POST 59.66

BRADLEY OVERHEAD (REPLACE)

ABUTMENT JOINT SEAL DETAILS

MOVEMENT RATING GREATER THAN 100 mm

DS OSD 2147A (METRIC) (REV. 2/25/97)

ORIGINAL SCALE IN MILLIMETERS FOR REDUCED PLANS 0 10 20 30 40 50 60 70 80 90 100

CU 10
EA 3A66U1

DISREGARD PRINTS BEARING EARLIER REVISION DATES 8-13-03

REVISION DATES (PRELIMINARY STAGE ONLY)

SHEET 69 OF 94

USERNAME => trmariak 39-0044-o-abjnt.dgn XS1279.DGN

DATE PLOTTED => 04-MAR-2009 TIME PLOTTED => 16:01

RELEASED 4-27-99

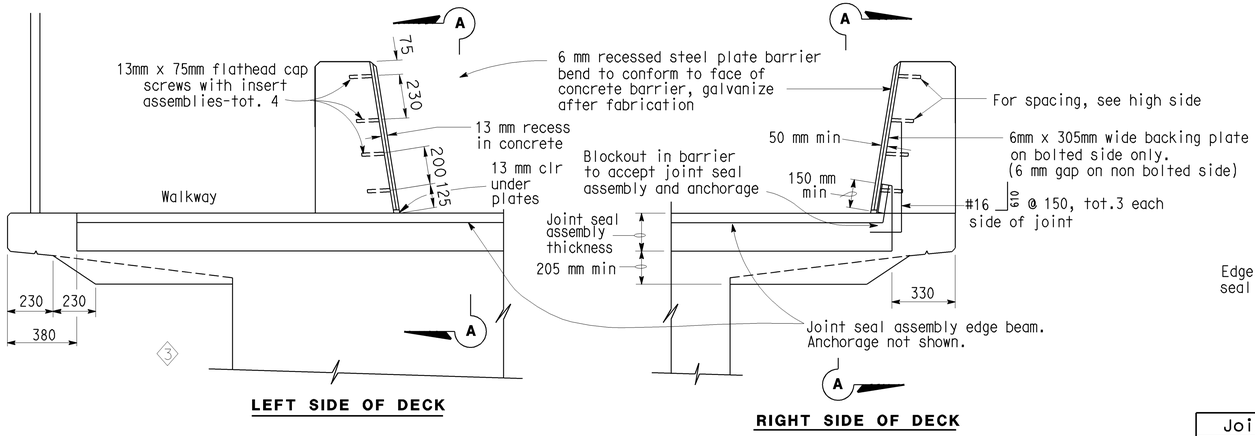

SEAL INSTALLATION

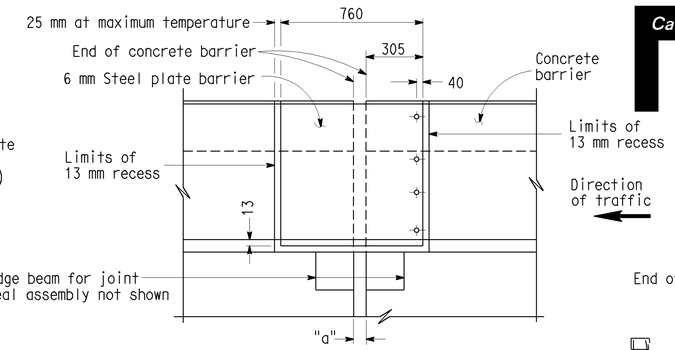

ELEVATION A-A

Joint Information		"a" Dimension (mm)			
Location	Movement Rating (MR)	Skew	Winter	Summer	Spring & Fall
Hinge 1	240 mm	00°00'00"	130	100	65

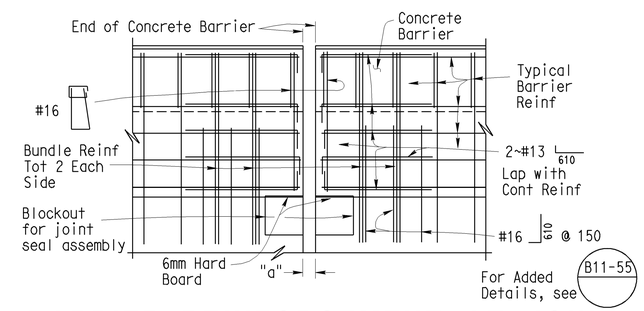

BARRIER REINFORCEMENT AT JOINT

Reinf Shown in Addition to Standard Plan Reinf

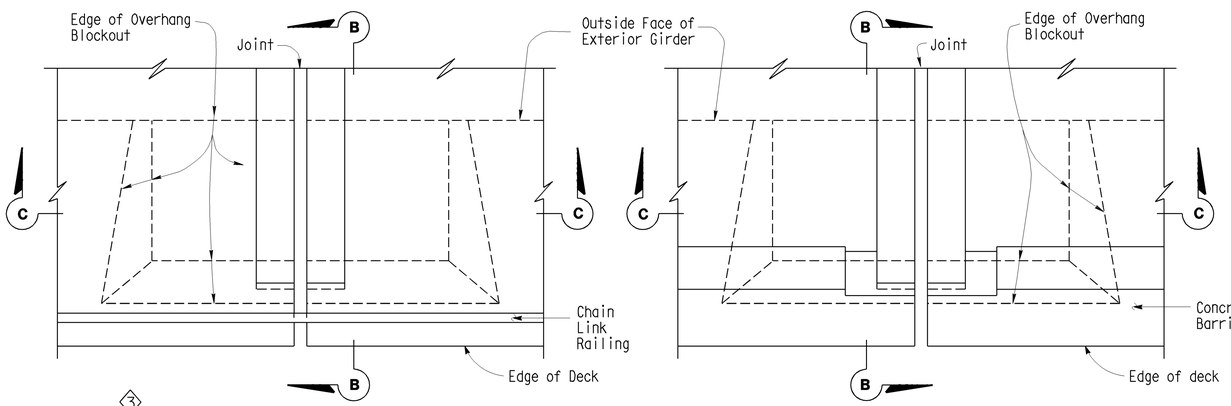

PLANS - DECK JOINT

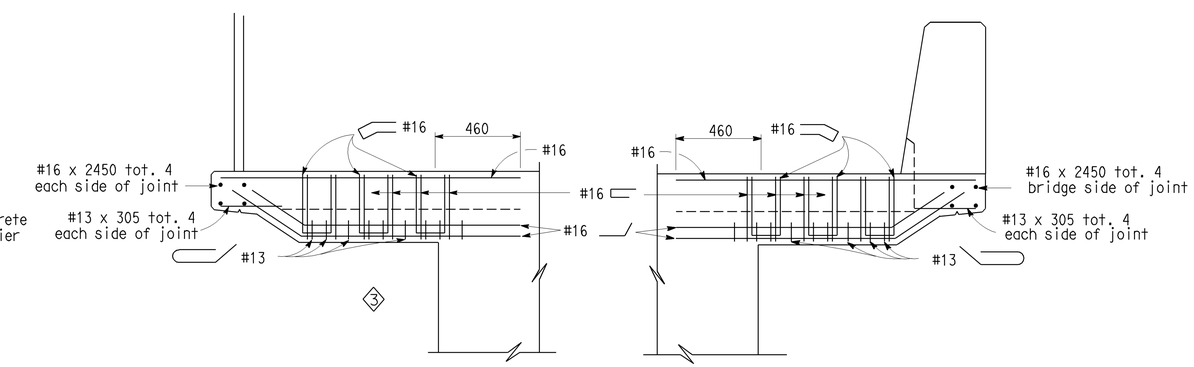

SECTION B-B

Reinf shown is in addition to slab reinf

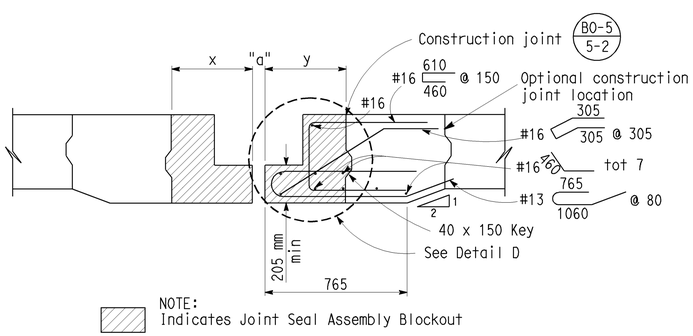

SECTION C-C

x is greater than or equal to y

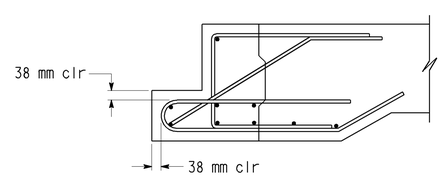

DETAIL D

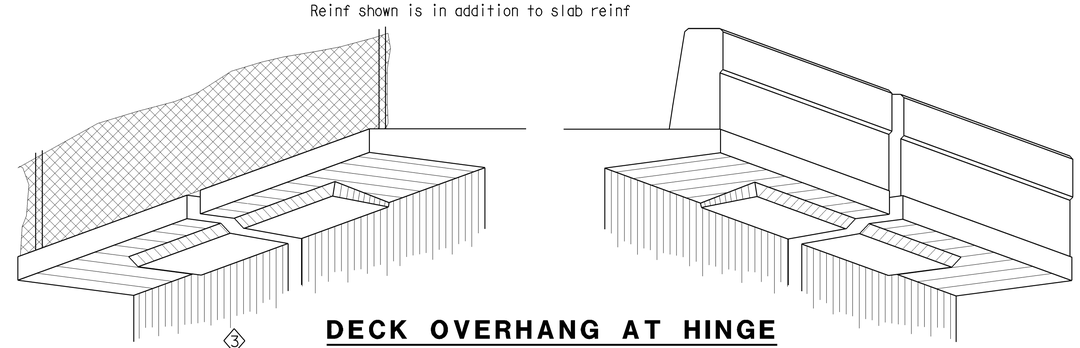

DECK OVERHANG AT HINGE

No Scale

NO SCALE
ALL DIMENSIONS ARE IN MILLIMETERS UNLESS OTHERWISE SHOWN

DIST.	COUNTY	ROUTE	KILOMETER POST TOTAL PROJECT	SHEET NO.	TOTAL SHEETS
10	Mer	140	58.7/60.5	307	384

Caltrans Metric

REGISTERED ENGINEER - CIVIL 9-30-08

3-2-09
PLANS APPROVAL DATE

The State of California or its officers or agents shall not be responsible for the accuracy or completeness of electronic copies of this plan sheet.

REGISTERED PROFESSIONAL ENGINEER M. VAN DE POL No. C 35610 Exp. 9-30-09 CIVIL STATE OF CALIFORNIA

STANDARD DRAWING

FILE NO. XS 12-79	DESIGN	BY DICK BARLOW	CHECKED R. LACALLE	APPROVAL RECOMMENDED BY
DRAWING DATE REVISED	DETAILS	BY R. YEE	CHECKED R. LACALLE	DESIGN SUPERVISOR
	SUBMITTED BY			

1 Deleted Details 3 Added Detail
2 Revised Details

STATE OF CALIFORNIA DEPARTMENT OF TRANSPORTATION

DIVISION OF STRUCTURES STRUCTURE DESIGN 9

BRIDGE NO. 39-0044
KILOMETER POST 59.66

BRADLEY OVERHEAD (REPLACE)

HINGE JOINT SEAL DETAILS

MOVEMENT RATING GREATER THAN 100 mm

DS OSD 2147A (METRIC) (REV. 2/25/97)

ORIGINAL SCALE IN MILLIMETERS FOR REDUCED PLANS 0 10 20 30 40 50 60 70 80 90 100

CU 10
EA 3A66U1

DISREGARD PRINTS BEARING EARLIER REVISION DATES 8-13-03

REVISION DATES (PRELIMINARY STAGE ONLY)

SHEET 70 OF 94

USERNAME => trmariak 39-0044-o-hndjnt.dgn XS1279.DGN

DATE PLOTTED => 04-MAR-2009 TIME PLOTTED => 16:01

DIST	COUNTY	ROUTE	KILOMETER POST TOTAL PROJECT	SHEET No	TOTAL SHEETS
10	Mer	140	58.7/60.5	308	384

REGISTERED CIVIL ENGINEER 9-30-08 DATE

3-2-09
PLANS APPROVAL DATE

REGISTERED PROFESSIONAL ENGINEER M. Van De Pol No. C35610 Exp. 9-30-09 CIVIL STATE OF CALIFORNIA

The State of California or its officers or agents shall not be responsible for the accuracy or completeness of electronic copies of this plan sheet.

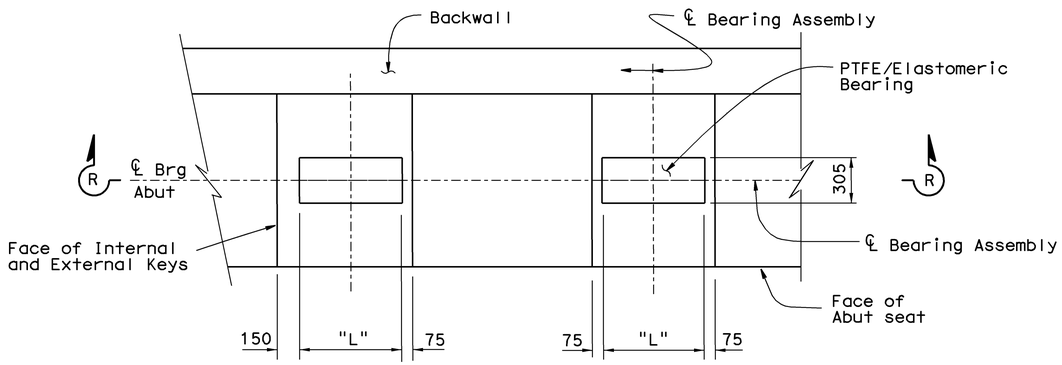

PLAN
No Scale

NOTE:
Expanded Polystyrene Not Shown

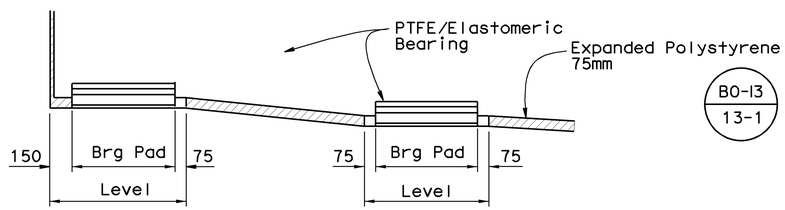

SECTION R-R
BEARING PAD DETAIL
No Scale

Note:

For PTFE/Elastomeric Bearing Assembly details, see "PTFE/Elastomeric Bearing Details No. 2" sheet

For additional details, see "Abutment Details No. 1", "Abutment Details No. 2" and "Abutment Layout" sheets

EXPANSION BEARING TABLE

LOCATION	* MAXIMUM VERTICAL LOAD (kN)	* MINIMUM DEAD LOAD (kN)	DESIGN ROTATION (Degrees)	BEARING PAD					PTFE				SOLE PLATE			ASSEMBLY HEIGHT (mm)
				WIDTH (mm)	"L" LENGTH (mm)	ELASTOMER THICKNESS (mm)	INTERMEDIATE PLATE THICKNESS (mm)	MASONRY PLATE THICKNESS (mm)	NUMBER OF DISKS	THICKNESS (mm)	DIAMETER (mm)	AREA (cm^2)	WIDTH (mm)	LENGTH (mm)	THICKNESS (mm)	
Abutment 1	1455	1143	2.00	305	710	75	32	19	2	8	210	690	670	710	29	163
Abutment 8	1548	1237	2.00	305	760	65	35	19	2	8	215	730	700	705	35	162

* Per Bearing Assembly

Caltrans Metric

ALL DIMENSIONS ARE IN MILLIMETERS UNLESS OTHERWISE SHOWN

	BY		CHECKED	
DESIGN	M. VAN DE POL	04-03	P. NORBOE	12-05
DETAILS	M. VAN DE POL	04-03	P. NORBOE	12-05
QUANTITIES	M. VAN DE POL	11-05	P. NORBOE	12-05

ORIGINAL SCALE IN MILLIMETERS FOR REDUCED PLANS 0 10 20 30 40 50 60 70 80 90 100

STATE OF CALIFORNIA
DEPARTMENT OF TRANSPORTATION

DIVISION OF ENGINEERING SERVICES
STRUCTURE DESIGN
DESIGN BRANCH 9

CU 10
EA 3A66U1

BRIDGE NO. 39-0044
KILOMETER POST 59.66

BRADLEY OVERHEAD (REPLACE)
PTFE/ELASTOMERIC BEARING DETAILS No. 1

DISREGARD PRINTS BEARING EARLIER REVISION DATES

REVISION DATES: 5-8-03 12-6-05

SHEET 71 OF 94

FILE => 39-0044-p-abpre101.dgn

STRUCTURES DESIGN DETAIL SHEET (METRIC) (REV.03-17-04)

USERNAME => trmorlok DATE PLOTTED => 04-MAR-2009 TIME PLOTTED => 16:01

DIST	COUNTY	ROUTE	KILOMETER POST TOTAL PROJECT	SHEET No	TOTAL SHEETS
10	Mer	140	58.7/60.5	309	384

REGISTERED CIVIL ENGINEER 9-30-08 DATE

3-2-09
PLANS APPROVAL DATE

The State of California or its officers or agents shall not be responsible for the accuracy or completeness of electronic copies of this plan sheet.

REGISTERED PROFESSIONAL ENGINEER M. Van De Pol No. C35610 Exp. 9-30-09 CIVIL STATE OF CALIFORNIA

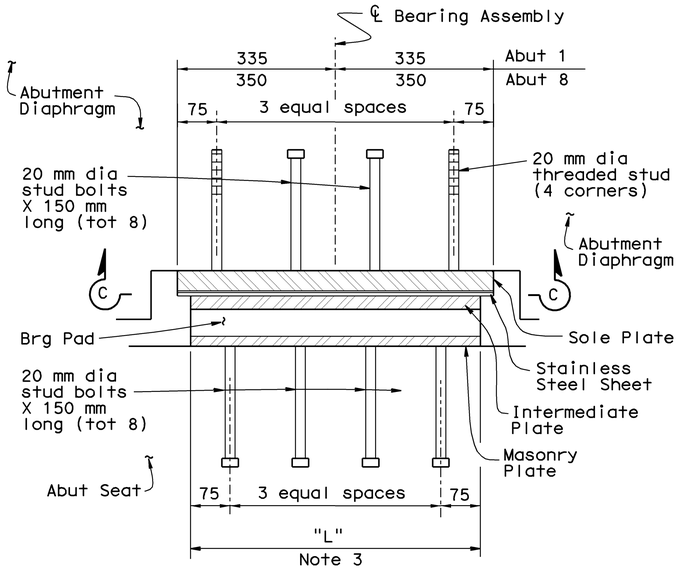

VIEW A-A

NO SCALE

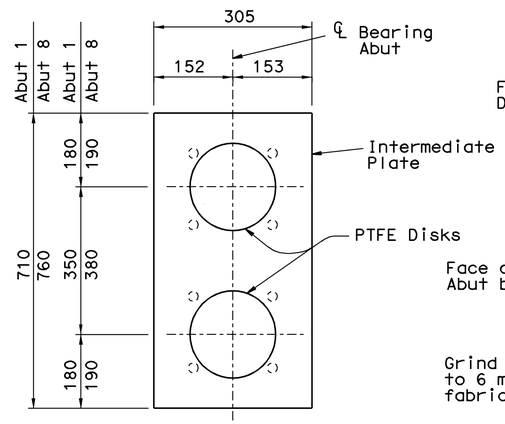

VIEW B-B

NO SCALE

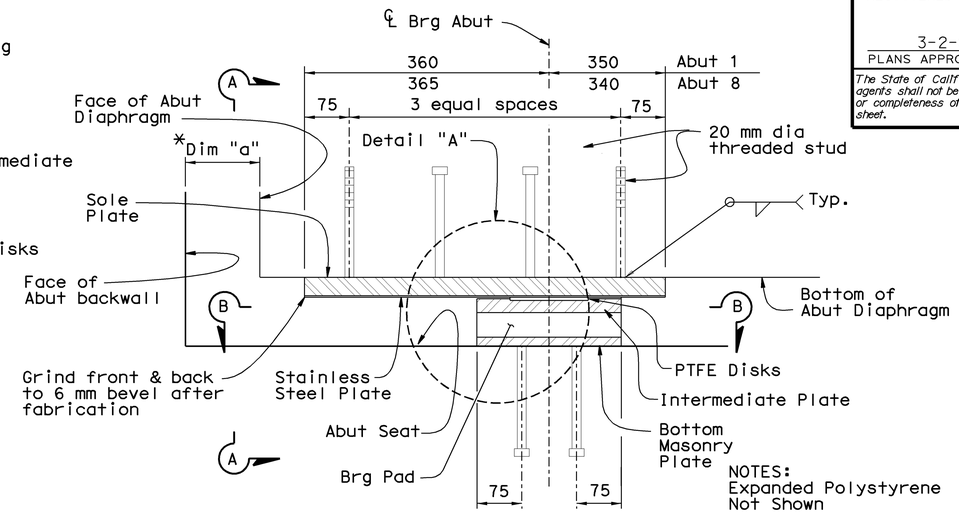

NOTES:
Expanded Polystyrene Not Shown

* For "a" Dimension, see "Abutment Joint Seal Details" sheet

BEARING DETAIL

NO SCALE

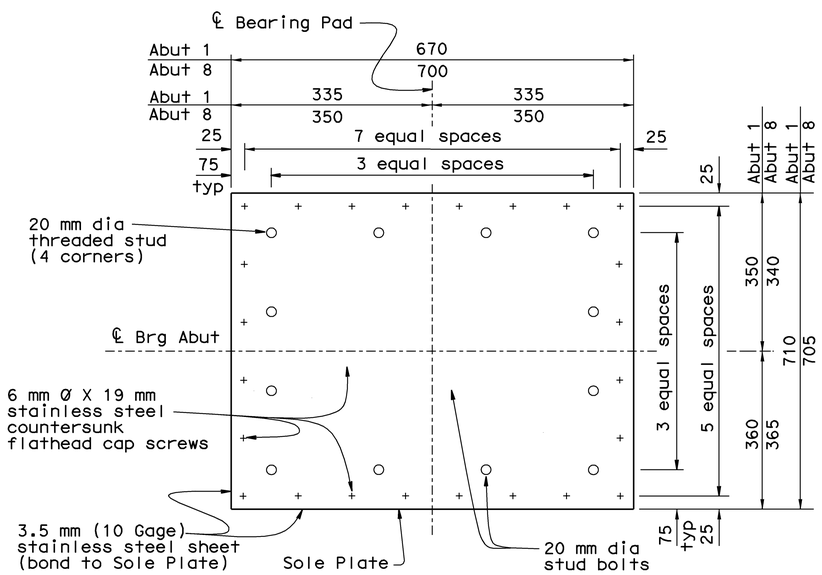

VIEW C-C

NO SCALE

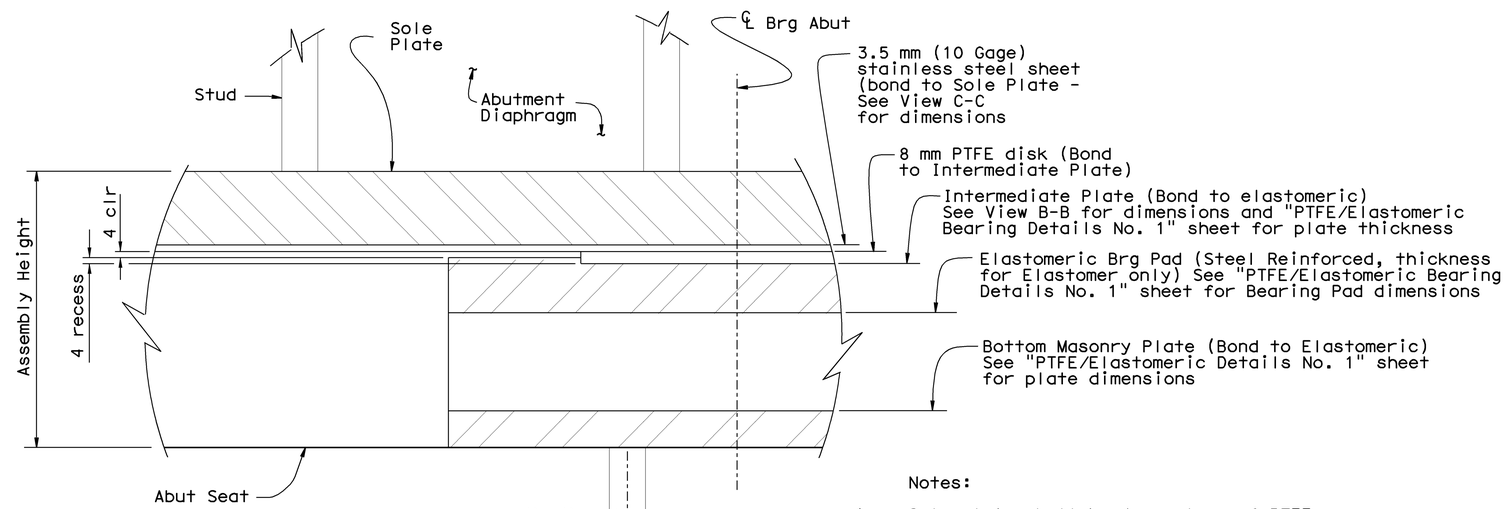

DETAIL "A"

NO SCALE

Notes:

1. Sole plate shall be 4 mm clear of PTFE prior to placement of concrete
2. To provide for free movement of the completed Abutment, concrete is to be excluded between the junction of the expanded polystyrene and PTFE / Elastomeric Bearing by sealing the joint
3. For dimensions not shown, see "Expansion Bearing Table" on "PTFE Elastomeric Bearing Details No. 1" sheet

Caltrans Metric

	BY		CHECKED
DESIGN	M. VAN DE POL	04-03	P. NORBOE-12-05
DETAILS	M. VAN DE POL	04-03	P. NORBOE-12-05
QUANTITIES	M. VAN DE POL	11-05	P. NORBOE-12-05

STATE OF CALIFORNIA
DEPARTMENT OF TRANSPORTATION

DIVISION OF ENGINEERING SERVICES
STRUCTURE DESIGN
DESIGN BRANCH 9

BRIDGE NO. 39-0044
KILOMETER POST 59.66

BRADLEY OVERHEAD (REPLACE)
PTFE/ELASTOMERIC BEARING DETAILS No. 2

ALL DIMENSIONS ARE IN MILLIMETERS UNLESS OTHERWISE SHOWN

ORIGINAL SCALE IN MILLIMETERS FOR REDUCED PLANS 0 10 20 30 40 50 60 70 80 90 100

CU 10
EA 3A66U1

DISREGARD PRINTS BEARING EARLIER REVISION DATES 5-8-03 12-6-05

REVISION DATES

SHEET 72 OF 94

FILE => 39-0044-p-abpre102.dgn

STRUCTURES DESIGN DETAIL SHEET (METRIC) (REV.03-17-04)

USERNAME => rrmorlock DATE PLOTTED => 04-MAR-2009 TIME PLOTTED => 16:01

RELEASED 4-9-97

DIST.	COUNTY	ROUTE	KILOMETER POST TOTAL PROJECT	SHEET NO.	TOTAL SHEETS
10	Mer	140	58.7/60.5	310	384

Caltrans Metric

REGISTERED ENGINEER - CIVIL 9-30-08

3-2-09
PLANS APPROVAL DATE

REGISTERED PROFESSIONAL ENGINEER M. VAN DE POL No. C35610 Exp. 9-30-09 CIVIL STATE OF CALIFORNIA

The State of California or its officers or agents shall not be responsible for the accuracy or completeness of electronic copies of this plan sheet.

EXPANSION BEARING TABLE

LOCATION	MAXIMUM VERTICAL LOAD (kN)	MINIMUM DEAD LOAD (kN)	DESIGN ROTATION (Radians)	CONCAVE PLATE						CONVEX PLATE		MASONRY PLATE			SOLE PLATE			ASSEMBLY HEIGHT
				WIDTH / LENGTH	FLAT PTFE AREA(mm²)	DIAMETER	SPHERICAL RADIUS	MINIMUM THICKNESS	MAXIMUM THICKNESS	DIAMETER	MAXIMUM THICKNESS	WIDTH	LENGTH	THICKNESS	WIDTH	LENGTH	THICKNESS	
				L_{cp}	A_{PTFE}	D_m	R_{act}	T_{min}	T_{max}	C_m	H_{act}	W_{mp}	L_{mp}	T_{mp}	W_{sp}	L_{sp}	T_{sp}	A_h
Hinge	1680	1420	2.00	362	87190	333	724	19	44	382	45	403	403	19	415	1090	64	161

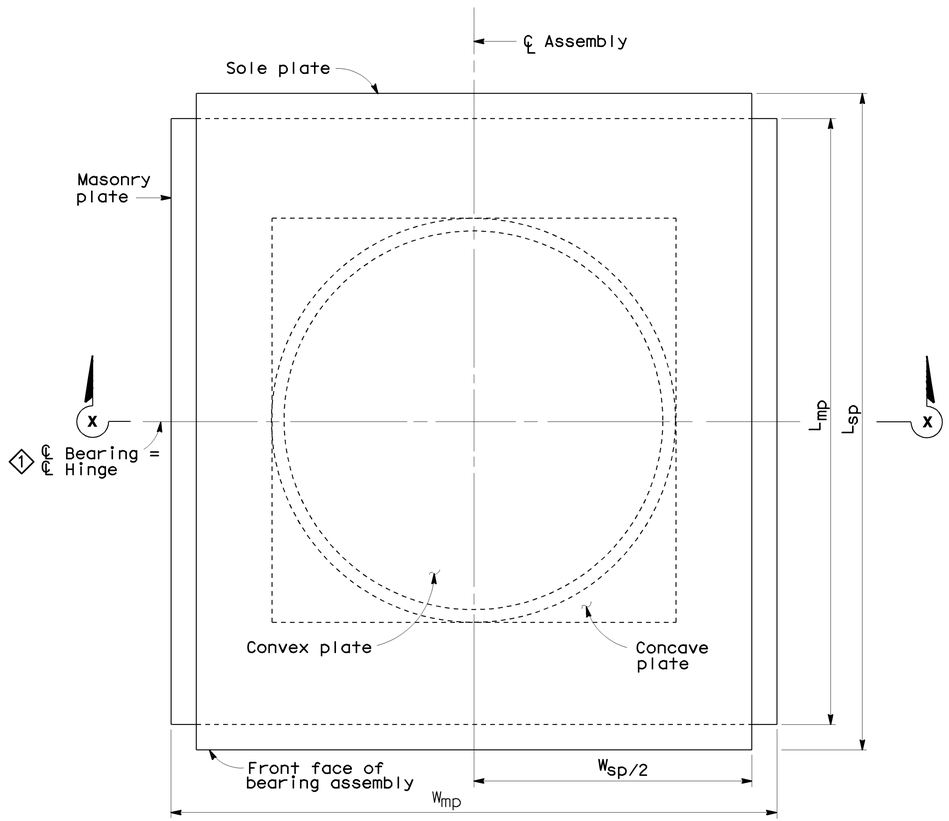

PLAN

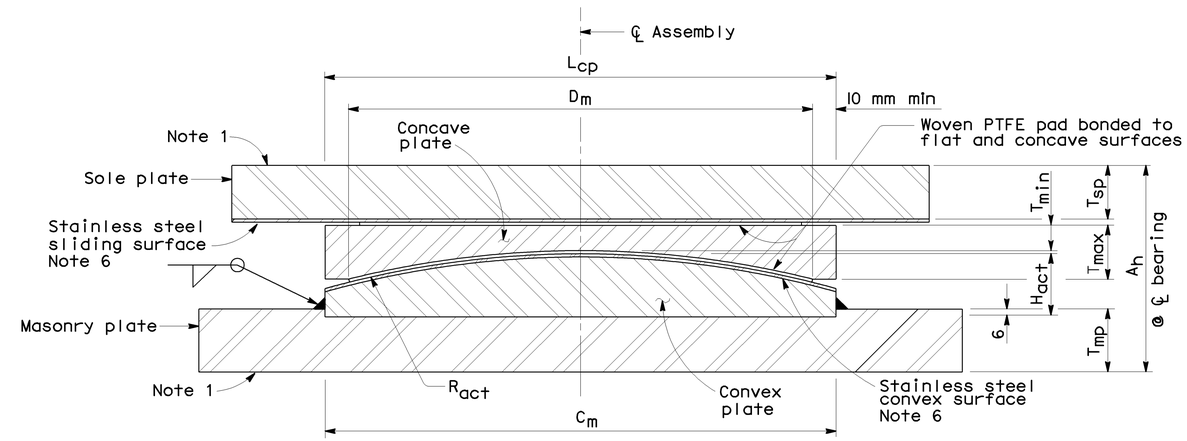

SECTION X-X

NOTES:

1. Anchorage method not shown.
2. (1) All dimensions shown are to faces of steel only unless otherwise noted.
3. H_{act} includes stainless steel.
4. A_h includes PTFE, substratum and stainless steel, (Varies).
5. R_{act} is to sliding surface.
6. Stainles Steel Plate 3.5 mm (10Gage) Minimum Thickness

SPECIAL DETAILS
NO SCALE

ALL DIMENSIONS ARE IN MILLIMETERS UNLESS OTHERWISE SHOWN

STANDARD DRAWING

FILE NO. XS 12-80	DESIGN BY ROBERTO LACALLE	CHECKED ROD SIMMONS	APPROVAL RECOMMENDED BY
DRAWING DATE Revised	DETAILS BY R. YEE	CHECKED ROD SIMMONS	DESIGN SUPERVISOR
	SUBMITTED BY ROBERTO LACALLE		

(1) Revised Note

STATE OF CALIFORNIA DEPARTMENT OF TRANSPORTATION

DIVISION OF STRUCTURES STRUCTURE DESIGN 9

BRIDGE NO. 39-0044
KILOMETER POST 59.66

BRADLEY OVERHEAD (REPLACE)

PTFE/SPHERICAL EXPANSION BEARING DETAILS No. 1

DS OSD 2147A (METRIC) (REV. 2/25/97)

ORIGINAL SCALE IN MILLIMETERS FOR REDUCED PLANS 0 10 20 30 40 50 60 70 80 90 100

CU 10
EA 3A66U1

DISREGARD PRINTS BEARING EARLIER REVISION DATES 08-12-03

REVISION DATES (PRELIMINARY STAGE ONLY)

SHEET 73 OF 94

USERNAME => trmikesl 39-0044-p-hngprel01.dgn XS1280.DGN

DATE PLOTTED => 05-MAR-2009 TIME PLOTTED => 06:23

DIST	COUNTY	ROUTE	KILOMETER POST TOTAL PROJECT	SHEET No	TOTAL SHEETS
10	Mer	140	58.7/60.5	311	384

REGISTERED CIVIL ENGINEER 9-30-08 DATE

3-2-09
PLANS APPROVAL DATE

The State of California or its officers or agents shall not be responsible for the accuracy or completeness of electronic copies of this plan sheet.

REGISTERED PROFESSIONAL ENGINEER M. Van De Pol No. C35610 Exp. 9-30-09 CIVIL STATE OF CALIFORNIA

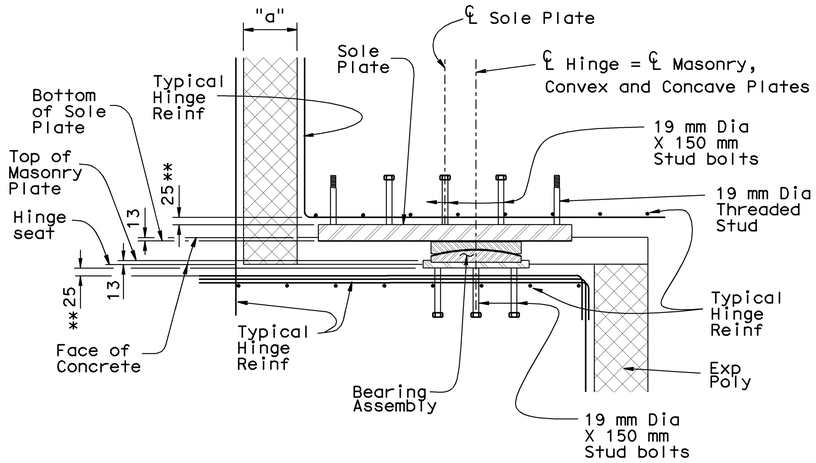

PART ELEVATION

1:10

NOTES:
** Clearance between plates and typical hinge reinforcement

For Typical Hinge Reinf, see "Hinge Details" Sheets

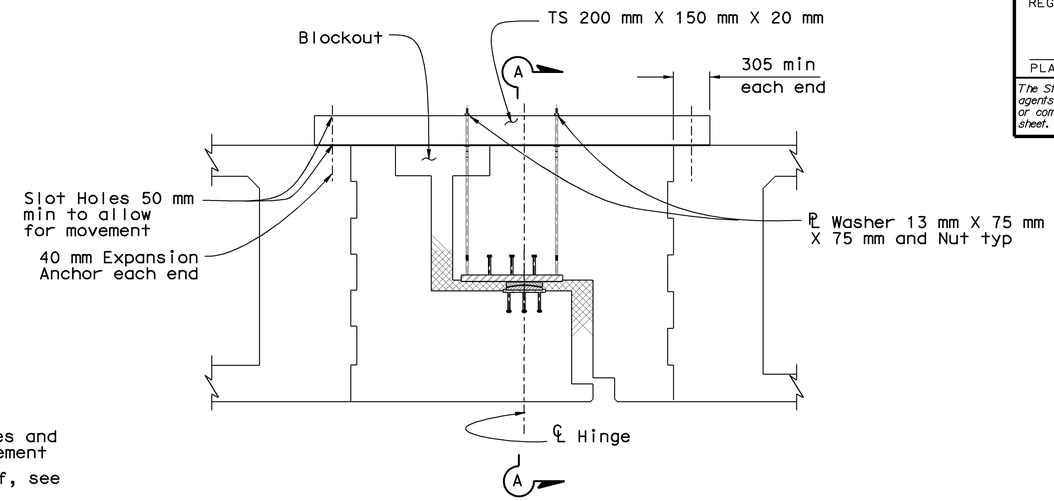

SECTION THRU HINGE

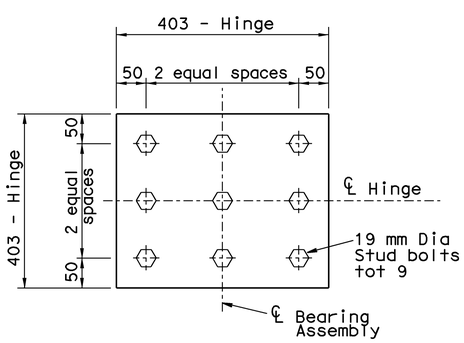

PLAN-MASONRY PLATE

1:5

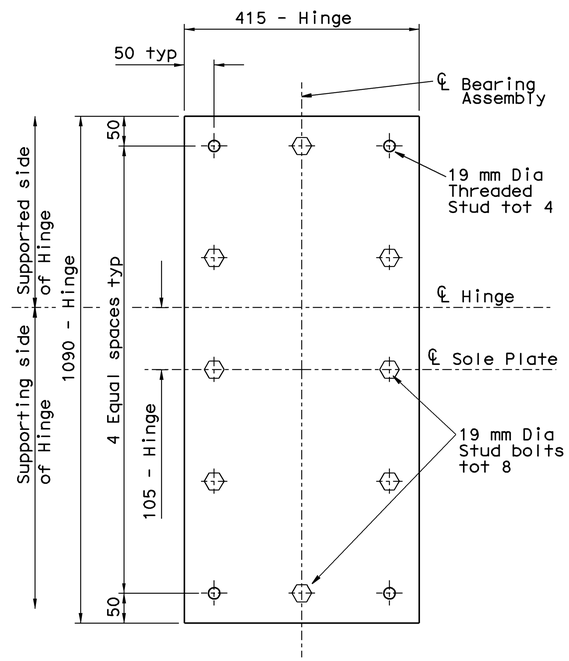

PLAN-SOLE PLATE

1:5

ANCHORAGE DETAILS HINGE

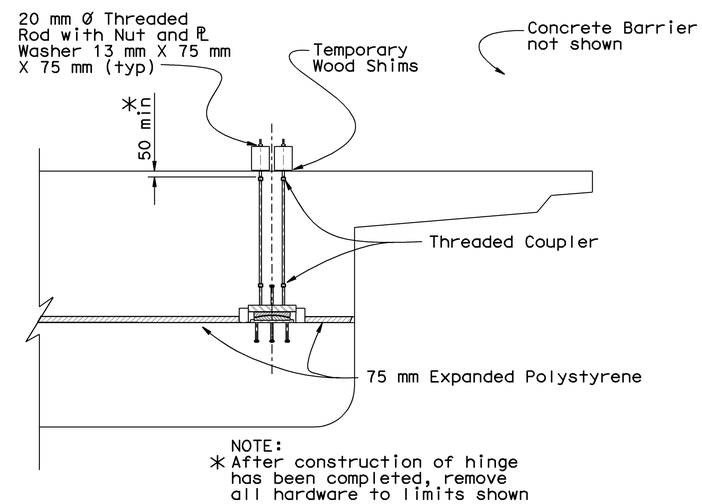

NOTE:
* After construction of hinge has been completed, remove all hardware to limits shown

PART ELEVATION A-A

TEMPORARY BEARING SUPPORT DETAILS

No Scale

Notes:

Details typical for all Bearing Assemblies

For locations of Bearing Assemblies see "Hinge Details No. 1" sheet

For "a" Dimension, see "Hinge Joint Seal Details" Sheet

For limits of Expanded Polystyrene, see "Hinge Details No. 1" Sheet

Caltrans Metric

	BY		CHECKED	
DESIGN	M. VAN DE POL	04-03	P. NORBOE	12-05
DETAILS	M. VAN DE POL	04-03	P. NORBOE	12-05
QUANTITIES	M. VAN DE POL	11-05	P. NORBOE	12-05

STATE OF CALIFORNIA
DEPARTMENT OF TRANSPORTATION

DIVISION OF ENGINEERING SERVICES
STRUCTURE DESIGN
DESIGN BRANCH 9

BRIDGE NO. 39-0044
KILOMETER POST 59.66

BRADLEY OVERHEAD (REPLACE)
PTFE/SPHERICAL EXPANSION BEARING DETAILS No. 2

ALL DIMENSIONS ARE IN MILLIMETERS UNLESS OTHERWISE SHOWN

ORIGINAL SCALE IN MILLIMETERS FOR REDUCED PLANS 0 10 20 30 40 50 60 70 80 90 100

CU 10
EA 3A66U1

DISREGARD PRINTS BEARING EARLIER REVISION DATES 5-8-03 12-6-05

REVISION DATES

SHEET 74 OF 94

FILE => 39-0044-p-hngpre102.dgn

STRUCTURES DESIGN DETAIL SHEET (METRIC) (REV.03-17-04)

USERNAME => trmikesl DATE PLOTTED => 05-MAR-2009 TIME PLOTTED => 06:23

DIST	COUNTY	ROUTE	KILOMETER POST TOTAL PROJECT	SHEET No	TOTAL SHEETS
10	Mer	140	58.7/60.5	312	384

REGISTERED CIVIL ENGINEER 9-30-08 DATE

3-2-09
PLANS APPROVAL DATE

REGISTERED PROFESSIONAL ENGINEER M. Van De Pol No. C35610 Exp. 9-30-09 CIVIL STATE OF CALIFORNIA

The State of California or its officers or agents shall not be responsible for the accuracy or completeness of electronic copies of this plan sheet.

Denotes Existing Structure
Denotes Construction Stage 1
Denotes Construction Stage 2

NOTE:
Denotes approximate limits of retainied Stage 1 falsework system, or added temporary support

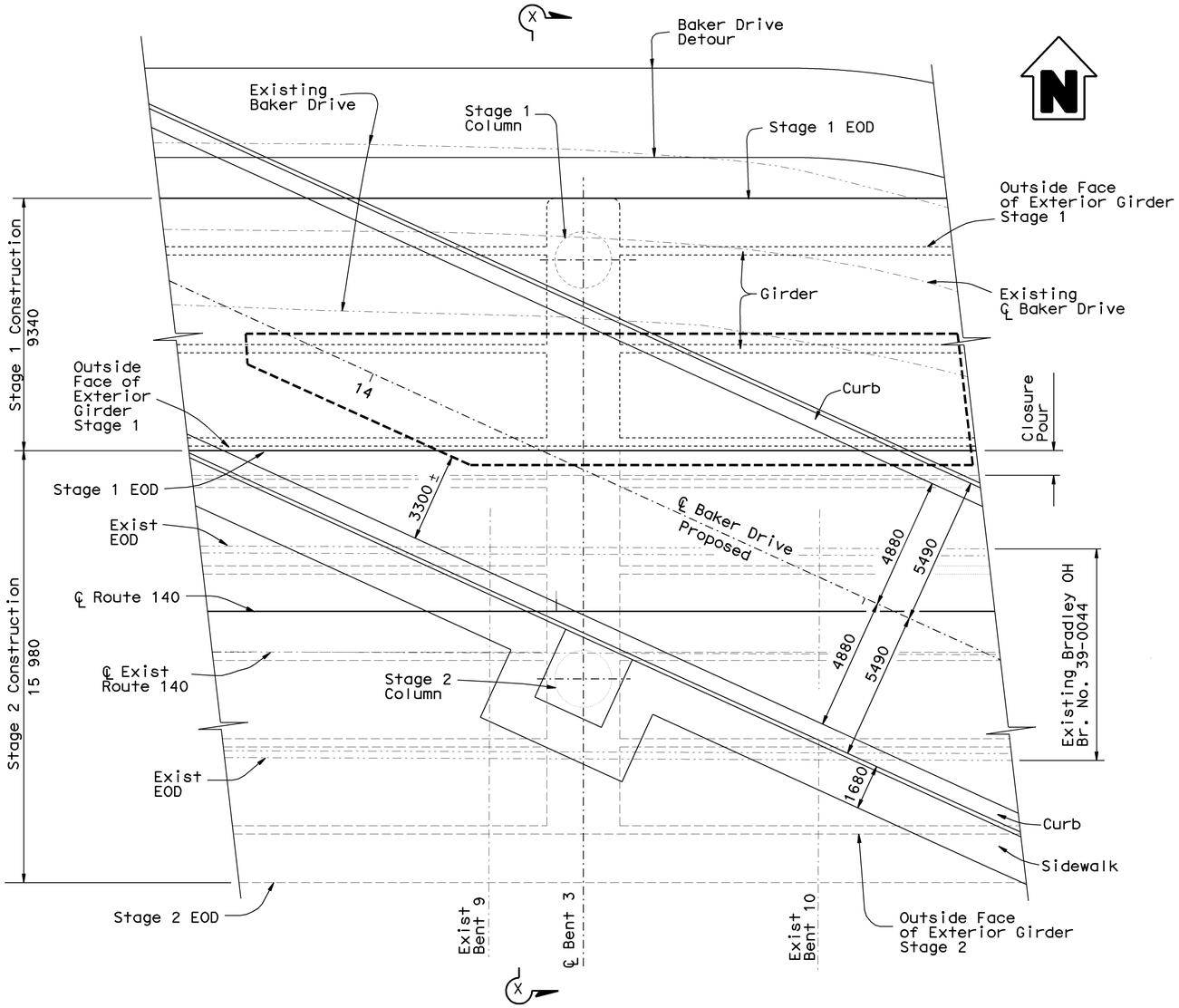

PART PLAN
1:100

NOTE:
Temporary Railing not shown

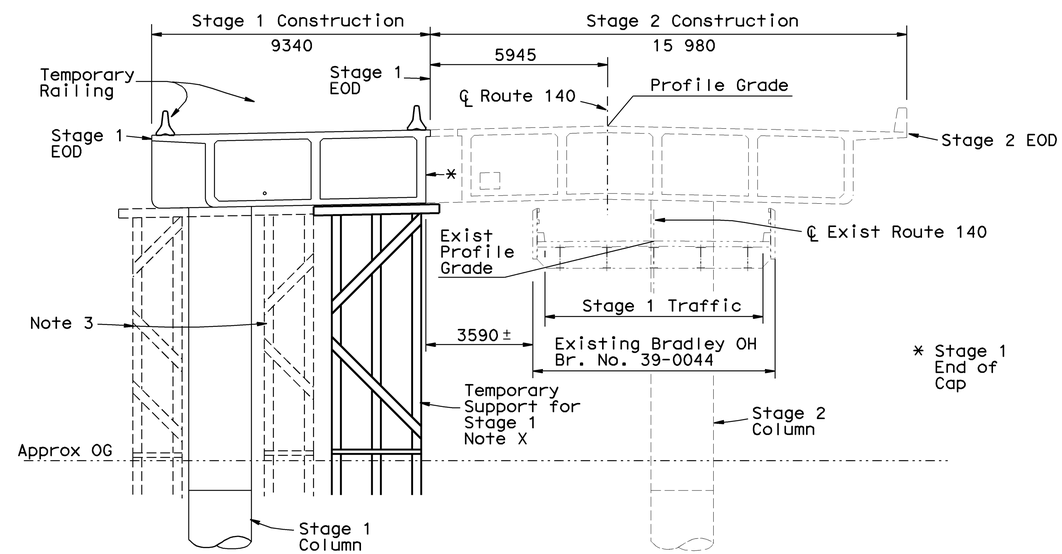

SECTION X-X
1:100

Notes:

1. For Removal Details, see "Removal Details" Sheet
2. For Additional Information, see "Stage Construction" and "Typical Section No. 1" sheets
3. Temporary Support May be Part of the Stage 1 Falsework System
4. Approximate Bent 3 Temporary Support Vertical Load = 3300 Kn min, 4850 Kn max
5. Approximate Bent 3 Temporary Support Lateral Load = 100 Kn
6. The Stage 1 Temporary Support System Shall be Released Along with the Stage 2 Falsework System
7. For Staged Traffic Handling on Baker Drive, see "Road Plans"

Note X:
Denotes Representation of Temporary Support System, Located Under the Stage 1 Bent 3 Cap. Actual Support System to be Designed by the Contractor or an Agent of the Contractor, as Approved by the Engineer

NOTE:
THE CONTRACTOR SHALL VERIFY ALL CONTROLLING FIELD DIMENSIONS BEFORE ORDERING OR FABRICATING ANY MATERIAL.

Caltrans Metric

	BY		CHECKED	
DESIGN	M. VAN DE POL	04-03	P. NORBOE	12-05
DETAILS	M. VAN DE POL	04-03	P. NORBOE	12-05
QUANTITIES	M. VAN DE POL	11-05	P. NORBOE	12-05

STATE OF CALIFORNIA
DEPARTMENT OF TRANSPORTATION

DIVISION OF ENGINEERING SERVICES
STRUCTURE DESIGN
DESIGN BRANCH 9

CU 10
EA 3A66U1

BRIDGE NO. 39-0044
KILOMETER POST 59.66

BRADLEY OVERHEAD (REPLACE)
TEMPORARY SUPPORT-BENT 3 STAGE 1

ALL DIMENSIONS ARE IN MILLIMETERS UNLESS OTHERWISE SHOWN

ORIGINAL SCALE IN MILLIMETERS FOR REDUCED PLANS 0 10 20 30 40 50 60 70 80 90 100

DISREGARD PRINTS BEARING EARLIER REVISION DATES 5-8-03 12-6-05

REVISION DATES

SHEET 75 OF 94

FILE => 39-0044-p-tmpss1.dgn

STRUCTURES DESIGN DETAIL SHEET (METRIC) (REV.03-17-04)

USERNAME => trmikesl DATE PLOTTED => 05-MAR-2009 TIME PLOTTED => 06:23

DIST	COUNTY	ROUTE	KILOMETER POST TOTAL PROJECT	SHEET No	TOTAL SHEETS
10	Mer	140	58.7/60.5	313	384

REGISTERED CIVIL ENGINEER 9-30-08 DATE

3-2-09
PLANS APPROVAL DATE

REGISTERED PROFESSIONAL ENGINEER M. Van De Pol No. C35610 Exp. 9-30-09 CIVIL STATE OF CALIFORNIA

The State of California or its officers or agents shall not be responsible for the accuracy or completeness of electronic copies of this plan sheet.

Denotes Existing Structure

Denotes Construction Stage 1

Denotes Construction Stage 2

NOTE:
Denotes approximate limits of retainied Stage 1 falsework system, or added temporary support

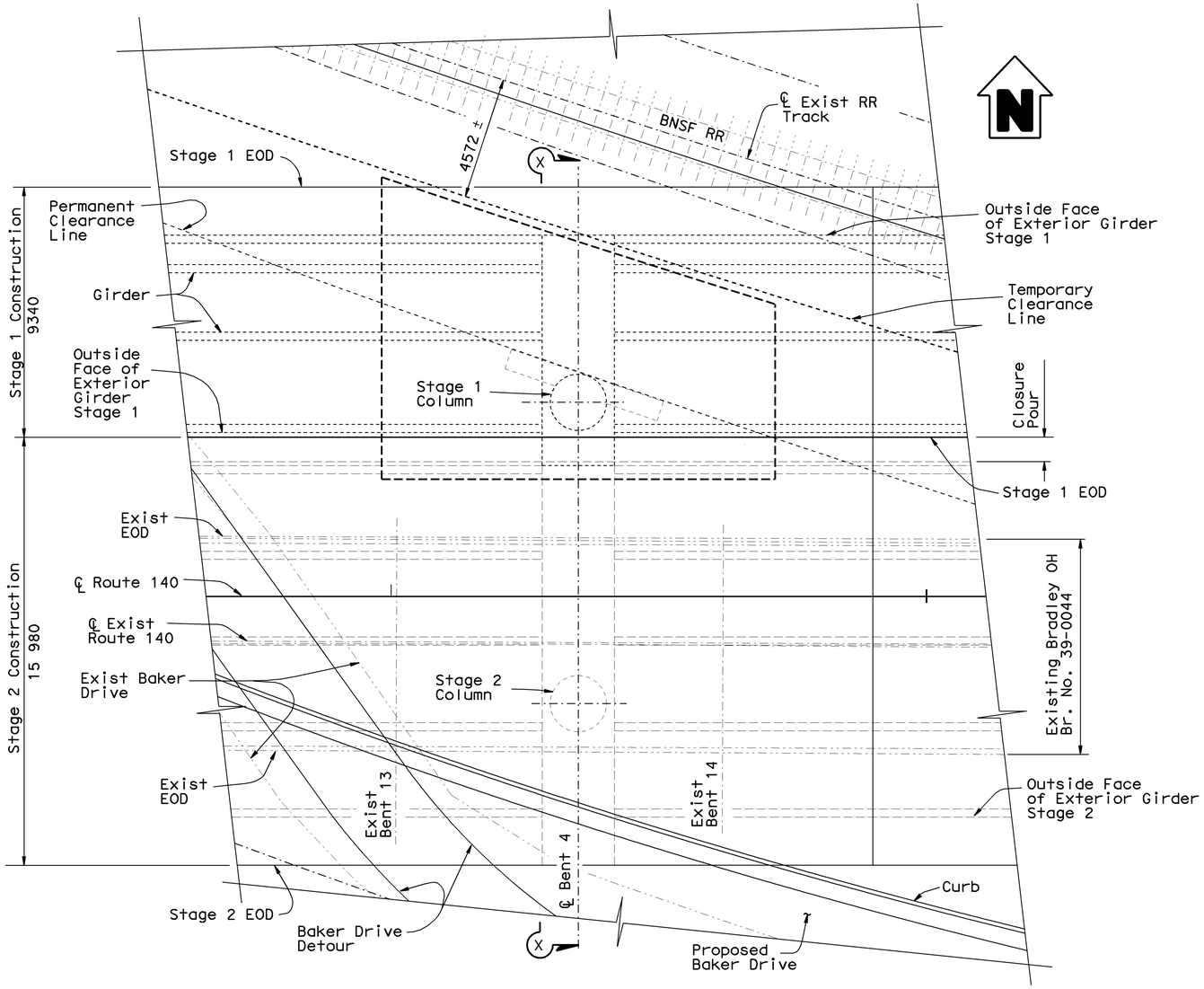

PART PLAN
1:100

NOTE:
Temporary Railing not shown

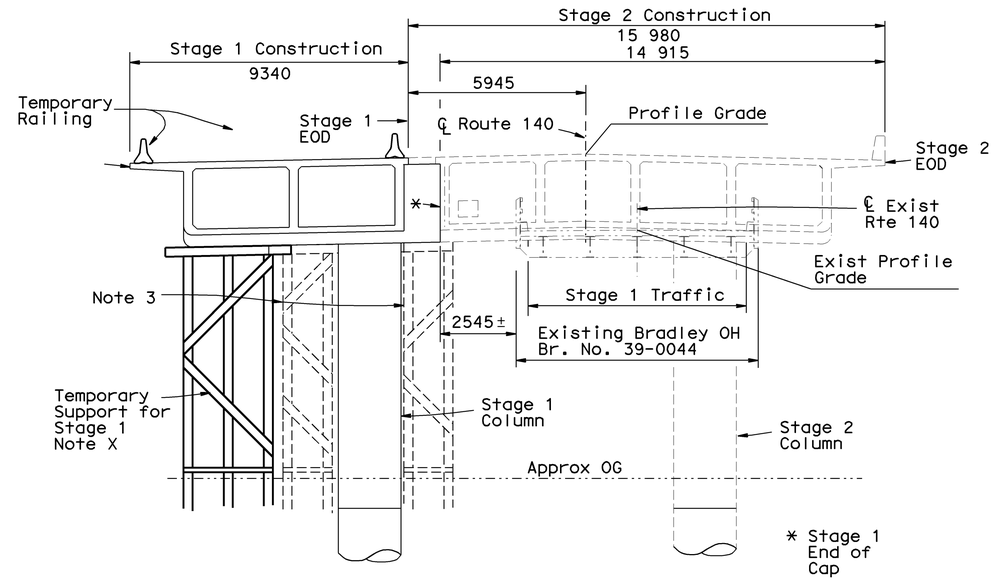

SECTION X-X
1:100

Notes:

1. For Removal Details, see "Removal Details" Sheet
2. For Additional Information, see "Stage Construction" and "Typical Section No. 1" sheets
3. Temporary Support May be Part of the Stage 1 Falsework System
4. Approximate Bent 4 Temporary Support Vertical Load = 7300 Kn min, 10000 Kn max
5. Approximate Bent 4 Temporary Support Lateral Load = 250 Kn
6. The Stage 1 Temporary Support System Shall be Released Along with the Stage 2 Falsework System

Note X:
Denotes Representation of Temporary Support System, Located Under the Stage 1 Bent 4 Cap. Actual Support System to be Designed by the Contractor or an Agent of the Contractor, as Approved by the Engineer

NOTE:
THE CONTRACTOR SHALL VERIFY ALL CONTROLLING FIELD DIMENSIONS BEFORE ORDERING OR FABRICATING ANY MATERIAL.

Caltrans Metric

	BY		CHECKED	
DESIGN	M. VAN DE POL	04-03	P. NORBOE	12-05
DETAILS	M. VAN DE POL	04-03	P. NORBOE	12-05
QUANTITIES	M. VAN DE POL	11-05	P. NORBOE	12-05

STATE OF CALIFORNIA
DEPARTMENT OF TRANSPORTATION

DIVISION OF ENGINEERING SERVICES
STRUCTURE DESIGN
DESIGN BRANCH 9

BRIDGE NO. 39-0044
KILOMETER POST 59.66

BRADLEY OVERHEAD (REPLACE)
TEMPORARY SUPPORT-BENT 4 STAGE 1

ALL DIMENSIONS ARE IN MILLIMETERS UNLESS OTHERWISE SHOWN

ORIGINAL SCALE IN MILLIMETERS FOR REDUCED PLANS 0 10 20 30 40 50 60 70 80 90 100

CU 10
EA 3A66U1

DISREGARD PRINTS BEARING EARLIER REVISION DATES

REVISION DATES: 5-8-03 12-6-05

SHEET 76 OF 94

FILE => 39-0044-p-tmpss2.dgn

STRUCTURES DESIGN DETAIL SHEET (METRIC) (REV.03-17-04)

USERNAME => trmikesl DATE PLOTTED => 05-MAR-2009 TIME PLOTTED => 06:23

DIST	COUNTY	ROUTE	KILOMETER POST TOTAL PROJECT	SHEET No	TOTAL SHEETS
10	Mer	140	58.7/60.5	314	384

REGISTERED CIVIL ENGINEER 9-30-08 DATE

3-2-09
PLANS APPROVAL DATE

The State of California or its officers or agents shall not be responsible for the accuracy or completeness of electronic copies of this plan sheet.

REGISTERED PROFESSIONAL ENGINEER M. Van De Pol No. C35610 Exp. 9-30-09 CIVIL STATE OF CALIFORNIA

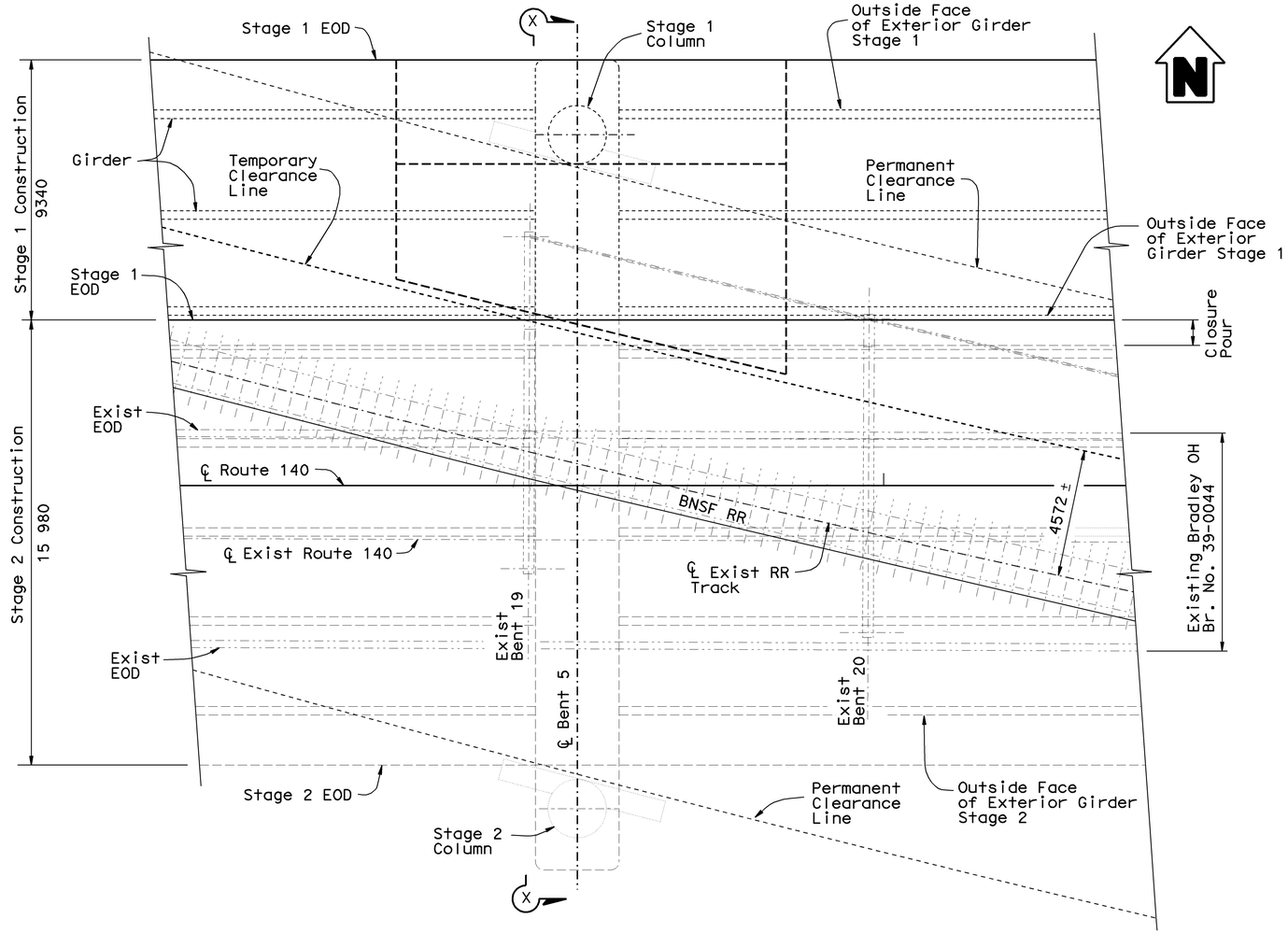

PART PLAN
1:100

Stage 1 Temporary Railing Not Shown

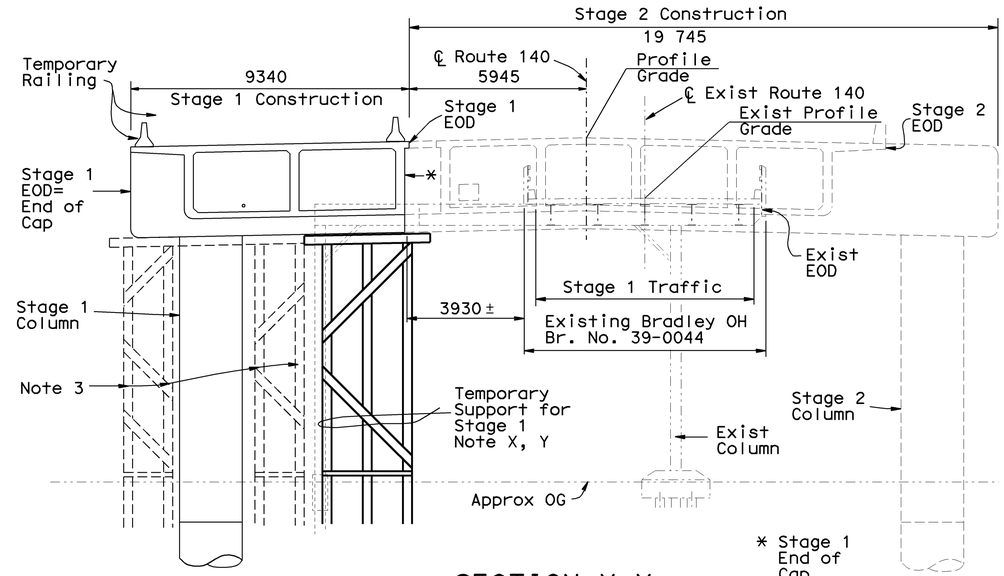

SECTION X-X
1:100

Denotes Existing Structure

Denotes Construction Stage 1

Denotes Construction Stage 2

NOTE:
Denotes approximate limits of retainied Stage 1 falsework system, or added temporary support

Notes:

1. For Removal Details, see "Removal Details" Sheet
2. For Additional Information, see "Stage Construction" and "Typical Section No. 1" sheets
3. Temporary Support May be Part of the Stage 1 Falsework System
4. Approximate Bent 5 Temporary Support Vertical Load = 6300 Kn min, 7600 Kn max
5. Approximate Bent 5 Temporary Support Lateral Load = 200 Kn
6. The Stage 1 Temporary Support System Shall be Released Along with the Stage 2 Falsework System

Note X:
Denotes Representation of Temporary Support System, Located Under the Stage 1 Bent 5 Cap. Actual Support System to be Designed by the Contractor or an Agent of the Contractor, as Approved by the Engineer

Note Y:
For Added Details, see "Existing Outrigger Bent Support Details" Sheet

NOTE:
THE CONTRACTOR SHALL VERIFY ALL CONTROLLING FIELD DIMENSIONS BEFORE ORDERING OR FABRICATING ANY MATERIAL.

Caltrans Metric

	BY		CHECKED	
DESIGN	M. VAN DE POL	04-03	P. NORBOE	12-05
DETAILS	M. VAN DE POL	04-03	P. NORBOE	12-05
QUANTITIES	M. VAN DE POL	11-05	P. NORBOE	12-05

STATE OF CALIFORNIA
DEPARTMENT OF TRANSPORTATION

DIVISION OF ENGINEERING SERVICES
STRUCTURE DESIGN
DESIGN BRANCH 9

BRIDGE NO. 39-0044
KILOMETER POST 59.66

BRADLEY OVERHEAD (REPLACE)
TEMPORARY SUPPORT-BENT 5 STAGE 1

ALL DIMENSIONS ARE IN MILLIMETERS UNLESS OTHERWISE SHOWN

ORIGINAL SCALE IN MILLIMETERS FOR REDUCED PLANS 0 10 20 30 40 50 60 70 80 90 100

CU 10
EA 3A66U1

DISREGARD PRINTS BEARING EARLIER REVISION DATES 5-8-03 12-6-05

REVISION DATES

SHEET 77 OF 94

FILE => 39-0044-p-tmpss3.dgn

STRUCTURES DESIGN DETAIL SHEET (METRIC) (REV.03-17-04)

USERNAME => tromikes1 DATE PLOTTED => 05-MAR-2009 TIME PLOTTED => 06:23

DIST	COUNTY	ROUTE	KILOMETER POST TOTAL PROJECT	SHEET No	TOTAL SHEETS
10	Mer	140	58.7/60.5	315	384

REGISTERED CIVIL ENGINEER 9-30-08 DATE

3-2-09
PLANS APPROVAL DATE

The State of California or its officers or agents shall not be responsible for the accuracy or completeness of electronic copies of this plan sheet.

REGISTERED PROFESSIONAL ENGINEER M. Van De Pol No. C35610 Exp. 9-30-09 CIVIL STATE OF CALIFORNIA

Denotes Existing Structure
Denotes Construction Stage 1
Denotes Construction Stage 2

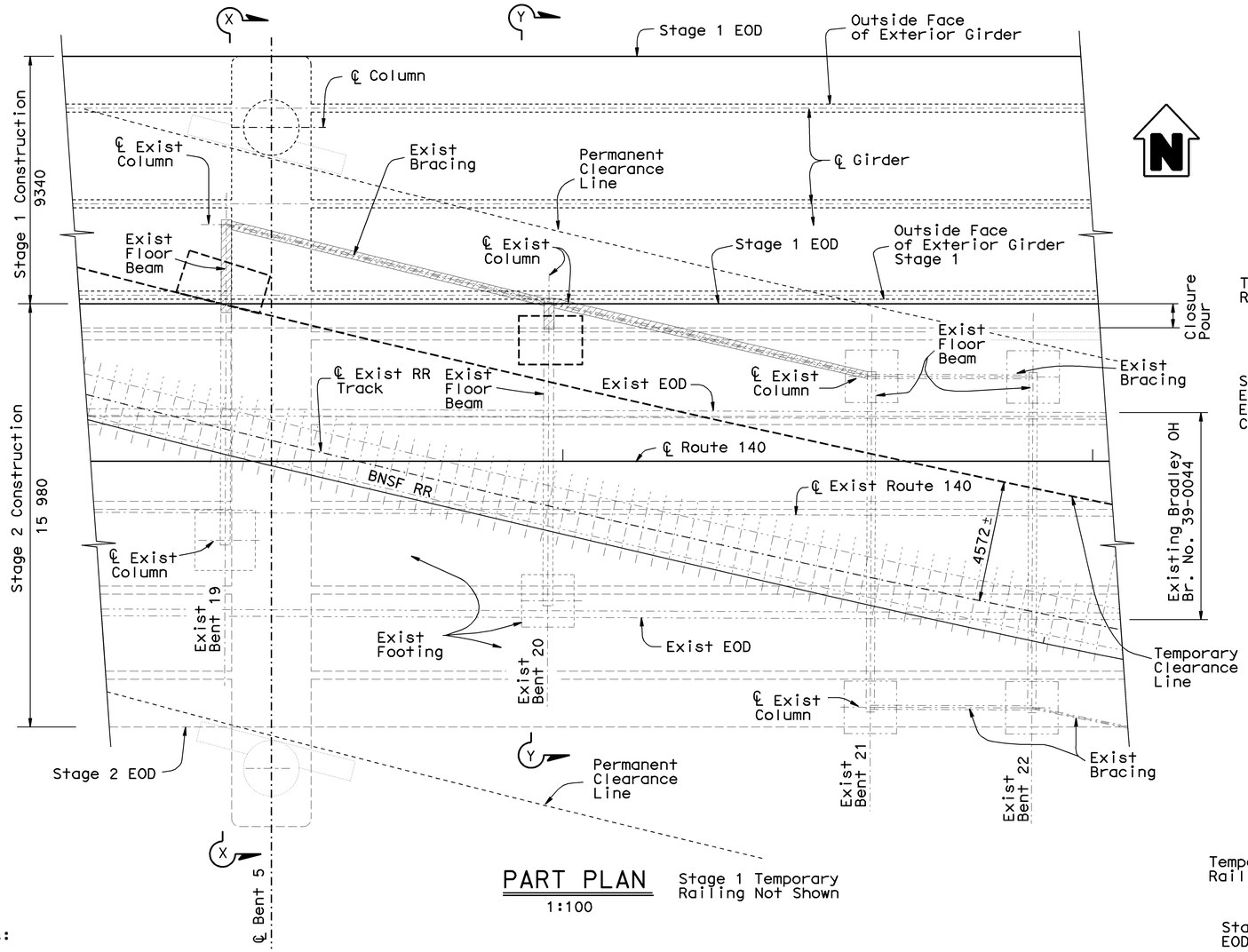

PART PLAN
1:100

Stage 1 Temporary Railing Not Shown

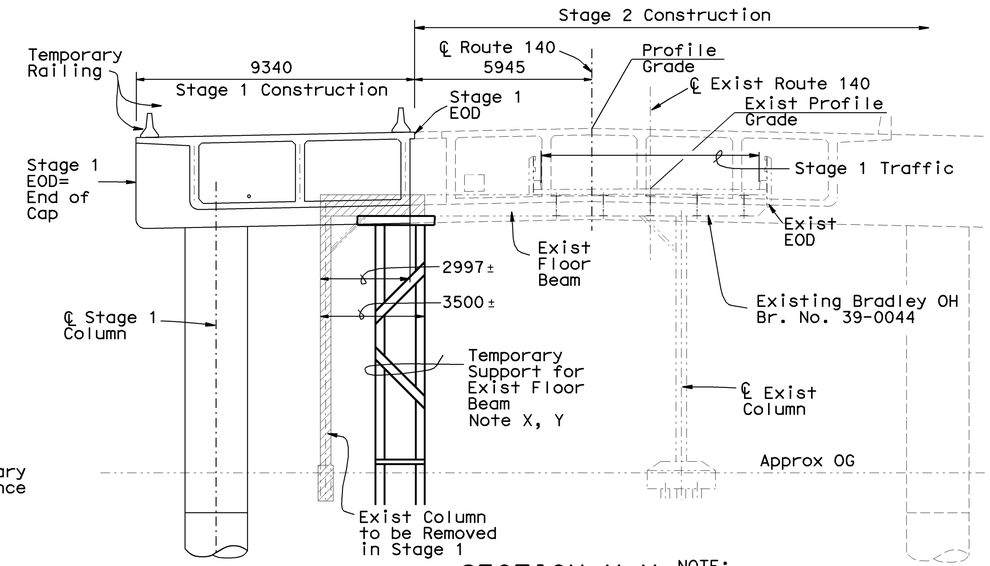

SECTION X-X
1:100

NOTE: Exist Bent 19

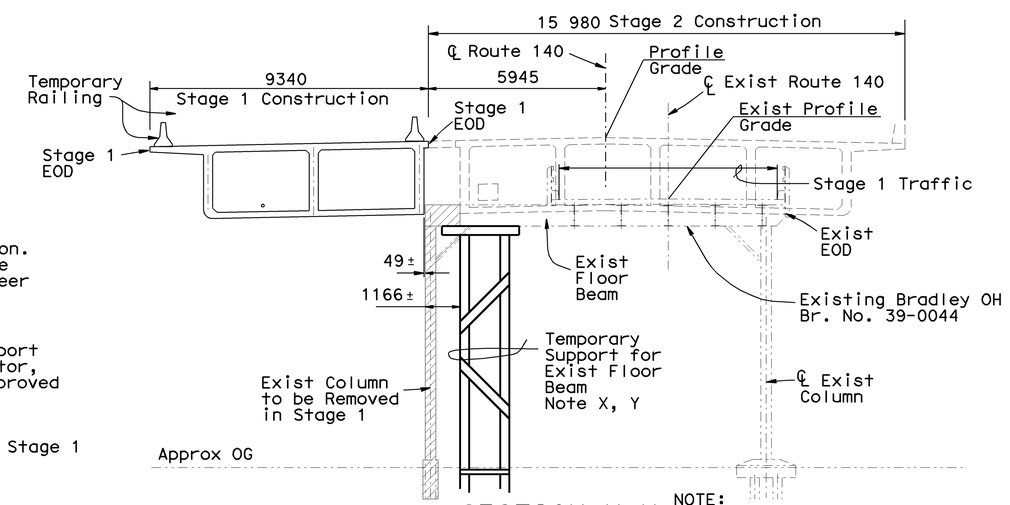

SECTION Y-Y
1:100

NOTE: Exist Bent 20

Notes:

1. For Removal Details, see "Removal Details" sheet
2. For Additional Information, see "Stage Construction" and "Typical Section No. 1" sheets
3. Temporary Supports May be Part of the Stage 1 Falsework
4. Approximate Bent 19 Temporary Support Vertical Load = 725 Kn max, -15 Kn min
5. Approximate Bent 19 Temporary Support Lateral Load = 15 Kn max
6. Approximate Bent 20 Temporary Support Vertical Load = 1190 Kn max, 190 Kn min
7. Approximate Bent 20 Temporary Support Lateral Load = 25 Kn
8. No Temporary Supports Required at Existing Bents 21 and 22

NOTE:
THE CONTRACTOR SHALL VERIFY ALL CONTROLLING FIELD DIMENSIONS BEFORE ORDERING OR FABRICATING ANY MATERIAL.

NOTES:

Denotes Approx Limits of Removal of Existing Bent for Stage 1 Construction. Actual Limits to be Determined by the Contractor, as Approved by the Engineer

Denotes Representation of Temporary Support System, Located Under the Existing Bent Floor Beam. Actual Support System to be Designed by the Contractor, or an Agent of the Contractor, as Approved by the Engineer

Note X
Temporary Support May be Part of the Stage 1 Falsework System

Note Y:
For Added Details, see "Existing Outrigger Bent Support Details" Sheet

Caltrans Metric

	BY		CHECKED	
DESIGN	M. VAN DE POL	04-03	P. NORBOE	12-05
DETAILS	M. VAN DE POL	04-03	P. NORBOE	12-05
QUANTITIES	M. VAN DE POL	11-05	P. NORBOE	12-05

STATE OF CALIFORNIA
DEPARTMENT OF TRANSPORTATION

DIVISION OF ENGINEERING SERVICES
STRUCTURE DESIGN
DESIGN BRANCH 9

BRIDGE NO. 39-0044
KILOMETER POST 59.66

BRADLEY OVERHEAD (REPLACE)
EXISTING OUTRIGGER BENT SUPPORT DETAILS

ALL DIMENSIONS ARE IN MILLIMETERS UNLESS OTHERWISE SHOWN

ORIGINAL SCALE IN MILLIMETERS FOR REDUCED PLANS 0 10 20 30 40 50 60 70 80 90 100

CU 10
EA 3A66U1

DISREGARD PRINTS BEARING EARLIER REVISION DATES 5-8-03 12-6-05

REVISION DATES

SHEET 78 OF 94

FILE => 39-0044-p-toutbts.dgn

STRUCTURES DESIGN DETAIL SHEET (METRIC) (REV.03-17-04)

USERNAME => ttmirkes1 DATE PLOTTED => 05-MAR-2009 TIME PLOTTED => 06:23

DIST	COUNTY	ROUTE	KILOMETER POST TOTAL PROJECT	SHEET No	TOTAL SHEETS
10	Mer	140	58.7/60.5	316	384

REGISTERED CIVIL ENGINEER 9-30-08 DATE

3-2-09
PLANS APPROVAL DATE

REGISTERED PROFESSIONAL ENGINEER M. Van De Pol No. C35610 Exp. 9-30-09 CIVIL STATE OF CALIFORNIA

The State of California or its officers or agents shall not be responsible for the accuracy or completeness of electronic copies of this plan sheet.

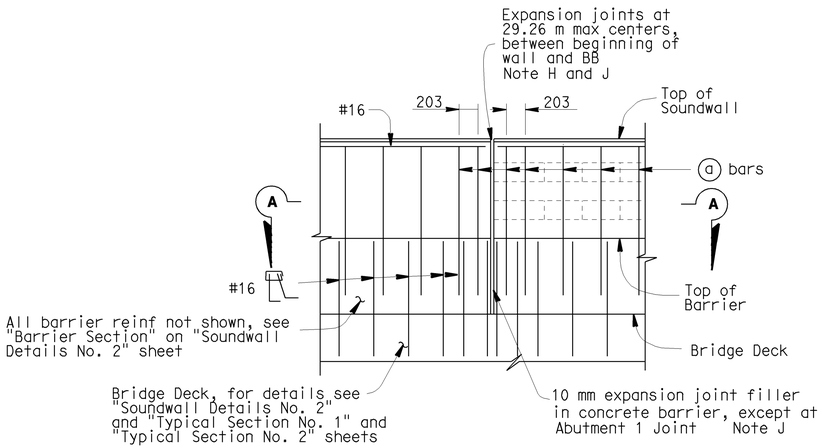

PART ELEVATION

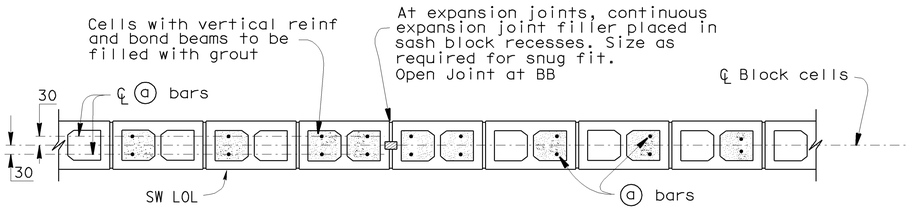

SECTION A-A

NOTE:
For Details on MSE Wall, see Other Plans This Contract

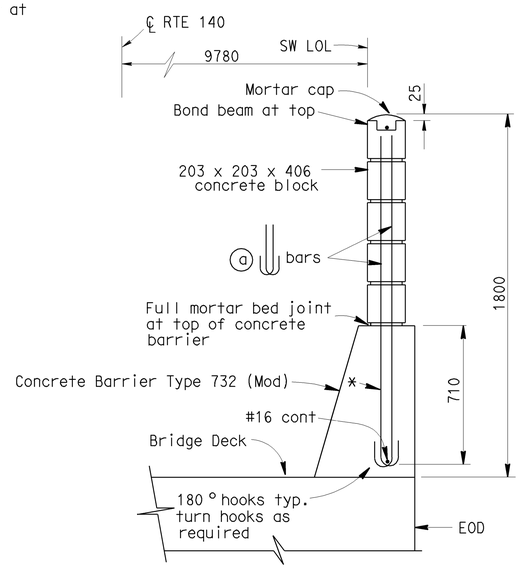

TYPICAL SECTION

NOTES:

* Adjust position of "a" bars to clear recess for joint seal assembly at Abutment 1

Architectural Treatment not shown

Soundwall on Concrete Barrier

SOUNDWALL REINFORCEMENT TABLE

H	ⓐ bars @ 406 max	f'm (MPa)	Compressive Strength of CMU (MPa)
1800	#19	17.24	25.86

LOCATION:
Rte 140 Sta 24+69.162 to
Rte 140 Sta 26+89.902
South Side Only

Note I : For Design Notes (Soundwall), see "Soundwall Details No. 2" sheet

GENERAL NOTES

Note A: For type of block and joint finish, see other sheets

Note B: When blocks are laid in stacked bond, ladder type, galvanized joint reinforcement shall be provided. A minimum of 2-3.76 mm wire continuous at 460 mm maximum to be used. Locate reinforcement in joints that are at the approximate midpoint between bond beams

Note C: Horizontal joints shall be tooled concave or may be weathered

Vertical joints shall be tooled concave or may be raked

Note D: Masonry strengths are listed in "SOUNDWALL REINFORCEMENT TABLE"

Note E: Class 2 concrete to be used for the barrier

Note F: For concrete barrier details, see "Soundwall Details No. 2" sheet and

B11-55

Note G: All masonry block to be high strength, unless otherwise noted

Note H: Additional expansion joints in soundwall shall be at the BB and at the centerline of Span 1

Note J: For additional details, see "Abutment Joint Seal Details" Sheet

NO SCALE

ALL DIMENSIONS ARE IN MILLIMETERS UNLESS OTHERWISE SHOWN

Caltrans Metric

	BY		CHECKED
DESIGN	M. VAN DE POL	04-03	P. NORBOE 11-05
DETAILS	M. VAN DE POL	04-03	P. NORBOE 11-05
QUANTITIES	M. VAN DE POL	11-05	P. NORBOE 11-05

STATE OF CALIFORNIA
DEPARTMENT OF TRANSPORTATION

DIVISION OF ENGINEERING SERVICES
STRUCTURE DESIGN
DESIGN BRANCH 9

BRIDGE NO. 39-0044
KILOMETER POST 59.66

BRADLEY OVERHEAD (REPLACE)
SOUND WALL DETAILS No. 1

ALL DIMENSIONS ARE IN MILLIMETERS UNLESS OTHERWISE SHOWN

ORIGINAL SCALE IN MILLIMETERS FOR REDUCED PLANS 0 10 20 30 40 50 60 70 80 90 100

CU 10
EA 3A66U1

DISREGARD PRINTS BEARING EARLIER REVISION DATES 12-13-05

REVISION DATES

SHEET 79 OF 94

FILE => 39-0044-r-swdt01.dgn

STRUCTURES DESIGN DETAIL SHEET (METRIC) (REV.03-17-04)

USERNAME => trmikesl DATE PLOTTED => 05-MAR-2009 TIME PLOTTED => 06:23

DIST	COUNTY	ROUTE	KILOMETER POST TOTAL PROJECT	SHEET No	TOTAL SHEETS
10	Mer	140	58.7/60.5	317	384

REGISTERED CIVIL ENGINEER 9-30-08 DATE

3-2-09
PLANS APPROVAL DATE

REGISTERED PROFESSIONAL ENGINEER M. Van De Pol No. C35610 Exp. 9-30-09 CIVIL STATE OF CALIFORNIA

The State of California or its officers or agents shall not be responsible for the accuracy or completeness of electronic copies of this plan sheet.

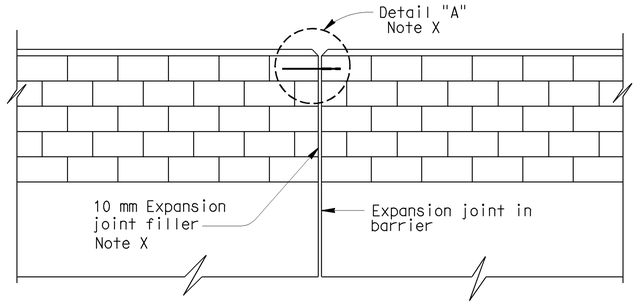

ALIGNMENT KEY DETAIL

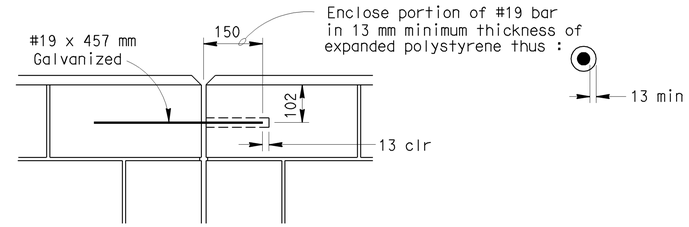

DETAIL A

Note X

Note X:
For additional details, see "Abutment Joint Seal Details" Sheet
Joint filler and "Detail A" not employed at abutment joints

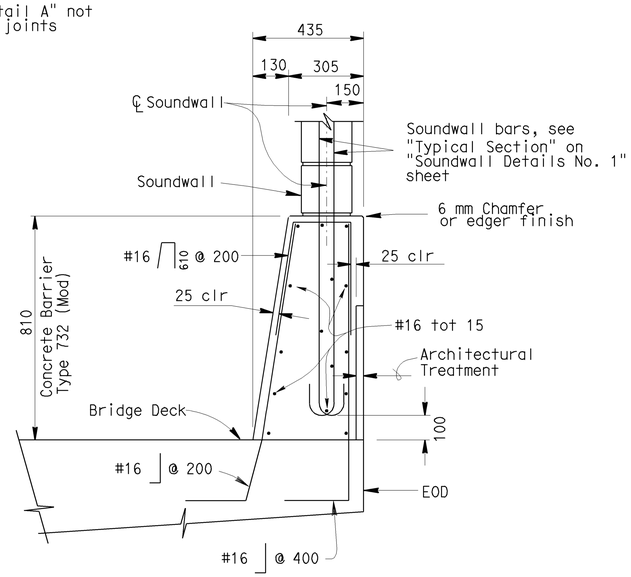

BARRIER SECTION

For Details on MSE Wall, see Other Plans This Contract

NOTES:

I : For details not shown,see "Typical Section No. 1" and "Typical Section No. 2" Sheets

II : For Barrier Reinforcement Details at Deck Joints, see "Abutment Joint Seal Details" and "Hinge Joint Seal Details" Sheets

III : Conduits not shown. Adjust conduits to clear reinf

DESIGN NOTES (SOUNDWALL)

DESIGN

Uniform Building Code,1997 Edition and the Bridge Design Specifications.

DESIGN WIND LOAD

1440 Pa

DESIGN SEISMIC LOAD

2.00 Dead load

CONCRETE MASONRY

REINFORCED CONCRETE

f'c = 22.41 Mpa
fy = 413.70 MPa

HIGH STRENGTH

f'm = 17.24 MPa
fy = 413.70 MPa

LOAD FACTORS AND LOAD COMBINATIONS

Working Stress Design (WSD) Percentage of unit stress

Group 1: D + W 100%
Group 2: D + 0.71 EQD 100%

Where:

D = Dead load
W = Wind load
EQD = Seismic dead load

Load Factor Design (LFD)

Group A: βD
Group B: βD + 1.3 W
Group C: βD + 1.0 EQD

Where : β = 0.9 or 1.2, whichever controls in design
D = Dead load
W = Wind load
EQD = Seismic dead load

STRENGTH REDUCTION FACTORS, Ø

Reinforced concrete:
For flexure _____ Ø=0.90
For shear _____ Ø=0.85

Concrete masonry:
For flexure _____ Ø=0.80
For shear _____ Ø=0.60

Barrier, Deck and Soundwall are designed by the Strength Design Method

NO SCALE

ALL DIMENSIONS ARE IN MILLIMETERS UNLESS OTHERWISE SHOWN

Caltrans Metric

	BY		CHECKED
DESIGN	M. VAN DE POL	04-03	P. NORBOE 11-05
DETAILS	M. VAN DE POL	04-03	P. NORBOE 11-05
QUANTITIES	M. VAN DE POL	11-05	P. NORBOE 11-05

STATE OF CALIFORNIA
DEPARTMENT OF TRANSPORTATION

DIVISION OF ENGINEERING SERVICES
STRUCTURE DESIGN
DESIGN BRANCH 9

BRIDGE NO. 39-0044
KILOMETER POST 59.66

BRADLEY OVERHEAD (REPLACE)
SOUND WALL DETAILS No. 2

ALL DIMENSIONS ARE IN MILLIMETERS UNLESS OTHERWISE SHOWN

ORIGINAL SCALE IN MILLIMETERS FOR REDUCED PLANS 0 10 20 30 40 50 60 70 80 90 100

CU 10
EA 3A66U1

DISREGARD PRINTS BEARING EARLIER REVISION DATES 12-13-05

REVISION DATES

SHEET 80 OF 94

FILE => 39-0044-r-swdt02.dgn

STRUCTURES DESIGN DETAIL SHEET (METRIC) (REV.03-17-04)

USERNAME => rtmikes1 DATE PLOTTED => 05-MAR-2009 TIME PLOTTED => 06:23

DIST	COUNTY	ROUTE	KILOMETER POST TOTAL PROJECT	SHEET No	TOTAL SHEETS
10	Mer	140	58.7/60.5	318	384

REGISTERED CIVIL ENGINEER 9-30-08 DATE

3-2-09
PLANS APPROVAL DATE

The State of California or its officers or agents shall not be responsible for the accuracy or completeness of electronic copies of this plan sheet.

REGISTERED PROFESSIONAL ENGINEER M. Van De Pol No. C35610 Exp. 9-30-09 CIVIL STATE OF CALIFORNIA

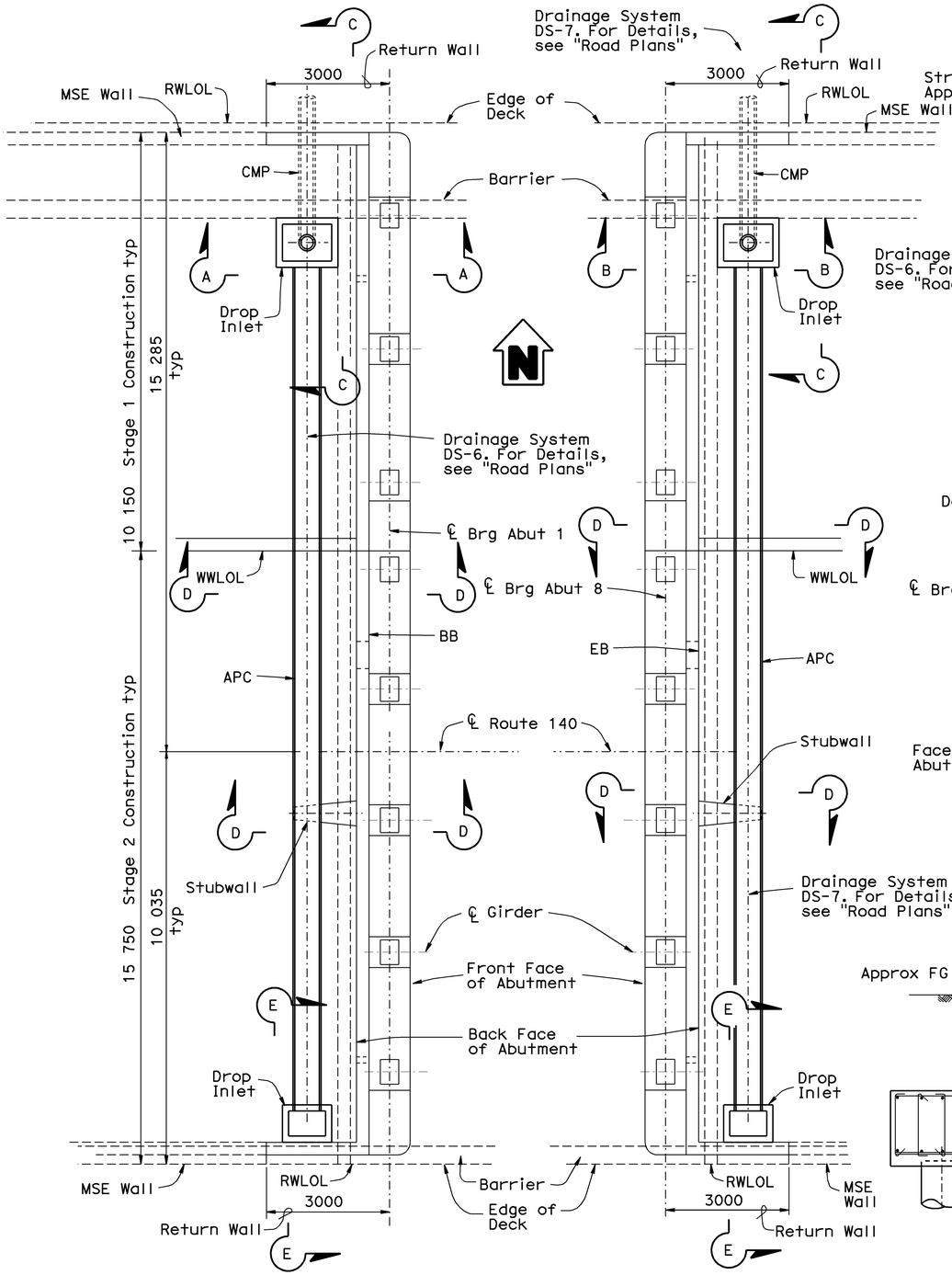

PLAN - ABUTMENT 1

No Scale

Superstructure Not Shown

PLAN - ABUTMENT 8

Barrier Slab not Shown

No Scale

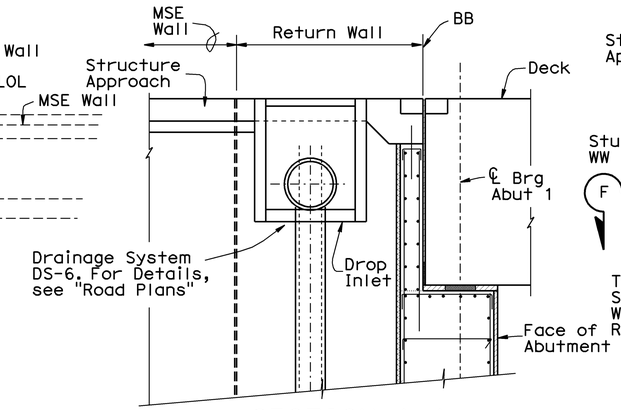

SECTION A-A

1:40

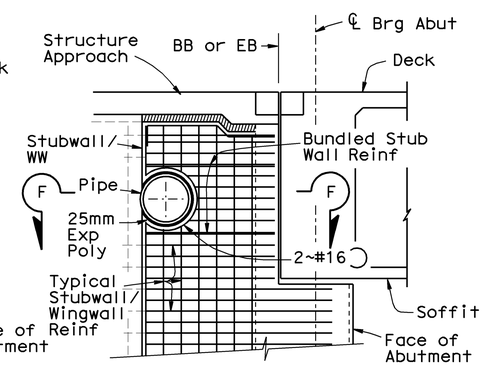

ELEVATION D-D

1:40

Stubwall Shown, Wingwall Similar

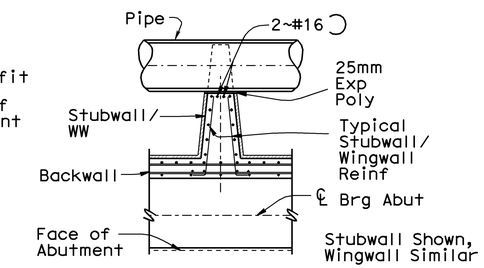

Stubwall Shown, Wingwall Similar

SECTION F-F

1:40

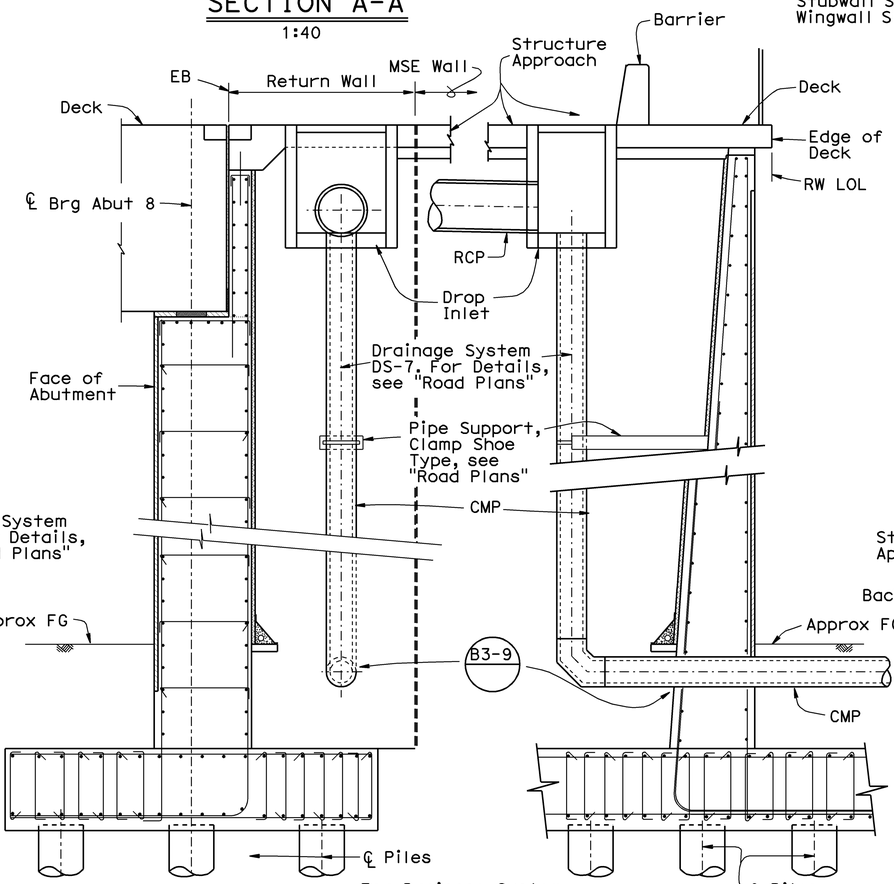

SECTION B-B

1:40

For Drainage System Details not shown, see "Road Plans"

Water Supply Lines not Shown. See "Abutment Details No. 1", "Abutment Details No. 3" Sheets and "Road Plans"

SECTION C-C

1:40

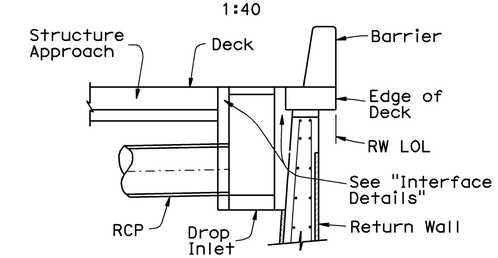

SECTION E-E

1:40

Soundwall Not Shown

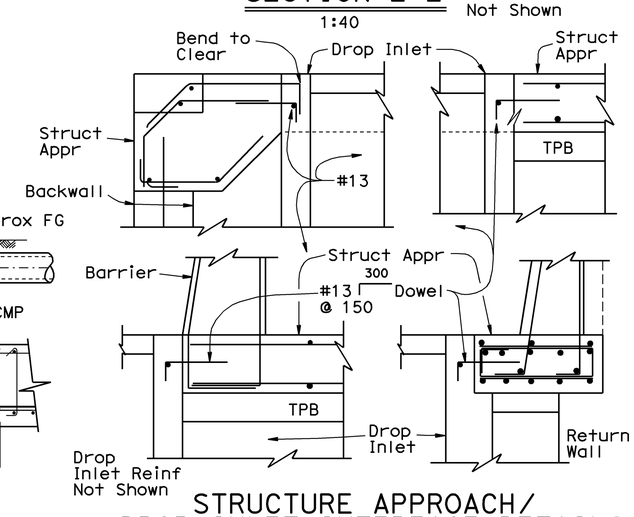

STRUCTURE APPROACH/ DROP INLET INTERFACE DETAILS

No Scale

For Approach Slab Reinf, see other detail sheets

DESIGN	BY M. VAN DE POL	04-03	CHECKED P. NORBOE	12-05		
DETAILS	BY M. VAN DE POL	04-03	CHECKED P. NORBOE	12-05		
QUANTITIES	BY M. VAN DE POL	11-05	CHECKED P. NORBOE	12-05		

STATE OF CALIFORNIA DEPARTMENT OF TRANSPORTATION

DIVISION OF ENGINEERING SERVICES STRUCTURE DESIGN

DESIGN BRANCH 9

BRIDGE NO. 39-0044

KILOMETER POST 59.66

BRADLEY OVERHEAD (REPLACE)

DRAINAGE DETAILS No. 1

Caltrans Metric

ALL DIMENSIONS ARE IN MILLIMETERS UNLESS OTHERWISE SHOWN

ORIGINAL SCALE IN MILLIMETERS FOR REDUCED PLANS 0 10 20 30 40 50 60 70 80 90 100

CU 10
EA 3A66U1

DISREGARD PRINTS BEARING EARLIER REVISION DATES 5-8-03

REVISION DATES

SHEET 81 OF 94

FILE => 39-0044-s-adrndt01.dgn

STRUCTURES DESIGN DETAIL SHEET (METRIC) (REV.03-17-04)

USERNAME => rtestrk DATE PLOTTED => 11-MAR-2009 TIME PLOTTED => 07:20

DIST	COUNTY	ROUTE	KILOMETER POST TOTAL PROJECT	SHEET No	TOTAL SHEETS
10	Mer	140	58.7/60.5	319	384

REGISTERED CIVIL ENGINEER 9-30-08 DATE

3-2-09
PLANS APPROVAL DATE

REGISTERED PROFESSIONAL ENGINEER M. Van De Pol No. C35610 Exp. 9-30-09 CIVIL STATE OF CALIFORNIA

The State of California or its officers or agents shall not be responsible for the accuracy or completeness of electronic copies of this plan sheet.

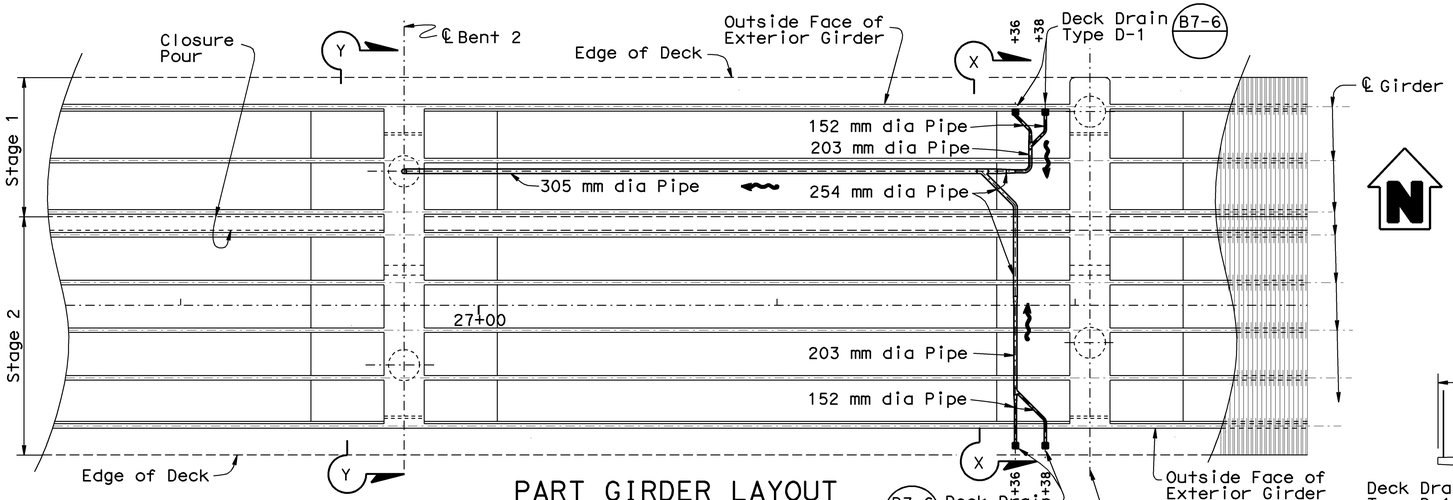

PART GIRDER LAYOUT

No Scale

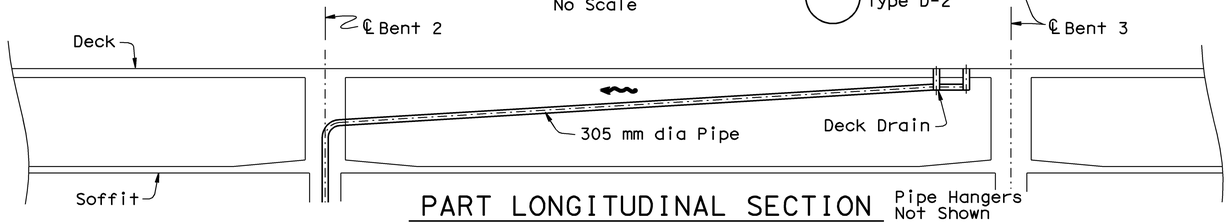

PART LONGITUDINAL SECTION

No Scale

Pipe Hangers Not Shown Note X

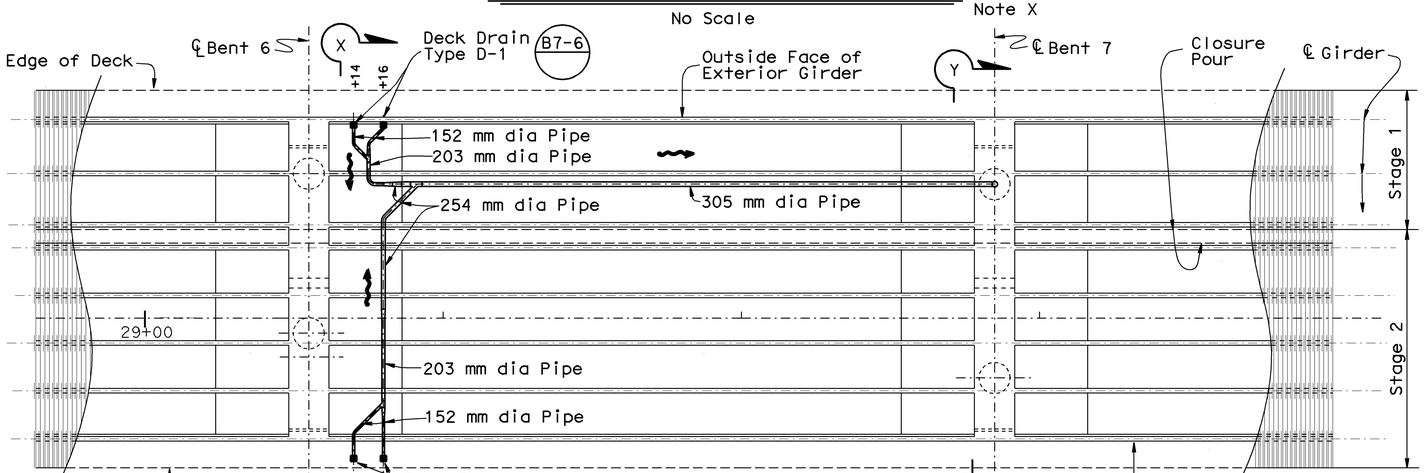

PART GIRDER LAYOUT

No Scale

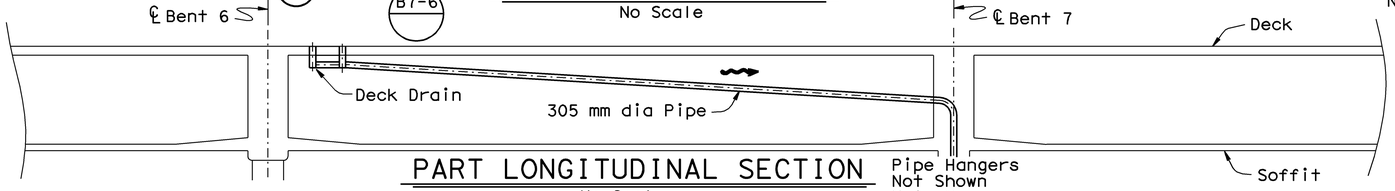

PART LONGITUDINAL SECTION

No Scale

Pipe Hangers Not Shown Note X

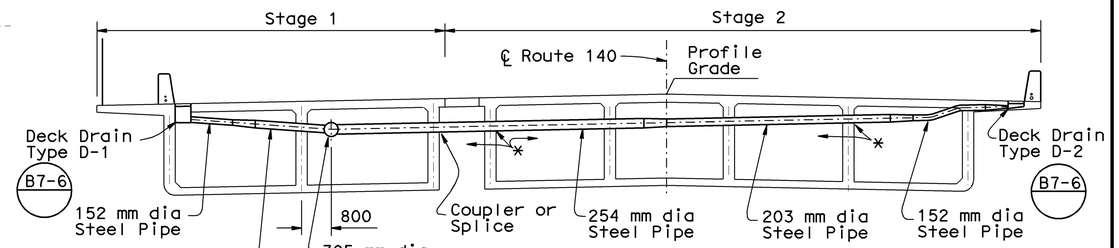

SECTION X-X

1:80

NOTES:
Pipe Hangers Not Shown. Note X
* Wrap Pipe with Two Layers of 7 kg Building Paper

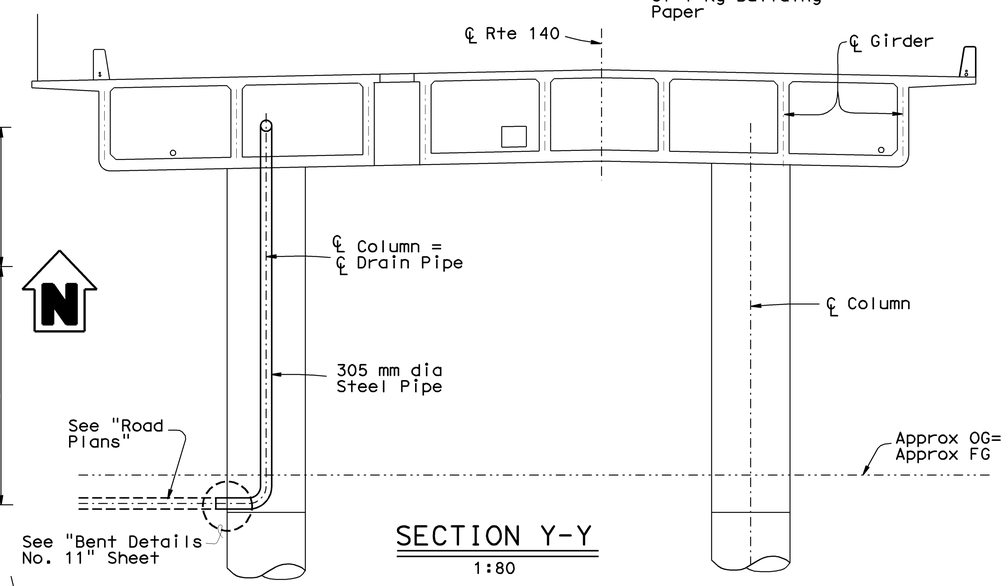

SECTION Y-Y

1:80

Note X:
Pipe Hangers for 305 mm dia Drain Pipe Shall be Adjustable Roller Type Hangers, Mounted to the Deck. Pipe Hangers for Other Drain Pipes Shall be Adjustable Clevis Type Hangers Mounted to the Deck. Pipe Hangers Shall be Made Galvanized or Stainless Steel. As Approved by the Engineer

NOTES:
Denotes Direction of Flow
For Drainage Details not shown, see "Road Plans"
For Drainage System at Abutments, see "Abutment Details" Sheets
For Additional Details, see "Girder Layout and "Bent Details" Sheets

Caltrans Metric

	BY		CHECKED	
DESIGN	M. VAN DE POL	04-03	P. NORBOE	12-05
DETAILS	M. VAN DE POL	04-03	P. NORBOE	12-05
QUANTITIES	M. VAN DE POL	11-05	P. NORBOE	12-05

STATE OF CALIFORNIA DEPARTMENT OF TRANSPORTATION

DIVISION OF ENGINEERING SERVICES STRUCTURE DESIGN
DESIGN BRANCH 9

BRIDGE NO. 39-0044
KILOMETER POST 59.66

BRADLEY OVERHEAD (REPLACE)
DRAINAGE DETAILS No. 2

ALL DIMENSIONS ARE IN MILLIMETERS UNLESS OTHERWISE SHOWN

ORIGINAL SCALE IN MILLIMETERS FOR REDUCED PLANS 0 10 20 30 40 50 60 70 80 90 100

CU 10
EA 3A66U1

DISREGARD PRINTS BEARING EARLIER REVISION DATES 6-8-03 12-13-05

REVISION DATES

SHEET 82 OF 94

FILE => 39-0044-s-adrndt02.dgn

STRUCTURES DESIGN DETAIL SHEET (METRIC) (REV.03-17-04)

USERNAME => trmikest DATE PLOTTED => 05-MAR-2009 TIME PLOTTED => 06:24

DIST	COUNTY	ROUTE	KILOMETER POST TOTAL PROJECT	SHEET No	TOTAL SHEETS
10	Mer	140	58.7/60.5	320	384

REGISTERED CIVIL ENGINEER 9-30-08 DATE

3-2-09
PLANS APPROVAL DATE

REGISTERED PROFESSIONAL ENGINEER M. Van De Pol No. C35610 Exp. 9-30-09 CIVIL STATE OF CALIFORNIA

The State of California or its officers or agents shall not be responsible for the accuracy or completeness of electronic copies of this plan sheet.

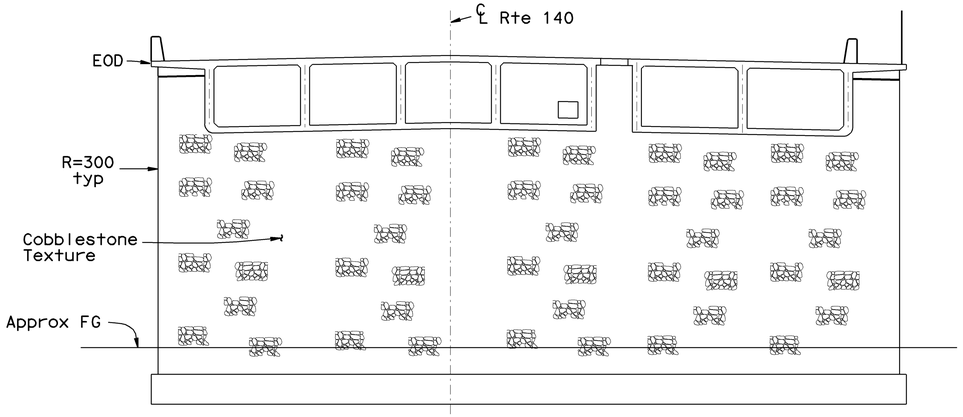

ABUTMENT ELEVATION

1:100

NOTE: Abutment 1 Shown, Abutment 8 Similar

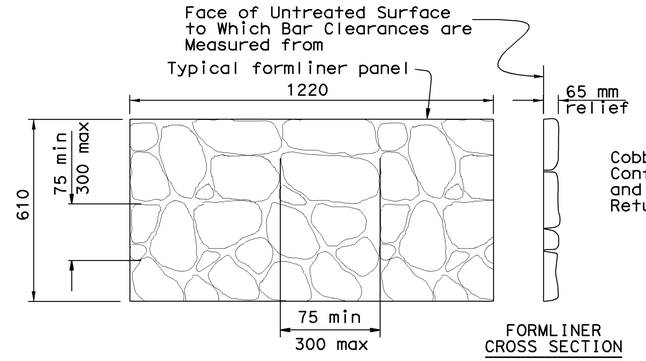

Cobblestone Texture Shall Conform Around Corners and at Interface Between Return Walls and MSE Walls

COBBLESTONE TEXTURE

No Scale

Bridge Abutment

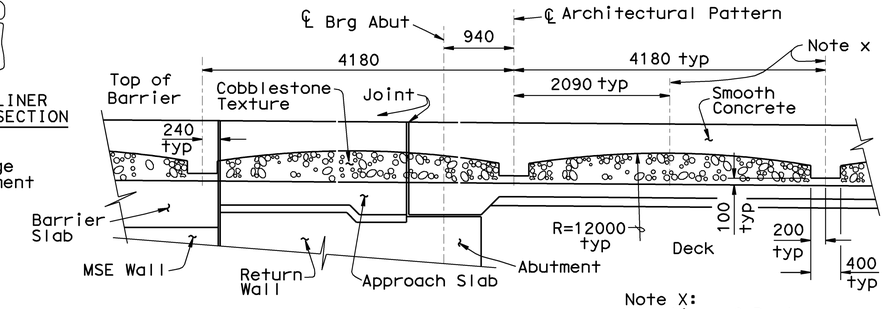

PART ELEVATION

1:40

Note X: Location of Posts for Chain Link Railing

NOTE: Concrete Barrier not shown

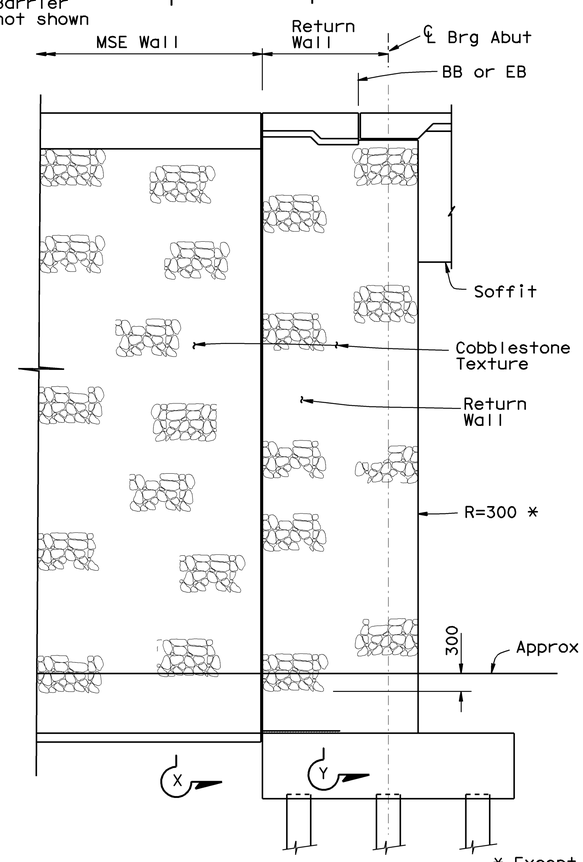

PART ELEVATION - WALL

1:50

* Except at Abut 8 Anchor Block Wall

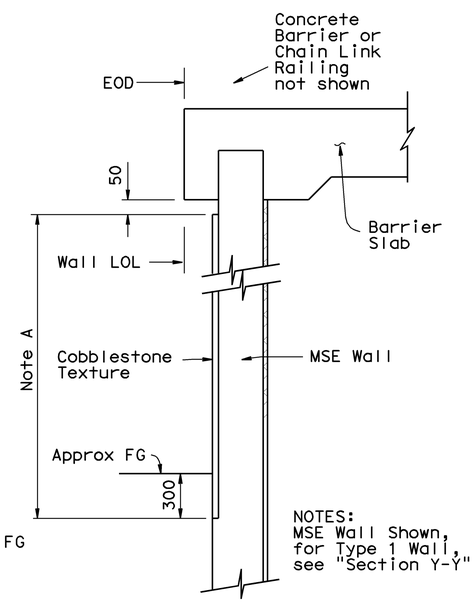

NOTES: MSE Wall Shown, for Type 1 Wall, see "Section Y-Y"

SECTION X-X

1:20

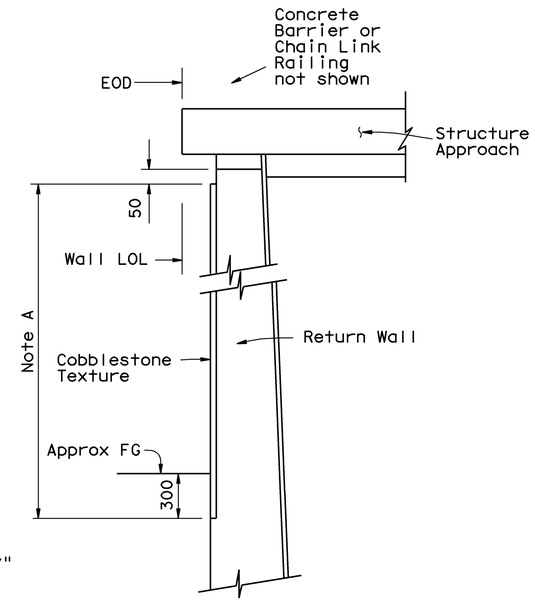

SECTION Y-Y

1:20

Note A
Limits of Cobblestone Texture and Prepare and Stain Concrete Surfaces

For MSE Wall Architectural Details, see Other Plans This Contract

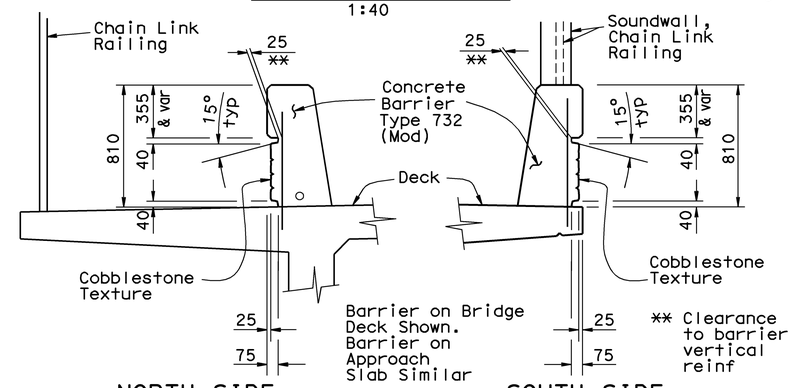

NORTH SIDE — SECTIONS — SOUTH SIDE

1:20

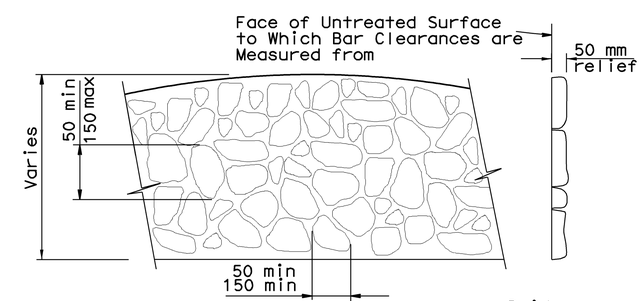

COBBLESTONE TEXTURE

Bridge Barrier

BARRIER TREATMENT DETAILS

DESIGN	BY M. VAN DE POL	04-03	CHECKED P. NORBOE 12-05
DETAILS	BY M. VAN DE POL	04-03	CHECKED P. NORBOE 12-05
QUANTITIES	BY M. VAN DE POL	11-05	CHECKED P. NORBOE 12-05

STATE OF CALIFORNIA DEPARTMENT OF TRANSPORTATION

DIVISION OF ENGINEERING SERVICES STRUCTURE DESIGN

DESIGN BRANCH 9

BRIDGE NO. 39-0044

KILOMETER POST 59.66

BRADLEY OVERHEAD (REPLACE)

BRIDGE ARCHITECTURAL DETAILS

Caltrans Metric

ALL DIMENSIONS ARE IN MILLIMETERS UNLESS OTHERWISE SHOWN

ORIGINAL SCALE IN MILLIMETERS FOR REDUCED PLANS 0 10 20 30 40 50 60 70 80 90 100

CU 10
EA 3A66U1

DISREGARD PRINTS BEARING EARLIER REVISION DATES 5-8-03 12-13-05

REVISION DATES

SHEET 83 OF 94

FILE => 39-0044-s-aebarcdet.dgn

STRUCTURES DESIGN DETAIL SHEET (METRIC) (REV.03-17-04)

USERNAME => ttrstrk DATE PLOTTED => 11-MAR-2009 TIME PLOTTED => 07:20

DIST	COUNTY	ROUTE	KILOMETER POST TOTAL PROJECT	SHEET No	TOTAL SHEETS
10	Mer	140	58.7/60.5	321	384

REGISTERED CIVIL ENGINEER 11-18-08 DATE

3-2-09
PLANS APPROVAL DATE

The State of California or its officers or agents shall not be responsible for the accuracy or completeness of electronic copies of this plan sheet.

REGISTERED PROFESSIONAL ENGINEER M. Van De Pol No. C35610 Exp. 9-30-09 CIVIL STATE OF CALIFORNIA

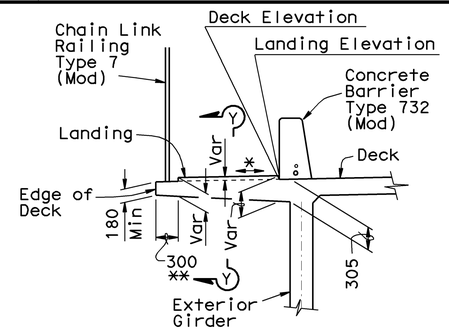

* Level
** At the Option of the Contractor, the Landing May Extend to the Bridge EOD

PART SECTION Bridge
1:40

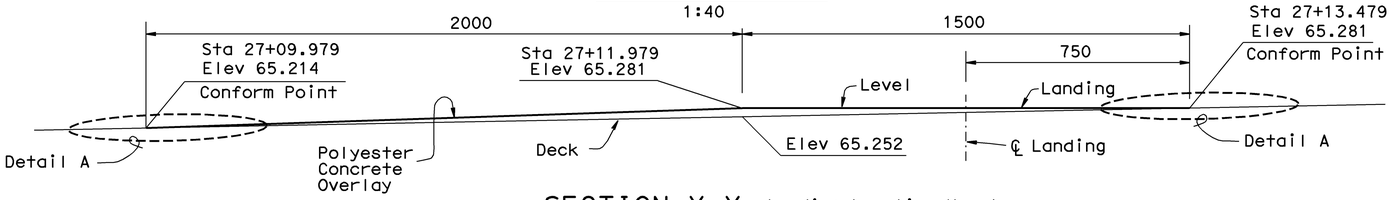

SECTION Y-Y Landing Location No. 1
No Scale

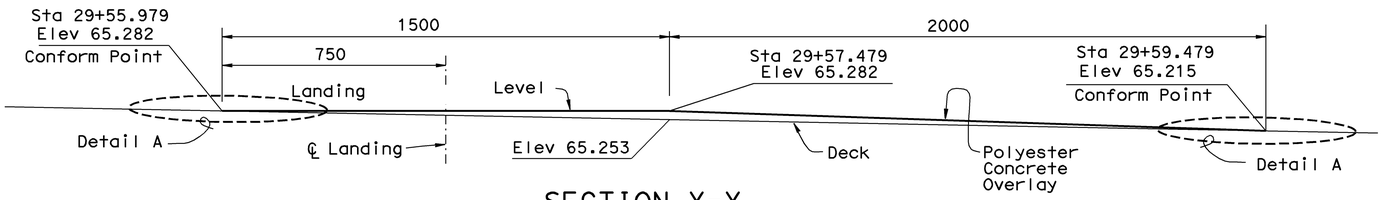

SECTION Y-Y Landing Location No. 2
No Scale

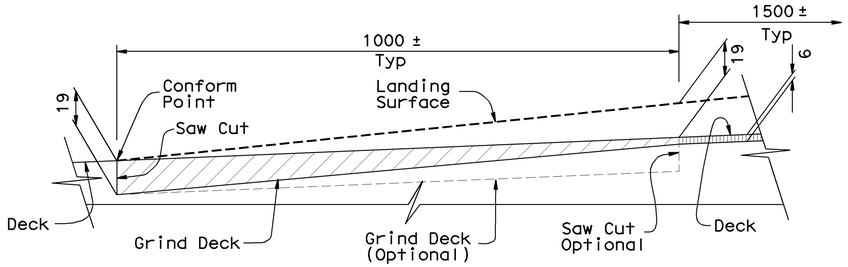

Removal

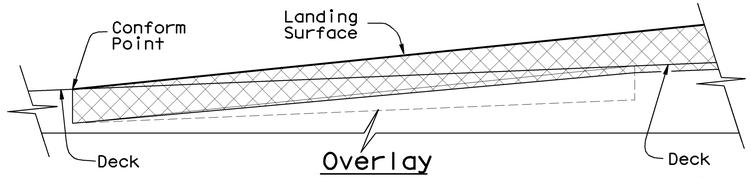

DETAIL A
No Scale

Low End Landing Conform Point Shown, High End Conform Point Similar

Notes

For Additional Details, See "Typical Section No. 1" and "Typical Section No. 2" Sheets

The Details Shown Herein Reflect Pedestrian Walkway/Bikeway Landing Constructed After the Bridge Deck has Been Completed. At the Option of the Contractor, the Landings May be Constructed with the Bridge Deck, as Approved by the Engineer

For Details at MSE Walls, see Other Plans This Contract

Denotes Approx Limits of Prepare Concrete Bridge Deck Surface

Denotes Approx Limits of "Prepare Concrete Bridge Deck Surface" and "Remove Concrete Deck Surface"

Denotes Approx Limits of Polyester Concrete Overlay

PEDESTRIAN WALKWAY / BIKEPATH LANDING DETAILS

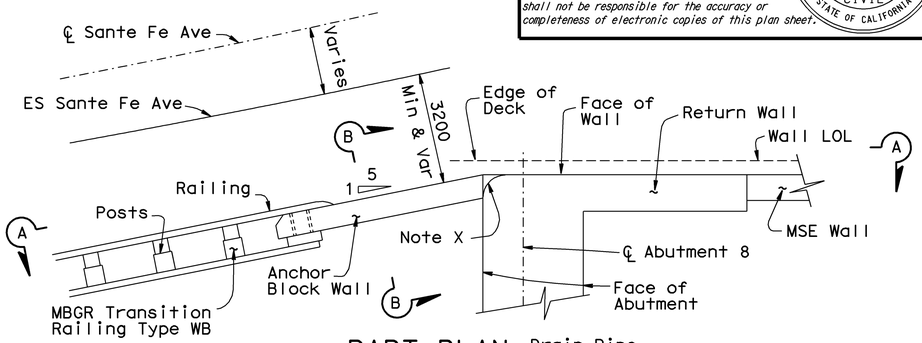

PART PLAN Drain Pipe Not Shown
1:25

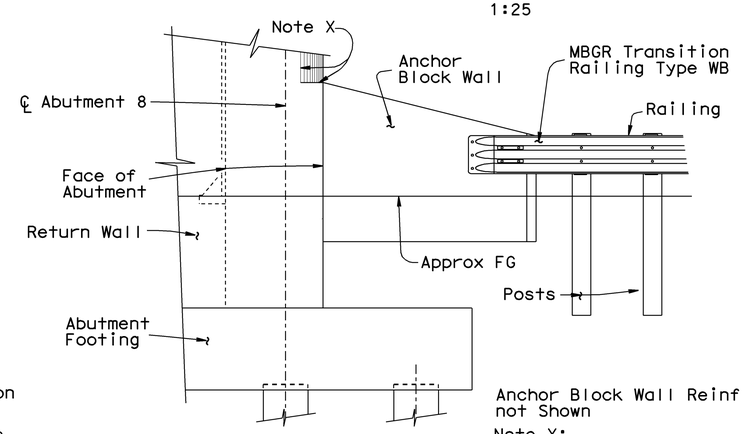

ELEVATION A-A
1:25

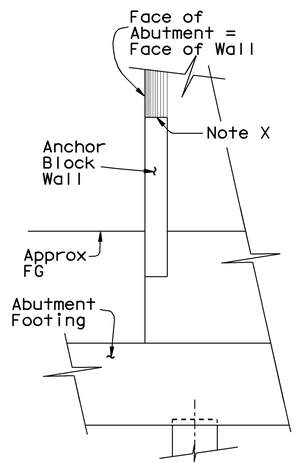

SECTION B-B
1:25

Anchor Block Wall Reinf not Shown

Note X:
300mm Radius at Corner of Abutment is Discontinued at Top of Anchor Block Wall. See "Abutment Details" Sheets

Notes:

For Abutment Details, see "Abutment Details No. 1" Through "Abutment Details No. 4" Sheets

For Additional Details, see A77J3 and A77J4

At the Contractor's Option, the Bottom of Anchor Block Wall May be Extended to the Top of Abutment Footing, as Approved by the Engineer

At the Contractor's Option, the Drill and Bond Dowels Located at the Interface Between the Anchor Block Wall and the Abutment, may be Substituted with Reinf Cast into the Abutment, or Reinf with Threaded Inserts, as Approved by the Engineer

For Additional Details, see "Road Plans"

Contour FG to Prevent Ponding at Abutment Face

No Architectural Treatment on Anchor Block Wall

MBGR ANCHOR BLOCK WALL AT ABUTMENT 8

Caltrans Metric

ALL DIMENSIONS ARE IN MILLIMETERS UNLESS OTHERWISE SHOWN

ORIGINAL SCALE IN MILLIMETERS FOR REDUCED PLANS 0 10 20 30 40 50 60 70 80 90 100

	BY		CHECKED
DESIGN	M. VAN DE POL	04-03	P. NORBOE 11-05
DETAILS	M. VAN DE POL	04-03	P. NORBOE 11-05
QUANTITIES	M. VAN DE POL	11-05	P. NORBOE 11-05

STATE OF CALIFORNIA DEPARTMENT OF TRANSPORTATION

DIVISION OF ENGINEERING SERVICES STRUCTURE DESIGN
DESIGN BRANCH 9

CU 10
EA 3A66U1

BRIDGE NO. 39-0044
KILOMETER POST 59.66

BRADLEY OVERHEAD (REPLACE)
MISCELLANEOUS DETAILS

DISREGARD PRINTS BEARING EARLIER REVISION DATES 12-20-05 11-18-08

REVISION DATES

SHEET 84 OF 94

STRUCTURES DESIGN DETAIL SHEET (METRIC) (REV.03-17-04)

FILE => 39-0044-s-miscdet01.dgn

USERNAME => trsttk DATE PLOTTED => 05-MAR-2009 TIME PLOTTED => 07:21

DIST	COUNTY	ROUTE	KILOMETER POST TOTAL PROJECT	SHEET No	TOTAL SHEETS
10	Mer	140	58.7/60.5	322	384

REGISTERED CIVIL ENGINEER 11-18-08 DATE

3-2-09
PLANS APPROVAL DATE

REGISTERED PROFESSIONAL ENGINEER M. Van De Pol No. C35610 Exp. 9-30-09 CIVIL STATE OF CALIFORNIA

The State of California or its officers or agents shall not be responsible for the accuracy or completeness of electronic copies of this plan sheet.

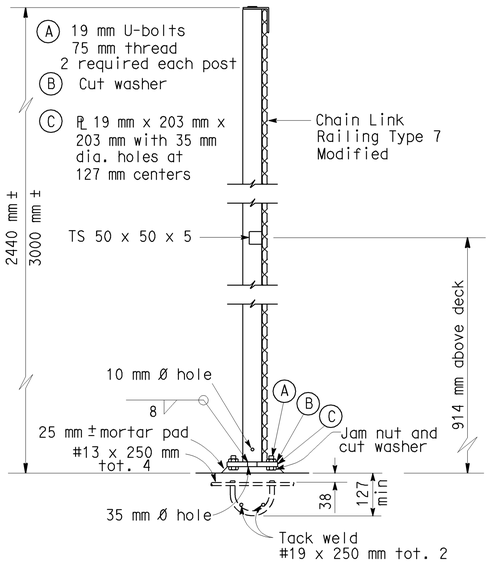

TYPICAL POST DETAIL

Left EOD Shown

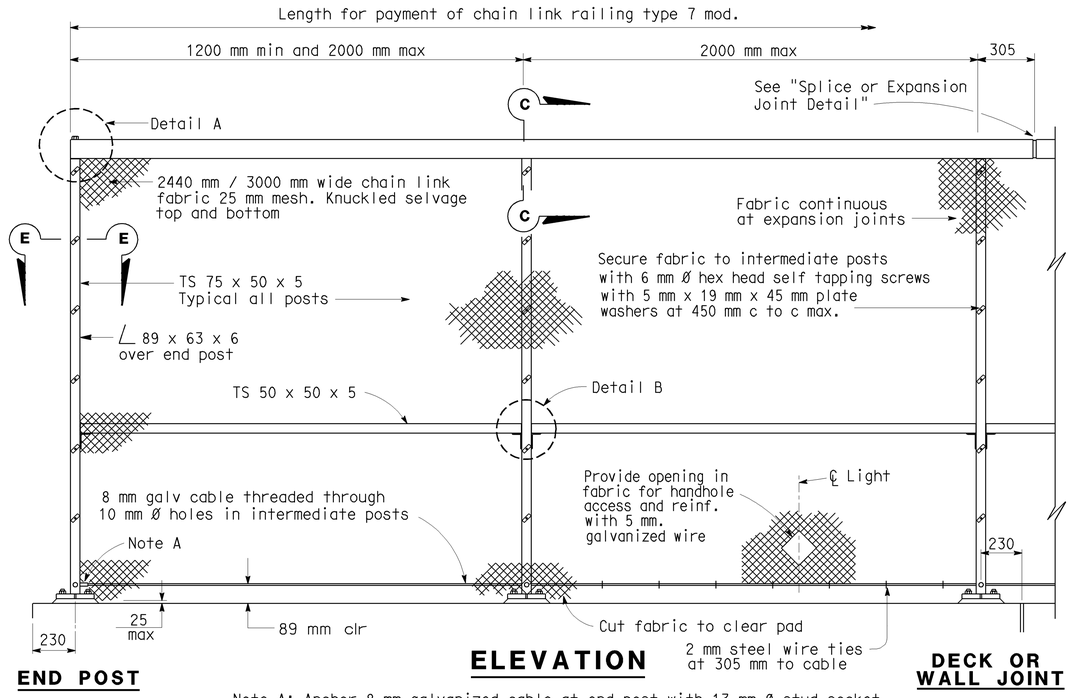

ELEVATION

Note A: Anchor 8 mm galvanized cable at end post with 13 mm Ø stud socket assembly or 13 mm Ø welded eyebolt and crimped sleeve clamp. Provide 38 mm min. take-up at each anchorage.

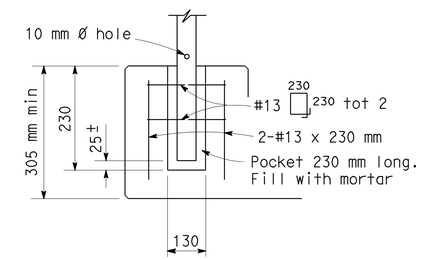

BARRIER ANCHORAGE DETAIL

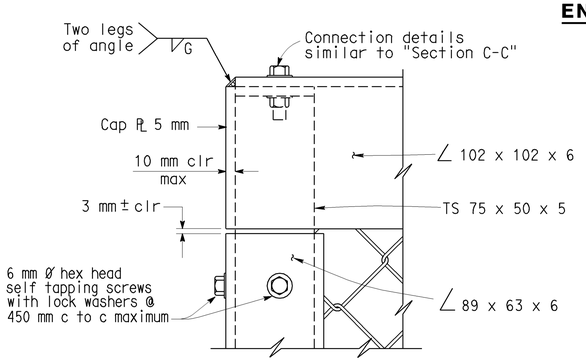

DETAIL A

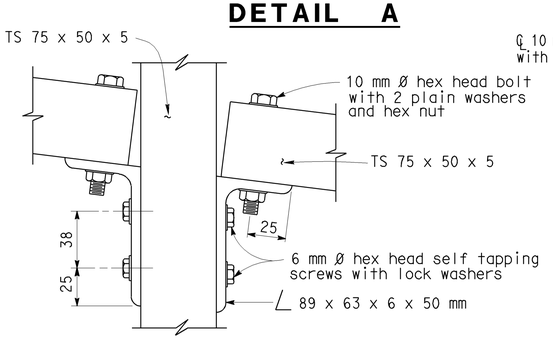

DETAIL B

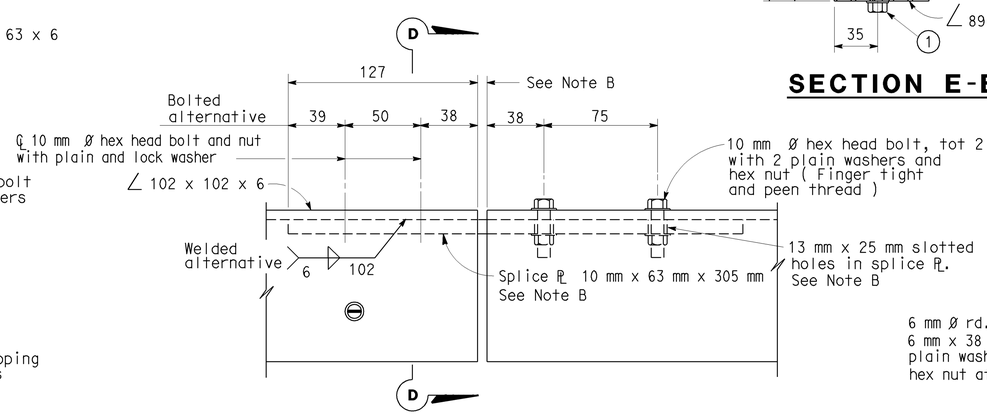

SPLICE OR EXPANSION JOINT DETAIL

Note B: Expansion joint same dimension as expansion joint in deck or wall. Increase slotted hole length and splice PL length correspondingly.

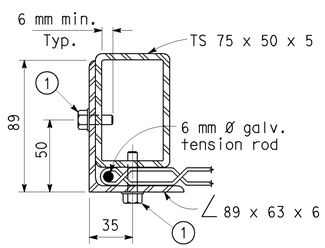

1 6 mm Ø hex head self-tapping screws with lock washers @ 380 mm c.to c. maximum

SECTION E-E

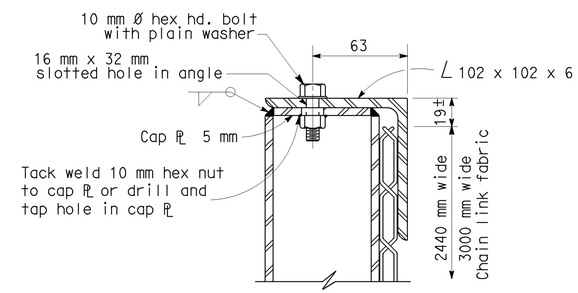

SECTION C-C

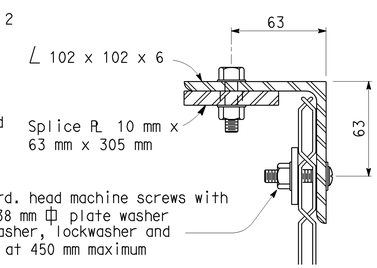

SECTION D-D

NOTES:

1. Railing assembly except chain link fabric to be galvanized after fabrication.
2. Railing shall conform to horizontal and vertical alignment. Post shall be vertical. Horizontal angle shall be bent to conform to horizontal alignment if radius is 45 m or less.
3. Horizontal angle shall be continuous over not less than two intermediate posts,except that a shorter length is permitted at expansion joints and other rail discontinuities.
4. Place fabric parallel to slope.
5. Alternative details may be submitted by the Contractor for Engineer's approval.
6. Provide thimbles at all cable loops.
7. Peen all exposed bolts.
8. For additional details, see "Typical Section No. 1" and "Typical Section No. 2" sheets

Caltrans Metric

	BY		CHECKED	
DESIGN	M. VAN DE POL	04-03	P. NORBOE	11-05
DETAILS	M. VAN DE POL	04-03	P. NORBOE	11-05
QUANTITIES	M. VAN DE POL	11-05	P. NORBOE	11-05

STATE OF CALIFORNIA DEPARTMENT OF TRANSPORTATION

DIVISION OF ENGINEERING SERVICES STRUCTURE DESIGN
DESIGN BRANCH 9

BRIDGE NO. 39-0044
KILOMETER POST 59.66

BRADLEY OVERHEAD (REPLACE)
CHAIN LINK RAILING TYPE 7 (MOD)

ALL DIMENSIONS ARE IN MILLIMETERS UNLESS OTHERWISE SHOWN

ORIGINAL SCALE IN MILLIMETERS FOR REDUCED PLANS 0 10 20 30 40 50 60 70 80 90 100

CU 10
EA 3A66U1

DISREGARD PRINTS BEARING EARLIER REVISION DATES 11-18-08

REVISION DATES

SHEET 85 OF 94

STRUCTURES DESIGN DETAIL SHEET (METRIC) (REV.03-17-04)

FILE => 39-0044-s-miscdet02.dgn

USERNAME => trsttk DATE PLOTTED => 05-MAR-2009 TIME PLOTTED => 07:21

DIST	COUNTY	ROUTE	KILOMETER POST TOTAL PROJECT	SHEET No	TOTAL SHEETS
10	Mer	140	58.7/60.5	323	384

REGISTERED CIVIL ENGINEER 9-30-08 DATE

3-2-09
PLANS APPROVAL DATE

REGISTERED PROFESSIONAL ENGINEER M. Van De Pol No. C35610 Exp. 9-30-09 CIVIL STATE OF CALIFORNIA

The State of California or its officers or agents shall not be responsible for the accuracy or completeness of electronic copies of this plan sheet.

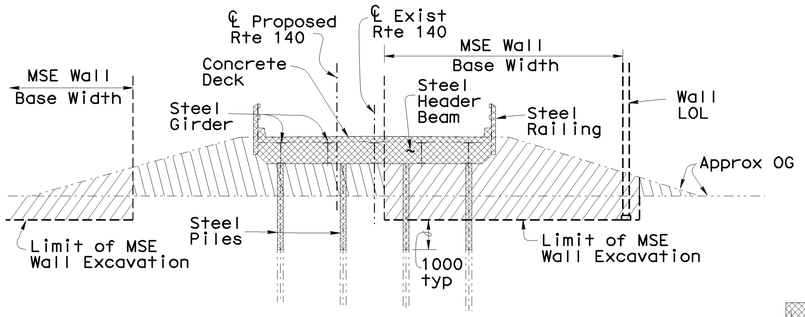

ABUTMENTS 1, 39

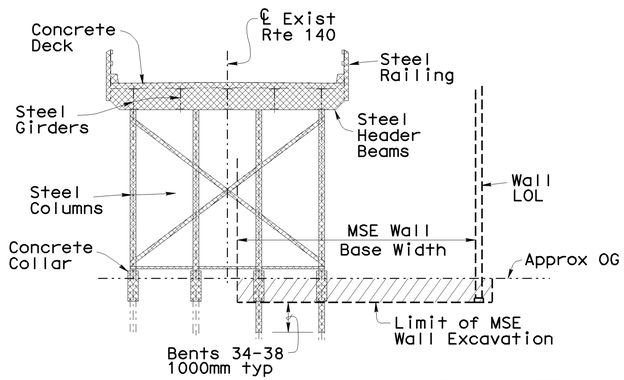

BENTS 2-8, 33-38
TOWER BENTS 6/7, 36/37

For Bent 33 Remove Piles to Bottom of New Abutment 8 Footing Elevation

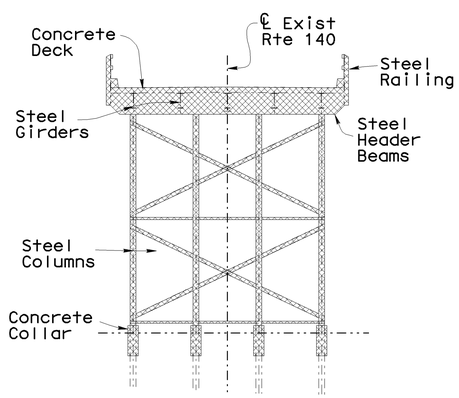

BENTS 9-18, 25-32
TOWER BENTS 11/12, 16/17, 26/27, 31/32

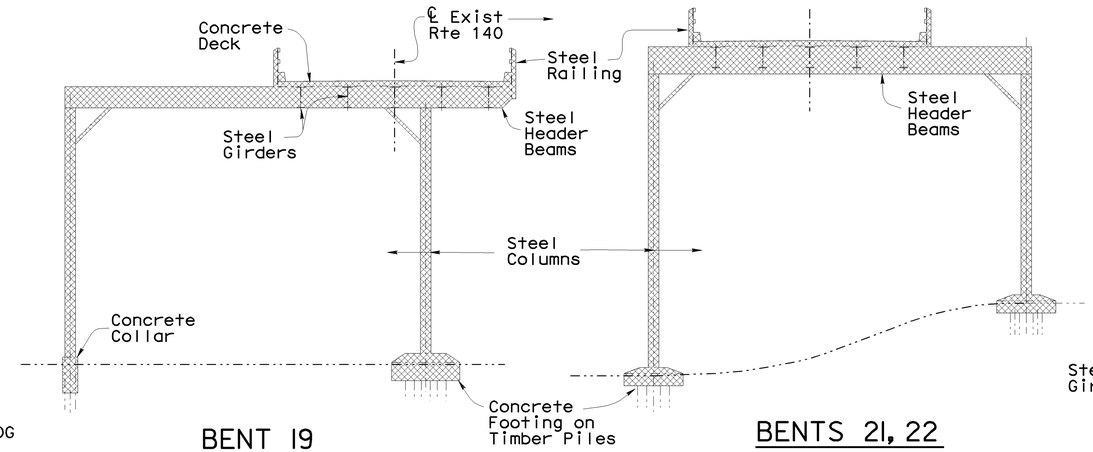

BENT 19

BENTS 21, 22

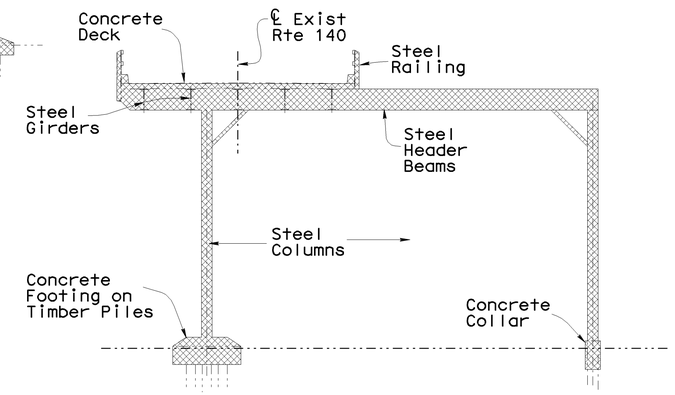

BENT 24

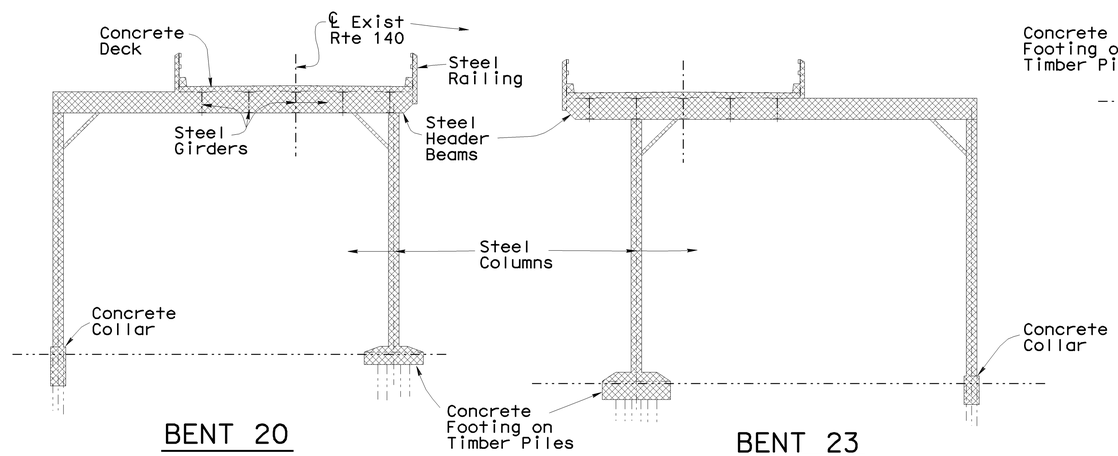

BENT 20

BENT 23

Denotes Limits of Removal of Existing Structure

Denotes Limits of Removal of Roadway Embankment, see "Road Plans"

Denotes Limits of Structure Excavation (MSE Wall), see Other Plans This Contract

EXISTING STRUCTURE BENT ELEVATIONS

No Scale

NOTE:
Asbestos Shims are Located at the Girder Ends, at Each Bent of the Existing Structure

For Added Details, see "Stage Construction", and "Temporary Support" Details Sheets

For Existing Bridge Approach Fill Removal Details, see "Road Plans"

NOTE:
THE CONTRACTOR SHALL VERIFY ALL CONTROLLING FIELD DIMENSIONS BEFORE ORDERING OR FABRICATING ANY MATERIAL.

Caltrans Metric

	BY		CHECKED	
DESIGN	M. VAN DE POL	04-03	P. NORBOE	12-05
DETAILS	M. VAN DE POL	04-03	P. NORBOE	12-05
QUANTITIES	M. VAN DE POL	11-05	P. NORBOE	12-05

STATE OF CALIFORNIA
DEPARTMENT OF TRANSPORTATION

DIVISION OF ENGINEERING SERVICES
STRUCTURE DESIGN
DESIGN BRANCH 9

BRIDGE NO. 39-0044
KILOMETER POST 59.66

BRADLEY OVERHEAD (REPLACE)
REMOVAL DETAILS

ALL DIMENSIONS ARE IN MILLIMETERS UNLESS OTHERWISE SHOWN

ORIGINAL SCALE IN MILLIMETERS FOR REDUCED PLANS 0 10 20 30 40 50 60 70 80 90 100

CU 10
EA 3A66U1

DISREGARD PRINTS BEARING EARLIER REVISION DATES 5-8-03 12-13-05

REVISION DATES

SHEET 86 OF 94

FILE => 39-0044-s-remldet.dgn

STRUCTURES DESIGN DETAIL SHEET (METRIC) (REV.03-17-04)

USERNAME => trstrk DATE PLOTTED => 05-MAR-2009 TIME PLOTTED => 07:21

DIST	COUNTY	ROUTE	KILOMETER POST TOTAL PROJECT	SHEET No	TOTAL SHEETS
10	Mer	140	58.7/60.5	324	384

REGISTERED CIVIL ENGINEER 9-30-08 DATE

3-2-09
PLANS APPROVAL DATE

The State of California or its officers or agents shall not be responsible for the accuracy or completeness of electronic copies of this plan sheet.

REGISTERED PROFESSIONAL ENGINEER M. Van De Pol No. C35610 Exp. 9-30-09 CIVIL STATE OF CALIFORNIA

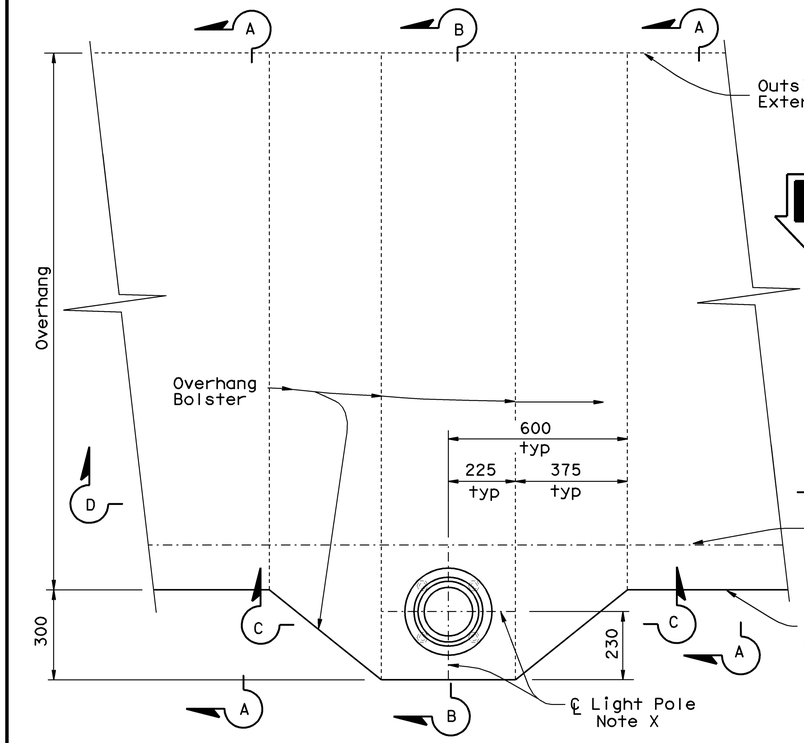

PART PLAN
1:10

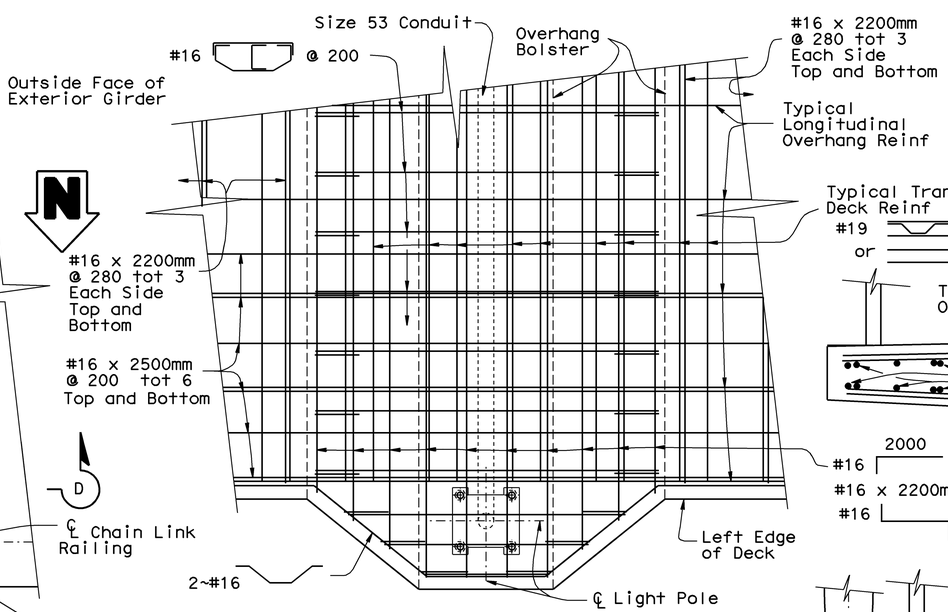

PART PLAN
1:10

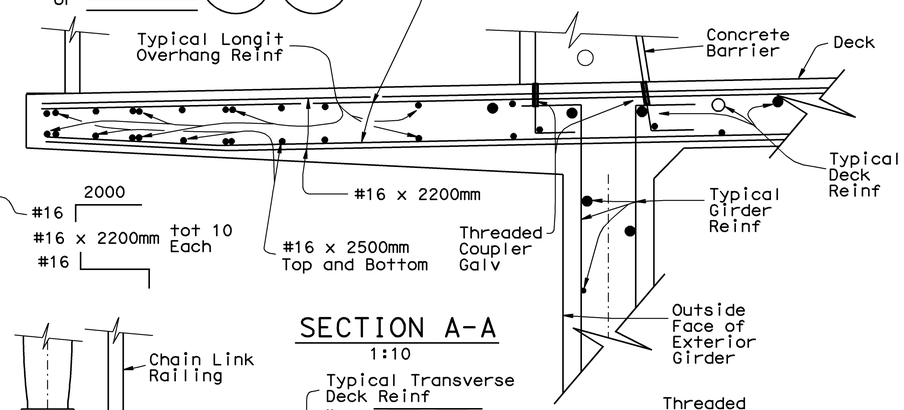

SECTION A-A
1:10

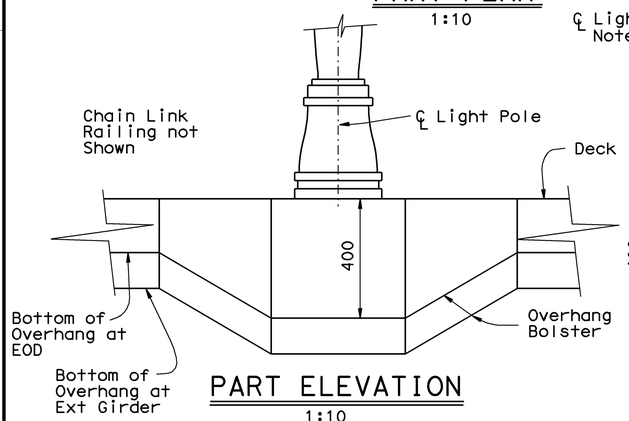

PART ELEVATION
1:10

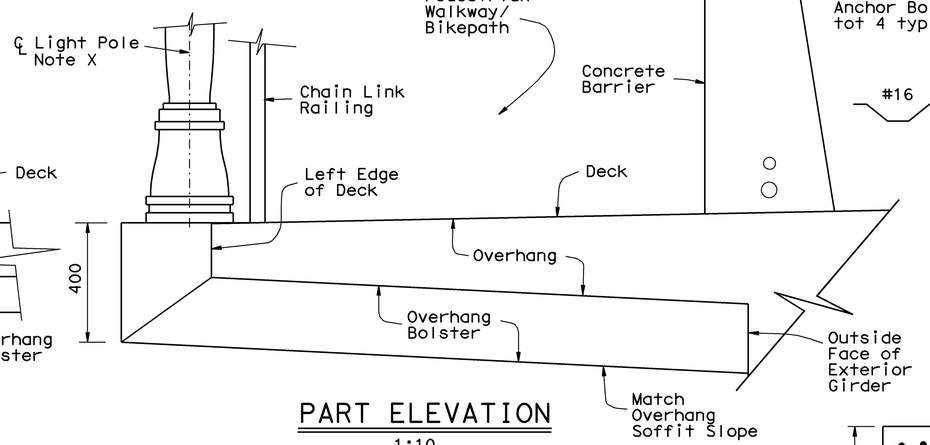

PART ELEVATION
1:10

BOLSTER DETAILS

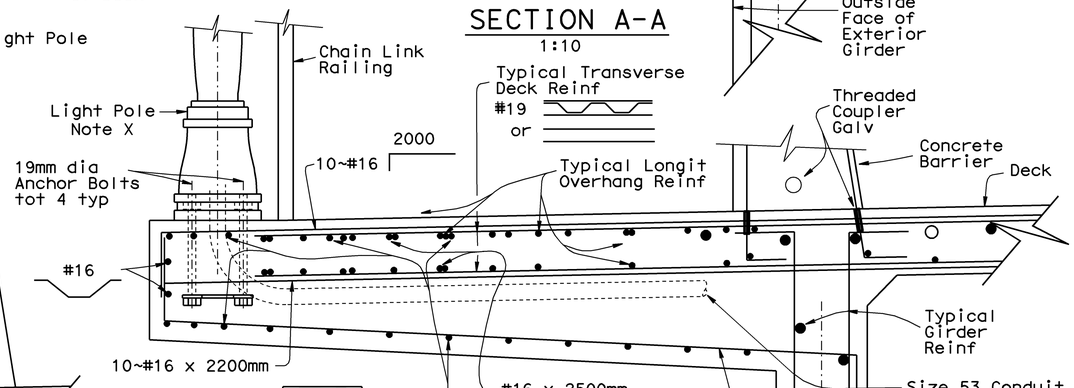

SECTION B-B
1:10

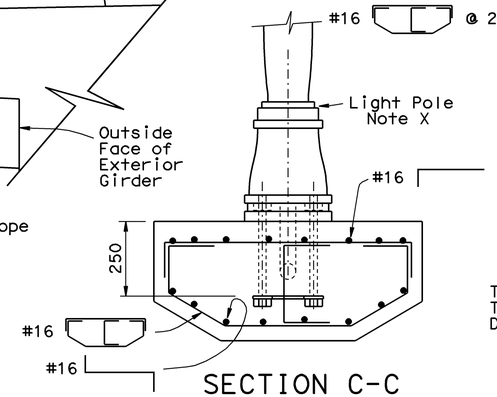

SECTION C-C
1:10

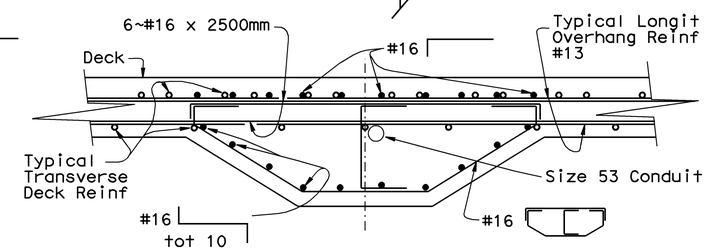

SECTION D-D
1:10

BOLSTER REINFORCEMENT DETAILS

Notes

For Additional Details, see "Typical Section No. 1" Sheet

For Locations of Light Standards, see "Road Plans"

Details Shown Herein, are for Light Standards to be Located at the Left Edge of Deck Only. For Light Standards Mounted on the Type 732 Barrier on the Right Edge of Deck, Refer to Details Shown in the Standard Plans Sheet B11-55

For Additional Details, see RSP ES-7M RSP ES-9A RSP ES-9B

Note X
For Light Pole and Fixture Details, see "Electrical Plans"

For Lighting Details at MSE Walls, see Other Plans this Contract

Caltrans Metric

	BY		CHECKED	
DESIGN	M. VAN DE POL	04-03	P. NORBOE	12-05
DETAILS	M. VAN DE POL	04-03	P. NORBOE	12-05
QUANTITIES	M. VAN DE POL	11-05	P. NORBOE	12-05

STATE OF CALIFORNIA
DEPARTMENT OF TRANSPORTATION

DIVISION OF ENGINEERING SERVICES
STRUCTURE DESIGN
DESIGN BRANCH 9

BRIDGE NO. 39-0044
KILOMETER POST 59.66

BRADLEY OVERHEAD (REPLACE)
LIGHTING DETAILS

ALL DIMENSIONS ARE IN MILLIMETERS UNLESS OTHERWISE SHOWN

ORIGINAL SCALE IN MILLIMETERS FOR REDUCED PLANS 0 10 20 30 40 50 60 70 80 90 100

CU 10
EA 3A66U1

DISREGARD PRINTS BEARING EARLIER REVISION DATES 5-8-03

REVISION DATES

SHEET 87 OF 94

STRUCTURES DESIGN DETAIL SHEET (METRIC) (REV.03-17-04)

FILE => 39-0044-s-slghtdt01.dgn

USERNAME => trrstrk DATE PLOTTED => 05-MAR-2009 TIME PLOTTED => 07:21

RELEASED 3-25-97

DIST.	COUNTY	ROUTE	KILOMETER POST TOTAL PROJECT	SHEET NO.	TOTAL SHEETS
10	Mer	140	58.7/60.5	325	384

REGISTERED ENGINEER - CIVIL 9-30-08

3-2-09
PLANS APPROVAL DATE

REGISTERED PROFESSIONAL ENGINEER M. VAN DE POL No. C35610 Exp. 9-30-09 CIVIL STATE OF CALIFORNIA

The State of California or its officers or agents shall not be responsible for the accuracy or completeness of electronic copies of this plan sheet.

Caltrans Metric

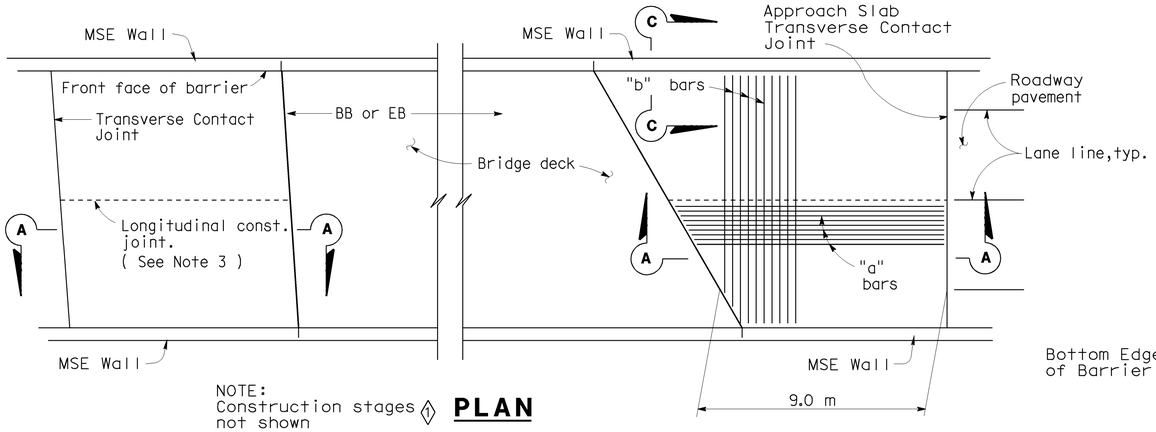

NOTE: Construction stages not shown

PLAN

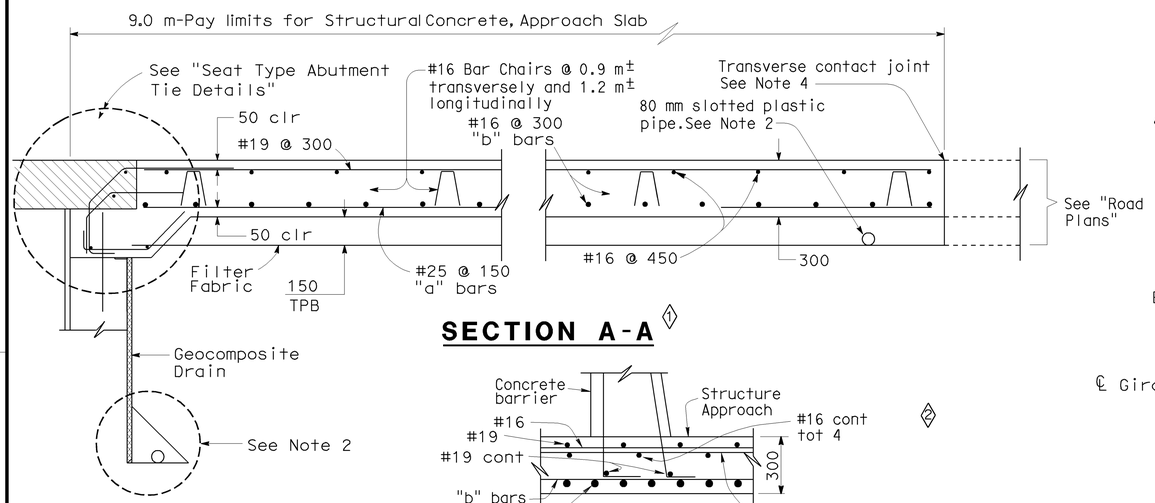

SECTION A-A

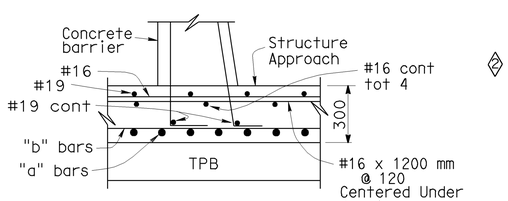

AT LEFT BARRIER

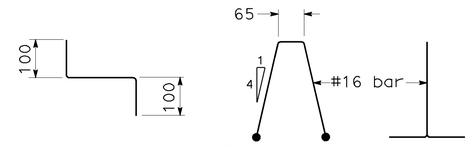

BAR CHAIR DETAIL

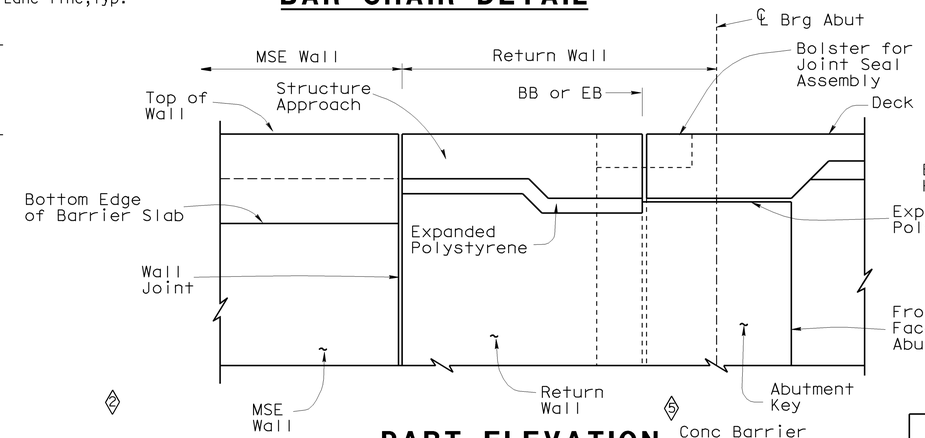

PART ELEVATION

MSE Slab at Return Wall

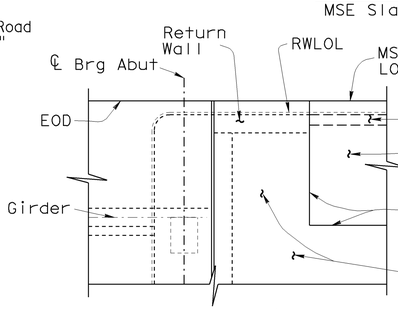

PART PLAN

Conc Barrier not shown
South Side shown, North Side similar

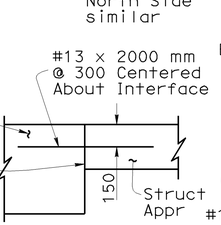

SECTION

BARRIER SLAB/APPROACH SLAB INTERFACE DETAILS

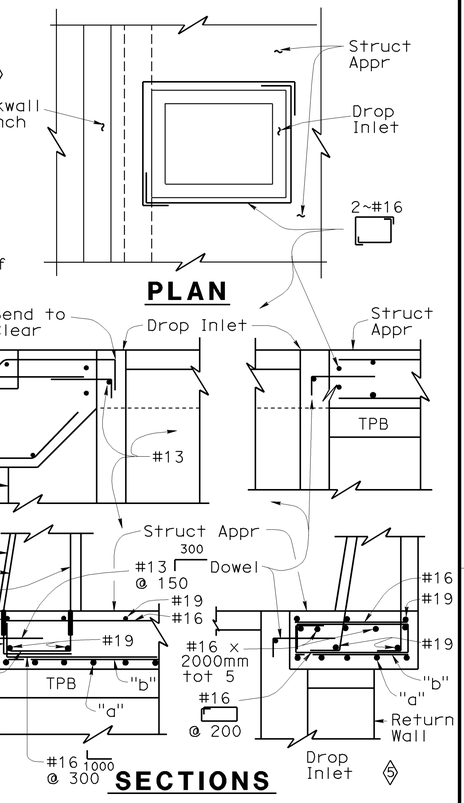

SECTIONS

STRUCTURE APPROACH/ DROP INLET INTERFACE DETAILS

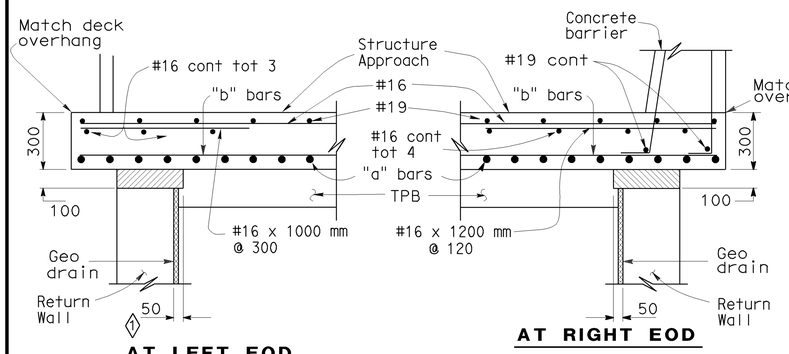

AT LEFT EOD

AT RIGHT EOD

SECTION C-C

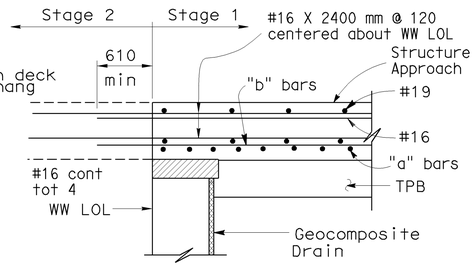

At INTERNAL WINGWALL

For Barrier Reinforcement Details at Deck Joints, see "Abutment Joint Seal Details" and "Hinge Joint Seal Details" Sheets

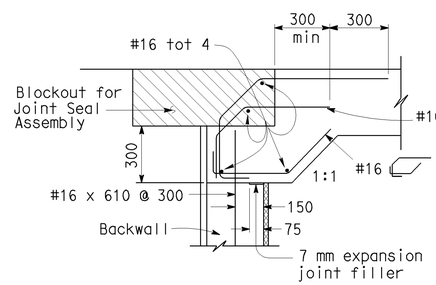

MR > 50 mm

For added details, see "Abutment Joint Seal Details" Sheet

For Details at MSE Walls, see Other Plans This Contract

SEAT TYPE ABUTMENT TIE DETAIL

ALL DIMENSIONS ARE IN MILLIMETERS UNLESS OTHERWISE SHOWN

NOTES: No Scale

1. For details not shown,see Structure Plans.
2. For drainage details,see "Structure Approach Drainage Details" sheet.
3. Longitudinal construction joints,when permitted by the Engineer, shall be located on lane lines.
4. For transverse contact joint with new PCC paving, refer to Standard Plan A35-A.
5. Approach slab transverse reinforcement to be placed parallel to centerline abutment. Spacing of transverse reinforcement is measured along rcenterline of roadway.
6. For locations of drop inlets,see "Drainage Details No. 1" and "Drainage Details No. 3" Sheets and "Road Plans"
7. For additional details, see "Structure Approach Details" Sheet

SPECIAL DETAILS
NO SCALE

STANDARD DRAWING				
FILE NO. XS 22-18	DESIGN BY M. TRAFFALIS	CHECKED E. THORKILDSEN	APPROVAL RECOMMENDED BY	
DRAWING DATE Revised	DETAILS BY R. YEE	CHECKED E. THORKILDSEN	DESIGN SUPERVISOR	
	SUBMITTED BY M. HA			

1 Revised detail 3 Revised Note 5 Added detail
2 Deleted detail 4 Deleted Chart

STATE OF CALIFORNIA DEPARTMENT OF TRANSPORTATION

DIVISION OF STRUCTURES STRUCTURE DESIGN 9

BRIDGE NO. 39-0044
KILOMETER POST 59.66

BRADLEY OVERHEAD (REPLACE)
STRUCTURE APPROACH TYPE N(9S)

DS OSD 2147A (METRIC) (REV. 2/25/97)

ORIGINAL SCALE IN MILLIMETERS FOR REDUCED PLANS 0 10 20 30 40 50 60 70 80 90 100

CU 10
EA 3A66U1

DISREGARD PRINTS BEARING EARLIER REVISION DATES 8-12-03 2-13-05

REVISION DATES (PRELIMINARY STAGE ONLY)

SHEET 88 OF 94

USERNAME => trstrk 39-0044-s-stra pr9s.dgn XS2218.DGN

DATE PLOTTED => 05-MAR-2009

DIST	COUNTY	ROUTE	KILOMETER POST TOTAL PROJECT	SHEET No	TOTAL SHEETS
10	Mer	140	58.7/60.5	326	384

REGISTERED CIVIL ENGINEER 9-30-08 DATE

3-2-09
PLANS APPROVAL DATE

REGISTERED PROFESSIONAL ENGINEER M. Van De Pol No. C35610 Exp. 9-30-09 CIVIL STATE OF CALIFORNIA

The State of California or its officers or agents shall not be responsible for the accuracy or completeness of electronic copies of this plan sheet.

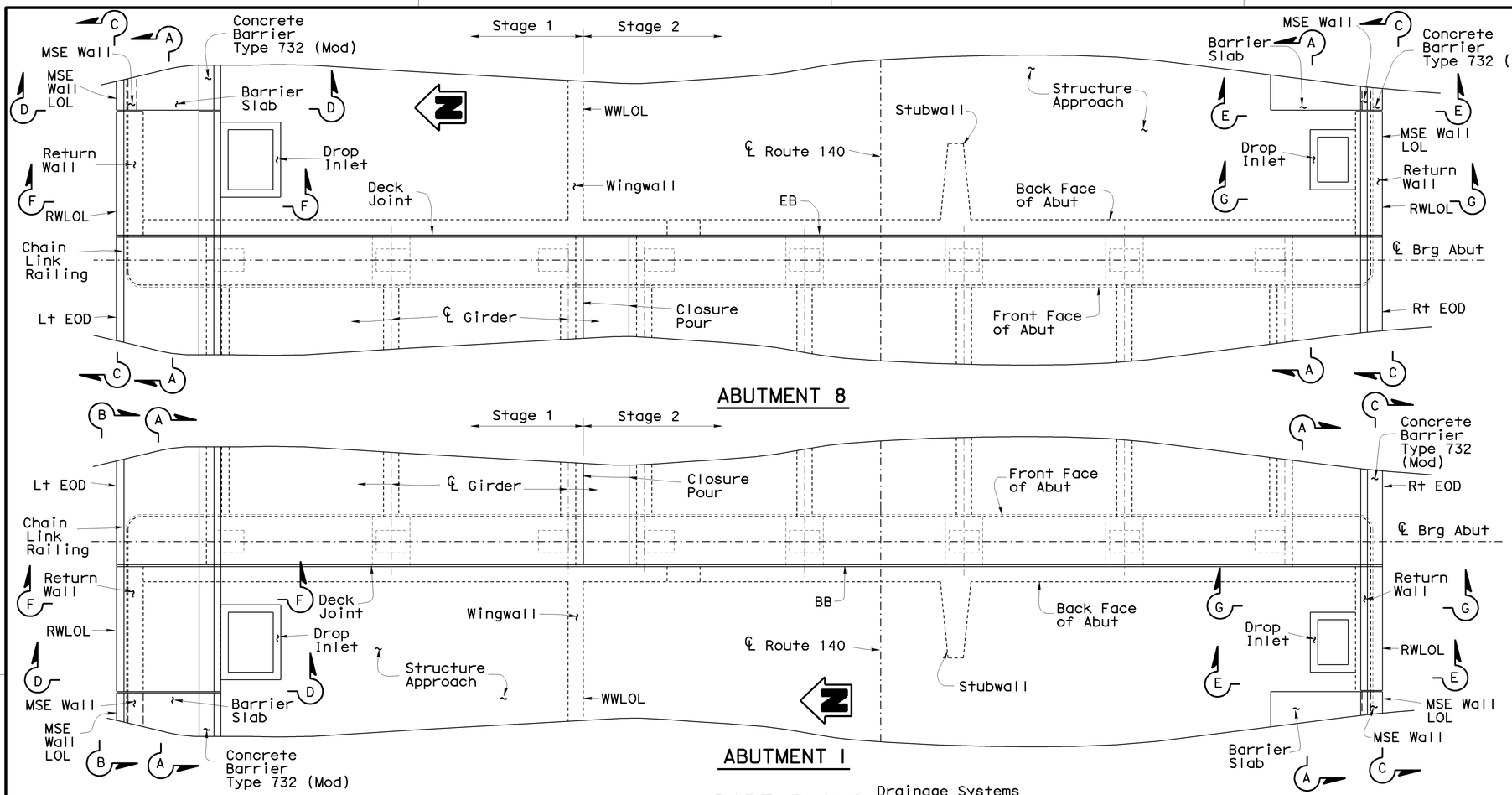

PART PLANS
1:50

Drainage Systems Not All Shown, see "Road Plans"

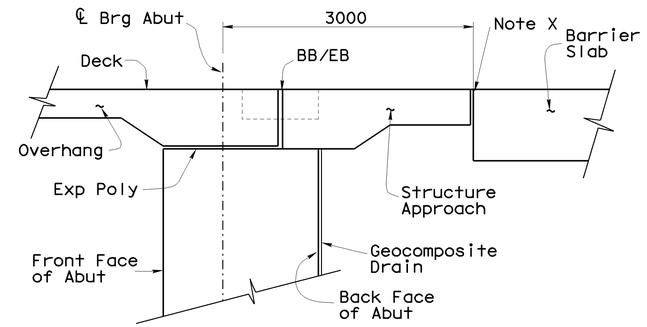

SECTION A-A
1:25

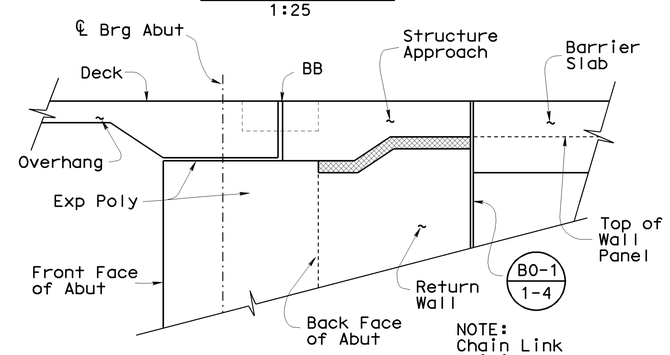

NOTE: Chain Link Railing not Shown

SECTION B-B
1:25

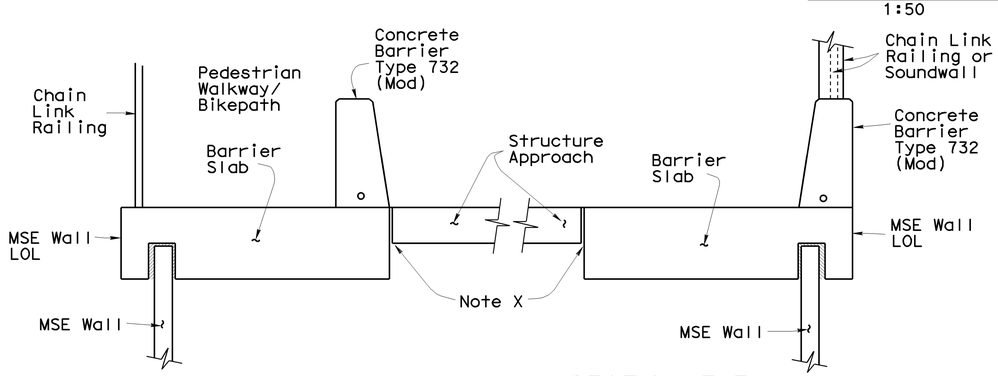

SECTION D-D
1:25

SECTION E-E
1:25

For MSE Wall Details at Structure Approach, see Other Plans This Contract

Note X:
For Barrier Slab / Structure Approach Interface Details, see "Structure Approach Type N(9S)" Sheet

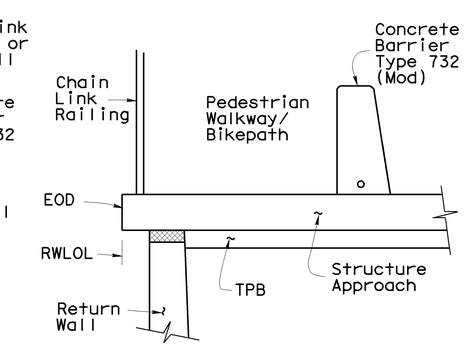

SECTION F-F
1:25

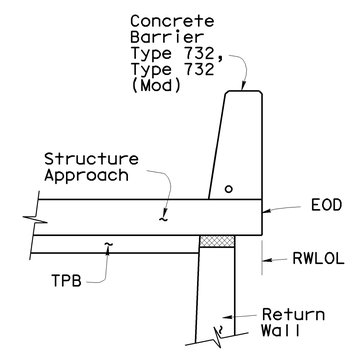

SECTION G-G
1:25

For additional details, see "Structure Approach Type N(9S)" and "Abutment Details" sheets

NOTES:
Abutment 8 Shown, Abutment 1 Similar

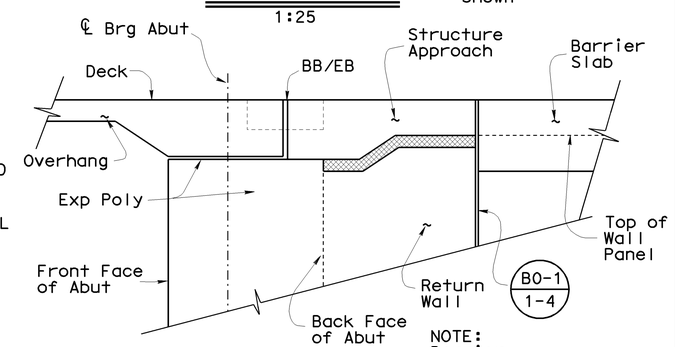

NOTE: Barrier not Shown

SECTION C-C
1:25

For Additional Details, see "Drainage Details" Sheet

Caltrans Metric

	BY		CHECKED
DESIGN	M. VAN DE POL	04-03	P. NORBOE 12-05
DETAILS	M. VAN DE POL	04-03	P. NORBOE 12-05
QUANTITIES	M. VAN DE POL	11-05	P. NORBOE 12-05

STATE OF CALIFORNIA
DEPARTMENT OF TRANSPORTATION

DIVISION OF ENGINEERING SERVICES
STRUCTURE DESIGN
DESIGN BRANCH 9

BRIDGE NO. 39-0044
KILOMETER POST 59.66

BRADLEY OVERHEAD (REPLACE)
STRUCTURE APPROACH DETAILS

ALL DIMENSIONS ARE IN MILLIMETERS UNLESS OTHERWISE SHOWN

ORIGINAL SCALE IN MILLIMETERS FOR REDUCED PLANS 0 10 20 30 40 50 60 70 80 90 100

CU 10
EA 3A66U1

DISREGARD PRINTS BEARING EARLIER REVISION DATES

REVISION DATES: 5-8-03 12-13-05

SHEET 89 OF 94

FILE => 39-0044-s-strapradet.dgn

STRUCTURES DESIGN DETAIL SHEET (METRIC) (REV.03-17-04)

USERNAME => trstrk DATE PLOTTED => 05-MAR-2009 TIME PLOTTED => 07:21

RELEASED 3-25-97

DIST.	COUNTY	ROUTE	KILOMETER POST TOTAL PROJECT	SHEET NO.	TOTAL SHEETS
10	Mer	140	58.7/60.5	327	384

Caltrans Metric

M. VAN DE POL 11-18-08
REGISTERED ENGINEER - CIVIL

3-2-09
PLANS APPROVAL DATE

REGISTERED PROFESSIONAL ENGINEER M. VAN DE POL No. C35610 Exp. 9-30-09 CIVIL STATE OF CALIFORNIA

The State of California or its officers or agents shall not be responsible for the accuracy or completeness of electronic copies of this plan sheet.

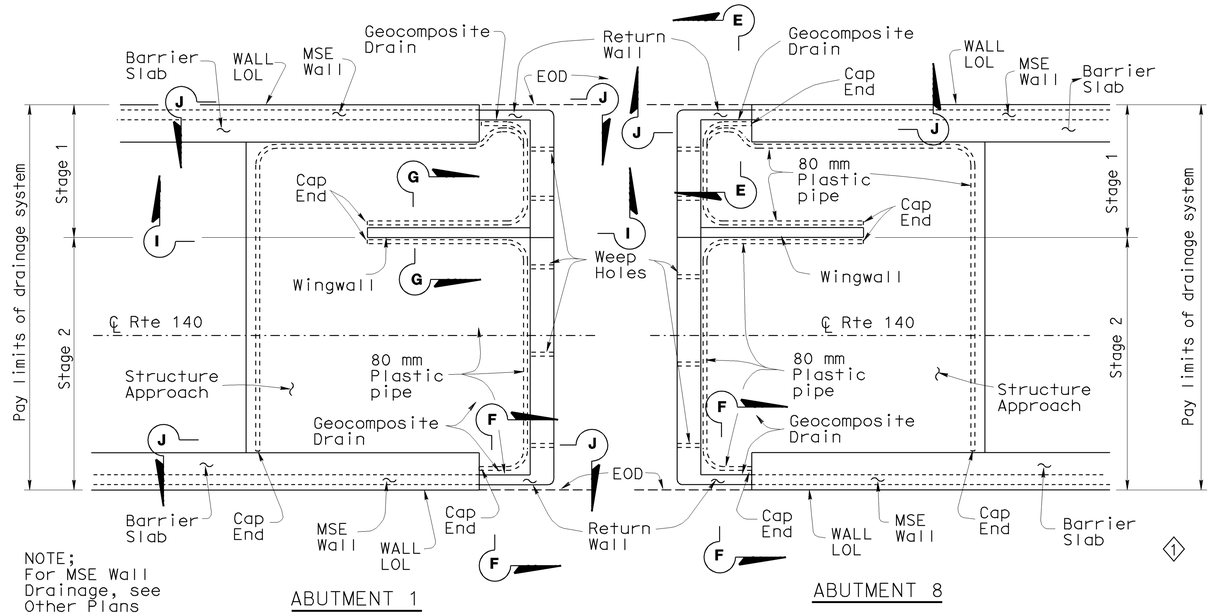

NOTE;
For MSE Wall Drainage, see Other Plans This Contract

TYPICAL PLANS ③

STUBWALLS NOT SHOWN

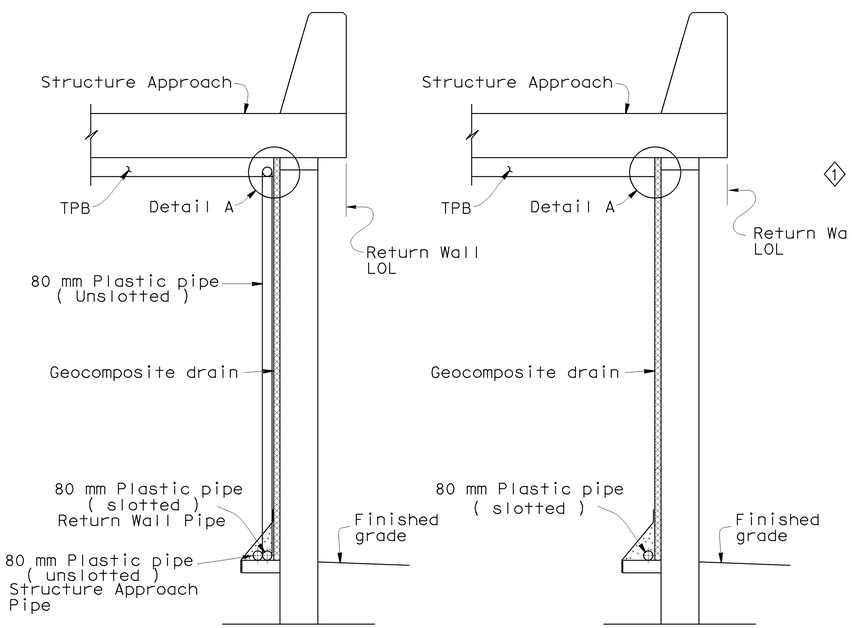

SECTION E-E ②

NOTE: Bends and junctions in 80 mm plastic pipe are 750 mm radius min.

SECTION F-F ④

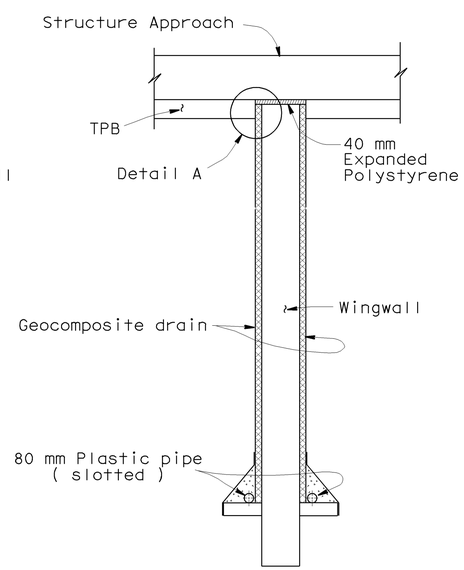

SECTION G-G ④

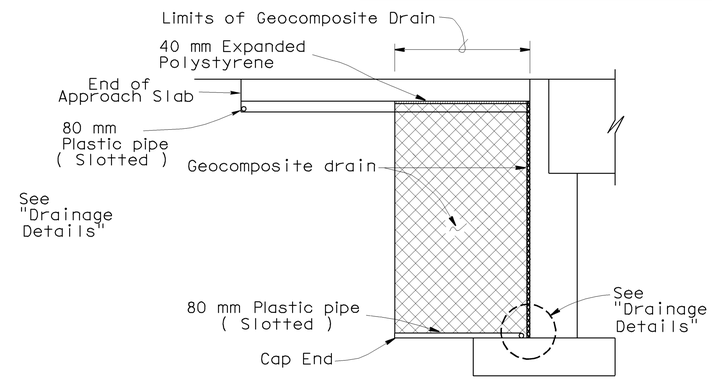

SECTION I-I ④

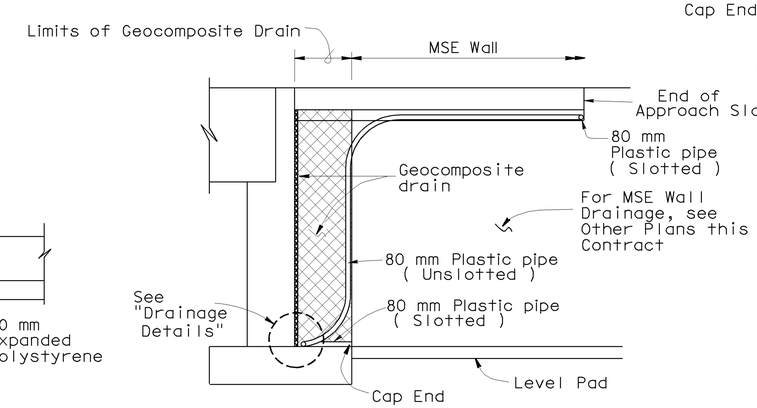

SECTION J-J ④

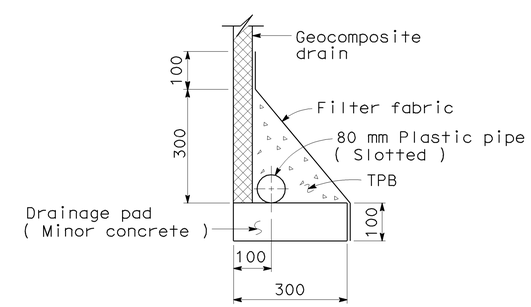

DRAINAGE DETAIL

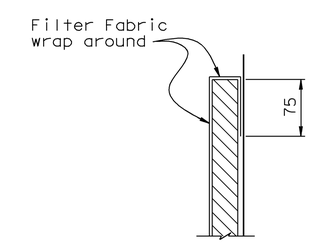

④ DETAIL "A"

NOTE:
For "Weep Hole and Geocomposite Drain" detail, see "Abutment Details No. 6" sheet

SPECIAL DETAILS

NO SCALE

ALL DIMENSIONS ARE IN MILLIMETERS UNLESS OTHERWISE SHOWN

STANDARD DRAWING				
FILE NO. XS 22-17	DESIGN	BY M. TRAFFALIS	CHECKED E. THORKILDSEN	APPROVAL RECOMMENDED BY
DRAWING DATE REVISED	DETAILS	BY R. YEE	CHECKED E. THORKILDSEN	DESIGN SUPERVISOR
	SUBMITTED BY M. HA			

① Deleted Detail
② Revised Section
③ Revised Plan
④ Added Detail

STATE OF CALIFORNIA
DEPARTMENT OF TRANSPORTATION

DIVISION OF STRUCTURES
STRUCTURE DESIGN 9

BRIDGE NO. 39-0044
KILOMETER POST 56.66

BRADLEY OVERHEAD (REPLACE)
STRUCTURE APPROACH DRAINAGE DETAILS

CU 10
EA 3A66U1

DISREGARD PRINTS BEARING EARLIER REVISION DATES 8-13-03 12-13-05 11-18-08

REVISION DATES (PRELIMINARY STAGE ONLY)

SHEET 90 OF 94

DS OSD 2147A (METRIC) (REV. 2/25/97)

ORIGINAL SCALE IN MILLIMETERS FOR REDUCED PLANS 0 10 20 30 40 50 60 70 80 90 100

USERNAME => trstrk

39-0044-s-straprdd.dgn

XS2217.DGN

DATE PLOTTED => 05-MAR-2009 TIME PLOTTED => 07:21

DIST	COUNTY	ROUTE	KILOMETER POST TOTAL PROJECT	SHEET No	TOTAL SHEETS
10	Mer	140	58.7/60.5	328	384

Caltrans Metric

Claudio Avila 8-16-04
CERTIFIED ENGINEERING GEOLOGIST

3-2-09
PLANS APPROVAL DATE

REGISTERED GEOLOGIST — Claudio Avila No. 2208 Exp. 9-30-05 — CERTIFIED ENGINEERING GEOLOGIST — STATE OF CALIFORNIA

The State of California or its officers or agents shall not be responsible for the accuracy or completeness of electronic copies of this plan sheet.

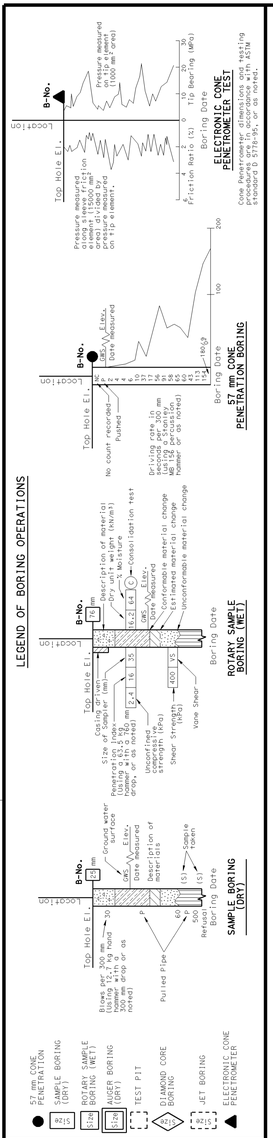

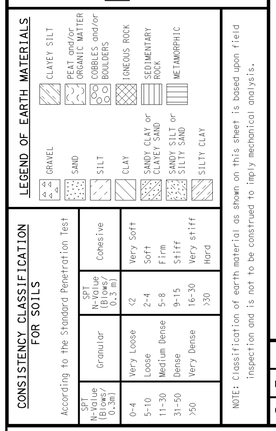

NOTE: Classification of earth material as shown on this sheet is based upon field inspection and is not to be construed to imply mechanical analysis.

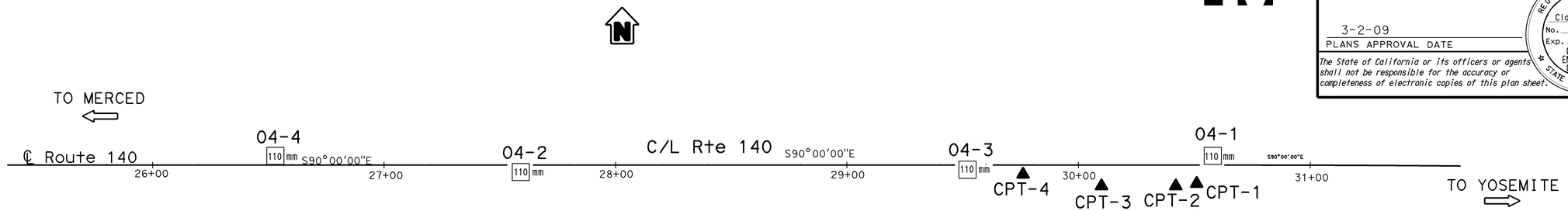

BENCH MARK

Pt 13: 1" Iron w/ red plug.
Elev: 57.04 m

Pt 21: 1" Iron w/red plug.
Elev: 55.63 m

PLAN
1:500

Notes:
1. Ground water was measured at elevations ranging from 43.34 m to 44.74 m in soil boring 04-3 and 04-1.
2. Laboratory data are available for review at 5900 Folsom Blvd, Sacramento, CA 95819.
3. (MA) Mechanical analysis.
   (A) Atterberg Limits.
   qu = unconfined compressive strength measured with a pocket penetrometer.

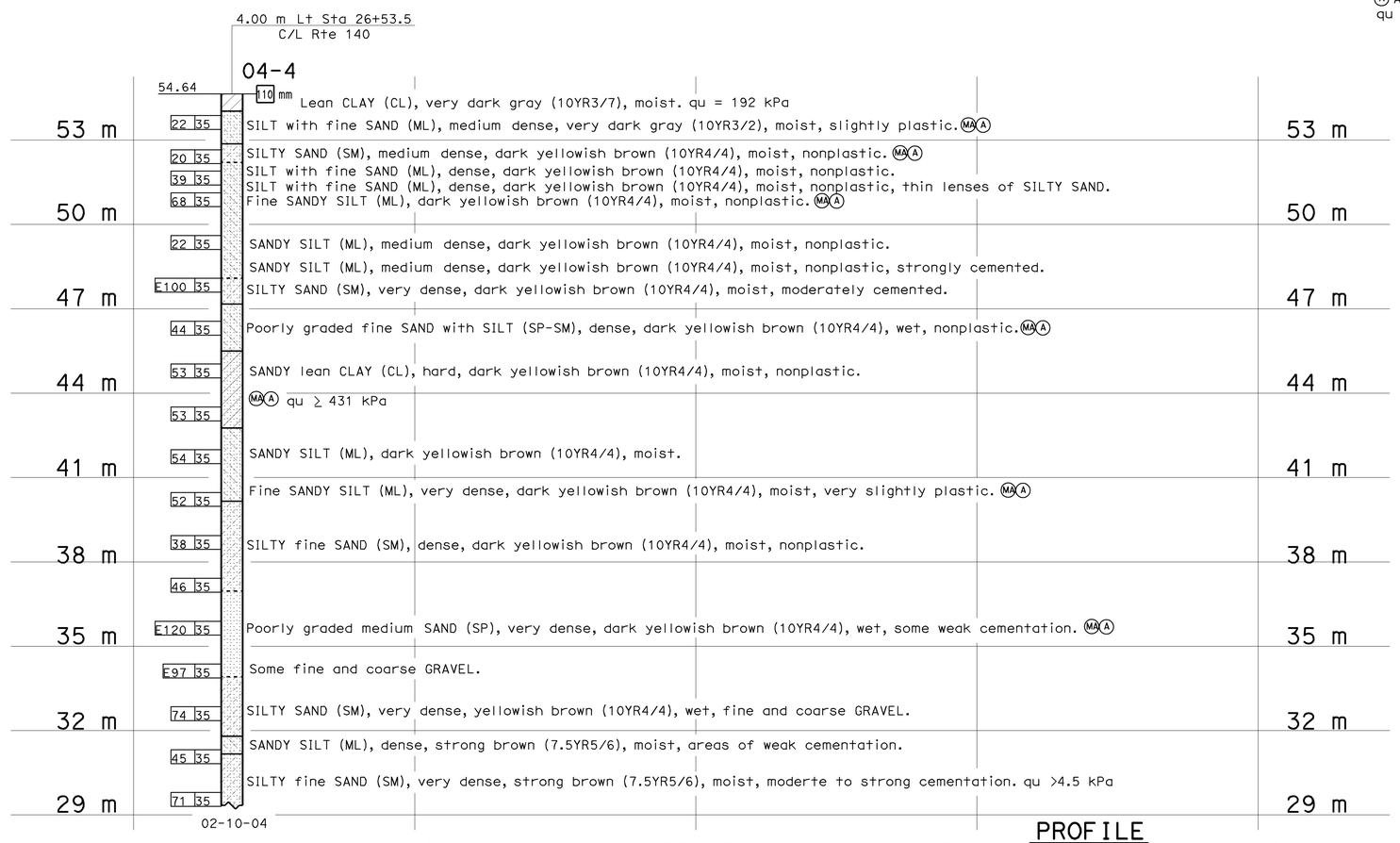

PROFILE
HOR. 1:100
VER. 1:100

ALL DIMENSIONS ARE IN METERS UNLESS OTHERWISE SHOWN

ENGINEERING SERVICES	GEOTECHNICAL SERVICES
DRAWN BY	F. Nguyen 6/04
CHECKED BY	C. Avila

FIELD INVESTIGATION BY: C. Avila

STATE OF CALIFORNIA DEPARTMENT OF TRANSPORTATION

DIVISION OF STRUCTURES STRUCTURE DESIGN 9

CU 10
EA 3A66U1

BRIDGE NO. 39-0044
KILOMETER POST 59.66

BRADLEY OVERHEAD (REPLACE)
LOG OF TEST BORINGS 1 OF 4

ORIGINAL SCALE IN MILLIMETERS FOR REDUCED PLANS 0 10 20 30 40 50 60 70 80 90 100

DISREGARD PRINTS BEARING EARLIER REVISION DATES — REVISION DATES (PRELIMINARY STAGE ONLY): ~~7-26-04~~ 12-13-05

SHEET 91 OF 94

OGS GEOLOGIST LOG OF TEST BORINGS SHEET (METRIC) (REV. 4/04)

FILE => 39-0044-z-1tb01.dgn

USERNAME => ttistrk DATE PLOTTED => 05-MAR-2009 TIME PLOTTED => 07:22

DIST	COUNTY	ROUTE	KILOMETER POST TOTAL PROJECT	SHEET No	TOTAL SHEETS
10	Mer	140	58.7/60.5	329	384

Caltrans Metric

Claudio Avila 8-16-04
CERTIFIED ENGINEERING GEOLOGIST

3-2-09
PLANS APPROVAL DATE

REGISTERED GEOLOGIST — Claudio Avila No. 2208 Exp. 9-30-05 — CERTIFIED ENGINEERING GEOLOGIST — STATE OF CALIFORNIA

The State of California or its officers or agents shall not be responsible for the accuracy or completeness of electronic copies of this plan sheet.

FOR PLAN VIEW, SEE
"LOG OF TEST BORINGS" 1 OF 4

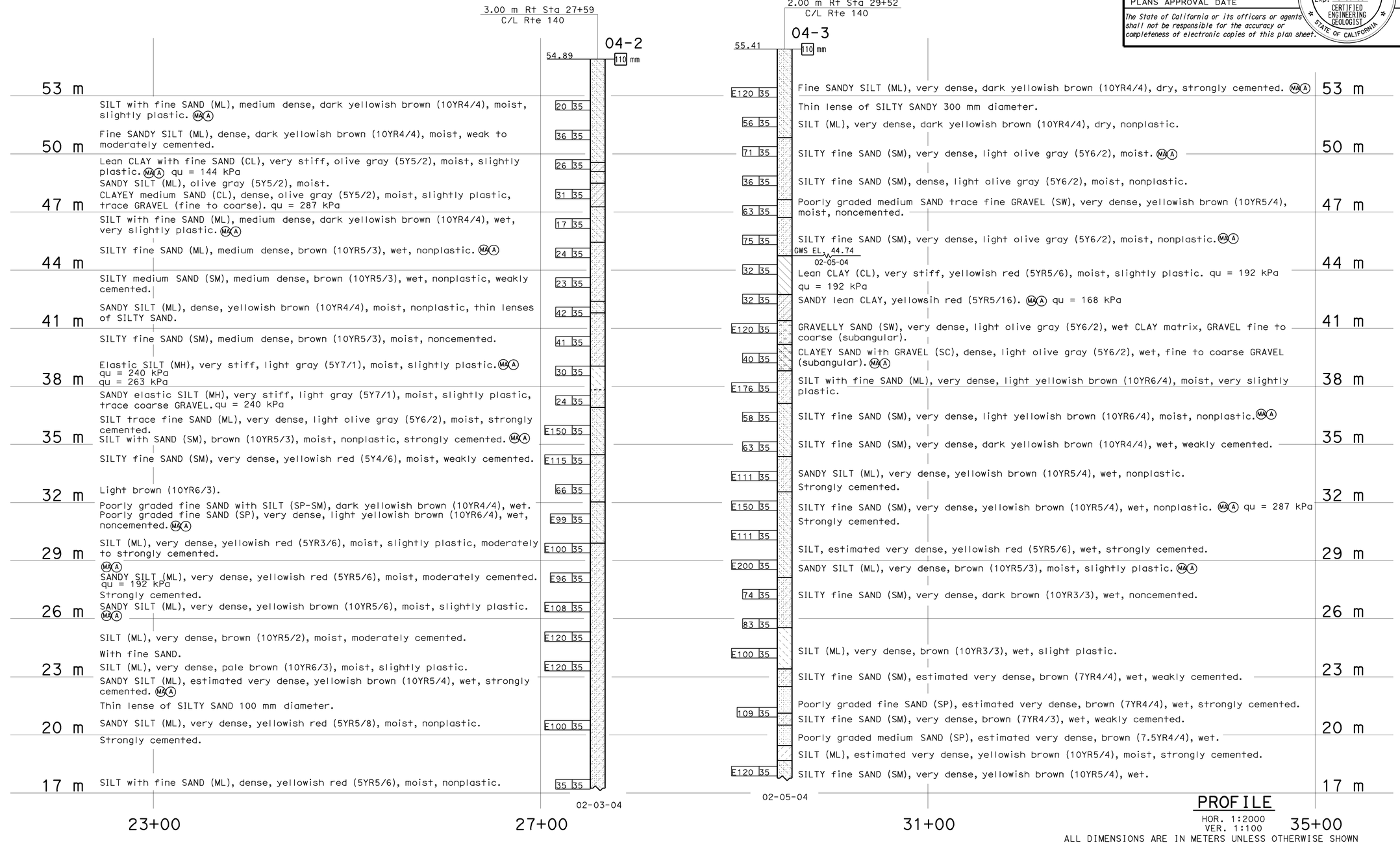

PROFILE
HOR. 1:2000
VER. 1:100

ALL DIMENSIONS ARE IN METERS UNLESS OTHERWISE SHOWN

LEGEND OF BORING OPERATIONS

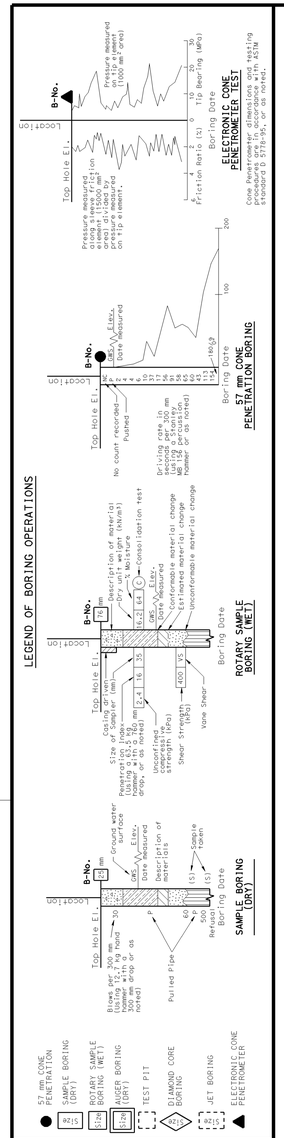

LEGEND OF EARTH MATERIALS

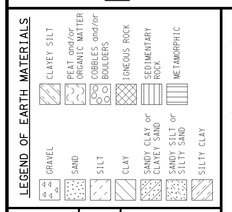

CONSISTENCY CLASSIFICATION FOR SOILS

According to the Standard Penetration Test

SPT N-Value (Blows/0.3m)	Granular	SPT N-Value (Blows/0.3m)	Cohesive
0-4	Very Loose	<2	Very Soft
5-10	Loose	2-4	Soft
11-30	Medium Dense	5-8	Firm
31-50	Dense	9-15	Stiff
>50	Very Dense	16-30	Very stiff
		>30	Hard

NOTE: Classification of earth material as shown on this sheet is based upon field inspection and is not to be construed to imply mechanical analysis.

ENGINEERING SERVICES	GEOTECHNICAL SERVICES
DRAWN BY F. Nguyen 6/04	
CHECKED BY C. Avila	

FIELD INVESTIGATION BY: C. Avila

STATE OF CALIFORNIA DEPARTMENT OF TRANSPORTATION

DIVISION OF STRUCTURES STRUCTURE DESIGN 9

BRIDGE NO. 39-0044
KILOMETER POST 59.66

BRADLEY OVERHEAD (REPLACE)

LOG OF TEST BORINGS 2 OF 4

CU 10
EA 3A66U1

DISREGARD PRINTS BEARING EARLIER REVISION DATES 12-26-04 12-13-05

SHEET 92 OF 94

OGS GEOLOGIST LOG OF TEST BORINGS SHEET (METRIC) (REV. 4/04)

ORIGINAL SCALE IN MILLIMETERS FOR REDUCED PLANS 0 10 20 30 40 50 60 70 80 90 100

FILE => 39-0044-z-1tb02.dgn

USERNAME => ttrstrk DATE PLOTTED => 05-MAR-2009 TIME PLOTTED => 07:22

DIST	COUNTY	ROUTE	KILOMETER POST TOTAL PROJECT	SHEET No	TOTAL SHEETS
10	Mer	140	58.7/60.5	330	384

Caltrans Metric

Claudio Avila 8-16-04
CERTIFIED ENGINEERING GEOLOGIST

3-2-09
PLANS APPROVAL DATE

REGISTERED GEOLOGIST — Claudio Avila — No. 2208 — Exp. 9-30-05 — CERTIFIED ENGINEERING GEOLOGIST — STATE OF CALIFORNIA

The State of California or its officers or agents shall not be responsible for the accuracy or completeness of electronic copies of this plan sheet.

FOR PLAN VIEW, SEE
"LOG OF TEST BORINGS" 1 OF 4

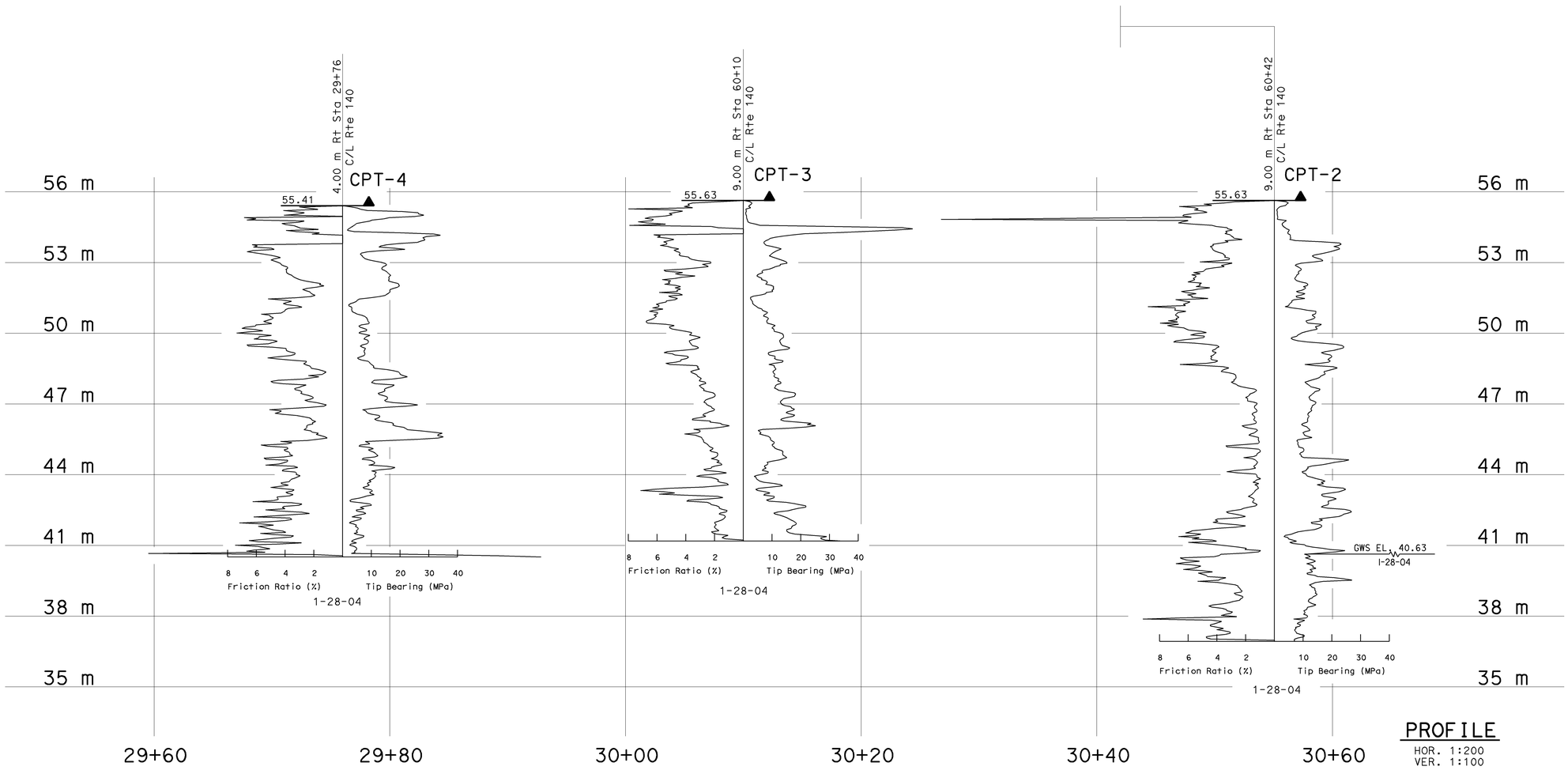

PROFILE
HOR. 1:200
VER. 1:100

ALL DIMENSIONS ARE IN METERS UNLESS OTHERWISE SHOWN

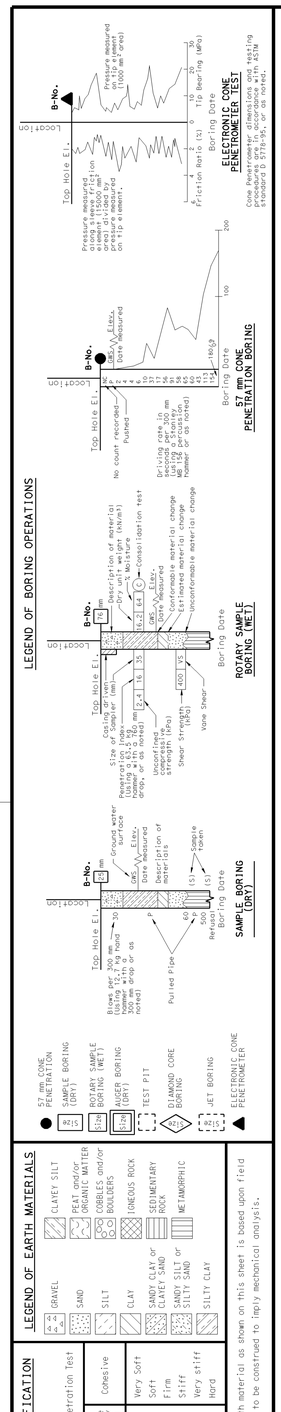

ENGINEERING SERVICES	GEOTECHNICAL SERVICES
DRAWN BY	F. Nguyen 6/04
CHECKED BY	

FIELD INVESTIGATION BY: C. Avila

STATE OF CALIFORNIA DEPARTMENT OF TRANSPORTATION

DIVISION OF STRUCTURES STRUCTURE DESIGN 9

BRIDGE NO. 39-0044
KILOMETER POST 59.66

BRADLEY OVERHEAD (REPLACE)
LOG OF TEST BORINGS 3 OF 4

CU 10
EA 3A66U1

DISREGARD PRINTS BEARING EARLIER REVISION DATES

REVISION DATES (PRELIMINARY STAGE ONLY) 12-13-05

SHEET 93 OF 94

OGS GEOLOGIST LOG OF TEST BORINGS SHEET (METRIC) (REV. 4/04)

ORIGINAL SCALE IN MILLIMETERS FOR REDUCED PLANS 0 10 20 30 40 50 60 70 80 90 100

FILE => 39-0044-z-1tb03.dgn

USERNAME => trstrk DATE PLOTTED => 05-MAR-2009 TIME PLOTTED => 07:22

DIST	COUNTY	ROUTE	KILOMETER POST TOTAL PROJECT	SHEET No	TOTAL SHEETS
10	Mer	140	58.7/60.5	331	384

Caltrans Metric

Claudio Avila 8-16-04
CERTIFIED ENGINEERING GEOLOGIST

3-2-09
PLANS APPROVAL DATE

The State of California or its officers or agents shall not be responsible for the accuracy or completeness of electronic copies of this plan sheet.

REGISTERED GEOLOGIST
Claudio Avila
No. 2208
Exp. 9-30-05
CERTIFIED ENGINEERING GEOLOGIST
STATE OF CALIFORNIA

FOR PLAN VIEW, SEE
"LOG OF TEST BORINGS" 1 OF 4

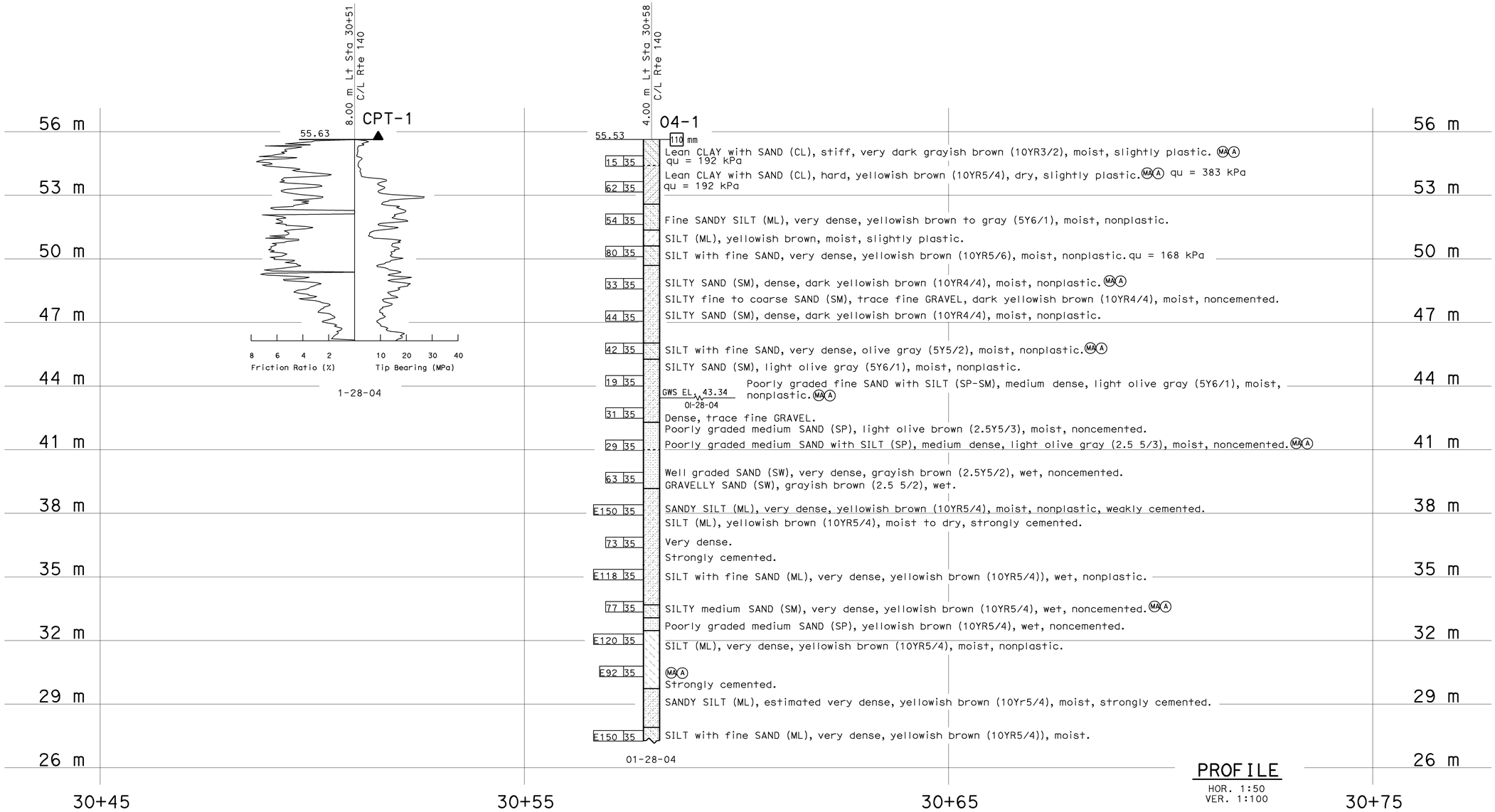

PROFILE
HOR. 1:50
VERT. 1:100

ALL DIMENSIONS ARE IN METERS UNLESS OTHERWISE SHOWN

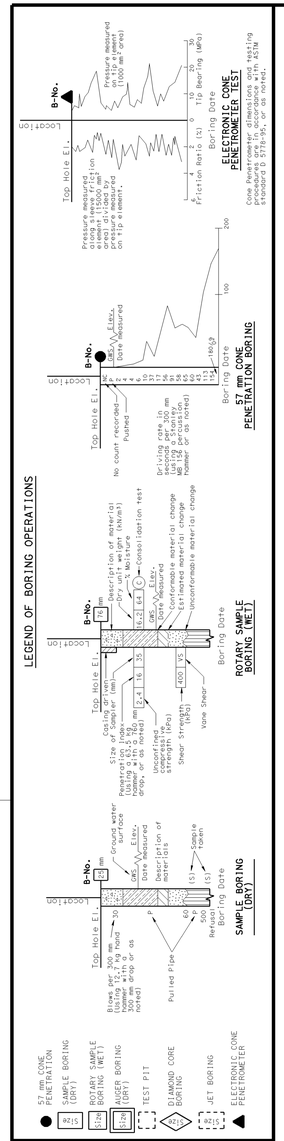

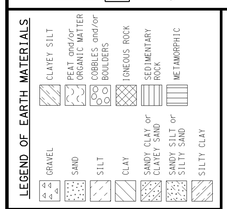

CONSISTENCY CLASSIFICATION FOR SOILS

According to the Standard Penetration Test

SPT N-Value (Blows/0.3 m)	Granular	SPT N-Value (Blows/0.3 m)	Cohesive
0-4	Very Loose	<2	Very Soft
5-10	Loose	2-4	Soft
11-30	Medium Dense	5-8	Firm
31-50	Dense	9-15	Stiff
>50	Very Dense	16-30	Very stiff
		>30	Hard

NOTE: Classification of earth material as shown on this sheet is based upon field inspection and is not to be construed to imply mechanical analysis.

ENGINEERING SERVICES	GEOTECHNICAL SERVICES
DRAWN BY	F. Nguyen 6/04
CHECKED BY	

FIELD INVESTIGATION BY: C. Avila

STATE OF CALIFORNIA
DEPARTMENT OF TRANSPORTATION

DIVISION OF STRUCTURES
STRUCTURE DESIGN 9

CU 10
EA 3A66U1

BRIDGE NO. 39-0044
KILOMETER POST 59.66

BRADLEY OVERHEAD (REPLACE)
LOG OF TEST BORINGS 4 OF 4

SHEET 94 OF 94

OGS GEOLOGIST LOG OF TEST BORINGS SHEET (METRIC) (REV. 4/04)

ORIGINAL SCALE IN MILLIMETERS FOR REDUCED PLANS 0 10 20 30 40 50 60 70 80 90 100

DISREGARD PRINTS BEARING EARLIER REVISION DATES

REVISION DATES (PRELIMINARY STAGE ONLY) 7-26-04 12-13-05

FILE => 39-0044-z-lltb04.dgn

USERNAME => ttistrk DATE PLOTTED => 05-MAR-2009 TIME PLOTTED => 07:22

DIST	COUNTY	ROUTE	KILOMETER POST TOTAL PROJECT	SHEET No	TOTAL SHEETS
10	Mer	140	58.7/60.5	332	384

REGISTERED CIVIL ENGINEER 9-30-08 DATE

3-2-09
PLANS APPROVAL DATE

The State of California or its officers or agents shall not be responsible for the accuracy or completeness of electronic copies of this plan sheet.

REGISTERED PROFESSIONAL ENGINEER M. Van De Pol No. C35610 Exp. 9-30-09 CIVIL STATE OF CALIFORNIA

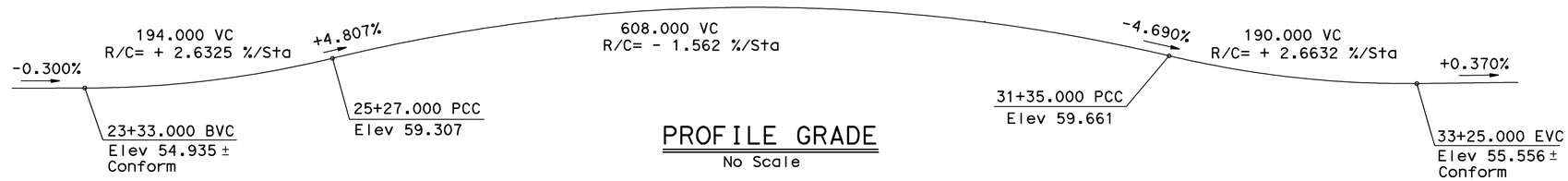

PROFILE GRADE

No Scale

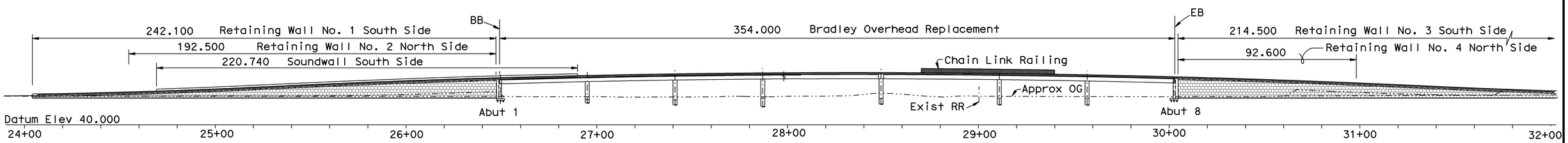

ELEVATION

1:1000

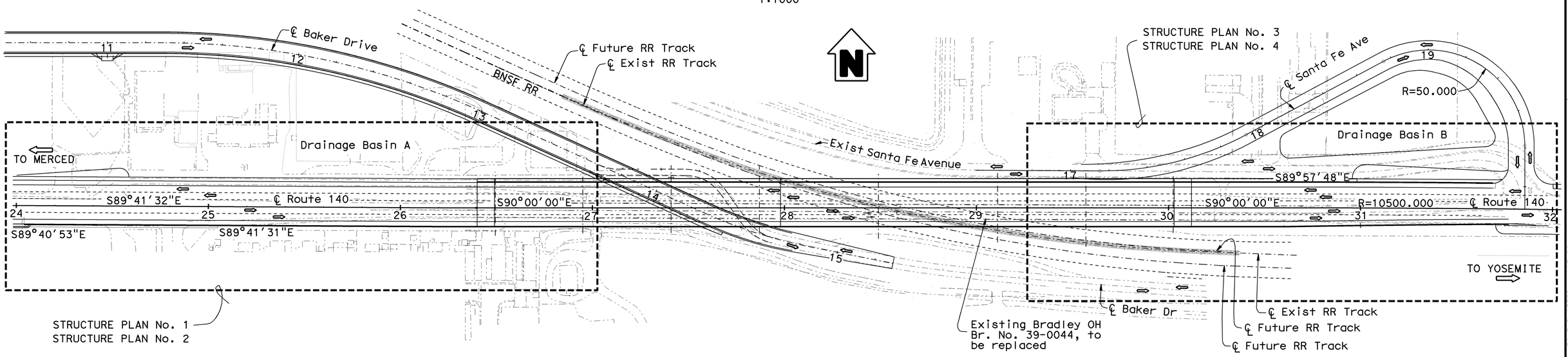

PLAN

1:1000

NOTES:

For Index To Plans, General Notes, and Standard Plans list see, "Index To Plans" sheet

For "Typical Sections", see "Typical Section" sheet

Temporary Railing not shown, see "Stage Construction" sheet and "Road Plans"

For Quantities and Curve Data see "Retaining Wall No. 1 Structure Plan", "Retaining Wall No. 2 Structure Plan", "Retaining Wall No. 3 Structure Plan", "Retaining Wall No. 4 Structure Plan", sheets

For Bridge Information, see Other Plans This Contract

Denotes existing

Denotes new construction

Denotes direction of traffic

NOTE:
THE CONTRACTOR SHALL VERIFY ALL CONTROLLING FIELD DIMENSIONS BEFORE ORDERING OR FABRICATING ANY MATERIAL.

Caltrans Metric

Gordon Danke
DESIGN ENGINEER

	BY	CHECKED
DESIGN	M. VAN DE POL 04-03	P. NORBOE 11-05
DETAILS	M. VAN DE POL 04-03	P. NORBOE 11-05
QUANTITIES	M. VAN DE POL 11-05	P. NORBOE 11-05

LOAD FACTOR DESIGN — LIVE LOADING: HS20-44 AND ALTERNATIVE AND PERMIT DESIGN LOAD

LAYOUT — BY M. VAN DE POL 04-03 — CHECKED P. NORBOE 11-05

SPECIFICATIONS — BY TANYA KERSHELL — PLANS AND SPECS COMPARED TANYA KERSHELL

ALL DIMENSIONS ARE IN METERS UNLESS OTHERWISE SHOWN

ORIGINAL SCALE IN MILLIMETERS FOR REDUCED PLANS 0 10 20 30 40 50 60 70 80 90 100

STATE OF CALIFORNIA
DEPARTMENT OF TRANSPORTATION

DIVISION OF ENGINEERING SERVICES
STRUCTURE DESIGN
DESIGN BRANCH 9

CU 10
EA 3A66U1

FILE => 39e0044-a-gp01.dgn

BRIDGE NO.
39E0001
39E0002
39E0003
39E0004
KILOMETER POST
59.66

BRADLEY OVERHEAD (REPLACE)
RETAINING WALLS
GENERAL PLAN

DISREGARD PRINTS BEARING EARLIER REVISION DATES

REVISION DATES: 5-8-03 11-28-05

SHEET 1 OF 53

STRUCTURES DESIGN GENERAL PLAN SHEET (METRIC) (REV.03-17-04)

USERNAME => ttrstrk DATE PLOTTED => 05-MAR-2009 TIME PLOTTED => 07:22

DIST	COUNTY	ROUTE	KILOMETER POST TOTAL PROJECT	SHEET No	TOTAL SHEETS
10	Mer	140	58.7/60.5	333	384

M. Van De Pol 11-18-08
REGISTERED CIVIL ENGINEER DATE

3-2-09
PLANS APPROVAL DATE

The State of California or its officers or agents shall not be responsible for the accuracy or completeness of electronic copies of this plan sheet.

REGISTERED PROFESSIONAL ENGINEER
M. Van De Pol
No. C35610
Exp. 9-30-09
CIVIL
STATE OF CALIFORNIA

INDEX TO PLANS

Sheet No.	Description
1.	General Plan
2.	Index To Plans
3.	Retaining Wall No. 1 Structure Plan
4.	Retaining Wall No. 2 Structure Plan
5.	Retaining Wall No. 3 Structure Plan
6.	Retaining Wall No. 4 Structure Plan
7.	Foundation Plan No. 1
8.	Foundation Plan No. 2
9.	Foundation Plan No. 3
10.	Foundation Plan No. 4
11.	Foundation Plan No. 5
12.	Retaining Wall No. 1 Panel Layout No. 1
13.	Retaining Wall No. 1 Panel Layout No. 2
14.	Retaining Wall No. 1 Panel Layout No. 3
15.	Retaining Wall No. 1 Panel Layout No. 4
16.	Retaining Wall No. 1 Panel Layout No. 5
17.	Retaining Wall No. 2 Panel Layout No. 1
18.	Retaining Wall No. 2 Panel Layout No. 2
19.	Retaining Wall No. 2 Panel Layout No. 3
20.	Retaining Wall No. 2 Panel Layout No. 4
21.	Retaining Wall No. 3 Panel Layout No. 1
22.	Retaining Wall No. 3 Panel Layout No. 2
23.	Retaining Wall No. 3 Panel Layout No. 3
24.	Retaining Wall No. 3 Panel Layout No. 4
25.	Retaining Wall No. 3 Panel Layout No. 5
26.	Retaining Wall No. 4 Panel Layout No. 1
27.	Retaining Wall No. 4 Panel Layout No. 2
28.	Retaining Wall No. 4 Panel Layout No. 3
29.	Typical Section
30.	Wall Details No. 1
31.	Wall Details No. 2
32.	Wall Details No. 3
33.	Wall Details No. 4
34.	Wall Details No. 5
35.	Wall Details No. 6
36.	Wall Details No. 7
37.	Wall Details No. 8
38.	Wall Details No. 9
39.	Wall Details No. 10
40.	Wall Details No. 11
41.	Wall Details No. 12
42.	Wall Details No. 13
43.	Staged Construction
44.	Drainage Details
45.	Wall Architectural Details
46.	Miscellaneous Details
47.	Chain Link Railing Type 7(Mod)
48.	Lighting Details
49.	Structure Approach Details
50.	Log of Test Borings 1 of 4
51.	Log of Test Borings 2 of 4
52.	Log of Test Borings 3 of 4
53.	Log of Test Borings 4 of 4

STANDARD PLANS Dated July 2004

STANDARD PLAN SHEET NO.
DETAIL NO.

A10A	Acronyms and Abbreviations (A-L)
A10B	Acronyms and Abbreviations (M-Z)
A10C	Symbols (Sheet 1 of 2)
A10D	Symbols (Sheet 2 of 2)
A62-B	Limits of Payment for Excavaton and Backfill Bridge
A62-C	Limits of Payment for Excavation and Backfill Retaining Wall
B0-1	Bridge Details
B0-3	Bridge Details
B0-13	Bridge Details
B3-8	Retaining Wall Details No. 1
B11-55	Concrete Barrier Type 732
B14-3	Communications and Sprinkler Control Conduits (Less than Size 103)
B14-4	Water Supply Line (Bridge) (Pipe Less than NPS 4)
B14-5	Water Supply Line (Details) (Pipe Sizes Less Than NPS 4)
RSP ES-6A	Electrical Systems (Lighting Standards Type 15 and 21)
ES-6B	Electrical Systems (Lighting Standards Type 15 and 21 Barrier Rail Mounted Details)
RSP ES-7M	Electrical Systems (Signal and Lighting Standards Details No. 1)
RSP ES-9A	Electrical Systems (Electrical Details Structure Installations)
RSP ES-9B	Electrical Systems (Electrical Details Structure Installations)
ES-9E	Electrical Systems (Electrical Details Structure Installations)
RSP ES-9F	Electrical Systems (Electrical Details Structure Installations)
T3	Temporary Railing (Type K)

GENERAL NOTES LOAD FACTOR DESIGN

MSE WALL: For Notes, see "Wall Details No. 1" Sheet
BRIDGE: See Other Plans This Contract
SOUNDWALL: For Notes, see "Wall Details No. 9" Sheet

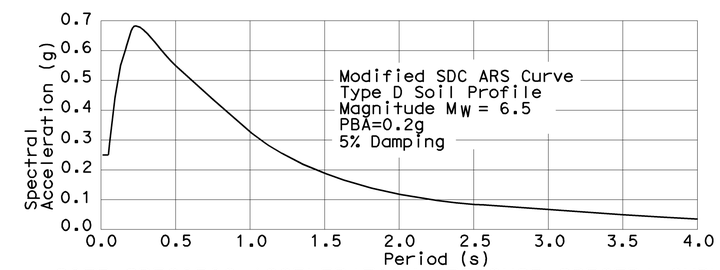

SITE SPECIFIC ACCELERATION RESPONSE SPECTRA CURVE

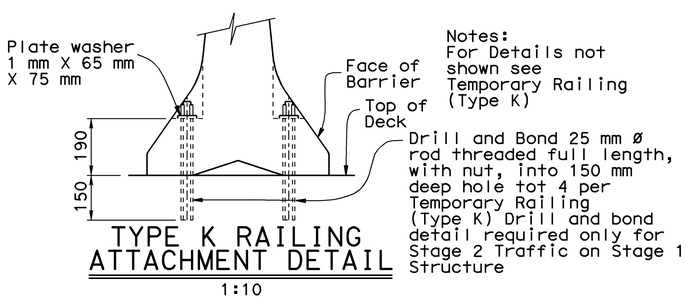

TYPE K RAILING ATTACHMENT DETAIL
1:10

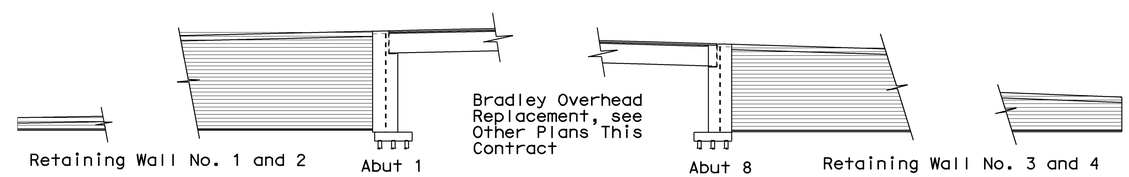

CONCRETE STRENGTH AND TYPE LIMITS

No Scale

MSE Retaining Wall

DESIGN	BY M. VAN DE POL	04-03	CHECKED P. NORBOE	11-05
DETAILS	BY M. VAN DE POL	04-03	CHECKED P. NORBOE	11-05
QUANTITIES	BY M. VAN DE POL	11-05	CHECKED P. NORBOE	11-05

STATE OF CALIFORNIA
DEPARTMENT OF TRANSPORTATION

DIVISION OF ENGINEERING SERVICES
STRUCTURE DESIGN
DESIGN BRANCH 9

CU 10
EA 3A66U1

BRIDGE NO. 39E0001 39E0002 39E0003 39E0004
KILOMETER POST 59.66

BRADLEY OVERHEAD (REPLACE)
RETAINING WALLS
INDEX TO PLANS

ALL DIMENSIONS ARE IN MILLIMETERS UNLESS OTHERWISE SHOWN

ORIGINAL SCALE IN MILLIMETERS FOR REDUCED PLANS 0 10 20 30 40 50 60 70 80 90 100

DISREGARD PRINTS BEARING EARLIER REVISION DATES

REVISION DATES: 8-11-03 11-29-05 11-18-08

SHEET 2 OF 53

FILE => 39e0044-a-itp.dgn

STRUCTURES DESIGN DETAIL SHEET (METRIC) (REV.03-17-04)

USERNAME => TTSTPR DATE PLOTTED => 05-MAR-2009 TIME PLOTTED => 07:22

DIST	COUNTY	ROUTE	KILOMETER POST TOTAL PROJECT	SHEET No	TOTAL SHEETS
10	Mer	140	58.7/60.5	334	384

REGISTERED CIVIL ENGINEER 10-27-08 DATE

3-2-09
PLANS APPROVAL DATE

The State of California or its officers or agents shall not be responsible for the accuracy or completeness of electronic copies of this plan sheet.

REGISTERED PROFESSIONAL ENGINEER M. VAN DE POL No. C35610 Exp. 9-30-09 CIVIL STATE OF CALIFORNIA

NOTES:

For "Typical Sections", see "Typical Section" sheet

Denotes existing structure

Denotes new construction

Denotes direction of traffic

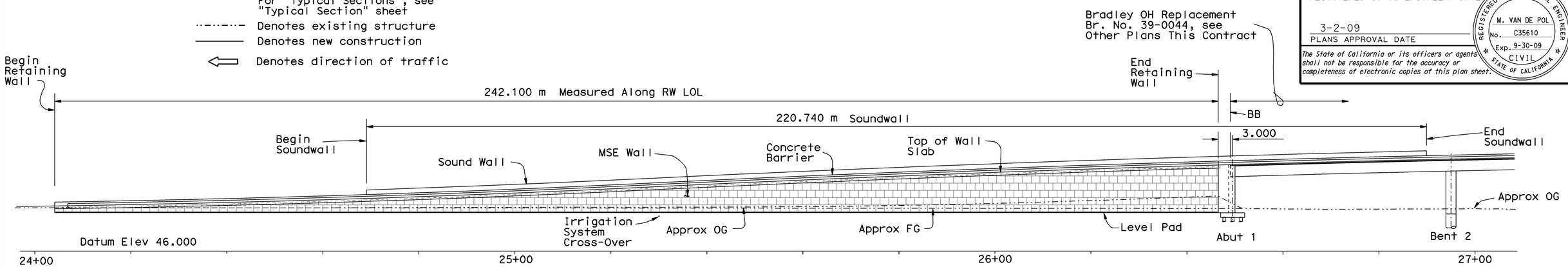

ELEVATION

1:400

QUANTITIES

EARTH RETAINING STRUCTURE, LOCATION A	1150 m^2
STRUCTURAL CONCRETE, BARRIER SLAB	310 m^3
SOUND WALL (MASONRY BLOCK)	50 m^2
PREPARE AND STAIN CONCRETE	1020 m^2
CONCRETE BARRIER (TYPE 732 MODIFIED)	242 m

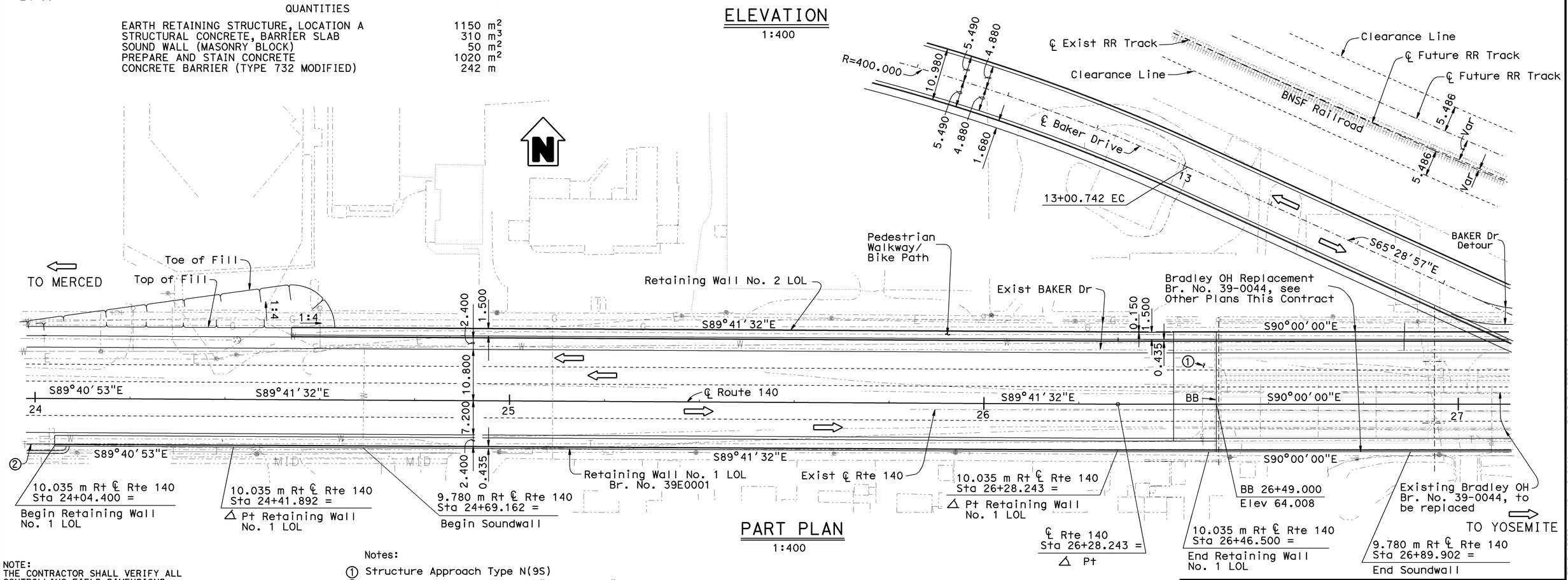

PART PLAN

1:400

Notes:

① Structure Approach Type N(9S)

② Metal Beam Guard Rail, see "Road Plans"

NOTE:
THE CONTRACTOR SHALL VERIFY ALL CONTROLLING FIELD DIMENSIONS BEFORE ORDERING OR FABRICATING ANY MATERIAL.

BRADLEY OVERHEAD (REPLACE)

RETAINING WALL No. 1

STRUCTURE PLAN

Caltrans Metric

Gordon Danke
DESIGN ENGINEER

	BY	CHECKED
DESIGN	M. VAN DE POL 04-03	P. NORBOE 11-05
DETAILS	M. VAN DE POL 04-03	P. NORBOE 11-05
QUANTITIES	M. VAN DE POL 11-05	P. NORBOE 11-05

LOAD FACTOR DESIGN — LIVE LOADING: HS20-44 AND ALTERNATIVE AND PERMIT DESIGN LOAD

LAYOUT — BY M. VAN DE POL 04-03 — CHECKED P. NORBOE 11-05

SPECIFICATIONS — BY TANYA KERSHELL — PLANS AND SPECS COMPARED TANYA KERSHELL

STATE OF CALIFORNIA
DEPARTMENT OF TRANSPORTATION

DIVISION OF ENGINEERING SERVICES
STRUCTURE DESIGN
DESIGN BRANCH 9

BRIDGE NO. 39E0001
KILOMETER POST 59.66

ALL DIMENSIONS ARE IN METERS UNLESS OTHERWISE SHOWN

ORIGINAL SCALE IN MILLIMETERS FOR REDUCED PLANS 0 10 20 30 40 50 60 70 80 90 100

CU 10
EA 3A66U1

DISREGARD PRINTS BEARING EARLIER REVISION DATES

REVISION DATES: 2-6-06 10-27-08

SHEET 3 OF 53

FILE => 39e0044-c-rw1a.dgn

STRUCTURES DESIGN GENERAL PLAN SHEET (METRIC) (REV.03-17-04)

USERNAME => TTSTPK DATE PLOTTED => 05-MAR-2009 TIME PLOTTED => 07:22

DIST	COUNTY	ROUTE	KILOMETER POST TOTAL PROJECT	SHEET No	TOTAL SHEETS
10	Mer	140	58.7/60.5	335	384

REGISTERED CIVIL ENGINEER 11-18-08 DATE

3-2-09
PLANS APPROVAL DATE

REGISTERED PROFESSIONAL ENGINEER M. VAN DE POL No. C35610 Exp. 9-30-09 CIVIL STATE OF CALIFORNIA

The State of California or its officers or agents shall not be responsible for the accuracy or completeness of electronic copies of this plan sheet.

NOTES:

For "Typical Sections", see "Typical Section" sheet

Denotes existing structure

Denotes new construction

Denotes direction of traffic

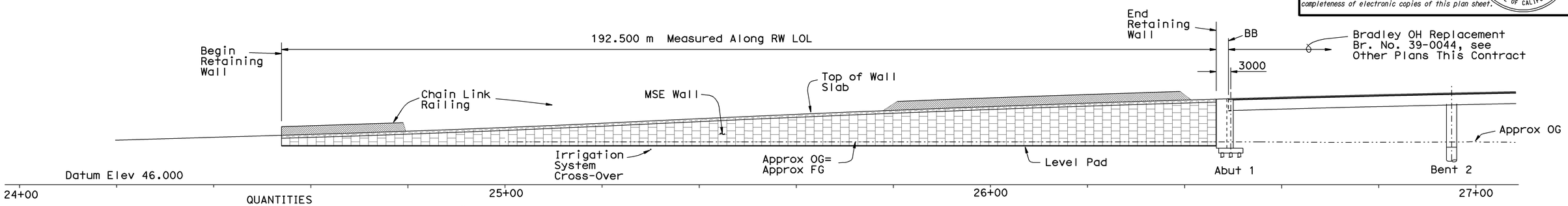

QUANTITIES

REMOVE CONCRETE DECK SURFACE	6 m^2
PREPARE CONCRETE BRIDGE DECK SURFACE	11 m^2
EARTH RETAINING STRUCTURE, LOCATION B	1080 m^2
STRUCTURAL CONCRETE, BARRIER SLAB	230 m^3
FURNISH POLYESTER CONCRETE OVERLAY	0.3 m^3
PLACE POLYESTER CONCRETE OVERLAY	11 m^2
PREPARE AND STAIN CONCRETE	1000 m^2
CHAIN LINK RAILING (TYPE 7 MODIFIED)	193 m
CONCRETE BARRIER (TYPE 732 MODIFIED)	193 m

MIRROR ELEVATION

1:400

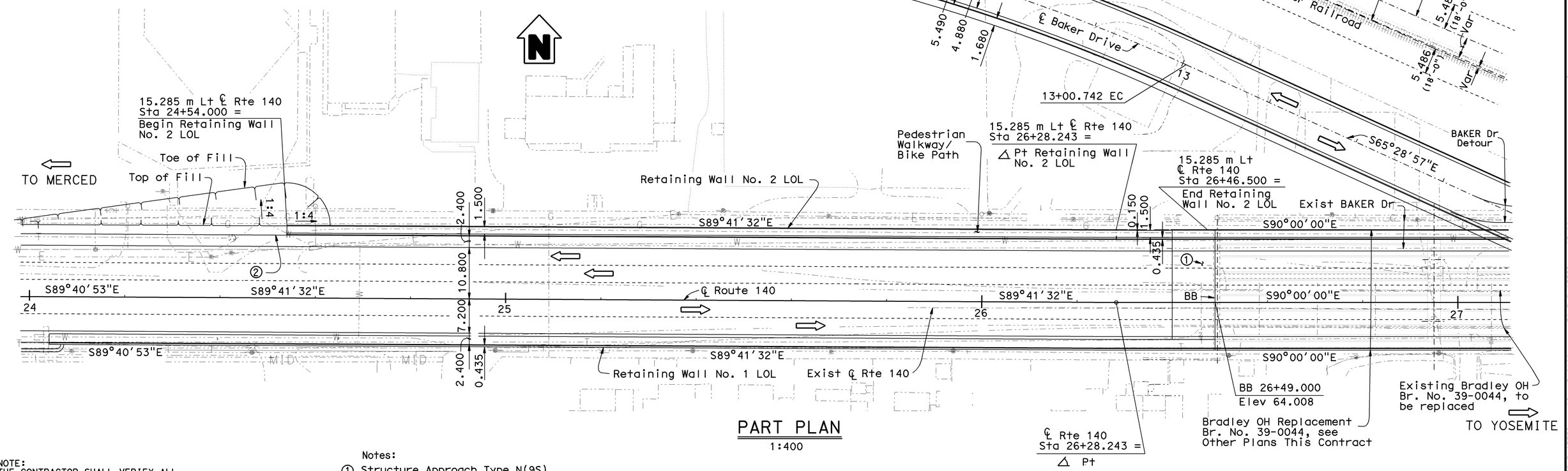

PART PLAN

1:400

Notes:

1. Structure Approach Type N(9S)
2. Metal Beam Guard Rail, see "Road Plans"

NOTE:
THE CONTRACTOR SHALL VERIFY ALL CONTROLLING FIELD DIMENSIONS BEFORE ORDERING OR FABRICATING ANY MATERIAL.

Caltrans Metric

Gordon Danke
DESIGN ENGINEER

	BY	CHECKED
DESIGN	M. VAN DE POL 04-03	P. NORBOE 11-05
DETAILS	M. VAN DE POL 04-03	P. NORBOE 11-05
QUANTITIES	M. VAN DE POL 11-05	P. NORBOE 11-05

LOAD FACTOR DESIGN — LIVE LOADING: HS20-44 AND ALTERNATIVE AND PERMIT DESIGN LOAD

LAYOUT — BY M. VAN DE POL 04-03 — CHECKED P. NORBOE 11-05

SPECIFICATIONS — BY TANYA KERSHELL — PLANS AND SPECS COMPARED TANYA KERSHELL

STATE OF CALIFORNIA
DEPARTMENT OF TRANSPORTATION

DIVISION OF ENGINEERING SERVICES
STRUCTURE DESIGN
DESIGN BRANCH 9

BRIDGE NO. 39E0002
KILOMETER POST 59.66

BRADLEY OVERHEAD (REPLACE)
RETAINING WALL No. 2
STRUCTURE PLAN

ALL DIMENSIONS ARE IN METERS UNLESS OTHERWISE SHOWN

ORIGINAL SCALE IN MILLIMETERS FOR REDUCED PLANS 0 10 20 30 40 50 60 70 80 90 100

CU 10
EA 3A66U1

DISREGARD PRINTS BEARING EARLIER REVISION DATES

REVISION DATES: 2-6-06 10-22-08 11-18-08

SHEET 4 OF 53

FILE => 39e0044-c-rw2a.dgn

STRUCTURES DESIGN GENERAL PLAN SHEET (METRIC) (REV.03-17-04)

USERNAME => trstrk DATE PLOTTED => 05-MAR-2009 TIME PLOTTED => 07:22

DIST	COUNTY	ROUTE	KILOMETER POST TOTAL PROJECT	SHEET No	TOTAL SHEETS
10	Mer	140	58.7/60.5	336	384

REGISTERED CIVIL ENGINEER 10-27-08 DATE

3-2-09
PLANS APPROVAL DATE

The State of California or its officers or agents shall not be responsible for the accuracy or completeness of electronic copies of this plan sheet.

REGISTERED PROFESSIONAL ENGINEER M. Van De Pol No. C35610 Exp. 9-30-09 CIVIL STATE OF CALIFORNIA

NOTES:

For "Typical Sections", see "Typical Section" sheet

Temporary Railing not shown, see "Stage Construction" sheet and "Road Plans"

Denotes existing structure
Denotes new construction
Denotes temporary construction
Denotes direction of traffic

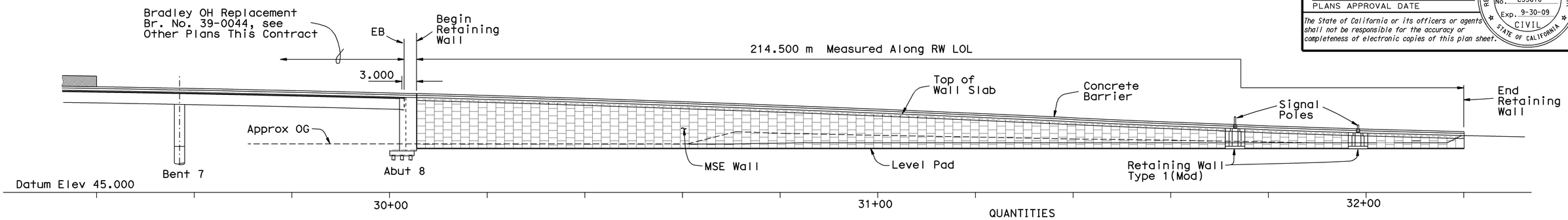

ELEVATION

1:400

QUANTITIES

STRUCTURE EXCAVATION (RETAINING WALL)	40	m^3
STRUCTURE BACKFILL (RETAINING WALL)	60	m^3
EARTH RETAINING STRUCTURE, LOCATION C	1300	m^2
STRUCTURAL CONCRETE, RETAINING WALL	35	m^3
STRUCTURAL CONCRETE, BARRIER SLAB	275	m^3
ARCHITECTURAL TREATMENT(COBBLESTONE TEXTURE)	25	m^2
BAR REINFORCING STEEL (RETAINING WALL)	3200	kg
PREPARE AND STAIN CONCRETE	1180	m^2
CONCRETE BARRIER (TYPE 732 MODIFIED)	215	m

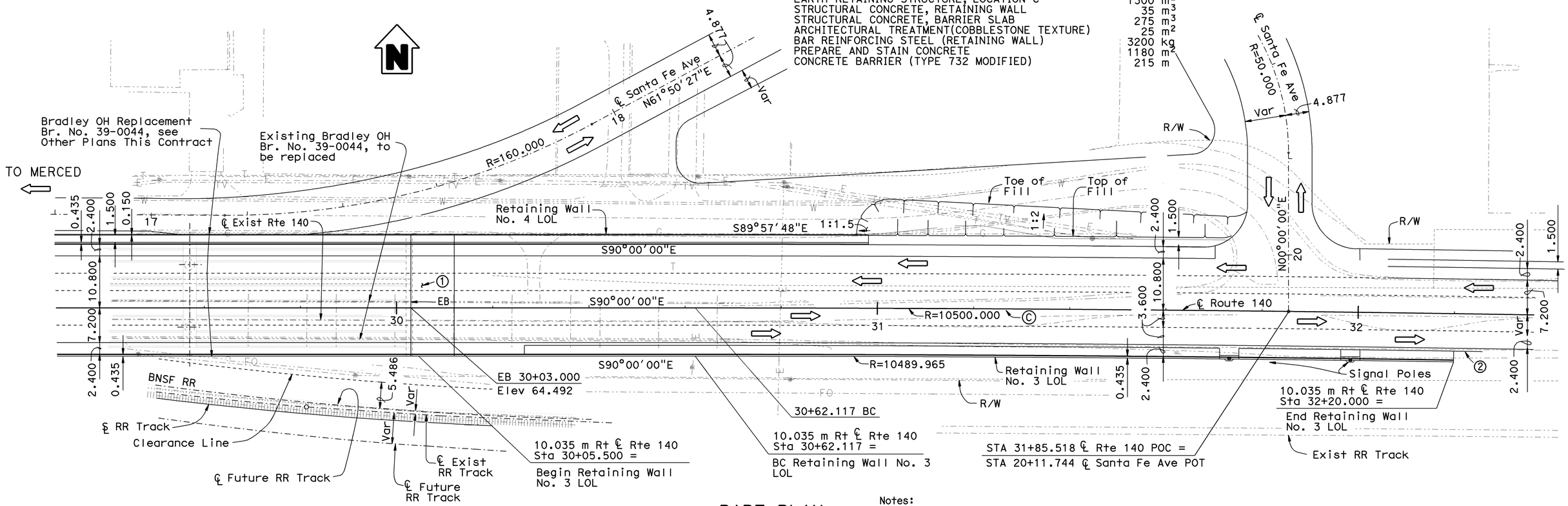

PART PLAN

1:400

Curve Data

Ⓒ
R = 10500.000
Δ = 1°19'12"
L = 241.883
T = 120.947

Notes:
① Structure Approach Type N(9S)
② MBGR See "Road Plans"

NOTE:
THE CONTRACTOR SHALL VERIFY ALL CONTROLLING FIELD DIMENSIONS BEFORE ORDERING OR FABRICATING ANY MATERIAL.

Caltrans Metric

Gordon Danke
DESIGN ENGINEER

	BY	CHECKED
DESIGN	M. VAN DE POL 04-03	P. NORBOE 11-05
DETAILS	M. VAN DE POL 04-03	P. NORBOE 11-05
QUANTITIES	M. VAN DE POL 11-05	P. NORBOE 11-05

LOAD FACTOR DESIGN — LIVE LOADING: HS20-44 AND ALTERNATIVE AND PERMIT DESIGN LOAD
LAYOUT — BY M. VAN DE POL 04-03 — CHECKED P. NORBOE 11-05
SPECIFICATIONS — BY TANYA KERSHELL — PLANS AND SPECS COMPARED TANYA KERSHELL

STATE OF CALIFORNIA
DEPARTMENT OF TRANSPORTATION

DIVISION OF ENGINEERING SERVICES
STRUCTURE DESIGN
DESIGN BRANCH 9

CU 10
EA 3A66U1

BRIDGE NO. 39E0003
KILOMETER POST 59.66

BRADLEY OVERHEAD (REPLACE)
RETAINING WALL No. 3
STRUCTURE PLAN

ALL DIMENSIONS ARE IN METERS UNLESS OTHERWISE SHOWN

ORIGINAL SCALE IN MILLIMETERS FOR REDUCED PLANS 0 10 20 30 40 50 60 70 80 90 100

DISREGARD PRINTS BEARING EARLIER REVISION DATES — REVISION DATES 2-06-06 10-27-08

SHEET 5 OF 53

FILE => 39e0044-c-rw3a.dgn

STRUCTURES DESIGN GENERAL PLAN SHEET (METRIC) (REV.03-17-04)

USERNAME => trostrk DATE PLOTTED => 05-MAR-2009 TIME PLOTTED => 07:22

DIST	COUNTY	ROUTE	KILOMETER POST TOTAL PROJECT	SHEET No	TOTAL SHEETS
10	Mer	140	58.7/60.5	337	384

REGISTERED CIVIL ENGINEER 11-18-08 DATE

3-2-09
PLANS APPROVAL DATE

REGISTERED PROFESSIONAL ENGINEER M. Van De Pol No. C35610 Exp. 9-30-09 CIVIL STATE OF CALIFORNIA

The State of California or its officers or agents shall not be responsible for the accuracy or completeness of electronic copies of this plan sheet.

NOTES:

For "Typical Sections", see "Typical Section" sheet

Temporary Railing not shown, see "Stage Construction" sheet and "Road Plans"

Denotes existing structure
Denotes new construction
Denotes temporary construction
Denotes direction of traffic

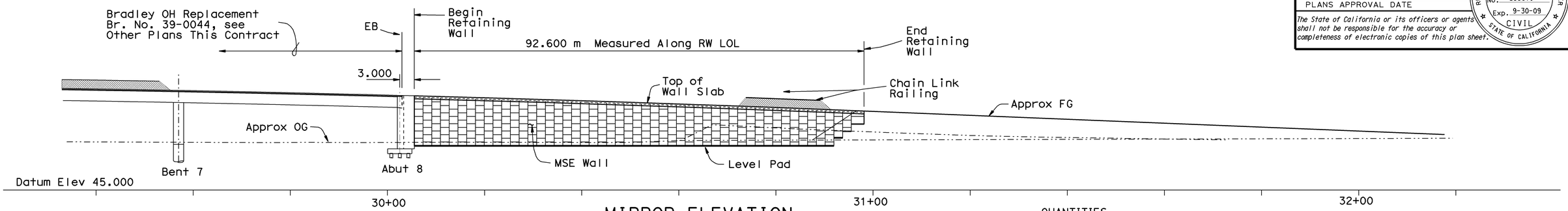

MIRROR ELEVATION

1:400

QUANTITIES

REMOVE CONCRETE DECK SURFACE	3 m^2
PREPARE CONCRETE BRIDGE DECK SURFACE	8 m^2
EARTH RETAINING STRUCTURE, LOCATION D	775 m^2
STRUCTURAL CONCRETE, BARRIER SLAB	110 m^3
FURNISH POLYESTER CONCRETE OVERLAY	0.3 m^3
PLACE POLYESTER CONCRETE OVERLAY	8 m^2
PREPARE AND STAIN CONCRETE	680 m^2
CHAIN LINK RAILING (TYPE 7 MODIFIED)	93 m
CONCRETE BARRIER (TYPE 732 MODIFIED)	93 m

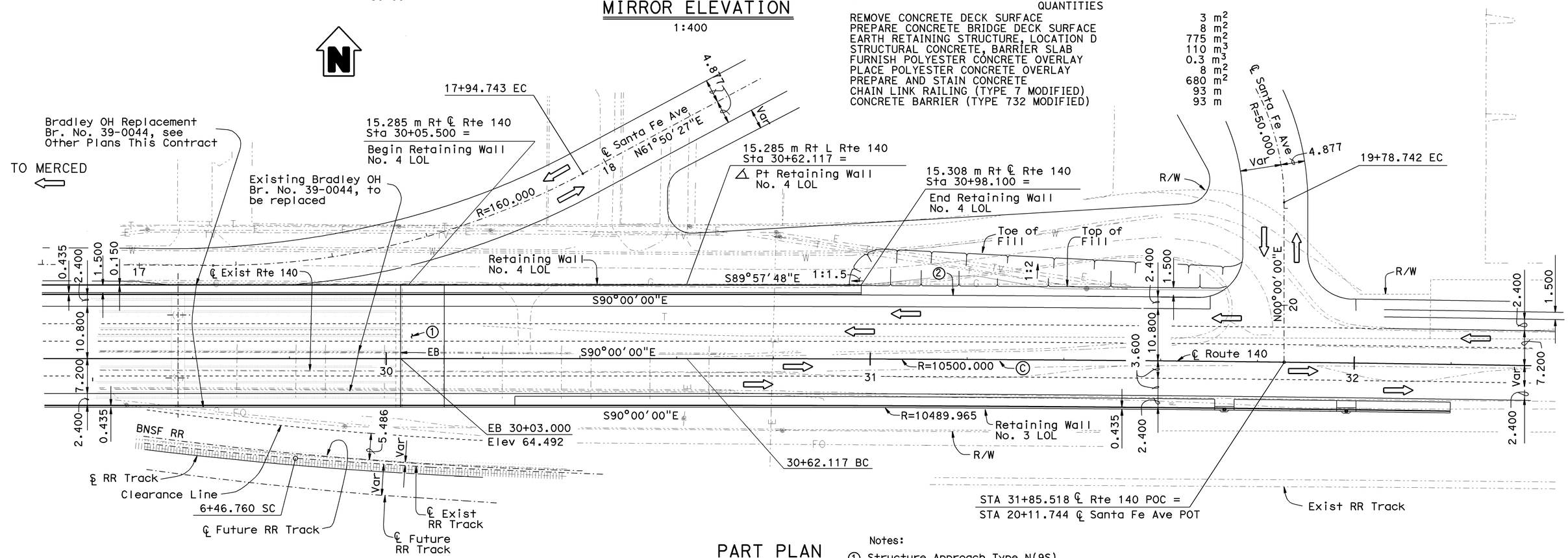

PART PLAN

1:400

Notes:

1. Structure Approach Type N(9S)
2. MBGR See "Road Plans"

Curve Data

℃

R = 10500.000
Δ = 1°19'12"
L = 241.883
T = 120.947

NOTE:
THE CONTRACTOR SHALL VERIFY ALL CONTROLLING FIELD DIMENSIONS BEFORE ORDERING OR FABRICATING ANY MATERIAL.

Caltrans Metric

Gordon Danke
DESIGN ENGINEER

	BY	CHECKED
DESIGN	M. VAN DE POL 04-03	P. NORBOE 11-05
DETAILS	M. VAN DE POL 04-03	P. NORBOE 11-05
QUANTITIES	M. VAN DE POL 11-05	P. NORBOE 11-05

LOAD FACTOR DESIGN — LIVE LOADING: HS20-44 AND ALTERNATIVE AND PERMIT DESIGN LOAD
LAYOUT — BY M. VAN DE POL 04-03 — CHECKED P. NORBOE 11-05
SPECIFICATIONS — BY TANYA KERSHELL — PLANS AND SPECS COMPARED TANYA KERSHELL

STATE OF CALIFORNIA
DEPARTMENT OF TRANSPORTATION

DIVISION OF ENGINEERING SERVICES
STRUCTURE DESIGN
DESIGN BRANCH 9

CU 10
EA 3A66U1

BRIDGE NO. 39E0004
KILOMETER POST 59.66

BRADLEY OVERHEAD (REPLACE)
RETAINING WALL No. 4
STRUCTURE PLAN

ALL DIMENSIONS ARE IN METERS UNLESS OTHERWISE SHOWN

ORIGINAL SCALE IN MILLIMETERS FOR REDUCED PLANS 0 10 20 30 40 50 60 70 80 90 100

DISREGARD PRINTS BEARING EARLIER REVISION DATES

REVISION DATES: 2-6-06 10-29-08 11-18-08

SHEET 6 OF 53

FILE => 39e0044-c-rw4a.dgn

STRUCTURES DESIGN GENERAL PLAN SHEET (METRIC) (REV.03-17-04)

USERNAME => frostrk DATE PLOTTED => 05-MAR-2009 TIME PLOTTED => 07:22

DIST	COUNTY	ROUTE	KILOMETER POST TOTAL PROJECT	SHEET No	TOTAL SHEETS
10	Mer	140	58.7/60.5	338	384

REGISTERED CIVIL ENGINEER 9-30-08

3-2-09
PLANS APPROVAL DATE

REGISTERED PROFESSIONAL ENGINEER M. VAN DE POL No. C35610 Exp. 9-30-09 CIVIL STATE OF CALIFORNIA

The State of California or its officers or agents shall not be responsible for the accuracy or completeness of electronic copies of this plan sheet.

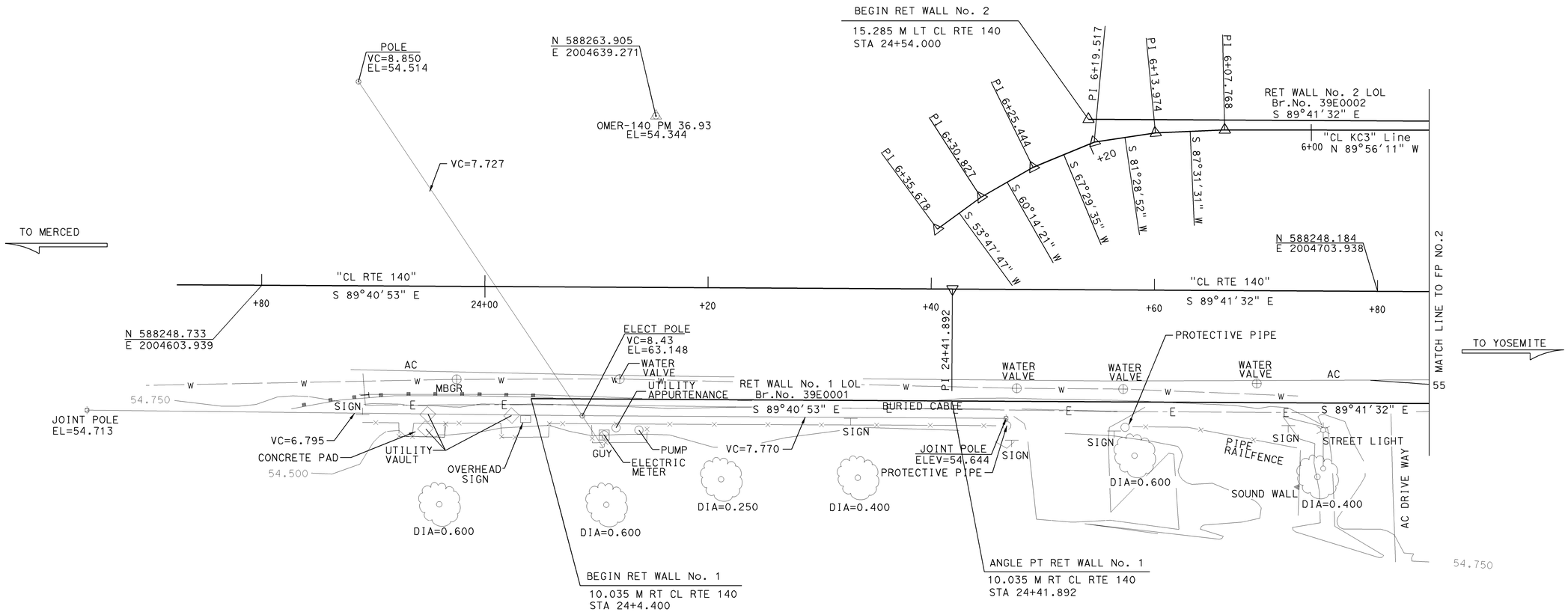

SURVEY CONTROL

OMER-140 PM 36.93
Fnd 1" IRON PIPE W/ RED PLUG
15.369 M Lt. ℄ "CL1 LINE RTE 140"
Sta. 24+15.247
N 588263.905
E 2004639.271
Elev. = 54.344

OMER-140 PM 37.07
Fnd 1" OD IRON PIPE W/RED PLUG
3.655 M Lt. ℄ "CL1 LINE RTE 140"
Sta. 26+43.439
N 588251.042
E 2004867.376
Elev. = 57.035

ALL DIMENSIONS ARE IN METERS UNLESS OTHERWISE SHOWN

PRELIMINARY INVESTIGATION SECTION

SCALE	VERT.DATUM NAD 83(1991.35)	PHOTOGRAMMETRY AS OF:		
1:200	HORZ.DATUM NGVD 29	SURVEYED	BY N. JONES 2/03	DRAFTED BY N. KELLEY 5/03
ALIGNMENT TIES	DIST. TRAVERSE SHEET	FIELD CHECKED	BY W.WILSON 2/03	CHECKED BY F. BANDA 5/03

DESIGN	BY M. VAN DE POL	08-03	CHECKED P. NORBOE 11-05
DETAILS	BY M. VAN DE POL	08-03	CHECKED P. NORBOE 11-05
QUANTITIES	BY M. VAN DE POL	11-05	CHECKED P. NORBOE 11-05

STATE OF CALIFORNIA
DEPARTMENT OF TRANSPORTATION

DIVISION OF STRUCTURES
STRUCTURE DESIGN 9

CU 10
EA 3A66U1

BRIDGE NO.
39E0001
39E0002
39E0003
39E0004
KILOMETER POST
58.2/61.1

BRADLEY OVERHEAD (REPLACE)
RETAINING WALLS
FOUNDATION PLAN No. 1

STRUCTURES FOUNDATION PLAN SHEET (METRIC) (REV. 4/20/00)

ORIGINAL SCALE IN MILLIMETERS FOR REDUCED PLANS 0 10 20 30 40 50 60 70 80 90 100

DISREGARD PRINTS BEARING EARLIER REVISION DATES

REVISION DATES (PRELIMINARY STAGE ONLY) 8-26-03 11-29-05

SHEET 7 OF 53

FILE => 39e0044-e-fnd01.dgn

USERNAME => TTSTTK DATE PLOTTED => 05-MAR-2009 TIME PLOTTED => 07:22

DIST	COUNTY	ROUTE	KILOMETER POST TOTAL PROJECT	SHEET No	TOTAL SHEETS
10	Mer	140	58.7/60.5	339	384

REGISTERED CIVIL ENGINEER 9-30-08

3-2-09
PLANS APPROVAL DATE

REGISTERED PROFESSIONAL ENGINEER M. VAN DE POL No. C35610 Exp. 9-30-09 CIVIL STATE OF CALIFORNIA

The State of California or its officers or agents shall not be responsible for the accuracy or completeness of electronic copies of this plan sheet.

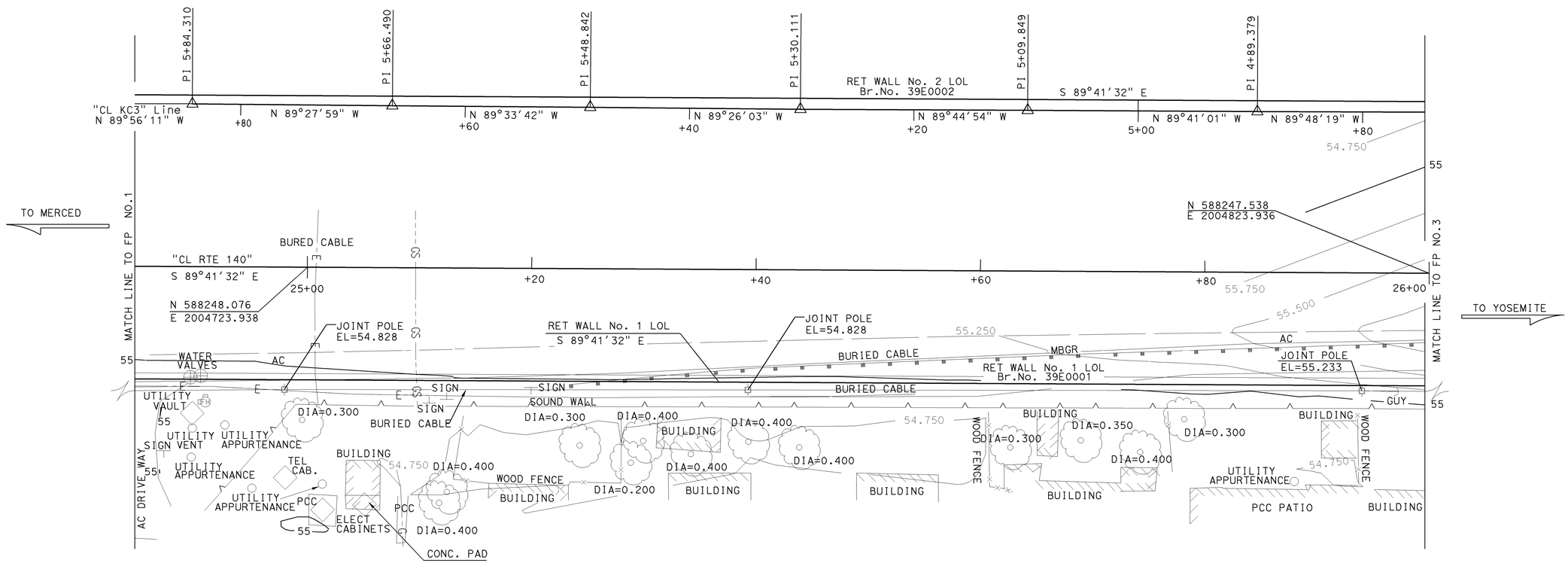

ALL DIMENSIONS ARE IN
METERS UNLESS OTHERWISE SHOWN

PRELIMINARY INVESTIGATION SECTION					
SCALE 1:200	VERT.DATUM NAD 83(1991.35)	PHOTOGRAMMETRY AS OF:			
	HORZ.DATUM NGVD 29	SURVEYED	BY N. JONES 2/03	DRAFTED	BY N. KELLEY 5/03
	ALIGNMENT TIES DIST. TRAVERSE SHEET	FIELD CHECKED	BY W.WILSON 2/03	CHECKED	BY F. BANDA 5/03

DESIGN	BY M. VAN DE POL	08-03	CHECKED P. NORBOE	11-05
DETAILS	BY M. VAN DE POL	08-03	CHECKED P. NORBOE	11-05
QUANTITIES	BY M. VAN DE POL	11-05	CHECKED P. NORBOE	11-05

STATE OF CALIFORNIA
DEPARTMENT OF TRANSPORTATION

DIVISION OF STRUCTURES
STRUCTURE DESIGN 9

CU 10
EA 3A66U1

BRIDGE NO.	
39E0001 39E0002 39E0003 39E0004	BRADLEY OVERHEAD (REPLACE)
	RETAINING WALLS
KILOMETER POST 58.2/61.1	FOUNDATION PLAN No. 2

STRUCTURES FOUNDATION PLAN SHEET (METRIC) (REV. 4/20/00)

ORIGINAL SCALE IN MILLIMETERS FOR REDUCED PLANS 0 10 20 30 40 50 60 70 80 90 100

DISREGARD PRINTS BEARING EARLIER REVISION DATES → 8-26-03 11-29-05

REVISION DATES (PRELIMINARY STAGE ONLY)

SHEET 8 OF 53

FILE => 39e0044-e-fnd02.dgn

USERNAME => trsirk DATE PLOTTED => 05-MAR-2009 TIME PLOTTED => 07:23

DIST	COUNTY	ROUTE	KILOMETER POST TOTAL PROJECT	SHEET No	TOTAL SHEETS
10	Mer	140	58.7/60.5	340	384

REGISTERED CIVIL ENGINEER 9-30-08

3-2-09
PLANS APPROVAL DATE

REGISTERED PROFESSIONAL ENGINEER M. VAN DE POL No. C35610 Exp. 9-30-09 CIVIL STATE OF CALIFORNIA

The State of California or its officers or agents shall not be responsible for the accuracy or completeness of electronic copies of this plan sheet.

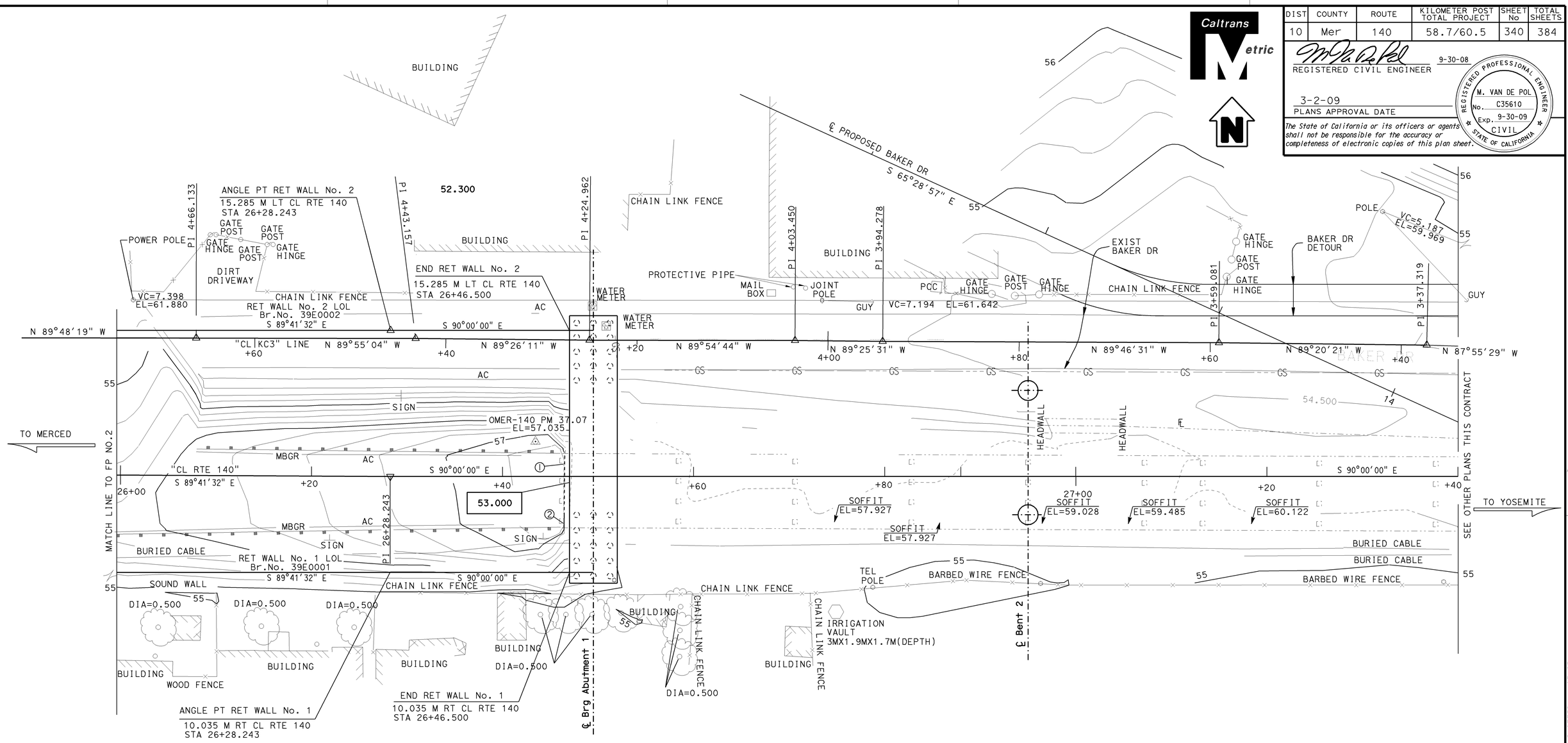

For Bridge Foundations, see Other Plans This Contract

Bridge Location

① - 1.291 Lt. ℄, Sta.26+46.368, Elev.=57.471 ±
② - 4.903 Rt. ℄, Sta.26+46.368, Elev.=57.474 ±
③ - 0.601 Lt. ℄, Sta.30+68.896, Elev.=58.440 ±
④ - 6.748 Rt. ℄, Sta.30+66.591, Elev.=58.453 ±

NOTES:

Denotes bottom footing elevation

Denotes existing structure

All Piles Not Shown

Denotes new structure

ALL DIMENSIONS ARE IN METERS UNLESS OTHERWISE SHOWN

PRELIMINARY INVESTIGATION SECTION

SCALE	VERT.DATUM 1929	PHOTOGRAMMETRY AS OF:		
1:200	HORZ.DATUM NAD83	SURVEYED BY N. JONES 2/03	DRAFTED BY N. KELLEY 5/03	
ALIGNMENT TIES	DIST. TRAVERSE SHEET	FIELD CHECKED BY W.WILSON 2/03	CHECKED BY F. BANDA 5/03	

	BY		CHECKED
DESIGN	M. VAN DE POL	08-03	P. NORBOE 11-05
DETAILS	M. VAN DE POL	08-03	P. NORBOE 11-05
QUANTITIES	M. VAN DE POL	11-05	P. NORBOE 11-05

STATE OF CALIFORNIA
DEPARTMENT OF TRANSPORTATION

DIVISION OF STRUCTURES
STRUCTURE DESIGN 9

CU 10
EA 3A66U1

BRIDGE NO. 39E0001 39E0002 39E0003 39E0004

KILOMETER POST 58.2/61.1

BRADLEY OVERHEAD (REPLACE)
RETAINING WALLS
FOUNDATION PLAN No. 3

STRUCTURES FOUNDATION PLAN SHEET (METRIC) (REV. 4/20/00)

ORIGINAL SCALE IN MILLIMETERS FOR REDUCED PLANS 0 10 20 30 40 50 60 70 80 90 100

DISREGARD PRINTS BEARING EARLIER REVISION DATES

REVISION DATES (PRELIMINARY STAGE ONLY) 8-26-03 11-29-05

SHEET 9 OF 53

FILE => 39e0044-e-fnd03.dgn

USERNAME => rtestrk DATE PLOTTED => 05-MAR-2009 TIME PLOTTED => 07:23

NO	R	Δ	T	L
1	10500.000	1°19′12"	120.947	241.884

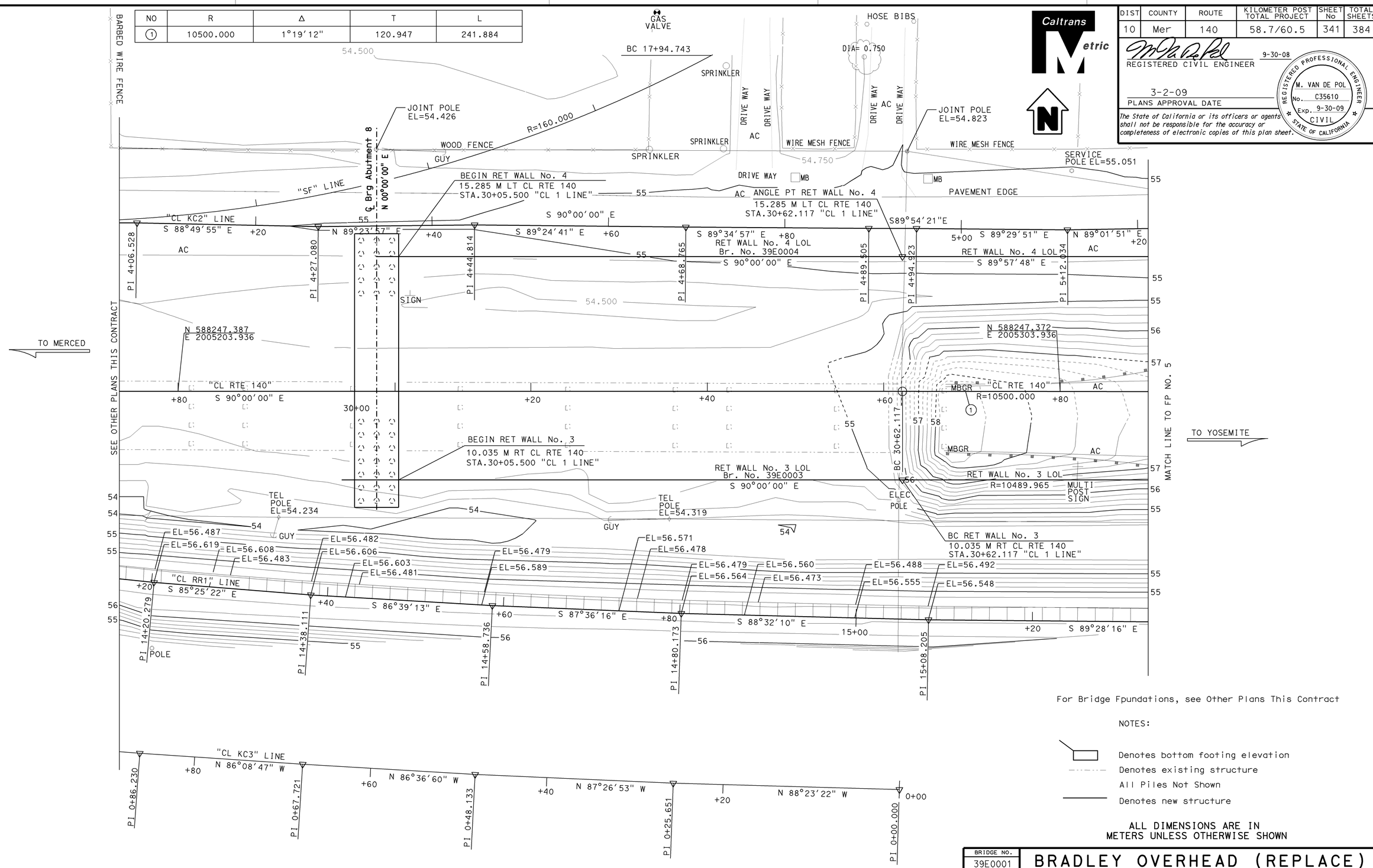

DIST	COUNTY	ROUTE	KILOMETER POST TOTAL PROJECT	SHEET No	TOTAL SHEETS
10	Mer	140	58.7/60.5	341	384

REGISTERED CIVIL ENGINEER 9-30-08

3-2-09
PLANS APPROVAL DATE

The State of California or its officers or agents shall not be responsible for the accuracy or completeness of electronic copies of this plan sheet.

REGISTERED PROFESSIONAL ENGINEER M. VAN DE POL No. C35610 Exp. 9-30-09 CIVIL STATE OF CALIFORNIA

For Bridge Fpundations, see Other Plans This Contract

NOTES:

Denotes bottom footing elevation
Denotes existing structure
All Piles Not Shown
Denotes new structure

ALL DIMENSIONS ARE IN METERS UNLESS OTHERWISE SHOWN

PRELIMINARY INVESTIGATION SECTION

SCALE 1:200	VERT.DATUM NGVD 29	PHOTOGRAMMETRY AS OF:			
	HORZ.DATUM NAD 83(1991.35)	SURVEYED	BY N. JONES 2/03	DRAFTED	BY N. KELLEY 5/03
	ALIGNMENT TIES DIST. TRAVERSE SHEET	FIELD CHECKED	BY W.WILSON 2/03	CHECKED	BY B.BANDA 5/03

STRUCTURES FOUNDATION PLAN SHEET (METRIC) (REV. 4/20/00)

DESIGN	BY M. VAN DE POL	08-03	CHECKED P. NORBOE	11-05
DETAILS	BY M. VAN DE POL	08-03	CHECKED P. NORBOE	11-05
QUANTITIES	BY M. VAN DE POL	11-05	CHECKED P. NORBOE	11-05

ORIGINAL SCALE IN MILLIMETERS FOR REDUCED PLANS 0 10 20 30 40 50 60 70 80 90 100

STATE OF CALIFORNIA
DEPARTMENT OF TRANSPORTATION

DIVISION OF STRUCTURES
STRUCTURE DESIGN 9

CU 10
EA 3A66U1

BRIDGE NO.
39E0001
39E0002
39E0003
39E0004
KILOMETER POST
58.3/61

BRADLEY OVERHEAD (REPLACE)
RETAINING WALLS
FOUNDATION PLAN No. 4

DISREGARD PRINTS BEARING EARLIER REVISION DATES

REVISION DATES (PRELIMINARY STAGE ONLY) 8-29-03 11-29-05

SHEET 10 OF 53

FILE => 39e0044-e-fnd04.dgn

USERNAME => trrene DATE PLOTTED => 05-MAR-2009 TIME PLOTTED => 06:21

DIST	COUNTY	ROUTE	KILOMETER POST TOTAL PROJECT	SHEET No	TOTAL SHEETS
10	Mer	140	58.7/60.5	342	384

Caltrans Metric

REGISTERED CIVIL ENGINEER 9-30-08

3-2-09
PLANS APPROVAL DATE

REGISTERED PROFESSIONAL ENGINEER M. VAN DE POL No. C35610 Exp. 9-30-09 CIVIL STATE OF CALIFORNIA

The State of California or its officers or agents shall not be responsible for the accuracy or completeness of electronic copies of this plan sheet.

NO	R	Δ	T	L
1	10500.000	1°19′12"	120.947	241.884

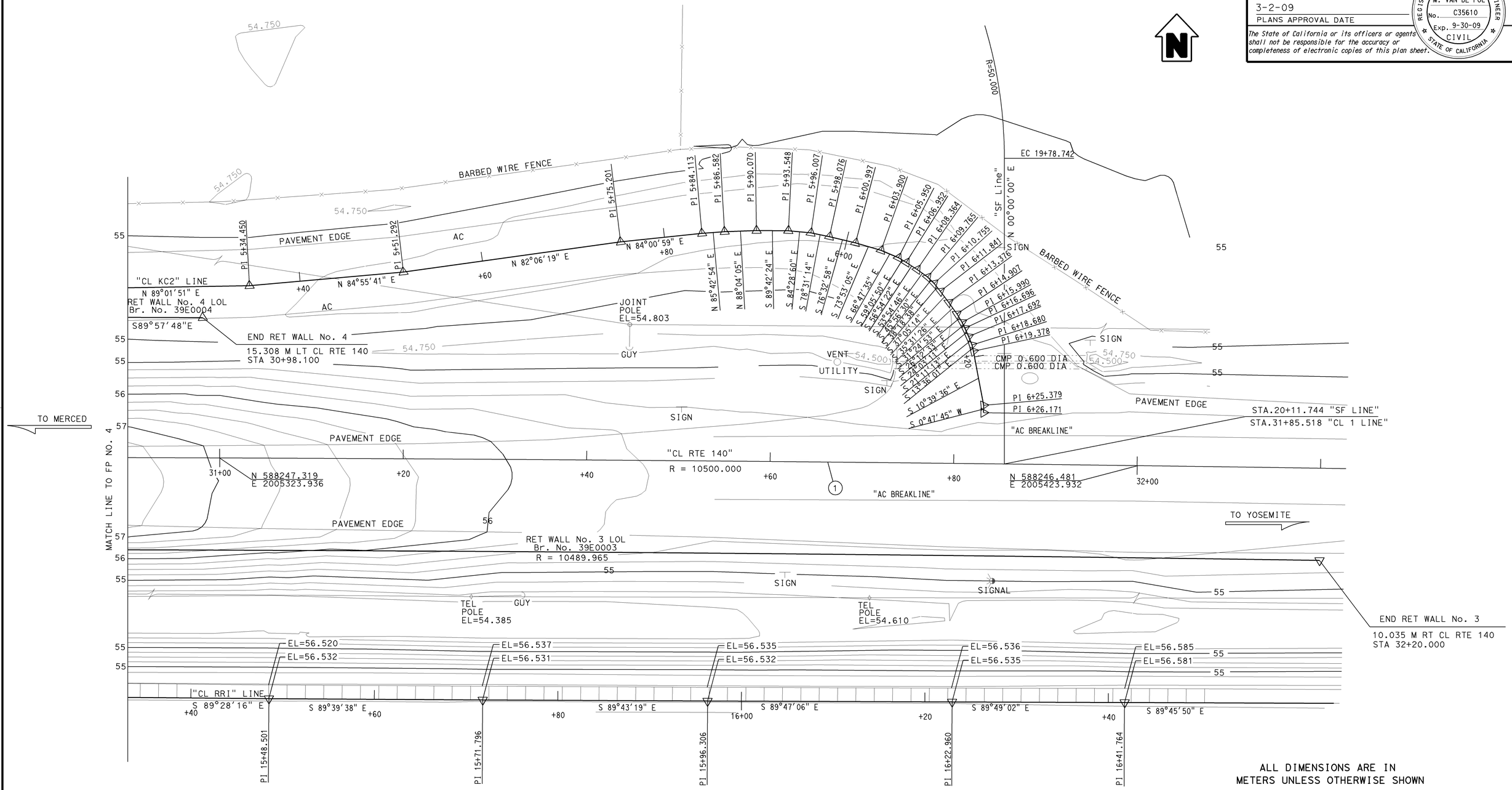

ALL DIMENSIONS ARE IN METERS UNLESS OTHERWISE SHOWN

PRELIMINARY INVESTIGATION SECTION

SCALE 1:200	VERT.DATUM NGVD 29	PHOTOGRAMMETRY AS OF:			
HORZ.DATUM NAD 83(1991.35)		SURVEYED	BY N. JONES 2/03	DRAFTED	BY N. KELLEY 5/03
ALIGNMENT TIES DIST. TRAVERSE SHEET		FIELD CHECKED	BY W.WILSON 2/03	CHECKED	BY F. BANDA 5/03

	BY		CHECKED
DESIGN	M. VAN DE POL	08-03	P. NORBOE 11-05
DETAILS	M. VAN DE POL	08-03	P. NORBOE 11-05
QUANTITIES	M. VAN DE POL	11-05	P. NORBOE 11-05

STATE OF CALIFORNIA
DEPARTMENT OF TRANSPORTATION

DIVISION OF STRUCTURES
STRUCTURE DESIGN 9

CU 10
EA 3A66U1

BRIDGE NO.
39E0001
39E0002
39E0003
39E0004
KILOMETER POST
58.2/61.1

BRADLEY OVERHEAD (REPLACE)
RETAINING WALLS
FOUNDATION PLAN No. 5

STRUCTURES FOUNDATION PLAN SHEET (METRIC) (REV. 4/20/00)

ORIGINAL SCALE IN MILLIMETERS FOR REDUCED PLANS 0 10 20 30 40 50 60 70 80 90 100

DISREGARD PRINTS BEARING EARLIER REVISION DATES

REVISION DATES (PRELIMINARY STAGE ONLY) 5/21/03 11-29-05

SHEET 11 OF 53

FILE => 39e0044-e-fnd05.dgn

USERNAME = ?rrene DATE PLOTTED => 05-MAR-2009 TIME PLOTTED => 06:21

DIST	COUNTY	ROUTE	KILOMETER POST TOTAL PROJECT	SHEET No	TOTAL SHEETS
10	Mer	140	58.7/60.5	343	384

REGISTERED CIVIL ENGINEER 9-30-08 DATE

3-2-09
PLANS APPROVAL DATE

REGISTERED PROFESSIONAL ENGINEER M. Van De Pol No. C35610 Exp. 9-30-09 CIVIL STATE OF CALIFORNIA

The State of California or its officers or agents shall not be responsible for the accuracy or completeness of electronic copies of this plan sheet.

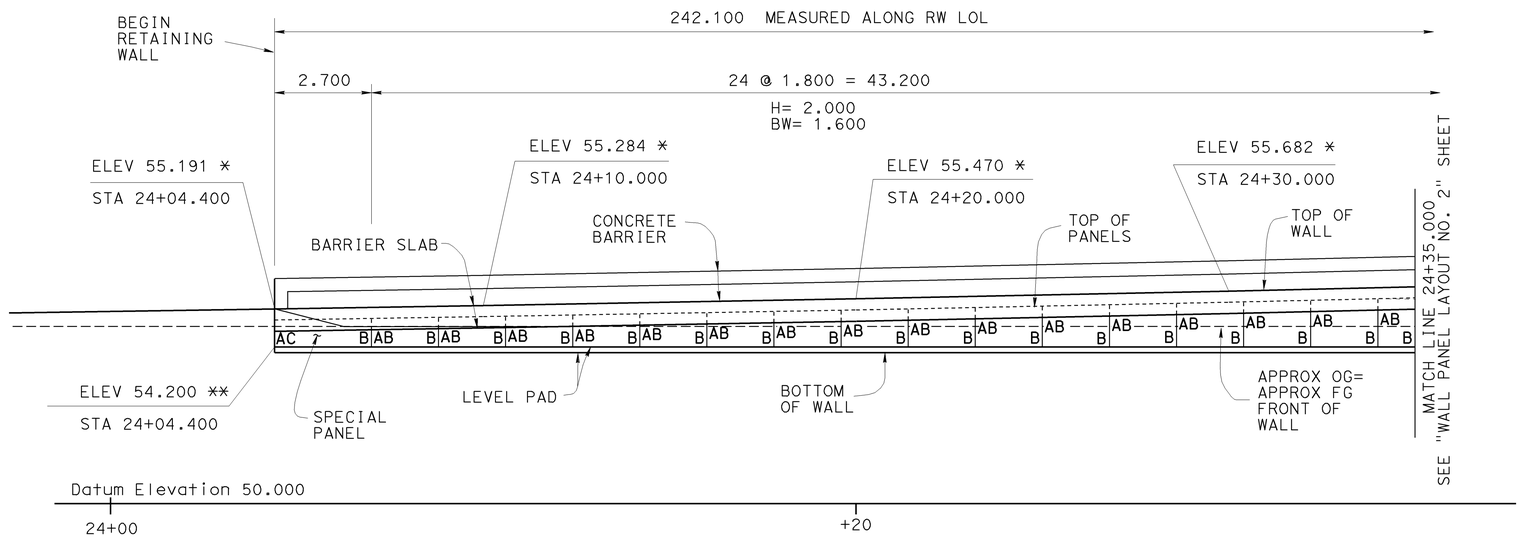

ELEVATION
1:80

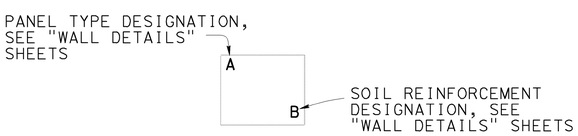

PANEL LEGEND

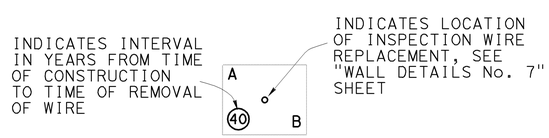

INSPECTION WIRE PANEL LEGEND

NOTES:
* DENOTES TOP OF WALL ELEVATION
** DENOTES TOP OF LEVEL PAD ELEVATION
ARCHITECTURAL TREATMENT NOT SHOWN
FOR WALL PANEL TYPE DETAILS, SEE "WALL DETAILS" SHEETS
FOR BARRIER SLAB DETAILS, SEE "WALL DETAILS No. 2" SHEET
MBGR NOT SHOWN
FOR SPECIAL PANEL DETAILS, SEE "WALL DETAILS No. 3" SHEET

BW = BASE WIDTH, SEE "WALL DETAILS NO. 1" AND "WALL DETAILS No. 2" SHEETS

H = DESIGN HEIGHT, SEE "WALL DETAILS No. 1" SHEET

Caltrans Metric

	BY		CHECKED
DESIGN	M. VAN DE POL	04-03	P. NORBOE 12-05
DETAILS	M. VAN DE POL	04-03	P. NORBOE 12-05
QUANTITIES	M. VAN DE POL	11-05	P. NORBOE 12-05

STATE OF CALIFORNIA
DEPARTMENT OF TRANSPORTATION

DIVISION OF ENGINEERING SERVICES
STRUCTURE DESIGN
DESIGN BRANCH 9

BRIDGE NO. 39E0001
KILOMETER POST 59.66

BRADLEY OVERHEAD (REPLACE)
RETAINING WALL No. 1
WALL PANEL LAYOUT No. 1

ALL DIMENSIONS ARE IN METERS UNLESS OTHERWISE SHOWN

ORIGINAL SCALE IN MILLIMETERS FOR REDUCED PLANS 0 10 20 30 40 50 60 70 80 90 100

CU 10
EA 3A66U1

DISREGARD PRINTS BEARING EARLIER REVISION DATES 5-8-03 12-6-05

REVISION DATES

SHEET 12 OF 53

FILE => 39e0044-r-rw1p101.dgn

STRUCTURES DESIGN DETAIL SHEET (METRIC) (REV.03-17-04)

USERNAME => ttrene DATE PLOTTED => 05-MAR-2009 TIME PLOTTED => 06:21

DIST	COUNTY	ROUTE	KILOMETER POST TOTAL PROJECT	SHEET No	TOTAL SHEETS
10	Mer	140	58.7/60.5	344	384

REGISTERED CIVIL ENGINEER 9-30-08 DATE

3-2-09
PLANS APPROVAL DATE

REGISTERED PROFESSIONAL ENGINEER M. Van De Pol No. C35610 Exp. 9-30-09 CIVIL STATE OF CALIFORNIA

The State of California or its officers or agents shall not be responsible for the accuracy or completeness of electronic copies of this plan sheet.

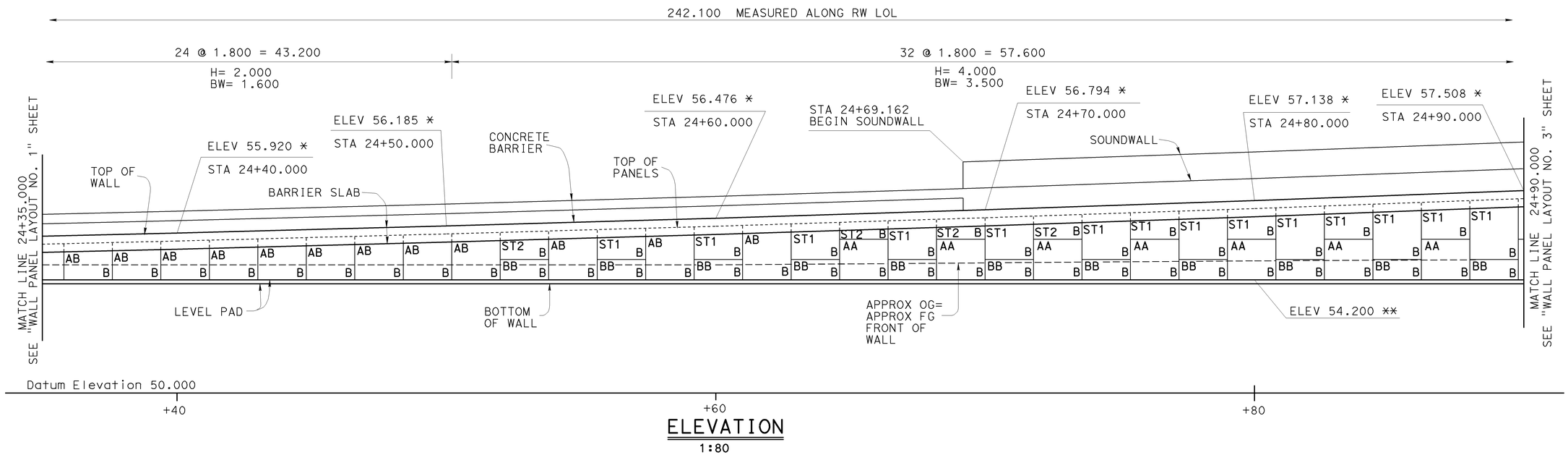

ELEVATION
1:80

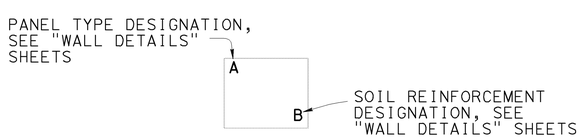

PANEL LEGEND

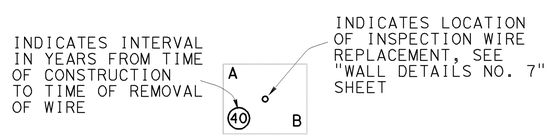

INSPECTION WIRE PANEL LEGEND

NOTES:

* DENOTES TOP OF WALL ELEVATION

** DENOTES TOP OF LEVEL PAD ELEVATION

ARCHITECTURAL TREATMENT NOT SHOWN

FOR WALL PANEL TYPE DETAILS, SEE "WALL DETAILS" SHEETS

FOR BARRIER SLAB DETAILS, SEE "WALL DETAILS No. 2" SHEET

FOR LIMITS OF SOUNDWALL, SEE "GENERAL PLAN No. 1" AND "TYPICAL SECTION" SHEETS

BW = BASE WIDTH, SEE "WALL DETAILS No. 1" AND "WALL DETAILS No. 2" SHEETS

H = DESIGN HEIGHT, SEE "WALL DETAILS No. 1" SHEET

Caltrans Metric

ALL DIMENSIONS ARE IN METERS UNLESS OTHERWISE SHOWN

ORIGINAL SCALE IN MILLIMETERS FOR REDUCED PLANS 0 10 20 30 40 50 60 70 80 90 100

	BY		CHECKED	
DESIGN	M. VAN DE POL	04-03	P. NORBOE	12-05
DETAILS	M. VAN DE POL	04-03	P. NORBOE	12-05
QUANTITIES	M. VAN DE POL	11-05	P. NORBOE	12-05

STATE OF CALIFORNIA
DEPARTMENT OF TRANSPORTATION

DIVISION OF ENGINEERING SERVICES
STRUCTURE DESIGN
DESIGN BRANCH 9

CU 10
EA 3A66U1

BRIDGE NO. 39E0001
KILOMETER POST 59.66

BRADLEY OVERHEAD (REPLACE)
RETAINING WALL No. 1
WALL PANEL LAYOUT No. 2

DISREGARD PRINTS BEARING EARLIER REVISION DATES

REVISION DATES: ~~5-2-03~~ 12-6-05

SHEET 13 OF 53

STRUCTURES DESIGN DETAIL SHEET (METRIC) (REV.03-17-04)

FILE => 39e0044-r-rw1p102.dgn

USERNAME => trrene DATE PLOTTED => 05-MAR-2009 TIME PLOTTED => 06:21

DIST	COUNTY	ROUTE	KILOMETER POST TOTAL PROJECT	SHEET No	TOTAL SHEETS
10	Mer	140	58.7/60.5	345	384

REGISTERED CIVIL ENGINEER 9-30-08 DATE

3-2-09
PLANS APPROVAL DATE

REGISTERED PROFESSIONAL ENGINEER M. Van De Pol No. C35610 Exp. 9-30-09 CIVIL STATE OF CALIFORNIA

The State of California or its officers or agents shall not be responsible for the accuracy or completeness of electronic copies of this plan sheet.

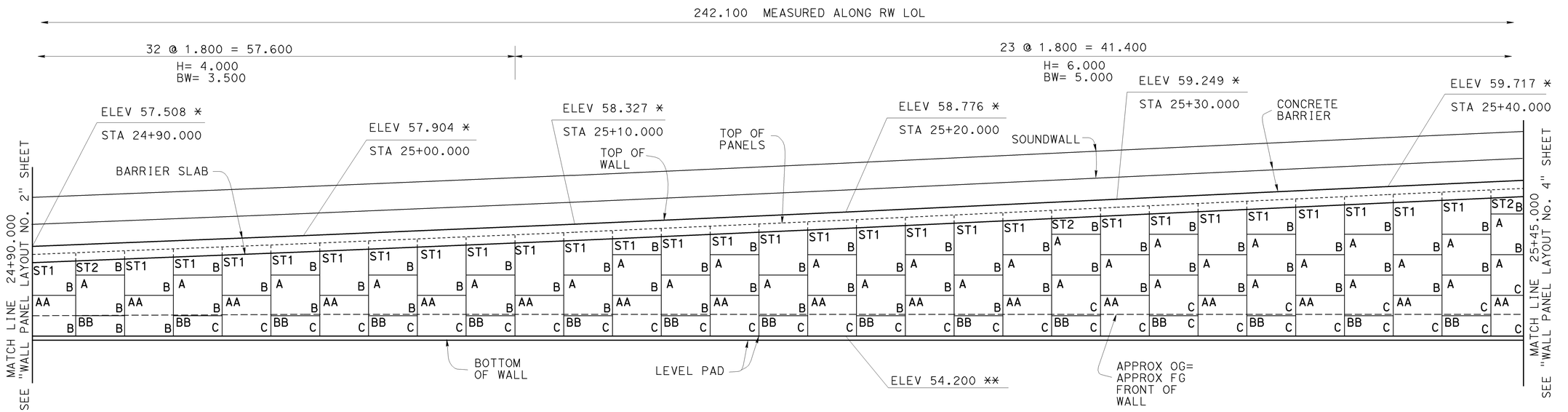

ELEVATION
1:80

PANEL TYPE DESIGNATION, SEE "WALL DETAILS" SHEETS

A

B

SOIL REINFORCEMENT DESIGNATION, SEE "WALL DETAILS" SHEETS

PANEL LEGEND

INDICATES INTERVAL IN YEARS FROM TIME OF CONSTRUCTION TO TIME OF REMOVAL OF WIRE

A

40

B

INDICATES LOCATION OF INSPECTION WIRE REPLACEMENT, SEE "WALL DETAILS No. 7" SHEET

INSPECTION WIRE PANEL LEGEND

NOTES:

* DENOTES TOP OF WALL ELEVATION

** DENOTES TOP OF LEVEL PAD ELEVATION

ARCHITECTURAL TREATMENT NOT SHOWN

FOR WALL PANEL TYPE DETAILS, SEE "WALL DETAILS" SHEETS

FOR BARRIER SLAB DETAILS, SEE "WALL DETAILS No. 2" SHEET

BW = BASE WIDTH, SEE "WALL DETAILS No. 1" AND "WALL DETAILS No. 2" SHEETS

H = DESIGN HEIGHT, SEE "WALL DETAILS No. 1" SHEET

Caltrans Metric

	BY		CHECKED
DESIGN	M. VAN DE POL	04-03	P. NORBOE 12-05
DETAILS	M. VAN DE POL	04-03	P. NORBOE 12-05
QUANTITIES	M. VAN DE POL	11-05	P. NORBOE 12-05

STATE OF CALIFORNIA
DEPARTMENT OF TRANSPORTATION

DIVISION OF ENGINEERING SERVICES
STRUCTURE DESIGN
DESIGN BRANCH 9

BRIDGE NO. 39E0001
KILOMETER POST 59.66

BRADLEY OVERHEAD (REPLACE)
RETAINING WALL No. 1
WALL PANEL LAYOUT No. 3

ALL DIMENSIONS ARE IN METERS UNLESS OTHERWISE SHOWN

ORIGINAL SCALE IN MILLIMETERS FOR REDUCED PLANS 0 10 20 30 40 50 60 70 80 90 100

CU 10
EA 3A66U1

DISREGARD PRINTS BEARING EARLIER REVISION DATES

REVISION DATES: 5-8-03 12-6-05

SHEET 14 OF 53

FILE => 39e0044-r-rw1p103.dgn

STRUCTURES DESIGN DETAIL SHEET (METRIC) (REV.03-17-04)

USERNAME => trrene DATE PLOTTED => 05-MAR-2009 TIME PLOTTED => 06:21

DIST	COUNTY	ROUTE	KILOMETER POST TOTAL PROJECT	SHEET No	TOTAL SHEETS
10	Mer	140	58.7/60.5	346	384

REGISTERED CIVIL ENGINEER 9-30-08 DATE

3-2-09
PLANS APPROVAL DATE

REGISTERED PROFESSIONAL ENGINEER M. Van De Pol No. C35610 Exp. 9-30-09 CIVIL STATE OF CALIFORNIA

The State of California or its officers or agents shall not be responsible for the accuracy or completeness of electronic copies of this plan sheet.

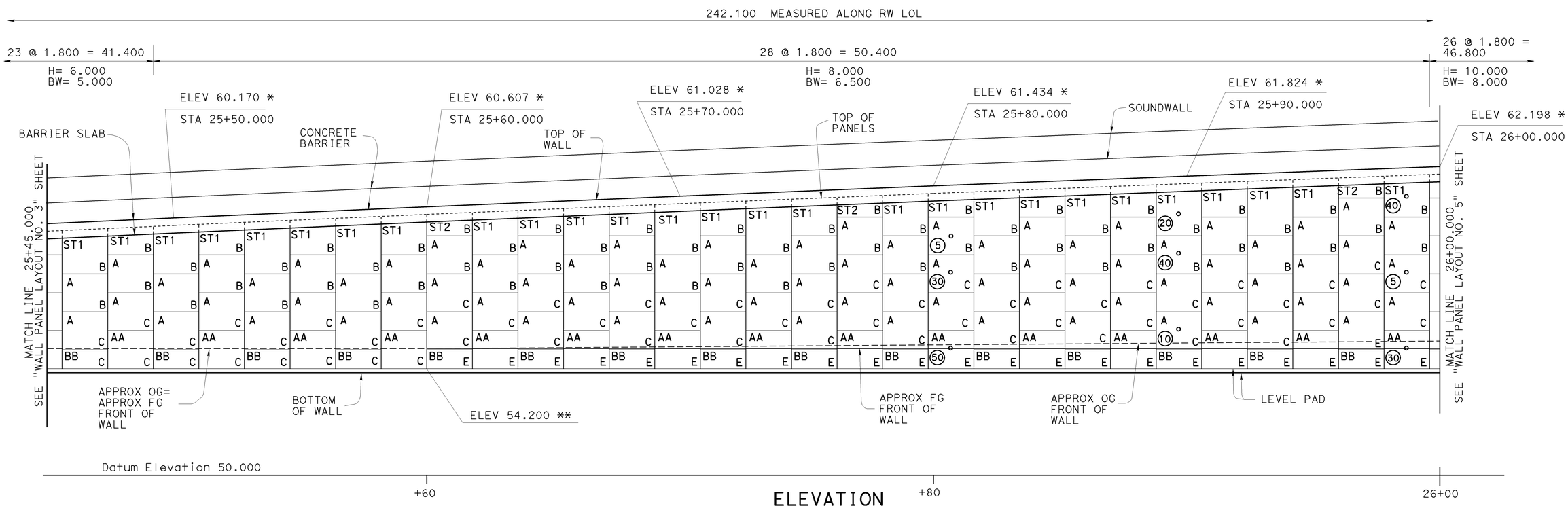

ELEVATION
1:80

PANEL TYPE DESIGNATION, SEE "WALL DETAILS" SHEETS

A

B

SOIL REINFORCEMENT DESIGNATION, SEE "WALL DETAILS" SHEETS

PANEL LEGEND

INDICATES INTERVAL IN YEARS FROM TIME OF CONSTRUCTION TO TIME OF REMOVAL OF WIRE

A

40

B

INDICATES LOCATION OF INSPECTION WIRE REPLACEMENT, SEE "WALL DETAILS No. 7" SHEET

INSPECTION WIRE PANEL LEGEND

NOTES:

* DENOTES TOP OF WALL ELEVATION

** DENOTES TOP OF LEVEL PAD ELEVATION

ARCHITECTURAL TREATMENT NOT SHOWN

FOR WALL PANEL TYPE DETAILS, SEE "WALL DETAILS" SHEETS

FOR BARRIER SLAB DETAILS, SEE "WALL DETAILS No. 2" SHEET

BW = BASE WIDTH, SEE "WALL DETAILS No. 1" AND "WALL DETAILS No. 2" SHEETS

H = DESIGN HEIGHT, SEE "WALL DETAILS No. 1" SHEET

Caltrans Metric

	BY		CHECKED	
DESIGN	M. VAN DE POL	04-03	P. NORBOE	12-05
DETAILS	M. VAN DE POL	04-03	P. NORBOE	12-05
QUANTITIES	M. VAN DE POL	11-05	P. NORBOE	12-05

STATE OF CALIFORNIA
DEPARTMENT OF TRANSPORTATION

DIVISION OF ENGINEERING SERVICES
STRUCTURE DESIGN
DESIGN BRANCH 9

BRIDGE NO. 39E0001
KILOMETER POST 59.66

BRADLEY OVERHEAD (REPLACE)
RETAINING WALL No. 1
WALL PANEL LAYOUT No. 4

ALL DIMENSIONS ARE IN METERS UNLESS OTHERWISE SHOWN

ORIGINAL SCALE IN MILLIMETERS FOR REDUCED PLANS 0 10 20 30 40 50 60 70 80 90 100

CU 10
EA 3A66U1

DISREGARD PRINTS BEARING EARLIER REVISION DATES 5-8-03 12-6-05

REVISION DATES

SHEET 15 OF 53

FILE => 39e0044-r-rw1p104.dgn

STRUCTURES DESIGN DETAIL SHEET (METRIC) (REV.03-17-04)

USERNAME => rtrene DATE PLOTTED => 05-MAR-2009 TIME PLOTTED => 06:21

DIST	COUNTY	ROUTE	KILOMETER POST TOTAL PROJECT	SHEET No	TOTAL SHEETS
10	Mer	140	58.7/60.5	347	384

REGISTERED CIVIL ENGINEER 9-30-08 DATE

3-2-09
PLANS APPROVAL DATE

REGISTERED PROFESSIONAL ENGINEER M. Van De Pol No. C35610 Exp. 9-30-09 CIVIL STATE OF CALIFORNIA

The State of California or its officers or agents shall not be responsible for the accuracy or completeness of electronic copies of this plan sheet.

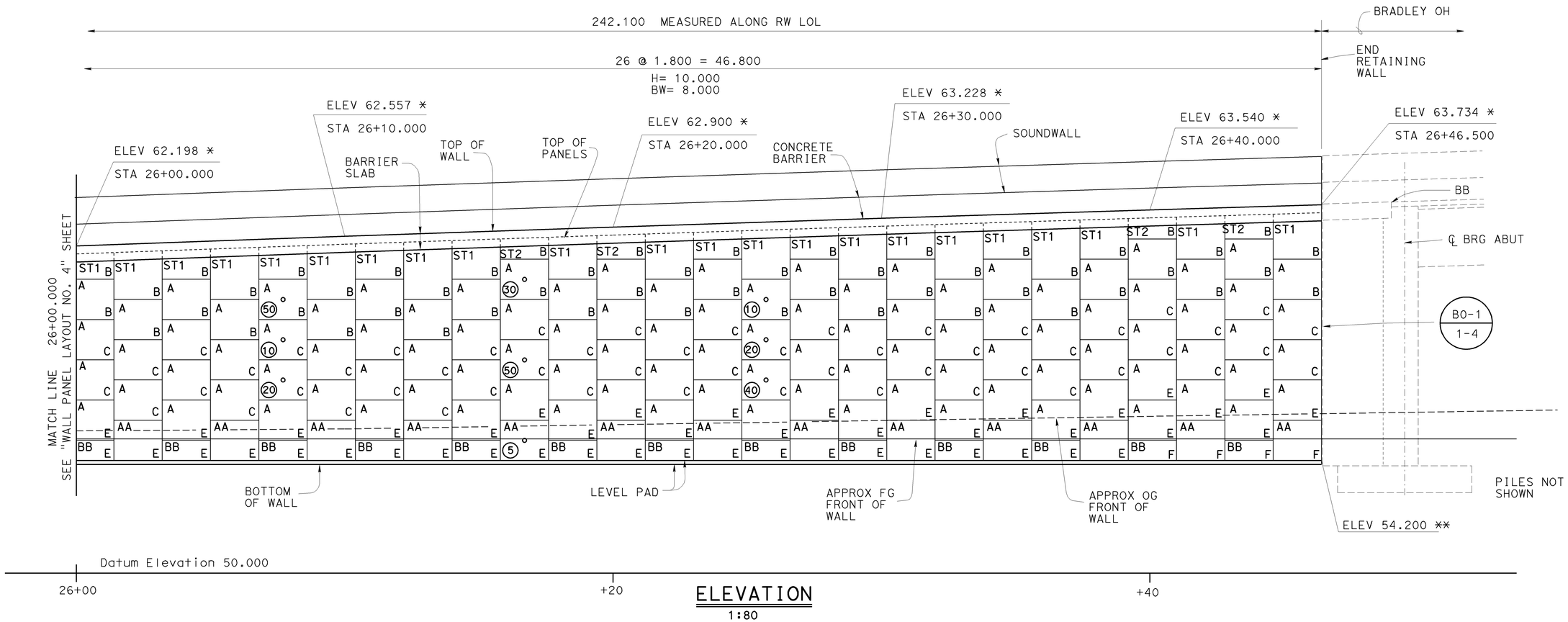

ELEVATION
1:80

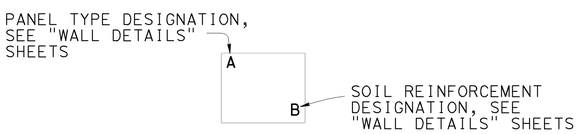

PANEL LEGEND

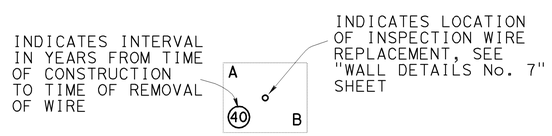

INSPECTION WIRE PANEL LEGEND

NOTES:
- * DENOTES TOP OF WALL ELEVATION
- ** DENOTES TOP OF LEVEL PAD ELEVATION
- ARCHITECTURAL TREATMENT NOT SHOWN
- FOR WALL PANEL TYPE DETAILS, SEE "WALL DETAILS" SHEETS
- FOR BARRIER SLAB DETAILS, SEE "WALL DETAILS No. 2" SHEET
- FOR ADDITIONAL DETAILS, SEE BRIDGE PLANS THIS CONTRACT

BW = BASE WIDTH, SEE "WALL DETAILS No. 1" AND "WALL DETAILS No. 2" SHEETS

H = DESIGN HEIGHT, SEE "WALL DETAILS No. 1" SHEET

BRADLEY OVERHEAD (REPLACE)
RETAINING WALL No. 1
WALL PANEL LAYOUT No. 5

Caltrans Metric

	BY		CHECKED
DESIGN	M. VAN DE POL	04-03	P. NORBOE 12-05
DETAILS	M. VAN DE POL	04-03	P. NORBOE 12-05
QUANTITIES	M. VAN DE POL	11-05	P. NORBOE 12-05

STATE OF CALIFORNIA
DEPARTMENT OF TRANSPORTATION

DIVISION OF ENGINEERING SERVICES
STRUCTURE DESIGN
DESIGN BRANCH 9

BRIDGE NO. 39E0001
KILOMETER POST 59.66

CU 10
EA 3A66U1

ALL DIMENSIONS ARE IN METERS UNLESS OTHERWISE SHOWN

ORIGINAL SCALE IN MILLIMETERS FOR REDUCED PLANS 0 10 20 30 40 50 60 70 80 90 100

DISREGARD PRINTS BEARING EARLIER REVISION DATES

REVISION DATES: 5-8-03 12-6-05

SHEET 16 OF 53

FILE => 39e0044-r-rw1p105.dgn

STRUCTURES DESIGN DETAIL SHEET (METRIC) (REV.03-17-04)

USERNAME => trrene DATE PLOTTED => 05-MAR-2009 TIME PLOTTED => 06:21

DIST	COUNTY	ROUTE	KILOMETER POST TOTAL PROJECT	SHEET No	TOTAL SHEETS
10	Mer	140	58.7/60.5	348	384

REGISTERED CIVIL ENGINEER 9-30-08 DATE

3-2-09
PLANS APPROVAL DATE

REGISTERED PROFESSIONAL ENGINEER M. Van De Pol No. C35610 Exp. 9-30-09 CIVIL STATE OF CALIFORNIA

The State of California or its officers or agents shall not be responsible for the accuracy or completeness of electronic copies of this plan sheet.

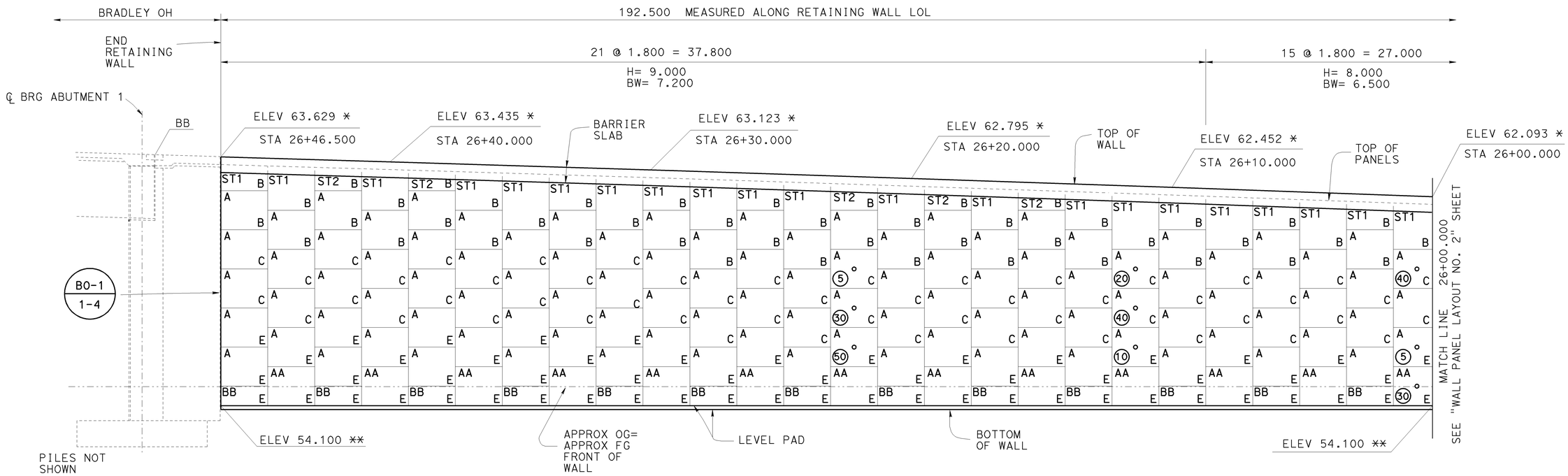

ELEVATION

1:80

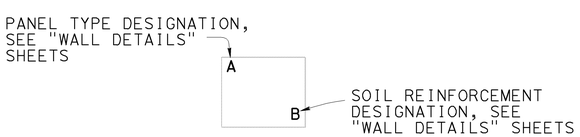

PANEL LEGEND

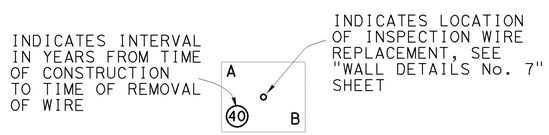

INSPECTION WIRE PANEL LEGEND

NOTES:

* DENOTES TOP OF WALL ELEVATION

** DENOTES TOP OF LEVEL PAD ELEVATION

CHAIN LINK RAILING NOT SHOWN

ARCHITECTURAL TREATMENT NOT SHOWN

FOR WALL PANEL TYPE DETAILS, SEE "WALL DETAILS" SHEETS

FOR BARRIER SLAB DETAILS, SEE "WALL DETAILS No. 2" SHEET

FOR ADDITIONAL DETAILS, SEE BRIDGE PLANS THIS CONTRACT

BW = BASE WIDTH, SEE "WALL DETAILS No. 1" AND "WALL DETAILS No. 2" SHEETS

H = DESIGN HEIGHT, SEE "WALL DETAILS No. 1" SHEET

BRADLEY OVERHEAD (REPLACE)

RETAINING WALL No. 2

WALL PANEL LAYOUT No. 1

Caltrans Metric

	BY		CHECKED	
DESIGN	M. VAN DE POL	04-03	P. NORBOE	12-05
DETAILS	M. VAN DE POL	04-03	P. NORBOE	12-05
QUANTITIES	M. VAN DE POL	11-05	P. NORBOE	12-05

STATE OF CALIFORNIA
DEPARTMENT OF TRANSPORTATION

DIVISION OF ENGINEERING SERVICES
STRUCTURE DESIGN
DESIGN BRANCH 9

BRIDGE NO. 39E0002
KILOMETER POST 59.66

ALL DIMENSIONS ARE IN METERS UNLESS OTHERWISE SHOWN

ORIGINAL SCALE IN MILLIMETERS FOR REDUCED PLANS 0 10 20 30 40 50 60 70 80 90 100

CU 10
EA 3A66U1

DISREGARD PRINTS BEARING EARLIER REVISION DATES

REVISION DATES 1-30-06

SHEET 17 OF 53

FILE => 39e0044-r-rw2p101.dgn

STRUCTURES DESIGN DETAIL SHEET (METRIC) (REV.03-17-04)

USERNAME => ttrene DATE PLOTTED => 05-MAR-2009 TIME PLOTTED => 06:21

DIST	COUNTY	ROUTE	KILOMETER POST TOTAL PROJECT	SHEET No	TOTAL SHEETS
10	Mer	140	58.7/60.5	349	384

REGISTERED CIVIL ENGINEER 9-30-08 DATE

3-2-09
PLANS APPROVAL DATE

REGISTERED PROFESSIONAL ENGINEER M. Van De Pol No. C35610 Exp. 9-30-09 CIVIL STATE OF CALIFORNIA

The State of California or its officers or agents shall not be responsible for the accuracy or completeness of electronic copies of this plan sheet.

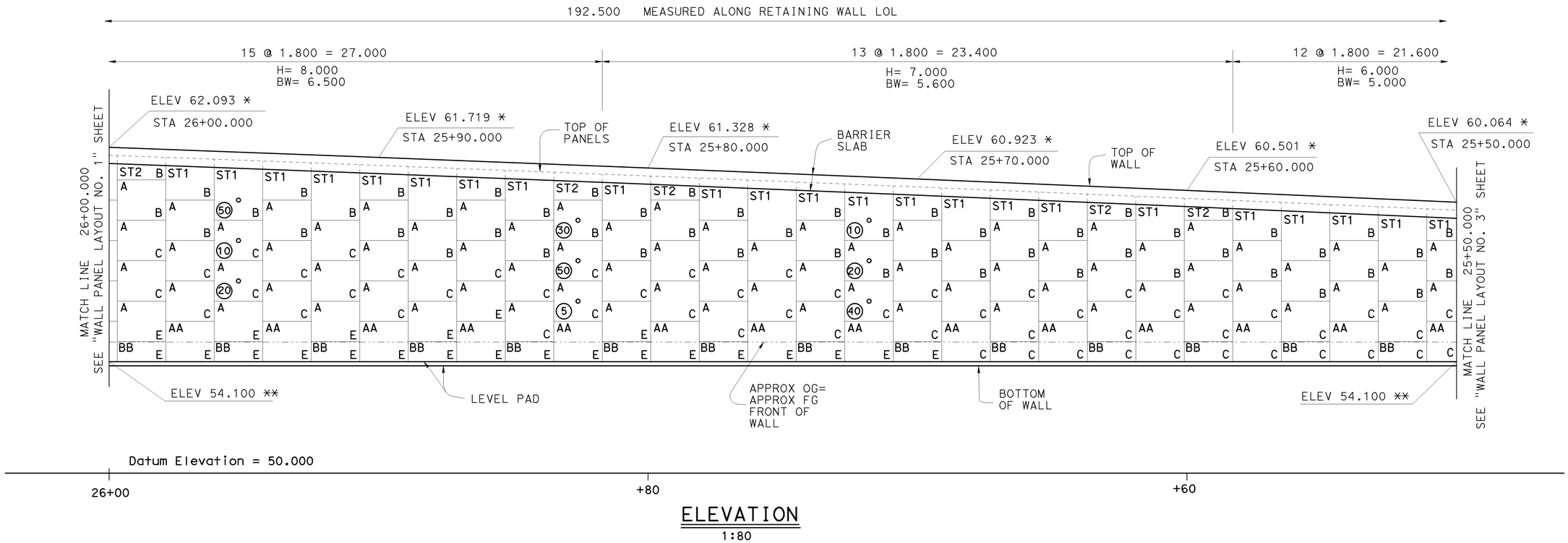

ELEVATION

1:80

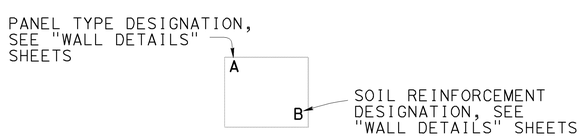

PANEL LEGEND

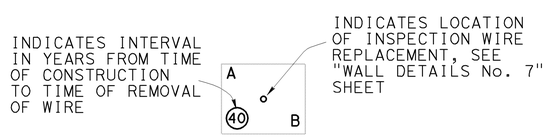

INSPECTION WIRE PANEL LEGEND

NOTES:

* DENOTES TOP OF WALL ELEVATION

** DENOTES TOP OF LEVEL PAD ELEVATION

CHAIN LINK RAILING NOT SHOWN

ARCHITECTURAL TREATMENT NOT SHOWN

FOR WALL PANEL TYPE DETAILS, SEE "WALL DETAILS" SHEETS

FOR BARRIER SLAB DETAILS, SEE "WALL DETAILS No. 2" SHEET

BW = BASE WIDTH, SEE "WALL DETAILS No. 1" AND "WALL DETAILS No. 2" SHEETS

H = DESIGN HEIGHT, SEE "WALL DETAILS No. 1" SHEET

BRADLEY OVERHEAD (REPLACE)

RETAINING WALL No. 2

WALL PANEL LAYOUT No. 2

Caltrans Metric

	BY		CHECKED
DESIGN	M. VAN DE POL	04-03	P. NORBOE 12-05
DETAILS	M. VAN DE POL	04-03	P. NORBOE 12-05
QUANTITIES	M. VAN DE POL	11-05	P. NORBOE 12-05

STATE OF CALIFORNIA
DEPARTMENT OF TRANSPORTATION

DIVISION OF ENGINEERING SERVICES
STRUCTURE DESIGN
DESIGN BRANCH 9

BRIDGE NO. 39E0002
KILOMETER POST 59.66

CU 10
EA 3A66U1

ALL DIMENSIONS ARE IN METERS UNLESS OTHERWISE SHOWN

ORIGINAL SCALE IN MILLIMETERS FOR REDUCED PLANS 0 10 20 30 40 50 60 70 80 90 100

DISREGARD PRINTS BEARING EARLIER REVISION DATES

REVISION DATES 1-30-06

SHEET 18 OF 53

FILE => 39e0044-r-rw2p102.dgn

STRUCTURES DESIGN DETAIL SHEET (METRIC) (REV.03-17-04)

USERNAME => trrene DATE PLOTTED => 05-MAR-2009 TIME PLOTTED => 06:21

DIST	COUNTY	ROUTE	KILOMETER POST TOTAL PROJECT	SHEET No	TOTAL SHEETS
10	Mer	140	58.7/60.5	350	384

REGISTERED CIVIL ENGINEER 9-30-08 DATE

3-2-09
PLANS APPROVAL DATE

REGISTERED PROFESSIONAL ENGINEER M. Van De Pol No. C35610 Exp. 9-30-09 CIVIL STATE OF CALIFORNIA

The State of California or its officers or agents shall not be responsible for the accuracy or completeness of electronic copies of this plan sheet.

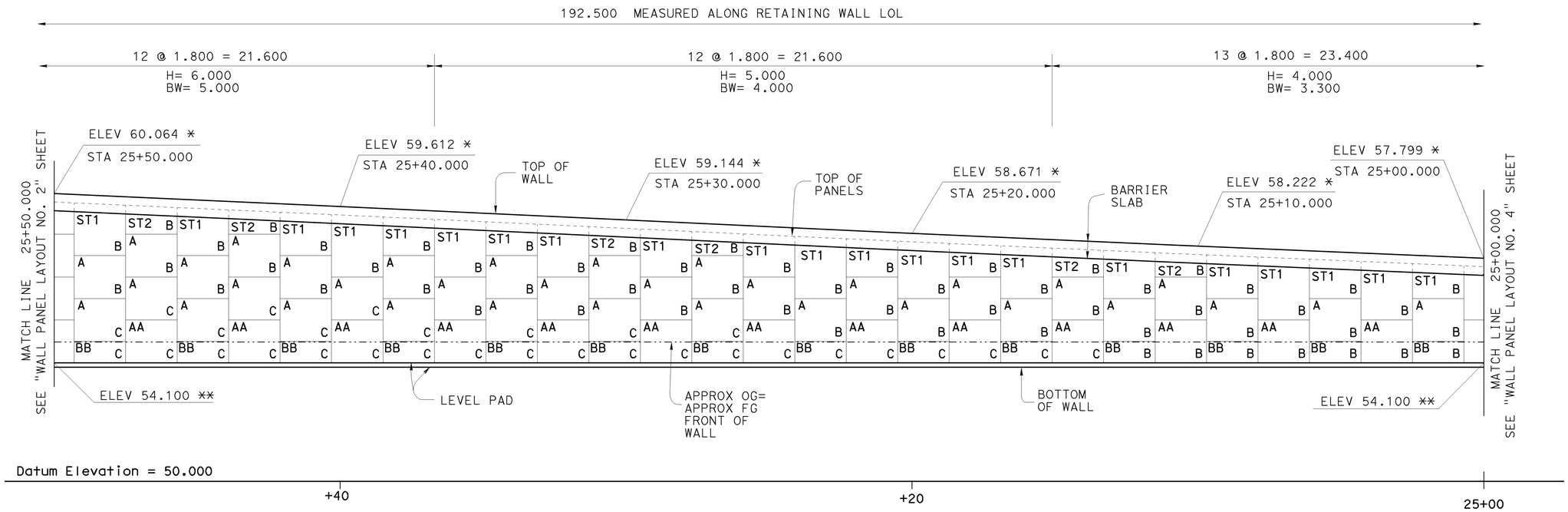

ELEVATION

1:80

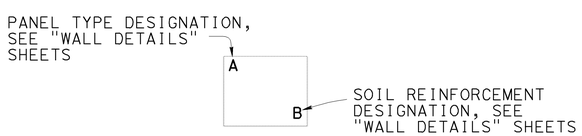

PANEL LEGEND

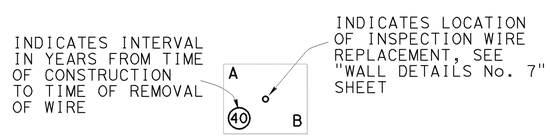

INSPECTION WIRE PANEL LEGEND

NOTES:

* DENOTES TOP OF WALL ELEVATION

** DENOTES TOP OF LEVEL PAD ELEVATION

CHAIN LINK RAILING NOT SHOWN

ARCHITECTURAL TREATMENT NOT SHOWN

FOR WALL PANEL TYPE DETAILS, SEE "WALL DETAILS" SHEETS

FOR BARRIER SLAB DETAILS, SEE "WALL DETAILS No. 2" SHEET

BW = BASE WIDTH, SEE "WALL DETAILS No. 1" AND "WALL DETAILS No. 2" SHEETS

H = DESIGN HEIGHT, SEE "WALL DETAILS No. 1" SHEET

BRADLEY OVERHEAD (REPLACE)

RETAINING WALL No. 2

WALL PANEL LAYOUT No. 3

Caltrans Metric

	BY		CHECKED
DESIGN	M. VAN DE POL	04-03	P. NORBOE 12-05
DETAILS	M. VAN DE POL	04-03	P. NORBOE 12-05
QUANTITIES	M. VAN DE POL	11-05	P. NORBOE 12-05

STATE OF CALIFORNIA DEPARTMENT OF TRANSPORTATION

DIVISION OF ENGINEERING SERVICES STRUCTURE DESIGN

DESIGN BRANCH 9

BRIDGE NO. 39E0002

KILOMETER POST 59.66

ALL DIMENSIONS ARE IN METERS UNLESS OTHERWISE SHOWN

ORIGINAL SCALE IN MILLIMETERS FOR REDUCED PLANS 0 10 20 30 40 50 60 70 80 90 100

CU 10
EA 3A66U1

DISREGARD PRINTS BEARING EARLIER REVISION DATES

REVISION DATES: r-30-06

SHEET 19 OF 53

FILE => 39e0044-r-rw2p103.dgn

STRUCTURES DESIGN DETAIL SHEET (METRIC) (REV.03-17-04)

USERNAME => trrene DATE PLOTTED => 05-MAR-2009 TIME PLOTTED => 06:22

DIST	COUNTY	ROUTE	KILOMETER POST TOTAL PROJECT	SHEET No	TOTAL SHEETS
10	Mer	140	58.7/60.5	351	384

REGISTERED CIVIL ENGINEER 9-30-08 DATE

3-2-09
PLANS APPROVAL DATE

REGISTERED PROFESSIONAL ENGINEER M. Van De Pol No. C35610 Exp. 9-30-09 CIVIL STATE OF CALIFORNIA

The State of California or its officers or agents shall not be responsible for the accuracy or completeness of electronic copies of this plan sheet.

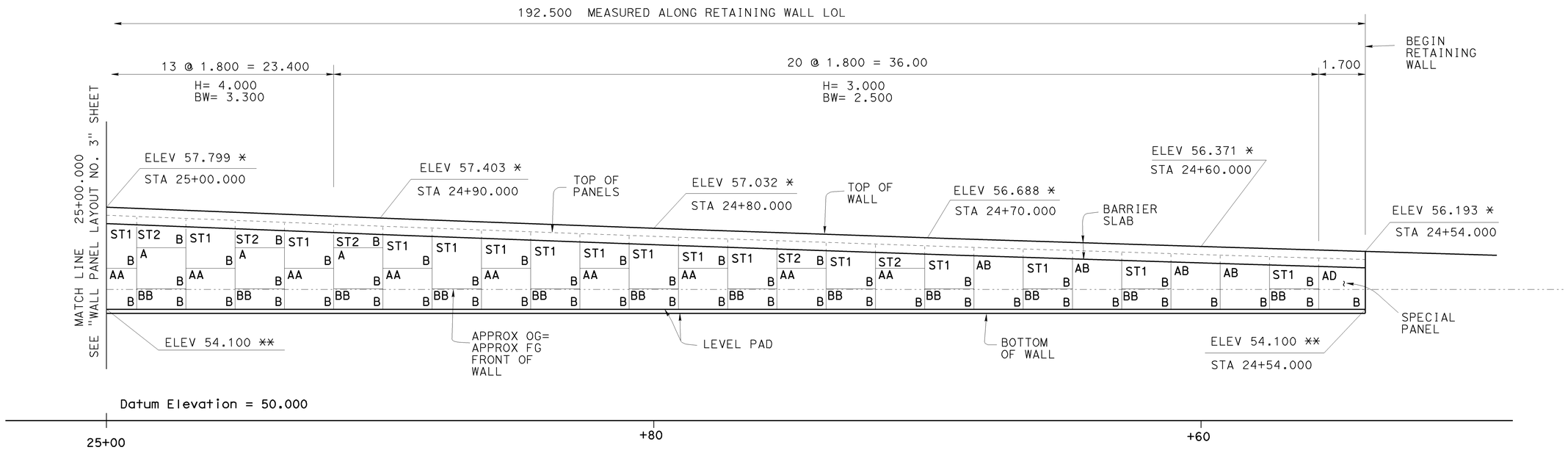

ELEVATION
1:80

PANEL TYPE DESIGNATION, SEE "WALL DETAILS" SHEETS

A

B

SOIL REINFORCEMENT DESIGNATION, SEE "WALL DETAILS" SHEETS

PANEL LEGEND

INDICATES INTERVAL IN YEARS FROM TIME OF CONSTRUCTION TO TIME OF REMOVAL OF WIRE

A

40

B

INDICATES LOCATION OF INSPECTION WIRE REPLACEMENT, SEE "WALL DETAILS No. 7" SHEET

INSPECTION WIRE PANEL LEGEND

NOTES:

* DENOTES TOP OF WALL ELEVATION

** DENOTES TOP OF LEVEL PAD ELEVATION

CHAIN LINK RAILING NOT SHOWN

ARCHITECTURAL TREATMENT NOT SHOWN

FOR WALL PANEL TYPE DETAILS, SEE "WALL DETAILS" SHEETS

FOR BARRIER SLAB DETAILS, SEE "WALL DETAILS No. 2" SHEET

FOR SPECIAL WALL PANEL DETAILS, SEE "WALL DETAILS No. 3" SHEET

BW = BASE WIDTH, SEE "WALL DETAILS No. 1" AND "WALL DETAILS No. 2" SHEETS

H = DESIGN HEIGHT, SEE "WALL DETAILS No. 1" SHEET

BRADLEY OVERHEAD (REPLACE)
RETAINING WALL No. 2
WALL PANEL LAYOUT No. 4

Caltrans Metric

	BY		CHECKED
DESIGN	M. VAN DE POL	04-03	P. NORBOE 12-05
DETAILS	M. VAN DE POL	04-03	P. NORBOE 12-05
QUANTITIES	M. VAN DE POL	11-05	P. NORBOE 12-05

STATE OF CALIFORNIA
DEPARTMENT OF TRANSPORTATION

DIVISION OF ENGINEERING SERVICES
STRUCTURE DESIGN
DESIGN BRANCH 9

BRIDGE NO. 39E0002
KILOMETER POST 59.66

CU 10
EA 3A66U1

ALL DIMENSIONS ARE IN METERS UNLESS OTHERWISE SHOWN

ORIGINAL SCALE IN MILLIMETERS FOR REDUCED PLANS 0 10 20 30 40 50 60 70 80 90 100

DISREGARD PRINTS BEARING EARLIER REVISION DATES 1-30-06

REVISION DATES

SHEET 20 OF 53

FILE => 39e0044-r-rw2p104.dgn

STRUCTURES DESIGN DETAIL SHEET (METRIC) (REV.03-17-04)

USERNAME => trrene DATE PLOTTED => 05-MAR-2009 TIME PLOTTED => 06:22

DIST	COUNTY	ROUTE	KILOMETER POST TOTAL PROJECT	SHEET No	TOTAL SHEETS
10	Mer	140	58.7/60.5	352	384

REGISTERED CIVIL ENGINEER 9-30-08 DATE

3-2-09
PLANS APPROVAL DATE

REGISTERED PROFESSIONAL ENGINEER M. Van De Pol No. C35610 Exp. 9-30-09 CIVIL STATE OF CALIFORNIA

The State of California or its officers or agents shall not be responsible for the accuracy or completeness of electronic copies of this plan sheet.

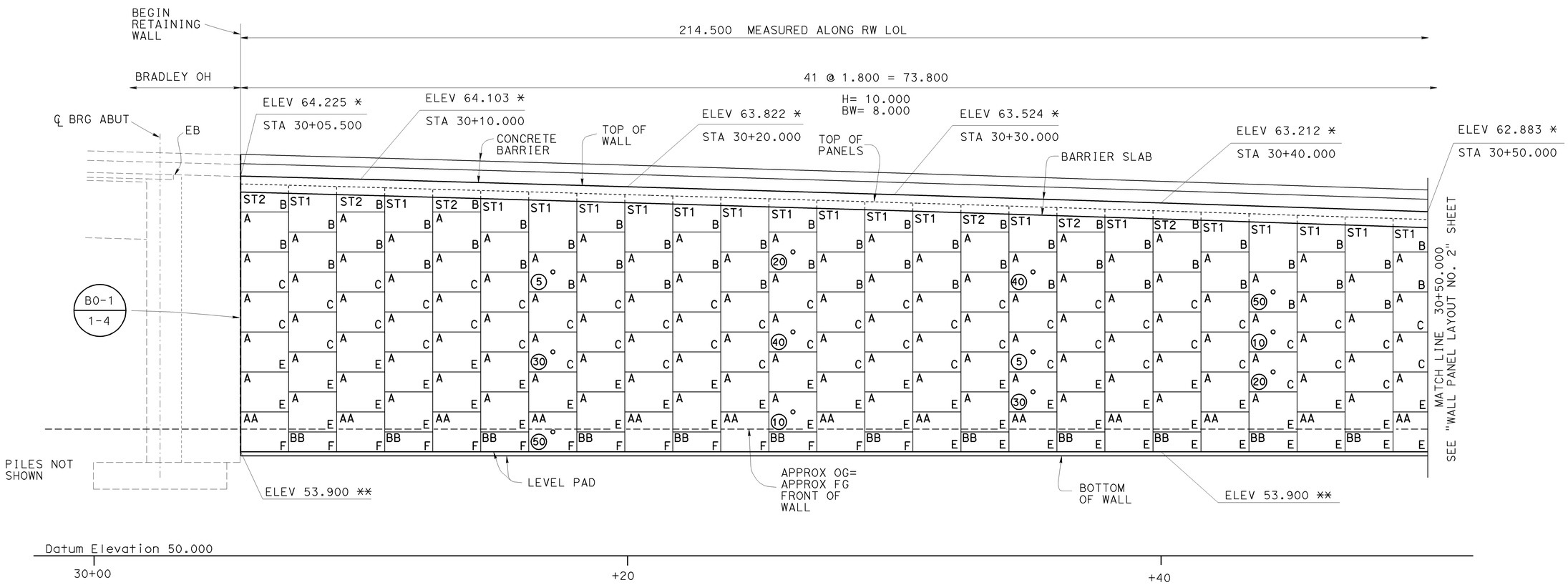

ELEVATION
1:80

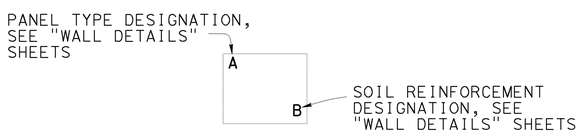

PANEL LEGEND

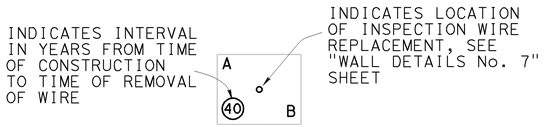

INSPECTION WIRE PANEL LEGEND

NOTES:
- * DENOTES TOP OF WALL ELEVATION
- ** DENOTES TOP OF LEVEL PAD ELEVATION
- ARCHITECTURAL TREATMENT NOT SHOWN
- FOR WALL PANEL TYPE DETAILS, SEE "WALL DETAILS" SHEETS
- FOR BARRIER SLAB DETAILS, SEE "WALL DETAILS No. 2" SHEET
- EXISTING STRUCTURE NOT SHOWN
- FOR ADDITIONAL DETAILS, SEE BRIDGE PLANS THIS CONTRACT

BW = BASE WIDTH, SEE "WALL DETAILS No. 1" AND "WALL DETAILS No. 2" SHEETS

H = DESIGN HEIGHT, SEE "WALL DETAILS No. 1" SHEET

BRADLEY OVERHEAD (REPLACE)
RETAINING WALL No. 3
WALL PANEL LAYOUT No. 1

Caltrans Metric

	BY		CHECKED	
DESIGN	M. VAN DE POL	04-03	P. NORBOE	12-05
DETAILS	M. VAN DE POL	04-03	P. NORBOE	12-05
QUANTITIES	M. VAN DE POL	11-05	P. NORBOE	12-05

STATE OF CALIFORNIA
DEPARTMENT OF TRANSPORTATION

DIVISION OF ENGINEERING SERVICES
STRUCTURE DESIGN
DESIGN BRANCH 9

BRIDGE NO. 39E0003
KILOMETER POST 59.66

ALL DIMENSIONS ARE IN METERS UNLESS OTHERWISE SHOWN

ORIGINAL SCALE IN MILLIMETERS FOR REDUCED PLANS 0 10 20 30 40 50 60 70 80 90 100

CU 10
EA 3A66U1

DISREGARD PRINTS BEARING EARLIER REVISION DATES 5-8-03 12-6-05

REVISION DATES

SHEET 21 OF 53

STRUCTURES DESIGN DETAIL SHEET (METRIC) (REV.03-17-04)

FILE => 39e0044-r-rw3p101.dgn

USERNAME => trrene DATE PLOTTED => 05-MAR-2009 TIME PLOTTED => 06:22

DIST	COUNTY	ROUTE	KILOMETER POST TOTAL PROJECT	SHEET No	TOTAL SHEETS
10	Mer	140	58.7/60.5	353	384

REGISTERED CIVIL ENGINEER 9-30-08 DATE

3-2-09
PLANS APPROVAL DATE

REGISTERED PROFESSIONAL ENGINEER M. Van De Pol No. C35610 Exp. 9-30-09 CIVIL STATE OF CALIFORNIA

The State of California or its officers or agents shall not be responsible for the accuracy or completeness of electronic copies of this plan sheet.

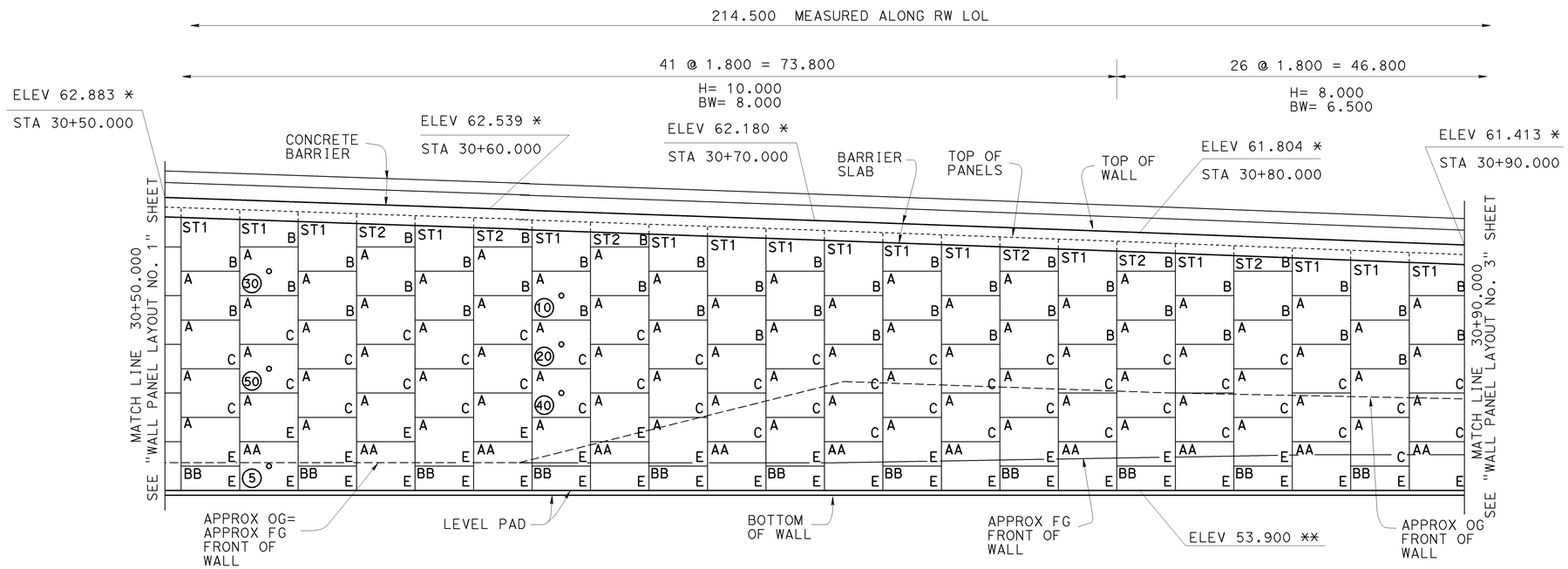

ELEVATION
1:80

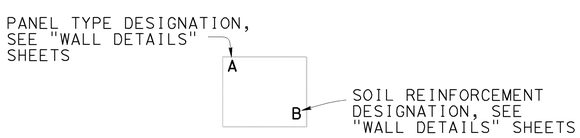

PANEL LEGEND

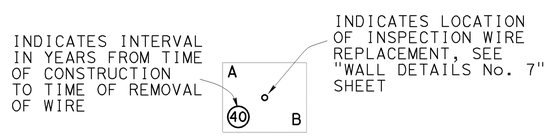

INSPECTION WIRE PANEL LEGEND

NOTES:
- * DENOTES TOP OF WALL ELEVATION
- ** DENOTES TOP OF LEVEL PAD ELEVATION
- ARCHITECTURAL TREATMENT NOT SHOWN
- FOR WALL PANEL TYPE DETAILS, SEE "WALL DETAILS" SHEETS
- FOR BARRIER SLAB DETAILS, SEE "WALL DETAILS No. 2" SHEET
- EXISTING STRUCTURE NOT SHOWN

BW = BASE WIDTH, SEE "WALL DETAILS No. 1" AND "WALL DETAILS No. 2" SHEETS

H = DESIGN HEIGHT, SEE "WALL DETAILS No. 1" SHEET

BRADLEY OVERHEAD (REPLACE)
RETAINING WALL No. 3
WALL PANEL LAYOUT No. 2

Caltrans Metric

ALL DIMENSIONS ARE IN METERS UNLESS OTHERWISE SHOWN

	BY		CHECKED	
DESIGN	M. VAN DE POL	04-03	P. NORBOE	12-05
DETAILS	M. VAN DE POL	04-03	P. NORBOE	12-05
QUANTITIES	M. VAN DE POL	11-05	P. NORBOE	12-05

ORIGINAL SCALE IN MILLIMETERS FOR REDUCED PLANS 0 10 20 30 40 50 60 70 80 90 100

STATE OF CALIFORNIA
DEPARTMENT OF TRANSPORTATION

DIVISION OF ENGINEERING SERVICES
STRUCTURE DESIGN
DESIGN BRANCH 9

CU 10
EA 3A66U1

BRIDGE NO. 39E0003
KILOMETER POST 59.66

DISREGARD PRINTS BEARING EARLIER REVISION DATES
REVISION DATES: 5-8-03 12-6-05

SHEET 22 OF 53

FILE => 39e0044-r-rw3p102.dgn

STRUCTURES DESIGN DETAIL SHEET (METRIC) (REV.03-17-04)

USERNAME => ttrene DATE PLOTTED => 05-MAR-2009 TIME PLOTTED => 06:22

DIST	COUNTY	ROUTE	KILOMETER POST TOTAL PROJECT	SHEET No	TOTAL SHEETS
10	Mer	140	58.7/60.5	354	384

REGISTERED CIVIL ENGINEER 9-30-08 DATE

3-2-09
PLANS APPROVAL DATE

REGISTERED PROFESSIONAL ENGINEER M. Van De Pol No. C35610 Exp. 9-30-09 CIVIL STATE OF CALIFORNIA

The State of California or its officers or agents shall not be responsible for the accuracy or completeness of electronic copies of this plan sheet.

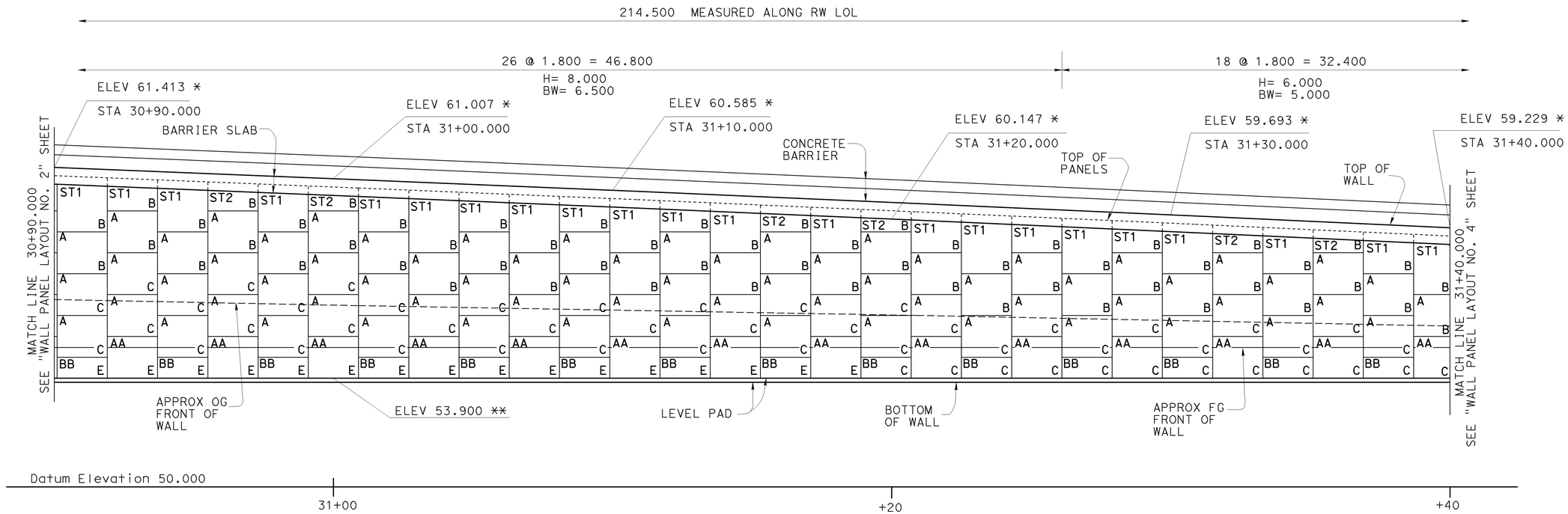

ELEVATION

1:80

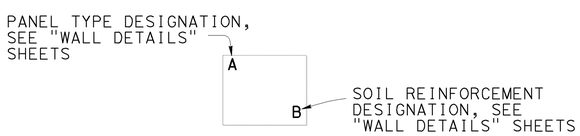

PANEL LEGEND

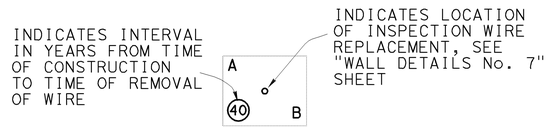

INSPECTION WIRE PANEL LEGEND

NOTES:

* DENOTES TOP OF WALL ELEVATION

** DENOTES TOP OF LEVEL PAD ELEVATION

ARCHITECTURAL TREATMENT NOT SHOWN

FOR WALL PANEL TYPE DETAILS, SEE "WALL DETAILS" SHEETS

FOR BARRIER SLAB DETAILS, SEE "WALL DETAILS No. 2" SHEET

BW = BASE WIDTH, SEE "WALL DETAILS No. 1" AND "WALL DETAILS No. 2" SHEETS

H = DESIGN HEIGHT, SEE "WALL DETAILS No. 1" SHEET

BRADLEY OVERHEAD (REPLACE)

RETAINING WALL No. 3

WALL PANEL LAYOUT No. 3

Caltrans Metric

	BY		CHECKED
DESIGN	M. VAN DE POL	04-03	P. NORBOE 12-05
DETAILS	M. VAN DE POL	04-03	P. NORBOE 12-05
QUANTITIES	M. VAN DE POL	11-05	P. NORBOE 12-05

STATE OF CALIFORNIA
DEPARTMENT OF TRANSPORTATION

DIVISION OF ENGINEERING SERVICES
STRUCTURE DESIGN
DESIGN BRANCH 9

BRIDGE NO. 39E0003
KILOMETER POST 59.66

ALL DIMENSIONS ARE IN METERS UNLESS OTHERWISE SHOWN

ORIGINAL SCALE IN MILLIMETERS FOR REDUCED PLANS 0 10 20 30 40 50 60 70 80 90 100

CU 10
EA 3A66U1

DISREGARD PRINTS BEARING EARLIER REVISION DATES 5-8-03 12-6-05

REVISION DATES

SHEET 23 OF 53

FILE => 39e0044-r-rw3p103.dgn

STRUCTURES DESIGN DETAIL SHEET (METRIC) (REV.03-17-04)

USERNAME => rtrene DATE PLOTTED => 05-MAR-2009 TIME PLOTTED => 06:22

DIST	COUNTY	ROUTE	KILOMETER POST TOTAL PROJECT	SHEET No	TOTAL SHEETS
10	Mer	140	58.7/60.5	355	384

REGISTERED CIVIL ENGINEER 9-30-08 DATE

3-2-09
PLANS APPROVAL DATE

REGISTERED PROFESSIONAL ENGINEER M. Van De Pol No. C35610 Exp. 9-30-09 CIVIL STATE OF CALIFORNIA

The State of California or its officers or agents shall not be responsible for the accuracy or completeness of electronic copies of this plan sheet.

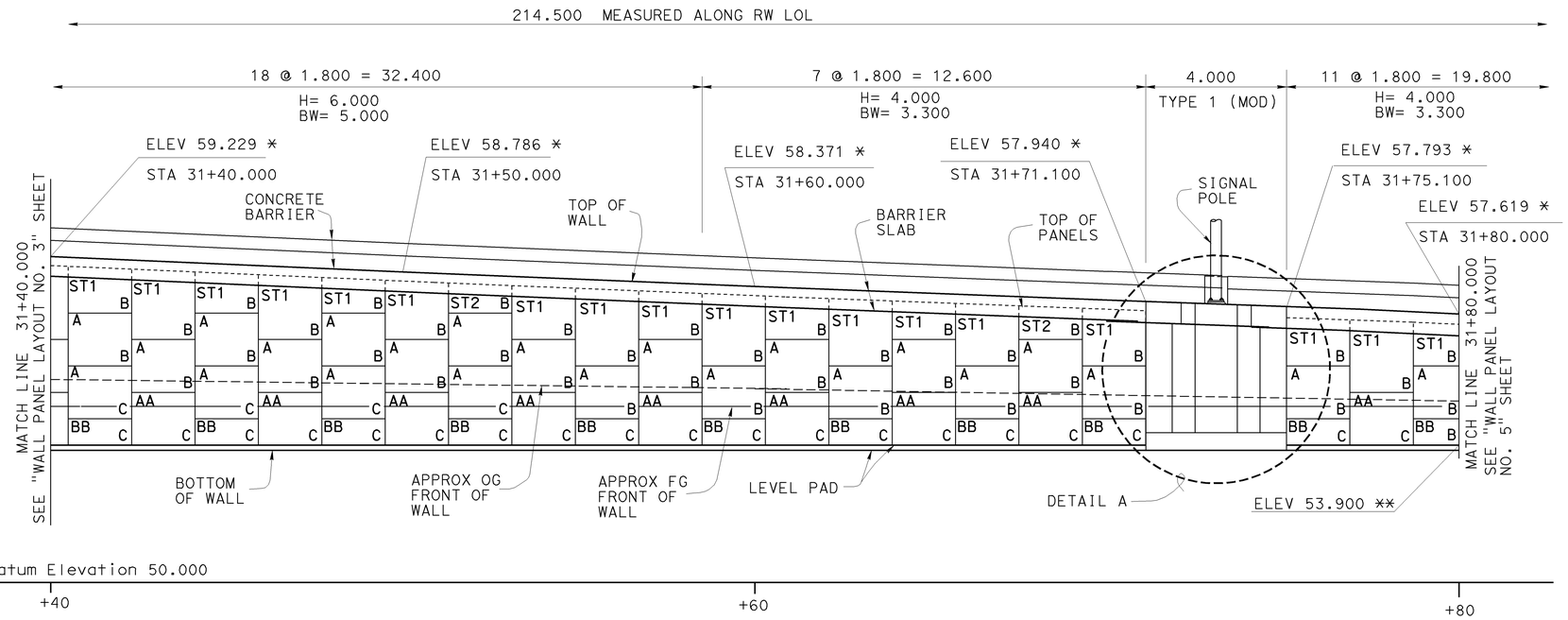

ELEVATION

1:80

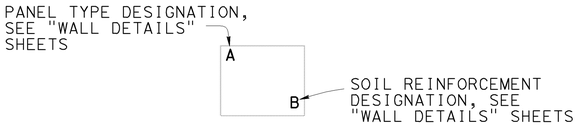

PANEL LEGEND

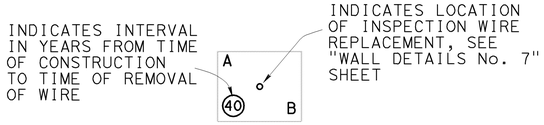

INSPECTION WIRE PANEL LEGEND

NOTES:

* DENOTES TOP OF WALL ELEVATION

** DENOTES TOP OF LEVEL PAD ELEVATION

ARCHITECTURAL TREATMENT NOT SHOWN

FOR WALL PANEL TYPE DETAILS, SEE "WALL DETAILS" SHEETS

FOR BARRIER SLAB DETAILS, SEE "WALL DETAILS No. 2" SHEET

FOR DETAIL A, SEE "WALL DETAILS No. 10" SHEET

BW = BASE WIDTH, SEE "WALL DETAILS No. 1" AND "WALL DETAILS No. 2" SHEETS

H = DESIGN HEIGHT, SEE "WALL DETAILS No. 1" SHEET

BRADLEY OVERHEAD (REPLACE)

RETAINING WALL No. 3

WALL PANEL LAYOUT No. 4

Caltrans Metric

	BY		CHECKED
DESIGN	M. VAN DE POL	04-03	P. NORBOE 12-05
DETAILS	M. VAN DE POL	04-03	P. NORBOE 12-05
QUANTITIES	M. VAN DE POL	11-05	P. NORBOE 12-05

STATE OF CALIFORNIA
DEPARTMENT OF TRANSPORTATION

DIVISION OF ENGINEERING SERVICES
STRUCTURE DESIGN
DESIGN BRANCH 9

BRIDGE NO. 39E0003
KILOMETER POST 59.66

ALL DIMENSIONS ARE IN METERS UNLESS OTHERWISE SHOWN

ORIGINAL SCALE IN MILLIMETERS FOR REDUCED PLANS 0 10 20 30 40 50 60 70 80 90 100

CU 10
EA 3A66U1

DISREGARD PRINTS BEARING EARLIER REVISION DATES

REVISION DATES: ~~5-8-03~~ 12-6-05

SHEET 24 OF 53

FILE => 39e0044-r-rw3p104.dgn

STRUCTURES DESIGN DETAIL SHEET (METRIC) (REV.03-17-04)

USERNAME => trrene DATE PLOTTED => 05-MAR-2009 TIME PLOTTED => 06:22

DIST	COUNTY	ROUTE	KILOMETER POST TOTAL PROJECT	SHEET No	TOTAL SHEETS
10	Mer	140	58.7/60.5	356	384

REGISTERED CIVIL ENGINEER 9-30-08 DATE

3-2-09
PLANS APPROVAL DATE

REGISTERED PROFESSIONAL ENGINEER M. Van De Pol No. C35610 Exp. 9-30-09 CIVIL STATE OF CALIFORNIA

The State of California or its officers or agents shall not be responsible for the accuracy or completeness of electronic copies of this plan sheet.

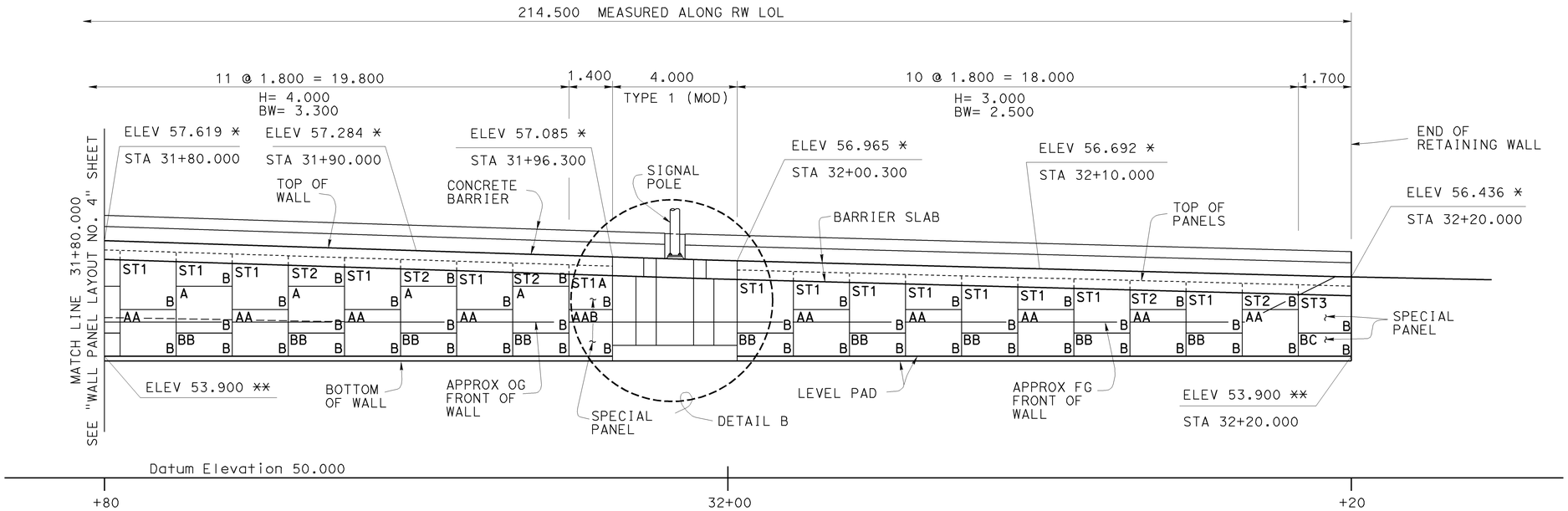

ELEVATION
1:80

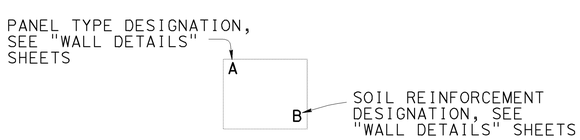

PANEL LEGEND

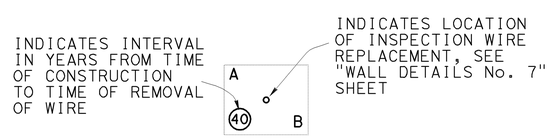

INSPECTION WIRE PANEL LEGEND

NOTES:
* DENOTES TOP OF WALL ELEVATION
** DENOTES TOP OF LEVEL PAD ELEVATION
ARCHITECTURAL TREATMENT NOT SHOWN
FOR WALL PANEL TYPE DETAILS, SEE "WALL DETAILS" SHEETS
FOR BARRIER SLAB DETAILS, SEE "WALL DETAILS No. 2" SHEET
FOR DETAIL B, SEE "WALL DETAILS No. 10" SHEET
FOR SPECIAL WALL PANELS, SEE "WALL DETAILS No. 3", "WALL DETAILS No. 5" AND "WALL DETAILS No. 12" SHEETS
MBGR NOT SHOWN

BW = BASE WIDTH, SEE "WALL DETAILS No. 1" AND "WALL DETAILS No. 2" SHEETS
H = DESIGN HEIGHT, SEE "WALL DETAILS No. 1" SHEET

BRADLEY OVERHEAD (REPLACE)
RETAINING WALL No. 3
WALL PANEL LAYOUT No. 5

Caltrans Metric

	BY		CHECKED	
DESIGN	M. VAN DE POL	04-03	P. NORBOE	12-05
DETAILS	M. VAN DE POL	04-03	P. NORBOE	12-05
QUANTITIES	M. VAN DE POL	11-05	P. NORBOE	12-05

STATE OF CALIFORNIA
DEPARTMENT OF TRANSPORTATION

DIVISION OF ENGINEERING SERVICES
STRUCTURE DESIGN
DESIGN BRANCH 9

BRIDGE NO. 39E0003
KILOMETER POST 59.66

ALL DIMENSIONS ARE IN METERS UNLESS OTHERWISE SHOWN

ORIGINAL SCALE IN MILLIMETERS FOR REDUCED PLANS 0 10 20 30 40 50 60 70 80 90 100

CU 10
EA 3A66U1

DISREGARD PRINTS BEARING EARLIER REVISION DATES
REVISION DATES: 5-8-03 12-6-05

SHEET 25 OF 53

FILE => 39e0044-r-rw3p105.dgn

STRUCTURES DESIGN DETAIL SHEET (METRIC) (REV.03-17-04)

USERNAME => trrene DATE PLOTTED => 05-MAR-2009 TIME PLOTTED => 06:22

DIST	COUNTY	ROUTE	KILOMETER POST TOTAL PROJECT	SHEET No	TOTAL SHEETS
10	Mer	140	58.7/60.5	357	384

REGISTERED CIVIL ENGINEER 9-30-08 DATE

3-2-09
PLANS APPROVAL DATE

REGISTERED PROFESSIONAL ENGINEER M. Van De Pol No. C35610 Exp. 9-30-09 CIVIL STATE OF CALIFORNIA

The State of California or its officers or agents shall not be responsible for the accuracy or completeness of electronic copies of this plan sheet.

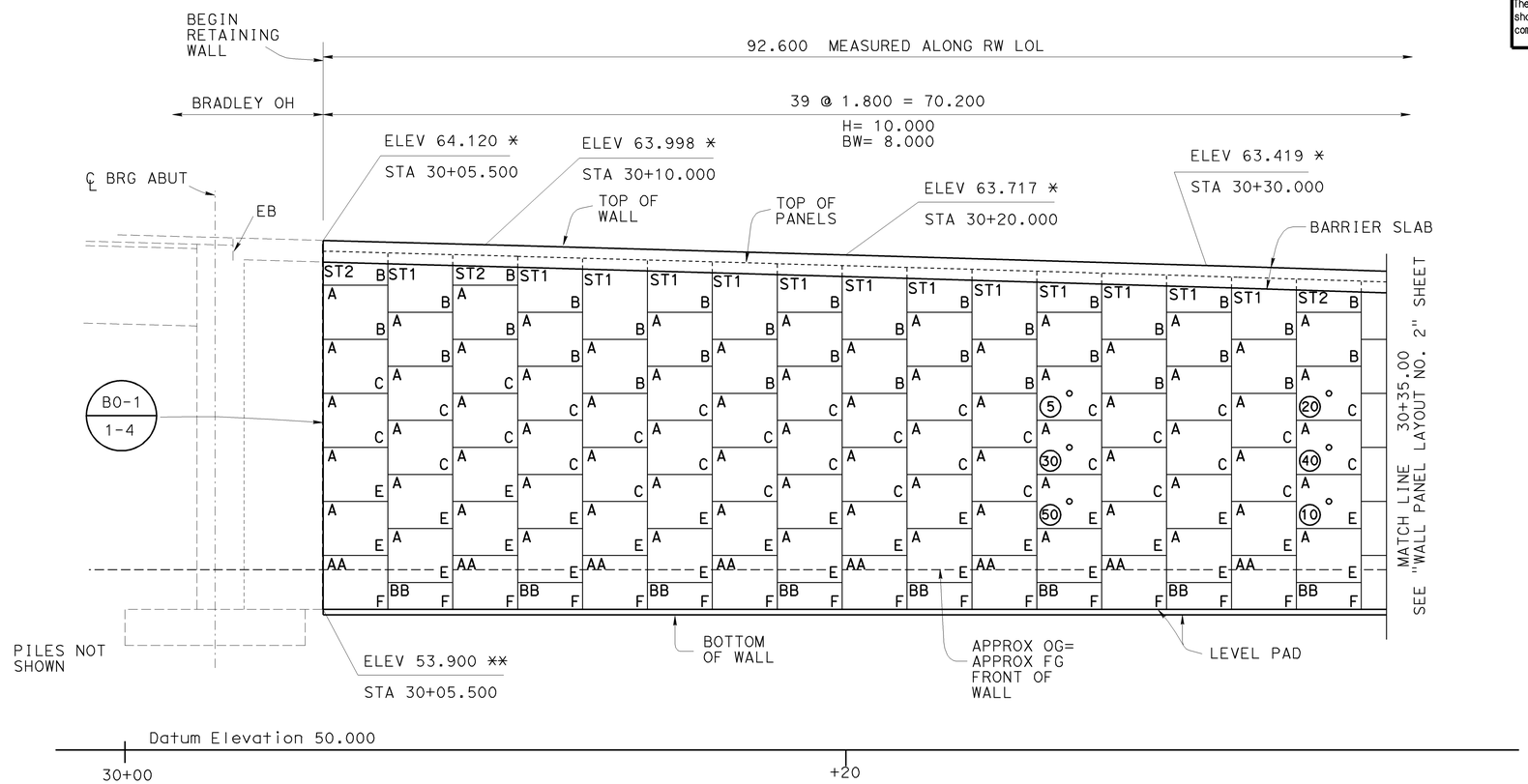

MIRROR ELEVATION

1:80

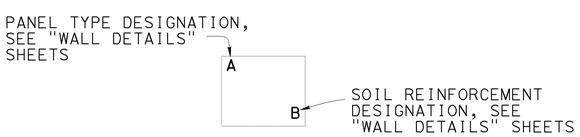

PANEL LEGEND

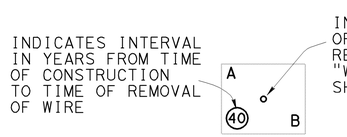

INSPECTION WIRE PANEL LEGEND

NOTES:

* DENOTES TOP OF WALL ELEVATION

** DENOTES TOP OF LEVEL PAD ELEVATION

CHAIN LINK RAILING NOT SHOWN

ARCHITECTURAL TREATMENT NOT SHOWN

FOR WALL PANEL TYPE DETAILS, SEE "WALL DETAILS" SHEETS

FOR BARRIER SLAB DETAILS, SEE "WALL DETAILS No. 2" SHEET

FOR ADDITIONAL DETAILS, SEE BRIDGE PLANS THIS CONTRACT

BW = BASE WIDTH, SEE "WALL DETAILS No. 1" AND "WALL DETAILS No. 2" SHEETS

H = DESIGN HEIGHT, SEE "WALL DETAILS No. 1" SHEET

BRADLEY OVERHEAD (REPLACE)

RETAINING WALL No. 4

WALL PANEL LAYOUT No. 1

Caltrans Metric

	BY		CHECKED
DESIGN	M. VAN DE POL	04-03	P. NORBOE 12-05
DETAILS	M. VAN DE POL	04-03	P. NORBOE 12-05
QUANTITIES	M. VAN DE POL	11-05	P. NORBOE 12-05

STATE OF CALIFORNIA DEPARTMENT OF TRANSPORTATION

DIVISION OF ENGINEERING SERVICES STRUCTURE DESIGN

DESIGN BRANCH 9

BRIDGE NO. 39E0004

KILOMETER POST 59.66

ALL DIMENSIONS ARE IN METERS UNLESS OTHERWISE SHOWN

ORIGINAL SCALE IN MILLIMETERS FOR REDUCED PLANS 0 10 20 30 40 50 60 70 80 90 100

CU 10
EA 3A66U1

DISREGARD PRINTS BEARING EARLIER REVISION DATES 5-8-03 12-6-05

REVISION DATES

SHEET 26 OF 53

FILE => 39e0044-r-rw4p101.dgn

STRUCTURES DESIGN DETAIL SHEET (METRIC) (REV.03-17-04)

USERNAME => trrene DATE PLOTTED => 05-MAR-2009 TIME PLOTTED => 06:22

DIST	COUNTY	ROUTE	KILOMETER POST TOTAL PROJECT	SHEET No	TOTAL SHEETS
10	Mer	140	58.7/60.5	358	384

REGISTERED CIVIL ENGINEER 9-30-08 DATE

3-2-09
PLANS APPROVAL DATE

REGISTERED PROFESSIONAL ENGINEER M. Van De Pol No. C35610 Exp. 9-30-09 CIVIL STATE OF CALIFORNIA

The State of California or its officers or agents shall not be responsible for the accuracy or completeness of electronic copies of this plan sheet.

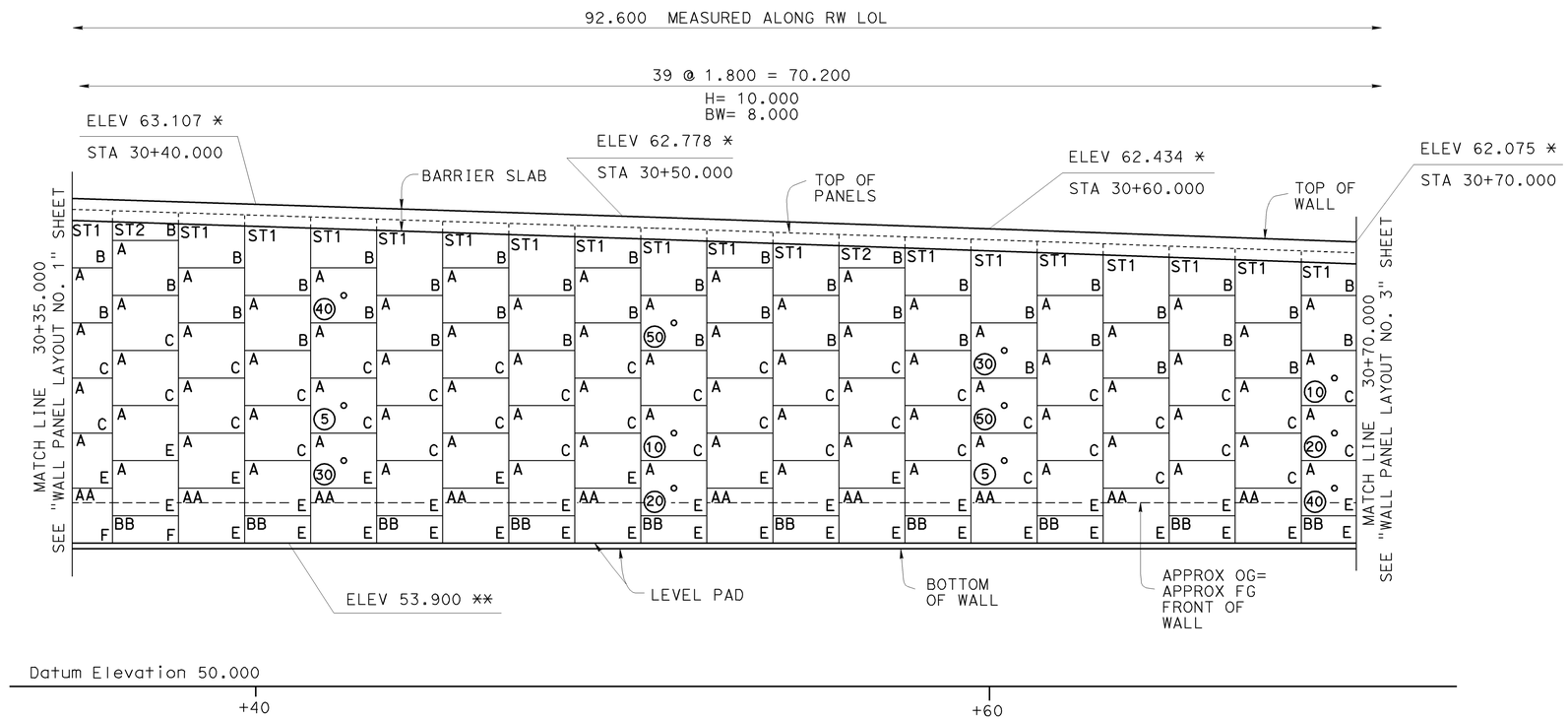

MIRROR ELEVATION

1:80

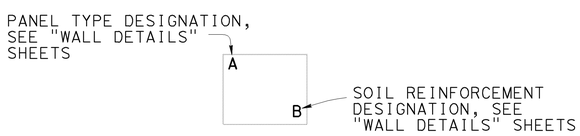

PANEL LEGEND

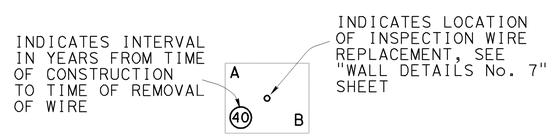

INSPECTION WIRE PANEL LEGEND

NOTES:

* DENOTES TOP OF WALL ELEVATION

** DENOTES TOP OF LEVEL PAD ELEVATION

CHAIN LINK RAILING NOT SHOWN

ARCHITECTURAL TREATMENT NOT SHOWN

FOR WALL PANEL TYPE DETAILS, SEE "WALL DETAILS" SHEETS

FOR BARRIER SLAB DETAILS, SEE "WALL DETAILS No. 2" SHEET

BW = BASE WIDTH, SEE "WALL DETAILS No. 1" AND "WALL DETAILS No. 2" SHEETS

H = DESIGN HEIGHT, SEE "WALL DETAILS No. 1" SHEET

Caltrans Metric

	BY		CHECKED	
DESIGN	M. VAN DE POL	04-03	P. NORBOE	12-05
DETAILS	M. VAN DE POL	04-03	P. NORBOE	12-05
QUANTITIES	M. VAN DE POL	11-05	P. NORBOE	12-05

STATE OF CALIFORNIA
DEPARTMENT OF TRANSPORTATION

DIVISION OF ENGINEERING SERVICES
STRUCTURE DESIGN
DESIGN BRANCH 9

BRIDGE NO. 39E0004
KILOMETER POST 59.66

BRADLEY OVERHEAD (REPLACE)
RETAINING WALL No. 4
WALL PANEL LAYOUT No. 2

ALL DIMENSIONS ARE IN METERS UNLESS OTHERWISE SHOWN

ORIGINAL SCALE IN MILLIMETERS FOR REDUCED PLANS 0 10 20 30 40 50 60 70 80 90 100

CU 10
EA 3A66U1

DISREGARD PRINTS BEARING EARLIER REVISION DATES 5-8-03 12-6-05

REVISION DATES

SHEET 27 OF 53

FILE => 39e0044-r-rw4p102.dgn

STRUCTURES DESIGN DETAIL SHEET (METRIC) (REV.03-17-04)

USERNAME => ttrene DATE PLOTTED => 05-MAR-2009 TIME PLOTTED => 06:22

DIST	COUNTY	ROUTE	KILOMETER POST TOTAL PROJECT	SHEET No	TOTAL SHEETS
10	Mer	140	58.7/60.5	359	384

REGISTERED CIVIL ENGINEER 9-30-08 DATE

3-2-09
PLANS APPROVAL DATE

REGISTERED PROFESSIONAL ENGINEER M. Van De Pol No. C35610 Exp. 9-30-09 CIVIL STATE OF CALIFORNIA

The State of California or its officers or agents shall not be responsible for the accuracy or completeness of electronic copies of this plan sheet.

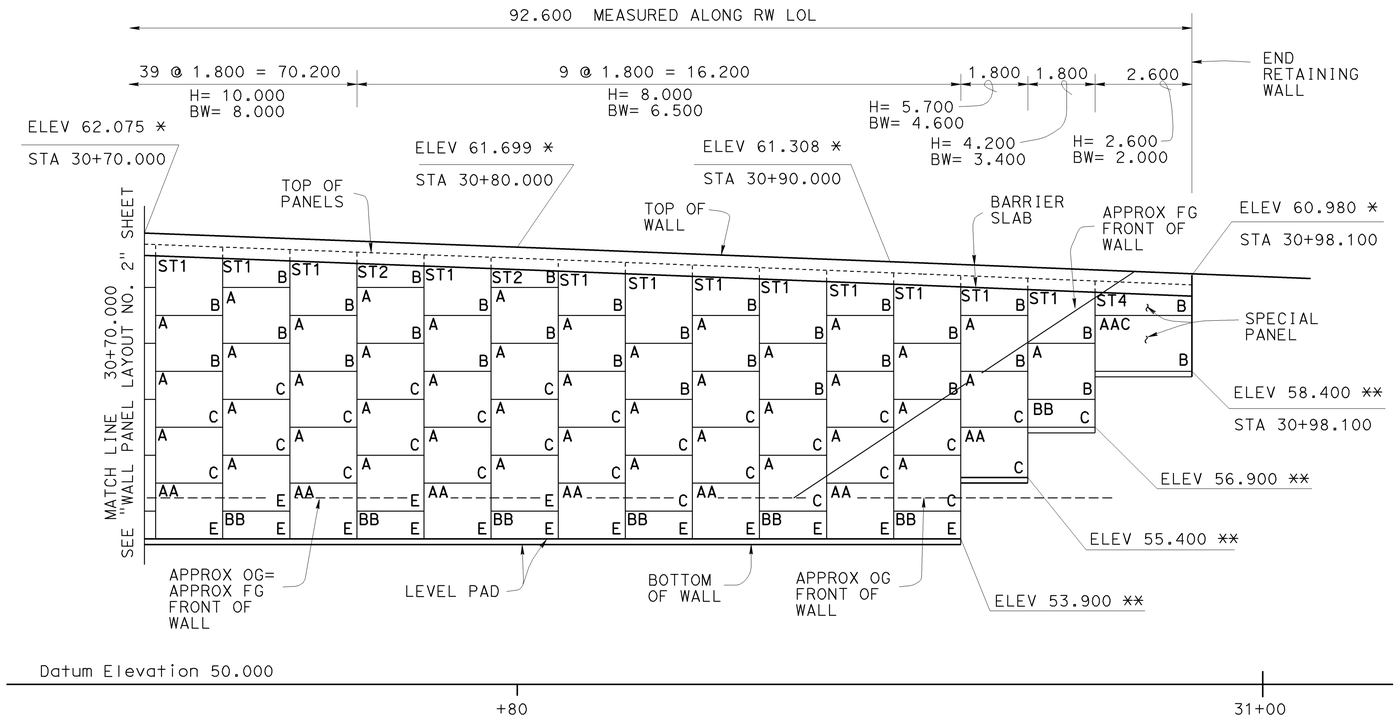

MIRROR ELEVATION

1:80

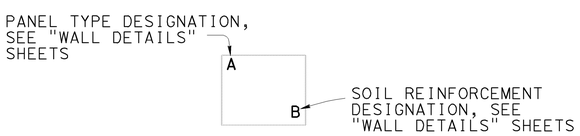

PANEL LEGEND

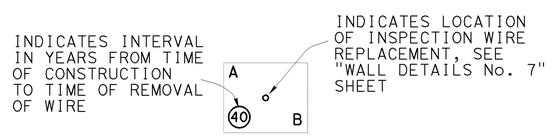

INSPECTION WIRE PANEL LEGEND

NOTES:

* DENOTES TOP OF WALL ELEVATION

** DENOTES TOP OF LEVEL PAD ELEVATION

CHAIN LINK RAILING NOT SHOWN

ARCHITECTURAL TREATMENT NOT SHOWN

FOR WALL PANEL TYPE DETAILS, SEE "WALL DETAILS" SHEETS

FOR BARRIER SLAB DETAILS, SEE "WALL DETAILS No. 2" SHEET

FOR SPECIAL PANEL DETAILS, SEE "WALL DETAILS No. 3" AND "WALL DETAILS No. 5" SHEETS

BW = BASE WIDTH, SEE "WALL DETAILS No. 1" AND "WALL DETAILS No. 2" SHEETS

H = DESIGN HEIGHT, SEE "WALL DETAILS No. 1" SHEET

BRADLEY OVERHEAD (REPLACE)

RETAINING WALL No. 4

WALL PANEL LAYOUT No. 3

Caltrans Metric

	BY		CHECKED
DESIGN	M. VAN DE POL	04-03	P. NORBOE 12-05
DETAILS	M. VAN DE POL	04-03	P. NORBOE 12-05
QUANTITIES	M. VAN DE POL	11-05	P. NORBOE 12-05

STATE OF CALIFORNIA DEPARTMENT OF TRANSPORTATION

DIVISION OF ENGINEERING SERVICES STRUCTURE DESIGN

DESIGN BRANCH 9

BRIDGE NO. 39E0004

KILOMETER POST 59.66

ALL DIMENSIONS ARE IN METERS UNLESS OTHERWISE SHOWN

ORIGINAL SCALE IN MILLIMETERS FOR REDUCED PLANS 0 10 20 30 40 50 60 70 80 90 100

CU 10
EA 3A66U1

DISREGARD PRINTS BEARING EARLIER REVISION DATES

REVISION DATES: 5-8-03 12-6-05

SHEET 28 OF 53

FILE => 39e0044-r-rw4p103.dgn

STRUCTURES DESIGN DETAIL SHEET (METRIC) (REV.03-17-04)

USERNAME => trrene DATE PLOTTED => 05-MAR-2009 TIME PLOTTED => 06:22

DIST	COUNTY	ROUTE	KILOMETER POST TOTAL PROJECT	SHEET No	TOTAL SHEETS
10	Mer	140	58.7/60.5	360	384

REGISTERED CIVIL ENGINEER 11-18-08 DATE

3-2-09
PLANS APPROVAL DATE

REGISTERED PROFESSIONAL ENGINEER M. Van De Pol No. C35610 Exp. 9-30-09 CIVIL STATE OF CALIFORNIA

The State of California or its officers or agents shall not be responsible for the accuracy or completeness of electronic copies of this plan sheet.

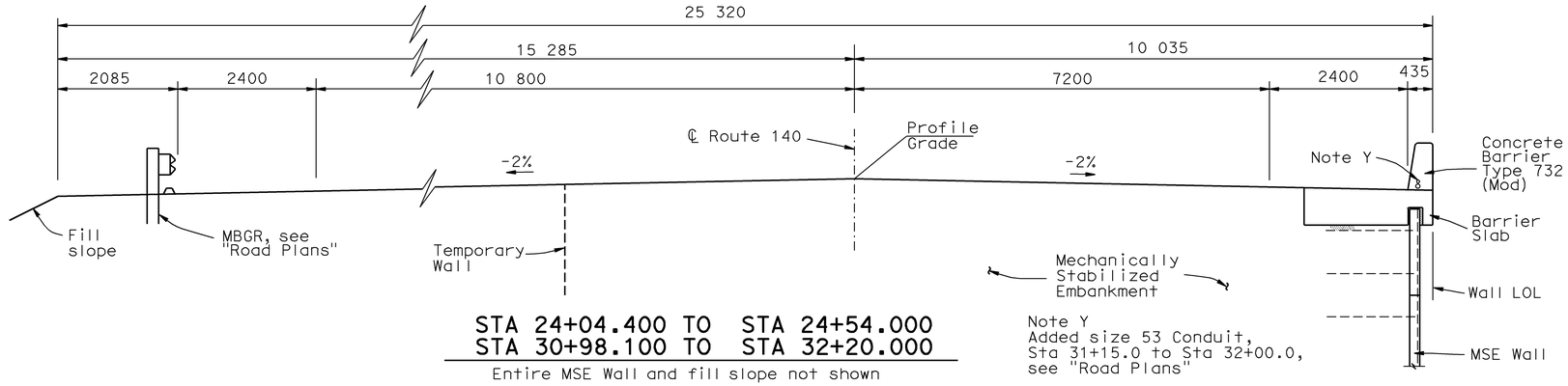

STA 24+04.400 TO STA 24+54.000
STA 30+98.100 TO STA 32+20.000

Entire MSE Wall and fill slope not shown

Note Y
Added size 53 Conduit, Sta 31+15.0 to Sta 32+00.0, see "Road Plans"

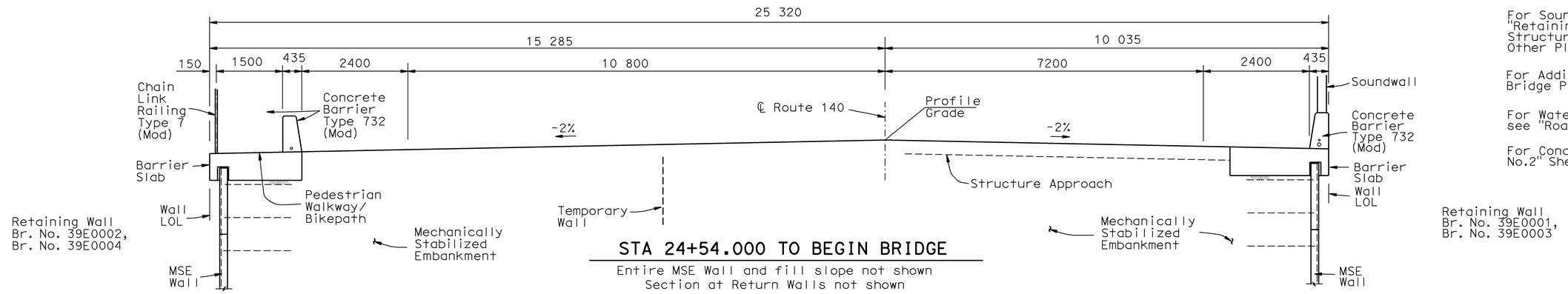

For Soundwall Limits, see "Retaining Wall No. 1 Structure Plan" and Other Plans This Contract

For Additional Details, see Bridge Plans This Contract

For Water Supply Lines, see "Road Plans"

For Conduits, see "Wall Details No.2" Sheet

STA 24+54.000 TO BEGIN BRIDGE

Entire MSE Wall and fill slope not shown
Section at Return Walls not shown

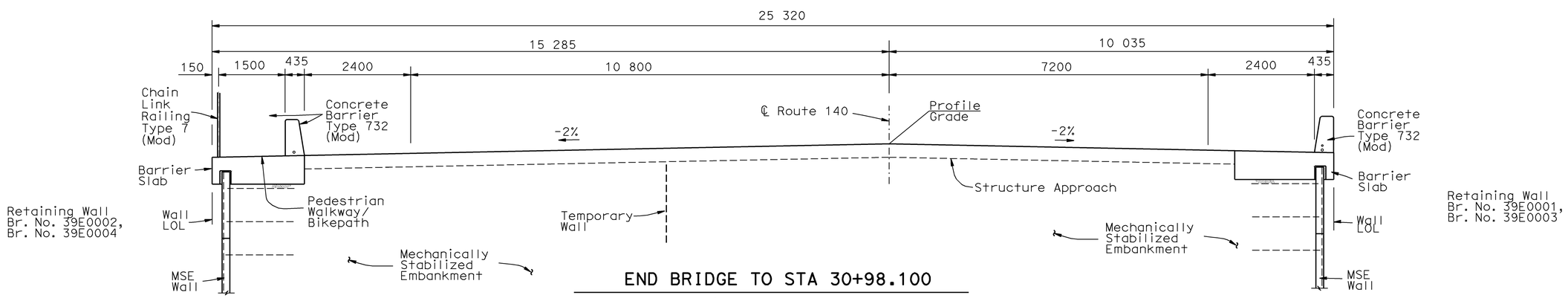

END BRIDGE TO STA 30+98.100

Entire MSE Wall not shown
Section at Return Walls not shown

NOTES:
Temporary Railing not Shown

For Stage Construction Details, see "Stage Construction" sheet and "Road Plans"

TYPICAL SECTIONS - BRIDGE APPROACHES

1:50

Caltrans Metric

	BY		CHECKED	
DESIGN	M. VAN DE POL	04-03	P. NORBOE	11-05
DETAILS	M. VAN DE POL	04-03	P. NORBOE	11-05
QUANTITIES	M. VAN DE POL	11-05	P. NORBOE	11-05

STATE OF CALIFORNIA
DEPARTMENT OF TRANSPORTATION

DIVISION OF ENGINEERING SERVICES
STRUCTURE DESIGN
DESIGN BRANCH 9

BRIDGE NO. 39E0001 39E0002 39E0003 39E0004
KILOMETER POST 59.66

BRADLEY OVERHEAD (REPLACE)
RETAINING WALLS
TYPICAL SECTION

ALL DIMENSIONS ARE IN MILLIMETERS UNLESS OTHERWISE SHOWN

ORIGINAL SCALE IN MILLIMETERS FOR REDUCED PLANS 0 10 20 30 40 50 60 70 80 90 100

CU 10
EA 3A66U1

DISREGARD PRINTS BEARING EARLIER REVISION DATES

REVISION DATES 3-23-03 12-2-05 11-18-08

SHEET 29 OF 53

FILE => 39e0044-r-rw4ts.dgn

STRUCTURES DESIGN DETAIL SHEET (METRIC) (REV.03-17-04)

USERNAME => trstrk DATE PLOTTED => 11-MAR-2009 TIME PLOTTED => 07:20

DIST	COUNTY	ROUTE	KILOMETER POST TOTAL PROJECT	SHEET No	TOTAL SHEETS
10	Mer	140	58.7/60.5	361	384

REGISTERED CIVIL ENGINEER 11-18-08 DATE

3-2-09
PLANS APPROVAL DATE

REGISTERED PROFESSIONAL ENGINEER M. Van De Pol No. C35610 Exp. 9-30-09 CIVIL STATE OF CALIFORNIA

The State of California or its officers or agents shall not be responsible for the accuracy or completeness of electronic copies of this plan sheet.

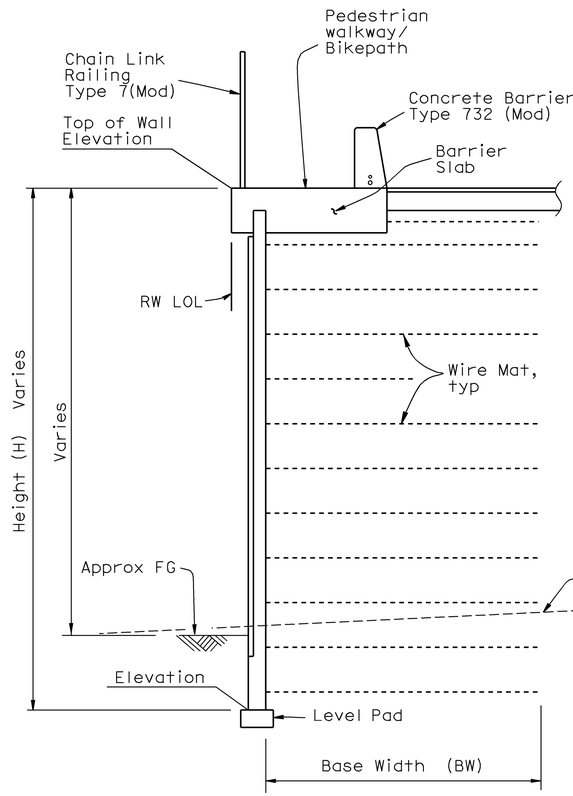

NORTH SIDE

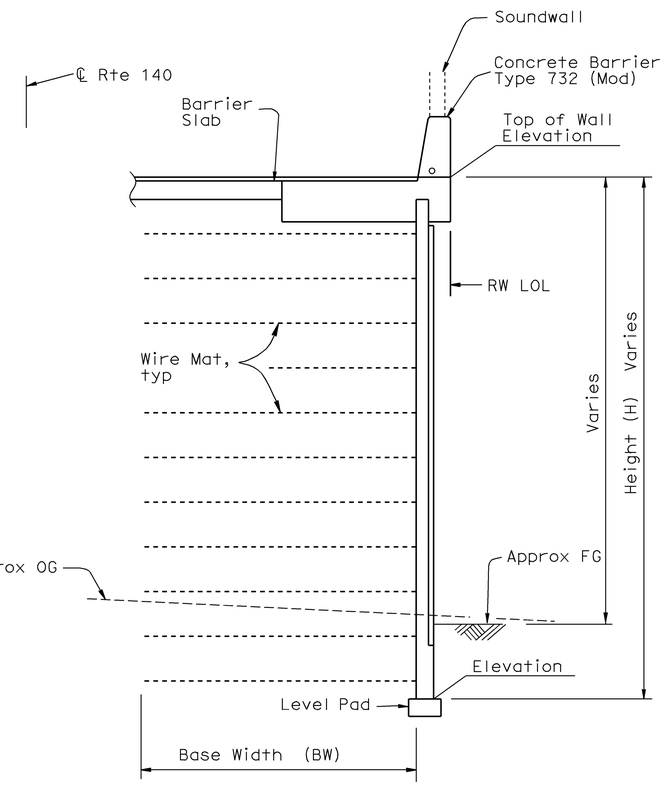

SOUTH SIDE

TYPICAL SECTIONS

1:40

NOTE:
For Wall Heights and Base Widths, see, "Wall Panel Layout" sheets

GENERAL NOTES

LIVE LOADING: Case 1 surcharge - 11.5 KPa (CALTRANS Bridge Design Aids Manual)

SOIL PARAMETERS: Internal design - $\Phi = 34°$, $\gamma = 19$ KN/m^3
External design - Φ = (backfill) = 34°, $\gamma = 19$ KN/m^3
Φ (foundation) = 30°
σallow = 258 kPa

PRECAST CONCRETE PANELS: fy = 420 MPa (yield strength of reinforcement)
f'c = 28 MPa (concrete compression strength at 28 days)

CAST-IN-PLACE CONCRETE: fy = 420 MPa (yield strength of reinforcement)
f'c = 25 MPa (concrete compression strength at 28 days)

SOIL REINFORCEMENT: Welded wire mats - fy = 450 MPa (yield strength)
Coupler - fy = 250 MPa (yield strength)
Corrosion rate - 33 μm/year
Design service life = 50 years
Service life for galvanization = 10 years

MSE: Mechanically Stabilized Embankment

SOIL REINFORCEMENT	WELDED WIRE MAT DENSITY
B	5 X MW70
C	6 X MW70
E	5 X MW130
F	6 X MW130

No. of Welded wires per mat — Size of Longitudinal wires

6 X MW70

LEGEND FOR WELDED WIRE MATS

NOTE:

Spacing of Tranverse wires for the welded wire mats shall be as follows:

Spacing for Top Panels 150 mm

Spacing for next 2 Panels 300 & 450 mm respectively

Spacing for all Lower Panels 600 mm

Wire Mat Length equals "Base Width" of wall. Except Length Shall not be Less Than 4.8 m for the Top Two Mat Levels

BRIDGE NO.
39E0001
39E0002
39E0003
39E0004
KILOMETER POST
59.66

BRADLEY OVERHEAD (REPLACE)
RETAINING WALLS
WALL DETAILS No. 1

Caltrans Metric

	BY		CHECKED
DESIGN	M. VAN DE POL	04-03	P. NORBOE 12-05
DETAILS	M. VAN DE POL	04-03	P. NORBOE 12-05
QUANTITIES	M. VAN DE POL	11-05	P. NORBOE 12-05

STATE OF CALIFORNIA
DEPARTMENT OF TRANSPORTATION

DIVISION OF ENGINEERING SERVICES
STRUCTURE DESIGN
DESIGN BRANCH 9

CU 10
EA 3A66U1

ALL DIMENSIONS ARE IN MILLIMETERS UNLESS OTHERWISE SHOWN

ORIGINAL SCALE IN MILLIMETERS FOR REDUCED PLANS 0 10 20 30 40 50 60 70 80 90 100

DISREGARD PRINTS BEARING EARLIER REVISION DATES

REVISION DATES: 5-8-03 12-16-05 11-18-08

SHEET 30 OF 53

FILE => 39e0044-r-rwdt01.dgn

STRUCTURES DESIGN DETAIL SHEET (METRIC) (REV.03-17-04)

USERNAME => trrstrk DATE PLOTTED => 11-MAR-2009 TIME PLOTTED => 07:20

DIST	COUNTY	ROUTE	KILOMETER POST TOTAL PROJECT	SHEET No	TOTAL SHEETS
10	Mer	140	58.7/60.5	362	384

REGISTERED CIVIL ENGINEER 11-18-08 DATE

3-2-09
PLANS APPROVAL DATE

REGISTERED PROFESSIONAL ENGINEER M. Van De Pol No. C35610 Exp. 9-30-09 CIVIL STATE OF CALIFORNIA

The State of California or its officers or agents shall not be responsible for the accuracy or completeness of electronic copies of this plan sheet.

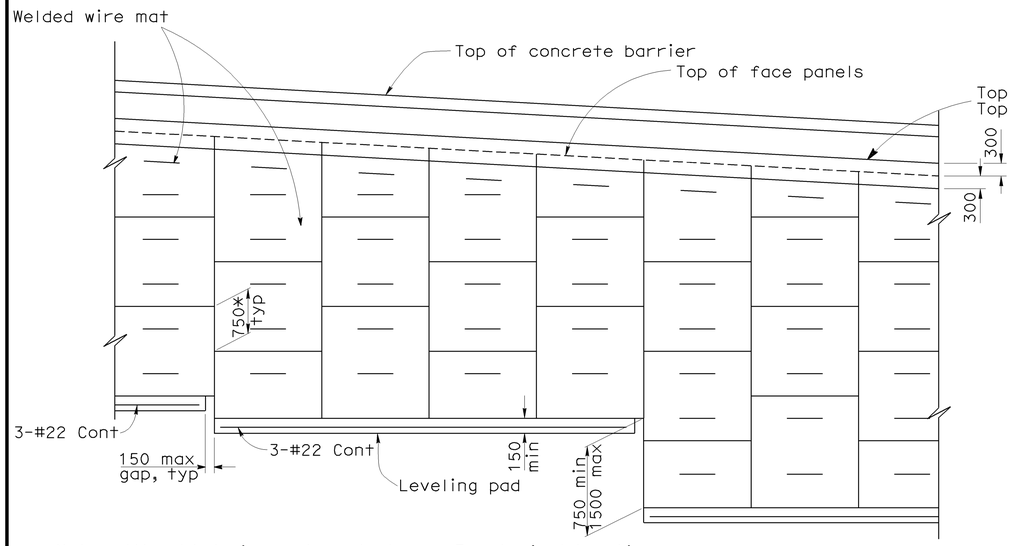

Note: All welded wire mats not shown. For typical location of welded wire mats at top panels, see "Detail A"

* Panel joint stagger typical, except at top panels

PART ELEVATION WITH CONCRETE BARRIER

NO SCALE

Note 1: For locations of Wall Panel Types and Level Pad steps, see "Wall Panel Layout" sheets

Notes:
1. Clearance to reinf steel in concrete barrier to be 25 mm.
2. No expansion joints in barrier on barrier slab within limits of wall.
3. Size 53 Lighting Conduit, See "Typical Section No. 1" Sheet, "Bridge Plans" and "Road Plans"
4. Couplers for Stage Construction
5. Size 53 Lighting Conduit, See "Typical Section No. 1" Sheet, "Bridge Plans" and "Road Plans"
6. Size 78 Communication Conduit, See "Typical Section No. 1" Sheet, "Bridge Plans" and "Road Plans"

(1) 25 mm Expanded polystyrene

(2) Recess expanded polystyrene 50 mm in to barrier slab

(3) #16 1500 @ 300 bundled with #16 @ 300 or #16 @ 300
South Side North Side

"a" bar = #19 cont
"b" bar = #19 x 18 000
"c" bar = #19 x 15 000

Place "b" & "c" bars at beginning and end of barrier slab

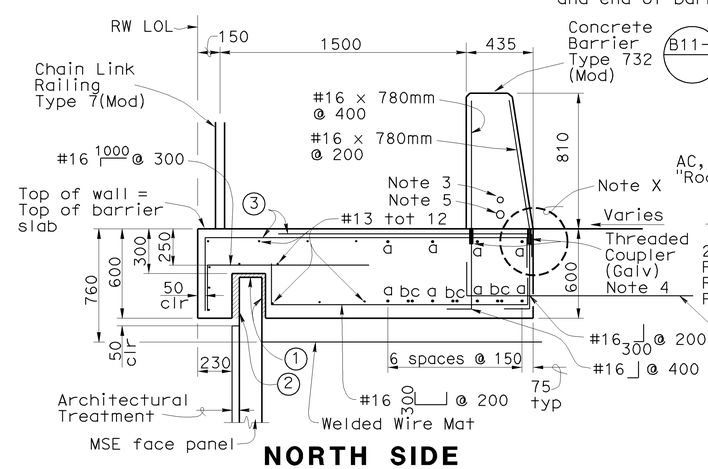

NORTH SIDE

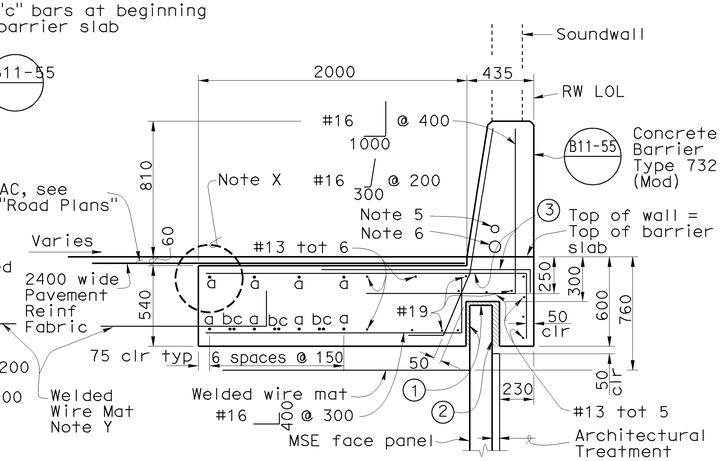

SOUTH SIDE

TOP OF WALL DETAILS

1:20

Note X:
For Details at Interface with Structure Approach, see Bridge Plans This Contract

Note Y:
For Barrier Slab Wire Mat Details, see "Wall Details No. 7" Sheet

NOTE:
For Barrier Slab Details at Drop Inlets, see Bridge Plans THis Contract

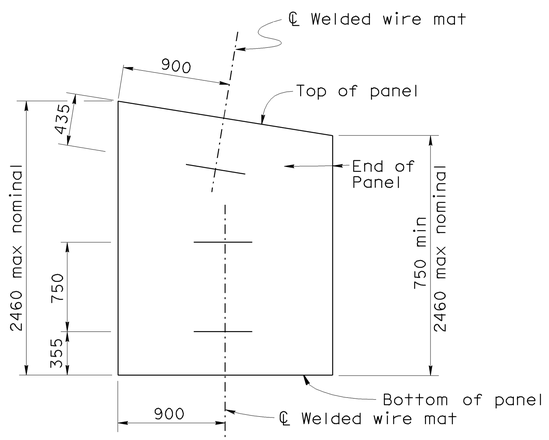

DETAIL A

NO SCALE

Full Panel Shown, Others Similar

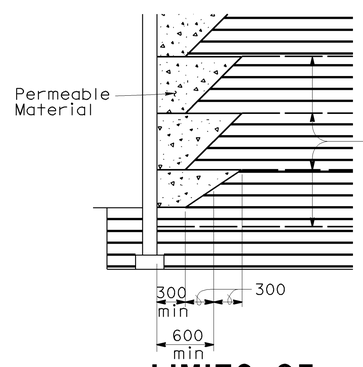

LIMITS OF PERMEABLE MATERIAL

NO SCALE

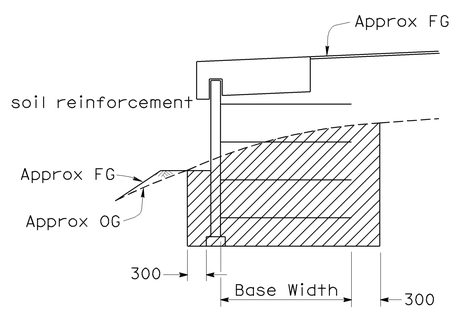

LIMITS OF EXCAVATION

NO SCALE

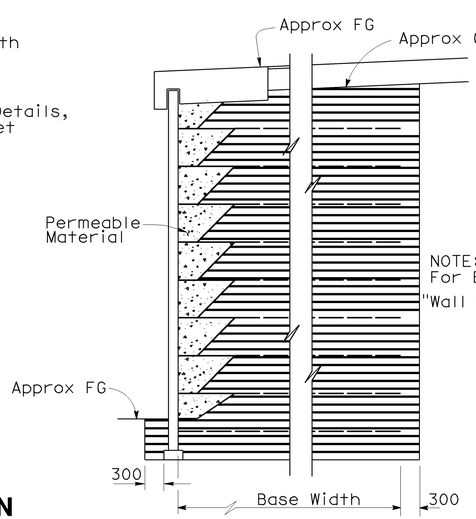

NOTE:
For Base Widths, see "Wall Panel Layout" sheets

LIMITS OF BACKFILL

NO SCALE

Note: Omit welded wire mats within lower levels that would be closer than 150 mm from a mat located in the level parallel to the top of panel.

RETAINING WALL - TYPE MSE DETAILS

For Additional Details, see "Miscellaneous Details" Sheet

	BY		CHECKED
DESIGN	M. VAN DE POL	04-03	P. NORBOE 12-05
DETAILS	M. VAN DE POL	04-03	P. NORBOE 12-05
QUANTITIES	M. VAN DE POL	11-05	P. NORBOE 12-05

STATE OF CALIFORNIA DEPARTMENT OF TRANSPORTATION

DIVISION OF ENGINEERING SERVICES STRUCTURE DESIGN

DESIGN BRANCH 9

CU 10
EA 3A66U1

BRIDGE NO. 39E0001 39E0002 39E0003 39E0004

KILOMETER POST 59.66

BRADLEY OVERHEAD (REPLACE)

RETAINING WALLS

WALL DETAILS No. 2

ALL DIMENSIONS ARE IN MILLIMETERS UNLESS OTHERWISE SHOWN

ORIGINAL SCALE IN MILLIMETERS FOR REDUCED PLANS 0 10 20 30 40 50 60 70 80 90 100

DISREGARD PRINTS BEARING EARLIER REVISION DATES 5-8-03 12-15-05 11-18-08

REVISION DATES

SHEET 31 OF 53

FILE => 39e0044-r-rwdt02.dgn

STRUCTURES DESIGN DETAIL SHEET (METRIC) (REV.03-17-04)

USERNAME => trsttrk DATE PLOTTED => 11-MAR-2009 TIME PLOTTED => 07:21

DIST	COUNTY	ROUTE	KILOMETER POST TOTAL PROJECT	SHEET No	TOTAL SHEETS
10	Mer	140	58.7/60.5	363	384

REGISTERED CIVIL ENGINEER 9-30-08 DATE

3-2-09
PLANS APPROVAL DATE

REGISTERED PROFESSIONAL ENGINEER M. Van De Pol No. C35610 Exp. 9-30-09 CIVIL STATE OF CALIFORNIA

The State of California or its officers or agents shall not be responsible for the accuracy or completeness of electronic copies of this plan sheet.

Note: For locations of Bottom and Intermediate Panel Types, see "Wall Panel Layout" sheets

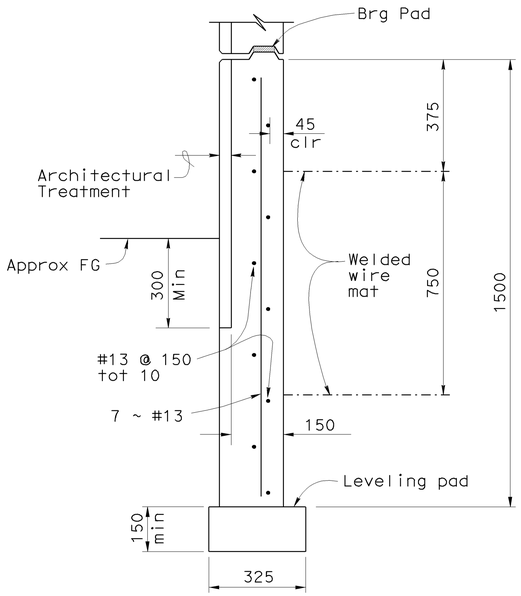

TYPE AA AND AAC BOTTOM PANEL

No Architectural Treatment on Panel AAC

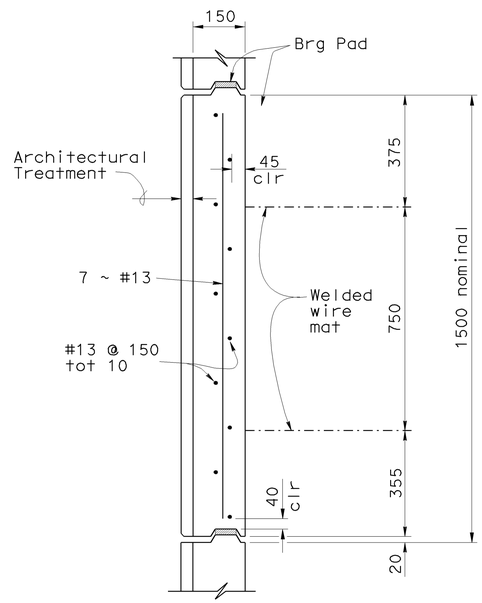

TYPE A INTERMEDIATE PANEL

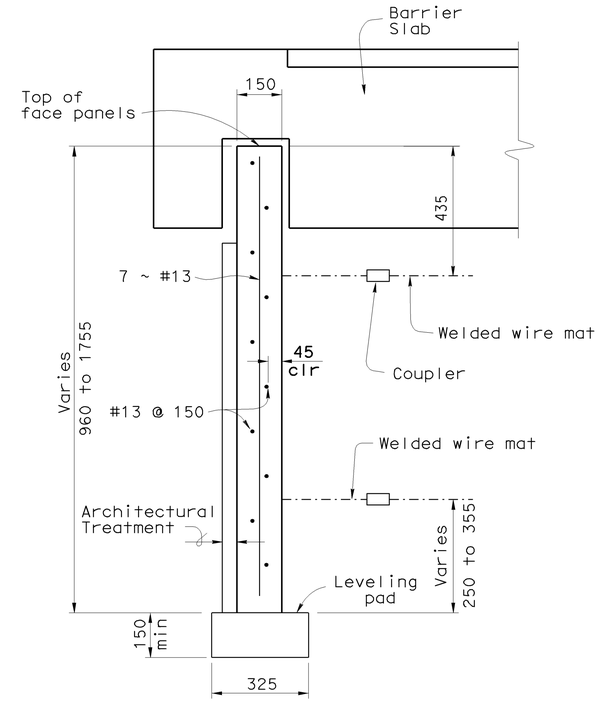

MULTI-WELDED WIRE MAT PANEL TYPE AB AND AD

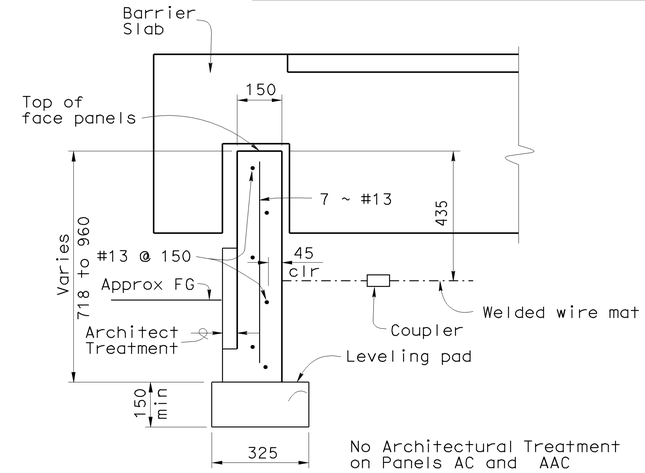

No Architectural Treatment on Panels AC and AAC

SINGLE WELDED WIRE MAT PANEL TYPE AB AND AC

BOTTOM PANELS

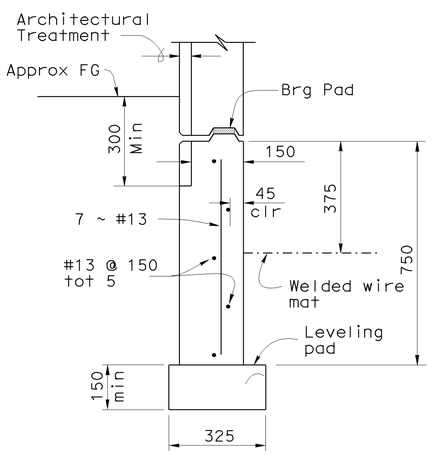

TYPES BB AND BC BOTTOM PANEL

No Architectural Treatment on Panel BC

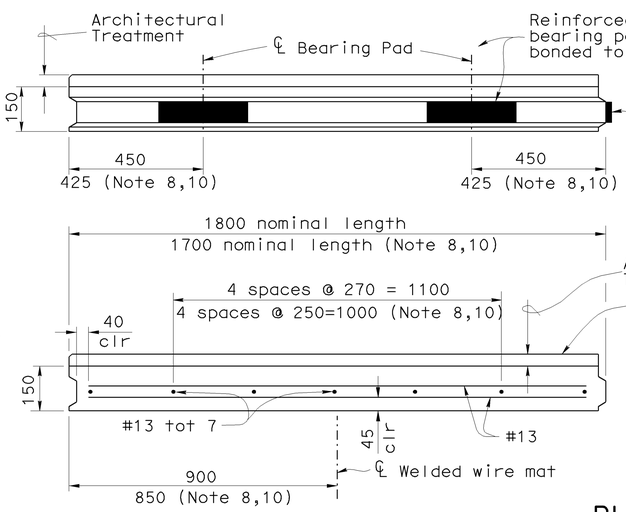

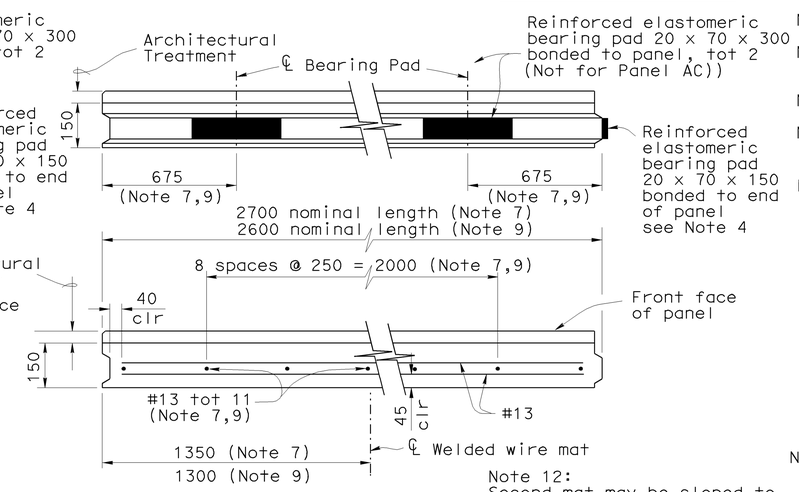

No Architectural Treatment on Panels AC, BC and AAC

Note 12: Second mat may be sloped to provide 150 mm min clear between mats as required per Note 11

PLAN VIEWS

FACE PANELS (MW70)

NO SCALE

NOTES:

Note 1: For architectural treatment, see "Wall Architectural Details" sheet

Note 2: Number of levels of welded mats in panels vary, see "Wall Details No. 1" sheet

Note 3: Panels to be cast straight along their length

Note 4: For locations of bearing pads in vertical joints, see "Wall Details No. 7" sheet

Note 5: For location of variable length panels see "Wall Panel Layout" sheets

Note 6: For location of Wall Panels Type AB, see "Retaining Wall No. 1, Wall Panel Layout No. 1 and Wall Panel Layout No. 2 " sheets

Note 7: For Wall Panel Type AC, For Location, see "Retaining Wall No. 1, Wall Panel Layout No. 1" sheet

Note 8: For Panel Type BC. For Location, See "Retaining Wall No. 3, Wall Panel Layout No. 5" Sheet

Note 9: For Panel Type AAC. For Location, See "Retaining Wall No. 4, Wall Panel Layout No. 3" Sheet

Note 10: For Wall Panel Type AD, For Location, see "Retaining Wall No. 2, Wall Panel Layout No. 4" sheet

Note 11: Top mat shall be sloped -5% to -15% to provide 100 mm min cover to Roadway Section as required

Caltrans Metric

	BY		CHECKED	
DESIGN	M. VAN DE POL	04-03	P. NORBOE	12-05
DETAILS	M. VAN DE POL	04-03	P. NORBOE	12-05
QUANTITIES	M. VAN DE POL	11-05	P. NORBOE	12-05

STATE OF CALIFORNIA DEPARTMENT OF TRANSPORTATION

DIVISION OF ENGINEERING SERVICES STRUCTURE DESIGN

DESIGN BRANCH 9

BRIDGE NO. 39E0001 39E0002 39E0003 39E0004

KILOMETER POST 59.66

BRADLEY OVERHEAD (REPLACE)

RETAINING WALLS

WALL DETAILS No. 3

ALL DIMENSIONS ARE IN MILLIMETERS UNLESS OTHERWISE SHOWN

ORIGINAL SCALE IN MILLIMETERS FOR REDUCED PLANS 0 10 20 30 40 50 60 70 80 90 100

CU 10
EA 3A66U1

DISREGARD PRINTS BEARING EARLIER REVISION DATES 9-8-03 12-13-05

REVISION DATES

SHEET 32 OF 53

FILE => 39e0044-r-rwdt03.dgn

STRUCTURES DESIGN DETAIL SHEET (METRIC) (REV.03-17-04)

USERNAME => rtrphils DATE PLOTTED => 05-MAR-2009 TIME PLOTTED => 06:15

DIST	COUNTY	ROUTE	KILOMETER POST TOTAL PROJECT	SHEET No	TOTAL SHEETS
10	Mer	140	58.7/60.5	364	384

REGISTERED CIVIL ENGINEER 9-30-08 DATE

3-2-09
PLANS APPROVAL DATE

REGISTERED PROFESSIONAL ENGINEER M. Van De Pol No. C35610 Exp. 9-30-09 CIVIL STATE OF CALIFORNIA

The State of California or its officers or agents shall not be responsible for the accuracy or completeness of electronic copies of this plan sheet.

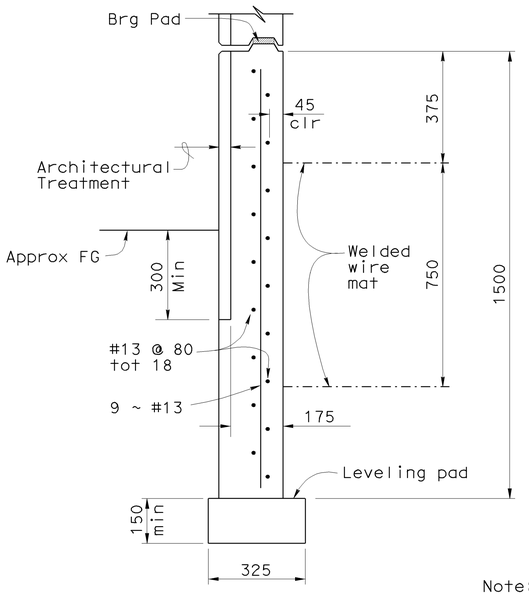

TYPE AA
FULL HEIGHT

Note: For locations of Bottom and Intermediate Panel Types, see "Wall Panel Layout" sheets

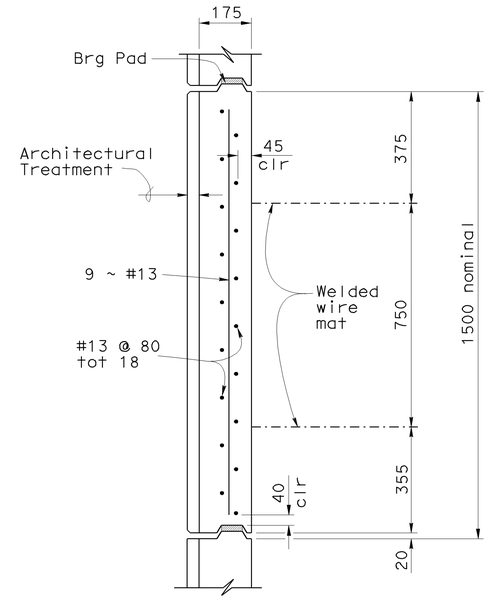

TYPE A
INTERMEDIATE PANEL

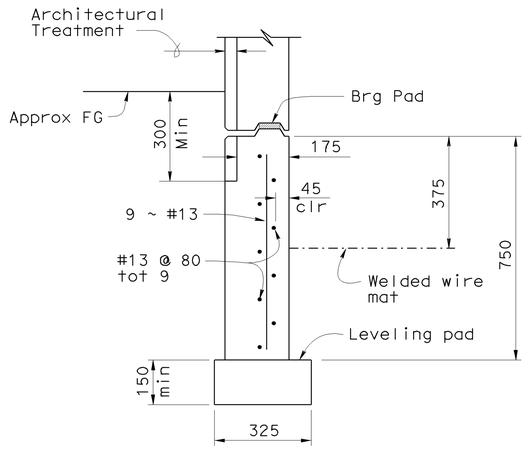

TYPE BB
HALF HEIGHT

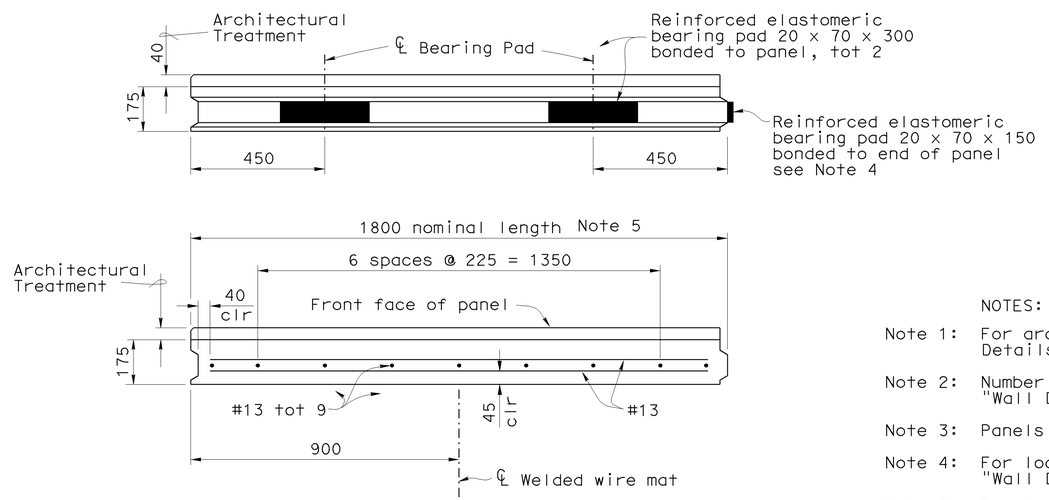

PLAN VIEWS

NOTES:

Note 1: For architectural treatment, see "Wall Architectural Details" sheet

Note 2: Number of levels of welded mats in panels vary, see "Wall Details No. 1" sheet

Note 3: Panels to be cast straight along their length

Note 4: For locations of bearing pads in vertical joints, see "Wall Details No. 7" sheet

Note 5: For locations of variable length panels, see "Wall Panel Layout" sheets

BOTTOM PANEL

FACE PANELS (MW130)

NO SCALE

Caltrans Metric

	BY		CHECKED
DESIGN	M. VAN DE POL	04-03	P. NORBOE 12-05
DETAILS	M. VAN DE POL	04-03	P. NORBOE 12-05
QUANTITIES	M. VAN DE POL	11-05	P. NORBOE 12-05

STATE OF CALIFORNIA
DEPARTMENT OF TRANSPORTATION

DIVISION OF ENGINEERING SERVICES
STRUCTURE DESIGN
DESIGN BRANCH 9

BRIDGE NO. 39E0001 39E0002 39E0003 39E0004
KILOMETER POST 59.66

BRADLEY OVERHEAD (REPLACE)
RETAINING WALLS
WALL DETAILS No. 4

ALL DIMENSIONS ARE IN MILLIMETERS UNLESS OTHERWISE SHOWN

ORIGINAL SCALE IN MILLIMETERS FOR REDUCED PLANS 0 10 20 30 40 50 60 70 80 90 100

CU 10
EA 3A66U1

DISREGARD PRINTS BEARING EARLIER REVISION DATES

REVISION DATES: 5-9-08 12-13-05

SHEET 33 OF 53

FILE => 39e0044-r-rwdt04.dgn

STRUCTURES DESIGN DETAIL SHEET (METRIC) (REV.03-17-04)

USERNAME => trpbtlis DATE PLOTTED => 05-MAR-2009 TIME PLOTTED => 06:15

DIST	COUNTY	ROUTE	KILOMETER POST TOTAL PROJECT	SHEET No	TOTAL SHEETS
10	Mer	140	58.7/60.5	365	384

REGISTERED CIVIL ENGINEER 9-30-08 DATE

3-2-09
PLANS APPROVAL DATE

REGISTERED PROFESSIONAL ENGINEER M. Van De Pol No. C35610 Exp. 9-30-09 CIVIL STATE OF CALIFORNIA

The State of California or its officers or agents shall not be responsible for the accuracy or completeness of electronic copies of this plan sheet.

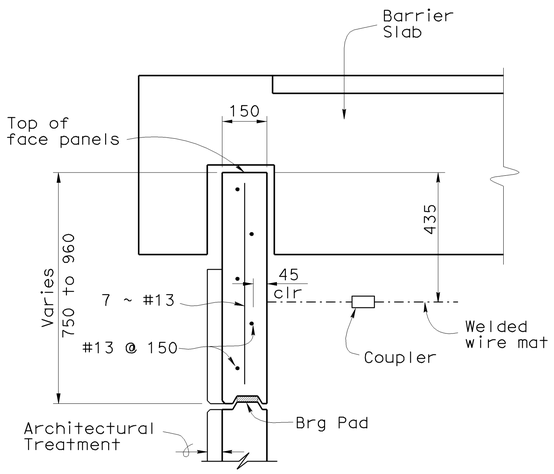

TYPE ST2 AND ST4

SINGLE WELDED WIRE MAT PANEL

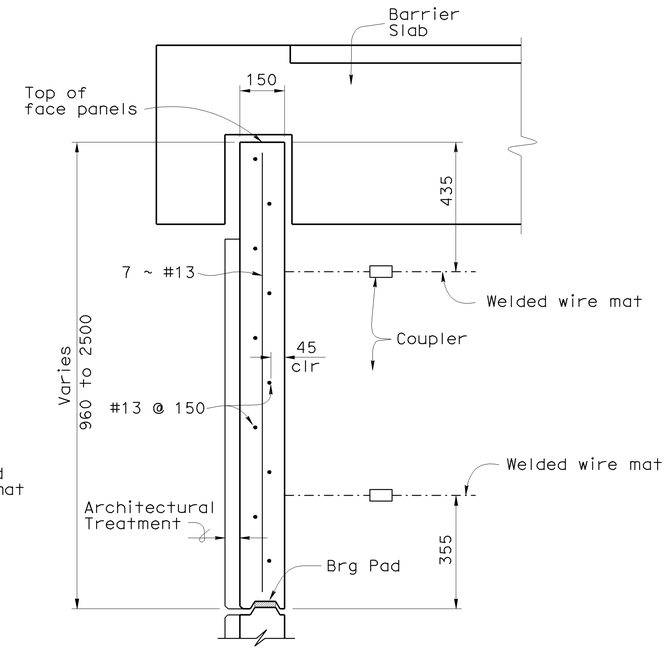

TYPE ST1 AND ST3

MULTI-WELDED WIRE MAT PANEL

SECTIONS

No Scale

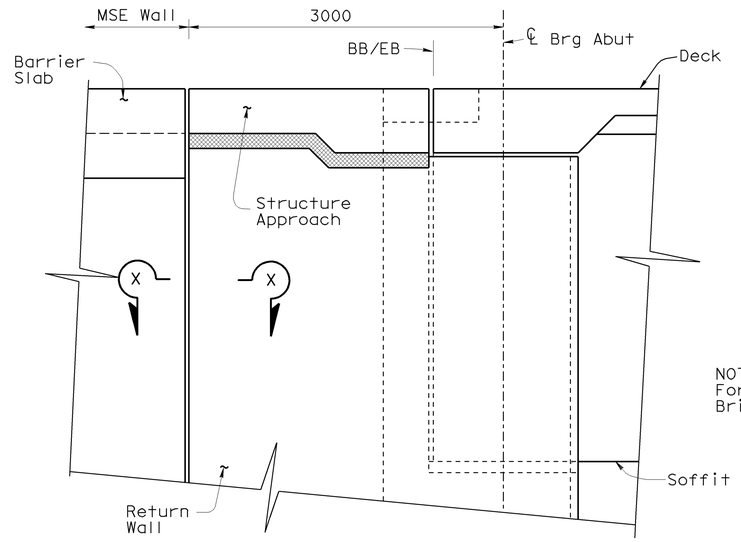

NOTE:
For additional details, see Bridge Plans This Contract

PART ELEVATION WALL INTERFACE

No Scale

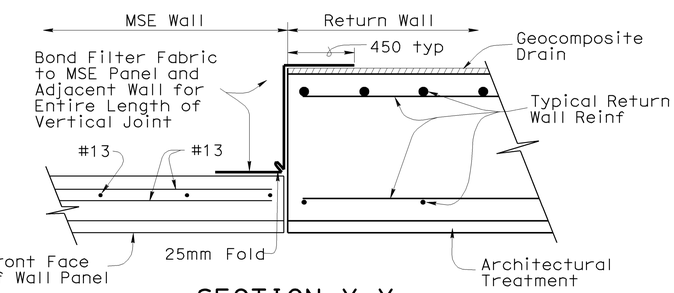

SECTION X-X

No Scale

MSE Wall Panel Key not Shown

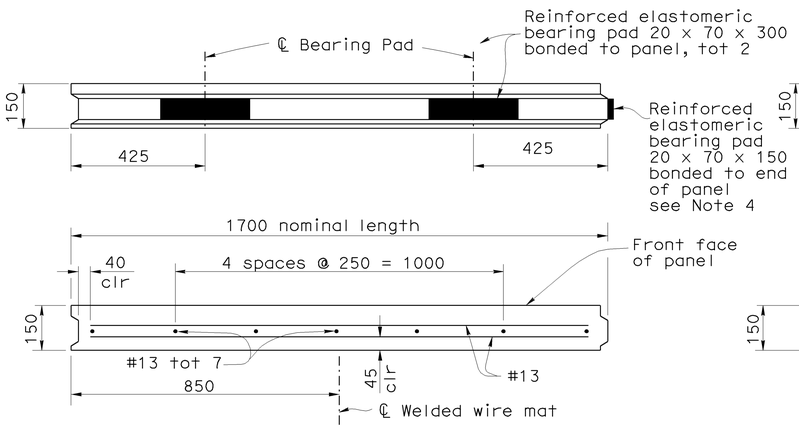

PLAN VIEW PANEL ST3

For Plan Views of Panels ST1 and ST2, see "Wall Detail No. 3" Sheet

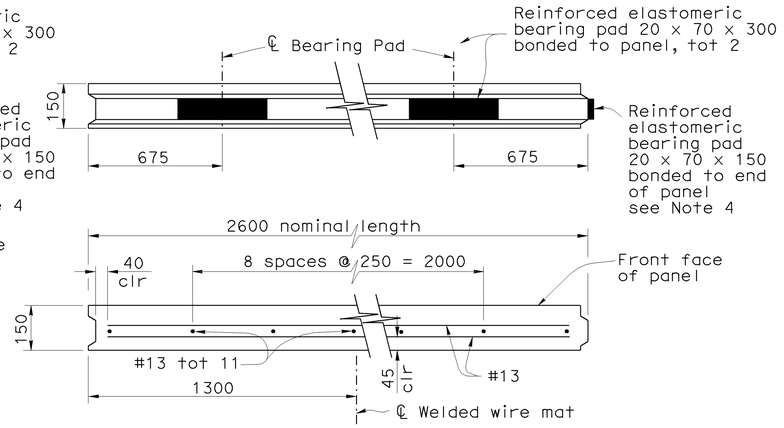

PLAN VIEW PANEL ST4

TOP PANEL DETAIL- MW70

No Scale

NOTES:

Note 1: For architectural treatment, see "Wall Architectural Details" sheet

Note 2: Number of levels of welded mats in panels vary, see "Wall Details No. 1" sheet

Note 3: Panels to be cast straight along their length

Note 4: For locations of bearing pads in vertical joints, see "Wall Details No. 7" sheet

Note 5: Top mat shall be sloped -5% to -15% to provide 100 mm min cover to Roadway Section as required

Note 6: Second mat may be sloped to provide 150 mm min clear between mats as required per Note 5

Note 7: For location of variable length panels, see "Wall Panel Layout" sheets

Note 8: For location of Wall Panel Type ST3, see "Retaining Wall No. 3, Wall Panel Layout No. 5 sheet

Note 8: For location of Wall Panel Type ST4, see "Retaining Wall No. 4, Wall Panel Layout No. 3 sheet

Note 9: For Additional Top Panel Details, see "Wall Details No. 3" and "Wall Details No. 12" sheets

Caltrans Metric

	BY		CHECKED
DESIGN	M. VAN DE POL	04-03	P. NORBOE 12-05
DETAILS	M. VAN DE POL	04-03	P. NORBOE 12-05
QUANTITIES	M. VAN DE POL	11-05	P. NORBOE 12-05

STATE OF CALIFORNIA DEPARTMENT OF TRANSPORTATION

DIVISION OF ENGINEERING SERVICES STRUCTURE DESIGN

DESIGN BRANCH 9

BRIDGE NO. 39E0001 39E0002 39E0003 39E0004

KILOMETER POST 59.66

BRADLEY OVERHEAD (REPLACE)

RETAINING WALLS

WALL DETAILS No. 5

ALL DIMENSIONS ARE IN MILLIMETERS UNLESS OTHERWISE SHOWN

ORIGINAL SCALE IN MILLIMETERS FOR REDUCED PLANS 0 10 20 30 40 50 60 70 80 90 100

CU 10
EA 3A66U1

DISREGARD PRINTS BEARING EARLIER REVISION DATES

REVISION DATES 5-8-03 12-13-05

SHEET 34 OF 53

FILE => 39e0044-r-rwdt05.dgn

STRUCTURES DESIGN DETAIL SHEET (METRIC) (REV.03-17-04)

USERNAME => trphtis DATE PLOTTED => 05-MAR-2009 TIME PLOTTED => 06:15

DIST	COUNTY	ROUTE	KILOMETER POST TOTAL PROJECT	SHEET No	TOTAL SHEETS
10	Mer	140	58.7/60.5	366	384

REGISTERED CIVIL ENGINEER 9-30-08 DATE

3-2-09
PLANS APPROVAL DATE

REGISTERED PROFESSIONAL ENGINEER M. Van De Pol No. C35610 Exp. 9-30-09 CIVIL STATE OF CALIFORNIA

The State of California or its officers or agents shall not be responsible for the accuracy or completeness of electronic copies of this plan sheet.

Notes:

1. Distance as required to permit coupler to be swaged.
2. #13 bar shall not be welded to connector mat. Length of bar equals mat width plus 200 mm. Center bar on connector mat.

Panel reinforcement not shown.

* Buttonheaded at coupler end

For architectural treatment, see "Wall Architectural Details" sheet.

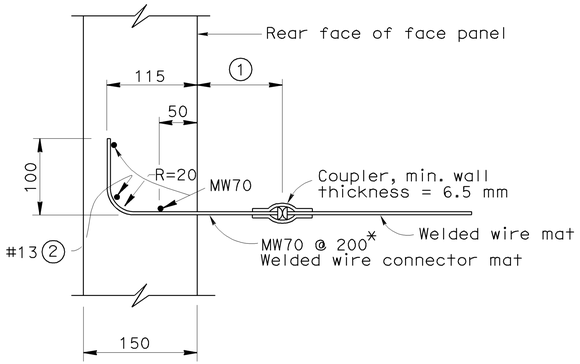

MW70 LONGITUDINAL WIRES

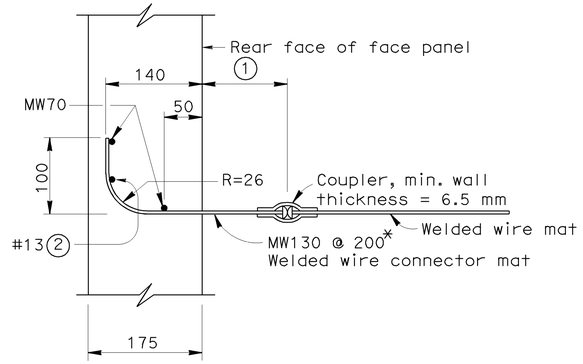

MW130 LONGITUDINAL WIRES

WELDED WIRE MAT CONNECTION DETAIL

NO SCALE

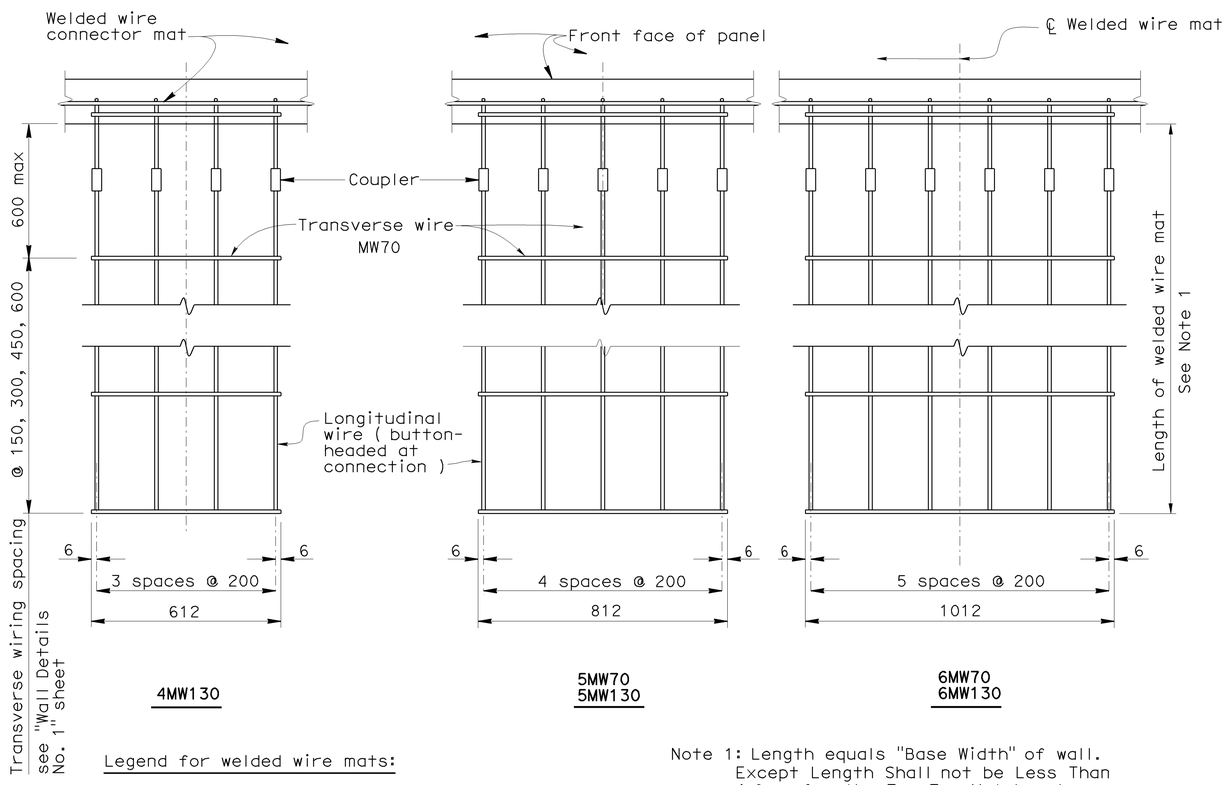

Legend for welded wire mats:

4 MW70
- Size of longitudinal wires
- Number of longitudinal wires

Note 1: Length equals "Base Width" of wall. Except Length Shall not be Less Than 4.8 m for the Top Two Mat Levels

WELDED WIRE MAT DETAIL

NO SCALE

See "Wall Panel Layout" Sheets

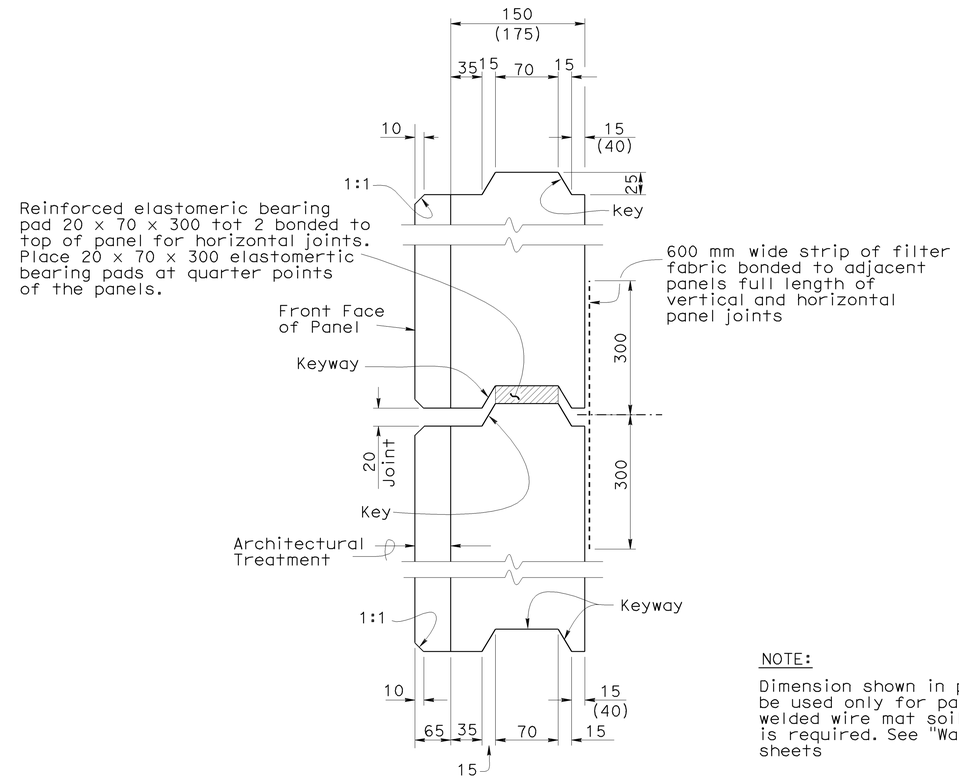

NOTE:

Dimension shown in parenthesis are to be used only for panels where MW130 welded wire mat soil reinforcement is required. See "Wall Panel Layout" sheets

TYPICAL VERTICAL AND HORIZONTAL PANEL JOINT

NO SCALE

NOTE:

For vertical joint bearing pad details, see "Wall Details No. 7" sheet

Caltrans Metric

	BY		CHECKED	
DESIGN	M. VAN DE POL	04-03	P. NORBOE	12-05
DETAILS	M. VAN DE POL	04-03	P. NORBOE	12-05
QUANTITIES	M. VAN DE POL	11-05	P. NORBOE	12-05

STATE OF CALIFORNIA DEPARTMENT OF TRANSPORTATION

DIVISION OF ENGINEERING SERVICES STRUCTURE DESIGN

DESIGN BRANCH 9

BRIDGE NO. 39E0001 39E0002 39E0003 39E0004

KILOMETER POST 59.66

BRADLEY OVERHEAD (REPLACE)

RETAINING WALLS

WALL DETAILS No. 6

ALL DIMENSIONS ARE IN MILLIMETERS UNLESS OTHERWISE SHOWN

ORIGINAL SCALE IN MILLIMETERS FOR REDUCED PLANS 0 10 20 30 40 50 60 70 80 90 100

CU 10
EA 3A66U1

DISREGARD PRINTS BEARING EARLIER REVISION DATES 5-8-03 12-13-05

REVISION DATES

SHEET 35 OF 53

FILE => 39e0044-r-rwdt06.dgn

STRUCTURES DESIGN DETAIL SHEET (METRIC) (REV.03-17-04)

USERNAME => rtrphils DATE PLOTTED => 05-MAR-2009 TIME PLOTTED => 06:15

DIST	COUNTY	ROUTE	KILOMETER POST TOTAL PROJECT	SHEET No	TOTAL SHEETS
10	Mer	140	58.7/60.5	367	384

REGISTERED CIVIL ENGINEER 9-30-08 DATE

3-2-09
PLANS APPROVAL DATE

REGISTERED PROFESSIONAL ENGINEER M. Van De Pol No. C35610 Exp. 9-30-09 CIVIL STATE OF CALIFORNIA

The State of California or its officers or agents shall not be responsible for the accuracy or completeness of electronic copies of this plan sheet.

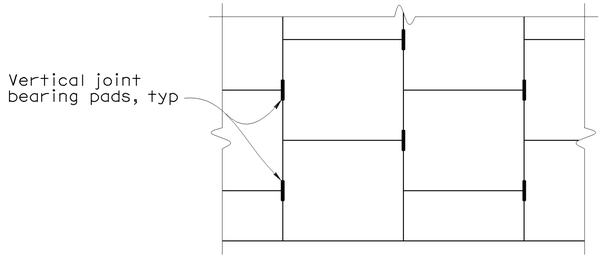

NOTES:

1. Horizontal joint bearing pads not shown.
2. Bearing Pads to be located at end of panel where horizontal panel joints intersect vertical panel joints (except at top and bottom of wall).

VERTICAL JOINT BEARING PAD DETAIL

NO SCALE

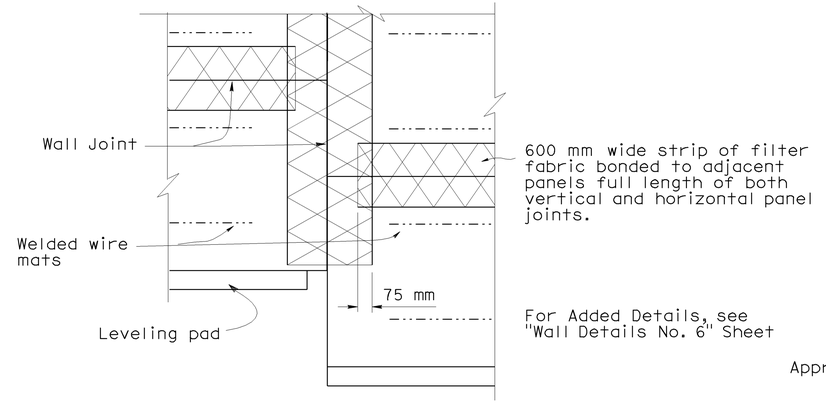

FILTER FABRIC DETAIL

NO SCALE

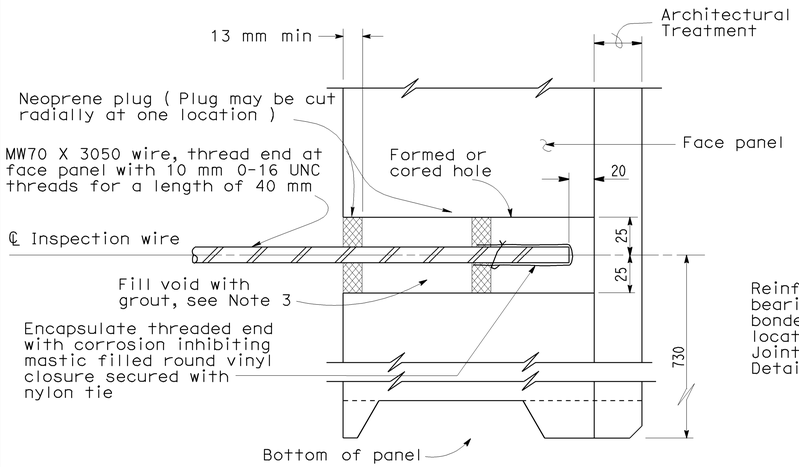

SECTION THRU INSPECTION WIRE

NO SCALE

NOTES:

1. Locate inspection wire at mid length of full face panels, or centered between two welded wire mats of half face panels
2. Inspection wires are to be fabricated from wire representative of the wire used for the welded wire mats for the wall
3. Contractor shall provide spacers in addition to the neoprene plug indicated to maintain the inspection wire in the center of the 50 mm diameter hole during backfill placement. prior to backfilling over inspection wire, inspection wire shall be placed so that its final position will be horizontal and perpendicular to the wall panel. after back fill placement to a level at least 600 mm above the inspection wire, remove the additional spacers and dry pack opening with 7.0 to 10.5 MPa grout. Trowel grout smooth and flush with face of panel

   UNC = Unified coarse threads
4. For location of inspection wiers, see "Wall Panel Layout" sheets
5. For Architectural Treatment, see "Wall Architectural Details" sheet

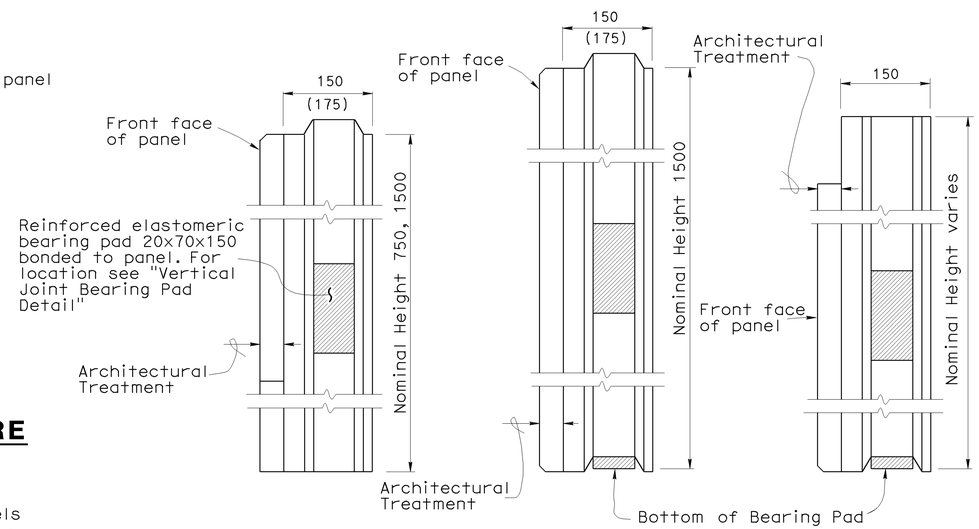

BOTTOM PANEL **INTERMEDIATE PANEL** **TOP PANEL**

NOTE:

Dimension shown in parenthesis are to be used only for panels where MW130 welded wire mat soil reinforcement is required. See "Wall Panel Layout" sheets

PANEL END VIEW (KEYWAY END)

NO SCALE

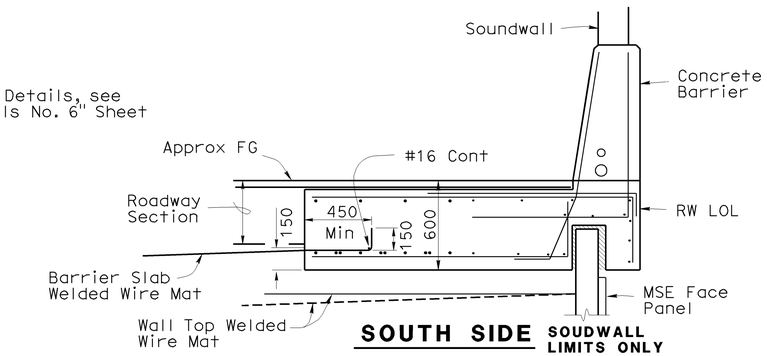

SOUTH SIDE **SOUDWALL LIMITS ONLY**

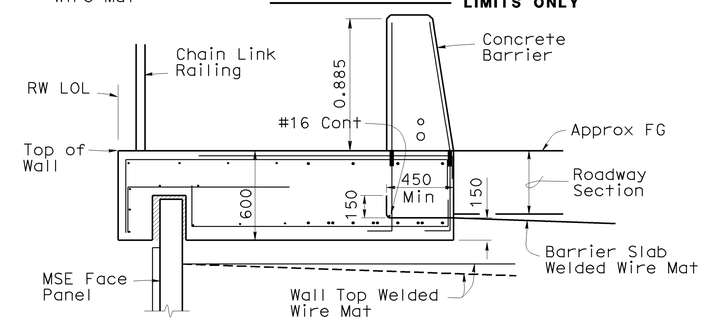

NORTH SIDE

BARRIER SLAB WIRE MAT DETAILS

1:20

Details Apply to Retaining Walls, Beyond the Limits of the Structure Approach Slab

For Details at Interface with Structure Approach, see Bridge Plans This Contract

For Barrier Slab Details, see "Wall Details No. 2" Sheet

Barrier Slab Mat shall be Sloped -5% to -15% ± to provide 100 mm min cover to Roadway Section as Required

The Top Wall Mat May be Sloped to Provide 300 mm min Clear Between Top Wall Mat and Barrier Mat

Barrier Wire Mat:
Longitudinal Wires: 6MW130
Transverse Wires: MW70 Spacing = 300mm
Welded Wire Mat Spacing = 3600 mm
Placed Normal to and Spaced Along RW LOL
Base Width = 6000 mm Typical

Caltrans Metric

	BY		CHECKED	
DESIGN	M. VAN DE POL	04-03	P. NORBOE	12-05
DETAILS	M. VAN DE POL	04-03	P. NORBOE	12-05
QUANTITIES	M. VAN DE POL	11-05	P. NORBOE	12-05

STATE OF CALIFORNIA DEPARTMENT OF TRANSPORTATION

DIVISION OF ENGINEERING SERVICES STRUCTURE DESIGN

DESIGN BRANCH 9

BRIDGE NO. 39E0001 39E0002 39E0003 39E0004

KILOMETER POST 59.66

BRADLEY OVERHEAD (REPLACE)

RETAINING WALLS

WALL DETAILS No. 7

ALL DIMENSIONS ARE IN MILLIMETERS UNLESS OTHERWISE SHOWN

ORIGINAL SCALE IN MILLIMETERS FOR REDUCED PLANS 0 10 20 30 40 50 60 70 80 90 100

CU 10
EA 3A66U1

DISREGARD PRINTS BEARING EARLIER REVISION DATES 5-26-05 12-13-05

REVISION DATES

SHEET 36 OF 53

FILE => 39e0044-r-rwdt07.dgn

STRUCTURES DESIGN DETAIL SHEET (METRIC) (REV.03-17-04)

USERNAME => trprhtts DATE PLOTTED => 05-MAR-2009 TIME PLOTTED => 06:15

DIST	COUNTY	ROUTE	KILOMETER POST TOTAL PROJECT	SHEET No	TOTAL SHEETS
10	Mer	140	58.7/60.5	368	384

REGISTERED CIVIL ENGINEER 9-30-08 DATE

3-2-09
PLANS APPROVAL DATE

REGISTERED PROFESSIONAL ENGINEER M. Van De Pol No. C35610 Exp. 9-30-09 CIVIL STATE OF CALIFORNIA

The State of California or its officers or agents shall not be responsible for the accuracy or completeness of electronic copies of this plan sheet.

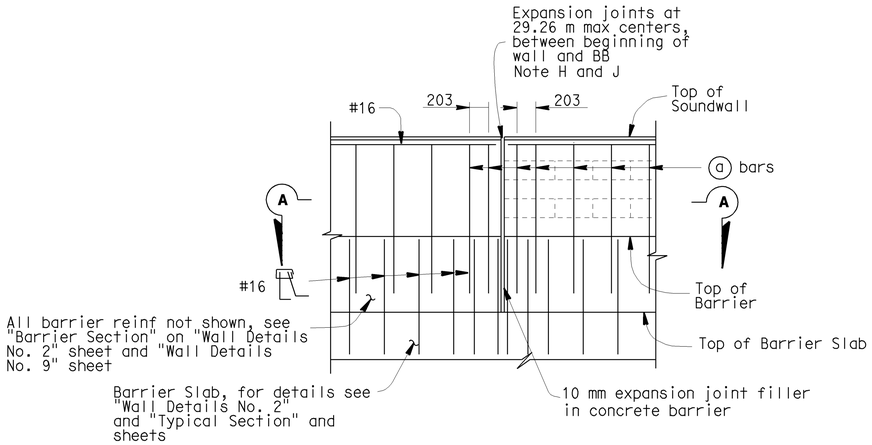

PART ELEVATION

Soundwall on Concrete Barrier

SOUNDWALL REINFORCEMENT TABLE			
H	ⓐ bars @ 406 max	f'm (MPa)	Compressive Strength of CMU (MPa)
1800	#19	17.24	25.86

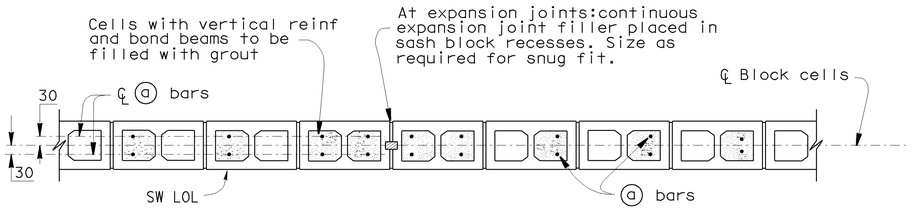

SECTION A-A

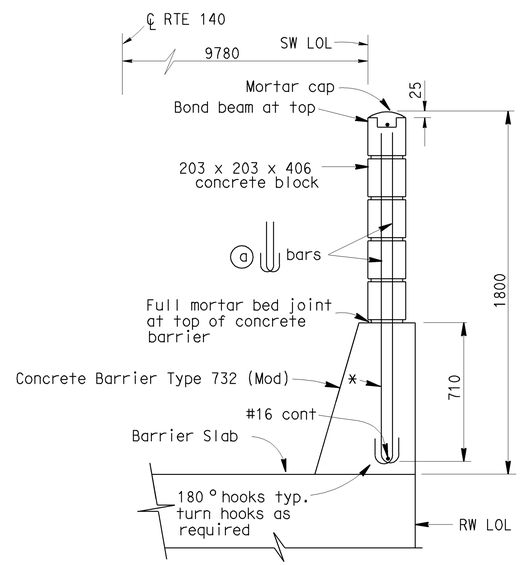

TYPICAL SECTION

Architectural Treatment Not Shown

LOCATION:
Rte 140 Sta 24+69.162 to
Rte 140 Sta 26+89.902
South Side Only

Note I : For details not shown,see other "Wall Details" sheets

Note II : For Design Notes (Soundwall), see "Wall Details No. 9" sheet

GENERAL NOTES

Note A: For type of block and joint finish, see other sheets

Note B: When blocks are laid in stacked bond, ladder type, galvanized joint reinforcement shall be provided. A minimum of 2-3.76 mm wire continuous at 460 mm maximum to be used. Locate reinforcement in joints that are at the approximate midpoint between bond beams

Note C: Horizontal joints shall be tooled concave or may be weathered

Vertical joints shall be tooled concave or may be raked

Note D: Masonry strengths are listed in "SOUNDWALL REINFORCEMENT TABLE"

Note E: Class 2 concrete to be used for the barrier

Note F: For concrete barrier details, see "Wall Details No. 2" and "Wall Details No. 9" sheets and B11-55

Note G: All masonry block to be high strength, unless otherwise noted

Note H: Additional expansion joints in soundwall shall be at the BB and at the centerline of Span 1

Note J: For additional details, see Bridge Plans This Contract

NO SCALE

ALL DIMENSIONS ARE IN MILLIMETERS UNLESS OTHERWISE SHOWN

Caltrans Metric

	BY		CHECKED
DESIGN	M. VAN DE POL	04-03	P. NORBOE 12-05
DETAILS	M. VAN DE POL	04-03	P. NORBOE 12-05
QUANTITIES	M. VAN DE POL	11-05	P. NORBOE 12-05

STATE OF CALIFORNIA DEPARTMENT OF TRANSPORTATION

DIVISION OF ENGINEERING SERVICES STRUCTURE DESIGN
DESIGN BRANCH 9

BRIDGE NO. 39E0001
KILOMETER POST 59.66

BRADLEY OVERHEAD (REPLACE)
RETAINING WALLS
WALL DETAILS No. 8

ALL DIMENSIONS ARE IN METERS UNLESS OTHERWISE SHOWN

ORIGINAL SCALE IN MILLIMETERS FOR REDUCED PLANS 0 10 20 30 40 50 60 70 80 90 100

CU 10
EA 3A66U1

DISREGARD PRINTS BEARING EARLIER REVISION DATES 12-13-05

REVISION DATES

SHEET 37 OF 53

FILE => 39e0044-r-rwdt08.dgn

STRUCTURES DESIGN DETAIL SHEET (METRIC) (REV.03-17-04)

USERNAME => trphrts DATE PLOTTED => 05-MAR-2009 TIME PLOTTED => 06:15

DIST	COUNTY	ROUTE	KILOMETER POST TOTAL PROJECT	SHEET No	TOTAL SHEETS
10	Mer	140	58.7/60.5	369	384

REGISTERED CIVIL ENGINEER 9-30-08 DATE

3-2-09
PLANS APPROVAL DATE

REGISTERED PROFESSIONAL ENGINEER M. Van De Pol No. C35610 Exp. 9-30-09 CIVIL STATE OF CALIFORNIA

The State of California or its officers or agents shall not be responsible for the accuracy or completeness of electronic copies of this plan sheet.

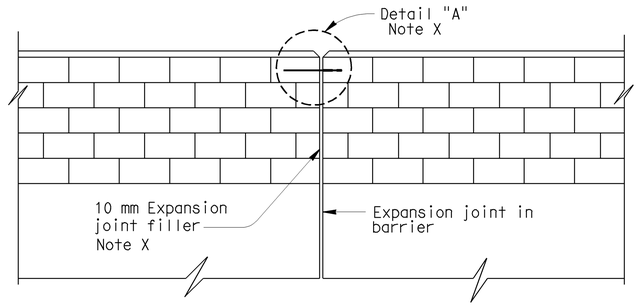

ALIGNMENT KEY DETAIL

Note X:
For additional details, see "Wall Details No. 8" Sheets
For additional details, see Bridge Plans Within This Contract

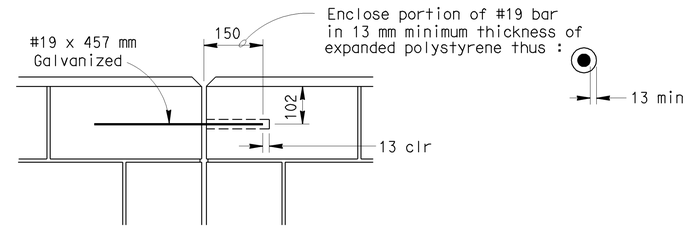

DETAIL A

Note X

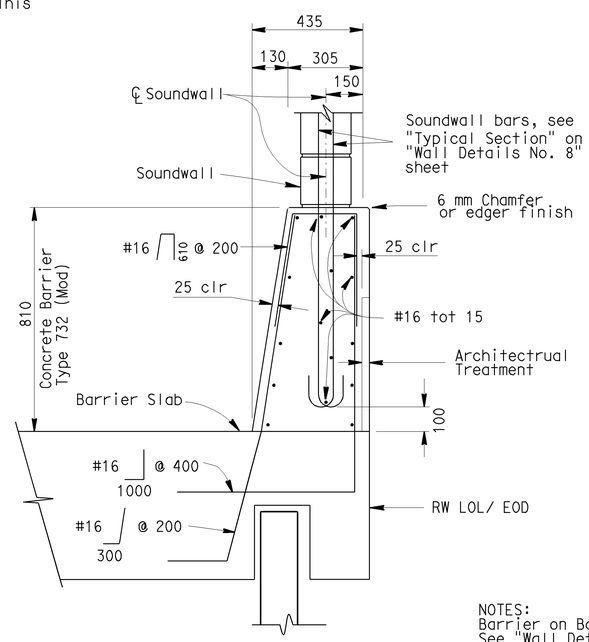

NOTES:
Barrier on Barrier Slab shown, See "Wall Details No. 1" and "Wall Details No. 2" Sheets

BARRIER SECTION

NOTES:

I : For details not shown,see other "Wall Details No. 2", "Wall Details No. 8" and "Typical Section" Sheets

II : Conduits not shown. Adjust conduit positions to clear reinf

DESIGN NOTES (SOUNDWALL)

DESIGN

Uniform Building Code,1997 Edition and the Bridge Design Specifications.

DESIGN WIND LOAD

1440 Pa

DESIGN SEISMIC LOAD

2.00 Dead load

CONCRETE MASONRY

REINFORCED CONCRETE

f'c = 22.41 Mpa
fy = 413.70 MPa

HIGH STRENGTH

f'm = 17.24 MPa
fy = 413.70 MPa

LOAD FACTORS AND LOAD COMBINATIONS

Working Stress Design (WSD) Percentage of unit stress

Group 1: D + W 100%
Group 2: D + 0.71 EQD 100%

Where:

D = Dead load
W = Wind load
EQD = Seismic dead load

Load Factor Design (LFD)

Group A: βD
Group B: βD + 1.3 W
Group C: βD + 1.0 EQD

Where : β = 0.9 or 1.2, whichever controls in design
D = Dead load
W = Wind load
EQD = Seismic dead load

STRENGTH REDUCTION FACTORS, Ø

Reinforced concrete:
For flexure _____ Ø=0.90
For shear _____ Ø=0.85

Concrete masonry:
For flexure _____ Ø=0.80
For shear _____ Ø=0.60

Barrier, Deck and Soundwall are designed by the Strength Design Method

NO SCALE

ALL DIMENSIONS ARE IN MILLIMETERS UNLESS OTHERWISE SHOWN

BRADLEY OVERHEAD (REPLACE)

RETAINING WALLS

WALL DETAILS No.9

Caltrans Metric

	BY		CHECKED	
DESIGN	M. VAN DE POL	04-03	P. NORBOE	12-05
DETAILS	M. VAN DE POL	04-03	P. NORBOE	12-05
QUANTITIES	M. VAN DE POL	11-05	P. NORBOE	12-05

STATE OF CALIFORNIA
DEPARTMENT OF TRANSPORTATION

DIVISION OF ENGINEERING SERVICES
STRUCTURE DESIGN
DESIGN BRANCH 9

BRIDGE NO. 39E0001
KILOMETER POST 59.66

ALL DIMENSIONS ARE IN METERS UNLESS OTHERWISE SHOWN

ORIGINAL SCALE IN MILLIMETERS FOR REDUCED PLANS 0 10 20 30 40 50 60 70 80 90 100

CU 10
EA 3A66U1

DISREGARD PRINTS BEARING EARLIER REVISION DATES 12-13-05

REVISION DATES

SHEET 38 OF 53

FILE => 39e0044-r-rwdt09.dgn

STRUCTURES DESIGN DETAIL SHEET (METRIC) (REV.03-17-04)

USERNAME => trphtis DATE PLOTTED => 05-MAR-2009 TIME PLOTTED => 06:15

DIST	COUNTY	ROUTE	KILOMETER POST TOTAL PROJECT	SHEET No	TOTAL SHEETS
10	Mer	140	58.7/60.5	370	384

REGISTERED CIVIL ENGINEER 9-30-08 DATE

3-2-09
PLANS APPROVAL DATE

REGISTERED PROFESSIONAL ENGINEER M. Van De Pol No. C35610 Exp. 09-30-09 CIVIL STATE OF CALIFORNIA

The State of California or its officers or agents shall not be responsible for the accuracy or completeness of electronic copies of this plan sheet.

NOTES:
* Smooth Face
** Upper Limit of Architectural Treatment

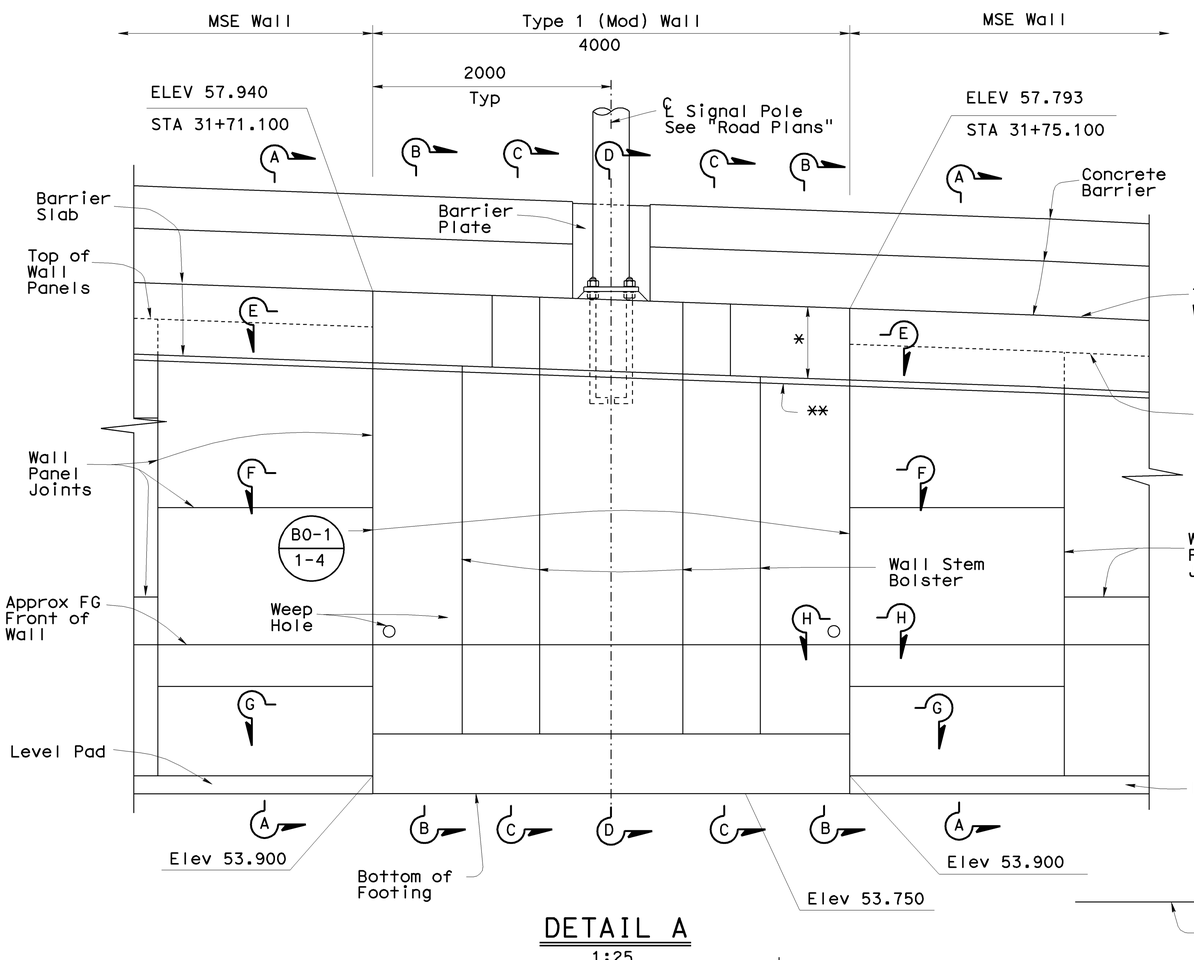

DETAIL A
1:25

NOTE:
Architectural Treatment not Shown

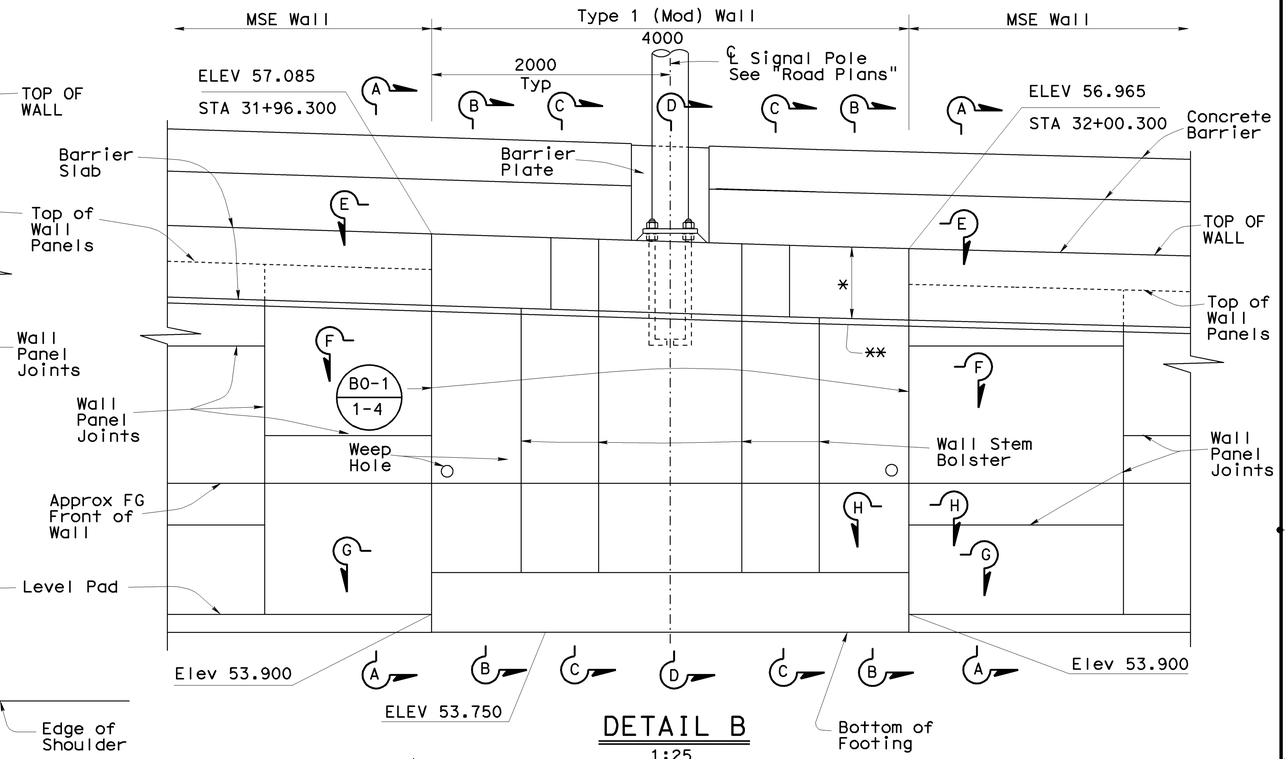

DETAIL B
1:25

NOTE:
Architectural Treatment not Shown

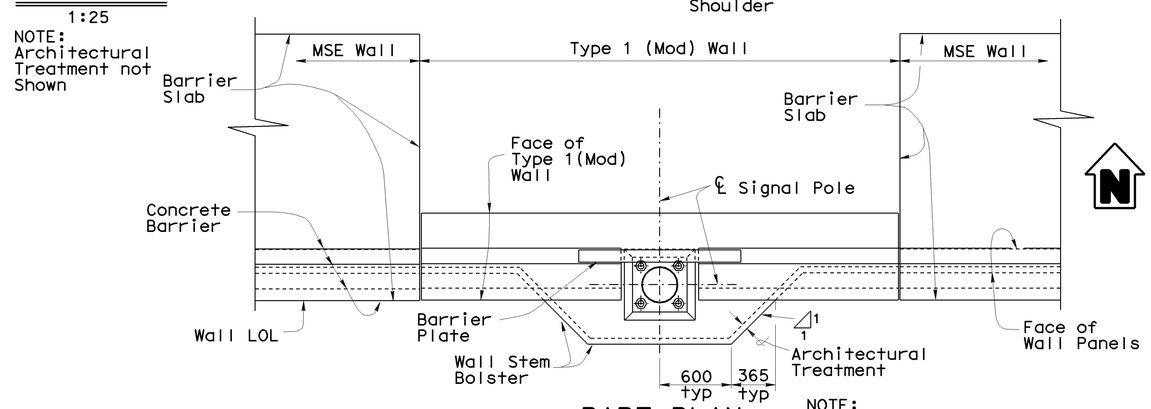

PART PLAN
1:25

NOTE:
Typical for Both Pole Locations

NOTES:
For Location of "Detail A", see "Retaining Wall No. 3 Wall Panel Layout No. 4" Sheet

For Location of "Detail B", see "Retaining Wall No. 3 Wall Panel Layout No. 5" Sheet

For "Section A-A" Through "Section H-H", see "Retaining Wall Details No. 11 Sheet

For MSE Wall Details, see other "Wall Detail" Sheets

For Special MSE Wall Panel Details, see "Wall Details No. 12" Sheet

For Wall Drainage Details, see "Wall Details No. 13" Sheet

BRADLEY OVERHEAD (REPLACE)

RETAINING WALLS

WALL DETAILS No. 10

Caltrans Metric

	BY		CHECKED	
DESIGN	M. VAN DE POL	08-05	P. NORBOE	09-05
DETAILS	M. VAN DE POL	08-05	P. NORBOE	09-05
QUANTITIES	M. VAN DE POL	08-05	P. NORBOE	09-05

STATE OF CALIFORNIA
DEPARTMENT OF TRANSPORTATION

DIVISION OF ENGINEERING SERVICES
STRUCTURE DESIGN
DESIGN BRANCH 9

BRIDGE NO. 39E0003
KILOMETER POST 59.66

ALL DIMENSIONS ARE IN MILLIMETERS UNLESS OTHERWISE SHOWN

ORIGINAL SCALE IN MILLIMETERS FOR REDUCED PLANS 0 10 20 30 40 50 60 70 80 90 100

CU 10
EA 3A66U1

DISREGARD PRINTS BEARING EARLIER REVISION DATES 8-18-05 12-13-05

REVISION DATES

SHEET 39 OF 53

FILE => 39e0044-r-rwdt10.dgn

STRUCTURES DESIGN DETAIL SHEET (METRIC) (REV.03-17-04)

USERNAME => trpphis DATE PLOTTED => 05-MAR-2009 TIME PLOTTED => 06:15

DIST	COUNTY	ROUTE	KILOMETER POST TOTAL PROJECT	SHEET No	TOTAL SHEETS
10	Mer	140	58.7/60.5	371	384

REGISTERED CIVIL ENGINEER 9-30-08 DATE

3-2-09
PLANS APPROVAL DATE

REGISTERED PROFESSIONAL ENGINEER M. Van De Pol No. C35610 Exp. 09-30-09 CIVIL STATE OF CALIFORNIA

The State of California or its officers or agents shall not be responsible for the accuracy or completeness of electronic copies of this plan sheet.

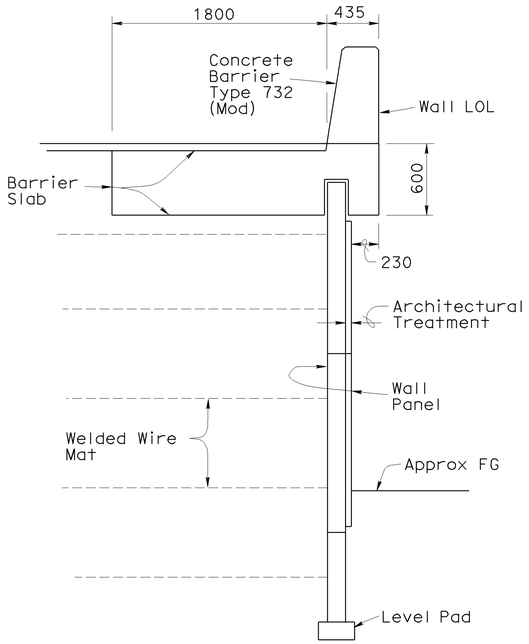

SECTION A-A
1:25

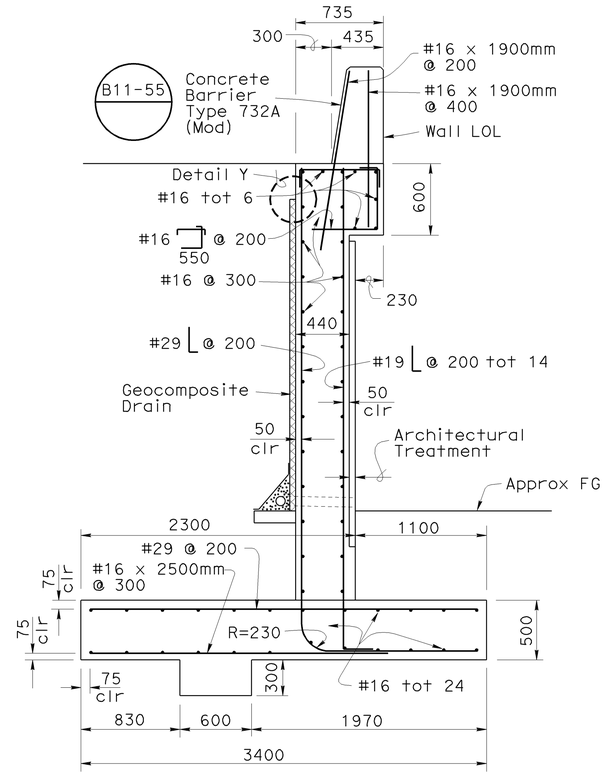

SECTION B-B
1:25

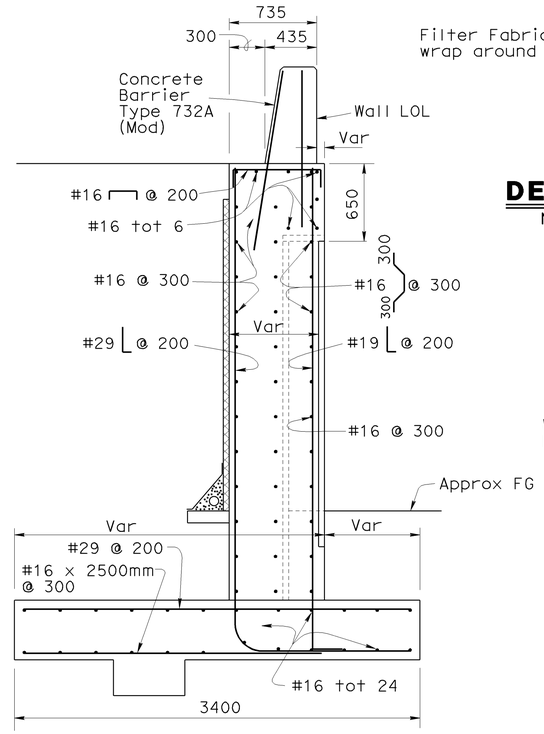

SECTION C-C
1:25

For Details, see "Section B-B"

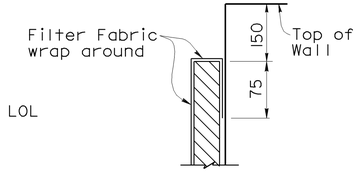

DETAIL Y
No Scale

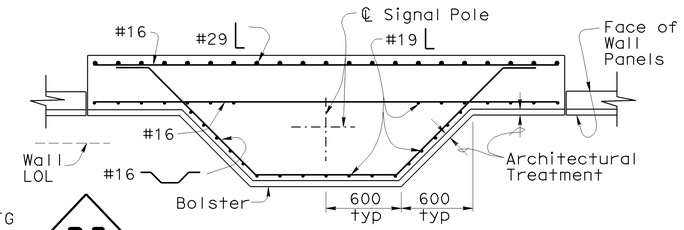

SECTION F-F
1:25

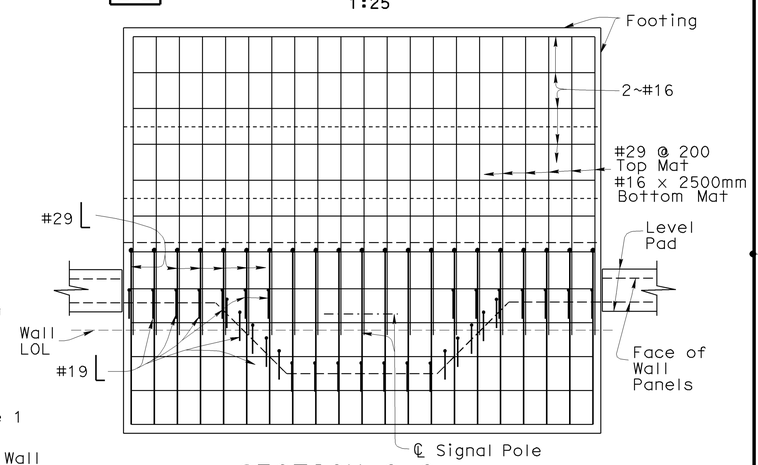

SECTION G-G
1:25

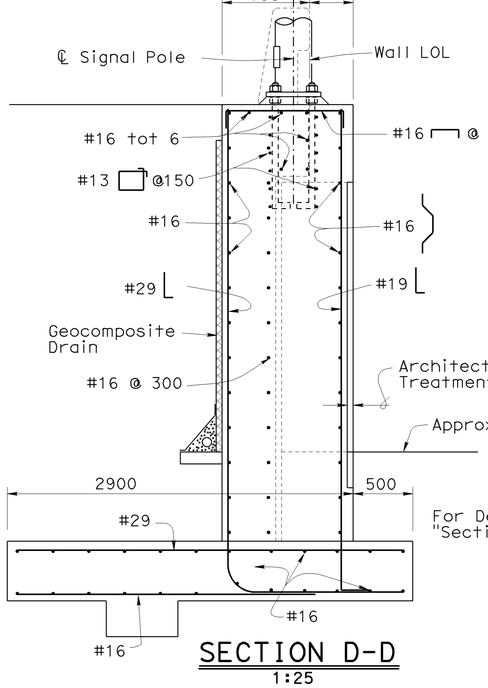

SECTION D-D
1:25

For Details, see "Section B-B"

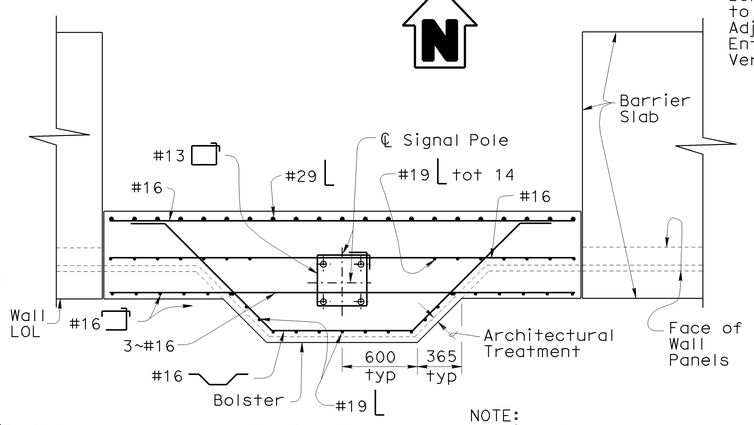

SECTION E-E
1:25

NOTE:
Barrier Slab Reinf Not Shown

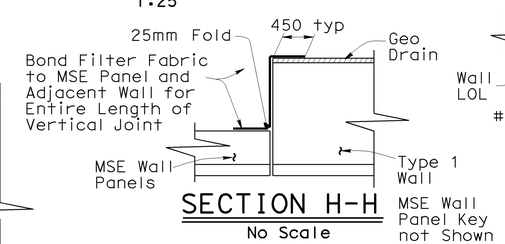

SECTION H-H
No Scale

MSE Wall Panel Key not Shown

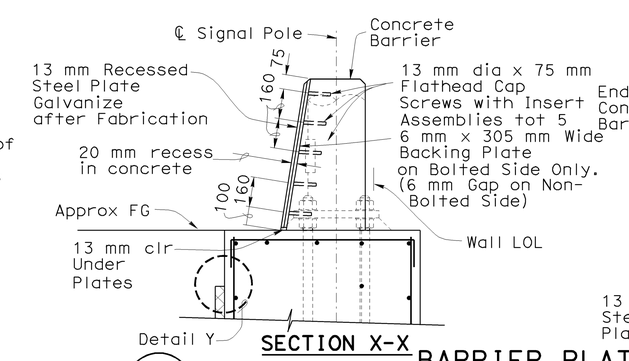

SECTION X-X

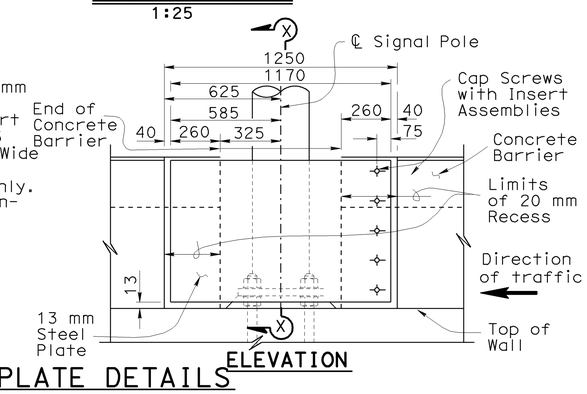

ELEVATION

BARRIER PLATE DETAILS
No Scale

For Excavation and Backfill Details, see A62-C

NOTES:
For Locations of "Section A-A" Through "Section H-H", see "Retaining Wall Details No. 10 Sheet
For MSE Wall Details, see Other Retaining Wall Detail Sheets
For Architectural Treatment see "Wall Architectural Details" Sheet
For Wall Drainage Details see "Wall Details No. 13" Sheet

Caltrans Metric

	BY	CHECKED
DESIGN	M. VAN DE POL 08-05	P. NORBOE 09-05
DETAILS	M. VAN DE POL 08-05	P. NORBOE 09-05
QUANTITIES	M. VAN DE POL 08-05	P. NORBOE 09-05

STATE OF CALIFORNIA
DEPARTMENT OF TRANSPORTATION

DIVISION OF ENGINEERING SERVICES
STRUCTURE DESIGN
DESIGN BRANCH 9

BRIDGE NO. 39E0003
KILOMETER POST 59.66

BRADLEY OVERHEAD (REPLACE)
RETAINING WALLS
WALL DETAILS No. 11

ALL DIMENSIONS ARE IN MILLIMETERS UNLESS OTHERWISE SHOWN

ORIGINAL SCALE IN MILLIMETERS FOR REDUCED PLANS 0 10 20 30 40 50 60 70 80 90 100

CU 10
EA 3A66U1

DISREGARD PRINTS BEARING EARLIER REVISION DATES 8-18-05 12-13-05

REVISION DATES

SHEET 40 OF 53

FILE => 39e0044-r-rwdt11.dgn

STRUCTURES DESIGN DETAIL SHEET (METRIC) (REV.03-17-04)

USERNAME => trstrk DATE PLOTTED => 11-MAR-2009 TIME PLOTTED => 07:21

DIST	COUNTY	ROUTE	KILOMETER POST TOTAL PROJECT	SHEET No	TOTAL SHEETS
10	Mer	140	58.7/60.5	372	384

REGISTERED CIVIL ENGINEER 9-30-08 DATE

3-2-09
PLANS APPROVAL DATE

REGISTERED PROFESSIONAL ENGINEER M. Van De Pol No. C35610 Exp. 9-30-09 CIVIL STATE OF CALIFORNIA

The State of California or its officers or agents shall not be responsible for the accuracy or completeness of electronic copies of this plan sheet.

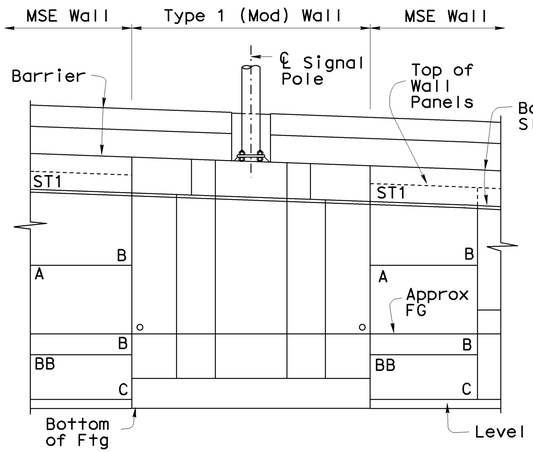

SIGNAL POLE AT WALL STA. 31+73.100

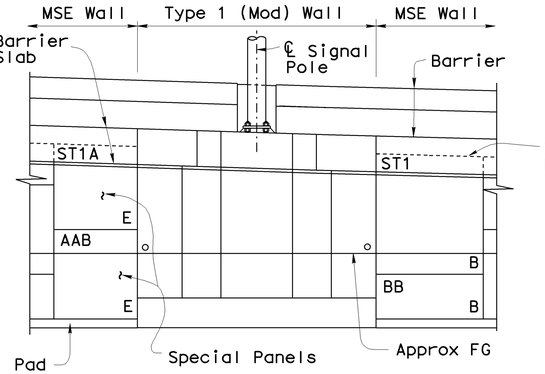

SIGNAL POLE AT WALL STA. 31+98.300

PART ELEVATIONS

1:50

Panel Type Designation, See "Wall Details" Sheets — A

Soil Reinforcement Designation, See "Wall Details" Sheets — B

PANEL LEGEND

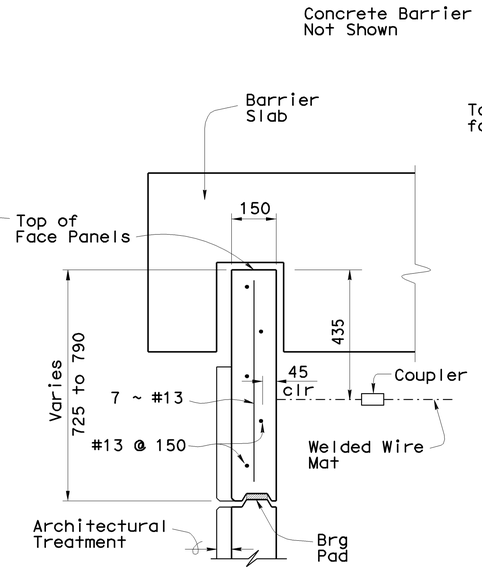

PANEL SECTION
PANEL TYPE ST2A

NO SCALE

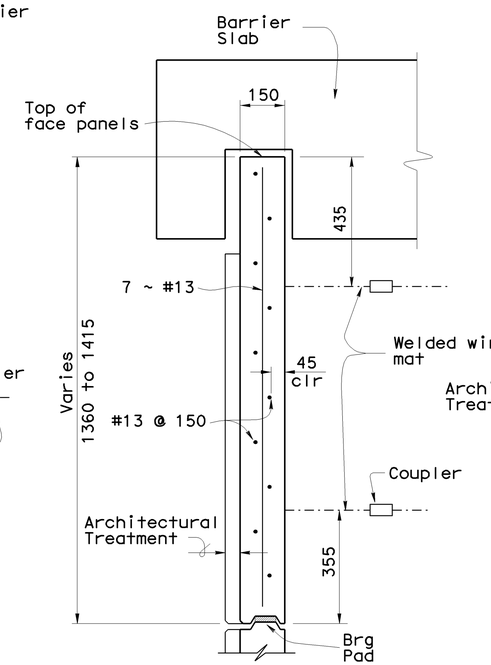

PANEL SECTION
PANEL TYPE ST1A

NO SCALE

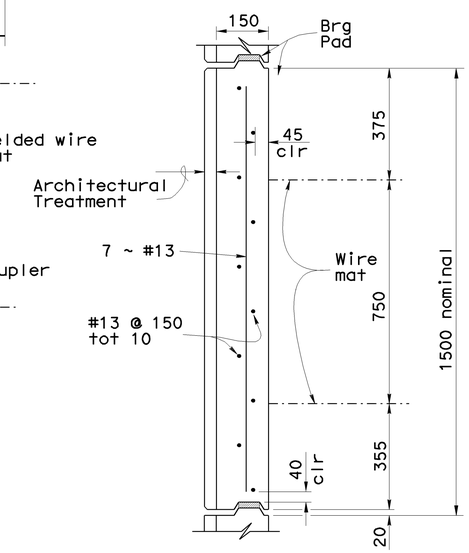

PANEL SECTION
PANEL TYPE AC

NO SCALE

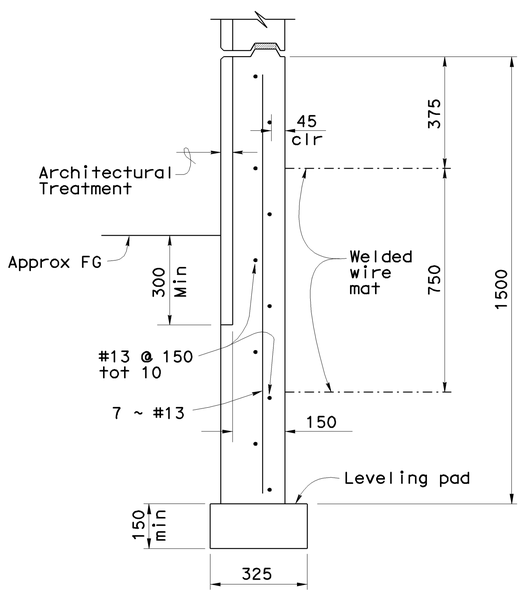

PANEL SECTION
TYPE AAB

NO SCALE

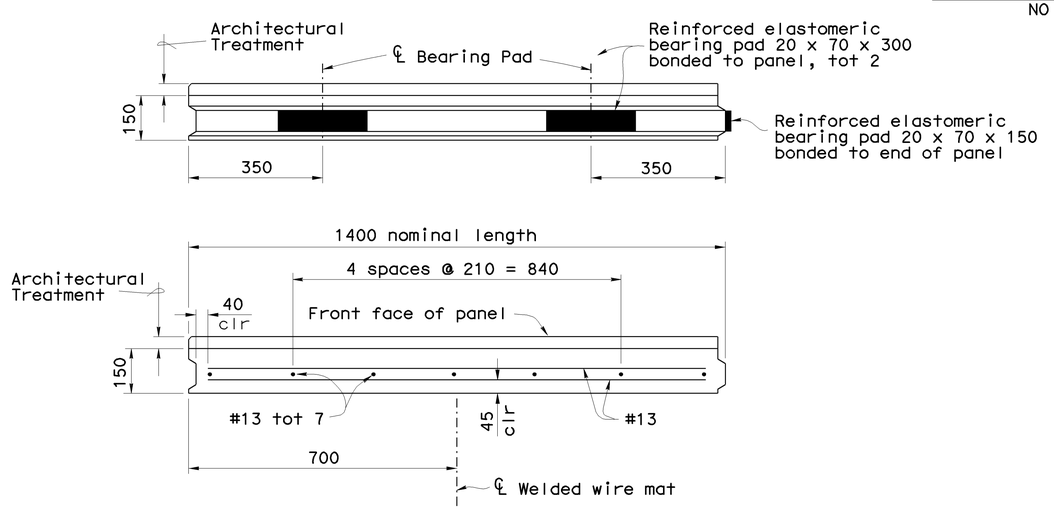

TYPICAL PLAN VIEWS

NOTES:

Concrete Barrier and Chain Link Railing not shown

For Locations of Special Wall Panels, see "Retaining Wall No. 3 Wall Panel Layout No. 4" and "Retaining Wall No. 3 Wall Panel Layout No. 5" Sheets

For architectural treatment, see "Wall Architectural Details" sheet

Number of levels of welded mats in panels vary, see "Wall Details No. 1" sheet

Panels to be cast straight along their length. For locations of bearing pads in vertical joints, see "Wall Details No. 7" sheet

Top mat shall be sloped -5% to -15% to provide 100 mm min cover to Roadway Section as required

Second mat may be sloped to provide 150 mm min clear between mats as required per Note 4

For Type 1 (Mod) Wall Details, see "Wall Details No. 10" and "Wall Details No. 11" Sheets

SPECIAL MSE WALL PANELS AT SIGNAL POLES (MW70)

NO SCALE

Caltrans Metric

	BY		CHECKED	
DESIGN	M. VAN DE POL	04-03	P. NORBOE	12-05
DETAILS	M. VAN DE POL	04-03	P. NORBOE	12-05
QUANTITIES	M. VAN DE POL	11-05	P. NORBOE	12-05

STATE OF CALIFORNIA
DEPARTMENT OF TRANSPORTATION

DIVISION OF ENGINEERING SERVICES
STRUCTURE DESIGN
DESIGN BRANCH 9

BRIDGE NO. 39E0001 39E0002 39E0003 39E0004

KILOMETER POST 59.66

BRADLEY OVERHEAD (REPLACE)
RETAINING WALLS
WALL DETAILS No. 12

ALL DIMENSIONS ARE IN MILLIMETERS UNLESS OTHERWISE SHOWN

ORIGINAL SCALE IN MILLIMETERS FOR REDUCED PLANS 0 10 20 30 40 50 60 70 80 90 100

CU 10
EA 3A66U1

DISREGARD PRINTS BEARING EARLIER REVISION DATES 9-9-03 12-13-05

REVISION DATES

SHEET 41 OF 53

FILE => 39e0044-r-rwdt12.dgn

STRUCTURES DESIGN DETAIL SHEET (METRIC) (REV.03-17-04)

USERNAME => trphnis DATE PLOTTED => 05-MAR-2009 TIME PLOTTED => 06:16

DIST	COUNTY	ROUTE	KILOMETER POST TOTAL PROJECT	SHEET No	TOTAL SHEETS
10	Mer	140	58.7/60.5	373	384

REGISTERED CIVIL ENGINEER 9-30-08 DATE

3-2-09
PLANS APPROVAL DATE

REGISTERED PROFESSIONAL ENGINEER M. Van De Pol No. C35610 Exp. 9-30-09 CIVIL STATE OF CALIFORNIA

The State of California or its officers or agents shall not be responsible for the accuracy or completeness of electronic copies of this plan sheet.

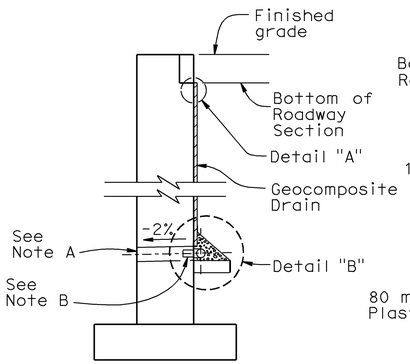

WALL SECTION

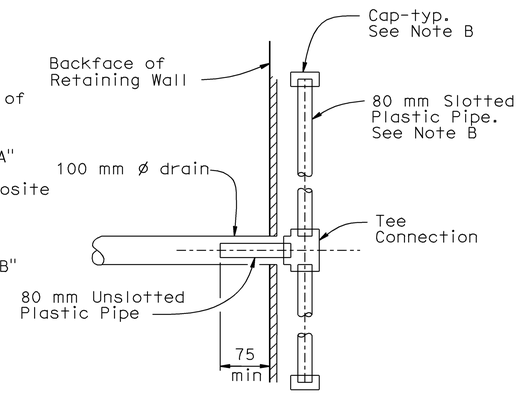

SECTION A-A

For Weephole Locations, see "Detail A" and "Detail B" on "Wall Details No. 10" Sheet

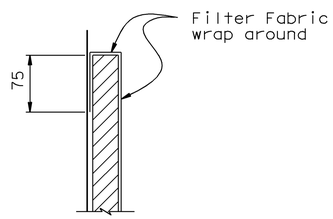

DETAIL "A"

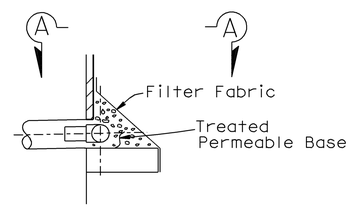

DETAIL "B"

At the option of the Contractor Standard Plan Detail B0-3/3-1 may be Substituted for the Geocomposite Drain, as Approved by the Engineer

WEEP HOLE AND GEOCOMPOSITE DRAIN

No Scale

Notes:

A. 100 mm ø drains shall be located as shown on "Wall Details No. 10" Sheet

B. Geocomposite drain, cement treated permeable base, and 80 mm ø slotted plastic pipe continuous behind retaining wall. Cap ends of pipe. Provide "Tee" connection at each 100 mm ø drain.

C. Connect the low end of plastic pipe to the main outlet pipe as applicable.

D. For additional details, see Bridge Plans this Contract

Caltrans Metric

	BY		CHECKED
DESIGN	M. VAN DE POL	04-03	P. NORBOE 12-05
DETAILS	M. VAN DE POL	04-03	P. NORBOE 12-05
QUANTITIES	M. VAN DE POL	11-05	P. NORBOE 12-05

STATE OF CALIFORNIA DEPARTMENT OF TRANSPORTATION

DIVISION OF ENGINEERING SERVICES STRUCTURE DESIGN DESIGN BRANCH 9

39E0003

KILOMETER POST 59.66

BRADLEY OVERHEAD (REPLACE)

RETAINING WALLS

WALL DETAILS No. 13

ALL DIMENSIONS ARE IN MILLIMETERS UNLESS OTHERWISE SHOWN

ORIGINAL SCALE IN MILLIMETERS FOR REDUCED PLANS 0 10 20 30 40 50 60 70 80 90 100

CU 10
EA 3A66U1

DISREGARD PRINTS BEARING EARLIER REVISION DATES 5-8-08 12-13-05

REVISION DATES

SHEET 42 OF 53

FILE => 39e0044-r-rwdt13.dgn

STRUCTURES DESIGN DETAIL SHEET (METRIC) (REV.03-17-04)

USERNAME => trpbtlg DATE PLOTTED => 05-MAR-2009 TIME PLOTTED => 06:16

DIST	COUNTY	ROUTE	KILOMETER POST TOTAL PROJECT	SHEET No	TOTAL SHEETS
10	Mer	140	58.7/60.5	374	384

REGISTERED CIVIL ENGINEER 9-30-08 DATE

3-2-09
PLANS APPROVAL DATE

REGISTERED PROFESSIONAL ENGINEER M. Van De Pol No. C35610 Exp. 9-30-09 CIVIL STATE OF CALIFORNIA

The State of California or its officers or agents shall not be responsible for the accuracy or completeness of electronic copies of this plan sheet.

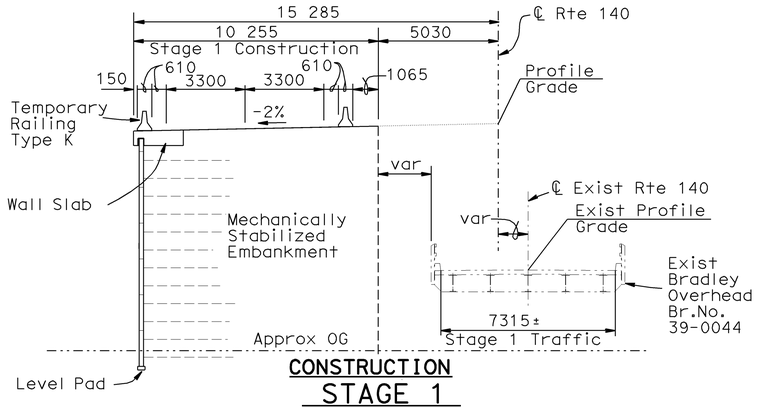

CONSTRUCTION
STAGE 1

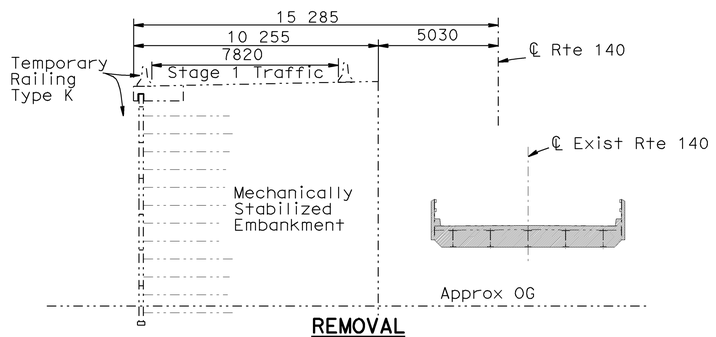

REMOVAL
STAGE 1

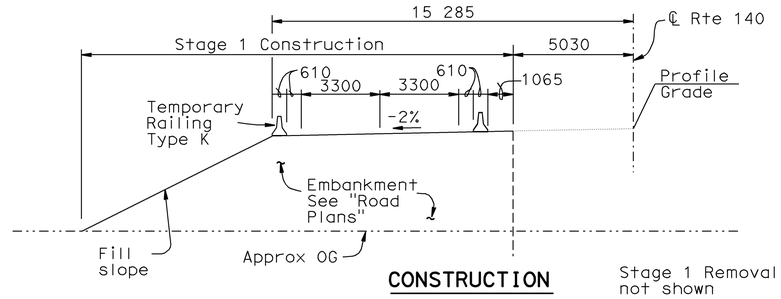

CONSTRUCTION
STAGE 1

Stage 1 Removal not shown

NOTES:

Denotes Limits of Removal of Existing Structure, see Other Plans This Contract

For details not shown, see "Typical Section" Sheet

For Other Stage Construction Details, see Other Plans This Contract

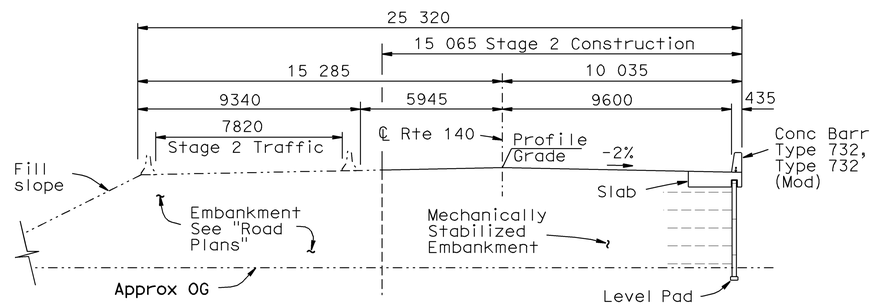

CONSTRUCTION
STAGE 2

Soundwall not Shown

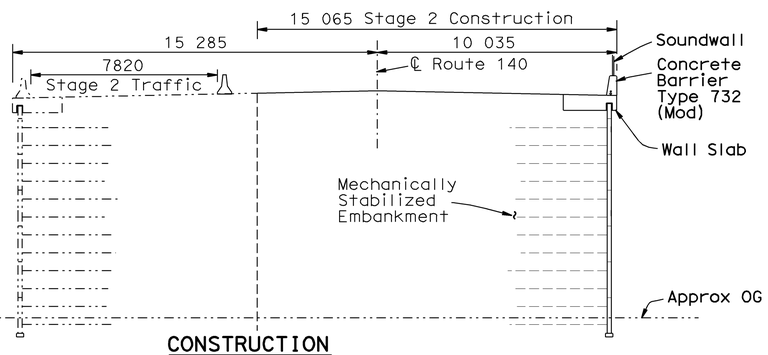

CONSTRUCTION
STAGE 2

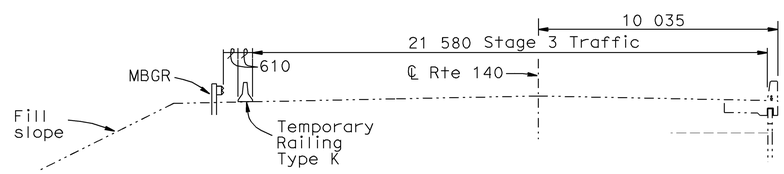

CONSTRUCTION
STAGE 3

MSE WALL WITH FILL SLOPE
1:125

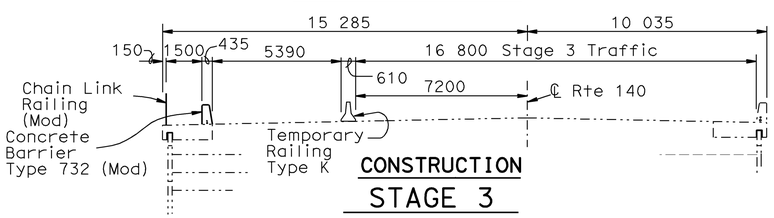

CONSTRUCTION
STAGE 3

PARALLEL MSE WALLS
1:125

Caltrans Metric

	BY		CHECKED
DESIGN	M. VAN DE POL	04-03	P. NORBOE 11-05
DETAILS	M. VAN DE POL	04-03	P. NORBOE 11-05
QUANTITIES	M. VAN DE POL	11-05	P. NORBOE 11-05

STATE OF CALIFORNIA
DEPARTMENT OF TRANSPORTATION

DIVISION OF ENGINEERING SERVICES
STRUCTURE DESIGN
DESIGN BRANCH 9

BRIDGE NO. 39E0001 39E0002 39E0003 39E0004
KILOMETER POST 59.66

BRADLEY OVERHEAD (REPLACE)
RETAINING WALLS
STAGE CONSTRUCTION

ALL DIMENSIONS ARE IN MILLIMETERS UNLESS OTHERWISE SHOWN

ORIGINAL SCALE IN MILLIMETERS FOR REDUCED PLANS 0 10 20 30 40 50 60 70 80 90 100

CU 10
EA 3A66U1

DISREGARD PRINTS BEARING EARLIER REVISION DATES

REVISION DATES 8-11-05 11-29-05

SHEET 43 OF 53

FILE => 39e0044-r-stg.dgn

STRUCTURES DESIGN DETAIL SHEET (METRIC) (REV.03-17-04)

USERNAME => trstrk DATE PLOTTED => 11-MAR-2009 TIME PLOTTED => 07:21

DIST	COUNTY	ROUTE	KILOMETER POST TOTAL PROJECT	SHEET No	TOTAL SHEETS
10	Mer	140	58.7/60.5	375	384

REGISTERED CIVIL ENGINEER 11-18-08 DATE

3-2-09
PLANS APPROVAL DATE

REGISTERED PROFESSIONAL ENGINEER M. Van De Pol No. C35610 Exp. 9-30-09 CIVIL STATE OF CALIFORNIA

The State of California or its officers or agents shall not be responsible for the accuracy or completeness of electronic copies of this plan sheet.

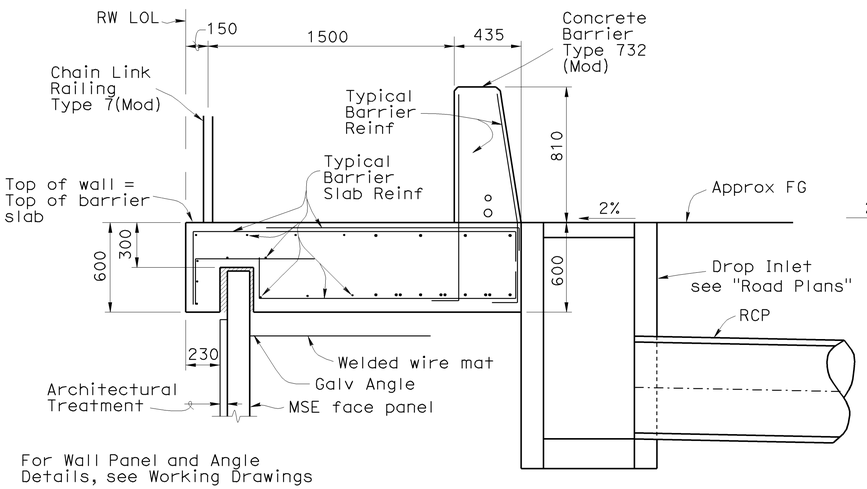

NORTH SIDE

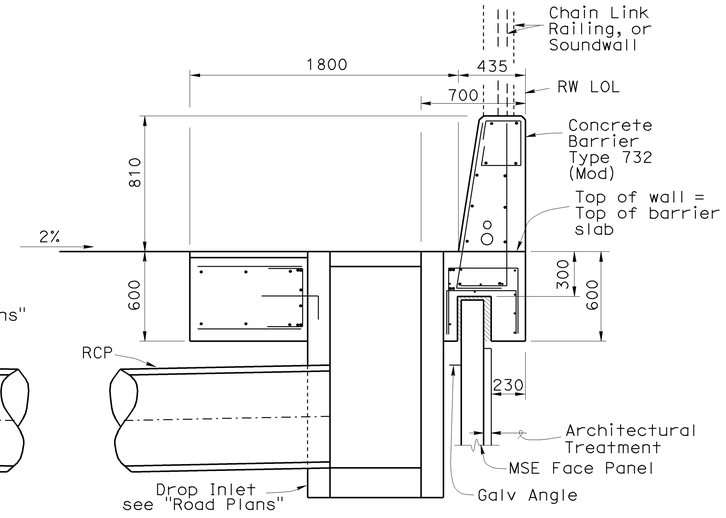

SOUTH SIDE

SECTIONS AT DROP INLETS

1:20

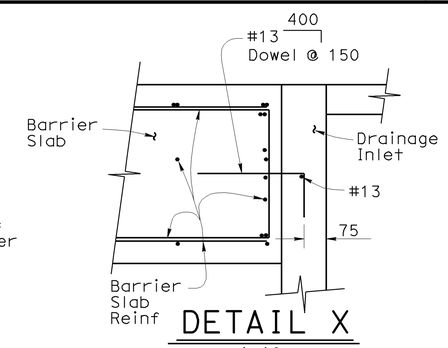

DETAIL X

1:10

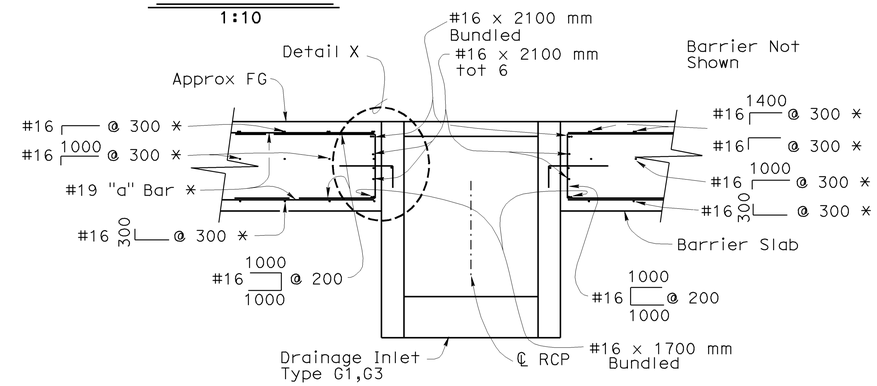

SECTION B-B

1:20

* Typical Barrier Slab Reinf

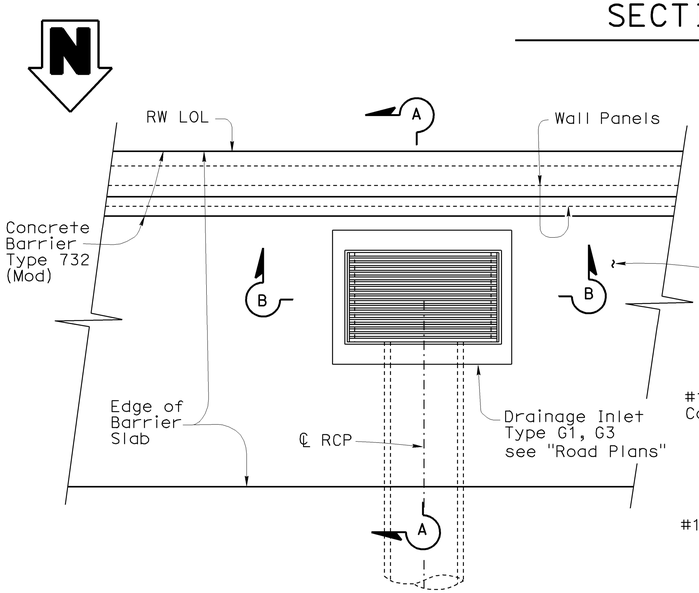

PART PLAN

1:20

South Side Shown

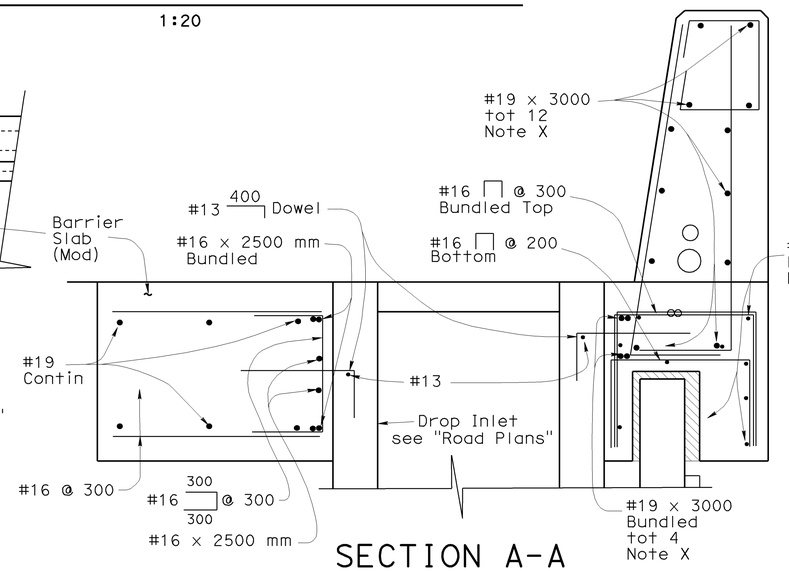

SECTION A-A

1:10

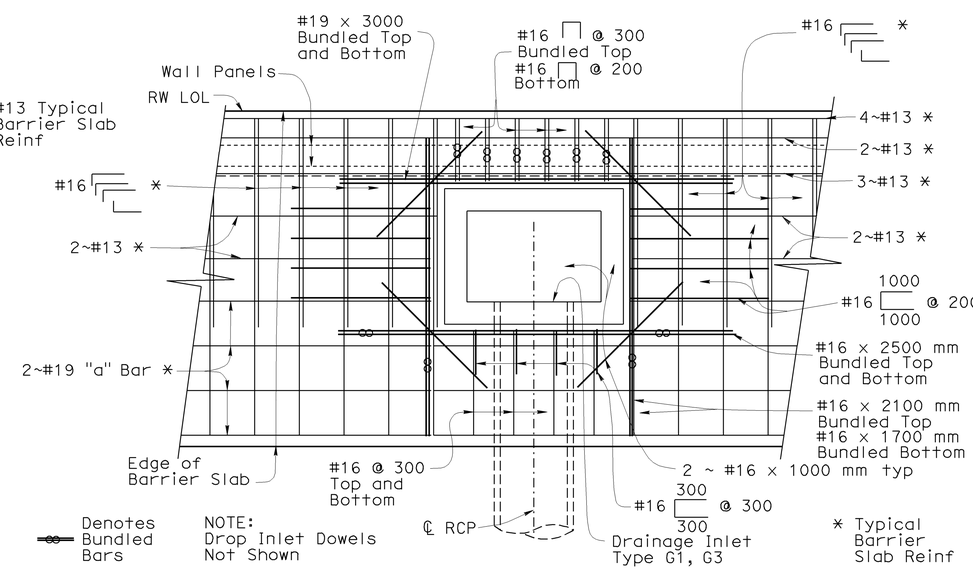

PART PLAN-BARRIER SLAB REINFORCEMENT

1:20

NOTES:
Drop Inlet Reinforcement not Shown

For Barrier Details, see B11-55

For Barrier Slab Details Not Shown, see "Wall Details No. 2" sheet

For Drainage System Location and Details, see "Road Plans"

For Details Not Shown ,see "Structure Approach Details" Sheet

For Details on Bridge, see Other Plans This Contract

Note X:
Reinf in Addition to Standard Barrier Contin Reinf. Bundle with Standard Barrier Reinf

NOTE:
For Wall Panel Details, see Working Drawings

Denotes Bundled Bars

Denotes Bundled Bars

NOTE:
Drop Inlet Dowels Not Shown

* Typical Barrier Slab Reinf

DRAINAGE DETAILS AT MSE WALL BARRIER SLAB

Caltrans Metric

	BY		CHECKED
DESIGN	M. VAN DE POL	04-03	P. NORBOE 12-05
DETAILS	M. VAN DE POL	04-03	P. NORBOE 12-05
QUANTITIES	M. VAN DE POL	11-05	P. NORBOE 12-05

STATE OF CALIFORNIA DEPARTMENT OF TRANSPORTATION

DIVISION OF ENGINEERING SERVICES STRUCTURE DESIGN

DESIGN BRANCH 9

CU 10
EA 3A66U1

ALL DIMENSIONS ARE IN MILLIMETERS UNLESS OTHERWISE SHOWN

ORIGINAL SCALE IN MILLIMETERS FOR REDUCED PLANS 0 10 20 30 40 50 60 70 80 90 100

FILE => 39e0044-s-adrndt.dgn

BRIDGE NO. 39E0001 39E0002 39E0003 39E0004

KILOMETER POST 59.66

BRADLEY OVERHEAD (REPLACE)

RETAINING WALLS

DRAINAGE DETAILS

DISREGARD PRINTS BEARING EARLIER REVISION DATES

REVISION DATES 5-8-03 12-13-05 11-18-08

SHEET 44 OF 53

STRUCTURES DESIGN DETAIL SHEET (METRIC) (REV.03-17-04)

USERNAME => trstrk DATE PLOTTED => 11-MAR-2009 TIME PLOTTED => 07:21

DIST	COUNTY	ROUTE	KILOMETER POST TOTAL PROJECT	SHEET No	TOTAL SHEETS
10	Mer	140	58.7/60.5	376	384

REGISTERED CIVIL ENGINEER 9-30-08 DATE

3-2-09
PLANS APPROVAL DATE

REGISTERED PROFESSIONAL ENGINEER M. Van De Pol No. C35610 Exp. 9-30-09 CIVIL STATE OF CALIFORNIA

The State of California or its officers or agents shall not be responsible for the accuracy or completeness of electronic copies of this plan sheet.

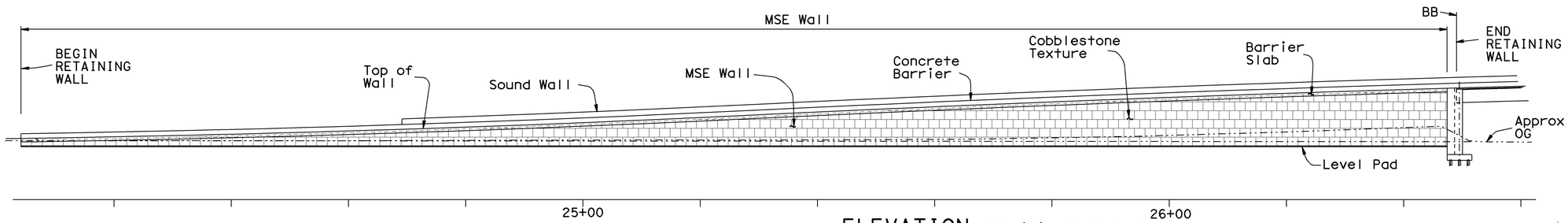

ELEVATION
1:400

Retaining Wall No 1 Shown, Other Walls Similar Architectural Treatment not Shown

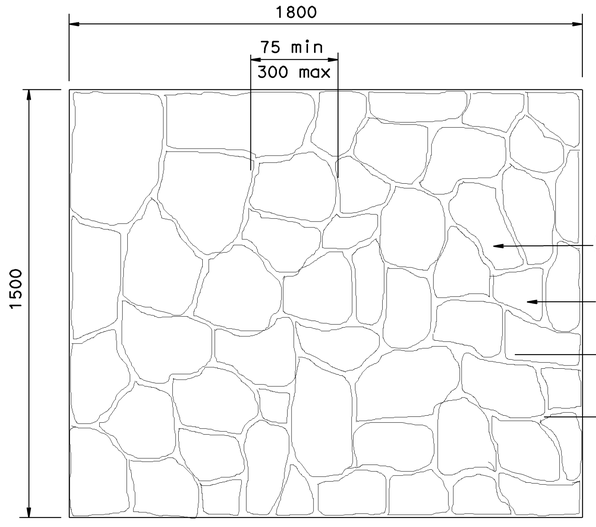

ELEVATION

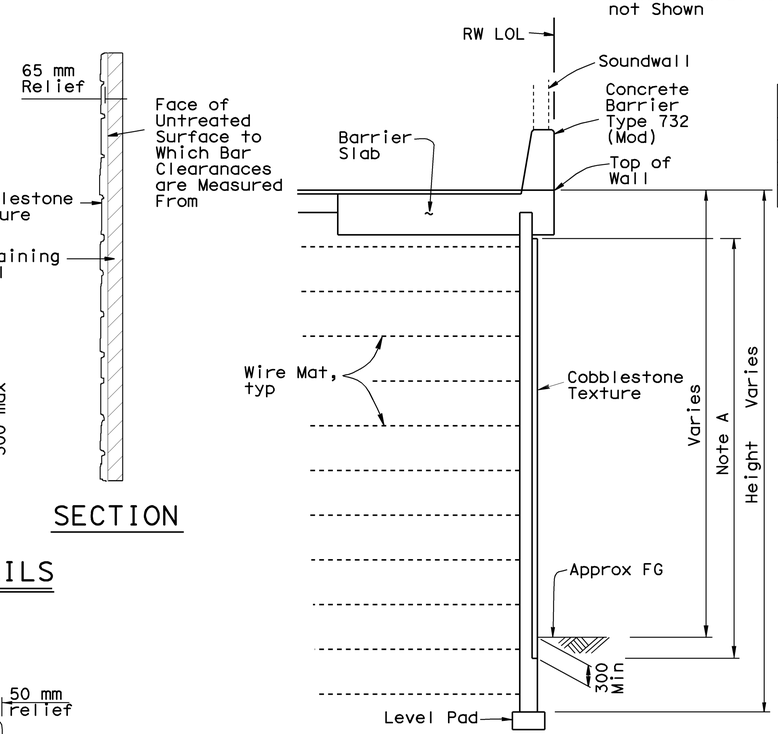

SECTION

MSE WALL PANEL DETAILS

Ret Wall Number	"A"
1	3.400
2	3.960
3	5.060
4	4.380

TYPICAL SECTION
NO SCALE

Note A
Limits of Cobblestone Texture and Prepare and Stain Concrete Surfaces

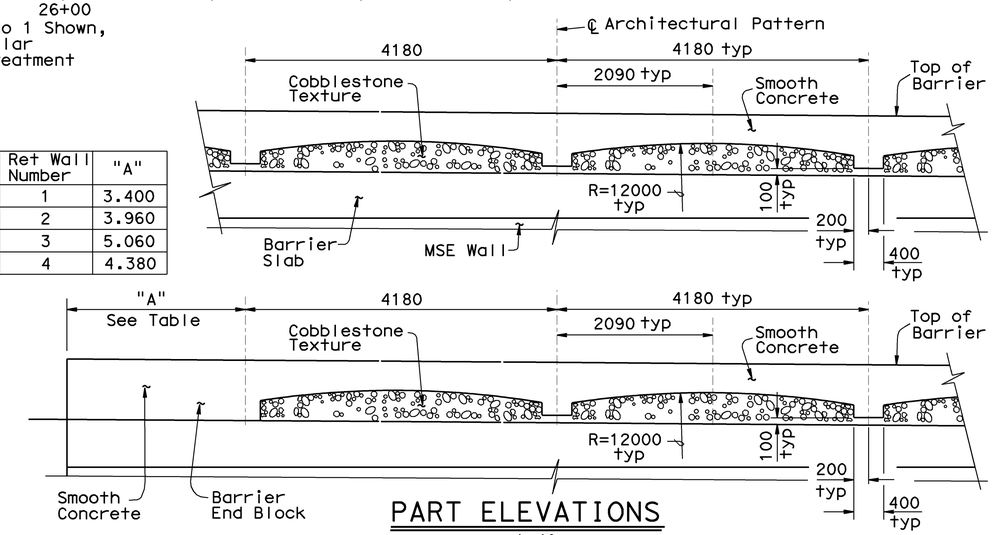

PART ELEVATIONS
1:40

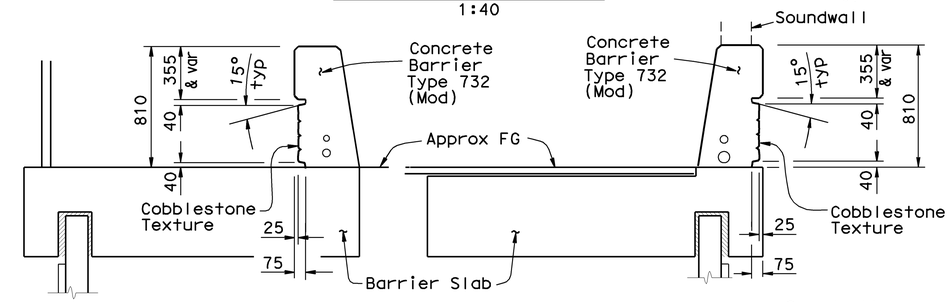

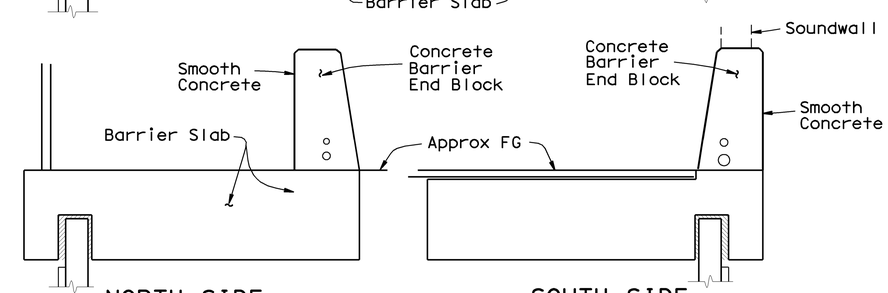

NORTH SIDE

SECTIONS
1:20

SOUTH SIDE

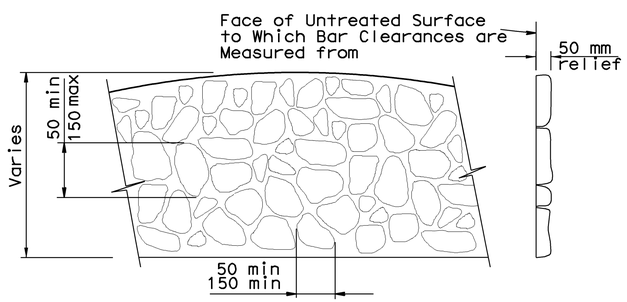

BARRIER DETAILS

NOTES:
For details not shown, see, "Wall Details No. 1" and "Wall Details No. 2" Sheets and "Road Plans"

For Additional Details, see "Bridge Architectural Details" on Other Plans This Contract

Cobblestone Texture Shall Match that of the Abutment and Return Walls, as Approved by the Engineer

COBBLESTONE TREATMENTS
NO SCALE

DESIGN	BY M. VAN DE POL	04-03	CHECKED P. NORBOE 12-05
DETAILS	BY M. VAN DE POL	04-03	CHECKED P. NORBOE 12-05
QUANTITIES	BY M. VAN DE POL	11-05	CHECKED P. NORBOE 12-05

STATE OF CALIFORNIA
DEPARTMENT OF TRANSPORTATION

DIVISION OF ENGINEERING SERVICES
STRUCTURE DESIGN
DESIGN BRANCH 9

CU 10
EA 3A66U1

BRIDGE NO. 39E0001 39E0002 39E0003 39E0004
KILOMETER POST 59.66

BRADLEY OVERHEAD (REPLACE)
RETAINING WALLS
WALL ARCHITECTURAL DETAILS

Caltrans Metric

ALL DIMENSIONS ARE IN MILLIMETERS UNLESS OTHERWISE SHOWN

ORIGINAL SCALE IN MILLIMETERS FOR REDUCED PLANS 0 10 20 30 40 50 60 70 80 90 100

DISREGARD PRINTS BEARING EARLIER REVISION DATES 5-8-03 12-13-05

REVISION DATES

SHEET 45 OF 53

FILE => 39e0044-s-awardet.dgn

STRUCTURES DESIGN DETAIL SHEET (METRIC) (REV.03-17-04)

USERNAME => ttstrk DATE PLOTTED => 11-MAR-2009 TIME PLOTTED => 07:21

DIST	COUNTY	ROUTE	KILOMETER POST TOTAL PROJECT	SHEET No	TOTAL SHEETS
10	Mer	140	58.7/60.5	377	384

REGISTERED CIVIL ENGINEER — DATE 11-18-08

3-2-09
PLANS APPROVAL DATE

REGISTERED PROFESSIONAL ENGINEER M. Van De Pol No. C35610 Exp. 9-30-09 CIVIL STATE OF CALIFORNIA

The State of California or its officers or agents shall not be responsible for the accuracy or completeness of electronic copies of this plan sheet.

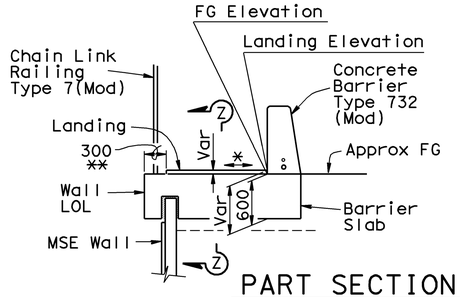

For Landing Details on Bridge, see Other Plans This Contract

* Level

** At the Option of the Contractor, the Landing May Extend to the Bridge EOD

PART SECTION RW No. 2,4

1:40

Notes

For Additional Details, See "Typical Section", "Wall Details No. 2" Sheets and "Road Plans"

The Details Shown Herein Reflect Pedestrian Walkway/Bikeway Landing Constructed After the Barrier Slab has Been Completed. At the Option of the Contractor, the Landings May be Constructed with the Barrier Slab, as Approved by the Engineer

Concrete Barrier, Chain Link Railing and Soundwall Not Shown

For Base Widths, see "Wall Panel Layout" Sheets

For Details, see A62-B

EXCAVATION/BACKFILL LEGEND

- Denotes Limits of Structure Excavation
- Denotes Limits of Structure Backfill
- Denotes Limits of Roadway Backfill
- Denotes Limits of Permeable Material

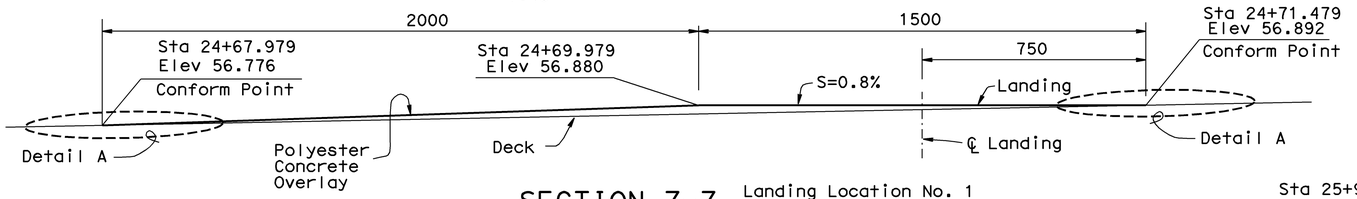

SECTION Z-Z

No Scale

Landing Location No. 1
Retaining Wall No. 2
Br. No. 39E0002

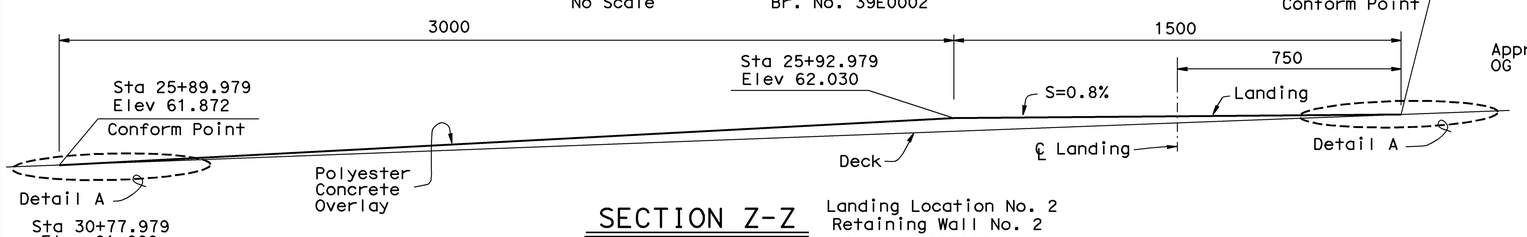

SECTION Z-Z

No Scale

Landing Location No. 2
Retaining Wall No. 2
Br. No. 39E0002

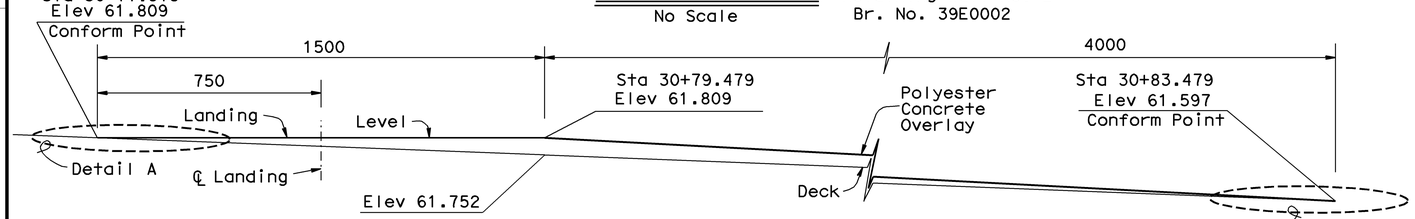

SECTION Z-Z

No Scale

Landing Location No. 3
Retaining Wall No. 4
Br. No. 39E0004

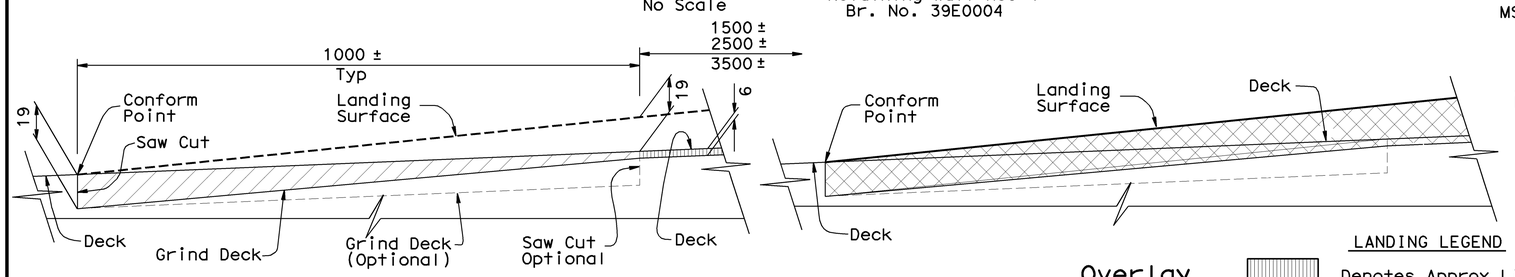

Removal

Overlay

Low End Landing Conform Point Shown, High End Conform Point Similar

DETAIL A

No Scale

LANDING LEGEND

- Denotes Approx Limits of Prepare Concrete Bridge Deck Surface
- Denotes Approx Limits of "Prepare Concrete Bridge Deck Surface" and "Remove Concrete Deck Surface"
- Denotes Approx Limits of Polyester Concrete Overlay

PEDESTRIAN WALKWAY / BIKEPATH LANDING DETAILS

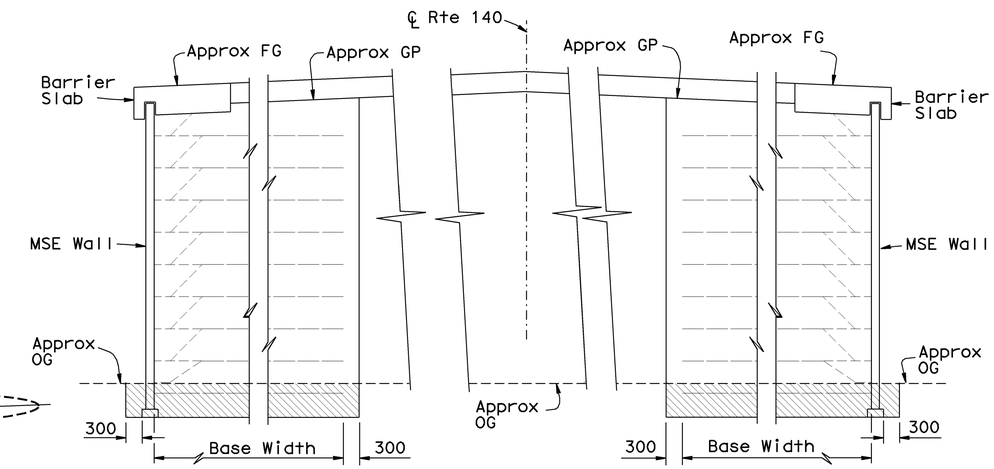

LIMITS OF EXCAVATION

No Scale

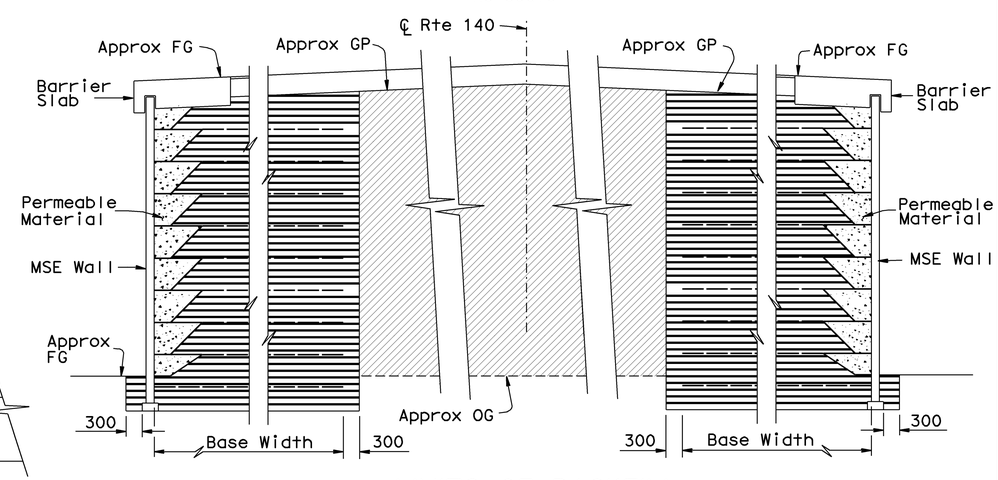

LIMITS OF BACKFILL

No Scale

EXCAVATION AND BACKFILL DETAILS

Caltrans Metric

	BY		CHECKED	
DESIGN	M. VAN DE POL	04-03	P. NORBOE	11-05
DETAILS	M. VAN DE POL	04-03	P. NORBOE	11-05
QUANTITIES	M. VAN DE POL	11-05	P. NORBOE	11-05

STATE OF CALIFORNIA
DEPARTMENT OF TRANSPORTATION

DIVISION OF ENGINEERING SERVICES
STRUCTURE DESIGN
DESIGN BRANCH 9

BRIDGE NO. 39E0002 39E0004
KILOMETER POST 59.66

BRADLEY OVERHEAD (REPLACE)
RETAINING WALLS
MISCELLANEOUS DETAILS

ALL DIMENSIONS ARE IN MILLIMETERS UNLESS OTHERWISE SHOWN

ORIGINAL SCALE IN MILLIMETERS FOR REDUCED PLANS 0 10 20 30 40 50 60 70 80 90 100

CU 10
EA 3A66U1

DISREGARD PRINTS BEARING EARLIER REVISION DATES

REVISION DATES 12-20-05 11-18-08

SHEET 46 OF 53

FILE => 39e0044-s-miscdet01.dgn

STRUCTURES DESIGN DETAIL SHEET (METRIC) (REV.03-17-04)

USERNAME => 7trphtts DATE PLOTTED => 05-MAR-2009 TIME PLOTTED => 08:16

DIST	COUNTY	ROUTE	KILOMETER POST TOTAL PROJECT	SHEET No	TOTAL SHEETS
10	Mer	140	58.7/60.5	378	384

REGISTERED CIVIL ENGINEER 11-18-08 DATE

3-2-09
PLANS APPROVAL DATE

REGISTERED PROFESSIONAL ENGINEER M. Van De Pol No. C35610 Exp. 9-30-09 CIVIL STATE OF CALIFORNIA

The State of California or its officers or agents shall not be responsible for the accuracy or completeness of electronic copies of this plan sheet.

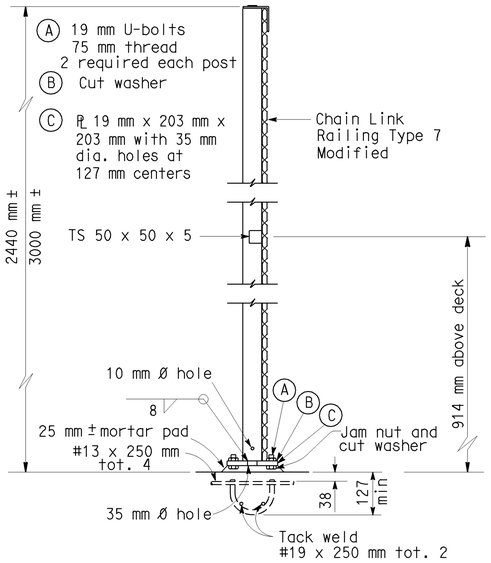

TYPICAL POST DETAIL

Left EOD Shown

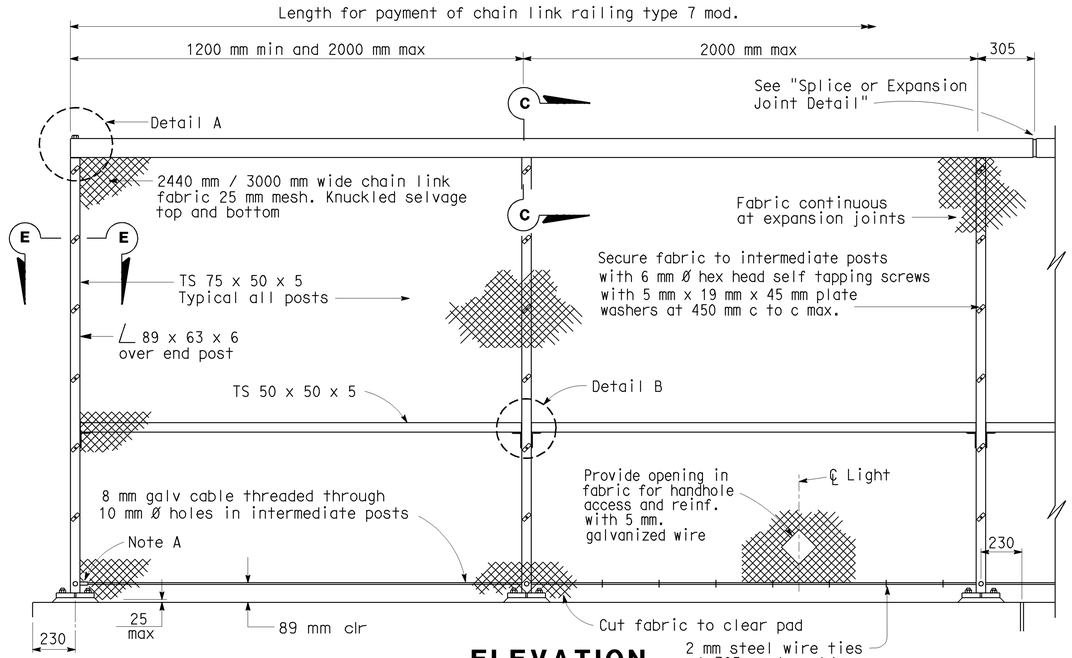

END POST **ELEVATION** **WALL JOINT**

Note A: Anchor 8 mm galvanized cable at end post with 13 mm Ø stud socket assembly or 13 mm Ø welded eyebolt and crimped sleeve clamp. Provide 38 mm min. take-up at each anchorage.

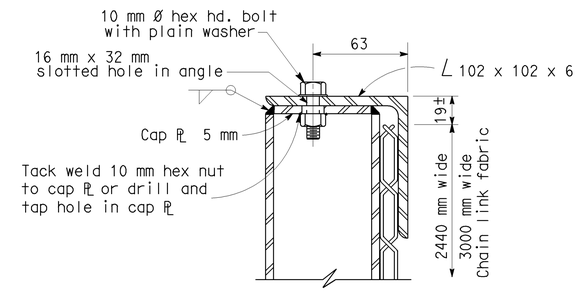

SECTION C-C

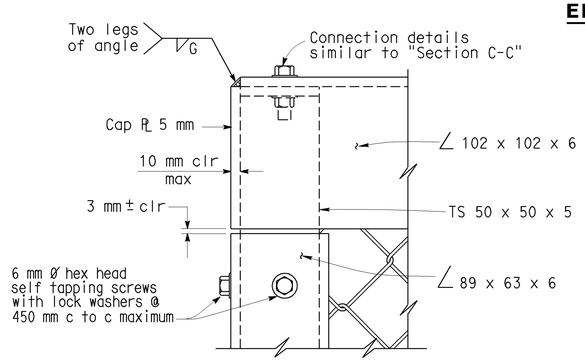

DETAIL A

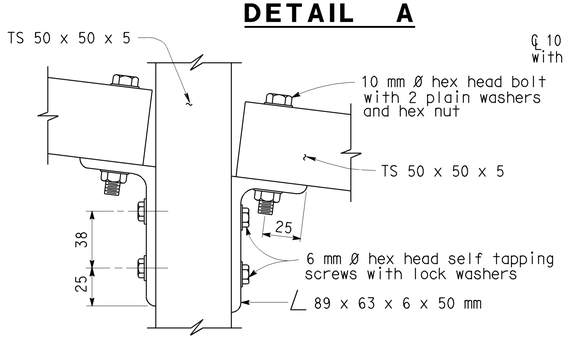

DETAIL B

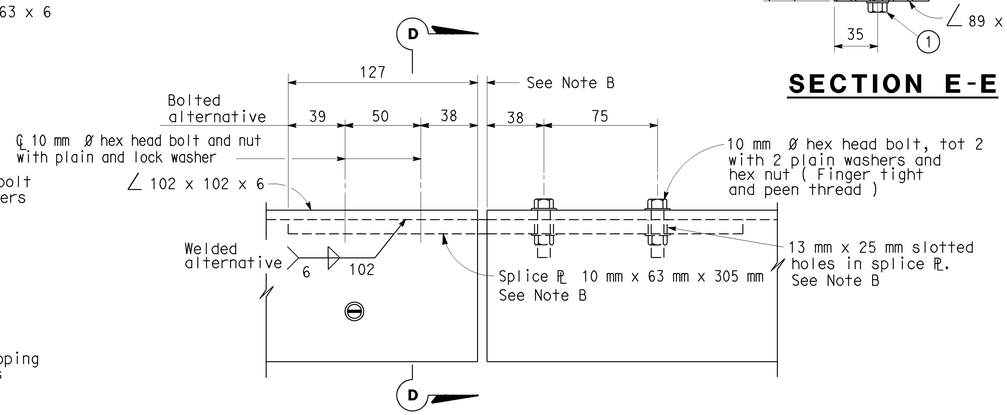

SPLICE OR EXPANSION JOINT DETAIL

Note B: Expansion joint same dimension as expansion joint in wall. Increase slotted hole length and splice PL length correspondingly.

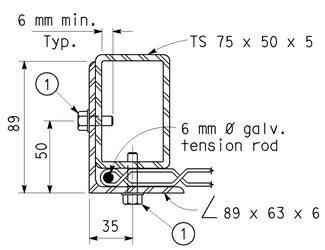

1 6 mm Ø hex head self-tapping screws with lock washers @ 380 mm c.to c. maximum

SECTION E-E

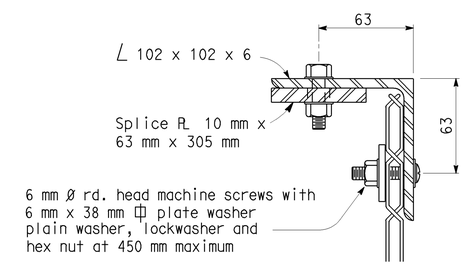

SECTION D-D

NOTES:

1. Railing assembly except chain link fabric to be galvanized after fabrication.
2. Railing shall conform to horizontal and vertical alignment. Post shall be vertical. Horizontal angle shall be bent to conform to horizontal alignment if radius is 45 m or less.
3. Horizontal angle shall be continuous over not less than two intermediate posts,except that a shorter length is permitted at expansion joints and other rail discontinuities.
4. Place fabric parallel to slope.
5. Alternative details may be submitted by the Contractor for Engineer's approval.
6. Provide thimbles at all cable loops.
7. Peen all exposed bolts.
8. For additional details, see "Typical Section" sheet

Caltrans Metric

	BY		CHECKED
DESIGN	M. VAN DE POL	04-03	P. NORBOE 11-05
DETAILS	M. VAN DE POL	04-03	P. NORBOE 11-05
QUANTITIES	M. VAN DE POL	11-05	P. NORBOE 11-05

STATE OF CALIFORNIA DEPARTMENT OF TRANSPORTATION

DIVISION OF ENGINEERING SERVICES STRUCTURE DESIGN DESIGN BRANCH 9

CU 10
EA 3A66U1

BRIDGE NO. 39E0002 39E0004

KILOMETER POST 59.66

BRADLEY OVERHEAD (REPLACE)
RETAINING WALLS
CHAIN LINK RAILING TYPE 7 (MOD)

ALL DIMENSIONS ARE IN MILLIMETERS UNLESS OTHERWISE SHOWN

ORIGINAL SCALE IN MILLIMETERS FOR REDUCED PLANS 0 10 20 30 40 50 60 70 80 90 100

DISREGARD PRINTS BEARING EARLIER REVISION DATES 11-18-08

REVISION DATES

SHEET 47 OF 53

FILE => 39e0044-s-miscdet02.dgn

STRUCTURES DESIGN DETAIL SHEET (METRIC) (REV.03-17-04)

USERNAME => trpphlis DATE PLOTTED => 05-MAR-2009 TIME PLOTTED => 06:16

DIST	COUNTY	ROUTE	KILOMETER POST TOTAL PROJECT	SHEET No	TOTAL SHEETS
10	Mer	140	58.7/60.5	379	384

REGISTERED CIVIL ENGINEER 9-30-08 DATE

3-2-09
PLANS APPROVAL DATE

REGISTERED PROFESSIONAL ENGINEER M. Van De Pol No. C35610 Exp. 9-30-09 CIVIL STATE OF CALIFORNIA

The State of California or its officers or agents shall not be responsible for the accuracy or completeness of electronic copies of this plan sheet.

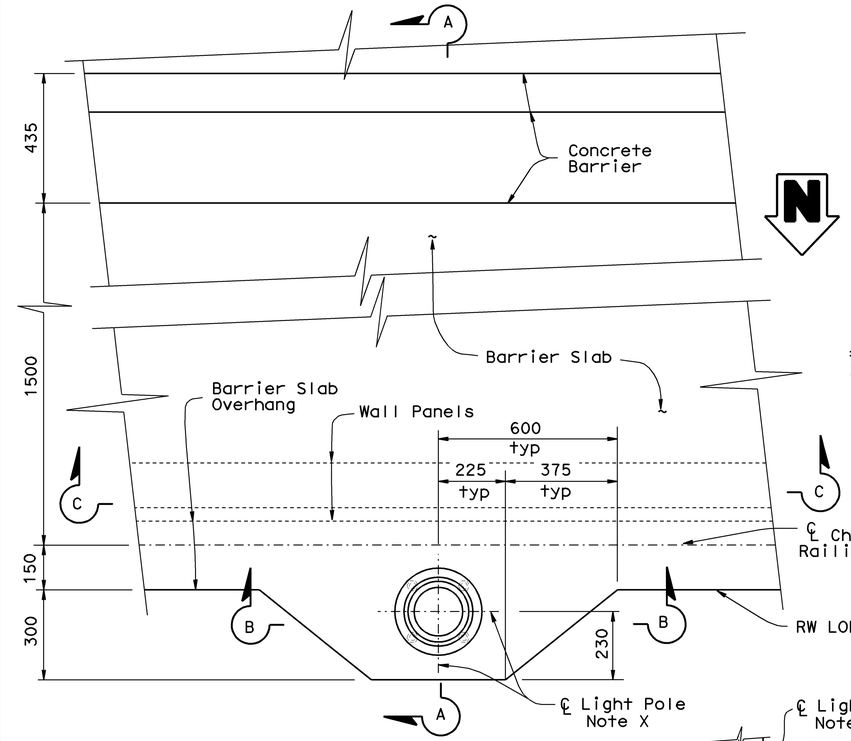

PART PLAN
1:10

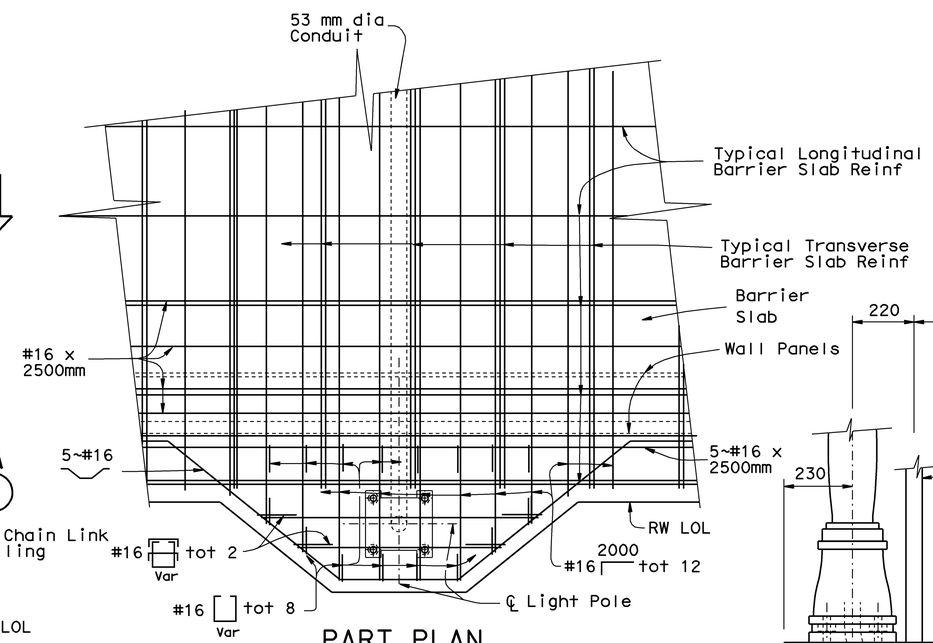

PART PLAN
1:10

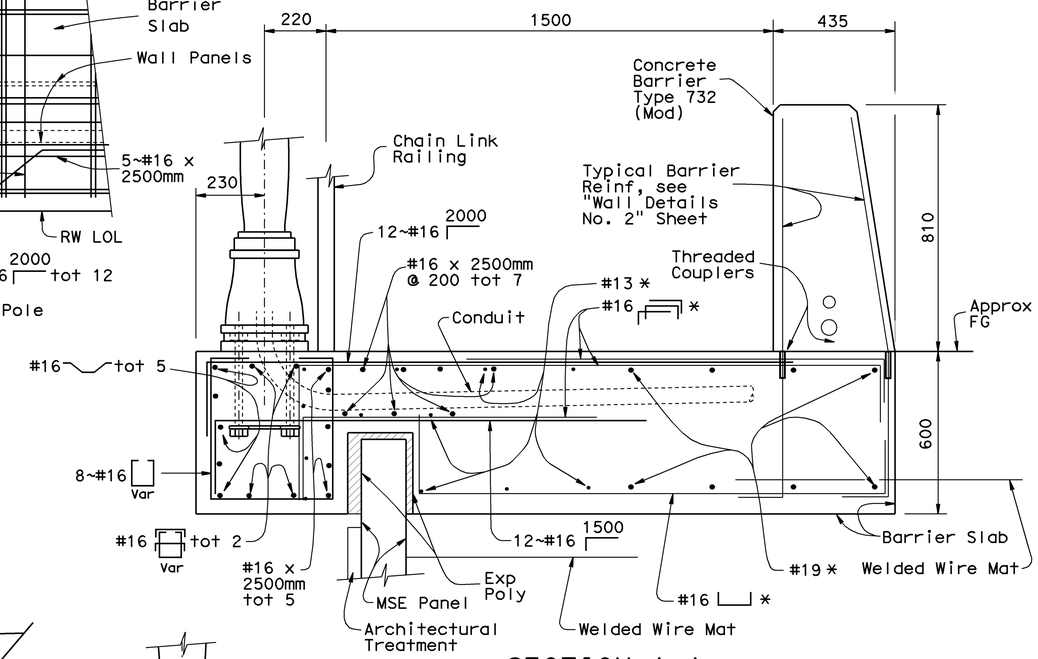

SECTION A-A
1:10

* Denotes Typical Barrier Slab Reinforcement. See "Wall Details No. 2" Sheet

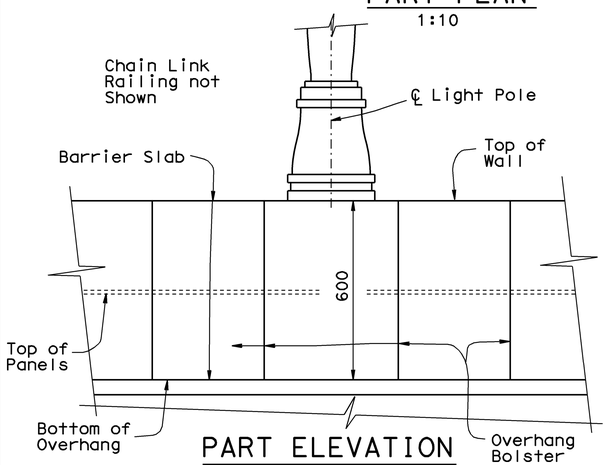

PART ELEVATION
1:10

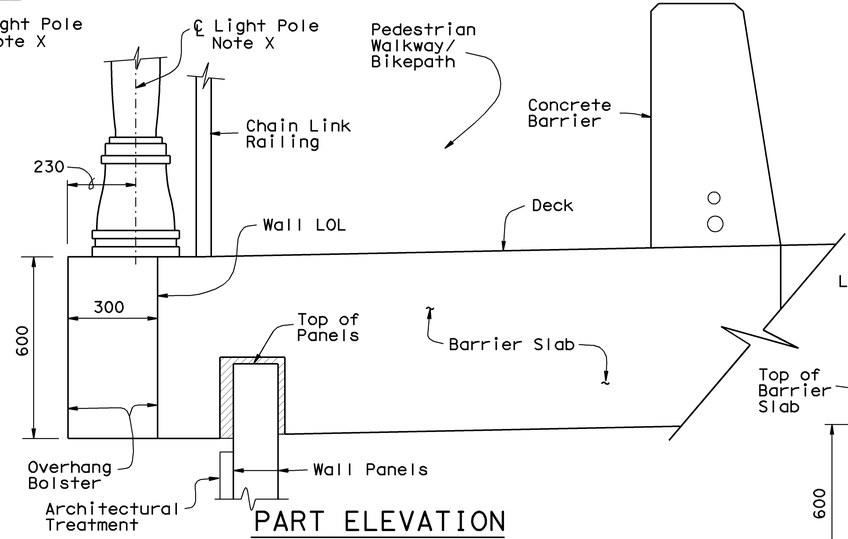

PART ELEVATION
1:10

BOLSTER DETAILS

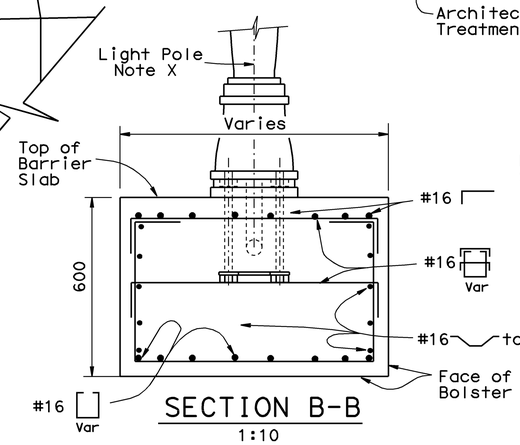

SECTION B-B
1:10

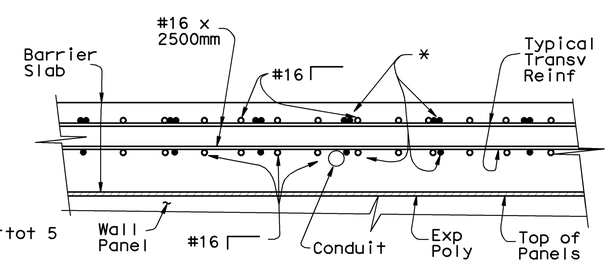

SECTION C-C
1:10

BOLSTER REINFORCEMENT DETAILS

Notes
For Additional Details, see "Typical Section No. 1", and "Wall Details No. 2" Sheets
For Locations of Light Standards, see "Road Plans"
Details Shown Herein, are for Light Standards to be Located at the Left Edge of Deck Only. For Light Standards Mounted on the Type 732 Barrier on the Right Edge of Deck, Refer to Details Shown in the Standard Plans Sheet B11-55

For Additional Details, see ES-6A ES-6B ES-7M ES-9A ES-9B

Note X
For Light Pole and Fixture Details, see "Electrical Plans"

Caltrans Metric

	BY		CHECKED	
DESIGN	M. VAN DE POL	04-03	P. NORBOE	12-05
DETAILS	M. VAN DE POL	04-03	P. NORBOE	12-05
QUANTITIES	M. VAN DE POL	11-05	P. NORBOE	12-05

ALL DIMENSIONS ARE IN MILLIMETERS UNLESS OTHERWISE SHOWN

ORIGINAL SCALE IN MILLIMETERS FOR REDUCED PLANS 0 10 20 30 40 50 60 70 80 90 100

STATE OF CALIFORNIA
DEPARTMENT OF TRANSPORTATION

DIVISION OF ENGINEERING SERVICES
STRUCTURE DESIGN
DESIGN BRANCH 9

CU 10
EA 3A66U1

BRIDGE NO. 39E0002 39E0004
KILOMETER POST 59.66

BRADLEY OVERHEAD (REPLACE)
RETAINING WALLS
LIGHTING DETAILS

DISREGARD PRINTS BEARING EARLIER REVISION DATES 5-8-03
REVISION DATES
SHEET 48 OF 53

FILE => 39e0044-s-slightdt.dgn

STRUCTURES DESIGN DETAIL SHEET (METRIC) (REV.03-17-04)

USERNAME => rtrphris DATE PLOTTED => 05-MAR-2009 TIME PLOTTED => 06:16

DIST	COUNTY	ROUTE	KILOMETER POST TOTAL PROJECT	SHEET No	TOTAL SHEETS
10	Mer	140	58.7/60.5	380	384

REGISTERED CIVIL ENGINEER 9-30-08 DATE

3-2-09
PLANS APPROVAL DATE

REGISTERED PROFESSIONAL ENGINEER M. Van De Pol No. C35610 Exp. 9-30-09 CIVIL STATE OF CALIFORNIA

The State of California or its officers or agents shall not be responsible for the accuracy or completeness of electronic copies of this plan sheet.

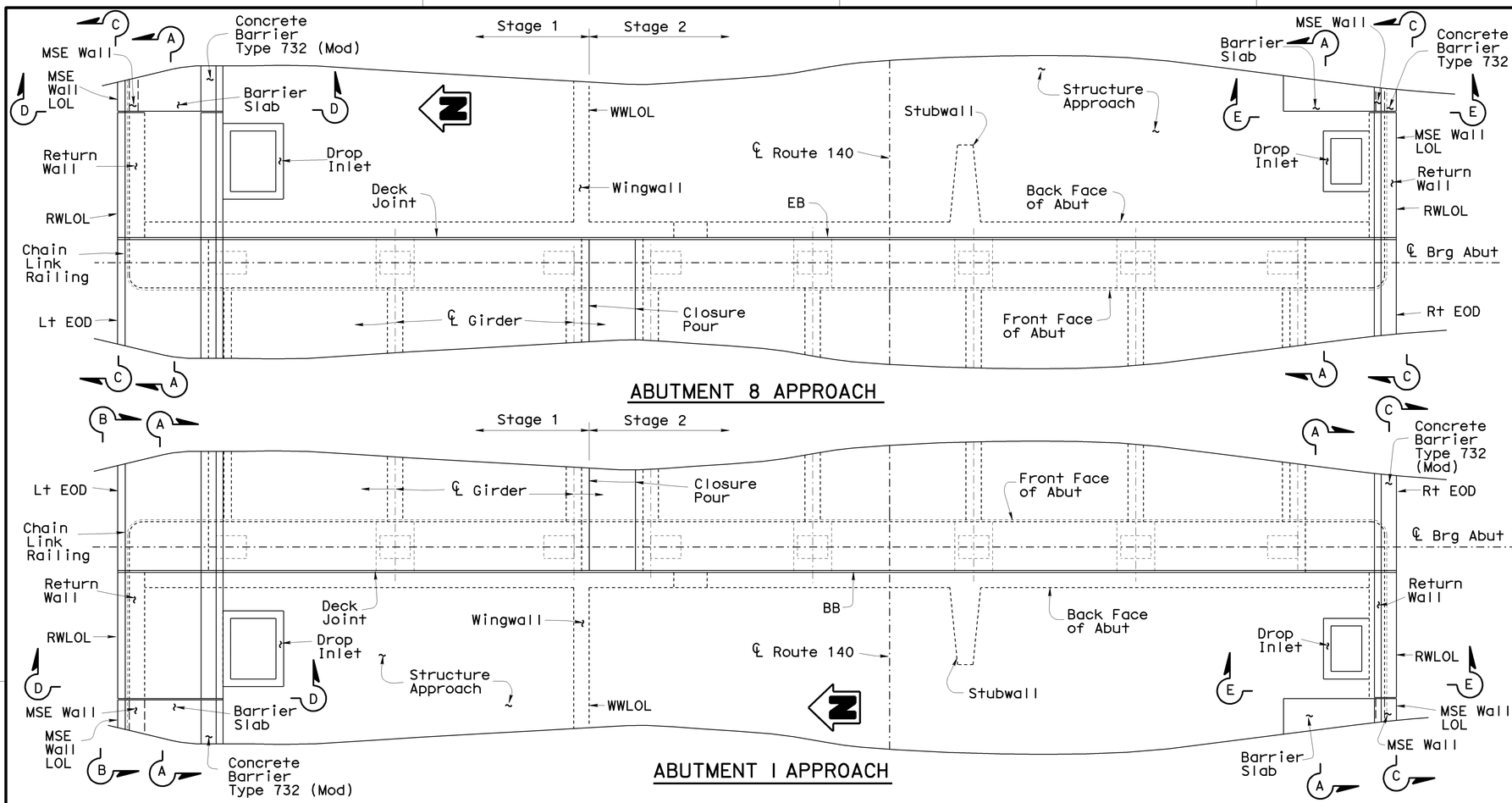

ABUTMENT 8 APPROACH

ABUTMENT 1 APPROACH

PART PLANS
1:50

Drainage Systems Not Shown

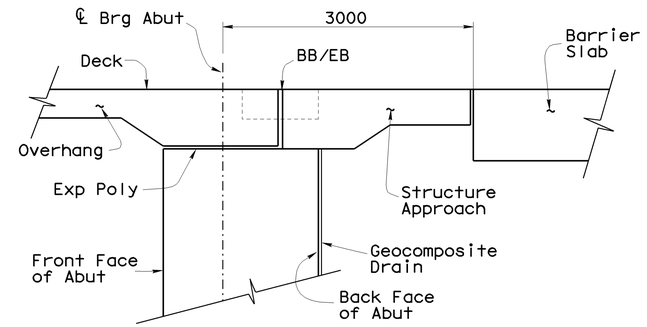

SECTION A-A
1:25

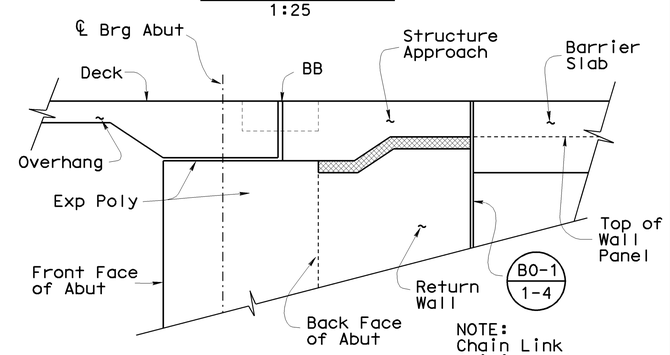

NOTE: Chain Link Railing not Shown

SECTION B-B
1:25

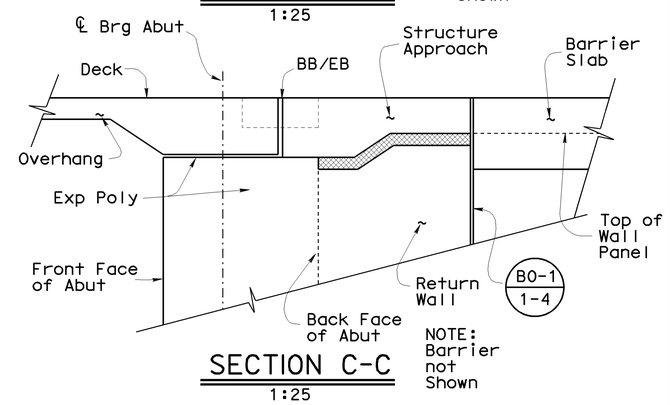

NOTE: Barrier not Shown

SECTION C-C
1:25

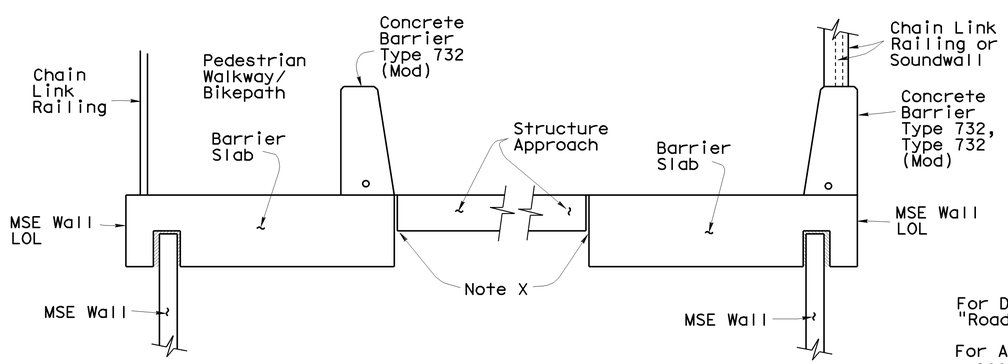

SECTION D-D
1:25

SECTION E-E
1:25

For Drainage Details, see "Road Plans"

For Additional Details not Shown, see Other Plans This Contract

Caltrans Metric

	BY		CHECKED
DESIGN	M. VAN DE POL	04-03	P. NORBOE 12-05
DETAILS	M. VAN DE POL	04-03	P. NORBOE 12-05
QUANTITIES	M. VAN DE POL	11-05	P. NORBOE 12-05

STATE OF CALIFORNIA
DEPARTMENT OF TRANSPORTATION

DIVISION OF ENGINEERING SERVICES
STRUCTURE DESIGN
DESIGN BRANCH 9

BRIDGE NO. 39E0001 39E0002 39E0003 39E0004
KILOMETER POST 59.66

BRADLEY OVERHEAD (REPLACE)
RETAINING WALLS
STRUCTURE APPROACH DETAILS

ALL DIMENSIONS ARE IN MILLIMETERS UNLESS OTHERWISE SHOWN

ORIGINAL SCALE IN MILLIMETERS FOR REDUCED PLANS 0 10 20 30 40 50 60 70 80 90 100

CU 10
EA 3A66U1

DISREGARD PRINTS BEARING EARLIER REVISION DATES

REVISION DATES: 5-8-03 12-13-05

SHEET 49 OF 53

FILE => 39e0044-s-strapradet.dgn

STRUCTURES DESIGN DETAIL SHEET (METRIC) (REV.03-17-04)

USERNAME => trstrk DATE PLOTTED => 11-MAR-2009 TIME PLOTTED => 07:21

DIST	COUNTY	ROUTE	KILOMETER POST TOTAL PROJECT	SHEET No	TOTAL SHEETS
10	Mer	140	58.7/60.5	381	384

Caltrans Metric

Claudio Avila 8-16-04
CERTIFIED ENGINEERING GEOLOGIST

3-2-09
PLANS APPROVAL DATE

The State of California or its officers or agents shall not be responsible for the accuracy or completeness of electronic copies of this plan sheet.

REGISTERED GEOLOGIST — Claudio Avila No. 2208 Exp. 9-30-05 — CERTIFIED ENGINEERING GEOLOGIST — STATE OF CALIFORNIA

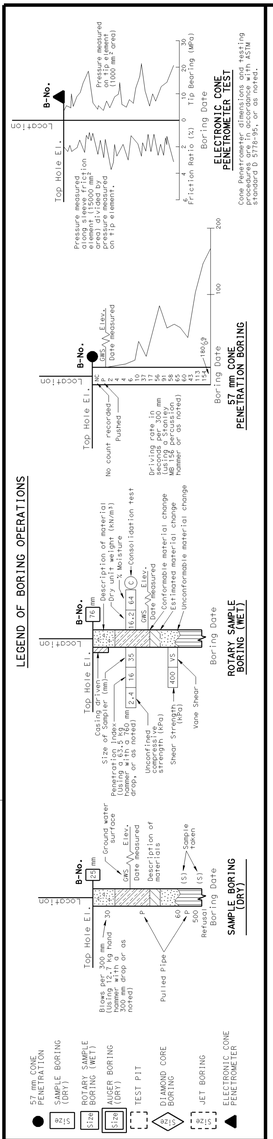

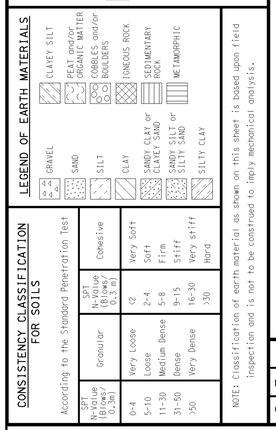

CONSISTENCY CLASSIFICATION FOR SOILS

According to the Standard Penetration Test

SPT N-Value (Blows/0.3m)	Granular	SPT N-Value (Blows/0.3m)	Cohesive
0-4	Very Loose	<2	Very Soft
5-10	Loose	2-4	Soft
11-30	Medium Dense	5-8	Firm
31-50	Dense	9-15	Stiff
>50	Very Dense	16-30	Very stiff
		>30	Hard

NOTE: Classification of earth material as shown on this sheet is based upon field inspection and is not to be construed to imply mechanical analysis.

TO MERCED ⇦

℄ Route 140 — 26+00 — 04-4 (110 mm) S90°00'00"E — 27+00 — 04-2 (110 mm) — 28+00 — C/L Rte 140 S90°00'00"E — 29+00 — 04-3 (110 mm) — CPT-4 — 30+00 — CPT-3 — CPT-2 — CPT-1 — 04-1 (110 mm) S90°00'00"E — 31+00 — TO YOSEMITE ⇨

BENCH MARK

Pt 13: 1" Iron w/ red plug.
Elev: 57.04 m

Pt 21: 1" Iron w/red plug.
Elev: 55.63 m

PLAN
1:500

Notes:
1. Ground water was measured at elevations ranging from 43.34 m to 44.74 m in soil boring 04-3 and 04-1.
2. Laboratory data are available for review at 5900 Folsom Blvd, Sacramento, CA 95819.
3. (MA) Mechanical analysis.
   (A) Atterberg Limits.
   qu = unconfined compressive strength measured with a pocket penetrometer.

4.00 m Lt Sta 26+53.5
C/L Rte 140

04-4 (110 mm) — 54.64

Elev.	N-Value	Description
		Lean CLAY (CL), very dark gray (10YR3/7), moist. qu = 192 kPa
53 m	22 35	SILT with fine SAND (ML), medium dense, very dark gray (10YR3/2), moist, slightly plastic. (MA)(A)
	20 35	SILTY SAND (SM), medium dense, dark yellowish brown (10YR4/4), moist, nonplastic. (MA)(A)
	39 35	SILT with fine SAND (ML), dense, dark yellowish brown (10YR4/4), moist, nonplastic.
	68 35	SILT with fine SAND (ML), dense, dark yellowish brown (10YR4/4), moist, nonplastic, thin lenses of SILTY SAND. Fine SANDY SILT (ML), dark yellowish brown (10YR4/4), moist, nonplastic. (MA)(A)
50 m		
	22 35	SANDY SILT (ML), medium dense, dark yellowish brown (10YR4/4), moist, nonplastic.
		SANDY SILT (ML), medium dense, dark yellowish brown (10YR4/4), moist, nonplastic, strongly cemented.
	E100 35	SILTY SAND (SM), very dense, dark yellowish brown (10YR4/4), moist, moderately cemented.
47 m		
	44 35	Poorly graded fine SAND with SILT (SP-SM), dense, dark yellowish brown (10YR4/4), wet, nonplastic. (MA)(A)
	53 35	SANDY lean CLAY (CL), hard, dark yellowish brown (10YR4/4), moist, nonplastic.
44 m		
	53 35	(MA)(A) qu ≥ 431 kPa
	54 35	SANDY SILT (ML), dark yellowish brown (10YR4/4), moist.
41 m		
	52 35	Fine SANDY SILT (ML), very dense, dark yellowish brown (10YR4/4), moist, very slightly plastic. (MA)(A)
	38 35	SILTY fine SAND (SM), dense, dark yellowish brown (10YR4/4), moist, nonplastic.
38 m		
	46 35	
	E120 35	Poorly graded medium SAND (SP), very dense, dark yellowish brown (10YR4/4), wet, some weak cementation. (MA)(A)
35 m		
	E97 35	Some fine and coarse GRAVEL.
	74 35	SILTY SAND (SM), very dense, yellowish brown (10YR4/4), wet, fine and coarse GRAVEL.
32 m		
	45 35	SANDY SILT (ML), dense, strong brown (7.5YR5/6), moist, areas of weak cementation.
	71 35	SILTY fine SAND (SM), very dense, strong brown (7.5YR5/6), moist, moderte to strong cementation. qu >4.5 kPa
29 m		

02-10-04

26+50 — 26+60 — 26+70 — 26+80 — 26+90

PROFILE
HOR. 1:100
VER. 1:100

ALL DIMENSIONS ARE IN METERS UNLESS OTHERWISE SHOWN

ENGINEERING SERVICES	GEOTECHNICAL SERVICES
DRAWN BY	F. Nguyen 6/04
CHECKED BY	C. Avila

FIELD INVESTIGATION BY: C. Avila

STATE OF CALIFORNIA DEPARTMENT OF TRANSPORTATION

DIVISION OF STRUCTURES STRUCTURE DESIGN 9

CU 10
EA 3A66U1

BRIDGE NO.
39E0001 39E0002 39E0003 39E0004
KILOMETER POST
59.66

BRADLEY OVERHEAD (REPLACE)
RETAINING WALLS
LOG OF TEST BORINGS 1 OF 4

DISREGARD PRINTS BEARING EARLIER REVISION DATES — REVISION DATES (PRELIMINARY STAGE ONLY): ~~7-26-04~~ 12-13-05

SHEET 50 OF 53

ORIGINAL SCALE IN MILLIMETERS FOR REDUCED PLANS 0 10 20 30 40 50 60 70 80 90 100

OGS GEOLOGIST LOG OF TEST BORINGS SHEET (METRIC) (REV. 4/04)

FILE => 39e0044-z-1tb01.dgn

USERNAME => trtphils DATE PLOTTED => 05-MAR-2009 TIME PLOTTED => 06:16

DIST	COUNTY	ROUTE	KILOMETER POST TOTAL PROJECT	SHEET No	TOTAL SHEETS
10	Mer	140	58.7/60.5	382	384

Caltrans Metric

Claudio Avila 8-16-04
CERTIFIED ENGINEERING GEOLOGIST

3-2-09
PLANS APPROVAL DATE

The State of California or its officers or agents shall not be responsible for the accuracy or completeness of electronic copies of this plan sheet.

REGISTERED GEOLOGIST — Claudio Avila No. 2208 Exp. 9-30-05 — CERTIFIED ENGINEERING GEOLOGIST — STATE OF CALIFORNIA

FOR PLAN VIEW, SEE
"LOG OF TEST BORINGS" 1 OF 4

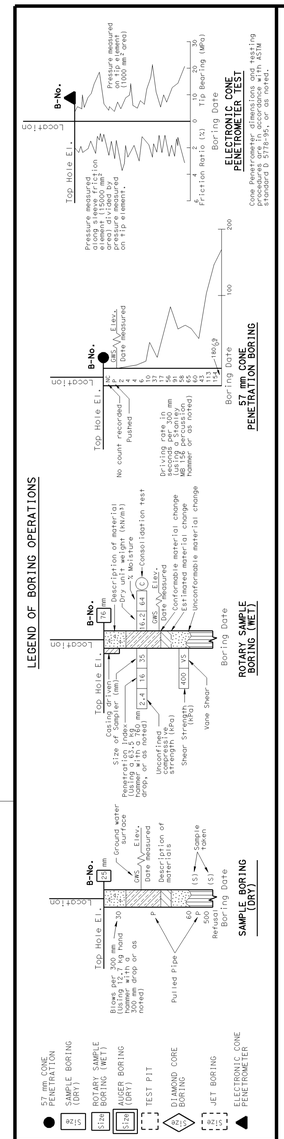

23+00 – 27+00

3.00 m Rt Sta 27+59
C/L Rte 140

04-2

54.89 — 110 mm

Elev.	Description	Blows
53 m	SILT with fine SAND (ML), medium dense, dark yellowish brown (10YR4/4), moist, slightly plastic. (MA)(A)	20 35
50 m	Fine SANDY SILT (ML), dense, dark yellowish brown (10YR4/4), moist, weak to moderately cemented.	36 35
	Lean CLAY with fine SAND (CL), very stiff, olive gray (5Y5/2), moist, slightly plastic. (MA)(A) qu = 144 kPa	26 35
	SANDY SILT (ML), olive gray (5Y5/2), moist.	
47 m	CLAYEY medium SAND (CL), dense, olive gray (5Y5/2), moist, slightly plastic, trace GRAVEL (fine to coarse). qu = 287 kPa	31 35
	SILT with fine SAND (ML), medium dense, dark yellowish brown (10YR4/4), wet, very slightly plastic. (MA)(A)	17 35
44 m	SILTY fine SAND (ML), medium dense, brown (10YR5/3), wet, nonplastic. (MA)(A)	24 35
	SILTY medium SAND (SM), medium dense, brown (10YR5/3), wet, nonplastic, weakly cemented.	23 35
41 m	SANDY SILT (ML), dense, yellowish brown (10YR4/4), moist, nonplastic, thin lenses of SILTY SAND.	42 35
	SILTY fine SAND (SM), medium dense, brown (10YR5/3), moist, noncemented.	41 35
38 m	Elastic SILT (MH), very stiff, light gray (5Y7/1), moist, slightly plastic. (MA)(A) qu = 240 kPa qu = 263 kPa	30 35
	SANDY elastic SILT (MH), very stiff, light gray (5Y7/1), moist, slightly plastic, trace coarse GRAVEL. qu = 240 kPa	24 35
35 m	SILT trace fine SAND (ML), very dense, light olive gray (5Y6/2), moist, strongly cemented. SILT with SAND (SM), brown (10YR5/3), moist, nonplastic, strongly cemented. (MA)(A)	E150 35
	SILTY fine SAND (SM), very dense, yellowish red (5Y4/6), moist, weakly cemented.	E115 35
32 m	Light brown (10YR6/3).	66 35
	Poorly graded fine SAND with SILT (SP-SM), dark yellowish brown (10YR4/4), wet. Poorly graded fine SAND (SP), very dense, light yellowish brown (10YR6/4), wet, noncemented. (MA)(A)	E99 35
29 m	SILT (ML), very dense, yellowish red (5YR3/6), moist, slightly plastic, moderately to strongly cemented. (MA)(A)	E100 35
	SANDY SILT (ML), very dense, yellowish red (5YR5/6), moist, moderately cemented. qu = 192 kPa Strongly cemented.	E96 35
26 m	SANDY SILT (ML), very dense, yellowish brown (10YR5/6), moist, slightly plastic. (MA)(A)	E108 35
	SILT (ML), very dense, brown (10YR5/2), moist, moderately cemented. With fine SAND.	E120 35
23 m	SILT (ML), very dense, pale brown (10YR6/3), moist, slightly plastic. SANDY SILT (ML), estimated very dense, yellowish brown (10YR5/4), wet, strongly cemented. (MA)(A) Thin lense of SILTY SAND 100 mm diameter.	E120 35
20 m	SANDY SILT (ML), very dense, yellowish red (5YR5/8), moist, nonplastic. Strongly cemented.	E100 35
17 m	SILT with fine SAND (ML), dense, yellowish red (5YR5/6), moist, nonplastic.	35 35

02-03-04

31+00 – 35+00

2.00 m Rt Sta 29+52
C/L Rte 140

04-3

55.41 — 110 mm

Elev.	Description	Blows
53 m	Fine SANDY SILT (ML), very dense, dark yellowish brown (10YR4/4), dry, strongly cemented. (MA)(A) Thin lense of SILTY SANDY 300 mm diameter.	E120 35
	SILT (ML), very dense, dark yellowish brown (10YR4/4), dry, nonplastic.	56 35
50 m	SILTY fine SAND (SM), very dense, light olive gray (5Y6/2), moist. (MA)(A)	71 35
	SILTY fine SAND (SM), dense, light olive gray (5Y6/2), moist, nonplastic.	36 35
47 m	Poorly graded medium SAND trace fine GRAVEL (SW), very dense, yellowish brown (10YR5/4), moist, noncemented.	63 35
	SILTY fine SAND (SM), very dense, light olive gray (5Y6/2), moist, nonplastic. (MA)(A)	75 35
44 m	GWS EL. 44.74 02-05-04 Lean CLAY (CL), very stiff, yellowish red (5YR5/6), moist, slightly plastic. qu = 192 kPa qu = 192 kPa	32 35
	SANDY lean CLAY, yellowsih red (5YR5/16). (MA)(A) qu = 168 kPa	32 35
41 m	GRAVELLY SAND (SW), very dense, light olive gray (5Y6/2), wet CLAY matrix, GRAVEL fine to coarse (subangular).	E120 35
	CLAYEY SAND with GRAVEL (SC), dense, light olive gray (5Y6/2), wet, fine to coarse GRAVEL (subangular). (MA)(A)	40 35
38 m	SILT with fine SAND (ML), very dense, light yellowish brown (10YR6/4), moist, very slightly plastic.	E176 35
	SILTY fine SAND (SM), very dense, light yellowish brown (10YR6/4), moist, nonplastic. (MA)(A)	58 35
35 m	SILTY fine SAND (SM), very dense, dark yellowish brown (10YR4/4), wet, weakly cemented.	63 35
	SANDY SILT (ML), very dense, yellowish brown (10YR5/4), wet, nonplastic. Strongly cemented.	E111 35
32 m	SILTY fine SAND (SM), very dense, yellowish brown (10YR5/4), wet, nonplastic. (MA)(A) qu = 287 kPa Strongly cemented.	E150 35
	SILT, estimated very dense, yellowish red (5YR5/6), wet, strongly cemented.	E111 35
29 m	SANDY SILT (ML), very dense, brown (10YR5/3), moist, slightly plastic. (MA)(A)	E200 35
	SILTY fine SAND (SM), very dense, dark brown (10YR3/3), wet, noncemented.	74 35
26 m		83 35
	SILT (ML), very dense, brown (10YR3/3), wet, slight plastic.	E100 35
23 m	SILTY fine SAND (SM), estimated very dense, brown (7YR4/4), wet, weakly cemented.	
	Poorly graded fine SAND (SP), estimated very dense, brown (7YR4/4), wet, strongly cemented. SILTY fine SAND (SM), very dense, brown (7YR4/3), wet, weakly cemented.	109 35
20 m	Poorly graded medium SAND (SP), estimated very dense, brown (7.5YR4/4), wet. SILT (ML), estimated very dense, yellowish brown (10YR5/4), moist, strongly cemented.	
17 m	SILTY fine SAND (SM), very dense, yellowish brown (10YR5/4), wet.	E120 35

02-05-04

PROFILE
HOR. 1:2000
VER. 1:100

ALL DIMENSIONS ARE IN METERS UNLESS OTHERWISE SHOWN

ENGINEERING SERVICES	GEOTECHNICAL SERVICES
DRAWN BY F. Nguyen 6/04	
CHECKED BY C. Avila	

FIELD INVESTIGATION BY: C. Avila

STATE OF CALIFORNIA
DEPARTMENT OF TRANSPORTATION

DIVISION OF STRUCTURES
STRUCTURE DESIGN 9

CU 10
EA 3A66U1

BRIDGE NO. 39E0001 39E0002 39E0003 39E0004

KILOMETER POST 59.66

BRADLEY OVERHEAD (REPLACE)
RETAINING WALLS
LOG OF TEST BORINGS 2 OF 4

DISREGARD PRINTS BEARING EARLIER REVISION DATES — REVISION DATES (PRELIMINARY STAGE ONLY): 7-26-04 12-13-05

SHEET 51 OF 53

ORIGINAL SCALE IN MILLIMETERS FOR REDUCED PLANS 0 10 20 30 40 50 60 70 80 90 100

OGS GEOLOGIST LOG OF TEST BORINGS SHEET (METRIC) (REV. 4/04)

FILE => 39e0044-z-1tb02.dgn

USERNAME => ttphils DATE PLOTTED => 05-MAR-2009 TIME PLOTTED => 06:16

DIST	COUNTY	ROUTE	KILOMETER POST TOTAL PROJECT	SHEET No	TOTAL SHEETS
10	Mer	140	58.7/60.5	383	384

Caltrans Metric

Claudio Avila 8-16-04
CERTIFIED ENGINEERING GEOLOGIST

REGISTERED GEOLOGIST
Claudio Avila
No. 2208
Exp. 9-30-05
CERTIFIED ENGINEERING GEOLOGIST
STATE OF CALIFORNIA

3-2-09
PLANS APPROVAL DATE

The State of California or its officers or agents shall not be responsible for the accuracy or completeness of electronic copies of this plan sheet.

FOR PLAN VIEW, SEE
"LOG OF TEST BORINGS" 1 OF 4

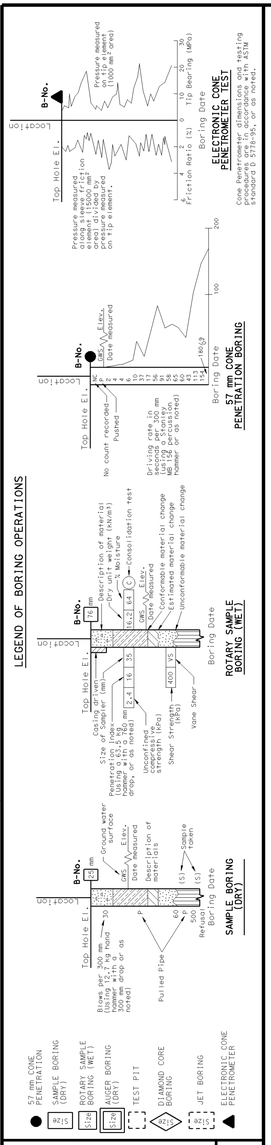

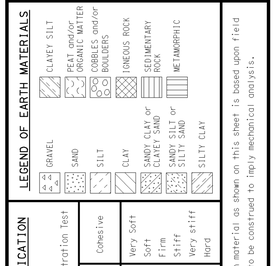

CONSISTENCY CLASSIFICATION FOR SOILS

According to the Standard Penetration Test

SPT N-Value (Blows/0.3m)	Granular	SPT N-Value (Blows/0.3m)	Cohesive
0-4	Very Loose	<2	Very Soft
5-10	Loose	2-4	Soft
11-30	Medium Dense	5-8	Firm
31-50	Dense	9-15	Stiff
>50	Very Dense	16-30	Very stiff
		>30	Hard

NOTE: Classification of earth material as shown on this sheet is based upon field inspection and is not to be construed to imply mechanical analysis.

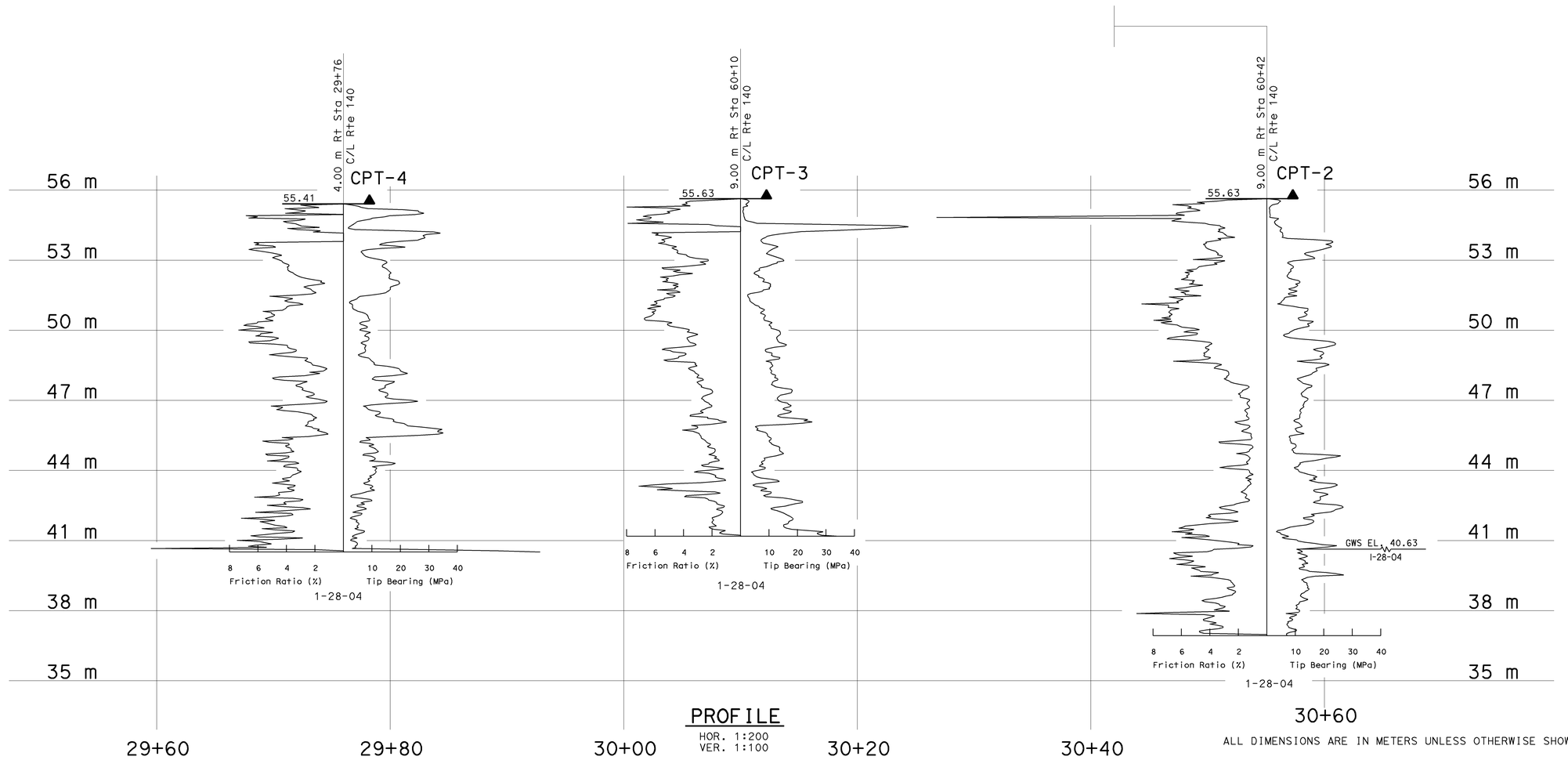

PROFILE
HOR. 1:200
VER. 1:100

ALL DIMENSIONS ARE IN METERS UNLESS OTHERWISE SHOWN

ENGINEERING SERVICES	GEOTECHNICAL SERVICES
DRAWN BY	F. Nguyen 6/04
CHECKED BY	

FIELD INVESTIGATION BY: C. Avila

STATE OF CALIFORNIA
DEPARTMENT OF TRANSPORTATION

DIVISION OF STRUCTURES
STRUCTURE DESIGN 9

BRIDGE NO. 39E0001 39E0002 39E0003 39E0004

KILOMETER POST 59.66

BRADLEY OVERHEAD (REPLACE)
RETAINING WALLS
LOG OF TEST BORINGS 3 OF 4

ORIGINAL SCALE IN MILLIMETERS FOR REDUCED PLANS 0 10 20 30 40 50 60 70 80 90 100

CU 10
EA 3A66U1

DISREGARD PRINTS BEARING EARLIER REVISION DATES 12-13-05

REVISION DATES (PRELIMINARY STAGE ONLY)

SHEET 52 OF 53

OGS GEOLOGIST LOG OF TEST BORINGS SHEET (METRIC) (REV. 4/04)

FILE => 39e0044-z-1tb03.dgn

USERNAME => trphris DATE PLOTTED => 05-MAR-2009 TIME PLOTTED => 06:17

DIST	COUNTY	ROUTE	KILOMETER POST TOTAL PROJECT	SHEET No	TOTAL SHEETS
10	Mer	140	58.7/60.5	384	384

Caltrans Metric

Claudio Avila 8-16-04
CERTIFIED ENGINEERING GEOLOGIST

3-2-09
PLANS APPROVAL DATE

The State of California or its officers or agents shall not be responsible for the accuracy or completeness of electronic copies of this plan sheet.

REGISTERED GEOLOGIST — Claudio Avila No. 2208 Exp. 9-30-05 — CERTIFIED ENGINEERING GEOLOGIST — STATE OF CALIFORNIA

FOR PLAN VIEW, SEE
"LOG OF TEST BORINGS" 1 OF 4

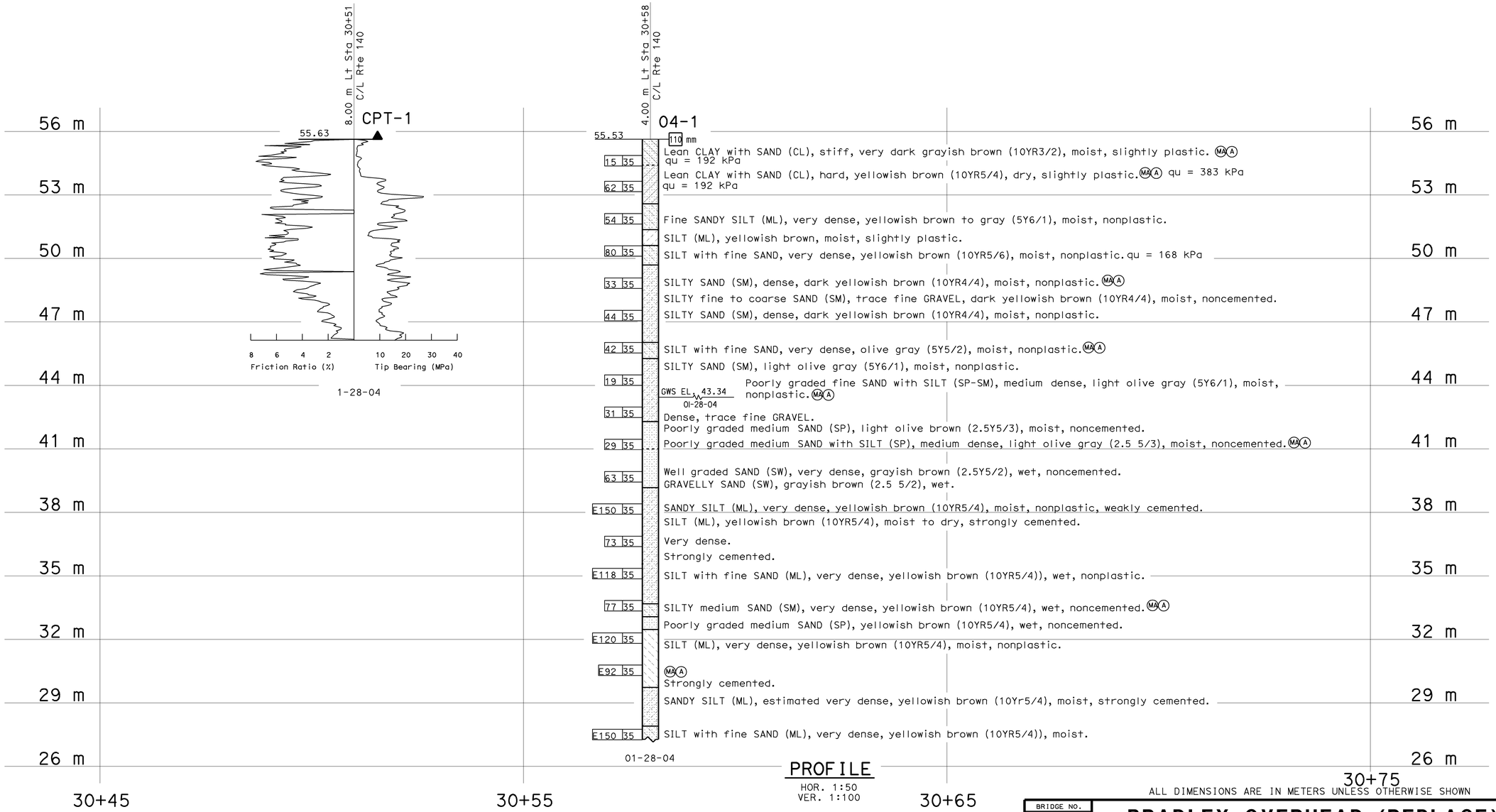

PROFILE
HOR. 1:50
VER. 1:100

ALL DIMENSIONS ARE IN METERS UNLESS OTHERWISE SHOWN

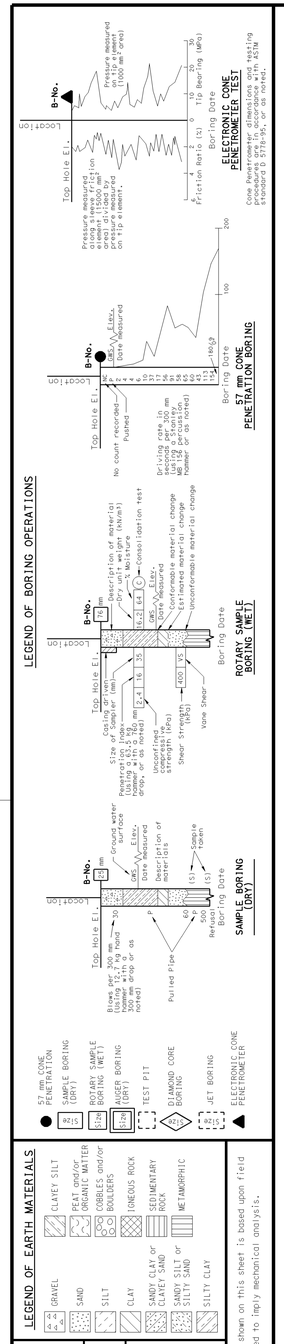

ENGINEERING SERVICES	GEOTECHNICAL SERVICES
DRAWN BY	F. Nguyen 6/04
CHECKED BY	

FIELD INVESTIGATION BY: C. Avila

STATE OF CALIFORNIA
DEPARTMENT OF TRANSPORTATION

DIVISION OF STRUCTURES
STRUCTURE DESIGN 9

CU 10
EA 3A66U1

BRIDGE NO. 39E0001 39E0002 39E0003 39E0004

KILOMETER POST 59.66

BRADLEY OVERHEAD (REPLACE)
RETAINING WALLS
LOG OF TEST BORINGS 4 OF 4

DISREGARD PRINTS BEARING EARLIER REVISION DATES — REVISION DATES (PRELIMINARY STAGE ONLY): 7-26-04 12-13-05

SHEET 53 OF 53

OGS GEOLOGIST LOG OF TEST BORINGS SHEET (METRIC) (REV. 4/04)

ORIGINAL SCALE IN MILLIMETERS FOR REDUCED PLANS 0 10 20 30 40 50 60 70 80 90 100

FILE => 39e0044-z-ltb04.dgn

USERNAME => trphilis DATE PLOTTED => 05-MAR-2009 TIME PLOTTED => 06:17