FOR CONTRACT NO.: 10-3A66U4

INFORMATION HANDOUT

	BRIDGE NUMBER(S)
FINAL FOUNDATION REPORT DATED JUNE 20, 2006	39-0044
FOUNDATION REVIEW DATED OCTOBER 1, 2008	39-0044
FOUNDATION REVIEW DATED OCTOBER 1, 2008	39E0001
	39E0002
	39E0003
	39E0004

INSTALLATION AND WIRING DETAILS FOR THE
STATE FURNISHED BATTERY BACKUP SYSTEM

ASBESTOS, LEAD-BASED PAINT, AND SOIL SURVEY REPORT

SITE INVESTIGATION REPORT

UNDERGROUND CLASSIFICATION NO. C258-047-09T

ROUTE: 10-MER-140-58.7/60.5

State of California
Department of Transportation

Business, Transportation and Housing Agency

Memorandum

Flex your power!
Be energy efficient!

To: GORDON DANKE
Senior Bridge Designer
Division of Engineering Services
Bridge Design Branch 9
Office of Bridge Design North

Attention: Mr. Mike Van De Pol

Date: June 20, 2006

File: 10-MER-140-KP 59.66
Bradley Overhead (Repl)
Bridge No. 39-0044
EA 10-0G1301

From: **DEPARTMENT OF TRANSPORTATION**
DIVISION OF ENGINEERING SERVICES
GEOTECHNICAL SERVICES – MS 5

THIS MEMO SUPERSEDS MEMO DATED JULY 15, 2004

Subject: Final Foundation Report

Per your request, the Office of Geotechnical Design North (OGD-N) has prepared this memo for the replacement of the Bradley Overhead Bridge (Bridge No. 39-0044). This report includes review and evaluation of the existing bridge file. In addition, four mud rotary borings (04-1 through 04-4) and four Cone Penetrometer Tests (CPT-1 through CPT-4) were drilled to determine the nature of foundation materials. Data are shown on the "Log of Test Borings" (LOTB), which will be forwarded when complete.

Existing Structure

The existing structure was originally built in 1931. It is a continuous 420.6 m, 38 span steel girder with a concrete deck. The deck is 7.8 m wide. Driven piles (H-piles and Redwood piles) were used at the support locations.

Geology

According to the Geologic Map of San Francisco – San Jose Quadrangle, California (Wagner 1991) the foundation material consists of Pleistocene alluvium deposits (Riverbank Formation). Based on the subsurface investigation, foundation material at the site consists of silt, silty sand and sand with lenses of lean clay becoming dense with depth.

Groundwater

Based on soil boring 04-1, groundwater was encountered at elevation +43.33 m. However, groundwater elevations may fluctuate seasonally precipitation.

Corrosion

Based on soil samples collected throughout the project site, native soil beneath the site is non-corrosive.

Seismicity

Based on the Caltrans California Seismic Hazard Map, 1996, the controlling fault for the project site is the Prairie Creek Spenceville-Dentman (PSD, Normal Fault) with a maximum credible earthquake moment magnitude of M_w=6.5 located approximately 30 kilometers northeast of the site. The Peak Bedrock Acceleration at this site, based on the above map is estimated to be 0.2 g. The potential for surface rupture at the site due to fault movement is considered insignificant since there are no known faults projecting toward or passing directly through the project site.

Liquefaction analysis, based on the results of the subsurface investigation, indicates that liquefaction of the granular materials may be considered insignificant.

Based on the LOTB's, a final Caltrans Seismic Design Criteria Acceleration Response Spectrum corresponding to soil profile Type D is recommended for design (See Figure 1).

Foundation Recommendations

The following foundation recommendations for bridge replacement, retaining wall and mechanically stabilized earth (MSE) walls are based on the General Plan dated February 6, 2006, loads provided by Mr. Mike Van De Pol from the Office of Bridge Design North and the subsurface investigations conducted at the site.

Bridge Replacement

The proposed bridge will consist of a 354 m long, seven span, CIP/PS Box Girder. The new bridge may be supported by CIDH piles at all support locations. Table 1 presents pile tip elevations for CIDH piles.

Table 1. CIDH Tip Elevations

Support Location	Type(mm)	Design Load (kN)	Nominal Resistance (kN)		Bottom Pile Cap Elev. (m) (2)	Design Tip Elevations (m)	Specified Tip Elevations (m)
			Compression	Tension			
Abut 1	609 CIDH	900 (1)	1,800	0	+ 53.5	+44.0 (3)	+44.0
Bent 2	2,100 CIDH	NA	26,000	0	+ 53.5	+ 26.0 (3)	+ 26.0
Bent 3	2,100 CIDH	NA	26,000	0	+ 53.65	+ 26.0 (3)	+ 26.0
Bent 4	2,100 CIDH	NA	26,000	0	+ 53.3	+ 26.0 (3)	+ 26.0
Bent 5 Lf	2,100 CIDH	NA	26,000	0	+ 53.2	+ 26.0 (3)	+ 26.0
Bent 5 Rt	2,100 CIDH	NA	26,000	0	+ 55.1	+ 26.0 (3)	+ 26.0
Bent 6	2,100 CIDH	NA	26,000	0	+ 54.0	+ 26.0 (3)	+ 26.0
Bent 7	2,100 CIDH	NA	26,000	0	+ 53.8	+ 26.0 (3)	+ 26.0
Abut 8	609 CIDH	900 (1)	1,800	0	+ 54.5	+ 44.2 (3)	+ 44.2

Design tip elevations are controlled by the following demands:

1. Design load using working stress design.
2. Pile cap or cutoff to be at or above this elevation.
3. Compression controls tip elevation.

Mechannically Stabilzed Embankment (MSE) Wall

There are four proposed MSE walls near the abutments. At Abutment 1 the north wall will begin at approximately 15 m left of station 24+54 to station 26+46 and a south wall from approximately 10 m right of station 24+04.4 to station 26+47.4. At Abutment 8 the north wall will begin at approximately 15 m left of station 30+04.6 to station 30+98.1 and a south wall from approximately 9 m right of station 30+04.6 to station 31+77.2.

- Based on the calculated allowable bearing capacity (258 kPa) and the estimated foundation pressure (234 kPa) as presented in the Caltrans April 2002 Bride Design Aids, all MSE walls can be supported on native soil.
- All detailed notes as specified on Bridge Standard Detail Sheets (Sheets XS 11-1 through XS 11-9) should be followed for the wall design and construction. Specifically, on the General Notes, Sheet XS 11-4, standard soil parameters can be used as listed below:

	Internal Frictional Angle (degrees)	Cohesion (Pa)	Density (kN/m^3)
For Internal Design	34.0	0.0	19.0
For External Design (Backfill)	34.0	0.0	19.0
For External Design (Foundation)	30.0	0.0	19.0

- The slope ratio of the slope below the wall should not be steeper than 2.0: 1.0 (H:V).
- The base width of the reinforcement should be at least seventy percent of the total design wall height (including the embedded depth) for all walls with flat finish grades above and below the wall.
- The embedded depth above the top of the leveling pad and below the finish grade should be at least either 0.6 meter or eight percent of the total design wall height, whichever is greater.
- The vertical spacing between layers of reinforcement should not be greater than 0.6 meter.

Construction Considerations

1. Prior to installing piles, a 45-day settlement period is recommended for the approach embankments.

2. Groundwater will be encountered during the pile construction. Therefore, construction difficulties should be anticipated due to the presence of high groundwater.

3. Should the specified pile tip elevations required to meet lateral load demands exceed the specified tip elevations given in this report, the Office of Geotechnical Design North should be contacted for further recommendations.

4. Settlement of the MSE wall was estimated at approximately 88 mm. After the final layer of reinforced backfill is constructed, we recommend a 45-day settlement period prior placing the pavement section.

Project Information

Standard Special Provisions S5-280, "Project Information," discloses to bidders and contractors a list of pertinent information available for their inspection prior to bid opening. The following is an excerpt from SSP S5-280 disclosing information originating from Geotechnical Services. Items listed to be included in the information Handout will be provided in Acrobat (.pdf) format to the addressee(s) of this report via electronic mail.

Data and information attached with the project plans are:

A. None

Data and Information included in the Information Handout provided to the bidders and Contractors are

A. Foundation Report for Bradley Overhead Bridge Replacement (39-0044), dated June 20, 2006

Data and Information available for inspection at the district Office:

A. None

Data and information available for inspection at the Transportation Laboratory:

A. None

If any conceptual changes are made during final project design, the Office of Geotechnical Design North should review those changes to determine if these foundation recommendations are still applicable.

If there are any questions, please contact me at (916) 227-7170.

Report by:

CLAUDIO AVILA, CEG 2208
Engineering Geologist
Geotechnical Design – North

REZA MAHALLATI, P.E.
Senior Materials and Research Engineer
Geotechnical Design - North

Attachment
Figure 1: Acceleration Response Spectrum for Design

c: RoyBibbens
ReidBuell
R. E. Pending
JohnStayton – SOE (4)
Peggy Lim – D10 (E-mail)
DaveDhillon – D10 (E-mail)

REGISTERED PROFESSIONAL ENGINEER
REZA MAHALLATI
No. 49374
Exp. 9/30/06
CIVIL
STATE OF CALIFORNIA

REGISTERED GEOLOGIST
CLAUDIO AVILA
No. 2208
CERTIFIED ENGINEERING GEOLOGIST
Exp. 9/30/07
STATE OF CALIFORNIA

Bradley OH
Br No. 39-0044
EA No. 10-0G1301

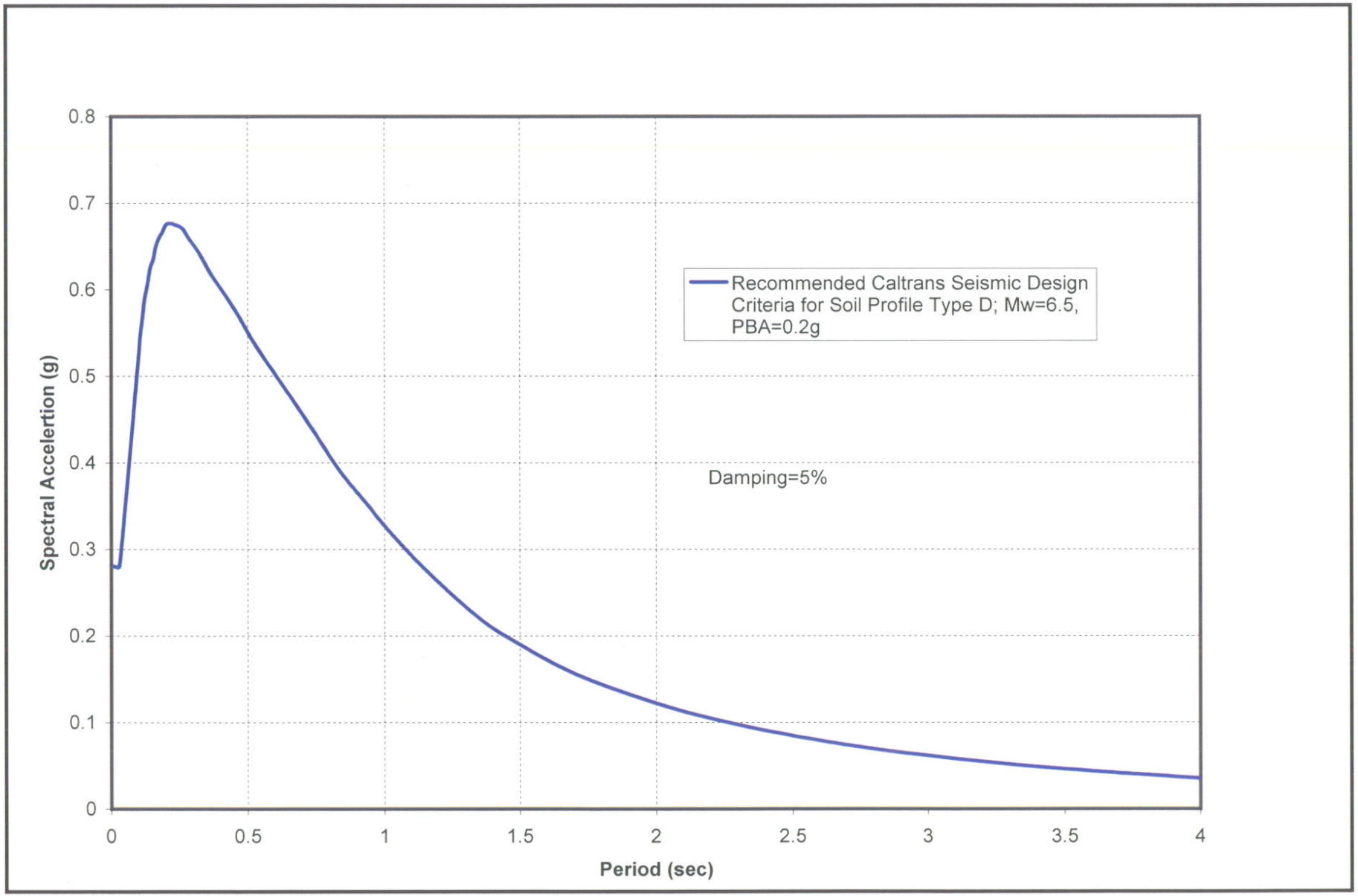

Figure 1. Acceleration Response Spectrum Recommended for Design

FOUNDATION REVIEW

DIVISION OF ENGINEERING SERVICES
GEOTECHNICAL SERVICES

To: **Structure Design**
1. Preliminary Report
2. R.E. ~~Pending File~~
3. Specifications & Estimates
4. File

Geotechnical Services
1. GS (Sacramento)
2. GS

District Project Development
District Project Engineer

Date: 10/1/08

Bradley OH
Structure Name

10 – Mer – 140 – 59.66
District County Route Post Km

10-3A66U1 39-0047
E.A. Number Structure Number

Foundation Report By: E. Avila / R. Mahallati Dated: 8/16/06

Reviewed By: M. Van De Pol (OSD) R. Price (GS)

General Plan Dated: 11/28/05 Foundation Plan Dated: 11/29/05

☒ No changes. ☐ The following changes are necessary.

FOUNDATION CHECKLIST

- ✓ Pile Types and Design Loads
- ✓ Pile Lengths
- ✓ Predrilling
- ✓ Pile Load Test
- ✓ Substitution of H Piles For Concrete Piles ☐ Yes ☑ No
- ✓ Footing Elevations, Design Loads, and Locations
- ✓ Seismic Data
- ✓ Location of Adjacent Structures and Utilities
- ✓ Stability of Cuts or Fills
- ✓ Fill Time Delay
- ✓ Effect of Fills on Abutments and Bents
- ✓ LOTB's
- ✓ Fill Surcharge
- ✓ Approach Paving Slabs
- ✓ Scour
- ✓ Ground Water
- ✓ Tremie Seals/Type D Excavation

Office of Structure Design Branch No. 9 Geotechnical Services

Rev. 10/02

FOUNDATION REVIEW

DIVISION OF ENGINEERING SERVICES
GEOTECHNICAL SERVICES

To: **Structure Design**
1. Preliminary Report
2. R.E. Pending File
3. Specifications & Estimates
4. File

Geotechnical Services
1. GS (Sacramento)
2. GS

District Project Development
District Project Engineer

Date: 10/1/08

Bradley OH. Ret Walls
Structure Name

10 - Mar - 140 - 59.55
District County Route Post Km

10-3A6U1 39E 0001 0002 0003 0004
E.A. Number Structure Number

Foundation Report By: C. Avila / R. Mahallati Dated: 6/16/06

Reviewed By: M. Van De Pol (OSD) R. Price (GS)

General Plan Dated: 11/28/05 Foundation Plan Dated: 11/23/05

☒ No changes. ☐ The following changes are necessary.

FOUNDATION CHECKLIST

- ✓ Pile Types and Design Loads
- ✓ Pile Lengths
- ✓ Predrilling
- ✓ Pile Load Test
- Substitution of H Piles For Concrete Piles ☐ Yes ✓ No
- ✓ Footing Elevations, Design Loads, and Locations
- ✓ Seismic Data
- ✓ Location of Adjacent Structures and Utilities
- ✓ Stability of Cuts or Fills
- ✓ Fill Time Delay
- ✓ Effect of Fills on Abutments and Bents
- ✓ LOTB's
- ✓ Fill Surcharge
- ✓ Approach Paving Slabs
- ✓ Scour
- ✓ Ground Water
- ✓ Tremie Seals/Type D Excavation

Office of Structure Design — Branch No. 9 — Geotechnical Services

Rev. 10/02

Dist	COUNTY	ROUTE	KILOMETER POST TOTAL PROJECT	SHEET No.	TOTAL SHEETS

Caltrans Metric

Theresa Gabriel 12-20-07
REGISTERED ELECTRICAL ENGINEER DATE

PLANS APPROVAL DATE

REGISTERED PROFESSIONAL ENGINEER Theresa A. Gabriel No. E15129 Exp. 6-30-08 ELECT STATE OF CALIFORNIA

THE STATE OF CALIFORNIA OR ITS OFFICERS OR AGENTS SHALL NOT BE RESPONSIBLE FOR THE ACCURACY OR COMPLETENESS OF ELECTRONIC COPIES OF THIS PLAN SHEET.

LEGEND: (THIS SHEET ONLY)

BBS = BATTERY BACKUP SYSTEM
PTS = POWER TRANSFER SWITCH
UPS = UNINTERRUPTIBLE POWER SUPPLY
UPSC = UNINTERRUPTIBLE POWER SUPPLY CONTROLLER
UPSM = UPS MODE
BP = BYPASS
MBPS = MANUAL BYPASS SWITCH
AC+ = UNGROUNDED CONDUCTOR
AC- = GROUNDED CONDUCTOR
C = COMMON
Grn = GREEN
Blk = BLACK
SF = STATE-FURNISHED
Batt = BATTERY
Temp = TEMPERATURE
TB = TERMINAL BLOCK
CNTL = CONTROL

NOTES: (THIS SHEET ONLY)

1. TYPE A REFERS TO BBS EQUIPMENT FROM MANUFACTURER A
2. CASE-1 REFERS TO THE SITUATION WHEN THE ENTIRE BBS EQUIPMENT INCLUDING THE BATTERIES ARE INSTALLED IN THE BBS CABINET.
3. THE LOCATION OF 41C NIPPLE WILL BE DETERMINED BY THE ENGINEER IN THE FIELD.
4. THE CONTRACTOR SHALL FURNISH AND INSTALL NEMA-1 ENCLOSURE WITH 30 A, 1P, 120/240 V RATED CIRCUIT BREAKER MANUFACTURED PER U.L. STANDARD 489.
5. TEMPERATURE PROBE SHALL BE ATTACHED TO THE BATTERY BY TAPE OR ATTACHED TO THE NEGATIVE TERMINAL OF THE BATTERY.
6. THE ELECTRICAL POWER FOR THE COOLING FAN FOR BBS CABINET SHALL BE TAPPED FROM THE BOTTOM OF TB IN 332 CABINET.

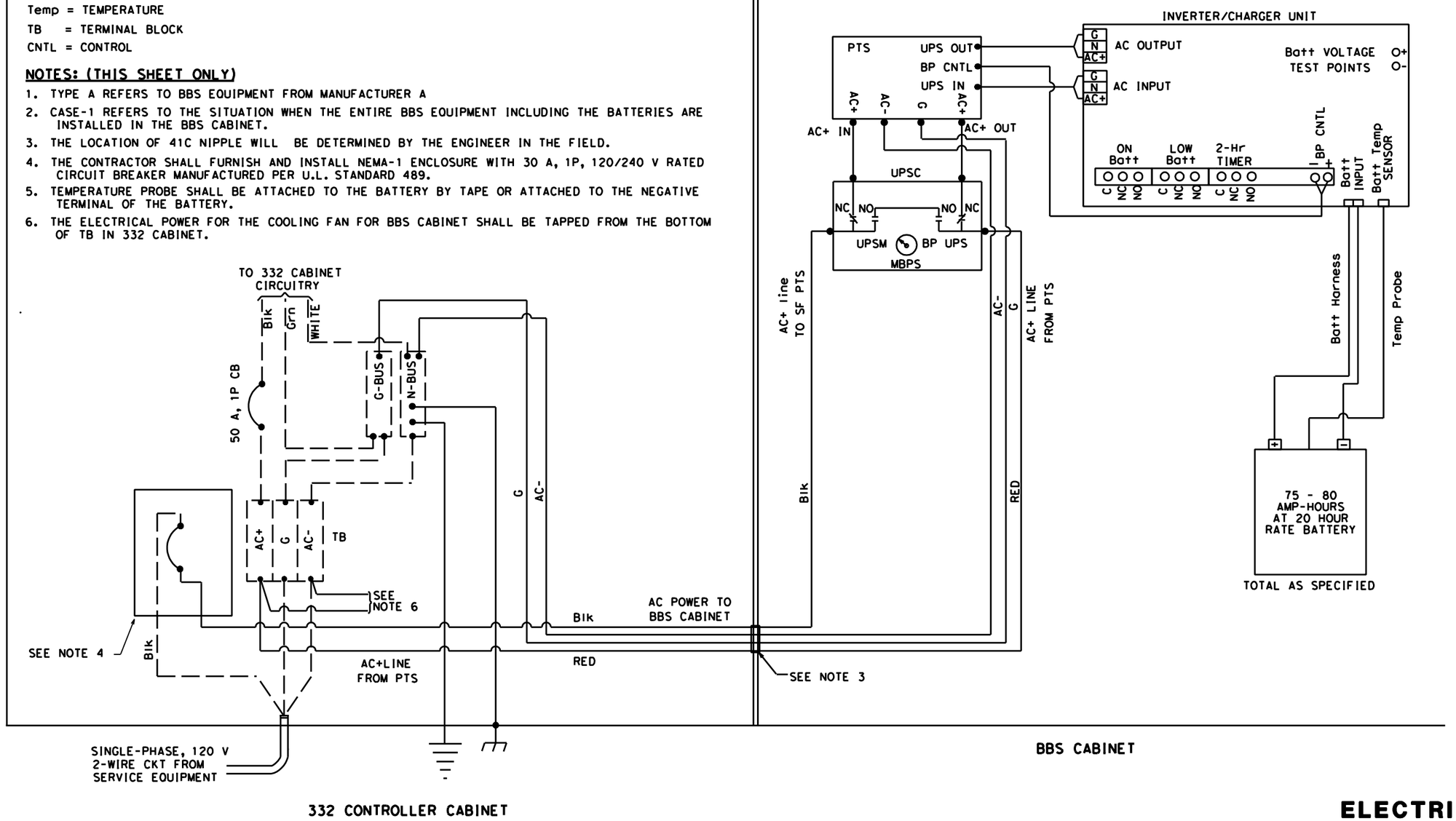

ELECTRICAL SYSTEMS
(BBS POWER CONNECTION DIAGRAM, TYPE A, CASE-1)

NO SCALE

STATE OF CALIFORNIA - DEPARTMENT OF TRANSPORTATION
Caltrans

FUNCTIONAL SUPERVISOR | CALCULATED-DESIGNED BY | CHECKED BY | REVISED BY | DATE REVISED

LAST REVISION 08-21-08 | DATE PLOTTED => $DATE | TIME PLOTTED => $TIME

Dist	COUNTY	ROUTE	KILOMETER POST TOTAL PROJECT	SHEET No.	TOTAL SHEETS

Theresa Gabriel 12-20-07
REGISTERED ELECT ENGINEER DATE

PLANS APPROVAL DATE

REGISTERED PROFESSIONAL ENGINEER Theresa A. Gabriel No. E15129 Exp. 6-30-08 ELECT STATE OF CALIFORNIA

THE STATE OF CALIFORNIA OR ITS OFFICERS OR AGENTS SHALL NOT BE RESPONSIBLE FOR THE ACCURACY OR COMPLETENESS OF ELECTRONIC COPIES OF THIS PLAN SHEET.

Caltrans Metric

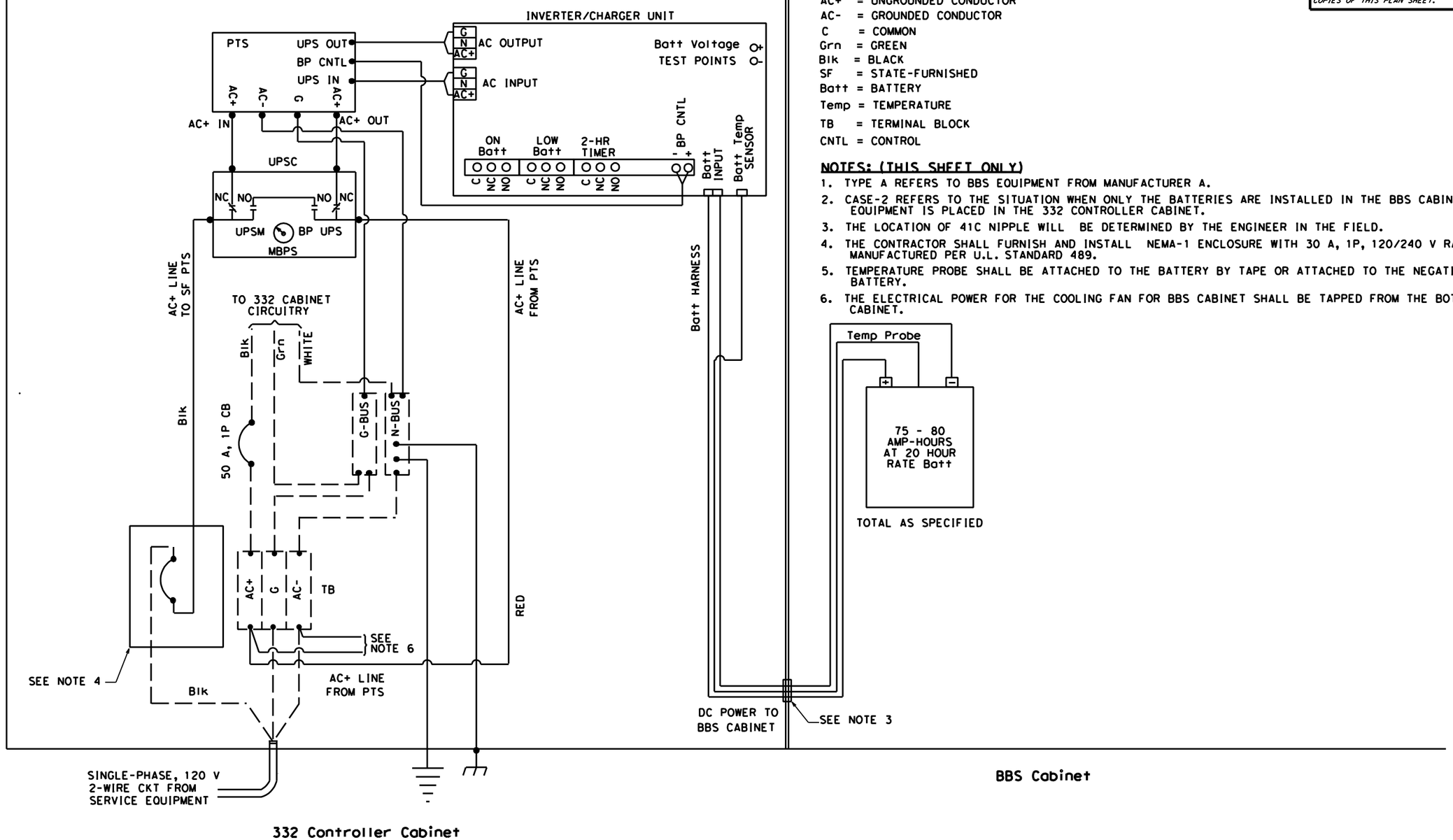

LEGEND: (THIS SHEET ONLY)

BBS = BATTERY BACKUP SYSTEM
PTS = POWER TRANSFER SWITCH
UPS = UNINTERRUPTIBLE POWER SUPPLY
UPSC = UNINTERRUPTIBLE POWER SUPPLY CONTROLLER
UPSM = UPS MODE
BP = BYPASS
MBPS = MANUAL BYPASS SWITCH
AC+ = UNGROUNDED CONDUCTOR
AC- = GROUNDED CONDUCTOR
C = COMMON
Grn = GREEN
Blk = BLACK
SF = STATE-FURNISHED
Batt = BATTERY
Temp = TEMPERATURE
TB = TERMINAL BLOCK
CNTL = CONTROL

NOTES: (THIS SHEET ONLY)

1. TYPE A REFERS TO BBS EQUIPMENT FROM MANUFACTURER A.
2. CASE-2 REFERS TO THE SITUATION WHEN ONLY THE BATTERIES ARE INSTALLED IN THE BBS CABINET. THE REMAINING EQUIPMENT IS PLACED IN THE 332 CONTROLLER CABINET.
3. THE LOCATION OF 41C NIPPLE WILL BE DETERMINED BY THE ENGINEER IN THE FIELD.
4. THE CONTRACTOR SHALL FURNISH AND INSTALL NEMA-1 ENCLOSURE WITH 30 A, 1P, 120/240 V RATED CIRCUIT BREAKER MANUFACTURED PER U.L. STANDARD 489.
5. TEMPERATURE PROBE SHALL BE ATTACHED TO THE BATTERY BY TAPE OR ATTACHED TO THE NEGATIVE TERMINAL OF THE BATTERY.
6. THE ELECTRICAL POWER FOR THE COOLING FAN FOR BBS CABINET SHALL BE TAPPED FROM THE BOTTOM OF TB IN 332 CABINET.

ELECTRICAL SYSTEMS
(BBS POWER CONNECTION DIAGRAM, TYPE A, CASE-2)

NO SCALE

REVISED BY | DATE REVISED
CALCULATED-DESIGNED BY | CHECKED BY
FUNCTIONAL SUPERVISOR

STATE OF CALIFORNIA - DEPARTMENT OF TRANSPORTATION
Caltrans

LAST REVISION 08-21-08 | DATE PLOTTED => $DATE | TIME PLOTTED => $TIME

BORDER LAST REVISED 3/1/2007 | RELATIVE BORDER SCALE IS IN MILLIMETERS 0 20 40 60 80 | USERNAME => $USER | DGN FILE => $REQUEST | CU 00000 | EA 000000

BBS 1250FSP metric 08-20-08.dgn 8/22/2008 1:53:27 PM

Dist	COUNTY	ROUTE	KILOMETER POST TOTAL PROJECT	SHEET No.	TOTAL SHEETS

Caltrans Metric

Theresa Gabriel 12-20-07
REGISTERED ELECTRICAL ENGINEER DATE

PLANS APPROVAL DATE

REGISTERED PROFESSIONAL ENGINEER Theresa A. Gabriel No. E15129 Exp. 6-30-08 ELECT STATE OF CALIFORNIA

THE STATE OF CALIFORNIA OR ITS OFFICERS OR AGENTS SHALL NOT BE RESPONSIBLE FOR THE ACCURACY OR COMPLETENESS OF ELECTRONIC COPIES OF THIS PLAN SHEET.

LEGEND: (THIS SHEET ONLY)

BBS = BATTERY BACKUP SYSTEM
PTS = POWER TRANSFER SWITCH
UPS = UNINTERRUPTIBLE POWER SUPPLY
UPSC = UNINTERRUPTIBLE POWER SUPPLY CONTROLLER
UPSM = UPS MODE
BP = BYPASS
MBPS = MANUAL BYPASS SWITCH
AC+ = UNGROUNDED CONDUCTOR
AC- = GROUNDED CONDUCTOR
C = COMMON
Grn = GREEN
Blk = BLACK
SF = STATE-FURNISHED
Batt = BATTERY
Temp = TEMPERATURE
TB = TERMINAL BLOCK
CNTL = CONTROL

NOTES: (THIS SHEET ONLY)

1. TYPE B REFERS TO BBS EQUIPMENT FROM MANUFACTURER B.
2. CASE-1 REFERS TO THE SITUATION WHEN THE ENTIRE BBS EQUIPMENT INCLUDING THE BATTERIES ARE INSTALLED IN THE BBS CABINET.
3. THE LOCATION OF 41C NIPPLE WILL BE DETERMINED BY THE ENGINEER IN THE FIELD.
4. THE CONTRACTOR SHALL FURNISH AND INSTALL NEMA-1 ENCLOSURE WITH 30 A, 1P, 120/240 VOLTS RATED CIRCUIT BREAKER MANUFACTURED PER U.L. STANDARD 489.
5. TEMPERATURE PROBE SHALL BE ATTACHED TO THE BATTERY BY TAPE OR ATTACHED TO THE NEGATIVE TERMINAL OF THE BATTERY.
6. THE ELECTRICAL POWER FOR THE COOLING FAN FOR BBS CABINET SHALL BE TAPPED FROM THE BOTTOM OF TB IN 332 CABINET.

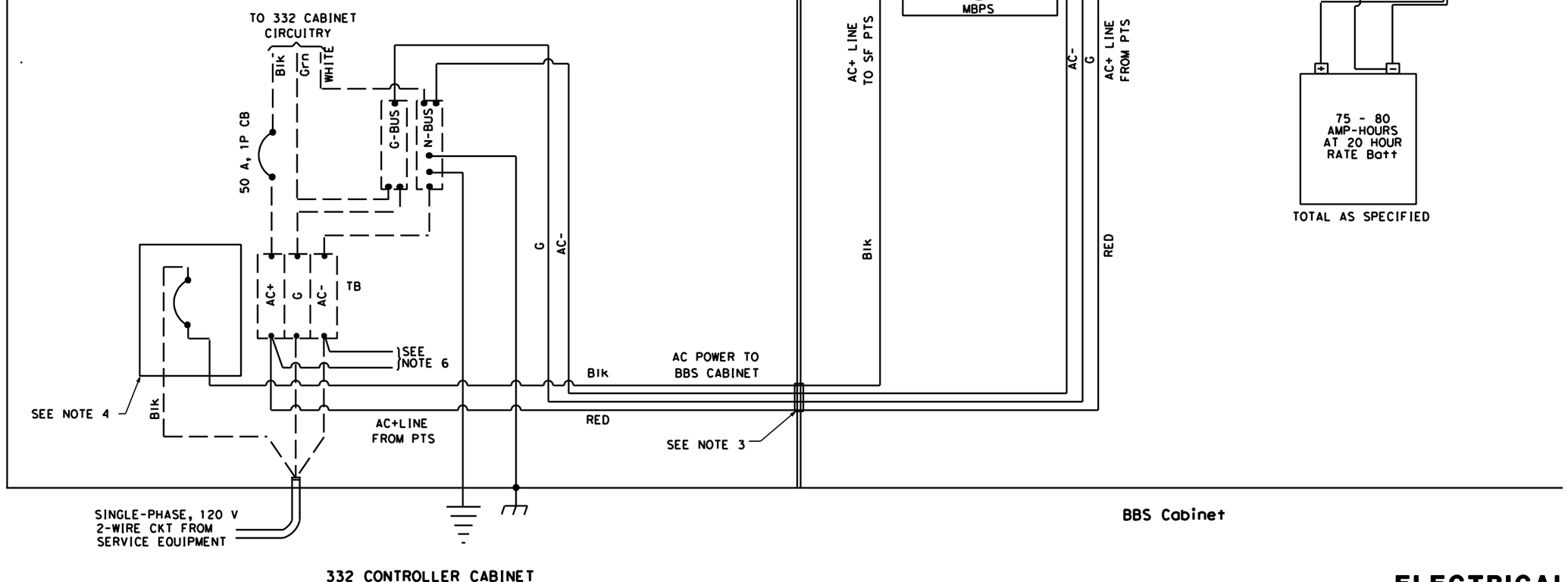

ELECTRICAL SYSTEMS
(BBS POWER CONNECTION DIAGRAM, TYPE B, CASE-1)
NO SCALE

REVISED BY | DATE REVISED | CALCULATED-DESIGNED BY | CHECKED BY | FUNCTIONAL SUPERVISOR

STATE OF CALIFORNIA - DEPARTMENT OF TRANSPORTATION Caltrans

LAST REVISION 08-22-08 | DATE PLOTTED => $DATE | TIME PLOTTED => $TIME

BORDER LAST REVISED 3/1/2007 | RELATIVE BORDER SCALE IS IN MILLIMETERS 0 20 40 60 80 | USERNAME => $USER | DGN FILE => $REQUEST | CU 00000 | EA 000000

BBS DUIFSM metric 08-20-08.dgn 8/22/2008 1:53:58 PM

Dist	COUNTY	ROUTE	KILOMETER POST TOTAL PROJECT	SHEET No.	TOTAL SHEETS

Theresa Gabriel 12-20-07
REGISTERED ELECT ENGINEER DATE

PLANS APPROVAL DATE

REGISTERED PROFESSIONAL ENGINEER Theresa A. Gabriel No. E15129 Exp. 6-30-08 ELECT STATE OF CALIFORNIA

THE STATE OF CALIFORNIA OR ITS OFFICERS OR AGENTS SHALL NOT BE RESPONSIBLE FOR THE ACCURACY OR COMPLETENESS OF ELECTRONIC COPIES OF THIS PLAN SHEET.

Caltrans Metric

LEGEND: (THIS SHEET ONLY)

BBS = BATTERY BACKUP SYSTEM
PTS = POWER TRANSFER SWITCH
UPS = UNINTERRUPTIBLE POWER SUPPLY
UPSC = UNINTERRUPTIBLE POWER SUPPLY CONTROLLER
UPSM = UPS MODE
BP = BYPASS
MBPS = MANUAL BYPASS SWITCH
AC+ = UNGROUNDED CONDUCTOR
AC- = GROUNDED CONDUCTOR
C = COMMON
Grn = GREEN
Blk = BLACK
SF = STATE-FURNISHED
Batt = BATTERY
Temp = TEMPERATURE
TB = TERMINAL BLOCK
CNTL = CONTROL

NOTES: (THIS SHEET ONLY)

1. TYPE B REFERS TO BBS EQUIPMENT FROM MANUFACTURER B.
2. CASE-2 REFERS TO THE SITUATION WHEN ONLY THE BATTERIES ARE INSTALLED IN THE BBS CABINET. THE REMAINING EQUIPMENT IS PLACED IN THE 332 CONTROLLER CABINET.
3. THE LOCATION OF 41C NIPPLE WILL BE DETERMINED BY THE ENGINEER IN THE FIELD.
4. THE CONTRACTOR SHALL FURNISH AND INSTALL NEMA-1 ENCLOSURE WITH 30 A, 1P, 120/240 VOLTS RATED CIRCUIT BREAKER MANUFACTURED PER U.L. STANDARD 489.
5. TEMPERATURE PROBE SHALL BE ATTACHED TO THE BATTERY BY TAPE OR ATTACHED TO THE NEGATIVE TERMINAL OF THE BATTERY.
6. THE ELECTRICAL POWER FOR THE COOLING FAN FOR BBS CABINET SHALL BE TAPPED FROM THE BOTTOM OF TB IN 332 CABINET.

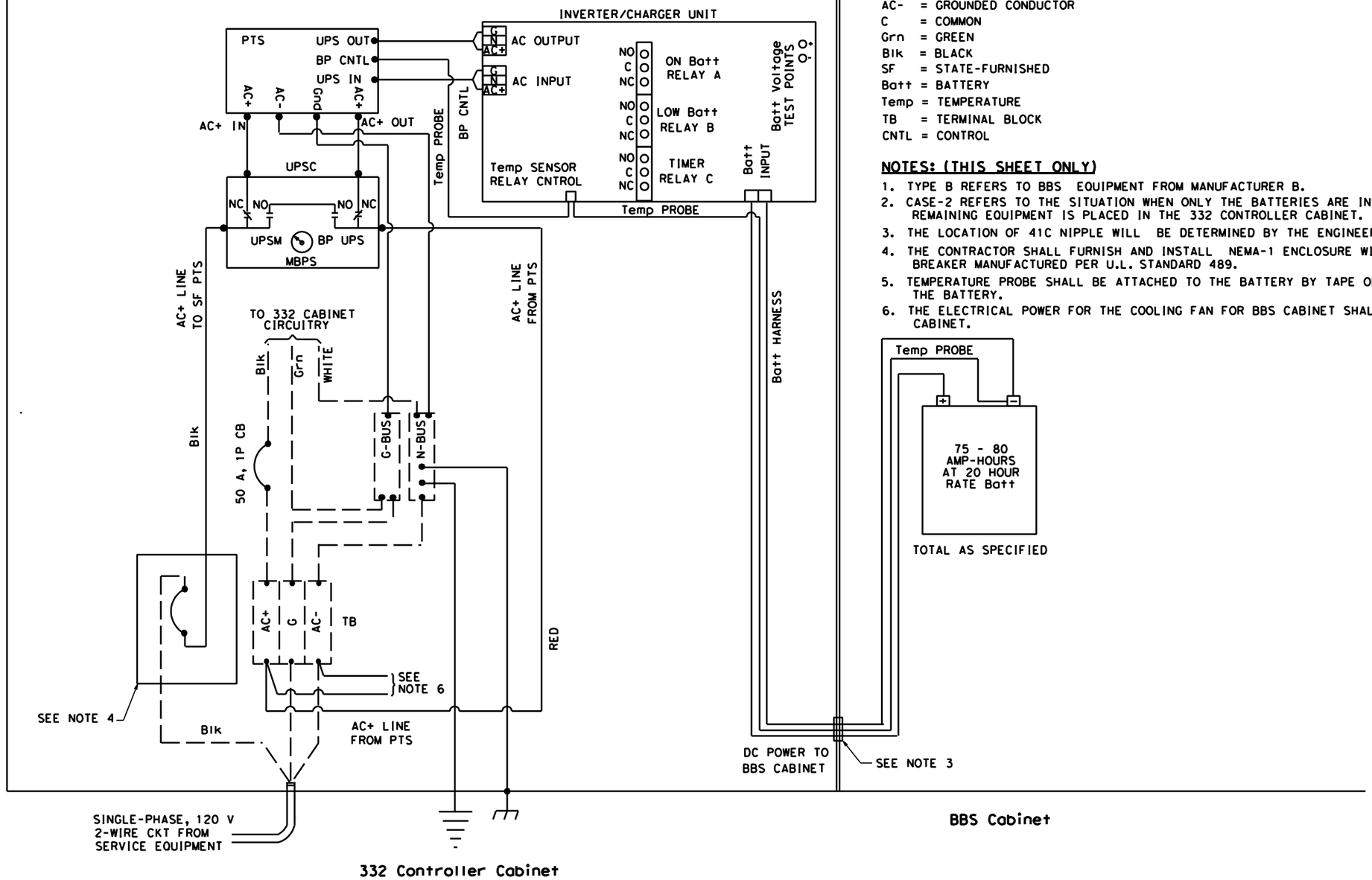

ELECTRICAL SYSTEMS
(BBS POWER CONNECTION DIAGRAM, TYPE B, CASE-2)
NO SCALE

STATE OF CALIFORNIA - DEPARTMENT OF TRANSPORTATION
Caltrans

FUNCTIONAL SUPERVISOR
CALCULATED-DESIGNED BY
CHECKED BY
REVISED BY
DATE REVISED

LAST REVISION 08-22-08
DATE PLOTTED => $DATE
TIME PLOTTED => $TIME

BORDER LAST REVISED 3/1/2007
RELATIVE BORDER SCALE IS IN MILLIMETERS 0 20 40 60 80
USERNAME => $USER
DGN FILE => $REQUEST
CU 00000
EA 000000

Dist	COUNTY	ROUTE	KILOMETER POST TOTAL PROJECT	SHEET No.	TOTAL SHEETS

Caltrans Metric

Theresa Gabriel 12-20-07
REGISTERED ELECTRICAL ENGINEER DATE

PLANS APPROVAL DATE

REGISTERED PROFESSIONAL ENGINEER Theresa A. Gabriel No. E15129 Exp. 6-30-08 ELECT STATE OF CALIFORNIA

THE STATE OF CALIFORNIA OR ITS OFFICERS OR AGENTS SHALL NOT BE RESPONSIBLE FOR THE ACCURACY OR COMPLETENESS OF ELECTRONIC COPIES OF THIS PLAN SHEET.

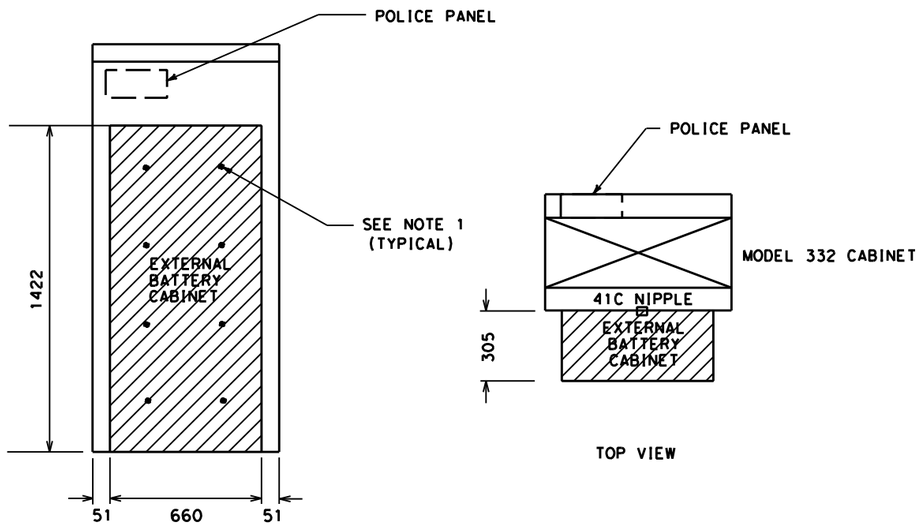

EXTERNAL BATTERY CABINET FOR MODEL 332 CABINETS

NOTES (APPLICABLE TO THIS PLAN SHEET ONLY)

1. THE BBS CABINET SHALL BE MOUNTED TO THE MODEL 332 CABINET WITH EIGHT 18-8 STAINLESS STEEL 9.5 mm-16 X 2.54 mm BOLTS, TWO 18-8 STAINLESS STEEL 2.54 mm OD ROUND FLAT WASHERS, AND ONE STAINLESS STEEL 9.5 mm-16 SCREW SIZE K-LOCK HEX NUT. THE LOCATION OF THE BOLTS SHALL BE DETERMINED BY THE ENGINEER.

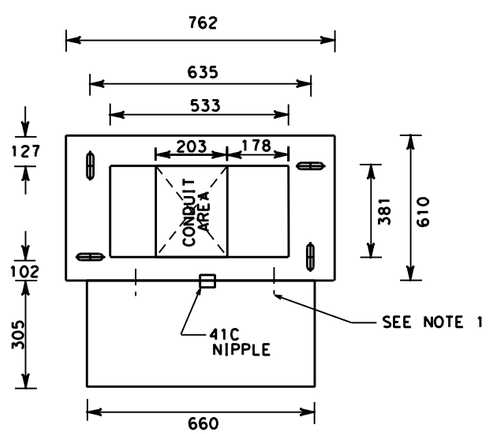

BASE PLAN FOR BBS PLUS MODEL 332 CABINETS

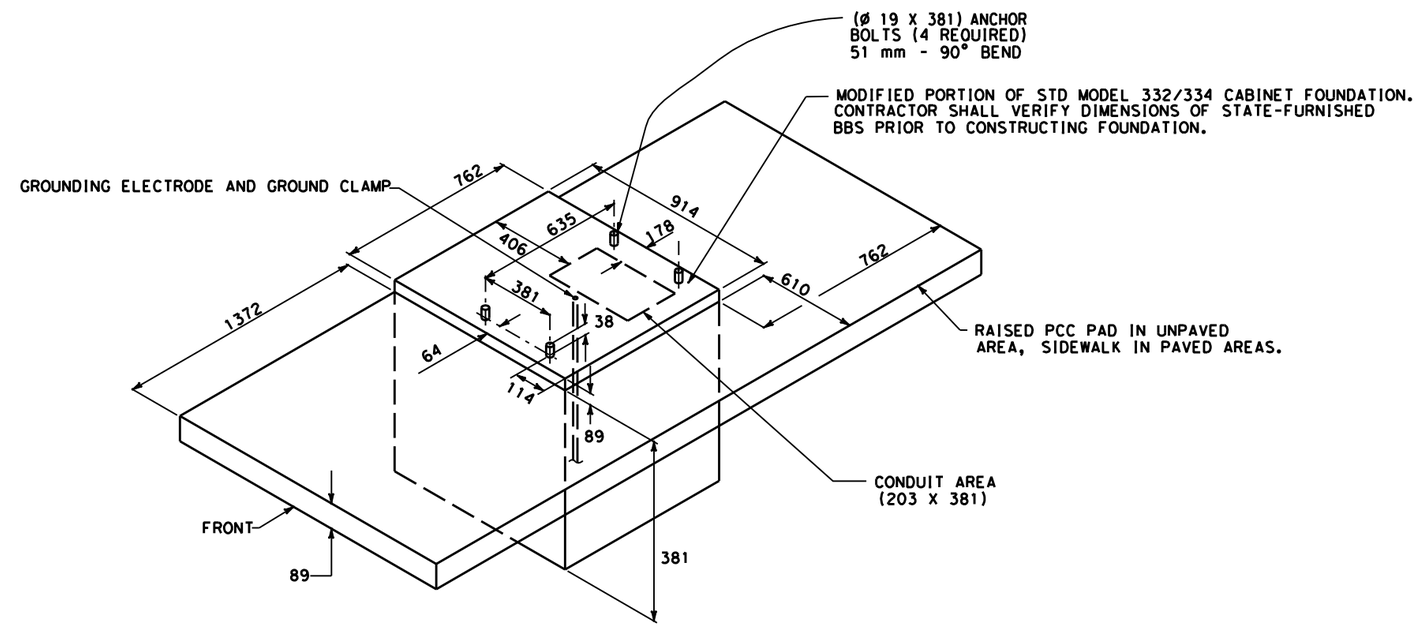

MODIFIED FOUNDATION DETAILS FOR BATTERY BACKUP SYSTEM

(SEE ES-3C OF THE STANDARD PLANS FOR STANDARD FOUNDATION DETAIL FOR MODEL 332 AND 334 CABINETS)

ELECTRICAL SYSTEMS
(BBS FOUNDATION DETAILS)

ALL DIMENSIONS ARE IN MILLIMETERS UNLESS OTHERWISE SHOWN

NO SCALE

REVISED BY | DATE REVISED

CALCULATED-DESIGNED BY | CHECKED BY

FUNCTIONAL SUPERVISOR

STATE OF CALIFORNIA - DEPARTMENT OF TRANSPORTATION

Caltrans

LAST REVISION 08-22-08 | DATE PLOTTED => $DATE | TIME PLOTTED => $TIME

BORDER LAST REVISED 3/1/2007 | RELATIVE BORDER SCALE IS IN MILLIMETERS 0 20 40 60 80 | USERNAME => $USER | DGN FILE => $REQUEST | CU 00000 | EA 000000

GEOCON

GEOTECHNICAL
&
ENVIRONMENTAL
CONSULTANTS

ASBESTOS, LEAD-BASED PAINT, AND SOIL SURVEY REPORT

BRADLEY OVERHEAD BRIDGE No. 39-004 MER-140 KP58 (PM 37) MERCED COUNTY, CALIFORNIA

PREPARED FOR

CALIFORNIA DEPARTMENT OF TRANSPORTATION
DISTRICT 10
FRESNO, CALIFORNIA

CALTRANS TASK ORDER NO.
10-3A6600-2J
GEOCON PROJECT NO. S8225-06-123

FEBRUARY 28, 2001

GEOCON
CONSULTANTS, INC.
ENVIRONMENTAL ■ GEOTECHNICAL ■ MATERIALS

Project No. S8225-06-123
February 28, 2001

Mr. Peter Hansen
California Department of Transportation
3402 North Blackstone Avenue, Suite 201
Fresno, California 93726

Subject: BRADLEY OVERHEAD, BRIDGE NO. 39-004, MER-140 KP58 (PM37)
MERCED COUNTY, CALIFORNIA
CONTRACT NO. 43A0012
TASK ORDER NO. 10-3A6600-2J
ASBESTOS, LEAD-BASED PAINT, AND SOIL SURVEY REPORT

Dear Mr. Hansen:

In accordance with Caltrans Contract No. 43A0012 and Task Order No. 10-3A6600-2J, Geocon Consultants, Inc. has performed an asbestos, a lead-based paint, and soil surveys of the subject overhead bridge (Site). This report summarizes the services performed including the collection and analysis of building material, paint-chip, and soil samples.

The contents of this report reflect the views of the author who is responsible for the facts and accuracy of the data presented herein. The contents do not necessarily reflect the official views or policies of the State of California or the Federal Highway Administration. This report does not constitute a standard, specification, or regulation.

If there are any questions concerning the contents of this report, or if Geocon may be of further service, please contact the undersigned at your convenience.

Sincerely,

GEOCON CONSULTANTS, INC.

John E. Juhrend, PE, CEG
Project Manager

Gemma G. Reblando
Staff Geologist

GGR:JEJ:krc

(5) Addressee

TABLE OF CONTENTS

ASBESTOS, LEAD-BASED PAINT, AND SOIL SURVEY REPORT FOR THE BRADLEY OVERHEAD BRIDGE

1.0 INTRODUCTION 1
- 1.1 General Objectives 1
- 1.2 Project Location, Existing and Proposed Improvements 1
- 1.3 Background 1
- 1.4 Asbestos Survey 1
- 1.5 Lead-Based Paint Survey 2
- 1.6 Lead in Soil 2

2.0 SCOPE OF SERVICES 3
- 2.1 Pre-Field Activities 3
- 2.2 Field Activities 3

3.0 INVESTIGATIVE METHODS 4
- 3.1 Asbestos Survey 4
- 3.2 Lead-Based Paint Survey 4
- 3.3 Lead Soil Survey 4
- 3.4 Laboratory Analyses 5

4.0 INVESTIGATIVE RESULTS 6
- 4.1 Asbestos Survey Results 6
- 4.2 Lead-Based Paint Survey Results 6
- 4.3 Lead Soil Survey Results 6
  - 4.3.1 Soil Analytical Results 6
  - 4.3.2 Statistical Evaluation for Lead Detected in Soil Samples 7
    - 4.3.2.1 Total Lead Distribution 7
    - 4.3.2.2 Calculating the UCLs for the True Mean 8
    - 4.3.2.3 Correlation of Total and Soluble Lead 9

5.0 CONCLUSIONS AND RECOMMENDATIONS 10
- 5.1 Asbestos Containing Building Materials 10
- 5.2 Materials Containing Lead-Based Paint 10
- 5.3 Lead in Soil 10
  - 5.3.1 Excavation Scenario 1 – Surface to 0.30 meters 10
  - 5.3.2 Excavation Scenario 2 – Surface to 0.60 meters 11
  - 5.3.3 Excavation Scenario 3 – Surface to 0.75 meters 11
  - 5.3.4 Risk to Human Health 12

6.0 REPORT LIMITATIONS 13

FIGURES

1. Vicinity Map
2a. Site Plan – West End
2b. Site Plan – East End

TABLES

1. Summary of Asbestos Survey Result
2. Summary of Lead-Based Paint Analytical Results – Title 22 Metals
3. Summary of Lead Soil Sample Analytical Data
4. Summary of Soil Statistical Data

APPENDICES

A. HB&T Asbestos Survey and Lead-Based Paint Survey Reports
B. Analytical Laboratory Reports and Chain-of-Custody Documentation
C. Lead Statistics and Regression Analysis Results
D. Caltrans Encroachment Permit

ASBESTOS, LEAD-BASED PAINT, AND SOIL SURVEY REPORT FOR THE BRADLEY OVERHEAD BRIDGE

1.0 INTRODUCTION

1.1 General Objectives

This Asbestos, Lead-Based Paint, and Soil Survey Report was prepared under Caltrans Contract No. 43A0012 in accordance with Task Order (TO) No 10-3A6600-2J, dated August 28, 2000. The objective of the scope of work outlined in the TO was to provide information regarding the potential presence of asbestos containing materials (ACMs), lead-based paint, or lead in soil at the subject bridge site. HB&T Environmental Inc., under subcontract to Geocon Consultants, Inc., performed the asbestos and lead-based paint surveys of the subject bridge site. Geocon performed the soil borings at the subject bridge site.

1.2 Project Location, Existing and Proposed Improvements

The Site includes an approximately 425 meter (1,400 feet) long, steel overhead bridge on State Route 140, which spans the Burlington Northern and Santa Fe Railroad in Merced County, California. The approximate site location is depicted on the attached Vicinity Map, Figure 1.

The proposed project consists of demolition and construction of a new Bradley Overhead Bridge. The existing Bradley Overhead Bridge is shown on the attached Site Plans, Figures 2a and 2b.

1.3 Background

A review of the as-built plans indicates that 1/16" asbestos sheet packing was used as expansion filler within the subject bridge structure.

1.4 Asbestos Survey

The *Code of Federal Regulations (CFR),* 40 CFR 61 Asbestos Hazard Emergency Response Act (AHERA) and Federal Occupational Safety and Health Administration (FED OSHA) classify ACMs as any material or product which contains more than 1% asbestos. Nonfriable asbestos materials are classified as either Category I or Category II material defined as follows:

- **Category I** – asbestos-containing resilient floor covering, asphalt roofing products, packings, gaskets and mastics.
- **Category II** – all remaining types of non-friable asbestos-containing material not included in Category I that when dry, cannot be crumbled, pulverized, or reduced to powder by hand pressure.

Regulated asbestos-containing material (RACM) is classified as any material that contains greater than one-percent asbestos by dry weight and is either:

1. Friable;
2. Category 1 non-friable material that is now friable;

3. Category 1 non-friable material that will be subjected to sanding grinding, cutting or abrading; or
4. Category 1 non-friable material that will become crumbled, pulverized, or reduced to a powder during demolition or renovation activities.

With respect to potential worker exposure, the California Code of Regulations (CCR), 8 CCR 341.6, defines asbestos-containing construction materials (ACCMs) as construction material that contains more than 0.1% asbestos.

1.5 Lead-Based Paint Survey

Lead-based paint is defined by CCR Title 17, Division 1, Chapter 8, §35033 as any surface coatings that contain an amount of lead equal to, or in excess of one milligram per square centimeter (1.0 mg/cm^2) or more than half of one percent (0.5%) by weight. Deteriorated lead-based paint is defined by CCR Title 17, Division 1, Chapter 8, §35022 as a surface coating that is cracking, chalking, flaking, chipping, peeling, non-intact, failed, or otherwise separating from a component. Demolition of a deteriorated lead-based paint component would require waste characterization and appropriate disposal. Intact lead-based paint on a component is currently accepted by most landfill facilities.

Potential hazards exist to workers who remove or cut through lead-based paint coating during demolition. Dust containing hazardous concentrations of lead may be generated during scraping or cutting materials coated with lead-based paint. Torching of these materials may produce lead oxide fumes. Therefore, air monitoring and/or respiratory protection may be required during the demolition of materials coated with lead-based paint. Guidelines regarding regulatory provisions for construction work where workers may be exposed to lead are presented in the CCR, Title 8, Section 1532.1 (*Lead in Construction*).

1.6 Lead in Soil

Regulatory criteria to classify a waste as "California Hazardous" for handling and disposal purposes are contained in the *CCR*, Title 22, Division 4.5, Chapter 11, Article 3, §66261.24. For lead containing waste, the material is classified as "California Hazardous" when:

1. The total lead content exceeds the Total Threshold Limit Concentration (TTLC) of 1,000 milligrams per kilogram (mg/kg); or

2. The soluble lead content exceeds the Soluble Threshold Limit Concentration (STLC) of 5.0 milligrams per liter (mg/l) based on Waste Extraction Test (WET) analysis.

When metals concentrations are greater than 10 times their STLC value, regulatory agencies typically initiate the requirement for the WET solubility test for the constituent of concern. The TTLC value for lead is 1,000 mg/kg and the STLC for lead using acid extract is 5.0 mg/l. Per Section 25157.8 of the California Health and Safety Code, on or after January 1, 1999, no person shall dispose waste that contains total lead in excess of 350 parts per million (ppm), to a landfill other than a Class I hazardous waste disposal facility.

2.0 SCOPE OF SERVICES

Outlined below is a summary of the scope of services performed by Geocon and Geocon's asbestos and lead-based paint subcontractor under the subject TO.

2.1 Pre-Field Activities

- Conducted a TO meeting on September 20, 2000 to review the proposed scope of work. The TO meeting included Mr. Peter Hansen with Caltrans, Mr. Jim Lessman with Geocon, and Mr. Tim Hoppe with HB&T.

- Prepared a *Workplan* dated October 12, 2000 to describe the requested scope of services and quality assurance/quality control (QA/QC), sampling and laboratory procedures.

- Prepared a *Health and Safety Plan* dated October 12, 2000 to provide guidelines on the use of personal protective equipment and the health and safety procedures to be implemented during the field activities.

- Retained the services of HB&T, QuanTEM Laboratories (Quantem) and Advanced Technology Laboratories (ATL), California-licensed and Caltrans approved subcontractors to perform the asbestos and lead-based paint sampling activities and analytical testing services. Mr. Owen Tilley with HB&T, a current Asbestos Hazard Emergency Response Consultant and California Department of Health Services certified lead-based paint sampler, reviewed the as-built bridge plans provided by Caltrans.

2.2 Field Activities

Mr. Owen Tilley with HB&T performed the asbestos survey and lead-based paint surveys of the subject bridges on November 1, 2000. Mr. West Bourgault and Mr. Sean Dixon with Geocon performed the forty soil borings at the Site on November 1, 2000.

- Collected nine bridge material samples consisting of gasket material (sheet packing) and concrete using a chisel.

- Collected ten paint chip samples from painted surfaces including metal guardrails, crossmembers, and stringers.

- Collected one hundred ten hand-auger soil samples. Soil samples were collected at depths of 10 centimeters (cm) (0.3 feet), 30 cm (1.0 feet), and 60 cm (2.0 feet). Refusal on concrete and brick rubble was reached in eight borings at approximately 10 to 30 cm below ground surface (bgs).

3.0 INVESTIGATIVE METHODS

3.1 Asbestos Survey

The asbestos survey including the identification and sampling of suspect ACMs at the subject bridge site was performed by Mr. Owen Tilley with HB&T. Suspected ACMs were grouped into homogeneous areas and a representative sample was collected from each area. In addition, each potential ACM was evaluated for condition (evidence of deterioration, physical damage, and water damage) friability, and accessibility. Following collection, the samples were transported to Quantem for analysis under standard chain-of-custody procedures.

Nine bridge material samples, 39-44-01-ASB through 39-44-09-ASB, were obtained from the subject bridge site including gasket material and concrete. No other suspected ACM was observed. The approximate building material sample locations are shown on Figures 2a and 2b.

3.2 Lead-Based Paint Survey

Mr. Owen Tilley, a California Department of Health Services certified lead-based paint sampler conducted the paint survey in conjunction with the asbestos survey at the subject bridge site. Ten representative samples, BOB-01-LP through BOB-10-LP, were collected from painted surfaces by scraping off the paint. Following collection, the paint chip samples were transported to ATL for chemical analysis under standard chain-of-custody procedures. In addition, each painted area was evaluated for evidence of deterioration such as flaking or cracking. The approximate paint-chip sample locations are shown on Figures 2a and 2b.

3.3 Lead Soil Survey

Mr. West Bourgault and Mr. Sean Dixon, OSHA 40-Hour Hazardous Waste Operations trained samplers conducted the soil survey at the Site. One hundred ten samples were obtained from forty boring locations (B1 through B40). Soil samples were obtained using a hand-auger from the surface and at depths of 10 cm (0.3 feet), 30 cm (1.0 feet), and 60 cm (1.5 feet). The soil samples obtained from the hand-auger borings were collected directly from the auger bucket, once the desired sampling depth was reached, and transferred into pre-labeled, sealable, plastic bags. The hand-auger borings were backfilled with the soil cuttings generated at each respective location.

QA/QC procedures were performed during the field exploration activities. These procedures included cleaning the sampling equipment between sampling intervals and providing chain-of-custody documentation for each soil sample submitted to the laboratory.

3.4 Laboratory Analyses

Nine bridge material samples were collected from the subject bridge during the asbestos survey and submitted to Quantem for the presence of asbestos in accordance with EPA Test Method 600/M4-82-020, polarized light microscopy.

Ten paint-chip samples collected from the subject bridge site during the lead-based paint survey were analyzed by ATL for Title 22 metals following EPA Test Method 6010B.

One hundred ten soil samples collected from forty hand-auger soil borings were analyzed by ATL for total lead following EPA Test Method 6010B. Nineteen soil samples were further analyzed for WET soluble lead using EPA Test Methods 3050 and 7420.

Twelve soil samples were analyzed by EPA Test Method 9045 for soil pH.

Prior to submitting the samples to the laboratory, the chain-of-custody documentation was reviewed for accuracy and completeness. The laboratory reports were also reviewed for accuracy and consistency with the chain-of-custody documentation.

4.0 INVESTIGATIVE RESULTS

4.1 Asbestos Survey Results

Asbestos was detected in eight of nine samples. Chrysotile asbestos was detected in all eight of the gasket material samples (39-44-01-ASB through 39-44-08-ASB) collected from subject bridge site at a concentration of 40%.

The asbestos analytical results and bridge material sample locations are summarized in Table 1. The HB&T asbestos survey report is presented in Appendix A. The laboratory report and chain-of-custody records are presented in Appendix B.

4.2 Lead-Based Paint Survey Results

Ten paint chip samples (BOB-01-LP through BOB-01-LP) collected from the painted steel guardrails, crossmembers, and stringers of the subject bridge site were analyzed for the presence of Title 22 metals. Lead was detected in each of the samples at concentrations ranging from 55,000 to 560,000 mg/kg. Zinc was detected in each of the samples at concentrations ranging from 17,000 to 110,000 mg/kg. Other elevated metals included antimony, arsenic, barium, cadmium, chromium, cobalt, copper and nickel. The lead-based paint sampler noted that the painted areas were in good condition at the time of the survey and are not considered deteriorated at this time.

The lead-paint analytical results are summarized in Table 2. The HB&T survey report is presented in Appendix A. The laboratory report and chain-of-custody records are presented in Appendix B.

4.3 Lead Soil Survey Results

4.3.1 Soil Analytical Results

Lead soil sample analytical results are summarized in Table 3. Laboratory results and chain-of-custody documentation are included in Appendix B.

- Total lead was detected in 88 of the 110 soil samples collected at concentrations ranging from 5.1 to 440 mg/kg.
- Nineteen (19) of the 110 soil samples (17%) had reported total lead results greater than 75 mg/kg. One (1) of the 110 soil samples (B6-10) had a reported total lead concentration greater than 350 mg/kg.
- Subsequent WET analysis of the 19 samples exceeding 75 mg/kg yielded soluble lead results ranging from 1.8 to 57 milligrams per liter (mg/l). Twelve (12) of the 19 soil samples (63%) exhibited soluble lead results exceeding 5.0 mg/l.

- Twelve soil samples selected for soil pH analysis had reported results ranging from 6.01 to 7.20 with an average of 6.43.

4.3.2 Statistical Evaluation for Lead Detected in Soil Samples

Based on a review of the analytical data and the boring locations, noticeable hot-spots were not apparent. Consequently, the data (not including background samples B22, B24, B25, B26) were treated as one population.

Statistical methods were applied to the total and soluble lead data to evaluate: 1) the distribution of the total lead data; 2) the upper one-sided confidence limits (UCLs) on the true means of the total lead concentrations for each sampling depth; and 3) if an acceptable correlation between total and soluble lead concentrations exists that would allow the prediction of soluble lead concentrations based on calculated UCLs. The statistical methods used to calculate the UCLs are provided in an EPA document entitled *Test Methods for Evaluating Solid Waste, Physical/Chemical Methods, SW-846, Third Edition* (SW-846) as recommended by Ms. Julia Turney with Caltrans. The statistical methods for evaluating the correlation between total and soluble (WET) lead are provided in *Statistics and Data Analysis in Geology*, by John Davis.

4.3.2.1 Total Lead Distribution

The presence of non-detects and/or low concentrations in total lead data can strongly skew sample data towards low values. Classical statistical methods do not work properly in these cases since they assume that the data exhibits an underlying normal distribution. Consequently, it is necessary to evaluate the distribution of the total lead data to apply the appropriate methods when determining the UCLs on the true total lead means. When evaluating the distribution of total lead concentrations, each sampling depth was treated as a separate data set within the population.

The total lead variance was greater than the total lead mean for each data set. According to SW-846, if the variance is greater than the mean, the total lead data may be characterized by a negative binomial distribution, as is the case for the data obtained from the site. In this circumstance, according to SW-846, normality can often be achieved using an arcsine transformation. Consequently, the total lead data was converted into decimal form by dividing the total lead concentrations in each data set by the maximum total lead concentration observed in each data set. This resulted in fractionalized total lead concentrations that ranged from close to zero to one. The fractionalized data was then transformed by taking the arcsine of the fractionalized data. UCLs were calculated in the next section using the transformed data.

4.3.2.2 Calculating the UCLs for the True Mean

The 90% and 95% UCLs of the true mean are defined as the values that, when calculated repeatedly for randomly drawn subsets of site data, equal or exceed the true mean 90% and 95% of the time, respectively. According to a statistics guidance letter prepared by Caltrans and dated February 5, 1998, the 90% UCL (80% confidence interval) is applicable if the soil will be re-used onsite, and the 95% UCL is applicable if the soil will be relinquished to the contractor for re-use or disposal.

Statistical confidence limits are the classical tool for addressing uncertainties of a distribution mean. The UCLs of the true mean concentration are used as the mean concentrations because it is not possible to know the true mean due to the essentially infinite number of soil samples that could be collected from the site. The UCLs therefore account for uncertainties due to limited sampling data. As data become less limited at a site, uncertainties decrease and the UCLs move closer to the true mean.

Procedures for obtaining the UCLs on the true means for a negative binomial distribution were used as described in Chapter 9 of SW-846. UCLs were calculated for each data set. The resulting UCLs allowed for the evaluation of total lead concentrations vertically as summarized below.

Depth Interval	90% Total Lead UCL (mg/kg)	Predicted Soluble Lead (mg/l)	95% Total Lead UCL (mg/kg)	Predicted Soluble Lead (mg/l)
0 to 0.15 meter	113	11	121	12
0.3 to 0.45 meter	57	5.6	63	6.1
0.6 to 0.75 meter	18	1.8	20	1.9

Utilizing the UCLs above, the following three excavation scenarios were evaluated:

- Excavation Scenario 1: Excavate the top 0.30 meter of soil.
- Excavation Scenario 2: Excavate the top 0.60 meter of soil.
- Excavation Scenario 3: Excavate the top 0.75 meter of soil.

To evaluate expected total lead concentrations for the different excavation scenarios, weighted averages of respective UCLs were calculated based on the soil mass in question. The UCLs for different excavation scenarios are presented as a portion of Table 4. The calculations are summarized as a portion of Appendix C.

4.3.2.3 Correlation of Total and Soluble Lead

Total and corresponding soluble (WET) lead concentrations are bivariate data with a linear structure. This linear structure should allow for the prediction of soluble lead (WET) concentrations based on the UCLs calculated above in Section 4.3.2.2.

To estimate the degree of interrelation between total and corresponding soluble (WET) lead values (x and y, respectively), the *correlation coefficient [r]* is used (see Davis pg. 40). The correlation coefficient is a ratio that ranges from +1 to –1. A *correlation coefficient* of +1 indicates a perfect direct relationship between two variables; a *correlation coefficient* of -1 indicates that one variable changes inversely with relation to the other. Between the two extremes is a spectrum of less-than-perfect relationships, including zero, which indicates the lack of any sort of linear relationship at all. The *correlation coefficient* was calculated for the 19 (x, y) data points (i.e., soil samples analyzed for both total lead [x] and soluble [WET] lead [y]) and equaled 0.8. According to a Caltrans statistics guidance letter, a *correlation coefficient* greater than or equal to 0.8, is an acceptable indicator that a correlation exists. Consequently, an acceptable correlation between total and soluble lead concentrations exists for data collected from the site.

Since the *correlation coefficient* indicates that a linear relationship exists between total and soluble (WET) lead concentrations, it is possible to compute the line of dependence, or a best-fit line between the two variables. Following methods outlined in Davis (pg. 180), a least squares method was used to find the equation of a best-fit line (regression line) by forcing the y-intercept equal to zero since that is a known point. The equation of the regression line was determined to be $y = 0.0969(x)$, where x represents total lead concentrations and y represents predicted soluble lead (WET) concentrations.

This equation was used to estimate the expected soluble lead (WET) concentrations for the UCLs calculated in Section 4.3.2.2. Regression analysis results and a scatter plot depicting the 19 (x, y) data points along with the regression line are included as a portion of Appendix C. In addition, the expected soluble lead concentrations are shown next to the UCLs in Table 4.

5.0 CONCLUSIONS AND RECOMMENDATIONS

5.1 Asbestos Containing Building Materials

Based on the analytical test results, the subject bridge site contains ACMs. The ACMs detected include the gasket material (sheet packing) and is classified as being in fair condition, non-friable, Category II material. These materials will require removal and disposal by a licensed and certified asbestos abatement contractor prior to the planned bridge demolition activities. The estimated quantity of ACM at the subject bridge site is 30 square feet. For budgetary planning purposes, the approximate abatement cost for this material is $1,200.

5.2 Materials Containing Lead-Based Paint

Based on the good condition of the paint on the steel girders at the subject bridge site, lead-based paint stabilization will not be required. The contractor who performs the construction activities should be notified that any construction activities that will disturb the lead-based girder paint may expose workers to lead requiring worker protection in accordance with CCR, Title 8, Section 1532.1, *Lead in Construction.*

5.3 Lead in Soil

The limited soil sampling and laboratory analyses indicate the following:

- The soil pH values were greater than 5 and ranged from 6.01 to 7.20;
- Total lead concentrations ranged from 5.1 to 440 mg/kg;
- Soluble lead (WET) concentrations ranged from 1.8 to 57 mg/l;

The following sections summarize the total lead UCLs, predicted soluble (WET) lead concentrations that correspond with the UCLs, and the waste classification for soil generated for the three different excavation scenarios. In addition, the reuse of soil excavated for each scenario has not been evaluated based on DTSC requirements for the Caltrans – District 10 variance since the presence of lead in the soil was not due to vehicle emissions.

5.3.1 Excavation Scenario 1 – Surface to 0.30 meters

Excavation	Total Lead	Predicted Soluble (WET) Lead	Waste Classification
Surface to 0.30 meter	113 mg/kg (90% UCL)	11 mg/l	**California-Hazardous**
	121 mg/kg (95% UCL)	12 mg/l	**California-Hazardous**
Underlying soil from 0.30 to 0.75 meter	38 mg/kg (90% UCL)	3.7 mg/l	**Non-Hazardous**
	41 mg/kg (95% UCL)	4.0 mg/l	**Non-Hazardous**

Based on the above information, if the top 0.30 meter of soil generated during the excavation activities within the population limit is mixed together and treated as one unit, the soil would be classified as a California-hazardous waste since the predicted soluble (WET) lead concentration is greater than the lead STLC of 5.0 mg/l. Since the soluble (WET) lead concentration is greater than the lead STLC of 5.0 mg/l, the soil would likely be accepted at a Class I disposal facility. The underlying soil from 0.30 to 0.75 meter has soluble (WET) lead concentration less than the lead STLC of 5.0 mg/l. Therefore, if the top 0.3 meter is taken off, the underlying soil below 0.30 meter is considered non-hazardous.

5.3.2 Excavation Scenario 2 – Surface to 0.60 meters

Excavation	Total Lead	Predicted Soluble (WET) Lead	Waste Classification
Surface to 0.60 meter	85 mg/kg (90% UCL)	8 mg/l	**California-Hazardous**
	92 mg/kg (95% UCL)	9 mg/l	**California-Hazardous**
Underlying soil from 0.60 to 0.75 meter	18 mg/kg (90% UCL)	1.8 mg/l	**Non-Hazardous**
	20 mg/kg (95% UCL)	1.9 mg/l	**Non-Hazardous**

Based on the above information, if the top 0.60 meter of soil generated during the excavation activities within the population limit is mixed together and treated as one unit, the soil would be classified as a California-hazardous waste since the predicted soluble (WET) lead concentration is greater than the lead STLC of 5.0 mg/l. Consequently, the soluble (WET) lead concentration is greater than the lead STLC of 5.0 mg/l, thus the soil would likely be accepted at a Class I disposal facility.

5.3.3 Excavation Scenario 3 – Surface to 0.75 meters

Excavation	Total Lead	Predicted Soluble (WET) Lead	Waste Classification
Surface to 0.75 meters	63 mg/kg (90% UCL)	6.1 mg/l	**California-Hazardous**
	68 mg/kg (95% UCL)	6.6 mg/l	**California-Hazardous**

Based on the above information, if the top 0.75 meter of soil generated during the excavation activities within the population limit is mixed together and treated as one unit, the soil would be classified as a California-hazardous waste since the predicted soluble (WET) lead concentration is greater than the lead STLC of 5.0 mg/l. Consequently, the soluble (WET) lead concentration is greater than the lead STLC of 5.0 mg/l, thus the soil would likely be accepted at a Class I disposal facility.

It is recommended that additional soil samples be collected at depths between the surface and 0.3 meter to determine if the hazardous waste lead concentrations exist only within the upper few centimeters. Based on the data obtained, the lateral distribution of the hazardous waste lead impacts appear to extend from beneath the bridge to a minimum of five meters to either side beyond the limit of the bridge structure. Additional soil sampling is recommended to confirm the lateral distribution of the lead soil impacts.

5.3.4 Risk to Human Health

Based on current and proposed use of the subject site and adjacent properties, it is appropriate to compare the highest calculated UCL to EPA Region 9 Preliminary Remediation Goal (PRG) for lead in industrial soil. PRGs are used to estimate contaminant concentrations in environmental media (soil, air, and water) that are protective of human health, including sensitive groups, over a lifetime. The total lead PRG for industrial soil is 750 mg/kg. Total lead concentrations above the PRG would not automatically trigger a response action or suggest that a significant risk to human health exists. Exceeding a PRG does suggest that further evaluation of the potential risks that may be posed by site contaminants is appropriate. The highest UCL of 121 mg/kg is less than the PRG of 750 mg/kg. Therefore, it is concluded that lead-impacted soil in the areas investigated does not pose a significant risk to the health of workers performing the construction activities.

6.0 REPORT LIMITATIONS

This report has been prepared exclusively for Caltrans. The information contained herein is only valid as of the date of the report, and will require an update to reflect additional information obtained.

The Client should recognize that this report is not a comprehensive site characterization and should not be construed as such. The findings as presented in this report are predicated on the results of the limited sampling and laboratory testing performed. In addition, the information obtained is not intended to address potential impacts related to sources other than those specified herein.

Therefore, the report should only be deemed conclusive with respect to the information obtained. No guarantee or warranty of the results of the report is implied within the intent of this report or any subsequent reports, correspondence or consultation, either expressed or implied. Geocon strived to perform the services summarized herein in accordance with the local standard of care in the geographic region at the time the services were rendered.

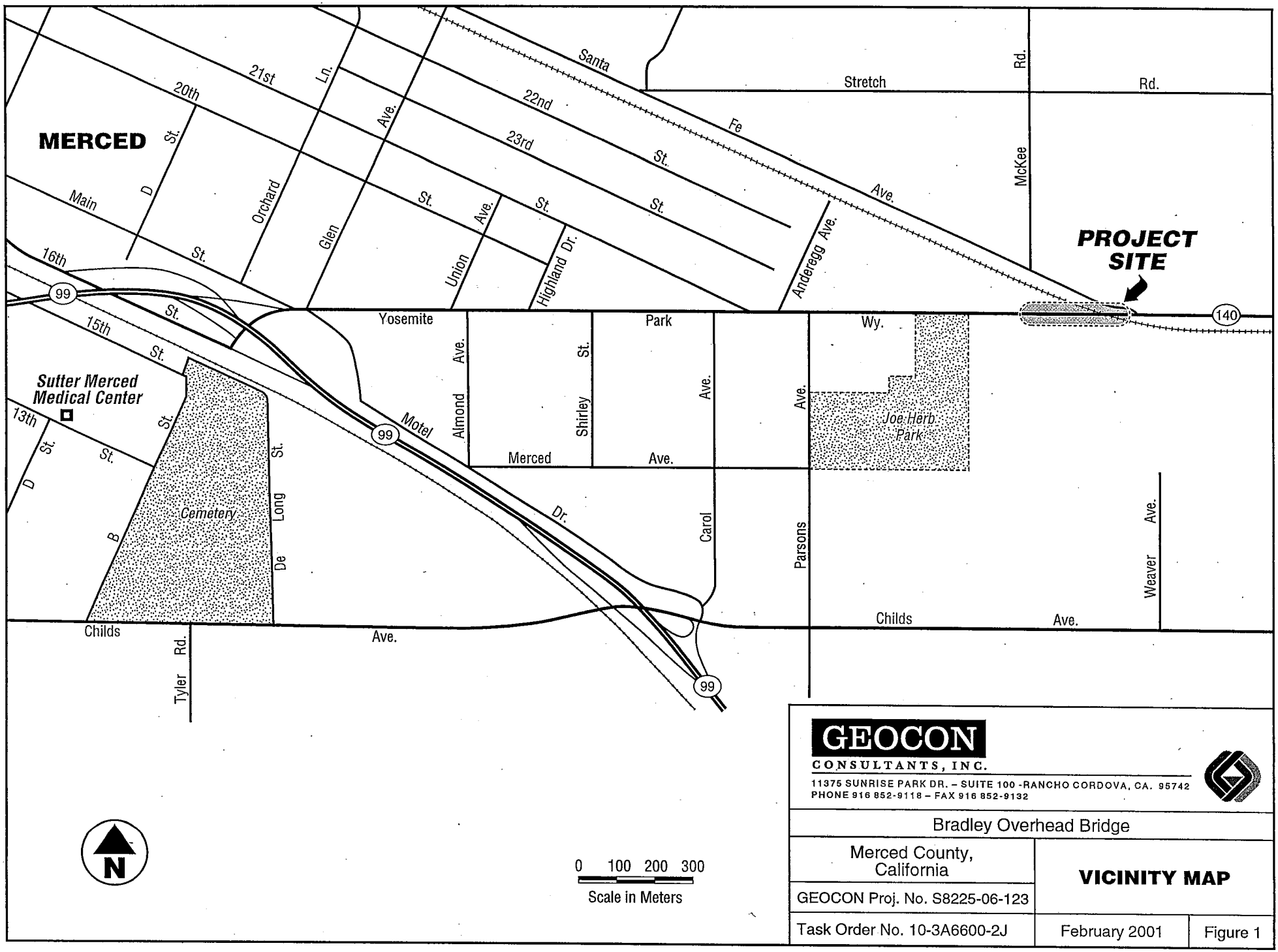

GEOCON
CONSULTANTS, INC.
11375 SUNRISE PARK DR. – SUITE 100 -RANCHO CORDOVA, CA. 95742
PHONE 916 852-9118 – FAX 916 852-9132

Bradley Overhead Bridge

Merced County, California

GEOCON Proj. No. S8225-06-123

Task Order No. 10-3A6600-2J

VICINITY MAP

February 2001

Figure 1

14

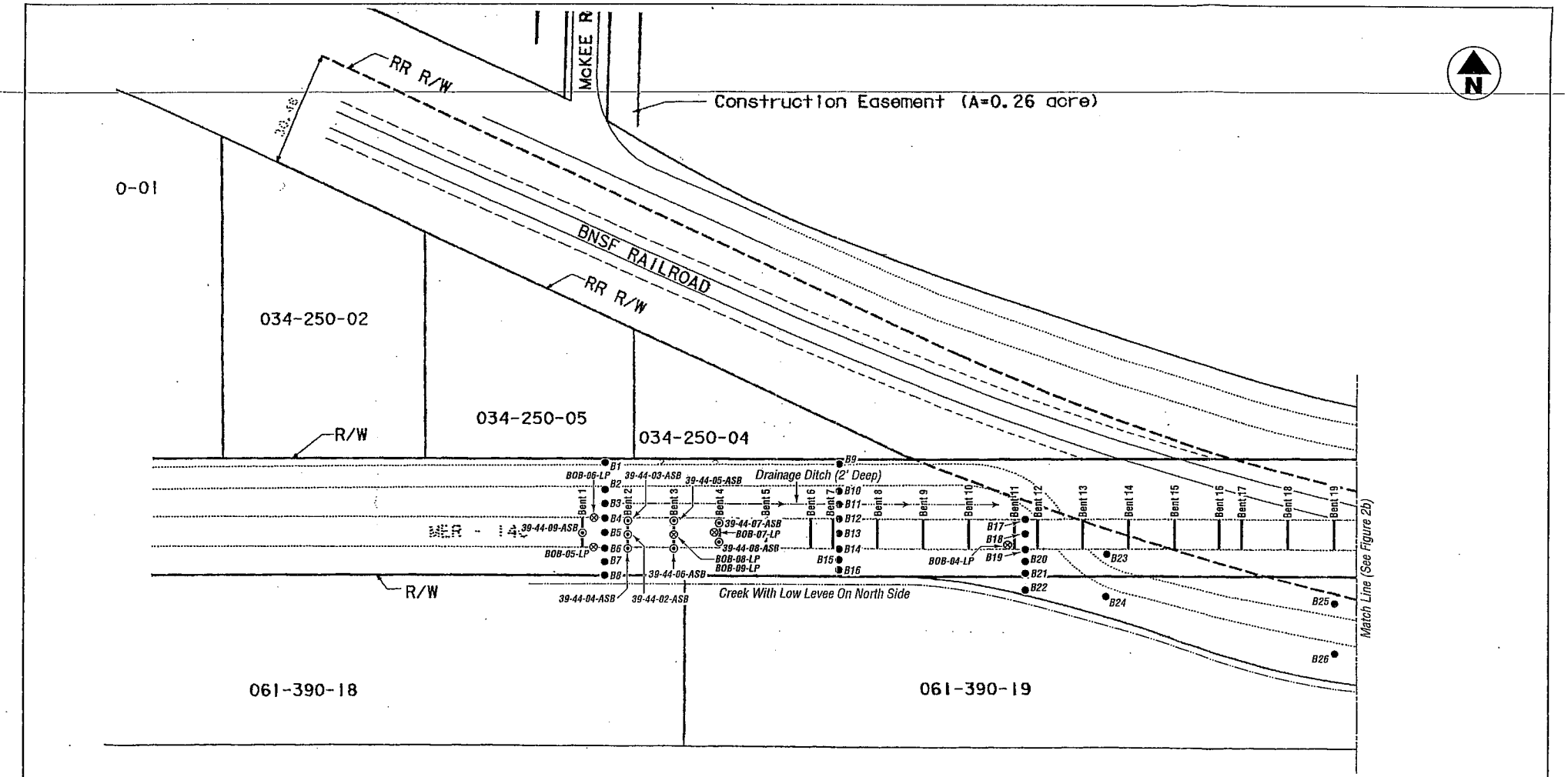

LEGEND:

- B1 ● Approximate Hand Auger Soil Boring Location
- 39-44-09-ASB ⊙ Approximate Bridge Material Sample Location
- BOB-05-LP ⊗ Approximate Lead-Based Paint Sample Location

0 10 20m
Scale: 1:1,000

GEOCON
CONSULTANTS, INC.
11375 SUNRISE PARK DR. – SUITE 100 - RANCHO CORDOVA, CA 95742
PHONE 916 852-9118 – FAX 916 852-9132

Bradley Overhead Bridge		
Merced County, California	**SITE PLAN**	
GEOCON Proj. No. S8225-06-123		
Task Order No. 10-3A6600-2J	February 2001	Figure 2a

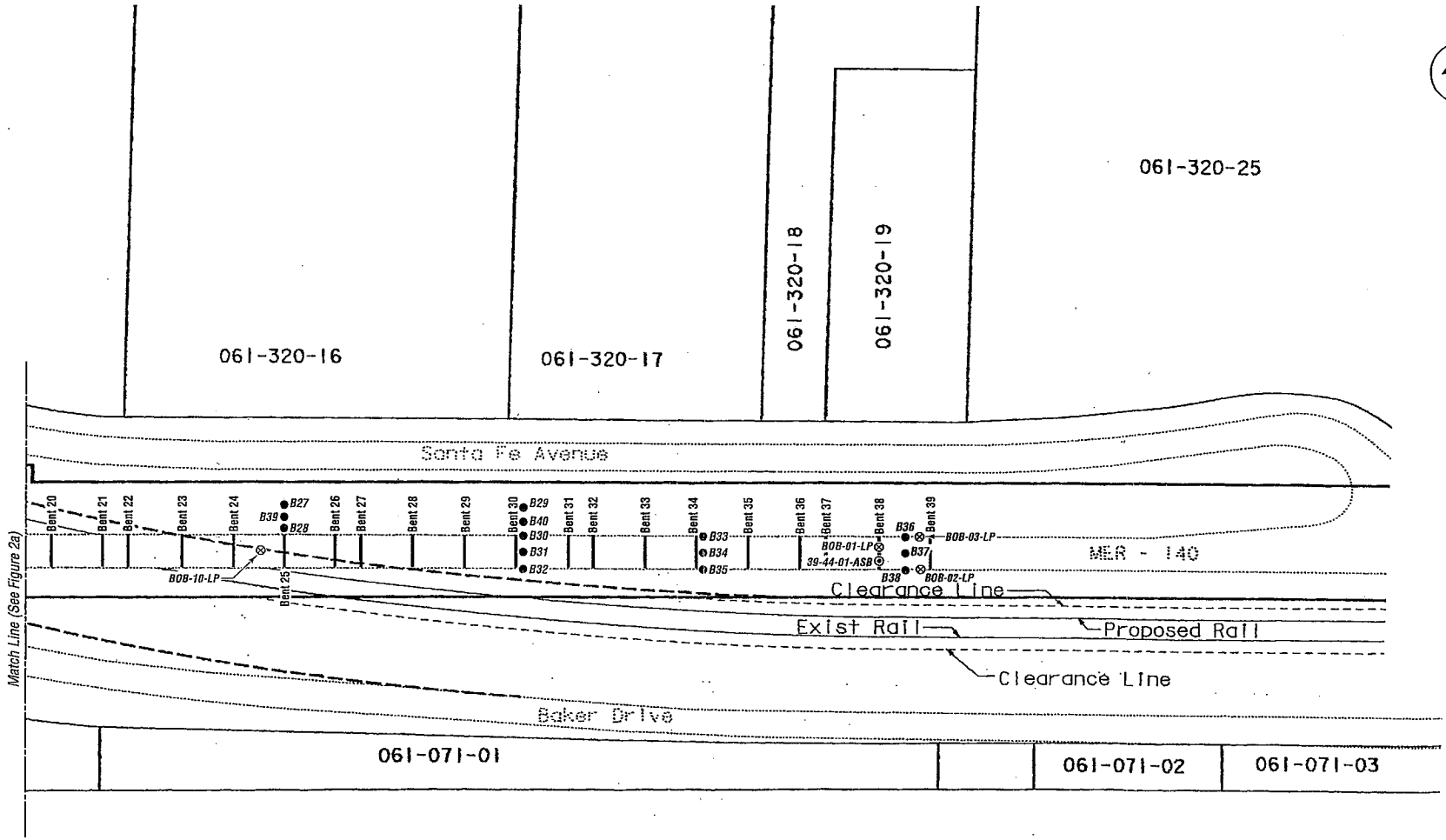

LEGEND:

B1 ● Approximate Hand Auger Soil Boring Location

39-44-09-ASB ⊙ Approximate Bridge Material Sample Location

BOB-05-LP ⊗ Approximate Lead-Based Paint Sample Location

0 10 20m
Scale: 1:1,000

GEOCON
CONSULTANTS, INC.
11375 SUNRISE PARK DR. – SUITE 100 - RANCHO CORDOVA, CA. 95742
PHONE 916 852-9118 – FAX 916 852-9132

Bradley Overhead Bridge		
Merced County, California	**SITE PLAN**	
GEOCON Proj. No. S8225-06-123		
Task Order No. 10-3A6600-2J	February 2001	Figure 2b

TABLE 1
SUMMARY OF ASBESTOS SURVEY RESULT
BRADLEY OVERHEAD BRIDGE
MERCED COUNTY, CALIFORNIA
CALTRANS TASK ORDER NO. 10-3A6600-2J

SAMPLE I.D.	STRUCTURE	SAMPLE LOCATION	MATERIAL DESCRIPTION	ASBESTOS EPA 600/M4-82-020 (% BY WEIGHT)
39-44-01-ASB	BRADLEY OH	BENT 38, EAST END	BLACK/SILVER GASKET MATERIAL	Chrysotile 40%
39-44-02-ASB	BRADLEY OH	BENT 2, SECOND COLUMN	SILVER/BLACK GASKET MATERIAL	Chrysotile 40%
39-44-03-ASB	BRADLEY OH	BENT 2, FIRST COLUMN	SILVER/BLACK GASKET MATERIAL	Chrysotile 40%
39-44-04-ASB	BRADLEY OH	BENT 2, THIRD COLUMN	SILVER/BLACK GASKET MATERIAL	Chrysotile 40%
39-44-05-ASB	BRADLEY OH	BENT 3, FIRST COLUMN	SILVER/BLACK GASKET MATERIAL	Chrysotile 40%
39-44-06-ASB	BRADLEY OH	BENT 3, THIRD COLUMN	SILVER/BLACK GASKET MATERIAL	Chrysotile 40%
39-44-07-ASB	BRADLEY OH	BENT 4, SECOND COLUMN	SILVER/BLACK GASKET MATERIAL	Chrysotile 40%
39-44-08-ASB	BRADLEY OH	BENT 4 SECOND COLUMN	SILVER/BLACK GASKET MATERIAL	Chrysotile 40%
39-44-09-ASB	BRADLEY OH	BENT 1, CONCRETE	GREY CONCRETE	ND

Notes: ND = Not detected

TABLE 2
SUMMARY OF LEAD-BASED PAINT ANALYTICAL RESULTS - TITLE 22 METALS
BRADLEY OVERHEAD BRIDGE – MERCED COUNTY, CALIFORNIA
CALTRANS TASK ORDER NO. 10-3A6600-2J

SAMPLE I.D.	BOB-01-LP	BOB-02-LP	BOB-03-LP	BOB-04-LP	BOB-05-LP	BOB-06-LP	BOB-07-LP	BOB-08-LP	BOB-09-LP	BOB-10-LP	TTLC	10 x STLC
ANALYTE	Results in milligrams per kilogram											
Antimony	10	15	**460**	<2.5	120	65	<2.5	<2.5	5.0	**1300**	500	150
Arsenic	**120**	<2.5	5.0	**120**	**290**	<2.5	**70**	**95**	**80**	<2.5	500	50
Barium	160	25	90	100	**1,800**	55	310	140	180	240	10,000	1,000
Beryllium	<1.5	<1.5	<1.5	<1.5	<1.5	<1.5	<1.5	<1.5	<1.5	<1.5	75	7.5
Cadmium	**80**	**40**	**75**	**10**	<1.5	**15**	**130**	**10**	**95**	2.8	100	10
Chromium	40	**3,300**	**45,000**	40	**6,000**	**8,100**	60	25	20	**120,000**	2,500	5,600
Cobalt	**410**	**280**	**640**	330	**350**	**160**	260	240	250	170	8,000	800
Copper	**130**	**45**	**290**	95	**4,100**	**100**	**140**	60	55	40	2,500	250
Lead	**300,000**	**55,000**	**560,000**	**260,000**	**97,000**	**130,000**	**410,000**	**170,000**	**380,000**	**380,000**	1,000	50
Molybdenum	<2.5	<2.5	<2.5	<2.5	240	<2.5	<2.5	<2.5	<2.5	<2.5	3,500	3,500
Nickel	50	15	**180**	20	**2,000**	20	30	15	15	10	2,000	200
Selenium	<2.5	<2.5	<2.5	<2.5	<2.5	<2.5	<2.5	<2.5	**5.0**	<2.5	100	10
Silver	<1.5	<1.5	<1.5	<1.5	<1.5	<1.5	<1.5	<1.5	<1.5	<1.5	500	50
Thallium	<2.5	<2.5	15	<2.5	10	<2.5	<2.5	<2.5	<2.5	**60**	700	70
Vanadium	30	<1.5	5.0	35	<1.5	<1.5	45	25	20	45	2,400	240
Zinc	**110,000**	**80,000**	**110,000**	**93,000**	**17,000**	**31,000**	**87,000**	**73,000**	**85,000**	**23,000**	5,000	2,500
Paint Color	Silver/orange	White	White/red	Silver/orange	White/red	White/red	Silver/orange	Silver/orange	Silver/orange	Yellow		
Sample Location	Bent 38, metal stringer	E end-S side, metal guardrail	E end-N side, metal guardrail	Bent 11-middle, metal crossmember	W end-S side, metal guardrail	W end-N side, metal guardrail	Bent 4-W end, metal floor beam	Bent 3, metal stringer	Bent 3, metal crossmember	W side of Baker Road, metal guardrail		
Condition	Good	Good	Good	Good	Good	Good	Good	Good	Good	Good		

Notes:
< = Less than laboratory reporting limits
TTLC = Total Threshold Limit Concentration
STLC = Soluble Threshold Limit Concentration
Bold = Total Metals Result is ≥ 10 x STLC

TABLE 3
SUMMARY OF LEAD SOIL SAMPLE ANALYTICAL DATA
BRADLEY OVERHEAD BRIDGE - MERCED COUNTY CALIFORNIA
CALTRANS TASK ORDER NO. 10-3A6600-2J

SAMPLE I.D.	SAMPLE DEPTH (meters)	SAMPLE LOCATION	TOTAL LEAD (mg/kg)	WET LEAD (mg/l)	SOIL pH
B1-10	0.1	N OF BRIDGE APPROX. 15M, BENT 1-2	46	---	---
B1-30	0.3	N OF BRIDGE APPROX. 15M, BENT 1-2	<5.0	---	---
B1-60	0.6	N OF BRIDGE APPROX. 15M, BENT 1-2	<5.0	---	---
B2-10	0.1	N OF BRIDGE APPROX. 7.5M, BENT 1-2	<5.0	---	---
B2-30	0.3	N OF BRIDGE APPROX. 7.5M, BENT 1-2	<5.0	---	---
B2-60	0.6	N OF BRIDGE APPROX. 7.5M, BENT 1-2	<5.0	---	---
B3-10	0.1	N OF BRIDGE APPROX. 4M, BENT 1-2	15	---	---
B3-30	0.3	N OF BRIDGE APPROX. 4M, BENT 1-2	5.1	---	---
B3-60	0.6	N OF BRIDGE APPROX. 4M, BENT 1-2	<5.0	---	6.28
B4-10	0.1	N SIDE OF BRIDGE, BENT 1-2	10	---	---
B4-30	0.3	N SIDE OF BRIDGE, BENT 1-2	5.1	---	---
B4-60	0.6	N SIDE OF BRIDGE, BENT 1-2	5.5	---	---
B5-10	0.1	UNDER BRIDGE, BENT 1-2	7.2	---	6.25
B5-30	0.3	UNDER BRIDGE, BENT 1-2	30	---	---
B5-60	0.6	UNDER BRIDGE, BENT 1-2	<5.0	---	---
B6-10	0.1	S SIDE OF BRIDGE, BENT 1-2	**440**	**57**	---
B6-30	0.3	S SIDE OF BRIDGE, BENT 1-2	43	---	---
B6-60	0.6	S SIDE OF BRIDGE, BENT 1-2	<5.0	---	---
B7-10	0.1	S OF BRIDGE APPROX. 4M, BENT 1-2	**190**	**28**	---
B7-30	0.3	S OF BRIDGE APPROX. 4M, BENT 1-2	14	---	---
B7-60	0.6	S OF BRIDGE APPROX. 4M, BENT 1-2	<5.0	---	---
B8-10	0.1	S OF BRIDGE APPROX. 7.5M, BENT 1-2	27	---	---
B8-30	0.3	S OF BRIDGE APPROX. 7.5M, BENT 1-2	5.3	---	---

TABLE 3
SUMMARY OF LEAD SOIL SAMPLE ANALYTICAL DATA
BRADLEY OVERHEAD BRIDGE - MERCED COUNTY CALIFORNIA
CALTRANS TASK ORDER NO. 10-3A6600-2J

SAMPLE I.D.	SAMPLE DEPTH (meters)	SAMPLE LOCATION	TOTAL LEAD (mg/kg)	WET LEAD (mg/l)	SOIL pH
B8-60	0.6	S OF BRIDGE APPROX. 7.5M, BENT 1-2	<5.0	---	---
B9-10	0.1	N OF BRIDGE APPROX. 15M, BENT 7	55	---	---
B9-30	0.3	N OF BRIDGE APPROX. 15M, BENT 7	<5.0	---	---
B9-60	0.6	N OF BRIDGE APPROX. 15M, BENT 7	<5.0	---	---
B10-10	0.1	N OF BRIDGE APPROX. 7.5M, BENT 7	6.4	---	---
B10-30	0.3	N OF BRIDGE APPROX. 7.5M, BENT 7	<5.0	---	6.07
B10-60	0.6	N OF BRIDGE APPROX. 7.5M, BENT 7	<5.0	---	---
B11-10	0.1	N OF BRIDGE APPROX. 4M, BENT 7	67	---	---
B11-30	0.3	N OF BRIDGE APPROX. 4M, BENT 7	6.1	---	---
B11-60	0.6	N OF BRIDGE APPROX. 4M, BENT 7	REFUSAL		---
B12-10	0.1	N SIDE OF BRIDGE, BENT 7	**94**	**5.3**	---
B12-30	0.3	N SIDE OF BRIDGE, BENT 7	<5.0	---	---
B12-60	0.6	N SIDE OF BRIDGE, BENT 7	7.3	---	---
B13-10	0.1	UNDER BRIDGE, BENT 7	24	---	6.21
B13-30	0.3	UNDER BRIDGE, BENT 7	12	---	---
B13-60	0.6	UNDER BRIDGE, BENT 7	35	---	---
B14-10	0.1	S SIDE OF BRIDGE, BENT 7	**240**	**31**	---
B14-30	0.3	S SIDE OF BRIDGE, BENT 7	**120**	2.6	6.01
B14-60	0.6	S SIDE OF BRIDGE, BENT 7	REFUSAL		---
B15-10	0.1	S OF BRIDGE APPROX. 3M, BENT 7	**310**	**39**	---
B15-30	0.3	S OF BRIDGE APPROX. 3M, BENT 7	71	---	---
B15-60	0.6	S OF BRIDGE APPROX. 3M, BENT 7	**93**	4.3	---
B16-10	0.1	S OF BRIDGE APPROX. 6M, BENT 7	31	---	---

TABLE 3
SUMMARY OF LEAD SOIL SAMPLE ANALYTICAL DATA
BRADLEY OVERHEAD BRIDGE - MERCED COUNTY CALIFORNIA
CALTRANS TASK ORDER NO. 10-3A6600-2J

SAMPLE I.D.	SAMPLE DEPTH (meters)	SAMPLE LOCATION	TOTAL LEAD (mg/kg)	WET LEAD (mg/l)	SOIL pH
B16-30	0.3	S OF BRIDGE APPROX. 6M, BENT 7	6.2	---	---
B16-60	0.6	S OF BRIDGE APPROX. 6M, BENT 7	8.3	---	---
B17-10	0.1	N SIDE OF BRIDGE, BENT 11-12	**120**	4.8	---
B17-30	0.3	N SIDE OF BRIDGE, BENT 11-12	46	---	---
B17-60	0.6	N SIDE OF BRIDGE, BENT 11-12	REFUSAL		---
B18-10	0.1	UNDER BRIDGE, BENT 11-12	14	---	---
B18-30	0.3	UNDER BRIDGE, BENT 11-12	8.9	---	---
B18-60	0.6	UNDER BRIDGE, BENT 11-12	**77**	1.9	---
B19-10	0.1	S SIDE OF BRIDGE, BENT 11-12	37	---	---
B19-30	0.3	S SIDE OF BRIDGE, BENT 11-12	6.3	---	---
B19-60	0.6	S SIDE OF BRIDGE, BENT 11-12	<5.0	---	---
B20-10	0.1	S OF BRIDGE APPROX. 3M, BENT 11-12	**80**	**5.0**	---
B20-30	0.3	S OF BRIDGE APPROX. 3M, BENT 11-12	**170**	**12**	---
B20-60	0.6	S OF BRIDGE APPROX. 3M, BENT 11-12	32	---	6.81
B21-10	0.1	S OF BRIDGE APPROX. 6M, BENT 11-12	54	---	---
B21-30	0.3	S OF BRIDGE APPROX. 6M, BENT 11-12	**190**	**11**	---
B21-60	0.6	S OF BRIDGE APPROX. 6M, BENT 11-12	49	---	---
B22-10	0.1	S OF BRIDGE APPROX. 11M, BENT 11-12	11	---	---
B22-30	0.3	S OF BRIDGE APPROX. 11M, BENT 11-12	13	---	6.07
B22-60	0.6	S OF BRIDGE APPROX. 11M, BENT 11-12	6.1	---	---
B23-10	0.1	S OF BRIDGE APPROX. 1M, BENT 13-14	59	---	---
B23-30	0.3	S OF BRIDGE APPROX. 1M, BENT 13-14	5.4	---	---
B23-60	0.6	S OF BRIDGE APPROX. 1M, BENT 13-14	5.2	---	---

TABLE 3
SUMMARY OF LEAD SOIL SAMPLE ANALYTICAL DATA
BRADLEY OVERHEAD BRIDGE - MERCED COUNTY CALIFORNIA
CALTRANS TASK ORDER NO. 10-3A6600-2J

SAMPLE I.D.	SAMPLE DEPTH (meters)	SAMPLE LOCATION	TOTAL LEAD (mg/kg)	WET LEAD (mg/l)	SOIL pH
B24-10	0.1	S OF BRIDGE APPROX. 12M, BENT 13-14	12	---	---
B24-30	0.3	S OF BRIDGE APPROX. 12M, BENT 13-14	5.3	---	---
B24-60	0.6	S OF BRIDGE APPROX. 12M, BENT 13-14	14	---	---
B25-10	0.1	S OF BRIDGE APPROX. 14M, BENT 19	33	---	---
B25-30	0.3	S OF BRIDGE APPROX. 14M, BENT 19	30	---	---
B25-60	0.6	S OF BRIDGE APPROX. 14M, BENT 19	10	---	---
B26-10	0.1	S OF BRIDGE APPROX. 28M, BENT 19	16	---	---
B26-30	0.3	S OF BRIDGE APPROX. 28M, BENT 19	<5.0	---	---
B26-60	0.6	S OF BRIDGE APPROX. 28M, BENT 19	<5.0	---	---
B27-10	0.1	N OF BRIDGE APPROX. 7M, BENT 25	14	---	---
B27-30	0.3	N OF BRIDGE APPROX. 7M, BENT 25	15	---	---
B27-60	0.6	N OF BRIDGE APPROX. 7M, BENT 25	12	---	---
B28-10	0.1	N OF BRIDGE APPROX. 1M, BENT 25	35	---	6.48
B28-30	0.3	N OF BRIDGE APPROX. 1M, BENT 25	5.7	---	---
B28-60	0.6	N OF BRIDGE APPROX. 1M, BENT 25	5.5	---	---
B29-10	0.1	N OF BRIDGE APPROX. 7M, BENT 30	**79**	4.1	---
B29-30	0.3	N OF BRIDGE APPROX. 7M, BENT 30	6.2	---	---
B29-60	0.6	N OF BRIDGE APPROX. 7M, BENT 30	11	---	---
B30-10	0.1	N SIDE OF BRIDGE, BENT 30	**76**	**5.3**	6.42
B30-30	0.3	N SIDE OF BRIDGE, BENT 30	5.0	---	---
B30-60	0.6	N SIDE OF BRIDGE, BENT 30	5.3	---	---
B31-10	0.1	UNDER BRIDGE, BENT 30	12	---	---
B31-30	0.3	UNDER BRIDGE, BENT 30	11	---	---
B31-60	0.6	UNDER BRIDGE, BENT 30	REFUSAL		---

TABLE 3
SUMMARY OF LEAD SOIL SAMPLE ANALYTICAL DATA
BRADLEY OVERHEAD BRIDGE - MERCED COUNTY CALIFORNIA
CALTRANS TASK ORDER NO. 10-3A6600-2J

SAMPLE I.D.	SAMPLE DEPTH (meters)	SAMPLE LOCATION	TOTAL LEAD (mg/kg)	WET LEAD (mg/l)	SOIL pH
B32-10	0.1	S SIDE OF BRIDGE, BENT 30	35	---	---
B32-30	0.3	S SIDE OF BRIDGE, BENT 30	REFUSAL		---
B32-60	0.6	S SIDE OF BRIDGE, BENT 30	REFUSAL		---
B33-10	0.1	N SIDE OF BRIDGE, BENT 34	70	---	---
B33-30	0.3	N SIDE OF BRIDGE, BENT 34	<5.0	---	---
B33-60	0.6	N SIDE OF BRIDGE, BENT 34	<5.0	---	---
B34-10	0.1	UNDER BRIDGE, BENT 34	39	---	---
B34-30	0.3	UNDER BRIDGE, BENT 34	30	---	---
B34-60	0.6	UNDER BRIDGE, BENT 34	REFUSAL		---
B35-10	0.1	S SIDE OF BRIDGE, BENT 34	**240**	**15**	---
B35-30	0.3	S SIDE OF BRIDGE, BENT 34	8.3	---	---
B35-60	0.6	S SIDE OF BRIDGE, BENT 34	6.0	---	6.71
B36-10	0.1	N SIDE OF BRIDGE, BENT 38-39	**340**	**52**	---
B36-30	0.3	N SIDE OF BRIDGE, BENT 38-39	**330**	2.2	---
B36-60	0.6	N SIDE OF BRIDGE, BENT 38-39	REFUSAL		---
B37-10	0.1	UNDER BRIDGE, BENT 38-39	LOST		---
B37-30	0.3	UNDER BRIDGE, BENT 38-39	**100**	1.8	6.61
B37-60	0.6	UNDER BRIDGE, BENT 38-39	REFUSAL		---
B38-10	0.1	S SIDE OF BRIDGE, BENT 38-39	**120**	**5.9**	---
B38-30	0.3	S SIDE OF BRIDGE, BENT 38-39	5.4	---	---
B38-60	0.6	S SIDE OF BRIDGE, BENT 38-39	<5.0	---	---
B39-10	0.1	N OF BRIDGE APPROX. 4M, BENT 25	9.4	---	---
B39-30	0.3	N OF BRIDGE APPROX. 4M, BENT 25	7.0	---	---
B39-60	0.6	N OF BRIDGE APPROX. 4M, BENT 25	6.9	---	---

TABLE 3
SUMMARY OF LEAD SOIL SAMPLE ANALYTICAL DATA
BRADLEY OVERHEAD BRIDGE - MERCED COUNTY CALIFORNIA
CALTRANS TASK ORDER NO. 10-3A6600-2J

SAMPLE I.D.	SAMPLE DEPTH (meters)	SAMPLE LOCATION	TOTAL LEAD (mg/kg)	WET LEAD (mg/l)	SOIL pH
B40-10	0.1	N OF BRIDGE APPROX. 4M, BENT 30	<5.0	---	---
B40-30	0.3	N OF BRIDGE APPROX. 4M, BENT 30	<5.0	---	---
B40-60	0.6	N OF BRIDGE APPROX. 4M, BENT 30	<5.0	---	7.20

Notes:
mg/kg = milligrams per kilogram
mg/l = milligrams per liter
< = Less than test method reporting limit
B1-10
Sample depth in centimeters below the surface.
Boring Identification

TABLE 4
SUMMARY OF SOIL STATISTICAL DATA
BRADLEY OVERHEAD BRIDGE
MERCED COUNTY, CALIFORNIA
CALTRANS TASK ORDER NO. 10-3A6600-2J

90% and 95% Total Lead UCLs and their Predicted Soluble (WET) Lead

Excavation Scenario	90% Total Lead UCL* (mg/kg)	Predicted Soluble Lead (mg/l)	95% Total Lead UCL** (mg/kg)	Predicted Soluble Lead (mg/l)
Surface to 0.3 meter bgs	113	**11**	121	**12**
Underlying Soil (0.30 to 0.75 meter bgs)	38	3.7	41	4.0
Surface to 0.60 meter bgs	85	**8.0**	92	**9.0**
Underlying Soil (0.60 to 0.75 meter bgs)	18	1.8	20	1.9
Surface to 0.75 meter bgs	63	**6.1**	68	**6.6**

Notes:
* = 90% UCL applicable if soil will be re-used on-site
** = 95% UCL applicable if soil will be relinquished to contractor for disposal or re-use off-site
bgs = below ground surface
mg/kg = milligrams per kilogram,
mg/l = milligrams per liter
Soluble Lead concentrations were predicted using the equation of the regression line : $y = 0.0969(x)$
Concentrations shown in **bold** are equal to or greater than the lead STLC of 5.0 mg/l.

HB&T ENVIRONMENTAL INC.

November 27, 2000
JOB #3647.00

Jim Lessman
Geocon Consultants, Inc.
11375 Sunrise Park Drive, Suite #100
Rancho Cordova, CA 95742

REF: Asbestos survey results for: **Bradley Overhead, Bridge #39-004**
Merced County, CA

Dear Mr. Lessman:

Per your request, HB&T Environmental, Inc. undertook an Asbestos Survey at the above referenced location on November 1st, 2000.

The purpose for this survey was to ascertain the existence of any Asbestos-Containing Materials (ACMs) that may be present in the area prior to any planned demolition activities.

During the course of the survey a total of Nine (9) bulk samples were taken of suspect ACMs. All samples taken were catalogued on site and were then delivered to Quantem Laboratories in Oklahoma City, OK for analysis by Polarized Light Microscopy. The subsequent analysis of these samples showed Asbestos present in eight (8) of the samples (See included laboratory report #0011PA103120).

Listed by location and sample number is the relevant information for each Asbestos-containing sample noted in the laboratory report.

1400 S STREET, SUITE 102, SACRAMENTO, CA 95814 • PHONE (916) 446-0406 • FAX (916) 446-4259

BRIDGE #39-0044

SAMPLE : 39-44-01-ASB

TYPE OF MATERIALS SAMPLED:
Gasket Material (Sheet Packing)

SAMPLED MATERIALS LOCATION:
Bent #38, East end

SAMPLED MATERIALS ASBESTOS CONTENTS:
40% Chrysotile

SAMPLED MATERIALS PRESENT CONDITION:
Good / Non-Friable, Category II

SAMPLE : 39-44-02-ASB

TYPE OF MATERIALS SAMPLED:
Gasket Material (Sheet Packing)

SAMPLED MATERIALS LOCATION:
2nd Bent, 2nd Column

SAMPLED MATERIALS ASBESTOS CONTENTS:
40% Chrysotile

SAMPLED MATERIALS PRESENT CONDITION:

Good / Non-Friable, Category II

SAMPLE : 39-44-03-ASB

TYPE OF MATERIALS SAMPLED:
Gasket Material (Sheet Packing)

SAMPLED MATERIALS LOCATION:
2nd Bent, 1st Column

SAMPLED MATERIALS ASBESTOS CONTENTS:
40% Chrysotile

SAMPLED MATERIALS PRESENT CONDITION:
Good / Non-Friable, Category II

SAMPLE : 39-44-04-ASB

TYPE OF MATERIALS SAMPLED:
Gasket Material (Sheet Packing)

SAMPLED MATERIALS LOCATION:
2nd Bent, 3rd Column

SAMPLED MATERIALS ASBESTOS CONTENTS:
40% Chrysotile

SAMPLED MATERIALS PRESENT CONDITION:
Good / Non-Friable, Category II

Jim Lessman
Geocon Consultants, Inc.
Rancho Cordova, CA

SAMPLE : 39-44-05-ASB

TYPE OF MATERIALS SAMPLED:
Gasket Material (Sheet Packing)

SAMPLED MATERIALS LOCATION:
3rd Bent, 1st Column

SAMPLED MATERIALS ASBESTOS CONTENTS:
40% Chrysotile

SAMPLED MATERIALS PRESENT CONDITION:
Good / Non-Friable, Category II

SAMPLE : 39-44-06-ASB

TYPE OF MATERIALS SAMPLED:
Gasket Material (Sheet Packing)

SAMPLED MATERIALS LOCATION:
3rd Bent, 3rd Column

SAMPLED MATERIALS ASBESTOS CONTENTS:
40% Chrysotile

SAMPLED MATERIALS PRESENT CONDITION:
Good / Non-Friable, Category II

Jim Lessman
Geocon Consultants, Inc.
Rancho Cordova, CA

SAMPLE : 39-44-07-ASB

TYPE OF MATERIALS SAMPLED:
Gasket Material (Sheet Packing)

SAMPLED MATERIALS LOCATION:
4th Bent, 2nd Column

SAMPLED MATERIALS ASBESTOS CONTENTS:
40% Chrysotile

SAMPLED MATERIALS PRESENT CONDITION:
Good / Non-Friable, Category II

SAMPLE : 39-44-08-ASB

TYPE OF MATERIALS SAMPLED:
Gasket Material (Sheet Packing)

SAMPLED MATERIALS LOCATION:
4th Bent, 2nd Column

SAMPLED MATERIALS ASBESTOS CONTENTS:
40% Chrysotile

SAMPLED MATERIALS PRESENT CONDITION:
Good / Non-Friable, Category II

SUMMARY:

The ACMs noted in this survey consist of the following:

Gasket Material (Sheet packing)

- Estimated Quantity of ACM: 30 Square Feet.
- Estimated abatement cost: $1,200.

Prior to any planned demolition that may disturb these materials, they must first be properly removed and disposed of by a licensed and certified Asbestos Abatement Contractor. Upon your request, HB&T Environmental, Inc. can provide Project Management Services that would monitor for the removal and disposal of these ACMs.

This survey was conducted in conformance with generally accepted standards of practice for identifying and evaluating ACM (Asbestos Containing Material) on structures. HB&T Environmental, Inc. uses only qualified professionals and laboratories to perform Asbestos surveys and sample analysis. However, HB&T Environmental, Inc. cannot warrant that the structure does not contain ACM in locations than those identified in this report.

If you have any questions, please feel free to call.

Sincerely,

Owen C. Tilley
EPA Accredited Building Inspector, Planner
CALIFORNIA ASBESTOS CONSULTANT, CERTIFICATION NO. 94-1310
DHS LEAD CERTIFIED - #5823

OCT:eh

Jim Lessman
Geocon Consultants, Inc.
Rancho Cordova, CA

QUANTEM® LABORATORIES
2033 Heritage Park Drive
Oklahoma City, OK 73120
Ph. (405) 755-7272
Fax (405) 755-2058

Polarized Light Microscopy
Asbestos Analysis Report

QuanTEM Set ID: 0011PA103120
Received By: Jane Day
Date Received: November 6, 2000
Analyzed By: Brandy Pelts
Date Analyzed: November 6 2000
Methodology: EPA 600/M4-82-020
Method Detection Limit 1%

Client: HB&T Environmental
Account Number: A103
Date Collected: N/A
Project: Cal Trans
Location: Bradley Overhead Bridge
Project No: 3647.00

QuanTEM Sample ID	Client Sample ID	Composition	Color/Description	Asbestos	Non-Asbestos Fiber	Friable Yes / No
110600-B	Not Applicable	Homogeneous	SRM 1866 Glass Fiber	Asbestos Not Present	N/A	N/A
1	39-44-01-ASB	Homogeneous	Black/Silver Gasket Material	Asbestos Present Chrysotile 40%	N/A	N/A
2	39-44-02-ASB	Homogeneous	Silver/Black Gasket Material	Asbestos Present Chrysotile 40%	N/A	N/A
3	39-44-03-ASB	Homogeneous	Silver/Black Gasket Material	Asbestos Present Chrysotile 40%	N/A	N/A
4	39-44-04-ASB	Homogeneous	Silver/Black Gasket Material	Asbestos Present Chrysotile 40%	N/A	N/A
5	39-44-05-ASB	Homogeneous	Silver/Black Gasket Material	Asbestos Present Chrysotile 40%	N/A	N/A
6	39-44-06-ASB	Homogeneous	Silver/Black Gasket Material	Asbestos Present Chrysotile 40%	N/A	N/A
7	39-44-07-ASB	Homogeneous	Silver/Black Gasket Material	Asbestos Present Chrysotile 40%	N/A	N/A
8	39-44-08-ASB	Homogeneous	ilver/Black Gasket Material	Asbestos Present Chrysotile 40%	N/A	N/A
9	39-44-09-ASB	Homogeneous	Grey Concrete	Asbestos Not Present	N/A	N/A

Laboratory Director

November 6, 2000
Date of Report

For sampling information, see attached chain of custody.

Note: Structures denoted as being "<5µ" refer to the structures whose length is from 0.5µm to 4.9µm.
QuanTEM is a NVLAP-accredited TEM and PLM laboratory (Lab Code 101959). This report relates only to the specific items tested.
NVLAP accreditation applies only to AHERA analysis [40 CFR Ch. I (1-1-87 ed.) Part 763, Appendix A to Subparts E and F].

HB&T ENVIRONMENTAL INC.

November 29, 2000
JOB #3647.00

Mr. Jim Lessman
GEOCON CONSULTANTS, INC.
11375 Sunrise Park Drive, Suite #100
Rancho Cordova, CA 95742

RE: Lead-based paint survey results for: Bradley Overhead, Bridge #39-004 Merced County, CA

Dear Mr. Lessman:

Per your request, HB&T Environmental, Inc. undertook a Lead-based Paint survey at the above referenced location on November 1st, 2000. The purpose of this survey was to ascertain the existence of any Lead-based paint that may be present in the area prior to any planned demolition activities.

During the course of the survey, a total of 10 paint samples were taken of painted surfaces. All samples taken were catalogued on site and were then delivered to Advanced Technology Laboratories for analysis by ICP, EPA Test Method 6010. The subsequent analysis of these samples showed Lead present at or above 0.5% by weight in all of the samples. Please refer to included laboratory report #047857.

Listed below by sample number is the relevant information for each sample collected.

SAMPLE # BOB-01-LP

COLOR: Silver/Orange

SUBSTRATE: Metal

LOCATION: Bent 38, Stringer

CONDITION: Good

RESULT: 60%

1400 S STREET, SUITE 102, SACRAMENTO, CA 95814 • PHONE (916) 446-0406 • FAX (916) 446-4259

SAMPLE # BOB-02-LP

COLOR: White

SUBSTRATE: Metal Guardrail

LOCATION: East End, South side

CONDITION: Good

RESULT: 37%

SAMPLE # BOB-03-lp

COLOR: White/Red

SUBSTRATE: Metal Guardrail

LOCATION: East End, North side

CONDITION: Good

RESULT: 110%

SAMPLE # BOB-04-LP

COLOR: Silver/Orange

SUBSTRATE: Metal Crossmember

LOCATION: Middle, Bent #11

CONDITION: Good

RESULT: 53%

SAMPLE # BOB-05-LP

COLOR: White/Red

SUBSTRATE: Metal Guardrail

LOCATION: West End, South side

CONDITION: Good

RESULT: 39%

SAMPLE # BOB-06-LP

COLOR: White/Red

SUBSTRATE: Metal Guardrail

LOCATION: West End, North side

CONDITION: Good

RESULT: 110%

SAMPLE # BOB-07-LP

COLOR: Silver/Orange

SUBSTRATE: Metal Floor Beam

LOCATION:4th Bent, West End

CONDITION: Good

RESULT: 81%

SAMPLE # BOB-08-LP

COLOR: Silver/Orange

SUBSTRATE: Metal Stringer

LOCATION: 3rd Bent

CONDITION: Good

RESULT: 34%

SAMPLE # BOB-09-LP

COLOR: Silver/Orange

SUBSTRATE: Metal Crossmember

LOCATION: 3rd Bent

CONDITION: Good

RESULT: 76%

SAMPLE # BOB-10-LP

COLOR: Yellow

SUBSTRATE: Metal Guardrail

LOCATION: West Side of Baker Road

CONDITION: Good

RESULT: 76%

The condition of the paint at the time of the survey was good; no deteriorated paint was noted. Stabilization of deteriorated Lead-Based paint prior to demolition is required only when deteriorated Lead-Based Paint is present.

This survey was conducted in conformance with generally accepted standards of practice for identifying and evaluating Lead-Based paint on structures. HB&T Environmental, Inc. uses only qualified professionals and laboratories to perform Lead-Based Paint surveys and sample analysis. However, HB&T Environmental, Inc. cannot warrant that

the structure does not contain Lead-Based Paint in locations other than those identified in this report.

If you have any questions, please feel free to call.

Submitted by:

Owen C. Tilley
EPA Accredited Building Inspector, Planner
CALIFORNIA ASBESTOS CONSULTANT, CERTIFICATION No. 94-1310
DHS LEAD CERTIFIED - #5823

OT:EH

APPENDIX B

QUANTEM LABORATORIES®
2000 Heritage Park Drive
Oklahoma City, OK 73120
Ph. (405) 755-7272
Fax (405) 755-2058

Polarized Light Microscopy
Asbestos Analysis Report

QuanTEM Set ID:	0011PA103120	Client:	H&T Environmental
Received By:	Jane Day	Account Number:	A103
Date Received:	November 6, 2000	Date Collected:	N/A
Analyzed By:	Brandy Pelts	Project:	Cal Trans
Date Analyzed:	November 6 2000	Location:	Bradley Overhead Bridge
Methodology:	EPA 600/M4-82-020 Method Detection Limit 1%	Project No:	3647 00

QuanTEM Sample ID	Client Sample ID	Composition	Color/Description	Asbestos	Non-Asbestos Fiber	Friable Yes / No
110600-B	Not Applicable	Homogeneous	SRM 1866 Glass Fiber	Asbestos Not Present	N/A	N/A
1	39-44-01-ASB	Homogeneous	Black/Silver Gasket Material	Asbestos Present Chrysotile 40%	N/A	N/A
2	39-44-02-ASB	Homogeneous	Silver/Black Gasket Material	Asbestos Present Chrysotile 40%	N/A	N/A
3	39-44-03-ASB	Homogeneous	Silver/Black Gasket Material	Asbestos Present Chrysotile 40%	N/A	N/A
4	39-44-04-ASB	Homogeneous	Silver/Black Gasket Material	Asbestos Present Chrysotile 40%	N/A	N/A
5	39-44-05-ASB	Homogeneous	Silver/Black Gasket Material	Asbestos Present Chrysotile 40%	N/A	N/A
6	39-44-06-ASB	Homogeneous	Silver/Black Gasket Material	Asbestos Present Chrysotile 40%	N/A	N/A
7	39-44-07-ASB	Homogeneous	Silver/Black Gasket Material	Asbestos Present Chrysotile 40%	N/A	N/A
8	39-44-08-ASB	Homogeneous	Silver/Black Gasket Material	Asbestos Present Chrysotile 40%	N/A	N/A
9	39-44-09-ASB	Homogeneous	Grey Concrete	Asbestos Not Present	N/A	N/A

Laboratory Director

November 6, 2000
Date of Report

For sampling information, see attached chain of custody.

Note: Structures denoted as being "<5µ" refer to the structures whose length is from 0.5µm to 4.9µm.
QuanTEM is a NVLAP-accredited TEM and PLM laboratory (Lab Code 101959). This report relates only to the specific items tested.
NVLAP accreditation applies only to AHERA analysis (40 CFR Ch. I (1-1-97 ed.) Part 763, Appendix A to Subparts E and I).
This report may not be used to claim product endorsement by NVLAP or any other agency of the U.S. Government.

0011CA103115

0011PA103120

Asbestos Chain-of-Custody Form

QUANTEM LABORATORIES
2033 Heritage Park Drive, Oklahoma City, OK 73120
(800) 822-1650 (405) 755-7272 Fax (405) 755-2058

Company Name: HB&T Environmental Project: Cal Trans

Project Location: Bradley Overhead Bridge Project Number: 3647.00

Sample ID Number	☑ To Be Analyzed	Color / Description	Volume / Area (If applicable)	Comments
39-44-01-ASb				
		9 Samples logged on attached Field Forms pages 1-3.		
39-44-09-ASb				

☑ Analytical Service Requested

TEM

	Air - AHERA clearance*
	Air - TEM
	Air - NIOSH 7402
	Bulk - Qualitative [Yes / No] (EPA 600/R-93/116)
	Bulk - Quantitative [weight %] (Chatfield)
	Dust - Qualitative [Yes / No]
	Dust - Quantative [fibers / sq. cm] (ASTM D5755)
	Drinking Water (EPA 100.2)
	Waste Water (EPA 600/4-83-043)
	Other

* AHERA clearance samples must consist of 5 inside, 5 outside, and 3 blank samples collected on 0.45 micron 25mm MCE filters with a minimum volume of 560 L.

PLM

X	Bulk Analysis (EPA 600/R-93/116)
	Quantitative Point Counting
	Other

PCM

	NIOSH 7400
	Other

Relinquished By	Time/Date	Via	Received By	Time/Date
[signature]	11-3-00	FedEx	[signature]	11-6-00 9:25
Relinquished By	Time/Date	Via	Received By	Time/Date

Turnaround: 24 hr
Date Due:
Time Due:
Report results to:
Telephone number:
Fax Number:

Saturday FedEx Shipping:
(Use for FedEx only)

4220 N. Santa Fe Ave,. Oklahoma City, OK 73105
(Mark package "*HOLD FOR PICKUP*")

DEC 2 6 2000

ELAP No.: 1838

Geocon Environmental
11375 Sunrise Park Drive, Suite 100
Rancho Cordova, CA 95742

ATTN: Jim Lessman
SUBJECT: AMENDED REPORT

Client's Project: Bradley Overhead Bridge, #3647.00
Lab No.: 47857-001/010

The report was amended for the following:

1) The results were amended due to calculation error.

Please disregard all previous documentation that corresponds to the page(s) enclosed.

Sincerely,

Date: 12/15/00

Edgar Caballero
Laboratory Director
EC/dg

Enclosures

This cover letter is an integral part of this analytical report.

This report pertains only to the samples investigated and does not necessarily apply to other apparently identical or similar materials. This report is submitted for the exclusive use of the client to whom it is addressed. Any reproduction of this report or use of this Laboratory's name for advertising or publicity purpose without authorization is prohibited.

Advanced Technology Laboratories 1510 E. 33rd Street Signal Hill, CA 90807 Tel: 562 989-4045 Fax: 562 989-4040

Advanced Technology Laboratories

Print Date: *12/13/00*

CLIENT: Geocon Environmental
Client Sample ID: BOB-01-LP
Lab Order: 047857
Project: Bradley Overhead Bridge - 3647.00
Collection Date: 11/1/00
Lab ID: 047857-001A
Matrix: SOLID

Analyses	Result	Limit	Qual	Units	DF	Date Analyzed
ICP METALS			EPA 6010B			
RunID: ICP2_001117D	BatchID: 2022			PrepDate: 11/10/00		Analyst: NP
Antimony	10	2.5		mg/Kg	10	11/20/00
Arsenic	120	2.5		mg/Kg	10	11/20/00
Barium	160	1.5		mg/Kg	10	11/20/00
Beryllium	ND	1.5		mg/Kg	10	11/20/00
Cadmium	80	1.5		mg/Kg	10	11/20/00
Chromium	40	1.5		mg/Kg	10	11/20/00
Cobalt	410	1.5		mg/Kg	10	11/20/00
Copper	130	1.5		mg/Kg	10	11/20/00
Lead	300000	2.5		mg/Kg	10	11/20/00
Molybdenum	ND	2.5		mg/Kg	10	11/20/00
Nickel	50	1.5		mg/Kg	10	11/20/00
Selenium	ND	2.5		mg/Kg	10	11/20/00
Silver	ND	1.5		mg/Kg	10	11/20/00
Thallium	ND	2.5		mg/Kg	10	11/20/00
Vanadium	30	1.5		mg/Kg	10	11/20/00
Zinc	110000	5.0		mg/Kg	10	11/20/00

Qualifiers:
ND - Not Detected at the Reporting Limit
J - Analyte detected below quantitation limits
B - Analyte detected in the associated Method Blank
DO - Surrogate Diluted Out
S - Spike/Surrogate outside of limits due to matrix interference.
H - Samples exceeding analytical holding time
E - Value above quantitation range
M - Not Monitored. Highly Reactive

Initials: _____

Advanced Technology Laboratories
1510 E. 33rd Street Signal Hill, CA 90807 Tel: 562 989-4045 Fax: 562 989-4040

42

Advanced Technology Laboratories

Print Date: *12/13/00*

CLIENT:	Geocon Environmental	**Client Sample ID:**	BOB-02
Lab Order:	047857		
Project:	Bradley Overhead Bridge - 3647.00	**Collection Date:**	11/1/00
Lab ID:	047857-002A	**Matrix:**	SOLID

Analyses	Result	Limit	Qual	Units	DF	Date Analyzed
ICP METALS			**EPA 6010B**			
RunID: **ICP2_001117D** BatchID: **2022**			PrepDate:	**11/10/00**		Analyst: **NP**
Antimony	15	2.5		mg/Kg	10	11/20/00
Arsenic	ND	2.5		mg/Kg	10	11/20/00
Barium	25	1.5		mg/Kg	10	11/20/00
Beryllium	ND	1.5		mg/Kg	10	11/20/00
Cadmium	40	1.5		mg/Kg	10	11/20/00
Chromium	3300	1.5		mg/Kg	10	11/20/00
Cobalt	280	1.5		mg/Kg	10	11/20/00
Copper	45	1.5		mg/Kg	10	11/20/00
Lead	55000	2.5		mg/Kg	10	11/20/00
Molybdenum	ND	2.5		mg/Kg	10	11/20/00
Nickel	15	1.5		mg/Kg	10	11/20/00
Selenium	ND	2.5		mg/Kg	10	11/20/00
Silver	ND	1.5		mg/Kg	10	11/20/00
Thallium	ND	2.5		mg/Kg	10	11/20/00
Vanadium	ND	1.5		mg/Kg	10	11/20/00
Zinc	80000	5.0		mg/Kg	10	11/20/00

Qualifiers:

ND - Not Detected at the Reporting Limit
J - Analyte detected below quantitation limits
B - Analyte detected in the associated Method Blank
DO - Surrogate Diluted Out
S - Spike/Surrogate outside of limits due to matrix interference.
H - Samples exceeding analytical holding time
E - Value above quantitation range
M - Not Monitored. Highly Reactive

Initials: _____

Advanced Technology Laboratories
1510 E. 33rd Street Signal Hill, CA 90807 Tel: 562 989-4045 Fax: 562 989-4040

Advanced Technology Laboratories

Print Date: *12/13/00*

CLIENT:	Geocon Environmental	**Client Sample ID:**	BOB-03
Lab Order:	047857		
Project:	Bradley Overhead Bridge - 3647.00	**Collection Date:**	11/1/00
Lab ID:	047857-003A	**Matrix:**	SOLID

Analyses	Result	Limit	Qual	Units	DF	Date Analyzed
ICP METALS			EPA 6010B			
RunID: ICP2_001117D	BatchID: 2022			PrepDate: 11/10/00		Analyst: NP
Antimony	460	2.5		mg/Kg	10	11/20/00
Arsenic	5.0	2.5		mg/Kg	10	11/20/00
Barium	90	1.5		mg/Kg	10	11/20/00
Beryllium	ND	1.5		mg/Kg	10	11/20/00
Cadmium	75	1.5		mg/Kg	10	11/20/00
Chromium	45000	1.5		mg/Kg	10	11/20/00
Cobalt	640	1.5		mg/Kg	10	11/20/00
Copper	290	1.5		mg/Kg	10	11/20/00
Lead	560000	2.5		mg/Kg	10	11/20/00
Molybdenum	ND	2.5		mg/Kg	10	11/20/00
Nickel	180	1.5		mg/Kg	10	11/20/00
Selenium	ND	2.5		mg/Kg	10	11/20/00
Silver	ND	1.5		mg/Kg	10	11/20/00
Thallium	15	2.5		mg/Kg	10	11/20/00
Vanadium	5.0	1.5		mg/Kg	10	11/20/00
Zinc	110000	5.0		mg/Kg	10	11/20/00

Qualifiers:

ND - Not Detected at the Reporting Limit
J - Analyte detected below quantitation limits
B - Analyte detected in the associated Method Blank
DO - Surrogate Diluted Out
S - Spike/Surrogate outside of limits due to matrix interference.
H - Samples exceeding analytical holding time
E - Value above quantitation range
M - Not Monitored. Highly Reactive

Initials: (?)

Advanced Technology Laboratories
1510 E. 33rd Street Signal Hill, CA 90807 Tel: 562 989-4045 Fax: 562 989-4040

44

Advanced Technology Laboratories

Print Date: *12/13/00*

CLIENT: Geocon Environmental
Lab Order: 047857
Project: Bradley Overhead Bridge - 3647.00
Lab ID: 047857-004A

Client Sample ID: BOB-04-LP
Collection Date: 11/1/00
Matrix: SOLID

Analyses	Result	Limit	Qual	Units	DF	Date Analyzed
ICP METALS			**EPA 6010B**			
RunID: **ICP2_001117D** BatchID: **2022**				PrepDate: **11/10/00**		Analyst: **NP**
Antimony	ND	2.5		mg/Kg	10	11/20/00
Arsenic	120	2.5		mg/Kg	10	11/20/00
Barium	100	1.5		mg/Kg	10	11/20/00
Beryllium	ND	1.5		mg/Kg	10	11/20/00
Cadmium	10	1.5		mg/Kg	10	11/20/00
Chromium	40	1.5		mg/Kg	10	11/20/00
Cobalt	330	1.5		mg/Kg	10	11/20/00
Copper	95	1.5		mg/Kg	10	11/20/00
Lead	260000	2.5		mg/Kg	10	11/20/00
Molybdenum	ND	2.5		mg/Kg	10	11/20/00
Nickel	20	1.5		mg/Kg	10	11/20/00
Selenium	ND	2.5		mg/Kg	10	11/20/00
Silver	ND	1.5		mg/Kg	10	11/20/00
Thallium	ND	2.5		mg/Kg	10	11/20/00
Vanadium	35	1.5		mg/Kg	10	11/20/00
Zinc	93000	5.0		mg/Kg	10	11/20/00

Qualifiers:
ND - Not Detected at the Reporting Limit
J - Analyte detected below quantitation limits
B - Analyte detected in the associated Method Blank.
DO - Surrogate Diluted Out
S - Spike/Surrogate outside of limits due to matrix interference.
H - Samples exceeding analytical holding time
E - Value above quantitation range
M - Not Monitored. Highly Reactive

Initials: _____

5

Advanced Technology Laboratories

Print Date: *12/13/00*

CLIENT: Geocon Environmental
Client Sample ID: BOB-05-LP
Lab Order: 047857
Project: Bradley Overhead Bridge - 3647.00
Collection Date: 11/1/00
Lab ID: 047857-005A
Matrix: SOLID

Analyses	Result	Limit	Qual	Units	DF	Date Analyzed
ICP METALS			EPA 6010B			
RunID: ICP2_001117D	BatchID: 2022			PrepDate: 11/10/00		Analyst: NP
Antimony	120	2.5		mg/Kg	10	11/20/00
Arsenic	290	2.5		mg/Kg	10	11/20/00
Barium	1800	1.5		mg/Kg	10	11/20/00
Beryllium	ND	1.5		mg/Kg	10	11/20/00
Cadmium	ND	1.5		mg/Kg	10	11/20/00
Chromium	6000	1.5		mg/Kg	10	11/20/00
Cobalt	350	1.5		mg/Kg	10	11/20/00
Copper	4100	1.5		mg/Kg	10	11/20/00
Lead	97000	2.5		mg/Kg	10	11/20/00
Molybdenum	240	2.5		mg/Kg	10	11/20/00
Nickel	2000	1.5		mg/Kg	10	11/20/00
Selenium	ND	2.5		mg/Kg	10	11/20/00
Silver	ND	1.5		mg/Kg	10	11/20/00
Thallium	10	2.5		mg/Kg	10	11/20/00
Vanadium	ND	1.5		mg/Kg	10	11/20/00
Zinc	17000	5.0		mg/Kg	10	11/20/00

Qualifiers:
ND - Not Detected at the Reporting Limit
J - Analyte detected below quantitation limits
B - Analyte detected in the associated Method Blank
DO - Surrogate Diluted Out
S - Spike/Surrogate outside of limits due to matrix interference.
H - Samples exceeding analytical holding time
E - Value above quantitation range
M - Not Monitored. Highly Reactive

Initials: ____

Advanced Technology Laboratories
1510 E. 33rd Street Signal Hill, CA 90807 Tel: 562 989-4045 Fax: 562 989-4040

Advanced Technology Laboratories

Print Date: *12/13/00*

CLIENT: Geocon Environmental
Client Sample ID: BOB-06-LP
Lab Order: 047857
Project: Bradley Overhead Bridge - 3647.00
Collection Date: 11/1/00
Lab ID: 047857-006A
Matrix: SOLID

Analyses	Result	Limit	Qual	Units	DF	Date Analyzed
ICP METALS			**EPA 6010B**			
RunID: ICP2_001117D	BatchID: 2022			PrepDate: 11/10/00		Analyst: NP
Antimony	65	2.5		mg/Kg	10	11/20/00
Arsenic	ND	2.5		mg/Kg	10	11/20/00
Barium	55	1.5		mg/Kg	10	11/20/00
Beryllium	ND	1.5		mg/Kg	10	11/20/00
Cadmium	15	1.5		mg/Kg	10	11/20/00
Chromium	8100	1.5		mg/Kg	10	11/20/00
Cobalt	160	1.5		mg/Kg	10	11/20/00
Copper	100	1.5		mg/Kg	10	11/20/00
Lead	130000	2.5		mg/Kg	10	11/20/00
Molybdenum	ND	2.5		mg/Kg	10	11/20/00
Nickel	20	1.5		mg/Kg	10	11/20/00
Selenium	ND	2.5		mg/Kg	10	11/20/00
Silver	ND	1.5		mg/Kg	10	11/20/00
Thallium	ND	2.5		mg/Kg	10	11/20/00
Vanadium	ND	1.5		mg/Kg	10	11/20/00
Zinc	31000	5.0		mg/Kg	10	11/20/00

Qualifiers:
ND - Not Detected at the Reporting Limit
J - Analyte detected below quantitation limits
B - Analyte detected in the associated Method Blank
DO - Surrogate Diluted Out
S - Spike/Surrogate outside of limits due to matrix interference.
H - Samples exceeding analytical holding time
E - Value above quantitation range
M - Not Monitored. Highly Reactive

Initials: _____

47

Advanced Technology Laboratories

Print Date: *12/13/00*

CLIENT: Geocon Environmental
Client Sample ID: BOB-07-LP
Lab Order: 047857
Project: Bradley Overhead Bridge - 3647.00
Collection Date: 11/1/00
Lab ID: 047857-007A
Matrix: SOLID

Analyses	Result	Limit	Qual	Units	DF	Date Analyzed
ICP METALS			EPA 6010B			
RunID: ICP2_001117D	BatchID: 2022			PrepDate: 11/10/00		Analyst: NP
Antimony	ND	2.5		mg/Kg	10	11/20/00
Arsenic	70	2.5		mg/Kg	10	11/20/00
Barium	310	1.5		mg/Kg	10	11/20/00
Beryllium	ND	1.5		mg/Kg	10	11/20/00
Cadmium	130	1.5		mg/Kg	10	11/20/00
Chromium	60	1.5		mg/Kg	10	11/20/00
Cobalt	260	1.5		mg/Kg	10	11/20/00
Copper	140	1.5		mg/Kg	10	11/20/00
Lead	410000	2.5		mg/Kg	10	11/20/00
Molybdenum	ND	2.5		mg/Kg	10	11/20/00
Nickel	30	1.5		mg/Kg	10	11/20/00
Selenium	ND	2.5		mg/Kg	10	11/20/00
Silver	ND	1.5		mg/Kg	10	11/20/00
Thallium	ND	2.5		mg/Kg	10	11/20/00
Vanadium	45	1.5		mg/Kg	10	11/20/00
Zinc	87000	5.0		mg/Kg	10	11/20/00

Qualifiers:
ND - Not Detected at the Reporting Limit
J - Analyte detected below quantitation limits
B - Analyte detected in the associated Method Blank
DO - Surrogate Diluted Out
S - Spike/Surrogate outside of limits due to matrix interference.
H - Samples exceeding analytical holding time
E - Value above quantitation range.
M - Not Monitored. Highly Reactive

Initials: [illegible]

48

Advanced Technology Laboratories
1510 E. 33rd Street Signal Hill, CA 90807 Tel: 562 989-4045 Fax: 562 989-4040

Advanced Technology Laboratories

Print Date: *12/13/00*

CLIENT: Geocon Environmental
Client Sample ID: BOB-08-LP
Lab Order: 047857
Project: Bradley Overhead Bridge - 3647.00
Collection Date: 11/1/00
Lab ID: 047857-008A
Matrix: SOLID

Analyses	Result	Limit	Qual	Units	DF	Date Analyzed
ICP METALS			**EPA 6010B**			
RunID: **ICP2_001117D**	BatchID: **2022**			PrepDate: **11/10/00**		Analyst: **NP**
Antimony	ND	2.5		mg/Kg	10	11/20/00
Arsenic	95	2.5		mg/Kg	10	11/20/00
Barium	140	1.5		mg/Kg	10	11/20/00
Beryllium	ND	1.5		mg/Kg	10	11/20/00
Cadmium	10	1.5		mg/Kg	10	11/20/00
Chromium	25	1.5		mg/Kg	10	11/20/00
Cobalt	240	1.5		mg/Kg	10	11/20/00
Copper	60	1.5		mg/Kg	10	11/20/00
Lead	170000	2.5		mg/Kg	10	11/20/00
Molybdenum	ND	2.5		mg/Kg	10	11/20/00
Nickel	15	1.5		mg/Kg	10	11/20/00
Selenium	ND	2.5		mg/Kg	10	11/20/00
Silver	ND	1.5		mg/Kg	10	11/20/00
Thallium	ND	2.5		mg/Kg	10	11/20/00
Vanadium	25	1.5		mg/Kg	10	11/20/00
Zinc	73000	5.0		mg/Kg	10	11/20/00

Qualifiers:
ND - Not Detected at the Reporting Limit
J - Analyte detected below quantitation limits
B - Analyte detected in the associated Method Blank
DO - Surrogate Diluted Out
S - Spike/Surrogate outside of limits due to matrix interference.
H - Samples exceeding analytical holding time
E - Value above quantitation range
M - Not Monitored. Highly Reactive

Initials: 49

Advanced Technology Laboratories

Print Date: *12/13/00*

CLIENT: Geocon Environmental
Client Sample ID: BOB-09-LP
Lab Order: 047857
Project: Bradley Overhead Bridge - 3647.00
Collection Date: 11/1/00
Lab ID: 047857-009A
Matrix: SOLID

Analyses	Result	Limit	Qual	Units	DF	Date Analyzed
ICP METALS			**EPA 6010B**			
RunID: **ICP2_001117D** BatchID: **2022**			PrepDate: **11/10/00**			Analyst: **NP**
Antimony	5.0	2.5		mg/Kg	10	11/20/00
Arsenic	80	2.5		mg/Kg	10	11/20/00
Barium	180	1.5		mg/Kg	10	11/20/00
Beryllium	ND	1.5		mg/Kg	10	11/20/00
Cadmium	95	1.5		mg/Kg	10	11/20/00
Chromium	20	1.5		mg/Kg	10	11/20/00
Cobalt	250	1.5		mg/Kg	10	11/20/00
Copper	55	1.5		mg/Kg	10	11/20/00
Lead	380000	2.5		mg/Kg	10	11/20/00
Molybdenum	ND	2.5		mg/Kg	10	11/20/00
Nickel	15	1.5		mg/Kg	10	11/20/00
Selenium	5.0	2.5		mg/Kg	10	11/20/00
Silver	ND	1.5		mg/Kg	10	11/20/00
Thallium	ND	2.5		mg/Kg	10	11/20/00
Vanadium	20	1.5		mg/Kg	10	11/20/00
Zinc	85000	5.0		mg/Kg	10	11/20/00

Qualifiers:
ND - Not Detected at the Reporting Limit
J - Analyte detected below quantitation limits
B - Analyte detected in the associated Method Blank
DO - Surrogate Diluted Out
S - Spike/Surrogate outside of limits due to matrix interference.
H - Samples exceeding analytical holding time
E - Value above quantitation range
M - Not Monitored. Highly Reactive

Initials: _____

50 10

Advanced Technology Laboratories
1510 E. 33rd Street Signal Hill, CA 90807 Tel: 562 989-4045 Fax: 562 989-4040

Advanced Technology Laboratories

Print Date: *12/13/00*

CLIENT: Geocon Environmental
Client Sample ID: BOB-10-LP
Lab Order: 047857
Project: Bradley Overhead Bridge - 3647.00
Collection Date: 11/1/00
Lab ID: 047857-010A
Matrix: SOLID

Analyses	Result	Limit	Qual	Units	DF	Date Analyzed
ICP METALS			**EPA 6010B**			
RunID: **ICP2_001117D** BatchID: **2022**			PrepDate:	**11/10/00**		Analyst: **NP**
Antimony	1300	2.5		mg/Kg	10	11/20/00
Arsenic	ND	2.5		mg/Kg	10	11/20/00
Barium	240	1.5		mg/Kg	10	11/20/00
Beryllium	ND	1.5		mg/Kg	10	11/20/00
Cadmium	2.8	1.5		mg/Kg	10	11/20/00
Chromium	120000	1.5		mg/Kg	10	11/20/00
Cobalt	170	1.5		mg/Kg	10	11/20/00
Copper	40	1.5		mg/Kg	10	11/20/00
Lead	380000	2.5		mg/Kg	10	11/20/00
Molybdenum	ND	2.5		mg/Kg	10	11/20/00
Nickel	10	1.5		mg/Kg	10	11/20/00
Selenium	ND	2.5		mg/Kg	10	11/20/00
Silver	ND	1.5		mg/Kg	10	11/20/00
Thallium	60	2.5		mg/Kg	10	11/20/00
Vanadium	45	1.5		mg/Kg	10	11/20/00
Zinc	23000	5.0		mg/Kg	10	11/20/00

Qualifiers:
ND - Not Detected at the Reporting Limit
J - Analyte detected below quantitation limits
B - Analyte detected in the associated Method Blank
DO - Surrogate Diluted Out
S - Spike/Surrogate outside of limits due to matrix interference.
H - Samples exceeding analytical holding time
E - Value above quantitation range
M - Not Monitored. Highly Reactive

Initials: _____

Advanced Technology Laboratories
1510 E. 33rd Street Signal Hill, CA 90807 Tel: 562 989-4045 Fax: 562 989-4040

52

CHAIN OF CUSTODY RECORD

Pg 1 of 1

Advanced Technology Laboratories
1510 E. 33rd Street
~~Signal Hill~~ Long Beach, CA 90807
(562) 989-4045 • FAX (562) 989-4040

FOR LABORATORY USE ONLY:

Batch #: _____ D.O. # _____
P.O.#: _____
Logged By: _____ Date: _____ Time: _____

Method of Transport: Walk-in ☐ Courier ☐ UPS ☐ FED. EXP. ☒ ATL ☐

Sample Condition Upon Receipt: 1. CHILLED Y☐ N☐ 4. SEALED Y☐ N☐ 2. HEADSPACE (VOA) Y☐ N☐ 5. # OF SPLS MATCH COC Y☐ N☐ 3. CONTAINER INTACT Y☐ N☐ 6. PRESERVED Y☐ N☐

Client: GEOCON ENVIRONMENTAL - SACRAMENTO
Attn: Jim Lessman
Address: 11375 Sunrise Park Drive, Suite 100
City: Rancho Cordova State: CA Zip Code: 95742
TEL: (916) 852-9118
FAX: (916) 852-9132

Project Name: Bradley Overhead Bridge Project #: 3647.00 Sampler: (Printed Name) OWEN Tilley (Signature) [signature]

Relinquished by: (Signature and Printed Name) [signature] Tim Hoppe Date: 11-3-00 Time: 1:30 Received by: (Signature and Printed Name) [signature] Date: 11/06 Time:
Relinquished by: (Signature and Printed Name) Date: Time: Received by: (Signature and Printed Name) Date: Time:
Relinquished by: (Signature and Printed Name) Date: Time: Received by: (Signature and Printed Name) Date: Time:

SHIP TO LAB: (SUB CONTRACT) _____ TEST: _____ ATL #: _____ DATE: _____ CLIENT I.D. _____

I hereby authorize ATL to perform the work indicated below:
Project Mgr /Submitter: Tim Hoppe Date: 11/03/00
Print Name
[signature]
Signature

Send Report To: Attn: _____ Co: _____ Address _____ City _____ State _____ Zip _____

Special Instructions/Comments:

Unless otherwise requested, all samples will be disposed 45 days after receipt.

Sample Archive/Disposal: ☐ Laboratory Standard ☐ Other _____ ☐ Return To: _____
* $10.00 FEE PER HAZARDOUS SAMPLE DISPOSAL.

Circle or Add Analysis(es) Requested: 601/8010 (Halogenated Volatiles-GC); 602/8020/BTEX (Aromatic Volatiles-GC); 608/8080 (Pesticides/PCB-GC); 624/8240 (Volatiles-GC/MS); 8260 (Volatiles-GC/MS); 8015/8270 (BNA-GC/MS); 8015M-TPH/BTEX/COMBINATION); 8015M TPH/D (Diesel-GC); 418.1 (TPH/HR); Metals-Total (CAC-8010/7000); TCP, EPA Test Method 6010

CIRCLE APPROPRIATE MATRIX: SOLID • SOIL • SLUDGE; OIL • SOLVENT • LIQUID; WATER • WASTEWATER; DRINKING WATER; AIR; WIPE • FILTER; OTHER

QA/QC: RTNE ☐ RWQCB ☐ WIP ☐ NAVY ☐ CT ☐ OTHER _____

ITEM	LAB USE ONLY: Batch #: Lab No.	Sample Description: Sample I.D.	Date	Time	601/8010	602/8020/BTEX	608/8080	624/8240	8260	8015/8270	8015M-TPH/BTEX	8015M TPH/D	418.1	Metals-Total	TCP, EPA Test Method 6010	SOLID • SOIL • SLUDGE	OIL • SOLVENT • LIQUID	WATER • WASTEWATER	DRINKING WATER	AIR	WIPE • FILTER	OTHER	TAT	Container(s) #	Container(s) Type	PRESERVATION	REMARKS
	47857-001	BOB-01-LP	11/1/00	1:00											X								E				
	2	BOB-02-LP	"	"											X								E				
	3	BOB-03-LP	"	"											X								E				
	4	BOB-04-LP	"	"											X								E				
	5	BOB-05-LP	"	"											X								E				
	6	BOB-06-LP	"	"											X								E				
	7	BOB-07-LP	"	"											X								E				
	8	BOB-08-LP	"	"											X								E				
	9	BOB-09-LP	"	"											X								E				
	10	BOB-10-LP	"	"											X								E				

• TAT starts 8 a.m. following day if samples received after 5 p.m.

TAT: A= Overnight ≤ 24 hr B= Emergency Next workday C= Critical 2 Workdays D= Urgent 3 Workdays E= Routine 7 Workdays

Preservatives: H=Hcl N=HNO_3 S=H_2SO_4 C=4°C Z=Zn(AC)$_2$ O=NaOH T=$Na_2S_2O_3$

Container Types: T=Tube V=VOA L=Liter P=Pint J=Jar B=Tedlar G=Glass P=Plastic M=Metal

DIS ION with Vel der, sub

Page 1/1
Mar-31-00 16:31;
Print By: GEOCON ENVIRONMENTAL CONSULTANTS;916 852 9132;
To: HB*T At: 4464259

ELAP No.: 1838

Geocon Environmental
11375 Sunrise Park Drive, Suite 100
Rancho Cordova, CA 95742

ATTN: Jim Lessman

Client's Project: Bradley OH, #S8225-06-123
Lab No.: 47817-001/111

Enclosed are the results for sample(s) received by Advanced Technology Laboratories and tested for the parameters indicated in the enclosed chain of custody.

Thank you for the opportunity to service the needs of your company. Please feel free to call me at (562) 989 - 4045 if I can be of further assistance to your company.

Sincerely,

Date: 11/17/00

Cheryl De Los Reyes
Technical Operations Manager
CDR/dg

Enclosures

This cover letter is an integral part of this analytical report.

This report pertains only to the samples investigated and does not necessarily apply to other apparently identical or similar materials. This report is submitted for the exclusive use of the client to whom it is addressed. Any reproduction of this report or use of this Laboratory's name for advertising or publicity purpose without authorization is prohibited.

Advanced Technology Laboratories

Print Date: *11/10/00*

CLIENT:	Geocon Environmental	**Client Sample ID:**	B1-10
Lab Order:	047817		
Project:	Bradley OH - S8225-06-123	**Collection Date:**	11/1/00
Lab ID:	047817-001A	**Matrix:**	SOIL

Analyses	Result	Limit	Qual	Units	DF	Date Analyzed
LEAD BY ICP			EPA 6010B			
RunID: ICP3_001109A	BatchID: 1983			PrepDate: 11/7/00		Analyst: NS
Lead	46	5.0		mg/Kg	1	11/9/00

Qualifiers:

ND - Not Detected at the Reporting Limit
J - Analyte detected below quantitation limits
B - Analyte detected in the associated Method Blank
* - Value exceeds Maximum Contaminant Level
S - Spike Recovery outside accepted recovery limits
R - RPD outside accepted recovery limits
E - Value above quantitation range
M - Not Monitored. Highly Reactive

Initials: _____

54

Advanced Technology Laboratories

1510 E. 33rd Street Signal Hill, CA 90807 Tel: 562 989-4045 Fax: 562 989-4040

Advanced Technology Laboratories

Print Date: *11/10/00*

CLIENT:	Geocon Environmental	**Client Sample ID:**	B1-30
Lab Order:	047817		
Project:	Bradley OH - S8225-06-123	**Collection Date:**	11/1/00
Lab ID:	047817-002A	**Matrix:**	SOIL

Analyses	Result	Limit	Qual	Units	DF	Date Analyzed
LEAD BY ICP			EPA 6010B			
RunID: ICP3_001109A	BatchID: 1983			PrepDate: 11/7/00		Analyst: NS
Lead	ND	5.0		mg/Kg	1	11/9/00

Qualifiers:

ND - Not Detected at the Reporting Limit
J - Analyte detected below quantitation limits
B - Analyte detected in the associated Method Blank
* - Value exceeds Maximum Contaminant Level
S - Spike Recovery outside accepted recovery limits
R - RPD outside accepted recovery limits
E - Value above quantitation range
M - Not Monitored. Highly Reactive

Initials: (A)

Advanced Technology Laboratories
1510 E. 33rd Street Signal Hill, CA 90807 Tel: 562 989-4045 Fax: 562 989-4040

Advanced Technology Laboratories

Print Date: *11/10/00*

CLIENT:	Geocon Environmental	**Client Sample ID:**	B1-60
Lab Order:	047817		
Project:	Bradley OH - S8225-06-123	**Collection Date:**	11/1/00
Lab ID:	047817-003A	**Matrix:**	SOIL

Analyses	Result	Limit	Qual	Units	DF	Date Analyzed
LEAD BY ICP			EPA 6010B			
RunID: ICP3_001109A BatchID: 1983				PrepDate: 11/7/00		Analyst: NS
Lead	ND	5.0		mg/Kg	1	11/9/00

Qualifiers:

ND - Not Detected at the Reporting Limit
J - Analyte detected below quantitation limits
B - Analyte detected in the associated Method Blank
* - Value exceeds Maximum Contaminant Level
S - Spike Recovery outside accepted recovery limits
R - RPD outside accepted recovery limits
E - Value above quantitation range
M - Not Monitored. Highly Reactive

Initials: _____

Advanced Technology Laboratories
1510 E. 33rd Street Signal Hill, CA 90807 Tel: 562 989-4045 Fax: 562 989-4040

Advanced Technology Laboratories

Print Date: *11/10/00*

CLIENT:	Geocon Environmental	**Client Sample ID:**	B2-10
Lab Order:	047817		
Project:	Bradley OH - S8225-06-123	**Collection Date:**	11/1/00
Lab ID:	047817-004A	**Matrix:**	SOIL

Analyses	Result	Limit	Qual	Units	DF	Date Analyzed
LEAD BY ICP			**EPA 6010B**			
RunID: **ICP3_001109A** BatchID: **1983**				PrepDate: **11/7/00**		Analyst: **NS**
Lead	ND	5.0		mg/Kg	1	11/9/00

Qualifiers:

ND - Not Detected at the Reporting Limit
J - Analyte detected below quantitation limits
B - Analyte detected in the associated Method Blank
* - Value exceeds Maximum Contaminant Level
S - Spike Recovery outside accepted recovery limits
R - RPD outside accepted recovery limits
E - Value above quantitation range
M - Not Monitored. Highly Reactive

Initials: _____

Advanced Technology Laboratories *1510 E. 33rd Street Signal Hill, CA 90807 Tel: 562 989-4045 Fax: 562 989-4040*

Advanced Technology Laboratories

Print Date: *11/10/00*

CLIENT:	Geocon Environmental	**Client Sample ID:**	B2-30
Lab Order:	047817		
Project:	Bradley OH - S8225-06-123	**Collection Date:**	11/1/00
Lab ID:	047817-005A	**Matrix:**	SOIL

Analyses	Result	Limit	Qual	Units	DF	Date Analyzed
LEAD BY ICP			EPA 6010B			
RunID: ICP3_001109A BatchID: 1983				PrepDate: 11/7/00		Analyst: NS
Lead	ND	5.0		mg/Kg	1	11/9/00

Qualifiers:

ND - Not Detected at the Reporting Limit
J - Analyte detected below quantitation limits
B - Analyte detected in the associated Method Blank
* - Value exceeds Maximum Contaminant Level
S - Spike Recovery outside accepted recovery limits
R - RPD outside accepted recovery limits
E - Value above quantitation range
M - Not Monitored. Highly Reactive

Initials: _____

Advanced Technology Laboratories
1510 E. 33rd Street Signal Hill, CA 90807 Tel: 562 989-4045 Fax: 562 989-4040

Advanced Technology Laboratories

Print Date: *11/10/00*

CLIENT:	Geocon Environmental	**Client Sample ID:**	B2-60
Lab Order:	047817		
Project:	Bradley OH - S8225-06-123	**Collection Date:**	11/1/00
Lab ID:	047817-006A	**Matrix:**	SOIL

Analyses	Result	Limit	Qual	Units	DF	Date Analyzed
LEAD BY ICP			EPA 6010B			
RunID: ICP3_001109A BatchID: 1983				PrepDate: 11/7/00		Analyst: NS
Lead	ND	5.0		mg/Kg	1	11/9/00

Qualifiers:

ND - Not Detected at the Reporting Limit
J - Analyte detected below quantitation limits
B - Analyte detected in the associated Method Blank
* - Value exceeds Maximum Contaminant Level
S - Spike Recovery outside accepted recovery limits
R - RPD outside accepted recovery limits
E - Value above quantitation range
M - Not Monitored. Highly Reactive

Initials: 59

Advanced Technology Laboratories 1510 E. 33rd Street Signal Hill, CA 90807 Tel: 562 989-4045 Fax: 562 989-4040

Advanced Technology Laboratories

Print Date: *11/10/00*

CLIENT:	Geocon Environmental	**Client Sample ID:**	B3-10
Lab Order:	047817		
Project:	Bradley OH - S8225-06-123	**Collection Date:**	11/1/00
Lab ID:	047817-007A	**Matrix:**	SOIL

Analyses	Result	Limit	Qual	Units	DF	Date Analyzed
LEAD BY ICP			EPA 6010B			
RunID: ICP3_001109A	BatchID: 1983			PrepDate: 11/7/00		Analyst: NS
Lead	15	5.0		mg/Kg	1	11/9/00

Qualifiers:

ND - Not Detected at the Reporting Limit
J - Analyte detected below quantitation limits
B - Analyte detected in the associated Method Blank
* - Value exceeds Maximum Contaminant Level
S - Spike Recovery outside accepted recovery limits
R - RPD outside accepted recovery limits
E - Value above quantitation range
M - Not Monitored. Highly Reactive

60

Initials: _____

Advanced Technology Laboratories

1510 E. 33rd Street Signal Hill, CA 90807 Tel: 562 989-4045 Fax: 562 989-4040

Advanced Technology Laboratories

Print Date: *11/10/00*

CLIENT:	Geocon Environmental	**Client Sample ID:**	B3-30
Lab Order:	047817		
Project:	Bradley OH - S8225-06-123	**Collection Date:**	11/1/00
Lab ID:	047817-008A	**Matrix:**	SOIL

Analyses	Result	Limit	Qual	Units	DF	Date Analyzed
LEAD BY ICP			**EPA 6010B**			
RunID: **ICP3_001109A** BatchID: **1983**				PrepDate: **11/7/00**		Analyst: **NS**
Lead	5.1	5.0		mg/Kg	1	11/9/00

Qualifiers:

ND - Not Detected at the Reporting Limit
J - Analyte detected below quantitation limits
B - Analyte detected in the associated Method Blank
* - Value exceeds Maximum Contaminant Level
S - Spike Recovery outside accepted recovery limits
R - RPD outside accepted recovery limits
E - Value above quantitation range
M - Not Monitored. Highly Reactive

Initials: [illegible]

61

Advanced Technology Laboratories

1510 E. 33rd Street Signal Hill, CA 90807 Tel: 562 989-4045 Fax: 562 989-4040

Advanced Technology Laboratories

Print Date: *11/10/00*

CLIENT:	Geocon Environmental	**Client Sample ID:**	B3-60
Lab Order:	047817		
Project:	Bradley OH - S8225-06-123	**Collection Date:**	11/1/00
Lab ID:	047817-009A	**Matrix:**	SOIL

Analyses	Result	Limit	Qual	Units	DF	Date Analyzed
LEAD BY ICP			EPA 6010B			
RunID: ICP3_001109A BatchID: 1983				PrepDate: 11/7/00		Analyst: NS
Lead	ND	5.0		mg/Kg	1	11/9/00

Qualifiers:

ND - Not Detected at the Reporting Limit
J - Analyte detected below quantitation limits
B - Analyte detected in the associated Method Blank
* - Value exceeds Maximum Contaminant Level
S - Spike Recovery outside accepted recovery limits
R - RPD outside accepted recovery limits
E - Value above quantitation range
M - Not Monitored, Highly Reactive

Initials: 62 1

Advanced Technology Laboratories

1510 E. 33rd Street Signal Hill, CA 90807 Tel: 562 989-4045 Fax: 562 989-4040

Advanced Technology Laboratories

Print Date: *11/10/00*

CLIENT:	Geocon Environmental	**Client Sample ID:**	B4-10
Lab Order:	047817		
Project:	Bradley OH - S8225-06-123	**Collection Date:**	11/1/00
Lab ID:	047817-010A	**Matrix:**	SOIL

Analyses	Result	Limit	Qual	Units	DF	Date Analyzed
LEAD BY ICP			**EPA 6010B**			
RunID: **ICP3_001109A** BatchID: **1983**				PrepDate: **11/7/00**		Analyst: **NS**
Lead	10	5.0		mg/Kg	1	11/9/00

Qualifiers:

ND - Not Detected at the Reporting Limit
J - Analyte detected below quantitation limits
B - Analyte detected in the associated Method Blank
* - Value exceeds Maximum Contaminant Level
S - Spike Recovery outside accepted recovery limits
R - RPD outside accepted recovery limits
E - Value above quantitation range
M - Not Monitored. Highly Reactive

Initials: 63 I

Advanced Technology Laboratories
1510 E. 33rd Street Signal Hill, CA 90807 Tel: 562 989-4045 Fax: 562 989-4040

Advanced Technology Laboratories

Print Date: *11/10/00*

CLIENT:	Geocon Environmental	**Client Sample ID:**	B4-30
Lab Order:	047817		
Project:	Bradley OH - S8225-06-123	**Collection Date:**	11/1/00
Lab ID:	047817-011A	**Matrix:**	SOIL

Analyses	Result	Limit	Qual	Units	DF	Date Analyzed
LEAD BY ICP			EPA 6010B			
RunID: ICP3_001109A BatchID: 1984				PrepDate: 11/7/00		Analyst: NS
Lead	5.1	5.0		mg/Kg	1	11/9/00

Qualifiers:

ND - Not Detected at the Reporting Limit
J - Analyte detected below quantitation limits
B - Analyte detected in the associated Method Blank
* - Value exceeds Maximum Contaminant Level
S - Spike Recovery outside accepted recovery limits
R - RPD outside accepted recovery limits
E - Value above quantitation range
M - Not Monitored. Highly Reactive

Initials: _____

Advanced Technology Laboratories
1510 E. 33rd Street Signal Hill, CA 90807 Tel: 562 989-4045 Fax: 562 989-4040

Advanced Technology Laboratories

Print Date: *11/10/00*

CLIENT:	Geocon Environmental	**Client Sample ID:**	B4-60
Lab Order:	047817		
Project:	Bradley OH - S8225-06-123	**Collection Date:**	11/1/00
Lab ID:	047817-012A	**Matrix:**	SOIL

Analyses	Result	Limit	Qual	Units	DF	Date Analyzed
LEAD BY ICP			EPA 6010B			
RunID: ICP3_001109A	BatchID: 1984			PrepDate: 11/7/00		Analyst: NS
Lead	5.5	5.0		mg/Kg	1	11/9/00

Qualifiers:

ND - Not Detected at the Reporting Limit
J - Analyte detected below quantitation limits
B - Analyte detected in the associated Method Blank
* - Value exceeds Maximum Contaminant Level
S - Spike Recovery outside accepted recovery limits
R - RPD outside accepted recovery limits
E - Value above quantitation range
M - Not Monitored. Highly Reactive

Initials: 65

Advanced Technology Laboratories
1510 E. 33rd Street Signal Hill, CA 90807 Tel: 562 989-4045 Fax: 562 989-4040

Advanced Technology Laboratories

Print Date: *11/10/00*

CLIENT:	Geocon Environmental	**Client Sample ID:**	B5-10
Lab Order:	047817		
Project:	Bradley OH - S8225-06-123	**Collection Date:**	11/1/00
Lab ID:	047817-013A	**Matrix:**	SOIL

Analyses	Result	Limit	Qual	Units	DF	Date Analyzed
LEAD BY ICP			EPA 6010B			
RunID: ICP3_001109A	BatchID: 1984			PrepDate: 11/7/00		Analyst: NS
Lead	7.2	5.0		mg/Kg	1	11/9/00

Qualifiers:

ND - Not Detected at the Reporting Limit
J - Analyte detected below quantitation limits
B - Analyte detected in the associated Method Blank
* - Value exceeds Maximum Contaminant Level
S - Spike Recovery outside accepted recovery limits
R - RPD outside accepted recovery limits
E - Value above quantitation range
M - Not Monitored. Highly Reactive

Initials: _____

Advanced Technology Laboratories
1510 E. 33rd Street Signal Hill, CA 90807 Tel: 562 989-4045 Fax: 562 989-4040

Advanced Technology Laboratories

Print Date: *11/10/00*

CLIENT:	Geocon Environmental	**Client Sample ID:**	B5-30
Lab Order:	047817		
Project:	Bradley OH - S8225-06-123	**Collection Date:**	11/1/00
Lab ID:	047817-014A	**Matrix:**	SOIL

Analyses	Result	Limit	Qual	Units	DF	Date Analyzed
LEAD BY ICP			**EPA 6010B**			
RunID: **ICP3_001109A** BatchID: **1984**				PrepDate: **11/7/00**		Analyst: **NS**
Lead	30	5.0		mg/Kg	1	11/9/00

Qualifiers:

ND - Not Detected at the Reporting Limit
J - Analyte detected below quantitation limits
B - Analyte detected in the associated Method Blank
* - Value exceeds Maximum Contaminant Level
S - Spike Recovery outside accepted recovery limits
R - RPD outside accepted recovery limits
E - Value above quantitation range
M - Not Monitored. Highly Reactive

Initials: 67

Advanced Technology Laboratories *1510 E. 33rd Street Signal Hill, CA 90807 Tel: 562 989-4045 Fax: 562 989-4040*

Advanced Technology Laboratories

Print Date: *11/10/00*

CLIENT:	Geocon Environmental	**Client Sample ID:**	B5-60
Lab Order:	047817		
Project:	Bradley OH - S8225-06-123	**Collection Date:**	11/1/00
Lab ID:	047817-015A	**Matrix:**	SOIL

Analyses	Result	Limit	Qual	Units	DF	Date Analyzed
LEAD BY ICP			EPA 6010B			
RunID: ICP3_001109A	BatchID: 1984			PrepDate: 11/7/00		Analyst: NS
Lead	ND	5.0		mg/Kg	1	11/9/00

Qualifiers:

ND - Not Detected at the Reporting Limit
J - Analyte detected below quantitation limits
B - Analyte detected in the associated Method Blank
* - Value exceeds Maximum Contaminant Level
S - Spike Recovery outside accepted recovery limits
R - RPD outside accepted recovery limits
E - Value above quantitation range
M - Not Monitored. Highly Reactive

Initials: ____

Advanced Technology Laboratories
1510 E. 33rd Street Signal Hill, CA 90807 Tel: 562 989-4045 Fax: 562 989-4040

Advanced Technology Laboratories

Print Date: *11/10/00*

CLIENT:	Geocon Environmental	**Client Sample ID:**	B6-10
Lab Order:	047817		
Project:	Bradley OH - S8225-06-123	**Collection Date:**	11/1/00
Lab ID:	047817-016A	**Matrix:**	SOIL

Analyses	Result	Limit	Qual	Units	DF	Date Analyzed
LEAD BY ICP			**EPA 6010B**			
RunID: **ICP3_001109A** BatchID: **1984**				PrepDate: **11/7/00**		Analyst: **NS**
Lead	440	5.0		mg/Kg	1	11/9/00

Qualifiers:

ND - Not Detected at the Reporting Limit
J - Analyte detected below quantitation limits
B - Analyte detected in the associated Method Blank
* - Value exceeds Maximum Contaminant Level
S - Spike Recovery outside accepted recovery limits
R - RPD outside accepted recovery limits
E - Value above quantitation range
M - Not Monitored. Highly Reactive

Initials: [illegible]

Advanced Technology Laboratories
1510 E. 33rd Street Signal Hill, CA 90807 Tel: 562 989-4045 Fax: 562 989-4040

Advanced Technology Laboratories

Print Date: *11/10/00*

CLIENT:	Geocon Environmental	**Client Sample ID:**	B6-30
Lab Order:	047817		
Project:	Bradley OH - S8225-06-123	**Collection Date:**	11/1/00
Lab ID:	047817-017A	**Matrix:**	SOIL

Analyses	Result	Limit	Qual	Units	DF	Date Analyzed
LEAD BY ICP			EPA 6010B			
RunID: ICP3_001109A BatchID: 1984				PrepDate: 11/7/00		Analyst: NS
Lead	43	5.0		mg/Kg	1	11/9/00

Qualifiers:

ND - Not Detected at the Reporting Limit
J - Analyte detected below quantitation limits
B - Analyte detected in the associated Method Blank
* - Value exceeds Maximum Contaminant Level
S - Spike Recovery outside accepted recovery limits
R - RPD outside accepted recovery limits
E - Value above quantitation range
M - Not Monitored. Highly Reactive

Initials: _____

70

Advanced Technology Laboratories
1510 E. 33rd Street Signal Hill, CA 90807 Tel: 562 989-4045 Fax: 562 989-4040

Advanced Technology Laboratories

Print Date: *11/10/00*

CLIENT:	Geocon Environmental	**Client Sample ID:**	B6-60
Lab Order:	047817		
Project:	Bradley OH - S8225-06-123	**Collection Date:**	11/1/00
Lab ID:	047817-018A	**Matrix:**	SOIL

Analyses	Result	Limit	Qual	Units	DF	Date Analyzed
LEAD BY ICP			EPA 6010B			
RunID: ICP3_001109A	BatchID: 1984			PrepDate: 11/7/00		Analyst: NS
Lead	ND	5.0		mg/Kg	1	11/9/00

Qualifiers:

ND - Not Detected at the Reporting Limit
J - Analyte detected below quantitation limits
B - Analyte detected in the associated Method Blank
* - Value exceeds Maximum Contaminant Level
S - Spike Recovery outside accepted recovery limits
R - RPD outside accepted recovery limits
E - Value above quantitation range
M - Not Monitored. Highly Reactive

Initials: _____

Advanced Technology Laboratories
1510 E. 33rd Street Signal Hill, CA 90807 Tel: 562 989-4045 Fax: 562 989-4040

Advanced Technology Laboratories

Print Date: *11/10/00*

CLIENT:	Geocon Environmental	**Client Sample ID:**	B7-10
Lab Order:	047817		
Project:	Bradley OH - S8225-06-123	**Collection Date:**	11/1/00
Lab ID:	047817-019A	**Matrix:**	SOIL

Analyses	Result	Limit	Qual	Units	DF	Date Analyzed
LEAD BY ICP			EPA 6010B			
RunID: ICP3_001109A	BatchID: 1984			PrepDate: 11/7/00		Analyst: NS
Lead	190	5.0		mg/Kg	1	11/9/00

Qualifiers:

ND - Not Detected at the Reporting Limit
J - Analyte detected below quantitation limits
B - Analyte detected in the associated Method Blank
* - Value exceeds Maximum Contaminant Level
S - Spike Recovery outside accepted recovery limits
R - RPD outside accepted recovery limits
E - Value above quantitation range
M - Not Monitored. Highly Reactive

Initials: _____

Advanced Technology Laboratories *1510 E. 33rd Street Signal Hill, CA 90807 Tel: 562 989-4045 Fax: 562 989-4040*

Advanced Technology Laboratories

Print Date: *11/10/00*

CLIENT:	Geocon Environmental	**Client Sample ID:**	B7-30
Lab Order:	047817		
Project:	Bradley OH - S8225-06-123	**Collection Date:**	11/1/00
Lab ID:	047817-020A	**Matrix:**	SOIL

Analyses	Result	Limit	Qual	Units	DF	Date Analyzed
LEAD BY ICP			**EPA 6010B**			
RunID: **ICP3_001109A**	BatchID: **1984**			PrepDate: **11/7/00**		Analyst: **NS**
Lead	14	5.0		mg/Kg	1	11/9/00

Qualifiers:

ND - Not Detected at the Reporting Limit
J - Analyte detected below quantitation limits
B - Analyte detected in the associated Method Blank
* - Value exceeds Maximum Contaminant Level
S - Spike Recovery outside accepted recovery limits
R - RPD outside accepted recovery limits
E - Value above quantitation range
M - Not Monitored. Highly Reactive

Initials: ____

73

Advanced Technology Laboratories

1510 E. 33rd Street Signal Hill, CA 90807 Tel: 562 989-4045 Fax: 562 989-4040

Advanced Technology Laboratories

Print Date: *11/10/00*

CLIENT:	Geocon Environmental	**Client Sample ID:**	B7-60
Lab Order:	047817		
Project:	Bradley OH - S8225-06-123	**Collection Date:**	11/1/00
Lab ID:	047817-021A	**Matrix:**	SOIL

Analyses	Result	Limit	Qual	Units	DF	Date Analyzed
LEAD BY ICP			EPA 6010B			
RunID: ICP3_001109A BatchID: 1985				PrepDate: 11/7/00		Analyst: NS
Lead	ND	5.0		mg/Kg	1	11/9/00

Qualifiers:

ND - Not Detected at the Reporting Limit
J - Analyte detected below quantitation limits
B - Analyte detected in the associated Method Blank
* - Value exceeds Maximum Contaminant Level
S - Spike Recovery outside accepted recovery limits
R - RPD outside accepted recovery limits
E - Value above quantitation range
M - Not Monitored. Highly Reactive

Initials: ____

Advanced Technology Laboratories
1510 E. 33rd Street Signal Hill, CA 90807 Tel: 562 989-4045 Fax: 562 989-4040

Advanced Technology Laboratories

Print Date: *11/10/00*

CLIENT:	Geocon Environmental	**Client Sample ID:**	B8-10
Lab Order:	047817		
Project:	Bradley OH - S8225-06-123	**Collection Date:**	11/1/00
Lab ID:	047817-022A	**Matrix:**	SOIL

Analyses	Result	Limit	Qual	Units	DF	Date Analyzed
LEAD BY ICP			**EPA 6010B**			
RunID: **ICP3_001109A**	BatchID: **1985**			PrepDate: **11/7/00**		Analyst: **NS**
Lead	27	5.0		mg/Kg	1	11/9/00

Qualifiers:
ND - Not Detected at the Reporting Limit
J - Analyte detected below quantitation limits
B - Analyte detected in the associated Method Blank
* - Value exceeds Maximum Contaminant Level
S - Spike Recovery outside accepted recovery limits
R - RPD outside accepted recovery limits
E - Value above quantitation range
M - Not Monitored. Highly Reactive

Initials: [illegible]

15

Advanced Technology Laboratories *1510 E. 33rd Street Signal Hill, CA 90807 Tel: 562 989-4045 Fax: 562 989-4040*

Advanced Technology Laboratories

Print Date: *11/10/00*

CLIENT:	Geocon Environmental	**Client Sample ID:**	B8-30
Lab Order:	047817		
Project:	Bradley OH - S8225-06-123	**Collection Date:**	11/1/00
Lab ID:	047817-023A	**Matrix:**	SOIL

Analyses	Result	Limit	Qual	Units	DF	Date Analyzed
LEAD BY ICP			EPA 6010B			
RunID: ICP3_001109A	BatchID: 1985			PrepDate: 11/7/00		Analyst: NS
Lead	5.3	5.0		mg/Kg	1	11/9/00

Qualifiers:

ND - Not Detected at the Reporting Limit
J - Analyte detected below quantitation limits
B - Analyte detected in the associated Method Blank
* - Value exceeds Maximum Contaminant Level
S - Spike Recovery outside accepted recovery limits
R - RPD outside accepted recovery limits
E - Value above quantitation range
M - Not Monitored. Highly Reactive

Initials: _____

Advanced Technology Laboratories
1510 E. 33rd Street Signal Hill, CA 90807 Tel: 562 989-4045 Fax: 562 989-4040

Advanced Technology Laboratories

Print Date: *11/10/00*

CLIENT:	Geocon Environmental	**Client Sample ID:**	B8-60
Lab Order:	047817		
Project:	Bradley OH - S8225-06-123	**Collection Date:**	11/1/00
Lab ID:	047817-024A	**Matrix:**	SOIL

Analyses	Result	Limit	Qual	Units	DF	Date Analyzed
LEAD BY ICP			**EPA 6010B**			
RunID: **ICP3_001109A** BatchID: **1985**				PrepDate: **11/7/00**		Analyst: **NS**
Lead	ND	5.0		mg/Kg	1	11/9/00

Qualifiers:

ND - Not Detected at the Reporting Limit
J - Analyte detected below quantitation limits
B - Analyte detected in the associated Method Blank
* - Value exceeds Maximum Contaminant Level
S - Spike Recovery outside accepted recovery limits
R - RPD outside accepted recovery limits
E - Value above quantitation range
M - Not Monitored. Highly Reactive

Initials: _____

Advanced Technology Laboratories *1510 E. 33rd Street Signal Hill, CA 90807 Tel: 562 989-4045 Fax: 562 989-4040*

Advanced Technology Laboratories

Print Date: *11/10/00*

CLIENT:	Geocon Environmental	**Client Sample ID:**	B9-10
Lab Order:	047817		
Project:	Bradley OH - S8225-06-123	**Collection Date:**	11/1/00
Lab ID:	047817-025A	**Matrix:**	SOIL

Analyses	Result	Limit	Qual	Units	DF	Date Analyzed
LEAD BY ICP			EPA 6010B			
RunID: ICP3_001109A	BatchID: 1985			PrepDate: 11/7/00		Analyst: NS
Lead	55	5.0		mg/Kg	1	11/9/00

Qualifiers:

ND - Not Detected at the Reporting Limit
J - Analyte detected below quantitation limits
B - Analyte detected in the associated Method Blank
* - Value exceeds Maximum Contaminant Level
S - Spike Recovery outside accepted recovery limits
R - RPD outside accepted recovery limits
E - Value above quantitation range
M - Not Monitored. Highly Reactive

Initials: _____

Advanced Technology Laboratories
1510 E. 33rd Street Signal Hill, CA 90807 Tel: 562 989-4045 Fax: 562 989-4040

Advanced Technology Laboratories

Print Date: *11/10/00*

CLIENT:	Geocon Environmental	**Client Sample ID:**	B9-30
Lab Order:	047817		
Project:	Bradley OH - S8225-06-123	**Collection Date:**	11/1/00
Lab ID:	047817-026A	**Matrix:**	SOIL

Analyses	Result	Limit	Qual	Units	DF	Date Analyzed
LEAD BY ICP			EPA 6010B			
RunID: ICP3_001109A	BatchID: 1985			PrepDate: 11/7/00		Analyst: NS
Lead	ND	5.0		mg/Kg	1	11/9/00

Qualifiers:

ND - Not Detected at the Reporting Limit
J - Analyte detected below quantitation limits
B - Analyte detected in the associated Method Blank
* - Value exceeds Maximum Contaminant Level
S - Spike Recovery outside accepted recovery limits
R - RPD outside accepted recovery limits
E - Value above quantitation range
M - Not Monitored. Highly Reactive

79

Initials: _____

Advanced Technology Laboratories
1510 E. 33rd Street Signal Hill, CA 90807 Tel: 562 989-4045 Fax: 562 989-4040

Advanced Technology Laboratories

Print Date: *11/10/00*

CLIENT:	Geocon Environmental	**Client Sample ID:**	B9-60
Lab Order:	047817		
Project:	Bradley OH - S8225-06-123	**Collection Date:**	11/1/00
Lab ID:	047817-027A	**Matrix:**	SOIL

Analyses	Result	Limit	Qual	Units	DF	Date Analyzed
LEAD BY ICP			EPA 6010B			
RunID: ICP3_001109A BatchID: 1985				PrepDate: 11/7/00		Analyst: NS
Lead	ND	5.0		mg/Kg	1	11/9/00

Qualifiers:

ND - Not Detected at the Reporting Limit
J - Analyte detected below quantitation limits
B - Analyte detected in the associated Method Blank
* - Value exceeds Maximum Contaminant Level
S - Spike Recovery outside accepted recovery limits
R - RPD outside accepted recovery limits
E - Value above quantitation range
M - Not Monitored. Highly Reactive

Initials: _____

Advanced Technology Laboratories *1510 E. 33rd Street Signal Hill, CA 90807 Tel: 562 989-4045 Fax: 562 989-4040*

Advanced Technology Laboratories

Print Date: *11/10/00*

CLIENT:	Geocon Environmental	**Client Sample ID:**	B10-10
Lab Order:	047817		
Project:	Bradley OH - S8225-06-123	**Collection Date:**	11/1/00
Lab ID:	047817-028A	**Matrix:**	SOIL

Analyses	Result	Limit	Qual	Units	DF	Date Analyzed
LEAD BY ICP			EPA 6010B			
RunID: ICP3_001109A	BatchID: 1985			PrepDate: 11/7/00		Analyst: NS
Lead	6.4	5.0		mg/Kg	1	11/9/00

Qualifiers:

ND - Not Detected at the Reporting Limit
J - Analyte detected below quantitation limits
B - Analyte detected in the associated Method Blank
* - Value exceeds Maximum Contaminant Level
S - Spike Recovery outside accepted recovery limits
R - RPD outside accepted recovery limits
E - Value above quantitation range
M - Not Monitored. Highly Reactive

Initials: _____

Advanced Technology Laboratories
1510 E. 33rd Street Signal Hill, CA 90807 Tel: 562 989-4045 Fax: 562 989-4040

Advanced Technology Laboratories

Print Date: *11/10/00*

CLIENT:	Geocon Environmental	**Client Sample ID:**	B10-30
Lab Order:	047817		
Project:	Bradley OH - S8225-06-123	**Collection Date:**	11/1/00
Lab ID:	047817-029A	**Matrix:**	SOIL

Analyses	Result	Limit	Qual	Units	DF	Date Analyzed
LEAD BY ICP			EPA 6010B			
RunID: ICP3_001109A	BatchID: 1985			PrepDate: 11/7/00		Analyst: NS
Lead	ND	5.0		mg/Kg	1	11/9/00

Qualifiers:

ND - Not Detected at the Reporting Limit
J - Analyte detected below quantitation limits
B - Analyte detected in the associated Method Blank
* - Value exceeds Maximum Contaminant Level
S - Spike Recovery outside accepted recovery limits
R - RPD outside accepted recovery limits
E - Value above quantitation range
M - Not Monitored. Highly Reactive

Initials: _____

Advanced Technology Laboratories
1510 E. 33rd Street Signal Hill, CA 90807 Tel: 562 989-4045 Fax: 562 989-4040

Advanced Technology Laboratories

Print Date: *11/10/00*

CLIENT:	Geocon Environmental	**Client Sample ID:**	B10-60
Lab Order:	047817		
Project:	Bradley OH - S8225-06-123	**Collection Date:**	11/1/00
Lab ID:	047817-030A	**Matrix:**	SOIL

Analyses	Result	Limit	Qual	Units	DF	Date Analyzed
LEAD BY ICP			**EPA 6010B**			
RunID: **ICP3_001109A** BatchID: **1985**				PrepDate: **11/7/00**		Analyst: **NS**
Lead	ND	5.0		mg/Kg	1	11/9/00

Qualifiers:

ND - Not Detected at the Reporting Limit
J - Analyte detected below quantitation limits
B - Analyte detected in the associated Method Blank
* - Value exceeds Maximum Contaminant Level
S - Spike Recovery outside accepted recovery limits
R - RPD outside accepted recovery limits
E - Value above quantitation range
M - Not Monitored. Highly Reactive

Initials: 83

Advanced Technology Laboratories 1510 E. 33rd Street Signal Hill, CA 90807 Tel: 562 989-4045 Fax: 562 989-4040

Advanced Technology Laboratories

Print Date: *11/10/00*

CLIENT:	Geocon Environmental	**Client Sample ID:**	B11-10
Lab Order:	047817		
Project:	Bradley OH - S8225-06-123	**Collection Date:**	11/1/00
Lab ID:	047817-031A	**Matrix:**	SOIL

Analyses	Result	Limit	Qual	Units	DF	Date Analyzed
LEAD BY ICP			EPA 6010B			
RunID: ICP3_001110A BatchID: 1986				PrepDate: 11/7/00		Analyst: NP
Lead	67	5.0		mg/Kg	1	11/10/00

Qualifiers:

ND - Not Detected at the Reporting Limit
J - Analyte detected below quantitation limits
B - Analyte detected in the associated Method Blank
* - Value exceeds Maximum Contaminant Level
S - Spike Recovery outside accepted recovery limits
R - RPD outside accepted recovery limits
E - Value above quantitation range
M - Not Monitored. Highly Reactive

Initials: _____

Advanced Technology Laboratories
1510 E. 33rd Street Signal Hill, CA 90807 Tel: 562 989-4045 Fax: 562 989-4040

Advanced Technology Laboratories

Print Date: *11/10/00*

CLIENT:	Geocon Environmental	**Client Sample ID:**	B11-30
Lab Order:	047817		
Project:	Bradley OH - S8225-06-123	**Collection Date:**	11/1/00
Lab ID:	047817-032A	**Matrix:**	SOIL

Analyses	Result	Limit	Qual	Units	DF	Date Analyzed
LEAD BY ICP			EPA 6010B			
RunID: ICP3_001110A	BatchID: 1986			PrepDate: 11/7/00		Analyst: NP
Lead	6.1	5.0		mg/Kg	1	11/10/00

Qualifiers:

ND - Not Detected at the Reporting Limit
J - Analyte detected below quantitation limits
B - Analyte detected in the associated Method Blank
* - Value exceeds Maximum Contaminant Level
S - Spike Recovery outside accepted recovery limits
R - RPD outside accepted recovery limits
E - Value above quantitation range
M - Not Monitored. Highly Reactive

Initials: _____ 85

Advanced Technology Laboratories *1510 E. 33rd Street Signal Hill, CA 90807 Tel: 562 989-4045 Fax: 562 989-4040*

Advanced Technology Laboratories

Print Date: *11/10/00*

CLIENT:	Geocon Environmental	**Client Sample ID:**	B12-10
Lab Order:	047817		
Project:	Bradley OH - S8225-06-123	**Collection Date:**	11/1/00
Lab ID:	047817-033A	**Matrix:**	SOIL

Analyses	Result	Limit	Qual	Units	DF	Date Analyzed
LEAD BY ICP			EPA 6010B			
RunID: ICP3_001110A BatchID: 1986				PrepDate: 11/7/00		Analyst: NP
Lead	94	5.0		mg/Kg	1	11/10/00

Qualifiers:

ND - Not Detected at the Reporting Limit
J - Analyte detected below quantitation limits
B - Analyte detected in the associated Method Blank
* - Value exceeds Maximum Contaminant Level
S - Spike Recovery outside accepted recovery limits
R - RPD outside accepted recovery limits
E - Value above quantitation range
M - Not Monitored. Highly Reactive

Initials: _____

Advanced Technology Laboratories
1510 E. 33rd Street Signal Hill, CA 90807 Tel: 562 989-4045 Fax: 562 989-4040

Advanced Technology Laboratories

Print Date: *11/10/00*

CLIENT:	Geocon Environmental	**Client Sample ID:**	B12-30
Lab Order:	047817		
Project:	Bradley OH - S8225-06-123	**Collection Date:**	11/1/00
Lab ID:	047817-034A	**Matrix:**	SOIL

Analyses	Result	Limit	Qual	Units	DF	Date Analyzed
LEAD BY ICP			**EPA 6010B**			
RunID: **ICP3_001110A** BatchID: **1986**				PrepDate: **11/7/00**		Analyst: **NP**
Lead	ND	5.0		mg/Kg	1	11/10/00

Qualifiers:
ND - Not Detected at the Reporting Limit
J - Analyte detected below quantitation limits
B - Analyte detected in the associated Method Blank
* - Value exceeds Maximum Contaminant Level
S - Spike Recovery outside accepted recovery limits
R - RPD outside accepted recovery limits
E - Value above quantitation range
M - Not Monitored. Highly Reactive

Initials: _____

87

Advanced Technology Laboratories
1510 E. 33rd Street · Signal Hill, CA 90807 Tel: 562 989-4045 Fax: 562 989-4040

Advanced Technology Laboratories

Print Date: *11/10/00*

CLIENT:	Geocon Environmental	**Client Sample ID:**	B12-60
Lab Order:	047817		
Project:	Bradley OH - S8225-06-123	**Collection Date:**	11/1/00
Lab ID:	047817-035A	**Matrix:**	SOIL

Analyses	Result	Limit	Qual	Units	DF	Date Analyzed
LEAD BY ICP			EPA 6010B			
RunID: ICP3_001110A BatchID: 1986				PrepDate: 11/7/00		Analyst: NP
Lead	7.3	5.0		mg/Kg	1	11/10/00

Qualifiers:

ND - Not Detected at the Reporting Limit
J - Analyte detected below quantitation limits
B - Analyte detected in the associated Method Blank
* - Value exceeds Maximum Contaminant Level
S - Spike Recovery outside accepted recovery limits
R - RPD outside accepted recovery limits
E - Value above quantitation range
M - Not Monitored. Highly Reactive

Initials: _____

Advanced Technology Laboratories
1510 E. 33rd Street Signal Hill, CA 90807 Tel: 562 989-4045 Fax: 562 989-4040

Advanced Technology Laboratories

Print Date: *11/10/00*

CLIENT:	Geocon Environmental	**Client Sample ID:**	B13-10
Lab Order:	047817		
Project:	Bradley OH - S8225-06-123	**Collection Date:**	11/1/00
Lab ID:	047817-036A	**Matrix:**	SOIL

Analyses	Result	Limit	Qual	Units	DF	Date Analyzed
LEAD BY ICP			**EPA 6010B**			
RunID: **ICP3_001110A** BatchID: **1986**				PrepDate: **11/7/00**		Analyst: **NP**
Lead	24	5.0		mg/Kg	1	11/10/00

Qualifiers:

ND - Not Detected at the Reporting Limit
J - Analyte detected below quantitation limits
B - Analyte detected in the associated Method Blank
* - Value exceeds Maximum Contaminant Level
S - Spike Recovery outside accepted recovery limits
R - RPD outside accepted recovery limits
E - Value above quantitation range
M - Not Monitored. Highly Reactive

Initials: _____

89

Advanced Technology Laboratories *1510 E. 33rd Street Signal Hill, CA 90807 Tel: 562 989-4045 Fax: 562 989-4040*

Advanced Technology Laboratories

Print Date: *11/10/00*

CLIENT:	Geocon Environmental	**Client Sample ID:**	B13-30
Lab Order:	047817		
Project:	Bradley OH - S8225-06-123	**Collection Date:**	11/1/00
Lab ID:	047817-037A	**Matrix:**	SOIL

Analyses	Result	Limit	Qual	Units	DF	Date Analyzed
LEAD BY ICP			EPA 6010B			
RunID: ICP3_001110A	BatchID: 1986			PrepDate: 11/7/00		Analyst: NP
Lead	12	5.0		mg/Kg	1	11/10/00

Qualifiers:

ND - Not Detected at the Reporting Limit
J - Analyte detected below quantitation limits
B - Analyte detected in the associated Method Blank
* - Value exceeds Maximum Contaminant Level
S - Spike Recovery outside accepted recovery limits
R - RPD outside accepted recovery limits
E - Value above quantitation range
M - Not Monitored. Highly Reactive

Initials: _____

Advanced Technology Laboratories
1510 E. 33rd Street Signal Hill, CA 90807 Tel: 562 989-4045 Fax: 562 989-4040

Advanced Technology Laboratories

Print Date: *11/10/00*

CLIENT:	Geocon Environmental	**Client Sample ID:**	B13-60
Lab Order:	047817		
Project:	Bradley OH - S8225-06-123	**Collection Date:**	11/1/00
Lab ID:	047817-038A	**Matrix:**	SOIL

Analyses	Result	Limit	Qual	Units	DF	Date Analyzed
LEAD BY ICP			EPA 6010B			
RunID: ICP3_001110A BatchID: 1986				PrepDate: 11/7/00		Analyst: NP
Lead	35	5.0		mg/Kg	1	11/10/00

Qualifiers:

ND - Not Detected at the Reporting Limit
J - Analyte detected below quantitation limits
B - Analyte detected in the associated Method Blank
* - Value exceeds Maximum Contaminant Level
S - Spike Recovery outside accepted recovery limits
R - RPD outside accepted recovery limits
E - Value above quantitation range
M - Not Monitored. Highly Reactive

91

Initials: _____

Advanced Technology Laboratories
1510 E. 33rd Street Signal Hill, CA 90807 Tel: 562 989-4045 Fax: 562 989-4040

Advanced Technology Laboratories

Print Date: *11/10/00*

CLIENT: Geocon Environmental **Client Sample ID:** B14-10

Lab Order: 047817

Project: Bradley OH - S8225-06-123 **Collection Date:** 11/1/00

Lab ID: 047817-039A **Matrix:** SOIL

Analyses	Result	Limit	Qual	Units	DF	Date Analyzed
LEAD BY ICP			EPA 6010B			
RunID: ICP3_001110A BatchID: 1986				PrepDate: 11/7/00		Analyst: NP
Lead	240	5.0		mg/Kg	1	11/10/00

Qualifiers:

ND - Not Detected at the Reporting Limit
J - Analyte detected below quantitation limits
B - Analyte detected in the associated Method Blank
* - Value exceeds Maximum Contaminant Level
S - Spike Recovery outside accepted recovery limits
R - RPD outside accepted recovery limits
E - Value above quantitation range
M - Not Monitored. Highly Reactive

QV

Initials: _____

Advanced Technology Laboratories

1510 E. 33rd Street Signal Hill, CA 90807 Tel: 562 989-4045 Fax: 562 989-4040

Advanced Technology Laboratories

Print Date: *11/10/00*

CLIENT:	Geocon Environmental	**Client Sample ID:**	B14-30
Lab Order:	047817		
Project:	Bradley OH - S8225-06-123	**Collection Date:**	11/1/00
Lab ID:	047817-040A	**Matrix:**	SOIL

Analyses	Result	Limit	Qual	Units	DF	Date Analyzed
LEAD BY ICP			**EPA 6010B**			
RunID: **ICP3_001110A** BatchID: **1986**			PrepDate: **11/7/00**			Analyst: **NP**
Lead	120	5.0		mg/Kg	1	11/10/00

Qualifiers:

ND - Not Detected at the Reporting Limit
J - Analyte detected below quantitation limits
B - Analyte detected in the associated Method Blank
* - Value exceeds Maximum Contaminant Level
S - Spike Recovery outside accepted recovery limits
R - RPD outside accepted recovery limits
E - Value above quantitation range
M - Not Monitored. Highly Reactive

Initials: _____

93

Advanced Technology Laboratories
1510 E. 33rd Street Signal Hill, CA 90807 Tel: 562 989-4045 Fax: 562 989-4040

Advanced Technology Laboratories

Print Date: *11/10/00*

CLIENT:	Geocon Environmental	**Client Sample ID:**	B15-10
Lab Order:	047817		
Project:	Bradley OH - S8225-06-123	**Collection Date:**	11/1/00
Lab ID:	047817-041A	**Matrix:**	SOIL

Analyses	Result	Limit	Qual	Units	DF	Date Analyzed
LEAD BY ICP			EPA 6010B			
RunID: ICP3_001110A	BatchID: 1987			PrepDate: 11/7/00		Analyst: NP
Lead	310	5.0		mg/Kg	1	11/10/00

Qualifiers:

ND - Not Detected at the Reporting Limit
J - Analyte detected below quantitation limits
B - Analyte detected in the associated Method Blank
* - Value exceeds Maximum Contaminant Level
S - Spike Recovery outside accepted recovery limits
R - RPD outside accepted recovery limits
E - Value above quantitation range
M - Not Monitored. Highly Reactive

Initials: _____

Advanced Technology Laboratories
1510 E. 33rd Street Signal Hill, CA 90807 Tel: 562 989-4045 Fax: 562 989-4040

Advanced Technology Laboratories

Print Date: *11/10/00*

CLIENT:	Geocon Environmental	**Client Sample ID:**	B15-30
Lab Order:	047817		
Project:	Bradley OH - S8225-06-123	**Collection Date:**	11/1/00
Lab ID:	047817-042A	**Matrix:**	SOIL

Analyses	Result	Limit	Qual	Units	DF	Date Analyzed
LEAD BY ICP			**EPA 6010B**			
RunID: **ICP3_001110A** BatchID: **1987**				PrepDate: **11/7/00**		Analyst: **NP**
Lead	71	5.0		mg/Kg	1	11/10/00

Qualifiers:

ND - Not Detected at the Reporting Limit
J - Analyte detected below quantitation limits
B - Analyte detected in the associated Method Blank
* - Value exceeds Maximum Contaminant Level
S - Spike Recovery outside accepted recovery limits
R - RPD outside accepted recovery limits
E - Value above quantitation range
M - Not Monitored. Highly Reactive

95

Initials: _____

43

Advanced Technology Laboratories

1510 E. 33rd Street Signal Hill, CA 90807 Tel: 562 989-4045 Fax: 562 989-4040

Advanced Technology Laboratories

Print Date: *11/10/00*

CLIENT:	Geocon Environmental	**Client Sample ID:**	B15-60
Lab Order:	047817		
Project:	Bradley OH - S8225-06-123	**Collection Date:**	11/1/00
Lab ID:	047817-043A	**Matrix:**	SOIL

Analyses	Result	Limit	Qual	Units	DF	Date Analyzed
LEAD BY ICP			EPA 6010B			
RunID: ICP3_001110A	BatchID: 1987			PrepDate: 11/7/00		Analyst: NP
Lead	93	5.0		mg/Kg	1	11/10/00

Qualifiers:

ND - Not Detected at the Reporting Limit
J - Analyte detected below quantitation limits
B - Analyte detected in the associated Method Blank
* - Value exceeds Maximum Contaminant Level
S - Spike Recovery outside accepted recovery limits
R - RPD outside accepted recovery limits
E - Value above quantitation range
M - Not Monitored. Highly Reactive

Initials: ____

Advanced Technology Laboratories
1510 E. 33rd Street Signal Hill, CA 90807 Tel: 562 989-4045 Fax: 562 989-4040

Advanced Technology Laboratories

Print Date: *11/10/00*

CLIENT:	Geocon Environmental	**Client Sample ID:**	B16-10
Lab Order:	047817		
Project:	Bradley OH - S8225-06-123	**Collection Date:**	11/1/00
Lab ID:	047817-044A	**Matrix:**	SOIL

Analyses	Result	Limit	Qual	Units	DF	Date Analyzed
LEAD BY ICP			EPA 6010B			
RunID: ICP3_001110A	BatchID: 1987			PrepDate: 11/7/00		Analyst: NP
Lead	31	5.0		mg/Kg	1	11/10/00

Qualifiers:

ND - Not Detected at the Reporting Limit
J - Analyte detected below quantitation limits
B - Analyte detected in the associated Method Blank
* - Value exceeds Maximum Contaminant Level
S - Spike Recovery outside accepted recovery limits
R - RPD outside accepted recovery limits
E - Value above quantitation range
M - Not Monitored. Highly Reactive

Initials: _____

97

Advanced Technology Laboratories *1510 E. 33rd Street Signal Hill, CA 90807 Tel: 562 989-4045 Fax: 562 989-4040*

Advanced Technology Laboratories

Print Date: *11/10/00*

CLIENT:	Geocon Environmental	**Client Sample ID:**	B16-30
Lab Order:	047817		
Project:	Bradley OH - S8225-06-123	**Collection Date:**	11/1/00
Lab ID:	047817-045A	**Matrix:**	SOIL

Analyses	Result	Limit	Qual	Units	DF	Date Analyzed
LEAD BY ICP			EPA 6010B			
RunID: ICP3_001110A BatchID: 1987				PrepDate: 11/7/00		Analyst: NP
Lead	6.2	5.0		mg/Kg	1	11/10/00

96

Qualifiers:

ND - Not Detected at the Reporting Limit
J - Analyte detected below quantitation limits
B - Analyte detected in the associated Method Blank
* - Value exceeds Maximum Contaminant Level
S - Spike Recovery outside accepted recovery limits
R - RPD outside accepted recovery limits
E - Value above quantitation range
M - Not Monitored. Highly Reactive

Initials: _____

Advanced Technology Laboratories

1510 E. 33rd Street Signal Hill, CA 90807 Tel: 562 989-4045 Fax: 562 989-4040

Advanced Technology Laboratories

Print Date: *11/10/00*

CLIENT:	Geocon Environmental	**Client Sample ID:**	B16-60
Lab Order:	047817		
Project:	Bradley OH - S8225-06-123	**Collection Date:**	11/1/00
Lab ID:	047817-046A	**Matrix:**	SOIL

Analyses	Result	Limit	Qual	Units	DF	Date Analyzed
LEAD BY ICP			**EPA 6010B**			
RunID: **ICP3_001110A** BatchID: **1987**				PrepDate: **11/7/00**		Analyst: **NP**
Lead	8.3	5.0		mg/Kg	1	11/10/00

99

Qualifiers:
ND - Not Detected at the Reporting Limit
J - Analyte detected below quantitation limits
B - Analyte detected in the associated Method Blank
* - Value exceeds Maximum Contaminant Level
S - Spike Recovery outside accepted recovery limits
R - RPD outside accepted recovery limits
E - Value above quantitation range
M - Not Monitored. Highly Reactive

Initials: _____

Advanced Technology Laboratories *1510 E. 33rd Street Signal Hill, CA 90807 Tel: 562 989-4045 Fax: 562 989-4040*

Advanced Technology Laboratories

Print Date: *11/10/00*

CLIENT:	Geocon Environmental	**Client Sample ID:**	B17-10
Lab Order:	047817		
Project:	Bradley OH - S8225-06-123	**Collection Date:**	11/1/00
Lab ID:	047817-047A	**Matrix:**	SOIL

Analyses	Result	Limit	Qual	Units	DF	Date Analyzed
LEAD BY ICP			EPA 6010B			
RunID: ICP3_001110A	BatchID: 1987			PrepDate: 11/7/00		Analyst: NP
Lead	120	5.0		mg/Kg	1	11/10/00

Qualifiers:

ND - Not Detected at the Reporting Limit
J - Analyte detected below quantitation limits
B - Analyte detected in the associated Method Blank
* - Value exceeds Maximum Contaminant Level
S - Spike Recovery outside accepted recovery limits
R - RPD outside accepted recovery limits
E - Value above quantitation range
M - Not Monitored: Highly Reactive

Initials: _____

100

Advanced Technology Laboratories
1510 E. 33rd Street Signal Hill, CA 90807 Tel: 562 989-4045 Fax: 562 989-4040

Advanced Technology Laboratories

Print Date: *11/10/00*

CLIENT:	Geocon Environmental	**Client Sample ID:**	B17-30
Lab Order:	047817		
Project:	Bradley OH - S8225-06-123	**Collection Date:**	11/1/00
Lab ID:	047817-048A	**Matrix:**	SOIL

Analyses	Result	Limit	Qual	Units	DF	Date Analyzed
LEAD BY ICP			**EPA 6010B**			
RunID: **ICP3_001110A**	BatchID: **1987**			PrepDate: **11/7/00**		Analyst: **NP**
Lead	46	5.0		mg/Kg	1	11/10/00

Qualifiers:

ND - Not Detected at the Reporting Limit
J - Analyte detected below quantitation limits
B - Analyte detected in the associated Method Blank
* - Value exceeds Maximum Contaminant Level
S - Spike Recovery outside accepted recovery limits
R - RPD outside accepted recovery limits
E - Value above quantitation range
M - Not Monitored. Highly Reactive

Initials: _____

Advanced Technology Laboratories 1510 E. 33rd Street Signal Hill, CA 90807 Tel: 562 989-4045 Fax: 562 989-4040

Advanced Technology Laboratories

Print Date: *11/10/00*

CLIENT:	Geocon Environmental	**Client Sample ID:**	B18-10
Lab Order:	047817		
Project:	Bradley OH - S8225-06-123	**Collection Date:**	11/1/00
Lab ID:	047817-049A	**Matrix:**	SOIL

Analyses	Result	Limit	Qual	Units	DF	Date Analyzed
LEAD BY ICP			EPA 6010B			
RunID: ICP3_001110A	BatchID: 1987			PrepDate: 11/7/00		Analyst: NP
Lead	14	5.0		mg/Kg	1	11/10/00

Qualifiers:

ND - Not Detected at the Reporting Limit
J - Analyte detected below quantitation limits
B - Analyte detected in the associated Method Blank
* - Value exceeds Maximum Contaminant Level
S - Spike Recovery outside accepted recovery limits
R - RPD outside accepted recovery limits
E - Value above quantitation range
M - Not Monitored. Highly Reactive

Initials: _____

102

Advanced Technology Laboratories
1510 E. 33rd Street Signal Hill, CA 90807 Tel: 562 989-4045 Fax: 562 989-4040

Advanced Technology Laboratories

Print Date: *11/10/00*

CLIENT:	Geocon Environmental	**Client Sample ID:**	B18-30
Lab Order:	047817		
Project:	Bradley OH - S8225-06-123	**Collection Date:**	11/1/00
Lab ID:	047817-050A	**Matrix:**	SOIL

Analyses	Result	Limit	Qual	Units	DF	Date Analyzed
LEAD BY ICP			**EPA 6010B**			
RunID: **ICP3_001110A** BatchID: **1987**				PrepDate: **11/7/00**		Analyst: **NP**
Lead	8.9	5.0		mg/Kg	1	11/10/00

Qualifiers:

ND - Not Detected at the Reporting Limit
J - Analyte detected below quantitation limits
B - Analyte detected in the associated Method Blank
* - Value exceeds Maximum Contaminant Level
S - Spike Recovery outside accepted recovery limits
R - RPD outside accepted recovery limits
E - Value above quantitation range
M - Not Monitored. Highly Reactive

Initials: _____

Advanced Technology Laboratories
1510 E. 33rd Street Signal Hill, CA 90807 Tel: 562 989-4045 Fax: 562 989-4040

Advanced Technology Laboratories

Print Date: *11/10/00*

CLIENT:	Geocon Environmental	**Client Sample ID:**	B18-60
Lab Order:	047817		
Project:	Bradley OH - S8225-06-123	**Collection Date:**	11/1/00
Lab ID:	047817-051A	**Matrix:**	SOIL

Analyses	Result	Limit	Qual	Units	DF	Date Analyzed
LEAD BY ICP			EPA 6010B			
RunID: ICP3_001110A BatchID: 1988				PrepDate: 11/7/00		Analyst: NP
Lead	77	5.0		mg/Kg	1	11/10/00

Qualifiers:

ND - Not Detected at the Reporting Limit
J - Analyte detected below quantitation limits
B - Analyte detected in the associated Method Blank
* - Value exceeds Maximum Contaminant Level
S - Spike Recovery outside accepted recovery limits
R - RPD outside accepted recovery limits
E - Value above quantitation range
M - Not Monitored, Highly Reactive

Initials: _____

Advanced Technology Laboratories
1510 E. 33rd Street Signal Hill, CA 90807 Tel: 562 989-4045 Fax: 562 989-4040

Advanced Technology Laboratories

Print Date: *11/10/00*

CLIENT:	Geocon Environmental	**Client Sample ID:**	B19-10
Lab Order:	047817		
Project:	Bradley OH - S8225-06-123	**Collection Date:**	11/1/00
Lab ID:	047817-052A	**Matrix:**	SOIL

Analyses	Result	Limit	Qual	Units	DF	Date Analyzed
LEAD BY ICP			EPA 6010B			
RunID: ICP3_001110A	BatchID: 1988			PrepDate: 11/7/00		Analyst: NP
Lead	37	5.0		mg/Kg	1	11/10/00

Qualifiers:

ND - Not Detected at the Reporting Limit
J - Analyte detected below quantitation limits
B - Analyte detected in the associated Method Blank
* - Value exceeds Maximum Contaminant Level
S - Spike Recovery outside accepted recovery limits
R - RPD outside accepted recovery limits
E - Value above quantitation range
M - Not Monitored. Highly Reactive

Initials: _____

Advanced Technology Laboratories
1510 E. 33rd Street Signal Hill, CA 90807 Tel: 562 989-4045 Fax: 562 989-4040

Advanced Technology Laboratories

Print Date: *11/10/00*

CLIENT:	Geocon Environmental	**Client Sample ID:**	B19-30
Lab Order:	047817		
Project:	Bradley OH - S8225-06-123	**Collection Date:**	11/1/00
Lab ID:	047817-053A	**Matrix:**	SOIL

Analyses	Result	Limit	Qual	Units	DF	Date Analyzed
LEAD BY ICP			EPA 6010B			
RunID: ICP3_001110A BatchID: 1988				PrepDate: 11/7/00		Analyst: NP
Lead	6.3	5.0		mg/Kg	1	11/10/00

Qualifiers:

ND - Not Detected at the Reporting Limit
J - Analyte detected below quantitation limits
B - Analyte detected in the associated Method Blank
* - Value exceeds Maximum Contaminant Level
S - Spike Recovery outside accepted recovery limits
R - RPD outside accepted recovery limits
E - Value above quantitation range
M - Not Monitored. Highly Reactive

106

Initials: _____

Advanced Technology Laboratories
1510 E. 33rd Street Signal Hill, CA 90807 Tel: 562 989-4045 Fax: 562 989-4040

Advanced Technology Laboratories

Print Date: *11/10/00*

CLIENT:	Geocon Environmental	**Client Sample ID:**	B19-60
Lab Order:	047817		
Project:	Bradley OH - S8225-06-123	**Collection Date:**	11/1/00
Lab ID:	047817-054A	**Matrix:**	SOIL

Analyses	Result	Limit	Qual	Units	DF	Date Analyzed
LEAD BY ICP			**EPA 6010B**			
RunID: **ICP3_001110A**	BatchID: **1988**			PrepDate: **11/7/00**		Analyst: **NP**
Lead	ND	5.0		mg/Kg	1	11/10/00

Qualifiers:

ND - Not Detected at the Reporting Limit
J - Analyte detected below quantitation limits
B - Analyte detected in the associated Method Blank
* - Value exceeds Maximum Contaminant Level
S - Spike Recovery outside accepted recovery limits
R - RPD outside accepted recovery limits
E - Value above quantitation range
M - Not Monitored. Highly Reactive

Initials: 107

Advanced Technology Laboratories *1510 E. 33rd Street Signal Hill, CA 90807 Tel: 562 989-4045 Fax: 562 989-4040*

Advanced Technology Laboratories

Print Date: *11/10/00*

CLIENT:	Geocon Environmental	**Client Sample ID:**	B20-10
Lab Order:	047817		
Project:	Bradley OH - S8225-06-123	**Collection Date:**	11/1/00
Lab ID:	047817-055A	**Matrix:**	SOIL

Analyses	Result	Limit	Qual	Units	DF	Date Analyzed
LEAD BY ICP			EPA 6010B			
RunID: ICP3_001110A	BatchID: 1988			PrepDate: 11/7/00		Analyst: NP
Lead	80	5.0		mg/Kg	1	11/10/00

Qualifiers:

ND - Not Detected at the Reporting Limit
J - Analyte detected below quantitation limits
B - Analyte detected in the associated Method Blank
* - Value exceeds Maximum Contaminant Level
S - Spike Recovery outside accepted recovery limits
R - RPD outside accepted recovery limits
E - Value above quantitation range
M - Not Monitored. Highly Reactive

Initials: _____

108

Advanced Technology Laboratories

1510 E. 33rd Street Signal Hill, CA 90807 Tel: 562 989-4045 Fax: 562 989-4040

Advanced Technology Laboratories

Print Date: *11/10/00*

CLIENT:	Geocon Environmental	**Client Sample ID:**	B20-30
Lab Order:	047817		
Project:	Bradley OH - S8225-06-123	**Collection Date:**	11/1/00
Lab ID:	047817-056A	**Matrix:**	SOIL

Analyses	Result	Limit	Qual	Units	DF	Date Analyzed
LEAD BY ICP			**EPA 6010B**			
RunID: **ICP3_001110A** BatchID: **1988**				PrepDate: **11/7/00**		Analyst: **NP**
Lead	170	5.0		mg/Kg	1	11/10/00

Qualifiers:

ND - Not Detected at the Reporting Limit
J - Analyte detected below quantitation limits
B - Analyte detected in the associated Method Blank
* - Value exceeds Maximum Contaminant Level
S - Spike Recovery outside accepted recovery limits
R - RPD outside accepted recovery limits
E - Value above quantitation range
M - Not Monitored. Highly Reactive

Initials: 109

Advanced Technology Laboratories *1510 E. 33rd Street Signal Hill, CA 90807 Tel: 562 989-4045 Fax: 562 989-4040*

Advanced Technology Laboratories

Print Date: *11/10/00*

CLIENT:	Geocon Environmental	**Client Sample ID:**	B20-60
Lab Order:	047817		
Project:	Bradley OH - S8225-06-123	**Collection Date:**	11/1/00
Lab ID:	047817-057A	**Matrix:**	SOIL

Analyses	Result	Limit	Qual	Units	DF	Date Analyzed
LEAD BY ICP			EPA 6010B			
RunID: ICP3_001110A BatchID: 1988				PrepDate: 11/7/00		Analyst: NP
Lead	32	5.0		mg/Kg	1	11/10/00

Qualifiers:

ND - Not Detected at the Reporting Limit
J - Analyte detected below quantitation limits
B - Analyte detected in the associated Method Blank
* - Value exceeds Maximum Contaminant Level
S - Spike Recovery outside accepted recovery limits
R - RPD outside accepted recovery limits
E - Value above quantitation range
M - Not Monitored, Highly Reactive

Initials: _____

Advanced Technology Laboratories 1510 E. 33rd Street Signal Hill, CA 90807 Tel: 562 989-4045 Fax: 562 989-4040

Advanced Technology Laboratories

Print Date: *11/10/00*

CLIENT:	Geocon Environmental	**Client Sample ID:**	B21-10
Lab Order:	047817		
Project:	Bradley OH - S8225-06-123	**Collection Date:**	11/1/00
Lab ID:	047817-058A	**Matrix:**	SOIL

Analyses	Result	Limit	Qual	Units	DF	Date Analyzed
LEAD BY ICP			**EPA 6010B**			
RunID: **ICP3_001110A** BatchID: **1988**				PrepDate: **11/7/00**		Analyst: **NP**
Lead	54	5.0		mg/Kg	1	11/10/00

Qualifiers:

ND - Not Detected at the Reporting Limit
J - Analyte detected below quantitation limits
B - Analyte detected in the associated Method Blank
* - Value exceeds Maximum Contaminant Level
S - Spike Recovery outside accepted recovery limits
R - RPD outside accepted recovery limits
E - Value above quantitation range
M - Not Monitored. Highly Reactive

Initials: 111

Advanced Technology Laboratories *1510 E. 33rd Street Signal Hill, CA 90807 Tel: 562 989-4045 Fax: 562 989-4040*

Advanced Technology Laboratories

Print Date: *11/10/00*

CLIENT:	Geocon Environmental	**Client Sample ID:**	B21-30
Lab Order:	047817		
Project:	Bradley OH - S8225-06-123	**Collection Date:**	11/1/00
Lab ID:	047817-059A	**Matrix:**	SOIL

Analyses	Result	Limit	Qual	Units	DF	Date Analyzed
LEAD BY ICP			EPA 6010B			
RunID: ICP3_001110A BatchID: 1988				PrepDate: 11/7/00		Analyst: NP
Lead	190	5.0		mg/Kg	1	11/10/00

Qualifiers:

ND - Not Detected at the Reporting Limit
J - Analyte detected below quantitation limits
B - Analyte detected in the associated Method Blank
* - Value exceeds Maximum Contaminant Level
S - Spike Recovery outside accepted recovery limits
R - RPD outside accepted recovery limits
E - Value above quantitation range
M - Not Monitored, Highly Reactive

112

Initials: _____

Advanced Technology Laboratories
1510 E. 33rd Street Signal Hill, CA 90807 Tel: 562 989-4045 Fax: 562 989-4040

Advanced Technology Laboratories

Print Date: *11/10/00*

CLIENT:	Geocon Environmental	**Client Sample ID:**	B21-60
Lab Order:	047817		
Project:	Bradley OH - S8225-06-123	**Collection Date:**	11/1/00
Lab ID:	047817-060A	**Matrix:**	SOIL

Analyses	Result	Limit	Qual	Units	DF	Date Analyzed
LEAD BY ICP			EPA 6010B			
RunID: ICP3_001110A	BatchID: 1988			PrepDate: 11/7/00		Analyst: NP
Lead	49	5.0		mg/Kg	1	11/10/00

Qualifiers:

ND - Not Detected at the Reporting Limit
J - Analyte detected below quantitation limits
B - Analyte detected in the associated Method Blank
* - Value exceeds Maximum Contaminant Level
S - Spike Recovery outside accepted recovery limits
R - RPD outside accepted recovery limits
E - Value above quantitation range
M - Not Monitored. Highly Reactive

113

Initials: _____

Advanced Technology Laboratories *1510 E. 33rd Street Signal Hill, CA 90807 Tel: 562 989-4045 Fax: 562 989-4040*

Advanced Technology Laboratories

Print Date: *11/10/00*

CLIENT:	Geocon Environmental	**Client Sample ID:**	B22-10
Lab Order:	047817		
Project:	Bradley OH - S8225-06-123	**Collection Date:**	11/1/00
Lab ID:	047817-061A	**Matrix:**	SOIL

Analyses	Result	Limit	Qual	Units	DF	Date Analyzed
LEAD BY ICP			EPA 6010B			
RunID: ICP3_001110A BatchID: 1989				PrepDate: 11/7/00		Analyst: NP
Lead	11	5.0		mg/Kg	1	11/10/00

Qualifiers:

ND - Not Detected at the Reporting Limit
J - Analyte detected below quantitation limits
B - Analyte detected in the associated Method Blank
* - Value exceeds Maximum Contaminant Level
S - Spike Recovery outside accepted recovery limits
R - RPD outside accepted recovery limits
E - Value above quantitation range
M - Not Monitored. Highly Reactive

114

Initials: _____

Advanced Technology Laboratories
1510 E. 33rd Street Signal Hill, CA 90807 Tel: 562 989-4045 Fax: 562 989-4040

Advanced Technology Laboratories

Print Date: *11/10/00*

CLIENT:	Geocon Environmental	**Client Sample ID:**	B22-30
Lab Order:	047817		
Project:	Bradley OH - S8225-06-123	**Collection Date:**	11/1/00
Lab ID:	047817-062A	**Matrix:**	SOIL

Analyses	Result	Limit	Qual	Units	DF	Date Analyzed
LEAD BY ICP			EPA 6010B			
RunID: ICP3_001110A	BatchID: 1989			PrepDate: 11/7/00		Analyst: NP
Lead	13	5.0		mg/Kg	1	11/10/00

Qualifiers:

ND - Not Detected at the Reporting Limit
J - Analyte detected below quantitation limits
B - Analyte detected in the associated Method Blank
* - Value exceeds Maximum Contaminant Level
S - Spike Recovery outside accepted recovery limits
R - RPD outside accepted recovery limits
E - Value above quantitation range
M - Not Monitored. Highly Reactive

Initials: NS

Advanced Technology Laboratories
1510 E. 33rd Street Signal Hill, CA 90807 Tel: 562 989-4045 Fax: 562 989-4040

Advanced Technology Laboratories

Print Date: *11/10/00*

CLIENT:	Geocon Environmental	**Client Sample ID:**	B22-60
Lab Order:	047817		
Project:	Bradley OH - S8225-06-123	**Collection Date:**	11/1/00
Lab ID:	047817-063A	**Matrix:**	SOIL

Analyses	Result	Limit	Qual	Units	DF	Date Analyzed
LEAD BY ICP			EPA 6010B			
RunID: ICP3_001110A	BatchID: 1989			PrepDate: 11/7/00		Analyst: NP
Lead	6.1	5.0		mg/Kg	1	11/10/00

Qualifiers:
ND - Not Detected at the Reporting Limit
J - Analyte detected below quantitation limits
B - Analyte detected in the associated Method Blank
* - Value exceeds Maximum Contaminant Level
S - Spike Recovery outside accepted recovery limits
R - RPD outside accepted recovery limits
E - Value above quantitation range
M - Not Monitored, Highly Reactive

116

Initials: _____

Advanced Technology Laboratories 1510 E. 33rd Street Signal Hill, CA 90807 Tel: 562 989-4045 Fax: 562 989-4040

Advanced Technology Laboratories

Print Date: *11/10/00*

CLIENT:	Geocon Environmental	**Client Sample ID:**	B23-10
Lab Order:	047817		
Project:	Bradley OH - S8225-06-123	**Collection Date:**	11/1/00
Lab ID:	047817-064A	**Matrix:**	SOIL

Analyses	Result	Limit	Qual	Units	DF	Date Analyzed
LEAD BY ICP			EPA 6010B			
RunID: ICP3_001110A	BatchID: 1989			PrepDate: 11/7/00		Analyst: NP
Lead	59	5.0		mg/Kg	1	11/10/00

Qualifiers:

ND - Not Detected at the Reporting Limit
J - Analyte detected below quantitation limits
B - Analyte detected in the associated Method Blank
* - Value exceeds Maximum Contaminant Level
S - Spike Recovery outside accepted recovery limits
R - RPD outside accepted recovery limits
E - Value above quantitation range
M - Not Monitored. Highly Reactive

Initials: _____

117

Advanced Technology Laboratories 1510 E. 33rd Street Signal Hill, CA 90807 Tel: 562 989-4045 Fax: 562 989-4040

Advanced Technology Laboratories

Print Date: *11/10/00*

CLIENT:	Geocon Environmental	**Client Sample ID:**	B23-30
Lab Order:	047817		
Project:	Bradley OH - S8225-06-123	**Collection Date:**	11/1/00
Lab ID:	047817-065A	**Matrix:**	SOIL

Analyses	Result	Limit	Qual	Units	DF	Date Analyzed
LEAD BY ICP			EPA 6010B			
RunID: ICP3_001110A	BatchID: 1989			PrepDate: 11/7/00		Analyst: NP
Lead	5.4	5.0		mg/Kg	1	11/10/00

Qualifiers:

ND - Not Detected at the Reporting Limit
J - Analyte detected below quantitation limits
B - Analyte detected in the associated Method Blank
* - Value exceeds Maximum Contaminant Level
S - Spike Recovery outside accepted recovery limits
R - RPD outside accepted recovery limits
E - Value above quantitation range
M - Not Monitored. Highly Reactive

118

Initials: _____

Advanced Technology Laboratories *1510 E. 33rd Street Signal Hill, CA 90807 Tel: 562 989-4045 Fax: 562 989-4040*

Advanced Technology Laboratories

Print Date: *11/10/00*

CLIENT:	Geocon Environmental	**Client Sample ID:**	B23-60
Lab Order:	047817		
Project:	Bradley OH - S8225-06-123	**Collection Date:**	11/1/00
Lab ID:	047817-066A	**Matrix:**	SOIL

Analyses	Result	Limit	Qual	Units	DF	Date Analyzed
LEAD BY ICP			EPA 6010B			
RunID: ICP3_001110A	BatchID: 1989			PrepDate: 11/7/00		Analyst: NP
Lead	5.2	5.0		mg/Kg	1	11/10/00

Qualifiers:

ND - Not Detected at the Reporting Limit
J - Analyte detected below quantitation limits
B - Analyte detected in the associated Method Blank
* - Value exceeds Maximum Contaminant Level
S - Spike Recovery outside accepted recovery limits
R - RPD outside accepted recovery limits
E - Value above quantitation range
M - Not Monitored. Highly Reactive

119

Initials: _____

Advanced Technology Laboratories
1510 E. 33rd Street Signal Hill, CA 90807 Tel: 562 989-4045 Fax: 562 989-4040

Advanced Technology Laboratories

Print Date: *11/10/00*

CLIENT:	Geocon Environmental	**Client Sample ID:**	B24-10
Lab Order:	047817		
Project:	Bradley OH - S8225-06-123	**Collection Date:**	11/1/00
Lab ID:	047817-067A	**Matrix:**	SOIL

Analyses	Result	Limit	Qual	Units	DF	Date Analyzed
LEAD BY ICP			EPA 6010B			
RunID: ICP3_001110A	BatchID: 1989			PrepDate: 11/7/00		Analyst: NP
Lead	12	5.0		mg/Kg	1	11/10/00

Qualifiers:

ND - Not Detected at the Reporting Limit
J - Analyte detected below quantitation limits
B - Analyte detected in the associated Method Blank
* - Value exceeds Maximum Contaminant Level
S - Spike Recovery outside accepted recovery limits
R - RPD outside accepted recovery limits
E - Value above quantitation range
M - Not Monitored, Highly Reactive

Initials: ____

Advanced Technology Laboratories *1510 E. 33rd Street Signal Hill, CA 90807 Tel: 562 989-4045 Fax: 562 989-4040*

Advanced Technology Laboratories

Print Date: *11/10/00*

CLIENT:	Geocon Environmental	**Client Sample ID:**	B24-30
Lab Order:	047817		
Project:	Bradley OH - S8225-06-123	**Collection Date:**	11/1/00
Lab ID:	047817-068A	**Matrix:**	SOIL

Analyses	Result	Limit	Qual	Units	DF	Date Analyzed
LEAD BY ICP			**EPA 6010B**			
RunID: **ICP3_001110A** BatchID: **1989**				PrepDate: **11/7/00**		Analyst: **NP**
Lead	5.3	5.0		mg/Kg	1	11/10/00

Qualifiers:

ND - Not Detected at the Reporting Limit
J - Analyte detected below quantitation limits
B - Analyte detected in the associated Method Blank
* - Value exceeds Maximum Contaminant Level
S - Spike Recovery outside accepted recovery limits
R - RPD outside accepted recovery limits
E - Value above quantitation range
M - Not Monitored. Highly Reactive

Initials: 121

Advanced Technology Laboratories
1510 E. 33rd Street Signal Hill, CA 90807 Tel: 562 989-4045 Fax: 562 989-4040

Advanced Technology Laboratories

Print Date: *11/10/00*

CLIENT:	Geocon Environmental	**Client Sample ID:**	B24-60
Lab Order:	047817		
Project:	Bradley OH - S8225-06-123	**Collection Date:**	11/1/00
Lab ID:	047817-069A	**Matrix:**	SOIL

Analyses	Result	Limit	Qual	Units	DF	Date Analyzed
LEAD BY ICP			EPA 6010B			
RunID: ICP3_001110A	BatchID: 1989			PrepDate: 11/7/00		Analyst: NP
Lead	14	5.0		mg/Kg	1	11/10/00

Qualifiers:

ND - Not Detected at the Reporting Limit
J - Analyte detected below quantitation limits
B - Analyte detected in the associated Method Blank
* - Value exceeds Maximum Contaminant Level
S - Spike Recovery outside accepted recovery limits
R - RPD outside accepted recovery limits
E - Value above quantitation range
M - Not Monitored. Highly Reactive

Initials: _____

Advanced Technology Laboratories 1510 E. 33rd Street Signal Hill, CA 90807 Tel: 562 989-4045 Fax: 562 989-4040

Advanced Technology Laboratories

Print Date: *11/10/00*

CLIENT:	Geocon Environmental	**Client Sample ID:**	B25-10
Lab Order:	047817		
Project:	Bradley OH - S8225-06-123	**Collection Date:**	11/1/00
Lab ID:	047817-070A	**Matrix:**	SOIL

Analyses	Result	Limit	Qual	Units	DF	Date Analyzed
LEAD BY ICP			EPA 6010B			
RunID: ICP3_001110A	BatchID: 1989			PrepDate: 11/7/00		Analyst: NP
Lead	33	5.0		mg/Kg	1	11/10/00

Qualifiers:

ND - Not Detected at the Reporting Limit
J - Analyte detected below quantitation limits
B - Analyte detected in the associated Method Blank
*- Value exceeds Maximum Contaminant Level
S - Spike Recovery outside accepted recovery limits
R - RPD outside accepted recovery limits
E - Value above quantitation range
M - Not Monitored. Highly Reactive

Initials: 123

Advanced Technology Laboratories
1510 E. 33rd Street Signal Hill, CA 90807 Tel: 562 989-4045 Fax: 562 989-4040

Advanced Technology Laboratories

Print Date: *11/10/00*

CLIENT:	Geocon Environmental	**Client Sample ID:**	B25-30
Lab Order:	047817		
Project:	Bradley OH - S8225-06-123	**Collection Date:**	11/1/00
Lab ID:	047817-071A	**Matrix:**	SOIL

Analyses	Result	Limit	Qual	Units	DF	Date Analyzed
LEAD BY ICP			EPA 6010B			
RunID: ICP3_001110A	BatchID: 1990			PrepDate: 11/7/00		Analyst: NP
Lead	30	5.0		mg/Kg	1	11/10/00

Qualifiers:

ND - Not Detected at the Reporting Limit
J - Analyte detected below quantitation limits
B - Analyte detected in the associated Method Blank
* - Value exceeds Maximum Contaminant Level
S - Spike Recovery outside accepted recovery limits
R - RPD outside accepted recovery limits
E - Value above quantitation range
M - Not Monitored. Highly Reactive

Initials: ____

124

Advanced Technology Laboratories *1510 E. 33rd Street Signal Hill, CA 90807 Tel: 562 989-4045 Fax: 562 989-4040*

Advanced Technology Laboratories

Print Date: *11/10/00*

CLIENT:	Geocon Environmental	**Client Sample ID:**	B25-60
Lab Order:	047817		
Project:	Bradley OH - S8225-06-123	**Collection Date:**	11/1/00
Lab ID:	047817-072A	**Matrix:**	SOIL

Analyses	Result	Limit	Qual	Units	DF	Date Analyzed
LEAD BY ICP			**EPA 6010B**			
RunID: **ICP3_001110A** BatchID: **1990**				PrepDate: **11/7/00**		Analyst: **NP**
Lead	10	5.0		mg/Kg	1	11/10/00

Qualifiers:
ND - Not Detected at the Reporting Limit
J - Analyte detected below quantitation limits
B - Analyte detected in the associated Method Blank
* - Value exceeds Maximum Contaminant Level
S - Spike Recovery outside accepted recovery limits
R - RPD outside accepted recovery limits
E - Value above quantitation range
M - Not Monitored. Highly Reactive

Initials: 125

Advanced Technology Laboratories 1510 E. 33rd Street Signal Hill, CA 90807 Tel: 562 989-4045 Fax: 562 989-4040

Advanced Technology Laboratories

Print Date: *11/10/00*

CLIENT:	Geocon Environmental	**Client Sample ID:**	B26-10
Lab Order:	047817		
Project:	Bradley OH - S8225-06-123	**Collection Date:**	11/1/00
Lab ID:	047817-073A	**Matrix:**	SOIL

Analyses	Result	Limit	Qual	Units	DF	Date Analyzed
LEAD BY ICP			EPA 6010B			
RunID: ICP3_001110A	BatchID: 1990			PrepDate: 11/7/00		Analyst: NP
Lead	16	5.0		mg/Kg	1	11/10/00

Qualifiers:

ND - Not Detected at the Reporting Limit
J - Analyte detected below quantitation limits
B - Analyte detected in the associated Method Blank
* - Value exceeds Maximum Contaminant Level
S - Spike Recovery outside accepted recovery limits
R - RPD outside accepted recovery limits
E - Value above quantitation range
M - Not Monitored. Highly Reactive

Initials: NO

Advanced Technology Laboratories *1510 E. 33rd Street Signal Hill, CA 90807 Tel: 562 989-4045 Fax: 562 989-4040*

Advanced Technology Laboratories

Print Date: *11/10/00*

CLIENT:	Geocon Environmental	**Client Sample ID:**	B26-30
Lab Order:	047817		
Project:	Bradley OH - S8225-06-123	**Collection Date:**	11/1/00
Lab ID:	047817-074A	**Matrix:**	SOIL

Analyses	Result	Limit	Qual	Units	DF	Date Analyzed
LEAD BY ICP			EPA 6010B			
RunID: ICP3_001110A BatchID: 1990				PrepDate: 11/7/00		Analyst: NP
Lead	ND	5.0		mg/Kg	1	11/10/00

Qualifiers:

ND - Not Detected at the Reporting Limit
J - Analyte detected below quantitation limits
B - Analyte detected in the associated Method Blank
* - Value exceeds Maximum Contaminant Level
S - Spike Recovery outside accepted recovery limits
R - RPD outside accepted recovery limits
E - Value above quantitation range
M - Not Monitored. Highly Reactive

Initials: 127

Advanced Technology Laboratories 1510 E. 33rd Street Signal Hill, CA 90807 Tel: 562 989-4045 Fax: 562 989-4040

Advanced Technology Laboratories

Print Date: *11/10/00*

CLIENT:	Geocon Environmental	**Client Sample ID:**	B26-60
Lab Order:	047817		
Project:	Bradley OH - S8225-06-123	**Collection Date:**	11/1/00
Lab ID:	047817-075A	**Matrix:**	SOIL

Analyses	Result	Limit	Qual	Units	DF	Date Analyzed
LEAD BY ICP			EPA 6010B			
RunID: ICP3_001110A BatchID: 1990				PrepDate: 11/7/00		Analyst: NP
Lead	ND	5.0		mg/Kg	1	11/10/00

Qualifiers:

ND - Not Detected at the Reporting Limit
J - Analyte detected below quantitation limits
B - Analyte detected in the associated Method Blank
* - Value exceeds Maximum Contaminant Level
S - Spike Recovery outside accepted recovery limits
R - RPD outside accepted recovery limits
E - Value above quantitation range
M - Not Monitored. Highly Reactive

Initials: _____

128

Advanced Technology Laboratories *1510 E. 33rd Street Signal Hill, CA 90807 Tel: 562 989-4045 Fax: 562 989-4040*

Advanced Technology Laboratories

Print Date: *11/10/00*

CLIENT:	Geocon Environmental	**Client Sample ID:**	B27-10
Lab Order:	047817		
Project:	Bradley OH - S8225-06-123	**Collection Date:**	11/1/00
Lab ID:	047817-076A	**Matrix:**	SOIL

Analyses	Result	Limit	Qual	Units	DF	Date Analyzed
LEAD BY ICP			**EPA 6010B**			
RunID: **ICP3_001110A** BatchID: **1990**				PrepDate: **11/7/00**		Analyst: **NP**
Lead	14	5.0		mg/Kg	1	11/10/00

Qualifiers:

ND - Not Detected at the Reporting Limit
J - Analyte detected below quantitation limits
B - Analyte detected in the associated Method Blank
* - Value exceeds Maximum Contaminant Level
S - Spike Recovery outside accepted recovery limits
R - RPD outside accepted recovery limits
E - Value above quantitation range
M - Not Monitored. Highly Reactive

Initials: 129

Advanced Technology Laboratories *1510 E. 33rd Street Signal Hill, CA 90807 Tel: 562 989-4045 Fax: 562 989-4040*

Advanced Technology Laboratories

Print Date: *11/10/00*

CLIENT:	Geocon Environmental	**Client Sample ID:**	B27-30
Lab Order:	047817		
Project:	Bradley OH - S8225-06-123	**Collection Date:**	11/1/00
Lab ID:	047817-077A	**Matrix:**	SOIL

Analyses	Result	Limit	Qual	Units	DF	Date Analyzed
LEAD BY ICP			EPA 6010B			
RunID: ICP3_001110A BatchID: 1990				PrepDate: 11/7/00		Analyst: NP
Lead	15	5.0		mg/Kg	1	11/10/00

Qualifiers:

ND - Not Detected at the Reporting Limit
J - Analyte detected below quantitation limits
B - Analyte detected in the associated Method Blank
* - Value exceeds Maximum Contaminant Level
S - Spike Recovery outside accepted recovery limits
R - RPD outside accepted recovery limits
E - Value above quantitation range
M - Not Monitored. Highly Reactive

130

Initials: ____

Advanced Technology Laboratories
1510 E. 33rd Street · Signal Hill, CA 90807 Tel: 562 989-4045 Fax: 562 989-4040

Advanced Technology Laboratories

Print Date: *11/10/00*

CLIENT:	Geocon Environmental	**Client Sample ID:**	B27-60
Lab Order:	047817		
Project:	Bradley OH - S8225-06-123	**Collection Date:**	11/1/00
Lab ID:	047817-078A	**Matrix:**	SOIL

Analyses	Result	Limit	Qual	Units	DF	Date Analyzed
LEAD BY ICP			**EPA 6010B**			
RunID: **ICP3_001110A** BatchID: **1990**			PrepDate: **11/7/00**			Analyst: **NP**
Lead	12	5.0		mg/Kg	1	11/10/00

Qualifiers:

ND - Not Detected at the Reporting Limit
J - Analyte detected below quantitation limits
B - Analyte detected in the associated Method Blank
* - Value exceeds Maximum Contaminant Level
S - Spike Recovery outside accepted recovery limits
R - RPD outside accepted recovery limits
E - Value above quantitation range
M - Not Monitored. Highly Reactive

131

Initials: _____

Advanced Technology Laboratories 1510 E. 33rd Street Signal Hill, CA 90807 Tel: 562 989-4045 Fax: 562 989-4040

Advanced Technology Laboratories

Print Date: *11/10/00*

CLIENT:	Geocon Environmental	**Client Sample ID:**	B28-10
Lab Order:	047817		
Project:	Bradley OH - S8225-06-123	**Collection Date:**	11/1/00
Lab ID:	047817-079A	**Matrix:**	SOIL

Analyses	Result	Limit	Qual	Units	DF	Date Analyzed
LEAD BY ICP			EPA 6010B			
RunID: ICP3_001110A	BatchID: 1990			PrepDate: 11/7/00		Analyst: NP
Lead	35	5.0		mg/Kg	1	11/10/00

Qualifiers:

ND - Not Detected at the Reporting Limit
J - Analyte detected below quantitation limits
B - Analyte detected in the associated Method Blank
* - Value exceeds Maximum Contaminant Level
S - Spike Recovery outside accepted recovery limits
R - RPD outside accepted recovery limits
E - Value above quantitation range
M - Not Monitored. Highly Reactive

Initials: _____

Advanced Technology Laboratories 1510 E. 33rd Street Signal Hill, CA 90807 Tel: 562 989-4045 Fax: 562 989-4040

Advanced Technology Laboratories

Print Date: *11/10/00*

CLIENT:	Geocon Environmental	**Client Sample ID:**	B28-30
Lab Order:	047817		
Project:	Bradley OH - S8225-06-123	**Collection Date:**	11/1/00
Lab ID:	047817-080A	**Matrix:**	SOIL

Analyses	Result	Limit	Qual	Units	DF	Date Analyzed
LEAD BY ICP			**EPA 6010B**			
RunID: **ICP3_001110A** BatchID: **1990**				PrepDate: **11/7/00**		Analyst: **NP**
Lead	5.7	5.0		mg/Kg	1	11/10/00

Qualifiers:

ND - Not Detected at the Reporting Limit
J - Analyte detected below quantitation limits
B - Analyte detected in the associated Method Blank
* - Value exceeds Maximum Contaminant Level
S - Spike Recovery outside accepted recovery limits
R - RPD outside accepted recovery limits
E - Value above quantitation range
M - Not Monitored. Highly Reactive

B3

Initials: ____

Advanced Technology Laboratories *1510 E. 33rd Street Signal Hill, CA 90807 Tel: 562 989-4045 Fax: 562 989-4040*

Advanced Technology Laboratories

Print Date: *11/10/00*

CLIENT:	Geocon Environmental	**Client Sample ID:**	B28-60
Lab Order:	047817		
Project:	Bradley OH - S8225-06-123	**Collection Date:**	11/1/00
Lab ID:	047817-081A	**Matrix:**	SOIL

Analyses	Result	Limit	Qual	Units	DF	Date Analyzed
LEAD BY ICP			EPA 6010B			
RunID: ICP3_001110A	BatchID: 1991			PrepDate: 11/7/00		Analyst: NP
Lead	5.5	5.0		mg/Kg	1	11/10/00

Qualifiers:

ND - Not Detected at the Reporting Limit
J - Analyte detected below quantitation limits
B - Analyte detected in the associated Method Blank
* - Value exceeds Maximum Contaminant Level
S - Spike Recovery outside accepted recovery limits
R - RPD outside accepted recovery limits
E - Value above quantitation range
M - Not Monitored. Highly Reactive

Initials: _____

134

Advanced Technology Laboratories
1510 E. 33rd Street Signal Hill, CA 90807 Tel: 562 989-4045 Fax: 562 989-4040

Advanced Technology Laboratories

Print Date: *11/10/00*

CLIENT:	Geocon Environmental	**Client Sample ID:**	B29-10
Lab Order:	047817		
Project:	Bradley OH - S8225-06-123	**Collection Date:**	11/1/00
Lab ID:	047817-082A	**Matrix:**	SOIL

Analyses	Result	Limit	Qual	Units	DF	Date Analyzed
LEAD BY ICP			**EPA 6010B**			
RunID: **ICP3_001110A**	BatchID: **1991**			PrepDate: **11/7/00**		Analyst: **NP**
Lead	79	5.0		mg/Kg	1	11/10/00

Qualifiers:

ND - Not Detected at the Reporting Limit
J - Analyte detected below quantitation limits
B - Analyte detected in the associated Method Blank
* - Value exceeds Maximum Contaminant Level
S - Spike Recovery outside accepted recovery limits
R - RPD outside accepted recovery limits
E - Value above quantitation range
M - Not Monitored. Highly Reactive

135

Initials: ____

Advanced Technology Laboratories

1510 E. 33rd Street Signal Hill, CA 90807 Tel: 562 989-4045 Fax: 562 989-4040

Advanced Technology Laboratories

Print Date: *11/10/00*

CLIENT:	Geocon Environmental	**Client Sample ID:**	B29-30
Lab Order:	047817		
Project:	Bradley OH - S8225-06-123	**Collection Date:**	11/1/00
Lab ID:	047817-083A	**Matrix:**	SOIL

Analyses	Result	Limit	Qual	Units	DF	Date Analyzed
LEAD BY ICP			EPA 6010B			
RunID: ICP3_001110A	BatchID: 1991			PrepDate: 11/7/00		Analyst: NP
Lead	6.2	5.0		mg/Kg	1	11/10/00

Qualifiers:

ND - Not Detected at the Reporting Limit
J - Analyte detected below quantitation limits
B - Analyte detected in the associated Method Blank
* - Value exceeds Maximum Contaminant Level
S - Spike Recovery outside accepted recovery limits
R - RPD outside accepted recovery limits
E - Value above quantitation range
M - Not Monitored. Highly Reactive

Initials: _____

Advanced Technology Laboratories *1510 E. 33rd Street Signal Hill, CA 90807 Tel: 562 989-4045 Fax: 562 989-4040*

Advanced Technology Laboratories

Print Date: *11/10/00*

CLIENT:	Geocon Environmental	**Client Sample ID:**	B29-60
Lab Order:	047817		
Project:	Bradley OH - S8225-06-123	**Collection Date:**	11/1/00
Lab ID:	047817-084A	**Matrix:**	SOIL

Analyses	Result	Limit	Qual	Units	DF	Date Analyzed
LEAD BY ICP			**EPA 6010B**			
RunID: **ICP3_001110A** BatchID: **1991**				PrepDate: **11/7/00**		Analyst: **NP**
Lead	11	5.0		mg/Kg	1	11/10/00

Qualifiers:

ND - Not Detected at the Reporting Limit
J - Analyte detected below quantitation limits
B - Analyte detected in the associated Method Blank
* - Value exceeds Maximum Contaminant Level
S - Spike Recovery outside accepted recovery limits
R - RPD outside accepted recovery limits
E - Value above quantitation range
M - Not Monitored. Highly Reactive

Initials: _____

B7

Advanced Technology Laboratories *1510 E. 33rd Street Signal Hill, CA 90807 Tel: 562 989-4045 Fax: 562 989-4040*

Advanced Technology Laboratories

Print Date: *11/10/00*

CLIENT:	Geocon Environmental	**Client Sample ID:**	B30-10
Lab Order:	047817		
Project:	Bradley OH - S8225-06-123	**Collection Date:**	11/1/00
Lab ID:	047817-085A	**Matrix:**	SOIL

Analyses	Result	Limit	Qual	Units	DF	Date Analyzed
LEAD BY ICP			EPA 6010B			
RunID: ICP3_001110A	BatchID: 1991			PrepDate: 11/7/00		Analyst: NP
Lead	76	5.0		mg/Kg	1	11/10/00

Qualifiers:
- ND - Not Detected at the Reporting Limit
- J - Analyte detected below quantitation limits
- B - Analyte detected in the associated Method Blank
- * - Value exceeds Maximum Contaminant Level
- S - Spike Recovery outside accepted recovery limits
- R - RPD outside accepted recovery limits
- E - Value above quantitation range
- M - Not Monitored, Highly Reactive

Initials: _____

136

Advanced Technology Laboratories *1510 E. 33rd Street Signal Hill, CA 90807 Tel: 562 989-4045 Fax: 562 989-4040*

Advanced Technology Laboratories

Print Date: *11/10/00*

CLIENT:	Geocon Environmental	**Client Sample ID:**	B30-30
Lab Order:	047817		
Project:	Bradley OH - S8225-06-123	**Collection Date:**	11/1/00
Lab ID:	047817-086A	**Matrix:**	SOIL

Analyses	Result	Limit	Qual	Units	DF	Date Analyzed
LEAD BY ICP			**EPA 6010B**			
RunID: **ICP3_001110A**	BatchID: **1991**			PrepDate: **11/7/00**		Analyst: **NP**
Lead	5.0	5.0		mg/Kg	1	11/10/00

Qualifiers:

ND - Not Detected at the Reporting Limit
J - Analyte detected below quantitation limits
B - Analyte detected in the associated Method Blank
* - Value exceeds Maximum Contaminant Level
S - Spike Recovery outside accepted recovery limits
R - RPD outside accepted recovery limits
E - Value above quantitation range
M - Not Monitored. Highly Reactive

Initials: _____

Advanced Technology Laboratories 1510 E. 33rd Street Signal Hill, CA 90807 Tel: 562 989-4045 Fax: 562 989-4040

Advanced Technology Laboratories

Print Date: *11/10/00*

CLIENT:	Geocon Environmental	**Client Sample ID:**	B30-60
Lab Order:	047817		
Project:	Bradley OH - S8225-06-123	**Collection Date:**	11/1/00
Lab ID:	047817-087A	**Matrix:**	SOIL

Analyses	Result	Limit	Qual	Units	DF	Date Analyzed
LEAD BY ICP			EPA 6010B			
RunID: ICP3_001110A	BatchID: 1991			PrepDate: 11/7/00		Analyst: NP
Lead	5.3	5.0		mg/Kg	1	11/10/00

Qualifiers:
ND - Not Detected at the Reporting Limit
J - Analyte detected below quantitation limits
B - Analyte detected in the associated Method Blank
* - Value exceeds Maximum Contaminant Level
S - Spike Recovery outside accepted recovery limits
R - RPD outside accepted recovery limits
E - Value above quantitation range
M - Not Monitored. Highly Reactive

140

Initials: [illegible]

Advanced Technology Laboratories
1510 E. 33rd Street Signal Hill, CA 90807 Tel: 562 989-4045 Fax: 562 989-4040

Advanced Technology Laboratories

Print Date: *11/10/00*

CLIENT:	Geocon Environmental	**Client Sample ID:**	B31-10
Lab Order:	047817		
Project:	Bradley OH - S8225-06-123	**Collection Date:**	11/1/00
Lab ID:	047817-088A	**Matrix:**	SOIL

Analyses	Result	Limit	Qual	Units	DF	Date Analyzed
LEAD BY ICP			**EPA 6010B**			
RunID: **ICP3_001110A** BatchID: **1991**				PrepDate: **11/7/00**		Analyst: **NP**
Lead	12	5.0		mg/Kg	1	11/10/00

Qualifiers:
ND - Not Detected at the Reporting Limit
J - Analyte detected below quantitation limits
B - Analyte detected in the associated Method Blank
* - Value exceeds Maximum Contaminant Level
S - Spike Recovery outside accepted recovery limits
R - RPD outside accepted recovery limits
E - Value above quantitation range
M - Not Monitored. Highly Reactive

Initials: 89

141

Advanced Technology Laboratories
1510 E. 33rd Street Signal Hill, CA 90807 Tel: 562 989-4045 Fax: 562 989-4040

Advanced Technology Laboratories

Print Date: *11/10/00*

CLIENT:	Geocon Environmental	**Client Sample ID:**	B31-30
Lab Order:	047817		
Project:	Bradley OH - S8225-06-123	**Collection Date:**	11/1/00
Lab ID:	047817-089A	**Matrix:**	SOIL

Analyses	Result	Limit	Qual	Units	DF	Date Analyzed
LEAD BY ICP			EPA 6010B			
RunID: ICP3_001110A BatchID: 1991				PrepDate: 11/7/00		Analyst: NP
Lead	11	5.0		mg/Kg	1	11/10/00

Qualifiers:

ND - Not Detected at the Reporting Limit
J - Analyte detected below quantitation limits
B - Analyte detected in the associated Method Blank
* - Value exceeds Maximum Contaminant Level
S - Spike Recovery outside accepted recovery limits
R - RPD outside accepted recovery limits
E - Value above quantitation range
M - Not Monitored. Highly Reactive

Initials: _____

Advanced Technology Laboratories
1510 E. 33rd Street Signal Hill, CA 90807 Tel: 562 989-4045 Fax: 562 989-4040

Advanced Technology Laboratories

Print Date: *11/10/00*

CLIENT:	Geocon Environmental	**Client Sample ID:**	B32-10
Lab Order:	047817		
Project:	Bradley OH - S8225-06-123	**Collection Date:**	11/1/00
Lab ID:	047817-090A	**Matrix:**	SOIL

Analyses	Result	Limit	Qual	Units	DF	Date Analyzed
LEAD BY ICP			**EPA 6010B**			
RunID: **ICP3_001110A**	BatchID: **1991**			PrepDate: **11/7/00**		Analyst: **NP**
Lead	35	5.0		mg/Kg	1	11/10/00

Qualifiers:

ND - Not Detected at the Reporting Limit
J - Analyte detected below quantitation limits
B - Analyte detected in the associated Method Blank
* - Value exceeds Maximum Contaminant Level
S - Spike Recovery outside accepted recovery limits
R - RPD outside accepted recovery limits
E - Value above quantitation range
M - Not Monitored. Highly Reactive

Initials: _____

143

Advanced Technology Laboratories
1510 E. 33rd Street Signal Hill, CA 90807 Tel: 562 989-4045 Fax: 562 989-4040

Advanced Technology Laboratories

Print Date: *11/10/00*

CLIENT:	Geocon Environmental	**Client Sample ID:**	B33-10
Lab Order:	047817		
Project:	Bradley OH - S8225-06-123	**Collection Date:**	11/1/00
Lab ID:	047817-091A	**Matrix:**	SOIL

Analyses	Result	Limit	Qual	Units	DF	Date Analyzed
LEAD BY ICP			EPA 6010B			
RunID: ICP3_001110A	BatchID: 1992			PrepDate: 11/7/00		Analyst: NP
Lead	70	5.0		mg/Kg	1	11/10/00

Qualifiers:

- ND - Not Detected at the Reporting Limit
- J - Analyte detected below quantitation limits
- B - Analyte detected in the associated Method Blank
- * - Value exceeds Maximum Contaminant Level
- S - Spike Recovery outside accepted recovery limits
- R - RPD outside accepted recovery limits
- E - Value above quantitation range
- M - Not Monitored, Highly Reactive

144

Initials: [illegible]

Advanced Technology Laboratories

1510 E. 33rd Street Signal Hill, CA 90807 Tel: 562 989-4045 Fax: 562 989-4040

Advanced Technology Laboratories

Print Date: *11/10/00*

CLIENT:	Geocon Environmental	**Client Sample ID:**	B33-30
Lab Order:	047817		
Project:	Bradley OH - S8225-06-123	**Collection Date:**	11/1/00
Lab ID:	047817-092A	**Matrix:**	SOIL

Analyses	Result	Limit	Qual	Units	DF	Date Analyzed
LEAD BY ICP			**EPA 6010B**			
RunID: **ICP3_001110A**	BatchID: **1992**			PrepDate: **11/7/00**		Analyst: **NP**
Lead	ND	5.0		mg/Kg	1	11/10/00

Qualifiers:

ND - Not Detected at the Reporting Limit
J - Analyte detected below quantitation limits
B - Analyte detected in the associated Method Blank
* - Value exceeds Maximum Contaminant Level
S - Spike Recovery outside accepted recovery limits
R - RPD outside accepted recovery limits
E - Value above quantitation range
M - Not Monitored. Highly Reactive

145

Initials: _____

Advanced Technology Laboratories

1510 E. 33rd Street Signal Hill, CA 90807 Tel: 562 989-4045 Fax: 562 989-4040

Advanced Technology Laboratories

Print Date: *11/10/00*

CLIENT:	Geocon Environmental	**Client Sample ID:**	B33-60
Lab Order:	047817		
Project:	Bradley OH - S8225-06-123	**Collection Date:**	11/1/00
Lab ID:	047817-093A	**Matrix:**	SOIL

Analyses	Result	Limit	Qual	Units	DF	Date Analyzed
LEAD BY ICP			EPA 6010B			
RunID: ICP3_001110A	BatchID: 1992			PrepDate: 11/7/00		Analyst: NP
Lead	ND	5.0		mg/Kg	1	11/10/00

Qualifiers:
ND - Not Detected at the Reporting Limit
J - Analyte detected below quantitation limits
B - Analyte detected in the associated Method Blank
* - Value exceeds Maximum Contaminant Level
S - Spike Recovery outside accepted recovery limits
R - RPD outside accepted recovery limits
E - Value above quantitation range
M - Not Monitored. Highly Reactive

Initials: [illegible]

146

94

Advanced Technology Laboratories *1510 E. 33rd Street Signal Hill, CA 90807 Tel: 562 989-4045 Fax: 562 989-4040*

Advanced Technology Laboratories

Print Date: *11/10/00*

CLIENT:	Geocon Environmental	**Client Sample ID:**	B34-10
Lab Order:	047817		
Project:	Bradley OH - S8225-06-123	**Collection Date:**	11/1/00
Lab ID:	047817-094A	**Matrix:**	SOIL

Analyses	Result	Limit	Qual	Units	DF	Date Analyzed
LEAD BY ICP			**EPA 6010B**			
RunID: **ICP3_001110A** BatchID: **1992**				PrepDate: **11/7/00**		Analyst: **NP**
Lead	39	5.0		mg/Kg	1	11/10/00

Qualifiers:

ND - Not Detected at the Reporting Limit
J - Analyte detected below quantitation limits
B - Analyte detected in the associated Method Blank
* - Value exceeds Maximum Contaminant Level
S - Spike Recovery outside accepted recovery limits
R - RPD outside accepted recovery limits
E - Value above quantitation range
M - Not Monitored. Highly Reactive

Initials: _____

147

Advanced Technology Laboratories
1510 E. 33rd Street Signal Hill, CA 90807 Tel: 562 989-4045 Fax: 562 989-4040

Advanced Technology Laboratories

Print Date: *11/10/00*

CLIENT:	Geocon Environmental	**Client Sample ID:**	B34-30
Lab Order:	047817		
Project:	Bradley OH - S8225-06-123	**Collection Date:**	11/1/00
Lab ID:	047817-095A	**Matrix:**	SOIL

Analyses	Result	Limit	Qual	Units	DF	Date Analyzed
LEAD BY ICP			EPA 6010B			
RunID: ICP3_001110A	BatchID: 1992			PrepDate: 11/7/00		Analyst: NP
Lead	30	5.0		mg/Kg	1	11/10/00

148

Qualifiers:

ND - Not Detected at the Reporting Limit
J - Analyte detected below quantitation limits
B - Analyte detected in the associated Method Blank
* - Value exceeds Maximum Contaminant Level
S - Spike Recovery outside accepted recovery limits
R - RPD outside accepted recovery limits
E - Value above quantitation range
M - Not Monitored, Highly Reactive

Initials: _____

Advanced Technology Laboratories
1510 E. 33rd Street Signal Hill, CA 90807 Tel: 562 989-4045 Fax: 562 989-4040

Advanced Technology Laboratories

Print Date: *11/10/00*

CLIENT:	Geocon Environmental	**Client Sample ID:**	B35-10
Lab Order:	047817		
Project:	Bradley OH - S8225-06-123	**Collection Date:**	11/1/00
Lab ID:	047817-096A	**Matrix:**	SOIL

Analyses	Result	Limit	Qual	Units	DF	Date Analyzed
LEAD BY ICP			**EPA 6010B**			
RunID: **ICP3_001110A** BatchID: **1992**				PrepDate: **11/7/00**		Analyst: **NP**
Lead	240	5.0		mg/Kg	1	11/10/00

Qualifiers:

ND - Not Detected at the Reporting Limit
J - Analyte detected below quantitation limits
B - Analyte detected in the associated Method Blank
* - Value exceeds Maximum Contaminant Level
S - Spike Recovery outside accepted recovery limits
R - RPD outside accepted recovery limits
E - Value above quantitation range
M - Not Monitored. Highly Reactive

149

Initials: _____

97

Advanced Technology Laboratories *1510 E. 33rd Street Signal Hill, CA 90807 Tel: 562 989-4045 Fax: 562 989-4040*

Advanced Technology Laboratories

Print Date: *11/10/00*

CLIENT:	Geocon Environmental	**Client Sample ID:**	B35-30
Lab Order:	047817		
Project:	Bradley OH - S8225-06-123	**Collection Date:**	11/1/00
Lab ID:	047817-097A	**Matrix:**	SOIL

Analyses	Result	Limit	Qual	Units	DF	Date Analyzed
LEAD BY ICP			EPA 6010B			
RunID: ICP3_001110A	BatchID: 1992			PrepDate: 11/7/00		Analyst: NP
Lead	8.3	5.0		mg/Kg	1	11/10/00

150

Qualifiers:

ND - Not Detected at the Reporting Limit
J - Analyte detected below quantitation limits
B - Analyte detected in the associated Method Blank
* - Value exceeds Maximum Contaminant Level
S - Spike Recovery outside accepted recovery limits
R - RPD outside accepted recovery limits
E - Value above quantitation range
M - Not Monitored. Highly Reactive

Initials: ____

98

Advanced Technology Laboratories
1510 E. 33rd Street Signal Hill, CA 90807 Tel: 562 989-4045 Fax: 562 989-4040

Advanced Technology Laboratories

Print Date: *11/10/00*

CLIENT:	Geocon Environmental	**Client Sample ID:**	B35-60
Lab Order:	047817		
Project:	Bradley OH - S8225-06-123	**Collection Date:**	11/1/00
Lab ID:	047817-098A	**Matrix:**	SOIL

Analyses	Result	Limit	Qual	Units	DF	Date Analyzed
LEAD BY ICP			**EPA 6010B**			
RunID: **ICP3_001110A** BatchID: **1992**				PrepDate: **11/7/00**		Analyst: **NP**
Lead	6.0	5.0		mg/Kg	1	11/10/00

Qualifiers:

ND - Not Detected at the Reporting Limit
J - Analyte detected below quantitation limits
B - Analyte detected in the associated Method Blank
* - Value exceeds Maximum Contaminant Level
S - Spike Recovery outside accepted recovery limits
R - RPD outside accepted recovery limits
E - Value above quantitation range
M - Not Monitored. Highly Reactive

151

Initials: ____

Advanced Technology Laboratories
1510 E. 33rd Street Signal Hill, CA 90807 Tel: 562 989-4045 Fax: 562 989-4040

Advanced Technology Laboratories

Print Date: *11/10/00*

CLIENT:	Geocon Environmental	**Client Sample ID:**	B36-10
Lab Order:	047817		
Project:	Bradley OH - S8225-06-123	**Collection Date:**	11/1/00
Lab ID:	047817-099A	**Matrix:**	SOIL

Analyses	Result	Limit	Qual	Units	DF	Date Analyzed
LEAD BY ICP			EPA 6010B			
RunID: ICP3_001110A	BatchID: 1992			PrepDate: 11/7/00		Analyst: NP
Lead	340	5.0		mg/Kg	1	11/10/00

Qualifiers:

ND - Not Detected at the Reporting Limit
J - Analyte detected below quantitation limits
B - Analyte detected in the associated Method Blank
* - Value exceeds Maximum Contaminant Level
S - Spike Recovery outside accepted recovery limits
R - RPD outside accepted recovery limits
E - Value above quantitation range
M - Not Monitored. Highly Reactive

Initials: _____

100

Advanced Technology Laboratories
1510 E. 33rd Street Signal Hill, CA 90807 Tel: 562 989-4045 Fax: 562 989-4040

Advanced Technology Laboratories

Print Date: *11/10/00*

CLIENT:	Geocon Environmental	**Client Sample ID:**	B36-30
Lab Order:	047817		
Project:	Bradley OH - S8225-06-123	**Collection Date:**	11/1/00
Lab ID:	047817-100A	**Matrix:**	SOIL

Analyses	Result	Limit	Qual	Units	DF	Date Analyzed
LEAD BY ICP			EPA 6010B			
RunID: ICP3_001110A	BatchID: 1992			PrepDate: 11/7/00		Analyst: NP
Lead	330	5.0		mg/Kg	1	11/10/00

Qualifiers:

ND - Not Detected at the Reporting Limit
J - Analyte detected below quantitation limits
B - Analyte detected in the associated Method Blank
* - Value exceeds Maximum Contaminant Level
S - Spike Recovery outside accepted recovery limits
R - RPD outside accepted recovery limits
E - Value above quantitation range
M - Not Monitored. Highly Reactive

153

Initials: _____

101

Advanced Technology Laboratories

1510 E. 33rd Street Signal Hill, CA 90807 Tel: 562 989-4045 Fax: 562 989-4040

RECEIVED
JAN 0 8 2001
BY: GEOCON

ELAP No.: 1838

Geocon Environmental
11375 Sunrise Park Drive, Suite 100
Rancho Cordova, CA 95742

ATTN: Jim Lessman

Client's Project: Bradley OH, #S8225-06-123
Lab No.: 48112-001/019

Enclosed are the results for sample(s) received by Advanced Technology Laboratories and tested for the parameters indicated in the enclosed chain of custody.

Thank you for the opportunity to service the needs of your company. Please feel free to call me at (562) 989 - 4045 if I can be of further assistance to your company.

Sincerely,

Date: 12/29/00

Edgar Caballero
Laboratory Director
EC/dg

Enclosures

This cover letter is an integral part of this analytical report.

This report pertains only to the samples investigated and does not necessarily apply to other apparently identical or similar materials. This report is submitted for the exclusive use of the client to whom it is addressed. Any reproduction of this report or use of this Laboratory's name for advertising or publicity purpose without authorization is prohibited.

154

Advanced Technology Laboratories

Print Date: *11/10/00*

CLIENT:	Geocon Environmental	**Client Sample ID:**	B37-30
Lab Order:	047817		
Project:	Bradley OH - S8225-06-123	**Collection Date:**	11/1/00
Lab ID:	047817-102A	**Matrix:**	SOIL

Analyses	Result	Limit	Qual	Units	DF	Date Analyzed
LEAD BY ICP			EPA 6010B			
RunID: ICP3_001110A	BatchID: 1993			PrepDate: 11/7/00		Analyst: NP
Lead	100	5.0		mg/Kg	1	11/10/00

Qualifiers:

ND - Not Detected at the Reporting Limit
J - Analyte detected below quantitation limits
B - Analyte detected in the associated Method Blank
* - Value exceeds Maximum Contaminant Level
S - Spike Recovery outside accepted recovery limits
R - RPD outside accepted recovery limits
E - Value above quantitation range
M - Not Monitored. Highly Reactive

155

Initials: _____

102

Advanced Technology Laboratories *1510 E. 33rd Street Signal Hill, CA 90807 Tel: 562 989-4045 Fax: 562 989-4040*

Advanced Technology Laboratories

Print Date: *11/10/00*

CLIENT:	Geocon Environmental	**Client Sample ID:**	B38-10
Lab Order:	047817		
Project:	Bradley OH - S8225-06-123	**Collection Date:**	11/1/00
Lab ID:	047817-103A	**Matrix:**	SOIL

Analyses	Result	Limit	Qual	Units	DF	Date Analyzed
LEAD BY ICP			EPA 6010B			
RunID: ICP3_001110A	BatchID: 1993			PrepDate: 11/7/00		Analyst: NP
Lead	120	5.0		mg/Kg	1	11/10/00

156

Qualifiers:
- ND - Not Detected at the Reporting Limit
- J - Analyte detected below quantitation limits
- B - Analyte detected in the associated Method Blank
- * - Value exceeds Maximum Contaminant Level
- S - Spike Recovery outside accepted recovery limits
- R - RPD outside accepted recovery limits
- E - Value above quantitation range
- M - Not Monitored. Highly Reactive

Initials: _____

Advanced Technology Laboratories *1510 E. 33rd Street Signal Hill, CA 90807 Tel: 562 989-4045 Fax: 562 989-4040*

Advanced Technology Laboratories

Print Date: *11/10/00*

CLIENT:	Geocon Environmental	**Client Sample ID:**	B38-30
Lab Order:	047817		
Project:	Bradley OH - S8225-06-123	**Collection Date:**	11/1/00
Lab ID:	047817-104A	**Matrix:**	SOIL

Analyses	Result	Limit	Qual	Units	DF	Date Analyzed
LEAD BY ICP			**EPA 6010B**			
RunID: **ICP3_001110A**	BatchID: **1993**			PrepDate: **11/7/00**		Analyst: **NP**
Lead	5.4	5.0		mg/Kg	1	11/10/00

Qualifiers:

ND - Not Detected at the Reporting Limit
J - Analyte detected below quantitation limits
B - Analyte detected in the associated Method Blank
* - Value exceeds Maximum Contaminant Level
S - Spike Recovery outside accepted recovery limits
R - RPD outside accepted recovery limits
E - Value above quantitation range
M - Not Monitored. Highly Reactive

Initials: 157

Advanced Technology Laboratories *1510 E. 33rd Street Signal Hill, CA 90807 Tel: 562 989-4045 Fax: 562 989-4040*

Advanced Technology Laboratories

Print Date: *11/10/00*

CLIENT:	Geocon Environmental	**Client Sample ID:**	B38-60
Lab Order:	047817		
Project:	Bradley OH - S8225-06-123	**Collection Date:**	11/1/00
Lab ID:	047817-105A	**Matrix:**	SOIL

Analyses	Result	Limit	Qual	Units	DF	Date Analyzed
LEAD BY ICP			EPA 6010B			
RunID: ICP3_001110A	BatchID: 1993			PrepDate: 11/7/00		Analyst: NP
Lead	ND	5.0		mg/Kg	1	11/10/00

Qualifiers:

ND - Not Detected at the Reporting Limit
J - Analyte detected below quantitation limits
B - Analyte detected in the associated Method Blank
* - Value exceeds Maximum Contaminant Level
S - Spike Recovery outside accepted recovery limits
R - RPD outside accepted recovery limits
E - Value above quantitation range
M - Not Monitored. Highly Reactive

158

Initials: _____

Advanced Technology Laboratories *1510 E. 33rd Street Signal Hill, CA 90807 Tel: 562 989-4045 Fax: 562 989-4040*

Advanced Technology Laboratories

Print Date: *11/10/00*

CLIENT:	Geocon Environmental	**Client Sample ID:**	B39-10
Lab Order:	047817		
Project:	Bradley OH - S8225-06-123	**Collection Date:**	11/1/00
Lab ID:	047817-106A	**Matrix:**	SOIL

Analyses	Result	Limit	Qual	Units	DF	Date Analyzed
LEAD BY ICP			**EPA 6010B**			
RunID: **ICP3_001110A** BatchID: **1993**				PrepDate: **11/7/00**		Analyst: **NP**
Lead	9.4	5.0		mg/Kg	1	11/10/00

Qualifiers:

ND - Not Detected at the Reporting Limit
J - Analyte detected below quantitation limits
B - Analyte detected in the associated Method Blank
* - Value exceeds Maximum Contaminant Level
S - Spike Recovery outside accepted recovery limits
R - RPD outside accepted recovery limits
E - Value above quantitation range
M - Not Monitored. Highly Reactive

Initials: _____

159

Advanced Technology Laboratories
1510 E. 33rd Street Signal Hill, CA 90807 Tel: 562 989-4045 Fax: 562 989-4040

Advanced Technology Laboratories

Print Date: *11/10/00*

CLIENT:	Geocon Environmental	**Client Sample ID:**	B39-30
Lab Order:	047817		
Project:	Bradley OH - S8225-06-123	**Collection Date:**	11/1/00
Lab ID:	047817-107A	**Matrix:**	SOIL

Analyses	Result	Limit	Qual	Units	DF	Date Analyzed
LEAD BY ICP			EPA 6010B			
RunID: ICP3_001110A	BatchID: 1993			PrepDate: 11/7/00		Analyst: NP
Lead	7.0	5.0		mg/Kg	1	11/10/00

Qualifiers:

ND - Not Detected at the Reporting Limit
J - Analyte detected below quantitation limits
B - Analyte detected in the associated Method Blank
* - Value exceeds Maximum Contaminant Level
S - Spike Recovery outside accepted recovery limits
R - RPD outside accepted recovery limits
E - Value above quantitation range
M - Not Monitored. Highly Reactive

Initials: _____

160

Advanced Technology Laboratories
1510 E. 33rd Street Signal Hill, CA 90807 Tel: 562 989-4045 Fax: 562 989-4040

Advanced Technology Laboratories

Print Date: *11/10/00*

CLIENT:	Geocon Environmental	**Client Sample ID:**	B39-60
Lab Order:	047817		
Project:	Bradley OH - S8225-06-123	**Collection Date:**	11/1/00
Lab ID:	047817-108A	**Matrix:**	SOIL

Analyses	Result	Limit	Qual	Units	DF	Date Analyzed
LEAD BY ICP			**EPA 6010B**			
RunID: **ICP3_001110A**	BatchID: **1993**			PrepDate: **11/7/00**		Analyst: **NP**
Lead	6.9	5.0		mg/Kg	1	11/10/00

Qualifiers:

ND - Not Detected at the Reporting Limit
J - Analyte detected below quantitation limits
B - Analyte detected in the associated Method Blank
* - Value exceeds Maximum Contaminant Level
S - Spike Recovery outside accepted recovery limits
R - RPD outside accepted recovery limits
E - Value above quantitation range
M - Not Monitored. Highly Reactive

Initials: ____

108

161

Advanced Technology Laboratories *1510 E. 33rd Street Signal Hill, CA 90807 Tel: 562 989-4045 Fax: 562 989-4040*

Advanced Technology Laboratories

Print Date: *11/10/00*

CLIENT:	Geocon Environmental	**Client Sample ID:**	B40-10
Lab Order:	047817		
Project:	Bradley OH - S8225-06-123	**Collection Date:**	11/1/00
Lab ID:	047817-109A	**Matrix:**	SOIL

Analyses	Result	Limit	Qual	Units	DF	Date Analyzed
LEAD BY ICP			EPA 6010B			
RunID: ICP3_001110A	BatchID: 1993			PrepDate: 11/7/00		Analyst: NP
Lead	ND	5.0		mg/Kg	1	11/10/00

Qualifiers:

ND - Not Detected at the Reporting Limit
J - Analyte detected below quantitation limits
B - Analyte detected in the associated Method Blank
* - Value exceeds Maximum Contaminant Level
S - Spike Recovery outside accepted recovery limits
R - RPD outside accepted recovery limits
E - Value above quantitation range
M - Not Monitored. Highly Reactive

Initials: ____

162

Advanced Technology Laboratories
1510 E. 33rd Street Signal Hill, CA 90807 Tel: 562 989-4045 Fax: 562 989-4040

Advanced Technology Laboratories

Print Date: *11/10/00*

CLIENT:	Geocon Environmental	**Client Sample ID:**	B40-30
Lab Order:	047817		
Project:	Bradley OH - S8225-06-123	**Collection Date:**	11/1/00
Lab ID:	047817-110A	**Matrix:**	SOIL

Analyses	Result	Limit	Qual	Units	DF	Date Analyzed
LEAD BY ICP			**EPA 6010B**			
RunID: **ICP3_001110A** BatchID: **1993**				PrepDate: **11/7/00**		Analyst: **NP**
Lead	ND	5.0		mg/Kg	1	11/10/00

Qualifiers:

ND - Not Detected at the Reporting Limit
J - Analyte detected below quantitation limits
B - Analyte detected in the associated Method Blank
* - Value exceeds Maximum Contaminant Level
S - Spike Recovery outside accepted recovery limits
R - RPD outside accepted recovery limits
E - Value above quantitation range
M - Not Monitored. Highly Reactive

Initials: _____

Advanced Technology Laboratories
1510 E. 33rd Street Signal Hill, CA 90807 Tel: 562 989-4045 Fax: 562 989-4040

Advanced Technology Laboratories

Print Date: *11/10/00*

CLIENT:	Geocon Environmental	**Client Sample ID:**	B40-60
Lab Order:	047817		
Project:	Bradley OH - S8225-06-123	**Collection Date:**	11/1/00
Lab ID:	047817-111A	**Matrix:**	SOIL

Analyses	Result	Limit	Qual	Units	DF	Date Analyzed
LEAD BY ICP			EPA 6010B			
RunID: ICP3_001110A	BatchID: 1993			PrepDate: 11/7/00		Analyst: NP
Lead	ND	5.0		mg/Kg	1	11/10/00

Qualifiers:
ND - Not Detected at the Reporting Limit
J - Analyte detected below quantitation limits
B - Analyte detected in the associated Method Blank
* - Value exceeds Maximum Contaminant Level
S - Spike Recovery outside accepted recovery limits
R - RPD outside accepted recovery limits
E - Value above quantitation range
M - Not Monitored, Highly Reactive

Initials: [illegible]

164

111

Advanced Technology Laboratories *1510 E. 33rd Street Signal Hill, CA 90807 Tel: 562 989-4045 Fax: 562 989-4040*

Advanced Technology Laboratories
1510 E. 33rd Street Signal Hill, CA 90807 Tel: 562 989-4045 Fax: 562 989-4040

165

Advanced Technology Laboratories

Date: *10-Nov-00*

CLIENT: Geocon Environmental
Work Order: 047817
Project: Bradley OH - S8225-06-123

QC SUMMARY REPORT
Method Blank

Sample ID **MB-1983** Batch ID: **1983** Test Name **LEAD BY ICP** Units **mg/Kg** Analysis Date: **11/9/00** Prep Date: **11/7/00**
MBLK SeqNo: **70603**

Analyte	Result	PQL	SPK value	SPK Ref Val	%REC	LowLimit	HighLimit	RPD Ref Val	%RPD	RPDLimit	Qual
Lead	0.7013	5.0									J

Sample ID **MB-1984** Batch ID: **1984** Test Name **LEAD BY ICP** Units **mg/Kg** Analysis Date: **11/9/00** Prep Date: **11/7/00**
MBLK SeqNo: **70604**

Analyte	Result	PQL	SPK value	SPK Ref Val	%REC	LowLimit	HighLimit	RPD Ref Val	%RPD	RPDLimit	Qual
Lead	0.2088	5.0									J

Sample ID **MB-1985** Batch ID: **1985** Test Name **LEAD BY ICP** Units **mg/Kg** Analysis Date: **11/9/00** Prep Date: **11/7/00**
MBLK SeqNo: **70605**

Analyte	Result	PQL	SPK value	SPK Ref Val	%REC	LowLimit	HighLimit	RPD Ref Val	%RPD	RPDLimit	Qual
Lead	0.02221	5.0									J

Sample ID **MB-1986** Batch ID: **1986** Test Name **LEAD BY ICP** Units **mg/Kg** Analysis Date: **11/10/00** Prep Date: **11/7/00**
MBLK SeqNo: **70857**

Analyte	Result	PQL	SPK value	SPK Ref Val	%REC	LowLimit	HighLimit	RPD Ref Val	%RPD	RPDLimit	Qual
Lead	0.1385	5.0									J

Sample ID **MB-1987** Batch ID: **1987** Test Name **LEAD BY ICP** Units **mg/Kg** Analysis Date: **11/10/00** Prep Date: **11/7/00**
MBLK SeqNo: **70858**

Analyte	Result	PQL	SPK value	SPK Ref Val	%REC	LowLimit	HighLimit	RPD Ref Val	%RPD	RPDLimit	Qual
Lead	0.4425	5.0									J

Qualifiers:
ND - Not Detected at the Reporting Limit
J - Analyte detected below quantitation limits
B - Analyte detected in the associated Method Blank
S - Spike Recovery outside accepted recovery limits
R - RPD outside accepted recovery limits
M - Not Monitored. Highly Reactive

Initials: B

Advanced Technology Laboratories
1510 E. 33rd Street Signal Hill, CA 90807 Tel: 562 989-4045 Fax: 562 989-4040

CLIENT: Geocon Environmental
Work Order: 047817
Project: Bradley OH - S8225-06-123

QC SUMMARY REPORT
Method Blank

Sample ID **MB-1988** Batch ID: **1988** Test Name **LEAD BY ICP** Units **mg/Kg** Analysis Date: **11/10/00** Prep Date: **11/7/00**
MBLK SeqNo: **70859**

Analyte	Result	PQL	SPK value	SPK Ref Val	%REC	LowLimit	HighLimit	RPD Ref Val	%RPD	RPDLimit	Qual
Lead	ND	5.0									

Sample ID **MB-1989** Batch ID: **1989** Test Name **LEAD BY ICP** Units **mg/Kg** Analysis Date: **11/10/00** Prep Date: **11/7/00**
MBLK SeqNo: **70860**

Analyte	Result	PQL	SPK value	SPK Ref Val	%REC	LowLimit	HighLimit	RPD Ref Val	%RPD	RPDLimit	Qual
Lead	0.01075	5.0									J

Sample ID **MB-1990** Batch ID: **1990** Test Name **LEAD BY ICP** Units **mg/Kg** Analysis Date: **11/10/00** Prep Date: **11/7/00**
MBLK SeqNo: **70861**

Analyte	Result	PQL	SPK value	SPK Ref Val	%REC	LowLimit	HighLimit	RPD Ref Val	%RPD	RPDLimit	Qual
Lead	0.00705	5.0									J

Sample ID **MB-1991** Batch ID: **1991** Test Name **LEAD BY ICP** Units **mg/Kg** Analysis Date: **11/10/00** Prep Date: **11/7/00**
MBLK SeqNo: **70862**

Analyte	Result	PQL	SPK value	SPK Ref Val	%REC	LowLimit	HighLimit	RPD Ref Val	%RPD	RPDLimit	Qual
Lead	ND	5.0									

Sample ID **MB-1992** Batch ID: **1992** Test Name **LEAD BY ICP** Units **mg/Kg** Analysis Date: **11/10/00** Prep Date: **11/7/00**
MBLK SeqNo: **70863**

Analyte	Result	PQL	SPK value	SPK Ref Val	%REC	LowLimit	HighLimit	RPD Ref Val	%RPD	RPDLimit	Qual
Lead	0.123	5.0									J

Qualifiers:
ND - Not Detected at the Reporting Limit
J - Analyte detected below quantitation limits
B - Analyte detected in the associated Method Blank
S - Spike Recovery outside accepted recovery limits
R - RPD outside accepted recovery limits
M - Not Monitored. Highly Reactive

Initials: _____

Advanced Technology Laboratories
1510 E. 33rd Street Signal Hill, CA 90807 Tel: 562 989-4045 Fax: 562 989-4040

CLIENT: Geocon Environmental
Work Order: 047817
Project: Bradley OH - S8225-06-123

QC SUMMARY REPORT
Method Blank

Sample ID **MB-1993** Batch ID: **1993** Test Name **LEAD BY ICP** Units **mg/Kg** Analysis Date: **11/10/00** Prep Date: **11/7/00**
MBLK SeqNo: **70864**

Analyte	Result	PQL	SPK value	SPK Ref Val	%REC	LowLimit	HighLimit	RPD Ref Val	%RPD	RPDLimit	Qual
Lead	ND	5.0									

Qualifiers:
ND - Not Detected at the Reporting Limit
J - Analyte detected below quantitation limits
B - Analyte detected in the associated Method Blank
S - Spike Recovery outside accepted recovery limits
R - RPD outside accepted recovery limits
M - Not Monitored, Highly Reactive

Initials: [illegible]

167

168

Advanced Technology Laboratories
1510 E. 33rd Street Signal Hill, CA 90807 Tel: 562 989-4045 Fax: 562 989-4040

Advanced Technology Laboratories

Date: *10-Nov-00*

CLIENT: Geocon Environmental
Work Order: 047817
Project: Bradley OH - S8225-06-123

QC SUMMARY REPORT
Sample Duplicate

Sample ID **047817-010A** Batch ID: **1983** Test Name **LEAD BY ICP** Units **mg/Kg** Analysis Date: **11/9/00** Prep Date: **11/7/00**
DUP SeqNo: **70576**

Analyte	Result	PQL	SPK value	SPK Ref Val	%REC	LowLimit	HighLimit	RPD Ref Val	%RPD	RPDLimit	Qual
Lead	15.65	5.0	0	0	0	0	0	10.11	43	30	R

Sample ID **047817-020A** Batch ID: **1984** Test Name **LEAD BY ICP** Units **mg/Kg** Analysis Date: **11/9/00** Prep Date: **11/7/00**
DUP SeqNo: **70588**

Analyte	Result	PQL	SPK value	SPK Ref Val	%REC	LowLimit	HighLimit	RPD Ref Val	%RPD	RPDLimit	Qual
Lead	24.58	5.0	0	0	0	0	0	14.17	54	30	R

Sample ID **047817-030A** Batch ID: **1985** Test Name **LEAD BY ICP** Units **mg/Kg** Analysis Date: **11/9/00** Prep Date: **11/7/00**
DUP SeqNo: **70600**

Analyte	Result	PQL	SPK value	SPK Ref Val	%REC	LowLimit	HighLimit	RPD Ref Val	%RPD	RPDLimit	Qual
Lead	4.47	5.0	0	0	0	0	0	4.031	10	30	J

Sample ID **047817-040A** Batch ID: **1986** Test Name **LEAD BY ICP** Units **mg/Kg** Analysis Date: **11/10/00** Prep Date: **11/7/00**
DUP SeqNo: **70770**

Analyte	Result	PQL	SPK value	SPK Ref Val	%REC	LowLimit	HighLimit	RPD Ref Val	%RPD	RPDLimit	Qual
Lead	45.91	5.0	0	0	0	0	0	122.2	91	30	R

Sample ID **047817-050A** Batch ID: **1987** Test Name **LEAD BY ICP** Units **mg/Kg** Analysis Date: **11/10/00** Prep Date: **11/7/00**
DUP SeqNo: **70782**

Analyte	Result	PQL	SPK value	SPK Ref Val	%REC	LowLimit	HighLimit	RPD Ref Val	%RPD	RPDLimit	Qual
Lead	9.278	5.0	0	0	0	0	0	8.869	5	30	

Qualifiers:
ND - Not Detected at the Reporting Limit
J - Analyte detected below quantitation limits
B - Analyte detected in the associated Method Blank
S - Spike Recovery outside accepted recovery limits
R - RPD outside accepted recovery limits
M - Not Monitored. Highly Reactive

Initials: _____

Advanced Technology Laboratories
1510 E. 33rd Street Signal Hill, CA 90807 Tel: 562 989-4045 Fax: 562 989-4040

CLIENT: Geocon Environmental
Work Order: 047817
Project: Bradley OH - S8225-06-123

QC SUMMARY REPORT

Sample Duplicate

Sample ID **047817-060A** Batch ID: **1988** Test Name **LEAD BY ICP** Units **mg/Kg** Analysis Date: **11/10/00** Prep Date: **11/7/00**
DUP SeqNo: **70794**

Analyte	Result	PQL	SPK value	SPK Ref Val	%REC	LowLimit	HighLimit	RPD Ref Val	%RPD	RPDLimit	Qual
Lead	28.21	5.0	0	0	0	0	0	48.58	53	30	R

Sample ID **047817-070A** Batch ID: **1989** Test Name **LEAD BY ICP** Units **mg/Kg** Analysis Date: **11/10/00** Prep Date: **11/7/00**
DUP SeqNo: **70806**

Analyte	Result	PQL	SPK value	SPK Ref Val	%REC	LowLimit	HighLimit	RPD Ref Val	%RPD	RPDLimit	Qual
Lead	30.42	5.0	0	0	0	0	0	33.02	8	30	

Sample ID **047817-080A** Batch ID: **1990** Test Name **LEAD BY ICP** Units **mg/Kg** Analysis Date: **11/10/00** Prep Date: **11/7/00**
DUP SeqNo: **70818**

Analyte	Result	PQL	SPK value	SPK Ref Val	%REC	LowLimit	HighLimit	RPD Ref Val	%RPD	RPDLimit	Qual
Lead	7.917	5.0	0	0	0	0	0	5.688	33	30	R

Sample ID **047817-090A** Batch ID: **1991** Test Name **LEAD BY ICP** Units **mg/Kg** Analysis Date: **11/10/00** Prep Date: **11/7/00**
DUP SeqNo: **70830**

Analyte	Result	PQL	SPK value	SPK Ref Val	%REC	LowLimit	HighLimit	RPD Ref Val	%RPD	RPDLimit	Qual
Lead	39.14	5.0	0	0	0	0	0	34.96	11	30	

Sample ID **047817-100A** Batch ID: **1992** Test Name **LEAD BY ICP** Units **mg/Kg** Analysis Date: **11/10/00** Prep Date: **11/7/00**
DUP SeqNo: **70842**

Analyte	Result	PQL	SPK value	SPK Ref Val	%REC	LowLimit	HighLimit	RPD Ref Val	%RPD	RPDLimit	Qual
Lead	16.78	5.0	0	0	0	0	0	334.2	181	30	R

Qualifiers:
ND - Not Detected at the Reporting Limit
J - Analyte detected below quantitation limits
B - Analyte detected in the associated Method Blank
S - Spike Recovery outside accepted recovery limits
R - RPD outside accepted recovery limits
M - Not Monitored. Highly Reactive

Initials: _____

169

70

Advanced Technology Laboratories
1510 E. 33rd Street Signal Hill, CA 90807 Tel: 562 989-4045 Fax: 562 989-4040

CLIENT: Geocon Environmental
Work Order: 047817
Project: Bradley OH - S8225-06-123

QC SUMMARY REPORT

Sample Duplicate

Sample ID **047817-110A** Batch ID: **1993** Test Name **LEAD BY ICP** Units mg/Kg Analysis Date: **11/10/00** Prep Date: **11/7/00**

DUP SeqNo: **70853**

Analyte	Result	PQL	SPK value	SPK Ref Val	%REC	LowLimit	HighLimit	RPD Ref Val	%RPD	RPDLimit	Qual
Lead	4.03	5.0	0	0	0	0	0	4.345	8	30	J

Qualifiers:
ND - Not Detected at the Reporting Limit
J - Analyte detected below quantitation limits
B - Analyte detected in the associated Method Blank
S - Spike Recovery outside accepted recovery limits
R - RPD outside accepted recovery limits
M - Not Monitored. Highly Reactive

Initials: _____

Advanced Technology Laboratories
1510 E. 33rd Street Signal Hill, CA 90807 Tel: 562 989-4045 Fax: 562 989-4040

Advanced Technology Laboratories

Date: *10-Nov-00*

CLIENT: Geocon Environmental
Work Order: 047817
Project: Bradley OH - S8225-06-123

QC SUMMARY REPORT
Sample Matrix Spike

Sample ID **047817-010A** Batch ID: **1983** Test Name **LEAD BY ICP** Units **mg/Kg** Analysis Date: **11/9/00** Prep Date: **11/7/00**
MS SeqNo: **70577**

Analyte	Result	PQL	SPK value	SPK Ref Val	%REC	LowLimit	HighLimit	RPD Ref Val	%RPD	RPDLimit	Qual
Lead	241.3	5.0	250	10.11	92	68	106	0			

Sample ID **047817-020A** Batch ID: **1984** Test Name **LEAD BY ICP** Units **mg/Kg** Analysis Date: **11/9/00** Prep Date: **11/7/00**
MS SeqNo: **70589**

Analyte	Result	PQL	SPK value	SPK Ref Val	%REC	LowLimit	HighLimit	RPD Ref Val	%RPD	RPDLimit	Qual
Lead	214	5.0	250	14.17	80	68	106	0			

Sample ID **047817-030A** Batch ID: **1985** Test Name **LEAD BY ICP** Units **mg/Kg** Analysis Date: **11/9/00** Prep Date: **11/7/00**
MS SeqNo: **70601**

Analyte	Result	PQL	SPK value	SPK Ref Val	%REC	LowLimit	HighLimit	RPD Ref Val	%RPD	RPDLimit	Qual
Lead	222.1	5.0	250	4.031	87	68	106	0			

Sample ID **047817-040A** Batch ID: **1986** Test Name **LEAD BY ICP** Units **mg/Kg** Analysis Date: **11/10/00** Prep Date: **11/7/00**
MS SeqNo: **70771**

Analyte	Result	PQL	SPK value	SPK Ref Val	%REC	LowLimit	HighLimit	RPD Ref Val	%RPD	RPDLimit	Qual
Lead	258.8	5.0	250	122.2	55	68	106	0			S

Sample ID **047817-050A** Batch ID: **1987** Test Name **LEAD BY ICP** Units **mg/Kg** Analysis Date: **11/10/00** Prep Date: **11/7/00**
MS SeqNo: **70783**

Analyte	Result	PQL	SPK value	SPK Ref Val	%REC	LowLimit	HighLimit	RPD Ref Val	%RPD	RPDLimit	Qual
Lead	211.9	5.0	250	8.869	81	68	106	0			

Qualifiers:
ND - Not Detected at the Reporting Limit
J - Analyte detected below quantitation limits
B - Analyte detected in the associated Method Blank
S - Spike Recovery outside accepted recovery limits
R - RPD outside accepted recovery limits
M - Not Monitored. Highly Reactive

Initials: _____

Advanced Technology Laboratories
1510 E. 33rd Street Signal Hill, CA 90807 Tel: 562 989-4045 Fax: 562 989-4040

172

CLIENT: Geocon Environmental
Work Order: 047817
Project: Bradley OH - S8225-06-123

QC SUMMARY REPORT
Sample Matrix Spike

Sample ID **047817-060A** Batch ID: **1988** Test Name **LEAD BY ICP** Units **mg/Kg** Analysis Date: **11/10/00** Prep Date: **11/7/00**
MS SeqNo: **70795**

Analyte	Result	PQL	SPK value	SPK Ref Val	%REC	LowLimit	HighLimit	RPD Ref Val	%RPD	RPDLimit	Qual
Lead	205.8	5.0	250	48.58	63	68	106	0			S

Sample ID **047817-070A** Batch ID: **1989** Test Name **LEAD BY ICP** Units **mg/Kg** Analysis Date: **11/10/00** Prep Date: **11/7/00**
MS SeqNo: **70807**

Analyte	Result	PQL	SPK value	SPK Ref Val	%REC	LowLimit	HighLimit	RPD Ref Val	%RPD	RPDLimit	Qual
Lead	224.1	5.0	250	33.02	76	68	106	0			

Sample ID **047817-080A** Batch ID: **1990** Test Name **LEAD BY ICP** Units **mg/Kg** Analysis Date: **11/10/00** Prep Date: **11/7/00**
MS SeqNo: **70819**

Analyte	Result	PQL	SPK value	SPK Ref Val	%REC	LowLimit	HighLimit	RPD Ref Val	%RPD	RPDLimit	Qual
Lead	187.7	5.0	250	5.688	73	68	106	0			

Sample ID **047817-090A** Batch ID: **1991** Test Name **LEAD BY ICP** Units **mg/Kg** Analysis Date: **11/10/00** Prep Date: **11/7/00**
MS SeqNo: **70831**

Analyte	Result	PQL	SPK value	SPK Ref Val	%REC	LowLimit	HighLimit	RPD Ref Val	%RPD	RPDLimit	Qual
Lead	241.5	5.0	250	34.96	83	68	106	0			

Sample ID **047817-100A** Batch ID: **1992** Test Name **LEAD BY ICP** Units **mg/Kg** Analysis Date: **11/10/00** Prep Date: **11/7/00**
MS SeqNo: **70843**

Analyte	Result	PQL	SPK value	SPK Ref Val	%REC	LowLimit	HighLimit	RPD Ref Val	%RPD	RPDLimit	Qual
Lead	268.3	5.0	250	334.2	-26	68	106	0			S

Qualifiers:
ND - Not Detected at the Reporting Limit
J - Analyte detected below quantitation limits
B - Analyte detected in the associated Method Blank
S - Spike Recovery outside accepted recovery limits
R - RPD outside accepted recovery limits
M - Not Monitored. Highly Reactive

Initials: _____

Advanced Technology Laboratories
1510 E. 33rd Street Signal Hill, CA 90807 Tel: 562 989-4045 Fax: 562 989-4040

CLIENT: Geocon Environmental
Work Order: 047817
Project: Bradley OH - S8225-06-123

QC SUMMARY REPORT
Sample Matrix Spike

Sample ID **047817-110A** Batch ID: **1993** Test Name **LEAD BY ICP** Units **mg/Kg** Analysis Date: **11/10/00** Prep Date: **11/7/00**

MS SeqNo: **70854**

Analyte	Result	PQL	SPK value	SPK Ref Val	%REC	LowLimit	HighLimit	RPD Ref Val	%RPD	RPDLimit	Qual
Lead	216.6	5.0	250	4.345	85	68	106	0			

Qualifiers:
ND - Not Detected at the Reporting Limit
J - Analyte detected below quantitation limits
B - Analyte detected in the associated Method Blank
S - Spike Recovery outside accepted recovery limits
R - RPD outside accepted recovery limits
M - Not Monitored. Highly Reactive

Initials: [illegible]

73

Advanced Technology Laboratories

Print Date: *10-Nov-00*

CLIENT: Geocon Environmental
Lab Order: 047817
Project: Bradley OH - S8225-06-123

Sample ID	Client Sample ID	Test No	pH	Units	Analysis Date	Analyst
047817-029	B10-30	EPA 9045C	6.07	pH Units	11/6/00	HLP
047817-036	B13-10	EPA 9045C	6.21	pH Units	11/6/00	HLP
047817-040	B14-30	EPA 9045C	6.01	pH Units	11/6/00	HLP
047817-057	B20-60	EPA 9045C	6.81	pH Units	11/6/00	HLP
047817-062	B22-30	EPA 9045C	6.07	pH Units	11/6/00	HLP
047817-079	B28-10	EPA 9045C	6.48	pH Units	11/6/00	HLP
047817-009	B3-60	EPA 9045C	6.28	pH Units	11/6/00	HLP
047817-085	B30-10	EPA 9045C	6.42	pH Units	11/6/00	HLP
047817-098	B35-60	EPA 9045C	6.71	pH Units	11/6/00	HLP
047817-102	B37-30	EPA 9045C	6.61	pH Units	11/6/00	HLP
047817-111	B40-60	EPA 9045C	7.20	pH Units	11/6/00	HLP
047817-013	B5-10	EPA 9045C	6.25	pH Units	11/6/00	HLP

Initial By: _____

Advanced Technology Laboratories
1510 E. 33rd Street Signal Hill, CA 90807 Tel: 562 989-4045 Fax: 562 989-4040

174

Advanced Technology Laboratories
1510 E. 33rd Street Signal Hill, CA 90807 Tel: 562-989-4045 Fax: 562 989-4040

Advanced Technology Laboratories

Date: *10-Nov-00*

CLIENT: Geocon Environmental
Work Order: 047817
Project: Bradley OH - S8225-06-123

QC SUMMARY REPORT

Sample Duplicate

Sample ID **047833-001A** Batch ID: **R3973** Test Name **pH** Units **pH Uni** Analysis Date: **11/6/00** Prep Date: **11/6/00**
DUP SeqNo: **68032**

Analyte	Result	PQL	SPK value	SPK Ref Val	%REC	LowLimit	HighLimit	RPD Ref Val	%RPD	RPDLimit	Qual
pH	7	0.10	0	0	0	0	0	6.07	14	20	

Sample ID **047817-040A** Batch ID: **R3976** Test Name **pH** Units **pH Uni** Analysis Date: **11/6/00** Prep Date: **11/6/00**
DUP SeqNo: **68063**

Analyte	Result	PQL	SPK value	SPK Ref Val	%REC	LowLimit	HighLimit	RPD Ref Val	%RPD	RPDLimit	Qual
pH	6.15	0.10	0	0	0	0	0	6.01	2	20	

Qualifiers:
ND - Not Detected at the Reporting Limit
J - Analyte detected below quantitation limits
B - Analyte detected in the associated Method Blank
S - Spike Recovery outside accepted recovery limits
R - RPD outside accepted recovery limits
M - Not Monitored. Highly Reactive

Initials: _____

75

176

CHAIN OF CUSTODY RECORD

Advanced Technology Laboratories
1510 E. 33rd Street
Signal Hill, CA 90807
(562) 989-4045 • FAX (562) 989-4040

FOR LABORATORY USE ONLY:

P.O.#: _____

Logged By: _____ Date: _____ Time: _____

Method of Transport: Walk-in ☐ Courier ☐ UPS ☐ FED. EXP. ☐ ATL ☐

Sample Condition Upon Receipt:
1. CHILLED Y☐ N☐
2. HEADSPACE (VOA) Y☐ N☐
3. CONTAINER INTACT Y☐ N☐
4. SEALED Y☐ N☐
5. # OF SPLS MATCH COC Y☐ N☐
6. PRESERVED Y☐ N☐

Client: GEOCON ENVIRONMENTAL - SACRAMENTO
Attn: Jim Lessman
Address: 11375 Sunrise Park Drive, Suite 100
City: Rancho Cordova State: CA Zip Code: 95742
TEL: (916) 852-9118
FAX: (916) 852-9132

Project Name: Bradley OH
Project #: 58225-06-123
Sampler: (Printed Name) West Bourgault (Signature)

Relinquished by: (Signature and Printed Name) West Bourgault Date: 11-2-00 Time: 500
Received by: (Signature and Printed Name) Cal Overnight Date: Time:
Relinquished by: (Signature and Printed Name) Date: Time:
Received by: (Signature and Printed Name) Date: 11/2 Time:
Relinquished by: (Signature and Printed Name) Date: Time:
Received by: (Signature and Printed Name) Date: Time:

I hereby authorize ATL to perform the work indicated below:
Project Mgr /Submitter:
Print Name _____ Date _____
Signature _____

Send Report To:
Attn: as above
Co: _____
Address _____
City _____ State _____ Zip _____

Bill To:
Attn: as above
Co: _____
Address _____
City _____ State _____ Zip _____

Special Instructions/Comments:

Unless otherwise requested, all samples will be disposed 45 days after receipt.

Sample Archive/Disposal:
☐ Laboratory Standard
☐ Other _____
☐ Return To: _____

* $10.00 FEE PER HAZARDOUS SAMPLE DISPOSAL.

Circle or Add Analysis(es) Requested

CIRCLE APPROPRIATE MATRIX

QA/QC: RTNE ☐ RWQCB ☐ WIP ☐ NAVY ☐ CT ☑ OTHER _____

ITEM	LAB USE ONLY: Batch #: Lab No.	Sample Description: Sample I.D.	Date (2000)	Time	8081 / 8082 (Pesticides/PCB-GC)	8260 (Volatiles-GC/MS)	625 / 8270 (BNA-GC/MS)	Metals-Total (CAC-6010 / 7000)	8015M TPHG/BTEX (COMBINATION)	8015M TPH/D (Diesel-GC)	Lead 7000	SOLID (SOIL) • SLUDGE	OIL • SOLVENT • LIQUID	WATER • WASTEWATER	DRINKING WATER	AIR	WIPE • FILTER	OTHER	TAT	Container(s) #	Container(s) Type	PRESERVATION	REMARKS
	47317-00	B1-10	11-1	810							X	X							E	1	Bag		
	2	B1-30		815																			
	3	B1-60		[illegible]																			
	4	B2-10		[illegible]																			
	5	B2-30		[illegible]																			
	6	B2-60		826																			
	7	B3-10		828																			
	8	B3-30		826																			
	9	B3-60		830																			
	10	B4-10		831																			

• TAT starts 8 a.m. following day if samples received after 5 p.m.

TAT: A= Overnight ≤ 24 hr B= Emergency Next workday C= Critical 2 Workdays D= Urgent 3 Workdays E= Routine 7 Workdays

Preservatives: H=Hcl N=HNO_3 S=H_2SO_4 C=4°C Z=Zn(AC)$_2$ O=NaOH T=$Na_2S_2O_3$

Container Types: T=Tube V=VOA L=Liter P=Pint J=Jar B=Tedlar G=Glass P=Plastic M=Metal

CHAIN OF CUSTODY RECORD

Pg 1 of 2

Advanced Technology Laboratories
1510 E. 33rd Street
Signal Hill, CA 90807
(562) 989-4045 • FAX (562) 989-4040

FOR LABORATORY USE ONLY:

P.O.#: _____

Logged By: _____ Date: _____ Time: _____

Method of Transport: Walk-in ☐ Courier ☐ UPS ☐ FED. EXP. ☐ ATL ☐

Sample Condition Upon Receipt:
1. CHILLED Y☐ N☐ 4. SEALED Y☐ N☐
2. HEADSPACE (VOA) Y☐ N☐ 5. # OF SPLS MATCH COC Y☐ N☐
3. CONTAINER INTACT Y☐ N☐ 6. PRESERVED Y☐ N☐

Client: GEOCON ENVIRONMENTAL - SACRAMENTO
Attn: Jim Lessman
Address: 11375 Sunrise Park Drive, Suite 100
City: Rancho Cordova State: CA Zip Code: 95742
TEL: (916) 852-9118
FAX: (916) 852-9132

Project Name: Bradley DH Project #: 58225-06-123 Sampler: (Printed Name) West Bourgault (Signature)

Relinquished by: (Signature and Printed Name)	Date:	Time:	Received by: (Signature and Printed Name)	Date:	Time:
West Bourgault	11-2-00	500	Cal Overnight		
				11/3	

I hereby authorize ATL to perform the work indicated below:
Project Mgr /Submitter:
Print Name Date
Signature

Send Report To: Attn: as above Co: Address: City State Zip

Bill To: Attn: as above Co: Address: City State Zip

Special Instructions/Comments:

Unless otherwise requested, all samples will be disposed 45 days after receipt.

Sample Archive/Disposal:
☐ Laboratory Standard
☐ Other
☐ Return To:
* $10.00 FEE PER HAZARDOUS SAMPLE DISPOSAL.

Circle or Add Analysis(es) Requested: 8081 / 8082 (Pesticides/PCB-GC); 8260 (Volatiles-GC/MS); 625 / 8270 (BNA-GC/MS); Metals-Total (CAC-6010 / 7000); 8015M TPHG/BTEX (COMBINATION); 8015M TPH/D (Diesel-GC); Lead 7420

CIRCLE APPROPRIATE MATRIX: SOLID • SOIL • SLUDGE; OIL • SOLVENT • LIQUID; WATER • WASTEWATER; DRINKING WATER; AIR; WIPE • FILTER; OTHER

ITEM	LAB USE ONLY: Batch #: Lab No.	Sample Description: Sample I.D.	Date (2000)	Time	8015M TPH/D (Diesel-GC)	SOLID • SOIL • SLUDGE	TAT	Container(s) #	Container(s) Type	PRESERVATION	REMARKS
	01	B4-30	11-1	432	X	X	E	1	Bag		
	02	B4-60		434							
	03	B5-10		430							
	04	B5-30		412							
	05	B5-60		444							
	06	B6-10		431							
	07	B6-30		433							
	08	B6-60		435							
	09	B7-10		441							
	10	B7-30		445							

QA/QC: RTNE ☐ RWQCB ☐ WIP ☐ NAVY ☐ CT ☑ OTHER

* TAT starts 8 a.m. following day if samples received after 5 p.m.

TAT: A= Overnight ≤ 24 hr; B= Emergency Next workday; C= Critical 2 Workdays; D= Urgent 3 Workdays; E= Routine 7 Workdays

Container Types: T=Tube V=VOA L=Liter P=Pint J=Jar B=Tedlar G=Glass P=Plastic M=Metal

Preservatives: H=Hcl N=HNO_3 S=H_2SO_4 C=4°C Z=$Zn(AC)_2$ O=NaOH T=$Na_2S_2O_3$

CHAIN OF CUSTODY RECORD

Advanced Technology Laboratories
1510 E. 33rd Street
Signal Hill, CA 90807
(562) 989-4045 • FAX (562) 989-4040

FOR LABORATORY USE ONLY:

P.O.#: _____

Logged By: _____ Date: _____ Time: _____

Method of Transport: Walk-in ☐ Courier ☐ UPS ☐ FED. EXP. ☐ ATL ☐

Sample Condition Upon Receipt:
1. CHILLED Y☐ N☐ 4. SEALED Y☐ N☐
2. HEADSPACE (VOA) Y☐ N☐ 5. # OF SPLS MATCH COC Y☐ N☐
3. CONTAINER INTACT Y☐ N☐ 6. PRESERVED Y☐ N☐

Client: GEOCON ENVIRONMENTAL - SACRAMENTO
Attn: Jim Lessman
Address: 11375 Sunrise Park Drive, Suite 100
City: Rancho Cordova State: CA Zip Code: 95742
TEL: (916) 852-9118
FAX: (916) 852-9132

Project Name: Braley OH Project #: S8225-06-123 Sampler: (Printed Name) West Bourgault (Signature)

Relinquished by: (Signature and Printed Name) West Bourgault Date: 11-7-00 Time: 500 Received by: (Signature and Printed Name) Cal Overnight Date: Time:
Relinquished by: (Signature and Printed Name) Date: Time: Received by: (Signature and Printed Name) Date: Time:
Relinquished by: (Signature and Printed Name) Date: Time: Received by: (Signature and Printed Name) Date: 11/8 Time:

I hereby authorize ATL to perform the work indicated below:
Project Mgr /Submitter:
Print Name Date
Signature

Send Report To: Attn: as above Co: Address: City State Zip

Bill To: Attn: as above Co: Address: City State Zip

Special Instructions/Comments:

Unless otherwise requested, all samples will be disposed 45 days after receipt.

Sample Archive/Disposal:
☐ Laboratory Standard
☐ Other
☐ Return To:
* $10.00 FEE PER HAZARDOUS SAMPLE DISPOSAL.

Circle or Add Analysis(es) Requested: 8081 / 8082 (Pesticides/PCB-GC); 8260 (Volatiles-GC/MS); 625 / 8270 (BNA-GC/MS); Metals-Total (CAC-6010 / 7000); 8015M TPHG/BTEX (COMBINATION); 8015M TPHD (Diesel-GC); Lead 7420

CIRCLE APPROPRIATE MATRIX: SOLID • SOIL • SLUDGE; OIL • SOLVENT • LIQUID; WATER • WASTEWATER; DRINKING WATER; AIR; WIPE • FILTER; OTHER

QA/QC: RTNE ☐ RWQCB ☐ WIP ☐ NAVY ☐ CT ☑ OTHER

ITEM	LAB USE ONLY: Batch #: / Lab No.	Sample Description: Sample I.D.	Date (2000)	Time	8081 / 8082 (Pesticides/PCB-GC)	8260 (Volatiles-GC/MS)	625 / 8270 (BNA-GC/MS)	Metals-Total (CAC-6010 / 7000)	8015M TPHG/BTEX (COMBINATION)	8015M TPHD (Diesel-GC)	Lead 7420	SOLID • SOIL • SLUDGE	OIL • SOLVENT • LIQUID	WATER • WASTEWATER	DRINKING WATER	AIR	WIPE • FILTER	OTHER	TAT	Container(s) #	Container(s) Type	PRESERVATION	REMARKS
	021	B7-60	11-1	851							X				X					E	1	Poly	
	22	B8-10		850																			
	23	B8-30		852																			
	24	B8-60		854																			
	25	B9-10		858																			
	26	B9-30		900																			
	27	B9-60		902																			
	28	B10-10		908																			
	29	B10-30		910																			
	30	B10-60		912																			

• TAT starts 8 a.m. following day if samples received after 5 p.m.

TAT: A= Overnight ≤ 24 hr B= Emergency Next workday C= Critical 2 Workdays D= Urgent 3 Workdays E= Routine 7 Workdays

Preservatives: H=HCl N=HNO_3 S=H_2SO_4 C=4°C Z=Zn(O= T= B_2O_3

Container Types: T=Tube V=VOA L=Liter P=Pint B=Jar G=Glass P=Plastic M=Metal

CHAIN OF CUSTODY RECORD

Advanced Technology Laboratories
1510 E. 33rd Street
Signal Hill, CA 90807
(562) 989-4045 • FAX (562) 989-4040

FOR LABORATORY USE ONLY:

P.O.#: _____

Logged By: _____ Date: _____ Time: _____

Method of Transport: Walk-in ☐ Courier ☐ UPS ☐ FED. EXP. ☐ ATL ☐

Sample Condition Upon Receipt:
1. CHILLED Y☐ N☐ 4. SEALED Y☐ N☐
2. HEADSPACE (VOA) Y☐ N☐ 5. # OF SPLS MATCH COC Y☐ N☐
3. CONTAINER INTACT Y☐ N☐ 6. PRESERVED Y☐ N☐

Client: GEOCON ENVIRONMENTAL - SACRAMENTO
Attn: Jim Lessman
Address: 11375 Sunrise Park Drive, Suite 100
City: Rancho Cordova State: CA Zip Code: 95742
TEL: (916) 852-9118
FAX: (916) 852-9132

Project Name: Bradley OH Project #: 58225-06-123 Sampler: (Printed Name) West Bourgault (Signature)

Relinquished by: (Signature and Printed Name)	Date:	Time:	Received by: (Signature and Printed Name)	Date:	Time:
West Bourgault	11-2-00	500	Cal Overnight		
			Am	11/3	

I hereby authorize ATL to perform the work indicated below:
Project Mgr /Submitter: _____ Print Name _____ Date _____ Signature

Send Report To: Attn: as above Co: _____ Address _____ City _____ State _____ Zip _____

Bill To: Attn: as above Co: _____ Address _____ City _____ State _____ Zip _____

Special Instructions/Comments:

Unless otherwise requested, all samples will be disposed 45 days after receipt.

Sample Archive/Disposal:
☐ Laboratory Standard
☐ Other _____
☐ Return To: _____

* $10.00 FEE PER HAZARDOUS SAMPLE DISPOSAL.

Circle or Add Analysis(es) Requested: 8081 / 8082 (Pesticides/PCB-GC); 8260 (Volatiles-GC/MS); 625 / 8270 (BNA-GC/MS); Metals-Total (CAC-6010 / 7000); 8015M TPHG/BTEX (COMBINATION); 8015M TPH/D (Diesel-GC); Lead 7420

CIRCLE APPROPRIATE MATRIX: SOLID • SOIL • SLUDGE; OIL • SOLVENT • LIQUID; WATER • WASTEWATER; DRINKING WATER; AIR; WIPE • FILTER; OTHER

ITEM	LAB USE ONLY: Batch #: / Lab No.	Sample Description: Sample I.D.	Date (2000)	Time	8081 / 8082 (Pesticides/PCB-GC)	8260 (Volatiles-GC/MS)	625 / 8270 (BNA-GC/MS)	Metals-Total (CAC-6010 / 7000)	8015M TPHG/BTEX (COMBINATION)	8015M TPH/D (Diesel-GC)	Lead 7420	SOLID • SOIL • SLUDGE	OIL • SOLVENT • LIQUID	WATER • WASTEWATER	DRINKING WATER	AIR	WIPE • FILTER	OTHER	TAT	Container(s) #	Container(s) Type	PRESERVATION	REMARKS
	31	B11-10	11/1	915							X	X							E	1	Bag		
	32	B11-30		917																			
		~~[illegible]~~																					
	33	B12-10		925																			
	34	B12-30		927																			
	35	B12-60		930																			
	36	B13-10		935																			
	37	B13-30		937																			
	38	B13-60		939																			
	39	B14-10		941																			

QA/QC: RTNE ☐ RWQCB ☐ WIP ☐ NAVY ☐ CT ☑ OTHER _____

• TAT starts 8 a.m. following day if samples received after 5 p.m.

TAT: A= Overnight ≤ 24 hr B= Emergency Next workday C= Critical 2 Workdays D= Urgent 3 Workdays E= Routine 7 Workdays

Container Types: T=Tube V=VOA L=Liter P=Pint J=Jar B=Tedlar G=Glass P=Plastic M=Metal

Preservatives: H=HCl N=HNO_3 S=H_2SO_4 C=4°C Z=$Zn(AC)_2$ O=NaOH T=$Na_2S_2O_3$

180

CHAIN OF CUSTODY RECORD

Advanced Technology Laboratories
1510 E. 33rd Street
Signal Hill, CA 90807
(562) 989-4045 • FAX (562) 989-4040

FOR LABORATORY USE ONLY:

P.O.#: _____

Logged By: _____ Date: _____ Time: _____

Method of Transport: Walk-in ☐ Courier ☐ UPS ☐ FED. EXP. ☐ ATL ☐

Sample Condition Upon Receipt
1. CHILLED Y☐ N☐ 4. SEALED Y☐ N☐
2. HEADSPACE (VOA) Y☐ N☐ 5. # OF SPLS MATCH COC Y☐ N☐
3. CONTAINER INTACT Y☐ N☐ 6. PRESERVED Y☐ N☐

Client: GEOCON ENVIRONMENTAL - SACRAMENTO
Attn: Jim Lessman
Address: 11375 Sunrise Park Drive, Suite 100
City: Rancho Cordova State: CA Zip Code: 95742
TEL: (916) 852-9118
FAX: (916) 852-9132

Project Name: Bradley Oil Project #: S8225-06-123 Sampler: (Printed Name) West Bourgault (Signature) [signature]

Relinquished by: (Signature and Printed Name) West Bourgault [signature] Date: 11-2-00 Time: 500 Received by: (Signature and Printed Name) Cal Overnight Date: Time:
Relinquished by: (Signature and Printed Name) Date: Time: Received by: (Signature and Printed Name) [signature] Date: 11/2 Time:
Relinquished by: (Signature and Printed Name) Date: Time: Received by: (Signature and Printed Name) Date: Time:

I hereby authorize ATL to perform the work indicated below:
Project Mgr /Submitter:
Print Name Date
Signature

Send Report To: Attn: as above Co: Address City State Zip

Bill To: Attn: as above Co: Address City State Zip

Special Instructions/Comments:

Unless otherwise requested, all samples will be disposed 45 days after receipt.

Sample Archive/Disposal:
☐ Laboratory Standard
☐ Other
☐ Return To:

* $10.00 FEE PER HAZARDOUS SAMPLE DISPOSAL.

Circle or Add Analysis(es) Requested

CIRCLE APPROPRIATE MATRIX

QA/QC: RTNE ☐ RWQCB ☐ WIP ☐ NAVY ☐ CT ☑ OTHER

ITEM	LAB USE ONLY: Batch #: Lab No.	Sample Description: Sample I.D.	Date (1000)	Time	8081 / 8082 (Pesticides/PCB-GC)	8260 (Volatiles-GC/MS)	625 / 8270 (BNA-GC/MS)	Metals-Total (CAC-6010 / 7000)	8015M TPHG/BTEX (COMBINATION)	8015M TPH/D (Diesel-GC)	Lead 7000	SOLID • SOIL • SLUDGE	OIL • SOLVENT • LIQUID	WATER • WASTEWATER	DRINKING WATER	AIR	WIPE • FILTER	OTHER	TAT	Container(s) #	Container(s) Type	PRESERVATION	REMARKS
	40	B14-30	11/1	944							X	X							E	1	Poly		
	41	B15-10		943																			
	42	B15-30		945																			
	43	B15-60		947																			
	44	B16-10		950																			
	45	B16-30		952																			
	46	B16-60		955																			
	47	B17-10		1001																			
	48	B17-30		1007																			
	49	B18-10		1009																			

• TAT starts 8 a.m. following day if samples received after 5 p.m.

TAT: A= Overnight ≤ 24 hr B= Emergency Next workday C= Critical 2 Workdays D= Urgent 3 Workdays E= Routine 7 Workdays

Preservatives: H=Hcl N=HNO_3 S=H_2SO_4 C=4°C Z=Zn( ) O= T S_2O_3

Container Types: T=Tube V=VOA Liter P=Pint B=Tedlar G=Glass P=Plastic M=Metal

CHAIN OF CUSTODY RECORD

Advanced Technology Laboratories
1510 E. 33rd Street
Signal Hill, CA 90807
(562) 989-4045 • FAX (562) 989-4040

FOR LABORATORY USE ONLY:

P.O.#: _____

Logged By: _____ Date: _____ Time: _____

Method of Transport: Walk-in ☐ Courier ☐ UPS ☐ FED. EXP. ☐ ATL ☐

Sample Condition Upon Receipt:
1. CHILLED Y☐ N☐ 4. SEALED Y☐ N☐
2. HEADSPACE (VOA) Y☐ N☐ 5. # OF SPLS MATCH COC Y☐ N☐
3. CONTAINER INTACT Y☐ N☐ 6. PRESERVED Y☐ N☐

Client: GEOCON ENVIRONMENTAL - SACRAMENTO
Attn: Jim Lessman
Address: 11375 Sunrise Park Drive, Suite 100
City: Rancho Cordova State: CA Zip Code: 95742
TEL: (916) 852-9118
FAX: (916) 852-9132

Project Name: Bradley OH Project #: 58225-06-B3 Sampler: (Printed Name) West Bourgault (Signature)

Relinquished by: (Signature and Printed Name)	Date:	Time:	Received by: (Signature and Printed Name)	Date:	Time:
West Bourgault	11-2-00	500	Cal Overnight		
				11/2	

I hereby authorize ATL to perform the work indicated below:
Project Mgr /Submitter: _____ Print Name _____ Date _____ Signature

Send Report To: Attn: as above Co: _____ Address _____ City _____ State _____ Zip _____

Bill To: Attn: as above Co: _____ Address _____ City _____ State _____ Zip _____

Special Instructions/Comments:

Unless otherwise requested, all samples will be disposed 45 days after receipt.

Sample Archive/Disposal:
☐ Laboratory Standard
☐ Other _____
☐ Return To: _____

* $10.00 FEE PER HAZARDOUS SAMPLE DISPOSAL.

Circle or Add Analysis(es) Requested: 8081 / 8082 (Pesticides/PCB-GC); 8260 (Volatiles-GC/MS); 625 / 8270 (BNA-GC/MS); Metals-Total (CAC-6010 / 7000); 8015M TPHG/BTEX (COMBINATION); 8015M TPH/D (Diesel-GC) Lead 7000

CIRCLE APPROPRIATE MATRIX: SOLID • SOIL • SLUDGE; OIL • SOLVENT • LIQUID; WATER • WASTEWATER; DRINKING WATER; AIR; WIPE • FILTER; OTHER

ITEM	LAB USE ONLY: Batch #: Lab No.	Sample Description: Sample I.D.	Date (2000)	Time	8015M TPH/D (Diesel-GC) Lead 7000	SOLID • SOIL • SLUDGE	TAT	Container(s) #	Container(s) Type	PRESERVATION	QA/QC	REMARKS
	50	B18-30	11/1	1011	X	X	E	1	Bag			
	51	B18-60	↓	1013	↓	↓						
	52	B19-10		1014								
	53	B19-30		1016								
	54	B19-60		1017								
	55	B20-10		1018								
	56	B20-30		1020								
	57	B20-60		1022								
	58	B21-10		1019								
	59	B21-30	↓	1021	↓	↓	↓					

QA/QC: RTNE ☐ RWQCB ☐ WIP ☐ NAVY ☐ CT ☐ OTHER _____

• TAT starts 8 a.m. following day if samples received after 5 p.m.

TAT: A= Overnight ≤ 24 hr; B= Emergency Next workday; C= Critical 2 Workdays; D= Urgent 3 Workdays; E= Routine 7 Workdays

Container Types: T=Tube V=VOA L=Liter P=Pint J=Jar B=Tedlar G=Glass P=Plastic M=Metal

Preservatives: H=Hcl N=HNO_3 S=H_2SO_4 C=4°C Z=$Zn(AC)_2$ O=NaOH T=$Na_2S_2O_3$

CHAIN OF CUSTODY RECORD

Advanced Technology Laboratories
1510 E. 33rd Street
Signal Hill, CA 90807
(562) 989-4045 • FAX (562) 989-4040

FOR LABORATORY USE ONLY:

P.O.#: _____

Logged By: _____ Date: _____ Time: _____

Method of Transport: Walk-in ☐ Courier ☐ UPS ☐ FED. EXP. ☐ ATL ☐

Sample Condition Upon Receipt: 1. CHILLED Y☐ N☐ 2. HEADSPACE (VOA) Y☐ N☐ 3. CONTAINER INTACT Y☐ N☐ 4. SEALED Y☐ N☐ 5. # OF SPLS MATCH COC Y☐ N☐ 6. PRESERVED Y☐ N☐

Client: GEOCON ENVIRONMENTAL - SACRAMENTO
Attn: Jim Lessman
Address: 11375 Sunrise Park Drive, Suite 100
City: Rancho Cordova State: CA Zip Code: 95742
TEL: (916) 852-9118
FAX: (916) 852-9132

Project Name: Bradley OH Project #: S8225-06-123 Sampler: (Printed Name) West Bourgault (Signature)

Relinquished by: (Signature and Printed Name) West Bourgault Date: 11-2-00 Time: 500 Received by: (Signature and Printed Name) Lal Overnight Date: Time:

Relinquished by: (Signature and Printed Name) Date: Time: Received by: (Signature and Printed Name) Date: 11/3 Time:

Relinquished by: (Signature and Printed Name) Date: Time: Received by: (Signature and Printed Name) Date: Time:

I hereby authorize ATL to perform the work indicated below:
Project Mgr /Submitter:
Print Name Date
Signature

Send Report To: Attn: as above Co: Address City State Zip

Bill To: Attn: as above Co: Address City State Zip

Special Instructions/Comments:

Unless otherwise requested, all samples will be disposed 45 days after receipt.

Sample Archive/Disposal:
☐ Laboratory Standard
☐ Other
☐ Return To:

* $10.00 FEE PER HAZARDOUS SAMPLE DISPOSAL.

Circle or Add Analysis(es) Requested: 8081 / 8082 (Pesticides/PCB-GC); 8260 (Volatiles-GC/MS); 625 / 8270 (BNA-GC/MS); Metals-Total (CAC-6010 / 7000); 8015M TPHG/BTEX (COMBINATION); 8015M TPHD (Diesel-GC); Lead 7421

CIRCLE APPROPRIATE MATRIX: SOLID • SOIL • SLUDGE; OIL • SOLVENT • LIQUID; WATER • WASTEWATER; DRINKING WATER; AIR; WIPE • FILTER; OTHER

QA/QC: RTNE ☐ RWQCB ☐ WIP ☐ NAVY ☐ CT ☑ OTHER

ITEM	LAB USE ONLY: Batch #: Lab No.	Sample Description: Sample I.D.	Date (2000)	Time	8081 / 8082 (Pesticides/PCB-GC)	8260 (Volatiles-GC/MS)	625 / 8270 (BNA-GC/MS)	Metals-Total (CAC-6010 / 7000)	8015M TPHG/BTEX (COMBINATION)	8015M TPHD (Diesel-GC)	Lead 7421	SOLID • SOIL • SLUDGE	OIL • SOLVENT • LIQUID	WATER • WASTEWATER	DRINKING WATER	AIR	WIPE • FILTER	OTHER	TAT	Container(s) #	Container(s) Type	PRESERVATION	REMARKS
	60	B21-60	11/1	1025							X	X							E	1	Brass		
	61	B22-10	↓	1027							↓	↓									↓		
	62	B22-30		1029																			
	63	B22-60		1031																			
	64	B23-10		1045																			
	65	B23-30		1047																			
	66	B23-60		1051																			
	67	B24-10		1053																			
	68	B24-30		1054																			
	69	B24-60	↓	1056							↓	↓									↓		

• TAT starts 8 a.m. following day if samples received after 5 p.m.

TAT: A= Overnight ≤ 24 hr B= Emergency Next workday C= Critical 2 Workdays D= Urgent 3 Workdays E= Routine 7 Workdays

Preservatives: H=Hcl N=HNO_3 S=H_2SO_4 C=4°C Z=Zn(AC)$_2$ O=NaOH T=$Na_2S_2O_3$

Container Types: T=Tube V=VOA L=Liter P=Pint J=Jar B=Tedlar G=Glass P=Plastic M=Metal

CHAIN OF CUSTODY RECORD

Advanced Technology Laboratories
1510 E. 33rd Street
Signal Hill, CA 90807
(562) 989-4045 • FAX (562) 989-4040

FOR LABORATORY USE ONLY:

P.O.#: _____

Logged By: _____ Date: _____ Time: _____

Method of Transport: Walk-In ☐ Courier ☐ UPS ☐ FED. EXP. ☐ ATL ☐

Sample Condition Upon Receipt:
1. CHILLED Y☐ N☐ 4. SEALED Y☐ N☐
2. HEADSPACE (VOA) Y☐ N☐ 5. # OF SPLS MATCH COC Y☐ N☐
3. CONTAINER INTACT Y☐ N☐ 6. PRESERVED Y☐ N☐

Client: GEOCON ENVIRONMENTAL - SACRAMENTO
Attn: Jim Lessmann
Address: 11375 Sunrise Park Drive, Suite 100
City: Rancho Cordova State: CA Zip Code: 95742
TEL: (916) 852-9118
FAX: (916) 852-9132

Project Name: Bradley Oil Project #: 58225-06-123 Sampler: (Printed Name) West Bourgault (Signature)

Relinquished by: (Signature and Printed Name)	Date:	Time:	Received by: (Signature and Printed Name)	Date:	Time:
West Bourgault	11/2/00	500	Cal Overnight		
			Pm	11/2	

I hereby authorize ATL to perform the work indicated below:
Project Mgr /Submitter: _____ Print Name _____ Date _____ Signature

Send Report To: Attn: as above Co: _____ Address _____ City _____ State _____ Zip _____

Bill To: Attn: as above Co: _____ Address _____ City _____ State _____ Zip _____

Special Instructions/Comments:

Unless otherwise requested, all samples will be disposed 45 days after receipt.

Sample Archive/Disposal:
☐ Laboratory Standard
☐ Other _____
☐ Return To: _____
* $10.00 FEE PER HAZARDOUS SAMPLE DISPOSAL.

Circle or Add Analysis(es) Requested: 8081 / 8082 (Pesticides/PCB-GC); 8260 (Volatiles-GC/MS); 625 / 8270 (BNA-GC/MS); Metals-Total (CAC-6010 / 7000); 8015M TPHG/BTEX (COMBINATION); 8015M TPH/D (Diesel-GC); Lead 7420

CIRCLE APPROPRIATE MATRIX: SOLID • SOIL • SLUDGE; OIL • SOLVENT • LIQUID; WATER • WASTEWATER; DRINKING WATER; AIR; WIPE • FILTER; OTHER

QA/QC: RTNE ☐ RWQCB ☐ WIP ☐ NAVY ☐ CT ☒ OTHER _____

ITEM	LAB USE ONLY: Batch #: Lab No.	Sample Description: Sample I.D.	Date (2000)	Time	8081 / 8082 (Pesticides/PCB-GC)	8260 (Volatiles-GC/MS)	625 / 8270 (BNA-GC/MS)	Metals-Total (CAC-6010 / 7000)	8015M TPHG/BTEX (COMBINATION)	8015M TPH/D (Diesel-GC)	Lead 7420	SOLID • SOIL • SLUDGE	OIL • SOLVENT • LIQUID	WATER • WASTEWATER	DRINKING WATER	AIR	WIPE • FILTER	OTHER	TAT	Container(s) #	Container(s) Type	PRESERVATION	REMARKS
	070	B25-10	11/1	1058					X			X							E	1	Bag		
	71	B25-30		1059																			
	72	B25-60		1103																			
	73	B26-10		1105																			
	74	B26-30		1107																			
	75	B26-60		1110																			
	76	B27-10		1124																			
	77	B27-30		1126																			
	78	B27-60		1128																			
	79	B28-10		1129																			

• TAT starts 8 a.m. following day if samples received after 5 p.m.

TAT: A= Overnight ≤ 24 hr; B= Emergency Next workday; C= Critical 2 Workdays; D= Urgent 3 Workdays; E= Routine 7 Workdays

Container Types: T=Tube V=VOA L=Liter P=Pint J=Jar B=Tedlar G=Glass P=Plastic M=Metal

Preservatives: H=Hcl N=HNO_3 S=H_2SO_4 C=4°C Z=$Zn(AC)_2$ O=NaOH T=$Na_2S_2O_3$

182

CHAIN OF CUSTODY RECORD

183

Advanced Technology Laboratories
1510 E. 33rd Street
Signal Hill, CA 90807
(562) 989-4045 • FAX (562) 989-4040

FOR LABORATORY USE ONLY:

P.O.#: _____

Logged By: _____ Date: _____ Time: _____

Method of Transport: Walk-in ☐ Courier ☐ UPS ☐ FED. EXP. ☐ ATL ☐

Sample Condition Upon Receipt:
1. CHILLED Y☐ N☐ 4. SEALED Y☐ N☐
2. HEADSPACE (VOA) Y☐ N☐ 5. # OF SPLS MATCH COC Y☐ N☐
3. CONTAINER INTACT Y☐ N☐ 6. PRESERVED Y☐ N☐

Client: GEOCON ENVIRONMENTAL - SACRAMENTO
Attn: Jim Lesemann
Address: 11375 Sunrise Park Drive, Suite 100
City: Rancho Cordova State: CA Zip Code: 95742
TEL: (916) 852-9118
FAX: (916) 852-9132

Project Name: Bradley OH Project #: 58225-06-123 Sampler: (Printed Name) West Bowgault (Signature)

Relinquished by: (Signature and Printed Name)	Date:	Time:	Received by: (Signature and Printed Name)	Date:	Time:
West Bowgault	11/2/06	800	Cal Overnight		
			AM	11/2	

I hereby authorize ATL to perform the work indicated below:
Project Mgr /Submitter:
Print Name Date
Signature

Send Report To: Attn: as above Co: Address City State Zip

Bill To: Attn: as above Co: Address City State Zip

Special Instructions/Comments:

Unless otherwise requested, all samples will be disposed 45 days after receipt.

Sample Archive/Disposal:
☐ Laboratory Standard
☐ Other
☐ Return To:
* $10.00 FEE PER HAZARDOUS SAMPLE DISPOSAL.

Circle or Add Analysis(es) Requested: 8081 / 8082 (Pesticides/PCB-GC); 8260 (Volatiles-GC/MS); 625 / 8270 (BNA-GC/MS); Metals-Total (CAC-6010 / 7000); 8015M TPHG/BTEX (COMBINATION); 8015M TPHD (Diesel-GC); Lead 7000

CIRCLE APPROPRIATE MATRIX: SOLID • SOIL • SLUDGE; OIL • SOLVENT • LIQUID; WATER • WASTEWATER; DRINKING WATER; AIR; WIPE • FILTER; OTHER

ITEM	LAB USE ONLY: Batch #: Lab No.	Sample Description: Sample I.D.	Date (2006)	Time	8015M TPHD (Diesel-GC) Lead 7000	SOLID • SOIL • SLUDGE	TAT	Container(s) #	Container(s) Type	PRESERVATION	REMARKS
	060	B28-30	11/1	1131	X	X	E	1	Bag		
	81	B28-60		1135							
	82	B29-10		1136							
	83	B29-30		1138							
	84	B29-60		1140							
	85	B30-10		1143							
	86	B30-30		1145							
	87	B30-60		1147							
	88	B31-10		1151							
	89	B31-30		1153							

QA/QC: RTNE ☐ RWQCB ☐ WIP ☐ NAVY ☐ CT ☐ OTHER

• TAT starts 8 a.m. following day if samples received after 5 p.m.

TAT: A= Overnight ≤ 24 hr B= Emergency Next workday C= Critical 2 Workdays D= Urgent 3 Workdays E= Routine 7 Workdays

Preservatives: H=Hcl N=HNO_3 S=H_2SO_4 C=4°C

Container Types: T=Tube V=VOA L=Liter P=Pint J=Jar B=Tedlar G=Glass P=Plastic M=Metal Z=Zn(AC)2 O=NaOH T=Na2S2O3

CHAIN OF CUSTODY RECORD

Advanced Technology Laboratories
1510 E. 33rd Street
Signal Hill, CA 90807
(562) 989-4045 • FAX (562) 989-4040

FOR LABORATORY USE ONLY:

P.O.#: _____

Logged By: _____ Date: _____ Time: _____

Method of Transport: Walk-In ☐ Courier ☐ UPS ☐ FED. EXP. ☐ ATL ☐

Sample Condition Upon Receipt:
1. CHILLED Y☐ N☐ 4. SEALED Y☐ N☐
2. HEADSPACE (VOA) Y☐ N☐ 5. # OF SPLS MATCH COC Y☐ N☐
3. CONTAINER INTACT Y☐ N☐ 6. PRESERVED Y☐ N☐

Client: GEOCON ENVIRONMENTAL - SACRAMENTO
Attn: Tim Lessmann
Address: 11375 Sunrise Park Drive, Suite 100
City: Rancho Cordova State: CA Zip Code: 95742
TEL: (916) 852-9118
FAX: (916) 852-9132

Project Name: Bradley OH Project #: 58225-06-123 Sampler: (Printed Name) West Bourgault (Signature) [signature]

Relinquished by: (Signature and Printed Name)	Date:	Time:	Received by: (Signature and Printed Name)	Date:	Time:
West Bourgault [signature]	11/2/00	500	Cal Overnight		
			[signature]		
				11/2	

I hereby authorize ATL to perform the work indicated below:
Project Mgr /Submitter: _____ Print Name _____ Date
Signature

Send Report To: Attn: as above Co: _____ Address _____ City _____ State _____ Zip _____

Bill To: Attn: as above Co: _____ Address _____ City _____ State _____ Zip _____

Special Instructions/Comments:

Unless otherwise requested, all samples will be disposed 45 days after receipt.

Sample Archive/Disposal:
☐ Laboratory Standard
☐ Other _____
☐ Return To: _____

* $10.00 FEE PER HAZARDOUS SAMPLE DISPOSAL.

Circle or Add Analysis(es) Requested: 8081 / 8082 (Pesticides/PCB-GC); 8260 (Volatiles-GC/MS); 625 / 8270 (BNA-GC/MS); Metals-Total (CAC-6010 / 7000); 8015M TPHG/BTEX (COMBINATION); 8015M TPH/D (Diesel-GC) West 7530

CIRCLE APPROPRIATE MATRIX: SOLID • SOIL • SLUDGE; OIL • SOLVENT • LIQUID; WATER • WASTEWATER; DRINKING WATER; AIR; WIPE • FILTER; OTHER

QA/QC: RTNE ☐ RWQCB ☐ WIP ☐ NAVY ☐ CT ☑ OTHER _____

ITEM	LAB USE ONLY: Batch #: / Lab No.	Sample Description: Sample I.D.	Date (2000)	Time	8015M TPH/D (Diesel-GC) West 7530	SOLID • SOIL • SLUDGE	TAT	Container(s) #	Container(s) Type	PRESERVATION	REMARKS
	080	B32-10	11/1	1156	X	X	E	1	Poly		
	81	B33-10		1201							
	82	B33-30		1205							
	83	B33-60		1207							
	84	B34-10		1208							
	85	B34-30		1210							
	86	B35-10		1211							
	87	B35-30		1217							
	88	B35-60		1219							
	89	B36-10		1220							

• TAT starts 8 a.m. following day if samples received after 5 p.m.

TAT: A= Overnight ≤ 24 hr; B= Emergency Next workday; C= Critical 2 Workdays; D= Urgent 3 Workdays; E= Routine 7 Workdays

Container Types: T=Tube V=VOA L=Liter P=Pint J=Jar B=Tedlar G=Glass P=Plastic M=Metal

Preservatives: H=Hcl N=HNO_3 S=H_2SO_4 C=4°C Z=$Zn(AC)_2$ O=NaOH T=$Na_2S_2O_3$

181

CHAIN OF CUSTODY RECORD

Advanced Technology Laboratories
1510 E. 33rd Street
Signal Hill, CA 90807
(562) 989-4045 • FAX (562) 989-4040

FOR LABORATORY USE ONLY:

P.O.#: _____

Logged By: _____ Date: _____ Time: _____

Method of Transport: Walk-in ☐ Courier ☐ UPS ☐ FED. EXP. ☐ ATL ☐

Sample Condition Upon Receipt:
1. CHILLED Y☐ N☐ 4. SEALED Y☐ N☐
2. HEADSPACE (VOA) Y☐ N☐ 5. # OF SPLS MATCH COC Y☐ N☐
3. CONTAINER INTACT Y☐ N☐ 6. PRESERVED Y☐ N☐

Client: GEOCON ENVIRONMENTAL - SACRAMENTO
Attn: Tina Lessmann
Address: 11375 Sunrise Park Drive, Suite 100
City: Rancho Cordova State: CA Zip Code: 95742
TEL: (916) 852-9118
FAX: (916) 852-9132

Project Name: Bradley Oil Project #: S8225-06-123 Sampler: (Printed Name) West Bourquin (Signature)

Relinquished by: (Signature and Printed Name) West Bourquin Date: 11/3/00 Time: 530 Received by: (Signature and Printed Name) Cal overnight Date: Time:
Relinquished by: (Signature and Printed Name) Date: Time: Received by: (Signature and Printed Name) Date: Time:
Relinquished by: (Signature and Printed Name) Date: Time: Received by: (Signature and Printed Name) Date: 11/2 Time:

I hereby authorize ATL to perform the work indicated below:
Project Mgr./Submitter:
Print Name Date
Signature

Send Report To: Attn: as above Co: Address: City State Zip

Bill To: Attn: as above Co: Address: City State Zip

Special Instructions/Comments:

Unless otherwise requested, all samples will be disposed 45 days after receipt.

Sample Archive/Disposal:
☐ Laboratory Standard
☐ Other
☐ Return To:

* $10.00 FEE PER HAZARDOUS SAMPLE DISPOSAL.

Circle or Add Analysis(es) Requested: 8081 / 8082 (Pesticides/PCB-GC); 8260 (Volatiles-GC/MS); 625 / 8270 (BNA-GC/MS); Metals-Total (CAC-6010 / 7000); 8015M TPHG/BTEX (COMBINATION); 8015M TPH/D (Diesel-GC); Lead 7420

CIRCLE APPROPRIATE MATRIX: SOLID • SOIL • SLUDGE; OIL • SOLVENT • LIQUID; WATER • WASTEWATER; DRINKING WATER; AIR; WIPE • FILTER; OTHER

PRESERVATION

Q A / Q C: RTNE ☐ RWQCB ☐ WIP ☐ NAVY ☐ CT ☑ OTHER

ITEM	LAB USE ONLY: Batch #: / Lab No.	Sample Description: Sample I.D.	Date (2000)	Time	8081 / 8082 (Pesticides/PCB-GC)	8260 (Volatiles-GC/MS)	625 / 8270 (BNA-GC/MS)	Metals-Total (CAC-6010 / 7000)	8015M TPHG/BTEX (COMBINATION)	8015M TPH/D (Diesel-GC)	Lead 7420	SOLID • SOIL • SLUDGE	OIL • SOLVENT • LIQUID	WATER • WASTEWATER	DRINKING WATER	AIR	WIPE • FILTER	OTHER	TAT	Container(s) #	Container(s) Type	PRESERVATION	REMARKS
	100	B36-30	11/1	1225							X	X							E	1	Bery		
	101	B37-10		1227																			
	102	B37-30		1229																			
	103	B38-10		1231																			
	104	B38-30		1233																			
	105	B38-60		1235																			
	106	B39-10		1237																			
	107	B39-30		1238																			
	108	B39-60		1239																			
	109	B40-10		1241																			

• TAT starts 8 a.m. following day if samples received after 5 p.m.

TAT: A= Overnight ≤ 24 hr B= Emergency Next workday C= Critical 2 Workdays D= Urgent 3 Workdays E= Routine 7 Workdays

Preservatives: H=Hcl N=HNO_3 S=H_2SO_4 C=4°C Z=Zn(AC) O=NaOH T=$Na_2S_2O_3$

Container Types: T=Tube V=VOA L=Liter P=Pint J=Jar B=Tedlar G=Glass P=Plastic M=Metal

CHAIN OF CUSTODY RECORD

Advanced Technology Laboratories
1510 E. 33rd Street
Signal Hill, CA 90807
(562) 989-4045 • FAX (562) 989-4040

FOR LABORATORY USE ONLY:

P.O.#: _____

Logged By: _____ Date: _____ Time: _____

Method of Transport: Walk-In ☐ Courier ☐ UPS ☐ FED. EXP. ☐ ATL ☐

Sample Condition Upon Receipt:
1. CHILLED Y☐ N☐ 4. SEALED Y☐ N☐
2. HEADSPACE (VOA) Y☐ N☐ 5. # OF SPLS MATCH COC Y☐ N☐
3. CONTAINER INTACT Y☐ N☐ 6. PRESERVED Y☐ N☐

Client: GEOCON ENVIRONMENTAL - SACRAMENTO
Attn: Jim Lessmann
Address: 11375 Sunrise Park Drive, Suite 100
City: Rancho Cordova State: CA Zip Code: 95742
TEL: (916) 852-9118
FAX: (916) 852-9132

Project Name: Bradley Oil Project #: 58225-06-123 Sampler: (Printed Name) West Bourgault (Signature)

Relinquished by: (Signature and Printed Name)	Date	Time	Received by: (Signature and Printed Name)	Date	Time
West Bourgault	11/2/00	500	Cal Overnight		
				11/3	

I hereby authorize ATL to perform the work indicated below:
Project Mgr /Submitter: _____ Print Name _____ Date _____ Signature

Send Report To: Attn: as above Co: _____ Address _____ City _____ State _____ Zip _____

Bill To: Attn: as above Co: _____ Address _____ City _____ State _____ Zip _____

Special Instructions/Comments:

Unless otherwise requested, all samples will be disposed 45 days after receipt.

Sample Archive/Disposal:
☐ Laboratory Standard
☐ Other _____
☐ Return To: _____

* $10.00 FEE PER HAZARDOUS SAMPLE DISPOSAL.

Circle or Add Analysis(es) Requested: 8081 / 8082 (Pesticides/PCB-GC); 8260 (Volatiles-GC/MS); 625 / 8270 (BNA-GC/MS); Metals-Total (CAC-6010 / 7000); 8015M TPHG/BTEX (COMBINATION); 8015M TPH/D (Diesel-GC); Lead 7420

CIRCLE APPROPRIATE MATRIX: SOLID • SOIL • SLUDGE; OIL • SOLVENT • LIQUID; WATER • WASTEWATER; DRINKING WATER; AIR; WIPE • FILTER; OTHER

ITEM	LAB USE ONLY: Batch #: / Lab No.	Sample Description / Sample I.D.	Date	Time	8081 / 8082 (Pesticides/PCB-GC)	8260 (Volatiles-GC/MS)	625 / 8270 (BNA-GC/MS)	Metals-Total (CAC-6010 / 7000)	8015M TPHG/BTEX (COMBINATION)	8015M TPH/D (Diesel-GC)	Lead 7420	SOLID • SOIL • SLUDGE	OIL • SOLVENT • LIQUID	WATER • WASTEWATER	DRINKING WATER	AIR	WIPE • FILTER	OTHER	TAT	Container(s) #	Container(s) Type	PRESERVATION	REMARKS
	110	B40-30	11/1	1273							X	X							E	1	Bag		
	111	B40-60	↓	1245							↓	↓											

QA/QC: RTNE ☐ RWQCB ☐ WIP ☐ NAVY ☐ CT ☑ OTHER _____

• TAT starts 8 a.m. following day if samples received after 5 p.m.

TAT: A= Overnight ≤ 24 hr; B= Emergency Next workday; C= Critical 2 Workdays; D= Urgent 3 Workdays; E= Routine 7 Workdays

Container Types: T=Tube V=VOA L=Liter P=Pint J=Jar B=Tedlar G=Glass P=Plastic M=Metal

Preservatives: H=Hcl N=HNO_3 S=H_2SO_4 C=4°C Z=$Zn(AC)_2$ O=NaOH T=$Na_2S_2O_3$

180

RECEIVED
JAN 08 2001
BY: GEOCON

ELAP No.: 1838

Geocon Environmental
11375 Sunrise Park Drive, Suite 100
Rancho Cordova, CA 95742

ATTN: Jim Lessman

Client's Project: Bradley OH, #S8225-06-123
Lab No.: 48112-001/019

Enclosed are the results for sample(s) received by Advanced Technology Laboratories and tested for the parameters indicated in the enclosed chain of custody.

Thank you for the opportunity to service the needs of your company. Please feel free to call me at (562) 989 - 4045 if I can be of further assistance to your company.

Sincerely,

Date: 12/29/00

Edgar Caballero
Laboratory Director
EC/dg

Enclosures

This cover letter is an integral part of this analytical report.

This report pertains only to the samples investigated and does not necessarily apply to other apparently identical or similar materials. This report is submitted for the exclusive use of the client to whom it is addressed. Any reproduction of this report or use of this Laboratory's name for advertising or publicity purpose without authorization is prohibited.

Advanced Technology Laboratories
1510 E. 33rd Street Signal Hill, CA 90807 Tel: 562 989-4045 Fax: 562 989-4040

188

Advanced Technology Laboratories

Print Date: *11/30/00*

CLIENT: Geocon Environmental
Client Sample ID: 47817-016/B6-10
Lab Order: 048112
Project: Bradley OH - S8225-06-123
Collection Date: 11/1/00
Lab ID: 048112-001A
Matrix: SOIL

Analyses	Result	Limit	Qual	Units	DF	Date Analyzed
LEAD BY ATOMIC ABSORPTION				**WET/ EPA 7420**		
RunID: **AA2_001130C** BatchID: **2134**				PrepDate: **11/26/00**		Analyst: **NS**
Lead	57	0.60		mg/L	4	11/30/00

Qualifiers:
ND - Not Detected at the Reporting Limit
J - Analyte detected below quantitation limits
B - Analyte detected in the associated Method Blank
DO - Surrogate Diluted Out
S - Spike/Surrogate outside of limits due to matrix interference.
H - Samples exceeding analytical holding time
E - Value above quantitation range
M - Not Monitored, Highly Reactive

Initials: _____

Advanced Technology Laboratories
1510 E. 33rd Street Signal Hill, CA 90807 Tel: 562 989-4045 Fax: 562 989-4040

Advanced Technology Laboratories

Print Date: *11/30/00*

CLIENT:	Geocon Environmental	**Client Sample ID:**	47817-019/B7-10
Lab Order:	048112		
Project:	Bradley OH - S8225-06-123	**Collection Date:**	11/1/00
Lab ID:	048112-002A	**Matrix:**	SOIL

Analyses	Result	Limit	Qual	Units	DF	Date Analyzed
LEAD BY ATOMIC ABSORPTION				**WET/ EPA 7420**		
RunID: **AA2_001130C** BatchID: **2134**				PrepDate: **11/26/00**		Analyst: **NS**
Lead	28	0.30		mg/L	2	11/30/00

Qualifiers:

ND - Not Detected at the Reporting Limit
J - Analyte detected below quantitation limits
B - Analyte detected in the associated Method Blank
DO - Surrogate Diluted Out
S - Spike/Surrogate outside of limits due to matrix interference.
H - Samples exceeding analytical holding time
E - Value above quantitation range
M - Not Monitored, Highly Reactive

Initials: _____

2

Advanced Technology Laboratories 1510 E. 33rd Street Signal Hill, CA 90807 Tel: 562 989-4045 Fax: 562 989-4040

Advanced Technology Laboratories

Print Date: *11/30/00*

CLIENT: Geocon Environmental
Lab Order: 048112
Project: Bradley OH - S8225-06-123
Lab ID: 048112-003A

Client Sample ID: 47817-033/B12-10
Collection Date: 11/1/00
Matrix: SOIL

Analyses	Result	Limit	Qual	Units	DF	Date Analyzed
LEAD BY ATOMIC ABSORPTION			WET/ EPA 7420			
RunID: AA2_001130C BatchID: 2134				PrepDate: 11/26/00		Analyst: NS
Lead	5.3	0.15		mg/L	1	11/30/00

Qualifiers:
ND - Not Detected at the Reporting Limit
J - Analyte detected below quantitation limits
B - Analyte detected in the associated Method Blank
DO - Surrogate Diluted Out
S - Spike/Surrogate outside of limits due to matrix interference.
H - Samples exceeding analytical holding time
E - Value above quantitation range
M - Not Monitored, Highly Reactive

Initials: ____

Advanced Technology Laboratories *1510 E. 33rd Street Signal Hill, CA 90807 Tel: 562 989-4045 Fax: 562 989-4040*

191

Advanced Technology Laboratories

Print Date: *11/30/00*

CLIENT: Geocon Environmental
Lab Order: 048112
Project: Bradley OH - S8225-06-123
Lab ID: 048112-004A

Client Sample ID: 47817-039/B14-10
Collection Date: 11/1/00
Matrix: SOIL

Analyses	Result	Limit	Qual	Units	DF	Date Analyzed
LEAD BY ATOMIC ABSORPTION			WET/ EPA 7420			
RunID: AA2_001130C BatchID: 2134				PrepDate: 11/26/00		Analyst: NS
Lead	31	0.45		mg/L	3	11/30/00

Qualifiers:
ND - Not Detected at the Reporting Limit
J - Analyte detected below quantitation limits
B - Analyte detected in the associated Method Blank
DO - Surrogate Diluted Out
S - Spike/Surrogate outside of limits due to matrix interference.
H - Samples exceeding analytical holding time
E - Value above quantitation range
M - Not Monitored. Highly Reactive

Initials: _____

Advanced Technology Laboratories
1510 E. 33rd Street Signal Hill, CA 90807 Tel: 562 989-4045 Fax: 562 989-4040

Advanced Technology Laboratories

Print Date: *11/30/00*

CLIENT:	Geocon Environmental	**Client Sample ID:**	47817-040/B14-30
Lab Order:	048112		
Project:	Bradley OH - S8225-06-123	**Collection Date:**	11/1/00
Lab ID:	048112-005A	**Matrix:**	SOIL

Analyses	Result	Limit	Qual	Units	DF	Date Analyzed
LEAD BY ATOMIC ABSORPTION			WET/ EPA 7420			
RunID: AA2_001130C BatchID: 2134				PrepDate: 11/26/00		Analyst: NS
Lead	2.6	0.15		mg/L	1	11/30/00

Qualifiers:
- ND - Not Detected at the Reporting Limit
- J - Analyte detected below quantitation limits
- B - Analyte detected in the associated Method Blank
- DO - Surrogate Diluted Out
- S - Spike/Surrogate outside of limits due to matrix interference.
- H - Samples exceeding analytical holding time
- E - Value above quantitation range
- M - Not Monitored. Highly Reactive

Initials: ____

Advanced Technology Laboratories *1510 E. 33rd Street Signal Hill, CA 90807 Tel: 562 989-4045 Fax: 562 989-4040*

193

Advanced Technology Laboratories

Print Date: *11/30/00*

CLIENT:	Geocon Environmental	**Client Sample ID:**	47817-041/B15-10
Lab Order:	048112		
Project:	Bradley OH - S8225-06-123	**Collection Date:**	11/1/00
Lab ID:	048112-006A	**Matrix:**	SOIL

Analyses	Result	Limit	Qual	Units	DF	Date Analyzed
LEAD BY ATOMIC ABSORPTION			WET/ EPA 7420			
RunID: AA2_001130C BatchID: 2134				PrepDate: 11/26/00		Analyst: NS
Lead	39	0.45		mg/L	3	11/30/00

Qualifiers:

ND - Not Detected at the Reporting Limit
J - Analyte detected below quantitation limits
B - Analyte detected in the associated Method Blank
DO - Surrogate Diluted Out
S - Spike/Surrogate outside of limits due to matrix interference.
H - Samples exceeding analytical holding time
E - Value above quantitation range
M - Not Monitored, Highly Reactive

Initials: 6

Advanced Technology Laboratories 1510 E. 33rd Street Signal Hill, CA 90807 Tel: 562 989-4045 Fax: 562 989-4040

Advanced Technology Laboratories

Print Date: *11/30/00*

CLIENT: Geocon Environmental
Lab Order: 048112
Project: Bradley OH - S8225-06-123
Lab ID: 048112-007A

Client Sample ID: 47817-043/B15-60
Collection Date: 11/1/00
Matrix: SOIL

Analyses	Result	Limit	Qual	Units	DF	Date Analyzed
LEAD BY ATOMIC ABSORPTION			WET/ EPA 7420			
RunID: AA2_001130C BatchID: 2134				PrepDate: 11/26/00		Analyst: NS
Lead	4.3	0.15		mg/L	1	11/30/00

Qualifiers:
ND - Not Detected at the Reporting Limit
J - Analyte detected below quantitation limits
B - Analyte detected in the associated Method Blank
DO - Surrogate Diluted Out
S - Spike/Surrogate outside of limits due to matrix interference.
H - Samples exceeding analytical holding time
E - Value above quantitation range
M - Not Monitored. Highly Reactive

Initials: [illegible]

195

Advanced Technology Laboratories 1510 E. 33rd Street Signal Hill, CA 90807 Tel: 562 989-4045 Fax: 562 989-4040

Advanced Technology Laboratories

Print Date: *11/30/00*

CLIENT: Geocon Environmental
Lab Order: 048112
Project: Bradley OH - S8225-06-123
Lab ID: 048112-008A

Client Sample ID: 47817-047/B17-10
Collection Date: 11/1/00
Matrix: SOIL

Analyses	Result	Limit	Qual	Units	DF	Date Analyzed
LEAD BY ATOMIC ABSORPTION			WET/ EPA 7420			
RunID: AA2_001130C BatchID: 2134				PrepDate: 11/26/00		Analyst: NS
Lead	4.8	0.15		mg/L	1	11/30/00

Qualifiers:
ND - Not Detected at the Reporting Limit
J - Analyte detected below quantitation limits
B - Analyte detected in the associated Method Blank
DO - Surrogate Diluted Out
S - Spike/Surrogate outside of limits due to matrix interference
H - Samples exceeding analytical holding time
E - Value above quantitation range
M - Not Monitored. Highly Reactive

Initials: [illegible]

Advanced Technology Laboratories 1510 E. 33rd Street Signal Hill, CA 90807 Tel: 562 989-4045 Fax: 562 989-4040

Advanced Technology Laboratories

Print Date: *11/30/00*

CLIENT: Geocon Environmental
Client Sample ID: 47817-051/B18-60
Lab Order: 048112
Project: Bradley OH - S8225-06-123
Collection Date: 11/1/00
Lab ID: 048112-009A
Matrix: SOIL

Analyses	Result	Limit	Qual	Units	DF	Date Analyzed
LEAD BY ATOMIC ABSORPTION			WET/ EPA 7420			
RunID: AA2_001130C BatchID: 2134				PrepDate: 11/26/00		Analyst: NS
Lead	1.9	0.15		mg/L	1	11/30/00

Qualifiers:
ND - Not Detected at the Reporting Limit
J - Analyte detected below quantitation limits
B - Analyte detected in the associated Method Blank
DO - Surrogate Diluted Out
S - Spike/Surrogate outside of limits due to matrix interference.
H - Samples exceeding analytical holding time
E - Value above quantitation range.
M - Not Monitored. Highly Reactive

Initials: (9)

197

Advanced Technology Laboratories
1510 E. 33rd Street Signal Hill, CA 90807 Tel: 562 989-4045 Fax: 562 989-4040

Advanced Technology Laboratories

Print Date: *11/30/00*

CLIENT: Geocon Environmental
Lab Order: 048112
Project: Bradley OH - S8225-06-123
Lab ID: 048112-010A

Client Sample ID: 47817-055/B20-10
Collection Date: 11/1/00
Matrix: SOIL

Analyses	Result	Limit	Qual	Units	DF	Date Analyzed
LEAD BY ATOMIC ABSORPTION			WET/ EPA 7420			
RunID: AA2_001130C BatchID: 2134				PrepDate: 11/26/00		Analyst: NS
Lead	5.0	0.15		mg/L	1	11/30/00

Qualifiers:
ND - Not Detected at the Reporting Limit
J - Analyte detected below quantitation limits
B - Analyte detected in the associated Method Blank
DO - Surrogate Diluted Out
S - Spike/Surrogate outside of limits due to matrix interference.
H - Samples exceeding analytical holding time
E - Value above quantitation range
M - Not Monitored. Highly Reactive

Initials: [illegible]

Advanced Technology Laboratories
1510 E. 33rd Street Signal Hill, CA 90807 Tel: 562 989-4045 Fax: 562 989-4040

Advanced Technology Laboratories

Print Date: *11/30/00*

CLIENT: Geocon Environmental
Lab Order: 048112
Project: Bradley OH - S8225-06-123
Lab ID: 048112-011A

Client Sample ID: 47817-056/B20-30
Collection Date: 11/1/00
Matrix: SOIL

Analyses	Result	Limit	Qual	Units	DF	Date Analyzed
LEAD BY ATOMIC ABSORPTION			WET/ EPA 7420			
RunID: AA2_001130C BatchID: 2135				PrepDate: 11/26/00		Analyst - NS
Lead	12	0.15		mg/L	1	11/30/00

Qualifiers:
ND - Not Detected at the Reporting Limit
J - Analyte detected below quantitation limits
B - Analyte detected in the associated Method Blank
DO - Surrogate Diluted Out
S - Spike/Surrogate outside of limits due to matrix interference.
H - Samples exceeding analytical holding time
E - Value above quantitation range
M - Not Monitored. Highly Reactive

Initials: [illegible]

199

Advanced Technology Laboratories 1510 E. 33rd Street Signal Hill, CA 90807 Tel: 562 989-4045 Fax: 562 989-4040

Advanced Technology Laboratories

Print Date: *11/30/00*

CLIENT: Geocon Environmental
Lab Order: 048112
Project: Bradley OH - S8225-06-123
Lab ID: 048112-012A

Client Sample ID: 47817-059/B21-30
Collection Date: 11/1/00
Matrix: SOIL

Analyses	Result	Limit	Qual	Units	DF	Date Analyzed
LEAD BY ATOMIC ABSORPTION				WET/ EPA 7420		
RunID: AA2_001130C BatchID: 2135				PrepDate: 11/26/00		Analyst: NS
Lead	11	0.15		mg/L	1	11/30/00

Qualifiers:
ND - Not Detected at the Reporting Limit
J - Analyte detected below quantitation limits
B - Analyte detected in the associated Method Blank
DO - Surrogate Diluted Out
S - Spike/Surrogate outside of limits due to matrix interference.
H - Samples exceeding analytical holding time
E - Value above quantitation range
M - Not Monitored. Highly Reactive

Initials: _____

Advanced Technology Laboratories
1510 E. 33rd Street Signal Hill, CA 90807 Tel: 562 989-4045 Fax: 562 989-4040

200

Advanced Technology Laboratories

Print Date: *11/30/00*

CLIENT: Geocon Environmental
Lab Order: 048112
Project: Bradley OH - S8225-06-123
Lab ID: 048112-013A

Client Sample ID: 47817-082/B29-10
Collection Date: 11/1/00
Matrix: SOIL

Analyses	Result	Limit	Qual	Units	DF	Date Analyzed
LEAD BY ATOMIC ABSORPTION			WET/ EPA 7420			
RunID: AA2_001130C BatchID: 2135				PrepDate: 11/26/00		Analyst: NS
Lead	4.1	0.15		mg/L	1	11/30/00

Qualifiers:
ND - Not Detected at the Reporting Limit
J - Analyte detected below quantitation limits
B - Analyte detected in the associated Method Blank
DO - Surrogate Diluted Out
S - Spike/Surrogate outside of limits due to matrix interference.
H - Samples exceeding analytical holding time
E - Value above quantitation range
M - Not Monitored. Highly Reactive

Initials: _____

Advanced Technology Laboratories 1510 E. 33rd Street Signal Hill, CA 90807 Tel: 562 989-4045 Fax: 562 989-4040

201

Advanced Technology Laboratories

Print Date: *11/30/00*

CLIENT: Geocon Environmental
Lab Order: 048112
Project: Bradley OH - S8225-06-123
Lab ID: 048112-014A

Client Sample ID: 47817-085/B30-10
Collection Date: 11/1/00
Matrix: SOIL

Analyses	Result	Limit	Qual	Units	DF	Date Analyzed
LEAD BY ATOMIC ABSORPTION			WET/ EPA 7420			
RunID: AA2_001130C BatchID: 2135				PrepDate: 11/26/00		Analyst: NS
Lead	5.3	0.15		mg/L	1	11/30/00

Qualifiers:
ND - Not Detected at the Reporting Limit
J - Analyte detected below quantitation limits
B - Analyte detected in the associated Method Blank
DO - Surrogate Diluted Out
S - Spike/Surrogate outside of limits due to matrix interference.
H - Samples exceeding analytical holding time
E - Value above quantitation range
M - Not Monitored. Highly Reactive

Initials: _____

Advanced Technology Laboratories
1510 E. 33rd Street Signal Hill, CA 90807 Tel: 562 989-4045 Fax: 562 989-4040

202

Advanced Technology Laboratories

Print Date: *11/30/00*

CLIENT: Geocon Environmental
Lab Order: 048112
Project: Bradley OH - S8225-06-123
Lab ID: 048112-015A

Client Sample ID: 47817-096/B35-10
Collection Date: 11/1/00
Matrix: SOIL

Analyses	Result	Limit	Qual	Units	DF	Date Analyzed
LEAD BY ATOMIC ABSORPTION			WET/ EPA 7420			
RunID: AA2_001130C BatchID: 2135				PrepDate: 11/26/00		Analyst: NS
Lead	15	0.15		mg/L	1	11/30/00

Qualifiers:
ND - Not Detected at the Reporting Limit
J - Analyte detected below quantitation limits
B - Analyte detected in the associated Method Blank
DO - Surrogate Diluted Out
S - Spike/Surrogate outside of limits due to matrix interference.
H - Samples exceeding analytical holding time
E - Value above quantitation range
M - Not Monitored. Highly Reactive

Initials: _____

Advanced Technology Laboratories 1510 E. 33rd Street Signal Hill, CA 90807 Tel: 562 989-4045 Fax: 562 989-4040

203

Advanced Technology Laboratories

Print Date: *11/30/00*

CLIENT: Geocon Environmental
Lab Order: 048112
Project: Bradley OH - S8225-06-123
Lab ID: 048112-016A

Client Sample ID: 47817-099/B36-10
Collection Date: 11/1/00
Matrix: SOIL

Analyses	Result	Limit	Qual	Units	DF	Date Analyzed
LEAD BY ATOMIC ABSORPTION				WET/ EPA 7420		
RunID: AA2_001130C BatchID: 2135				PrepDate: 11/26/00		Analyst: NS
Lead	52	0.60		mg/L	4	11/30/00

Qualifiers:
ND - Not Detected at the Reporting Limit
J - Analyte detected below quantitation limits
B - Analyte detected in the associated Method Blank
DO - Surrogate Diluted Out
S - Spike/Surrogate outside of limits due to matrix interference.
H - Samples exceeding analytical holding time
E - Value above quantitation range
M - Not Monitored. Highly Reactive

Initials: [illegible]

Advanced Technology Laboratories 1510 E. 33rd Street Signal Hill, CA 90807 Tel: 562 989-4045 Fax: 562 989-4040

Advanced Technology Laboratories

Print Date: *11/30/00*

CLIENT:	Geocon Environmental	**Client Sample ID:**	47817-100/B36-30
Lab Order:	048112		
Project:	Bradley OH - S8225-06-123	**Collection Date:**	11/1/00
Lab ID:	048112-017A	**Matrix:**	SOIL

Analyses	Result	Limit	Qual	Units	DF	Date Analyzed
LEAD BY ATOMIC ABSORPTION			WET/ EPA 7420			
RunID: AA2_001130C BatchID: 2135				PrepDate: 11/26/00		Analyst: NS
Lead	2.2	0.15		mg/L	1	11/30/00

Qualifiers:
ND - Not Detected at the Reporting Limit
J - Analyte detected below quantitation limits
B - Analyte detected in the associated Method Blank
DO - Surrogate Diluted Out
S - Spike/Surrogate outside of limits due to matrix interference.
H - Samples exceeding analytical holding time
E - Value above quantitation range
M - Not Monitored. Highly Reactive

Initials: [signature]

Advanced Technology Laboratories *1510 E. 33rd Street Signal Hill, CA 90807 Tel: 562 989-4045 Fax: 562 989-4040*

205

Advanced Technology Laboratories

Print Date: *11/30/00*

CLIENT: Geocon Environmental
Lab Order: 048112
Project: Bradley OH - S8225-06-123
Lab ID: 048112-018A

Client Sample ID: 47817-102/B37-30
Collection Date: 11/1/00
Matrix: SOIL

Analyses	Result	Limit	Qual	Units	DF	Date Analyzed
LEAD BY ATOMIC ABSORPTION			WET/ EPA 7420			
RunID: AA2_001130C BatchID: 2135				PrepDate: 11/26/00		Analyst: NS
Lead	1.8	0.15		mg/L	1	11/30/00

Qualifiers:
ND - Not Detected at the Reporting Limit
J - Analyte detected below quantitation limits
B - Analyte detected in the associated Method Blank
DO - Surrogate Diluted Out
S - Spike/Surrogate outside of limits due to matrix interference.
H - Samples exceeding analytical holding time
E - Value above quantitation range
M - Not Monitored. Highly Reactive

Initials: _____

Advanced Technology Laboratories
1510 E. 33rd Street Signal Hill, CA 90807 Tel: 562 989-4045 Fax: 562 989-4040

Advanced Technology Laboratories

Print Date: 11/30/00

CLIENT: Geocon Environmental
Lab Order: 048112
Project: Bradley OH - S8225-06-123
Lab ID: 048112-019A

Client Sample ID: 47817-103/B38-10
Collection Date: 11/1/00
Matrix: SOIL

Analyses	Result	Limit	Qual	Units	DF	Date Analyzed
LEAD BY ATOMIC ABSORPTION			WET/ EPA 7420			
RunID: AA2_001130C BatchID: 2135				PrepDate: 11/26/00		Analyst: NS
Lead	5.9	0.15		mg/L	1	11/30/00

Qualifiers:
ND - Not Detected at the Reporting Limit
J - Analyte detected below quantitation limits
B - Analyte detected in the associated Method Blank
DO - Surrogate Diluted Out
S - Spike/Surrogate outside of limits due to matrix interference.
H - Samples exceeding analytical holding time
E - Value above quantitation range
M - Not Monitored, Highly Reactive

Initials: [illegible]

Advanced Technology Laboratories 1510 E. 33rd Street Signal Hill, CA 90807 Tel: 562 989-4045 Fax: 562 989-4040

207

Advanced Technology Laboratories
1510 E. 33rd Street Signal Hill, CA 90807 Tel: 562 989-4045 Fax: 562 989-4040

Advanced Technology Laboratories

Date: *30-Nov-00*

CLIENT: Geocon Environmental
Work Order: 048112
Project: Bradley OH - S8225-06-123

QC SUMMARY REPORT
Method Blank

Sample ID: MB-2134 Batch ID: 2134 Test Name: LEAD BY ATOMIC ABSORPTION Units mg/L Analysis Date: 11/30/00 Prep Date: 11/26/00
MBLK SeqNo: 75314

Analyte	Result	PQL	SPK value	SPK Ref Val	%REC	LowLimit	HighLimit	RPD Ref Val	%RPD	RPDLimit	Qual
Lead	ND	0.15									

Sample ID: MB-2135 Batch ID: 2135 Test Name: LEAD BY ATOMIC ABSORPTION Units mg/L Analysis Date: 11/30/00 Prep Date: 11/26/00
MBLK SeqNo: 75327

Analyte	Result	PQL	SPK value	SPK Ref Val	%REC	LowLimit	HighLimit	RPD Ref Val	%RPD	RPDLimit	Qual
Lead	ND	0.15									

Qualifiers:
ND - Not Detected at the Reporting Limit
J - Analyte detected below quantitation limits
R - RPD outside accepted recovery limits
B - Analyte detected in the associated Method Blank
M - Not Monitored. Highly Reactive
S - Spike/Surrogate outside of limits due to matrix interference
DO - Surrogate Diluted Out

Initials: ____

208

209

Advanced Technology Laboratories

Date: 30-Nov-00

CLIENT: Geocon Environmental
Work Order: 048112
Project: Bradley OH - S8225-06-123

QC SUMMARY REPORT
Sample Duplicate

Sample ID: 048112-010A Batch ID: 2134 Test Name: LEAD BY ATOMIC ABSORPTION Units mg/L Analysis Date: 11/30/00 Prep Date: 11/26/00
DUP SeqNo: 75325

Analyte	Result	PQL	SPK value	SPK Ref Val	%REC	LowLimit	HighLimit	RPD Ref Val	%RPD	RPDLimit	Qual
Lead	6.432	0.15	0	0	0	0	0	4.994	25	30	

Sample ID: 048112-019A Batch ID: 2135 Test Name: LEAD BY ATOMIC ABSORPTION Units mg/L Analysis Date: 11/30/00 Prep Date: 11/26/00
DUP SeqNo: 75337

Analyte	Result	PQL	SPK value	SPK Ref Val	%REC	LowLimit	HighLimit	RPD Ref Val	%RPD	RPDLimit	Qual
Lead	7.694	0.15	0	0	0	0	0	5.932	26	30	

Qualifiers: ND - Not Detected at the Reporting Limit
J - Analyte detected below quantitation limits
R - RPD outside accepted recovery limits
B - Analyte detected in the associated Method Blank
M - Not Monitored. Highly Reactive
S - Spike/Surrogate outside of limits due to matrix interference
DO - Surrogate Diluted Out

Initials: [signature]

Advanced Technology Laboratories 1510 E. 33rd Street Signal Hill, CA 90807 Tel: 562 989-4045 Fax: 562 989-4040

Advanced Technology Laboratories
1510 E. 33rd Street Signal Hill, CA 90807 Tel: 562 989-4045 Fax: 562 989-4040

Advanced Technology Laboratories

Date: *30-Nov-00*

CLIENT: Geocon Environmental
Work Order: 048112
Project: Bradley OH - S8225-06-123

QC SUMMARY REPORT
Sample Matrix Spike

Sample ID: **048112-010A** Batch ID: **2134** Test Name: **LEAD BY ATOMIC ABSORPTION** Units **mg/L** Analysis Date: **11/30/00** Prep Date: **11/26/00**
MS SeqNo: **75325**

Analyte	Result	PQL	SPK value	SPK Ref Val	%REC	LowLimit	HighLimit	RPD Ref Val	%RPD	RPDLimit	Qual
Lead	9.64	0.15	5	4.994	93	80	120	0			

Sample ID: **048112-019A** Batch ID: **2135** Test Name: **LEAD BY ATOMIC ABSORPTION** Units **mg/L** Analysis Date: **11/30/00** Prep Date: **11/26/00**
MS SeqNo: **75338**

Analyte	Result	PQL	SPK value	SPK Ref Val	%REC	LowLimit	HighLimit	RPD Ref Val	%RPD	RPDLimit	Qual
Lead	10.49	0.15	5	5.932	91	80	120	0			

Qualifiers: ND - Not Detected at the Reporting Limit
J - Analyte detected below quantitation limits
R - RPD outside accepted recovery limits
B - Analyte detected in the associated Method Blank
M - Not Monitored. Highly Reactive
S - Spike/Surrogate outside of limits due to matrix interference
DO - Surrogate Diluted Out

Initials: (B)

210

211

CHAIN OF CUSTODY RECORD

Advanced Technology Laboratories
1510 E. 33rd Street
Signal Hill, CA 90807
(562) 989-4045 • FAX (562) 989-4040

FOR LABORATORY USE ONLY:

P.O.#: _____

Logged By: _____ Date: _____ Time: _____

Method of Transport: Walk-in ☐ Courier ☐ UPS ☐ FED. EXP. ☐ ATL ☐

Sample Condition Upon Receipt:
1. CHILLED Y☐ N☐ 4. SEALED Y☐ N☐
2. HEADSPACE (VOA) Y☐ N☐ 5. # OF SPLS MATCH COC Y☐ N☐
3. CONTAINER INTACT Y☐ N☐ 6. PRESERVED Y☐ N☐

Client: Geocon Consultants
Attn: J. Lessman
Address: 11375 Sunrise Park Dr., Suite 100
City Rancho Cordova State CA Zip Code 95742
TEL: (916) 852-9118
FAX: (916) 852-9132

Project Name: Bradley OH
Project #: 58225-06-123
Sampler: (Printed Name) (Signature)

Relinquished by: (Signature and Printed Name) Date: Time: Received by: (Signature and Printed Name) Date: 11/7/3 Time:
Relinquished by: (Signature and Printed Name) Date: Time: Received by: (Signature and Printed Name) Date: Time:
Relinquished by: (Signature and Printed Name) Date: Time: Received by: (Signature and Printed Name) Date: Time:

I hereby authorize ATL to perform the work indicated below:
Project Mgr /Submitter:
Print Name Date
Signature

Send Report To:
Attn: CARE
Co:
Address
City State Zip

Bill To:
Attn:
Co:
Address
City State Zip

Special Instructions/Comments:

Unless otherwise requested, all samples will be disposed 45 days after receipt.

Sample Archive/Disposal:
☐ Laboratory Standard
☐ Other
☐ Return To:
* $10.00 FEE PER HAZARDOUS SAMPLE DISPOSAL.

Circle or Add Analysis(es) Requested: 8081 / 8082 (Pesticides/PCB-GC); 8260 (Volatiles-GC/MS); 625 / 8270 (BNA-GC/MS); Metals-Total (CAC-6010 / 7000); 8015M TPHG/BTEX (COMBINATION); 8015M TPHD (Diesel-GC); STLC Pb

CIRCLE APPROPRIATE MATRIX: SOLID SOIL • SLUDGE; OIL • SOLVENT • LIQUID; WATER • WASTEWATER; DRINKING WATER; AIR; WIPE • FILTER; OTHER

ITEM	LAB USE ONLY: Batch #: Lab No.	Sample Description: Sample I.D.	Date	Time	8081 / 8082	8260	625 / 8270	Metals-Total	8015M TPHG/BTEX	8015M TPHD	STLC Pb	SOLID SOIL	OIL • SOLVENT • LIQUID	WATER • WASTEWATER	DRINKING WATER	AIR	WIPE • FILTER	OTHER	TAT	Container(s) #	Container(s) Type	PRESERVATION	REMARKS
	48112-001	48117-016 / B6-10	11/6								X	X							E				
	2	-018 / B7-10																					
	3	-033 / B12-10																					
	4	-039 / B14-10																					
	5	-040 / B14-30																					
	6	-041 / B15-10																					
	7	-043 / B15-60																					
	8	-047 / B17-10																					
	9	-051 / B18-60																					
	10	-055 / B20-10																					

QA/QC: RTNE ☐ RWQCB ☐ WIP ☐ NAVY ☐ CT ☒ OTHER

* TAT starts 8 a.m. following day if samples received after 5 p.m.

TAT: A= Overnight ≤ 24 hr; B= Emergency Next workday; C= Critical 2 Workdays; D= Urgent 3 Workdays; E= Routine 7 Workdays

Preservatives: H=HCl N=HNO_3 S=H_2SO_4 C=4°C Z=$Zn(AC)_2$ O=NaOH T=$Na_2S_2O_3$

Container Types: T=Tube V=VOA L=Liter P=Pint J=Jar B=Tedlar G=Glass P=Plastic M=Metal

DISTRIBUTION: White with report, Yellow to folder, Pink to submitter

NOV-30-00 THU 04:38 PM ADVANCED TECHNOLOGY LAB FAX NO. 5629894040 P. 20/20

CHAIN OF CUSTODY RECORD

Advanced Technology Laboratories
1510 E. 33rd Street
Signal Hill, CA 90807
(562) 989-4045 • FAX (562) 989-4040

FOR LABORATORY USE ONLY:

P.O.#:

Logged By: Date: Time:

Method of Transport: Walk-In ☐ Courier ☐ UPS ☐ FED. EXP. ☐ ATL ☐

Sample Condition Upon Receipt:
1. CHILLED Y☐ N☐ 4. SEALED Y☐ N☐
2. HEADSPACE (VOA) Y☐ N☐ 5. # OF SPLS MATCH COC Y☐ N☐
3. CONTAINER INTACT Y☐ N☐ 6. PRESERVED Y☐ N☐

Client: Address: TEL: ( )
Attn: City State Zip Code FAX: ( )

Project Name: Project #: Sampler: (Printed Name) (Signature)

Relinquished by: (Signature and Printed Name) Date: Time: Received by: (Signature and Printed Name) Date: Time:
Relinquished by: (Signature and Printed Name) Date: Time: Received by: (Signature and Printed Name) Date: Time:
Relinquished by: (Signature and Printed Name) Date: Time: Received by: (Signature and Printed Name) Date: Time:

I hereby authorize ATL to perform the work indicated below:
Project Mgr /Submitter:
Print Name Date
Signature

Send Report To:
Attn: SAME
Co:
Address
City State Zip

Bill To:
Attn:
Co:
Address
City State Zip

Special Instructions/Comments:

Unless otherwise requested, all samples will be disposed 45 days after receipt.

Sample Archive/Disposal:
☐ Laboratory Standard
☐ Other
☐ Return To:

* $10.00 FEE PER HAZARDOUS SAMPLE DISPOSAL

Circle or Add Analysis(es) Requested: 8081 / 8082 (Pesticides/PCB-GC); 8260 (Volatiles-GCMS); 625 / 8270 (BNA-GCMS); Metals-Total (CAC-6010 / 7000); 8015M TPHG/BTEX (COMBINATION); 8015M TPH/D (Diesel-GC); STLC Pb

CIRCLE APPROPRIATE MATRIX: SOLIDS • SOIL • SLUDGE; OIL • SOLVENT • LIQUID; WATER • WASTEWATER; DRINKING WATER; AIR; WIPE • FILTER; OTHER

Q A / Q C: RTNE ☐ RWQCB ☐ WIP ☐ NAVY ☐ CT ☐ OTHER

ITEM	LAB USE ONLY: Batch #: Lab No.	Sample Description: Sample I.D.	Date	Time	8015M TPH/D (Diesel-GC)	SOLIDS • SOIL • SLUDGE	TAT	Container(s) #	Container(s) Type	PRESERVATION	REMARKS
	48112-001	47817-056 / B20-30	11/01		X	X	E				
	12	-059 / B21-30									
	13	-082 / B29-10									
	14	-085 / B30-10									
	15	-096 / B35-10									
	16	-099 / B36-10									
	17	-100 / B36-30									
	18	-102 / B37-30									
	19	-103 / B38-10			X	X					

* TAT starts 8 a.m. following day if samples received after 5 p.m.

TAT: A= Overnight ≤ 24 hr; B= Emergency Next workday; C= Critical 2 Workdays; D= Urgent 3 Workdays; E= Routine 7 Workdays

Container Types: T=Tube V=VOA L=Liter P=Pint J=Jar B=Tedlar G=Glass P=Plastic M=Metal

Preservatives: H=Hcl N=HNO_3 S=H_2SO_4 C=4°C Z=$Zn(AC)_2$ O=NaOH T=$Na_2S_2O_3$

DISTRIBUTION: White with report, Yellow to folder, Pink to submitter.

NOV-30-00 THU 04:39 PM ADVANCED TECHNOLOGY LAB FAX NO. 5629894040 P. 20/20

LEAD STATISTICS
0.1 METER SAMPLE DEPTHS
Bradley Overhead Bridge

Total Lead	*t*	*Arcsine*
Maximum, x	440.0	1.6
Mean (Average), x	77.0	0.2
Standard Deviation of a Sample, S	102.1	0.3
Variance, S^2	10,433.2	0.1

Variance Greater Than Mean — Use Arcsine Transform

	t	*Arcsine*
Number of samples, n	40	40
t90% for (n-1) samples	1.304	1.304
t95% for (n-1) samples	1.685	1.685
90% UCL (Total Lead, mg/kg)	98.0	112.8
95% UCL (Total Lead, mg/kg)	104.2	120.6

Predicted Soluble (WET) Lead

constant	0.0
slope	0.0969

	t		*Arcsine*	
90% UCL (Total Lead, mg/kg)	98.0	***OK***	112.8	***OK***
Predicted Soluble Lead (mg/l)	9.5	***Haz***	10.9	***Haz***
95% UCL (Total Lead, mg/kg)	104.2	***OK***	120.6	***OK***
Predicted Soluble Lead (mg/l)	10.1	***Haz***	11.7	***Haz***

Appropriate Number of Samples	*t*		*Arcsine*	
HSC Threshold	350.0		0.92	
Number of Samples	40.0		40.0	
Appropriate No. of Samples (90% UCL)	0.2	***# Samples OK***	0.3	***# Samples OK***
Appropriate No. of Samples (95% UCL)	0.4	***# Samples OK***	0.5	***# Samples OK***

Reuse/Disposal Options

90% UCL	*t*	*Arcsine*
Total Lead (mg/kg)	98.0	112.8
Soluble Lead (mg/l)	9.5	10.9
	VARIANCE	***VARIANCE***

95% UCL	*t*	*Arcsine*
Total Lead (mg/kg)	104.2	120.59
Soluble Lead (mg/l)	10.1	11.68
	VARIANCE	***VARIANCE***

213

LEAD STATISTICS
0.3 METER SAMPLE DEPTHS
Bradley Overhead Bridge

Total Lead	*t*	*Arcsine*
Maximum, x	330.0	1.6
Mean (Average), x	33.5	0.1
Standard Deviation of a Sample, S	65.3	0.3
Variance, S^2	4,270.0	0.1

Variance Greater Than Mean — Use Arcsine Transform

	t	*Arcsine*
Number of samples, n	40	40
t90% for (n-1) samples	1.304	1.304
t95% for (n-1) samples	1.685	1.685
90% UCL (Total Lead, mg/kg)	47.0	57.3
95% UCL (Total Lead, mg/kg)	50.9	62.6

Predicted Soluble (WET) Lead

constant	0.0
slope	0.0969

	t		*Arcsine*	
90% UCL (Total Lead, mg/kg)	47.0	***OK***	57.3	***OK***
Predicted Soluble Lead (mg/l)	4.6	***Non-Haz***	5.6	***Haz***
95% UCL (Total Lead, mg/kg)	50.9	***OK***	62.6	***OK***
Predicted Soluble Lead (mg/l)	4.9	***Non-Haz***	6.1	***Haz***

Appropriate Number of Samples	*t*		*Arcsine*	
HSC Threshold	350.0		1.57	
Number of Samples	40.0		40.0	
Appropriate No. of Samples (90% UCL)	0.1	***# Samples OK***	0.1	***# Samples OK***
Appropriate No. of Samples (95% UCL)	0.1	***# Samples OK***	0.1	***# Samples OK***

Reuse/Disposal Options

90% UCL	*t*	*Arcsine*
Total Lead (mg/kg)	47.0	57.3
Soluble Lead (mg/l)	4.6	5.6
	NON-HAZ	***VARIANCE***

95% UCL	*t*	*Arcsine*
Total Lead (mg/kg)	50.9	62.65
Soluble Lead (mg/l)	4.9	6.07
	NON-HAZ	***VARIANCE***

LEAD STATISTICS
0.6 METER SAMPLE DEPTHS
Bradley Overhead Bridge

Total Lead	*t*	*Arcsine*
Maximum, x	93.0	1.6
Mean (Average), x	11.2	0.1
Standard Deviation of a Sample, S	19.8	0.3
Variance, S^2	392.6	0.1

Variance Greater Than Mean — Use Arcsine Transform

	t	*Arcsine*
Number of samples, n	40	40
t90% for (n-1) samples	1.304	1.304
t95% for (n-1) samples	1.685	1.685
90% UCL (Total Lead, mg/kg)	15.3	18.4
95% UCL (Total Lead, mg/kg)	16.5	20.1

Predicted Soluble (WET) Lead

constant	0.0
slope	0.0969

	t		*Arcsine*	
90% UCL (Total Lead, mg/kg)	15.3	***OK***	18.4	***OK***
Predicted Soluble Lead (mg/l)	1.5	***Non-Haz***	1.8	***Non-Haz***
95% UCL (Total Lead, mg/kg)	16.5	***OK***	20.1	***OK***
Predicted Soluble Lead (mg/l)	1.6	***Non-Haz***	1.9	***Non-Haz***

Appropriate Number of Samples	*t*		*Arcsine*	
HSC Threshold	350.0		1.57	
Number of Samples	40.0		40.0	
Appropriate No. of Samples (90% UCL)	0.0	***# Samples OK***	0.1	***# Samples OK***
Appropriate No. of Samples (95% UCL)	0.0	***# Samples OK***	0.1	***# Samples OK***

Reuse/Disposal Options

90% UCL	*t*	*Arcsine*
Total Lead (mg/kg)	15.3	18.4
Soluble Lead (mg/l)	1.5	1.8
	NON-HAZ	***NON-HAZ***

95% UCL	*t*	*Arcsine*
Total Lead (mg/kg)	16.5	20.06
Soluble Lead (mg/l)	1.6	1.94
	NON-HAZ	***NON-HAZ***

216

Project Name: Bradley Overhead Bridge
Project Number: S8225-06-123
Task Order Number: 10-3A6600-2J

Regression Analysis Results for Total Lead vs. Soluble Lead (WET)

Regression Output:

Constant *(b)*	0
Slope *(m)*	0.0969
Correlation *(r)*	0.782
Number of *(x, y)* Observations	19
Total Lead Mean	41
Total Lead Standard Error	17
Total Lead Standard Deviation	75
Soluble Lead (WET) Mean	15
Soluble Lead (WET) Standard Error	4.0
Soluble Lead (WET) Standard Deviation	18

Regression Line: $y = m(x) + b$, where x = total lead and y = soluble lead (WET)

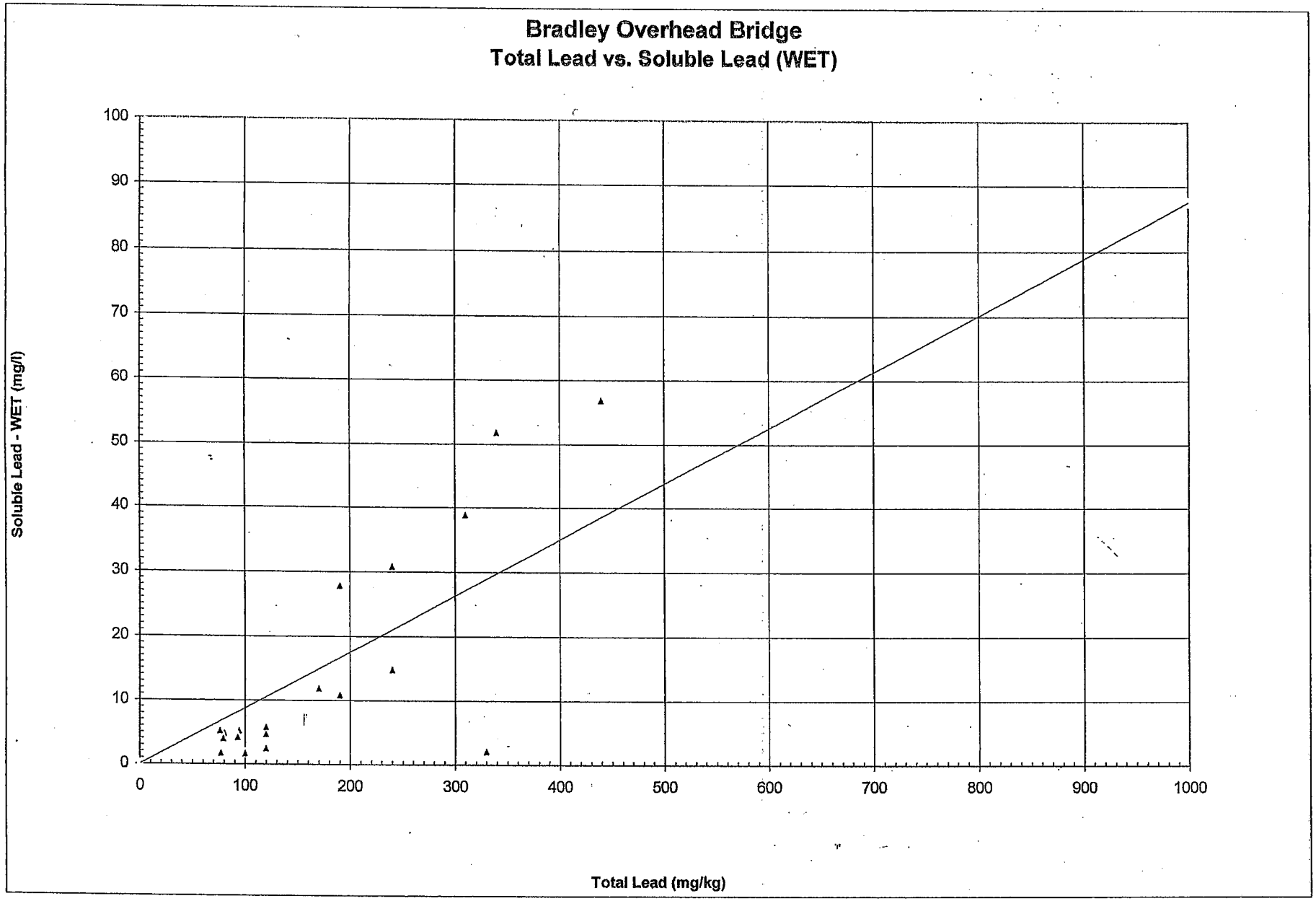
Bradley Overhead Bridge
Total Lead vs. Soluble Lead (WET)
Soluble Lead - WET (mg/l)
Total Lead (mg/kg)
0
10
20
30
40
50
60
70
80
90
100
0
100
200
300
400
500
600
700
800
900
1000

STATE OF CALIFORNIA • DEPARTMENT OF TRANSPORTATION

ENCROACHMENT PERMIT

TR-0120 (REV. 2/98)

In order to better serve you, please fill out and return the Customer Service Questionnaire attached to this permit.

Permit No.	1000-NSV-0947
Dist/Co/Rte/PM	10-MER-140-PM 36.9/ 37.4
Date	OCTOBER 19, 2000
Fee Paid	$ EXEMPT
Deposit	$
Performance Bond Amount (1)	$
Payment Bond Amount (2)	$
Bond Company	
Bond Number (1)	
Bond Number (2)	

In compliance with (Check one):

- [x] Your application of **SEPTEMBER 1, 2000**
- [ ] Utility Notice No. _____ of _____
- [ ] Agreement No. _____ of _____
- [ ] R/W Contract No. _____ of _____

RECEIVED
OCT 20 2000
BY: GEOCON

TO:

GEOCON CONSULTANTS, INC
11375 SUNRISE PARK DRIVE, SUITE #100
RANCHO CORDOVA, CA 95742

ATTN: JAMES L. LESSMAN
TEL : (916) 852-9118

, PERMITTEE

and subject to the following, PERMISSION IS HEREBY GRANTED to:

Perform a survey for potential asbestos containing materials and a survey for lead based paint on/under Bradley Overhead Bridge (Bridge # 39-004), hand auger 40 borings at bridge abutment, bridge deck, at the top of piers/bents at girders etc. and repair and seal the structural surfaces where sampling takes place on State Route 140 right of way in Merced as shown in the attached Location Map/ Vicinity Map and Site Plan. This work shall be done in accordance with Caltrans Contract Number 43A0012 and Task Order Number 10-3A6600-2J. All work shall be done without interference to public traffic. A traffic control plan shall be submitted to the State representative before doing any work. The purpose of this survey is to determine the potential presence and quantity of asbestos containing materials and lead based paint at this structure on State Route 140 right of way in Merced County.

In accordance with General Provision No. 6, **TWO WORKING DAYS PRIOR** to the start of this work, permittee shall notify the State representative **BILL D. LaMASCUS**, 908 N. Emerald Avenue,Modesto, CA 95351, (209) 576-6299 and/or P.O. Box 311, Merced, CA 95341, (209) 726-6598. All work under this permit must meet with the approval of the State representative.

The following attachments are also included as part of this permit (Check applicable):

- [x] Yes [ ] No General Provisions
- [ ] Yes [x] No Utility Maintenance Provisions
- [x] Yes [ ] No Special Provisions T
- [ ] Yes [x] No A Cal-OSHA permit required prior to beginning work; #

In addition to fee, the permittee will be billed actual costs for:

- [ ] Yes [x] No Review
- [ ] Yes [x] No Inspection
- [x] Yes [ ] No Field Work

(If any Caltrans effort expended)

- [ ] Yes [x] No The information in the environmental documentation has been reviewed and is considered prior to approval of this permit.

This permit is void unless the work is complete before **APRIL 30, 2001.**

This permit is to be strictly construed and no other work other than specifically mentioned is hereby authorized.
No project work shall be commenced until all other necessary permits and environmental clearances have been obtained.

1 - Permittee
1 - File
3 - BILL D. LaMASCUS

PS.VENKAT

APPROVED:

MARK LEJA, District Director

BY: P. S. Venkatesan

FRANKLIN L. WEISHAAR, JR., District Permit Engineer

FM 91 1436

220

Failure on the permittee's part to comply with any provision will be cause for revocation of this permit.

IMMEDIATELY FOLLOWING COMPLETION OF WORK PERMITTED HEREIN, PERMITTEE SHALL FILL OUT AND MAIL NOTICE OF COMPLETION PROVIDED BY GRANTOR.

Permittee's attention is directed to Section 6, "CONTROL OF MATERIALS", of the State Standard Specifications Reference to Engineer in the State Standard Specifications shall include State Representative.

Permittee is directed to Standard Specification section 7-1.11 Preservation of Property, and Business and Professions Code, Section 8771. Permittee shall physically inspect the work site and locate survey monuments prior to work commencement. Monuments shall be referenced or reset in accordance with Business and Professions Code.

A **pre-job conference** with the permittee, contractor, and State representative is required prior to start of work. Permittee shall contact the State representative and arrange the meeting. This meeting may be waived at the direction of the State representative.

Notwithstanding General Provision #4, your contractor is required to apply for and obtain an encroachment permit prior to start of work.

Permittee shall, prior to commencement of any work, provide the State representative with the **name and phone number** of the **person in responsible charge** of the work to be performed under this permit.

Traffic control shall be done in conformance with Caltrans Manual of Traffic Controls 1996.

In addition to General Provision 35, "Notification of department and TMC", the permittee shall notify the Department's representative AND THE TRANSPORTATION MANAGEMENT CENTER (TMC) immediately prior to initiating any traffic control and immediately upon the removal of any traffic controls. The telephone number for Caltrans District 10 TMC is (209) 948-7556.

Except when necessary, as determined by the State representative, no installation, construction equipment, or personal vehicles shall operate or park within the traveled way.

No cutting of pavement or improved shoulder is authorized under this permit.

In addition to the attached General Provisions, the following special provisions are also applicable:

1. Unless specifically authorized elsewhere in this permit, survey work shall not be performed:
   - A. On holiday(s) and a day preceeding holiday(s)
   - B. In medians.
   - C. When work requires traffic control on lanes.
2. Permittee shall furnish, place, and maintain required signs, safety equipment, and traffic control and warning devices in accordance with the Manual of Traffic Controls published by the Department of Transportation.
3. All personnel shall wear hard hats and orange vests, shirts or jackets as appropriate.
4. Unless specifically authorized in this permit, survey markings within the right of way shall be temporary. Paint used for markings shall be water-soluble and other markers shall be removed upon completion of survey.
5. Any collected survey data requested by Caltrans shall be furnished to Caltrans without charge.
6. Measurements across traffic lanes shall be made through the use of an electronic distance-measuring device utilizing non-visible light or other optical means.
7. Electromagnetic and radioactive equipment must be operated by certified personnel and shall not interfere with radio communications or be directed toward the traveling public.

221

8. Vehicles necessary for survey work may be parked in Sate Highway right of way off paved shoulders. Auxiliary support and employee vehicles shall remain outside the right of way.

9. Detonating explosive charges within State right of way is prohibited.

10. Permittee shall provide for the safe passage of pedestrians.

11. Information pertaining to Caltrans survey monumentation may be obtained upon request to: Survey Section, Department of Transportation, P.O. Box 2048, Stockton, CA 95201. Telephone, (209) 948-3983.

Before commencing work, permittee must obtain written concurrence from the State Highway Resident Engineer on the scheduling of the proposed work.

Permittee shall fully conform to the requirements of the Caltrans statewide **NPDES Storm Water Permit, Order No. 99-06-DWQ, NPDES No. CAS000003, adopted by the State Water Resources Control Board on July 15, 1999.** The permittee shall also conform to the requirements of the General NPDES Permit for construction Activities and any subsequent General Permit in effect at the time of issuance of this Encroachment Permit. These permits regulate storm water discharges associated with year-round construction or special event encroachment activities.

For all projects of 5 acres or more the permittee shall develop, implement, and maintain a **Storm Water Pollution Plan (SWPPP)** and for projects less than 5 acres a **Water Pollution Control Program (WPCP).** Either the Plan or Program shall also conform to the requirements of the Caltrans Storm Water Quality Handbook, Construction Contractor's Guide and Specifications and Caltrans Specification Section 7-1-.01G and subsequent revisions.

The State of California, Department of Transportation makes no assurance or expressed warranty that the plans are complete or that the planned construction fits field conditions. Should additional work or modifications of the work be required in order to meet established Department Standards or in order to fit field conditions, the work shall be performed by Permittee as directed by the State's Inspector.

222

Shaw™ Shaw Environmental, Inc.

SITE INVESTIGATION REPORT

INVESTIGATION OF HEAVY METALS AND HYDROCARBONS IN SOIL STATE ROUTE 140 (PM 36.2 – 38.0), MERCED COUNTY, CALIFORNIA

November 29, 2005

Prepared for:

California Department of Transportation
2015 East Shields Avenue
Fresno, California 93726

Prepared by:

Shaw Environmental, Inc.
1326 North Market Boulevard
Sacramento, California 95834-1912

Task Order No.: 17
Contract No.: 06A0752

Project No.: 117535

SITE INVESTIGATION REPORT

INVESTIGATION OF HEAVY METALS AND HYDROCARBON IN SOIL
STATE ROUTE 140 (PM 36.2 – 38.0), MERCED COUNTY, CALIFORNIA

Prepared for:

California Department of Transportation
2015 East Shields Avenue
Fresno, California 93726

Prepared by:

Shaw Environmental, Inc.
1326 North Market Boulevard
Sacramento, California 95834

Task Order No.: 17
Contract No.: 06A0752

Project No.: 117535

SHAW ENVIRONMENTAL, INC.

PROFESSIONAL GEOLOGIST
TIMOTHY D. AULT
No. 7608
STATE OF CALIFORNIA

Tim Ault, P. G.
Task Order Manager

Table of Contents

List of Tables iii
List of Figures iii
List of Appendices iv

Executive Summary ES-1
1.0 Introduction 1-1
1.1 Project Description 1-1
1.2 Project Objectives 1-1
2.0 Scope of Work 2-1
2.1 Planning and Permitting 2-1
2.2 Field Investigation 2-1
2.2.1 Drilling and Sampling 2-1
2.2.2 Location Survey 2-2
2.3 Laboratory Analyses 2-3
2.3.1 Metals Analysis 2-3
2.3.2 Hydrocarbon Analysis 2-3
3.0 Investigation Results 3-1
3.1 Metals and pH Results 3-1
3.2 Hydrocarbon Results 3-1
3.3 Volatile Organic Compound Results 3-2
3.4 Equipment Rinse Results 3-2
3.5 Waste Soil Sampling Results 3-2
4.0 Conclusions and Recommendations 4-1
5.0 References 5-1

List of Tables

Table 1 Summary of Detected Heavy Metals and pH Results
Table 2 Summary of TPH and Detected VOCs Results

List of Figures

Figure 1 Site Vicinity Map
Figure 2 Boring Location Map

List of Appendices

Appendix A Drilling Permits
Appendix B Drilling and Sampling Procedures
Appendix C Laboratory Analytical Reports and Chain-of-Custody Forms

Executive Summary

Shaw Environmental, Inc. (Shaw) conducted an investigation of heavy metals and hydrocarbons in soil along State Route (SR) 140 between Post Mile 36.2 and 38.0 (Post Kilometer 58.3 to 61.2) in Merced County, California (Figure 1). This investigation is associated with proposed improvement work by the California Department of Transportation (Caltrans) at the intersection of SR 140 (Yosemite Parkway) and Parsons Avenue in Merced, California, as part of the Bradley Overhead project. Shaw's investigation was conducted at the request and authorization of Ms. Susan Greenwood of Caltrans under Contract No. 06A0752, Task Order No. 17.

The purpose of the investigation was to identify and characterize the presence and concentration of heavy metal and hydrocarbon contamination relating to the presence of the former gasoline facilities in two parcels located adjacent to the Bradley Overhead project. Nine soil borings were installed on the two parcels. Soil samples from the borings were analyzed for: total petroleum hydrocarbons (TPH) as gasoline (TPHg) and diesel (TPHd); benzene, toluene, ethylbenzene, and xylenes (BTEX); volatile organic compounds (VOCs); and CAM-17 total metals.

Antimony, arsenic, beryllium, cadmium, molybdenum, nickel, selenium, and thallium were not detected above their respective reporting limits. Seven metals (barium, chromium, cobalt, copper, lead, vanadium, and zinc) were detected in all eight samples analyzed, mercury was reported in 4 samples, and silver was detected in one sample. No metals exceeded their respective ten times Soluble Threshold Limit Concentration (STLC) value; therefore, no analysis by the Waste Extraction Test (WET) was required.

There were no detections of TPHg, TPHd, benzene, ethylbenzene, total xylenes and VOCs above laboratory detection limits in soil samples from the borings. Toluene was detected in one sample and acetone was detected in five samples. Toluene is probably site related; however, the low concentration and singular location indicates minimal impact. Acetone is commonly observed as laboratory contaminants and the relatively low concentrations are considered to be the result of laboratory contamination rather than soil constituents.

Based on these results, it is concluded that there has been no hydrocarbon impact to soils at these locations.

1.0 Introduction

This report presents the results of the soil investigation performed by Shaw Environmental, Inc. (Shaw) investigation at the intersection of SR 140 (Yosemite Parkway) and Parsons Avenue in Merced, California (Figure 1).

1.1 Project Description

This investigation is associated with proposed improvement work by the California Department of Transportation (Caltrans) as part of the Bradley Overhead project. This investigation was conducted at the request and authorization of Ms. Susan Greenwood of Caltrans under Contract No. 06A0752, Task Order No. 17. All drilling work was conducted within Caltrans right-of-way at two parcels that have been identified as having been former underground storage tank (UST) facilities. These parcels are located at 1990 Yosemite Parkway (APN 035-090-006) and 2010 Yosemite Parkway (APN 061-390-001).

Shaw is not aware of any previous site investigative work in the project area.

1.2 Project Objectives

The purpose of the investigation was to identify and characterize the presence and concentration of heavy metal and hydrocarbon contamination in soil related to the former presence of USTs within an area proposed for excavation by Caltrans.

2.0 Scope of Work

The investigation scope of work was presented in Shaw's workplan dated September 28, 2005, which was approved for implementation by Caltrans (Shaw, 2005a). The following scope of work was conducted:

1. Permitting and Mobilization
2. Field Investigation (sampling)
3. Laboratory Analyses
4. Site Investigation Report Preparation

2.1 Planning and Permitting

Planning and permitting included a pre-work site visit, preparation of a work plan (WP) and health and safety plan (HSP), and acquisition of required permits.

A pre-work site visit was conducted at the site on September 15, 2005, and was attended by Mr. Tim Ault of Shaw and Ms. Susan Greenwood of Caltrans. Locations for soil borings were observed and marked, and the scope of work and objectives were discussed.

A site-specific HSP (Shaw, 2005b) was prepared for the site in general accordance with 29 CFR 1910.120 and Title 8, California Code of Regulations, Section 5192. The HSP included safety procedures for work to be performed at the site, chemical hazard information, identification of site safety officers, and preferred medical emergency locations.

Drilling permits were obtained by Shaw from the City of Merced (Appendix A). Right-to-enter consent was obtained by Caltrans from the owners of the two parcels.

2.2 Field Investigation

A utility survey was performed by USA and Shaw prior to beginning field work, and the locations of utilities present at the site were marked on the ground surface. The field investigation, consisting of drilling and sampling, was conducted on October 11 and 12, 2005.

2.2.1 Drilling and Sampling

The field work consisted of advancing nine soil borings on two parcels on the south side of SR140 and on either side of Parsons Avenue (Figure 2). Boring locations were selected by Caltrans in accordance with Caltrans' Task Order No. 17. Borings B01 through B05 were located on the parcel west of Parsons Road (1990 Yosemite Parkway) and borings

B06 through B09 were located on the parcel east of Parsons Road (2010 Yosemite Parkway), as shown on Figure 2.

The nine soil borings were advanced, using hollow-stem auger drilling equipment, to a maximum depth of 9.1 meters (m) (30 feet [ft]) below ground surface (bgs). Soil samples were collected at 1.5 m (5 ft) intervals as follows: 1.5 m (5 ft), 3 m (10 ft), 4.5 m (15 ft), 6 m (20 ft), 7.5 m (25 ft), and to 9 m (30 ft) bgs.

- All samples collected from each boring were analyzed for total petroleum hydrocarbons (TPH) as gasoline (TPHg) and as diesel (TPHd), and for benzene, toluene, ethylbenzene, and xylenes (BTEX).
- Samples collected at 1.5 m (5 ft), 4.5 m (15 ft), and 9 m (30 ft) bgs in each boring were analyzed for volatile organic compounds (VOCs).
- The uppermost (1.5 m [5 ft] bgs) soil sample from each boring was analyzed for CAM-17 total metals.
- pH was analyzed in 10% of the samples, randomly selected.

Soil samples were collected using a split-spoon sampler lined with six-inch-long stainless steel sample tubes. The first (lowest) sample tube from the sampler was designated for laboratory analyses. The sleeve was immediately capped and labeled and placed on ice in a sample cooler. Soil from the next sleeve was used for soil description and field headspace analysis of VOCs. Drilling and sampling procedures are included in Appendix B.

All drilling and sampling equipment was washed prior to use and between borings. One equipment rinse sample was collected on each field investigation day by pouring deionized water through the washed sampling equipment into laboratory-prepared containers. The two equipment rinse samples were analyzed for TPHg, TPHd, BTEX, VOCs and CAM-17 total metals.

Wash water generated during the field investigation was poured onto the ground in a manner to minimize run-off. Following soil sample collection, the borings were grouted according to the requirement of the City of Merced.

2.2.2 *Location Survey*

The horizontal and vertical locations of the borings were established using a Trimble GPS Pathfinder™ Pro XRS global positioning system (GPS). The GPS utilized a GPS receiver and MSK radio beacon differential receiver. The GPS is reported to have sub-meter accuracy for horizontal location of the borings. The vertical accuracy is reported to be two to five times that

of the horizontal precision. The GPS data was downloaded in the office and Trimble software was utilized to provide differential corrections to the coordinates. The horizontal and vertical datums used for this investigation were the California Coordinate System of 1983, Zone 3, and the North American Vertical Datum of 1988, respectively. The standard unit of measurement for both of these data was the meter. The boring positions are presented in GIS database format in Table 1.

2.3 Laboratory Analyses

The soil samples were submitted to Sparger Technology, Inc. (Sparger), of Sacramento, California, a California-certified analytical laboratory. Chain-of-custody procedures, including the use of chain-of-custody forms, were used to document sample handling and transport from the time of collection to delivery to the laboratory for analysis. The chain-of-custody forms and laboratory analytical reports are included in Appendix C.

The analyses were conducted on a standard turnaround basis in general accordance with U.S. Environmental Protection Agency (EPA) specified holding times. The number of soil samples for each analysis and the method used are shown below:

Number of Samples	Analysis	Method
8	Total Metals	EPA 6010B
8	Total Mercury	EPA 7471A
53	TPHg and TPHd	EPA 8015M DHS
53	BTEX	EPA 8260B
26	VOCs	EPA 8260B
9	pH	EPA 9045

2.3.1 Metals Analysis

A total of eight soil samples were analyzed for total metals in general accordance with EPA Methods 6010 and 7470. The 1.5-meter sample from boring B07 was not collected due to insufficient soil volume in the sample tube; therefore, metals were not analyzed in that boring.

2.3.2 Hydrocarbon Analysis

Soil samples collected from the nine borings were submitted for analysis of hydrocarbons and VOCs. A total of 53 soil samples were analyzed for TPHg and TPHd by EPA Method 8015M and BTEX by EPA Method 8260B, and 26 samples were analyzed for VOCs by EPA Method 8260B.

3.0 Investigation Results

3.1 Metals and pH Results

Antimony, arsenic, beryllium, cadmium, molybdenum, nickel, selenium, and thallium were not detected above their respective reporting limits. Seven metals (barium, chromium, cobalt, copper, lead, vanadium, and zinc) were detected in all eight samples analyzed, mercury was reported in 4 samples, and silver was detected in the sample from boring B06. The detections of each metal were compared to a value of ten times its soluble threshold limit concentration (STLC) limit. The results are presented in Table 1 and are summarized below:

Metal Detected	Number of Detections	Concentration Range (mg/kg)	STLC / 10X (mg/L)	No. Samples Exceeding 10X STLC
Barium	8	84 – 230	100 / 1,000	0
Chromium	8	26 – 48	5 / 50	0
Cobalt	8	7.2 – 16	80 / 800	0
Copper	8	16 – 37	25 / 250	0
Lead	8	2.3 – 5.0	5 / 50	0
Mercury	4	<0.01 – 0.012	0.2 / 2	0
Silver	1	1.9	5 / 50	0
Vanadium	8	32 – 63	24 / 240	0
Zinc	8	31 – 57	250 / 2,500	0

Notes:
mg/kg = milligrams per kilogram
mg/L = milligrams per liter

The work plan specified that any metal with a total metals value equal to or greater than ten times the STLC would be further analyzed by the Waste Extraction Test (WET). No metals results exceeded these values; therefore, no analysis by the WET was required.

Nine samples, one from each boring, were analyzed for pH. The reported pH values ranged from 7.2 to 9.4 pH units.

3.2 Hydrocarbon Results

The purpose of the hydrocarbon investigation was to determine the presence of hydrocarbon impact in soils from possible former USTs in the vicinity of proposed Caltrans excavation. Analytical results for TPHg and TPHd in soil samples collected from the nine borings were

below laboratory detection limits (Table 2). Based on these results, it appears that there has been no hydrocarbon impact in soils at these locations.

3.3 Volatile Organic Compound Results

Benzene, ethylbenzene, and total xylenes in soil samples collected from the nine borings were below laboratory detection limits (Table 2). Two VOCs were detected in the soil samples.

One sample (B03-6.0) had a detection of toluene at a concentration of 1.90 µg/kg. Toluene is probably site related; however, the low concentration and singular location indicates minimal impact.

Five samples (B02-4.5, B02-9.0, B05-1.5, B06-4.5, and B08-1.5) had acetone detections ranging from 2.1 to 11 µg/kg. Acetone is commonly observed as laboratory contaminants. The relatively low concentrations are considered to be the result of laboratory contamination rather than soil constituents.

3.4 Equipment Rinse Results

Two equipment rinse samples were analyzed for TPHg, TPHd, BTEX, VOCs and CAM-17 total metals. There were no detections in the equipment rinse samples except for 0.08 mg/L of copper in the sample collected on October 12.

3.5 Waste Soil Sampling Results

Soil generated during drilling was containerized on site in fifteen 208-liter (55-gallon) drums for temporary storage onsite, pending receipt of laboratory analysis. The drums will be transported by Universal Environmental, Inc. for off-site disposal.

Four composite soil samples were collected from each drum and submitted for analysis of TPHg, TPHd, BTEX, and CAM-17 total metals. Two of the waste soil samples were also analyzed for VOCs.

4.0 Conclusions and Recommendations

Based on the laboratory results, current regulatory guidelines, and the judgment of Shaw, the following conclusions and recommendations are offered:

- Antimony, arsenic, beryllium, cadmium, molybdenum, nickel, selenium, and thallium were not detected above their respective reporting limits.
- Seven metals (barium, chromium, cobalt, copper, lead, vanadium, and zinc) were detected in all eight samples analyzed, mercury was reported in 4 samples, and silver was detected in one sample.
- The results for metals detected in site soil samples were all less than ten times their respective STLC value; therefore, no analysis by the WET was required.
- There were no detections of TPHg, TPHd, benzene, ethylbenzene, total xylenes and VOCs above laboratory detection limits in soil samples from the borings.
- Toluene was detected in one sample and acetone was detected in five samples. Toluene is probably site related; however, the low concentration and singular location indicates minimal impact. Acetone is commonly observed as laboratory contaminants and the relatively low concentrations are considered to be the result of laboratory contamination rather than soil constituents.
- Based on these results, it is concluded that there has been no hydrocarbon impact to soils at these locations.

5.0 References

Caltrans (California Department of Transportation), 2005, District 6, Contract No. 06A0752, Task Order No. 17, dated August 2, 2005.

Shaw (Shaw Environmental, Inc.), 2005a, Work Plan for Investigation of Heavy Metals and Hydrocarbons in Soil, State Route 140, PM 36.2 – 38.0 (KP 58.3 – 61.2), Merced County, California: dated September 28, 2005.

Shaw, 2005b, Health and Safety Plan, Investigation of Heavy Metals and Hydrocarbons in Soil, State Route 140, PM 36.2 – 38.0 (KP 58.3 – 61.2), Merced County, California: dated September 28, 2005.

TABLES

Table 1
Summary of Detected Heavy Metals and pH Results
State Route 140
Merced County, California
Task Order No. 17

Boring	Sample Description (site-boring-depth)	Longitude	Latitude	Surface Elevation MSL	Sample Depth	Sample Depth	Barium	Chro-mium	Cobalt	Copper	Lead	Mercury	Silver	Vana-dium	Zinc	pH
			Units	m	m	ft	mg/kg	mg/kg	mg/kg	mg/kg	mg/kg	mg/kg	mg/kg	mg/kg	mg/kg	SU
B-01	SR140-B01-1.5	-120.45194869	37.295026139	22.64	1.5	4.9	186	42	12	29	4.5	0.0100	<1	51	44	8.0
B-02	SR140-B02-3	-120.45195394	37.294919652	23.578	3	9.8	--	--	--	--	--	--	--	--	--	9.4
B-03	SR140-B03-1.5	-120.45185921	37.295006082	22.063	1.5	4.9	139	35	9.8	23	3.6	<0.01	<1	43	36	--
B-03	SR140-B03-4.5	-120.45185921	37.295006082	22.063	4.5	14.8	--	--	--	--	--	--	--	--	--	7.9
B-04	SR140-B04-1.5	-120.45171946	37.295016234	22.596	1.5	4.9	113	26	7.2	16	2.3	<0.01	<1	32	31	--
B-04	SR140-B04-6	-120.45171946	37.295016234	22.596	6	19.7	--	--	--	--	--	--	--	--	--	7.6
B-05	SR140-B05-1.5	-120.45171935	37.294878265	23.229	1.5	4.9	118	28	9.1	18	2.8	<0.01	<1	34	32	--
B-05	SR140-B05-7.5	-120.45171935	37.294878265	23.229	7.5	24.6	--	--	--	--	--	--	--	--	--	7.4
B-06	SR140-B06-1.5	-120.45142532	37.294798464	22.359	1.5	4.9	84	30	9.2	21	3.6	0.011	1.9	35	31	--
B-06	SR140-B06-9	-120.45142532	37.294798464	22.359	9	29.5	--	--	--	--	--	--	--	--	--	7.2
B-07	SR140-B07-1.5	-120.4514179	37.29491455	22.628	1.5	4.9	117	39	10	25	3.8	<0.01	<1	44	44	7.6
B-08	SR140-B08-1.5	-120.45141617	37.295018608	22.956	1.5	4.9	165	48	16	37	5.0	0.011	<1	61	57	--
B-08	SR140-B08-3	-120.45141617	37.295018608	22.956	3	9.8	--	--	--	--	--	--	--	--	--	8.0
B-09	SR140-B09-1.5	-120.45132895	37.294963124	23.054	1.5	4.9	230	48	10	30	4.1	0.012	<1	63	46	--
B-09	SR140-B09-4.5	-120.45132895	37.294963124	23.054	4.5	14.8	--	--	--	--	--	--	--	--	--	7.4
						Reporting Limit	**2**	**1**	**5**	**2**	**1**	**0.01**	**1**	**5**	**1.5**	**0.1**
						TTLC (mg/kg)	**10,000**	**2,500**	**8,000**	**2,500**	**1,000**	**20**	**500**	**2,400**	**5,000**	
						STLC (mg/L)	**100**	**5**	**80**	**25**	**5**	**0.2**	**5**	**24**	**250**	

Notes:
Analyses conducted in general accordance with EPA Method 6010 for lead.
TTLC = Total Threshold Limit Concentration
STLC = soluble threshold limit concentration
MSL = Mean Sea Level
< = Not detected at specified detection limit
-- = Not analyzed
m = meter
ft = feet
mg/kg = milligrams per kilogram
mg/L = milligrams per Liter
SU = standard units

Table 2
Summary of TPH and Detected VOCs Results
State Route 140
Merced County, California
Task Order No. 17

Boring ID	Sample Depth (m)	Sample Depth (ft)	Longitude	Latitude	Surface Elevation MSL (m)	Acetone (ug/kg)	TPH-d (mg/kg)	TPH-g (mg/kg)	Total Xylenes (ug/kg)	Benzene (ug/kg)	Ethyl-benzene (ug/kg)	Toluene (ug/kg)
SR140-B01-1.5	1.5	4.9	-120.45194869	37.295026139	22.64	<2	<1	<0.5	<1	<1	<1	<1
SR140-B01-3	3	9.8	-120.45194869	37.295026139	22.64	--	<1	<0.5	<1	<1	<1	<1
SR140-B01-4.5	4.5	14.8	-120.45194869	37.295026139	22.64	<2	<1	<0.5	<1	<1	<1	<1
SR140-B01-6	6	19.7	-120.45194869	37.295026139	22.64	--	<1	<0.5	<1	<1	<1	<1
SR140-B01-7.5	7.5	24.6	-120.45194869	37.295026139	22.64	--	<1	<0.5	<1	<1	<1	<1
SR140-B01-9	9	29.5	-120.45194869	37.295026139	22.64	<2	<1	<0.5	<1	<1	<1	<1
SR140-B02-3	3	9.8	-120.45195394	37.294919652	23.578	--	<1	<0.5	<1	<1	<1	<1
SR140-B02-4.5	4.5	14.8	-120.45195394	37.294919652	23.578	2.1	<1	<0.5	<1	<1	<1	<1
SR140-B02-6	6	19.7	-120.45195394	37.294919652	23.578	--	<1	<0.5	<1	<1	<1	<1
SR140-B02-7.5	7.5	24.6	-120.45195394	37.294919652	23.578	--	<1	<0.5	<1	<1	<1	<1
SR140-B02-9	9	29.5	-120.45195394	37.294919652	23.578	2.7	<1	<0.5	<1	<1	<1	<1
SR140-B03-1.5	1.5	4.9	-120.45185921	37.295006082	22.063	<2	<1	<0.5	<1	<1	<1	<1
SR140-B03-3	3	9.8	-120.45185921	37.295006082	22.063	--	<1	<0.5	<1	<1	<1	<1
SR140-B03-4.5	4.5	14.8	-120.45185921	37.295006082	22.063	<2	<1	<0.5	<1	<1	<1	<1
SR140-B03-6	6	19.7	-120.45185921	37.295006082	22.063	--	<1	<0.5	<1	<1	<1	1.90
SR140-B03-7.5	7.5	24.6	-120.45185921	37.295006082	22.063	--	<1	<0.5	<1	<1	<1	<1
SR140-B03-9	9	29.5	-120.45185921	37.295006082	22.063	<2	<1	<0.5	<1	<1	<1	<1
SR140-B04-1.5	1.5	4.9	-120.45171946	37.295016234	22.596	<2	<1	<0.5	<1	<1	<1	<1
SR140-B04-3	3	9.8	-120.45171946	37.295016234	22.596	--	<1	<0.5	<1	<1	<1	<1
SR140-B04-4.5	4.5	14.8	-120.45171946	37.295016234	22.596	<2	<1	<0.5	<1	<1	<1	<1
SR140-B04-6	6	19.7	-120.45171946	37.295016234	22.596	--	<1	<0.5	<1	<1	<1	<1
SR140-B04-7.5	7.5	24.6	-120.45171946	37.295016234	22.596	--	<1	<0.5	<1	<1	<1	<1
SR140-B04-9	9	29.5	-120.45171946	37.295016234	22.596	<2	<1	<0.5	<1	<1	<1	<1
SR140-B05-1.5	1.5	4.9	-120.45171935	37.294878265	23.229	11	<1	<0.5	<1	<1	<1	<1
SR140-B05-3	3	9.8	-120.45171935	37.294878265	23.229	--	<1	<0.5	<1	<1	<1	<1
SR140-B05-4.5	4.5	14.8	-120.45171935	37.294878265	23.229	<2	<1	<0.5	<1	<1	<1	<1
SR140-B05-6	6	19.7	-120.45171935	37.294878265	23.229	--	<1	<0.5	<1	<1	<1	<1
SR140-B05-7.5	7.5	24.6	-120.45171935	37.294878265	23.229	--	<1	<0.5	<1	<1	<1	<1
SR140-B05-9	9	29.5	-120.45171935	37.294878265	23.229	<2	<1	<0.5	<1	<1	<1	<1
SR140-B06-1.5	1.5	4.9	-120.45142532	37.294798464	22.359	<2	<1	<0.5	<1	<1	<1	<1
SR140-B06-3	3	9.8	-120.45142532	37.294798464	22.359	--	<1	<0.5	<1	<1	<1	<1
SR140-B06-4.5	4.5	14.8	-120.45142532	37.294798464	22.359	3.5	<1	<0.5	<1	<1	<1	<1
SR140-B06-6	6	19.7	-120.45142532	37.294798464	22.359	--	<1	<0.5	<1	<1	<1	<1
SR140-B06-7.5	7.5	24.6	-120.45142532	37.294798464	22.359	--	<1	<0.5	<1	<1	<1	<1
SR140-B06-9	9	29.5	-120.45142532	37.294798464	22.359	<2	<1	<0.5	<1	<1	<1	<1

Table 2
Summary of TPH and Detected VOCs Results
State Route 140
Merced County, California
Task Order No. 17

Boring ID	Sample Depth (m)	Sample Depth (ft)	Longitude	Latitude	Surface Elevation MSL (m)	Acetone (ug/kg)	TPH-d (mg/kg)	TPH-g (mg/kg)	Total Xylenes (ug/kg)	Benzene (ug/kg)	Ethyl-benzene (ug/kg)	Toluene (ug/kg)
SR140-B07-1.5	1.5	4.9	-120.4514179	37.29491455	22.628	<2	<1	<0.5	<1	<1	<1	<1
SR140-B07-3	3	9.8	-120.4514179	37.29491455	22.628	--	<1	<0.5	<1	<1	<1	<1
SR140-B07-4.5	4.5	14.8	-120.4514179	37.29491455	22.628	<2	<1	<0.5	<1	<1	<1	<1
SR140-B07-6	6	19.7	-120.4514179	37.29491455	22.628	--	<1	<0.5	<1	<1	<1	<1
SR140-B07-7.5	7.5	24.6	-120.4514179	37.29491455	22.628	--	<1	<0.5	<1	<1	<1	<1
SR140-B07-9	9	29.5	-120.4514179	37.29491455	22.628	<2	<1	<0.5	<1	<1	<1	<1
SR140-B08-1.5	1.5	4.9	-120.45141617	37.295018608	22.956	5.8	<1	<0.5	<1	<1	<1	<1
SR140-B08-3	3	9.8	-120.45141617	37.295018608	22.956	--	<1	<0.5	<1	<1	<1	<1
SR140-B08-4.5	4.5	14.8	-120.45141617	37.295018608	22.956	<2	<1	<0.5	<1	<1	<1	<1
SR140-B08-6	6	19.7	-120.45141617	37.295018608	22.956	--	<1	<0.5	<1	<1	<1	<1
SR140-B08-7.5	7.5	24.6	-120.45141617	37.295018608	22.956	--	<1	<0.5	<1	<1	<1	<1
SR140-B08-9	9	29.5	-120.45141617	37.295018608	22.956	<2	<1	<0.5	<1	<1	<1	<1
SR140-B09-1.5	1.5	4.9	-120.45132895	37.294963124	23.054	<2	<1	<0.5	<1	<1	<1	<1
SR140-B09-3	3	9.8	-120.45132895	37.294963124	23.054	--	<1	<0.5	<1	<1	<1	<1
SR140-B09-4.5	4.5	14.8	-120.45132895	37.294963124	23.054	<2	<1	<0.5	<1	<1	<1	<1
SR140-B09-6	6	19.7	-120.45132895	37.294963124	23.054	--	<1	<0.5	<1	<1	<1	<1
SR140-B09-7.5	7.5	24.6	-120.45132895	37.294963124	23.054	--	<1	<0.5	<1	<1	<1	<1
SR140-B09-9	9	29.5	-120.45132895	37.294963124	23.054	<2	<1	<0.5	<1	<1	<1	<1

Notes:
Analyses conducted in general accordance with EPA Method 6010 for lead.
MSL = Mean Sea Level
< = Not detected at specified detection limit
-- = Not analyzed
m = meter
ft = feet
mg/kg = milligrams per kilogram
ug/kg = micrograms per kilogram
VOCs = Volatile organic compounds
TPH-d = Total petroleum hydrocarbons as diesel
TPH-g = Total petroleum hydrocarbons as gasoline

FIGURES

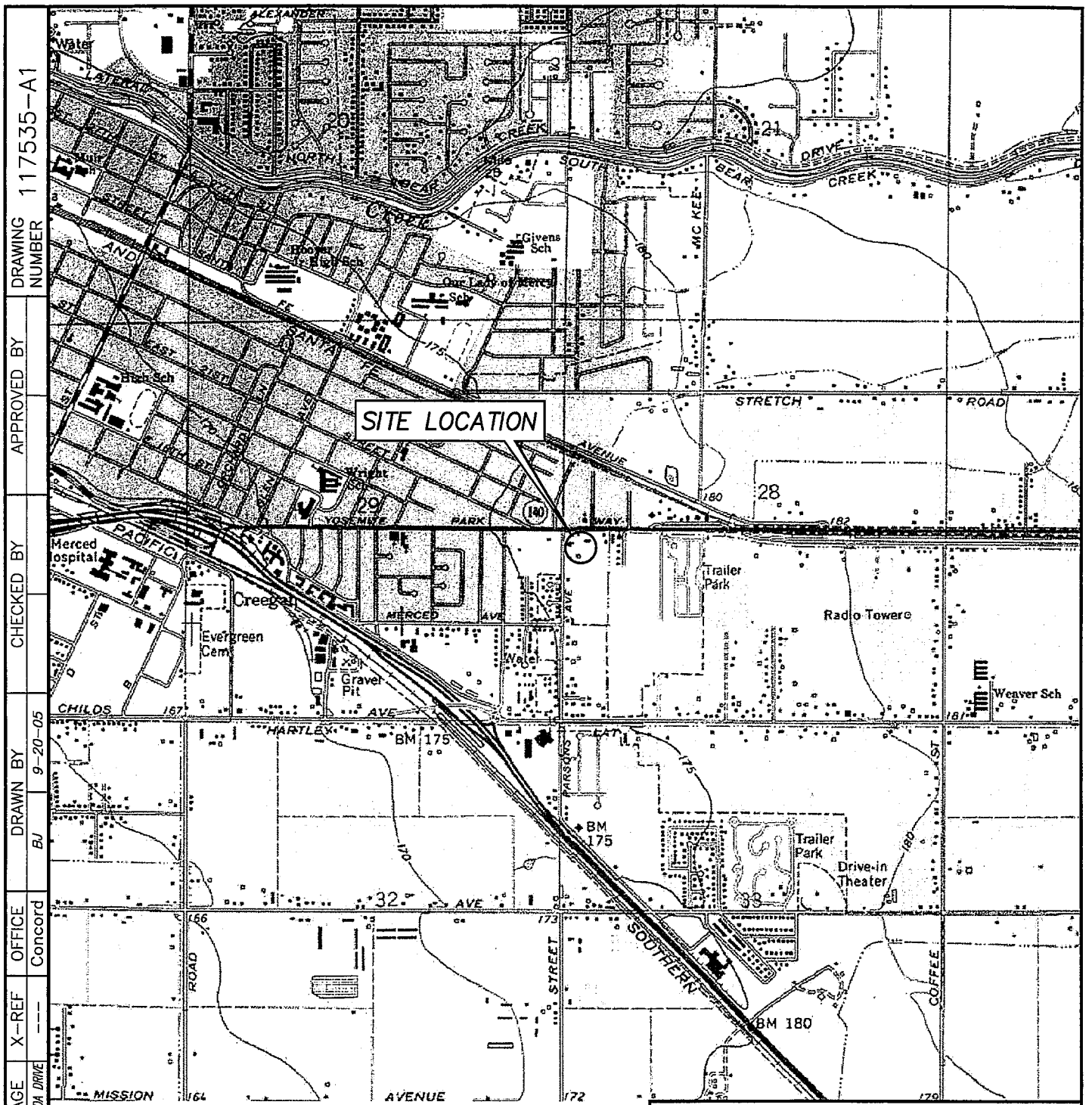

REFERENCE:
TOPO! 2001 NATIONAL GEOGRAPHIC HOLDINGS

SCALE
0 600 1200 METERS

Shaw® Shaw Environmental, Inc.

CALTRANS
SR 140 AT PARSONS AVENUE
MERCED COUNTY, CA
TASK ORDER #17

FIGURE 1

SITE VICINITY MAP

DRAWING NUMBER	APPROVED BY	CHECKED BY	DRAWN BY	OFFICE	X-REF	IMAGE
117535-A1			BJ 9-20-05	Concord	---	ARBOLEDA DRIVE

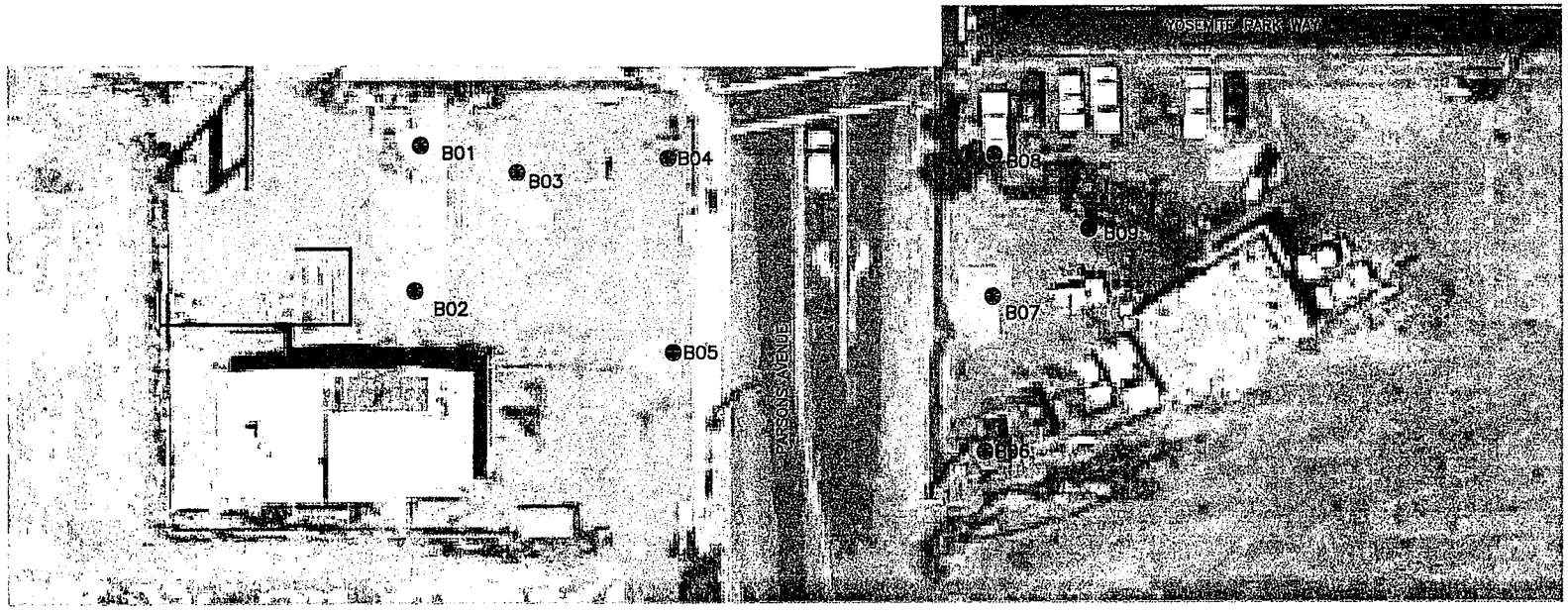

LEGEND

● HYDROCARBONS AND METAL SOIL BORINGS

SCALE

0 10 20 FEET

Shaw® Shaw Environmental, Inc.

CALTRANS
SR 140 AT PARSONS AVENUE
MERCED COUNTY, CA
TASK ORDER #17

FIGURE 2

BORING LOCATION MAP

IMAGE	X-REF	OFFICE	DRAWN BY	CHECKED BY	APPROVED BY	DRAWING NUMBER
b/map	---	CONCORD	BJ 11-10-05			117535-B1

FORMAT REVISION 2/26/99

20

APPENDIX A
DRILLING PERMITS

CITY OF MERCED
1776 GROGAN AVENUE
MERCED, CALIFORNIA 95340
WELL PERMIT APPLICATION

1990 Yosemite Parkway
Job Address (APN 035-090-0006)

Caltrans (Susan Greenwood)
Name of Well Owner (Printed)

Martha Adams for Caltrans
Signature of Well Owner

Permit Number 1102

2015 E. Shields Ave, Ste 100, Fresno CA 93726
Owner Mailing Address (Street, City, Zip)

Twining Labs — 506159
Name of Well Driller — **C-57 License Number** (*C-57 License Required*)

TYPE OF WORK	Quantity	PURPOSE OF PROJECT (*check*)		EQUIPMENT (*check*)	
Water Supply Well	( )	Public	( )	Air Rotary	( )
Well Repair or Modification	( )	Domestic	( )	Mud Rotary	( )
Well Destruction	( )	Agricultural	( )	Hollow Stem	(X)
GW Monitoring Well	( )	LUFT Invest./Clean-up	( )	Cable Tool	( )
Hydro punch	( )	Site Assessment	(X)	Geoprobe	( )
Soil Boring	(150)	Compaction Test	( )	CPT	( )
Soil Vapor Extraction (SVE)	( )	Other	( )	Other	( )
		(Describe)			

I hereby agree to comply with all State, County, and City of Merced regulations pertaining to well construction, repair, modification and destruction. Within 60 days of completion of work, I will furnish the City of Merced with a complete and accurate log of the well. When signed by the City Engineer, this application is a Permit.

Applicant's Signature Martha Adams **Date** 10/3/05 **City of Merced Business License #** 47612

Applicant's Title (check box): **Driller** ☐ **Consultant** ☒ **Owner** ☐

WELL DEPTH 30 feet

DIAMETER OF WELL BORE 8 inches

PROPOSED CASING (*check*)
PVC------( )
Steel------( )
Other-----( )
Specify NA

CASING DIAMETER (*check*)
2 inch------( )
4 inch------( )
6 inch------( )
Other-------(NA)

PROPOSED SEALING ZONE(s)
#1)→From Surface To 30 feet
#2)→From ↓ To ↓
#3)→From To
#4)→From To
#5)→From To

SEALING MATERIAL (*check*)
Neat Cement*----------(X)
Cement Sand Slurry*----------( )
Bentonite Clay*----------( )
Concrete*----------( )
* 4-1/2 to 6-1/2 gal. of water per sack of material

PERFORATIONS / SCREEN INTERVEL (ft)
#1)→From NA To NA
#2)→From ↓ To ↓
#3)→From To
#4)→From To
#5)→From To

RECEIVED OCT 4 2005 CITY OF MERCED ENVIRONMENTAL CONTROL

22

CITY OF MERCED
1776 GROGAN AVENUE
MERCED, CALIFORNIA 95340
WELL PERMIT APPLICATION

2010 E. Yosemite Parkway
Job Address (APN 061-390-001)

Caltrans (Susan Greenwood)
Name of Well Owner (Printed)

Martha Adams for Caltrans
Signature of Well Owner

Permit Number 1102

2015 E. Shields Ave Ste 100, Fresno CA 93726
Owner Mailing Address (Street, City, Zip)

Twining Labs
Name of Well Driller

506159
C-57 License Number
(C-57 License Required)

TYPE OF WORK	Quantity
Water Supply Well	( )
Well Repair or Modification	( )
Well Destruction	( )
GW Monitoring Well	( )
Hydro punch	( )
Soil Boring	(120)
Soil Vapor Extraction (SVE)	( )

PURPOSE OF PROJECT (*check*)	
Public	( )
Domestic	( )
Agricultural	( )
LUFT Invest./Clean-up	( )
Site Assessment	(X)
Compaction Test	( )
Other	( )
(Describe)	

EQUIPMENT (*check*)	
Air Rotary	( )
Mud Rotary	( )
Hollow Stem	(X)
Cable Tool	( )
Geoprobe	( )
CPT	( )
Other	( )

I hereby agree to comply with all State, County, and City of Merced regulations pertaining to well construction, repair, modification and destruction. Within 60 days of completion of work, I will furnish the City of Merced with a complete and accurate log of the well. When signed by the City Engineer, this application is a Permit.

Applicant's Signature Martha Adams **Date** 10/3/05 **City of Merced Business License #** 47612

Applicant's Title (check box): **Driller** ☐ **Consultant** ☒ **Owner** ☐

WELL DEPTH 30 feet

DIAMETER OF WELL BORE 8 inches

PROPOSED CASING (*check*)
PVC------( )
Steel------( )
Other-----( )
Specify NA

CASING DIAMETER (*check*)
2 inch------( )
4 inch------( )
6 inch------( )
Other-------(NA)

PROPOSED SEALING ZONE(s)
#1)→From Surface To 30 feet
#2)→From ↓ To ↓
#3)→From ↓ To ↓
#4)→From ↓ To ↓
#5)→From To

SEALING MATERIAL (*check*)
Neat Cement*----------(X)
Cement Sand Slurry*----------( )
Bentonite Clay*----------( )
Concrete*----------( )
4-1/2 to 6-1/2 gal. of water per sack of material

PERFORATIONS / SCREEN INTERVEL (ft)
#1)→From NA To NA
#2)→From ↓ To ↓
#3)→From ↓ To ↓
#4)→From ↓ To ↓
#5)→From To

CITY OF MERCED
WELL PERMIT APPLICATION

FOR OFFICE USE ONLY

Permit Start Date 10-11/05 Expiration Date 10/12/05 Fee Deposit 10/12/05

Date Fee Paid [illegible] Inspector [illegible] Date Work Completed 10/12/05

Status of Application: Approved with conditions below→ ☑ Denied→ ☐

If denied or on hold, reason for status: _____

STANDARD CONDITIONS

1) Underground Service Alert (USA) shall be notified at least 48 hours prior to planned commencement of work. In California, call (800) 642-2444.
2) Twenty-four hours advance notification (minimum of one full working day) shall be given to the City of Merced Environmental Control Division prior to commencement of work. Call (209)-385-6209.
3) City of Merced reserves right to sample and inspect wells per Merced Municipal Code, Title 8, Section 8.12.040 (F). View on City web site @ www.cityofmerced.org. Fee schedule is listed there as well.
4) Final Report of drilling, construction and sample results to be submitted to the City of Merced Environmental Control Division within thirty (30) days of work completion.
5) Upon completion of work, the site shall be cleaned and all construction materials including drill cuttings, drums of material and equipment shall be removed from the site or out of public view. Any drums stored on site will be labeled indicating contents and disposition of contents.

ADDITIONAL CONDITIONS

_____

_____

_____

I certify that I understand that inspection and associated costs in excess of the standard permit fee, based on hourly rates, will be billed to permittee and permittee hereby agrees to promptly pay such charges.

Martha Adams
Printed Name of Responsible Party

Martha Adams
Signature of Responsible Party

(916) 565.4183
Contact Telephone Number

DEPUTY DIR.
~~City Engineer~~ [illegible]

'lling Address: Shaw Environmental
1326 North Market Blvd, Sacramento CA 95834

APPENDIX B
DRILLING AND SAMPLING PROCEDURES

Appendix B
Drilling and Sampling Procedures

The procedures used for drilling the borings and collecting the soil samples are presented below.

Drilling

- Drilling permits were obtained by Shaw from the City of Merced (Appendix A). Right-to-enter consents were obtained by Caltrans from the affected property owners.
- A hollow-stem auger drill rig was used to install the borings.
- Samples were collected using 6-inch metal tubes inside a split spoon sampler.
- Soil cuttings were drummed on site and a composite sample was collected from each drum for waste profiling purposes.
- Borings were backfilled with neat cement grout.

Soil Sample Collection

- Nine soil borings were advanced, using hollow-stem auger drilling equipment, to a maximum depth of 9.1 meters (m) (30 feet [ft]) below ground surface (bgs). Soil samples were collected at 1.5 m (5 ft) intervals as follows: 1.5 m (5 ft), 3 m (10 ft), 4.5 m (15 ft), 6 m (20 ft), 7.5 m (25 ft), and to 9 m (30 ft) bgs.
- All samples collected from each boring were analyzed for total petroleum hydrocarbons (TPH) as gasoline (TPHg) and as diesel (TPHd), and for benzene, toluene, ethylbenzene, and xylenes (BTEX).
- Samples collected at 1.5 m (5 ft), 4.5 m (15 ft), and 9 m (30 ft) bgs in each boring were analyzed for volatile organic compounds (VOCs).
- The uppermost (1.5 m [5 ft] bgs) soil sample from each boring was analyzed for CAM-17 total metals.
- pH was analyzed in 10% of the samples, randomly selected.
- Soil samples were labeled with the project area, boring number, and sample collection depth. For example, "SR140-B10-1.5" represents State Route 140, Boring 10, collected at a depth of 1.5 m bgs.

Decontamination

- Augers and sampling equipment were washed prior to drilling each boring.
- One equipment rinse was collected on each field work day to verify the effectiveness of washing. The equipment rinse sample was analyzed for TPHg, TPHd, BTEX, VOCs, and CAM-17 total metals.

- Wash water generated during the field investigation was poured onto the ground within the investigation area in a manner to minimize run-off.

Sample Retention and Analysis

- All soil samples were placed in an insulated chest.
- Chain-of-custody procedures, including the use of chain-of-custody forms, were used to document sample handling and transport from collection to delivery to the laboratory for analysis.
- The samples were delivered to the laboratory within approximately 24 hours of completion of field work. The samples were transported to the laboratory in a motor vehicle.
- Laboratory quality assurance/quality control procedures are summarized below:
  - Method Blank Frequency = one per 10 samples
  - Matrix Spike/Matrix Spike Duplicate = one per 10 samples
  - Laboratory Control Sample/Laboratory Control Sample Duplicate = one per 10 sample

APPENDIX C
LABORATORY ANALYTICAL REPORTS AND CHAIN-OF-CUSTODY FORMS

Sparger Technology, Inc.
Environmental Laboratories

Analytical Laboratory Division
Mobile Laboratory Division
Scientific Division

Martha Adams
Shaw Environmental & Infrastructure
1326 North Market Blvd.
Sacramento, CA 95834

Client	Shaw Environmental & Infrastructure
Workorder	17088 CalTrans Merced
Received	10/12/05

The samples were received in EPA specified containers. The samples were transported and received under documented chain of custody and stored at four (4) degrees C until analysis was performed.

Sparger Technology, Inc. ID Suffix Keys - These descriptors will follow the Sparger Technology, Inc. ID numbers and help identify the specific sample and clarify the report.

DUP - Matrix Duplicate
MS - Matrix Spike
MSD - Matrix Spike Duplicate
LCS - Lab Control Sample
LCSD - Lab Control Sample Duplicate
RPD - Relative Percent Difference
QC - Additional Quality Control
DIL - Results from a diluted sample
ND - None Detected
RL - Reporting Limit

Note: In an effort to conserve paper, the results are printed on both sides of the paper.

Ray James
Laboratory Director

3738 Bradview Drive • Sacramento, California 95827 • (916) 369-7688 • FAX (916) 369-7689

29

Sparger Technology, Inc.
Environmental Laboratories

Analytical Laboratory Division
Mobile Laboratory Division
Scientific Division

Test Certificate of Analysis

Client ID	Shaw Environmental & Infrastructure	**Workorder ID**	CalTrans Merced
Workorder #	17088	**Sampled**	10/11/05
Laboratory ID	17088001	**Received**	10/11/05
Sample ID	SR140-B3-1.5	**Reported**	10/26/05
Matrix	Soil		

8260B Oxygenates - 8260B

Parameter	Prep Date	Analyzed	Result	RL	Units	Dilution
Benzene	10/19/05	10/19/05	ND	1.0	ug/kg	1:1
Toluene	10/19/05	10/19/05	ND	1.0	ug/kg	1:1
Ethylbenzene	10/19/05	10/19/05	ND	1.0	ug/kg	1:1
Xylene (Total)	10/19/05	10/19/05	ND	1.0	ug/kg	1:1

Surrogates	Result	Recovery	Limits
1,2-Dichloroethane-d4	60 ug/kg	120 %	(65 - 135)

30

3738 Bradview Drive • Sacramento, California 95827 • (916) 369-7688 • FAX (916) 369-7689

Sparger Technology, Inc.
Environmental Laboratories

Analytical Laboratory Division
Mobile Laboratory Division
Scientific Division

Test Certificate of Analysis

Client ID	Shaw Environmental & Infrastructure	**Workorder ID**	CalTrans Merced
Workorder #	17088	**Sampled**	10/11/05
Laboratory ID	17088001	**Received**	10/11/05
Sample ID	SR140-B3-1.5	**Reported**	10/26/05
Matrix	Soil		

8260B GC/MS Volatiles - 8260B

Parameter	Prep Date	Analyzed	Result	RL	Units	Dilution
Dichlorodifluoromethane	10/19/05	10/19/05	ND	2.0	ug/kg	1:1
Chloromethane	10/19/05	10/19/05	ND	2.0	ug/kg	1:1
Vinyl chloride	10/19/05	10/19/05	ND	2.0	ug/kg	1:1
Bromomethane	10/19/05	10/19/05	ND	2.0	ug/kg	1:1
Chloroethane	10/19/05	10/19/05	ND	2.0	ug/kg	1:1
Trichlorofluoromethane	10/19/05	10/19/05	ND	2.0	ug/kg	1:1
Acrolein	10/19/05	10/19/05	ND	2.0	ug/kg	1:1
1,1-Dichloroethene	10/19/05	10/19/05	ND	2.0	ug/kg	1:1
Acetone	10/19/05	10/19/05	ND	2.0	ug/kg	1:1
Methyl iodide	10/19/05	10/19/05	ND	2.0	ug/kg	1:1
Carbon disulfide	10/19/05	10/19/05	ND	2.0	ug/kg	1:1
Dichloromethane	10/19/05	10/19/05	ND	2.0	ug/kg	1:1
Acrylonitrile	10/19/05	10/19/05	ND	2.0	ug/kg	1:1
trans-1,2-Dichloroethene	10/19/05	10/19/05	ND	2.0	ug/kg	1:1
1,1-Dichloroethane	10/19/05	10/19/05	ND	2.0	ug/kg	1:1
Vinyl acetate	10/19/05	10/19/05	ND	2.0	ug/kg	1:1
cis-1,2-Dichloroethene	10/19/05	10/19/05	ND	2.0	ug/kg	1:1
2-Butanone (MEK)	10/19/05	10/19/05	ND	2.0	ug/kg	1:1
Bromochloromethane	10/19/05	10/19/05	ND	2.0	ug/kg	1:1
Chloroform	10/19/05	10/19/05	ND	2.0	ug/kg	1:1
2,2-dichloropropane	10/19/05	10/19/05	ND	2.0	ug/kg	1:1
1,1,1-Trichloroethane	10/19/05	10/19/05	ND	2.0	ug/kg	1:1
1,1-dichloropropane	10/19/05	10/19/05	ND	2.0	ug/kg	1:1
Carbon tetrachloride	10/19/05	10/19/05	ND	2.0	ug/kg	1:1
Benzene	10/19/05	10/19/05	ND	2.0	ug/kg	1:1
1,2-Dichloroethane	10/19/05	10/19/05	ND	2.0	ug/kg	1:1
Dibromomethane	10/19/05	10/19/05	ND	2.0	ug/kg	1:1
Bromodichloromethane	10/19/05	10/19/05	ND	2.0	ug/kg	1:1
1,2-Dichloropropane	10/19/05	10/19/05	ND	2.0	ug/kg	1:1
Trichloroethene	10/19/05	10/19/05	ND	2.0	ug/kg	1:1
2-Chloroethylvinyl ether	10/19/05	10/19/05	ND	2.0	ug/kg	1:1
cis-1,3-Dichloropropene	10/19/05	10/19/05	ND	2.0	ug/kg	1:1

3738 Bradview Drive • Sacramento, California 95827 • (916) 369-7688 • FAX (916) 369-7689

31

Sparger Technology, Inc.
Environmental Laboratories

Analytical Laboratory Division
Mobile Laboratory Division
Scientific Division

Test Certificate of Analysis

Client ID	Shaw Environmental & Infrastructure	**Workorder ID**	CalTrans Merced
Workorder #	17088	**Sampled**	10/11/05
Laboratory ID	17088001	**Received**	10/11/05
Sample ID	SR140-B3-1.5	**Reported**	10/26/05
Matrix	Soil		

8260B GC/MS Volatiles - 8260B (continued)

Parameter	Prep Date	Analyzed	Result	RL	Units	Dilution
4-Methyl-2-pentanone	10/19/05	10/19/05	ND	2.0	ug/kg	1:1
trans-1,3Dichloropropene	10/19/05	10/19/05	ND	2.0	ug/kg	1:1
1,1,2-Trichloroethane	10/19/05	10/19/05	ND	2.0	ug/kg	1:1
Toluene	10/19/05	10/19/05	ND	2.0	ug/kg	1:1
1,2-Dibromoethane (EDB)	10/19/05	10/19/05	ND	2.0	ug/kg	1:1
1,3-Dichloropropane	10/19/05	10/19/05	ND	2.0	ug/kg	1:1
2-Hexanone	10/19/05	10/19/05	ND	2.0	ug/kg	1:1
Dibromochloromethane	10/19/05	10/19/05	ND	2.0	ug/kg	1:1
Tetrachloroethene	10/19/05	10/19/05	ND	2.0	ug/kg	1:1
1,1,1,2Tetrachloroethane	10/19/05	10/19/05	ND	2.0	ug/kg	1:1
Chlorobenzene	10/19/05	10/19/05	ND	2.0	ug/kg	1:1
Ethylbenzene	10/19/05	10/19/05	ND	2.0	ug/kg	1:1
M+P-Xylene	10/19/05	10/19/05	ND	2.0	ug/kg	1:1
Bromoform	10/19/05	10/19/05	ND	2.0	ug/kg	1:1
Styrene	10/19/05	10/19/05	ND	2.0	ug/kg	1:1
o-Xylene	10/19/05	10/19/05	ND	2.0	ug/kg	1:1
1,1,2,2Tetrachloroethane	10/19/05	10/19/05	ND	2.0	ug/kg	1:1
1,2,3-Trichloropropane	10/19/05	10/19/05	ND	2.0	ug/kg	1:1
Isopropylbenzene (Cumene)	10/19/05	10/19/05	ND	2.0	ug/kg	1:1
Bromobenzene	10/19/05	10/19/05	ND	2.0	ug/kg	1:1
n-Propylbenzene	10/19/05	10/19/05	ND	2.0	ug/kg	1:1
2-Chlorotoluene	10/19/05	10/19/05	ND	2.0	ug/kg	1:1
4-Chlorotoluene	10/19/05	10/19/05	ND	2.0	ug/kg	1:1
1,3,5-Trimethylbenzene	10/19/05	10/19/05	ND	2.0	ug/kg	1:1
tert-Butylbenzene	10/19/05	10/19/05	ND	2.0	ug/kg	1:1
1,2,4-Trimethylbenzene	10/19/05	10/19/05	ND	2.0	ug/kg	1:1
sec-Butylbenzene	10/19/05	10/19/05	ND	2.0	ug/kg	1:1
1,3-Dichlorobenzene	10/19/05	10/19/05	ND	2.0	ug/kg	1:1
1,4-Dichlorobenzene	10/19/05	10/19/05	ND	2.0	ug/kg	1:1
4-Isopropyltoluene	10/19/05	10/19/05	ND	2.0	ug/kg	1:1
1,2-Dichlorobenzene	10/19/05	10/19/05	ND	2.0	ug/kg	1:1
n-Butylbenzene	10/19/05	10/19/05	ND	2.0	ug/kg	1:1

3738 Bradview Drive • Sacramento, California 95827 • (916) 369-7688 • FAX (916) 369-7689

Sparger Technology, Inc.
Environmental Laboratories

Analytical Laboratory Division
Mobile Laboratory Division
Scientific Division

Test Certificate of Analysis

Client ID	Shaw Environmental & Infrastructure	**Workorder ID**	CalTrans Merced
Workorder #	17088	**Sampled**	10/11/05
Laboratory ID	17088001	**Received**	10/11/05
Sample ID	SR140-B3-1.5	**Reported**	10/26/05
Matrix	Soil		

8260B GC/MS Volatiles - 8260B (continued)

Parameter	Prep Date	Analyzed	Result	RL	Units	Dilution
1,2Dibromo3chloropropane	10/19/05	10/19/05	ND	2.0	ug/kg	1:1
1,2,4-Trichlorobenzene	10/19/05	10/19/05	ND	2.0	ug/kg	1:1
Naphthalene	10/19/05	10/19/05	ND	2.0	ug/kg	1:1
Hexachlorobutadiene	10/19/05	10/19/05	ND	2.0	ug/kg	1:1
1,2,3-Trichlorobenzene	10/19/05	10/19/05	ND	2.0	ug/kg	1:1

Surrogates	Result	Recovery	Limits
1,2-Dichloroethane-d4	60 ug/kg	120 %	(70 - 135)
Toluene d8	50 ug/kg	100 %	(70 - 135)
4-Bromofluorobenzene	53 ug/kg	106 %	(70 - 135)

3738 Bradview Drive • Sacramento, California 95827 • (916) 369-7688 • FAX (916) 369-7689

Sparger Technology, Inc.
Environmental Laboratories

Analytical Laboratory Division
Mobile Laboratory Division
Scientific Division

Test Certificate of Analysis

Client ID	Shaw Environmental & Infrastructure	**Workorder ID**	CalTrans Merced
Workorder #	17088	**Sampled**	10/11/05
Laboratory ID	17088001	**Received**	10/11/05
Sample ID	SR140-B3-1.5	**Reported**	10/26/05
Matrix	Soil		

Metals, CAM17 - 6010B

Parameter	Prep Date	Analyzed	Result	RL	Units	Dilution
Antimony	10/13/05	10/17/05	ND	6.0	mg/Kg	1:1
Arsenic	10/13/05	10/17/05	ND	8.0	mg/Kg	1:1
Barium	**10/13/05**	**10/17/05**	**139**	**2.0**	**mg/Kg**	**1:1**
Beryllium	10/13/05	10/17/05	ND	0.30	mg/Kg	1:1
Cadmium	10/13/05	10/17/05	ND	0.50	mg/Kg	1:1
Chromium	**10/13/05**	**10/17/05**	**35**	**1.0**	**mg/Kg**	**1:1**
Cobalt	**10/13/05**	**10/17/05**	**9.8**	**5.0**	**mg/Kg**	**1:1**
Copper	**10/13/05**	**10/17/05**	**23**	**2.0**	**mg/Kg**	**1:1**
Lead	**10/13/05**	**10/17/05**	**3.6**	**1.0**	**mg/Kg**	**1:1**
Molybdenum	10/13/05	10/17/05	ND	5.0	mg/Kg	1:1
Nickel	10/13/05	10/17/05	ND	4.0	mg/Kg	1:1
Selenium	10/13/05	10/17/05	ND	10	mg/Kg	1:1
Silver	10/13/05	10/17/05	ND	1.0	mg/Kg	1:1
Thallium	10/13/05	10/17/05	ND	10	mg/Kg	1:1
Vanadium	**10/13/05**	**10/17/05**	**43**	**5.0**	**mg/Kg**	**1:1**
Zinc	**10/13/05**	**10/17/05**	**36**	**1.5**	**mg/Kg**	**1:1**

34

3738 Bradview Drive • Sacramento, California 95827 • (916) 369-7688 • FAX (916) 369-7689

Sparger Technology, Inc.
Environmental Laboratories

Analytical Laboratory Division
Mobile Laboratory Division
Scientific Division

Test Certificate of Analysis

Client ID	Shaw Environmental & Infrastructure	**Workorder ID**	CalTrans Merced
Workorder #	17088	**Sampled**	10/11/05
Laboratory ID	17088002	**Received**	10/11/05
Sample ID	SR140-B3-3.0	**Reported**	10/26/05
Matrix	Soil		

8260B Oxygenates - 8260B

Parameter	Prep Date	Analyzed	Result	RL	Units	Dilution
Benzene	10/18/05	10/18/05	ND	1.0	ug/kg	1:1
Toluene	10/18/05	10/18/05	ND	1.0	ug/kg	1:1
Ethylbenzene	10/18/05	10/18/05	ND	1.0	ug/kg	1:1
Xylene (Total)	10/18/05	10/18/05	ND	1.0	ug/kg	1:1

Surrogates	Result	Recovery	Limits
1,2-Dichloroethane-d4	50 ug/kg	100 %	(65 - 135)

3738 Bradview Drive • Sacramento, California 95827 • (916) 369-7688 • FAX (916) 369-7689

Sparger Technology, Inc.
Environmental Laboratories

Analytical Laboratory Division
Mobile Laboratory Division
Scientific Division

Test Certificate of Analysis

Client ID	Shaw Environmental & Infrastructure	**Workorder ID**	CalTrans Merced
Workorder #	17088	**Sampled**	10/11/05
Laboratory ID	17088003	**Received**	10/11/05
Sample ID	SR140-B3-4.5	**Reported**	10/26/05
Matrix	Soil		

8260B Oxygenates - 8260B

Parameter	Prep Date	Analyzed	Result	RL	Units	Dilution
Benzene	10/19/05	10/19/05	ND	1.0	ug/kg	1:1
Toluene	10/19/05	10/19/05	ND	1.0	ug/kg	1:1
Ethylbenzene	10/19/05	10/19/05	ND	1.0	ug/kg	1:1
Xylene (Total)	10/19/05	10/19/05	ND	1.0	ug/kg	1:1

Surrogates	Result	Recovery	Limits
1,2-Dichloroethane-d4	60 ug/kg	120 %	(65 - 135)

3738 Bradview Drive • Sacramento, California 95827 • (916) 369-7688 • FAX (916) 369-7689

Sparger Technology, Inc.
Environmental Laboratories

Analytical Laboratory Division
Mobile Laboratory Division
Scientific Division

Test Certificate of Analysis

Client ID	Shaw Environmental & Infrastructure	**Workorder ID**	CalTrans Merced
Workorder #	17088	**Sampled**	10/11/05
Laboratory ID	17088003	**Received**	10/11/05
Sample ID	SR140-B3-4.5	**Reported**	10/26/05
Matrix	Soil		

8260B GC/MS Volatiles - 8260B

Parameter	Prep Date	Analyzed	Result	RL	Units	Dilution
Dichlorodifluoromethane	10/19/05	10/19/05	ND	2.0	ug/kg	1:1
Chloromethane	10/19/05	10/19/05	ND	2.0	ug/kg	1:1
Vinyl chloride	10/19/05	10/19/05	ND	2.0	ug/kg	1:1
Bromomethane	10/19/05	10/19/05	ND	2.0	ug/kg	1:1
Chloroethane	10/19/05	10/19/05	ND	2.0	ug/kg	1:1
Trichlorofluoromethane	10/19/05	10/19/05	ND	2.0	ug/kg	1:1
Acrolein	10/19/05	10/19/05	ND	2.0	ug/kg	1:1
1,1-Dichloroethene	10/19/05	10/19/05	ND	2.0	ug/kg	1:1
Acetone	10/19/05	10/19/05	ND	2.0	ug/kg	1:1
Methyl iodide	10/19/05	10/19/05	ND	2.0	ug/kg	1:1
Carbon disulfide	10/19/05	10/19/05	ND	2.0	ug/kg	1:1
Dichloromethane	10/19/05	10/19/05	ND	2.0	ug/kg	1:1
Acrylonitrile	10/19/05	10/19/05	ND	2.0	ug/kg	1:1
trans-1,2-Dichloroethene	10/19/05	10/19/05	ND	2.0	ug/kg	1:1
1,1-Dichloroethane	10/19/05	10/19/05	ND	2.0	ug/kg	1:1
Vinyl acetate	10/19/05	10/19/05	ND	2.0	ug/kg	1:1
cis-1,2-Dichloroethene	10/19/05	10/19/05	ND	2.0	ug/kg	1:1
2-Butanone (MEK)	10/19/05	10/19/05	ND	2.0	ug/kg	1:1
Bromochloromethane	10/19/05	10/19/05	ND	2.0	ug/kg	1:1
Chloroform	10/19/05	10/19/05	ND	2.0	ug/kg	1:1
2,2-dichloropropane	10/19/05	10/19/05	ND	2.0	ug/kg	1:1
1,1,1-Trichloroethane	10/19/05	10/19/05	ND	2.0	ug/kg	1:1
1,1-dichloropropane	10/19/05	10/19/05	ND	2.0	ug/kg	1:1
Carbon tetrachloride	10/19/05	10/19/05	ND	2.0	ug/kg	1:1
Benzene	10/19/05	10/19/05	ND	2.0	ug/kg	1:1
1,2-Dichloroethane	10/19/05	10/19/05	ND	2.0	ug/kg	1:1
Dibromomethane	10/19/05	10/19/05	ND	2.0	ug/kg	1:1
Bromodichloromethane	10/19/05	10/19/05	ND	2.0	ug/kg	1:1
1,2-Dichloropropane	10/19/05	10/19/05	ND	2.0	ug/kg	1:1
Trichloroethene	10/19/05	10/19/05	ND	2.0	ug/kg	1:1
2-Chloroethylvinyl ether	10/19/05	10/19/05	ND	2.0	ug/kg	1:1
cis-1,3-Dichloropropene	10/19/05	10/19/05	ND	2.0	ug/kg	1:1

3738 Bradview Drive • Sacramento, California 95827 • (916) 369-7688 • FAX (916) 369-7689

37

Sparger Technology, Inc.
Environmental Laboratories

Analytical Laboratory Division
Mobile Laboratory Division
Scientific Division

Test Certificate of Analysis

Client ID	Shaw Environmental & Infrastructure	**Workorder ID**	CalTrans Merced
Workorder #	17088	**Sampled**	10/11/05
Laboratory ID	17088003	**Received**	10/11/05
Sample ID	SR140-B3-4.5	**Reported**	10/26/05
Matrix	Soil		

8260B GC/MS Volatiles - 8260B (continued)

Parameter	Prep Date	Analyzed	Result	RL	Units	Dilution
4-Methyl-2-pentanone	10/19/05	10/19/05	ND	2.0	ug/kg	1:1
trans-1,3Dichloropropene	10/19/05	10/19/05	ND	2.0	ug/kg	1:1
1,1,2-Trichloroethane	10/19/05	10/19/05	ND	2.0	ug/kg	1:1
Toluene	10/19/05	10/19/05	ND	2.0	ug/kg	1:1
1,2-Dibromoethane (EDB)	10/19/05	10/19/05	ND	2.0	ug/kg	1:1
1,3-Dichloropropane	10/19/05	10/19/05	ND	2.0	ug/kg	1:1
2-Hexanone	10/19/05	10/19/05	ND	2.0	ug/kg	1:1
Dibromochloromethane	10/19/05	10/19/05	ND	2.0	ug/kg	1:1
Tetrachloroethene	10/19/05	10/19/05	ND	2.0	ug/kg	1:1
1,1,1,2Tetrachloroethane	10/19/05	10/19/05	ND	2.0	ug/kg	1:1
Chlorobenzene	10/19/05	10/19/05	ND	2.0	ug/kg	1:1
Ethylbenzene	10/19/05	10/19/05	ND	2.0	ug/kg	1:1
M+P-Xylene	10/19/05	10/19/05	ND	2.0	ug/kg	1:1
Bromoform	10/19/05	10/19/05	ND	2.0	ug/kg	1:1
Styrene	10/19/05	10/19/05	ND	2.0	ug/kg	1:1
o-Xylene	10/19/05	10/19/05	ND	2.0	ug/kg	1:1
1,1,2,2Tetrachloroethane	10/19/05	10/19/05	ND	2.0	ug/kg	1:1
1,2,3-Trichloropropane	10/19/05	10/19/05	ND	2.0	ug/kg	1:1
Isopropylbenzene (Cumene)	10/19/05	10/19/05	ND	2.0	ug/kg	1:1
Bromobenzene	10/19/05	10/19/05	ND	2.0	ug/kg	1:1
n-Propylbenzene	10/19/05	10/19/05	ND	2.0	ug/kg	1:1
2-Chlorotoluene	10/19/05	10/19/05	ND	2.0	ug/kg	1:1
4-Chlorotoluene	10/19/05	10/19/05	ND	2.0	ug/kg	1:1
1,3,5-Trimethylbenzene	10/19/05	10/19/05	ND	2.0	ug/kg	1:1
tert-Butylbenzene	10/19/05	10/19/05	ND	2.0	ug/kg	1:1
1,2,4-Trimethylbenzene	10/19/05	10/19/05	ND	2.0	ug/kg	1:1
sec-Butylbenzene	10/19/05	10/19/05	ND	2.0	ug/kg	1:1
1,3-Dichlorobenzene	10/19/05	10/19/05	ND	2.0	ug/kg	1:1
1,4-Dichlorobenzene	10/19/05	10/19/05	ND	2.0	ug/kg	1:1
4-Isopropyltoluene	10/19/05	10/19/05	ND	2.0	ug/kg	1:1
1,2-Dichlorobenzene	10/19/05	10/19/05	ND	2.0	ug/kg	1:1
n-Butylbenzene	10/19/05	10/19/05	ND	2.0	ug/kg	1:1

3738 Bradview Drive • Sacramento, California 95827 • (916) 369-7688 • FAX (916) 369-7689

Sparger Technology, Inc.
Environmental Laboratories

Analytical Laboratory Division
Mobile Laboratory Division
Scientific Division

Test Certificate of Analysis

Client ID	Shaw Environmental & Infrastructure	**Workorder ID**	CalTrans Merced
Workorder #	17088	**Sampled**	10/11/05
Laboratory ID	17088003	**Received**	10/11/05
Sample ID	SR140-B3-4.5	**Reported**	10/26/05
Matrix	Soil		

8260B GC/MS Volatiles - 8260B (continued)

Parameter	Prep Date	Analyzed	Result	RL	Units	Dilution
1,2Dibromo3chloropropane	10/19/05	10/19/05	ND	2.0	ug/kg	1:1
1,2,4-Trichlorobenzene	10/19/05	10/19/05	ND	2.0	ug/kg	1:1
Naphthalene	10/19/05	10/19/05	ND	2.0	ug/kg	1:1
Hexachlorobutadiene	10/19/05	10/19/05	ND	2.0	ug/kg	1:1
1,2,3-Trichlorobenzene	10/19/05	10/19/05	ND	2.0	ug/kg	1:1

Surrogates	Result	Recovery	Limits
1,2-Dichloroethane-d4	60 ug/kg	120 %	(70 - 135)
Toluene d8	41 ug/kg	82 %	(70 - 135)
4-Bromofluorobenzene	50 ug/kg	100 %	(70 - 135)

3738 Bradview Drive • Sacramento, California 95827 • (916) 369-7688 • FAX (916) 369-7689

39

Sparger Technology, Inc.
Environmental Laboratories

Analytical Laboratory Division
Mobile Laboratory Division
Scientific Division

Test Certificate of Analysis

Client ID	Shaw Environmental & Infrastructure	**Workorder ID**	CalTrans Merced
Workorder #	17088	**Sampled**	10/11/05
Laboratory ID	17088004	**Received**	10/11/05
Sample ID	SR140-B3-6.0	**Reported**	10/26/05
Matrix	Soil		

8260B Oxygenates - 8260B

Parameter	Prep Date	Analyzed	Result	RL	Units	Dilution
Benzene	10/18/05	10/18/05	ND	1.0	ug/kg	1:1
Toluene	**10/18/05**	**10/18/05**	**1.90**	**1.0**	**ug/kg**	**1:1**
Ethylbenzene	10/18/05	10/18/05	ND	1.0	ug/kg	1:1
Xylene (Total)	10/18/05	10/18/05	ND	1.0	ug/kg	1:1

Surrogates	Result	Recovery	Limits
1,2-Dichloroethane-d4	54 ug/kg	108 %	(65 - 135)

40

3738 Bradview Drive • Sacramento, California 95827 • (916) 369-7688 • FAX (916) 369-7689

Sparger Technology, Inc.
Environmental Laboratories

Analytical Laboratory Division
Mobile Laboratory Division
Scientific Division

Test Certificate of Analysis

Client ID	Shaw Environmental & Infrastructure	**Workorder ID**	CalTrans Merced
Workorder #	17088	**Sampled**	10/11/05
Laboratory ID	17088005	**Received**	10/11/05
Sample ID	SR140-B3-7.5	**Reported**	10/26/05
Matrix	Soil		

8260B Oxygenates - 8260B

Parameter	Prep Date	Analyzed	Result	RL	Units	Dilution
Benzene	10/18/05	10/18/05	ND	1.0	ug/kg	1:1
Toluene	10/18/05	10/18/05	ND	1.0	ug/kg	1:1
Ethylbenzene	10/18/05	10/18/05	ND	1.0	ug/kg	1:1
Xylene (Total)	10/18/05	10/18/05	ND	1.0	ug/kg	1:1

Surrogates	Result	Recovery	Limits
1,2-Dichloroethane-d4	51 ug/kg	102 %	(65 - 135)

3738 Bradview Drive • Sacramento, California 95827 • (916) 369-7688 • FAX (916) 369-7689

41

Sparger Technology, Inc.
Environmental Laboratories

Analytical Laboratory Division
Mobile Laboratory Division
Scientific Division

Test Certificate of Analysis

Client ID	Shaw Environmental & Infrastructure	**Workorder ID**	CalTrans Merced
Workorder #	17088	**Sampled**	10/11/05
Laboratory ID	17088006	**Received**	10/11/05
Sample ID	SR140-B3-9.0	**Reported**	10/26/05
Matrix	Soil		

8260B Oxygenates - 8260B

Parameter	Prep Date	Analyzed	Result	RL	Units	Dilution
Benzene	10/19/05	10/19/05	ND	1.0	ug/kg	1:1
Toluene	10/19/05	10/19/05	ND	1.0	ug/kg	1:1
Ethylbenzene	10/19/05	10/19/05	ND	1.0	ug/kg	1:1
Xylene (Total)	10/19/05	10/19/05	ND	1.0	ug/kg	1:1

Surrogates	Result	Recovery	Limits
1,2-Dichloroethane-d4	51 ug/kg	102 %	(65 - 135)

42

3738 Bradview Drive • Sacramento, California 95827 • (916) 369-7688 • FAX (916) 369-7689

Sparger Technology, Inc.
Environmental Laboratories

Analytical Laboratory Division
Mobile Laboratory Division
Scientific Division

Test Certificate of Analysis

Client ID	Shaw Environmental & Infrastructure	**Workorder ID**	CalTrans Merced
Workorder #	17088	**Sampled**	10/11/05
Laboratory ID	17088006	**Received**	10/11/05
Sample ID	SR140-B3-9.0	**Reported**	10/26/05
Matrix	Soil		

8260B GC/MS Volatiles - 8260B

Parameter	Prep Date	Analyzed	Result	RL	Units	Dilution
Dichlorodifluoromethane	10/19/05	10/19/05	ND	2.0	ug/kg	1:1
Chloromethane	10/19/05	10/19/05	ND	2.0	ug/kg	1:1
Vinyl chloride	10/19/05	10/19/05	ND	2.0	ug/kg	1:1
Bromomethane	10/19/05	10/19/05	ND	2.0	ug/kg	1:1
Chloroethane	10/19/05	10/19/05	ND	2.0	ug/kg	1:1
Trichlorofluoromethane	10/19/05	10/19/05	ND	2.0	ug/kg	1:1
Acrolein	10/19/05	10/19/05	ND	2.0	ug/kg	1:1
1,1-Dichloroethene	10/19/05	10/19/05	ND	2.0	ug/kg	1:1
Acetone	10/19/05	10/19/05	ND	2.0	ug/kg	1:1
Methyl iodide	10/19/05	10/19/05	ND	2.0	ug/kg	1:1
Carbon disulfide	10/19/05	10/19/05	ND	2.0	ug/kg	1:1
Dichloromethane	10/19/05	10/19/05	ND	2.0	ug/kg	1:1
Acrylonitrile	10/19/05	10/19/05	ND	2.0	ug/kg	1:1
trans-1,2-Dichloroethene	10/19/05	10/19/05	ND	2.0	ug/kg	1:1
1,1-Dichloroethane	10/19/05	10/19/05	ND	2.0	ug/kg	1:1
Vinyl acetate	10/19/05	10/19/05	ND	2.0	ug/kg	1:1
cis-1,2-Dichloroethene	10/19/05	10/19/05	ND	2.0	ug/kg	1:1
2-Butanone (MEK)	10/19/05	10/19/05	ND	2.0	ug/kg	1:1
Bromochloromethane	10/19/05	10/19/05	ND	2.0	ug/kg	1:1
Chloroform	10/19/05	10/19/05	ND	2.0	ug/kg	1:1
2,2-dichloropropane	10/19/05	10/19/05	ND	2.0	ug/kg	1:1
1,1,1-Trichloroethane	10/19/05	10/19/05	ND	2.0	ug/kg	1:1
1,1-dichloropropane	10/19/05	10/19/05	ND	2.0	ug/kg	1:1
Carbon tetrachloride	10/19/05	10/19/05	ND	2.0	ug/kg	1:1
Benzene	10/19/05	10/19/05	ND	2.0	ug/kg	1:1
1,2-Dichloroethane	10/19/05	10/19/05	ND	2.0	ug/kg	1:1
Dibromomethane	10/19/05	10/19/05	ND	2.0	ug/kg	1:1
Bromodichloromethane	10/19/05	10/19/05	ND	2.0	ug/kg	1:1
1,2-Dichloropropane	10/19/05	10/19/05	ND	2.0	ug/kg	1:1
Trichloroethene	10/19/05	10/19/05	ND	2.0	ug/kg	1:1
2-Chloroethylvinyl ether	10/19/05	10/19/05	ND	2.0	ug/kg	1:1
cis-1,3-Dichloropropene	10/19/05	10/19/05	ND	2.0	ug/kg	1:1

3738 Bradview Drive • Sacramento, California 95827 • (916) 369-7688 • FAX (916) 369-7689

43

Test Certificate of Analysis

Client ID	Shaw Environmental & Infrastructure	**Workorder ID**	CalTrans Merced
Workorder #	17088	**Sampled**	10/11/05
Laboratory ID	17088006	**Received**	10/11/05
Sample ID	SR140-B3-9.0	**Reported**	10/26/05
Matrix	Soil		

8260B GC/MS Volatiles - 8260B (continued)

Parameter	Prep Date	Analyzed	Result	RL	Units	Dilution
4-Methyl-2-pentanone	10/19/05	10/19/05	ND	2.0	ug/kg	1:1
trans-1,3Dichloropropene	10/19/05	10/19/05	ND	2.0	ug/kg	1:1
1,1,2-Trichloroethane	10/19/05	10/19/05	ND	2.0	ug/kg	1:1
Toluene	10/19/05	10/19/05	ND	2.0	ug/kg	1:1
1,2-Dibromoethane (EDB)	10/19/05	10/19/05	ND	2.0	ug/kg	1:1
1,3-Dichloropropane	10/19/05	10/19/05	ND	2.0	ug/kg	1:1
2-Hexanone	10/19/05	10/19/05	ND	2.0	ug/kg	1:1
Dibromochloromethane	10/19/05	10/19/05	ND	2.0	ug/kg	1:1
Tetrachloroethene	10/19/05	10/19/05	ND	2.0	ug/kg	1:1
1,1,1,2Tetrachloroethane	10/19/05	10/19/05	ND	2.0	ug/kg	1:1
Chlorobenzene	10/19/05	10/19/05	ND	2.0	ug/kg	1:1
Ethylbenzene	10/19/05	10/19/05	ND	2.0	ug/kg	1:1
M+P-Xylene	10/19/05	10/19/05	ND	2.0	ug/kg	1:1
Bromoform	10/19/05	10/19/05	ND	2.0	ug/kg	1:1
Styrene	10/19/05	10/19/05	ND	2.0	ug/kg	1:1
o-Xylene	10/19/05	10/19/05	ND	2.0	ug/kg	1:1
1,1,2,2Tetrachloroethane	10/19/05	10/19/05	ND	2.0	ug/kg	1:1
1,2,3-Trichloropropane	10/19/05	10/19/05	ND	2.0	ug/kg	1:1
Isopropylbenzene(Cumene)	10/19/05	10/19/05	ND	2.0	ug/kg	1:1
Bromobenzene	10/19/05	10/19/05	ND	2.0	ug/kg	1:1
n-Propylbenzene	10/19/05	10/19/05	ND	2.0	ug/kg	1:1
2-Chlorotoluene	10/19/05	10/19/05	ND	2.0	ug/kg	1:1
4-Chlorotoluene	10/19/05	10/19/05	ND	2.0	ug/kg	1:1
1,3,5-Trimethylbenzene	10/19/05	10/19/05	ND	2.0	ug/kg	1:1
tert-Butylbenzene	10/19/05	10/19/05	ND	2.0	ug/kg	1:1
1,2,4-Trimethylbenzene	10/19/05	10/19/05	ND	2.0	ug/kg	1:1
sec-Butylbenzene	10/19/05	10/19/05	ND	2.0	ug/kg	1:1
1,3-Dichlorobenzene	10/19/05	10/19/05	ND	2.0	ug/kg	1:1
1,4-Dichlorobenzene	10/19/05	10/19/05	ND	2.0	ug/kg	1:1
4-Isopropyltoluene	10/19/05	10/19/05	ND	2.0	ug/kg	1:1
1,2-Dichlorobenzene	10/19/05	10/19/05	ND	2.0	ug/kg	1:1
n-Butylbenzene	10/19/05	10/19/05	ND	2.0	ug/kg	1:1

44

3738 Bradview Drive • Sacramento, California 95827 • (916) 369-7688 • FAX (916) 369-7689

Sparger Technology, Inc.
Environmental Laboratories

Analytical Laboratory Division
Mobile Laboratory Division
Scientific Division

Test Certificate of Analysis

Client ID	Shaw Environmental & Infrastructure	**Workorder ID**	CalTrans Merced
Workorder #	17088	**Sampled**	10/11/05
Laboratory ID	17088006	**Received**	10/11/05
Sample ID	SR140-B3-9.0	**Reported**	10/26/05
Matrix	Soil		

8260B GC/MS Volatiles - 8260B (continued)

Parameter	Prep Date	Analyzed	Result	RL	Units	Dilution
1,2Dibromo3chloropropane	10/19/05	10/19/05	ND	2.0	ug/kg	1:1
1,2,4-Trichlorobenzene	10/19/05	10/19/05	ND	2.0	ug/kg	1:1
Naphthalene	10/19/05	10/19/05	ND	2.0	ug/kg	1:1
Hexachlorobutadiene	10/19/05	10/19/05	ND	2.0	ug/kg	1:1
1,2,3-Trichlorobenzene	10/19/05	10/19/05	ND	2.0	ug/kg	1:1

Surrogates	Result	Recovery	Limits
1,2-Dichloroethane-d4	51 ug/kg	102 %	(70 - 135)
Toluene d8	44 ug/kg	88 %	(70 - 135)
4-Bromofluorobenzene	50 ug/kg	100 %	(70 - 135)

3738 Bradview Drive • Sacramento, California 95827 • (916) 369-7688 • FAX (916) 369-7689

Sparger Technology, Inc.
Environmental Laboratories

Analytical Laboratory Division
Mobile Laboratory Division
Scientific Division

Test Certificate of Analysis

Client ID	Shaw Environmental & Infrastructure	**Workorder ID**	CalTrans Merced
Workorder #	17088	**Sampled**	10/11/05
Laboratory ID	17088007	**Received**	10/11/05
Sample ID	SR140-B1-1.5	**Reported**	10/26/05
Matrix	Soil		

8260B Oxygenates - 8260B

Parameter	Prep Date	Analyzed	Result	RL	Units	Dilution
Benzene	10/19/05	10/19/05	ND	1.0	ug/kg	1:1
Toluene	10/19/05	10/19/05	ND	1.0	ug/kg	1:1
Ethylbenzene	10/19/05	10/19/05	ND	1.0	ug/kg	1:1
Xylene (Total)	10/19/05	10/19/05	ND	1.0	ug/kg	1:1

Surrogates	Result	Recovery	Limits
1,2-Dichloroethane-d4	54 ug/kg	108 %	(65 - 135)

46

3738 Bradview Drive • Sacramento, California 95827 • (916) 369-7688 • FAX (916) 369-7689

Sparger Technology, Inc.
Environmental Laboratories

Analytical Laboratory Division
Mobile Laboratory Division
Scientific Division

Test Certificate of Analysis

Client ID	Shaw Environmental & Infrastructure	**Workorder ID**	CalTrans Merced
Workorder #	17088	**Sampled**	10/11/05
Laboratory ID	17088007	**Received**	10/11/05
Sample ID	SR140-B1-1.5	**Reported**	10/26/05
Matrix	Soil		

8260B GC/MS Volatiles - 8260B

Parameter	Prep Date	Analyzed	Result	RL	Units	Dilution
Dichlorodifluoromethane	10/19/05	10/19/05	ND	2.0	ug/kg	1:1
Chloromethane	10/19/05	10/19/05	ND	2.0	ug/kg	1:1
Vinyl chloride	10/19/05	10/19/05	ND	2.0	ug/kg	1:1
Bromomethane	10/19/05	10/19/05	ND	2.0	ug/kg	1:1
Chloroethane	10/19/05	10/19/05	ND	2.0	ug/kg	1:1
Trichlorofluoromethane	10/19/05	10/19/05	ND	2.0	ug/kg	1:1
Acrolein	10/19/05	10/19/05	ND	2.0	ug/kg	1:1
1,1-Dichloroethene	10/19/05	10/19/05	ND	2.0	ug/kg	1:1
Acetone	10/19/05	10/19/05	ND	2.0	ug/kg	1:1
Methyl iodide	10/19/05	10/19/05	ND	2.0	ug/kg	1:1
Carbon disulfide	10/19/05	10/19/05	ND	2.0	ug/kg	1:1
Dichloromethane	10/19/05	10/19/05	ND	2.0	ug/kg	1:1
Acrylonitrile	10/19/05	10/19/05	ND	2.0	ug/kg	1:1
trans-1,2-Dichloroethene	10/19/05	10/19/05	ND	2.0	ug/kg	1:1
1,1-Dichloroethane	10/19/05	10/19/05	ND	2.0	ug/kg	1:1
Vinyl acetate	10/19/05	10/19/05	ND	2.0	ug/kg	1:1
cis-1,2-Dichloroethene	10/19/05	10/19/05	ND	2.0	ug/kg	1:1
2-Butanone (MEK)	10/19/05	10/19/05	ND	2.0	ug/kg	1:1
Bromochloromethane	10/19/05	10/19/05	ND	2.0	ug/kg	1:1
Chloroform	10/19/05	10/19/05	ND	2.0	ug/kg	1:1
2,2-dichloropropane	10/19/05	10/19/05	ND	2.0	ug/kg	1:1
1,1,1-Trichloroethane	10/19/05	10/19/05	ND	2.0	ug/kg	1:1
1,1-dichloropropane	10/19/05	10/19/05	ND	2.0	ug/kg	1:1
Carbon tetrachloride	10/19/05	10/19/05	ND	2.0	ug/kg	1:1
Benzene	10/19/05	10/19/05	ND	2.0	ug/kg	1:1
1,2-Dichloroethane	10/19/05	10/19/05	ND	2.0	ug/kg	1:1
Dibromomethane	10/19/05	10/19/05	ND	2.0	ug/kg	1:1
Bromodichloromethane	10/19/05	10/19/05	ND	2.0	ug/kg	1:1
1,2-Dichloropropane	10/19/05	10/19/05	ND	2.0	ug/kg	1:1
Trichloroethene	10/19/05	10/19/05	ND	2.0	ug/kg	1:1
2-Chloroethylvinyl ether	10/19/05	10/19/05	ND	2.0	ug/kg	1:1
cis-1,3-Dichloropropene	10/19/05	10/19/05	ND	2.0	ug/kg	1:1

3738 Bradview Drive • Sacramento, California 95827 • (916) 369-7688 • FAX (916) 369-7689

Test Certificate of Analysis

Client ID	Shaw Environmental & Infrastructure	**Workorder ID**	CalTrans Merced
Workorder #	17088	**Sampled**	10/11/05
Laboratory ID	17088007	**Received**	10/11/05
Sample ID	SR140-B1-1.5	**Reported**	10/26/05
Matrix	Soil		

8260B GC/MS Volatiles - 8260B (continued)

Parameter	Prep Date	Analyzed	Result	RL	Units	Dilution
4-Methyl-2-pentanone	10/19/05	10/19/05	ND	2.0	ug/kg	1:1
trans-1,3Dichloropropene	10/19/05	10/19/05	ND	2.0	ug/kg	1:1
1,1,2-Trichloroethane	10/19/05	10/19/05	ND	2.0	ug/kg	1:1
Toluene	10/19/05	10/19/05	ND	2.0	ug/kg	1:1
1,2-Dibromoethane (EDB)	10/19/05	10/19/05	ND	2.0	ug/kg	1:1
1,3-Dichloropropane	10/19/05	10/19/05	ND	2.0	ug/kg	1:1
2-Hexanone	10/19/05	10/19/05	ND	2.0	ug/kg	1:1
Dibromochloromethane	10/19/05	10/19/05	ND	2.0	ug/kg	1:1
Tetrachloroethene	10/19/05	10/19/05	ND	2.0	ug/kg	1:1
1,1,1,2Tetrachloroethane	10/19/05	10/19/05	ND	2.0	ug/kg	1:1
Chlorobenzene	10/19/05	10/19/05	ND	2.0	ug/kg	1:1
Ethylbenzene	10/19/05	10/19/05	ND	2.0	ug/kg	1:1
M+P-Xylene	10/19/05	10/19/05	ND	2.0	ug/kg	1:1
Bromoform	10/19/05	10/19/05	ND	2.0	ug/kg	1:1
Styrene	10/19/05	10/19/05	ND	2.0	ug/kg	1:1
o-Xylene	10/19/05	10/19/05	ND	2.0	ug/kg	1:1
1,1,2,2Tetrachloroethane	10/19/05	10/19/05	ND	2.0	ug/kg	1:1
1,2,3-Trichloropropane	10/19/05	10/19/05	ND	2.0	ug/kg	1:1
Isopropylbenzene(Cumene)	10/19/05	10/19/05	ND	2.0	ug/kg	1:1
Bromobenzene	10/19/05	10/19/05	ND	2.0	ug/kg	1:1
n-Propylbenzene	10/19/05	10/19/05	ND	2.0	ug/kg	1:1
2-Chlorotoluene	10/19/05	10/19/05	ND	2.0	ug/kg	1:1
4-Chlorotoluene	10/19/05	10/19/05	ND	2.0	ug/kg	1:1
1,3,5-Trimethylbenzene	10/19/05	10/19/05	ND	2.0	ug/kg	1:1
tert-Butylbenzene	10/19/05	10/19/05	ND	2.0	ug/kg	1:1
1,2,4-Trimethylbenzene	10/19/05	10/19/05	ND	2.0	ug/kg	1:1
sec-Butylbenzene	10/19/05	10/19/05	ND	2.0	ug/kg	1:1
1,3-Dichlorobenzene	10/19/05	10/19/05	ND	2.0	ug/kg	1:1
1,4-Dichlorobenzene	10/19/05	10/19/05	ND	2.0	ug/kg	1:1
4-Isopropyltoluene	10/19/05	10/19/05	ND	2.0	ug/kg	1:1
1,2-Dichlorobenzene	10/19/05	10/19/05	ND	2.0	ug/kg	1:1
n-Butylbenzene	10/19/05	10/19/05	ND	2.0	ug/kg	1:1

48

3738 Bradview Drive • Sacramento, California 95827 • (916) 369-7688 • FAX (916) 369-7689

Sparger Technology, Inc.
Environmental Laboratories

Analytical Laboratory Division
Mobile Laboratory Division
Scientific Division

Test Certificate of Analysis

Client ID	Shaw Environmental & Infrastructure	**Workorder ID**	CalTrans Merced
Workorder #	17088	**Sampled**	10/11/05
Laboratory ID	17088007	**Received**	10/11/05
Sample ID	SR140-B1-1.5	**Reported**	10/26/05
Matrix	Soil		

8260B GC/MS Volatiles - 8260B (continued)

Parameter	Prep Date	Analyzed	Result	RL	Units	Dilution
1,2Dibromo3chloropropane	10/19/05	10/19/05	ND	2.0	ug/kg	1:1
1,2,4-Trichlorobenzene	10/19/05	10/19/05	ND	2.0	ug/kg	1:1
Naphthalene	10/19/05	10/19/05	ND	2.0	ug/kg	1:1
Hexachlorobutadiene	10/19/05	10/19/05	ND	2.0	ug/kg	1:1
1,2,3-Trichlorobenzene	10/19/05	10/19/05	ND	2.0	ug/kg	1:1

Surrogates	Result	Recovery	Limits
1,2-Dichloroethane-d4	54 ug/kg	108 %	(70 - 135)
Toluene d8	44 ug/kg	88 %	(70 - 135)
4-Bromofluorobenzene	51 ug/kg	102 %	(70 - 135)

3738 Bradview Drive • Sacramento, California 95827 • (916) 369-7688 • FAX (916) 369-7689

49

Sparger Technology, Inc.
Environmental Laboratories

Analytical Laboratory Division
Mobile Laboratory Division
Scientific Division

Test Certificate of Analysis

Client ID	Shaw Environmental & Infrastructure	**Workorder ID**	CalTrans Merced
Workorder #	17088	**Sampled**	10/11/05
Laboratory ID	17088007	**Received**	10/11/05
Sample ID	SR140-B1-1.5	**Reported**	10/26/05
Matrix	Soil		

Metals, CAM17 - 6010B

Parameter	Prep Date	Analyzed	Result	RL	Units	Dilution
Antimony	10/13/05	10/17/05	ND	6.0	mg/Kg	1:1
Arsenic	10/13/05	10/17/05	ND	8.0	mg/Kg	1:1
Barium	**10/13/05**	**10/17/05**	**186**	**2.0**	**mg/Kg**	**1:1**
Beryllium	10/13/05	10/17/05	ND	0.30	mg/Kg	1:1
Cadmium	10/13/05	10/17/05	ND	0.50	mg/Kg	1:1
Chromium	**10/13/05**	**10/17/05**	**42**	**1.0**	**mg/Kg**	**1:1**
Cobalt	**10/13/05**	**10/17/05**	**12**	**5.0**	**mg/Kg**	**1:1**
Copper	**10/13/05**	**10/17/05**	**29**	**2.0**	**mg/Kg**	**1:1**
Lead	**10/13/05**	**10/17/05**	**4.5**	**1.0**	**mg/Kg**	**1:1**
Molybdenum	10/13/05	10/17/05	ND	5.0	mg/Kg	1:1
Nickel	10/13/05	10/17/05	ND	4.0	mg/Kg	1:1
Selenium	10/13/05	10/17/05	ND	10	mg/Kg	1:1
Silver	10/13/05	10/17/05	ND	1.0	mg/Kg	1:1
Thallium	10/13/05	10/17/05	ND	10	mg/Kg	1:1
Vanadium	**10/13/05**	**10/17/05**	**51**	**5.0**	**mg/Kg**	**1:1**
Zinc	**10/13/05**	**10/17/05**	**44**	**1.5**	**mg/Kg**	**1:1**

60

3738 Bradview Drive • Sacramento, California 95827 • (916) 369-7688 • FAX (916) 369-7689

Sparger Technology, Inc.
Environmental Laboratories

Analytical Laboratory Division
Mobile Laboratory Division
Scientific Division

Test Certificate of Analysis

Client ID	Shaw Environmental & Infrastructure	**Workorder ID**	CalTrans Merced
Workorder #	17088	**Sampled**	10/11/05
Laboratory ID	17088008	**Received**	10/11/05
Sample ID	SR140-B1-3.0	**Reported**	10/26/05
Matrix	Soil		

8260B Oxygenates - 8260B

Parameter	Prep Date	Analyzed	Result	RL	Units	Dilution
Benzene	10/18/05	10/18/05	ND	1.0	ug/kg	1:1
Toluene	10/18/05	10/18/05	ND	1.0	ug/kg	1:1
Ethylbenzene	10/18/05	10/18/05	ND	1.0	ug/kg	1:1
Xylene (Total)	10/18/05	10/18/05	ND	1.0	ug/kg	1:1

Surrogates	Result	Recovery	Limits
1,2-Dichloroethane-d4	56 ug/kg	112 %	(65 - 135)

3738 Bradview Drive • Sacramento, California 95827 • (916) 369-7688 • FAX (916) 369-7689

Sparger Technology, Inc.
Environmental Laboratories

Analytical Laboratory Division
Mobile Laboratory Division
Scientific Division

Test Certificate of Analysis

Client ID	Shaw Environmental & Infrastructure	**Workorder ID**	CalTrans Merced
Workorder #	17088	**Sampled**	10/11/05
Laboratory ID	17088009	**Received**	10/11/05
Sample ID	SR140-B1-4.5	**Reported**	10/26/05
Matrix	Soil		

8260B Oxygenates - 8260B

Parameter	Prep Date	Analyzed	Result	RL	Units	Dilution
Benzene	10/19/05	10/19/05	ND	1.0	ug/kg	1:1
Toluene	10/19/05	10/19/05	ND	1.0	ug/kg	1:1
Ethylbenzene	10/19/05	10/19/05	ND	1.0	ug/kg	1:1
Xylene (Total)	10/19/05	10/19/05	ND	1.0	ug/kg	1:1

Surrogates	Result	Recovery	Limits
1,2-Dichloroethane-d4	55 ug/kg	110 %	(65 - 135)

5V

3738 Bradview Drive • Sacramento, California 95827 • (916) 369-7688 • FAX (916) 369-7689

Sparger Technology, Inc.
Environmental Laboratories

Analytical Laboratory Division
Mobile Laboratory Division
Scientific Division

Test Certificate of Analysis

Client ID	Shaw Environmental & Infrastructure	**Workorder ID**	CalTrans Merced
Workorder #	17088	**Sampled**	10/11/05
Laboratory ID	17088009	**Received**	10/11/05
Sample ID	SR140-B1-4.5	**Reported**	10/26/05
Matrix	Soil		

8260B GC/MS Volatiles - 8260B

Parameter	Prep Date	Analyzed	Result	RL	Units	Dilution
Dichlorodifluoromethane	10/19/05	10/19/05	ND	2.0	ug/kg	1:1
Chloromethane	10/19/05	10/19/05	ND	2.0	ug/kg	1:1
Vinyl chloride	10/19/05	10/19/05	ND	2.0	ug/kg	1:1
Bromomethane	10/19/05	10/19/05	ND	2.0	ug/kg	1:1
Chloroethane	10/19/05	10/19/05	ND	2.0	ug/kg	1:1
Trichlorofluoromethane	10/19/05	10/19/05	ND	2.0	ug/kg	1:1
Acrolein	10/19/05	10/19/05	ND	2.0	ug/kg	1:1
1,1-Dichloroethene	10/19/05	10/19/05	ND	2.0	ug/kg	1:1
Acetone	10/19/05	10/19/05	ND	2.0	ug/kg	1:1
Methyl iodide	10/19/05	10/19/05	ND	2.0	ug/kg	1:1
Carbon disulfide	10/19/05	10/19/05	ND	2.0	ug/kg	1:1
Dichloromethane	10/19/05	10/19/05	ND	2.0	ug/kg	1:1
Acrylonitrile	10/19/05	10/19/05	ND	2.0	ug/kg	1:1
trans-1,2-Dichloroethene	10/19/05	10/19/05	ND	2.0	ug/kg	1:1
1,1-Dichloroethane	10/19/05	10/19/05	ND	2.0	ug/kg	1:1
Vinyl acetate	10/19/05	10/19/05	ND	2.0	ug/kg	1:1
cis-1,2-Dichloroethene	10/19/05	10/19/05	ND	2.0	ug/kg	1:1
2-Butanone (MEK)	10/19/05	10/19/05	ND	2.0	ug/kg	1:1
Bromochloromethane	10/19/05	10/19/05	ND	2.0	ug/kg	1:1
Chloroform	10/19/05	10/19/05	ND	2.0	ug/kg	1:1
2,2-dichloropropane	10/19/05	10/19/05	ND	2.0	ug/kg	1:1
1,1,1-Trichloroethane	10/19/05	10/19/05	ND	2.0	ug/kg	1:1
1,1-dichloropropane	10/19/05	10/19/05	ND	2.0	ug/kg	1:1
Carbon tetrachloride	10/19/05	10/19/05	ND	2.0	ug/kg	1:1
Benzene	10/19/05	10/19/05	ND	2.0	ug/kg	1:1
1,2-Dichloroethane	10/19/05	10/19/05	ND	2.0	ug/kg	1:1
Dibromomethane	10/19/05	10/19/05	ND	2.0	ug/kg	1:1
Bromodichloromethane	10/19/05	10/19/05	ND	2.0	ug/kg	1:1
1,2-Dichloropropane	10/19/05	10/19/05	ND	2.0	ug/kg	1:1
Trichloroethene	10/19/05	10/19/05	ND	2.0	ug/kg	1:1
2-Chloroethylvinyl ether	10/19/05	10/19/05	ND	2.0	ug/kg	1:1
cis-1,3-Dichloropropene	10/19/05	10/19/05	ND	2.0	ug/kg	1:1

3738 Bradview Drive • Sacramento, California 95827 • (916) 369-7688 • FAX (916) 369-7689

Sparger Technology, Inc.
Environmental Laboratories

Analytical Laboratory Division
Mobile Laboratory Division
Scientific Division

Test Certificate of Analysis

Client ID	Shaw Environmental & Infrastructure	**Workorder ID**	CalTrans Merced
Workorder #	17088	**Sampled**	10/11/05
Laboratory ID	17088009	**Received**	10/11/05
Sample ID	SR140-B1-4.5	**Reported**	10/26/05
Matrix	Soil		

8260B GC/MS Volatiles - 8260B (continued)

Parameter	Prep Date	Analyzed	Result	RL	Units	Dilution
4-Methyl-2-pentanone	10/19/05	10/19/05	ND	2.0	ug/kg	1:1
trans-1,3Dichloropropene	10/19/05	10/19/05	ND	2.0	ug/kg	1:1
1,1,2-Trichloroethane	10/19/05	10/19/05	ND	2.0	ug/kg	1:1
Toluene	10/19/05	10/19/05	ND	2.0	ug/kg	1:1
1,2-Dibromoethane (EDB)	10/19/05	10/19/05	ND	2.0	ug/kg	1:1
1,3-Dichloropropane	10/19/05	10/19/05	ND	2.0	ug/kg	1:1
2-Hexanone	10/19/05	10/19/05	ND	2.0	ug/kg	1:1
Dibromochloromethane	10/19/05	10/19/05	ND	2.0	ug/kg	1:1
Tetrachloroethene	10/19/05	10/19/05	ND	2.0	ug/kg	1:1
1,1,1,2Tetrachloroethane	10/19/05	10/19/05	ND	2.0	ug/kg	1:1
Chlorobenzene	10/19/05	10/19/05	ND	2.0	ug/kg	1:1
Ethylbenzene	10/19/05	10/19/05	ND	2.0	ug/kg	1:1
M+P-Xylene	10/19/05	10/19/05	ND	2.0	ug/kg	1:1
Bromoform	10/19/05	10/19/05	ND	2.0	ug/kg	1:1
Styrene	10/19/05	10/19/05	ND	2.0	ug/kg	1:1
o-Xylene	10/19/05	10/19/05	ND	2.0	ug/kg	1:1
1,1,2,2Tetrachloroethane	10/19/05	10/19/05	ND	2.0	ug/kg	1:1
1,2,3-Trichloropropane	10/19/05	10/19/05	ND	2.0	ug/kg	1:1
Isopropylbenzene (Cumene)	10/19/05	10/19/05	ND	2.0	ug/kg	1:1
Bromobenzene	10/19/05	10/19/05	ND	2.0	ug/kg	1:1
n-Propylbenzene	10/19/05	10/19/05	ND	2.0	ug/kg	1:1
2-Chlorotoluene	10/19/05	10/19/05	ND	2.0	ug/kg	1:1
4-Chlorotoluene	10/19/05	10/19/05	ND	2.0	ug/kg	1:1
1,3,5-Trimethylbenzene	10/19/05	10/19/05	ND	2.0	ug/kg	1:1
tert-Butylbenzene	10/19/05	10/19/05	ND	2.0	ug/kg	1:1
1,2,4-Trimethylbenzene	10/19/05	10/19/05	ND	2.0	ug/kg	1:1
sec-Butylbenzene	10/19/05	10/19/05	ND	2.0	ug/kg	1:1
1,3-Dichlorobenzene	10/19/05	10/19/05	ND	2.0	ug/kg	1:1
1,4-Dichlorobenzene	10/19/05	10/19/05	ND	2.0	ug/kg	1:1
4-Isopropyltoluene	10/19/05	10/19/05	ND	2.0	ug/kg	1:1
1,2-Dichlorobenzene	10/19/05	10/19/05	ND	2.0	ug/kg	1:1
n-Butylbenzene	10/19/05	10/19/05	ND	2.0	ug/kg	1:1

5K

3738 Bradview Drive • Sacramento, California 95827 • (916) 369-7688 • FAX (916) 369-7689

Test Certificate of Analysis

Client ID	Shaw Environmental & Infrastructure	**Workorder ID**	CalTrans Merced
Workorder #	17088	**Sampled**	10/11/05
Laboratory ID	17088009	**Received**	10/11/05
Sample ID	SR140-B1-4.5	**Reported**	10/26/05
Matrix	Soil		

8260B GC/MS Volatiles - 8260B (continued)

Parameter	Prep Date	Analyzed	Result	RL	Units	Dilution
1,2Dibromo3chloropropane	10/19/05	10/19/05	ND	2.0	ug/kg	1:1
1,2,4-Trichlorobenzene	10/19/05	10/19/05	ND	2.0	ug/kg	1:1
Naphthalene	10/19/05	10/19/05	ND	2.0	ug/kg	1:1
Hexachlorobutadiene	10/19/05	10/19/05	ND	2.0	ug/kg	1:1
1,2,3-Trichlorobenzene	10/19/05	10/19/05	ND	2.0	ug/kg	1:1

Surrogates	Result	Recovery	Limits
1,2-Dichloroethane-d4	55 ug/kg	110 %	(70 - 135)
Toluene d8	45 ug/kg	90 %	(70 - 135)
4-Bromofluorobenzene	50 ug/kg	100 %	(70 - 135)

3738 Bradview Drive • Sacramento, California 95827 • (916) 369-7688 • FAX (916) 369-7689

Sparger Technology, Inc.
Environmental Laboratories

Analytical Laboratory Division
Mobile Laboratory Division
Scientific Division

Test Certificate of Analysis

Client ID	Shaw Environmental & Infrastructure	**Workorder ID**	CalTrans Merced
Workorder #	17088	**Sampled**	10/11/05
Laboratory ID	17088010	**Received**	10/11/05
Sample ID	SR140-B1-6.0	**Reported**	10/26/05
Matrix	Soil		

8260B Oxygenates - 8260B

Parameter	Prep Date	Analyzed	Result	RL	Units	Dilution
Benzene	10/18/05	10/18/05	ND	1.0	ug/kg	1:1
Toluene	10/18/05	10/18/05	ND	1.0	ug/kg	1:1
Ethylbenzene	10/18/05	10/18/05	ND	1.0	ug/kg	1:1
Xylene (Total)	10/18/05	10/18/05	ND	1.0	ug/kg	1:1

Surrogates	Result	Recovery	Limits
1,2-Dichloroethane-d4	54 ug/kg	108 %	(65 - 135)

56

3738 Bradview Drive • Sacramento, California 95827 • (916) 369-7688 • FAX (916) 369-7689

Sparger Technology, Inc.
Environmental Laboratories

Analytical Laboratory Division
Mobile Laboratory Division
Scientific Division

Test Certificate of Analysis

Client ID	Shaw Environmental & Infrastructure	**Workorder ID**	CalTrans Merced
Workorder #	17088	**Sampled**	10/11/05
Laboratory ID	17088011	**Received**	10/11/05
Sample ID	SR140-B1-7.5	**Reported**	10/26/05
Matrix	Soil		

8260B Oxygenates - 8260B

Parameter	Prep Date	Analyzed	Result	RL	Units	Dilution
Benzene	10/18/05	10/18/05	ND	1.0	ug/kg	1:1
Toluene	10/18/05	10/18/05	ND	1.0	ug/kg	1:1
Ethylbenzene	10/18/05	10/18/05	ND	1.0	ug/kg	1:1
Xylene (Total)	10/18/05	10/18/05	ND	1.0	ug/kg	1:1

Surrogates	Result	Recovery	Limits
1,2-Dichloroethane-d4	54 ug/kg	108 %	(65 - 135)

3738 Bradview Drive • Sacramento, California 95827 • (916) 369-7688 • FAX (916) 369-7689

Sparger Technology, Inc.
Environmental Laboratories

Analytical Laboratory Division
Mobile Laboratory Division
Scientific Division

Test Certificate of Analysis

Client ID	Shaw Environmental & Infrastructure	**Workorder ID**	CalTrans Merced
Workorder #	17088	**Sampled**	10/11/05
Laboratory ID	17088012	**Received**	10/11/05
Sample ID	SR140-B1-9.0	**Reported**	10/26/05
Matrix	Soil		

8260B Oxygenates - 8260B

Parameter	Prep Date	Analyzed	Result	RL	Units	Dilution
Benzene	10/19/05	10/19/05	ND	1.0	ug/kg	1:1
Toluene	10/19/05	10/19/05	ND	1.0	ug/kg	1:1
Ethylbenzene	10/19/05	10/19/05	ND	1.0	ug/kg	1:1
Xylene (Total)	10/19/05	10/19/05	ND	1.0	ug/kg	1:1

Surrogates	Result	Recovery	Limits
1,2-Dichloroethane-d4	51 ug/kg	102 %	(65 - 135)

58

3738 Bradview Drive • Sacramento, California 95827 • (916) 369-7688 • FAX (916) 369-7689

Sparger Technology, Inc.
Environmental Laboratories

Analytical Laboratory Division
Mobile Laboratory Division
Scientific Division

Test Certificate of Analysis

Client ID	Shaw Environmental & Infrastructure	**Workorder ID**	CalTrans Merced
Workorder #	17088	**Sampled**	10/11/05
Laboratory ID	17088012	**Received**	10/11/05
Sample ID	SR140-B1-9.0	**Reported**	10/26/05
Matrix	Soil		

8260B GC/MS Volatiles - 8260B

Parameter	Prep Date	Analyzed	Result	RL	Units	Dilution
Dichlorodifluoromethane	10/19/05	10/19/05	ND	2.0	ug/kg	1:1
Chloromethane	10/19/05	10/19/05	ND	2.0	ug/kg	1:1
Vinyl chloride	10/19/05	10/19/05	ND	2.0	ug/kg	1:1
Bromomethane	10/19/05	10/19/05	ND	2.0	ug/kg	1:1
Chloroethane	10/19/05	10/19/05	ND	2.0	ug/kg	1:1
Trichlorofluoromethane	10/19/05	10/19/05	ND	2.0	ug/kg	1:1
Acrolein	10/19/05	10/19/05	ND	2.0	ug/kg	1:1
1,1-Dichloroethene	10/19/05	10/19/05	ND	2.0	ug/kg	1:1
Acetone	10/19/05	10/19/05	ND	2.0	ug/kg	1:1
Methyl iodide	10/19/05	10/19/05	ND	2.0	ug/kg	1:1
Carbon disulfide	10/19/05	10/19/05	ND	2.0	ug/kg	1:1
Dichloromethane	10/19/05	10/19/05	ND	2.0	ug/kg	1:1
Acrylonitrile	10/19/05	10/19/05	ND	2.0	ug/kg	1:1
trans-1,2-Dichloroethene	10/19/05	10/19/05	ND	2.0	ug/kg	1:1
1,1-Dichloroethane	10/19/05	10/19/05	ND	2.0	ug/kg	1:1
Vinyl acetate	10/19/05	10/19/05	ND	2.0	ug/kg	1:1
cis-1,2-Dichloroethene	10/19/05	10/19/05	ND	2.0	ug/kg	1:1
2-Butanone (MEK)	10/19/05	10/19/05	ND	2.0	ug/kg	1:1
Bromochloromethane	10/19/05	10/19/05	ND	2.0	ug/kg	1:1
Chloroform	10/19/05	10/19/05	ND	2.0	ug/kg	1:1
2,2-dichloropropane	10/19/05	10/19/05	ND	2.0	ug/kg	1:1
1,1,1-Trichloroethane	10/19/05	10/19/05	ND	2.0	ug/kg	1:1
1,1-dichloropropane	10/19/05	10/19/05	ND	2.0	ug/kg	1:1
Carbon tetrachloride	10/19/05	10/19/05	ND	2.0	ug/kg	1:1
Benzene	10/19/05	10/19/05	ND	2.0	ug/kg	1:1
1,2-Dichloroethane	10/19/05	10/19/05	ND	2.0	ug/kg	1:1
Dibromomethane	10/19/05	10/19/05	ND	2.0	ug/kg	1:1
Bromodichloromethane	10/19/05	10/19/05	ND	2.0	ug/kg	1:1
1,2-Dichloropropane	10/19/05	10/19/05	ND	2.0	ug/kg	1:1
Trichloroethene	10/19/05	10/19/05	ND	2.0	ug/kg	1:1
2-Chloroethylvinyl ether	10/19/05	10/19/05	ND	2.0	ug/kg	1:1
cis-1,3-Dichloropropene	10/19/05	10/19/05	ND	2.0	ug/kg	1:1

3738 Bradview Drive • Sacramento, California 95827 • (916) 369-7688 • FAX (916) 369-7689

Test Certificate of Analysis

Client ID	Shaw Environmental & Infrastructure	**Workorder ID**	CalTrans Merced
Workorder #	17088	**Sampled**	10/11/05
Laboratory ID	17088012	**Received**	10/11/05
Sample ID	SR140-B1-9.0	**Reported**	10/26/05
Matrix	Soil		

8260B GC/MS Volatiles - 8260B (continued)

Parameter	Prep Date	Analyzed	Result	RL	Units	Dilution
4-Methyl-2-pentanone	10/19/05	10/19/05	ND	2.0	ug/kg	1:1
trans-1,3Dichloropropene	10/19/05	10/19/05	ND	2.0	ug/kg	1:1
1,1,2-Trichloroethane	10/19/05	10/19/05	ND	2.0	ug/kg	1:1
Toluene	10/19/05	10/19/05	ND	2.0	ug/kg	1:1
1,2-Dibromoethane (EDB)	10/19/05	10/19/05	ND	2.0	ug/kg	1:1
1,3-Dichloropropane	10/19/05	10/19/05	ND	2.0	ug/kg	1:1
2-Hexanone	10/19/05	10/19/05	ND	2.0	ug/kg	1:1
Dibromochloromethane	10/19/05	10/19/05	ND	2.0	ug/kg	1:1
Tetrachloroethene	10/19/05	10/19/05	ND	2.0	ug/kg	1:1
1,1,1,2Tetrachloroethane	10/19/05	10/19/05	ND	2.0	ug/kg	1:1
Chlorobenzene	10/19/05	10/19/05	ND	2.0	ug/kg	1:1
Ethylbenzene	10/19/05	10/19/05	ND	2.0	ug/kg	1:1
M+P-Xylene	10/19/05	10/19/05	ND	2.0	ug/kg	1:1
Bromoform	10/19/05	10/19/05	ND	2.0	ug/kg	1:1
Styrene	10/19/05	10/19/05	ND	2.0	ug/kg	1:1
o-Xylene	10/19/05	10/19/05	ND	2.0	ug/kg	1:1
1,1,2,2Tetrachloroethane	10/19/05	10/19/05	ND	2.0	ug/kg	1:1
1,2,3-Trichloropropane	10/19/05	10/19/05	ND	2.0	ug/kg	1:1
Isopropylbenzene(Cumene)	10/19/05	10/19/05	ND	2.0	ug/kg	1:1
Bromobenzene	10/19/05	10/19/05	ND	2.0	ug/kg	1:1
n-Propylbenzene	10/19/05	10/19/05	ND	2.0	ug/kg	1:1
2-Chlorotoluene	10/19/05	10/19/05	ND	2.0	ug/kg	1:1
4-Chlorotoluene	10/19/05	10/19/05	ND	2.0	ug/kg	1:1
1,3,5-Trimethylbenzene	10/19/05	10/19/05	ND	2.0	ug/kg	1:1
tert-Butylbenzene	10/19/05	10/19/05	ND	2.0	ug/kg	1:1
1,2,4-Trimethylbenzene	10/19/05	10/19/05	ND	2.0	ug/kg	1:1
sec-Butylbenzene	10/19/05	10/19/05	ND	2.0	ug/kg	1:1
1,3-Dichlorobenzene	10/19/05	10/19/05	ND	2.0	ug/kg	1:1
1,4-Dichlorobenzene	10/19/05	10/19/05	ND	2.0	ug/kg	1:1
4-Isopropyltoluene	10/19/05	10/19/05	ND	2.0	ug/kg	1:1
1,2-Dichlorobenzene	10/19/05	10/19/05	ND	2.0	ug/kg	1:1
n-Butylbenzene	10/19/05	10/19/05	ND	2.0	ug/kg	1:1

3738 Bradview Drive • Sacramento, California 95827 • (916) 369-7688 • FAX (916) 369-7689

Sparger Technology, Inc.
Environmental Laboratories

Analytical Laboratory Division
Mobile Laboratory Division
Scientific Division

Test Certificate of Analysis

Client ID	Shaw Environmental & Infrastructure	**Workorder ID**	CalTrans Merced
Workorder #	17088	**Sampled**	10/11/05
Laboratory ID	17088012	**Received**	10/11/05
Sample ID	SR140-B1-9.0	**Reported**	10/26/05
Matrix	Soil		

8260B GC/MS Volatiles - 8260B (continued)

Parameter	Prep Date	Analyzed	Result	RL	Units	Dilution
1,2Dibromo3chloropropane	10/19/05	10/19/05	ND	2.0	ug/kg	1:1
1,2,4-Trichlorobenzene	10/19/05	10/19/05	ND	2.0	ug/kg	1:1
Naphthalene	10/19/05	10/19/05	ND	2.0	ug/kg	1:1
Hexachlorobutadiene	10/19/05	10/19/05	ND	2.0	ug/kg	1:1
1,2,3-Trichlorobenzene	10/19/05	10/19/05	ND	2.0	ug/kg	1:1

Surrogates	Result	Recovery	Limits
1,2-Dichloroethane-d4	51 ug/kg	102 %	(70 - 135)
Toluene d8	43 ug/kg	86 %	(70 - 135)
4-Bromofluorobenzene	50 ug/kg	100 %	(70 - 135)

3738 Bradview Drive • Sacramento, California 95827 • (916) 369-7688 • FAX (916) 369-7689

61

Sparger Technology, Inc.
Environmental Laboratories

Analytical Laboratory Division
Mobile Laboratory Division
Scientific Division

Test Certificate of Analysis

Client ID	Shaw Environmental & Infrastructure	**Workorder ID**	CalTrans Merced
Workorder #	17088	**Sampled**	10/11/05
Laboratory ID	17088013	**Received**	10/11/05
Sample ID	SR140-B4-1.5	**Reported**	10/26/05
Matrix	Soil		

8260B Oxygenates - 8260B

Parameter	Prep Date	Analyzed	Result	RL	Units	Dilution
Benzene	10/19/05	10/19/05	ND	1.0	ug/kg	1:1
Toluene	10/19/05	10/19/05	ND	1.0	ug/kg	1:1
Ethylbenzene	10/19/05	10/19/05	ND	1.0	ug/kg	1:1
Xylene (Total)	10/19/05	10/19/05	ND	1.0	ug/kg	1:1

Surrogates	Result	Recovery	Limits
1,2-Dichloroethane-d4	55 ug/kg	110 %	(65 - 135)

62

3738 Bradview Drive • Sacramento, California 95827 • (916) 369-7688 • FAX (916) 369-7689

Sparger Technology, Inc.
Environmental Laboratories

Analytical Laboratory Division
Mobile Laboratory Division
Scientific Division

Test Certificate of Analysis

Client ID	Shaw Environmental & Infrastructure	**Workorder ID**	CalTrans Merced
Workorder #	17088	**Sampled**	10/11/05
Laboratory ID	17088013	**Received**	10/11/05
Sample ID	SR140-B4-1.5	**Reported**	10/26/05
Matrix	Soil		

8260B GC/MS Volatiles - 8260B

Parameter	Prep Date	Analyzed	Result	RL	Units	Dilution
Dichlorodifluoromethane	10/19/05	10/19/05	ND	2.0	ug/kg	1:1
Chloromethane	10/19/05	10/19/05	ND	2.0	ug/kg	1:1
Vinyl chloride	10/19/05	10/19/05	ND	2.0	ug/kg	1:1
Bromomethane	10/19/05	10/19/05	ND	2.0	ug/kg	1:1
Chloroethane	10/19/05	10/19/05	ND	2.0	ug/kg	1:1
Trichlorofluoromethane	10/19/05	10/19/05	ND	2.0	ug/kg	1:1
Acrolein	10/19/05	10/19/05	ND	2.0	ug/kg	1:1
1,1-Dichloroethene	10/19/05	10/19/05	ND	2.0	ug/kg	1:1
Acetone	10/19/05	10/19/05	ND	2.0	ug/kg	1:1
Methyl iodide	10/19/05	10/19/05	ND	2.0	ug/kg	1:1
Carbon disulfide	10/19/05	10/19/05	ND	2.0	ug/kg	1:1
Dichloromethane	10/19/05	10/19/05	ND	2.0	ug/kg	1:1
Acrylonitrile	10/19/05	10/19/05	ND	2.0	ug/kg	1:1
trans-1,2-Dichloroethene	10/19/05	10/19/05	ND	2.0	ug/kg	1:1
1,1-Dichloroethane	10/19/05	10/19/05	ND	2.0	ug/kg	1:1
Vinyl acetate	10/19/05	10/19/05	ND	2.0	ug/kg	1:1
cis-1,2-Dichloroethene	10/19/05	10/19/05	ND	2.0	ug/kg	1:1
2-Butanone (MEK)	10/19/05	10/19/05	ND	2.0	ug/kg	1:1
Bromochloromethane	10/19/05	10/19/05	ND	2.0	ug/kg	1:1
Chloroform	10/19/05	10/19/05	ND	2.0	ug/kg	1:1
2,2-dichloropropane	10/19/05	10/19/05	ND	2.0	ug/kg	1:1
1,1,1-Trichloroethane	10/19/05	10/19/05	ND	2.0	ug/kg	1:1
1,1-dichloropropane	10/19/05	10/19/05	ND	2.0	ug/kg	1:1
Carbon tetrachloride	10/19/05	10/19/05	ND	2.0	ug/kg	1:1
Benzene	10/19/05	10/19/05	ND	2.0	ug/kg	1:1
1,2-Dichloroethane	10/19/05	10/19/05	ND	2.0	ug/kg	1:1
Dibromomethane	10/19/05	10/19/05	ND	2.0	ug/kg	1:1
Bromodichloromethane	10/19/05	10/19/05	ND	2.0	ug/kg	1:1
1,2-Dichloropropane	10/19/05	10/19/05	ND	2.0	ug/kg	1:1
Trichloroethene	10/19/05	10/19/05	ND	2.0	ug/kg	1:1
2-Chloroethylvinyl ether	10/19/05	10/19/05	ND	2.0	ug/kg	1:1
cis-1,3-Dichloropropene	10/19/05	10/19/05	ND	2.0	ug/kg	1:1

3738 Bradview Drive • Sacramento, California 95827 • (916) 369-7688 • FAX (916) 369-7689

63

Test Certificate of Analysis

Client ID	Shaw Environmental & Infrastructure	**Workorder ID**	CalTrans Merced
Workorder #	17088	**Sampled**	10/11/05
Laboratory ID	17088013	**Received**	10/11/05
Sample ID	SR140-B4-1.5	**Reported**	10/26/05
Matrix	Soil		

8260B GC/MS Volatiles - 8260B (continued)

Parameter	Prep Date	Analyzed	Result	RL	Units	Dilution
4-Methyl-2-pentanone	10/19/05	10/19/05	ND	2.0	ug/kg	1:1
trans-1,3Dichloropropene	10/19/05	10/19/05	ND	2.0	ug/kg	1:1
1,1,2-Trichloroethane	10/19/05	10/19/05	ND	2.0	ug/kg	1:1
Toluene	10/19/05	10/19/05	ND	2.0	ug/kg	1:1
1,2-Dibromoethane (EDB)	10/19/05	10/19/05	ND	2.0	ug/kg	1:1
1,3-Dichloropropane	10/19/05	10/19/05	ND	2.0	ug/kg	1:1
2-Hexanone	10/19/05	10/19/05	ND	2.0	ug/kg	1:1
Dibromochloromethane	10/19/05	10/19/05	ND	2.0	ug/kg	1:1
Tetrachloroethene	10/19/05	10/19/05	ND	2.0	ug/kg	1:1
1,1,1,2Tetrachloroethane	10/19/05	10/19/05	ND	2.0	ug/kg	1:1
Chlorobenzene	10/19/05	10/19/05	ND	2.0	ug/kg	1:1
Ethylbenzene	10/19/05	10/19/05	ND	2.0	ug/kg	1:1
M+P-Xylene	10/19/05	10/19/05	ND	2.0	ug/kg	1:1
Bromoform	10/19/05	10/19/05	ND	2.0	ug/kg	1:1
Styrene	10/19/05	10/19/05	ND	2.0	ug/kg	1:1
o-Xylene	10/19/05	10/19/05	ND	2.0	ug/kg	1:1
1,1,2,2Tetrachloroethane	10/19/05	10/19/05	ND	2.0	ug/kg	1:1
1,2,3-Trichloropropane	10/19/05	10/19/05	ND	2.0	ug/kg	1:1
Isopropylbenzene (Cumene)	10/19/05	10/19/05	ND	2.0	ug/kg	1:1
Bromobenzene	10/19/05	10/19/05	ND	2.0	ug/kg	1:1
n-Propylbenzene	10/19/05	10/19/05	ND	2.0	ug/kg	1:1
2-Chlorotoluene	10/19/05	10/19/05	ND	2.0	ug/kg	1:1
4-Chlorotoluene	10/19/05	10/19/05	ND	2.0	ug/kg	1:1
1,3,5-Trimethylbenzene	10/19/05	10/19/05	ND	2.0	ug/kg	1:1
tert-Butylbenzene	10/19/05	10/19/05	ND	2.0	ug/kg	1:1
1,2,4-Trimethylbenzene	10/19/05	10/19/05	ND	2.0	ug/kg	1:1
sec-Butylbenzene	10/19/05	10/19/05	ND	2.0	ug/kg	1:1
1,3-Dichlorobenzene	10/19/05	10/19/05	ND	2.0	ug/kg	1:1
1,4-Dichlorobenzene	10/19/05	10/19/05	ND	2.0	ug/kg	1:1
4-Isopropyltoluene	10/19/05	10/19/05	ND	2.0	ug/kg	1:1
1,2-Dichlorobenzene	10/19/05	10/19/05	ND	2.0	ug/kg	1:1
n-Butylbenzene	10/19/05	10/19/05	ND	2.0	ug/kg	1:1

3738 Bradview Drive • Sacramento, California 95827 • (916) 369-7688 • FAX (916) 369-7689
64

Sparger Technology, Inc.
Environmental Laboratories

Analytical Laboratory Division
Mobile Laboratory Division
Scientific Division

Test Certificate of Analysis

Client ID	Shaw Environmental & Infrastructure	**Workorder ID**	CalTrans Merced
Workorder #	17088	**Sampled**	10/11/05
Laboratory ID	17088013	**Received**	10/11/05
Sample ID	SR140-B4-1.5	**Reported**	10/26/05
Matrix	Soil		

8260B GC/MS Volatiles - 8260B (continued)

Parameter	Prep Date	Analyzed	Result	RL	Units	Dilution
1,2Dibromo3chloropropane	10/19/05	10/19/05	ND	2.0	ug/kg	1:1
1,2,4-Trichlorobenzene	10/19/05	10/19/05	ND	2.0	ug/kg	1:1
Naphthalene	10/19/05	10/19/05	ND	2.0	ug/kg	1:1
Hexachlorobutadiene	10/19/05	10/19/05	ND	2.0	ug/kg	1:1
1,2,3-Trichlorobenzene	10/19/05	10/19/05	ND	2.0	ug/kg	1:1

Surrogates	Result	Recovery	Limits
1,2-Dichloroethane-d4	55 ug/kg	110 %	(70 - 135)
Toluene d8	46 ug/kg	92 %	(70 - 135)
4-Bromofluorobenzene	50 ug/kg	100 %	(70 - 135)

3738 Bradview Drive • Sacramento, California 95827 • (916) 369-7688 • FAX (916) 369-7689

Sparger Technology, Inc.
Environmental Laboratories

Analytical Laboratory Division
Mobile Laboratory Division
Scientific Division

Test Certificate of Analysis

Client ID	Shaw Environmental & Infrastructure	**Workorder ID**	CalTrans Merced
Workorder #	17088	**Sampled**	10/11/05
Laboratory ID	17088013	**Received**	10/11/05
Sample ID	SR140-B4-1.5	**Reported**	10/26/05
Matrix	Soil		

Metals, CAM17 - 6010B

Parameter	Prep Date	Analyzed	Result	RL	Units	Dilution
Antimony	10/13/05	10/17/05	ND	6.0	mg/Kg	1:1
Arsenic	10/13/05	10/17/05	ND	8.0	mg/Kg	1:1
Barium	**10/13/05**	**10/17/05**	**113**	**2.0**	**mg/Kg**	**1:1**
Beryllium	10/13/05	10/17/05	ND	0.30	mg/Kg	1:1
Cadmium	10/13/05	10/17/05	ND	0.50	mg/Kg	1:1
Chromium	**10/13/05**	**10/17/05**	**26**	**1.0**	**mg/Kg**	**1:1**
Cobalt	**10/13/05**	**10/17/05**	**7.2**	**5.0**	**mg/Kg**	**1:1**
Copper	**10/13/05**	**10/17/05**	**16**	**2.0**	**mg/Kg**	**1:1**
Lead	**10/13/05**	**10/17/05**	**2.3**	**1.0**	**mg/Kg**	**1:1**
Molybdenum	10/13/05	10/17/05	ND	5.0	mg/Kg	1:1
Nickel	10/13/05	10/17/05	ND	4.0	mg/Kg	1:1
Selenium	10/13/05	10/17/05	ND	10	mg/Kg	1:1
Silver	10/13/05	10/17/05	ND	1.0	mg/Kg	1:1
Thallium	10/13/05	10/17/05	ND	10	mg/Kg	1:1
Vanadium	**10/13/05**	**10/17/05**	**32**	**5.0**	**mg/Kg**	**1:1**
Zinc	**10/13/05**	**10/17/05**	**31**	**1.5**	**mg/Kg**	**1:1**

66

3738 Bradview Drive • Sacramento, California 95827 • (916) 369-7688 • FAX (916) 369-7689

Sparger Technology, Inc.
Environmental Laboratories

Analytical Laboratory Division
Mobile Laboratory Division
Scientific Division

Test Certificate of Analysis

Client ID	Shaw Environmental & Infrastructure	**Workorder ID**	CalTrans Merced
Workorder #	17088	**Sampled**	10/11/05
Laboratory ID	17088014	**Received**	10/11/05
Sample ID	SR140-B4-3.0	**Reported**	10/26/05
Matrix	Soil		

8260B Oxygenates - 8260B

Parameter	Prep Date	Analyzed	Result	RL	Units	Dilution
Benzene	10/18/05	10/18/05	ND	1.0	ug/kg	1:1
Toluene	10/18/05	10/18/05	ND	1.0	ug/kg	1:1
Ethylbenzene	10/18/05	10/18/05	ND	1.0	ug/kg	1:1
Xylene (Total)	10/18/05	10/18/05	ND	1.0	ug/kg	1:1

Surrogates	Result	Recovery	Limits
1,2-Dichloroethane-d4	47 ug/kg	94 %	(65 - 135)

3738 Bradview Drive • Sacramento, California 95827 • (916) 369-7688 • FAX (916) 369-7689

67

Sparger Technology, Inc.
Environmental Laboratories

Analytical Laboratory Division
Mobile Laboratory Division
Scientific Division

Test Certificate of Analysis

Client ID	Shaw Environmental & Infrastructure	**Workorder ID**	CalTrans Merced
Workorder #	17088	**Sampled**	10/11/05
Laboratory ID	17088015	**Received**	10/11/05
Sample ID	SR140-B4-4.5	**Reported**	10/26/05
Matrix	Soil		

8260B Oxygenates - 8260B

Parameter	Prep Date	Analyzed	Result	RL	Units	Dilution
Benzene	10/19/05	10/19/05	ND	1.0	ug/kg	1:1
Toluene	10/19/05	10/19/05	ND	1.0	ug/kg	1:1
Ethylbenzene	10/19/05	10/19/05	ND	1.0	ug/kg	1:1
Xylene (Total)	10/19/05	10/19/05	ND	1.0	ug/kg	1:1

Surrogates	Result	Recovery	Limits
1,2-Dichloroethane-d4	53 ug/kg	106 %	(65 - 135)

3738 Bradview Drive • Sacramento, California 95827 • (916) 369-7688 • FAX (916) 369-7689

Sparger Technology, Inc.
Environmental Laboratories

Analytical Laboratory Division
Mobile Laboratory Division
Scientific Division

Test Certificate of Analysis

Client ID	Shaw Environmental & Infrastructure	**Workorder ID**	CalTrans Merced
Workorder #	17088	**Sampled**	10/11/05
Laboratory ID	17088015	**Received**	10/11/05
Sample ID	SR140-B4-4.5	**Reported**	10/26/05
Matrix	Soil		

8260B GC/MS Volatiles - 8260B

Parameter	Prep Date	Analyzed	Result	RL	Units	Dilution
Dichlorodifluoromethane	10/19/05	10/19/05	ND	2.0	ug/kg	1:1
Chloromethane	10/19/05	10/19/05	ND	2.0	ug/kg	1:1
Vinyl chloride	10/19/05	10/19/05	ND	2.0	ug/kg	1:1
Bromomethane	10/19/05	10/19/05	ND	2.0	ug/kg	1:1
Chloroethane	10/19/05	10/19/05	ND	2.0	ug/kg	1:1
Trichlorofluoromethane	10/19/05	10/19/05	ND	2.0	ug/kg	1:1
Acrolein	10/19/05	10/19/05	ND	2.0	ug/kg	1:1
1,1-Dichloroethene	10/19/05	10/19/05	ND	2.0	ug/kg	1:1
Acetone	10/19/05	10/19/05	ND	2.0	ug/kg	1:1
Methyl iodide	10/19/05	10/19/05	ND	2.0	ug/kg	1:1
Carbon disulfide	10/19/05	10/19/05	ND	2.0	ug/kg	1:1
Dichloromethane	10/19/05	10/19/05	ND	2.0	ug/kg	1:1
Acrylonitrile	10/19/05	10/19/05	ND	2.0	ug/kg	1:1
trans-1,2-Dichloroethene	10/19/05	10/19/05	ND	2.0	ug/kg	1:1
1,1-Dichloroethane	10/19/05	10/19/05	ND	2.0	ug/kg	1:1
Vinyl acetate	10/19/05	10/19/05	ND	2.0	ug/kg	1:1
cis-1,2-Dichloroethene	10/19/05	10/19/05	ND	2.0	ug/kg	1:1
2-Butanone (MEK)	10/19/05	10/19/05	ND	2.0	ug/kg	1:1
Bromochloromethane	10/19/05	10/19/05	ND	2.0	ug/kg	1:1
Chloroform	10/19/05	10/19/05	ND	2.0	ug/kg	1:1
2,2-dichloropropane	10/19/05	10/19/05	ND	2.0	ug/kg	1:1
1,1,1-Trichloroethane	10/19/05	10/19/05	ND	2.0	ug/kg	1:1
1,1-dichloropropane	10/19/05	10/19/05	ND	2.0	ug/kg	1:1
Carbon tetrachloride	10/19/05	10/19/05	ND	2.0	ug/kg	1:1
Benzene	10/19/05	10/19/05	ND	2.0	ug/kg	1:1
1,2-Dichloroethane	10/19/05	10/19/05	ND	2.0	ug/kg	1:1
Dibromomethane	10/19/05	10/19/05	ND	2.0	ug/kg	1:1
Bromodichloromethane	10/19/05	10/19/05	ND	2.0	ug/kg	1:1
1,2-Dichloropropane	10/19/05	10/19/05	ND	2.0	ug/kg	1:1
Trichloroethene	10/19/05	10/19/05	ND	2.0	ug/kg	1:1
2-Chloroethylvinyl ether	10/19/05	10/19/05	ND	2.0	ug/kg	1:1
cis-1,3-Dichloropropene	10/19/05	10/19/05	ND	2.0	ug/kg	1:1

3738 Bradview Drive • Sacramento, California 95827 • (916) 369-7688 • FAX (916) 369-7689

69

Sparger Technology, Inc.
Environmental Laboratories

Analytical Laboratory Division
Mobile Laboratory Division
Scientific Division

Test Certificate of Analysis

Client ID	Shaw Environmental & Infrastructure	**Workorder ID**	CalTrans Merced
Workorder #	17088	**Sampled**	10/11/05
Laboratory ID	17088015	**Received**	10/11/05
Sample ID	SR140-B4-4.5	**Reported**	10/26/05
Matrix	Soil		

8260B GC/MS Volatiles - 8260B (continued)

Parameter	Prep Date	Analyzed	Result	RL	Units	Dilution
4-Methyl-2-pentanone	10/19/05	10/19/05	ND	2.0	ug/kg	1:1
trans-1,3Dichloropropene	10/19/05	10/19/05	ND	2.0	ug/kg	1:1
1,1,2-Trichloroethane	10/19/05	10/19/05	ND	2.0	ug/kg	1:1
Toluene	10/19/05	10/19/05	ND	2.0	ug/kg	1:1
1,2-Dibromoethane (EDB)	10/19/05	10/19/05	ND	2.0	ug/kg	1:1
1,3-Dichloropropane	10/19/05	10/19/05	ND	2.0	ug/kg	1:1
2-Hexanone	10/19/05	10/19/05	ND	2.0	ug/kg	1:1
Dibromochloromethane	10/19/05	10/19/05	ND	2.0	ug/kg	1:1
Tetrachloroethene	10/19/05	10/19/05	ND	2.0	ug/kg	1:1
1,1,1,2Tetrachloroethane	10/19/05	10/19/05	ND	2.0	ug/kg	1:1
Chlorobenzene	10/19/05	10/19/05	ND	2.0	ug/kg	1:1
Ethylbenzene	10/19/05	10/19/05	ND	2.0	ug/kg	1:1
M+P-Xylene	10/19/05	10/19/05	ND	2.0	ug/kg	1:1
Bromoform	10/19/05	10/19/05	ND	2.0	ug/kg	1:1
Styrene	10/19/05	10/19/05	ND	2.0	ug/kg	1:1
o-Xylene	10/19/05	10/19/05	ND	2.0	ug/kg	1:1
1,1,2,2Tetrachloroethane	10/19/05	10/19/05	ND	2.0	ug/kg	1:1
1,2,3-Trichloropropane	10/19/05	10/19/05	ND	2.0	ug/kg	1:1
Isopropylbenzene(Cumene)	10/19/05	10/19/05	ND	2.0	ug/kg	1:1
Bromobenzene	10/19/05	10/19/05	ND	2.0	ug/kg	1:1
n-Propylbenzene	10/19/05	10/19/05	ND	2.0	ug/kg	1:1
2-Chlorotoluene	10/19/05	10/19/05	ND	2.0	ug/kg	1:1
4-Chlorotoluene	10/19/05	10/19/05	ND	2.0	ug/kg	1:1
1,3,5-Trimethylbenzene	10/19/05	10/19/05	ND	2.0	ug/kg	1:1
tert-Butylbenzene	10/19/05	10/19/05	ND	2.0	ug/kg	1:1
1,2,4-Trimethylbenzene	10/19/05	10/19/05	ND	2.0	ug/kg	1:1
sec-Butylbenzene	10/19/05	10/19/05	ND	2.0	ug/kg	1:1
1,3-Dichlorobenzene	10/19/05	10/19/05	ND	2.0	ug/kg	1:1
1,4-Dichlorobenzene	10/19/05	10/19/05	ND	2.0	ug/kg	1:1
4-Isopropyltoluene	10/19/05	10/19/05	ND	2.0	ug/kg	1:1
1,2-Dichlorobenzene	10/19/05	10/19/05	ND	2.0	ug/kg	1:1
n-Butylbenzene	10/19/05	10/19/05	ND	2.0	ug/kg	1:1

3738 Bradview Drive • Sacramento, California 95827 • (916) 369-7688 • FAX (916) 369-7689

10

Sparger Technology, Inc.
Environmental Laboratories

Analytical Laboratory Division
Mobile Laboratory Division
Scientific Division

Test Certificate of Analysis

Client ID	Shaw Environmental & Infrastructure	**Workorder ID**	CalTrans Merced
Workorder #	17088	**Sampled**	10/11/05
Laboratory ID	17088015	**Received**	10/11/05
Sample ID	SR140-B4-4.5	**Reported**	10/26/05
Matrix	Soil		

8260B GC/MS Volatiles - 8260B (continued)

Parameter	Prep Date	Analyzed	Result	RL	Units	Dilution
1,2Dibromo3chloropropane	10/19/05	10/19/05	ND	2.0	ug/kg	1:1
1,2,4-Trichlorobenzene	10/19/05	10/19/05	ND	2.0	ug/kg	1:1
Naphthalene	10/19/05	10/19/05	ND	2.0	ug/kg	1:1
Hexachlorobutadiene	10/19/05	10/19/05	ND	2.0	ug/kg	1:1
1,2,3-Trichlorobenzene	10/19/05	10/19/05	ND	2.0	ug/kg	1:1

Surrogates	Result	Recovery	Limits
1,2-Dichloroethane-d4	53 ug/kg	106 %	(70 - 135)
Toluene d8	46 ug/kg	92 %	(70 - 135)
4-Bromofluorobenzene	52 ug/kg	104 %	(70 - 135)

3738 Bradview Drive • Sacramento, California 95827 • (916) 369-7688 • FAX (916) 369-7689

71

Sparger Technology, Inc.
Environmental Laboratories

Analytical Laboratory Division
Mobile Laboratory Division
Scientific Division

Test Certificate of Analysis

Client ID	Shaw Environmental & Infrastructure	**Workorder ID**	CalTrans Merced
Workorder #	17088	**Sampled**	10/11/05
Laboratory ID	17088016	**Received**	10/11/05
Sample ID	SR140-B4-6.0	**Reported**	10/26/05
Matrix	Soil		

8260B Oxygenates - 8260B

Parameter	Prep Date	Analyzed	Result	RL	Units	Dilution
Benzene	10/18/05	10/18/05	ND	1.0	ug/kg	1:1
Toluene	10/18/05	10/18/05	ND	1.0	ug/kg	1:1
Ethylbenzene	10/18/05	10/18/05	ND	1.0	ug/kg	1:1
Xylene (Total)	10/18/05	10/18/05	ND	1.0	ug/kg	1:1

Surrogates	Result	Recovery	Limits
1,2-Dichloroethane-d4	58 ug/kg	116 %	(65 - 135)

3738 Bradview Drive • Sacramento, California 95827 • (916) 369-7688 • FAX (916) 369-7689

72

Sparger Technology, Inc.
Environmental Laboratories

Analytical Laboratory Division
Mobile Laboratory Division
Scientific Division

Test Certificate of Analysis

Client ID	Shaw Environmental & Infrastructure	**Workorder ID**	CalTrans Merced
Workorder #	17088	**Sampled**	10/11/05
Laboratory ID	17088017	**Received**	10/11/05
Sample ID	SR140-B4-7.5	**Reported**	10/26/05
Matrix	Soil		

8260B Oxygenates - 8260B

Parameter	Prep Date	Analyzed	Result	RL	Units	Dilution
Benzene	10/18/05	10/18/05	ND	1.0	ug/kg	1:1
Toluene	10/18/05	10/18/05	ND	1.0	ug/kg	1:1
Ethylbenzene	10/18/05	10/18/05	ND	1.0	ug/kg	1:1
Xylene (Total)	10/18/05	10/18/05	ND	1.0	ug/kg	1:1

Surrogates	Result	Recovery	Limits
1,2-Dichloroethane-d4	50 ug/kg	100 %	(65 - 135)

3738 Bradview Drive • Sacramento, California 95827 • (916) 369-7688 • FAX (916) 369-7689

Sparger Technology, Inc.
Environmental Laboratories

Analytical Laboratory Division
Mobile Laboratory Division
Scientific Division

Test Certificate of Analysis

Client ID	Shaw Environmental & Infrastructure	**Workorder ID**	CalTrans Merced
Workorder #	17088	**Sampled**	10/11/05
Laboratory ID	17088018	**Received**	10/11/05
Sample ID	SR140-B4-9.0	**Reported**	10/26/05
Matrix	Soil		

8260B Oxygenates - 8260B

Parameter	Prep Date	Analyzed	Result	RL	Units	Dilution
Benzene	10/19/05	10/19/05	ND	1.0	ug/kg	1:1
Toluene	10/19/05	10/19/05	ND	1.0	ug/kg	1:1
Ethylbenzene	10/19/05	10/19/05	ND	1.0	ug/kg	1:1
Xylene (Total)	10/19/05	10/19/05	ND	1.0	ug/kg	1:1

Surrogates	Result	Recovery	Limits
1,2-Dichloroethane-d4	48 ug/kg	96 %	(65 - 135)

3738 Bradview Drive • Sacramento, California 95827 • (916) 369-7688 • FAX (916) 369-7689

Sparger Technology, Inc.
Environmental Laboratories

Analytical Laboratory Division
Mobile Laboratory Division
Scientific Division

Test Certificate of Analysis

Client ID	Shaw Environmental & Infrastructure	**Workorder ID**	CalTrans Merced
Workorder #	17088	**Sampled**	10/11/05
Laboratory ID	17088018	**Received**	10/11/05
Sample ID	SR140-B4-9.0	**Reported**	10/26/05
Matrix	Soil		

8260B GC/MS Volatiles - 8260B

Parameter	Prep Date	Analyzed	Result	RL	Units	Dilution
Dichlorodifluoromethane	10/19/05	10/19/05	ND	2.0	ug/kg	1:1
Chloromethane	10/19/05	10/19/05	ND	2.0	ug/kg	1:1
Vinyl chloride	10/19/05	10/19/05	ND	2.0	ug/kg	1:1
Bromomethane	10/19/05	10/19/05	ND	2.0	ug/kg	1:1
Chloroethane	10/19/05	10/19/05	ND	2.0	ug/kg	1:1
Trichlorofluoromethane	10/19/05	10/19/05	ND	2.0	ug/kg	1:1
Acrolein	10/19/05	10/19/05	ND	2.0	ug/kg	1:1
1,1-Dichloroethene	10/19/05	10/19/05	ND	2.0	ug/kg	1:1
Acetone	10/19/05	10/19/05	ND	2.0	ug/kg	1:1
Methyl iodide	10/19/05	10/19/05	ND	2.0	ug/kg	1:1
Carbon disulfide	10/19/05	10/19/05	ND	2.0	ug/kg	1:1
Dichloromethane	10/19/05	10/19/05	ND	2.0	ug/kg	1:1
Acrylonitrile	10/19/05	10/19/05	ND	2.0	ug/kg	1:1
trans-1,2-Dichloroethene	10/19/05	10/19/05	ND	2.0	ug/kg	1:1
1,1-Dichloroethane	10/19/05	10/19/05	ND	2.0	ug/kg	1:1
Vinyl acetate	10/19/05	10/19/05	ND	2.0	ug/kg	1:1
cis-1,2-Dichloroethene	10/19/05	10/19/05	ND	2.0	ug/kg	1:1
2-Butanone (MEK)	10/19/05	10/19/05	ND	2.0	ug/kg	1:1
Bromochloromethane	10/19/05	10/19/05	ND	2.0	ug/kg	1:1
Chloroform	10/19/05	10/19/05	ND	2.0	ug/kg	1:1
2,2-dichloropropane	10/19/05	10/19/05	ND	2.0	ug/kg	1:1
1,1,1-Trichloroethane	10/19/05	10/19/05	ND	2.0	ug/kg	1:1
1,1-dichloropropane	10/19/05	10/19/05	ND	2.0	ug/kg	1:1
Carbon tetrachloride	10/19/05	10/19/05	ND	2.0	ug/kg	1:1
Benzene	10/19/05	10/19/05	ND	2.0	ug/kg	1:1
1,2-Dichloroethane	10/19/05	10/19/05	ND	2.0	ug/kg	1:1
Dibromomethane	10/19/05	10/19/05	ND	2.0	ug/kg	1:1
Bromodichloromethane	10/19/05	10/19/05	ND	2.0	ug/kg	1:1
1,2-Dichloropropane	10/19/05	10/19/05	ND	2.0	ug/kg	1:1
Trichloroethene	10/19/05	10/19/05	ND	2.0	ug/kg	1:1
2-Chloroethylvinyl ether	10/19/05	10/19/05	ND	2.0	ug/kg	1:1
cis-1,3-Dichloropropene	10/19/05	10/19/05	ND	2.0	ug/kg	1:1

3738 Bradview Drive • Sacramento, California 95827 • (916) 369-7688 • FAX (916) 369-7689

Sparger Technology, Inc.
Environmental Laboratories

Analytical Laboratory Division
Mobile Laboratory Division
Scientific Division

Test Certificate of Analysis

Client ID	Shaw Environmental & Infrastructure	**Workorder ID**	CalTrans Merced
Workorder #	17088	**Sampled**	10/11/05
Laboratory ID	17088018	**Received**	10/11/05
Sample ID	SR140-B4-9.0	**Reported**	10/26/05
Matrix	Soil		

8260B GC/MS Volatiles - 8260B (continued)

Parameter	Prep Date	Analyzed	Result	RL	Units	Dilution
4-Methyl-2-pentanone	10/19/05	10/19/05	ND	2.0	ug/kg	1:1
trans-1,3Dichloropropene	10/19/05	10/19/05	ND	2.0	ug/kg	1:1
1,1,2-Trichloroethane	10/19/05	10/19/05	ND	2.0	ug/kg	1:1
Toluene	10/19/05	10/19/05	ND	2.0	ug/kg	1:1
1,2-Dibromoethane (EDB)	10/19/05	10/19/05	ND	2.0	ug/kg	1:1
1,3-Dichloropropane	10/19/05	10/19/05	ND	2.0	ug/kg	1:1
2-Hexanone	10/19/05	10/19/05	ND	2.0	ug/kg	1:1
Dibromochloromethane	10/19/05	10/19/05	ND	2.0	ug/kg	1:1
Tetrachloroethene	10/19/05	10/19/05	ND	2.0	ug/kg	1:1
1,1,1,2Tetrachloroethane	10/19/05	10/19/05	ND	2.0	ug/kg	1:1
Chlorobenzene	10/19/05	10/19/05	ND	2.0	ug/kg	1:1
Ethylbenzene	10/19/05	10/19/05	ND	2.0	ug/kg	1:1
M+P-Xylene	10/19/05	10/19/05	ND	2.0	ug/kg	1:1
Bromoform	10/19/05	10/19/05	ND	2.0	ug/kg	1:1
Styrene	10/19/05	10/19/05	ND	2.0	ug/kg	1:1
o-Xylene	10/19/05	10/19/05	ND	2.0	ug/kg	1:1
1,1,2,2Tetrachloroethane	10/19/05	10/19/05	ND	2.0	ug/kg	1:1
1,2,3-Trichloropropane	10/19/05	10/19/05	ND	2.0	ug/kg	1:1
Isopropylbenzene (Cumene)	10/19/05	10/19/05	ND	2.0	ug/kg	1:1
Bromobenzene	10/19/05	10/19/05	ND	2.0	ug/kg	1:1
n-Propylbenzene	10/19/05	10/19/05	ND	2.0	ug/kg	1:1
2-Chlorotoluene	10/19/05	10/19/05	ND	2.0	ug/kg	1:1
4-Chlorotoluene	10/19/05	10/19/05	ND	2.0	ug/kg	1:1
1,3,5-Trimethylbenzene	10/19/05	10/19/05	ND	2.0	ug/kg	1:1
tert-Butylbenzene	10/19/05	10/19/05	ND	2.0	ug/kg	1:1
1,2,4-Trimethylbenzene	10/19/05	10/19/05	ND	2.0	ug/kg	1:1
sec-Butylbenzene	10/19/05	10/19/05	ND	2.0	ug/kg	1:1
1,3-Dichlorobenzene	10/19/05	10/19/05	ND	2.0	ug/kg	1:1
1,4-Dichlorobenzene	10/19/05	10/19/05	ND	2.0	ug/kg	1:1
4-Isopropyltoluene	10/19/05	10/19/05	ND	2.0	ug/kg	1:1
1,2-Dichlorobenzene	10/19/05	10/19/05	ND	2.0	ug/kg	1:1
n-Butylbenzene	10/19/05	10/19/05	ND	2.0	ug/kg	1:1

76

3738 Bradview Drive • Sacramento, California 95827 • (916) 369-7688 • FAX (916) 369-7689

Sparger Technology, Inc.
Environmental Laboratories

Analytical Laboratory Division
Mobile Laboratory Division
Scientific Division

Test Certificate of Analysis

Client ID	Shaw Environmental & Infrastructure	**Workorder ID**	CalTrans Merced
Workorder #	17088	**Sampled**	10/11/05
Laboratory ID	17088018	**Received**	10/11/05
Sample ID	SR140-B4-9.0	**Reported**	10/26/05
Matrix	Soil		

8260B GC/MS Volatiles - 8260B (continued)

Parameter	Prep Date	Analyzed	Result	RL	Units	Dilution
1,2Dibromo3chloropropane	10/19/05	10/19/05	ND	2.0	ug/kg	1:1
1,2,4-Trichlorobenzene	10/19/05	10/19/05	ND	2.0	ug/kg	1:1
Naphthalene	10/19/05	10/19/05	ND	2.0	ug/kg	1:1
Hexachlorobutadiene	10/19/05	10/19/05	ND	2.0	ug/kg	1:1
1,2,3-Trichlorobenzene	10/19/05	10/19/05	ND	2.0	ug/kg	1:1

Surrogates	Result	Recovery	Limits
1,2-Dichloroethane-d4	48 ug/kg	96 %	(70 - 135)
Toluene d8	44 ug/kg	88 %	(70 - 135)
4-Bromofluorobenzene	49 ug/kg	98 %	(70 - 135)

3738 Bradview Drive • Sacramento, California 95827 • (916) 369-7688 • FAX (916) 369-7689

77

Sparger Technology, Inc.
Environmental Laboratories

Analytical Laboratory Division
Mobile Laboratory Division
Scientific Division

Test Certificate of Analysis

Client ID Shaw Environmental & Infrastructure
Workorder # 17088 **Workorder ID** CalTrans Merced

Parameter TPHdiesel
Method 8015M DHS

Lab ID	Sample ID	Result	RL	Units	Collected	Analyzed	Matrix	Dilution
17088001	SR140-B3-1.5	ND	1.0	mg/Kg	10/11/05	10/12/05	Soil	1:1
17088002	SR140-B3-3.0	ND	1.0	mg/Kg	10/11/05	10/12/05	Soil	1:1
17088003	SR140-B3-4.5	ND	1.0	mg/Kg	10/11/05	10/12/05	Soil	1:1
17088004	SR140-B3-6.0	ND	1.0	mg/Kg	10/11/05	10/12/05	Soil	1:1
17088005	SR140-B3-7.5	ND	1.0	mg/Kg	10/11/05	10/12/05	Soil	1:1
17088006	SR140-B3-9.0	ND	1.0	mg/Kg	10/11/05	10/12/05	Soil	1:1
17088007	SR140-B1-1.5	ND	1.0	mg/Kg	10/11/05	10/12/05	Soil	1:1
17088008	SR140-B1-3.0	ND	1.0	mg/Kg	10/11/05	10/12/05	Soil	1:1
17088009	SR140-B1-4.5	ND	1.0	mg/Kg	10/11/05	10/12/05	Soil	1:1
17088010	SR140-B1-6.0	ND	1.0	mg/Kg	10/11/05	10/12/05	Soil	1:1
17088011	SR140-B1-7.5	ND	1.0	mg/Kg	10/11/05	10/12/05	Soil	1:1
17088012	SR140-B1-9.0	ND	1.0	mg/Kg	10/11/05	10/12/05	Soil	1:1
17088013	SR140-B4-1.5	ND	1.0	mg/Kg	10/11/05	10/12/05	Soil	1:1
17088014	SR140-B4-3.0	ND	1.0	mg/Kg	10/11/05	10/12/05	Soil	1:1
17088015	SR140-B4-4.5	ND	1.0	mg/Kg	10/11/05	10/12/05	Soil	1:1
17088016	SR140-B4-6.0	ND	1.0	mg/Kg	10/11/05	10/12/05	Soil	1:1
17088017	SR140-B4-7.5	ND	1.0	mg/Kg	10/11/05	10/12/05	Soil	1:1
17088018	SR140-B4-9.0	ND	1.0	mg/Kg	10/11/05	10/12/05	Soil	1:1

78

3738 Bradview Drive • Sacramento, California 95827 • (916) 369-7688 • FAX (916) 369-7689

Sparger Technology, Inc.
Environmental Laboratories

Analytical Laboratory Division
Mobile Laboratory Division
Scientific Division

Test Certificate of Analysis

Client ID Shaw Environmental & Infrastructure
Workorder # 17088 **Workorder ID** CalTrans Merced

Parameter TPHgas
Method 8015M DHS

Lab ID	Sample ID	Result	RL	Units	Collected	Analyzed	Matrix	Dilution
17088001	SR140-B3-1.5	ND	0.50	mg/Kg	10/11/05	10/18/05	Soil	1:1
17088002	SR140-B3-3.0	ND	0.50	mg/Kg	10/11/05	10/18/05	Soil	1:1
17088003	SR140-B3-4.5	ND	0.50	mg/Kg	10/11/05	10/18/05	Soil	1:1
17088004	SR140-B3-6.0	ND	0.50	mg/Kg	10/11/05	10/18/05	Soil	1:1
17088005	SR140-B3-7.5	ND	0.50	mg/Kg	10/11/05	10/19/05	Soil	1:1
17088006	SR140-B3-9.0	ND	0.50	mg/Kg	10/11/05	10/19/05	Soil	1:1
17088007	SR140-B1-1.5	ND	0.50	mg/Kg	10/11/05	10/19/05	Soil	1:1
17088008	SR140-B1-3.0	ND	0.50	mg/Kg	10/11/05	10/19/05	Soil	1:1
17088009	SR140-B1-4.5	ND	0.50	mg/Kg	10/11/05	10/19/05	Soil	1:1
17088010	SR140-B1-6.0	ND	0.50	mg/Kg	10/11/05	10/19/05	Soil	1:1
17088011	SR140-B1-7.5	ND	0.50	mg/Kg	10/11/05	10/19/05	Soil	1:1
17088012	SR140-B1-9.0	ND	0.50	mg/Kg	10/11/05	10/19/05	Soil	1:1
17088013	SR140-B4-1.5	ND	0.50	mg/Kg	10/11/05	10/19/05	Soil	1:1
17088014	SR140-B4-3.0	ND	0.50	mg/Kg	10/11/05	10/19/05	Soil	1:1
17088015	SR140-B4-4.5	ND	0.50	mg/Kg	10/11/05	10/19/05	Soil	1:1
17088016	SR140-B4-6.0	ND	0.50	mg/Kg	10/11/05	10/19/05	Soil	1:1
17088017	SR140-B4-7.5	ND	0.50	mg/Kg	10/11/05	10/19/05	Soil	1:1
17088018	SR140-B4-9.0	ND	0.50	mg/Kg	10/11/05	10/19/05	Soil	1:1

3738 Bradview Drive • Sacramento, California 95827 • (916) 369-7688 • FAX (916) 369-7689

Sparger Technology, Inc.
Environmental Laboratories

Analytical Laboratory Division
Mobile Laboratory Division
Scientific Division

Test Certificate of Analysis

Client ID Shaw Environmental & Infrastructure
Workorder # 17088 **Workorder ID** CalTrans Merced

Parameter Mercury
Method EPA 7471A

Lab ID	Sample ID	Result	RL	Units	Collected	Analyzed	Matrix	Dilution
17088001	SR140-B3-1.5	ND	0.010	mg/Kg	10/11/05	10/18/05	Soil	1:1
17088007	SR140-B1-1.5	0.0100	0.010	mg/Kg	10/11/05	10/18/05	Soil	1:1
17088013	SR140-B4-1.5	ND	0.010	mg/Kg	10/11/05	10/18/05	Soil	1:1

3738 Bradview Drive • Sacramento, California 95827 • (916) 369-7688 • FAX (916) 369-7689

Sparger Technology, Inc.
Environmental Laboratories

Analytical Laboratory Division
Mobile Laboratory Division
Scientific Division

Test Certificate of Analysis

Client ID Shaw Environmental & Infrastructure
Workorder # 17088 **Workorder ID** CalTrans Merced

Parameter pH
Method 9045 PH

Lab ID	Sample ID	Result	RL	Units	Collected	Analyzed	Matrix	Dilution
17088003	SR140-B3-4.5	7.9	0.10	SU	10/11/05	10/18/05	Soil	1:1
17088007	SR140-B1-1.5	8.0	0.10	SU	10/11/05	10/18/05	Soil	1:1
17088016	SR140-B4-6.0	7.6	0.10	SU	10/11/05	10/18/05	Soil	1:1

3738 Bradview Drive • Sacramento, California 95827 • (916) 369-7688 • FAX (916) 369-7689

81

Sparger Technology, Inc.
Environmental Laboratories

Analytical Laboratory Division
Mobile Laboratory Division
Scientific Division

Method Blank Report

Client ID Shaw Environmental & Infrastructure
Workorder ID CalTrans Merced
Laboratory ID 71039
Sample ID MB for HBN 275960 [SGXV/2278]
Matrix Soil

Parameter	Method	Prep Date	Analyzed	Result	RL	Units	Dilution
TPHdiesel	8015M DHS	10/12/05	10/12/05	ND	1.0	mg/Kg	1:1

3738 Bradview Drive • Sacramento, California 95827 • (916) 369-7688 • FAX (916) 369-7689

Sparger Technology, Inc.
Environmental Laboratories

Analytical Laboratory Division
Mobile Laboratory Division
Scientific Division

Lab Control Sample Report

Client ID Shaw Environmental & Infrastructure
Workorder ID CalTrans Merced
Laboratory ID 71040
Sample ID LCS for HBN 275960 [SGXV/2278]
Matrix Soil

Parameter	Method	Prep Date	Analyzed	Result	RL	Units	Dilution
TPHdiesel	8015M DHS	10/12/05	10/12/05	46	1.0	mg/Kg	1:1

3738 Bradview Drive • Sacramento, California 95827 • (916) 369-7688 • FAX (916) 369-7689

83

Sparger Technology, Inc.
Environmental Laboratories

Analytical Laboratory Division
Mobile Laboratory Division
Scientific Division

Lab Control Sample Duplicate Report

Client ID Shaw Environmental & Infrastructure
Workorder ID CalTrans Merced
Laboratory ID 71041
Sample ID LCSD for HBN 275960 [SGXV/2278
Matrix Soil

Parameter	Method	Prep Date	Analyzed	Result	RL	Units	Dilution
TPHdiesel	8015M DHS	10/12/05	10/12/05	45	1.0	mg/Kg	1:1

84

3738 Bradview Drive • Sacramento, California 95827 • (916) 369-7688 • FAX (916) 369-7689

Sparger Technology, Inc.
Environmental Laboratories

Analytical Laboratory Division
Mobile Laboratory Division
Scientific Division

Matrix Spike Report

Client ID	Shaw Environmental & Infrastructure
Workorder ID	CalTrans Merced
Laboratory ID	71042
Sample ID	MS for HBN 275960 [SGXV/2278]
Matrix	Soil

Parameter	Method	Prep Date	Analyzed	Result	RL	Units	Dilution
TPHdiesel	8015M DHS	10/12/05	10/12/05	50	1.0	mg/Kg	1:1

3738 Bradview Drive • Sacramento, California 95827 • (916) 369-7688 • FAX (916) 369-7689

Sparger Technology, Inc.
Environmental Laboratories

Analytical Laboratory Division
Mobile Laboratory Division
Scientific Division

Matrix Spike Duplicate Report

Client ID	Shaw Environmental & Infrastructure
Workorder ID	CalTrans Merced
Laboratory ID	71043
Sample ID	MSD for HBN 275960 [SGXV/2278]
Matrix	Soil

Parameter	Method	Prep Date	Analyzed	Result	RL	Units	Dilution
TPHdiesel	8015M DHS	10/12/05	10/12/05	57	1.0	mg/Kg	1:1

86

3738 Bradview Drive • Sacramento, California 95827 • (916) 369-7688 • FAX (916) 369-7689

Sparger Technology, Inc.
Environmental Laboratories

Analytical Laboratory Division
Mobile Laboratory Division
Scientific Division

Method Blank Report

Client ID Shaw Environmental & Infrastructure
Workorder ID CalTrans Merced
Laboratory ID 71116
Sample ID MB for HBN 276253 [ICPV/5246]
Matrix Soil

Parameter	Method	Prep Date	Analyzed	Result	RL	Units	Dilution
Antimony	6010B	10/13/05	10/17/05	ND	6.0	mg/Kg	1:1
Arsenic	6010B	10/13/05	10/17/05	ND	8.0	mg/Kg	1:1
Barium	6010B	10/13/05	10/17/05	ND	2.0	mg/Kg	1:1
Beryllium	6010B	10/13/05	10/17/05	ND	0.30	mg/Kg	1:1
Cadmium	6010B	10/13/05	10/17/05	ND	0.50	mg/Kg	1:1
Chromium	6010B	10/13/05	10/17/05	ND	1.0	mg/Kg	1:1
Cobalt	6010B	10/13/05	10/17/05	ND	5.0	mg/Kg	1:1
Copper	6010B	10/13/05	10/17/05	ND	2.0	mg/Kg	1:1
Lead	6010B	10/13/05	10/17/05	ND	1.0	mg/Kg	1:1
Molybdenum	6010B	10/13/05	10/17/05	ND	5.0	mg/Kg	1:1
Nickel	6010B	10/13/05	10/17/05	ND	4.0	mg/Kg	1:1
Selenium	6010B	10/13/05	10/17/05	ND	10	mg/Kg	1:1
Silver	6010B	10/13/05	10/17/05	ND	1.0	mg/Kg	1:1
Thallium	6010B	10/13/05	10/17/05	ND	10	mg/Kg	1:1
Vanadium	6010B	10/13/05	10/17/05	ND	5.0	mg/Kg	1:1
Zinc	6010B	10/13/05	10/17/05	ND	1.5	mg/Kg	1:1

3738 Bradview Drive • Sacramento, California 95827 • (916) 369-7688 • FAX (916) 369-7689
87

Sparger Technology, Inc.
Environmental Laboratories

Analytical Laboratory Division
Mobile Laboratory Division
Scientific Division

Lab Control Sample Report

Client ID Shaw Environmental & Infrastructure
Workorder ID CalTrans Merced
Laboratory ID 71117
Sample ID LCS for HBN 276253 [ICPV/5246]
Matrix Soil

Parameter	Method	Prep Date	Analyzed	Result	RL	Units	Dilution
Antimony	6010B	10/13/05	10/17/05	52	6.0	mg/Kg	1:1
Arsenic	6010B	10/13/05	10/17/05	51	8.0	mg/Kg	1:1
Barium	6010B	10/13/05	10/17/05	53	2.0	mg/Kg	1:1
Beryllium	6010B	10/13/05	10/17/05	10	0.30	mg/Kg	1:1
Cadmium	6010B	10/13/05	10/17/05	20	0.50	mg/Kg	1:1
Chromium	6010B	10/13/05	10/17/05	55	1.0	mg/Kg	1:1
Cobalt	6010B	10/13/05	10/17/05	21	5.0	mg/Kg	1:1
Copper	6010B	10/13/05	10/17/05	53	2.0	mg/Kg	1:1
Lead	6010B	10/13/05	10/17/05	51	1.0	mg/Kg	1:1
Molybdenum	6010B	10/13/05	10/17/05	54	5.0	mg/Kg	1:1
Nickel	6010B	10/13/05	10/17/05	100	4.0	mg/Kg	1:1
Selenium	6010B	10/13/05	10/17/05	54	10	mg/Kg	1:1
Silver	6010B	10/13/05	10/17/05	5.6	1.0	mg/Kg	1:1
Thallium	6010B	10/13/05	10/17/05	51	10	mg/Kg	1:1
Vanadium	6010B	10/13/05	10/17/05	20	5.0	mg/Kg	1:1
Zinc	6010B	10/13/05	10/17/05	55	1.5	mg/Kg	1:1

86

3738 Bradview Drive • Sacramento, California 95827 • (916) 369-7688 • FAX (916) 369-7689

Sparger Technology, Inc.
Environmental Laboratories

Analytical Laboratory Division
Mobile Laboratory Division
Scientific Division

Lab Control Sample Duplicate Report

Client ID Shaw Environmental & Infrastructure
Workorder ID CalTrans Merced
Laboratory ID 71118
Sample ID LCSD for HBN 276253 [ICPV/5246
Matrix Soil

Parameter	Method	Prep Date	Analyzed	Result	RL	Units	Dilution
Antimony	6010B	10/13/05	10/17/05	52	6.0	mg/Kg	1:1
Arsenic	6010B	10/13/05	10/17/05	52	8.0	mg/Kg	1:1
Barium	6010B	10/13/05	10/17/05	53	2.0	mg/Kg	1:1
Beryllium	6010B	10/13/05	10/17/05	11	0.30	mg/Kg	1:1
Cadmium	6010B	10/13/05	10/17/05	20	0.50	mg/Kg	1:1
Chromium	6010B	10/13/05	10/17/05	56	1.0	mg/Kg	1:1
Cobalt	6010B	10/13/05	10/17/05	21	5.0	mg/Kg	1:1
Copper	6010B	10/13/05	10/17/05	54	2.0	mg/Kg	1:1
Lead	6010B	10/13/05	10/17/05	52	1.0	mg/Kg	1:1
Molybdenum	6010B	10/13/05	10/17/05	55	5.0	mg/Kg	1:1
Nickel	6010B	10/13/05	10/17/05	102	4.0	mg/Kg	1:1
Selenium	6010B	10/13/05	10/17/05	54	10	mg/Kg	1:1
Silver	6010B	10/13/05	10/17/05	5.6	1.0	mg/Kg	1:1
Thallium	6010B	10/13/05	10/17/05	51	10	mg/Kg	1:1
Vanadium	6010B	10/13/05	10/17/05	20	5.0	mg/Kg	1:1
Zinc	6010B	10/13/05	10/17/05	55	1.5	mg/Kg	1:1

3738 Bradview Drive • Sacramento, California 95827 • (916) 369-7688 • FAX (916) 369-7689

Sparger Technology, Inc.
Environmental Laboratories

Analytical Laboratory Division
Mobile Laboratory Division
Scientific Division

Matrix Spike Report

Client ID Shaw Environmental & Infrastructure
Workorder ID CalTrans Merced
Laboratory ID 71119
Sample ID MS for HBN 276253 [ICPV/5246]
Matrix Soil

Parameter	Method	Prep Date	Analyzed	Result	RL	Units	Dilution
Antimony	6010B	10/13/05	10/17/05	39	6.0	mg/Kg	1:1
Arsenic	6010B	10/13/05	10/17/05	54	8.0	mg/Kg	1:1
Barium	6010B	10/13/05	10/17/05	209	2.0	mg/Kg	1:1
Beryllium	6010B	10/13/05	10/17/05	11	0.30	mg/Kg	1:1
Cadmium	6010B	10/13/05	10/17/05	20	0.50	mg/Kg	1:1
Chromium	6010B	10/13/05	10/17/05	92	1.0	mg/Kg	1:1
Cobalt	6010B	10/13/05	10/17/05	30	5.0	mg/Kg	1:1
Copper	6010B	10/13/05	10/17/05	80	2.0	mg/Kg	1:1
Lead	6010B	10/13/05	10/17/05	54	1.0	mg/Kg	1:1
Molybdenum	6010B	10/13/05	10/17/05	50	5.0	mg/Kg	1:1
Nickel	6010B	10/13/05	10/17/05	123	4.0	mg/Kg	1:1
Selenium	6010B	10/13/05	10/17/05	57	10	mg/Kg	1:1
Silver	6010B	10/13/05	10/17/05	5.5	1.0	mg/Kg	1:1
Thallium	6010B	10/13/05	10/17/05	50	10	mg/Kg	1:1
Vanadium	6010B	10/13/05	10/17/05	66	5.0	mg/Kg	1:1
Zinc	6010B	10/13/05	10/17/05	92	1.5	mg/Kg	1:1

3738 Bradview Drive • Sacramento, California 95827 • (916) 369-7688 • FAX (916) 369-7689

Sparger Technology, Inc.
Environmental Laboratories

Analytical Laboratory Division
Mobile Laboratory Division
Scientific Division

Matrix Spike Duplicate Report

Client ID Shaw Environmental & Infrastructure
Workorder ID CalTrans Merced
Laboratory ID 71120
Sample ID MSD for HBN 276253 [ICPV/5246]
Matrix Soil

Parameter	Method	Prep Date	Analyzed	Result	RL	Units	Dilution
Antimony	6010B	10/13/05	10/17/05	40	6.0	mg/Kg	1:1
Arsenic	6010B	10/13/05	10/17/05	54	8.0	mg/Kg	1:1
Barium	6010B	10/13/05	10/17/05	219	2.0	mg/Kg	1:1
Beryllium	6010B	10/13/05	10/17/05	11	0.30	mg/Kg	1:1
Cadmium	6010B	10/13/05	10/17/05	20	0.50	mg/Kg	1:1
Chromium	6010B	10/13/05	10/17/05	93	1.0	mg/Kg	1:1
Cobalt	6010B	10/13/05	10/17/05	30	5.0	mg/Kg	1:1
Copper	6010B	10/13/05	10/17/05	80	2.0	mg/Kg	1:1
Lead	6010B	10/13/05	10/17/05	54	1.0	mg/Kg	1:1
Molybdenum	6010B	10/13/05	10/17/05	50	5.0	mg/Kg	1:1
Nickel	6010B	10/13/05	10/17/05	122	4.0	mg/Kg	1:1
Selenium	6010B	10/13/05	10/17/05	56	10	mg/Kg	1:1
Silver	6010B	10/13/05	10/17/05	5.5	1.0	mg/Kg	1:1
Thallium	6010B	10/13/05	10/17/05	50	10	mg/Kg	1:1
Vanadium	6010B	10/13/05	10/17/05	67	5.0	mg/Kg	1:1
Zinc	6010B	10/13/05	10/17/05	92	1.5	mg/Kg	1:1

3738 Bradview Drive • Sacramento, California 95827 • (916) 369-7688 • FAX (916) 369-7689

Sparger Technology, Inc.
Environmental Laboratories

Analytical Laboratory Division
Mobile Laboratory Division
Scientific Division

Duplicate Report

Client ID Shaw Environmental & Infrastructure
Workorder ID CalTrans Merced
Laboratory ID 71121
Sample ID DUP for HBN 276253 [ICPV/5246]
Matrix Soil

Parameter	Method	Prep Date	Analyzed	Result	RL	Units	Dilution
Antimony	6010B	10/13/05	10/17/05	ND	6.0	mg/Kg	1:1
Arsenic	6010B	10/13/05	10/17/05	ND	8.0	mg/Kg	1:1
Barium	6010B	10/13/05	10/17/05	140	2.0	mg/Kg	1:1
Beryllium	6010B	10/13/05	10/17/05	ND	0.30	mg/Kg	1:1
Cadmium	6010B	10/13/05	10/17/05	ND	0.50	mg/Kg	1:1
Chromium	6010B	10/13/05	10/17/05	35	1.0	mg/Kg	1:1
Cobalt	6010B	10/13/05	10/17/05	9.8	5.0	mg/Kg	1:1
Copper	6010B	10/13/05	10/17/05	23	2.0	mg/Kg	1:1
Lead	6010B	10/13/05	10/17/05	3.4	1.0	mg/Kg	1:1
Molybdenum	6010B	10/13/05	10/17/05	ND	5.0	mg/Kg	1:1
Nickel	6010B	10/13/05	10/17/05	ND	4.0	mg/Kg	1:1
Selenium	6010B	10/13/05	10/17/05	ND	10	mg/Kg	1:1
Silver	6010B	10/13/05	10/17/05	ND	1.0	mg/Kg	1:1
Thallium	6010B	10/13/05	10/17/05	ND	10	mg/Kg	1:1
Vanadium	6010B	10/13/05	10/17/05	44	5.0	mg/Kg	1:1
Zinc	6010B	10/13/05	10/17/05	36	1.5	mg/Kg	1:1

3738 Bradview Drive • Sacramento, California 95827 • (916) 369-7688 • FAX (916) 369-7689

Sparger Technology, Inc.
Environmental Laboratories

Analytical Laboratory Division
Mobile Laboratory Division
Scientific Division

Method Blank Report

Client ID	Shaw Environmental & Infrastructure
Workorder ID	CalTrans Merced
Laboratory ID	71148
Sample ID	MB for HBN 276454 [DIGV/1573]
Matrix	Soil

Parameter	Method	Prep Date	Analyzed	Result	RL	Units	Dilution
Mercury	EPA 7471A	10/14/05	10/18/05	ND	0.010	mg/Kg	1:1

3738 Bradview Drive • Sacramento, California 95827 • (916) 369-7688 • FAX (916) 369-7689

Sparger Technology, Inc.
Environmental Laboratories

Analytical Laboratory Division
Mobile Laboratory Division
Scientific Division

Lab Control Sample Report

Client ID	Shaw Environmental & Infrastructure
Workorder ID	CalTrans Merced
Laboratory ID	71149
Sample ID	LCS for HBN 276454 [DIGV/1573]
Matrix	Soil

Parameter	Method	Prep Date	Analyzed	Result	RL	Units	Dilution
Mercury	EPA 7471A	10/14/05	10/18/05	0.046	0.010	mg/Kg	1:1

qh

3738 Bradview Drive • Sacramento, California 95827 • (916) 369-7688 • FAX (916) 369-7689

Sparger Technology, Inc.
Environmental Laboratories

Analytical Laboratory Division
Mobile Laboratory Division
Scientific Division

Lab Control Sample Duplicate Report

Client ID Shaw Environmental & Infrastructure
Workorder ID CalTrans Merced
Laboratory ID 71150
Sample ID LCSD for HBN 276454 [DIGV/1573
Matrix Soil

Parameter	Method	Prep Date	Analyzed	Result	RL	Units	Dilution
Mercury	EPA 7471A	10/14/05	10/18/05	0.047	0.010	mg/Kg	1:1

3738 Bradview Drive • Sacramento, California 95827 • (916) 369-7688 • FAX (916) 369-7689

95

Sparger Technology, Inc.
Environmental Laboratories

Analytical Laboratory Division
Mobile Laboratory Division
Scientific Division

Duplicate Report

Client ID	Shaw Environmental & Infrastructure
Workorder ID	CalTrans Merced
Laboratory ID	71151
Sample ID	DUP for HBN 276454 [DIGV/1573]
Matrix	Soil

Parameter	Method	Prep Date	Analyzed	Result	RL	Units	Dilution
Mercury	EPA 7471A	10/14/05	10/18/05	ND	0.010	mg/Kg	1:1

96

3738 Bradview Drive • Sacramento, California 95827 • (916) 369-7688 • FAX (916) 369-7689

Sparger Technology, Inc.
Environmental Laboratories

Analytical Laboratory Division
Mobile Laboratory Division
Scientific Division

Matrix Spike Report

Client ID	Shaw Environmental & Infrastructure
Workorder ID	CalTrans Merced
Laboratory ID	71152
Sample ID	MS for HBN 276454 [DIGV/1573]
Matrix	Soil

Parameter	Method	Prep Date	Analyzed	Result	RL	Units	Dilution
Mercury	EPA 7471A	10/14/05	10/18/05	0.062	0.010	mg/Kg	1:1

3738 Bradview Drive • Sacramento, California 95827 • (916) 369-7688 • FAX (916) 369-7689

Sparger Technology, Inc.
Environmental Laboratories

Analytical Laboratory Division
Mobile Laboratory Division
Scientific Division

Matrix Spike Duplicate Report

Client ID	Shaw Environmental & Infrastructure
Workorder ID	CalTrans Merced
Laboratory ID	71153
Sample ID	MSD for HBN 276454 [DIGV/1573]
Matrix	Soil

Parameter	Method	Prep Date	Analyzed	Result	RL	Units	Dilution
Mercury	EPA 7471A	10/14/05	10/18/05	0.060	0.010	mg/Kg	1:1

3738 Bradview Drive • Sacramento, California 95827 • (916) 369-7688 • FAX (916) 369-7689

Sparger Technology, Inc.
Environmental Laboratories

Analytical Laboratory Division
Mobile Laboratory Division
Scientific Division

Duplicate Report

Client ID	Shaw Environmental & Infrastructure
Workorder ID	CalTrans Merced
Laboratory ID	71164
Sample ID	DUP for HBN 276554 [PHV/1562]
Matrix	Soil

Parameter	Method	Prep Date	Analyzed	Result	RL	Units	Dilution
pH	9045 PH	10/18/05	10/18/05	7.9	0.10	SU	1:1

3738 Bradview Drive • Sacramento, California 95827 • (916) 369-7688 • FAX (916) 369-7689

Sparger Technology, Inc.
Environmental Laboratories

Analytical Laboratory Division
Mobile Laboratory Division
Scientific Division

Method Blank Report

Client ID Shaw Environmental & Infrastructure
Workorder ID CalTrans Merced
Laboratory ID 71187
Sample ID MB for HBN 276567 [VGXV/2729]
Matrix Soil

Parameter	Method	Prep Date	Analyzed	Result	RL	Units	Dilution
TPHgas	8015M DHS	10/18/05	10/18/05	ND	0.50	mg/Kg	1:1

160

3738 Bradview Drive • Sacramento, California 95827 • (916) 369-7688 • FAX (916) 369-7689

Sparger Technology, Inc.
Environmental Laboratories

Analytical Laboratory Division
Mobile Laboratory Division
Scientific Division

Lab Control Sample Report

Client ID Shaw Environmental & Infrastructure
Workorder ID CalTrans Merced
Laboratory ID 71188
Sample ID LCS for HBN 276567 [VGXV/2729]
Matrix Soil

Parameter	Method	Prep Date	Analyzed	Result	RL	Units	Dilution
TPHgas	8015M DHS	10/18/05	10/18/05	1.0	0.50	mg/Kg	1:1

3738 Bradview Drive • Sacramento, California 95827 • (916) 369-7688 • FAX (916) 369-7689

101

Sparger Technology, Inc.
Environmental Laboratories

Analytical Laboratory Division
Mobile Laboratory Division
Scientific Division

Lab Control Sample Duplicate Report

Client ID Shaw Environmental & Infrastructure
Workorder ID CalTrans Merced
Laboratory ID 71189
Sample ID LCSD for HBN 276567 [VGXV/2729
Matrix Soil

Parameter	Method	Prep Date	Analyzed	Result	RL	Units	Dilution
TPHgas	8015M DHS	10/18/05	10/18/05	0.92	0.50	mg/Kg	1:1

102

3738 Bradview Drive • Sacramento, California 95827 • (916) 369-7688 • FAX (916) 369-7689

Sparger Technology, Inc.
Environmental Laboratories

Analytical Laboratory Division
Mobile Laboratory Division
Scientific Division

Matrix Spike Report

Client ID	Shaw Environmental & Infrastructure
Workorder ID	CalTrans Merced
Laboratory ID	71190
Sample ID	MS for HBN 276567 [VGXV/2729]
Matrix	Soil

Parameter	Method	Prep Date	Analyzed	Result	RL	Units	Dilution
TPHgas	8015M DHS	10/18/05	10/18/05	0.85	0.50	mg/Kg	1:1

3738 Bradview Drive • Sacramento, California 95827 • (916) 369-7688 • FAX (916) 369-7689

Sparger Technology, Inc.
Environmental Laboratories

Analytical Laboratory Division
Mobile Laboratory Division
Scientific Division

Matrix Spike Duplicate Report

Client ID Shaw Environmental & Infrastructure
Workorder ID CalTrans Merced
Laboratory ID 71191
Sample ID MSD for HBN 276567 [VGXV/2729]
Matrix Soil

Parameter	Method	Prep Date	Analyzed	Result	RL	Units	Dilution
TPHgas	8015M DHS	10/18/05	10/18/05	0.88	0.50	mg/Kg	1:1

104

3738 Bradview Drive • Sacramento, California 95827 • (916) 369-7688 • FAX (916) 369-7689

Sparger Technology, Inc.
Environmental Laboratories

Analytical Laboratory Division
Mobile Laboratory Division
Scientific Division

Method Blank Report

Client ID Shaw Environmental & Infrastructure
Workorder ID CalTrans Merced
Laboratory ID 71292
Sample ID MB for HBN 276866 [VGXV/2732]
Matrix Soil

Parameter	Method	Prep Date	Analyzed	Result	RL	Units	Dilution
TPHgas	8015M DHS	10/19/05	10/19/05	ND	0.50	mg/Kg	1:1

3738 Bradview Drive • Sacramento, California 95827 • (916) 369-7688 • FAX (916) 369-7689

Sparger Technology, Inc.
Environmental Laboratories

Analytical Laboratory Division
Mobile Laboratory Division
Scientific Division

Lab Control Sample Report

Client ID	Shaw Environmental & Infrastructure
Workorder ID	CalTrans Merced
Laboratory ID	71293
Sample ID	LCS for HBN 276866 [VGXV/2732]
Matrix	Soil

Parameter	Method	Prep Date	Analyzed	Result	RL	Units	Dilution
TPHgas	8015M DHS	10/19/05	10/19/05	0.99	0.50	mg/Kg	1:1

106

3738 Bradview Drive • Sacramento, California 95827 • (916) 369-7688 • FAX (916) 369-7689

Sparger Technology, Inc.
Environmental Laboratories

Analytical Laboratory Division
Mobile Laboratory Division
Scientific Division

Lab Control Sample Duplicate Report

Client ID Shaw Environmental & Infrastructure
Workorder ID CalTrans Merced
Laboratory ID 71294
Sample ID LCSD for HBN 276866 [VGXV/2732
Matrix Soil

Parameter	Method	Prep Date	Analyzed	Result	RL	Units	Dilution
TPHgas	8015M DHS	10/19/05	10/19/05	0.98	0.50	mg/Kg	1:1

3738 Bradview Drive • Sacramento, California 95827 • (916) 369-7688 • FAX (916) 369-7689

Sparger Technology, Inc.
Environmental Laboratories

Analytical Laboratory Division
Mobile Laboratory Division
Scientific Division

Matrix Spike Report

Client ID Shaw Environmental & Infrastructure
Workorder ID CalTrans Merced
Laboratory ID 71295
Sample ID MS for HBN 276866 [VGXV/2732]
Matrix Soil

Parameter	Method	Prep Date	Analyzed	Result	RL	Units	Dilution
TPHgas	8015M DHS	10/19/05	10/19/05	0.90	0.50	mg/Kg	1:1

108

3738 Bradview Drive • Sacramento, California 95827 • (916) 369-7688 • FAX (916) 369-7689

Sparger Technology, Inc.
Environmental Laboratories

Analytical Laboratory Division
Mobile Laboratory Division
Scientific Division

Matrix Spike Duplicate Report

Client ID	Shaw Environmental & Infrastructure
Workorder ID	CalTrans Merced
Laboratory ID	71296
Sample ID	MSD for HBN 276866 [VGXV/2732]
Matrix	Soil

Parameter	Method	Prep Date	Analyzed	Result	RL	Units	Dilution
TPHgas	8015M DHS	10/19/05	10/19/05	0.93	0.50	mg/Kg	1:1

3738 Bradview Drive • Sacramento, California 95827 • (916) 369-7688 • FAX (916) 369-7689
109

Sparger Technology, Inc.
Environmental Laboratories

Analytical Laboratory Division
Mobile Laboratory Division
Scientific Division

Method Blank Report

Client ID Shaw Environmental & Infrastructure
Workorder ID CalTrans Merced
Laboratory ID 71327
Sample ID MB for HBN 276967 [VMXV/2631]
Matrix Soil

Parameter	Method	Prep Date	Analyzed	Result	RL	Units	Dilution
Dichlorodifluoromethane	8260B	10/19/05	10/19/05	ND	2.0	ug/kg	1:1
Chloromethane	8260B	10/19/05	10/19/05	ND	2.0	ug/kg	1:1
Vinyl chloride	8260B	10/19/05	10/19/05	ND	2.0	ug/kg	1:1
Bromomethane	8260B	10/19/05	10/19/05	ND	2.0	ug/kg	1:1
Chloroethane	8260B	10/19/05	10/19/05	ND	2.0	ug/kg	1:1
Trichlorofluoromethane	8260B	10/19/05	10/19/05	ND	2.0	ug/kg	1:1
Acrolein	8260B	10/19/05	10/19/05	ND	2.0	ug/kg	1:1
1,1-Dichloroethene	8260B	10/19/05	10/19/05	ND	2.0	ug/kg	1:1
Acetone	8260B	10/19/05	10/19/05	ND	2.0	ug/kg	1:1
Methyl iodide	8260B	10/19/05	10/19/05	ND	2.0	ug/kg	1:1
Carbon disulfide	8260B	10/19/05	10/19/05	ND	2.0	ug/kg	1:1
Dichloromethane	8260B	10/19/05	10/19/05	ND	2.0	ug/kg	1:1
Acrylonitrile	8260B	10/19/05	10/19/05	ND	2.0	ug/kg	1:1
trans-1,2-Dichloroethene	8260B	10/19/05	10/19/05	ND	2.0	ug/kg	1:1
1,1-Dichloroethane	8260B	10/19/05	10/19/05	ND	2.0	ug/kg	1:1
Vinyl acetate	8260B	10/19/05	10/19/05	ND	2.0	ug/kg	1:1
cis-1,2-Dichloroethene	8260B	10/19/05	10/19/05	ND	2.0	ug/kg	1:1
2-Butanone (MEK)	8260B	10/19/05	10/19/05	ND	2.0	ug/kg	1:1
Bromochloromethane	8260B	10/19/05	10/19/05	ND	2.0	ug/kg	1:1
Chloroform	8260B	10/19/05	10/19/05	ND	2.0	ug/kg	1:1
2,2-dichloropropane	8260B	10/19/05	10/19/05	ND	2.0	ug/kg	1:1
1,1,1-Trichloroethane	8260B	10/19/05	10/19/05	ND	2.0	ug/kg	1:1
1,1-dichloropropane	8260B	10/19/05	10/19/05	ND	2.0	ug/kg	1:1
Carbon tetrachloride	8260B	10/19/05	10/19/05	ND	2.0	ug/kg	1:1
Benzene	8260B	10/19/05	10/19/05	ND	2.0	ug/kg	1:1
1,2-Dichloroethane	8260B	10/19/05	10/19/05	ND	2.0	ug/kg	1:1
Dibromomethane	8260B	10/19/05	10/19/05	ND	2.0	ug/kg	1:1
Bromodichloromethane	8260B	10/19/05	10/19/05	ND	2.0	ug/kg	1:1
1,2-Dichloropropane	8260B	10/19/05	10/19/05	ND	2.0	ug/kg	1:1
Trichloroethene	8260B	10/19/05	10/19/05	ND	2.0	ug/kg	1:1
2-Chloroethylvinyl ether	8260B	10/19/05	10/19/05	ND	2.0	ug/kg	1:1
cis-1,3-Dichloropropene	8260B	10/19/05	10/19/05	ND	2.0	ug/kg	1:1
4-Methyl-2-pentanone	8260B	10/19/05	10/19/05	ND	2.0	ug/kg	1:1

3738 Bradview Drive • Sacramento, California 95827 • (916) 369-7688 • FAX (916) 369-7689

Sparger Technology, Inc.
Environmental Laboratories

Analytical Laboratory Division
Mobile Laboratory Division
Scientific Division

Method Blank Report

Client ID Shaw Environmental & Infrastructure
Workorder ID CalTrans Merced
Laboratory ID 71327
Sample ID MB for HBN 276967 [VMXV/2631]
Matrix Soil

Parameter	Method	Prep Date	Analyzed	Result	RL	Units	Dilution
(continued)							
trans-1,3Dichloropropene	8260B	10/19/05	10/19/05	ND	2.0	ug/kg	1:1
1,1,2-Trichloroethane	8260B	10/19/05	10/19/05	ND	2.0	ug/kg	1:1
Toluene	8260B	10/19/05	10/19/05	ND	2.0	ug/kg	1:1
1,2-Dibromoethane (EDB)	8260B	10/19/05	10/19/05	ND	2.0	ug/kg	1:1
1,3-Dichloropropane	8260B	10/19/05	10/19/05	ND	2.0	ug/kg	1:1
2-Hexanone	8260B	10/19/05	10/19/05	ND	2.0	ug/kg	1:1
Dibromochloromethane	8260B	10/19/05	10/19/05	ND	2.0	ug/kg	1:1
Tetrachloroethene	8260B	10/19/05	10/19/05	ND	2.0	ug/kg	1:1
1,1,1,2Tetrachloroethane	8260B	10/19/05	10/19/05	ND	2.0	ug/kg	1:1
Chlorobenzene	8260B	10/19/05	10/19/05	ND	2.0	ug/kg	1:1
Ethylbenzene	8260B	10/19/05	10/19/05	ND	2.0	ug/kg	1:1
M+P-Xylene	8260B	10/19/05	10/19/05	ND	2.0	ug/kg	1:1
Bromoform	8260B	10/19/05	10/19/05	ND	2.0	ug/kg	1:1
Styrene	8260B	10/19/05	10/19/05	ND	2.0	ug/kg	1:1
o-Xylene	8260B	10/19/05	10/19/05	ND	2.0	ug/kg	1:1
1,1,2,2Tetrachloroethane	8260B	10/19/05	10/19/05	ND	2.0	ug/kg	1:1
1,2,3-Trichloropropane	8260B	10/19/05	10/19/05	ND	2.0	ug/kg	1:1
Isopropylbenzene(Cumene)	8260B	10/19/05	10/19/05	ND	2.0	ug/kg	1:1
Bromobenzene	8260B	10/19/05	10/19/05	ND	2.0	ug/kg	1:1
n-Propylbenzene	8260B	10/19/05	10/19/05	ND	2.0	ug/kg	1:1
2-Chlorotoluene	8260B	10/19/05	10/19/05	ND	2.0	ug/kg	1:1
4-Chlorotoluene	8260B	10/19/05	10/19/05	ND	2.0	ug/kg	1:1
1,3,5-Trimethylbenzene	8260B	10/19/05	10/19/05	ND	2.0	ug/kg	1:1
tert-Butylbenzene	8260B	10/19/05	10/19/05	ND	2.0	ug/kg	1:1
1,2,4-Trimethylbenzene	8260B	10/19/05	10/19/05	ND	2.0	ug/kg	1:1
sec-Butylbenzene	8260B	10/19/05	10/19/05	ND	2.0	ug/kg	1:1
1,3-Dichlorobenzene	8260B	10/19/05	10/19/05	ND	2.0	ug/kg	1:1
1,4-Dichlorobenzene	8260B	10/19/05	10/19/05	ND	2.0	ug/kg	1:1
4-Isopropyltoluene	8260B	10/19/05	10/19/05	ND	2.0	ug/kg	1:1
1,2-Dichlorobenzene	8260B	10/19/05	10/19/05	ND	2.0	ug/kg	1:1
n-Butylbenzene	8260B	10/19/05	10/19/05	ND	2.0	ug/kg	1:1

3738 Bradview Drive • Sacramento, California 95827 • (916) 369-7688 • FAX (916) 369-7689

Sparger Technology, Inc.
Environmental Laboratories

Analytical Laboratory Division
Mobile Laboratory Division
Scientific Division

Method Blank Report

Client ID Shaw Environmental & Infrastructure
Workorder ID CalTrans Merced
Laboratory ID 71327
Sample ID MB for HBN 276967 [VMXV/2631]
Matrix Soil

Parameter	Method	Prep Date	Analyzed	Result	RL	Units	Dilution
(continued)							
1,2Dibromo3chloropropane	8260B	10/19/05	10/19/05	ND	2.0	ug/kg	1:1
1,2,4-Trichlorobenzene	8260B	10/19/05	10/19/05	ND	2.0	ug/kg	1:1
Naphthalene	8260B	10/19/05	10/19/05	ND	2.0	ug/kg	1:1
Hexachlorobutadiene	8260B	10/19/05	10/19/05	ND	2.0	ug/kg	1:1
1,2,3-Trichlorobenzene	8260B	10/19/05	10/19/05	ND	2.0	ug/kg	1:1

Surrogates	Result	Recovery	Limits
1,2-Dichloroethane-d4	52 ug/kg	104 %	(70 - 135)
Toluene d8	44 ug/kg	88 %	(70 - 135)
4-Bromofluorobenzene	49 ug/kg	98 %	(70 - 135)

112

3738 Bradview Drive • Sacramento, California 95827 • (916) 369-7688 • FAX (916) 369-7689

Sparger Technology, Inc.
Environmental Laboratories

Analytical Laboratory Division
Mobile Laboratory Division
Scientific Division

Lab Control Sample Report

Client ID Shaw Environmental & Infrastructure
Workorder ID CalTrans Merced
Laboratory ID 71328
Sample ID LCS for HBN 276967 [VMXV/2631]
Matrix Soil

Parameter	Method	Prep Date	Analyzed	Result	RL	Units	Dilution
1,1-Dichloroethene	8260B	10/19/05	10/19/05	66	2.0	ug/kg	1:1
Benzene	8260B	10/19/05	10/19/05	55	2.0	ug/kg	1:1
Trichloroethene	8260B	10/19/05	10/19/05	55	2.0	ug/kg	1:1
Toluene	8260B	10/19/05	10/19/05	54	2.0	ug/kg	1:1
Chlorobenzene	8260B	10/19/05	10/19/05	54	2.0	ug/kg	1:1

3738 Bradview Drive • Sacramento, California 95827 • (916) 369-7688 • FAX (916) 369-7689

113

Sparger Technology, Inc.
Environmental Laboratories

Analytical Laboratory Division
Mobile Laboratory Division
Scientific Division

Lab Control Sample Duplicate Report

Client ID Shaw Environmental & Infrastructure
Workorder ID CalTrans Merced
Laboratory ID 71329
Sample ID LCSD for HBN 276967 [VMXV/2631
Matrix Soil

Parameter	Method	Prep Date	Analyzed	Result	RL	Units	Dilution
1,1-Dichloroethene	8260B	10/19/05	10/19/05	61	2.0	ug/kg	1:1
Benzene	8260B	10/19/05	10/19/05	56	2.0	ug/kg	1:1
Trichloroethene	8260B	10/19/05	10/19/05	52	2.0	ug/kg	1:1
Toluene	8260B	10/19/05	10/19/05	57	2.0	ug/kg	1:1
Chlorobenzene	8260B	10/19/05	10/19/05	54	2.0	ug/kg	1:1

114

3738 Bradview Drive • Sacramento, California 95827 • (916) 369-7688 • FAX (916) 369-7689

Sparger Technology, Inc.
Environmental Laboratories

Analytical Laboratory Division
Mobile Laboratory Division
Scientific Division

Matrix Spike Report

Client ID Shaw Environmental & Infrastructure
Workorder ID CalTrans Merced
Laboratory ID 71330
Sample ID MS for HBN 276967 [VMXV/2631]
Matrix Soil

Parameter	Method	Prep Date	Analyzed	Result	RL	Units	Dilution
1,1-Dichloroethene	8260B	10/19/05	10/19/05	64	2.0	ug/kg	1:1
Benzene	8260B	10/19/05	10/19/05	54	2.0	ug/kg	1:1
Trichloroethene	8260B	10/19/05	10/19/05	56	2.0	ug/kg	1:1
Toluene	8260B	10/19/05	10/19/05	55	2.0	ug/kg	1:1
Chlorobenzene	8260B	10/19/05	10/19/05	52	2.0	ug/kg	1:1

3738 Bradview Drive • Sacramento, California 95827 • (916) 369-7688 • FAX (916) 369-7689

Sparger Technology, Inc.
Environmental Laboratories

Analytical Laboratory Division
Mobile Laboratory Division
Scientific Division

Matrix Spike Duplicate Report

Client ID Shaw Environmental & Infrastructure
Workorder ID CalTrans Merced
Laboratory ID 71331
Sample ID MSD for HBN 276967 [VMXV/2631]
Matrix Soil

Parameter	Method	Prep Date	Analyzed	Result	RL	Units	Dilution
1,1-Dichloroethene	8260B	10/19/05	10/19/05	59	2.0	ug/kg	1:1
Benzene	8260B	10/19/05	10/19/05	49	2.0	ug/kg	1:1
Trichloroethene	8260B	10/19/05	10/19/05	49	2.0	ug/kg	1:1
Toluene	8260B	10/19/05	10/19/05	50	2.0	ug/kg	1:1
Chlorobenzene	8260B	10/19/05	10/19/05	51	2.0	ug/kg	1:1

116

3738 Bradview Drive • Sacramento, California 95827 • (916) 369-7688 • FAX (916) 369-7689

Sparger Technology, Inc.
Environmental Laboratories

Analytical Laboratory Division
Mobile Laboratory Division
Scientific Division

Method Blank Report

Client ID Shaw Environmental & Infrastructure
Workorder ID CalTrans Merced
Laboratory ID 71337
Sample ID MB for HBN 276973 [VMXV/2633]
Matrix Soil

Parameter	Method	Prep Date	Analyzed	Result	RL	Units	Dilution
Benzene	8260B	10/19/05	10/19/05	ND	1.0	ug/kg	1:1
Toluene	8260B	10/19/05	10/19/05	ND	1.0	ug/kg	1:1
Ethylbenzene	8260B	10/19/05	10/19/05	ND	1.0	ug/kg	1:1
Xylene (Total)	8260B	10/19/05	10/19/05	ND	1.0	ug/kg	1:1

Surrogates	Result	Recovery	Limits
1,2-Dichloroethane-d4	52 ug/kg	104 %	(65 - 135)

3738 Bradview Drive • Sacramento, California 95827 • (916) 369-7688 • FAX (916) 369-7689

Sparger Technology, Inc.
Environmental Laboratories

Analytical Laboratory Division
Mobile Laboratory Division
Scientific Division

Lab Control Sample Report

Client ID Shaw Environmental & Infrastructure
Workorder ID CalTrans Merced
Laboratory ID 71338
Sample ID LCS for HBN 276973 [VMXV/2633]
Matrix Soil

Parameter	Method	Prep Date	Analyzed	Result	RL	Units	Dilution
Benzene	8260B	10/19/05	10/19/05	55.0	1.0	ug/kg	1:1
Toluene	8260B	10/19/05	10/19/05	54.0	1.0	ug/kg	1:1
Ethylbenzene	8260B	10/19/05	10/19/05	54.0	1.0	ug/kg	1:1
Xylene (Total)	8260B	10/19/05	10/19/05	166	1.0	ug/kg	1:1

118

3738 Bradview Drive • Sacramento, California 95827 • (916) 369-7688 • FAX (916) 369-7689

Sparger Technology, Inc.
Environmental Laboratories

Analytical Laboratory Division
Mobile Laboratory Division
Scientific Division

Lab Control Sample Duplicate Report

Client ID Shaw Environmental & Infrastructure
Workorder ID CalTrans Merced
Laboratory ID 71339
Sample ID LCSD for HBN 276973 [VMXV/2633
Matrix Soil

Parameter	Method	Prep Date	Analyzed	Result	RL	Units	Dilution
Benzene	8260B	10/19/05	10/19/05	56.0	1.0	ug/kg	1:1
Toluene	8260B	10/19/05	10/19/05	57.0	1.0	ug/kg	1:1
Ethylbenzene	8260B	10/19/05	10/19/05	56.0	1.0	ug/kg	1:1
Xylene (Total)	8260B	10/19/05	10/19/05	167	1.0	ug/kg	1:1

3738 Bradview Drive • Sacramento, California 95827 • (916) 369-7688 • FAX (916) 369-7689

Sparger Technology, Inc.
Environmental Laboratories

Analytical Laboratory Division
Mobile Laboratory Division
Scientific Division

Matrix Spike Report

Client ID Shaw Environmental & Infrastructure
Workorder ID CalTrans Merced
Laboratory ID 71340
Sample ID MS for HBN 276973 [VMXV/2633]
Matrix Soil

Parameter	Method	Prep Date	Analyzed	Result	RL	Units	Dilution
Benzene	8260B	10/19/05	10/19/05	55.0	1.0	ug/kg	1:1
Toluene	8260B	10/19/05	10/19/05	55.0	1.0	ug/kg	1:1
Ethylbenzene	8260B	10/19/05	10/19/05	54.0	1.0	ug/kg	1:1
Xylene (Total)	8260B	10/19/05	10/19/05	159	1.0	ug/kg	1:1

120

3738 Bradview Drive • Sacramento, California 95827 • (916) 369-7688 • FAX (916) 369-7689

Sparger Technology, Inc.
Environmental Laboratories

Analytical Laboratory Division
Mobile Laboratory Division
Scientific Division

Matrix Spike Duplicate Report

Client ID Shaw Environmental & Infrastructure
Workorder ID CalTrans Merced
Laboratory ID 71341
Sample ID MSD for HBN 276973 [VMXV/2633]
Matrix Soil

Parameter	Method	Prep Date	Analyzed	Result	RL	Units	Dilution
Benzene	8260B	10/19/05	10/19/05	50.0	1.0	ug/kg	1:1
Toluene	8260B	10/19/05	10/19/05	50.0	1.0	ug/kg	1:1
Ethylbenzene	8260B	10/19/05	10/19/05	54.0	1.0	ug/kg	1:1
Xylene (Total)	8260B	10/19/05	10/19/05	157	1.0	ug/kg	1:1

3738 Bradview Drive • Sacramento, California 95827 • (916) 369-7688 • FAX (916) 369-7689
121

Sparger Technology, Inc.
Environmental Laboratories

Analytical Laboratory Division
Mobile Laboratory Division
Scientific Division

QC SUMMARY

Client ID	Shaw Environmental & Infrastructure		
Workorder ID	CalTrans Merced		
QC Batch	ICPP 5273	**Original**	17088001
Matrix	Soil	**Sample**	Duplicate [71121]

Parameter	RPD	RPD Limits
Antimony	0000	(35)
Arsenic	0.2650	(35)
Barium	0.7170	(35)
Beryllium	0000	(35)
Cadmium	0000	(35)
Chromium	0.2880	(35)
Cobalt	0.1020	(35)
Copper	0.4280	(35)
Lead	5.48	(35)
Molybdenum	0000	(35)
Nickel	0000	(35)
Selenium	0000	(35)
Silver	0000	(35)
Thallium	0000	(35)
Vanadium	1.60	(35)
Zinc	0.8280	(35)

122

3738 Bradview Drive • Sacramento, California 95827 • (916) 369-7688 • FAX (916) 369-7689

Sparger Technology, Inc.
Environmental Laboratories

Analytical Laboratory Division
Mobile Laboratory Division
Scientific Division

QC SUMMARY

Client ID	Shaw Environmental & Infrastructure		
Workorder ID	CalTrans Merced		
QC Batch	DIG 1579	**Original**	17088001
Matrix	Soil	**Sample**	Duplicate [71151]

Parameter	RPD	RPD Limits
Mercury	6.41	(35)

3738 Bradview Drive • Sacramento, California 95827 • (916) 369-7688 • FAX (916) 369-7689

123

Sparger Technology, Inc.
Environmental Laboratories

Analytical Laboratory Division
Mobile Laboratory Division
Scientific Division

QC SUMMARY

Client ID	Shaw Environmental & Infrastructure		
Workorder ID	CalTrans Merced		
QC Batch	PHX 1515	**Original**	17088003
Matrix	Soil	**Sample**	Duplicate [71164]

Parameter	RPD	RPD Limits
pH	0.130	(35)

124

3738 Bradview Drive • Sacramento, California 95827 • (916) 369-7688 • FAX (916) 369-7689

Sparger Technology, Inc.
Environmental Laboratories

Analytical Laboratory Division
Mobile Laboratory Division
Scientific Division

QC SUMMARY

Client ID	Shaw Environmental & Infrastructure		
Workorder ID	CalTrans Merced		
QC Batch	SGX 2311	**Original**	17088006
Matrix	Soil	**Samples**	Matrix Spike [71042] Matrix Spike Duplicate [71043]

Parameter	Spike %Recovery	Spike Dup %Recovery	Recovery Limits	RPD	RPD Limits
TPHdiesel	100	114	(65-135)	13	(20 MAX)

3738 Bradview Drive • Sacramento, California 95827 • (916) 369-7688 • FAX (916) 369-7689

Sparger Technology, Inc.
Environmental Laboratories

Analytical Laboratory Division
Mobile Laboratory Division
Scientific Division

QC SUMMARY

Client ID Shaw Environmental & Infrastructure
Workorder ID CalTrans Merced
QC Batch ICPP 5273
Matrix Soil

Original Samples 17088001
Matrix Spike [71119]
Matrix Spike Duplicate [71120]

Parameter	Spike %Recovery	Spike Dup %Recovery	Recovery Limits	RPD	RPD Limits
Antimony	77.6	81.0	(75-125)	4.29	(35 MAX)
Arsenic	101	99.5	(75-125)	1.50	(35 MAX)
Barium	140	160	(75-125)	13.3	(35 MAX)
Beryllium	110	107	(75-125)	2.76	(35 MAX)
Cadmium	102	101	(75-125)	0.9850	(35 MAX)
Chromium	115	116	(75-125)	0.8660	(35 MAX)
Cobalt	102	101	(75-125)	0.9850	(35 MAX)
Copper	112	113	(75-125)	0.8890	(35 MAX)
Lead	100	100	(75-125)	0000	(35 MAX)
Molybdenum	100	101	(75-125)	0.9950	(35 MAX)
Nickel	123	122	(75-125)	0.8160	(35 MAX)
Selenium	114	112	(75-125)	1.77	(35 MAX)
Silver	110	109	(75-125)	0.9130	(35 MAX)
Thallium	99.4	100	(75-125)	0.6020	(35 MAX)
Vanadium	114	118	(75-125)	3.45	(35 MAX)
Zinc	111	111	(75-125)	0000	(35 MAX)

* High Barium MS/MSD recoveries due to sample matrix effect.

126

3738 Bradview Drive • Sacramento, California 95827 • (916) 369-7688 • FAX (916) 369-7689

Sparger Technology, Inc.
Environmental Laboratories

Analytical Laboratory Division
Mobile Laboratory Division
Scientific Division

QC SUMMARY

Client ID	Shaw Environmental & Infrastructure		
Workorder ID	CalTrans Merced		
QC Batch	DIG 1579	**Original**	17088001
Matrix	Soil	**Samples**	Matrix Spike [71152] Matrix Spike Duplicate [71153]

Parameter	Spike %Recovery	Spike Dup %Recovery	Recovery Limits	RPD	RPD Limits
Mercury	105	103	(75-125)	1.92	(35 MAX)

3738 Bradview Drive • Sacramento, California 95827 • (916) 369-7688 • FAX (916) 369-7689

127

Sparger Technology, Inc.
Environmental Laboratories

Analytical Laboratory Division
Mobile Laboratory Division
Scientific Division

QC SUMMARY

Client ID	Shaw Environmental & Infrastructure		
Workorder ID	CalTrans Merced		
QC Batch	VGX 2842	**Original**	17083001
Matrix	Soil	**Samples**	Matrix Spike [71190] Matrix Spike Duplicate [71191]

Parameter	Spike %Recovery	Spike Dup %Recovery	Recovery Limits	RPD	RPD Limits
TPHgas	85	88	(65-135)	3.5	(20 MAX)

128

3738 Bradview Drive • Sacramento, California 95827 • (916) 369-7688 • FAX (916) 369-7689

Sparger Technology, Inc.
Environmental Laboratories

Analytical Laboratory Division
Mobile Laboratory Division
Scientific Division

QC SUMMARY

Client ID	Shaw Environmental & Infrastructure		
Workorder ID	CalTrans Merced		
QC Batch	VGX 2845	**Original**	17088014
Matrix	Soil	**Samples**	Matrix Spike [71295] Matrix Spike Duplicate [71296]

Parameter	Spike %Recovery	Spike Dup %Recovery	Recovery Limits	RPD	RPD Limits
TPHgas	90	93	(65-135)	3.3	(20 MAX)

3738 Bradview Drive • Sacramento, California 95827 • (916) 369-7688 • FAX (916) 369-7689

129

Sparger Technology, Inc.
Environmental Laboratories

Analytical Laboratory Division
Mobile Laboratory Division
Scientific Division

QC SUMMARY

Client ID Shaw Environmental & Infrastructure
Workorder ID CalTrans Merced
QC Batch VMX 2682
Matrix Soil

Original Samples 17088001
Matrix Spike [71330]
Matrix Spike Duplicate [71331]

Parameter	Spike %Recovery	Spike Dup %Recovery	Recovery Limits	RPD	RPD Limits
1,1-Dichloroethene	128	118	(59-172)	8.1	(22 MAX)
Benzene	108	98	(62-142)	9.7	(24 MAX)
Trichloroethene	112	98	(60-137)	13	(21 MAX)
Toluene	110	100	(59-139)	9.5	(21 MAX)
Chlorobenzene	104	102	(66-133)	1.9	(21 MAX)

3738 Bradview Drive • Sacramento, California 95827 • (916) 369-7688 • FAX (916) 369-7689

Sparger Technology, Inc.
Environmental Laboratories

Analytical Laboratory Division
Mobile Laboratory Division
Scientific Division

QC SUMMARY

Client ID Shaw Environmental & Infrastructure
Workorder ID CalTrans Merced
QC Batch VMX 2684
Matrix Soil

Original Samples 17088001
Matrix Spike [71340]
Matrix Spike Duplicate [71341]

Parameter	Spike %Recovery	Spike Dup %Recovery	Recovery Limits	RPD	RPD Limits
Benzene	110	100	(76-135)	9.5	(20 MAX)
Toluene	110	100	(76-135)	9.5	(20 MAX)
Ethylbenzene	108	108	(76-135)	00	(20 MAX)
Xylene (Total)	106	105	(76-135)	0.90	(20 MAX)

3738 Bradview Drive • Sacramento, California 95827 • (916) 369-7688 • FAX (916) 369-7689

131

Sparger Technology, Inc.
Environmental Laboratories

Analytical Laboratory Division
Mobile Laboratory Division
Scientific Division

QC SUMMARY

Client ID Shaw Environmental & Infrastructure
Workorder ID CalTrans Merced
QC Batch SGX 2311
Matrix Soil

Samples Lab Control Sample [71040]
Lab Control Sample Duplicate [71041]

Parameter	Check %Recovery	Check Dup %Recovery	Recovery Limits	RPD	RPD Limits
TPHdiesel	92	90	(65-135)	2.2	(20 MAX)

132

3738 Bradview Drive • Sacramento, California 95827 • (916) 369-7688 • FAX (916) 369-7689

Sparger Technology, Inc.
Environmental Laboratories

Analytical Laboratory Division
Mobile Laboratory Division
Scientific Division

QC SUMMARY

Client ID Shaw Environmental & Infrastructure
Workorder ID CalTrans Merced
QC Batch ICPP 5273
Matrix Soil

Samples Lab Control Sample [71117]
Lab Control Sample Duplicate [71118]

Parameter	Check %Recovery	Check Dup %Recovery	Recovery Limits	RPD	RPD Limits
Antimony	104	104	(70-120)	0000	(20 MAX)
Arsenic	102	104	(80-120)	1.94	(20 MAX)
Barium	105	106	(80-120)	0.9480	(20 MAX)
Beryllium	105	107	(80-120)	1.89	(20 MAX)
Cadmium	101	102	(80-120)	0.9850	(20 MAX)
Chromium	110	112	(80-120)	1.80	(20 MAX)
Cobalt	104	105	(80-120)	0.9570	(20 MAX)
Copper	106	108	(80-120)	1.87	(20 MAX)
Lead	102	104	(80-120)	1.94	(20 MAX)
Molybdenum	108	110	(80-120)	1.83	(20 MAX)
Nickel	100	102	(80-120)	1.98	(20 MAX)
Selenium	107	108	(80-120)	0.9300	(20 MAX)
Silver	112	112	(60-120)	0000	(20 MAX)
Thallium	103	102	(80-120)	0.9760	(20 MAX)
Vanadium	99.5	98.5	(80-120)	1.01	(20 MAX)
Zinc	110	109	(80-120)	0.9130	(20 MAX)

3738 Bradview Drive • Sacramento, California 95827 • (916) 369-7688 • FAX (916) 369-7689

133

Sparger Technology, Inc.
Environmental Laboratories

Analytical Laboratory Division
Mobile Laboratory Division
Scientific Division

QC SUMMARY

Client ID Shaw Environmental & Infrastructure
Workorder ID CalTrans Merced
QC Batch DIG 1579
Matrix Soil

Samples Lab Control Sample [71149]
Lab Control Sample Duplicate [71150]

Parameter	Check %Recovery	Check Dup %Recovery	Recovery Limits	RPD	RPD Limits
Mercury	93.0	94.0	(80-120)	1.07	(20 MAX)

134

3738 Bradview Drive • Sacramento, California 95827 • (916) 369-7688 • FAX (916) 369-7689

Sparger Technology, Inc.
Environmental Laboratories

Analytical Laboratory Division
Mobile Laboratory Division
Scientific Division

QC SUMMARY

Client ID Shaw Environmental & Infrastructure
Workorder ID CalTrans Merced
QC Batch VGX 2842
Matrix Soil

Samples Lab Control Sample [71188]
Lab Control Sample Duplicate [71189]

Parameter	Check %Recovery	Check Dup %Recovery	Recovery Limits	RPD	RPD Limits
TPHgas	100	92	(65-135)	8.3	(20 MAX)

3738 Bradview Drive • Sacramento, California 95827 • (916) 369-7688 • FAX (916) 369-7689

135

Sparger Technology, Inc.
Environmental Laboratories

Analytical Laboratory Division
Mobile Laboratory Division
Scientific Division

QC SUMMARY

Client ID Shaw Environmental & Infrastructure
Workorder ID CalTrans Merced
QC Batch VGX 2845
Matrix Soil

Samples Lab Control Sample [71293]
Lab Control Sample Duplicate [71294]

Parameter	Check %Recovery	Check Dup %Recovery	Recovery Limits	RPD	RPD Limits
TPHgas	99	98	(65-135)	1.0	(20 MAX)

136

3738 Bradview Drive • Sacramento, California 95827 • (916) 369-7688 • FAX (916) 369-7689

Sparger Technology, Inc.
Environmental Laboratories

Analytical Laboratory Division
Mobile Laboratory Division
Scientific Division

QC SUMMARY

Client ID Shaw Environmental & Infrastructure
Workorder ID CalTrans Merced
QC Batch VMX 2682
Matrix Soil

Samples Lab Control Sample [71328]
Lab Control Sample Duplicate [71329]

Parameter	Check %Recovery	Check Dup %Recovery	Recovery Limits	RPD	RPD Limits
1,1-Dichloroethene	132	122	(59-172)	7.9	(22 MAX)
Benzene	110	112	(62-142)	1.8	(24 MAX)
Trichloroethene	110	104	(60-137)	5.6	(21 MAX)
Toluene	108	114	(59-139)	5.4	(21 MAX)
Chlorobenzene	108	108	(66-133)	00	(21 MAX)

3738 Bradview Drive • Sacramento, California 95827 • (916) 369-7688 • FAX (916) 369-7689

Sparger Technology, Inc.
Environmental Laboratories

Analytical Laboratory Division
Mobile Laboratory Division
Scientific Division

QC SUMMARY

Client ID Shaw Environmental & Infrastructure
Workorder ID CalTrans Merced
QC Batch VMX 2684
Matrix Soil

Samples Lab Control Sample [71338]
Lab Control Sample Duplicate [71339]

Parameter	Check %Recovery	Check Dup %Recovery	Recovery Limits	RPD	RPD Limits
Benzene	110	112	(76-135)	1.8	(20 MAX)
Toluene	108	114	(76-135)	5.4	(20 MAX)
Ethylbenzene	108	112	(76-135)	3.6	(20 MAX)
Xylene (Total)	111	111	(76-135)	00	(20 MAX)

136

3738 Bradview Drive • Sacramento, California 95827 • (916) 369-7688 • FAX (916) 369-7689

WORKORDER DATA SHEET
Oct 12, 2005 09:09

ID 17088	WO # 17088	CalTrans Merced		STATUS WP
DESC B9B				
CREATED	10/12/05 08:42	PO project 117535QA	TYPE CM	ACODE REPORT_WO
CLIENT	Shaw Shaw Environmental & Infrastructure			
PROFILE	10213 CaltransStan Caltrans Standard			

WORKORDER SAMPLES

1 **17088001** 17088001 SR140-B3-1.5

WP	TYPE SAMPLE	MATRIX	Soil
COLLECTED	10/11/05 09:30	DUE	10/25/05 17:00

Analyses		Turndays
8015M_G S	TPH Gas SOIL	10
OXG+/EDBS	8260B Oxygs + 1,2-DCA, + EDB S	10
8260 SOIL	8260B GCMS VOLATILES SOIL	10
8015M_D S	TPHdiesel Soil	10
CAM17SOIL	6010B ELEMENTS CAM17 SOIL	10

2 **17088002** 17088002 SR140-B3-3.0

WP	TYPE SAMPLE	MATRIX	Soil
COLLECTED	10/11/05 09:35	DUE	10/25/05 17:00

Analyses		Turndays
8015M_G S	TPH Gas SOIL	10
OXG+/EDBS	8260B Oxygs + 1,2-DCA, + EDB S	10
8015M_D S	TPHdiesel Soil	10

3 **17088003** 17088003 SR140-B3-4.5

WP	TYPE SAMPLE	MATRIX	Soil
COLLECTED	10/11/05 09:45	DUE	10/25/05 17:00

Analyses		Turndays
8015M_G S	TPH Gas SOIL	10
OXG+/EDBS	8260B Oxygs + 1,2-DCA, + EDB S	10
8260 SOIL	8260B GCMS VOLATILES SOIL	10
8015M_D S	TPHdiesel Soil	10
9045 PH S	9045, PH, Soil	10

4 **17088004** 17088004 SR140-B3-6.0

WP	TYPE SAMPLE	MATRIX	Soil
COLLECTED	10/11/05 10:05	DUE	10/25/05 17:00

Analyses		Turndays
8015M_G S	TPH Gas SOIL	10
OXG+/EDBS	8260B Oxygs + 1,2-DCA, + EDB S	10
8015M_D S	TPHdiesel Soil	10

139

WORKORDER DATA SHEET
Oct 12, 2005 09:09

5 **17088005** 17088005 SR140-B3-7.5

WP	TYPE SAMPLE	MATRIX	Soil
COLLECTED	10/11/05 10:20	DUE	10/25/05 17:00

Analyses		Turndays
8015M_G S	TPH Gas SOIL	10
OXG+/EDBS	8260B Oxygs + 1,2-DCA, + EDB S	10
8015M_D S	TPHdiesel Soil	10

6 **17088006** 17088006 SR140-B3-9.0

WP	TYPE SAMPLE	MATRIX	Soil
COLLECTED	10/11/05 10:32	DUE	10/25/05 17:00

Analyses		Turndays
8015M_G S	TPH Gas SOIL	10
OXG+/EDBS	8260B Oxygs + 1,2-DCA, + EDB S	10
8260 SOIL	8260B GCMS VOLATILES SOIL	10
8015M_D S	TPHdiesel Soil	10

7 **17088007** 17088007 SR140-B1-1.5

WP	TYPE SAMPLE	MATRIX	Soil
COLLECTED	10/11/05 11:33	DUE	10/25/05 17:00

Analyses		Turndays
8015M_G S	TPH Gas SOIL	10
OXG+/EDBS	8260B Oxygs + 1,2-DCA, + EDB S	10
8260 SOIL	8260B GCMS VOLATILES SOIL	10
8015M_D S	TPHdiesel Soil	10
CAM17SOIL	6010B ELEMENTS CAM17 SOIL	10
9045 PH S	9045, PH, Soil	10

8 **17088008** 17088008 SR140-B1-3.0

WP	TYPE SAMPLE	MATRIX	Soil
COLLECTED	10/11/05 11:45	DUE	10/25/05 17:00

Analyses		Turndays
8015M_G S	TPH Gas SOIL	10
OXG+/EDBS	8260B Oxygs + 1,2-DCA, + EDB S	10
8015M_D S	TPHdiesel Soil	10

9 **17088009** 17088009 SR140-B1-4.5

WP	TYPE SAMPLE	MATRIX	Soil
COLLECTED	10/11/05 11:55	DUE	10/25/05 17:00

Analyses		Turndays
8015M_G S	TPH Gas SOIL	10
OXG+/EDBS	8260B Oxygs + 1,2-DCA, + EDB S	10
8260 SOIL	8260B GCMS VOLATILES SOIL	10
8015M_D S	TPHdiesel Soil	10

140

WORKORDER DATA SHEET
Oct 12, 2005 09:09

10 **17088010** 17088010 SR140-B1-6.0

WP	TYPE SAMPLE	MATRIX	Soil
COLLECTED	10/11/05 12:05	DUE	10/25/05 17:00

Analyses		Turndays
8015M_G S	TPH Gas SOIL	10
OXG+/EDBS	8260B Oxygs + 1,2-DCA, + EDB S	10
8015M_D S	TPHdiesel Soil	10

11 **17088011** 17088011 SR140-B1-7.5

WP	TYPE SAMPLE	MATRIX	Soil
COLLECTED	10/11/05 12:20	DUE	10/25/05 17:00

Analyses		Turndays
8015M_G S	TPH Gas SOIL	10
OXG+/EDBS	8260B Oxygs + 1,2-DCA, + EDB S	10
8015M_D S	TPHdiesel Soil	10

12 **17088012** 17088012 SR140-B1-9.0

WP	TYPE SAMPLE	MATRIX	Soil
COLLECTED	10/11/05 12:37	DUE	10/25/05 17:00

Analyses		Turndays
8015M_G S	TPH Gas SOIL	10
OXG+/EDBS	8260B Oxygs + 1,2-DCA, + EDB S	10
8260 SOIL	8260B GCMS VOLATILES SOIL	10
8015M_D S	TPHdiesel Soil	10

13 **17088013** 17088013 SR140-B4-1.5

WP	TYPE SAMPLE	MATRIX	Soil
COLLECTED	10/11/05 14:20	DUE	10/25/05 17:00

Analyses		Turndays
8015M_G S	TPH Gas SOIL	10
OXG+/EDBS	8260B Oxygs + 1,2-DCA, + EDB S	10
8260 SOIL	8260B GCMS VOLATILES SOIL	10
8015M_D S	TPHdiesel Soil	10
CAM17SOIL	6010B ELEMENTS CAM17 SOIL	10

14 **17088014** 17088014 SR140-B4-3.0

WP	TYPE SAMPLE	MATRIX	Soil
COLLECTED	10/11/05 14:30	DUE	10/25/05 17:00

Analyses		Turndays
8015M_G S	TPH Gas SOIL	10
OXG+/EDBS	8260B Oxygs + 1,2-DCA, + EDB S	10
8015M_D S	TPHdiesel Soil	10

WORKORDER DATA SHEET
Oct 12, 2005 09:09

15	**17088015**	17088015	SR140-B4-4.5		
	WP	TYPE SAMPLE		MATRIX	Soil
	COLLECTED	10/11/05 14:41		DUE	10/25/05 17:00

Analyses		Turndays
8015M_G S	TPH Gas SOIL	10
OXG+/EDBS	8260B Oxygs + 1,2-DCA, + EDB S	10
8260 SOIL	8260B GCMS VOLATILES SOIL	10
8015M_D S	TPHdiesel Soil	10

16	**17088016**	17088016	SR140-B4-6.0		
	WP	TYPE SAMPLE		MATRIX	Soil
	COLLECTED	10/11/05 14:51		DUE	10/25/05 17:00

Analyses		Turndays
8015M_G S	TPH Gas SOIL	10
OXG+/EDBS	8260B Oxygs + 1,2-DCA, + EDB S	10
8015M_D S	TPHdiesel Soil	10
9045 PH S	9045, PH, Soil	10

17	**17088017**	17088017	SR140-B4-7.5		
	WP	TYPE SAMPLE		MATRIX	Soil
	COLLECTED	10/11/05 15:02		DUE	10/25/05 17:00

Analyses		Turndays
8015M_G S	TPH Gas SOIL	10
OXG+/EDBS	8260B Oxygs + 1,2-DCA, + EDB S	10
8015M_D S	TPHdiesel Soil	10

18	**17088018**	17088018	SR140-B4-9.0		
	WP	TYPE SAMPLE		MATRIX	Soil
	COLLECTED	10/11/05 15:14		DUE	10/25/05 17:00

Analyses		Turndays
8015M_G S	TPH Gas SOIL	10
OXG+/EDBS	8260B Oxygs + 1,2-DCA, + EDB S	10
8260 SOIL	8260B GCMS VOLATILES SOIL	10
8015M_D S	TPHdiesel Soil	10

19	**17088019**	17088019	SR140-B4-9.1		
	WP	TYPE SAMPLE		MATRIX	Soil
	COLLECTED	10/11/05 15:14		DUE	10/25/05 17:00

Analyses		Turndays
8015M_G S	TPH Gas SOIL	10
OXG+/EDBS	8260B Oxygs + 1,2-DCA, + EDB S	10
8260 SOIL	8260B GCMS VOLATILES SOIL	10
8015M_D S	TPHdiesel Soil	10

142

Shaw® Shaw Environmental, Inc.

B9B

CHAIN OF CUSTODY

10088

Ref. Document # CTSR140-101105

1326 North Market Blvd
Sacramento, CA 95834

Project Manager: Martha Adams / 916-565-4183
(Name & phone #)

Project Number: 117535
Project Name / Location: CalTrans Merced St Rt 140 & Parsons
Purchase Order #:

Shipment Date: 10-11-05
Waybill Number: Courrier
Lab Destination: Sparger Laboratory, Rancho Cordova,Ca
Lab Contact Name / ph. #: Will 916-369-7688

Send Report To: ATTN: Martha Adams
Phone/Fax Number: 916-565-4183 / 916-565-4356
Address: 1326 North Market Blvd
City: Sacramento, CA 95834

Sampler's Name(s): Joe Strack

Sample ID Number	Sample Description		Collection Information Date	Time	Method	Matrix	# of containers	Container type	Preservative HCL	NaOH	HNO_3	H_2SO_4	Ice		TPH as gasoline (EPA 8015)	TPH as diesel (EPA 8015)	BTEX (EPA 8260)	HvyMetals(Sb,As,Ba,Be,CdTotCr,Co,Cu,Pb Hg,Mo,Ni,Se,Ag,Ti,V,Zn)(EPA3050/7471A	Soluble Heavy Metals (EPA 3050A WET	VOCs (EPA 8260)	Soluble Lead (for ADL EPA 3050A WET	pH (EPA 9045)			
SR140-B3 - 1.5	Soil	5 ft	10/11/2005	09:30	Grab	SOIL	1	Tube							X	X	X	X X	See special instructions "a"	X					
SR140-B3 - 3.0	Soil	10 ft	10/11/2005	09:35	Grab	SOIL	1	Tube							X	X	X								
SR140-B3 - 4.5	Soil	15 ft	10/11/2005	09:45	Grab	SOIL	1	Tube							X	X	X			X		X			
SR140-B3 - 6.0	Soil	20 ft	10/11/2005	10:05	Grab	SOIL	1	Tube							X	X	X								
SR140-B3 - 7.5	Soil	25 ft	10/11/2005	10:20	Grab	SOIL	1	Tube							X	X	X								
SR140-B3 - 9.0	Soil	30 ft	10/11/2005	10:32	Grab	SOIL	1	Tube							X	X	X			X					
SR140-B1 - 1.5	Soil	5 ft	10/11/2005	11:33	Grab	SOIL	1	Tube							X	X	X	X X		X		X			
SR140-B1 - 3.0	Soil	10 ft	10/11/2005	11:45	Grab	SOIL	1	Tube							X	X	X								
SR140-B1 - 4.5	Soil	15 ft	10/11/2005	11:55	Grab	SOIL	1	Tube							X	X	X			X					
SR140-B1 - 6.0	Soil	20 ft	10/11/2005	12:05	Grab	SOIL	1	Tube							X	X	X								
SR140-B1 - 7.5	Soil	25 ft	10/11/2005	12:20	Grab	SOIL	1	Tube							X	X	X								
SR140-B1 - 9.0	Soil	30 ft	10/11/2005	12:37	Grab	SOIL	1	Tube							X	X	X			X					

Special Instructions: a) Up to 3 reanalysis if required based on initial results of 5-ft (1.5m) sample (Normal TAT)

Normal TAT

Level Of QC Required: Method Blank Frequency = 1 per 10 samples
MS/MSD = 1 per 10 samples, Lab Control Duplicate = 1 per 10 samles

Relinquished By:	Date:	Time:	Received By:	Date:	Time:
Joe Strack	10-11-05	1530	[signature]	10/11/05	1530

Method Codes

C = Composite
G = Grab

Matrix Codes

DW = Drinking Water
SO = Soil
GW = Ground Water
SL = Sludge
WW = Waste Water
CP = Chip Samples
SW = Surface Water
WP = Wipe Samples
LIQ = Other Liquid
SOL = Other Solid
GS = Air Sample

143

CHAIN OF CUSTODY

Ref. Document # CTSR140-101105

Shaw® Shaw Environmental, Inc.

1326 North Market Blvd
Sacramento, CA 95834

Project Manager: Martha Adams / 916-565-4183 (Name & phone #)

Send Report To: ATTN: Martha Adams
Phone/Fax Number: 916-565-4183 / 916-565-4356
Address: 1326 North Market Blvd
City: Sacramento, CA 95834

Project Number: 117535
Project Name / Location: CalTrans Merced St Rt 140 & Parsons
Purchase Order #:

Shipment Date: 10-11-05
Waybill Number: Courrier
Lab Destination: Sparger Laboratory, Rancho Cordova,Ca
Lab Contact Name / ph. #: Will 916-369-7688

Sampler's Name(s): Joe Strack

Analyses Requested

Sample ID Number	Sample Description		Collection Information Date	Time	Method	Matrix	# of containers	Container type	Preservative HCL	NaOH	HNO_3	H_2SO_4	Ice		TPH as gasoline (EPA 8015)	TPH as diesel (EPA 8015)	BTEX (EPA 8260)	HvyMetals(Sb,As,Ba,Be,CdTotCr,Co,Cu, Pb Hg,Mo,Ni,Se,Ag,Ti,V,Zn)(EPA3050/7471)	Soluble Heavy Metals (EPA 3050A WET)	VOCs (EPA 8260)	Soluble Lead (for ADL EPA 3050A WET)	pH (EPA 9045)			
SR140-B 4-1.5	Soil	5 ft	10/11/2005	14:20	Grab	SOIL	1	Tube							X	X	X	X X	See special instructions "a"	X					
SR140-B 4-3.0	Soil	10 ft	10/11/2005	14:30	Grab	SOIL	1	Tube							X	X	X								
SR140-B 4-4.5	Soil	15 ft	10/11/2005	14:41	Grab	SOIL	1	Tube							X	X	X			X					
SR140-B 4-6.0	Soil	20 ft	10/11/2005	14:51	Grab	SOIL	1	Tube							X	X	X					X			
SR140-B 4-7.5	Soil	25 ft	10/11/2005	15:02	Grab	SOIL	1	Tube							X	X	X								
SR140-B 4-9.0	Soil	30 ft	10/11/2005	15:14	Grab	SOIL	1	Tube							X	X	X			X					
~~SR140-B -1.5~~	~~Soil~~	~~5 ft~~	~~10/ /2005~~		~~Grab~~	~~SOIL~~	~~1~~	~~Tube~~							X	X	X	X X		X					
~~SR140-B -3.0~~	~~Soil~~	~~10 ft~~	~~10/ /2005~~		~~Grab~~	~~SOIL~~	~~1~~	~~Tube~~							X	X	X								
~~SR140-B -4.5~~	~~Soil~~	~~15 ft~~	~~10/ /2005~~		~~Grab~~	~~SOIL~~	~~1~~	~~Tube~~							X	X	X			X					
~~SR140-B -6.0~~	~~Soil~~	~~20 ft~~	~~10/ /2005~~		~~Grab~~	~~SOIL~~	~~1~~	~~Tube~~							X	X	X								
~~SR140-B -7.5~~	~~Soil~~	~~25 ft~~	~~10/ /2005~~		~~Grab~~	~~SOIL~~	~~1~~	~~Tube~~							X	X	X								
~~SR140-B -9.0~~	~~Soil~~	~~30 ft~~	~~10/ /2005~~		Grab	SOIL	1	Tube							X	X	X			X					

NOT USED

Special Instructions: a) Up to 3 reanalysis if required based on initial results of 5-ft (1.5m) sample (Normal TAT)

Normal TAT

Level Of QC Required: Method Blank Frequency = 1 per 10 samples
MS/MSD = 1 per 10 samples, Lab Control Duplicate = 1 per 10 samles

Relinquished By:	Date:	Received By:	Date:
Joe Strack	10-11-05 Time: 1530	[signature]	10/11/05 Time: 15:30
Relinquished By:	Date: Time:	Received By:	Date: Time:
Relinquished By:	Date: Time:	Received By:	Date: Time:

Method Codes

C = Composite G = Grab

Matrix Codes

DW = Drinking Water SO = Soil
GW = Ground Water SL = Sludge
WW = Waste Water CP = Chip Samples
SW = Surface Water WP = Wipe Samples
LIQ = Other Liquid SOL = Other Solid
GS = Air Sample

144

Sparger Technology, Inc.
Environmental Laboratories

Analytical Laboratory Division
Mobile Laboratory Division
Scientific Division

Martha Adams
Shaw Environmental & Infrastructure
1326 North Market Blvd.
Sacramento, CA 95834

Client	Shaw Environmental & Infrastructure
Workorder	17091 CalTrans Merced 117535
Received	10/13/05

The samples were received in EPA specified containers. The samples were transported and received under documented chain of custody and stored at four (4) degrees C until analysis was performed.

Sparger Technology, Inc. ID Suffix Keys - These descriptors will follow the Sparger Technology, Inc. ID numbers and help identify the specific sample and clarify the report.

DUP - Matrix Duplicate
MS - Matrix Spike
MSD - Matrix Spike Duplicate
LCS - Lab Control Sample
LCSD - Lab Control Sample Duplicate
RPD - Relative Percent Difference
QC - Additional Quality Control
DIL - Results from a diluted sample
ND - None Detected
RL - Reporting Limit

Note: In an effort to conserve paper, the results are printed on both sides of the paper.

Ray James
Laboratory Director

3738 Bradview Drive • Sacramento, California 95827 • (916) 369-7688 • FAX (916) 369-7689

145

Sparger Technology, Inc.
Environmental Laboratories

Analytical Laboratory Division
Mobile Laboratory Division
Scientific Division

Test Certificate of Analysis

Client ID	Shaw Environmental & Infrastructure	**Workorder ID**	CalTrans Merced 117535
Workorder #	17091	**Sampled**	10/11/05
Laboratory ID	17091001	**Received**	10/13/05
Sample ID	SR140-B05-1.5	**Reported**	10/26/05
Matrix	Soil		

8260B Oxygenates - 8260B

Parameter	Prep Date	Analyzed	Result	RL	Units	Dilution
Benzene	10/19/05	10/19/05	ND	1.0	ug/kg	1:1
Toluene	10/19/05	10/19/05	ND	1.0	ug/kg	1:1
Ethylbenzene	10/19/05	10/19/05	ND	1.0	ug/kg	1:1
Xylene (Total)	10/19/05	10/19/05	ND	1.0	ug/kg	1:1

Surrogates	Result	Recovery	Limits
1,2-Dichloroethane-d4	55 ug/kg	110 %	(65 - 135)

3738 Bradview Drive • Sacramento, California 95827 • (916) 369-7688 • FAX (916) 369-7689

246

Sparger Technology, Inc.
Environmental Laboratories

Analytical Laboratory Division
Mobile Laboratory Division
Scientific Division

Test Certificate of Analysis

Client ID	Shaw Environmental & Infrastructure	**Workorder ID**	CalTrans Merced 117535
Workorder #	17091	**Sampled**	10/11/05
Laboratory ID	17091001	**Received**	10/13/05
Sample ID	SR140-B05-1.5	**Reported**	10/26/05
Matrix	Soil		

8260B GC/MS Volatiles - 8260B

Parameter	Prep Date	Analyzed	Result	RL	Units	Dilution
Dichlorodifluoromethane	10/19/05	10/19/05	ND	2.0	ug/kg	1:1
Chloromethane	10/19/05	10/19/05	ND	2.0	ug/kg	1:1
Vinyl chloride	10/19/05	10/19/05	ND	2.0	ug/kg	1:1
Bromomethane	10/19/05	10/19/05	ND	2.0	ug/kg	1:1
Chloroethane	10/19/05	10/19/05	ND	2.0	ug/kg	1:1
Trichlorofluoromethane	10/19/05	10/19/05	ND	2.0	ug/kg	1:1
Acrolein	10/19/05	10/19/05	ND	2.0	ug/kg	1:1
1,1-Dichloroethene	10/19/05	10/19/05	ND	2.0	ug/kg	1:1
Acetone	**10/19/05**	**10/19/05**	**11**	**2.0**	**ug/kg**	**1:1**
Methyl iodide	10/19/05	10/19/05	ND	2.0	ug/kg	1:1
Carbon disulfide	10/19/05	10/19/05	ND	2.0	ug/kg	1:1
Dichloromethane	10/19/05	10/19/05	ND	2.0	ug/kg	1:1
Acrylonitrile	10/19/05	10/19/05	ND	2.0	ug/kg	1:1
trans-1,2-Dichloroethene	10/19/05	10/19/05	ND	2.0	ug/kg	1:1
1,1-Dichloroethane	10/19/05	10/19/05	ND	2.0	ug/kg	1:1
Vinyl acetate	10/19/05	10/19/05	ND	2.0	ug/kg	1:1
cis-1,2-Dichloroethene	10/19/05	10/19/05	ND	2.0	ug/kg	1:1
2-Butanone (MEK)	10/19/05	10/19/05	ND	2.0	ug/kg	1:1
Bromochloromethane	10/19/05	10/19/05	ND	2.0	ug/kg	1:1
Chloroform	10/19/05	10/19/05	ND	2.0	ug/kg	1:1
2,2-dichloropropane	10/19/05	10/19/05	ND	2.0	ug/kg	1:1
1,1,1-Trichloroethane	10/19/05	10/19/05	ND	2.0	ug/kg	1:1
1,1-dichloropropane	10/19/05	10/19/05	ND	2.0	ug/kg	1:1
Carbon tetrachloride	10/19/05	10/19/05	ND	2.0	ug/kg	1:1
Benzene	10/19/05	10/19/05	ND	2.0	ug/kg	1:1
1,2-Dichloroethane	10/19/05	10/19/05	ND	2.0	ug/kg	1:1
Dibromomethane	10/19/05	10/19/05	ND	2.0	ug/kg	1:1
Bromodichloromethane	10/19/05	10/19/05	ND	2.0	ug/kg	1:1
1,2-Dichloropropane	10/19/05	10/19/05	ND	2.0	ug/kg	1:1
Trichloroethene	10/19/05	10/19/05	ND	2.0	ug/kg	1:1
2-Chloroethylvinyl ether	10/19/05	10/19/05	ND	2.0	ug/kg	1:1
cis-1,3-Dichloropropene	10/19/05	10/19/05	ND	2.0	ug/kg	1:1

3738 Bradview Drive • Sacramento, California 95827 • (916) 369-7688 • FAX (916) 369-7689

147

Sparger Technology, Inc.
Environmental Laboratories

Analytical Laboratory Division
Mobile Laboratory Division
Scientific Division

Test Certificate of Analysis

Client ID	Shaw Environmental & Infrastructure	**Workorder ID**	CalTrans Merced 117535
Workorder #	17091	**Sampled**	10/11/05
Laboratory ID	17091001	**Received**	10/13/05
Sample ID	SR140-B05-1.5	**Reported**	10/26/05
Matrix	Soil		

8260B GC/MS Volatiles - 8260B (continued)

Parameter	Prep Date	Analyzed	Result	RL	Units	Dilution
4-Methyl-2-pentanone	10/19/05	10/19/05	ND	2.0	ug/kg	1:1
trans-1,3Dichloropropene	10/19/05	10/19/05	ND	2.0	ug/kg	1:1
1,1,2-Trichloroethane	10/19/05	10/19/05	ND	2.0	ug/kg	1:1
Toluene	10/19/05	10/19/05	ND	2.0	ug/kg	1:1
1,2-Dibromoethane (EDB)	10/19/05	10/19/05	ND	2.0	ug/kg	1:1
1,3-Dichloropropane	10/19/05	10/19/05	ND	2.0	ug/kg	1:1
2-Hexanone	10/19/05	10/19/05	ND	2.0	ug/kg	1:1
Dibromochloromethane	10/19/05	10/19/05	ND	2.0	ug/kg	1:1
Tetrachloroethene	10/19/05	10/19/05	ND	2.0	ug/kg	1:1
1,1,1,2Tetrachloroethane	10/19/05	10/19/05	ND	2.0	ug/kg	1:1
Chlorobenzene	10/19/05	10/19/05	ND	2.0	ug/kg	1:1
Ethylbenzene	10/19/05	10/19/05	ND	2.0	ug/kg	1:1
M+P-Xylene	10/19/05	10/19/05	ND	2.0	ug/kg	1:1
Bromoform	10/19/05	10/19/05	ND	2.0	ug/kg	1:1
Styrene	10/19/05	10/19/05	ND	2.0	ug/kg	1:1
o-Xylene	10/19/05	10/19/05	ND	2.0	ug/kg	1:1
1,1,2,2Tetrachloroethane	10/19/05	10/19/05	ND	2.0	ug/kg	1:1
1,2,3-Trichloropropane	10/19/05	10/19/05	ND	2.0	ug/kg	1:1
Isopropylbenzene(Cumene)	10/19/05	10/19/05	ND	2.0	ug/kg	1:1
Bromobenzene	10/19/05	10/19/05	ND	2.0	ug/kg	1:1
n-Propylbenzene	10/19/05	10/19/05	ND	2.0	ug/kg	1:1
2-Chlorotoluene	10/19/05	10/19/05	ND	2.0	ug/kg	1:1
4-Chlorotoluene	10/19/05	10/19/05	ND	2.0	ug/kg	1:1
1,3,5-Trimethylbenzene	10/19/05	10/19/05	ND	2.0	ug/kg	1:1
tert-Butylbenzene	10/19/05	10/19/05	ND	2.0	ug/kg	1:1
1,2,4-Trimethylbenzene	10/19/05	10/19/05	ND	2.0	ug/kg	1:1
sec-Butylbenzene	10/19/05	10/19/05	ND	2.0	ug/kg	1:1
1,3-Dichlorobenzene	10/19/05	10/19/05	ND	2.0	ug/kg	1:1
1,4-Dichlorobenzene	10/19/05	10/19/05	ND	2.0	ug/kg	1:1
4-Isopropyltoluene	10/19/05	10/19/05	ND	2.0	ug/kg	1:1
1,2-Dichlorobenzene	10/19/05	10/19/05	ND	2.0	ug/kg	1:1
n-Butylbenzene	10/19/05	10/19/05	ND	2.0	ug/kg	1:1

148

3738 Bradview Drive • Sacramento, California 95827 • (916) 369-7688 • FAX (916) 369-7689

Sparger Technology, Inc.
Environmental Laboratories

Analytical Laboratory Division
Mobile Laboratory Division
Scientific Division

Test Certificate of Analysis

Client ID	Shaw Environmental & Infrastructure	**Workorder ID**	CalTrans Merced 117535
Workorder #	17091	**Sampled**	10/11/05
Laboratory ID	17091001	**Received**	10/13/05
Sample ID	SR140-B05-1.5	**Reported**	10/26/05
Matrix	Soil		

8260B GC/MS Volatiles - 8260B (continued)

Parameter	Prep Date	Analyzed	Result	RL	Units	Dilution
1,2Dibromo3chloropropane	10/19/05	10/19/05	ND	2.0	ug/kg	1:1
1,2,4-Trichlorobenzene	10/19/05	10/19/05	ND	2.0	ug/kg	1:1
Naphthalene	10/19/05	10/19/05	ND	2.0	ug/kg	1:1
Hexachlorobutadiene	10/19/05	10/19/05	ND	2.0	ug/kg	1:1
1,2,3-Trichlorobenzene	10/19/05	10/19/05	ND	2.0	ug/kg	1:1

Surrogates	Result	Recovery	Limits
1,2-Dichloroethane-d4	55 ug/kg	110 %	(70 - 135)
Toluene d8	45 ug/kg	90 %	(70 - 135)
4-Bromofluorobenzene	50 ug/kg	100 %	(70 - 135)

3738 Bradview Drive • Sacramento, California 95827 • (916) 369-7688 • FAX (916) 369-7689

Sparger Technology, Inc.
Environmental Laboratories

Analytical Laboratory Division
Mobile Laboratory Division
Scientific Division

Test Certificate of Analysis

Client ID	Shaw Environmental & Infrastructure	**Workorder ID**	CalTrans Merced 117535
Workorder #	17091	**Sampled**	10/11/05
Laboratory ID	17091001	**Received**	10/13/05
Sample ID	SR140-B05-1.5	**Reported**	10/26/05
Matrix	Soil		

Metals, CAM17 - 6010B

Parameter	Prep Date	Analyzed	Result	RL	Units	Dilution
Antimony	10/13/05	10/17/05	ND	6.0	mg/Kg	1:1
Arsenic	10/13/05	10/17/05	ND	8.0	mg/Kg	1:1
Barium	**10/13/05**	**10/17/05**	**118**	**2.0**	**mg/Kg**	**1:1**
Beryllium	10/13/05	10/17/05	ND	0.30	mg/Kg	1:1
Cadmium	10/13/05	10/17/05	ND	0.50	mg/Kg	1:1
Chromium	**10/13/05**	**10/17/05**	**28**	**1.0**	**mg/Kg**	**1:1**
Cobalt	**10/13/05**	**10/17/05**	**9.1**	**5.0**	**mg/Kg**	**1:1**
Copper	**10/13/05**	**10/17/05**	**18**	**2.0**	**mg/Kg**	**1:1**
Lead	**10/13/05**	**10/17/05**	**2.8**	**1.0**	**mg/Kg**	**1:1**
Molybdenum	10/13/05	10/17/05	ND	5.0	mg/Kg	1:1
Nickel	10/13/05	10/17/05	ND	4.0	mg/Kg	1:1
Selenium	10/13/05	10/17/05	ND	10	mg/Kg	1:1
Silver	10/13/05	10/17/05	ND	1.0	mg/Kg	1:1
Thallium	10/13/05	10/17/05	ND	10	mg/Kg	1:1
Vanadium	**10/13/05**	**10/17/05**	**34**	**5.0**	**mg/Kg**	**1:1**
Zinc	**10/13/05**	**10/17/05**	**32**	**1.5**	**mg/Kg**	**1:1**

150

3738 Bradview Drive • Sacramento, California 95827 • (916) 369-7688 • FAX (916) 369-7689

Sparger Technology, Inc.
Environmental Laboratories

Analytical Laboratory Division
Mobile Laboratory Division
Scientific Division

Test Certificate of Analysis

Client ID	Shaw Environmental & Infrastructure	**Workorder ID**	CalTrans Merced 117535
Workorder #	17091	**Sampled**	10/11/05
Laboratory ID	17091002	**Received**	10/13/05
Sample ID	SR140-B05-3.0	**Reported**	10/26/05
Matrix	Soil		

8260B Oxygenates - 8260B

Parameter	Prep Date	Analyzed	Result	RL	Units	Dilution
Benzene	10/18/05	10/18/05	ND	1.0	ug/kg	1:1
Toluene	10/18/05	10/18/05	ND	1.0	ug/kg	1:1
Ethylbenzene	10/18/05	10/18/05	ND	1.0	ug/kg	1:1
Xylene (Total)	10/18/05	10/18/05	ND	1.0	ug/kg	1:1

Surrogates	Result	Recovery	Limits
1,2-Dichloroethane-d4	56 ug/kg	112 %	(65 - 135)

3738 Bradview Drive • Sacramento, California 95827 • (916) 369-7688 • FAX (916) 369-7689

151

Sparger Technology, Inc.
Environmental Laboratories

Analytical Laboratory Division
Mobile Laboratory Division
Scientific Division

Test Certificate of Analysis

Client ID	Shaw Environmental & Infrastructure	**Workorder ID**	CalTrans Merced 117535
Workorder #	17091	**Sampled**	10/11/05
Laboratory ID	17091003	**Received**	10/13/05
Sample ID	SR140-B05-4.5	**Reported**	10/26/05
Matrix	Soil		

8260B Oxygenates - 8260B

Parameter	Prep Date	Analyzed	Result	RL	Units	Dilution
Benzene	10/19/05	10/19/05	ND	1.0	ug/kg	1:1
Toluene	10/19/05	10/19/05	ND	1.0	ug/kg	1:1
Ethylbenzene	10/19/05	10/19/05	ND	1.0	ug/kg	1:1
Xylene (Total)	10/19/05	10/19/05	ND	1.0	ug/kg	1:1

Surrogates	Result	Recovery	Limits
1,2-Dichloroethane-d4	52 ug/kg	104 %	(65 - 135)

152

3738 Bradview Drive • Sacramento, California 95827 • (916) 369-7688 • FAX (916) 369-7689

Sparger Technology, Inc.
Environmental Laboratories

Analytical Laboratory Division
Mobile Laboratory Division
Scientific Division

Test Certificate of Analysis

Client ID	Shaw Environmental & Infrastructure	**Workorder ID**	CalTrans Merced 117535
Workorder #	17091	**Sampled**	10/11/05
Laboratory ID	17091003	**Received**	10/13/05
Sample ID	SR140-B05-4.5	**Reported**	10/26/05
Matrix	Soil		

8260B GC/MS Volatiles - 8260B

Parameter	Prep Date	Analyzed	Result	RL	Units	Dilution
Dichlorodifluoromethane	10/19/05	10/19/05	ND	2.0	ug/kg	1:1
Chloromethane	10/19/05	10/19/05	ND	2.0	ug/kg	1:1
Vinyl chloride	10/19/05	10/19/05	ND	2.0	ug/kg	1:1
Bromomethane	10/19/05	10/19/05	ND	2.0	ug/kg	1:1
Chloroethane	10/19/05	10/19/05	ND	2.0	ug/kg	1:1
Trichlorofluoromethane	10/19/05	10/19/05	ND	2.0	ug/kg	1:1
Acrolein	10/19/05	10/19/05	ND	2.0	ug/kg	1:1
1,1-Dichloroethene	10/19/05	10/19/05	ND	2.0	ug/kg	1:1
Acetone	10/19/05	10/19/05	ND	2.0	ug/kg	1:1
Methyl iodide	10/19/05	10/19/05	ND	2.0	ug/kg	1:1
Carbon disulfide	10/19/05	10/19/05	ND	2.0	ug/kg	1:1
Dichloromethane	10/19/05	10/19/05	ND	2.0	ug/kg	1:1
Acrylonitrile	10/19/05	10/19/05	ND	2.0	ug/kg	1:1
trans-1,2-Dichloroethene	10/19/05	10/19/05	ND	2.0	ug/kg	1:1
1,1-Dichloroethane	10/19/05	10/19/05	ND	2.0	ug/kg	1:1
Vinyl acetate	10/19/05	10/19/05	ND	2.0	ug/kg	1:1
cis-1,2-Dichloroethene	10/19/05	10/19/05	ND	2.0	ug/kg	1:1
2-Butanone (MEK)	10/19/05	10/19/05	ND	2.0	ug/kg	1:1
Bromochloromethane	10/19/05	10/19/05	ND	2.0	ug/kg	1:1
Chloroform	10/19/05	10/19/05	ND	2.0	ug/kg	1:1
2,2-dichloropropane	10/19/05	10/19/05	ND	2.0	ug/kg	1:1
1,1,1-Trichloroethane	10/19/05	10/19/05	ND	2.0	ug/kg	1:1
1,1-dichloropropane	10/19/05	10/19/05	ND	2.0	ug/kg	1:1
Carbon tetrachloride	10/19/05	10/19/05	ND	2.0	ug/kg	1:1
Benzene	10/19/05	10/19/05	ND	2.0	ug/kg	1:1
1,2-Dichloroethane	10/19/05	10/19/05	ND	2.0	ug/kg	1:1
Dibromomethane	10/19/05	10/19/05	ND	2.0	ug/kg	1:1
Bromodichloromethane	10/19/05	10/19/05	ND	2.0	ug/kg	1:1
1,2-Dichloropropane	10/19/05	10/19/05	ND	2.0	ug/kg	1:1
Trichloroethene	10/19/05	10/19/05	ND	2.0	ug/kg	1:1
2-Chloroethylvinyl ether	10/19/05	10/19/05	ND	2.0	ug/kg	1:1
cis-1,3-Dichloropropene	10/19/05	10/19/05	ND	2.0	ug/kg	1:1

3738 Bradview Drive • Sacramento, California 95827 • (916) 369-7688 • FAX (916) 369-7689

153

Sparger Technology, Inc.
Environmental Laboratories

Analytical Laboratory Division
Mobile Laboratory Division
Scientific Division

Test Certificate of Analysis

Client ID	Shaw Environmental & Infrastructure	**Workorder ID**	CalTrans Merced 117535
Workorder #	17091	**Sampled**	10/11/05
Laboratory ID	17091003	**Received**	10/13/05
Sample ID	SR140-B05-4.5	**Reported**	10/26/05
Matrix	Soil		

8260B GC/MS Volatiles - 8260B (continued)

Parameter	Prep Date	Analyzed	Result	RL	Units	Dilution
4-Methyl-2-pentanone	10/19/05	10/19/05	ND	2.0	ug/kg	1:1
trans-1,3Dichloropropene	10/19/05	10/19/05	ND	2.0	ug/kg	1:1
1,1,2-Trichloroethane	10/19/05	10/19/05	ND	2.0	ug/kg	1:1
Toluene	10/19/05	10/19/05	ND	2.0	ug/kg	1:1
1,2-Dibromoethane (EDB)	10/19/05	10/19/05	ND	2.0	ug/kg	1:1
1,3-Dichloropropane	10/19/05	10/19/05	ND	2.0	ug/kg	1:1
2-Hexanone	10/19/05	10/19/05	ND	2.0	ug/kg	1:1
Dibromochloromethane	10/19/05	10/19/05	ND	2.0	ug/kg	1:1
Tetrachloroethene	10/19/05	10/19/05	ND	2.0	ug/kg	1:1
1,1,1,2Tetrachloroethane	10/19/05	10/19/05	ND	2.0	ug/kg	1:1
Chlorobenzene	10/19/05	10/19/05	ND	2.0	ug/kg	1:1
Ethylbenzene	10/19/05	10/19/05	ND	2.0	ug/kg	1:1
M+P-Xylene	10/19/05	10/19/05	ND	2.0	ug/kg	1:1
Bromoform	10/19/05	10/19/05	ND	2.0	ug/kg	1:1
Styrene	10/19/05	10/19/05	ND	2.0	ug/kg	1:1
o-Xylene	10/19/05	10/19/05	ND	2.0	ug/kg	1:1
1,1,2,2Tetrachloroethane	10/19/05	10/19/05	ND	2.0	ug/kg	1:1
1,2,3-Trichloropropane	10/19/05	10/19/05	ND	2.0	ug/kg	1:1
Isopropylbenzene (Cumene)	10/19/05	10/19/05	ND	2.0	ug/kg	1:1
Bromobenzene	10/19/05	10/19/05	ND	2.0	ug/kg	1:1
n-Propylbenzene	10/19/05	10/19/05	ND	2.0	ug/kg	1:1
2-Chlorotoluene	10/19/05	10/19/05	ND	2.0	ug/kg	1:1
4-Chlorotoluene	10/19/05	10/19/05	ND	2.0	ug/kg	1:1
1,3,5-Trimethylbenzene	10/19/05	10/19/05	ND	2.0	ug/kg	1:1
tert-Butylbenzene	10/19/05	10/19/05	ND	2.0	ug/kg	1:1
1,2,4-Trimethylbenzene	10/19/05	10/19/05	ND	2.0	ug/kg	1:1
sec-Butylbenzene	10/19/05	10/19/05	ND	2.0	ug/kg	1:1
1,3-Dichlorobenzene	10/19/05	10/19/05	ND	2.0	ug/kg	1:1
1,4-Dichlorobenzene	10/19/05	10/19/05	ND	2.0	ug/kg	1:1
4-Isopropyltoluene	10/19/05	10/19/05	ND	2.0	ug/kg	1:1
1,2-Dichlorobenzene	10/19/05	10/19/05	ND	2.0	ug/kg	1:1
n-Butylbenzene	10/19/05	10/19/05	ND	2.0	ug/kg	1:1

154

3738 Bradview Drive • Sacramento, California 95827 • (916) 369-7688 • FAX (916) 369-7689

Sparger Technology, Inc.
Environmental Laboratories

Analytical Laboratory Division
Mobile Laboratory Division
Scientific Division

Test Certificate of Analysis

Client ID	Shaw Environmental & Infrastructure	**Workorder ID**	CalTrans Merced 117535
Workorder #	17091	**Sampled**	10/11/05
Laboratory ID	17091003	**Received**	10/13/05
Sample ID	SR140-B05-4.5	**Reported**	10/26/05
Matrix	Soil		

8260B GC/MS Volatiles - 8260B (continued)

Parameter	Prep Date	Analyzed	Result	RL	Units	Dilution
1,2Dibromo3chloropropane	10/19/05	10/19/05	ND	2.0	ug/kg	1:1
1,2,4-Trichlorobenzene	10/19/05	10/19/05	ND	2.0	ug/kg	1:1
Naphthalene	10/19/05	10/19/05	ND	2.0	ug/kg	1:1
Hexachlorobutadiene	10/19/05	10/19/05	ND	2.0	ug/kg	1:1
1,2,3-Trichlorobenzene	10/19/05	10/19/05	ND	2.0	ug/kg	1:1

Surrogates	Result	Recovery	Limits
1,2-Dichloroethane-d4	52 ug/kg	104 %	(70 - 135)
Toluene d8	45 ug/kg	90 %	(70 - 135)
4-Bromofluorobenzene	48 ug/kg	96 %	(70 - 135)

3738 Bradview Drive • Sacramento, California 95827 • (916) 369-7688 • FAX (916) 369-7689

155

Sparger Technology, Inc.
Environmental Laboratories

Analytical Laboratory Division
Mobile Laboratory Division
Scientific Division

Test Certificate of Analysis

Client ID	Shaw Environmental & Infrastructure	**Workorder ID**	CalTrans Merced 117535
Workorder #	17091	**Sampled**	10/11/05
Laboratory ID	17091004	**Received**	10/13/05
Sample ID	SR140-B05-6.0	**Reported**	10/26/05
Matrix	Soil		

8260B Oxygenates - 8260B

Parameter	Prep Date	Analyzed	Result	RL	Units	Dilution
Benzene	10/18/05	10/18/05	ND	1.0	ug/kg	1:1
Toluene	10/18/05	10/18/05	ND	1.0	ug/kg	1:1
Ethylbenzene	10/18/05	10/18/05	ND	1.0	ug/kg	1:1
Xylene (Total)	10/18/05	10/18/05	ND	1.0	ug/kg	1:1

Surrogates	Result	Recovery	Limits
1,2-Dichloroethane-d4	60 ug/kg	120 %	(65 - 135)

156

3738 Bradview Drive • Sacramento, California 95827 • (916) 369-7688 • FAX (916) 369-7689

Sparger Technology, Inc.
Environmental Laboratories

Analytical Laboratory Division
Mobile Laboratory Division
Scientific Division

Test Certificate of Analysis

Client ID	Shaw Environmental & Infrastructure	**Workorder ID**	CalTrans Merced 117535
Workorder #	17091	**Sampled**	10/11/05
Laboratory ID	17091005	**Received**	10/13/05
Sample ID	SR140-B05-7.5	**Reported**	10/26/05
Matrix	Soil		

8260B Oxygenates - 8260B

Parameter	Prep Date	Analyzed	Result	RL	Units	Dilution
Benzene	10/18/05	10/18/05	ND	1.0	ug/kg	1:1
Toluene	10/18/05	10/18/05	ND	1.0	ug/kg	1:1
Ethylbenzene	10/18/05	10/18/05	ND	1.0	ug/kg	1:1
Xylene (Total)	10/18/05	10/18/05	ND	1.0	ug/kg	1:1

Surrogates	Result	Recovery	Limits
1,2-Dichloroethane-d4	61 ug/kg	122 %	(65 - 135)

3738 Bradview Drive • Sacramento, California 95827 • (916) 369-7688 • FAX (916) 369-7689

157

Sparger Technology, Inc.
Environmental Laboratories

Analytical Laboratory Division
Mobile Laboratory Division
Scientific Division

Test Certificate of Analysis

Client ID	Shaw Environmental & Infrastructure	**Workorder ID**	CalTrans Merced 117535
Workorder #	17091	**Sampled**	10/11/05
Laboratory ID	17091006	**Received**	10/13/05
Sample ID	SR140-B05-9.0	**Reported**	10/26/05
Matrix	Soil		

8260B Oxygenates - 8260B

Parameter	Prep Date	Analyzed	Result	RL	Units	Dilution
Benzene	10/19/05	10/19/05	ND	1.0	ug/kg	1:1
Toluene	10/19/05	10/19/05	ND	1.0	ug/kg	1:1
Ethylbenzene	10/19/05	10/19/05	ND	1.0	ug/kg	1:1
Xylene (Total)	10/19/05	10/19/05	ND	1.0	ug/kg	1:1

Surrogates	Result	Recovery	Limits
1,2-Dichloroethane-d4	55 ug/kg	110 %	(65 - 135)

158

3738 Bradview Drive • Sacramento, California 95827 • (916) 369-7688 • FAX (916) 369-7689

Sparger Technology, Inc.
Environmental Laboratories

Analytical Laboratory Division
Mobile Laboratory Division
Scientific Division

Test Certificate of Analysis

Client ID	Shaw Environmental & Infrastructure	**Workorder ID**	CalTrans Merced 117535
Workorder #	17091	**Sampled**	10/11/05
Laboratory ID	17091006	**Received**	10/13/05
Sample ID	SR140-B05-9.0	**Reported**	10/26/05
Matrix	Soil		

8260B GC/MS Volatiles - 8260B

Parameter	Prep Date	Analyzed	Result	RL	Units	Dilution
Dichlorodifluoromethane	10/19/05	10/19/05	ND	2.0	ug/kg	1:1
Chloromethane	10/19/05	10/19/05	ND	2.0	ug/kg	1:1
Vinyl chloride	10/19/05	10/19/05	ND	2.0	ug/kg	1:1
Bromomethane	10/19/05	10/19/05	ND	2.0	ug/kg	1:1
Chloroethane	10/19/05	10/19/05	ND	2.0	ug/kg	1:1
Trichlorofluoromethane	10/19/05	10/19/05	ND	2.0	ug/kg	1:1
Acrolein	10/19/05	10/19/05	ND	2.0	ug/kg	1:1
1,1-Dichloroethene	10/19/05	10/19/05	ND	2.0	ug/kg	1:1
Acetone	10/19/05	10/19/05	ND	2.0	ug/kg	1:1
Methyl iodide	10/19/05	10/19/05	ND	2.0	ug/kg	1:1
Carbon disulfide	10/19/05	10/19/05	ND	2.0	ug/kg	1:1
Dichloromethane	10/19/05	10/19/05	ND	2.0	ug/kg	1:1
Acrylonitrile	10/19/05	10/19/05	ND	2.0	ug/kg	1:1
trans-1,2-Dichloroethene	10/19/05	10/19/05	ND	2.0	ug/kg	1:1
1,1-Dichloroethane	10/19/05	10/19/05	ND	2.0	ug/kg	1:1
Vinyl acetate	10/19/05	10/19/05	ND	2.0	ug/kg	1:1
cis-1,2-Dichloroethene	10/19/05	10/19/05	ND	2.0	ug/kg	1:1
2-Butanone (MEK)	10/19/05	10/19/05	ND	2.0	ug/kg	1:1
Bromochloromethane	10/19/05	10/19/05	ND	2.0	ug/kg	1:1
Chloroform	10/19/05	10/19/05	ND	2.0	ug/kg	1:1
2,2-dichloropropane	10/19/05	10/19/05	ND	2.0	ug/kg	1:1
1,1,1-Trichloroethane	10/19/05	10/19/05	ND	2.0	ug/kg	1:1
1,1-dichloropropane	10/19/05	10/19/05	ND	2.0	ug/kg	1:1
Carbon tetrachloride	10/19/05	10/19/05	ND	2.0	ug/kg	1:1
Benzene	10/19/05	10/19/05	ND	2.0	ug/kg	1:1
1,2-Dichloroethane	10/19/05	10/19/05	ND	2.0	ug/kg	1:1
Dibromomethane	10/19/05	10/19/05	ND	2.0	ug/kg	1:1
Bromodichloromethane	10/19/05	10/19/05	ND	2.0	ug/kg	1:1
1,2-Dichloropropane	10/19/05	10/19/05	ND	2.0	ug/kg	1:1
Trichloroethene	10/19/05	10/19/05	ND	2.0	ug/kg	1:1
2-Chloroethylvinyl ether	10/19/05	10/19/05	ND	2.0	ug/kg	1:1
cis-1,3-Dichloropropene	10/19/05	10/19/05	ND	2.0	ug/kg	1:1

3738 Bradview Drive • Sacramento, California 95827 • (916) 369-7688 • FAX (916) 369-7689

159

Test Certificate of Analysis

Client ID	Shaw Environmental & Infrastructure	**Workorder ID**	CalTrans Merced 117535
Workorder #	17091	**Sampled**	10/11/05
Laboratory ID	17091006	**Received**	10/13/05
Sample ID	SR140-B05-9.0	**Reported**	10/26/05
Matrix	Soil		

8260B GC/MS Volatiles - 8260B (continued)

Parameter	Prep Date	Analyzed	Result	RL	Units	Dilution
4-Methyl-2-pentanone	10/19/05	10/19/05	ND	2.0	ug/kg	1:1
trans-1,3Dichloropropene	10/19/05	10/19/05	ND	2.0	ug/kg	1:1
1,1,2-Trichloroethane	10/19/05	10/19/05	ND	2.0	ug/kg	1:1
Toluene	10/19/05	10/19/05	ND	2.0	ug/kg	1:1
1,2-Dibromoethane (EDB)	10/19/05	10/19/05	ND	2.0	ug/kg	1:1
1,3-Dichloropropane	10/19/05	10/19/05	ND	2.0	ug/kg	1:1
2-Hexanone	10/19/05	10/19/05	ND	2.0	ug/kg	1:1
Dibromochloromethane	10/19/05	10/19/05	ND	2.0	ug/kg	1:1
Tetrachloroethene	10/19/05	10/19/05	ND	2.0	ug/kg	1:1
1,1,1,2Tetrachloroethane	10/19/05	10/19/05	ND	2.0	ug/kg	1:1
Chlorobenzene	10/19/05	10/19/05	ND	2.0	ug/kg	1:1
Ethylbenzene	10/19/05	10/19/05	ND	2.0	ug/kg	1:1
M+P-Xylene	10/19/05	10/19/05	ND	2.0	ug/kg	1:1
Bromoform	10/19/05	10/19/05	ND	2.0	ug/kg	1:1
Styrene	10/19/05	10/19/05	ND	2.0	ug/kg	1:1
o-Xylene	10/19/05	10/19/05	ND	2.0	ug/kg	1:1
1,1,2,2Tetrachloroethane	10/19/05	10/19/05	ND	2.0	ug/kg	1:1
1,2,3-Trichloropropane	10/19/05	10/19/05	ND	2.0	ug/kg	1:1
Isopropylbenzene (Cumene)	10/19/05	10/19/05	ND	2.0	ug/kg	1:1
Bromobenzene	10/19/05	10/19/05	ND	2.0	ug/kg	1:1
n-Propylbenzene	10/19/05	10/19/05	ND	2.0	ug/kg	1:1
2-Chlorotoluene	10/19/05	10/19/05	ND	2.0	ug/kg	1:1
4-Chlorotoluene	10/19/05	10/19/05	ND	2.0	ug/kg	1:1
1,3,5-Trimethylbenzene	10/19/05	10/19/05	ND	2.0	ug/kg	1:1
tert-Butylbenzene	10/19/05	10/19/05	ND	2.0	ug/kg	1:1
1,2,4-Trimethylbenzene	10/19/05	10/19/05	ND	2.0	ug/kg	1:1
sec-Butylbenzene	10/19/05	10/19/05	ND	2.0	ug/kg	1:1
1,3-Dichlorobenzene	10/19/05	10/19/05	ND	2.0	ug/kg	1:1
1,4-Dichlorobenzene	10/19/05	10/19/05	ND	2.0	ug/kg	1:1
4-Isopropyltoluene	10/19/05	10/19/05	ND	2.0	ug/kg	1:1
1,2-Dichlorobenzene	10/19/05	10/19/05	ND	2.0	ug/kg	1:1
n-Butylbenzene	10/19/05	10/19/05	ND	2.0	ug/kg	1:1

160

3738 Bradview Drive • Sacramento, California 95827 • (916) 369-7688 • FAX (916) 369-7689

Sparger Technology, Inc.
Environmental Laboratories

Analytical Laboratory Division
Mobile Laboratory Division
Scientific Division

Test Certificate of Analysis

Client ID	Shaw Environmental & Infrastructure	**Workorder ID**	CalTrans Merced 117535
Workorder #	17091	**Sampled**	10/11/05
Laboratory ID	17091006	**Received**	10/13/05
Sample ID	SR140-B05-9.0	**Reported**	10/26/05
Matrix	Soil		

8260B GC/MS Volatiles - 8260B (continued)

Parameter	Prep Date	Analyzed	Result	RL	Units	Dilution
1,2Dibromo3chloropropane	10/19/05	10/19/05	ND	2.0	ug/kg	1:1
1,2,4-Trichlorobenzene	10/19/05	10/19/05	ND	2.0	ug/kg	1:1
Naphthalene	10/19/05	10/19/05	ND	2.0	ug/kg	1:1
Hexachlorobutadiene	10/19/05	10/19/05	ND	2.0	ug/kg	1:1
1,2,3-Trichlorobenzene	10/19/05	10/19/05	ND	2.0	ug/kg	1:1

Surrogates	Result	Recovery	Limits
1,2-Dichloroethane-d4	55 ug/kg	110 %	(70 - 135)
Toluene d8	45 ug/kg	90 %	(70 - 135)
4-Bromofluorobenzene	51 ug/kg	102 %	(70 - 135)

3738 Bradview Drive • Sacramento, California 95827 • (916) 369-7688 • FAX (916) 369-7689

161

Sparger Technology, Inc.
Environmental Laboratories

Analytical Laboratory Division
Mobile Laboratory Division
Scientific Division

Test Certificate of Analysis

Client ID	Shaw Environmental & Infrastructure	**Workorder ID**	CalTrans Merced 117535
Workorder #	17091	**Sampled**	10/11/05
Laboratory ID	17091007	**Received**	10/13/05
Sample ID	SR140-B06-1.5	**Reported**	10/26/05
Matrix	Soil		

8260B Oxygenates - 8260B

Parameter	Prep Date	Analyzed	Result	RL	Units	Dilution
Benzene	10/19/05	10/19/05	ND	1.0	ug/kg	1:1
Toluene	10/19/05	10/19/05	ND	1.0	ug/kg	1:1
Ethylbenzene	10/19/05	10/19/05	ND	1.0	ug/kg	1:1
Xylene (Total)	10/19/05	10/19/05	ND	1.0	ug/kg	1:1

Surrogates	Result	Recovery	Limits
1,2-Dichloroethane-d4	55 ug/kg	110 %	(65 - 135)

162

3738 Bradview Drive • Sacramento, California 95827 • (916) 369-7688 • FAX (916) 369-7689

Sparger Technology, Inc.
Environmental Laboratories

Analytical Laboratory Division
Mobile Laboratory Division
Scientific Division

Test Certificate of Analysis

Client ID	Shaw Environmental & Infrastructure	**Workorder ID**	CalTrans Merced 117535
Workorder #	17091	**Sampled**	10/11/05
Laboratory ID	17091007	**Received**	10/13/05
Sample ID	SR140-B06-1.5	**Reported**	10/26/05
Matrix	Soil		

8260B GC/MS Volatiles - 8260B

Parameter	Prep Date	Analyzed	Result	RL	Units	Dilution
Dichlorodifluoromethane	10/19/05	10/19/05	ND	2.0	ug/kg	1:1
Chloromethane	10/19/05	10/19/05	ND	2.0	ug/kg	1:1
Vinyl chloride	10/19/05	10/19/05	ND	2.0	ug/kg	1:1
Bromomethane	10/19/05	10/19/05	ND	2.0	ug/kg	1:1
Chloroethane	10/19/05	10/19/05	ND	2.0	ug/kg	1:1
Trichlorofluoromethane	10/19/05	10/19/05	ND	2.0	ug/kg	1:1
Acrolein	10/19/05	10/19/05	ND	2.0	ug/kg	1:1
1,1-Dichloroethene	10/19/05	10/19/05	ND	2.0	ug/kg	1:1
Acetone	10/19/05	10/19/05	ND	2.0	ug/kg	1:1
Methyl iodide	10/19/05	10/19/05	ND	2.0	ug/kg	1:1
Carbon disulfide	10/19/05	10/19/05	ND	2.0	ug/kg	1:1
Dichloromethane	10/19/05	10/19/05	ND	2.0	ug/kg	1:1
Acrylonitrile	10/19/05	10/19/05	ND	2.0	ug/kg	1:1
trans-1,2-Dichloroethene	10/19/05	10/19/05	ND	2.0	ug/kg	1:1
1,1-Dichloroethane	10/19/05	10/19/05	ND	2.0	ug/kg	1:1
Vinyl acetate	10/19/05	10/19/05	ND	2.0	ug/kg	1:1
cis-1,2-Dichloroethene	10/19/05	10/19/05	ND	2.0	ug/kg	1:1
2-Butanone (MEK)	10/19/05	10/19/05	ND	2.0	ug/kg	1:1
Bromochloromethane	10/19/05	10/19/05	ND	2.0	ug/kg	1:1
Chloroform	10/19/05	10/19/05	ND	2.0	ug/kg	1:1
2,2-dichloropropane	10/19/05	10/19/05	ND	2.0	ug/kg	1:1
1,1,1-Trichloroethane	10/19/05	10/19/05	ND	2.0	ug/kg	1:1
1,1-dichloropropane	10/19/05	10/19/05	ND	2.0	ug/kg	1:1
Carbon tetrachloride	10/19/05	10/19/05	ND	2.0	ug/kg	1:1
Benzene	10/19/05	10/19/05	ND	2.0	ug/kg	1:1
1,2-Dichloroethane	10/19/05	10/19/05	ND	2.0	ug/kg	1:1
Dibromomethane	10/19/05	10/19/05	ND	2.0	ug/kg	1:1
Bromodichloromethane	10/19/05	10/19/05	ND	2.0	ug/kg	1:1
1,2-Dichloropropane	10/19/05	10/19/05	ND	2.0	ug/kg	1:1
Trichloroethene	10/19/05	10/19/05	ND	2.0	ug/kg	1:1
2-Chloroethylvinyl ether	10/19/05	10/19/05	ND	2.0	ug/kg	1:1
cis-1,3-Dichloropropene	10/19/05	10/19/05	ND	2.0	ug/kg	1:1

3738 Bradview Drive • Sacramento, California 95827 • (916) 369-7688 • FAX (916) 369-7689

163

Test Certificate of Analysis

Client ID	Shaw Environmental & Infrastructure	**Workorder ID**	CalTrans Merced 117535
Workorder #	17091	**Sampled**	10/11/05
Laboratory ID	17091007	**Received**	10/13/05
Sample ID	SR140-B06-1.5	**Reported**	10/26/05
Matrix	Soil		

8260B GC/MS Volatiles - 8260B (continued)

Parameter	Prep Date	Analyzed	Result	RL	Units	Dilution
4-Methyl-2-pentanone	10/19/05	10/19/05	ND	2.0	ug/kg	1:1
trans-1,3Dichloropropene	10/19/05	10/19/05	ND	2.0	ug/kg	1:1
1,1,2-Trichloroethane	10/19/05	10/19/05	ND	2.0	ug/kg	1:1
Toluene	10/19/05	10/19/05	ND	2.0	ug/kg	1:1
1,2-Dibromoethane (EDB)	10/19/05	10/19/05	ND	2.0	ug/kg	1:1
1,3-Dichloropropane	10/19/05	10/19/05	ND	2.0	ug/kg	1:1
2-Hexanone	10/19/05	10/19/05	ND	2.0	ug/kg	1:1
Dibromochloromethane	10/19/05	10/19/05	ND	2.0	ug/kg	1:1
Tetrachloroethene	10/19/05	10/19/05	ND	2.0	ug/kg	1:1
1,1,1,2Tetrachloroethane	10/19/05	10/19/05	ND	2.0	ug/kg	1:1
Chlorobenzene	10/19/05	10/19/05	ND	2.0	ug/kg	1:1
Ethylbenzene	10/19/05	10/19/05	ND	2.0	ug/kg	1:1
M+P-Xylene	10/19/05	10/19/05	ND	2.0	ug/kg	1:1
Bromoform	10/19/05	10/19/05	ND	2.0	ug/kg	1:1
Styrene	10/19/05	10/19/05	ND	2.0	ug/kg	1:1
o-Xylene	10/19/05	10/19/05	ND	2.0	ug/kg	1:1
1,1,2,2Tetrachloroethane	10/19/05	10/19/05	ND	2.0	ug/kg	1:1
1,2,3-Trichloropropane	10/19/05	10/19/05	ND	2.0	ug/kg	1:1
Isopropylbenzene (Cumene)	10/19/05	10/19/05	ND	2.0	ug/kg	1:1
Bromobenzene	10/19/05	10/19/05	ND	2.0	ug/kg	1:1
n-Propylbenzene	10/19/05	10/19/05	ND	2.0	ug/kg	1:1
2-Chlorotoluene	10/19/05	10/19/05	ND	2.0	ug/kg	1:1
4-Chlorotoluene	10/19/05	10/19/05	ND	2.0	ug/kg	1:1
1,3,5-Trimethylbenzene	10/19/05	10/19/05	ND	2.0	ug/kg	1:1
tert-Butylbenzene	10/19/05	10/19/05	ND	2.0	ug/kg	1:1
1,2,4-Trimethylbenzene	10/19/05	10/19/05	ND	2.0	ug/kg	1:1
sec-Butylbenzene	10/19/05	10/19/05	ND	2.0	ug/kg	1:1
1,3-Dichlorobenzene	10/19/05	10/19/05	ND	2.0	ug/kg	1:1
1,4-Dichlorobenzene	10/19/05	10/19/05	ND	2.0	ug/kg	1:1
4-Isopropyltoluene	10/19/05	10/19/05	ND	2.0	ug/kg	1:1
1,2-Dichlorobenzene	10/19/05	10/19/05	ND	2.0	ug/kg	1:1
n-Butylbenzene	10/19/05	10/19/05	ND	2.0	ug/kg	1:1

164

3738 Bradview Drive • Sacramento, California 95827 • (916) 369-7688 • FAX (916) 369-7689

Sparger Technology, Inc.
Environmental Laboratories

Analytical Laboratory Division
Mobile Laboratory Division
Scientific Division

Test Certificate of Analysis

Client ID	Shaw Environmental & Infrastructure	**Workorder ID**	CalTrans Merced 117535
Workorder #	17091	**Sampled**	10/11/05
Laboratory ID	17091007	**Received**	10/13/05
Sample ID	SR140-B06-1.5	**Reported**	10/26/05
Matrix	Soil		

8260B GC/MS Volatiles - 8260B (continued)

Parameter	Prep Date	Analyzed	Result	RL	Units	Dilution
1,2Dibromo3chloropropane	10/19/05	10/19/05	ND	2.0	ug/kg	1:1
1,2,4-Trichlorobenzene	10/19/05	10/19/05	ND	2.0	ug/kg	1:1
Naphthalene	10/19/05	10/19/05	ND	2.0	ug/kg	1:1
Hexachlorobutadiene	10/19/05	10/19/05	ND	2.0	ug/kg	1:1
1,2,3-Trichlorobenzene	10/19/05	10/19/05	ND	2.0	ug/kg	1:1

Surrogates	Result	Recovery	Limits
1,2-Dichloroethane-d4	55 ug/kg	110 %	(70 - 135)
Toluene d8	46 ug/kg	92 %	(70 - 135)
4-Bromofluorobenzene	50 ug/kg	100 %	(70 - 135)

3738 Bradview Drive • Sacramento, California 95827 • (916) 369-7688 • FAX (916) 369-7689

165

Sparger Technology, Inc.
Environmental Laboratories

Analytical Laboratory Division
Mobile Laboratory Division
Scientific Division

Test Certificate of Analysis

Client ID	Shaw Environmental & Infrastructure	**Workorder ID**	CalTrans Merced 117535
Workorder #	17091	**Sampled**	10/11/05
Laboratory ID	17091007	**Received**	10/13/05
Sample ID	SR140-B06-1.5	**Reported**	10/26/05
Matrix	Soil		

Metals, CAM17 - 6010B

Parameter	Prep Date	Analyzed	Result	RL	Units	Dilution
Antimony	10/13/05	10/17/05	ND	6.0	mg/Kg	1:1
Arsenic	10/13/05	10/17/05	ND	8.0	mg/Kg	1:1
Barium	**10/13/05**	**10/17/05**	**84**	**2.0**	**mg/Kg**	**1:1**
Beryllium	10/13/05	10/17/05	ND	0.30	mg/Kg	1:1
Cadmium	10/13/05	10/17/05	ND	0.50	mg/Kg	1:1
Chromium	**10/13/05**	**10/17/05**	**30**	**1.0**	**mg/Kg**	**1:1**
Cobalt	**10/13/05**	**10/17/05**	**9.2**	**5.0**	**mg/Kg**	**1:1**
Copper	**10/13/05**	**10/17/05**	**21**	**2.0**	**mg/Kg**	**1:1**
Lead	**10/13/05**	**10/17/05**	**3.6**	**1.0**	**mg/Kg**	**1:1**
Molybdenum	10/13/05	10/17/05	ND	5.0	mg/Kg	1:1
Nickel	10/13/05	10/17/05	ND	4.0	mg/Kg	1:1
Selenium	10/13/05	10/17/05	ND	10	mg/Kg	1:1
Silver	**10/13/05**	**10/17/05**	**1.9**	**1.0**	**mg/Kg**	**1:1**
Thallium	10/13/05	10/17/05	ND	10	mg/Kg	1:1
Vanadium	**10/13/05**	**10/17/05**	**35**	**5.0**	**mg/Kg**	**1:1**
Zinc	**10/13/05**	**10/17/05**	**31**	**1.5**	**mg/Kg**	**1:1**

166

3738 Bradview Drive • Sacramento, California 95827 • (916) 369-7688 • FAX (916) 369-7689

Sparger Technology, Inc.
Environmental Laboratories

Analytical Laboratory Division
Mobile Laboratory Division
Scientific Division

Test Certificate of Analysis

Client ID	Shaw Environmental & Infrastructure	**Workorder ID**	CalTrans Merced 117535
Workorder #	17091	**Sampled**	10/11/05
Laboratory ID	17091008	**Received**	10/13/05
Sample ID	SR140-B06-3.0	**Reported**	10/26/05
Matrix	Soil		

8260B Oxygenates - 8260B

Parameter	Prep Date	Analyzed	Result	RL	Units	Dilution
Benzene	10/18/05	10/18/05	ND	1.0	ug/kg	1:1
Toluene	10/18/05	10/18/05	ND	1.0	ug/kg	1:1
Ethylbenzene	10/18/05	10/18/05	ND	1.0	ug/kg	1:1
Xylene (Total)	10/18/05	10/18/05	ND	1.0	ug/kg	1:1

Surrogates	Result	Recovery	Limits
1,2-Dichloroethane-d4	59 ug/kg	118 %	(65 - 135)

3738 Bradview Drive • Sacramento, California 95827 • (916) 369-7688 • FAX (916) 369-7689

167

Sparger Technology, Inc.
Environmental Laboratories

Analytical Laboratory Division
Mobile Laboratory Division
Scientific Division

Test Certificate of Analysis

Client ID	Shaw Environmental & Infrastructure	**Workorder ID**	CalTrans Merced 117535
Workorder #	17091	**Sampled**	10/11/05
Laboratory ID	17091009	**Received**	10/13/05
Sample ID	SR140-B06-4.5	**Reported**	10/26/05
Matrix	Soil		

8260B Oxygenates - 8260B

Parameter	Prep Date	Analyzed	Result	RL	Units	Dilution
Benzene	10/19/05	10/19/05	ND	1.0	ug/kg	1:1
Toluene	10/19/05	10/19/05	ND	1.0	ug/kg	1:1
Ethylbenzene	10/19/05	10/19/05	ND	1.0	ug/kg	1:1
Xylene (Total)	10/19/05	10/19/05	ND	1.0	ug/kg	1:1

Surrogates	Result	Recovery	Limits
1,2-Dichloroethane-d4	54 ug/kg	108 %	(65 - 135)

3738 Bradview Drive • Sacramento, California 95827 • (916) 369-7688 • FAX (916) 369-7689

Sparger Technology, Inc.
Environmental Laboratories

Analytical Laboratory Division
Mobile Laboratory Division
Scientific Division

Test Certificate of Analysis

Client ID	Shaw Environmental & Infrastructure	**Workorder ID**	CalTrans Merced 117535
Workorder #	17091	**Sampled**	10/11/05
Laboratory ID	17091009	**Received**	10/13/05
Sample ID	SR140-B06-4.5	**Reported**	10/26/05
Matrix	Soil		

8260B GC/MS Volatiles - 8260B

Parameter	Prep Date	Analyzed	Result	RL	Units	Dilution
Dichlorodifluoromethane	10/19/05	10/19/05	ND	2.0	ug/kg	1:1
Chloromethane	10/19/05	10/19/05	ND	2.0	ug/kg	1:1
Vinyl chloride	10/19/05	10/19/05	ND	2.0	ug/kg	1:1
Bromomethane	10/19/05	10/19/05	ND	2.0	ug/kg	1:1
Chloroethane	10/19/05	10/19/05	ND	2.0	ug/kg	1:1
Trichlorofluoromethane	10/19/05	10/19/05	ND	2.0	ug/kg	1:1
Acrolein	10/19/05	10/19/05	ND	2.0	ug/kg	1:1
1,1-Dichloroethene	10/19/05	10/19/05	ND	2.0	ug/kg	1:1
Acetone	**10/19/05**	**10/19/05**	**3.5**	**2.0**	**ug/kg**	**1:1**
Methyl iodide	10/19/05	10/19/05	ND	2.0	ug/kg	1:1
Carbon disulfide	10/19/05	10/19/05	ND	2.0	ug/kg	1:1
Dichloromethane	10/19/05	10/19/05	ND	2.0	ug/kg	1:1
Acrylonitrile	10/19/05	10/19/05	ND	2.0	ug/kg	1:1
trans-1,2-Dichloroethene	10/19/05	10/19/05	ND	2.0	ug/kg	1:1
1,1-Dichloroethane	10/19/05	10/19/05	ND	2.0	ug/kg	1:1
Vinyl acetate	10/19/05	10/19/05	ND	2.0	ug/kg	1:1
cis-1,2-Dichloroethene	10/19/05	10/19/05	ND	2.0	ug/kg	1:1
2-Butanone (MEK)	10/19/05	10/19/05	ND	2.0	ug/kg	1:1
Bromochloromethane	10/19/05	10/19/05	ND	2.0	ug/kg	1:1
Chloroform	10/19/05	10/19/05	ND	2.0	ug/kg	1:1
2,2-dichloropropane	10/19/05	10/19/05	ND	2.0	ug/kg	1:1
1,1,1-Trichloroethane	10/19/05	10/19/05	ND	2.0	ug/kg	1:1
1,1-dichloropropane	10/19/05	10/19/05	ND	2.0	ug/kg	1:1
Carbon tetrachloride	10/19/05	10/19/05	ND	2.0	ug/kg	1:1
Benzene	10/19/05	10/19/05	ND	2.0	ug/kg	1:1
1,2-Dichloroethane	10/19/05	10/19/05	ND	2.0	ug/kg	1:1
Dibromomethane	10/19/05	10/19/05	ND	2.0	ug/kg	1:1
Bromodichloromethane	10/19/05	10/19/05	ND	2.0	ug/kg	1:1
1,2-Dichloropropane	10/19/05	10/19/05	ND	2.0	ug/kg	1:1
Trichloroethene	10/19/05	10/19/05	ND	2.0	ug/kg	1:1
2-Chloroethylvinyl ether	10/19/05	10/19/05	ND	2.0	ug/kg	1:1
cis-1,3-Dichloropropene	10/19/05	10/19/05	ND	2.0	ug/kg	1:1

3738 Bradview Drive • Sacramento, California 95827 • (916) 369-7688 • FAX (916) 369-7689

169

Test Certificate of Analysis

Client ID	Shaw Environmental & Infrastructure	**Workorder ID**	CalTrans Merced 117535
Workorder #	17091	**Sampled**	10/11/05
Laboratory ID	17091009	**Received**	10/13/05
Sample ID	SR140-B06-4.5	**Reported**	10/26/05
Matrix	Soil		

8260B GC/MS Volatiles - 8260B (continued)

Parameter	Prep Date	Analyzed	Result	RL	Units	Dilution
4-Methyl-2-pentanone	10/19/05	10/19/05	ND	2.0	ug/kg	1:1
trans-1,3Dichloropropene	10/19/05	10/19/05	ND	2.0	ug/kg	1:1
1,1,2-Trichloroethane	10/19/05	10/19/05	ND	2.0	ug/kg	1:1
Toluene	10/19/05	10/19/05	ND	2.0	ug/kg	1:1
1,2-Dibromoethane (EDB)	10/19/05	10/19/05	ND	2.0	ug/kg	1:1
1,3-Dichloropropane	10/19/05	10/19/05	ND	2.0	ug/kg	1:1
2-Hexanone	10/19/05	10/19/05	ND	2.0	ug/kg	1:1
Dibromochloromethane	10/19/05	10/19/05	ND	2.0	ug/kg	1:1
Tetrachloroethene	10/19/05	10/19/05	ND	2.0	ug/kg	1:1
1,1,1,2Tetrachloroethane	10/19/05	10/19/05	ND	2.0	ug/kg	1:1
Chlorobenzene	10/19/05	10/19/05	ND	2.0	ug/kg	1:1
Ethylbenzene	10/19/05	10/19/05	ND	2.0	ug/kg	1:1
M+P-Xylene	10/19/05	10/19/05	ND	2.0	ug/kg	1:1
Bromoform	10/19/05	10/19/05	ND	2.0	ug/kg	1:1
Styrene	10/19/05	10/19/05	ND	2.0	ug/kg	1:1
o-Xylene	10/19/05	10/19/05	ND	2.0	ug/kg	1:1
1,1,2,2Tetrachloroethane	10/19/05	10/19/05	ND	2.0	ug/kg	1:1
1,2,3-Trichloropropane	10/19/05	10/19/05	ND	2.0	ug/kg	1:1
Isopropylbenzene (Cumene)	10/19/05	10/19/05	ND	2.0	ug/kg	1:1
Bromobenzene	10/19/05	10/19/05	ND	2.0	ug/kg	1:1
n-Propylbenzene	10/19/05	10/19/05	ND	2.0	ug/kg	1:1
2-Chlorotoluene	10/19/05	10/19/05	ND	2.0	ug/kg	1:1
4-Chlorotoluene	10/19/05	10/19/05	ND	2.0	ug/kg	1:1
1,3,5-Trimethylbenzene	10/19/05	10/19/05	ND	2.0	ug/kg	1:1
tert-Butylbenzene	10/19/05	10/19/05	ND	2.0	ug/kg	1:1
1,2,4-Trimethylbenzene	10/19/05	10/19/05	ND	2.0	ug/kg	1:1
sec-Butylbenzene	10/19/05	10/19/05	ND	2.0	ug/kg	1:1
1,3-Dichlorobenzene	10/19/05	10/19/05	ND	2.0	ug/kg	1:1
1,4-Dichlorobenzene	10/19/05	10/19/05	ND	2.0	ug/kg	1:1
4-Isopropyltoluene	10/19/05	10/19/05	ND	2.0	ug/kg	1:1
1,2-Dichlorobenzene	10/19/05	10/19/05	ND	2.0	ug/kg	1:1
n-Butylbenzene	10/19/05	10/19/05	ND	2.0	ug/kg	1:1

170

3738 Bradview Drive • Sacramento, California 95827 • (916) 369-7688 • FAX (916) 369-7689

Sparger Technology, Inc.
Environmental Laboratories

Analytical Laboratory Division
Mobile Laboratory Division
Scientific Division

Test Certificate of Analysis

Client ID	Shaw Environmental & Infrastructure	**Workorder ID**	CalTrans Merced 117535
Workorder #	17091	**Sampled**	10/11/05
Laboratory ID	17091009	**Received**	10/13/05
Sample ID	SR140-B06-4.5	**Reported**	10/26/05
Matrix	Soil		

8260B GC/MS Volatiles - 8260B (continued)

Parameter	Prep Date	Analyzed	Result	RL	Units	Dilution
1,2Dibromo3chloropropane	10/19/05	10/19/05	ND	2.0	ug/kg	1:1
1,2,4-Trichlorobenzene	10/19/05	10/19/05	ND	2.0	ug/kg	1:1
Naphthalene	10/19/05	10/19/05	ND	2.0	ug/kg	1:1
Hexachlorobutadiene	10/19/05	10/19/05	ND	2.0	ug/kg	1:1
1,2,3-Trichlorobenzene	10/19/05	10/19/05	ND	2.0	ug/kg	1:1

Surrogates	Result	Recovery	Limits
1,2-Dichloroethane-d4	54 ug/kg	108 %	(70 - 135)
Toluene d8	46 ug/kg	92 %	(70 - 135)
4-Bromofluorobenzene	49 ug/kg	98 %	(70 - 135)

3738 Bradview Drive • Sacramento, California 95827 • (916) 369-7688 • FAX (916) 369-7689

171

Sparger Technology, Inc.
Environmental Laboratories

Analytical Laboratory Division
Mobile Laboratory Division
Scientific Division

Test Certificate of Analysis

Client ID	Shaw Environmental & Infrastructure	**Workorder ID**	CalTrans Merced 117535
Workorder #	17091	**Sampled**	10/11/05
Laboratory ID	17091010	**Received**	10/13/05
Sample ID	SR140-B06-6.0	**Reported**	10/26/05
Matrix	Soil		

8260B Oxygenates - 8260B

Parameter	Prep Date	Analyzed	Result	RL	Units	Dilution
Benzene	10/18/05	10/18/05	ND	1.0	ug/kg	1:1
Toluene	10/18/05	10/18/05	ND	1.0	ug/kg	1:1
Ethylbenzene	10/18/05	10/18/05	ND	1.0	ug/kg	1:1
Xylene (Total)	10/18/05	10/18/05	ND	1.0	ug/kg	1:1

Surrogates	Result	Recovery	Limits
1,2-Dichloroethane-d4	61 ug/kg	122 %	(65 - 135)

172

3738 Bradview Drive • Sacramento, California 95827 • (916) 369-7688 • FAX (916) 369-7689

Sparger Technology, Inc.
Environmental Laboratories

Analytical Laboratory Division
Mobile Laboratory Division
Scientific Division

Test Certificate of Analysis

Client ID	Shaw Environmental & Infrastructure	**Workorder ID**	CalTrans Merced 117535
Workorder #	17091	**Sampled**	10/11/05
Laboratory ID	17091011	**Received**	10/13/05
Sample ID	SR140-B06-7.5	**Reported**	10/26/05
Matrix	Soil		

8260B Oxygenates - 8260B

Parameter	Prep Date	Analyzed	Result	RL	Units	Dilution
Benzene	10/18/05	10/18/05	ND	1.0	ug/kg	1:1
Toluene	10/18/05	10/18/05	ND	1.0	ug/kg	1:1
Ethylbenzene	10/18/05	10/18/05	ND	1.0	ug/kg	1:1
Xylene (Total)	10/18/05	10/18/05	ND	1.0	ug/kg	1:1

Surrogates	Result	Recovery	Limits
1,2-Dichloroethane-d4	64 ug/kg	128 %	(65 - 135)

3738 Bradview Drive • Sacramento, California 95827 • (916) 369-7688 • FAX (916) 369-7689

173

Sparger Technology, Inc.
Environmental Laboratories

Analytical Laboratory Division
Mobile Laboratory Division
Scientific Division

Test Certificate of Analysis

Client ID	Shaw Environmental & Infrastructure	**Workorder ID**	CalTrans Merced 117535
Workorder #	17091	**Sampled**	10/11/05
Laboratory ID	17091012	**Received**	10/13/05
Sample ID	SR140-B06-9.0	**Reported**	10/26/05
Matrix	Soil		

8260B Oxygenates - 8260B

Parameter	Prep Date	Analyzed	Result	RL	Units	Dilution
Benzene	10/19/05	10/19/05	ND	1.0	ug/kg	1:1
Toluene	10/19/05	10/19/05	ND	1.0	ug/kg	1:1
Ethylbenzene	10/19/05	10/19/05	ND	1.0	ug/kg	1:1
Xylene (Total)	10/19/05	10/19/05	ND	1.0	ug/kg	1:1

Surrogates	Result	Recovery	Limits
1,2-Dichloroethane-d4	55 ug/kg	110 %	(65 - 135)

174

3738 Bradview Drive • Sacramento, California 95827 • (916) 369-7688 • FAX (916) 369-7689

Sparger Technology, Inc.
Environmental Laboratories

Analytical Laboratory Division
Mobile Laboratory Division
Scientific Division

Test Certificate of Analysis

Client ID	Shaw Environmental & Infrastructure	**Workorder ID**	CalTrans Merced 117535
Workorder #	17091	**Sampled**	10/11/05
Laboratory ID	17091012	**Received**	10/13/05
Sample ID	SR140-B06-9.0	**Reported**	10/26/05
Matrix	Soil		

8260B GC/MS Volatiles - 8260B

Parameter	Prep Date	Analyzed	Result	RL	Units	Dilution
Dichlorodifluoromethane	10/19/05	10/19/05	ND	2.0	ug/kg	1:1
Chloromethane	10/19/05	10/19/05	ND	2.0	ug/kg	1:1
Vinyl chloride	10/19/05	10/19/05	ND	2.0	ug/kg	1:1
Bromomethane	10/19/05	10/19/05	ND	2.0	ug/kg	1:1
Chloroethane	10/19/05	10/19/05	ND	2.0	ug/kg	1:1
Trichlorofluoromethane	10/19/05	10/19/05	ND	2.0	ug/kg	1:1
Acrolein	10/19/05	10/19/05	ND	2.0	ug/kg	1:1
1,1-Dichloroethene	10/19/05	10/19/05	ND	2.0	ug/kg	1:1
Acetone	10/19/05	10/19/05	ND	2.0	ug/kg	1:1
Methyl iodide	10/19/05	10/19/05	ND	2.0	ug/kg	1:1
Carbon disulfide	10/19/05	10/19/05	ND	2.0	ug/kg	1:1
Dichloromethane	10/19/05	10/19/05	ND	2.0	ug/kg	1:1
Acrylonitrile	10/19/05	10/19/05	ND	2.0	ug/kg	1:1
trans-1,2-Dichloroethene	10/19/05	10/19/05	ND	2.0	ug/kg	1:1
1,1-Dichloroethane	10/19/05	10/19/05	ND	2.0	ug/kg	1:1
Vinyl acetate	10/19/05	10/19/05	ND	2.0	ug/kg	1:1
cis-1,2-Dichloroethene	10/19/05	10/19/05	ND	2.0	ug/kg	1:1
2-Butanone (MEK)	10/19/05	10/19/05	ND	2.0	ug/kg	1:1
Bromochloromethane	10/19/05	10/19/05	ND	2.0	ug/kg	1:1
Chloroform	10/19/05	10/19/05	ND	2.0	ug/kg	1:1
2,2-dichloropropane	10/19/05	10/19/05	ND	2.0	ug/kg	1:1
1,1,1-Trichloroethane	10/19/05	10/19/05	ND	2.0	ug/kg	1:1
1,1-dichloropropane	10/19/05	10/19/05	ND	2.0	ug/kg	1:1
Carbon tetrachloride	10/19/05	10/19/05	ND	2.0	ug/kg	1:1
Benzene	10/19/05	10/19/05	ND	2.0	ug/kg	1:1
1,2-Dichloroethane	10/19/05	10/19/05	ND	2.0	ug/kg	1:1
Dibromomethane	10/19/05	10/19/05	ND	2.0	ug/kg	1:1
Bromodichloromethane	10/19/05	10/19/05	ND	2.0	ug/kg	1:1
1,2-Dichloropropane	10/19/05	10/19/05	ND	2.0	ug/kg	1:1
Trichloroethene	10/19/05	10/19/05	ND	2.0	ug/kg	1:1
2-Chloroethylvinyl ether	10/19/05	10/19/05	ND	2.0	ug/kg	1:1
cis-1,3-Dichloropropene	10/19/05	10/19/05	ND	2.0	ug/kg	1:1

3738 Bradview Drive • Sacramento, California 95827 • (916) 369-7688 • FAX (916) 369-7689

175

Sparger Technology, Inc.
Environmental Laboratories

Analytical Laboratory Division
Mobile Laboratory Division
Scientific Division

Test Certificate of Analysis

Client ID	Shaw Environmental & Infrastructure	**Workorder ID**	CalTrans Merced 117535
Workorder #	17091	**Sampled**	10/11/05
Laboratory ID	17091012	**Received**	10/13/05
Sample ID	SR140-B06-9.0	**Reported**	10/26/05
Matrix	Soil		

8260B GC/MS Volatiles - 8260B (continued)

Parameter	Prep Date	Analyzed	Result	RL	Units	Dilution
4-Methyl-2-pentanone	10/19/05	10/19/05	ND	2.0	ug/kg	1:1
trans-1,3Dichloropropene	10/19/05	10/19/05	ND	2.0	ug/kg	1:1
1,1,2-Trichloroethane	10/19/05	10/19/05	ND	2.0	ug/kg	1:1
Toluene	10/19/05	10/19/05	ND	2.0	ug/kg	1:1
1,2-Dibromoethane (EDB)	10/19/05	10/19/05	ND	2.0	ug/kg	1:1
1,3-Dichloropropane	10/19/05	10/19/05	ND	2.0	ug/kg	1:1
2-Hexanone	10/19/05	10/19/05	ND	2.0	ug/kg	1:1
Dibromochloromethane	10/19/05	10/19/05	ND	2.0	ug/kg	1:1
Tetrachloroethene	10/19/05	10/19/05	ND	2.0	ug/kg	1:1
1,1,1,2Tetrachloroethane	10/19/05	10/19/05	ND	2.0	ug/kg	1:1
Chlorobenzene	10/19/05	10/19/05	ND	2.0	ug/kg	1:1
Ethylbenzene	10/19/05	10/19/05	ND	2.0	ug/kg	1:1
M+P-Xylene	10/19/05	10/19/05	ND	2.0	ug/kg	1:1
Bromoform	10/19/05	10/19/05	ND	2.0	ug/kg	1:1
Styrene	10/19/05	10/19/05	ND	2.0	ug/kg	1:1
o-Xylene	10/19/05	10/19/05	ND	2.0	ug/kg	1:1
1,1,2,2Tetrachloroethane	10/19/05	10/19/05	ND	2.0	ug/kg	1:1
1,2,3-Trichloropropane	10/19/05	10/19/05	ND	2.0	ug/kg	1:1
Isopropylbenzene(Cumene)	10/19/05	10/19/05	ND	2.0	ug/kg	1:1
Bromobenzene	10/19/05	10/19/05	ND	2.0	ug/kg	1:1
n-Propylbenzene	10/19/05	10/19/05	ND	2.0	ug/kg	1:1
2-Chlorotoluene	10/19/05	10/19/05	ND	2.0	ug/kg	1:1
4-Chlorotoluene	10/19/05	10/19/05	ND	2.0	ug/kg	1:1
1,3,5-Trimethylbenzene	10/19/05	10/19/05	ND	2.0	ug/kg	1:1
tert-Butylbenzene	10/19/05	10/19/05	ND	2.0	ug/kg	1:1
1,2,4-Trimethylbenzene	10/19/05	10/19/05	ND	2.0	ug/kg	1:1
sec-Butylbenzene	10/19/05	10/19/05	ND	2.0	ug/kg	1:1
1,3-Dichlorobenzene	10/19/05	10/19/05	ND	2.0	ug/kg	1:1
1,4-Dichlorobenzene	10/19/05	10/19/05	ND	2.0	ug/kg	1:1
4-Isopropyltoluene	10/19/05	10/19/05	ND	2.0	ug/kg	1:1
1,2-Dichlorobenzene	10/19/05	10/19/05	ND	2.0	ug/kg	1:1
n-Butylbenzene	10/19/05	10/19/05	ND	2.0	ug/kg	1:1

176

3738 Bradview Drive • Sacramento, California 95827 • (916) 369-7688 • FAX (916) 369-7689

Sparger Technology, Inc.
Environmental Laboratories

Analytical Laboratory Division
Mobile Laboratory Division
Scientific Division

Test Certificate of Analysis

Client ID	Shaw Environmental & Infrastructure	**Workorder ID**	CalTrans Merced 117535
Workorder #	17091	**Sampled**	10/11/05
Laboratory ID	17091012	**Received**	10/13/05
Sample ID	SR140-B06-9.0	**Reported**	10/26/05
Matrix	Soil		

8260B GC/MS Volatiles - 8260B (continued)

Parameter	Prep Date	Analyzed	Result	RL	Units	Dilution
1,2Dibromo3chloropropane	10/19/05	10/19/05	ND	2.0	ug/kg	1:1
1,2,4-Trichlorobenzene	10/19/05	10/19/05	ND	2.0	ug/kg	1:1
Naphthalene	10/19/05	10/19/05	ND	2.0	ug/kg	1:1
Hexachlorobutadiene	10/19/05	10/19/05	ND	2.0	ug/kg	1:1
1,2,3-Trichlorobenzene	10/19/05	10/19/05	ND	2.0	ug/kg	1:1

Surrogates	Result	Recovery	Limits
1,2-Dichloroethane-d4	55 ug/kg	110 %	(70 - 135)
Toluene d8	44 ug/kg	88 %	(70 - 135)
4-Bromofluorobenzene	50 ug/kg	100 %	(70 - 135)

3738 Bradview Drive • Sacramento, California 95827 • (916) 369-7688 • FAX (916) 369-7689

Sparger Technology, Inc.
Environmental Laboratories

Analytical Laboratory Division
Mobile Laboratory Division
Scientific Division

Test Certificate of Analysis

Client ID	Shaw Environmental & Infrastructure	**Workorder ID**	CalTrans Merced 117535
Workorder #	17091	**Sampled**	10/11/05
Laboratory ID	17091013	**Received**	10/13/05
Sample ID	SR140-ER-1011	**Reported**	10/26/05
Matrix	Water		

EPA Method 7470A Mercury - EPA 7470A

Parameter	Prep Date	Analyzed	Result	RL	Units	Dilution
Mercury	10/14/05	10/18/05	ND	0.00020	mg/L	1:1

178

3738 Bradview Drive • Sacramento, California 95827 • (916) 369-7688 • FAX (916) 369-7689

Sparger Technology, Inc.
Environmental Laboratories

Analytical Laboratory Division
Mobile Laboratory Division
Scientific Division

Test Certificate of Analysis

Client ID	Shaw Environmental & Infrastructure	**Workorder ID**	CalTrans Merced 117535
Workorder #	17091	**Sampled**	10/11/05
Laboratory ID	17091013	**Received**	10/13/05
Sample ID	SR140-ER-1011	**Reported**	10/26/05
Matrix	Water		

8260B Oxygenates - 8260B

Parameter	Prep Date	Analyzed	Result	RL	Units	Dilution
Benzene	10/19/05	10/19/05	ND	1.0	ug/L	1:1
Toluene	10/19/05	10/19/05	ND	1.0	ug/L	1:1
Ethylbenzene	10/19/05	10/19/05	ND	1.0	ug/L	1:1
Xylene (Total)	10/19/05	10/19/05	ND	1.0	ug/L	1:1

Surrogates	Result	Recovery	Limits
1,2-Dichloroethane-d4	59 ug/L	118 %	(65 - 135)

3738 Bradview Drive • Sacramento, California 95827 • (916) 369-7688 • FAX (916) 369-7689

Sparger Technology, Inc.
Environmental Laboratories

Analytical Laboratory Division
Mobile Laboratory Division
Scientific Division

Test Certificate of Analysis

Client ID	Shaw Environmental & Infrastructure	**Workorder ID**	CalTrans Merced 117535
Workorder #	17091	**Sampled**	10/11/05
Laboratory ID	17091013	**Received**	10/13/05
Sample ID	SR140-ER-1011	**Reported**	10/26/05
Matrix	Water		

Metals, CAM17 - 6010B

Parameter	Prep Date	Analyzed	Result	RL	Units	Dilution
Antimony	10/13/05	10/14/05	ND	0.060	mg/L	1:1
Arsenic	10/13/05	10/14/05	ND	0.080	mg/L	1:1
Barium	10/13/05	10/14/05	ND	0.020	mg/L	1:1
Beryllium	10/13/05	10/14/05	ND	0.0030	mg/L	1:1
Cadmium	10/13/05	10/14/05	ND	0.0050	mg/L	1:1
Chromium	10/13/05	10/14/05	ND	0.010	mg/L	1:1
Cobalt	10/13/05	10/14/05	ND	0.050	mg/L	1:1
Copper	10/13/05	10/14/05	ND	0.020	mg/L	1:1
Lead	10/13/05	10/14/05	ND	0.010	mg/L	1:1
Molybdenum	10/13/05	10/14/05	ND	0.050	mg/L	1:1
Nickel	10/13/05	10/14/05	ND	0.040	mg/L	1:1
Selenium	10/13/05	10/14/05	ND	0.10	mg/L	1:1
Silver	10/13/05	10/14/05	ND	0.010	mg/L	1:1
Thallium	10/13/05	10/14/05	ND	0.10	mg/L	1:1
Vanadium	10/13/05	10/14/05	ND	0.050	mg/L	1:1
Zinc	10/13/05	10/14/05	ND	0.015	mg/L	1:1

180

3738 Bradview Drive • Sacramento, California 95827 • (916) 369-7688 • FAX (916) 369-7689

Sparger Technology, Inc.
Environmental Laboratories

Analytical Laboratory Division
Mobile Laboratory Division
Scientific Division

Test Certificate of Analysis

Client ID	Shaw Environmental & Infrastructure	**Workorder ID**	CalTrans Merced 117535
Workorder #	17091	**Sampled**	10/12/05
Laboratory ID	17091014	**Received**	10/13/05
Sample ID	SR140-B07-1.5	**Reported**	11/01/05
Matrix	Soil		

8260B Oxygenates - 8260B

Parameter	Prep Date	Analyzed	Result	RL	Units	Dilution
Benzene	10/19/05	10/19/05	ND	1.0	ug/kg	1:1
Toluene	10/19/05	10/19/05	ND	1.0	ug/kg	1:1
Ethylbenzene	10/19/05	10/19/05	ND	1.0	ug/kg	1:1
Xylene (Total)	10/19/05	10/19/05	ND	1.0	ug/kg	1:1

Surrogates	Result	Recovery	Limits
1,2-Dichloroethane-d4	52 ug/kg	104 %	(65 - 135)

3738 Bradview Drive • Sacramento, California 95827 • (916) 369-7688 • FAX (916) 369-7689

Sparger Technology, Inc.
Environmental Laboratories

Analytical Laboratory Division
Mobile Laboratory Division
Scientific Division

Test Certificate of Analysis

Client ID	Shaw Environmental & Infrastructure	**Workorder ID**	CalTrans Merced 117535
Workorder #	17091	**Sampled**	10/12/05
Laboratory ID	17091014	**Received**	10/13/05
Sample ID	SR140-B07-1.5	**Reported**	11/01/05
Matrix	Soil		

8260B GC/MS Volatiles - 8260B

Parameter	Prep Date	Analyzed	Result	RL	Units	Dilution
Dichlorodifluoromethane	10/19/05	10/19/05	ND	2.0	ug/kg	1:1
Chloromethane	10/19/05	10/19/05	ND	2.0	ug/kg	1:1
Vinyl chloride	10/19/05	10/19/05	ND	2.0	ug/kg	1:1
Bromomethane	10/19/05	10/19/05	ND	2.0	ug/kg	1:1
Chloroethane	10/19/05	10/19/05	ND	2.0	ug/kg	1:1
Trichlorofluoromethane	10/19/05	10/19/05	ND	2.0	ug/kg	1:1
Acrolein	10/19/05	10/19/05	ND	2.0	ug/kg	1:1
1,1-Dichloroethene	10/19/05	10/19/05	ND	2.0	ug/kg	1:1
Acetone	10/19/05	10/19/05	ND	2.0	ug/kg	1:1
Methyl iodide	10/19/05	10/19/05	ND	2.0	ug/kg	1:1
Carbon disulfide	10/19/05	10/19/05	ND	2.0	ug/kg	1:1
Dichloromethane	10/19/05	10/19/05	ND	2.0	ug/kg	1:1
Acrylonitrile	10/19/05	10/19/05	ND	2.0	ug/kg	1:1
trans-1,2-Dichloroethene	10/19/05	10/19/05	ND	2.0	ug/kg	1:1
1,1-Dichloroethane	10/19/05	10/19/05	ND	2.0	ug/kg	1:1
Vinyl acetate	10/19/05	10/19/05	ND	2.0	ug/kg	1:1
cis-1,2-Dichloroethene	10/19/05	10/19/05	ND	2.0	ug/kg	1:1
2-Butanone (MEK)	10/19/05	10/19/05	ND	2.0	ug/kg	1:1
Bromochloromethane	10/19/05	10/19/05	ND	2.0	ug/kg	1:1
Chloroform	10/19/05	10/19/05	ND	2.0	ug/kg	1:1
2,2-dichloropropane	10/19/05	10/19/05	ND	2.0	ug/kg	1:1
1,1,1-Trichloroethane	10/19/05	10/19/05	ND	2.0	ug/kg	1:1
1,1-dichloropropane	10/19/05	10/19/05	ND	2.0	ug/kg	1:1
Carbon tetrachloride	10/19/05	10/19/05	ND	2.0	ug/kg	1:1
Benzene	10/19/05	10/19/05	ND	2.0	ug/kg	1:1
1,2-Dichloroethane	10/19/05	10/19/05	ND	2.0	ug/kg	1:1
Dibromomethane	10/19/05	10/19/05	ND	2.0	ug/kg	1:1
Bromodichloromethane	10/19/05	10/19/05	ND	2.0	ug/kg	1:1
1,2-Dichloropropane	10/19/05	10/19/05	ND	2.0	ug/kg	1:1
Trichloroethene	10/19/05	10/19/05	ND	2.0	ug/kg	1:1
2-Chloroethylvinyl ether	10/19/05	10/19/05	ND	2.0	ug/kg	1:1
cis-1,3-Dichloropropene	10/19/05	10/19/05	ND	2.0	ug/kg	1:1

182

3738 Bradview Drive • Sacramento, California 95827 • (916) 369-7688 • FAX (916) 369-7689

Sparger Technology, Inc.
Environmental Laboratories

Analytical Laboratory Division
Mobile Laboratory Division
Scientific Division

Test Certificate of Analysis

Client ID	Shaw Environmental & Infrastructure	**Workorder ID**	CalTrans Merced 117535
Workorder #	17091	**Sampled**	10/12/05
Laboratory ID	17091014	**Received**	10/13/05
Sample ID	SR140-B07-1.5	**Reported**	11/01/05
Matrix	Soil		

8260B GC/MS Volatiles - 8260B (continued)

Parameter	Prep Date	Analyzed	Result	RL	Units	Dilution
4-Methyl-2-pentanone	10/19/05	10/19/05	ND	2.0	ug/kg	1:1
trans-1,3Dichloropropene	10/19/05	10/19/05	ND	2.0	ug/kg	1:1
1,1,2-Trichloroethane	10/19/05	10/19/05	ND	2.0	ug/kg	1:1
Toluene	10/19/05	10/19/05	ND	2.0	ug/kg	1:1
1,2-Dibromoethane (EDB)	10/19/05	10/19/05	ND	2.0	ug/kg	1:1
1,3-Dichloropropane	10/19/05	10/19/05	ND	2.0	ug/kg	1:1
2-Hexanone	10/19/05	10/19/05	ND	2.0	ug/kg	1:1
Dibromochloromethane	10/19/05	10/19/05	ND	2.0	ug/kg	1:1
Tetrachloroethene	10/19/05	10/19/05	ND	2.0	ug/kg	1:1
1,1,1,2Tetrachloroethane	10/19/05	10/19/05	ND	2.0	ug/kg	1:1
Chlorobenzene	10/19/05	10/19/05	ND	2.0	ug/kg	1:1
Ethylbenzene	10/19/05	10/19/05	ND	2.0	ug/kg	1:1
M+P-Xylene	10/19/05	10/19/05	ND	2.0	ug/kg	1:1
Bromoform	10/19/05	10/19/05	ND	2.0	ug/kg	1:1
Styrene	10/19/05	10/19/05	ND	2.0	ug/kg	1:1
o-Xylene	10/19/05	10/19/05	ND	2.0	ug/kg	1:1
1,1,2,2Tetrachloroethane	10/19/05	10/19/05	ND	2.0	ug/kg	1:1
1,2,3-Trichloropropane	10/19/05	10/19/05	ND	2.0	ug/kg	1:1
Isopropylbenzene(Cumene)	10/19/05	10/19/05	ND	2.0	ug/kg	1:1
Bromobenzene	10/19/05	10/19/05	ND	2.0	ug/kg	1:1
n-Propylbenzene	10/19/05	10/19/05	ND	2.0	ug/kg	1:1
2-Chlorotoluene	10/19/05	10/19/05	ND	2.0	ug/kg	1:1
4-Chlorotoluene	10/19/05	10/19/05	ND	2.0	ug/kg	1:1
1,3,5-Trimethylbenzene	10/19/05	10/19/05	ND	2.0	ug/kg	1:1
tert-Butylbenzene	10/19/05	10/19/05	ND	2.0	ug/kg	1:1
1,2,4-Trimethylbenzene	10/19/05	10/19/05	ND	2.0	ug/kg	1:1
sec-Butylbenzene	10/19/05	10/19/05	ND	2.0	ug/kg	1:1
1,3-Dichlorobenzene	10/19/05	10/19/05	ND	2.0	ug/kg	1:1
1,4-Dichlorobenzene	10/19/05	10/19/05	ND	2.0	ug/kg	1:1
4-Isopropyltoluene	10/19/05	10/19/05	ND	2.0	ug/kg	1:1
1,2-Dichlorobenzene	10/19/05	10/19/05	ND	2.0	ug/kg	1:1
n-Butylbenzene	10/19/05	10/19/05	ND	2.0	ug/kg	1:1

3738 Bradview Drive • Sacramento, California 95827 • (916) 369-7688 • FAX (916) 369-7689

183

Sparger Technology, Inc.
Environmental Laboratories

Analytical Laboratory Division
Mobile Laboratory Division
Scientific Division

Test Certificate of Analysis

Client ID	Shaw Environmental & Infrastructure	**Workorder ID**	CalTrans Merced 117535
Workorder #	17091	**Sampled**	10/12/05
Laboratory ID	17091014	**Received**	10/13/05
Sample ID	SR140-B07-1.5	**Reported**	11/01/05
Matrix	Soil		

8260B GC/MS Volatiles - 8260B (continued)

Parameter	Prep Date	Analyzed	Result	RL	Units	Dilution
1,2Dibromo3chloropropane	10/19/05	10/19/05	ND	2.0	ug/kg	1:1
1,2,4-Trichlorobenzene	10/19/05	10/19/05	ND	2.0	ug/kg	1:1
Naphthalene	10/19/05	10/19/05	ND	2.0	ug/kg	1:1
Hexachlorobutadiene	10/19/05	10/19/05	ND	2.0	ug/kg	1:1
1,2,3-Trichlorobenzene	10/19/05	10/19/05	ND	2.0	ug/kg	1:1

Surrogates	Result	Recovery	Limits
1,2-Dichloroethane-d4	52 ug/kg	104 %	(70 - 135)
Toluene d8	45 ug/kg	90 %	(70 - 135)
4-Bromofluorobenzene	48 ug/kg	96 %	(70 - 135)

188

3738 Bradview Drive • Sacramento, California 95827 • (916) 369-7688 • FAX (916) 369-7689

Sparger Technology, Inc.
Environmental Laboratories

Analytical Laboratory Division
Mobile Laboratory Division
Scientific Division

Test Certificate of Analysis

Client ID	Shaw Environmental & Infrastructure	**Workorder ID**	CalTrans Merced 117535
Workorder #	17091	**Sampled**	10/12/05
Laboratory ID	17091014	**Received**	10/13/05
Sample ID	SR140-B07-1.5	**Reported**	11/01/05
Matrix	Soil		

Metals, CAM17 - 6010B

Parameter	Prep Date	Analyzed	Result	RL	Units	Dilution
Antimony	10/13/05	10/17/05	ND	6.0	mg/Kg	1:1
Arsenic	10/13/05	10/17/05	ND	8.0	mg/Kg	1:1
Barium	**10/13/05**	**10/17/05**	**117**	**2.0**	**mg/Kg**	**1:1**
Beryllium	10/13/05	10/17/05	ND	0.30	mg/Kg	1:1
Cadmium	10/13/05	10/17/05	ND	0.50	mg/Kg	1:1
Chromium	**10/13/05**	**10/17/05**	**39**	**1.0**	**mg/Kg**	**1:1**
Cobalt	**10/13/05**	**10/17/05**	**10**	**5.0**	**mg/Kg**	**1:1**
Copper	**10/13/05**	**10/17/05**	**25**	**2.0**	**mg/Kg**	**1:1**
Lead	**10/13/05**	**10/17/05**	**3.8**	**1.0**	**mg/Kg**	**1:1**
Molybdenum	10/13/05	10/17/05	ND	5.0	mg/Kg	1:1
Nickel	10/13/05	10/17/05	ND	4.0	mg/Kg	1:1
Selenium	10/13/05	10/17/05	ND	10	mg/Kg	1:1
Silver	10/13/05	10/17/05	ND	1.0	mg/Kg	1:1
Thallium	10/13/05	10/17/05	ND	10	mg/Kg	1:1
Vanadium	**10/13/05**	**10/17/05**	**44**	**5.0**	**mg/Kg**	**1:1**
Zinc	**10/13/05**	**10/17/05**	**44**	**1.5**	**mg/Kg**	**1:1**

3738 Bradview Drive • Sacramento, California 95827 • (916) 369-7688 • FAX (916) 369-7689

Sparger Technology, Inc.
Environmental Laboratories

Analytical Laboratory Division
Mobile Laboratory Division
Scientific Division

Test Certificate of Analysis

Client ID	Shaw Environmental & Infrastructure	**Workorder ID**	CalTrans Merced 117535
Workorder #	17091	**Sampled**	10/12/05
Laboratory ID	17091015	**Received**	10/13/05
Sample ID	SR140-B07-3.0	**Reported**	10/26/05
Matrix	Soil		

8260B Oxygenates - 8260B

Parameter	Prep Date	Analyzed	Result	RL	Units	Dilution
Benzene	10/18/05	10/18/05	ND	1.0	ug/kg	1:1
Toluene	10/18/05	10/18/05	ND	1.0	ug/kg	1:1
Ethylbenzene	10/18/05	10/18/05	ND	1.0	ug/kg	1:1
Xylene (Total)	10/18/05	10/18/05	ND	1.0	ug/kg	1:1

Surrogates	Result	Recovery	Limits
1,2-Dichloroethane-d4	61 ug/kg	122 %	(65 - 135)

3738 Bradview Drive • Sacramento, California 95827 • (916) 369-7688 • FAX (916) 369-7689

Sparger Technology, Inc.
Environmental Laboratories

Analytical Laboratory Division
Mobile Laboratory Division
Scientific Division

Test Certificate of Analysis

Client ID	Shaw Environmental & Infrastructure	**Workorder ID**	CalTrans Merced 117535
Workorder #	17091	**Sampled**	10/12/05
Laboratory ID	17091016	**Received**	10/13/05
Sample ID	SR140-B07-4.5	**Reported**	10/26/05
Matrix	Soil		

8260B Oxygenates - 8260B

Parameter	Prep Date	Analyzed	Result	RL	Units	Dilution
Benzene	10/19/05	10/19/05	ND	1.0	ug/kg	1:1
Toluene	10/19/05	10/19/05	ND	1.0	ug/kg	1:1
Ethylbenzene	10/19/05	10/19/05	ND	1.0	ug/kg	1:1
Xylene (Total)	10/19/05	10/19/05	ND	1.0	ug/kg	1:1

Surrogates	Result	Recovery	Limits
1,2-Dichloroethane-d4	53 ug/kg	106 %	(65 - 135)

188

3738 Bradview Drive • Sacramento, California 95827 • (916) 369-7688 • FAX (916) 369-7689

Sparger Technology, Inc.
Environmental Laboratories

Analytical Laboratory Division
Mobile Laboratory Division
Scientific Division

Test Certificate of Analysis

Client ID	Shaw Environmental & Infrastructure	**Workorder ID**	CalTrans Merced 117535
Workorder #	17091	**Sampled**	10/12/05
Laboratory ID	17091016	**Received**	10/13/05
Sample ID	SR140-B07-4.5	**Reported**	10/26/05
Matrix	Soil		

8260B GC/MS Volatiles - 8260B

Parameter	Prep Date	Analyzed	Result	RL	Units	Dilution
Dichlorodifluoromethane	10/19/05	10/19/05	ND	2.0	ug/kg	1:1
Chloromethane	10/19/05	10/19/05	ND	2.0	ug/kg	1:1
Vinyl chloride	10/19/05	10/19/05	ND	2.0	ug/kg	1:1
Bromomethane	10/19/05	10/19/05	ND	2.0	ug/kg	1:1
Chloroethane	10/19/05	10/19/05	ND	2.0	ug/kg	1:1
Trichlorofluoromethane	10/19/05	10/19/05	ND	2.0	ug/kg	1:1
Acrolein	10/19/05	10/19/05	ND	2.0	ug/kg	1:1
1,1-Dichloroethene	10/19/05	10/19/05	ND	2.0	ug/kg	1:1
Acetone	10/19/05	10/19/05	ND	2.0	ug/kg	1:1
Methyl iodide	10/19/05	10/19/05	ND	2.0	ug/kg	1:1
Carbon disulfide	10/19/05	10/19/05	ND	2.0	ug/kg	1:1
Dichloromethane	10/19/05	10/19/05	ND	2.0	ug/kg	1:1
Acrylonitrile	10/19/05	10/19/05	ND	2.0	ug/kg	1:1
trans-1,2-Dichloroethene	10/19/05	10/19/05	ND	2.0	ug/kg	1:1
1,1-Dichloroethane	10/19/05	10/19/05	ND	2.0	ug/kg	1:1
Vinyl acetate	10/19/05	10/19/05	ND	2.0	ug/kg	1:1
cis-1,2-Dichloroethene	10/19/05	10/19/05	ND	2.0	ug/kg	1:1
2-Butanone (MEK)	10/19/05	10/19/05	ND	2.0	ug/kg	1:1
Bromochloromethane	10/19/05	10/19/05	ND	2.0	ug/kg	1:1
Chloroform	10/19/05	10/19/05	ND	2.0	ug/kg	1:1
2,2-dichloropropane	10/19/05	10/19/05	ND	2.0	ug/kg	1:1
1,1,1-Trichloroethane	10/19/05	10/19/05	ND	2.0	ug/kg	1:1
1,1-dichloropropane	10/19/05	10/19/05	ND	2.0	ug/kg	1:1
Carbon tetrachloride	10/19/05	10/19/05	ND	2.0	ug/kg	1:1
Benzene	10/19/05	10/19/05	ND	2.0	ug/kg	1:1
1,2-Dichloroethane	10/19/05	10/19/05	ND	2.0	ug/kg	1:1
Dibromomethane	10/19/05	10/19/05	ND	2.0	ug/kg	1:1
Bromodichloromethane	10/19/05	10/19/05	ND	2.0	ug/kg	1:1
1,2-Dichloropropane	10/19/05	10/19/05	ND	2.0	ug/kg	1:1
Trichloroethene	10/19/05	10/19/05	ND	2.0	ug/kg	1:1
2-Chloroethylvinyl ether	10/19/05	10/19/05	ND	2.0	ug/kg	1:1
cis-1,3-Dichloropropene	10/19/05	10/19/05	ND	2.0	ug/kg	1:1

3738 Bradview Drive • Sacramento, California 95827 • (916) 369-7688 • FAX (916) 369-7689

Test Certificate of Analysis

Client ID	Shaw Environmental & Infrastructure	**Workorder ID**	CalTrans Merced 117535
Workorder #	17091	**Sampled**	10/12/05
Laboratory ID	17091016	**Received**	10/13/05
Sample ID	SR140-B07-4.5	**Reported**	10/26/05
Matrix	Soil		

8260B GC/MS Volatiles - 8260B (continued)

Parameter	Prep Date	Analyzed	Result	RL	Units	Dilution
4-Methyl-2-pentanone	10/19/05	10/19/05	ND	2.0	ug/kg	1:1
trans-1,3Dichloropropene	10/19/05	10/19/05	ND	2.0	ug/kg	1:1
1,1,2-Trichloroethane	10/19/05	10/19/05	ND	2.0	ug/kg	1:1
Toluene	10/19/05	10/19/05	ND	2.0	ug/kg	1:1
1,2-Dibromoethane (EDB)	10/19/05	10/19/05	ND	2.0	ug/kg	1:1
1,3-Dichloropropane	10/19/05	10/19/05	ND	2.0	ug/kg	1:1
2-Hexanone	10/19/05	10/19/05	ND	2.0	ug/kg	1:1
Dibromochloromethane	10/19/05	10/19/05	ND	2.0	ug/kg	1:1
Tetrachloroethene	10/19/05	10/19/05	ND	2.0	ug/kg	1:1
1,1,1,2Tetrachloroethane	10/19/05	10/19/05	ND	2.0	ug/kg	1:1
Chlorobenzene	10/19/05	10/19/05	ND	2.0	ug/kg	1:1
Ethylbenzene	10/19/05	10/19/05	ND	2.0	ug/kg	1:1
M+P-Xylene	10/19/05	10/19/05	ND	2.0	ug/kg	1:1
Bromoform	10/19/05	10/19/05	ND	2.0	ug/kg	1:1
Styrene	10/19/05	10/19/05	ND	2.0	ug/kg	1:1
o-Xylene	10/19/05	10/19/05	ND	2.0	ug/kg	1:1
1,1,2,2Tetrachloroethane	10/19/05	10/19/05	ND	2.0	ug/kg	1:1
1,2,3-Trichloropropane	10/19/05	10/19/05	ND	2.0	ug/kg	1:1
Isopropylbenzene (Cumene)	10/19/05	10/19/05	ND	2.0	ug/kg	1:1
Bromobenzene	10/19/05	10/19/05	ND	2.0	ug/kg	1:1
n-Propylbenzene	10/19/05	10/19/05	ND	2.0	ug/kg	1:1
2-Chlorotoluene	10/19/05	10/19/05	ND	2.0	ug/kg	1:1
4-Chlorotoluene	10/19/05	10/19/05	ND	2.0	ug/kg	1:1
1,3,5-Trimethylbenzene	10/19/05	10/19/05	ND	2.0	ug/kg	1:1
tert-Butylbenzene	10/19/05	10/19/05	ND	2.0	ug/kg	1:1
1,2,4-Trimethylbenzene	10/19/05	10/19/05	ND	2.0	ug/kg	1:1
sec-Butylbenzene	10/19/05	10/19/05	ND	2.0	ug/kg	1:1
1,3-Dichlorobenzene	10/19/05	10/19/05	ND	2.0	ug/kg	1:1
1,4-Dichlorobenzene	10/19/05	10/19/05	ND	2.0	ug/kg	1:1
4-Isopropyltoluene	10/19/05	10/19/05	ND	2.0	ug/kg	1:1
1,2-Dichlorobenzene	10/19/05	10/19/05	ND	2.0	ug/kg	1:1
n-Butylbenzene	10/19/05	10/19/05	ND	2.0	ug/kg	1:1

190

3738 Bradview Drive • Sacramento, California 95827 • (916) 369-7688 • FAX (916) 369-7689

Sparger Technology, Inc.
Environmental Laboratories

Analytical Laboratory Division
Mobile Laboratory Division
Scientific Division

Test Certificate of Analysis

Client ID	Shaw Environmental & Infrastructure	**Workorder ID**	CalTrans Merced 117535
Workorder #	17091	**Sampled**	10/12/05
Laboratory ID	17091016	**Received**	10/13/05
Sample ID	SR140-B07-4.5	**Reported**	10/26/05
Matrix	Soil		

8260B GC/MS Volatiles - 8260B (continued)

Parameter	Prep Date	Analyzed	Result	RL	Units	Dilution
1,2Dibromo3chloropropane	10/19/05	10/19/05	ND	2.0	ug/kg	1:1
1,2,4-Trichlorobenzene	10/19/05	10/19/05	ND	2.0	ug/kg	1:1
Naphthalene	10/19/05	10/19/05	ND	2.0	ug/kg	1:1
Hexachlorobutadiene	10/19/05	10/19/05	ND	2.0	ug/kg	1:1
1,2,3-Trichlorobenzene	10/19/05	10/19/05	ND	2.0	ug/kg	1:1

Surrogates	Result	Recovery	Limits
1,2-Dichloroethane-d4	53 ug/kg	106 %	(70 - 135)
Toluene d8	45 ug/kg	90 %	(70 - 135)
4-Bromofluorobenzene	54 ug/kg	108 %	(70 - 135)

3738 Bradview Drive • Sacramento, California 95827 • (916) 369-7688 • FAX (916) 369-7689

Sparger Technology, Inc.
Environmental Laboratories

Analytical Laboratory Division
Mobile Laboratory Division
Scientific Division

Test Certificate of Analysis

Client ID	Shaw Environmental & Infrastructure	**Workorder ID**	CalTrans Merced 117535
Workorder #	17091	**Sampled**	10/12/05
Laboratory ID	17091017	**Received**	10/13/05
Sample ID	SR140-B07-6.0	**Reported**	10/26/05
Matrix	Soil		

8260B Oxygenates - 8260B

Parameter	Prep Date	Analyzed	Result	RL	Units	Dilution
Benzene	10/18/05	10/18/05	ND	1.0	ug/kg	1:1
Toluene	10/18/05	10/18/05	ND	1.0	ug/kg	1:1
Ethylbenzene	10/18/05	10/18/05	ND	1.0	ug/kg	1:1
Xylene (Total)	10/18/05	10/18/05	ND	1.0	ug/kg	1:1

Surrogates	Result	Recovery	Limits
1,2-Dichloroethane-d4	63 ug/kg	126 %	(65 - 135)

192

3738 Bradview Drive • Sacramento, California 95827 • (916) 369-7688 • FAX (916) 369-7689

Sparger Technology, Inc.
Environmental Laboratories

Analytical Laboratory Division
Mobile Laboratory Division
Scientific Division

Test Certificate of Analysis

Client ID	Shaw Environmental & Infrastructure	**Workorder ID**	CalTrans Merced 117535
Workorder #	17091	**Sampled**	10/12/05
Laboratory ID	17091018	**Received**	10/13/05
Sample ID	SR140-B07-7.5	**Reported**	10/26/05
Matrix	Soil		

8260B Oxygenates - 8260B

Parameter	Prep Date	Analyzed	Result	RL	Units	Dilution
Benzene	10/18/05	10/18/05	ND	1.0	ug/kg	1:1
Toluene	10/18/05	10/18/05	ND	1.0	ug/kg	1:1
Ethylbenzene	10/18/05	10/18/05	ND	1.0	ug/kg	1:1
Xylene (Total)	10/18/05	10/18/05	ND	1.0	ug/kg	1:1

Surrogates	Result	Recovery	Limits
1,2-Dichloroethane-d4	63 ug/kg	126 %	(65 - 135)

3738 Bradview Drive • Sacramento, California 95827 • (916) 369-7688 • FAX (916) 369-7689

Sparger Technology, Inc.
Environmental Laboratories

Analytical Laboratory Division
Mobile Laboratory Division
Scientific Division

Test Certificate of Analysis

Client ID	Shaw Environmental & Infrastructure	**Workorder ID**	CalTrans Merced 117535
Workorder #	17091	**Sampled**	10/12/05
Laboratory ID	17091019	**Received**	10/13/05
Sample ID	SR140-B07-9.0	**Reported**	10/26/05
Matrix	Soil		

8260B Oxygenates - 8260B

Parameter	Prep Date	Analyzed	Result	RL	Units	Dilution
Benzene	10/19/05	10/19/05	ND	1.0	ug/kg	1:1
Toluene	10/19/05	10/19/05	ND	1.0	ug/kg	1:1
Ethylbenzene	10/19/05	10/19/05	ND	1.0	ug/kg	1:1
Xylene (Total)	10/19/05	10/19/05	ND	1.0	ug/kg	1:1

Surrogates	Result	Recovery	Limits
1,2-Dichloroethane-d4	56 ug/kg	112 %	(65 - 135)

194

3738 Bradview Drive • Sacramento, California 95827 • (916) 369-7688 • FAX (916) 369-7689

Sparger Technology, Inc.
Environmental Laboratories

Analytical Laboratory Division
Mobile Laboratory Division
Scientific Division

Test Certificate of Analysis

Client ID	Shaw Environmental & Infrastructure	**Workorder ID**	CalTrans Merced 117535
Workorder #	17091	**Sampled**	10/12/05
Laboratory ID	17091019	**Received**	10/13/05
Sample ID	SR140-B07-9.0	**Reported**	10/26/05
Matrix	Soil		

8260B GC/MS Volatiles - 8260B

Parameter	Prep Date	Analyzed	Result	RL	Units	Dilution
Dichlorodifluoromethane	10/19/05	10/19/05	ND	2.0	ug/kg	1:1
Chloromethane	10/19/05	10/19/05	ND	2.0	ug/kg	1:1
Vinyl chloride	10/19/05	10/19/05	ND	2.0	ug/kg	1:1
Bromomethane	10/19/05	10/19/05	ND	2.0	ug/kg	1:1
Chloroethane	10/19/05	10/19/05	ND	2.0	ug/kg	1:1
Trichlorofluoromethane	10/19/05	10/19/05	ND	2.0	ug/kg	1:1
Acrolein	10/19/05	10/19/05	ND	2.0	ug/kg	1:1
1,1-Dichloroethene	10/19/05	10/19/05	ND	2.0	ug/kg	1:1
Acetone	10/19/05	10/19/05	ND	2.0	ug/kg	1:1
Methyl iodide	10/19/05	10/19/05	ND	2.0	ug/kg	1:1
Carbon disulfide	10/19/05	10/19/05	ND	2.0	ug/kg	1:1
Dichloromethane	10/19/05	10/19/05	ND	2.0	ug/kg	1:1
Acrylonitrile	10/19/05	10/19/05	ND	2.0	ug/kg	1:1
trans-1,2-Dichloroethene	10/19/05	10/19/05	ND	2.0	ug/kg	1:1
1,1-Dichloroethane	10/19/05	10/19/05	ND	2.0	ug/kg	1:1
Vinyl acetate	10/19/05	10/19/05	ND	2.0	ug/kg	1:1
cis-1,2-Dichloroethene	10/19/05	10/19/05	ND	2.0	ug/kg	1:1
2-Butanone (MEK)	10/19/05	10/19/05	ND	2.0	ug/kg	1:1
Bromochloromethane	10/19/05	10/19/05	ND	2.0	ug/kg	1:1
Chloroform	10/19/05	10/19/05	ND	2.0	ug/kg	1:1
2,2-dichloropropane	10/19/05	10/19/05	ND	2.0	ug/kg	1:1
1,1,1-Trichloroethane	10/19/05	10/19/05	ND	2.0	ug/kg	1:1
1,1-dichloropropane	10/19/05	10/19/05	ND	2.0	ug/kg	1:1
Carbon tetrachloride	10/19/05	10/19/05	ND	2.0	ug/kg	1:1
Benzene	10/19/05	10/19/05	ND	2.0	ug/kg	1:1
1,2-Dichloroethane	10/19/05	10/19/05	ND	2.0	ug/kg	1:1
Dibromomethane	10/19/05	10/19/05	ND	2.0	ug/kg	1:1
Bromodichloromethane	10/19/05	10/19/05	ND	2.0	ug/kg	1:1
1,2-Dichloropropane	10/19/05	10/19/05	ND	2.0	ug/kg	1:1
Trichloroethene	10/19/05	10/19/05	ND	2.0	ug/kg	1:1
2-Chloroethylvinyl ether	10/19/05	10/19/05	ND	2.0	ug/kg	1:1
cis-1,3-Dichloropropene	10/19/05	10/19/05	ND	2.0	ug/kg	1:1

3738 Bradview Drive • Sacramento, California 95827 • (916) 369-7688 • FAX (916) 369-7689

195

Test Certificate of Analysis

Client ID	Shaw Environmental & Infrastructure	**Workorder ID**	CalTrans Merced 117535
Workorder #	17091	**Sampled**	10/12/05
Laboratory ID	17091019	**Received**	10/13/05
Sample ID	SR140-B07-9.0	**Reported**	10/26/05
Matrix	Soil		

8260B GC/MS Volatiles - 8260B (continued)

Parameter	Prep Date	Analyzed	Result	RL	Units	Dilution
4-Methyl-2-pentanone	10/19/05	10/19/05	ND	2.0	ug/kg	1:1
trans-1,3Dichloropropene	10/19/05	10/19/05	ND	2.0	ug/kg	1:1
1,1,2-Trichloroethane	10/19/05	10/19/05	ND	2.0	ug/kg	1:1
Toluene	10/19/05	10/19/05	ND	2.0	ug/kg	1:1
1,2-Dibromoethane (EDB)	10/19/05	10/19/05	ND	2.0	ug/kg	1:1
1,3-Dichloropropane	10/19/05	10/19/05	ND	2.0	ug/kg	1:1
2-Hexanone	10/19/05	10/19/05	ND	2.0	ug/kg	1:1
Dibromochloromethane	10/19/05	10/19/05	ND	2.0	ug/kg	1:1
Tetrachloroethene	10/19/05	10/19/05	ND	2.0	ug/kg	1:1
1,1,1,2Tetrachloroethane	10/19/05	10/19/05	ND	2.0	ug/kg	1:1
Chlorobenzene	10/19/05	10/19/05	ND	2.0	ug/kg	1:1
Ethylbenzene	10/19/05	10/19/05	ND	2.0	ug/kg	1:1
M+P-Xylene	10/19/05	10/19/05	ND	2.0	ug/kg	1:1
Bromoform	10/19/05	10/19/05	ND	2.0	ug/kg	1:1
Styrene	10/19/05	10/19/05	ND	2.0	ug/kg	1:1
o-Xylene	10/19/05	10/19/05	ND	2.0	ug/kg	1:1
1,1,2,2Tetrachloroethane	10/19/05	10/19/05	ND	2.0	ug/kg	1:1
1,2,3-Trichloropropane	10/19/05	10/19/05	ND	2.0	ug/kg	1:1
Isopropylbenzene (Cumene)	10/19/05	10/19/05	ND	2.0	ug/kg	1:1
Bromobenzene	10/19/05	10/19/05	ND	2.0	ug/kg	1:1
n-Propylbenzene	10/19/05	10/19/05	ND	2.0	ug/kg	1:1
2-Chlorotoluene	10/19/05	10/19/05	ND	2.0	ug/kg	1:1
4-Chlorotoluene	10/19/05	10/19/05	ND	2.0	ug/kg	1:1
1,3,5-Trimethylbenzene	10/19/05	10/19/05	ND	2.0	ug/kg	1:1
tert-Butylbenzene	10/19/05	10/19/05	ND	2.0	ug/kg	1:1
1,2,4-Trimethylbenzene	10/19/05	10/19/05	ND	2.0	ug/kg	1:1
sec-Butylbenzene	10/19/05	10/19/05	ND	2.0	ug/kg	1:1
1,3-Dichlorobenzene	10/19/05	10/19/05	ND	2.0	ug/kg	1:1
1,4-Dichlorobenzene	10/19/05	10/19/05	ND	2.0	ug/kg	1:1
4-Isopropyltoluene	10/19/05	10/19/05	ND	2.0	ug/kg	1:1
1,2-Dichlorobenzene	10/19/05	10/19/05	ND	2.0	ug/kg	1:1
n-Butylbenzene	10/19/05	10/19/05	ND	2.0	ug/kg	1:1

196

3738 Bradview Drive • Sacramento, California 95827 • (916) 369-7688 • FAX (916) 369-7689

Sparger Technology, Inc.
Environmental Laboratories

Analytical Laboratory Division
Mobile Laboratory Division
Scientific Division

Test Certificate of Analysis

Client ID	Shaw Environmental & Infrastructure	**Workorder ID**	CalTrans Merced 117535
Workorder #	17091	**Sampled**	10/12/05
Laboratory ID	17091019	**Received**	10/13/05
Sample ID	SR140-B07-9.0	**Reported**	10/26/05
Matrix	Soil		

8260B GC/MS Volatiles - 8260B (continued)

Parameter	Prep Date	Analyzed	Result	RL	Units	Dilution
1,2Dibromo3chloropropane	10/19/05	10/19/05	ND	2.0	ug/kg	1:1
1,2,4-Trichlorobenzene	10/19/05	10/19/05	ND	2.0	ug/kg	1:1
Naphthalene	10/19/05	10/19/05	ND	2.0	ug/kg	1:1
Hexachlorobutadiene	10/19/05	10/19/05	ND	2.0	ug/kg	1:1
1,2,3-Trichlorobenzene	10/19/05	10/19/05	ND	2.0	ug/kg	1:1

Surrogates	Result	Recovery	Limits
1,2-Dichloroethane-d4	56 ug/kg	112 %	(70 - 135)
Toluene d8	45 ug/kg	90 %	(70 - 135)
4-Bromofluorobenzene	51 ug/kg	102 %	(70 - 135)

3738 Bradview Drive • Sacramento, California 95827 • (916) 369-7688 • FAX (916) 369-7689

197

Sparger Technology, Inc.
Environmental Laboratories

Analytical Laboratory Division
Mobile Laboratory Division
Scientific Division

Test Certificate of Analysis

Client ID	Shaw Environmental & Infrastructure	**Workorder ID**	CalTrans Merced 117535
Workorder #	17091	**Sampled**	10/12/05
Laboratory ID	17091020	**Received**	10/13/05
Sample ID	SR140-B08-1.5	**Reported**	10/26/05
Matrix	Soil		

8260B Oxygenates - 8260B

Parameter	Prep Date	Analyzed	Result	RL	Units	Dilution
Benzene	10/20/05	10/20/05	ND	1.0	ug/kg	1:1
Toluene	10/20/05	10/20/05	ND	1.0	ug/kg	1:1
Ethylbenzene	10/20/05	10/20/05	ND	1.0	ug/kg	1:1
Xylene (Total)	10/20/05	10/20/05	ND	1.0	ug/kg	1:1

Surrogates	Result	Recovery	Limits
1,2-Dichloroethane-d4	56 ug/kg	112 %	(65 - 135)

198

3738 Bradview Drive • Sacramento, California 95827 • (916) 369-7688 • FAX (916) 369-7689

Sparger Technology, Inc.
Environmental Laboratories

Analytical Laboratory Division
Mobile Laboratory Division
Scientific Division

Test Certificate of Analysis

Client ID	Shaw Environmental & Infrastructure	**Workorder ID**	CalTrans Merced 117535
Workorder #	17091	**Sampled**	10/12/05
Laboratory ID	17091020	**Received**	10/13/05
Sample ID	SR140-B08-1.5	**Reported**	10/26/05
Matrix	Soil		

8260B GC/MS Volatiles - 8260B

Parameter	Prep Date	Analyzed	Result	RL	Units	Dilution
Dichlorodifluoromethane	10/19/05	10/20/05	ND	2.0	ug/kg	1:1
Chloromethane	10/19/05	10/20/05	ND	2.0	ug/kg	1:1
Vinyl chloride	10/19/05	10/20/05	ND	2.0	ug/kg	1:1
Bromomethane	10/19/05	10/20/05	ND	2.0	ug/kg	1:1
Chloroethane	10/19/05	10/20/05	ND	2.0	ug/kg	1:1
Trichlorofluoromethane	10/19/05	10/20/05	ND	2.0	ug/kg	1:1
Acrolein	10/19/05	10/20/05	ND	2.0	ug/kg	1:1
1,1-Dichloroethene	10/19/05	10/20/05	ND	2.0	ug/kg	1:1
Acetone	**10/19/05**	**10/20/05**	**5.8**	**2.0**	**ug/kg**	**1:1**
Methyl iodide	10/19/05	10/20/05	ND	2.0	ug/kg	1:1
Carbon disulfide	10/19/05	10/20/05	ND	2.0	ug/kg	1:1
Dichloromethane	10/19/05	10/20/05	ND	2.0	ug/kg	1:1
Acrylonitrile	10/19/05	10/20/05	ND	2.0	ug/kg	1:1
trans-1,2-Dichloroethene	10/19/05	10/20/05	ND	2.0	ug/kg	1:1
1,1-Dichloroethane	10/19/05	10/20/05	ND	2.0	ug/kg	1:1
Vinyl acetate	10/19/05	10/20/05	ND	2.0	ug/kg	1:1
cis-1,2-Dichloroethene	10/19/05	10/20/05	ND	2.0	ug/kg	1:1
2-Butanone (MEK)	10/19/05	10/20/05	ND	2.0	ug/kg	1:1
Bromochloromethane	10/19/05	10/20/05	ND	2.0	ug/kg	1:1
Chloroform	10/19/05	10/20/05	ND	2.0	ug/kg	1:1
2,2-dichloropropane	10/19/05	10/20/05	ND	2.0	ug/kg	1:1
1,1,1-Trichloroethane	10/19/05	10/20/05	ND	2.0	ug/kg	1:1
1,1-dichloropropane	10/19/05	10/20/05	ND	2.0	ug/kg	1:1
Carbon tetrachloride	10/19/05	10/20/05	ND	2.0	ug/kg	1:1
Benzene	10/19/05	10/20/05	ND	2.0	ug/kg	1:1
1,2-Dichloroethane	10/19/05	10/20/05	ND	2.0	ug/kg	1:1
Dibromomethane	10/19/05	10/20/05	ND	2.0	ug/kg	1:1
Bromodichloromethane	10/19/05	10/20/05	ND	2.0	ug/kg	1:1
1,2-Dichloropropane	10/19/05	10/20/05	ND	2.0	ug/kg	1:1
Trichloroethene	10/19/05	10/20/05	ND	2.0	ug/kg	1:1
2-Chloroethylvinyl ether	10/19/05	10/20/05	ND	2.0	ug/kg	1:1
cis-1,3-Dichloropropene	10/19/05	10/20/05	ND	2.0	ug/kg	1:1

3738 Bradview Drive • Sacramento, California 95827 • (916) 369-7688 • FAX (916) 369-7689

199

Test Certificate of Analysis

Client ID	Shaw Environmental & Infrastructure	**Workorder ID**	CalTrans Merced 117535
Workorder #	17091	**Sampled**	10/12/05
Laboratory ID	17091020	**Received**	10/13/05
Sample ID	SR140-B08-1.5	**Reported**	10/26/05
Matrix	Soil		

8260B GC/MS Volatiles - 8260B (continued)

Parameter	Prep Date	Analyzed	Result	RL	Units	Dilution
4-Methyl-2-pentanone	10/19/05	10/20/05	ND	2.0	ug/kg	1:1
trans-1,3Dichloropropene	10/19/05	10/20/05	ND	2.0	ug/kg	1:1
1,1,2-Trichloroethane	10/19/05	10/20/05	ND	2.0	ug/kg	1:1
Toluene	10/19/05	10/20/05	ND	2.0	ug/kg	1:1
1,2-Dibromoethane (EDB)	10/19/05	10/20/05	ND	2.0	ug/kg	1:1
1,3-Dichloropropane	10/19/05	10/20/05	ND	2.0	ug/kg	1:1
2-Hexanone	10/19/05	10/20/05	ND	2.0	ug/kg	1:1
Dibromochloromethane	10/19/05	10/20/05	ND	2.0	ug/kg	1:1
Tetrachloroethene	10/19/05	10/20/05	ND	2.0	ug/kg	1:1
1,1,1,2Tetrachloroethane	10/19/05	10/20/05	ND	2.0	ug/kg	1:1
Chlorobenzene	10/19/05	10/20/05	ND	2.0	ug/kg	1:1
Ethylbenzene	10/19/05	10/20/05	ND	2.0	ug/kg	1:1
M+P-Xylene	10/19/05	10/20/05	ND	2.0	ug/kg	1:1
Bromoform	10/19/05	10/20/05	ND	2.0	ug/kg	1:1
Styrene	10/19/05	10/20/05	ND	2.0	ug/kg	1:1
o-Xylene	10/19/05	10/20/05	ND	2.0	ug/kg	1:1
1,1,2,2Tetrachloroethane	10/19/05	10/20/05	ND	2.0	ug/kg	1:1
1,2,3-Trichloropropane	10/19/05	10/20/05	ND	2.0	ug/kg	1:1
Isopropylbenzene(Cumene)	10/19/05	10/20/05	ND	2.0	ug/kg	1:1
Bromobenzene	10/19/05	10/20/05	ND	2.0	ug/kg	1:1
n-Propylbenzene	10/19/05	10/20/05	ND	2.0	ug/kg	1:1
2-Chlorotoluene	10/19/05	10/20/05	ND	2.0	ug/kg	1:1
4-Chlorotoluene	10/19/05	10/20/05	ND	2.0	ug/kg	1:1
1,3,5-Trimethylbenzene	10/19/05	10/20/05	ND	2.0	ug/kg	1:1
tert-Butylbenzene	10/19/05	10/20/05	ND	2.0	ug/kg	1:1
1,2,4-Trimethylbenzene	10/19/05	10/20/05	ND	2.0	ug/kg	1:1
sec-Butylbenzene	10/19/05	10/20/05	ND	2.0	ug/kg	1:1
1,3-Dichlorobenzene	10/19/05	10/20/05	ND	2.0	ug/kg	1:1
1,4-Dichlorobenzene	10/19/05	10/20/05	ND	2.0	ug/kg	1:1
4-Isopropyltoluene	10/19/05	10/20/05	ND	2.0	ug/kg	1:1
1,2-Dichlorobenzene	10/19/05	10/20/05	ND	2.0	ug/kg	1:1
n-Butylbenzene	10/19/05	10/20/05	ND	2.0	ug/kg	1:1

200

3738 Bradview Drive • Sacramento, California 95827 • (916) 369-7688 • FAX (916) 369-7689

Sparger Technology, Inc.
Environmental Laboratories

Analytical Laboratory Division
Mobile Laboratory Division
Scientific Division

Test Certificate of Analysis

Client ID	Shaw Environmental & Infrastructure	**Workorder ID**	CalTrans Merced 117535
Workorder #	17091	**Sampled**	10/12/05
Laboratory ID	17091020	**Received**	10/13/05
Sample ID	SR140-B08-1.5	**Reported**	10/26/05
Matrix	Soil		

8260B GC/MS Volatiles - 8260B (continued)

Parameter	Prep Date	Analyzed	Result	RL	Units	Dilution
1,2Dibromo3chloropropane	10/19/05	10/20/05	ND	2.0	ug/kg	1:1
1,2,4-Trichlorobenzene	10/19/05	10/20/05	ND	2.0	ug/kg	1:1
Naphthalene	10/19/05	10/20/05	ND	2.0	ug/kg	1:1
Hexachlorobutadiene	10/19/05	10/20/05	ND	2.0	ug/kg	1:1
1,2,3-Trichlorobenzene	10/19/05	10/20/05	ND	2.0	ug/kg	1:1

Surrogates	Result	Recovery	Limits
1,2-Dichloroethane-d4	56 ug/kg	112 %	(70 - 135)
Toluene d8	45 ug/kg	90 %	(70 - 135)
4-Bromofluorobenzene	51 ug/kg	102 %	(70 - 135)

3738 Bradview Drive • Sacramento, California 95827 • (916) 369-7688 • FAX (916) 369-7689

201

Sparger Technology, Inc.
Environmental Laboratories

Analytical Laboratory Division
Mobile Laboratory Division
Scientific Division

Test Certificate of Analysis

Client ID	Shaw Environmental & Infrastructure	**Workorder ID**	CalTrans Merced 117535
Workorder #	17091	**Sampled**	10/12/05
Laboratory ID	17091022	**Received**	10/13/05
Sample ID	SR140-B08-4.5	**Reported**	10/26/05
Matrix	Soil		

8260B Oxygenates - 8260B

Parameter	Prep Date	Analyzed	Result	RL	Units	Dilution
Benzene	10/20/05	10/20/05	ND	1.0	ug/kg	1:1
Toluene	10/20/05	10/20/05	ND	1.0	ug/kg	1:1
Ethylbenzene	10/20/05	10/20/05	ND	1.0	ug/kg	1:1
Xylene (Total)	10/20/05	10/20/05	ND	1.0	ug/kg	1:1

Surrogates	Result	Recovery	Limits
1,2-Dichloroethane-d4	52 ug/kg	104 %	(65 - 135)

204

3738 Bradview Drive • Sacramento, California 95827 • (916) 369-7688 • FAX (916) 369-7689

Sparger Technology, Inc.
Environmental Laboratories

Analytical Laboratory Division
Mobile Laboratory Division
Scientific Division

Test Certificate of Analysis

Client ID	Shaw Environmental & Infrastructure	**Workorder ID**	CalTrans Merced 117535
Workorder #	17091	**Sampled**	10/12/05
Laboratory ID	17091022	**Received**	10/13/05
Sample ID	SR140-B08-4.5	**Reported**	10/26/05
Matrix	Soil		

8260B GC/MS Volatiles - 8260B

Parameter	Prep Date	Analyzed	Result	RL	Units	Dilution
Dichlorodifluoromethane	10/19/05	10/20/05	ND	2.0	ug/kg	1:1
Chloromethane	10/19/05	10/20/05	ND	2.0	ug/kg	1:1
Vinyl chloride	10/19/05	10/20/05	ND	2.0	ug/kg	1:1
Bromomethane	10/19/05	10/20/05	ND	2.0	ug/kg	1:1
Chloroethane	10/19/05	10/20/05	ND	2.0	ug/kg	1:1
Trichlorofluoromethane	10/19/05	10/20/05	ND	2.0	ug/kg	1:1
Acrolein	10/19/05	10/20/05	ND	2.0	ug/kg	1:1
1,1-Dichloroethene	10/19/05	10/20/05	ND	2.0	ug/kg	1:1
Acetone	10/19/05	10/20/05	ND	2.0	ug/kg	1:1
Methyl iodide	10/19/05	10/20/05	ND	2.0	ug/kg	1:1
Carbon disulfide	10/19/05	10/20/05	ND	2.0	ug/kg	1:1
Dichloromethane	10/19/05	10/20/05	ND	2.0	ug/kg	1:1
Acrylonitrile	10/19/05	10/20/05	ND	2.0	ug/kg	1:1
trans-1,2-Dichloroethene	10/19/05	10/20/05	ND	2.0	ug/kg	1:1
1,1-Dichloroethane	10/19/05	10/20/05	ND	2.0	ug/kg	1:1
Vinyl acetate	10/19/05	10/20/05	ND	2.0	ug/kg	1:1
cis-1,2-Dichloroethene	10/19/05	10/20/05	ND	2.0	ug/kg	1:1
2-Butanone (MEK)	10/19/05	10/20/05	ND	2.0	ug/kg	1:1
Bromochloromethane	10/19/05	10/20/05	ND	2.0	ug/kg	1:1
Chloroform	10/19/05	10/20/05	ND	2.0	ug/kg	1:1
2,2-dichloropropane	10/19/05	10/20/05	ND	2.0	ug/kg	1:1
1,1,1-Trichloroethane	10/19/05	10/20/05	ND	2.0	ug/kg	1:1
1,1-dichloropropane	10/19/05	10/20/05	ND	2.0	ug/kg	1:1
Carbon tetrachloride	10/19/05	10/20/05	ND	2.0	ug/kg	1:1
Benzene	10/19/05	10/20/05	ND	2.0	ug/kg	1:1
1,2-Dichloroethane	10/19/05	10/20/05	ND	2.0	ug/kg	1:1
Dibromomethane	10/19/05	10/20/05	ND	2.0	ug/kg	1:1
Bromodichloromethane	10/19/05	10/20/05	ND	2.0	ug/kg	1:1
1,2-Dichloropropane	10/19/05	10/20/05	ND	2.0	ug/kg	1:1
Trichloroethene	10/19/05	10/20/05	ND	2.0	ug/kg	1:1
2-Chloroethylvinyl ether	10/19/05	10/20/05	ND	2.0	ug/kg	1:1
cis-1,3-Dichloropropene	10/19/05	10/20/05	ND	2.0	ug/kg	1:1

3738 Bradview Drive • Sacramento, California 95827 • (916) 369-7688 • FAX (916) 369-7689

Test Certificate of Analysis

Client ID	Shaw Environmental & Infrastructure	**Workorder ID**	CalTrans Merced 117535
Workorder #	17091	**Sampled**	10/12/05
Laboratory ID	17091022	**Received**	10/13/05
Sample ID	SR140-B08-4.5	**Reported**	10/26/05
Matrix	Soil		

8260B GC/MS Volatiles - 8260B (continued)

Parameter	Prep Date	Analyzed	Result	RL	Units	Dilution
4-Methyl-2-pentanone	10/19/05	10/20/05	ND	2.0	ug/kg	1:1
trans-1,3Dichloropropene	10/19/05	10/20/05	ND	2.0	ug/kg	1:1
1,1,2-Trichloroethane	10/19/05	10/20/05	ND	2.0	ug/kg	1:1
Toluene	10/19/05	10/20/05	ND	2.0	ug/kg	1:1
1,2-Dibromoethane (EDB)	10/19/05	10/20/05	ND	2.0	ug/kg	1:1
1,3-Dichloropropane	10/19/05	10/20/05	ND	2.0	ug/kg	1:1
2-Hexanone	10/19/05	10/20/05	ND	2.0	ug/kg	1:1
Dibromochloromethane	10/19/05	10/20/05	ND	2.0	ug/kg	1:1
Tetrachloroethene	10/19/05	10/20/05	ND	2.0	ug/kg	1:1
1,1,1,2Tetrachloroethane	10/19/05	10/20/05	ND	2.0	ug/kg	1:1
Chlorobenzene	10/19/05	10/20/05	ND	2.0	ug/kg	1:1
Ethylbenzene	10/19/05	10/20/05	ND	2.0	ug/kg	1:1
M+P-Xylene	10/19/05	10/20/05	ND	2.0	ug/kg	1:1
Bromoform	10/19/05	10/20/05	ND	2.0	ug/kg	1:1
Styrene	10/19/05	10/20/05	ND	2.0	ug/kg	1:1
o-Xylene	10/19/05	10/20/05	ND	2.0	ug/kg	1:1
1,1,2,2Tetrachloroethane	10/19/05	10/20/05	ND	2.0	ug/kg	1:1
1,2,3-Trichloropropane	10/19/05	10/20/05	ND	2.0	ug/kg	1:1
Isopropylbenzene (Cumene)	10/19/05	10/20/05	ND	2.0	ug/kg	1:1
Bromobenzene	10/19/05	10/20/05	ND	2.0	ug/kg	1:1
n-Propylbenzene	10/19/05	10/20/05	ND	2.0	ug/kg	1:1
2-Chlorotoluene	10/19/05	10/20/05	ND	2.0	ug/kg	1:1
4-Chlorotoluene	10/19/05	10/20/05	ND	2.0	ug/kg	1:1
1,3,5-Trimethylbenzene	10/19/05	10/20/05	ND	2.0	ug/kg	1:1
tert-Butylbenzene	10/19/05	10/20/05	ND	2.0	ug/kg	1:1
1,2,4-Trimethylbenzene	10/19/05	10/20/05	ND	2.0	ug/kg	1:1
sec-Butylbenzene	10/19/05	10/20/05	ND	2.0	ug/kg	1:1
1,3-Dichlorobenzene	10/19/05	10/20/05	ND	2.0	ug/kg	1:1
1,4-Dichlorobenzene	10/19/05	10/20/05	ND	2.0	ug/kg	1:1
4-Isopropyltoluene	10/19/05	10/20/05	ND	2.0	ug/kg	1:1
1,2-Dichlorobenzene	10/19/05	10/20/05	ND	2.0	ug/kg	1:1
n-Butylbenzene	10/19/05	10/20/05	ND	2.0	ug/kg	1:1

206

3738 Bradview Drive • Sacramento, California 95827 • (916) 369-7688 • FAX (916) 369-7689

Sparger Technology, Inc.
Environmental Laboratories

Analytical Laboratory Division
Mobile Laboratory Division
Scientific Division

Test Certificate of Analysis

Client ID	Shaw Environmental & Infrastructure	**Workorder ID**	CalTrans Merced 117535
Workorder #	17091	**Sampled**	10/12/05
Laboratory ID	17091022	**Received**	10/13/05
Sample ID	SR140-B08-4.5	**Reported**	10/26/05
Matrix	Soil		

8260B GC/MS Volatiles - 8260B (continued)

Parameter	Prep Date	Analyzed	Result	RL	Units	Dilution
1,2Dibromo3chloropropane	10/19/05	10/20/05	ND	2.0	ug/kg	1:1
1,2,4-Trichlorobenzene	10/19/05	10/20/05	ND	2.0	ug/kg	1:1
Naphthalene	10/19/05	10/20/05	ND	2.0	ug/kg	1:1
Hexachlorobutadiene	10/19/05	10/20/05	ND	2.0	ug/kg	1:1
1,2,3-Trichlorobenzene	10/19/05	10/20/05	ND	2.0	ug/kg	1:1

Surrogates	Result	Recovery	Limits
1,2-Dichloroethane-d4	52 ug/kg	104 %	(70 - 135)
Toluene d8	46 ug/kg	92 %	(70 - 135)
4-Bromofluorobenzene	51 ug/kg	102 %	(70 - 135)

3738 Bradview Drive • Sacramento, California 95827 • (916) 369-7688 • FAX (916) 369-7689

Sparger Technology, Inc.
Environmental Laboratories

Analytical Laboratory Division
Mobile Laboratory Division
Scientific Division

Test Certificate of Analysis

Client ID	Shaw Environmental & Infrastructure	**Workorder ID**	CalTrans Merced 117535
Workorder #	17091	**Sampled**	10/12/05
Laboratory ID	17091023	**Received**	10/13/05
Sample ID	SR140-B08-6.0	**Reported**	10/26/05
Matrix	Soil		

8260B Oxygenates - 8260B

Parameter	Prep Date	Analyzed	Result	RL	Units	Dilution
Benzene	10/18/05	10/18/05	ND	1.0	ug/kg	1:1
Toluene	10/18/05	10/18/05	ND	1.0	ug/kg	1:1
Ethylbenzene	10/18/05	10/18/05	ND	1.0	ug/kg	1:1
Xylene (Total)	10/18/05	10/18/05	ND	1.0	ug/kg	1:1

Surrogates	Result	Recovery	Limits
1,2-Dichloroethane-d4	64 ug/kg	128 %	(65 - 135)

208

3738 Bradview Drive • Sacramento, California 95827 • (916) 369-7688 • FAX (916) 369-7689

Sparger Technology, Inc.
Environmental Laboratories

Analytical Laboratory Division
Mobile Laboratory Division
Scientific Division

Test Certificate of Analysis

Client ID	Shaw Environmental & Infrastructure	**Workorder ID**	CalTrans Merced 117535
Workorder #	17091	**Sampled**	10/12/05
Laboratory ID	17091024	**Received**	10/13/05
Sample ID	SR140-B08-7.5	**Reported**	10/26/05
Matrix	Soil		

8260B Oxygenates - 8260B

Parameter	Prep Date	Analyzed	Result	RL	Units	Dilution
Benzene	10/18/05	10/18/05	ND	1.0	ug/kg	1:1
Toluene	10/18/05	10/18/05	ND	1.0	ug/kg	1:1
Ethylbenzene	10/18/05	10/18/05	ND	1.0	ug/kg	1:1
Xylene (Total)	10/18/05	10/18/05	ND	1.0	ug/kg	1:1

Surrogates	Result	Recovery	Limits
1,2-Dichloroethane-d4	65 ug/kg	130 %	(65 - 135)

3738 Bradview Drive • Sacramento, California 95827 • (916) 369-7688 • FAX (916) 369-7689

Sparger Technology, Inc.
Environmental Laboratories

Analytical Laboratory Division
Mobile Laboratory Division
Scientific Division

Test Certificate of Analysis

Client ID	Shaw Environmental & Infrastructure	**Workorder ID**	CalTrans Merced 117535
Workorder #	17091	**Sampled**	10/12/05
Laboratory ID	17091025	**Received**	10/13/05
Sample ID	SR140-B08-9.0	**Reported**	10/26/05
Matrix	Soil		

8260B Oxygenates - 8260B

Parameter	Prep Date	Analyzed	Result	RL	Units	Dilution
Benzene	10/20/05	10/20/05	ND	1.0	ug/kg	1:1
Toluene	10/20/05	10/20/05	ND	1.0	ug/kg	1:1
Ethylbenzene	10/20/05	10/20/05	ND	1.0	ug/kg	1:1
Xylene (Total)	10/20/05	10/20/05	ND	1.0	ug/kg	1:1

Surrogates	Result	Recovery	Limits
1,2-Dichloroethane-d4	54 ug/kg	108 %	(65 - 135)

210

3738 Bradview Drive • Sacramento, California 95827 • (916) 369-7688 • FAX (916) 369-7689

Sparger Technology, Inc.
Environmental Laboratories

Analytical Laboratory Division
Mobile Laboratory Division
Scientific Division

Test Certificate of Analysis

Client ID	Shaw Environmental & Infrastructure	**Workorder ID**	CalTrans Merced 117535
Workorder #	17091	**Sampled**	10/12/05
Laboratory ID	17091025	**Received**	10/13/05
Sample ID	SR140-B08-9.0	**Reported**	10/26/05
Matrix	Soil		

8260B GC/MS Volatiles - 8260B

Parameter	Prep Date	Analyzed	Result	RL	Units	Dilution
Dichlorodifluoromethane	10/20/05	10/20/05	ND	2.0	ug/kg	1:1
Chloromethane	10/20/05	10/20/05	ND	2.0	ug/kg	1:1
Vinyl chloride	10/20/05	10/20/05	ND	2.0	ug/kg	1:1
Bromomethane	10/20/05	10/20/05	ND	2.0	ug/kg	1:1
Chloroethane	10/20/05	10/20/05	ND	2.0	ug/kg	1:1
Trichlorofluoromethane	10/20/05	10/20/05	ND	2.0	ug/kg	1:1
Acrolein	10/20/05	10/20/05	ND	2.0	ug/kg	1:1
1,1-Dichloroethene	10/20/05	10/20/05	ND	2.0	ug/kg	1:1
Acetone	10/20/05	10/20/05	ND	2.0	ug/kg	1:1
Methyl iodide	10/20/05	10/20/05	ND	2.0	ug/kg	1:1
Carbon disulfide	10/20/05	10/20/05	ND	2.0	ug/kg	1:1
Dichloromethane	10/20/05	10/20/05	ND	2.0	ug/kg	1:1
Acrylonitrile	10/20/05	10/20/05	ND	2.0	ug/kg	1:1
trans-1,2-Dichloroethene	10/20/05	10/20/05	ND	2.0	ug/kg	1:1
1,1-Dichloroethane	10/20/05	10/20/05	ND	2.0	ug/kg	1:1
Vinyl acetate	10/20/05	10/20/05	ND	2.0	ug/kg	1:1
cis-1,2-Dichloroethene	10/20/05	10/20/05	ND	2.0	ug/kg	1:1
2-Butanone (MEK)	10/20/05	10/20/05	ND	2.0	ug/kg	1:1
Bromochloromethane	10/20/05	10/20/05	ND	2.0	ug/kg	1:1
Chloroform	10/20/05	10/20/05	ND	2.0	ug/kg	1:1
2,2-dichloropropane	10/20/05	10/20/05	ND	2.0	ug/kg	1:1
1,1,1-Trichloroethane	10/20/05	10/20/05	ND	2.0	ug/kg	1:1
1,1-dichloropropane	10/20/05	10/20/05	ND	2.0	ug/kg	1:1
Carbon tetrachloride	10/20/05	10/20/05	ND	2.0	ug/kg	1:1
Benzene	10/20/05	10/20/05	ND	2.0	ug/kg	1:1
1,2-Dichloroethane	10/20/05	10/20/05	ND	2.0	ug/kg	1:1
Dibromomethane	10/20/05	10/20/05	ND	2.0	ug/kg	1:1
Bromodichloromethane	10/20/05	10/20/05	ND	2.0	ug/kg	1:1
1,2-Dichloropropane	10/20/05	10/20/05	ND	2.0	ug/kg	1:1
Trichloroethene	10/20/05	10/20/05	ND	2.0	ug/kg	1:1
2-Chloroethylvinyl ether	10/20/05	10/20/05	ND	2.0	ug/kg	1:1
cis-1,3-Dichloropropene	10/20/05	10/20/05	ND	2.0	ug/kg	1:1

3738 Bradview Drive • Sacramento, California 95827 • (916) 369-7688 • FAX (916) 369-7689

Sparger Technology, Inc.
Environmental Laboratories

Analytical Laboratory Division
Mobile Laboratory Division
Scientific Division

Test Certificate of Analysis

Client ID	Shaw Environmental & Infrastructure	**Workorder ID**	CalTrans Merced 117535
Workorder #	17091	**Sampled**	10/12/05
Laboratory ID	17091025	**Received**	10/13/05
Sample ID	SR140-B08-9.0	**Reported**	10/26/05
Matrix	Soil		

8260B GC/MS Volatiles - 8260B (continued)

Parameter	Prep Date	Analyzed	Result	RL	Units	Dilution
4-Methyl-2-pentanone	10/20/05	10/20/05	ND	2.0	ug/kg	1:1
trans-1,3Dichloropropene	10/20/05	10/20/05	ND	2.0	ug/kg	1:1
1,1,2-Trichloroethane	10/20/05	10/20/05	ND	2.0	ug/kg	1:1
Toluene	10/20/05	10/20/05	ND	2.0	ug/kg	1:1
1,2-Dibromoethane (EDB)	10/20/05	10/20/05	ND	2.0	ug/kg	1:1
1,3-Dichloropropane	10/20/05	10/20/05	ND	2.0	ug/kg	1:1
2-Hexanone	10/20/05	10/20/05	ND	2.0	ug/kg	1:1
Dibromochloromethane	10/20/05	10/20/05	ND	2.0	ug/kg	1:1
Tetrachloroethene	10/20/05	10/20/05	ND	2.0	ug/kg	1:1
1,1,1,2Tetrachloroethane	10/20/05	10/20/05	ND	2.0	ug/kg	1:1
Chlorobenzene	10/20/05	10/20/05	ND	2.0	ug/kg	1:1
Ethylbenzene	10/20/05	10/20/05	ND	2.0	ug/kg	1:1
M+P-Xylene	10/20/05	10/20/05	ND	2.0	ug/kg	1:1
Bromoform	10/20/05	10/20/05	ND	2.0	ug/kg	1:1
Styrene	10/20/05	10/20/05	ND	2.0	ug/kg	1:1
o-Xylene	10/20/05	10/20/05	ND	2.0	ug/kg	1:1
1,1,2,2Tetrachloroethane	10/20/05	10/20/05	ND	2.0	ug/kg	1:1
1,2,3-Trichloropropane	10/20/05	10/20/05	ND	2.0	ug/kg	1:1
Isopropylbenzene (Cumene)	10/20/05	10/20/05	ND	2.0	ug/kg	1:1
Bromobenzene	10/20/05	10/20/05	ND	2.0	ug/kg	1:1
n-Propylbenzene	10/20/05	10/20/05	ND	2.0	ug/kg	1:1
2-Chlorotoluene	10/20/05	10/20/05	ND	2.0	ug/kg	1:1
4-Chlorotoluene	10/20/05	10/20/05	ND	2.0	ug/kg	1:1
1,3,5-Trimethylbenzene	10/20/05	10/20/05	ND	2.0	ug/kg	1:1
tert-Butylbenzene	10/20/05	10/20/05	ND	2.0	ug/kg	1:1
1,2,4-Trimethylbenzene	10/20/05	10/20/05	ND	2.0	ug/kg	1:1
sec-Butylbenzene	10/20/05	10/20/05	ND	2.0	ug/kg	1:1
1,3-Dichlorobenzene	10/20/05	10/20/05	ND	2.0	ug/kg	1:1
1,4-Dichlorobenzene	10/20/05	10/20/05	ND	2.0	ug/kg	1:1
4-Isopropyltoluene	10/20/05	10/20/05	ND	2.0	ug/kg	1:1
1,2-Dichlorobenzene	10/20/05	10/20/05	ND	2.0	ug/kg	1:1
n-Butylbenzene	10/20/05	10/20/05	ND	2.0	ug/kg	1:1

212

3738 Bradview Drive • Sacramento, California 95827 • (916) 369-7688 • FAX (916) 369-7689

Sparger Technology, Inc.
Environmental Laboratories

Analytical Laboratory Division
Mobile Laboratory Division
Scientific Division

Test Certificate of Analysis

Client ID	Shaw Environmental & Infrastructure	**Workorder ID**	CalTrans Merced 117535
Workorder #	17091	**Sampled**	10/12/05
Laboratory ID	17091025	**Received**	10/13/05
Sample ID	SR140-B08-9.0	**Reported**	10/26/05
Matrix	Soil		

8260B GC/MS Volatiles - 8260B (continued)

Parameter	Prep Date	Analyzed	Result	RL	Units	Dilution
1,2Dibromo3chloropropane	10/20/05	10/20/05	ND	2.0	ug/kg	1:1
1,2,4-Trichlorobenzene	10/20/05	10/20/05	ND	2.0	ug/kg	1:1
Naphthalene	10/20/05	10/20/05	ND	2.0	ug/kg	1:1
Hexachlorobutadiene	10/20/05	10/20/05	ND	2.0	ug/kg	1:1
1,2,3-Trichlorobenzene	10/20/05	10/20/05	ND	2.0	ug/kg	1:1

Surrogates	Result	Recovery	Limits
1,2-Dichloroethane-d4	54 ug/kg	108 %	(70 - 135)
Toluene d8	45 ug/kg	90 %	(70 - 135)
4-Bromofluorobenzene	50 ug/kg	100 %	(70 - 135)

3738 Bradview Drive • Sacramento, California 95827 • (916) 369-7688 • FAX (916) 369-7689

Sparger Technology, Inc.
Environmental Laboratories

Analytical Laboratory Division
Mobile Laboratory Division
Scientific Division

Test Certificate of Analysis

Client ID	Shaw Environmental & Infrastructure	**Workorder ID**	CalTrans Merced 117535
Workorder #	17091	**Sampled**	10/12/05
Laboratory ID	17091026	**Received**	10/13/05
Sample ID	SR140-WS-01(A-D)	**Reported**	10/26/05
Matrix	Soil		

8260B Oxygenates - 8260B

Parameter	Prep Date	Analyzed	Result	RL	Units	Dilution
Benzene	10/20/05	10/20/05	ND	1.0	ug/kg	1:1
Toluene	10/20/05	10/20/05	ND	1.0	ug/kg	1:1
Ethylbenzene	10/20/05	10/20/05	ND	1.0	ug/kg	1:1
Xylene (Total)	10/20/05	10/20/05	ND	1.0	ug/kg	1:1

Surrogates	Result	Recovery	Limits
1,2-Dichloroethane-d4	54 ug/kg	108 %	(65 - 135)

214

3738 Bradview Drive • Sacramento, California 95827 • (916) 369-7688 • FAX (916) 369-7689

Sparger Technology, Inc.
Environmental Laboratories

Analytical Laboratory Division
Mobile Laboratory Division
Scientific Division

Test Certificate of Analysis

Client ID	Shaw Environmental & Infrastructure	**Workorder ID**	CalTrans Merced 117535
Workorder #	17091	**Sampled**	10/12/05
Laboratory ID	17091026	**Received**	10/13/05
Sample ID	SR140-WS-01(A-D)	**Reported**	10/26/05
Matrix	Soil		

8260B GC/MS Volatiles - 8260B

Parameter	Prep Date	Analyzed	Result	RL	Units	Dilution
Dichlorodifluoromethane	10/20/05	10/20/05	ND	2.0	ug/kg	1:1
Chloromethane	10/20/05	10/20/05	ND	2.0	ug/kg	1:1
Vinyl chloride	10/20/05	10/20/05	ND	2.0	ug/kg	1:1
Bromomethane	10/20/05	10/20/05	ND	2.0	ug/kg	1:1
Chloroethane	10/20/05	10/20/05	ND	2.0	ug/kg	1:1
Trichlorofluoromethane	10/20/05	10/20/05	ND	2.0	ug/kg	1:1
Acrolein	10/20/05	10/20/05	ND	2.0	ug/kg	1:1
1,1-Dichloroethene	10/20/05	10/20/05	ND	2.0	ug/kg	1:1
Acetone	10/20/05	10/20/05	ND	2.0	ug/kg	1:1
Methyl iodide	10/20/05	10/20/05	ND	2.0	ug/kg	1:1
Carbon disulfide	10/20/05	10/20/05	ND	2.0	ug/kg	1:1
Dichloromethane	10/20/05	10/20/05	ND	2.0	ug/kg	1:1
Acrylonitrile	10/20/05	10/20/05	ND	2.0	ug/kg	1:1
trans-1,2-Dichloroethene	10/20/05	10/20/05	ND	2.0	ug/kg	1:1
1,1-Dichloroethane	10/20/05	10/20/05	ND	2.0	ug/kg	1:1
Vinyl acetate	10/20/05	10/20/05	ND	2.0	ug/kg	1:1
cis-1,2-Dichloroethene	10/20/05	10/20/05	ND	2.0	ug/kg	1:1
2-Butanone (MEK)	10/20/05	10/20/05	ND	2.0	ug/kg	1:1
Bromochloromethane	10/20/05	10/20/05	ND	2.0	ug/kg	1:1
Chloroform	10/20/05	10/20/05	ND	2.0	ug/kg	1:1
2,2-dichloropropane	10/20/05	10/20/05	ND	2.0	ug/kg	1:1
1,1,1-Trichloroethane	10/20/05	10/20/05	ND	2.0	ug/kg	1:1
1,1-dichloropropane	10/20/05	10/20/05	ND	2.0	ug/kg	1:1
Carbon tetrachloride	10/20/05	10/20/05	ND	2.0	ug/kg	1:1
Benzene	10/20/05	10/20/05	ND	2.0	ug/kg	1:1
1,2-Dichloroethane	10/20/05	10/20/05	ND	2.0	ug/kg	1:1
Dibromomethane	10/20/05	10/20/05	ND	2.0	ug/kg	1:1
Bromodichloromethane	10/20/05	10/20/05	ND	2.0	ug/kg	1:1
1,2-Dichloropropane	10/20/05	10/20/05	ND	2.0	ug/kg	1:1
Trichloroethene	10/20/05	10/20/05	ND	2.0	ug/kg	1:1
2-Chloroethylvinyl ether	10/20/05	10/20/05	ND	2.0	ug/kg	1:1
cis-1,3-Dichloropropene	10/20/05	10/20/05	ND	2.0	ug/kg	1:1

3738 Bradview Drive • Sacramento, California 95827 • (916) 369-7688 • FAX (916) 369-7689

25

Test Certificate of Analysis

Client ID	Shaw Environmental & Infrastructure	**Workorder ID**	CalTrans Merced 117535
Workorder #	17091	**Sampled**	10/12/05
Laboratory ID	17091026	**Received**	10/13/05
Sample ID	SR140-WS-01(A-D)	**Reported**	10/26/05
Matrix	Soil		

8260B GC/MS Volatiles - 8260B (continued)

Parameter	Prep Date	Analyzed	Result	RL	Units	Dilution
4-Methyl-2-pentanone	10/20/05	10/20/05	ND	2.0	ug/kg	1:1
trans-1,3Dichloropropene	10/20/05	10/20/05	ND	2.0	ug/kg	1:1
1,1,2-Trichloroethane	10/20/05	10/20/05	ND	2.0	ug/kg	1:1
Toluene	10/20/05	10/20/05	ND	2.0	ug/kg	1:1
1,2-Dibromoethane (EDB)	10/20/05	10/20/05	ND	2.0	ug/kg	1:1
1,3-Dichloropropane	10/20/05	10/20/05	ND	2.0	ug/kg	1:1
2-Hexanone	10/20/05	10/20/05	ND	2.0	ug/kg	1:1
Dibromochloromethane	10/20/05	10/20/05	ND	2.0	ug/kg	1:1
Tetrachloroethene	10/20/05	10/20/05	ND	2.0	ug/kg	1:1
1,1,1,2Tetrachloroethane	10/20/05	10/20/05	ND	2.0	ug/kg	1:1
Chlorobenzene	10/20/05	10/20/05	ND	2.0	ug/kg	1:1
Ethylbenzene	10/20/05	10/20/05	ND	2.0	ug/kg	1:1
M+P-Xylene	10/20/05	10/20/05	ND	2.0	ug/kg	1:1
Bromoform	10/20/05	10/20/05	ND	2.0	ug/kg	1:1
Styrene	10/20/05	10/20/05	ND	2.0	ug/kg	1:1
o-Xylene	10/20/05	10/20/05	ND	2.0	ug/kg	1:1
1,1,2,2Tetrachloroethane	10/20/05	10/20/05	ND	2.0	ug/kg	1:1
1,2,3-Trichloropropane	10/20/05	10/20/05	ND	2.0	ug/kg	1:1
Isopropylbenzene(Cumene)	10/20/05	10/20/05	ND	2.0	ug/kg	1:1
Bromobenzene	10/20/05	10/20/05	ND	2.0	ug/kg	1:1
n-Propylbenzene	10/20/05	10/20/05	ND	2.0	ug/kg	1:1
2-Chlorotoluene	10/20/05	10/20/05	ND	2.0	ug/kg	1:1
4-Chlorotoluene	10/20/05	10/20/05	ND	2.0	ug/kg	1:1
1,3,5-Trimethylbenzene	10/20/05	10/20/05	ND	2.0	ug/kg	1:1
tert-Butylbenzene	10/20/05	10/20/05	ND	2.0	ug/kg	1:1
1,2,4-Trimethylbenzene	10/20/05	10/20/05	ND	2.0	ug/kg	1:1
sec-Butylbenzene	10/20/05	10/20/05	ND	2.0	ug/kg	1:1
1,3-Dichlorobenzene	10/20/05	10/20/05	ND	2.0	ug/kg	1:1
1,4-Dichlorobenzene	10/20/05	10/20/05	ND	2.0	ug/kg	1:1
4-Isopropyltoluene	10/20/05	10/20/05	ND	2.0	ug/kg	1:1
1,2-Dichlorobenzene	10/20/05	10/20/05	ND	2.0	ug/kg	1:1
n-Butylbenzene	10/20/05	10/20/05	ND	2.0	ug/kg	1:1

216

3738 Bradview Drive • Sacramento, California 95827 • (916) 369-7688 • FAX (916) 369-7689

Sparger Technology, Inc.
Environmental Laboratories

Analytical Laboratory Division
Mobile Laboratory Division
Scientific Division

Test Certificate of Analysis

Client ID	Shaw Environmental & Infrastructure	**Workorder ID**	CalTrans Merced 117535
Workorder #	17091	**Sampled**	10/12/05
Laboratory ID	17091026	**Received**	10/13/05
Sample ID	SR140-WS-01(A-D)	**Reported**	10/26/05
Matrix	Soil		

8260B GC/MS Volatiles - 8260B (continued)

Parameter	Prep Date	Analyzed	Result	RL	Units	Dilution
1,2Dibromo3chloropropane	10/20/05	10/20/05	ND	2.0	ug/kg	1:1
1,2,4-Trichlorobenzene	10/20/05	10/20/05	ND	2.0	ug/kg	1:1
Naphthalene	10/20/05	10/20/05	ND	2.0	ug/kg	1:1
Hexachlorobutadiene	10/20/05	10/20/05	ND	2.0	ug/kg	1:1
1,2,3-Trichlorobenzene	10/20/05	10/20/05	ND	2.0	ug/kg	1:1

Surrogates	Result	Recovery	Limits
1,2-Dichloroethane-d4	54 ug/kg	108 %	(70 - 135)
Toluene d8	33 ug/kg	66 %	(70 - 135)
4-Bromofluorobenzene	45 ug/kg	90 %	(70 - 135)

3738 Bradview Drive • Sacramento, California 95827 • (916) 369-7688 • FAX (916) 369-7689

Sparger Technology, Inc.
Environmental Laboratories

Analytical Laboratory Division
Mobile Laboratory Division
Scientific Division

Test Certificate of Analysis

Client ID	Shaw Environmental & Infrastructure	**Workorder ID**	CalTrans Merced 117535
Workorder #	17091	**Sampled**	10/12/05
Laboratory ID	17091026	**Received**	10/13/05
Sample ID	SR140-WS-01(A-D)	**Reported**	10/26/05
Matrix	Soil		

Metals, CAM17 - 6010B

Parameter	Prep Date	Analyzed	Result	RL	Units	Dilution
Antimony	10/13/05	10/17/05	ND	6.0	mg/Kg	1:1
Arsenic	10/13/05	10/17/05	ND	8.0	mg/Kg	1:1
Barium	**10/13/05**	**10/17/05**	**138**	**2.0**	**mg/Kg**	**1:1**
Beryllium	10/13/05	10/17/05	ND	0.30	mg/Kg	1:1
Cadmium	10/13/05	10/17/05	ND	0.50	mg/Kg	1:1
Chromium	**10/13/05**	**10/17/05**	**36**	**1.0**	**mg/Kg**	**1:1**
Cobalt	**10/13/05**	**10/17/05**	**10**	**5.0**	**mg/Kg**	**1:1**
Copper	**10/13/05**	**10/17/05**	**24**	**2.0**	**mg/Kg**	**1:1**
Lead	**10/13/05**	**10/17/05**	**5.0**	**1.0**	**mg/Kg**	**1:1**
Molybdenum	10/13/05	10/17/05	ND	5.0	mg/Kg	1:1
Nickel	10/13/05	10/17/05	ND	4.0	mg/Kg	1:1
Selenium	10/13/05	10/17/05	ND	10	mg/Kg	1:1
Silver	10/13/05	10/17/05	ND	1.0	mg/Kg	1:1
Thallium	10/13/05	10/17/05	ND	10	mg/Kg	1:1
Vanadium	**10/13/05**	**10/17/05**	**40**	**5.0**	**mg/Kg**	**1:1**
Zinc	**10/13/05**	**10/17/05**	**39**	**1.5**	**mg/Kg**	**1:1**

218

3738 Bradview Drive • Sacramento, California 95827 • (916) 369-7688 • FAX (916) 369-7689

Sparger Technology, Inc.
Environmental Laboratories

Analytical Laboratory Division
Mobile Laboratory Division
Scientific Division

Test Certificate of Analysis

Client ID	Shaw Environmental & Infrastructure	**Workorder ID**	CalTrans Merced 117535
Workorder #	17091	**Sampled**	10/12/05
Laboratory ID	17091027	**Received**	10/13/05
Sample ID	SR140-B09-1.5	**Reported**	10/26/05
Matrix	Soil		

8260B Oxygenates - 8260B

Parameter	Prep Date	Analyzed	Result	RL	Units	Dilution
Benzene	10/20/05	10/20/05	ND	1.0	ug/kg	1:1
Toluene	10/20/05	10/20/05	ND	1.0	ug/kg	1:1
Ethylbenzene	10/20/05	10/20/05	ND	1.0	ug/kg	1:1
Xylene (Total)	10/20/05	10/20/05	ND	1.0	ug/kg	1:1

Surrogates	Result	Recovery	Limits
1,2-Dichloroethane-d4	54 ug/kg	108 %	(65 - 135)

3738 Bradview Drive • Sacramento, California 95827 • (916) 369-7688 • FAX (916) 369-7689

Sparger Technology, Inc.
Environmental Laboratories

Analytical Laboratory Division
Mobile Laboratory Division
Scientific Division

Test Certificate of Analysis

Client ID	Shaw Environmental & Infrastructure	**Workorder ID**	CalTrans Merced 117535
Workorder #	17091	**Sampled**	10/12/05
Laboratory ID	17091027	**Received**	10/13/05
Sample ID	SR140-B09-1.5	**Reported**	10/26/05
Matrix	Soil		

8260B GC/MS Volatiles - 8260B

Parameter	Prep Date	Analyzed	Result	RL	Units	Dilution
Dichlorodifluoromethane	10/20/05	10/20/05	ND	2.0	ug/kg	1:1
Chloromethane	10/20/05	10/20/05	ND	2.0	ug/kg	1:1
Vinyl chloride	10/20/05	10/20/05	ND	2.0	ug/kg	1:1
Bromomethane	10/20/05	10/20/05	ND	2.0	ug/kg	1:1
Chloroethane	10/20/05	10/20/05	ND	2.0	ug/kg	1:1
Trichlorofluoromethane	10/20/05	10/20/05	ND	2.0	ug/kg	1:1
Acrolein	10/20/05	10/20/05	ND	2.0	ug/kg	1:1
1,1-Dichloroethene	10/20/05	10/20/05	ND	2.0	ug/kg	1:1
Acetone	10/20/05	10/20/05	ND	2.0	ug/kg	1:1
Methyl iodide	10/20/05	10/20/05	ND	2.0	ug/kg	1:1
Carbon disulfide	10/20/05	10/20/05	ND	2.0	ug/kg	1:1
Dichloromethane	10/20/05	10/20/05	ND	2.0	ug/kg	1:1
Acrylonitrile	10/20/05	10/20/05	ND	2.0	ug/kg	1:1
trans-1,2-Dichloroethene	10/20/05	10/20/05	ND	2.0	ug/kg	1:1
1,1-Dichloroethane	10/20/05	10/20/05	ND	2.0	ug/kg	1:1
Vinyl acetate	10/20/05	10/20/05	ND	2.0	ug/kg	1:1
cis-1,2-Dichloroethene	10/20/05	10/20/05	ND	2.0	ug/kg	1:1
2-Butanone (MEK)	10/20/05	10/20/05	ND	2.0	ug/kg	1:1
Bromochloromethane	10/20/05	10/20/05	ND	2.0	ug/kg	1:1
Chloroform	10/20/05	10/20/05	ND	2.0	ug/kg	1:1
2,2-dichloropropane	10/20/05	10/20/05	ND	2.0	ug/kg	1:1
1,1,1-Trichloroethane	10/20/05	10/20/05	ND	2.0	ug/kg	1:1
1,1-dichloropropane	10/20/05	10/20/05	ND	2.0	ug/kg	1:1
Carbon tetrachloride	10/20/05	10/20/05	ND	2.0	ug/kg	1:1
Benzene	10/20/05	10/20/05	ND	2.0	ug/kg	1:1
1,2-Dichloroethane	10/20/05	10/20/05	ND	2.0	ug/kg	1:1
Dibromomethane	10/20/05	10/20/05	ND	2.0	ug/kg	1:1
Bromodichloromethane	10/20/05	10/20/05	ND	2.0	ug/kg	1:1
1,2-Dichloropropane	10/20/05	10/20/05	ND	2.0	ug/kg	1:1
Trichloroethene	10/20/05	10/20/05	ND	2.0	ug/kg	1:1
2-Chloroethylvinyl ether	10/20/05	10/20/05	ND	2.0	ug/kg	1:1
cis-1,3-Dichloropropene	10/20/05	10/20/05	ND	2.0	ug/kg	1:1

220

3738 Bradview Drive • Sacramento, California 95827 • (916) 369-7688 • FAX (916) 369-7689

Sparger Technology, Inc.
Environmental Laboratories

Analytical Laboratory Division
Mobile Laboratory Division
Scientific Division

Test Certificate of Analysis

Client ID	Shaw Environmental & Infrastructure	**Workorder ID**	CalTrans Merced 117535
Workorder #	17091	**Sampled**	10/12/05
Laboratory ID	17091027	**Received**	10/13/05
Sample ID	SR140-B09-1.5	**Reported**	10/26/05
Matrix	Soil		

8260B GC/MS Volatiles - 8260B (continued)

Parameter	Prep Date	Analyzed	Result	RL	Units	Dilution
4-Methyl-2-pentanone	10/20/05	10/20/05	ND	2.0	ug/kg	1:1
trans-1,3Dichloropropene	10/20/05	10/20/05	ND	2.0	ug/kg	1:1
1,1,2-Trichloroethane	10/20/05	10/20/05	ND	2.0	ug/kg	1:1
Toluene	10/20/05	10/20/05	ND	2.0	ug/kg	1:1
1,2-Dibromoethane (EDB)	10/20/05	10/20/05	ND	2.0	ug/kg	1:1
1,3-Dichloropropane	10/20/05	10/20/05	ND	2.0	ug/kg	1:1
2-Hexanone	10/20/05	10/20/05	ND	2.0	ug/kg	1:1
Dibromochloromethane	10/20/05	10/20/05	ND	2.0	ug/kg	1:1
Tetrachloroethene	10/20/05	10/20/05	ND	2.0	ug/kg	1:1
1,1,1,2Tetrachloroethane	10/20/05	10/20/05	ND	2.0	ug/kg	1:1
Chlorobenzene	10/20/05	10/20/05	ND	2.0	ug/kg	1:1
Ethylbenzene	10/20/05	10/20/05	ND	2.0	ug/kg	1:1
M+P-Xylene	10/20/05	10/20/05	ND	2.0	ug/kg	1:1
Bromoform	10/20/05	10/20/05	ND	2.0	ug/kg	1:1
Styrene	10/20/05	10/20/05	ND	2.0	ug/kg	1:1
o-Xylene	10/20/05	10/20/05	ND	2.0	ug/kg	1:1
1,1,2,2Tetrachloroethane	10/20/05	10/20/05	ND	2.0	ug/kg	1:1
1,2,3-Trichloropropane	10/20/05	10/20/05	ND	2.0	ug/kg	1:1
Isopropylbenzene(Cumene)	10/20/05	10/20/05	ND	2.0	ug/kg	1:1
Bromobenzene	10/20/05	10/20/05	ND	2.0	ug/kg	1:1
n-Propylbenzene	10/20/05	10/20/05	ND	2.0	ug/kg	1:1
2-Chlorotoluene	10/20/05	10/20/05	ND	2.0	ug/kg	1:1
4-Chlorotoluene	10/20/05	10/20/05	ND	2.0	ug/kg	1:1
1,3,5-Trimethylbenzene	10/20/05	10/20/05	ND	2.0	ug/kg	1:1
tert-Butylbenzene	10/20/05	10/20/05	ND	2.0	ug/kg	1:1
1,2,4-Trimethylbenzene	10/20/05	10/20/05	ND	2.0	ug/kg	1:1
sec-Butylbenzene	10/20/05	10/20/05	ND	2.0	ug/kg	1:1
1,3-Dichlorobenzene	10/20/05	10/20/05	ND	2.0	ug/kg	1:1
1,4-Dichlorobenzene	10/20/05	10/20/05	ND	2.0	ug/kg	1:1
4-Isopropyltoluene	10/20/05	10/20/05	ND	2.0	ug/kg	1:1
1,2-Dichlorobenzene	10/20/05	10/20/05	ND	2.0	ug/kg	1:1
n-Butylbenzene	10/20/05	10/20/05	ND	2.0	ug/kg	1:1

3738 Bradview Drive • Sacramento, California 95827 • (916) 369-7688 • FAX (916) 369-7689

221

Test Certificate of Analysis

Client ID	Shaw Environmental & Infrastructure	**Workorder ID**	CalTrans Merced 117535
Workorder #	17091	**Sampled**	10/12/05
Laboratory ID	17091027	**Received**	10/13/05
Sample ID	SR140-B09-1.5	**Reported**	10/26/05
Matrix	Soil		

8260B GC/MS Volatiles - 8260B (continued)

Parameter	Prep Date	Analyzed	Result	RL	Units	Dilution
1,2Dibromo3chloropropane	10/20/05	10/20/05	ND	2.0	ug/kg	1:1
1,2,4-Trichlorobenzene	10/20/05	10/20/05	ND	2.0	ug/kg	1:1
Naphthalene	10/20/05	10/20/05	ND	2.0	ug/kg	1:1
Hexachlorobutadiene	10/20/05	10/20/05	ND	2.0	ug/kg	1:1
1,2,3-Trichlorobenzene	10/20/05	10/20/05	ND	2.0	ug/kg	1:1

Surrogates	Result	Recovery	Limits
1,2-Dichloroethane-d4	54 ug/kg	108 %	(70 - 135)
Toluene d8	43 ug/kg	86 %	(70 - 135)
4-Bromofluorobenzene	51 ug/kg	102 %	(70 - 135)

222

3738 Bradview Drive • Sacramento, California 95827 • (916) 369-7688 • FAX (916) 369-7689

Sparger Technology, Inc.
Environmental Laboratories

Analytical Laboratory Division
Mobile Laboratory Division
Scientific Division

Test Certificate of Analysis

Client ID	Shaw Environmental & Infrastructure	**Workorder ID**	CalTrans Merced 117535
Workorder #	17091	**Sampled**	10/12/05
Laboratory ID	17091027	**Received**	10/13/05
Sample ID	SR140-B09-1.5	**Reported**	10/26/05
Matrix	Soil		

Metals, CAM17 - 6010B

Parameter	Prep Date	Analyzed	Result	RL	Units	Dilution
Antimony	10/13/05	10/17/05	ND	6.0	mg/Kg	1:1
Arsenic	10/13/05	10/17/05	ND	8.0	mg/Kg	1:1
Barium	**10/13/05**	**10/17/05**	**230**	**2.0**	**mg/Kg**	**1:1**
Beryllium	10/13/05	10/17/05	ND	0.30	mg/Kg	1:1
Cadmium	10/13/05	10/17/05	ND	0.50	mg/Kg	1:1
Chromium	**10/13/05**	**10/17/05**	**48**	**1.0**	**mg/Kg**	**1:1**
Cobalt	**10/13/05**	**10/17/05**	**10**	**5.0**	**mg/Kg**	**1:1**
Copper	**10/13/05**	**10/17/05**	**30**	**2.0**	**mg/Kg**	**1:1**
Lead	**10/13/05**	**10/17/05**	**4.1**	**1.0**	**mg/Kg**	**1:1**
Molybdenum	10/13/05	10/17/05	ND	5.0	mg/Kg	1:1
Nickel	10/13/05	10/17/05	ND	4.0	mg/Kg	1:1
Selenium	10/13/05	10/17/05	ND	10	mg/Kg	1:1
Silver	10/13/05	10/17/05	ND	1.0	mg/Kg	1:1
Thallium	10/13/05	10/17/05	ND	10	mg/Kg	1:1
Vanadium	**10/13/05**	**10/17/05**	**63**	**5.0**	**mg/Kg**	**1:1**
Zinc	**10/13/05**	**10/17/05**	**46**	**1.5**	**mg/Kg**	**1:1**

3738 Bradview Drive • Sacramento, California 95827 • (916) 369-7688 • FAX (916) 369-7689

Sparger Technology, Inc.
Environmental Laboratories

Analytical Laboratory Division
Mobile Laboratory Division
Scientific Division

Test Certificate of Analysis

Client ID	Shaw Environmental & Infrastructure	**Workorder ID**	CalTrans Merced 117535
Workorder #	17091	**Sampled**	10/12/05
Laboratory ID	17091028	**Received**	10/13/05
Sample ID	SR140-B09-3.0	**Reported**	10/26/05
Matrix	Soil		

8260B Oxygenates - 8260B

Parameter	Prep Date	Analyzed	Result	RL	Units	Dilution
Benzene	10/18/05	10/18/05	ND	1.0	ug/kg	1:1
Toluene	10/18/05	10/18/05	ND	1.0	ug/kg	1:1
Ethylbenzene	10/18/05	10/18/05	ND	1.0	ug/kg	1:1
Xylene (Total)	10/18/05	10/18/05	ND	1.0	ug/kg	1:1

Surrogates	Result	Recovery	Limits
1,2-Dichloroethane-d4	64 ug/kg	128 %	(65 - 135)

224

3738 Bradview Drive • Sacramento, California 95827 • (916) 369-7688 • FAX (916) 369-7689

Sparger Technology, Inc.
Environmental Laboratories

Analytical Laboratory Division
Mobile Laboratory Division
Scientific Division

Test Certificate of Analysis

Client ID	Shaw Environmental & Infrastructure	**Workorder ID**	CalTrans Merced 117535
Workorder #	17091	**Sampled**	10/12/05
Laboratory ID	17091029	**Received**	10/13/05
Sample ID	SR140-B09-4.5	**Reported**	10/26/05
Matrix	Soil		

8260B Oxygenates - 8260B

Parameter	Prep Date	Analyzed	Result	RL	Units	Dilution
Benzene	10/20/05	10/20/05	ND	1.0	ug/kg	1:1
Toluene	10/20/05	10/20/05	ND	1.0	ug/kg	1:1
Ethylbenzene	10/20/05	10/20/05	ND	1.0	ug/kg	1:1
Xylene (Total)	10/20/05	10/20/05	ND	1.0	ug/kg	1:1

Surrogates	Result	Recovery	Limits
1,2-Dichloroethane-d4	53 ug/kg	106 %	(65 - 135)

3738 Bradview Drive • Sacramento, California 95827 • (916) 369-7688 • FAX (916) 369-7689

225

Sparger Technology, Inc.
Environmental Laboratories

Analytical Laboratory Division
Mobile Laboratory Division
Scientific Division

Test Certificate of Analysis

Client ID	Shaw Environmental & Infrastructure	**Workorder ID**	CalTrans Merced 117535
Workorder #	17091	**Sampled**	10/12/05
Laboratory ID	17091029	**Received**	10/13/05
Sample ID	SR140-B09-4.5	**Reported**	10/26/05
Matrix	Soil		

8260B GC/MS Volatiles - 8260B

Parameter	Prep Date	Analyzed	Result	RL	Units	Dilution
Dichlorodifluoromethane	10/20/05	10/20/05	ND	2.0	ug/kg	1:1
Chloromethane	10/20/05	10/20/05	ND	2.0	ug/kg	1:1
Vinyl chloride	10/20/05	10/20/05	ND	2.0	ug/kg	1:1
Bromomethane	10/20/05	10/20/05	ND	2.0	ug/kg	1:1
Chloroethane	10/20/05	10/20/05	ND	2.0	ug/kg	1:1
Trichlorofluoromethane	10/20/05	10/20/05	ND	2.0	ug/kg	1:1
Acrolein	10/20/05	10/20/05	ND	2.0	ug/kg	1:1
1,1-Dichloroethene	10/20/05	10/20/05	ND	2.0	ug/kg	1:1
Acetone	10/20/05	10/20/05	ND	2.0	ug/kg	1:1
Methyl iodide	10/20/05	10/20/05	ND	2.0	ug/kg	1:1
Carbon disulfide	10/20/05	10/20/05	ND	2.0	ug/kg	1:1
Dichloromethane	10/20/05	10/20/05	ND	2.0	ug/kg	1:1
Acrylonitrile	10/20/05	10/20/05	ND	2.0	ug/kg	1:1
trans-1,2-Dichloroethene	10/20/05	10/20/05	ND	2.0	ug/kg	1:1
1,1-Dichloroethane	10/20/05	10/20/05	ND	2.0	ug/kg	1:1
Vinyl acetate	10/20/05	10/20/05	ND	2.0	ug/kg	1:1
cis-1,2-Dichloroethene	10/20/05	10/20/05	ND	2.0	ug/kg	1:1
2-Butanone (MEK)	10/20/05	10/20/05	ND	2.0	ug/kg	1:1
Bromochloromethane	10/20/05	10/20/05	ND	2.0	ug/kg	1:1
Chloroform	10/20/05	10/20/05	ND	2.0	ug/kg	1:1
2,2-dichloropropane	10/20/05	10/20/05	ND	2.0	ug/kg	1:1
1,1,1-Trichloroethane	10/20/05	10/20/05	ND	2.0	ug/kg	1:1
1,1-dichloropropane	10/20/05	10/20/05	ND	2.0	ug/kg	1:1
Carbon tetrachloride	10/20/05	10/20/05	ND	2.0	ug/kg	1:1
Benzene	10/20/05	10/20/05	ND	2.0	ug/kg	1:1
1,2-Dichloroethane	10/20/05	10/20/05	ND	2.0	ug/kg	1:1
Dibromomethane	10/20/05	10/20/05	ND	2.0	ug/kg	1:1
Bromodichloromethane	10/20/05	10/20/05	ND	2.0	ug/kg	1:1
1,2-Dichloropropane	10/20/05	10/20/05	ND	2.0	ug/kg	1:1
Trichloroethene	10/20/05	10/20/05	ND	2.0	ug/kg	1:1
2-Chloroethylvinyl ether	10/20/05	10/20/05	ND	2.0	ug/kg	1:1
cis-1,3-Dichloropropene	10/20/05	10/20/05	ND	2.0	ug/kg	1:1

3738 Bradview Drive • Sacramento, California 95827 • (916) 369-7688 • FAX (916) 369-7689

Sparger Technology, Inc.
Environmental Laboratories

Analytical Laboratory Division
Mobile Laboratory Division
Scientific Division

Test Certificate of Analysis

Client ID	Shaw Environmental & Infrastructure	**Workorder ID**	CalTrans Merced 117535
Workorder #	17091	**Sampled**	10/12/05
Laboratory ID	17091029	**Received**	10/13/05
Sample ID	SR140-B09-4.5	**Reported**	10/26/05
Matrix	Soil		

8260B GC/MS Volatiles - 8260B (continued)

Parameter	Prep Date	Analyzed	Result	RL	Units	Dilution
4-Methyl-2-pentanone	10/20/05	10/20/05	ND	2.0	ug/kg	1:1
trans-1,3Dichloropropene	10/20/05	10/20/05	ND	2.0	ug/kg	1:1
1,1,2-Trichloroethane	10/20/05	10/20/05	ND	2.0	ug/kg	1:1
Toluene	10/20/05	10/20/05	ND	2.0	ug/kg	1:1
1,2-Dibromoethane (EDB)	10/20/05	10/20/05	ND	2.0	ug/kg	1:1
1,3-Dichloropropane	10/20/05	10/20/05	ND	2.0	ug/kg	1:1
2-Hexanone	10/20/05	10/20/05	ND	2.0	ug/kg	1:1
Dibromochloromethane	10/20/05	10/20/05	ND	2.0	ug/kg	1:1
Tetrachloroethene	10/20/05	10/20/05	ND	2.0	ug/kg	1:1
1,1,1,2Tetrachloroethane	10/20/05	10/20/05	ND	2.0	ug/kg	1:1
Chlorobenzene	10/20/05	10/20/05	ND	2.0	ug/kg	1:1
Ethylbenzene	10/20/05	10/20/05	ND	2.0	ug/kg	1:1
M+P-Xylene	10/20/05	10/20/05	ND	2.0	ug/kg	1:1
Bromoform	10/20/05	10/20/05	ND	2.0	ug/kg	1:1
Styrene	10/20/05	10/20/05	ND	2.0	ug/kg	1:1
o-Xylene	10/20/05	10/20/05	ND	2.0	ug/kg	1:1
1,1,2,2Tetrachloroethane	10/20/05	10/20/05	ND	2.0	ug/kg	1:1
1,2,3-Trichloropropane	10/20/05	10/20/05	ND	2.0	ug/kg	1:1
Isopropylbenzene(Cumene)	10/20/05	10/20/05	ND	2.0	ug/kg	1:1
Bromobenzene	10/20/05	10/20/05	ND	2.0	ug/kg	1:1
n-Propylbenzene	10/20/05	10/20/05	ND	2.0	ug/kg	1:1
2-Chlorotoluene	10/20/05	10/20/05	ND	2.0	ug/kg	1:1
4-Chlorotoluene	10/20/05	10/20/05	ND	2.0	ug/kg	1:1
1,3,5-Trimethylbenzene	10/20/05	10/20/05	ND	2.0	ug/kg	1:1
tert-Butylbenzene	10/20/05	10/20/05	ND	2.0	ug/kg	1:1
1,2,4-Trimethylbenzene	10/20/05	10/20/05	ND	2.0	ug/kg	1:1
sec-Butylbenzene	10/20/05	10/20/05	ND	2.0	ug/kg	1:1
1,3-Dichlorobenzene	10/20/05	10/20/05	ND	2.0	ug/kg	1:1
1,4-Dichlorobenzene	10/20/05	10/20/05	ND	2.0	ug/kg	1:1
4-Isopropyltoluene	10/20/05	10/20/05	ND	2.0	ug/kg	1:1
1,2-Dichlorobenzene	10/20/05	10/20/05	ND	2.0	ug/kg	1:1
n-Butylbenzene	10/20/05	10/20/05	ND	2.0	ug/kg	1:1

3738 Bradview Drive • Sacramento, California 95827 • (916) 369-7688 • FAX (916) 369-7689

Sparger Technology, Inc.
Environmental Laboratories

Analytical Laboratory Division
Mobile Laboratory Division
Scientific Division

Test Certificate of Analysis

Client ID	Shaw Environmental & Infrastructure	**Workorder ID**	CalTrans Merced 117535
Workorder #	17091	**Sampled**	10/12/05
Laboratory ID	17091029	**Received**	10/13/05
Sample ID	SR140-B09-4.5	**Reported**	10/26/05
Matrix	Soil		

8260B GC/MS Volatiles - 8260B (continued)

Parameter	Prep Date	Analyzed	Result	RL	Units	Dilution
1,2Dibromo3chloropropane	10/20/05	10/20/05	ND	2.0	ug/kg	1:1
1,2,4-Trichlorobenzene	10/20/05	10/20/05	ND	2.0	ug/kg	1:1
Naphthalene	10/20/05	10/20/05	ND	2.0	ug/kg	1:1
Hexachlorobutadiene	10/20/05	10/20/05	ND	2.0	ug/kg	1:1
1,2,3-Trichlorobenzene	10/20/05	10/20/05	ND	2.0	ug/kg	1:1

Surrogates	Result	Recovery	Limits
1,2-Dichloroethane-d4	53 ug/kg	106 %	(70 - 135)
Toluene d8	44 ug/kg	88 %	(70 - 135)
4-Bromofluorobenzene	49 ug/kg	98 %	(70 - 135)

3738 Bradview Drive • Sacramento, California 95827 • (916) 369-7688 • FAX (916) 369-7689

Sparger Technology, Inc.
Environmental Laboratories

Analytical Laboratory Division
Mobile Laboratory Division
Scientific Division

Test Certificate of Analysis

Client ID	Shaw Environmental & Infrastructure	**Workorder ID**	CalTrans Merced 117535
Workorder #	17091	**Sampled**	10/12/05
Laboratory ID	17091030	**Received**	10/13/05
Sample ID	SR140-B09-6.0	**Reported**	10/26/05
Matrix	Soil		

8260B Oxygenates - 8260B

Parameter	Prep Date	Analyzed	Result	RL	Units	Dilution
Benzene	10/18/05	10/18/05	ND	1.0	ug/kg	1:1
Toluene	10/18/05	10/18/05	ND	1.0	ug/kg	1:1
Ethylbenzene	10/18/05	10/18/05	ND	1.0	ug/kg	1:1
Xylene (Total)	10/18/05	10/18/05	ND	1.0	ug/kg	1:1

Surrogates	Result	Recovery	Limits
1,2-Dichloroethane-d4	66 ug/kg	132 %	(65 - 135)

3738 Bradview Drive • Sacramento, California 95827 • (916) 369-7688 • FAX (916) 369-7689

Sparger Technology, Inc.
Environmental Laboratories

Analytical Laboratory Division
Mobile Laboratory Division
Scientific Division

Test Certificate of Analysis

Client ID	Shaw Environmental & Infrastructure	**Workorder ID**	CalTrans Merced 117535
Workorder #	17091	**Sampled**	10/12/05
Laboratory ID	17091031	**Received**	10/13/05
Sample ID	SR140-B09-7.5	**Reported**	10/26/05
Matrix	Soil		

8260B Oxygenates - 8260B

Parameter	Prep Date	Analyzed	Result	RL	Units	Dilution
Benzene	10/18/05	10/18/05	ND	1.0	ug/kg	1:1
Toluene	10/18/05	10/18/05	ND	1.0	ug/kg	1:1
Ethylbenzene	10/18/05	10/18/05	ND	1.0	ug/kg	1:1
Xylene (Total)	10/18/05	10/18/05	ND	1.0	ug/kg	1:1

Surrogates	Result	Recovery	Limits
1,2-Dichloroethane-d4	66 ug/kg	132 %	(65 - 135)

3738 Bradview Drive • Sacramento, California 95827 • (916) 369-7688 • FAX (916) 369-7689

Sparger Technology, Inc.
Environmental Laboratories

Analytical Laboratory Division
Mobile Laboratory Division
Scientific Division

Test Certificate of Analysis

Client ID	Shaw Environmental & Infrastructure	**Workorder ID**	CalTrans Merced 117535
Workorder #	17091	**Sampled**	10/12/05
Laboratory ID	17091032	**Received**	10/13/05
Sample ID	SR140-B09-9.0	**Reported**	10/26/05
Matrix	Soil		

8260B Oxygenates - 8260B

Parameter	Prep Date	Analyzed	Result	RL	Units	Dilution
Benzene	10/20/05	10/20/05	ND	1.0	ug/kg	1:1
Toluene	10/20/05	10/20/05	ND	1.0	ug/kg	1:1
Ethylbenzene	10/20/05	10/20/05	ND	1.0	ug/kg	1:1
Xylene (Total)	10/20/05	10/20/05	ND	1.0	ug/kg	1:1

Surrogates	Result	Recovery	Limits
1,2-Dichloroethane-d4	58 ug/kg	116 %	(65 - 135)

3738 Bradview Drive • Sacramento, California 95827 • (916) 369-7688 • FAX (916) 369-7689

Test Certificate of Analysis

Client ID	Shaw Environmental & Infrastructure	**Workorder ID**	CalTrans Merced 117535
Workorder #	17091	**Sampled**	10/12/05
Laboratory ID	17091032	**Received**	10/13/05
Sample ID	SR140-B09-9.0	**Reported**	10/26/05
Matrix	Soil		

8260B GC/MS Volatiles - 8260B (continued)

Parameter	Prep Date	Analyzed	Result	RL	Units	Dilution
1,2Dibromo3chloropropane	10/20/05	10/20/05	ND	2.0	ug/kg	1:1
1,2,4-Trichlorobenzene	10/20/05	10/20/05	ND	2.0	ug/kg	1:1
Naphthalene	10/20/05	10/20/05	ND	2.0	ug/kg	1:1
Hexachlorobutadiene	10/20/05	10/20/05	ND	2.0	ug/kg	1:1
1,2,3-Trichlorobenzene	10/20/05	10/20/05	ND	2.0	ug/kg	1:1

Surrogates	Result	Recovery	Limits
1,2-Dichloroethane-d4	58 ug/kg	116 %	(70 - 135)
Toluene d8	46 ug/kg	92 %	(70 - 135)
4-Bromofluorobenzene	50 ug/kg	100 %	(70 - 135)

3738 Bradview Drive • Sacramento, California 95827 • (916) 369-7688 • FAX (916) 369-7689

Sparger Technology, Inc.
Environmental Laboratories

Analytical Laboratory Division
Mobile Laboratory Division
Scientific Division

Test Certificate of Analysis

Client ID	Shaw Environmental & Infrastructure	**Workorder ID**	CalTrans Merced 117535
Workorder #	17091	**Sampled**	10/12/05
Laboratory ID	17091033	**Received**	10/13/05
Sample ID	SR140-B02-3.0	**Reported**	10/26/05
Matrix	Soil		

8260B Oxygenates - 8260B

Parameter	Prep Date	Analyzed	Result	RL	Units	Dilution
Benzene	10/18/05	10/18/05	ND	1.0	ug/kg	1:1
Toluene	10/18/05	10/18/05	ND	1.0	ug/kg	1:1
Ethylbenzene	10/18/05	10/18/05	ND	1.0	ug/kg	1:1
Xylene (Total)	10/18/05	10/18/05	ND	1.0	ug/kg	1:1

Surrogates	Result	Recovery	Limits
1,2-Dichloroethane-d4	67 ug/kg	134 %	(65 - 135)

3738 Bradview Drive • Sacramento, California 95827 • (916) 369-7688 • FAX (916) 369-7689

Test Certificate of Analysis

Client ID	Shaw Environmental & Infrastructure	**Workorder ID**	CalTrans Merced 117535
Workorder #	17091	**Sampled**	10/12/05
Laboratory ID	17091034	**Received**	10/13/05
Sample ID	SR140-B02-4.5	**Reported**	10/26/05
Matrix	Soil		

8260B GC/MS Volatiles - 8260B (continued)

Parameter	Prep Date	Analyzed	Result	RL	Units	Dilution
4-Methyl-2-pentanone	10/20/05	10/20/05	ND	2.0	ug/kg	1:1
trans-1,3Dichloropropene	10/20/05	10/20/05	ND	2.0	ug/kg	1:1
1,1,2-Trichloroethane	10/20/05	10/20/05	ND	2.0	ug/kg	1:1
Toluene	10/20/05	10/20/05	ND	2.0	ug/kg	1:1
1,2-Dibromoethane (EDB)	10/20/05	10/20/05	ND	2.0	ug/kg	1:1
1,3-Dichloropropane	10/20/05	10/20/05	ND	2.0	ug/kg	1:1
2-Hexanone	10/20/05	10/20/05	ND	2.0	ug/kg	1:1
Dibromochloromethane	10/20/05	10/20/05	ND	2.0	ug/kg	1:1
Tetrachloroethene	10/20/05	10/20/05	ND	2.0	ug/kg	1:1
1,1,1,2Tetrachloroethane	10/20/05	10/20/05	ND	2.0	ug/kg	1:1
Chlorobenzene	10/20/05	10/20/05	ND	2.0	ug/kg	1:1
Ethylbenzene	10/20/05	10/20/05	ND	2.0	ug/kg	1:1
M+P-Xylene	10/20/05	10/20/05	ND	2.0	ug/kg	1:1
Bromoform	10/20/05	10/20/05	ND	2.0	ug/kg	1:1
Styrene	10/20/05	10/20/05	ND	2.0	ug/kg	1:1
o-Xylene	10/20/05	10/20/05	ND	2.0	ug/kg	1:1
1,1,2,2Tetrachloroethane	10/20/05	10/20/05	ND	2.0	ug/kg	1:1
1,2,3-Trichloropropane	10/20/05	10/20/05	ND	2.0	ug/kg	1:1
Isopropylbenzene (Cumene)	10/20/05	10/20/05	ND	2.0	ug/kg	1:1
Bromobenzene	10/20/05	10/20/05	ND	2.0	ug/kg	1:1
n-Propylbenzene	10/20/05	10/20/05	ND	2.0	ug/kg	1:1
2-Chlorotoluene	10/20/05	10/20/05	ND	2.0	ug/kg	1:1
4-Chlorotoluene	10/20/05	10/20/05	ND	2.0	ug/kg	1:1
1,3,5-Trimethylbenzene	10/20/05	10/20/05	ND	2.0	ug/kg	1:1
tert-Butylbenzene	10/20/05	10/20/05	ND	2.0	ug/kg	1:1
1,2,4-Trimethylbenzene	10/20/05	10/20/05	ND	2.0	ug/kg	1:1
sec-Butylbenzene	10/20/05	10/20/05	ND	2.0	ug/kg	1:1
1,3-Dichlorobenzene	10/20/05	10/20/05	ND	2.0	ug/kg	1:1
1,4-Dichlorobenzene	10/20/05	10/20/05	ND	2.0	ug/kg	1:1
4-Isopropyltoluene	10/20/05	10/20/05	ND	2.0	ug/kg	1:1
1,2-Dichlorobenzene	10/20/05	10/20/05	ND	2.0	ug/kg	1:1
n-Butylbenzene	10/20/05	10/20/05	ND	2.0	ug/kg	1:1

3738 Bradview Drive • Sacramento, California 95827 • (916) 369-7688 • FAX (916) 369-7689

Sparger Technology, Inc.
Environmental Laboratories

Analytical Laboratory Division
Mobile Laboratory Division
Scientific Division

Test Certificate of Analysis

Client ID	Shaw Environmental & Infrastructure	**Workorder ID**	CalTrans Merced 117535
Workorder #	17091	**Sampled**	10/12/05
Laboratory ID	17091034	**Received**	10/13/05
Sample ID	SR140-B02-4.5	**Reported**	10/26/05
Matrix	Soil		

8260B GC/MS Volatiles - 8260B (continued)

Parameter	Prep Date	Analyzed	Result	RL	Units	Dilution
1,2Dibromo3chloropropane	10/20/05	10/20/05	ND	2.0	ug/kg	1:1
1,2,4-Trichlorobenzene	10/20/05	10/20/05	ND	2.0	ug/kg	1:1
Naphthalene	10/20/05	10/20/05	ND	2.0	ug/kg	1:1
Hexachlorobutadiene	10/20/05	10/20/05	ND	2.0	ug/kg	1:1
1,2,3-Trichlorobenzene	10/20/05	10/20/05	ND	2.0	ug/kg	1:1

Surrogates	Result	Recovery	Limits
1,2-Dichloroethane-d4	56 ug/kg	112 %	(70 - 135)
Toluene d8	44 ug/kg	88 %	(70 - 135)
4-Bromofluorobenzene	49 ug/kg	98 %	(70 - 135)

3738 Bradview Drive • Sacramento, California 95827 • (916) 369-7688 • FAX (916) 369-7689

Sparger Technology, Inc.
Environmental Laboratories

Analytical Laboratory Division
Mobile Laboratory Division
Scientific Division

Test Certificate of Analysis

Client ID	Shaw Environmental & Infrastructure	**Workorder ID**	CalTrans Merced 117535
Workorder #	17091	**Sampled**	10/12/05
Laboratory ID	17091035	**Received**	10/13/05
Sample ID	SR140-B02-6.0	**Reported**	10/26/05
Matrix	Soil		

8260B Oxygenates - 8260B

Parameter	Prep Date	Analyzed	Result	RL	Units	Dilution
Benzene	10/18/05	10/18/05	ND	1.0	ug/kg	1:1
Toluene	10/18/05	10/18/05	ND	1.0	ug/kg	1:1
Ethylbenzene	10/18/05	10/18/05	ND	1.0	ug/kg	1:1
Xylene (Total)	10/18/05	10/18/05	ND	1.0	ug/kg	1:1

Surrogates	Result	Recovery	Limits
1,2-Dichloroethane-d4	67 ug/kg	134 %	(65 - 135)

3738 Bradview Drive • Sacramento, California 95827 • (916) 369-7688 • FAX (916) 369-7689

Sparger Technology, Inc.
Environmental Laboratories

Analytical Laboratory Division
Mobile Laboratory Division
Scientific Division

Test Certificate of Analysis

Client ID	Shaw Environmental & Infrastructure	**Workorder ID**	CalTrans Merced 117535
Workorder #	17091	**Sampled**	10/12/05
Laboratory ID	17091036	**Received**	10/13/05
Sample ID	SR140-B02-7.5	**Reported**	10/26/05
Matrix	Soil		

8260B Oxygenates - 8260B

Parameter	Prep Date	Analyzed	Result	RL	Units	Dilution
Benzene	10/18/05	10/18/05	ND	1.0	ug/kg	1:1
Toluene	10/18/05	10/18/05	ND	1.0	ug/kg	1:1
Ethylbenzene	10/18/05	10/18/05	ND	1.0	ug/kg	1:1
Xylene (Total)	10/18/05	10/18/05	ND	1.0	ug/kg	1:1

Surrogates	Result	Recovery	Limits
1,2-Dichloroethane-d4	67 ug/kg	134 %	(65 - 135)

3738 Bradview Drive • Sacramento, California 95827 • (916) 369-7688 • FAX (916) 369-7689

Sparger Technology, Inc.
Environmental Laboratories

Analytical Laboratory Division
Mobile Laboratory Division
Scientific Division

Test Certificate of Analysis

Client ID	Shaw Environmental & Infrastructure	**Workorder ID**	CalTrans Merced 117535
Workorder #	17091	**Sampled**	10/12/05
Laboratory ID	17091037	**Received**	10/13/05
Sample ID	SR140-B02-9.0	**Reported**	10/26/05
Matrix	Soil		

8260B Oxygenates - 8260B

Parameter	Prep Date	Analyzed	Result	RL	Units	Dilution
Benzene	10/20/05	10/20/05	ND	1.0	ug/kg	1:1
Toluene	10/20/05	10/20/05	ND	1.0	ug/kg	1:1
Ethylbenzene	10/20/05	10/20/05	ND	1.0	ug/kg	1:1
Xylene (Total)	10/20/05	10/20/05	ND	1.0	ug/kg	1:1

Surrogates	Result	Recovery	Limits
1,2-Dichloroethane-d4	51 ug/kg	102 %	(65 - 135)

3738 Bradview Drive • Sacramento, California 95827 • (916) 369-7688 • FAX (916) 369-7689

Sparger Technology, Inc.
Environmental Laboratories

Analytical Laboratory Division
Mobile Laboratory Division
Scientific Division

Test Certificate of Analysis

Client ID	Shaw Environmental & Infrastructure	**Workorder ID**	CalTrans Merced 117535
Workorder #	17091	**Sampled**	10/12/05
Laboratory ID	17091037	**Received**	10/13/05
Sample ID	SR140-B02-9.0	**Reported**	10/26/05
Matrix	Soil		

8260B GC/MS Volatiles - 8260B

Parameter	Prep Date	Analyzed	Result	RL	Units	Dilution
Dichlorodifluoromethane	10/20/05	10/20/05	ND	2.0	ug/kg	1:1
Chloromethane	10/20/05	10/20/05	ND	2.0	ug/kg	1:1
Vinyl chloride	10/20/05	10/20/05	ND	2.0	ug/kg	1:1
Bromomethane	10/20/05	10/20/05	ND	2.0	ug/kg	1:1
Chloroethane	10/20/05	10/20/05	ND	2.0	ug/kg	1:1
Trichlorofluoromethane	10/20/05	10/20/05	ND	2.0	ug/kg	1:1
Acrolein	10/20/05	10/20/05	ND	2.0	ug/kg	1:1
1,1-Dichloroethene	10/20/05	10/20/05	ND	2.0	ug/kg	1:1
Acetone	**10/20/05**	**10/20/05**	**2.7**	**2.0**	**ug/kg**	**1:1**
Methyl iodide	10/20/05	10/20/05	ND	2.0	ug/kg	1:1
Carbon disulfide	10/20/05	10/20/05	ND	2.0	ug/kg	1:1
Dichloromethane	10/20/05	10/20/05	ND	2.0	ug/kg	1:1
Acrylonitrile	10/20/05	10/20/05	ND	2.0	ug/kg	1:1
trans-1,2-Dichloroethene	10/20/05	10/20/05	ND	2.0	ug/kg	1:1
1,1-Dichloroethane	10/20/05	10/20/05	ND	2.0	ug/kg	1:1
Vinyl acetate	10/20/05	10/20/05	ND	2.0	ug/kg	1:1
cis-1,2-Dichloroethene	10/20/05	10/20/05	ND	2.0	ug/kg	1:1
2-Butanone (MEK)	10/20/05	10/20/05	ND	2.0	ug/kg	1:1
Bromochloromethane	10/20/05	10/20/05	ND	2.0	ug/kg	1:1
Chloroform	10/20/05	10/20/05	ND	2.0	ug/kg	1:1
2,2-dichloropropane	10/20/05	10/20/05	ND	2.0	ug/kg	1:1
1,1,1-Trichloroethane	10/20/05	10/20/05	ND	2.0	ug/kg	1:1
1,1-dichloropropane	10/20/05	10/20/05	ND	2.0	ug/kg	1:1
Carbon tetrachloride	10/20/05	10/20/05	ND	2.0	ug/kg	1:1
Benzene	10/20/05	10/20/05	ND	2.0	ug/kg	1:1
1,2-Dichloroethane	10/20/05	10/20/05	ND	2.0	ug/kg	1:1
Dibromomethane	10/20/05	10/20/05	ND	2.0	ug/kg	1:1
Bromodichloromethane	10/20/05	10/20/05	ND	2.0	ug/kg	1:1
1,2-Dichloropropane	10/20/05	10/20/05	ND	2.0	ug/kg	1:1
Trichloroethene	10/20/05	10/20/05	ND	2.0	ug/kg	1:1
2-Chloroethylvinyl ether	10/20/05	10/20/05	ND	2.0	ug/kg	1:1
cis-1,3-Dichloropropene	10/20/05	10/20/05	ND	2.0	ug/kg	1:1

3738 Bradview Drive • Sacramento, California 95827 • (916) 369-7688 • FAX (916) 369-7689

Test Certificate of Analysis

Client ID	Shaw Environmental & Infrastructure	**Workorder ID**	CalTrans Merced 117535
Workorder #	17091	**Sampled**	10/12/05
Laboratory ID	17091037	**Received**	10/13/05
Sample ID	SR140-B02-9.0	**Reported**	10/26/05
Matrix	Soil		

8260B GC/MS Volatiles - 8260B (continued)

Parameter	Prep Date	Analyzed	Result	RL	Units	Dilution
4-Methyl-2-pentanone	10/20/05	10/20/05	ND	2.0	ug/kg	1:1
trans-1,3Dichloropropene	10/20/05	10/20/05	ND	2.0	ug/kg	1:1
1,1,2-Trichloroethane	10/20/05	10/20/05	ND	2.0	ug/kg	1:1
Toluene	10/20/05	10/20/05	ND	2.0	ug/kg	1:1
1,2-Dibromoethane (EDB)	10/20/05	10/20/05	ND	2.0	ug/kg	1:1
1,3-Dichloropropane	10/20/05	10/20/05	ND	2.0	ug/kg	1:1
2-Hexanone	10/20/05	10/20/05	ND	2.0	ug/kg	1:1
Dibromochloromethane	10/20/05	10/20/05	ND	2.0	ug/kg	1:1
Tetrachloroethene	10/20/05	10/20/05	ND	2.0	ug/kg	1:1
1,1,1,2Tetrachloroethane	10/20/05	10/20/05	ND	2.0	ug/kg	1:1
Chlorobenzene	10/20/05	10/20/05	ND	2.0	ug/kg	1:1
Ethylbenzene	10/20/05	10/20/05	ND	2.0	ug/kg	1:1
M+P-Xylene	10/20/05	10/20/05	ND	2.0	ug/kg	1:1
Bromoform	10/20/05	10/20/05	ND	2.0	ug/kg	1:1
Styrene	10/20/05	10/20/05	ND	2.0	ug/kg	1:1
o-Xylene	10/20/05	10/20/05	ND	2.0	ug/kg	1:1
1,1,2,2Tetrachloroethane	10/20/05	10/20/05	ND	2.0	ug/kg	1:1
1,2,3-Trichloropropane	10/20/05	10/20/05	ND	2.0	ug/kg	1:1
Isopropylbenzene (Cumene)	10/20/05	10/20/05	ND	2.0	ug/kg	1:1
Bromobenzene	10/20/05	10/20/05	ND	2.0	ug/kg	1:1
n-Propylbenzene	10/20/05	10/20/05	ND	2.0	ug/kg	1:1
2-Chlorotoluene	10/20/05	10/20/05	ND	2.0	ug/kg	1:1
4-Chlorotoluene	10/20/05	10/20/05	ND	2.0	ug/kg	1:1
1,3,5-Trimethylbenzene	10/20/05	10/20/05	ND	2.0	ug/kg	1:1
tert-Butylbenzene	10/20/05	10/20/05	ND	2.0	ug/kg	1:1
1,2,4-Trimethylbenzene	10/20/05	10/20/05	ND	2.0	ug/kg	1:1
sec-Butylbenzene	10/20/05	10/20/05	ND	2.0	ug/kg	1:1
1,3-Dichlorobenzene	10/20/05	10/20/05	ND	2.0	ug/kg	1:1
1,4-Dichlorobenzene	10/20/05	10/20/05	ND	2.0	ug/kg	1:1
4-Isopropyltoluene	10/20/05	10/20/05	ND	2.0	ug/kg	1:1
1,2-Dichlorobenzene	10/20/05	10/20/05	ND	2.0	ug/kg	1:1
n-Butylbenzene	10/20/05	10/20/05	ND	2.0	ug/kg	1:1

3738 Bradview Drive • Sacramento, California 95827 • (916) 369-7688 • FAX (916) 369-7689

Sparger Technology, Inc.
Environmental Laboratories

Analytical Laboratory Division
Mobile Laboratory Division
Scientific Division

Test Certificate of Analysis

Client ID	Shaw Environmental & Infrastructure	**Workorder ID**	CalTrans Merced 117535
Workorder #	17091	**Sampled**	10/12/05
Laboratory ID	17091037	**Received**	10/13/05
Sample ID	SR140-B02-9.0	**Reported**	10/26/05
Matrix	Soil		

8260B GC/MS Volatiles - 8260B (continued)

Parameter	Prep Date	Analyzed	Result	RL	Units	Dilution
1,2Dibromo3chloropropane	10/20/05	10/20/05	ND	2.0	ug/kg	1:1
1,2,4-Trichlorobenzene	10/20/05	10/20/05	ND	2.0	ug/kg	1:1
Naphthalene	10/20/05	10/20/05	ND	2.0	ug/kg	1:1
Hexachlorobutadiene	10/20/05	10/20/05	ND	2.0	ug/kg	1:1
1,2,3-Trichlorobenzene	10/20/05	10/20/05	ND	2.0	ug/kg	1:1

Surrogates	Result	Recovery	Limits
1,2-Dichloroethane-d4	51 ug/kg	102 %	(70 - 135)
Toluene d8	45 ug/kg	90 %	(70 - 135)
4-Bromofluorobenzene	51 ug/kg	102 %	(70 - 135)

3738 Bradview Drive • Sacramento, California 95827 • (916) 369-7688 • FAX (916) 369-7689

Sparger Technology, Inc.
Environmental Laboratories

Analytical Laboratory Division
Mobile Laboratory Division
Scientific Division

Test Certificate of Analysis

Client ID	Shaw Environmental & Infrastructure	**Workorder ID**	CalTrans Merced 117535
Workorder #	17091	**Sampled**	10/12/05
Laboratory ID	17091038	**Received**	10/13/05
Sample ID	SR140-ER-1012	**Reported**	10/26/05
Matrix	Water		

Metals, CAM17 - 6010B

Parameter	Prep Date	Analyzed	Result	RL	Units	Dilution
Antimony	10/13/05	10/14/05	ND	0.060	mg/L	1:1
Arsenic	10/13/05	10/14/05	ND	0.080	mg/L	1:1
Barium	10/13/05	10/14/05	ND	0.020	mg/L	1:1
Beryllium	10/13/05	10/14/05	ND	0.0030	mg/L	1:1
Cadmium	10/13/05	10/14/05	ND	0.0050	mg/L	1:1
Chromium	10/13/05	10/14/05	ND	0.010	mg/L	1:1
Cobalt	10/13/05	10/14/05	ND	0.050	mg/L	1:1
Copper	**10/13/05**	**10/14/05**	**0.080**	**0.020**	**mg/L**	**1:1**
Lead	10/13/05	10/14/05	ND	0.010	mg/L	1:1
Molybdenum	10/13/05	10/14/05	ND	0.050	mg/L	1:1
Nickel	10/13/05	10/14/05	ND	0.040	mg/L	1:1
Selenium	10/13/05	10/14/05	ND	0.10	mg/L	1:1
Silver	10/13/05	10/14/05	ND	0.010	mg/L	1:1
Thallium	10/13/05	10/14/05	ND	0.10	mg/L	1:1
Vanadium	10/13/05	10/14/05	ND	0.050	mg/L	1:1
Zinc	10/13/05	10/14/05	ND	0.015	mg/L	1:1

3738 Bradview Drive • Sacramento, California 95827 • (916) 369-7688 • FAX (916) 369-7689

Sparger Technology, Inc.
Environmental Laboratories

Analytical Laboratory Division
Mobile Laboratory Division
Scientific Division

Test Certificate of Analysis

Client ID	Shaw Environmental & Infrastructure	**Workorder ID**	CalTrans Merced 117535
Workorder #	17091	**Sampled**	10/12/05
Laboratory ID	17091039	**Received**	10/13/05
Sample ID	SR140-WS-04(A-D)	**Reported**	10/26/05
Matrix	Soil		

8260B Oxygenates - 8260B

Parameter	Prep Date	Analyzed	Result	RL	Units	Dilution
Benzene	10/18/05	10/18/05	ND	1.0	ug/kg	1:1
Toluene	10/18/05	10/18/05	ND	1.0	ug/kg	1:1
Ethylbenzene	10/18/05	10/18/05	ND	1.0	ug/kg	1:1
Xylene (Total)	10/18/05	10/18/05	ND	1.0	ug/kg	1:1

Surrogates	Result	Recovery	Limits
1,2-Dichloroethane-d4	67 ug/kg	134 %	(65 - 135)

3738 Bradview Drive • Sacramento, California 95827 • (916) 369-7688 • FAX (916) 369-7689

Sparger Technology, Inc.
Environmental Laboratories

Analytical Laboratory Division
Mobile Laboratory Division
Scientific Division

Test Certificate of Analysis

Client ID	Shaw Environmental & Infrastructure	**Workorder ID**	CalTrans Merced 117535
Workorder #	17091	**Sampled**	10/12/05
Laboratory ID	17091039	**Received**	10/13/05
Sample ID	SR140-WS-04(A-D)	**Reported**	10/26/05
Matrix	Soil		

Metals, CAM17 - 6010B

Parameter	Prep Date	Analyzed	Result	RL	Units	Dilution
Antimony	10/13/05	10/17/05	ND	6.0	mg/Kg	1:1
Arsenic	10/13/05	10/17/05	ND	8.0	mg/Kg	1:1
Barium	**10/13/05**	**10/17/05**	**127**	**2.0**	**mg/Kg**	**1:1**
Beryllium	10/13/05	10/17/05	ND	0.30	mg/Kg	1:1
Cadmium	10/13/05	10/17/05	ND	0.50	mg/Kg	1:1
Chromium	**10/13/05**	**10/17/05**	**36**	**1.0**	**mg/Kg**	**1:1**
Cobalt	**10/13/05**	**10/17/05**	**10**	**5.0**	**mg/Kg**	**1:1**
Copper	**10/13/05**	**10/17/05**	**23**	**2.0**	**mg/Kg**	**1:1**
Lead	**10/13/05**	**10/17/05**	**3.4**	**1.0**	**mg/Kg**	**1:1**
Molybdenum	10/13/05	10/17/05	ND	5.0	mg/Kg	1:1
Nickel	10/13/05	10/17/05	ND	4.0	mg/Kg	1:1
Selenium	10/13/05	10/17/05	ND	10	mg/Kg	1:1
Silver	10/13/05	10/17/05	ND	1.0	mg/Kg	1:1
Thallium	10/13/05	10/17/05	ND	10	mg/Kg	1:1
Vanadium	**10/13/05**	**10/17/05**	**36**	**5.0**	**mg/Kg**	**1:1**
Zinc	**10/13/05**	**10/17/05**	**34**	**1.5**	**mg/Kg**	**1:1**

3738 Bradview Drive • Sacramento, California 95827 • (916) 369-7688 • FAX (916) 369-7689

Sparger Technology, Inc.
Environmental Laboratories

Analytical Laboratory Division
Mobile Laboratory Division
Scientific Division

Test Certificate of Analysis

Client ID	Shaw Environmental & Infrastructure	**Workorder ID**	CalTrans Merced 117535
Workorder #	17091	**Sampled**	10/12/05
Laboratory ID	17091040	**Received**	10/13/05
Sample ID	SR140-WS-03(A-C)	**Reported**	10/26/05
Matrix	Soil		

8260B Oxygenates - 8260B

Parameter	Prep Date	Analyzed	Result	RL	Units	Dilution
Benzene	10/20/05	10/20/05	ND	1.0	ug/kg	1:1
Toluene	10/20/05	10/20/05	ND	1.0	ug/kg	1:1
Ethylbenzene	10/20/05	10/20/05	ND	1.0	ug/kg	1:1
Xylene (Total)	10/20/05	10/20/05	ND	1.0	ug/kg	1:1

Surrogates	Result	Recovery	Limits
1,2-Dichloroethane-d4	56 ug/kg	112 %	(65 - 135)

3738 Bradview Drive • Sacramento, California 95827 • (916) 369-7688 • FAX (916) 369-7689

Sparger Technology, Inc.
Environmental Laboratories

Analytical Laboratory Division
Mobile Laboratory Division
Scientific Division

Test Certificate of Analysis

Client ID	Shaw Environmental & Infrastructure	**Workorder ID**	CalTrans Merced 117535
Workorder #	17091	**Sampled**	10/12/05
Laboratory ID	17091040	**Received**	10/13/05
Sample ID	SR140-WS-03(A-C)	**Reported**	10/26/05
Matrix	Soil		

8260B GC/MS Volatiles - 8260B

Parameter	Prep Date	Analyzed	Result	RL	Units	Dilution
Dichlorodifluoromethane	10/20/05	10/20/05	ND	2.0	ug/kg	1:1
Chloromethane	10/20/05	10/20/05	ND	2.0	ug/kg	1:1
Vinyl chloride	10/20/05	10/20/05	ND	2.0	ug/kg	1:1
Bromomethane	10/20/05	10/20/05	ND	2.0	ug/kg	1:1
Chloroethane	10/20/05	10/20/05	ND	2.0	ug/kg	1:1
Trichlorofluoromethane	10/20/05	10/20/05	ND	2.0	ug/kg	1:1
Acrolein	10/20/05	10/20/05	ND	2.0	ug/kg	1:1
1,1-Dichloroethene	10/20/05	10/20/05	ND	2.0	ug/kg	1:1
Acetone	10/20/05	10/20/05	ND	2.0	ug/kg	1:1
Methyl iodide	10/20/05	10/20/05	ND	2.0	ug/kg	1:1
Carbon disulfide	10/20/05	10/20/05	ND	2.0	ug/kg	1:1
Dichloromethane	10/20/05	10/20/05	ND	2.0	ug/kg	1:1
Acrylonitrile	10/20/05	10/20/05	ND	2.0	ug/kg	1:1
trans-1,2-Dichloroethene	10/20/05	10/20/05	ND	2.0	ug/kg	1:1
1,1-Dichloroethane	10/20/05	10/20/05	ND	2.0	ug/kg	1:1
Vinyl acetate	10/20/05	10/20/05	ND	2.0	ug/kg	1:1
cis-1,2-Dichloroethene	10/20/05	10/20/05	ND	2.0	ug/kg	1:1
2-Butanone (MEK)	10/20/05	10/20/05	ND	2.0	ug/kg	1:1
Bromochloromethane	10/20/05	10/20/05	ND	2.0	ug/kg	1:1
Chloroform	10/20/05	10/20/05	ND	2.0	ug/kg	1:1
2,2-dichloropropane	10/20/05	10/20/05	ND	2.0	ug/kg	1:1
1,1,1-Trichloroethane	10/20/05	10/20/05	ND	2.0	ug/kg	1:1
1,1-dichloropropane	10/20/05	10/20/05	ND	2.0	ug/kg	1:1
Carbon tetrachloride	10/20/05	10/20/05	ND	2.0	ug/kg	1:1
Benzene	10/20/05	10/20/05	ND	2.0	ug/kg	1:1
1,2-Dichloroethane	10/20/05	10/20/05	ND	2.0	ug/kg	1:1
Dibromomethane	10/20/05	10/20/05	ND	2.0	ug/kg	1:1
Bromodichloromethane	10/20/05	10/20/05	ND	2.0	ug/kg	1:1
1,2-Dichloropropane	10/20/05	10/20/05	ND	2.0	ug/kg	1:1
Trichloroethene	10/20/05	10/20/05	ND	2.0	ug/kg	1:1
2-Chloroethylvinyl ether	10/20/05	10/20/05	ND	2.0	ug/kg	1:1
cis-1,3-Dichloropropene	10/20/05	10/20/05	ND	2.0	ug/kg	1:1

3738 Bradview Drive • Sacramento, California 95827 • (916) 369-7688 • FAX (916) 369-7689

Sparger Technology, Inc.
Environmental Laboratories

Analytical Laboratory Division
Mobile Laboratory Division
Scientific Division

Test Certificate of Analysis

Client ID	Shaw Environmental & Infrastructure	**Workorder ID**	CalTrans Merced 117535
Workorder #	17091	**Sampled**	10/12/05
Laboratory ID	17091040	**Received**	10/13/05
Sample ID	SR140-WS-03(A-C)	**Reported**	10/26/05
Matrix	Soil		

8260B GC/MS Volatiles - 8260B (continued)

Parameter	Prep Date	Analyzed	Result	RL	Units	Dilution
4-Methyl-2-pentanone	10/20/05	10/20/05	ND	2.0	ug/kg	1:1
trans-1,3Dichloropropene	10/20/05	10/20/05	ND	2.0	ug/kg	1:1
1,1,2-Trichloroethane	10/20/05	10/20/05	ND	2.0	ug/kg	1:1
Toluene	10/20/05	10/20/05	ND	2.0	ug/kg	1:1
1,2-Dibromoethane (EDB)	10/20/05	10/20/05	ND	2.0	ug/kg	1:1
1,3-Dichloropropane	10/20/05	10/20/05	ND	2.0	ug/kg	1:1
2-Hexanone	10/20/05	10/20/05	ND	2.0	ug/kg	1:1
Dibromochloromethane	10/20/05	10/20/05	ND	2.0	ug/kg	1:1
Tetrachloroethene	10/20/05	10/20/05	ND	2.0	ug/kg	1:1
1,1,1,2Tetrachloroethane	10/20/05	10/20/05	ND	2.0	ug/kg	1:1
Chlorobenzene	10/20/05	10/20/05	ND	2.0	ug/kg	1:1
Ethylbenzene	10/20/05	10/20/05	ND	2.0	ug/kg	1:1
M+P-Xylene	10/20/05	10/20/05	ND	2.0	ug/kg	1:1
Bromoform	10/20/05	10/20/05	ND	2.0	ug/kg	1:1
Styrene	10/20/05	10/20/05	ND	2.0	ug/kg	1:1
o-Xylene	10/20/05	10/20/05	ND	2.0	ug/kg	1:1
1,1,2,2Tetrachloroethane	10/20/05	10/20/05	ND	2.0	ug/kg	1:1
1,2,3-Trichloropropane	10/20/05	10/20/05	ND	2.0	ug/kg	1:1
Isopropylbenzene(Cumene)	10/20/05	10/20/05	ND	2.0	ug/kg	1:1
Bromobenzene	10/20/05	10/20/05	ND	2.0	ug/kg	1:1
n-Propylbenzene	10/20/05	10/20/05	ND	2.0	ug/kg	1:1
2-Chlorotoluene	10/20/05	10/20/05	ND	2.0	ug/kg	1:1
4-Chlorotoluene	10/20/05	10/20/05	ND	2.0	ug/kg	1:1
1,3,5-Trimethylbenzene	10/20/05	10/20/05	ND	2.0	ug/kg	1:1
tert-Butylbenzene	10/20/05	10/20/05	ND	2.0	ug/kg	1:1
1,2,4-Trimethylbenzene	10/20/05	10/20/05	ND	2.0	ug/kg	1:1
sec-Butylbenzene	10/20/05	10/20/05	ND	2.0	ug/kg	1:1
1,3-Dichlorobenzene	10/20/05	10/20/05	ND	2.0	ug/kg	1:1
1,4-Dichlorobenzene	10/20/05	10/20/05	ND	2.0	ug/kg	1:1
4-Isopropyltoluene	10/20/05	10/20/05	ND	2.0	ug/kg	1:1
1,2-Dichlorobenzene	10/20/05	10/20/05	ND	2.0	ug/kg	1:1
n-Butylbenzene	10/20/05	10/20/05	ND	2.0	ug/kg	1:1

3738 Bradview Drive • Sacramento, California 95827 • (916) 369-7688 • FAX (916) 369-7689

Sparger Technology, Inc.
Environmental Laboratories

Analytical Laboratory Division
Mobile Laboratory Division
Scientific Division

Test Certificate of Analysis

Client ID	Shaw Environmental & Infrastructure	**Workorder ID**	CalTrans Merced 117535
Workorder #	17091	**Sampled**	10/12/05
Laboratory ID	17091040	**Received**	10/13/05
Sample ID	SR140-WS-03(A-C)	**Reported**	10/26/05
Matrix	Soil		

8260B GC/MS Volatiles - 8260B (continued)

Parameter	Prep Date	Analyzed	Result	RL	Units	Dilution
1,2Dibromo3chloropropane	10/20/05	10/20/05	ND	2.0	ug/kg	1:1
1,2,4-Trichlorobenzene	10/20/05	10/20/05	ND	2.0	ug/kg	1:1
Naphthalene	10/20/05	10/20/05	ND	2.0	ug/kg	1:1
Hexachlorobutadiene	10/20/05	10/20/05	ND	2.0	ug/kg	1:1
1,2,3-Trichlorobenzene	10/20/05	10/20/05	ND	2.0	ug/kg	1:1

Surrogates	Result	Recovery	Limits
1,2-Dichloroethane-d4	56 ug/kg	112 %	(70 - 135)
Toluene d8	41 ug/kg	82 %	(70 - 135)
4-Bromofluorobenzene	51 ug/kg	102 %	(70 - 135)

3738 Bradview Drive • Sacramento, California 95827 • (916) 369-7688 • FAX (916) 369-7689

Sparger Technology, Inc.
Environmental Laboratories

Analytical Laboratory Division
Mobile Laboratory Division
Scientific Division

Test Certificate of Analysis

Client ID	Shaw Environmental & Infrastructure	**Workorder ID**	CalTrans Merced 117535
Workorder #	17091	**Sampled**	10/12/05
Laboratory ID	17091040	**Received**	10/13/05
Sample ID	SR140-WS-03(A-C)	**Reported**	10/26/05
Matrix	Soil		

Metals, CAM17 - 6010B

Parameter	Prep Date	Analyzed	Result	RL	Units	Dilution
Antimony	10/13/05	10/17/05	ND	6.0	mg/Kg	1:1
Arsenic	10/13/05	10/17/05	ND	8.0	mg/Kg	1:1
Barium	**10/13/05**	**10/17/05**	**142**	**2.0**	**mg/Kg**	**1:1**
Beryllium	10/13/05	10/17/05	ND	0.30	mg/Kg	1:1
Cadmium	10/13/05	10/17/05	ND	0.50	mg/Kg	1:1
Chromium	**10/13/05**	**10/17/05**	**40**	**1.0**	**mg/Kg**	**1:1**
Cobalt	**10/13/05**	**10/17/05**	**11**	**5.0**	**mg/Kg**	**1:1**
Copper	**10/13/05**	**10/17/05**	**26**	**2.0**	**mg/Kg**	**1:1**
Lead	**10/13/05**	**10/17/05**	**3.8**	**1.0**	**mg/Kg**	**1:1**
Molybdenum	10/13/05	10/17/05	ND	5.0	mg/Kg	1:1
Nickel	10/13/05	10/17/05	ND	4.0	mg/Kg	1:1
Selenium	10/13/05	10/17/05	ND	10	mg/Kg	1:1
Silver	10/13/05	10/17/05	ND	1.0	mg/Kg	1:1
Thallium	10/13/05	10/17/05	ND	10	mg/Kg	1:1
Vanadium	**10/13/05**	**10/17/05**	**46**	**5.0**	**mg/Kg**	**1:1**
Zinc	**10/13/05**	**10/17/05**	**39**	**1.5**	**mg/Kg**	**1:1**

3738 Bradview Drive • Sacramento, California 95827 • (916) 369-7688 • FAX (916) 369-7689

Sparger Technology, Inc.
Environmental Laboratories

Analytical Laboratory Division
Mobile Laboratory Division
Scientific Division

Test Certificate of Analysis

Client ID	Shaw Environmental & Infrastructure	**Workorder ID**	CalTrans Merced 117535
Workorder #	17091	**Sampled**	10/12/05
Laboratory ID	17091041	**Received**	10/13/05
Sample ID	SR140-WS-02(A-D)	**Reported**	10/26/05
Matrix	Soil		

8260B Oxygenates - 8260B

Parameter	Prep Date	Analyzed	Result	RL	Units	Dilution
Benzene	10/18/05	10/18/05	ND	1.0	ug/kg	1:1
Toluene	10/18/05	10/18/05	ND	1.0	ug/kg	1:1
Ethylbenzene	10/18/05	10/18/05	ND	1.0	ug/kg	1:1
Xylene (Total)	10/18/05	10/18/05	ND	1.0	ug/kg	1:1

Surrogates	Result	Recovery	Limits
1,2-Dichloroethane-d4	66 ug/kg	132 %	(65 - 135)

3738 Bradview Drive • Sacramento, California 95827 • (916) 369-7688 • FAX (916) 369-7689

Sparger Technology, Inc.
Environmental Laboratories

Analytical Laboratory Division
Mobile Laboratory Division
Scientific Division

Test Certificate of Analysis

Client ID	Shaw Environmental & Infrastructure	**Workorder ID**	CalTrans Merced 117535
Workorder #	17091	**Sampled**	10/12/05
Laboratory ID	17091041	**Received**	10/13/05
Sample ID	SR140-WS-02(A-D)	**Reported**	10/26/05
Matrix	Soil		

Metals, CAM17 - 6010B

Parameter	Prep Date	Analyzed	Result	RL	Units	Dilution
Antimony	10/13/05	10/17/05	ND	6.0	mg/Kg	1:1
Arsenic	10/13/05	10/17/05	ND	8.0	mg/Kg	1:1
Barium	**10/13/05**	**10/17/05**	**167**	**2.0**	**mg/Kg**	**1:1**
Beryllium	10/13/05	10/17/05	ND	0.30	mg/Kg	1:1
Cadmium	10/13/05	10/17/05	ND	0.50	mg/Kg	1:1
Chromium	**10/13/05**	**10/17/05**	**45**	**1.0**	**mg/Kg**	**1:1**
Cobalt	**10/13/05**	**10/17/05**	**13**	**5.0**	**mg/Kg**	**1:1**
Copper	**10/13/05**	**10/17/05**	**28**	**2.0**	**mg/Kg**	**1:1**
Lead	**10/13/05**	**10/17/05**	**4.1**	**1.0**	**mg/Kg**	**1:1**
Molybdenum	10/13/05	10/17/05	ND	5.0	mg/Kg	1:1
Nickel	10/13/05	10/17/05	ND	4.0	mg/Kg	1:1
Selenium	10/13/05	10/17/05	ND	10	mg/Kg	1:1
Silver	10/13/05	10/17/05	ND	1.0	mg/Kg	1:1
Thallium	10/13/05	10/17/05	ND	10	mg/Kg	1:1
Vanadium	**10/13/05**	**10/17/05**	**46**	**5.0**	**mg/Kg**	**1:1**
Zinc	**10/13/05**	**10/17/05**	**39**	**1.5**	**mg/Kg**	**1:1**

3738 Bradview Drive • Sacramento, California 95827 • (916) 369-7688 • FAX (916) 369-7689

Sparger Technology, Inc.
Environmental Laboratories

Analytical Laboratory Division
Mobile Laboratory Division
Scientific Division

Test Certificate of Analysis

Client ID Shaw Environmental & Infrastructure
Workorder # 17091 **Workorder ID** CalTrans Merced 117535

Parameter TPHdiesel
Method 8015M DHS

Lab ID	Sample ID	Result	RL	Units	Collected	Analyzed	Matrix	Dilution
17091001	SR140-B05-1.5	ND	1.0	mg/Kg	10/11/05	10/14/05	Soil	1:1
17091002	SR140-B05-3.0	ND	1.0	mg/Kg	10/11/05	10/14/05	Soil	1:1
17091003	SR140-B05-4.5	ND	1.0	mg/Kg	10/11/05	10/14/05	Soil	1:1
17091004	SR140-B05-6.0	ND	1.0	mg/Kg	10/11/05	10/14/05	Soil	1:1
17091005	SR140-B05-7.5	ND	1.0	mg/Kg	10/11/05	10/14/05	Soil	1:1
17091006	SR140-B05-9.0	ND	1.0	mg/Kg	10/11/05	10/14/05	Soil	1:1
17091007	SR140-B06-1.5	ND	1.0	mg/Kg	10/11/05	10/14/05	Soil	1:1
17091008	SR140-B06-3.0	ND	1.0	mg/Kg	10/11/05	10/14/05	Soil	1:1
17091009	SR140-B06-4.5	ND	1.0	mg/Kg	10/11/05	10/14/05	Soil	1:1
17091010	SR140-B06-6.0	ND	1.0	mg/Kg	10/11/05	10/14/05	Soil	1:1
17091011	SR140-B06-7.5	ND	1.0	mg/Kg	10/11/05	10/14/05	Soil	1:1
17091012	SR140-B06-9.0	ND	1.0	mg/Kg	10/11/05	10/15/05	Soil	1:1
17091013	SR140-ER-1011	ND	50	ug/L	10/11/05	10/21/05	Water	1:1
17091014	SR140-B07-1.5	ND	1.0	mg/Kg	10/12/05	10/15/05	Soil	1:1
17091015	SR140-B07-3.0	ND	1.0	mg/Kg	10/12/05	10/15/05	Soil	1:1
17091016	SR140-B07-4.5	ND	1.0	mg/Kg	10/12/05	10/15/05	Soil	1:1
17091017	SR140-B07-6.0	ND	1.0	mg/Kg	10/12/05	10/15/05	Soil	1:1
17091018	SR140-B07-7.5	ND	1.0	mg/Kg	10/12/05	10/15/05	Soil	1:1
17091019	SR140-B07-9.0	ND	1.0	mg/Kg	10/12/05	10/15/05	Soil	1:1
17091020	SR140-B08-1.5	ND	1.0	mg/Kg	10/12/05	10/15/05	Soil	1:1
17091021	SR140-B08-3.0	ND	1.0	mg/Kg	10/12/05	10/19/05	Soil	1:1
17091022	SR140-B08-4.5	ND	1.0	mg/Kg	10/12/05	10/19/05	Soil	1:1
17091023	SR140-B08-6.0	ND	1.0	mg/Kg	10/12/05	10/19/05	Soil	1:1
17091024	SR140-B08-7.5	ND	1.0	mg/Kg	10/12/05	10/19/05	Soil	1:1
17091025	SR140-B08-9.0	ND	1.0	mg/Kg	10/12/05	10/19/05	Soil	1:1
17091026	SR140-WS-01(A-D)	ND	1.0	mg/Kg	10/12/05	10/20/05	Soil	1:1
17091027	SR140-B09-1.5	ND	1.0	mg/Kg	10/12/05	10/20/05	Soil	1:1
17091028	SR140-B09-3.0	ND	1.0	mg/Kg	10/12/05	10/20/05	Soil	1:1
17091029	SR140-B09-4.5	ND	1.0	mg/Kg	10/12/05	10/20/05	Soil	1:1
17091030	SR140-B09-6.0	ND	1.0	mg/Kg	10/12/05	10/20/05	Soil	1:1
17091031	SR140-B09-7.5	ND	1.0	mg/Kg	10/12/05	10/20/05	Soil	1:1
17091032	SR140-B09-9.0	ND	1.0	mg/Kg	10/12/05	10/20/05	Soil	1:1
17091033	SR140-B02-3.0	ND	1.0	mg/Kg	10/12/05	10/20/05	Soil	1:1
17091034	SR140-B02-4.5	ND	1.0	mg/Kg	10/12/05	10/20/05	Soil	1:1

3738 Bradview Drive • Sacramento, California 95827 • (916) 369-7688 • FAX (916) 369-7689

Sparger Technology, Inc.
Environmental Laboratories

Analytical Laboratory Division
Mobile Laboratory Division
Scientific Division

Test Certificate of Analysis

Client ID Shaw Environmental & Infrastructure
Workorder # 17091 **Workorder ID** CalTrans Merced 117535

Parameter TPHdiesel (continued)
Method 8015M DHS

Lab ID	Sample ID	Result	RL	Units	Collected	Analyzed	Matrix	Dilution
17091035	SR140-B02-6.0	ND	1.0	mg/Kg	10/12/05	10/20/05	Soil	1:1
17091036	SR140-B02-7.5	ND	1.0	mg/Kg	10/12/05	10/20/05	Soil	1:1
17091037	SR140-B02-9.0	ND	1.0	mg/Kg	10/12/05	10/20/05	Soil	1:1
17091038	SR140-ER-1012	ND	50	ug/L	10/12/05	10/21/05	Water	1:1
17091039	SR140-WS-04(A-D)	ND	1.0	mg/Kg	10/12/05	10/20/05	Soil	1:1
17091040	SR140-WS-03(A-C)	ND	1.0	mg/Kg	10/12/05	10/20/05	Soil	1:1
17091041	SR140-WS-02(A-D)	ND	1.0	mg/Kg	10/12/05	10/20/05	Soil	1:1

3738 Bradview Drive • Sacramento, California 95827 • (916) 369-7688 • FAX (916) 369-7689

Sparger Technology, Inc.
Environmental Laboratories

Analytical Laboratory Division
Mobile Laboratory Division
Scientific Division

Test Certificate of Analysis

Client ID Shaw Environmental & Infrastructure
Workorder # 17091 **Workorder ID** CalTrans Merced 117535

Parameter TPHgas
Method 8015M DHS

Lab ID	Sample ID	Result	RL	Units	Collected	Analyzed	Matrix	Dilution
17091001	SR140-B05-1.5	ND	0.50	mg/Kg	10/11/05	10/19/05	Soil	1:1
17091002	SR140-B05-3.0	ND	0.50	mg/Kg	10/11/05	10/19/05	Soil	1:1
17091003	SR140-B05-4.5	ND	0.50	mg/Kg	10/11/05	10/19/05	Soil	1:1
17091004	SR140-B05-6.0	ND	0.50	mg/Kg	10/11/05	10/19/05	Soil	1:1
17091005	SR140-B05-7.5	ND	0.50	mg/Kg	10/11/05	10/19/05	Soil	1:1
17091006	SR140-B05-9.0	ND	0.50	mg/Kg	10/11/05	10/19/05	Soil	1:1
17091007	SR140-B06-1.5	ND	0.50	mg/Kg	10/11/05	10/19/05	Soil	1:1
17091008	SR140-B06-3.0	ND	0.50	mg/Kg	10/11/05	10/19/05	Soil	1:1
17091009	SR140-B06-4.5	ND	0.50	mg/Kg	10/11/05	10/19/05	Soil	1:1
17091010	SR140-B06-6.0	ND	0.50	mg/Kg	10/11/05	10/19/05	Soil	1:1
17091011	SR140-B06-7.5	ND	0.50	mg/Kg	10/11/05	10/19/05	Soil	1:1
17091012	SR140-B06-9.0	ND	0.50	mg/Kg	10/11/05	10/19/05	Soil	1:1
17091013	SR140-ER-1011	ND	50	ug/L	10/11/05	10/19/05	Water	1:1
17091014	SR140-B07-1.5	ND	0.50	mg/Kg	10/12/05	10/19/05	Soil	1:1
17091015	SR140-B07-3.0	ND	0.50	mg/Kg	10/12/05	10/19/05	Soil	1:1
17091016	SR140-B07-4.5	ND	0.50	mg/Kg	10/12/05	10/19/05	Soil	1:1
17091017	SR140-B07-6.0	ND	0.50	mg/Kg	10/12/05	10/20/05	Soil	1:1
17091018	SR140-B07-7.5	ND	0.50	mg/Kg	10/12/05	10/20/05	Soil	1:1
17091019	SR140-B07-9.0	ND	0.50	mg/Kg	10/12/05	10/20/05	Soil	1:1
17091020	SR140-B08-1.5	ND	0.50	mg/Kg	10/12/05	10/20/05	Soil	1:1
17091021	SR140-B08-3.0	ND	0.50	mg/Kg	10/12/05	10/20/05	Soil	1:1
17091022	SR140-B08-4.5	ND	0.50	mg/Kg	10/12/05	10/20/05	Soil	1:1
17091023	SR140-B08-6.0	ND	0.50	mg/Kg	10/12/05	10/20/05	Soil	1:1
17091024	SR140-B08-7.5	ND	0.50	mg/Kg	10/12/05	10/20/05	Soil	1:1
17091025	SR140-B08-9.0	ND	0.50	mg/Kg	10/12/05	10/20/05	Soil	1:1
17091026	SR140-WS-01(A-D)	ND	0.50	mg/Kg	10/12/05	10/20/05	Soil	1:1
17091027	SR140-B09-1.5	ND	0.50	mg/Kg	10/12/05	10/20/05	Soil	1:1
17091028	SR140-B09-3.0	ND	0.50	mg/Kg	10/12/05	10/20/05	Soil	1:1
17091029	SR140-B09-4.5	ND	0.50	mg/Kg	10/12/05	10/20/05	Soil	1:1
17091030	SR140-B09-6.0	ND	0.50	mg/Kg	10/12/05	10/20/05	Soil	1:1
17091031	SR140-B09-7.5	ND	0.50	mg/Kg	10/12/05	10/20/05	Soil	1:1
17091032	SR140-B09-9.0	ND	0.50	mg/Kg	10/12/05	10/21/05	Soil	1:1
17091033	SR140-B02-3.0	ND	0.50	mg/Kg	10/12/05	10/21/05	Soil	1:1
17091034	SR140-B02-4.5	ND	0.50	mg/Kg	10/12/05	10/21/05	Soil	1:1

3738 Bradview Drive • Sacramento, California 95827 • (916) 369-7688 • FAX (916) 369-7689

Sparger Technology, Inc.
Environmental Laboratories

Analytical Laboratory Division
Mobile Laboratory Division
Scientific Division

Test Certificate of Analysis

Client ID Shaw Environmental & Infrastructure
Workorder # 17091 **Workorder ID** CalTrans Merced 117535

Parameter TPHgas (continued)
Method 8015M DHS

Lab ID	Sample ID	Result	RL	Units	Collected	Analyzed	Matrix	Dilution
17091035	SR140-B02-6.0	ND	0.50	mg/Kg	10/12/05	10/21/05	Soil	1:1
17091036	SR140-B02-7.5	ND	0.50	mg/Kg	10/12/05	10/21/05	Soil	1:1
17091037	SR140-B02-9.0	ND	0.50	mg/Kg	10/12/05	10/21/05	Soil	1:1
17091038	SR140-ER-1012	ND	50	ug/L	10/12/05	10/19/05	Water	1:1
17091039	SR140-WS-04(A-D)	ND	0.50	mg/Kg	10/12/05	10/21/05	Soil	1:1
17091040	SR140-WS-03(A-C)	ND	0.50	mg/Kg	10/12/05	10/21/05	Soil	1:1
17091041	SR140-WS-02(A-D)	ND	0.50	mg/Kg	10/12/05	10/21/05	Soil	1:1

3738 Bradview Drive • Sacramento, California 95827 • (916) 369-7688 • FAX (916) 369-7689

Sparger Technology, Inc.
Environmental Laboratories

Analytical Laboratory Division
Mobile Laboratory Division
Scientific Division

Test Certificate of Analysis

Client ID Shaw Environmental & Infrastructure
Workorder # 17091 **Workorder ID** CalTrans Merced 117535

Parameter Mercury
Method EPA 7471A

Lab ID	Sample ID	Result	RL	Units	Collected	Analyzed	Matrix	Dilution
17091001	SR140-B05-1.5	ND	0.010	mg/Kg	10/11/05	10/18/05	Soil	1:1
17091007	SR140-B06-1.5	0.011	0.010	mg/Kg	10/11/05	10/18/05	Soil	1:1
17091014	SR140-B07-1.5	ND	0.010	mg/Kg	10/12/05	10/18/05	Soil	1:1
17091020	SR140-B08-1.5	0.011	0.010	mg/Kg	10/12/05	10/18/05	Soil	1:1
17091026	SR140-WS-01(A-D)	ND	0.010	mg/Kg	10/12/05	10/18/05	Soil	1:1
17091027	SR140-B09-1.5	0.012	0.010	mg/Kg	10/12/05	10/18/05	Soil	1:1
17091039	SR140-WS-04(A-D)	ND	0.010	mg/Kg	10/12/05	10/18/05	Soil	1:1
17091040	SR140-WS-03(A-C)	ND	0.010	mg/Kg	10/12/05	10/18/05	Soil	1:1
17091041	SR140-WS-02(A-D)	0.0100	0.010	mg/Kg	10/12/05	10/18/05	Soil	1:1

3738 Bradview Drive • Sacramento, California 95827 • (916) 369-7688 • FAX (916) 369-7689

Sparger Technology, Inc.
Environmental Laboratories

Analytical Laboratory Division
Mobile Laboratory Division
Scientific Division

Test Certificate of Analysis

Client ID Shaw Environmental & Infrastructure
Workorder # 17091 **Workorder ID** CalTrans Merced 117535

Parameter pH
Method 9045 PH

Lab ID	Sample ID	Result	RL	Units	Collected	Analyzed	Matrix	Dilution
17091005	SR140-B05-7.5	7.4	0.10	SU	10/11/05	10/18/05	Soil	1:1
17091012	SR140-B06-9.0	7.2	0.10	SU	10/11/05	10/18/05	Soil	1:1
17091014	SR140-B07-1.5	7.6	0.10	SU	10/12/05	10/18/05	Soil	1:1
17091021	SR140-B08-3.0	8.0	0.10	SU	10/12/05	10/18/05	Soil	1:1
17091029	SR140-B09-4.5	7.4	0.10	SU	10/12/05	10/18/05	Soil	1:1
17091033	SR140-B02-3.0	9.4	0.10	SU	10/12/05	10/18/05	Soil	1:1

3738 Bradview Drive • Sacramento, California 95827 • (916) 369-7688 • FAX (916) 369-7689

Sparger Technology, Inc.
Environmental Laboratories

Analytical Laboratory Division
Mobile Laboratory Division
Scientific Division

Method Blank Report

Client ID Shaw Environmental & Infrastructure
Workorder ID CalTrans Merced 117535
Laboratory ID 71089
Sample ID MB for HBN 276059 [SGXV/2280]
Matrix Soil

Parameter	Method	Prep Date	Analyzed	Result	RL	Units	Dilution
TPHdiesel	8015M DHS	10/14/05	10/14/05	ND	1.0	mg/Kg	1:1

3738 Bradview Drive • Sacramento, California 95827 • (916) 369-7688 • FAX (916) 369-7689

Sparger Technology, Inc.
Environmental Laboratories

Analytical Laboratory Division
Mobile Laboratory Division
Scientific Division

Lab Control Sample Report

Client ID Shaw Environmental & Infrastructure
Workorder ID CalTrans Merced 117535
Laboratory ID 71090
Sample ID LCS for HBN 276059 [SGXV/2280]
Matrix Soil

Parameter	Method	Prep Date	Analyzed	Result	RL	Units	Dilution
TPHdiesel	8015M DHS	10/14/05	10/14/05	48	1.0	mg/Kg	1:1

3738 Bradview Drive • Sacramento, California 95827 • (916) 369-7688 • FAX (916) 369-7689

Sparger Technology, Inc.
Environmental Laboratories

Analytical Laboratory Division
Mobile Laboratory Division
Scientific Division

Lab Control Sample Duplicate Report

Client ID Shaw Environmental & Infrastructure
Workorder ID CalTrans Merced 117535
Laboratory ID 71091
Sample ID LCSD for HBN 276059 [SGXV/2280
Matrix Soil

Parameter	Method	Prep Date	Analyzed	Result	RL	Units	Dilution
TPHdiesel	8015M DHS	10/14/05	10/14/05	49	1.0	mg/Kg	1:1

3738 Bradview Drive • Sacramento, California 95827 • (916) 369-7688 • FAX (916) 369-7689

Sparger Technology, Inc.
Environmental Laboratories

Analytical Laboratory Division
Mobile Laboratory Division
Scientific Division

Matrix Spike Report

Client ID	Shaw Environmental & Infrastructure
Workorder ID	CalTrans Merced 117535
Laboratory ID	71092
Sample ID	MS for HBN 276059 [SGXV/2280]
Matrix	Soil

Parameter	Method	Prep Date	Analyzed	Result	RL	Units	Dilution
TPHdiesel	8015M DHS	10/14/05	10/14/05	43	1.0	mg/Kg	1:1

3738 Bradview Drive • Sacramento, California 95827 • (916) 369-7688 • FAX (916) 369-7689

Sparger Technology, Inc.
Environmental Laboratories

Analytical Laboratory Division
Mobile Laboratory Division
Scientific Division

Matrix Spike Duplicate Report

Client ID Shaw Environmental & Infrastructure
Workorder ID CalTrans Merced 117535
Laboratory ID 71093
Sample ID MSD for HBN 276059 [SGXV/2280]
Matrix Soil

Parameter	Method	Prep Date	Analyzed	Result	RL	Units	Dilution
TPHdiesel	8015M DHS	10/14/05	10/14/05	47	1.0	mg/Kg	1:1

3738 Bradview Drive • Sacramento, California 95827 • (916) 369-7688 • FAX (916) 369-7689

Sparger Technology, Inc.
Environmental Laboratories

Analytical Laboratory Division
Mobile Laboratory Division
Scientific Division

Method Blank Report

Client ID	Shaw Environmental & Infrastructure
Workorder ID	CalTrans Merced 117535
Laboratory ID	71094
Sample ID	MB for HBN 276061 [SGXV/2281]
Matrix	Soil

Parameter	Method	Prep Date	Analyzed	Result	RL	Units	Dilution
TPHdiesel	8015M DHS	10/14/05	10/19/05	ND	1.0	mg/Kg	1:1

3738 Bradview Drive • Sacramento, California 95827 • (916) 369-7688 • FAX (916) 369-7689

Sparger Technology, Inc.
Environmental Laboratories

Analytical Laboratory Division
Mobile Laboratory Division
Scientific Division

Lab Control Sample Report

Client ID	Shaw Environmental & Infrastructure
Workorder ID	CalTrans Merced 117535
Laboratory ID	71095
Sample ID	LCS for HBN 276061 [SGXV/2281]
Matrix	Soil

Parameter	Method	Prep Date	Analyzed	Result	RL	Units	Dilution
TPHdiesel	8015M DHS	10/14/05	10/19/05	43	1.0	mg/Kg	1:1

3738 Bradview Drive • Sacramento, California 95827 • (916) 369-7688 • FAX (916) 369-7689

Sparger Technology, Inc.
Environmental Laboratories

Analytical Laboratory Division
Mobile Laboratory Division
Scientific Division

Lab Control Sample Duplicate Report

Client ID	Shaw Environmental & Infrastructure
Workorder ID	CalTrans Merced 117535
Laboratory ID	71096
Sample ID	LCSD for HBN 276061 [SGXV/2281
Matrix	Soil

Parameter	Method	Prep Date	Analyzed	Result	RL	Units	Dilution
TPHdiesel	8015M DHS	10/14/05	10/19/05	43	1.0	mg/Kg	1:1

3738 Bradview Drive • Sacramento, California 95827 • (916) 369-7688 • FAX (916) 369-7689

Sparger Technology, Inc.
Environmental Laboratories

Analytical Laboratory Division
Mobile Laboratory Division
Scientific Division

Matrix Spike Report

Client ID Shaw Environmental & Infrastructure
Workorder ID CalTrans Merced 117535
Laboratory ID 71097
Sample ID MS for HBN 276061 [SGXV/2281]
Matrix Soil

Parameter	Method	Prep Date	Analyzed	Result	RL	Units	Dilution
TPHdiesel	8015M DHS	10/14/05	10/20/05	42	1.0	mg/Kg	1:1

3738 Bradview Drive • Sacramento, California 95827 • (916) 369-7688 • FAX (916) 369-7689

Sparger Technology, Inc.
Environmental Laboratories

Analytical Laboratory Division
Mobile Laboratory Division
Scientific Division

Matrix Spike Duplicate Report

Client ID Shaw Environmental & Infrastructure
Workorder ID CalTrans Merced 117535
Laboratory ID 71098
Sample ID MSD for HBN 276061 [SGXV/2281]
Matrix Soil

Parameter	Method	Prep Date	Analyzed	Result	RL	Units	Dilution
TPHdiesel	8015M DHS	10/14/05	10/20/05	47	1.0	mg/Kg	1:1

3738 Bradview Drive • Sacramento, California 95827 • (916) 369-7688 • FAX (916) 369-7689

Sparger Technology, Inc.
Environmental Laboratories

Analytical Laboratory Division
Mobile Laboratory Division
Scientific Division

Method Blank Report

Client ID Shaw Environmental & Infrastructure
Workorder ID CalTrans Merced 117535
Laboratory ID 71099
Sample ID MB for HBN 276063 [ICPV/5245]
Matrix Water

Parameter	Method	Prep Date	Analyzed	Result	RL	Units	Dilution
Antimony	6010B	10/13/05	10/14/05	ND	0.060	mg/L	1:1
Arsenic	6010B	10/13/05	10/14/05	ND	0.080	mg/L	1:1
Barium	6010B	10/13/05	10/14/05	ND	0.020	mg/L	1:1
Beryllium	6010B	10/13/05	10/14/05	ND	0.0030	mg/L	1:1
Cadmium	6010B	10/13/05	10/14/05	ND	0.0050	mg/L	1:1
Chromium	6010B	10/13/05	10/14/05	ND	0.010	mg/L	1:1
Cobalt	6010B	10/13/05	10/14/05	ND	0.050	mg/L	1:1
Copper	6010B	10/13/05	10/14/05	ND	0.020	mg/L	1:1
Lead	6010B	10/13/05	10/14/05	ND	0.010	mg/L	1:1
Molybdenum	6010B	10/13/05	10/14/05	ND	0.050	mg/L	1:1
Nickel	6010B	10/13/05	10/14/05	ND	0.040	mg/L	1:1
Selenium	6010B	10/13/05	10/14/05	ND	0.10	mg/L	1:1
Silver	6010B	10/13/05	10/14/05	ND	0.010	mg/L	1:1
Thallium	6010B	10/13/05	10/14/05	ND	0.10	mg/L	1:1
Vanadium	6010B	10/13/05	10/14/05	ND	0.050	mg/L	1:1
Zinc	6010B	10/13/05	10/14/05	ND	0.015	mg/L	1:1

3738 Bradview Drive • Sacramento, California 95827 • (916) 369-7688 • FAX (916) 369-7689

Sparger Technology, Inc.
Environmental Laboratories

Analytical Laboratory Division
Mobile Laboratory Division
Scientific Division

Lab Control Sample Report

Client ID Shaw Environmental & Infrastructure
Workorder ID CalTrans Merced 117535
Laboratory ID 71100
Sample ID LCS for HBN 276063 [ICPV/5245]
Matrix Water

Parameter	Method	Prep Date	Analyzed	Result	RL	Units	Dilution
Antimony	6010B	10/13/05	10/14/05	0.50	0.060	mg/L	1:1
Arsenic	6010B	10/13/05	10/14/05	0.50	0.080	mg/L	1:1
Barium	6010B	10/13/05	10/14/05	0.50	0.020	mg/L	1:1
Beryllium	6010B	10/13/05	10/14/05	0.100	0.0030	mg/L	1:1
Cadmium	6010B	10/13/05	10/14/05	0.19	0.0050	mg/L	1:1
Chromium	6010B	10/13/05	10/14/05	0.55	0.010	mg/L	1:1
Cobalt	6010B	10/13/05	10/14/05	0.19	0.050	mg/L	1:1
Copper	6010B	10/13/05	10/14/05	0.53	0.020	mg/L	1:1
Lead	6010B	10/13/05	10/14/05	0.50	0.010	mg/L	1:1
Molybdenum	6010B	10/13/05	10/14/05	0.54	0.050	mg/L	1:1
Nickel	6010B	10/13/05	10/14/05	0.98	0.040	mg/L	1:1
Selenium	6010B	10/13/05	10/14/05	0.57	0.10	mg/L	1:1
Silver	6010B	10/13/05	10/14/05	0.055	0.010	mg/L	1:1
Thallium	6010B	10/13/05	10/14/05	0.52	0.10	mg/L	1:1
Vanadium	6010B	10/13/05	10/14/05	0.19	0.050	mg/L	1:1
Zinc	6010B	10/13/05	10/14/05	0.53	0.015	mg/L	1:1

3738 Bradview Drive • Sacramento, California 95827 • (916) 369-7688 • FAX (916) 369-7689

Sparger Technology, Inc.
Environmental Laboratories

Analytical Laboratory Division
Mobile Laboratory Division
Scientific Division

Lab Control Sample Duplicate Report

Client ID Shaw Environmental & Infrastructure
Workorder ID CalTrans Merced 117535
Laboratory ID 71101
Sample ID LCSD for HBN 276063 [ICPV/5245
Matrix Water

Parameter	Method	Prep Date	Analyzed	Result	RL	Units	Dilution
Antimony	6010B	10/13/05	10/14/05	0.51	0.060	mg/L	1:1
Arsenic	6010B	10/13/05	10/14/05	0.52	0.080	mg/L	1:1
Barium	6010B	10/13/05	10/14/05	0.52	0.020	mg/L	1:1
Beryllium	6010B	10/13/05	10/14/05	0.11	0.0030	mg/L	1:1
Cadmium	6010B	10/13/05	10/14/05	0.20	0.0050	mg/L	1:1
Chromium	6010B	10/13/05	10/14/05	0.57	0.010	mg/L	1:1
Cobalt	6010B	10/13/05	10/14/05	0.20	0.050	mg/L	1:1
Copper	6010B	10/13/05	10/14/05	0.52	0.020	mg/L	1:1
Lead	6010B	10/13/05	10/14/05	0.50	0.010	mg/L	1:1
Molybdenum	6010B	10/13/05	10/14/05	0.54	0.050	mg/L	1:1
Nickel	6010B	10/13/05	10/14/05	0.98	0.040	mg/L	1:1
Selenium	6010B	10/13/05	10/14/05	0.56	0.10	mg/L	1:1
Silver	6010B	10/13/05	10/14/05	0.054	0.010	mg/L	1:1
Thallium	6010B	10/13/05	10/14/05	0.53	0.10	mg/L	1:1
Vanadium	6010B	10/13/05	10/14/05	0.19	0.050	mg/L	1:1
Zinc	6010B	10/13/05	10/14/05	0.53	0.015	mg/L	1:1

3738 Bradview Drive • Sacramento, California 95827 • (916) 369-7688 • FAX (916) 369-7689

Sparger Technology, Inc.
Environmental Laboratories

Analytical Laboratory Division
Mobile Laboratory Division
Scientific Division

Duplicate Report

Client ID	Shaw Environmental & Infrastructure
Workorder ID	CalTrans Merced 117535
Laboratory ID	71102
Sample ID	DUP for HBN 276063 [ICPV/5245]
Matrix	Water

Parameter	Method	Prep Date	Analyzed	Result	RL	Units	Dilution
Antimony	6010B	10/13/05	10/14/05	ND	0.060	mg/L	1:1
Arsenic	6010B	10/13/05	10/14/05	ND	0.080	mg/L	1:1
Barium	6010B	10/13/05	10/14/05	ND	0.020	mg/L	1:1
Beryllium	6010B	10/13/05	10/14/05	ND	0.0030	mg/L	1:1
Cadmium	6010B	10/13/05	10/14/05	ND	0.0050	mg/L	1:1
Chromium	6010B	10/13/05	10/14/05	ND	0.010	mg/L	1:1
Cobalt	6010B	10/13/05	10/14/05	ND	0.050	mg/L	1:1
Copper	6010B	10/13/05	10/14/05	ND	0.020	mg/L	1:1
Lead	6010B	10/13/05	10/14/05	ND	0.010	mg/L	1:1
Molybdenum	6010B	10/13/05	10/14/05	ND	0.050	mg/L	1:1
Nickel	6010B	10/13/05	10/14/05	ND	0.040	mg/L	1:1
Selenium	6010B	10/13/05	10/14/05	ND	0.10	mg/L	1:1
Silver	6010B	10/13/05	10/14/05	ND	0.010	mg/L	1:1
Thallium	6010B	10/13/05	10/14/05	ND	0.10	mg/L	1:1
Vanadium	6010B	10/13/05	10/14/05	ND	0.050	mg/L	1:1
Zinc	6010B	10/13/05	10/14/05	ND	0.015	mg/L	1:1

3738 Bradview Drive • Sacramento, California 95827 • (916) 369-7688 • FAX (916) 369-7689

Sparger Technology, Inc.
Environmental Laboratories

Analytical Laboratory Division
Mobile Laboratory Division
Scientific Division

Matrix Spike Report

Client ID Shaw Environmental & Infrastructure
Workorder ID CalTrans Merced 117535
Laboratory ID 71103
Sample ID MS for HBN 276063 [ICPV/5245]
Matrix Water

Parameter	Method	Prep Date	Analyzed	Result	RL	Units	Dilution
Antimony	6010B	10/13/05	10/14/05	0.52	0.060	mg/L	1:1
Arsenic	6010B	10/13/05	10/14/05	0.54	0.080	mg/L	1:1
Barium	6010B	10/13/05	10/14/05	0.54	0.020	mg/L	1:1
Beryllium	6010B	10/13/05	10/14/05	0.11	0.0030	mg/L	1:1
Cadmium	6010B	10/13/05	10/14/05	0.21	0.0050	mg/L	1:1
Chromium	6010B	10/13/05	10/14/05	0.60	0.010	mg/L	1:1
Cobalt	6010B	10/13/05	10/14/05	0.21	0.050	mg/L	1:1
Copper	6010B	10/13/05	10/14/05	0.56	0.020	mg/L	1:1
Lead	6010B	10/13/05	10/14/05	0.51	0.010	mg/L	1:1
Molybdenum	6010B	10/13/05	10/14/05	0.55	0.050	mg/L	1:1
Nickel	6010B	10/13/05	10/14/05	1.0	0.040	mg/L	1:1
Selenium	6010B	10/13/05	10/14/05	0.55	0.10	mg/L	1:1
Silver	6010B	10/13/05	10/14/05	0.053	0.010	mg/L	1:1
Thallium	6010B	10/13/05	10/14/05	0.53	0.10	mg/L	1:1
Vanadium	6010B	10/13/05	10/14/05	0.20	0.050	mg/L	1:1
Zinc	6010B	10/13/05	10/14/05	0.56	0.015	mg/L	1:1

3738 Bradview Drive • Sacramento, California 95827 • (916) 369-7688 • FAX (916) 369-7689

Sparger Technology, Inc.
Environmental Laboratories

Analytical Laboratory Division
Mobile Laboratory Division
Scientific Division

Matrix Spike Duplicate Report

Client ID Shaw Environmental & Infrastructure
Workorder ID CalTrans Merced 117535
Laboratory ID 71104
Sample ID MSD for HBN 276063 [ICPV/5245]
Matrix Water

Parameter	Method	Prep Date	Analyzed	Result	RL	Units	Dilution
Antimony	6010B	10/13/05	10/14/05	0.52	0.060	mg/L	1:1
Arsenic	6010B	10/13/05	10/14/05	0.54	0.080	mg/L	1:1
Barium	6010B	10/13/05	10/14/05	0.54	0.020	mg/L	1:1
Beryllium	6010B	10/13/05	10/14/05	0.11	0.0030	mg/L	1:1
Cadmium	6010B	10/13/05	10/14/05	0.20	0.0050	mg/L	1:1
Chromium	6010B	10/13/05	10/14/05	0.59	0.010	mg/L	1:1
Cobalt	6010B	10/13/05	10/14/05	0.20	0.050	mg/L	1:1
Copper	6010B	10/13/05	10/14/05	0.55	0.020	mg/L	1:1
Lead	6010B	10/13/05	10/14/05	0.49	0.010	mg/L	1:1
Molybdenum	6010B	10/13/05	10/14/05	0.53	0.050	mg/L	1:1
Nickel	6010B	10/13/05	10/14/05	0.98	0.040	mg/L	1:1
Selenium	6010B	10/13/05	10/14/05	0.57	0.10	mg/L	1:1
Silver	6010B	10/13/05	10/14/05	0.053	0.010	mg/L	1:1
Thallium	6010B	10/13/05	10/14/05	0.54	0.10	mg/L	1:1
Vanadium	6010B	10/13/05	10/14/05	0.20	0.050	mg/L	1:1
Zinc	6010B	10/13/05	10/14/05	0.56	0.015	mg/L	1:1

3738 Bradview Drive • Sacramento, California 95827 • (916) 369-7688 • FAX (916) 369-7689

Sparger Technology, Inc.
Environmental Laboratories

Analytical Laboratory Division
Mobile Laboratory Division
Scientific Division

Method Blank Report

Client ID Shaw Environmental & Infrastructure
Workorder ID CalTrans Merced 117535
Laboratory ID 71116
Sample ID MB for HBN 276253 [ICPV/5246]
Matrix Soil

Parameter	Method	Prep Date	Analyzed	Result	RL	Units	Dilution
Antimony	6010B	10/13/05	10/17/05	ND	6.0	mg/Kg	1:1
Arsenic	6010B	10/13/05	10/17/05	ND	8.0	mg/Kg	1:1
Barium	6010B	10/13/05	10/17/05	ND	2.0	mg/Kg	1:1
Beryllium	6010B	10/13/05	10/17/05	ND	0.30	mg/Kg	1:1
Cadmium	6010B	10/13/05	10/17/05	ND	0.50	mg/Kg	1:1
Chromium	6010B	10/13/05	10/17/05	ND	1.0	mg/Kg	1:1
Cobalt	6010B	10/13/05	10/17/05	ND	5.0	mg/Kg	1:1
Copper	6010B	10/13/05	10/17/05	ND	2.0	mg/Kg	1:1
Lead	6010B	10/13/05	10/17/05	ND	1.0	mg/Kg	1:1
Molybdenum	6010B	10/13/05	10/17/05	ND	5.0	mg/Kg	1:1
Nickel	6010B	10/13/05	10/17/05	ND	4.0	mg/Kg	1:1
Selenium	6010B	10/13/05	10/17/05	ND	10	mg/Kg	1:1
Silver	6010B	10/13/05	10/17/05	ND	1.0	mg/Kg	1:1
Thallium	6010B	10/13/05	10/17/05	ND	10	mg/Kg	1:1
Vanadium	6010B	10/13/05	10/17/05	ND	5.0	mg/Kg	1:1
Zinc	6010B	10/13/05	10/17/05	ND	1.5	mg/Kg	1:1

3738 Bradview Drive • Sacramento, California 95827 • (916) 369-7688 • FAX (916) 369-7689

Sparger Technology, Inc.
Environmental Laboratories

Analytical Laboratory Division
Mobile Laboratory Division
Scientific Division

Lab Control Sample Report

Client ID Shaw Environmental & Infrastructure
Workorder ID CalTrans Merced 117535
Laboratory ID 71117
Sample ID LCS for HBN 276253 [ICPV/5246]
Matrix Soil

Parameter	Method	Prep Date	Analyzed	Result	RL	Units	Dilution
Antimony	6010B	10/13/05	10/17/05	52	6.0	mg/Kg	1:1
Arsenic	6010B	10/13/05	10/17/05	51	8.0	mg/Kg	1:1
Barium	6010B	10/13/05	10/17/05	53	2.0	mg/Kg	1:1
Beryllium	6010B	10/13/05	10/17/05	10	0.30	mg/Kg	1:1
Cadmium	6010B	10/13/05	10/17/05	20	0.50	mg/Kg	1:1
Chromium	6010B	10/13/05	10/17/05	55	1.0	mg/Kg	1:1
Cobalt	6010B	10/13/05	10/17/05	21	5.0	mg/Kg	1:1
Copper	6010B	10/13/05	10/17/05	53	2.0	mg/Kg	1:1
Lead	6010B	10/13/05	10/17/05	51	1.0	mg/Kg	1:1
Molybdenum	6010B	10/13/05	10/17/05	54	5.0	mg/Kg	1:1
Nickel	6010B	10/13/05	10/17/05	100	4.0	mg/Kg	1:1
Selenium	6010B	10/13/05	10/17/05	54	10	mg/Kg	1:1
Silver	6010B	10/13/05	10/17/05	5.6	1.0	mg/Kg	1:1
Thallium	6010B	10/13/05	10/17/05	51	10	mg/Kg	1:1
Vanadium	6010B	10/13/05	10/17/05	20	5.0	mg/Kg	1:1
Zinc	6010B	10/13/05	10/17/05	55	1.5	mg/Kg	1:1

3738 Bradview Drive • Sacramento, California 95827 • (916) 369-7688 • FAX (916) 369-7689

Sparger Technology, Inc.
Environmental Laboratories

Analytical Laboratory Division
Mobile Laboratory Division
Scientific Division

Lab Control Sample Duplicate Report

Client ID Shaw Environmental & Infrastructure
Workorder ID CalTrans Merced 117535
Laboratory ID 71118
Sample ID LCSD for HBN 276253 [ICPV/5246
Matrix Soil

Parameter	Method	Prep Date	Analyzed	Result	RL	Units	Dilution
Antimony	6010B	10/13/05	10/17/05	52	6.0	mg/Kg	1:1
Arsenic	6010B	10/13/05	10/17/05	52	8.0	mg/Kg	1:1
Barium	6010B	10/13/05	10/17/05	53	2.0	mg/Kg	1:1
Beryllium	6010B	10/13/05	10/17/05	11	0.30	mg/Kg	1:1
Cadmium	6010B	10/13/05	10/17/05	20	0.50	mg/Kg	1:1
Chromium	6010B	10/13/05	10/17/05	56	1.0	mg/Kg	1:1
Cobalt	6010B	10/13/05	10/17/05	21	5.0	mg/Kg	1:1
Copper	6010B	10/13/05	10/17/05	54	2.0	mg/Kg	1:1
Lead	6010B	10/13/05	10/17/05	52	1.0	mg/Kg	1:1
Molybdenum	6010B	10/13/05	10/17/05	55	5.0	mg/Kg	1:1
Nickel	6010B	10/13/05	10/17/05	102	4.0	mg/Kg	1:1
Selenium	6010B	10/13/05	10/17/05	54	10	mg/Kg	1:1
Silver	6010B	10/13/05	10/17/05	5.6	1.0	mg/Kg	1:1
Thallium	6010B	10/13/05	10/17/05	51	10	mg/Kg	1:1
Vanadium	6010B	10/13/05	10/17/05	20	5.0	mg/Kg	1:1
Zinc	6010B	10/13/05	10/17/05	55	1.5	mg/Kg	1:1

3738 Bradview Drive • Sacramento, California 95827 • (916) 369-7688 • FAX (916) 369-7689

Sparger Technology, Inc.
Environmental Laboratories

Analytical Laboratory Division
Mobile Laboratory Division
Scientific Division

Matrix Spike Report

Client ID Shaw Environmental & Infrastructure
Workorder ID CalTrans Merced 117535
Laboratory ID 71119
Sample ID MS for HBN 276253 [ICPV/5246]
Matrix Soil

Parameter	Method	Prep Date	Analyzed	Result	RL	Units	Dilution
Antimony	6010B	10/13/05	10/17/05	39	6.0	mg/Kg	1:1
Arsenic	6010B	10/13/05	10/17/05	54	8.0	mg/Kg	1:1
Barium	6010B	10/13/05	10/17/05	209	2.0	mg/Kg	1:1
Beryllium	6010B	10/13/05	10/17/05	11	0.30	mg/Kg	1:1
Cadmium	6010B	10/13/05	10/17/05	20	0.50	mg/Kg	1:1
Chromium	6010B	10/13/05	10/17/05	92	1.0	mg/Kg	1:1
Cobalt	6010B	10/13/05	10/17/05	30	5.0	mg/Kg	1:1
Copper	6010B	10/13/05	10/17/05	80	2.0	mg/Kg	1:1
Lead	6010B	10/13/05	10/17/05	54	1.0	mg/Kg	1:1
Molybdenum	6010B	10/13/05	10/17/05	50	5.0	mg/Kg	1:1
Nickel	6010B	10/13/05	10/17/05	123	4.0	mg/Kg	1:1
Selenium	6010B	10/13/05	10/17/05	57	10	mg/Kg	1:1
Silver	6010B	10/13/05	10/17/05	5.5	1.0	mg/Kg	1:1
Thallium	6010B	10/13/05	10/17/05	50	10	mg/Kg	1:1
Vanadium	6010B	10/13/05	10/17/05	66	5.0	mg/Kg	1:1
Zinc	6010B	10/13/05	10/17/05	92	1.5	mg/Kg	1:1

3738 Bradview Drive • Sacramento, California 95827 • (916) 369-7688 • FAX (916) 369-7689

Sparger Technology, Inc.
Environmental Laboratories

Analytical Laboratory Division
Mobile Laboratory Division
Scientific Division

Matrix Spike Duplicate Report

Client ID Shaw Environmental & Infrastructure
Workorder ID CalTrans Merced 117535
Laboratory ID 71120
Sample ID MSD for HBN 276253 [ICPV/5246]
Matrix Soil

Parameter	Method	Prep Date	Analyzed	Result	RL	Units	Dilution
Antimony	6010B	10/13/05	10/17/05	40	6.0	mg/Kg	1:1
Arsenic	6010B	10/13/05	10/17/05	54	8.0	mg/Kg	1:1
Barium	6010B	10/13/05	10/17/05	219	2.0	mg/Kg	1:1
Beryllium	6010B	10/13/05	10/17/05	11	0.30	mg/Kg	1:1
Cadmium	6010B	10/13/05	10/17/05	20	0.50	mg/Kg	1:1
Chromium	6010B	10/13/05	10/17/05	93	1.0	mg/Kg	1:1
Cobalt	6010B	10/13/05	10/17/05	30	5.0	mg/Kg	1:1
Copper	6010B	10/13/05	10/17/05	80	2.0	mg/Kg	1:1
Lead	6010B	10/13/05	10/17/05	54	1.0	mg/Kg	1:1
Molybdenum	6010B	10/13/05	10/17/05	50	5.0	mg/Kg	1:1
Nickel	6010B	10/13/05	10/17/05	122	4.0	mg/Kg	1:1
Selenium	6010B	10/13/05	10/17/05	56	10	mg/Kg	1:1
Silver	6010B	10/13/05	10/17/05	5.5	1.0	mg/Kg	1:1
Thallium	6010B	10/13/05	10/17/05	50	10	mg/Kg	1:1
Vanadium	6010B	10/13/05	10/17/05	67	5.0	mg/Kg	1:1
Zinc	6010B	10/13/05	10/17/05	92	1.5	mg/Kg	1:1

3738 Bradview Drive • Sacramento, California 95827 • (916) 369-7688 • FAX (916) 369-7689

Sparger Technology, Inc.
Environmental Laboratories

Analytical Laboratory Division
Mobile Laboratory Division
Scientific Division

Duplicate Report

Client ID Shaw Environmental & Infrastructure
Workorder ID CalTrans Merced 117535
Laboratory ID 71121
Sample ID DUP for HBN 276253 [ICPV/5246]
Matrix Soil

Parameter	Method	Prep Date	Analyzed	Result	RL	Units	Dilution
Antimony	6010B	10/13/05	10/17/05	ND	6.0	mg/Kg	1:1
Arsenic	6010B	10/13/05	10/17/05	ND	8.0	mg/Kg	1:1
Barium	6010B	10/13/05	10/17/05	140	2.0	mg/Kg	1:1
Beryllium	6010B	10/13/05	10/17/05	ND	0.30	mg/Kg	1:1
Cadmium	6010B	10/13/05	10/17/05	ND	0.50	mg/Kg	1:1
Chromium	6010B	10/13/05	10/17/05	35	1.0	mg/Kg	1:1
Cobalt	6010B	10/13/05	10/17/05	9.8	5.0	mg/Kg	1:1
Copper	6010B	10/13/05	10/17/05	23	2.0	mg/Kg	1:1
Lead	6010B	10/13/05	10/17/05	3.4	1.0	mg/Kg	1:1
Molybdenum	6010B	10/13/05	10/17/05	ND	5.0	mg/Kg	1:1
Nickel	6010B	10/13/05	10/17/05	ND	4.0	mg/Kg	1:1
Selenium	6010B	10/13/05	10/17/05	ND	10	mg/Kg	1:1
Silver	6010B	10/13/05	10/17/05	ND	1.0	mg/Kg	1:1
Thallium	6010B	10/13/05	10/17/05	ND	10	mg/Kg	1:1
Vanadium	6010B	10/13/05	10/17/05	44	5.0	mg/Kg	1:1
Zinc	6010B	10/13/05	10/17/05	36	1.5	mg/Kg	1:1

3738 Bradview Drive • Sacramento, California 95827 • (916) 369-7688 • FAX (916) 369-7689

Sparger Technology, Inc.
Environmental Laboratories

Analytical Laboratory Division
Mobile Laboratory Division
Scientific Division

Method Blank Report

Client ID	Shaw Environmental & Infrastructure
Workorder ID	CalTrans Merced 117535
Laboratory ID	71142
Sample ID	MB for HBN 276450 [DIGV/1572]
Matrix	Water

Parameter	Method	Prep Date	Analyzed	Result	RL	Units	Dilution
Mercury	EPA 7470A	10/14/05	10/18/05	ND	0.00020	mg/L	1:1

3738 Bradview Drive • Sacramento, California 95827 • (916) 369-7688 • FAX (916) 369-7689

Sparger Technology, Inc.
Environmental Laboratories

Analytical Laboratory Division
Mobile Laboratory Division
Scientific Division

Lab Control Sample Report

Client ID Shaw Environmental & Infrastructure
Workorder ID CalTrans Merced 117535
Laboratory ID 71143
Sample ID LCS for HBN 276450 [DIGV/1572]
Matrix Water

Parameter	Method	Prep Date	Analyzed	Result	RL	Units	Dilution
Mercury	EPA 7470A	10/14/05	10/18/05	0.00095	0.00020	mg/L	1:1

3738 Bradview Drive • Sacramento, California 95827 • (916) 369-7688 • FAX (916) 369-7689

Sparger Technology, Inc.
Environmental Laboratories

Analytical Laboratory Division
Mobile Laboratory Division
Scientific Division

Lab Control Sample Duplicate Report

Client ID	Shaw Environmental & Infrastructure
Workorder ID	CalTrans Merced 117535
Laboratory ID	71144
Sample ID	LCSD for HBN 276450 [DIGV/1572
Matrix	Water

Parameter	Method	Prep Date	Analyzed	Result	RL	Units	Dilution
Mercury	EPA 7470A	10/14/05	10/18/05	0.00095	0.00020	mg/L	1:1

3738 Bradview Drive • Sacramento, California 95827 • (916) 369-7688 • FAX (916) 369-7689

Sparger Technology, Inc.
Environmental Laboratories

Analytical Laboratory Division
Mobile Laboratory Division
Scientific Division

Duplicate Report

Client ID	Shaw Environmental & Infrastructure
Workorder ID	CalTrans Merced 117535
Laboratory ID	71145
Sample ID	DUP for HBN 276450 [DIGV/1572]
Matrix	Water

Parameter	Method	Prep Date	Analyzed	Result	RL	Units	Dilution
Mercury	EPA 7470A	10/14/05	10/18/05	ND	0.00020	mg/L	1:1

3738 Bradview Drive • Sacramento, California 95827 • (916) 369-7688 • FAX (916) 369-7689

Sparger Technology, Inc.
Environmental Laboratories

Analytical Laboratory Division
Mobile Laboratory Division
Scientific Division

Matrix Spike Report

Client ID	Shaw Environmental & Infrastructure
Workorder ID	CalTrans Merced 117535
Laboratory ID	71146
Sample ID	MS for HBN 276450 [DIGV/1572]
Matrix	Water

Parameter	Method	Prep Date	Analyzed	Result	RL	Units	Dilution
Mercury	EPA 7470A	10/14/05	10/18/05	0.00095	0.00020	mg/L	1:1

3738 Bradview Drive • Sacramento, California 95827 • (916) 369-7688 • FAX (916) 369-7689

Sparger Technology, Inc.
Environmental Laboratories

Analytical Laboratory Division
Mobile Laboratory Division
Scientific Division

Matrix Spike Duplicate Report

Client ID Shaw Environmental & Infrastructure
Workorder ID CalTrans Merced 117535
Laboratory ID 71147
Sample ID MSD for HBN 276450 [DIGV/1572]
Matrix Water

Parameter	Method	Prep Date	Analyzed	Result	RL	Units	Dilution
Mercury	EPA 7470A	10/14/05	10/18/05	0.00096	0.00020	mg/L	1:1

3738 Bradview Drive • Sacramento, California 95827 • (916) 369-7688 • FAX (916) 369-7689

Sparger Technology, Inc.
Environmental Laboratories

Analytical Laboratory Division
Mobile Laboratory Division
Scientific Division

Method Blank Report

Client ID	Shaw Environmental & Infrastructure
Workorder ID	CalTrans Merced 117535
Laboratory ID	71148
Sample ID	MB for HBN 276454 [DIGV/1573]
Matrix	Soil

Parameter	Method	Prep Date	Analyzed	Result	RL	Units	Dilution
Mercury	EPA 7471A	10/14/05	10/18/05	ND	0.010	mg/Kg	1:1

3738 Bradview Drive • Sacramento, California 95827 • (916) 369-7688 • FAX (916) 369-7689

Sparger Technology, Inc.
Environmental Laboratories

Analytical Laboratory Division
Mobile Laboratory Division
Scientific Division

Lab Control Sample Report

Client ID Shaw Environmental & Infrastructure
Workorder ID CalTrans Merced 117535
Laboratory ID 71149
Sample ID LCS for HBN 276454 [DIGV/1573]
Matrix Soil

Parameter	Method	Prep Date	Analyzed	Result	RL	Units	Dilution
Mercury	EPA 7471A	10/14/05	10/18/05	0.046	0.010	mg/Kg	1:1

3738 Bradview Drive • Sacramento, California 95827 • (916) 369-7688 • FAX (916) 369-7689

Sparger Technology, Inc.
Environmental Laboratories

Analytical Laboratory Division
Mobile Laboratory Division
Scientific Division

Matrix Spike Report

Client ID	Shaw Environmental & Infrastructure
Workorder ID	CalTrans Merced 117535
Laboratory ID	71152
Sample ID	MS for HBN 276454 [DIGV/1573]
Matrix	Soil

Parameter	Method	Prep Date	Analyzed	Result	RL	Units	Dilution
Mercury	EPA 7471A	10/14/05	10/18/05	0.062	0.010	mg/Kg	1:1

3738 Bradview Drive • Sacramento, California 95827 • (916) 369-7688 • FAX (916) 369-7689

Sparger Technology, Inc.
Environmental Laboratories

Analytical Laboratory Division
Mobile Laboratory Division
Scientific Division

Matrix Spike Duplicate Report

Client ID Shaw Environmental & Infrastructure
Workorder ID CalTrans Merced 117535
Laboratory ID 71153
Sample ID MSD for HBN 276454 [DIGV/1573]
Matrix Soil

Parameter	Method	Prep Date	Analyzed	Result	RL	Units	Dilution
Mercury	EPA 7471A	10/14/05	10/18/05	0.060	0.010	mg/Kg	1:1

3738 Bradview Drive • Sacramento, California 95827 • (916) 369-7688 • FAX (916) 369-7689

Sparger Technology, Inc.
Environmental Laboratories

Analytical Laboratory Division
Mobile Laboratory Division
Scientific Division

Lab Control Sample Duplicate Report

Client ID Shaw Environmental & Infrastructure
Workorder ID CalTrans Merced 117535
Laboratory ID 71161
Sample ID LCSD for HBN 276552 [SGXV/2282
Matrix Water

Parameter	Method	Prep Date	Analyzed	Result	RL	Units	Dilution
TPHdiesel	8015M DHS	10/17/05	10/21/05	1050	50	ug/L	1:1

3738 Bradview Drive • Sacramento, California 95827 • (916) 369-7688 • FAX (916) 369-7689

Sparger Technology, Inc.
Environmental Laboratories

Analytical Laboratory Division
Mobile Laboratory Division
Scientific Division

Duplicate Report

Client ID	Shaw Environmental & Infrastructure
Workorder ID	CalTrans Merced 117535
Laboratory ID	71164
Sample ID	DUP for HBN 276554 [PHV/1562]
Matrix	Soil

Parameter	Method	Prep Date	Analyzed	Result	RL	Units	Dilution
pH	9045 PH	10/18/05	10/18/05	7.9	0.10	SU	1:1

3738 Bradview Drive • Sacramento, California 95827 • (916) 369-7688 • FAX (916) 369-7689

Sparger Technology, Inc.
Environmental Laboratories

Analytical Laboratory Division
Mobile Laboratory Division
Scientific Division

Method Blank Report

Client ID	Shaw Environmental & Infrastructure
Workorder ID	CalTrans Merced 117535
Laboratory ID	71207
Sample ID	MB for HBN 276658 [VGXV/2730]
Matrix	Water

Parameter	Method	Prep Date	Analyzed	Result	RL	Units	Dilution
TPHgas	8015M DHS	10/19/05	10/19/05	ND	50	ug/L	1:1

3738 Bradview Drive • Sacramento, California 95827 • (916) 369-7688 • FAX (916) 369-7689

Sparger Technology, Inc.
Environmental Laboratories

Analytical Laboratory Division
Mobile Laboratory Division
Scientific Division

Lab Control Sample Report

Client ID	Shaw Environmental & Infrastructure
Workorder ID	CalTrans Merced 117535
Laboratory ID	71208
Sample ID	LCS for HBN 276658 [VGXV/2730]
Matrix	Water

Parameter	Method	Prep Date	Analyzed	Result	RL	Units	Dilution
TPHgas	8015M DHS	10/19/05	10/19/05	988	50	ug/L	1:1

3738 Bradview Drive • Sacramento, California 95827 • (916) 369-7688 • FAX (916) 369-7689

Sparger Technology, Inc.
Environmental Laboratories

Analytical Laboratory Division
Mobile Laboratory Division
Scientific Division

Matrix Spike Duplicate Report

Client ID	Shaw Environmental & Infrastructure
Workorder ID	CalTrans Merced 117535
Laboratory ID	71211
Sample ID	MSD for HBN 276658 [VGXV/2730]
Matrix	Water

Parameter	Method	Prep Date	Analyzed	Result	RL	Units	Dilution
TPHgas	8015M DHS	10/19/05	10/19/05	1560	50	ug/L	1:1

3738 Bradview Drive • Sacramento, California 95827 • (916) 369-7688 • FAX (916) 369-7689

Sparger Technology, Inc.
Environmental Laboratories

Analytical Laboratory Division
Mobile Laboratory Division
Scientific Division

Method Blank Report

Client ID Shaw Environmental & Infrastructure
Workorder ID CalTrans Merced 117535
Laboratory ID 71262
Sample ID MB for HBN 276853 [VGXV/2731]
Matrix Soil

Parameter	Method	Prep Date	Analyzed	Result	RL	Units	Dilution
TPHgas	8015M DHS	10/21/05	10/21/05	ND	0.50	mg/Kg	1:1

3738 Bradview Drive • Sacramento, California 95827 • (916) 369-7688 • FAX (916) 369-7689

Sparger Technology, Inc.
Environmental Laboratories

Analytical Laboratory Division
Mobile Laboratory Division
Scientific Division

Lab Control Sample Report

Client ID	Shaw Environmental & Infrastructure
Workorder ID	CalTrans Merced 117535
Laboratory ID	71263
Sample ID	LCS for HBN 276853 [VGXV/2731]
Matrix	Soil

Parameter	Method	Prep Date	Analyzed	Result	RL	Units	Dilution
TPHgas	8015M DHS	10/21/05	10/21/05	1.0	0.50	mg/Kg	1:1

3738 Bradview Drive • Sacramento, California 95827 • (916) 369-7688 • FAX (916) 369-7689

Sparger Technology, Inc.
Environmental Laboratories

Analytical Laboratory Division
Mobile Laboratory Division
Scientific Division

Lab Control Sample Duplicate Report

Client ID Shaw Environmental & Infrastructure
Workorder ID CalTrans Merced 117535
Laboratory ID 71264
Sample ID LCSD for HBN 276853 [VGXV/2731
Matrix Soil

Parameter	Method	Prep Date	Analyzed	Result	RL	Units	Dilution
TPHgas	8015M DHS	10/21/05	10/21/05	1.0	0.50	mg/Kg	1:1

3738 Bradview Drive • Sacramento, California 95827 • (916) 369-7688 • FAX (916) 369-7689

Sparger Technology, Inc.
Environmental Laboratories

Analytical Laboratory Division
Mobile Laboratory Division
Scientific Division

Matrix Spike Report

Client ID	Shaw Environmental & Infrastructure
Workorder ID	CalTrans Merced 117535
Laboratory ID	71265
Sample ID	MS for HBN 276853 [VGXV/2731]
Matrix	Soil

Parameter	Method	Prep Date	Analyzed	Result	RL	Units	Dilution
TPHgas	8015M DHS	10/21/05	10/21/05	0.80	0.50	mg/Kg	1:1

3738 Bradview Drive • Sacramento, California 95827 • (916) 369-7688 • FAX (916) 369-7689

Sparger Technology, Inc.
Environmental Laboratories

Analytical Laboratory Division
Mobile Laboratory Division
Scientific Division

Matrix Spike Duplicate Report

Client ID Shaw Environmental & Infrastructure
Workorder ID CalTrans Merced 117535
Laboratory ID 71266
Sample ID MSD for HBN 276853 [VGXV/2731]
Matrix Soil

Parameter	Method	Prep Date	Analyzed	Result	RL	Units	Dilution
TPHgas	8015M DHS	10/21/05	10/21/05	0.90	0.50	mg/Kg	1:1

3738 Bradview Drive • Sacramento, California 95827 • (916) 369-7688 • FAX (916) 369-7689

Sparger Technology, Inc.
Environmental Laboratories

Analytical Laboratory Division
Mobile Laboratory Division
Scientific Division

Method Blank Report

Client ID	Shaw Environmental & Infrastructure
Workorder ID	CalTrans Merced 117535
Laboratory ID	71292
Sample ID	MB for HBN 276866 [VGXV/2732]
Matrix	Soil

Parameter	Method	Prep Date	Analyzed	Result	RL	Units	Dilution
TPHgas	8015M DHS	10/19/05	10/19/05	ND	0.50	mg/Kg	1:1

3738 Bradview Drive • Sacramento, California 95827 • (916) 369-7688 • FAX (916) 369-7689

Sparger Technology, Inc.
Environmental Laboratories

Analytical Laboratory Division
Mobile Laboratory Division
Scientific Division

Lab Control Sample Report

Client ID Shaw Environmental & Infrastructure
Workorder ID CalTrans Merced 117535
Laboratory ID 71293
Sample ID LCS for HBN 276866 [VGXV/2732]
Matrix Soil

Parameter	Method	Prep Date	Analyzed	Result	RL	Units	Dilution
TPHgas	8015M DHS	10/19/05	10/19/05	0.99	0.50	mg/Kg	1:1

3738 Bradview Drive • Sacramento, California 95827 • (916) 369-7688 • FAX (916) 369-7689

Sparger Technology, Inc.
Environmental Laboratories

Analytical Laboratory Division
Mobile Laboratory Division
Scientific Division

Lab Control Sample Duplicate Report

Client ID	Shaw Environmental & Infrastructure
Workorder ID	CalTrans Merced 117535
Laboratory ID	71294
Sample ID	LCSD for HBN 276866 [VGXV/2732
Matrix	Soil

Parameter	Method	Prep Date	Analyzed	Result	RL	Units	Dilution
TPHgas	8015M DHS	10/19/05	10/19/05	0.98	0.50	mg/Kg	1:1

3738 Bradview Drive • Sacramento, California 95827 • (916) 369-7688 • FAX (916) 369-7689

Sparger Technology, Inc.
Environmental Laboratories

Analytical Laboratory Division
Mobile Laboratory Division
Scientific Division

Matrix Spike Report

Client ID Shaw Environmental & Infrastructure
Workorder ID CalTrans Merced 117535
Laboratory ID 71295
Sample ID MS for HBN 276866 [VGXV/2732]
Matrix Soil

Parameter	Method	Prep Date	Analyzed	Result	RL	Units	Dilution
TPHgas	8015M DHS	10/19/05	10/19/05	0.90	0.50	mg/Kg	1:1

3738 Bradview Drive • Sacramento, California 95827 • (916) 369-7688 • FAX (916) 369-7689

Sparger Technology, Inc.
Environmental Laboratories

Analytical Laboratory Division
Mobile Laboratory Division
Scientific Division

Matrix Spike Duplicate Report

Client ID	Shaw Environmental & Infrastructure
Workorder ID	CalTrans Merced 117535
Laboratory ID	71296
Sample ID	MSD for HBN 276866 [VGXV/2732]
Matrix	Soil

Parameter	Method	Prep Date	Analyzed	Result	RL	Units	Dilution
TPHgas	8015M DHS	10/19/05	10/19/05	0.93	0.50	mg/Kg	1:1

3738 Bradview Drive • Sacramento, California 95827 • (916) 369-7688 • FAX (916) 369-7689

Sparger Technology, Inc.
Environmental Laboratories

Analytical Laboratory Division
Mobile Laboratory Division
Scientific Division

Method Blank Report

Client ID Shaw Environmental & Infrastructure
Workorder ID CalTrans Merced 117535
Laboratory ID 71297
Sample ID MB for HBN 276869 [VGXV/2733]
Matrix Soil

Parameter	Method	Prep Date	Analyzed	Result	RL	Units	Dilution
TPHgas	8015M DHS	10/20/05	10/20/05	ND	0.50	mg/Kg	1:1

3738 Bradview Drive • Sacramento, California 95827 • (916) 369-7688 • FAX (916) 369-7689

Sparger Technology, Inc.
Environmental Laboratories

Analytical Laboratory Division
Mobile Laboratory Division
Scientific Division

Lab Control Sample Report

Client ID	Shaw Environmental & Infrastructure
Workorder ID	CalTrans Merced 117535
Laboratory ID	71298
Sample ID	LCS for HBN 276869 [VGXV/2733]
Matrix	Soil

Parameter	Method	Prep Date	Analyzed	Result	RL	Units	Dilution
TPHgas	8015M DHS	10/20/05	10/20/05	0.96	0.50	mg/Kg	1:1

3738 Bradview Drive • Sacramento, California 95827 • (916) 369-7688 • FAX (916) 369-7689

Sparger Technology, Inc.
Environmental Laboratories

Analytical Laboratory Division
Mobile Laboratory Division
Scientific Division

Lab Control Sample Duplicate Report

Client ID Shaw Environmental & Infrastructure
Workorder ID CalTrans Merced 117535
Laboratory ID 71299
Sample ID LCSD for HBN 276869 [VGXV/2733
Matrix Soil

Parameter	Method	Prep Date	Analyzed	Result	RL	Units	Dilution
TPHgas	8015M DHS	10/20/05	10/20/05	1.1	0.50	mg/Kg	1:1

3738 Bradview Drive • Sacramento, California 95827 • (916) 369-7688 • FAX (916) 369-7689

Sparger Technology, Inc.
Environmental Laboratories

Analytical Laboratory Division
Mobile Laboratory Division
Scientific Division

Matrix Spike Report

Client ID	Shaw Environmental & Infrastructure
Workorder ID	CalTrans Merced 117535
Laboratory ID	71300
Sample ID	MS for HBN 276869 [VGXV/2733]
Matrix	Soil

Parameter	Method	Prep Date	Analyzed	Result	RL	Units	Dilution
TPHgas	8015M DHS	10/20/05	10/20/05	0.93	0.50	mg/Kg	1:1

3738 Bradview Drive • Sacramento, California 95827 • (916) 369-7688 • FAX (916) 369-7689

Sparger Technology, Inc.
Environmental Laboratories

Analytical Laboratory Division
Mobile Laboratory Division
Scientific Division

Matrix Spike Duplicate Report

Client ID Shaw Environmental & Infrastructure
Workorder ID CalTrans Merced 117535
Laboratory ID 71301
Sample ID MSD for HBN 276869 [VGXV/2733]
Matrix Soil

Parameter	Method	Prep Date	Analyzed	Result	RL	Units	Dilution
TPHgas	8015M DHS	10/20/05	10/20/05	0.98	0.50	mg/Kg	1:1

3738 Bradview Drive • Sacramento, California 95827 • (916) 369-7688 • FAX (916) 369-7689

Sparger Technology, Inc.
Environmental Laboratories

Analytical Laboratory Division
Mobile Laboratory Division
Scientific Division

Method Blank Report

Client ID Shaw Environmental & Infrastructure
Workorder ID CalTrans Merced 117535
Laboratory ID 71327
Sample ID MB for HBN 276967 [VMXV/2631]
Matrix Soil

Parameter	Method	Prep Date	Analyzed	Result	RL	Units	Dilution
Dichlorodifluoromethane	8260B	10/19/05	10/19/05	ND	2.0	ug/kg	1:1
Chloromethane	8260B	10/19/05	10/19/05	ND	2.0	ug/kg	1:1
Vinyl chloride	8260B	10/19/05	10/19/05	ND	2.0	ug/kg	1:1
Bromomethane	8260B	10/19/05	10/19/05	ND	2.0	ug/kg	1:1
Chloroethane	8260B	10/19/05	10/19/05	ND	2.0	ug/kg	1:1
Trichlorofluoromethane	8260B	10/19/05	10/19/05	ND	2.0	ug/kg	1:1
Acrolein	8260B	10/19/05	10/19/05	ND	2.0	ug/kg	1:1
1,1-Dichloroethene	8260B	10/19/05	10/19/05	ND	2.0	ug/kg	1:1
Acetone	8260B	10/19/05	10/19/05	ND	2.0	ug/kg	1:1
Methyl iodide	8260B	10/19/05	10/19/05	ND	2.0	ug/kg	1:1
Carbon disulfide	8260B	10/19/05	10/19/05	ND	2.0	ug/kg	1:1
Dichloromethane	8260B	10/19/05	10/19/05	ND	2.0	ug/kg	1:1
Acrylonitrile	8260B	10/19/05	10/19/05	ND	2.0	ug/kg	1:1
trans-1,2-Dichloroethene	8260B	10/19/05	10/19/05	ND	2.0	ug/kg	1:1
1,1-Dichloroethane	8260B	10/19/05	10/19/05	ND	2.0	ug/kg	1:1
Vinyl acetate	8260B	10/19/05	10/19/05	ND	2.0	ug/kg	1:1
cis-1,2-Dichloroethene	8260B	10/19/05	10/19/05	ND	2.0	ug/kg	1:1
2-Butanone (MEK)	8260B	10/19/05	10/19/05	ND	2.0	ug/kg	1:1
Bromochloromethane	8260B	10/19/05	10/19/05	ND	2.0	ug/kg	1:1
Chloroform	8260B	10/19/05	10/19/05	ND	2.0	ug/kg	1:1
2,2-dichloropropane	8260B	10/19/05	10/19/05	ND	2.0	ug/kg	1:1
1,1,1-Trichloroethane	8260B	10/19/05	10/19/05	ND	2.0	ug/kg	1:1
1,1-dichloropropane	8260B	10/19/05	10/19/05	ND	2.0	ug/kg	1:1
Carbon tetrachloride	8260B	10/19/05	10/19/05	ND	2.0	ug/kg	1:1
Benzene	8260B	10/19/05	10/19/05	ND	2.0	ug/kg	1:1
1,2-Dichloroethane	8260B	10/19/05	10/19/05	ND	2.0	ug/kg	1:1
Dibromomethane	8260B	10/19/05	10/19/05	ND	2.0	ug/kg	1:1
Bromodichloromethane	8260B	10/19/05	10/19/05	ND	2.0	ug/kg	1:1
1,2-Dichloropropane	8260B	10/19/05	10/19/05	ND	2.0	ug/kg	1:1
Trichloroethene	8260B	10/19/05	10/19/05	ND	2.0	ug/kg	1:1
2-Chloroethylvinyl ether	8260B	10/19/05	10/19/05	ND	2.0	ug/kg	1:1
cis-1,3-Dichloropropene	8260B	10/19/05	10/19/05	ND	2.0	ug/kg	1:1
4-Methyl-2-pentanone	8260B	10/19/05	10/19/05	ND	2.0	ug/kg	1:1

3738 Bradview Drive • Sacramento, California 95827 • (916) 369-7688 • FAX (916) 369-7689

Sparger Technology, Inc.
Environmental Laboratories

Analytical Laboratory Division
Mobile Laboratory Division
Scientific Division

Method Blank Report

Client ID	Shaw Environmental & Infrastructure
Workorder ID	CalTrans Merced 117535
Laboratory ID	71327
Sample ID	MB for HBN 276967 [VMXV/2631]
Matrix	Soil

Parameter	Method	Prep Date	Analyzed	Result	RL	Units	Dilution
(continued)							
trans-1,3Dichloropropene	8260B	10/19/05	10/19/05	ND	2.0	ug/kg	1:1
1,1,2-Trichloroethane	8260B	10/19/05	10/19/05	ND	2.0	ug/kg	1:1
Toluene	8260B	10/19/05	10/19/05	ND	2.0	ug/kg	1:1
1,2-Dibromoethane (EDB)	8260B	10/19/05	10/19/05	ND	2.0	ug/kg	1:1
1,3-Dichloropropane	8260B	10/19/05	10/19/05	ND	2.0	ug/kg	1:1
2-Hexanone	8260B	10/19/05	10/19/05	ND	2.0	ug/kg	1:1
Dibromochloromethane	8260B	10/19/05	10/19/05	ND	2.0	ug/kg	1:1
Tetrachloroethene	8260B	10/19/05	10/19/05	ND	2.0	ug/kg	1:1
1,1,1,2Tetrachloroethane	8260B	10/19/05	10/19/05	ND	2.0	ug/kg	1:1
Chlorobenzene	8260B	10/19/05	10/19/05	ND	2.0	ug/kg	1:1
Ethylbenzene	8260B	10/19/05	10/19/05	ND	2.0	ug/kg	1:1
M+P-Xylene	8260B	10/19/05	10/19/05	ND	2.0	ug/kg	1:1
Bromoform	8260B	10/19/05	10/19/05	ND	2.0	ug/kg	1:1
Styrene	8260B	10/19/05	10/19/05	ND	2.0	ug/kg	1:1
o-Xylene	8260B	10/19/05	10/19/05	ND	2.0	ug/kg	1:1
1,1,2,2Tetrachloroethane	8260B	10/19/05	10/19/05	ND	2.0	ug/kg	1:1
1,2,3-Trichloropropane	8260B	10/19/05	10/19/05	ND	2.0	ug/kg	1:1
Isopropylbenzene(Cumene)	8260B	10/19/05	10/19/05	ND	2.0	ug/kg	1:1
Bromobenzene	8260B	10/19/05	10/19/05	ND	2.0	ug/kg	1:1
n-Propylbenzene	8260B	10/19/05	10/19/05	ND	2.0	ug/kg	1:1
2-Chlorotoluene	8260B	10/19/05	10/19/05	ND	2.0	ug/kg	1:1
4-Chlorotoluene	8260B	10/19/05	10/19/05	ND	2.0	ug/kg	1:1
1,3,5-Trimethylbenzene	8260B	10/19/05	10/19/05	ND	2.0	ug/kg	1:1
tert-Butylbenzene	8260B	10/19/05	10/19/05	ND	2.0	ug/kg	1:1
1,2,4-Trimethylbenzene	8260B	10/19/05	10/19/05	ND	2.0	ug/kg	1:1
sec-Butylbenzene	8260B	10/19/05	10/19/05	ND	2.0	ug/kg	1:1
1,3-Dichlorobenzene	8260B	10/19/05	10/19/05	ND	2.0	ug/kg	1:1
1,4-Dichlorobenzene	8260B	10/19/05	10/19/05	ND	2.0	ug/kg	1:1
4-Isopropyltoluene	8260B	10/19/05	10/19/05	ND	2.0	ug/kg	1:1
1,2-Dichlorobenzene	8260B	10/19/05	10/19/05	ND	2.0	ug/kg	1:1
n-Butylbenzene	8260B	10/19/05	10/19/05	ND	2.0	ug/kg	1:1

3738 Bradview Drive • Sacramento, California 95827 • (916) 369-7688 • FAX (916) 369-7689

Sparger Technology, Inc.
Environmental Laboratories

Analytical Laboratory Division
Mobile Laboratory Division
Scientific Division

Method Blank Report

Client ID Shaw Environmental & Infrastructure
Workorder ID CalTrans Merced 117535
Laboratory ID 71327
Sample ID MB for HBN 276967 [VMXV/2631]
Matrix Soil

Parameter	Method	Prep Date	Analyzed	Result	RL	Units	Dilution
(continued)							
1,2Dibromo3chloropropane	8260B	10/19/05	10/19/05	ND	2.0	ug/kg	1:1
1,2,4-Trichlorobenzene	8260B	10/19/05	10/19/05	ND	2.0	ug/kg	1:1
Naphthalene	8260B	10/19/05	10/19/05	ND	2.0	ug/kg	1:1
Hexachlorobutadiene	8260B	10/19/05	10/19/05	ND	2.0	ug/kg	1:1
1,2,3-Trichlorobenzene	8260B	10/19/05	10/19/05	ND	2.0	ug/kg	1:1

Surrogates	Result	Recovery	Limits
1,2-Dichloroethane-d4	52 ug/kg	104 %	(70 - 135)
Toluene d8	44 ug/kg	88 %	(70 - 135)
4-Bromofluorobenzene	49 ug/kg	98 %	(70 - 135)

3738 Bradview Drive • Sacramento, California 95827 • (916) 369-7688 • FAX (916) 369-7689

Sparger Technology, Inc.
Environmental Laboratories

Analytical Laboratory Division
Mobile Laboratory Division
Scientific Division

Lab Control Sample Report

Client ID	Shaw Environmental & Infrastructure
Workorder ID	CalTrans Merced 117535
Laboratory ID	71328
Sample ID	LCS for HBN 276967 [VMXV/2631]
Matrix	Soil

Parameter	Method	Prep Date	Analyzed	Result	RL	Units	Dilution
1,1-Dichloroethene	8260B	10/19/05	10/19/05	66	2.0	ug/kg	1:1
Benzene	8260B	10/19/05	10/19/05	55	2.0	ug/kg	1:1
Trichloroethene	8260B	10/19/05	10/19/05	55	2.0	ug/kg	1:1
Toluene	8260B	10/19/05	10/19/05	54	2.0	ug/kg	1:1
Chlorobenzene	8260B	10/19/05	10/19/05	54	2.0	ug/kg	1:1

3738 Bradview Drive • Sacramento, California 95827 • (916) 369-7688 • FAX (916) 369-7689

Sparger Technology, Inc.
Environmental Laboratories

Analytical Laboratory Division
Mobile Laboratory Division
Scientific Division

Lab Control Sample Duplicate Report

Client ID Shaw Environmental & Infrastructure
Workorder ID CalTrans Merced 117535
Laboratory ID 71329
Sample ID LCSD for HBN 276967 [VMXV/2631
Matrix Soil

Parameter	Method	Prep Date	Analyzed	Result	RL	Units	Dilution
1,1-Dichloroethene	8260B	10/19/05	10/19/05	61	2.0	ug/kg	1:1
Benzene	8260B	10/19/05	10/19/05	56	2.0	ug/kg	1:1
Trichloroethene	8260B	10/19/05	10/19/05	52	2.0	ug/kg	1:1
Toluene	8260B	10/19/05	10/19/05	57	2.0	ug/kg	1:1
Chlorobenzene	8260B	10/19/05	10/19/05	54	2.0	ug/kg	1:1

3738 Bradview Drive • Sacramento, California 95827 • (916) 369-7688 • FAX (916) 369-7689

Sparger Technology, Inc.
Environmental Laboratories

Analytical Laboratory Division
Mobile Laboratory Division
Scientific Division

Matrix Spike Report

Client ID Shaw Environmental & Infrastructure
Workorder ID CalTrans Merced 117535
Laboratory ID 71330
Sample ID MS for HBN 276967 [VMXV/2631]
Matrix Soil

Parameter	Method	Prep Date	Analyzed	Result	RL	Units	Dilution
1,1-Dichloroethene	8260B	10/19/05	10/19/05	64	2.0	ug/kg	1:1
Benzene	8260B	10/19/05	10/19/05	54	2.0	ug/kg	1:1
Trichloroethene	8260B	10/19/05	10/19/05	56	2.0	ug/kg	1:1
Toluene	8260B	10/19/05	10/19/05	55	2.0	ug/kg	1:1
Chlorobenzene	8260B	10/19/05	10/19/05	52	2.0	ug/kg	1:1

3738 Bradview Drive • Sacramento, California 95827 • (916) 369-7688 • FAX (916) 369-7689

Sparger Technology, Inc.
Environmental Laboratories

Analytical Laboratory Division
Mobile Laboratory Division
Scientific Division

Matrix Spike Duplicate Report

Client ID Shaw Environmental & Infrastructure
Workorder ID CalTrans Merced 117535
Laboratory ID 71331
Sample ID MSD for HBN 276967 [VMXV/2631]
Matrix Soil

Parameter	Method	Prep Date	Analyzed	Result	RL	Units	Dilution
1,1-Dichloroethene	8260B	10/19/05	10/19/05	59	2.0	ug/kg	1:1
Benzene	8260B	10/19/05	10/19/05	49	2.0	ug/kg	1:1
Trichloroethene	8260B	10/19/05	10/19/05	49	2.0	ug/kg	1:1
Toluene	8260B	10/19/05	10/19/05	50	2.0	ug/kg	1:1
Chlorobenzene	8260B	10/19/05	10/19/05	51	2.0	ug/kg	1:1

3738 Bradview Drive • Sacramento, California 95827 • (916) 369-7688 • FAX (916) 369-7689

Sparger Technology, Inc.
Environmental Laboratories

Analytical Laboratory Division
Mobile Laboratory Division
Scientific Division

Method Blank Report

Client ID Shaw Environmental & Infrastructure
Workorder ID CalTrans Merced 117535
Laboratory ID 71332
Sample ID MB for HBN 276970 [VMXV/2632]
Matrix Soil

Parameter	Method	Prep Date	Analyzed	Result	RL	Units	Dilution
Dichlorodifluoromethane	8260B	10/20/05	10/20/05	ND	2.0	ug/kg	1:1
Chloromethane	8260B	10/20/05	10/20/05	ND	2.0	ug/kg	1:1
Vinyl chloride	8260B	10/20/05	10/20/05	ND	2.0	ug/kg	1:1
Bromomethane	8260B	10/20/05	10/20/05	ND	2.0	ug/kg	1:1
Chloroethane	8260B	10/20/05	10/20/05	ND	2.0	ug/kg	1:1
Trichlorofluoromethane	8260B	10/20/05	10/20/05	ND	2.0	ug/kg	1:1
Acrolein	8260B	10/20/05	10/20/05	ND	2.0	ug/kg	1:1
1,1-Dichloroethene	8260B	10/20/05	10/20/05	ND	2.0	ug/kg	1:1
Acetone	8260B	10/20/05	10/20/05	ND	2.0	ug/kg	1:1
Methyl iodide	8260B	10/20/05	10/20/05	ND	2.0	ug/kg	1:1
Carbon disulfide	8260B	10/20/05	10/20/05	ND	2.0	ug/kg	1:1
Dichloromethane	8260B	10/20/05	10/20/05	ND	2.0	ug/kg	1:1
Acrylonitrile	8260B	10/20/05	10/20/05	ND	2.0	ug/kg	1:1
trans-1,2-Dichloroethene	8260B	10/20/05	10/20/05	ND	2.0	ug/kg	1:1
1,1-Dichloroethane	8260B	10/20/05	10/20/05	ND	2.0	ug/kg	1:1
Vinyl acetate	8260B	10/20/05	10/20/05	ND	2.0	ug/kg	1:1
cis-1,2-Dichloroethene	8260B	10/20/05	10/20/05	ND	2.0	ug/kg	1:1
2-Butanone (MEK)	8260B	10/20/05	10/20/05	ND	2.0	ug/kg	1:1
Bromochloromethane	8260B	10/20/05	10/20/05	ND	2.0	ug/kg	1:1
Chloroform	8260B	10/20/05	10/20/05	ND	2.0	ug/kg	1:1
2,2-dichloropropane	8260B	10/20/05	10/20/05	ND	2.0	ug/kg	1:1
1,1,1-Trichloroethane	8260B	10/20/05	10/20/05	ND	2.0	ug/kg	1:1
1,1-dichloropropane	8260B	10/20/05	10/20/05	ND	2.0	ug/kg	1:1
Carbon tetrachloride	8260B	10/20/05	10/20/05	ND	2.0	ug/kg	1:1
Benzene	8260B	10/20/05	10/20/05	ND	2.0	ug/kg	1:1
1,2-Dichloroethane	8260B	10/20/05	10/20/05	ND	2.0	ug/kg	1:1
Dibromomethane	8260B	10/20/05	10/20/05	ND	2.0	ug/kg	1:1
Bromodichloromethane	8260B	10/20/05	10/20/05	ND	2.0	ug/kg	1:1
1,2-Dichloropropane	8260B	10/20/05	10/20/05	ND	2.0	ug/kg	1:1
Trichloroethene	8260B	10/20/05	10/20/05	ND	2.0	ug/kg	1:1
2-Chloroethylvinyl ether	8260B	10/20/05	10/20/05	ND	2.0	ug/kg	1:1
cis-1,3-Dichloropropene	8260B	10/20/05	10/20/05	ND	2.0	ug/kg	1:1
4-Methyl-2-pentanone	8260B	10/20/05	10/20/05	ND	2.0	ug/kg	1:1

3738 Bradview Drive • Sacramento, California 95827 • (916) 369-7688 • FAX (916) 369-7689

Sparger Technology, Inc.
Environmental Laboratories

Analytical Laboratory Division
Mobile Laboratory Division
Scientific Division

Method Blank Report

Client ID	Shaw Environmental & Infrastructure
Workorder ID	CalTrans Merced 117535
Laboratory ID	71332
Sample ID	MB for HBN 276970 [VMXV/2632]
Matrix	Soil

Parameter	Method	Prep Date	Analyzed	Result	RL	Units	Dilution
(continued)							
trans-1,3Dichloropropene	8260B	10/20/05	10/20/05	ND	2.0	ug/kg	1:1
1,1,2-Trichloroethane	8260B	10/20/05	10/20/05	ND	2.0	ug/kg	1:1
Toluene	8260B	10/20/05	10/20/05	ND	2.0	ug/kg	1:1
1,2-Dibromoethane (EDB)	8260B	10/20/05	10/20/05	ND	2.0	ug/kg	1:1
1,3-Dichloropropane	8260B	10/20/05	10/20/05	ND	2.0	ug/kg	1:1
2-Hexanone	8260B	10/20/05	10/20/05	ND	2.0	ug/kg	1:1
Dibromochloromethane	8260B	10/20/05	10/20/05	ND	2.0	ug/kg	1:1
Tetrachloroethene	8260B	10/20/05	10/20/05	ND	2.0	ug/kg	1:1
1,1,1,2Tetrachloroethane	8260B	10/20/05	10/20/05	ND	2.0	ug/kg	1:1
Chlorobenzene	8260B	10/20/05	10/20/05	ND	2.0	ug/kg	1:1
Ethylbenzene	8260B	10/20/05	10/20/05	ND	2.0	ug/kg	1:1
M+P-Xylene	8260B	10/20/05	10/20/05	ND	2.0	ug/kg	1:1
Bromoform	8260B	10/20/05	10/20/05	ND	2.0	ug/kg	1:1
Styrene	8260B	10/20/05	10/20/05	ND	2.0	ug/kg	1:1
o-Xylene	8260B	10/20/05	10/20/05	ND	2.0	ug/kg	1:1
1,1,2,2Tetrachloroethane	8260B	10/20/05	10/20/05	ND	2.0	ug/kg	1:1
1,2,3-Trichloropropane	8260B	10/20/05	10/20/05	ND	2.0	ug/kg	1:1
Isopropylbenzene(Cumene)	8260B	10/20/05	10/20/05	ND	2.0	ug/kg	1:1
Bromobenzene	8260B	10/20/05	10/20/05	ND	2.0	ug/kg	1:1
n-Propylbenzene	8260B	10/20/05	10/20/05	ND	2.0	ug/kg	1:1
2-Chlorotoluene	8260B	10/20/05	10/20/05	ND	2.0	ug/kg	1:1
4-Chlorotoluene	8260B	10/20/05	10/20/05	ND	2.0	ug/kg	1:1
1,3,5-Trimethylbenzene	8260B	10/20/05	10/20/05	ND	2.0	ug/kg	1:1
tert-Butylbenzene	8260B	10/20/05	10/20/05	ND	2.0	ug/kg	1:1
1,2,4-Trimethylbenzene	8260B	10/20/05	10/20/05	ND	2.0	ug/kg	1:1
sec-Butylbenzene	8260B	10/20/05	10/20/05	ND	2.0	ug/kg	1:1
1,3-Dichlorobenzene	8260B	10/20/05	10/20/05	ND	2.0	ug/kg	1:1
1,4-Dichlorobenzene	8260B	10/20/05	10/20/05	ND	2.0	ug/kg	1:1
4-Isopropyltoluene	8260B	10/20/05	10/20/05	ND	2.0	ug/kg	1:1
1,2-Dichlorobenzene	8260B	10/20/05	10/20/05	ND	2.0	ug/kg	1:1
n-Butylbenzene	8260B	10/20/05	10/20/05	ND	2.0	ug/kg	1:1

3738 Bradview Drive • Sacramento, California 95827 • (916) 369-7688 • FAX (916) 369-7689

Sparger Technology, Inc.
Environmental Laboratories

Analytical Laboratory Division
Mobile Laboratory Division
Scientific Division

Method Blank Report

Client ID	Shaw Environmental & Infrastructure
Workorder ID	CalTrans Merced 117535
Laboratory ID	71332
Sample ID	MB for HBN 276970 [VMXV/2632]
Matrix	Soil

Parameter	Method	Prep Date	Analyzed	Result	RL	Units	Dilution
(continued)							
1,2Dibromo3chloropropane	8260B	10/20/05	10/20/05	ND	2.0	ug/kg	1:1
1,2,4-Trichlorobenzene	8260B	10/20/05	10/20/05	ND	2.0	ug/kg	1:1
Naphthalene	8260B	10/20/05	10/20/05	ND	2.0	ug/kg	1:1
Hexachlorobutadiene	8260B	10/20/05	10/20/05	ND	2.0	ug/kg	1:1
1,2,3-Trichlorobenzene	8260B	10/20/05	10/20/05	ND	2.0	ug/kg	1:1

Surrogates	Result	Recovery	Limits
1,2-Dichloroethane-d4	52 ug/kg	104 %	(70 - 135)
Toluene d8	44 ug/kg	88 %	(70 - 135)
4-Bromofluorobenzene	50 ug/kg	100 %	(70 - 135)

3738 Bradview Drive • Sacramento, California 95827 • (916) 369-7688 • FAX (916) 369-7689

Sparger Technology, Inc.
Environmental Laboratories

Analytical Laboratory Division
Mobile Laboratory Division
Scientific Division

Lab Control Sample Report

Client ID Shaw Environmental & Infrastructure
Workorder ID CalTrans Merced 117535
Laboratory ID 71333
Sample ID LCS for HBN 276970 [VMXV/2632]
Matrix Soil

Parameter	Method	Prep Date	Analyzed	Result	RL	Units	Dilution
1,1-Dichloroethene	8260B	10/20/05	10/20/05	60	2.0	ug/kg	1:1
Benzene	8260B	10/20/05	10/20/05	47	2.0	ug/kg	1:1
Trichloroethene	8260B	10/20/05	10/20/05	51	2.0	ug/kg	1:1
Toluene	8260B	10/20/05	10/20/05	49	2.0	ug/kg	1:1
Chlorobenzene	8260B	10/20/05	10/20/05	54	2.0	ug/kg	1:1

3738 Bradview Drive • Sacramento, California 95827 • (916) 369-7688 • FAX (916) 369-7689

Sparger Technology, Inc.
Environmental Laboratories

Analytical Laboratory Division
Mobile Laboratory Division
Scientific Division

Lab Control Sample Duplicate Report

Client ID Shaw Environmental & Infrastructure
Workorder ID CalTrans Merced 117535
Laboratory ID 71334
Sample ID LCSD for HBN 276970 [VMXV/2632
Matrix Soil

Parameter	Method	Prep Date	Analyzed	Result	RL	Units	Dilution
1,1-Dichloroethene	8260B	10/20/05	10/20/05	60	2.0	ug/kg	1:1
Benzene	8260B	10/20/05	10/20/05	48	2.0	ug/kg	1:1
Trichloroethene	8260B	10/20/05	10/20/05	51	2.0	ug/kg	1:1
Toluene	8260B	10/20/05	10/20/05	56	2.0	ug/kg	1:1
Chlorobenzene	8260B	10/20/05	10/20/05	52	2.0	ug/kg	1:1

3738 Bradview Drive • Sacramento, California 95827 • (916) 369-7688 • FAX (916) 369-7689

Sparger Technology, Inc.
Environmental Laboratories

Analytical Laboratory Division
Mobile Laboratory Division
Scientific Division

Matrix Spike Report

Client ID Shaw Environmental & Infrastructure
Workorder ID CalTrans Merced 117535
Laboratory ID 71335
Sample ID MS for HBN 276970 [VMXV/2632]
Matrix Soil

Parameter	Method	Prep Date	Analyzed	Result	RL	Units	Dilution
1,1-Dichloroethene	8260B	10/20/05	10/20/05	65	2.0	ug/kg	1:1
Benzene	8260B	10/20/05	10/20/05	52	2.0	ug/kg	1:1
Trichloroethene	8260B	10/20/05	10/20/05	57	2.0	ug/kg	1:1
Toluene	8260B	10/20/05	10/20/05	56	2.0	ug/kg	1:1
Chlorobenzene	8260B	10/20/05	10/20/05	53	2.0	ug/kg	1:1

3738 Bradview Drive • Sacramento, California 95827 • (916) 369-7688 • FAX (916) 369-7689

Sparger Technology, Inc.
Environmental Laboratories

Analytical Laboratory Division
Mobile Laboratory Division
Scientific Division

Matrix Spike Duplicate Report

Client ID Shaw Environmental & Infrastructure
Workorder ID CalTrans Merced 117535
Laboratory ID 71336
Sample ID MSD for HBN 276970 [VMXV/2632]
Matrix Soil

Parameter	Method	Prep Date	Analyzed	Result	RL	Units	Dilution
1,1-Dichloroethene	8260B	10/20/05	10/20/05	57	2.0	ug/kg	1:1
Benzene	8260B	10/20/05	10/20/05	44	2.0	ug/kg	1:1
Trichloroethene	8260B	10/20/05	10/20/05	45	2.0	ug/kg	1:1
Toluene	8260B	10/20/05	10/20/05	46	2.0	ug/kg	1:1
Chlorobenzene	8260B	10/20/05	10/20/05	43	2.0	ug/kg	1:1

3738 Bradview Drive • Sacramento, California 95827 • (916) 369-7688 • FAX (916) 369-7689

Sparger Technology, Inc.
Environmental Laboratories

Analytical Laboratory Division
Mobile Laboratory Division
Scientific Division

Method Blank Report

Client ID Shaw Environmental & Infrastructure
Workorder ID CalTrans Merced 117535
Laboratory ID 71337
Sample ID MB for HBN 276973 [VMXV/2633]
Matrix Soil

Parameter	Method	Prep Date	Analyzed	Result	RL	Units	Dilution
Benzene	8260B	10/19/05	10/19/05	ND	1.0	ug/kg	1:1
Toluene	8260B	10/19/05	10/19/05	ND	1.0	ug/kg	1:1
Ethylbenzene	8260B	10/19/05	10/19/05	ND	1.0	ug/kg	1:1
Xylene (Total)	8260B	10/19/05	10/19/05	ND	1.0	ug/kg	1:1

Surrogates	Result	Recovery	Limits
1,2-Dichloroethane-d4	52 ug/kg	104 %	(65 - 135)

3738 Bradview Drive • Sacramento, California 95827 • (916) 369-7688 • FAX (916) 369-7689

Sparger Technology, Inc.
Environmental Laboratories

Analytical Laboratory Division
Mobile Laboratory Division
Scientific Division

Lab Control Sample Report

Client ID	Shaw Environmental & Infrastructure
Workorder ID	CalTrans Merced 117535
Laboratory ID	71338
Sample ID	LCS for HBN 276973 [VMXV/2633]
Matrix	Soil

Parameter	Method	Prep Date	Analyzed	Result	RL	Units	Dilution
Benzene	8260B	10/19/05	10/19/05	55.0	1.0	ug/kg	1:1
Toluene	8260B	10/19/05	10/19/05	54.0	1.0	ug/kg	1:1
Ethylbenzene	8260B	10/19/05	10/19/05	54.0	1.0	ug/kg	1:1
Xylene (Total)	8260B	10/19/05	10/19/05	166	1.0	ug/kg	1:1

3738 Bradview Drive • Sacramento, California 95827 • (916) 369-7688 • FAX (916) 369-7689

Sparger Technology, Inc.
Environmental Laboratories

Analytical Laboratory Division
Mobile Laboratory Division
Scientific Division

Lab Control Sample Duplicate Report

Client ID Shaw Environmental & Infrastructure
Workorder ID CalTrans Merced 117535
Laboratory ID 71339
Sample ID LCSD for HBN 276973 [VMXV/2633
Matrix Soil

Parameter	Method	Prep Date	Analyzed	Result	RL	Units	Dilution
Benzene	8260B	10/19/05	10/19/05	56.0	1.0	ug/kg	1:1
Toluene	8260B	10/19/05	10/19/05	57.0	1.0	ug/kg	1:1
Ethylbenzene	8260B	10/19/05	10/19/05	56.0	1.0	ug/kg	1:1
Xylene (Total)	8260B	10/19/05	10/19/05	167	1.0	ug/kg	1:1

3738 Bradview Drive • Sacramento, California 95827 • (916) 369-7688 • FAX (916) 369-7689

Sparger Technology, Inc.
Environmental Laboratories

Analytical Laboratory Division
Mobile Laboratory Division
Scientific Division

Matrix Spike Report

Client ID Shaw Environmental & Infrastructure
Workorder ID CalTrans Merced 117535
Laboratory ID 71340
Sample ID MS for HBN 276973 [VMXV/2633]
Matrix Soil

Parameter	Method	Prep Date	Analyzed	Result	RL	Units	Dilution
Benzene	8260B	10/19/05	10/19/05	55.0	1.0	ug/kg	1:1
Toluene	8260B	10/19/05	10/19/05	55.0	1.0	ug/kg	1:1
Ethylbenzene	8260B	10/19/05	10/19/05	54.0	1.0	ug/kg	1:1
Xylene (Total)	8260B	10/19/05	10/19/05	159	1.0	ug/kg	1:1

3738 Bradview Drive • Sacramento, California 95827 • (916) 369-7688 • FAX (916) 369-7689

Sparger Technology, Inc.
Environmental Laboratories

Analytical Laboratory Division
Mobile Laboratory Division
Scientific Division

Matrix Spike Duplicate Report

Client ID Shaw Environmental & Infrastructure
Workorder ID CalTrans Merced 117535
Laboratory ID 71341
Sample ID MSD for HBN 276973 [VMXV/2633]
Matrix Soil

Parameter	Method	Prep Date	Analyzed	Result	RL	Units	Dilution
Benzene	8260B	10/19/05	10/19/05	50.0	1.0	ug/kg	1:1
Toluene	8260B	10/19/05	10/19/05	50.0	1.0	ug/kg	1:1
Ethylbenzene	8260B	10/19/05	10/19/05	54.0	1.0	ug/kg	1:1
Xylene (Total)	8260B	10/19/05	10/19/05	157	1.0	ug/kg	1:1

3738 Bradview Drive • Sacramento, California 95827 • (916) 369-7688 • FAX (916) 369-7689

Sparger Technology, Inc.
Environmental Laboratories

Analytical Laboratory Division
Mobile Laboratory Division
Scientific Division

Method Blank Report

Client ID Shaw Environmental & Infrastructure
Workorder ID CalTrans Merced 117535
Laboratory ID 71355
Sample ID MB for HBN 276985 [VMXV/2634]
Matrix Soil

Parameter	Method	Prep Date	Analyzed	Result	RL	Units	Dilution
Benzene	8260B	10/20/05	10/20/05	ND	1.0	ug/kg	1:1
Toluene	8260B	10/20/05	10/20/05	ND	1.0	ug/kg	1:1
Ethylbenzene	8260B	10/20/05	10/20/05	ND	1.0	ug/kg	1:1
Xylene (Total)	8260B	10/20/05	10/20/05	ND	1.0	ug/kg	1:1

Surrogates	Result	Recovery	Limits
1,2-Dichloroethane-d4	52 ug/kg	104 %	(65 - 135)

3738 Bradview Drive • Sacramento, California 95827 • (916) 369-7688 • FAX (916) 369-7689

Sparger Technology, Inc.
Environmental Laboratories

Analytical Laboratory Division
Mobile Laboratory Division
Scientific Division

Lab Control Sample Report

Client ID Shaw Environmental & Infrastructure
Workorder ID CalTrans Merced 117535
Laboratory ID 71356
Sample ID LCS for HBN 276985 [VMXV/2634]
Matrix Soil

Parameter	Method	Prep Date	Analyzed	Result	RL	Units	Dilution
Benzene	8260B	10/20/05	10/20/05	48.0	1.0	ug/kg	1:1
Toluene	8260B	10/20/05	10/20/05	49.0	1.0	ug/kg	1:1
Ethylbenzene	8260B	10/20/05	10/20/05	58.0	1.0	ug/kg	1:1
Xylene (Total)	8260B	10/20/05	10/20/05	171	1.0	ug/kg	1:1

3738 Bradview Drive • Sacramento, California 95827 • (916) 369-7688 • FAX (916) 369-7689

Sparger Technology, Inc.
Environmental Laboratories

Analytical Laboratory Division
Mobile Laboratory Division
Scientific Division

Lab Control Sample Duplicate Report

Client ID Shaw Environmental & Infrastructure
Workorder ID CalTrans Merced 117535
Laboratory ID 71357
Sample ID LCSD for HBN 276985 [VMXV/2634
Matrix Soil

Parameter	Method	Prep Date	Analyzed	Result	RL	Units	Dilution
Benzene	8260B	10/20/05	10/20/05	48.0	1.0	ug/kg	1:1
Toluene	8260B	10/20/05	10/20/05	56.0	1.0	ug/kg	1:1
Ethylbenzene	8260B	10/20/05	10/20/05	59.0	1.0	ug/kg	1:1
Xylene (Total)	8260B	10/20/05	10/20/05	164	1.0	ug/kg	1:1

3738 Bradview Drive • Sacramento, California 95827 • (916) 369-7688 • FAX (916) 369-7689

Sparger Technology, Inc.
Environmental Laboratories

Analytical Laboratory Division
Mobile Laboratory Division
Scientific Division

Matrix Spike Report

Client ID Shaw Environmental & Infrastructure
Workorder ID CalTrans Merced 117535
Laboratory ID 71358
Sample ID MS for HBN 276985 [VMXV/2634]
Matrix Soil

Parameter	Method	Prep Date	Analyzed	Result	RL	Units	Dilution
Benzene	8260B	10/20/05	10/20/05	53.0	1.0	ug/kg	1:1
Toluene	8260B	10/20/05	10/20/05	56.0	1.0	ug/kg	1:1
Ethylbenzene	8260B	10/20/05	10/20/05	53.0	1.0	ug/kg	1:1
Xylene (Total)	8260B	10/20/05	10/20/05	165	1.0	ug/kg	1:1

3738 Bradview Drive • Sacramento, California 95827 • (916) 369-7688 • FAX (916) 369-7689

Sparger Technology, Inc.
Environmental Laboratories

Analytical Laboratory Division
Mobile Laboratory Division
Scientific Division

Matrix Spike Duplicate Report

Client ID Shaw Environmental & Infrastructure
Workorder ID CalTrans Merced 117535
Laboratory ID 71359
Sample ID MSD for HBN 276985 [VMXV/2634]
Matrix Soil

Parameter	Method	Prep Date	Analyzed	Result	RL	Units	Dilution
Benzene	8260B	10/20/05	10/20/05	44.0	1.0	ug/kg	1:1
Toluene	8260B	10/20/05	10/20/05	46.0	1.0	ug/kg	1:1
Ethylbenzene	8260B	10/20/05	10/20/05	48.0	1.0	ug/kg	1:1
Xylene (Total)	8260B	10/20/05	10/20/05	140	1.0	ug/kg	1:1

3738 Bradview Drive • Sacramento, California 95827 • (916) 369-7688 • FAX (916) 369-7689

Sparger Technology, Inc.
Environmental Laboratories

Analytical Laboratory Division
Mobile Laboratory Division
Scientific Division

QC SUMMARY

Client ID	Shaw Environmental & Infrastructure		
Workorder ID	CalTrans Merced 117535		
QC Batch	ICPP 5272	**Original**	17091013
Matrix	Water	**Sample**	Duplicate [71102]

Parameter	RPD	RPD Limits
Antimony	00	(35)
Arsenic	00	(35)
Barium	00	(35)
Beryllium	00	(35)
Cadmium	00	(35)
Chromium	00	(35)
Cobalt	00	(35)
Copper	00	(35)
Lead	00	(35)
Molybdenum	00	(35)
Nickel	00	(35)
Selenium	00	(35)
Silver	00	(35)
Thallium	00	(35)
Vanadium	00	(35)
Zinc	00	(35)

3738 Bradview Drive • Sacramento, California 95827 • (916) 369-7688 • FAX (916) 369-7689

Sparger Technology, Inc.
Environmental Laboratories

Analytical Laboratory Division
Mobile Laboratory Division
Scientific Division

QC SUMMARY

Client ID	Shaw Environmental & Infrastructure		
Workorder ID	CalTrans Merced 117535		
QC Batch	ICPP 5273	**Original**	17088001
Matrix	Soil	**Sample**	Duplicate [71121]

Parameter	RPD	RPD Limits
Antimony	0000	(35)
Arsenic	0.2650	(35)
Barium	0.7170	(35)
Beryllium	0000	(35)
Cadmium	0000	(35)
Chromium	0.2880	(35)
Cobalt	0.1020	(35)
Copper	0.4280	(35)
Lead	5.48	(35)
Molybdenum	0000	(35)
Nickel	0000	(35)
Selenium	0000	(35)
Silver	0000	(35)
Thallium	0000	(35)
Vanadium	1.60	(35)
Zinc	0.8280	(35)

3738 Bradview Drive • Sacramento, California 95827 • (916) 369-7688 • FAX (916) 369-7689

Sparger Technology, Inc.
Environmental Laboratories

Analytical Laboratory Division
Mobile Laboratory Division
Scientific Division

QC SUMMARY

Client ID	Shaw Environmental & Infrastructure		
Workorder ID	CalTrans Merced 117535		
QC Batch	DIG 1578	**Original**	17091013
Matrix	Water	**Sample**	Duplicate [71145]

Parameter	RPD	RPD Limits
Mercury	0000	(35)

3738 Bradview Drive • Sacramento, California 95827 • (916) 369-7688 • FAX (916) 369-7689

Sparger Technology, Inc.
Environmental Laboratories

Analytical Laboratory Division
Mobile Laboratory Division
Scientific Division

QC SUMMARY

Client ID	Shaw Environmental & Infrastructure		
Workorder ID	CalTrans Merced 117535		
QC Batch	DIG 1579	**Original**	17088001
Matrix	Soil	**Sample**	Duplicate [71151]

Parameter	RPD	RPD Limits
Mercury	6.41	(35)

3738 Bradview Drive • Sacramento, California 95827 • (916) 369-7688 • FAX (916) 369-7689

Sparger Technology, Inc.
Environmental Laboratories

Analytical Laboratory Division
Mobile Laboratory Division
Scientific Division

QC SUMMARY

Client ID	Shaw Environmental & Infrastructure		
Workorder ID	CalTrans Merced 117535		
QC Batch	PHX 1515	**Original**	17088003
Matrix	Soil	**Sample**	Duplicate [71164]

Parameter	RPD	RPD Limits
pH	0.130	(35)

3738 Bradview Drive • Sacramento, California 95827 • (916) 369-7688 • FAX (916) 369-7689

Sparger Technology, Inc.
Environmental Laboratories

Analytical Laboratory Division
Mobile Laboratory Division
Scientific Division

QC SUMMARY

Client ID	Shaw Environmental & Infrastructure		
Workorder ID	CalTrans Merced 117535		
QC Batch	SGX 2313	**Original**	17091006
Matrix	Soil	**Samples**	Matrix Spike [71092] Matrix Spike Duplicate [71093]

Parameter	Spike %Recovery	Spike Dup %Recovery	Recovery Limits	RPD	RPD Limits
TPHdiesel	86	94	(65-135)	8.9	(20 MAX)

3738 Bradview Drive • Sacramento, California 95827 • (916) 369-7688 • FAX (916) 369-7689

Sparger Technology, Inc.
Environmental Laboratories

Analytical Laboratory Division
Mobile Laboratory Division
Scientific Division

QC SUMMARY

Client ID Shaw Environmental & Infrastructure
Workorder ID CalTrans Merced 117535
QC Batch ICPP 5273
Matrix Soil

Original Samples 17088001
Matrix Spike [71119]
Matrix Spike Duplicate [71120]

Parameter	Spike %Recovery	Spike Dup %Recovery	Recovery Limits	RPD	RPD Limits
Antimony	77.6	81.0	(75-125)	4.29	(35 MAX)
Arsenic	101	99.5	(75-125)	1.50	(35 MAX)
Barium	140	160	(75-125)	13.3	(35 MAX)
Beryllium	110	107	(75-125)	2.76	(35 MAX)
Cadmium	102	101	(75-125)	0.9850	(35 MAX)
Chromium	115	116	(75-125)	0.8660	(35 MAX)
Cobalt	102	101	(75-125)	0.9850	(35 MAX)
Copper	112	113	(75-125)	0.8890	(35 MAX)
Lead	100	100	(75-125)	0000	(35 MAX)
Molybdenum	100	101	(75-125)	0.9950	(35 MAX)
Nickel	123	122	(75-125)	0.8160	(35 MAX)
Selenium	114	112	(75-125)	1.77	(35 MAX)
Silver	110	109	(75-125)	0.9130	(35 MAX)
Thallium	99.4	100	(75-125)	0.6020	(35 MAX)
Vanadium	114	118	(75-125)	3.45	(35 MAX)
Zinc	111	111	(75-125)	0000	(35 MAX)

* High Barium MS/MSD recoveries due to sample matrix effect.

3738 Bradview Drive • Sacramento, California 95827 • (916) 369-7688 • FAX (916) 369-7689

Sparger Technology, Inc.
Environmental Laboratories

Analytical Laboratory Division
Mobile Laboratory Division
Scientific Division

QC SUMMARY

Client ID	Shaw Environmental & Infrastructure		
Workorder ID	CalTrans Merced 117535		
QC Batch	DIG 1578	**Original**	17091013
Matrix	Water	**Samples**	Matrix Spike [71146] Matrix Spike Duplicate [71147]

Parameter	Spike %Recovery	Spike Dup %Recovery	Recovery Limits	RPD	RPD Limits
Mercury	95.1	95.9	(75-125)	0.8380	(35 MAX)

3738 Bradview Drive • Sacramento, California 95827 • (916) 369-7688 • FAX (916) 369-7689

Sparger Technology, Inc.
Environmental Laboratories

Analytical Laboratory Division
Mobile Laboratory Division
Scientific Division

QC SUMMARY

Client ID	Shaw Environmental & Infrastructure		
Workorder ID	CalTrans Merced 117535		
QC Batch	VGX 2844	**Original**	17091032
Matrix	Soil	**Samples**	Matrix Spike [71265] Matrix Spike Duplicate [71266]

Parameter	Spike %Recovery	Spike Dup %Recovery	Recovery Limits	RPD	RPD Limits
TPHgas	80	90	(65-135)	12	(20 MAX)

3738 Bradview Drive • Sacramento, California 95827 • (916) 369-7688 • FAX (916) 369-7689

Sparger Technology, Inc.
Environmental Laboratories

Analytical Laboratory Division
Mobile Laboratory Division
Scientific Division

QC SUMMARY

Client ID	Shaw Environmental & Infrastructure		
Workorder ID	CalTrans Merced 117535		
QC Batch	VGX 2845	**Original**	17088014
Matrix	Soil	**Samples**	Matrix Spike [71295] Matrix Spike Duplicate [71296]

Parameter	Spike %Recovery	Spike Dup %Recovery	Recovery Limits	RPD	RPD Limits
TPHgas	90	93	(65-135)	3.3	(20 MAX)

3738 Bradview Drive • Sacramento, California 95827 • (916) 369-7688 • FAX (916) 369-7689

Sparger Technology, Inc.
Environmental Laboratories

Analytical Laboratory Division
Mobile Laboratory Division
Scientific Division

QC SUMMARY

Client ID	Shaw Environmental & Infrastructure		
Workorder ID	CalTrans Merced 117535		
QC Batch	VGX 2846	**Original**	17091017
Matrix	Soil	**Samples**	Matrix Spike [71300] Matrix Spike Duplicate [71301]

Parameter	Spike %Recovery	Spike Dup %Recovery	Recovery Limits	RPD	RPD Limits
TPHgas	93	98	(65-135)	5.2	(20 MAX)

3738 Bradview Drive • Sacramento, California 95827 • (916) 369-7688 • FAX (916) 369-7689

Sparger Technology, Inc.
Environmental Laboratories

Analytical Laboratory Division
Mobile Laboratory Division
Scientific Division

QC SUMMARY

Client ID Shaw Environmental & Infrastructure
Workorder ID CalTrans Merced 117535
QC Batch VMX 2682
Matrix Soil

Original Samples 17088001
Matrix Spike [71330]
Matrix Spike Duplicate [71331]

Parameter	Spike %Recovery	Spike Dup %Recovery	Recovery Limits	RPD	RPD Limits
1,1-Dichloroethene	128	118	(59-172)	8.1	(22 MAX)
Benzene	108	98	(62-142)	9.7	(24 MAX)
Trichloroethene	112	98	(60-137)	13	(21 MAX)
Toluene	110	100	(59-139)	9.5	(21 MAX)
Chlorobenzene	104	102	(66-133)	1.9	(21 MAX)

3738 Bradview Drive • Sacramento, California 95827 • (916) 369-7688 • FAX (916) 369-7689

Sparger Technology, Inc.
Environmental Laboratories

Analytical Laboratory Division
Mobile Laboratory Division
Scientific Division

QC SUMMARY

Client ID Shaw Environmental & Infrastructure
Workorder ID CalTrans Merced 117535
QC Batch VMX 2683
Matrix Soil

Original Samples 17091025
Matrix Spike [71335]
Matrix Spike Duplicate [71336]

Parameter	Spike %Recovery	Spike Dup %Recovery	Recovery Limits	RPD	RPD Limits
1,1-Dichloroethene	130	114	(59-172)	13	(22 MAX)
Benzene	104	88	(62-142)	17	(24 MAX)
Trichloroethene	114	90	(60-137)	24	(21 MAX)
Toluene	112	92	(59-139)	20	(21 MAX)
Chlorobenzene	106	86	(66-133)	21	(21 MAX)

* High RPD due to sample matrix effect.

3738 Bradview Drive • Sacramento, California 95827 • (916) 369-7688 • FAX (916) 369-7689

Sparger Technology, Inc.
Environmental Laboratories

Analytical Laboratory Division
Mobile Laboratory Division
Scientific Division

QC SUMMARY

Client ID Shaw Environmental & Infrastructure
Workorder ID CalTrans Merced 117535
QC Batch VMX 2684
Matrix Soil

Original Samples 17088001
Matrix Spike [71340]
Matrix Spike Duplicate [71341]

Parameter	Spike %Recovery	Spike Dup %Recovery	Recovery Limits	RPD	RPD Limits
Benzene	110	100	(76-135)	9.5	(20 MAX)
Toluene	110	100	(76-135)	9.5	(20 MAX)
Ethylbenzene	108	108	(76-135)	00	(20 MAX)
Xylene (Total)	106	105	(76-135)	0.90	(20 MAX)

3738 Bradview Drive • Sacramento, California 95827 • (916) 369-7688 • FAX (916) 369-7689

Sparger Technology, Inc.
Environmental Laboratories

Analytical Laboratory Division
Mobile Laboratory Division
Scientific Division

QC SUMMARY

Client ID Shaw Environmental & Infrastructure
Workorder ID CalTrans Merced 117535
QC Batch ICPP 5273
Matrix Soil

Samples Lab Control Sample [71117]
Lab Control Sample Duplicate [71118]

Parameter	Check %Recovery	Check Dup %Recovery	Recovery Limits	RPD	RPD Limits
Antimony	104	104	(70-120)	0000	(20 MAX)
Arsenic	102	104	(80-120)	1.94	(20 MAX)
Barium	105	106	(80-120)	0.9480	(20 MAX)
Beryllium	105	107	(80-120)	1.89	(20 MAX)
Cadmium	101	102	(80-120)	0.9850	(20 MAX)
Chromium	110	112	(80-120)	1.80	(20 MAX)
Cobalt	104	105	(80-120)	0.9570	(20 MAX)
Copper	106	108	(80-120)	1.87	(20 MAX)
Lead	102	104	(80-120)	1.94	(20 MAX)
Molybdenum	108	110	(80-120)	1.83	(20 MAX)
Nickel	100	102	(80-120)	1.98	(20 MAX)
Selenium	107	108	(80-120)	0.9300	(20 MAX)
Silver	112	112	(60-120)	0000	(20 MAX)
Thallium	103	102	(80-120)	0.9760	(20 MAX)
Vanadium	99.5	98.5	(80-120)	1.01	(20 MAX)
Zinc	110	109	(80-120)	0.9130	(20 MAX)

3738 Bradview Drive • Sacramento, California 95827 • (916) 369-7688 • FAX (916) 369-7689

Sparger Technology, Inc.
Environmental Laboratories

Analytical Laboratory Division
Mobile Laboratory Division
Scientific Division

QC SUMMARY

Client ID Shaw Environmental & Infrastructure
Workorder ID CalTrans Merced 117535
QC Batch DIG 1578
Matrix Water

Samples Lab Control Sample [71143]
Lab Control Sample Duplicate [71144]

Parameter	Check %Recovery	Check Dup %Recovery	Recovery Limits	RPD	RPD Limits
Mercury	95.0	95.0	(80-120)	0000	(20 MAX)

3738 Bradview Drive • Sacramento, California 95827 • (916) 369-7688 • FAX (916) 369-7689

Sparger Technology, Inc.
Environmental Laboratories

Analytical Laboratory Division
Mobile Laboratory Division
Scientific Division

QC SUMMARY

Client ID Shaw Environmental & Infrastructure
Workorder ID CalTrans Merced 117535
QC Batch DIG 1579
Matrix Soil

Samples Lab Control Sample [71149]
Lab Control Sample Duplicate [71150]

Parameter	Check %Recovery	Check Dup %Recovery	Recovery Limits	RPD	RPD Limits
Mercury	93.0	94.0	(80-120)	1.07	(20 MAX)

3738 Bradview Drive • Sacramento, California 95827 • (916) 369-7688 • FAX (916) 369-7689

Sparger Technology, Inc.
Environmental Laboratories

Analytical Laboratory Division
Mobile Laboratory Division
Scientific Division

QC SUMMARY

Client ID	Shaw Environmental & Infrastructure		
Workorder ID	CalTrans Merced 117535		
QC Batch	SGX 2313	**Original**	17091006
Matrix	Soil	**Samples**	Matrix Spike [71092] Matrix Spike Duplicate [71093]

Parameter	Spike %Recovery	Spike Dup %Recovery	Recovery Limits	RPD	RPD Limits
TPHdiesel	86	94	(65-135)	8.9	(20 MAX)

3738 Bradview Drive • Sacramento, California 95827 • (916) 369-7688 • FAX (916) 369-7689

Sparger Technology, Inc.
Environmental Laboratories

Analytical Laboratory Division
Mobile Laboratory Division
Scientific Division

QC SUMMARY

Client ID Shaw Environmental & Infrastructure
Workorder ID CalTrans Merced 117535
QC Batch ICPP 5273
Matrix Soil

Original Samples 17088001
Matrix Spike [71119]
Matrix Spike Duplicate [71120]

Parameter	Spike %Recovery	Spike Dup %Recovery	Recovery Limits	RPD	RPD Limits
Antimony	77.6	81.0	(75-125)	4.29	(35 MAX)
Arsenic	101	99.5	(75-125)	1.50	(35 MAX)
Barium	140	160	(75-125)	13.3	(35 MAX)
Beryllium	110	107	(75-125)	2.76	(35 MAX)
Cadmium	102	101	(75-125)	0.9850	(35 MAX)
Chromium	115	116	(75-125)	0.8660	(35 MAX)
Cobalt	102	101	(75-125)	0.9850	(35 MAX)
Copper	112	113	(75-125)	0.8890	(35 MAX)
Lead	100	100	(75-125)	0000	(35 MAX)
Molybdenum	100	101	(75-125)	0.9950	(35 MAX)
Nickel	123	122	(75-125)	0.8160	(35 MAX)
Selenium	114	112	(75-125)	1.77	(35 MAX)
Silver	110	109	(75-125)	0.9130	(35 MAX)
Thallium	99.4	100	(75-125)	0.6020	(35 MAX)
Vanadium	114	118	(75-125)	3.45	(35 MAX)
Zinc	111	111	(75-125)	0000	(35 MAX)

* High Barium MS/MSD recoveries due to sample matrix effect.

3738 Bradview Drive • Sacramento, California 95827 • (916) 369-7688 • FAX (916) 369-7689

Sparger Technology, Inc.
Environmental Laboratories

Analytical Laboratory Division
Mobile Laboratory Division
Scientific Division

QC SUMMARY

Client ID	Shaw Environmental & Infrastructure		
Workorder ID	CalTrans Merced 117535		
QC Batch	DIG 1578	**Original**	17091013
Matrix	Water	**Samples**	Matrix Spike [71146] Matrix Spike Duplicate [71147]

Parameter	Spike %Recovery	Spike Dup %Recovery	Recovery Limits	RPD	RPD Limits
Mercury	95.1	95.9	(75-125)	0.8380	(35 MAX)

3738 Bradview Drive • Sacramento, California 95827 • (916) 369-7688 • FAX (916) 369-7689

Sparger Technology, Inc.
Environmental Laboratories

Analytical Laboratory Division
Mobile Laboratory Division
Scientific Division

QC SUMMARY

Client ID	Shaw Environmental & Infrastructure		
Workorder ID	CalTrans Merced 117535		
QC Batch	VGX 2844	**Original**	17091032
Matrix	Soil	**Samples**	Matrix Spike [71265] Matrix Spike Duplicate [71266]

Parameter	Spike %Recovery	Spike Dup %Recovery	Recovery Limits	RPD	RPD Limits
TPHgas	80	90	(65-135)	12	(20 MAX)

3738 Bradview Drive • Sacramento, California 95827 • (916) 369-7688 • FAX (916) 369-7689

Sparger Technology, Inc.
Environmental Laboratories

Analytical Laboratory Division
Mobile Laboratory Division
Scientific Division

QC SUMMARY

Client ID	Shaw Environmental & Infrastructure		
Workorder ID	CalTrans Merced 117535		
QC Batch	VGX 2845	**Original**	17088014
Matrix	Soil	**Samples**	Matrix Spike [71295] Matrix Spike Duplicate [71296]

Parameter	Spike %Recovery	Spike Dup %Recovery	Recovery Limits	RPD	RPD Limits
TPHgas	90	93	(65-135)	3.3	(20 MAX)

3738 Bradview Drive • Sacramento, California 95827 • (916) 369-7688 • FAX (916) 369-7689

Sparger Technology, Inc.
Environmental Laboratories

Analytical Laboratory Division
Mobile Laboratory Division
Scientific Division

QC SUMMARY

Client ID	Shaw Environmental & Infrastructure		
Workorder ID	CalTrans Merced 117535		
QC Batch	VGX 2846	**Original**	17091017
Matrix	Soil	**Samples**	Matrix Spike [71300] Matrix Spike Duplicate [71301]

Parameter	Spike %Recovery	Spike Dup %Recovery	Recovery Limits	RPD	RPD Limits
TPHgas	93	98	(65-135)	5.2	(20 MAX)

3738 Bradview Drive • Sacramento, California 95827 • (916) 369-7688 • FAX (916) 369-7689

Sparger Technology, Inc.
Environmental Laboratories

Analytical Laboratory Division
Mobile Laboratory Division
Scientific Division

QC SUMMARY

Client ID Shaw Environmental & Infrastructure
Workorder ID CalTrans Merced 117535
QC Batch VMX 2682
Matrix Soil

Original Samples 17088001
Matrix Spike [71330]
Matrix Spike Duplicate [71331]

Parameter	Spike %Recovery	Spike Dup %Recovery	Recovery Limits	RPD	RPD Limits
1,1-Dichloroethene	128	118	(59-172)	8.1	(22 MAX)
Benzene	108	98	(62-142)	9.7	(24 MAX)
Trichloroethene	112	98	(60-137)	13	(21 MAX)
Toluene	110	100	(59-139)	9.5	(21 MAX)
Chlorobenzene	104	102	(66-133)	1.9	(21 MAX)

3738 Bradview Drive • Sacramento, California 95827 • (916) 369-7688 • FAX (916) 369-7689

Sparger Technology, Inc.
Environmental Laboratories

Analytical Laboratory Division
Mobile Laboratory Division
Scientific Division

QC SUMMARY

Client ID Shaw Environmental & Infrastructure
Workorder ID CalTrans Merced 117535
QC Batch VMX 2683
Matrix Soil

Original Samples 17091025
Matrix Spike [71335]
Matrix Spike Duplicate [71336]

Parameter	Spike %Recovery	Spike Dup %Recovery	Recovery Limits	RPD	RPD Limits
1,1-Dichloroethene	130	114	(59-172)	13	(22 MAX)
Benzene	104	88	(62-142)	17	(24 MAX)
Trichloroethene	114	90	(60-137)	24	(21 MAX)
Toluene	112	92	(59-139)	20	(21 MAX)
Chlorobenzene	106	86	(66-133)	21	(21 MAX)

* High RPD due to sample matrix effect.

3738 Bradview Drive • Sacramento, California 95827 • (916) 369-7688 • FAX (916) 369-7689

Sparger Technology, Inc.
Environmental Laboratories

Analytical Laboratory Division
Mobile Laboratory Division
Scientific Division

QC SUMMARY

Client ID Shaw Environmental & Infrastructure
Workorder ID CalTrans Merced 117535
QC Batch VMX 2684
Matrix Soil

Original Samples 17088001
Matrix Spike [71340]
Matrix Spike Duplicate [71341]

Parameter	Spike %Recovery	Spike Dup %Recovery	Recovery Limits	RPD	RPD Limits
Benzene	110	100	(76-135)	9.5	(20 MAX)
Toluene	110	100	(76-135)	9.5	(20 MAX)
Ethylbenzene	108	108	(76-135)	00	(20 MAX)
Xylene (Total)	106	105	(76-135)	0.90	(20 MAX)

3738 Bradview Drive • Sacramento, California 95827 • (916) 369-7688 • FAX (916) 369-7689

Sparger Technology, Inc.
Environmental Laboratories

Analytical Laboratory Division
Mobile Laboratory Division
Scientific Division

QC SUMMARY

Client ID Shaw Environmental & Infrastructure
Workorder ID CalTrans Merced 117535
QC Batch ICPP 5273
Matrix Soil

Samples Lab Control Sample [71117]
Lab Control Sample Duplicate [71118]

Parameter	Check %Recovery	Check Dup %Recovery	Recovery Limits	RPD	RPD Limits
Antimony	104	104	(70-120)	0000	(20 MAX)
Arsenic	102	104	(80-120)	1.94	(20 MAX)
Barium	105	106	(80-120)	0.9480	(20 MAX)
Beryllium	105	107	(80-120)	1.89	(20 MAX)
Cadmium	101	102	(80-120)	0.9850	(20 MAX)
Chromium	110	112	(80-120)	1.80	(20 MAX)
Cobalt	104	105	(80-120)	0.9570	(20 MAX)
Copper	106	108	(80-120)	1.87	(20 MAX)
Lead	102	104	(80-120)	1.94	(20 MAX)
Molybdenum	108	110	(80-120)	1.83	(20 MAX)
Nickel	100	102	(80-120)	1.98	(20 MAX)
Selenium	107	108	(80-120)	0.9300	(20 MAX)
Silver	112	112	(60-120)	0000	(20 MAX)
Thallium	103	102	(80-120)	0.9760	(20 MAX)
Vanadium	99.5	98.5	(80-120)	1.01	(20 MAX)
Zinc	110	109	(80-120)	0.9130	(20 MAX)

3738 Bradview Drive • Sacramento, California 95827 • (916) 369-7688 • FAX (916) 369-7689

Sparger Technology, Inc.
Environmental Laboratories

Analytical Laboratory Division
Mobile Laboratory Division
Scientific Division

QC SUMMARY

Client ID Shaw Environmental & Infrastructure
Workorder ID CalTrans Merced 117535
QC Batch DIG 1578
Matrix Water

Samples Lab Control Sample [71143]
Lab Control Sample Duplicate [71144]

Parameter	Check %Recovery	Check Dup %Recovery	Recovery Limits	RPD	RPD Limits
Mercury	95.0	95.0	(80-120)	0000	(20 MAX)

3738 Bradview Drive • Sacramento, California 95827 • (916) 369-7688 • FAX (916) 369-7689

Sparger Technology, Inc.
Environmental Laboratories

Analytical Laboratory Division
Mobile Laboratory Division
Scientific Division

QC SUMMARY

Client ID Shaw Environmental & Infrastructure
Workorder ID CalTrans Merced 117535
QC Batch DIG 1579
Matrix Soil

Samples Lab Control Sample [71149]
Lab Control Sample Duplicate [71150]

Parameter	Check %Recovery	Check Dup %Recovery	Recovery Limits	RPD	RPD Limits
Mercury	93.0	94.0	(80-120)	1.07	(20 MAX)

3738 Bradview Drive • Sacramento, California 95827 • (916) 369-7688 • FAX (916) 369-7689

Sparger Technology, Inc.
Environmental Laboratories

Analytical Laboratory Division
Mobile Laboratory Division
Scientific Division

QC SUMMARY

Client ID Shaw Environmental & Infrastructure
Workorder ID CalTrans Merced 117535
QC Batch SGX 2315
Matrix Water

Samples Lab Control Sample [71160]
Lab Control Sample Duplicate [71161]

Parameter	Check %Recovery	Check Dup %Recovery	Recovery Limits	RPD	RPD Limits
TPHdiesel	106	105	(65-135)	0.90	(20 MAX)

3738 Bradview Drive • Sacramento, California 95827 • (916) 369-7688 • FAX (916) 369-7689

Sparger Technology, Inc.
Environmental Laboratories

Analytical Laboratory Division
Mobile Laboratory Division
Scientific Division

QC SUMMARY

Client ID Shaw Environmental & Infrastructure
Workorder ID CalTrans Merced 117535
QC Batch VGX 2843
Matrix Water

Samples Lab Control Sample [71208]
Lab Control Sample Duplicate [71209]

Parameter	Check %Recovery	Check Dup %Recovery	Recovery Limits	RPD	RPD Limits
TPHgas	99	98	(65-135)	1.0	(20 MAX)

3738 Bradview Drive • Sacramento, California 95827 • (916) 369-7688 • FAX (916) 369-7689

Sparger Technology, Inc.
Environmental Laboratories

Analytical Laboratory Division
Mobile Laboratory Division
Scientific Division

QC SUMMARY

Client ID Shaw Environmental & Infrastructure
Workorder ID CalTrans Merced 117535
QC Batch VGX 2844
Matrix Soil

Samples Lab Control Sample [71263]
Lab Control Sample Duplicate [71264]

Parameter	Check %Recovery	Check Dup %Recovery	Recovery Limits	RPD	RPD Limits
TPHgas	101	105	(65-135)	3.9	(20 MAX)

3738 Bradview Drive • Sacramento, California 95827 • (916) 369-7688 • FAX (916) 369-7689

Sparger Technology, Inc.
Environmental Laboratories

Analytical Laboratory Division
Mobile Laboratory Division
Scientific Division

QC SUMMARY

Client ID Shaw Environmental & Infrastructure
Workorder ID CalTrans Merced 117535
QC Batch VMX 2682
Matrix Soil

Samples Lab Control Sample [71328]
Lab Control Sample Duplicate [71329]

Parameter	Check %Recovery	Check Dup %Recovery	Recovery Limits	RPD	RPD Limits
1,1-Dichloroethene	132	122	(59-172)	7.9	(22 MAX)
Benzene	110	112	(62-142)	1.8	(24 MAX)
Trichloroethene	110	104	(60-137)	5.6	(21 MAX)
Toluene	108	114	(59-139)	5.4	(21 MAX)
Chlorobenzene	108	108	(66-133)	00	(21 MAX)

3738 Bradview Drive • Sacramento, California 95827 • (916) 369-7688 • FAX (916) 369-7689

Sparger Technology, Inc.
Environmental Laboratories

Analytical Laboratory Division
Mobile Laboratory Division
Scientific Division

QC SUMMARY

Client ID Shaw Environmental & Infrastructure
Workorder ID CalTrans Merced 117535
QC Batch VMX 2683
Matrix Soil

Samples Lab Control Sample [71333]
Lab Control Sample Duplicate [71334]

Parameter	Check %Recovery	Check Dup %Recovery	Recovery Limits	RPD	RPD Limits
1,1-Dichloroethene	120	120	(59-172)	00	(22 MAX)
Benzene	94	96	(62-142)	2.1	(24 MAX)
Trichloroethene	102	102	(60-137)	00	(21 MAX)
Toluene	98	112	(59-139)	13	(21 MAX)
Chlorobenzene	108	104	(66-133)	3.8	(21 MAX)

3738 Bradview Drive • Sacramento, California 95827 • (916) 369-7688 • FAX (916) 369-7689

Sparger Technology, Inc.
Environmental Laboratories

Analytical Laboratory Division
Mobile Laboratory Division
Scientific Division

QC SUMMARY

Client ID Shaw Environmental & Infrastructure
Workorder ID CalTrans Merced 117535
QC Batch VMX 2684
Matrix Soil

Samples Lab Control Sample [71338]
Lab Control Sample Duplicate [71339]

Parameter	Check %Recovery	Check Dup %Recovery	Recovery Limits	RPD	RPD Limits
Benzene	110	112	(76-135)	1.8	(20 MAX)
Toluene	108	114	(76-135)	5.4	(20 MAX)
Ethylbenzene	108	112	(76-135)	3.6	(20 MAX)
Xylene (Total)	111	111	(76-135)	00	(20 MAX)

3738 Bradview Drive • Sacramento, California 95827 • (916) 369-7688 • FAX (916) 369-7689

Sparger Technology, Inc.
Environmental Laboratories

Analytical Laboratory Division
Mobile Laboratory Division
Scientific Division

QC SUMMARY

Client ID Shaw Environmental & Infrastructure
Workorder ID CalTrans Merced 117535
QC Batch VMX 2685
Matrix Soil

Samples Lab Control Sample [71356]
Lab Control Sample Duplicate [71357]

Parameter	Check %Recovery	Check Dup %Recovery	Recovery Limits	RPD	RPD Limits
Benzene	96	96	(76-135)	00	(20 MAX)
Toluene	98	112	(76-135)	13	(20 MAX)
Ethylbenzene	116	118	(76-135)	1.7	(20 MAX)
Xylene (Total)	114	109	(76-135)	4.5	(20 MAX)

3738 Bradview Drive • Sacramento, California 95827 • (916) 369-7688 • FAX (916) 369-7689

Sparger Technology, Inc.
Environmental Laboratories

Analytical Laboratory Division
Mobile Laboratory Division
Scientific Division

QC SUMMARY

Client ID Shaw Environmental & Infrastructure
Workorder ID CalTrans Merced 117535
QC Batch SGX 2315
Matrix Water

Samples Lab Control Sample [71160]
Lab Control Sample Duplicate [71161]

Parameter	Check %Recovery	Check Dup %Recovery	Recovery Limits	RPD	RPD Limits
TPHdiesel	106	105	(65-135)	0.90	(20 MAX)

3738 Bradview Drive • Sacramento, California 95827 • (916) 369-7688 • FAX (916) 369-7689

Sparger Technology, Inc.
Environmental Laboratories

Analytical Laboratory Division
Mobile Laboratory Division
Scientific Division

QC SUMMARY

Client ID Shaw Environmental & Infrastructure
Workorder ID CalTrans Merced 117535
QC Batch VGX 2843
Matrix Water

Samples Lab Control Sample [71208]
Lab Control Sample Duplicate [71209]

Parameter	Check %Recovery	Check Dup %Recovery	Recovery Limits	RPD	RPD Limits
TPHgas	99	98	(65-135)	1.0	(20 MAX)

3738 Bradview Drive • Sacramento, California 95827 • (916) 369-7688 • FAX (916) 369-7689

Sparger Technology, Inc.
Environmental Laboratories

Analytical Laboratory Division
Mobile Laboratory Division
Scientific Division

QC SUMMARY

Client ID Shaw Environmental & Infrastructure
Workorder ID CalTrans Merced 117535
QC Batch VGX 2844
Matrix Soil

Samples Lab Control Sample [71263]
Lab Control Sample Duplicate [71264]

Parameter	Check %Recovery	Check Dup %Recovery	Recovery Limits	RPD	RPD Limits
TPHgas	101	105	(65-135)	3.9	(20 MAX)

3738 Bradview Drive • Sacramento, California 95827 • (916) 369-7688 • FAX (916) 369-7689

Sparger Technology, Inc.
Environmental Laboratories

Analytical Laboratory Division
Mobile Laboratory Division
Scientific Division

QC SUMMARY

Client ID Shaw Environmental & Infrastructure
Workorder ID CalTrans Merced 117535
QC Batch VMX 2682
Matrix Soil

Samples Lab Control Sample [71328]
Lab Control Sample Duplicate [71329]

Parameter	Check %Recovery	Check Dup %Recovery	Recovery Limits	RPD	RPD Limits
1,1-Dichloroethene	132	122	(59-172)	7.9	(22 MAX)
Benzene	110	112	(62-142)	1.8	(24 MAX)
Trichloroethene	110	104	(60-137)	5.6	(21 MAX)
Toluene	108	114	(59-139)	5.4	(21 MAX)
Chlorobenzene	108	108	(66-133)	00	(21 MAX)

3738 Bradview Drive • Sacramento, California 95827 • (916) 369-7688 • FAX (916) 369-7689

Sparger Technology, Inc.
Environmental Laboratories

Analytical Laboratory Division
Mobile Laboratory Division
Scientific Division

QC SUMMARY

Client ID Shaw Environmental & Infrastructure
Workorder ID CalTrans Merced 117535
QC Batch VMX 2683
Matrix Soil

Samples Lab Control Sample [71333]
Lab Control Sample Duplicate [71334]

Parameter	Check %Recovery	Check Dup %Recovery	Recovery Limits	RPD	RPD Limits
1,1-Dichloroethene	120	120	(59-172)	00	(22 MAX)
Benzene	94	96	(62-142)	2.1	(24 MAX)
Trichloroethene	102	102	(60-137)	00	(21 MAX)
Toluene	98	112	(59-139)	13	(21 MAX)
Chlorobenzene	108	104	(66-133)	3.8	(21 MAX)

3738 Bradview Drive • Sacramento, California 95827 • (916) 369-7688 • FAX (916) 369-7689

Sparger Technology, Inc.
Environmental Laboratories

Analytical Laboratory Division
Mobile Laboratory Division
Scientific Division

QC SUMMARY

Client ID Shaw Environmental & Infrastructure
Workorder ID CalTrans Merced 117535
QC Batch VMX 2684
Matrix Soil

Samples Lab Control Sample [71338]
Lab Control Sample Duplicate [71339]

Parameter	Check %Recovery	Check Dup %Recovery	Recovery Limits	RPD	RPD Limits
Benzene	110	112	(76-135)	1.8	(20 MAX)
Toluene	108	114	(76-135)	5.4	(20 MAX)
Ethylbenzene	108	112	(76-135)	3.6	(20 MAX)
Xylene (Total)	111	111	(76-135)	00	(20 MAX)

3738 Bradview Drive • Sacramento, California 95827 • (916) 369-7688 • FAX (916) 369-7689

Sparger Technology, Inc.
Environmental Laboratories

Analytical Laboratory Division
Mobile Laboratory Division
Scientific Division

QC SUMMARY

Client ID Shaw Environmental & Infrastructure
Workorder ID CalTrans Merced 117535
QC Batch VMX 2685
Matrix Soil

Samples Lab Control Sample [71356]
Lab Control Sample Duplicate [71357]

Parameter	Check %Recovery	Check Dup %Recovery	Recovery Limits	RPD	RPD Limits
Benzene	96	96	(76-135)	00	(20 MAX)
Toluene	98	112	(76-135)	13	(20 MAX)
Ethylbenzene	116	118	(76-135)	1.7	(20 MAX)
Xylene (Total)	114	109	(76-135)	4.5	(20 MAX)

3738 Bradview Drive • Sacramento, California 95827 • (916) 369-7688 • FAX (916) 369-7689

WORKORDER DATA SHEET
Oct 13, 2005 10:57

ID 17091 WO # 17091 CalTrans Merced 117535 STATUS WP
DESC B10E/R2-1

CREATED	10/13/05 10:03	PO 123928 OP	QA	TYPE CM	ACODE REPORT_WO
CLIENT	Shaw Shaw Environmental & Infrastructure				
PROFILE	10213 CaltransStan Caltrans Standard				

WORKORDER SAMPLES

1 **17091001** 17091001 SR140-B05-1.5

WP	TYPE SAMPLE	MATRIX	Soil
COLLECTED	10/11/05 15:48	DUE	10/27/05 17:00

Analyses		Turndays
8015M_G S	TPH Gas SOIL	10
OXG+/EDBS	8260B Oxygs + 1,2-DCA, + EDB S	10
8260 SOIL	8260B GCMS VOLATILES SOIL	10
8015M_D S	TPHdiesel Soil	10
CAM17SOIL	6010B ELEMENTS CAM17 SOIL	10

2 **17091002** 17091002 SR140-B05-3.0

WP	TYPE SAMPLE	MATRIX	Soil
COLLECTED	10/11/05 16:00	DUE	10/27/05 17:00

Analyses		Turndays
8015M_G S	TPH Gas SOIL	10
OXG+/EDBS	8260B Oxygs + 1,2-DCA, + EDB S	10
8015M_D S	TPHdiesel Soil	10

3 **17091003** 17091003 SR140-B05-4.5

WP	TYPE SAMPLE	MATRIX	Soil
COLLECTED	10/11/05 16:10	DUE	10/27/05 17:00

Analyses		Turndays
8015M_G S	TPH Gas SOIL	10
OXG+/EDBS	8260B Oxygs + 1,2-DCA, + EDB S	10
8260 SOIL	8260B GCMS VOLATILES SOIL	10
8015M_D S	TPHdiesel Soil	10

4 **17091004** 17091004 SR140-B05-6.0

WP	TYPE SAMPLE	MATRIX	Soil
COLLECTED	10/11/05 16:20	DUE	10/27/05 17:00

Analyses		Turndays
8015M_G S	TPH Gas SOIL	10
OXG+/EDBS	8260B Oxygs + 1,2-DCA, + EDB S	10
8015M_D S	TPHdiesel Soil	10

WORKORDER DATA SHEET
Oct 13, 2005 10:57

5 **17091005** 17091005 SR140-B05-7.5

WP	TYPE SAMPLE	MATRIX	Soil
COLLECTED	10/11/05 16:28	DUE	10/27/05 17:00

Analyses		Turndays
8015M_G S	TPH Gas SOIL	10
OXG+/EDBS	8260B Oxygs + 1,2-DCA, + EDB S	10
8015M_D S	TPHdiesel Soil	10
9045 PH S	9045, PH, Soil	10

6 **17091006** 17091006 SR140-B05-9.0

WP	TYPE SAMPLE	MATRIX	Soil
COLLECTED	10/11/05 16:41	DUE	10/27/05 17:00

Analyses		Turndays
8015M_G S	TPH Gas SOIL	10
OXG+/EDBS	8260B Oxygs + 1,2-DCA, + EDB S	10
8015M_D S	TPHdiesel Soil	10
8260 SOIL	8260B GCMS VOLATILES SOIL	10

7 **17091007** 17091007 SR140-B06-1.5

WP	TYPE SAMPLE	MATRIX	Soil
COLLECTED	10/11/05 17:45	DUE	10/27/05 17:00

Analyses		Turndays
8015M_G S	TPH Gas SOIL	10
OXG+/EDBS	8260B Oxygs + 1,2-DCA, + EDB S	10
8260 SOIL	8260B GCMS VOLATILES SOIL	10
8015M_D S	TPHdiesel Soil	10
CAM17SOIL	6010B ELEMENTS CAM17 SOIL	10

8 **17091008** 17091008 SR140-B06-3.0

WP	TYPE SAMPLE	MATRIX	Soil
COLLECTED	10/11/05 17:55	DUE	10/27/05 17:00

Analyses		Turndays
8015M_G S	TPH Gas SOIL	10
OXG+/EDBS	8260B Oxygs + 1,2-DCA, + EDB S	10
8015M_D S	TPHdiesel Soil	10

9 **17091009** 17091009 SR140-B06-4.5

WP	TYPE SAMPLE	MATRIX	Soil
COLLECTED	10/11/05 18:05	DUE	10/27/05 17:00

Analyses		Turndays
8015M_G S	TPH Gas SOIL	10
OXG+/EDBS	8260B Oxygs + 1,2-DCA, + EDB S	10
8015M_D S	TPHdiesel Soil	10
8260 SOIL	8260B GCMS VOLATILES SOIL	10

WORKORDER DATA SHEET
Oct 13, 2005 10:57

10	**17091010**	17091010	SR140-B06-6.0		
	WP	TYPE SAMPLE		MATRIX	Soil
	COLLECTED	10/11/05 18:15		DUE	10/27/05 17:00

Analyses		Turndays
8015M_G S	TPH Gas SOIL	10
OXG+/EDBS	8260B Oxygs + 1,2-DCA, + EDB S	10
8015M_D S	TPHdiesel Soil	10

11	**17091011**	17091011	SR140-B06-7.5		
	WP	TYPE SAMPLE		MATRIX	Soil
	COLLECTED	10/11/05 18:22		DUE	10/27/05 17:00

Analyses		Turndays
8015M_G S	TPH Gas SOIL	10
OXG+/EDBS	8260B Oxygs + 1,2-DCA, + EDB S	10
8015M_D S	TPHdiesel Soil	10

12	**17091012**	17091012	SR140-B06-9.0		
	WP	TYPE SAMPLE		MATRIX	Soil
	COLLECTED	10/11/05 18:35		DUE	10/27/05 17:00

Analyses		Turndays
8015M_G S	TPH Gas SOIL	10
OXG+/EDBS	8260B Oxygs + 1,2-DCA, + EDB S	10
8260 SOIL	8260B GCMS VOLATILES SOIL	10
8015M_D S	TPHdiesel Soil	10
9045 PH S	9045, PH, Soil	10

13	**17091013**	17091013	SR140-ER-1011		
	WP	TYPE SAMPLE		MATRIX	Water
	COLLECTED	10/11/05 17:00		DUE	10/27/05 17:00

Analyses		Turndays
8015M_G W	TPH Gas WATR	10
8015M_D W	TPHdiesel Water	10
OXG+/EDBW	8260B Oxygs + 1,2-DCA, + EDB W	10
CAM17WATR	6010B ELEMENTS CAM17 WATER	10

14	**17091014**	17091014	SR140-B07-1.5		
	WP	TYPE SAMPLE		MATRIX	Soil
	COLLECTED	10/12/05 09:50		DUE	10/27/05 17:00

Analyses		Turndays
8015M_G S	TPH Gas SOIL	10
OXG+/EDBS	8260B Oxygs + 1,2-DCA, + EDB S	10
8260 SOIL	8260B GCMS VOLATILES SOIL	10
8015M_D S	TPHdiesel Soil	10

CAM17SOIL	6010B ELEMENTS CAM17 SOIL	10
9045 PH S	9045, PH, Soil	10

15 **17091015** 17091015 SR140-B07-3.0

WP	TYPE SAMPLE	MATRIX	Soil
COLLECTED	10/12/05 10:00	DUE	10/27/05 17:00

Analyses		Turndays
8015M_G S	TPH Gas SOIL	10
OXG+/EDBS	8260B Oxygs + 1,2-DCA, + EDB S	10
8015M_D S	TPHdiesel Soil	10

16 **17091016** 17091016 SR140-B07-4.5

WP	TYPE SAMPLE	MATRIX	Soil
COLLECTED	10/12/05 10:10	DUE	10/27/05 17:00

Analyses		Turndays
8015M_G S	TPH Gas SOIL	10
OXG+/EDBS	8260B Oxygs + 1,2-DCA, + EDB S	10
8015M_D S	TPHdiesel Soil	10
8260 SOIL	8260B GCMS VOLATILES SOIL	10

17 **17091017** 17091017 SR140-B07-6.0

WP	TYPE SAMPLE	MATRIX	Soil
COLLECTED	10/12/05 10:20	DUE	10/27/05 17:00

Analyses		Turndays
8015M_G S	TPH Gas SOIL	10
OXG+/EDBS	8260B Oxygs + 1,2-DCA, + EDB S	10
8015M_D S	TPHdiesel Soil	10

18 **17091018** 17091018 SR140-B07-7.5

WP	TYPE SAMPLE	MATRIX	Soil
COLLECTED	10/12/05 10:30	DUE	10/27/05 17:00

Analyses		Turndays
8015M_G S	TPH Gas SOIL	10
OXG+/EDBS	8260B Oxygs + 1,2-DCA, + EDB S	10
8015M_D S	TPHdiesel Soil	10

19 **17091019** 17091019 SR140-B07-9.0

WP	TYPE SAMPLE	MATRIX	Soil
COLLECTED	10/12/05 10:40	DUE	10/27/05 17:00

Analyses		Turndays
8015M_G S	TPH Gas SOIL	10
OXG+/EDBS	8260B Oxygs + 1,2-DCA, + EDB S	10
8015M_D S	TPHdiesel Soil	10
8260 SOIL	8260B GCMS VOLATILES SOIL	10

WORKORDER DATA SHEET
Oct 13, 2005 10:57

20	**17091020**	17091020	SR140-B08-1.5		
	WP	TYPE SAMPLE		MATRIX	Soil
	COLLECTED	10/12/05 11:20		DUE	10/27/05 17:00

Analyses		Turndays
8015M_G S	TPH Gas SOIL	10
OXG+/EDBS	8260B Oxygs + 1,2-DCA, + EDB S	10
8260 SOIL	8260B GCMS VOLATILES SOIL	10
8015M_D S	TPHdiesel Soil	10
CAM17SOIL	6010B ELEMENTS CAM17 SOIL	10

21	**17091021**	17091021	SR140-B08-3.0		
	WP	TYPE SAMPLE		MATRIX	Soil
	COLLECTED	10/12/05 11:30		DUE	10/27/05 17:00

Analyses		Turndays
8015M_G S	TPH Gas SOIL	10
OXG+/EDBS	8260B Oxygs + 1,2-DCA, + EDB S	10
8015M_D S	TPHdiesel Soil	10
9045 PH S	9045, PH, Soil	10

22	**17091022**	17091022	SR140-B08-4.5		
	WP	TYPE SAMPLE		MATRIX	Soil
	COLLECTED	10/12/05 11:40		DUE	10/27/05 17:00

Analyses		Turndays
8015M_G S	TPH Gas SOIL	10
OXG+/EDBS	8260B Oxygs + 1,2-DCA, + EDB S	10
8015M_D S	TPHdiesel Soil	10
8260 SOIL	8260B GCMS VOLATILES SOIL	10

23	**17091023**	17091023	SR140-B08-6.0		
	WP	TYPE SAMPLE		MATRIX	Soil
	COLLECTED	10/12/05 11:50		DUE	10/27/05 17:00

Analyses		Turndays
8015M_G S	TPH Gas SOIL	10
OXG+/EDBS	8260B Oxygs + 1,2-DCA, + EDB S	10
8015M_D S	TPHdiesel Soil	10

24	**17091024**	17091024	SR140-B08-7.5		
	WP	TYPE SAMPLE		MATRIX	Soil
	COLLECTED	10/12/05 12:00		DUE	10/27/05 17:00

Analyses		Turndays
8015M_G S	TPH Gas SOIL	10
OXG+/EDBS	8260B Oxygs + 1,2-DCA, + EDB S	10
8015M_D S	TPHdiesel Soil	10

WORKORDER DATA SHEET
Oct 13, 2005 10:57

25	**17091025**	17091025	SR140-B08-9.0		
	WP	TYPE SAMPLE		MATRIX	Soil
	COLLECTED	10/12/05 12:20		DUE	10/27/05 17:00

Analyses		Turndays
8015M_G S	TPH Gas SOIL	10
OXG+/EDBS	8260B Oxygs + 1,2-DCA, + EDB S	10
8015M_D S	TPHdiesel Soil	10
8260 SOIL	8260B GCMS VOLATILES SOIL	10

26	**17091026**	17091026	SR140-WS-01(A-D)		
	WP	TYPE SAMPLE		MATRIX	Soil
	COLLECTED	10/12/05 17:00		DUE	10/27/05 17:00

Analyses		Turndays
8015M_G S	TPH Gas SOIL	10
OXG+/EDBS	8260B Oxygs + 1,2-DCA, + EDB S	10
8260 SOIL	8260B GCMS VOLATILES SOIL	10
8015M_D S	TPHdiesel Soil	10
CAM17SOIL	6010B ELEMENTS CAM17 SOIL	10

27	**17091027**	17091027	SR140-B09-1.5		
	WP	TYPE SAMPLE		MATRIX	Soil
	COLLECTED	10/12/05 13:00		DUE	10/27/05 17:00

Analyses		Turndays
8015M_G S	TPH Gas SOIL	10
OXG+/EDBS	8260B Oxygs + 1,2-DCA, + EDB S	10
8260 SOIL	8260B GCMS VOLATILES SOIL	10
8015M_D S	TPHdiesel Soil	10
CAM17SOIL	6010B ELEMENTS CAM17 SOIL	10

28	**17091028**	17091028	SR140-B09-3.0		
	WP	TYPE SAMPLE		MATRIX	Soil
	COLLECTED	10/12/05 13:10		DUE	10/27/05 17:00

Analyses		Turndays
8015M_G S	TPH Gas SOIL	10
OXG+/EDBS	8260B Oxygs + 1,2-DCA, + EDB S	10
8015M_D S	TPHdiesel Soil	10

WORKORDER DATA SHEET
Oct 13, 2005 10:57

29 **17091029** 17091029 SR140-B09-4.5
WP TYPE SAMPLE MATRIX Soil
COLLECTED 10/12/05 13:20 DUE 10/27/05 17:00

Analyses		Turndays
8015M_G S	TPH Gas SOIL	10
OXG+/EDBS	8260B Oxygs + 1,2-DCA, + EDB S	10
8260 SOIL	8260B GCMS VOLATILES SOIL	10
8015M_D S	TPHdiesel Soil	10
9045 PH S	9045, PH, Soil	10

30 **17091030** 17091030 SR140-B09-6.0
WP TYPE SAMPLE MATRIX Soil
COLLECTED 10/12/05 13:30 DUE 10/27/05 17:00

Analyses		Turndays
8015M_G S	TPH Gas SOIL	10
OXG+/EDBS	8260B Oxygs + 1,2-DCA, + EDB S	10
8015M_D S	TPHdiesel Soil	10

31 **17091031** 17091031 SR140-B09-7.5
WP TYPE SAMPLE MATRIX Soil
COLLECTED 10/12/05 13:40 DUE 10/27/05 17:00

Analyses		Turndays
8015M_G S	TPH Gas SOIL	10
OXG+/EDBS	8260B Oxygs + 1,2-DCA, + EDB S	10
8015M_D S	TPHdiesel Soil	10

32 **17091032** 17091032 SR140-B09-9.0
WP TYPE SAMPLE MATRIX Soil
COLLECTED 10/12/05 14:30 DUE 10/27/05 17:00

Analyses		Turndays
8015M_G S	TPH Gas SOIL	10
OXG+/EDBS	8260B Oxygs + 1,2-DCA, + EDB S	10
8015M_D S	TPHdiesel Soil	10
8260 SOIL	8260B GCMS VOLATILES SOIL	10

33 **17091033** 17091033 SR140-B02-3.0
WP TYPE SAMPLE MATRIX Soil
COLLECTED 10/12/05 15:30 DUE 10/27/05 17:00

Analyses		Turndays
8015M_G S	TPH Gas SOIL	10
OXG+/EDBS	8260B Oxygs + 1,2-DCA, + EDB S	10
8015M_D S	TPHdiesel Soil	10
9045 PH S	9045, PH, Soil	10

WORKORDER DATA SHEET
Oct 13, 2005 10:57

34	**17091034**	17091034	SR140-B02-4.5		
	WP	TYPE SAMPLE		MATRIX	Soil
	COLLECTED	10/12/05 15:40		DUE	10/27/05 17:00

Analyses		Turndays
8015M_G S	TPH Gas SOIL	10
OXG+/EDBS	8260B Oxygs + 1,2-DCA, + EDB S	10
8015M_D S	TPHdiesel Soil	10
8260 SOIL	8260B GCMS VOLATILES SOIL	10

35	**17091035**	17091035	SR140-B02-6.0		
	WP	TYPE SAMPLE		MATRIX	Soil
	COLLECTED	10/12/05 15:45		DUE	10/27/05 17:00

Analyses		Turndays
8015M_G S	TPH Gas SOIL	10
OXG+/EDBS	8260B Oxygs + 1,2-DCA, + EDB S	10
8015M_D S	TPHdiesel Soil	10

36	**17091036**	17091036	SR140-B02-7.5		
	WP	TYPE SAMPLE		MATRIX	Soil
	COLLECTED	10/12/05 15:50		DUE	10/27/05 17:00

Analyses		Turndays
8015M_G S	TPH Gas SOIL	10
OXG+/EDBS	8260B Oxygs + 1,2-DCA, + EDB S	10
8015M_D S	TPHdiesel Soil	10

37	**17091037**	17091037	SR140-B02-9.0		
	WP	TYPE SAMPLE		MATRIX	Soil
	COLLECTED	10/12/05 16:10		DUE	10/27/05 17:00

Analyses		Turndays
8015M_G S	TPH Gas SOIL	10
OXG+/EDBS	8260B Oxygs + 1,2-DCA, + EDB S	10
8015M_D S	TPHdiesel Soil	10
8260 SOIL	8260B GCMS VOLATILES SOIL	10

38	**17091038**	17091038	SR140-ER-1012		
	WP	TYPE SAMPLE		MATRIX	Water
	COLLECTED	10/12/05 15:05		DUE	10/27/05 17:00

Analyses		Turndays
8015M_G W	TPH Gas WATR	10
8015M_D W	TPHdiesel Water	10
OXG+/EDBW	8260B Oxygs + 1,2-DCA, + EDB W	10
CAM17WATR	6010B ELEMENTS CAM17 WATER	10

WORKORDER DATA SHEET
Oct 13, 2005 10:57

39	**17091039**	17091039	SR140-WS-04(A-D)		
	WP	TYPE SAMPLE		MATRIX	Soil
	COLLECTED	10/12/05 17:30		DUE	10/27/05 17:00

Analyses		Turndays
8015M_G S	TPH Gas SOIL	10
OXG+/EDBS	8260B Oxygs + 1,2-DCA, + EDB S	10
8015M_D S	TPHdiesel Soil	10
CAM17SOIL	6010B ELEMENTS CAM17 SOIL	10

40	**17091040**	17091040	SR140-WS-03(A-C)		
	WP	TYPE SAMPLE		MATRIX	Soil
	COLLECTED	10/12/05 17:20		DUE	10/27/05 17:00

Analyses		Turndays
8015M_G S	TPH Gas SOIL	10
OXG+/EDBS	8260B Oxygs + 1,2-DCA, + EDB S	10
8015M_D S	TPHdiesel Soil	10
CAM17SOIL	6010B ELEMENTS CAM17 SOIL	10
8260 SOIL	8260B GCMS VOLATILES SOIL	10

41	**17091041**	17091041	SR140-WS-02(A-D)		
	WP	TYPE SAMPLE		MATRIX	Soil
	COLLECTED	10/12/05 17:10		DUE	10/27/05 17:00

Analyses		Turndays
8015M_G S	TPH Gas SOIL	10
OXG+/EDBS	8260B Oxygs + 1,2-DCA, + EDB S	10
8015M_D S	TPHdiesel Soil	10
CAM17SOIL	6010B ELEMENTS CAM17 SOIL	10

BIOE|R2-1

CHAIN OF CUSTODY

Ref. Document # CTSR140-101205

Page 1 of 4

17091

Shaw® Shaw Environmental, Inc.

1326 North Market Blvd
Sacramento, CA 95834

Project Number: 117535
Project Name / Location: CalTrans Merced St Rt 140 & Parsons
Purchase Order #:

Project Manager: Martha Adams / 916-565-4183 (Name & phone #)

Shipment Date: 10-13-05
Waybill Number: Courrier
Lab Destination: Sparger Laboratory, Rancho Cordova, Ca
Lab Contact Name / ph. #: Will 916-369-7688 916 508-0134 CELL PH

Send Report To: ATTN: Martha Adams
Phone/Fax Number: 916-565-4183 / 916-565-4356
Address: 1326 North Market Blvd
City: Sacramento, CA 95834

Sampler's Name(s): Joe Strack

Analyses Requested

Sample ID Number	Sample Description		Collection Information: Date	Time	Method	Matrix	# of containers	Container type	Preservative: HCL	NaOH	HNO_3	H_2SO_4	Ice	TPH as gasoline (EPA 8015)	TPH as diesel (EPA 8015)	BTEX (EPA 8260)	HvyMetals(Sb,As,Ba,Be,CdTotCr,Co,Cu,Pb, Hg,Mo,Ni,Se,Ag,Ti,V,Zn)(EPA3050/7471A) CAM 17	Soluble Heavy Metals (EPA 3050A WET)	VOCs (EPA 8260)	Soluble Lead (for ADL EPA 3050A WET)	pH (EPA 9045)
SR140-B05 - 1.5	Soil	5 ft	10/11/2005	15:48	Grab	SOIL	1	Tube					X	X	X	X	X	See special instructions "a"	X		
SR140-B05 - 3.0	Soil	10 ft	10/11/2005	16:00	Grab	SOIL	1	Tube						X	X	X					
SR140-B05 - 4.5	Soil	15 ft	10/11/2005	16:10	Grab	SOIL	1	Tube						X	X	X			X		
SR140-B05 - 6.0	Soil	20 ft	10/11/2005	16:20	Grab	SOIL	1	Tube						X	X	X					
SR140-B05 - 7.5	Soil	25 ft	10/11/2005	16:28	Grab	SOIL	1	Tube						X	X	X					X
SR140-B05 - 9.0	Soil	30 ft	10/11/2005	16:41	Grab	SOIL	1	Tube						X	X	X			X		
SR140-B06 - 1.5	Soil	5 ft	10/11/2005	17:45	Grab	SOIL	1	Tube						X	X	X	X		X		
SR140-B06 - 3.0	Soil	10 ft	10/11/2005	17:55	Grab	SOIL	1	Tube						X	X	X					
SR140-B06 - 4.5	Soil	15 ft	10/11/2005	18:05	Grab	SOIL	1	Tube						X	X	X			X		
SR140-B06 - 6.0	Soil	20 ft	10/11/2005	18:15	Grab	SOIL	1	Tube						X	X	X					
SR140-B06 - 7.5	Soil	25 ft	10/11/2005	18:22	Grab	SOIL	1	Tube						X	X	X					
SR140-B06 - 9.0	Soil	30 ft	10/11/2005	18:35	Grab	SOIL	1	Tube						X	X	X			X		X
SR140-ER-1011	DI Water	Lab	10/11/05	17:00	Equipment Rinse	WATER	5	3VOA 2x1l	X	–	X		X	X	X	X	X				

Special Instructions: a) Up to 3 reanalysis if required based on initial results of 5-ft (1.5m) sample (Normal TAT)

Normal TAT

Level Of QC Required: Method Blank Frequency = 1 per 10 samples
MS/MSD = 1 per 10 samples, Lab Control Duplicate = 1 per 10 samles

Relinquished By:	Date: / Time:	Received By:	Date: / Time:
Joe Strack	Date: 10-13-05 Time: 0930	[signature]	Date: 10/13/05 Time: 930
	Date: Time:		Date: Time:
	Date: Time:		Date: Time:

Method Codes

C = Composite
G = Grab

Matrix Codes

DW = Drinking Water
SO = Soil
GW = Ground Water
SL = Sludge
WW = Waste Water
CP = Chip Samples
SW = Surface Water
WP = Wipe Samples
LIQ = Other Liquid
SOL = Other Solid
GS = Air Sample

17091

CHAIN OF CUSTODY

Ref. Document # CTSR140-101205

Shaw® Shaw Environmental, Inc.

1326 North Market Blvd
Sacramento, CA 95834

Project Manager: Martha Adams / 916-565-4183 (Name & phone #)

Send Report To: ATTN: Martha Adams
Phone/Fax Number: 916-565-4183 / 916-565-4356
Address: 1326 North Market Blvd
City: Sacramento, CA 95834

Project Number: 117535
Project Name / Location: CalTrans Merced St Rt 140 & Parsons
Purchase Order #:

Shipment Date: 10-13-05
Waybill Number: Courrier
Lab Destination: Sparger Laboratory, Rancho Cordova,Ca
Lab Contact Name / ph. #: Will 916-369-7688

Sampler's Name(s): Joe Strack

Sample ID Number	Sample Description		Collection Information Date	Time	Method	Matrix	# of containers	Container type	Preservative HCL	NaOH	HNO_3	H_2SO_4	Ice		TPH as gasoline (EPA 8015)	TPH as diesel (EPA 8015)	BTEX (EPA 8260)	HvyMetals(Sb,As,Ba,Be,CdTotCr,Co,Cu,Pb CAM 17 Hg,Mo,Ni,Se,Ag,Ti,V,Zn)(EPA3050/7471A	Soluble Heavy Metals (EPA 3050A WET	VOCs (EPA 8260)	Soluble Lead (for ADL EPA 3050A WET	pH (EPA 9045)			
SR140-B07-1.5	Soil	5 ft	10/12/2005	0950	Grab	SOIL	1	Tube					X		X	X	X	X	X	See special instructions "a"	X		X			
SR140-B07-3.0	Soil	10 ft	10/12/2005	1000	Grab	SOIL	1	Tube					X		X	X	X									
SR140-B07-4.5	Soil	15 ft	10/12/2005	1010	Grab	SOIL	1	Tube					X		X	X	X				X					
SR140-B07-6.0	Soil	20 ft	10/12/2005	1020	Grab	SOIL	1	Tube					X		X	X	X									
SR140-B07-7.5	Soil	25 ft	10/12/2005	1030	Grab	SOIL	1	Tube					X		X	X	X									
SR140-B07-9.0	Soil	30 ft	10/12/2005	1040	Grab	SOIL	1	Tube					X		X	X	X				X					
SR140-B08-1.5	Soil	5 ft	10/12/2005	1120	Grab	SOIL	1	Tube					X		X	X	X	X	X		X					
SR140-B08-3.0	Soil	10 ft	10/12/2005	1130	Grab	SOIL	1	Tube					X		X	X	X						X			
SR140-B08-4.5	Soil	15 ft	10/12/2005	1140	Grab	SOIL	1	Tube					X		X	X	X				X					
SR140-B08-6.0	Soil	20 ft	10/12/2005	1150	Grab	SOIL	1	Tube					X		X	X	X									
SR140-B08-7.5	Soil	25 ft	10/12/2005	1200	Grab	SOIL	1	Tube					X		X	X	X									
SR140-B08-9.0	Soil	30 ft	10/12/2005	1220	Grab	SOIL	1	Tube					X		X	X	X				X					
SR140-WS-01(A-D)	SOIL (FOR COMPOSITE) WASTE		10-12-05	1700	GRAB	SOIL	4	JAR					X		X	X	X	X			X					

Special Instructions: a) Up to 3 reanalysis if required based on initial results of 5-ft (1.5m) sample (Normal TAT)

COMPOSITE BY LAB: SR140-WS-01(A-D)

Normal TAT

Level Of QC Required: Method Blank Frequency = 1 per 10 samples
MS/MSD = 1 per 10 samples, Lab Control Duplicate = 1 per 10 samles

Relinquished By:	Date: / Time:	Received By:	Date: / Time:
Joe Strack	Date: 10-13-05 Time: 0930	Kris Marix	Date: 10/13/05 Time: 930
	Date: Time:		Date: Time:
	Date: Time:		Date: Time:

Method Codes

C = Composite G = Grab

Matrix Codes

DW = Drinking Water SO = Soil
GW = Ground Water SL = Sludge
WW = Waste Water CP = Chip Samples
SW = Surface Water WP = Wipe Samples
LIQ = Other Liquid SOL = Other Solid
GS = Air Sample

CHAIN OF CUSTODY

Shaw® Shaw Environmental, Inc.

1326 North Market Blvd
Sacramento, CA 95834

Project Manager: Martha Adams / 916-565-4183 (Name & phone #)

Send Report To: ATTN: Martha Adams
Phone/Fax Number: 916-565-4183 / 916-565-4356
Address: 1326 North Market Blvd
City: Sacramento, CA 95834

Project Number: 117535
Project Name / Location: CalTrans Merced St Rt 140 & Parsons
Purchase Order #:

Shipment Date: 10-13-05
Waybill Number: Courrier
Lab Destination: Sparger Laboratory, Rancho Cordova,Ca
Lab Contact Name / ph. #: Will 916-369-7688

Ref. Document # CTSR140-101205

Page 3 of 4

Sampler's Name(s): Joe Strack

Sample ID Number	Sample Description		Collection Information Date	Time	Method	Matrix	# of containers	Container type	Preservative HCL	NaOH	HNO_3	H_2SO_4	Ice	TPH as gasoline (EPA 8015)	TPH as diesel (EPA 8015)	BTEX (EPA 8260)	HvyMetals(Sb,As,Ba,Be,CdTotCr,Co,Cu,Pb Hg,Mo,Ni,Se,Ag,Ti,V,Zn)(EPA3050/7471A CAM 17	Soluble Heavy Metals (EPA 3050A WET	VOCs (EPA 8260)	Soluble Lead (for ADL EPA 3050A WET	pH (EPA 9045)			
SR140-B09-1.5	Soil	5 ft	10/12/2005	1300	Grab	SOIL	1	Tube					X	X	X	X	X	See special instructions "a"	X					
SR140-B09-3.0	Soil	10 ft	10/12/2005	1310	Grab	SOIL	1	Tube					X	X	X	X								
SR140-B09-4.5	Soil	15 ft	10/12/2005	1320	Grab	SOIL	1	Tube					X	X	X	X			X		X			
SR140-B09-6.0	Soil	20 ft	10/12/2005	1330	Grab	SOIL	1	Tube					X	X	X	X								
SR140-B09-7.5	Soil	25 ft	10/12/2005	1340	Grab	SOIL	1	Tube					X	X	X	X								
SR140-B09-9.0	Soil	30 ft	10/ /2005	1430	Grab	SOIL	1	Tube					X	X	X	X			X					
~~SR140-B - 1.5~~	~~Soil~~	~~5 ft~~	10/ /2005		Grab	~~SOIL~~	~~1~~	~~Tube~~		NOT			COL	~~LECTED~~										
SR140-B02-3.0	Soil	10 ft	10/12/2005	1530	Grab	SOIL	1	Tube					X	X	X	X					X			
SR140-B02-4.5	Soil	15 ft	10/12/2005	1540	Grab	SOIL	1	Tube					X	X	X	X			X					
SR140-B02-6.0	Soil	20 ft	10/12/2005	1545	Grab	SOIL	1	Tube					X	X	X	X								
SR140-B02-7.5	Soil	25 ft	10/12/2005	1550	Grab	SOIL	1	Tube					X	X	X	X								
SR140-B02-9.0	Soil	30 ft	10/12/2005	1610	Grab	SOIL	1	Tube					X	X	X	X			X					
SR140-ER-1012	EQUIP RINSE WATER		10/12/05	1505	~~GRAB~~	WATER	5	3 VOA 2x12	X			X	X	X	X	X	X							

Special Instructions: a) Up to 3 reanalysis if required based on initial results of 5-ft (1.5m) sample (Normal TAT)

Normal TAT

Level Of QC Required: Method Blank Frequency = 1 per 10 samples
MS/MSD = 1 per 10 samples, Lab Control Duplicate = 1 per 10 samles

Relinquished By	Date	Time	Received By	Date	Time
Joe Strack	10-13-05	0930	KA Vieaux	10/13/05	930

Method Codes

C = Composite G = Grab

Matrix Codes

DW = Drinking Water SO =Soil
GW = Ground Water SL = Sludge
WW = Waste Water CP = Chip Samples
SW = Surface Water WP = Wipe Samples
LIQ = Other Liquid SOL = Other Solid
GS = Air Sample

CHAIN OF CUSTODY

T-1091

Ref. Document # CTSR140-101205

Shaw Shaw Environmental, Inc.

1326 North Market Blvd
Sacramento, CA 95834

Project Manager: Martha Adams / 916-565-4183 (Name & phone #)

Send Report To: ATTN: Martha Adams
Phone/Fax Number: 916-565-4183 / 916-565-4356
Address: 1326 North Market Blvd
City: Sacramento, CA 95834

Project Number: 117535
Project Name / Location: CalTrans Merced St Rt 140 & Parsons
Purchase Order #:

Shipment Date: 10-13-05
Waybill Number: Courrier
Lab Destination: Sparger Laboratory, Rancho Cordova,Ca
Lab Contact Name / ph. #: Will 916-369-7688

Sampler's Name(s): Joe Strack

Sample ID Number	Sample Description		Collection Information Date	Time	Method	Matrix	# of containers	Container type	Preservative HCL	NaOH	HNO_3	H_2SO_4	Ice		TPH as gasoline (EPA 8015)	TPH as diesel (EPA 8015)	BTEX (EPA 8260)	HvyMetals(Sb,As,Ba,Be,CdTotCr,Co,Cu,Pb,Hg,Mo,Ni,Se,Ag,Ti,V,Zn)(EPA3050/7471A) CAM 17	Soluble Heavy Metals (EPA 3050A WET)	VOCs (EPA 8260)	Soluble Lead (for ADL EPA 3050A WET)	pH (EPA 9045)			
~~SR140-B - 1.5~~	~~Soil~~	~~5 ft~~	~~10/ /2005~~		~~Grab~~	~~SOIL~~	~~1~~	~~Tube~~											See special instructions "a"						
~~SR140-B - 3.0~~	~~Soil~~	~~10 ft~~	~~10/ /2005~~		~~Grab~~	~~SOIL~~	1	Tube																	
~~SR140-B - 4.5~~	~~Soil~~	15 ft	~~10/ /2005~~		~~Grab~~	~~SOIL~~	~~1~~	~~Tube~~																	
~~SR140-B - 6.0~~	~~Soil~~	20 ft	~~10/ /2005~~		~~Grab~~	~~SOIL~~	1	~~Tube~~																	
~~SR140-B - 7.5~~	~~Soil~~	~~25 ft~~	~~10/ /2005~~		~~Grab~~	~~SOIL~~	~~1~~	~~Tube~~																	
~~SR140-B - 9.0~~	~~Soil~~	~~30 ft~~	~~10/ /2005~~		~~Grab~~	~~SOIL~~	~~1~~	~~Tube~~																	
~~SR140-B - 1.5~~	~~Soil~~	~~5 ft~~	~~10/ /2005~~		~~Grab~~	~~SOIL~~	~~1~~	~~Tube~~																	
~~SR140-B - 3.0~~	~~Soil~~	~~10 ft~~	~~10/ /2005~~		~~Grab~~	~~SOIL~~	~~1~~	~~Tube~~																	
~~SR140-B - 4.5~~	~~Soil~~	~~15 ft~~	~~10/ /2005~~		~~Grab~~	~~SOIL~~	~~1~~	~~Tube~~																	
~~SR140-B - 6.0~~	Soil	20 ft	~~10/ /2005~~		Grab	SOIL	1	Tube																	
SR140-WS-04(A-D)	Soil (FOR COMPOSITE) ~~WASTE~~		10/12/2005	1730	Grab	SOIL	4	JAR					X					X							
SR140-WS-03(A-C)	Soil (FOR COMPOSITE) ~~WASTE~~		10/12/2005	1720	Grab	SOIL	4	JAR					X					X							
SR140-WS-02(A-D)	SOIL (FOR COMPOSITE) WASTE		10-12-05	1710	GRAB	SOIL	4	JAR					X		X	X	X	X							

USED

Special Instructions: a) Up to 3 reanalysis if required based on initial results of 5-ft (1.5m) sample (Normal TAT)

COMPOSITE BY LAB WS-04(A-D), WS-03(A-C), WS-02 (A-D)

Normal TAT

Level Of QC Required: Method Blank Frequency = 1 per 10 samples
MS/MSD = 1 per 10 samples, Lab Control Duplicate = 1 per 10 samles

Relinquished By:	Date:	Time:	Received By:	Date:	Time:
Joe Strack	10-13-05	0930	K. Vleaux	10/13/05	930

Method Codes

C = Composite
G = Grab

Matrix Codes

DW = Drinking Water
SO = Soil
GW = Ground Water
SL = Sludge
WW = Waste Water
CP = Chip Samples
SW = Surface Water
WP = Wipe Samples
LIQ = Other Liquid
SOL = Other Solid
GS = Air Sample

STATE OF CALIFORNIA

ARNOLD SCHWARZENEGGER, Governor

DEPARTMENT OF INDUSTRIAL RELATIONS
DIVISION OF OCCUPATIONAL SAFETY AND HEALTH
MINING AND TUNNELING UNIT
2211 Park Towne Circle, Suite 2
Sacramento, California 95825

Telephone (916) 574-2540
FAX (916) 574-2542

June 1, 2009

Department of Transportation
2015 E Shields Avenue, Suite 100
Fresno, California 93726

Attention: Stephen J. Sakata, STE

Subject: Underground Classification No. C258-047-09T
Route 140 Improvements – Merced County

Mr. Sakata:

The information provided to this office relative to the above project has been reviewed. On the basis of this analysis, an Underground Classification of "Potentially Gassy with Special Conditions" has been assigned to the tunnel identified on your submittal. Please retain the original Classification for your records and deliver a true and correct copy of the Classification to the tunnel contractor for posting at the job site.

When the contractor who will be performing the work is selected, please advise them to notify this office to schedule the mandated Prejob Conference with the Division prior to commencing any activity associated with construction or rehabilitation of the tunnel.

Please be informed that whenever an employee enters any bore or shaft being constructed under 30 inches in diameter, the Mining and Tunneling Unit then has immediate jurisdiction over that job. Please contact the Mining and Tunneling Unit prior to entering such spaces.

If you have any questions on this subject, please contact this office at your earliest convenience.

Sincerely,

John R. Leahy
Senior Engineer

cc: Ned McDougald
File

State of California

Department of Industrial Relations

DIVISION OF OCCUPATIONAL SAFETY AND HEALTH
MINING AND TUNNELING UNIT

Underground Classification

C258-047-09T

DEPARTMENT OF TRANSPORTATION
(NAME OF TUNNEL OR MINE AND COMPANY NAME)

of 2015 E. Shields Avenue, Suite 100, Fresno, California 93726
(MAILING ADDRESS)

at ROUTE 140 IMPROVEMENTS – MERCED COUNTY
(LOCATION)

has been classified as *** POTENTIALLY GASSY with Special Conditions***
(CLASSIFICATION)

as required by the California Labor Code Section 7955.

The Division shall be notified if sufficient quantities of flammable gas or vapors have been encountered underground. Classifications are based on the California Labor Code Part 9, Tunnel Safety Orders and Mine Safety Orders.

SPECIAL CONDITIONS

1. A Certified Gas Tester shall perform pre-entry and continuous monitoring of the underground environment to measure Oxygen and detect explosive, flammable, and toxic gasses whenever an employee is working in the underground environment.
2. Mechanical ventilation shall provide for continuous exhaust of fumes and air at any time an employee is working in the underground environment. The primary ventilation fans must be located outside of the underground environment and shall be reversible by a single switch near the fan location.
3. The Division shall be notified immediately if any **Flammable Gas** or **Petroleum Vapor** exceeds 5% of the Lower Explosive Limit.
4. All utilities that may be in conflict with the project shall be identified and physically located (potholed) prior to the start of project operations.

The twelve 84-inch diameter by 90 feet deep drilled shafts (bridge project) located at the Bradley Overhead on Route 140 approximately 600 feet east of the intersection of Route 140 and Edwards Avenue, Merced, Merced County.

This classification shall be conspicuously posted at the place of employment.

Date June 1, 2009

(SENIOR ENGINEER)
John R. Leahy