DIST	COUNTY	ROUTE	POST MILES TOTAL PROJECT	SHEET No.	TOTAL SHEETS
10	Mer	140,165	16.2 26.7/30.0	118A	146

REGISTERED CIVIL ENGINEER — DATE 2-7-13

9-16-13
PLANS APPROVAL DATE

REGISTERED PROFESSIONAL ENGINEER — RICHARD LANCE WARREN — No. C78431 — Exp. 9/30/13 — CIVIL — STATE OF CALIFORNIA

The State of California or its officers or agents shall not be responsible for the accuracy or completeness of electronic copies of this plan sheet.

1

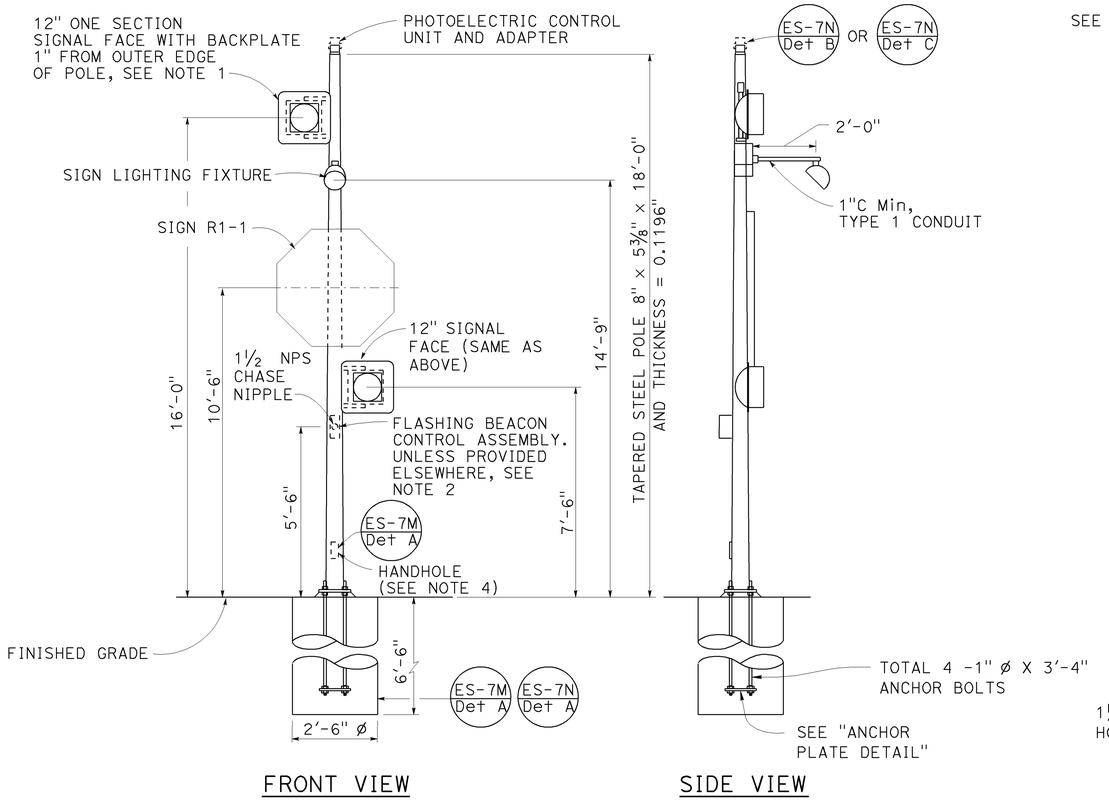

TYPE 15-FBS (MOD)

ADVANCE FLASHING BEACON WITH FIXED BASE INSTALLATION

NO SCALE

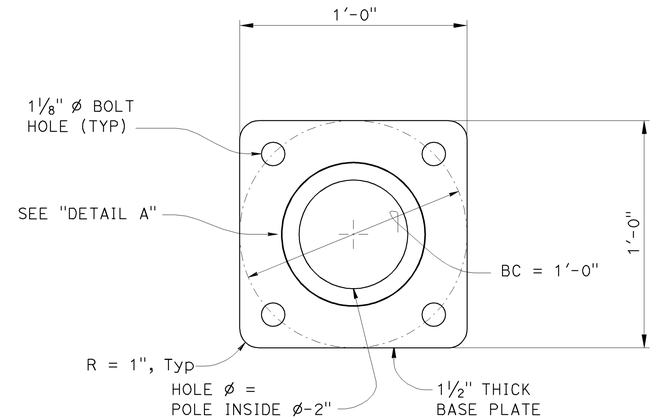

BASE PLATE

NO SCALE

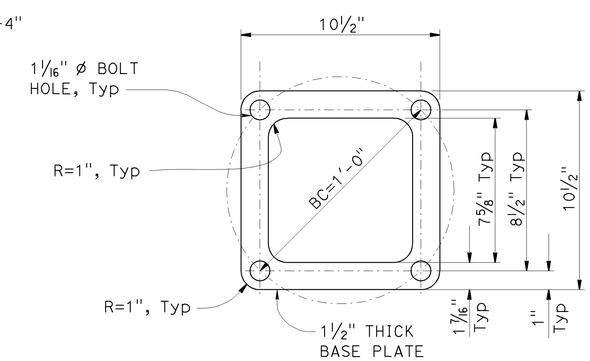

ANCHOR PLATE

NO SCALE

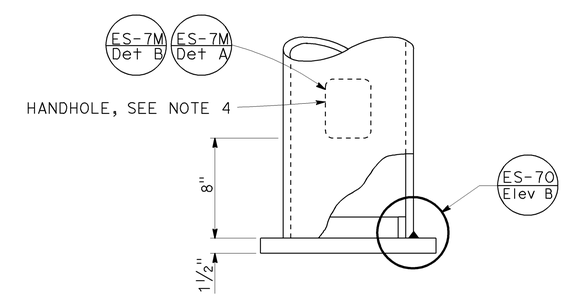

DETAIL A

NO SCALE

NOTES:

1. See Standard Plans ES-4A and ES-4D for attachment fitting details.
2. For wiring diagram, see Standard Plan ES-14B.
3. For additional notes and details, see Standard Plans ES-7M and ES-7N.
4. Handhole shall be located on the downstream side of traffic.

1 **ADDED PER ADDENDUM No. 1 DATED FEBRUARY 07, 2014**

	BY	CHECKED
DESIGN	LANCE WARREN	VICTOR LOPEZ
DETAILS	P C WELLS	LANCE WARREN
QUANTITIES	X	X

STATE OF CALIFORNIA
DEPARTMENT OF TRANSPORTATION

DIVISION OF ENGINEERING SERVICES
STRUCTURE DESIGN
SPECIAL DESIGN BRANCH

BRIDGE NO. N/A
POST MILE 26.7

TYPE 15 - FBS (MOD)
ADVANCED FB WITH FIXED BASE INSTALLATION

SES-1

STRUCTURES DESIGN SPECIAL DESIGN SHEET (ENGLISH) (REV. 09-01-10)

ORIGINAL SCALE IN INCHES FOR REDUCED PLANS 0 1 2 3

UNIT: 3619
PROJECT NUMBER & PHASE: 1000000407
CONTRACT NO.: 10-38151

DISREGARD PRINTS BEARING EARLIER REVISION DATES

REVISION DATES

SHEET 1 OF 1

FILE => 10-38151_ses-1ksin-sheet.dgn

USERNAME => s124393 DATE PLOTTED => 07-FEB-2013 TIME PLOTTED => 12:02