Dist	COUNTY	ROUTE	POST MILES TOTAL PROJECT	SHEET No.	TOTAL SHEETS
10	Tuo	108	R4.0/R6.0	101	237

REGISTERED CIVIL ENGINEER 01-07-10 DATE

5-10-10
PLANS APPROVAL DATE

REGISTERED PROFESSIONAL ENGINEER
KAL H. DAHER
No. C44510
Exp. 3-31-10
CIVIL
STATE OF CALIFORNIA

THE STATE OF CALIFORNIA OR ITS OFFICERS OR AGENTS SHALL NOT BE RESPONSIBLE FOR THE ACCURACY OR COMPLETENESS OF SCANNED COPIES OF THIS PLAN SHEET.

NOTE: FOR ACCURATE RIGHT OF WAY AND ACCESS DATA, CONTACT RIGHT OF WAY ENGINEERING AT THE DISTRICT OFFICE

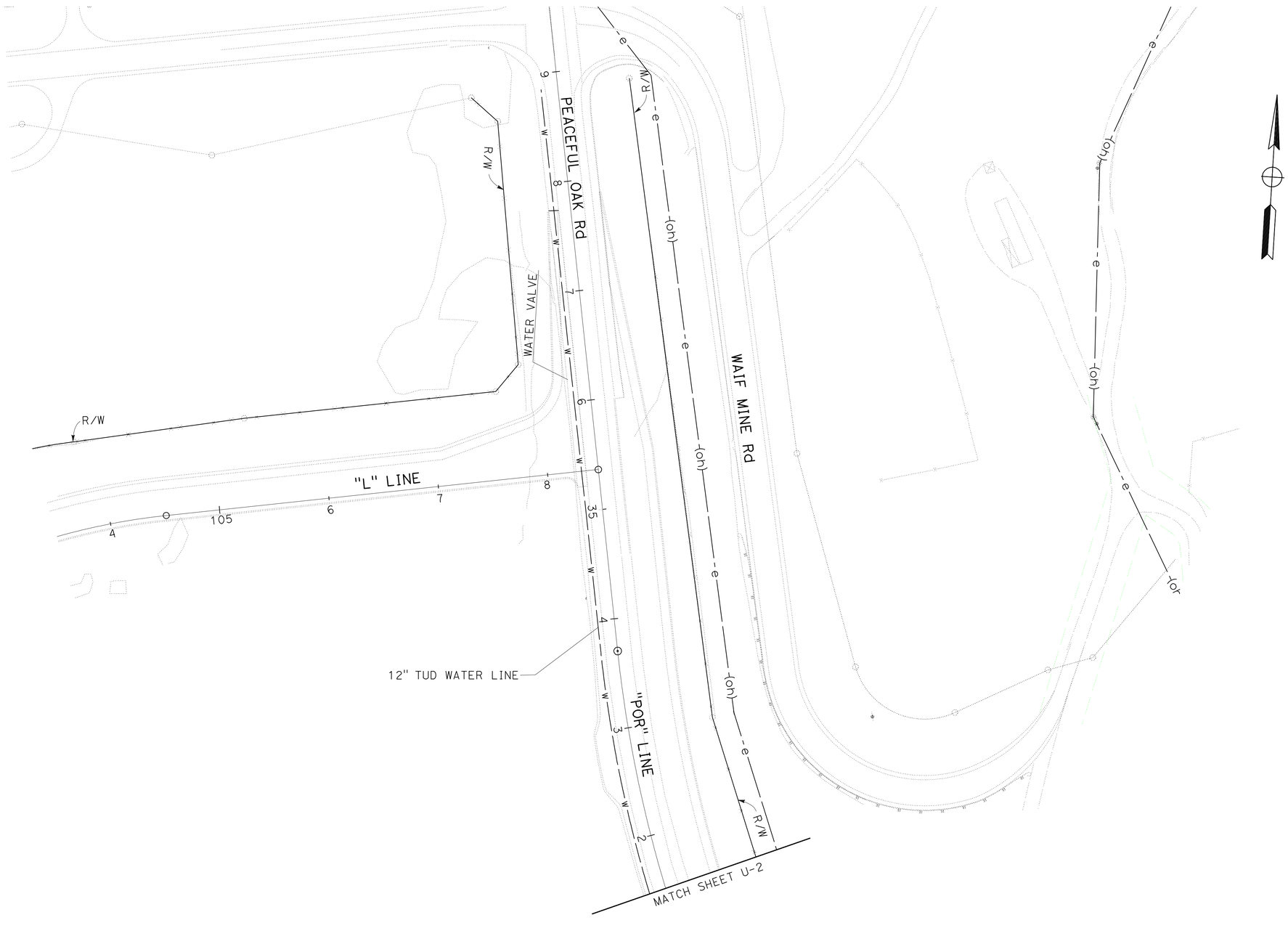

THIS PLAN ACCURATE FOR UTILITIES ONLY

UTILITY PLAN
U-3

SCALE: 1" = 50'

REVISED BY	JORGE AGUILERA
DATE REVISED	KAL DAHER
CALCULATED-DESIGNED BY	FUNCTIONAL SUPERVISOR
CHECKED BY	TERRY OGLE

STATE OF CALIFORNIA - DEPARTMENT OF TRANSPORTATION
Caltrans
06-DESIGN

LAST REVISION 01-07-10 | DATE PLOTTED => 12-MAY-2010 | TIME PLOTTED => 07:41

Dist	COUNTY	ROUTE	POST MILES TOTAL PROJECT	SHEET No.	TOTAL SHEETS
10	Tuo	108	R4.0/R6.0	102	237

REGISTERED CIVIL ENGINEER 01-07-10 DATE

5-10-10
PLANS APPROVAL DATE

REGISTERED PROFESSIONAL ENGINEER
KAL H. DAHER
No. C44510
Exp. 3-31-10
CIVIL
STATE OF CALIFORNIA

THE STATE OF CALIFORNIA OR ITS OFFICERS OR AGENTS SHALL NOT BE RESPONSIBLE FOR THE ACCURACY OR COMPLETENESS OF SCANNED COPIES OF THIS PLAN SHEET.

NOTE: FOR ACCURATE RIGHT OF WAY AND ACCESS DATA, CONTACT RIGHT OF WAY ENGINEERING AT THE DISTRICT OFFICE.

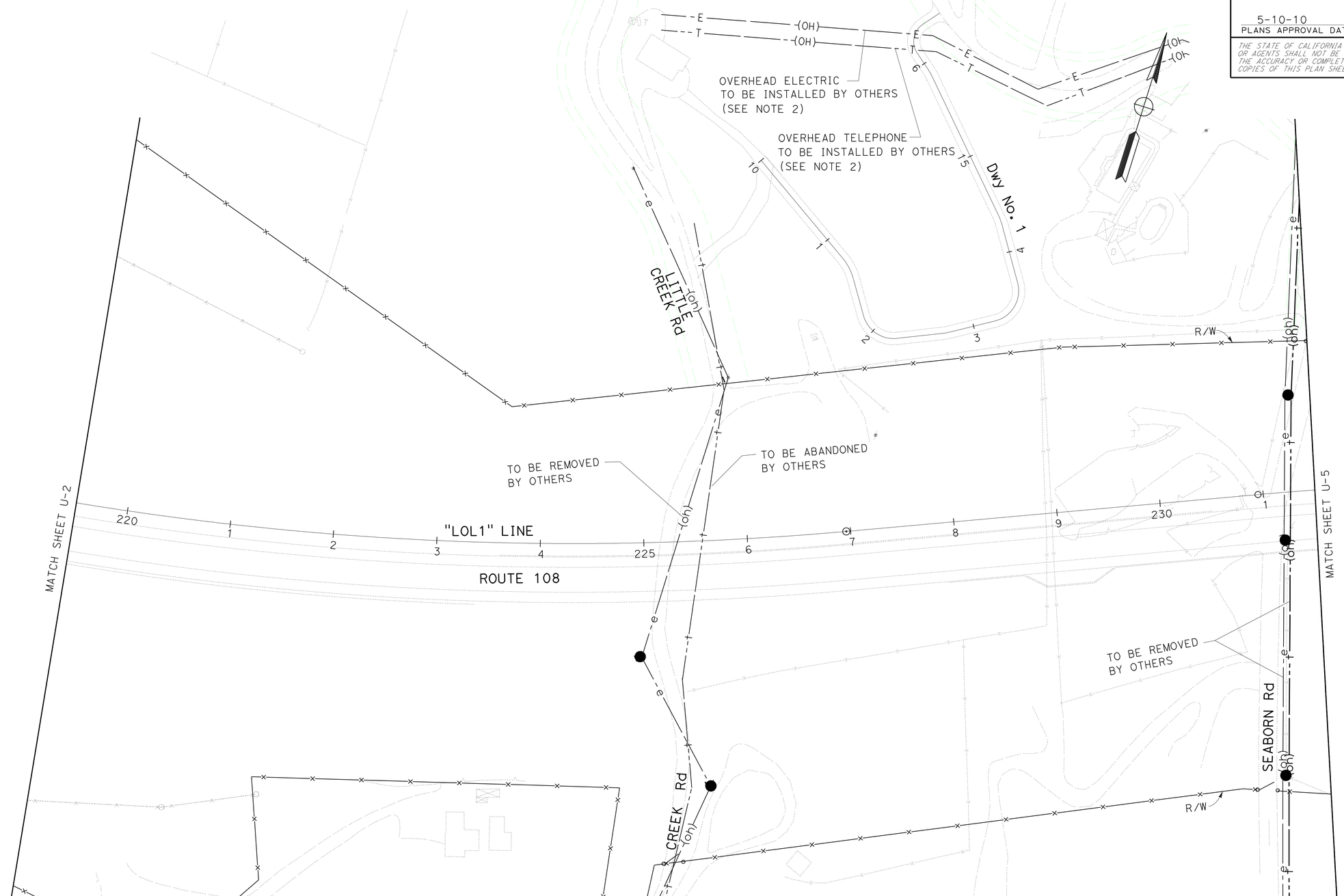

THIS PLAN ACCURATE FOR UTILITIES ONLY

UTILITY PLAN
U-4

SCALE: 1" = 50'

STATE OF CALIFORNIA - DEPARTMENT OF TRANSPORTATION
Caltrans
06-DESIGN

FUNCTIONAL SUPERVISOR: TERRY OGLE
CALCULATED-DESIGNED BY: JORGE AGUILERA
CHECKED BY: KAL DAHER
REVISED BY
DATE REVISED

LAST REVISION 01-11-10
DATE PLOTTED => 12-MAY-2010
TIME PLOTTED => 07:41

BORDER LAST REVISED 4/11/2008
RELATIVE BORDER SCALE IS IN INCHES 0 1 2 3
USERNAME => trmariak
DGN FILE => a34042ka004.dgn
CU 06228
EA 340421

Dist	COUNTY	ROUTE	POST MILES TOTAL PROJECT	SHEET No.	TOTAL SHEETS
10	Tuo	108	R4.0/R6.0	103	237

REGISTERED CIVIL ENGINEER 01-07-10 DATE

5-10-10
PLANS APPROVAL DATE

REGISTERED PROFESSIONAL ENGINEER KAL H. DAHER No. C44510 Exp. 3-31-10 CIVIL STATE OF CALIFORNIA

THE STATE OF CALIFORNIA OR ITS OFFICERS OR AGENTS SHALL NOT BE RESPONSIBLE FOR THE ACCURACY OR COMPLETENESS OF SCANNED COPIES OF THIS PLAN SHEET.

NOTE: FOR ACCURATE RIGHT OF WAY AND ACCESS DATA, CONTACT RIGHT OF WAY ENGINEERING AT THE DISTRICT OFFICE

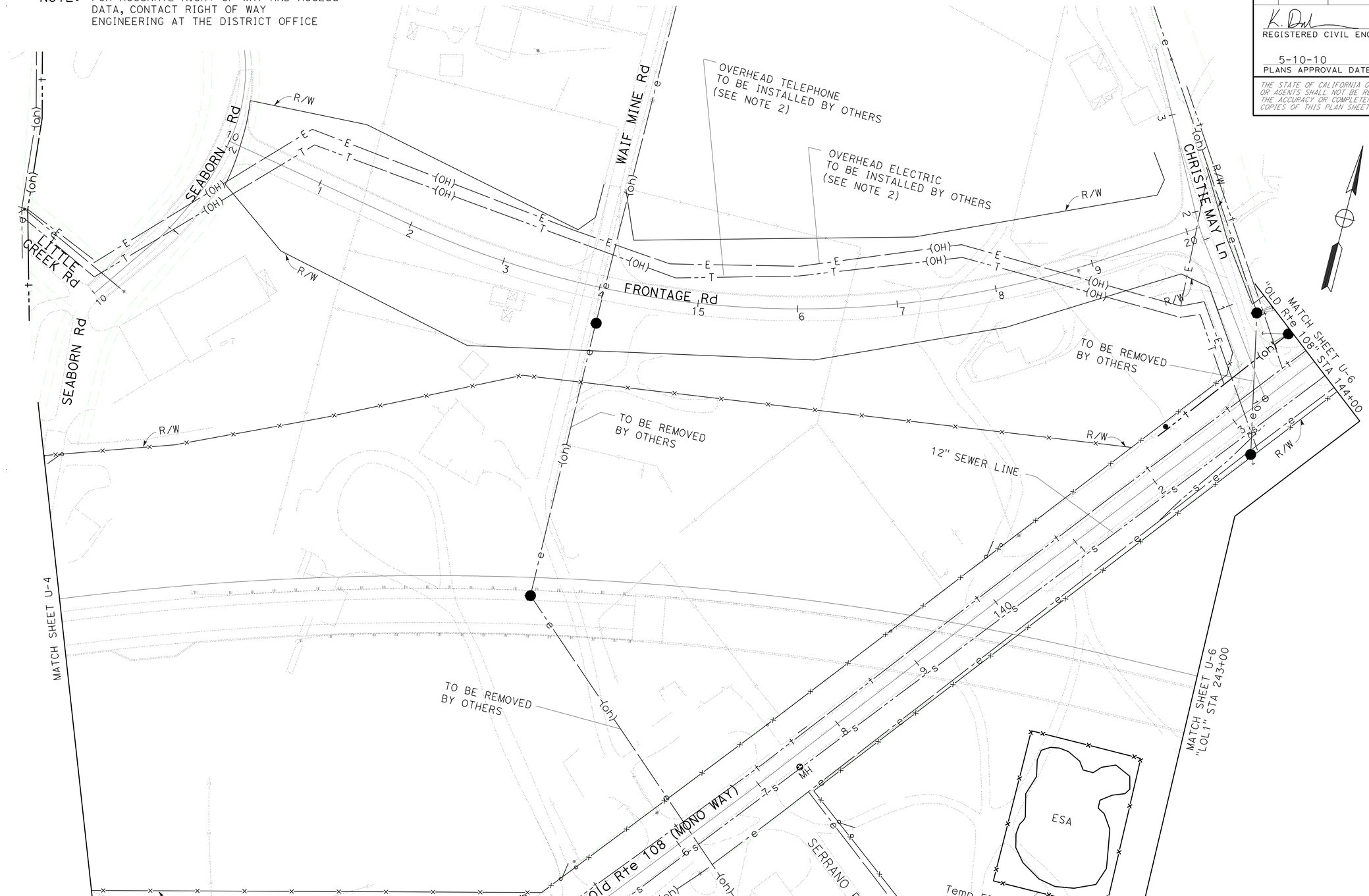

THIS PLAN ACCURATE FOR UTILITIES ONLY

UTILITY PLAN U-5

SCALE: 1" = 50'

STATE OF CALIFORNIA - DEPARTMENT OF TRANSPORTATION
Caltrans
06-DESIGN

FUNCTIONAL SUPERVISOR: TERRY OGLE
CALCULATED-DESIGNED BY: JORGE AGUILERA
CHECKED BY: KAL DAHER
REVISED BY
DATE REVISED

LAST REVISION DATE PLOTTED => 12-MAY-2010
TIME PLOTTED => 07:41
01-07-10

BORDER LAST REVISED 4/11/2008
RELATIVE BORDER SCALE IS IN INCHES 0 1 2 3
USERNAME => trmariak
DGN FILE => a34042ka005.dgn
CU 06228
EA 340421

Dist	COUNTY	ROUTE	POST MILES TOTAL PROJECT	SHEET No.	TOTAL SHEETS
10	Tuo	108	R4.0/R6.0	104	237

K. Daher 01-07-10
REGISTERED CIVIL ENGINEER DATE

5-10-10
PLANS APPROVAL DATE

REGISTERED PROFESSIONAL ENGINEER KAL H. DAHER No. C44510 Exp. 3-31-10 CIVIL STATE OF CALIFORNIA

THE STATE OF CALIFORNIA OR ITS OFFICERS OR AGENTS SHALL NOT BE RESPONSIBLE FOR THE ACCURACY OR COMPLETENESS OF SCANNED COPIES OF THIS PLAN SHEET.

NOTE: FOR ACCURATE RIGHT OF WAY AND ACCESS DATA, CONTACT RIGHT OF WAY ENGINEERING AT THE DISTRICT OFFICE

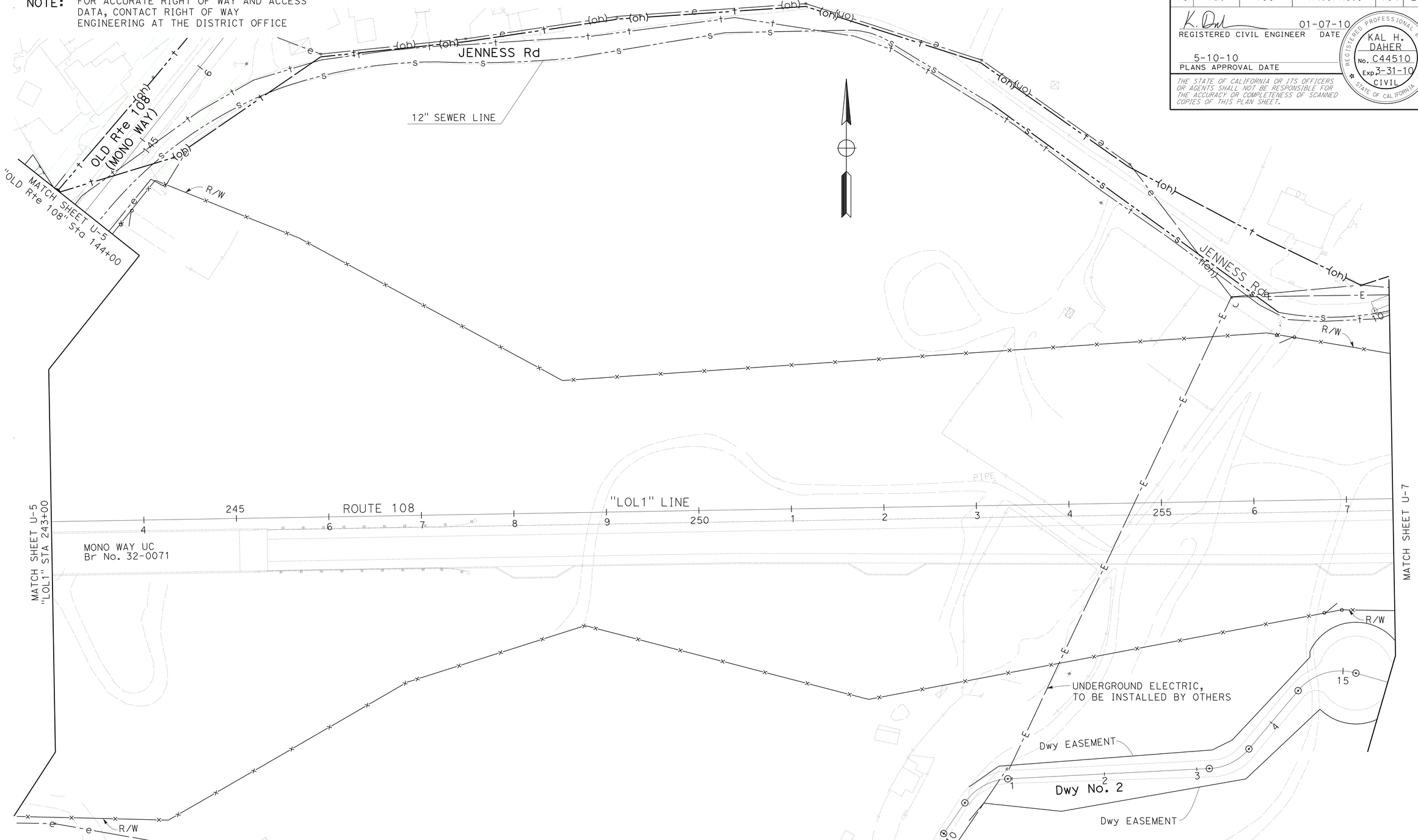

THIS PLAN ACCURATE FOR UTILITIES

UTILITY PLAN U-6

SCALE: 1" = 50'

STATE OF CALIFORNIA - DEPARTMENT OF TRANSPORTATION
Caltrans
06-DESIGN

FUNCTIONAL SUPERVISOR: TERRY OGLE
CALCULATED-DESIGNED BY: JORGE AGUILERA
CHECKED BY: KAL DAHER
REVISED BY
DATE REVISED

LAST REVISION 01-07-10
DATE PLOTTED => 12-MAY-2010
TIME PLOTTED => 15:24

Dist	COUNTY	ROUTE	POST MILES TOTAL PROJECT	SHEET No.	TOTAL SHEETS
10	Tuo	108	R4.0/R6.0	105	237

REGISTERED CIVIL ENGINEER 01-07-10 DATE

5-10-10
PLANS APPROVAL DATE

REGISTERED PROFESSIONAL ENGINEER KAL H. DAHER No. C44510 Exp. 3-31-10 CIVIL STATE OF CALIFORNIA

THE STATE OF CALIFORNIA OR ITS OFFICERS OR AGENTS SHALL NOT BE RESPONSIBLE FOR THE ACCURACY OR COMPLETENESS OF SCANNED COPIES OF THIS PLAN SHEET.

NOTE: FOR ACCURATE RIGHT OF WAY AND ACCESS DATA, CONTACT RIGHT OF WAY ENGINEERING AT THE DISTRICT OFFICE

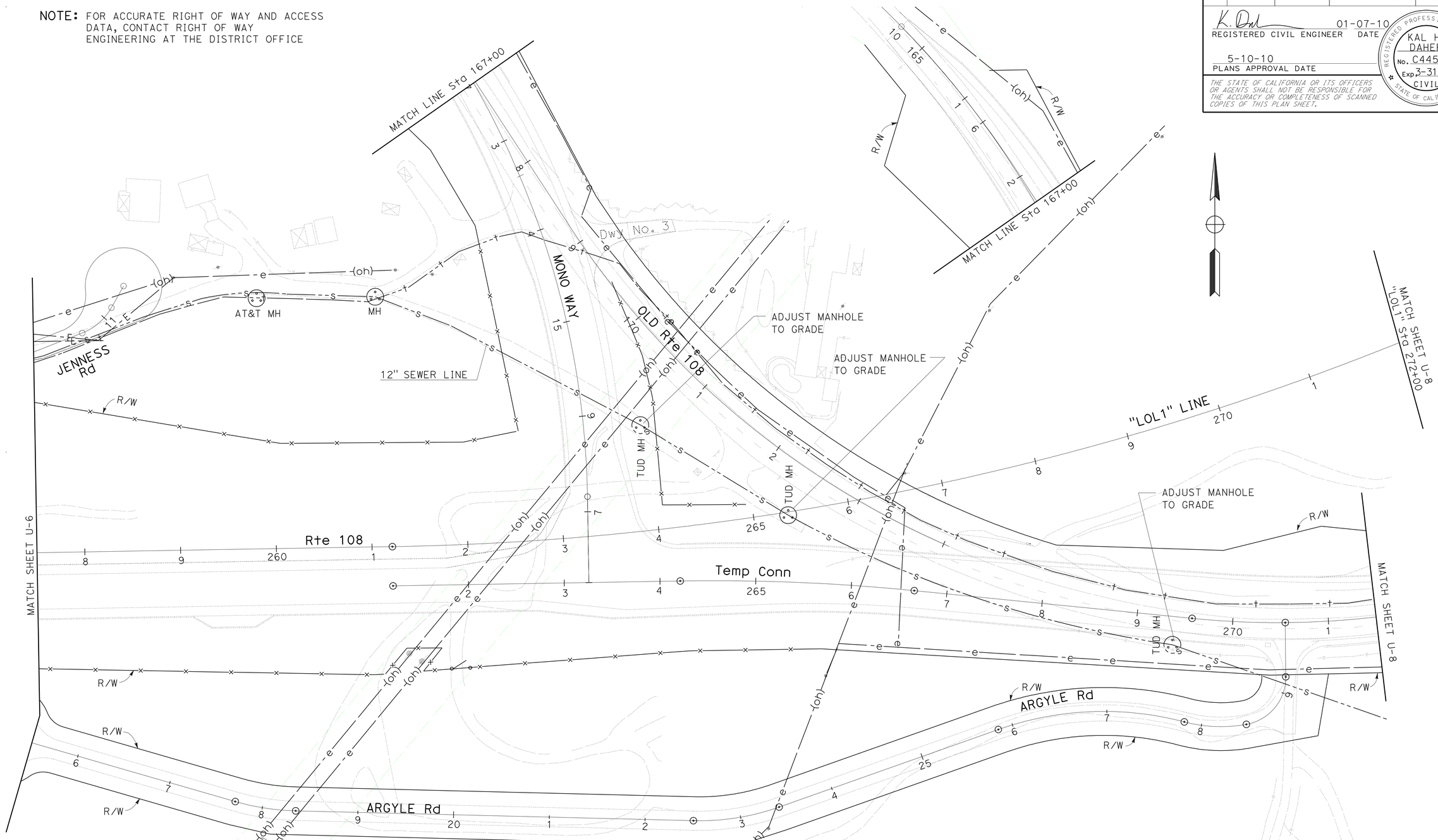

THIS PLAN ACCURATE FOR UTILITIES ONLY

UTILITY PLAN U-7

SCALE: 1" = 50'

STATE OF CALIFORNIA - DEPARTMENT OF TRANSPORTATION
Caltrans
06-DESIGN

FUNCTIONAL SUPERVISOR: TERRY OGLE
CALCULATED-DESIGNED BY: JORGE AGUILERA
CHECKED BY: KAL DAHER
REVISED BY
DATE REVISED

LAST REVISION 01-07-10
DATE PLOTTED => 12-MAY-2010
TIME PLOTTED => 07:41

Dist	COUNTY	ROUTE	POST MILES TOTAL PROJECT	SHEET No.	TOTAL SHEETS
10	Tuo	108	R4.0/R6.0	106	237

REGISTERED CIVIL ENGINEER 01-07-10 DATE

5-10-10
PLANS APPROVAL DATE

REGISTERED PROFESSIONAL ENGINEER
KAL H. DAHER
No. C44510
Exp. 3-31-10
CIVIL
STATE OF CALIFORNIA

THE STATE OF CALIFORNIA OR ITS OFFICERS OR AGENTS SHALL NOT BE RESPONSIBLE FOR THE ACCURACY OR COMPLETENESS OF SCANNED COPIES OF THIS PLAN SHEET.

NOTE: FOR ACCURATE RIGHT OF WAY AND ACCESS DATA, CONTACT RIGHT OF WAY ENGINEERING AT THE DISTRICT OFFICE

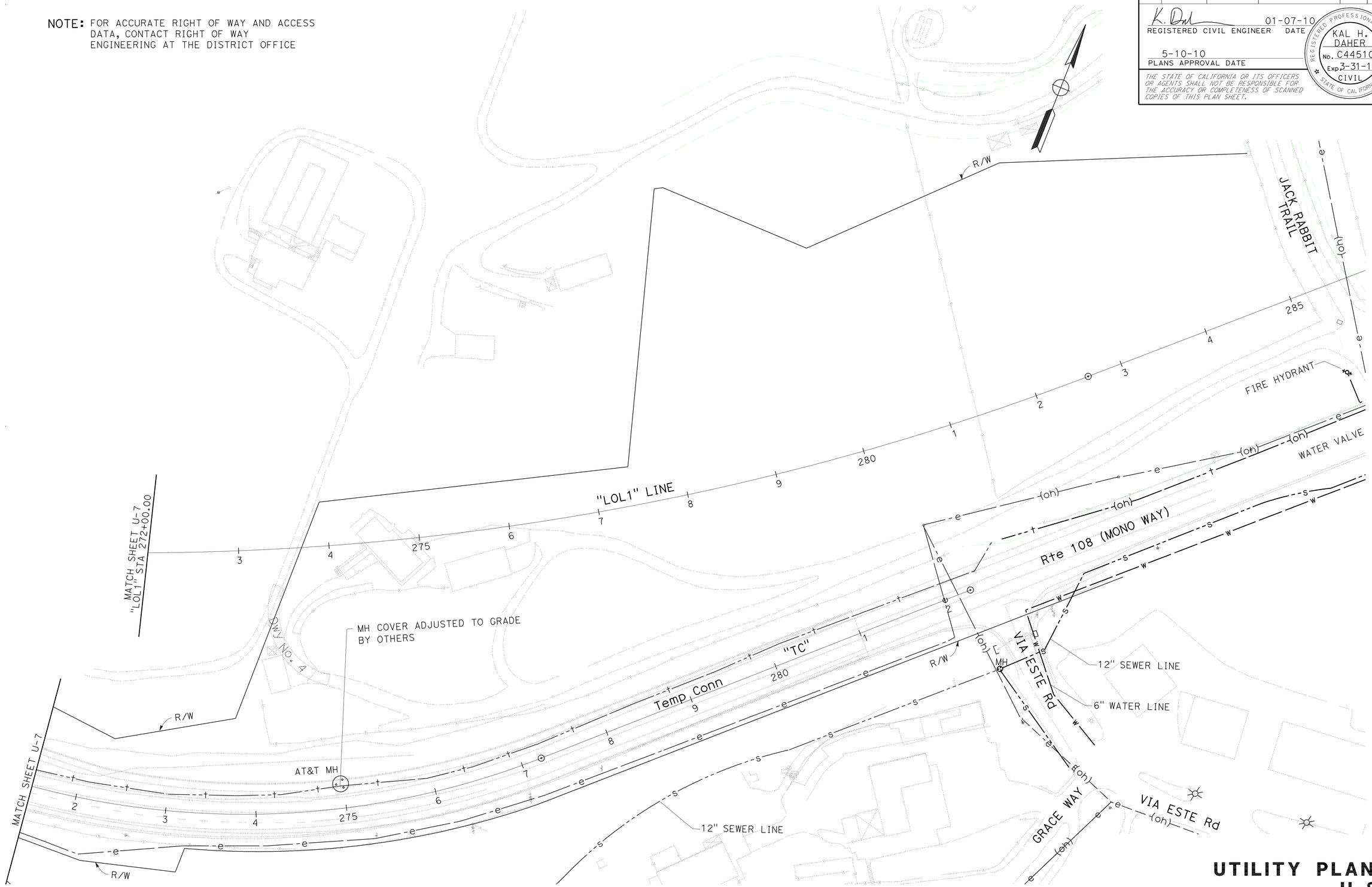

THIS PLAN ACCURATE FOR UTILITIES ONLY

UTILITY PLAN
U-8

SCALE: 1" = 50'

STATE OF CALIFORNIA - DEPARTMENT OF TRANSPORTATION
Caltrans
06-DESIGN

FUNCTIONAL SUPERVISOR: TERRY OGLE
CALCULATED-DESIGNED BY: JORGE AGUILERA
CHECKED BY: KAL DAHER
REVISED BY
DATE REVISED

LAST REVISION 01-07-10
DATE PLOTTED => 12-MAY-2010
TIME PLOTTED => 07:41

Dist	COUNTY	ROUTE	POST MILES TOTAL PROJECT	SHEET No.	TOTAL SHEETS
10	Tuo	108	R4.0/R6.0	107	237

REGISTERED CIVIL ENGINEER 01-12-10 DATE

5-10-10
PLANS APPROVAL DATE

REGISTERED PROFESSIONAL ENGINEER KAL H. DAHER No. C44510 Exp. 3-31-10 CIVIL STATE OF CALIFORNIA

THE STATE OF CALIFORNIA OR ITS OFFICERS OR AGENTS SHALL NOT BE RESPONSIBLE FOR THE ACCURACY OR COMPLETENESS OF SCANNED COPIES OF THIS PLAN SHEET.

STAGE 1: CONSTRUCT ALL DRIVEWAYS, JENNES Rd CUL-DE-SAC, ARGYLE Rd AND FRONTAGE ROAD. LOCAL ROADS SHALL REMAIN OPEN TO PUBLIC TRAFFIC UNTIL FRONTAGE ROAD IS COMPLETED AND OPENED TO TRAFFIC.

STAGE 2: CONSTRUCT ROUTE 108 (Sta 197+50 TO Sta 261+21).
CONSTRUCT TEMPORARY CONNECTION (Sta 261+21 TO Sta 266+50).
CONSTRUCT MONO WAY DETOUR (SEE SHEETS TH-1 AND TH-2).
WIDEN PEACEFUL OAK ROAD.
CONSTRUCT RAMP "L". (DETOUR WB ROUTE 108 TRAFFIC ONTO MONO WAY TO HESS AVENUE INTERCHANGE WHILE CONNECTING RAMP "L" WITH EXISTING ROUTE 108).

STAGE 3: OPEN RAMP "L" TO WB TRAFFIC.
RESTRIPE EXISTING TEMPORARY CONNECTION AS EB OFF-RAMP ONLY (RAMP E).
COMPLETE ROUTE 108 (Sta 191+50 TO Sta 197+00).
CONSTRUCT MONO WAY BETWEEN Sta 10+00 AND Sta 17+46.

STAGE 4: COMPLETE TEMP CONNECTION (Sta 266+50 TO Sta 269+50).
COMPLETE MONO WAY (Sta 10+00 TO Sta 14+00).
WIDEN/OVERLAY EXISTING ROUTE 108 (Sta 269+50 TO Sta 281+00).
(STAGE 4 REQUIRES ONE-WAY TRAFFIC CONTROL)

LEGEND

- DIRECTION OF TRAFFIC (ONE LANE)
- EXISTING ROADBED AND ROADBEDS COMPLETED IN PREVIOUS STAGES
- STAGE 1
- STAGE 2
- STAGE 3
- STAGE 4

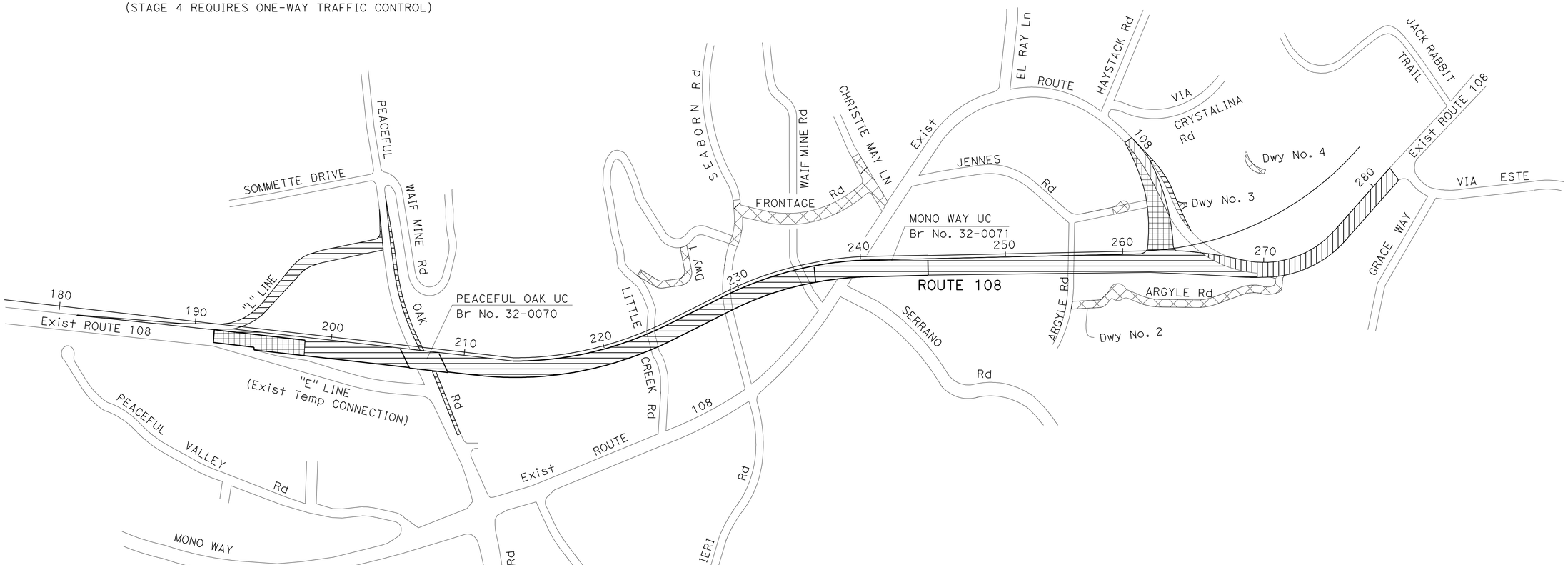

STAGE CONSTRUCTION

SC-1

NO SCALE

STATE OF CALIFORNIA - DEPARTMENT OF TRANSPORTATION
Caltrans
06-DESIGN

FUNCTIONAL SUPERVISOR: TERRY OGLE
CALCULATED-DESIGNED BY: LILIANA BRASALI
CHECKED BY: KAL DAHER
REVISED BY
DATE REVISED

LAST REVISION 01-12-10
DATE PLOTTED => 12-MAY-2010
TIME PLOTTED => 07:42

Dist	COUNTY	ROUTE	POST MILES TOTAL PROJECT	SHEET No.	TOTAL SHEETS
10	Tuo	108	R4.0/R6.0	108	237

REGISTERED CIVIL ENGINEER 01-12-10 DATE

5-10-10
PLANS APPROVAL DATE

REGISTERED PROFESSIONAL ENGINEER KAL H. DAHER No. C44510 Exp. 3-31-10 CIVIL STATE OF CALIFORNIA

THE STATE OF CALIFORNIA OR ITS OFFICERS OR AGENTS SHALL NOT BE RESPONSIBLE FOR THE ACCURACY OR COMPLETENESS OF SCANNED COPIES OF THIS PLAN SHEET.

STAGE 2: CONSTRUCT ROUTE 108 (Sta 197+50 TO Sta 261+21).
CONSTRUCT TEMPORARY CONNECTION (Sta 261+21 TO Sta 266+50).
CONSTRUCT MONO WAY DETOUR (SEE SHEETS TH-1 AND TH-2).
WIDEN PEACEFUL OAK ROAD.
CONSTRUCT RAMP "L". (DETOUR WB ROUTE 108 TRAFFIC ONTO MONO WAY TO HESS AVENUE INTERCHANGE WHILE CONNECTING RAMP "L" WITH EXISTING ROUTE 108).

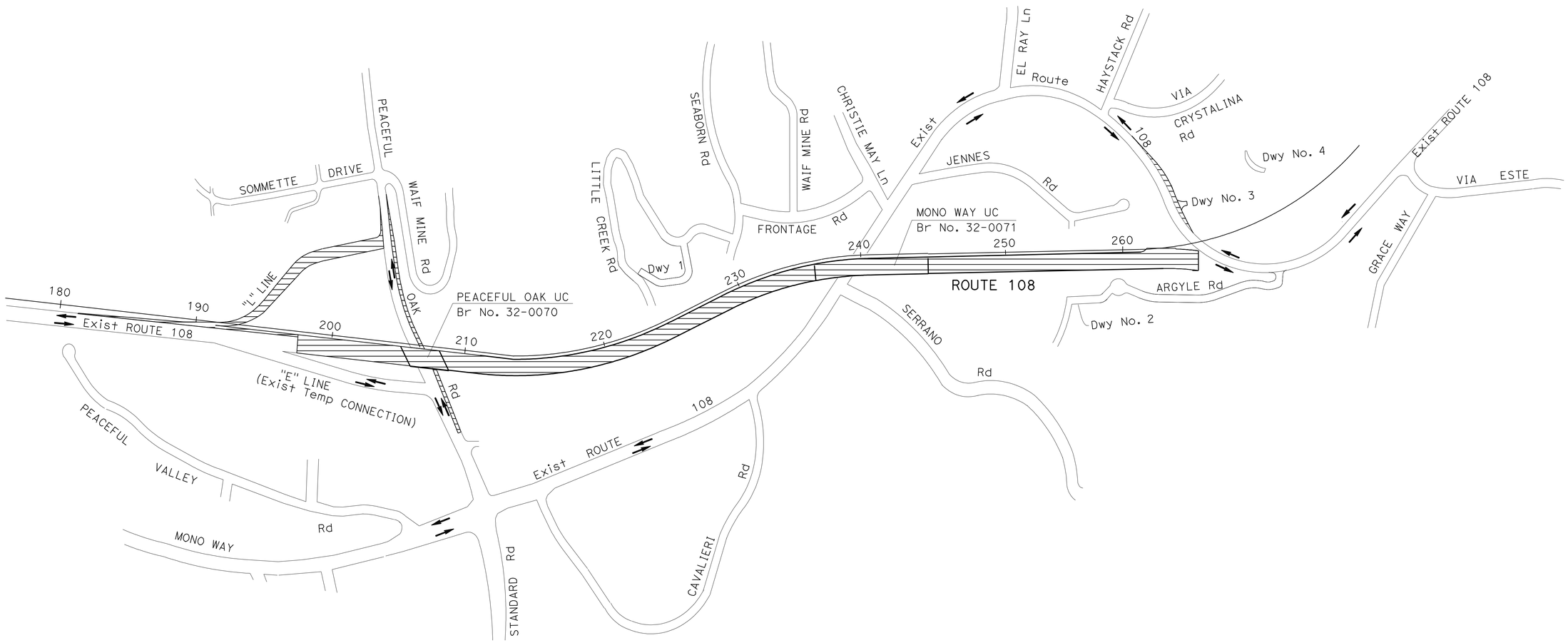

STAGE CONSTRUCTION
(STAGE 2)

NO SCALE

SC-2

STATE OF CALIFORNIA - DEPARTMENT OF TRANSPORTATION
Caltrans
06-DESIGN

FUNCTIONAL SUPERVISOR: TERRY OGLE
CALCULATED-DESIGNED BY: LILIANA BRASALI
CHECKED BY: KAL DAHER
REVISED BY
DATE REVISED

LAST REVISION 01-12-10
DATE PLOTTED => 12-MAY-2010
TIME PLOTTED => 08:56

Dist	COUNTY	ROUTE	POST MILES TOTAL PROJECT	SHEET No.	TOTAL SHEETS
10	Tuo	108	R4.0/R6.0	109	237

REGISTERED ~~CIVIL~~ ENGINEER 01/07/10 DATE

5-10-10
PLANS APPROVAL DATE

REGISTERED PROFESSIONAL ENGINEER HUE NGUYEN No. 74484 Exp. 12/31/11 CIVIL STATE OF CALIFORNIA

THE STATE OF CALIFORNIA OR ITS OFFICERS OR AGENTS SHALL NOT BE RESPONSIBLE FOR THE ACCURACY OR COMPLETENESS OF SCANNED COPIES OF THIS PLAN SHEET.

NOTES:

1. FOR ADDITIONAL CONSTRUCTION AREA SIGNS SEE SHEET CS-1.
2. COVER ALL CONFLICTING SIGNS AND REMOVE ALL CONFLICTING STRIPING AND MARKINGS AS DIRECTED BY THE ENGINEER.

LEGEND

- CONSTRUCTION AREA
- DIRECTION OF TRAFFIC
- Temp RAILING (TYPE K)
- CHANNELIZERS (SURFACE MOUNTED)
- XX TEMPORARY TRAFFIC STRIPE (PAINT) DETAIL No.
- XX REMOVE PAINTED TRAFFIC STRIPE DETAIL No.
- XX REMOVE YELLOW PAINTED TRAFFIC STRIPE (HAZARDOUS WASTE) DETAIL No.
- X ROADSIDE SIGN No.
- ROADSIDE SIGN ONE-POST
- ROADSIDE SIGN TWO-POST
- CONSTRUCTION AREA SIGN

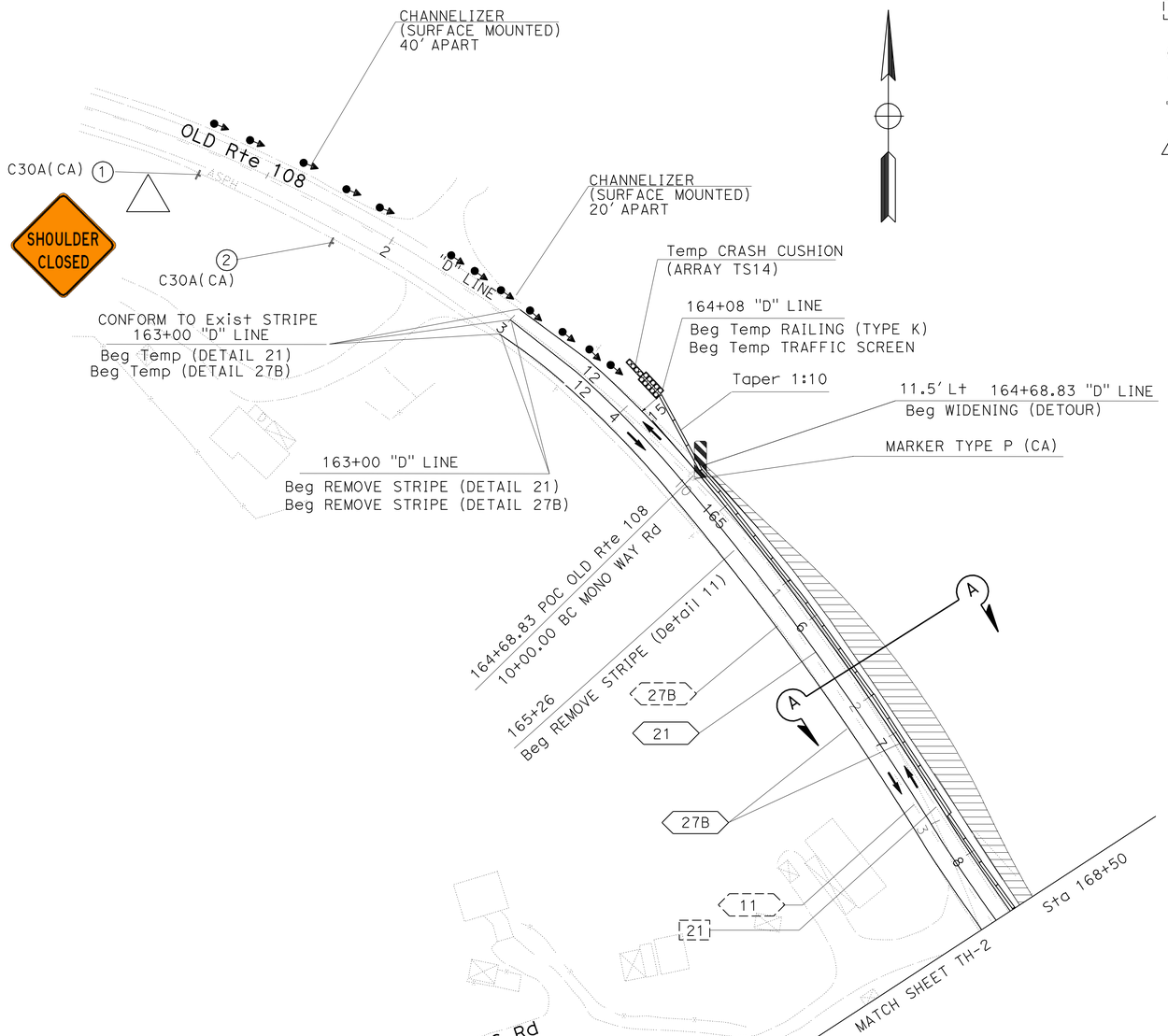

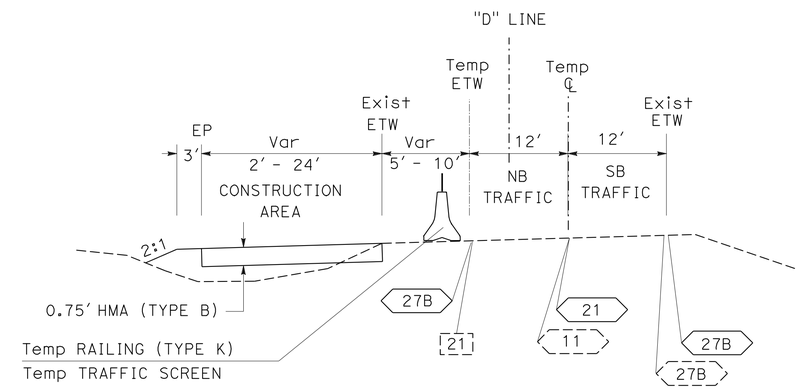

STA 163+00.00 - STA 175+32.00

DETOUR

SECTION A-A

THIS PLAN ACCURATE FOR TRAFFIC HANDLING WORK ONLY.

TRAFFIC HANDLING PLAN
(STAGE 2 - MONO WAY DETOUR)

SCALE: 1" = 50'

TH-1

STATE OF CALIFORNIA - DEPARTMENT OF TRANSPORTATION
Caltrans® **TRAFFIC DESIGN**

FUNCTIONAL SUPERVISOR: MOHAMMED QATAMI
CALCULATED-DESIGNED BY: FERNANDO LOPEZ
CHECKED BY: MAZIN AL-ALI
REVISED BY: HN
DATE REVISED: 01/12/10

LAST REVISION 12-03-09
DATE PLOTTED => 12-MAY-2010
TIME PLOTTED => 13:28

Dist	COUNTY	ROUTE	POST MILES TOTAL PROJECT	SHEET No.	TOTAL SHEETS
10	Tuo	108	R4.0/R6.0	110	237

REGISTERED CIVIL ENGINEER 01/07/10 DATE

5-10-10
PLANS APPROVAL DATE

REGISTERED PROFESSIONAL ENGINEER HUE NGUYEN No. 74484 Exp 12/31/11 CIVIL STATE OF CALIFORNIA

THE STATE OF CALIFORNIA OR ITS OFFICERS OR AGENTS SHALL NOT BE RESPONSIBLE FOR THE ACCURACY OR COMPLETENESS OF SCANNED COPIES OF THIS PLAN SHEET.

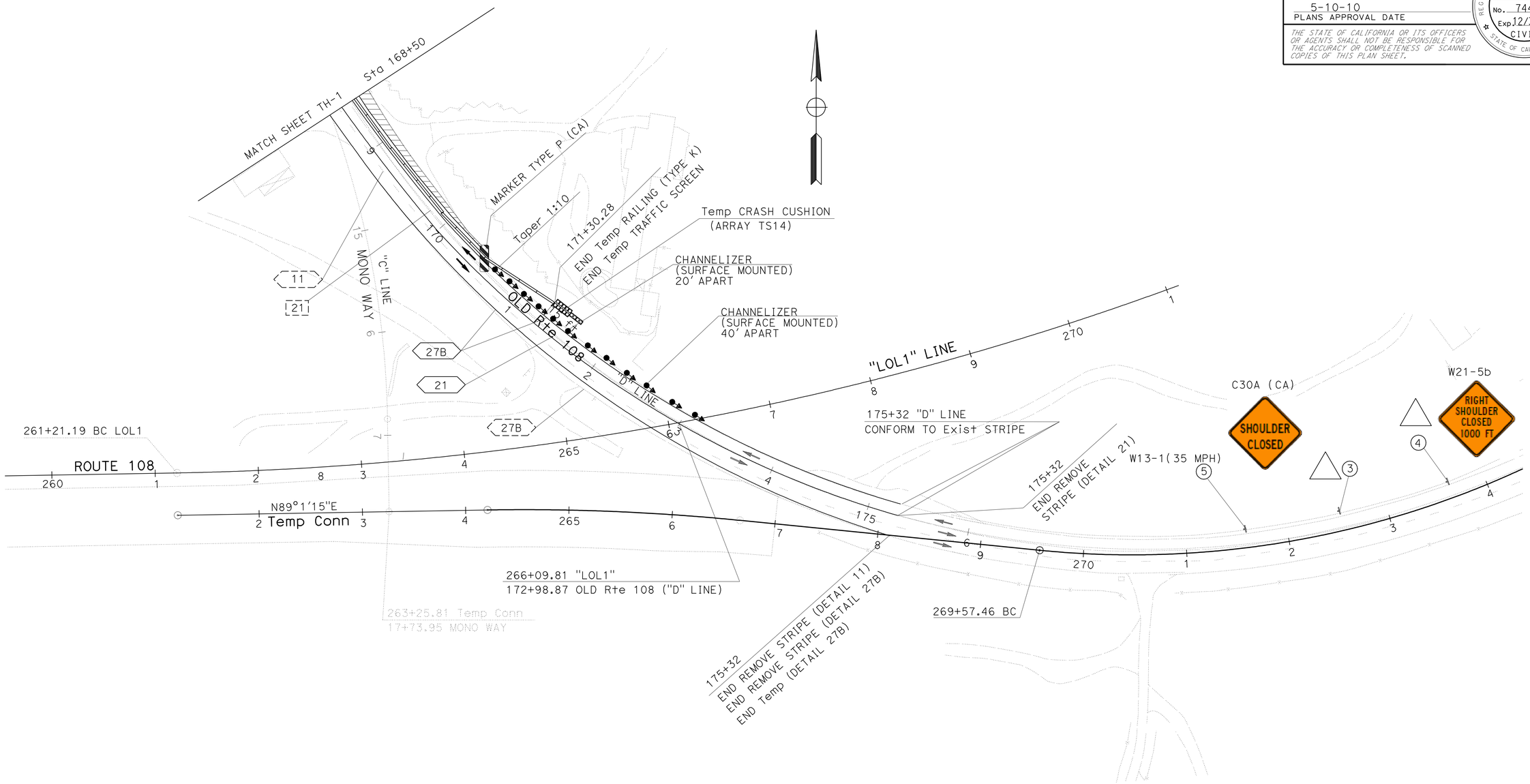

TRAFFIC HANDLING PLAN
(STAGE 2 - MONO WAY DETOUR)

THIS PLAN ACCURATE FOR TRAFFIC HANDLING WORK ONLY.

SCALE: 1" = 50'

TH-2

STATE OF CALIFORNIA - DEPARTMENT OF TRANSPORTATION
Caltrans® TRAFFIC DESIGN

FUNCTIONAL SUPERVISOR: MOHAMMED QATAMI
CALCULATED-DESIGNED BY: FERNANDO LOPEZ
CHECKED BY: MAZIN AL-ALI
REVISED BY: HN
DATE REVISED: 01/12/10

LAST REVISION DATE PLOTTED => 12-MAY-2010
12-07-09 TIME PLOTTED => 13:29

BORDER LAST REVISED 4/11/2008 | RELATIVE BORDER SCALE IS IN INCHES 0 1 2 3 | USERNAME => trmikesl | DGN FILE => a34042md002.dgn | CU 06385 | EA 340421

Dist	COUNTY	ROUTE	POST MILES TOTAL PROJECT	SHEET No.	TOTAL SHEETS
10	Tuo	108	R4.0/R6.0	111	237

REGISTERED ~~CIVIL~~ ENGINEER 01/07/10 DATE

5-10-10
PLANS APPROVAL DATE

REGISTERED PROFESSIONAL ENGINEER HUE NGUYEN No. 74484 Exp.12/31/11 CIVIL STATE OF CALIFORNIA

THE STATE OF CALIFORNIA OR ITS OFFICERS OR AGENTS SHALL NOT BE RESPONSIBLE FOR THE ACCURACY OR COMPLETENESS OF SCANNED COPIES OF THIS PLAN SHEET.

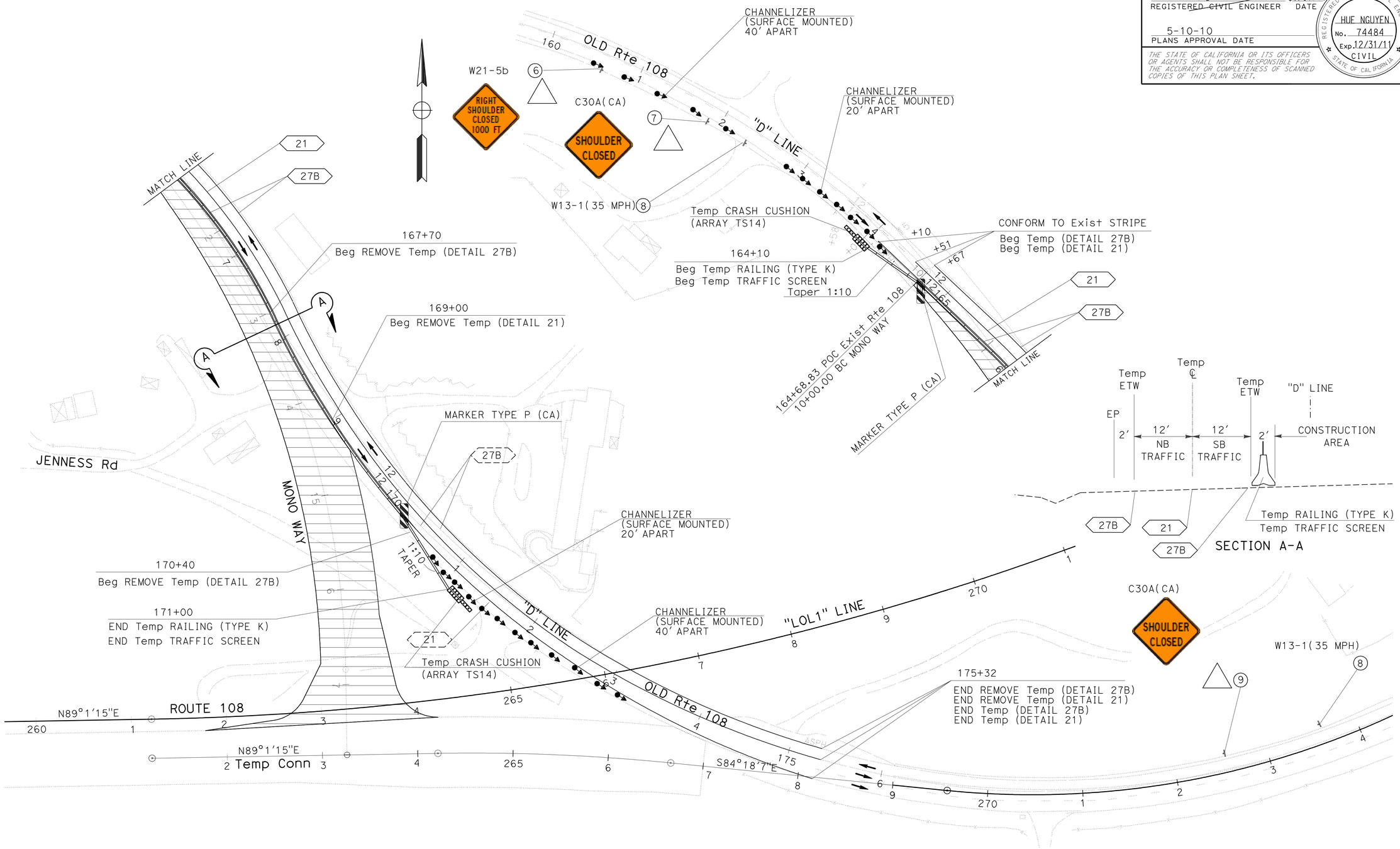

TRAFFIC HANDLING PLAN
(STAGE 3)

SCALE: 1" = 50'

TH-3

THIS PLAN ACCURATE FOR TRAFFIC HANDLING WORK ONLY.

STATE OF CALIFORNIA - DEPARTMENT OF TRANSPORTATION
Caltrans
TRAFFIC DESIGN

FUNCTIONAL SUPERVISOR: MOHAMMED QATAMI
CALCULATED-DESIGNED BY: FERNANDO LOPEZ
CHECKED BY: MAZIN AL-ALI
REVISED BY: HN
DATE REVISED: 01/12/10

LAST REVISION 01-13-10 | DATE PLOTTED => 12-MAY-2010 | TIME PLOTTED => 13:29

BORDER LAST REVISED 4/11/2008 | RELATIVE BORDER SCALE IS IN INCHES 0 1 2 3 | USERNAME => trmikesl | DGN FILE => a34042md003.dgn | CU 06385 | EA 340421

Dist	COUNTY	ROUTE	POST MILES TOTAL PROJECT	SHEET No.	TOTAL SHEETS
10	Tuo	108	R4.0/R6.0	112	237

REGISTERED CIVIL ENGINEER 01/07/10 DATE

5-10-10
PLANS APPROVAL DATE

REGISTERED PROFESSIONAL ENGINEER HUE NGUYEN No. 74484 Exp. 12/31/11 CIVIL STATE OF CALIFORNIA

THE STATE OF CALIFORNIA OR ITS OFFICERS OR AGENTS SHALL NOT BE RESPONSIBLE FOR THE ACCURACY OR COMPLETENESS OF SCANNED COPIES OF THIS PLAN SHEET.

NOTES:

1. REMOVAL QUANTITIES OF EXISTING AND TEMPORARY TRAFFIC STRIPE COMBINED UNDER SAME COLUMNS.
2. FOR ADDITIONAL CONSTRUCTION AREA SIGNS, SEE SHEET CS-1.

TEMPORARY PAVEMENT DELINEATION

SHEET No.	LOCATION	DIRECTION	DETAIL No.	TEMPORARY TRAFFIC STRIPE (PAINT) 4" SOLID	REMOVE PAINTED TRAFFIC STRIPE	REMOVE YELLOW PAINTED TRAFFIC STRIPE (HAZARDOUS WASTE)
				LF	LF	LF
TH-1	STA 163+00 TO STA 168+50		21			1100
	STA 165+26 TO STA 168+50	SB	11		324	
	STA 163+58 TO STA 168+50		21	550		
	STA 163+00 TO STA 168+50	NB	27B	550	550	
	STA 163+00 TO STA 168+50	SB	27B	550		
TH-2	STA 168+50 TO STA 175+32	SB	11		682	
	STA 168+50 TO STA 175+32	NB	21			1364
	STA 168+50 TO STA 175+32	SB	27B		682	
	STA 168+50 TO STA 175+32		21	1364		
	STA 168+50 TO STA 175+32	NB	27B	682		
	STA 168+50 TO STA 175+32	SB	27B	682		
TH-3	STA 167+70 TO STA 172+50	NB	27B		762	
	STA 169+00 TO STA 172+50		21		632	
	STA 170+40 TO STA 172+50	SB	27B		492	
	STA 164+10 TO STA 172+50	SB	27B	840		
	STA 164+51 TO STA 172+50		21	1598		
	STA 164+67 TO STA 172+50	NB	27B	783		
TOTAL				7599	4124	2464

TEMPORARY TRAFFIC SCREEN

SHEET No.	LOCATION	LF
TH-1, TH-2	STA 164+08 TO STA 171+08 "D" LINE	700
TH-3	STA 164+10 TO STA 171+10 "D" LINE	700
	TOTAL	1400

TEMPORARY RAILING (TYPE K)

SHEET No.	LOCATION	LF
TH-1, TH-2	STA 164+08 TO STA 171+08 "D" LINE	700
TH-3	STA 164+10 TO STA 171+10 "D" LINE	700
	TOTAL	1400

CONSTRUCTION AREA SIGNS

SHEET No.	SIGN No.	SIGN CODE	SIGN MESSAGE	PANEL SIZE	No. OF POST AND SIZE	No. OF SIGNS
TH-1	1	C30A (CA)	SHOULDER CLOSED	30" x 30"	1 - 4" x 6"	1
	2	W13-1(35 MPH)	ADVOSORY SPEED PLAQUE	30" x 30"	1 - 4" x 6"	1
TH-2	3	C30A (CA)	SHOULDER CLOSED	30" x 30"	1 - 4" x 6"	1
	4	W21-5b	RIGHT SHOULDER CLOSED 1000 FT	30" x 30"	1 - 4" x 6"	1
	5	W13-1(35 MPH)	ADVOSORY SPEED PLAQUE	30" x 30"	1 - 4" x 6"	1
TH-3	6	W21-5b	RIGHT SHOULDER CLOSED 1000 FT	30" x 30"	1 - 4" x 6"	1
	7	C30A (CA)	SHOULDER CLOSED	30" x 30"	1 - 4" x 6"	1
	8	W13-1(35 MPH)	ADVOSORY SPEED PLAQUE	30" x 30"	1 - 4" x 6"	2
	9	C30A (CA)	SHOULDER CLOSED	30" x 30"	1 - 4" x 6"	1

TEMPORARY CRASH CUSHION MODULE

SHEET No.	EA
TH-1	14
TH-2	14
TH-3	28
Total	56

CHANNELIZER (SURFACE MOUNTED)

SHEET No.	EA
TH-1	12
TH-2	12
TH-3	24
Total	48

TRAFFIC HANDLING QUANTITIES

THQ-1

STATE OF CALIFORNIA - DEPARTMENT OF TRANSPORTATION
Caltrans
TRAFFIC DESIGN

FUNCTIONAL SUPERVISOR: MOHAMMED QATAMI
CALCULATED-DESIGNED BY: FERNANDO LOPEZ
CHECKED BY: MAZIN AL-ALI
REVISED BY
DATE REVISED

LAST REVISION 01-13-10
DATE PLOTTED => 12-MAY-2010
TIME PLOTTED => 13:33

Dist	COUNTY	ROUTE	POST MILES TOTAL PROJECT	SHEET No.	TOTAL SHEETS
10	Tuo	108	R4.0/R6.0	113	237

REGISTERED ~~CIVIL~~ ENGINEER 01/07/10 DATE

5-10-10
PLANS APPROVAL DATE

REGISTERED PROFESSIONAL ENGINEER HUE NGUYEN No. 74484 Exp. 12/31/11 CIVIL STATE OF CALIFORNIA

THE STATE OF CALIFORNIA OR ITS OFFICERS OR AGENTS SHALL NOT BE RESPONSIBLE FOR THE ACCURACY OR COMPLETENESS OF SCANNED COPIES OF THIS PLAN SHEET.

STATIONARY MOUNTED CONSTRUCTION AREA SIGNS

SIGN No.	SIGN CODE	SIGN MESSAGE	PANEL SIZE	No. OF POST AND SIZE	No. OF SIGNS EA
A	W20-1	ROAD WORK AHEAD	48" x 48"	1 - 4" x 6"	2
B	G20-2	END ROAD WORK	36" x 18"	1 - 4" x 4"	9
C	W20-1	ROAD WORK AHEAD	36" x 36"	1 - 4" x 4"	10
D	CPFIS	CONSTRUCTION PROJECT FUNDING IDENTIFICATION SIGN	90" x 60"	2 - 6" x 6"	2
E	C40 (CA)	TRAFFIC FINES DOUBLED IN CONSTRUCTION ZONES	72" x 36"	2 - 4" x 6"	2

NOTES:

1. LOCATIONS OF CONSTRUCTION AREA SIGNS SHOWN ARE APPROXIMATE EXACT LOCATIONS TO BE DETERMINED BY THE ENGINEER.
2. FOR ADDITIONAL CONSTRUCTION AREA SIGNS SEE TRAFFIC HANDLING SHEETS.

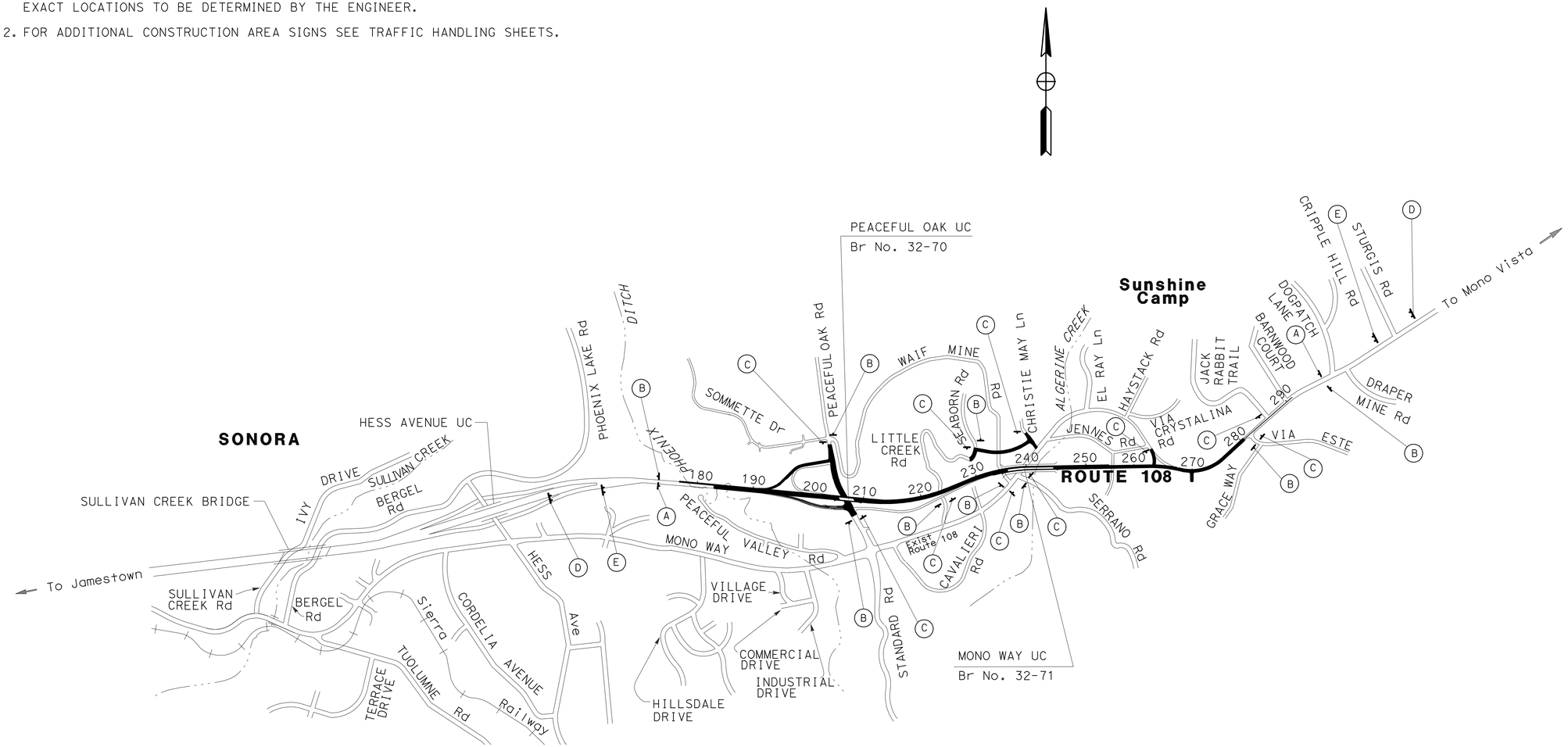

THIS PLAN ACCURATE FOR CONSTRUCTION ARE SIGN WORK ONLY

CONSTRUCTION AREA SIGNS

NO SCALE

CS-1

STATE OF CALIFORNIA - DEPARTMENT OF TRANSPORTATION
Caltrans
TRAFFIC DESIGN

FUNCTIONAL SUPERVISOR: MOHAMMED QATAMI
CALCULATED-DESIGNED BY: MAZIN AL-ALI
CHECKED BY: FERNANDO LOPEZ
REVISED BY
DATE REVISED

LAST REVISION 01-13-10 | DATE PLOTTED => 12-MAY-2010 | TIME PLOTTED => 13:33

Dist	COUNTY	ROUTE	POST MILES TOTAL PROJECT	SHEET No.	TOTAL SHEETS
10	Tuo	108	R4.0/R6.0	114	237

REGISTERED ~~CIVIL~~ ENGINEER 01/07/10

5-10-10
PLANS APPROVAL DATE

REGISTERED PROFESSIONAL ENGINEER HUE NGUYEN No. 74484 Exp. 12/31/11 CIVIL STATE OF CALIFORNIA

THE STATE OF CALIFORNIA OR ITS OFFICERS OR AGENTS SHALL NOT BE RESPONSIBLE FOR THE ACCURACY OR COMPLETENESS OF ELECTRONIC COPIES OF THIS PLAN SHEET.

LEGEND:

- PAINT TRAFFIC STRIPE (2-COAT) DETAIL No.
- REMOVE PAINTED TRAFFIC STRIPE DETAIL No.
- REMOVE THERMOPLASTIC PAVEMENT MARKING
- THERMOPLASTIC PAVEMENT MARKING
- TYPE III ARROW (THERMOPLASTIC PAVEMENT MARKING)
- TYPE II (R) ARROW (THERMOPLASTIC PAVEMENT MARKING)
- TYPE I ARROW (THERMOPLASTIC PAVEMENT MARKING) 24'
- TYPE V ARROW (THERMOPLASTIC PAVEMENT MARKING)
- TYPE VI ARROW (THERMOPLASTIC PAVEMENT MARKING)
- E,F,G - DELINEATOR (CLASS I), TYPE AS SHOWN
- CHANGE OF PAVEMENT DELINEATION DETAIL
- DIRECTION OF TRAFFIC
- K,L,P - OBJECT MARKER(TYPE K, TYPE L, TYPE P)
- MP - MILEPOST MARKER
- GF - GUARD RAILING DELINEATOR (TYPE F AS SHOWN)

NOTE: FOR ACCURATE RIGHT OF WAY AND ACCESS DATA, CONTACT RIGHT OF WAY ENGINEERING AT THE DISTRICT OFFICE.

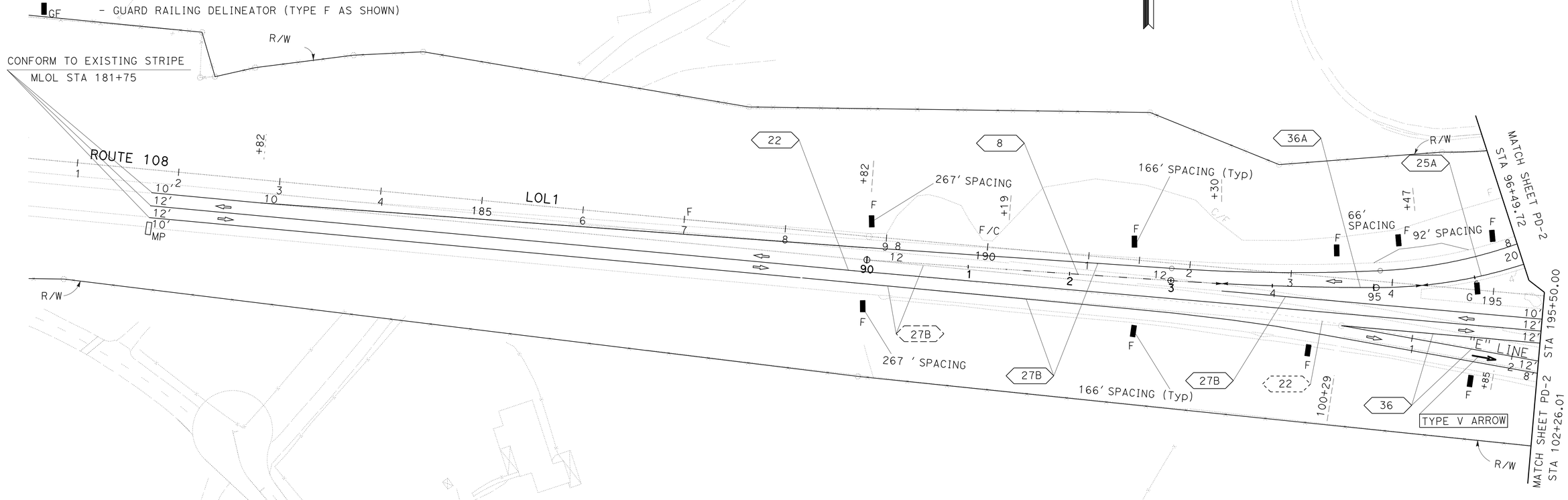

THIS PLAN ACCURATE FOR PAVEMENT DELINEATION WORK ONLY

PAVEMENT DELINEATION PLAN

SCALE: 1" = 50'

PD-1

STATE OF CALIFORNIA - DEPARTMENT OF TRANSPORTATION	CALCULATED- DESIGNED BY	REVISED BY	FERNANDO LOPEZ
Caltrans TRAFFIC DESIGN	CHECKED BY	DATE REVISED	MAZIN AL-ALI
	FUNCTIONAL SUPERVISOR	QT	01-13-10
	MOHAMMED QATAMI		

LAST REVISION 01-13-10 | DATE PLOTTED => 12-MAY-2010 | TIME PLOTTED => 13:41

BORDER LAST REVISED 3/1/2007 | RELATIVE BORDER SCALE IS IN INCHES 0 1 2 3 | USERNAME => trmikesl | DGN FILE => a34042na001.dgn | CU 06385 | EA 340421

Dist	COUNTY	ROUTE	POST MILES TOTAL PROJECT	SHEET No.	TOTAL SHEETS
10	Tuo	108	R4.0/R6.0	115	237

REGISTERED ~~CIVIL~~ ENGINEER DATE 01/07/10

5-10-10
PLANS APPROVAL DATE

REGISTERED PROFESSIONAL ENGINEER
HUE NGUYEN
No. 74484
Exp 12/31/11
CIVIL
STATE OF CALIFORNIA

THE STATE OF CALIFORNIA OR ITS OFFICERS OR AGENTS SHALL NOT BE RESPONSIBLE FOR THE ACCURACY OR COMPLETENESS OF ELECTRONIC COPIES OF THIS PLAN SHEET.

NOTE: FOR ACCURATE RIGHT OF WAY AND ACCESS DATA, CONTACT RIGHT OF WAY ENGINEERING AT THE DISTRICT OFFICE.

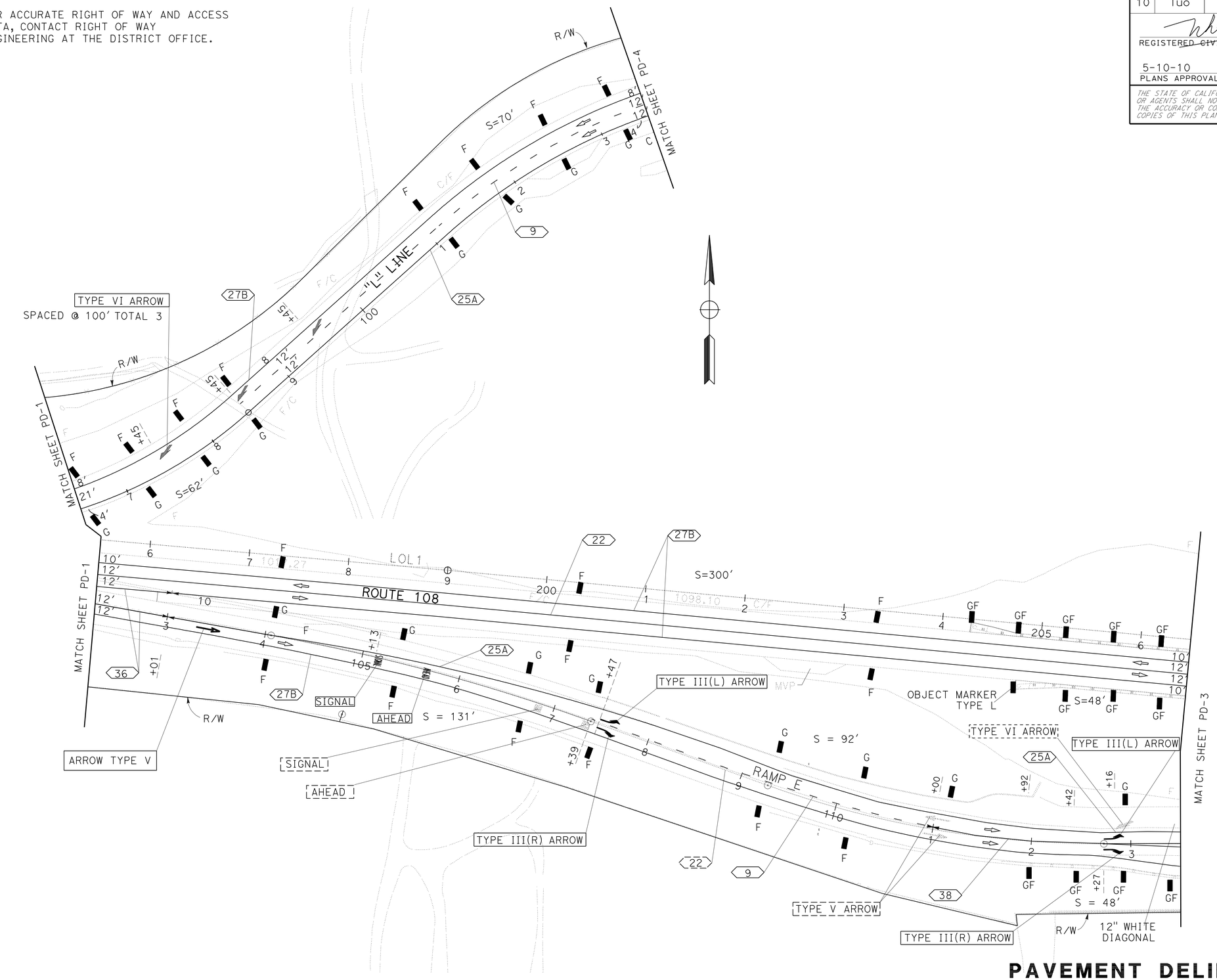

PAVEMENT DELINEATION PLAN

SCALE: 1" = 50'

PD-2

THIS PLAN ACCURATE FOR PAVEMENT DELINEATION WORK ONLY

REVISED BY	QT
DATE REVISED	01-13-10
CALCULATED-DESIGNED BY	FERNANDO LOPEZ
CHECKED BY	MAZIN AL-ALI
FUNCTIONAL SUPERVISOR	MOHAMMED QATAMI

STATE OF CALIFORNIA - DEPARTMENT OF TRANSPORTATION
Caltrans
TRAFFIC DESIGN

LAST REVISION 01-07-10
DATE PLOTTED => 12-MAY-2010
TIME PLOTTED => 13:41

NOTE: FOR ACCURATE RIGHT OF WAY AND ACCESS DATA, CONTACT RIGHT OF WAY ENGINEERING AT THE DISTRICT OFFICE.

Dist	COUNTY	ROUTE	POST MILES TOTAL PROJECT	SHEET No.	TOTAL SHEETS
10	Tuo	108	R4.0/R6.0	116	237

REGISTERED ~~CIVIL~~ ENGINEER DATE 01/07/10

5-10-10
PLANS APPROVAL DATE

REGISTERED PROFESSIONAL ENGINEER HUE NGUYEN No. 74484 Exp 12/31/11 CIVIL STATE OF CALIFORNIA

THE STATE OF CALIFORNIA OR ITS OFFICERS OR AGENTS SHALL NOT BE RESPONSIBLE FOR THE ACCURACY OR COMPLETENESS OF ELECTRONIC COPIES OF THIS PLAN SHEET.

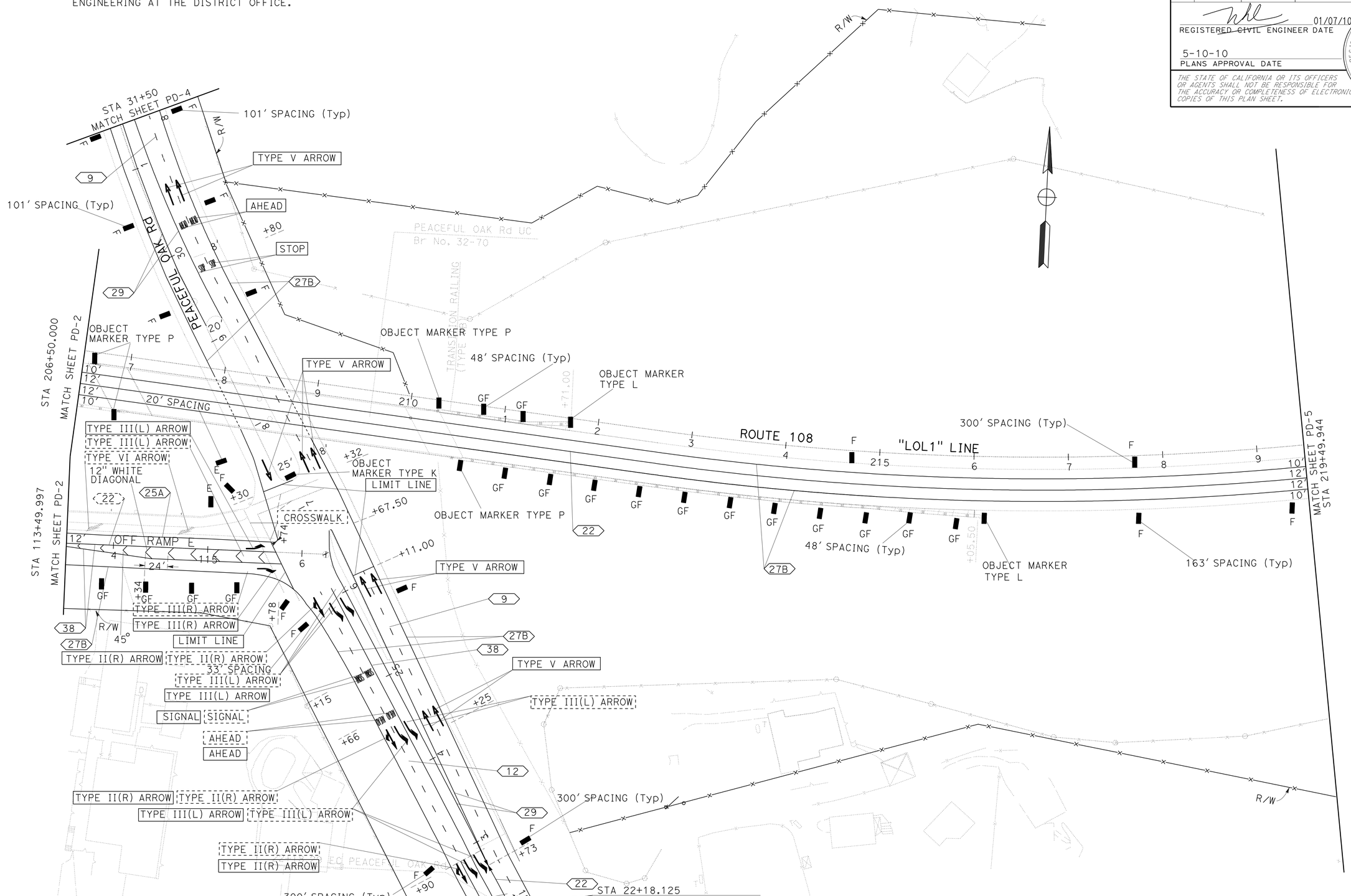

THIS PLAN ACCURATE FOR PAVEMENT DELINEATION WORK ONLY

PAVEMENT DELINEATION PLAN

SCALE: 1" = 50'

PD-3

REVISED BY	DATE REVISED
GT	01-13-10

FERNANDO LOPEZ — CALCULATED-DESIGNED BY
MAZIN AL-ALI — CHECKED BY
MOHAMMED QATAMI — FUNCTIONAL SUPERVISOR

STATE OF CALIFORNIA - DEPARTMENT OF TRANSPORTATION
Caltrans
TRAFFIC DESIGN

LAST REVISION 08-25-09 | DATE PLOTTED => 12-MAY-2010 | TIME PLOTTED => 13:41

Dist	COUNTY	ROUTE	POST MILES TOTAL PROJECT	SHEET No.	TOTAL SHEETS
10	Tuo	108	R4.0/R6.0	117	237

REGISTERED ~~CIVIL~~ ENGINEER 01/07/10 DATE

5-10-10
PLANS APPROVAL DATE

REGISTERED PROFESSIONAL ENGINEER
HUE NGUYEN
No. 74484
Exp 12/31/11
CIVIL
STATE OF CALIFORNIA

THE STATE OF CALIFORNIA OR ITS OFFICERS OR AGENTS SHALL NOT BE RESPONSIBLE FOR THE ACCURACY OR COMPLETENESS OF SCANNED COPIES OF THIS PLAN SHEET.

NOTE: FOR ACCURATE RIGHT OF WAY AND ACCESS DATA, CONTACT RIGHT OF WAY ENGINEERING AT THE DISTRICT OFFICE.

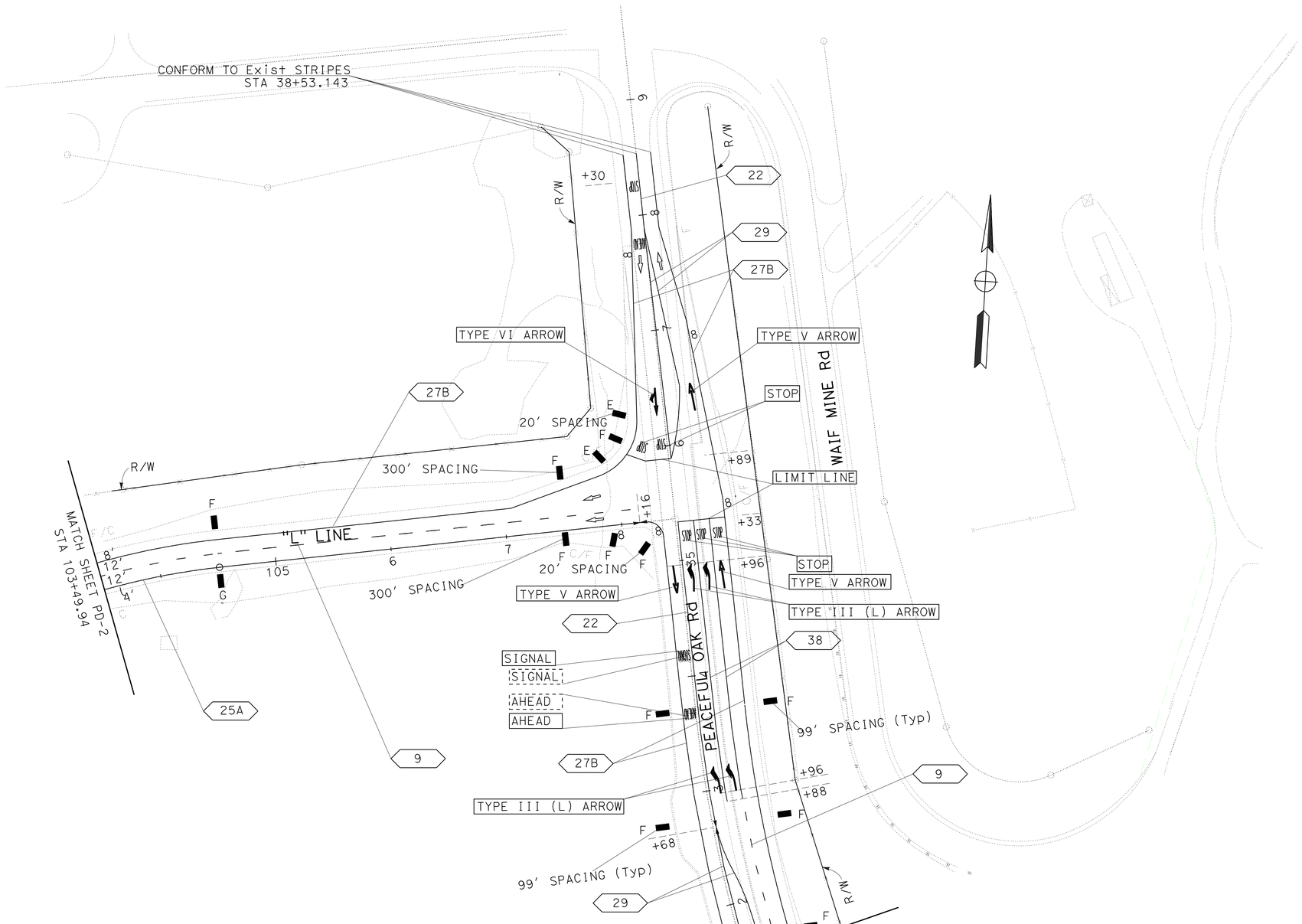

THIS PLAN ACCURATE FOR PAVEMENT DELINEATION WORK ONLY

PAVEMENT DELINEATION PLAN

SCALE: 1" = 50'

PD-4

REVISED BY	DATE REVISED
QT	01-13-10

CALCULATED-DESIGNED BY: FERNANDO LOPEZ
CHECKED BY: MAZIN AL-ALI
FUNCTIONAL SUPERVISOR: MOHAMMED QATAMI

STATE OF CALIFORNIA - DEPARTMENT OF TRANSPORTATION
Caltrans®
TRAFFIC DESIGN

LAST REVISION 01-13-10
DATE PLOTTED => 12-MAY-2010
TIME PLOTTED => 13:41

Dist	COUNTY	ROUTE	POST MILES TOTAL PROJECT	SHEET No.	TOTAL SHEETS
10	Tuo	108	R4.0/R6.0	118	237

REGISTERED ~~CIVIL~~ ENGINEER 01/07/10 DATE

5-10-10
PLANS APPROVAL DATE

REGISTERED PROFESSIONAL ENGINEER HUE NGUYEN No. 74484 Exp. 12/31/11 CIVIL STATE OF CALIFORNIA

THE STATE OF CALIFORNIA OR ITS OFFICERS OR AGENTS SHALL NOT BE RESPONSIBLE FOR THE ACCURACY OR COMPLETENESS OF SCANNED COPIES OF THIS PLAN SHEET.

NOTE: FOR ACCURATE RIGHT OF WAY AND ACCESS DATA, CONTACT RIGHT OF WAY ENGINEERING AT THE DISTRICT OFFICE.

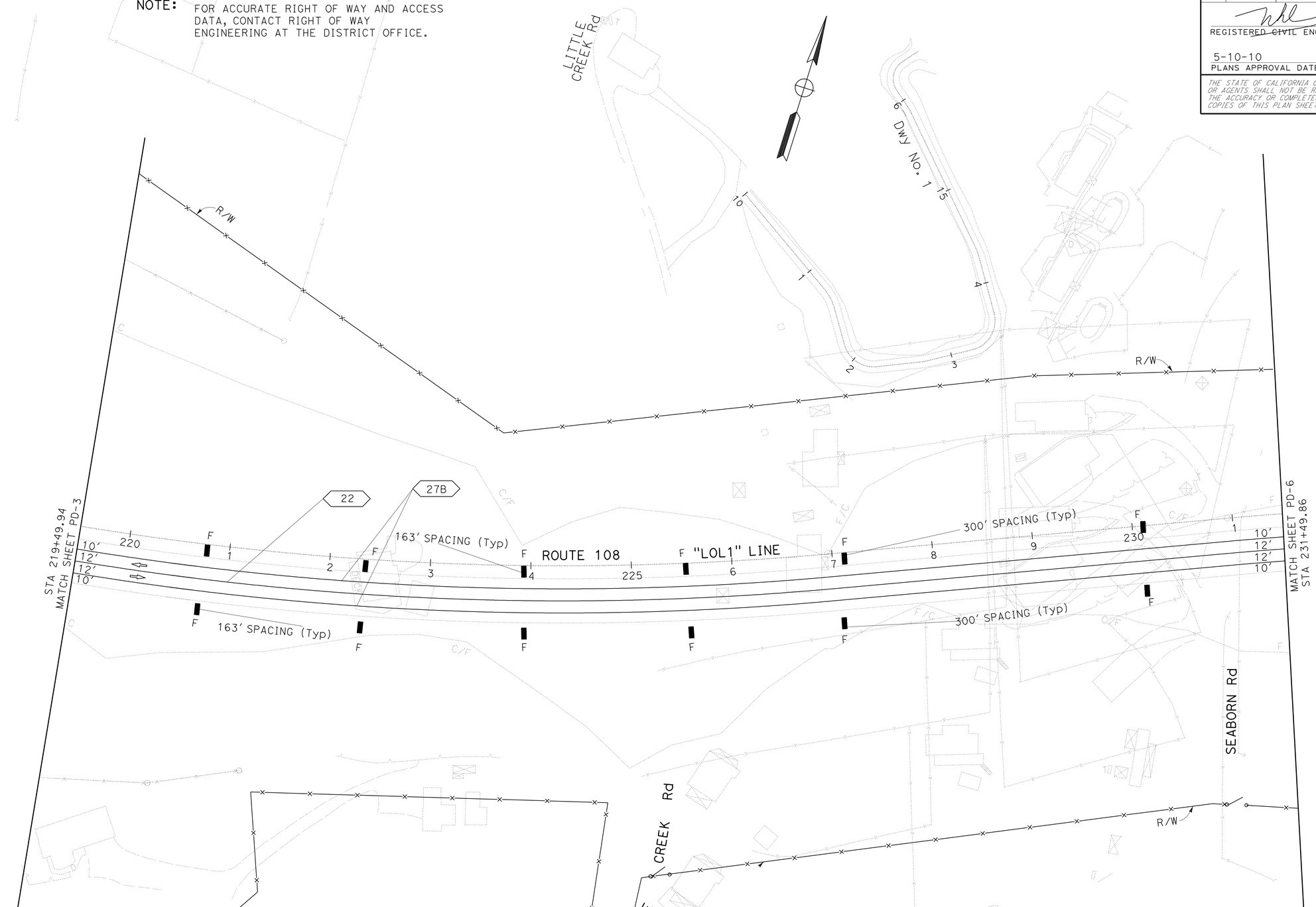

PAVEMENT DELINEATION PLAN

SCALE: 1" = 50'

PD-5

THIS PLAN ACCURATE FOR PAVEMENT DELINEATION WORK ONLY

STATE OF CALIFORNIA - DEPARTMENT OF TRANSPORTATION

Caltrans®

TRAFFIC DESIGN

FUNCTIONAL SUPERVISOR: MOHAMMED QATAMI

CALCULATED-DESIGNED BY: FERNANDO LOPEZ

CHECKED BY: MAZIN AL-ALI

REVISED BY: QT

DATE REVISED: 01-13-10

LAST REVISION 01-13-10 | DATE PLOTTED => 12-MAY-2010 | TIME PLOTTED => 13:41

Dist	COUNTY	ROUTE	POST MILES TOTAL PROJECT	SHEET No.	TOTAL SHEETS
10	Tuo	108	R4.0/R6.0	119	237

REGISTERED ~~CIVIL~~ ENGINEER 01/07/10 DATE

5-10-10
PLANS APPROVAL DATE

REGISTERED PROFESSIONAL ENGINEER HUE NGUYEN No. 74484 Exp. 12/31/11 CIVIL STATE OF CALIFORNIA

THE STATE OF CALIFORNIA OR ITS OFFICERS OR AGENTS SHALL NOT BE RESPONSIBLE FOR THE ACCURACY OR COMPLETENESS OF SCANNED COPIES OF THIS PLAN SHEET.

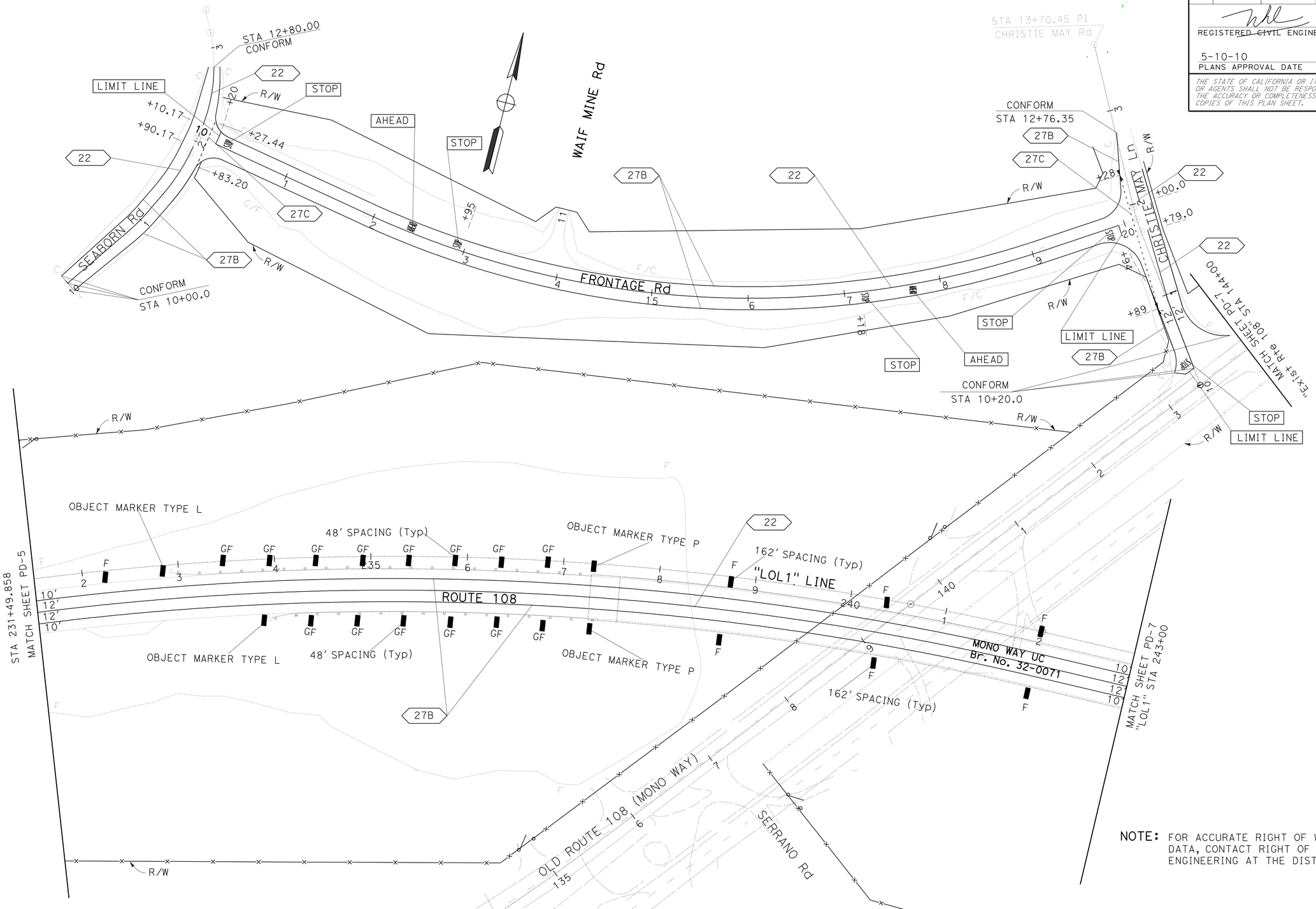

NOTE: FOR ACCURATE RIGHT OF WAY AND ACCESS DATA, CONTACT RIGHT OF WAY ENGINEERING AT THE DISTRICT OFFICE.

THIS PLAN ACCURATE FOR PAVEMENT DELINEATION WORK ONLY

PAVEMENT DELINEATION PLAN

SCALE: 1" = 50'

PD-6

STATE OF CALIFORNIA - DEPARTMENT OF TRANSPORTATION
Caltrans® **TRAFFIC DESIGN**

FUNCTIONAL SUPERVISOR: MOHAMMED QATAMI
CALCULATED-DESIGNED BY: FERNANDO LOPEZ
CHECKED BY: MAZIN AL-ALI
REVISED BY
DATE REVISED

LAST REVISION 11-23-09
DATE PLOTTED => 12-MAY-2010
TIME PLOTTED => 13:42

Dist	COUNTY	ROUTE	POST MILES TOTAL PROJECT	SHEET No.	TOTAL SHEETS
10	Tuo	108	R4.0/R6.0	120	237

REGISTERED ~~CIVIL~~ ENGINEER 01/07/10 DATE

5-10-10
PLANS APPROVAL DATE

REGISTERED PROFESSIONAL ENGINEER
HUE NGUYEN
No. 74484
Exp 12/31/11
CIVIL
STATE OF CALIFORNIA

THE STATE OF CALIFORNIA OR ITS OFFICERS OR AGENTS SHALL NOT BE RESPONSIBLE FOR THE ACCURACY OR COMPLETENESS OF SCANNED COPIES OF THIS PLAN SHEET.

NOTE: FOR ACCURATE RIGHT OF WAY AND ACCESS DATA, CONTACT RIGHT OF WAY ENGINEERING AT THE DISTRICT OFFICE.

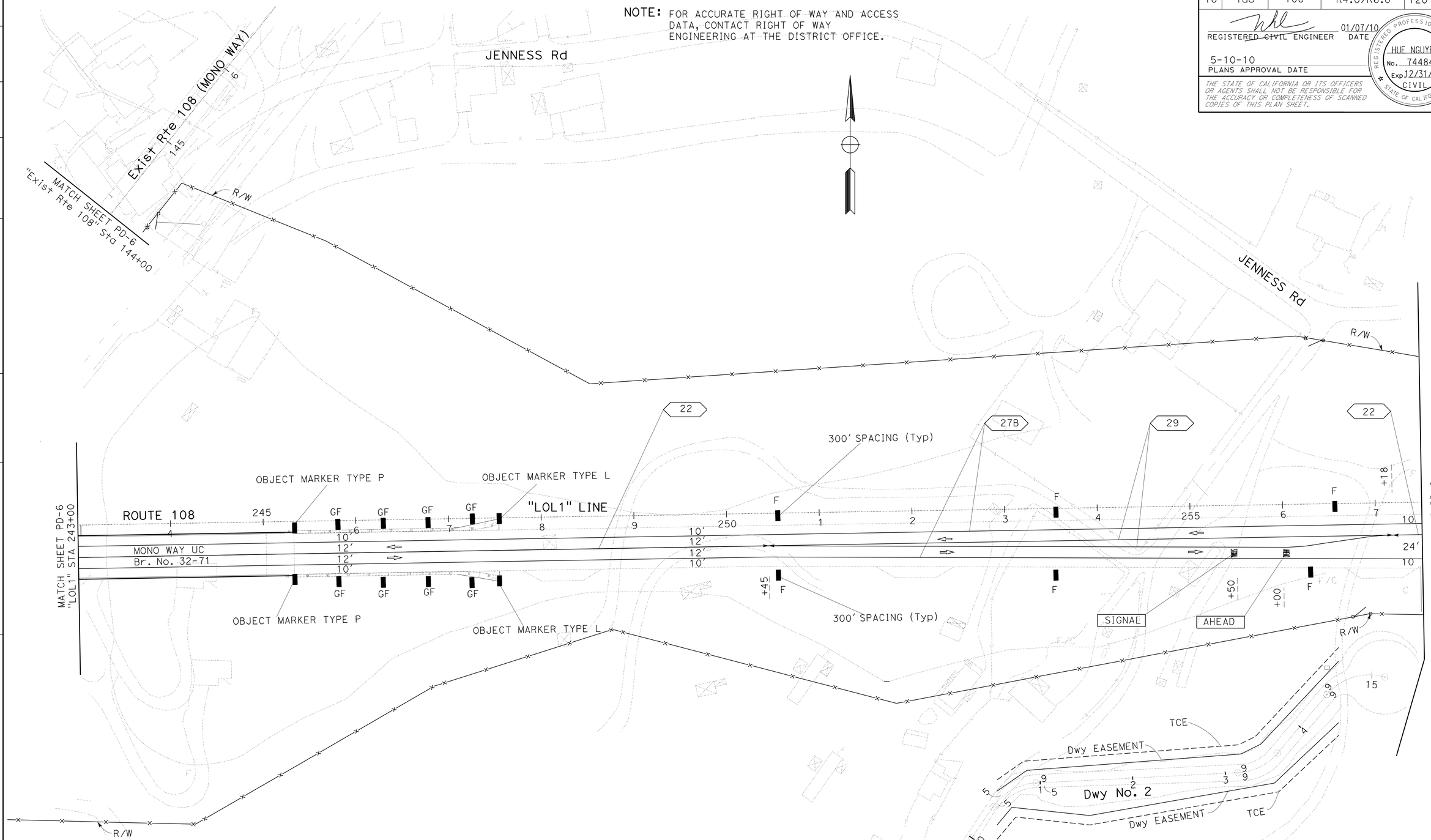

THIS PLAN ACCURATE FOR PAVEMENT DELINEATION WORK ONLY

PAVEMENT DELINEATION PLAN

SCALE: 1" = 50'

PD-7

REVISED BY	DATE REVISED
QT	01-13-10

CALCULATED-DESIGNED BY: FERNANDO LOPEZ
CHECKED BY: MAZIN AL-ALI
FUNCTIONAL SUPERVISOR: MOHAMMED QATAMI

STATE OF CALIFORNIA - DEPARTMENT OF TRANSPORTATION
Caltrans
TRAFFIC DESIGN

LAST REVISION 01-13-10 | DATE PLOTTED => 12-MAY-2010 | TIME PLOTTED => 15:24

Dist	COUNTY	ROUTE	POST MILES TOTAL PROJECT	SHEET No.	TOTAL SHEETS
10	Tuo	108	R4.0/R6.0	121	237

REGISTERED ~~CIVIL~~ ENGINEER 01/07/10 DATE

5-10-10
PLANS APPROVAL DATE

REGISTERED PROFESSIONAL ENGINEER HUE NGUYEN No. 74484 Exp 12/31/11 CIVIL STATE OF CALIFORNIA

THE STATE OF CALIFORNIA OR ITS OFFICERS OR AGENTS SHALL NOT BE RESPONSIBLE FOR THE ACCURACY OR COMPLETENESS OF SCANNED COPIES OF THIS PLAN SHEET.

NOTE: FOR ACCURATE RIGHT OF WAY AND ACCESS DATA, CONTACT RIGHT OF WAY ENGINEERING AT THE DISTRICT OFFICE.

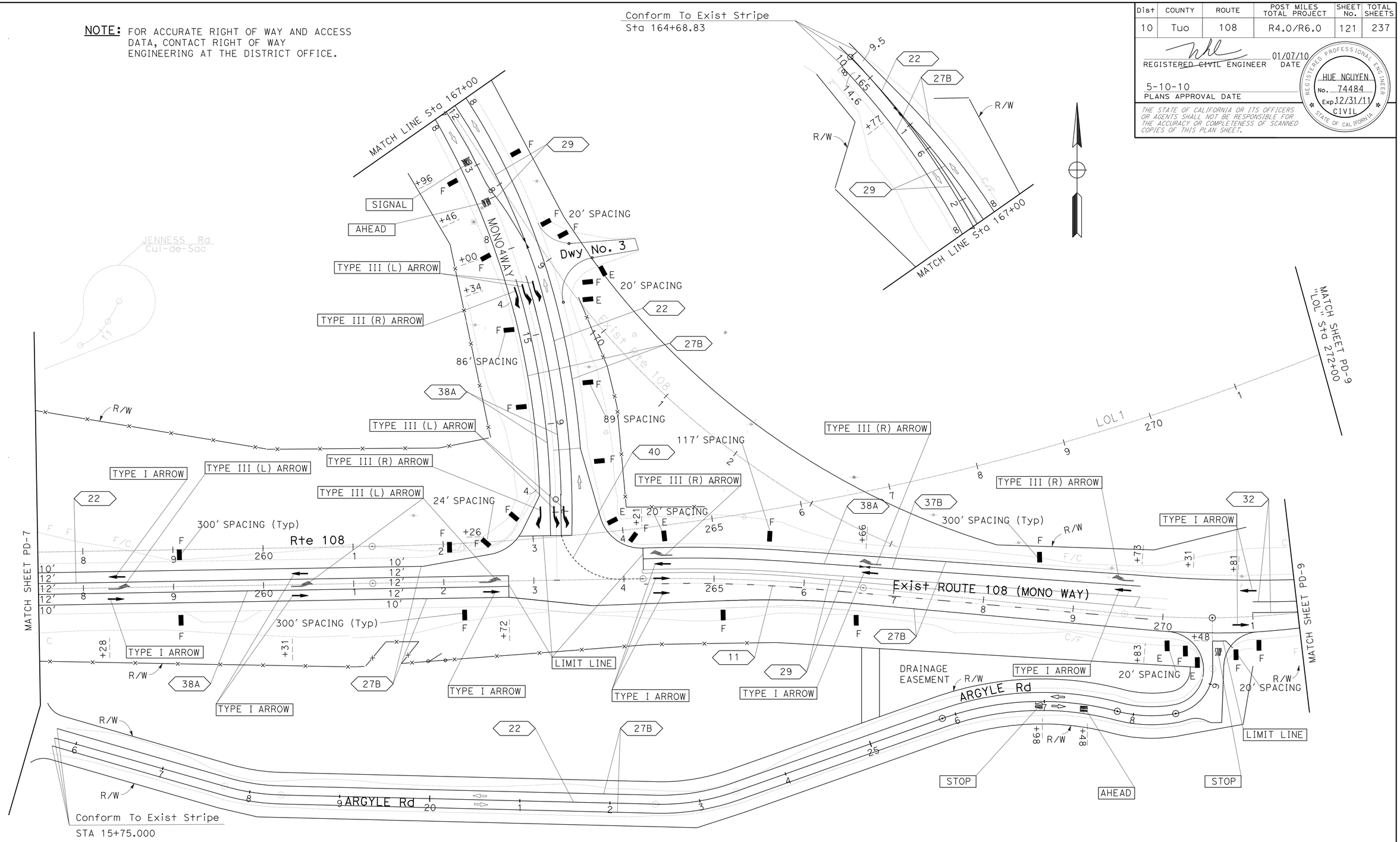

PAVEMENT DELINEATION PLAN

SCALE: 1" = 50'

PD-8

THIS PLAN ACCURATE FOR PAVEMENT DELINEATION WORK ONLY

STATE OF CALIFORNIA - DEPARTMENT OF TRANSPORTATION
Caltrans
TRAFFIC DESIGN

FUNCTIONAL SUPERVISOR: MOHAMMED QATAMI
CALCULATED-DESIGNED BY: FERNANDO LOPEZ
CHECKED BY: ALI JUMA
REVISED BY: QT
DATE REVISED: 01-13-10

LAST REVISION 01-13-10
DATE PLOTTED => 12-MAY-2010
TIME PLOTTED => 13:42

BORDER LAST REVISED 4/11/2008
RELATIVE BORDER SCALE IS IN INCHES 0 1 2 3
USERNAME => trmikesl
DGN FILE => a34042na008.dgn
CU 06385
EA 340421

Dist	COUNTY	ROUTE	POST MILES TOTAL PROJECT	SHEET No.	TOTAL SHEETS
10	Tuo	108	R4.0/R6.0	122	237

REGISTERED ~~CIVIL~~ ENGINEER 01/07/10 DATE

5-10-10
PLANS APPROVAL DATE

REGISTERED PROFESSIONAL ENGINEER
HUE NGUYEN
No. 74484
Exp 12/31/11
CIVIL
STATE OF CALIFORNIA

THE STATE OF CALIFORNIA OR ITS OFFICERS OR AGENTS SHALL NOT BE RESPONSIBLE FOR THE ACCURACY OR COMPLETENESS OF SCANNED COPIES OF THIS PLAN SHEET.

NOTE: FOR ACCURATE RIGHT OF WAY AND ACCESS DATA, CONTACT RIGHT OF WAY ENGINEERING AT THE DISTRICT OFFICE.

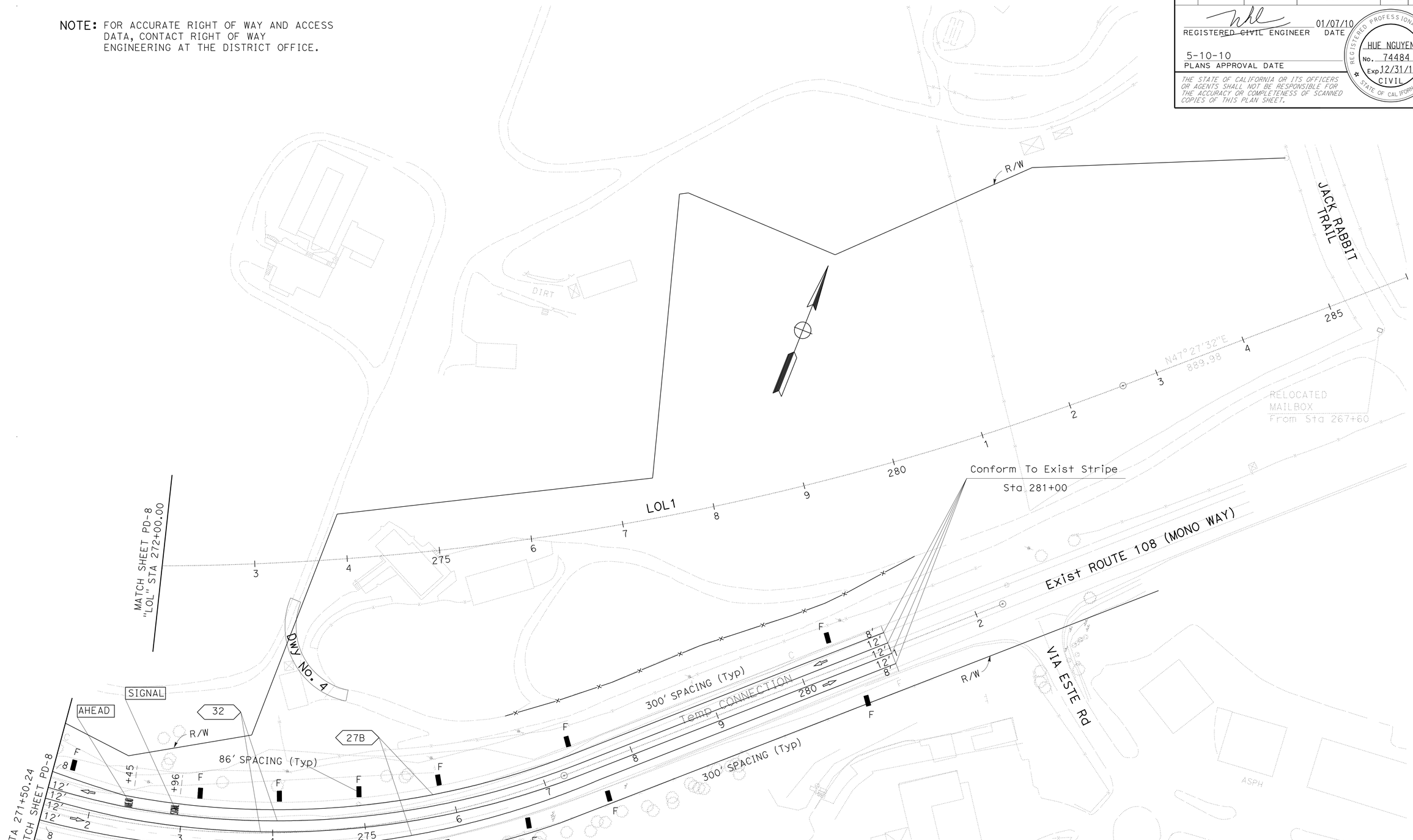

THIS PLAN ACCURATE FOR PAVEMENT DELINEATION WORK ONLY

PAVEMENT DELINEATION PLAN

SCALE: 1" = 50'

PD-9

STATE OF CALIFORNIA - DEPARTMENT OF TRANSPORTATION
Caltrans
TRAFFIC DESIGN

FUNCTIONAL SUPERVISOR: MOHAMMED QATAMI
CALCULATED-DESIGNED BY: FERNANDO LOPEZ
CHECKED BY: MAZIN AL-ALI
REVISED BY: QT
DATE REVISED: 01-13-10

LAST REVISION DATE PLOTTED => 12-MAY-2010
TIME PLOTTED => 13:42

BORDER LAST REVISED 4/11/2008
RELATIVE BORDER SCALE IS IN INCHES 0 1 2 3
USERNAME => trmikesl
DGN FILE => a34042na009.dgn
CU 06385
EA 340421

Dist	COUNTY	ROUTE	POST MILES TOTAL PROJECT	SHEET No.	TOTAL SHEETS
10	Tuo	108	R4.0/R6.0	123	237

REGISTERED CIVIL ENGINEER 01/07/10 DATE

5-10-10
PLANS APPROVAL DATE

REGISTERED PROFESSIONAL ENGINEER HUE NGUYEN No. 74484 Exp 12/31/11 CIVIL STATE OF CALIFORNIA

THE STATE OF CALIFORNIA OR ITS OFFICERS OR AGENTS SHALL NOT BE RESPONSIBLE FOR THE ACCURACY OR COMPLETENESS OF SCANNED COPIES OF THIS PLAN SHEET.

PAVEMENT DELINEATION QUANTITIES

SHEET No.	LOCATION	REMOVE THERMOPLASTIC TRAFFIC STRIPE: DETAIL 22 DOUBLE YELLOW (HAZARDOUS WASTE)	DETAIL 8 WHITE	DETAIL 27B WHITE	DETAIL 38 WHITE	DETAIL 12 WHITE	REMOVE THERMOPLASTIC PAVEMENT MARKING	REMOVE PAVEMENT MARKER
		LF		LF			SQFT	EA
PD-1	ROUTE 108	2,594		2,476				218
PD-2	RAMP "E"	2,248		1,706			171	190
PD-3	PEACEFUL OAK Rd			3,048	600	71	857	29
	RAMP "E"	456	108	858	175		576	48
PD-8	MONO WAY Rd			970				
	ROUTE 108			1,146				
PD-9	ROUTE 108			1,724				
TOTAL		5,298	12,882				1628	485

MILEPOST MARKER

SHEET No.	MILEPOST	DIRECTION	EA
PD-1	R4.00	EB	1
PD-3	R4.50	WB	1
PD-5	R5.00	EB	1
PD-8	R5.50	WB	1
		TOTAL	4

OBJECT MARKER

SHEET No.	TYPE L(CA)	TYPE P(CA)	TYPE K(CA)
	EA		
PD-2		2	
PD-3	4	2	1
PD-6	2	2	
PD-7	2	4	
SUBTOTAL	8	10	1
TOTAL	19		

PAVEMENT DELINEATION QUANTITIES

SHEET No.	LOCATION	STATION LIMITS	PAINT TRAFFIC STRIPE(2-COAT) DETAIL 8: WHITE 4" BROKEN	DETAIL 9: WHITE 4" BROKEN	DETAIL 11: WHITE 4" BROKEN	DETAIL 27C: WHITE 4" BROKEN	DETAIL 27B: 4" SOLID WHITE	DETAIL 36: 8" SOLID WHITE	DETAIL 36A: 8" SOLID WHITE	DETAIL 37B: 8" SOLID WHITE	DETAIL 38: 8" SOLID WHITE	DETAIL 38A: 8" SOLID WHITE	DETAIL 40: 4" WHITE BROKEN 6-1	DETAIL 12: WHITE 4" BROKEN 36-12	DETAIL 22: YELLOW 4" DOUBLE	DETAIL 25A: YELLOW 4" SOLID	DETAIL 29: YELLOW 4" DOUBLE	DETAIL 32: YELLOW 4" SOLID, BROKEN 36-12	THERMOPLASTIC PAVEMENT MARKING: STOP	SIGNAL	AHEAD	LIMIT LINE	12" DIAGONAL SOLID WHITE LINE	TYPE ARROW: I (24')	II(R)	III (R)	III (L)	V	VI	PAVEMENT MARKER RETRO-REFLECTIVE TYPE G	PAVEMENT MARKER RETRO-REFLECTIVE TYPE H	DELINEATOR (CLASS-1) TYPE E	DELINEATOR (CLASS-1) TYPE F	DELINEATOR (CLASS-1) TYPE G	PAVEMENT MARKER RECESSED TYPE 2 D	GUARD RAILING DELINEATOR TYPE F
			LF																SQFT											EA			EA			EA	
PD-1	ROUTE 108	181+75 TO 195+50					2,880							1375																			4			117	
	RAMP "L"	90+00 TO 96+50	211				501		107						117	103													5	6		3	1			
	RAMP "E"	100+00 TO 102+26					226	334																			33		30			2				
PD-2	ROUTE 108	195+50 TO 206+50					2,200								1,100																	5		94	8	
	RAMP "L"	96+43 TO 103+50		505			700									700												126	12	30		8	8			
	RAMP "E"	102+26 TO 113+50		611			1,124									1124				64	62		137			84	84	33		14	48		6	8			4
PD-3	ROUTE 108	206+50 TO 219+50					2,600								1,300																	4				13
	PEACEFUL OAK Rd	22+18 TO 31+50		428			1,760				197			328	110		3092		44	64	124	58			135		252	297		27			9		271	
	RAMP "E"	113+50 TO 115+78		226			228				623					515						90				42	42			33	23	2	3			4
PD-4	ON RAMP "L"	103+50 TO 108+16		466			466									466														12	20	2	6	1		
	PEACEFUL OAK Rd	212+20 TO 225+80		138			1,220				490				530		1268								45		168	99		25			6		154	
PD-5	ROUTE 108	219+50 TO 231+50					2,400								1,200																		12			
PD-6	FRONTAGE Rd	10+20 TO 19+94					1,948								974				88		62	32													202	
	SEABORN Rd	10+00 TO 12+80				56	560								280																				49	
	ROUTE 108	231+50 TO 243+00					2,300								1,150																		7		149	14
	CHRISTIE MAY LN	10+20 TO 12+76				139	466								187						31	24													40	
PD-7	ROUTE 108	243+00 TO 257+50					2,900								799		1346			32	31												6		182	8
PD-8	MONO WAY RD	12+50 TO 17+26					1,452					584			806		1292			32	31	63				84	168					2	10		179	
	ARGYLE Rd	15+75 TO 29+48					2,746								1,373				44		31	12													218	
	ROUTE 108	257+50 TO 271+50			552		2,502			307		767	113		1,044		2208	100						341		126	126					4	14		289	
PD-9	EXIST HWY 108 (MONO WAY)	271+50 TO 281+00					1,900											3800		32	31												15		400	
SUB-TOTAL			211	2374	552	195	33,079	334	107	307	1310	1351	113	1703	10,930	2805	9206	3900	176	224	403	279	137	341	1180	336	840	462	126	158	127	10	120	18	2344	
SHEET TOTAL			68,497																3504											285		148			2344	51

PAVEMENT DELINEATION QUANTITIES
PDQ-1

STATE OF CALIFORNIA - DEPARTMENT OF TRANSPORTATION
Caltrans TRAFFIC DESIGN

FUNCTIONAL SUPERVISOR: MOHAMMED QATAMI
CALCULATED-DESIGNED BY: FERNANDO LOPEZ
CHECKED BY: KAL DAHER
REVISED BY: HN
DATE REVISED: 03-11-10

LAST REVISION 12-10-09
DATE PLOTTED => 12-MAY-2010
TIME PLOTTED => 15:25

Dist	COUNTY	ROUTE	POST MILES TOTAL PROJECT	SHEET No.	TOTAL SHEETS
10	Tuo	108	R4.0/R6.0	124	237

K. Daher 01-11-10
REGISTERED CIVIL ENGINEER DATE

5-10-10
PLANS APPROVAL DATE

REGISTERED PROFESSIONAL ENGINEER KAL H. DAHER No. C44510 Exp. 3-31-10 CIVIL STATE OF CALIFORNIA

THE STATE OF CALIFORNIA OR ITS OFFICERS OR AGENTS SHALL NOT BE RESPONSIBLE FOR THE ACCURACY OR COMPLETENESS OF SCANNED COPIES OF THIS PLAN SHEET.

ABBREVIATIONS

HMA HOT MIX SPHALT

ROADWAY QUANTITIES

LOCATION		HMA	CLASS 2 AGGREGATE BASE	COLD PLANE AC PAVEMENT	TACK COAT
		TON	CY	SQYD	TON
Rte 108 "LOL1" LINE	182+82.00 TO 261+21.19	12,140	7,399		34
Temp CONNECTION	261+21.19 TO 281+00.00	3,543	2,187		2
Temp CONNECTION	269+50.00 TO 281+00.00	486		4802	12
"L" LINE	90+00.00 TO 108+35.00	2,331	1,497		9
PEACEFUL OAK Rd	22+60.00 TO 38+67.75	1,070	1,004		5
PEACEFUL OAK Rd	25+13.85 TO 29+23.42	37			
FRONTAGE Rd	10+12.00 TO 20+06.00	645	455		5
WAIF MINE Rd	10+00.00 TO 11+02.19	33	32		0.1
CHRISTIE MAY Ln	10+00.00 TO 13+70.45	214	151		2
SEABORN Rd	10+00.00 TO 12+80.00	159	112		2
MONO WAY	10+00.00 TO 17+44.00	1,698	1,593		6
MONO WAY (DETOUR)		399			1
ARGYLE Rd	14+62.00 TO 29+50.00	910	642		8
HMA DIKE		531			1
HIGH SIDE SUPER GUTTER (HSSG)		61			0.2
FROM MBGR QUANTITIES TABLE		150			0.5
DRIVEWAY No. 1			118		0.7
DRIVEWAY No. 2		102	100		1.5
DRIVEWAY No. 3			35		
DRIVEWAY No. 4		25	25		0.3
JENNESS ROAD CUL-DE-SAC		111	109		1.6
MAINTENANCE VEHICLE PULLOUT		106	104		0.3
SERVICE ROAD (DRAINAGE BASIN)			230		
TOTAL		24,751	15,793	4802	92.2

EARTHWORK SUMMARY

LOCATION		ROADWAY EXCAVATION	ROCK EXCAVATION (CONTROLLED BLASTING)	EMBANKMENT (N)	DRILL HOLE (PRESPLITTING)
		CY	CY	CY	LF
Rte 108 "LOL1" LINE	182+82.00 TO 207+70.00	5,016		93,471	
Rte 108 "LOL1" LINE	208+78.00 TO 224+00.00		476,721	34,796	95,000
Rte 108 "LOL1" LINE	224+00.00 TO 238+23.00	17,189		199,633	
Rte 108 "LOL1" LINE	243+30.00 TO 248+00.00	1,089		105,826	
Rte 108 "LOL1" LINE	248+00.00 TO 261+21.19	15,219		84,537	
Temp CONNECTION	261+21.19 TO 281+00.00	14,390		1,169	
RAMP L - "L" LINE	95+50.00 TO 108+23.26	15,359		13,179	
RAMP E - "E" LINE	112+30.17 TO 115+72.83	120			
BASIN			31,563	120	
PEACEFUL OAK Rd	22+60.00 TO 38+67.75	2,726		1,105	
SEABORN Rd	10+10.00 TO 12+80.00	396		5	
FRONTAGE Rd	10+12.00 TO 20+06.00	2,055		19,066	
WAIF MINE Rd	10+12.00 TO 11+02.19			950	
CHRISTIE MAY Ln	10+00.00 TO 12+76.35	907		38	
MONO WAY	10+00.00 TO 17+36.00	1,102		15,788	
ARGYLE Rd	14+62.30 TO 29+49.18	1,836		630	
DRIVEWAY 1	10+00.00 TO 16+64.13	438		385	
DRIVEWAY 2	10+50.00 TO 14+62.30	868		162	
DRIVEWAY 3				184	
DRIVEWAY 4		12		32	
TOTAL		78,722	508,284	571,076	95,000

TEMPORARY FENCE (TYPE ESA)

SHEET	Beg STA	END STA	Temp FENCE (TYPE ESA)
L-6	246.6' Rt 241+43.00 "LOL"	91.0' Rt 241+49.00 "LOL"	155.30
	91.0' Rt 241+49.00 "LOL"	93.4' Rt 242+64.00 "LOL"	113.20
	93.4' Rt 242+64.00 "LOL"	248.6' Rt 242+64.00 "LOL"	155.20
	248.6' Rt 242+64.00 "LOL"	246.6' Rt 241+43.00 "LOL"	116.15
		TOTAL	539.85

(N) NOT A SEPARATE PAY ITEM, FOR INFORMATION ONLY.

SUMMARY OF QUANTITIES
Q-1

REVISED BY | DATE REVISED
LILIANA BRASALI | KAL DAHER
CALCULATED-DESIGNED BY | CHECKED BY
FUNCTIONAL SUPERVISOR | TERRY OGLE
STATE OF CALIFORNIA - DEPARTMENT OF TRANSPORTATION
Caltrans
06-DESIGN

LAST REVISION 01-11-10 | DATE PLOTTED => 12-MAY-2010 TIME PLOTTED => 13:47

Dist	COUNTY	ROUTE	POST MILES TOTAL PROJECT	SHEET No.	TOTAL SHEETS
10	Tuo	108	R4.0/R6.0	125	237

REGISTERED CIVIL ENGINEER 12-29-09 DATE

5-10-10
PLANS APPROVAL DATE

REGISTERED PROFESSIONAL ENGINEER KAL H. DAHER No. C44510 Exp. 3-31-10 CIVIL STATE OF CALIFORNIA

THE STATE OF CALIFORNIA OR ITS OFFICERS OR AGENTS SHALL NOT BE RESPONSIBLE FOR THE ACCURACY OR COMPLETENESS OF SCANNED COPIES OF THIS PLAN SHEET.

HOT MIX ASPHALT DIKE

LOCATION	STA	SIDE	PLACE HMA DIKE (TYPE A)	(TYPE C)	(TYPE E)	(TYPE F)	HMA
		L+/R+	LF	LF	LF	LF	TON
R+e 108 "LOL1" LINE	188+50.00 TO 190+00.00	L+			150.0		3.95
R+e 108 "LOL1" LINE	196+00.00 TO 203+99.20	L+			799.2		21.04
R+e 108 "LOL1" LINE	203+99.20 TO 204+61.70	L+		62.5			0.48
R+e 108 "LOL1" LINE	204+61.70 TO 206+67.87	L+				206.2	2.76
R+e 108 "LOL1" LINE	223+60.00 TO 230+50.00	L+			690.0		18.16
R+e 108 "LOL1" LINE	245+33.00 TO 247+22.40	L+				189.4	2.53
R+e 108 "LOL1" LINE	247+22.40 TO 247+84.90	L+		62.5			0.48
R+e 108 "LOL1" LINE	247+84.90 TO 261+21.19	L+			1,336.3		35.18
R+e 108 "LOL1" LINE	197+60.00 TO 204+49.10	R+			689.1		18.14
R+e 108 "LOL1" LINE	204+49.10 TO 205+11.60	R+		62.5			0.48
R+e 108 "LOL1" LINE	205+11.60 TO 206+99.95	R+				188.4	2.52
R+e 108 "LOL1" LINE	210+36.00 TO 211+50.00	R+				114.0	1.52
R+e 108 "LOL1" LINE	215+98.00 TO 223+38.00	R+			740.0		19.48
R+e 108 "LOL1" LINE	227+90.00 TO 233+59.44	R+			569.5		14.99
R+e 108 "LOL1" LINE	233+59.44 TO 234+21.94	R+		62.5			0.48
R+e 108 "LOL1" LINE	234+21.94 TO 237+29.07	R+				307.2	4.11
R+e 108 "LOL1" LINE	245+03.00 TO 247+14.00	R+				211.0	2.82
R+e 108 "LOL1" LINE	247+14.00 TO 247+76.50	R+		62.5			0.48
R+e 108 "LOL1" LINE	247+76.50 TO 261+21.19	R+			1,344.7		35.40
Temp CONNECTION	261+21.19 TO 262+51.29	L+			130.1		3.43
Temp CONNECTION	264+22.00 TO 281+00.00	L+			1,678.0		44.17
Temp CONNECTION	261+21.19 TO 270+12.97	R+			891.8		23.48
Temp CONNECTION	270+97.50 TO 276+17.12	R+			519.6		13.68
"L" LINE	93+66.70 TO 99+42.60	L+			575.9		15.16
"L" LINE	103+65.00 TO 107+85.00	L+			420.0		11.06
"L" LINE	98+98.00 TO 108+27.06	R+			929.1		24.46
SUBTOTAL				312.5	11,463.3	1216.2	320.44

HOT MIX ASPHALT DIKE

LOCATION	STA	SIDE	PLACE HMA DIKE (TYPE A)	(TYPE C)	(TYPE E)	(TYPE F)	HMA
		L+/R+	LF	LF	LF	LF	TON
"POR" LINE	28+77.00 TO 37+88.00	R+			911.0		23.98
"POR" LINE	35+91.30 TO 37+75.30	L+			184.0		4.84
"POR" LINE	26+87.63 TO 28+77.32	L+			189.7		4.99
FRONTAGE Rd	10+07.77 TO 20+21.10	L+			1,133.8		29.85
FRONTAGE Rd	18+25.33 TO 20+02.02	R+			176.7		4.65
CHRISTIE MAY Ln	10+04.94 TO 11+40.12	L+			135.2		3.56
SEABORN Rd	10+00.00 TO 12+80.03	L+			280.0		7.37
SEABORN Rd	10+00.00 TO 11+74.66	R+			174.7		4.60
SEABORN Rd	12+33.67 TO 12+80.03	R+			46.4		1.22
MONO WAY	10+00.00 TO 12+50.00	L+			250.0		6.58
MONO WAY	10+30.50 TO 17+35.80	R+			705.3		18.57
"E" LINE	112+22.30 TO 115+71.23	L+			348.9		9.19
ARGYLE Rd	14+62.30 TO 29+44.55	L+			1,482.3		39.02
ARGYLE Rd	14+62.30 TO 28+71.68	R+			1,409.4		37.10
Dwy # 2	10+61.00 TO 14+62.30	L+			363.3		9.56
Dwy # 2	10+50.00 TO 14+62.30	R+	412.3				5.51
SUBTOTAL					7,790.7		210.59
TOTAL			412.3	312.5	19,254.0	1,216.2	531.03*

* HMA QUANTITY INCLUDED IN ROADWAY QUANTITIES TABLE

OBLITERATE SURFACING

LOCATION	STA	OBLITERATE SURFACING
		SQYD
Exist R+e 108	169+50.00 TO 173+20.00	1440
TOTAL		1440

SUMMARY OF QUANTITIES

Q-2

STATE OF CALIFORNIA - DEPARTMENT OF TRANSPORTATION
Caltrans
06-DESIGN

FUNCTIONAL SUPERVISOR: TERRY OGLE
CALCULATED-DESIGNED BY: LILIANA BRASALI
CHECKED BY: KAL DAHER
REVISED BY
DATE REVISED

LAST REVISION 12-29-09
DATE PLOTTED => 12-MAY-2010
TIME PLOTTED => 07:50

Dist	COUNTY	ROUTE	POST MILES TOTAL PROJECT	SHEET No.	TOTAL SHEETS
10	Tuo	108	R4.0/R6.0	126	237

K. Daher 01-11-10
REGISTERED CIVIL ENGINEER DATE

5-10-10
PLANS APPROVAL DATE

REGISTERED PROFESSIONAL ENGINEER KAL H. DAHER No. C44510 Exp. 3-31-10 CIVIL STATE OF CALIFORNIA

THE STATE OF CALIFORNIA OR ITS OFFICERS OR AGENTS SHALL NOT BE RESPONSIBLE FOR THE ACCURACY OR COMPLETENESS OF SCANNED COPIES OF THIS PLAN SHEET.

METAL BEAM GUARD RAILING

LOCATION	DIRECTION	LAYOUT TYPE (N)	MBGR (WOOD POST)	ALTERNATIVE FLARED TERMINAL SYSTEM	TRANSITION RAILING (TYPE WB)	PLACE HMA (Misc AREA)	HMA
	EB/WB		LF	EA	EA	SQYD	TON
Sta 204+24.20 TO 206+79.52 "LOL1" LINE	WB	12BB	187.5	1	1	97.73	13.19
Sta 204+74.10 TO 207+12.62 "LOL1" LINE	EB	12B	175.0	1	1	91.62	12.37
Sta 210+19.67 TO 211+76.37 "LOL1" LINE	WB	12B	87.5	1	1	67.01	9.05
Sta 210+44.75 TO 216+07.25 "LOL1" LINE	EB	12BB	500.0	1	1	202.15	27.29
Sta 232+81.00 TO 237+47.50 "LOL1" LINE	WB	12BB	400.0	1	1	165.34	22.32
Sta 233+92.00 TO 237+42.30 "LOL1" LINE	EB	12B	287.5	1	1	129.36	17.47
Sta 245+19.00 TO 247+56.50 "LOL1" LINE	WB	12B	175.0	1	1	92.18	12.45
Sta 245+19.00 TO 247+56.50 "LOL1" LINE	EB	12BB	175.0	1	1	92.18	12.45
FROM DRAINAGE QUANTITY						169.40	22.89
TOTAL			1987.5	8	8	1106.97	149.48*

* HMA QUANTITY INCLUDED IN ROADWAY QUANTITIES TABLE

TEMPORARY WATER POLLUTION CONTROL QUANTITIES

SHEET No.	Temp FIBER ROLL	Temp REINFORCED SILT FENCE	Temp SILT FENCE	Temp CHECK DAM		Temp HYDRAULIC MULCH (BONDED FIBER MATRIX)	Temp DRAINAGE INLET PROTECTION	Temp CONCRETE WASHOUT FACILITY	Temp CONSTRUCION ENTRANCE
				TYPE 1	TYPE 2				
	LF	LF	LF	LF	LF	SQYD	EA	EA	EA
WPC-1	2,878	804		390			2		
WPC-2	2,786	3,345		1,470	288	4,839	10		
WPC-3	433	3,366		1,830	476	12,210	13		
WPC-4	1,673	1,631					1		
WPC-5	7,672	2,712	1215	2,147	130	2,196	4		
WPC-6	2,720	3,155	1169	1,241	312	15,795	8		
WPC-7	11,042	4,490		2,505	1,078	15,269	13		
WPC-8	7,868	7,702		600	241		12		
WPC-9	2,080	1,803					2		
WPC1-9								8	8
TOTAL	39,152	29,008	2384	12,708		50,309	65	8	8

LOCATIONS OF Temp WATER POLLUTION CONTROL SHOWN ARE APPROXIMATE, EXACT LOCATIONS TO BE DETERMINED BY THE ENGINEER.

FENCE

SHEET No.	FENCE (TYPE WM, METAL POST)		CHAIN LINK FENCE (TYPE CL-8)		REMOVE FENCE	
	LF		LF		LF	
	L+	R+	L+	R+	L+	R+
L-2	376.0					
L-3	1,228.7	1,261.1		914.8	1456.9	1190.2
L-4	550.0					
L-5	1,215.7	1,554.2			201.1	219.8
L-6	1,101.9	2,197.6				
L-7	1,463.9	1,705.2				
L-8	1,152.2	881.7				
L-9	475.6					
TOTAL	15,163.8		914.8		3068.0	

(N) NOT A SEPARATE PAY ITEM, FOR INFORMATION ONLY

GATE

SHEET No.	16' METAL GATE		14' CHAIN LINK GATE (TYPE CL-8)	
	EA		EA	
	L+	R+	L+	R+
L-4				1
L-5	1	2		
L-6	1	2		
L-7	2	1		
TOTAL	9		1	

MINOR CONCRETE (Misc CONSTRUCTION)

LOCATION	CONCRETE CURB (TYPE A1-6)	ISLAND PAVING
	CY	CY
Sta 25+13.85 TO 26+62.39 "POR"	8.0	12.9
Sta 27+30.44 TO 29+23.42 "POR"	10.7	75.8
SUBTOTAL	18.7	88.7
TOTAL	107.4	

SUMMARY OF QUANTITIES
Q-3

REVISED BY | DATE REVISED
LILIANA BRASALI | KAL DAHER
CALCULATED-DESIGNED BY | CHECKED BY
FUNCTIONAL SUPERVISOR | TERRY OGLE
STATE OF CALIFORNIA - DEPARTMENT OF TRANSPORTATION
Caltrans
06-DESIGN

LAST REVISION 01-11-10 | DATE PLOTTED => 20-JUL-2011 | TIME PLOTTED => 06:32

Dist	COUNTY	ROUTE	POST MILES TOTAL PROJECT	SHEET No.	TOTAL SHEETS
10	Tuo	108	R4.0/R6.0	127	237

REGISTERED CIVIL ENGINEER 01-11-10 DATE

5-10-10
PLANS APPROVAL DATE

REGISTERED PROFESSIONAL ENGINEER KAL H. DAHER No. C44510 Exp. 3-31-10 CIVIL STATE OF CALIFORNIA

THE STATE OF CALIFORNIA OR ITS OFFICERS OR AGENTS SHALL NOT BE RESPONSIBLE FOR THE ACCURACY OR COMPLETENESS OF SCANNED COPIES OF THIS PLAN SHEET.

GUTTER TABLE

SHEET No.	LOCATION (SHEET No.)	GUTTER No.	RSP (LIGHT, METHOD B) CY	RSP FABRIC SQYD	WIDTH (W) LF	LENGTH LF	DEPTH (D) LF	DESCRIPTION
L-2	STA 97+00 TO STA 103+65 "L"	D1				665	3.0	V-GUTTER (UN-LINED)
L-2	STA 30+59 TO STA 31+15 "POR"	D2	127	196	4.0	60	3.5	TRAPEZOIDAL GUTTER
L-3, 5	STA 211+50 TO STA 223+62 "LOL1"	D3		1,334		1212	1.0	BENCH V-GUTTER
L-5	STA 223+62 TO STA 225+08 "LOL1"	D4	321 *	487	4.0	146	3.5	TRAPEZOIDAL GUTTER
L-5	STA 223+30 TO STA 227+90 "LOL1"	D5	1233 *	1,853	4.0	557	3.5	TRAPEZOIDAL GUTTER
L-5, 6	STA 229+72 TO STA 237+55 "LOL1"	D6	1789 *	2,657	4.0	779	3.5	TRAPEZOIDAL GUTTER
L-6	STA 236+00 "LOL1"	D7	282	435	4.0	133	3.5	TRAPEZOIDAL GUTTER
L-6, 7	STA 242+15 "LOL1"	D8	1629	2,419	8.0	655	3.5	TRAPEZOIDAL GUTTER
L-6, 7	STA 242+27 "LOL1"	D8a	411	634	4.0	194	3.5	TRAPEZOIDAL GUTTER
L-7	STA 242+87 TO STA 251+68 "LOL1"	D9	2028 *	3,077	4.0	942	3.5	TRAPEZOIDAL GUTTER
L-7	STA 251+68 TO STA 256+50 "LOL1"	D10	569	1,310		504	4.0	V-GUTTER (LINED)
L-7	STA 256+10 TO STA 256+70 "LOL1"	D11	34	114		93	1.5	V-GUTTER (LINED)
L-7, 8	STA 253+65 TO STA 259+23 "LOL1"	D12	566	1,410		574	4.0	V-GUTTER (LINED)
L-8	STA 12+50 TO STA 15+50 MONO WAY	D13				300	2.0	V-GUTTER (UN-LINED)
L-8	STA 266+75 TO STA 267+18 "TC"	D14				119	1.5	V-GUTTER (UN-LINED)
FROM DRAINAGE QUANTITIES			198	570				
TOTAL			9187	16,496				

* QUANTITY INCLUDES CHECK DAMS

HIGH SIDE SUPER GUTTER

LAYOUT SHEET No.	LOCATION	L+/R+	HMA TON
L-4	103+65.00 TO 107+85.00 "L" LINE	L+	18.9
L-3, L-5	215+98.00 TO 223+38.00 "LOL1" LINE	R+	33.3
L-6	18+25.33 TO 20+02.00 FRONTAGE Rd	R+	8.0
TOTAL			60.2 **

**INCLUDED IN ROADWAY QUANTITIES

RELOCATE MAILBOX

LOCATION				
SHEET	FROM	SHEET	TO	EACH
L-6	OLD Hwy 108 Sta 121+30 26' Lt	L-6	OLD Hwy 108 Sta 142+90 23' Lt	1
L-6	OLD Hwy 108 Sta 143+25 23' Lt	L-6	OLD Hwy 108 Sta 142+90 23' Lt	7
L-7	"LOL1" Sta 244+01 361' Lt (Exist JENNESS Rd)	L-7	DRIVEWAY 2 Sta 14+62 12' Lt	3
L-8	"LOL1" Sta 267+71 80' Rt	L-9	"LOL1" Sta 285+41 40' Rt	1
			Total	12

TOP OF CUT GUTTER

LAYOUT SHEET No.	DITCH No.	LOCATION	L+/R+	(N) DEPTH LF	(N) LENGTH LF
L-3, L-5	TOCG 1	210+95.00 TO 223+68.00 "LOL1" LINE	L+	2.0	1273.0
L-5	TOCG 2	227+00.00 TO 230+50.00 "LOL1" LINE	L+	2.0	350.0
L-6	TOCG 3	15+00.00 TO 20+00.00 FRONTAGE Rd	L+	2.0	500.0
L-7	TOCG 4	10+50.00 TO 14+62.00 DRIVEWAY 2	R+	1.0	412.0
L-7, L-8	TOCG 5	14+62.00 TO 20+64.00 ARGYLE Rd	R+	1.0	602.0
L-7, L-8	TOCG 6	256+50.00 TO 261+21.19 "LOL1" LINE	R+	2.0	521.2
L-8	TOCG 7	261+21.19 TO 269+00.00 Temp Conn	R+	2.0	778.8
L-8, L-9	TOCG 8	269+00.00 TO 276+00.00 Temp Conn	L+	2.0	700.0

(N) NOT A SEPARATE PAY ITEM, FOR INFORMATION ONLY

ADJUST MANHOLE TO GRADE

SHEET	LOCATION	EA
U-7	16+15.00 59.3' Lt MONO Wy	1
	265+31.37 69.8' Lt Temp Conn	1
	269+39.70 29.51' Rt Temp Conn	1
	TOTAL	3

SUMMARY OF QUANTITIES
Q-4

REVISED BY | DATE REVISED
LILIANA BRASALI | KAL DAHER
CALCULATED-DESIGNED BY | CHECKED BY
FUNCTIONAL SUPERVISOR: TERRY OGLE
STATE OF CALIFORNIA - DEPARTMENT OF TRANSPORTATION
Caltrans®
06-DESIGN

LAST REVISION 01-11-10
DATE PLOTTED => 12-MAY-2010
TIME PLOTTED => 13:54

Dist	COUNTY	ROUTE	POST MILES TOTAL PROJECT	SHEET No.	TOTAL SHEETS
10	Tuo	108	R4.0/R6.0	128	237

REGISTERED CIVIL ENGINEER 01/07/10 DATE

5-10-10
PLANS APPROVAL DATE

REGISTERED PROFESSIONAL ENGINEER HUE NGUYEN No. 74484 Exp.12/31/11 CIVIL STATE OF CALIFORNIA

THE STATE OF CALIFORNIA OR ITS OFFICERS OR AGENTS SHALL NOT BE RESPONSIBLE FOR THE ACCURACY OR COMPLETENESS OF SCANNED COPIES OF THIS PLAN SHEET.

LEGEND

- (XX) ROADSIDE SIGN NUMBER
- ONE POST SIGN LOCATION
- TWO POST SIGN LOCATION
- RE REMOVE ROADSIDE SIGN
- RELOCATE ROADSIDE SIGN

NOTE: FOR ACCURATE RIGHT OF WAY AND ACCESS DATA, CONTACT RIGHT OF WAY ENGINEERING AT THE DISTRICT OFFICE.

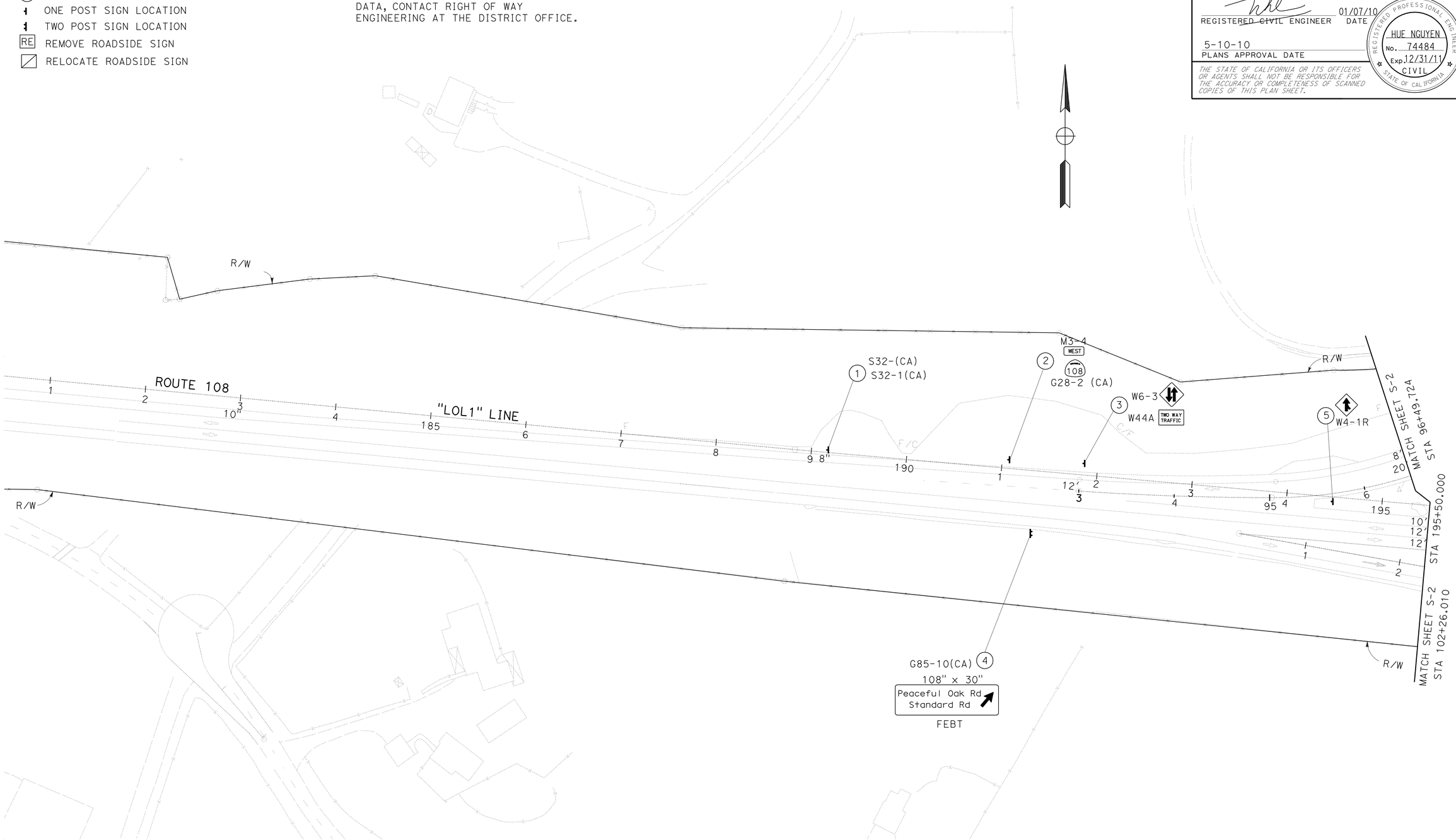

THIS PLAN ACCURATE FOR SIGN WORK ONLY

SIGN PLAN

SCALE: 1" = 50'

S-1

STATE OF CALIFORNIA - DEPARTMENT OF TRANSPORTATION

Caltrans

TRAFFIC DESIGN

FUNCTIONAL SUPERVISOR: MOHAMMED QATAMI

CALCULATED-DESIGNED BY: FERNANDO LOPEZ

CHECKED BY: MAZIN AL-ALI

REVISED BY: HN

DATE REVISED: 01/12/10

LAST REVISION DATE PLOTTED => 12-MAY-2010
01-06-10 TIME PLOTTED => 13:59

Dist	COUNTY	ROUTE	POST MILES TOTAL PROJECT	SHEET No.	TOTAL SHEETS
10	Tuo	108	R4.0/R6.0	129	237

REGISTERED ~~CIVIL~~ ENGINEER 01/07/10 DATE

5-10-10
PLANS APPROVAL DATE

REGISTERED PROFESSIONAL ENGINEER HUE NGUYEN No. 74484 Exp. 12/31/11 CIVIL STATE OF CALIFORNIA

THE STATE OF CALIFORNIA OR ITS OFFICERS OR AGENTS SHALL NOT BE RESPONSIBLE FOR THE ACCURACY OR COMPLETENESS OF SCANNED COPIES OF THIS PLAN SHEET.

NOTE: FOR ACCURATE RIGHT OF WAY AND ACCESS DATA, CONTACT RIGHT OF WAY ENGINEERING AT THE DISTRICT OFFICE.

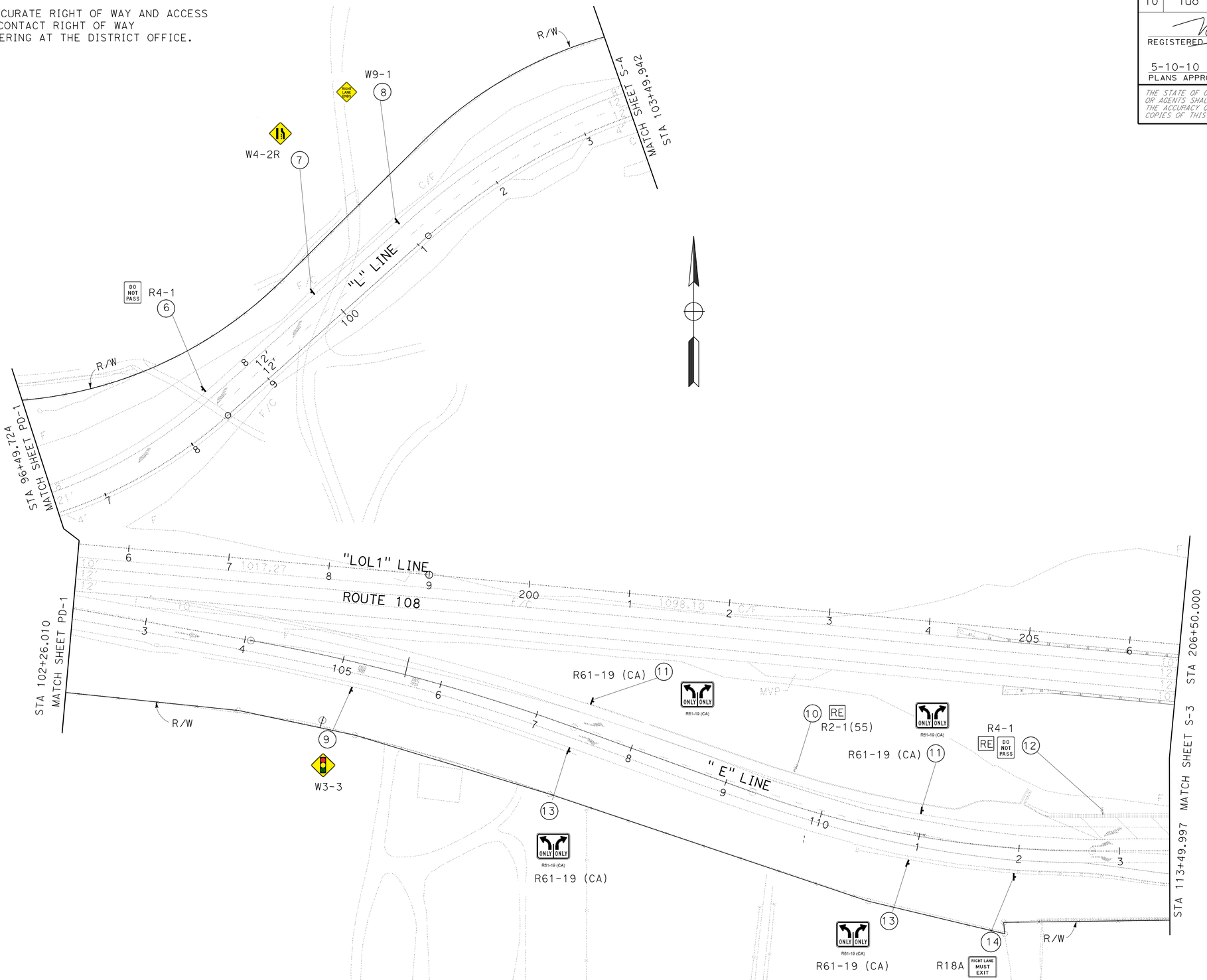

THIS PLAN ACCURATE FOR SIGN WORK ONLY

SCALE: 1" = 50'

SIGN PLAN
S-2

CALCULATED-DESIGNED BY	FERNANDO LOPEZ
CHECKED BY	MAZIN AL-ALI
REVISED BY	HN
DATE REVISED	01/12/10
FUNCTIONAL SUPERVISOR	MOHAMMED QATAMI

STATE OF CALIFORNIA - DEPARTMENT OF TRANSPORTATION
Caltrans
TRAFFIC DESIGN

LAST REVISION 01-13-10 | DATE PLOTTED => 12-MAY-2010 | TIME PLOTTED => 13:59

Dist	COUNTY	ROUTE	POST MILES TOTAL PROJECT	SHEET No.	TOTAL SHEETS
10	Tuo	108	R4.0/R6.0	130	237

REGISTERED ~~CIVIL~~ ENGINEER 01/07/10 DATE

5-10-10
PLANS APPROVAL DATE

REGISTERED PROFESSIONAL ENGINEER HUE NGUYEN No. 74484 Exp. 12/31/11 CIVIL STATE OF CALIFORNIA

THE STATE OF CALIFORNIA OR ITS OFFICERS OR AGENTS SHALL NOT BE RESPONSIBLE FOR THE ACCURACY OR COMPLETENESS OF SCANNED COPIES OF THIS PLAN SHEET.

NOTE: FOR ACCURATE RIGHT OF WAY AND ACCESS DATA, CONTACT RIGHT OF WAY ENGINEERING AT THE DISTRICT OFFICE.

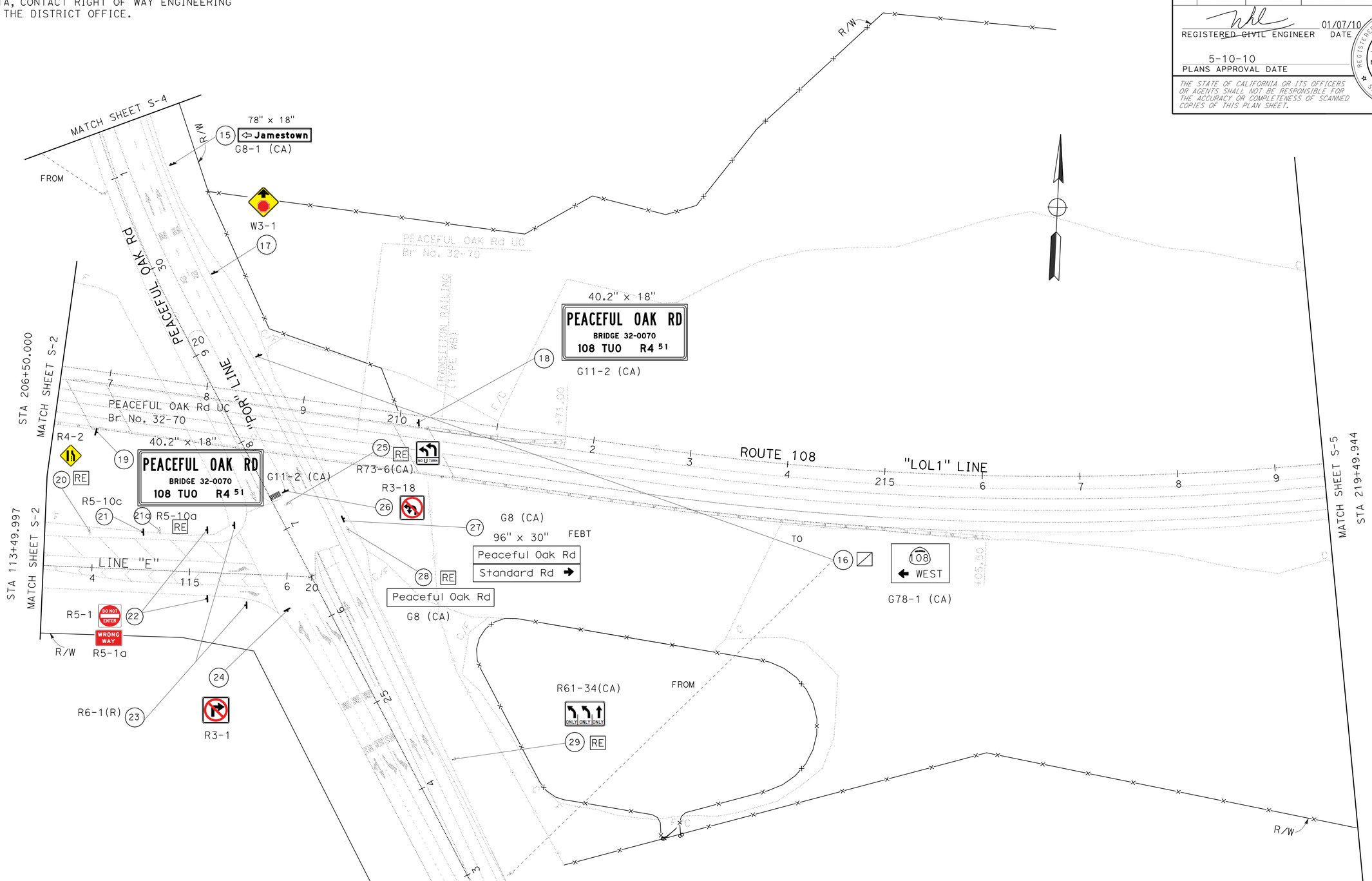

THIS PLAN ACCURATE FOR SIGN WORK ONLY

SCALE: 1" = 50'

SIGN PLAN
S-3

CALCULATED-DESIGNED BY	HN	REVISED BY	FERNANDO LOPEZ
CHECKED BY	01/12/10	DATE REVISED	MAZIN AL-ALI

FUNCTIONAL SUPERVISOR: MOHAMMED QATAMI

STATE OF CALIFORNIA - DEPARTMENT OF TRANSPORTATION

Caltrans® TRAFFIC DESIGN

LAST REVISION 01-06-10 | DATE PLOTTED => 12-MAY-2010 | TIME PLOTTED => 13:59

Dist	COUNTY	ROUTE	POST MILES TOTAL PROJECT	SHEET No.	TOTAL SHEETS
10	Tuo	108	R4.0/R6.0	131	237

REGISTERED CIVIL ENGINEER 01/07/10 DATE

5-10-10
PLANS APPROVAL DATE

REGISTERED PROFESSIONAL ENGINEER HUE NGUYEN No. 74484 Exp. 12/31/11 CIVIL STATE OF CALIFORNIA

THE STATE OF CALIFORNIA OR ITS OFFICERS OR AGENTS SHALL NOT BE RESPONSIBLE FOR THE ACCURACY OR COMPLETENESS OF SCANNED COPIES OF THIS PLAN SHEET.

NOTE: FOR ACCURATE RIGHT OF WAY AND ACCESS DATA, CONTACT RIGHT OF WAY ENGINEERING AT THE DISTRICT OFFICE.

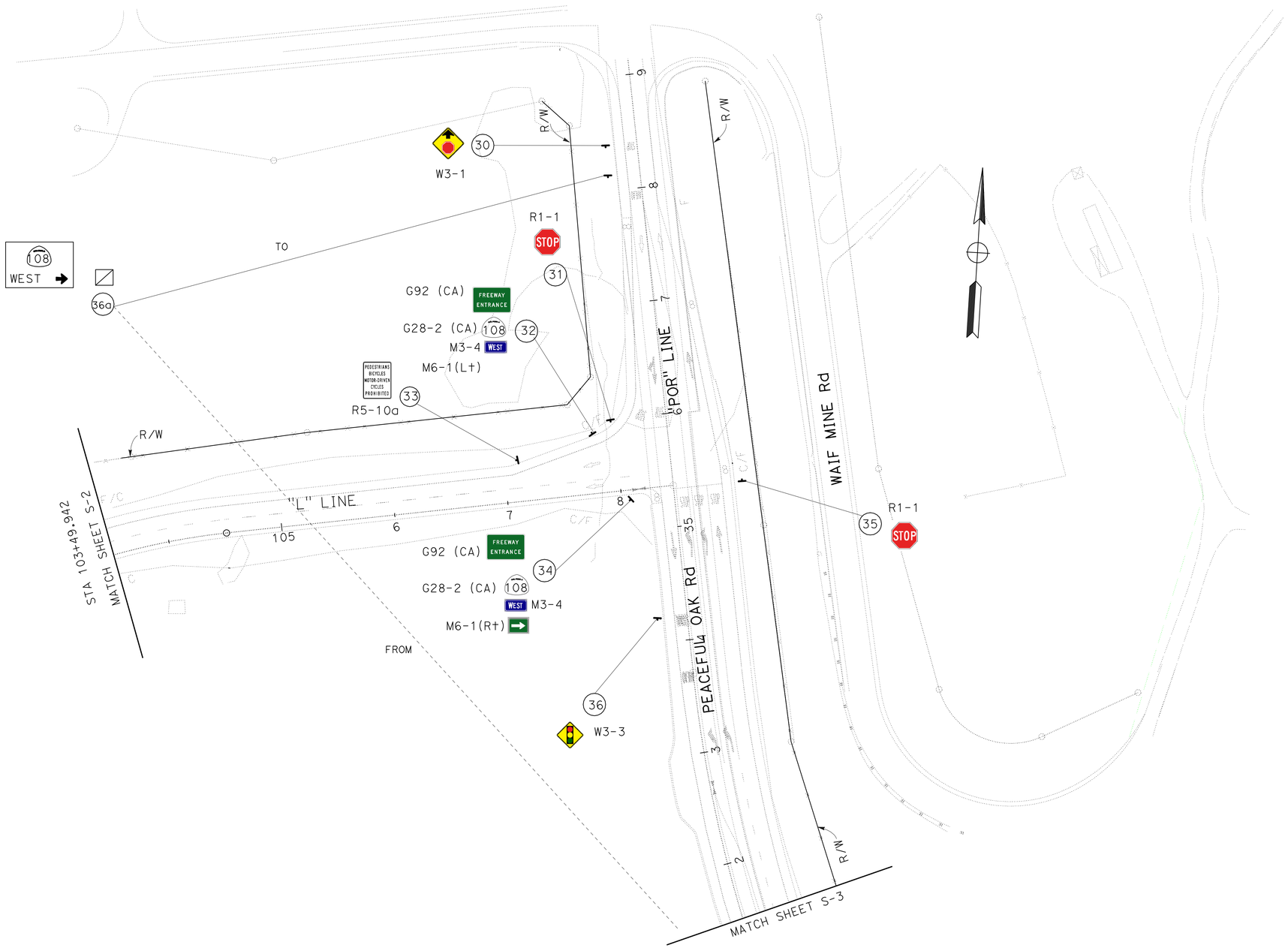

THIS PLAN ACCURATE FOR SIGN WORK ONLY

SIGN PLAN S-4

SCALE: 1" = 50'

STATE OF CALIFORNIA - DEPARTMENT OF TRANSPORTATION
Caltrans
TRAFFIC DESIGN

FUNCTIONAL SUPERVISOR: MOHAMMED QATAMI

CALCULATED-DESIGNED BY: FERNANDO LOPEZ
CHECKED BY: MAZIN AL-ALI

REVISED BY: HN
DATE REVISED: 01/12/10

LAST REVISION 12-16-09
DATE PLOTTED => 12-MAY-2010
TIME PLOTTED => 13:59

Dist	COUNTY	ROUTE	POST MILES TOTAL PROJECT	SHEET No.	TOTAL SHEETS
10	Tuo	108	R4.0/R6.0	132	237

REGISTERED ~~CIVIL~~ ENGINEER 01/07/10 DATE

5-10-10
PLANS APPROVAL DATE

REGISTERED PROFESSIONAL ENGINEER
HUE NGUYEN
No. 74484
Exp. 12/31/11
CIVIL
STATE OF CALIFORNIA

THE STATE OF CALIFORNIA OR ITS OFFICERS OR AGENTS SHALL NOT BE RESPONSIBLE FOR THE ACCURACY OR COMPLETENESS OF SCANNED COPIES OF THIS PLAN SHEET.

NOTE: FOR ACCURATE RIGHT OF WAY AND ACCESS DATA, CONTACT RIGHT OF WAY ENGINEERING AT THE DISTRICT OFFICE.

THIS PLAN ACCURATE FOR SIGN WORK ONLY

SIGN PLAN

SCALE: 1" = 50'

S-5

REVISED BY	DATE REVISED
HN	01/12/10

CALCULATED-DESIGNED BY: FERNANDO LOPEZ
CHECKED BY: MAZIN AL-ALI

FUNCTIONAL SUPERVISOR: MOHAMMED QATAMI

STATE OF CALIFORNIA - DEPARTMENT OF TRANSPORTATION
Caltrans
TRAFFIC DESIGN

LAST REVISION 01-13-10 | DATE PLOTTED => 12-MAY-2010 | TIME PLOTTED => 13:59

BORDER LAST REVISED 4/11/2008 | RELATIVE BORDER SCALE IS IN INCHES 0 1 2 3 | USERNAME => trmikesl | DGN FILE => a34042oa005.dgn | CU 06385 | EA 340421

Dist	COUNTY	ROUTE	POST MILES TOTAL PROJECT	SHEET No.	TOTAL SHEETS
10	Tuo	108	R4.0/R6.0	133	237

REGISTERED CIVIL ENGINEER 01/07/10 DATE

5-10-10
PLANS APPROVAL DATE

REGISTERED PROFESSIONAL ENGINEER HUE NGUYEN No. 74484 Exp 12/31/11 CIVIL STATE OF CALIFORNIA

THE STATE OF CALIFORNIA OR ITS OFFICERS OR AGENTS SHALL NOT BE RESPONSIBLE FOR THE ACCURACY OR COMPLETENESS OF SCANNED COPIES OF THIS PLAN SHEET.

NOTE: FOR ACCURATE RIGHT OF WAY AND ACCESS DATA, CONTACT RIGHT OF WAY ENGINEERING AT THE DISTRICT OFFICE.

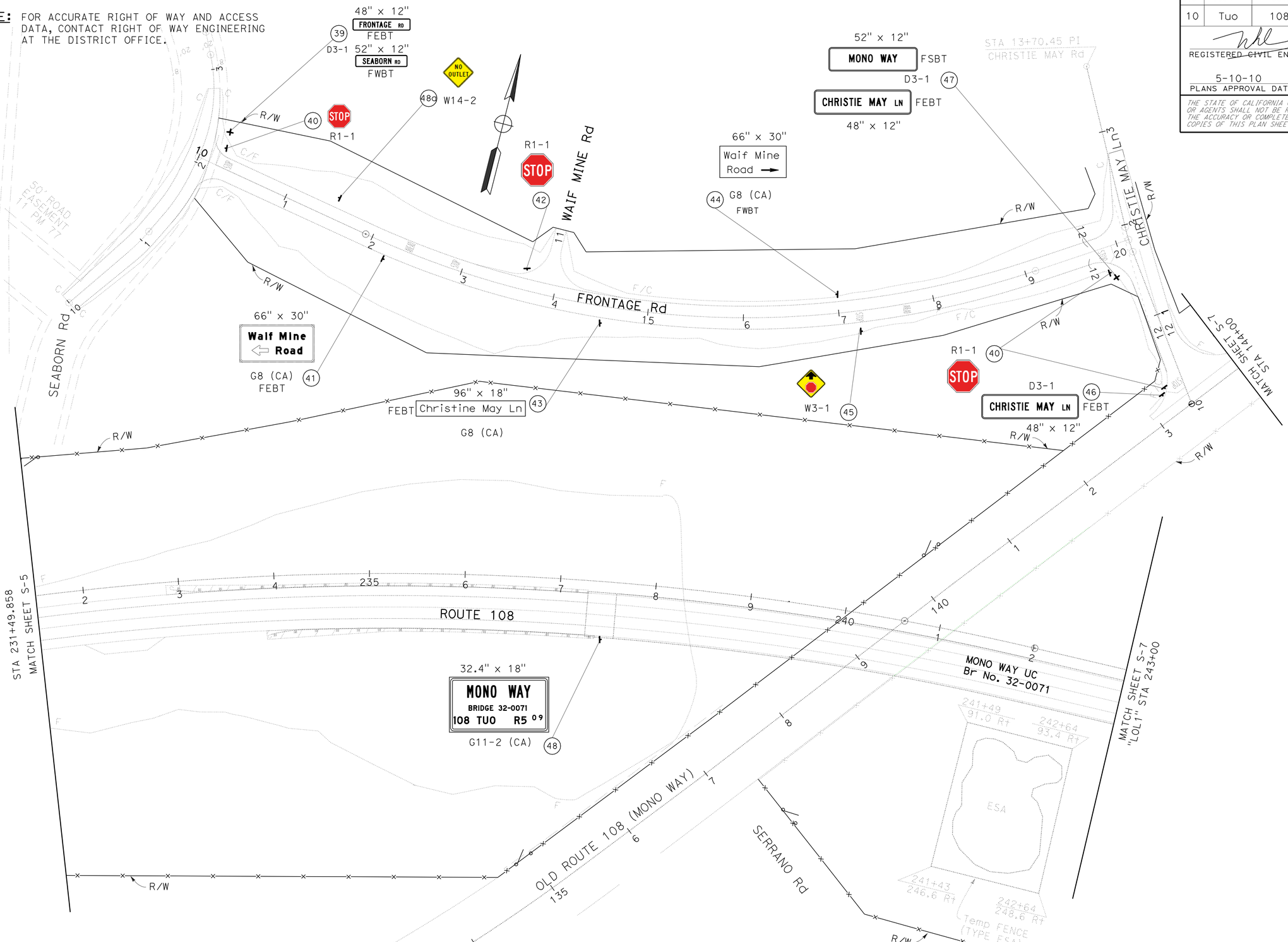

THIS PLAN ACCURATE FOR SIGN WORK ONLY

SIGN PLAN S-6

SCALE: 1" = 50'

REVISED BY	HN
DATE REVISED	01/12/10
FERNANDO LOPEZ	
MAZIN AL-ALI	
CALCULATED-DESIGNED BY	
CHECKED BY	
FUNCTIONAL SUPERVISOR	
MOHAMMED QATAMI	

STATE OF CALIFORNIA - DEPARTMENT OF TRANSPORTATION
Caltrans
TRAFFIC DESIGN

LAST REVISION 12-17-09
DATE PLOTTED => 12-MAY-2010
TIME PLOTTED => 13:59

Dist	COUNTY	ROUTE	POST MILES TOTAL PROJECT	SHEET No.	TOTAL SHEETS
10	Tuo	108	R4.0/R6.0	134	237

REGISTERED CIVIL ENGINEER 01/07/10 DATE

5-10-10
PLANS APPROVAL DATE

REGISTERED PROFESSIONAL ENGINEER HUE NGUYEN No. 74484 Exp. 12/31/11 CIVIL STATE OF CALIFORNIA

THE STATE OF CALIFORNIA OR ITS OFFICERS OR AGENTS SHALL NOT BE RESPONSIBLE FOR THE ACCURACY OR COMPLETENESS OF SCANNED COPIES OF THIS PLAN SHEET.

NOTE: FOR ACCURATE RIGHT OF WAY AND ACCESS DATA, CONTACT RIGHT OF WAY ENGINEERING AT THE DISTRICT OFFICE.

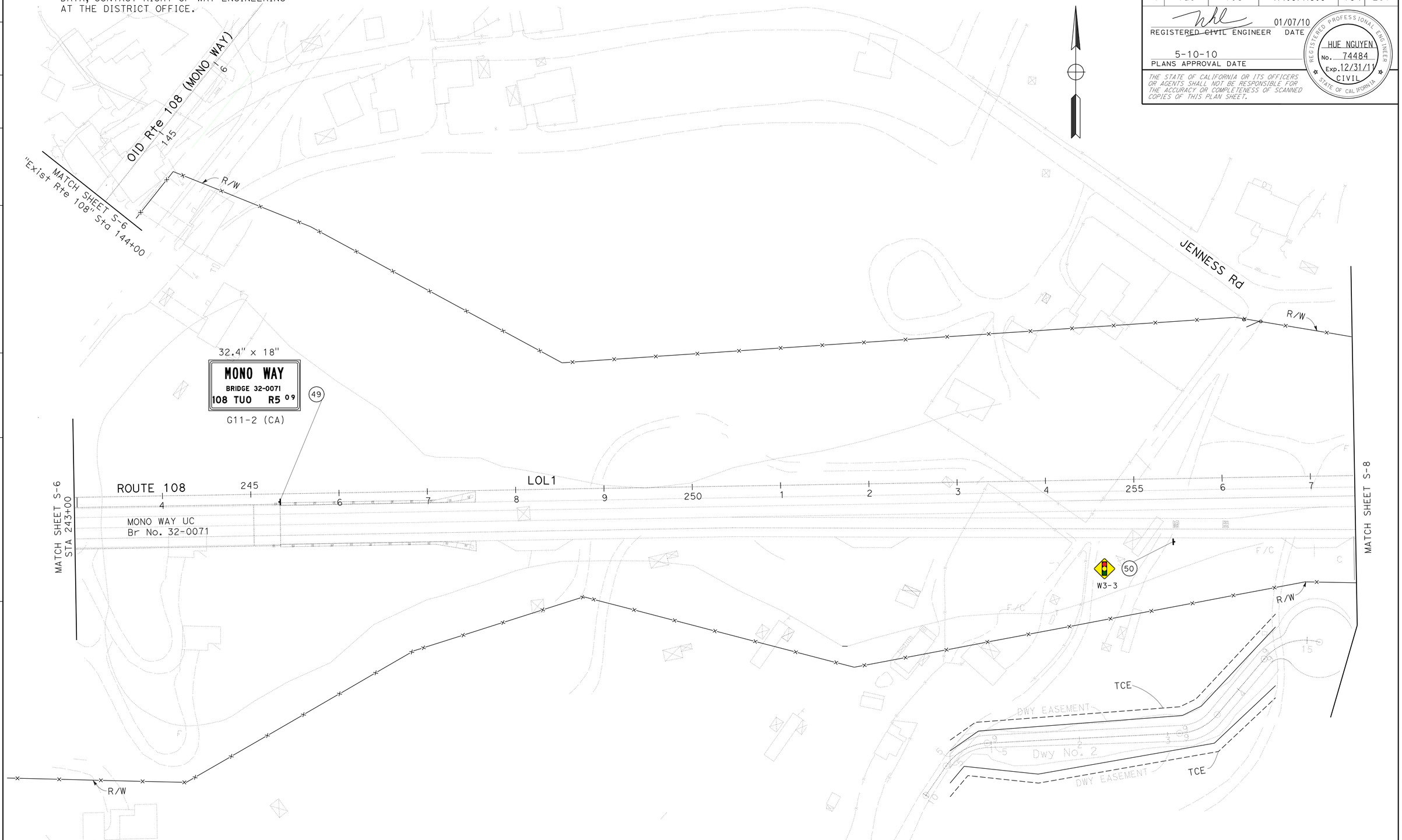

THIS PLAN ACCURATE FOR SIGN WORK ONLY

SIGN PLAN S-7

SCALE: 1" = 50'

STATE OF CALIFORNIA - DEPARTMENT OF TRANSPORTATION
Caltrans
TRAFFIC DESIGN

FUNCTIONAL SUPERVISOR: MOHAMMED QATAMI
CALCULATED-DESIGNED BY: FERNANDO LOPEZ
CHECKED BY: MAZIN AL-ALI
REVISED BY: HN
DATE REVISED: 01/12/10

LAST REVISION 01-13-10 | DATE PLOTTED => 12-MAY-2010 | TIME PLOTTED => 13:59

Dist	COUNTY	ROUTE	POST MILES TOTAL PROJECT	SHEET No.	TOTAL SHEETS
10	Tuo	108	R4.0/R6.0	135	237

REGISTERED ~~CIVIL~~ ENGINEER 01/07/10 DATE

5-10-10
PLANS APPROVAL DATE

REGISTERED PROFESSIONAL ENGINEER
HUE NGUYEN
No. 74484
Exp. 12/31/11
CIVIL
STATE OF CALIFORNIA

THE STATE OF CALIFORNIA OR ITS OFFICERS OR AGENTS SHALL NOT BE RESPONSIBLE FOR THE ACCURACY OR COMPLETENESS OF SCANNED COPIES OF THIS PLAN SHEET.

NOTE: FOR ACCURATE RIGHT OF WAY AND ACCESS DATA, CONTACT RIGHT OF WAY ENGINEERING AT THE DISTRICT OFFICE.

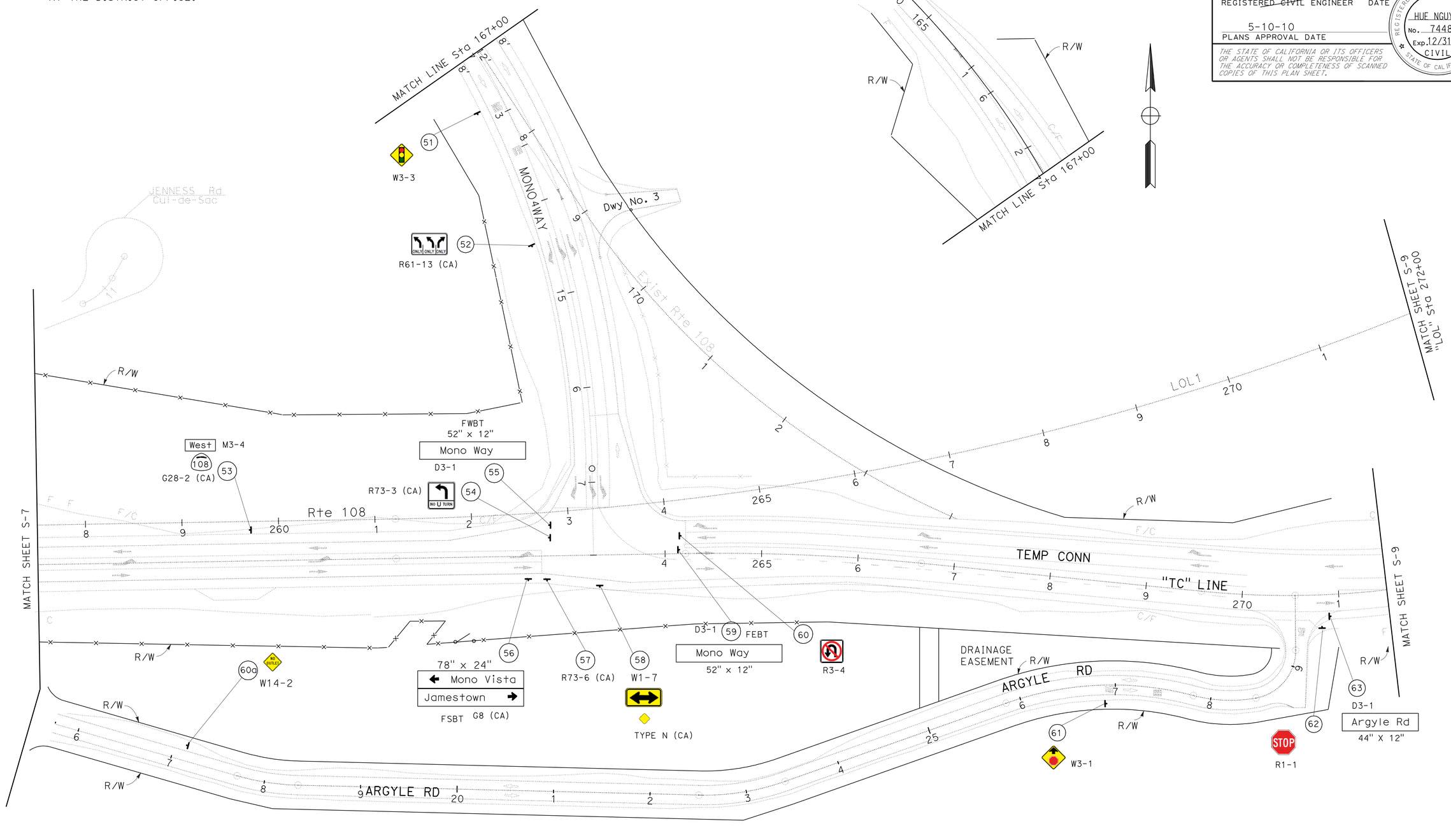

SCALE: 1" = 50'

SIGN PLAN

S-8

STATE OF CALIFORNIA - DEPARTMENT OF TRANSPORTATION	Caltrans
TRAFFIC DESIGN	
FUNCTIONAL SUPERVISOR	MOHAMMED QATAMI
CALCULATED-DESIGNED BY	FERNANDO LOPEZ
CHECKED BY	MAZIN AL-ALI
REVISED BY	HN
DATE REVISED	01/12/10

LAST REVISION 12-21-09 | DATE PLOTTED => 12-MAY-2010 | TIME PLOTTED => 13:59

Dist	COUNTY	ROUTE	POST MILES TOTAL PROJECT	SHEET No.	TOTAL SHEETS
10	Tuo	108	R4.0/R6.0	136	237

REGISTERED ~~CIVIL~~ ENGINEER 01/07/10 DATE

5-10-10
PLANS APPROVAL DATE

REGISTERED PROFESSIONAL ENGINEER
HUE NGUYEN
No. 74484
Exp. 12/31/11
CIVIL
STATE OF CALIFORNIA

THE STATE OF CALIFORNIA OR ITS OFFICERS OR AGENTS SHALL NOT BE RESPONSIBLE FOR THE ACCURACY OR COMPLETENESS OF SCANNED COPIES OF THIS PLAN SHEET.

NOTE: FOR ACCURATE RIGHT OF WAY AND ACCESS DATA, CONTACT RIGHT OF WAY ENGINEERING AT THE DISTRICT OFFICE.

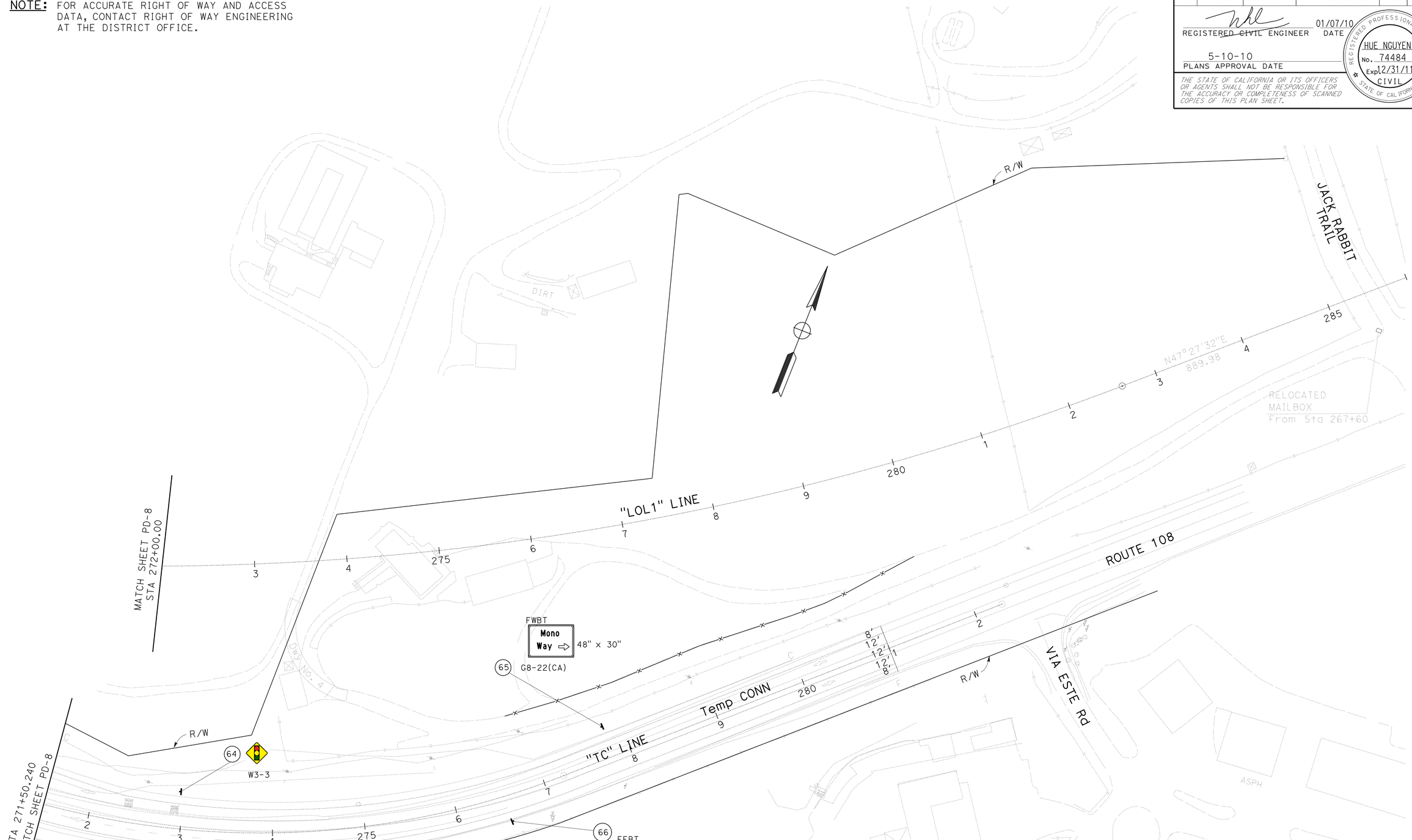

THIS PLAN ACCURATE FOR SIGN WORK ONLY

SIGN PLAN S-9

SCALE: 1" = 50'

REVISED BY	DATE REVISED
HN	01/12/10

FERNANDO LOPEZ
MAZIN AL-ALI

CALCULATED-DESIGNED BY
CHECKED BY

FUNCTIONAL SUPERVISOR
MOHAMMED QATAMI

STATE OF CALIFORNIA - DEPARTMENT OF TRANSPORTATION
Caltrans
TRAFFIC DESIGN

LAST REVISION 01-13-10
DATE PLOTTED => 12-MAY-2010
TIME PLOTTED => 13:59

Dist	COUNTY	ROUTE	POST MILES TOTAL PROJECT	SHEET No.	TOTAL SHEETS
10	Tuo	108	R4.0/R6.0	137	237

REGISTERED CIVIL ENGINEER 01/07/10 DATE

5-10-10
PLANS APPROVAL DATE

REGISTERED PROFESSIONAL ENGINEER HUE NGUYEN No. 74484 Exp. 12/31/11 CIVIL STATE OF CALIFORNIA

THE STATE OF CALIFORNIA OR ITS OFFICERS OR AGENTS SHALL NOT BE RESPONSIBLE FOR THE ACCURACY OR COMPLETENESS OF SCANNED COPIES OF THIS PLAN SHEET.

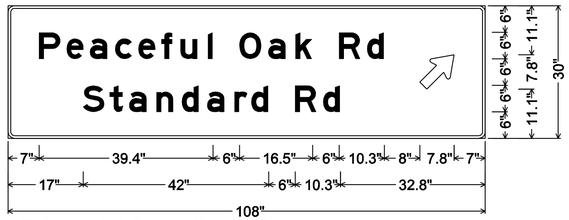

1.5" Radius, 0.6" Border, White on Green;
[Peaceful Oak Rd] E; [Standard Rd] E;
Standard Arrow Custom 9.9" X 6.1" 45°;

(4) G8-1 (CA) FEBT (S-1)

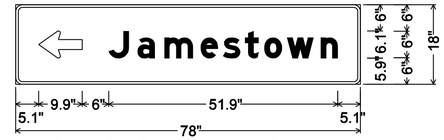

1.5" Radius, 0.6" Border, White on Green;
Standard Arrow Custom 9.9" X 6.1" 180°;
[Jamestown] E Mod;

(15) G8-1 (CA) FEBT (S-3)

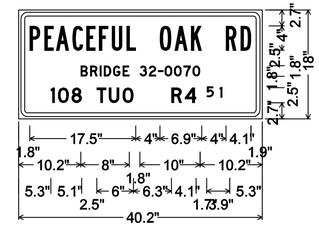

1.5" Radius, 0.6" Border, 0.4" Indent, White on White;
[PEACEFUL OAK RD] Black B;
[BRIDGE 32-0070] Black D;
[108 TUO] Black D;
[R4] Black D; [76] Black D;

(18) G11-2 (CA) FWBT

(19) G11-2 (CA) FEBT

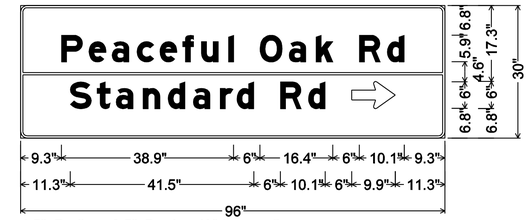

1.5" Radius, 0.5" Border, White on Green;
[Peaceful Oak Rd] E Mod; [Standard Rd] E Mod;
Standard Arrow Custom 9.9" X 6.1" 0°;

(27) G8 (CA) FEBT (S-3)

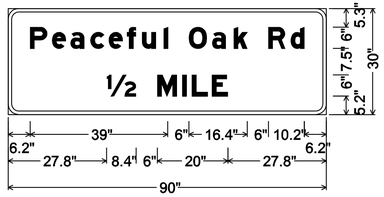

OH-30-90(L);
3.0" Radius, 1.0" Border, White on Green;
[Peaceful Oak Rd] E Mod;
[½ MILE] E Mod;

(37) G83-1 (CA) FWBT (S-5)

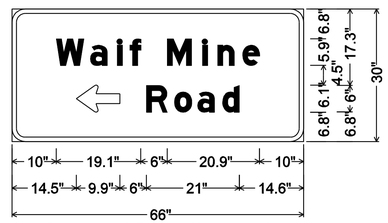

3.0" Radius, 1.0" Border, White on Green;
[Waif Mine] E Mod;
[Road] E Mod;
Standard Arrow Custom 9.9" X 6.1" 180°;

(41) G8 (CA) FEBT (S-6)

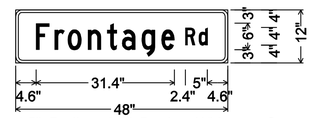

1.5" Radius, 0.6" Border, White on Green;
[FrontageRd] C;

(39) D3-1 FEBT (S-6)

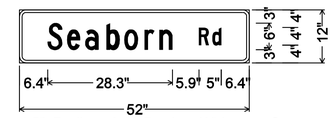

1.5" Radius, 0.6" Border, White on Green;
[Seaborn Rd] C;

(39) D3-1 FWBT (S-6)

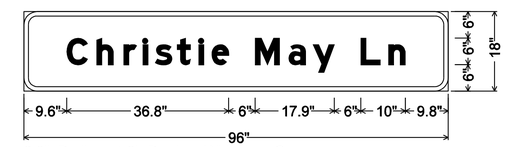

3.0" Radius, 1.0" Border, White on Green;
[Christie May Ln] E Mod;

(43) G8 (CA) FEBT (S-6)

3.0" Radius, 1.0" Border, White on Green;
[Waif Mine] E Mod; [Road] E Mod;
Standard Arrow Custom 9.9" X 6.1" 0°;

(44) G8 (CA) FWBT (S-6)

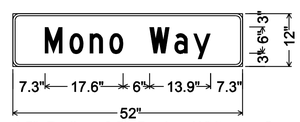

1.5" Radius, 0.5" Border, White on Green;
[Mono Way] C;

(47) D3-1 FSBT (S-6)

(55) D3-1 FWBT (S-8)

(59) D3-1 FEBT (S-8)

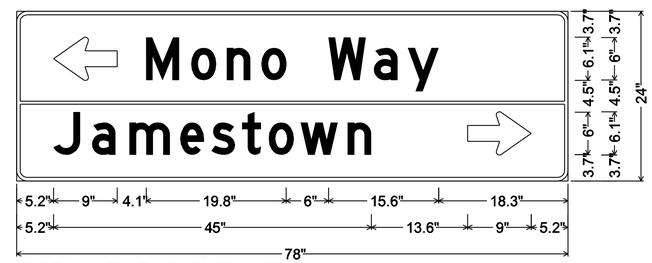

1.5" Radius, 0.5" Border, White on Green;
Standard Arrow Custom 9.0" X 6.1" 180°; [Mono Way] D; [Jamestown] D;
Standard Arrow Custom 9.0" X 6.1" 0°;

(56) G8 (CA) FSBT (S-8)

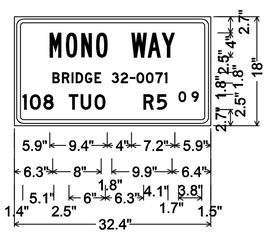

[MONO WAY] Black B;
1.5" Radius, 0.6" Border, 0.4" Indent, White on White;
[BRIDGE 32-0070] Black D;
[108 TUO] Black D;
[R4] Black D;
[76] Black D;

(48) G11-2 (CA) FEBT

(49) G11-2 (CA) FWBT

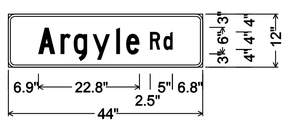

1.5" Radius, 0.5" Border, White on Green;
[ArgyleRd] C;

(63) D3-1 (CA) FEBT (S-8)

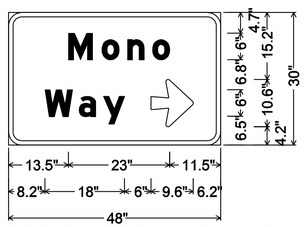

3.0" Radius, 1.0" Border, White on Green;
[Mono] E Mod;
[Way] E Mod;
Arrow 6UC-2LH - 9.6" 0°;

(65) G8-22 (CA) FWBT (S-9)

3.0" Radius, 1.0" Border, White on Green;
[Via Este] E Mod;
[Road] E Mod;
Standard Arrow Custom 9.9" X 6.1" 0°;

(66) G8-22 (CA) FEBT (S-9)

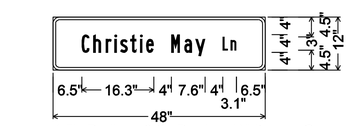

1.5" Radius, 0.6" Border, White on Green;
[Christie May Ln] B;

(46) D3-1 FEBT (S-6)

(47) D3-1 FEBT (S-6)

SIGN DETAILS

NO SCALE

SD-1

REVISED BY	HN
DATE REVISED	01/12/10
CALCULATED-DESIGNED BY	FERNANDO LOPEZ
CHECKED BY	MAZIN AL-ALI
FUNCTIONAL SUPERVISOR	MOHAMMED QATAMI

STATE OF CALIFORNIA - DEPARTMENT OF TRANSPORTATION
Caltrans®
TRAFFIC DESIGN

LAST REVISION 01-06-10
DATE PLOTTED => 20-JUL-2011
TIME PLOTTED => 06:34

Dist	COUNTY	ROUTE	POST MILES TOTAL PROJECT	SHEET No.	TOTAL SHEETS
10	Tuo	108	R4.0/R6.0	138	237

REGISTERED CIVIL ENGINEER 01/07/10 DATE

5-10-10
PLANS APPROVAL DATE

REGISTERED PROFESSIONAL ENGINEER HUE NGUYEN No. 74484 Exp. 12/31/11 CIVIL STATE OF CALIFORNIA

THE STATE OF CALIFORNIA OR ITS OFFICERS OR AGENTS SHALL NOT BE RESPONSIBLE FOR THE ACCURACY OR COMPLETENESS OF SCANNED COPIES OF THIS PLAN SHEET.

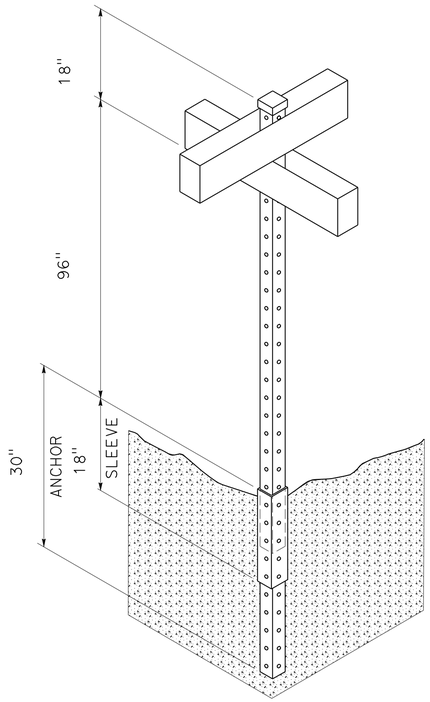

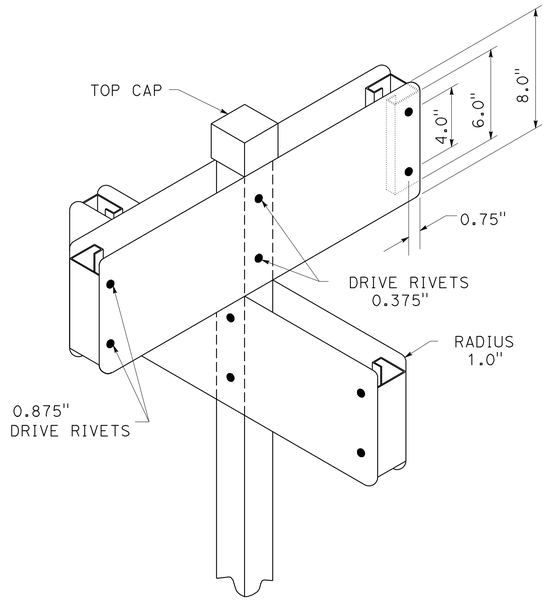

STREET NAME SIGN INSTALLATION

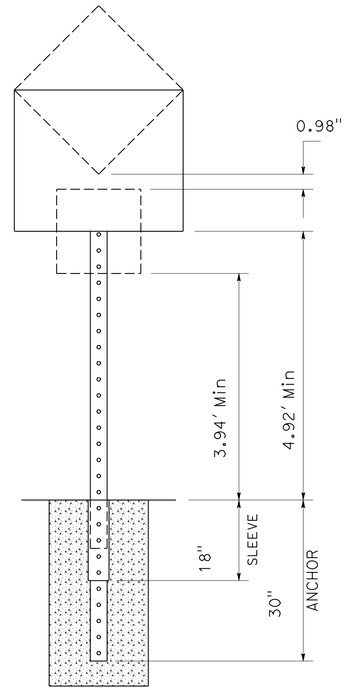

TYPICAL INSTALLATION

NOTES:
1. POST SHALL BE 2.0 in x 2.0 in x 10.0' 10 GAUGE, HOT-DIPPED GALVANIZED STEEL TUBING. POST MAY BE TELESPAR 20F12-P GR OR EQUIVALENT.
2. POST SHALL BE ANCHORED AS SHOWN. DEPTH OF ANCHOR MAY BE ADJUSTED BY THE ENGINEER. ANCHOR SHALL BE 2.2 in x 2.2 in x 2.5' 3.0" FOR SAND AREA, HOT-DIPPED GALVANIZED STEEL TUBING. ANCHOR MAY BE TELESPAR 22F12A2.5 PG OR EQUIVALENT. SLEEVE SHALL BE 2.5 in x 2.5 in x 1.5' HOT-DIPPED GALVANIZED STEEL TUBING. SLEEVE MAY BE TELESPAR 24F12A PG OR EQUIVALENT.
3. PLATES SHALL BE RIVETED ONTO THE POST AS SHOWN. PLATES SHALL BE RIVETED ON BOTH ENDS TO A 6" SECTION OF 1.625" ALUMINUM CHANNEL. CHANNEL MAY BE TELESPAR 5.98" - P-1000 OR EQUIVALENT.

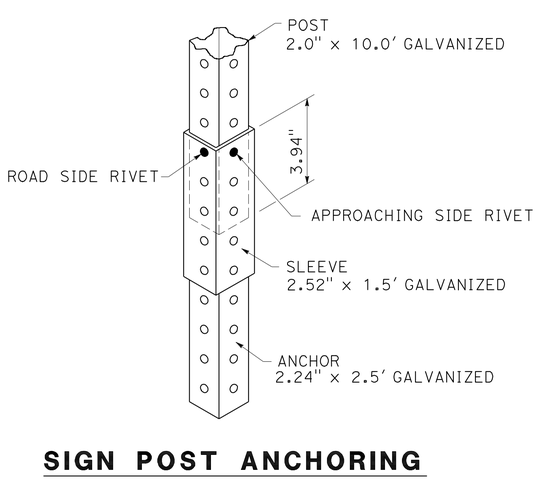

SIGN POST ANCHORING

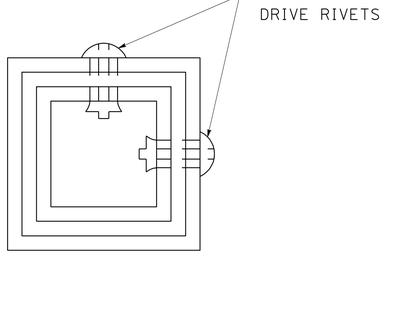

THIS PLAN ACCURATE FOR SIGN WORK ONLY

SIGN DETAILS (ROADSIDE SIGN - STEEL POST)

NO SCALE

SD-2

REVISED BY	DATE REVISED
HN	01/12/10

FERNANDO LOPEZ — CALCULATED-DESIGNED BY
MAZIN AL-ALI — CHECKED BY
MOHAMMED QATAMI — FUNCTIONAL SUPERVISOR

STATE OF CALIFORNIA - DEPARTMENT OF TRANSPORTATION
Caltrans
TRAFFIC DESIGN

LAST REVISION 01-13-10 | DATE PLOTTED => 12-MAY-2010 | TIME PLOTTED => 07:54

NOTES: (1) EXACT LOCATION OF ROADSIDE SIGNS TO BE DETERMINED BY THE ENGINEER.
(2) CALIFORNIA SIGN CODES ARE DESIGNATED BY (CA), OTHERWISE FEDERAL MUTCD SIGN ARE SHOWN.
(3) *SEE SIGN DETAILS SHEET FOR ROADSIDE SIGN (STEEL POST).

ROADSIDE SIGN QUANTITIES

SHEET No.	SIGN No.	SIGN CODE	PANEL SIZE	POST SIZE	ROADSIDE SIGN RELOCATE (EA)	ROADSIDE SIGN *STEEL POST (EA)	ROADSIDE SIGN ONE POST (EA)	ROADSIDE SIGN TWO POST (EA)	ROADSIDE SIGN REMOVE (EA)	TITLE OF SIGN	FURNISH SINGLE SHEET ALUMINUM SIGN FRAMED 0.063" (SQFT)	FRAMED 0.080" (SQFT)	UNFRAMED 0.063" (SQFT)	UNFRAMED 0.080" (SQFT)	SINGLE FACED	DOUBLE FACED	BACKGROUND SHEETING COLOR	BACKGROUND RETROREFLECTIVITY ASTM TYPE	LEGEND SHEETING COLOR	LEGEND RETROREFLECTIVITY ASTM TYPE	GRAFFITI FLOW STANDARD	GRAFFITI FLOW PREMIUM	REMARKS
S-1	1	S32 (CA)	36" x 30"	4" x 4"			1			Adopt - A - Highway			7.50		X		BLUE	III	WHITE	III		X	
		S32-1 (CA)	10" x 12"							Adopt - A - Highway Symbol			0.83		X		BLUE	III	WHITE	III		X	
	2	M3-4	30" x 15"	4" x 4"			1			WEST			3.12		X		GREEN	III	WHITE	III		X	
		G28-2(CA)	28" x 25"							State Route Marker (108)			4.86		X		GREEN	III	WHITE	III		X	
	3	W6-3	36" x 36"	4" x 6"			1			Two-Way Traffic			9.00		X		YELLOW	III	BLACK			X	
		W44A (CA)	36" x 24"							TWO-WAY TRAFFIC Plaque			6.00		X		YELLOW	VII	BLACK			X	
	4	G85-10(CA)	108" x 30"	4" x 6"				1		Peaceful Oak Rd; Standard Rd-->		22.5			X		GREEN	VII	WHITE	VII		X	
	5	W4-1R	36" x 36"	4" x 6"			1			Merge			9.00		X		YELLOW	VII	BLACK			X	
S-2	6	R4-1	36" x 48"	4" x 6"			1			Do Not Pass				12.00	X		WHITE	VII	BLACK			X	
	7	W4-2R	36" x 36"	4" x 6"			1			Lane Ends			9.00		X		YELLOW	III	BLACK			X	
	8	W9-1	36" x 36"	4" x 6"			1			Right Lane Ends			9.00		X		YELLOW	VII	BLACK			X	
	9	W3-3	36" x 36"	4" x 6"			1			Signal Ahead			9.00		X		YELLOW	VII	B/R/G	VII		X	
	10	R2-1 (55)							1	Speed Limit (55)													
	11	R61-19(CA)	48" x 36"	4" x 6"			2			Intersection Lane Control				24.00	X		WHITE	VII	BLACK			X	
	12	R4-1							1	Do Not Pass													
	13	R61-19(CA)	48" x 36"	4" x 6"			2			Intersection Lane Control				24.00	X		WHITE	III	BLACK			X	
	14	R18A	36" x 36"	4" x 6"			1			Right Lane Must Exist			9.00		X		WHITE	VII	BLACK			X	
S-3	15	G8-1 (CA)	78" x 18"	4" x 6"				1		<--- Jamestown	9.75				X		GREEN	VII	WHITE	VII		X	
	16	G78-1 (CA)			1					MARKER (108) WEST----->													
	17	W3-1	36" x 36"	4" x 6"		1				Stop Ahead			9.00		X		YELLOW	VII	B/R/G	VII		X	
	18	G11-2(CA)	36" x 18"	4" x 6"			1			Peaceful Oak Rd Bridge 32-0070			4.50		X		WHITE	VII	BLACK			X	
	19	G11-2(CA)	36" x 18"	4" x 6"			1			Peaceful Oak Rd Bridge 32-0070			4.50		X		WHITE	VII	BLACK			X	
	20	W4-2							1	Right Lane Ends													
	21	R5-10c	12" x 24"	4" x 6"			1			Pedestrians prohibited			2.00		X		BLACK		WHITE	VII		X	
	21a	R5-10a							1														
	22	R5-1	36" x 36"	4" x 6"			2			Do Not Enter			18.00		X		RED	VII	WHITE	VII		X	
		R5-1a	36" x 24"							Wrong Way			12.00		X		RED	VII	WHITE	VII		X	
	23	R6-1(R)	36" x 12"	4" x 6"			2			One Way			6.00		X		BLACK		WHITE	VII		X	
	24	R3-1	30" x 30"	4" x 6"			1			Right Turn Prohibition			6.25		X		WHITE	VII	R/B	VII		X	SEE ELECTRICAL PLANS
	25	R73-6 (CA)							1	Intersection Lane Control					X								
	26	R3-18	30" x 30"							No U-Turn/No Left Turn			6.25		X		WHITE	VII	R/B	VII		X	SEE ELECTRICAL PLANS
	27	G8 (CA)	96" x 30"	4" x 6"				1		Peaceful Oak Rd; Standard Rd ---->		20.00			X		GREEN	VII	WHITE	VII		X	
	28	G8 (CA)							1	Peaceful Oak Rd													
	29	R61-34(CA)							1	Intersection Lane Control													
S-4	30	W3-1	36" x 36"	4" x 6"		1				Stop Ahead			9.00		X		YELLOW	VII	B/R/G	VII		X	
	31	R1-1	36" x 36"	4" x 6"		1				STOP			9.00		X		RED	VII	WHITE	VII		X	
	32	G92 (CA)	48" x 30"	6" x 6"			1			FREEWAY ENTRANCE				10.00	X		GREEN	VII	WHITE	VII		X	
		G28-2(108)	28" x 25"							State Route Marker (108)			4.86		X		GREEN	VII	WHITE	VII		X	SEE ELECTRICAL PLANS
		M3-4	30" x 15"							WEST			3.12		X		GREEN	III	WHITE	VII		X	
		M6-1(Lt)	24" x 12"							Directional Arrow Auxiliary ---->			2.00		X		GREEN	III	WHITE	VII		X	
	33	R5-10a	30" x 36"	4" x 4"			1			Pedestrians Bicycles Motor-Driven Cycles Prohibited			7.50		X		WHITE	VII	BLACK	VII		X	
	34	G92 (CA)	48" x 30"	6" x 6"			1			FREEWAY ENTRANCE				10.00	X		GREEN	VII	WHITE	VII		X	
		G28-2(108)	28" x 25"							State Route Marker (108)			4.86		X		GREEN	VII	WHITE	VII		X	
		M3-4	30" x 15"							WEST			3.12		X		GREEN	VII	WHITE	VII		X	
		M6-1(Rt)	24" x 12"							Directional Arrow Auxiliary ---->			2.00		X		GREEN	VII	WHITE	VII		X	
	35	R1-1	36" x 36"	4" x 6"		1				STOP			9.00		X		RED	VII	WHITE	VII		X	
	36	W3-3	36" x 36"	4" x 6"		1				Signal Ahead			9.00		X		YELLOW	VII	B/R/G	VII		X	
SUB-TOTAL					1	5	22	3	7		9.75	42.50	207.15	100.0									

Dist	COUNTY	ROUTE	POST MILES TOTAL PROJECT	SHEET No.	TOTAL SHEETS
10	Tuo	108	R4.0/R6.0	139	237

REGISTERED CIVIL ENGINEER 01/07/10 DATE

5-10-10
PLANS APPROVAL DATE

REGISTERED PROFESSIONAL ENGINEER HUE NGUYEN No. 74484 Exp. 12/31/11 CIVIL STATE OF CALIFORNIA

THE STATE OF CALIFORNIA OR ITS OFFICERS OR AGENTS SHALL NOT BE RESPONSIBLE FOR THE ACCURACY OR COMPLETENESS OF SCANNED COPIES OF THIS PLAN SHEET.

REVISED BY HN
DATE REVISED 01/12/10
FERNANDO LOPEZ
MAZIN AL-ALI
CALCULATED-DESIGNED BY
CHECKED BY
FUNCTIONAL SUPERVISOR MOHAMMED QATAMI

STATE OF CALIFORNIA - DEPARTMENT OF TRANSPORTATION
Caltrans
TRAFFIC DESIGN

SIGN QUANTITIES
SQ-1

LAST REVISION 01-06-10
DATE PLOTTED => 12-MAY-2010
TIME PLOTTED => 07:54

NOTES: (1) EXACT LOCATION OF ROADSIDE SIGNS TO BE DETERMINED BY THE ENGINEER.
(2) CALIFORNIA SIGN CODES ARE DESIGNATED BY (CA), OTHERWISE FEDERAL MUTCD SIGN ARE SHOWN.
(3) *SEE SIGN DETAILS SHEET FOR ROADSIDE SIGN (STEEL POST).

Dist	COUNTY	ROUTE	POST MILES TOTAL PROJECT	SHEET No.	TOTAL SHEETS
10	Tuo	108	R4.0/R6.0	140	237

REGISTERED ~~CIVIL~~ ENGINEER 01/07/10 DATE

5-10-10
PLANS APPROVAL DATE

REGISTERED PROFESSIONAL ENGINEER HUE NGUYEN No. 74484 Exp 12/31/11 CIVIL STATE OF CALIFORNIA

THE STATE OF CALIFORNIA OR ITS OFFICERS OR AGENTS SHALL NOT BE RESPONSIBLE FOR THE ACCURACY OR COMPLETENESS OF SCANNED COPIES OF THIS PLAN SHEET.

ROADSIDE SIGN QUANTITIES

SHEET No.	SIGN No.	SIGN CODE	PANEL SIZE	POST SIZE	ROADSIDE SIGN: RELOCATE	*STEEL POST	ONE POST	TWO POST	REMOVE	TITLE OF SIGN	SIGN MATERIALS: FURNISH SINGLE SHEET ALUMINUM SIGN: FRAMED 0.063 in	FRAMED 0.080 in	UNFRAMED 0.063 in	UNFRAMED 0.080 in	SINGLE FACED	DOUBLE FACED	BACKGROUND: SHEETING COLOR	RETROREFLECTIVITY ASTM TYPE	LEGEND: SHEETING COLOR	RETROREFLECTIVITY ASTM TYPE	GRAFFITI FLOW: STANDARD	PREMIUM	REMARKS
					EA						SQFT												
S-4	36a	G78-1 (CA)			1					MARKER (108) WEST----->													
S-5	37	G83-1(CA)	90" x 30"	4" x 6"				1		Peaceful Oak Rd ½ MILE		18.75			X		GREEN	VII	WHITE	VII		X	
	38	M3-1	24" x 12"	4" x 4"			1			North			2.00		X		GREEN	VII	WHITE	VII		X	
		G28-2(108)	28" x 25"							State Route Marker (108)			4.86		X		GREEN	VII	WHITE	VII		X	
S-6	39	D3-1	48" x 12"			1				Frontage Rd			8.00			X	GREEN	VII	WHITE	VII		X	
		D3-1	52" x 12"							Seaborn Rd				8.66		X	GREEN	VII	WHITE	VII		X	
	40	R1-1	36" x 36"			3				Stop			27.00		X		RED	VII	WHITE	VII		X	
	41	G8 (CA)	66" x 30"	4" x 6"				1		<----- Waif Mine Road	13.75				X		GREEN	VII	WHITE	VII		X	
	42	R1-1	36" x 36"			1				Stop			9.00		X		RED	VII	WHITE	VII		X	
	43	G8 (CA)	96" x 18"	4" x 6"				1		Christie May Ln		12.00			X		GREEN	VII	WHITE	VII		X	
	44	G8 (CA)	66" x 30"	4" x 6"				1		Waif Mine Road ---->	13.75				X		GREEN	VII	WHITE	VII		X	
	45	W3-1	36" x 36"			1				Stop Ahead			9.00		X		YELLOW	VII	B/R/G	VII		X	
	46	D3-1	48" x 12"	4" x 4"		1				Christie May Ln			4.00			X	GREEN	VII	WHITE	VII		X	
	47	D3-1	52" x 12"			1				Mono Way				8.66		X	GREEN	VII	WHITE	VII		X	
		D3-1	48" x 12"							Christie May Ln			8.00			X	GREEN	VII	WHITE	VII		X	
	48	G11-2(CA)	36" x 18"	4" x 4"			1			Mono Way Undercrossing Bridge 32-0071			4.50		X		WHITE	VII	BLACK			X	
	48a	W14-2	36" x 36"	4" x 6"			1			No Outlet			9.00		X		YELLOW	VII	BLACK			X	
S-7	49	G11-2(CA)	36" x 18"	4" x 4"			1			Mono Way Undercrossing Bridge 32-0071			4.50		X		WHITE	VII	BLACK			X	
	50	W3-3	36" x 36"			1				Signal Ahead			9.00		X		YELLOW	VII	B/R/G	VII		X	
S-8	51	W3-3	36" x 36"			1				Signal Ahead			9.00		X		YELLOW	VII	B/R/G	VII		X	
	52	R61-13(CA)	52" x 34"	4" x 6"			1			Intersection Lane Control				12.28	X		WHITE	III	BLACK			X	
	53	M3-4	30" x 15"	4" x 6"			1			WEST			3.12		X		GREEN	VII	WHITE	VII		X	
		G28-2(CA)	28" x 25"							MARKER (108) WEST----->			4.86		X		GREEN	VII	WHITE	VII		X	
	54	R73-3(CA)	36" x 36"							Intersection Lane Control			9.00		X		WHITE	III	BLACK			X	SEE ELECTRICAL PLANS
	55	D3-1	34" x 14"							Mono Way			6.62			X	GREEN	VII	WHITE	VII		X	SEE ELECTRICAL PLANS
	56	G8 (CA)	78" x 24"							<---- Mono Vista; Jamestown ---->	13.00				X		GREEN	VII	WHITE	VII		X	SEE ELECTRICAL PLANS
	57	R73-6 (CA)	36" x 36"							Intersection Lane Control			9.00		X		WHITE	VII	BLACK			X	SEE ELECTRICAL PLANS
	58	W1-7	48" x 24"	4" x 6"			1			Two Direction Large Arrow				8.00	X		YELLOW	VII	BLACK			X	
		R5-1a	24" x 24"							Object Marker			4.00		X		YELLOW	VII	YELLOW	VII		X	
	59	D3-1	52" x 12"							Mono Way				8.66		X	GREEN	VII	WHITE	VII		X	SEE ELECTRICAL PLANS
	60	R3-4	30" x 30"							U-Turn Prohibited			6.25		X		WHITE	III	R/B	III		X	SEE ELECTRICAL PLANS
	61	W3-1	36" x 36"	4" x 6"			1			Stop Ahead			9.00		X		YELLOW	VII	B/R/G	VII		X	
	62	R1-1	36" x 36"			1				STOP			9.00		X		RED	VII	WHITE	VII		X	
	63	D3-1	44" x 12"			1				Argyle Rd			7.34			X	GREEN	VII	WHITE	VII		X	
	63a	W14-2	36" x 36"	4" x 6"			1			No Outlet			9.00		X		YELLOW	VII	BLACK			X	
S-9	64	W3-3	36" x 36"			1				Signal Ahead			9.00		X		YELLOW	VII	B/R/G	VII		X	
	65	G8-22 (CA)	48" x 30"	4" x 6"			1			Mono Way --->		17.69			X		GREEN	VII	WHITE	VII		X	
	66	G8-22 (CA)	54" x 30"	4" x 6"				1		Via Este Road --->				11.25	X		GREEN	VII	WHITE	VII		X	
SUB-TOTAL					1	13	10	5			40.50	48.44	181.05	57.51									
TOTAL SHEET SQ-1					1	5	22	3	7		9.75	42.50	220.15	100.0									
TOTAL					2	18	32	8	7		50.25	90.94	401.2	157.51									

SIGN QUANTITIES
SQ-2

REVISED BY	DATE REVISED	CALCULATED-DESIGNED BY	CHECKED BY	FUNCTIONAL SUPERVISOR
HN	01/12/10	FERNANDO LOPEZ	MAZIN AL-ALI	MOHAMMED QATAMI

STATE OF CALIFORNIA - DEPARTMENT OF TRANSPORTATION
Caltrans® TRAFFIC DESIGN

LAST REVISION 01-06-10 | DATE PLOTTED => 12-MAY-2010 | TIME PLOTTED => 07:54

Dist	COUNTY	ROUTE	POST MILES TOTAL PROJECT	SHEET No.	TOTAL SHEETS
10	Tuo	108	R4.0/R6.0	141	237

REGISTERED ELECTRICAL ENGINEER DATE 01-14-10

PLANS APPROVAL DATE 5-10-10

REGISTERED PROFESSIONAL ENGINEER ALVARO JAVIER ARAICA No. 15558 Exp. 12/31/11 ELECTRICAL STATE OF CALIFORNIA

THE STATE OF CALIFORNIA OR ITS OFFICERS OR AGENTS SHALL NOT BE RESPONSIBLE FOR THE ACCURACY OR COMPLETENESS OF SCANNED COPIES OF THIS PLAN SHEET.

NOTES: (FOR THIS SHEET ONLY)

1. 120/240 V, 1Ø, 3-WIRE TYPE III-CF SERVICE EQUIPMENT ENCLOSURE WITH THE FOLLOWING CIRCUIT BREAKERS:

CTID No. 10321080004040T

AMPERES	VOLTS	POLES	NAME PLATE	METER	PEC TYPE
100	240	2	MAIN BREAKER	YES	-
30	120	1	TMS	YES	-
20	120	1	SPARE	YES	-

CTID No. 10321080004040L

AMPERES	VOLTS	POLES	NAME PLATE	METER	PEC TYPE
100	240	2	MAIN BREAKER	YES	-
40	240	2	HIGHWAY LIGHTING	YES	V
15	120	1	LIGHTING CONTROL	YES	-

2. PULL BOX PER PG&E REQUIREMENTS.
3. INSTALL ONE WIRELESS MODEM AND SF MODEL 2070 CONTROLLER ASSEMBLY.
4. FOR ACCURATE RIGHT OF WAY AND ACCESS DATA, CONTACT RIGHT OF WAY ENGINEERING AT THE DISTRICT OFFICE.
5. THE CONTRACTOR SHALL COORDINATE WITH UTILITIES FOR SERVICE CONNECTION.

ABBREVIATIONS:

CTID - CALTRANS IDENTIFICATION
PG&E - PACIFIC GAS AND ELECTRIC COMPANY
SF - STATE-FURNISHED
ADV - ADVANCE
INT - INTERMEDIATE

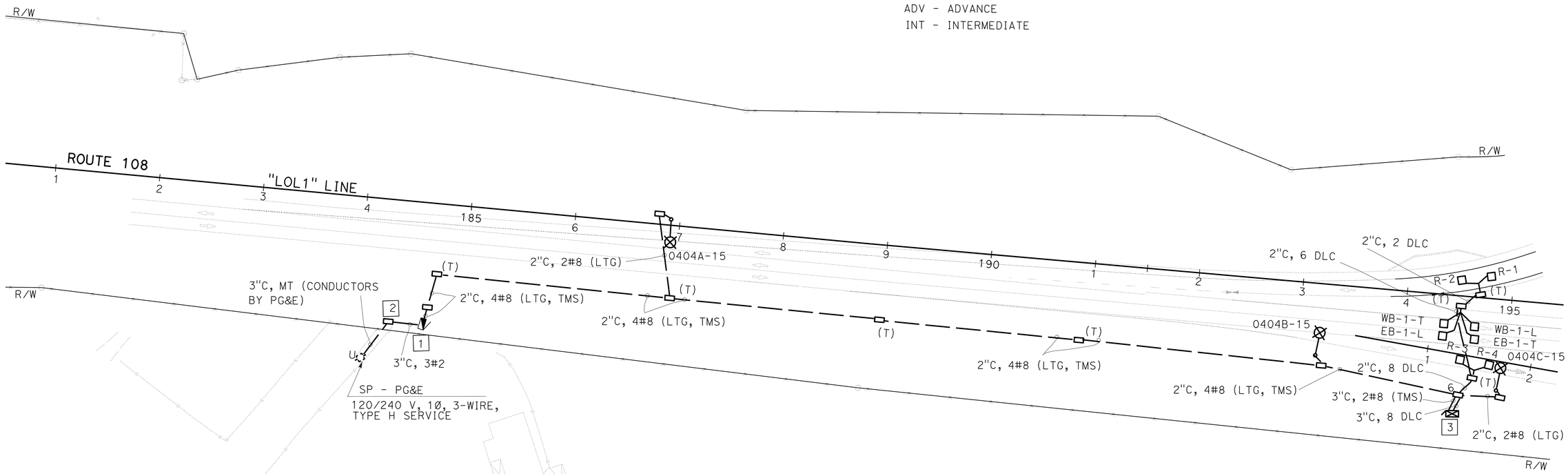

LIGHTING
TRAFFIC MONITORING STATION

SCALE: 1" = 50'

E-1

THIS PLAN IS ACCURATE FOR ELECTRICAL WORK ONLY.

STATE OF CALIFORNIA - DEPARTMENT OF TRANSPORTATION
Caltrans® ELECTRICAL DESIGN

FUNCTIONAL SUPERVISOR: ALI BAKHDOUD
CALCULATED-DESIGNED BY: ALVARO ARAICA
CHECKED BY: JASPAL SINGH
REVISED BY
DATE REVISED

LAST REVISION 12-30-09
DATE PLOTTED => 12-MAY-2010
TIME PLOTTED => 14:01

Dist	COUNTY	ROUTE	POST MILES TOTAL PROJECT	SHEET No.	TOTAL SHEETS
10	Tuo	108	R4.0/R6.0	142	237

REGISTERED ELECTRICAL ENGINEER 01-14-10

PLANS APPROVAL DATE 5-10-10

REGISTERED PROFESSIONAL ENGINEER ALVARO JAVIER ARAICA No. 15558 Exp. 12/31/11 ELECTRICAL STATE OF CALIFORNIA

THE STATE OF CALIFORNIA OR ITS OFFICERS OR AGENTS SHALL NOT BE RESPONSIBLE FOR THE ACCURACY OR COMPLETENESS OF SCANNED COPIES OF THIS PLAN SHEET.

NOTES: (FOR THIS SHEET ONLY)

1. INSTALL ONE WIRELESS MODEM AND SF MODEL 2070 CONTROLLER ASSEMBLY.
2. FOR ACCURATE RIGHT OF WAY AND ACCESS DATA, CONTACT RIGHT OF WAY ENGINEERING AT THE DISTRICT OFFICE.

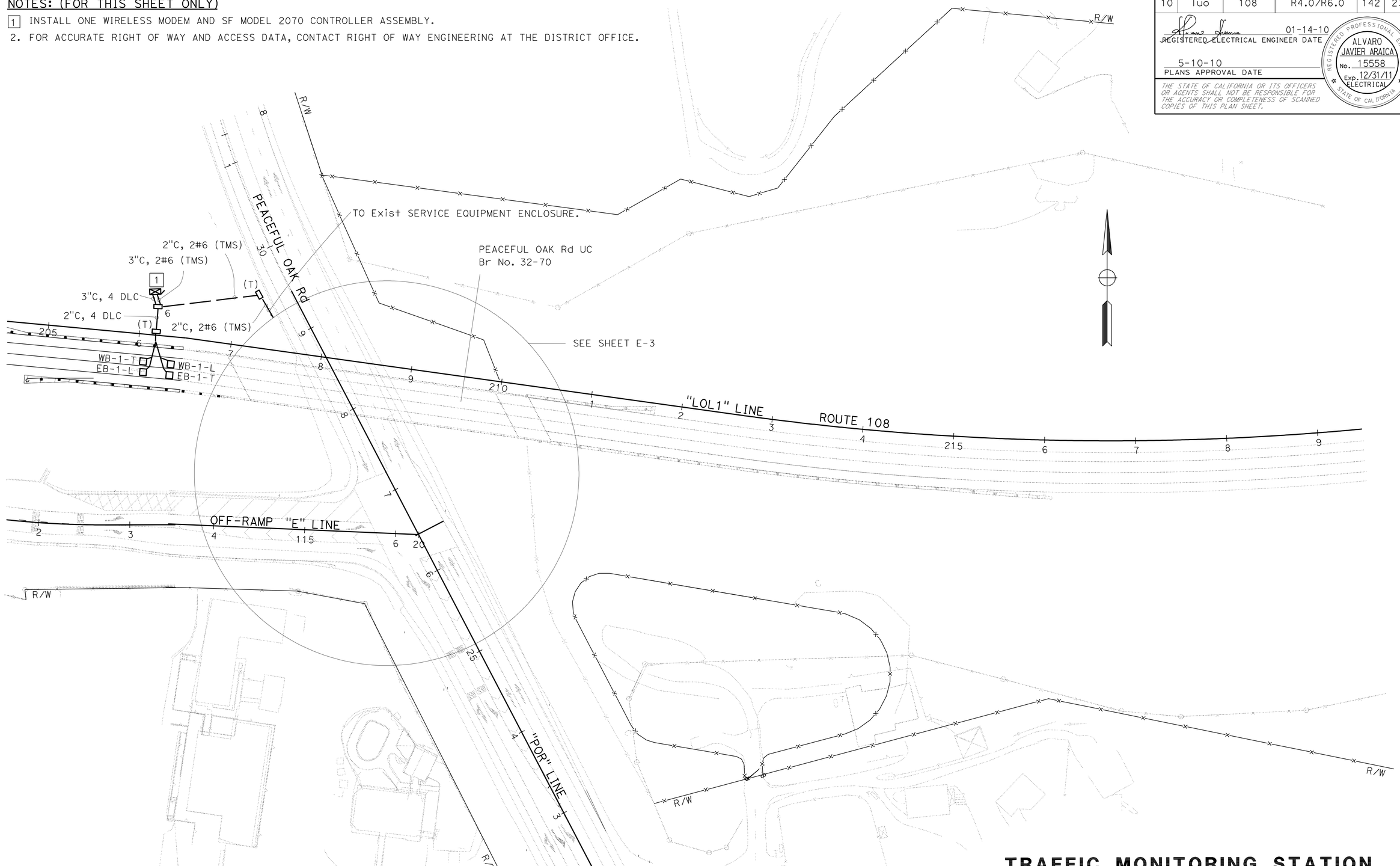

TRAFFIC MONITORING STATION

SCALE: 1" = 50'

E-2

THIS PLAN IS ACCURATE FOR ELECTRICAL WORK ONLY.

STATE OF CALIFORNIA - DEPARTMENT OF TRANSPORTATION

Caltrans® ELECTRICAL DESIGN

FUNCTIONAL SUPERVISOR: ALI BAKHDOUD

CALCULATED-DESIGNED BY: ALVARO ARAICA

CHECKED BY: JASPAL SINGH

REVISED BY / DATE REVISED

LAST REVISION 12-30-09

DATE PLOTTED => 12-MAY-2010

TIME PLOTTED => 10:34

Dist	COUNTY	ROUTE	POST MILES TOTAL PROJECT	SHEET No.	TOTAL SHEETS
10	Tuo	108	R4.0/R6.0	143	237

REGISTERED ELECTRICAL ENGINEER 01-14-10 DATE

PLANS APPROVAL DATE 5-10-10

REGISTERED PROFESSIONAL ENGINEER ALVARO JAVIER ARAICA No. 15558 Exp. 12/31/11 ELECTRICAL STATE OF CALIFORNIA

THE STATE OF CALIFORNIA OR ITS OFFICERS OR AGENTS SHALL NOT BE RESPONSIBLE FOR THE ACCURACY OR COMPLETENESS OF SCANNED COPIES OF THIS PLAN SHEET.

NOTES:

1. FOR NOTES AND SCHEDULES REFER TO SHEET E-5.
2. FOR ACCURATE RIGHT OF WAY AND ACCESS DATA, CONTACT RIGHT OF WAY ENGINEERING AT THE DISTRICT OFFICE.

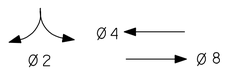

PHASE DIAGRAM
STEADY DEMAND SEQUENCE

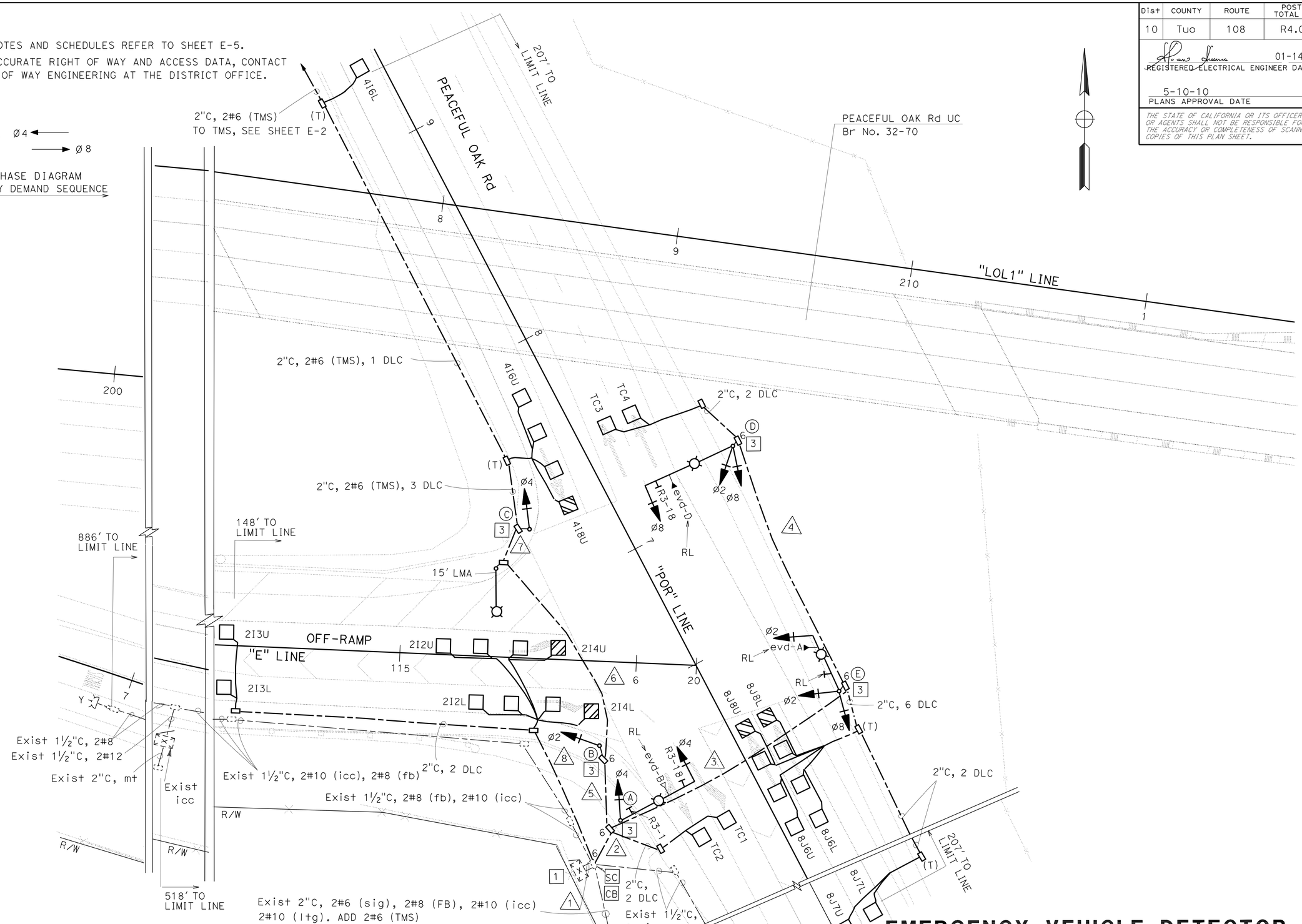

THIS PLAN IS ACCURATE FOR ELECTRICAL WORK ONLY.

EMERGENCY VEHICLE DETECTOR SYSTEM SIGNAL AND LIGHTING (LOCATION 1)

SCALE: 1" = 20'

E-3

STATE OF CALIFORNIA - DEPARTMENT OF TRANSPORTATION
Caltrans® ELECTRICAL DESIGN

FUNCTIONAL SUPERVISOR: ALI BAKHDOUD
CALCULATED-DESIGNED BY: ALVARO ARAICA
CHECKED BY: JASPAL SINGH
REVISED BY / DATE REVISED

LAST REVISION 12-30-09 | DATE PLOTTED => 20-MAY-2010 | TIME PLOTTED => 13:02

Dist	COUNTY	ROUTE	POST MILES TOTAL PROJECT	SHEET No.	TOTAL SHEETS
10	Tuo	108	R4.0/R6.0	144	237

REGISTERED ELECTRICAL ENGINEER DATE 01-14-10

5-10-10
PLANS APPROVAL DATE

REGISTERED PROFESSIONAL ENGINEER ALVARO JAVIER ARAICA No. 15558 Exp. 12/31/11 ELECTRICAL STATE OF CALIFORNIA

THE STATE OF CALIFORNIA OR ITS OFFICERS OR AGENTS SHALL NOT BE RESPONSIBLE FOR THE ACCURACY OR COMPLETENESS OF SCANNED COPIES OF THIS PLAN SHEET.

NOTES: (FOR THIS SHEET ONLY)

1 Exist TYPE III-CF SERVICE EQUIPMENT ENCLOSURE

2 Exist CONTROLLER CABINET

1. FOR ACCURATE RIGHT OF WAY AND ACCESS DATA, CONTACT RIGHT OF WAY ENGINEERING AT THE DISTRICT OFFICE.

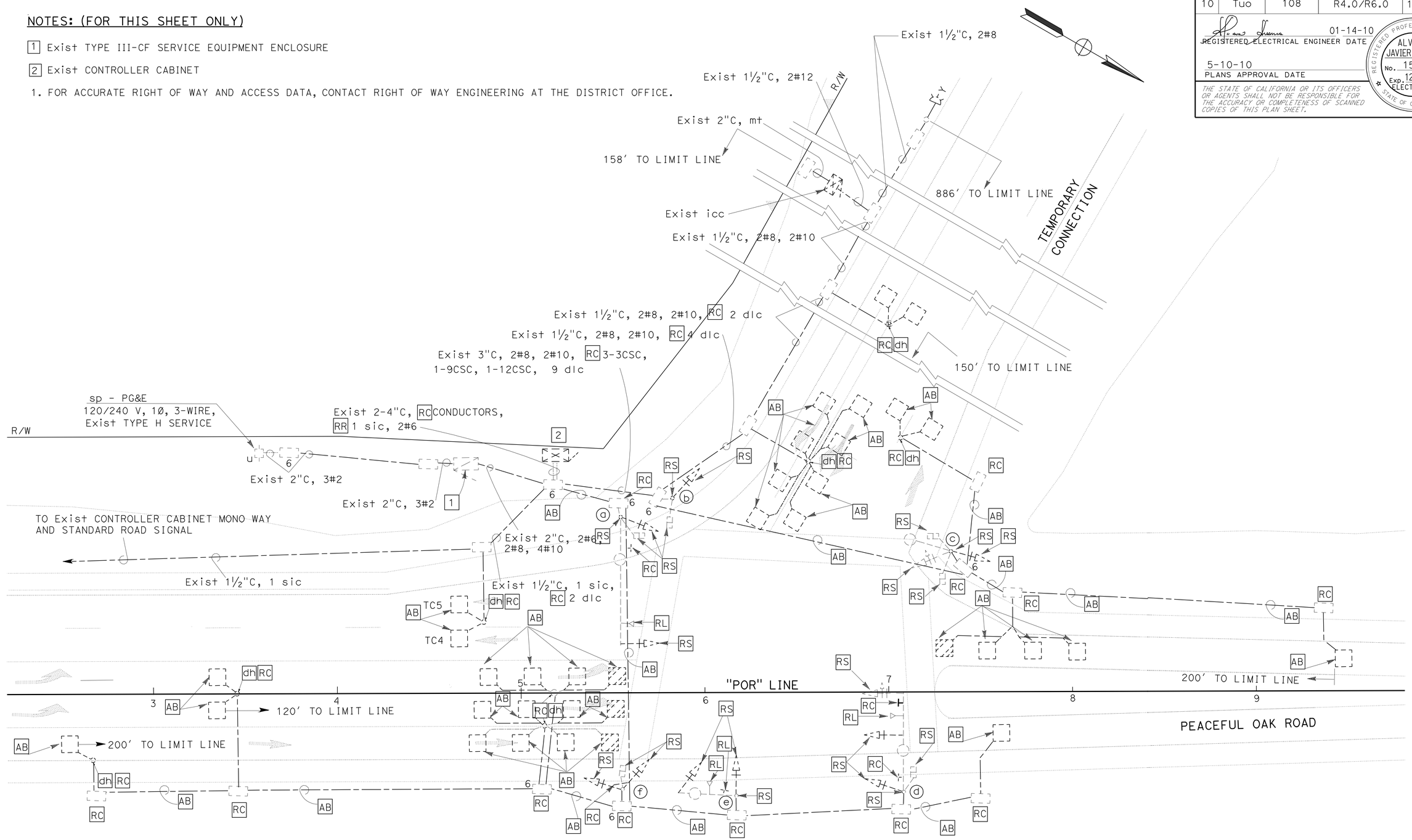

EXISTING SIGNAL AND LIGHTING

EMERGENCY VEHICLE DETECTOR SYSTEM SIGNAL AND LIGHTING (LOCATION 1)

THIS PLAN IS ACCURATE FOR ELECTRICAL WORK ONLY.

NO SCALE

E-4

STATE OF CALIFORNIA - DEPARTMENT OF TRANSPORTATION
Caltrans® ELECTRICAL DESIGN

FUNCTIONAL SUPERVISOR: ALI BAKHDOUD
CALCULATED-DESIGNED BY: ALVARO ARAICA
CHECKED BY: JASPAL SINGH
REVISED BY / DATE REVISED

LAST REVISION 12-30-09
DATE PLOTTED => 20-MAY-2010
TIME PLOTTED => 13:02

BORDER LAST REVISED 4/11/2008
RELATIVE BORDER SCALE IS IN INCHES 0 1 2 3
USERNAME => trmikesl
DGN FILE => a34042ua004.dgn
CU 06391
EA 340421

Dist	COUNTY	ROUTE	POST MILES TOTAL PROJECT	SHEET No.	TOTAL SHEETS
10	Tuo	108	R4.0/R6.0	145	237

REGISTERED ELECTRICAL ENGINEER 01-14-10

PLANS APPROVAL DATE 5-10-10

REGISTERED PROFESSIONAL ENGINEER ALVARO JAVIER ARAICA No. 15558 Exp. 12/31/11 ELECTRICAL STATE OF CALIFORNIA

THE STATE OF CALIFORNIA OR ITS OFFICERS OR AGENTS SHALL NOT BE RESPONSIBLE FOR THE ACCURACY OR COMPLETENESS OF SCANNED COPIES OF THIS PLAN SHEET.

NOTES: (FOR SHEET E-3)

1 Exist MODEL 170 CONTROLLER ASSEMBLY WITH bbs.

2 Exist 120/240 V, 1ø, 3-WIRE, TYPE III-CF SERVICE EQUIPMENT ENCLOSURE WITH THE FOLLOWING CIRCUIT BREAKERS:

CTID No. 1032108X007390S

AMPERES	VOLTS	POLES	NAME PLATE	METER	PEC TYPE
100	240	2	MAIN BREAKER	YES	-
50	120	1	SIGNAL	YES	-
15	120	1	SPARE	YES	-
15	120	1	FLASHING BEACON	YES	-
20	120	1	IRRIGATION	YES	-
30	120	1	TMS 4	YES	-

CTID No. 1032108X007390L

AMPERES	VOLTS	POLES	NAME PLATE	METER	PEC TYPE
100	240	2	MAIN BREAKER	YES	-
30	240	2	INTERSECTION LIGHTING	YES	V
15	120	1	CONTROL	YES	-

3 COIL 15′ OF 3CSC IN PULL BOX FOR FUTURE USE.

4 INSTALL 30 A, 120 V, 1P, CB AND LABEL TMS.

POLE AND EQUIPMENT SCHEDULE

STANDARD				VEH SIG MTG		HPS LUM	SPECIAL REQUIREMENTS
POLE	TYPE	SMA	LMA	MAST ARM	POLE		
A	24-3-100	35′	15′	MAS	SV-1-T	200 W	IS R3-1 AND R3-18 SIGNS ON SMA. RL EVD FROM POLE a.
B	1-A				TV-1-T		
C	1-A				TV-1-T		
D	26-4-100	40′	12′	MAS	SV-2-TA	200 W	IS R3-18 SIGNS ON SMA. RL EVD FROM POLE d.
E	19-4-100	25′	15′	MAS	SV-2-TA	200 W	RL G8 (CA) SIGNS ON SMA. RL EVD FROM POLE e.

CONDUIT AND CONDUCTOR SCHEDULE

CONDUCTOR DESIGNATION			CONDUIT RUN NUMBER AND SIZE							
CABLE TYPE	POLE	PHASE	1	2	3	4	5	6	7	8
			2-4"	4"	4"	4"	4"	4"	4"	4"
VEH-PED 12CSC	A	4	1	1	1					
		FUTURE	1	1	1					
	B	2	1	1	1		1			
		FUTURE	1	1	1		1			
	C	4	1	1	1		1	1	1	1
		FUTURE	1	1	1		1	1	1	1
PPB 3CSC	D	2,8	1	1	1	1	1			
		FUTURE	1	1	1	1	1			
	E	2,8	1	1	1	1				
		FUTURE	1	1	1	1				
TOTAL			5/5	5/5	2/2	1/1	2/2	1/1	1/1	
AWG	CIRCUIT									
#6	SIGNALS		*2							
#10	LTG			2	2	2	2	2		
#6	TMS			2			2	2	2	
OPTICAL DETECTOR CABLE			3	3	2	1				
sic			*1							
DLC	PHASE									
	ø2		4							4
	ø2 ADV		2							2
	ø4		2	2			2	2	2	
	ø4 ADV		1	1			1	1	1	
	ø8		4	4	4					
	ø8 ADV		2	2	2					
	TC1		1	1						
	TC2		1	1						
	TC3		1	1	1	1				
	TC4		1	1	1	1				
	TOTAL		19	13	8	2	3	3	3	6

CONDUIT RUN 1 IS Exist.

* RR

THIS PLAN IS ACCURATE FOR ELECTRICAL WORK ONLY.

EMERGENCY VEHICLE DETECTOR SYSTEM SIGNAL AND LIGHTING (LOCATION 1)

E-5

STATE OF CALIFORNIA - DEPARTMENT OF TRANSPORTATION

Caltrans® ELECTRICAL DESIGN

FUNCTIONAL SUPERVISOR: ALI BAKHDOUD

CALCULATED-DESIGNED BY: ALVARO ARAICA

CHECKED BY: JASPAL SINGH

REVISED BY

DATE REVISED

LAST REVISION 12-30-09

DATE PLOTTED => 20-MAY-2010

TIME PLOTTED => 13:12

Dist	COUNTY	ROUTE	POST MILES TOTAL PROJECT	SHEET No.	TOTAL SHEETS
10	Tuo	108	R4.0/R6.0	146	237

REGISTERED ELECTRICAL ENGINEER 01-14-10 DATE

5-10-10
PLANS APPROVAL DATE

REGISTERED PROFESSIONAL ENGINEER ALVARO JAVIER ARAICA No. 15558 Exp. 12/31/11 ELECTRICAL STATE OF CALIFORNIA

THE STATE OF CALIFORNIA OR ITS OFFICERS OR AGENTS SHALL NOT BE RESPONSIBLE FOR THE ACCURACY OR COMPLETENESS OF SCANNED COPIES OF THIS PLAN SHEET.

NOTES: (FOR THIS SHEET ONLY)

1 120/240 V, 1ø, 3-WIRE TYPE III-AF SERVICE EQUIPMENT ENCLOSURE WITH THE FOLLOWING CIRCUIT BREAKERS:

CTID No. 10321080004550L

AMPERES	VOLTS	POLES	NAME PLATE	METER	PEC TYPE
100	240	2	MAIN BREAKER	YES	-
20	240	2	HIGHWAY LIGHTING	YES	V
15	120	1	LIGHTING CONTROL	YES	-
20	120	1	SPARE	YES	
-	-	4	SPACE	-	-

2 PULL BOX PER PG&E REQUIREMENTS.

3. FOR ACCURATE RIGHT OF WAY AND ACCESS DATA, CONTACT RIGHT OF WAY ENGINEERING AT THE DISTRICT OFFICE.

4. THE CONTRACTOR SHALL COORDINATE WITH UTILITIES FOR SERVICE CONNECTION.

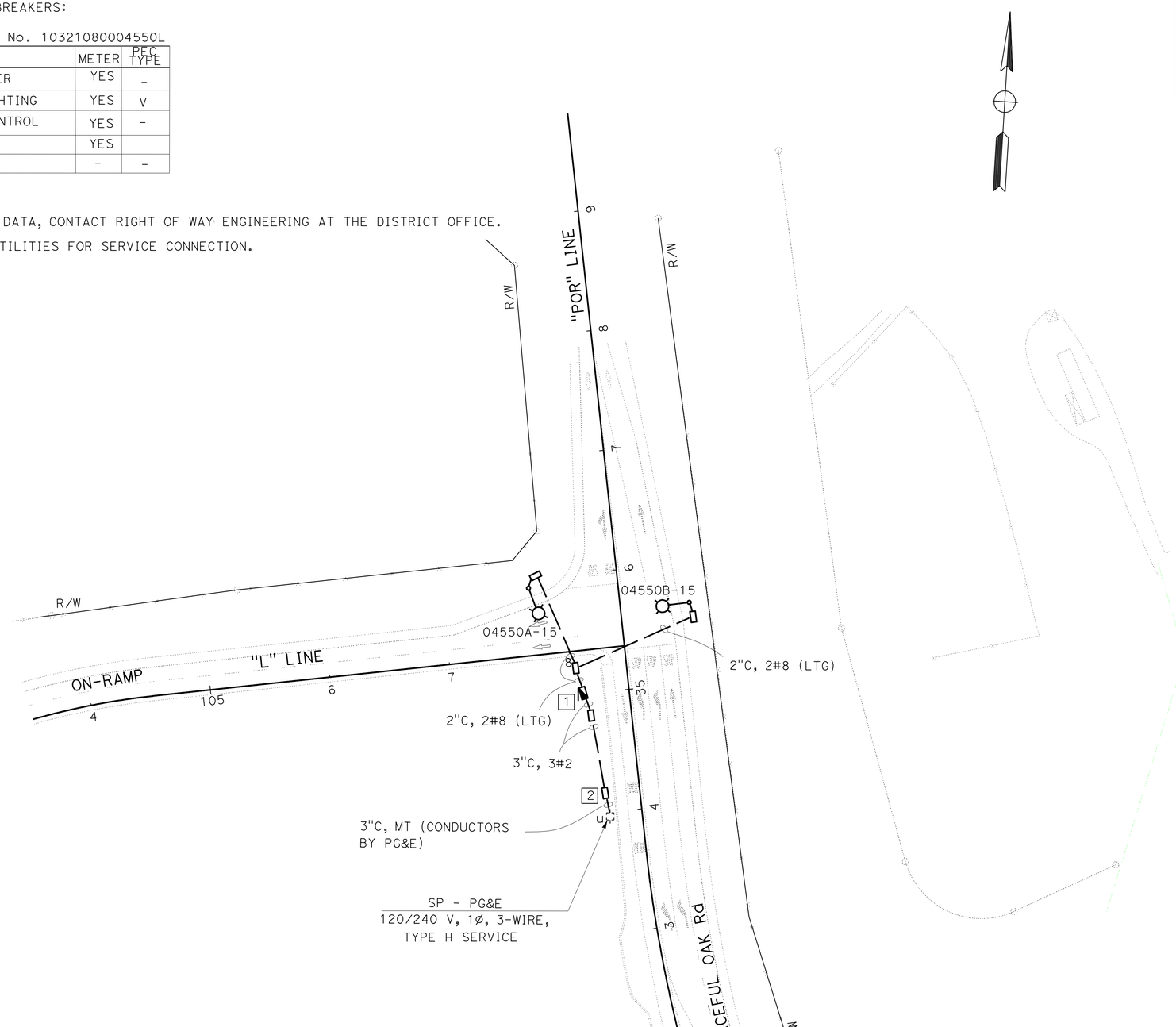

THIS PLAN IS ACCURATE FOR ELECTRICAL WORK ONLY.

LIGHTING

SCALE: 1" = 50'

E-6

STATE OF CALIFORNIA - DEPARTMENT OF TRANSPORTATION
Caltrans® ELECTRICAL DESIGN

FUNCTIONAL SUPERVISOR: ALI BAKHDOUD
CALCULATED-DESIGNED BY: ALVARO ARAICA
CHECKED BY: JASPAL SINGH
REVISED BY
DATE REVISED

LAST REVISION 12-30-09
DATE PLOTTED => 12-MAY-2010
TIME PLOTTED => 14:08

Dist	COUNTY	ROUTE	POST MILES TOTAL PROJECT	SHEET No.	TOTAL SHEETS
10	Tuo	108	R4.0/R6.0	147	237

REGISTERED ELECTRICAL ENGINEER DATE 01-14-10

PLANS APPROVAL DATE 5-10-10

REGISTERED PROFESSIONAL ENGINEER ALVARO JAVIER ARAICA No. 15558 Exp. 12/31/11 ELECTRICAL STATE OF CALIFORNIA

THE STATE OF CALIFORNIA OR ITS OFFICERS OR AGENTS SHALL NOT BE RESPONSIBLE FOR THE ACCURACY OR COMPLETENESS OF SCANNED COPIES OF THIS PLAN SHEET.

NOTES: (FOR THIS SHEET ONLY)

1. 120/240 V, 1Ø, 3-WIRE TYPE III-AF SERVICE EQUIPMENT ENCLOSURE WITH THE FOLLOWING CIRCUIT BREAKERS:

CTID No. 10321080004910T

AMPERES	VOLTS	POLES	NAME PLATE	METER
100	240	2	MAIN BREAKER	YES
30	120	1	TMS	YES
20	120	1	SPARE	YES
15	120	1	SPARE	YES

2. PULL BOX PER PG&E REQUIREMENTS.
3. INSTALL ONE WIRELESS MODEM AND SF MODEL 2070 CONTROLLER ASSEMBLY.
4. FOR ACCURATE RIGHT OF WAY AND ACCESS DATA, CONTACT RIGHT OF WAY ENGINEERING AT THE DISTRICT OFFICE.
5. THE CONTRACTOR SHALL COORDINATE WITH UTILITIES FOR SERVICE CONNECTION.

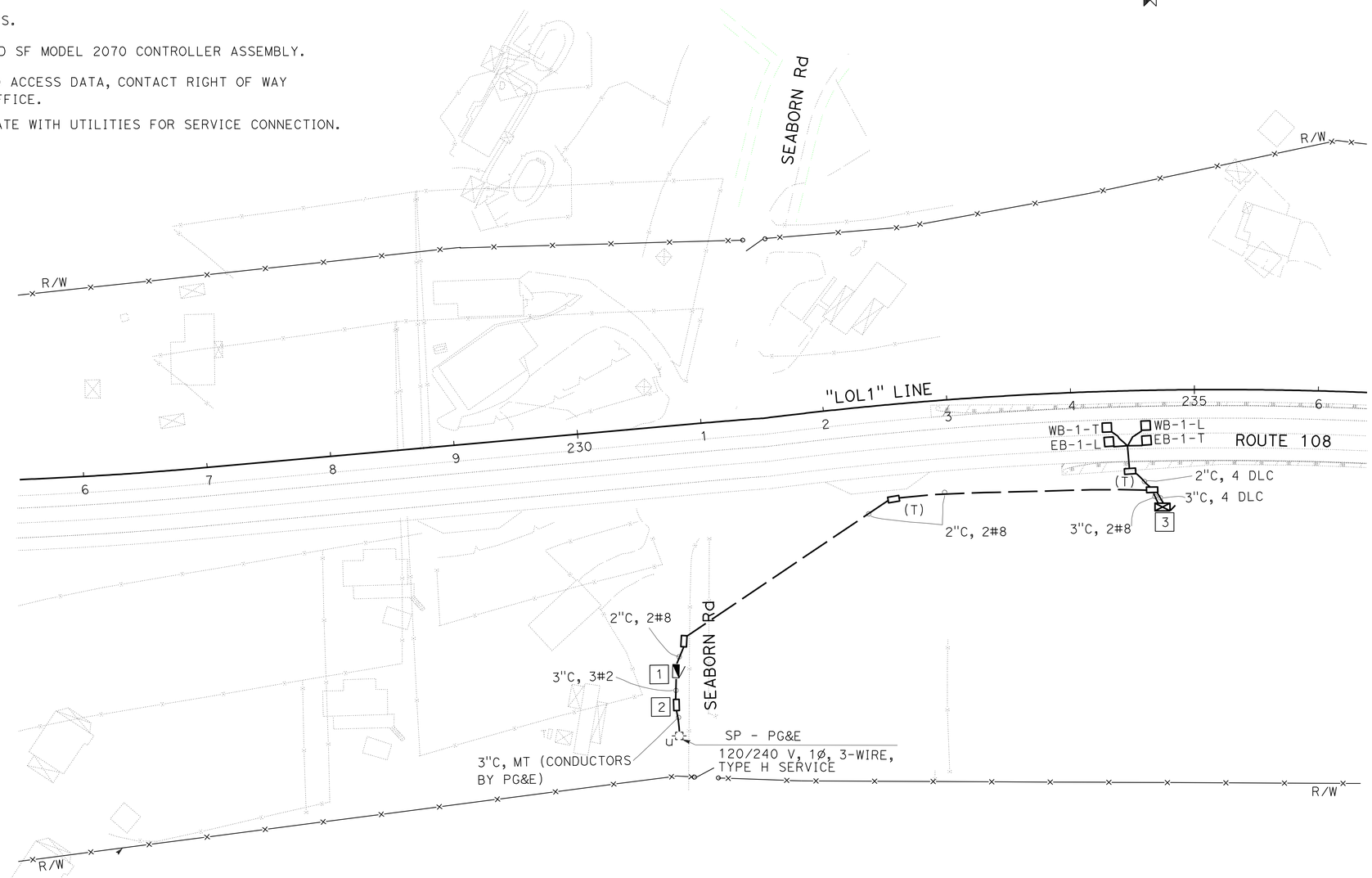

TRAFFIC MONITORING STATION

E-7

THIS PLAN IS ACCURATE FOR ELECTRICAL WORK ONLY.

SCALE: 1" = 50'

STATE OF CALIFORNIA - DEPARTMENT OF TRANSPORTATION

Caltrans® ELECTRICAL DESIGN

FUNCTIONAL SUPERVISOR: ALI BAKHDOUD

CALCULATED-DESIGNED BY: ALVARO ARAICA

CHECKED BY: JASPAL SINGH

REVISED BY | DATE REVISED

LAST REVISION 12-30-09

DATE PLOTTED => 12-MAY-2010

TIME PLOTTED => 14:08

Dist	COUNTY	ROUTE	POST MILES TOTAL PROJECT	SHEET No.	TOTAL SHEETS
10	Tuo	108	R4.0/R6.0	148	237

REGISTERED ELECTRICAL ENGINEER DATE 01-14-10

PLANS APPROVAL DATE 5-10-10

REGISTERED PROFESSIONAL ENGINEER ALVARO JAVIER ARAICA No. 15558 Exp. 12/31/11 ELECTRICAL STATE OF CALIFORNIA

THE STATE OF CALIFORNIA OR ITS OFFICERS OR AGENTS SHALL NOT BE RESPONSIBLE FOR THE ACCURACY OR COMPLETENESS OF SCANNED COPIES OF THIS PLAN SHEET.

NOTES:

1. FOR NOTES AND SCHEDULES REFER TO SHEET E-9.
2. FOR ACCURATE RIGHT OF WAY AND ACCESS DATA, CONTACT RIGHT OF WAY ENGINEERING AT THE DISTRICT OFFICE.

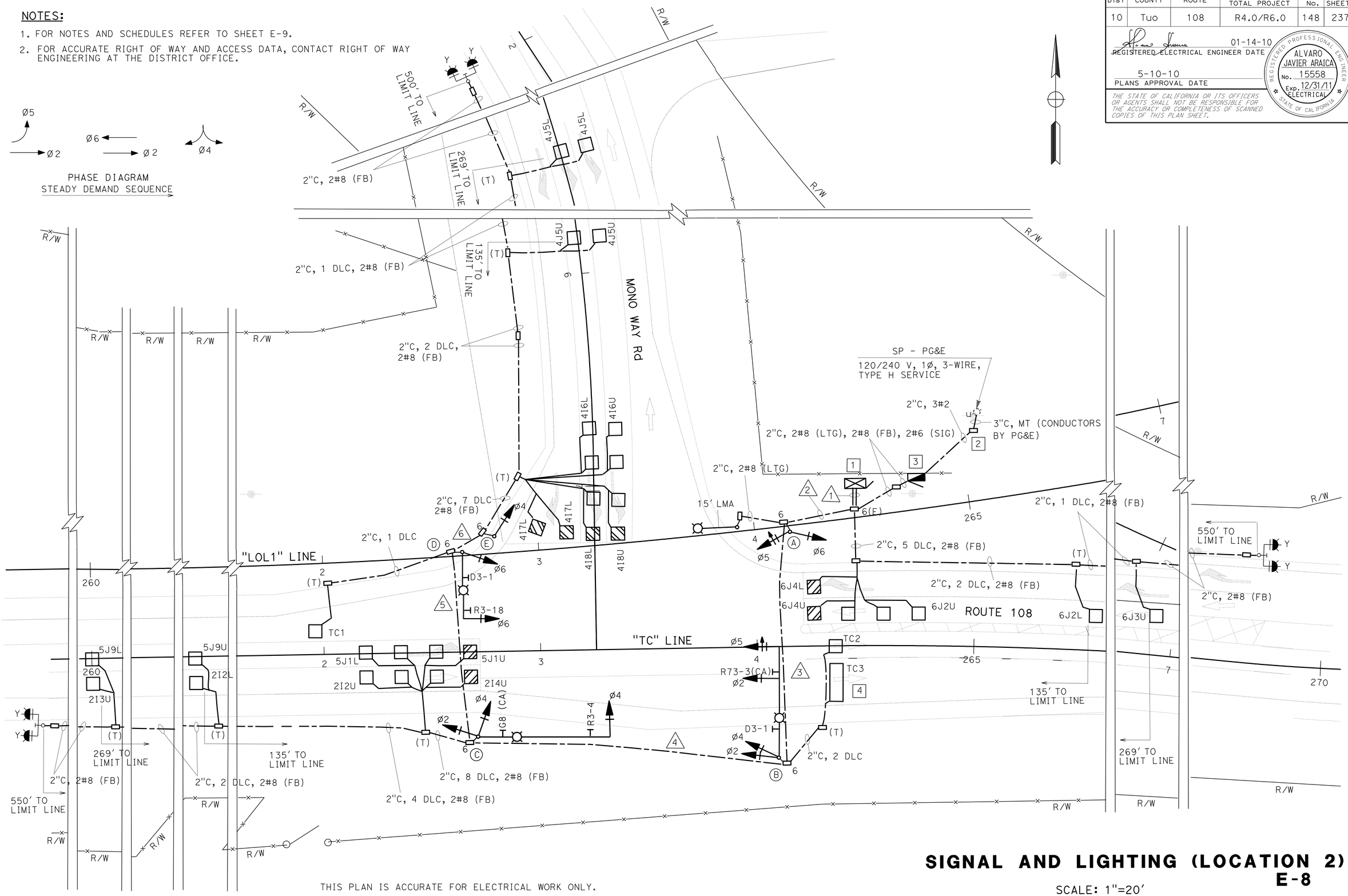

THIS PLAN IS ACCURATE FOR ELECTRICAL WORK ONLY.

SIGNAL AND LIGHTING (LOCATION 2)

SCALE: 1"=20'

E-8

STATE OF CALIFORNIA - DEPARTMENT OF TRANSPORTATION
Caltrans® ELECTRICAL DESIGN

FUNCTIONAL SUPERVISOR: ALI BAKHDOUD
CALCULATED-DESIGNED BY: ALVARO ARAICA
CHECKED BY: JASPAL SINGH
REVISED BY / DATE REVISED

LAST REVISION 12-30-09 | DATE PLOTTED => 12-MAY-2010 | TIME PLOTTED => 12:46

BORDER LAST REVISED 4/11/2008 | RELATIVE BORDER SCALE IS IN INCHES 0 1 2 3 | USERNAME => trrene | DGN FILE => a34042ua008.dgn | CU 06391 | EA 340421

Dist	COUNTY	ROUTE	POST MILES TOTAL PROJECT	SHEET No.	TOTAL SHEETS
10	Tuo	108	R4.0/R6.0	149	237

REGISTERED ELECTRICAL ENGINEER 01-14-10 DATE

5-10-10
PLANS APPROVAL DATE

REGISTERED PROFESSIONAL ENGINEER ALVARO JAVIER ARAICA No. 15558 Exp. 12/31/11 ELECTRICAL STATE OF CALIFORNIA

THE STATE OF CALIFORNIA OR ITS OFFICERS OR AGENTS SHALL NOT BE RESPONSIBLE FOR THE ACCURACY OR COMPLETENESS OF SCANNED COPIES OF THIS PLAN SHEET.

NOTES: (FOR SHEET E-8)

1 INSTALL ONE WIRELESS MODEM AND SF MODEL 2070 CONTROLLER ASSEMBLY.

2 PULL BOX PER PG&E REQUIREMENTS.

3 120/240 V, 1ø, 3-WIRE, TYPE III-CF SERVICE EQUIPMENT ENCLOSURE WITH THE FOLLOWING CIRCUIT BREAKERS:

CTID No. 10321080005480S

AMPERES	VOLTS	POLES	NAME PLATE	METER	PEC TYPE
100	240	2	MAIN BREAKER	YES	-
50	120	1	SIGNAL	YES	-
15	120	1	FLASHING BEACON	YES	-
20	120	1	SPARE	YES	-

CTID No. 10321080005480L

AMPERES	VOLTS	POLES	NAME PLATE	METER	PEC TYPE
100	240	2	MAIN BREAKER	YES	-
40	240	2	HIGHWAY LIGHTING	YES	V
15	120	1	LIGHTING CONTROL	YES	-

4 INSTALL 6′ X 18′ LOOP DETECTOR.

5. THE CONTRACTOR SHALL COORDINATE WITH UTILITIES FOR SERVICE CONNECTION.

POLE AND EQUIPMENT SCHEDULE

STANDARD				VEH SIG MTG		HPS LUM	SPECIAL REQUIREMENTS
POLE	TYPE	SMA	LMA	MAST ARM	POLE		
A	1-A				TV-2-T		
B	29-5-100	50′	15′	MAS MAS	SV-2-TA	200 W	F=15′, IS D3-1 AND R73-3(CA) SIGNS ON SMA.
C	61-5-100	60′	15′	MAS	SV-2-TA	200 W	IS G8 (CA) AND R3-4 SIGNS ON SMA.
D	19-4-100	30′	15′	MAS	SV-1-T	200 W	IS D3-1 AND R3-18 SIGNS ON SMA.
E	1-A				TV-1-T		

CONDUIT AND CONDUCTOR SCHEDULE

CONDUCTOR DESIGNATION			CONDUIT RUN NUMBER AND SIZE					
CABLE TYPE	POLE	PHASE	1	2	3	4	5	6
			2-4"	4"	4"	4"	4"	4"
VEH-PED 12CSC	A	5,6	1	1				
	B	2,4,5	1	1	1			
	C	2,4	1	1	1	1		
	D	6	1	1	1	1	1	
	E	4	1	1	1	1	1	1
		TOTAL	5	5	4	3	2	1
AWG	CIRCUIT							
#6	SIGNALS		2					
#8	LTG			2	2	2	2	
#8	FLASHING BEACON			2	2	2	2	2
DLC	PHASE							
	ø2		2	2	2	2		
	ø2 INT/ADV		2	2	2	2		
	ø4		5	5	5	5	5	5
	ø4 INT/ADV		2	2	2	2	2	2
	ø5		2	2	2	2		
	ø5 INT/ADV		2	2	2	2		
	ø6		3					
	ø6 INT/ADV		2					
	TC1		1	1	1	1	1	
	TC2		1	1	1			
	TC3		1	1	1			
	TOTAL		23	18	18	16	8	7

THIS PLAN IS ACCURATE FOR ELECTRICAL WORK ONLY.

SIGNAL AND LIGHTING (LOCATION 2)
E-9

STATE OF CALIFORNIA - DEPARTMENT OF TRANSPORTATION
Caltrans ELECTRICAL DESIGN

FUNCTIONAL SUPERVISOR: ALI BAKHDOUD
CALCULATED-DESIGNED BY: ALVARO ARAICA
CHECKED BY: JASPAL SINGH
REVISED BY / DATE REVISED

LAST REVISION 12-30-09 | DATE PLOTTED => 20-MAY-2010 | TIME PLOTTED => 13:12

Dist	COUNTY	ROUTE	POST MILES TOTAL PROJECT	SHEET No.	TOTAL SHEETS
10	Tuo	108	R4.0/R6.0	150	237

REGISTERED ELECTRICAL ENGINEER DATE 01-14-10

PLANS APPROVAL DATE 5-10-10

REGISTERED PROFESSIONAL ENGINEER ALVARO JAVIER ARAICA No. 15558 Exp. 12/31/11 ELECTRICAL STATE OF CALIFORNIA

THE STATE OF CALIFORNIA OR ITS OFFICERS OR AGENTS SHALL NOT BE RESPONSIBLE FOR THE ACCURACY OR COMPLETENESS OF SCANNED COPIES OF THIS PLAN SHEET.

NOTES: (FOR THIS SHEET ONLY)

1. 120/240 V, 1Ø, 3-WIRE TYPE III-AF SERVICE EQUIPMENT ENCLOSURE WITH THE FOLLOWING CIRCUIT BREAKERS:

CTID No. 1032108X005860T

AMPERES	VOLTS	POLES	NAME PLATE	METER
100	240	2	MAIN BREAKER	YES
30	120	1	TMS	YES
20	120	1	SPARE	YES
15	120	1	SPARE	YES

2. PULL BOX PER PG&E REQUIREMENTS.

3. INSTALL ONE WIRELESS MODEM AND SF MODEL 2070 CONTROLLER ASSEMBLY.

4. FOR ACCURATE RIGHT OF WAY AND ACCESS DATA, CONTACT RIGHT OF WAY ENGINEERING AT THE DISTRICT OFFICE.

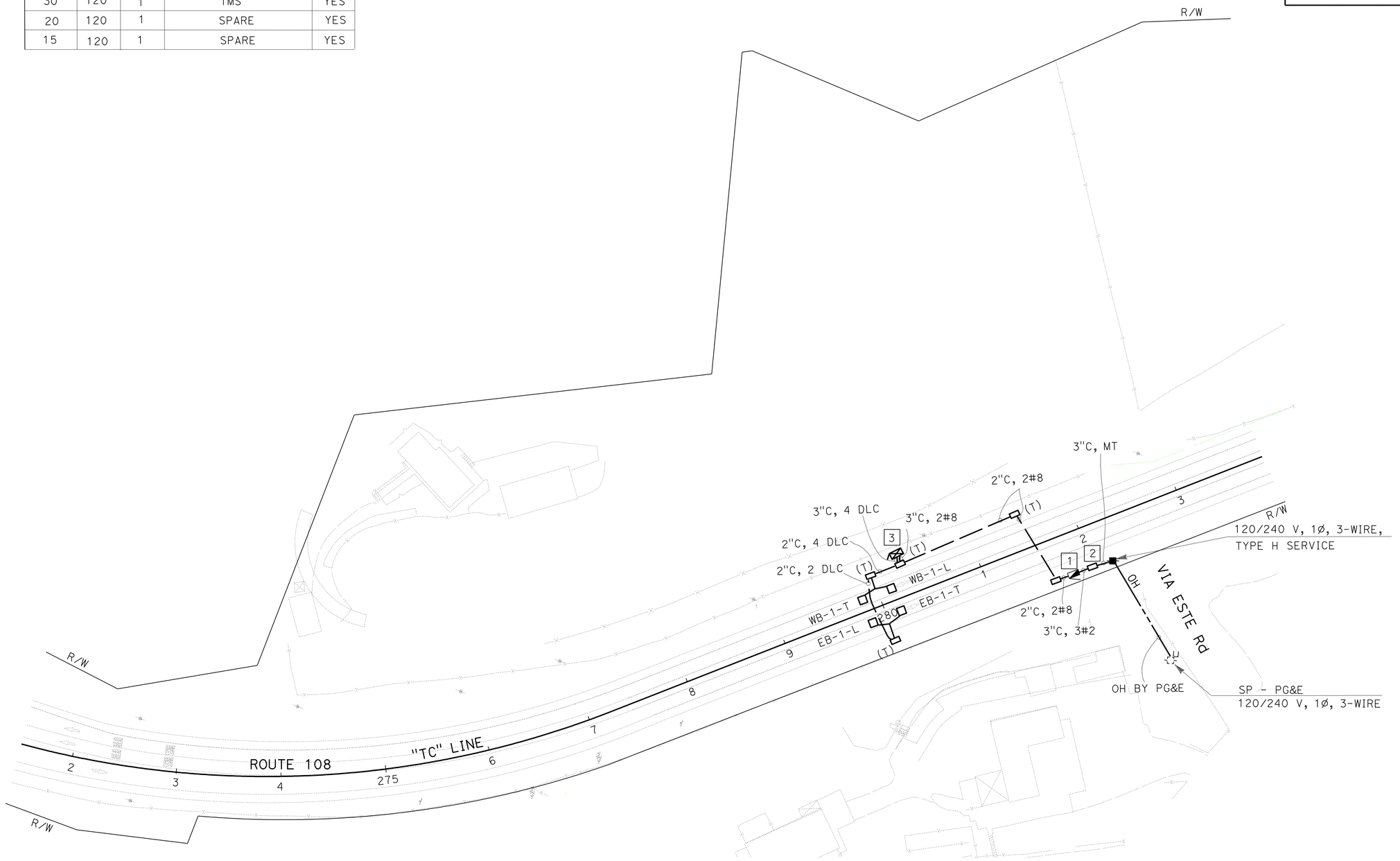

TRAFFIC MONITORING STATION

E-10

THIS PLAN IS ACCURATE FOR ELECTRICAL WORK ONLY.

SCALE: 1" = 50'

STATE OF CALIFORNIA - DEPARTMENT OF TRANSPORTATION

Caltrans® ELECTRICAL DESIGN

FUNCTIONAL SUPERVISOR: ALI BAKHDOUD

CALCULATED-DESIGNED BY: ALVARO ARAICA

CHECKED BY: JASPAL SINGH

REVISED BY / DATE REVISED

LAST REVISION: DATE PLOTTED => 12-MAY-2010 TIME PLOTTED => 14:08

12-29-09

BORDER LAST REVISED 4/11/2008

RELATIVE BORDER SCALE IS IN INCHES 0 1 2 3

USERNAME => trmikesl

DGN FILE => a34042ua010.dgn

CU 06391

EA 340421

DIST	COUNTY	ROUTE	POST MILES TOTAL PROJECT	SHEET NO.	TOTAL SHEETS
10	Tuo	108	R4.0/R6.0	151	237

REGISTERED CIVIL ENGINEER

November 17, 2006
PLANS APPROVAL DATE

REGISTERED PROFESSIONAL ENGINEER Dallas Forester No. C37765 Exp. 12-31-06 CIVIL STATE OF CALIFORNIA

The State of California or its officers or agents shall not be responsible for the accuracy or completeness of electronic copies of this plan sheet.

To accompany plans dated 5-10-10

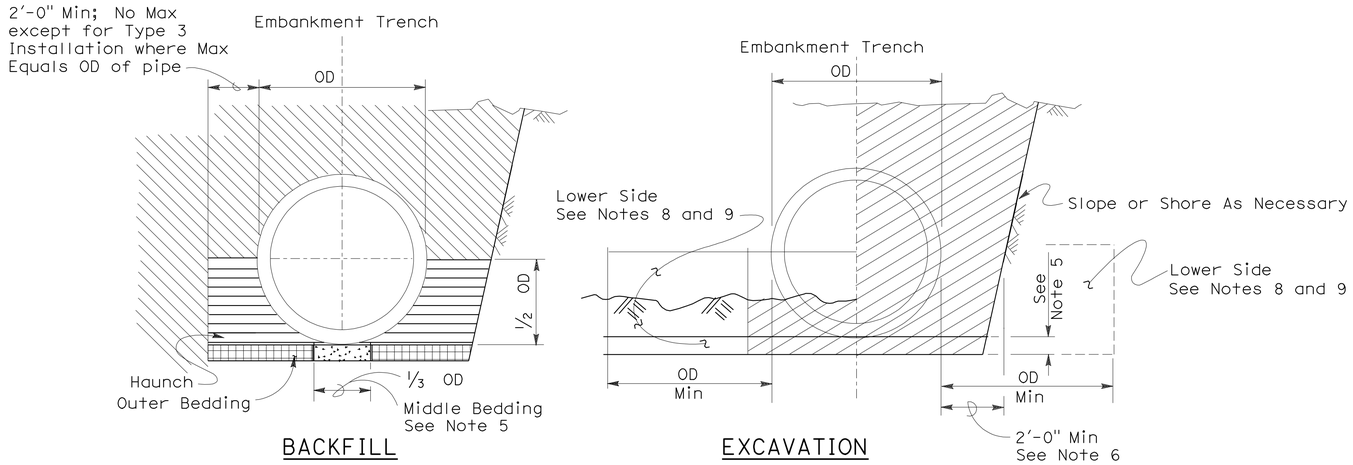

Roadway Embankment

Structure Backfill (Culvert) See Note 6

Structure Backfill (Culvert) See Note 6

Loose Backfill

Excavation Structure (Culvert)

TYPE 1 INSTALLATION:

The haunch and outer bedding shall be compacted to a minimum 90 percent relative compaction. In addition, the minimum sand equivalent in these areas shall be 30 and the maximum percentage passing the 75 μm sieve size shall be 12.

TYPE 2 INSTALLATION:

The haunch and outer bedding shall be compacted to a minimum 90 percent relative compaction. In addition, the minimum sand equivalent in these areas shall be 25.

TYPE 3 INSTALLATION:

The haunch and outer bedding shall be compacted to a minimum 85 percent relative compaction. 90 percent relative compaction will be required where the fill over the pipe is less than 4'-0" or 1/2 OD.

NOTES:

1. Unless otherwise shown on the plans or specified in the special provision, the Contractor shall have the option of selecting the class of RCP and the type of installation to be used, provided the height of cover does not exceed the value shown for the RCP selected.
   Example: 24" RCP culvert with maximum cover of 19'-0" the options are:
   a) Class III or stronger with Installation Type 1.
   b) Class III Special or stronger with Installation Type 2.
   c) Class IV Special or stronger with Installation Type 3.
   Cover is defined as the maximum vertical distance from top of the pipe to finished grade within the length of any given culvert.
2. The class of RCP and Installation Type selected shall be the same throughout the length of any given culvert.
3. The "length of any culvert" is defined as the culvert between:
   a) Successive drainage structure (inlets, junction boxes, headwalls, etc.).
   b) A drainage structure and the inlet or outlet end of the culvert.
   c) The inlet and outlet end of the culvert when there are no intervening drainage structures.
4. Oval and arch shaped RCP shall not be used.
5. 1/25 OD Min, not less than 3".
6. Slurry cement backfill may be substituted for backfill in the outer bedding and haunch areas. If slurry is used the outer and middle beddings shall be omitted. Prior to installation the soil under the middle 1/3 of the outside diameter of the pipe shall be softened by scarifying or other means to a minimum depth of 1/25 OD, but not less than 3". Where slurry cement backfill is used clear distance to trench wall may be reduced as set forth in Section 19-3.062 of the Standard Specifications.
7. Backfill shall be placed full width of excavation except where dimensions are shown for backfill width or thickness. Dimensions shown are minimums.
8. Lower side shall be suitable material as determined by the Engineer. Otherwise it shall be considered unsuitable as set forth in Section 19-2.02 of the Standard Specifications. See Note 9.
9. Where the pipe is placed in a trench, if the trench walls are sloped at 5 vertical to 1 horizontal or steeper for at least 90 percent of the trench height or up to not less than 12" from the grading plane, the firmness of the soil in the lower side need not be considered.
10. Non-reinforced precast concrete pipe sizes 3'-0" or smaller may be placed under installation Types 1, 2 or 3.

INSTALLATION TYPE 1

MINIMUM CLASS AND D-LOAD	COVER	
	108" Dia AND SMALLER	OVER 108" Dia
Class II 1000D	14.9'	12.9'
Class III 1350D	15.0' - 20.9'	13.0' - 18.9'
Class III Special 1700D	21.0' - 26.9'	19.0' - 24.9'
Class IV 2000D	27.0' - 31.9'	25.0' - 29.9'
Class IV Special 2500D	32.0' - 40.9'	30.0' - 38.9'
Class V 3000D	41.0' - 49.9'	39.0' - 46.9'
Class V Special 3600D	50.0' - 59.0'	47.0' - 58.0'

INSTALLATION TYPE 2

MINIMUM CLASS AND D-LOAD	COVER
Class II 1000D	9.9'
Class III 1350D	10.0'- 14.9'
Class III Special 1700D	15.0' - 19.9'
Class IV 2000D	20.0' - 24.9'
Class IV Special 2500D	25.0' - 31.9'
Class V 3000D	32.0' - 38.9'
Class V Special 3600D	39.0' - 47.0'

INSTALLATION TYPE 3

MINIMUM CLASS AND D-LOAD	COVER	
	48" Dia AND SMALLER	OVER 48" Dia
Class II 1000D	7.9'	5.9'
Class III 1350D	8.0' - 10.9'	6.0' - 8.9'
Class III Special 1700D	11.0' - 14.9'	9.0' - 12.9'
Class IV 2000D	15.0' - 17.9'	13.0' - 15.9'
Class IV Special 2500D	18.0' - 21.9'	16.0' - 19.9'
Class V 3000D	22.0' - 26.9'	20.0' - 24.9'
Class V Special 3600D	30.0' - 33.0'	25.0' - 31.0'

STATE OF CALIFORNIA
DEPARTMENT OF TRANSPORTATION

EXCAVATION AND BACKFILL CONCRETE PIPE CULVERTS

NO SCALE

RSP A62DA DATED NOVEMBER 17, 2006 SUPERSEDES STANDARD PLAN A62DA DATED MAY 1, 2006 - PAGE 20 OF THE STANDARD PLANS BOOK DATED MAY 2006.

REVISED STANDARD PLAN RSP A62DA

2006 REVISED STANDARD PLAN RSP A62DA

10-26-06

DIST	COUNTY	ROUTE	POST MILES TOTAL PROJECT	SHEET NO.	TOTAL SHEETS
10	Tuo	108	R4.0/R6.0	152	237

REGISTERED CIVIL ENGINEER

June 6, 2008
PLANS APPROVAL DATE

REGISTERED PROFESSIONAL ENGINEER
Donald E. Howe
No. C46402
Exp. 3-31-09
CIVIL
STATE OF CALIFORNIA

The State of California or its officers or agents shall not be responsible for the accuracy or completeness of electronic copies of this plan sheet.

To accompany plans dated 5-10-10

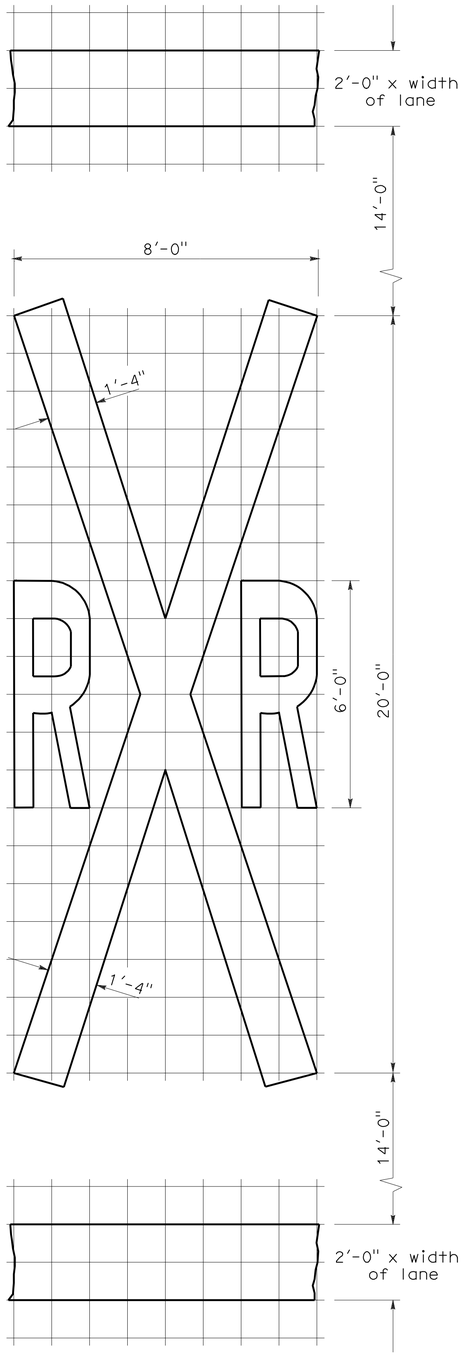

RAILROAD CROSSING SYMBOL

✳70 sq ft DOES NOT INCLUDE THE 2'-0" x VARIABLE WIDTH TRANSVERSE LINES.

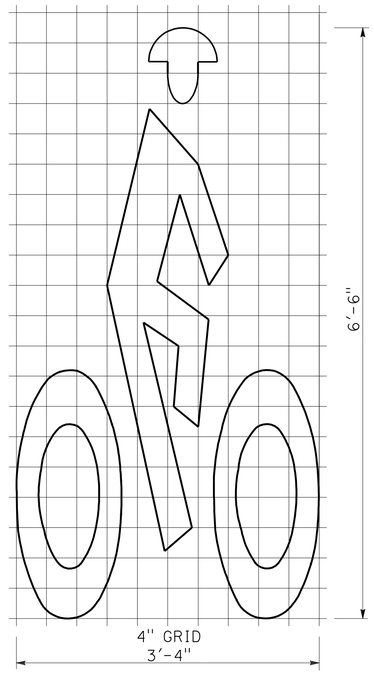

BIKE LANE SYMBOL

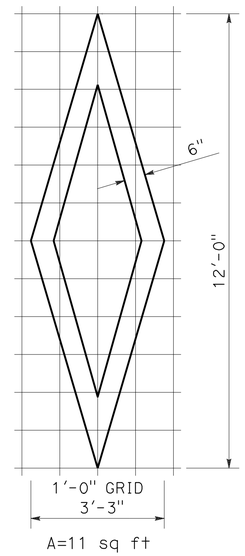

DIAMOND SYMBOL

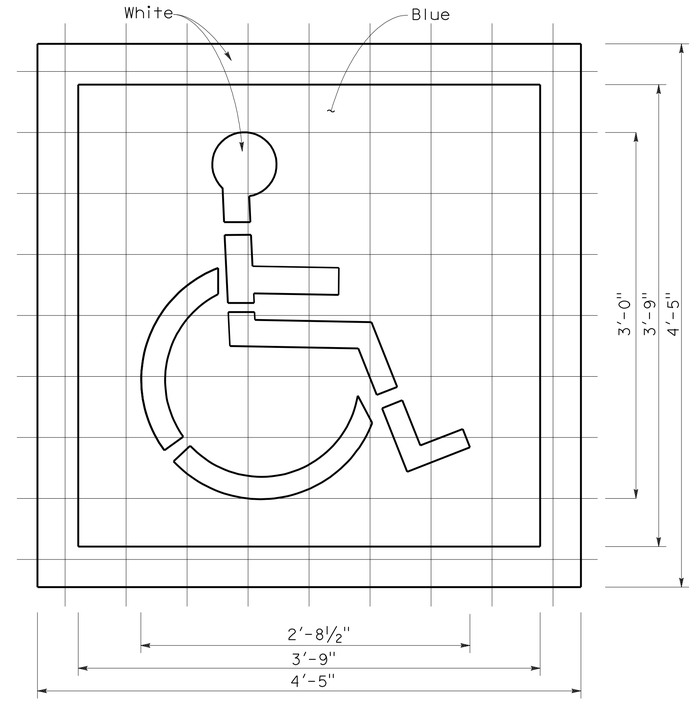

INTERNATIONAL SYMBOL OF ACCESSIBILITY MARKING

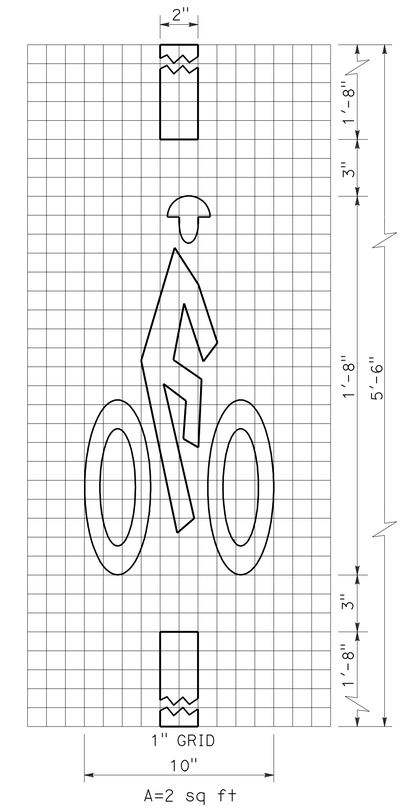

BICYCLE LOOP DETECTOR SYMBOL

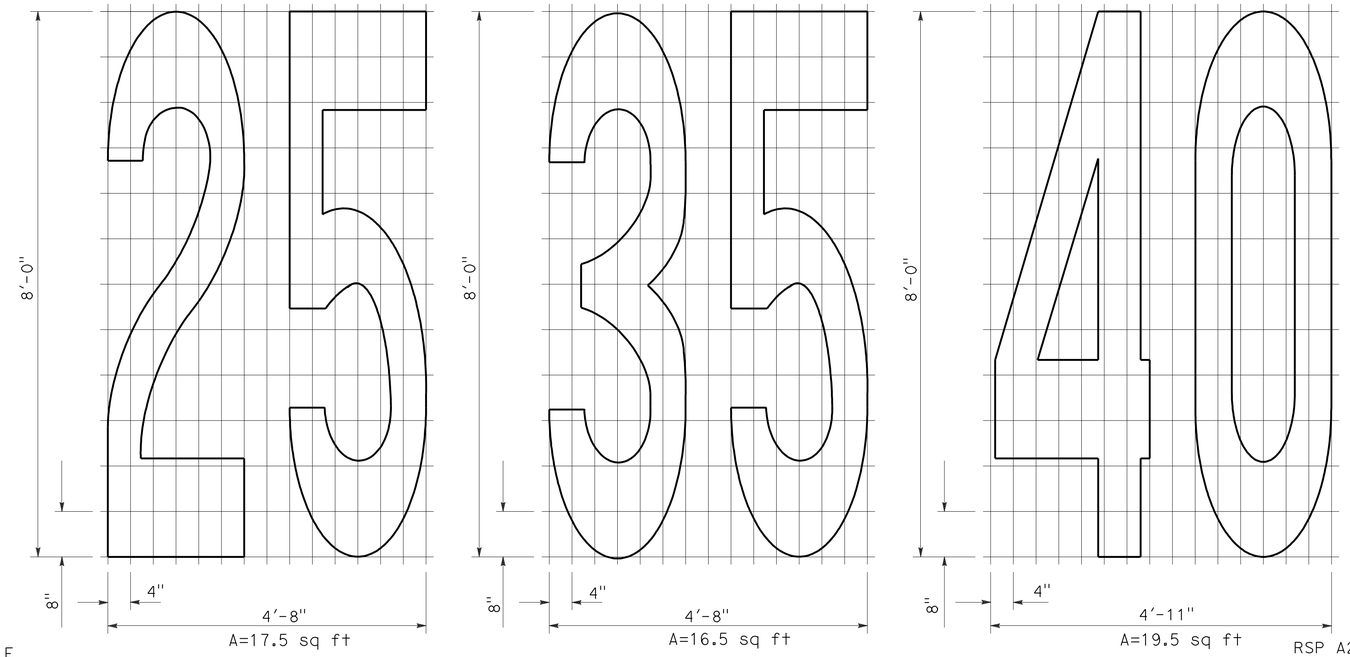

NUMERALS

NOTE:

1. Minor variations in dimensions may be accepted by the Engineer.

STATE OF CALIFORNIA
DEPARTMENT OF TRANSPORTATION

PAVEMENT MARKINGS SYMBOLS AND NUMERALS

NO SCALE

RSP A24C DATED JUNE 6, 2008 SUPERSEDES STANDARD PLAN A24C DATED MAY 1, 2006 - PAGE 11 OF THE STANDARD PLANS BOOK DATED MAY 2006.

REVISED STANDARD PLAN RSP A24C

2006 REVISED STANDARD PLAN RSP A24C

5-27-08

DIST	COUNTY	ROUTE	POST MILES TOTAL PROJECT	SHEET NO.	TOTAL SHEETS
10	Tuo	108	R4.0/R6.0	153	237

Randell D. Hiatt
REGISTERED CIVIL ENGINEER

June 6, 2008
PLANS APPROVAL DATE

REGISTERED PROFESSIONAL ENGINEER
Randell D. Hiatt
No. C50200
Exp. 6-30-09
CIVIL
STATE OF CALIFORNIA

The State of California or its officers or agents shall not be responsible for the accuracy or completeness of electronic copies of this plan sheet.

To accompany plans dated 5-10-10

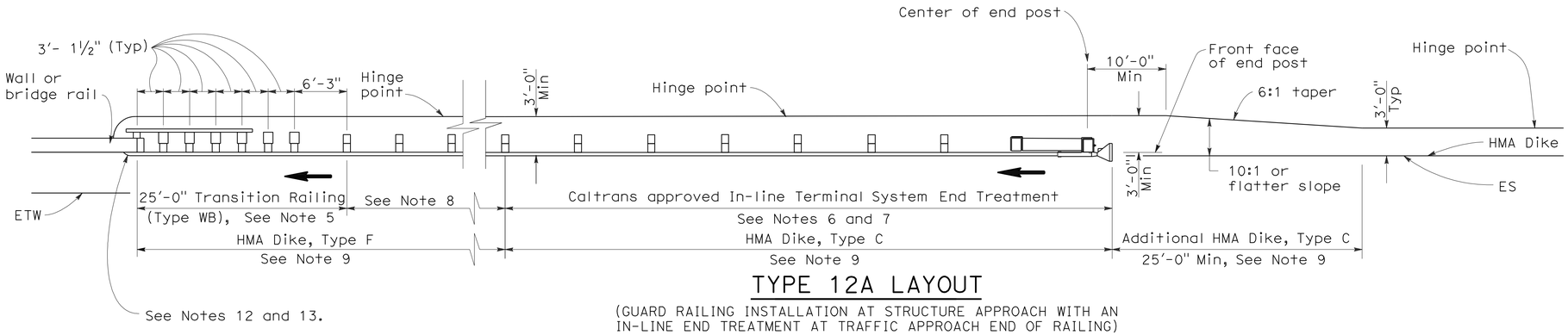

TYPE 12A LAYOUT

(GUARD RAILING INSTALLATION AT STRUCTURE APPROACH WITH AN IN-LINE END TREATMENT AT TRAFFIC APPROACH END OF RAILING)
See Notes 10

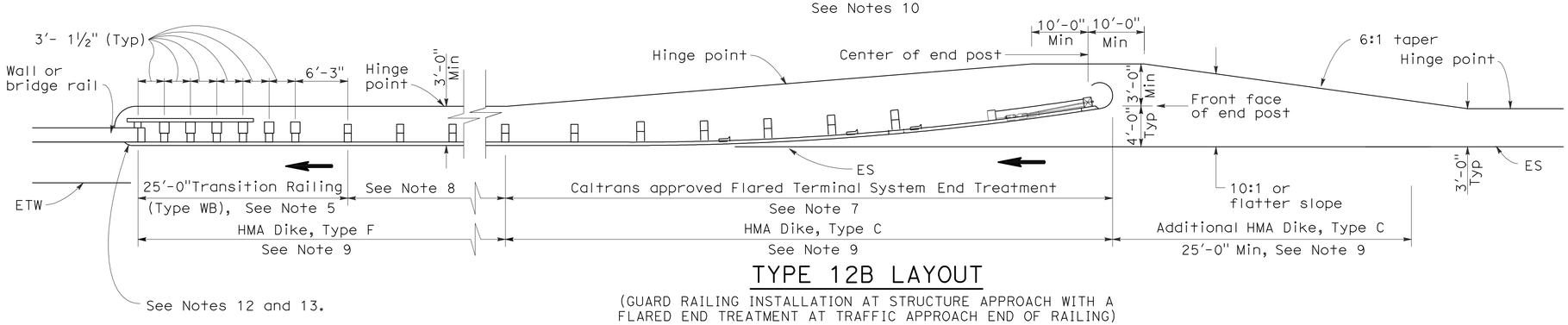

TYPE 12B LAYOUT

(GUARD RAILING INSTALLATION AT STRUCTURE APPROACH WITH A FLARED END TREATMENT AT TRAFFIC APPROACH END OF RAILING)
See Notes 10

NOTES:

1. Line post, blocks and hardware to be used are shown on Standard Plans A77A1, A77A2, A77B1, A77C1 and A77C2.
2. Guard rail post spacing to be 6'-3" center to center, except as otherwise noted.
3. Except as noted, line posts are 6" x 8" x 6'-0" wood with 6" x 8" x 1'-2" wood blocks. W6 x 9 steel posts, 6'-0" in length, with 6" x 8" x 1'-2" notched wood blocks or plastic blocks may be used for 6" x 8" x 6'-0" wood posts with 6" x 8" x 1'-2" wood blocks where applicable and when specified.
4. Direction of adjacent traffic indicated by ➡.
5. For Transition Railing (Type WB) details for Types 12A and 12B Layouts, see Standard Plan A77J4.
6. In-line Terminal System End Treatments are used where site conditions will not accommodate a flared end treatment.
7. The type of terminal system end treatment to be used will be shown on the Project Plans.
8. Dependent on site conditions (embankment height, side slopes, or other fixed objects), it may be advisable to construct additional guard railing (a length equal to multiples of 12'-6" with 6'-3" post spacing) between the transition railing and end treatment.
9. Where placement of dike is required with guard railing installations, see Revised Standard Plan RSP A77C4 for dike positioning details.
10. Type 12A or Type 12B Layouts are typically used:
    a. To the right of approaching traffic, at the end of a structure, on two-lane conventional highway where the roadbed width across the structure is less than 40 feet.
    b. To the left of approaching traffic, at the end of a structure, on two-lane conventional highway where the roadbed width across the structure is less than 40 feet.
    c. To the right of approaching traffic at the end of each structure on multilane freeways or expressways with separate adjacent or parallel bridges.
    d. To the right of approaching traffic at the end of the structure on multilane freeways or expressways with decked median on the bridge.
11. See Revised Standard Plan RSP A77F3 for typical layout used left of approaching traffic at the ends of each structure on multilane freeways or expressways with separate adjacent or parallel bridges.
12. For additional details of typical connections to bridge rail, see Connection Detail AA on Revised Standard Plans RSP A77J1 and RSP A77J2 and Connection Detail FF on Standard Plans A77K1 and A77K2.
13. For additional details of a typical connection to walls or abutments, see Standard Plan A77J3.

STATE OF CALIFORNIA
DEPARTMENT OF TRANSPORTATION

METAL BEAM GUARD RAILING TYPICAL LAYOUTS FOR STRUCTURE APPROACH

NO SCALE

RSP A77F1 DATED JUNE 6, 2008 SUPERSEDES STANDARD PLAN A77F1
DATED MAY 1, 2006 - PAGE 54 OF THE STANDARD PLANS BOOK DATED MAY 2006.

REVISED STANDARD PLAN RSP A77F1

2006 REVISED STANDARD PLAN RSP A77F1

12-10-07

DIST	COUNTY	ROUTE	POST MILES TOTAL PROJECT	SHEET NO.	TOTAL SHEETS
10	Tuo	108	R4.0/R6.0	154	237

Randell D. Hiatt
REGISTERED CIVIL ENGINEER

June 6, 2008
PLANS APPROVAL DATE

REGISTERED PROFESSIONAL ENGINEER
Randell D. Hiatt
No. C50200
Exp. 6-30-09
CIVIL
STATE OF CALIFORNIA

The State of California or its officers or agents shall not be responsible for the accuracy or completeness of electronic copies of this plan sheet.

To accompany plans dated 5-10-10

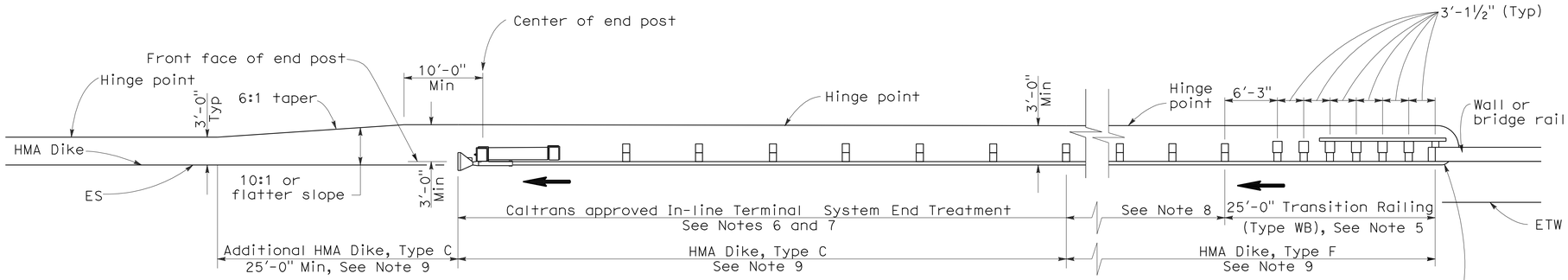

TYPE 12AA LAYOUT

(GUARD RAILING INSTALLATION AT STRUCTURE DEPARTURE WITH AN IN-LINE END TREATMENT AT TRAILING END OF RAILING)
See Notes 9 and 10

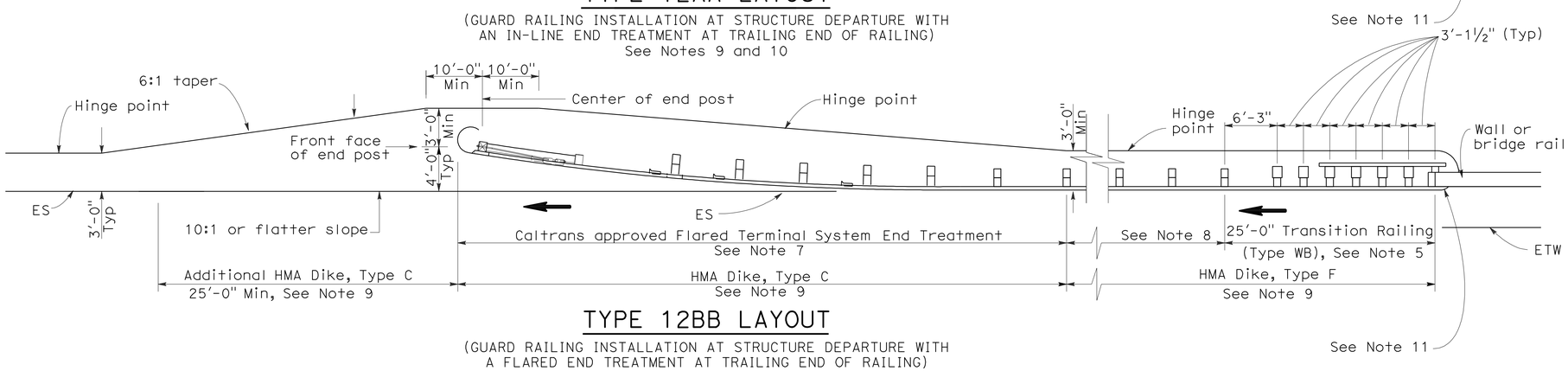

TYPE 12BB LAYOUT

(GUARD RAILING INSTALLATION AT STRUCTURE DEPARTURE WITH A FLARED END TREATMENT AT TRAILING END OF RAILING)
See Notes 9 and 10

NOTES:

1. Line post, blocks and hardware to be used are shown on Standard Plans A77A1, A77A2, A77B1, A77C1 and A77C2.
2. Guard rail post spacing to be 6'-3" center to center, except as otherwise noted.
3. Except as noted, line posts are 6" x 8" x 6'-0" wood with 6" x 8" x 1'-2" wood blocks. W6 x 9 steel posts, 6'-0" in length, with 6" x 8" x 1-2" notched wood blocks or notched recycled plastic blocks may be used for 6" x 8" x 6'-0" wood posts with 6" x 8" x 1'-2" wood blocks where applicable and when specified.
4. Direction of adjacent traffic indicated by ➡.
5. For Transition Railing (Type WB) details for Types 12AA and 12BB Layouts, see Standard Plan A77J4.
6. In-line Terminal System Treatments are used where site conditions will not accommodate a flared end treatment.
7. The type of terminal system to be used will be shown on the Project Plans.
8. Dependent on site conditions (embankment height, side slopes, other fixed objects), it may be advisable to construct additional guard railing (a length equal to multiples of 12'-6" with 6'-3" post spacing) between the transition railing and end treatments.
9. Where placement of dike is required with guard railing installations, see Revised Standard Plan RSP A77C4 for dike positioning details.
10. Type 12AA or Type 12BB Layouts are typically used to the right of traffic departing a structure on two-way conventional highways where the roadbed width across the structure is less than 40 feet.
11. For additional details of typical connections to bridge rail, see Connection Detail CC on Revised Standard Plan RSP A77J2 and Connection Detail HH on Standard Plans A77k2.

STATE OF CALIFORNIA
DEPARTMENT OF TRANSPORTATION

METAL BEAM GUARD RAILING TYPICAL LAYOUTS FOR STRUCTURE DEPARTURE

NO SCALE

RSP A77F4 DATED JUNE 6, 2008 SUPERSEDES STANDARD PLAN A77F4
DATED MAY 1, 2006 - PAGE 57 OF THE STANDARD PLANS BOOK DATED MAY 2006.

REVISED STANDARD PLAN RSP A77F4

2006 REVISED STANDARD PLAN RSP A77F4

12-10-07

DIST	COUNTY	ROUTE	POST MILES TOTAL PROJECT	SHEET NO.	TOTAL SHEETS
10	Tuo	108	R4.0/R6.0	155	237

Randell D. Hiatt
REGISTERED CIVIL ENGINEER

June 5, 2009
PLANS APPROVAL DATE

REGISTERED PROFESSIONAL ENGINEER
Randell D. Hiatt
No. C50200
Exp. 6-30-09
CIVIL
STATE OF CALIFORNIA

The State of California or its officers or agents shall not be responsible for the accuracy or completeness of electronic copies of this plan sheet.

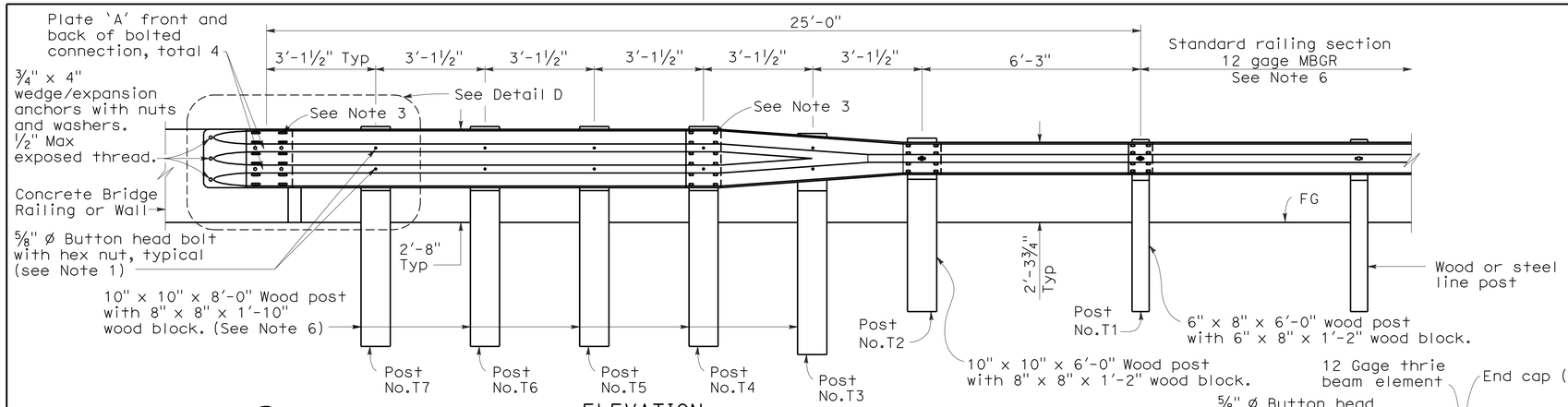

ELEVATION

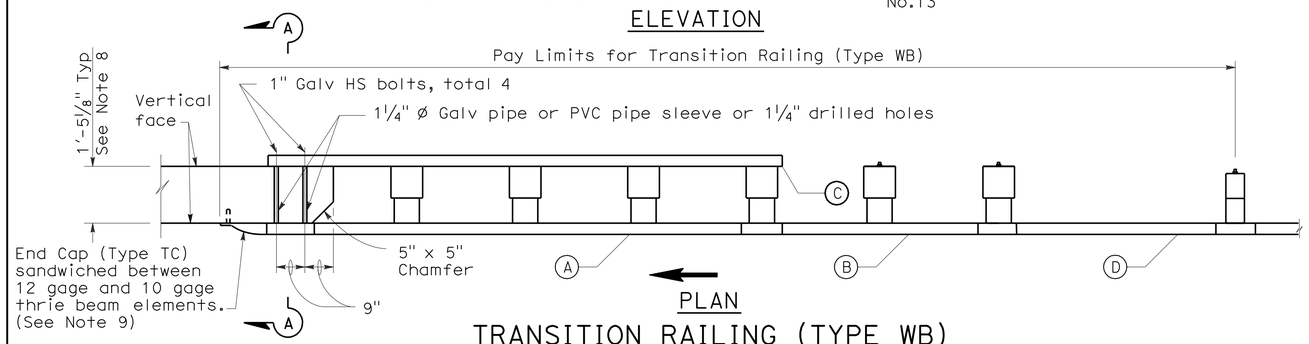

PLAN

TRANSITION RAILING (TYPE WB)

(No Blockout Attachment)

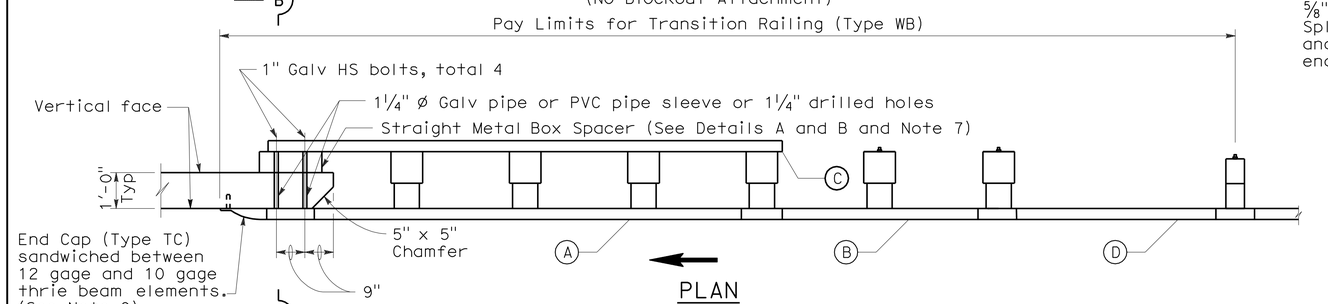

PLAN

TRANSITION RAILING (TYPE WB)

(Blockout Attachment)

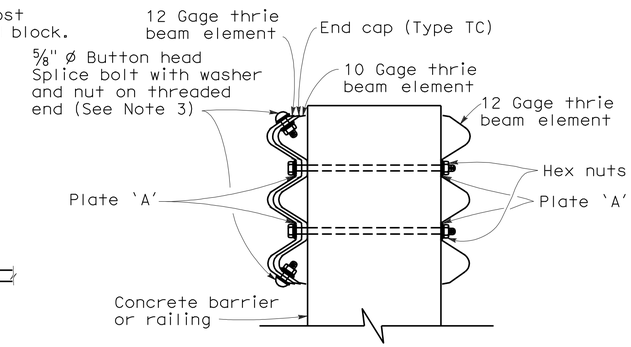

SECTION A-A

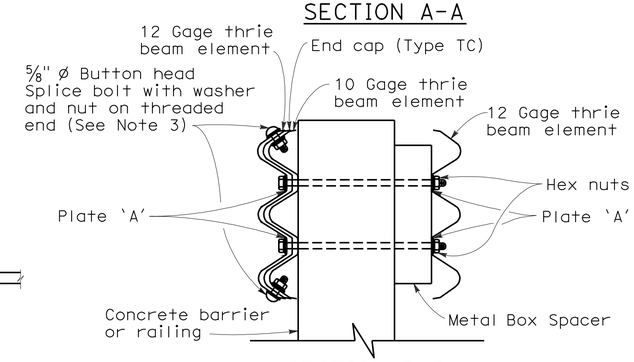

SECTION B-B

LEGEND

(A) Nested thrie beam elements (one 12 gage element nested over one 10 gage element).

(B) One 10 gage "W" beam to thrie beam element.

(C) One 12 gage thrie beam element.

(D) One 10 gage "W" beam rail element (7'-3½" length)

10 gage = 0.135" thick

12 gage = 0.108" thick

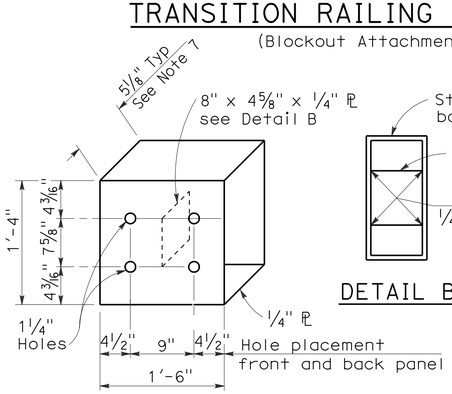

DETAIL A

STRAIGHT METAL BOX SPACER

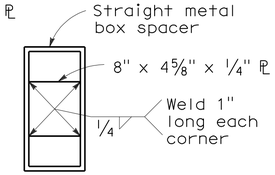

DETAIL B

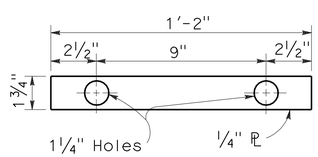

DETAIL C

PLATE 'A'

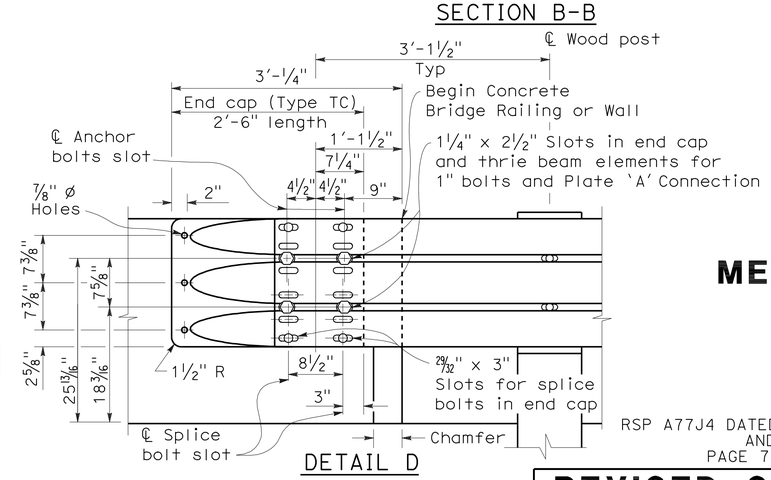

DETAIL D

NOTES:

To accompany plans dated 5-10-10

1. Use 5/8 " ø Button head bolts and hex nuts for connections to posts. No washer on rail face for bolted connections to post.
2. The nested rail elements, end cap, and 'W' beam to thrie beam element may be spliced together prior to bolting the elements to the wood post and concrete barrier or railing.
3. Exterior splice bolt holes for rail element splices at Post No.T4 and the connection to the concrete barrier or railing shall be the standard 29/32 " x 1 1/8 " slot size. Interior splice bolt holes at these locations may be increased up to 1 1/4 " ø. Only the top 2 and the bottom 2 splice bolts with washers and nuts are required for rail splices at Post No.T4 and the connection to the concrete barrier or railing.
4. Direction of adjacent traffic indicated by →.
5. The top elevation of Post Nos.T2 through T7 shall not project more than 1" above the top elevation of the rail element.
6. Typically, the railing connected to Transition Railing (Type WB) will be either standard railing section of metal beam guard railing or an approved Caltrans end treatment attached to Post No.T1.
7. The depth of the metal box spacer varies from the 5 1/8 " to 1 1/2 " and is dependent on the width of the concrete railing or wall. The combined dimension for the depth of the metal box spacer plus the width of railing or wall is typically 17 1/8 ". Where the space between the backside of the concrete railing or wall and the rear thrie beam element is less than 1 1/2 ", metal plates similar to Plate 'A' are to be used as spacers.
8. Where the width of the concrete railing or wall is greater than 17 1/8 ", wood blocks are to be used to fill the space created between the backside of Posts No.4 through No.7 and the rear thrie beam element. These wood blocks shall be 8" in width and 1'-2" in length. The dimension between the front thrie beam element and the rear thrie beam element is to match the width of the concrete railing or wall.
9. End cap may be installed over 12 gage and 10 gage thrie beam elements where transition railing is installed on the departure end of bridge railing.

STATE OF CALIFORNIA
DEPARTMENT OF TRANSPORTATION

METAL BEAM GUARD RAILING TRANSITION RAILING (TYPE WB)

NO SCALE

RSP A77J4 DATED JUNE 5, 2009 SUPERSEDES RSP A77J4 DATED JUNE 6, 2008 AND STANDARD PLAN A77J4 DATED MAY 1, 2006 - PAGE 75 OF THE STANDARD PLANS BOOK DATED MAY 2006.

REVISED STANDARD PLAN RSP A77J4

2006 REVISED STANDARD PLAN RSP A77J4

5-14-09

DIST	COUNTY	ROUTE	POST MILES TOTAL PROJECT	SHEET NO.	TOTAL SHEETS
10	Tuo	108	R4.0/R6.0	156	237

REGISTERED CIVIL ENGINEER

June 5, 2009
PLANS APPROVAL DATE

REGISTERED PROFESSIONAL ENGINEER Glenn DeCou No. C34547 Exp. 9-30-09 CIVIL STATE OF CALIFORNIA

The State of California or its officers or agents shall not be responsible for the accuracy or completeness of electronic copies of this plan sheet.

To accompany plans dated 5-10-10

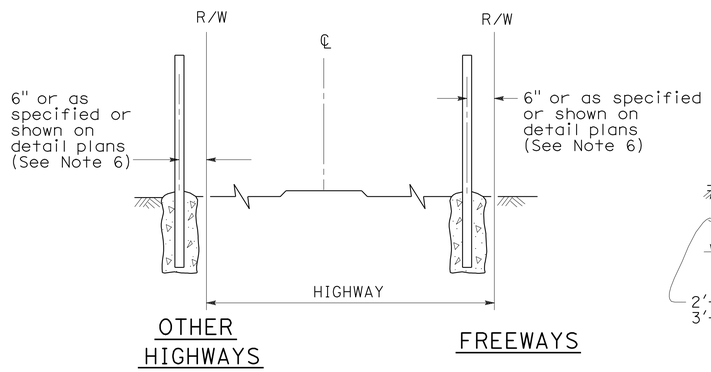

FENCE LOCATION

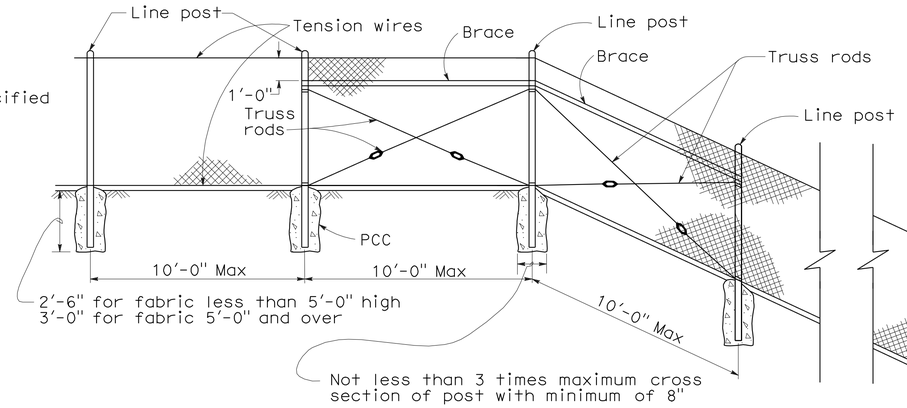

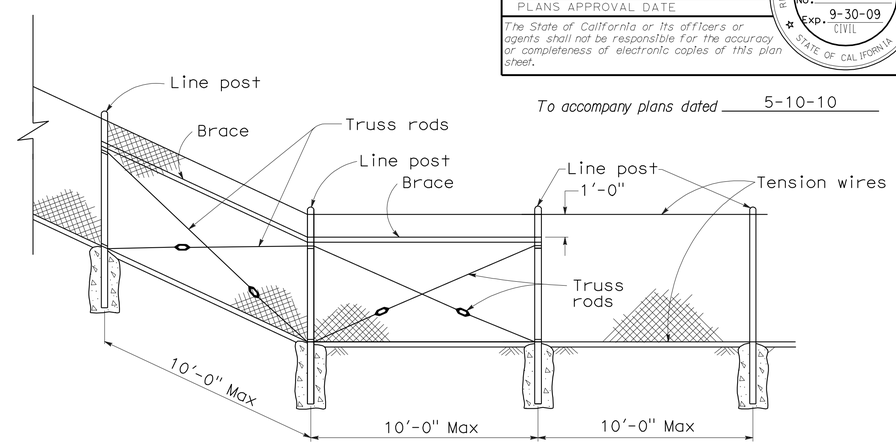

CHAIN LINK FENCE ON SHARP BREAK IN GRADE

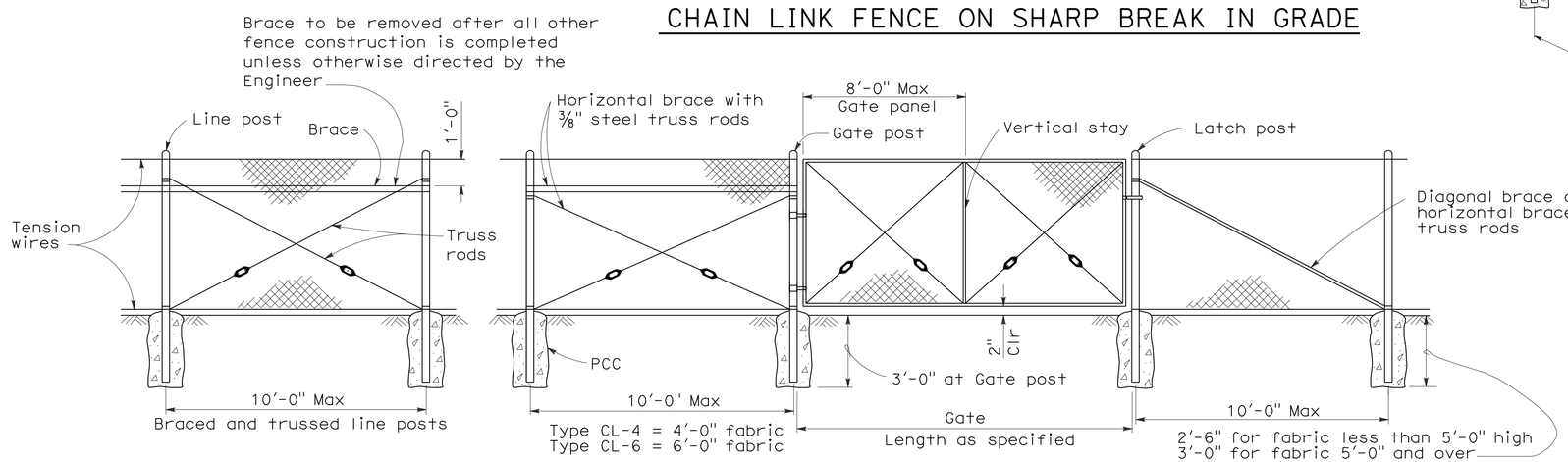

CHAIN LINK GATE INSTALLATION

GATE POST			
FENCE HEIGHT	GATE WIDTHS	NOMINAL ID	WEIGHT PER FOOT
6'-0" and Less	Up thru 6'-0"	2½"	4.95 LB
	Over 6'-0" thru 12'-0"	4"	10.79 LB
	Over 12'-0" thru 18'-0"	5"	14.62 LB
	Over 18'-0" to 24'-0" Max	6"	18.97 LB
Over 6'-0"	Up thru 6'-0"	3"	7.58 LB
	Over 6'-0" thru 12'-0"	5"	14.62 LB
	Over 12'-0" thru 18'-0"	6"	18.97 LB
	Over 18'-0" to 24'-0" Max	8"	28.55 LB

Above post dimensions and weights are minimums. Larger sizes may be used on approval of the Engineer.

NOTES:

1. The below table shows examples of post and brace sections which may comply with the Specifications.
2. Sections shown in the tables must also comply with the strength requirements and other provisions of the Specifications.
3. Other sections which comply with the strength requirements and other provisions of the Specifications may be used on approval of the Engineer.
4. Options exercised shall be uniform on any one project.
5. Dimensions shown are nominal.
6. Offset to be 2'-0" at monument locations, measured at right angles to R/W lines. Taper to achieve offset to be at least 20'-0" long.

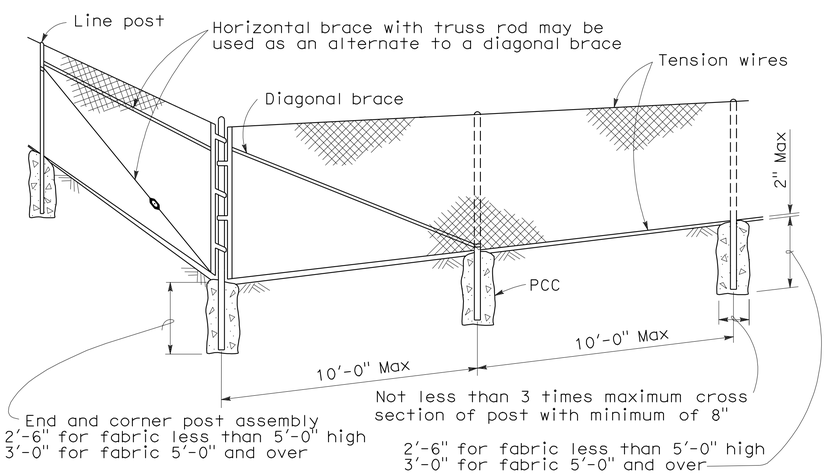

CORNER POST

TYPICAL MEMBER DIMENSIONS (See Notes)											
FENCE HEIGHT	LINE POSTS			END, LATCH & CORNER POSTS				BRACES			
	ROUND ID	H	ROLL FORMED	ROUND ID	ROLL FORMED			ROUND ID	H	ROLL FORMED	
6' & less	1½"	1⅞" × 1⅝"	1⅞" × 1⅝"	2"	3½" × 3½"	2" × 1¾"		1¼"	1½" × 1 5/16"	1⅝" × 1¼"	1¾" × 1¼"
Over 6'	2"	2¼" × 2"	2" × 1¾"	2½"	3½" × 3½"	2½" × 2½"		1¼"	1½" × 1 5/16"	1⅝" × 1¼"	1¾" × 1¼"

STATE OF CALIFORNIA
DEPARTMENT OF TRANSPORTATION

CHAIN LINK FENCE

NO SCALE

RSP A85 DATED JUNE 5, 2009 SUPERSEDES STANDARD PLAN A85
DATED MAY 1, 2006 - PAGE 111 OF THE STANDARD PLANS BOOK DATED MAY 2006.

REVISED STANDARD PLAN RSP A85

2006 REVISED STANDARD PLAN RSP A85

5-7-09

DIST	COUNTY	ROUTE	POST MILES TOTAL PROJECT	SHEET NO.	TOTAL SHEETS
10	Tuo	108	R4.0/R6.0	157	237

REGISTERED CIVIL ENGINEER

June 5, 2009
PLANS APPROVAL DATE

REGISTERED PROFESSIONAL ENGINEER Glenn DeCou No. C34547 Exp. 9-30-09 CIVIL STATE OF CALIFORNIA

The State of California or its officers or agents shall not be responsible for the accuracy or completeness of electronic copies of this plan sheet.

To accompany plans dated 5-10-10

NOTES:

1. H is 2'-6" for fabric less than 5'-0" high.
   H is 3'-0" for fabric 5'-0" and over.
2. T is not less than 3 times maximum cross section of post with minimum of 8".
3. Arms with barbed wire to be used where shown on plans.
4. See Revised Standard Plan RSP A85 for Chain Link Fencing dimensions.
5. Reinforcing must comply with ASTM A 706.
6. See Detail A on New Standard Plan NSP A86B for connection at headwall.

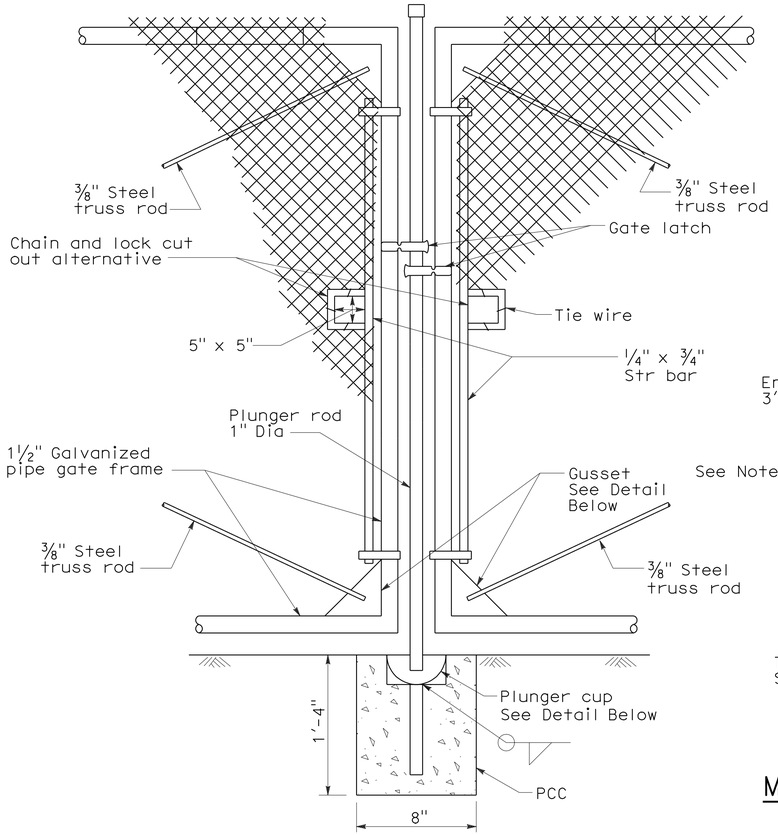

TYPICAL DOUBLE GATE
REMOVABLE CENTER POST

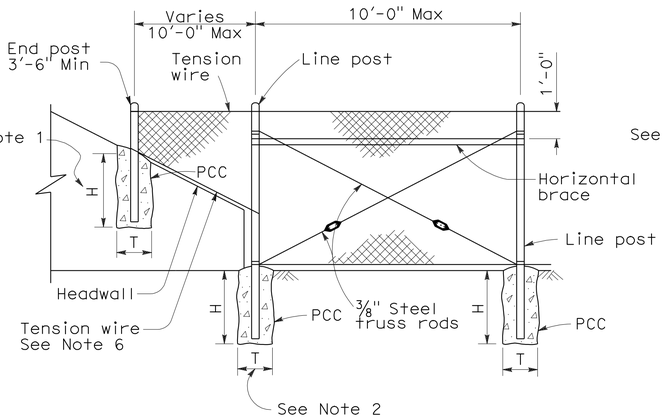

METHOD OF TYING FENCE TO HEADWALL

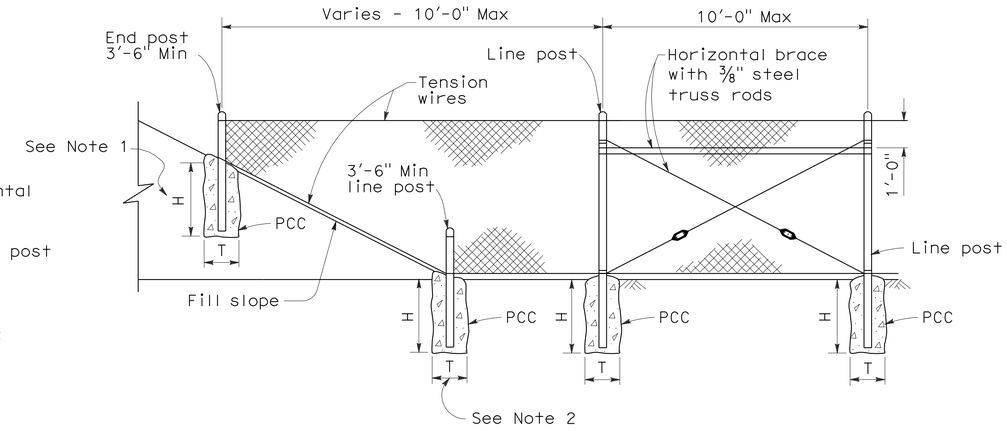

METHOD OF ERECTING FENCE FOR FILL SLOPE

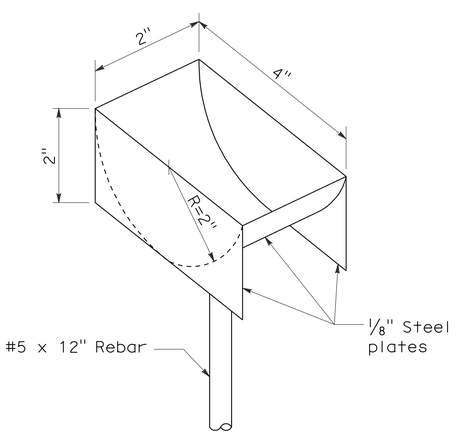

PLUNGER CUP DETAIL

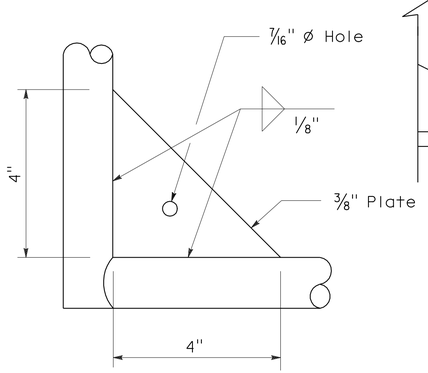

GUSSET DETAIL

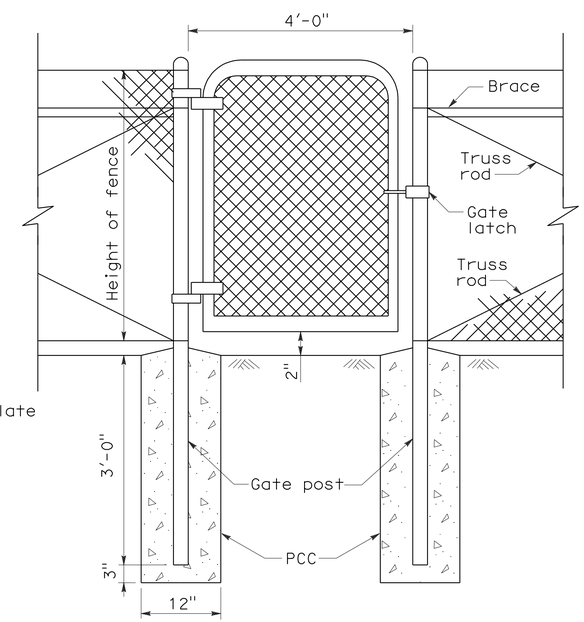

WALK GATE

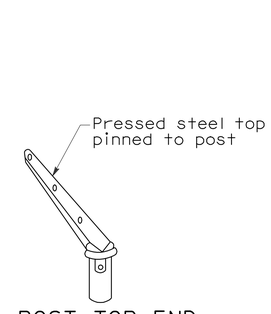

POST TOP END

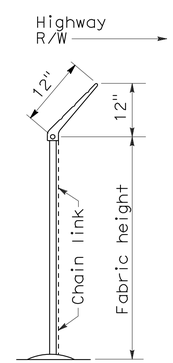

END ELEVATION

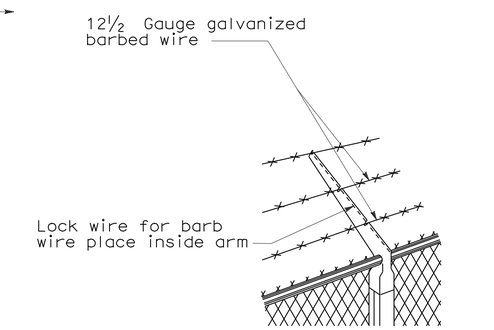

LINE POST TOP
Vertical arms when desired

BARBED WIRE POST TOP
See Note 3

STATE OF CALIFORNIA
DEPARTMENT OF TRANSPORTATION

CHAIN LINK FENCE DETAILS

NO SCALE

NSP A85A DATED JUNE 5, 2009 SUPPLEMENTS THE STANDARD PLANS BOOK DATED MAY 2006.

NEW STANDARD PLAN NSP A85A

2006 NEW STANDARD PLAN NSP A85A

5-7-09

DIST	COUNTY	ROUTE	POST MILES TOTAL PROJECT	SHEET NO.	TOTAL SHEETS
10	Tuo	108	R4.0/R6.0	158	237

REGISTERED CIVIL ENGINEER

June 5, 2009
PLANS APPROVAL DATE

REGISTERED PROFESSIONAL ENGINEER Glenn DeCou No. C34547 Exp. 9-30-09 CIVIL STATE OF CALIFORNIA

The State of California or its officers or agents shall not be responsible for the accuracy or completeness of electronic copies of this plan sheet.

To accompany plans dated 5-10-10

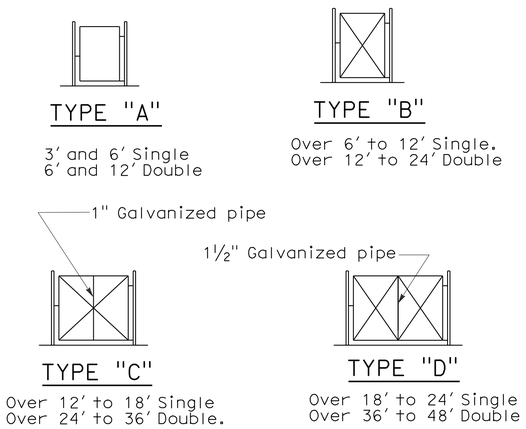

TYPICAL FRAMEWORK SHOWING NUMBER OF BAYS IN GATE

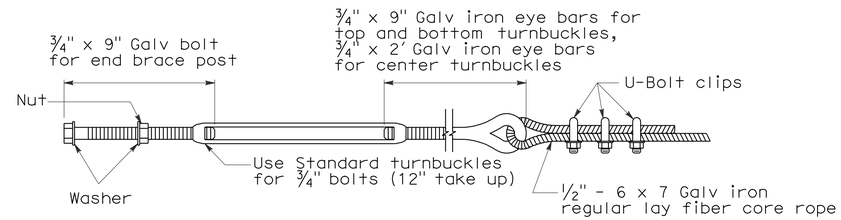

TURNBUCKLE A

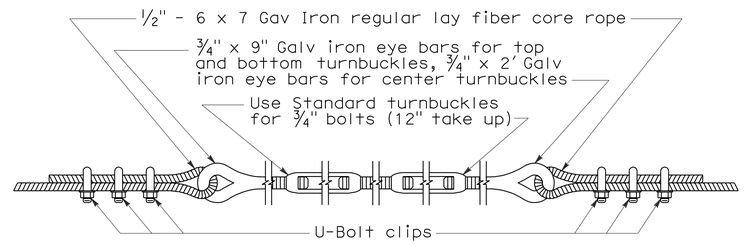

TURNBUCKLE B

NOTES:

1. All material for abutment connection to be galvanized.
2. The chain link fabric shall be replaced by barbed wire strands at 12" maximum centers between the double posts.
3. When the width of the culvert makes it necessary to anchor a post to the top of the culvert, a cast iron shoe or other device approved by the Engineer shall be used.
4. Fencing over stream and around headwall may also use Barbed Wire or Wire Mesh fencing with either wood post or steel post installation.
5. See Revised Standard Plan RSP A85 for Chain Link fence dimensions. See Standard Plan A86 for Barbed Wire and Wire Mesh fence dimensions and for wood post and steel post installation.

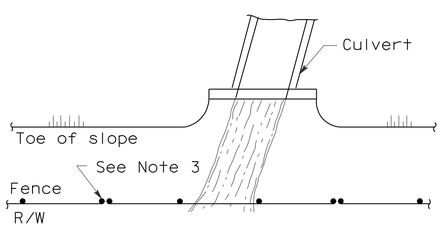

PLAN

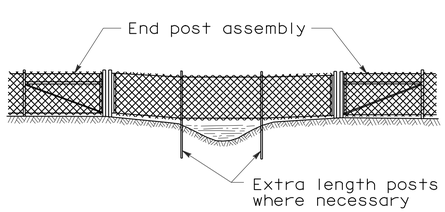

ELEVATION

INSTALLATION OVER STREAM

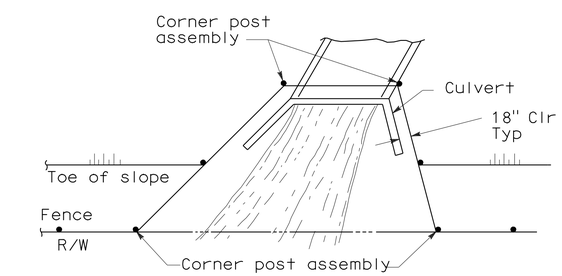

PLAN

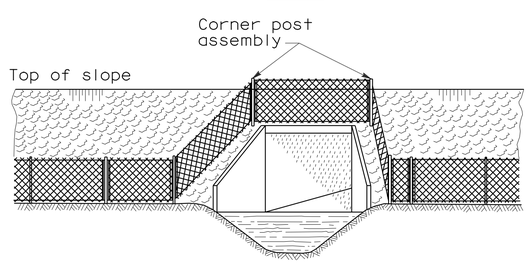

ELEVATION

INSTALLATION AROUND HEADWALL

See Note 4

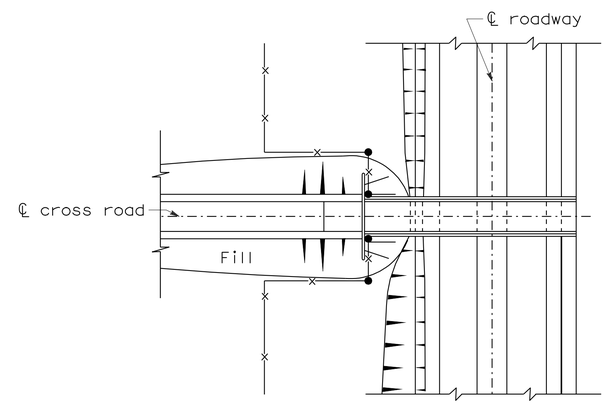

PLAN OF ROADWAY - UNDERPASS

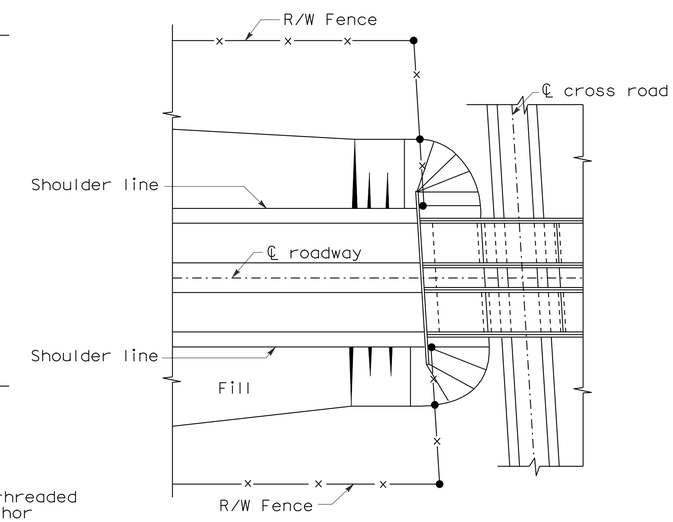

PLAN OF ROADWAY - OVERPASS

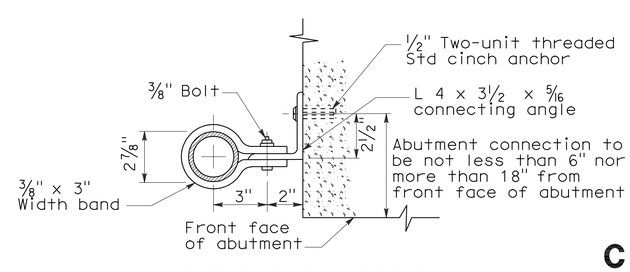

ABUTMENT CONNECTION

TYPICAL INSTALLATION AT BRIDGES

STATE OF CALIFORNIA
DEPARTMENT OF TRANSPORTATION

CHAIN LINK FENCE DETAILS

NO SCALE

NSP A85B DATED JUNE 5, 2009 SUPPLEMENTS THE STANDARD PLANS BOOK DATED MAY 2006.

NEW STANDARD PLAN NSP A85B

2006 NEW STANDARD PLAN NSP A85B

5-12-09

DIST	COUNTY	ROUTE	POST MILES TOTAL PROJECT	SHEET NO.	TOTAL SHEETS
10	Tuo	108	R4.0/R6.0	159	237

REGISTERED CIVIL ENGINEER

November 17, 2006
PLANS APPROVAL DATE

REGISTERED PROFESSIONAL ENGINEER
Michael Janzen
No. 44788
Exp. 03-31-08
CIVIL
STATE OF CALIFORNIA

The State of California or its officers or agents shall not be responsible for the accuracy or completeness of electronic copies of this plan sheet.

To accompany plans dated 5-10-10

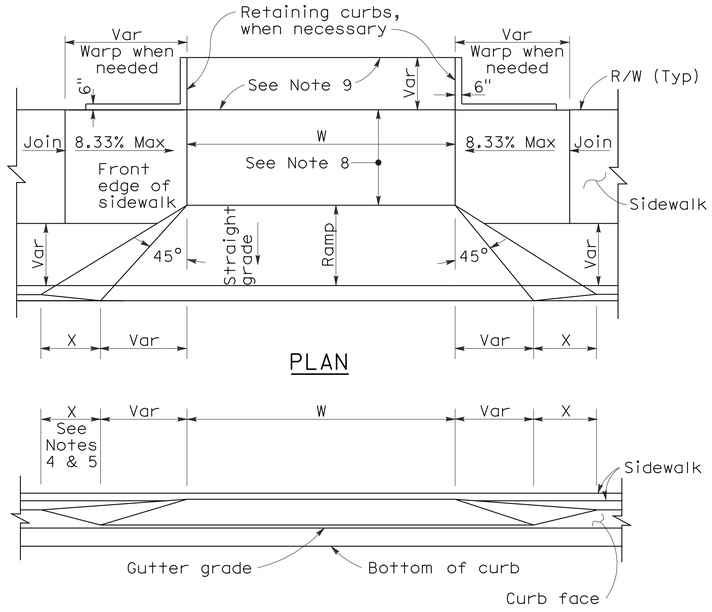

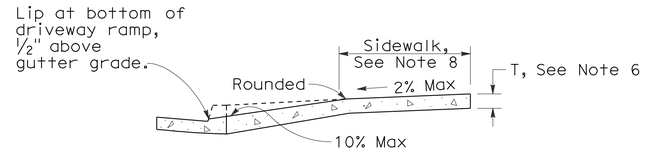

CASE A

Typical driveway, sidewalk not depressed

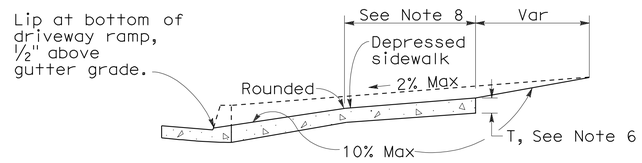

CASE B

Driveway with depressed sidewalk

SECTIONS

CURB QUANTITIES

TYPE	CUBIC YARDS PER LINEAR FOOT
A1-6	0.02585
A1-8	0.03084
A2-6	0.05903
A2-8	0.06379
A3-6	0.01036
A3-8	0.01435
B1-4	0.02185
B1-6	0.02930
B2-4	0.05515
B2-6	0.06171
B3-4	0.00641
B3-6	0.01074
B4	0.05709
D-4	0.04083
D-6	0.06804
E	0.06661

TABLE A

CURB TYPE	DIMENSIONS "H1"	"H2"	"W1"	"W2"
A1-6	1'-2"	6"	7½"	1½"
A1-8	1'-4"	8"	8"	2"
A2-6	1'-0"	6"	2'-7½"	1½"
A2-8	1'-2"	8"	2'-8"	2"
A3-6	6"	5"	7¼"	1¼"
A3-8	8"	7"	7¾"	1¾"
B1-4	1'-0"	4"	7½"	2½"
B1-6	1'-2"	6"	9"	4"
B2-4	10"	4"	2'-7½"	2½"
B2-6	1'-0"	6"	2'-9"	4"
B3-4	4"	3"	7"	2"
B3-6	6"	5"	8½"	3½"
D-4	10"	4"	1'-6"	1'-1"
D-6	1'-0"	6"	2'-2"	1'-8"

DRIVEWAYS

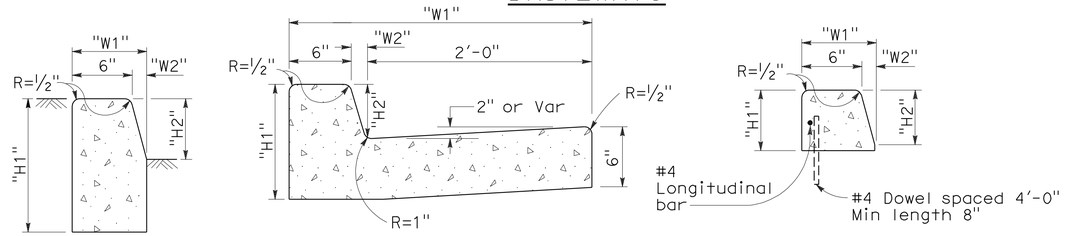

TYPE A1 CURBS
See Table A

TYPE A2 CURBS
See Table A

TYPE A3 CURBS
Superimposed on existing pavement
See Table A

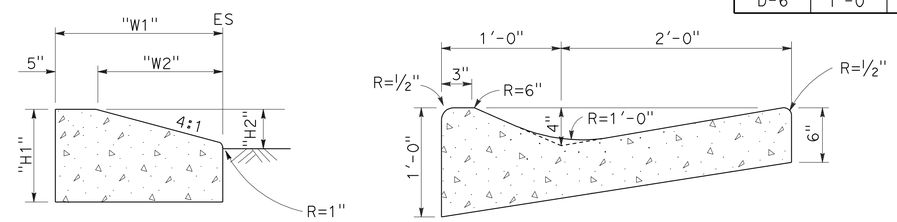

TYPE D CURBS
See Table A

TYPE E CURB

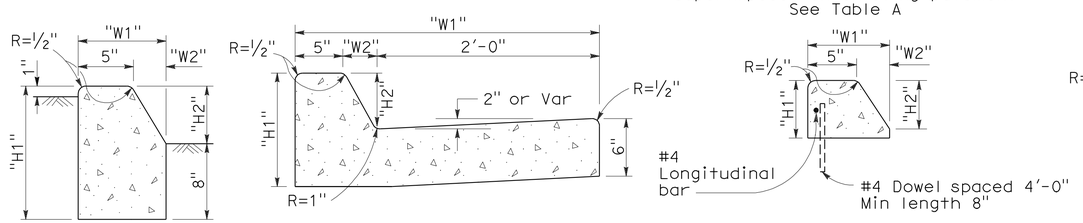

TYPE B1 CURBS
See Table A

TYPE B2 CURBS
See Table A

TYPE B3 CURBS
Superimposed on existing pavement
See Table A

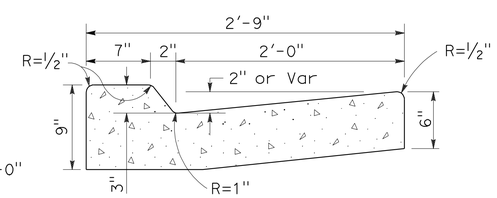

TYPE B4 CURBS

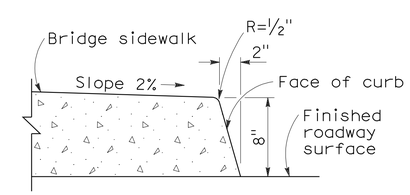

TYPE H CURB
On Bridges

CURBS

NOTES:

1. Case A driveway section typically applies.
2. Use Case B driveway section when ramp slopes would exceed 10% in Case A.
3. Use Case B driveway section when sidewalk cross slope would exceed 2% in Case A.
4. X=3'-0" except for curb heights over 10" where 4:1 slopes shall be used on curb slope.
5. X is a variable when sidewalk is located where wheelchairs may traverse the surface. Slopes shall not exceed 8.33%.
6. Sidewalk and ramp thickness "T" at driveway shall be 4" for residental and 6" for commercial.
7. Difference in slope of the driveway ramp and the slope of a line between the gutter and a point on the roadway 5'-0" from gutter line shall not exceed 15%. Reduce driveway ramp slope, not gutter slope, where required.
8. Minimum width of clear passageway for sidewalk shall be 4'-0".
9. Retaining curbs and acquisition of construction easement may be necessary for narrow sidewalks or curb heights in excess of 6".
10. Across the pedestrian route at curb ramp locations, the gutter pan slope shall not exceed 1" of depth for each 2'-0" of width.

STATE OF CALIFORNIA
DEPARTMENT OF TRANSPORTATION

CURBS AND DRIVEWAYS

NO SCALE

RSP A87A DATED NOVEMBER 17, 2006 SUPERSEDES STANDARD PLAN A87A DATED MAY 1, 2006 - PAGE 113 OF THE STANDARD PLANS BOOK DATED MAY 2006.

REVISED STANDARD PLAN RSP A87A

2006 REVISED STANDARD PLAN RSP A87A

10-25-06

DIST	COUNTY	ROUTE	POST MILES TOTAL PROJECT	SHEET NO.	TOTAL SHEETS
10	Tuo	108	R4.0/R6.0	160	237

REGISTERED CIVIL ENGINEER

June 6, 2008
PLANS APPROVAL DATE

REGISTERED PROFESSIONAL ENGINEER
Raymond Don Tsztoo
No. C37332
Exp. 6-30-08
CIVIL
STATE OF CALIFORNIA

The State of California or its officers or agents shall not be responsible for the accuracy or completeness of electronic copies of this plan sheet.

To accompany plans dated 5-10-10

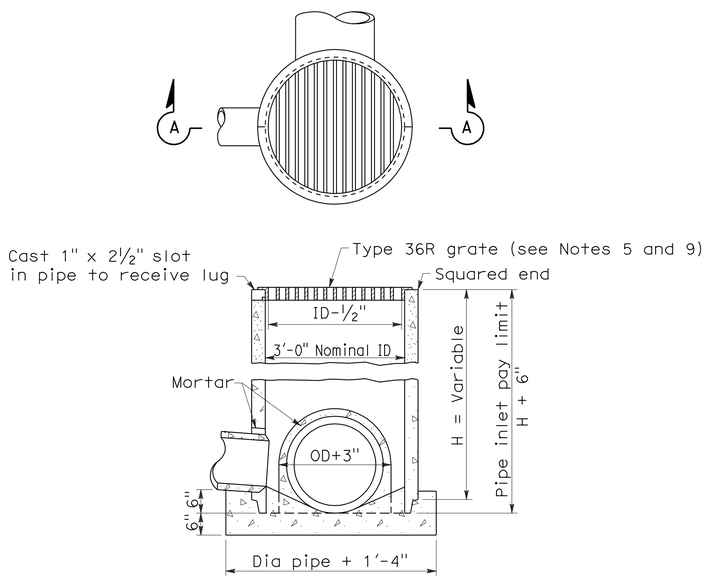

SECTION A-A

TYPE GCP

CONCRETE PIPE INLET WITH GRATE

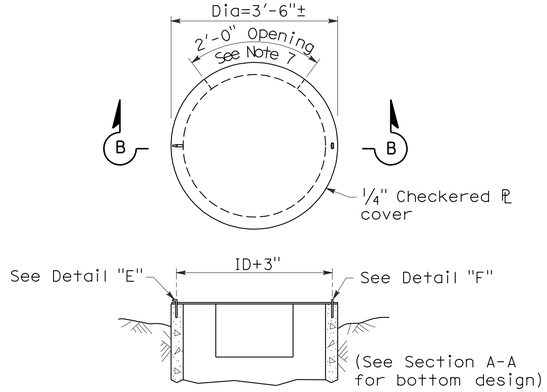

SECTION B-B

TYPE OCP or OCPI

CONCRETE PIPE INLET WITH STEEL COVER
(See Note 6)

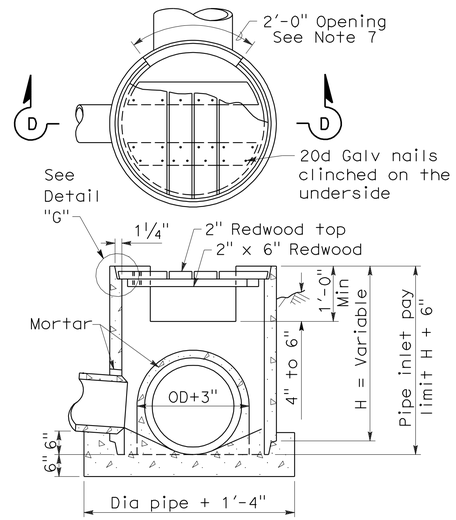

SECTION D-D

TYPE OCP or OCPI

CONCRETE PIPE INLET WITH REDWOOD COVER
(See Notes 6 and 10)

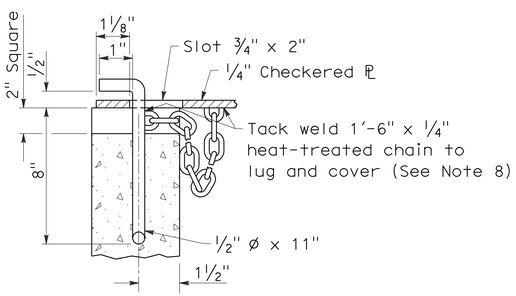

DETAIL "E"

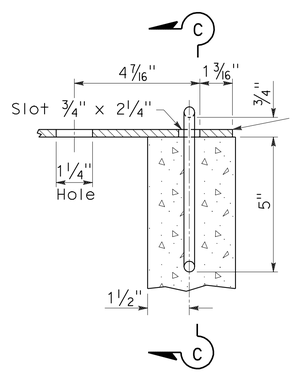

DETAIL "F"

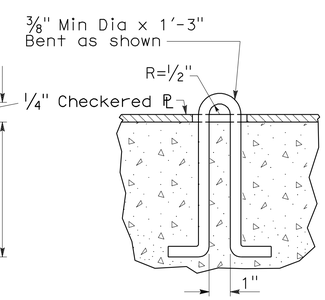

SECTION C-C

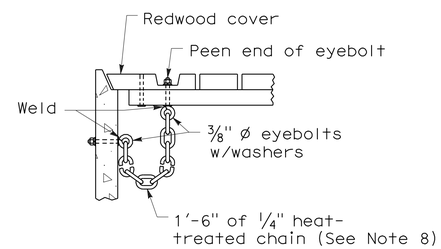

DETAIL "G"

NOTES:

1. For details of steel pipe inlets, see Standard Plan D75A.
2. For details of ladder and steps and when ladder or steps are required, see Standard Plan D75C.
3. Inlet pipes shall not protrude into basin.
4. Except for inlets used for junction boxes, basin floors shall have minimum slope of 4:1 from all directions toward outlet pipe, and a wood trowel finish.
5. See Revised Standard Plan RSP D77A and Standard Plan D77B for Grate and Frame Details and Weights of Miscellaneous Iron and Steel.
6. Designation of Type OCPI pipe inlets on plans indicates trash racks are to be furnished and installed on all side openings. See Standard Plan D75C for Trash Rack details.
7. More than one side opening may be required. Location and number as ordered by the Engineer. Opening may be cast in pipe.
8. Chain to be provided when specified.
9. Place pipe so bars of grate will be parallel with main surface flow.
10. Redwood covers shall only be placed at locations designated on the plans.

STATE OF CALIFORNIA
DEPARTMENT OF TRANSPORTATION

CONCRETE PIPE INLETS

NO SCALE

RSP D75B DATED JUNE 6, 2008 SUPERSEDES STANDARD PLAN D75B
DATED MAY 1, 2006 - PAGE 153 OF THE STANDARD PLANS BOOK DATED MAY 2006.

REVISED STANDARD PLAN RSP D75B

2006 REVISED STANDARD PLAN RSP D75B

5-20-08

DIST	COUNTY	ROUTE	POST MILES TOTAL PROJECT	SHEET NO.	TOTAL SHEETS
10	Tuo	108	R4.0/R6.0	161	237

Raymond Don Tsztoo
REGISTERED CIVIL ENGINEER

January 18, 2008
PLANS APPROVAL DATE

REGISTERED PROFESSIONAL ENGINEER
Raymond Don Tsztoo
No. C37332
Exp. 6-30-08
CIVIL
STATE OF CALIFORNIA

The State of California or its officers or agents shall not be responsible for the accuracy or completeness of electronic copies of this plan sheet.

To accompany plans dated 5-10-10

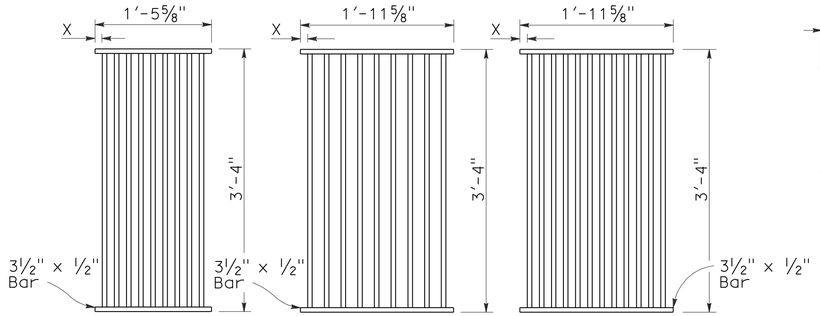

TYPE 18-9

1⅜" Clear spacing. Use within the roadbed on highways where bicycles and pedestrians are excluded.

TYPE 24-9

2" Clear spacing. Use in locations off the roadbed on all types of highways.

TYPE 24-12

1⅜" Clear spacing. Use within the roadbed on highways where bicycles and pedestrians are excluded.

RECTANGULAR GRATE DETAILS

(See table below)

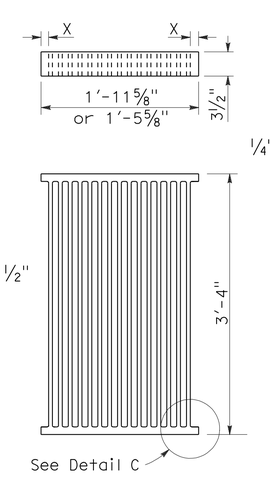

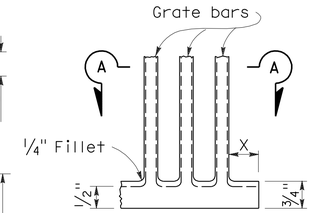

DETAIL C

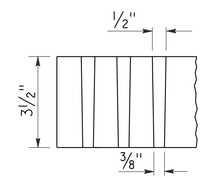

SECTION A-A

ALTERNATIVE CAST NODULAR IRON GRATE OR CAST STEEL GRATE

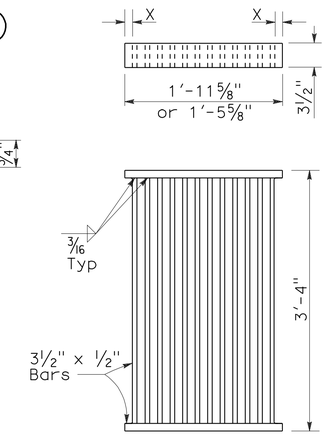

ALTERNATIVE WELDED GRATE

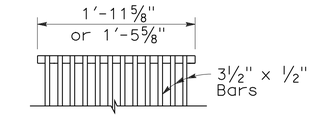

CAST END BLOCK

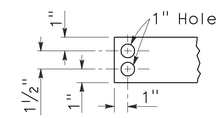

END OF BAR

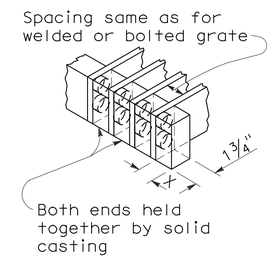

ALTERNATIVE CAST NODULAR IRON OR CAST STEEL END BLOCK GRATE

NOTES:

1. Grate type numbers refer to approximate width of grate in inches and number of bars, respectively.
2. Contractor has the option of using cast nodular iron, cast steel, welded, bolted, or cast end block grate.
3. See Special Provisions for requirements pertaining to galvanizing or asphalt dipping of grates and frames.
4. Rounded top of bars optional on all grates.
5. Pipe inlets with a grate shall be placed so that bars parallel direction of principle surface flow.
6. Full penetration butt welds may be substituted for the fillet welds on all anchors.
7. Standard square, hexagon, round or equivalent headed anchors may be substituted for the right angle hooks on the anchors shown on this plan.
8. Grate and frame weights are based on welded grates (weights of face angles, steps, protection bars, etc. are not included).

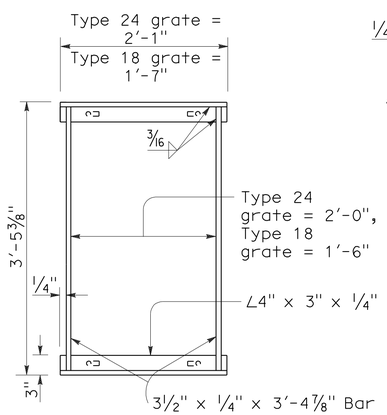

TYPICAL FRAME

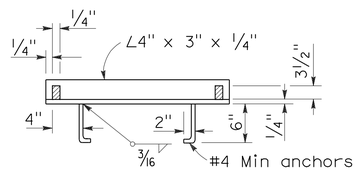

CROSS SECTION

(Thru frame)

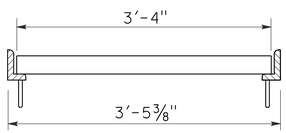

LONGITUDINAL SECTION

(Thru frame and grate)

RECTANGULAR FRAME DETAILS

(For all rectangular grates)

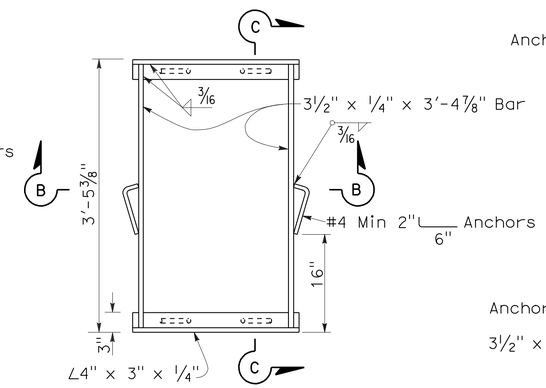

TYPICAL FRAME

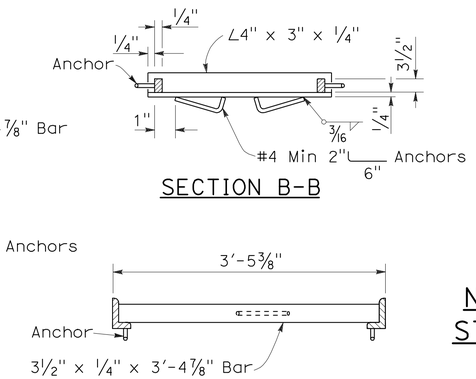

SECTION B-B

SECTION C-C

ALTERNATIVE ANCHOR FOR RECTANGULAR FRAME

(For details not shown, See Rectangular Frame Details)

INLET TYPE	GRATE TYPE	No. OF GRATES	WEIGHT LB
GDO	24-12	2	634
GOL-7	24-12	1	326
GOL-10	24-12	1	326
GO,G1,G2,G3,G4 (TYPE 24)	24-9	1	263
	24-12	1	326
G4 (TYPE 18),G5,G6	18-9	1	249
GT1	18-9	2	498
GT2	18-9	2	498
GT3	24-12	2	652
GT4	24-12	2	652
TRASH RACK			22

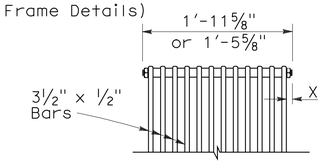

BOLTED END BLOCK

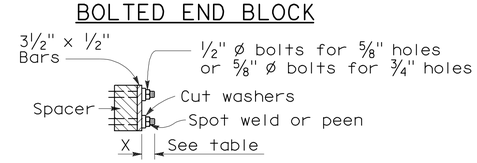

BOLTING DETAIL

ALTERNATIVE BOLTED GRATE

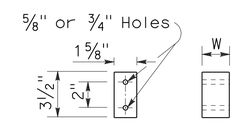

BAR SPACER

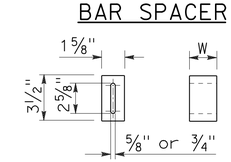

ALTERNATIVE SPACER

W = 1⅜" or 2"

GRATE BAR SPACING TABLE

TYPE	No. OF BARS	CLEAR BAR SPACING	X
18-9	9	1⅜"	1 1/16"
24-9	9	2"	1 9/16"
24-12	12	1⅜"	1¼"

INLET TYPE	COVER TYPE	WEIGHT LB
OS	PLATE	174
OL-7	PLATE	170
OL-10	PLATE	170
OL-14	PLATE	170
OL-21	PLATE	170
OCP	PLATE	112
OCPI	PLATE	112
OCPI	REDWOOD	42
OMP	PLATE	177
OMPI	PLATE	177

BASIS FOR MISC IRON & STEEL FINAL PAY WEIGHTS FOR DRAINAGE INLETS

(See General Notes, No 8)

STATE OF CALIFORNIA
DEPARTMENT OF TRANSPORTATION

GRATE DETAILS

NO SCALE

RSP D77A DATED JANUARY 18, 2008 SUPERSEDES STANDARD PLAN D77A DATED MAY 1, 2006 - PAGE 155 OF THE STANDARD PLANS BOOK DATED MAY 2006.

REVISED STANDARD PLAN RSP D77A

2006 REVISED STANDARD PLAN RSP D77A

12-14-07

DIST	COUNTY	ROUTE	POST MILES TOTAL PROJECT	SHEET NO.	TOTAL SHEETS
10	Tuo	108	R4.0/R6.0	162	237

Raymond Don Tsztoo
REGISTERED CIVIL ENGINEER

June 6, 2008
PLANS APPROVAL DATE

REGISTERED PROFESSIONAL ENGINEER
Raymond Don Tsztoo
No. C37332
Exp. 6-30-08
CIVIL
STATE OF CALIFORNIA

The State of California or its officers or agents shall not be responsible for the accuracy or completeness of electronic copies of this plan sheet.

To accompany plans dated 5-10-10

ANNULAR AND HELICAL PROFILE

COUPLING TYPE	PIPE CORRUGATION	PIPE SIZE	W OR A	PIPE WALL THICKNESS		BAND THICKNESS		BAR AND STRAP (CSP ONLY)			ANGLE						
											DIMENSIONS		BOLTS (No.- Dia)		RIVETS ANGLE TO BAND		SPOT WELDS ANGLE TO BAND
				CSP	CAP	CSP	CAP	STRAP THICKNESS	BOLTS Dia	BAR Dia	CSP	CAP	CSP	CAP	CSP	CAP	CSP
TWO PIECE INTEGRAL FLANGE	1½′ × ¼″	6″	7″	0.064″-0.168″		0.052″							3-⅜″				
	1½′ × ¼″	8″-10″	7″	0.064″-0.168″	0.060″-0.164″	0.064″	0.060″						3-⅜″	3-⅜″			
ANNULAR	2⅔″ × ½″	THROUGH 24″	12″	0.064″-0.168″	0.060″-0.164″	0.064″	0.060″				2″ × 2″ × 3⁄16″	2″ × 2″ × 3⁄16″	3-½″	3-½″	3-⅜″	3-⅜″	3-½″
HUGGER	2⅔″ × ½″ REROLLED END	THROUGH 24″	10½″	0.064″-0.168″		0.064″		0.079″	½″	⅞″							

SPIRAL RIB PROFILE

COUPLING TYPE	PIPE CORRUGATION	PIPE SIZE	W	PIPE WALL THICKNESS		BAND THICKNESS		BAR AND STRAP (SSRP ONLY)			ANGLE						
											DIMENSIONS		BOLTS (No.- Dia)		RIVETS ANGLE TO BAND		SPOT WELDS ANGLE TO BAND
				SSRP	ASRP	SSRP	ASRP	STRAP THICKNESS	BOLTS Dia	BAR Dia	SSRP	ASRP	SSRP	ASRP	SSRP	ASRP	SSRP
ANNULAR	2⅔″ × ½″ * REROLLED END	24″	12″	0.064″-0.168″	0.060″-0.164″	0.064″	0.060″				2″ × 2″ × 3⁄16″	2″ × 2″ × 3⁄16″	3-½″	3-½″	3-⅜″	3-⅜″	3-½″
HUGGER	2⅔″ × ½″ * REROLLED END	24″	10½″	0.064″-0.168″		0.064″		0.079″	½″	⅞″							

* See Note 12.

NOTES:

1. All ferrous metal coupling band connection hardware shall be galvanized or electro-plated in accordance with the Standard Specifications.
2. For helically corrugated coupling bands, the connection angles may be oriented parallel to the pipe axis, provided connecting holes are slotted lengthwise sufficiently to allow adjustment for the helix angle.
3. Tension strap may be connected to band with either spot welds or fillet welds that develop minimum required strength of strap.
4. Use 1¼″ gage line dimension on attached angle leg for rivets and spot welds.
5. Band thickness shall not be less than:
   a. 3 standard thicknesses lighter than the thickness of the pipe for Corrugated Steel Pipe.
   b. 2 standard thicknesses lighter than the thickness of the pipe and in no case lighter than 0.060″ for Corrugated Aluminum Pipe.
6. Dimensions, thicknesses and strengths shown are minimum.
7. For pipe arches use same width band as for round pipe of equal periphery.
8. Fillet welds of equivalent strenght may be substituted for spot welds or rivets.
9. Spot welds shall develop minimum required strength of strap.
10. Pipe with rerolled ends having at least two 2⅔″ × ½″ annular corrugations at each end with or without an upturned flange may be connected with any of the annular coupling bands shown for pipe of the same diameter and wall thickness and having 2⅔″ × ½″ corrugations.
11. For downdrain applications, two piece integral flange couplers shall have factory applied sleeve type rubber gaskets with a minimum length of 7″ measured along the length of the pipe.
12. All profiles of Spiral Rib Pipe (¾″ × ¾″ ribs at 7½″ pitch and ¾″ × 1″ ribs at 11½″ pitch in both steel and aluminum and ¾″ × 1″ ribs at 8½″ pitch in steel only) shall be manufactured with rerolled ends. Corrugation profile of the rerolled ends shall be 2⅔″ × ½″ annual corrugations with a minimum of two full corrugations at each end.

STATE OF CALIFORNIA
DEPARTMENT OF TRANSPORTATION

CORRUGATED METAL PIPE COUPLING DETAILS No. 7 DOWNDRAIN

NO SCALE

RSP D97G DATED JUNE 6, 2008 SUPERSEDES STANDARD PLAN D97G
DATED MAY 1, 2006 - PAGE 189 OF THE STANDARD PLANS BOOK DATED MAY 2006.

REVISED STANDARD PLAN RSP D97G

2006 REVISED STANDARD PLAN RSP D97G

4-4-08

DIST	COUNTY	ROUTE	POST MILES TOTAL PROJECT	SHEET NO.	TOTAL SHEETS
10	Tuo	108	R4.0/R6.0	163	237

LICENSED LANDSCAPE ARCHITECT

June 5, 2009
PLANS APPROVAL DATE

The State of California or its officers or agents shall not be responsible for the accuracy or completeness of electronic copies of this plan sheet.

LICENSED LANDSCAPE ARCHITECT — Gregory A. Balzer 2878 — Expiration 2-28-11 (Renewal Date) — 5-14-09 Date — STATE OF CALIFORNIA

To accompany plans dated 5-10-10

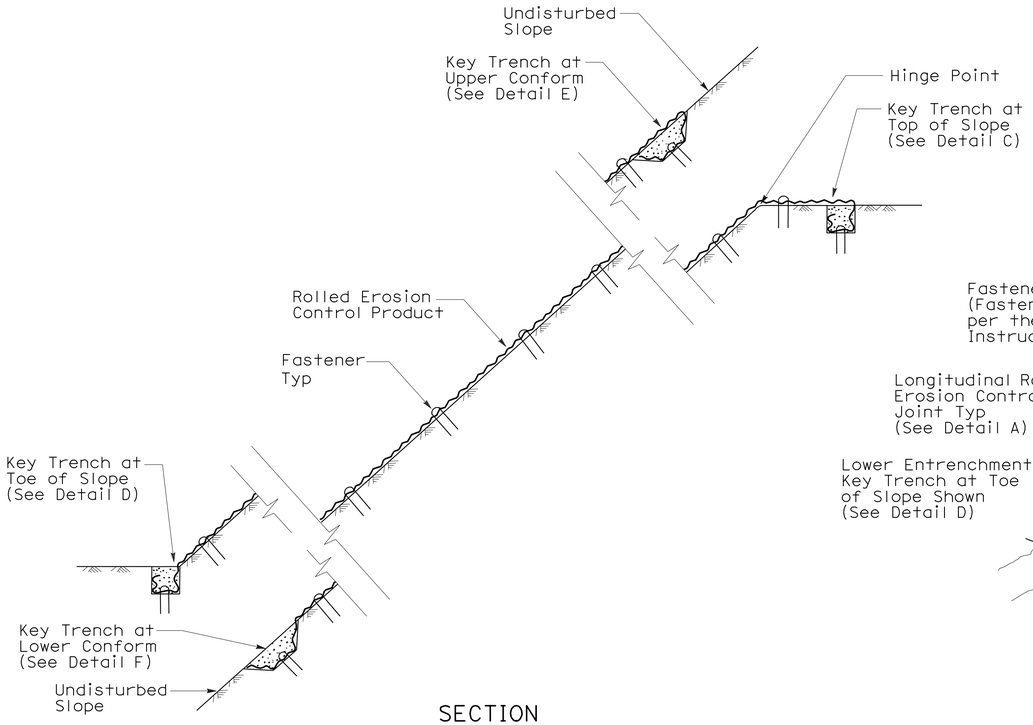

SECTION

ROLLED EROSION CONTROL PRODUCT ON SLOPE WITH VARIOUS KEY ENTRENCHMENTS

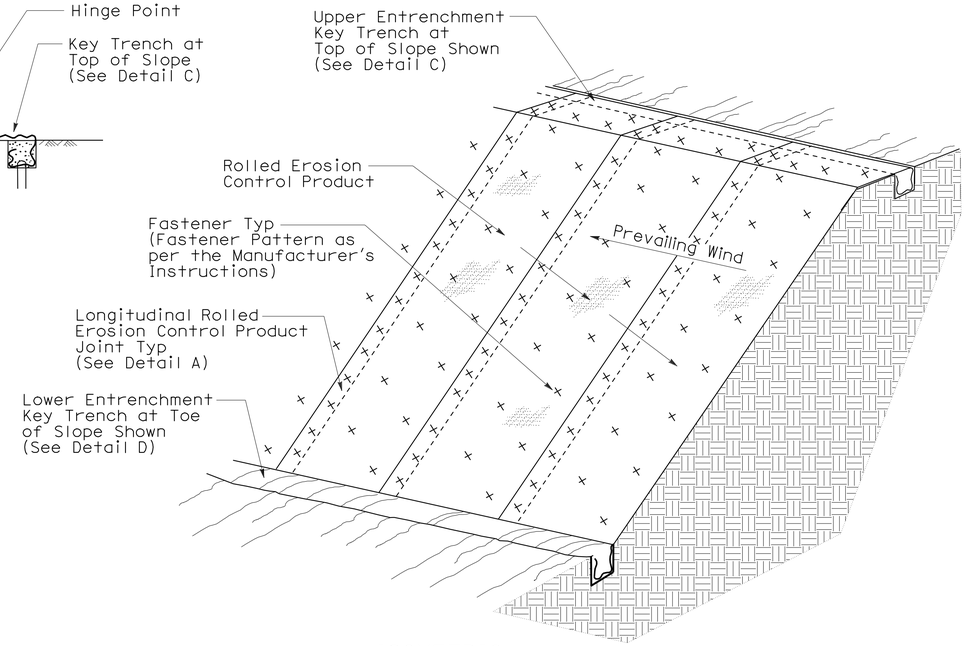

ISOMETRIC

ROLLED EROSION CONTROL PRODUCT ON SLOPE

NOTE:

1. Fiber Roll/Compost Sock shown for reference purposes only.
2. If transverse rolled erosion control product joints are required on slopes, see Detail B.

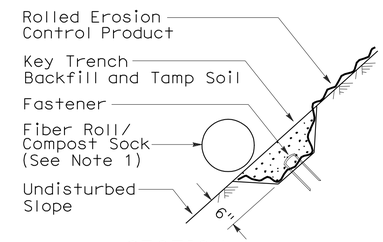

SECTION

DETAIL F
KEY TRENCH AT LOWER CONFORM

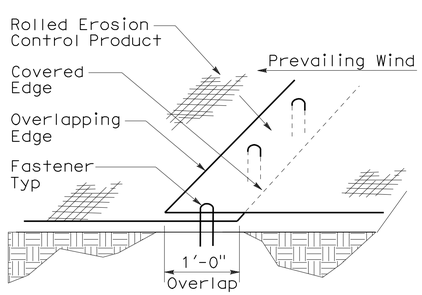

PERSPECTIVE

DETAIL A
LONGITUDINAL ROLLED EROSION CONTROL PRODUCT JOINT

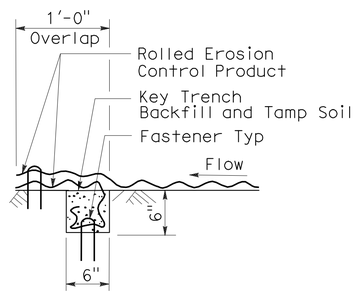

SECTION

DETAIL B
TRANSVERSE ROLLED EROSION CONTROL PRODUCT JOINT

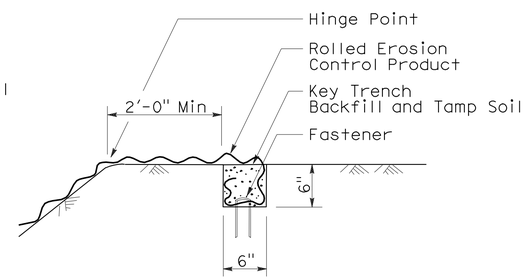

SECTION

DETAIL C
KEY TRENCH AT TOP OF SLOPE

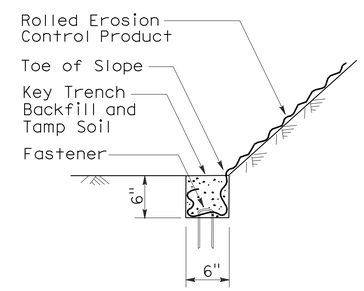

SECTION

DETAIL D
KEY TRENCH AT TOE OF SLOPE

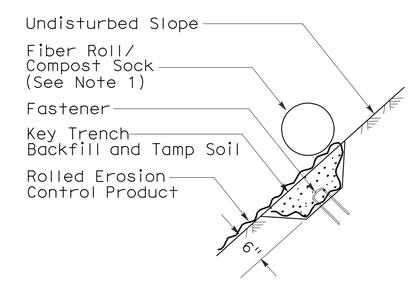

SECTION

DETAIL E
KEY TRENCH AT UPPER CONFORM

STATE OF CALIFORNIA
DEPARTMENT OF TRANSPORTATION

ROLLED EROSION CONTROL PRODUCT

NO SCALE

NSP H53 DATED JUNE 5, 2009 SUPPLEMENTS
THE STANDARD PLANS BOOK DATED MAY 2006.

NEW STANDARD PLAN NSP H53

2006 NEW STANDARD PLAN NSP H53

3-4-09

DIST	COUNTY	ROUTE	POST MILES TOTAL PROJECT	SHEET NO.	TOTAL SHEETS
10	Tuo	108	R4.0/R6.0	164	237

Randell D. Hiatt
REGISTERED CIVIL ENGINEER

June 6, 2008
PLANS APPROVAL DATE

REGISTERED PROFESSIONAL ENGINEER
Randell D. Hiatt
No. C50200
Exp. 6-30-09
CIVIL
STATE OF CALIFORNIA

The State of California or its officers or agents shall not be responsible for the accuracy or completeness of electronic copies of this plan sheet.

To accompany plans dated 5-10-10

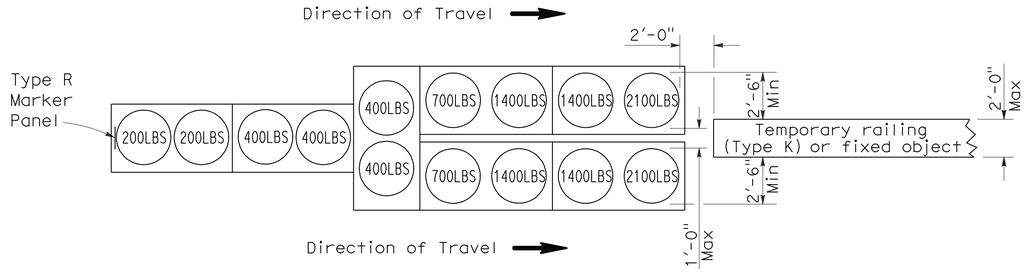

ARRAY 'TU14'

Approach speed 45 mph or more

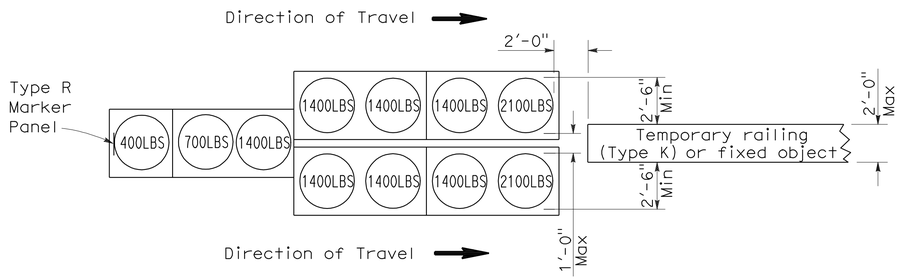

ARRAY 'TU11'

Approach speed less than 45 mph

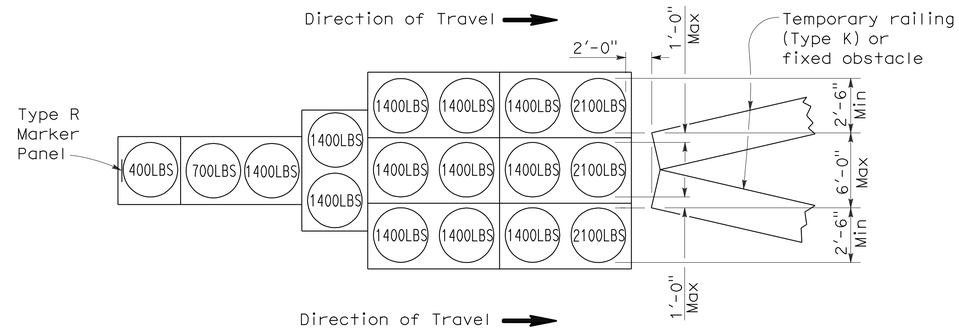

ARRAY 'TU17'

Approach speed less than 45 mph

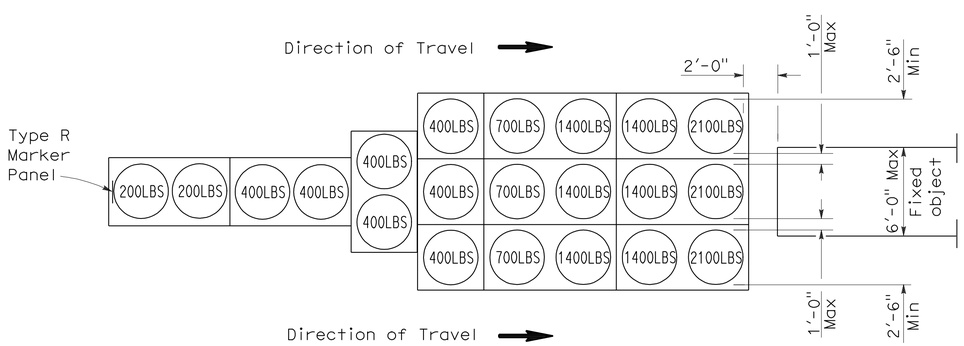

ARRAY 'TU21'

Approach speed 45 mph or more

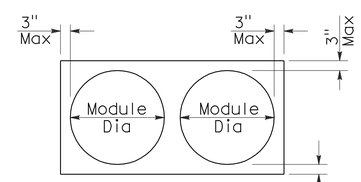

PLAN

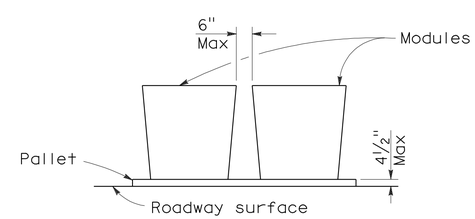

ELEVATION

CRASH CUSHION PALLET DETAIL

See Note 7

NOTES:

1. (XXX) Indicates sand filled module location and weight of sand in pounds for each module. Module spacing is based on the greater diameter of the module.
2. All sand weights are nominal.
3. Temporary crash cushion arrays shall not encroach on the traveled way.
4. Place the top of Type R marker panel 1" below the module lid.
5. Refer to Standard Plan A73B for marker details.
6. Approach speeds indicated conform to NCHRP 350 Report criteria.
7. Use of pallets is optional.

STATE OF CALIFORNIA
DEPARTMENT OF TRANSPORTATION

TEMPORARY CRASH CUSHION, SAND FILLED (UNIDIRECTIONAL)

NO SCALE

RSP T1A DATED JUNE 6, 2008 SUPERSEDES STANDARD PLAN T1A
DATED MAY 1, 2006 - PAGE 211 OF THE STANDARD PLANS BOOK DATED MAY 2006.

REVISED STANDARD PLAN RSP T1A

2006 REVISED STANDARD PLAN RSP T1A

DIST	COUNTY	ROUTE	POST MILES TOTAL PROJECT	SHEET NO.	TOTAL SHEETS
10	Tuo	108	R4.0/R6.0	165	237

Randell D. Hiatt
REGISTERED CIVIL ENGINEER

June 6, 2008
PLANS APPROVAL DATE

REGISTERED PROFESSIONAL ENGINEER
Randell D. Hiatt
No. C50200
Exp. 6-30-09
CIVIL
STATE OF CALIFORNIA

The State of California or its officers or agents shall not be responsible for the accuracy or completeness of electronic copies of this plan sheet.

To accompany plans dated 5-10-10

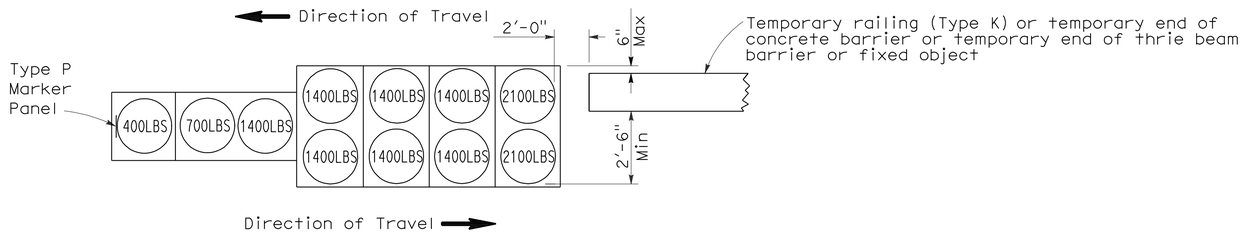

ARRAY 'TB11'

Approach speed less than 45 mph

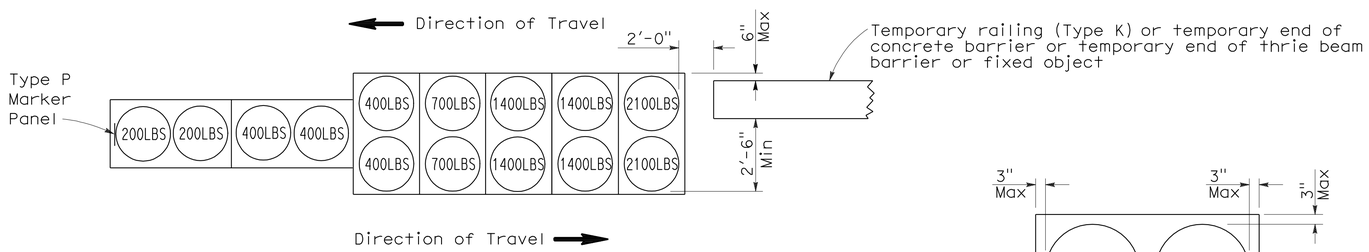

ARRAY 'TB14'

Approach speed 45 mph or more

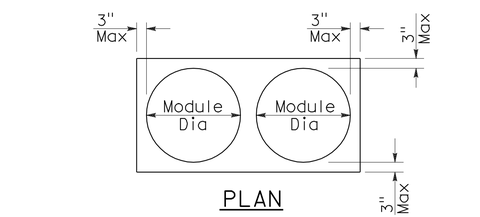

PLAN

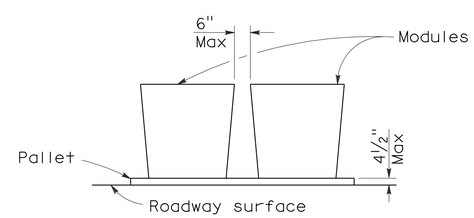

ELEVATION

CRASH CUSHION PALLET DETAIL

See Note 7

NOTES:

1. (XXX) Indicates sand filled module location and weight of sand in pounds for each module. Module spacing is based on the greater diameter of the module.
2. All sand weights are nominal.
3. Temporary crash cushion arrays shall not encroach on the traveled way.
4. Place the Type P marker panel so that the bottom of the panel rests upon the pallet.
5. Refer to Standard Plan A73B for marker details.
6. Approach speeds indicated conform to NCHRP 350 Report criteria.
7. Use of pallets is optional.

STATE OF CALIFORNIA
DEPARTMENT OF TRANSPORTATION

TEMPORARY CRASH CUSHION, SAND FILLED (BIDIRECTIONAL)

NO SCALE

RSP T1B DATED JUNE 6, 2008 SUPERSEDES STANDARD PLAN T1B
DATED MAY 1, 2006 - PAGE 212 OF THE STANDARD PLANS BOOK DATED MAY 2006.

REVISED STANDARD PLAN RSP T1B

2006 REVISED STANDARD PLAN RSP T1B

5-15-08

DIST	COUNTY	ROUTE	POST MILES TOTAL PROJECT	SHEET NO.	TOTAL SHEETS
10	Tuo	108	R4.0/R6.0	166	237

Randell D. Hiatt
REGISTERED CIVIL ENGINEER

June 6, 2008
PLANS APPROVAL DATE

REGISTERED PROFESSIONAL ENGINEER
Randell D. Hiatt
No. C50200
Exp. 6-30-09
CIVIL
STATE OF CALIFORNIA

The State of California or its officers or agents shall not be responsible for the accuracy or completeness of electronic copies of this plan sheet.

To accompany plans dated 5-10-10

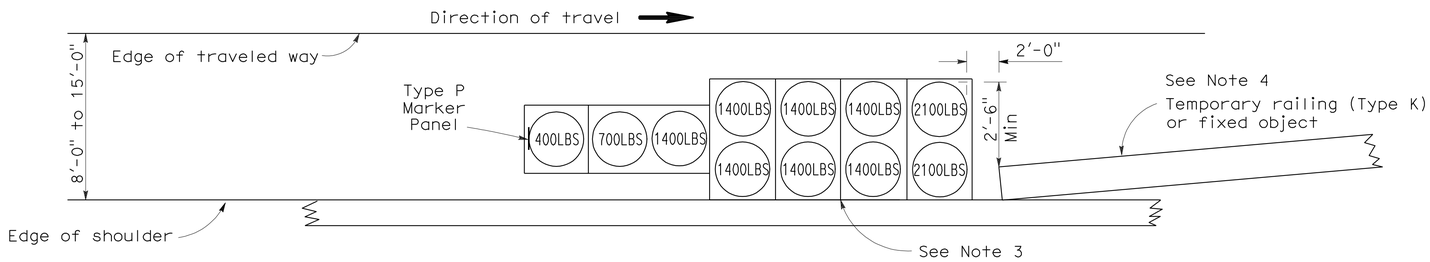

ARRAY 'TS11'

Approach speed less than 45 mph
See Note 9

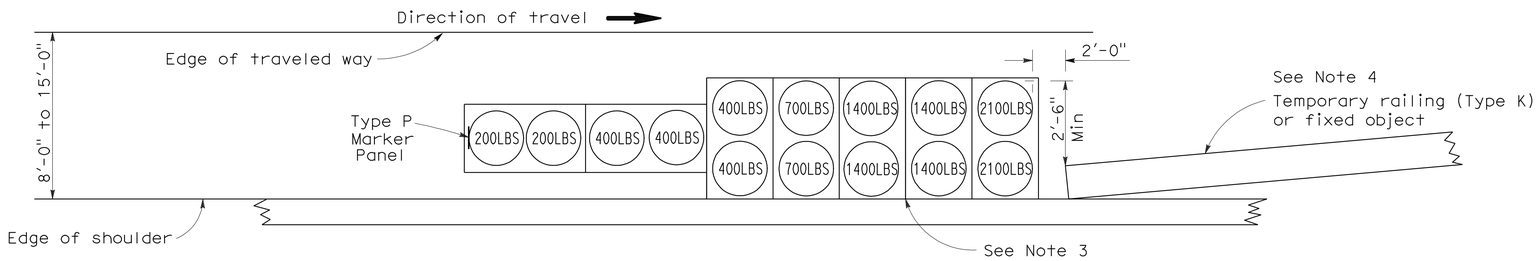

ARRAY 'TS14'

Approach speed 45 mph or more
See Note 9

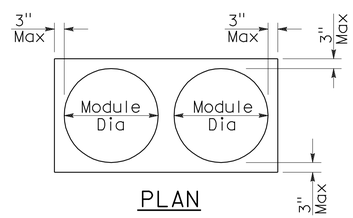

PLAN

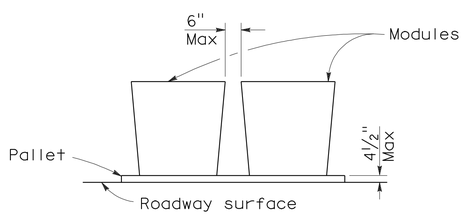

ELEVATION

CRASH CUSHION PALLET DETAIL

See Note 11

NOTES:

1. (XXX) Indicates sand filled module location and weight of sand in pounds for each module. Module spacing is based on the greater diameter of the module.
2. All sand weights are nominal.
3. The temporary crash cushion arrays shown on this plan shall be used only in locations where there will be traffic on one side of the temporary crash cushion array.
4. If the fixed object or approach end of the temporary railing is less than 15'-0" from the edge of traveled way, a temporary crash cushion is required in a construction or work zone.
5. Temporary crash cushion arrays shall not encroach on the traveled way.
6. Arrays for median shoulders shall conform to details shown on this plan for outside shoulders.
7. Place the Type P marker panel so that the bottom of the panel rests upon the pallet and faces traffic.
8. Refer to Standard Plan A73B for marker details.
9. For shoulder widths less than 8'-0", appropriate approved crash cushion protection, other than sand filled modules, shall be provided at fixed objects and at approach ends of temporary railing. The specific type of crash cushion shall be as shown on the project plans or as specified in the Special Provisions, or if not shown on the project plans or specified in the Special Provisions, shall be as approved by the Engineer.
10. Approach speeds indicated conform to NCHRP 350 Report criteria.
11. Use of pallets is optional.

STATE OF CALIFORNIA
DEPARTMENT OF TRANSPORTATION

TEMPORARY CRASH CUSHION, SAND FILLED (SHOULDER INSTALLATIONS)

NO SCALE

RSP T2 DATED JUNE 6, 2008 SUPERSEDES STANDARD PLAN T2
DATED MAY 1, 2006 - PAGE 213 OF THE STANDARD PLANS BOOK DATED MAY 2006.

REVISED STANDARD PLAN RSP T2

2006 REVISED STANDARD PLAN RSP T2

DIST	COUNTY	ROUTE	POST MILES TOTAL PROJECT	SHEET NO.	TOTAL SHEETS
10	Tuo	108	R4.0/R6.0	167	237

REGISTERED CIVIL ENGINEER

November 17, 2006
PLANS APPROVAL DATE

REGISTERED PROFESSIONAL ENGINEER
Greg W. Edwards
No. C36386
Exp. 6-30-08
CIVIL
STATE OF CALIFORNIA

The State of California or its officers or agents shall not be responsible for the accuracy or completeness of electronic copies of this plan sheet.

To accompany plans dated 5-10-10

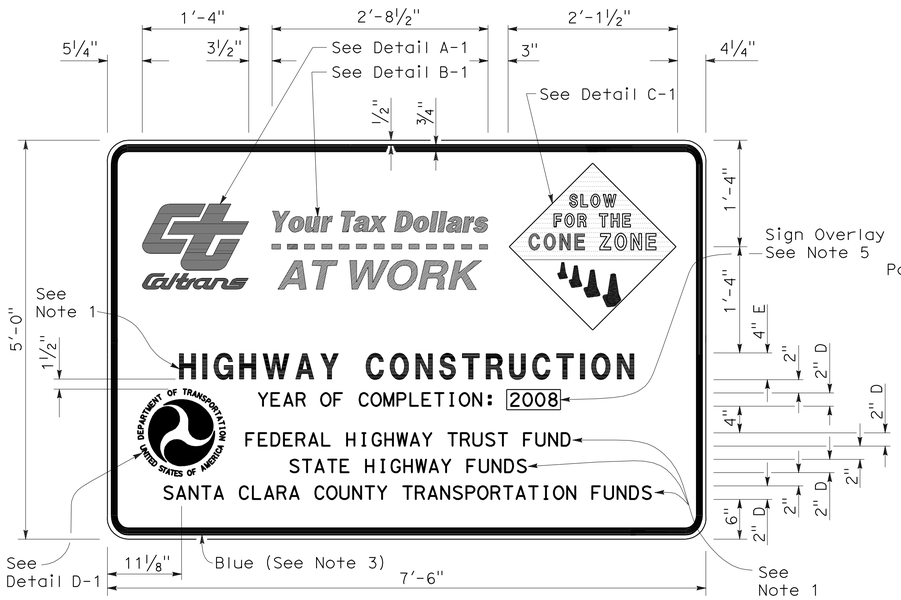

TYPE 1

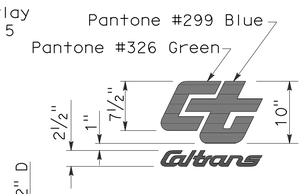

DETAIL A-1

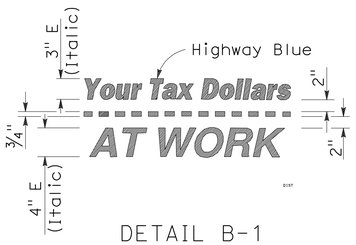

DETAIL B-1
(See Note 3)

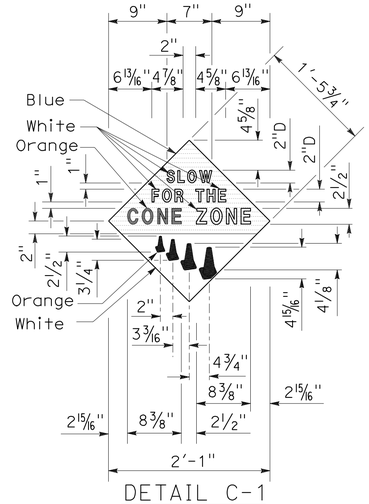

DETAIL C-1
(See Note 4)

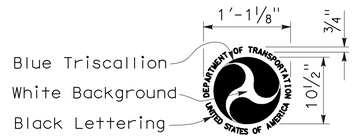

DETAIL D-1
(See Note 6)

NOTES:

1. The sign messages shown for type of project and fund types are examples only. See the Special Provisions for the applicable type of project and fund type messages to be used.
2. Except as otherwise shown, the legend of sign shall be black on a white background (non-reflective).
3. The border of the signs and details "B-1" and "B-2" shall be blue (non-reflective).
4. The diamond in details "C-1" and "C-2" shall be blue for the background of message, " SLOW FOR THE CONE ZONE", and white background for the orange cones. The color and type of font for the "SLOW FOR THE CONE ZONE" message shall be: "SLOW" white D; "FOR THE" white D; "CONE" orange Arial font; "ZONE" white Arial font.
5. Year of completion of project construction shown on the overlay is an example only. See the Special Provisions.
6. Use when the Project involves Federal Highway Trust Fund.

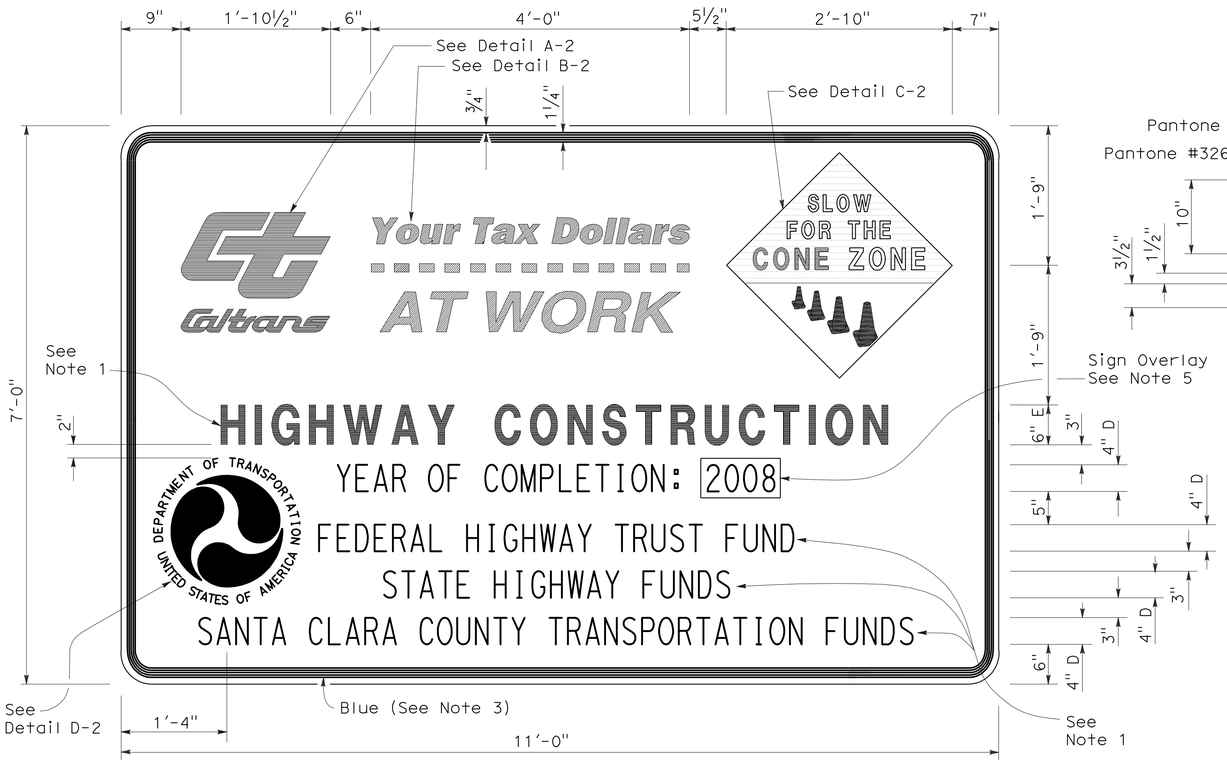

TYPE 2

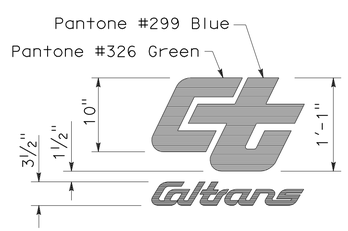

DETAIL A-2

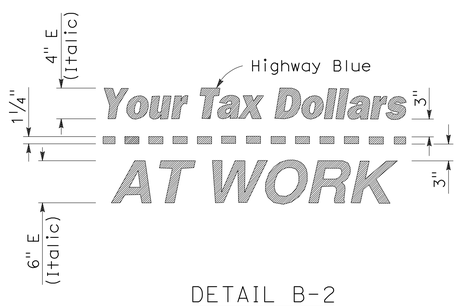

DETAIL B-2
(See Note 3)

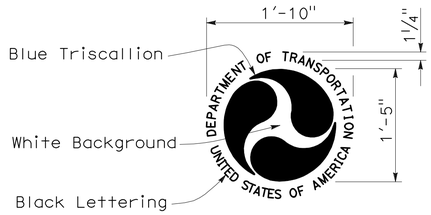

DETAIL D-2
(See Note 6)

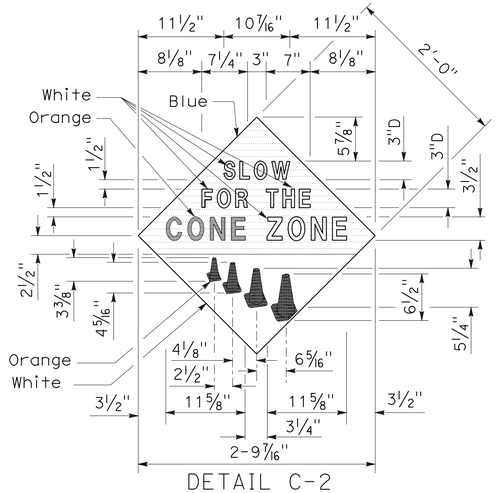

DETAIL C-2
(See Note 4)

STATE OF CALIFORNIA
DEPARTMENT OF TRANSPORTATION

CONSTRUCTION PROJECT FUNDING IDENTIFICATION SIGNS

NO SCALE

RSP T7 DATED NOVEMBER 17, 2006 SUPERSEDES STANDARD PLAN T7
DATED MAY 1, 2006 - PAGE 217 OF THE STANDARD PLANS BOOK DATED MAY 2006.

REVISED STANDARD PLAN RSP T7

2006 REVISED STANDARD PLAN RSP T7

9-7-06

DIST	COUNTY	ROUTE	POST MILES TOTAL PROJECT	SHEET NO.	TOTAL SHEETS
10	Tuo	108	R4.0/R6.0	168	237

LICENSED LANDSCAPE ARCHITECT

April 3, 2009
PLANS APPROVAL DATE

The State of California or its officers or agents shall not be responsible for the accuracy or completeness of electronic copies of this plan sheet.

LICENSED LANDSCAPE ARCHITECT — Robert B. Schott — Signature — 11-30-10 Renewal Date — 2-25-09 Date — STATE OF CALIFORNIA

To accompany plans dated 5-10-10

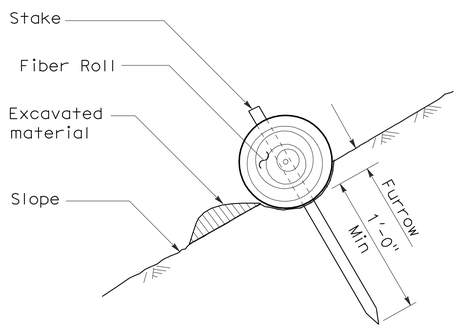

SECTION

TEMPORARY FIBER ROLL (TYPE 1)

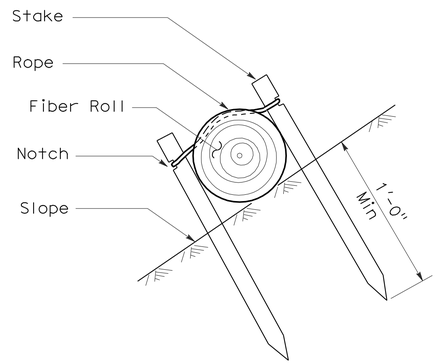

SECTION

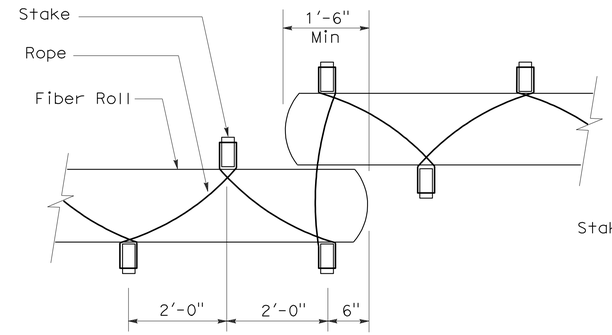

PLAN

TEMPORARY FIBER ROLL (TYPE 2)

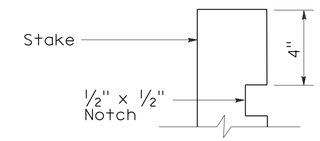

ELEVATION

STAKE NOTCH DETAIL

NOTES:

1. Temporary fiber roll spacing varies depending upon slope inclination.
2. Installations shown in the perspectives are for slope inclination of 10:1 and steeper.

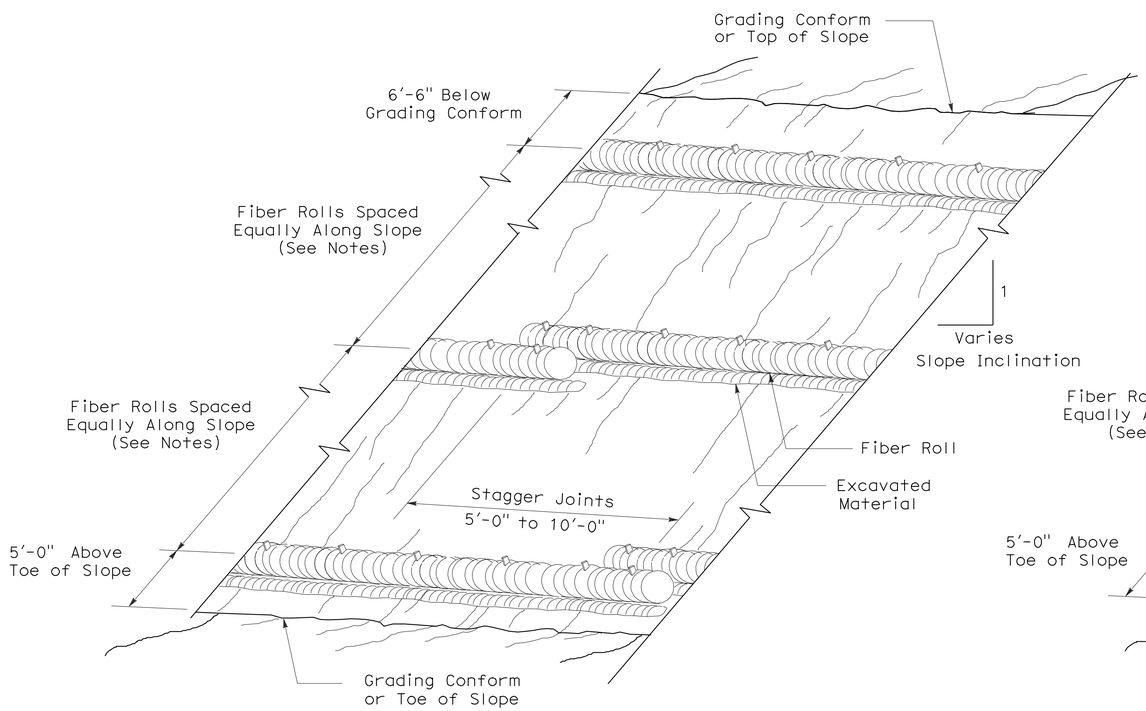

PERSPECTIVE

TEMPORARY FIBER ROLL (TYPE 1)

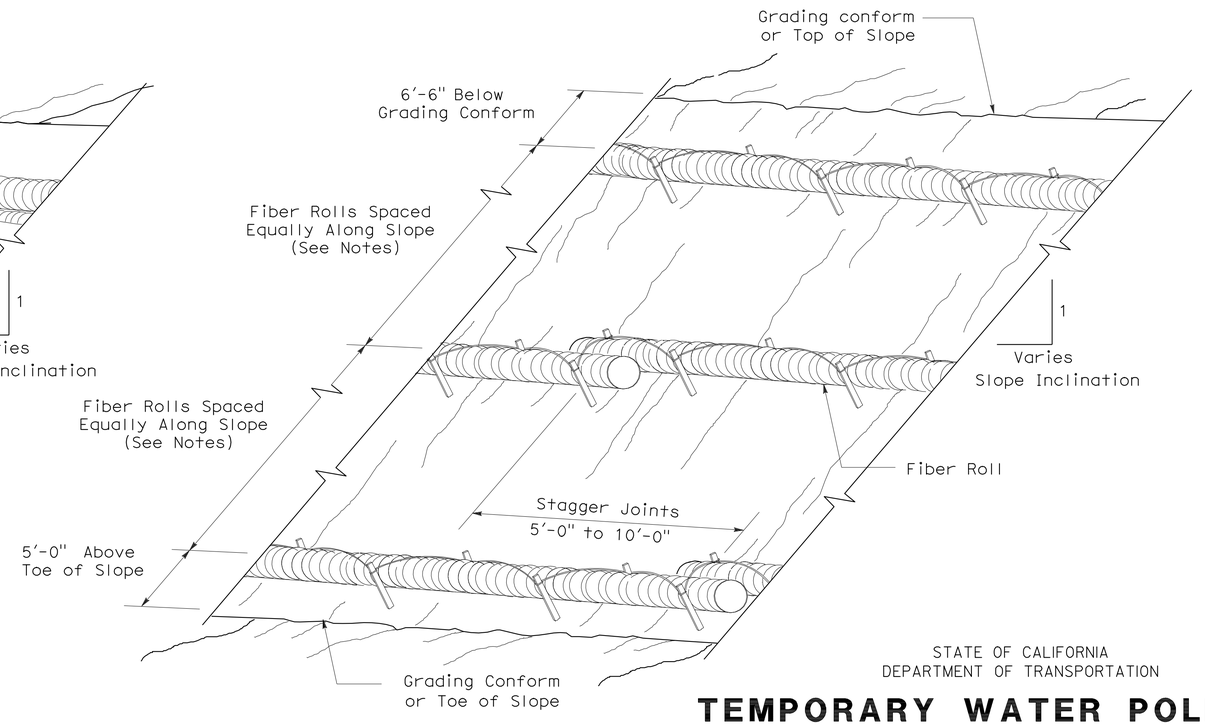

PERSPECTIVE

TEMPORARY FIBER ROLL (TYPE 2)

STATE OF CALIFORNIA
DEPARTMENT OF TRANSPORTATION

TEMPORARY WATER POLLUTION CONTROL DETAILS (TEMPORARY FIBER ROLL)

NO SCALE

RSP T56 DATED APRIL 3, 2009 SUPERSEDES STANDARD PLAN T56
DATED MAY 1, 2006 - PAGE 232 OF THE STANDARD PLANS BOOK DATED MAY 2006.

REVISED STANDARD PLAN RSP T56

2006 REVISED STANDARD PLAN RSP T56

2-23-09

DIST	COUNTY	ROUTE	POST MILES TOTAL PROJECT	SHEET NO.	TOTAL SHEETS
10	Tuo	108	R4.0/R6.0	169	237

LICENSED LANDSCAPE ARCHITECT

April 3, 2009
PLANS APPROVAL DATE

The State of California or its officers or agents shall not be responsible for the accuracy or completeness of electronic copies of this plan sheet.

LICENSED LANDSCAPE ARCHITECT — Robert B. Schott — Signature — 11-30-10 Renewal Date — 2-25-09 Date — STATE OF CALIFORNIA

To accompany plans dated 5-10-10

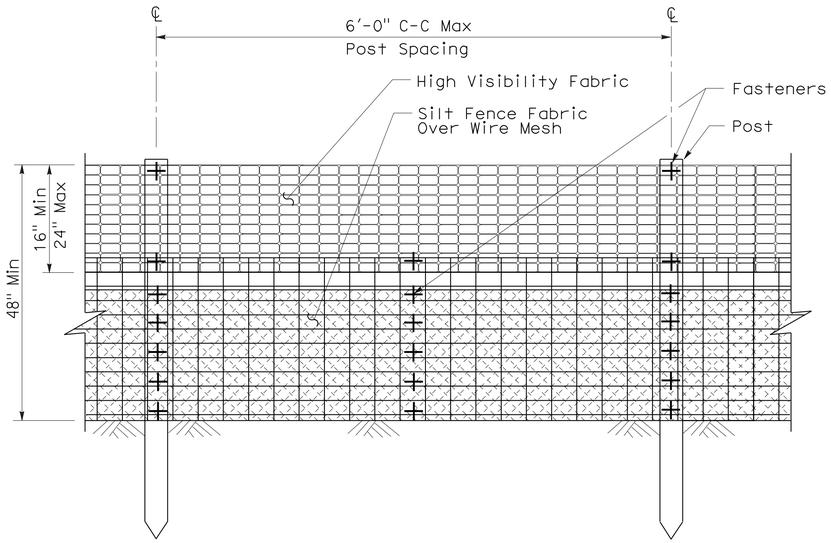

ELEVATION

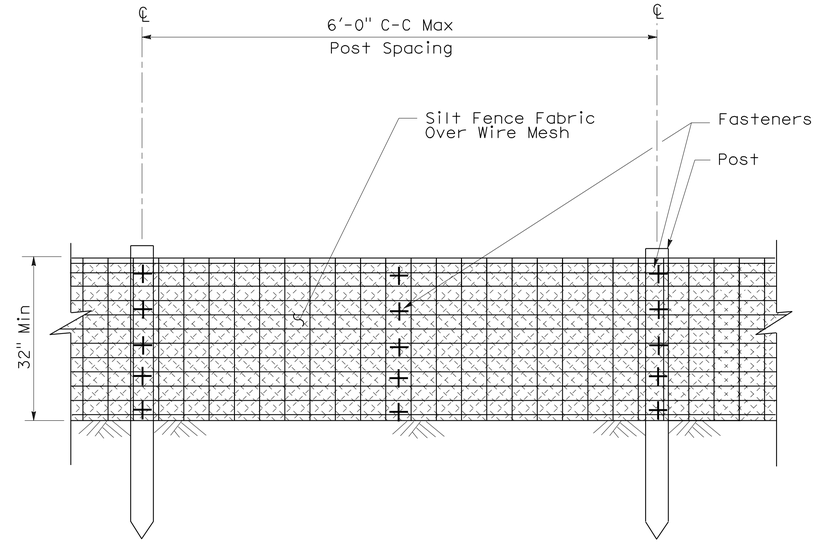

ELEVATION

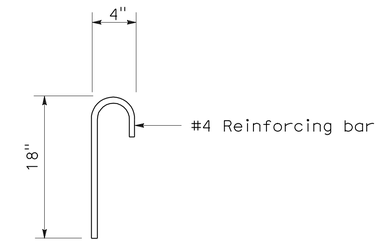

ANCHOR

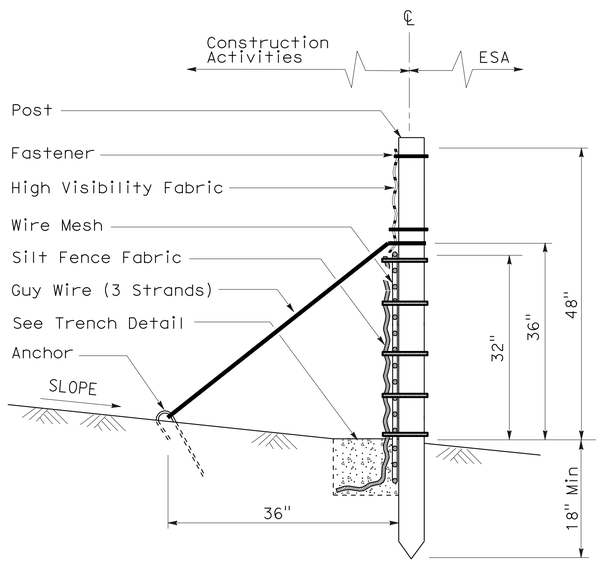

SECTION

TEMPORARY REINFORCED SILT FENCE (TYPE 1)

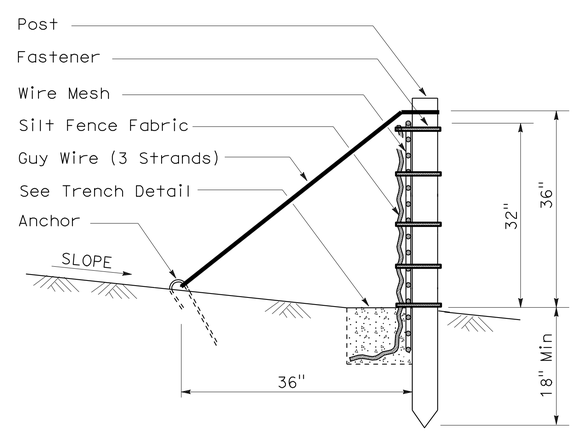

SECTION

TEMPORARY REINFORCED SILT FENCE (TYPE 2)

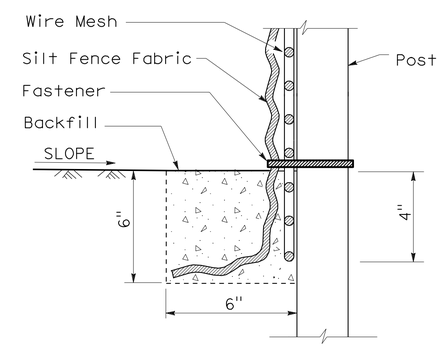

SECTION

TRENCH DETAIL

STATE OF CALIFORNIA
DEPARTMENT OF TRANSPORTATION

TEMPORARY WATER POLLUTION CONTROL DETAILS (TEMPORARY REINFORCED SILT FENCE)

NO SCALE

NSP T60 DATED APRIL 3, 2009 SUPPLEMENTS
THE STANDARD PLANS BOOK DATED MAY 2006.

NEW STANDARD PLAN NSP T60

2006 NEW STANDARD PLAN NSP T60

DIST	COUNTY	ROUTE	POST MILES TOTAL PROJECT	SHEET NO.	TOTAL SHEETS
10	Tuo	108	R4.0/R6.0	170	237

LICENSED LANDSCAPE ARCHITECT

August 15, 2008
PLANS APPROVAL DATE

LICENSED LANDSCAPE ARCHITECT — Robert B. Schott — Signature — 11-04-08 Renewal Date — 08-11-08 Date — STATE OF CALIFORNIA

The State of California or its officers or agents shall not be responsible for the accuracy or completeness of electronic copies of this plan sheet.

To accompany plans dated 5-10-10

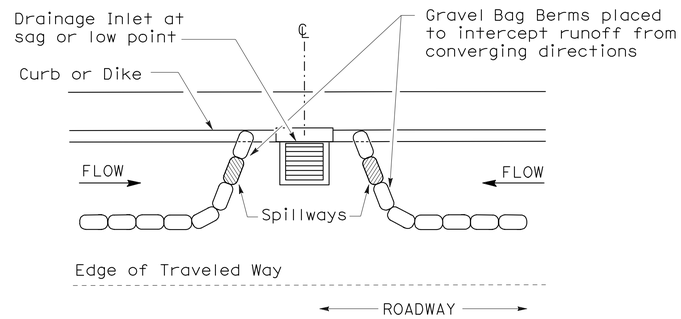

PLAN

CONFIGURATION FOR SAG POINT INLET (GRAVEL BAG BERM)

GRAVEL BAG BERM (TYPE 3A) SPACING TABLE

SLOPE OF ROADWAY (PERCENT)	1 to 3.9	4 to 5.9	6 to 7.9	8 to 10	10+
INTERVAL BETWEEN BERM	100′	75′	50′	25′	12′

For slope of less than 1%, install barriers only if erosion/sediment is prevalent

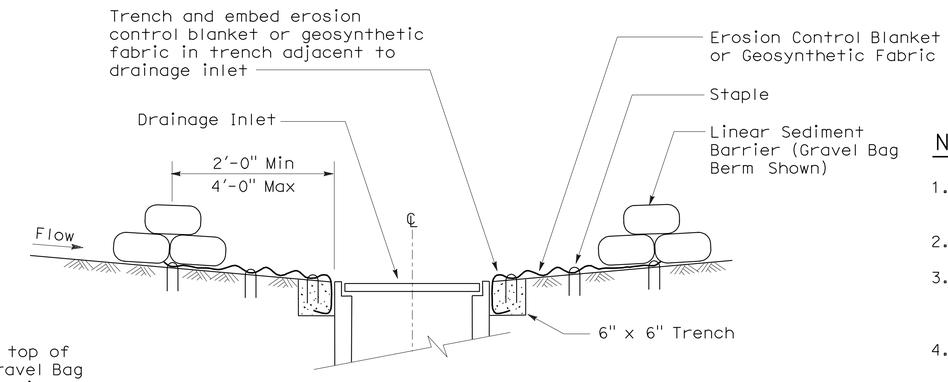

SECTION A-A

NOTES:

1. Place safety cones adjacent to drainage inlet protection.
2. Dimensions may vary to fit field conditions.
3. Install a minimum of 3 gravel bag berms upstream of each drainage inlet to be protected.
4. Position erosion control blanket or geosynthetic fabric at edge of concrete apron and secure in trench.
5. Erosion control blanket or geosynthetic fabric is not required if the area adjacent to the drainage inlet is vegetated or paved.

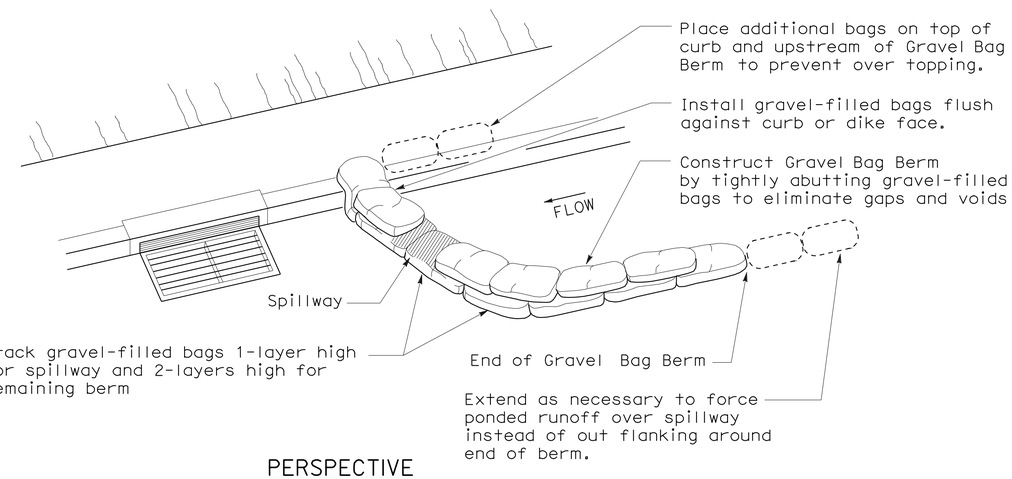

PERSPECTIVE

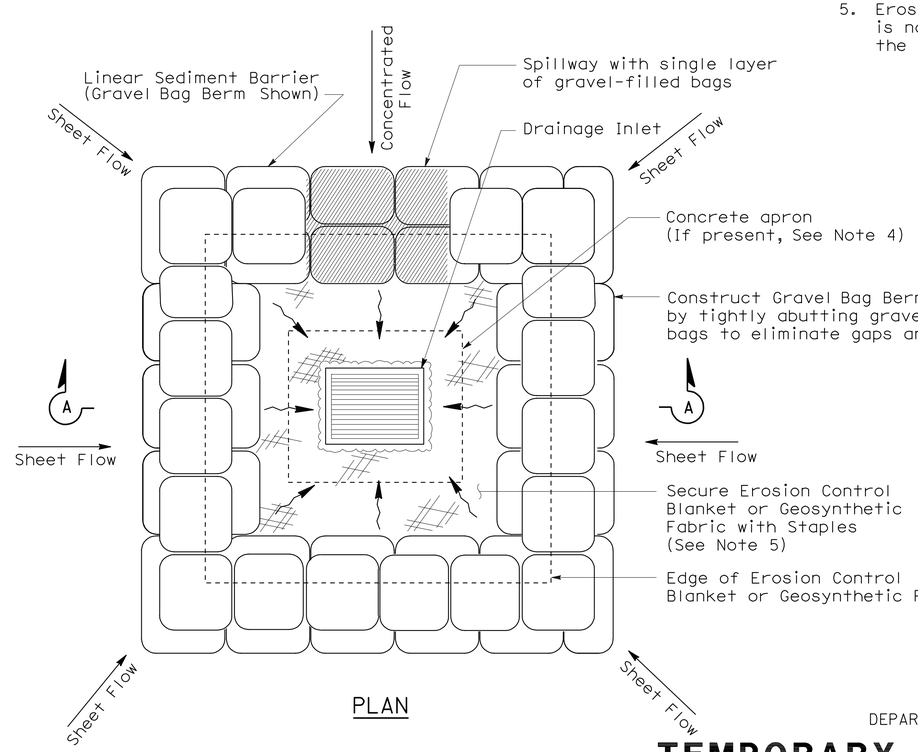

PLAN

TEMPORARY DRAINAGE INLET PROTECTION (TYPE 3B)

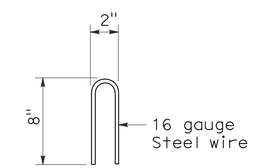

STAPLE DETAIL

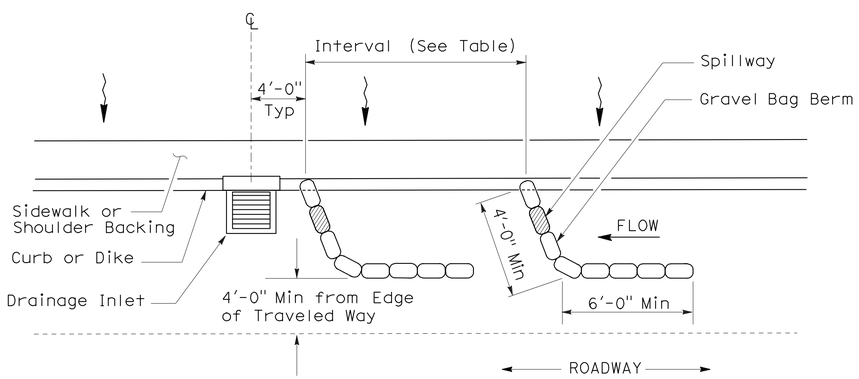

PLAN

TEMPORARY DRAINAGE INLET PROTECTION (TYPE 3A) (GRAVEL BAG BERM)

STATE OF CALIFORNIA
DEPARTMENT OF TRANSPORTATION

TEMPORARY WATER POLLUTION CONTROL DETAILS (TEMPORARY DRAINAGE INLET PROTECTION)

NO SCALE

NSP T62 DATED AUGUST 15, 2008 SUPPLEMENTS THE STANDARD PLANS BOOK DATED MAY 2006.

NEW STANDARD PLAN NSP T62

2006 NEW STANDARD PLAN NSP T62

7-11-08

DIST	COUNTY	ROUTE	POST MILES TOTAL PROJECT	SHEET NO.	TOTAL SHEETS
10	Tuo	108	R4.0/R6.0	171	237

Robert B Schott
LICENSED LANDSCAPE ARCHITECT

August 15, 2008
PLANS APPROVAL DATE

LICENSED LANDSCAPE ARCHITECT Robert B. Schott 3025 Signature 11-04-08 Renewal Date 08-11-08 Date STATE OF CALIFORNIA

The State of California or its officers or agents shall not be responsible for the accuracy or completeness of electronic copies of this plan sheet.

To accompany plans dated 5-10-10

FLEXIBLE SEDIMENT BARRIER SPACING TABLE

SLOPE OF ROADWAY (PERCENT)	0 to 0.9	1 to 1.9	2 to 2.9	3 to 4	5+
INTERVAL BETWEEN BARRIERS	50′	35′	30′	25′	20′
ANGLE FROM FACE OF CURB	70°	70°	70°	45°	45°
SUGGESTED BARRIER LENGTH	6′	6′	6′	6′	6′

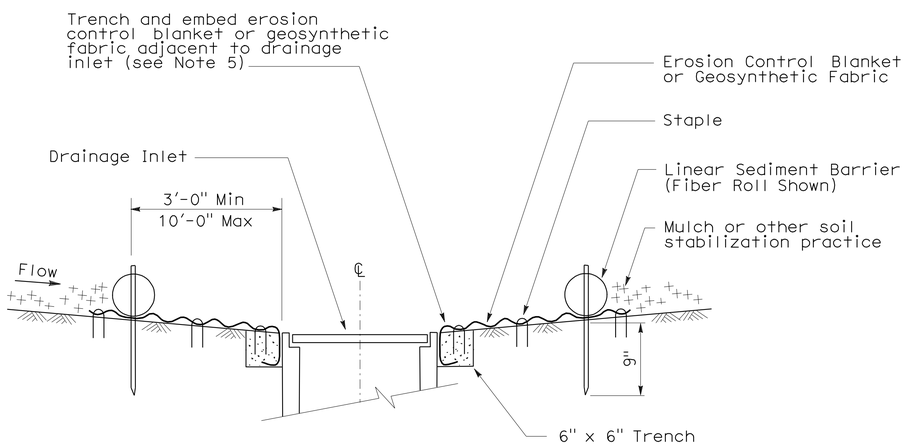

SECTION A-A

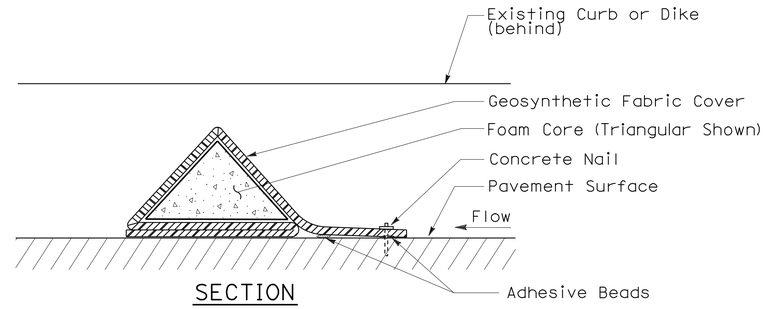

SECTION

FLEXIBLE SEDIMENT BARRIER DETAIL (FOAM BARRIER SHOWN)

NOTES:

1. See Standard Plan T51 for Temporary Silt Fence.
2. Dimensions may vary to fit field conditions.
3. Install a minimum of 3 flexible sediment barriers upstream of each drainage inlet to be protected.
4. Position erosion control blanket or geosynthetic fabric at edge of concrete apron and secure in trench.
5. Erosion control blanket or geosynthetic fabric is not required if the area adjacent to the drainage inlet is vegetated.

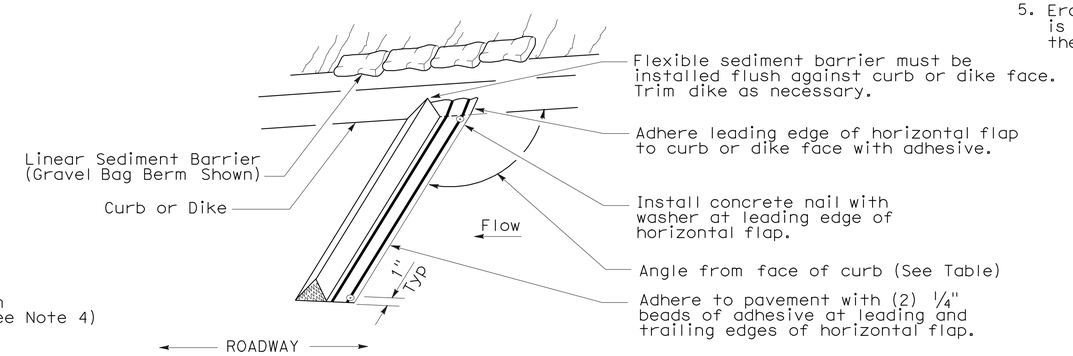

PERSPECTIVE

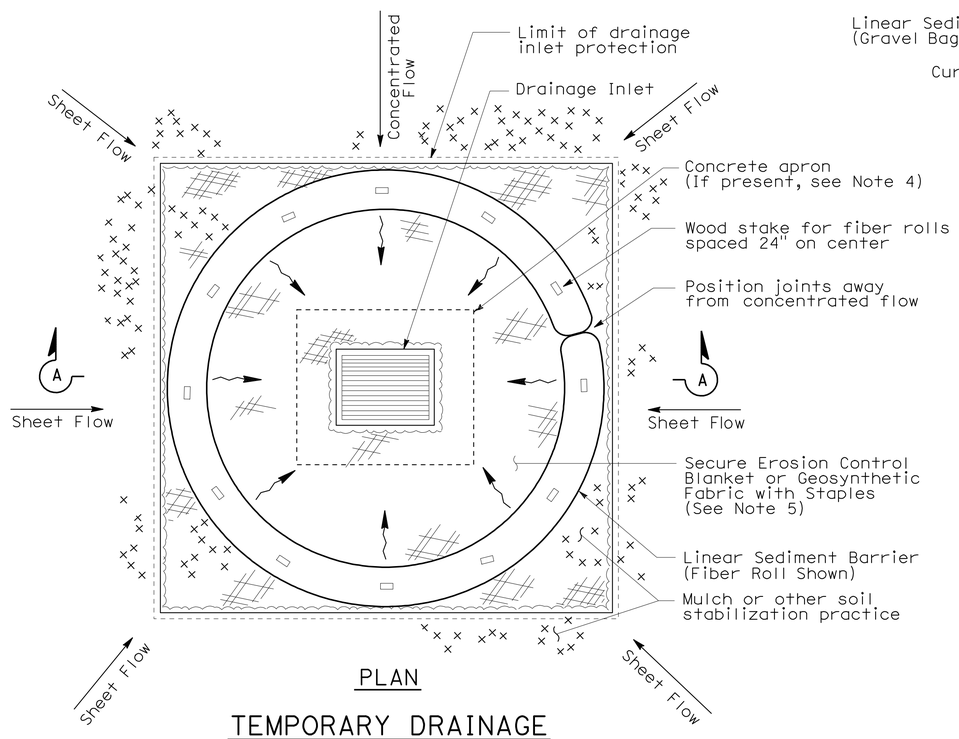

PLAN

TEMPORARY DRAINAGE INLET PROTECTION (TYPE 4A)

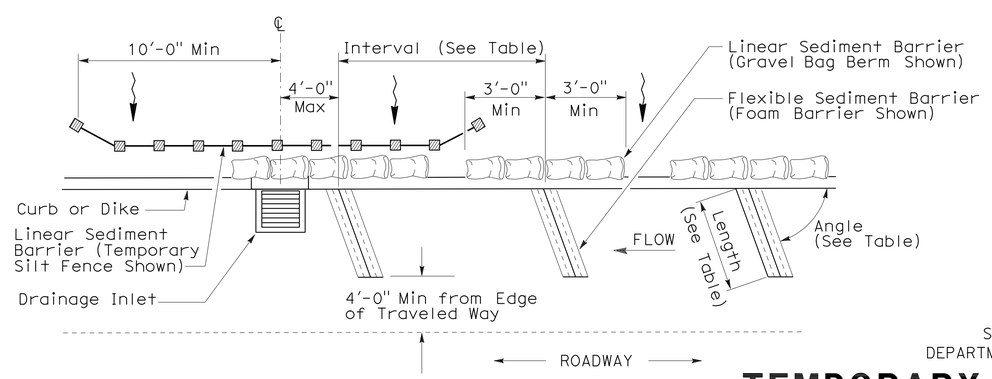

PLAN

TEMPORARY DRAINAGE INLET PROTECTION (TYPE 4B) FLEXIBLE SEDIMENT BARRIER

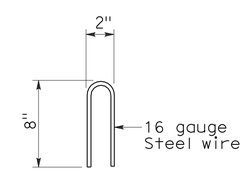

STAPLE DETAIL

STATE OF CALIFORNIA
DEPARTMENT OF TRANSPORTATION

TEMPORARY WATER POLLUTION CONTROL DETAILS (TEMPORARY DRAINAGE INLET PROTECTION)

NO SCALE

NSP T63 DATED AUGUST 15, 2008 SUPPLEMENTS THE STANDARD PLANS BOOK DATED MAY 2006.

NEW STANDARD PLAN NSP T63

2006 NEW STANDARD PLAN NSP T63

DIST	COUNTY	ROUTE	POST MILES TOTAL PROJECT	SHEET NO.	TOTAL SHEETS
10	Tuo	108	R4.0/R6.0	172	237

LICENSED LANDSCAPE ARCHITECT

August 15, 2008
PLANS APPROVAL DATE

LICENSED LANDSCAPE ARCHITECT
Robert B. Schott
Signature
11-04-08
Renewal Date
08-11-08
Date
STATE OF CALIFORNIA

The State of California or its officers or agents shall not be responsible for the accuracy or completeness of electronic copies of this plan sheet.

To accompany plans dated 5-10-10

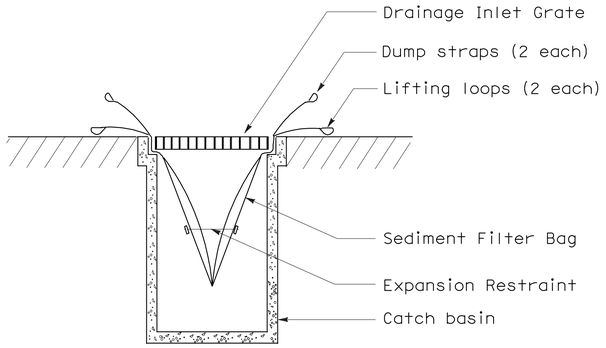

SECTION B-B

SEDIMENT FILTER BAG DETAIL

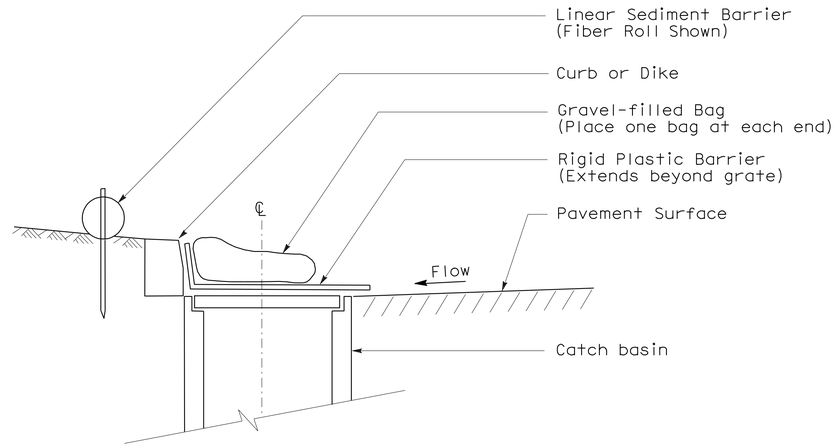

SECTION

TEMPORARY DRAINAGE INLET PROTECTION (TYPE 6A) (CATCH BASIN WITH GRATE)

NOTES:

1. See Standard Plan T51 for Temporary Silt Fence.
2. Dimensions may vary to fit field conditions.

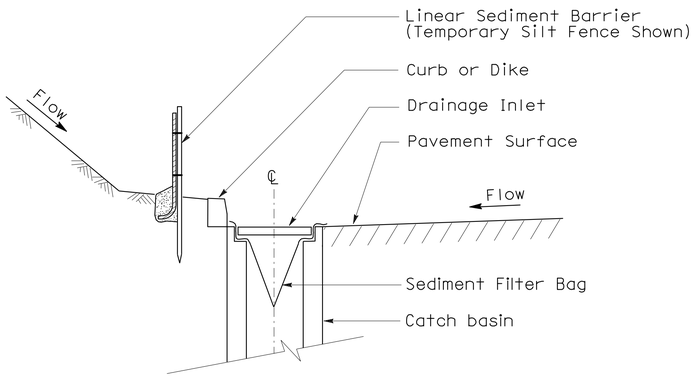

SECTION A-A

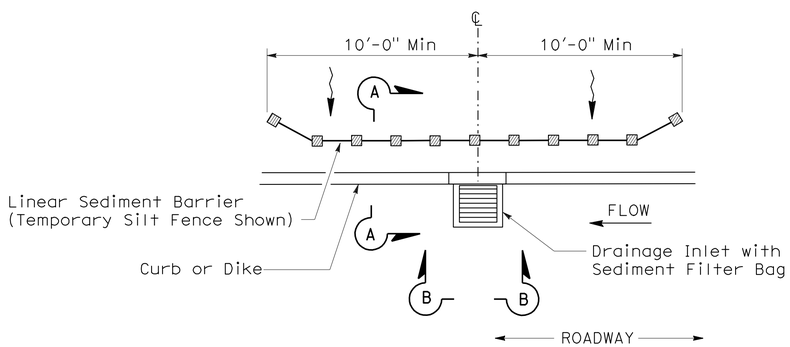

PLAN

TEMPORARY DRAINAGE INLET PROTECTION (TYPE 5) (SEDIMENT FILTER BAG)

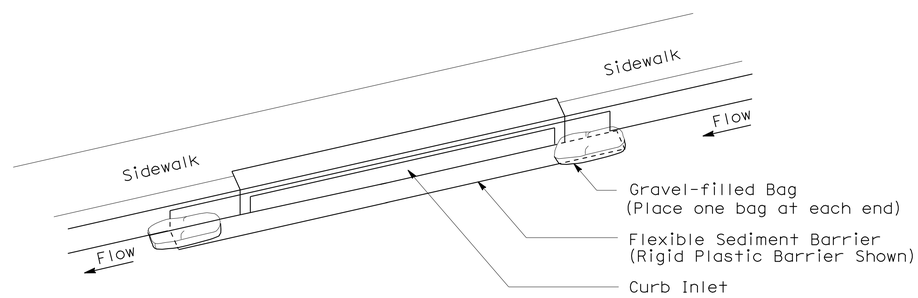

PERSPECTIVE

TEMPORARY DRAINAGE INLET PROTECTION (TYPE 6B) (CURB INLET WITHOUT GRATE)

STATE OF CALIFORNIA
DEPARTMENT OF TRANSPORTATION

TEMPORARY WATER POLLUTION CONTROL DETAILS (TEMPORARY DRAINAGE INLET PROTECTION)

NO SCALE

NSP T64 DATED AUGUST 15, 2008 SUPPLEMENTS
THE STANDARD PLANS BOOK DATED MAY 2006.

NEW STANDARD PLAN NSP T64

2006 NEW STANDARD PLAN NSP T64

7-11-08

DIST	COUNTY	ROUTE	POST MILES TOTAL PROJECT	SHEET NO.	TOTAL SHEETS
10	Tuo	108	R4.0/R6.0	173	237

LICENSED LANDSCAPE ARCHITECT

April 3, 2009
PLANS APPROVAL DATE

The State of California or its officers or agents shall not be responsible for the accuracy or completeness of electronic copies of this plan sheet.

LICENSED LANDSCAPE ARCHITECT
Robert B. Schott 3025
Signature
11-30-10
Renewal Date
2-25-09
Date
STATE OF CALIFORNIA

To accompany plans dated 5-10-10

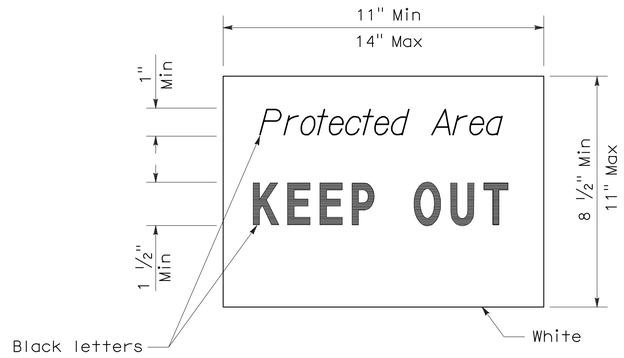

SIGN DETAIL

NOTE:

1. Temporary silt fence and temporary straw bale barrier shown for reference purposes only.

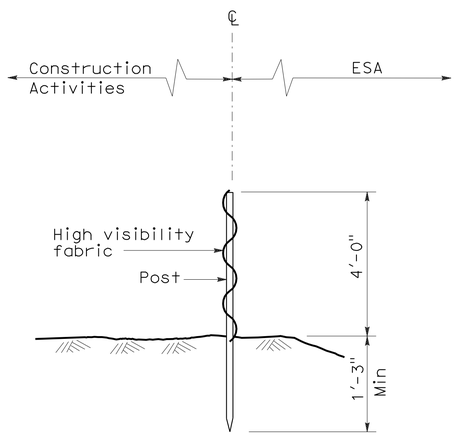

SECTION
TEMPORARY FENCE (TYPE ESA)

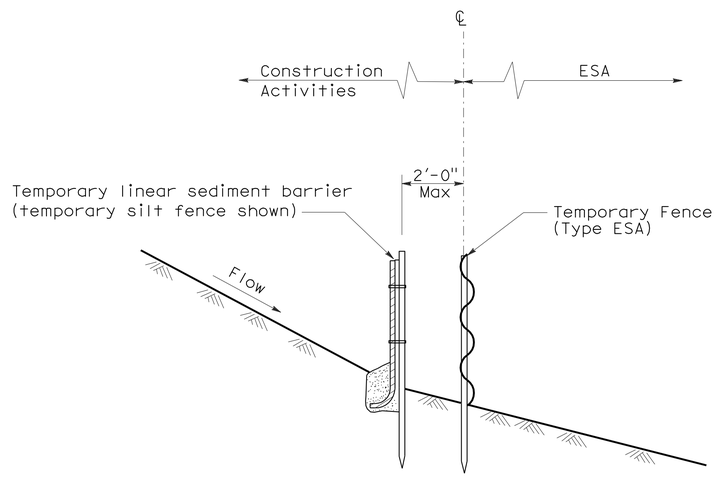

SECTION
PLACEMENT DETAIL
FOR TEMPORARY LINEAR SEDIMENT BARRIER
USED WITH TEMPORARY
FENCE (TYPE ESA)
(See Note 1)

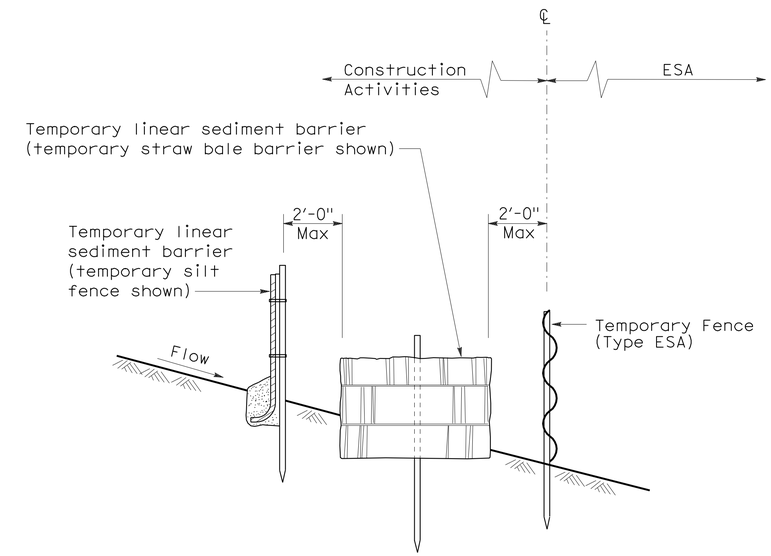

SECTION
PLACEMENT DETAIL
FOR TEMPORARY SILT FENCE
AND TEMPORARY STRAW BALE BARRIER
USED WITH TEMPORARY FENCE (TYPE ESA)
(See Note 1)

STATE OF CALIFORNIA
DEPARTMENT OF TRANSPORTATION

TEMPORARY WATER POLLUTION CONTROL DETAILS [TEMPORARY FENCE (TYPE ESA)]

NO SCALE

NSP T65 DATED APRIL 3, 2009 SUPPLEMENTS
THE STANDARD PLANS BOOK DATED MAY 2006.

NEW STANDARD PLAN NSP T65

2006 NEW STANDARD PLAN NSP T65

DIST	COUNTY	ROUTE	POST MILES TOTAL PROJECT	SHEET NO.	TOTAL SHEETS
10	Tuo	108	R4.0/R6.0	174	237

REGISTERED ELECTRICAL ENGINEER

October 5, 2007
PLANS APPROVAL DATE

REGISTERED PROFESSIONAL ENGINEER Jeffery G. McRae No. E14512 Exp. 6-30-08 ELECTRICAL STATE OF CALIFORNIA

The State of California or its officers or agents shall not be responsible for the accuracy or completeness of electronic copies of this plan sheet.

To accompany plans dated 5-10-10

ELECTROLIERS

STANDARD TYPES
15, 15D
15 STRUCTURE
21, 21D STRUCTURE
30
31
32
35
36-20A

High mast light pole

Double Arm lighting standard

Existing electrolier

Electrolier foundation (Future installation)

NOTES:

1. Luminaires shall be 310 W HPS when installed on Type 21, 21D, 30, 31, 32, 35 and 36-20A Standards, unless otherwise specified. Luminaires shall be 200 W HPS when installed on other type standards or poles, unless otherwise specified.
2. Luminaires shall be the cutoff type, ANSI Type Ⅲ medium cutoff lighting distribution, unless otherwise specified.
3. Variations noted adjacent to symbol on project plans.

Electrolier (see project notes or project plans)

Luminaire on wood pole

STANDARD NOTES:

- AB — Abandon. If applied to conduit, remove conductors.
- BC — Install pull box in existing conduit run.
- BP — Pedestrian barricade, type as indicated on plan.
- CB — Install conduit into existing pull box.
- CC — Connect new and existing conduit. Remove existing conductors and install conductors as indicated.
- CF — Conduit to remain for future use. Remove conductors. Install pull wire or rope.
- DH — Detector handhole.
- FA — Foundation to be abandoned.
- IS — Install sign on signal mast arm.
- NS — No slip base on standard.
- PEC — Photoelectric control.
- PEU — Photoelectric unit.
- RC — Equipment or material to be removed and become the property of the Contractor.
- RE — Remove electrolier, fuses and ballast. Tape ends of conductors.
- RL — Relocate equipment.
- RR — Remove and reuse equipment.
- RS — Remove and salvage equipment.
- SC — Splice new to existing conductors.
- SD — Service disconnect.
- SF — Standard to remain for future use. Remove luminaire, pole conductors, fuses and ballast.
- TSP — Telephone service point.

ABBREVIATIONS AND EQUIPMENT DESIGNATIONS

PROPOSED	EXISTING	
BBS	bbs	Battery backup system
BC	bc	Bolt circle
C	C	Conduit
CCTV	cctv	Closed circuit television
CKT	ckt	Circuit
CMS	cms	Changeable message sign
DLC	dlc	Loop detector lead-in cable
EMS	ems	Extinguishable message sign
EVC	evc	Emergency vehicle cable
EVD	evd	Emergency vehicle detector
FB	fb	Flashing beacon
FBCA	fbca	Flashing beacon control assembly
FBS	fbs	Flashing beacon with slip base
FO	fo	Fiber optic
G	G	Ground (Equipment Grounding Conductor)
GFCI	GFCI	Ground fault circuit interrupt
HAR	har	Highway advisory radio
HEX	hex	Hexagonal
HPS	hps	High pressure sodium
IISNS	iisns	Internally illuminated street name sign
ISL	isl	Induction sign lighting
LED	led	Light emitting diode
LMA	lma	Luminaire mast arm
LPS	lps	Low pressure sodium
LTG	ltg	Lighting
LUM	lum	Luminaire
MAT	mat	Mast arm mounting vehicle signal faces, top attachment
MAS	mas	Mast arm mounting vehicle signal faces, side attachment
MAS-4A	mas-4A	Mast arm mounting vehicle signal faces, side attachment - 4 signal section
MAS-4B	mas-4B	
MAS-4C	mas-4C	
MAS-5A	mas-5A	Mast arm mounting vehicle signal faces, side attachment - 5 signal section
MAS-5B	mas-5B	
MC	mc	Mercury contactor
M/M	m/m	Multiple to multiple transformer
MT	mt	Conduit with pull wire or rope only
MTG	mtg	Mounting
	mv	Mercury vapor lighting fixture
N	N	Neutral (Grounded Conductor)
NC	NC	Normally closed
NO	NO	Normally open
PB	pb	Pull box
PEC	pec	Photoelectric control (Type Ⅰ, Ⅱ, Ⅲ, Ⅳ or Ⅴ as shown)
PED	ped	Pedestrian
PEU	peu	Photoelectric unit
PPB	ppb	Pedestrian push button
RL		Relocated equipment
RM	rm	Ramp metering
SB	sb	Slip base
SIC	sic	Signal interconnect cable
SIG	sig	Signal
SMA	sma	Signal mast arm
SNS	sns	Street name sign
SP	sp	Service point
TDC	tdc	Telephone demarcation cabinet
TMS	tms	Traffic monitoring station
TOS	tos	Traffic Operations System
VEH	veh	Vehicle
XFMR	xfmr	Transformer
COMM	comm	Communication
RWIS	rwis	Roadway weather information system

SOFFIT AND WALL MOUNTED LUMINAIRES

Pendant, 70 W HPS unless otherwise specified.

Flush, 70 W HPS unless otherwise specified.

Wall surface, 70 W HPS unless otherwise specified.

Existing soffit or wall luminaire to remain unmodified.

Existing soffit or wall luminaire to be modified as specified.

NOTE:

Arrow indicates "street side" of luminaire.

STATE OF CALIFORNIA
DEPARTMENT OF TRANSPORTATION

ELECTRICAL SYSTEMS (SYMBOLS AND ABBREVIATIONS)

NO SCALE

RSP ES-1A DATED OCTOBER 5, 2007 SUPERSEDES STANDARD PLAN ES-1A DATED MAY 1, 2006 - PAGE 400 OF THE STANDARD PLANS BOOK DATED MAY 2006.

REVISED STANDARD PLAN RSP ES-1A

2006 REVISED STANDARD PLAN RSP ES-1A

DIST	COUNTY	ROUTE	POST MILES TOTAL PROJECT	SHEET NO.	TOTAL SHEETS
10	Tuo	108	R4.0/R6.0	175	237

REGISTERED ELECTRICAL ENGINEER

October 5, 2007
PLANS APPROVAL DATE

REGISTERED PROFESSIONAL ENGINEER Jeffery G. McRae No. E14512 Exp. 6-30-08 ELECTRICAL STATE OF CALIFORNIA

The State of California or its officers or agents shall not be responsible for the accuracy or completeness of electronic copies of this plan sheet.

To accompany plans dated 5-10-10

CONDUIT

PROPOSED	EXISTING	
		Lighting Conduit, unless otherwise indicated or noted
		Traffic signal conduit
C	c	Communication conduit
T	t	Telephone conduit
F	f	Fire alarm conduit
FO	fo	Fiber optic conduit
		Conduit termination (RSP ES-9A C)
R	r	Conduit riser in/on structure or service pole

SERVICE EQUIPMENT

PROPOSED	EXISTING	
OH	oh	Overhead lines
U	U	Wood pole "U" indicates utility owned
		Pole guy with anchor
		Utility transformer - ground mounted
III		Service equipment enclosure type
		Service equipment enclosure door indicates front of enclosure
T	t	Telephone demarcation cabinet

POLE-MOUNTED SERVICE DESIGNATION

Type of installation

TYPE H SERVICE - 28'-10" ← Pole height above grade

ILLUMINATED OVERHEAD SIGN

PROPOSED	EXISTING	
		Overhead sign - Single post
		Overhead sign - Two post
		Overhead sign - Mounted on structure
		Overhead sign with electrolier

SIGNAL EQUIPMENT

PROPOSED	EXISTING	
		Pedestrian signal face
		Pedestrian push button post
		Pedestrian barricade
		Vehicle signal face (with backplate, 3-Section: red, yellow and green)
		Vehicle signal face with angle visors
PV	PV	Modifications of basic symbols: "L" indicates all non-arrow sections louvered "LG" indicates louvered green section only "PV" indicates 12" programmed visibility sections "8" indicates all 8" sections (only when specified)
		Type 15TS and Vehicle signal face
		Vehicle signal face with red, yellow and green left arrow sections
		Vehicle signal face with red and yellow sections and up green arrow
		Vehicle signal face (5 Section) with red, yellow and green sections and yellow and green right arrows
		Type 1 Standard and attached vehicle signal faces
		Standard with signal mast arm only and attached vehicle signal faces and internally illuminated street name sign
		Type 33 Standard, Left-turn vehicle signal face and sign
		Standard with luminaire and signal mast arms and attached vehicle signal faces
		Cantilever flashing beacon Type 9 Frame, with a sign unless otherwise specified or indicated
		Type 15-FBS Standard with two vehicle signal face sections with lens, backplate and visor with a sign
R	Y	Flashing beacon. One vehicle signal face section with lens, backplate and visor. "R" indicates red indication, "Y" indicates yellow indication
		Controller assembly. Door indicates front of cabinet

SIGNAL EQUIPMENT Cont

PROPOSED	EXISTING	
		Guard post
		Type 1 Standard with "Meter On" sign
		Emergency Vehicle detector

NOTES:

1. All signal sections shall be 12" unless shown otherwise.
2. Signal heads shall be provided with backplates unless shown otherwise.
3. Signal indication shall be LED.

STATE OF CALIFORNIA
DEPARTMENT OF TRANSPORTATION

ELECTRICAL SYSTEMS (SYMBOLS AND ABBREVIATIONS)

NO SCALE

RSP ES-1B DATED OCTOBER 5, 2007 SUPERCEDES STANDARD PLAN ES-1B DATED MAY 1, 2006 - PAGE 401 OF THE STANDARD PLANS BOOK DATED MAY 2006.

REVISED STANDARD PLAN RSP ES-1B

2006 REVISED STANDARD PLAN RSP ES-1B

7-10-07

DIST	COUNTY	ROUTE	POST MILES TOTAL PROJECT	SHEET NO.	TOTAL SHEETS
10	Tuo	108	R4.0/R6.0	176	237

REGISTERED ELECTRICAL ENGINEER

October 5, 2007
PLANS APPROVAL DATE

The State of California or its officers or agents shall not be responsible for the accuracy or completeness of electronic copies of this plan sheet.

REGISTERED PROFESSIONAL ENGINEER
Jeffery G. McRae
No. E14512
Exp. 6-30-08
ELECTRICAL
STATE OF CALIFORNIA

To accompany plans dated 5-10-10

EQUIPMENT IDENTIFICATION

ILLUMINATED SIGN IDENTIFICATION NUMBER:

Sign No. 12345

10 ISL SCI 1.0

- Sign number - Place on post or structure
- Transformer rating (kVA)
- Lighting control type
- Number and type of fixtures

Do NOT place on standard or structure

ELECTROLIER OR EQUIPMENT IDENTIFICATION NUMBER:

12345 - 15'-0"

- Mast arm length, if shown. Do not place on standard or structure.
- Equipment number - Place on standard or structure. Existing equipment numbers are shown in parenthesis

CONDUIT AND CONDUCTOR IDENTIFICATION:

1½"C, 2#10, 15#14, 2 DLC

- Number and size of conductors and cables
- Size of conduit in inches

Ø1, Ø2, Ø2P, etc.	Traffic phase identification for signal faces, detectors and phase diagrams
1 2 3	Project note numbers
A B C	Equipment description, installation or item numbers
1 2 3	Conduit run numbers

SIGNAL AND LIGHTING STANDARD (TYPICAL DESIGNATION):

19A - 3 - 100

- Wind velocity = 100 mph
- Case 3 arm loading
- Standard type
- Standard Plan sheet number
- Detail number or letter

MISCELLANEOUS EQUIPMENT

PROPOSED	EXISTING	
CMS	cms	Changeable message sign
		Closed circuit television camera
		Highway advisory radio pole and antenna
EMS	ems	Extinguishable message sign
M V	m v	Detection device M = Microwave sensor V = Video image sensor

WIRING DIAGRAM LEGEND

P	Pole
CB	Circuit breaker
A	Ampere
V	Volt
M	Metered
UM	Unmetered
NB	Neutral bus
GB	Ground bus
G	Equipment grounding conductor
N	Grounded conductor (Neutral)

- External conductor
- Conductor or bus
- Tie point
- Contactor coil
- Contactor, Contact NO
- Terminal blocks
- Contactor, Contact NC
- Enclosure bond
- Grounding electrode
- Circuit breaker
- Receptacle

PULL BOXES

PROPOSED EXISTING

Pull box-No. 5 unless otherwise indicated or noted.

3 9A(21)

Pull box-Additional designations or descriptions

3	= No. 3½ pull box
5	= No. 5 pull box
6	= No. 6 pull box
7	= No. 7 (Ceiling pull box)
8	= No. 8 (Pendant soffit pull box)
9	= No. 9 pull box
9A	= No. 9A pull box

(C) = Communications pull box
(E) = Pull box with extension
(S) = Sprinkler control pull box
(21) = Anchor bolts and conduit for future installation of Type 21 Standard
(T) = Traffic pull box

VEHICLE DETECTORS

5 J 9 U

- Vehicle detector designation
- U = Upper
  L = Lower
- Slot number in input file
- Input file (I or J)
- Phase

PROPOSED EXISTING

	Type A detector loop. Outline of sawcut shown.
	Type B detector loop. Outline of sawcut shown.
	Type C detector loop. Outline of sawcut shown.
	Type D detector loop. Outline of sawcut shown.
	Type E detector loop. Outline of sawcut shown.
	Type Q detector loop. Outline of sawcut shown.
	Magnetic detector
DH dh	Detector handhole
	Microwave or video detection zone

STATE OF CALIFORNIA
DEPARTMENT OF TRANSPORTATION

ELECTRICAL SYSTEMS (SYMBOLS AND ABBREVIATIONS)

NO SCALE

RSP ES-1C DATED OCTOBER 5, 2007 SUPERCEDES STANDARD PLAN ES-1C DATED MAY 1, 2006 - PAGE 402 OF THE STANDARD PLANS BOOK DATED MAY 2006.

REVISED STANDARD PLAN RSP ES-1C

2006 REVISED STANDARD PLAN RSP ES-1C

DIST	COUNTY	ROUTE	POST MILES TOTAL PROJECT	SHEET NO.	TOTAL SHEETS
10	Tuo	108	R4.0/R6.0	177	237

REGISTERED ELECTRICAL ENGINEER

October 5, 2007
PLANS APPROVAL DATE

REGISTERED PROFESSIONAL ENGINEER
Jeffery G. McRae
No. E14512
Exp. 6-30-08
ELECTRICAL
STATE OF CALIFORNIA

The State of California or its officers or agents shall not be responsible for the accuracy or completeness of electronic copies of this plan sheet.

To accompany plans dated 5-10-10

2006 REVISED STANDARD PLAN RSP ES-2C

NOTES-TYPE III SERVICE EQUIPMENT ENCLOSURES:

1. Service equipment enclosure and metering equipment shall meet the requirements of the service utility. The meter area shall have a sealable, lockable, weathertight cover that can be removed without the use of tools.

2. Service equipment enclosures shall be factory wired and conform to NEMA standards.

3. Dimensions of service equipment enclosures shall meet the requirements of the service utility.

4. The dead front panels on Type III service equipment enclosures shall have a continuous stainless steel or aluminum piano hinge. The panel in front of the breakers shall be secured with a latch or captive screws. No live parts shall be mounted on the dead front panel.

5. The exterior door shall have provisions for padlocking. The padlock hole shall be a minimum diameter of 7/16".

6. Enclosures housing transformers of more than one kVA shall have effective screened ventilation louver of not less than 50 square inches. Screen shall be stainless steel No. 304, with a No. 10 size mesh. Framed screen shall be secured with at least four bolts.

7. Fasteners on the exterior of the enclosure shall be vandal-resistant and shall not be removable from the exterior. Exterior screws, nuts, bolts and washers shall be stainless steel.

8. Landing lugs for incoming service conductors shall be compatible with either copper or aluminum conductors sized to suit the conductors shown on the plan. Landing lugs shall be copper or tin-plated aluminum. Neutral bus shall be rated for 125 A and be suitable for copper or aluminum conductors unless otherwise specified. The terminal shall include but not be limited to:

   a) Incoming terminals (landing lugs)
   b) Neutral lugs
   c) Solid neutral terminal strip

9. At least 6 standard single pole circuit breaker spaces, 3/4" nominal, shall be provided for branch circuits. Circuit breaker interiors shall be copper. Interiors of enclosure shall accept plug-in or cable-in/cable-out circuit breakers.

10. Control wiring shall be 600 V, 14 stranded machine tool wire. Where subject to flexing, 19 strand wire shall be used.

11. Main bus shall be rated for 125 A and shall be tin-plated copper.

12. A plastic laminated wiring diagram shall be provided with brass mounting eyelets and attached to the inside of the enclosure and the wiring diagram shall be affixed to the interior with a UL or ETL approved method.

13. An engraved phenolic nameplate on the dead front panel indicating the function of each circuit or device shall be installed with stainless steel rivets or stainless steel screws:

    a) Adjacent to the breaker or device with character size a minimum of 1/8".

    b) At the top of the exterior door panel indicating State system number, voltage level and number of phases with character size a minimum of 3/16".

14. The plan shows the approximate location of devices within the enclosure. Components may be rearranged, however, the "working" clearances within the service equipment enclosure shall be maintained.

15. In unpaved areas a raised portland cement concrete pad 2'-0" x 4" x width of foundation shall be constructed in front of new service equipment enclosure installation. Pad shall be set to elevation of foundation.

16. Foundation shall extend 2" minimum beyond edge of service equipment enclosure.

17. Internal bus, where shown, is typical only. Alternative design of proposed service equipment enclosure shall be submitted to the Engineer for approval.

18. Plug-in circuit breakers may be mounted in the vertical or horizontal position. Cable-in/cable-out circuit breakers shall be mounted in the vertical position.

19. Type III-AF and Type III-BF service equipment enclosures shall have the meter viewing windows located on the front side of the service equipment enclosures.

20. Type III-AR and Type III-BR service equipment enclosures shall be similarly constructed as Type III-AF and Type III-BF respectively, except the meter viewing windows shall be located on the back side of the service equipment enclosures.

21. Minimum clearance shall be required for front and back of service equipment enclosure per National Electrical Code, Article 110.26, "Spaces About Electric Equipment (600 Volts, Nominal, or Less)."

STATE OF CALIFORNIA
DEPARTMENT OF TRANSPORTATION

ELECTRICAL SYSTEMS (SERVICE EQUIPMENT NOTES TYPE III SERIES)

NO SCALE

RSP ES-2C DATED OCTOBER 5, 2007 SUPERCEDES STANDARD PLAN ES-2C
DATED MAY 1, 2006 - PAGE 405 OF THE STANDARD PLANS BOOK DATED MAY 2006.

REVISED STANDARD PLAN RSP ES-2C

DIST	COUNTY	ROUTE	POST MILES TOTAL PROJECT	SHEET NO.	TOTAL SHEETS
10	Tuo	108	R4.0/R6.0	178	237

REGISTERED ELECTRICAL ENGINEER

October 5, 2007
PLANS APPROVAL DATE

REGISTERED PROFESSIONAL ENGINEER Jeffery G. McRae No. E14512 Exp. 6-30-08 ELECTRICAL STATE OF CALIFORNIA

The State of California or its officers or agents shall not be responsible for the accuracy or completeness of electronic copies of this plan sheet.

To accompany plans dated 5-10-10

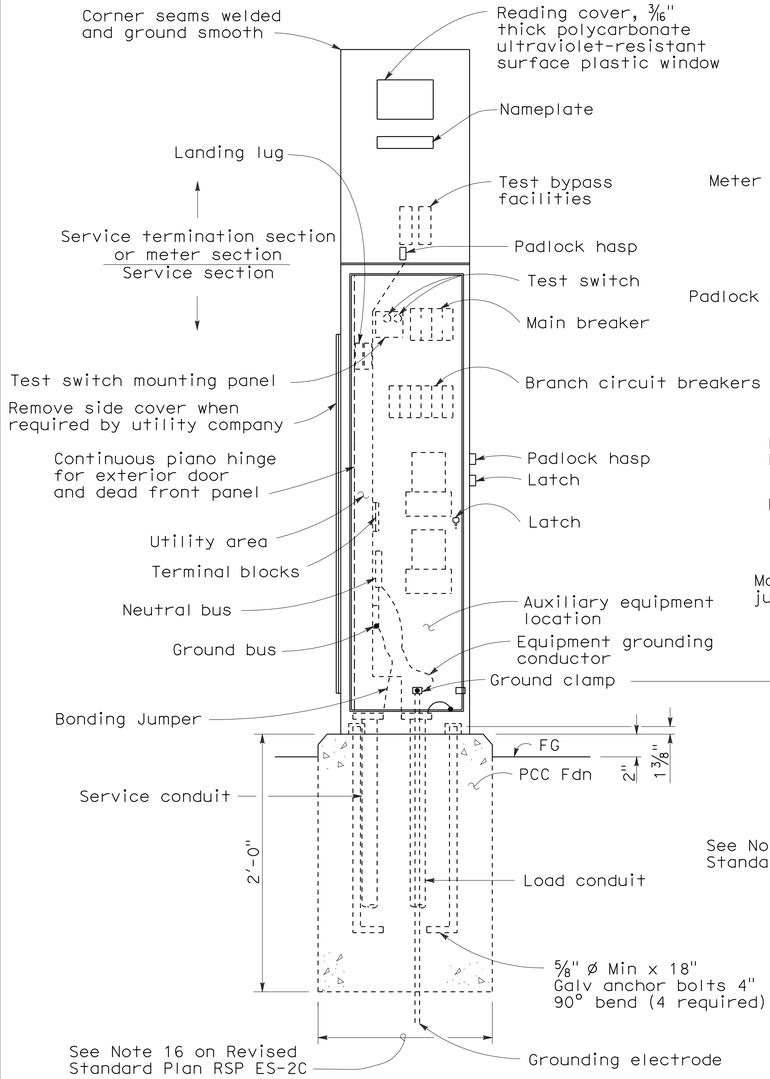

FRONT VIEW

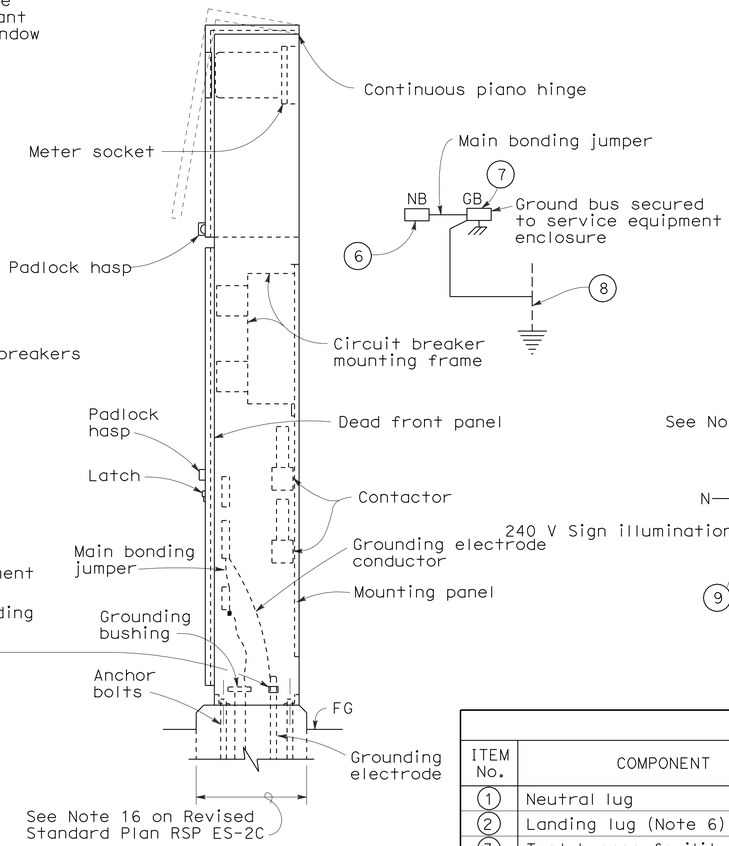

SIDE VIEW

TYPE III-AF SERVICE EQUIPMENT ENCLOSURE (TYPICAL)

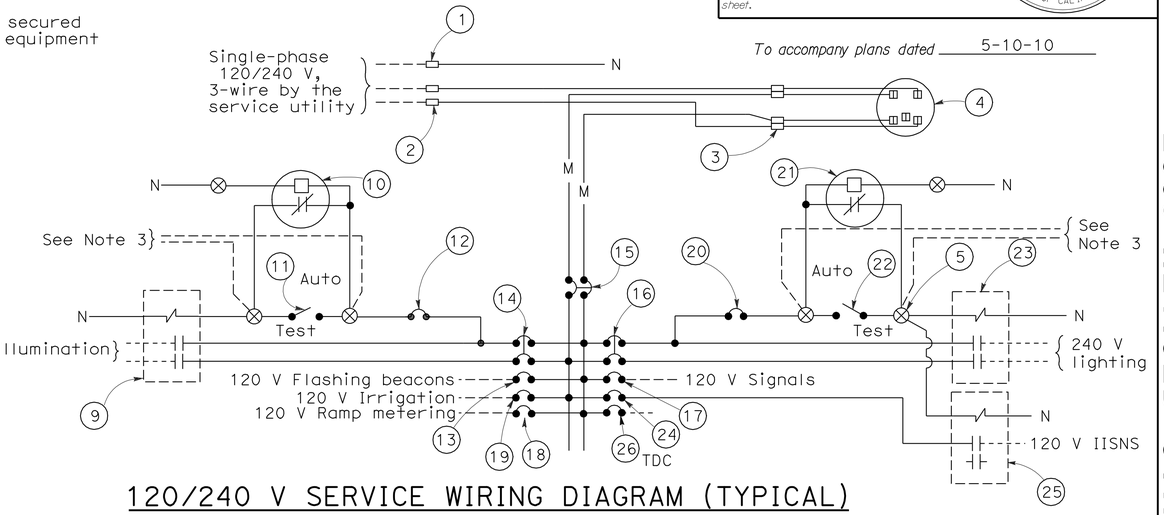

120/240 V SERVICE WIRING DIAGRAM (TYPICAL)

TYPE III-A SERVICE (120/240 V) EQUIPMENT LEGEND

ITEM No.	COMPONENT	NAME PLATE DESCRIPTION	ITEM No.	COMPONENT	NAME PLATE DESCRIPTION
1	Neutral lug		14	30 A, 240 V, 2P, CB	Sign Illumination
2	Landing lug (Note 6)		15	100 A, 240 V, 2P, CB	Main Breaker
3	Test bypass facility		16	30 A, 240 V, 2P, CB	Lighting
4	Meter socket and support		17	50 A, 120 V, 1P, CB	Signals
5	Terminal blocks		18	30 A, 120 V, 1P, CB	Ramp Metering
6	Neutral bus		19	20 A, 120 V, 1P, CB	Irrigation
7	Ground bus		20	15 A, 120 V, 1P, CB	Lighting Control
8	Grounding electrode		21	Photoelectric unit (Note 7)	
9	30 A, 2PNO Contactor	Sign Illumination	22	15 A, 1P, Test switch	Lighting Test Switch
10	Photoelectric unit (Note 7)		23	60 A, 2PNO Contactor	Lighting
11	15 A, 1P, Test switch	Sign Illumination Test Switch	24	15 A, 120 V, 1P, CB	IISNS
12	15 A, 120 V, 1P, CB	Sign Illumination Control	25	30 A, 2PNO Contactor	IISNS
13	15 A, 120 V, 1P, CB	Flashing Beacon	26	20 A, 120 V, 1P, CB	Telephone Demarcation Cabinet

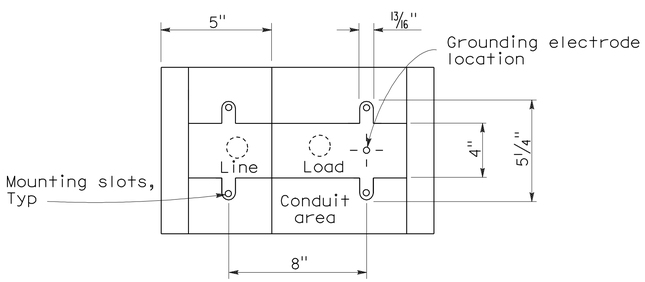

BASE FOR TYPE III-A SERVICE EQUIPMENT ENCLOSURE

NOTES: (FOR SERVICE EQUIPMENT ENCLOSURE)

1. Voltage ratings of service equipment shall conform to the service voltages indicated on the plans.
2. Unless otherwise indicated on the plans, service equipment items shall be provided for each service equipment enclosure as shown.
3. Connect to remote test switch mounted on lighting standards, sign post or structure when required.
4. Items No. 1 and 6 shall be isolated from the service equipment enclosure.
5. Meter sockets shall be 5 clip type.
6. The landing lug shall be suitable for multiple conductors.
7. Type V photoelectric control shall be used unless otherwise indicated on the plans.

STATE OF CALIFORNIA
DEPARTMENT OF TRANSPORTATION

ELECTRICAL SYSTEMS (SERVICE EQUIPMENT AND TYPICAL WIRING DIAGRAM, TYPE III-A SERIES)

NO SCALE

RSP ES-2D DATED OCTOBER 5, 2007 SUPERCEDES STANDARD PLAN ES-2D DATED MAY 1, 2006 - PAGE 406 OF THE STANDARD PLANS BOOK DATED MAY 2006.

REVISED STANDARD PLAN RSP ES-2D

2006 REVISED STANDARD PLAN RSP ES-2D

DIST	COUNTY	ROUTE	POST MILES TOTAL PROJECT	SHEET NO.	TOTAL SHEETS
10	Tuo	108	R4.0/R6.0	179	237

REGISTERED ELECTRICAL ENGINEER

October 5, 2007
PLANS APPROVAL DATE

REGISTERED PROFESSIONAL ENGINEER Jeffery G. McRae No. E14512 Exp. 6-30-08 ELECTRICAL STATE OF CALIFORNIA

The State of California or its officers or agents shall not be responsible for the accuracy or completeness of electronic copies of this plan sheet.

To accompany plans dated 5-10-10

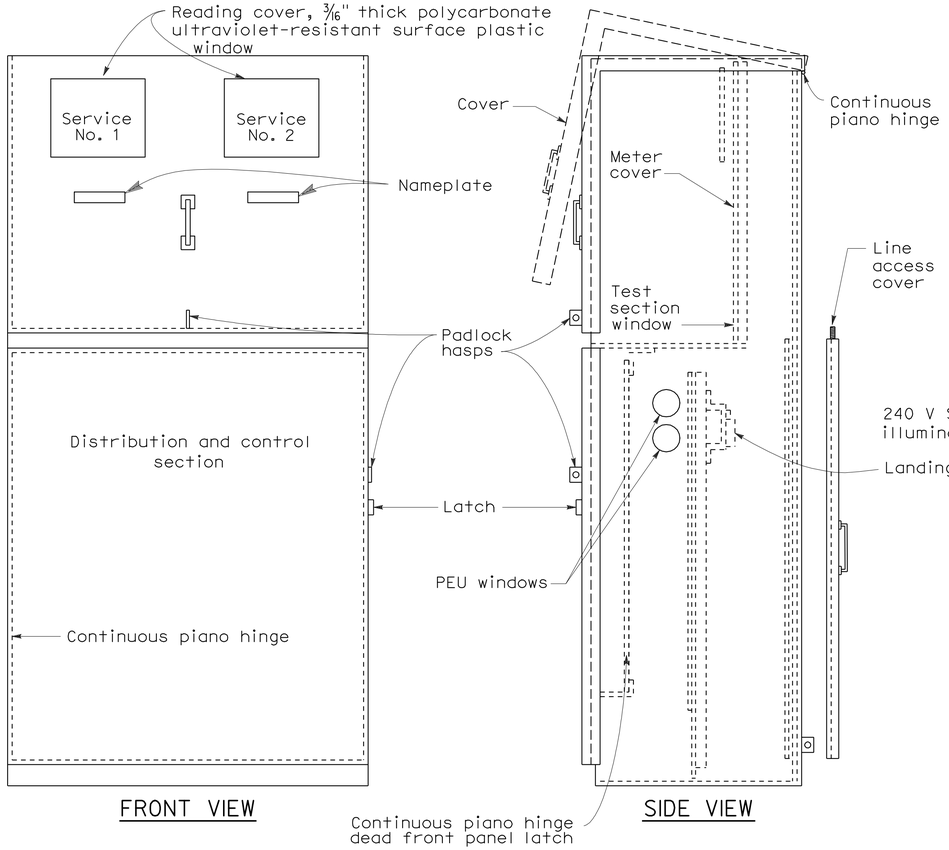

FRONT VIEW

SIDE VIEW

TYPE III-CF SERVICE EQUIPMENT ENCLOSURE WITH PROVISIONS FOR TWO 100 A METERS (TYPICAL)

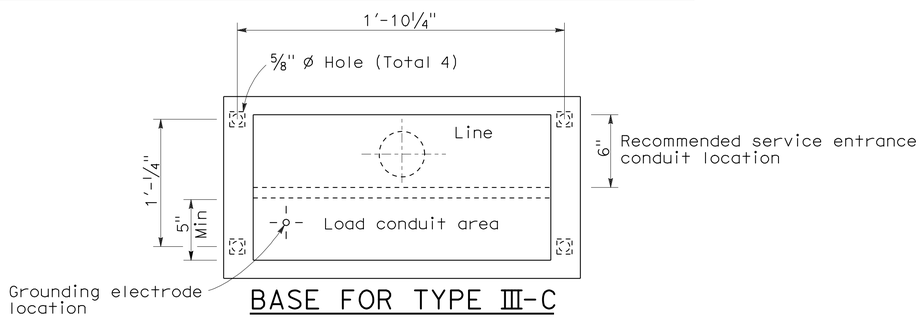

BASE FOR TYPE III-C SERVICE EQUIPMENT ENCLOSURE

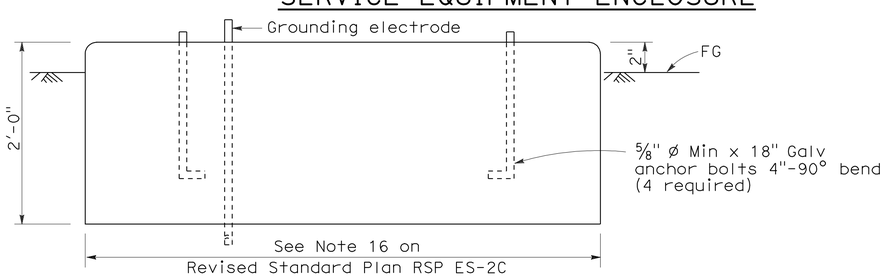

FOUNDATION DETAIL

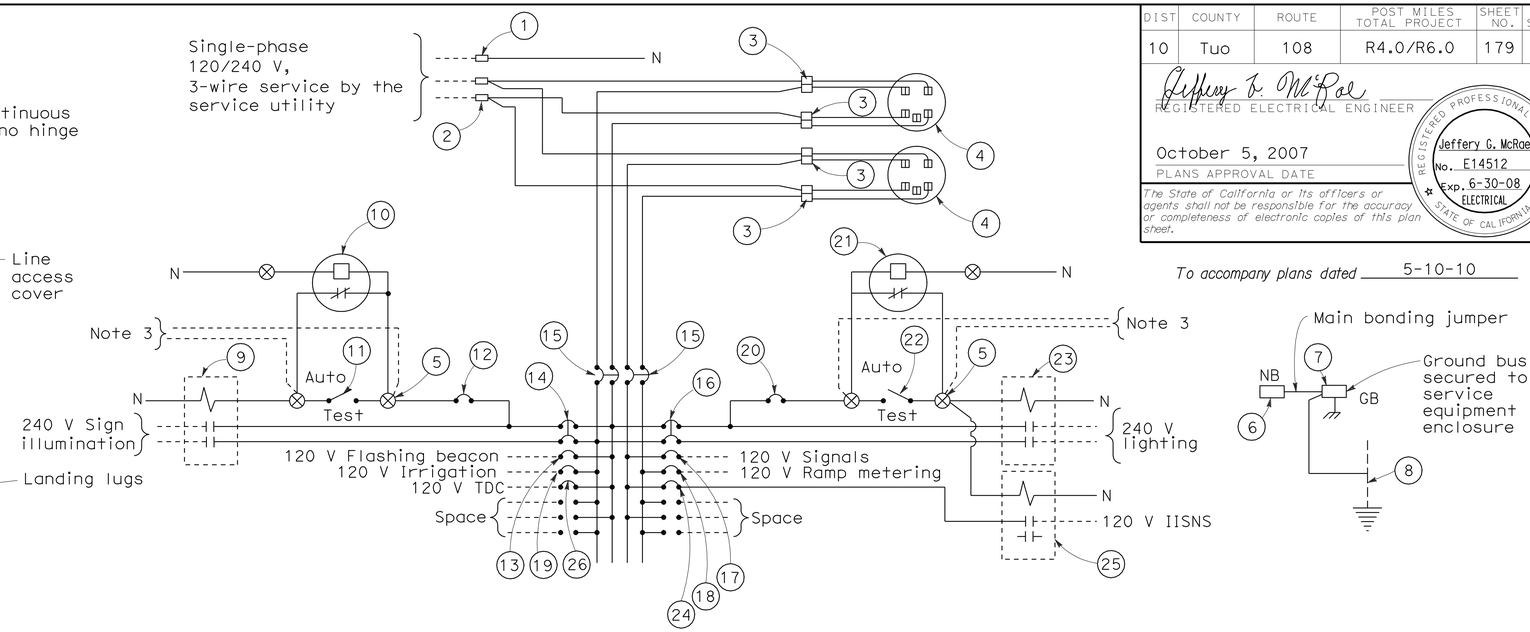

120/240 V SERVICE WIRING DIAGRAM (TYPICAL)

TYPE III-C SERVICE (120/240 V) EQUIPMENT LEGEND

ITEM No.	COMPONENT	NAME PLATE DESCRIPTION	ITEM No.	COMPONENT	NAME PLATE DESCRIPTION
1	Neutral lug		14	30 A, 240 V, 2P, CB	Sign Illumination
2	Landing lug (Note 6)		15	100 A, 240 V, 2P, CB	Main Breaker
3	Test bypass facility		16	30 A, 240 V, 2P, CB	Lighting
4	Meter socket and support		17	50 A, 120 V, 1P, CB	Signals
5	Terminal blocks		18	30 A, 120 V, 1P, CB	Ramp Metering
6	Neutral bus		19	20 A, 120 V, 1P, CB	Irrigation
7	Ground bus		20	15 A, 120 V, 1P, CB	Lighting Control
8	Grounding electrode		21	Photoelectric unit (Note 7)	
9	30 A, 2PNO, Contactor	Sign Illumination	22	15 A, 1P, Test switch	Lighting Control
10	Photoelectric unit (Note 7)		23	60 A, 2PNO Contactor	Lighting
11	15 A, 1P, Test switch	Sign Illumination Test Switch	24	15 A, 120 V, 1P, CB	IISNS
12	15 A, 120 V, 1P, CB	Sign Illumination Control	25	30 A, 2PNO Contactor	IISNS
13	15 A, 120 V, 1P, CB	Flashing Beacon	26	20 A, 120 V, 1P, CB	Telephone Demarcation Cabinet

NOTES: (FOR SERVICE EQUIPMENT ENCLOSURE)

1. Voltage ratings of service equipment shall conform to the service voltages indicated on the plans.
2. Unless otherwise indicated on the plans, service equipment items shall be provided for each service equipment enclosure as shown.
3. Connect to remote test switch mounted on lighting standards, sign post or structure when required.
4. Items No. 1 and 6 shall be isolated from the service equipment enclosure.
5. Meter sockets shall be 5 clip type.
6. The landing lug shall be suitable for multiple conductors.
7. Type V photoelectric control shall be used unless otherwise indicated on the plans.

STATE OF CALIFORNIA
DEPARTMENT OF TRANSPORTATION

ELECTRICAL SYSTEMS (SERVICE EQUIPMENT AND TYPICAL WIRING DIAGRAM TYPE III-C SERIES)

NO SCALE

RSP ES-2F DATED OCTOBER 5, 2007 SUPERCEDES STANDARD PLAN ES-2F DATED MAY 1, 2006 - PAGE 408 OF THE STANDARD PLANS BOOK DATED MAY 2006.

REVISED STANDARD PLAN RSP ES-2F

2006 REVISED STANDARD PLAN RSP ES-2F

8-17-07

DIST	COUNTY	ROUTE	POST MILES TOTAL PROJECT	SHEET NO.	TOTAL SHEETS
10	Tuo	108	R4.0/R6.0	180	237

REGISTERED ELECTRICAL ENGINEER

June 6, 2008
PLANS APPROVAL DATE

REGISTERED PROFESSIONAL ENGINEER
Jeffery G. McRae
No. E14512
Exp. 6-30-10
ELECTRICAL
STATE OF CALIFORNIA

The State of California or its officers or agents shall not be responsible for the accuracy or completeness of electronic copies of this plan sheet.

To accompany plans dated 5-10-10

VISORS

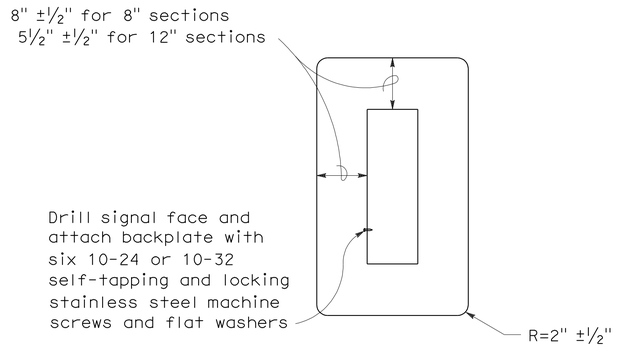

8" AND 12" SECTIONS

BACKPLATE

1/16" minimum thickness
3001-14 aluminum, or plastic when specified

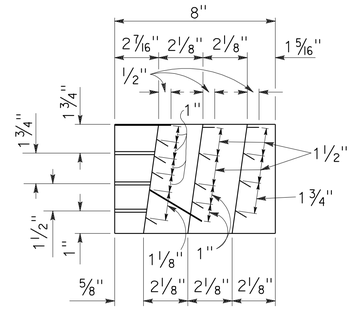

SECTION A-A

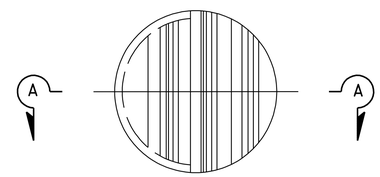

FRONT VIEW

DIRECTIONAL LOUVER

Directional louvers shall be oriented as directed by the Engineer and secured in place with one plated brass machine screw and nut.

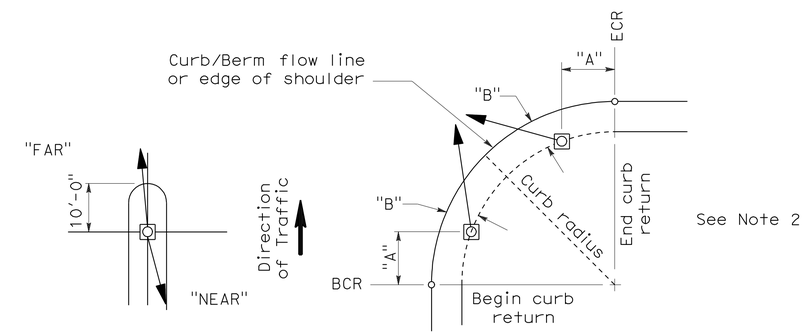

NOTES:

1. Typical signal pole placement unless dimensioned on plans.
2. For "A" and "B" dimensions, see Pole Schedule, or as directed by the Engineer.

SIGNAL STANDARD PLACEMENT DIMENSIONS AND EQUIPMENT LOCATIONS

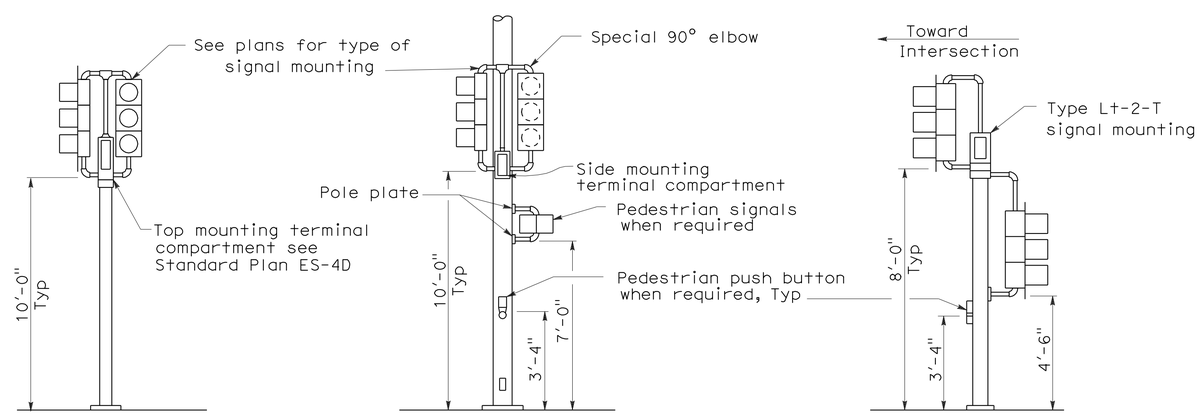

TOP MOUNTED SIGNALS (TV)

Type 1-A, 1-B, 1-C and 1-D standard as indicated on the plans

SIDE MOUNTED SIGNALS (SV AND SP)

Normally used on standards with luminaire or signal mast arm

LEFT TURN LANE SIGNAL

Type 1-A, 1-B, 1-C and 1-D standard as indicated on plans

TYPICAL SIGNAL INSTALLATIONS

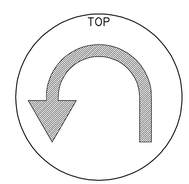

U-TURN SIGNAL FACE

BICYCLE SIGNAL FACE

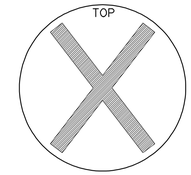

LANE CONTROL SIGNAL FACE

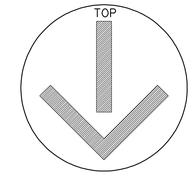

LANE CONTROL SIGNAL FACE

STATE OF CALIFORNIA
DEPARTMENT OF TRANSPORTATION

ELECTRICAL SYSTEMS (SIGNAL HEADS AND MOUNTINGS)

NO SCALE

RSP ES-4C DATED JUNE 6, 2008 SUPERSEDES STANDARD PLAN ES-4C DATED MAY 1, 2006 - PAGE 420 OF THE STANDARD PLANS BOOK DATED MAY 2006.

REVISED STANDARD PLAN RSP ES-4C

2006 REVISED STANDARD PLAN RSP ES-4C

5-19-08

DIST	COUNTY	ROUTE	POST MILES TOTAL PROJECT	SHEET NO.	TOTAL SHEETS
10	Tuo	108	R4.0/R6.0	181	237

REGISTERED ELECTRICAL ENGINEER

June 6, 2008
PLANS APPROVAL DATE

REGISTERED PROFESSIONAL ENGINEER Jeffery G. McRae No. E14512 Exp. 6-30-10 ELECTRICAL STATE OF CALIFORNIA

The State of California or its officers or agents shall not be responsible for the accuracy or completeness of electronic copies of this plan sheet.

To accompany plans dated 5-10-10

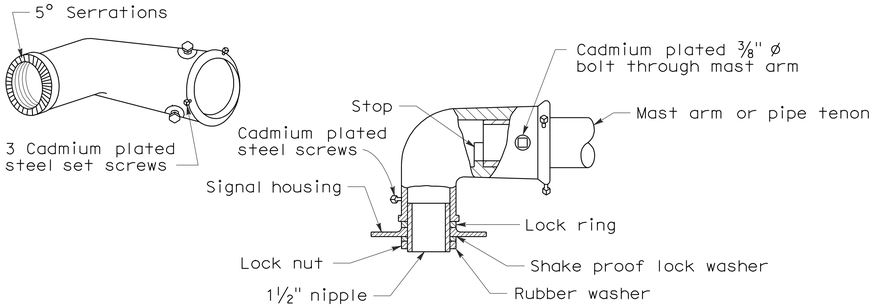

MAST ARM MOUNTING - TYPE "MAT"

For 2 NPS pipe, see Note 1.

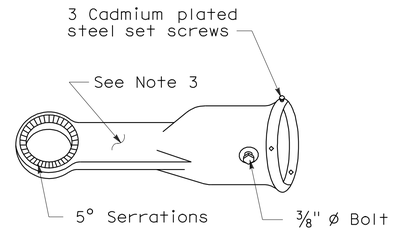

MAST ARM MOUNTING - TYPE "MAS"

For 2 NPS pipe. See Note 1.

SIGNAL SLIP FITTERS

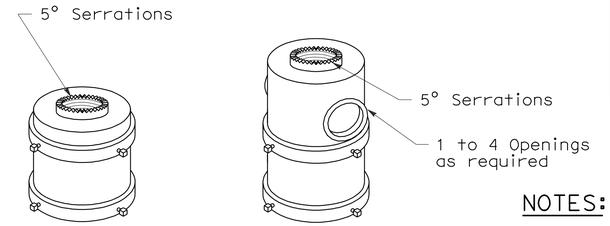

For one mounting For mulitiple mountings

TOP MOUNTINGS

For 4 NPS pipe, see Note 2.

NOTES:

1. After mast arm signal has been plumbed and secured, drill 7/16" hole through mast arm tenon in line with slip fitter hole. Place a cadmium plated 3/8" ø galvanized bolt with washer under bolt head through hole and secure with washer, nut, and locknut. Seal openings between mast arm mountings and mast arm with mastic.
2. (a) Threaded top mounted slip fitter openings shall be 1½ NPS.
   (b) Serrations in fittings shall match those on bottom of signal heads or in lock ring.
   (c) Top opening shall be offset when backplate is used.
3. Wireway shall have a cross section area of 0.95 square inch minimum. Minimum width of ½".

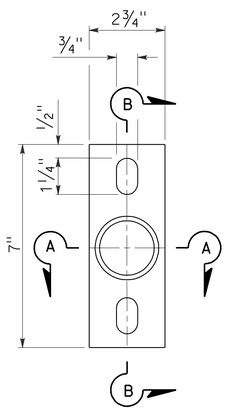

POLE PLATE

For side mountings

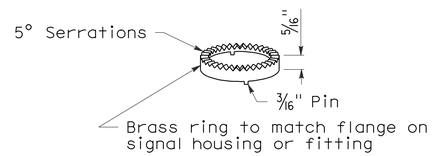

LOCK RING

Use where locking ring is not integral with signal housing or fitting.

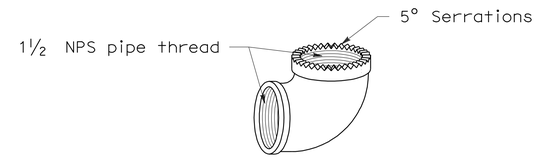

SPECIAL 90° ELBOW

One for each signal head, except those with special slip fitter mounting

MISCELLANEOUS MOUNTING HARDWARE

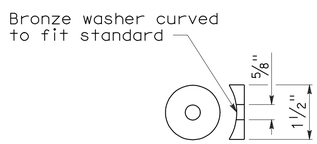

DETAIL "C"

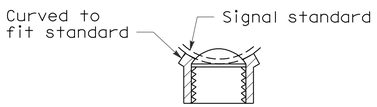

SECTION A-A

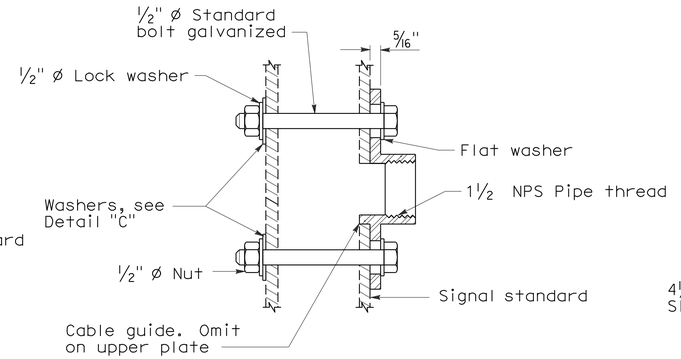

SECTION B-B

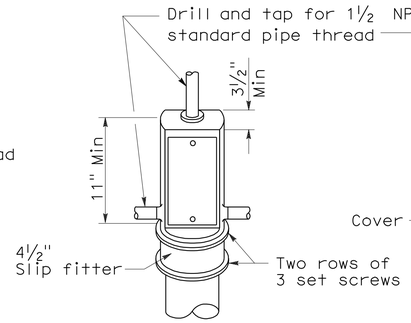

TOP MOUNTING

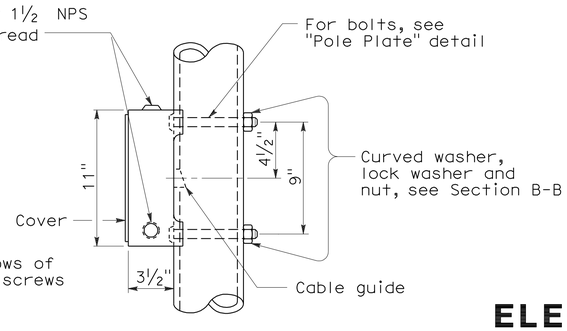

SIDE MOUNTING

TERMINAL COMPARTMENTS

STATE OF CALIFORNIA
DEPARTMENT OF TRANSPORTATION

ELECTRICAL SYSTEMS (SIGNAL HEADS AND MOUNTINGS)

NO SCALE

RSP ES-4D DATED June 6, 2008 SUPERSEDES STANDARD PLAN ES-4D
DATED MAY 1, 2006 - PAGE 421 OF THE STANDARD PLANS BOOK DATED MAY 2006.

REVISED STANDARD PLAN RSP ES-4D

2006 REVISED STANDARD PLAN RSP ES-4D

5-19-08

DIST	COUNTY	ROUTE	POST MILES TOTAL PROJECT	SHEET NO.	TOTAL SHEETS
10	Tuo	108	R4.0/R6.0	182	237

REGISTERED ELECTRICAL ENGINEER

October 5, 2007
PLANS APPROVAL DATE

REGISTERED PROFESSIONAL ENGINEER Jeffery G. McRae No. E14512 Exp. 6-30-08 ELECTRICAL STATE OF CALIFORNIA

The State of California or its officers or agents shall not be responsible for the accuracy or completeness of electronic copies of this plan sheet.

To accompany plans dated 5-10-10

2006 REVISED STANDARD PLAN RSP ES-5A

LOOP INSTALLATION PROCEDURE

1. Loops shall be centered in lanes.
2. Saw slots in pavement for loop conductors as shown in details.
3. Distance between side of loop and a lead-in saw cut from adjacent detectors shall be 2'-0" minimum. Distance between lead-in saw cuts shall be 6" minimum.
4. Bottom of saw slot shall be smooth with no sharp edges.
5. Slots shall be washed until clean, blown out and thoroughly dried before installing loop conductors.
6. Adjacent loops on the same sensor unit channel shall be wound in opposite directions.
7. Identify and tag loop circuit pairs in the pull box with loop number, start (S) and finish (F) of conductor. Identify and tag lead-in-cable with sensor number and phase.
8. Install loop conductor in slot using a 3/16" to 1/4" thick wood paddle. Hold loop conductors with wood paddles (at the bottom of the sawed slot) during sealant placement.
9. No more than 2 twisted pairs shall be installed in one sawed slot.
10. Allow additional 5'-0" of slack length of conductor for the lead-in run to pull box.
11. The additional length of each conductor for each loop shall be twisted together into a pair (6 turns per 3'-4" minimum) before being placed in the slot and conduit leading to pull box.
12. Test each loop circuit for continuity, circuit resistance and insulation resistance at the pull box before filling slots.
13. Fill slots as shown in details.
14. Splice loop conductors to lead-in-cable. Splices shall be soldered.
15. End of lead-in-cable and Type 2 loop conductor shall be waterproofed prior to installing in conduit to prevent moisture from entering the cable.
16. Lead-in-cable shall not be spliced between the pull box and the controller cabinet terminals.
17. Test each loop circuit for continuity, circuit resistance and insulation resistance at the controller cabinet location.
18. Where loop conductors are not to be spliced to a lead-in-cable, the ends of the conductors shall be taped and waterproofed with electrical insulating coating.

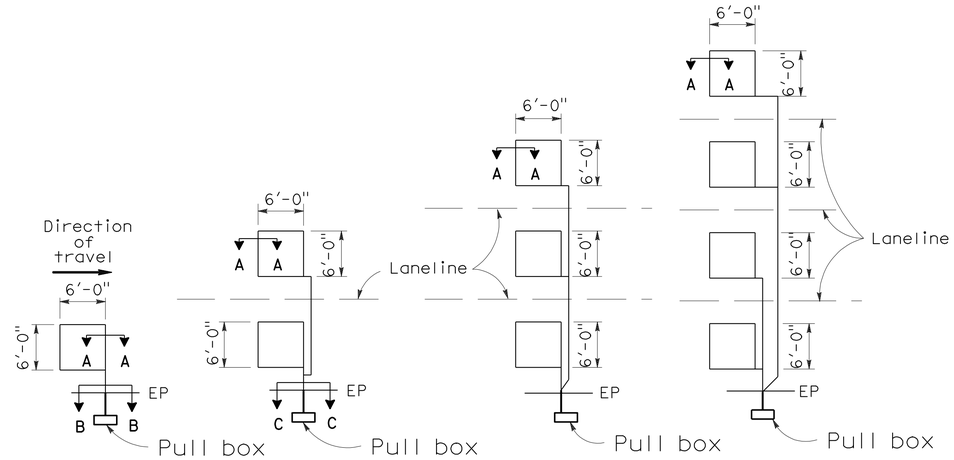

TYPE 1A INSTALLATION | TYPE 2A INSTALLATION | TYPE 3A INSTALLATION | TYPE 4A INSTALLATION

SAWCUT DETAILS

(Type A loop detector configurations illustrated)

1. 1A thru 4A = 1 Type A loop configuration in each lane.
2. 1B thru 4B = 1 Type B loop configuration in each lane.
3. 1C = 1 Type C loop configuration entering lanes as required.
4. 1D thru 4D = 1 Type D loop configuration in each lane.
5. 1E thru 4E = 1 Type E loop configuration in each lane.
6. 1Q thru 4Q = 1 Type Q loop configuration in each lane. (Use Type A, B, C, D, E or Q loop detector configurations only when specified or shown on plans)

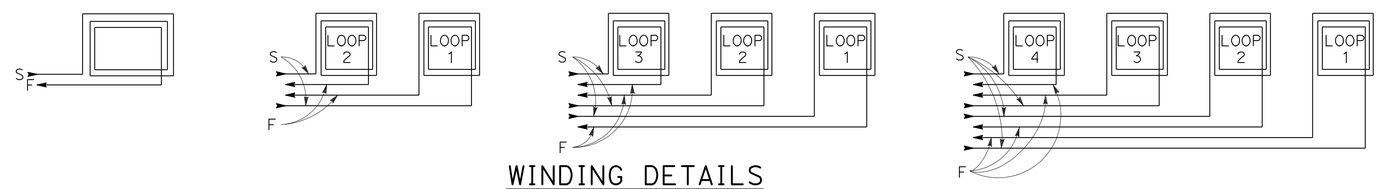

WINDING DETAILS

See Notes 6 and 7

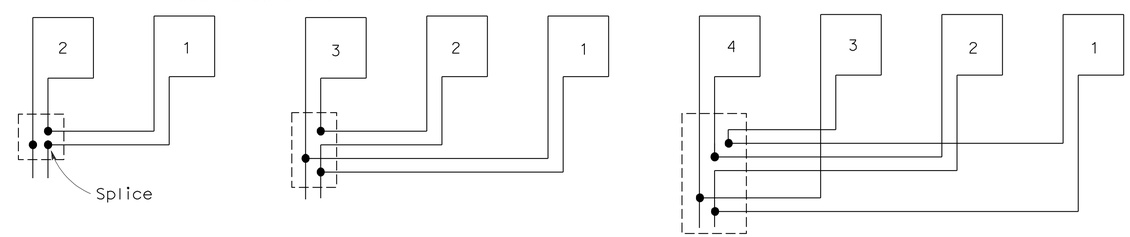

TYPICAL LOOP CONNECTIONS

(Dashed lines represent the pull box)

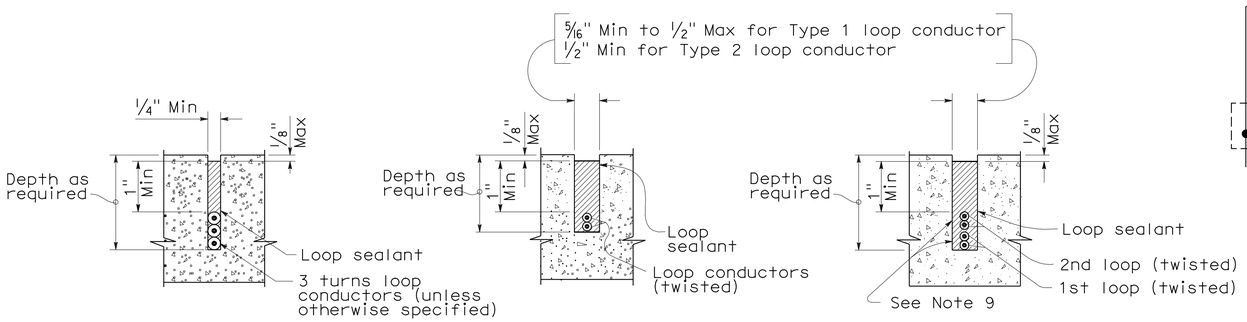

SECTION A-A | SECTION B-B | SECTION C-C

SLOT DETAILS - TYPE 1 AND TYPE 2 LOOP CONDUCTOR

STATE OF CALIFORNIA
DEPARTMENT OF TRANSPORTATION

ELECTRICAL SYSTEMS (DETECTORS)

NO SCALE

RSP ES-5A DATED OCTOBER 5, 2007 SUPERCEDES STANDARD PLAN ES-5A DATED MAY 1, 2006 - PAGE 423 OF THE STANDARD PLANS BOOK DATED MAY 2006.

REVISED STANDARD PLAN RSP ES-5A

DIST	COUNTY	ROUTE	POST MILES TOTAL PROJECT	SHEET NO.	TOTAL SHEETS
10	Tuo	108	R4.0/R6.0	183	237

REGISTERED CIVIL ENGINEER

October 5, 2007
PLANS APPROVAL DATE

REGISTERED PROFESSIONAL ENGINEER
Stanley P. Johnson
No. C57793
Exp. 3-31-08
CIVIL
STATE OF CALIFORNIA

The State of California or its officers or agents shall not be responsible for the accuracy or completeness of electronic copies of this plan sheet.

To accompany plans dated 5-10-10

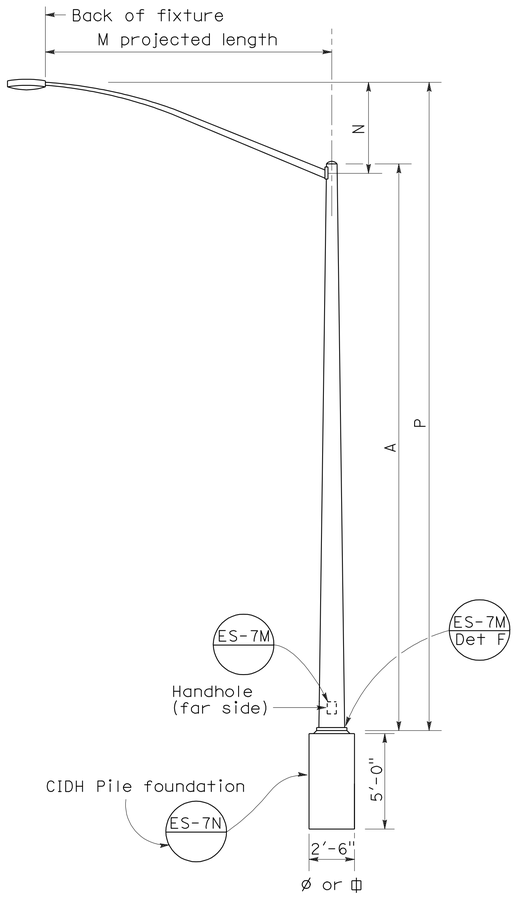

ELEVATION
TYPE 15 AND TYPE 21

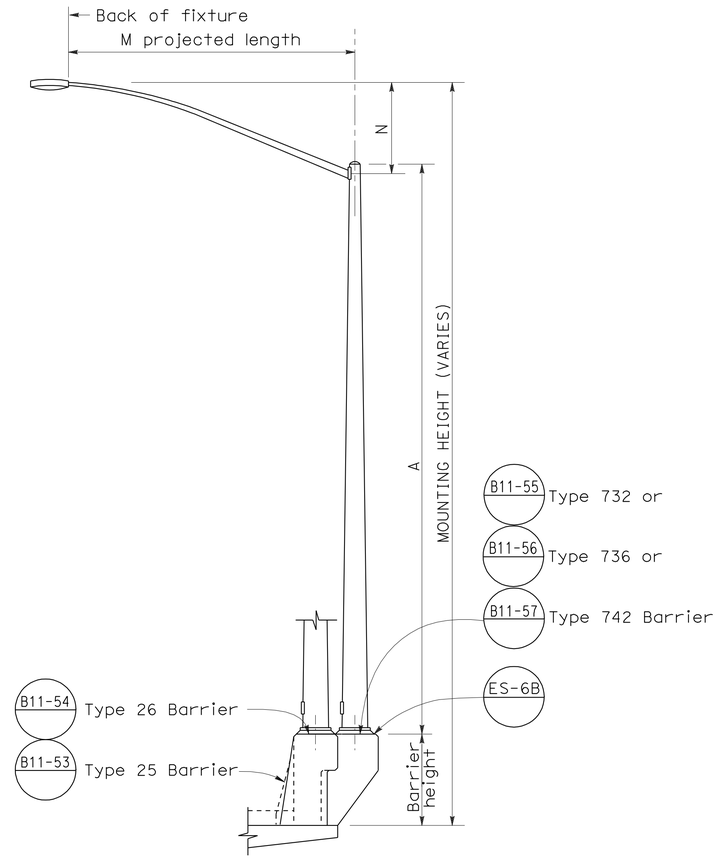

ELEVATION
TYPE 15 AND TYPE 21 BARRIER RAIL MOUNTED

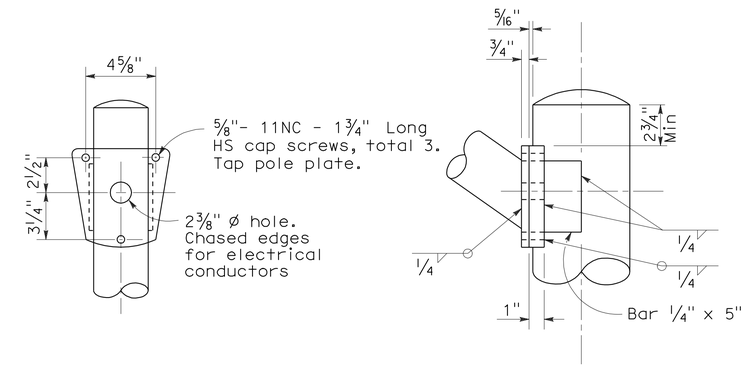

DETAIL R
LUMINAIRE ARM CONNECTION

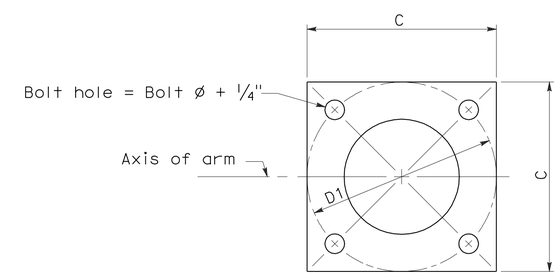

BASE PLATE

POLE TYPE	POLE DATA				BASE PLATE DATA				LUMINAIRE ARM
	A Height	Min OD Base	Min OD Top	Wall Thickness	C	D1 Bolt Circle	Thickness	Anchor Bolts Size	
15	30′	8"	3 7/8"	0.1196"	1′-0"	1′-0"	1"	1" ø x 3′-0" x 4"*	6′ - 15′ [12′]
21	35′	8 5/8"	3 7/8"	0.1196"	1′-0"	1′-0"	1"	1 1/4"ø x 3′-0" x 4"*	6′ - 15′ [12′]

* For barrier rail bolts, see Standard Plan ES-6B.

LUMINAIRE ARM DATA					
M Projected Length	N Rise	Min OD At Pole	Nominal Thickness	P Type 15	P Type 21
6′-0"	2′-0"±	3 1/4"	0.1196"	31′-6"±	36′-6"±
8′-0"	2′-6"±	3 1/2"	0.1196"	32′-0"±	37′-0"±
10′-0"	3′-3"±	3 7/8"	0.1196"	32′-9"±	37′-9"±
12′-0"	4′-3"±	3 7/8"	0.1196"	33′-9"±	38′-9"±
15′-0"	4′-9"±	4 1/4"	0.1196"	34′-3"±	39′-3"±

NOTES:

1. ☐ Indicates arm length to be used unless otherwise noted on the plans.
2. For Type 15-SB, use Type 15 standard with Type 30 slip base plate details, see Standard Plan ES-6F.
3. For additional notes, see Standard Plan ES-7M and ES-7N.

STATE OF CALIFORNIA
DEPARTMENT OF TRANSPORTATION

ELECTRICAL SYSTEMS (LIGHTING STANDARD TYPES 15 AND 21)

NO SCALE

RSP ES-6A DATED OCTOBER 5, 2007 SUPERCEDES STANDARD PLAN ES-6A DATED MAY 1, 2006 - PAGE 427 OF THE STANDARD PLANS BOOK DATED MAY 2006.

REVISED STANDARD PLAN RSP ES-6A

2006 REVISED STANDARD PLAN RSP ES-6A

7-10-07

DIST	COUNTY	ROUTE	POST MILES TOTAL PROJECT	SHEET NO.	TOTAL SHEETS
10	Tuo	108	R4.0/R6.0	184	237

REGISTERED CIVIL ENGINEER

January 18, 2008
PLANS APPROVAL DATE

REGISTERED PROFESSIONAL ENGINEER
Stanley P. Johnson
No. C57793
Exp. 03-31-08
CIVIL
STATE OF CALIFORNIA

The State of California or its officers or agents shall not be responsible for the accuracy or completeness of electronic copies of this plan sheet.

To accompany plans dated 5-10-10

LUMINAIRE ARM DATA

PROJECTED LENGTH	THICKNESS	MINIMUM OD @ POLE	MOUNTING HEIGHT
* 6'-0"	0.1196"	3¼"	36'-9"±
8'-0"		3½"	37'-3"±
10'-0"		3¾"	38'-0"±
12'-0"		3¾"	39'-0"±
15'-0"		4¼"	39'-6"±
** 20'-0"	0.1793"	5"	37'-0"±

* Type 30 - arm length 6'-0" - 15'-0" maximum
** Type 31 - arm lengths 20'-0"

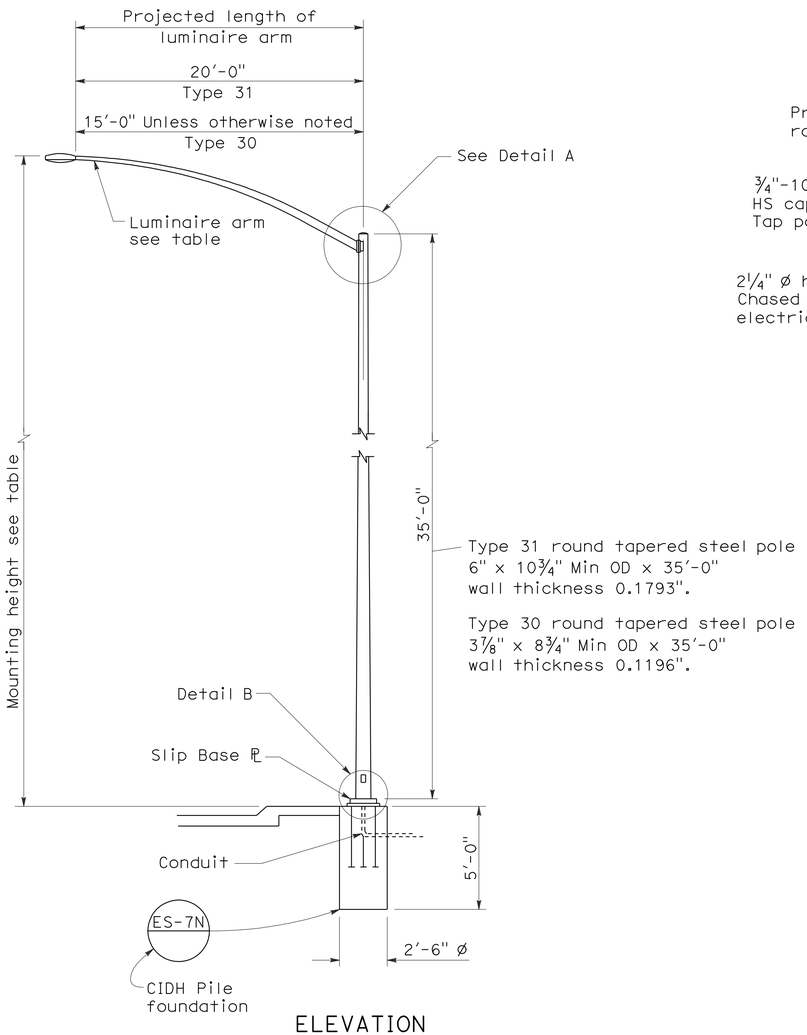

ELEVATION

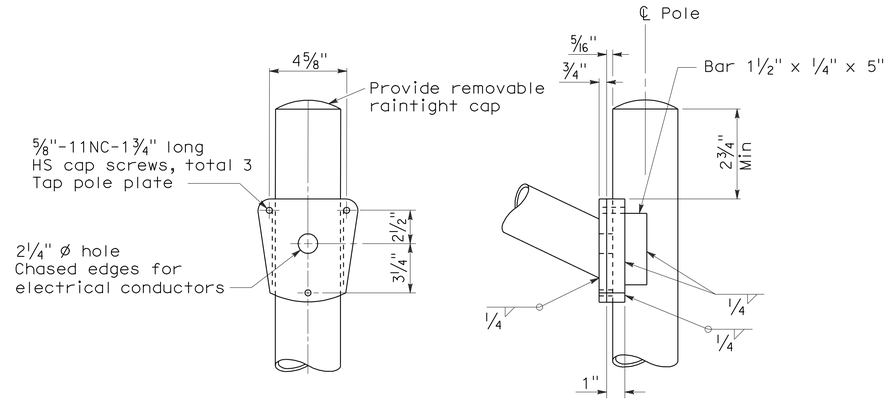

DETAIL A - TYPE 30

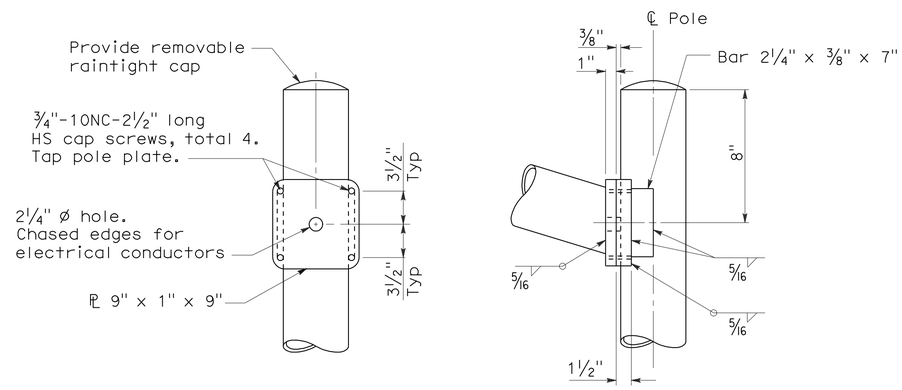

DETAIL A - TYPE 31

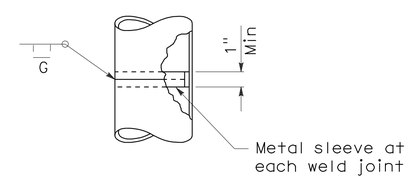

POLE SPLICE

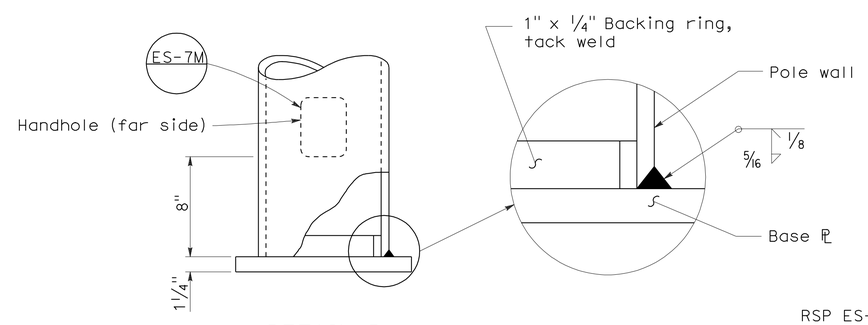

DETAIL B

NOTES:

1. Sheet steel shall have a minimum yield of 48,000 psi.
2. For slip base details see Standard Plan ES-6F.
3. For Type 30 fixed base use Type 15 base plate, and foundation shown on Revised Standard Plan RSP ES-6A. Use 1¼" Dia x 3'-6" x 4" anchor bolts.
4. For Type 31 fixed base use Type 32 base plate, anchor bolts and foundation on Standard Plan ES-6G.
5. Handhole shall be located on downstream side of traffic unless noted otherwise on plans.
6. For additional general notes refer to Standard Plan ES-7M.

STATE OF CALIFORNIA
DEPARTMENT OF TRANSPORTATION

ELECTRICAL SYSTEMS (LIGHTING STANDARD TYPES 30 AND 31)

NO SCALE

RSP ES-6E DATED JANUARY 18, 2008 SUPERCEDES STANDARD PLAN ES-6E DATED MAY 1, 2006 - PAGE 430 OF THE STANDARD PLANS BOOK DATED MAY 2006.

REVISED STANDARD PLAN RSP ES-6E

2006 REVISED STANDARD PLAN RSP ES-6E

11-19-07

DIST	COUNTY	ROUTE	POST MILES TOTAL PROJECT	SHEET NO.	TOTAL SHEETS
10	Tuo	108	R4.0/R6.0	185	237

REGISTERED CIVIL ENGINEER

October 5, 2007
PLANS APPROVAL DATE

REGISTERED PROFESSIONAL ENGINEER
Stanley P. Johnson
No. C57793
Exp. 3-31-08
CIVIL
STATE OF CALIFORNIA

The State of California or its officers or agents shall not be responsible for the accuracy or completeness of electronic copies of this plan sheet.

To accompany plans dated 5-10-10

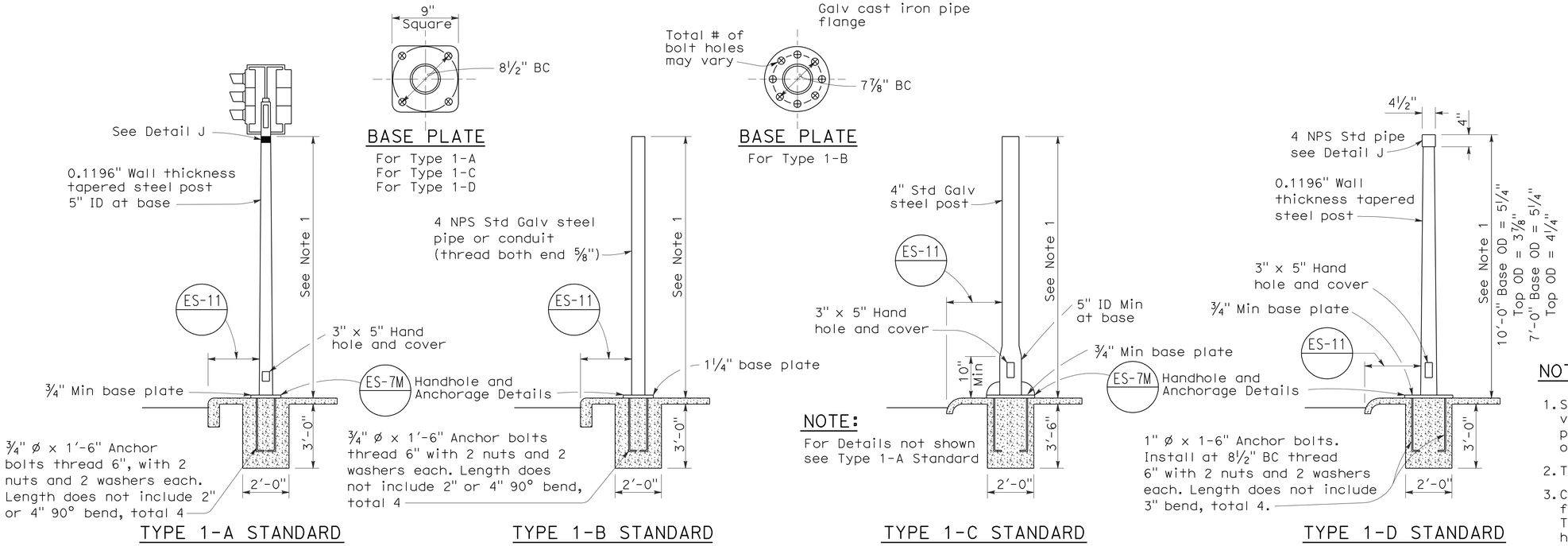

TYPE 1 SIGNAL STANDARDS

NOTES:

1. Standards shall be 10'-0" ± 2" for vehicle signals and 7'-0" ± 2" for pedestrian signals unless otherwise noted on plans.
2. Top of standards shall be 4½" OD.
3. Conduits shall extend 2" maximum above finished surface of foundation and for Types 1-A, 1-C and 1-D shall be sloped toward handhole.
4. Anchor bolts shall be bonded to conduit or grounding conductor.
5. Conduit between standard and adjacent pull box shall be 2" minimum.
6. Paint numbers on roadway side facing traffic when electrolier or post is left of direction of traffic.

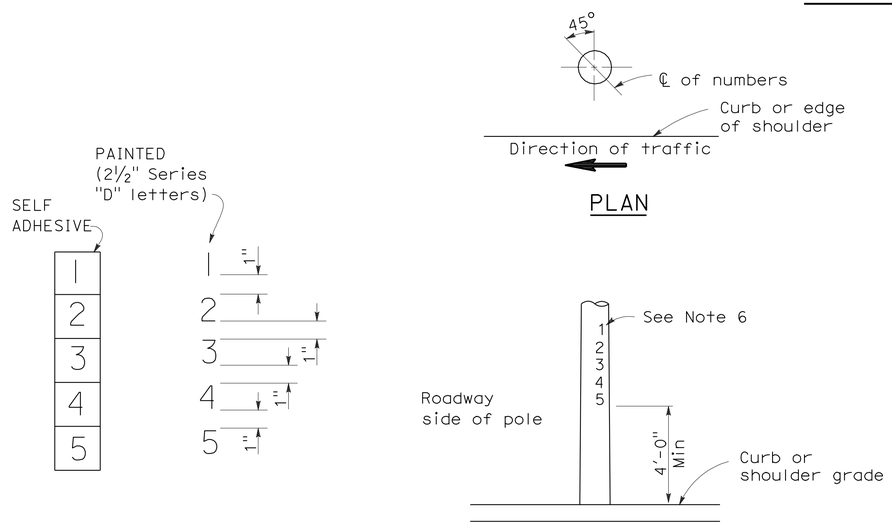

LOCATION OF EQUIPMENT NUMBERS ON STANDARDS AND POSTS

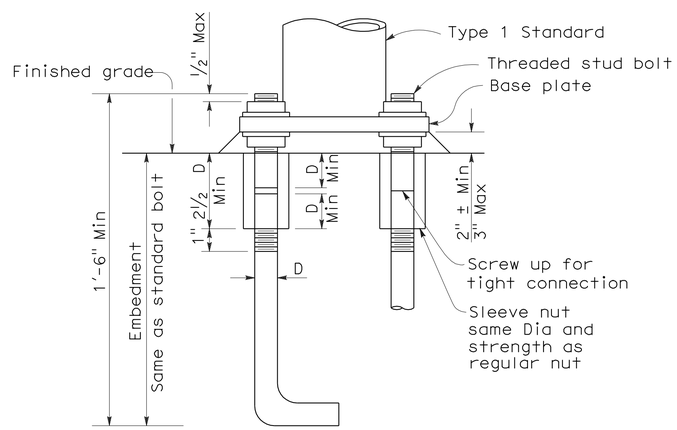

ANCHOR BOLTS WITH SLEEVE NUTS

Sleeve nuts to be used only when shown or specified on Project Plans

D = Diameter of anchor bolt

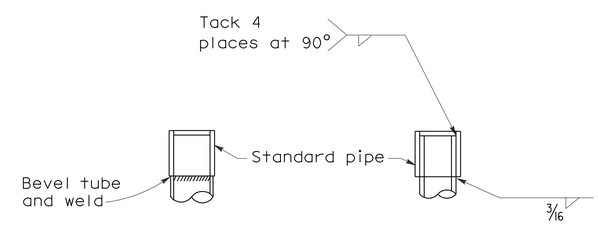

DETAIL J

Tube may be inserted into pipe or butted as required

STATE OF CALIFORNIA
DEPARTMENT OF TRANSPORTATION

ELECTRICAL SYSTEMS (SIGNAL AND LIGHTING STANDARD TYPE 1 STANDARD AND EQUIPMENT NUMBERING)

NO SCALE

RSP ES-7B DATED OCTOBER 5, 2007 SUPERCEDES STANDARD PLAN ES-7B DATED MAY 1, 2006 - PAGE 438 OF THE STANDARD PLANS BOOK DATED MAY 2006.

REVISED STANDARD PLAN RSP ES-7B

2006 REVISED STANDARD PLAN RSP ES-7B

7-10-07

DIST	COUNTY	ROUTE	POST MILES TOTAL PROJECT	SHEET NO.	TOTAL SHEETS
10	Tuo	108	R4.0/R6.0	186	237

REGISTERED CIVIL ENGINEER

June 15, 2007
PLANS APPROVAL DATE

REGISTERED PROFESSIONAL ENGINEER Stanley P. Johnson No. C57793 Exp. 3-31-08 CIVIL STATE OF CALIFORNIA

The State of California or its officers or agents shall not be responsible for the accuracy or completeness of electronic copies of this plan sheet.

To accompany plans dated 5-10-10

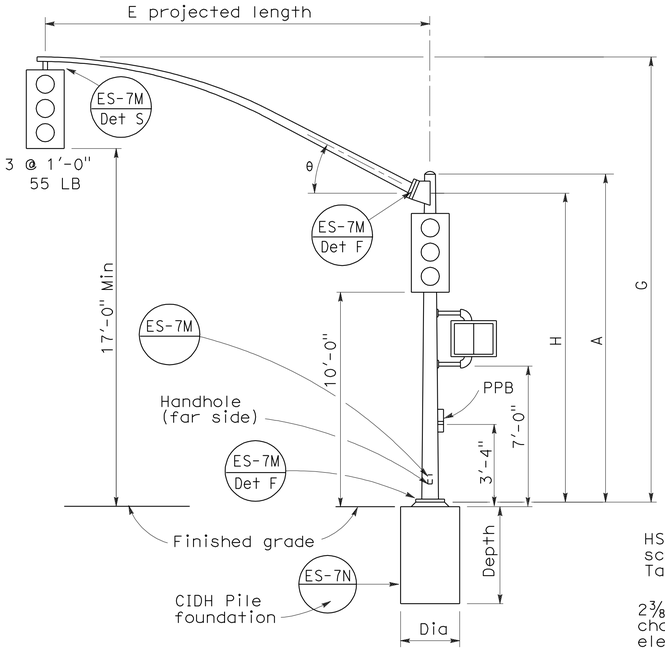

ELEVATION

TYPE 16-1-100, 18-1-100

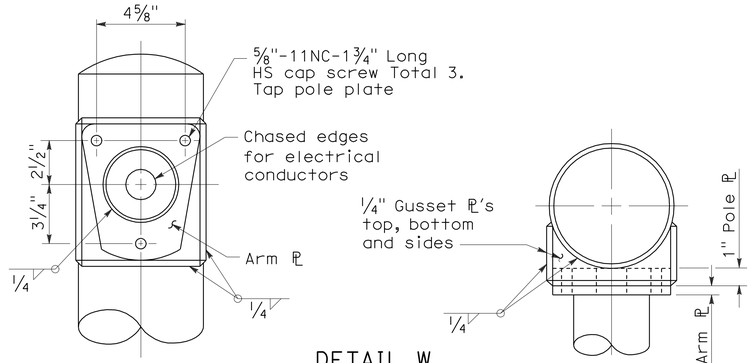

DETAIL W

LUMINAIRE ARM CONNECTION

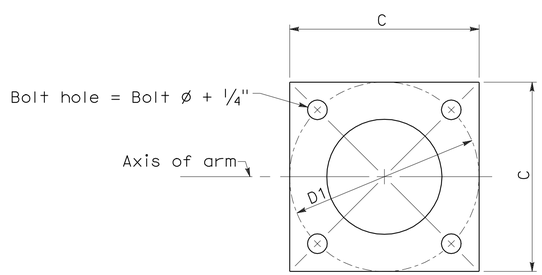

BASE PLATE

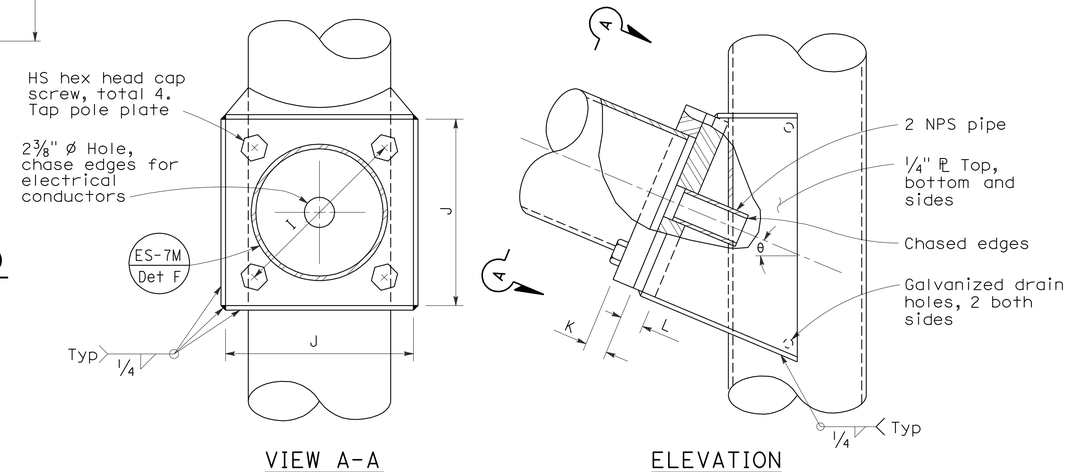

VIEW A-A ELEVATION

SIGNAL ARM CONNECTION DETAILS

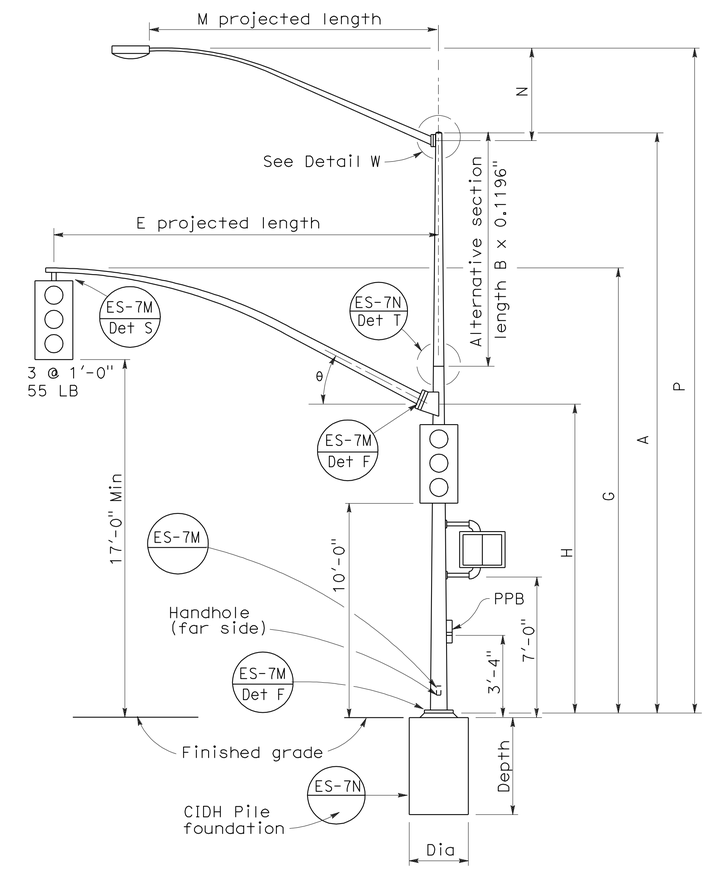

ELEVATION

TYPE 19-1-100, 19A-1-100

SIGNAL ARM DATA										
E Projected Length	G Mounting Height	H	Min OD At Pole	Thickness	I Bolt Circle	HS Cap Screws	J Plate size	K Arm ℙ Thickness	L Pole ℙ Thickness	θ
15'-0"	21'-8"±	17'-6"	7"	0.1196"	12"	1¼"-7NC-3"	1'-0"	1¼"	1½"	23°
20'-0"	21'-8"±		7⅛"							
25'-0"	22'-8"±	16'-0"	7 5/16"							
30'-0"	23'-0"±		8"							

LUMINAIRE ARM DATA					
M Projected Length	N Rise	Min OD at Pole	Thickness	P Mounting Height 30'-0" Pole	P Mounting Height 35'-0" Pole
6'-0"	2'-0"±	3¼"	0.1196"	31'-6"±	36'-6"±
8'-0"	2'-6"±	3½"		32'-0"±	37'-0"±
10'-0"	3'-3"±	3⅞"		32'-9"±	37'-9"±
12'-0"	4'-3"±			33'-9"±	38'-9"±
15'-0"	4'-9"±	4¼"		34'-3"±	39'-3"±

Pole Type	Load Case	Wind Velocity mph	POLE DATA: A Height	Min OD Base	Min OD Top	Thickness	Alternative Section B Length	Alternative Section Bottom	Alternative Section Top	BASE PLATE DATA: C	D1 Bolt Circle	Thickness	Anchor Bolts Size	Luminaire Arm	Signal Arm	CIDH PILE FOUNDATION: Diameter	Depth	Reinforced
16-1-100	1	100	18'-6"	10¾"	8¼"	0.1793"	None			1'-6"	1'-5½"	1¼"	1½" ø x 42" x 6"	None	15'-0", 20'-0"	2'-6"	7'-2"	Yes
18-1-100			17'-0"		8 7/16"		None							None				
19-1-100			30'-0"		6⅝"		10'-0"	8"	6⅝"					6'-15' [12'-0"]	25'-0", 30'-0"			
19A-1-100			35'-0"		5 15/16"		15'-0"		5 15/16"					6'-15' [15'-0"]				

☐ Indicates arm length to be used unless otherwise noted on plans.

STATE OF CALIFORNIA
DEPARTMENT OF TRANSPORTATION

ELECTRICAL SYSTEMS (SIGNAL AND LIGHTING STANDARD CASE 1 ARM LOADING WIND VELOCITY = 100 MPH ARM LENGTHS 15' TO 30')

NO SCALE

RSP ES-7C DATED JUNE 15, 2007 SUPERSEDES STANDARD PLAN ES-7C DATED MAY 1, 2006 - PAGE 439 OF THE STANDARD PLANS BOOK DATED MAY 2006.

REVISED STANDARD PLAN RSP ES-7C

2006 REVISED STANDARD PLAN RSP ES-7C

1-26-07

DIST	COUNTY	ROUTE	POST MILES TOTAL PROJECT	SHEET NO.	TOTAL SHEETS
10	Tuo	108	R4.0/R6.0	187	237

REGISTERED CIVIL ENGINEER

June 30, 2006
PLANS APPROVAL DATE

REGISTERED PROFESSIONAL ENGINEER — Jeffrey B. Woody — No. C41260 — Exp. 3-31-07 — CIVIL — STATE OF CALIFORNIA

The State of California or its officers or agents shall not be responsible for the accuracy or completeness of electronic copies of this plan sheet.

To accompany plans dated 5-10-10

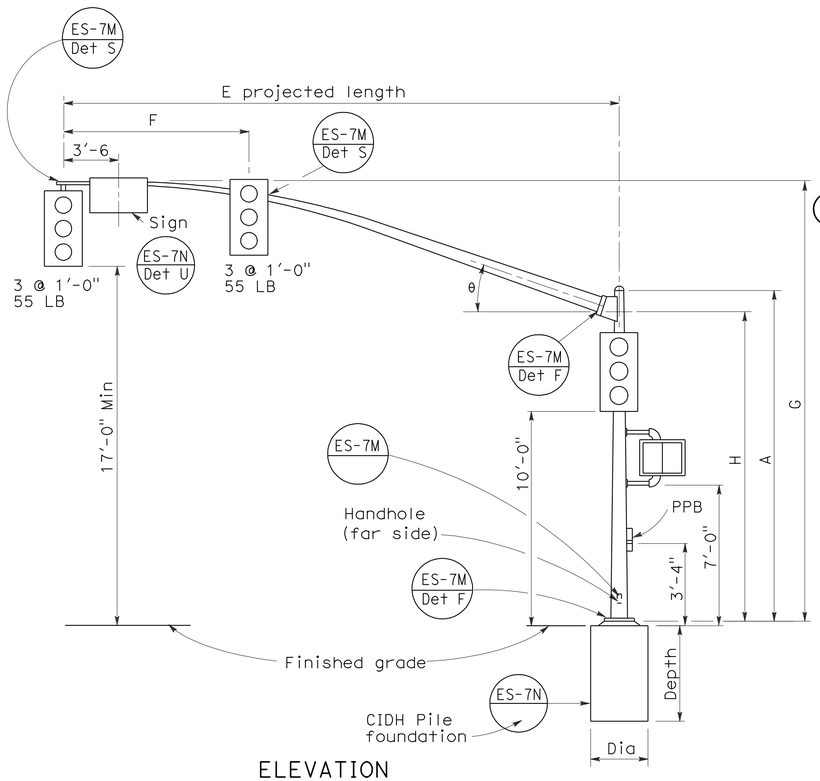

ELEVATION

TYPE 16-3-100, 18-3-100, 23-3-100, 27-3-100

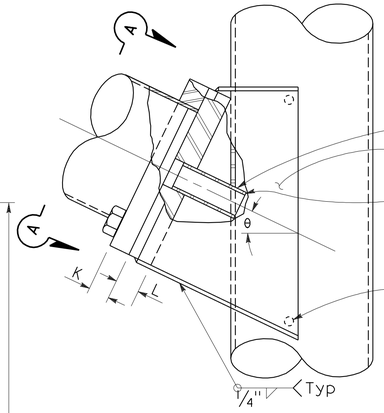

ELEVATION

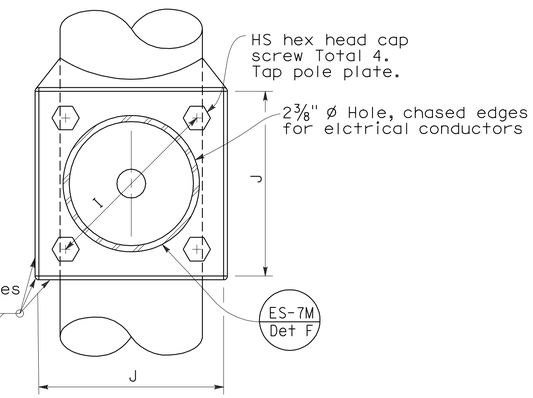

VIEW A-A

SIGNAL ARM CONNECTION DETAILS

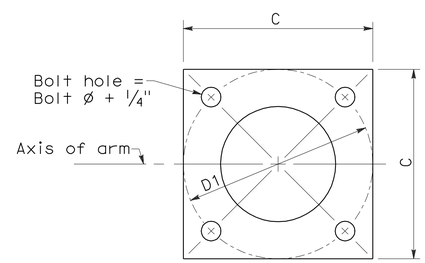

BASE PLATE

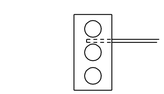

Type 17-3-100

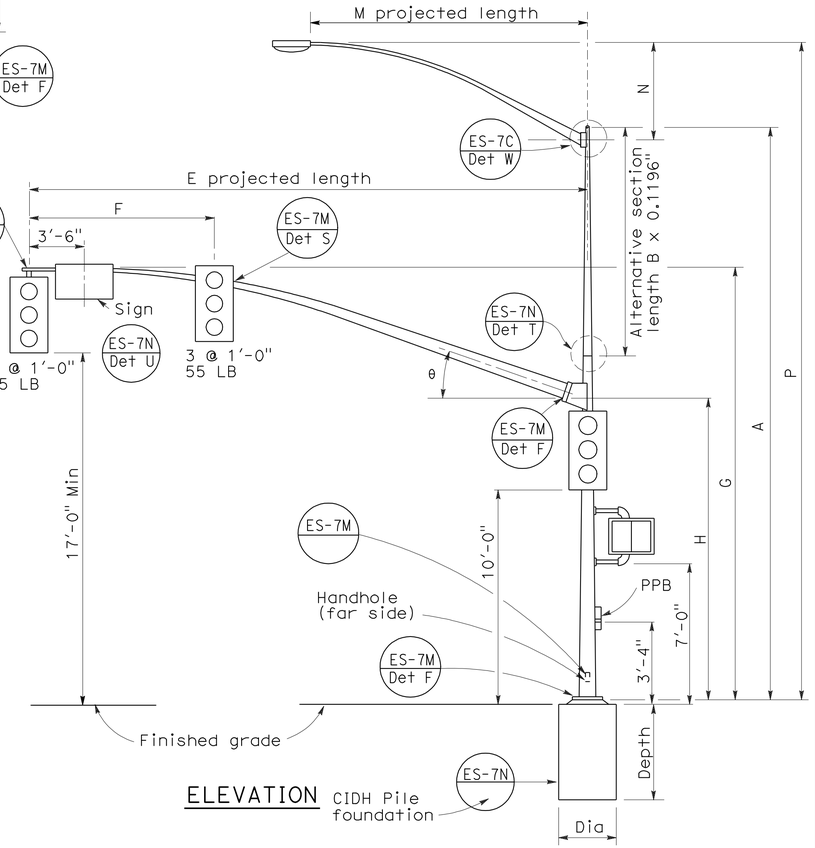

ELEVATION

TYPE 17-3-100, 24A-3-100, 19-3-100, 26-3-100, 19A-3-100, 26A-3-100, 24-3-100

SIGNAL ARM DATA

E Projected Length	F Min Spacing	G Mounting Height	H	Min OD At Pole	Thickness	I Bolt Circle	HS Cap Screws	J Plate Size	K Arm PL Thickness	L Pole PL Thickness	θ
15'-0"	8'-0"	21'-8"±	17'-6"	6 5/8"	0.1793"	12"	1 1/4"-7NC-3"	1'-0"	1 1/4"	1 1/2"	23°
20'-0"		21'-8"±		7"							
25'-0"	12'-0"	22'-8"±	16'-0"	7 5/16"	0.2391"						
30'-0"				8"							
35'-0"	14'-0"	23'-0"±		8 3/4"		13"		1'-1"	1 1/2"	1 3/4"	21°
40'-0"	15'-0"			9 3/8"							15°
45'-0"		23'-8"±		10 1/16"							

LUMINAIRE ARM DATA

M Projected Length	N Rise	Min OD at Pole	Thickness	P Mounting Height 30'-0" Pole	P Mounting Height 35'-0" Pole
6'-0"	2'-0"±	3 1/4"	0.1196"	31'-6"±	36'-6"±
8'-0"	2'-6"±	3 1/2"		32'-0"±	37'-0"±
10'-0"	3'-3"±	3 7/8"		32'-9"±	37'-9"±
12'-0"	4'-3"±			33'-9"±	38'-9"±
15'-0"	4'-9"±	4 1/4"		34'-3"±	39'-3"±

POLE DATA / BASE PLATE DATA / CIDH PILE FOUNDATION

Pole Type	Load Case	Wind Velocity mph	A Height	Min OD Base	Min OD Top	Thickness	Alternative Section B Length	Alternative Section Bottom	Alternative Section Top	C	D1 Bolt Circle	Thickness	Anchor Bolts Size	Luminaire Arm	Signal Arm	CIDH Pile Foundation Diameter	Depth	Reinforced
16-3-100	3	100	18'-6"	10 3/4"	8 1/4"	0.1793"	None			1'-6"	1'-5 1/2"	1 1/2"	2"Ø x 42" x 6"	None	15'-0", 20'-0"	3'-0"	9'-0"	Yes
17-3-100			30'-0"		6 5/8"		10'-0"	8"	7 5/16"					6'-15' [12'-0"]				
18-3-100			17'-0"	1'-0"	8 7/16"	0.2391"	None							None	25'-0", [30'-0"]			
19-3-100			30'-0"		7 7/8"		10'-0"	9 1/4"	7 7/8"					6'-15' [12'-0"]				
19A-3-100			35'-0"		7 3/16"		15'-0"		7 3/16"					6'-15' [15'-0"]				
23-3-100			17'-0"		9 5/8"		None							None	35'-0"			
24-3-100			30'-0"		7 7/8"		10'-0"	9 1/4"	7 7/8"					6'-15' [12'-0"]				
24A-3-100			35'-0"		7 3/16"		15'-0"		7 3/16"					6'-15' [15'-0"]				
26-3-100			30'-0"	1'-1/8"	8"	0.3125"	10'-0"	9 3/8"	8"					6'-15' [12'-0"]	40'-0", [45'-0"]			
26A-3-100			35'-0"		7 5/16"		15'-0"		7 5/16"					6'-15' [15'-0"]				
27-3-100			17'-0"		9 3/4"		None							None				

☐ Indicates arm length to be used unless otherwise noted on plans.

STATE OF CALIFORNIA
DEPARTMENT OF TRANSPORTATION

ELECTRICAL SYSTEMS (SIGNAL AND LIGHTING STANDARD CASE 3 ARM LOADING WIND VELOCITY=100 MPH ARM LENGTHS 15' TO 45')

NO SCALE

RSP ES-7E DATED JUNE 30, 2006 SUPERSEDES STANDARD PLAN DATED MAY 1, 2006 - PAGE 441 OF THE STANDARD PLANS BOOK DATED MAY 2006.

REVISED STANDARD PLAN RSP ES-7E

2006 REVISED STANDARD PLAN RSP ES-7E

5-9-06

DIST	COUNTY	ROUTE	POST MILES TOTAL PROJECT	SHEET NO.	TOTAL SHEETS
10	Tuo	108	R4.0/R6.0	188	237

REGISTERED CIVIL ENGINEER

October 5, 2007
PLANS APPROVAL DATE

REGISTERED PROFESSIONAL ENGINEER
Stanley P. Johnson
No. C57793
Exp. 3-31-08
CIVIL
STATE OF CALIFORNIA

The State of California or its officers or agents shall not be responsible for the accuracy or completeness of electronic copies of this plan sheet.

To accompany plans dated 5-10-10

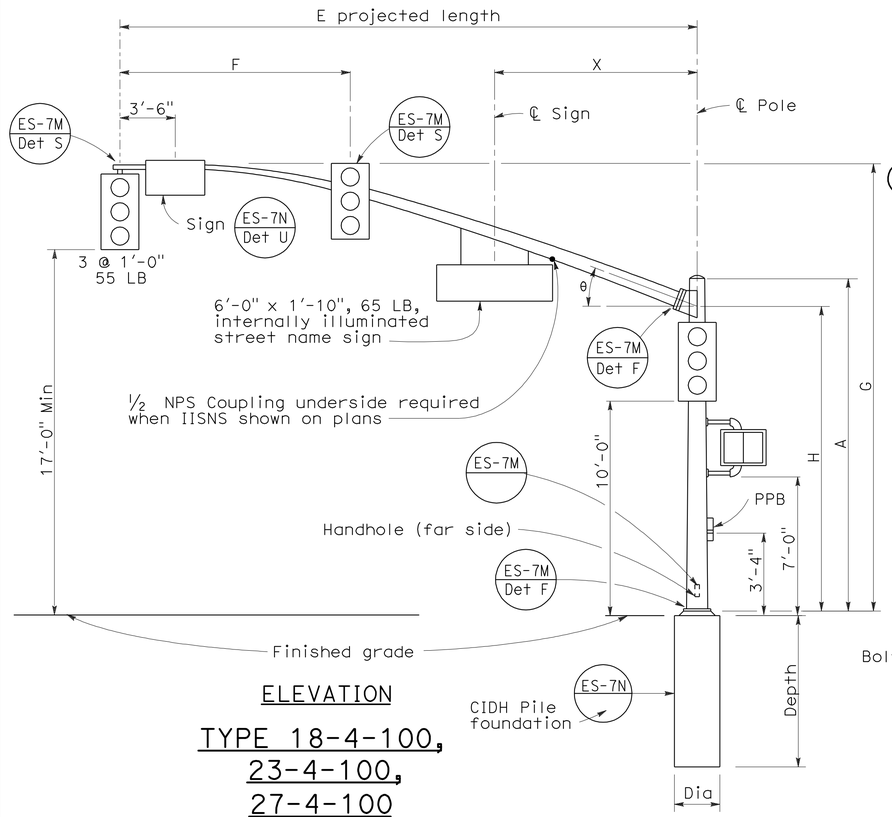

ELEVATION

TYPE 18-4-100,
23-4-100,
27-4-100

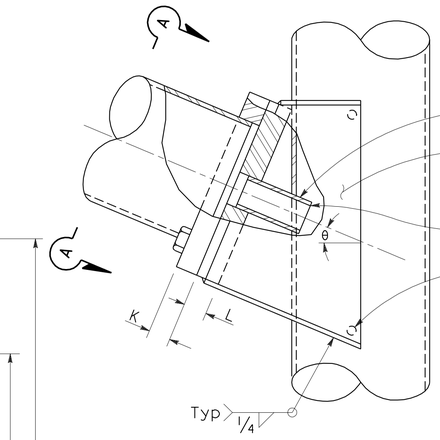

ELEVATION

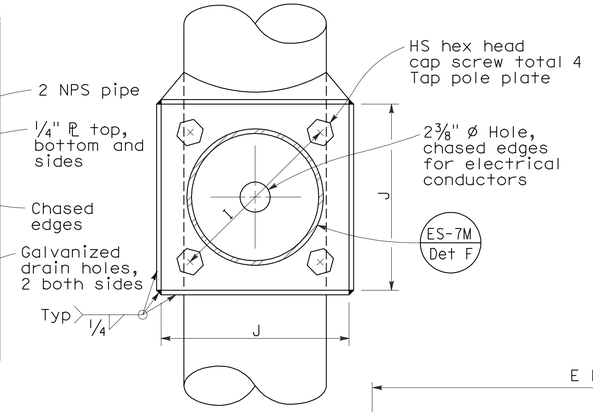

VIEW A-A

SIGNAL ARM CONNECTION DETAILS

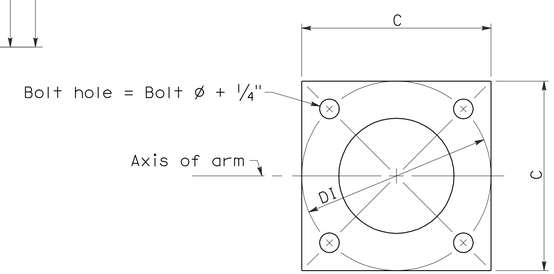

BASE PLATE

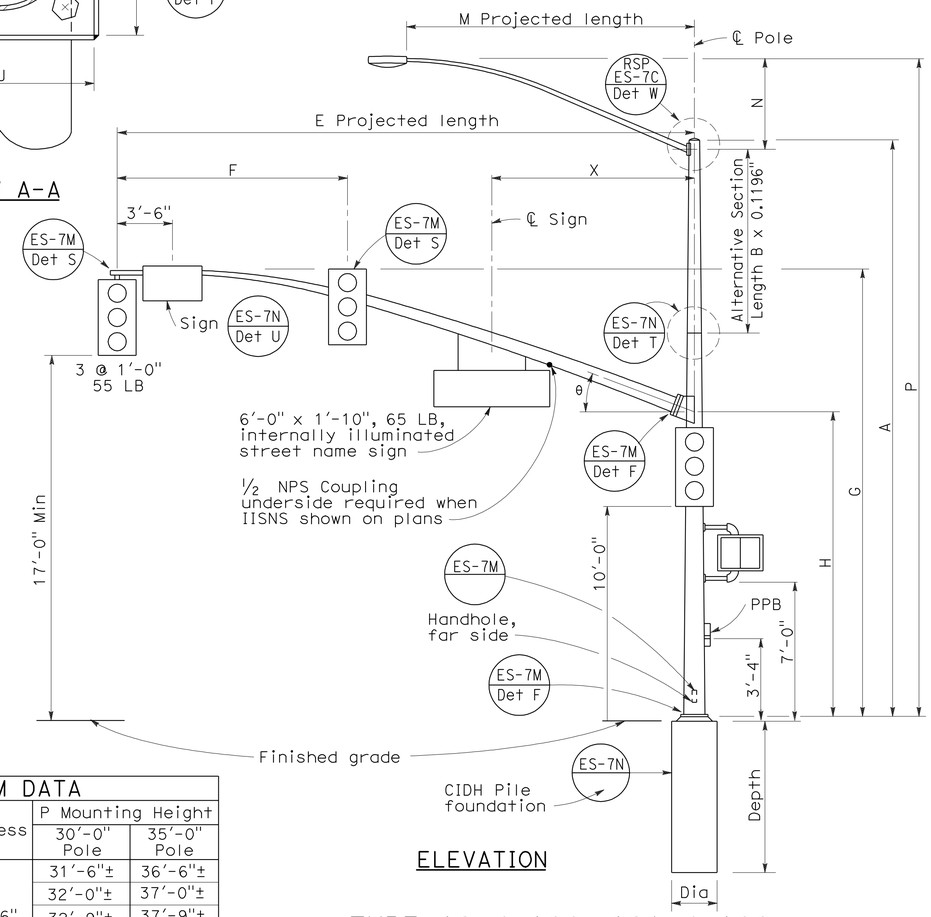

ELEVATION

TYPE 19-4-100, 19A-4-100,
24-4-100, 24A-4-100,
26-4-100, 26A-4-100

SIGNAL ARM DATA

E Projected Length	F Min Spacing	G Mounting Height	H	Min OD at Pole	Thickness	I Bolt Circle	HS Cap Screws	J Plate Size	K Arm ℙ Thickness	L Pole ℙ Thickness	θ	X Max
25'-0"	10'-0"	22'-8"±	16'-0"	7 5/16"	0.2391"	12"	1¼"-7NC-3"	1'-0"	1¼"	1½"	23°	10'-6"
30'-0"	12'-0"	23'-0"±		8"								
35'-0"	14'-0"			8 11/16"		13½"		1'-1½"	1½"	1¾"	21°	13'-0"
40'-0"	15'-0"			9⅜"							15°	
45'-0"		23'-8"±		10¼"								

LUMINAIRE ARM DATA

M Projected Length	N Rise	Min OD at Pole	Thickness	P Mounting Height 30'-0" Pole	P Mounting Height 35'-0" Pole
6'-0"	2'-0"±	3¼"	0.1196"	31'-6"±	36'-6"±
8'-0"	2'-6"±	3½"		32'-0"±	37'-0"±
10'-0"	3'-3"±	3⅞"		32'-9"±	37'-9"±
12'-0"	4'-3"±			33'-9"±	38'-9"±
15'-0"	4'-9"±	4¼"		34'-3"±	39'-3"±

POLE DATA / BASE PLATE DATA / CIDH PILE FOUNDATION

Pole Type	Load Case	Wind Velocity mph	A Height	Min OD Base	Min OD Top	Thickness	Alternative Section B Length	Alternative Section Bottom	Alternative Section Top	C	DI Bolt Circle	Thickness	Anchor Bolts Size	Luminaire Arm	Signal Arm	Dia	Depth	Reinforced
18-4-100	4	100	17'-0"	12"	9"	0.2391"	None	9⅜"		1'-6"	1'-6"	1½"	2" Ø x 42" x 6"	None	25'-0", [30'-0"]	3'-0"	9'-0"	Yes
19-4-100			30'-0"		8"		10'-0"		8"					6'-15' [12'-0"]				
19A-4-100			35'-0"		7 5/16"		15'-0'		7 5/16"					6'-15' [15'-0"]				
23-4-100			17'-0"		9"		None							None	35'-0"			
24-4-100			30'-0"		8"		10'-0"	9⅜"	8"					6'-15' [12'-0"]				
24A-4-100			35'-0"		7 5/16"		15'-0"		7 5/16"					6'-15' [15'-0"]				
26-4-100			30'-0"	12½"	8"	0.3125"	10'-0"	9¾"	8⅜"					6'-15' [12'-0"]	40'-0", [45'-0"]			
26A-4-100			35'-0"		7 5/16"		15'-0"		7 11/16"					6'-15' [15'-0"]				
27-4-100			17'-0"		9¾"		None							None				

☐ Indicates arm length to be used unless otherwise noted on plans.

STATE OF CALIFORNIA
DEPARTMENT OF TRANSPORTATION

ELECTRICAL SYSTEMS (SIGNAL AND LIGHTING STANDARD CASE 4 ARM LOADING WIND VELOCITY=100 MPH ARM LENGTHS 25' TO 45')

NO SCALE

RSP ES-7F DATED OCTOBER 5, 2007 SUPERCEDES RSP ES-7F DATED NOVEMBER 17, 2006 AND STANDARD PLAN ES-7F DATED MAY 1, 2006 - PAGE 442 OF THE STANDARD PLANS BOOK DATED MAY 2006.

REVISED STANDARD PLAN RSP ES-7F

2006 REVISED STANDARD PLAN RSP ES-7F

DIST	COUNTY	ROUTE	POST MILES TOTAL PROJECT	SHEET NO.	TOTAL SHEETS
10	Tuo	108	R4.0/R6.0	189	237

REGISTERED CIVIL ENGINEER

November 17, 2006
PLANS APPROVAL DATE

REGISTERED PROFESSIONAL ENGINEER
Stanley P. Johnson
No. C57793
Exp. 03-31-08
CIVIL
STATE OF CALIFORNIA

The State of California or its officers or agents shall not be responsible for the accuracy or completeness of electronic copies of this plan sheet.

To accompany plans dated 5-10-10

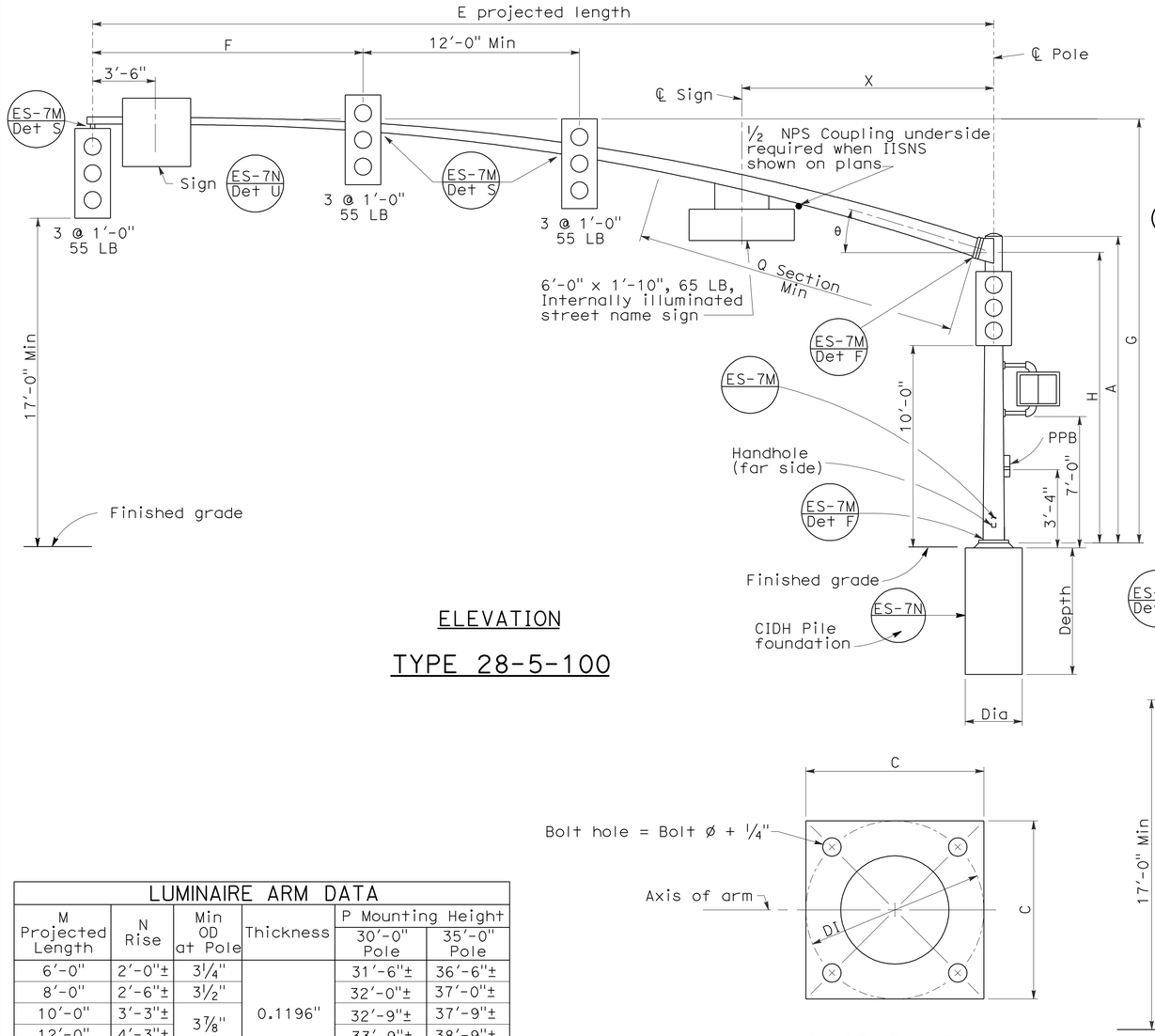

ELEVATION

TYPE 28-5-100

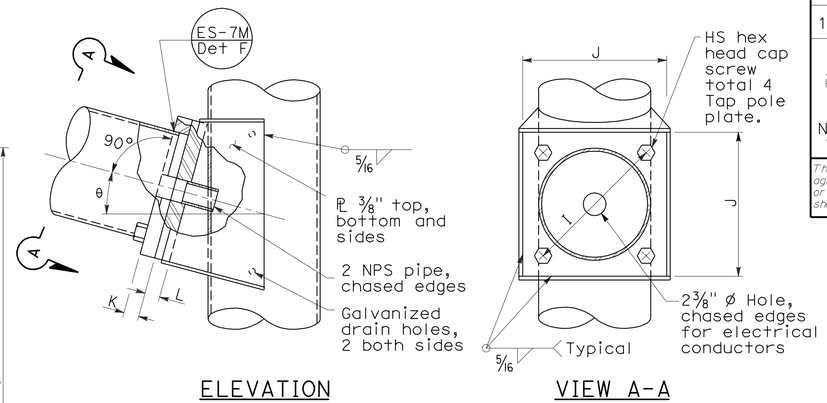

ELEVATION

VIEW A-A

SIGNAL ARM CONNECTION DETAILS

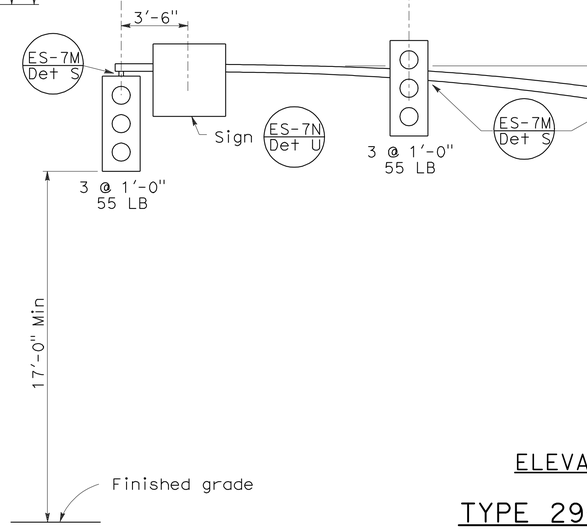

BASE PLATE

ELEVATION

TYPE 29-5-100, 29A-5-100

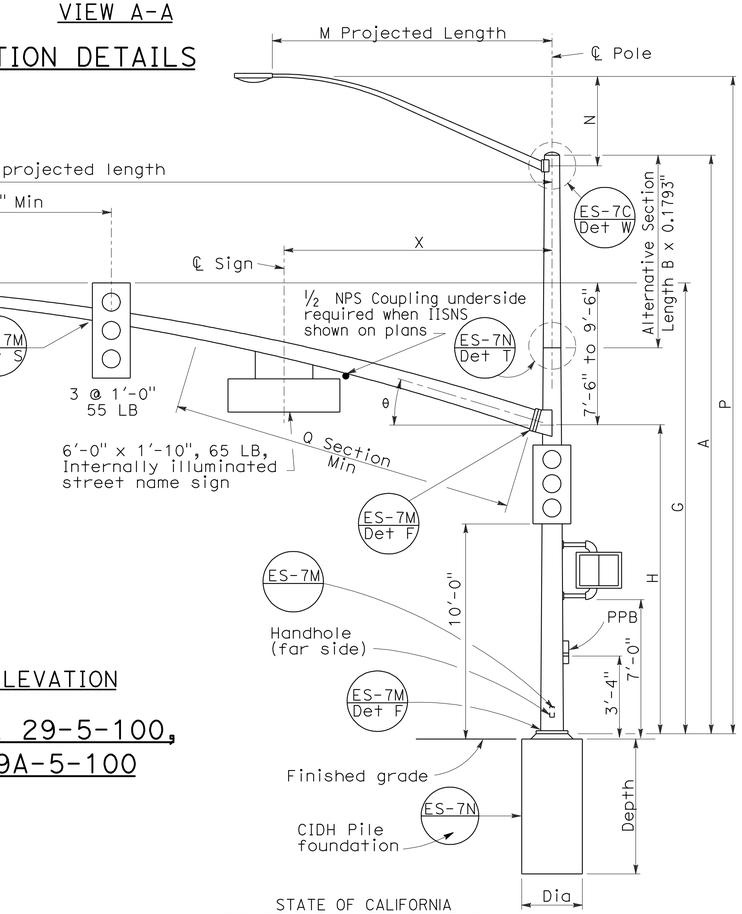

LUMINAIRE ARM DATA					
M Projected Length	N Rise	Min OD at Pole	Thickness	P Mounting Height 30'-0" Pole	P Mounting Height 35'-0" Pole
6'-0"	2'-0"±	3¼"	0.1196"	31'-6"±	36'-6"±
8'-0"	2'-6"±	3½"		32'-0"±	37'-0"±
10'-0"	3'-3"±	3⅞"		32'-9"±	37'-9"±
12'-0"	4'-3"±			33'-9"±	38'-9"±
15'-0"	4'-9"±	4¼"		34'-3"±	39'-3"±

SIGNAL ARM DATA														
E Projected Length	F Min Spacing	G Mounting Height	H	Min OD at Pole	Thickness	I Bolt Circle	HS Cap Screws	J Plate Size	K Arm ℄ Thickness	L Pole ℄ Thickness	θ	Q Section Length	Q Section Thickness	X Max
50'-0"	15'-0"	23'-7"± to 25'-7"±	16'-0"	11 7/16"	0.1793"	16"	1½"-6NC-3¼"	1'-4"	1¾"	1¾"	15°	18'-0"	0.2391"	14'-0"
55'-0"				1'-¼"								23'-0"		

Pole Type	Load Case	Wind Velocity mph	POLE DATA A Height	Min OD Base	Min OD Top	Thickness	Alternative Section B Length	Alternative Section Bottom	Alternative Section Top	BASE PLATE DATA C	DI Bolt Circle	Thickness	Anchor Bolts Size	Luminaire Arm	Signal Arm	CIDH PILE FOUNDATION Dia	Depth	Reinforced
28-5-100	5	100	17'-0"	14"	11 11/16"	0.3125"	None	11¼"	9⅞"	21"	21"	1¾"	2" ø x 42" x 6"	None	50'-0", 55'-0"	3'-0"	9'-2"	Yes
29-5-100			30'-0"		9⅞"		10'-0"							6'-15' [15'-0"]				
29A-5-100			35'-0"		9 3/16"		15'-0"		9 3/16"	23"	23"							

☐ Indicates arm length to be used unless otherwise noted on plans.

STATE OF CALIFORNIA
DEPARTMENT OF TRANSPORTATION

ELECTRICAL SYSTEMS (SIGNAL AND LIGHTING STANDARD CASE 5 ARM LOADING WIND VELOCITY=100 MPH ARM LENGTHS 50' TO 55')

NO SCALE

RSP ES-7G DATED NOVEMBER 17, 2006 SUPERSEDES STANDARD PLAN ES-7G DATED MAY 1, 2006 - PAGE 443 OF THE STANDARD PLANS BOOK DATED MAY 2006.

REVISED STANDARD PLAN RSP ES-7G

2006 REVISED STANDARD PLAN RSP ES-7G

5-15-06

DIST	COUNTY	ROUTE	POST MILES TOTAL PROJECT	SHEET No	TOTAL SHEETS
10	Tuo	108	R4.0/R6.0	190	237

REGISTERED CIVIL ENGINEER — DATE 12-17-09

5-10-10
PLANS APPROVAL DATE

REGISTERED PROFESSIONAL ENGINEER — Rodney Simmons — No. 51174 — Exp. 09-30-11 — CIVIL — STATE OF CALIFORNIA

The State of California or its officers or agents shall not be responsible for the accuracy or completeness of electronic copies of this plan sheet.

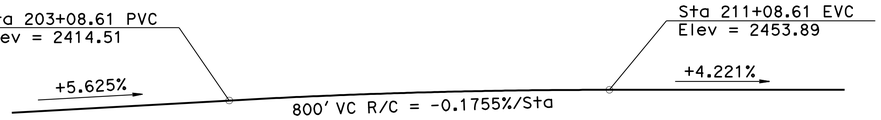

PROFILE GRADE
NO SCALE

QUANTITIES

24" DRILLED HOLE (SOIL)	1,970	LF
24" DRILLED HOLE (ROCK SOCKET)	220	LF
STRUCTURE EXCAVATION (BRIDGE)	475	CY
STRUCTURE BACKFILL (BRIDGE)	285	CY
STEEL PILING (HP 14 X 73)	2,420	LF
PRESTRESSING CAST-IN-PLACE CONCRETE	LUMP	SUM
STRUCTURAL CONCRETE, BRIDGE FOOTING	130	CY
STRUCTURAL CONCRETE, BRIDGE	1,310	CY
STRUCTURAL CONCRETE, APPROACH SLAB (TYPE N)	105	CY
JOINT SEAL ASSEMBLY (MR 2½")	115	LF
BAR REINFORCING STEEL (BRIDGE)	138,200	LB
BAR REINFORCING STEEL (EPOXY COATED) (BRIDGE)	195,000	LB
CONCRETE BARRIER (TYPE 732)	665	LF

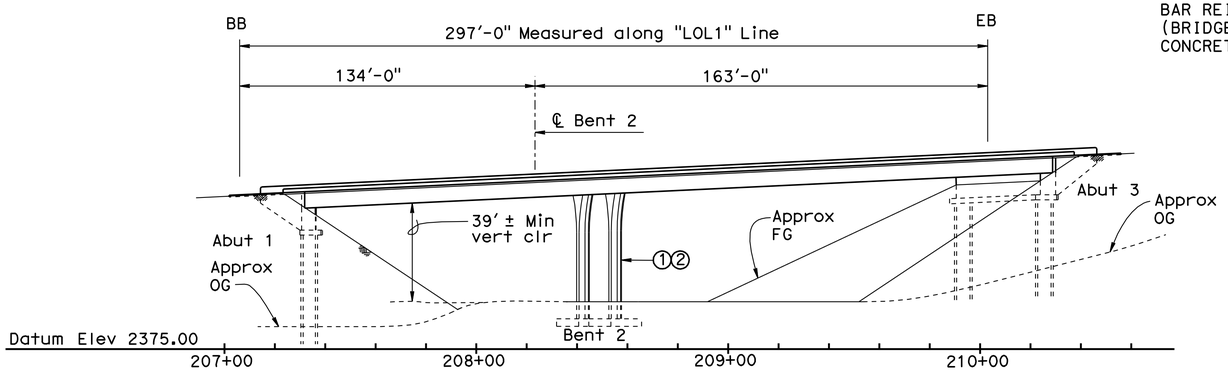

ELEVATION
1" = 30'

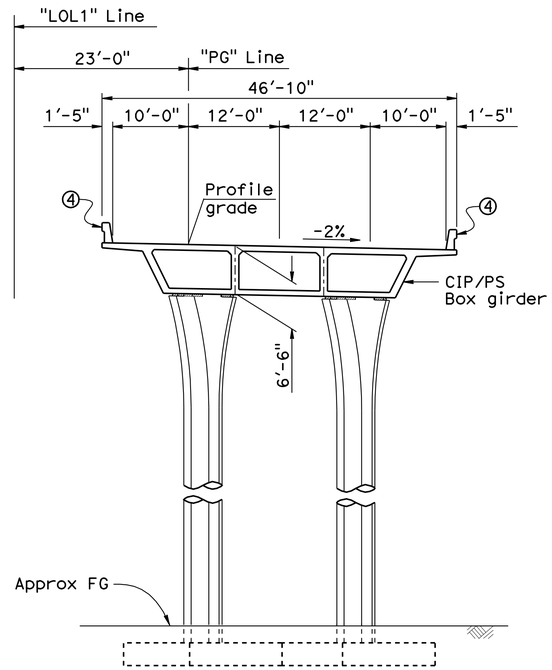

TYPICAL SECTION
1" = 10'

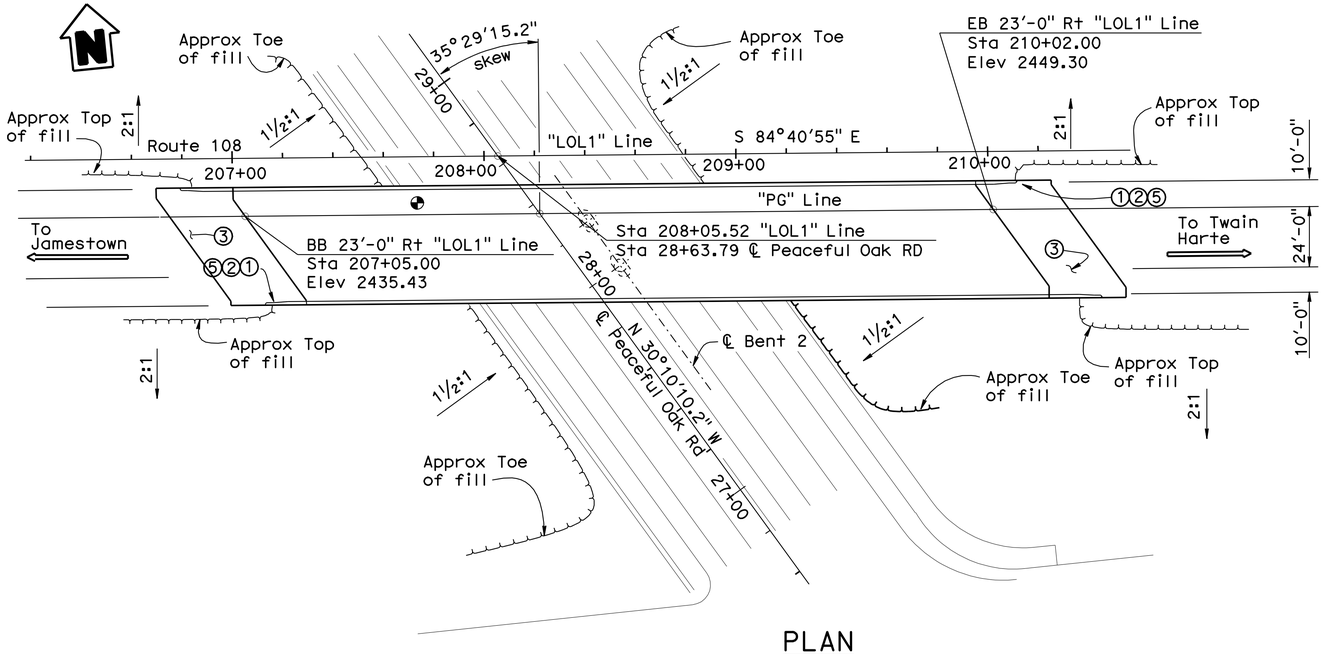

PLAN
1" = 30'

Notes:

① Paint "PEACEFUL OAK ROAD UC"
② Paint "BRIDGE NO. 32-0070"
③ Structure Approach Type N(30S)
④ Concrete Barrier Type 732
⑤ Metal Beam Guard Rail not shown, see "ROAD PLANS"
◐ Indicates point of minimum vertical clearance

Ganapathy Murugesh
DESIGN ENGINEER

	BY	CHECKED			
DESIGN	R. Simmons/E. Hall	I. Chernioglo	LOAD & RESISTANCE FACTOR DESIGN	LIVE LOADING: HL93 W/"LOW-BOY"; PERMIT DESIGN VEHICLE	
DETAILS	L. Wang/S. Ng	E. Hall	LAYOUT	E. Hall	R. Simmons
QUANTITIES	E. Hall	R. Simmons	SPECIFICATIONS	Jennifer Holman	PLANS AND SPECS COMPARED X

STATE OF CALIFORNIA
DEPARTMENT OF TRANSPORTATION

DIVISION OF ENGINEERING SERVICES
STRUCTURE DESIGN
DESIGN BRANCH 17

BRIDGE NO. 32-0070
POST MILE R4.51

PEACEFUL OAK ROAD UNDERCROSSING
GENERAL PLAN

STRUCTURES DESIGN GENERAL PLAN SHEET (ENGLISH) (REV. 10/25/05)

ORIGINAL SCALE IN INCHES FOR REDUCED PLANS 0 1 2 3

CU 06 228
EA 340421

DISREGARD PRINTS BEARING EARLIER REVISION DATES

REVISION DATES: 05-11-07 11-06-09 11-14-09 12-02-09 12-04-09 12-10-09 12-15-09 01-14-09 01-21-09

SHEET 1 OF 20

FILE => 32-0070-a-gp.dgn

STRUCTURES DESIGN GENERAL PLAN SHEET (ENGLISH) (REV.07-24-06)

USERNAME => trlenard DATE PLOTTED => 12-MAY-2010 TIME PLOTTED => 05:56

DIST	COUNTY	ROUTE	POST MILES TOTAL PROJECT	SHEET No	TOTAL SHEETS
10	Tuo	108	R4.0/R6.0	191	237

REGISTERED CIVIL ENGINEER 12-17-09 DATE

5-10-10
PLANS APPROVAL DATE

REGISTERED PROFESSIONAL ENGINEER Rodney Simmons No. 51174 Exp. 09-30-11 CIVIL STATE OF CALIFORNIA

The State of California or its officers or agents shall not be responsible for the accuracy or completeness of electronic copies of this plan sheet.

INDEX TO PLANS

SHEET NO.	SHEET TITLE
1	GENERAL PLAN
2	INDEX TO PLANS
3	DECK CONTOURS
4	FOUNDATION PLAN
5	ABUTMENT 1 LAYOUT
6	ABUTMENT 3 LAYOUT
7	ABUTMENT DETAILS NO. 1
8	ABUTMENT DETAILS NO. 2
9	BENT LAYOUT
10	BENT DETAILS
11	TYPICAL SECTION
12	GIRDER LAYOUT
13	GIRDER REINFORCEMENT
14	JOINT SEAL ASSEMBLY (MAXIUM MOVEMENT RATING = 4")
15	STRUCTURE APPROACH TYPE N (30S)
16	STRUCTURE APPROACH DRAINAGE DETAILS
17	LOG OF TEST BORINGS 1 OF 4
18	LOG OF TEST BORINGS 2 OF 4
19	LOG OF TEST BORINGS 3 OF 4
20	LOG OF TEST BORINGS 4 OF 4

STANDARD PLANS DATED MAY 2006

A10A	ACRONYMS AND ABBREVIATIONS (1 of 2)
A10B	ACRONYMS AND ABBREVIATIONS (2 of 2)
A10C	SYMBOLS 1 OF 2
A10D	SYMBOLS 2 OF 2
A62A	EXCAVATION AND BACKFILL-MISCELLANEOUS DETAILS
A62B	LIMITS OF PAYMENT FOR EXCAVATION AND BACKFILL -BRIDGE SURCHARGE AND WALL
A62C	LIMITS OF PAYMENT FOR EXCAVATION AND BACKFILL-BRIDGE
B0-1	BRIDGE DETAILS
B0-3	BRIDGE DETAILS
B0-5	BRIDGE DETAILS
B0-13	BRIDGE DETAILS
B7-1	BOX GIRDER DETAILS
B8-5	CAST-IN-PLACE PRESTRESSED GIRDER DETAILS
B11-55	CONCRETE BARRIER TYPE 732

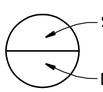

Pile Data Table

Support Location	Pile Type	Nominal Resistance (kips)		DESIGN Tip Elevation (ft)	Specified Tip Elevation (ft)	Nominal Driving Resistance Required (kips)	Pile Length (d)
		Comp	Tension				
Abutment 1	HP 14X73	270	N/A	2358(a)(b)	2358	N/A(c)	67.5
Abutment 3	HP 14X73	260	N/A	2397(a)(b)	2397	N/A(c)	42.5

NOTES:

(a) Design tip elevations are controlled by compression.
(b) The design tip elevation includes a socket of 5 feet into competent granite/granodiorite bedrock.
(c) Pile are to be drilled and socketed into bedrock.
(d) Additional pile length provided to account for variability of rack surface elevation.

Spread Footing Data Table

Support Location	Working Stress Design (WSD)		Load and Resistance Factor Design (LRFD)		
			Service	Strength	Extreme Event
	Permissable Gross Contact Stress (Settlement) (ksf)	Allowable Gross Bearing Capacity (ksf)	Permissable Net Contact Stress (ksf)	Factored Gross Nominal Bearing Resistance øb = 0.45 (ksf)	Factored Gross Nominal Bearing Resistance øb = 1.00 (ksf)
Bent 2 (Left & Right)	N/A	N/A	N/A	55.4	123.1

GENERAL NOTES
LOAD AND RESISTANCE FACTOR DESIGN

DESIGN: AASHTO LRFD Bridge Design Specifications, Fourth edition with the California Amendments, preface date; December 2008 except that Concrete Barriers, and Wingwalls are designed using Bridge Design Specifications ('96 AASHTO w/Revisions by Caltrans)

SEISMIC DESIGN: Caltrans Seismic Design Criteria, (SDC) Version 1.4 dated JUNE 2006

DEAD LOAD: Includes 35 psf for future wearing surface.

LIVE LOAD: HL93 and permit design load.

SEISMIC LOADING: Site specific Acceleration Response Spectra, see ARS CURVE on "DECK CONTOUR" sheet.

CONCRETE: f_y = 60 ksi
f'_c = 4.0 ksi
n = 8

PRESTESSED CONCRETE: See prestressing notes on "Girder Layout" sheet.

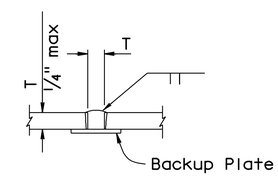

SQUARE GROOVE

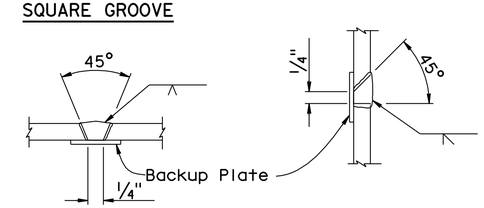

SINGLE VEE-GROOVE SINGLE BEVEL-GROOVE

PILE WELDING DETAIL-BUTT JOINTS

Notes:
1. Single Vee-Groove And Square Groove Permitted for all positions.
2. Single Bevel-Groove permitted for horizontal joints only

	BY	CHECKED
DESIGN	E. Hall	I. Chernioglo
DETAILS	G. Leung / S. Ng	E. Hall
QUANTITIES	E. Hall	R. Simmons

STATE OF CALIFORNIA DEPARTMENT OF TRANSPORTATION

DIVISION OF ENGINEERING SERVICES STRUCTURE DESIGN DESIGN BRANCH 17

BRIDGE NO. 32-0070
POST MILE R4.51

PEACEFUL OAK ROAD UNDERCROSSING
INDEX TO PLANS

STRUCTURES DESIGN DETAIL SHEET (ENGLISH) (REV. 10/25/05)

ORIGINAL SCALE IN INCHES FOR REDUCED PLANS 0 1 2 3

CU 06 228
EA 340421

DISREGARD PRINTS BEARING EARLIER REVISION DATES

REVISION DATES: 06-2-09 06-30-09 07-28-09 9-08-09 9-08-09 11-18-09 11-18-09 12-10-09

SHEET 2 OF 20

FILE => 32-0070-a-itp.dgn

USERNAME => ttmirkes1 DATE PLOTTED => 11-MAY-2010 TIME PLOTTED => 14:17

DIST	COUNTY	ROUTE	POST MILES TOTAL PROJECT	SHEET No	TOTAL SHEETS
10	Tuo	108	R4.0/R6.0	192	237

REGISTERED CIVIL ENGINEER 12-17-09 DATE

5-10-10
PLANS APPROVAL DATE

The State of California or its officers or agents shall not be responsible for the accuracy or completeness of electronic copies of this plan sheet.

REGISTERED PROFESSIONAL ENGINEER
Rodney Simmons
No. 51174
Exp. 09-30-11
CIVIL
STATE OF CALIFORNIA

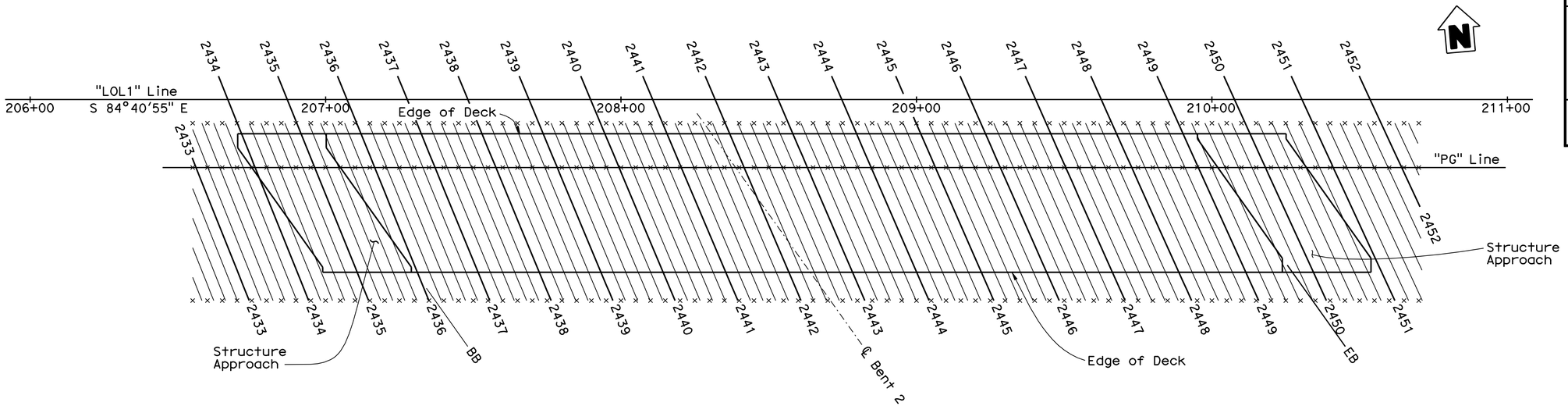

Notes:

X = 5' Intervals along station line.
Contours do not include camber.
Contour interval = 0.2'

DECK CONTOURS

1" = 20'

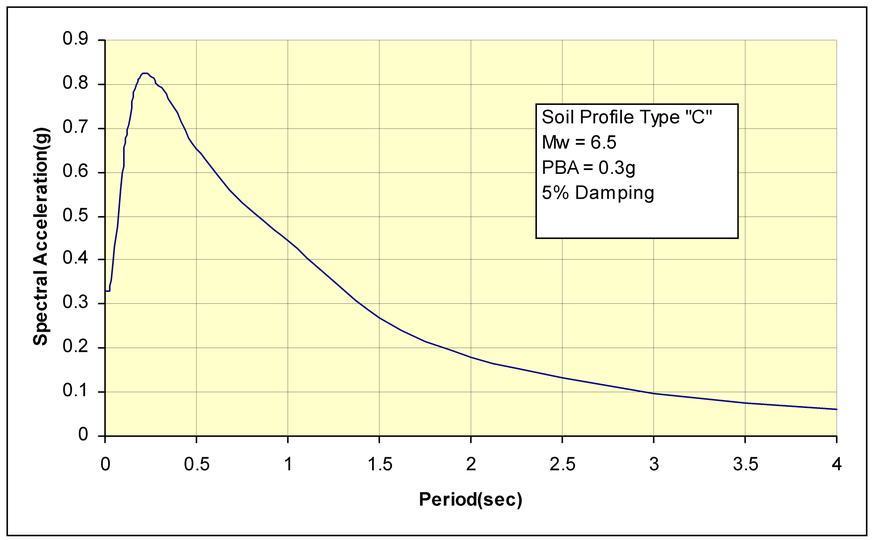

ARS CURVE

No Scale

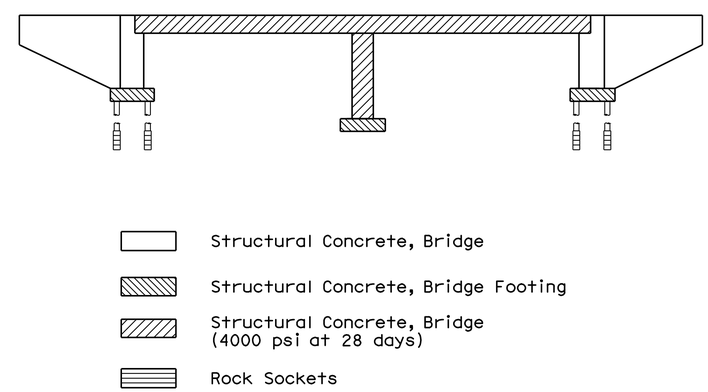

CONCRETE STRENGTH AND TYPE LIMITS

No Scale

DESIGN	BY E. Hall	CHECKED R. Simmons
DETAILS	BY S. Ng	CHECKED E. Hall
QUANTITIES	BY E. Hall	CHECKED R. Simmons

STATE OF CALIFORNIA
DEPARTMENT OF TRANSPORTATION

DIVISION OF ENGINEERING SERVICES
STRUCTURE DESIGN
DESIGN BRANCH 17

BRIDGE NO. 32-0070
POST MILE R4.51

PEACEFUL OAK ROAD UNDERCROSSING
DECK CONTOURS

STRUCTURES DESIGN DETAIL SHEET (ENGLISH) (REV. 10/25/05)

ORIGINAL SCALE IN INCHES FOR REDUCED PLANS 0 1 2 3

CU 06 228
EA 340421

DISREGARD PRINTS BEARING EARLIER REVISION DATES

REVISION DATES: 11-17-08 | 06-30-09 | 07-31-09 | 9-08-09 | 11-10-09 | 12-01-09 | 12-10-09 | 12-16-09

SHEET 3 OF 20

FILE => 32-0070-d-dc.dgn

USERNAME => trlenard DATE PLOTTED => 12-MAY-2010 TIME PLOTTED => 05:56

DIST	COUNTY	ROUTE	POST MILES TOTAL PROJECT	SHEET No	TOTAL SHEETS
10	Tuo	108	R4.0/R6.0	193	237

REGISTERED CIVIL ENGINEER 12-17-09 DATE

5-10-10
PLANS APPROVAL DATE

REGISTERED PROFESSIONAL ENGINEER Rodney Simmons No. 51174 Exp. 09-30-11 CIVIL STATE OF CALIFORNIA

The State of California or its officers or agents shall not be responsible for the accuracy or completeness of electronic copies of this plan sheet.

CURVE DATA

No.	R	Δ	T	L
A	1181.10	20°34'25"	214.36	424.11

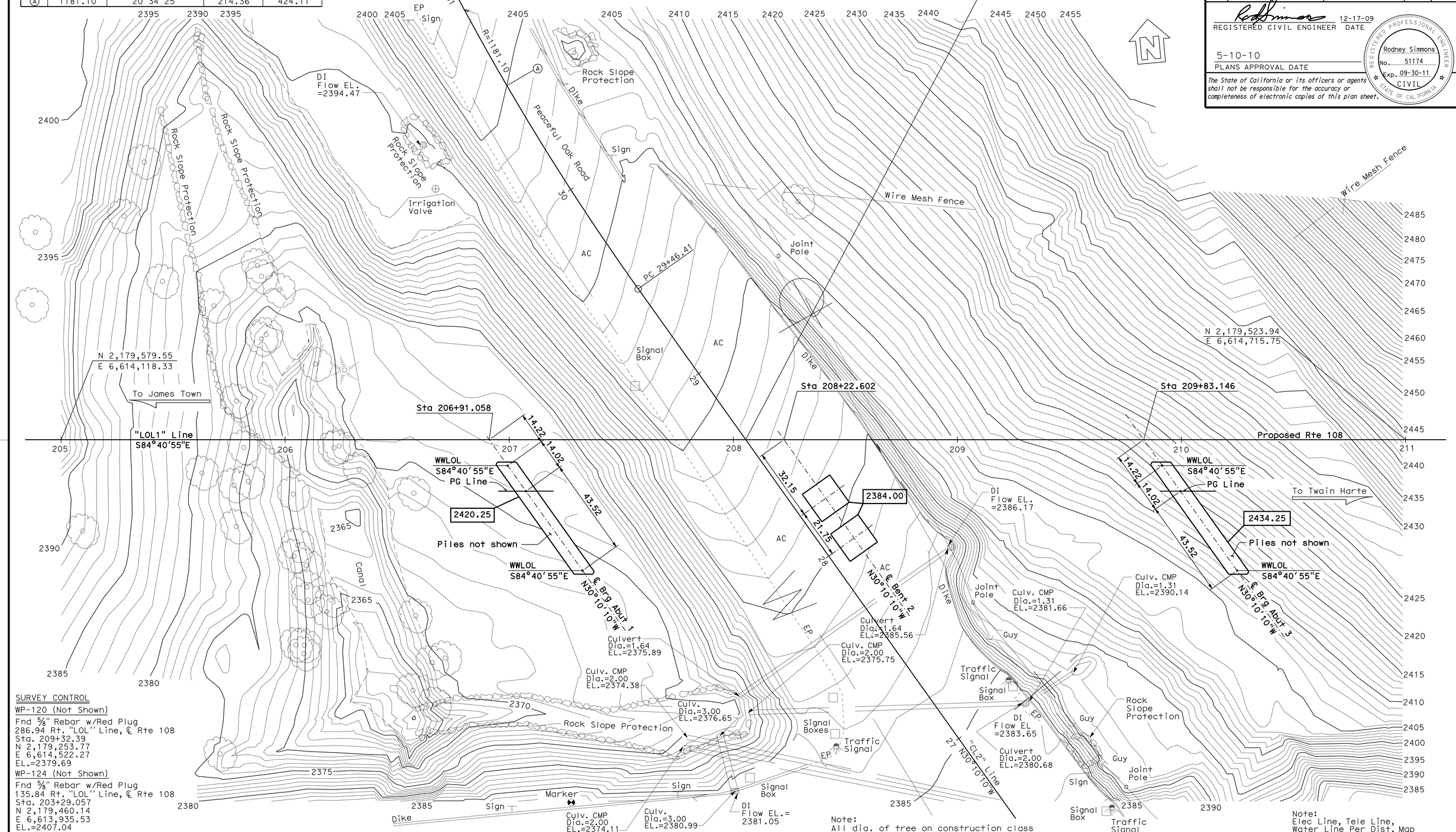

SURVEY CONTROL

WP-120 (Not Shown)
Fnd 5/8" Rebar w/Red Plug
286.94 Rt. "LOL" Line, ℄ Rte 108
Sta. 209+32.39
N 2,179,253.77
E 6,614,522.27
EL.=2379.69

WP-124 (Not Shown)
Fnd 5/8" Rebar w/Red Plug
135.84 Rt. "LOL" Line, ℄ Rte 108
Sta. 203+29.057
N 2,179,460.14
E 6,613,935.53
EL.=2407.04

PRELIMINARY INVESTIGATION SECTION

SCALE	VERT.DATUM NGVD 29	PHOTOGRAMMETRY AS OF: X		
1"=20'	HORZ.DATUM NAD83-92(1991.35)	SURVEYED	BY Tom Gillet 06/2009	CHECKED BY Sou T. Sang 06/2009
ALIGNMENT TIES Dist. Traverse Sheet		DRAFTED	BY Sharon Zheng 06/2009	CHECKED BY T.Zolnikova 06/2009

DESIGN	BY E. Hall	CHECKED R. Simmons
DETAILS	BY S. Ng	CHECKED E. Hall
QUANTITIES	BY E. Hall	CHECKED R. Simmons

STATE OF CALIFORNIA
DEPARTMENT OF TRANSPORTATION

DIVISION OF ENGINEERING SERVICES
STRUCTURE DESIGN
DESIGN BRANCH 17

BRIDGE NO. 32-0070
POST MILE R4.51

PEACEFUL OAK ROAD UNDERROSSING
FOUNDATION PLAN

STRUCTURES FOUNDATION PLAN SHEET (ENGLISH) (REV. 10/25/05)

ORIGINAL SCALE IN INCHES FOR REDUCED PLANS 0 1 2 3

CU 06 228
EA 340421

DISREGARD PRINTS BEARING EARLIER REVISION DATES

REVISION DATES: 06-25-09 07-01-09 07-14-09 07-31-09 9-08-09 11-18-09 11-20-09 12-10-09

SHEET 4 OF 20

FILE => 32-0070-e-fpl-01.dgn

USERNAME => tfriebord DATE PLOTTED => 12-MAY-2010 TIME PLOTTED => 05:56

DIST	COUNTY	ROUTE	POST MILES TOTAL PROJECT	SHEET No	TOTAL SHEETS
10	Tuo	108	R4.0/R6.0	194	237

REGISTERED CIVIL ENGINEER — DATE 12-17-09

5-10-10
PLANS APPROVAL DATE

REGISTERED PROFESSIONAL ENGINEER — Rodney Simmons — No. 51174 — Exp. 09-30-11 — CIVIL — STATE OF CALIFORNIA

The State of California or its officers or agents shall not be responsible for the accuracy or completeness of electronic copies of this plan sheet.

Notes:

1. For "a" dimension, see "JOINT SEAL ASSEMBLY" sheet.
2. For ROCK SOCKET detail, see "ABUTMENT DETAILS NO. 2" sheet.
3. For SECTION B-B and C-C, see "ABUTMENT DETAILS NO. 1" sheet.
4. Orient pile axes as shown

Legend:

-H- Denotes vertical steel H-pile

ECR = Epoxy Coated Reinforcement

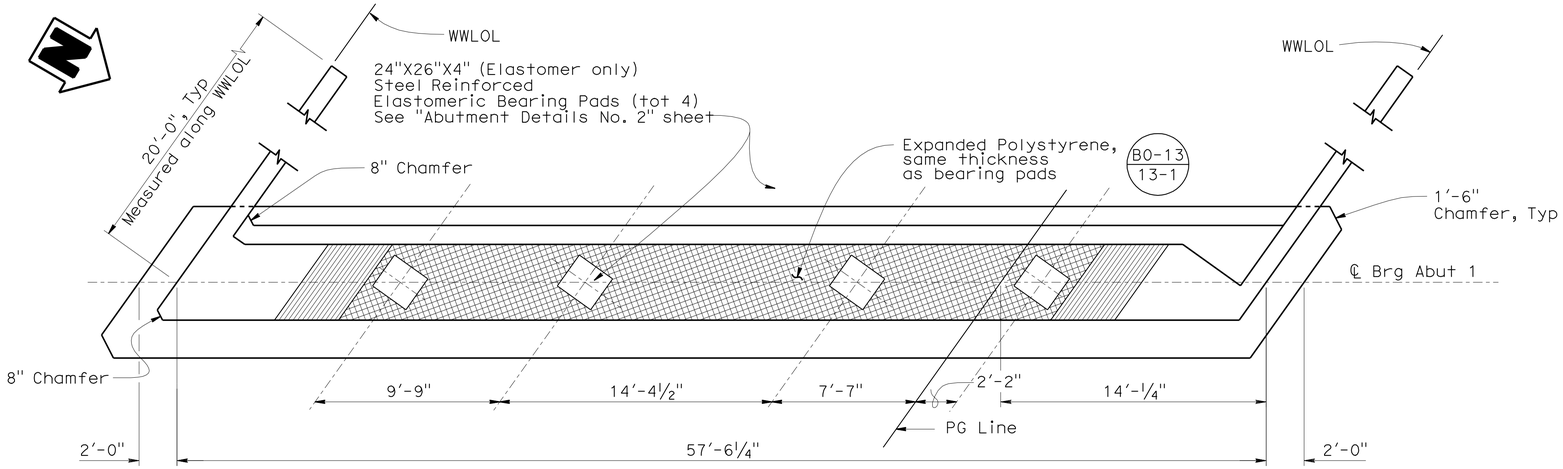

PLAN
¼" = 1'-0"

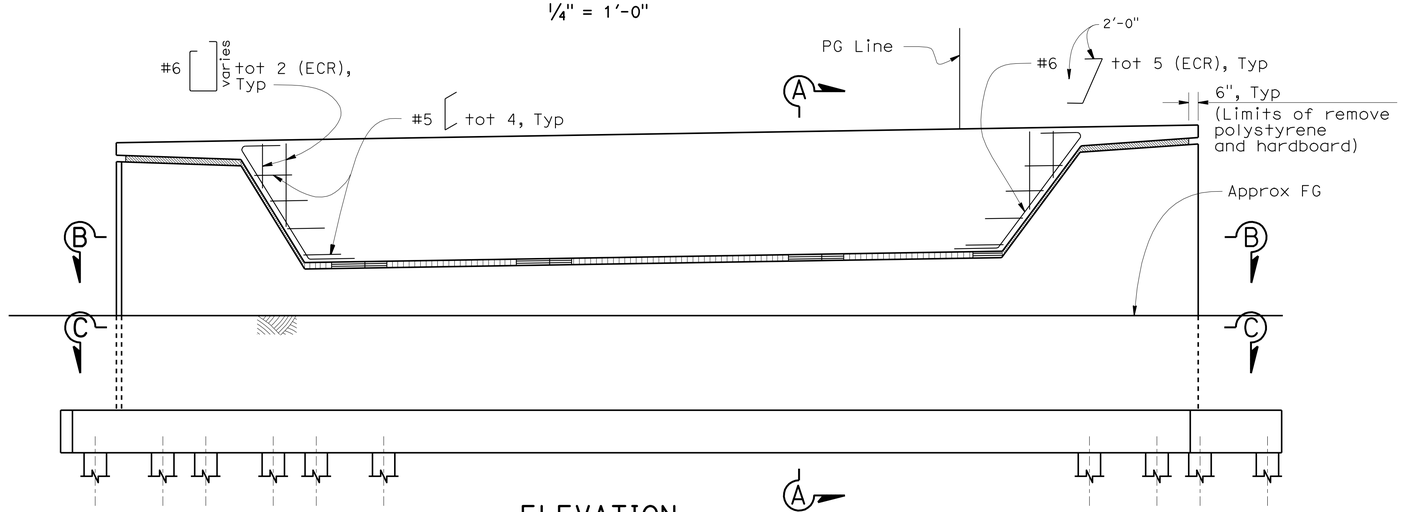

Note: All piles not shown

ELEVATION
¼" = 1'-0"

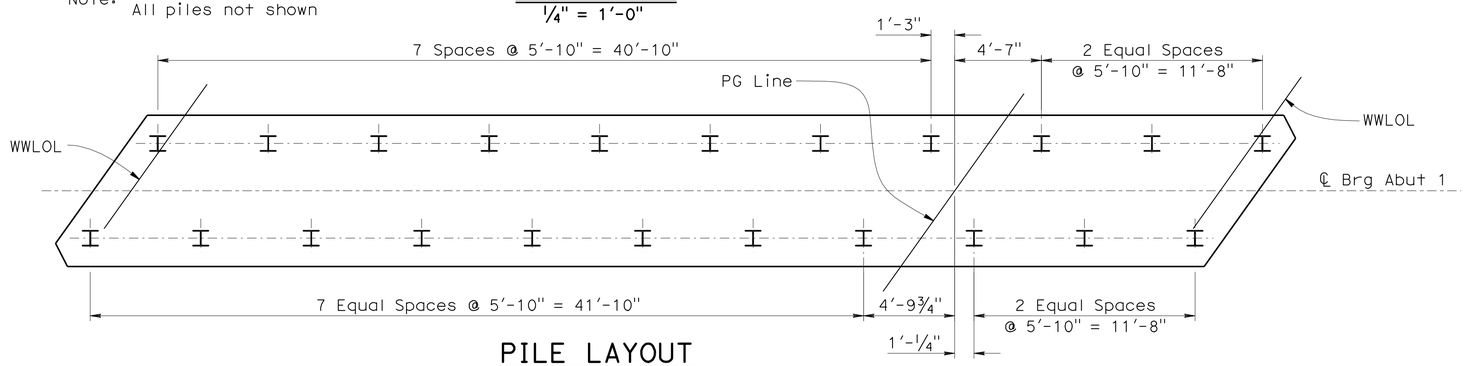

PILE LAYOUT
¼" = 1'-0"

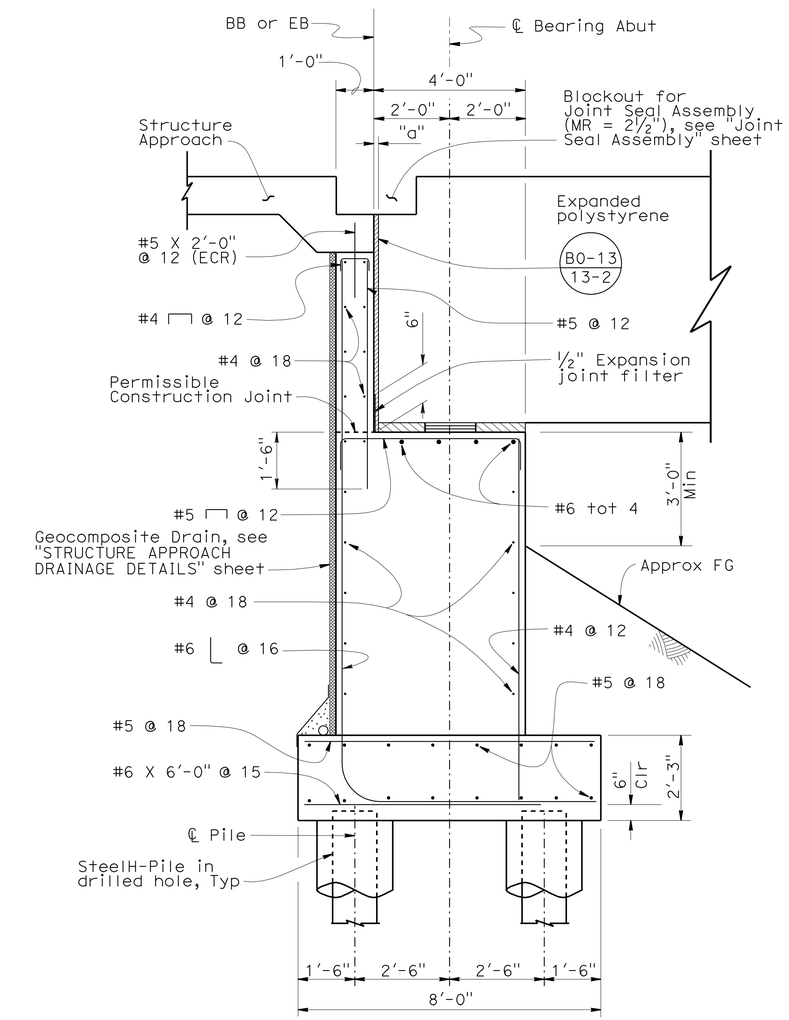

SECTION A-A
½" = 1'

DESIGN	BY E. Hall	CHECKED I. Chernioglo	
DETAILS	BY J. Guo / S. Ng	CHECKED E. Hall	
QUANTITIES	BY E. Hall	CHECKED R. Simmons	

STATE OF CALIFORNIA
DEPARTMENT OF TRANSPORTATION

DIVISION OF ENGINEERING SERVICES
STRUCTURE DESIGN
DESIGN BRANCH 17

BRIDGE NO. 32-0070
POST MILE R4.51

PEACEFUL OAK ROAD UNDERCROSSING
ABUTMENT 1 LAYOUT

STRUCTURES DESIGN DETAIL SHEET (ENGLISH) (REV. 10/25/05)

ORIGINAL SCALE IN INCHES FOR REDUCED PLANS 0 1 2 3

CU 06 228
EA 340421

DISREGARD PRINTS BEARING EARLIER REVISION DATES

REVISION DATES: 1-10-09, 11-14-09, 12-02-09, 12-03-09, 12-10-09, 12-16-09, 7-03-09, 9-01-09, 9-08-09

SHEET 5 OF 20

FILE => 32-0070-f-abt1.dgn

USERNAME => friehard DATE PLOTTED => 12-MAY-2010 TIME PLOTTED => 05:56

DIST	COUNTY	ROUTE	POST MILES TOTAL PROJECT	SHEET No	TOTAL SHEETS
10	Tuo	108	R4.0/R6.0	195	237

REGISTERED CIVIL ENGINEER 12-17-09 DATE

5-10-10
PLANS APPROVAL DATE

REGISTERED PROFESSIONAL ENGINEER Rodney Simmons No. 51174 Exp. 09-30-11 CIVIL STATE OF CALIFORNIA

The State of California or its officers or agents shall not be responsible for the accuracy or completeness of electronic copies of this plan sheet.

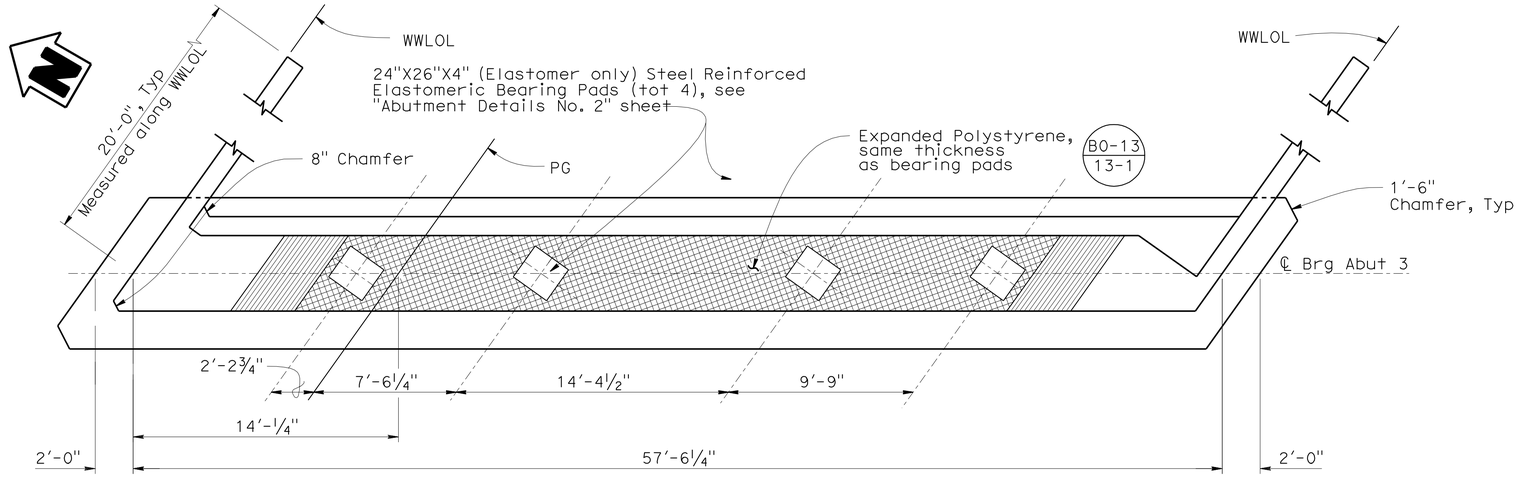

PLAN
¼" = 1'-0"

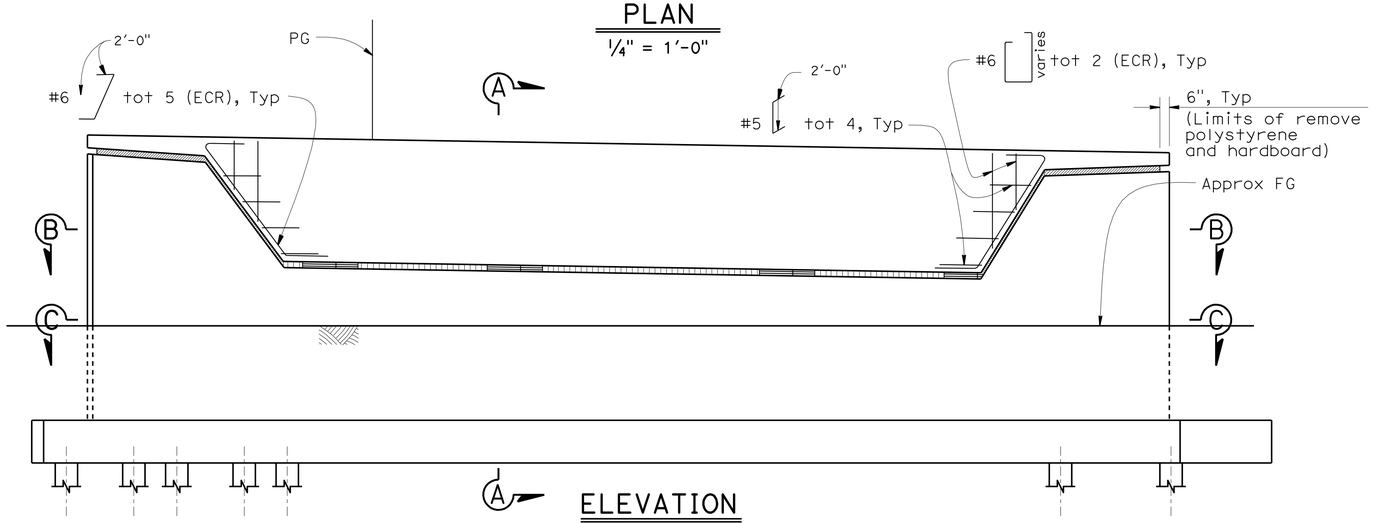

ELEVATION
¼" = 1'-0"

Note: All piles not shown

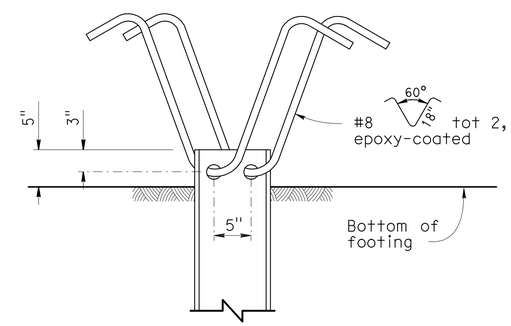

ELEVATION

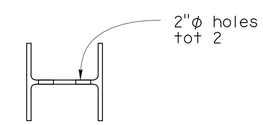

PLAN

STEEL PILE ANCHOR DETAIL
No Scale

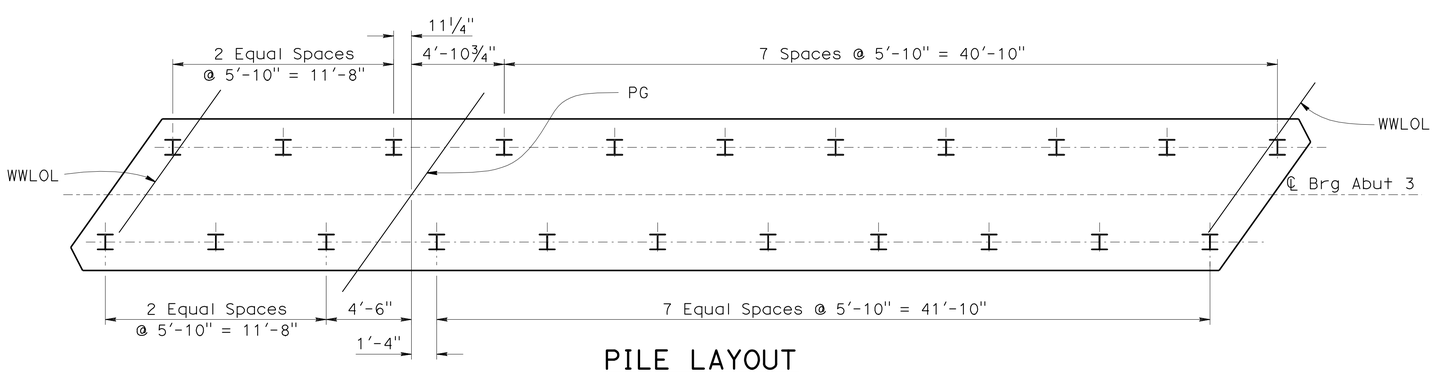

PILE LAYOUT
¼" = 1'-0"

Legend:

Denotes vertical steel H-pile

ECR = Epoxy Coated Reinforcement

NOTES:

1. For SECTION A-A, see "ABUTMENT 1 LAYOUT" sheet.
2. For SECTION B-B and C-C, see "ABUTMENT DETAILS NO. 1" sheet.
3. For ROCK SOCKET detail, see "ABUTMENT DETAILS NO. 2" sheet.

	BY	CHECKED
DESIGN	E. Hall	I. Chernioglo
DETAILS	J. Guo / S. Ng	E. Hall
QUANTITIES	E. Hall	R. Simmons

STATE OF CALIFORNIA
DEPARTMENT OF TRANSPORTATION

DIVISION OF ENGINEERING SERVICES
STRUCTURE DESIGN
DESIGN BRANCH 17

BRIDGE NO. 32-0070
POST MILE R4.51

PEACEFUL OAK ROAD UNDERCROSSING
ABUTMENT 3 LAYOUT

STRUCTURES DESIGN DETAIL SHEET (ENGLISH) (REV. 10/25/05)

ORIGINAL SCALE IN INCHES FOR REDUCED PLANS 0 1 2 3

CU 06 228
EA 340421

DISREGARD PRINTS BEARING EARLIER REVISION DATES

REVISION DATES: 1-10-09, 12-02-09, 12-03-09, 12-10-09, 3-05-09, 6-2-09, 7-06-09, 9-01-09, 11-14-09

SHEET 6 OF 20

FILE => 32-0070-f-abt3.dgn

USERNAME => trlenard DATE PLOTTED => 12-MAY-2010 TIME PLOTTED => 05:57

DIST	COUNTY	ROUTE	POST MILES TOTAL PROJECT	SHEET No	TOTAL SHEETS
10	Tuo	108	R4.0/R6.0	196	237

REGISTERED CIVIL ENGINEER — DATE 12-17-09

5-10-10
PLANS APPROVAL DATE

REGISTERED PROFESSIONAL ENGINEER — Rodney Simmons — No. 51174 — Exp. 09-30-11 — CIVIL — STATE OF CALIFORNIA

The State of California or its officers or agents shall not be responsible for the accuracy or completeness of electronic copies of this plan sheet.

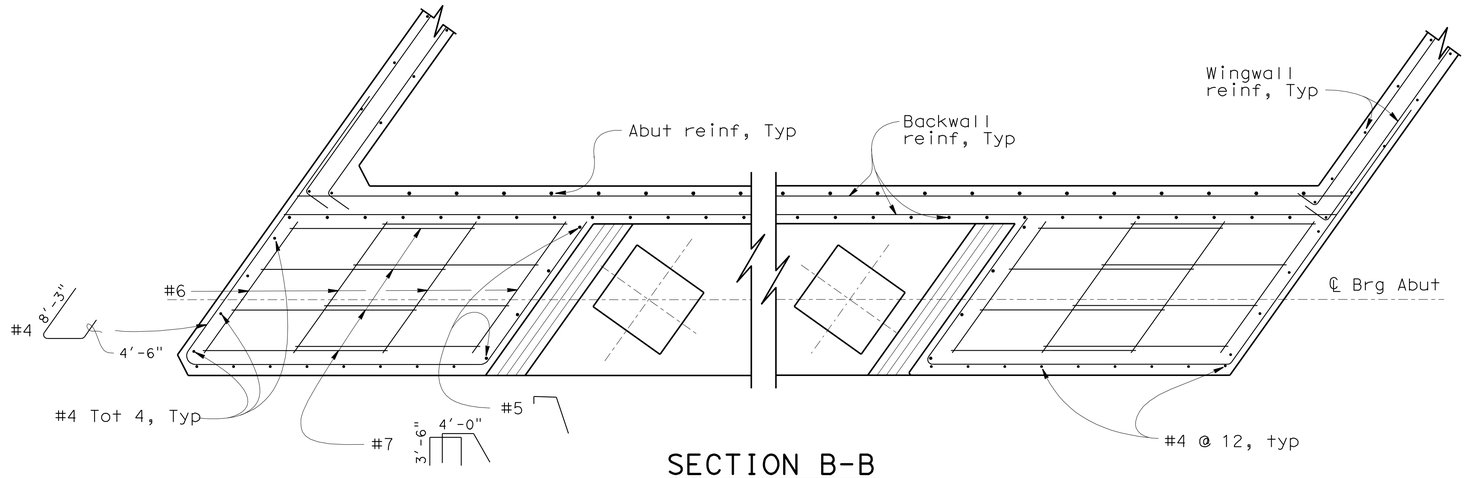

SECTION B-B

½" = 1'

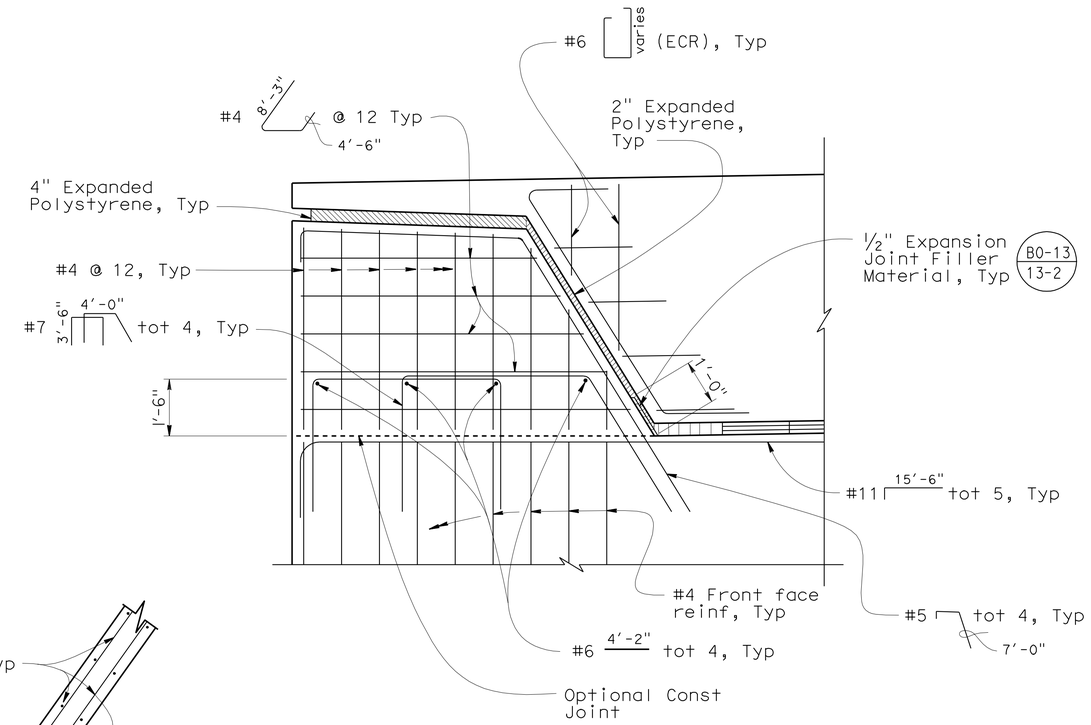

TYPICAL SHEAR KEY

½" = 1'

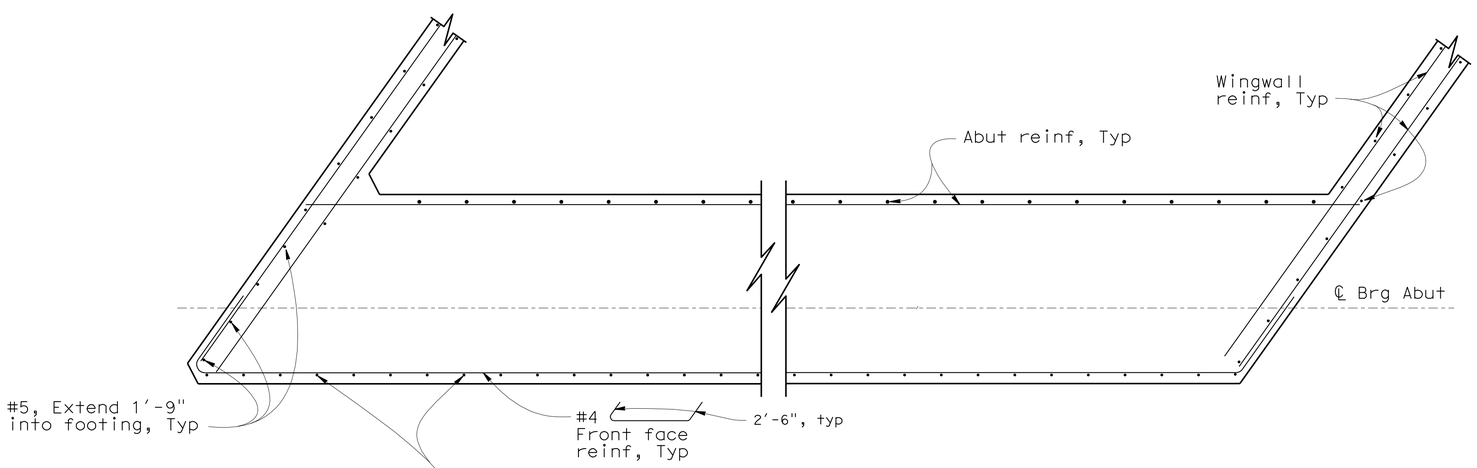

SECTION C-C

½" = 1'

	BY	CHECKED
DESIGN	E. Hall	I. Chernioglo
DETAILS	J. Guo / S. Ng	E. Hall
QUANTITIES	E. Hall	R. Simmons

STATE OF CALIFORNIA
DEPARTMENT OF TRANSPORTATION

DIVISION OF ENGINEERING SERVICES
STRUCTURE DESIGN
DESIGN BRANCH 17

BRIDGE NO. 32-0070
POST MILE R4.51

PEACEFUL OAK ROAD UNDERCROSSING
ABUTMENT DETAILS NO. 1

STRUCTURES DESIGN DETAIL SHEET (ENGLISH) (REV. 10/25/05)

ORIGINAL SCALE IN INCHES FOR REDUCED PLANS 0 1 2 3

CU 06 228
EA 340421

DISREGARD PRINTS BEARING EARLIER REVISION DATES

REVISION DATES: 3-05-09 3-11-09 3-23-09 5-22-09 7-06-09 10-15-09 11-20-09 11-30-09 12-03-09 12-14-09

SHEET 7 OF 20

FILE => 32-0070-f-abt-det1.dgn

USERNAME => trlenord DATE PLOTTED => 12-MAY-2010 TIME PLOTTED => 05:57

DIST	COUNTY	ROUTE	POST MILES TOTAL PROJECT	SHEET No	TOTAL SHEETS
10	Tuo	108	R4.0/R6.0	197	237

REGISTERED CIVIL ENGINEER 12-17-09 DATE

5-10-10
PLANS APPROVAL DATE

REGISTERED PROFESSIONAL ENGINEER Rodney Simmons No. 51174 Exp. 09-30-11 CIVIL STATE OF CALIFORNIA

The State of California or its officers or agents shall not be responsible for the accuracy or completeness of electronic copies of this plan sheet.

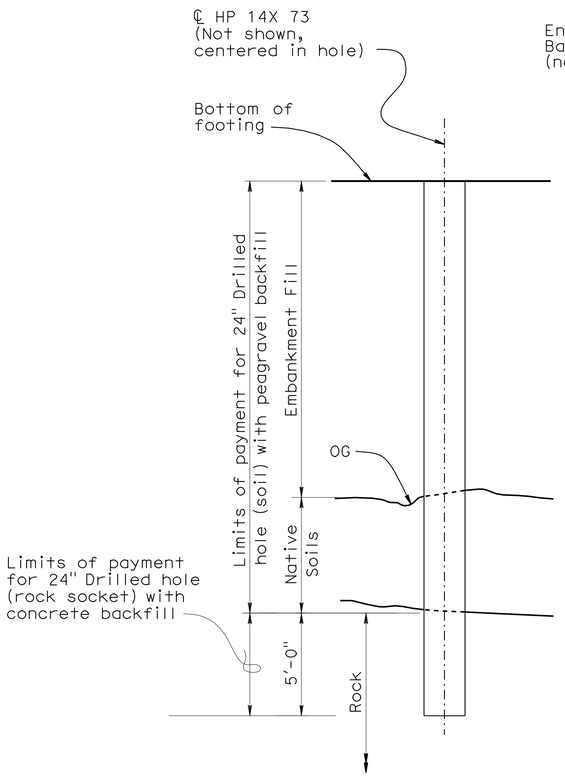

LIMITS OF PAYMENT FOR DRILLED HOLE (SOIL) AND (ROCK SOCKET)

NO SCALE

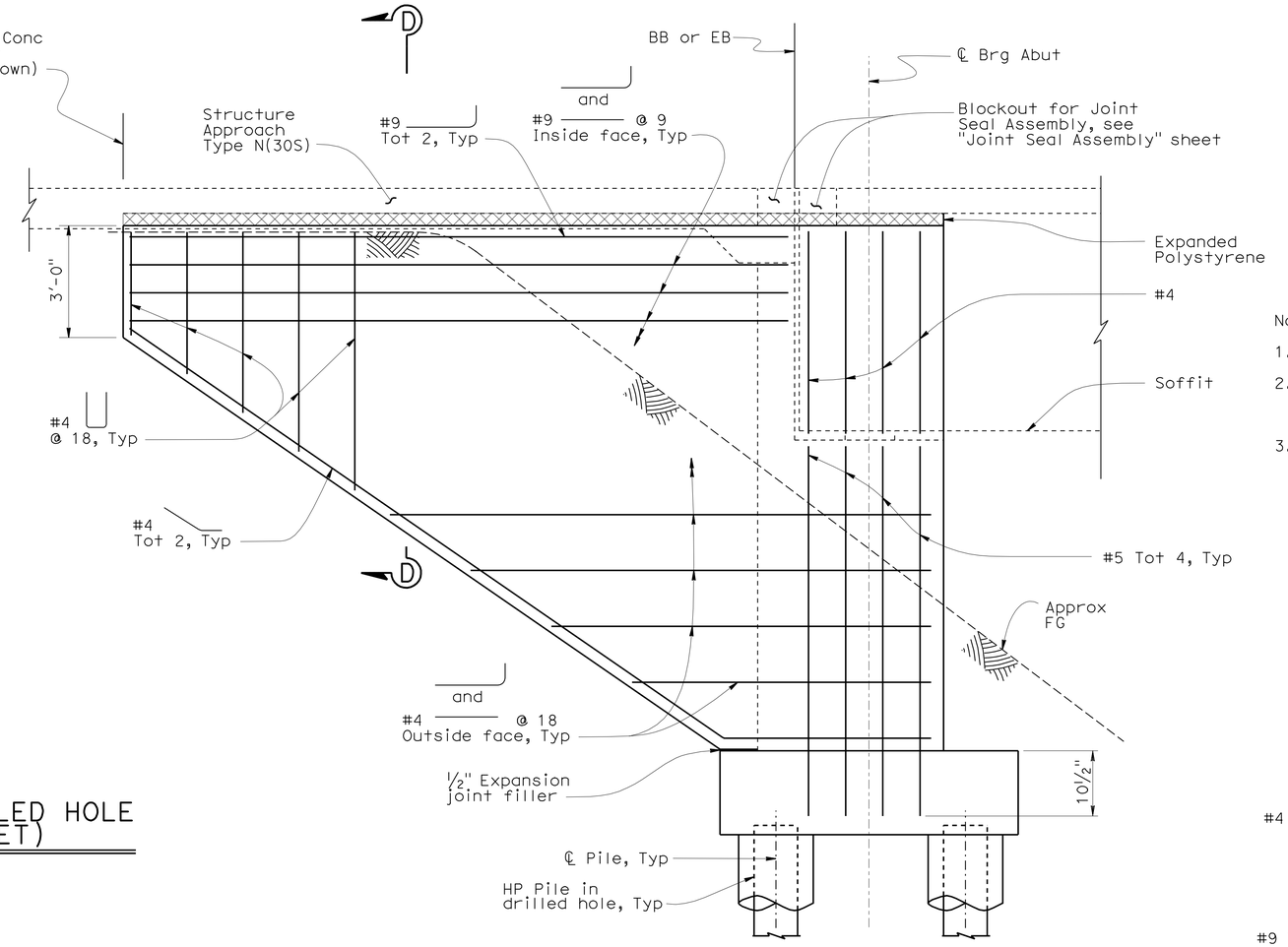

TYPICAL WINGWALL ELEVATION

½" = 1'

Notes:

1. Abutment 1 right shown, others similar.
2. Concrete Barrier and Structure Approach are not shown, see "STRUCTURE APPROACH TYPE N(30S)" sheet.
3. For abutment drainage, see "STRUCTURE APPROACH DRAINAGE DETAILS" sheet.

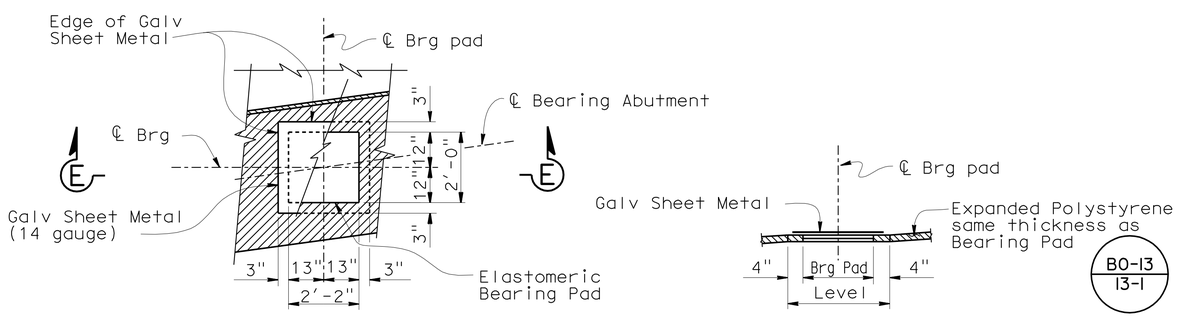

Note:

Coat top of Bearing Pad with silicone grease prior to placing sheet metal.

PLAN

SECTION E-E

BEARING PAD DETAIL

No Scale

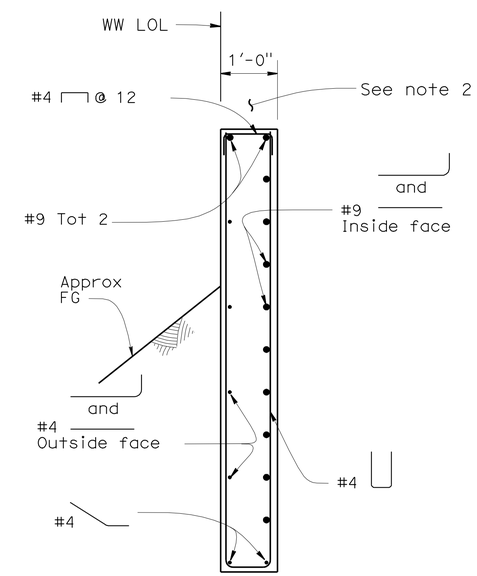

SECTION D-D

¾" = 1'-0"

DESIGN	BY E. Hall	CHECKED I. Chernioglo	
DETAILS	BY J. Guo / S. Ng	CHECKED E. Hall	
QUANTITIES	BY E. Hall	CHECKED R. Simmons	

STATE OF CALIFORNIA
DEPARTMENT OF TRANSPORTATION

DIVISION OF ENGINEERING SERVICES
STRUCTURE DESIGN
DESIGN BRANCH 17

BRIDGE NO. 32-0070
POST MILE R4.51

PEACEFUL OAK ROAD UNDERCROSSING
ABUTMENT DETAILS NO. 2

STRUCTURES DESIGN DETAIL SHEET (ENGLISH) (REV. 10/25/05)

ORIGINAL SCALE IN INCHES FOR REDUCED PLANS 0 1 2 3

CU 06 228
EA 340421

DISREGARD PRINTS BEARING EARLIER REVISION DATES

REVISION DATES: 3-18-09 12-14-09 12-16-09 9-08-09 10-15-09 11-16-09 11-20-09 11-20-09 12-03-09

SHEET 8 OF 20

FILE => 32-0070-f-abt-det2.dgn

USERNAME => trlemard DATE PLOTTED => 12-MAY-2010 TIME PLOTTED => 05:57

DIST	COUNTY	ROUTE	POST MILES TOTAL PROJECT	SHEET No	TOTAL SHEETS
10	Tuo	108	R4.0/R6.0	198	237

REGISTERED CIVIL ENGINEER 12-17-09 DATE

5-10-10
PLANS APPROVAL DATE

REGISTERED PROFESSIONAL ENGINEER Rodney Simmons No. 51174 Exp. 09-30-11 CIVIL STATE OF CALIFORNIA

The State of California or its officers or agents shall not be responsible for the accuracy or completeness of electronic copies of this plan sheet.

Notes:

1. Bundled bars shown thus:
2. Only Service Splices are allowed for Bent Cap main reinforcement.
3. ECR = Epoxy Coated Reinforcement

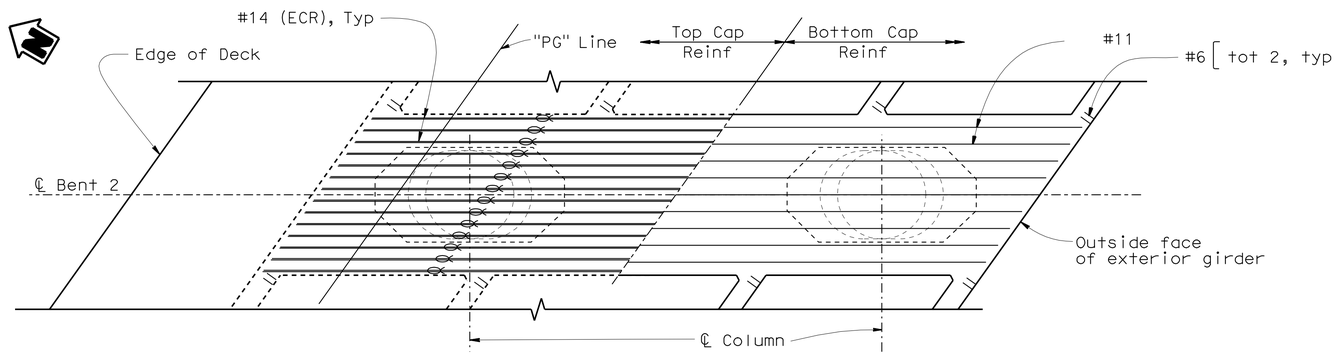

PLAN
1/4"=1'-0"

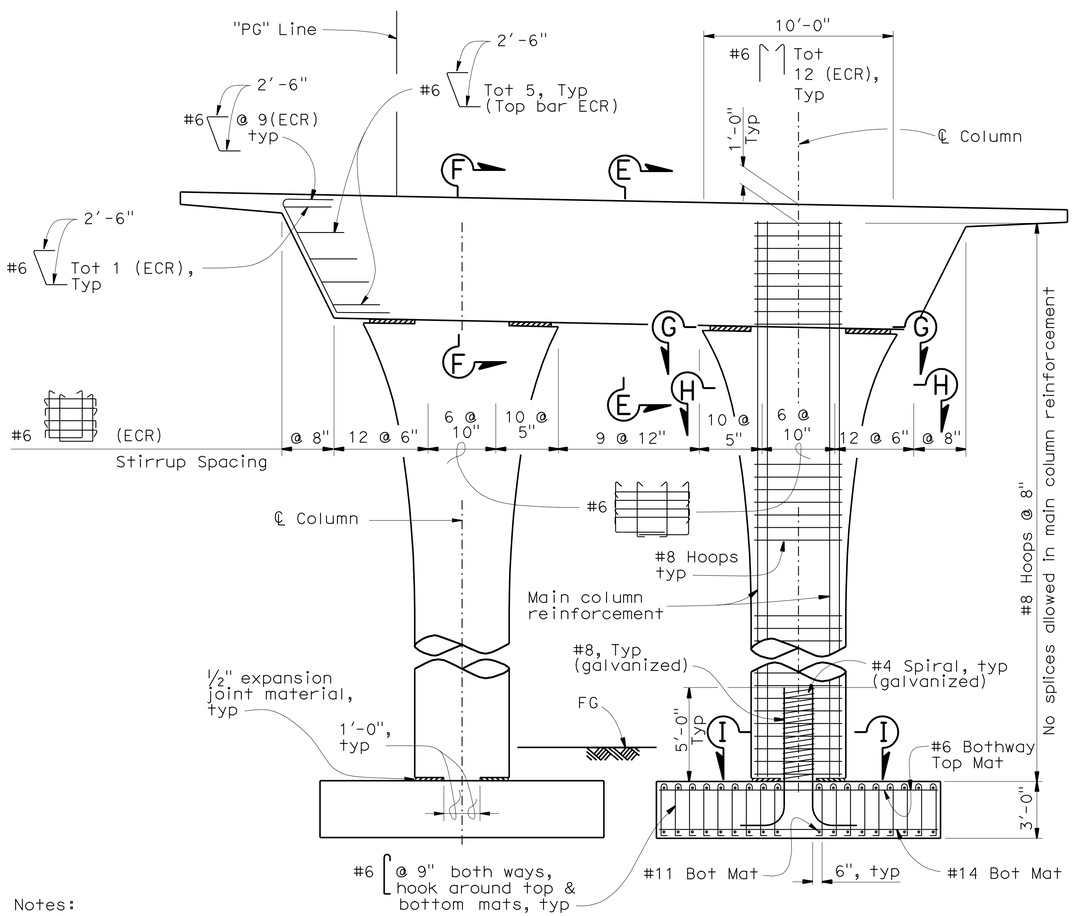

Notes:

1. For "Section G-G", "Section H-H", "Section I-I" & "Footing Plan" see "BENT DETAILS" sheet
2. All hoops are "Ultimate" butt spliced continuous

ELEVATION
1/4"=1'-0"

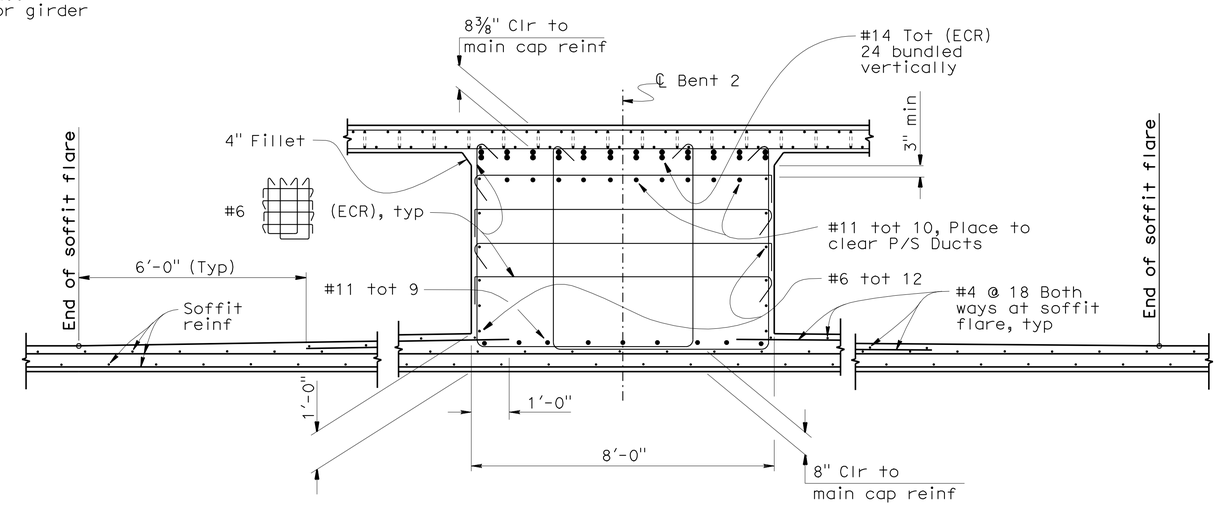

SECTION F-F
1/2" = 1'-0"

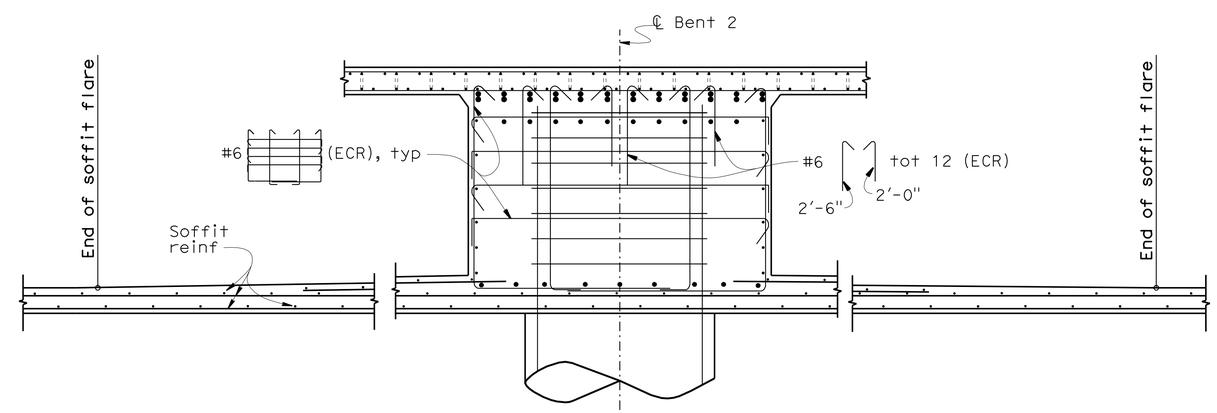

For details not shown, see "Section E-E"

SECTION F-F
1/2" = 1'-0"

	BY	CHECKED
DESIGN	E. Hall	I. Chernioglo
DETAILS	G. Leung / S. Ng	E. Hall
QUANTITIES	E. Hall	R. Simmons

STATE OF CALIFORNIA
DEPARTMENT OF TRANSPORTATION

DIVISION OF ENGINEERING SERVICES
STRUCTURE DESIGN
DESIGN BRANCH 17

BRIDGE NO. 32-0070
POST MILE R4.51

PEACEFUL OAK ROAD UNDERCROSSING
BENT LAYOUT

STRUCTURES DESIGN DETAIL SHEET (ENGLISH) (REV. 10/25/05)

ORIGINAL SCALE IN INCHES FOR REDUCED PLANS 0 1 2 3

CU 06 228
EA 340421

DISREGARD PRINTS BEARING EARLIER REVISION DATES

REVISION DATES: 6-2-09 7-07-09 9-08-09 9-09-09 11-21-09 12-02-09 12-03-09 12-15-09 12-16-09

SHEET 9 OF 20

FILE => 32-0070-h-bnt1.dgn

USERNAME => trlenard DATE PLOTTED => 12-MAY-2010 TIME PLOTTED => 05:57

DIST	COUNTY	ROUTE	POST MILES TOTAL PROJECT	SHEET No	TOTAL SHEETS
10	Tuo	108	R4.0/R6.0	199	237

REGISTERED CIVIL ENGINEER 12-17-09 DATE

5-10-10
PLANS APPROVAL DATE

REGISTERED PROFESSIONAL ENGINEER
Rodney Simmons
No. 51174
Exp. 09-30-11
CIVIL
STATE OF CALIFORNIA

The State of California or its officers or agents shall not be responsible for the accuracy or completeness of electronic copies of this plan sheet.

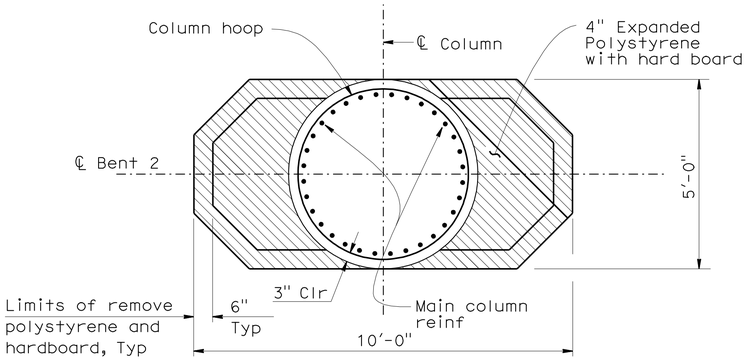

SECTION G-G
½" = 1'-0"

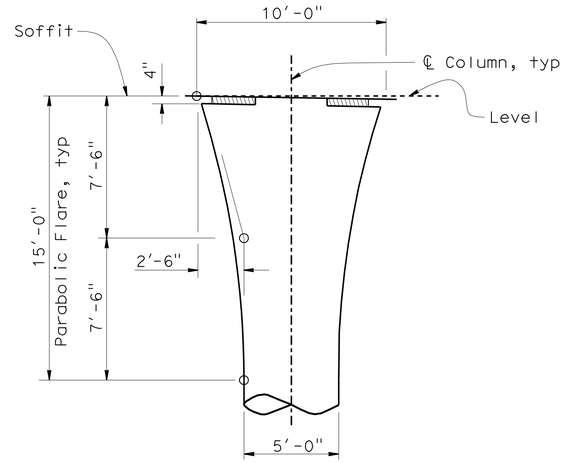

FLARE GEOMETRY
¼" = 1'-0"

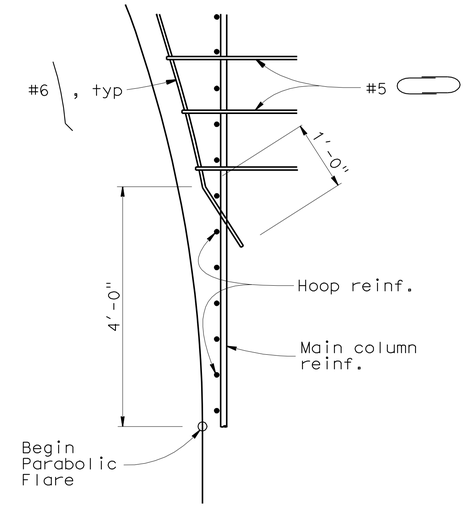

TIE DETAIL
NO SCALE

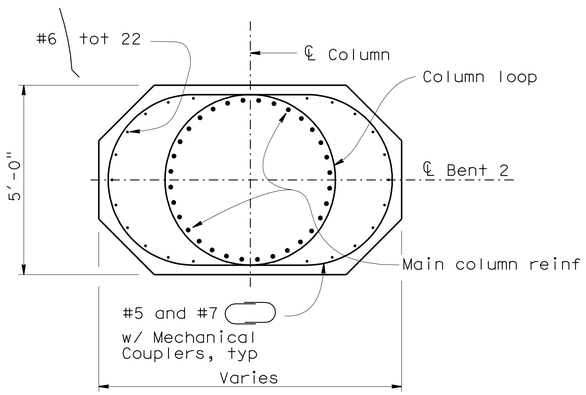

SECTION H-H
½" = 1'-0"

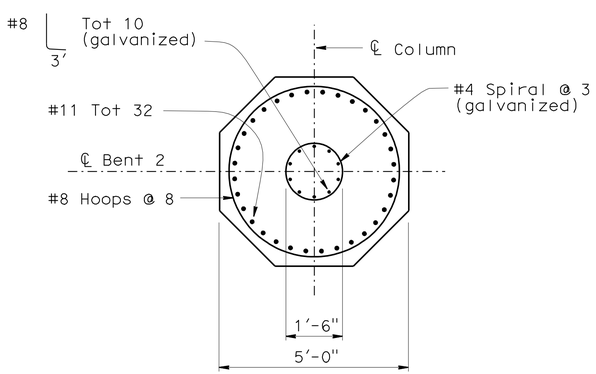

SECTION I-I
½" = 1'-0"

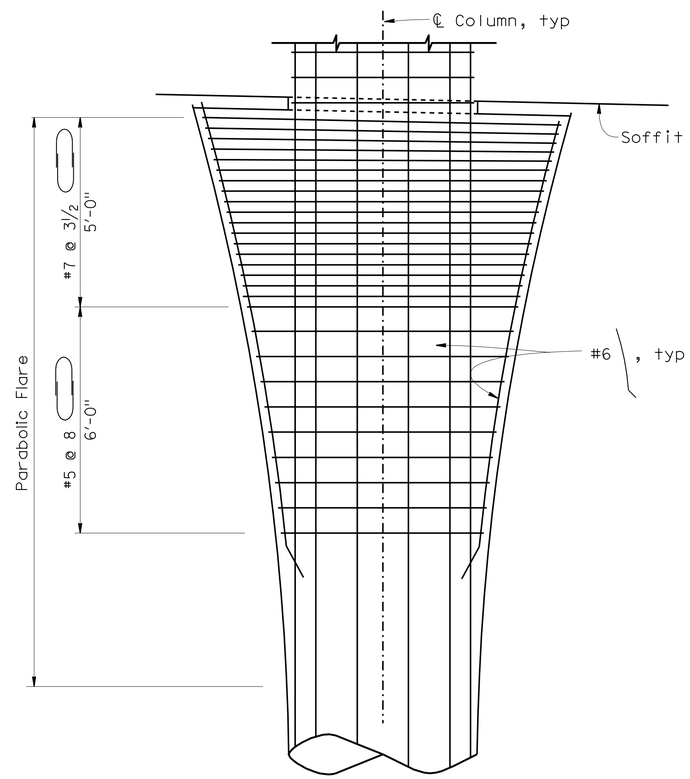

FLARE ELEVATION
½" = 1'-0"

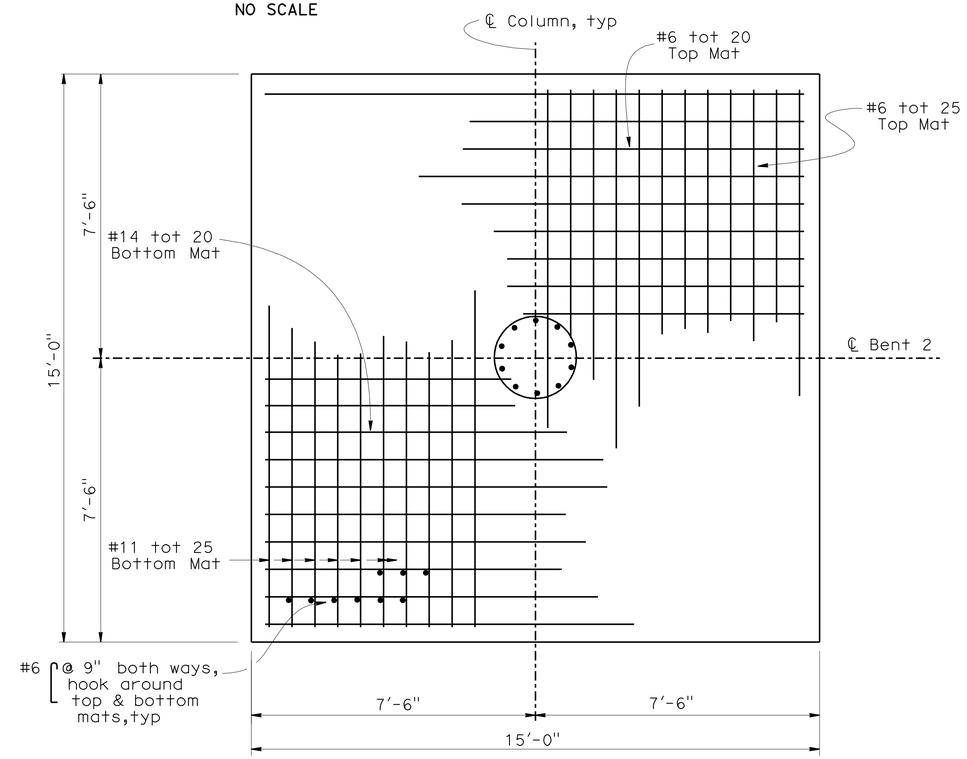

FOOTING PLAN
½" = 1'-0"

	BY	CHECKED
DESIGN	E. Hall	I. Cherniogio
DETAILS	G. Leung / S. Ng	E. Hall
QUANTITIES	E. Hall	R. Simmons

STATE OF CALIFORNIA
DEPARTMENT OF TRANSPORTATION

DIVISION OF ENGINEERING SERVICES
STRUCTURE DESIGN
DESIGN BRANCH 17

BRIDGE NO. 32-0070
POST MILE R4.51

PEACEFUL OAK ROAD UNDERCROSSING
BENT DETAILS

STRUCTURES DESIGN DETAIL SHEET (ENGLISH) (REV. 10/25/05)

ORIGINAL SCALE IN INCHES FOR REDUCED PLANS 0 1 2 3

CU 06 228
EA 340421

DISREGARD PRINTS BEARING EARLIER REVISION DATES

REVISION DATES: 5-22-09 7-07-09 9-04-09 11-21-09 12-15-09 12-16-09

SHEET 10 OF 20

FILE => 32-0070-h-bnt2.dgn

USERNAME => trlenard DATE PLOTTED => 12-MAY-2010 TIME PLOTTED => 05:57

DIST	COUNTY	ROUTE	POST MILES TOTAL PROJECT	SHEET No	TOTAL SHEETS
10	Tuo	108	R4.0/R6.0	200	237

REGISTERED CIVIL ENGINEER 12-17-09 DATE

5-10-10
PLANS APPROVAL DATE

The State of California or its officers or agents shall not be responsible for the accuracy or completeness of electronic copies of this plan sheet.

REGISTERED PROFESSIONAL ENGINEER
Rodney Simmons
No. 51174
Exp. 09-30-11
CIVIL
STATE OF CALIFORNIA

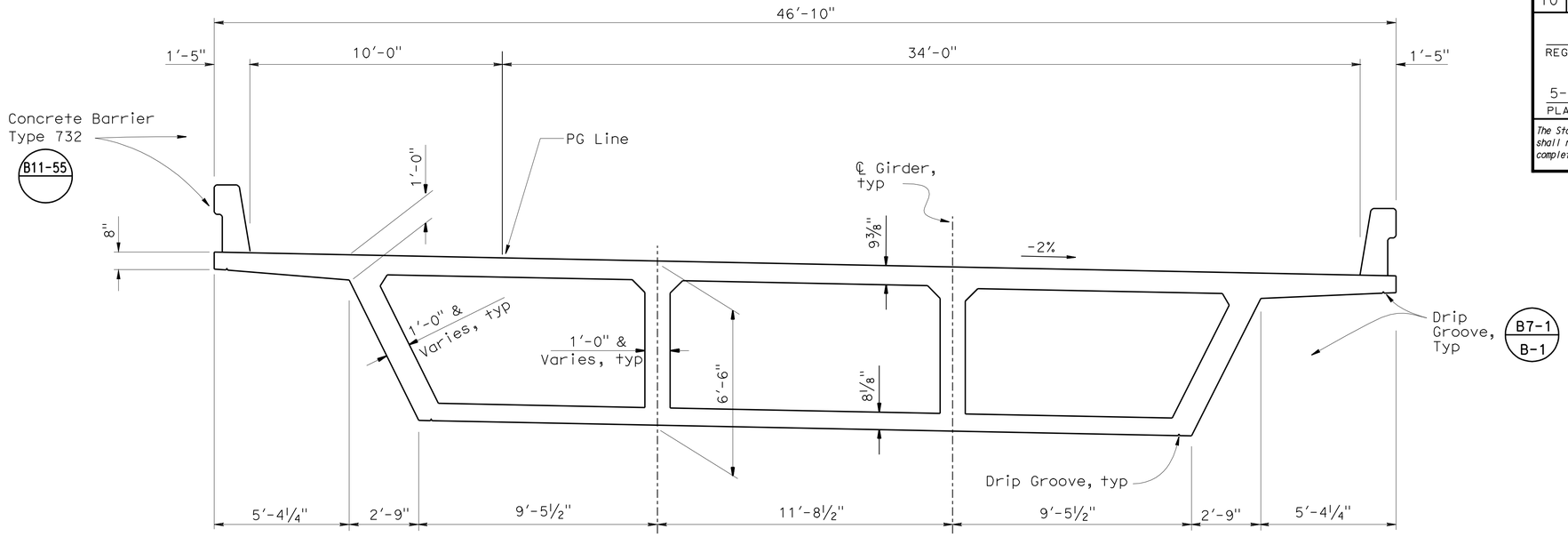

TYPICAL SECTION

3/8"=1'-0"

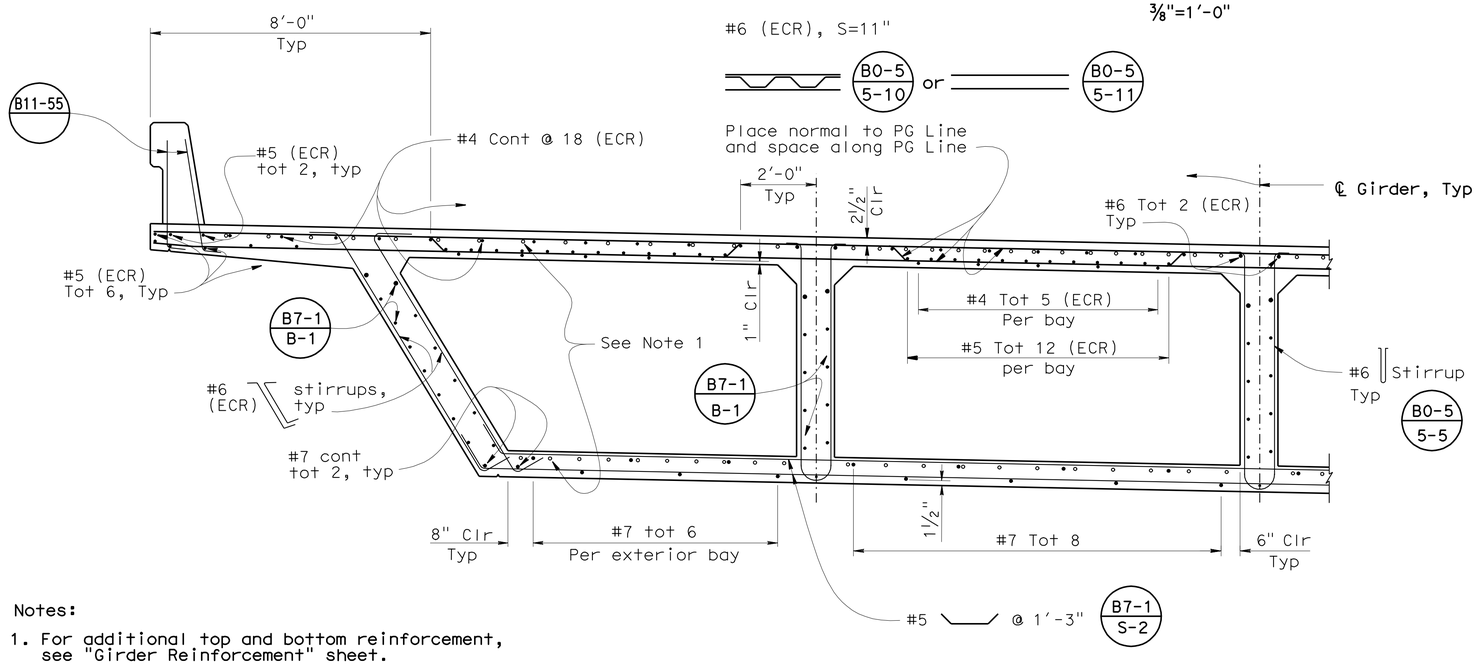

Notes:

1. For additional top and bottom reinforcement, see "Girder Reinforcement" sheet.
2. ECR = Epoxy Coated Reinforcement.

PART TYPICAL SECTION

1/2"=1'-0"

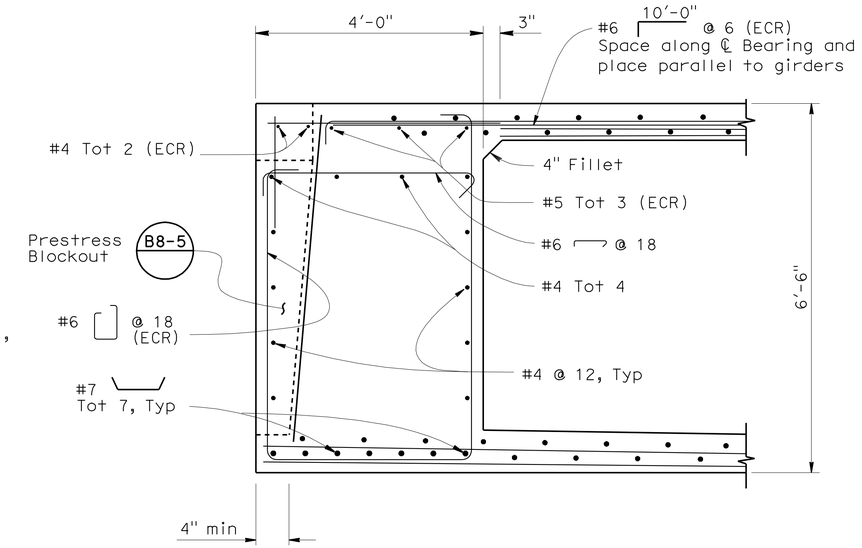

END DIAPHRAGM

3/4" = 1'-0"

DESIGN	BY E. Hall	CHECKED I. Chernioglo	
DETAILS	BY G. Leung / S. Ng	CHECKED E. Hall	
QUANTITIES	BY E. Hall	CHECKED R. Simmons	

STATE OF CALIFORNIA
DEPARTMENT OF TRANSPORTATION

DIVISION OF ENGINEERING SERVICES
STRUCTURE DESIGN
DESIGN BRANCH 17

BRIDGE NO. 32-0070
POST MILE R4.51

PEACEFUL OAK ROAD UNDERCROSSING
TYPICAL SECTION

STRUCTURES DESIGN DETAIL SHEET (ENGLISH) (REV. 10/25/05)

ORIGINAL SCALE IN INCHES FOR REDUCED PLANS 0 1 2 3

CU 06 228
EA 340421

DISREGARD PRINTS BEARING EARLIER REVISION DATES

REVISION DATES: 6-2-09 7-07-09 9-03-09 11-21-09 11-24-09 12-03-09 12-15-09 12-16-09

SHEET 11 OF 20

FILE => 32-0070-k-ts.dgn

USERNAME => trlenard DATE PLOTTED => 12-MAY-2010 TIME PLOTTED => 08:57