Dist	COUNTY	ROUTE	POST MILES TOTAL PROJECT	SHEET No.	TOTAL SHEETS
10	Tuo	108	R4.0/R6.0	1	237

STATE OF CALIFORNIA

DEPARTMENT OF TRANSPORTATION

PROJECT PLANS FOR CONSTRUCTION ON

STATE HIGHWAY

IN TUOLUMNE COUNTY
NEAR SONORA
FROM 0.3 MILE WEST OF PEACEFUL OAK ROAD
TO VIA ESTE ROAD

TO BE SUPPLEMENTED BY STANDARD PLANS DATED MAY 2006

INDEX OF PLANS

SHEET No.	DESCRIPTION
1	TITLE AND LOCATION MAP
2-6	TYPICAL CROSS SECTIONS
7-15	LAYOUTS
16-27	PROFILES
28-33	SUPERELEVATION DIAGRAMS
34-44	CONSTRUCTION DETAILS
45-53	TEMPORARY WATER POLLUTION CONTROL PLANS AND QUANTITIES
54-63	EROSION CONTROL PLANS, DETAILS AND QUANTITIES
64-98	DRAINAGE PLANS, PROFILES, DETAILS AND QUANTITIES
99-106	UTILITY PLANS
107-108	STAGE CONSTRUCTION PLANS
109-112	TRAFFIC HANDLING PLANS AND QUANTITIES
113	CONSTRUCTION AREA SIGNS
114-123	PAVEMENT DELINEATION PLANS AND QUANTITIES
124-127	SUMMARY OF QUANTITIES
128-140	SIGN PLANS, DETAILS AND QUANTITIES
141-150	ELECTRICAL PLANS
151-189	REVISED AND NEW STANDARD PLANS

STRUCTURE PLANS

190-209	PEACEFUL OAK ROAD UNDERCROSSING
210-237	MONO WAY UNDERCROSSING

THE STANDARD PLANS LIST APPLICABLE TO THIS CONTRACT IS INCLUDED IN THE NOTICE TO BIDDERS AND SPECIAL PROVISIONS BOOK.

LOCATION MAP

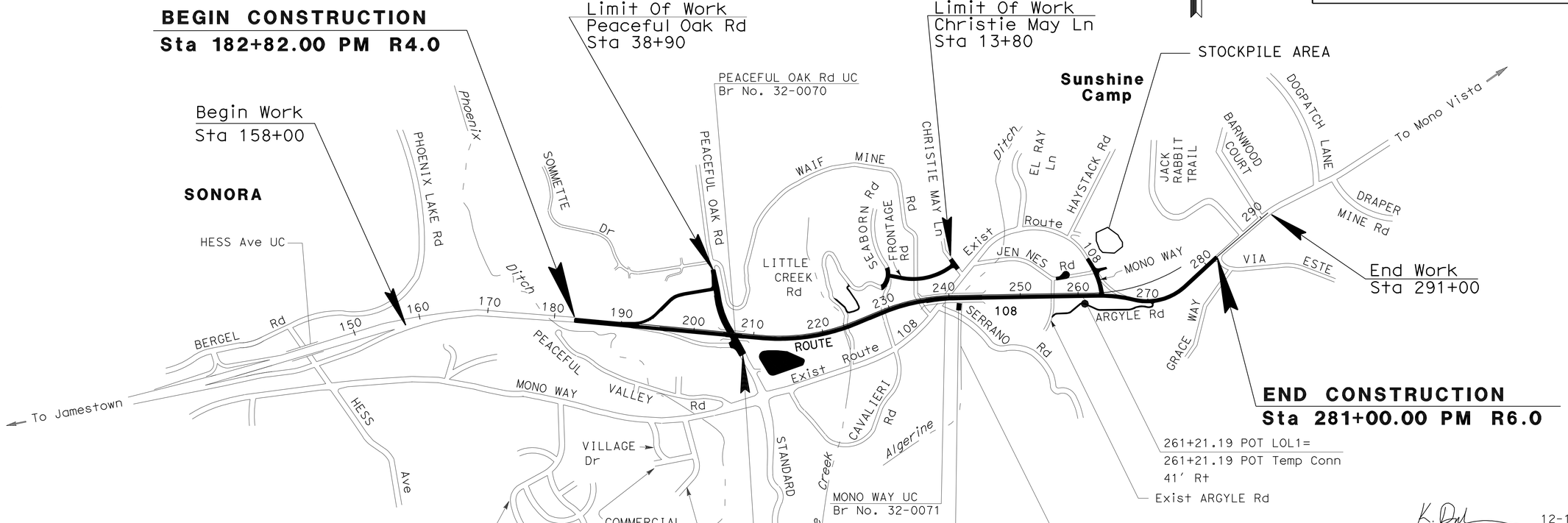

K. Daher 12-17-09
PROJECT ENGINEER DATE
REGISTERED CIVIL ENGINEER

May 10, 2010
PLANS APPROVAL DATE

REGISTERED PROFESSIONAL ENGINEER KAL H. DAHER No. C44510 Exp. 3-31-10 CIVIL STATE OF CALIFORNIA

THE STATE OF CALIFORNIA OR ITS OFFICERS OR AGENTS SHALL NOT BE RESPONSIBLE FOR THE ACCURACY OR COMPLETENESS OF SCANNED COPIES OF THIS PLAN SHEET.

THE CONTRACTOR SHALL POSSESS THE CLASS (OR CLASSES) OF LICENSE AS SPECIFIED IN THE "NOTICE TO BIDDERS."

PROJECT MANAGER JOY PINNE

DESIGN ENGINEER TERRY OGLE

CONTRACT No.	10-340424
PROJECT ID	1000000394

LAST REVISION 12-17-09 DATE PLOTTED => 20-JUL-2011 TIME PLOTTED => 06:26

Dist	COUNTY	ROUTE	POST MILES TOTAL PROJECT	SHEET No.	TOTAL SHEETS
10	Tuo	108	R4.0/R6.0	2	237

REGISTERED CIVIL ENGINEER 12-28-09 DATE

5-10-10
PLANS APPROVAL DATE

REGISTERED PROFESSIONAL ENGINEER KAL H. DAHER No. C44510 Exp. 3-31-10 CIVIL STATE OF CALIFORNIA

THE STATE OF CALIFORNIA OR ITS OFFICERS OR AGENTS SHALL NOT BE RESPONSIBLE FOR THE ACCURACY OR COMPLETENESS OF SCANNED COPIES OF THIS PLAN SHEET.

NOTES:

1. DIMENSIONS OF THE PAVEMENT STRUCTURES (STRUCTURAL SECTIONS) ARE SUBJECT TO TOLERANCES SPECIFIED IN THE STANDARD SPECIFICATIONS.
2. SUPER ELEVATION AS SHOWN OR AS DIRECTED BY THE ENGINEER.
3. FOR ACCURATE RIGHT OF WAY AND ACCESS DATA, CONTACT RIGHT OF WAY ENGINEERING AT THE DISTRICT OFFICE

Rte 108 DESIGN DESIGNATION

2012 ADT	27,100	D	60%
2032 ADT	42,000	T	5.0%
DHV (2012)	2700	V	70 MPH
DHV (2032)	4200	TI	11.5

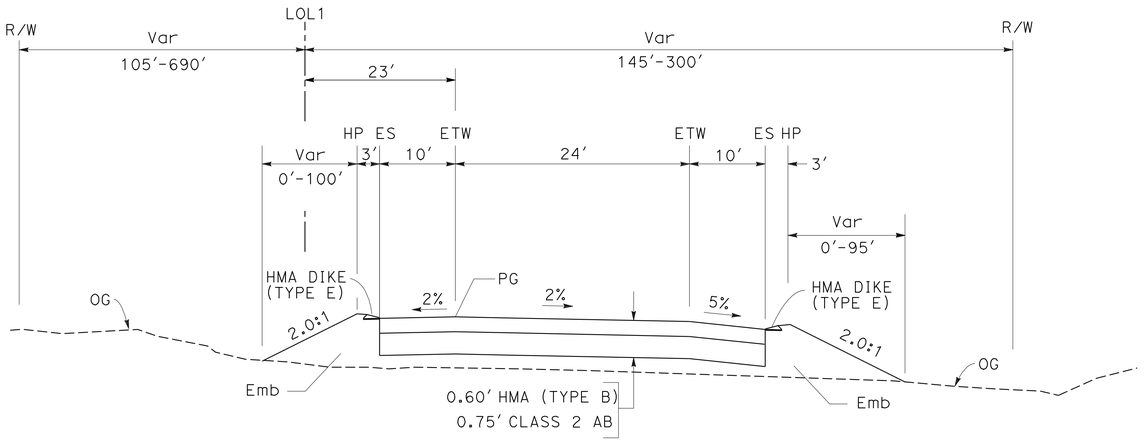

STA 194+30.00 TO STA 206+75.00

ROUTE 108

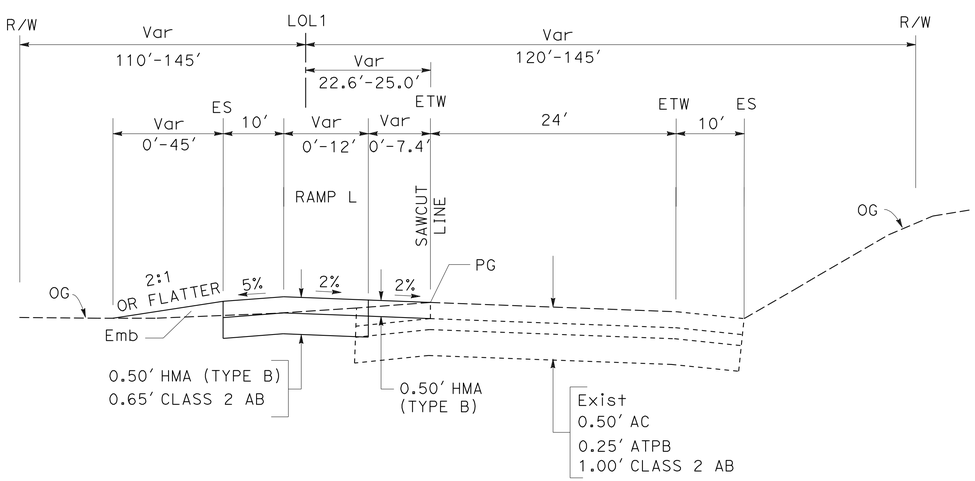

STA 182+82.00 TO STA 191+50.00

ROUTE 108

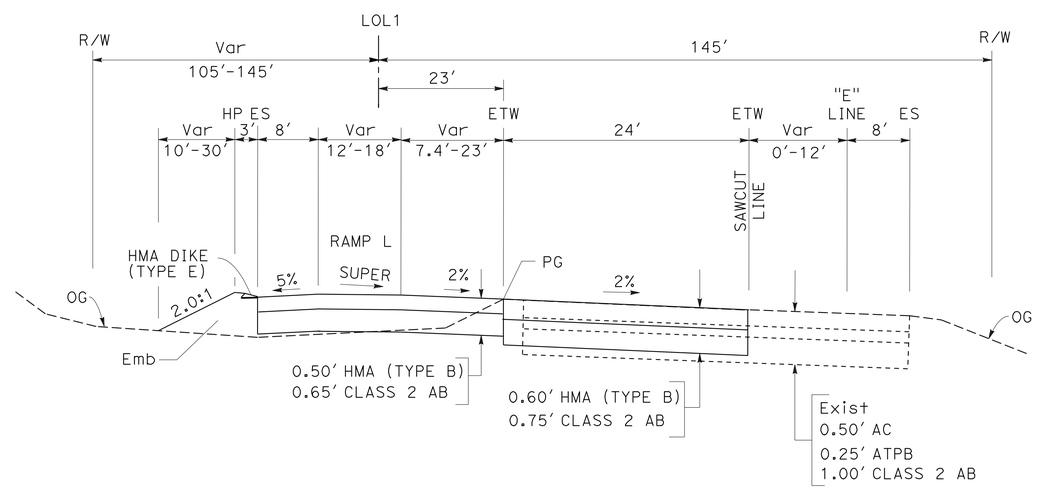

STA 191+50.00 TO STA 194+30.00

ROUTE 108

TYPICAL CROSS SECTIONS

X-1

NO SCALE

STATE OF CALIFORNIA - DEPARTMENT OF TRANSPORTATION
Caltrans
06-DESIGN
FUNCTIONAL SUPERVISOR: TERRY OGLE
CALCULATED-DESIGNED BY: JORGE AGUILERA
CHECKED BY: KAL DAHER
REVISED BY
DATE REVISED

LAST REVISION DATE PLOTTED => 11-MAY-2010
01-11-10 TIME PLOTTED => 15:42

Dist	COUNTY	ROUTE	POST MILES TOTAL PROJECT	SHEET No.	TOTAL SHEETS
10	Tuo	108	R4.0/R6.0	3	237

REGISTERED CIVIL ENGINEER 12-28-09 DATE

5-10-10
PLANS APPROVAL DATE

REGISTERED PROFESSIONAL ENGINEER KAL H. DAHER No. C44510 Exp. 3-31-10 CIVIL STATE OF CALIFORNIA

THE STATE OF CALIFORNIA OR ITS OFFICERS OR AGENTS SHALL NOT BE RESPONSIBLE FOR THE ACCURACY OR COMPLETENESS OF SCANNED COPIES OF THIS PLAN SHEET.

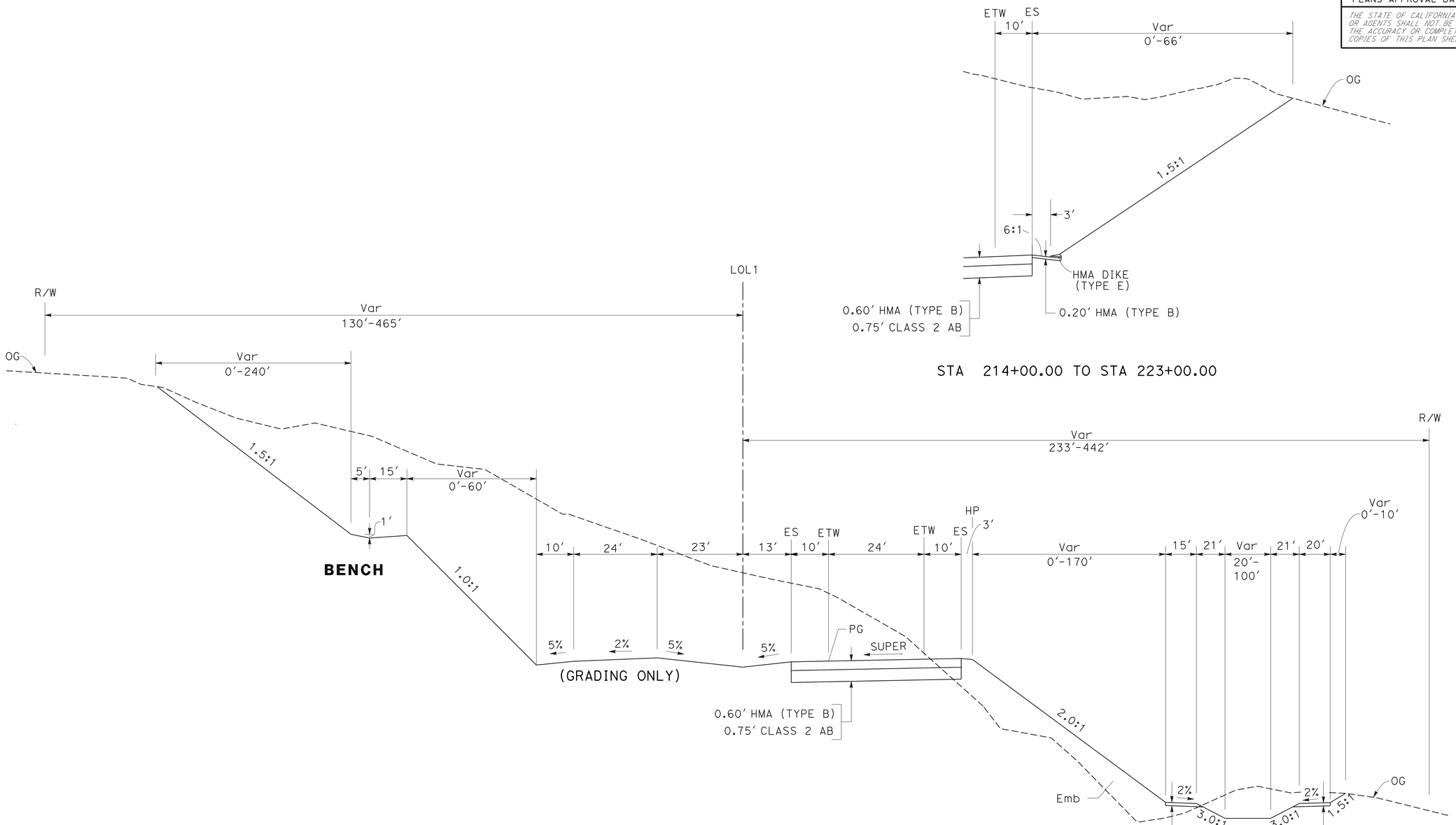

STA 214+00.00 TO STA 223+00.00

STA 210+32.00 TO STA 223+50.00

ROUTE 108

BASIN
STA 211+00.00 TO 214+50.00

TYPICAL CROSS SECTIONS

NO SCALE

X-2

STATE OF CALIFORNIA - DEPARTMENT OF TRANSPORTATION
Caltrans
06-DESIGN

FUNCTIONAL SUPERVISOR: TERRY OGLE
CALCULATED-DESIGNED BY: JORGE AGUILERA
CHECKED BY: KAL DAHER
REVISED BY
DATE REVISED

LAST REVISION 01-11-10
DATE PLOTTED => 12-MAY-2010
TIME PLOTTED => 11:20

Dist	COUNTY	ROUTE	POST MILES TOTAL PROJECT	SHEET No.	TOTAL SHEETS
10	Tuo	108	R4.0/R6.0	4	237

REGISTERED CIVIL ENGINEER 12-28-09 DATE

5-10-10
PLANS APPROVAL DATE

REGISTERED PROFESSIONAL ENGINEER KAL H. DAHER No. C44510 Exp. 3-31-10 CIVIL STATE OF CALIFORNIA

THE STATE OF CALIFORNIA OR ITS OFFICERS OR AGENTS SHALL NOT BE RESPONSIBLE FOR THE ACCURACY OR COMPLETENESS OF SCANNED COPIES OF THIS PLAN SHEET.

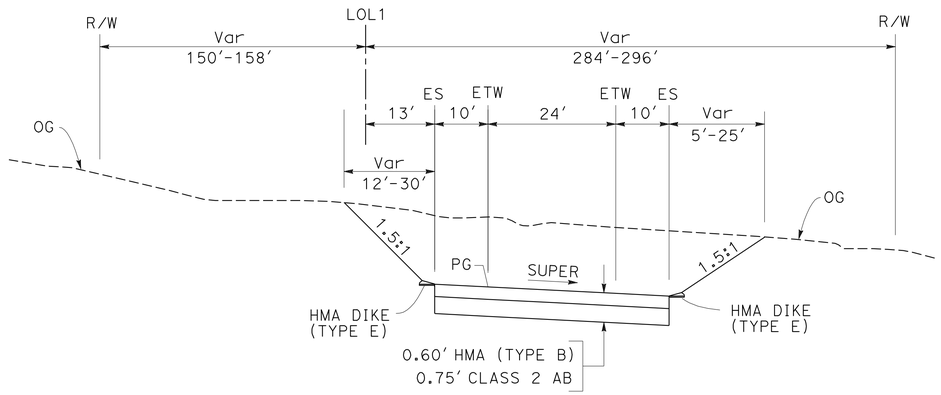

STA 227+50.00 TO STA 230+50.00

ROUTE 108

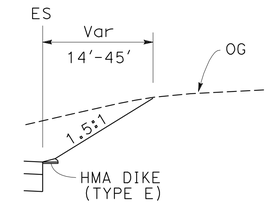

STA 256+50.00 TO STA 261+21.19

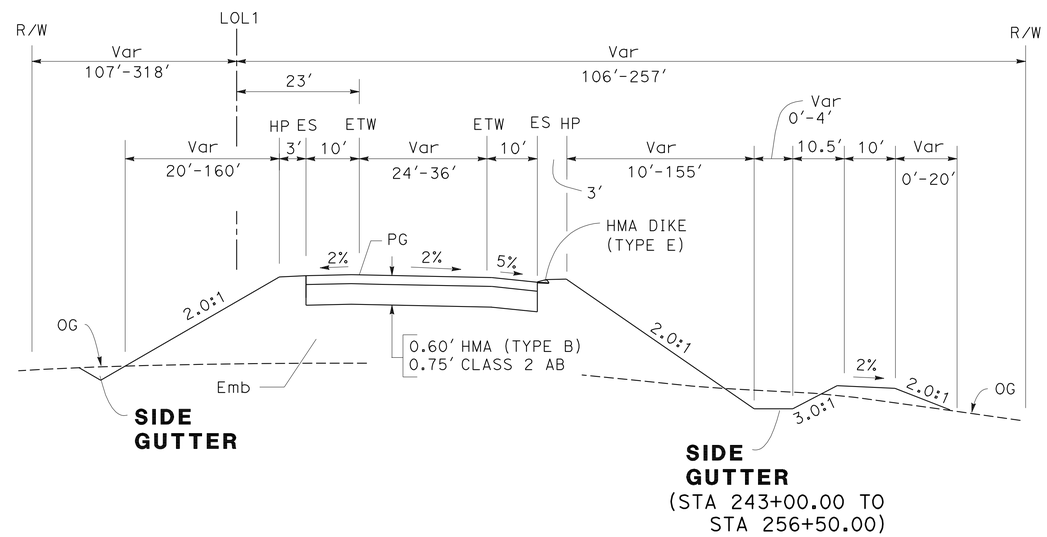

STA 245+33.00 TO STA 261+21.19

ROUTE 108

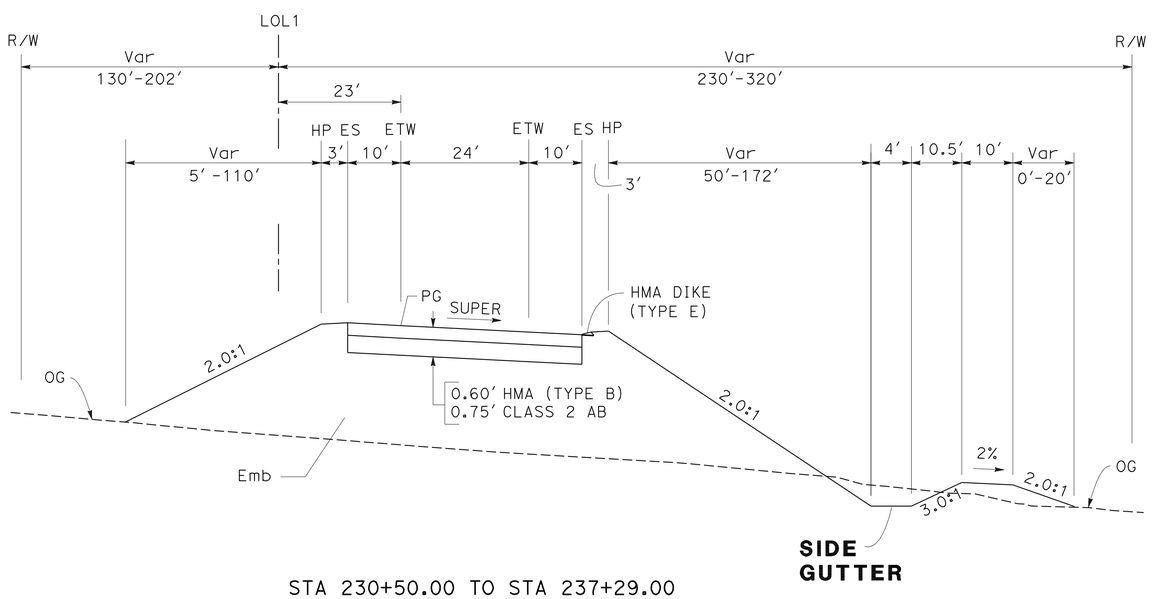

STA 230+50.00 TO STA 237+29.00
STA 223+50.00 TO STA 227+50.00

ROUTE 108

TYPICAL CROSS SECTIONS

NO SCALE

X-3

STATE OF CALIFORNIA - DEPARTMENT OF TRANSPORTATION
Caltrans
06-DESIGN

FUNCTIONAL SUPERVISOR: TERRY OGLE
CALCULATED-DESIGNED BY: JORGE AGUILERA
CHECKED BY: KAL DAHER
REVISED BY
DATE REVISED

LAST REVISION 01-11-10
DATE PLOTTED => 11-MAY-2010
TIME PLOTTED => 15:42

Dist	COUNTY	ROUTE	POST MILES TOTAL PROJECT	SHEET No.	TOTAL SHEETS
10	Tuo	108	R4.0/R6.0	5	237

REGISTERED CIVIL ENGINEER 12-28-09 DATE

5-10-10
PLANS APPROVAL DATE

REGISTERED PROFESSIONAL ENGINEER KAL H. DAHER No. C44510 Exp. 3-31-10 CIVIL STATE OF CALIFORNIA

THE STATE OF CALIFORNIA OR ITS OFFICERS OR AGENTS SHALL NOT BE RESPONSIBLE FOR THE ACCURACY OR COMPLETENESS OF SCANNED COPIES OF THIS PLAN SHEET.

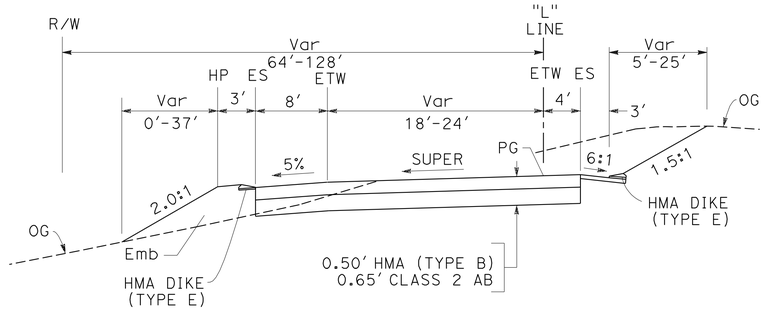

STA 95+32.25 TO STA 108+27.00

RAMP "L"

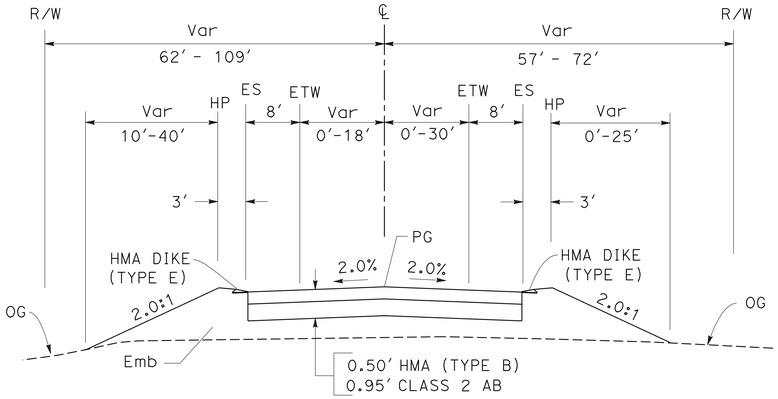

STA 10+00.00 TO STA 17+44.00

MONO WAY

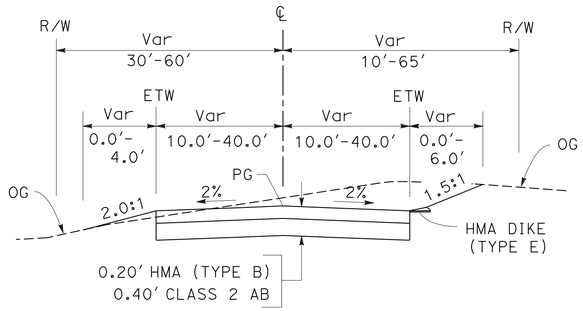

STA 10+00.00 TO STA 11+38.00

JENNES Rd CUL-DE-SAC

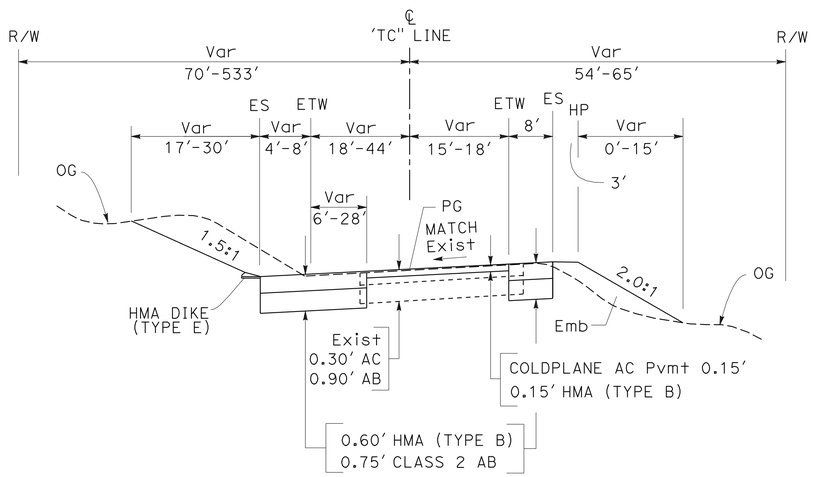

STA 269+50.00 TO STA 281+00.00

TEMPORARY CONNECTION

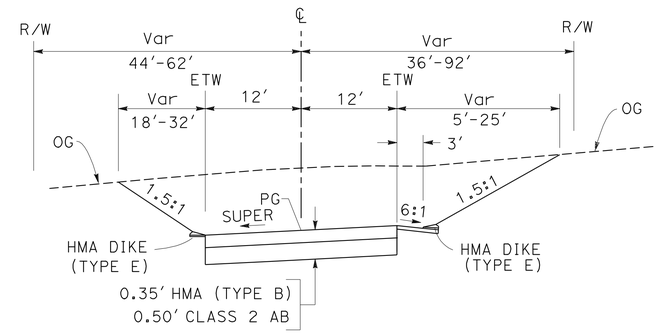

STA 18+30.00 TO STA 20+01.37

FRONTAGE ROAD

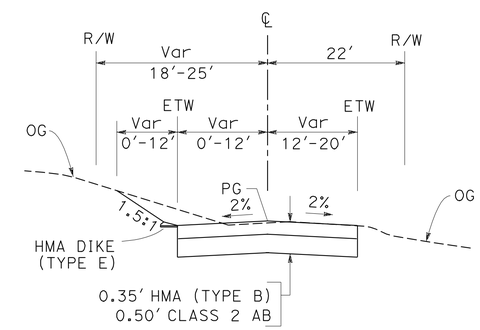

STA 10+12.00 TO STA 12+76.35

CHRISTIE MAY LANE

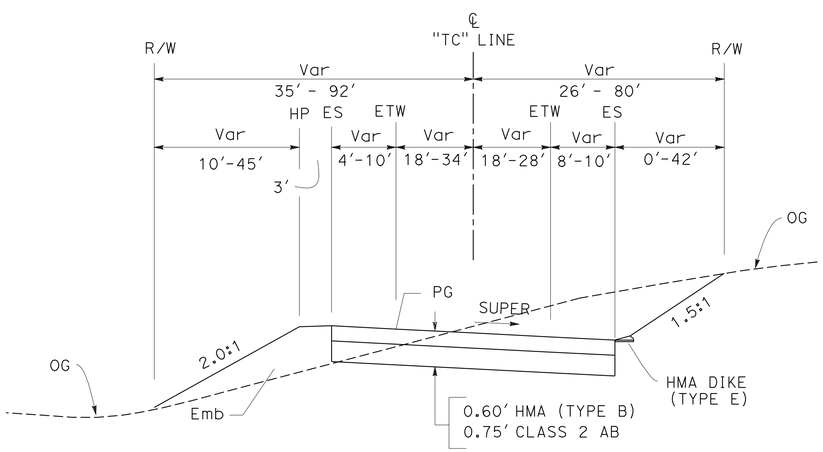

STA 261+21.19 TO STA 269+50.00

TEMPORARY CONNECTION

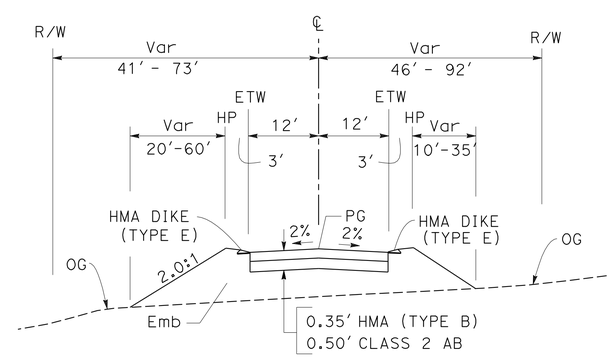

STA 10+10.00 TO STA 18+30.00

FRONTAGE ROAD

TYPICAL CROSS SECTIONS

NO SCALE

X-4

STATE OF CALIFORNIA - DEPARTMENT OF TRANSPORTATION
Caltrans
06-DESIGN

FUNCTIONAL SUPERVISOR: TERRY OGLE
CALCULATED-DESIGNED BY: JORGE AGUILERA
CHECKED BY: KAL DAHER
REVISED BY
DATE REVISED

LAST REVISION 01-11-10 | DATE PLOTTED => 11-MAY-2010 | TIME PLOTTED => 15:42

Dist	COUNTY	ROUTE	POST MILES TOTAL PROJECT	SHEET No.	TOTAL SHEETS
10	Tuo	108	R4.0/R6.0	6	237

REGISTERED CIVIL ENGINEER 12-28-09 DATE

5-10-10
PLANS APPROVAL DATE

REGISTERED PROFESSIONAL ENGINEER KAL H. DAHER No. C44510 Exp. 3-31-10 CIVIL STATE OF CALIFORNIA

THE STATE OF CALIFORNIA OR ITS OFFICERS OR AGENTS SHALL NOT BE RESPONSIBLE FOR THE ACCURACY OR COMPLETENESS OF SCANNED COPIES OF THIS PLAN SHEET.

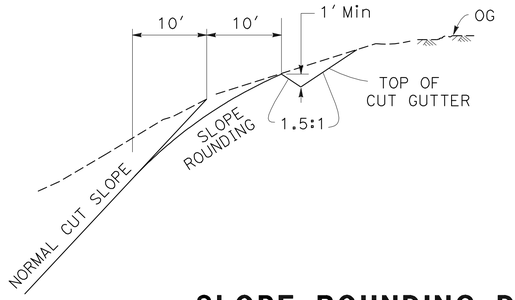

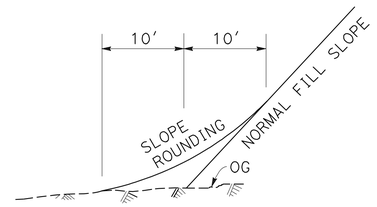

SLOPE ROUNDING DETAILS

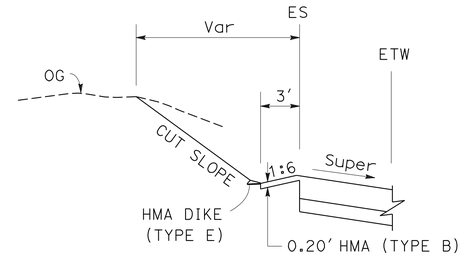

HIGH SIDE SUPER GUTTER IN CUT

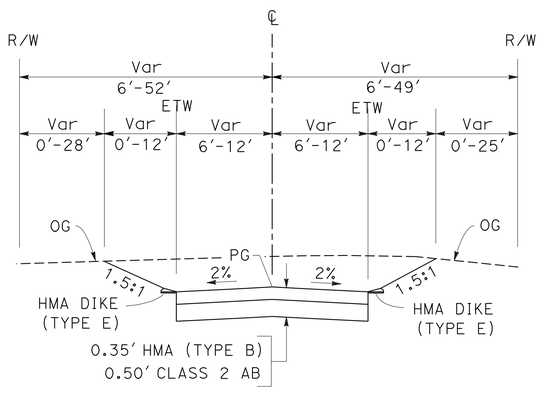

STA 10+00.00 TO STA 12+80.00

SEABORN Rd

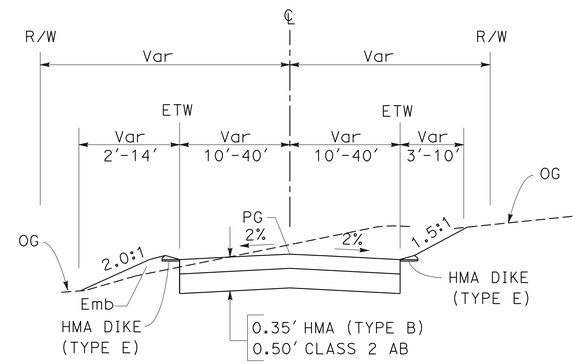

STA 14+62.30 TO STA 29+50.00

ARGYLE Rd

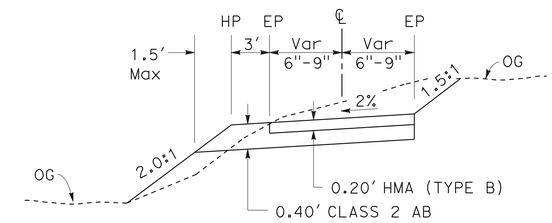

Dwy No. 4
Dwy No. 2
WAIF MINE Rd

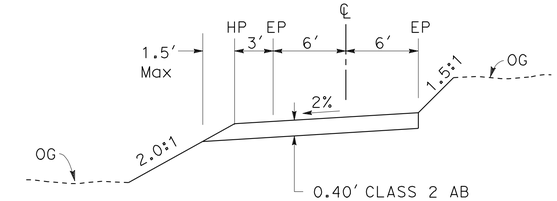

Dwy No. 3
Dwy No. 1

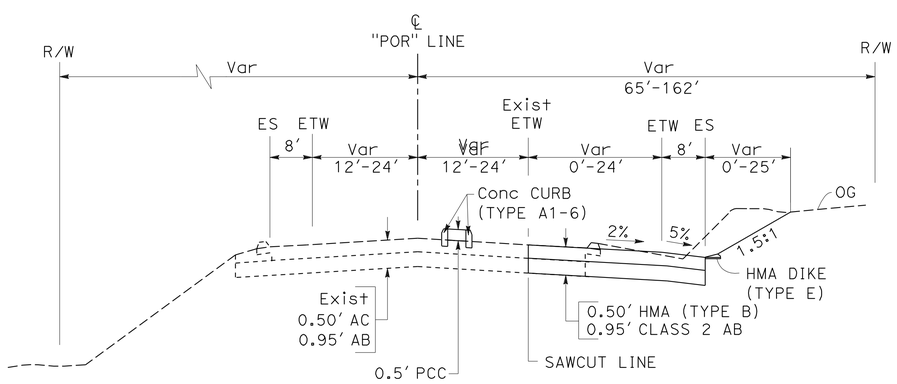

STA 22+60.00 TO STA 37+88.00

PEACEFUL OAK ROAD

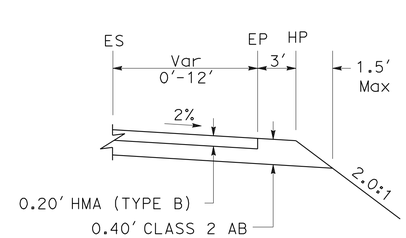

MAINTENANCE VEHICLE PULLOUT

TYPICAL CROSS SECTIONS

NO SCALE

X-5

REVISED BY | DATE REVISED
JORGE AGUILERA | KAL DAHER
CALCULATED-DESIGNED BY | CHECKED BY
FUNCTIONAL SUPERVISOR | TERRY OGLE
STATE OF CALIFORNIA - DEPARTMENT OF TRANSPORTATION
Caltrans
06-DESIGN

LAST REVISION 01-11-10 | DATE PLOTTED => 11-MAY-2010 | TIME PLOTTED => 15:42

Dist	COUNTY	ROUTE	POST MILES TOTAL PROJECT	SHEET No.	TOTAL SHEETS
10	Tuo	108	R4.0/R6.0	7	237

K. Daher 12-29-09
REGISTERED CIVIL ENGINEER DATE

5-10-10
PLANS APPROVAL DATE

REGISTERED PROFESSIONAL ENGINEER KAL H. DAHER No. C44510 Exp. 3-31-10 CIVIL STATE OF CALIFORNIA

THE STATE OF CALIFORNIA OR ITS OFFICERS OR AGENTS SHALL NOT BE RESPONSIBLE FOR THE ACCURACY OR COMPLETENESS OF SCANNED COPIES OF THIS PLAN SHEET.

NOTE: FOR ACCURATE RIGHT OF WAY AND ACCESS DATA, CONTACT RIGHT OF WAY ENGINEERING AT THE DISTRICT OFFICE

LEGEND

- OBLITERATE AC SURFACING
- REMOVE SURFACING
- COLD PLANE AC 0.15′ Max
- AMA — ARCHEOLOGICAL MONITORING AREA
- LOL1 — LAYOUT LINE
- (1) — ALTERNATIVE FLARED TERMINAL SYSTEM (AFTS)
- (2) LENGTH — MBGR

ABBREVIATION:

HMA - HOT MIX ASPHALT
HSSG - HIGH SIDE SUPER GUTTER
TOCG - TOP OF CUT GUTTER
D# - SIDE GUTTER

CURVE DATA

No.	R	Δ	T	L
(1)	3000.00′	3°51′49"	101.19′	202.30′
(2)	470.00′	41°52′36"	179.84′	343.52′

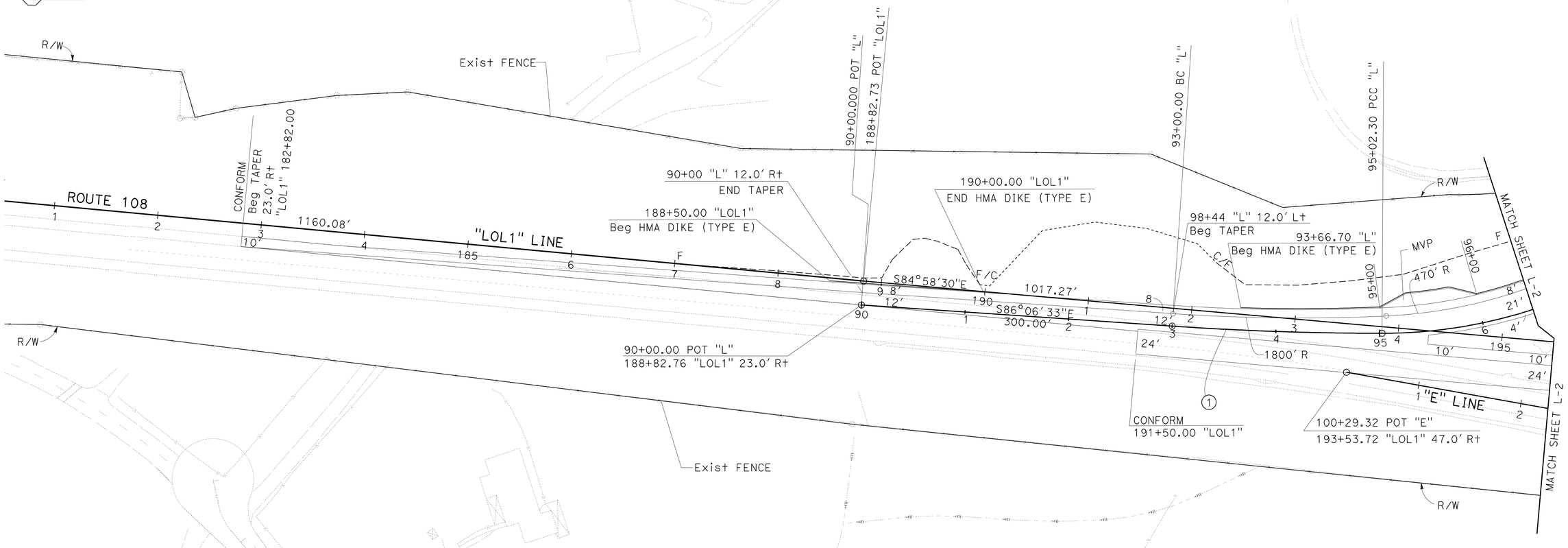

SCALE: 1" = 50′

LAYOUT L-1

STATE OF CALIFORNIA - DEPARTMENT OF TRANSPORTATION
Caltrans
06-DESIGN

FUNCTIONAL SUPERVISOR: TERRY OGLE
CALCULATED-DESIGNED BY: JORGE AGUILERA
CHECKED BY: KAL DAHER
REVISED BY
DATE REVISED

LAST REVISION 01-13-10 | DATE PLOTTED => 12-MAY-2010 | TIME PLOTTED => 11:30

BORDER LAST REVISED 4/11/2008
RELATIVE BORDER SCALE IS IN INCHES 0 1 2 3
USERNAME => trmikesl
DGN FILE => a34042ea001.dgn
CU 06228
EA 340421

Dist	COUNTY	ROUTE	POST MILES TOTAL PROJECT	SHEET No.	TOTAL SHEETS
10	Tuo	108	R4.0/R6.0	8	237

REGISTERED CIVIL ENGINEER 12-29-09 DATE

5-10-10
PLANS APPROVAL DATE

REGISTERED PROFESSIONAL ENGINEER KAL H. DAHER No. C44510 Exp. 3-31-10 CIVIL STATE OF CALIFORNIA

THE STATE OF CALIFORNIA OR ITS OFFICERS OR AGENTS SHALL NOT BE RESPONSIBLE FOR THE ACCURACY OR COMPLETENESS OF SCANNED COPIES OF THIS PLAN SHEET.

NOTE: FOR ACCURATE RIGHT OF WAY AND ACCESS DATA, CONTACT RIGHT OF WAY ENGINEERING AT THE DISTRICT OFFICE

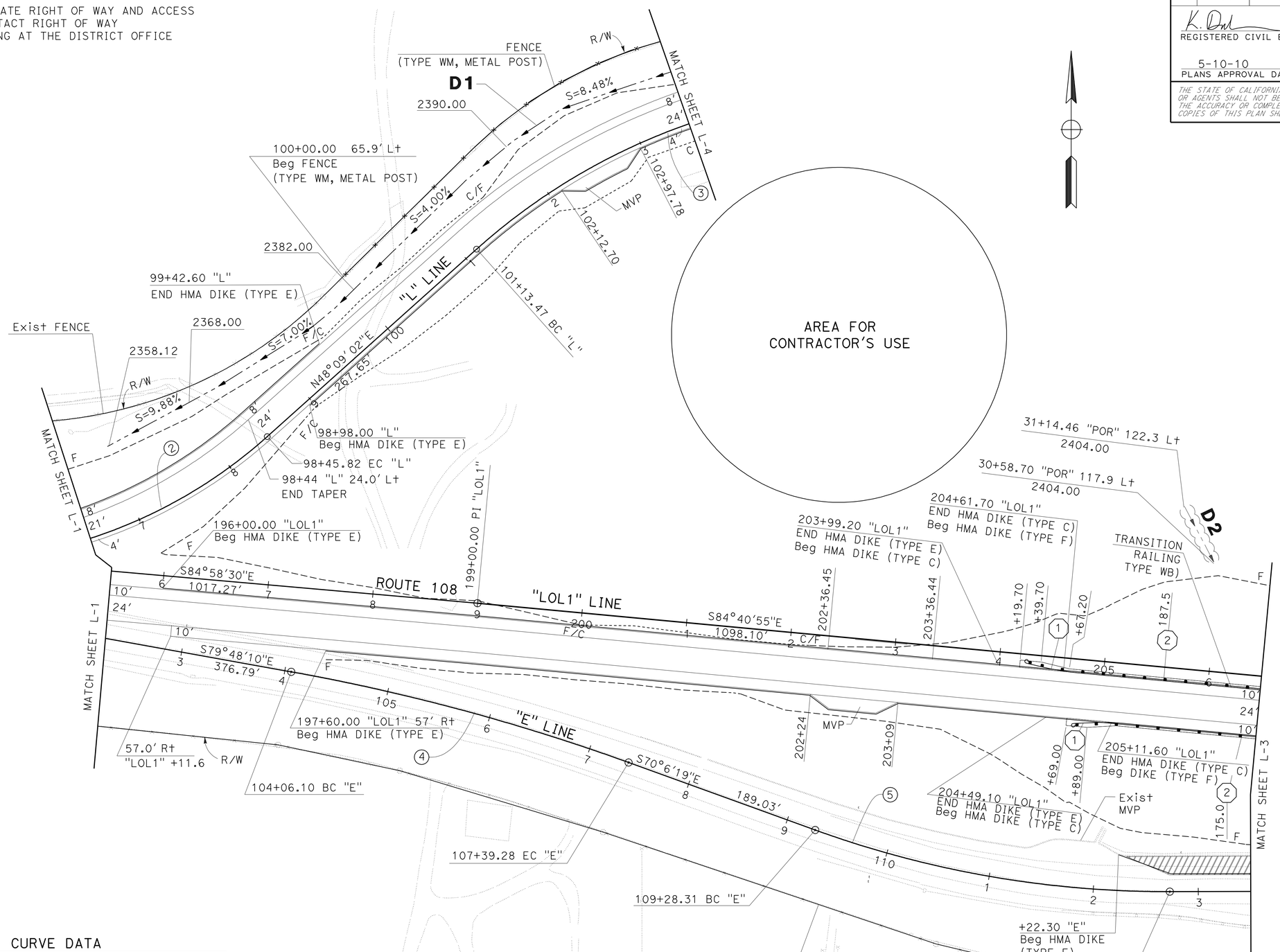

CURVE DATA

No.	R	Δ	T	L
2	470.00'	41°52'36"	179.84'	343.52'
3	600.00'	32°15'13"	173.49'	337.76'
4	1968.50'	09°41'51"	166.99'	333.18'
5	984.00'	20°03'51"	174.07'	344.58'

LAYOUT L-2

SCALE: 1" = 50'

STATE OF CALIFORNIA - DEPARTMENT OF TRANSPORTATION
Caltrans
06-DESIGN

FUNCTIONAL SUPERVISOR: TERRY OGLE
CALCULATED-DESIGNED BY: JORGE AGUILERA
CHECKED BY: KAL DAHER
REVISED BY
DATE REVISED

LAST REVISION 12-29-09
DATE PLOTTED => 12-MAY-2010
TIME PLOTTED => 11:30

Dist	COUNTY	ROUTE	POST MILES TOTAL PROJECT	SHEET No.	TOTAL SHEETS
10	Tuo	108	R4.0/R6.0	9	237

K. Daher 01-07-10
REGISTERED CIVIL ENGINEER DATE

5-10-10
PLANS APPROVAL DATE

REGISTERED PROFESSIONAL ENGINEER KAL H. DAHER No. C44510 Exp. 3-31-10 CIVIL STATE OF CALIFORNIA

THE STATE OF CALIFORNIA OR ITS OFFICERS OR AGENTS SHALL NOT BE RESPONSIBLE FOR THE ACCURACY OR COMPLETENESS OF SCANNED COPIES OF THIS PLAN SHEET.

NOTE: FOR ACCURATE RIGHT OF WAY AND ACCESS DATA, CONTACT RIGHT OF WAY ENGINEERING AT THE DISTRICT OFFICE

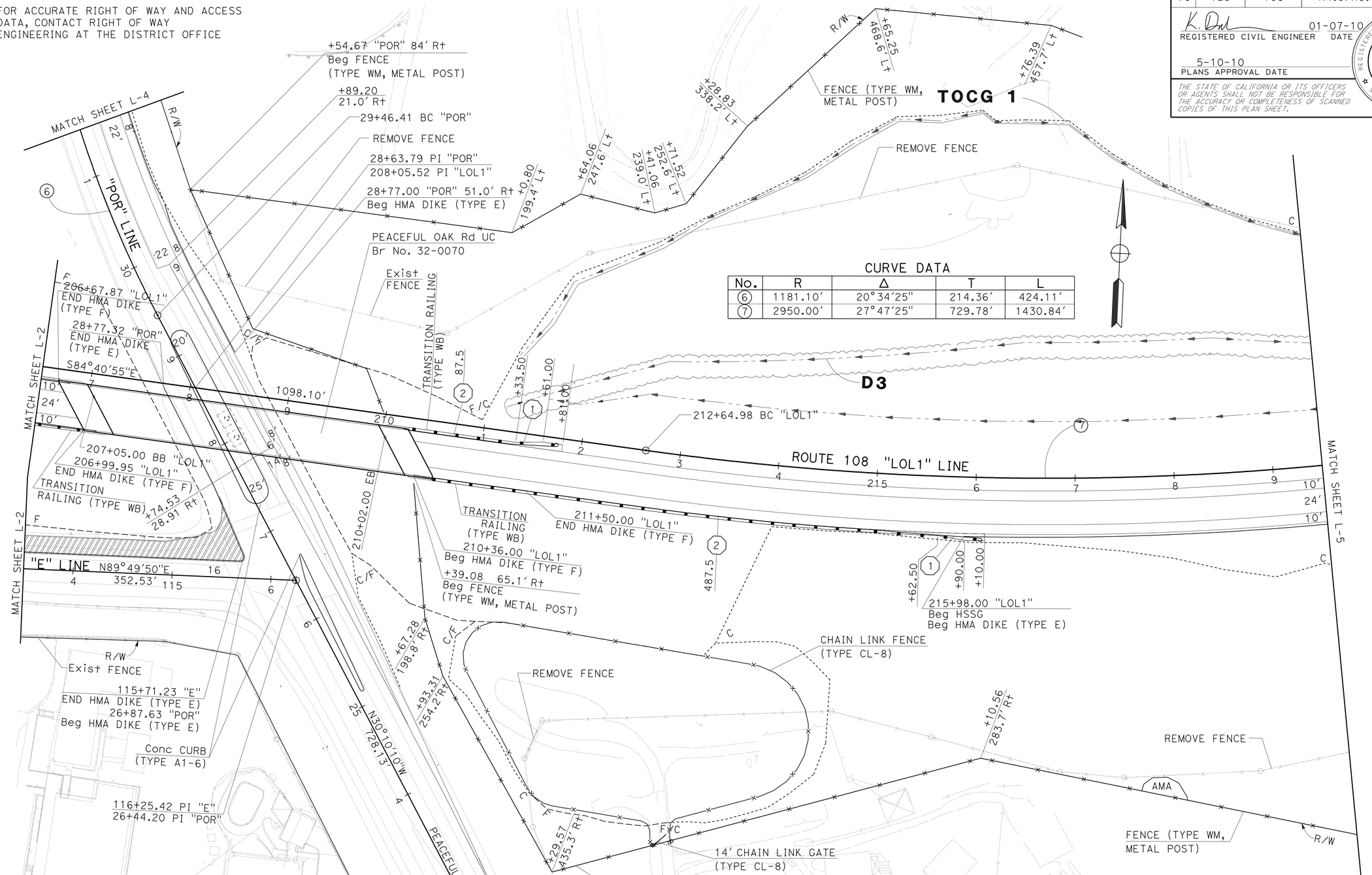

CURVE DATA

No.	R	Δ	T	L
6	1181.10'	20°34'25"	214.36'	424.11'
7	2950.00'	27°47'25"	729.78'	1430.84'

LAYOUT L-3

SCALE: 1" = 50'

STATE OF CALIFORNIA - DEPARTMENT OF TRANSPORTATION
06-DESIGN
Caltrans

FUNCTIONAL SUPERVISOR: TERRY OGLE
CALCULATED-DESIGNED BY: JORGE AGUILERA
CHECKED BY: KAL DAHER
REVISED BY
DATE REVISED

LAST REVISION 01-14-10
DATE PLOTTED => 12-MAY-2010
TIME PLOTTED => 11:30

BORDER LAST REVISED 4/11/2008
RELATIVE BORDER SCALE IS IN INCHES 0 1 2 3
USERNAME => trmikesl
DGN FILE => a34042ea003.dgn
CU 06228
EA 340421

Dist	COUNTY	ROUTE	POST MILES TOTAL PROJECT	SHEET No.	TOTAL SHEETS
10	Tuo	108	R4.0/R6.0	10	237

K. Daher 12-29-09
REGISTERED CIVIL ENGINEER DATE

5-10-10
PLANS APPROVAL DATE

REGISTERED PROFESSIONAL ENGINEER KAL H. DAHER No. C44510 Exp 3-31-10 CIVIL STATE OF CALIFORNIA

THE STATE OF CALIFORNIA OR ITS OFFICERS OR AGENTS SHALL NOT BE RESPONSIBLE FOR THE ACCURACY OR COMPLETENESS OF SCANNED COPIES OF THIS PLAN SHEET.

NOTE: FOR ACCURATE RIGHT OF WAY AND ACCESS DATA, CONTACT RIGHT OF WAY ENGINEERING AT THE DISTRICT OFFICE

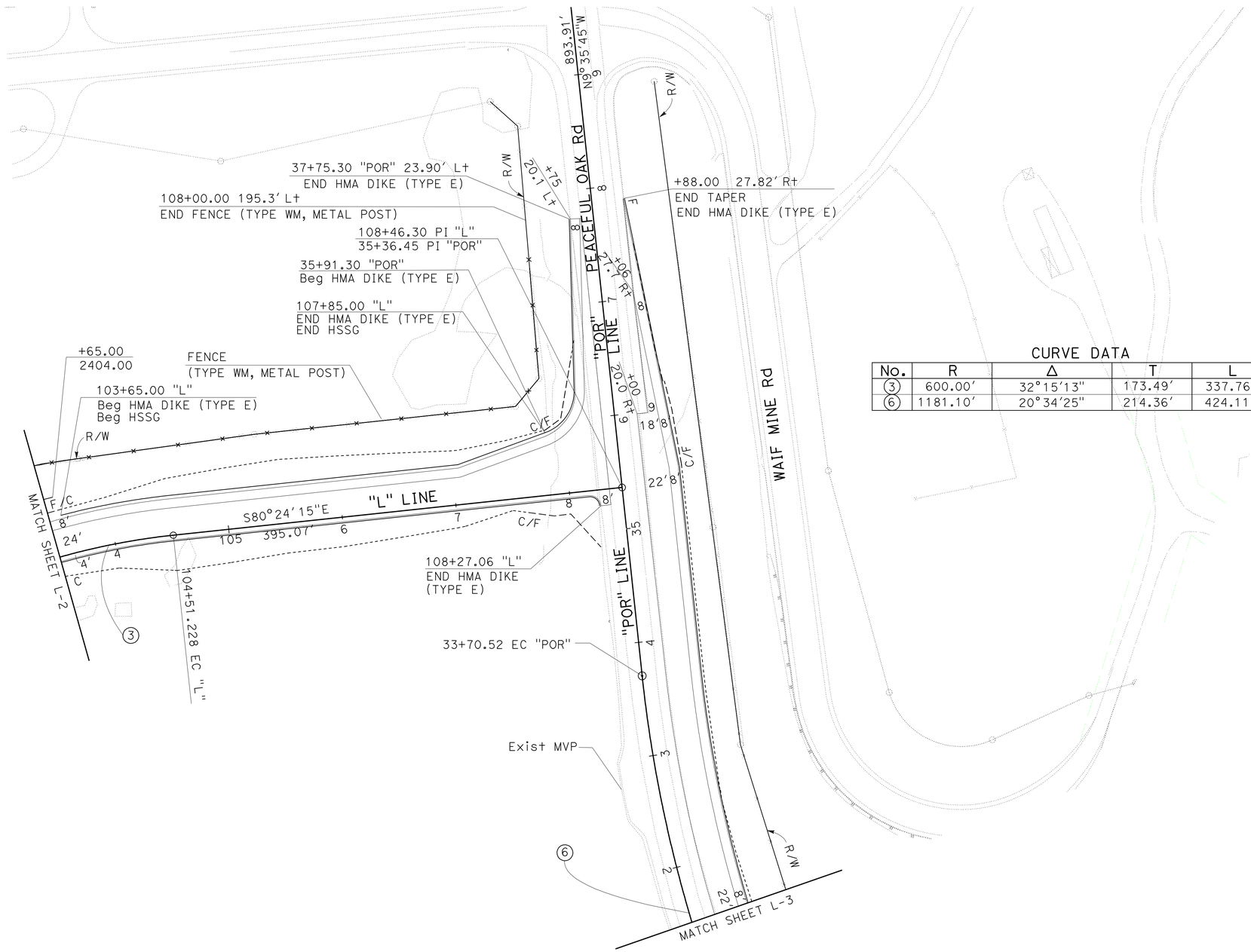

CURVE DATA

No.	R	Δ	T	L
3	600.00'	32°15'13"	173.49'	337.76'
6	1181.10'	20°34'25"	214.36'	424.11'

LAYOUT L-4

SCALE: 1" = 50'

STATE OF CALIFORNIA - DEPARTMENT OF TRANSPORTATION
Caltrans
06-DESIGN

FUNCTIONAL SUPERVISOR: TERRY OGLE
CALCULATED-DESIGNED BY: JORGE AGUILERA
CHECKED BY: KAL DAHER
REVISED BY
DATE REVISED

LAST REVISION 12-29-09 | DATE PLOTTED => 20-MAY-2010 | TIME PLOTTED => 09:54

Dist	COUNTY	ROUTE	POST MILES TOTAL PROJECT	SHEET No.	TOTAL SHEETS
10	Tuo	108	R4.0/R6.0	11	237

REGISTERED CIVIL ENGINEER 12-29-09 DATE

5-10-10
PLANS APPROVAL DATE

REGISTERED PROFESSIONAL ENGINEER KAL H. DAHER No. C44510 Exp. 3-31-10 CIVIL STATE OF CALIFORNIA

THE STATE OF CALIFORNIA OR ITS OFFICERS OR AGENTS SHALL NOT BE RESPONSIBLE FOR THE ACCURACY OR COMPLETENESS OF SCANNED COPIES OF THIS PLAN SHEET.

NOTE: FOR ACCURATE RIGHT OF WAY AND ACCESS DATA, CONTACT RIGHT OF WAY ENGINEERING AT THE DISTRICT OFFICE

CURVE DATA

No.	R	Δ	T	L
7	2950.00′	27°47′25″	729.78′	1430.84′
8	2950.00′	21°29′35″	559.89′	1106.61′

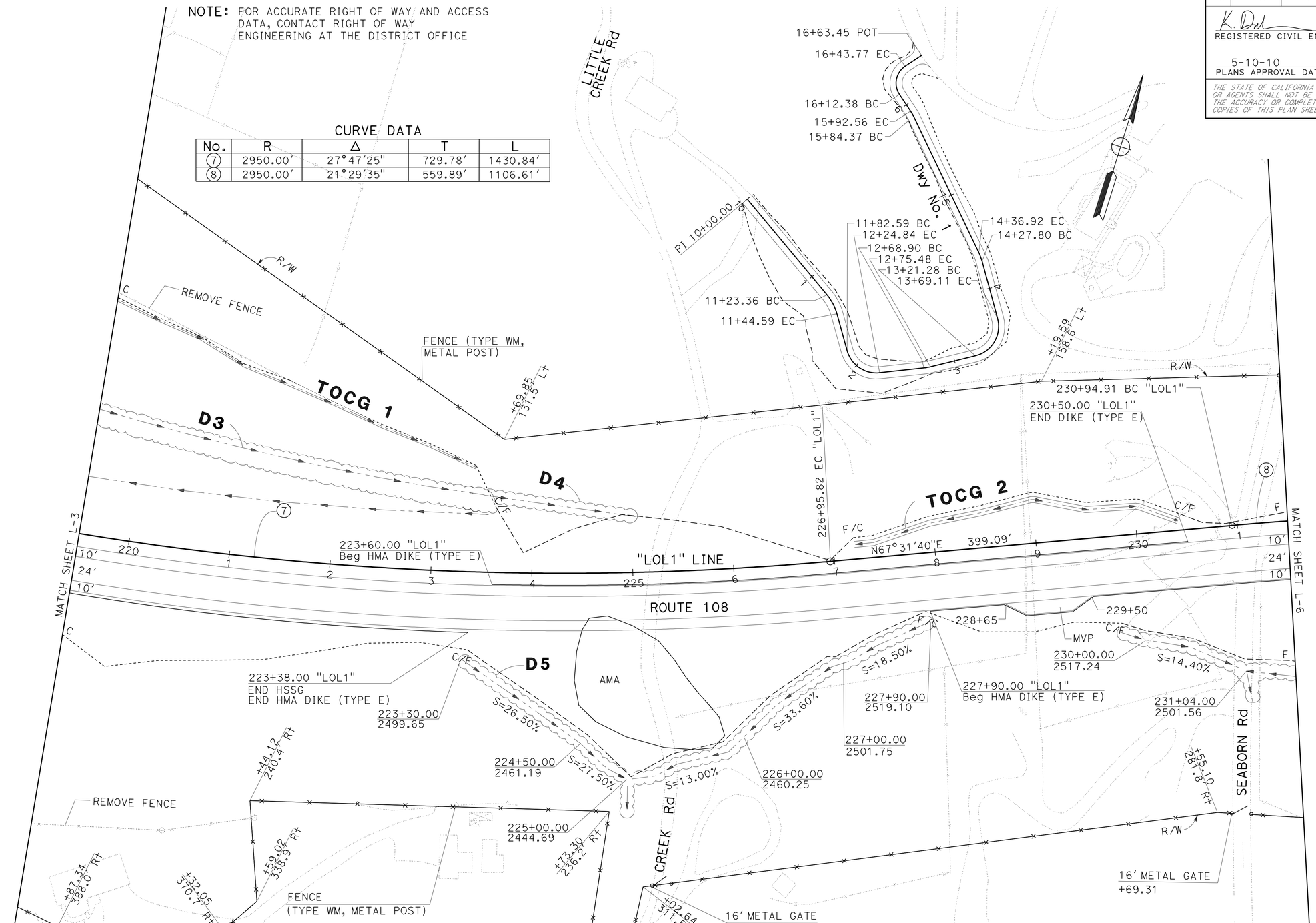

SCALE: 1" = 50′

LAYOUT L-5

STATE OF CALIFORNIA - DEPARTMENT OF TRANSPORTATION
Caltrans
06-DESIGN

FUNCTIONAL SUPERVISOR: TERRY OGLE
CALCULATED-DESIGNED BY: JORGE AGUILERA
CHECKED BY: KAL DAHER
REVISED BY
DATE REVISED

LAST REVISION 01-13-10
DATE PLOTTED => 12-MAY-2010
TIME PLOTTED => 11:30

Dist	COUNTY	ROUTE	POST MILES TOTAL PROJECT	SHEET No.	TOTAL SHEETS
10	Tuo	108	R4.0/R6.0	12	237

REGISTERED CIVIL ENGINEER 12-29-09 DATE

5-10-10
PLANS APPROVAL DATE

REGISTERED PROFESSIONAL ENGINEER KAL H. DAHER No. C44510 Exp. 3-31-10 CIVIL STATE OF CALIFORNIA

THE STATE OF CALIFORNIA OR ITS OFFICERS OR AGENTS SHALL NOT BE RESPONSIBLE FOR THE ACCURACY OR COMPLETENESS OF SCANNED COPIES OF THIS PLAN SHEET.

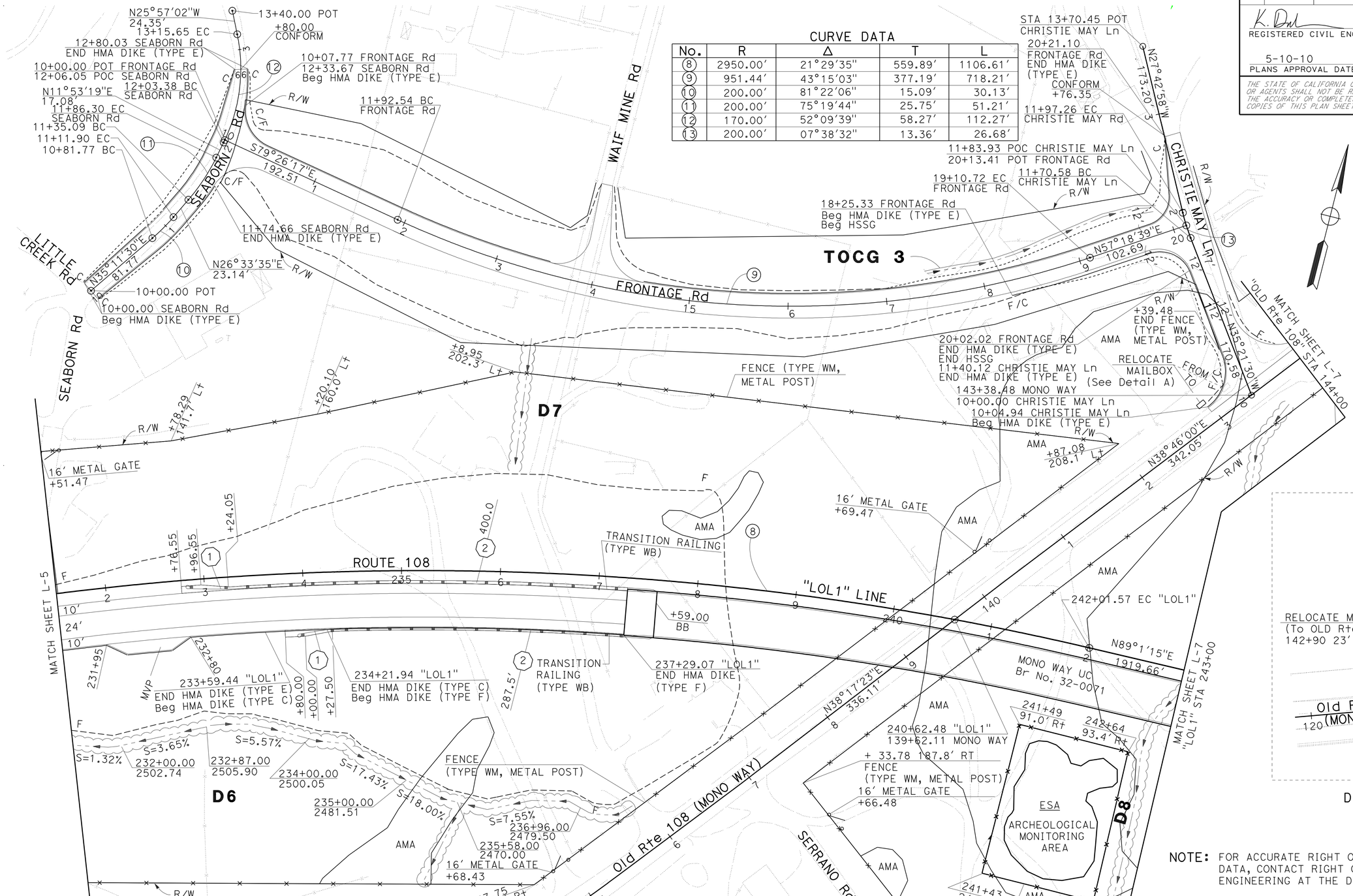

CURVE DATA

No.	R	Δ	T	L
8	2950.00'	21°29'35"	559.89'	1106.61'
9	951.44'	43°15'03"	377.19'	718.21'
10	200.00'	81°22'06"	15.09'	30.13'
11	200.00'	75°19'44"	25.75'	51.21'
12	170.00'	52°09'39"	58.27'	112.27'
13	200.00'	07°38'32"	13.36'	26.68'

NOTE: FOR ACCURATE RIGHT OF WAY AND ACCESS DATA, CONTACT RIGHT OF WAY ENGINEERING AT THE DISTRICT OFFICE

SCALE: 1" = 50'

LAYOUT L-6

STATE OF CALIFORNIA - DEPARTMENT OF TRANSPORTATION
Caltrans
06-DESIGN

FUNCTIONAL SUPERVISOR: TERRY OGLE
CALCULATED-DESIGNED BY: JORGE AGUILERA
CHECKED BY: KAL DAHER
REVISED BY
DATE REVISED

LAST REVISION 01-14-10
DATE PLOTTED => 12-MAY-2010
TIME PLOTTED => 11:30

Dist	COUNTY	ROUTE	POST MILES TOTAL PROJECT	SHEET No.	TOTAL SHEETS
10	Tuo	108	R4.0/R6.0	13	237

K. Daher 12-29-09
REGISTERED CIVIL ENGINEER DATE

5-10-10
PLANS APPROVAL DATE

REGISTERED PROFESSIONAL ENGINEER KAL H. DAHER No. C44510 Exp. 3-31-10 CIVIL STATE OF CALIFORNIA

THE STATE OF CALIFORNIA OR ITS OFFICERS OR AGENTS SHALL NOT BE RESPONSIBLE FOR THE ACCURACY OR COMPLETENESS OF SCANNED COPIES OF THIS PLAN SHEET.

NOTE: FOR ACCURATE RIGHT OF WAY AND ACCESS DATA, CONTACT RIGHT OF WAY ENGINEERING AT THE DISTRICT OFFICE

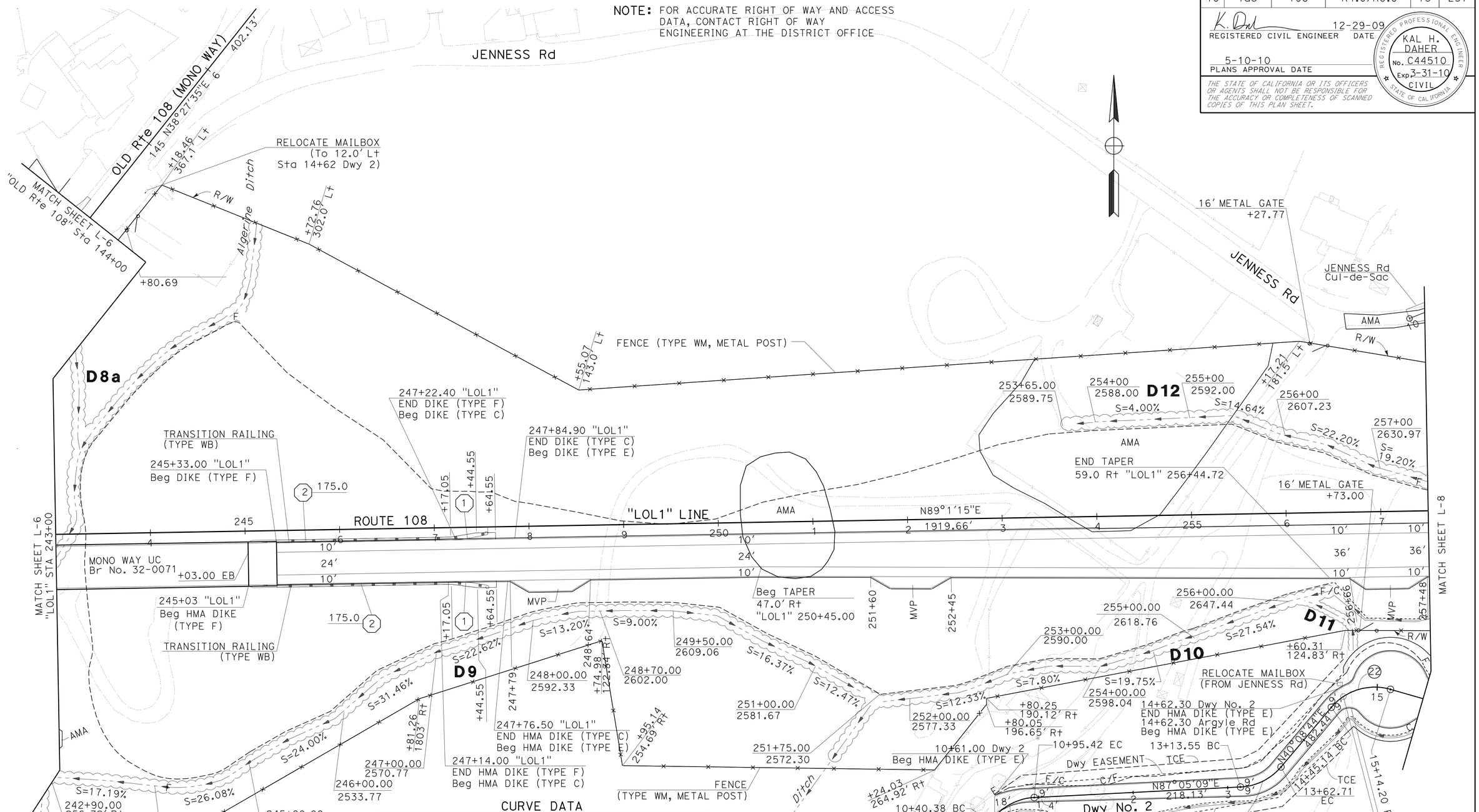

CURVE DATA

No.	R	Δ	T	L
20	60.00'	52°33'41"	29.63'	55.04'
21	60.00'	46°56'25"	26.05'	49.16'
22	60.00'	65°56'53"	38.93'	69.06'

LAYOUT L-7

SCALE: 1" = 50'

REVISED BY	DATE REVISED

CALCULATED-DESIGNED BY	CHECKED BY
JORGE AGUILERA	KAL DAHER

FUNCTIONAL SUPERVISOR: TERRY OGLE

STATE OF CALIFORNIA - DEPARTMENT OF TRANSPORTATION
06-DESIGN

LAST REVISION 01-13-10 | DATE PLOTTED => 12-MAY-2010 | TIME PLOTTED => 11:31

Dist	COUNTY	ROUTE	POST MILES TOTAL PROJECT	SHEET No.	TOTAL SHEETS
10	Tuo	108	R4.0/R6.0	14	237

REGISTERED CIVIL ENGINEER 12-29-09 DATE

5-10-10
PLANS APPROVAL DATE

REGISTERED PROFESSIONAL ENGINEER KAL H. DAHER No. C44510 Exp. 3-31-10 CIVIL STATE OF CALIFORNIA

THE STATE OF CALIFORNIA OR ITS OFFICERS OR AGENTS SHALL NOT BE RESPONSIBLE FOR THE ACCURACY OR COMPLETENESS OF SCANNED COPIES OF THIS PLAN SHEET.

NOTE: FOR ACCURATE RIGHT OF WAY AND ACCESS DATA, CONTACT RIGHT OF WAY ENGINEERING AT THE DISTRICT OFFICE

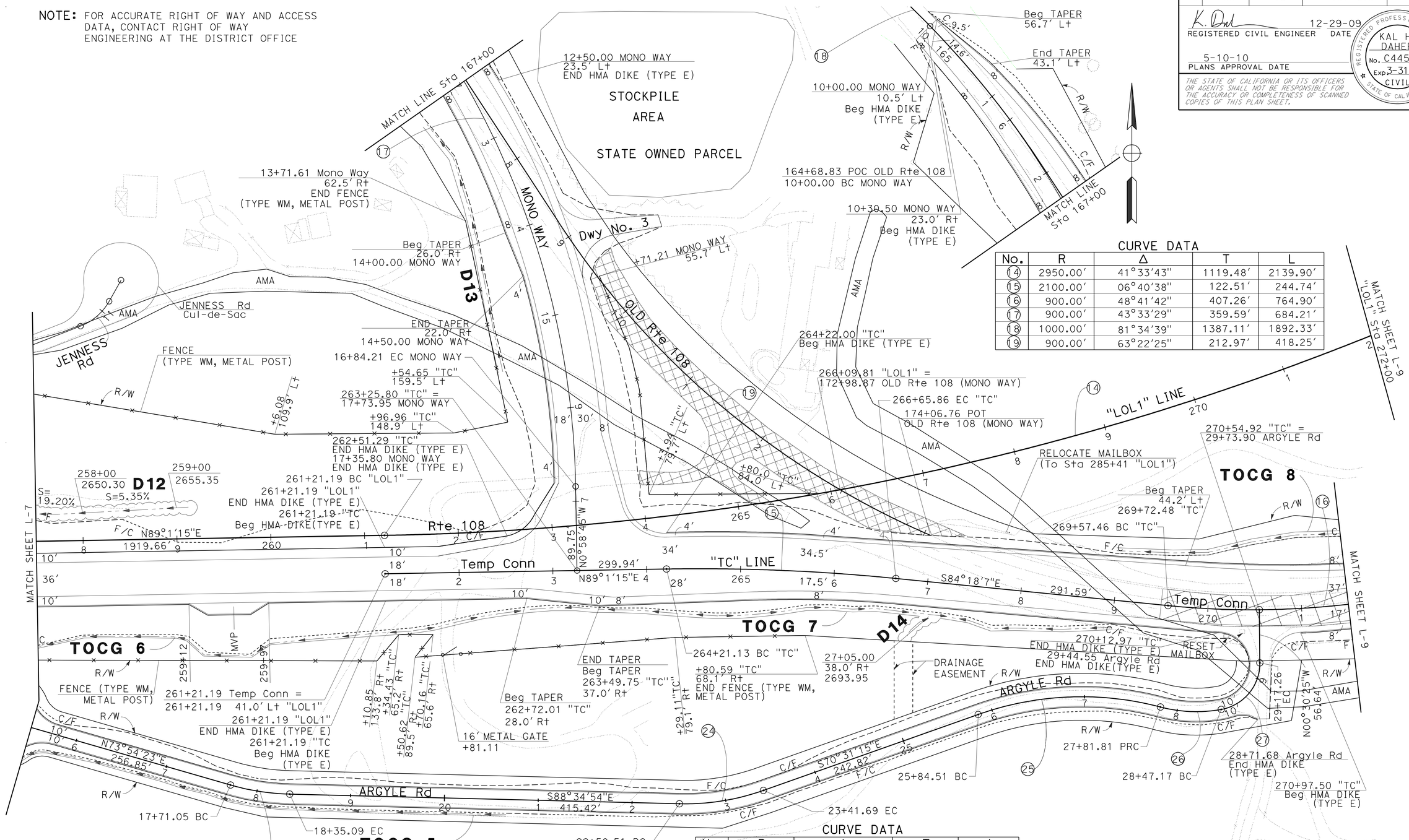

CURVE DATA

No.	R	Δ	T	L
14	2950.00'	41°33'43"	1119.48'	2139.90'
15	2100.00'	06°40'38"	122.51'	244.74'
16	900.00'	48°41'42"	407.26'	764.90'
17	900.00'	43°33'29"	359.59'	684.21'
18	1000.00'	81°34'39"	1387.11'	1892.33'
19	900.00'	63°22'25"	212.97'	418.25'

CURVE DATA

No.	R	Δ	T	L
23	250.00'	14°40'31"	32.19'	64.03'
24	250.00'	20°53'51"	46.10'	91.18'
25	330.00'	34°15'18"	101.69'	197.29'
26	150.00'	24°58'04"	33.21'	65.36'
27	50.00'	80°18'55"	42.19'	70.09'

SCALE: 1" = 50'

LAYOUT L-8

STATE OF CALIFORNIA - DEPARTMENT OF TRANSPORTATION
Caltrans
06-DESIGN

FUNCTIONAL SUPERVISOR: TERRY OGLE
CALCULATED-DESIGNED BY: JORGE AGUILERA
CHECKED BY: KAL DAHER
REVISED BY
DATE REVISED

LAST REVISION 01-13-10
DATE PLOTTED => 12-MAY-2010
TIME PLOTTED => 11:31

Dist	COUNTY	ROUTE	POST MILES TOTAL PROJECT	SHEET No.	TOTAL SHEETS
10	Tuo	108	R4.0/R6.0	15	237

K. Daher 12-29-09
REGISTERED CIVIL ENGINEER DATE

5-10-10
PLANS APPROVAL DATE

REGISTERED PROFESSIONAL ENGINEER
KAL H. DAHER
No. C44510
Exp. 3-31-10
CIVIL
STATE OF CALIFORNIA

THE STATE OF CALIFORNIA OR ITS OFFICERS OR AGENTS SHALL NOT BE RESPONSIBLE FOR THE ACCURACY OR COMPLETENESS OF SCANNED COPIES OF THIS PLAN SHEET.

NOTE: FOR ACCURATE RIGHT OF WAY AND ACCESS DATA, CONTACT RIGHT OF WAY ENGINEERING AT THE DISTRICT OFFICE

AMA

CURVE DATA

No.	R	Δ	T	L
14	2950.00′	41°33′43"	1119.48′	2139.90′
16	900.00′	48°41′42"	407.26′	764.90′

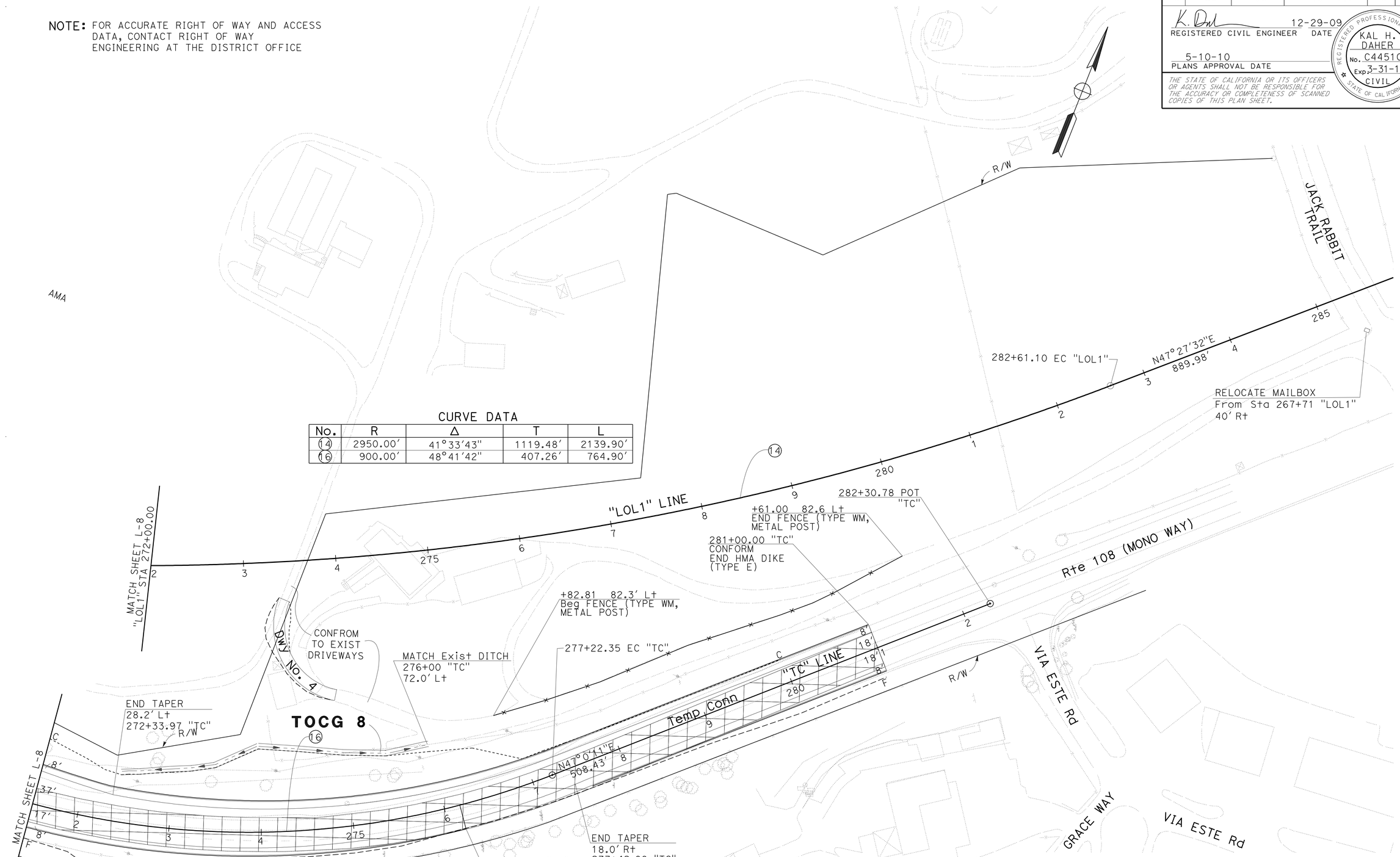

LAYOUT L-9

SCALE: 1" = 50′

STATE OF CALIFORNIA - DEPARTMENT OF TRANSPORTATION
Caltrans
06-DESIGN

FUNCTIONAL SUPERVISOR: TERRY OGLE
CALCULATED-DESIGNED BY: JORGE AGUILERA
CHECKED BY: KAL DAHER
REVISED BY
DATE REVISED

LAST REVISION 12-29-09
DATE PLOTTED => 12-MAY-2010
TIME PLOTTED => 11:31

Dist	COUNTY	ROUTE	POST MILES TOTAL PROJECT	SHEET No.	TOTAL SHEETS
10	Tuo	108	R4.0/R6.0	16	237

REGISTERED CIVIL ENGINEER 11-09-09 DATE

5-10-10
PLANS APPROVAL DATE

REGISTERED PROFESSIONAL ENGINEER
KAL H. DAHER
No. C44510
Exp. 3-31-10
CIVIL
STATE OF CALIFORNIA

THE STATE OF CALIFORNIA OR ITS OFFICERS OR AGENTS SHALL NOT BE RESPONSIBLE FOR THE ACCURACY OR COMPLETENESS OF SCANNED COPIES OF THIS PLAN SHEET.

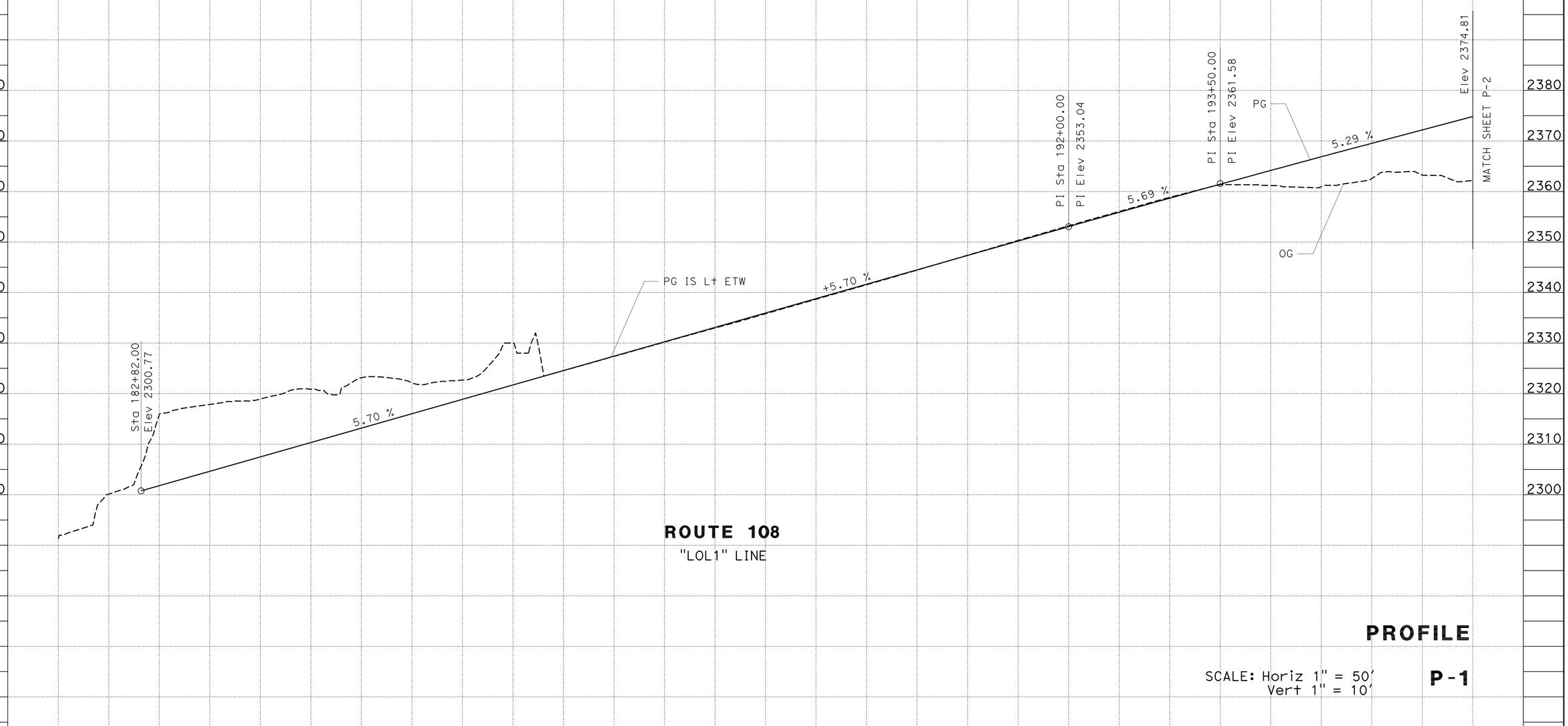

ROUTE 108
"LOL1" LINE

PROFILE

SCALE: Horiz 1" = 50'
Vert 1" = 10'

P-1

STATE OF CALIFORNIA - DEPARTMENT OF TRANSPORTATION
Caltrans
06-DESIGN

FUNCTIONAL SUPERVISOR: TERRY OGLE
CALCULATED-DESIGNED BY: JORGE AGUILERA
CHECKED BY: KAL DAHER
REVISED BY
DATE REVISED

LAST REVISION 01-04-10
DATE PLOTTED => 11-MAY-2010
TIME PLOTTED => 15:15

BORDER LAST REVISED 4/11/2008
RELATIVE BORDER SCALE IS IN INCHES 0 1 2 3
USERNAME => s135318
DGN FILE => a34042fa001.dgn
CU 06228
EA 340421

Dist	COUNTY	ROUTE	POST MILES TOTAL PROJECT	SHEET No.	TOTAL SHEETS
10	Tuo	108	R4.0/R6.0	17	237

K. Daher 01-04-10
REGISTERED CIVIL ENGINEER DATE

5-10-10
PLANS APPROVAL DATE

REGISTERED PROFESSIONAL ENGINEER
KAL H. DAHER
No. C44510
Exp. 3-31-10
CIVIL
STATE OF CALIFORNIA

THE STATE OF CALIFORNIA OR ITS OFFICERS OR AGENTS SHALL NOT BE RESPONSIBLE FOR THE ACCURACY OR COMPLETENESS OF SCANNED COPIES OF THIS PLAN SHEET.

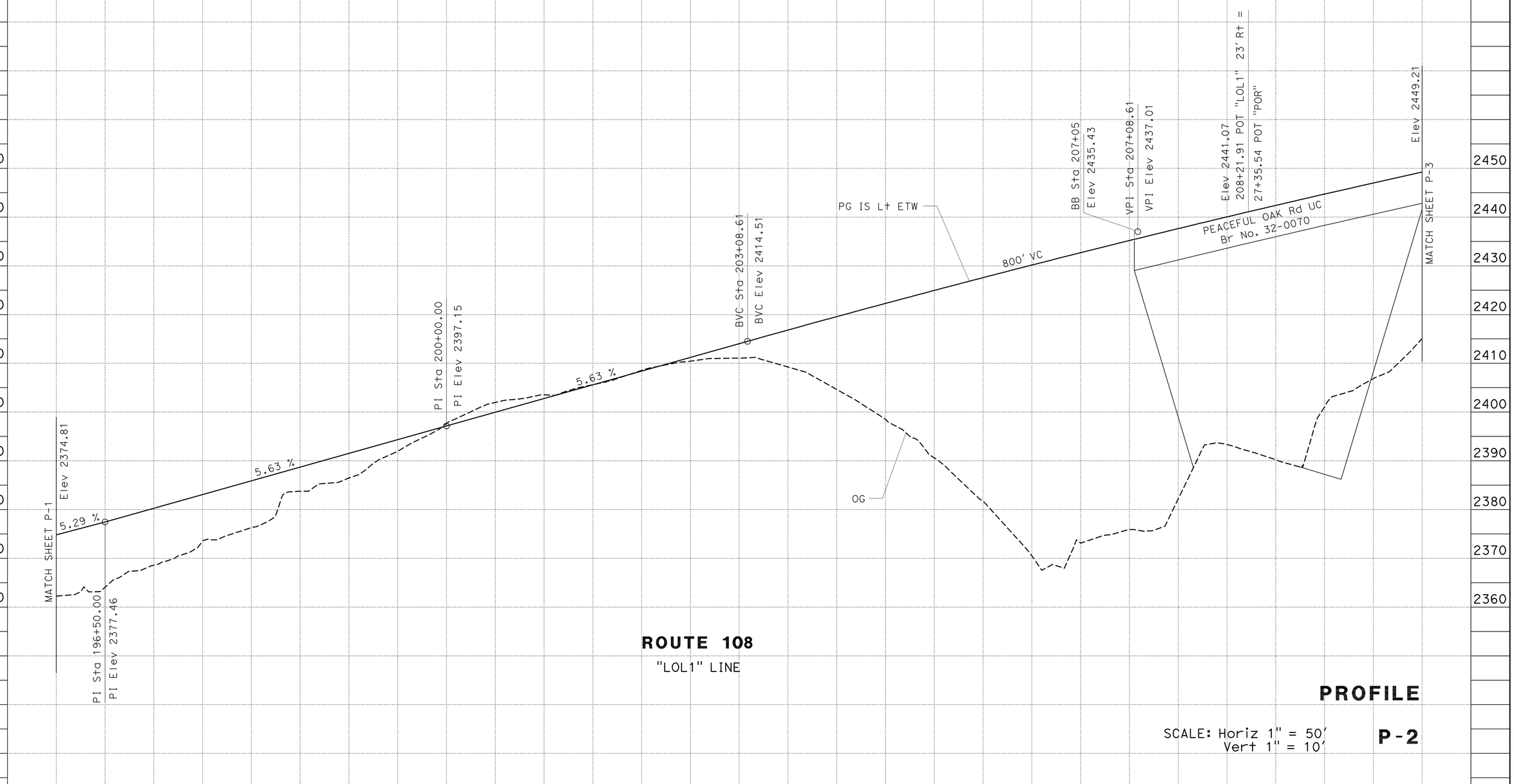

ROUTE 108

"LOL1" LINE

PROFILE

SCALE: Horiz 1" = 50'
Vert 1" = 10'

P-2

STATION	196	197	198	199	200	201	202	203	204	205	206	207	208	209	210	TOTAL
CY Exc	1,080													0		1,080
CY Emb	87,266													3,391		90,657

STATE OF CALIFORNIA - DEPARTMENT OF TRANSPORTATION
Caltrans
06-DESIGN

FUNCTIONAL SUPERVISOR: TERRY OGLE
CALCULATED-DESIGNED BY: JORGE AGUILERA
CHECKED BY: KAL DAHER
REVISED BY
DATE REVISED

LAST REVISION 01-04-10
DATE PLOTTED => 11-MAY-2010
TIME PLOTTED => 15:15

Dist	COUNTY	ROUTE	POST MILES TOTAL PROJECT	SHEET No.	TOTAL SHEETS
10	Tuo	108	R4.0/R6.0	18	237

REGISTERED CIVIL ENGINEER 01-04-10 DATE

5-10-10
PLANS APPROVAL DATE

REGISTERED PROFESSIONAL ENGINEER
KAL H. DAHER
No. C44510
Exp. 3-31-10
CIVIL
STATE OF CALIFORNIA

THE STATE OF CALIFORNIA OR ITS OFFICERS OR AGENTS SHALL NOT BE RESPONSIBLE FOR THE ACCURACY OR COMPLETENESS OF SCANNED COPIES OF THIS PLAN SHEET.

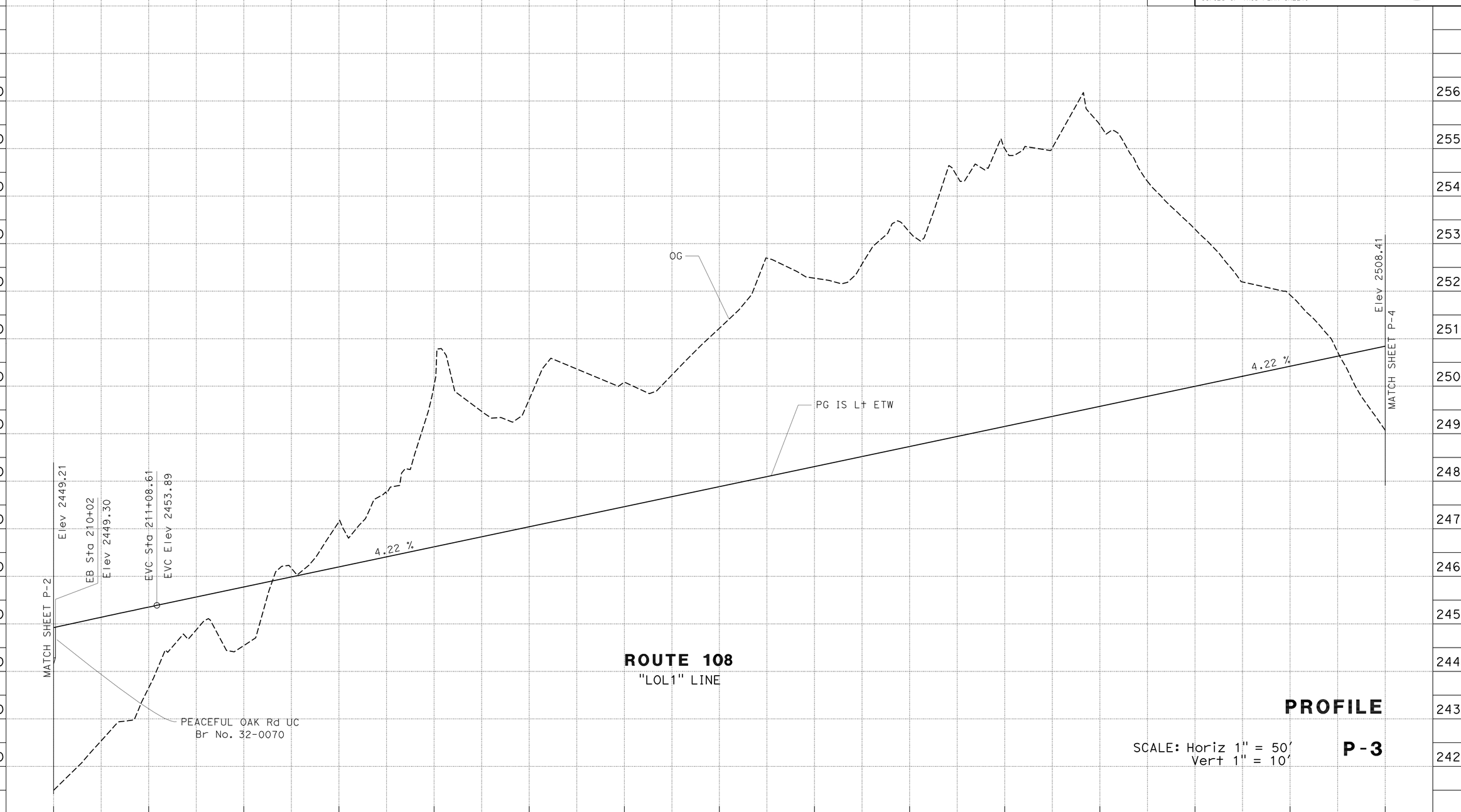

REVISED BY
DATE REVISED

JORGE AGUILERA
KAL DAHER

CALCULATED-DESIGNED BY
CHECKED BY

FUNCTIONAL SUPERVISOR
TERRY OGLE

STATE OF CALIFORNIA - DEPARTMENT OF TRANSPORTATION
06-DESIGN
Caltrans

DATE PLOTTED => 11-MAY-2010
TIME PLOTTED => 15:15
LAST REVISION 01-04-10

Dist	COUNTY	ROUTE	POST MILES TOTAL PROJECT	SHEET No.	TOTAL SHEETS
10	Tuo	108	R4.0/R6.0	19	237

REGISTERED CIVIL ENGINEER 01-04-10 DATE

5-10-10
PLANS APPROVAL DATE

REGISTERED PROFESSIONAL ENGINEER
KAL H. DAHER
No. C44510
Exp. 3-31-10
CIVIL
STATE OF CALIFORNIA

THE STATE OF CALIFORNIA OR ITS OFFICERS OR AGENTS SHALL NOT BE RESPONSIBLE FOR THE ACCURACY OR COMPLETENESS OF SCANNED COPIES OF THIS PLAN SHEET.

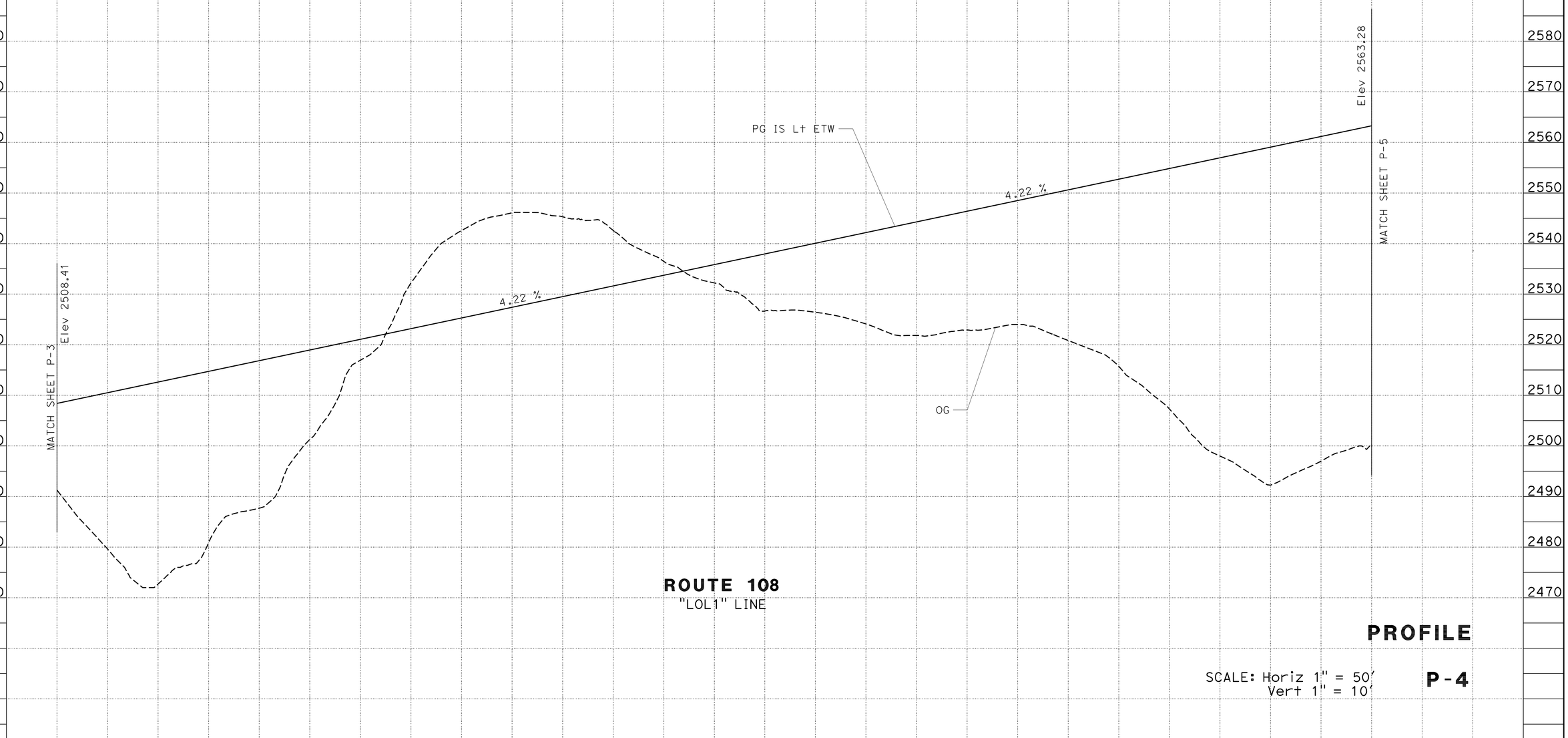

REVISED BY
DATE REVISED

JORGE AGUILERA
KAL DAHER

CALCULATED-DESIGNED BY
CHECKED BY

FUNCTIONAL SUPERVISOR
TERRY OGLE

STATE OF CALIFORNIA - DEPARTMENT OF TRANSPORTATION
06-DESIGN
Caltrans

LAST REVISION 01-04-10
DATE PLOTTED => 11-MAY-2010
TIME PLOTTED => 15:15

Dist	COUNTY	ROUTE	POST MILES TOTAL PROJECT	SHEET No.	TOTAL SHEETS
10	Tuo	108	R4.0/R6.0	20	237

K. Daher 01-04-10
REGISTERED CIVIL ENGINEER DATE

5-10-10
PLANS APPROVAL DATE

REGISTERED PROFESSIONAL ENGINEER
KAL H. DAHER
No. C44510
Exp. 3-31-10
CIVIL
STATE OF CALIFORNIA

THE STATE OF CALIFORNIA OR ITS OFFICERS OR AGENTS SHALL NOT BE RESPONSIBLE FOR THE ACCURACY OR COMPLETENESS OF SCANNED COPIES OF THIS PLAN SHEET.

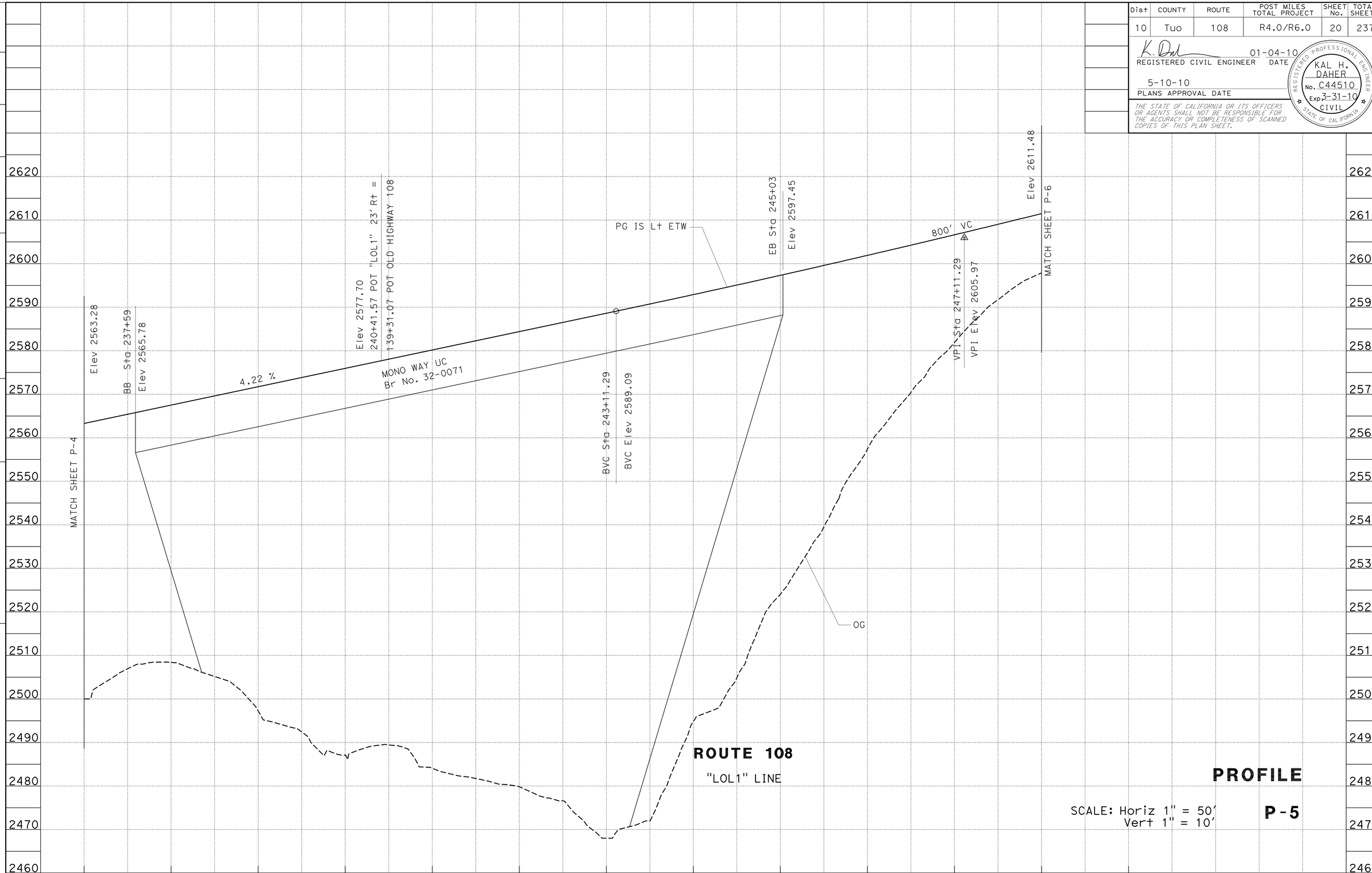

STATION		237	238	239	240	241	242	243	244	245	246	247	248	249	TOTAL
CY	Exc	0							1,089						1,100
	Emb	35,806							105,826						141,632

STATE OF CALIFORNIA - DEPARTMENT OF TRANSPORTATION
Caltrans
06-DESIGN

FUNCTIONAL SUPERVISOR: TERRY OGLE
CALCULATED-DESIGNED BY: JORGE AGUILERA
CHECKED BY: KAL DAHER
REVISED BY
DATE REVISED

LAST REVISION 01-11-10
DATE PLOTTED => 11-MAY-2010
TIME PLOTTED => 15:15

Dist	COUNTY	ROUTE	POST MILES TOTAL PROJECT	SHEET No.	TOTAL SHEETS
10	Tuo	108	R4.0/R6.0	21	237

REGISTERED CIVIL ENGINEER 01-04-10 DATE

5-10-10
PLANS APPROVAL DATE

REGISTERED PROFESSIONAL ENGINEER
KAL H. DAHER
No. C44510
Exp. 3-31-10
CIVIL
STATE OF CALIFORNIA

THE STATE OF CALIFORNIA OR ITS OFFICERS OR AGENTS SHALL NOT BE RESPONSIBLE FOR THE ACCURACY OR COMPLETENESS OF SCANNED COPIES OF THIS PLAN SHEET.

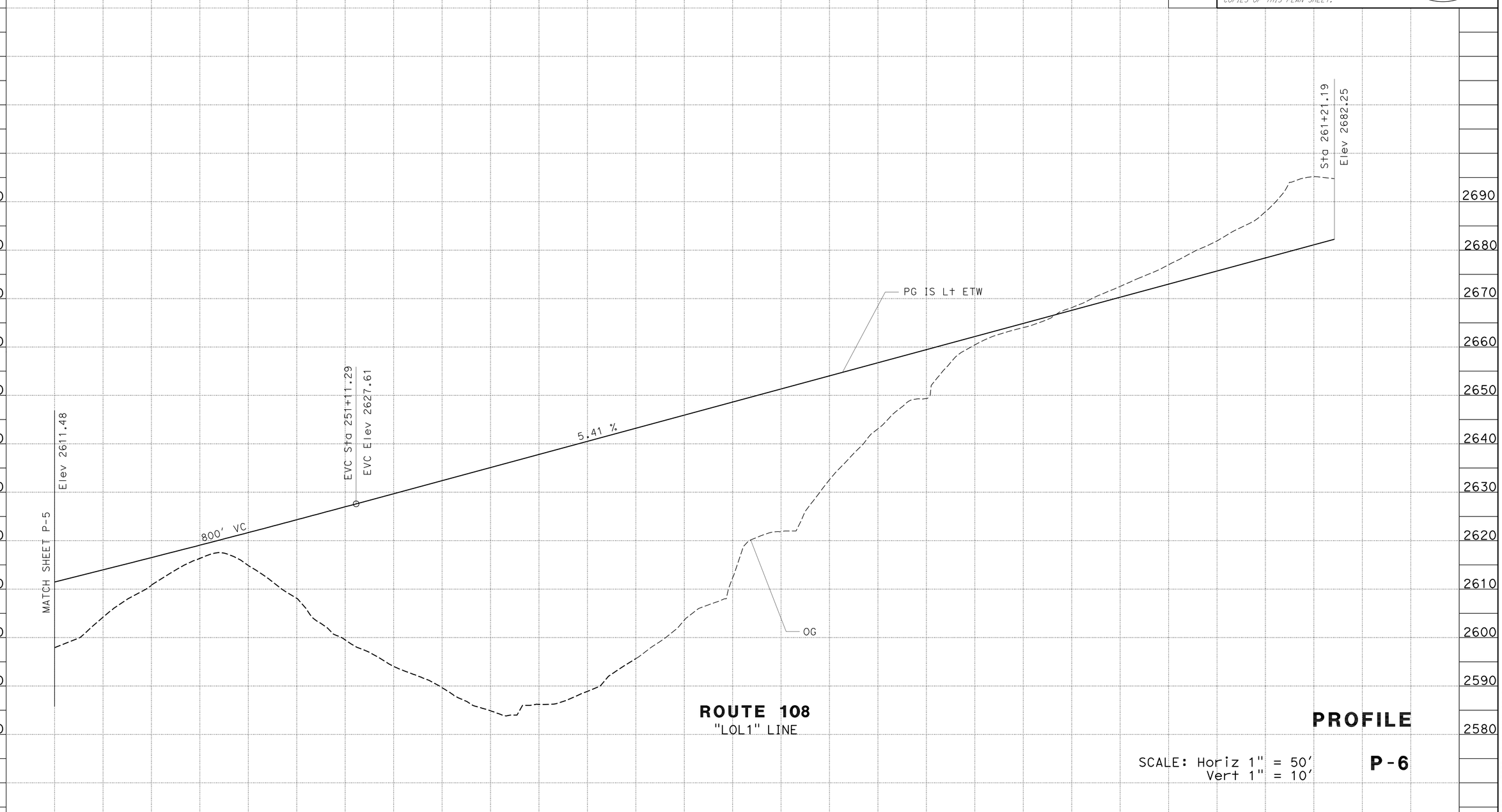

ROUTE 108
"LOL1" LINE

PROFILE

SCALE: Horiz 1" = 50'
Vert 1" = 10'

P-6

CY		
Exc	15,219	
Emb	84,537	

STATE OF CALIFORNIA - DEPARTMENT OF TRANSPORTATION
Caltrans®
06-DESIGN

FUNCTIONAL SUPERVISOR: TERRY OGLE
CALCULATED-DESIGNED BY: JORGE AGUILERA
CHECKED BY: KAL DAHER
REVISED BY
DATE REVISED

LAST REVISION 01-11-10
DATE PLOTTED => 11-MAY-2010
TIME PLOTTED => 15:15

Dist	COUNTY	ROUTE	POST MILES TOTAL PROJECT	SHEET No.	TOTAL SHEETS
10	Tuo	108	R4.0/R6.0	22	237

K. Daher 01-04-10
REGISTERED CIVIL ENGINEER DATE

5-10-10
PLANS APPROVAL DATE

REGISTERED PROFESSIONAL ENGINEER KAL H. DAHER No. C44510 Exp. 3-31-10 CIVIL STATE OF CALIFORNIA

THE STATE OF CALIFORNIA OR ITS OFFICERS OR AGENTS SHALL NOT BE RESPONSIBLE FOR THE ACCURACY OR COMPLETENESS OF SCANNED COPIES OF THIS PLAN SHEET.

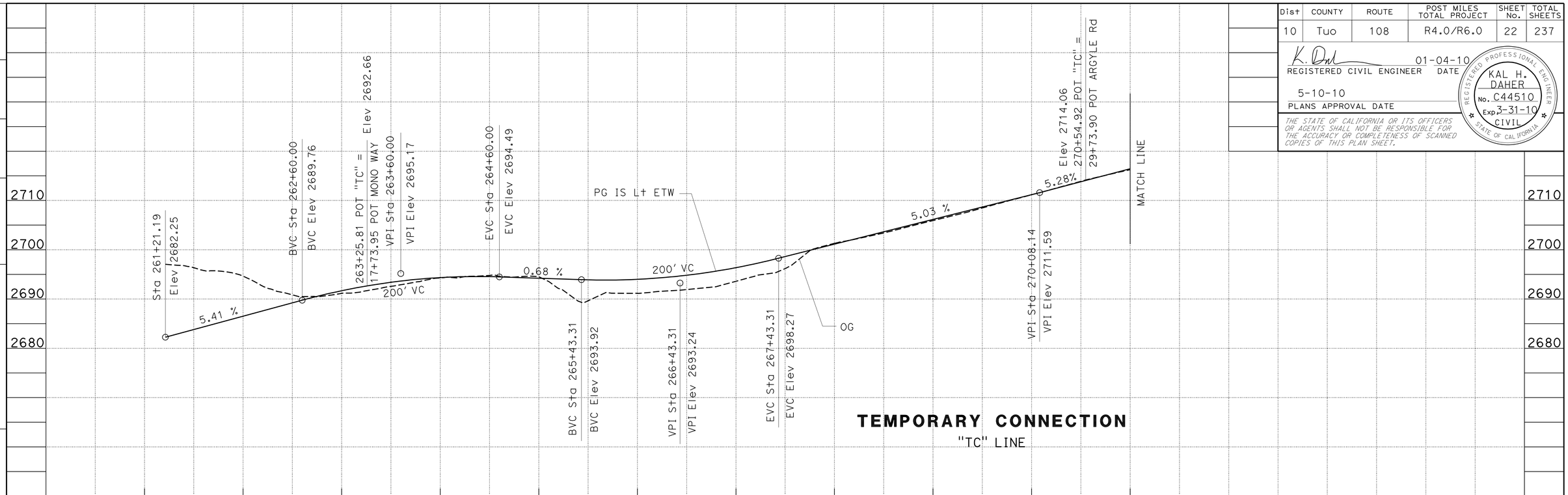

TEMPORARY CONNECTION
"TC" LINE

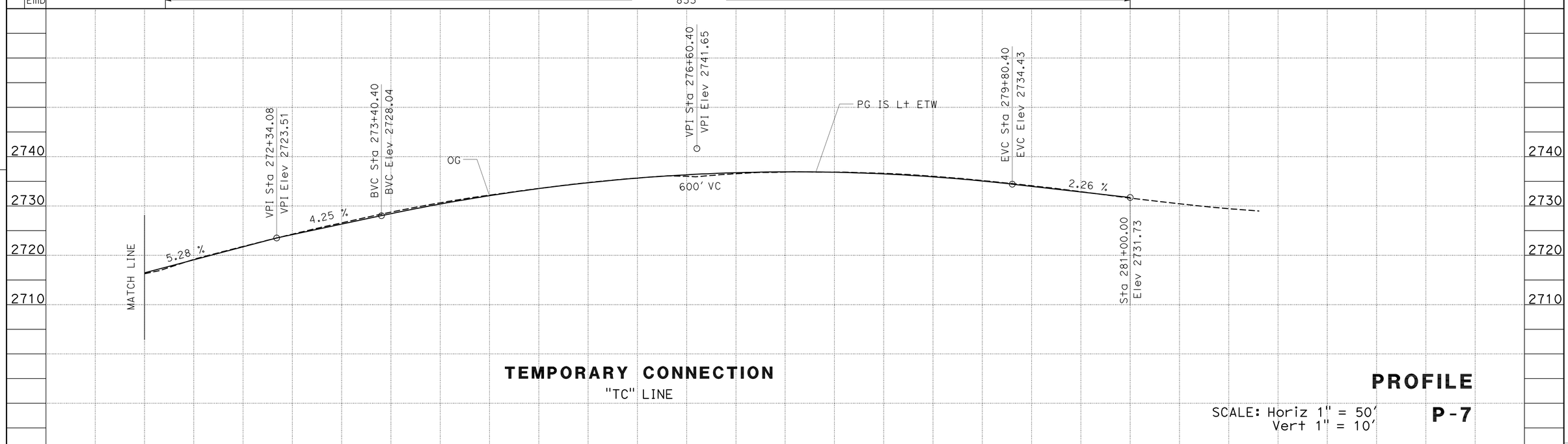

TEMPORARY CONNECTION
"TC" LINE

PROFILE

SCALE: Horiz 1" = 50'
Vert 1" = 10'

P-7

STATE OF CALIFORNIA - DEPARTMENT OF TRANSPORTATION
06-DESIGN
Caltrans

FUNCTIONAL SUPERVISOR: TERRY OGLE
CALCULATED-DESIGNED BY: JORGE AGUILERA
CHECKED BY: KAL DAHER
REVISED BY
DATE REVISED

LAST REVISION 01-04-10
DATE PLOTTED => 11-MAY-2010
TIME PLOTTED => 15:15

Dist	COUNTY	ROUTE	POST MILES TOTAL PROJECT	SHEET No.	TOTAL SHEETS
10	Tuo	108	R4.0/R6.0	23	237

REGISTERED CIVIL ENGINEER 01-04-10 DATE

5-10-10
PLANS APPROVAL DATE

REGISTERED PROFESSIONAL ENGINEER
KAL H. DAHER
No. C44510
Exp. 3-31-10
CIVIL
STATE OF CALIFORNIA

THE STATE OF CALIFORNIA OR ITS OFFICERS OR AGENTS SHALL NOT BE RESPONSIBLE FOR THE ACCURACY OR COMPLETENESS OF SCANNED COPIES OF THIS PLAN SHEET.

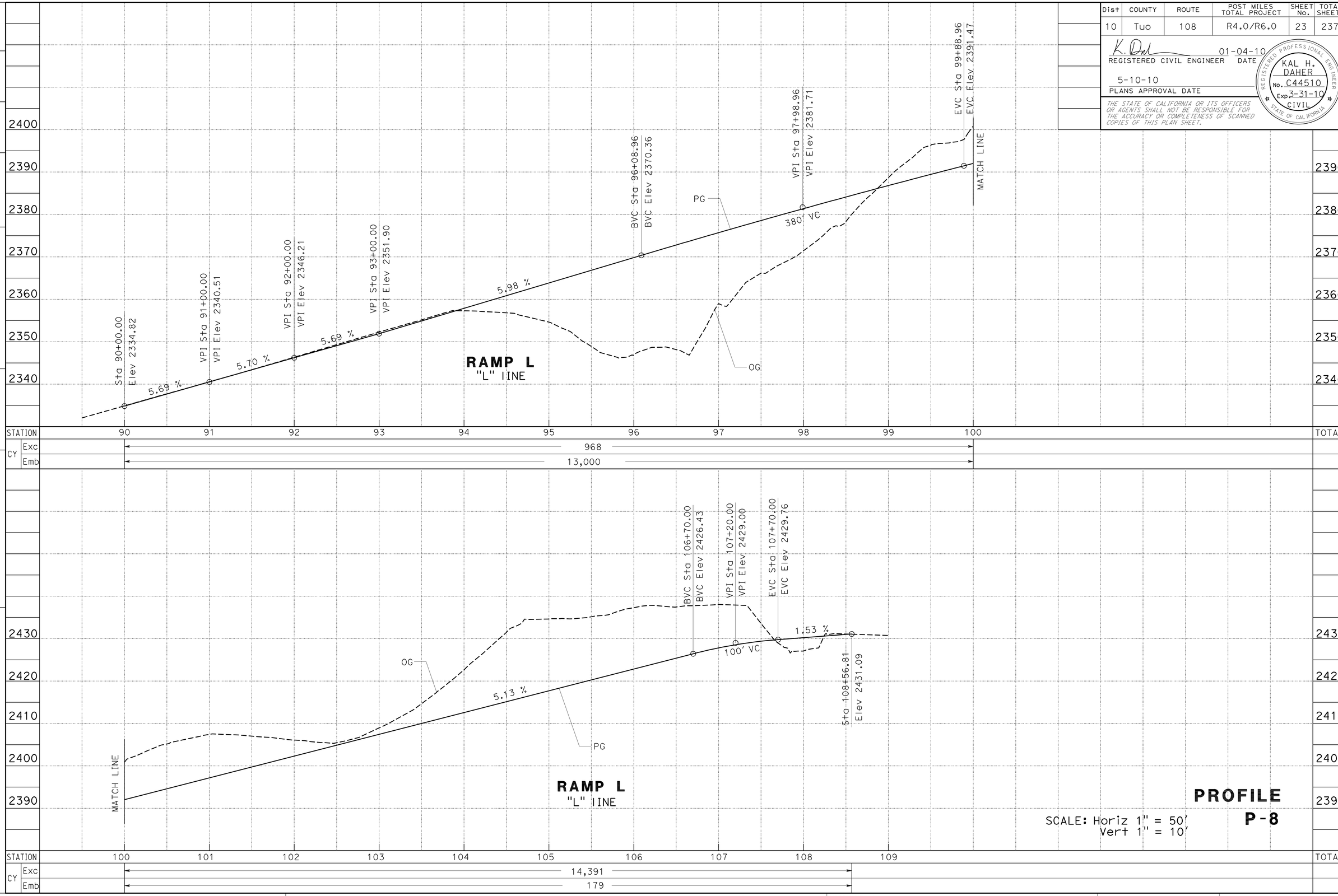

STATE OF CALIFORNIA - DEPARTMENT OF TRANSPORTATION
06-DESIGN
Caltrans

FUNCTIONAL SUPERVISOR: TERRY OGLE
CALCULATED-DESIGNED BY: JORGE AGUILERA
CHECKED BY: KAL DAHER
REVISED BY
DATE REVISED

LAST REVISION 01-04-10
DATE PLOTTED => 11-MAY-2010
TIME PLOTTED => 15:15

Dist	COUNTY	ROUTE	POST MILES TOTAL PROJECT	SHEET No.	TOTAL SHEETS
10	Tuo	108	R4.0/R6.0	24	237

K. Daher 01-04-10
REGISTERED CIVIL ENGINEER DATE

5-10-10
PLANS APPROVAL DATE

REGISTERED PROFESSIONAL ENGINEER
KAL H. DAHER
No. C44510
Exp. 3-31-10
CIVIL
STATE OF CALIFORNIA

THE STATE OF CALIFORNIA OR ITS OFFICERS OR AGENTS SHALL NOT BE RESPONSIBLE FOR THE ACCURACY OR COMPLETENESS OF SCANNED COPIES OF THIS PLAN SHEET.

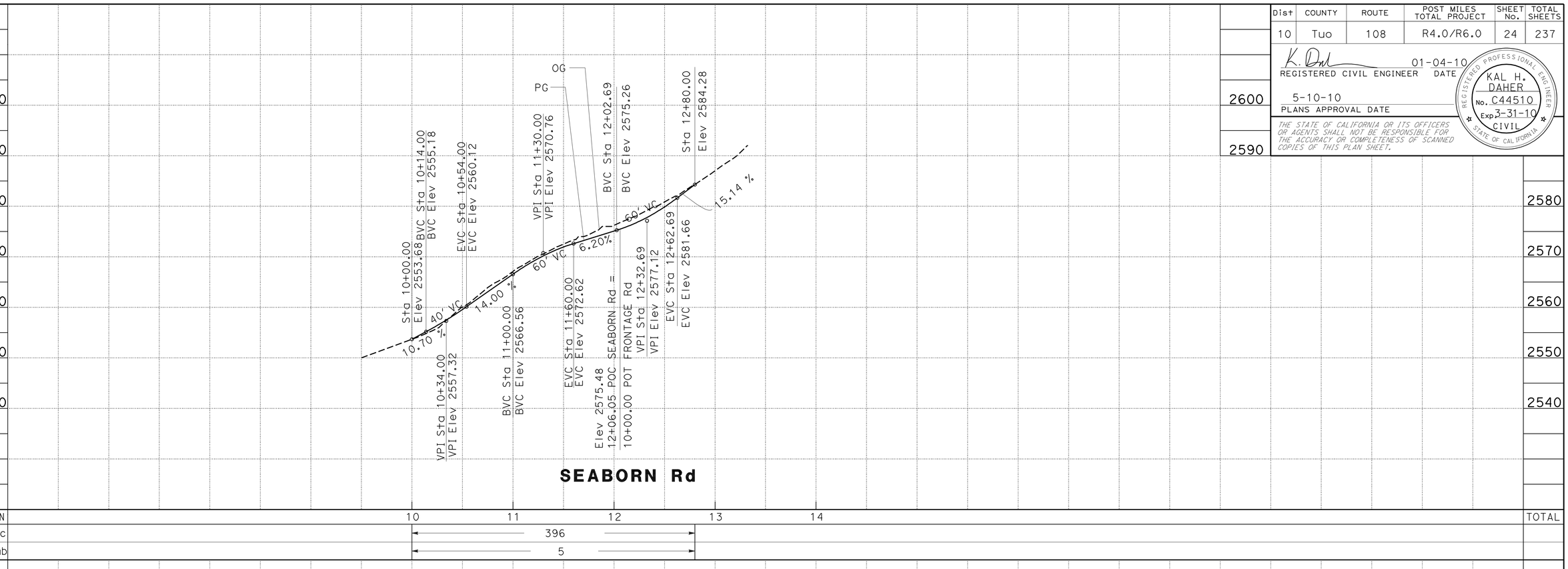

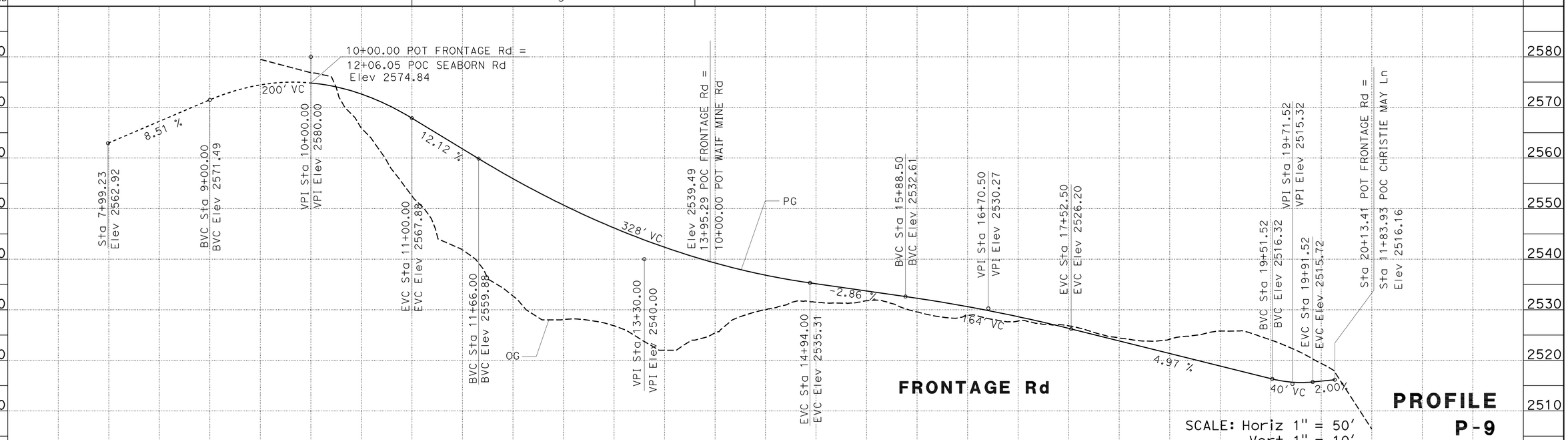

PROFILE
P-9

REVISED BY	
DATE REVISED	
CALCULATED-DESIGNED BY	JORGE AGUILERA
CHECKED BY	KAL DAHER
FUNCTIONAL SUPERVISOR	TERRY OGLE

STATE OF CALIFORNIA - DEPARTMENT OF TRANSPORTATION
Caltrans®
06-DESIGN

LAST REVISION 01-11-10 | DATE PLOTTED => 11-MAY-2010 | TIME PLOTTED => 15:16

Dist	COUNTY	ROUTE	POST MILES TOTAL PROJECT	SHEET No.	TOTAL SHEETS
10	Tuo	108	R4.0/R6.0	25	237

K. Daher 01-04-10
REGISTERED CIVIL ENGINEER DATE

5-10-10
PLANS APPROVAL DATE

REGISTERED PROFESSIONAL ENGINEER KAL H. DAHER No. C44510 Exp. 3-31-10 CIVIL STATE OF CALIFORNIA

THE STATE OF CALIFORNIA OR ITS OFFICERS OR AGENTS SHALL NOT BE RESPONSIBLE FOR THE ACCURACY OR COMPLETENESS OF SCANNED COPIES OF THIS PLAN SHEET.

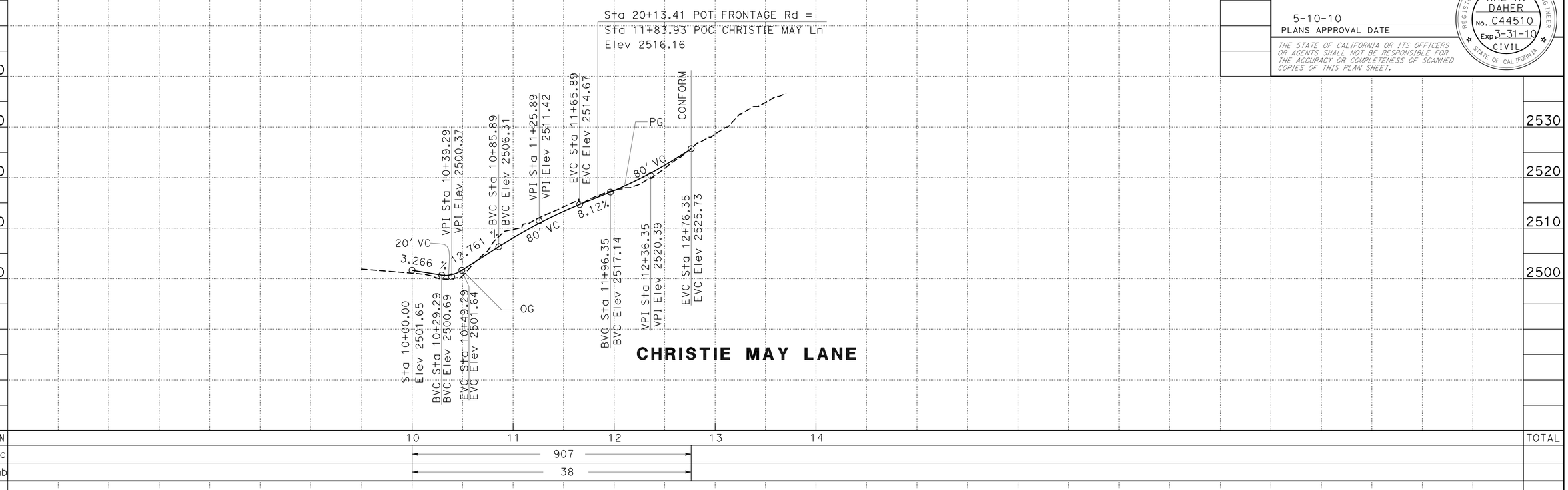

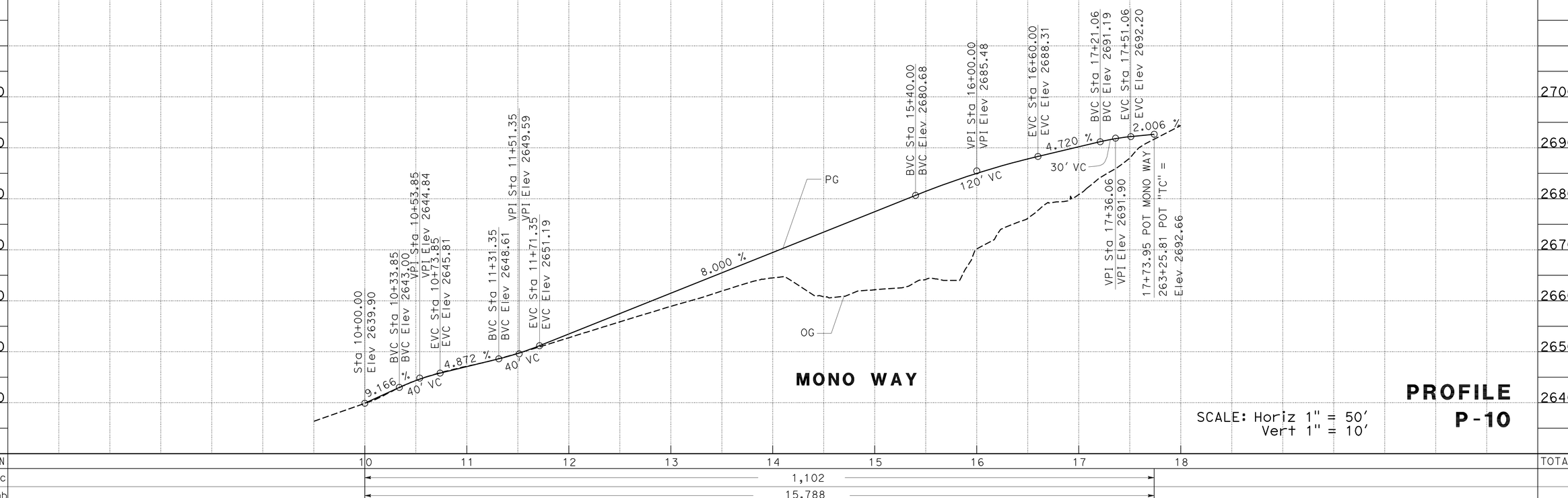

SCALE: Horiz 1" = 50'
Vert 1" = 10'

PROFILE
P-10

REVISED BY	
DATE REVISED	
CALCULATED-DESIGNED BY	JORGE AGUILERA
CHECKED BY	KAL DAHER
FUNCTIONAL SUPERVISOR	TERRY OGLE

STATE OF CALIFORNIA - DEPARTMENT OF TRANSPORTATION
Caltrans®
06-DESIGN

LAST REVISION 01-11-10
DATE PLOTTED => 11-MAY-2010
TIME PLOTTED => 15:16

Dist	COUNTY	ROUTE	POST MILES TOTAL PROJECT	SHEET No.	TOTAL SHEETS
10	Tuo	108	R4.0/R6.0	26	237

REGISTERED CIVIL ENGINEER 01-04-10 DATE

5-10-10
PLANS APPROVAL DATE

REGISTERED PROFESSIONAL ENGINEER KAL H. DAHER No. C44510 Exp. 3-31-10 CIVIL STATE OF CALIFORNIA

THE STATE OF CALIFORNIA OR ITS OFFICERS OR AGENTS SHALL NOT BE RESPONSIBLE FOR THE ACCURACY OR COMPLETENESS OF SCANNED COPIES OF THIS PLAN SHEET.

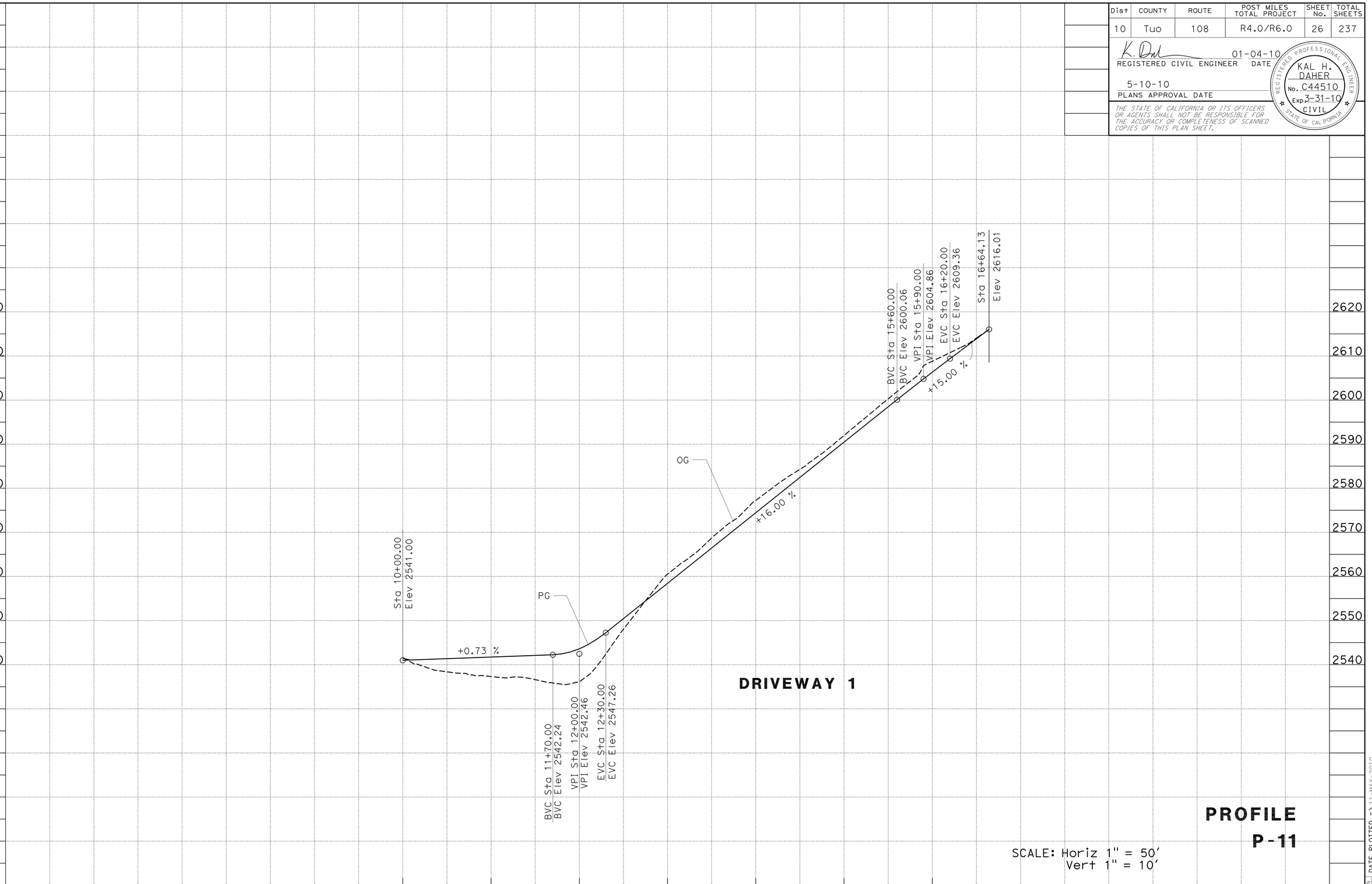

PROFILE

P-11

SCALE: Horiz 1" = 50'
Vert 1" = 10'

STATE OF CALIFORNIA - DEPARTMENT OF TRANSPORTATION
Caltrans
06-DESIGN

FUNCTIONAL SUPERVISOR: TERRY OGLE
CALCULATED-DESIGNED BY: JORGE AGUILERA
CHECKED BY: KAL DAHER
REVISED BY
DATE REVISED

LAST REVISION DATE PLOTTED => 11-MAY-2010
TIME PLOTTED => 15:16
01-04-10

BORDER LAST REVISED 4/11/2008
RElevATIVE BORDER SCALE IS IN INCHES 0 1 2 3
USERNAME => s135318
DGN FILE => a34042fa011.dgn
CU 06228
EA 340421

Dist	COUNTY	ROUTE	POST MILES TOTAL PROJECT	SHEET No.	TOTAL SHEETS
10	Tuo	108	R4.0/R6.0	27	237

K. Daher 01-04-10
REGISTERED CIVIL ENGINEER DATE

5-10-10
PLANS APPROVAL DATE

REGISTERED PROFESSIONAL ENGINEER KAL H. DAHER No. C44510 Exp. 3-31-10 CIVIL STATE OF CALIFORNIA

THE STATE OF CALIFORNIA OR ITS OFFICERS OR AGENTS SHALL NOT BE RESPONSIBLE FOR THE ACCURACY OR COMPLETENESS OF SCANNED COPIES OF THIS PLAN SHEET.

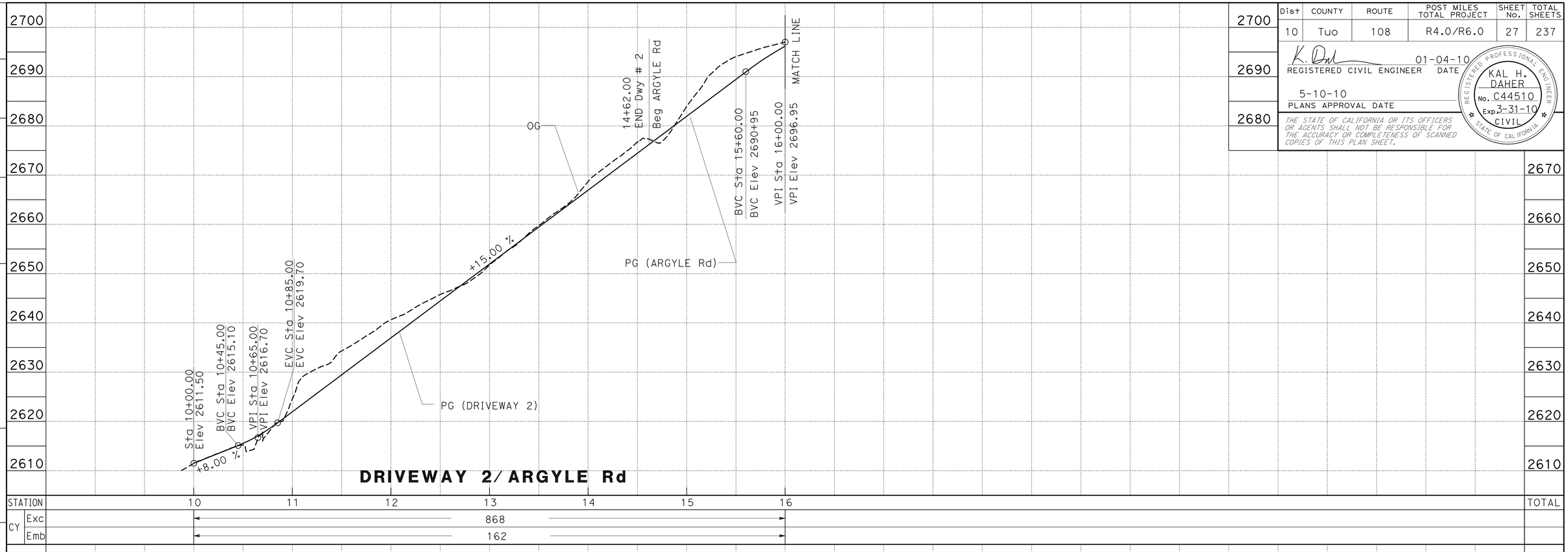

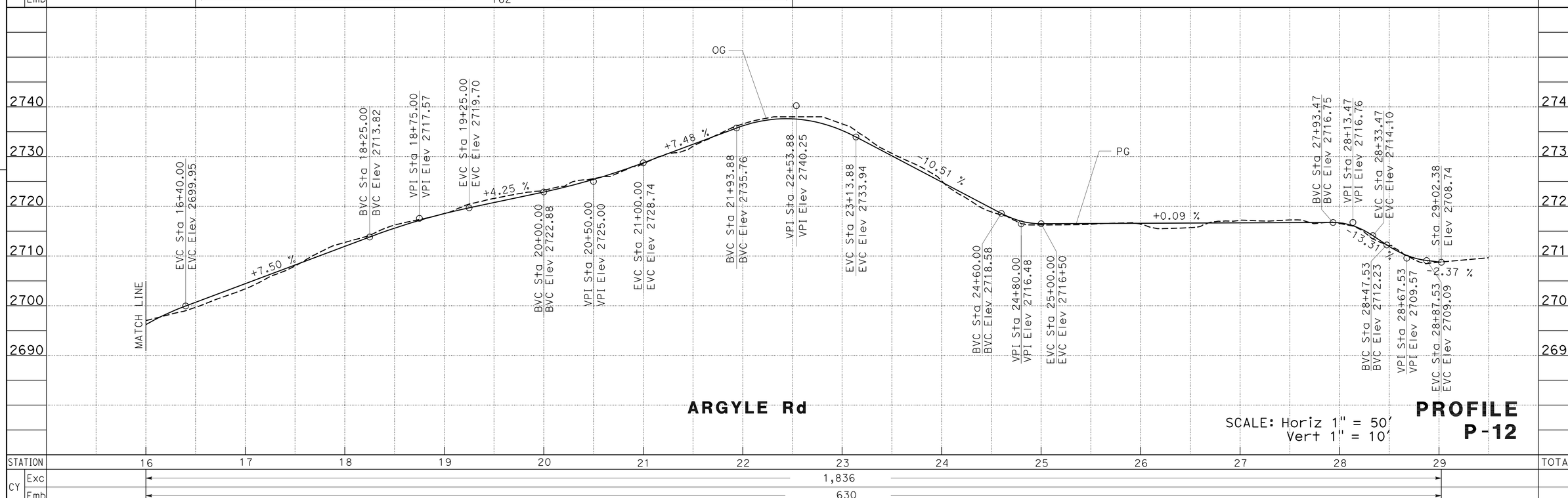

REVISED BY | DATE REVISED
JORGE AGUILERA | KAL DAHER
CALCULATED-DESIGNED BY | CHECKED BY
FUNCTIONAL SUPERVISOR
TERRY OGLE

STATE OF CALIFORNIA - DEPARTMENT OF TRANSPORTATION
06-DESIGN
Caltrans

LAST REVISION 01-11-10 | DATE PLOTTED => 11-MAY-2010 | TIME PLOTTED => 15:16

Dist	COUNTY	ROUTE	POST MILES TOTAL PROJECT	SHEET No.	TOTAL SHEETS
10	Tuo	108	R4.0/R6.0	28	237

K. Daher 01-04-10
REGISTERED CIVIL ENGINEER DATE

5-10-10
PLANS APPROVAL DATE

REGISTERED PROFESSIONAL ENGINEER KAL H. DAHER No. C44510 Exp. 3-31-10 CIVIL STATE OF CALIFORNIA

THE STATE OF CALIFORNIA OR ITS OFFICERS OR AGENTS SHALL NOT BE RESPONSIBLE FOR THE ACCURACY OR COMPLETENESS OF SCANNED COPIES OF THIS PLAN SHEET.

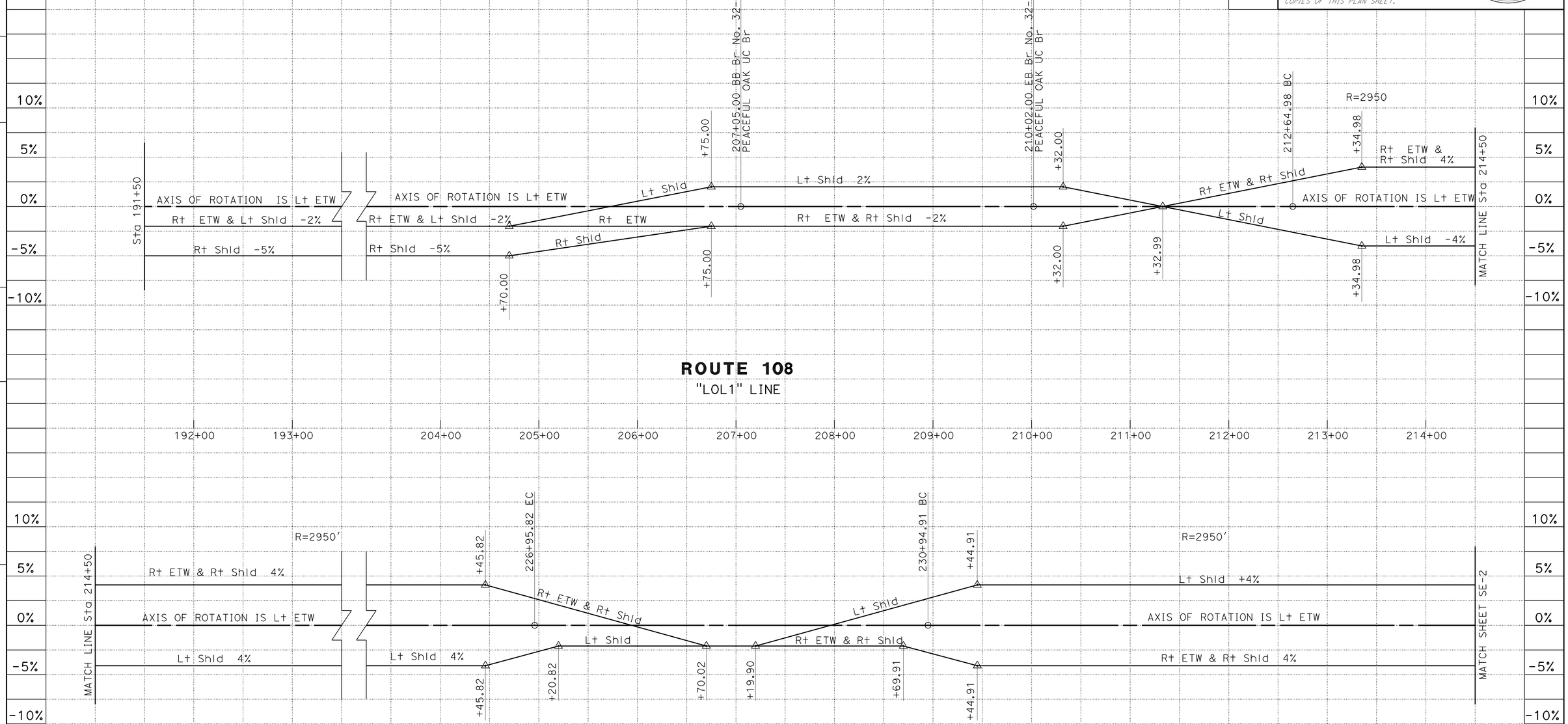

ROUTE 108
"LOL1" LINE

ROUTE 108
"LOL1" LINE

SUPERELEVATION DIAGRAM

SCALE: Horiz 1" = 50'

SE-1

REVISED BY	DATE REVISED
JORGE AGUILERA	KAL DAHER
CALCULATED-DESIGNED BY	CHECKED BY
FUNCTIONAL SUPERVISOR	TERRY OGLE

STATE OF CALIFORNIA - DEPARTMENT OF TRANSPORTATION
Caltrans
06-DESIGN

LAST REVISION 01-11-10 | DATE PLOTTED => 11-MAY-2010 TIME PLOTTED => 15:16

Dist	COUNTY	ROUTE	POST MILES TOTAL PROJECT	SHEET No.	TOTAL SHEETS
10	Tuo	108	R4.0/R6.0	29	237

REGISTERED CIVIL ENGINEER 01-04-10 DATE

5-10-10
PLANS APPROVAL DATE

REGISTERED PROFESSIONAL ENGINEER KAL H. DAHER No. C44510 Exp. 3-31-10 CIVIL STATE OF CALIFORNIA

THE STATE OF CALIFORNIA OR ITS OFFICERS OR AGENTS SHALL NOT BE RESPONSIBLE FOR THE ACCURACY OR COMPLETENESS OF SCANNED COPIES OF THIS PLAN SHEET.

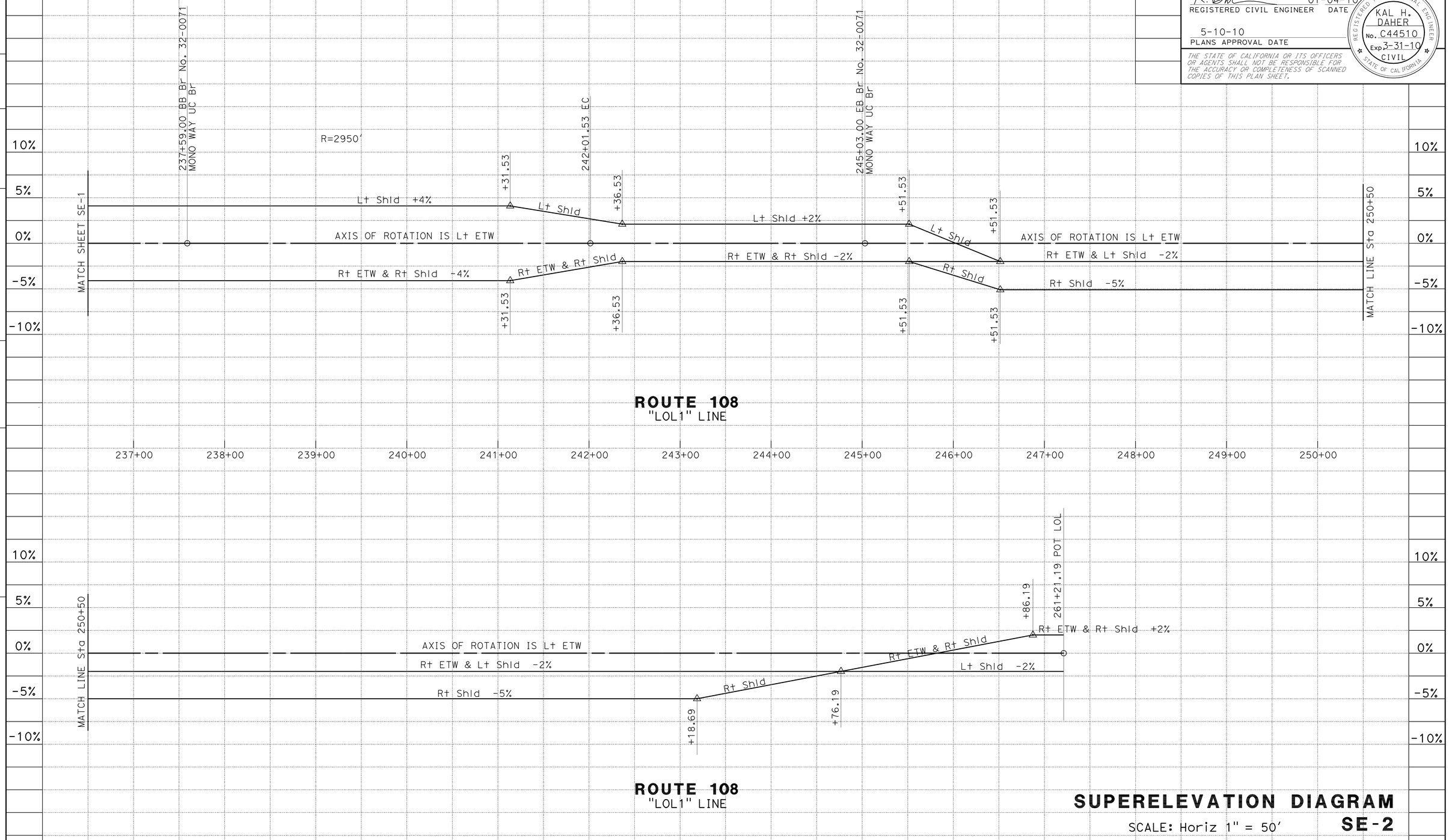

SUPERELEVATION DIAGRAM

SCALE: Horiz 1" = 50'

SE-2

REVISED BY | DATE REVISED

JORGE AGUILERA | KAL DAHER

CALCULATED-DESIGNED BY | CHECKED BY

FUNCTIONAL SUPERVISOR: TERRY OGLE

STATE OF CALIFORNIA - DEPARTMENT OF TRANSPORTATION

06-DESIGN

Caltrans

LAST REVISION 01-11-10

DATE PLOTTED => 11-MAY-2010
TIME PLOTTED => 15:16

Dist	COUNTY	ROUTE	POST MILES TOTAL PROJECT	SHEET No.	TOTAL SHEETS
10	Tuo	108	R4.0/R6.0	30	237

REGISTERED CIVIL ENGINEER 01-04-10 DATE

5-10-10
PLANS APPROVAL DATE

REGISTERED PROFESSIONAL ENGINEER KAL H. DAHER No. C44510 Exp. 3-31-10 CIVIL STATE OF CALIFORNIA

THE STATE OF CALIFORNIA OR ITS OFFICERS OR AGENTS SHALL NOT BE RESPONSIBLE FOR THE ACCURACY OR COMPLETENESS OF SCANNED COPIES OF THIS PLAN SHEET.

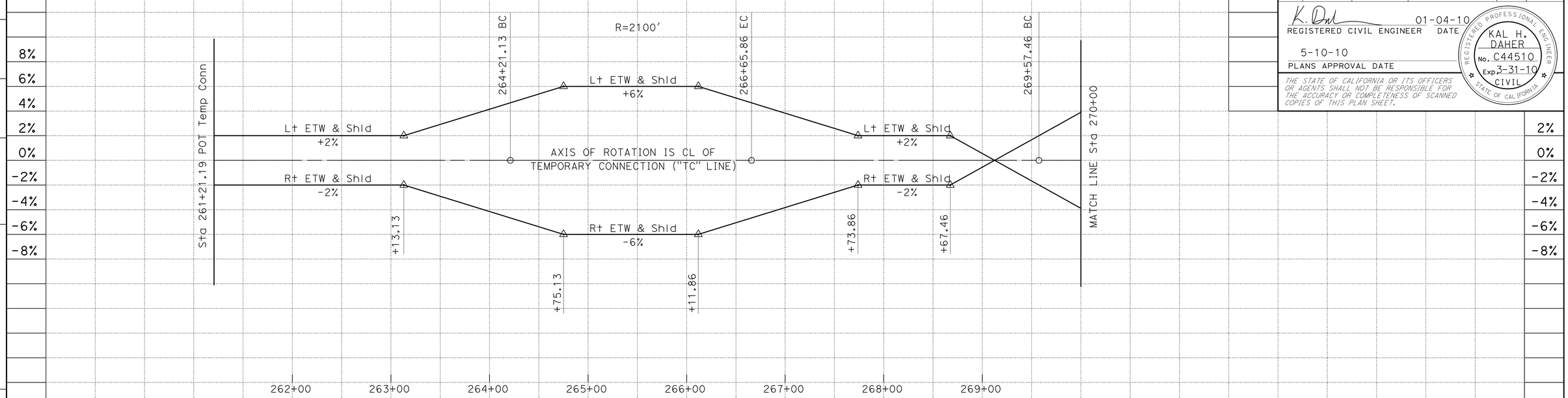

TEMPORARY CONNECTION
"TC" LINE

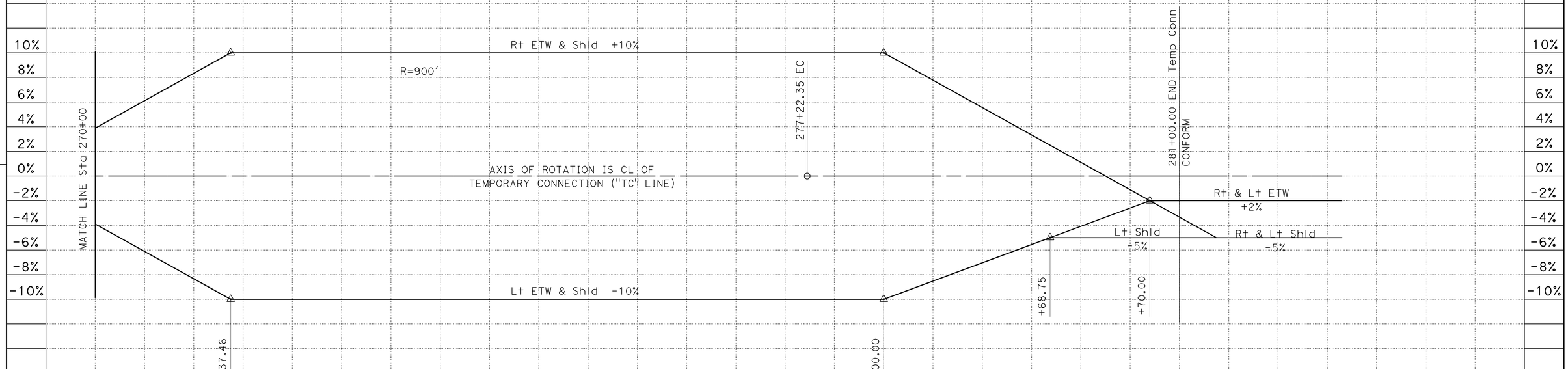

TEMPORARY CONNECTION
"TC" LINE

SUPERELEVATION DIAGRAM
SCALE: Horiz 1:50
SE-3

STATION		TOTAL
CY	Exc	
	Emb	

REVISED BY / DATE REVISED
JORGE AGUILERA / KAL DAHER
CALCULATED-DESIGNED BY / CHECKED BY
FUNCTIONAL SUPERVISOR: TERRY OGLE

STATE OF CALIFORNIA - DEPARTMENT OF TRANSPORTATION
Caltrans
06-DESIGN

LAST REVISION 01-11-10 | DATE PLOTTED => 11-MAY-2010 | TIME PLOTTED => 15:16

BORDER LAST REVISED 4/11/2008 | RELATIVE BORDER SCALE IS IN INCHES 0 1 2 3 | USERNAME => s135318 | DGN FILE => a34042fc003.dgn | CU 06228 | EA 340421

Dist	COUNTY	ROUTE	POST MILES TOTAL PROJECT	SHEET No.	TOTAL SHEETS
10	Tuo	108	R4.0/R6.0	31	237

REGISTERED CIVIL ENGINEER 01-04-10 DATE

5-10-10
PLANS APPROVAL DATE

REGISTERED PROFESSIONAL ENGINEER KAL H. DAHER No. C44510 Exp. 3-31-10 CIVIL STATE OF CALIFORNIA

THE STATE OF CALIFORNIA OR ITS OFFICERS OR AGENTS SHALL NOT BE RESPONSIBLE FOR THE ACCURACY OR COMPLETENESS OF SCANNED COPIES OF THIS PLAN SHEET.

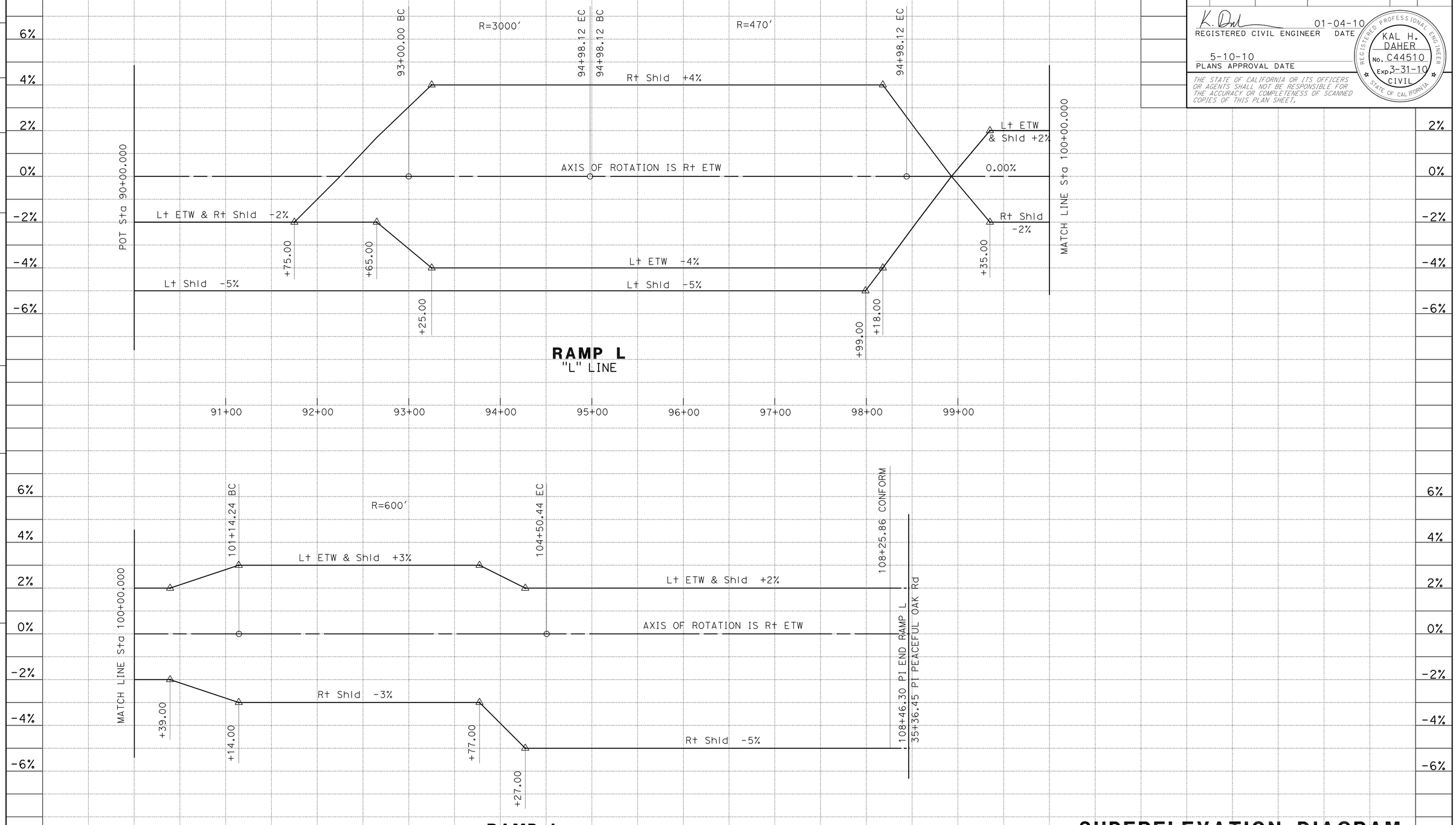

SUPERELEVATION DIAGRAM

SCALE: Horiz 1" = 50'

SE-4

STATE OF CALIFORNIA - DEPARTMENT OF TRANSPORTATION

06-DESIGN

Caltrans®

FUNCTIONAL SUPERVISOR: TERRY OGLE

CALCULATED-DESIGNED BY: JORGE AGUILERA

CHECKED BY: KAL DAHER

REVISED BY

DATE REVISED

LAST REVISION 01-11-10

DATE PLOTTED => 11-MAY-2010
TIME PLOTTED => 14:55

Dist	COUNTY	ROUTE	POST MILES TOTAL PROJECT	SHEET No.	TOTAL SHEETS
10	Tuo	108	R4.0/R6.0	32	237

REGISTERED CIVIL ENGINEER 12-10-09 DATE

5-10-10
PLANS APPROVAL DATE

REGISTERED PROFESSIONAL ENGINEER
KAL H. DAHER
No. C44510
Exp. 3-31-10
CIVIL
STATE OF CALIFORNIA

THE STATE OF CALIFORNIA OR ITS OFFICERS OR AGENTS SHALL NOT BE RESPONSIBLE FOR THE ACCURACY OR COMPLETENESS OF SCANNED COPIES OF THIS PLAN SHEET.

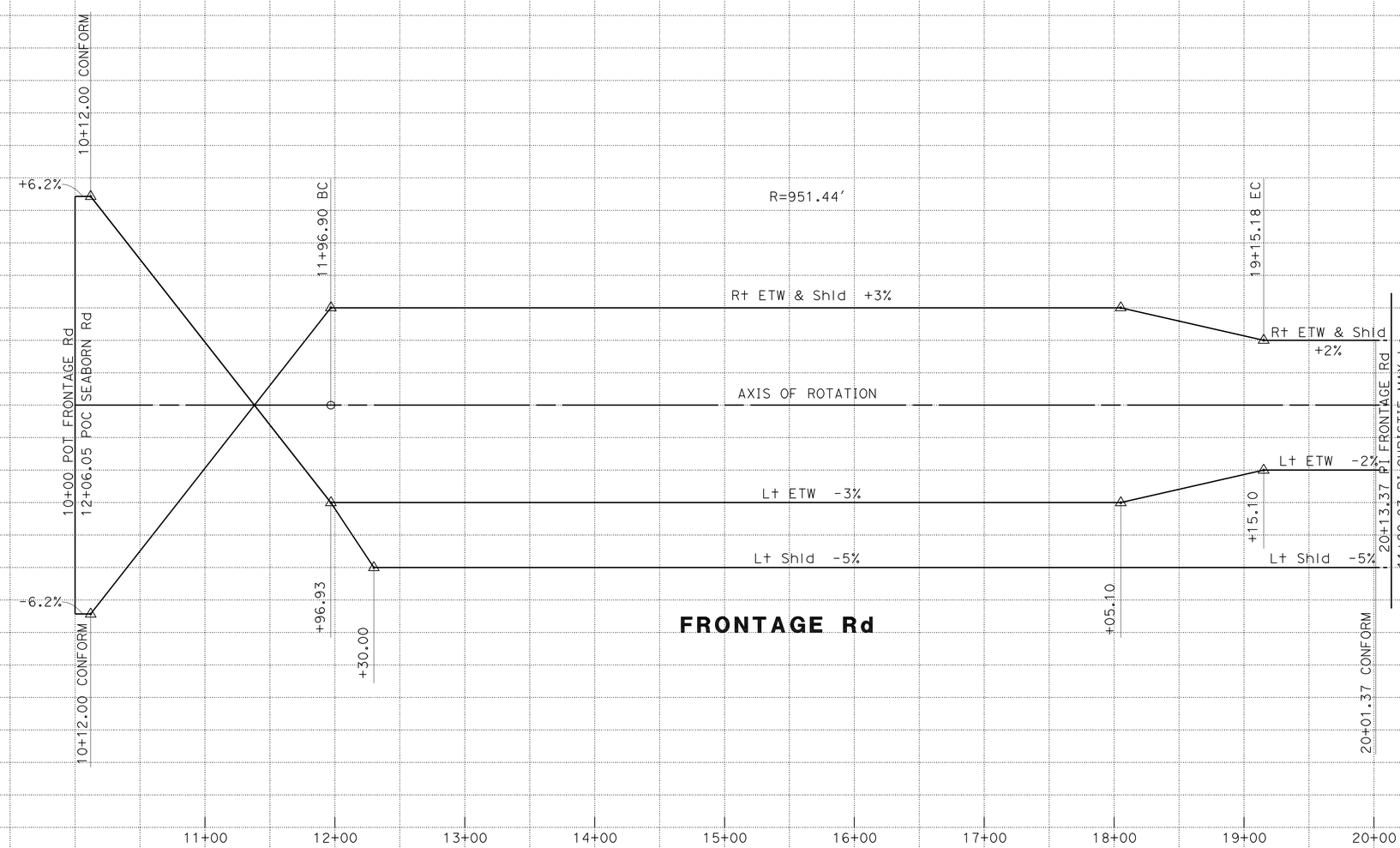

SUPERELEVATION DIAGRAM

SCALE: Horiz 1" = 50'

SE-5

STATION		TOTAL
CY	Exc	
	Emb	

STATE OF CALIFORNIA - DEPARTMENT OF TRANSPORTATION
06-DESIGN
Caltrans®

FUNCTIONAL SUPERVISOR: TERRY OGLE
CALCULATED-DESIGNED BY: JORGE AGUILERA
CHECKED BY: KAL DAHER
REVISED BY
DATE REVISED

LAST REVISION 01-11-10
DATE PLOTTED => 11-MAY-2010
TIME PLOTTED => 14:55

Dist	COUNTY	ROUTE	POST MILES TOTAL PROJECT	SHEET No.	TOTAL SHEETS
10	Tuo	108	R4.0/R6.0	33	237

REGISTERED CIVIL ENGINEER 01-04-10 DATE

5-10-10
PLANS APPROVAL DATE

REGISTERED PROFESSIONAL ENGINEER
KAL H. DAHER
No. C44510
Exp. 3-31-10
CIVIL
STATE OF CALIFORNIA

THE STATE OF CALIFORNIA OR ITS OFFICERS OR AGENTS SHALL NOT BE RESPONSIBLE FOR THE ACCURACY OR COMPLETENESS OF SCANNED COPIES OF THIS PLAN SHEET.

SUPERELEVATION DIAGRAM

SCALE: Horiz 1" = 50'

SE-6

STATION		TOTAL
CY	Exc	
	Emb	

STATE OF CALIFORNIA - DEPARTMENT OF TRANSPORTATION
Caltrans
06-DESIGN

FUNCTIONAL SUPERVISOR: TERRY OGLE
CALCULATED-DESIGNED BY: JORGE AGUILERA
CHECKED BY: KAL DAHER
REVISED BY
DATE REVISED

LAST REVISION 01-11-10 | DATE PLOTTED => 11-MAY-2010 | TIME PLOTTED => 14:55

Dist	COUNTY	ROUTE	POST MILES TOTAL PROJECT	SHEET No.	TOTAL SHEETS
10	Tuo	108	R4.0/R6.0	34	237

REGISTERED CIVIL ENGINEER 12-29-09 DATE

5-10-10
PLANS APPROVAL DATE

REGISTERED PROFESSIONAL ENGINEER KAL H. DAHER No. C44510 Exp. 3-31-10 CIVIL STATE OF CALIFORNIA

THE STATE OF CALIFORNIA OR ITS OFFICERS OR AGENTS SHALL NOT BE RESPONSIBLE FOR THE ACCURACY OR COMPLETENESS OF SCANNED COPIES OF THIS PLAN SHEET.

LEGEND

OBLITERATE AC SURFACING

REMOVE SURFACING

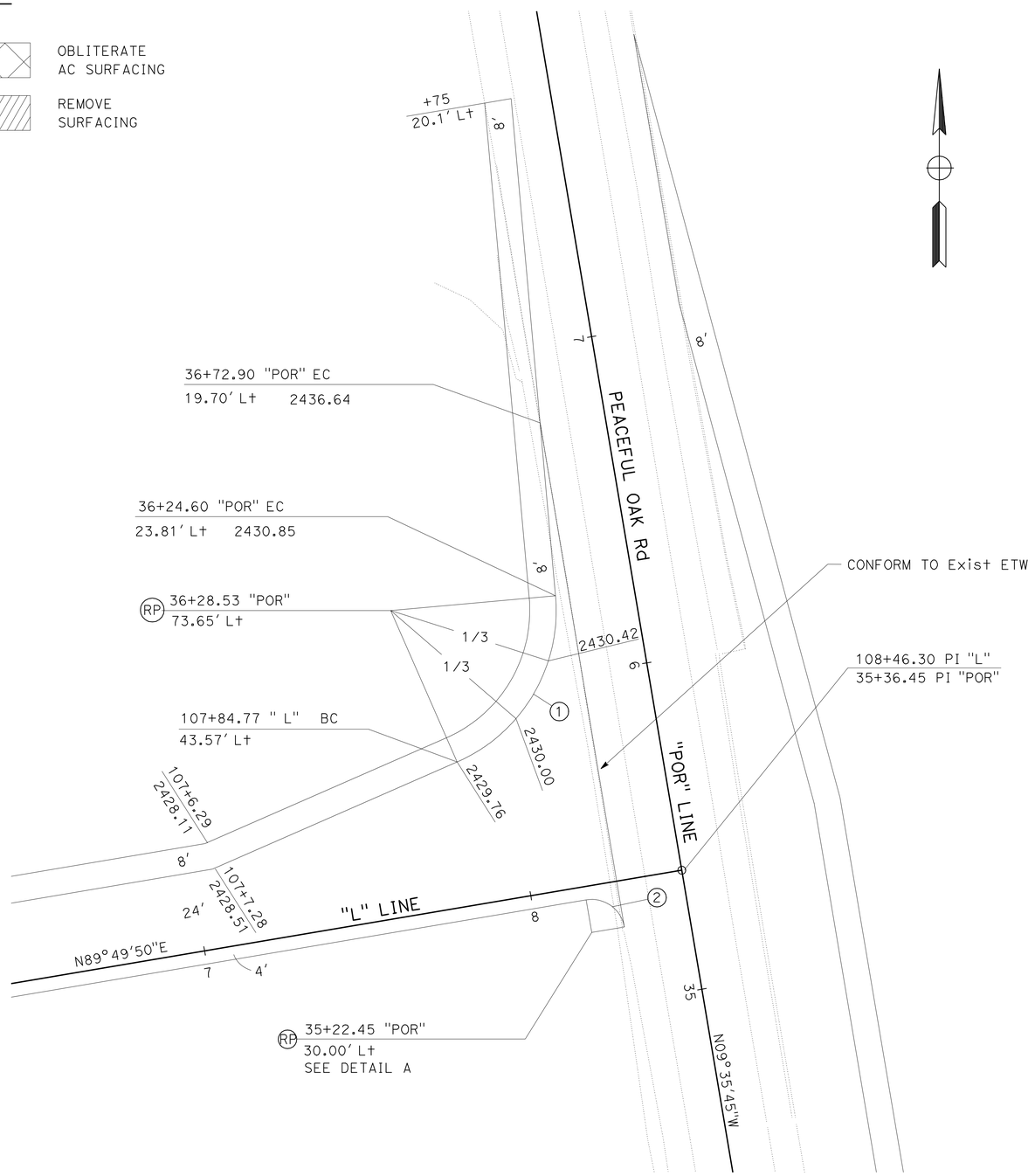

SCALE: 1" = 20'

CURVE DATA

No.	R	Δ	T	L
1	50.00'	71°22'59"	35.92'	62.29'
2	10.00'	90°00'00"	10.00'	15.71'

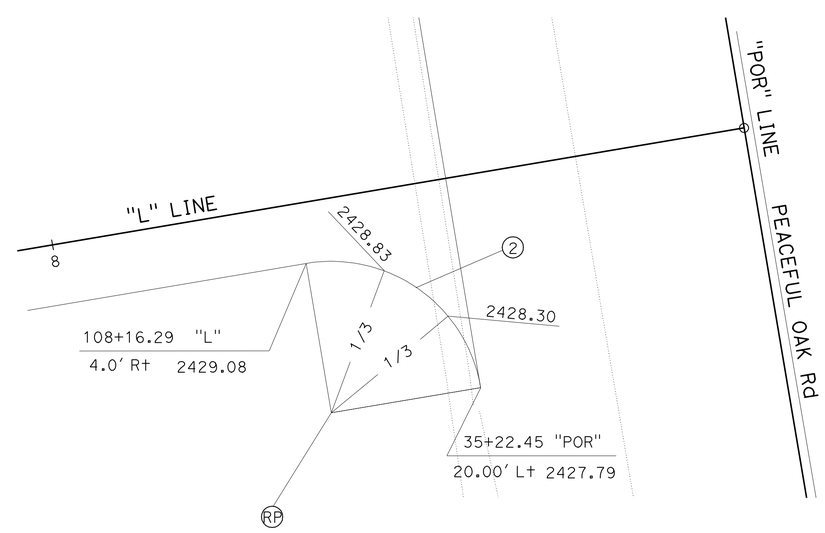

DETAIL A

SCALE: 1" = 5'

CONSTRUCTION DETAILS

SCALE AS SHOWN

C-1

STATE OF CALIFORNIA - DEPARTMENT OF TRANSPORTATION

Caltrans

06-DESIGN

FUNCTIONAL SUPERVISOR: TERRY OGLE

CALCULATED-DESIGNED BY: JORGE AGUILERA

CHECKED BY: KAL DAHER

REVISED BY

DATE REVISED

LAST REVISION 01-11-10 | DATE PLOTTED => 11-MAY-2010 | TIME PLOTTED => 14:55

Dist	COUNTY	ROUTE	POST MILES TOTAL PROJECT	SHEET No.	TOTAL SHEETS
10	Tuo	108	R4.0/R6.0	35	237

REGISTERED CIVIL ENGINEER 12-29-09 DATE

5-10-10
PLANS APPROVAL DATE

REGISTERED PROFESSIONAL ENGINEER KAL H. DAHER No. C44510 Exp. 3-31-10 CIVIL STATE OF CALIFORNIA

THE STATE OF CALIFORNIA OR ITS OFFICERS OR AGENTS SHALL NOT BE RESPONSIBLE FOR THE ACCURACY OR COMPLETENESS OF SCANNED COPIES OF THIS PLAN SHEET.

CURVE DATA

No.	R	Δ	T	L
1	5.00′	115°28′44"	7.92′	10.08′
2	2.00′	178°16′01"	132.23′	6.22′
3	100.00′	13°36′46"	11.94′	23.76′
4	1.00′	168°7′12"	9.61′	2.93′
5	12.50′	174°44′58"	272.62′	38.12′
6	100.00′	7°9′34"	6.26′	12.50′
7	10.00′	178°5′28"	600.23′	31.08′

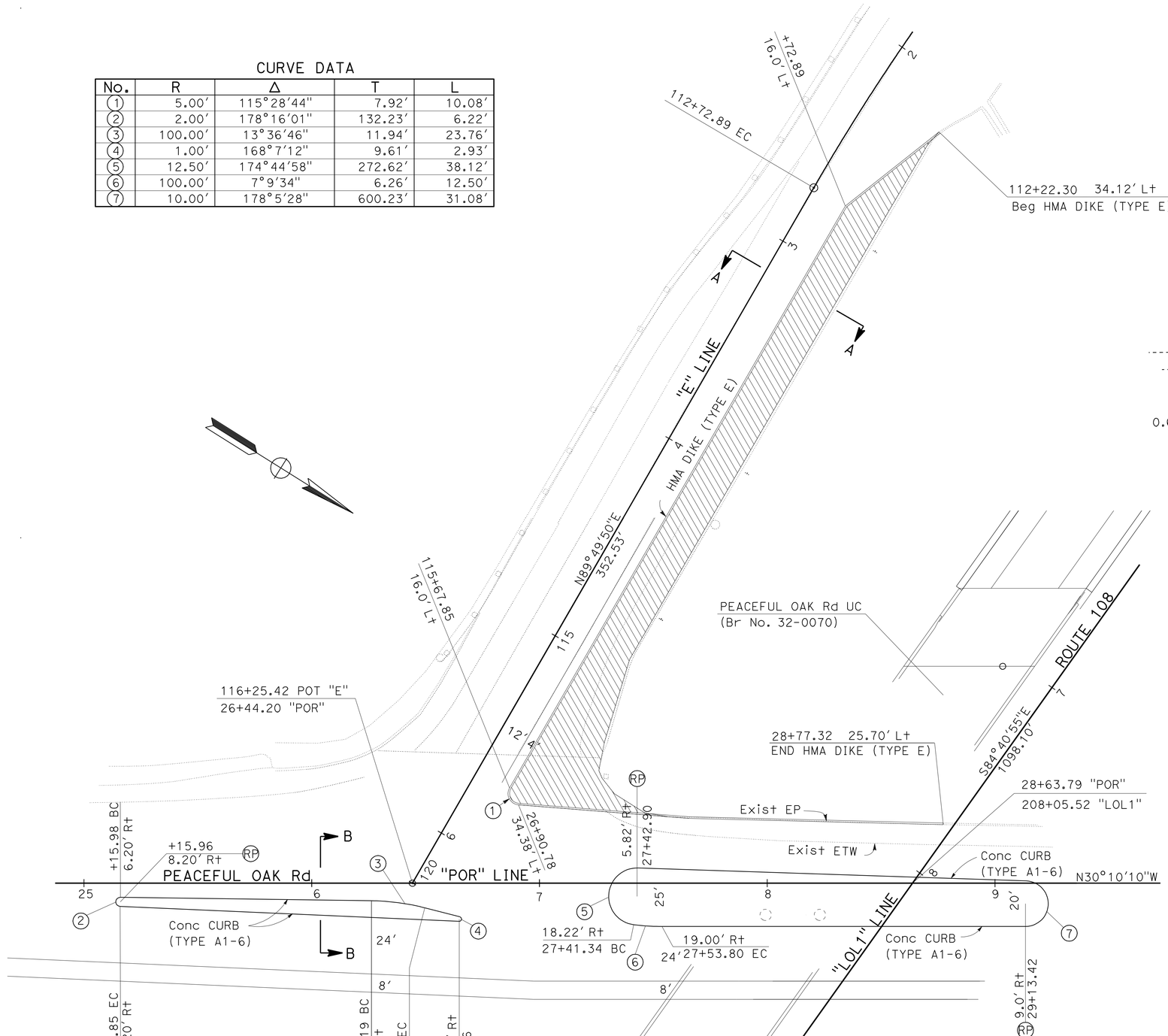

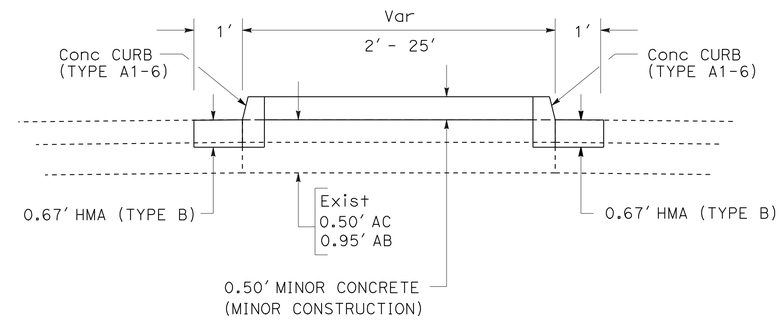

SECTION B-B

STA 25+13.85 TO STA 26+65.76 "POR"
STA 27+30.44 TO STA 29+23.42 "POR"

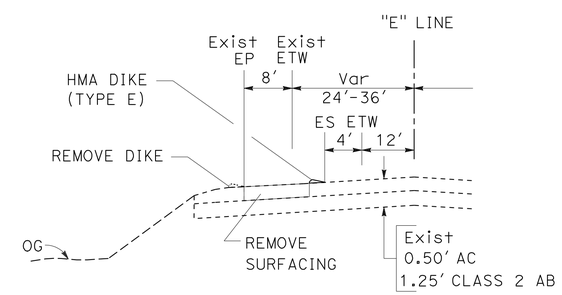

SECTION A-A

CONSTRUCTION DETAILS

SCALE: 1" = 25′

C-2

STATE OF CALIFORNIA - DEPARTMENT OF TRANSPORTATION
06-DESIGN
Caltrans

FUNCTIONAL SUPERVISOR: TERRY OGLE
CALCULATED-DESIGNED BY: JORGE AGUILERA
CHECKED BY: KAL DAHER
REVISED BY
DATE REVISED

LAST REVISION 01-12-10
DATE PLOTTED => 11-MAY-2010
TIME PLOTTED => 14:56

Dist	COUNTY	ROUTE	POST MILES TOTAL PROJECT	SHEET No.	TOTAL SHEETS
10	Tuo	108	R4.0/R6.0	36	237

K. Daher 01-04-10
REGISTERED CIVIL ENGINEER DATE

5-10-10
PLANS APPROVAL DATE

REGISTERED PROFESSIONAL ENGINEER
KAL H. DAHER
No. C44510
Exp. 3-31-10
CIVIL
STATE OF CALIFORNIA

THE STATE OF CALIFORNIA OR ITS OFFICERS OR AGENTS SHALL NOT BE RESPONSIBLE FOR THE ACCURACY OR COMPLETENESS OF SCANNED COPIES OF THIS PLAN SHEET.

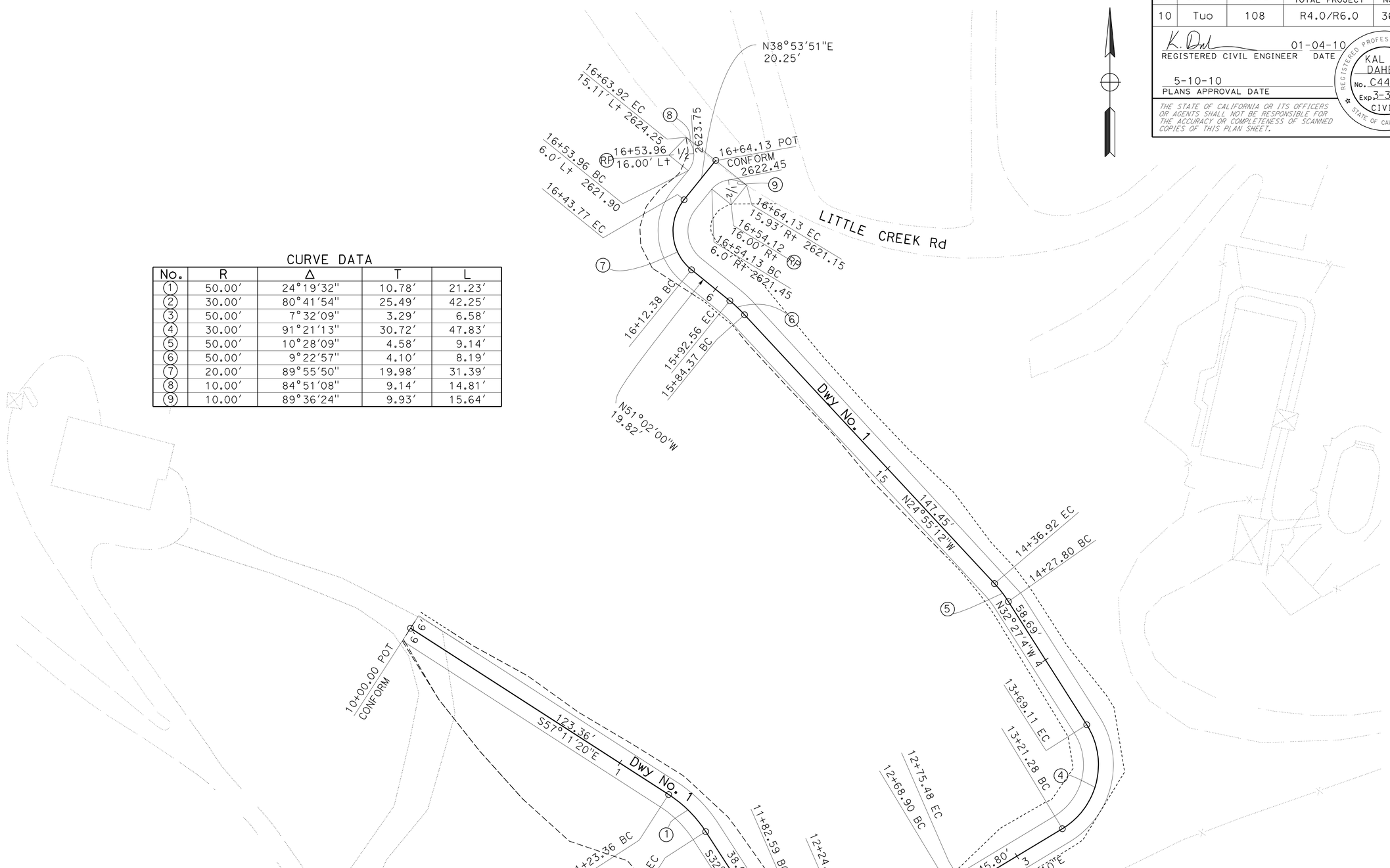

CURVE DATA

No.	R	Δ	T	L
1	50.00′	24°19′32"	10.78′	21.23′
2	30.00′	80°41′54"	25.49′	42.25′
3	50.00′	7°32′09"	3.29′	6.58′
4	30.00′	91°21′13"	30.72′	47.83′
5	50.00′	10°28′09"	4.58′	9.14′
6	50.00′	9°22′57"	4.10′	8.19′
7	20.00′	89°55′50"	19.98′	31.39′
8	10.00′	84°51′08"	9.14′	14.81′
9	10.00′	89°36′24"	9.93′	15.64′

CONSTRUCTION DETAILS

SCALE: 1" = 20′

C-3

STATE OF CALIFORNIA - DEPARTMENT OF TRANSPORTATION
Caltrans
06-DESIGN

FUNCTIONAL SUPERVISOR: TERRY OGLE
CALCULATED-DESIGNED BY: JORGE AGUILERA
CHECKED BY: KAL DAHER
REVISED BY
DATE REVISED

LAST REVISION 01-04-10
DATE PLOTTED => 11-MAY-2010
TIME PLOTTED => 15:38

Dist	COUNTY	ROUTE	POST MILES TOTAL PROJECT	SHEET No.	TOTAL SHEETS
10	Tuo	108	R4.0/R6.0	37	237

REGISTERED CIVIL ENGINEER 12-10-09 DATE

5-10-10
PLANS APPROVAL DATE

REGISTERED PROFESSIONAL ENGINEER KAL H. DAHER No. C44510 Exp. 3-31-10 CIVIL STATE OF CALIFORNIA

THE STATE OF CALIFORNIA OR ITS OFFICERS OR AGENTS SHALL NOT BE RESPONSIBLE FOR THE ACCURACY OR COMPLETENESS OF SCANNED COPIES OF THIS PLAN SHEET.

CURVE DATA

No.	R	Δ	T	L
1	40.00′	81°33′48"	34.50′	56.94′
2	40.00′	73°28′09"	29.85′	51.29′
3	200.00′	81°22′06"	15.09′	30.13′
4	200.00′	75°19′44"	25.75′	51.21′
5	205.42′	10°12′53"	18.36′	36.62′
6	33.00′	93°23′14"	35.01′	53.79′
7	40.00′	83°19′25"	35.59′	58.17′
8	951.44′	43°15′03"	377.19′	718.21′

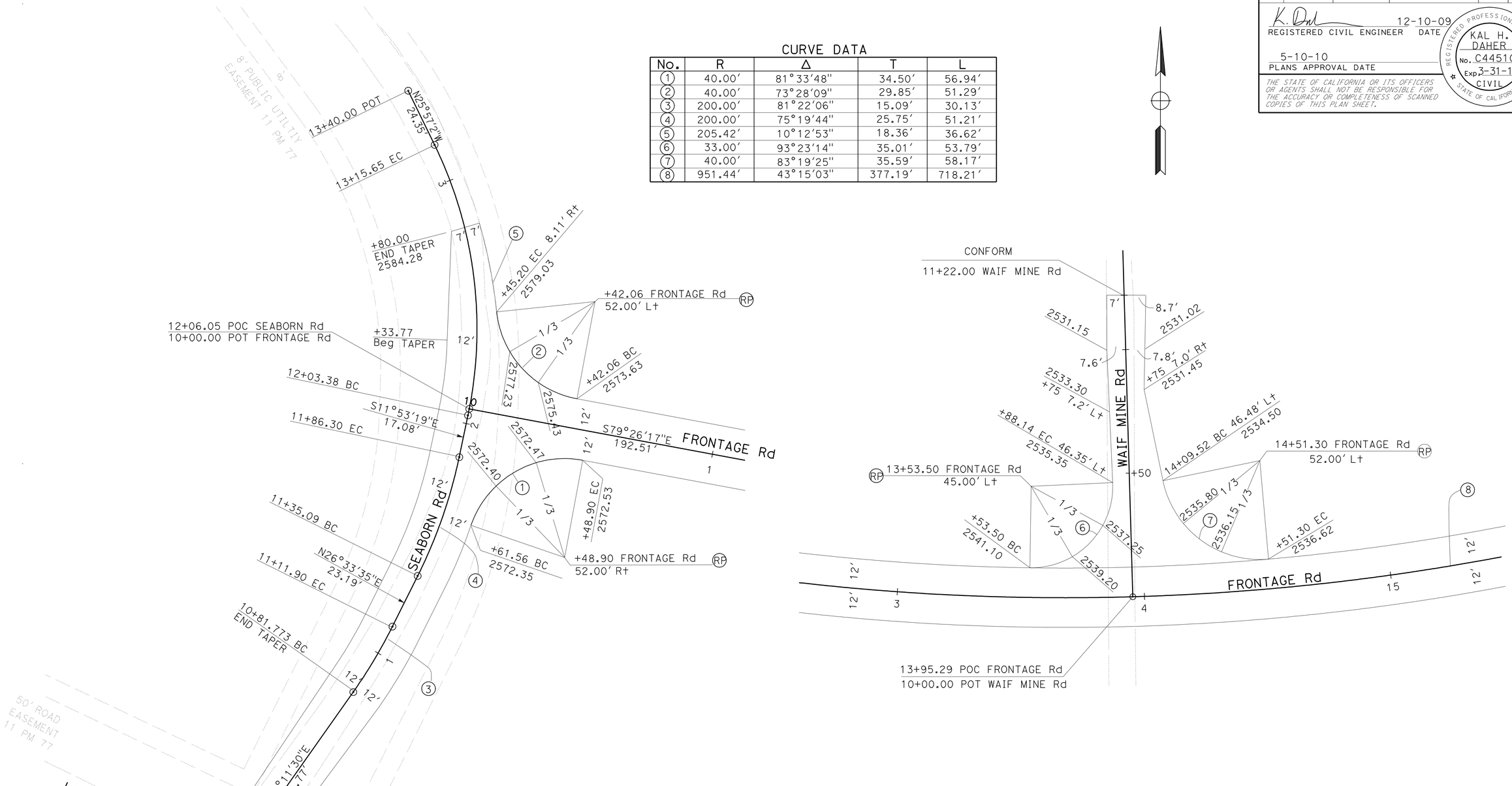

CONSTRUCTION DETAILS

SCALE: 1" = 20′

C-4

STATE OF CALIFORNIA - DEPARTMENT OF TRANSPORTATION
Caltrans
06-DESIGN

FUNCTIONAL SUPERVISOR: TERRY OGLE
CALCULATED-DESIGNED BY: JORGE AGUILERA
CHECKED BY: KAL DAHER
REVISED BY
DATE REVISED

LAST REVISION 01-11-10
DATE PLOTTED => 11-MAY-2010
TIME PLOTTED => 15:44

BORDER LAST REVISED 4/11/2008
RELATIVE BORDER SCALE IS IN INCHES 0 1 2 3
USERNAME => trstrk
DGN FILE => a34042ga004.dgn
CU 06228
EA 340421

Dist	COUNTY	ROUTE	POST MILES TOTAL PROJECT	SHEET No.	TOTAL SHEETS
10	Tuo	108	R4.0/R6.0	38	237

K. Daher 01-12-10
REGISTERED CIVIL ENGINEER DATE

5-10-10
PLANS APPROVAL DATE

REGISTERED PROFESSIONAL ENGINEER
KAL H. DAHER
No. C44510
Exp. 3-31-10
CIVIL
STATE OF CALIFORNIA

THE STATE OF CALIFORNIA OR ITS OFFICERS OR AGENTS SHALL NOT BE RESPONSIBLE FOR THE ACCURACY OR COMPLETENESS OF SCANNED COPIES OF THIS PLAN SHEET.

CURVE DATA

No.	R	Δ	T	L
1	30.00′	75°53′42"	23.39′	39.74′
2	35.02′	87°19′51"	33.42′	53.37′
3	45.66′	73°20′03"	33.99′	58.44′
4	46.29′	103°54′53"	59.15′	83.95′
5	200.00′	7°38′32"	13.36′	26.68′

CONSTRUCTION DETAILS

SCALE: 1" = 20′

C-5

STATE OF CALIFORNIA - DEPARTMENT OF TRANSPORTATION
Caltrans
06-DESIGN

FUNCTIONAL SUPERVISOR: TERRY OGLE
CALCULATED-DESIGNED BY: JORGE AGUILERA
CHECKED BY: KAL DAHER
REVISED BY
DATE REVISED

LAST REVISION 01-12-10
DATE PLOTTED => 11-MAY-2010
TIME PLOTTED => 15:38

Dist	COUNTY	ROUTE	POST MILES TOTAL PROJECT	SHEET No.	TOTAL SHEETS
10	Tuo	108	R4.0/R6.0	39	237

K. Daher 12-29-09
REGISTERED CIVIL ENGINEER DATE

5-10-10
PLANS APPROVAL DATE

REGISTERED PROFESSIONAL ENGINEER
KAL H. DAHER
No. C44510
Exp. 3-31-10
CIVIL
STATE OF CALIFORNIA

THE STATE OF CALIFORNIA OR ITS OFFICERS OR AGENTS SHALL NOT BE RESPONSIBLE FOR THE ACCURACY OR COMPLETENESS OF SCANNED COPIES OF THIS PLAN SHEET.

CURVE DATA

No.	R	Δ	T	L
1	50.00′	53°37′15"	25.27′	46.79′
2	50.00′	75°41′19"	38.85′	66.05′
3	5250.00′	6°40′38"	306.27′	611.84′
4	900.00′	43°33′29"	359.59′	684.21′
5	1192.00′	07°19′32"	76.31′	152.41′

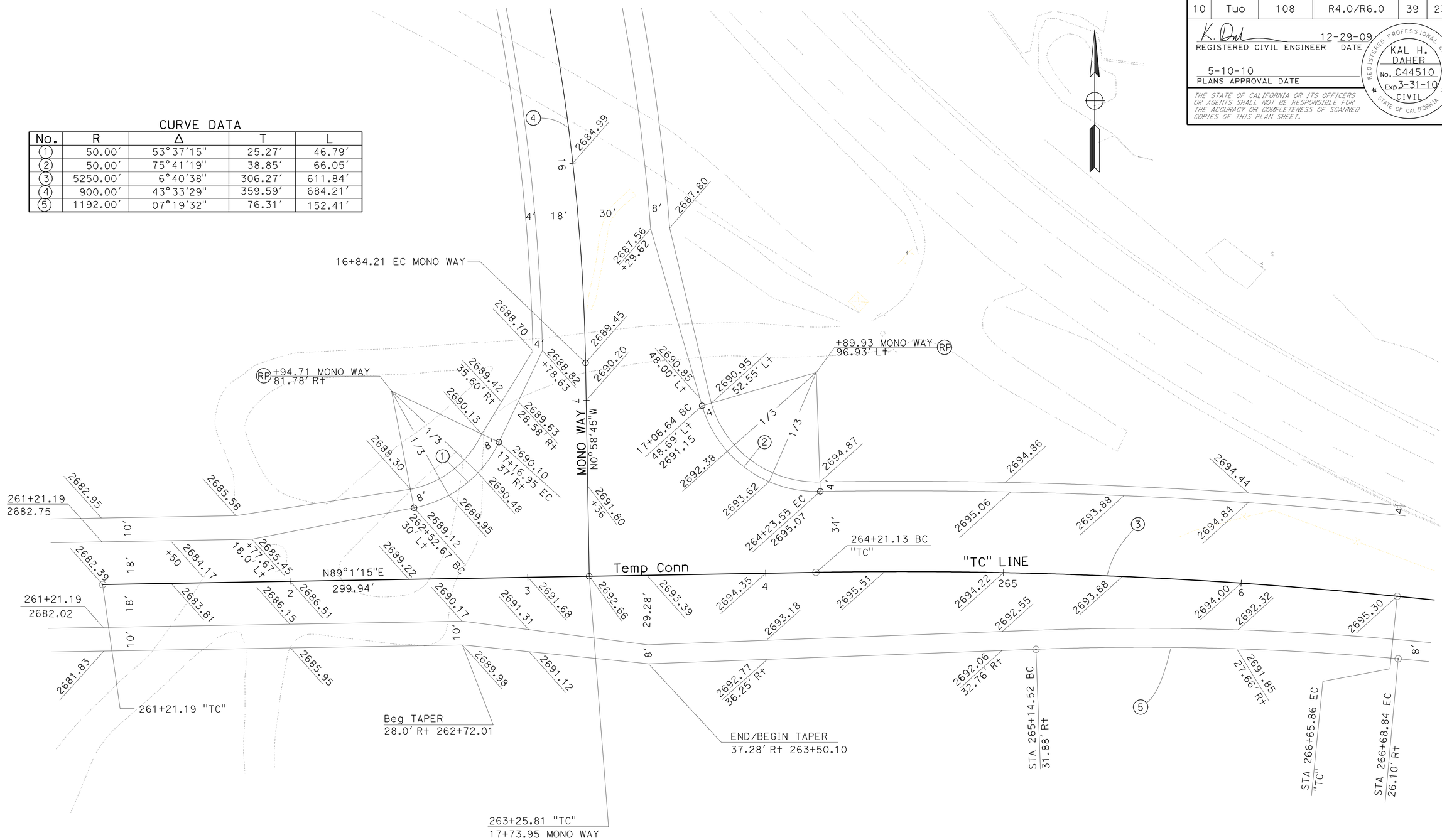

CONSTRUCTION DETAILS

C-6

SCALE: 1" = 20′

STATE OF CALIFORNIA - DEPARTMENT OF TRANSPORTATION
Caltrans
06-DESIGN

FUNCTIONAL SUPERVISOR: TERRY OGLE
CALCULATED-DESIGNED BY: JORGE AGUILERA
CHECKED BY: KAL DAHER
REVISED BY
DATE REVISED

LAST REVISION 01-11-10
DATE PLOTTED => 11-MAY-2010
TIME PLOTTED => 15:38

Dist	COUNTY	ROUTE	POST MILES TOTAL PROJECT	SHEET No.	TOTAL SHEETS
10	Tuo	108	R4.0/R6.0	40	237

K. Daher 12-29-09
REGISTERED CIVIL ENGINEER DATE

5-10-10
PLANS APPROVAL DATE

REGISTERED PROFESSIONAL ENGINEER KAL H. DAHER No. C44510 Exp. 3-31-10 CIVIL STATE OF CALIFORNIA

THE STATE OF CALIFORNIA OR ITS OFFICERS OR AGENTS SHALL NOT BE RESPONSIBLE FOR THE ACCURACY OR COMPLETENESS OF SCANNED COPIES OF THIS PLAN SHEET.

CURVE DATA

No.	R	Δ	T	L
1	40.00′	21°07′37"	27.43′	48.08′
2	40.00′	4°39′30"	43.39′	66.08′
3	60.00′	39°19′37"	21.43′	41.17′
4	40.00′	75°31′21"	30.98′	52.72′
5	40.00′	255°31′21"	51.64′	178.39′
6	2250.00′	78°46′54"	220.98′	440.54′
7	2950.00′	41°33′43"	1119.48′	2139.90′
8	70.00′	100°39′10"	84.39′	122.97′
9	82.00′	100°48′38"	99.14′	144.28′

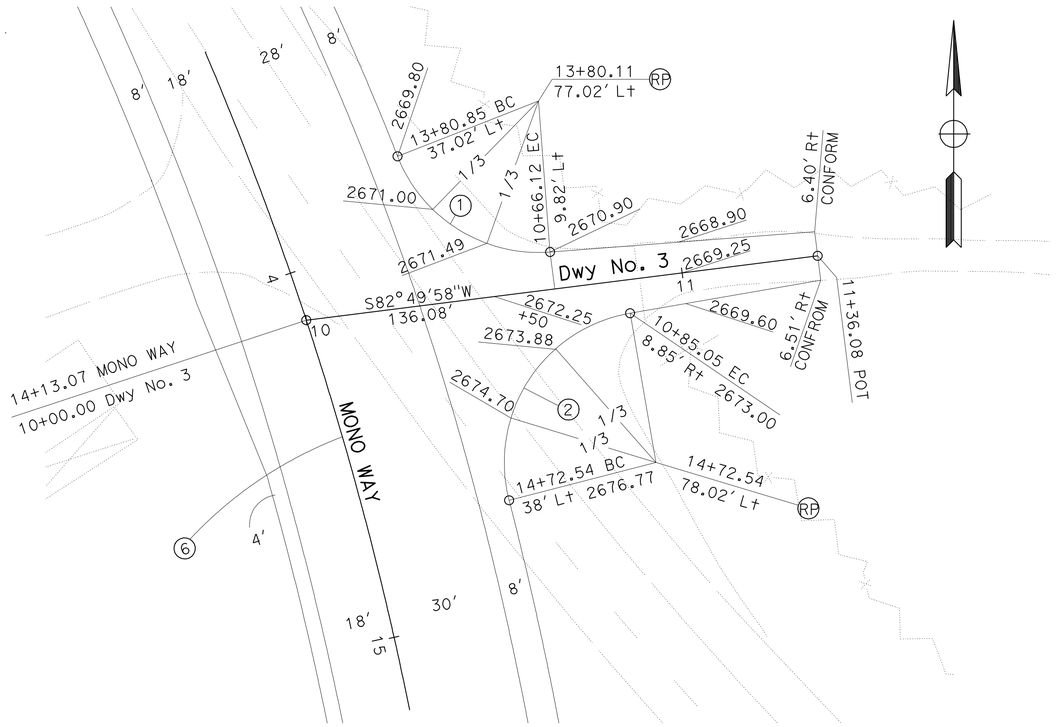

DRIVEWAY No. 3

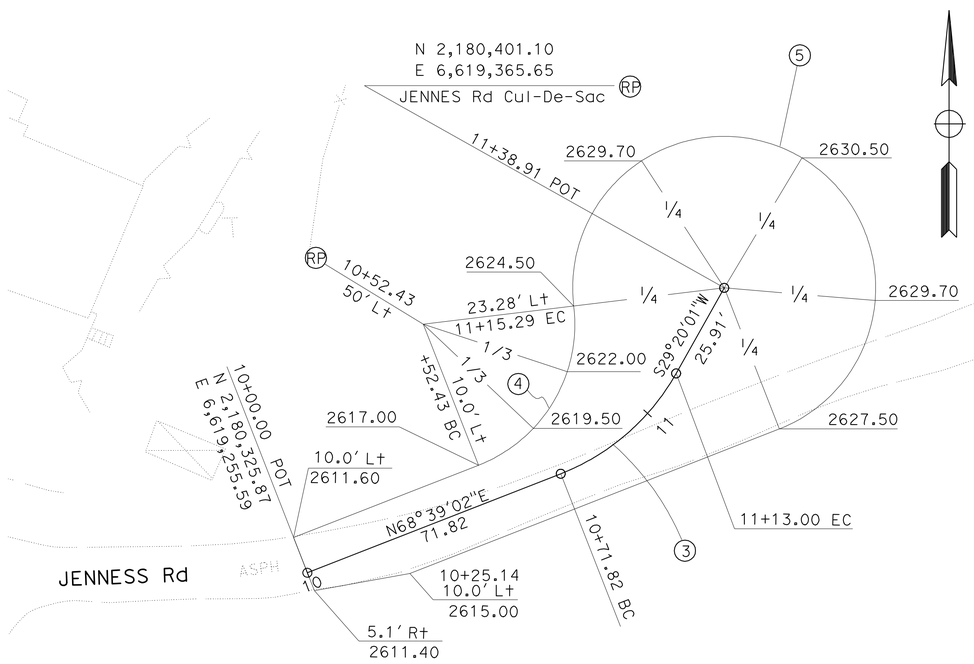

JENNESS ROAD CUL-DE-SAC

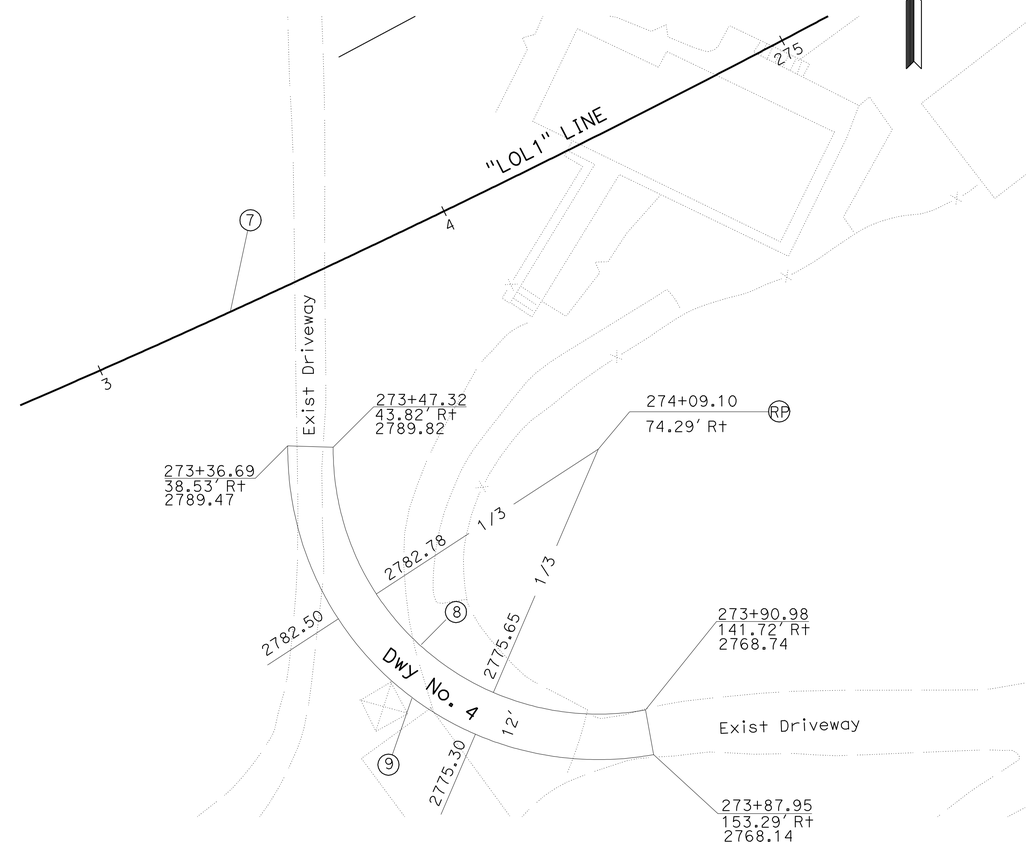

DRIVEWAY No. 4

CONSTRUCTION DETAILS

C-7

SCALE: 1" = 20′

STATE OF CALIFORNIA - DEPARTMENT OF TRANSPORTATION
Caltrans
06-DESIGN

FUNCTIONAL SUPERVISOR: TERRY OGLE
CALCULATED-DESIGNED BY: JORGE AGUILERA
CHECKED BY: KAL DAHER
REVISED BY
DATE REVISED

LAST REVISION 01-11-10 | DATE PLOTTED => 11-MAY-2010 | TIME PLOTTED => 15:38

BORDER LAST REVISED 4/11/2008 | RELATIVE BORDER SCALE IS IN INCHES 0 1 2 3 | USERNAME => trstrk | DGN FILE => a34042ga007.dgn | CU 06228 | EA 340421

Dist	COUNTY	ROUTE	POST MILES TOTAL PROJECT	SHEET No.	TOTAL SHEETS
10	Tuo	108	R4.0/R6.0	41	237

REGISTERED CIVIL ENGINEER 12-29-09 DATE

5-10-10
PLANS APPROVAL DATE

REGISTERED PROFESSIONAL ENGINEER KAL H. DAHER No. C44510 Exp. 3-31-10 CIVIL STATE OF CALIFORNIA

THE STATE OF CALIFORNIA OR ITS OFFICERS OR AGENTS SHALL NOT BE RESPONSIBLE FOR THE ACCURACY OR COMPLETENESS OF SCANNED COPIES OF THIS PLAN SHEET.

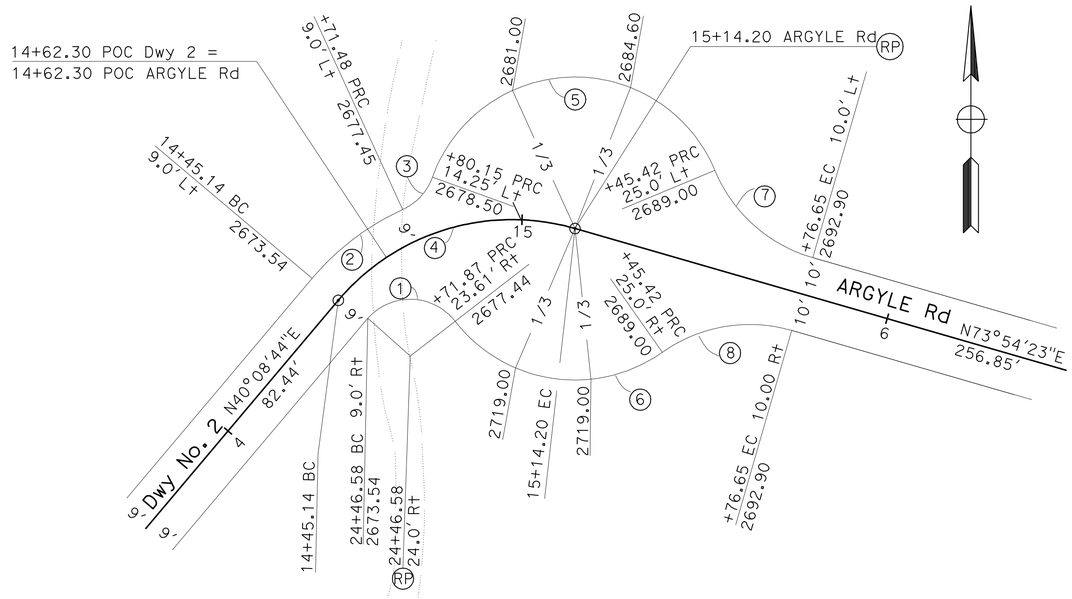

ARGYLE ROAD
CUL-DE-SAC / Dwy No. 2

CURVE DATA

No.	R	Δ	T	L
1	15.00′	100°29′25"	18.03′	26.31′
2	69.00′	25°9′09"	15.39′	30.29′
3	15.00′	45°27′36"	6.28′	11.90′
4	60.00′	65°56′53"	38.93′	69.06′
5	40.00′	137°34′25"	103.06′	96.04′
6	40.00′	87°28′22"	38.27′	61.07′
7	40.00′	51°19′04"	19.22′	35.83′
8	40.00′	51°19′04"	19.22′	35.83′
9	900.00′	48°41′42"	407.26′	764.90′
10	150.00′	24°58′04"	33.21′	65.37′
11	50.00′	80°18′54"	42.19′	70.09′
12	35.00′	102°23′40"	43.53′	62.55′
13	30.00′	83°20′37"	26.70′	43.64′
14	24.99′	40°31′09"	9.23′	17.67′

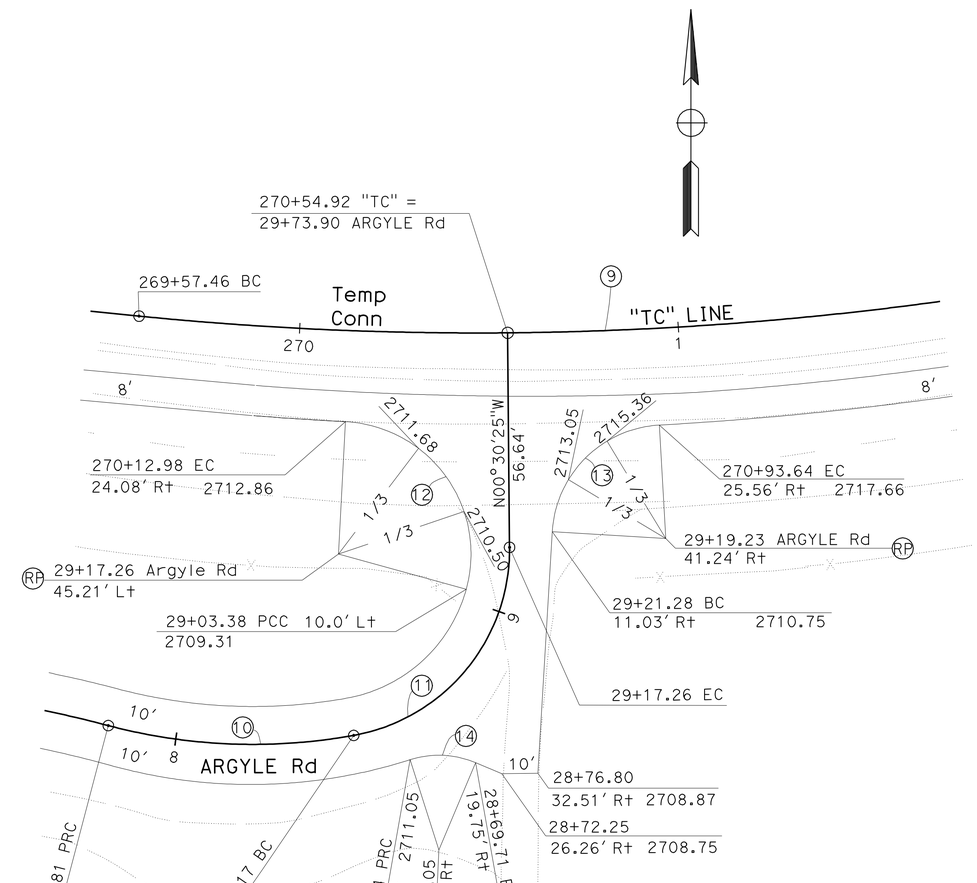

ARGYLE ROAD

CONSTRUCTION DETAILS

SCALE: 1" = 20′

C-8

STATE OF CALIFORNIA - DEPARTMENT OF TRANSPORTATION
Caltrans
06-DESIGN

FUNCTIONAL SUPERVISOR: TERRY OGLE
CALCULATED-DESIGNED BY: JORGE AGUILERA
CHECKED BY: KAL DAHER
REVISED BY
DATE REVISED

LAST REVISION 01-11-10
DATE PLOTTED => 11-MAY-2010
TIME PLOTTED => 15:38

Dist	COUNTY	ROUTE	POST MILES TOTAL PROJECT	SHEET No.	TOTAL SHEETS
10	Tuo	108	R4.0/R6.0	42	237

REGISTERED CIVIL ENGINEER 01-12-10 DATE

PLANS APPROVAL DATE 5-10-10

REGISTERED PROFESSIONAL ENGINEER KAL H. DAHER No. C44510 Exp. 3-31-10 CIVIL STATE OF CALIFORNIA

THE STATE OF CALIFORNIA OR ITS OFFICERS OR AGENTS SHALL NOT BE RESPONSIBLE FOR THE ACCURACY OR COMPLETENESS OF SCANNED COPIES OF THIS PLAN SHEET.

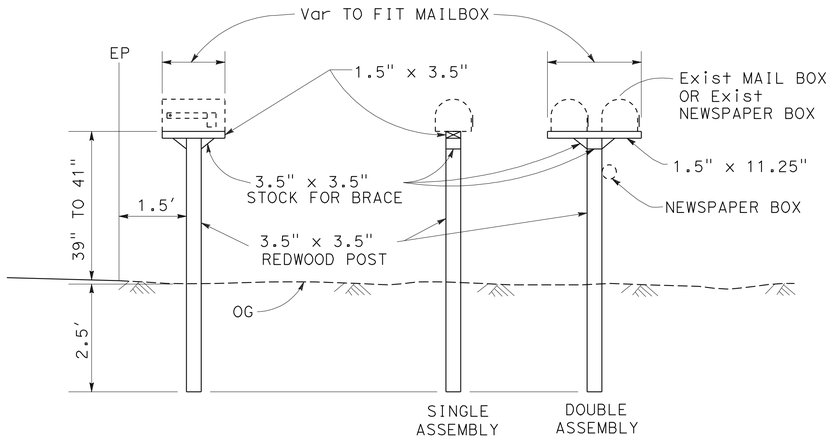

RELOCATE MAILBOX DETAIL

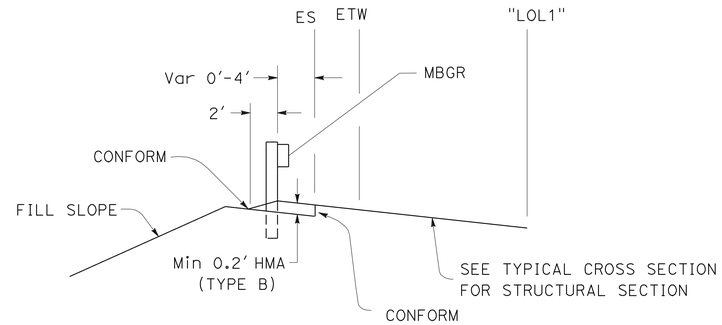

PLACE HMA (MISC AREA) DETAIL

CULVERT BACKFILL DETAIL

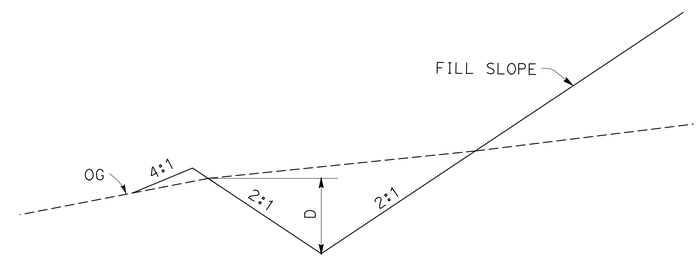

V-GUTTER (UN-LINED)

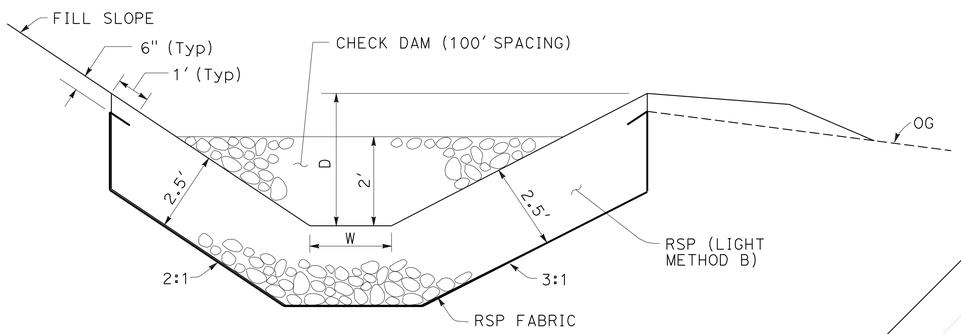

SECTION A-A

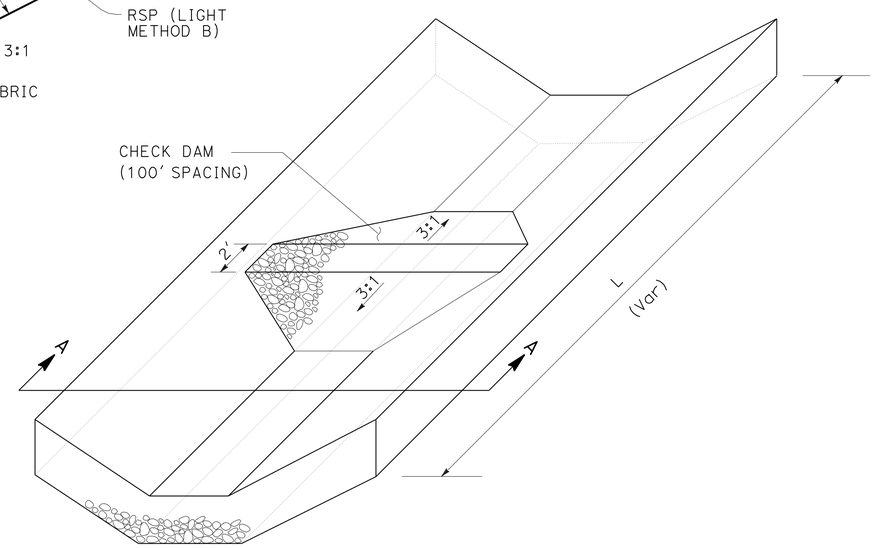

PLAN VIEW

TRAPEZOIDAL GUTTER

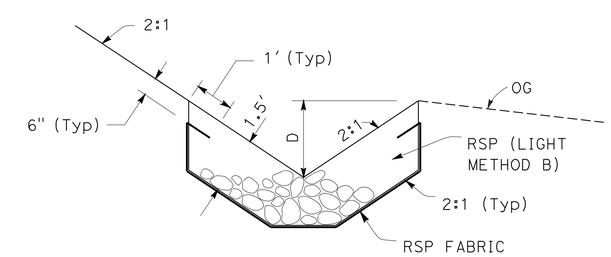

V-GUTTER (LINED)

CONSTRUCTION DETAILS

SCALEL: 1" = 20'

C-9

STATE OF CALIFORNIA - DEPARTMENT OF TRANSPORTATION

Caltrans®

06-DESIGN

FUNCTIONAL SUPERVISOR: TERRY OGLE

CALCULATED-DESIGNED BY: JORGE AGUILERA

CHECKED BY: KAL DAHER

REVISED BY

DATE REVISED

LAST REVISION 01-12-10 DATE PLOTTED => 11-MAY-2010 TIME PLOTTED => 15:38

Dist	COUNTY	ROUTE	POST MILES TOTAL PROJECT	SHEET No.	TOTAL SHEETS
10	Tuo	108	R4.0/R6.0	43	237

REGISTERED CIVIL ENGINEER 01-12-10 DATE

5-10-10
PLANS APPROVAL DATE

REGISTERED PROFESSIONAL ENGINEER KAL H. DAHER No. C44510 Exp. 3-31-10 CIVIL STATE OF CALIFORNIA

THE STATE OF CALIFORNIA OR ITS OFFICERS OR AGENTS SHALL NOT BE RESPONSIBLE FOR THE ACCURACY OR COMPLETENESS OF SCANNED COPIES OF THIS PLAN SHEET.

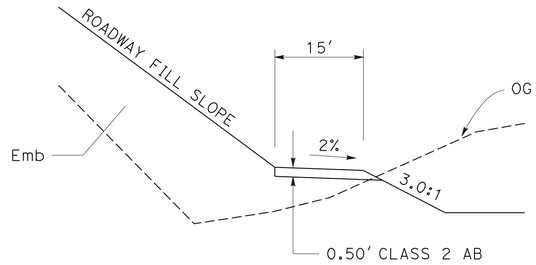

SECTION A-A

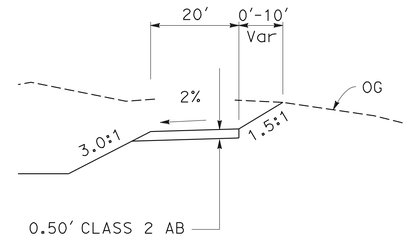

SECTION B-B

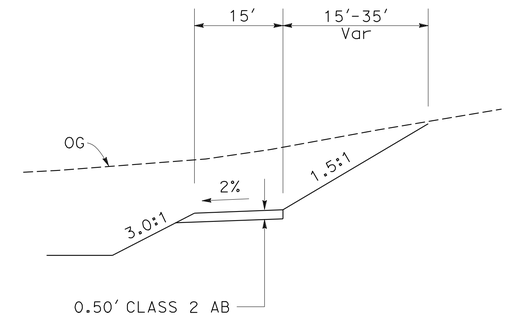

SECTION C-C

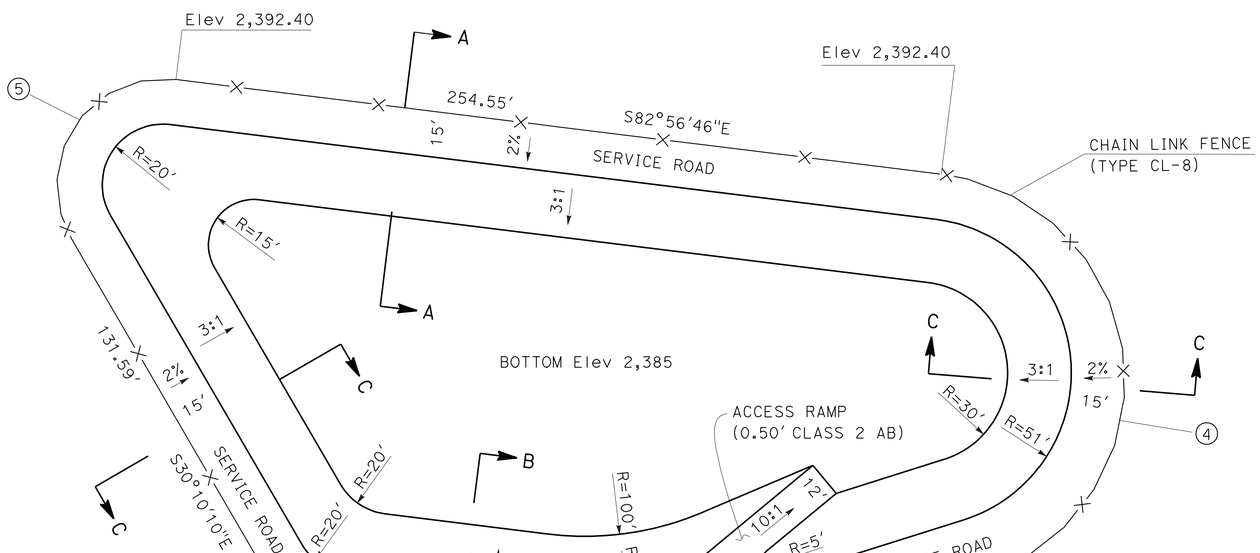

CURVE DATA

No.	R	Δ	T	L
1	35.00'	52°46'35"	17.37'	32.24'
2	10.00'	77°04'35"	7.97'	13.45'
3	10.00'	78°23'20"	8.15'	13.68'
4	68.50'	155°27'55"	315.04'	185.87'
5	35.00'	127°13'25"	70.54'	77.72'

Sta 211+00.00 TO 214+50.00 "LOL1"

BASIN

CONSTRUCTION DETAILS

SCALE: 1" = 20'

C-10

STATE OF CALIFORNIA - DEPARTMENT OF TRANSPORTATION
Caltrans
06-DESIGN

FUNCTIONAL SUPERVISOR: TERRY OGLE
CALCULATED-DESIGNED BY: JORGE AGUILERA
CHECKED BY: KAL DAHER
REVISED BY
DATE REVISED

LAST REVISION 01-12-10
DATE PLOTTED => 11-MAY-2010
TIME PLOTTED => 15:38

Dist	COUNTY	ROUTE	POST MILES TOTAL PROJECT	SHEET No.	TOTAL SHEETS
10	Tuo	108	R4.0/R6.0	44	237

REGISTERED CIVIL ENGINEER 01-12-10 DATE

5-10-10
PLANS APPROVAL DATE

REGISTERED PROFESSIONAL ENGINEER KAL H. DAHER No. C44510 Exp. 3-31-10 CIVIL STATE OF CALIFORNIA

THE STATE OF CALIFORNIA OR ITS OFFICERS OR AGENTS SHALL NOT BE RESPONSIBLE FOR THE ACCURACY OR COMPLETENESS OF SCANNED COPIES OF THIS PLAN SHEET.

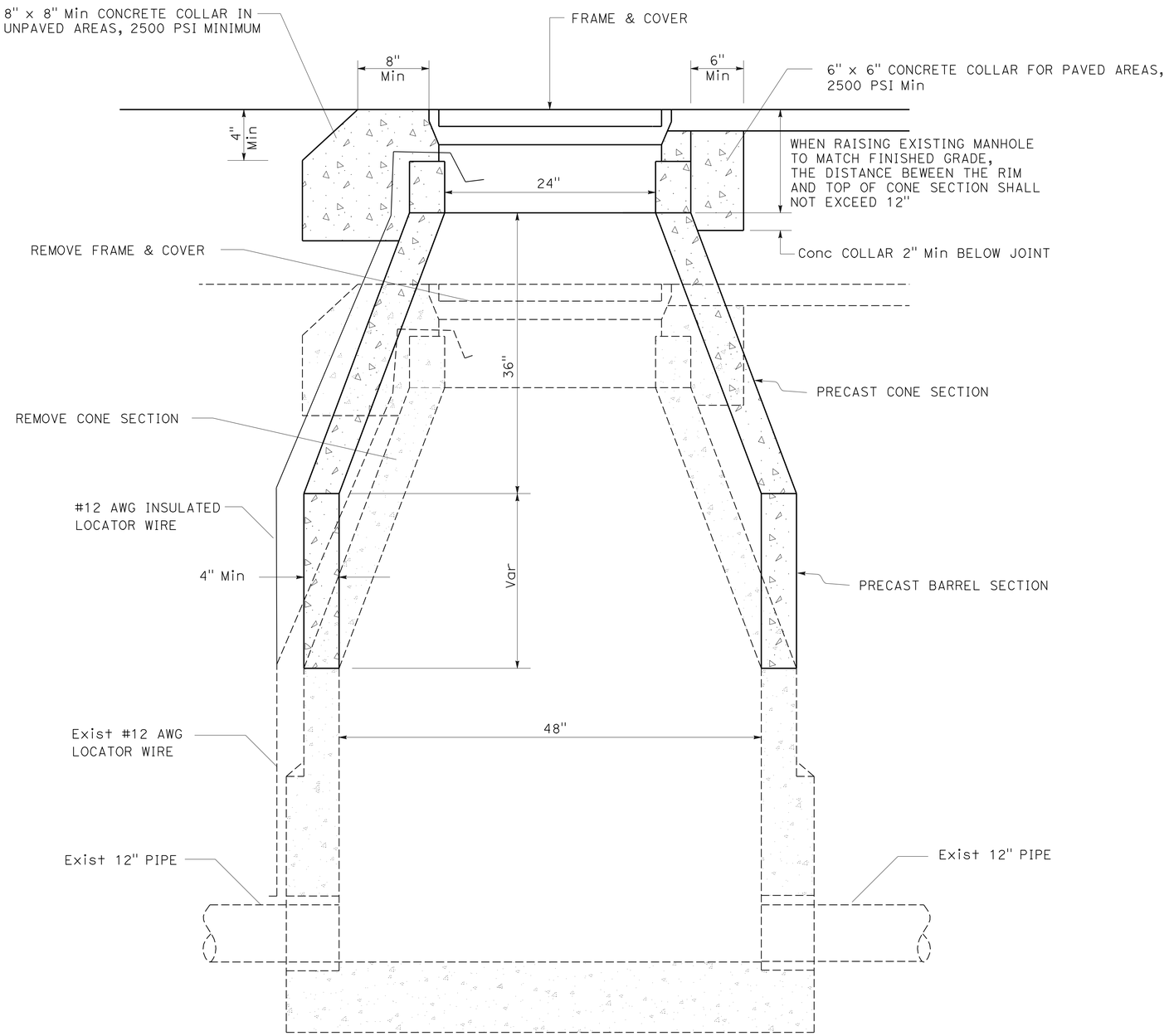

ADJUST MANHOLE TO GRADE

NOTES:

A. ALL MANHOLE JOINTS SHALL BE SEALED WITH RAM-NECK, KENT-SEAL #2 OR APPROVED EQUAL. INSIDE JOINTS SHALL BE TRIMMED AND MORTARED TO A SMOOTH FINISH. EXTERIOR OF MANHOLE IS TO BE COATED WITH AN APPROVED WATERTIGHT SEALER. IF HIGH GROUNDWATER IS EXPERIENCED, COAT EXTERIOR OF MANHOLE WITH BITUMASTIC SEALER.

B. FRAME & COVER SHALL BE STATE FURNISHED.

C. ALL JOINTS BETWEEN PRECAST SECTIONS SHALL BE MORTARED.

CONSTRUCTION DETAILS

NO SCALE

C-11

STATE OF CALIFORNIA - DEPARTMENT OF TRANSPORTATION
Caltrans
06-DESIGN

FUNCTIONAL SUPERVISOR: TERRY OGLE
CALCULATED-DESIGNED BY: JORGE AGUILERA
CHECKED BY: KAL DAHER
REVISED BY
DATE REVISED

LAST REVISION 01-12-10
DATE PLOTTED => 11-MAY-2010
TIME PLOTTED => 15:38

Dist	COUNTY	ROUTE	POST MILES TOTAL PROJECT	SHEET No.	TOTAL SHEETS
10	Tuo	108	R4.0/R6.0	45	237

REGISTERED CIVIL ENGINEER 12-23-09 DATE

5-10-10
PLANS APPROVAL DATE

REGISTERED PROFESSIONAL ENGINEER KAL H. DAHER No. C44510 Exp. 3-31-10 CIVIL STATE OF CALIFORNIA

THE STATE OF CALIFORNIA OR ITS OFFICERS OR AGENTS SHALL NOT BE RESPONSIBLE FOR THE ACCURACY OR COMPLETENESS OF SCANNED COPIES OF THIS PLAN SHEET.

LEGEND/ABBREVIATION:

- TBFM / Temp HYDRAULIC MULCH (BONDED FIBER MATRIX)
- TSF / Temp SILT FENCE (Type 1)
- TRSF / Temp REINFORCED SILT FENCE (Type 1)
- TFR / Temp FIBER ROLL
- Temp CHECK DAM (Type 1) (10' PER CHECK DAM AT 10' SPACING)
- Temp CHECK DAM (Type 2) (4' PER CHECK DAM AT 10' SPACING)

NOTE: FOR ACCURATE RIGHT OF WAY AND ACCESS DATA, CONTACT RIGHT OF WAY ENGINEERING AT THE DISTRICT OFFICE.

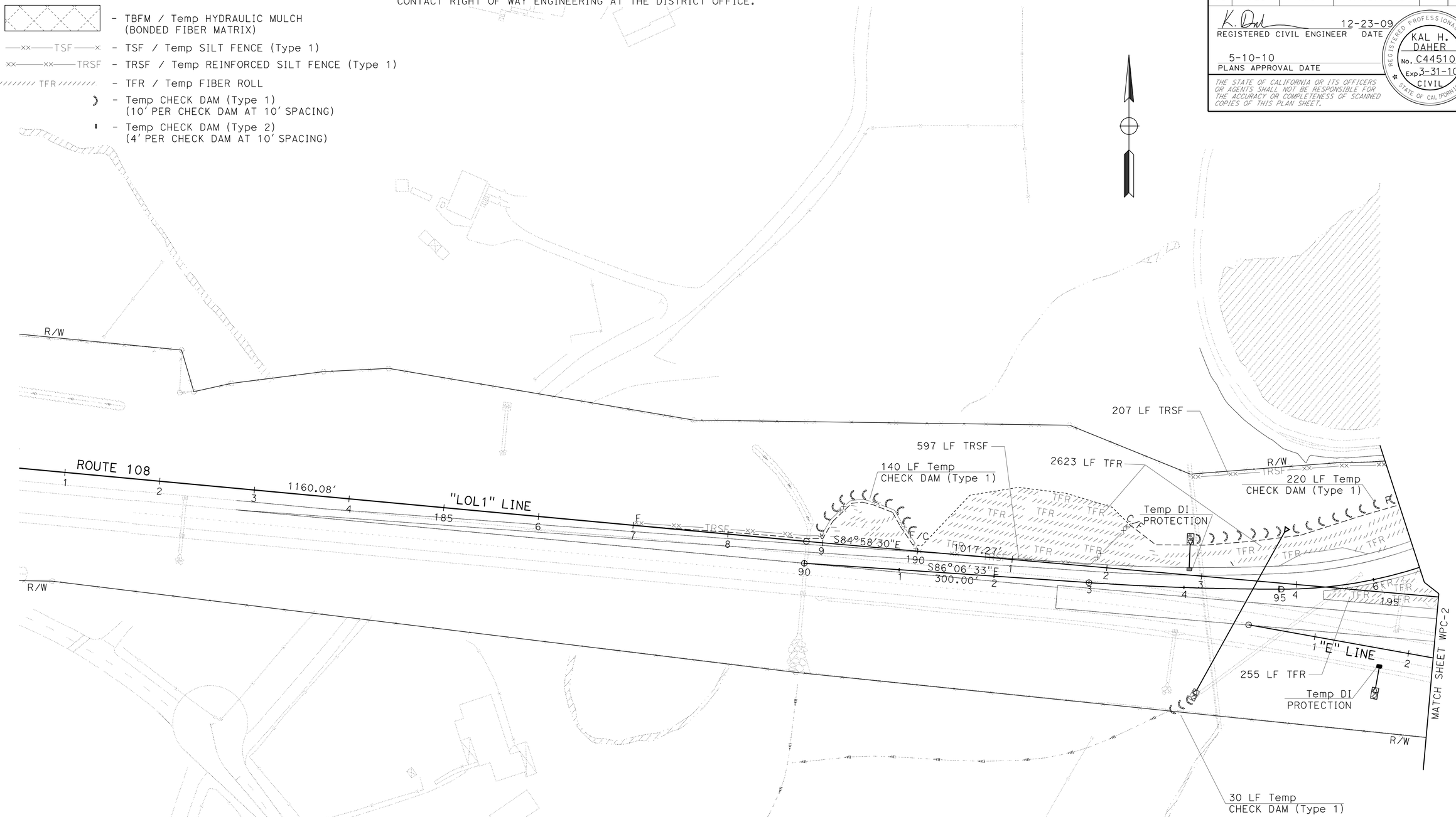

TEMPORARY WATER POLLUTION CONTROL PLAN

SCALE: 1" = 50'

WPC-1

THIS PLAN ACCURATE FOR TEMPORARY WATER POLLUTION CONTROL WORK ONLY

STATE OF CALIFORNIA - DEPARTMENT OF TRANSPORTATION
Caltrans
06-DESIGN

FUNCTIONAL SUPERVISOR: TERRY OGLE
CALCULATED-DESIGNED BY: JORGE AGUILERA
CHECKED BY: KAL DAHER
REVISED BY
DATE REVISED

LAST REVISION 01-06-10
DATE PLOTTED => 11-MAY-2010
TIME PLOTTED => 15:51

Dist	COUNTY	ROUTE	POST MILES TOTAL PROJECT	SHEET No.	TOTAL SHEETS
10	Tuo	108	R4.0/R6.0	46	237

REGISTERED CIVIL ENGINEER 01-06-10 DATE

5-10-10
PLANS APPROVAL DATE

REGISTERED PROFESSIONAL ENGINEER KAL H. DAHER No. C44510 Exp. 3-31-10 CIVIL STATE OF CALIFORNIA

THE STATE OF CALIFORNIA OR ITS OFFICERS OR AGENTS SHALL NOT BE RESPONSIBLE FOR THE ACCURACY OR COMPLETENESS OF SCANNED COPIES OF THIS PLAN SHEET.

NOTE: FOR ACCURATE RIGHT OF WAY AND ACCESS DATA, CONTACT RIGHT OF WAY ENGINEERING AT THE DISTRICT OFFICE.

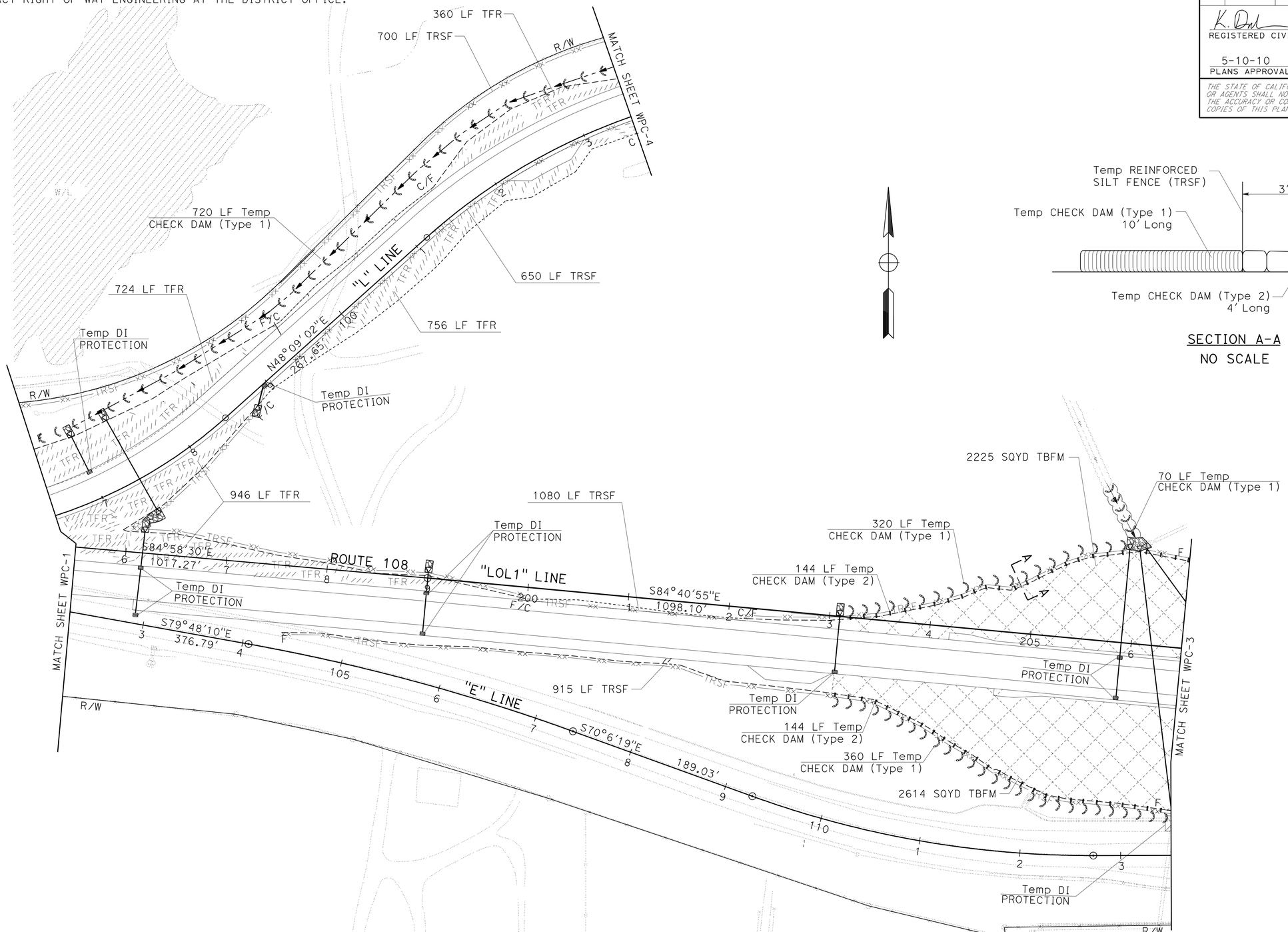

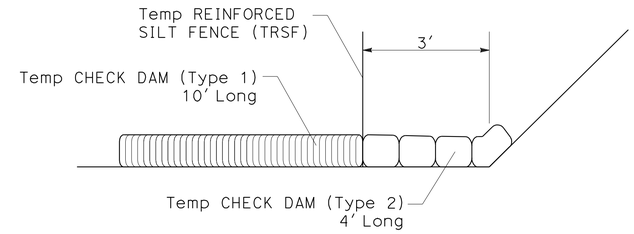

SECTION A-A
NO SCALE

TEMPORARY WATER POLLUTION CONTROL PLAN

SCALE: 1" = 50'

WPC-2

THIS PLAN ACCURATE FOR TEMPORARY WATER POLLUTION CONTROL WORK ONLY

STATE OF CALIFORNIA - DEPARTMENT OF TRANSPORTATION
Caltrans
06-DESIGN

FUNCTIONAL SUPERVISOR: TERRY OGLE
CALCULATED-DESIGNED BY: JORGE AGUILERA
CHECKED BY: KAL DAHER
REVISED BY
DATE REVISED

LAST REVISION DATE PLOTTED => 11-MAY-2010
01-06-10 TIME PLOTTED => 15:52

BORDER LAST REVISED 4/11/2008
RELATIVE BORDER SCALE IS IN INCHES 0 1 2 3
USERNAME => trstrk
DGN FILE => a34042gb002.dgn
CU 06228
EA 340421

Dist	COUNTY	ROUTE	POST MILES TOTAL PROJECT	SHEET No.	TOTAL SHEETS
10	Tuo	108	R4.0/R6.0	47	237

K. Daher 01-06-10
REGISTERED CIVIL ENGINEER DATE

5-10-10
PLANS APPROVAL DATE

REGISTERED PROFESSIONAL ENGINEER KAL H. DAHER No. C44510 Exp. 3-31-10 CIVIL STATE OF CALIFORNIA

THE STATE OF CALIFORNIA OR ITS OFFICERS OR AGENTS SHALL NOT BE RESPONSIBLE FOR THE ACCURACY OR COMPLETENESS OF SCANNED COPIES OF THIS PLAN SHEET.

NOTE: FOR ACCURATE RIGHT OF WAY AND ACCESS DATA, CONTACT RIGHT OF WAY ENGINEERING AT THE DISTRICT OFFICE.

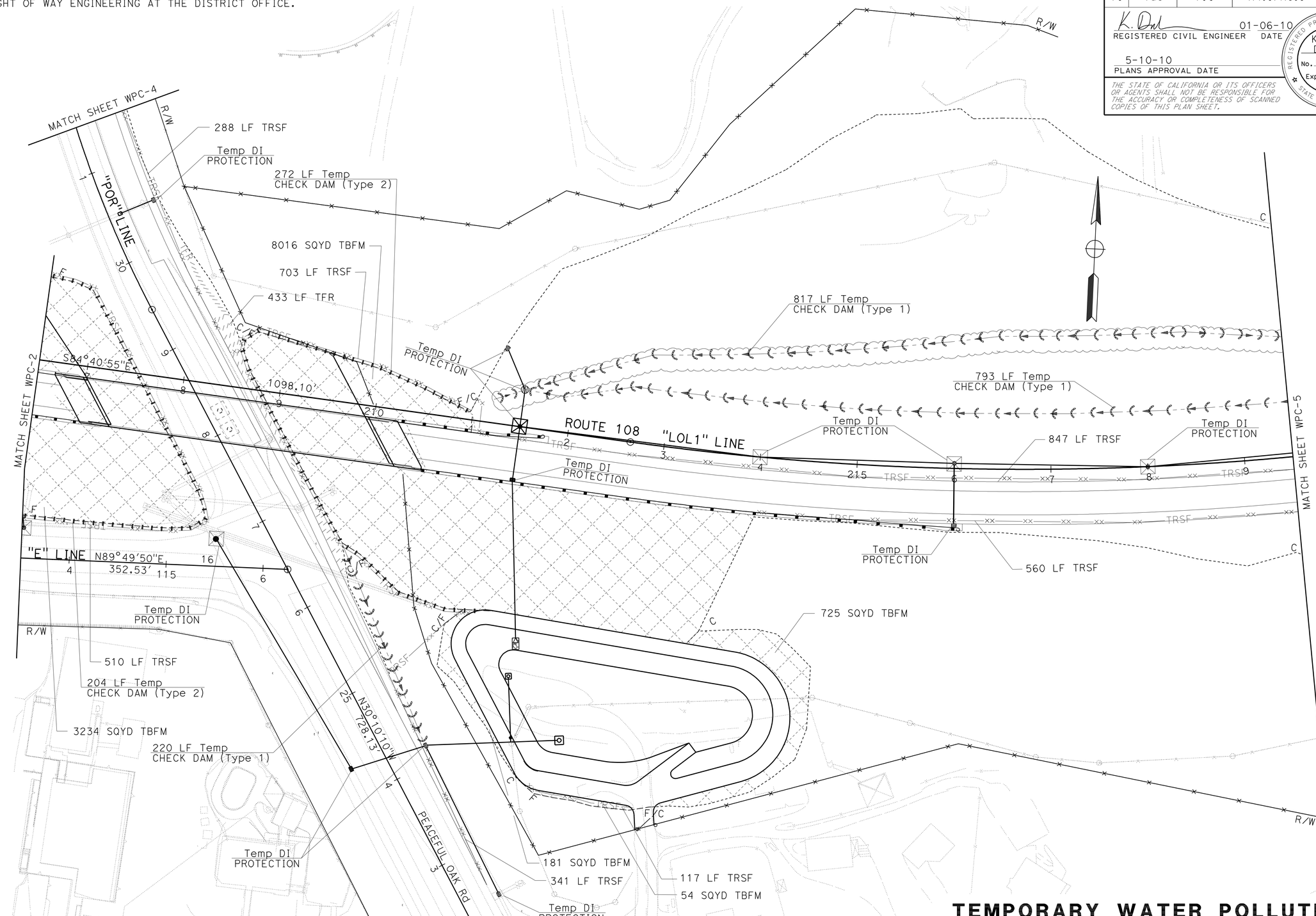

TEMPORARY WATER POLLUTION CONTROL PLAN

SCALE: 1" = 50'

WPC-3

THIS PLAN ACCURATE FOR TEMPORARY WATER POLLUTION CONTROL WORK ONLY

STATE OF CALIFORNIA - DEPARTMENT OF TRANSPORTATION
Caltrans
06-DESIGN

FUNCTIONAL SUPERVISOR: TERRY OGLE
CALCULATED-DESIGNED BY: JORGE AGUILERA
CHECKED BY: KAL DAHER
REVISED BY
DATE REVISED

LAST REVISION 01-06-10
DATE PLOTTED => 11-MAY-2010
TIME PLOTTED => 15:39

Dist	COUNTY	ROUTE	POST MILES TOTAL PROJECT	SHEET No.	TOTAL SHEETS
10	Tuo	108	R4.0/R6.0	48	237

K. Daher 01-06-10
REGISTERED CIVIL ENGINEER DATE

5-10-10
PLANS APPROVAL DATE

REGISTERED PROFESSIONAL ENGINEER
KAL H. DAHER
No. C44510
Exp. 3-31-10
CIVIL
STATE OF CALIFORNIA

THE STATE OF CALIFORNIA OR ITS OFFICERS OR AGENTS SHALL NOT BE RESPONSIBLE FOR THE ACCURACY OR COMPLETENESS OF SCANNED COPIES OF THIS PLAN SHEET.

NOTE: FOR ACCURATE RIGHT OF WAY AND ACCESS DATA, CONTACT RIGHT OF WAY ENGINEERING AT THE DISTRICT OFFICE.

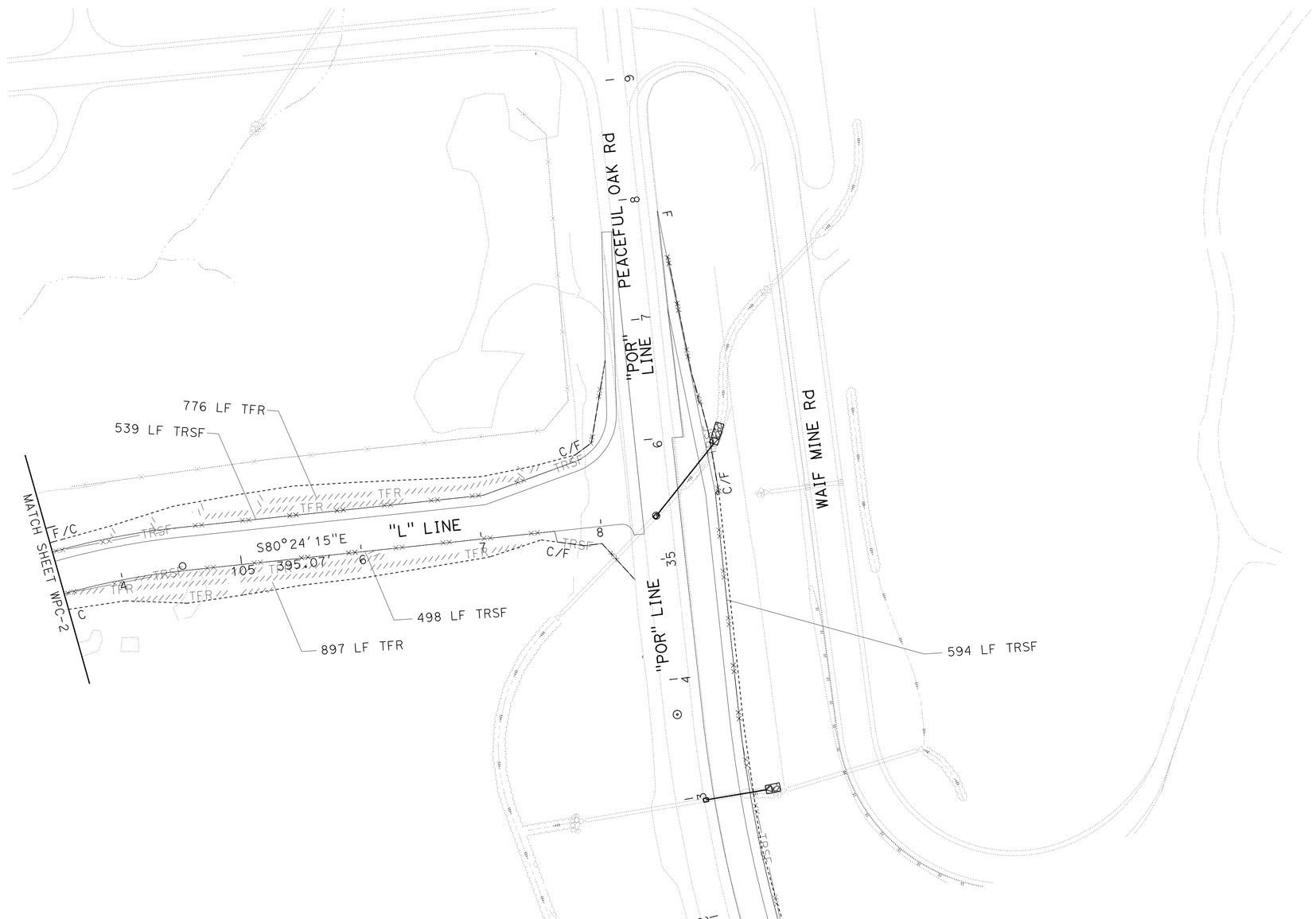

TEMPORARY WATER POLLUTION CONTROL PLAN

SCALE: 1" = 50'

WPC-4

THIS PLAN ACCURATE FOR TEMPORARY WATER POLLUTION CONTROL WORK ONLY

STATE OF CALIFORNIA - DEPARTMENT OF TRANSPORTATION
Caltrans
06-DESIGN

FUNCTIONAL SUPERVISOR: TERRY OGLE
CALCULATED-DESIGNED BY: JORGE AGUILERA
CHECKED BY: KAL DAHER
REVISED BY
DATE REVISED

LAST REVISION 01-06-10 | DATE PLOTTED => 11-MAY-2010 | TIME PLOTTED => 15:39

BORDER LAST REVISED 4/11/2008
RELATIVE BORDER SCALE IS IN INCHES 0 1 2 3
USERNAME => trstrk
DGN FILE => a34042gb004.dgn
CU 06228
EA 340421

Dist	COUNTY	ROUTE	POST MILES TOTAL PROJECT	SHEET No.	TOTAL SHEETS
10	Tuo	108	R4.0/R6.0	49	237

REGISTERED CIVIL ENGINEER 01-06-10 DATE

5-10-10
PLANS APPROVAL DATE

REGISTERED PROFESSIONAL ENGINEER KAL H. DAHER No. C44510 Exp. 3-31-10 CIVIL STATE OF CALIFORNIA

THE STATE OF CALIFORNIA OR ITS OFFICERS OR AGENTS SHALL NOT BE RESPONSIBLE FOR THE ACCURACY OR COMPLETENESS OF SCANNED COPIES OF THIS PLAN SHEET.

NOTE: FOR ACCURATE RIGHT OF WAY AND ACCESS DATA, CONTACT RIGHT OF WAY ENGINEERING AT THE DISTRICT OFFICE.

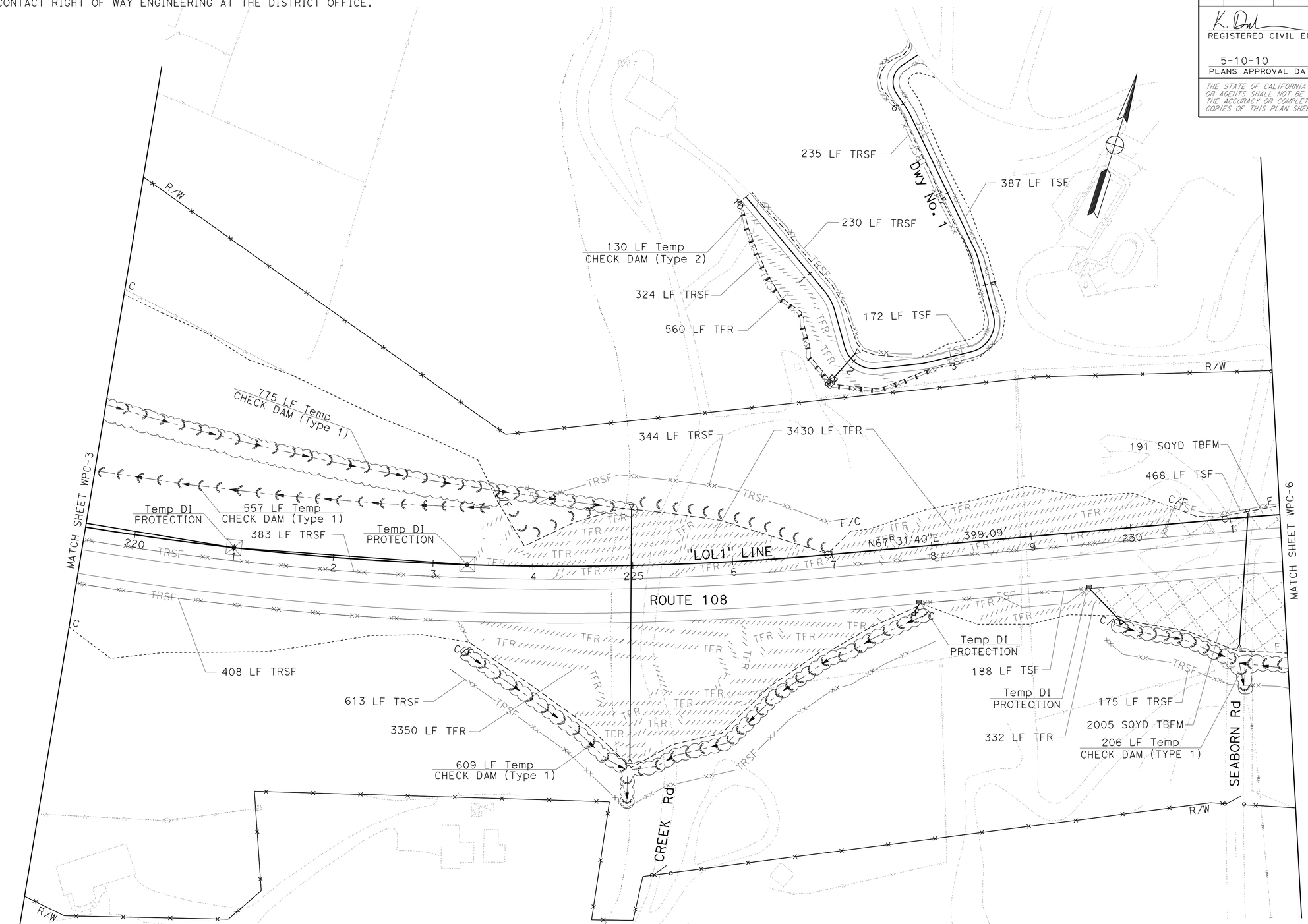

TEMPORARY WATER POLLUTION CONTROL PLAN

SCALE: 1" = 50'

WPC-5

THIS PLAN ACCURATE FOR TEMPORARY WATER POLLUTION CONTROL WORK ONLY

STATE OF CALIFORNIA - DEPARTMENT OF TRANSPORTATION
Caltrans®
06-DESIGN

FUNCTIONAL SUPERVISOR: TERRY OGLE

CALCULATED-DESIGNED BY: JORGE AGUILERA
CHECKED BY: KAL DAHER

REVISED BY
DATE REVISED

LAST REVISION 01-06-10
DATE PLOTTED => 11-MAY-2010
TIME PLOTTED => 15:39

Dist	COUNTY	ROUTE	POST MILES TOTAL PROJECT	SHEET No.	TOTAL SHEETS
10	Tuo	108	R4.0/R6.0	50	237

REGISTERED CIVIL ENGINEER 01-06-10 DATE

5-10-10
PLANS APPROVAL DATE

REGISTERED PROFESSIONAL ENGINEER KAL H. DAHER No. C44510 Exp. 3-31-10 CIVIL STATE OF CALIFORNIA

THE STATE OF CALIFORNIA OR ITS OFFICERS OR AGENTS SHALL NOT BE RESPONSIBLE FOR THE ACCURACY OR COMPLETENESS OF SCANNED COPIES OF THIS PLAN SHEET.

NOTE: FOR ACCURATE RIGHT OF WAY AND ACCESS DATA, CONTACT RIGHT OF WAY ENGINEERING AT THE DISTRICT OFFICE.

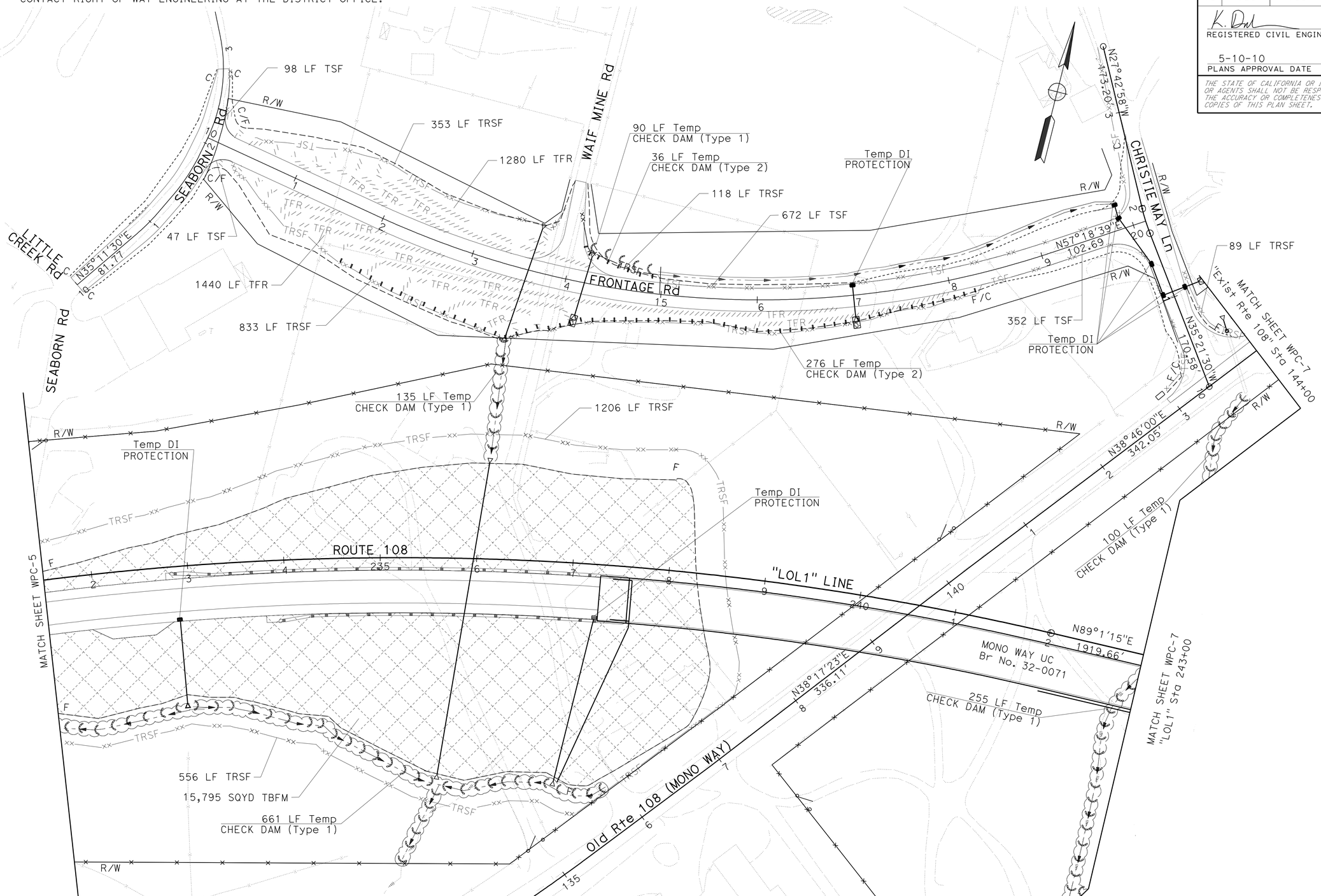

TEMPORARY WATER POLLUTION CONTROL PLAN

SCALE: 1" = 50'

WPC-6

THIS PLAN ACCURATE FOR TEMPORARY WATER POLLUTION CONTROL WORK ONLY

STATE OF CALIFORNIA - DEPARTMENT OF TRANSPORTATION

Caltrans

06-DESIGN

FUNCTIONAL SUPERVISOR: TERRY OGLE

CALCULATED-DESIGNED BY: JORGE AGUILERA

CHECKED BY: KAL DAHER

REVISED BY

DATE REVISED

LAST REVISION 01-06-10 | DATE PLOTTED => 11-MAY-2010 | TIME PLOTTED => 15:54

BORDER LAST REVISED 4/11/2008

RELATIVE BORDER SCALE IS IN INCHES 0 1 2 3

USERNAME => trstrk
DGN FILE => a34042gb006.dgn

CU 06228

EA 340421

NOTE: FOR ACCURATE RIGHT OF WAY AND ACCESS DATA, CONTACT RIGHT OF WAY ENGINEERING AT THE DISTRICT OFFICE.

Dist	COUNTY	ROUTE	POST MILES TOTAL PROJECT	SHEET No.	TOTAL SHEETS
10	Tuo	108	R4.0/R6.0	51	237

REGISTERED CIVIL ENGINEER 01-06-10 DATE

5-10-10
PLANS APPROVAL DATE

REGISTERED PROFESSIONAL ENGINEER KAL H. DAHER No. C44510 Exp. 3-31-10 CIVIL STATE OF CALIFORNIA

THE STATE OF CALIFORNIA OR ITS OFFICERS OR AGENTS SHALL NOT BE RESPONSIBLE FOR THE ACCURACY OR COMPLETENESS OF SCANNED COPIES OF THIS PLAN SHEET.

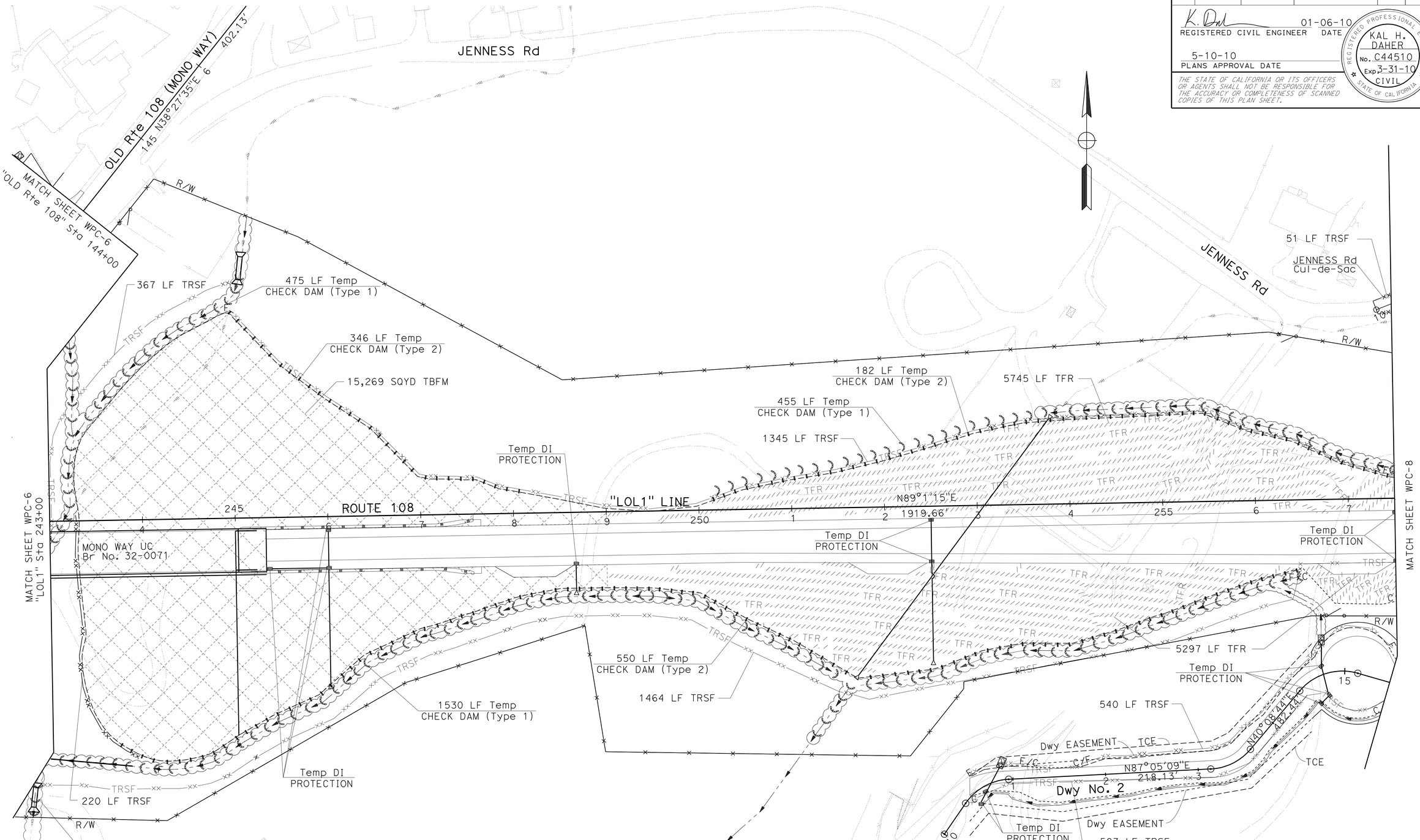

TEMPORARY WATER POLLUTION CONTROL PLAN

SCALE: 1" = 50'

WPC-7

THIS PLAN ACCURATE FOR TEMPORARY WATER POLLUTION CONTROL WORK ONLY

STATE OF CALIFORNIA - DEPARTMENT OF TRANSPORTATION
Caltrans
06-DESIGN

FUNCTIONAL SUPERVISOR: TERRY OGLE
CALCULATED-DESIGNED BY: JORGE AGUILERA
CHECKED BY: KAL DAHER
REVISED BY
DATE REVISED

LAST REVISION 01-06-10 | DATE PLOTTED => 11-MAY-2010 TIME PLOTTED => 17:02

Dist	COUNTY	ROUTE	POST MILES TOTAL PROJECT	SHEET No.	TOTAL SHEETS
10	Tuo	108	R4.0/R6.0	52	237

K. Daher 01-07-10
REGISTERED CIVIL ENGINEER DATE

5-10-10
PLANS APPROVAL DATE

REGISTERED PROFESSIONAL ENGINEER KAL H. DAHER No. C44510 Exp. 3-31-10 CIVIL STATE OF CALIFORNIA

THE STATE OF CALIFORNIA OR ITS OFFICERS OR AGENTS SHALL NOT BE RESPONSIBLE FOR THE ACCURACY OR COMPLETENESS OF SCANNED COPIES OF THIS PLAN SHEET.

NOTE: FOR ACCURATE RIGHT OF WAY AND ACCESS DATA, CONTACT RIGHT OF WAY ENGINEERING AT THE DISTRICT OFFICE.

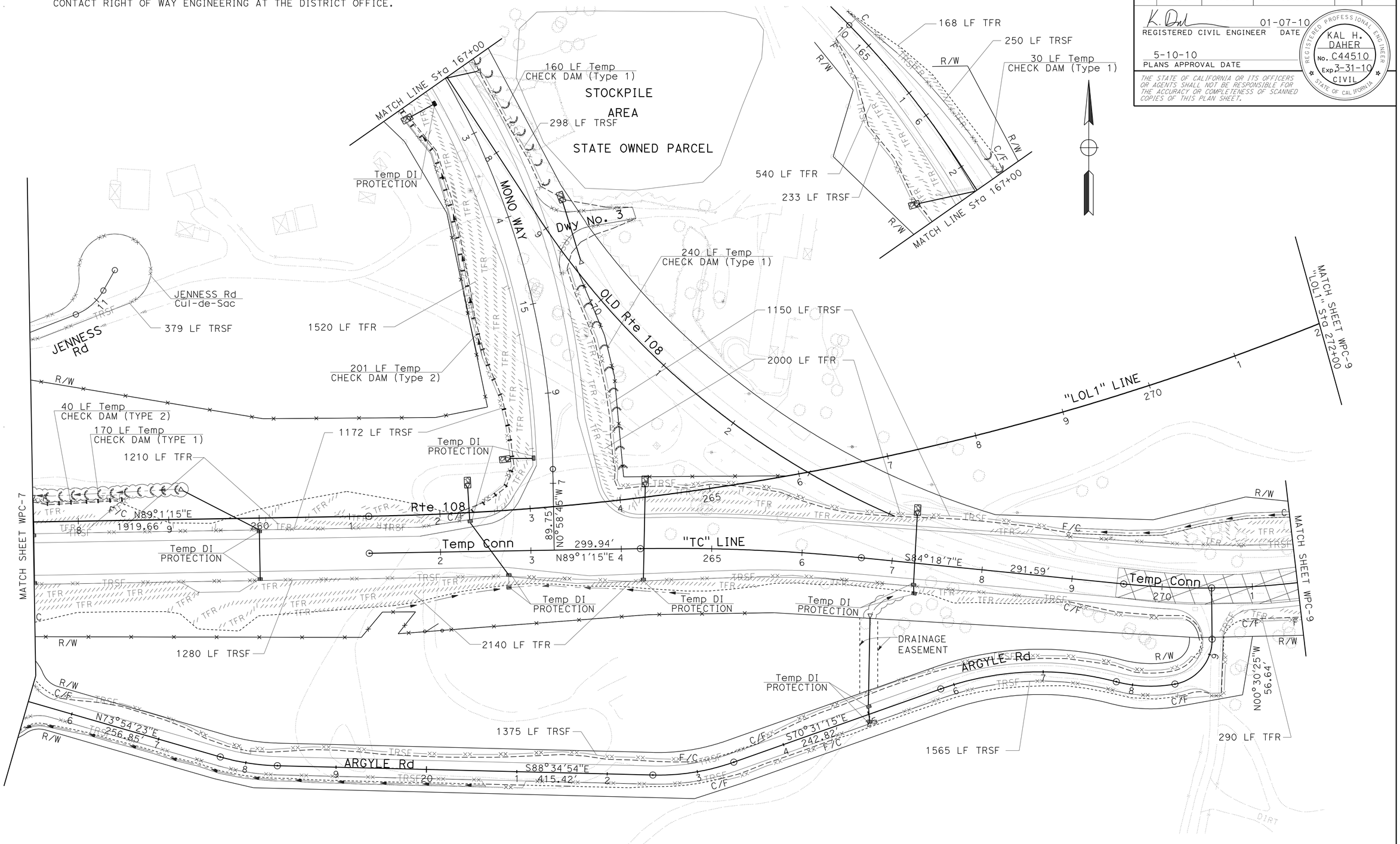

TEMPORARY WATER POLLUTION CONTROL PLAN

SCALE: 1" = 50'

WPC-8

THIS PLAN ACCURATE FOR TEMPORARY WATER POLLUTION CONTROL WORK ONLY

STATE OF CALIFORNIA - DEPARTMENT OF TRANSPORTATION
Caltrans
06-DESIGN

FUNCTIONAL SUPERVISOR: TERRY OGLE
CALCULATED-DESIGNED BY: JORGE AGUILERA
CHECKED BY: KAL DAHER
REVISED BY
DATE REVISED

LAST REVISION DATE PLOTTED => 11-MAY-2010
01-07-10 TIME PLOTTED => 16:58

Dist	COUNTY	ROUTE	POST MILES TOTAL PROJECT	SHEET No.	TOTAL SHEETS
10	Tuo	108	R4.0/R6.0	53	237

REGISTERED CIVIL ENGINEER 01-07-10 DATE

5-10-10
PLANS APPROVAL DATE

REGISTERED PROFESSIONAL ENGINEER
KAL H. DAHER
No. C44510
Exp. 3-31-10
CIVIL
STATE OF CALIFORNIA

THE STATE OF CALIFORNIA OR ITS OFFICERS OR AGENTS SHALL NOT BE RESPONSIBLE FOR THE ACCURACY OR COMPLETENESS OF SCANNED COPIES OF THIS PLAN SHEET.

NOTE: FOR ACCURATE RIGHT OF WAY AND ACCESS DATA, CONTACT RIGHT OF WAY ENGINEERING AT THE DISTRICT OFFICE.

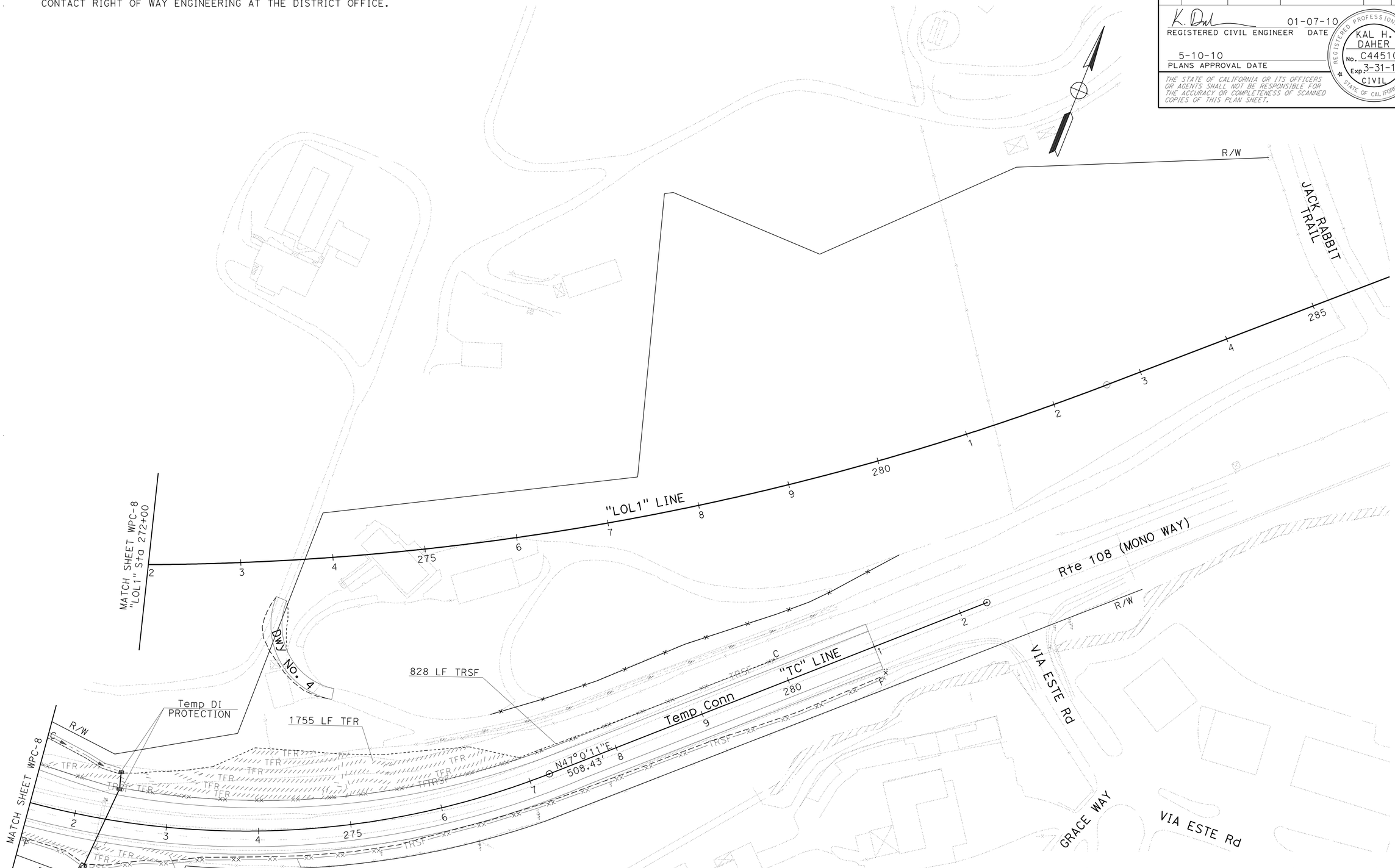

TEMPORARY WATER POLLUTION CONTROL PLAN

SCALE: 1" = 50'

WPC-9

THIS PLAN ACCURATE FOR TEMPORARY WATER POLLUTION CONTROL WORK ONLY

STATE OF CALIFORNIA - DEPARTMENT OF TRANSPORTATION
Caltrans
06-DESIGN

FUNCTIONAL SUPERVISOR: TERRY OGLE
CALCULATED-DESIGNED BY: JORGE AGUILERA
CHECKED BY: KAL DAHER
REVISED BY
DATE REVISED

LAST REVISION DATE PLOTTED => 11-MAY-2010
01-07-10 TIME PLOTTED => 16:58

Dist	COUNTY	ROUTE	POST MILES TOTAL PROJECT	SHEET No.	TOTAL SHEETS
10	Tuo	108	R4.0/R6.0	54	237

LICENSED LANDSCAPE ARCHITECT

5-10-10
PLANS APPROVAL DATE

LICENSED LANDSCAPE ARCHITECT
William Duttera No. 2342
Signature
9/30/10
Renewal Date
12/16/09
Date
STATE OF CALIFORNIA

THE STATE OF CALIFORNIA OR ITS OFFICERS OR AGENTS SHALL NOT BE RESPONSIBLE FOR THE ACCURACY OR COMPLETENESS OF ELECTRONIC COPIES OF THIS PLAN SHEET.

NOTE: FOR ACCURATE RIGHT OF WAY AND ACCESS DATA, CONTACT RIGHT OF WAY ENGINEERING AT THE DISTRICT OFFICE.

LEGEND:

- EROSION CONTROL (BONDED FIBER MATRIX) AND ROLLED EROSION CONTROL PRODUCT (JUTE MESH)
- EROSION CONTROL (BONDED FIBER MATRIX)
- EROSION CONTROL (HYDROSEED) AND EROSION CONTROL (COMPOST BLANKET)

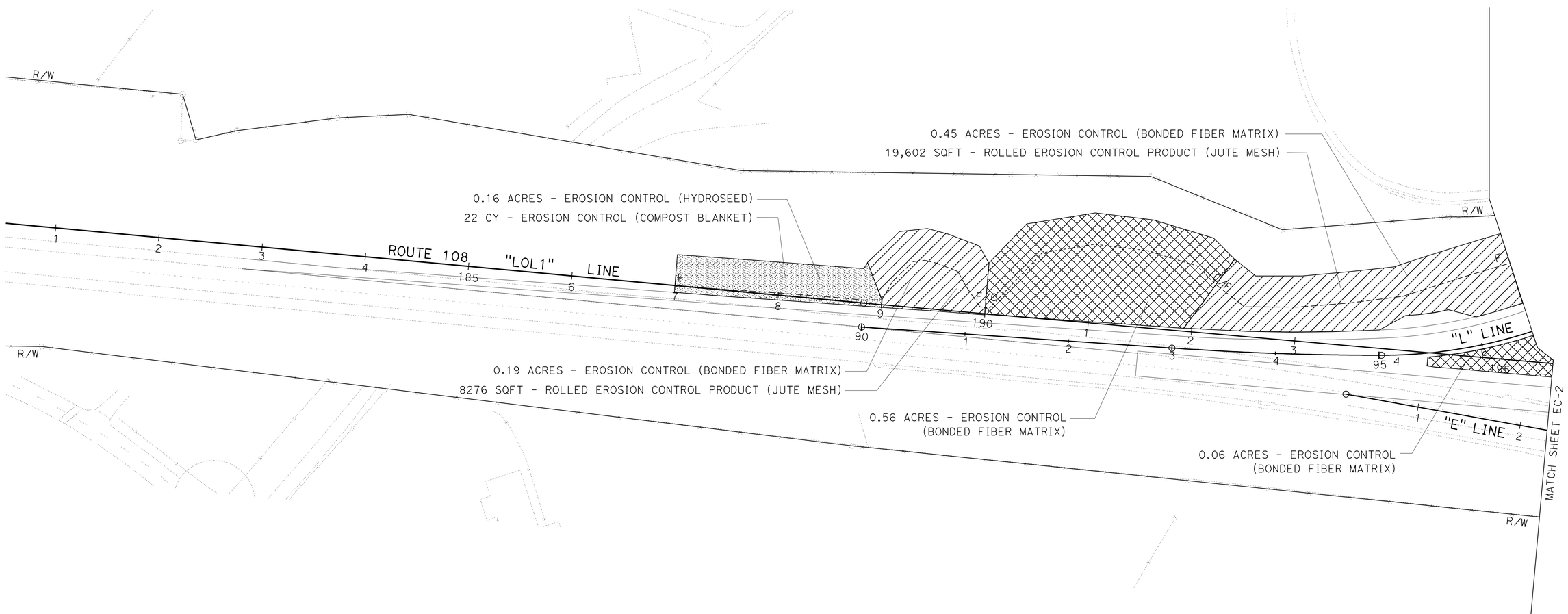

EROSION CONTROL PLAN

SCALE: 1" = 50'

EC-1

THIS PLAN ACCURATE FOR EROSION CONTROL WORK ONLY

STATE OF CALIFORNIA - DEPARTMENT OF TRANSPORTATION
Caltrans LANDSCAPE ARCHITECTURE

FUNCTIONAL SUPERVISOR: ELBERT COX
CALCULATED-DESIGNED BY: GUS ESCUTIA
CHECKED BY: BILL DUTTERA
REVISED BY: BD
DATE REVISED: 12-16-09

LAST REVISION 01-14-10 | DATE PLOTTED => 11-MAY-2010 | TIME PLOTTED => 16:58

Dist	COUNTY	ROUTE	POST MILES TOTAL PROJECT	SHEET No.	TOTAL SHEETS
10	Tuo	108	R4.0/R6.0	55	237

LICENSED LANDSCAPE ARCHITECT

5-10-10
PLANS APPROVAL DATE

LICENSED LANDSCAPE ARCHITECT William Duttera No. 3242 Expiration Date 9/30/10 Renewal Date 12/16/09 Date STATE OF CALIFORNIA

THE STATE OF CALIFORNIA OR ITS OFFICERS OR AGENTS SHALL NOT BE RESPONSIBLE FOR THE ACCURACY OR COMPLETENESS OF ELECTRONIC COPIES OF THIS PLAN SHEET.

NOTE: FOR ACCURATE RIGHT OF WAY AND ACCESS DATA, CONTACT RIGHT OF WAY ENGINEERING AT THE DISTRICT OFFICE.

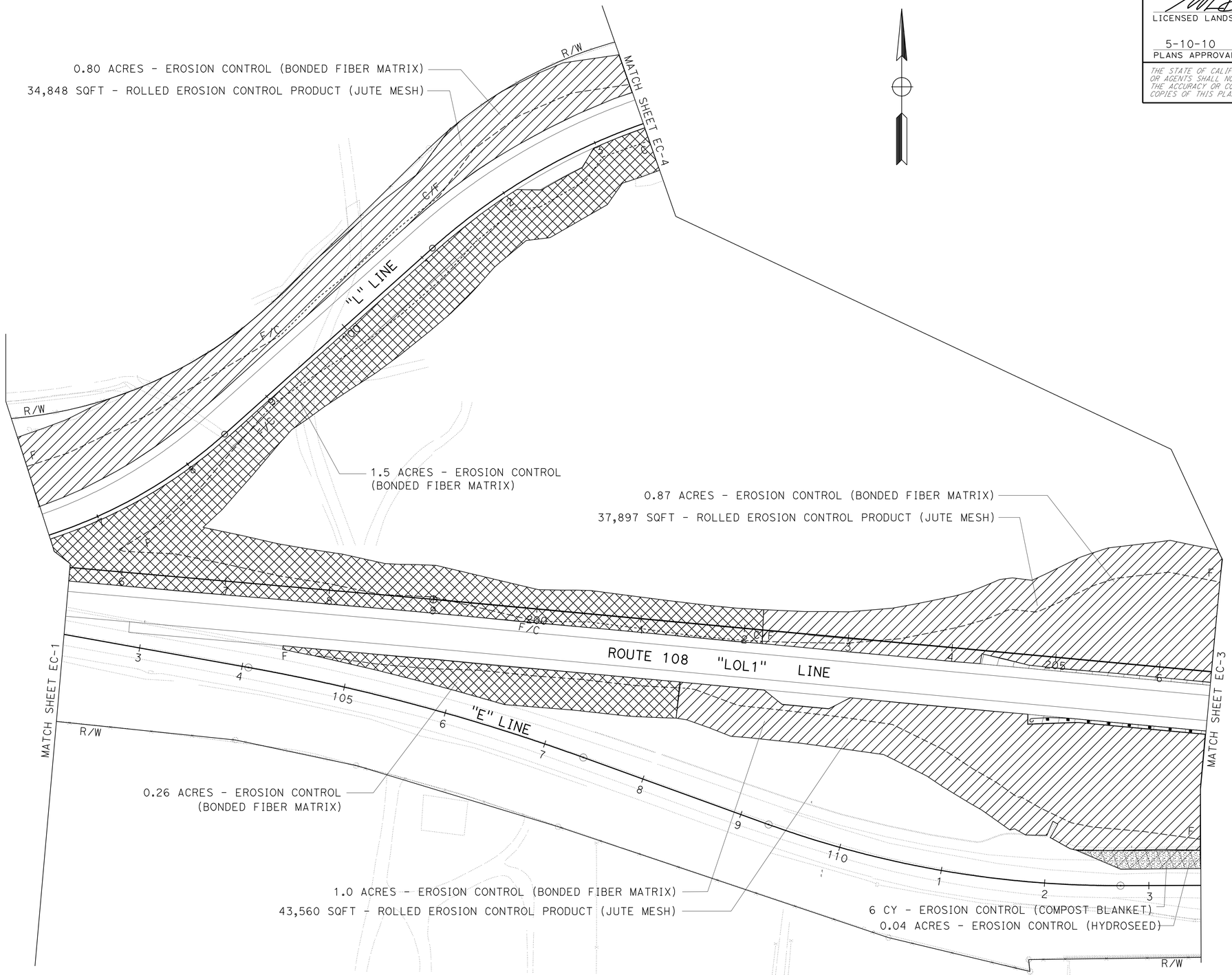

EROSION CONTROL PLAN

SCALE: 1" = 50'

EC-2

THIS PLAN ACCURATE FOR EROSION CONTROL WORK ONLY

CALCULATED-DESIGNED BY	GUS ESCUTIA
CHECKED BY	BILL DUTTERA
REVISED BY	BD
DATE REVISED	12-16-09
FUNCTIONAL SUPERVISOR	ELBERT COX

STATE OF CALIFORNIA - DEPARTMENT OF TRANSPORTATION
Caltrans
LANDSCAPE ARCHITECTURE

LAST REVISION 01-14-10
DATE PLOTTED => 11-MAY-2010
TIME PLOTTED => 16:58

Dist	COUNTY	ROUTE	POST MILES TOTAL PROJECT	SHEET No.	TOTAL SHEETS
10	Tuo	108	R4.0/R6.0	56	237

LICENSED LANDSCAPE ARCHITECT

5-10-10
PLANS APPROVAL DATE

LICENSED LANDSCAPE ARCHITECT
William Duttera No. 3425
Signature
9/30/10
Renewal Date
01/14/10
Date
STATE OF CALIFORNIA

THE STATE OF CALIFORNIA OR ITS OFFICERS OR AGENTS SHALL NOT BE RESPONSIBLE FOR THE ACCURACY OR COMPLETENESS OF ELECTRONIC COPIES OF THIS PLAN SHEET.

NOTE: FOR ACCURATE RIGHT OF WAY AND ACCESS DATA, CONTACT RIGHT OF WAY ENGINEERING AT THE DISTRICT OFFICE.

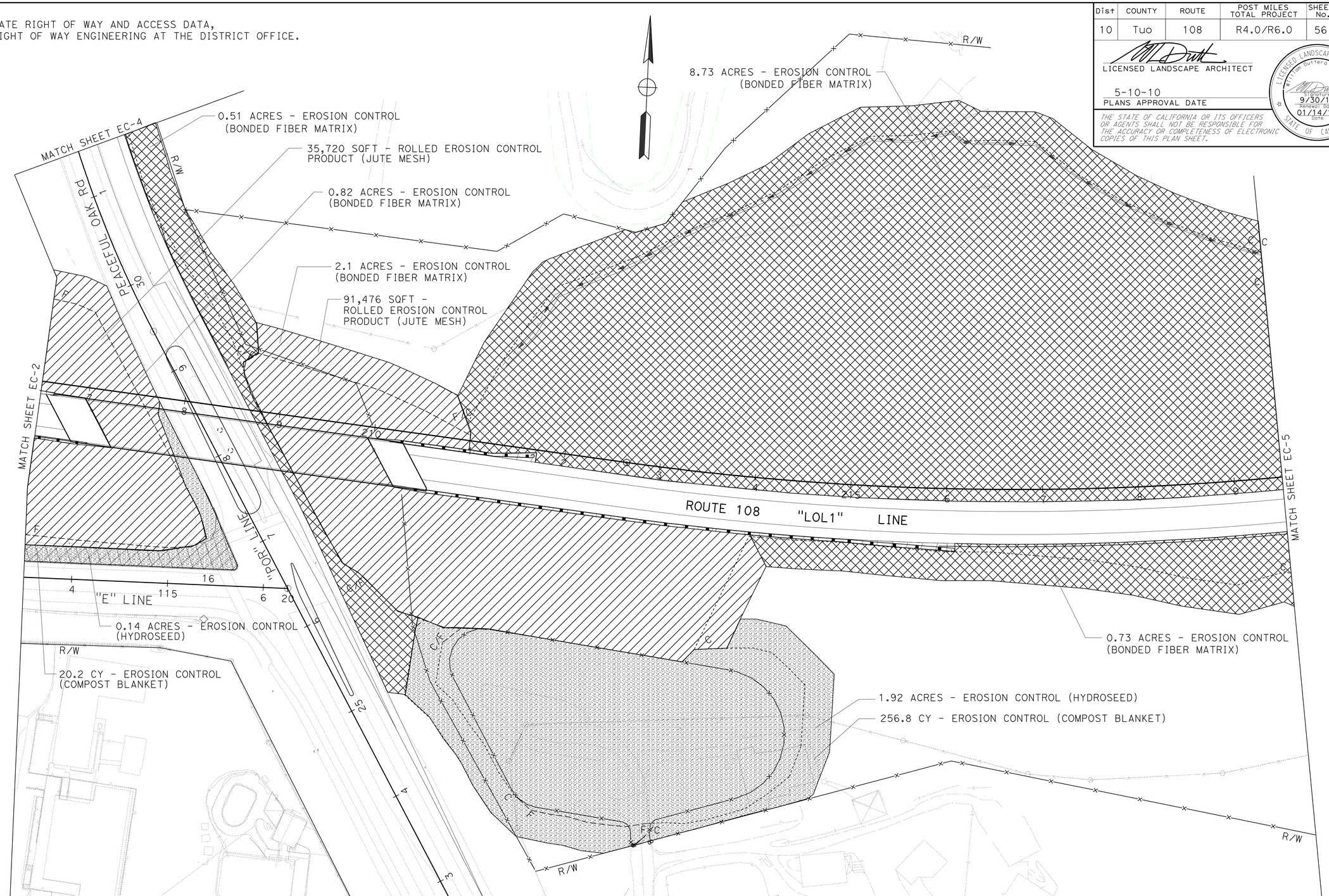

EROSION CONTROL PLAN

SCALE: 1" = 50'

EC-3

THIS PLAN ACCURATE FOR EROSION CONTROL WORK ONLY

STATE OF CALIFORNIA - DEPARTMENT OF TRANSPORTATION
Caltrans® LANDSCAPE ARCHITECTURE

FUNCTIONAL SUPERVISOR: ELBERT COX
CALCULATED-DESIGNED BY: GUS ESCUTIA
CHECKED BY: BILL DUTTERA
REVISED BY: BD
DATE REVISED: 01-14-10

LAST REVISION 01-14-10 | DATE PLOTTED => 11-MAY-2010 | TIME PLOTTED => 17:05

NOTE: FOR ACCURATE RIGHT OF WAY AND ACCESS DATA, CONTACT RIGHT OF WAY ENGINEERING AT THE DISTRICT OFFICE.

Dist	COUNTY	ROUTE	POST MILES TOTAL PROJECT	SHEET No.	TOTAL SHEETS
10	Tuo	108	R4.0/R6.0	57	237

LICENSED LANDSCAPE ARCHITECT

5-10-10
PLANS APPROVAL DATE

LICENSED LANDSCAPE ARCHITECT
William Duttera No. 4242
Signature
9/30/10
Renewal Date
12/16/09
Date
STATE OF CALIFORNIA

THE STATE OF CALIFORNIA OR ITS OFFICERS OR AGENTS SHALL NOT BE RESPONSIBLE FOR THE ACCURACY OR COMPLETENESS OF ELECTRONIC COPIES OF THIS PLAN SHEET.

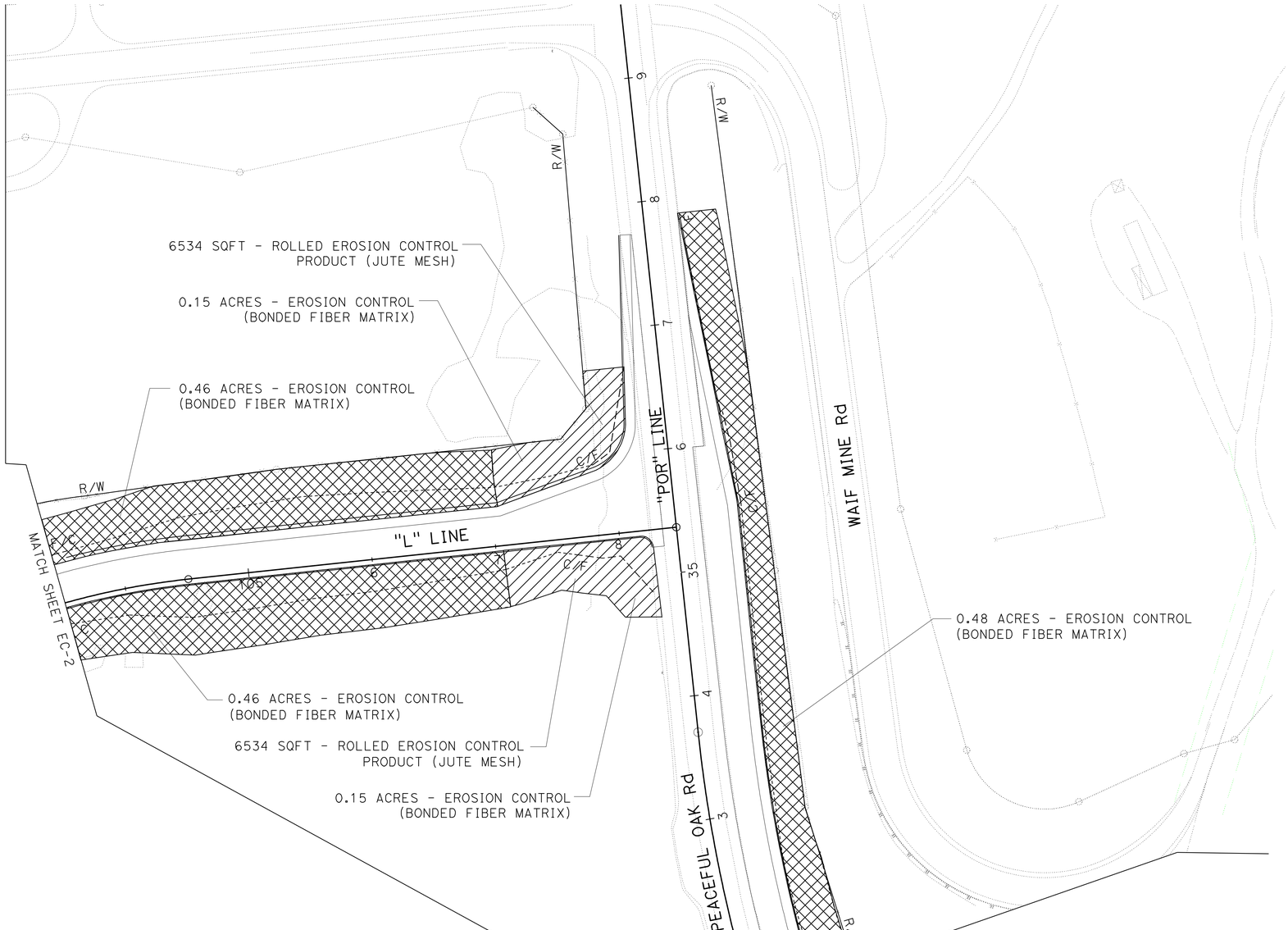

THIS PLAN ACCURATE FOR EROSION CONTROL WORK ONLY

EROSION CONTROL PLAN
SCALE: 1" = 50'

EC-4

STATE OF CALIFORNIA - DEPARTMENT OF TRANSPORTATION
Caltrans® LANDSCAPE ARCHITECTURE

FUNCTIONAL SUPERVISOR: ELBERT COX
CALCULATED-DESIGNED BY: GUS ESCUTIA
CHECKED BY: BILL DUTTERA
REVISED BY: BD
DATE REVISED: 12-16-09

LAST REVISION 01-14-10 | DATE PLOTTED => 11-MAY-2010 | TIME PLOTTED => 16:59

Dist	COUNTY	ROUTE	POST MILES TOTAL PROJECT	SHEET No.	TOTAL SHEETS
10	Tuo	108	R4.0/R6.0	58	237

LICENSED LANDSCAPE ARCHITECT

5-10-10
PLANS APPROVAL DATE

LICENSED LANDSCAPE ARCHITECT
William Duttera No. 4242
Expiration Date 9/30/10
Renewal Date 01/14/10
STATE OF CALIFORNIA

THE STATE OF CALIFORNIA OR ITS OFFICERS OR AGENTS SHALL NOT BE RESPONSIBLE FOR THE ACCURACY OR COMPLETENESS OF ELECTRONIC COPIES OF THIS PLAN SHEET.

NOTE: FOR ACCURATE RIGHT OF WAY AND ACCESS DATA, CONTACT RIGHT OF WAY ENGINEERING AT THE DISTRICT OFFICE.

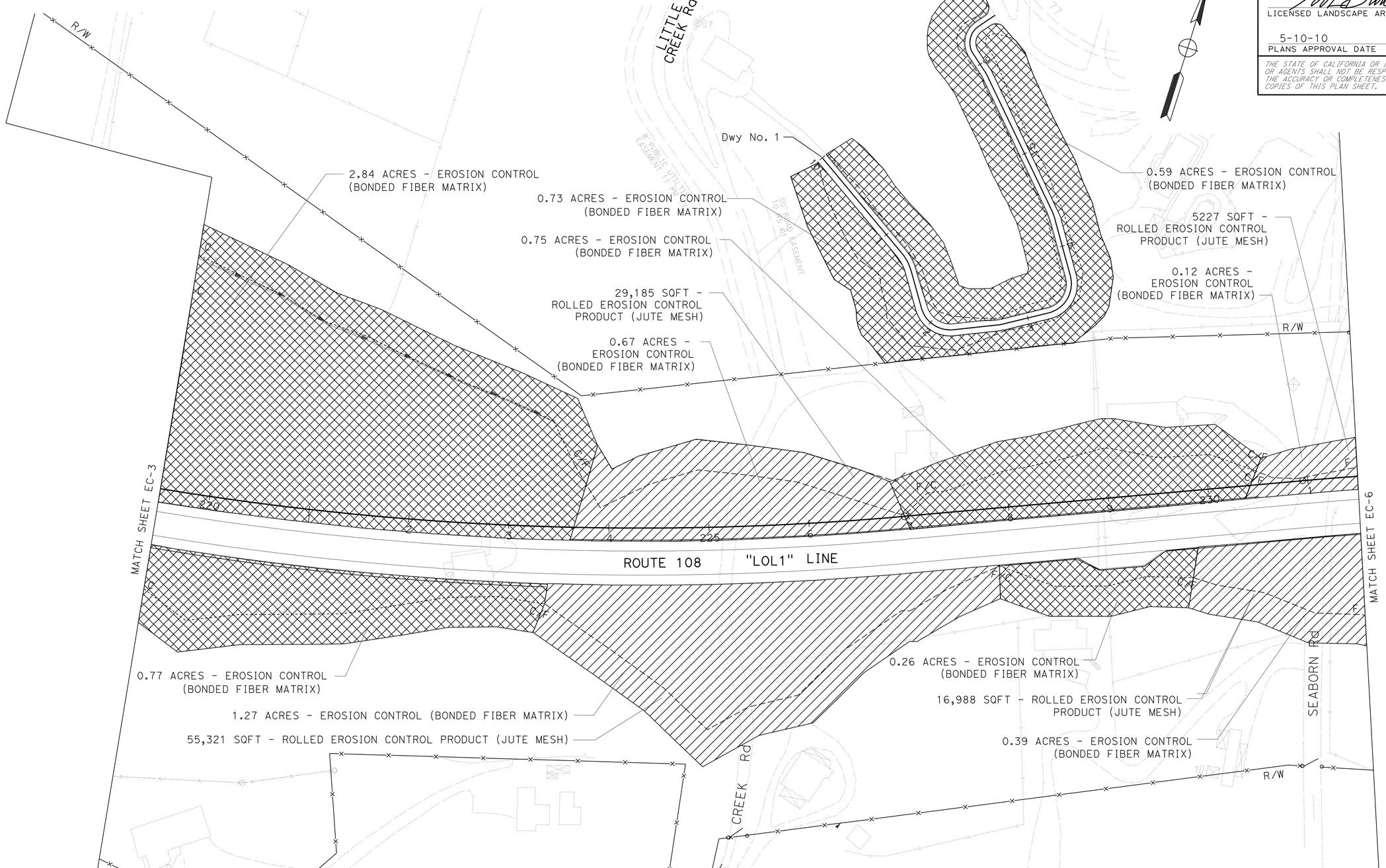

THIS PLAN ACCURATE FOR EROSION CONTROL WORK ONLY

EROSION CONTROL PLAN

SCALE: 1" = 50'

EC-5

CALCULATED-DESIGNED BY	GUS ESCUTIA
CHECKED BY	BILL DUTTERA
REVISED BY	BD
DATE REVISED	01-14-10
FUNCTIONAL SUPERVISOR	ELBERT COX

STATE OF CALIFORNIA - DEPARTMENT OF TRANSPORTATION
Caltrans® LANDSCAPE ARCHITECTURE

LAST REVISION 01-14-10 | DATE PLOTTED => 11-MAY-2010 | TIME PLOTTED => 17:08

Dist	COUNTY	ROUTE	POST MILES TOTAL PROJECT	SHEET No.	TOTAL SHEETS
10	Tuo	108	R4.0/R6.0	59	237

LICENSED LANDSCAPE ARCHITECT

5-10-10
PLANS APPROVAL DATE

LICENSED LANDSCAPE ARCHITECT
William Duttera No. 4242
Signature
9/30/10
Renewal Date
12/16/09
Date
STATE OF CALIFORNIA

THE STATE OF CALIFORNIA OR ITS OFFICERS OR AGENTS SHALL NOT BE RESPONSIBLE FOR THE ACCURACY OR COMPLETENESS OF ELECTRONIC COPIES OF THIS PLAN SHEET.

NOTE: FOR ACCURATE RIGHT OF WAY AND ACCESS DATA, CONTACT RIGHT OF WAY ENGINEERING AT THE DISTRICT OFFICE.

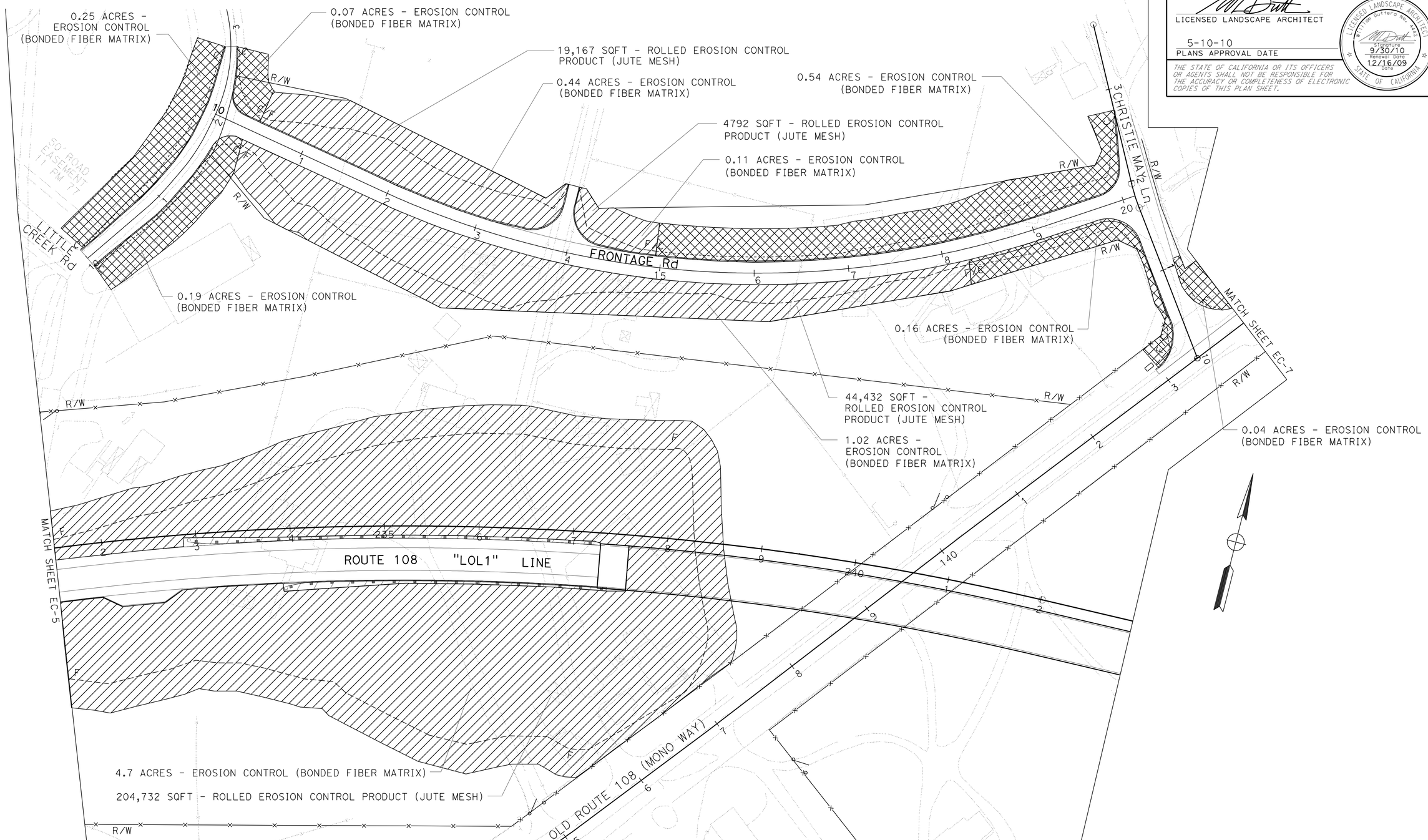

EROSION CONTROL PLAN

SCALE: 1" = 50'

EC-6

THIS PLAN ACCURATE FOR EROSION CONTROL WORK ONLY

STATE OF CALIFORNIA - DEPARTMENT OF TRANSPORTATION
Caltrans® LANDSCAPE ARCHITECTURE

FUNCTIONAL SUPERVISOR: ELBERT COX
CALCULATED-DESIGNED BY: GUS ESCUTIA
CHECKED BY: BILL DUTTERA
REVISED BY: BD
DATE REVISED: 12-16-09

LAST REVISION 01-14-10 | DATE PLOTTED => 11-MAY-2010 | TIME PLOTTED => 17:09

BORDER LAST REVISED 4/11/2008 | RELATIVE BORDER SCALE IS IN INCHES 0 1 2 3 | USERNAME => trstrk | DGN FILE => a34042ge006.dgn | CU 06342 | EA 340421

Dist	COUNTY	ROUTE	POST MILES TOTAL PROJECT	SHEET No.	TOTAL SHEETS
10	Tuo	108	R4.0/R6.0	60	237

LICENSED LANDSCAPE ARCHITECT

5-10-10
PLANS APPROVAL DATE

LICENSED LANDSCAPE ARCHITECT William Duttera No. 4343 Expiration Date 9/30/10 Renewal Date 12/16/09 Date STATE OF CALIFORNIA

THE STATE OF CALIFORNIA OR ITS OFFICERS OR AGENTS SHALL NOT BE RESPONSIBLE FOR THE ACCURACY OR COMPLETENESS OF ELECTRONIC COPIES OF THIS PLAN SHEET.

NOTE: FOR ACCURATE RIGHT OF WAY AND ACCESS DATA, CONTACT RIGHT OF WAY ENGINEERING AT THE DISTRICT OFFICE.

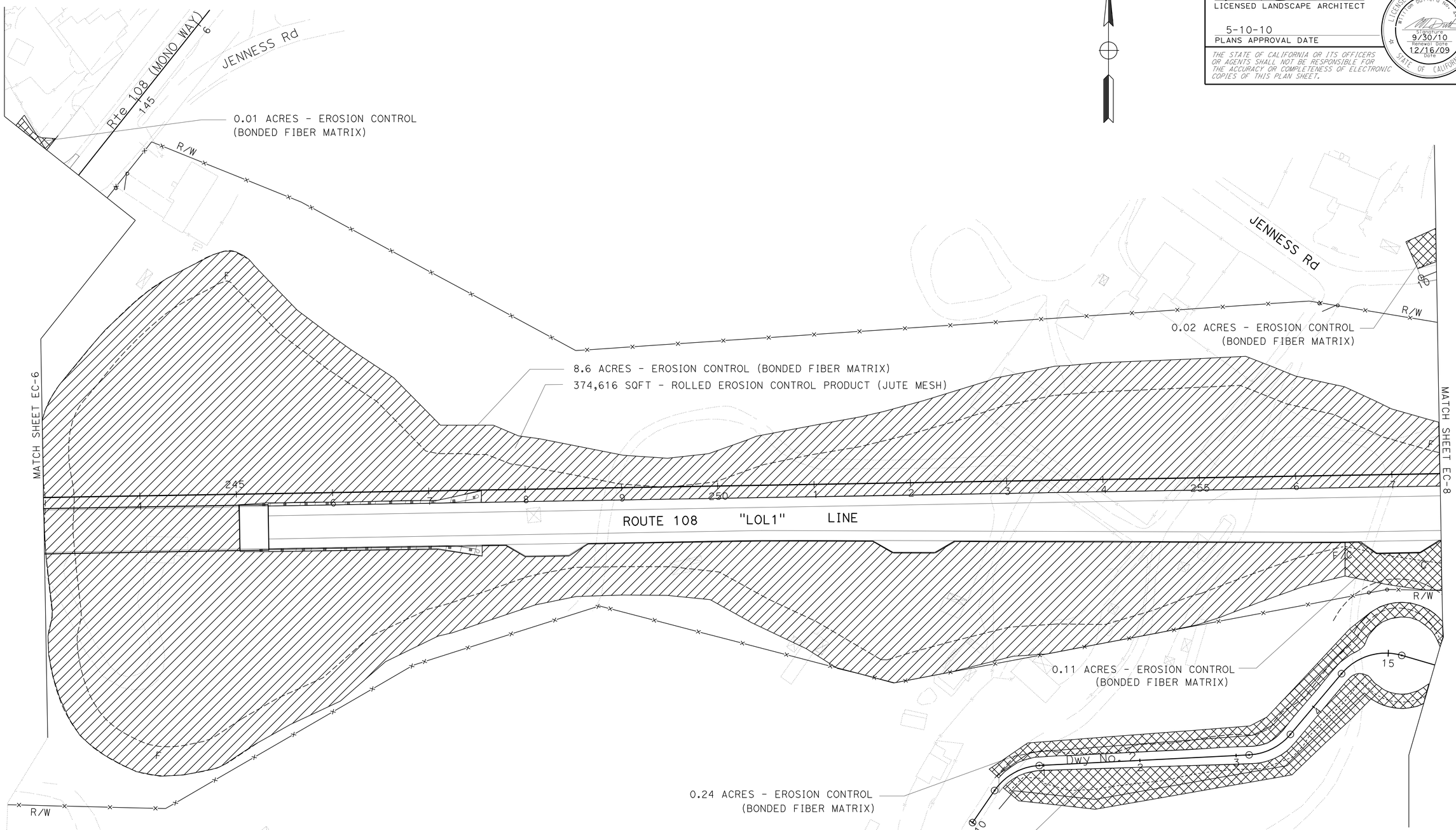

EROSION CONTROL PLAN

SCALE: 1" = 50'

EC-7

THIS PLAN ACCURATE FOR EROSION CONTROL WORK ONLY

REVISED BY	DATE REVISED
BD	12-16-09

CALCULATED-DESIGNED BY: GUS ESCUTIA
CHECKED BY: BILL DUTTERA
FUNCTIONAL SUPERVISOR: ELBERT COX

STATE OF CALIFORNIA - DEPARTMENT OF TRANSPORTATION
Caltrans® LANDSCAPE ARCHITECTURE

LAST REVISION 01-14-10 | DATE PLOTTED => 11-MAY-2010 | TIME PLOTTED => 17:13

Dist	COUNTY	ROUTE	POST MILES TOTAL PROJECT	SHEET No.	TOTAL SHEETS
10	Tuo	108	R4.0/R6.0	61	237

LICENSED LANDSCAPE ARCHITECT

5-10-10
PLANS APPROVAL DATE

LICENSED LANDSCAPE ARCHITECT William Duttera No. 4242 Signature 9/30/10 Renewal Date 01/14/10 Date STATE OF CALIFORNIA

THE STATE OF CALIFORNIA OR ITS OFFICERS OR AGENTS SHALL NOT BE RESPONSIBLE FOR THE ACCURACY OR COMPLETENESS OF ELECTRONIC COPIES OF THIS PLAN SHEET.

NOTE: FOR ACCURATE RIGHT OF WAY AND ACCESS DATA, CONTACT RIGHT OF WAY ENGINEERING AT THE DISTRICT OFFICE.

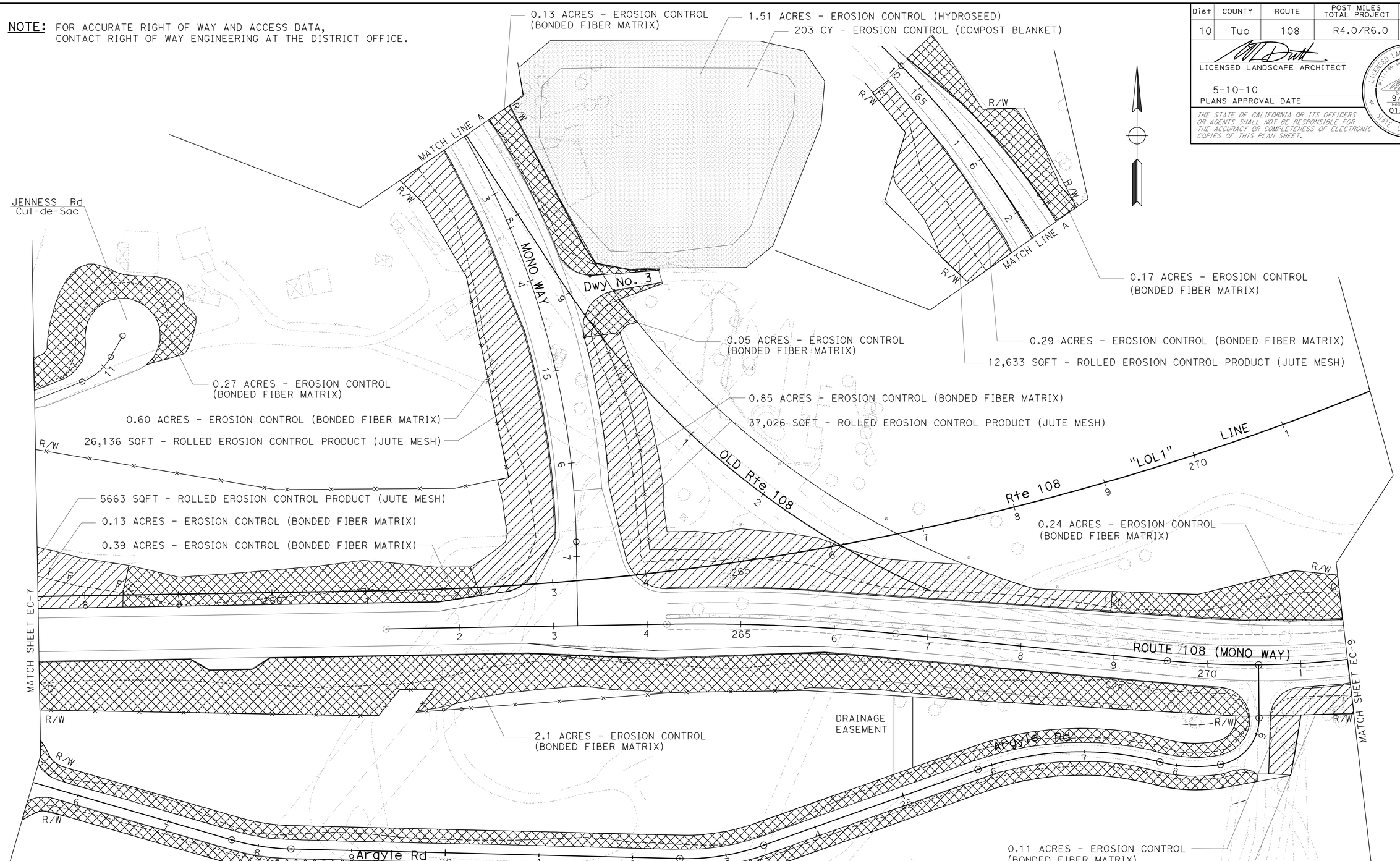

THIS PLAN ACCURATE FOR EROSION CONTROL WORK ONLY

EROSION CONTROL PLAN

SCALE: 1" = 50'

EC-8

REVISED BY	DATE REVISED
BD	01-14-10

GUS ESCUTIA — BILL DUTTERA — CALCULATED-DESIGNED BY — CHECKED BY

FUNCTIONAL SUPERVISOR: ELBERT COX

STATE OF CALIFORNIA - DEPARTMENT OF TRANSPORTATION
Caltrans LANDSCAPE ARCHITECTURE

LAST REVISION 01-14-10 | DATE PLOTTED => 12-MAY-2010 | TIME PLOTTED => 13:24

BORDER LAST REVISED 4/11/2008 | RELATIVE BORDER SCALE IS IN INCHES 0 1 2 3 | USERNAME => trstrk | DGN FILE => a34042ge008.dgn | CU 06342 | EA 340421

Dist	COUNTY	ROUTE	POST MILES TOTAL PROJECT	SHEET No.	TOTAL SHEETS
10	Tuo	108	R4.0/R6.0	62	237

LICENSED LANDSCAPE ARCHITECT

5-10-10
PLANS APPROVAL DATE

LICENSED LANDSCAPE ARCHITECT
William Duttera No. 3425
Signature
9/30/10
Renewal Date
12/16/09
Date
STATE OF CALIFORNIA

THE STATE OF CALIFORNIA OR ITS OFFICERS OR AGENTS SHALL NOT BE RESPONSIBLE FOR THE ACCURACY OR COMPLETENESS OF ELECTRONIC COPIES OF THIS PLAN SHEET.

NOTE: FOR ACCURATE RIGHT OF WAY AND ACCESS DATA, CONTACT RIGHT OF WAY ENGINEERING AT THE DISTRICT OFFICE.

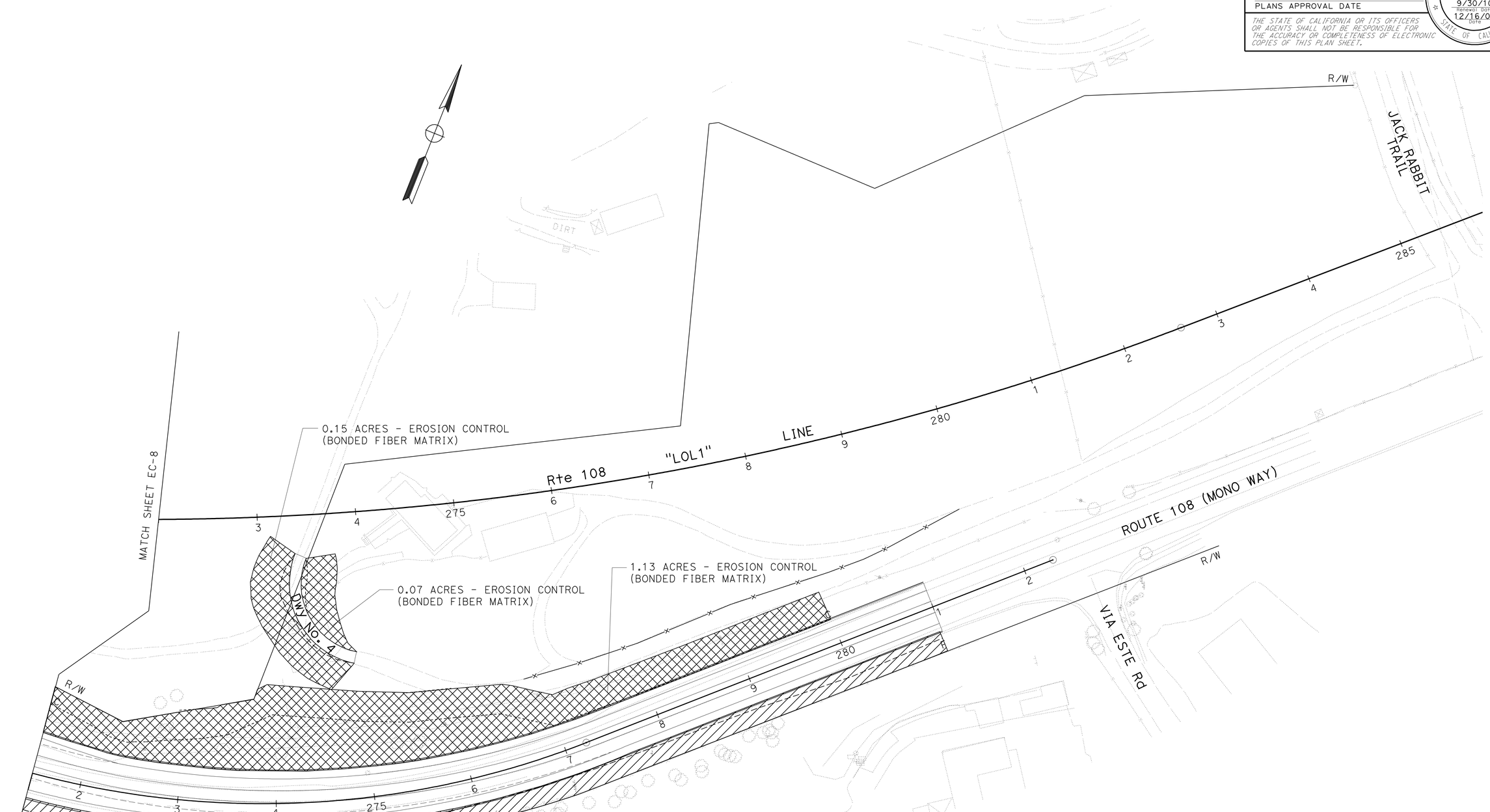

THIS PLAN ACCURATE FOR EROSION CONTROL WORK ONLY

EROSION CONTROL PLAN

SCALE: 1" = 50'

EC-9

REVISED BY	BD
DATE REVISED	12-16-09
GUS ESCUTIA	
BILL DUTTERA	
CALCULATED-DESIGNED BY	
CHECKED BY	
FUNCTIONAL SUPERVISOR	
ELBERT COX	

STATE OF CALIFORNIA - DEPARTMENT OF TRANSPORTATION
Caltrans LANDSCAPE ARCHITECTURE

LAST REVISION 01-14-10 | DATE PLOTTED => 12-MAY-2010 | TIME PLOTTED => 13:26

Dist	COUNTY	ROUTE	POST MILES TOTAL PROJECT	SHEET No.	TOTAL SHEETS
10	Tuo	108	R4.0/R6.0	63	237

LICENSED LANDSCAPE ARCHITECT

5-10-10
PLANS APPROVAL DATE

LICENSED LANDSCAPE ARCHITECT
William Duttera No. 3242
Signature
9/30/10
Renewal Date
01/14/10
Date
STATE OF CALIFORNIA

THE STATE OF CALIFORNIA OR ITS OFFICERS OR AGENTS SHALL NOT BE RESPONSIBLE FOR THE ACCURACY OR COMPLETENESS OF ELECTRONIC COPIES OF THIS PLAN SHEET.

EROSION CONTROL (BONDED FIBER MATRIX)

SHEET No.	SIDE		AREA	① BONDED FIBER (N)	② BONDED FIBER (N)	PURE LIVE SEED (N)	ORGANIC FERTILIZER (N)
	R†	L†	ACRE	LBS	LBS	LBS	LBS
EC-1		X	1.26	2100	1960	68	226.8
EC-2	X	X	4.43	13,290	-	239.2	797.4
EC-3	X	X	12.89	10,290	32,230	696	2320.2
EC-4		X	1.7	1830	3815	91.8	306
EC-5	X	X	8.39	7350	20,900	453.1	1510.2
EC-6	X	X	7.52	18,480	4760	406.1	1353.6
EC-7	X	X	9.31	27,510	490	502.7	1675.8
EC-8	X	X	7.40	6990	12,425	399.6	1332
EC-9	X	X	1.92	2370	3955	103.7	345.6
TOTAL			54.82				

(N) - NOT A SEPARATE PAY ITEM, FOR INFORMATION ONLY.

① FOR SLOPES FROM 3:1 TO 2:1 (H:V).

② FOR SLOPES STEEPER THAN 2:1 (H:V).

ROLLED EROSION CONTROL PRODUCT (JUTE MESH)

SHEET No.	SIDE		JUTE MESH	JUTE MESH (N)
	R†	L†	SQFT	ACRES
EC-1		X	27,878	0.64
EC-2	X	X	116,305	2.67
EC-3	X	X	127,196	2.92
EC-4		X	13,068	0.30
EC-5	X	X	106,721	2.45
EC-6	X	X	273,123	6.27
EC-7	X	X	374,616	8.62
EC-8	X	X	86,250	1.98
EC-9	X		24,829	0.57
TOTAL			1,149,986	

(N) - NOT A SEPARATE PAY ITEM, FOR INFORMATION ONLY.

EROSION CONTROL (HYDROSEED)

SHEET No.	SIDE		AREA	STRAW (N)	FIBER (N)	PURE LIVE SEED (N)	ORGANIC FERTILIZER (N)	TACKIFIER (N)
	R†	L†	ACRES	TON	LBS	LBS	LBS	LBS
EC-1		X	0.16	0.32	172.8	8.6	28.8	28
EC-2	X		0.04	0.08	43.2	2.2	7.2	7
EC-3	X		2.06	4.1	2224.8	111.2	370.8	360.5
EC-8		X	1.51	3.02	1630.8	81.54	271.8	264.3
TOTAL			3.77					

(N) - NOT A SEPARATE PAY ITEM, FOR INFORMATION ONLY.

EROSION CONTROL (COMPOST BLANKET)

SHEET No.	SIDE		COMPOST
	R†	L†	CY
EC-1		X	22
EC-2	X		6
EC-3	X		277
EC-8		X	203
TOTAL			508

EROSION CONTROL QUANTITIES
ECQ-1

REVISED BY	DATE REVISED
BD	01-14-10

GUS ESCUTIA — BILL DUTTERA

CALCULATED-DESIGNED BY — CHECKED BY

FUNCTIONAL SUPERVISOR: ELBERT COX

STATE OF CALIFORNIA - DEPARTMENT OF TRANSPORTATION
Caltrans® LANDSCAPE ARCHITECTURE

LAST REVISION 01-14-10 | DATE PLOTTED => 12-MAY-2010 | TIME PLOTTED => 13:22

Dist	COUNTY	ROUTE	POST MILES TOTAL PROJECT	SHEET No.	TOTAL SHEETS
10	Tuo	108	R4.0/R6.0	64	237

REGISTERED CIVIL ENGINEER 01-11-10 DATE

5-10-10
PLANS APPROVAL DATE

REGISTERED PROFESSIONAL ENGINEER KAL H. DAHER No. C44510 Exp. 3-31-10 CIVIL STATE OF CALIFORNIA

THE STATE OF CALIFORNIA OR ITS OFFICERS OR AGENTS SHALL NOT BE RESPONSIBLE FOR THE ACCURACY OR COMPLETENESS OF SCANNED COPIES OF THIS PLAN SHEET.

NOTES:

1. FOR ACCURATE RIGHT OF WAY AND ACCESS DATA, CONTACT RIGHT OF WAY ENGINEERING AT THE DISTRICT OFFICE.
2. SEE SHEET DD-2 FOR DOWNDRAIN DETAILS AND C-9 FOR GUTTER DETAILS.

LEGEND

- RSP WITHIN SIDE GUTTER
- INLET WITH HMA APRONN
- DRAINAGE SYSTEM No.
- DRAINAGE UNIT No.

ABBREVIATION:

APDD - ALTERNATIVE PIPE DOWNDRAIN
HMA - HOT MIX ASPHALT

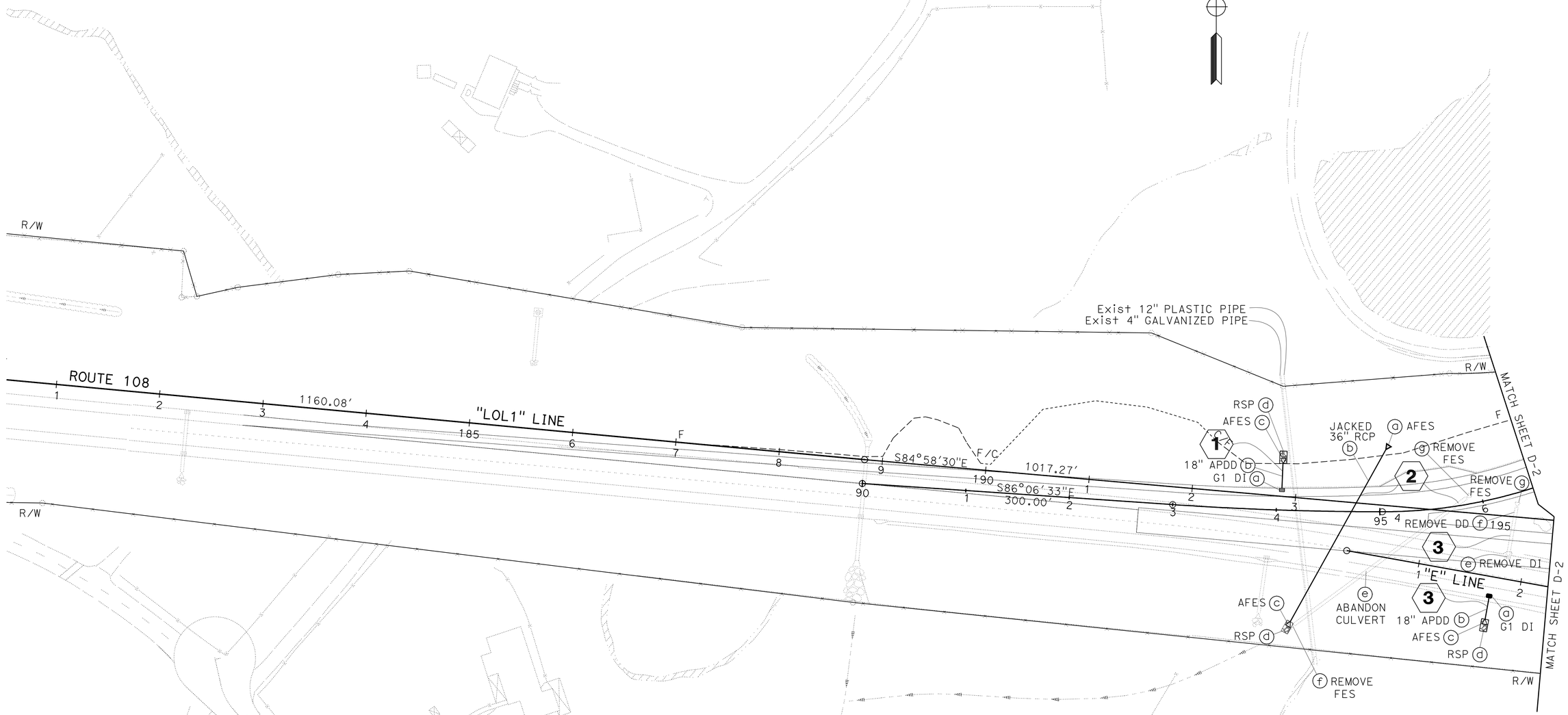

THIS PLAN ACCURATE FOR DRAINAGE WORK ONLY

DRAINAGE PLAN

SCALE: 1" = 50'

D-1

STATE OF CALIFORNIA - DEPARTMENT OF TRANSPORTATION
Caltrans
06-DESIGN

FUNCTIONAL SUPERVISOR: TERRY OGLE
CALCULATED-DESIGNED BY: JORGE AGUILERA
CHECKED BY: KAL DAHER
REVISED BY
DATE REVISED

LAST REVISION 01-12-10
DATE PLOTTED => 12-MAY-2010
TIME PLOTTED => 13:03

BORDER LAST REVISED 4/11/2008
RELATIVE BORDER SCALE IS IN INCHES 0 1 2 3
USERNAME => trmikesl
DGN FILE => a34042ia001.dgn
CU 06228
EA 340421

Dist	COUNTY	ROUTE	POST MILES TOTAL PROJECT	SHEET No.	TOTAL SHEETS
10	Tuo	108	R4.0/R6.0	65	237

REGISTERED CIVIL ENGINEER 01-11-10 DATE

5-10-10
PLANS APPROVAL DATE

REGISTERED PROFESSIONAL ENGINEER KAL H. DAHER No. C44510 Exp. 3-31-10 CIVIL STATE OF CALIFORNIA

THE STATE OF CALIFORNIA OR ITS OFFICERS OR AGENTS SHALL NOT BE RESPONSIBLE FOR THE ACCURACY OR COMPLETENESS OF SCANNED COPIES OF THIS PLAN SHEET.

NOTE:
FOR ACCURATE RIGHT OF WAY AND ACCESS DATA, CONTACT RIGHT OF WAY ENGINEERING AT THE DISTRICT OFFICE

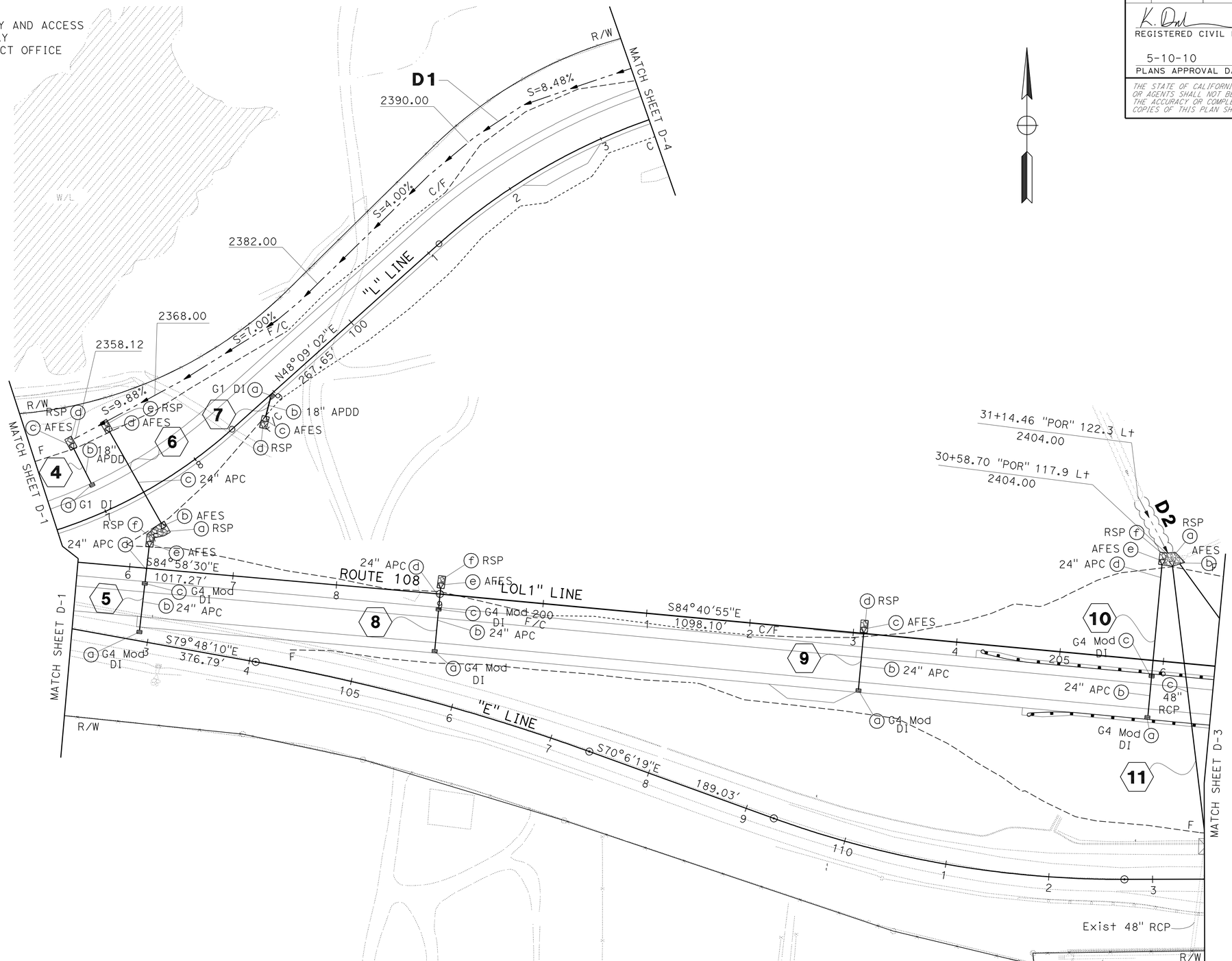

THIS PLAN ACCURATE FOR DRAINAGE WORK ONLY

DRAINAGE PLAN

SCALE: 1" = 50'

D-2

STATE OF CALIFORNIA - DEPARTMENT OF TRANSPORTATION
06-DESIGN

FUNCTIONAL SUPERVISOR: TERRY OGLE
CALCULATED-DESIGNED BY: JORGE AGUILERA
CHECKED BY: KAL DAHER
REVISED BY
DATE REVISED

LAST REVISION 01-11-10
DATE PLOTTED => 11-MAY-2010
TIME PLOTTED => 16:06

Dist	COUNTY	ROUTE	POST MILES TOTAL PROJECT	SHEET No.	TOTAL SHEETS
10	Tuo	108	R4.0/R6.0	66	237

REGISTERED CIVIL ENGINEER 01-11-10 DATE

5-10-10
PLANS APPROVAL DATE

REGISTERED PROFESSIONAL ENGINEER KAL H. DAHER No. C44510 Exp. 3-31-10 CIVIL STATE OF CALIFORNIA

THE STATE OF CALIFORNIA OR ITS OFFICERS OR AGENTS SHALL NOT BE RESPONSIBLE FOR THE ACCURACY OR COMPLETENESS OF SCANNED COPIES OF THIS PLAN SHEET.

NOTE: FOR ACCURATE RIGHT OF WAY AND ACCESS DATA, CONTACT RIGHT OF WAY ENGINEERING AT THE DISTRICT OFFICE.

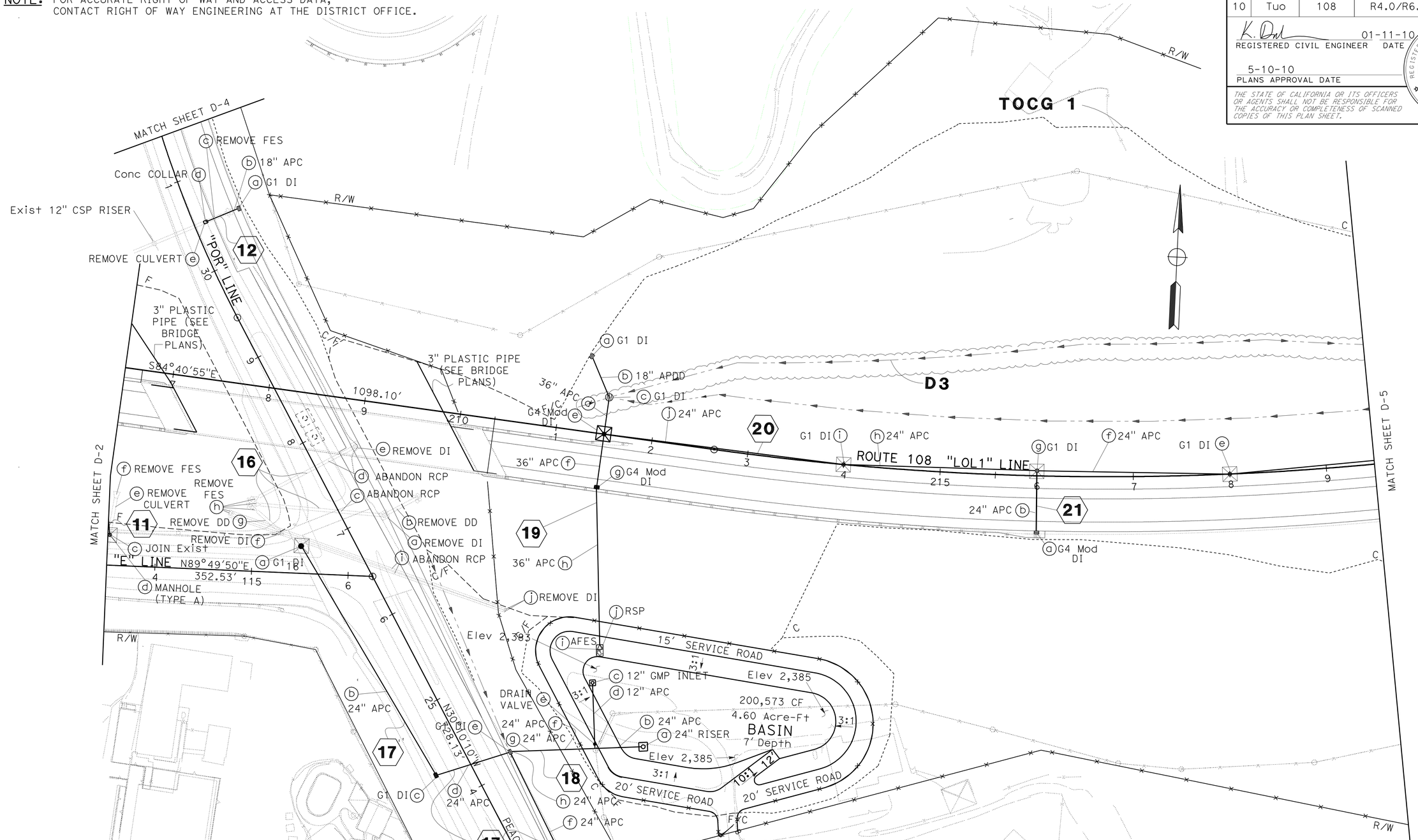

DRAINAGE PLAN

SCALE: 1" = 50'

D-3

THIS PLAN ACCURATE FOR DRAINAGE WORK ONLY

REVISED BY	DATE REVISED

CALCULATED-DESIGNED BY	CHECKED BY
JORGE AGUILERA	KAL DAHER

FUNCTIONAL SUPERVISOR: TERRY OGLE

STATE OF CALIFORNIA - DEPARTMENT OF TRANSPORTATION

Caltrans

06-DESIGN

LAST REVISION 01-12-10 | DATE PLOTTED => 11-MAY-2010 | TIME PLOTTED => 18:04

Dist	COUNTY	ROUTE	POST MILES TOTAL PROJECT	SHEET No.	TOTAL SHEETS
10	Tuo	108	R4.0/R6.0	67	237

K. Daher 01-11-10
REGISTERED CIVIL ENGINEER DATE

5-10-10
PLANS APPROVAL DATE

REGISTERED PROFESSIONAL ENGINEER
KAL H. DAHER
No. C44510
Exp. 3-31-10
CIVIL
STATE OF CALIFORNIA

THE STATE OF CALIFORNIA OR ITS OFFICERS OR AGENTS SHALL NOT BE RESPONSIBLE FOR THE ACCURACY OR COMPLETENESS OF SCANNED COPIES OF THIS PLAN SHEET.

NOTE: FOR ACCURATE RIGHT OF WAY AND ACCESS DATA, CONTACT RIGHT OF WAY ENGINEERING AT THE DISTRICT OFFICE.

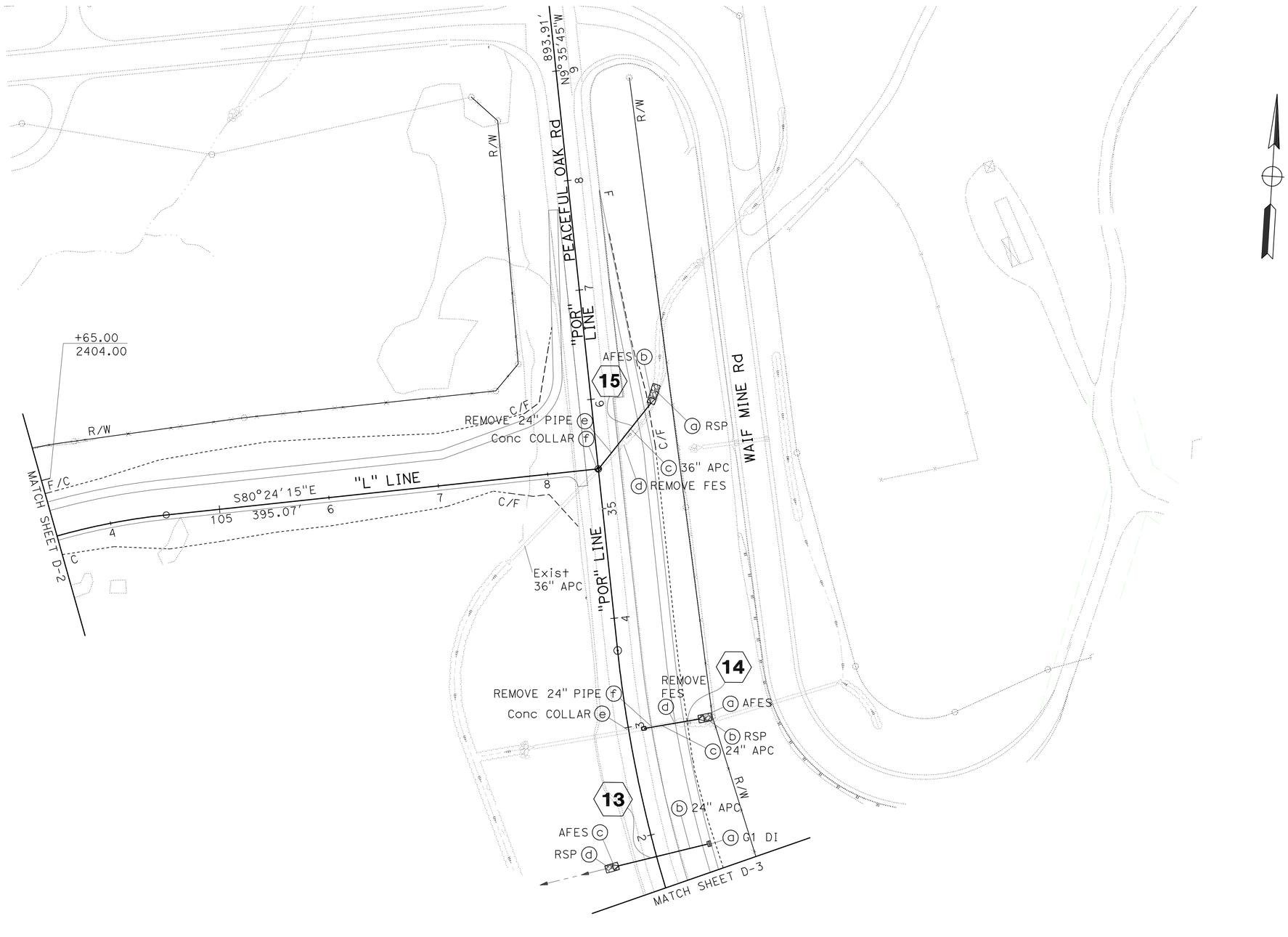

DRAINAGE PLAN

SCALE: 1" = 50'

D-4

THIS PLAN ACCURATE FOR DRAINAGE WORK ONLY

REVISED BY	DATE REVISED

CALCULATED-DESIGNED BY	JORGE AGUILERA
CHECKED BY	KAL DAHER

FUNCTIONAL SUPERVISOR: TERRY OGLE

STATE OF CALIFORNIA - DEPARTMENT OF TRANSPORTATION
Caltrans
06-DESIGN

LAST REVISION 01-12-10 | DATE PLOTTED => 11-MAY-2010 | TIME PLOTTED => 17:58

Dist	COUNTY	ROUTE	POST MILES TOTAL PROJECT	SHEET No.	TOTAL SHEETS
10	Tuo	108	R4.0/R6.0	68	237

K. Daher 01-11-10
REGISTERED CIVIL ENGINEER DATE

5-10-10
PLANS APPROVAL DATE

REGISTERED PROFESSIONAL ENGINEER
KAL H. DAHER
No. C44510
Exp. 3-31-10
CIVIL
STATE OF CALIFORNIA

THE STATE OF CALIFORNIA OR ITS OFFICERS OR AGENTS SHALL NOT BE RESPONSIBLE FOR THE ACCURACY OR COMPLETENESS OF SCANNED COPIES OF THIS PLAN SHEET.

NOTE: FOR ACCURATE RIGHT OF WAY AND ACCESS DATA, CONTACT RIGHT OF WAY ENGINEERING AT THE DISTRICT OFFICE.

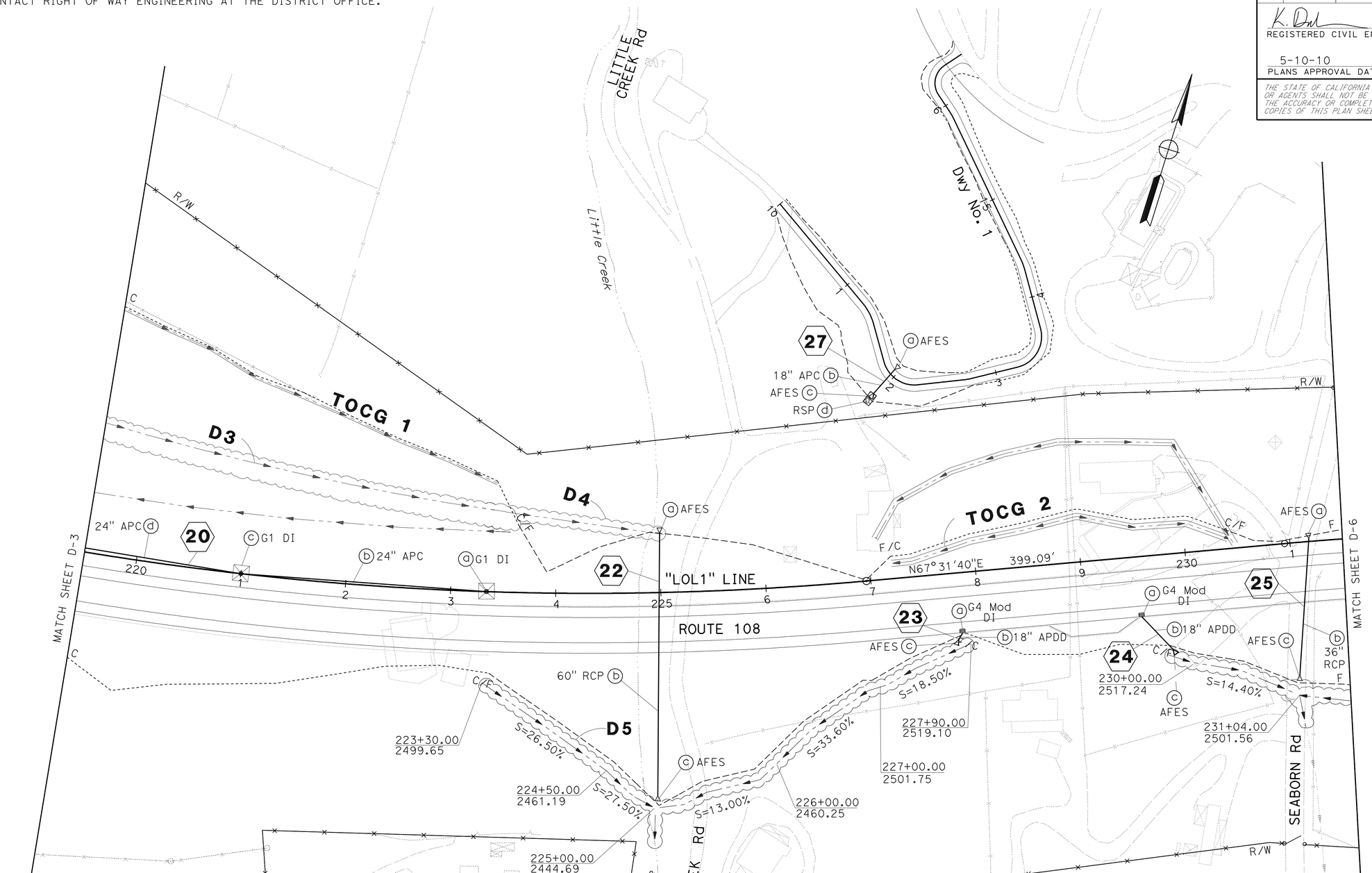

DRAINAGE PLAN

SCALE: 1" = 50'

D-5

THIS PLAN ACCURATE FOR DRAINAGE WORK ONLY

STATE OF CALIFORNIA - DEPARTMENT OF TRANSPORTATION
Caltrans
06-DESIGN

FUNCTIONAL SUPERVISOR: TERRY OGLE
CALCULATED-DESIGNED BY: JORGE AGUILERA
CHECKED BY: KAL DAHER
REVISED BY
DATE REVISED

LAST REVISION DATE PLOTTED => 11-MAY-2010
TIME PLOTTED => 17:58
01-12-10

BORDER LAST REVISED 4/11/2008
RELATIVE BORDER SCALE IS IN INCHES 0 1 2 3
USERNAME => trstrk
DGN FILE => a34042ia005.dgn
CU 06228
EA 340421

Dist	COUNTY	ROUTE	POST MILES TOTAL PROJECT	SHEET No.	TOTAL SHEETS
10	Tuo	108	R4.0/R6.0	69	237

K. Daher 01-11-10
REGISTERED CIVIL ENGINEER DATE

5-10-10
PLANS APPROVAL DATE

REGISTERED PROFESSIONAL ENGINEER KAL H. DAHER No. C44510 Exp. 3-31-10 CIVIL STATE OF CALIFORNIA

THE STATE OF CALIFORNIA OR ITS OFFICERS OR AGENTS SHALL NOT BE RESPONSIBLE FOR THE ACCURACY OR COMPLETENESS OF SCANNED COPIES OF THIS PLAN SHEET.

NOTE: FOR ACCURATE RIGHT OF WAY AND ACCESS DATA, CONTACT RIGHT OF WAY ENGINEERING AT THE DISTRICT OFFICE.

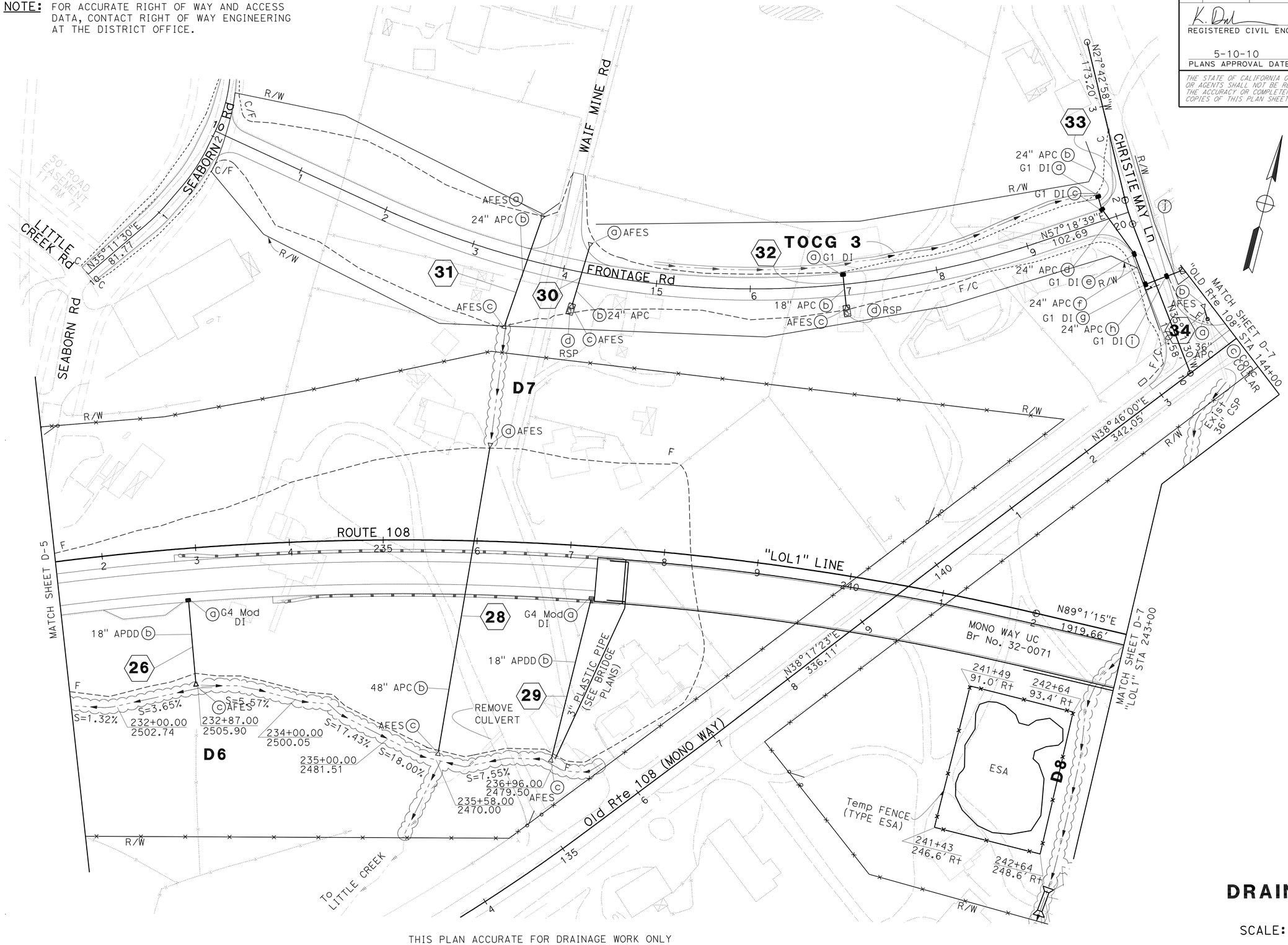

THIS PLAN ACCURATE FOR DRAINAGE WORK ONLY

DRAINAGE PLAN D-6

SCALE: 1" = 50'

REVISED BY	DATE REVISED
JORGE AGUILERA	KAL DAHER
CALCULATED-DESIGNED BY	CHECKED BY
FUNCTIONAL SUPERVISOR	TERRY OGLE

STATE OF CALIFORNIA - DEPARTMENT OF TRANSPORTATION
Caltrans
06-DESIGN

LAST REVISION 01-12-10
DATE PLOTTED => 12-MAY-2010
TIME PLOTTED => 13:56

Dist	COUNTY	ROUTE	POST MILES TOTAL PROJECT	SHEET No.	TOTAL SHEETS
10	Tuo	108	R4.0/R6.0	70	237

REGISTERED CIVIL ENGINEER 01-11-10 DATE

5-10-10
PLANS APPROVAL DATE

REGISTERED PROFESSIONAL ENGINEER KAL H. DAHER No. C44510 Exp. 3-31-10 CIVIL STATE OF CALIFORNIA

THE STATE OF CALIFORNIA OR ITS OFFICERS OR AGENTS SHALL NOT BE RESPONSIBLE FOR THE ACCURACY OR COMPLETENESS OF SCANNED COPIES OF THIS PLAN SHEET.

NOTE: FOR ACCURATE RIGHT OF WAY AND ACCESS DATA, CONTACT RIGHT OF WAY ENGINEERING AT THE DISTRICT OFFICE.

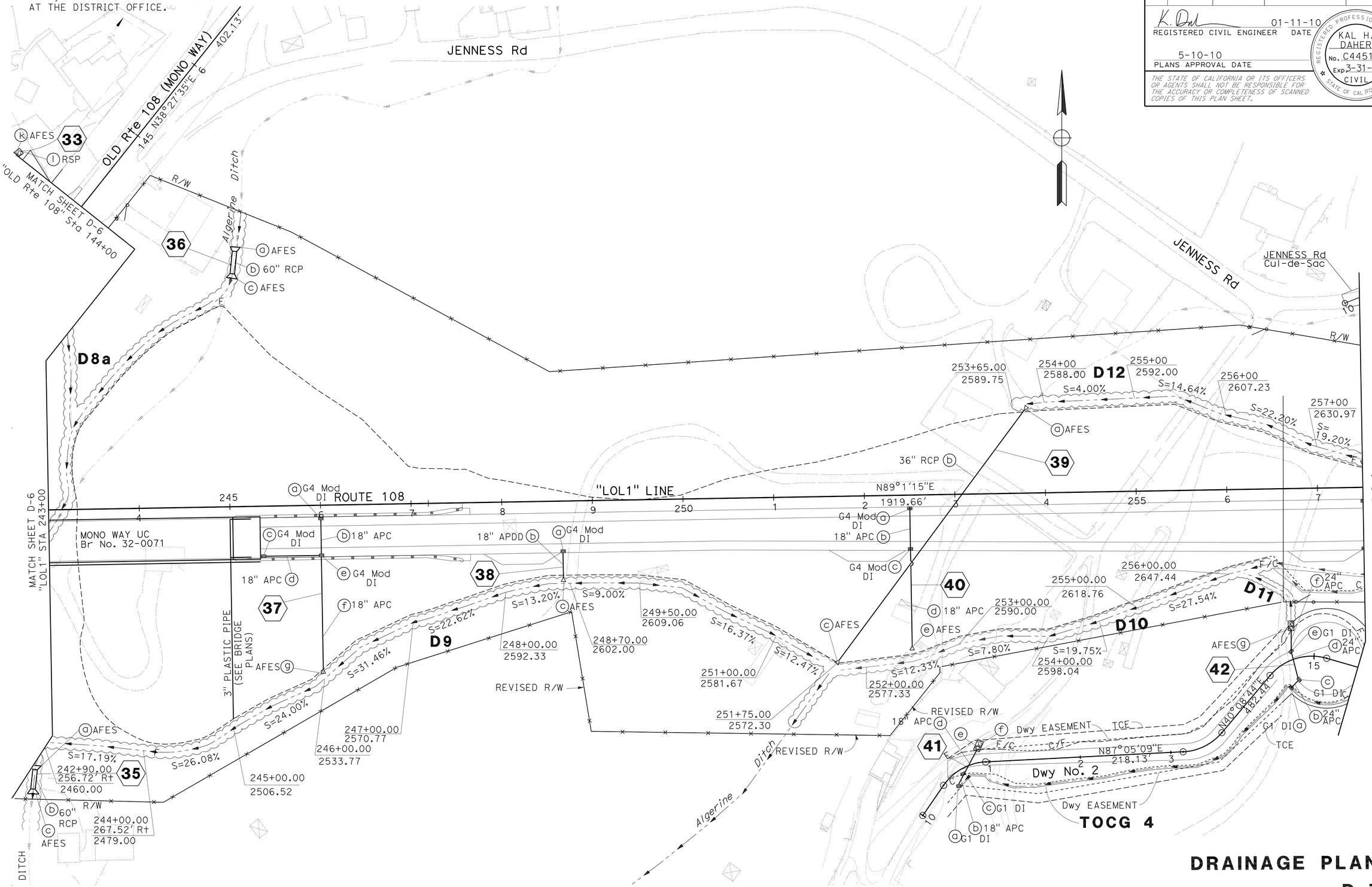

THIS PLAN ACCURATE FOR DRAINAGE WORK ONLY

DRAINAGE PLAN

SCALE: 1" = 50'

D-7

STATE OF CALIFORNIA - DEPARTMENT OF TRANSPORTATION
Caltrans 06-DESIGN

FUNCTIONAL SUPERVISOR: TERRY OGLE
CALCULATED-DESIGNED BY: JORGE AGUILERA
CHECKED BY: KAL DAHER
REVISED BY / DATE REVISED

LAST REVISION 01-12-10 | DATE PLOTTED => 12-MAY-2010 | TIME PLOTTED => 13:56

BORDER LAST REVISED 4/11/2008 | RELATIVE BORDER SCALE IS IN INCHES 0 1 2 3 | USERNAME => trstrk | DGN FILE => a34042ia007.dgn | CU 06228 | EA 340421

Dist	COUNTY	ROUTE	POST MILES TOTAL PROJECT	SHEET No.	TOTAL SHEETS
10	Tuo	108	R4.0/R6.0	71	237

REGISTERED CIVIL ENGINEER 01-11-10 DATE

5-10-10
PLANS APPROVAL DATE

REGISTERED PROFESSIONAL ENGINEER KAL H. DAHER No. C44510 Exp. 3-31-10 CIVIL STATE OF CALIFORNIA

THE STATE OF CALIFORNIA OR ITS OFFICERS OR AGENTS SHALL NOT BE RESPONSIBLE FOR THE ACCURACY OR COMPLETENESS OF SCANNED COPIES OF THIS PLAN SHEET.

NOTE: FOR ACCURATE RIGHT OF WAY AND ACCESS DATA, CONTACT RIGHT OF WAY ENGINEERING AT THE DISTRICT OFFICE.

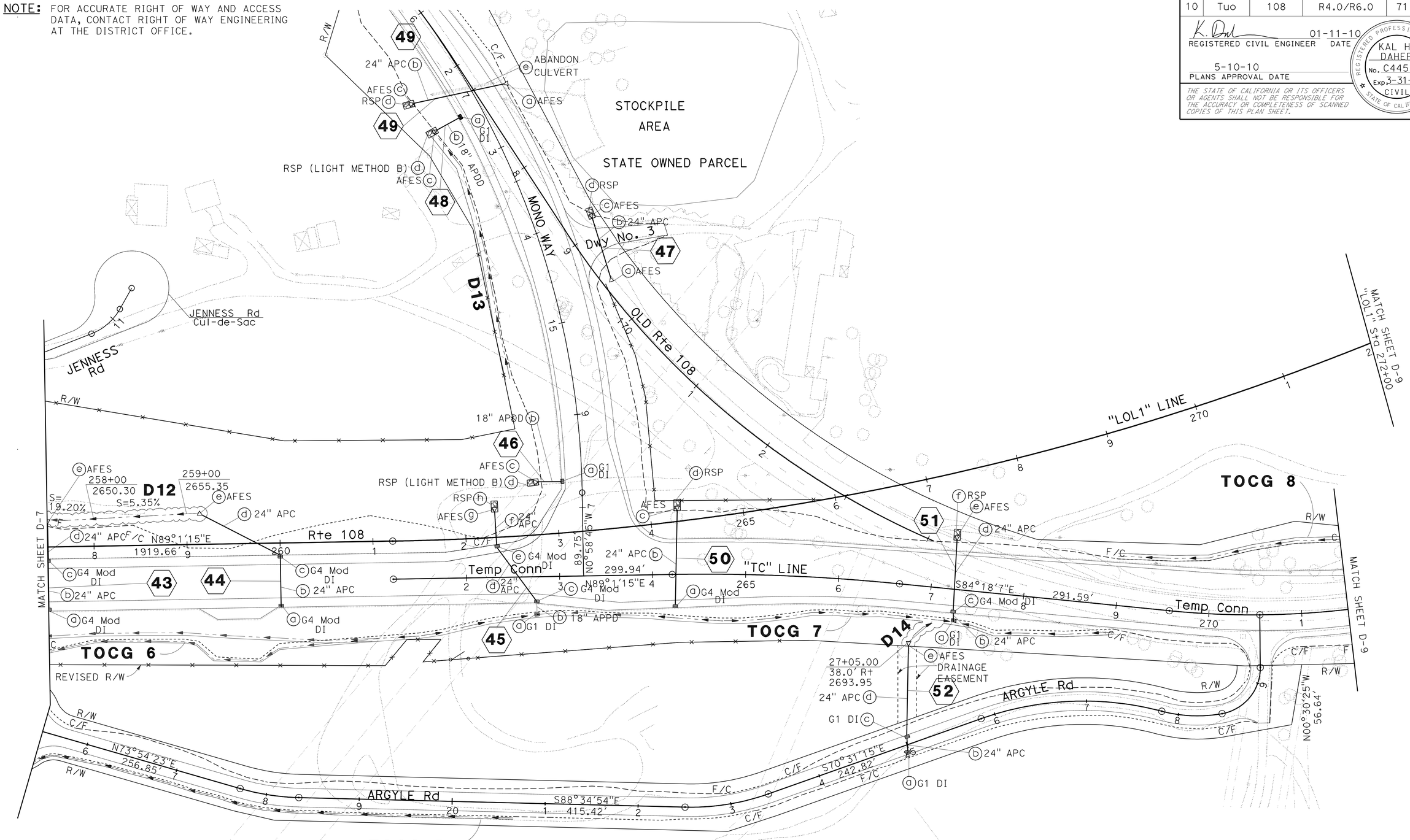

DRAINAGE PLAN

SCALE: 1" = 50'

D-8

THIS PLAN ACCURATE FOR DRAINAGE WORK ONLY

STATE OF CALIFORNIA - DEPARTMENT OF TRANSPORTATION
06-DESIGN
Caltrans

FUNCTIONAL SUPERVISOR: TERRY OGLE
CALCULATED-DESIGNED BY: JORGE AGUILERA
CHECKED BY: KAL DAHER
REVISED BY
DATE REVISED

LAST REVISION 01-12-10
DATE PLOTTED => 12-MAY-2010
TIME PLOTTED => 13:56

Dist	COUNTY	ROUTE	POST MILES TOTAL PROJECT	SHEET No.	TOTAL SHEETS
10	Tuo	108	R4.0/R6.0	72	237

REGISTERED CIVIL ENGINEER 01-11-10 DATE

5-10-10
PLANS APPROVAL DATE

REGISTERED PROFESSIONAL ENGINEER KAL H. DAHER No. C44510 Exp. 3-31-10 CIVIL STATE OF CALIFORNIA

THE STATE OF CALIFORNIA OR ITS OFFICERS OR AGENTS SHALL NOT BE RESPONSIBLE FOR THE ACCURACY OR COMPLETENESS OF SCANNED COPIES OF THIS PLAN SHEET.

NOTE: FOR ACCURATE RIGHT OF WAY AND ACCESS DATA, CONTACT RIGHT OF WAY ENGINEERING AT THE DISTRICT OFFICE.

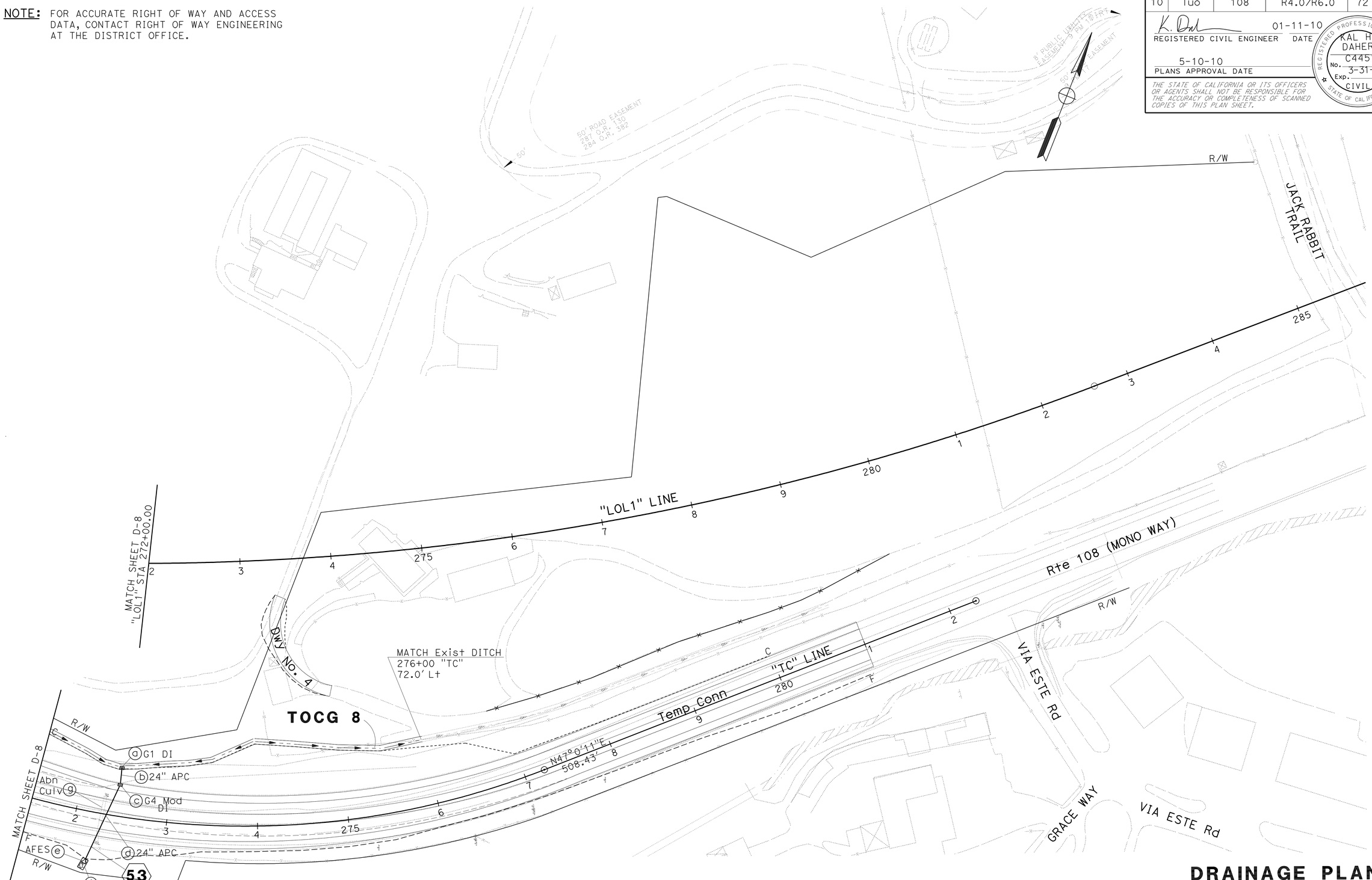

THIS PLAN ACCURATE FOR DRAINAGE WORK ONLY

DRAINAGE PLAN

SCALE: 1" = 50'

D-9

STATE OF CALIFORNIA - DEPARTMENT OF TRANSPORTATION

Caltrans

06-DESIGN

FUNCTIONAL SUPERVISOR: TERRY OGLE

CALCULATED-DESIGNED BY: JORGE AGUILERA

CHECKED BY: KAL DAHER

REVISED BY

DATE REVISED

LAST REVISION 01-11-10

DATE PLOTTED => 12-MAY-2010

TIME PLOTTED => 13:56

Dist	COUNTY	ROUTE	POST MILES TOTAL PROJECT	SHEET No.	TOTAL SHEETS
10	Tuo	108	R4.0/R6.0	73	237

REGISTERED CIVIL ENGINEER 01-11-10 DATE

5-10-10
PLANS APPROVAL DATE

REGISTERED PROFESSIONAL ENGINEER KAL H. DAHER No. C44510 Exp. 3-31-10 CIVIL STATE OF CALIFORNIA

THE STATE OF CALIFORNIA OR ITS OFFICERS OR AGENTS SHALL NOT BE RESPONSIBLE FOR THE ACCURACY OR COMPLETENESS OF SCANNED COPIES OF THIS PLAN SHEET.

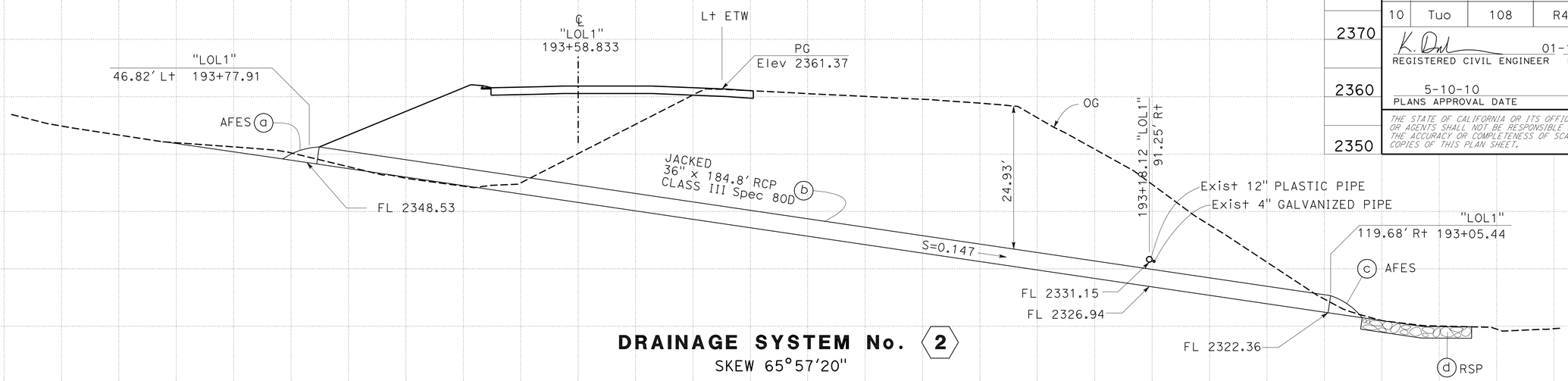

DRAINAGE SYSTEM No. 2

SKEW 65°57'20"

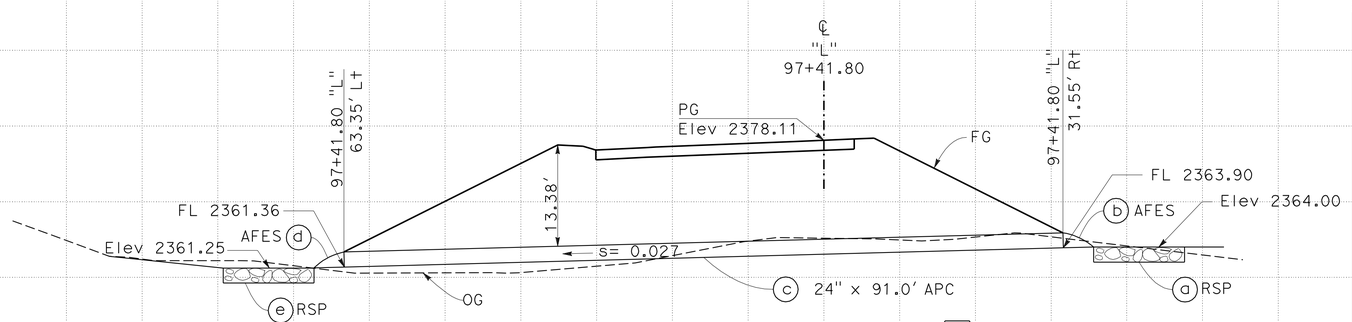

DRAINAGE SYSTEM No. 6

SKEW 90°00'00"

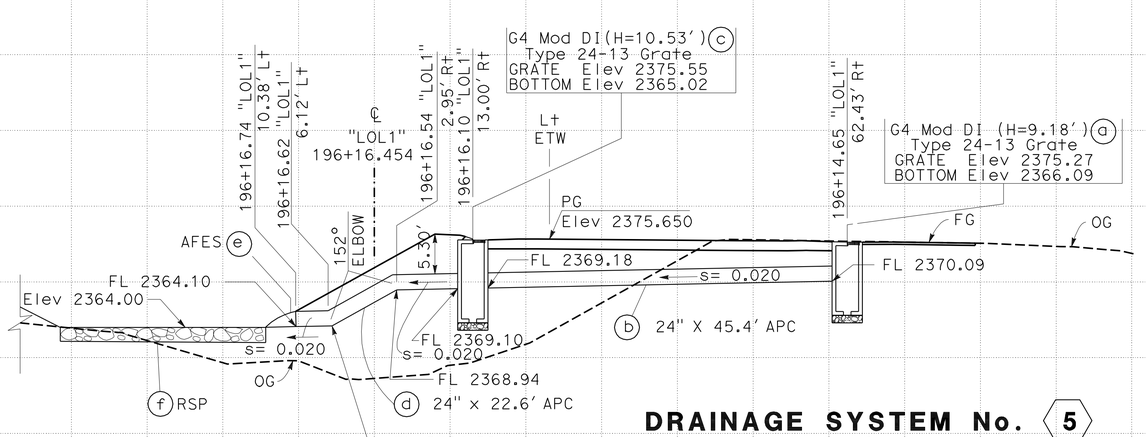

DRAINAGE SYSTEM No. 5

SKEW 88°24'51"

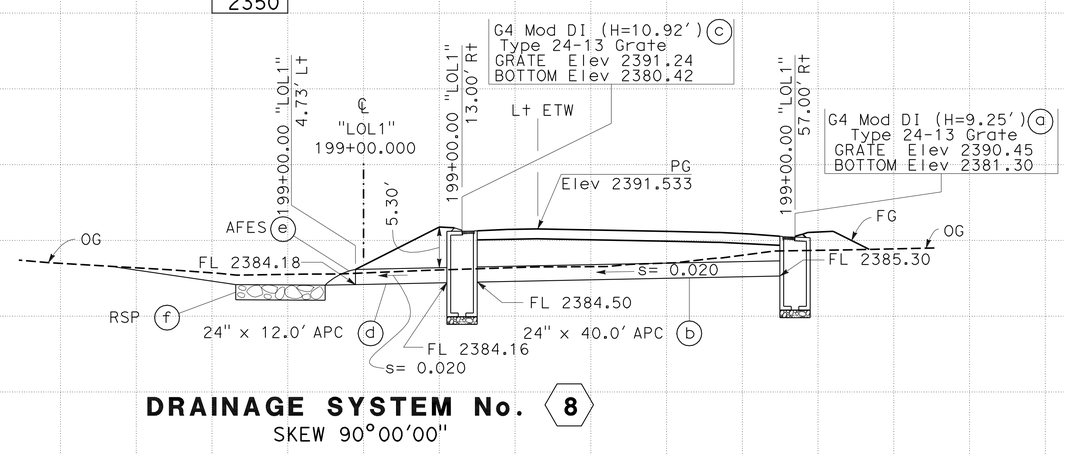

DRAINAGE SYSTEM No. 8

SKEW 90°00'00"

NOTES:

1. ALL STATIONS, OFFSETS AND CORRESPONDING SHOWN LEADER LINES ARE TO THE CENTER OF BOX (COB) OR FLOW LINE AT CURB (FLC) UNLESS OTHERWISE SHOWN.
2. ALL DRAINAGE STRUCTURES ARE RADIAL TO THE REFERENCED ALIGNMENT UNLESS OTHERWISE SHOWN.

DRAINAGE PROFILES DP-1

SCALE: Horiz 1" = 10'
Vert 1" = 10'

REVISED BY	DATE REVISED

CALCULATED-DESIGNED BY	CHECKED BY
JORGE AGUILERA	KAL DAHER

FUNCTIONAL SUPERVISOR: TERRY OGLE

STATE OF CALIFORNIA - DEPARTMENT OF TRANSPORTATION
Caltrans®
06-DESIGN

STATION		TOTAL
CY	Exc	
	Emb	

LAST REVISION 01-11-10 | DATE PLOTTED => 12-MAY-2010 | TIME PLOTTED => 13:10

Dist	COUNTY	ROUTE	POST MILES TOTAL PROJECT	SHEET No.	TOTAL SHEETS
10	Tuo	108	R4.0/R6.0	74	237

REGISTERED CIVIL ENGINEER 01-11-10 DATE

5-10-10
PLANS APPROVAL DATE

REGISTERED PROFESSIONAL ENGINEER KAL H. DAHER No. C44510 Exp. 3-31-10 CIVIL STATE OF CALIFORNIA

THE STATE OF CALIFORNIA OR ITS OFFICERS OR AGENTS SHALL NOT BE RESPONSIBLE FOR THE ACCURACY OR COMPLETENESS OF SCANNED COPIES OF THIS PLAN SHEET.

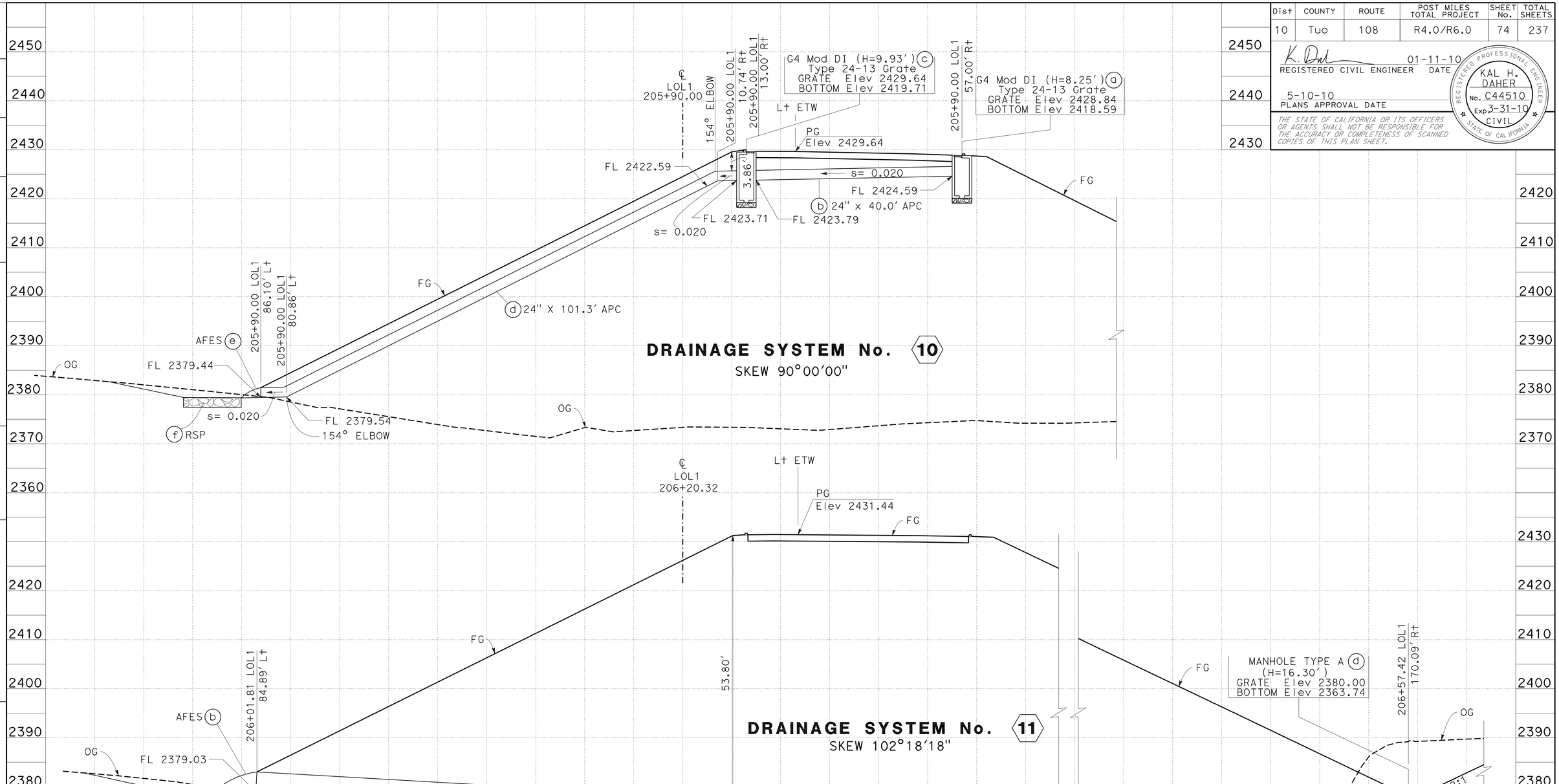

DRAINAGE PROFILES
DP-2

SCALE: Horiz 1" = 10'
Vert 1" = 10'

STATION		TOTAL
CY	Exc	
	Emb	

STATE OF CALIFORNIA - DEPARTMENT OF TRANSPORTATION
Caltrans
06-DESIGN

FUNCTIONAL SUPERVISOR: TERRY OGLE
CALCULATED-DESIGNED BY: JORGE AGUILERA
CHECKED BY: KAL DAHER
REVISED BY
DATE REVISED

LAST REVISION 01-11-10 | DATE PLOTTED => 12-MAY-2010 | TIME PLOTTED => 08:52

Dist	COUNTY	ROUTE	POST MILES TOTAL PROJECT	SHEET No.	TOTAL SHEETS
10	Tuo	108	R4.0/R6.0	75	237

REGISTERED CIVIL ENGINEER 01-11-10 DATE

5-10-10
PLANS APPROVAL DATE

REGISTERED PROFESSIONAL ENGINEER KAL H. DAHER No. C44510 Exp. 3-31-10 CIVIL STATE OF CALIFORNIA

THE STATE OF CALIFORNIA OR ITS OFFICERS OR AGENTS SHALL NOT BE RESPONSIBLE FOR THE ACCURACY OR COMPLETENESS OF SCANNED COPIES OF THIS PLAN SHEET.

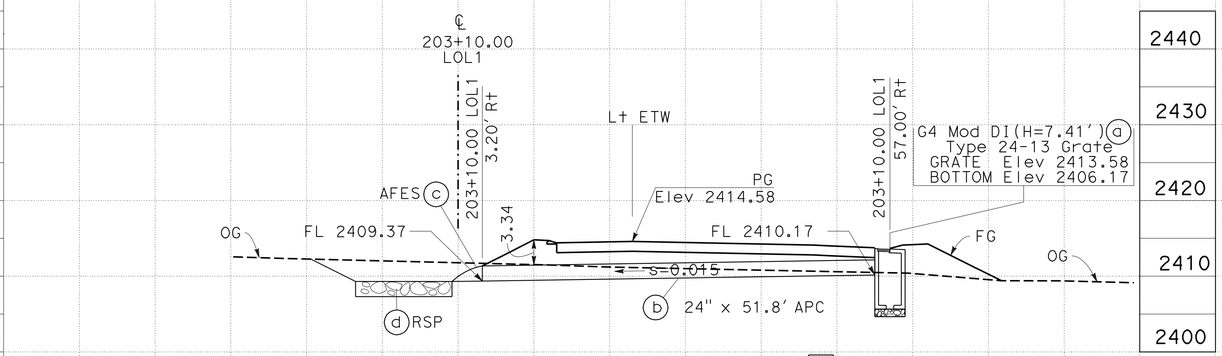

DRAINAGE SYSTEM No. 9
SKEW 90°00'00"

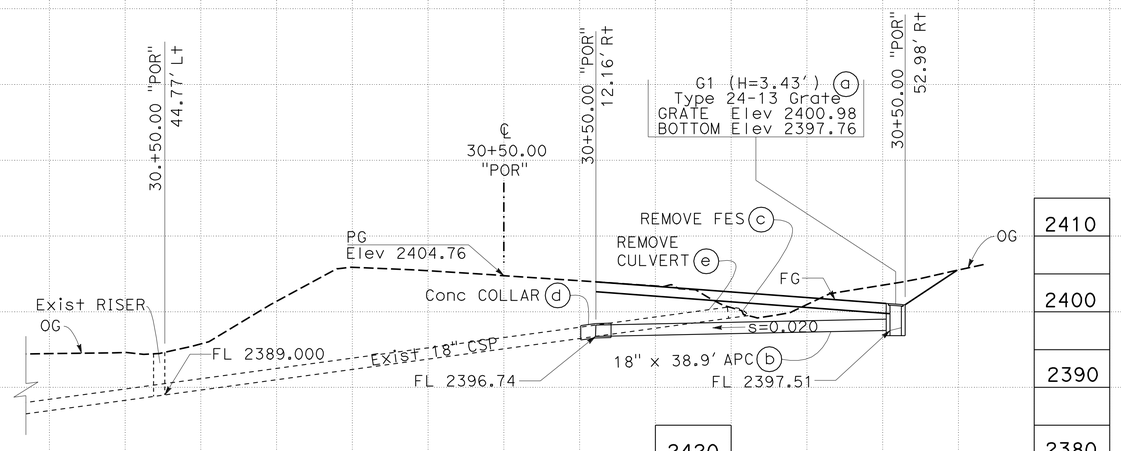

DRAINAGE SYSTEM No. 12
SKEW 90°00'00"

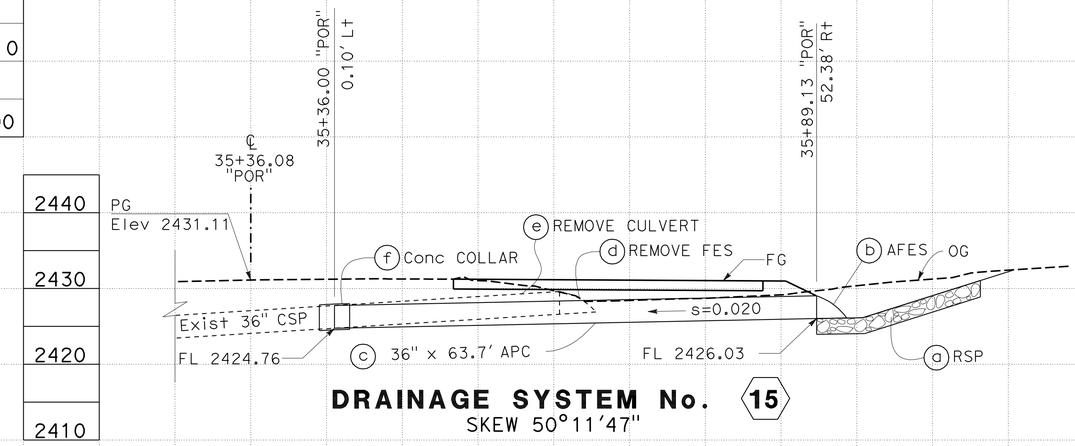

DRAINAGE SYSTEM No. 15
SKEW 50°11'47"

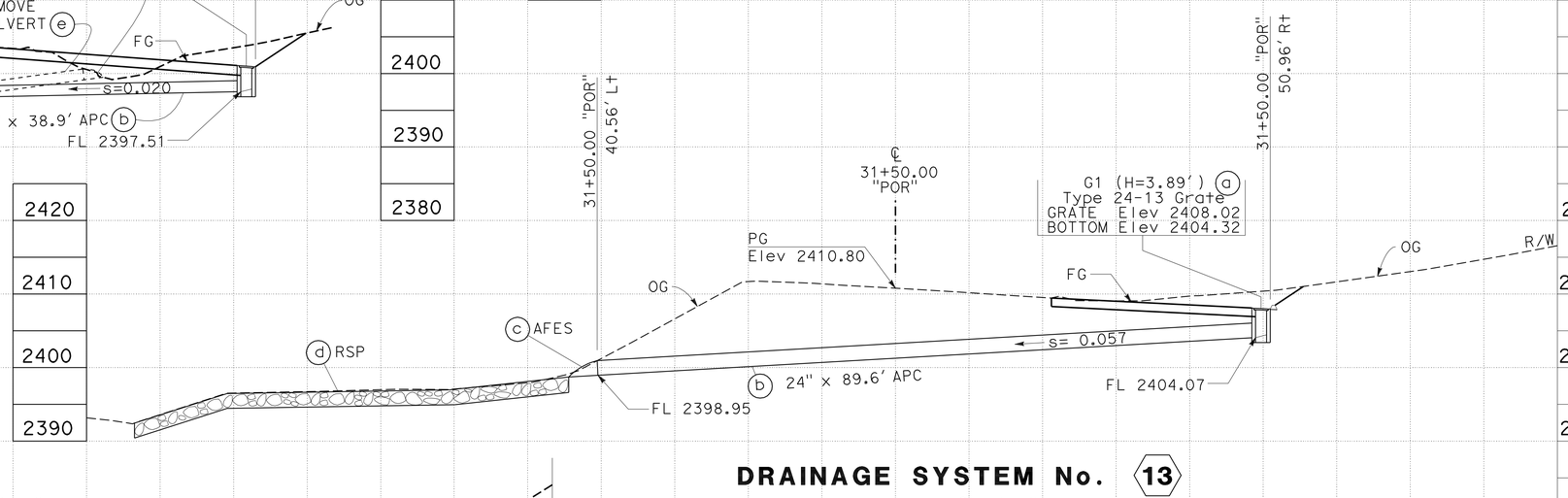

DRAINAGE SYSTEM No. 13
SKEW 90°00'00"

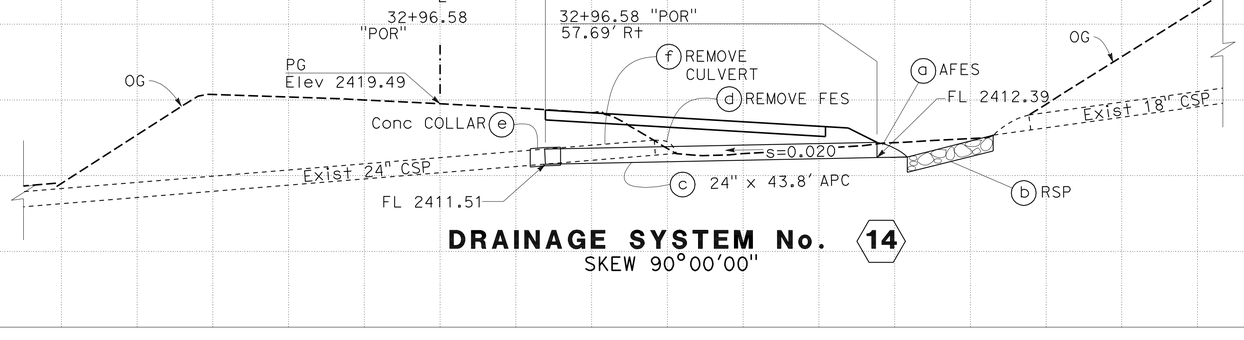

DRAINAGE SYSTEM No. 14
SKEW 90°00'00"

DRAINAGE PROFILES

SCALE: Horiz 1" = 10'
Vert 1" = 10'

DP-3

STATION	
CY	Exc
	Emb

TOTAL

LAST REVISION 01-11-10
DATE PLOTTED => 12-MAY-2010
TIME PLOTTED => 08:52

STATE OF CALIFORNIA - DEPARTMENT OF TRANSPORTATION
06-DESIGN
Caltrans®

FUNCTIONAL SUPERVISOR: TERRY OGLE
CALCULATED-DESIGNED BY: JORGE AGUILERA
CHECKED BY: KAL DAHER
REVISED BY
DATE REVISED

Dist	COUNTY	ROUTE	POST MILES TOTAL PROJECT	SHEET No.	TOTAL SHEETS
10	Tuo	108	R4.0/R6.0	76	237

K. Daher 01-11-10
REGISTERED CIVIL ENGINEER DATE

5-10-10
PLANS APPROVAL DATE

REGISTERED PROFESSIONAL ENGINEER KAL H. DAHER No. C44510 Exp. 3-31-10 CIVIL STATE OF CALIFORNIA

THE STATE OF CALIFORNIA OR ITS OFFICERS OR AGENTS SHALL NOT BE RESPONSIBLE FOR THE ACCURACY OR COMPLETENESS OF SCANNED COPIES OF THIS PLAN SHEET.

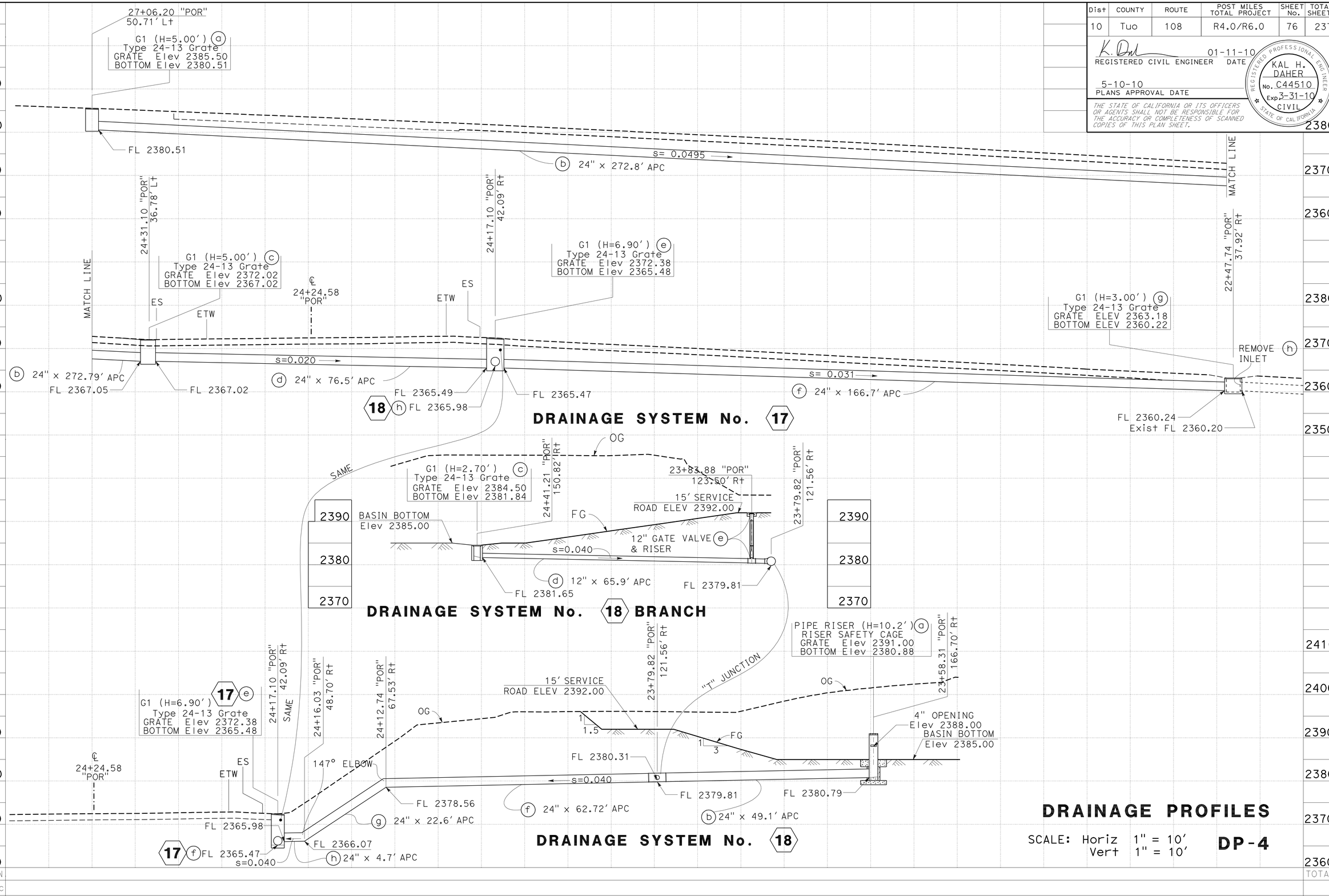

STATION
CY Exc
Emb
TOTAL

REVISED BY | DATE REVISED
JORGE AGUILERA | KAL DAHER
CALCULATED-DESIGNED BY | CHECKED BY
FUNCTIONAL SUPERVISOR | TERRY OGLE

STATE OF CALIFORNIA - DEPARTMENT OF TRANSPORTATION
06-DESIGN
Caltrans

LAST REVISION 01-11-10 | DATE PLOTTED => 12-MAY-2010 | TIME PLOTTED => 08:52

Dist	COUNTY	ROUTE	POST MILES TOTAL PROJECT	SHEET No.	TOTAL SHEETS
10	Tuo	108	R4.0/R6.0	77	237

REGISTERED CIVIL ENGINEER 01-11-10 DATE

5-10-10
PLANS APPROVAL DATE

REGISTERED PROFESSIONAL ENGINEER KAL H. DAHER No. C44510 Exp. 3-31-10 CIVIL STATE OF CALIFORNIA

THE STATE OF CALIFORNIA OR ITS OFFICERS OR AGENTS SHALL NOT BE RESPONSIBLE FOR THE ACCURACY OR COMPLETENESS OF SCANNED COPIES OF THIS PLAN SHEET.

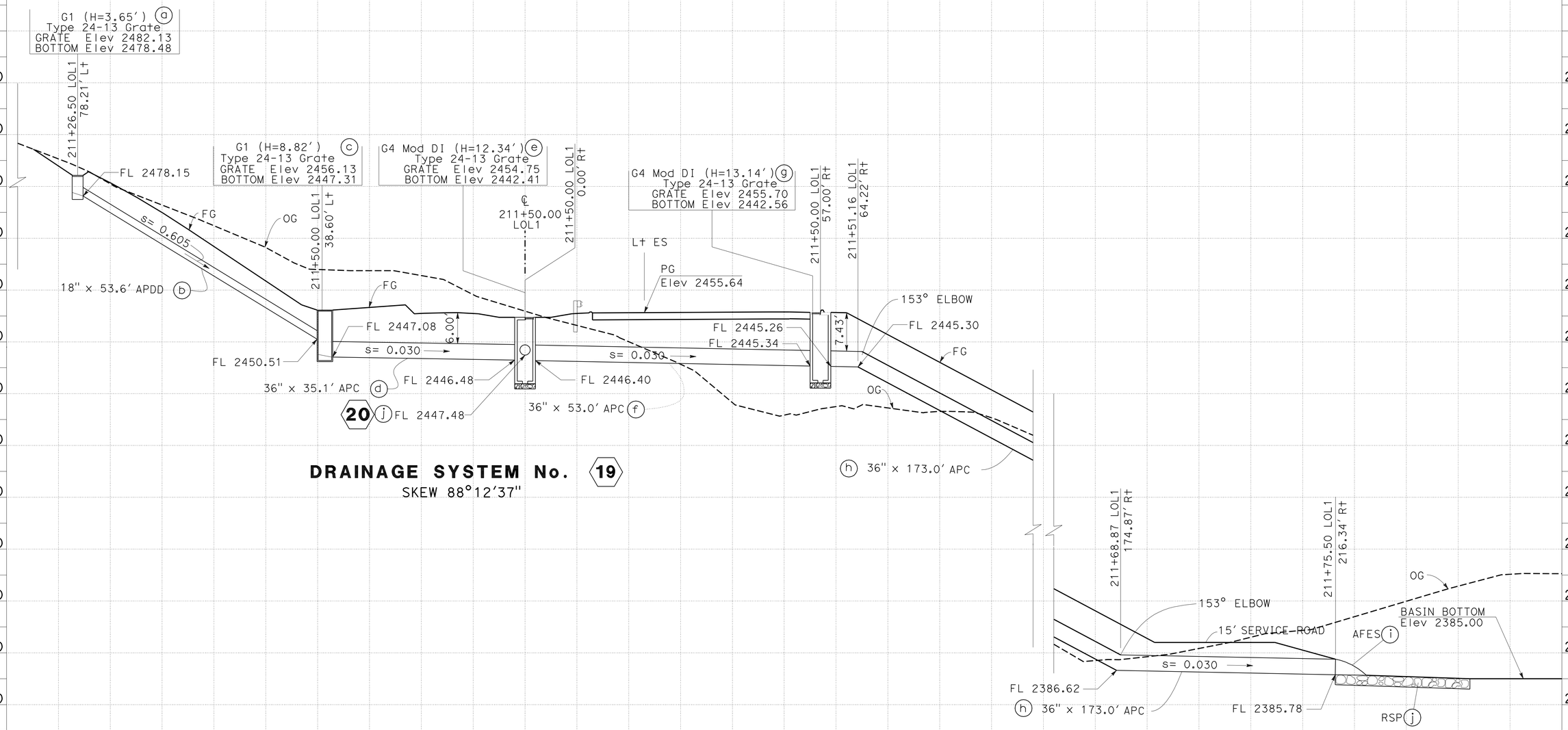

DRAINAGE SYSTEM No. 19

SKEW 88°12'37"

DRAINAGE PROFILES

SCALE: Horiz 1" = 10'
Vert 1" = 10'

DP-5

STATION		TOTAL
CY	Exc	
	Emb	

STATE OF CALIFORNIA - DEPARTMENT OF TRANSPORTATION
Caltrans
06-DESIGN

FUNCTIONAL SUPERVISOR: TERRY OGLE
CALCULATED-DESIGNED BY: JORGE AGUILERA
CHECKED BY: KAL DAHER
REVISED BY
DATE REVISED

LAST REVISION 01-11-10
DATE PLOTTED => 12-MAY-2010
TIME PLOTTED => 08:52

Dist	COUNTY	ROUTE	POST MILES TOTAL PROJECT	SHEET No.	TOTAL SHEETS
10	Tuo	108	R4.0/R6.0	78	237

REGISTERED CIVIL ENGINEER 01-11-10 DATE

5-10-10
PLANS APPROVAL DATE

REGISTERED PROFESSIONAL ENGINEER KAL H. DAHER No. C44510 Exp. 3-31-10 CIVIL STATE OF CALIFORNIA

THE STATE OF CALIFORNIA OR ITS OFFICERS OR AGENTS SHALL NOT BE RESPONSIBLE FOR THE ACCURACY OR COMPLETENESS OF SCANNED COPIES OF THIS PLAN SHEET.

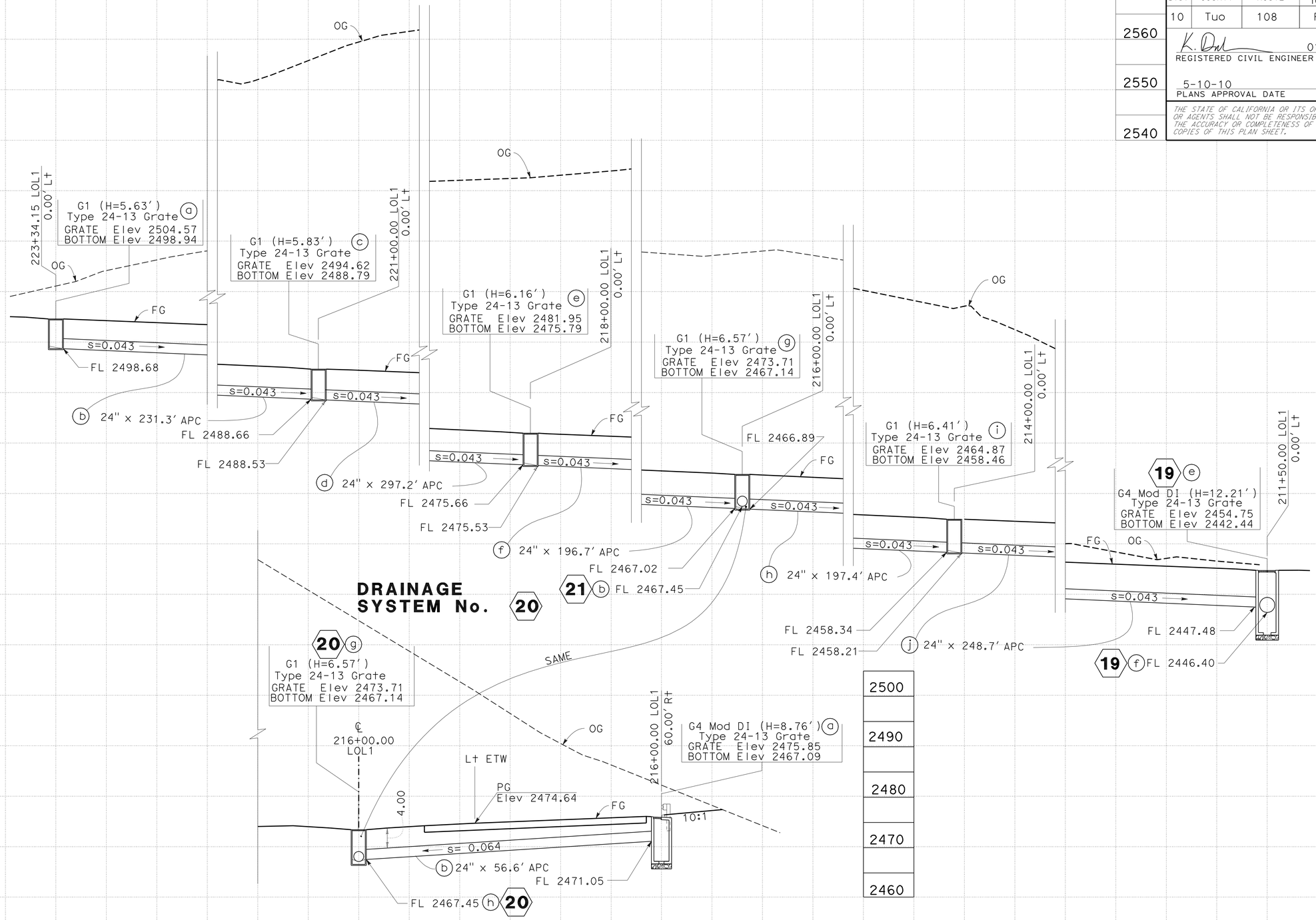

DRAINAGE PROFILES

SCALE: Horiz 1" = 10'
Vert 1" = 10'

DP-6

STATION
CY Exc
Emb
TOTAL

REVISED BY | DATE REVISED
JORGE AGUILERA | KAL DAHER
CALCULATED-DESIGNED BY | CHECKED BY
FUNCTIONAL SUPERVISOR
TERRY OGLE

STATE OF CALIFORNIA - DEPARTMENT OF TRANSPORTATION
Caltrans
06-DESIGN

LAST REVISION 01-11-10 | DATE PLOTTED => 12-MAY-2010 | TIME PLOTTED => 08:53

BORDER LAST REVISED 4/11/2008 | RELATIVE BORDER SCALE IS IN INCHES 0 1 2 3 | USERNAME => trpierce | DGN FILE => a34042ib006.dgn | CU 06228 | EA 340421

Dist	COUNTY	ROUTE	POST MILES TOTAL PROJECT	SHEET No.	TOTAL SHEETS
10	Tuo	108	R4.0/R6.0	79	237

REGISTERED CIVIL ENGINEER 01-11-10 DATE

5-10-10
PLANS APPROVAL DATE

REGISTERED PROFESSIONAL ENGINEER KAL H. DAHER No. C44510 Exp. 3-31-10 CIVIL STATE OF CALIFORNIA

THE STATE OF CALIFORNIA OR ITS OFFICERS OR AGENTS SHALL NOT BE RESPONSIBLE FOR THE ACCURACY OR COMPLETENESS OF SCANNED COPIES OF THIS PLAN SHEET.

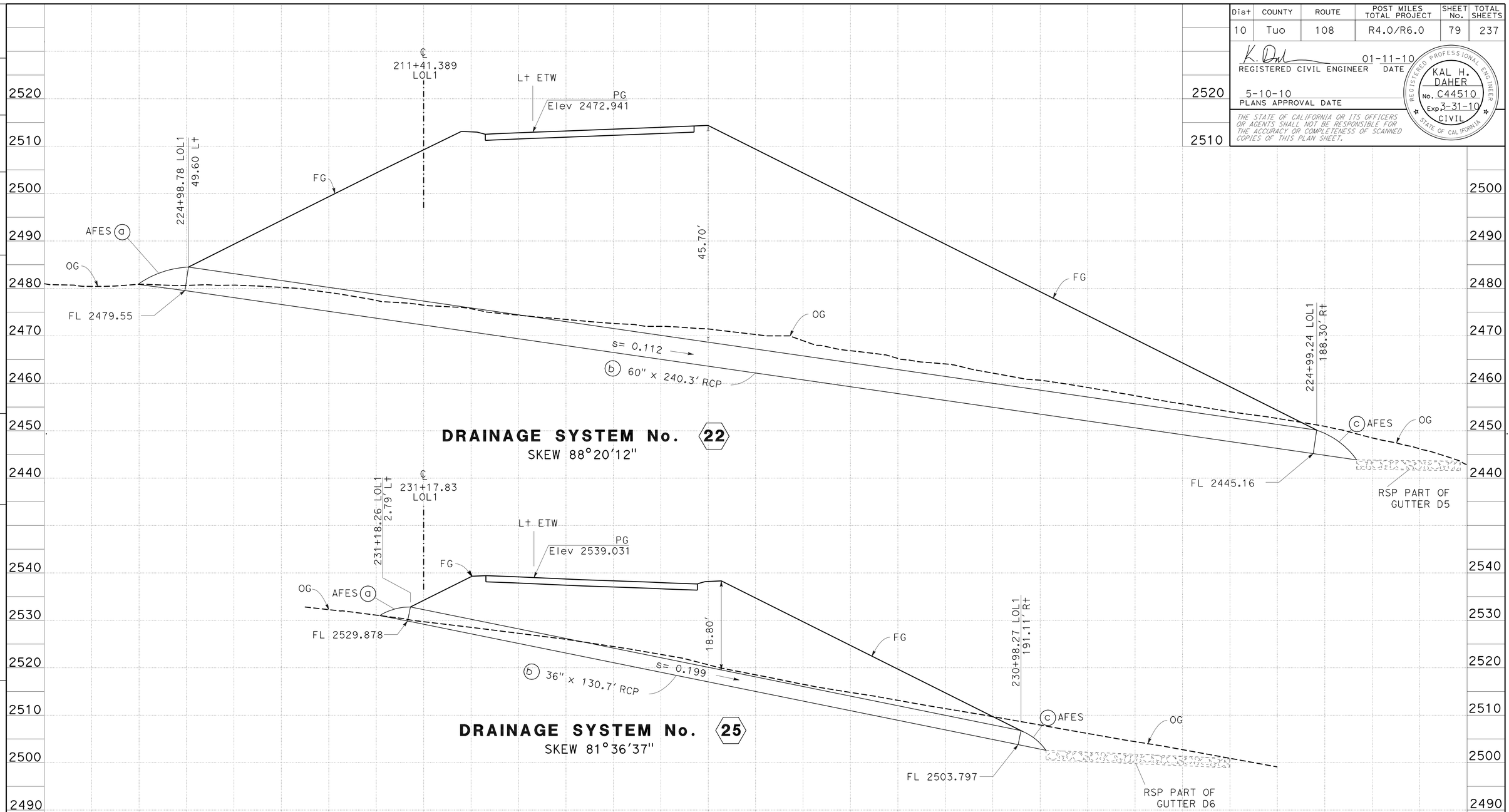

DRAINAGE SYSTEM No. 22
SKEW 88°20'12"

DRAINAGE SYSTEM No. 25
SKEW 81°36'37"

DRAINAGE PROFILES
DP-7

SCALE: Horiz 1" = 10'
Vert 1" = 10'

STATION		TOTAL
CY	Exc	
	Emb	

REVISED BY | DATE REVISED
JORGE AGUILERA | KAL DAHER
CALCULATED-DESIGNED BY | CHECKED BY
FUNCTIONAL SUPERVISOR: TERRY OGLE

STATE OF CALIFORNIA - DEPARTMENT OF TRANSPORTATION
Caltrans
06-DESIGN

LAST REVISION 01-11-10 | DATE PLOTTED => 12-MAY-2010 | TIME PLOTTED => 08:53

Dist	COUNTY	ROUTE	POST MILES TOTAL PROJECT	SHEET No.	TOTAL SHEETS
10	Tuo	108	R4.0/R6.0	80	237

K. Daher 01-11-10
REGISTERED CIVIL ENGINEER DATE

5-10-10
PLANS APPROVAL DATE

REGISTERED PROFESSIONAL ENGINEER
KAL H. DAHER
No. C44510
Exp. 3-31-10
CIVIL
STATE OF CALIFORNIA

THE STATE OF CALIFORNIA OR ITS OFFICERS OR AGENTS SHALL NOT BE RESPONSIBLE FOR THE ACCURACY OR COMPLETENESS OF SCANNED COPIES OF THIS PLAN SHEET.

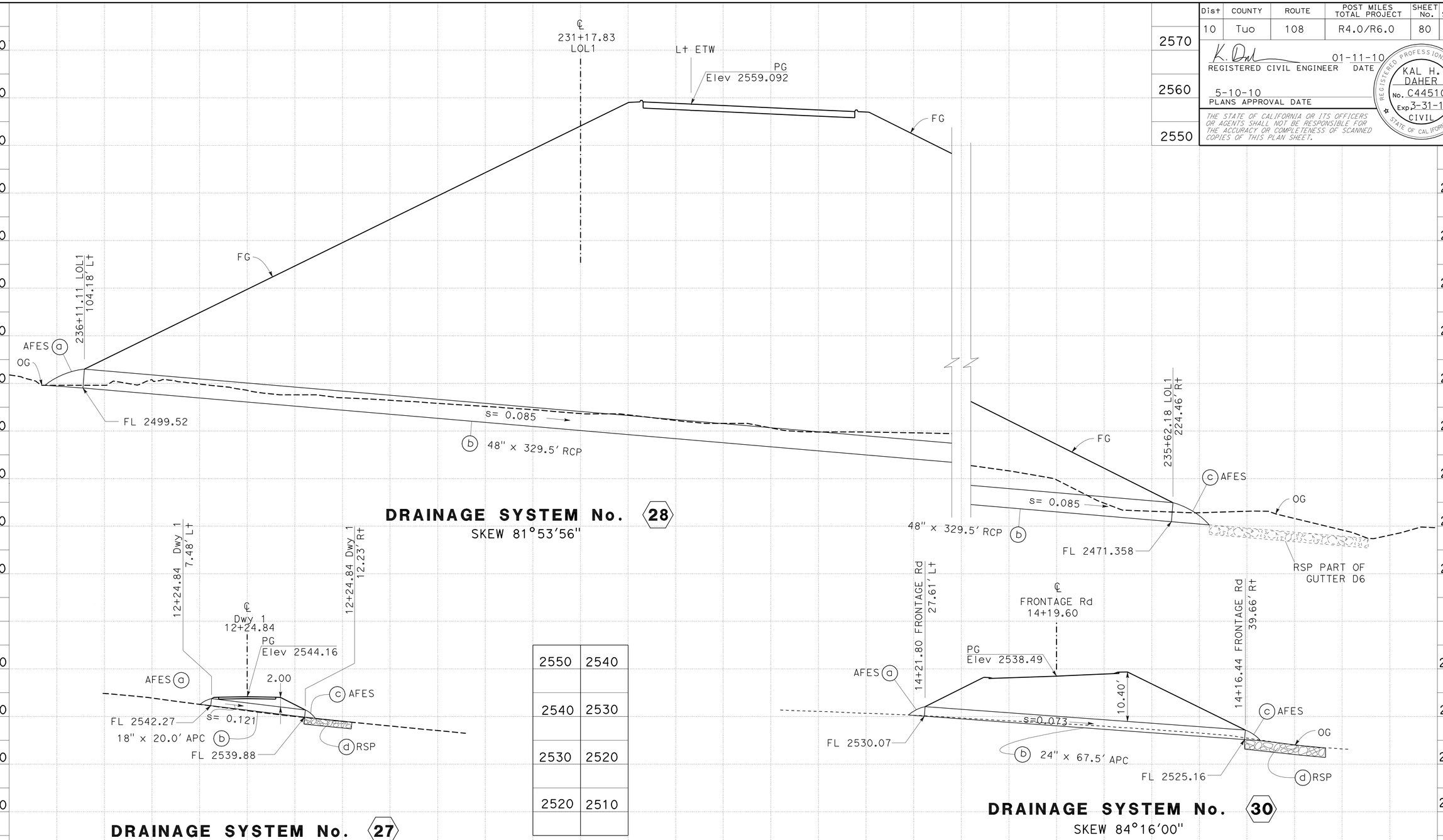

DRAINAGE SYSTEM No. 28
SKEW 81°53'56"

DRAINAGE SYSTEM No. 27
SKEW 90°00'00"

DRAINAGE SYSTEM No. 30
SKEW 84°16'00"

2550	2540
2540	2530
2530	2520
2520	2510

DRAINAGE PROFILES

SCALE: Horiz 1" = 10'
Vert 1" = 10'

DP-8

REVISED BY | DATE REVISED
JORGE AGUILERA | KAL DAHER
CALCULATED-DESIGNED BY | CHECKED BY
FUNCTIONAL SUPERVISOR: TERRY OGLE

STATE OF CALIFORNIA - DEPARTMENT OF TRANSPORTATION
Caltrans
06-DESIGN

STATION
CY Exc
Emb
TOTAL

LAST REVISION 01-11-10
DATE PLOTTED => 12-MAY-2010
TIME PLOTTED => 08:53

Dist	COUNTY	ROUTE	POST MILES TOTAL PROJECT	SHEET No.	TOTAL SHEETS
10	Tuo	108	R4.0/R6.0	81	237

REGISTERED CIVIL ENGINEER 01-11-10 DATE

5-10-10
PLANS APPROVAL DATE

REGISTERED PROFESSIONAL ENGINEER KAL H. DAHER No. C44510 Exp. 3-31-10 CIVIL STATE OF CALIFORNIA

THE STATE OF CALIFORNIA OR ITS OFFICERS OR AGENTS SHALL NOT BE RESPONSIBLE FOR THE ACCURACY OR COMPLETENESS OF SCANNED COPIES OF THIS PLAN SHEET.

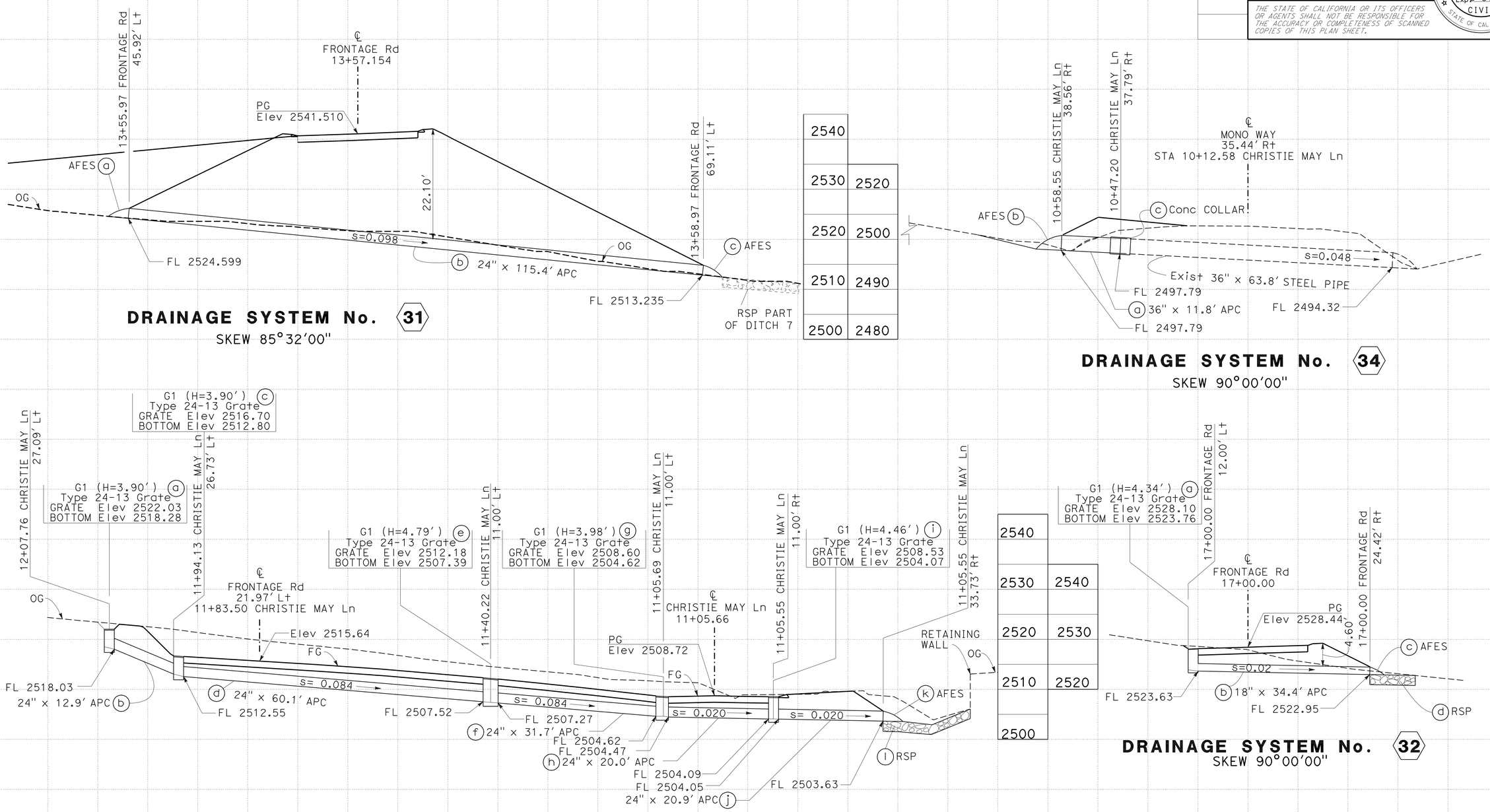

DRAINAGE PROFILES

SCALE: Horiz 1" = 10'
Vert 1" = 10'

DP-9

STATION		TOTAL
CY	Exc	
	Emb	

STATE OF CALIFORNIA - DEPARTMENT OF TRANSPORTATION
Caltrans
06-DESIGN

FUNCTIONAL SUPERVISOR: TERRY OGLE
CALCULATED-DESIGNED BY: JORGE AGUILERA
CHECKED BY: KAL DAHER
REVISED BY / DATE REVISED

LAST REVISION 01-11-10 | DATE PLOTTED => 12-MAY-2010 | TIME PLOTTED => 08:53

Dist	COUNTY	ROUTE	POST MILES TOTAL PROJECT	SHEET No.	TOTAL SHEETS
10	Tuo	108	R4.0/R6.0	82	237

K. Daher 01-11-10
REGISTERED CIVIL ENGINEER DATE

5-10-10
PLANS APPROVAL DATE

REGISTERED PROFESSIONAL ENGINEER KAL H. DAHER No. C44510 Exp. 3-31-10 CIVIL STATE OF CALIFORNIA

THE STATE OF CALIFORNIA OR ITS OFFICERS OR AGENTS SHALL NOT BE RESPONSIBLE FOR THE ACCURACY OR COMPLETENESS OF SCANNED COPIES OF THIS PLAN SHEET.

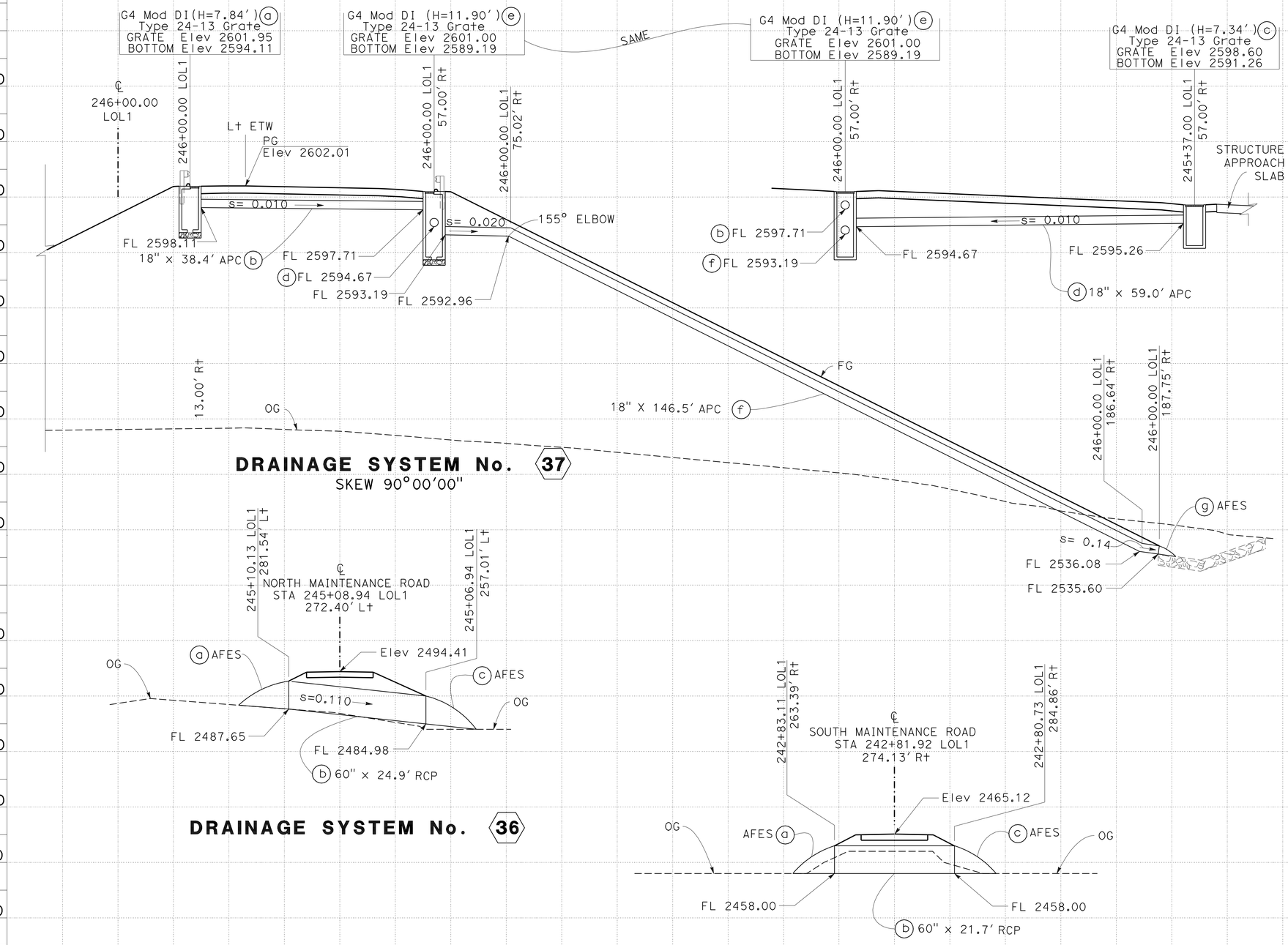

DRAINAGE SYSTEM No. 37

SKEW 90°00'00"

DRAINAGE SYSTEM No. 36

DRAINAGE SYSTEM No. 35

DRAINAGE PROFILES

SCALE: Horiz 1" = 10'
Vert 1" = 10'

DP-10

STATION		
CY	Exc	
	Emb	

TOTAL

STATE OF CALIFORNIA - DEPARTMENT OF TRANSPORTATION
Caltrans
06-DESIGN

FUNCTIONAL SUPERVISOR: TERRY OGLE
CALCULATED-DESIGNED BY: JORGE AGUILERA
CHECKED BY: KAL DAHER
REVISED BY
DATE REVISED

LAST REVISION 01-11-10
DATE PLOTTED => 12-MAY-2010
TIME PLOTTED => 08:53

Dist	COUNTY	ROUTE	POST MILES TOTAL PROJECT	SHEET No.	TOTAL SHEETS
10	Tuo	108	R4.0/R6.0	83	237

K. Daher 01-11-10
REGISTERED CIVIL ENGINEER DATE

5-10-10
PLANS APPROVAL DATE

REGISTERED PROFESSIONAL ENGINEER
KAL H. DAHER
No. C44510
Exp. 3-31-10
CIVIL
STATE OF CALIFORNIA

THE STATE OF CALIFORNIA OR ITS OFFICERS OR AGENTS SHALL NOT BE RESPONSIBLE FOR THE ACCURACY OR COMPLETENESS OF SCANNED COPIES OF THIS PLAN SHEET.

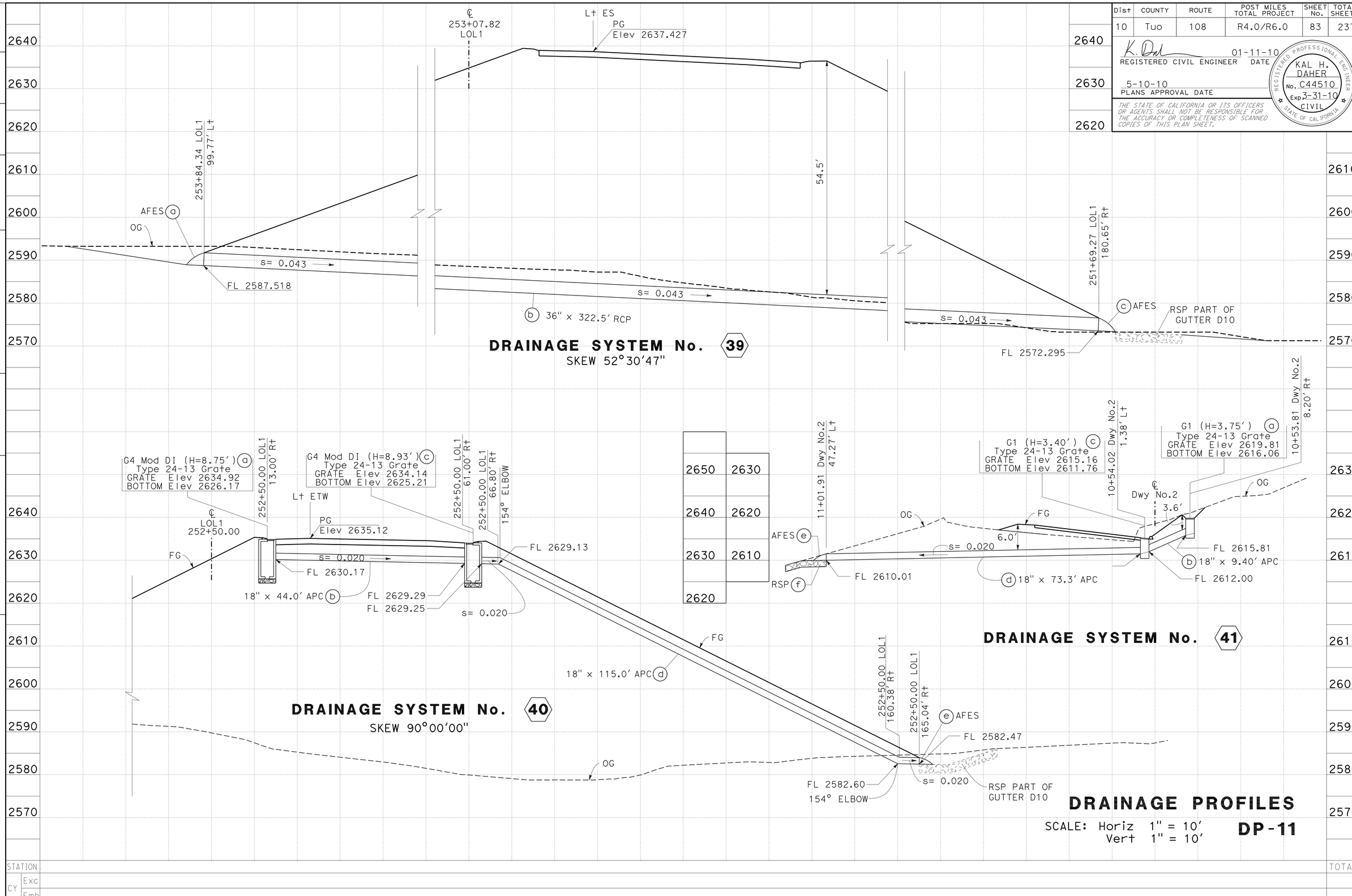

STATION	
CY	Exc
	Emb

TOTAL

REVISED BY | DATE REVISED
JORGE AGUILERA | KAL DAHER
CALCULATED-DESIGNED BY | CHECKED BY
FUNCTIONAL SUPERVISOR: TERRY OGLE
STATE OF CALIFORNIA - DEPARTMENT OF TRANSPORTATION
Caltrans
06-DESIGN

LAST REVISION | DATE PLOTTED => 12-MAY-2010 | TIME PLOTTED => 08:53
01-11-10

Dist	COUNTY	ROUTE	POST MILES TOTAL PROJECT	SHEET No.	TOTAL SHEETS
10	Tuo	108	R4.0/R6.0	84	237

REGISTERED CIVIL ENGINEER 01-11-10 DATE

5-10-10
PLANS APPROVAL DATE

REGISTERED PROFESSIONAL ENGINEER KAL H. DAHER No. C44510 Exp. 3-31-10 CIVIL STATE OF CALIFORNIA

THE STATE OF CALIFORNIA OR ITS OFFICERS OR AGENTS SHALL NOT BE RESPONSIBLE FOR THE ACCURACY OR COMPLETENESS OF SCANNED COPIES OF THIS PLAN SHEET.

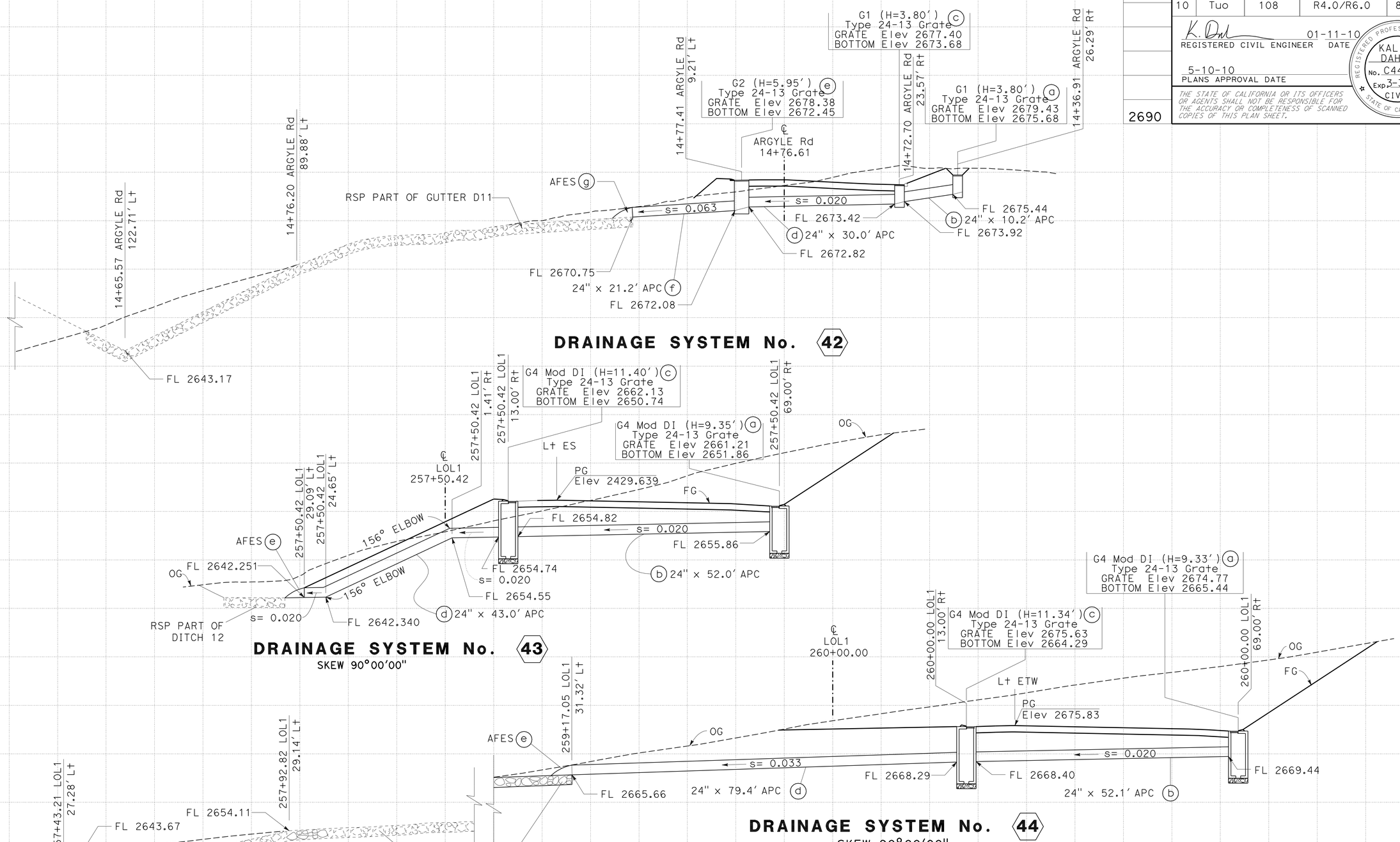

DRAINAGE PROFILES

SCALE: Horiz 1" = 10′
Vert 1" = 10′

DP-12

STATE OF CALIFORNIA - DEPARTMENT OF TRANSPORTATION
Caltrans
06-DESIGN

FUNCTIONAL SUPERVISOR: TERRY OGLE
CALCULATED-DESIGNED BY: JORGE AGUILERA
CHECKED BY: KAL DAHER
REVISED BY / DATE REVISED

STATION
CY Exc
Emb
TOTAL

LAST REVISION 01-11-10
DATE PLOTTED => 12-MAY-2010
TIME PLOTTED => 08:53

BORDER LAST REVISED 4/11/2008
RELATIVE BORDER SCALE IS IN INCHES 0 1 2 3
USERNAME => trpierce
DGN FILE => a34042ib012.dgn
CU 06228
EA 340421

Dist	COUNTY	ROUTE	POST MILES TOTAL PROJECT	SHEET No.	TOTAL SHEETS
10	Tuo	108	R4.0/R6.0	85	237

K. Daher 01-11-10
REGISTERED CIVIL ENGINEER DATE

5-10-10
PLANS APPROVAL DATE

REGISTERED PROFESSIONAL ENGINEER KAL H. DAHER No. C44510 Exp. 3-31-10 CIVIL STATE OF CALIFORNIA

THE STATE OF CALIFORNIA OR ITS OFFICERS OR AGENTS SHALL NOT BE RESPONSIBLE FOR THE ACCURACY OR COMPLETENESS OF SCANNED COPIES OF THIS PLAN SHEET.

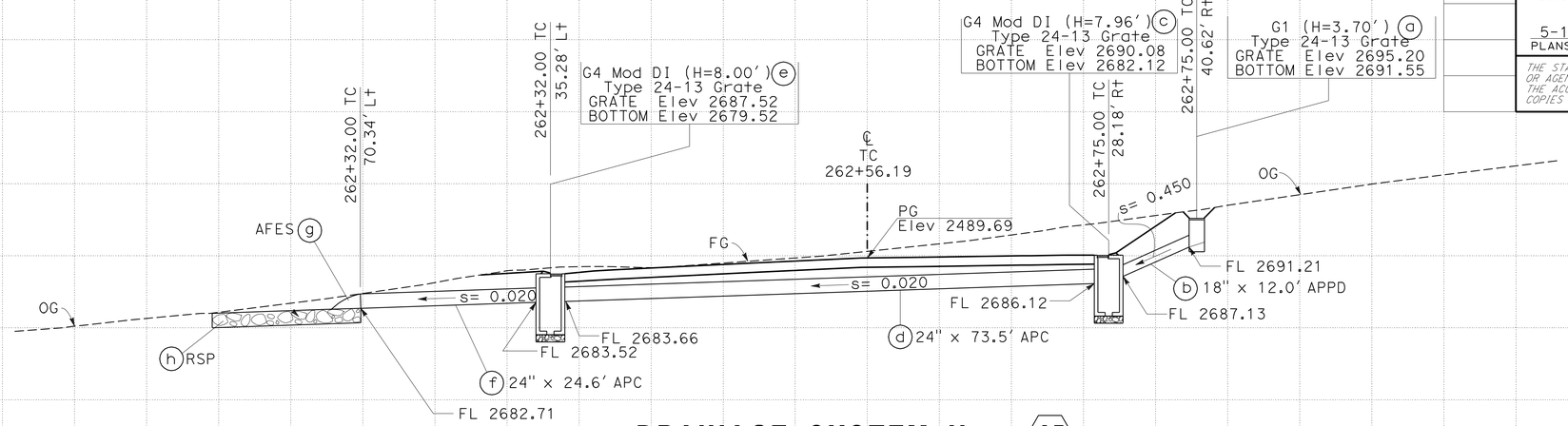

DRAINAGE SYSTEM No. (45)

SKEW 56°35′26"

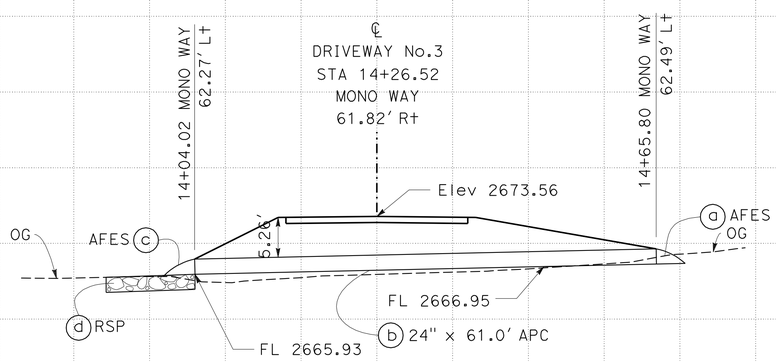

DRAINAGE SYSTEM No. (47)

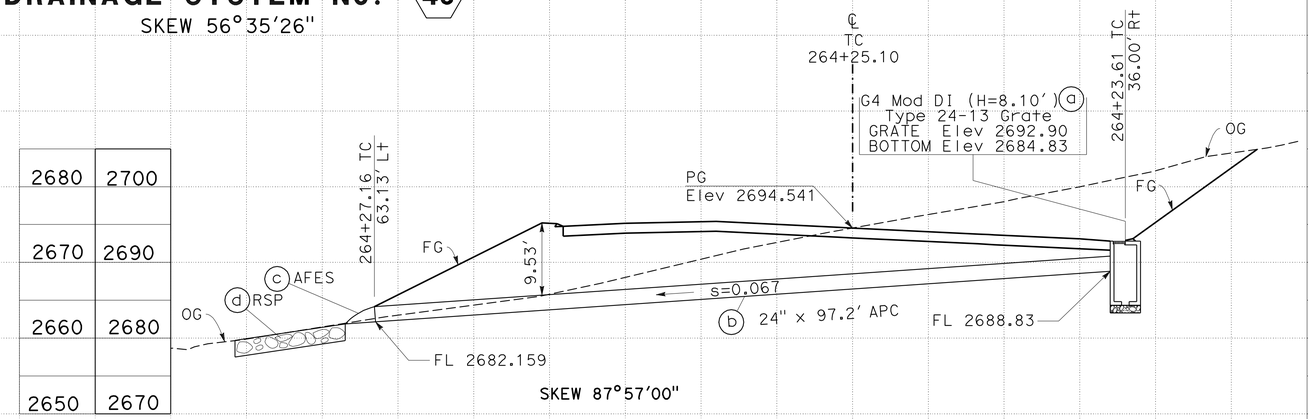

SKEW 87°57′00"

DRAINAGE SYSTEM No. (50)

SKEW 88°00′00"

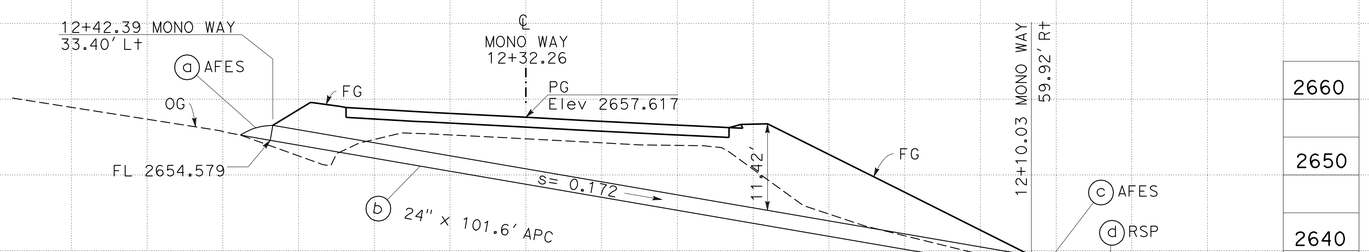

DRAINAGE SYSTEM No. (49)

SKEW 70°58′00"

DRAINAGE PROFILES

SCALE: Horiz 1" = 10′
Vert 1" = 10′

DP-13

STATION
CY Exc
Emb
TOTAL

STATE OF CALIFORNIA - DEPARTMENT OF TRANSPORTATION
06-DESIGN
Caltrans

FUNCTIONAL SUPERVISOR: TERRY OGLE
CALCULATED-DESIGNED BY: JORGE AGUILERA
CHECKED BY: KAL DAHER
REVISED BY
DATE REVISED

LAST REVISION 01-11-10
DATE PLOTTED => 12-MAY-2010
TIME PLOTTED => 08:53

BORDER LAST REVISED 4/11/2008
RELATIVE BORDER SCALE IS IN INCHES 0 1 2 3
USERNAME => trpierce
DGN FILE => a34042ib013.dgn
CU 06228
EA 340421

Dist	COUNTY	ROUTE	POST MILES TOTAL PROJECT	SHEET No.	TOTAL SHEETS
10	Tuo	108	R4.0/R6.0	86	237

REGISTERED CIVIL ENGINEER 01-11-10 DATE

5-10-10
PLANS APPROVAL DATE

REGISTERED PROFESSIONAL ENGINEER KAL H. DAHER No. C44510 Exp. 3-31-10 CIVIL STATE OF CALIFORNIA

THE STATE OF CALIFORNIA OR ITS OFFICERS OR AGENTS SHALL NOT BE RESPONSIBLE FOR THE ACCURACY OR COMPLETENESS OF SCANNED COPIES OF THIS PLAN SHEET.

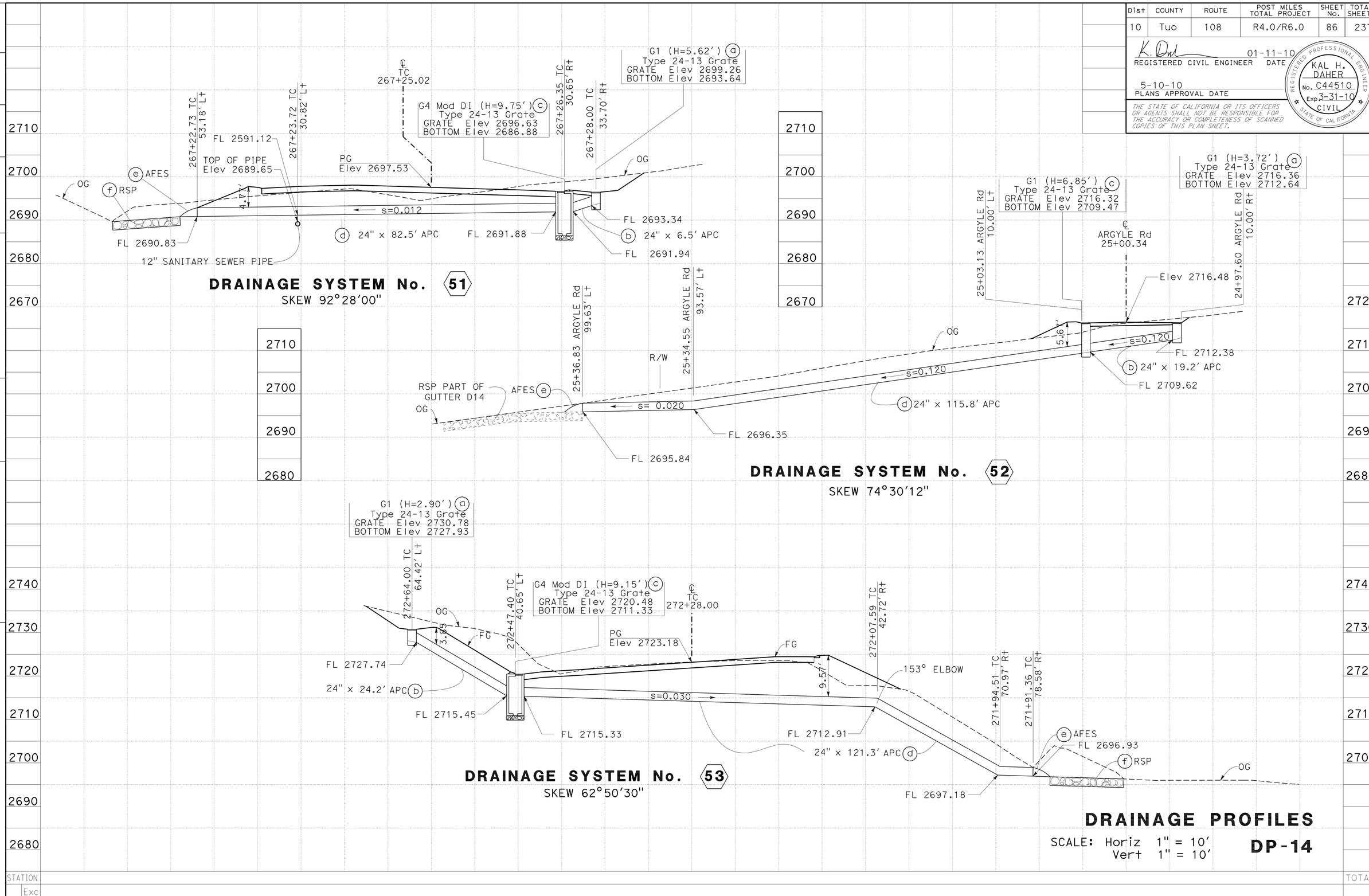

DRAINAGE PROFILES

SCALE: Horiz 1" = 10'
Vert 1" = 10'

DP-14

STATION		TOTAL
CY	Exc	
	Emb	

STATE OF CALIFORNIA - DEPARTMENT OF TRANSPORTATION
Caltrans
06-DESIGN

FUNCTIONAL SUPERVISOR: TERRY OGLE
CALCULATED-DESIGNED BY: JORGE AGUILERA
CHECKED BY: KAL DAHER
REVISED BY / DATE REVISED

LAST REVISION 01-11-10 | DATE PLOTTED => 12-MAY-2010 | TIME PLOTTED => 08:53

Dist	COUNTY	ROUTE	POST MILES TOTAL PROJECT	SHEET No.	TOTAL SHEETS
10	Tuo	108	R4.0/R6.0	87	237

K. Daher 01-12-10
REGISTERED CIVIL ENGINEER DATE

5-10-10
PLANS APPROVAL DATE

REGISTERED PROFESSIONAL ENGINEER KAL H. DAHER No. C44510 Exp. 3-31-10 CIVIL STATE OF CALIFORNIA

THE STATE OF CALIFORNIA OR ITS OFFICERS OR AGENTS SHALL NOT BE RESPONSIBLE FOR THE ACCURACY OR COMPLETENESS OF SCANNED COPIES OF THIS PLAN SHEET.

NOTE:
USE CLASS II RCP
ECCENTRIC CONE & SHAFT

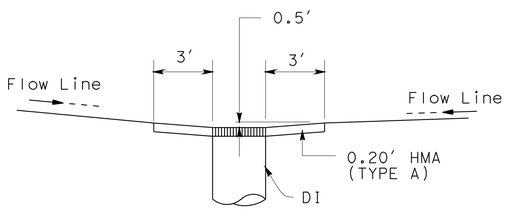

PARALLEL
TO FLOW LINE

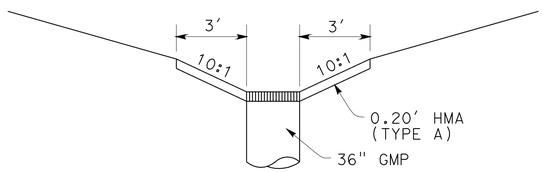

PERPENDICULAR
TO FLOW LINE

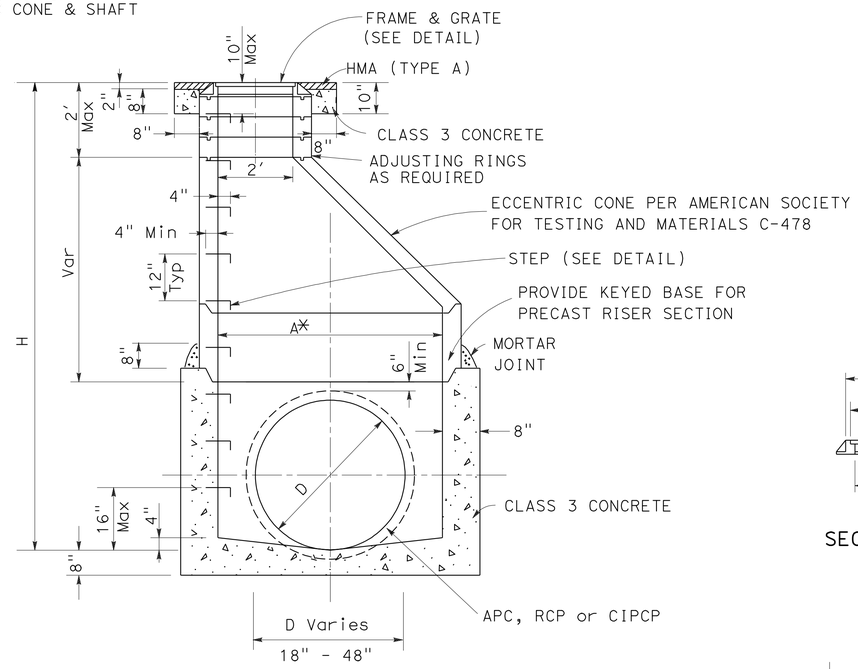

SECTION A-A

*STANDARD MANHOLE
Case I A=48"
Case II A=60"
Case III A=72"

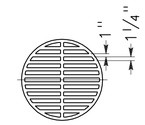

PLAN OF GRATE

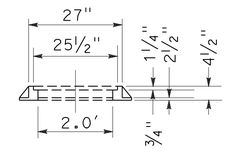

SECTION OF FRAME

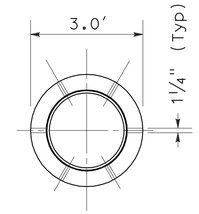

PLAN OF FRAME

NOTES:

1. AN ALTERNATE STEP MAY BE USED SUBJECT TO THE APPROVAL OF THE ENGINEER.
2. ALL STEPS SHALL BE FIRMLY AND RIGIDLY SET WITH EPOXY GROUT OR EPOXY.
3. STEPS SHALL BE GALVANIZED AFTER BENDING.
4. IN MANHOLES WITH LATERAL LINE CONNECTIONS, THE STEPS SHALL BE PLACED IN THE WALL WITH NO LATERALS OR THE WALL WITH THE LEAST DIAMETER LATERAL, SUCH THAT A CONTINUOUS VERTICAL ALIGNMENT OF STEPS MAY BE ACHIEVED.
5. ALL JOINTS BETWEEN PRECAST SECTIONS SHALL BE MORTARED.
6. INTERIOR OF THE MANHOLE SHALL HAVE A SMOOTH TROWELED SURFACE.
7. ECCENTRIC CONES IN PAVED AREAS SHALL BE ORIENTED TO PLACE FRAMES & COVER AWAY FROM WHEEL TRACKS.
8. PRECAST PIPE, ADJUSTING RINGS AND ECCENTRIC CONE SHALL BE CONSTRUCTED IN ACCORDANCE WITH AMERICAN SOCIETY FOR TESTING AND MATERIALS C-478M.

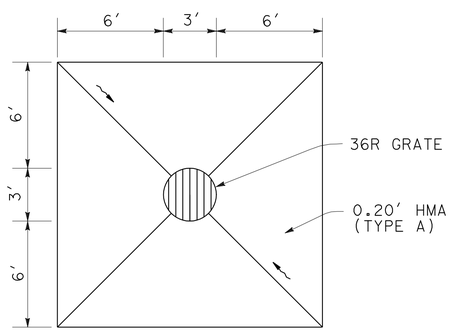

DRAINAGE INLET APRON DETAIL

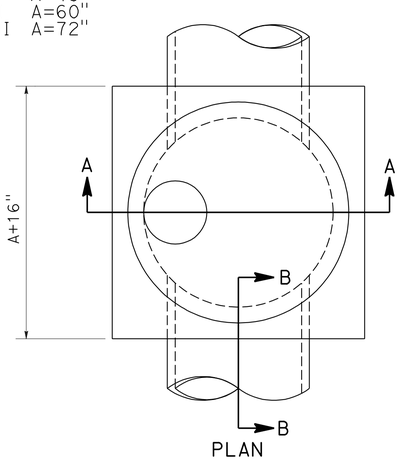

PLAN

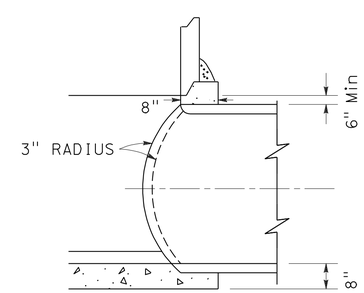

SECTION B-B

TYPE A MANHOLE

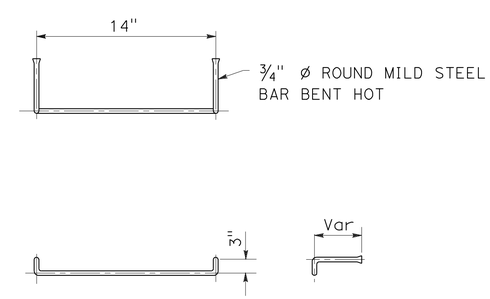

STEP DETAIL

THIS PLAN ACCURATE FOR DRAINAGE WORK ONLY

DRAINAGE DETAILS

NO SCALE

DD-1

STATE OF CALIFORNIA - DEPARTMENT OF TRANSPORTATION
06-DESIGN
Caltrans
FUNCTIONAL SUPERVISOR: TERRY OGLE
CALCULATED-DESIGNED BY: JORGE AGUILERA
CHECKED BY: KAL DAHER
REVISED BY
DATE REVISED

LAST REVISION 01-12-10
DATE PLOTTED => 12-MAY-2010
TIME PLOTTED => 08:54

Dist	COUNTY	ROUTE	POST MILES TOTAL PROJECT	SHEET No.	TOTAL SHEETS
10	Tuo	108	R4.0/R6.0	88	237

REGISTERED CIVIL ENGINEER 01-12-10 DATE

5-10-10
PLANS APPROVAL DATE

REGISTERED PROFESSIONAL ENGINEER KAL H. DAHER No. C44510 Exp. 3-31-10 CIVIL STATE OF CALIFORNIA

THE STATE OF CALIFORNIA OR ITS OFFICERS OR AGENTS SHALL NOT BE RESPONSIBLE FOR THE ACCURACY OR COMPLETENESS OF SCANNED COPIES OF THIS PLAN SHEET.

DOWNDRAINS

DRAINAGE SYSTEM No. ⬡	LOCATION	GUTTER FLOWLINE	GRATE FLOWLINE	INLET FLOWLINE	OUTLET FLOWLINE
		Elev			
1	20.0′ Lt 94+06.00 "L"	2358.51	2358.43	2355.51	2348.22
3	20.5′ Rt 101+73.00 "E"	2368.35	2368.27	2365.35	2365.00
4	28.8′ Lt 97+00.00 "L"	2374.48	2374.40	2371.48	2358.12
7	4.0′ Rt 98+96.00 "L"	2386.90	2386.82	2383.90	2382.90
23	57.0′ Rt 227+85.00 "LOL1"	2523.81	2523.72	2520.81	2517.50
24	57.0′ Rt 229+53.41 "LOL1"	2533.05	2532.97	2530.05	2515.00
26	57.0′ Rt 232+86.00 "LOL1"	2544.20	2544.12	2541.20	2505.50
29	57.0′ Rt 237+27.00 "LOL1"	2562.98	2562.90	2559.98	2580.25
38	57.0′ Rt 248+67.00 "LOL1"	2613.79	2613.71	2610.79	2601.83
46	22.0′ Rt 16+72.00 MONO WAY	2689.34	2689.26	2686.34	2674.95
48	26.0′ Rt 12+50.50 MONO WAY	2658.15	2658.07	2655.15	2643.50

NOTE: OFFSET MEASURE TO FLOWLINE OF GUTTER.
FOR TYPE OF INLET SEE DRAINAGE QUANTITIES.

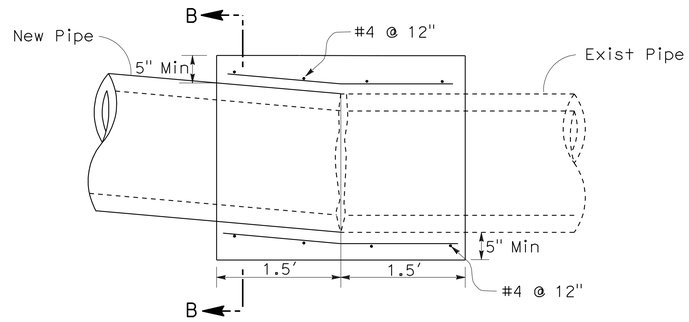

PLAN

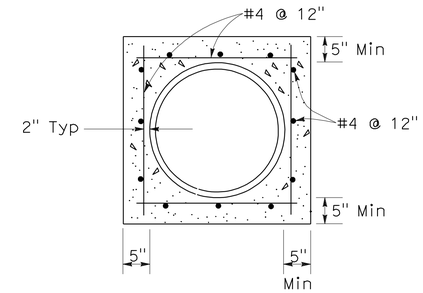

SECTION B-B

TYPICAL CONCRETE COLLAR DETAIL

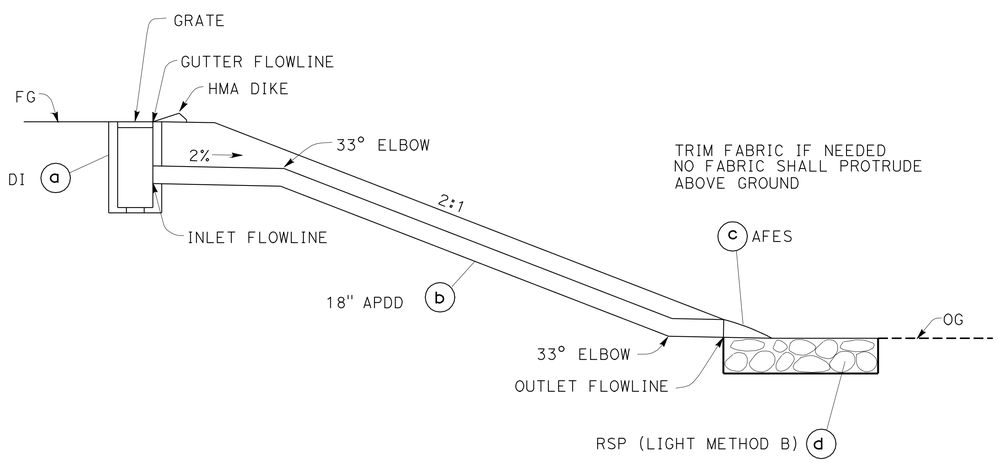

TYPICAL DOWNDRAIN DETAIL

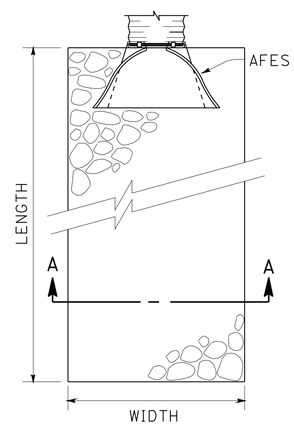

PLAN

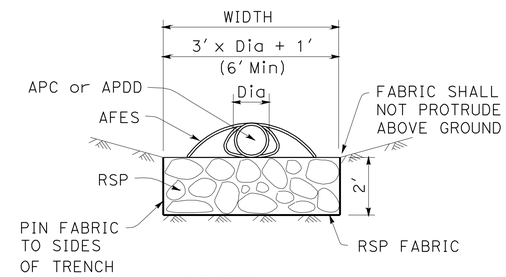

SECTION A-A

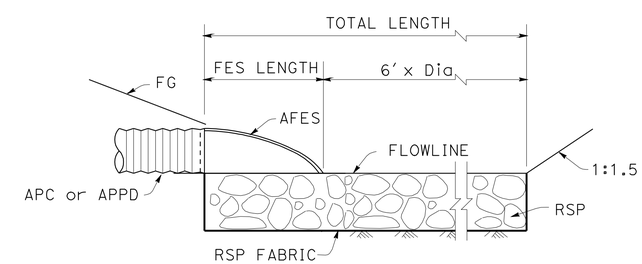

PROFILE

ROCK SLOPE PROTECTION AT OUTLET

THIS PLAN ACCURATE FOR DRAINAGE WORK ONLY

DRAINAGE DETAILS

NO SCALE

DD-2

STATE OF CALIFORNIA - DEPARTMENT OF TRANSPORTATION
Caltrans
06-DESIGN

FUNCTIONAL SUPERVISOR: TERRY OGLE
CALCULATED-DESIGNED BY: JORGE AGUILERA
CHECKED BY: KAL DAHER
REVISED BY
DATE REVISED

LAST REVISION 01-12-10
DATE PLOTTED => 12-MAY-2010
TIME PLOTTED => 08:54

Dist	COUNTY	ROUTE	POST MILES TOTAL PROJECT	SHEET No.	TOTAL SHEETS
10	Tuo	108	R4.0/R6.0	89	237

REGISTERED CIVIL ENGINEER 01-13-10 DATE

5-10-10
PLANS APPROVAL DATE

REGISTERED PROFESSIONAL ENGINEER KAL H. DAHER No. C44510 Exp. 3-31-10 CIVIL STATE OF CALIFORNIA

THE STATE OF CALIFORNIA OR ITS OFFICERS OR AGENTS SHALL NOT BE RESPONSIBLE FOR THE ACCURACY OR COMPLETENESS OF SCANNED COPIES OF THIS PLAN SHEET.

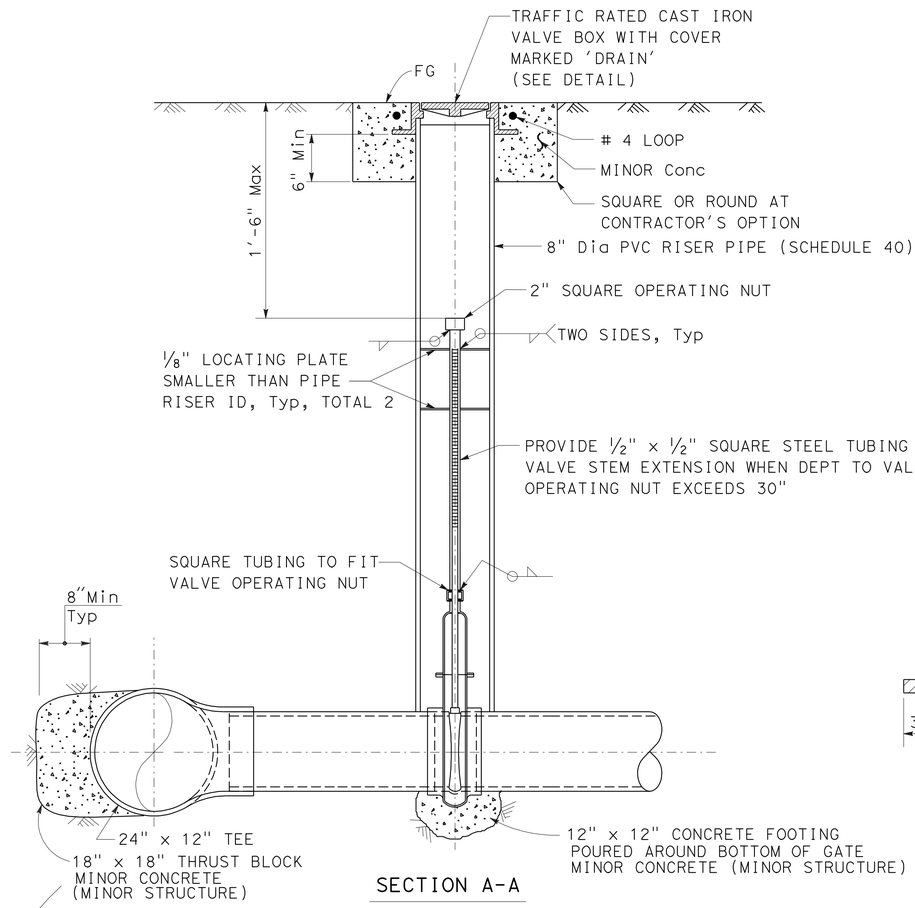

SECTION A-A

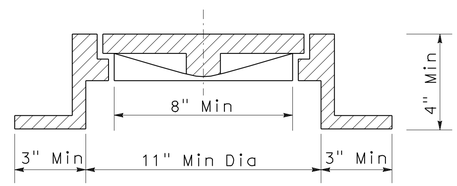

VALVE BOX AND COVER DETAIL

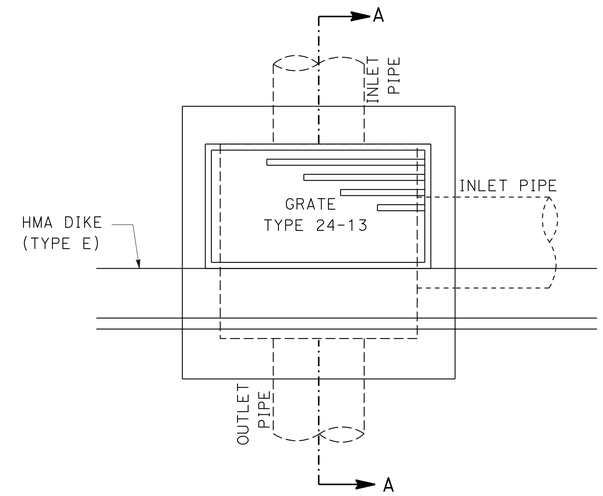

PLAN VIEW

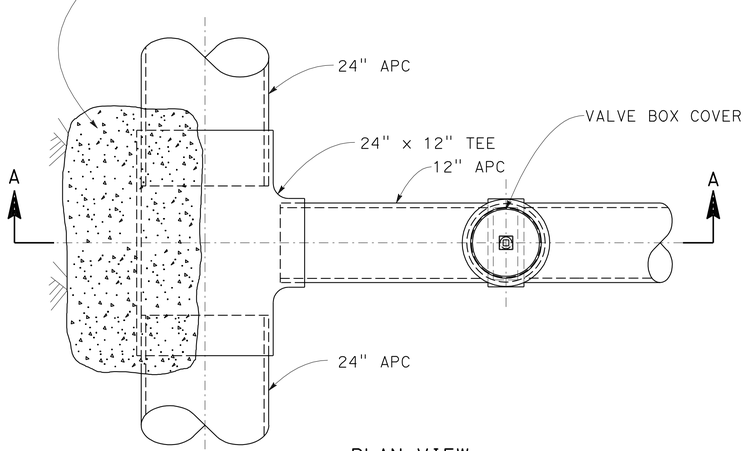

PLAN VIEW

GATE VALVE & RISER

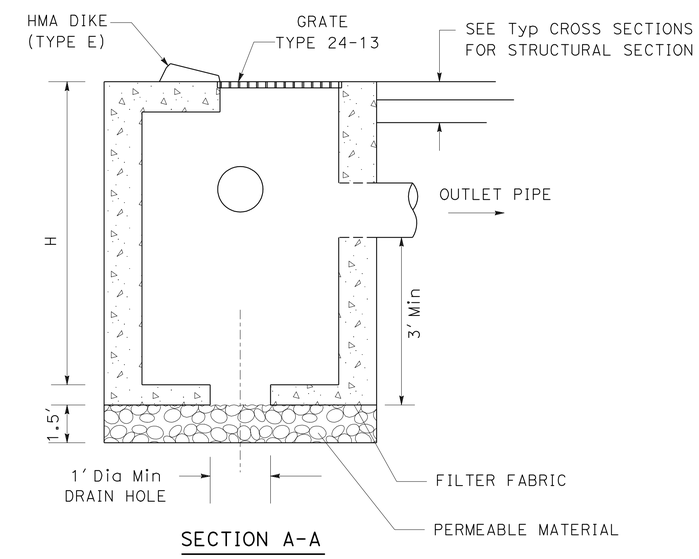

SECTION A-A

G4 MODIFIED DRAINAGE INLET

THIS PLAN ACCURATE FOR DRAINAGE WORK ONLY

DRAINAGE DETAILS

NO SCALE

DD-3

STATE OF CALIFORNIA - DEPARTMENT OF TRANSPORTATION
Caltrans
06-DESIGN
FUNCTIONAL SUPERVISOR: TERRY OGLE
CALCULATED-DESIGNED BY: JORGE AGUILERA
CHECKED BY: KAL DAHER
REVISED BY
DATE REVISED

LAST REVISION 01-13-10
DATE PLOTTED => 12-MAY-2010
TIME PLOTTED => 08:54

Dist	COUNTY	ROUTE	POST MILES TOTAL PROJECT	SHEET No.	TOTAL SHEETS
10	Tuo	108	R4.0/R6.0	90	237

REGISTERED CIVIL ENGINEER 01-11-10 DATE

PLANS APPROVAL DATE 5-10-10

REGISTERED PROFESSIONAL ENGINEER KAL H. DAHER No. C44510 Exp. 3-31-10 CIVIL STATE OF CALIFORNIA

THE STATE OF CALIFORNIA OR ITS OFFICERS OR AGENTS SHALL NOT BE RESPONSIBLE FOR THE ACCURACY OR COMPLETENESS OF SCANNED COPIES OF THIS PLAN SHEET.

NOTE: EXCEPT FOR PIPE DOWNDRAINS WHICH REQUIRE WATER TIGHT JOINTS, ALL JOINTS ARE STANDARD JOINT TYPE.

ABBREVIATIONS

APDD - ALTERNATIVE PIPE DOWNDRAIN
S - STANDARD JOINT TYPE
D - DOWNDRAIN JOINT TYPE
API - ALTERNATIVE PIPE INLET
CML - CHRISTIE MAY LANE
AR - ARGYLE ROAD
FR - FRONTAGE ROAD

APC ALLOWABLE PIPE MATERIAL AND PROTECTION

DESIGNATION	RCP	CSP WITH POLYMERIC SHEET COATING			PLASTIC PIPE	
	SIZE	SIZE	THICKNESS (MIN)	CORRUGATIONS	SIZE	SMOOTH INTERIOR
	INCH	INCH	INCH	INCH		WALL TYPE
18" APC	18	18	0.11 *		18	No
24" APC	24	24	0.11 *	2.67 x 0.50	24	No
36" APC	36	36	0.11 * *	2.67 x 0.50	36	No

* - EITHER HELICAL OR ANNULAR CORRUGATIONS ARE ALLOWABLE
** - HELICAL CORRUGATIONS ONLY

DRAINAGE QUANTITIES

DRAINAGE PLAN SHEET No.	DRAINAGE SYSTEM No.	DRAINAGE UNIT	MISC IRON AND STEEL	HOT MIX ASPHALT (TYPE B)	18" APDD	APC 12"	APC 18"	APC 24"	APC 36"	REINFORCED CONCRETE PIPE 36"	REINFORCED CONCRETE PIPE 48"	REINFORCED CONCRETE PIPE 60"	JACKED 36" RCP (CLASS III)	REMOVE FES	REMOVE INLET	(N) REMOVE FRAME AND GRATE	REMOVE CULVERT	(N) Conc COLLAR	ABANDON CULVERT	SAND BACKFILL	REMOVE DOWNDRAIN	AFES 18"	AFES 24"	AFES 36"	AFES 48"	AFES 60"	DRAIN VALVE	(N) MAXIMUM COVER	(N) HEIGHT OF INLET "H"	MINOR CONCRETE (MINOR STRUCTURE)	MANHOLE (TYPE A)	(N) FRAME AND GRATE	PLACE HOT MIX ASPHALT (MISCELLANEOUS AREA)	RSP (1/2 T, METHOD B)	RSP (LIGHT, METHOD B)	RSP FABRIC	DESCRIPTION	STATION	DRAINAGE PLAN SHEET No.	DRAINAGE SYSTEM No.	DRAINAGE UNIT
			LB	TON	LF	LF	LF	LF		LF	LF	LF	LF	EA	EA	EA	LF	EA	LF	CY	LF	EA	EA	EA	EA	EA		LF	LF	CY	EA	EA	SQYD	CY	CY	SQYD					
D-1	1	a	188																										3.00	0.95		1					G1 DI TYPE 24-13 GRATE	21.0 L+ 94+05 "L"	D-1	1	a
		b			26.8																																18" APDD				b
		c																				1															18" AFES				c
	1	d																																	4.0	12.7	RSP (LIGHT, METHOD B)			1	d
D-1	2	a																						1													36" AFES	46.82′ L+ 193+77.91 "LOL1"	D-1	2	a
		b											184.8															25.00									JACKED 36" RCP				b
		c																						1													36" AFES	119.68′ L+ 193+05.44 "LOL1"			c
		d																																	13.4	32.4	RSP (LIGHT, METHOD B)				d
		e																	206.0	24.0																	ABANDON 24" CULVERT				e
		f												1																							REMOVE FES				f
	2	g												1																							REMOVE FES			2	g
D-1	3	a	188																										3.00	0.95		1					G1 DI TYPE 24-13 GRATE	20.5 R+ 101+73 "E"	D-1	3	a
		b			25.2																																18" APDD				b
		c																				1															18" AFES				c
		d																																	4.0	12.7	RSP (LIGHT, METHOD B)				d
		e													1	1																					REMOVE INLET				e
		f																			56																REMOVE 12" DD				f
	3	g												1																							REMOVE FES			3	g
D-2	4	a	188																										3.00	0.95		1					G1 DI TYPE 24-13 GRATE	28.8 L+ 97+00 "L"	D-2	4	a
		b			47.6																																18" APDD				b
		c																				1															18" AFES				c
	4	d																																	4.0	12.7	RSP (LIGHT, METHOD B)			4	d
D-2	5	a	188																										9.18	3.90		1					G4 Mod DI TYPE 24-13 GRATE	62.43′ R+ 196+14.65 "LOL1"	D-2	5	a
		b						45.4																				4.37								24" APC				b
		c	188																										10.53	4.40		1					G4 Mod DI TYPE 24-13 GRATE	13.00′ R+ 196+16.10 "LOL1"			c
		d						22.6																				5.30								24" APC				d
		e																					1														24" AFES	10.38′ L+ 196+16.74 "LOL1"			e
	5	f																																	6.3	17.8	RSP (LIGHT, METHOD B)			5	f
D-2	6	a																																	6.3	17.8	RSP (LIGHT, METHOD B)		D-2	6	a
		b																					1														24" AFES	31.55′ R+ 97+41.80 "L"			b
		c						91.0																				13.40								24" APC				c
		d																					1														24" AFES	63.35′ L+ 97+41.80 "L"			d
	6	e																																	6.3	17.8	RSP (LIGHT, METHOD B)			6	e
SHEET TOTAL			940		99.6			159.0					184.8	3	1				206.0	24.0	56	3	3	2						11.15					44.3	123.9					

DRAINAGE QUANTITIES
DQ-1

STATE OF CALIFORNIA - DEPARTMENT OF TRANSPORTATION
Caltrans®
06-DESIGN

FUNCTIONAL SUPERVISOR: TERRY OGLE
CALCULATED-DESIGNED BY: JORGE AGUILERA
CHECKED BY: KAL DAHER
REVISED BY
DATE REVISED

LAST REVISION 01-11-10
DATE PLOTTED => 12-MAY-2010
TIME PLOTTED => 08:54

Dist	COUNTY	ROUTE	POST MILES TOTAL PROJECT	SHEET No.	TOTAL SHEETS
10	Tuo	108	R4.0/R6.0	91	237

REGISTERED CIVIL ENGINEER 01-11-10 DATE

5-10-10
PLANS APPROVAL DATE

REGISTERED PROFESSIONAL ENGINEER KAL H. DAHER No. C44510 Exp 3-31-10 CIVIL STATE OF CALIFORNIA

THE STATE OF CALIFORNIA OR ITS OFFICERS OR AGENTS SHALL NOT BE RESPONSIBLE FOR THE ACCURACY OR COMPLETENESS OF SCANNED COPIES OF THIS PLAN SHEET.

DRAINAGE QUANTITES

DRAINAGE PLAN SHEET No.	DRAINAGE SYSTEM No.	DRAINAGE UNIT	MISC IRON AND STEEL (LB)	HOT MIX ASPHALT (TYPE B) (TON)	18" APDD (LF)	APC 12" (LF)	APC 18" (LF)	APC 24" (LF)	APC 36" (LF)	REINFORCED CONCRETE PIPE 36" (LF)	REINFORCED CONCRETE PIPE 48" (LF)	REINFORCED CONCRETE PIPE 60" (LF)	JACKED 36" RCP (CLASS III) (LF)	REMOVE FES (EA)	REMOVE INLET (EA)	(N) REMOVE FRAME AND GRATE (EA)	REMOVE CULVERT (LF)	Conc COLLAR (N) (EA)	ABANDON CULVERT (LF)	SAND BACKFILL (CY)	REMOVE DOWNDRAIN (LF)	AFES 18" (EA)	AFES 24" (EA)	AFES 36" (EA)	AFES 48" (EA)	AFES 60" (EA)	DRAIN VALVE	(N) MAXIMUM COVER (LF)	(N) HEIGHT OF INLET "H" (LF)	MINOR CONCRETE (MINOR STRUCTURE) (CY)	MANHOLE (TYPE A) (EA)	(N) FRAME AND GRATE (EA)	PLACE HOT MIX ASPHALT (MISCELLANEOUS AREA) (SQYD)	RSP (1/2 T, METHOD B) (CY)	RSP (LIGHT, METHOD B) (CY)	RSP FABRIC (SQYD)	DESCRIPTION	STATION	DRAINAGE PLAN SHEET No.	DRAINAGE SYSTEM No.	DRAINAGE UNIT
D-2	7	a	188																										3.00	0.95		1					G1 DI TYPE 24-13 GRATE	4.00′ R+ 98+96 "L"	D-2	7	a
		b			12.4																																18" APDD				b
		c																				1															18" AFES				c
	7	d																																	4.0	12.7	RSP (LIGHT, METHOD B)			7	d
D-2	8	a	188																										9.25	3.92		1					G4 Mod DI TYPE 24-13 GRATE	57.00′ R+ 199+00.00 "LOL1"	D-2	8	a
		b						40.0																				4.8								24" APC				b
		c	188																										10.92	4.51		1					G4 Mod DI TYPE 24-13 GRATE	13.00′ R+ 199+00.00 "LOL1"			c
		d						12.0																				5.3								24" APC				d
		e																					1														24" AFES	4.73′ L+ 199+00.00 "LOL1"			e
	8	f																																	6.3	17.8	RSP (LIGHT, METHOD B)			8	f
D-2	9	a	188																										7.41	2.42		1					G4 Mod DI TYPE 24-13 GRATE	57.00′ L+ 203+10.00 "LOL1"	D-2	9	a
		b						51.8																				3.3								24" APC				b
		c																					1														24" AFES	3.20′ L+ 203+10.00 "LOL1"			c
	9	d																																	6.3	17.8	RSP (LIGHT, METHOD B)			9	d
D-2	10	a	188																										8.25	3.56		1					G4 Mod DI TYPE 24-13 GRATE	57.00′ R+ 205+90 "LOL1"	D-2	10	a
		b						40.0																				3.9								24" APC				b
		c	188																										9.93	4.16		1					G4 Mod DI TYPE 24-13 GRATE	13.00′ R+ 205+90 "LOL1"			c
		d						101.3																													24" APC				d
		e																					1														24" AFES	86.10′ R+ 205+90 "LOL1"			e
	10	f																																	6.3	17.8	RSP (LIGHT, METHOD B)			10	f
D-2	11	a																																6.3		17.8	RSP (1/2T, METHOD B)	84.89′ L+ 206+01.81 "LOL1"	D-2	11	a
		b																							1												48" AFES				b
		c									259.4																	53.8									48" RCP	170.1′ R+ 206+57.42 "LOL1"			c
D-3		d	236	3.27																									16.10		1	1	24.2	1.0			MANHOLE (TYPE A) 24R GRATE	170.1′ R+ 206+57.42 "LOL1"	D-3		d
		e															40.3																				REMOVE CULVERT (PORTION)				e
	11	f													1																						REMOVE 48" FES			11	f
D-3	12	a	188																										3.43	1.05		1					G1 DI TYPE 24-13 GRATE	52.98′ R+ 30+50.00 "POR"	D-3	12	a
		b					38.9																					5.7								18" APC				b
		c													1																						REMOVE FES				c
		d																1																			Conc COLLAR	12.16′ R+ 30+50.00 "POR"			d
	12	e															18.7																				REMOVE CULVERT (PORTION)			12	e
D-4	13	a	188																										3.90	1.17		1					G1 DI TYPE 24-13 GRATE	51.0′ R+ 31+50 "POR"	D-4	13	a
		b						89.6																				5.0								24" APC				b
		c																					1														24" AFES	40.6′ L+ 31+50 "POR"			c
	13	d																																	18.9	53.4	RSP (LIGHT, METHOD B)			13	d
SHEET TOTAL			1740	3.27	12.4		38.9	334.7			259.4			2			59.0					1	4	1				21.74	1	24.2	7.3	41.8	137.3							

DRAINAGE QUANTITIES
DQ-2

STATE OF CALIFORNIA - DEPARTMENT OF TRANSPORTATION
Caltrans®
06-DESIGN

FUNCTIONAL SUPERVISOR: TERRY OGLE
CALCULATED-DESIGNED BY: JORGE AGUILERA
CHECKED BY: KAL DAHER
REVISED BY
DATE REVISED

LAST REVISION 01-11-10
DATE PLOTTED => 12-MAY-2010
TIME PLOTTED => 08:54

Dist	COUNTY	ROUTE	POST MILES TOTAL PROJECT	SHEET No.	TOTAL SHEETS
10	Tuo	108	R4.0/R6.0	92	237

K. Daher 01-11-10
REGISTERED CIVIL ENGINEER DATE

5-10-10
PLANS APPROVAL DATE

REGISTERED PROFESSIONAL ENGINEER KAL H. DAHER No. C44510 Exp. 3-31-10 CIVIL STATE OF CALIFORNIA

THE STATE OF CALIFORNIA OR ITS OFFICERS OR AGENTS SHALL NOT BE RESPONSIBLE FOR THE ACCURACY OR COMPLETENESS OF SCANNED COPIES OF THIS PLAN SHEET.

DRAINAGE QUANTITIES

DRAINAGE PLAN SHEET No.	DRAINAGE SYSTEM No.	DRAINAGE UNIT	MISC IRON AND STEEL (LB)	HOT MIX ASPHALT (TYPE B) (TON)	18" APDD (LF)	APC 12" (LF)	APC 18" (LF)	APC 24" (LF)	APC 36" (LF)	REINFORCED CONCRETE PIPE 36" (LF)	REINFORCED CONCRETE PIPE 48" (LF)	REINFORCED CONCRETE PIPE 60" (LF)	JACKED 36" RCP (CLASS III) (LF)	REMOVE FES (EA)	REMOVE INLET (EA)	(N) REMOVE FRAME AND GRATE (EA)	REMOVE CULVERT (LF)	Conc COLLAR (N) (EA)	ABANDON CULVERT (LF)	SAND BACKFILL (CY)	REMOVE DOWNDRAIN (LF)	AFES 18" (EA)	AFES 24" (EA)	AFES 36" (EA)	AFES 48" (EA)	AFES 60" (EA)	DRAIN VALVE	(N) MAXIMUM COVER (LF)	(N) HEIGHT OF INLET "H" (LF)	MINOR CONCRETE (MINOR STRUCTURE) (CY)	MANHOLE (TYPE A) (EA)	(N) FRAME AND GRATE (EA)	PLACE HOT MIX ASPHALT (MISCELLANEOUS AREA) (SQYD)	RSP (1/2 T, METHOD B) (CY)	RSP (LIGHT, METHOD B) (CY)	RSP FABRIC (SQYD)	DESCRIPTION	STATION	DRAINAGE PLAN SHEET No.	DRAINAGE SYSTEM No.	DRAINAGE UNIT
D-4	14	a																					1															24" AFES	57.70′ R+ 32+96.58 "POR"	D-4	14	a
		b																																	6.3	17.8	RSP (LIGHT, METHOD B)				b
		c						43.8																			5.2									24" APC				c
		d												1																						REMOVE FES				d
		e																1																		Conc COLLAR	13.90′ R+ 32+96.58 "POR"			e
	14	f															25.6																			REMOVE CULVERT (PORTION)			14	f
D-4	15	a																																	6.3	17.8	RSP (LIGHT, METHOD B)		D-4	15	a
		b																						1												36" AFES	52.38" R+ 35+89.13 "POR"			b
		c							63.7																											36" APC				c
		d												1																						REMOVE FES				d
		e															29.7																			REMOVE CULVERT (PORTION)				e
	15	f																1																		Conc COLLAR	0.10" L+ 35+36.00 "POR"		15	f
D-3	16	a													1	1																				REMOVE INLET H = 3′	40.00′ R+ 26+97.00 "POR"	D-3	16	a
		b																			43.0															REMOVE 18" DD				b
		c																	125.9	14.7																ABANDON 24" CULVERT				c
		d																	110.4	7.2																ABANDON 18" CULVERT				d
		e													1	1																				REMOVE INLET H = 3′	45.00′ R+ 27+78.00 "POR"			e
		f													1	1																				REMOVE INLET H = 3′	65.00′ L+ 27+25.00 "POR"			f
		g																			32.4															REMOVE DD				g
		h												5																						REMOVE FES				h
		i																	601.5	70.0																ABANDON 24" CULVERTS				i
	16	j													2	2																				REMOVE INLETS H = 8′	104′ AND 106′ R+ 25+49.00 "POR"		16	j
D-3	17	a	188																										5.0	1.39		1				G1 DI, TYPE 24-13 GRATE	50.71′ L+ 27+06.20 "POR"	D-3	17	a
		b						272.8																			2.9									24" APC				b
		c	188																										5.0	1.39		1				G1 DI, TYPE 24-13 GRATE	36.78′ L+ 24+31.10 "POR"			c
		d						76.5																												24" APC				d
		e	188																										6.9	1.80		1				G1 DI, TYPE 24-13 GRATE	42.10′ R+ 24+17.10 "POR"			e
		f						166.7																												24" APC				f
		g	188																										3.0	0.95		1				G1 DI, TYPE 24-13 GRATE	37.92′ R+ 22+47.74 "POR"			g
	17	h													1	1																				REMOVE INLET	37.92′ R+ 22+47.74 "POR"		17	h
D-3	18	a																											10.2			1				24" CSP RISER, 26 R GRATE	166.70′ R+ 23+58.31 "POR"	D-3	18	a
		b						49.1																												24" APC				b
		c	188																										2.7	0.95		1				G1 DI, TYPE 24-13 GRATE	150.82′ R+ 24+41.21 "POR"			c
		d				65.9																														12" APC				d
		e																								1			10.6							12" GATE VALVE & RISER	123.50′ R+ 23+83.88 "POR"			e
		f						62.7																												24" APC				f
		g						22.6																												24" APC				g
	18	h						4.7																												24" APC			18	h
SHEET TOTAL			940			65.9		698.9	63.7					7	6		55.3		236.3	91.9	75.4	1	1			1				6.48				12.6	35.6						

DRAINAGE QUANTITIES
DQ-3

STATE OF CALIFORNIA - DEPARTMENT OF TRANSPORTATION
Caltrans® 06-DESIGN

FUNCTIONAL SUPERVISOR: TERRY OGLE
CALCULATED-DESIGNED BY: JORGE AGUILERA
CHECKED BY: KAL DAHER
REVISED BY
DATE REVISED

LAST REVISION 01-11-10
DATE PLOTTED => 12-MAY-2010
TIME PLOTTED => 13:20

Dist	COUNTY	ROUTE	POST MILES TOTAL PROJECT	SHEET No.	TOTAL SHEETS
10	Tuo	108	R4.0/R6.0	93	237

K. Daher 01-11-10
REGISTERED CIVIL ENGINEER DATE

5-10-10
PLANS APPROVAL DATE

REGISTERED PROFESSIONAL ENGINEER KAL H. DAHER No. C44510 Exp. 3-31-10 CIVIL STATE OF CALIFORNIA

THE STATE OF CALIFORNIA OR ITS OFFICERS OR AGENTS SHALL NOT BE RESPONSIBLE FOR THE ACCURACY OR COMPLETENESS OF SCANNED COPIES OF THIS PLAN SHEET.

DRAINAGE QUANTITIES

DRAINAGE PLAN SHEET No.	DRAINAGE SYSTEM No.	DRAINAGE UNIT	MISC IRON AND STEEL	HOT MIX ASPHALT (TYPE B)	18" APDD	APC 12"	APC 18"	APC 24"	APC 36"	REINFORCED CONCRETE PIPE 36"	REINFORCED CONCRETE PIPE 48"	REINFORCED CONCRETE PIPE 60"	JACKED 36" RCP (CLASS III)	REMOVE FES	REMOVE INLET	(N) REMOVE FRAME AND GRATE	REMOVE CULVERT	(N) Conc COLLAR	ABANDON CULVERT	SAND BACKFILL	REMOVE DOWNDRAIN	AFES 18"	AFES 24"	AFES 36"	AFES 48"	AFES 60"	DRAIN VALVE	(N) MAXIMUM COVER	(N) HEIGHT OF INLET "H"	MINOR CONCRETE (MINOR STRUCTURE)	MANHOLE (TYPE A)	(N) FRAME AND GRATE	PLACE HOT MIX ASPHALT (MISCELLANEOUS AREA)	RSP (1/2 T, METHOD B)	RSP (LIGHT, METHOD B)	RSP FABRIC	DESCRIPTION	STATION	DRAINAGE PLAN SHEET No.	DRAINAGE SYSTEM No.	DRAINAGE UNIT
			LB	TON	LF	LF	LF	LF	LF	LF	LF	LF	LF	EA	EA	EA	LF	EA	LF	CY	LF	EA	EA	EA	EA	EA		LF	LF	CY	EA	EA	SQYD	CY	CY	SQYD					
D-3	19	a	188																										3.7	1.10		1					G1 DI TYPE 24-13 GRATE	78.21′ L+ 211+26.50 "LOL1"	D-3	19	a
		b			53.6																																18" APDD				b
		c	188	3.27																									8.8	3.76		1	24.2				G1 DI TYPE 24-13 GRATE	38.60′ L+ 211+50.00 "LOL1"			c
		d							35.1																		6.0									36" APC				d
		e	188																										12.3	5.00		1					G4 Mod DI TYPE 24-13 GRATE	0.00′ L+ 211+50.00 "LOL1"			e
		f							53.0																		7.4									36" APC				f
		g	188																										13.1	5.27		1					G4 Mod DI TYPE 24-13 GRATE	57.00′ R+ 211+50.00 "LOL1"			g
		h							173.0																		7.4									36" APC				h
		i																						1													36" AFES	216.34′ R+ 211+75.50 "LOL1"			i
	19	j																																	13.4	32.4	RSP (LIGHT, METHOD B)			19	j
D-5	20	a	188	3.27																									5.6	1.52		1	24.2				G1 DI TYPE 24-13 GRATE	0.00′ L+ 223+34.15 "LOL1"	D-5	20	a
		b						231.3																			4.0									24" APC				b
		c	188	3.27																									5.8	1.57		1	24.2				G1 DI TYPE 24-13 GRATE	0.00′ L+ 221+00.00 "LOL1"			c
		d						297.2																			4.4									24" APC				d
D-3		e	188	3.27																									6.2	1.65		1	24.2				G1 DI TYPE 24-13 GRATE	0.00′ L+ 218+00.00 "LOL1"	D-3		e
		f						196.7																			4.8									24" APC				f
		g	188	3.27																									6.6	1.74		1	24.2				G1 DI TYPE 24-13 GRATE	0.00′ L+ 216+00.00 "LOL1"			g
		h						197.4																			4.6									24" APC				h
		i	188	3.27																									6.4	1.70		1	24.2				G1 DI TYPE 24-13 GRATE	0.00′ L+ 214+00.00 "LOL1"			I
	20	j						248.7																			5.4									24" APC			20	J
D-3	21	a	188																										8.76	3.72		1					G4 Mod DI TYPE 24-13 GRATE	60.0′ R+ 216+00 "LOL1"	D-3	21	a
		b						56.6																			4.0									24" APC				b
D-5	22	a																							1												60" AFES	49.60′ L+ 224+98.78 "LOL1"	D-5	22	a
		b										240.3															45.7										60" RCP				b
	22	c																							1												60" AFES	188.30′ R+ 224+99.24 "LOL1"		22	c
D-5	23	a	188																										6.0	2.04		1					G4 Mod DI, TYPE 24-13 GRATE	57.0′ R+ 227+52.80 "LOL1"	D-5	23	a
		b			8.6																																18" APDD				b
	23	c																				1															18" AFES			23	c
D-5	24	a	188																										6.0	2.04		1					G4 Mod DI, TYPE 24-13 GRATE	57.0′ R+ 229+53.20 "LOL1"	D-5	24	a
		b			43.8																	1															18" APDD				b
	24	c																																			18" AFES			24	c
SHEET TOTAL			2256	19.62	106.0			1227.9	261.1			240.3										2	1	2					31.11			145.2		13.4	32.4					

DRAINAGE QUANTITIES
DQ-4

STATE OF CALIFORNIA - DEPARTMENT OF TRANSPORTATION
Caltrans
06-DESIGN

FUNCTIONAL SUPERVISOR: TERRY OGLE
CALCULATED-DESIGNED BY: JORGE AGUILERA
CHECKED BY: KAL DAHER
REVISED BY
DATE REVISED

LAST REVISION 01-11-10 | DATE PLOTTED => 12-MAY-2010 | TIME PLOTTED => 08:54

Dist	COUNTY	ROUTE	POST MILES TOTAL PROJECT	SHEET No.	TOTAL SHEETS
10	Tuo	108	R4.0/R6.0	94	237

K. Daher 01-11-10
REGISTERED CIVIL ENGINEER DATE

5-10-10
PLANS APPROVAL DATE

REGISTERED PROFESSIONAL ENGINEER KAL H. DAHER No. C44510 Exp. 3-31-10 CIVIL STATE OF CALIFORNIA

THE STATE OF CALIFORNIA OR ITS OFFICERS OR AGENTS SHALL NOT BE RESPONSIBLE FOR THE ACCURACY OR COMPLETENESS OF SCANNED COPIES OF THIS PLAN SHEET.

DRAINAGE QUANTITIES

DRAINAGE PLAN SHEET No.	DRAINAGE SYSTEM No.	DRAINAGE UNIT	MISC IRON AND STEEL	HOT MIX ASPHALT (TYPE B)	18" APDD	APC 12"	APC 18"	APC 24"	APC 36"	REINFORCED CONCRETE PIPE 36"	REINFORCED CONCRETE PIPE 48"	REINFORCED CONCRETE PIPE 60"	JACKED 36" RCP (CLASS III)	REMOVE FES	REMOVE INLET	(N) REMOVE FRAME AND GRATE	REMOVE CULVERT	(N) Conc COLLAR	ABANDON CULVERT	SAND BACKFILL	REMOVE DOWNDRAIN	AFES 18"	AFES 24"	AFES 36"	AFES 48"	AFES 60"	DRAIN VALVE	(N) MAXIMUM COVER	(N) HEIGHT OF INLET "H"	MINOR CONCRETE (MINOR STRUCTURE)	MANHOLE (TYPE A)	(N) FRAME AND GRATE	PLACE HOT MIX ASPHALT (MISCELLANEOUS AREA)	RSP (1/2 T, METHOD B)	RSP (LIGHT, METHOD B)	RSP FABRIC	DESCRIPTION	STATION	DRAINAGE PLAN SHEET No.	DRAINAGE SYSTEM No.	DRAINAGE UNIT
			LB	TON	LF	LF	LF	LF	LF	LF	LF	LF	LF	EA	EA	EA	LF	EA	LF	CY	LF	EA	EA	EA	EA	EA		LF	LF	CY	EA	EA	SQYD	CY	CY	SQYD					
D-5	25	a																						1													36" AFES	2.79′ L+ 231+18.26 "LOL1"	D-5	25	a
		b								130.7																		18.8									36" RCP				b
	25	c																						1													36" AFES	191.11′ R+ 230+98.27 "LOL1"		25	c
D-6	26	a	188																										6.0	2.04		1					G4 Mod DI, TYPE 24-13 GRATE	57.00′ R+ 232+87.25 "LOL1"	D-6	26	a
		b			95.5																																18" APDD				b
	26	c																				1															18" AFES	142.00′ R+ 232+89.00 "LOL1"		26	c
D-5	27	a																				1															18" AFES	7.48′ L+ 12+24.84 "Dwy1"	D-5	27	a
		b					20.0																					2.0									18" APC				b
		c																				1															18" AFES	12.23′ R+ 12+24.84 "Dwy1"			c
	27	d																																6.3	17.8		RSP (LIGHT, METHOD B)			27	d
D-6	28	a																						1													48" AFES	104.18 L+ 236+11.11 "LOL1"	D-6	28	a
		b									329.5																	68.0									48" RCP				b
	28	c																						1													48" AFES	224.46′ R+ 235+62.18 "LOL1"		28	c
D-6	29	a	188																										6.0	2.04		1					G4 Mod DI, TYPE 24-13 GRATE	55.60′ R+ 237+25.73 "LOL1"	D-6	29	a
		b			193.9																																18" APDD				b
	29	c																				1															18" AFES	227.15′ R+ 236+92.80 "LOL1"		29	c
D-6	30	a																					1														24" AFES	27.61′ L+ 14+21.80 FR Rd	D-6	30	a
		b						67.5																				10.4									24" APC				b
		c																					1														24" AFES	39.66′ R+ 14+16.44 FR Rd			c
	30	d																																6.3	17.8		RSP (LIGHT, METHOD B)			30	d
D-6	31	a																					1														24" AFES	45.92′ L+ 13+55.97 FR Rd	D-6	31	a
		b						115.4																				22.1									24" APC				b
	31	c																					1														24" AFES	69.11′ L+ 13+58.97 FR Rd		31	c
D-6	32	a	188																										4.3	1.24		1					G1 DI TYPE 24-13 GRATE	12.00′ L+ 17+00.00 FR Rd	D-6	32	a
		b					34.4																					4.6									18" APC				b
		c																				1															18" AFES	24.42′ R+ 17+00.00 FR Rd			c
	32	d																																6.3	17.8		RSP (LIGHT, METHOD B)			32	d
SHEET TOTAL			564		289.4		54.4	182.9		130.7	329.5											5	4	2	2					5.32					18.9	53.4					

DRAINAGE QUANTITIES
DQ-5

STATE OF CALIFORNIA - DEPARTMENT OF TRANSPORTATION
Caltrans®
06-DESIGN

FUNCTIONAL SUPERVISOR: TERRY OGLE
CALCULATED-DESIGNED BY: KAL DAHER
CHECKED BY
REVISED BY
DATE REVISED

LAST REVISION: DATE PLOTTED => 12-MAY-2010
01-11-10 TIME PLOTTED => 08:54

Dist	COUNTY	ROUTE	POST MILES TOTAL PROJECT	SHEET No.	TOTAL SHEETS
10	Tuo	108	R4.0/R6.0	95	237

REGISTERED CIVIL ENGINEER 01-11-10 DATE

5-10-10
PLANS APPROVAL DATE

REGISTERED PROFESSIONAL ENGINEER KAL H. DAHER No. C44510 Exp. 3-31-10 CIVIL STATE OF CALIFORNIA

THE STATE OF CALIFORNIA OR ITS OFFICERS OR AGENTS SHALL NOT BE RESPONSIBLE FOR THE ACCURACY OR COMPLETENESS OF SCANNED COPIES OF THIS PLAN SHEET.

DRAINAGE QUANTITIES

DRAINAGE PLAN SHEET No.	DRAINAGE SYSTEM No.	DRAINAGE UNIT	MISC IRON AND STEEL	HOT MIX ASPHALT (TYPE B)	18" APDD	APC 12"	APC 18"	APC 24"	APC 36"	REINFORCED CONCRETE PIPE 36"	REINFORCED CONCRETE PIPE 48"	REINFORCED CONCRETE PIPE 60"	JACKED 36" RCP (CLASS III)	REMOVE FES	REMOVE INLET	REMOVE FRAME AND GRATE (N)	REMOVE CULVERT	Conc COLLAR (N)	ABANDON CULVERT	SAND BACKFILL	REMOVE DOWNDRAIN	AFES 18"	AFES 24"	AFES 36"	AFES 48"	AFES 60"	DRAIN VALVE	MAXIMUM COVER (N)	HEIGHT OF INLET "H" (N)	MINOR CONCRETE (MINOR STRUCTURE)	MANHOLE (TYPE A)	FRAME AND GRATE (N)	PLACE HOT MIX ASPHALT (MISCELLANEOUS AREA)	RSP (1/2 T, METHOD B)	RSP (LIGHT, METHOD B)	RSP FABRIC	DESCRIPTION	STATION	DRAINAGE PLAN SHEET No.	DRAINAGE SYSTEM No.	DRAINAGE UNIT
			LB	TON	LF	LF	LF	LF	LF	LF	LF	LF	LF	EA	EA	EA	LF	EA	LF	CY	LF	EA	EA	EA	EA	EA		LF	LF	CY	EA	EA	SQYD	CY	CY	SQYD				
D-6	33	a	188																										3.9	1.15		1					G1 DI TYPE 24-13 GRATE	27.09′ L+ 12+07.76 CML	D-6	33	a
		b						12.9																			6.9										24" APC				b
		c	188																										3.9	1.15		1					G1 DI TYPE 24-13 GRATE	26.73′ L+ 11+94.13 CML			c
		d						60.1																			3.0										24" APC				d
		e	188																										4.8	1.35		1					G1 DI TYPE 24-13 GRATE	11.00′ L+ 11+40.22 CML			e
		f						31.7																			3.0										24" APC				f
		g	188																										4.0	1.17		1					G1 DI TYPE 24-13 GRATE	11.00′ L+ 11+05.69 CML			g
		h						20.0																			2.5										24" APC				h
		i	188																										4.5	1.28		1					G1 DI TYPE 24-13 GRATE	11.00′ L+ 11+05.55 CML			i
		j						20.9																			3.9										24" APC				j
D-7		k																				1															24" AFES	33.73′ L+ 11+05.55 CML	D-7		k
	33	l																																	9.5	26.7	RSP (LIGHT, METHOD B)			33	l
D-6	34	a																					1														36" AFES	38.56′ R+ 10+58.55 CML	D-6	34	a
		b							11.8																		3.8										EXTEND Exist 36" CULVERT				b
	34	c																1																			Conc COLLAR			34	c
D-7	35	a																							1												60" AFES	263.39′ R+ 242+83.11 "LOL1"	D-7	35	a
		b										21.7															3.0										60" RCP				b
	35	c																							1												60" AFES	284.86′ R+ 242+80.73 "LOL1"		35	c
D-7	36	a																							1												60" AFES	281.54′ L+ 245+10.13 "LOL1"	D-7	36	a
		b										24.9															3.0										60" RCP				b
	36	c																							1												60" AFES	257.01′ L+ 245+01.94 "LOL1"		36	c
SHEET TOTAL			940					145.6	11.8			46.6										1	1		4				6.10					9.5	26.7					

DRAINAGE QUANTITIES
DQ-6

STATE OF CALIFORNIA - DEPARTMENT OF TRANSPORTATION
06-DESIGN
Caltrans

JORGE AGUILERA — KAL DAHER — TERRY OGLE
CALCULATED-DESIGNED BY — CHECKED BY — FUNCTIONAL SUPERVISOR
REVISED BY — DATE REVISED

LAST REVISION 01-11-10 | DATE PLOTTED => 12-MAY-2010 | TIME PLOTTED => 08:54

Dist	COUNTY	ROUTE	POST MILES TOTAL PROJECT	SHEET No.	TOTAL SHEETS
10	Tuo	108	R4.0/R6.0	96	237

K. Daher 01-11-10
REGISTERED CIVIL ENGINEER DATE

5-10-10
PLANS APPROVAL DATE

REGISTERED PROFESSIONAL ENGINEER KAL H. DAHER No. C44510 Exp. 3-31-10 CIVIL STATE OF CALIFORNIA

THE STATE OF CALIFORNIA OR ITS OFFICERS OR AGENTS SHALL NOT BE RESPONSIBLE FOR THE ACCURACY OR COMPLETENESS OF SCANNED COPIES OF THIS PLAN SHEET.

DRAINAGE QUANTITIES

DRAINAGE PLAN SHEET No.	DRAINAGE SYSTEM No.	DRAINAGE UNIT	MISC IRON AND STEEL	HOT MIX ASPHALT (TYPE B)	APC 18" APDD	APC 12"	APC 18"	APC 24"	APC 36"	REINFORCED CONCRETE PIPE 36"	REINFORCED CONCRETE PIPE 48"	REINFORCED CONCRETE PIPE 60"	JACKED 36" RCP (CLASS III)	REMOVE FES	REMOVE INLET	(N) REMOVE FRAME AND GRATE	REMOVE CULVERT	(N) Conc COLLAR	ABANDON CULVERT	SAND BACKFILL	REMOVE DOWNDRAIN	AFES 18"	AFES 24"	AFES 36"	AFES 48"	AFES 60"	DRAIN VALVE	(N) MAXIMUM COVER	(N) HEIGHT OF INLET "H"	MINOR CONCRETE (MINOR STRUCTURE)	MANHOLE (TYPE A)	(N) FRAME AND GRATE	PLACE HOT MIX ASPHALT (MISCELLANEOUS AREA)	RSP (1/2 T, METHOD B)	RSP (LIGHT, METHOD B)	RSP FABRIC	DESCRIPTION	STATION	DRAINAGE PLAN SHEET No.	DRAINAGE SYSTEM No.	DRAINAGE UNIT
			LB	TON	LF	LF	LF	LF	LF	LF	LF	LF	LF	EA	EA	EA	LF	EA	LF	CY	LF	EA	EA	EA	EA	EA		LF	LF	CY	EA	EA	SQYD	CY	CY	SQYD				
D-7	37	a	188																										7.8	3.40		1					G4 Mod DI TYPE 24-13 GRATE	13.00' R+ 246+00.00 "LOL1"	D-7	37	a
		b					38.4																				3.0									18" APC				b
		c																											7.3	2.40							G4 Mod DI TYPE 24-13 GRATE	57.00' L+ 245+37.00 "LOL1"			c
		d					59.0																				4.8									18" APC				d
		e																											11.9	4.90							G4 Mod DI TYPE 24-13 GRATE	57.00' R+ 246+00.00 "LOL1"			e
		f					146.5																				4.8									18" APC				f
	37	g																				1															18" AFES	187.75' L+ 246+00.00 "LOL1"		37	g
D-7	38	a	188																										6.0	2.04		1					G4 Mod DI, TYPE 24-13 GRATE	57.00' R+ 248+00.00 "LOL1"	D-7	38	a
		b			30.3																															18" APDD				b
	38	c																				1															18" AFES			38	c
D-7	39	a																						1													36" AFES	99.77' L+ 253+84.34 "LOL1"	D-7	39	a
		b								322.5																	54.5									36" RCP				b
	39	c																						1													36" AFES	180.65 R+ 251+69.27 "LOL1"		39	c
D-7	40	a	188																										8.8	3.76		1					G4 Mod DI TYPE 24-13 GRATE	13.00' L+ 252+50.00 "LOL1"		40	a
		b					44.0																				4.0									18" APC				b
		c	188																										8.9	3.80		1					G4 Mod DI TYPE 24-13 GRATE	61.00' R+ 252+50.00 "LOL1"			c
		d					115.0																				5.0									18" APC				d
	40	e																				1															18" AFES	165.04' R+ 252+50.00 "LOL1"		40	e
D-7	41	a	188																										3.8	1.13		1					G1 DI TYPE 24-13 GRATE	8.20' R+ 10+53.81 Dwy 2	D-7	41	a
		b					9.4																				3.6									18" APC				b
		c	188																										3.4	1.04		1					G1 DI TYPE 24-13 GRATE	1.38' L+ 10+54.02 Dwy 2			c
		d					73.3																				6.0									18" APC				d
		e																				1															18" AFES	47.27' L+ 11+01.91 Dwy 2			e
	41	f																																6.3	17.8		RSP (LIGHT, METHOD B)			41	f
D-7	42	a	188																										3.8	1.13		1					G1 DI TYPE 24-13 GRATE	26.29' R+ 14+36.91 AR	D-7	42	a
		b						10.2																			4.0									24" APC				b
		c	188																										3.8	1.13		1					G1 DI TYPE 24-13 GRATE	23.57' R+ 14+72.70 AR			c
		d						30.0																			4.0									24" APC				d
		e																											6.0	1.61		1					G1 DI TYPE 24-13 GRATE	9.21' R+ 14+77.14 AR			e
		f						21.2																			6.0									24" APC				f
	42	g																				1															24" AFES	30.50' R+ 14+80.60 AR		42	g
SHEET TOTAL			1504		30.3		485.6	61.4		322.5												5		2						26.34				6.3	17.8						

DRAINAGE QUANTITIES
DQ-7

STATE OF CALIFORNIA - DEPARTMENT OF TRANSPORTATION
Caltrans®
06-DESIGN

FUNCTIONAL SUPERVISOR: TERRY OGLE
CALCULATED-DESIGNED BY: JORGE AGUILERA
CHECKED BY: KAL DAHER
REVISED BY
DATE REVISED

LAST REVISION 01-11-10
DATE PLOTTED => 12-MAY-2010
TIME PLOTTED => 07:12

Dist	COUNTY	ROUTE	POST MILES TOTAL PROJECT	SHEET No.	TOTAL SHEETS
10	Tuo	108	R4.0/R6.0	97	237

K. Daher 01-11-10
REGISTERED CIVIL ENGINEER DATE

5-10-10
PLANS APPROVAL DATE

REGISTERED PROFESSIONAL ENGINEER KAL H. DAHER No. C44510 Exp. 3-31-10 CIVIL STATE OF CALIFORNIA

THE STATE OF CALIFORNIA OR ITS OFFICERS OR AGENTS SHALL NOT BE RESPONSIBLE FOR THE ACCURACY OR COMPLETENESS OF SCANNED COPIES OF THIS PLAN SHEET.

DRAINAGE QUANTITIES

DRAINAGE PLAN SHEET No.	DRAINAGE SYSTEM No.	DRAINAGE UNIT	MISC IRON AND STEEL	HOT MIX ASPHALT (TYPE B)	18" APDD	APC 12"	APC 18"	APC 24"	APC 36"	REINFORCED CONCRETE PIPE 36"	REINFORCED CONCRETE PIPE 48"	REINFORCED CONCRETE PIPE 60"	JACKED 36" RCP (CLASS III)	REMOVE FES	REMOVE INLET	(N) REMOVE FRAME AND GRATE	REMOVE CULVERT	(N) Conc COLLAR	ABANDON CULVERT	SAND BACKFILL	REMOVE DOWNDRAIN	AFES 18"	AFES 24"	AFES 36"	AFES 48"	AFES 60"	DRAIN VALVE	(N) MAXIMUM COVER	(N) HEIGHT OF INLET "H"	MINOR CONCRETE (MINOR STRUCTURE)	MANHOLE (TYPE A)	(N) FRAME AND GRATE	PLACE HOT MIX ASPHALT (MISCELLANEOUS AREA)	RSP (1/2 T, METHOD B)	RSP (LIGHT, METHOD B)	RSP FABRIC	DESCRIPTION	STATION	DRAINAGE PLAN SHEET No.	DRAINAGE SYSTEM No.	DRAINAGE UNIT
			LB	TON	LF	LF	LF	LF	LF	LF	LF	LF	LF	EA	EA	EA	LF	EA	LF	CY	LF	EA	EA	EA	EA	EA		LF	LF	CY	EA	EA	SQYD	CY	CY	SQYD					
D-8	43	a	188																										9.4	3.97		1					G4 Mod DI TYPE 24-13 GRATE	69.00′ R+ 257+50.42 "LOL1"	D-8	43	a
		b						52.0																				5.4								24" APC				b
		c	188																										11.4	4.68		1					G4 Mod DI TYPE 24-13 GRATE	13.00′ R+ 257+50.42 "LOL1"			c
		d						43.0																				6.0								24" APC				d
	43	e																					1														24" AFES	29.10′ L+ 257+00.42 "LOL1"		43	e
D-8	44	a	188																										9.3	3.93		1					G4 Mod DI TYPE 24-13 GRATE	69.00′ R+ 260+00.00 "LOL1"	D-8	44	a
		b						52.1																				4.5								24" APC				b
		c	188																										11.3	4.67		1					G4 Mod DI TYPE 24-13 GRATE	13.00′ R+ 260+00.00 "LOL1"			c
		d						79.4																				4.5								24" APC				d
	44	e																					1														24" AFES	31.32′ L+ 259+17.05 "LOL1"		44	e
D-8	45	a	188																										3.7	1.10		1					G1 DI TYPE 24-13 GRATE	40.62′ R+ 262+75.00 "TC"	D-8	45	a
		b			12.0																							3.5								18" APDD				b
		c	188																										8.0	2.57		1					G4 Mod DI TYPE 24-13 GRATE	28.18′ R+ 262+75.00 "TC"			c
		d						73.5																				2.5								24" APC				d
		e	188																										8.0	2.57		1					G4 Mod DI TYPE 24-13 GRATE	35.28′ L+ 262+32.00 "TC"			e
		f						24.6																				3.0								24" APC				f
		g																					1														24" AFES	70.34′ L+ 262+32.00 "TC"			g
	45	h																																6.3	17.8		RSP (LIGHT, METHOD B)			45	h
D-8	46	a	188																										3.0	0.95		1					G1 DI TYPE 24-13 GRATE	22.70′ R+ 16+72.10 MONO WAY	D-8	46	a
		b			26.8																							3.0								18" APDD				b
		c																				1															18" AFES	46.60′ R+ 16+72.10 MONO WAY"			c
	46	d																																6.3	17.8		RSP (LIGHT, METHOD B)			46	d
D-8	47	a																					1														24" AFES	62.49′ L+ 14+65.80 MONO WAY	D-8	47	a
		b						61.0																				5.3								24" APC				b
		c																					1														24" AFES	62.27′ L+ 14+04.02 MONO WAY			c
	47	d																																6.3	17.8		RSP (LIGHT, METHOD B)			47	d
D-8	48	a	188																										3.0	0.95		1					G1 DI TYPE 24-13 GRATE	26.00′ R+ 12+47.00 MONO WAY	D-8	48	a
		b			30.2																																18" APDD				b
		c																				1															18" AFES				c
	48	d																																6.3	17.8		RSP (LIGHT, METHOD B)			48	d
SHEET TOTAL			1692		69.0			385.6														2	5							25.39				25.2	71.2						

DRAINAGE QUANTITIES
DQ-8

STATE OF CALIFORNIA - DEPARTMENT OF TRANSPORTATION
06-DESIGN
Caltrans

FUNCTIONAL SUPERVISOR: TERRY OGLE
CALCULATED-DESIGNED BY: JORGE AGUILERA
CHECKED BY: KAL DAHER
REVISED BY
DATE REVISED

LAST REVISION 01-11-10
DATE PLOTTED => 12-MAY-2010
TIME PLOTTED => 07:12

Dist	COUNTY	ROUTE	POST MILES TOTAL PROJECT	SHEET No.	TOTAL SHEETS
10	Tuo	108	R4.0/R6.0	98	237

REGISTERED CIVIL ENGINEER 01-11-10 DATE

5-10-10
PLANS APPROVAL DATE

REGISTERED PROFESSIONAL ENGINEER KAL H. DAHER No. C44510 Exp. 3-31-10 CIVIL STATE OF CALIFORNIA

THE STATE OF CALIFORNIA OR ITS OFFICERS OR AGENTS SHALL NOT BE RESPONSIBLE FOR THE ACCURACY OR COMPLETENESS OF SCANNED COPIES OF THIS PLAN SHEET.

3" PLASTIC PIPE (OUTLET)

DRAINAGE PLAN	LOCATION	LENGTH LF
D-2,3	Sta 206+06.96 TO 206+98.40 "LOL1"	165.7
D-3	Sta 209+47.99 TO 209+88.04 "LOL1"	79.2
D-6	Sta 236+96.94 TO 237+62.78 "LOL1"	211.9
D-7	Sta 245+00.00 TO 245+00.00 "LOL1"	210.9
	TOTAL	667.7

DRAINAGE QUANTITIES

DRAINAGE PLAN SHEET No.	DRAINAGE SYSTEM No.	DRAINAGE UNIT	MISC IRON AND STEEL LB	HOT MIX ASPHALT (TYPE B) TON	18" APDD LF	APC 12" LF	APC 18" LF	APC 24" LF	APC 36" LF	REINFORCED CONCRETE PIPE 36" LF	REINFORCED CONCRETE PIPE 48" LF	REINFORCED CONCRETE PIPE 60" LF	JACKED 36" RCP (CLASS III) LF	REMOVE FES EA	REMOVE INLET EA	(N) REMOVE FRAME AND GRATE EA	REMOVE CULVERT LF	(N) Conc COLLAR EA	ABANDON CULVERT LF	SAND BACKFILL CY	REMOVE DOWNDRAIN LF	AFES 18" EA	AFES 24" EA	AFES 36" EA	AFES 48" EA	AFES 60" EA	DRAIN VALVE	(N) MAXIMUM COVER LF	(N) HEIGHT OF INLET "H" LF	MINOR CONCRETE (MINOR STRUCTURE) CY	MANHOLE (TYPE A) EA	(N) FRAME AND GRATE EA	PLACE HOT MIX ASPHALT (MISCELLANEOUS AREA) SQYD	RSP (1/2 T, METHOD B) CY	RSP (LIGHT, METHOD B) CY	RSP FABRIC SQYD	DESCRIPTION	STATION	DRAINAGE PLAN SHEET No.	DRAINAGE SYSTEM No.	DRAINAGE UNIT
D-8	49	a																				1															24" AFES	33.40' L+ 12+42.39 MONO WAY	D-8	49	a
		b						101.6																			11.5									24" APC				b
		c																				1															24" AFES	59.92' R+ 12+10.03 MONO WAY			c
		d																																6.3	17.8	RSP (LIGHT, METHOD B)				d
	49	e																	67.7	4.4																	ABANDON 18" CULVERT			49	e
D-8	50	a	188																									8.1	3.5		1					G4 Mod DI TYPE 24-13 GRATE	36.00' R+ 264+23.61 "TC"	D-8	50	a
		b						97.2																			9.5									24" APC				b
		c																				1															24" AFES	63.13' L+ 264+27.16 "TC"			c
	50	d																																6.3	17.8	RSP (LIGHT, METHOD B)			50	d
D-8	51	a	188																									5.6	1.52		1					G1 DI TYPE 24-13 GRATE	33.70' R+ 267+28.00 "TC"	D-8	51	a
		b						6.5																			6.5									24" APC				b
		c	188																									9.8	4.08		1					G4 Mod DI TYPE 24-13 GRATE	30.65' R+ 267+26.35 "TC"			c
		d						82.5																			4.8									24" APC				d
		e																				1															24" AFES	53.18' L+ 267+22.73 "TC"			e
	51	f																																6.3	17.8	RSP (LIGHT, METHOD B)			51	f
D-8	52	a	188																									3.7	1.10		1					G1 DI TYPE 24-13 GRATE	10.00' R+ 24+97.60 AR	D-8	52	a
		b						19.2																			4.7									24" APC				b
		c	188																									6.9	1.80		1					G1 DI TYPE 24-13 GRATE	10.00' L+ 25+03.13 AR			c
		d						115.8																			5.7									24" APC				d
	52	e																				1															24" AFES	99.63' L+ 25+36.83 AR		52	e
D-9	53	a	188																									2.9	0.95		1					G1 DI TYPE 24-13 GRATE	64.42' L+ 272+64.00 "TC"	D-9	53	a
		b						24.2																			3.9									24" APC				b
		c	188																			1						9.2	3.88		1					G4 Mod DI TYPE 24-13 GRATE	40.65' L+ 272+47.40 "TC"			c
		d						121.3																			9.6									24" APC				d
		e																				1															24" AFES	78.58' R+ 271+91.36 "TC"			e
		f																																6.3	17.8	RSP (LIGHT, METHOD B)				f
	53	g																	50.2	5.8																	ABANDON 24" CULVERT			53	g
SHEET TOTAL			1316					568.3											117.9	10.2		7								16.83				25.2	71.2					
GRAND TOTAL			11,892	22.89*	606.7	65.9	578.9	3764.3	336.6	453.2	588.9	286.6	184.8	10	5	114.3			560.2	126.1	131.4	18	25	9	3	6	1			150.46	1		169.4*	7.3	197.2**	569.5**					

* HMA AND PLACE HMA (Misc AREA) QUANTITY INCLUDED IN MBGR QUANTITIES TABLE
** RSP (Light, Method B) AND RSP FABRIC QUANTITY INCLUDED IN GUTTER QUANTITIES TABLE

DRAINAGE QUANTITIES
DQ-9

REVISED BY | DATE REVISED
JORGE AGUILERA | KAL DAHER
CALCULATED-DESIGNED BY | CHECKED BY
FUNCTIONAL SUPERVISOR: TERRY OGLE

STATE OF CALIFORNIA - DEPARTMENT OF TRANSPORTATION
06-DESIGN
Caltrans

LAST REVISION 01-11-10 | DATE PLOTTED => 12-MAY-2010 | TIME PLOTTED => 07:12

Dist	COUNTY	ROUTE	POST MILES TOTAL PROJECT	SHEET No.	TOTAL SHEETS
10	Tuo	108	R4.0/R6.0	99	237

K. Daher 01-07-10
REGISTERED CIVIL ENGINEER DATE

5-10-10
PLANS APPROVAL DATE

REGISTERED PROFESSIONAL ENGINEER KAL H. DAHER No. C44510 Exp. 3-31-10 CIVIL STATE OF CALIFORNIA

THE STATE OF CALIFORNIA OR ITS OFFICERS OR AGENTS SHALL NOT BE RESPONSIBLE FOR THE ACCURACY OR COMPLETENESS OF SCANNED COPIES OF THIS PLAN SHEET.

NOTES:

1. FOR ACCURATE RIGHT OF WAY AND ACCESS DATA, CONTACT RIGHT OF WAY ENGINEERING AT THE DISTRICT OFFICE.
2. NEW OVERHEAD UTILITIES WILL BE INSTALLED BY OTHERS AFTER COMPLETION OF THE FRONTAGE ROAD. EXISTING OVERHEAD UTILITIES WITHIN THE RIGHT OF WAY WILL BE REMOVED OR ABANDONED BY THE UTILITY OWNERS AFTER INSTALLATION OF THE NEW OVERHEAD FACILITIES ALONG THE FRONTAGE ROAD.

ABBREVIATION:

HDPE	- HIGH DENSITY POLYETHYLENE PIPE
TUD	- TUOLUMNE UTILITY DISTRICT
PG&E	- PACIFIC GAS AND ELECTRIC COMPANY
AT&T	- AMERICAN TELEGRAPH AND TELEPHONE COMPANY

LEGEND:

●	POLE TO BE REMOVED BY OTHERS
—--t——— ———--t—	AT&T TELEPHONE
——--s——--——--s—	TUD SEWER
-——w—— ——— ——w—	TUD WATER
——-e——— ———-(oh)—	PG&E ELECTRIC
—--t——— ———--(oh)—	AT&T TELEPHONE
——-E——— ———-(OH)—	PG&E ELECTRIC
——-E——— ———-E—	PG&E ELECTRIC
—--T——— ———--(OH)—	AT&T TELEPHONE

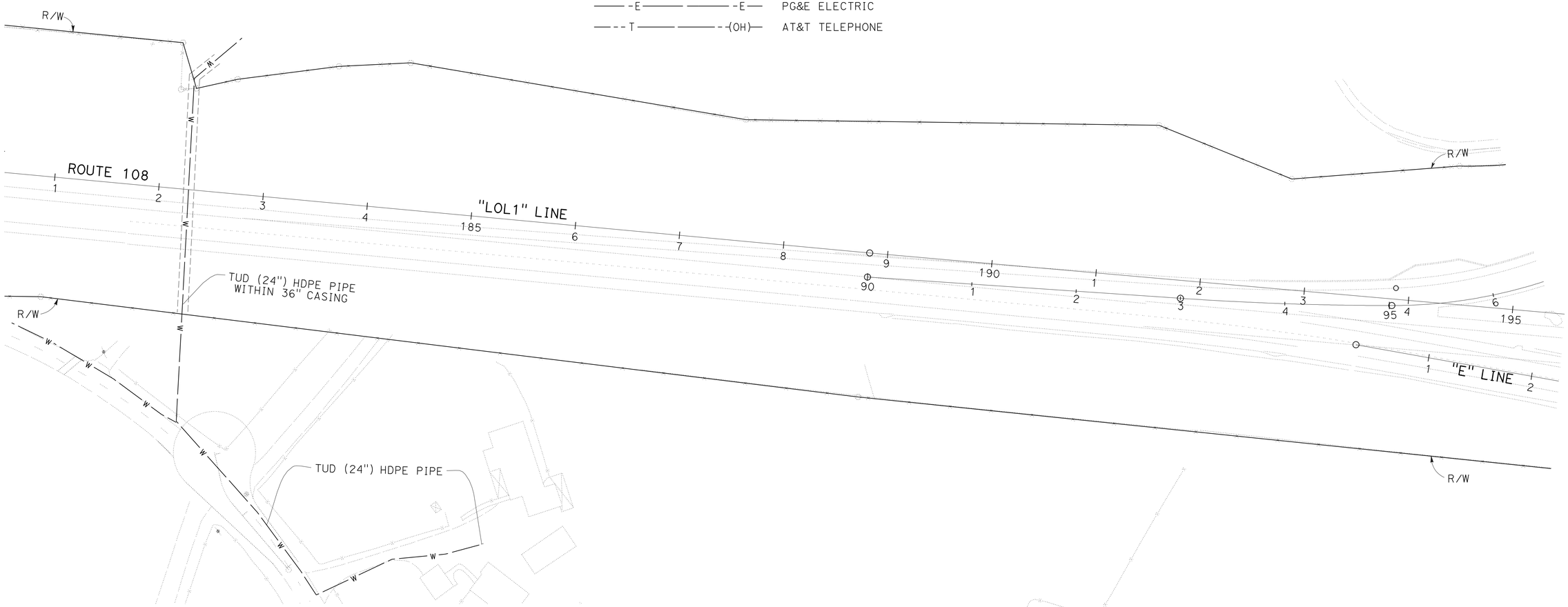

THIS PLAN ACCURATE FOR UTILITIES ONLY

UTILITY PLAN
U-1

SCALE: 1" = 50'

STATE OF CALIFORNIA - DEPARTMENT OF TRANSPORTATION
Caltrans®
06-DESIGN

FUNCTIONAL SUPERVISOR: TERRY OGLE
CALCULATED-DESIGNED BY: JORGE AGUILERA
CHECKED BY: KAL DAHER
REVISED BY
DATE REVISED

LAST REVISION 01-07-10
DATE PLOTTED => 12-MAY-2010
TIME PLOTTED => 15:24

Dist	COUNTY	ROUTE	POST MILES TOTAL PROJECT	SHEET No.	TOTAL SHEETS
10	Tuo	108	R4.0/R6.0	100	237

K. Daher 01-07-10
REGISTERED CIVIL ENGINEER DATE

5-10-10
PLANS APPROVAL DATE

REGISTERED PROFESSIONAL ENGINEER
KAL H. DAHER
No. C44510
Exp. 3-31-10
CIVIL
STATE OF CALIFORNIA

THE STATE OF CALIFORNIA OR ITS OFFICERS OR AGENTS SHALL NOT BE RESPONSIBLE FOR THE ACCURACY OR COMPLETENESS OF SCANNED COPIES OF THIS PLAN SHEET.

NOTE: FOR ACCURATE RIGHT OF WAY AND ACCESS DATA, CONTACT RIGHT OF WAY ENGINEERING AT THE DISTRICT OFFICE.

THIS PLAN ACCURATE FOR UTILITIES ONLY

UTILITY PLAN U-2

SCALE: 1" = 50'

STATE OF CALIFORNIA - DEPARTMENT OF TRANSPORTATION	Caltrans
06-DESIGN	
FUNCTIONAL SUPERVISOR	TERRY OGLE
CALCULATED-DESIGNED BY	JORGE AGUILERA
CHECKED BY	KAL DAHER
REVISED BY	
DATE REVISED	

LAST REVISION DATE PLOTTED => 12-MAY-2010
01-07-10 TIME PLOTTED => 07:13