Dist	COUNTY	ROUTE	POST MILES TOTAL PROJECT	SHEET No.	TOTAL SHEETS
10	Tuo	108	R4.0/R6.0	1	237

STATE OF CALIFORNIA

DEPARTMENT OF TRANSPORTATION

PROJECT PLANS FOR CONSTRUCTION ON

STATE HIGHWAY

IN TUOLUMNE COUNTY
NEAR SONORA
FROM 0.3 MILE WEST OF PEACEFUL OAK ROAD
TO VIA ESTE ROAD

TO BE SUPPLEMENTED BY STANDARD PLANS DATED MAY 2006

INDEX OF PLANS

SHEET No.	DESCRIPTION
1	TITLE AND LOCATION MAP
2-6	TYPICAL CROSS SECTIONS
7-15	LAYOUTS
16-27	PROFILES
28-33	SUPERELEVATION DIAGRAMS
34-44	CONSTRUCTION DETAILS
45-53	TEMPORARY WATER POLLUTION CONTROL PLANS AND QUANTITIES
54-63	EROSION CONTROL PLANS, DETAILS AND QUANTITIES
64-98	DRAINAGE PLANS, PROFILES, DETAILS AND QUANTITIES
99-106	UTILITY PLANS
107-108	STAGE CONSTRUCTION PLANS
109-112	TRAFFIC HANDLING PLANS AND QUANTITIES
113	CONSTRUCTION AREA SIGNS
114-123	PAVEMENT DELINEATION PLANS AND QUANTITIES
124-127	SUMMARY OF QUANTITIES
128-140	SIGN PLANS, DETAILS AND QUANTITIES
141-150	ELECTRICAL PLANS
151-189	REVISED AND NEW STANDARD PLANS

STRUCTURE PLANS

190-209	PEACEFUL OAK ROAD UNDERCROSSING
210-237	MONO WAY UNDERCROSSING

THE STANDARD PLANS LIST APPLICABLE TO THIS CONTRACT IS INCLUDED IN THE NOTICE TO BIDDERS AND SPECIAL PROVISIONS BOOK.

LOCATION MAP

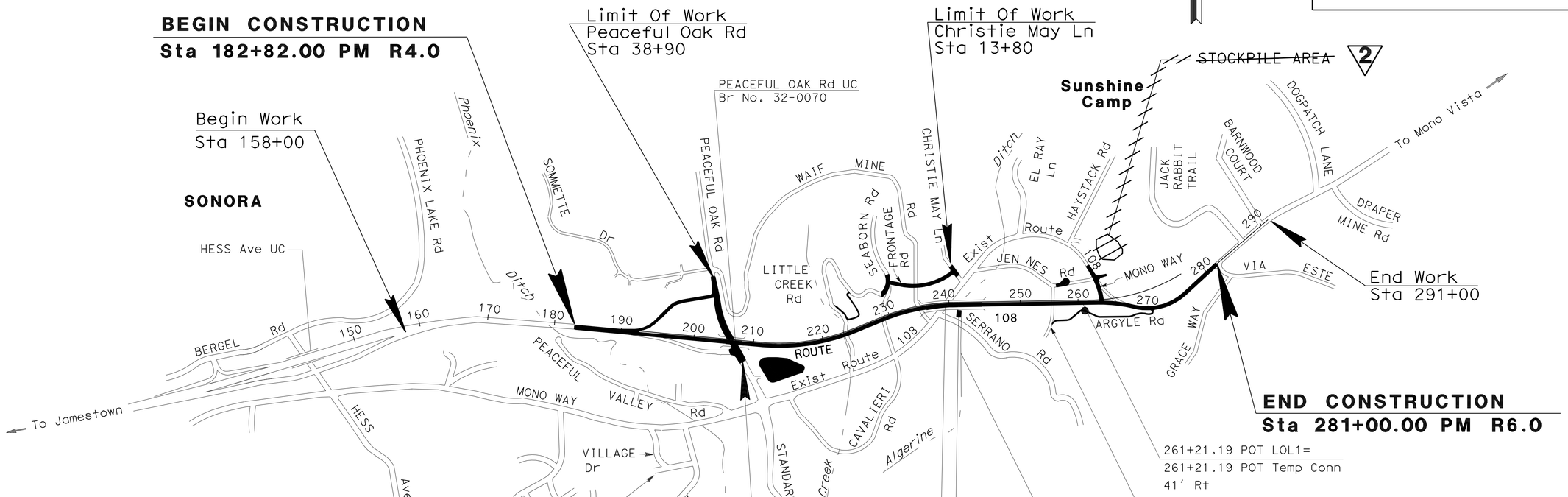

NO SCALE

THE CONTRACTOR SHALL POSSESS THE CLASS (OR CLASSES) OF LICENSE AS SPECIFIED IN THE "NOTICE TO BIDDERS."

2 REVISED PER ADDENDUM No. 2 DATED NOVEMBER 3, 2011

K. Daher 12-17-09
PROJECT ENGINEER DATE
REGISTERED CIVIL ENGINEER

May 10, 2010
PLANS APPROVAL DATE

REGISTERED PROFESSIONAL ENGINEER KAL H. DAHER No. C44510 Exp. 3-31-10 CIVIL STATE OF CALIFORNIA

THE STATE OF CALIFORNIA OR ITS OFFICERS OR AGENTS SHALL NOT BE RESPONSIBLE FOR THE ACCURACY OR COMPLETENESS OF SCANNED COPIES OF THIS PLAN SHEET.

PROJECT MANAGER JOY PINNE
DESIGN ENGINEER TERRY OGLE

LAST REVISION 12-17-09
DATE PLOTTED => 02-NOV-2011
TIME PLOTTED => 06:17

CONTRACT No.	10-340424
PROJECT ID	1000000394

Dist	COUNTY	ROUTE	POST MILES TOTAL PROJECT	SHEET No.	TOTAL SHEETS
10	Tuo	108	R4.0/R6.0	4	237

REGISTERED CIVIL ENGINEER 12-28-09 DATE

5-10-10
PLANS APPROVAL DATE

REGISTERED PROFESSIONAL ENGINEER KAL H. DAHER No. C44510 Exp. 3-31-10 CIVIL STATE OF CALIFORNIA

THE STATE OF CALIFORNIA OR ITS OFFICERS OR AGENTS SHALL NOT BE RESPONSIBLE FOR THE ACCURACY OR COMPLETENESS OF SCANNED COPIES OF THIS PLAN SHEET.

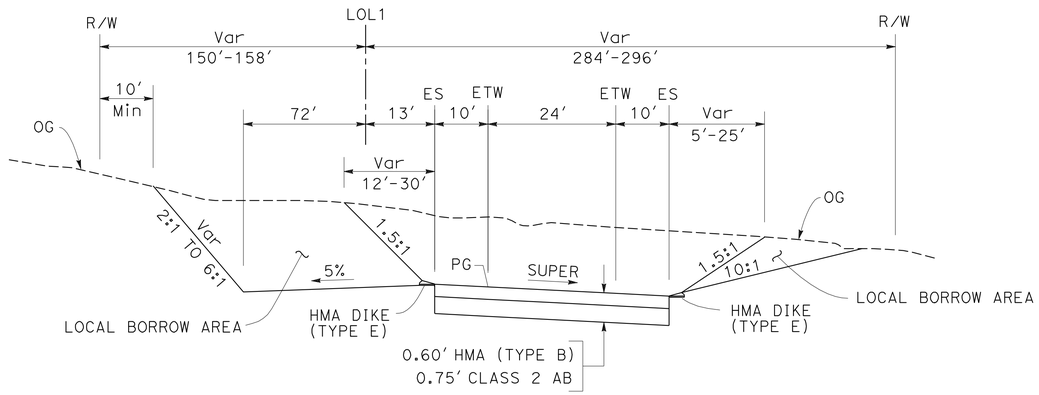

STA 227+50.00 TO STA 230+50.00

ROUTE 108

2

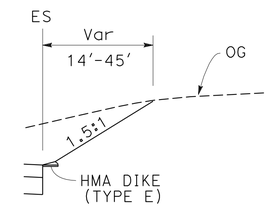

STA 256+50.00 TO STA 261+21.19

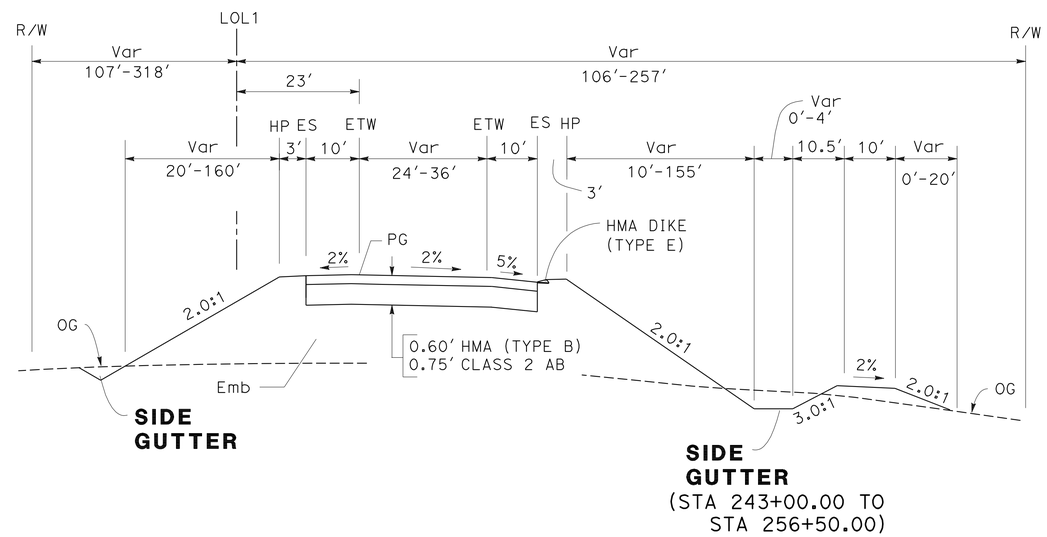

STA 245+33.00 TO STA 261+21.19

ROUTE 108

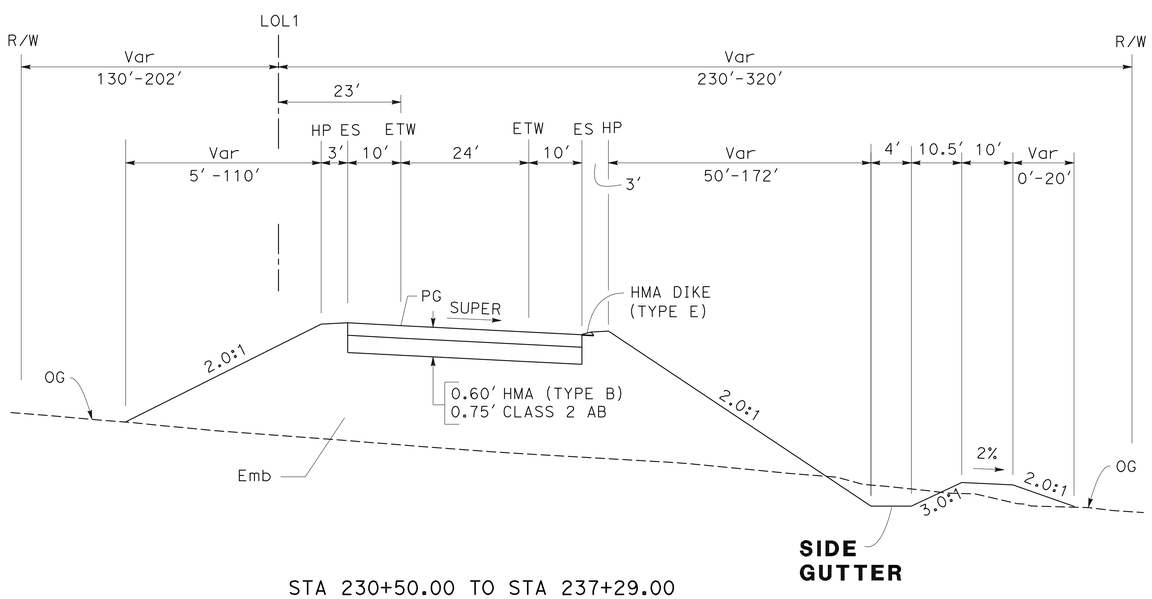

STA 230+50.00 TO STA 237+29.00
STA 223+50.00 TO STA 227+50.00

ROUTE 108

2 **REVISED PER ADDENDUM No. 2 DATED NOVEMBER 3, 2011**

TYPICAL CROSS SECTIONS

NO SCALE

X-3

STATE OF CALIFORNIA - DEPARTMENT OF TRANSPORTATION
Caltrans
06-DESIGN

FUNCTIONAL SUPERVISOR: TERRY OGLE
CALCULATED-DESIGNED BY: JORGE AGUILERA
CHECKED BY: KAL DAHER
REVISED BY
DATE REVISED

LAST REVISION 01-11-10
DATE PLOTTED => 02-NOV-2011
TIME PLOTTED => 06:17

Dist	COUNTY	ROUTE	POST MILES TOTAL PROJECT	SHEET No.	TOTAL SHEETS
10	Tuo	108	R4.0/R6.0	5	237

REGISTERED CIVIL ENGINEER 12-28-09 DATE

5-10-10
PLANS APPROVAL DATE

REGISTERED PROFESSIONAL ENGINEER KAL H. DAHER No. C44510 Exp. 3-31-10 CIVIL STATE OF CALIFORNIA

THE STATE OF CALIFORNIA OR ITS OFFICERS OR AGENTS SHALL NOT BE RESPONSIBLE FOR THE ACCURACY OR COMPLETENESS OF SCANNED COPIES OF THIS PLAN SHEET.

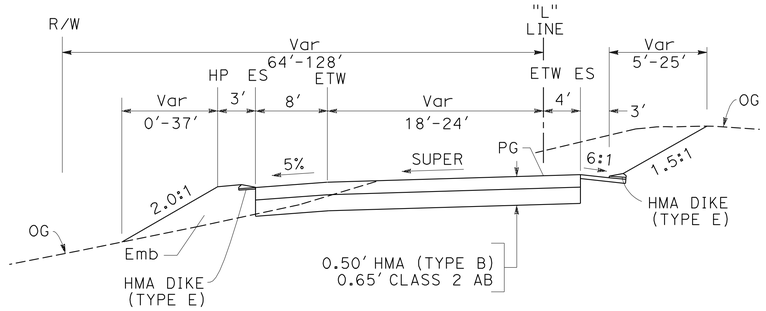

STA 95+32.25 TO STA 108+27.00

RAMP "L"

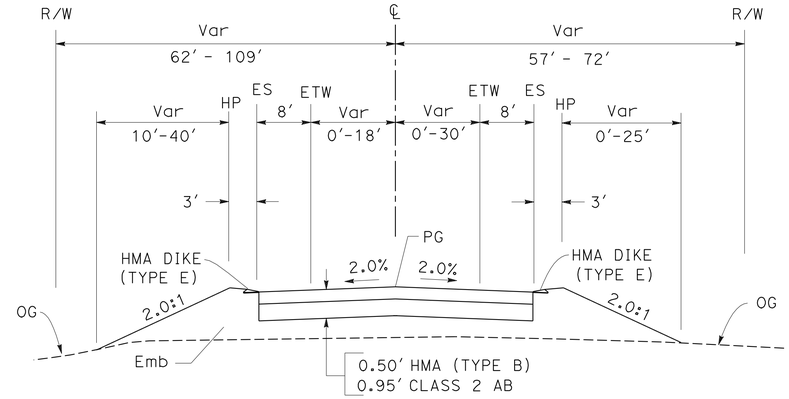

STA 10+00.00 TO STA 17+44.00

MONO WAY

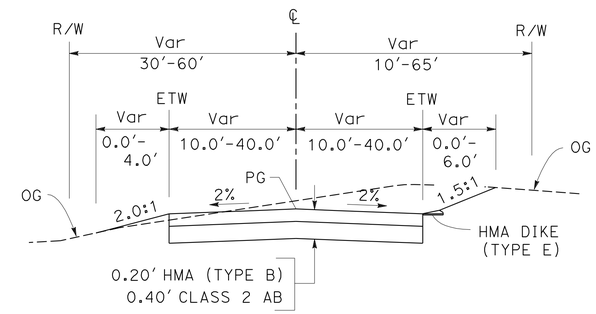

STA 10+00.00 TO STA 11+38.00

JENNES Rd CUL-DE-SAC

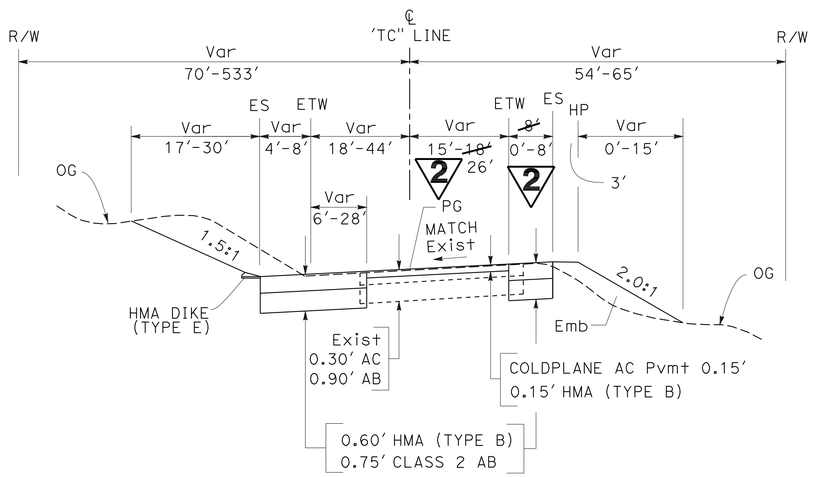

STA 269+50.00 TO STA 281+00.00

TEMPORARY CONNECTION

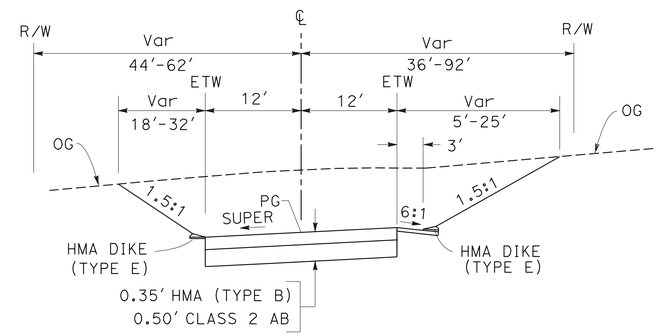

STA 18+30.00 TO STA 20+01.37

FRONTAGE ROAD

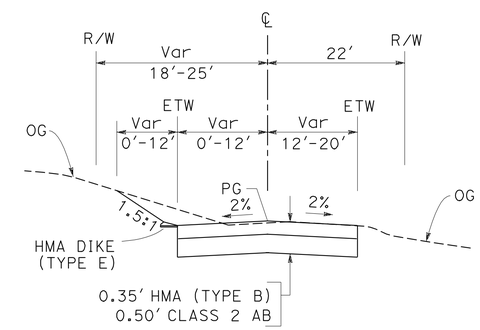

STA 10+12.00 TO STA 12+76.35

CHRISTIE MAY LANE

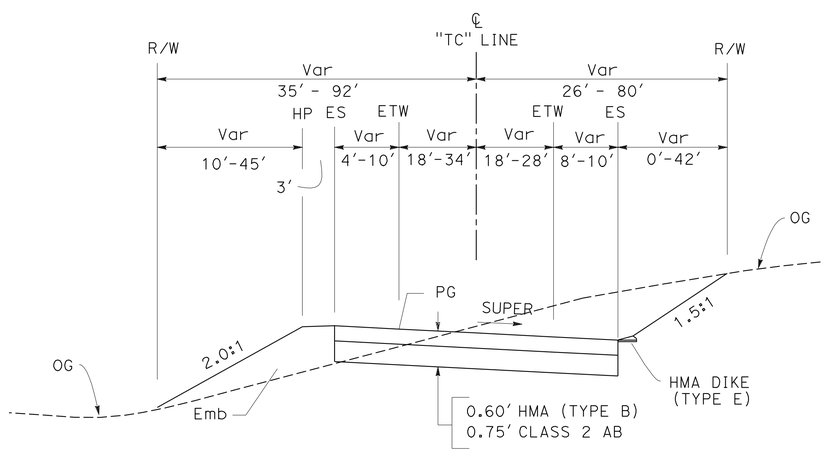

STA 261+21.19 TO STA 269+50.00

TEMPORARY CONNECTION

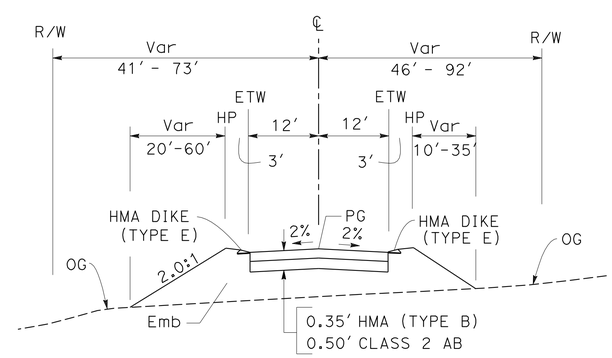

STA 10+10.00 TO STA 18+30.00

FRONTAGE ROAD

2 REVISED PER ADDENDUM No. 2 DATED NOVEMBER 3, 2011

TYPICAL CROSS SECTIONS

NO SCALE

X-4

REVISED BY | DATE REVISED
JORGE AGUILERA | KAL DAHER
CALCULATED-DESIGNED BY | CHECKED BY
FUNCTIONAL SUPERVISOR
TERRY OGLE

STATE OF CALIFORNIA - DEPARTMENT OF TRANSPORTATION
06-DESIGN
Caltrans

LAST REVISION 01-11-10 | DATE PLOTTED => 02-NOV-2011 | TIME PLOTTED => 06:17

Dist	COUNTY	ROUTE	POST MILES TOTAL PROJECT	SHEET No.	TOTAL SHEETS
10	Tuo	108	R4.0/R6.0	12	237

REGISTERED CIVIL ENGINEER 12-29-09 DATE

5-10-10
PLANS APPROVAL DATE

REGISTERED PROFESSIONAL ENGINEER KAL H. DAHER No. C44510 Exp. 3-31-10 CIVIL STATE OF CALIFORNIA

THE STATE OF CALIFORNIA OR ITS OFFICERS OR AGENTS SHALL NOT BE RESPONSIBLE FOR THE ACCURACY OR COMPLETENESS OF SCANNED COPIES OF THIS PLAN SHEET.

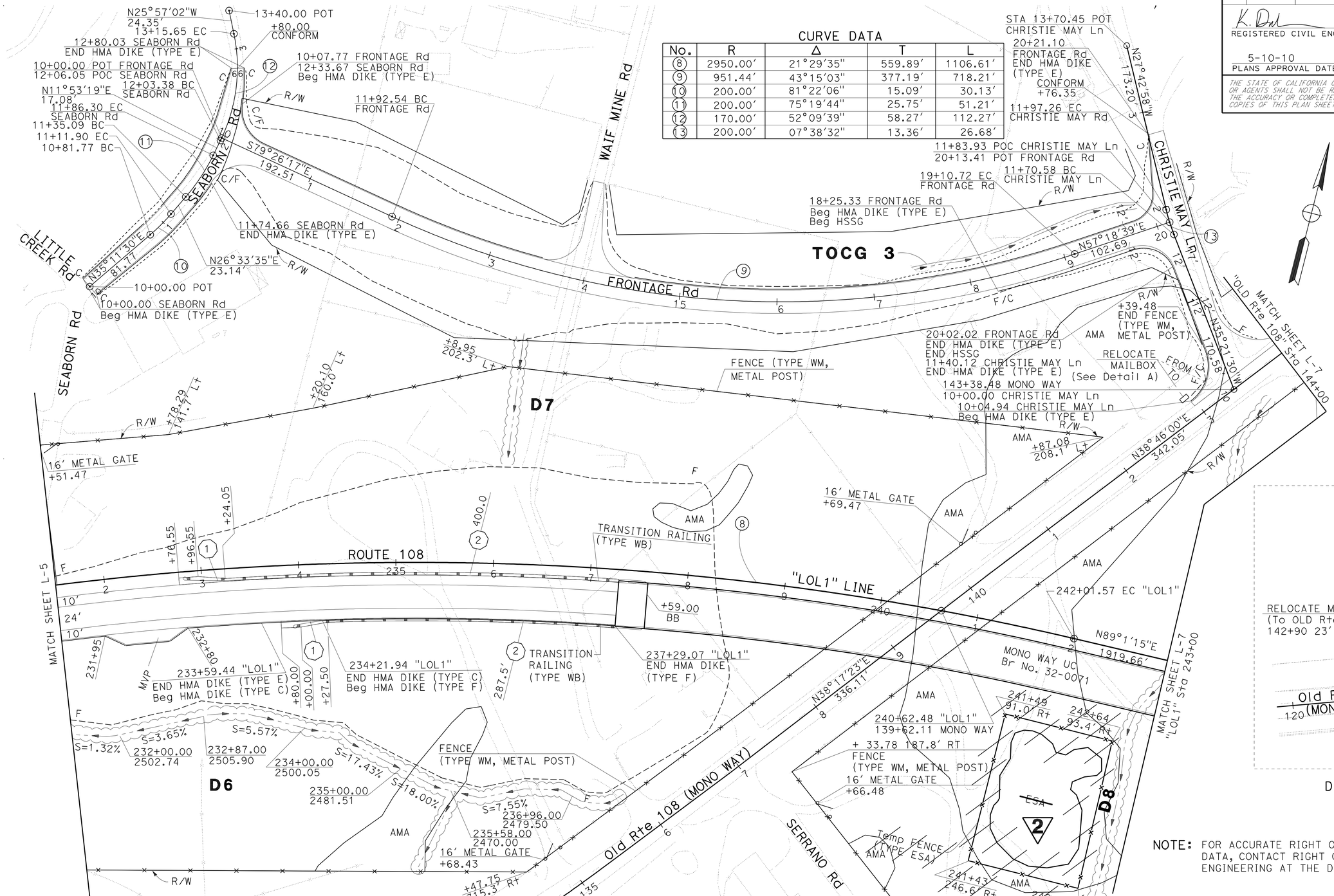

NOTE: FOR ACCURATE RIGHT OF WAY AND ACCESS DATA, CONTACT RIGHT OF WAY ENGINEERING AT THE DISTRICT OFFICE

2 REVISED PER ADDENDUM No. 1 DATED NOVEMBER 3, 2011

SCALE: 1" = 50'

LAYOUT L-6

CURVE DATA

No.	R	Δ	T	L
8	2950.00'	21°29'35"	559.89'	1106.61'
9	951.44'	43°15'03"	377.19'	718.21'
10	200.00'	81°22'06"	15.09'	30.13'
11	200.00'	75°19'44"	25.75'	51.21'
12	170.00'	52°09'39"	58.27'	112.27'
13	200.00'	07°38'32"	13.36'	26.68'

STATE OF CALIFORNIA - DEPARTMENT OF TRANSPORTATION
Caltrans
06-DESIGN

FUNCTIONAL SUPERVISOR: TERRY OGLE
CALCULATED-DESIGNED BY: JORGE AGUILERA
CHECKED BY: KAL DAHER
REVISED BY
DATE REVISED

LAST REVISION 01-14-10
DATE PLOTTED => 02-NOV-2011
TIME PLOTTED => 06:17

Dist	COUNTY	ROUTE	POST MILES TOTAL PROJECT	SHEET No.	TOTAL SHEETS
10	Tuo	108	R4.0/R6.0	13	237

K. Daher 12-29-09
REGISTERED CIVIL ENGINEER DATE

5-10-10
PLANS APPROVAL DATE

REGISTERED PROFESSIONAL ENGINEER KAL H. DAHER No. C44510 Exp. 3-31-10 CIVIL STATE OF CALIFORNIA

THE STATE OF CALIFORNIA OR ITS OFFICERS OR AGENTS SHALL NOT BE RESPONSIBLE FOR THE ACCURACY OR COMPLETENESS OF SCANNED COPIES OF THIS PLAN SHEET.

NOTE: FOR ACCURATE RIGHT OF WAY AND ACCESS DATA, CONTACT RIGHT OF WAY ENGINEERING AT THE DISTRICT OFFICE

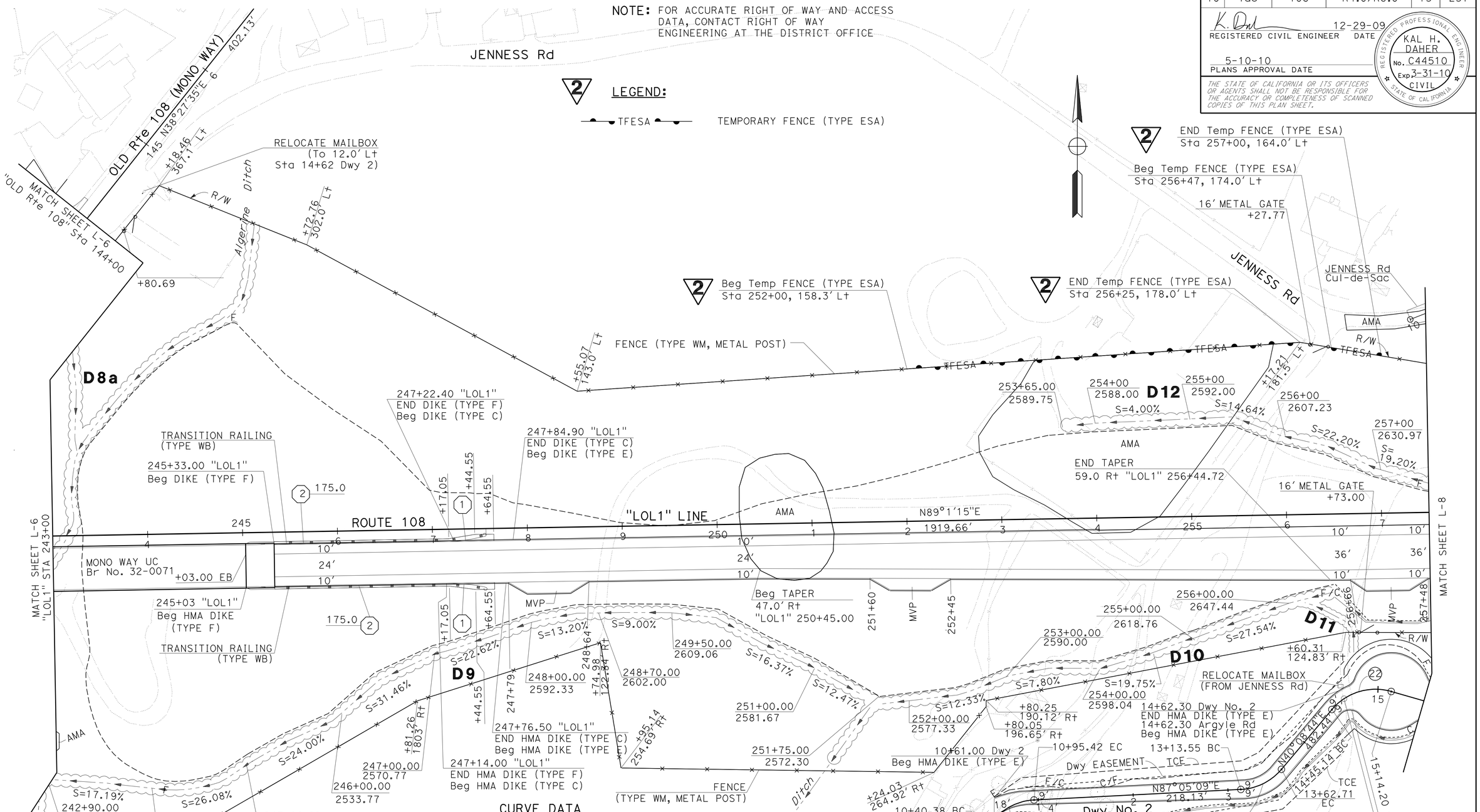

LEGEND:

TFESA — TEMPORARY FENCE (TYPE ESA)

CURVE DATA

No.	R	Δ	T	L
20	60.00'	52°33'41"	29.63'	55.04'
21	60.00'	46°56'25"	26.05'	49.16'
22	60.00'	65°56'53"	38.93'	69.06'

REVISED PER ADDENDUM No. 2 DATED NOVEMBER 3, 2011

LAYOUT L-7

SCALE: 1" = 50'

STATE OF CALIFORNIA - DEPARTMENT OF TRANSPORTATION
06-DESIGN
Caltrans

FUNCTIONAL SUPERVISOR: TERRY OGLE
CALCULATED-DESIGNED BY: JORGE AGUILERA
CHECKED BY: KAL DAHER
REVISED BY / DATE REVISED

LAST REVISION 01-13-10
DATE PLOTTED => 02-NOV-2011
TIME PLOTTED => 06:18

Dist	COUNTY	ROUTE	POST MILES TOTAL PROJECT	SHEET No.	TOTAL SHEETS
10	Tuo	108	R4.0/R6.0	14	237

REGISTERED CIVIL ENGINEER 12-29-09 DATE

5-10-10
PLANS APPROVAL DATE

REGISTERED PROFESSIONAL ENGINEER KAL H. DAHER No. C44510 Exp. 3-31-10 CIVIL STATE OF CALIFORNIA

THE STATE OF CALIFORNIA OR ITS OFFICERS OR AGENTS SHALL NOT BE RESPONSIBLE FOR THE ACCURACY OR COMPLETENESS OF SCANNED COPIES OF THIS PLAN SHEET.

NOTE: FOR ACCURATE RIGHT OF WAY AND ACCESS DATA, CONTACT RIGHT OF WAY ENGINEERING AT THE DISTRICT OFFICE

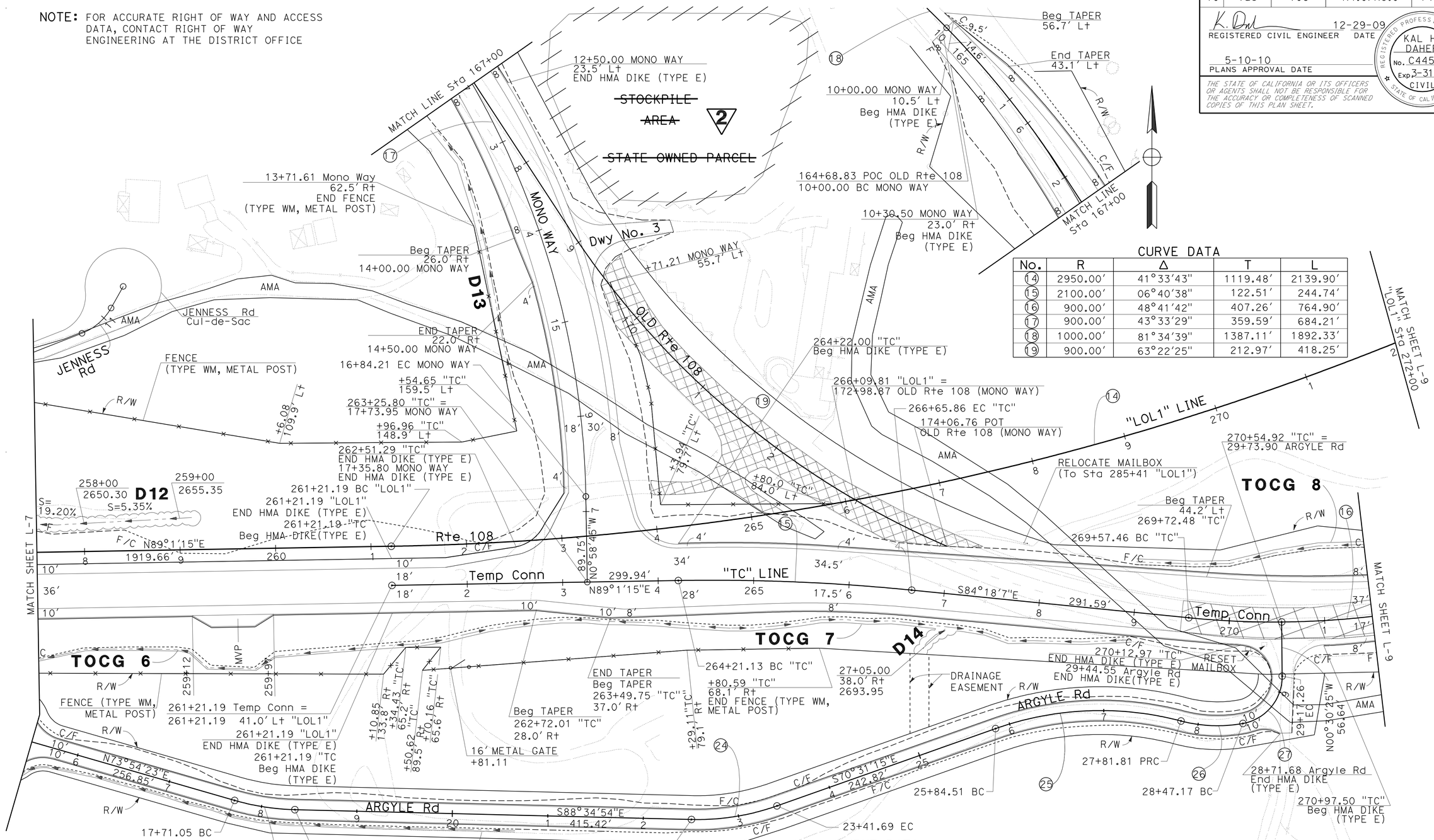

CURVE DATA

No.	R	Δ	T	L
14	2950.00'	41°33'43"	1119.48'	2139.90'
15	2100.00'	06°40'38"	122.51'	244.74'
16	900.00'	48°41'42"	407.26'	764.90'
17	900.00'	43°33'29"	359.59'	684.21'
18	1000.00'	81°34'39"	1387.11'	1892.33'
19	900.00'	63°22'25"	212.97'	418.25'

CURVE DATA

No.	R	Δ	T	L
23	250.00'	14°40'31"	32.19'	64.03'
24	250.00'	20°53'51"	46.10'	91.18'
25	330.00'	34°15'18"	101.69'	197.29'
26	150.00'	24°58'04"	33.21'	65.36'
27	50.00'	80°18'55"	42.19'	70.09'

2 **REVISED PER ADDENDUM No. 2 DATED NOVEMBER 3, 2011**

SCALE: 1" = 50'

LAYOUT L-8

REVISED BY | DATE REVISED
JORGE AGUILERA | KAL DAHER
CALCULATED-DESIGNED BY | CHECKED BY
FUNCTIONAL SUPERVISOR | TERRY OGLE
STATE OF CALIFORNIA - DEPARTMENT OF TRANSPORTATION | 06-DESIGN
Caltrans

LAST REVISION 01-13-10 | DATE PLOTTED => 02-NOV-2011 | TIME PLOTTED => 06:18

Dist	COUNTY	ROUTE	POST MILES TOTAL PROJECT	SHEET No.	TOTAL SHEETS
10	Tuo	108	R4.0/R6.0	69	237

K. Daher 01-11-10
REGISTERED CIVIL ENGINEER DATE

5-10-10
PLANS APPROVAL DATE

REGISTERED PROFESSIONAL ENGINEER KAL H. DAHER No. C44510 Exp. 3-31-10 CIVIL STATE OF CALIFORNIA

THE STATE OF CALIFORNIA OR ITS OFFICERS OR AGENTS SHALL NOT BE RESPONSIBLE FOR THE ACCURACY OR COMPLETENESS OF SCANNED COPIES OF THIS PLAN SHEET.

NOTE: FOR ACCURATE RIGHT OF WAY AND ACCESS DATA, CONTACT RIGHT OF WAY ENGINEERING AT THE DISTRICT OFFICE.

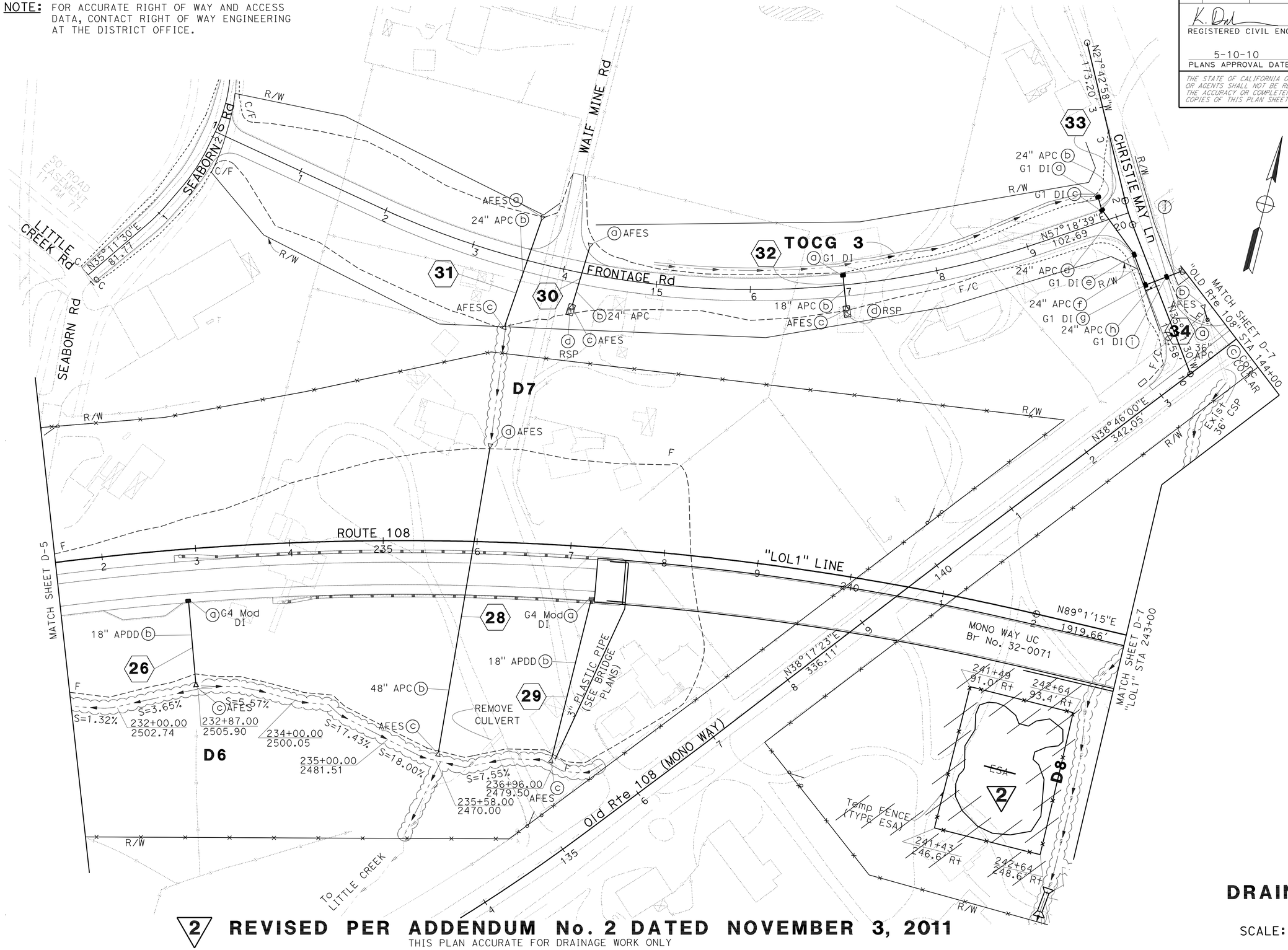

2 **REVISED PER ADDENDUM No. 2 DATED NOVEMBER 3, 2011**

THIS PLAN ACCURATE FOR DRAINAGE WORK ONLY

DRAINAGE PLAN D-6

SCALE: 1" = 50'

STATE OF CALIFORNIA - DEPARTMENT OF TRANSPORTATION
Caltrans
06-DESIGN

FUNCTIONAL SUPERVISOR: TERRY OGLE
CALCULATED-DESIGNED BY: JORGE AGUILERA
CHECKED BY: KAL DAHER
REVISED BY / DATE REVISED

LAST REVISION 01-12-10
DATE PLOTTED => 02-NOV-2011
TIME PLOTTED => 06:18

BORDER LAST REVISED 4/11/2008
RELATIVE BORDER SCALE IS IN INCHES 0 1 2 3
USERNAME => s121614
DGN FILE => d34042ia006.add
CU 06228
EA 340421

Dist	COUNTY	ROUTE	POST MILES TOTAL PROJECT	SHEET No.	TOTAL SHEETS
10	Tuo	108	R4.0/R6.0	100	237

K. Daher 01-07-10
REGISTERED CIVIL ENGINEER DATE

5-10-10
PLANS APPROVAL DATE

REGISTERED PROFESSIONAL ENGINEER
KAL H. DAHER
No. C44510
Exp. 3-31-10
CIVIL
STATE OF CALIFORNIA

THE STATE OF CALIFORNIA OR ITS OFFICERS OR AGENTS SHALL NOT BE RESPONSIBLE FOR THE ACCURACY OR COMPLETENESS OF SCANNED COPIES OF THIS PLAN SHEET.

NOTE: FOR ACCURATE RIGHT OF WAY AND ACCESS DATA, CONTACT RIGHT OF WAY ENGINEERING AT THE DISTRICT OFFICE.

THIS PLAN ACCURATE FOR UTILITIES ONLY 2 **REVISED PER ADDENDUM No. 2 DATED NOVEMBER 3, 2011**

UTILITY PLAN U-2

SCALE: 1" = 50'

STATE OF CALIFORNIA - DEPARTMENT OF TRANSPORTATION
Caltrans
06-DESIGN

FUNCTIONAL SUPERVISOR: TERRY OGLE
CALCULATED-DESIGNED BY: JORGE AGUILERA
CHECKED BY: KAL DAHER
REVISED BY
DATE REVISED

LAST REVISION 01-07-10
DATE PLOTTED => 02-NOV-2011
TIME PLOTTED => 06:18

BORDER LAST REVISED 4/11/2008
RELATIVE BORDER SCALE IS IN INCHES 0 1 2 3
USERNAME => s121614
DGN FILE => a34042ka002.add
CU 06228
EA 340421

Dist	COUNTY	ROUTE	POST MILES TOTAL PROJECT	SHEET No.	TOTAL SHEETS
10	Tuo	108	R4.0/R6.0	101	237

REGISTERED CIVIL ENGINEER 01-07-10 DATE

5-10-10
PLANS APPROVAL DATE

REGISTERED PROFESSIONAL ENGINEER
KAL H. DAHER
No. C44510
Exp. 3-31-10
CIVIL
STATE OF CALIFORNIA

THE STATE OF CALIFORNIA OR ITS OFFICERS OR AGENTS SHALL NOT BE RESPONSIBLE FOR THE ACCURACY OR COMPLETENESS OF SCANNED COPIES OF THIS PLAN SHEET.

NOTE: FOR ACCURATE RIGHT OF WAY AND ACCESS DATA, CONTACT RIGHT OF WAY ENGINEERING AT THE DISTRICT OFFICE

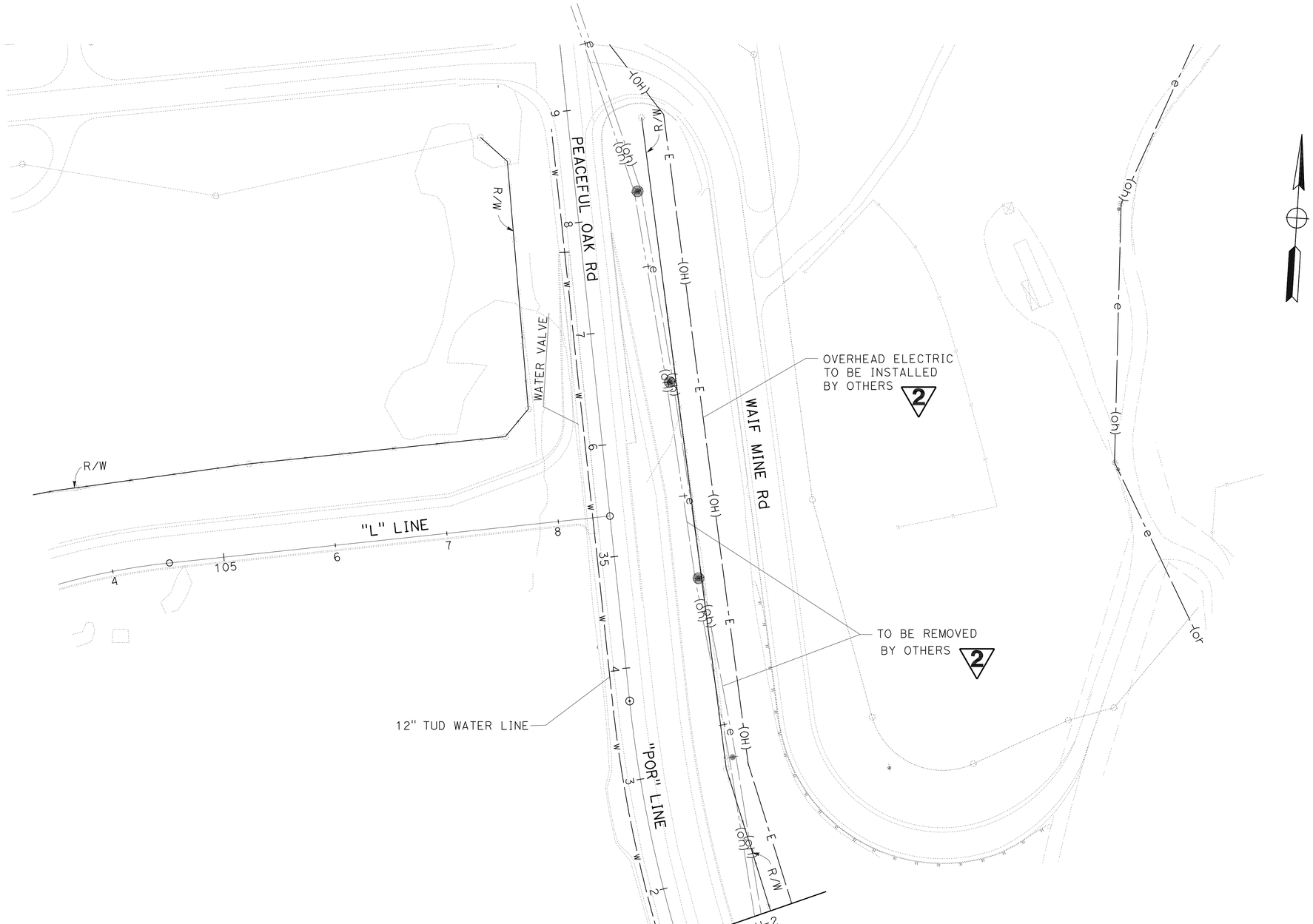

THIS PLAN ACCURATE FOR UTILITIES ONLY

2 **REVISED PER ADDENDUM No. 2 DATED NOVEMBER 3, 2011**

UTILITY PLAN U-3

SCALE: 1" = 50'

STATE OF CALIFORNIA - DEPARTMENT OF TRANSPORTATION
Caltrans
06-DESIGN

FUNCTIONAL SUPERVISOR: TERRY OGLE
CALCULATED-DESIGNED BY: JORGE AGUILERA
CHECKED BY: KAL DAHER
REVISED BY
DATE REVISED

LAST REVISION 01-07-10
DATE PLOTTED => 02-NOV-2011
TIME PLOTTED => 06:18

Dist	COUNTY	ROUTE	POST MILES TOTAL PROJECT	SHEET No.	TOTAL SHEETS
10	Tuo	108	R4.0/R6.0	102	237

REGISTERED CIVIL ENGINEER 01-07-10 DATE

5-10-10
PLANS APPROVAL DATE

REGISTERED PROFESSIONAL ENGINEER KAL H. DAHER No. C44510 Exp. 3-31-10 CIVIL STATE OF CALIFORNIA

THE STATE OF CALIFORNIA OR ITS OFFICERS OR AGENTS SHALL NOT BE RESPONSIBLE FOR THE ACCURACY OR COMPLETENESS OF SCANNED COPIES OF THIS PLAN SHEET.

NOTE: FOR ACCURATE RIGHT OF WAY AND ACCESS DATA, CONTACT RIGHT OF WAY ENGINEERING AT THE DISTRICT OFFICE.

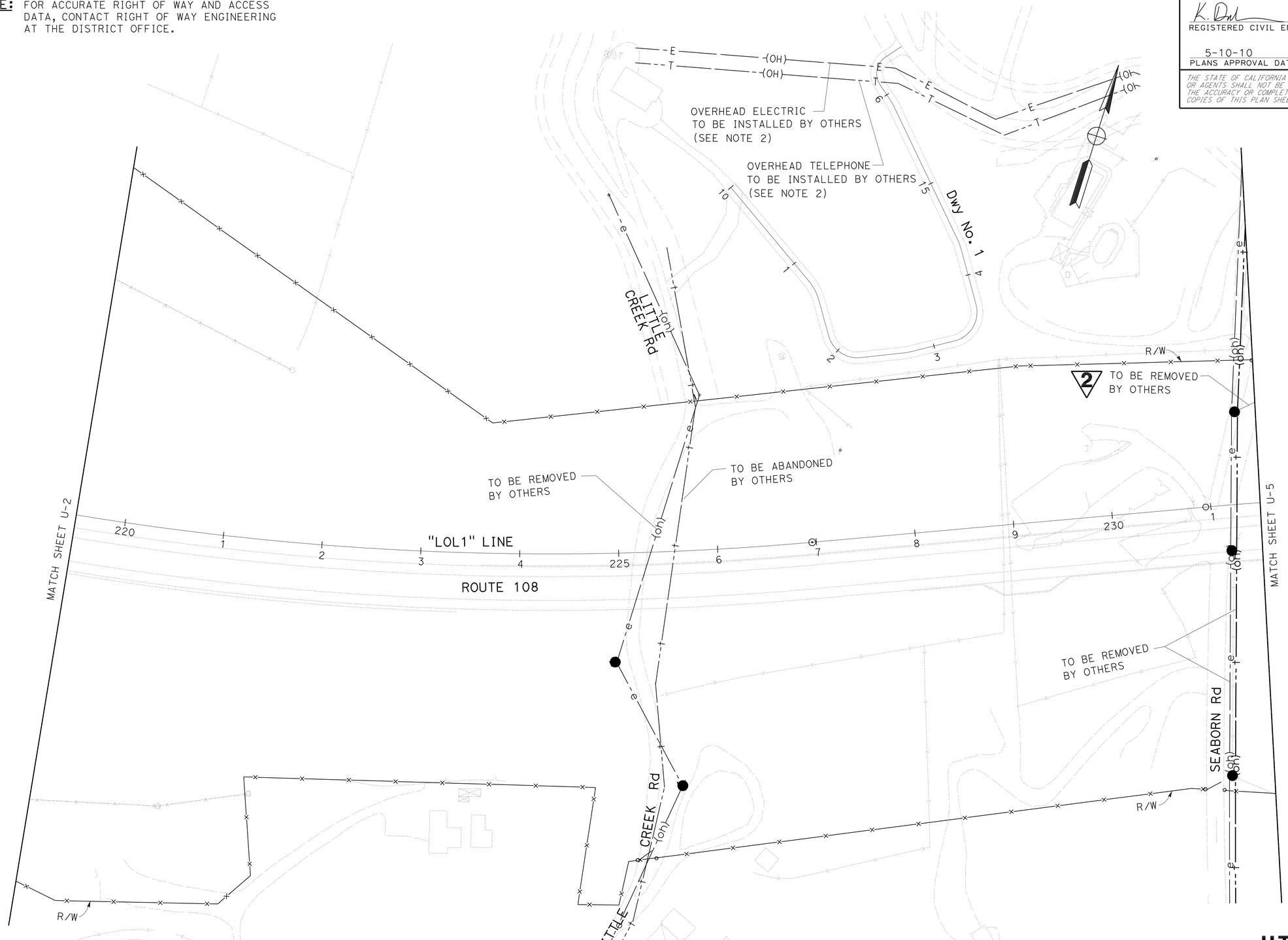

THIS PLAN ACCURATE FOR UTILITIES ONLY

2 **REVISED PER ADDENDUM No. 2 DATED NOVEMBER 3, 2011**

UTILITY PLAN U-4

SCALE: 1" = 50'

STATE OF CALIFORNIA - DEPARTMENT OF TRANSPORTATION
Caltrans
06-DESIGN

FUNCTIONAL SUPERVISOR: TERRY OGLE
CALCULATED-DESIGNED BY: JORGE AGUILERA
CHECKED BY: KAL DAHER
REVISED BY
DATE REVISED

LAST REVISION 01-11-10
DATE PLOTTED => 02-NOV-2011
TIME PLOTTED => 06:18

BORDER LAST REVISED 4/11/2008
RELATIVE BORDER SCALE IS IN INCHES 0 1 2 3
USERNAME => s121614
DGN FILE => a34042ka004.add
CU 06228
EA 340421

Dist	COUNTY	ROUTE	POST MILES TOTAL PROJECT	SHEET No.	TOTAL SHEETS
10	Tuo	108	R4.0/R6.0	103	237

K. Dal 01-07-10
REGISTERED CIVIL ENGINEER DATE

5-10-10
PLANS APPROVAL DATE

REGISTERED PROFESSIONAL ENGINEER KAL H. DAHER No. C44510 Exp. 3-31-10 CIVIL STATE OF CALIFORNIA

THE STATE OF CALIFORNIA OR ITS OFFICERS OR AGENTS SHALL NOT BE RESPONSIBLE FOR THE ACCURACY OR COMPLETENESS OF SCANNED COPIES OF THIS PLAN SHEET.

NOTE: FOR ACCURATE RIGHT OF WAY AND ACCESS DATA, CONTACT RIGHT OF WAY ENGINEERING AT THE DISTRICT OFFICE

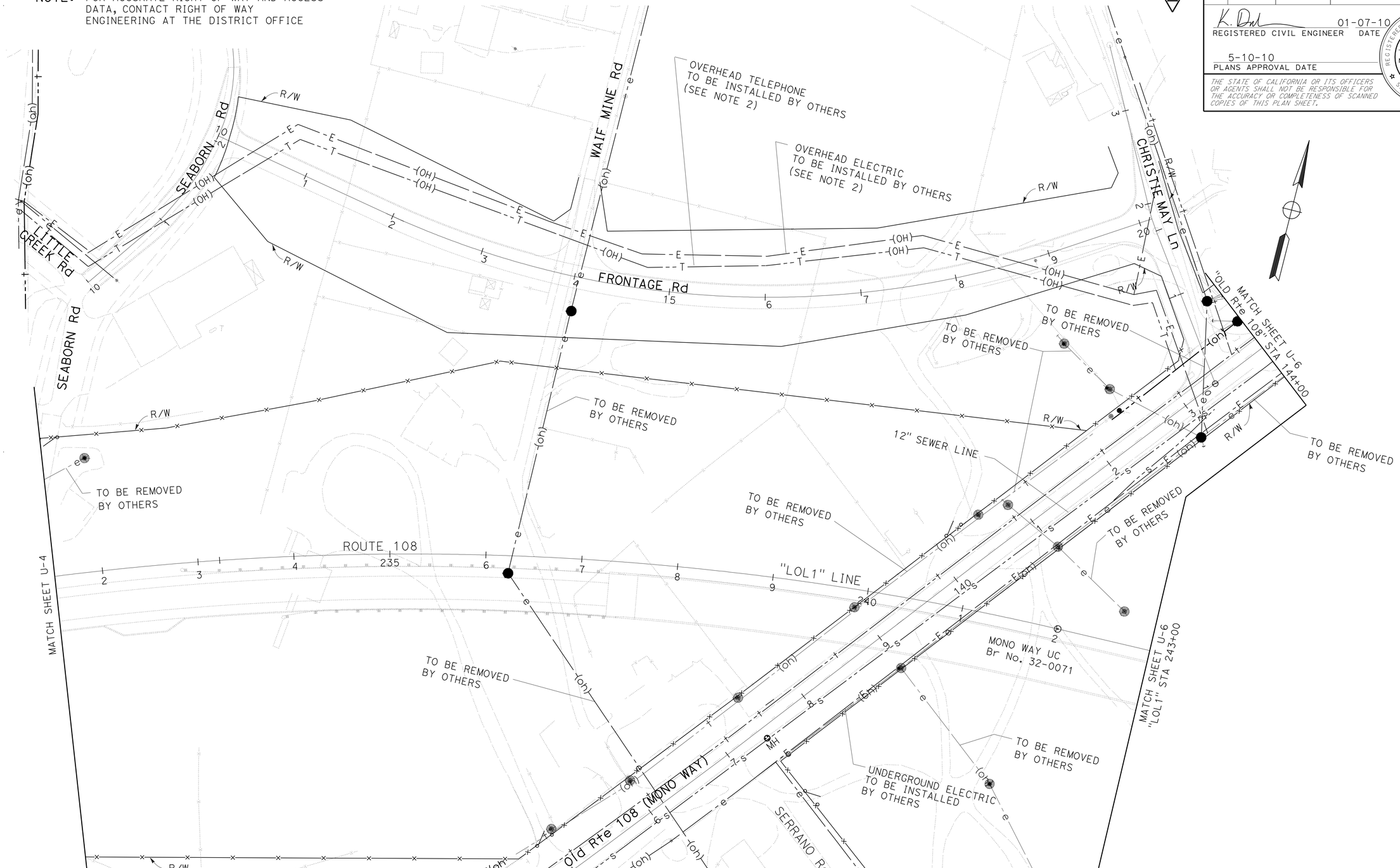

THIS PLAN ACCURATE FOR UTILITIES ONLY

2 **REVISED PER ADDENDUM No. 2 DATED NOVEMBER 3, 2011**

UTILITY PLAN U-5

SCALE: 1" = 50'

STATE OF CALIFORNIA - DEPARTMENT OF TRANSPORTATION
Caltrans
06-DESIGN

FUNCTIONAL SUPERVISOR: TERRY OGLE
CALCULATED-DESIGNED BY: JORGE AGUILERA
CHECKED BY: KAL DAHER
REVISED BY
DATE REVISED

LAST REVISION 01-07-10
DATE PLOTTED => 02-NOV-2011
TIME PLOTTED => 06:18

BORDER LAST REVISED 4/11/2008
RELATIVE BORDER SCALE IS IN INCHES 0 1 2 3
USERNAME => s121614
DGN FILE => a34042ka005.add
CU 06228
EA 340421

Dist	COUNTY	ROUTE	POST MILES TOTAL PROJECT	SHEET No.	TOTAL SHEETS
10	Tuo	108	R4.0/R6.0	104	237

REGISTERED CIVIL ENGINEER 01-07-10 DATE

5-10-10
PLANS APPROVAL DATE

REGISTERED PROFESSIONAL ENGINEER KAL H. DAHER No. C44510 Exp. 3-31-10 CIVIL STATE OF CALIFORNIA

THE STATE OF CALIFORNIA OR ITS OFFICERS OR AGENTS SHALL NOT BE RESPONSIBLE FOR THE ACCURACY OR COMPLETENESS OF SCANNED COPIES OF THIS PLAN SHEET.

NOTE: FOR ACCURATE RIGHT OF WAY AND ACCESS DATA, CONTACT RIGHT OF WAY ENGINEERING AT THE DISTRICT OFFICE

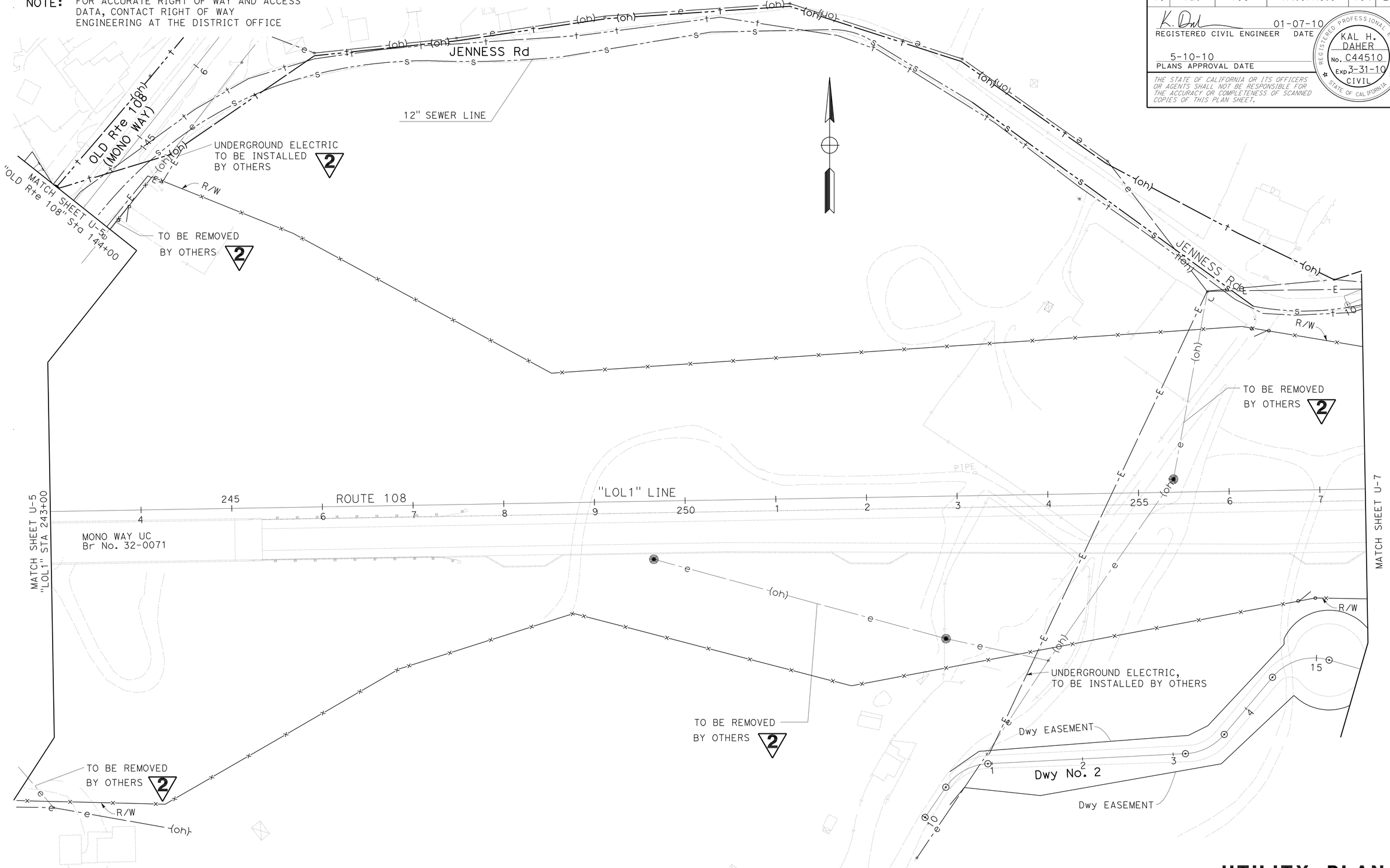

THIS PLAN ACCURATE FOR UTILITIES

2 **REVISED PER ADDENDUM No. 2 DATED NOVEMBER 3, 2011**

UTILITY PLAN U-6

SCALE: 1" = 50'

STATE OF CALIFORNIA - DEPARTMENT OF TRANSPORTATION
Caltrans 06-DESIGN

FUNCTIONAL SUPERVISOR: TERRY OGLE
CALCULATED-DESIGNED BY: JORGE AGUILERA
CHECKED BY: KAL DAHER
REVISED BY / DATE REVISED

LAST REVISION 01-07-10 | DATE PLOTTED => 02-NOV-2011 | TIME PLOTTED => 06:18

BORDER LAST REVISED 4/11/2008 | RELATIVE BORDER SCALE IS IN INCHES 0 1 2 3 | USERNAME => s121614 | DGN FILE => a34042ka006.add | CU 06228 | EA 340421

Dist	COUNTY	ROUTE	POST MILES TOTAL PROJECT	SHEET No.	TOTAL SHEETS
10	Tuo	108	R4.0/R6.0	105	237

REGISTERED CIVIL ENGINEER 01-07-10 DATE

5-10-10
PLANS APPROVAL DATE

REGISTERED PROFESSIONAL ENGINEER KAL H. DAHER No. C44510 Exp. 3-31-10 CIVIL STATE OF CALIFORNIA

THE STATE OF CALIFORNIA OR ITS OFFICERS OR AGENTS SHALL NOT BE RESPONSIBLE FOR THE ACCURACY OR COMPLETENESS OF SCANNED COPIES OF THIS PLAN SHEET.

NOTE: FOR ACCURATE RIGHT OF WAY AND ACCESS DATA, CONTACT RIGHT OF WAY ENGINEERING AT THE DISTRICT OFFICE

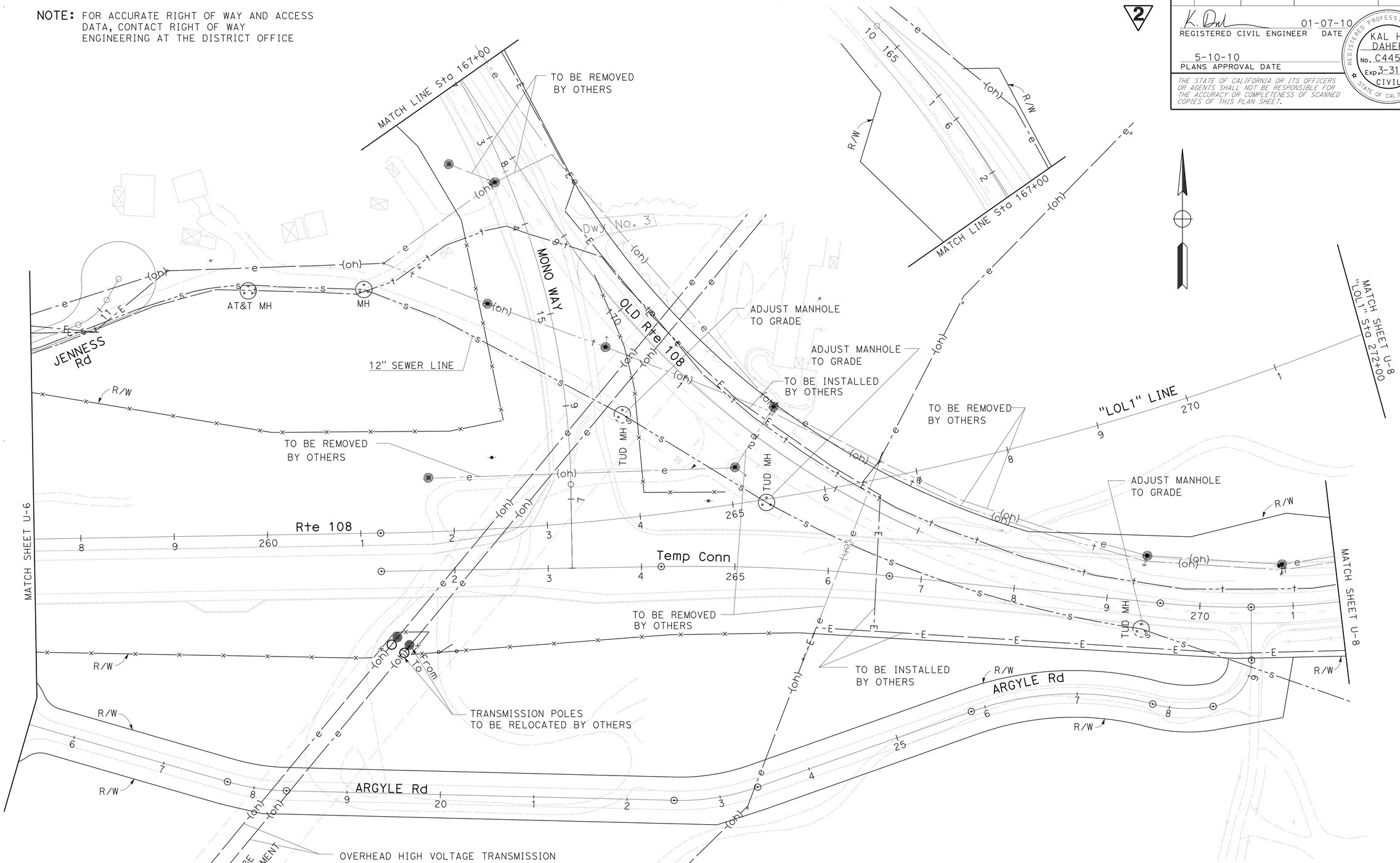

THIS PLAN ACCURATE FOR UTILITIES ONLY

2 **REVISED PER ADDENDUM No. 2 DATED NOVEMBER 3, 2011**

UTILITY PLAN U-7

SCALE: 1" = 50'

STATE OF CALIFORNIA - DEPARTMENT OF TRANSPORTATION
Caltrans
06-DESIGN

FUNCTIONAL SUPERVISOR: TERRY OGLE
CALCULATED-DESIGNED BY: JORGE AGUILERA
CHECKED BY: KAL DAHER
REVISED BY
DATE REVISED

LAST REVISION 01-07-10
DATE PLOTTED => 02-NOV-2011
TIME PLOTTED => 06:19

Dist	COUNTY	ROUTE	POST MILES TOTAL PROJECT	SHEET No.	TOTAL SHEETS
10	Tuo	108	R4.0/R6.0	106	237

REGISTERED CIVIL ENGINEER 01-07-10 DATE

5-10-10
PLANS APPROVAL DATE

REGISTERED PROFESSIONAL ENGINEER KAL H. DAHER No. C44510 Exp. 3-31-10 CIVIL STATE OF CALIFORNIA

THE STATE OF CALIFORNIA OR ITS OFFICERS OR AGENTS SHALL NOT BE RESPONSIBLE FOR THE ACCURACY OR COMPLETENESS OF SCANNED COPIES OF THIS PLAN SHEET.

NOTE: FOR ACCURATE RIGHT OF WAY AND ACCESS DATA, CONTACT RIGHT OF WAY ENGINEERING AT THE DISTRICT OFFICE

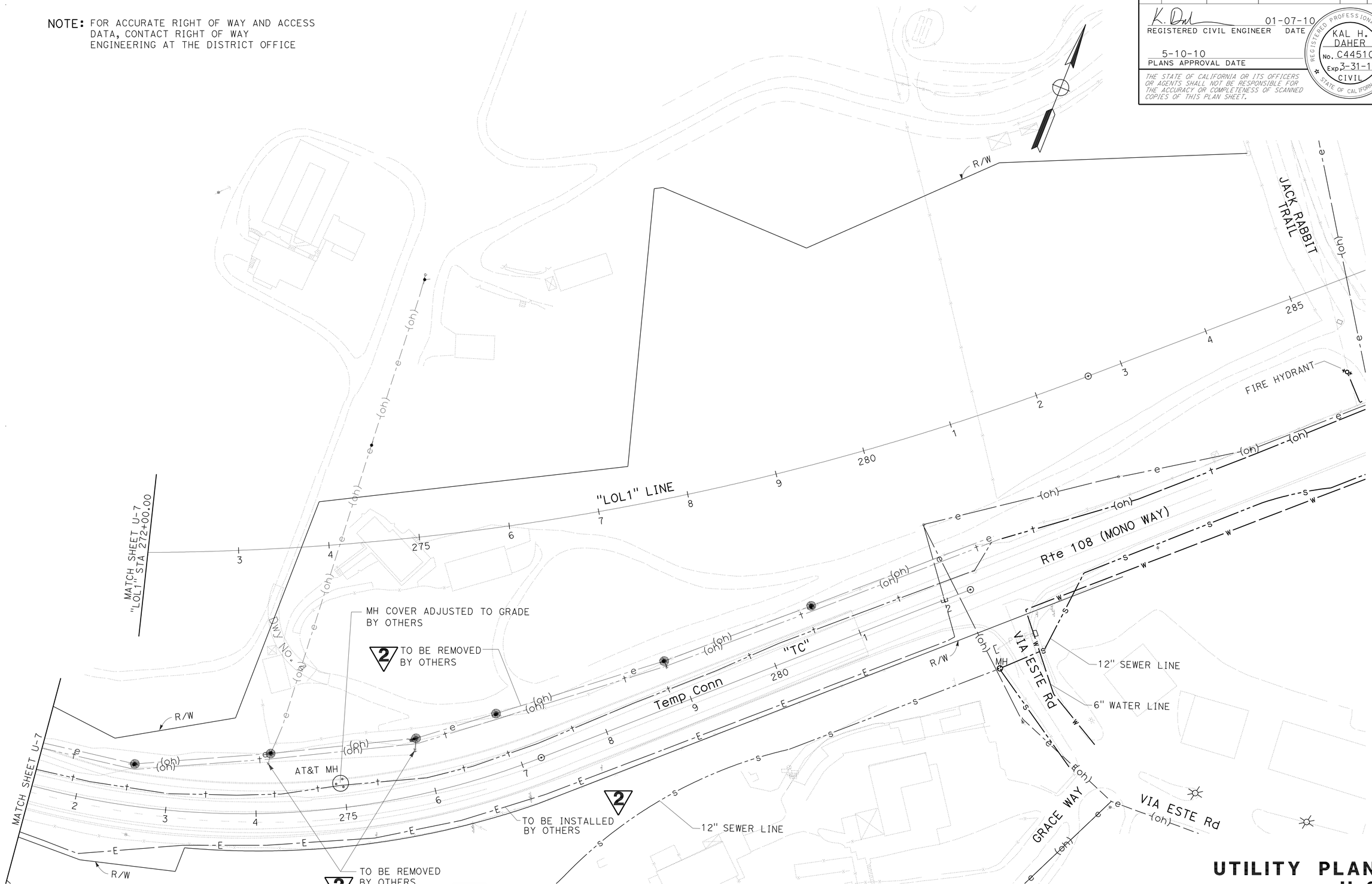

THIS PLAN ACCURATE FOR UTILITIES ONLY

2 REVISED PER ADDENDUM No. 2 DATED NOVEMBER 3, 2011

SCALE: 1" = 50'

UTILITY PLAN U-8

STATE OF CALIFORNIA - DEPARTMENT OF TRANSPORTATION
Caltrans 06-DESIGN

FUNCTIONAL SUPERVISOR: TERRY OGLE
CALCULATED-DESIGNED BY: JORGE AGUILERA
CHECKED BY: KAL DAHER
REVISED BY / DATE REVISED

LAST REVISION 01-07-10
DATE PLOTTED => 02-NOV-2011
TIME PLOTTED => 06:19

Dist	COUNTY	ROUTE	POST MILES TOTAL PROJECT	SHEET No.	TOTAL SHEETS
10	Tuo	108	R4.0/R6.0	124	237

K. Daher 01-11-10
REGISTERED CIVIL ENGINEER DATE

5-10-10
PLANS APPROVAL DATE

REGISTERED PROFESSIONAL ENGINEER KAL H. DAHER No. C44510 Exp. 3-31-10 CIVIL STATE OF CALIFORNIA

THE STATE OF CALIFORNIA OR ITS OFFICERS OR AGENTS SHALL NOT BE RESPONSIBLE FOR THE ACCURACY OR COMPLETENESS OF SCANNED COPIES OF THIS PLAN SHEET.

2

NOTE: EARTHWORK QUANTITIES INCLUDE EMBANKMENT AT BRIDGE ABUTMENTS.

ROADWAY QUANTITIES

LOCATION		HMA	CLASS 2 AGGREGATE BASE	COLD PLANE AC PAVEMENT	TACK COAT
		TON	CY	SQYD	TON
Rte 108 "LOL1" LINE	182+82.00 TO 261+21.19	12,140	7,399		34
Temp CONNECTION	261+21.19 TO 281+00.00	3,543	2,187		2
Temp CONNECTION	269+50.00 TO 281+00.00	486		4802	12
"L" LINE	90+00.00 TO 108+35.00	2,331	1,497		9
PEACEFUL OAK Rd	22+60.00 TO 38+67.75	1,070	1,004		5
PEACEFUL OAK Rd	25+13.85 TO 29+23.42	37			
FRONTAGE Rd	10+12.00 TO 20+06.00	645	455		5
WAIF MINE Rd	10+00.00 TO 11+02.19	33	32		0.1
CHRISTIE MAY Ln	10+00.00 TO 13+70.45	214	151		2
SEABORN Rd	10+00.00 TO 12+80.00	159	112		2
MONO WAY	10+00.00 TO 17+44.00	1,698	1,593		6
MONO WAY (DETOUR)		399			1
ARGYLE Rd	14+62.00 TO 29+50.00	910	642		8
HMA DIKE		531			1
HIGH SIDE SUPER GUTTER (HSSG)		61			0.2
FROM MBGR QUANTITIES TABLE		150			0.5
DRIVEWAY No. 1			118		0.7
DRIVEWAY No. 2		102	100		1.5
DRIVEWAY No. 3			35		
DRIVEWAY No. 4		25	25		0.3
JENNESS ROAD CUL-DE-SAC		111	109		1.6
MAINTENANCE VEHICLE PULLOUT		106	104		0.3
SERVICE ROAD (DRAINAGE BASIN)			230		
TOTAL		24,751	15,793	4802	92.2

EARTHWORK SUMMARY

LOCATION		ROADWAY EXCAVATION	ROCK EXCAVATION (CONTROLLED BLASTING)	EMBANKMENT (N)
		CY	CY	CY
Rte 108 "LOL1" LINE	182+82.00 TO 208+00.00	4,941		96,590
Rte 108 "LOL1" LINE	208+78.00 TO 224+00.00		485,717	36,481
Rte 108 "LOL1" LINE	224+00.00 TO 238+45.00	15,942		197,332
Rte 108 "LOL1" LINE	243+26.00 TO 248+00.00	862		119,367
Rte 108 "LOL1" LINE	248+00.00 TO 261+21.19	14,599		118,884
Temp CONNECTION	261+21.19 TO 281+00.00	16,269		4,691
RAMP L - "L" LINE	95+50.00 TO 108+23.26	16,415		14,064
RAMP E - "E" LINE	112+30.17 TO 115+72.83	120		
BASIN			31,563	120
PEACEFUL OAK Rd	22+60.00 TO 38+67.75	2,759		1,056
SEABORN Rd	10+10.00 TO 12+80.00	513		4
FRONTAGE Rd	10+12.00 TO 20+06.00	1,849		20,204
WAIF MINE Rd	10+12.00 TO 11+02.19			950
CHRISTIE MAY Ln	10+00.00 TO 12+76.35	434		19
MONO WAY	10+00.00 TO 17+36.00	1,269		16,130
ARGYLE Rd	14+62.30 TO 29+49.18	1,742		583
DRIVEWAY 1	10+00.00 TO 16+64.13	667		1,639
DRIVEWAY 2	10+50.00 TO 14+62.30	833		153
DRIVEWAY 3				184
DRIVEWAY 4		12		32
LOCAL BORROW (227+50 TO 230+50 Lt "LOL1" LINE)		27,000		
LOCAL BORROW (228+00 TO 229+50 Rt "LOL1" LINE)		1,600		
TOTAL		107,826	517,280	628,483

ADDITIONAL EXCAVATED MATERIAL AVAILABLE FOR EMBANKMENT (N)

TYPE	CY
STRUCTURE EXCAVATION (CULVERTS)	939
STRUCTURE EXCAVATION (BRIDGE)	900
ROCK SLOPE PROTECTION	7,468
TOTAL	9,307

TEMPORARY FENCE (TYPE ESA)

SHEET	Beg STA	END STA	Temp FENCE (TYPE ESA)
			LF
L-7	158.3' Lt 252+00.00 "LOL"	178.0' Lt 256+25.00 "LOL"	425.5
	174.0' Lt 256+47.00 "LOL"	164.0' Lt 257+00.00 "LOL"	56.5
TOTAL			482.0

2 **REVISED PER ADDENDUM No. 2 DATED NOVEMBER 3, 2011**

(N) NOT A SEPARATE PAY ITEM, FOR INFORMATION ONLY.

SUMMARY OF QUANTITIES
Q-1

REVISED BY | DATE REVISED
LILIANA BRASALI | KAL DAHER
CALCULATED-DESIGNED BY | CHECKED BY
FUNCTIONAL SUPERVISOR | TERRY OGLE
STATE OF CALIFORNIA - DEPARTMENT OF TRANSPORTATION
Caltrans
06-DESIGN

LAST REVISION 01-11-10 | DATE PLOTTED => 02-NOV-2011 | TIME PLOTTED => 06:19

Dist	COUNTY	ROUTE	POST MILES TOTAL PROJECT	SHEET No.	TOTAL SHEETS
10	Tuo	108	R4.0/R6.0	127	237

REGISTERED CIVIL ENGINEER 01-11-10 DATE

5-10-10
PLANS APPROVAL DATE

REGISTERED PROFESSIONAL ENGINEER KAL H. DAHER No. C44510 Exp. 3-31-10 CIVIL STATE OF CALIFORNIA

THE STATE OF CALIFORNIA OR ITS OFFICERS OR AGENTS SHALL NOT BE RESPONSIBLE FOR THE ACCURACY OR COMPLETENESS OF SCANNED COPIES OF THIS PLAN SHEET.

GUTTER TABLE 2

SHEET No.	LOCATION (SHEET No.)	GUTTER No.	RSP (LIGHT, METHOD B) CY	RSP FABRIC SQYD	WIDTH (W) LF	LENGTH LF	DEPTH (D) LF	DESCRIPTION
L-2	STA 97+00 TO STA 103+65 "L"	D1				665	3.0	V-GUTTER (UN-LINED)
L-2	STA 30+59 TO STA 31+15 "POR"	D2	127	196	4.0	60	3.5	TRAPEZOIDAL GUTTER
L-3, 5	STA 211+50 TO STA 223+62 "LOL1"	D3		1,334		1212	1.0	BENCH V-GUTTER
L-5	STA 223+62 TO STA 225+08 "LOL1"	D4	321 *	487	4.0	146	3.5	TRAPEZOIDAL GUTTER
L-5	STA 223+30 TO STA 227+90 "LOL1"	D5	1233 *	1,853	4.0	557	3.5	TRAPEZOIDAL GUTTER
L-5, 6	STA 229+72 TO STA 237+55 "LOL1"	D6	1789 *	2,657	4.0	779	3.5	TRAPEZOIDAL GUTTER
L-6	STA 236+00 "LOL1"	D7	282	435	4.0	133	3.5	TRAPEZOIDAL GUTTER
L-6, 7	STA 242+15 "LOL1"	D8	1629	2,419	8.0	655	3.5	TRAPEZOIDAL GUTTER
L-6, 7	STA 242+27 "LOL1"	D8a	411	634	4.0	194	3.5	TRAPEZOIDAL GUTTER
L-7	STA 242+87 TO STA 251+68 "LOL1"	D9	2028 *	3,077	4.0	942	3.5	TRAPEZOIDAL GUTTER
L-7	STA 251+68 TO STA 256+50 "LOL1"	D10	497	1,238		504	4.0	V-GUTTER (LINED)
L-7	STA 256+10 TO STA 256+70 "LOL1"	D11	34	114		93	1.5	V-GUTTER (LINED)
L-7, 8	STA 253+65 TO STA 259+23 "LOL1"	D12	566	1,410		574	4.0	V-GUTTER (LINED)
L-8	STA 12+50 TO STA 15+50 MONO WAY	D13				300	2.0	V-GUTTER (UN-LINED)
L-8	STA 266+75 TO STA 267+18 "TC"	D14	30	102		119	1.5	V-GUTTER (LINED)
FROM DRAINAGE QUANTITIES			198	570				
TOTAL			9145	16,526				

* QUANTITY INCLUDES CHECK DAMS

HIGH SIDE SUPER GUTTER

LAYOUT SHEET No.	LOCATION	Lt/Rt	HMA TON
L-4	103+65.00 TO 107+85.00 "L" LINE	Lt	18.9
L-3, L-5	215+98.00 TO 223+38.00 "LOL1" LINE	Rt	33.3
L-6	18+25.33 TO 20+02.00 FRONTAGE Rd	Rt	8.0
TOTAL			60.2 **

**INCLUDED IN ROADWAY QUANTITIES

RELOCATE MAILBOX

LOCATION				
SHEET	FROM	SHEET	TO	EACH
L-6	OLD Hwy 108 Sta 121+30 26' Lt	L-6	OLD Hwy 108 Sta 142+90 23' Lt	1
L-6	OLD Hwy 108 Sta 143+25 23' Lt	L-6	OLD Hwy 108 Sta 142+90 23' Lt	7
L-7	"LOL1" Sta 244+01 361' Lt (Exist JENNESS Rd)	L-7	DRIVEWAY 2 Sta 14+62 12' Lt	3
L-8	"LOL1" Sta 267+71 80' Rt	L-9	"LOL1" Sta 285+41 40' Rt	1
			Total	12

TOP OF CUT GUTTER

LAYOUT SHEET No.	DITCH No.	LOCATION	Lt/Rt	(N) DEPTH LF	(N) LENGTH LF
L-3, L-5	TOCG 1	210+95.00 TO 223+68.00 "LOL1" LINE	Lt	2.0	1273.0
L-5	TOCG 2	227+00.00 TO 230+50.00 "LOL1" LINE	Lt	2.0	350.0
L-6	TOCG 3	15+00.00 TO 20+00.00 FRONTAGE Rd	Lt	2.0	500.0
L-7	TOCG 4	10+50.00 TO 14+62.00 DRIVEWAY 2	Rt	1.0	412.0
L-7, L-8	TOCG 5	14+62.00 TO 20+64.00 ARGYLE Rd	Rt	1.0	602.0
L-7, L-8	TOCG 6	256+50.00 TO 261+21.19 "LOL1" LINE	Rt	2.0	521.2
L-8	TOCG 7	261+21.19 TO 269+00.00 Temp Conn	Rt	2.0	778.8
L-8, L-9	TOCG 8	269+00.00 TO 276+00.00 Temp Conn	Lt	2.0	700.0

(N) NOT A SEPARATE PAY ITEM, FOR INFORMATION ONLY

ADJUST MANHOLE TO GRADE

SHEET	LOCATION	EA
U-7	16+15.00 59.3' Lt MONO Wy	1
	265+31.37 69.8' Lt Temp Conn	1
	269+39.70 29.51' Rt Temp Conn	1
	TOTAL	3

2 REVISED PER ADDENDUM No. 2 DATED NOVEMBER 3, 2011

SUMMARY OF QUANTITIES
Q-4

STATE OF CALIFORNIA - DEPARTMENT OF TRANSPORTATION
Caltrans 06-DESIGN
FUNCTIONAL SUPERVISOR TERRY OGLE
CALCULATED-DESIGNED BY KAL DAHER
CHECKED BY
REVISED BY
DATE REVISED
LILIANA BRASALI

LAST REVISION 01-11-10
DATE PLOTTED => 02-NOV-2011
TIME PLOTTED => 06:19

DIST	COUNTY	ROUTE	POST MILES TOTAL PROJECT	SHEET NO.	TOTAL SHEETS
10	Tuo	108	R4.0/R6.0	158A	237

REGISTERED CIVIL ENGINEER

June 5, 2009
PLANS APPROVAL DATE

REGISTERED PROFESSIONAL ENGINEER Glenn DeCou No. C34547 Exp. 9-30-09 CIVIL STATE OF CALIFORNIA

The State of California or its officers or agents shall not be responsible for the accuracy or completeness of electronic copies of this plan sheet.

2

To accompany plans dated 5-10-10

NOTES:

1. Offset to be 2'-0" at monument locations, measured at right angles to R/W lines. Taper to achieve offset to be at least 20'-0" long.
2. Line post spacing for wood post equals 12'-0" maximum. Line post spacing for metal post equals 10'-0" maximum.
3. See Standard Plan A86 for Barbed Wire and Wire Mesh dimensions and for steel post and wood post dimensions and weight.
4. Use wood posts when specified in the Special Provisions or shown on the Project Plans.

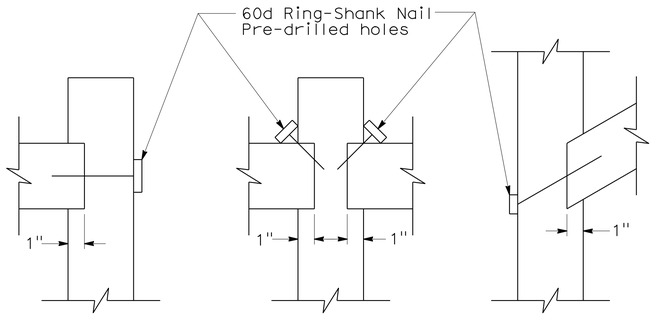

WOOD MORTISE DETAIL

See Note 4

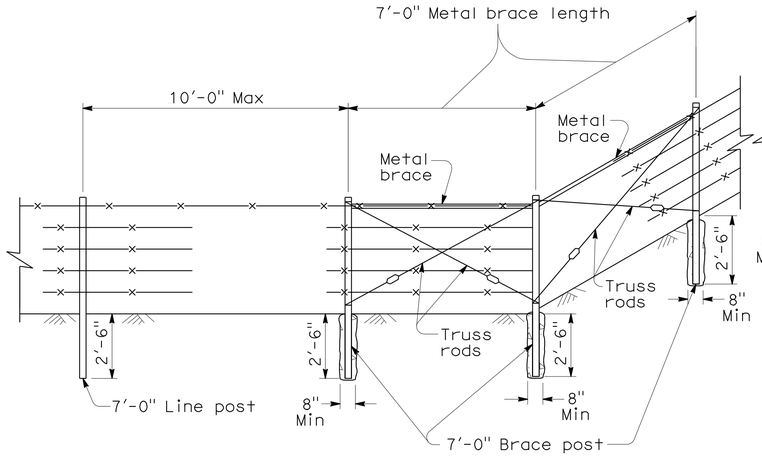

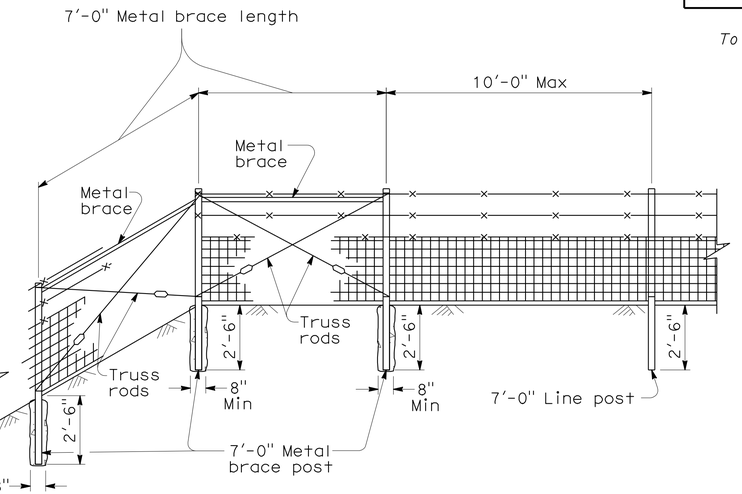

METAL POST

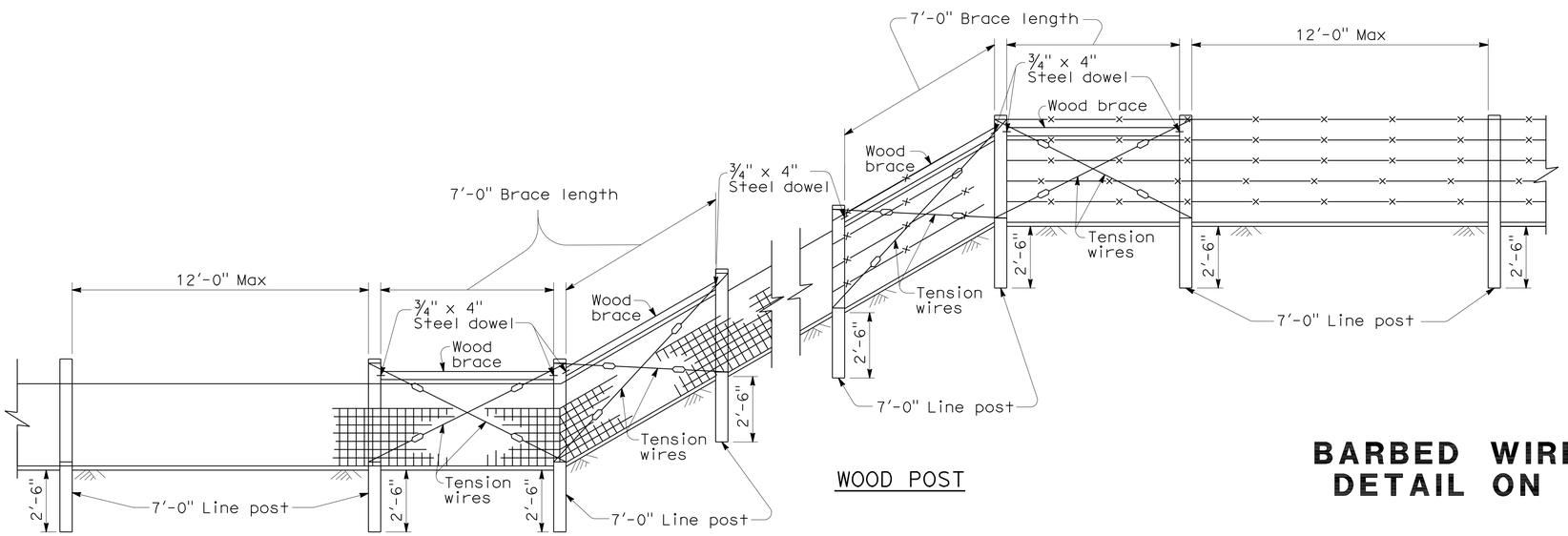

WOOD POST

FENCE ON SHARP BREAK IN GRADE

LEGEND

Wire Mesh fencing

Barbed Wire fencing

STATE OF CALIFORNIA
DEPARTMENT OF TRANSPORTATION

BARBED WIRE AND WIRE MESH FENCE DETAIL ON SHARP BREAK IN GRADE

NO SCALE

NSP A86A DATED JUNE 5, 2009 SUPPLEMENTS THE STANDARD PLANS BOOK DATED MAY 2006.

2 ADDED PER ADDENDUM No. 2 DATED NOVEMBER 3, 2011

NEW STANDARD PLAN NSP A86A

2006 NEW STANDARD PLAN NSP A86A

5-12-09

DIST	COUNTY	ROUTE	POST MILES TOTAL PROJECT	SHEET NO.	TOTAL SHEETS
10	Tuo	108	R4.0/R6.0	158B	237

REGISTERED CIVIL ENGINEER

June 5, 2009
PLANS APPROVAL DATE

REGISTERED PROFESSIONAL ENGINEER Glenn DeCou No. C34547 Exp. 9-30-09 CIVIL STATE OF CALIFORNIA

The State of California or its officers or agents shall not be responsible for the accuracy or completeness of electronic copies of this plan sheet.

2

To accompany plans dated 5-10-10

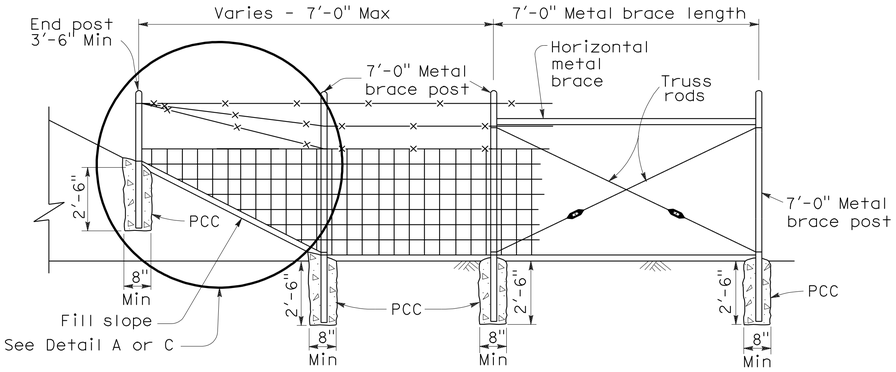

METAL POST

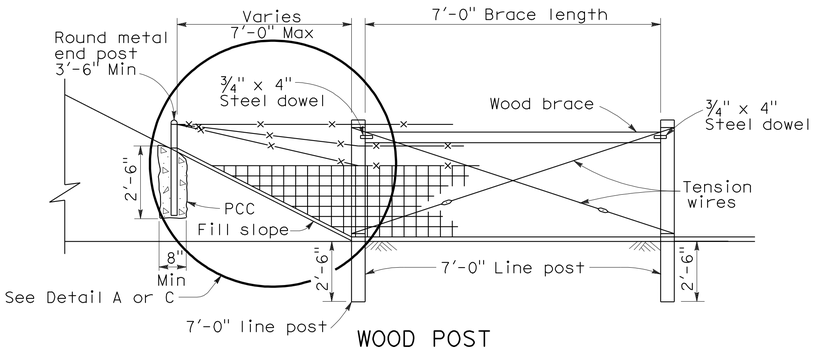

WOOD POST

METHOD OF ERECTING FENCE FOR FILL SLOPE

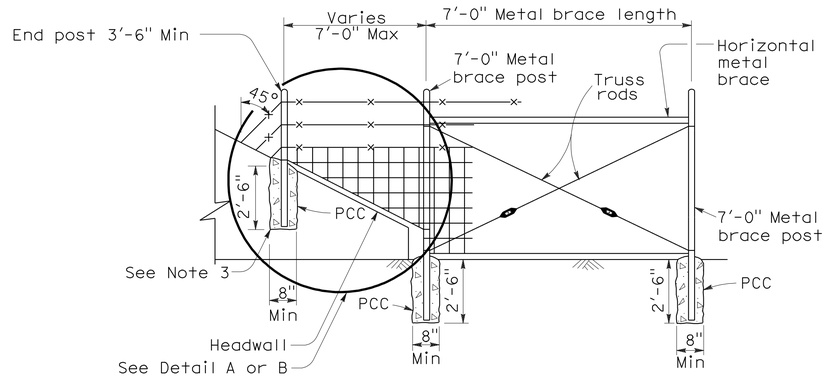

METAL POST

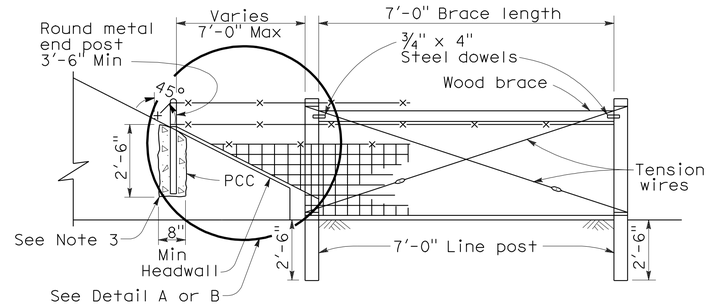

WOOD POST

METHOD OF TYING FENCE TO HEADWALL

NOTES:

1. Wire Mesh fencing shown, can also use Barbed Wire fencing.
2. See Standard Plan A86 for Wire Mesh and Barbed Wire fence dimensions.
3. See Standard Plan B11-7 Alternative Anchorage Detail for connection at headwall. Round metal post to be used for all fence types.

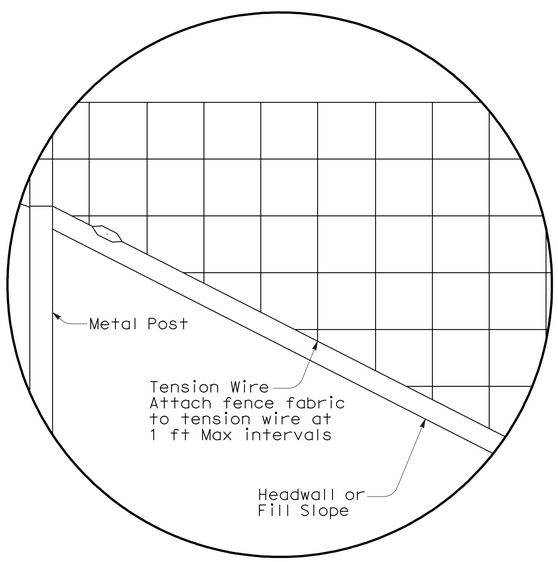

DETAIL A

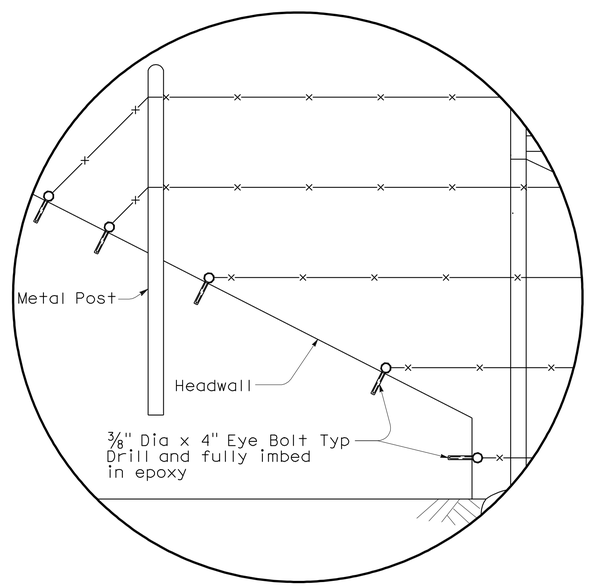

DETAIL B

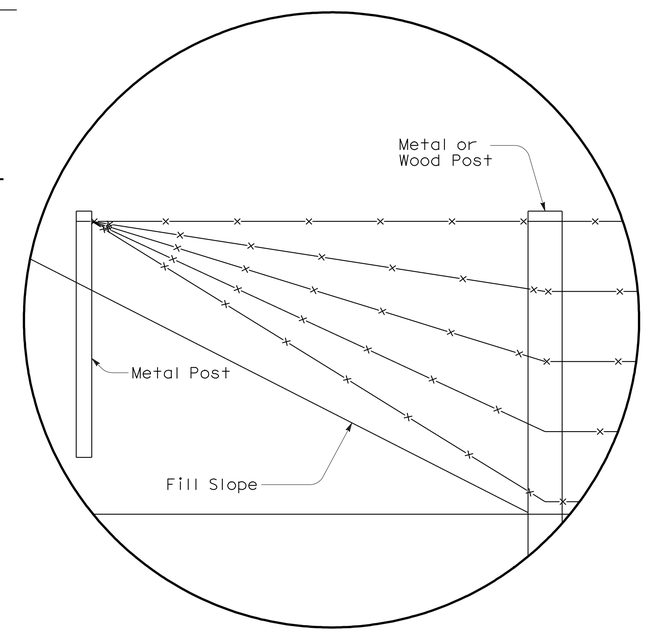

DETAIL C

STATE OF CALIFORNIA
DEPARTMENT OF TRANSPORTATION

BARBED WIRE AND WIRE MESH FENCE DETAILS

NSP A86B DATED JUNE 5, 2009 SUPPLEMENTS THE STANDARD PLANS BOOK DATED MAY 2006.

2 **ADDED PER ADDENDUM No. 2 DATED NOVEMBER 3, 2011**

NEW STANDARD PLAN NSP A86B

2006 NEW STANDARD PLAN NSP A86B

5-12-09

DIST	COUNTY	ROUTE	POST MILES TOTAL PROJECT	SHEET NO.	TOTAL SHEETS
10	Tuo	108	R4.0/R6.0	158C	237

REGISTERED CIVIL ENGINEER

June 5, 2009
PLANS APPROVAL DATE

REGISTERED PROFESSIONAL ENGINEER Glenn DeCou No. C34547 Exp. 9-30-09 CIVIL STATE OF CALIFORNIA

The State of California or its officers or agents shall not be responsible for the accuracy or completeness of electronic copies of this plan sheet.

2

To accompany plans dated 5-10-10

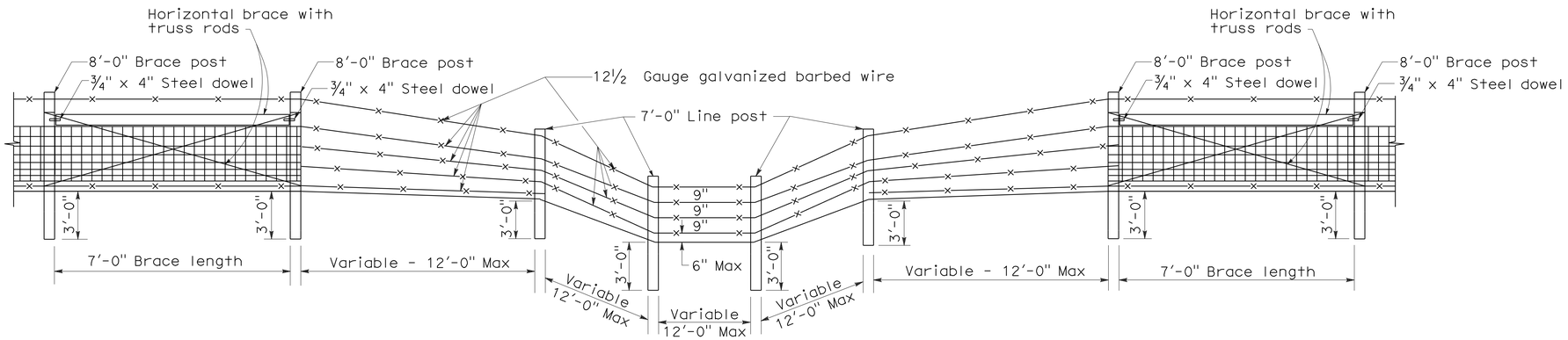

TYPE I

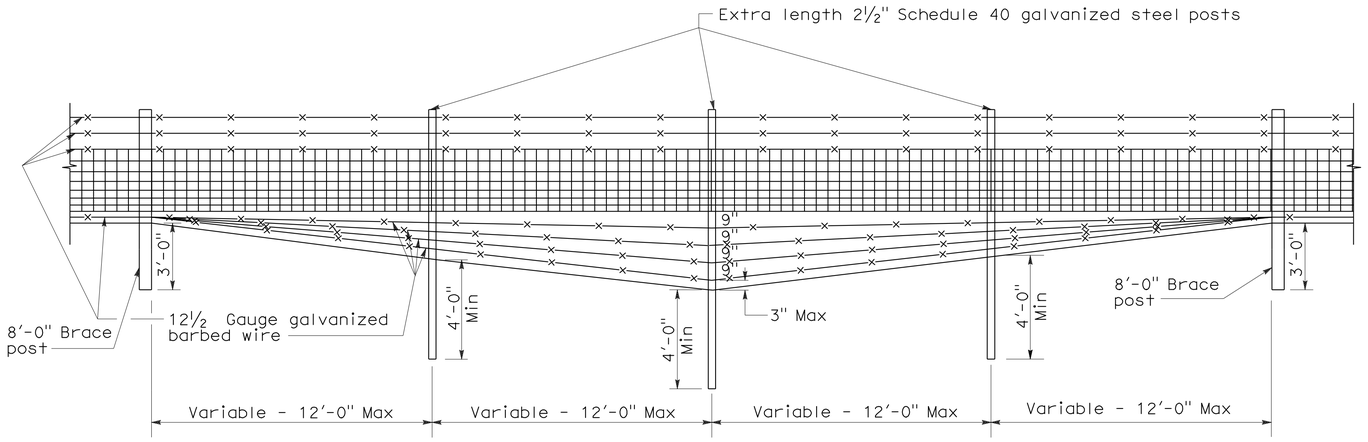

TYPE II

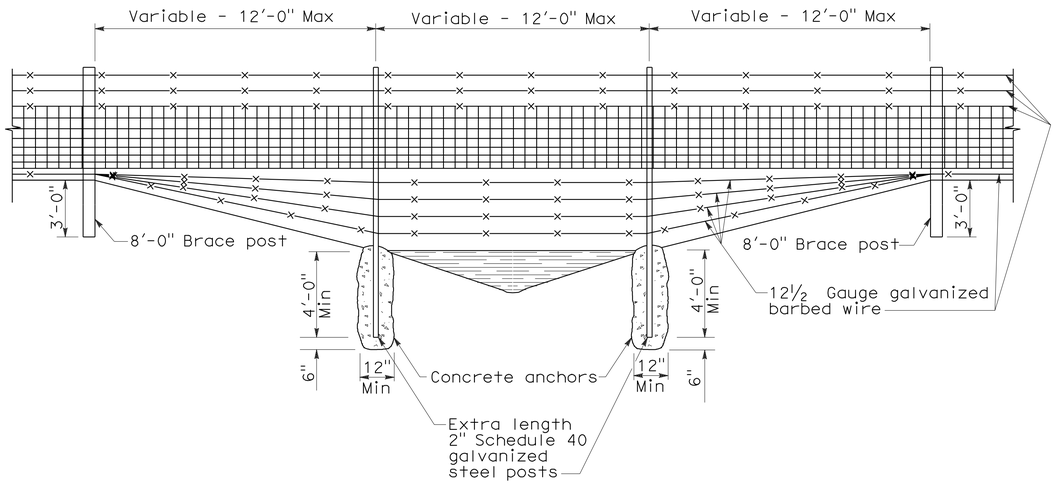

TYPE III

DITCH CROSSINGS

NOTES:

1. Type I Ditch Crossing shows wood posts. Steel posts may be used in place of wood.
2. Ditch crossing show Wire Mesh fencing. Barbed Wire fencing may be used in place of Wire Mesh.
3. See Standard Plan A86 for Wire Mesh and Barbed Wire fence dimensions.
4. See Standard Plan A86 for steel post installation.

STATE OF CALIFORNIA
DEPARTMENT OF TRANSPORTATION

BARBED WIRE AND WIRE MESH FENCE DETAILS AT DITCH CROSSING

NO SCALE

NSP A86C DATED JUNE 5, 2009 SUPPLEMENTS THE STANDARD PLANS BOOK DATED MAY 2006.

NEW STANDARD PLAN NSP A86C

2 **ADDED PER ADDENDUM No. 2 DATED NOVEMBER 3, 2011**

2006 NEW STANDARD PLAN NSP A86C

5-12-09