Dist	COUNTY	ROUTE	POST MILES TOTAL PROJECT	SHEET No.	TOTAL SHEETS
10	SJ	120	R0.8	1	16

INDEX OF PLANS

SHEET No.	DESCRIPTION
1	TITLE AND LOCATION MAP
2	LAYOUT AND SUMMARY OF QUANTITIES
3	CONSTRUCTION AREA SIGNS
4	TRAFFIC HANDLING PLAN AND DETAILS
5	PAVEMENT DELINEATION PLAN AND QUANTITIES
6-7	REVISED STANDARD PLANS

STRUCTURE PLANS

8-16	W ROUTE 120-120-N ROUTE 5 Conn OH

THE STANDARD PLANS LIST APPLICABLE TO THIS CONTRACT IS INCLUDED IN THE NOTICE TO BIDDERS AND SPECIAL PROVISIONS BOOK.

STATE OF CALIFORNIA

DEPARTMENT OF TRANSPORTATION

PROJECT PLANS FOR CONSTRUCTION ON

STATE HIGHWAY

IN SAN JOAQUIN COUNTY
IN LATHROP
AT WEST ROUTE 120 - NORTH ROUTE 5 CONNECTOR OVERHEAD

TO BE SUPPLEMENTED BY STANDARD PLANS DATED 2010

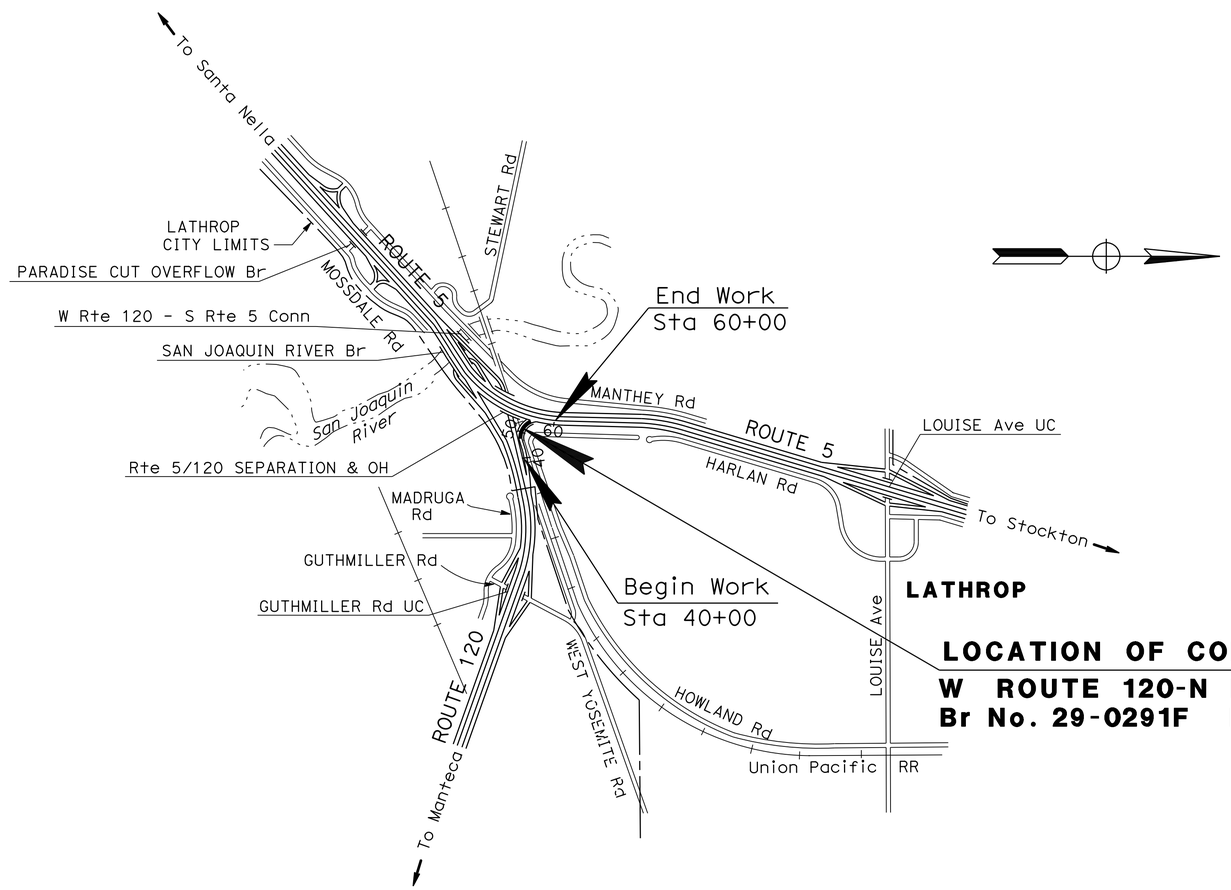

LOCATION OF CONSTRUCTION

W ROUTE 120-N ROUTE 5 CONNECTOR OH
Br No. 29-0291F PM R0.8

LOCATION MAP

Patricia L. Teczon 1/6/14
PROJECT ENGINEER DATE
REGISTERED CIVIL ENGINEER

January 6, 2014
PLANS APPROVAL DATE

THE STATE OF CALIFORNIA OR ITS OFFICERS OR AGENTS SHALL NOT BE RESPONSIBLE FOR THE ACCURACY OR COMPLETENESS OF SCANNED COPIES OF THIS PLAN SHEET.

REGISTERED PROFESSIONAL ENGINEER
Patricia Teczon
No. 37294
Exp. 6/30/14
CIVIL
STATE OF CALIFORNIA

PROJECT MANAGER: KERRY MORGAN
DESIGN ENGINEER: CAROLINE REYES

THE CONTRACTOR SHALL POSSESS THE CLASS (OR CLASSES) OF LICENSE AS SPECIFIED IN THE "NOTICE TO BIDDERS."

NO SCALE

CONTRACT No.	10-1C0104
PROJECT ID	1014000059

LAST REVISION 00-00-00
DATE PLOTTED => 07-JAN-2014
TIME PLOTTED => 09:14

Dist	COUNTY	ROUTE	POST MILES TOTAL PROJECT	SHEET No.	TOTAL SHEETS
10	SJ	120	R0.8	2	16

Patricia L. Teczon 1/6/14
REGISTERED CIVIL ENGINEER DATE

01-06-14
PLANS APPROVAL DATE

REGISTERED PROFESSIONAL ENGINEER Patricia Teczon No. 37294 Exp 6/30/14 CIVIL STATE OF CALIFORNIA

THE STATE OF CALIFORNIA OR ITS OFFICERS OR AGENTS SHALL NOT BE RESPONSIBLE FOR THE ACCURACY OR COMPLETENESS OF SCANNED COPIES OF THIS PLAN SHEET.

NOTE:

FOR ACCURATE RIGHT OF WAY DATA, CONTACT RIGHT OF WAY ENGINEERING AT THE DISTRICT OFFICE.

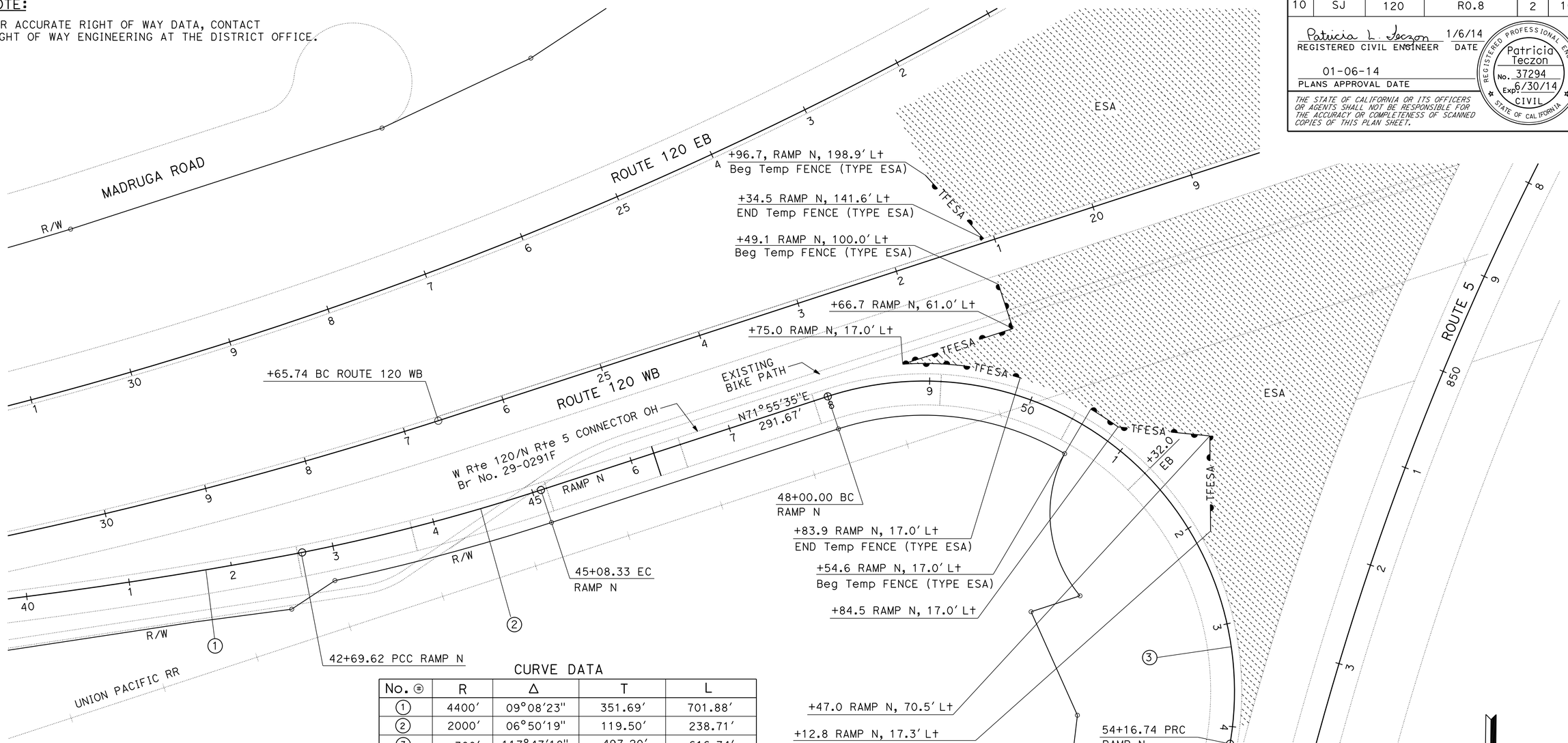

CURVE DATA

No. ⊕	R	Δ	T	L
1	4400'	09°08'23"	351.69'	701.88'
2	2000'	06°50'19"	119.50'	238.71'
3	300'	117°47'18"	497.20'	616.74'
4	4829'	06°55'04"	291.86'	583.02'

TRAFFIC MANAGEMENT SYSTEM ELEMENT (EXISTING)

PM	SIDE	LOCATION	TYPE	DESCRIPTION
R0.49	WB	NORTH OF SB ROUTE 5 JUNCTION	TMS	TRAFFIC MONITORING STATION
R0.49	WB	ROUTE 5 JUNCTION	RWIS	ROADSIDE WEATHER INFORMATION SYSTEM
R0.54		WEST OF NB ROUTE 5 JUNCTION	TMS	TRAFFIC MONITORING STATION
R0.59	EB	EAST OF ROUTE 5	CCTV	CLOSED CIRCUIT TELEVISION CAMERA
R0.59	WB	EAST OF ROUTE 5	CMS	CHANGEABLE MESSAGE SIGN
R0.92	WB	EAST OF NB ROUTE 5 JUNCTION	TMS	TRAFFIC MONITORING STATION
R1.27	WB	WEST OF GUTHMILLER ROAD UC	TMS	TRAFFIC MONITORING STATION
R1.27	WB	ON-RAMP TO YOSEMITE Ave	TMS	TRAFFIC MONITORING STATION
R1.27	EB	OFF-RAMP TO YOSEMITE Ave	TMS	TRAFFIC MONITORING STATION

NOTE: TRAFFIC MANAGEMENT SYSTEM ELEMENT LOCATIONS ARE APPROXIMATE.

TEMPORARY FENCE (TYPE ESA)

LOCATION STATION TO STATION	LF
48+96.7 TO 49+34.5	83
48+75 TO 49+83.9	272
50+54.6 TO 52+12.8	213
TOTAL	568

LAYOUT AND SUMMARY OF QUANTITIES

SCALE: 1" = 50'

L-1

REVISED BY	DATE REVISED
PT	11/07/13

INGRID STEWART — PATRICIA TECZON — CALCULATED-DESIGNED BY — CHECKED BY

CAROLINE REYES — FUNCTIONAL SUPERVISOR

STATE OF CALIFORNIA - DEPARTMENT OF TRANSPORTATION — DESIGN — Caltrans

LAST REVISION 00-00-00 — DATE PLOTTED => 09-JAN-2014 — TIME PLOTTED => 09:21

Dist	COUNTY	ROUTE	POST MILES TOTAL PROJECT	SHEET No.	TOTAL SHEETS
10	SJ	120	R0.8	3	16

REGISTERED CIVIL ENGINEER 1/6/14 DATE

01-06-14
PLANS APPROVAL DATE

REGISTERED PROFESSIONAL ENGINEER HUE NGUYEN No. 74484 Exp 12/31/15 CIVIL STATE OF CALIFORNIA

THE STATE OF CALIFORNIA OR ITS OFFICERS OR AGENTS SHALL NOT BE RESPONSIBLE FOR THE ACCURACY OR COMPLETENESS OF SCANNED COPIES OF THIS PLAN SHEET.

STATIONARY MOUNTED CONSTRUCTION AREA SIGNS

SIGN	SIGN CODE FEDERAL	PANEL SIZE	POST No. POST SIZE	SIGN MESSAGE	No. OF SIGNS
A	W20-1	48" x 48"	1 - 4" x 6"	ROAD WORK AHEAD	1
B	G20-2	36" x 18"	1 - 4" x 4"	END ROAD WORK	1

NOTES:
1. EXACT SIGN LOCATIONS TO BE DETERMINED BY THE ENGINEER.
2. FOR ADDITIONAL CONSTRUCTION AREA SIGNS SEE TRAFFIC HANDLING SHEET.

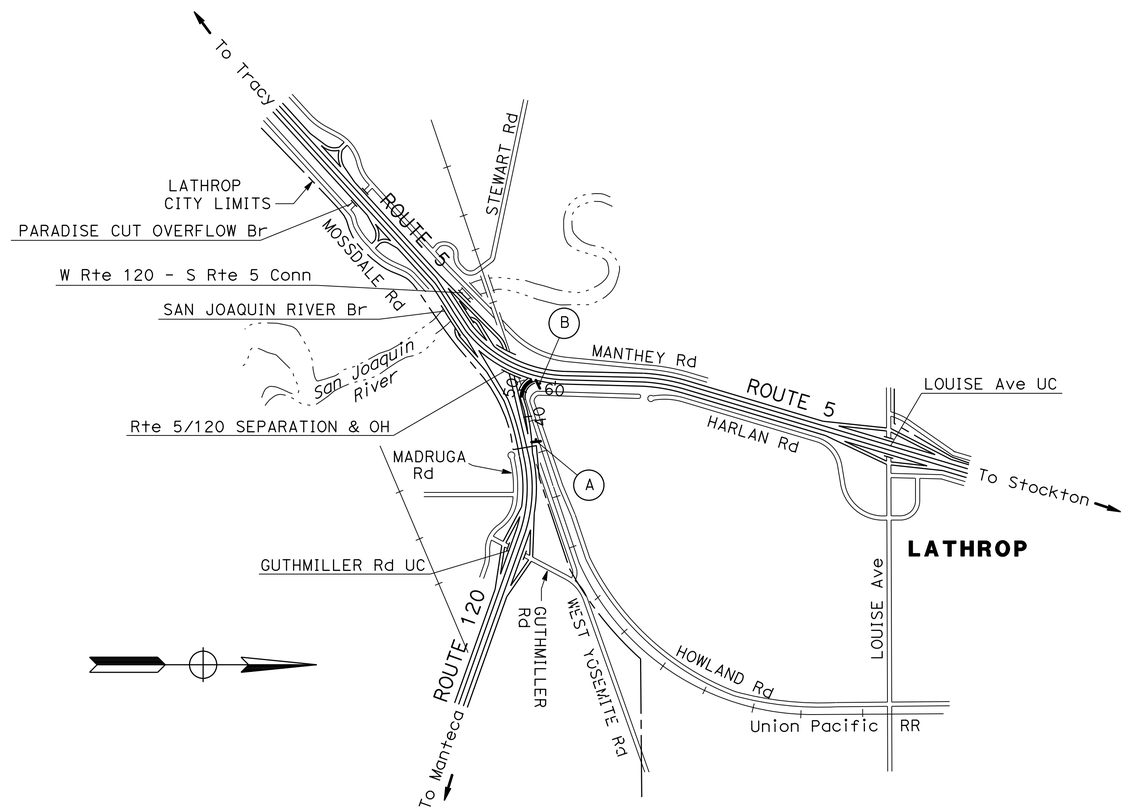

APPROVED FOR CONSTRUCTION AREA SIGN WORK ONLY

CONSTRUCTION AREA SIGNS
NO SCALE

CS-1

REVISED BY	DATE REVISED
HN	01/06/14

HUE NGUYEN — CALCULATED-DESIGNED BY
FERNANDO LOPEZ — CHECKED BY
MOHAMMED QATAMI — FUNCTIONAL SUPERVISOR

STATE OF CALIFORNIA - DEPARTMENT OF TRANSPORTATION
Caltrans® **TRAFFIC DESIGN**

LAST REVISION 00-00-00
DATE PLOTTED => 07-JAN-2014
TIME PLOTTED => 09:14

Dist	COUNTY	ROUTE	POST MILES TOTAL PROJECT	SHEET No.	TOTAL SHEETS
10	SJ	120	R0.8	4	16

REGISTERED CIVIL ENGINEER 1/6/14 DATE

01-06-14
PLANS APPROVAL DATE

REGISTERED PROFESSIONAL ENGINEER HUE NGUYEN No. 74484 Exp. 12/31/15 CIVIL STATE OF CALIFORNIA

THE STATE OF CALIFORNIA OR ITS OFFICERS OR AGENTS SHALL NOT BE RESPONSIBLE FOR THE ACCURACY OR COMPLETENESS OF SCANNED COPIES OF THIS PLAN SHEET.

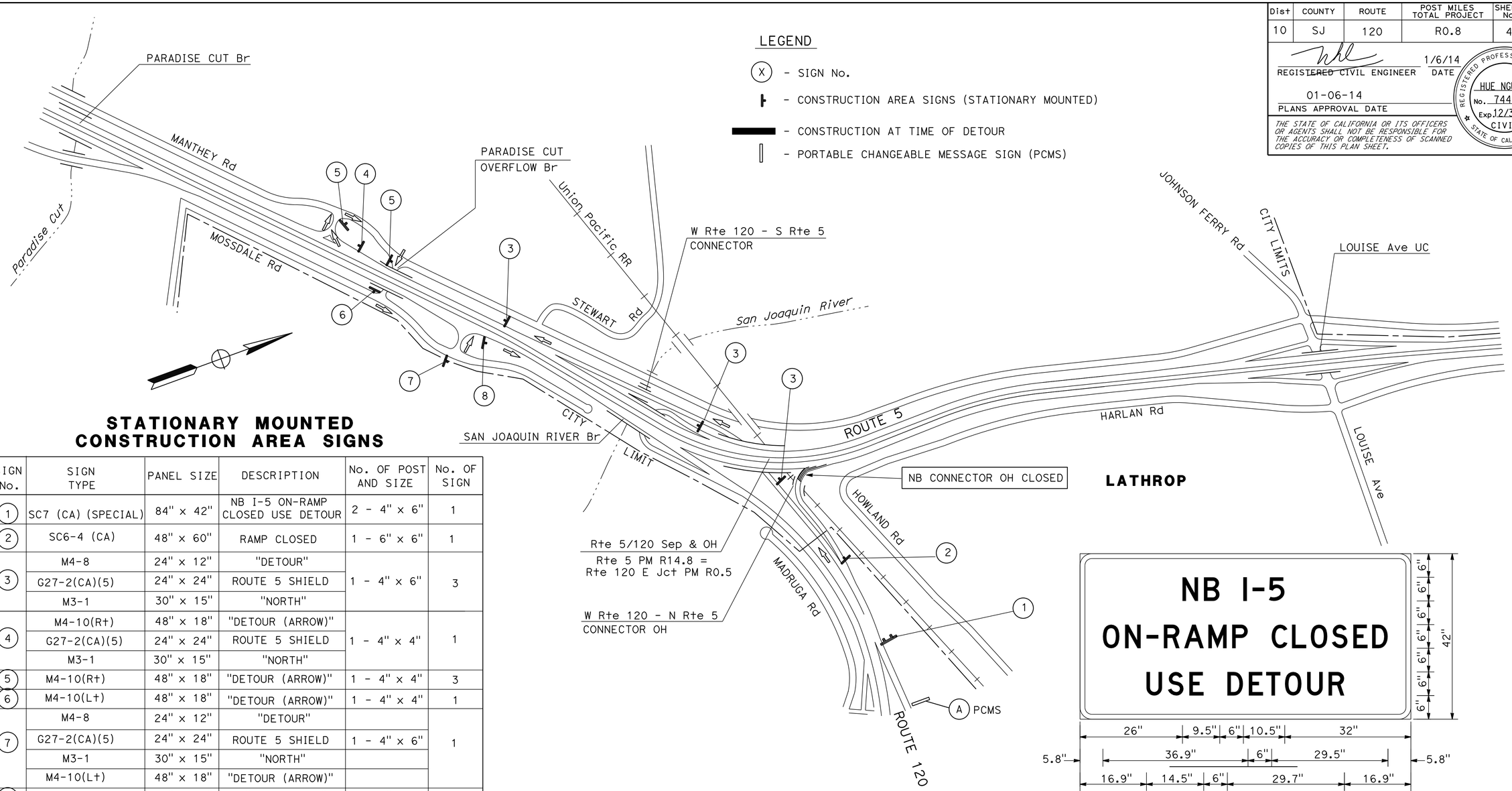

STATIONARY MOUNTED CONSTRUCTION AREA SIGNS

SIGN No.	SIGN TYPE	PANEL SIZE	DESCRIPTION	No. OF POST AND SIZE	No. OF SIGN
1	SC7 (CA) (SPECIAL)	84" x 42"	NB I-5 ON-RAMP CLOSED USE DETOUR	2 - 4" x 6"	1
2	SC6-4 (CA)	48" x 60"	RAMP CLOSED	1 - 6" x 6"	1
3	M4-8	24" x 12"	"DETOUR"	1 - 4" x 6"	3
	G27-2(CA)(5)	24" x 24"	ROUTE 5 SHIELD		
	M3-1	30" x 15"	"NORTH"		
4	M4-10(R+)	48" x 18"	"DETOUR (ARROW)"	1 - 4" x 4"	1
	G27-2(CA)(5)	24" x 24"	ROUTE 5 SHIELD		
	M3-1	30" x 15"	"NORTH"		
5	M4-10(R+)	48" x 18"	"DETOUR (ARROW)"	1 - 4" x 4"	3
6	M4-10(L+)	48" x 18"	"DETOUR (ARROW)"	1 - 4" x 4"	1
7	M4-8	24" x 12"	"DETOUR"	1 - 4" x 6"	1
	G27-2(CA)(5)	24" x 24"	ROUTE 5 SHIELD		
	M3-1	30" x 15"	"NORTH"		
	M4-10(L+)	48" x 18"	"DETOUR (ARROW)"		
8	M4-8a	24" x 12"	"END DETOUR"	1 - 4" x 4"	1

NOTES:

1. EXACT SIGN LOCATIONS TO BE DETERMINED BY THE ENGINEER.
2. WHEN DETOUR IS NOT IN USE, COVER ALL CONSTRUCTION AREA SIGNS (TRAFFIC HANDLING) EXCEPT SC6-4.
3. COVER ALL CONFLICTING ROADSIDE SIGNS.
4. DURING THE NB ON-RAMP ROUTE 5/120 CONNECTOR CLOSURE, THE PCMS MESSAGE AT (A) SHOULD READ.

NB I-5 ON-RAMP CLOSED	→	USE SB I-5
1ST FRAME		2ND FRAME

5. SEE CONSTRUCTION AREA SIGNS SHEET FOR ADDITIONAL SIGNS.

TRAFFIC DETOUR PLAN

NB ON-RAMP ROUTE 5/120 CONNECTOR CLOSED
CONTINUE ON WB ROUTE 120 ONTO SB ROUTE 5
TAKE MANTHEY ROAD OFF-RAMP
TURN RIGHT ONTO MANTHEY ROAD
TURN RIGHT TO MOSSDALE ROAD
TURN LEFT ONTO MOSSDALE ROAD
TAKE NB ON-RAMP AT MOSSDALE ROAD TO NB ROUTE 5

RAMP CLOSED
THRU
60"
48"
BLACK/ORANGE

(2) SC6-4(CA)

NB I-5
ON-RAMP CLOSED
USE DETOUR

9" 9" 9" 9" 9" 9" 9" 42"

26" 9.5" 6" 10.5" 32"
5.8" 36.9" 6" 29.5" 5.8"
16.9" 14.5" 6" 29.7" 16.9"
84"

3.0" RADIUS, 1.3" BORDER, BLACK ON ORANGE;
[NB I-5] D; [ON-RAMP CLOSED] D;
[USE DETOUR] D;

(1) SC7(CA) SPECIAL MESSAGE SIGN

APPROVED FOR TRAFFIC HANDLING WORK ONLY

TRAFFIC HANDLING PLAN AND DETAILS
DETOUR LAYOUT
(WEST ROUTE 120 - NORTH ROUTE 5 CONNECTOR OH CLOSURE)

NO SCALE

TH-1

STATE OF CALIFORNIA - DEPARTMENT OF TRANSPORTATION
Caltrans® TRAFFIC DESIGN

FUNCTIONAL SUPERVISOR: MOHAMMED QATAMI
CALCULATED-DESIGNED BY: HUE NGUYEN
CHECKED BY: FERNANDO LOPEZ
REVISED BY: FL
DATE REVISED: 12/11/13

LAST REVISION 12-30-11
DATE PLOTTED => 07-JAN-2014
TIME PLOTTED => 11:06

Dist	COUNTY	ROUTE	POST MILES TOTAL PROJECT	SHEET No.	TOTAL SHEETS
10	SJ	120	R0.8	5	16

REGISTERED CIVIL ENGINEER 1/6/14 DATE

01-06-14
PLANS APPROVAL DATE

REGISTERED PROFESSIONAL ENGINEER HUE NGUYEN No. 74484 Exp 12/31/15 CIVIL STATE OF CALIFORNIA

THE STATE OF CALIFORNIA OR ITS OFFICERS OR AGENTS SHALL NOT BE RESPONSIBLE FOR THE ACCURACY OR COMPLETENESS OF SCANNED COPIES OF THIS PLAN SHEET.

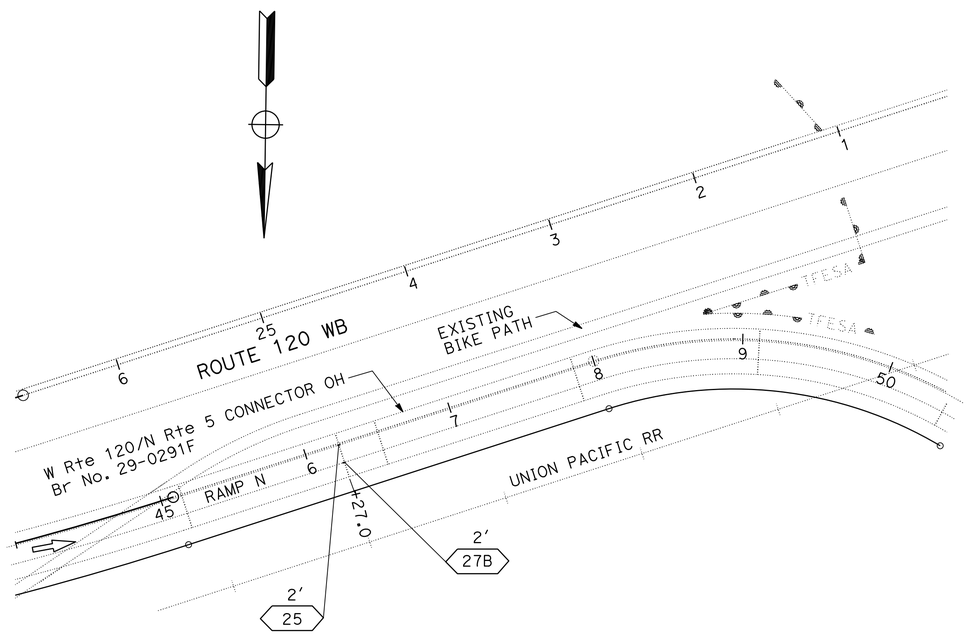

PAVEMENT DELINEATION ITEMS

STATION LIMIT	THERMOPLASTIC TRAFFIC STRIPE (SPRAYABLE)	
	4" SOLID YELLOW	4" SOLID WHITE
	DETAIL 25	DETAIL 27B
	LF	
46+27.0	2	2
TOTAL	4	

PVEMENT DELINEATION PLAN AND QUANTITIES

NO SCALE

PD-1

APPROVED FOR PAVEMENT DELINEATION WORK ONLY

STATE OF CALIFORNIA - DEPARTMENT OF TRANSPORTATION
Caltrans® TRAFFIC DESIGN

FUNCTIONAL SUPERVISOR: MOHAMMED QATAMI

CALCULATED-DESIGNED BY: HUE NGUYEN
CHECKED BY: FERNANDO LOPEZ

REVISED BY: HN
DATE REVISED: 11/12/13

LAST REVISION 00-00-00
DATE PLOTTED => 07-JAN-2014
TIME PLOTTED => 09:14

M

Maint	MAINTENANCE
Max	MAXIMUM
MB	METAL BEAM
MBB	METAL BEAM BARRIER
MBGR	METAL BEAM GUARD RAILING
Med	MEDIAN
MGS	MIDWEST GUARDRAIL SYSTEM
MH	MANHOLE
Min	MINIMUM
Misc	MISCELLANEOUS
Misc I & S	MISCELLANEOUS IRON AND STEEL
Mkr	MARKER
Mod	MODIFIED,
	MODIFY
Mon	MONUMENT
MP	METAL PLATE
MPGR	METAL PLATE GUARD RAILING
MR	MOVEMENT RATING
MSE	MECHANICALLY STABILIZED EMBANKMENT
Mt	MOUNTAIN, MOUNT
Mtl	MATERIAL
MVP	MAINTENANCE VEHICLE PULLOUT

N

N	NORTH
NB	NORTHBOUND
No.	NUMBER (MUST HAVE PERIOD)
Nos.	NUMBERS (MUST HAVE PERIOD)
NPS	NOMINAL PIPE SIZE
NS	NEAR SIDE
NSP	NEW STANDARD PLAN
NTS	NOT TO SCALE

O

Oblr	OBLITERATE
OC	OVERCROSSING
OD	OUTSIDE DIAMETER
OF	OUTSIDE FACE
OG	ORIGINAL GROUND
OGAC	OPEN GRADED ASPHALT CONCRETE
OGFC	OPEN GRADED FRICTION COURSE
OH	OVERHEAD
OHWM	ORDINARY HIGH WATER MARK
O-O	OUT TO OUT
Opp	OPPOSITE
OSD	OVERSIDE DRAIN

P

P	PAGE
PAP	PERFORATED ALUMINUM PIPE
PB	PULL BOX
PC	POINT OF CURVATURE,
	PRECAST
PCC	POINT OF COMPOUND CURVE,
	PORTLAND CEMENT CONCRETE
PCMS	PORTABLE CHANGEABLE MESSAGE SIGN
PCP	PERFORATED CONCRETE PIPE,
	PRESTRESSED CONCRETE PIPE
PCVC	POINT OF COMPOUND VERTICAL CURVE
PEC	PERMIT TO ENTER AND CONSTRUCT
Ped	PEDESTRIAN
Ped OC	PEDESTRIAN OVERCROSSING
Ped UC	PEDESTRIAN UNDERCROSSING
Perm Mtl	PERMEABLE MATERIAL

P continued

PG	PROFILE GRADE
PI	POINT OF INTERSECTION
PJP	PARTIAL JOINT PENETRATION
Pkwy	PARKWAY
ℙ,PL	PLATE
P/L	PROPERTY LINE
PM	POST MILE,
	TIME FROM NOON TO MIDNIGHT
PN	PAVING NOTCH
POC	POINT OF HORIZONTAL CURVE
POT	POINT OF TANGENT
POVC	POINT OF VERTICAL CURVE
PP	PIPE PILE,
	PLASTIC PIPE,
	POWER POLE
PPL	PREFORMED PERMEABLE LINER
PPP	PERFORATED PLASTIC PIPE
PRC	POINT OF REVERSE CURVE
PRF	PAVEMENT REINFORCING FABRIC
PRVC	POINT OF REVERSE VERTICAL CURVE
PS&E	PLANS, SPECIFICATIONS AND ESTIMATES
PS, P/S	PRESTRESSED
PSP	PERFORATED STEEL PIPE
PT	POINT OF TANGENCY
PVC	POLYVINYL CHLORIDE
Pvmt	PAVEMENT

Q

Qty	QUANTITY

R

R	RADIUS
R & D	REMOVE AND DISPOSE
R & S	REMOVE AND SALVAGE
R/C	RATE OF CHANGE
RCA	REINFORCED CONCRETE ARCH
RCB	REINFORCED CONCRETE BOX
RCP	REINFORCED CONCRETE PIPE
RCPA	REINFORCED CONCRETE PIPE ARCH
Rd	ROAD
Reinf	REINFORCED,
	REINFORCEMENT,
	REINFORCING
Rel	RELOCATE
Repl	REPLACEMENT
Ret	RETAINING
Rev	REVISED, REVISION
Rdwy	ROADWAY
RHMA	RUBBERIZED HOT MIX ASPHALT
Riv	RIVER
RM	ROAD-MIXED
RP	RADIUS POINT,
	REFERENCE POINT
RR	RAILROAD
RSP	ROCK SLOPE PROTECTION,
	REVISED STANDARD PLAN
Rt	RIGHT
Rte	ROUTE
RW	REDWOOD,
	RETAINING WALL
R/W	RIGHT OF WAY
Rwy	RAILWAY

S

S	SOUTH,
	SUPPLEMENT
SAE	STRUCTURE APPROACH EMBANKMENT
Salv	SALVAGE
SAPP	STRUCTURAL ALUMINUM PLATE PIPE
SB	SOUTHBOUND
SC	SAND CUSHION
SCSP	SLOTTED CORRUGATED STEEL PIPE
SD	STORM DRAIN
Sec	SECOND,
	SECTION
Sep	SEPARATION
SG	SUBGRADE
Shld	SHOULDER
Sht	SHEET
Sim	SIMILAR
℄	STATION LINE
SM	SELECTED MATERIAL
Spec	SPECIAL,
	SPECIFICATIONS
SPP	SLOTTED PLASTIC PIPE
SS	SLOPE STAKE
SSBM	STRAP AND SADDLE BRACKET METHOD
SSD	STRUCTURAL SECTION DRAIN
SSPA	STRUCTURAL STEEL PLATE ARCH
SSPP	STRUCTURAL STEEL PLATE PIPE
SSPPA	STRUCTURAL STEEL PLATE PIPE ARCH
SSRP	STEEL SPIRAL RIB PIPE
St	STREET
Sta	STATION
STBB	SINGLE THRIE BEAM BARRIER
Std	STANDARD
Str	STRUCTURE
Surf	SURFACING
SW	SIDEWALK,
	SOUND WALL
Swr	SEWER
Sym	SYMMETRICAL
S4S	SURFACE 4 SIDES

T

T	SEMI-TANGENT
Tan	TANGENT
TBB	THRIE BEAM BARRIER
Tbr	TIMBER
TC	TOP OF CURB
TCB	TRAFFIC CONTROL BOX
TCE	TEMPORARY CONSTRUCTION EASEMENT
Tel	TELEPHONE
Temp	TEMPORARY
TG	TOP OF GRADE
Tot	TOTAL
TP	TELEPHONE POLE
TPB	TREATED PERMEABLE BASE
TPM	TREATED PERMEABLE MATERIAL
Trans	TRANSITION

T continued

TS	TRANSVERSE,
	TRAFFIC SIGNAL,
	TUBULAR STEEL
Typ	TYPICAL

U

UC	UNDERCROSSING
UD	UNDERDRAIN
UG	UNDERGROUND
UON	UNLESS OTHERWISE NOTED
UP	UNDERPASS

V

V	VALVE,
	DESIGN SPEED
Var	VARIABLE,
	VARIES
VC	VERTICAL CURVE
VCP	VITRIFIED CLAY PIPE
Vert	VERTICAL
Via	VIADUCT
Vol	VOLUME

W

W	WEST,
	WIDTH
WB	WESTBOUND
WH	WEEP HOLE
WM	WIRE MESH
WS	WATER SURFACE
WSP	WELDED STEEL PIPE
Wt	WEIGHT
WV	WATER VALVE
WW	WINGWALL
WWLOL	WINGWALL LAYOUT LINE

X

X Sec	CROSS SECTION
Xing	CROSSING

Y

Yr	YEAR
Yrs	YEARS

Dist	COUNTY	ROUTE	POST MILES TOTAL PROJECT	SHEET No.	TOTAL SHEETS
10	SJ	120	R0.8	6	16

Grace M. Tsushima
REGISTERED CIVIL ENGINEER

July 19, 2013
PLANS APPROVAL DATE

REGISTERED PROFESSIONAL ENGINEER
Grace M. Tsushima
No. C49814
Exp. 9-30-14
CIVIL
STATE OF CALIFORNIA

THE STATE OF CALIFORNIA OR ITS OFFICERS OR AGENTS SHALL NOT BE RESPONSIBLE FOR THE ACCURACY OR COMPLETENESS OF SCANNED COPIES OF THIS PLAN SHEET.

TO ACCOMPANY PLANS DATED 01-06-14

UNIT OF MEASUREMENT SYMBOLS:

Some of the symbols used in the project plan quantity tables and in the Bid Item List are:

TABLE A

SYMBOL USED	DEFINITIONS
ACRE	ACRE
CF	CUBIC FOOT
CY	CUBIC YARD
EA	EACH
GAL	GALLON
LB	POUND
LF	LINEAR FOOT
SQFT	SQUARE FOOT
SQYD	SQUARE YARD
STA	100 FEET
TAB	TABLET
TON	2,000 POUNDS

Some of the symbols used in the plans other than in the project plan quantity tables are:

TABLE B

SYMBOL USED	DEFINITIONS
ksi	KIPS PER SQUARE INCH
ksf	KIPS PER SQUARE FOOT
psi	POUNDS PER SQUARE INCH
psf	POUNDS PER SQUARE FOOT
lb/ft^3, pcf	POUNDS PER CUBIC FOOT
tsf	TONS PER SQUARE FOOT
mph, MPH *	MILES PER HOUR
ø	NOMINAL DIAMETER
oz	OUNCE
lb	POUND
kip	1,000 POUNDS
cal	CALORIE
ft	FOOT OR FEET
gal	GALLON

* For use on a sign panel only

STATE OF CALIFORNIA
DEPARTMENT OF TRANSPORTATION

ABBREVIATIONS (SHEET 2 OF 2)

NO SCALE

RSP A10B DATED JULY 19, 2013 SUPERSEDES STANDARD PLAN A10B DATED MAY 20, 2011 - PAGE 2 OF THE STANDARD PLANS BOOK DATED 2010.

REVISED STANDARD PLAN RSP A10B

2010 REVISED STANDARD PLAN RSP A10B

6-7-13

TO ACCOMPANY PLANS DATED 01-06-14

Dist	COUNTY	ROUTE	POST MILES TOTAL PROJECT	SHEET No.	TOTAL SHEETS
10	SJ	120	R0.8	7	16

REGISTERED CIVIL ENGINEER

April 19, 2013
PLANS APPROVAL DATE

REGISTERED PROFESSIONAL ENGINEER Gurinderpal Bhullar No. C48815 Exp. 9-30-14 CIVIL STATE OF CALIFORNIA

THE STATE OF CALIFORNIA OR ITS OFFICERS OR AGENTS SHALL NOT BE RESPONSIBLE FOR THE ACCURACY OR COMPLETENESS OF SCANNED COPIES OF THIS PLAN SHEET.

NOTES:

See Revised Standard Plan RSP T9 for tables.

Use cone spacing X for taper segment, Y for tangent segment or Z for conflict situations, as approriate, per Table 1, unless X, Y, or Z cone spacing is shown on this sheet.

Unless otherwise specified in the special provisions, all temporary warning signs shall have black legend on fluorescent orange background.

California codes are designated by (CA). Otherwise, Federal (MUTCD) codes are shown.

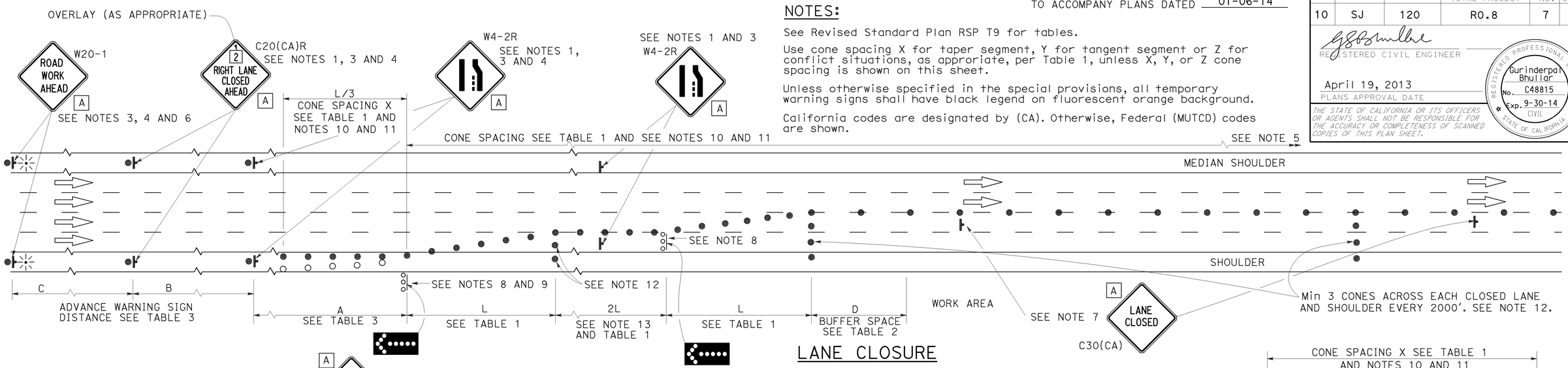

LANE CLOSURE

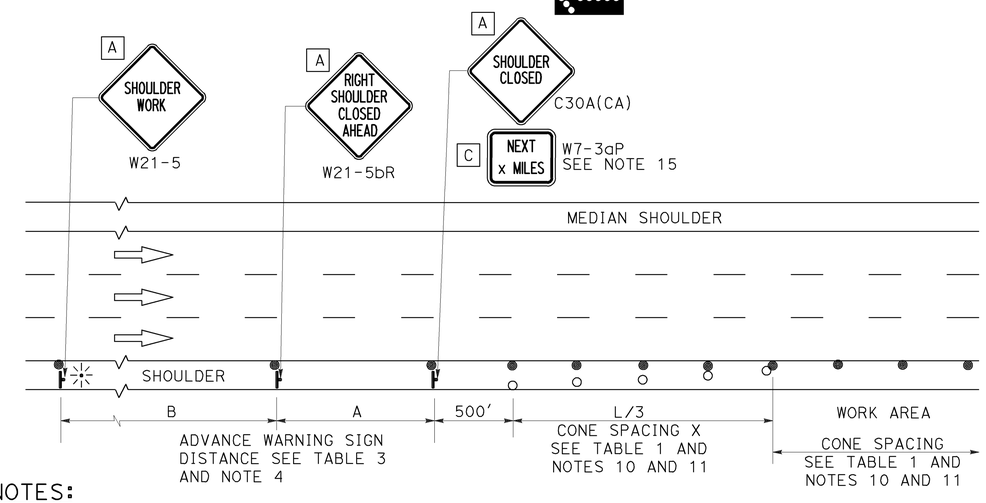

SHOULDER CLOSURE

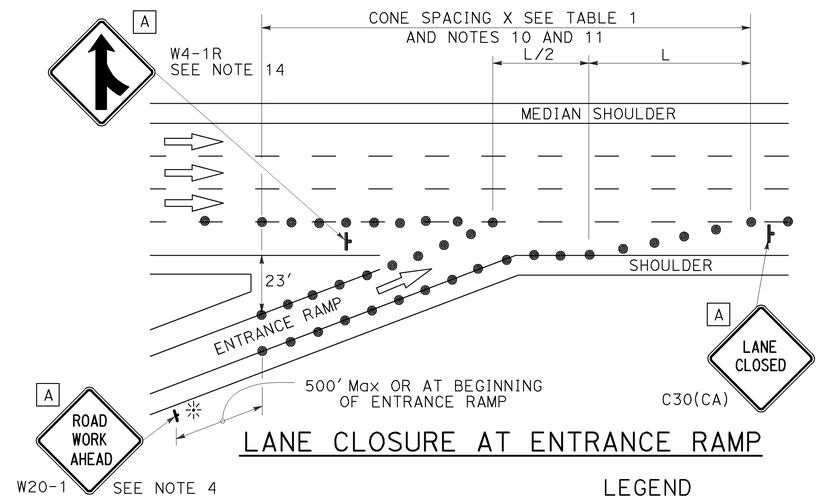

LANE CLOSURE AT ENTRANCE RAMP

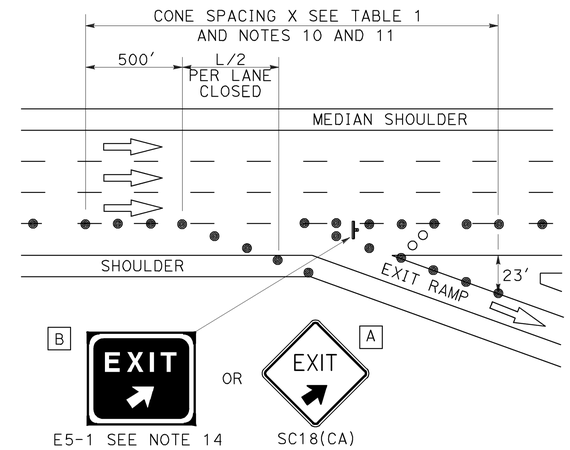

LANE CLOSURE AT EXIT RAMP

NOTES:

1. Median lane closures shall conform to the details as shown except that C20(CA)L and W4-2L signs shall be used.
2. At least one person shall be assigned to provide full time maintenance of traffic control devices for lane closures.
3. Duplicate sign installations are not required:
   a) On opposite shoulder if at least one-half of the available lanes remain open to traffic.
   b) In the median if the width of the median shoulder is less than 8' and the outside lanes are to be closed.
4. Each advance warning sign on each side of the roadway shall be equipped with at least two flags for daytime closure. Each flag shall be at least 16" x 16" in size and shall be orange or fluorescent red-orange in color. Flashing beacons shall be placed at the locations indicated for lane closure during hours of darkness.
5. A G20-2 "END ROAD WORK" sign, with minimum size of 48" x 24" as appropriate, shall be placed at the end of the lane closure unless the end of work area is obvious or ends within a larger project's limits.
6. If the W20-1 sign would follow within 2000' of a stationary W20-1 or G20-1 "ROAD WORK NEXT _____ MILES", use a C20(CA) sign for the first advance warning sign.
7. Place a C30(CA) sign every 2000' throughout length of lane closure.
8. One flashing arrow sign for each lane closed. The flashing arrow signs shall be Type I.
9. A minimum 1500' of sight distance shall be provided where possible for vehicles approaching the first flashing arrow sign. Lane closures shall not begin at top of crest vertical curve or on a horizontal curve.
10. All cones used for lane closures during the hours of darkness shall be fitted with retroreflective bands (or sleeves) as specified in the specifications.
11. Portable delineators, placed at one-half the spacing indicated for traffic cones may be used instead of cones for daytime closures only.
12. Unless otherwise specified in the special provisions, a minimum of 3 cones shall be placed transversely across each closed lane and shoulder at each location where a taper across a traffic lane ends and every 2000' as shown on the "Lane Closure" detail. Two Type II barricades may be used instead of the 3 cones. The transverse alignment of the cones or barricades on the closed shoulder may be shifted from the transverse alignment to provide access to the work.
13. Unless otherwise specified in the special provisions, the 2L tangent shown along lane lines shall be used between the L tapers required for each closed traffic lane.
14. Unless otherwise specified in the special provisions, the E5-1 or SC18(CA) and W4-1 signs shall be used as shown.
15. A W7-3aP "NEXT____ MILES" plaque must be used if theshoulder closure extends beyond the distance that can be perceived by road users.

LEGEND

- TRAFFIC CONE
- TRAFFIC CONE (OPTIONAL TAPER)
- TEMPORARY TRAFFIC CONTROL SIGN
- FLASHING ARROW SIGN (FAS)
- FAS SUPPORT OR TRAILER
- PORTABLE FLASHING BEACON

SIGN PANEL SIZE (Min)

A	48" x 48"
B	72" x 60"
C	36" x 30"

STATE OF CALIFORNIA
DEPARTMENT OF TRANSPORTATION

TRAFFIC CONTROL SYSTEM FOR LANE CLOSURE ON FREEWAYS AND EXPRESSWAYS

NO SCALE

RSP T10 DATED APRIL 19, 2013 SUPERSEDES STANDARD PLAN T10 DATED MAY 20, 2011 - PAGE 237 OF THE STANDARD PLANS BOOK DATED 2010.

REVISED STANDARD PLAN RSP T10

2010 REVISED STANDARD PLAN RSP T10

12-18-12

DIST	COUNTY	ROUTE	POST MILES TOTAL PROJECT	SHEET No.	TOTAL SHEETS
10	SJ	120	R0.8	8	16

REGISTERED CIVIL ENGINEER 12-10-13 DATE

01-06-14
PLANS APPROVAL DATE

REGISTERED PROFESSIONAL ENGINEER BRIAN P. NGUYEN No. C 68270 Exp. 9-30-15 CIVIL STATE OF CALIFORNIA

The State of California or its officers or agents shall not be responsible for the accuracy or completeness of electronic copies of this plan sheet.

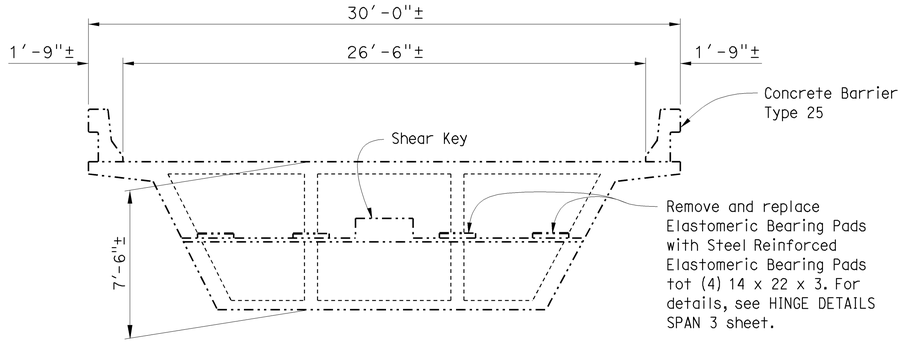

TYPICAL SECTION AT SPAN 3 HINGE

1/4" = 1'-0"

INDEX TO PLANS

SHEET NO.	TITLE
1	GENERAL PLAN NO. 1
2	HINGE DETAILS SPAN 3
3	HINGE RESTRAINER DETAILS
4	MISCELLANEOUS DETAILS
5	DECK PLATING DETAILS
6	JOINT SEAL ASSEMBLY DETAILS
7	DECK AND SOFFIT OPENINGS
8	CABLE RESTRAINER ADJUSTMENT HARDWARE
9	JOINT SEAL - HINGE DETAILS (MOVEMENT RATING GREATER THAN 3")

STANDARD PLANS DATED MAY 2010

SHEET NO.	TITLE
A10A	ABBREVIATIONS (SHEET 1 OF 2)
A10B	ABBREVIATIONS (SHEET 2 OF 2)
B6-21	JOINT SEALS (MAX MOVEMENT RATING = 2")

NOTES: (APPLY TO ALL SHEETS)

-·-·-·- Indicates existing.

THE CONTRACTOR SHALL VERIFY ALL CONTROLLING FIELD DIMENSIONS BEFORE ORDERING OR FABRICATING ANY MATERIAL.

STANDARD PLAN SHEET NUMBER

DETAIL NUMBER

NOTES: (APPLY TO THIS SHEET ONLY)

Indicates location of remove existing joint seal assembly and place new joint seal assembly. For details, see JOINT SEAL TABLE on MISCELLANEOUS DETAILS sheet and JOINT SEAL ASSEMBLY sheet.

Indicates location of remove existing joint seal and place new joint seal. For details, see MISCELLANEOUS DETAILS sheet.

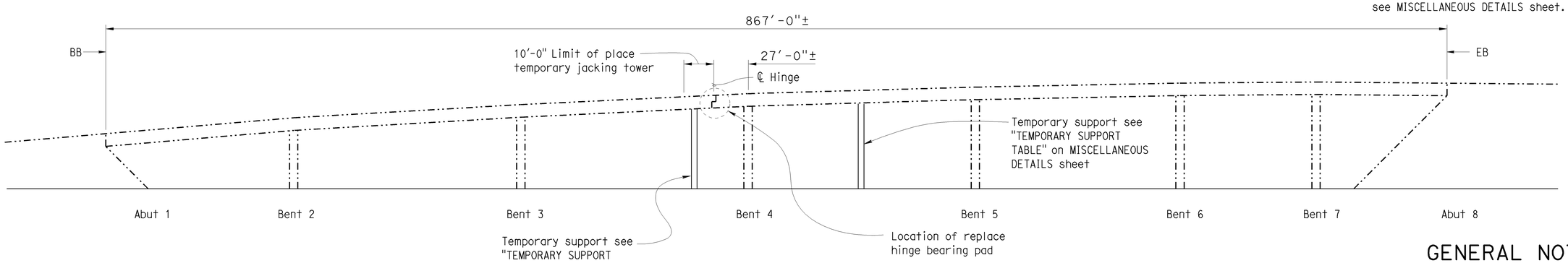

ELEVATION

1" = 30'

GENERAL NOTES
LOAD FACTOR DESIGN

DESIGN: BRIDGE DESIGN SPECIFICATIONS (1996 AASHTO with Interims and Revisions by CALTRANS)

LIVE LOADING: HS20-44 and alternative and permit design load

REINFORCED CONCRETE: f_y = 60 ksi

f'_c = 4000 psi

n = 8

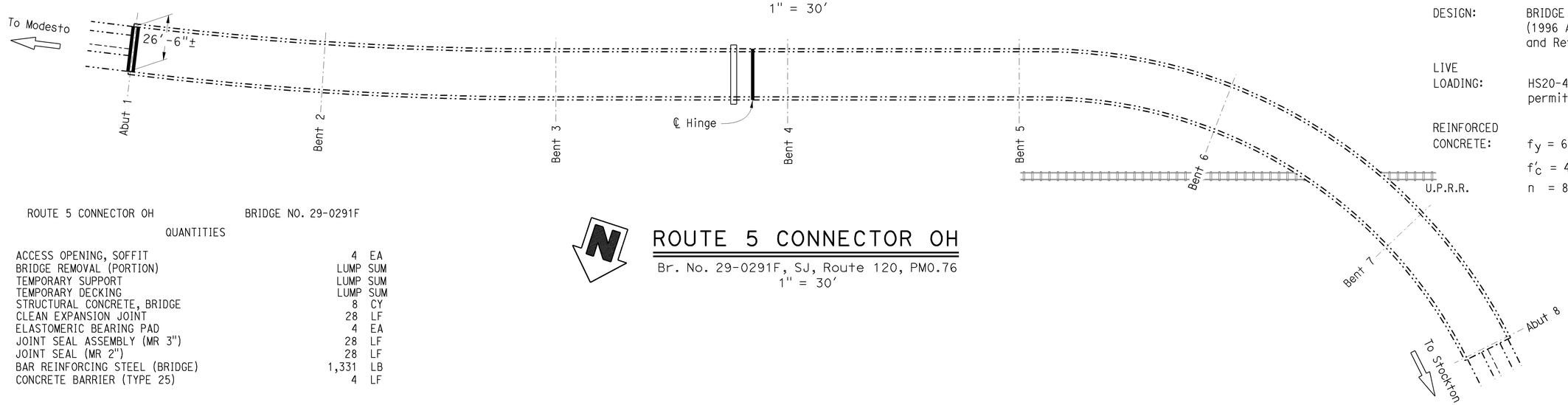

ROUTE 5 CONNECTOR OH BRIDGE NO. 29-0291F

QUANTITIES

ACCESS OPENING, SOFFIT	4	EA
BRIDGE REMOVAL (PORTION)	LUMP	SUM
TEMPORARY SUPPORT	LUMP	SUM
TEMPORARY DECKING	LUMP	SUM
STRUCTURAL CONCRETE, BRIDGE	8	CY
CLEAN EXPANSION JOINT	28	LF
ELASTOMERIC BEARING PAD	4	EA
JOINT SEAL ASSEMBLY (MR 3")	28	LF
JOINT SEAL (MR 2")	28	LF
BAR REINFORCING STEEL (BRIDGE)	1,331	LB
CONCRETE BARRIER (TYPE 25)	4	LF

ROUTE 5 CONNECTOR OH

Br. No. 29-0291F, SJ, Route 120, PM0.76
1" = 30'

12-10-13 Michael J. Lee
DESIGN ENGINEER

	BY	CHECKED
DESIGN	B. Nguyen	F. Espinoza
DETAILS	M. Hallstrom	F. Espinoza
QUANTITIES	B. Nguyen	F. Espinoza

		BY	CHECKED
LOAD FACTOR DESIGN	LIVE LOADING: HS20-44 AND ALTERNATIVE AND PERMIT DESIGN LOAD		
LAYOUT		M. Hallstrom	F. Espinoza
SPECIFICATIONS		Karla Meier	PLANS AND SPECS COMPARED Karla Meier

STATE OF CALIFORNIA
DEPARTMENT OF TRANSPORTATION

DIVISION OF MAINTENANCE
STRUCTURE MAINTENANCE DESIGN

BRIDGE NO. 29-0291F
POST MILE 0.76

ROUTE 5 CONNECTOR OH
GENERAL PLAN NO. 1

STRUCTURES MAINTENANCE GENERAL PLAN SHEET (ENGLISH) (REV. 09-01-10)

ORIGINAL SCALE IN INCHES FOR REDUCED PLANS 0 1 2 3

UNIT: 3488
PROJECT NUMBER & PHASE: 1014000059
CONTRACT NO.: 10-1C0101

DISREGARD PRINTS BEARING EARLIER REVISION DATES

REVISION DATES: 11-7-13

SHEET 1 OF 9

FILE => 10-1c0101_01gp.dgn

USERNAME => s137417 DATE PLOTTED => 12-DEC-2013 TIME PLOTTED => 12:42

DIST	COUNTY	ROUTE	POST MILES TOTAL PROJECT	SHEET No.	TOTAL SHEETS
10	SJ	120	R0.8	9	16

REGISTERED CIVIL ENGINEER 12-10-13 DATE

01-06-14
PLANS APPROVAL DATE

REGISTERED PROFESSIONAL ENGINEER BRIAN P. NGUYEN No. C 68270 Exp. 9-30-15 CIVIL STATE OF CALIFORNIA

The State of California or its officers or agents shall not be responsible for the accuracy or completeness of electronic copies of this plan sheet.

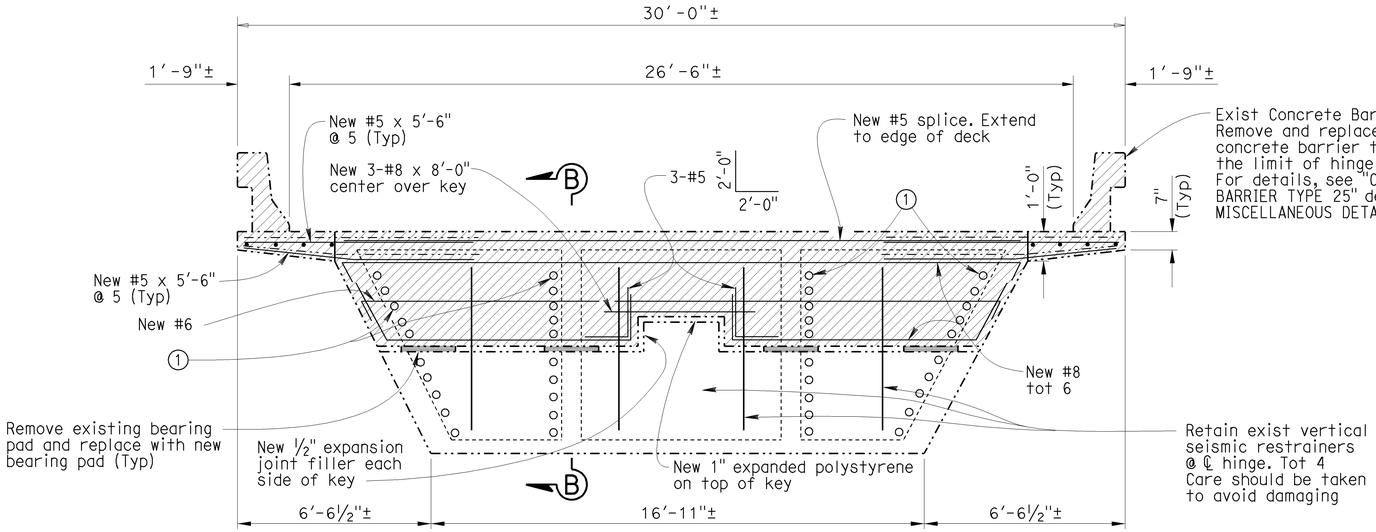

TYPICAL SECTION AT ℄ HINGE

BR NO. 29-0291F
3/8" = 1'-0"

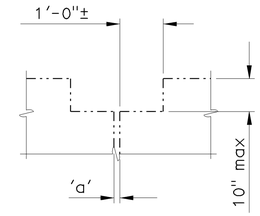

BLOCK OUT DETAIL

NO SCALE

For overhang blockout, see "JOINT SEAL - HINGE DETAILS" sheet

NOTES: (APPLY TO THIS SHEET ONLY)

Indicates limits of remove existing concrete.

Indicates limits of place new concrete after placement of new bearing pads. Falsework shall remain in place until concrete strength reaches at least 3600psi.

(1) Retain exist Type 2A longit restrainers, tot 20. Install new 2"ø PVC pipe as required for cable.Remove restrainers before remove structural concrete. Upon completion of reconstruct bearing pad, reinstall existing seismic restrainer.

See HINGE RESTRAINER DETAILS sheet for location and detail of longitudinal and vertical hinge restrainers.

Retain all exist longit. reinforcement.

Reinforcing to be retained may be bent as required for removal and replacement of joint seal assembly and bearing pads.

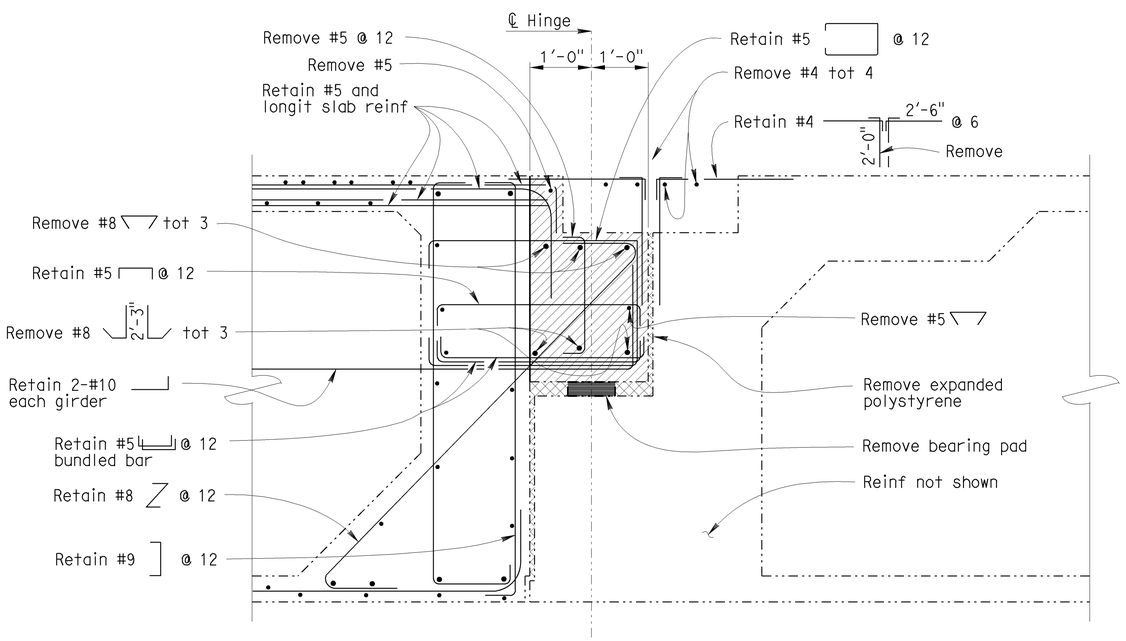

EXISTING

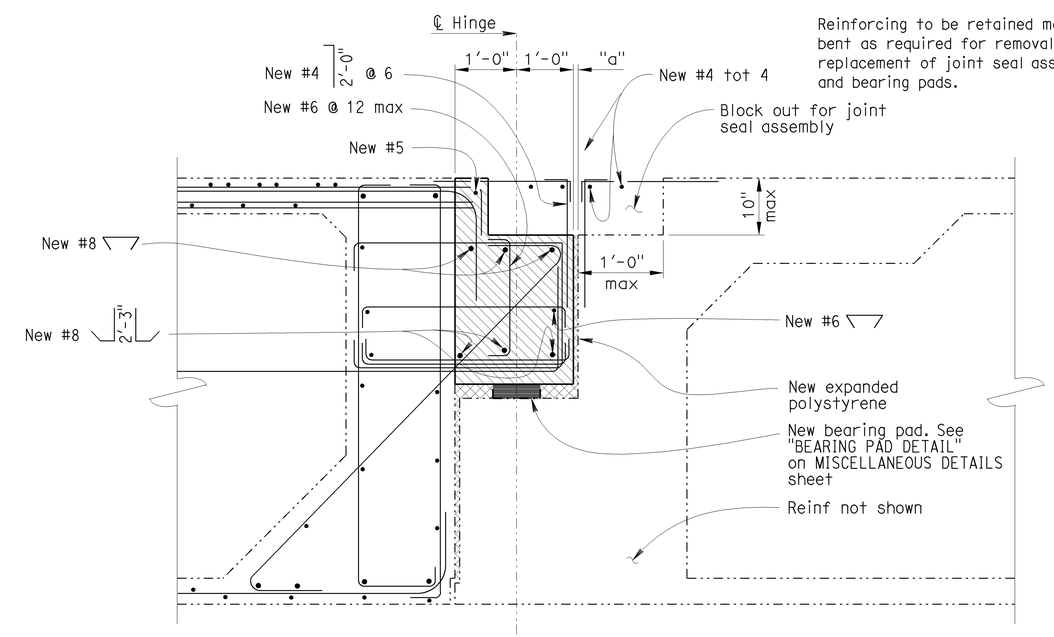

RECONSTRUCTION

SECTION B-B

3/4" = 1'-0"

	BY	CHECKED
DESIGN	B. Nguyen	F. Espinoza
DETAILS	M. Hallstrom	F. Espinoza
QUANTITIES	B. Nguyen	F. Espinoza

STATE OF CALIFORNIA
DEPARTMENT OF TRANSPORTATION

DIVISION OF MAINTENANCE
STRUCTURE MAINTENANCE DESIGN

BRIDGE NO. 29-0291F
POST MILE 0.76

ROUTE 5 CONNECTOR OH
HINGE DETAILS SPAN 3

STRUCTURES MAINTENANCE DETAIL SHEET (ENGLISH) (REV. 09-01-10)

ORIGINAL SCALE IN INCHES FOR REDUCED PLANS 0 1 2 3

UNIT: 3488
PROJECT NUMBER & PHASE: 1014000059
CONTRACT NO.: 10-1C0101

DISREGARD PRINTS BEARING EARLIER REVISION DATES

REVISION DATES 11-7-13

SHEET 2 OF 9

FILE => 10-1c0101_02hingedets-3.dgn

USERNAME => s137417 DATE PLOTTED => 11-DEC-2013 TIME PLOTTED => 11:16

DIST	COUNTY	ROUTE	POST MILES TOTAL PROJECT	SHEET No.	TOTAL SHEETS
10	SJ	120	R0.8	10	16

REGISTERED CIVIL ENGINEER 12-10-13 DATE

01-06-14
PLANS APPROVAL DATE

REGISTERED PROFESSIONAL ENGINEER BRIAN P. NGUYEN No. C 68270 Exp. 9-30-15 CIVIL STATE OF CALIFORNIA

The State of California or its officers or agents shall not be responsible for the accuracy or completeness of electronic copies of this plan sheet.

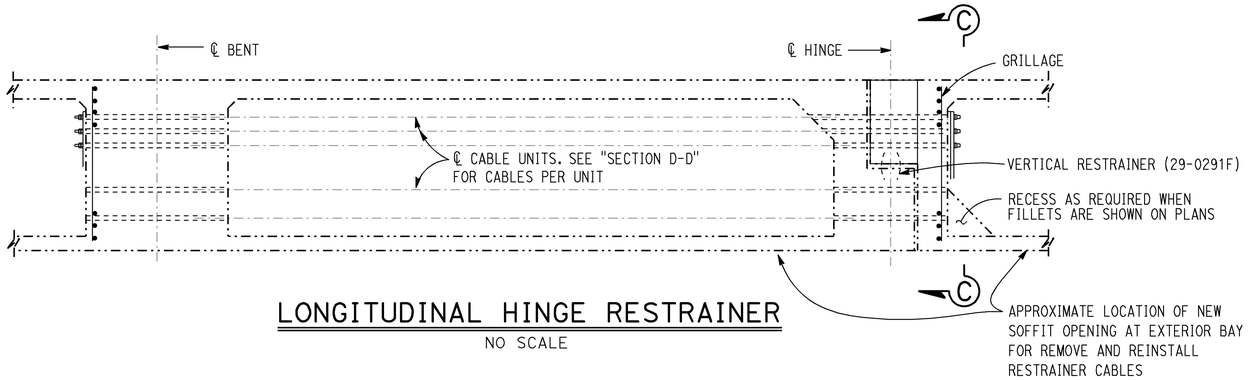

LONGITUDINAL HINGE RESTRAINER

NO SCALE

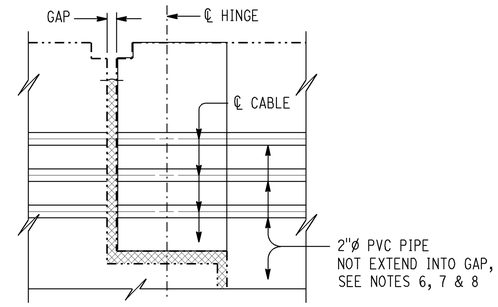

HINGE DETAIL

NOTES:

1. Restrainer units to be on tangent alignment
2. Anchor nuts shall not be set until 30 days following completion of reconstruct bearing pads.
3. See other sheets for location and number of longitudinal and vertical hinge restrainers, and table of joint openings
4. Replace all adjustment end with new hardware of all longitudinal restrainers except "BAR B" plate.
5. Replace with new polystyrene and duct tape for all vertical restrainer. Retain the main vertical restrainer units.
6. The ends of pipe shall be covered or capped to prevent concrete and debris from entering the pipe until hinge concrete is placed
7. Care should be taken to align the pipes on each side of the hinge
8. All ends of pipes must be flush with or slightly recessed from the concrete. The inside edges of the pipes must be smooth to prevent fraying of cables

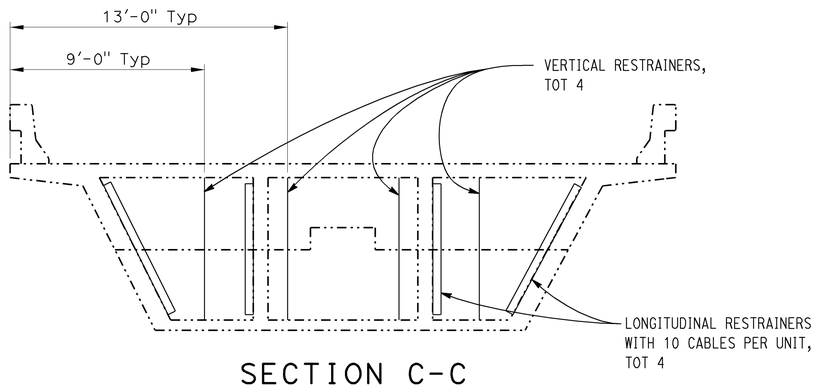

SECTION C-C

HINGE RESTRAINER LAYOUT
NO SCALE

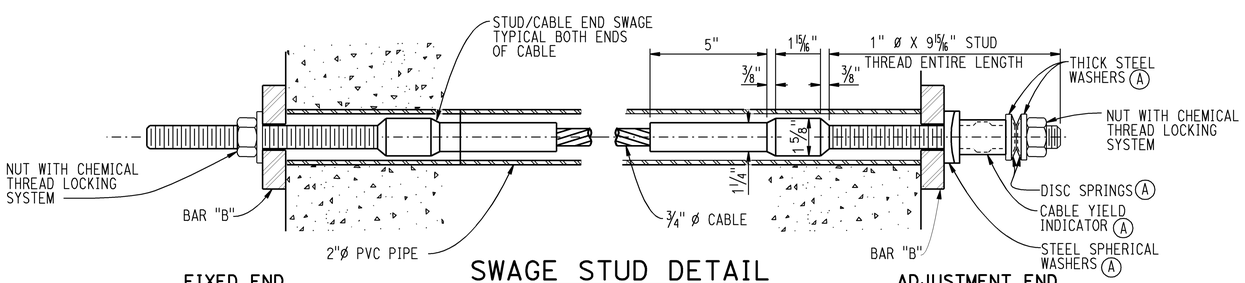

FIXED END

SWAGE STUD DETAIL

ADJUSTMENT END

(A) FOR DIMENSIONS AND INSTALLATION PROCEDURE, SEE "CABLE RESTRAINER ADJUSTMENT HARDWARE" SHEET xs7-090

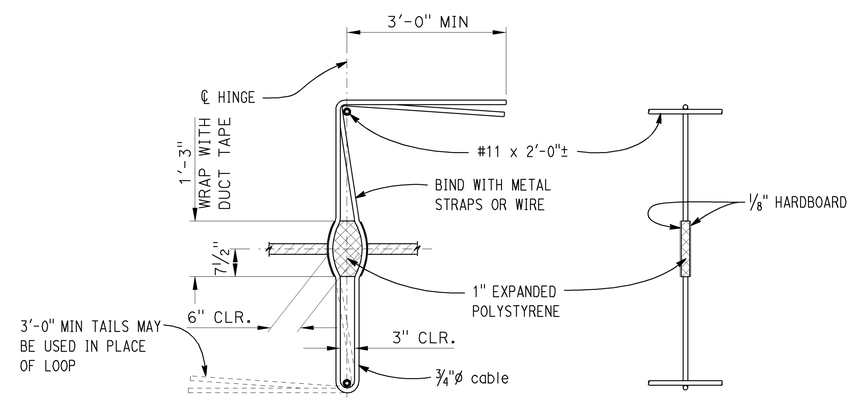

ELEVATION

SECTION

VERTICAL RESTRAINER

NO SCALE

DESIGN	BY B. Nguyen	CHECKED F. Espinoza	
DETAILS	BY M. Hallstrom	CHECKED F. Espinoza	
QUANTITIES	BY B. Nguyen	CHECKED F. Espinoza	

STATE OF CALIFORNIA
DEPARTMENT OF TRANSPORTATION

DIVISION OF MAINTENANCE
STRUCTURE MAINTENANCE DESIGN

BRIDGE NO. 29-0291F
POST MILE 0.76

ROUTE 5 CONNECTOR OH
HINGE RESTRAINER DETAILS

STRUCTURES MAINTENANCE DETAIL SHEET (ENGLISH) (REV. 09-01-10)

ORIGINAL SCALE IN INCHES FOR REDUCED PLANS 0 1 2 3

UNIT: 3488
PROJECT NUMBER & PHASE: 1014000059
CONTRACT NO.: 10-1C0101

DISREGARD PRINTS BEARING EARLIER REVISION DATES

REVISION DATES 11-7-13

SHEET 3 OF 9

FILE => 10-1c0101_03hinge_restrainer.dgn

USERNAME => s137417 DATE PLOTTED => 11-DEC-2013 TIME PLOTTED => 11:16

DIST	COUNTY	ROUTE	POST MILES TOTAL PROJECT	SHEET No.	TOTAL SHEETS
10	SJ	120	R0.8	11	16

REGISTERED CIVIL ENGINEER 12-10-13 DATE

01-06-14
PLANS APPROVAL DATE

REGISTERED PROFESSIONAL ENGINEER BRIAN P. NGUYEN No. C 68270 Exp. 9-30-15 CIVIL STATE OF CALIFORNIA

The State of California or its officers or agents shall not be responsible for the accuracy or completeness of electronic copies of this plan sheet.

TEMPORARY SUPPORT TABLE

Bridge No.	Location	DL (Kips)	Minimum Design Load DL+LL+I(Kips)	Minimum Lateral Design Load (Kips)
29-0291F	Span 3 Hinge	520	1316	52
	Midspan 4	206	552	21

JACKING NOTES:

1. Jacking operation shall not exceed the maximum upward deflection of 1/4".
2. The jacking force shall be applied to all jacks simultaneously across the entire width of the superstructure. The total vertical lift shall be enough to release existing bearing pads and install new bearing pads, but no greater than 1/4in above final grade. The differential lift between jacks shall not exceed 1/8in.
3. Vertical deflection shall be maintained during repair operations.

JOINT SEAL TABLE

Bridge No.	Location	Minimum MR (in.)	Existing Waterstop	Approx Length (ft)
29-0291F	Abut 1	2	Yes	28
	Span 3 Hinge	3	Yes	28

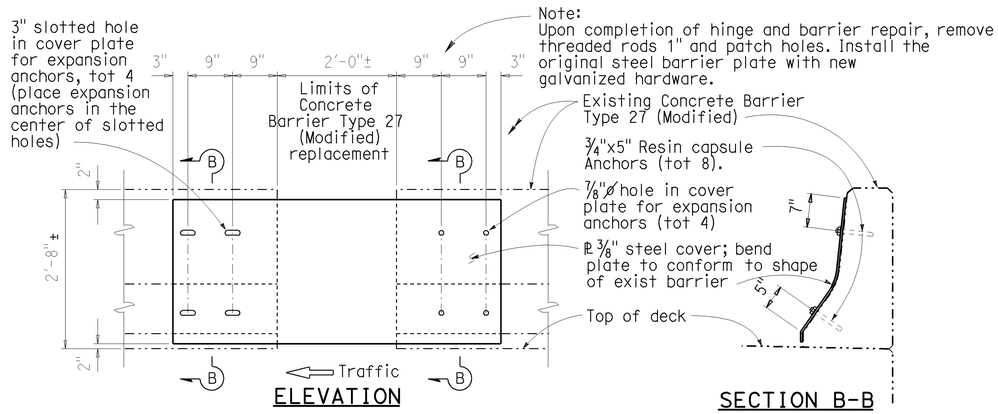

TEMPORARY BARRIER AT HINGES

CONCRETE BARRIER TYPE 27 (MODIFIED) SHOWN, TYPE 25 SIMILAR
NO SCALE

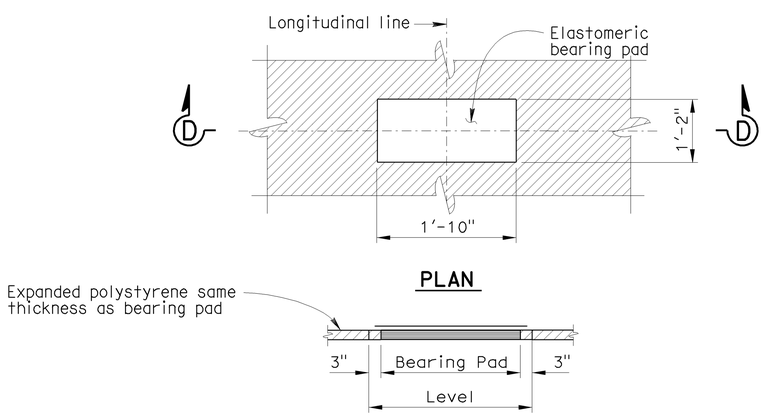

BEARING PAD DETAIL

NO SCALE

The following notes apply to JOINT SEAL TYPE B:

1) Seal must satisfy both minimum Movement Rating (MR) and minimum W1 requirements.

2) Minimum W1 is the calculated maximum width of the joint based on field measurements. After the joints have been cleaned, minimum W1 is to be calculated by the Engineer.

3) W1 shall be the smaller of the values determined as follows:

   A) 0.85 times the manufacturer's designed minimum uncompressed width of the seal.

   B) The width of the seal on the third successive test cycle of the pressure deflection test, when compressed to an average pressure of 3 psi.

Bend Type B joint seal 6" up into curb or rail on the low side of the deck where deck joint matches curb or rail joint.

For details not shown see RSP B6-21

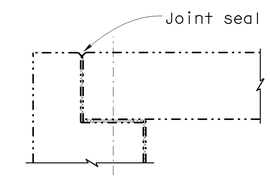

ABUTMENT

JOINT SEAL LOCATION

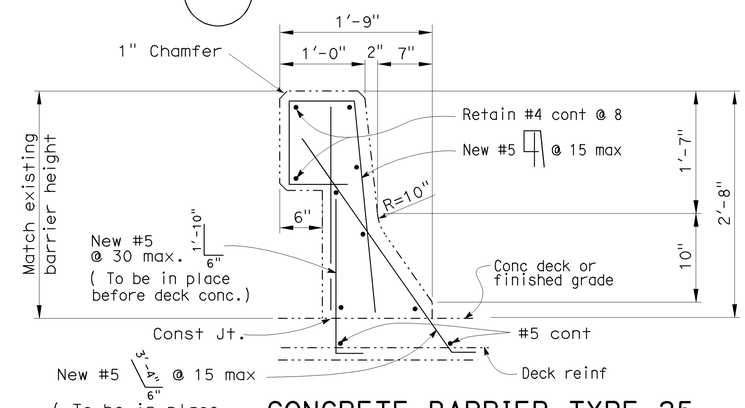

CONCRETE BARRIER TYPE 25

NO SCALE

1 1/2" PVC located in existing concrete barrier. Conduit to remain in place and protected during concrete barrier removal and reconstruction.

DESIGN	BY B. Nguyen	CHECKED F. Espinoza	
DETAILS	BY M. Hallstrom	CHECKED F. Espinoza	
QUANTITIES	BY B. Nguyen	CHECKED F. Espinoza	

STATE OF CALIFORNIA
DEPARTMENT OF TRANSPORTATION

DIVISION OF MAINTENANCE
STRUCTURE MAINTENANCE DESIGN

BRIDGE NO. 29-0291F
POST MILE 0.76

ROUTE 5 CONNECTOR OH
MISCELLANEOUS DETAILS

STRUCTURES MAINTENANCE DETAIL SHEET (ENGLISH) (REV. 09-01-10)

ORIGINAL SCALE IN INCHES FOR REDUCED PLANS 0 1 2 3

UNIT: 3488
PROJECT NUMBER & PHASE: 1014000059
CONTRACT NO.: 10-1C0101

DISREGARD PRINTS BEARING EARLIER REVISION DATES

REVISION DATES 11-7-13

SHEET 4 OF 9

FILE => 10-1c0101_04miscdets.dgn

USERNAME => s137417 DATE PLOTTED => 11-DEC-2013 TIME PLOTTED => 11:17

DIST	COUNTY	ROUTE	POST MILES TOTAL PROJECT	SHEET No.	TOTAL SHEETS
10	SJ	120	R0.8	12	16

REGISTERED CIVIL ENGINEER 12-10-13 DATE

01-06-14
PLANS APPROVAL DATE

REGISTERED PROFESSIONAL ENGINEER BRIAN P. NGUYEN No. C 68270 Exp. 9-30-15 CIVIL STATE OF CALIFORNIA

The State of California or its officers or agents shall not be responsible for the accuracy or completeness of electronic copies of this plan sheet.

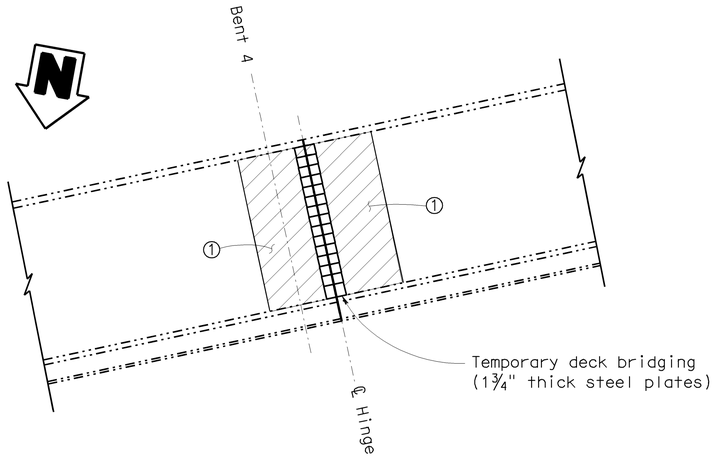

CONCRETE TAPER DETAIL

No Scale

Note:

① Place tapered 200:1 (leading / trailing edge = ½" thick Max) rigid pavement material at approach and departure of construction.

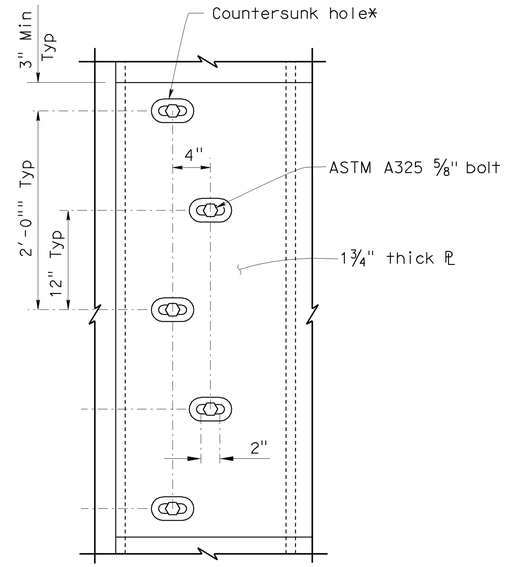

BOLT STAGGER DETAIL

1½" = 1'-0"

NOTES: (APPLY TO THIS SHEET ONLY)

* Countersink bolt holes with slotted plate holes to allow for thermal expansion.

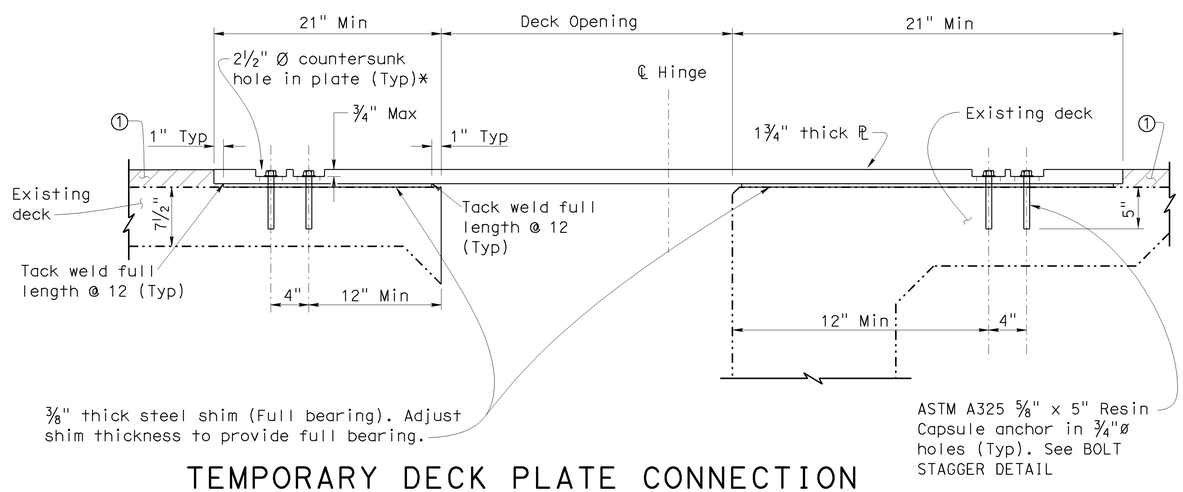

TEMPORARY DECK PLATE CONNECTION

NO SCALE

NOTE:
THE CONTRACTOR SHALL VERIFY ALL CONTROLLING FIELD DIMENSIONS BEFORE ORDERING OR FABRICATING ANY MATERIAL.

	BY	CHECKED
DESIGN	B. Nguyen	F. Espinoza
DETAILS	M. Hallstrom	F. Espinoza
QUANTITIES	B. Nguyen	F. Espinoza

STATE OF CALIFORNIA
DEPARTMENT OF TRANSPORTATION

DIVISION OF MAINTENANCE
STRUCTURE MAINTENANCE DESIGN

BRIDGE NO. 29-0291F
POST MILE 0.76

ROUTE 5 CONNECTOR OH
DECK PLATING DETAILS

STRUCTURES MAINTENANCE DETAIL SHEET (ENGLISH) (REV. 09-01-10)

ORIGINAL SCALE IN INCHES FOR REDUCED PLANS 0 1 2 3

UNIT: 3488
PROJECT NUMBER & PHASE: 1014000059
CONTRACT NO.: 10-1C0101

DISREGARD PRINTS BEARING EARLIER REVISION DATES

REVISION DATES 11-7-13

SHEET 5 OF 9

FILE => 10-1c0101_05deck-pl-dets.dgn

USERNAME => s137417 DATE PLOTTED => 11-DEC-2013 TIME PLOTTED => 11:17

DIST.	COUNTY	ROUTE	POST MILES TOTAL PROJECT	SHEET NO.	TOTAL SHEETS
10	SJ	120	R0.8	13	16

12-10-13
REGISTERED ENGINEER - CIVIL

01-06-14
PLANS APPROVAL DATE

REGISTERED PROFESSIONAL ENGINEER BRIAN P. NGUYEN No. C 68270 Exp. 9-30-15 CIVIL STATE OF CALIFORNIA

The State of California or its officers or agents shall not be responsible for the accuracy or completeness of electronic copies of this plan sheet.

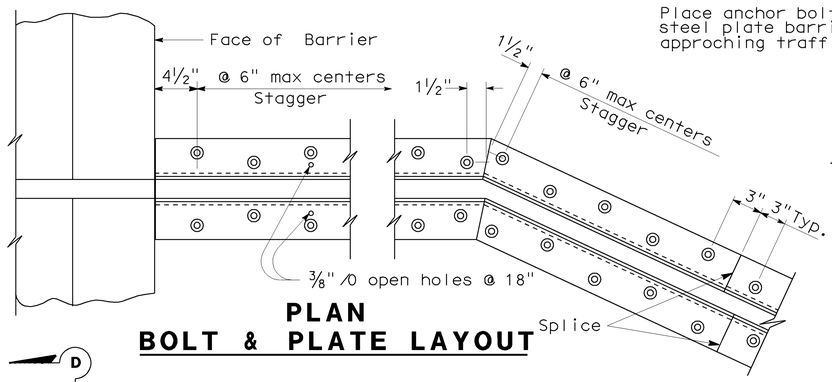

PLAN
BOLT & PLATE LAYOUT

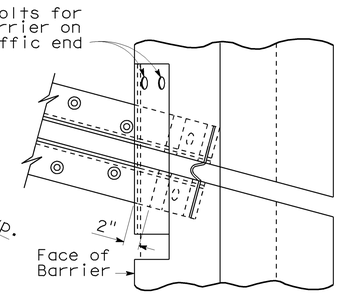

SKEW ≤ 20°

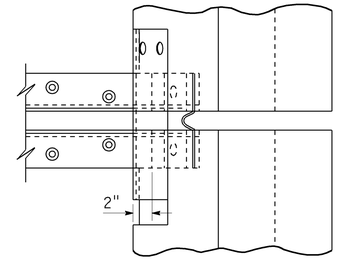

SKEW > 20°

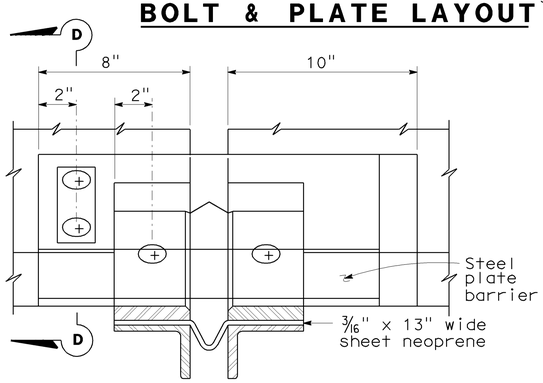

VIEW B-B

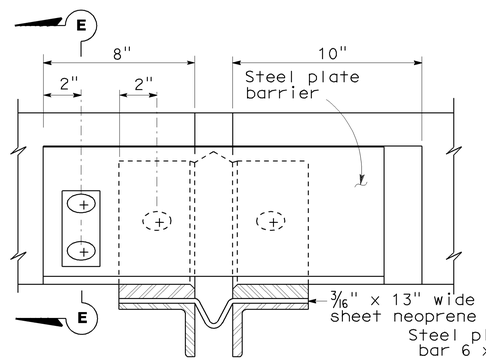

VIEW C-C

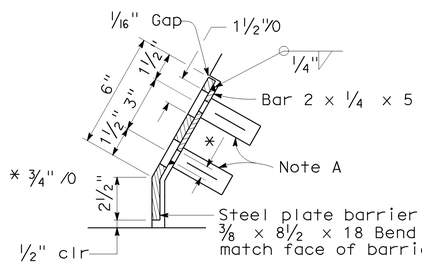

SECTION D-D

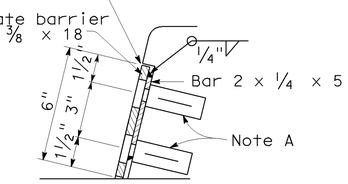

SECTION E-E

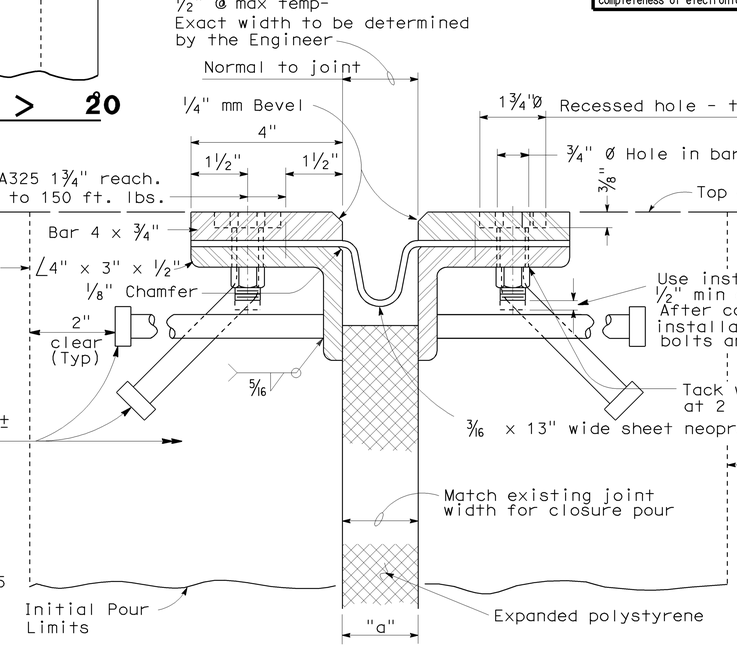

SECTION A-A

Note :
Stagger anchor studs @ 4½"± on centers thus:

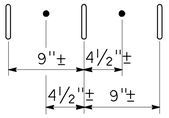

Joint Opening Table "a" dimension (in.)				
TEMP (F)	MR=1½	MR=2	MR=3	MR=5½
41	2	2⅕	3	4⅝
66	1½	1¾	2	3¼
90	1 1/7	1¼	1¼	1⅞
114	¾	¾	½	½

1

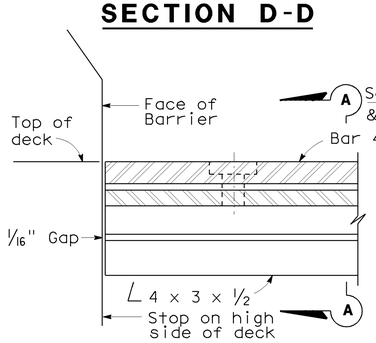

HIGH SIDE BARRIER DETAIL

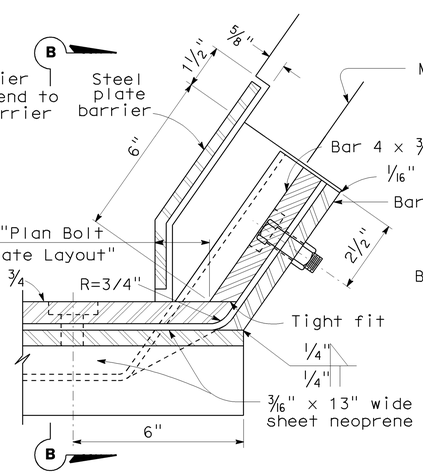

LOW SIDE BARRIER DETAIL
(See Note B)

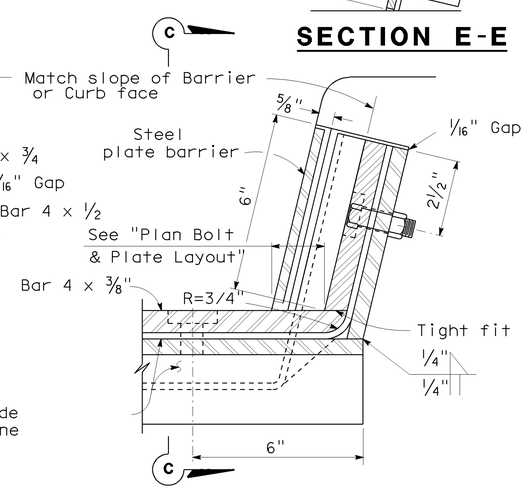

SIDEWALK DETAIL
(See Note B)

NOTES:

Full penetration butt welds may be substituted for fillet welds on all anchor studs.

Alternate types of anchor studs may be permitted subject to the approval by the Engineer.

Joint seal assembly to be used in conjunction with closure pour. (See other sheets for limits). Closure pour shall not be placed until final deck surface is within the tolerances specified.

Use joint at crown of roadway, at any change in traverse slope in deck and at changes in horizontal direction. Place other joints at or near lanes. All metal parts to be painted or galvanized after fabrication.

Sheet neoprene shall be fabricated in one continuous piece or joints shall be vulcanized. Neoprene shall be fabricated to bend around corners. 1" holes in neoprene sheets shall be drilled or punched so that the neoprene is not distorted at the time of installation.

NOTE A

Insert assembly or expansion anchorage for ⅝" x 1¾" A325 bolt.

NOTE B

Use the sidewalk Detail at all sidewalk joints. Use the Barrier Detail at both sides if the roadway is crowned or if the difference in elevation between the ends of the seal is 0.5' or less.

NO SCALE

STANDARD DRAWING

FILE NO. xs8-010e

APPROVED BY T. DELIS
RESPONSIBLE TECHNICAL SPECIALIST
APPROVAL DATE 5-8-08

RELEASED BY ROBERTO LACALLE
RESPONSIBLE OFFICE CHIEF
RELEASE DATE 5-8-08

1 Detail Modified

STATE OF CALIFORNIA
DEPARTMENT OF TRANSPORTATION

DIVISION OF ENGINEERING SERVICES

BRIDGE NO. 29-0291F
POST MILE 0.76

ROUTE 5 CONNECTOR OH
JOINT SEAL ASSEMBLY (MAXIMUM MOVEMENT RATING = 4")

DS OSD 2147A (ENGLISH STANDARD DRAWING "XS" BORDER REV. 01/11/08)

ORIGINAL SCALE IN INCHES FOR REDUCED PLANS 0 1 2 3

CU 10
EA 1C0101

DISREGARD PRINTS BEARING EARLIER REVISION DATES 11-7-13

REVISION DATES (PRELIMINARY STAGE ONLY)

SHEET 6 OF 9

USERNAME => s137417

10-1c0101_06jointseal

DATE PLOTTED => 11-DEC-2013 TIME PLOTTED => 11:17

DIST	COUNTY	ROUTE	POST MILES TOTAL PROJECT	SHEET No.	TOTAL SHEETS
10	SJ	120	R0.8	14	16

REGISTERED CIVIL ENGINEER 12-10-13 DATE

01-06-14
PLANS APPROVAL DATE

REGISTERED PROFESSIONAL ENGINEER BRIAN P. NGUYEN No. C 68270 Exp. 9-30-15 CIVIL STATE OF CALIFORNIA

The State of California or its officers or agents shall not be responsible for the accuracy or completeness of electronic copies of this plan sheet.

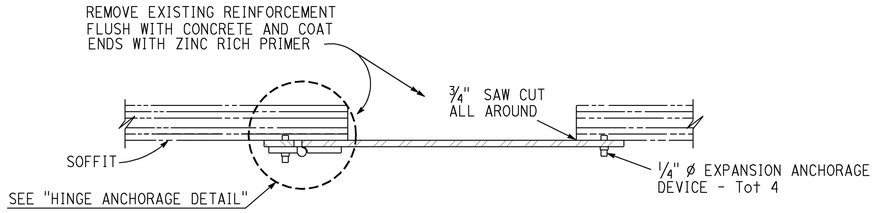

SECTION A-A

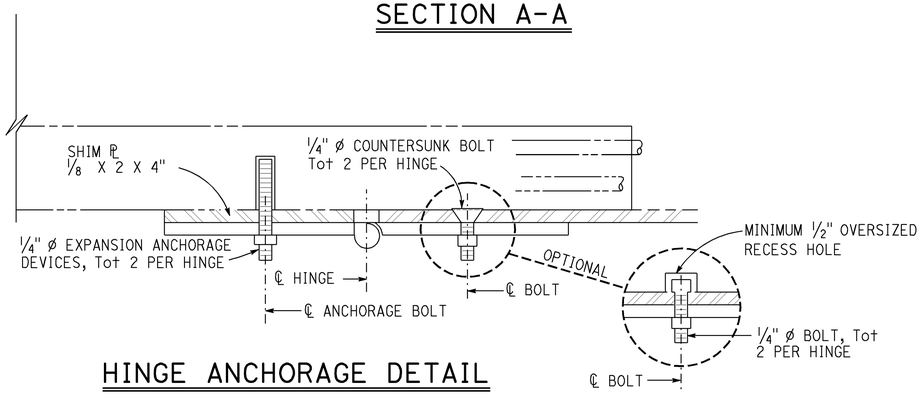

HINGE ANCHORAGE DETAIL

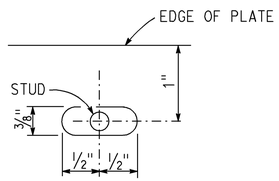

DETAIL A

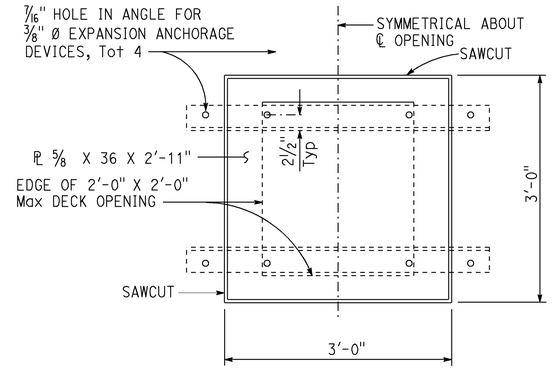

PLAN

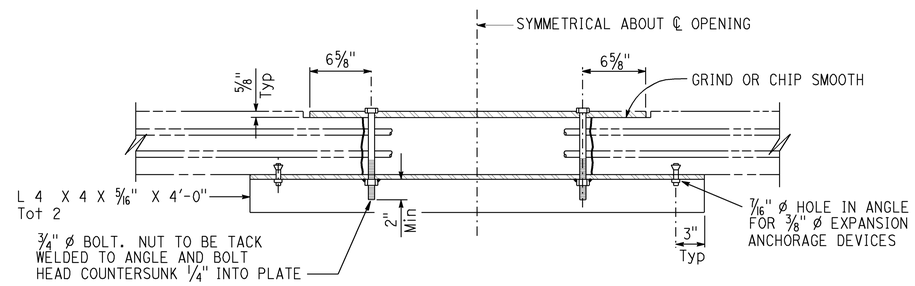

TEMPORARY DECK COVER PLATE

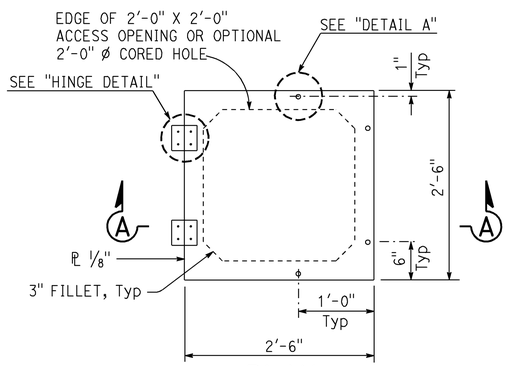

PLAN

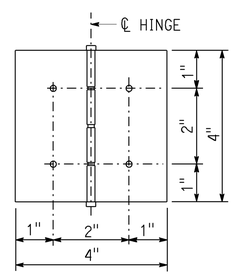

HINGE DETAIL

NOTES:

1. Non-removable pin in hinge
2. Hinge assembly to be galvanized, brass or stainless steel
3. Use thread locking system for all hinge nuts
4. Hinge assembly to be minimum 1/8" Thick

SOFFIT ACCESS DOOR ASSEMBLY

NOTE: SOFFIT ACCESS DOOR OPENING DIRECTION TO BE DETERMINED BY THE ENGINEER

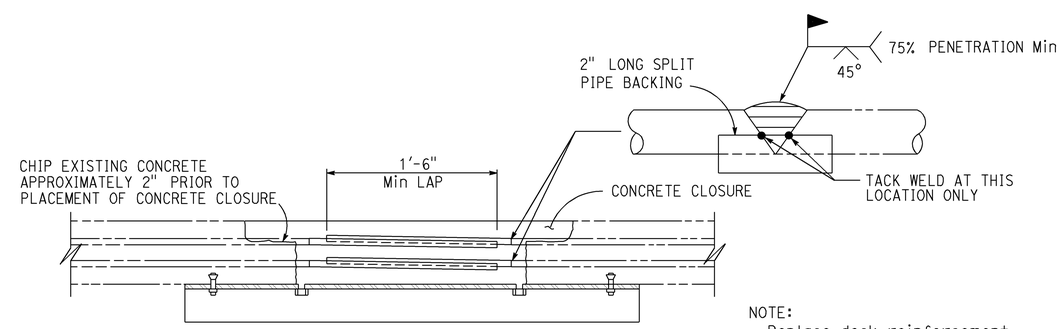

DECK CLOSURE

NOTE:
Replace deck reinforcement. Butt weld to existing

NO SCALE

	BY	CHECKED
DESIGN	B. Nguyen	F. Espinoza
DETAILS	M. Hallstrom	F. Espinoza
QUANTITIES	B. Nguyen	F. Espinoza

STATE OF CALIFORNIA
DEPARTMENT OF TRANSPORTATION

DIVISION OF MAINTENANCE
STRUCTURE MAINTENANCE DESIGN

BRIDGE NO. 29-0291F
POST MILE 0.76

ROUTE 5 CONNECTOR OH
DECK AND SOFFIT OPENINGS

STRUCTURES MAINTENANCE DETAIL SHEET (ENGLISH) (REV. 09-01-10)

ORIGINAL SCALE IN INCHES FOR REDUCED PLANS 0 1 2 3

UNIT: 3488
PROJECT NUMBER & PHASE: 1014000059
CONTRACT NO.: 10-1C0101

DISREGARD PRINTS BEARING EARLIER REVISION DATES

REVISION DATES 11-7-13

SHEET 7 OF 9

FILE => 10-1c0101_07deck_soffit.dgn

USERNAME => b137477 DATE PLOTTED => 11-DEC-2013 TIME PLOTTED => 11:17

DIST	COUNTY	ROUTE	POST MILES TOTAL PROJECT	SHEET No.	TOTAL SHEETS
10	SJ	120	R0.8	15	16

REGISTERED CIVIL ENGINEER 12-10-13 DATE

01-06-14
PLANS APPROVAL DATE

REGISTERED PROFESSIONAL ENGINEER BRIAN P. NGUYEN No. C 68270 Exp. 9-30-15 CIVIL STATE OF CALIFORNIA

The State of California or its officers or agents shall not be responsible for the accuracy or completeness of electronic copies of this plan sheet.

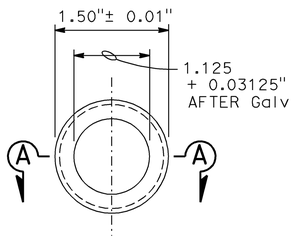

END VIEW

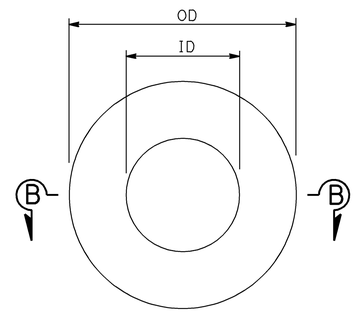

PLAN

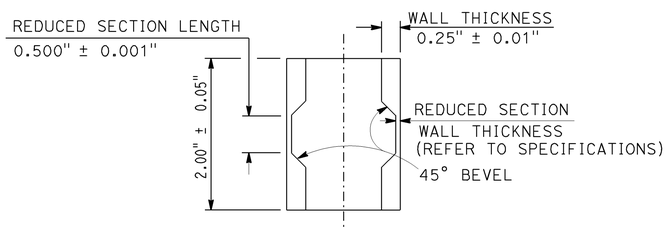

SECTION A-A

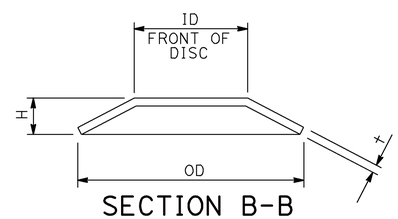

SECTION B-B
(SINGLE SPRING)

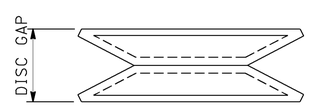

AS INSTALLED ON STUD

"ALL DIMENSIONS ARE BEFORE GALVANIZING EXCEPT AS NOTED"

CABLE YIELD INDICATOR

NOTE: FOR DIMENSIONS NOT SHOWN, SEE TABLE

DISC SPRING

DISC SPRINGS AND WASHERS

ALL DIMENSIONS IN INCHES, EXCEPT AS NOTED

	DISC SPRING					STEEL SPHERICAL WASHER			THICK WASHER		
L*	ID	OD	†	H	COLOR CODE	ID	OD	NOMINAL THICKNESS	ID	OD	†**
00.0 - 25.0	1.00	2.00	0.065	0.130	WHITE	1.19	2.25	0.50	1.03	2.00	0.25
25.1 - 31.9	1.00	2.00	0.084	0.136	RED	1.19	2.25	0.50	1.03	2.00	0.25
32.0 - 37.9	1.00	2.00	0.097	0.145	BLUE	1.19	2.25	0.50	1.03	2.00	0.25
38.0 - 45.0	1.25	2.50	0.120	0.180	YELLOW	1.31	2.50	0.50	1.16	2.00	0.25

* For limits of length L (ft), use effective length of cable, from face-to-face outer surfaces of anchorage plate or bearing bar. Refer to Bridge detail sheets for approximate length required.

** MINIMUM VALUE

NOTE: All OD and ID dimensions for washers and disc springs shall meet the dimensional tolerances for hardened steel washers, ASTM F436

RESTRAINER UNIT INSTALLATION PROCEDURE

1a. For typical 'girder to opposite girder' or 'bent cap to girder' restrainers with one adjustment end:

Place nut, washer and Thread Locking System on fixed end stud prior to tightening the cable

The adjustment end shall be at the same end of the cable for all restrainers at a specific hinge or bent

Tighten the nuts on the cable from the Adjustment End of restrainer until the disc springs collapse and there is no disc gap remaining between the discs

1b. For typical "U" or "V" shaped restrainers units with two adjustment ends: Install Cable Yield Indicator, spherical washers, disc springs, washers and nuts on both adjustment ends of cable type restrainers

The ends of the cable must be adjusted simultaneously.
Tighten the nuts on the cable from the adjustment ends of restrainer until the disc springs collapse and there is no disc gap remaining between the discs on either end of the cable

2. Place thread locking system on adjustment end(s) after tightening the cable but before backing off the nut(s)

Back off the nut(s) at the adjustable anchorage(s) a distance equal to the maximum additional amount that the hinge is expected to open, relative to existing ambient conditions, as shown on the plans for movement rating

STANDARD DRAWING
FILE NO. xs7-090
APPROVAL DATE July 2011

STATE OF CALIFORNIA
DEPARTMENT OF TRANSPORTATION

DIVISION OF ENGINEERING SERVICES

BRIDGE NO. 29-0291F
POST MILE 0.76

ROUTE 5 CONNECTOR OH
CABLE RESTRAINER ADJUSTMENT HARDWARE

DS OSD 2147A (ENGLISH STANDARD DRAWING "XS" BORDER REV. (02-02-11))

ORIGINAL SCALE IN INCHES FOR REDUCED PLANS 0 1 2 3

UNIT: 3488
PROJECT NUMBER & PHASE: 1014000059
CONTRACT NO.: 10-1C0101

DISREGARD PRINTS BEARING EARLIER REVISION DATES

REVISION DATES 11-7-13

SHEET 8 OF 9

FILE => 10-1c0101_08cable-rest-dets.dgn

USERNAME => s137417 DATE PLOTTED => 11-DEC-2013 TIME PLOTTED => 11:17

DIST	COUNTY	ROUTE	POST MILES TOTAL PROJECT	SHEET No.	TOTAL SHEETS
10	SJ	120	R0.8	16	16

REGISTERED CIVIL ENGINEER 12-10-13 DATE

01-06-14
PLANS APPROVAL DATE

REGISTERED PROFESSIONAL ENGINEER BRIAN P. NGUYEN No. C 68270 Exp. 9-30-15 CIVIL STATE OF CALIFORNIA

The State of California or its officers or agents shall not be responsible for the accuracy or completeness of electronic copies of this plan sheet.

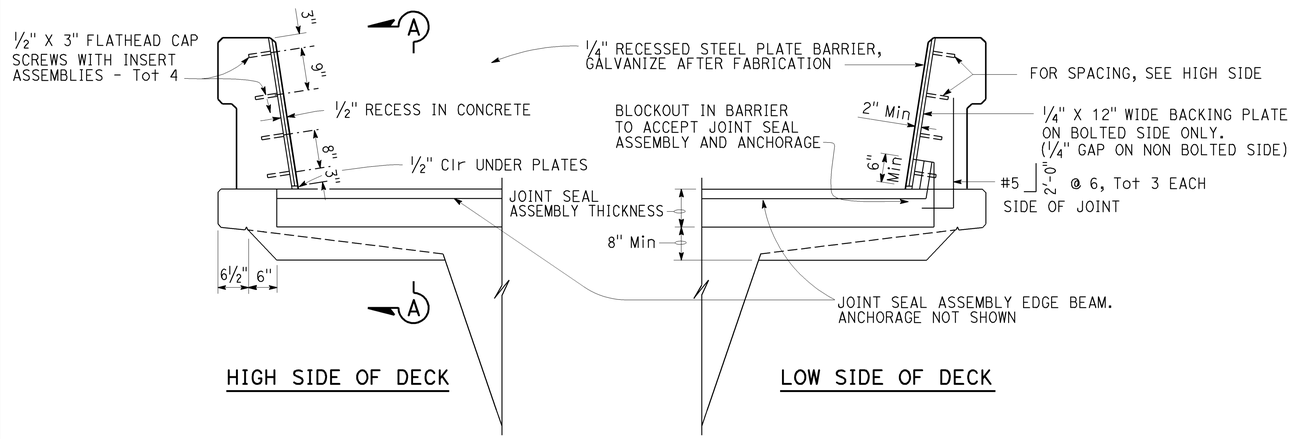

SEAL INSTALLATION

¾" = 1'-0"

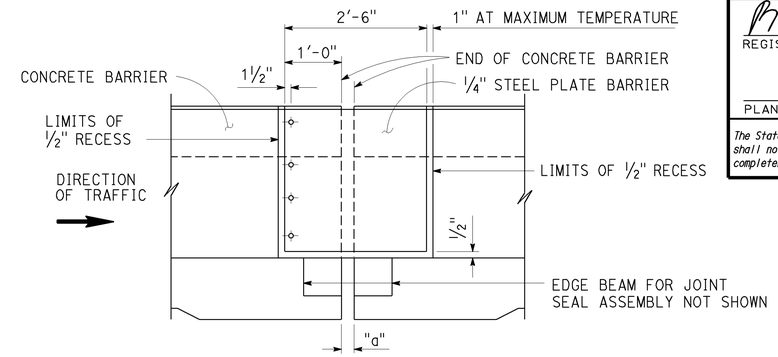

ELEVATION A-A

¾" = 1'-0"

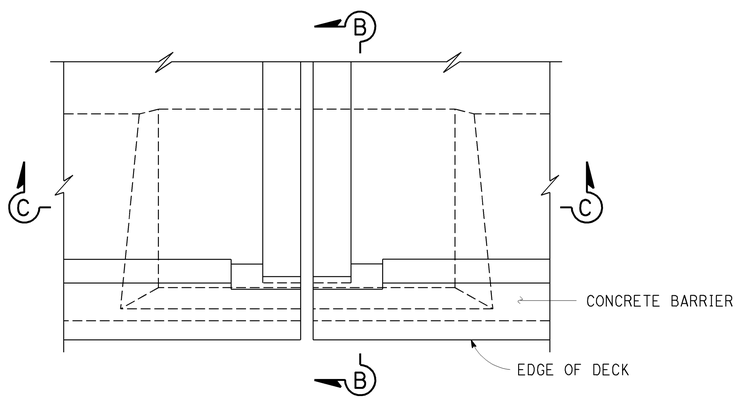

PLAN - DECK JOINT

¾" = 1'-0"

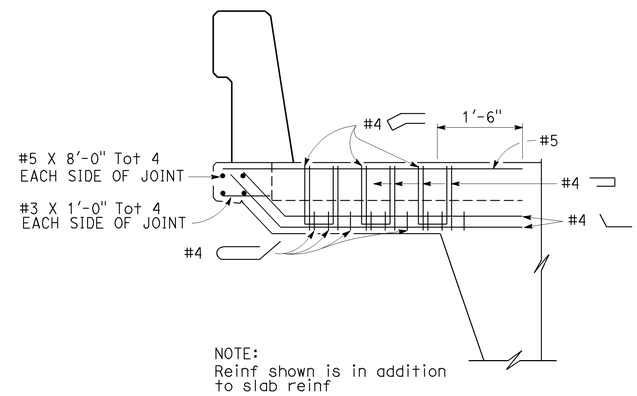

SECTION B-B

¾" = 1'-0"

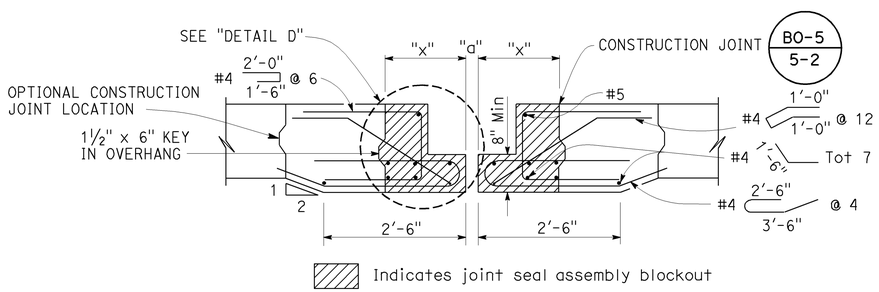

SECTION C-C

¾" = 1'-0"

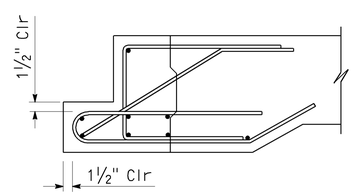

DETAIL D

1" = 1'-0"

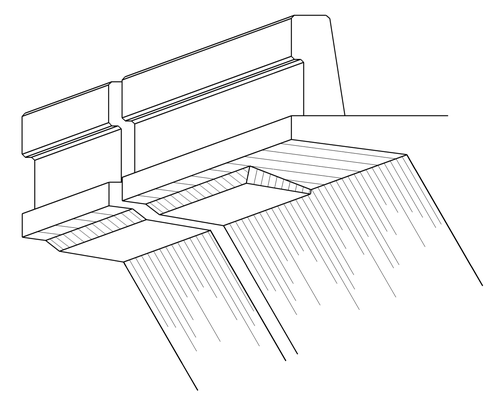

DECK OVERHANG AT HINGE

NO SCALE

STANDARD DRAWING					
FILE NO. xs8-020	APPROVAL DATE July 2011	STATE OF CALIFORNIA DEPARTMENT OF TRANSPORTATION	DIVISION OF ENGINEERING SERVICES	BRIDGE NO. 29-0291F / POST MILE 0.76	ROUTE 5 CONNECTOR OH JOINT SEAL - HINGE DETAILS MOVEMENT RATING GREATER THAN 3"

DS OSD 2147A (ENGLISH STANDARD DRAWING "XS" BORDER REV. (02-02-11))

ORIGINAL SCALE IN INCHES FOR REDUCED PLANS 0 1 2 3

UNIT: 3488
PROJECT NUMBER & PHASE: 1014000059
CONTRACT NO.: 10-1C0101

DISREGARD PRINTS BEARING EARLIER REVISION DATES

REVISION DATES				SHEET	OF
11-7-13				9	9

FILE => 10-1c0101_09joint-hinge-dets.dgn

USERNAME => s137417 DATE PLOTTED => 11-DEC-2013 TIME PLOTTED => 11:17