INFORMATION HANDOUT

For Contract No. 10-0W1104
At 10-SJ-4-R16.2

Identified by
Project ID 1000020426

MATERIALS INFORMATION

Manufacturer's Drawings for Alternative In-Line Terminal System

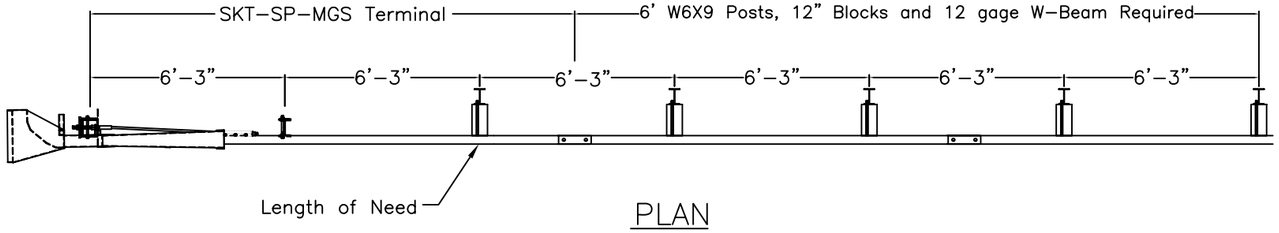

PLAN

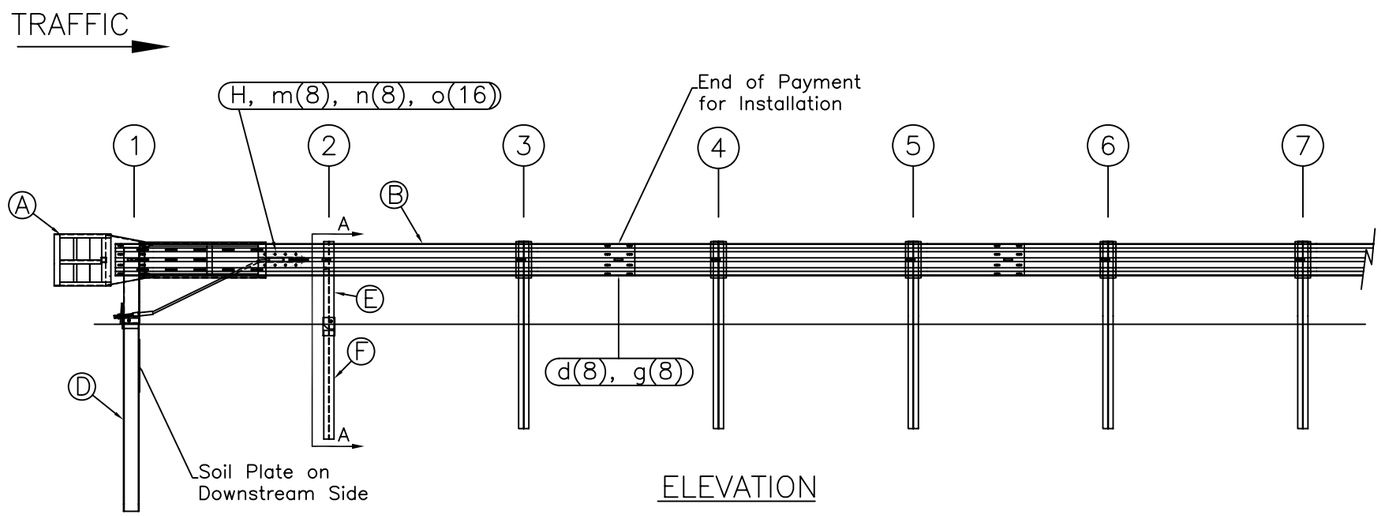

ELEVATION

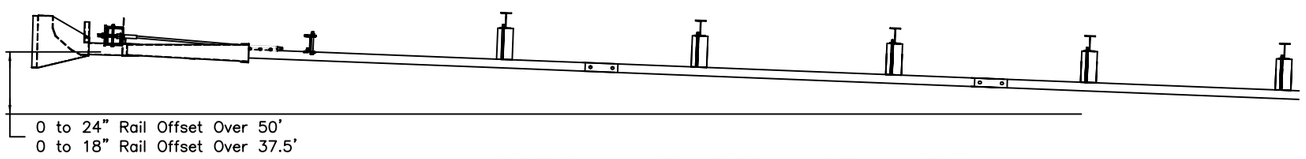

OPTIONAL FLARED INSTALLATION

25:1 maximum flare rate

ITEM	QTY	BILL OF MATERIALS	ITEM NO.
A	1	IMPACT HEAD	S3000
B	1	W-BEAM GUARDRAIL END SECTION, 12 Ga.	MGS-SF1303
C	1	FIRST POST TOP (6X6X$\frac{1}{8}$" Tube)	TPHP1A
D	1	FIRST POST BOTTOM (6' W6X15)	TPHP1B
E	1	SECOND POST ASSEMBLY TOP	UHP2A
F	1	SECOND POST ASSEMBLY BOTTOM	HP3B
G	1	BEARING PLATE	E750
H	1	CABLE ANCHOR BOX	S760
J	1	BCT CABLE ANCHOR ASSEMBLY	E770
		HARDWARE (ALL DIMENSIONS IN INCHES)	
a	2	5/16 x 1 HEX BOLT GRD 5	B5160104A
b	4	5/16 WASHER	W0516
c	2	5/16 HEX NUT	N0516
d	9	5/8 Dia. x 1 1/4 SPLICE BOLT (POST #2)	B580122
e	1	5/8 Dia. x 9 HEX BOLT GRD 5	B580904A
f	3	5/8 WASHER	W050
g	10	5/8 Dia. H.G.R NUT	N050
h	1	3/4 Dia. x 8 1/2 HEX BOLT GRD A449	B340854A
j	1	3/4 Dia. HEX NUT	N030
k	2	1 ANCHOR CABLE HEX NUT	N100
l	2	1 ANCHOR CABLE WASHER	W100
m	8	CABLE ANCHOR BOX SHOULDER BOLT	SB58A
n	8	1/2 A325 STRUCTURAL NUT	N055A
o	16	1 1/16 OD x 9/16 ID A325 STR. WASHER	W050A

GENERAL NOTES:

1. All bolts, nuts, cable assemblies, cable anchors and bearing plates shall be galvanized.
2. The lower sections of the Posts 1&2 shall not protrude more than 4 in above the ground (measured along a 5' cord). Site grading may be necessary to meet this requirement.
3. The lower sections of the hinged posts should not be driven with the upper post attached. If the post is placed in a drilled hole, the backfill material must be satisfactorily compacted to prevent settlement.
4. When competent rock is encountered, a 12" Ø post hole, 20 in. deep cored into the rock surface may be used if approved by the engineer for post 1. Granular material will be placed in the bottom of the hole, approximately 2.5" deep to provide drainage. The first post can be field cut to length, placed in the hole and backfilled with suitable backfill. The soil plate may be trimmed if required.
5. A site evaluation should be considered if there is less than 25' between the outlet side of the terminal and any adjacent driving lane.
6. The breakaway cable assembly must be taut. A locking device (vice grips or channel lock pliers) should be used to prevent the cable from twisting when tightening nuts.

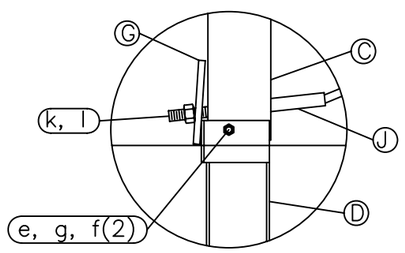

Post #1 Connection Detail

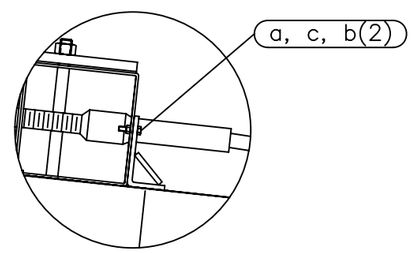

Impact Head Connection Detail

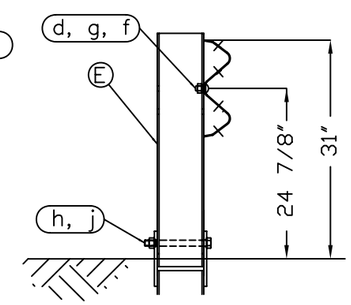

SECTION A-A

Post #2

RSI
Road Systems, Inc.
Big Spring, TX
Phone: 432-263-2435
or Phone: 330-346-0721

SKT-SP-MGS Terminal
Midwest Guardrail System
31" Top of Rail

Sheet: 1
Date: 02/24/10
By: JRR
Drawing Name: SKT-SP-S-MGS
Scale: None
Rev: 0

Appendix A - System Configuration, 37' 6" MGS

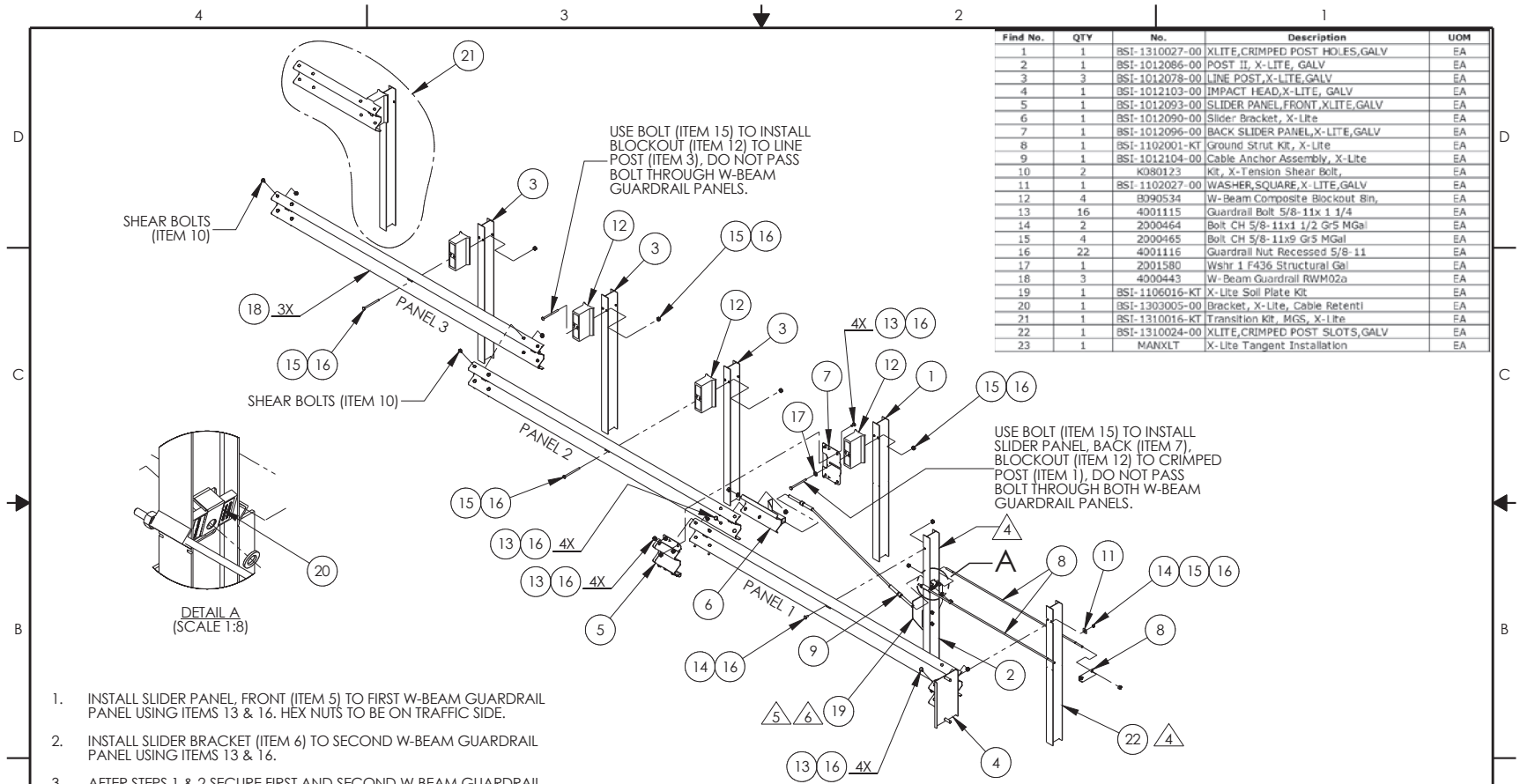

Find No.	QTY	No.	Description	UOM
1	1	BSI-1310027-00	XLITE,CRIMPED POST HOLES,GALV	EA
2	1	BSI-1012086-00	POST II, X-LITE, GALV	EA
3	3	BSI-1012078-00	LINE POST,X-LITE,GALV	EA
4	1	BSI-1012103-00	IMPACT HEAD,X-LITE, GALV	EA
5	1	BSI-1012093-00	SLIDER PANEL,FRONT,XLITE,GALV	EA
6	1	BSI-1012090-00	Slider Bracket, X-Lite	EA
7	1	BSI-1012096-00	BACK SLIDER PANEL,X-LITE,GALV	EA
8	1	BSI-1102001-KT	Ground Strut Kit, X-Lite	EA
9	1	BSI-1012104-00	Cable Anchor Assembly, X-Lite	EA
10	2	K080123	Kit, X-Tension Shear Bolt,	EA
11	1	BSI-1102027-00	WASHER,SQUARE,X-LITE,GALV	EA
12	4	B090534	W-Beam Composite Blockout 8in,	EA
13	16	4001115	Guardrail Bolt 5/8-11x 1 1/4	EA
14	2	2000464	Bolt CH 5/8-11x1 1/2 Gr5 MGal	EA
15	4	2000465	Bolt CH 5/8-11x9 Gr5 MGal	EA
16	22	4001116	Guardrail Nut Recessed 5/8-11	EA
17	1	2001580	Wshr 1 F436 Structural Gal	EA
18	3	4000443	W-Beam Guardrail RWM02a	EA
19	1	BSI-1106016-KT	X-Lite Soil Plate Kit	EA
20	1	BSI-1303005-00	Bracket, X-Lite, Cable Retentl	EA
21	1	BSI-1310016-KT	Transition Kit, MGS, X-Lite	EA
22	1	BSI-1310024-00	XLITE,CRIMPED POST SLOTS,GALV	EA
23	1	MANXLT	X-Lite Tangent Installation	EA

1. INSTALL SLIDER PANEL, FRONT (ITEM 5) TO FIRST W-BEAM GUARDRAIL PANEL USING ITEMS 13 & 16. HEX NUTS TO BE ON TRAFFIC SIDE.
2. INSTALL SLIDER BRACKET (ITEM 6) TO SECOND W-BEAM GUARDRAIL PANEL USING ITEMS 13 & 16.
3. AFTER STEPS 1 & 2 SECURE FIRST AND SECOND W-BEAM GUARDRAIL PANEL USING ITEMS 7, 13 & 16. HEX NUTS TO BE ON TRAFFIC SIDE.
4. SLOT ON POSTS 1 AND 2 TO FACE GUARDRAIL PANEL.
5. IF ROCK OR STIFF SOIL IS ENCOUNTERED, THE POST AND SOIL PLATE MAY BE INSTALLED BY AUGERING AND BACKFILLING THE HOLE. EXTRA CARE MUST BE TAKEN TO PREVENT SETTLEMENT OR LATERAL DISPLACEMENT OF THE POST. BACKFILL MATERIAL SHALL BE COMPACTED TO OPTIMUM COMPACTION.
6. IF ROCK IS ENCOUNTERED, THE SOIL PLATE MAY BE MODIFIED IF APPROVED BY THE PROJECT ENGINEER.

© 2010 BARRIER SYSTEMS INC. THE INFORMATION CONTAINED IN THIS DRAWING IS THE SOLE PROPERTY OF BARRIER SYSTEMS INC. ANY REPRODUCTION IN PART OR WHOLE WITHOUT THE WRITTEN PERMISSION OF BARRIER SYSTEMS INC. IS PROHIBITED.

APPROVALS

DRAWN BY:	JMT
DRAWN DATE:	10/09/2013
APPR'D BY:	GAD
APPR'D DATE:	10/09/13

UNLESS OTHERWISE SPECIFIED DIMENSIONS ARE IN INCHES. TOLERANCES ARE:
FRACTIONS ±1/16 DECIMAL .XX = ±.03 .XXX = ±.010 ANGLES ±1/2°
INTERPRET DIMENSIONS AND TOLERANCES PER ASME Y14.5-1994

THIRD ANGLE PROJECTION

DO NOT SCALE DRAWING

REV	ECN#	DATE
B	2220	01/23/14
A	2165	11/13/13
0	2151	10/09/13

BARRIER SYSTEMS
A LINDSAY TRANSPORTATION SOLUTIONS COMPANY
3333 Vaca Valley Parkway Ste 800
Vacaville, CA 95688
Tel: 888-800-3691
www.barriersystemsinc.com

TITLE
X-LITE SYSTEM ASSEMBLY, TANGENT, TRANSITION TO MGS

SIZE B | DWG NO. XLTSUS-MGS | REV. B
SCALE 1:40 | SHEET 1 OF 2

Doc. B100108

ITEM NO.	PART NUMBER	DESCRIPTION	QTY	UOM
1	BSI-1301252-KT	X-Tension Terminal Comp, 31 in	1	EACH
2	K070202	X-Tension Hardware Kit, GT,	1	EACH
3	K070206	X-Tension System Hardware Kit,	1	EACH
4	K070210	X-Tension GT Guardrail	1	EACH
5	B061100	BSI, I-Beam Post, Middle, X350	1	EACH
6	MANXT1	X-TENSION Installation Manual	1	EACH

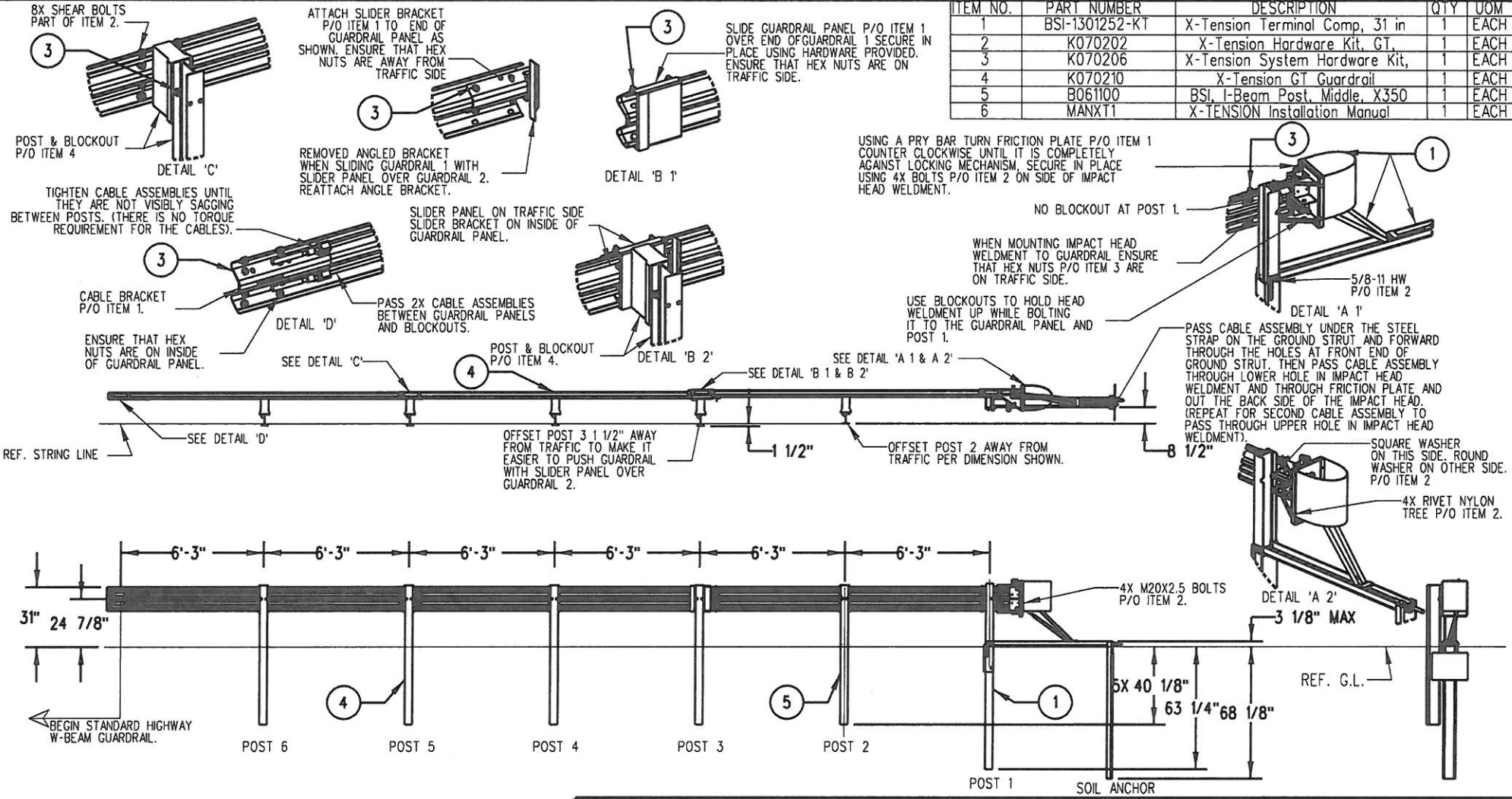

NOTES: UNLESS OTHERWISE SPECIFIED.

1. SYSTEM TO BE INSTALLED PER MANUFACTURER SPECIFICATIONS.
2. ONLY TIGHTEN THE CABLE ASSEMBLIES USING THE NUTS AT THE CABLE BRACKET (SEE DETAIL 'D'). DO NOT TIGHTEN THE CABLES AT THE FRONT OF THE GROUND ANCHOR.
3. WHEN DRIVING STEEL POST, ENSURE THAT A DRIVING CAP WITH TIMBER OR PLASTIC INSERT IS USED TO PREVENT DAMAGE TO THE GALVANIZING TO THE TOP OF THE POST.

© 2012 BARRIER SYSTEMS INC. THE INFORMATION CONTAINED IN THIS DRAWING IS THE SOLE PROPERTY OF BARRIER SYSTEMS INC. ANY REPRODUCTION IN PART OR WHOLE WITHOUT THE WRITTEN PERMISSION OF BARRIER SYSTEMS INC. IS PROHIBITED.

APPROVALS

DRAWN BY:	NMV
DRAWN DATE:	2/08/13
APPR'D BY:	JMT
APPR'D DATE:	2/08/13

UNLESS OTHERWISE SPECIFIED DIMENSIONS ARE IN INCHES. TOLERANCES ARE:
FRACTIONS ±1/16 DECIMAL .XX - ±.03 .XXX - ±.010 ANGLES ±1/2°
INTERPRET DIMENSIONS AND TOLERANCES PER ASME Y14.5-1994
THIRD ANGLE PROJECTION
DO NOT SCALE DRAWING

REV	ECN#	DATE
B	2067	03/02/15
A	2022	2/08/13

LINDSAY TRANSPORTATION SOLUTIONS™

BARRIER SYSTEMS INC.
3333 Vaca Valley Parkway Ste 800
Vacaville, CA 95688
Tel: 888-800-3691
www.barriersystemsinc.com

TITLE
X-TENSION GUARDRAIL TERMINAL SYSTEM STEEL POST WITH COMPOSITE BLOCKOUT 31" RAIL HEIGHT

SIZE	DWG NO.	REV.
B	XTGTSS5	B

SCALE 1:50 SHEET 1 OF 1