Dist	COUNTY	ROUTE	POST MILES TOTAL PROJECT	SHEET No.	TOTAL SHEETS
10	Mer	152	R6.0/R10.1	1	28

ACNHG-P152(081)E

STATE OF CALIFORNIA
DEPARTMENT OF TRANSPORTATION

PROJECT PLANS FOR CONSTRUCTION ON
STATE HIGHWAY

IN MERCED COUNTY
ABOUT 10 MILES WEST OF LOS BANOS
FROM SAN LUIS DAM SERVICE ROAD
TO SAN LUIS FOREBAY BRIDGE

TO BE SUPPLEMENTED BY STANDARD PLANS DATED MAY 2006

INDEX OF PLANS

SHEET No.	DESCRITPTION
1	TITLE AND LOCATION MAP
2-3	TYPICAL CROSS SECTION
4-6	PROFILES
7-14	CONSTRUCTION DETAILS
15	CONSTRUCTION AREA SIGNS
16	SUMMARY OF QUANTITIES
17-28	REVISED AND NEW STANDARD PLANS

THE STANDARD PLANS LIST APPLICABLE TO THIS CONTRACT IS INCLUDED IN THE NOTICE TO BIDDERS AND SPECIAL PROVISIONS BOOK.

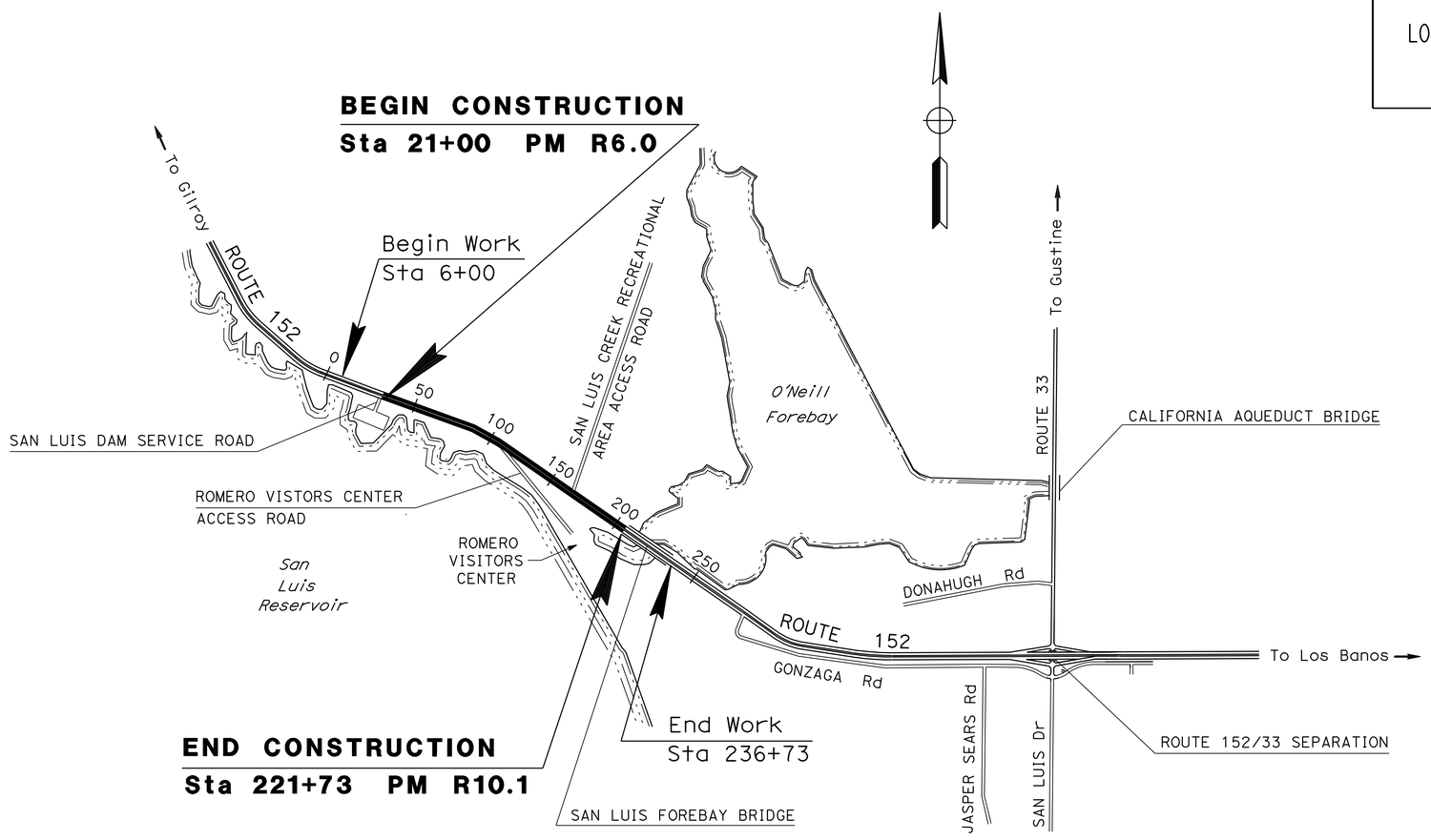

PROJECT MANAGER: MARK MCAVOY

DESIGN ENGINEER: JOSE HUERTA

PROJECT ENGINEER REGISTERED CIVIL ENGINEER — DATE 4/13/12

April 30, 2012
PLANS APPROVAL DATE

REGISTERED PROFESSIONAL ENGINEER — HongLoan T. Luong — No. 63864 — Exp. 9/30/12 — CIVIL — STATE OF CALIFORNIA

THE STATE OF CALIFORNIA OR ITS OFFICERS OR AGENTS SHALL NOT BE RESPONSIBLE FOR THE ACCURACY OR COMPLETENESS OF SCANNED COPIES OF THIS PLAN SHEET.

THE CONTRACTOR SHALL POSSESS THE CLASS (OR CLASSES) OF LICENSE AS SPECIFIED IN THE "NOTICE TO BIDDERS."

NO SCALE

CONTRACT No.	10-0S9404
PROJECT ID	1000000268

LAST REVISION 00-00-00 — DATE PLOTTED => 30-MAY-2012 — TIME PLOTTED => 13:22

Dist	COUNTY	ROUTE	POST MILES TOTAL PROJECT	SHEET No.	TOTAL SHEETS
10	Mer	152	R6.0/R10.1	2	28

REGISTERED CIVIL ENGINEER 4/13/12 DATE

4/30/12
PLANS APPROVAL DATE

REGISTERED PROFESSIONAL ENGINEER HongLoan T. Luong No. 63864 Exp 9/30/12 CIVIL STATE OF CALIFORNIA

THE STATE OF CALIFORNIA OR ITS OFFICERS OR AGENTS SHALL NOT BE RESPONSIBLE FOR THE ACCURACY OR COMPLETENESS OF SCANNED COPIES OF THIS PLAN SHEET.

NOTE:

FOR ACCURATE RIGHT OF WAY DATA, CONTACT RIGHT OF WAY ENGINEERING AT DISTRICT OFFICE.

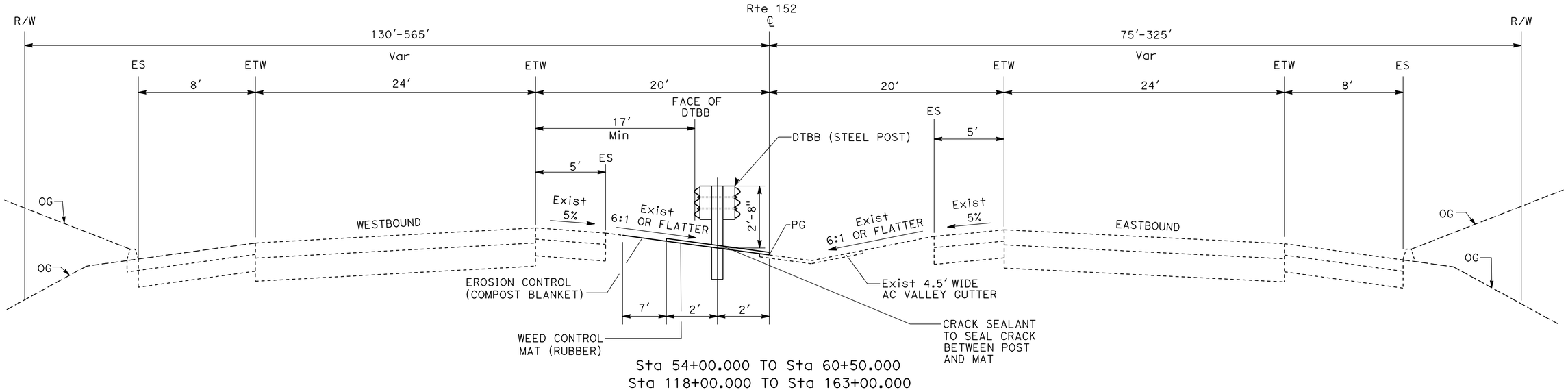

Sta 54+00.000 TO Sta 60+50.000
Sta 118+00.000 TO Sta 163+00.000

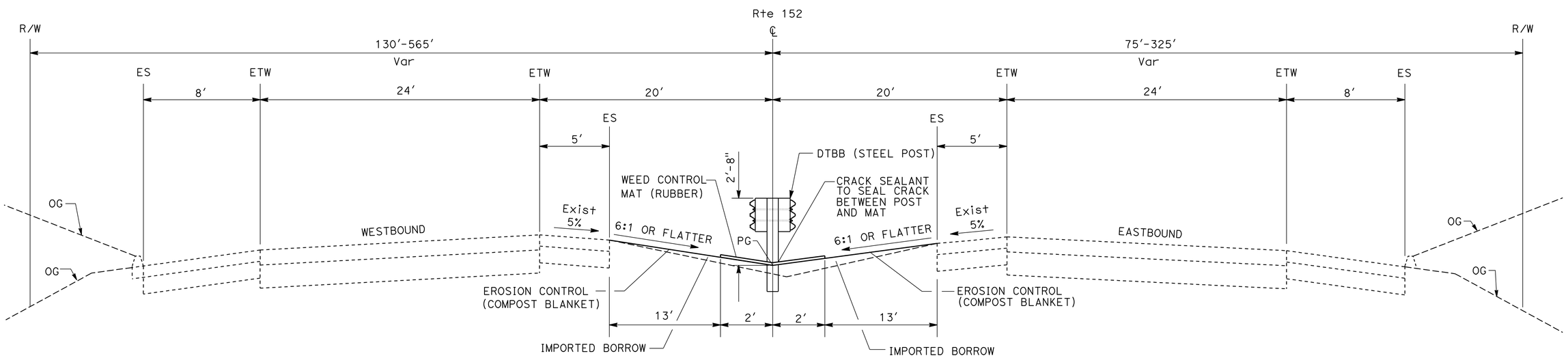

Sta 21+00.000 TO Sta 54+00.000

ROUTE 152

TYPICAL CROSS SECTIONS

NO SCALE

X-1

REVISED BY	DATE REVISED
HH	04/30/12

CALCULATED-DESIGNED BY: HUY HA
CHECKED BY: HONGLOAN T. LUONG
FUNCTIONAL SUPERVISOR: JOSE HUERTA

STATE OF CALIFORNIA - DEPARTMENT OF TRANSPORTATION
Caltrans
DESIGN

LAST REVISION 00-00-00
DATE PLOTTED => 30-MAY-2012
TIME PLOTTED => 13:22

Dist	COUNTY	ROUTE	POST MILES TOTAL PROJECT	SHEET No.	TOTAL SHEETS
10	Mer	152	R6.0/R10.1	3	28

REGISTERED CIVIL ENGINEER 4/13/12 DATE

4/30/12
PLANS APPROVAL DATE

REGISTERED PROFESSIONAL ENGINEER HongLoan T. Luong No. 63864 Exp 9/30/12 CIVIL STATE OF CALIFORNIA

THE STATE OF CALIFORNIA OR ITS OFFICERS OR AGENTS SHALL NOT BE RESPONSIBLE FOR THE ACCURACY OR COMPLETENESS OF SCANNED COPIES OF THIS PLAN SHEET.

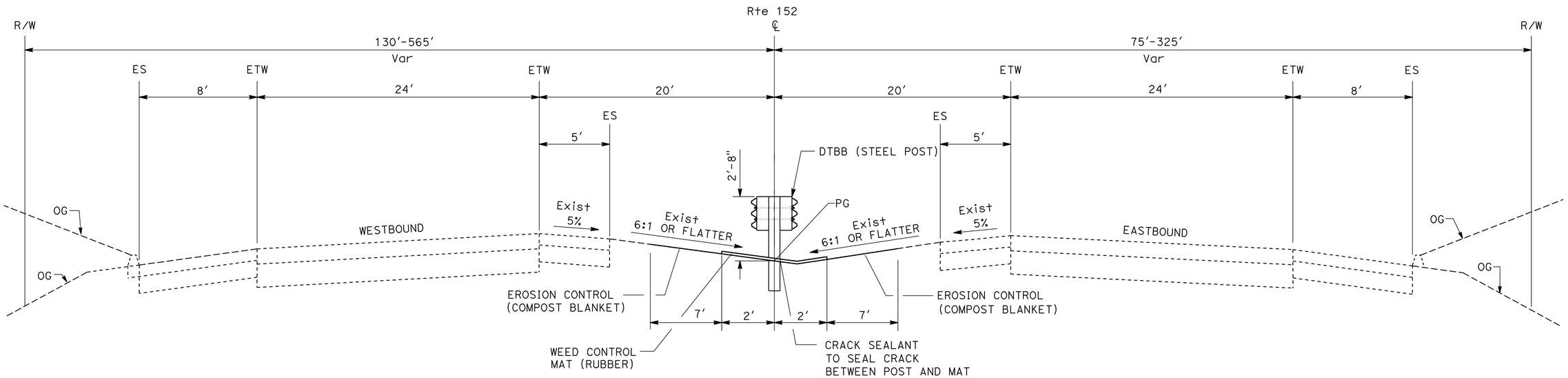

Sta 62+50.000 TO Sta 108+43.750
Sta 163+00.000 TO Sta 200+43.750
Sta 212+40.000 TO Sta 221+73.000

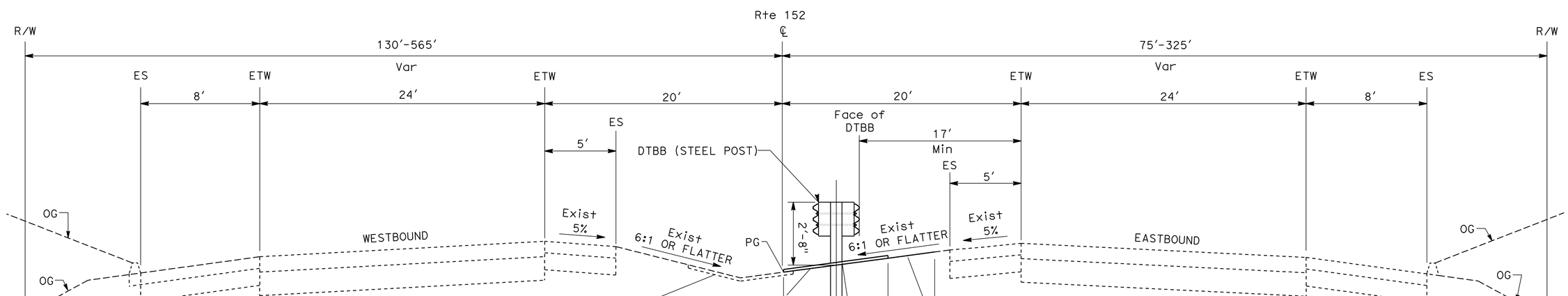

Sta 60+50.000 TO Sta 62+50.000

ROUTE 152

TYPICAL CROSS SECTIONS

NO SCALE

X-2

STATE OF CALIFORNIA - DEPARTMENT OF TRANSPORTATION
Caltrans® **DESIGN**

FUNCTIONAL SUPERVISOR: JOSE HUERTA

CALCULATED-DESIGNED BY: HUY HA
CHECKED BY: HONGLOAN T. LUONG

REVISED BY: HH
DATE REVISED: 04/30/12

LAST REVISION 00-00-00
DATE PLOTTED => 30-MAY-2012
TIME PLOTTED => 13:22

Dist	COUNTY	ROUTE	POST MILES TOTAL PROJECT	SHEET No.	TOTAL SHEETS
10	Mer	152	R6.0/R10.1	4	28

REGISTERED CIVIL ENGINEER 4/13/12 DATE

4/30/12
PLANS APPROVAL DATE

REGISTERED PROFESSIONAL ENGINEER HongLoan T. Luong No. 63864 Exp 9/30/12 CIVIL STATE OF CALIFORNIA

THE STATE OF CALIFORNIA OR ITS OFFICERS OR AGENTS SHALL NOT BE RESPONSIBLE FOR THE ACCURACY OR COMPLETENESS OF SCANNED COPIES OF THIS PLAN SHEET.

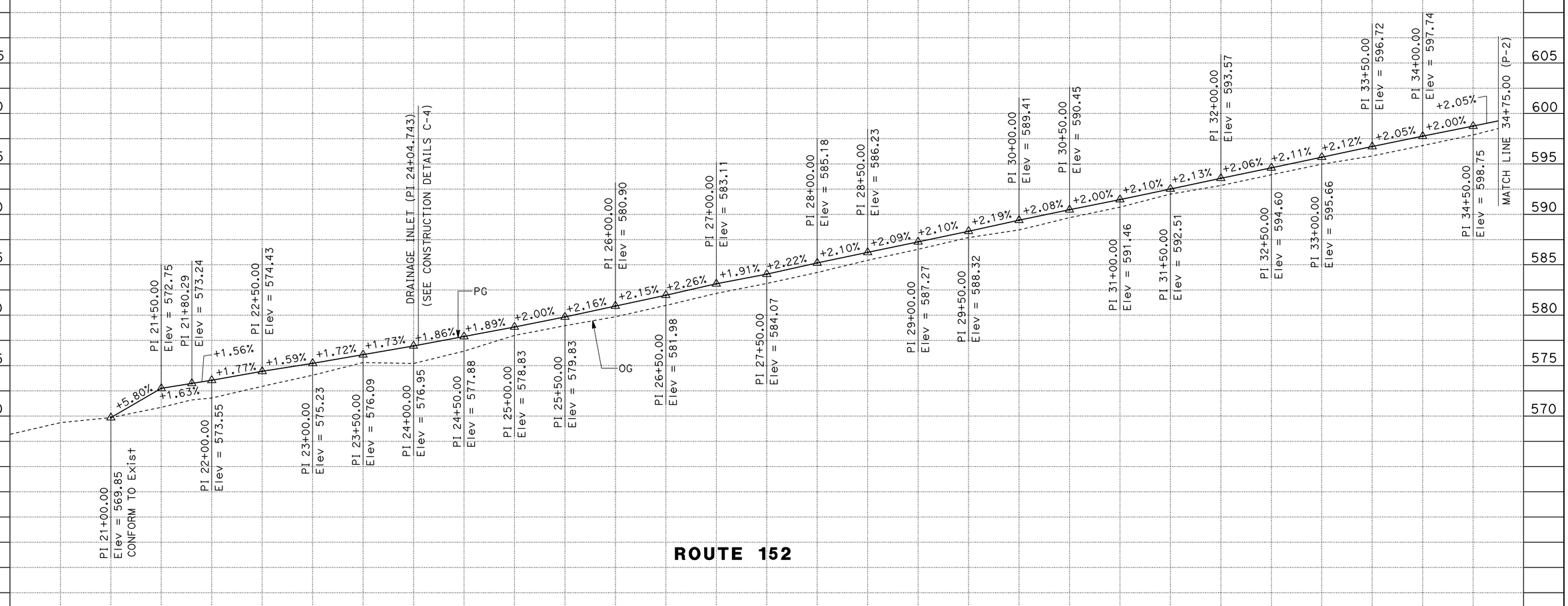

PROFILE

SCALE: Horiz 1" = 50'
Vert 1" = 5'

P-1

20+00 1+00 2+00 3+00 4+00 25+00 6+00 7+00 8+00 9+00 30+00 1+00 2+00 3+00 4+00 35+00

CY Exc 0
Emb 846

STATE OF CALIFORNIA - DEPARTMENT OF TRANSPORTATION
Caltrans® DESIGN

FUNCTIONAL SUPERVISOR: JOSE HUERTA
CALCULATED-DESIGNED BY: HUY HA
CHECKED BY: HONGLOAN T. LUONG
REVISED BY: RS
DATE REVISED: 04/16/12

LAST REVISION 00-00-00
DATE PLOTTED => 30-MAY-2012
TIME PLOTTED => 13:22

Dist	COUNTY	ROUTE	POST MILES TOTAL PROJECT	SHEET No.	TOTAL SHEETS
10	Mer	152	R6.0/R10.1	5	28

REGISTERED CIVIL ENGINEER 4/13/12 DATE

4/30/12
PLANS APPROVAL DATE

REGISTERED PROFESSIONAL ENGINEER HongLoan T. Luong No. 63864 Exp 9/30/12 CIVIL STATE OF CALIFORNIA

THE STATE OF CALIFORNIA OR ITS OFFICERS OR AGENTS SHALL NOT BE RESPONSIBLE FOR THE ACCURACY OR COMPLETENESS OF SCANNED COPIES OF THIS PLAN SHEET.

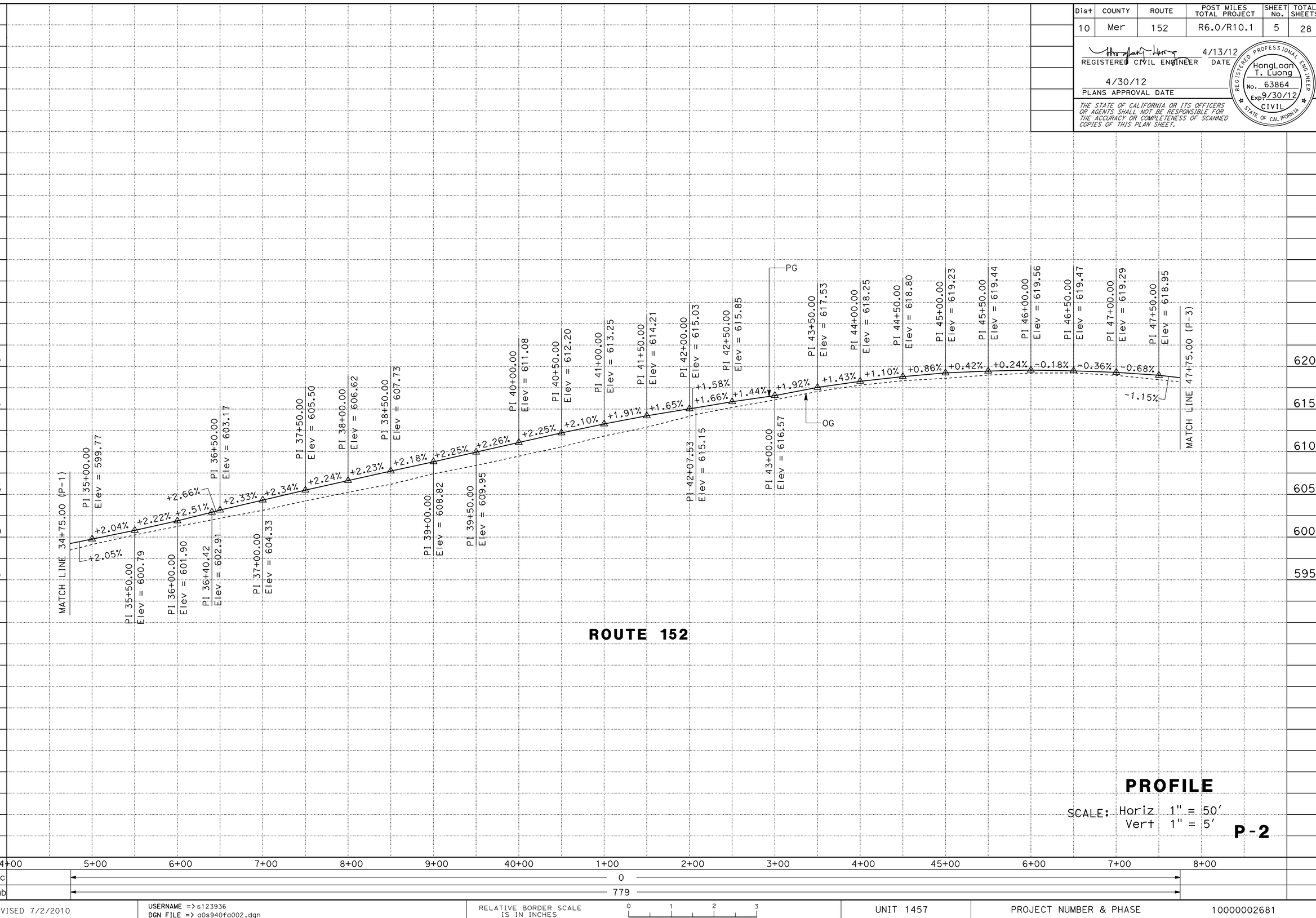

PROFILE

SCALE: Horiz 1" = 50'
Vert 1" = 5'

P-2

STATE OF CALIFORNIA - DEPARTMENT OF TRANSPORTATION
Caltrans
DESIGN

FUNCTIONAL SUPERVISOR: JOSE HUERTA

CALCULATED-DESIGNED BY: HUY HA
CHECKED BY: HONGLOAN T. LUONG

REVISED BY: RS
DATE REVISED: 04/16/12

LAST REVISION 00-00-00
DATE PLOTTED => 30-MAY-2012
TIME PLOTTED => 13:22

Dist	COUNTY	ROUTE	POST MILES TOTAL PROJECT	SHEET No.	TOTAL SHEETS
10	Mer	152	R6.0/R10.1	6	28

REGISTERED CIVIL ENGINEER 4/13/12 DATE

4/30/12
PLANS APPROVAL DATE

REGISTERED PROFESSIONAL ENGINEER HongLoan T. Luong No. 63864 Exp 9/30/12 CIVIL STATE OF CALIFORNIA

THE STATE OF CALIFORNIA OR ITS OFFICERS OR AGENTS SHALL NOT BE RESPONSIBLE FOR THE ACCURACY OR COMPLETENESS OF SCANNED COPIES OF THIS PLAN SHEET.

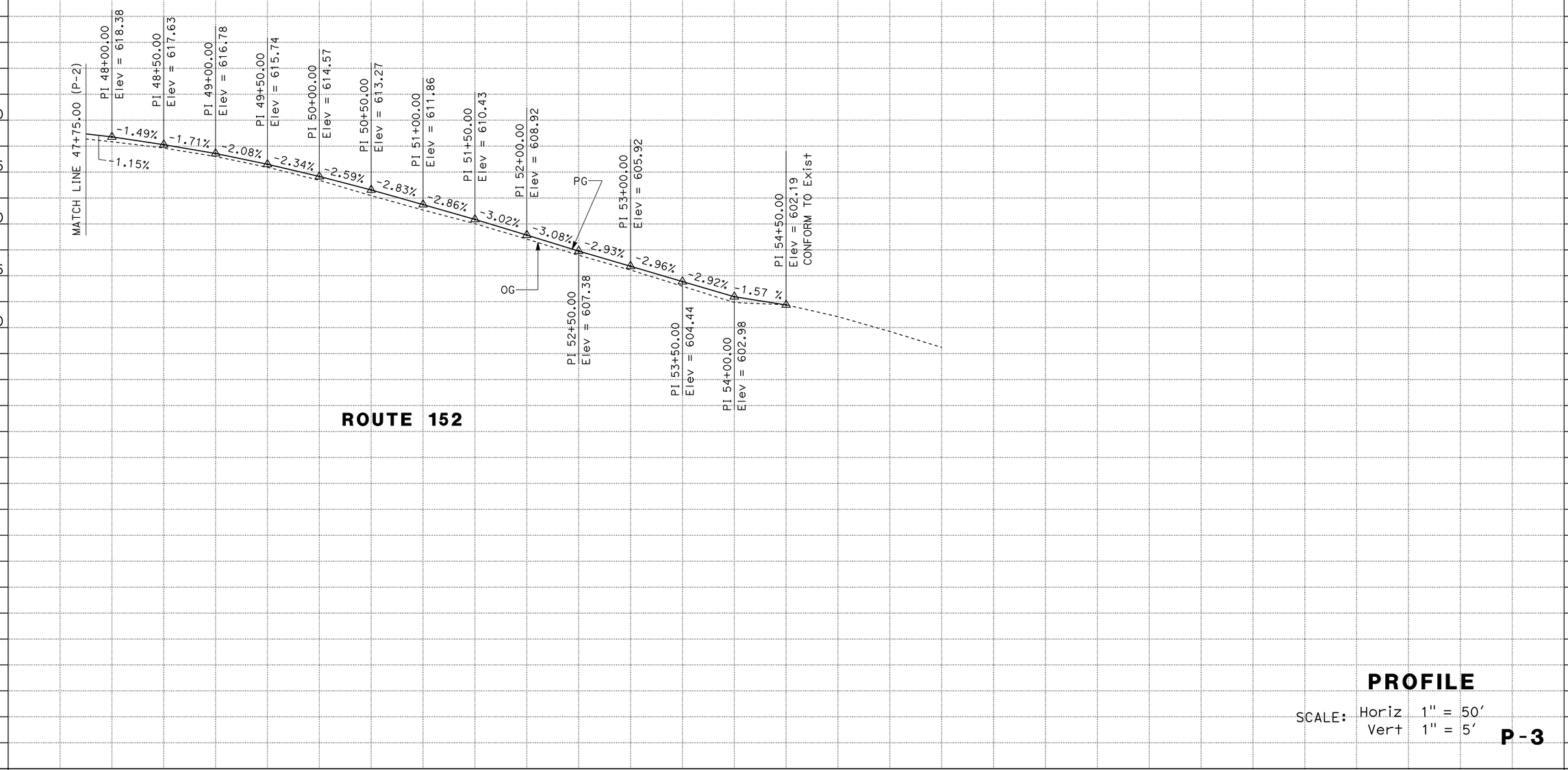

PROFILE

SCALE: Horiz 1" = 50'
Vert 1" = 5'

P-3

	47+00	8+00	9+00	50+00	1+00	2+00	3+00	4+00	55+00	TOTAL
CY Exc		0								
CY Emb		225								

STATE OF CALIFORNIA - DEPARTMENT OF TRANSPORTATION
Caltrans® DESIGN

FUNCTIONAL SUPERVISOR: JOSE HUERTA
CALCULATED-DESIGNED BY: HUY HA
CHECKED BY: HONGLOAN T. LUONG
REVISED BY: RS
DATE REVISED: 04/16/12

LAST REVISION 00-00-00
DATE PLOTTED => 30-MAY-2012
TIME PLOTTED => 13:22

Dist	COUNTY	ROUTE	POST MILES TOTAL PROJECT	SHEET No.	TOTAL SHEETS
10	Mer	152	R6.0/R10.1	7	28

REGISTERED CIVIL ENGINEER 4/13/12 DATE

4/30/12
PLANS APPROVAL DATE

REGISTERED PROFESSIONAL ENGINEER HongLoan T. Luong No. 63864 Exp. 9/30/12 CIVIL STATE OF CALIFORNIA

THE STATE OF CALIFORNIA OR ITS OFFICERS OR AGENTS SHALL NOT BE RESPONSIBLE FOR THE ACCURACY OR COMPLETENESS OF SCANNED COPIES OF THIS PLAN SHEET.

NOTES:

1. SEE STANDARD PLANS FOR TRANSITION TAPER AND CONNECTIONS TO BRIDGE RAILING.
2. PLACE GUARD RAILING DELINEATOR (TYPE G) ON TOP OF DTBB TRANSITION TAPER AT 25′ SPACING WHEN THE CLEARANCE BETWEEN THE BARRIER AND THE EDGE OF TRAVELED WAY IS LESS THAN 8′ AND ALSO SEE SUMMARY OF QUANTITIES SHEET.
3. TRANSITION TAPER BEGINNING AND ENDING LOCATIONS MUST BE VERIFIED IN FIELD OR AS DIRECTED BY THE ENGINEER.

LEGEND

DIRECTION OF TRAFFIC

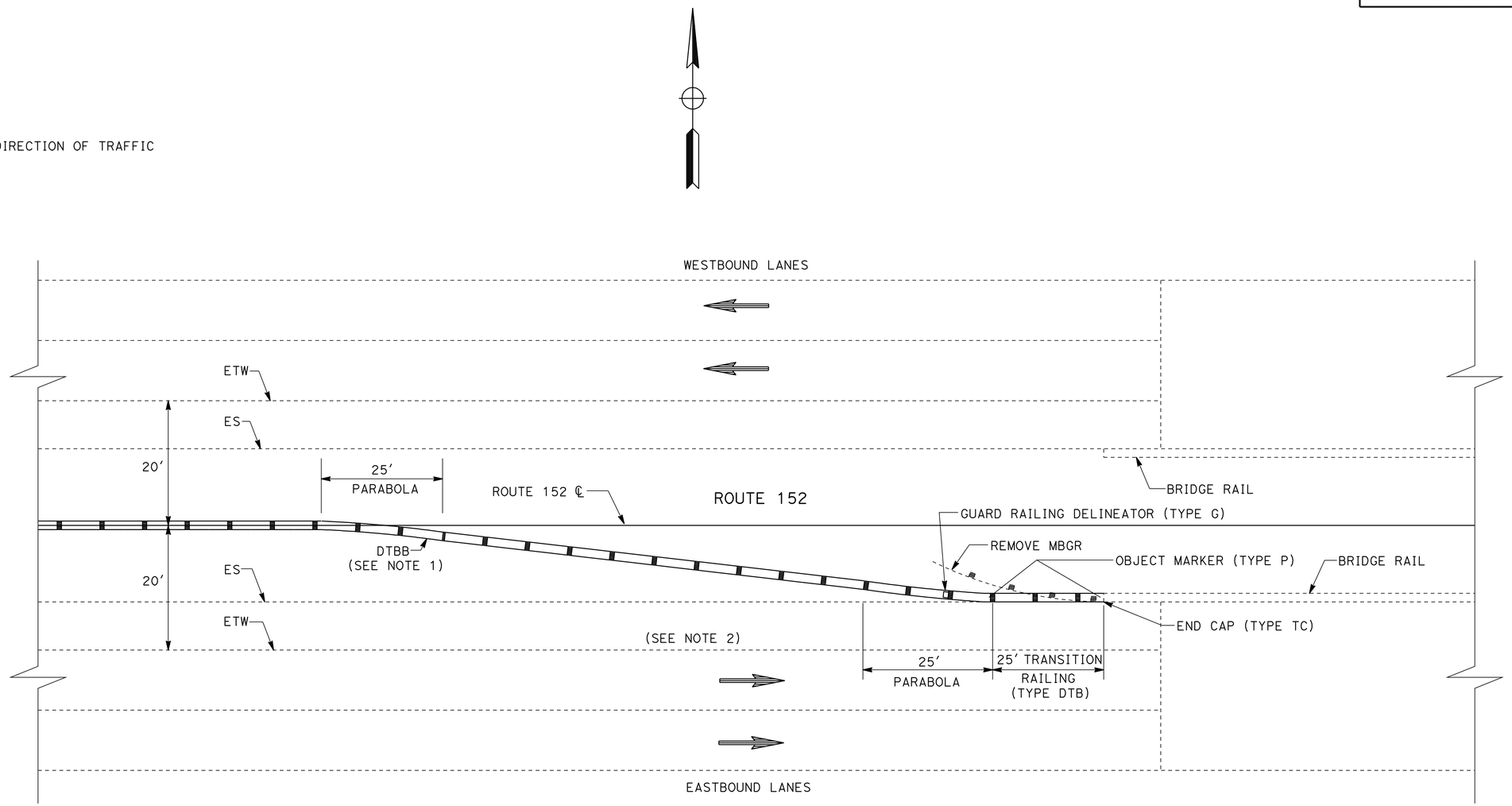

SAN LUIS FOREBAY BRIDGE - Sta 221+73.00

DOUBLE THRIE BEAM BARRIER CONNECTION TO BRIDGE RAILING

CONSTRUCTION DETAILS

NO SCALE **C-1**

STATE OF CALIFORNIA - DEPARTMENT OF TRANSPORTATION
Caltrans
DESIGN

FUNCTIONAL SUPERVISOR: JOSE HUERTA
CALCULATED-DESIGNED BY: HUY HA
CHECKED BY: HONGLOAN T. LUONG
REVISED BY: HH
DATE REVISED: 04/30/12

LAST REVISION 00-00-00
DATE PLOTTED => 30-MAY-2012
TIME PLOTTED => 13:22

Dist	COUNTY	ROUTE	POST MILES TOTAL PROJECT	SHEET No.	TOTAL SHEETS
10	Mer	152	R6.0/R10.1	8	28

REGISTERED CIVIL ENGINEER 4/13/12 DATE

4/30/12
PLANS APPROVAL DATE

REGISTERED PROFESSIONAL ENGINEER HongLoan T. Luong No. 63864 Exp 9/30/12 CIVIL STATE OF CALIFORNIA

THE STATE OF CALIFORNIA OR ITS OFFICERS OR AGENTS SHALL NOT BE RESPONSIBLE FOR THE ACCURACY OR COMPLETENESS OF SCANNED COPIES OF THIS PLAN SHEET.

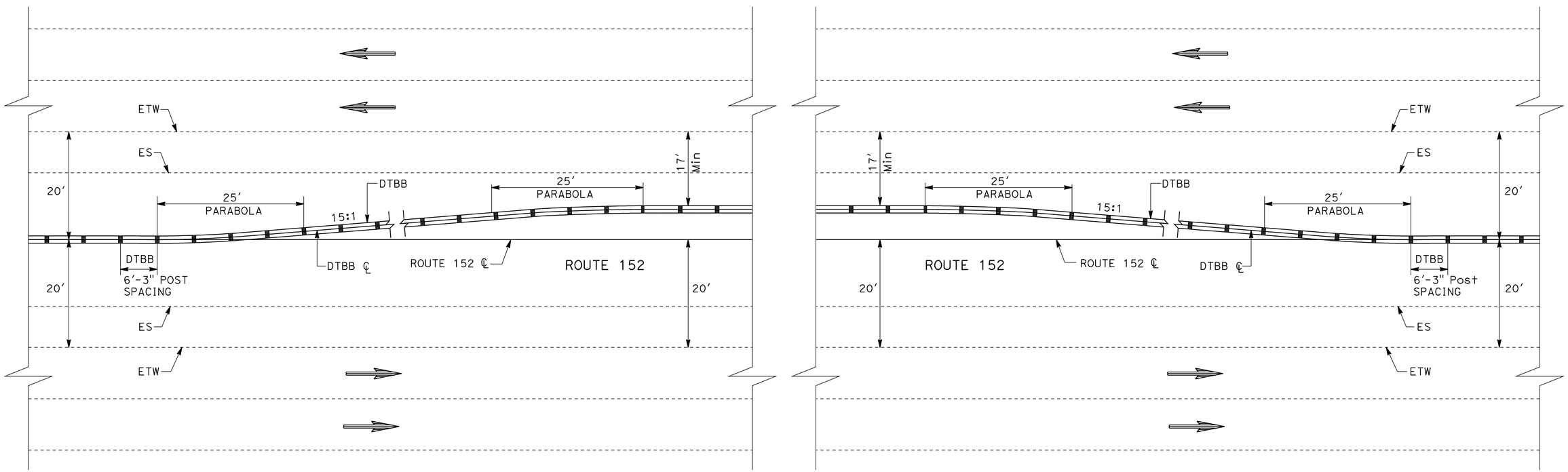

TYPICAL DOUBLE THRIE BEAM BARRIER TRANSITION TAPER

CONSTRUCTION DETAILS

NO SCALE **C-2**

STATE OF CALIFORNIA - DEPARTMENT OF TRANSPORTATION
Caltrans® DESIGN

FUNCTIONAL SUPERVISOR: JOSE HUERTA
CALCULATED-DESIGNED BY: HUY HA
CHECKED BY: HONGLOAN T. LUONG
REVISED BY: HH
DATE REVISED: 04/30/12

LAST REVISION 00-00-00
DATE PLOTTED => 30-MAY-2012
TIME PLOTTED => 13:22

Dist	COUNTY	ROUTE	POST MILES TOTAL PROJECT	SHEET No.	TOTAL SHEETS
10	Mer	152	R6.0/R10.1	9	28

REGISTERED CIVIL ENGINEER 4/13/12 DATE

4/30/12
PLANS APPROVAL DATE

REGISTERED PROFESSIONAL ENGINEER HongLoan T. Luong No. 63864 Exp 9/30/12 CIVIL STATE OF CALIFORNIA

THE STATE OF CALIFORNIA OR ITS OFFICERS OR AGENTS SHALL NOT BE RESPONSIBLE FOR THE ACCURACY OR COMPLETENESS OF SCANNED COPIES OF THIS PLAN SHEET.

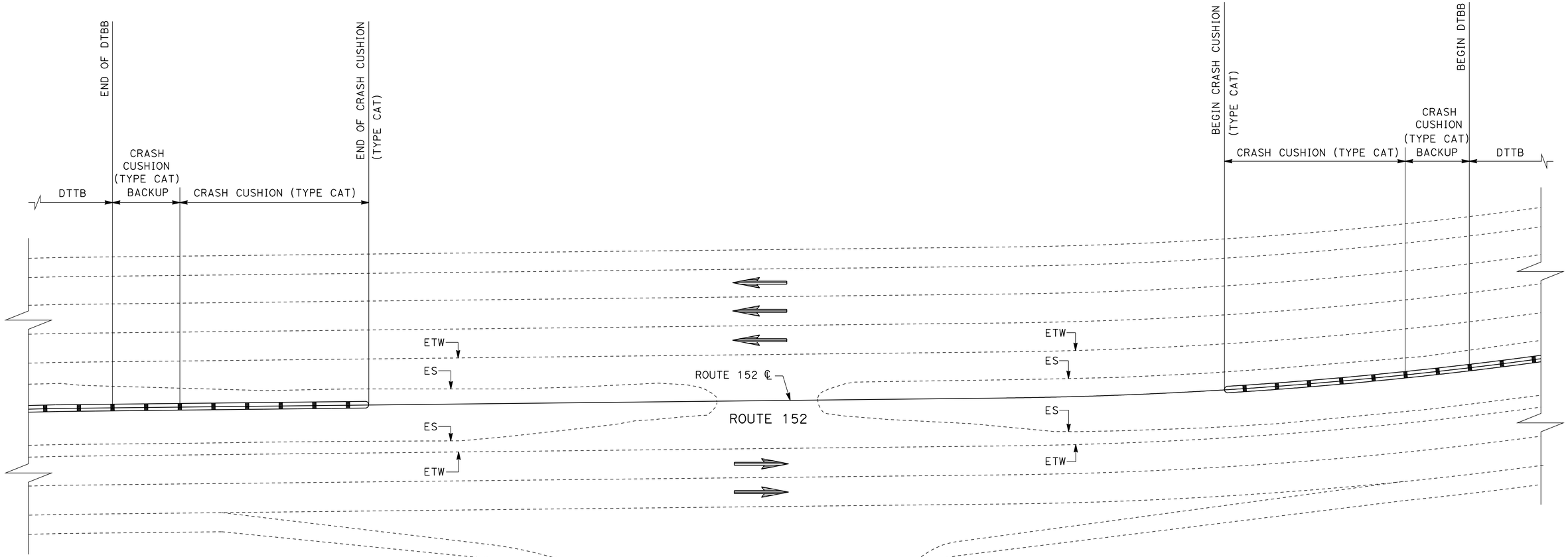

CRASH CUSHION LOCATIONS AT PUBLIC ROAD INTERSECTIONS

LOCATION	END CRASH CUSHION (TYPE CAT)	BEGIN CRASH CUSHION (TYPE CAT)
	Sta	Sta
SAN LUIS DAM SERVICE Rd/ ROUTE 152 INTERSECTION (Sta 18+00.00)	———	21+00.00
ROMERO VISITORS CENTER ACCESS Rd/ ROUTE 152 INTERSECTION (Sta 112+50.00)	108+43.75	118+00.00
SAN LUIS CREEK RECREATIONAL AREA ACCESS Rd/ ROUTE 152 INTERSECTION (Sta 207+50.00)	200+43.75	212+40.00

PUBLIC ROAD

TYPICAL DTBB AT PUBLIC ROAD INTERSECTIONS

SEE CRASH CUSHION TABLE FOR LOCATIONS

CONSTRUCTION DETAILS

NO SCALE

C-3

STATE OF CALIFORNIA - DEPARTMENT OF TRANSPORTATION
Caltrans® DESIGN

FUNCTIONAL SUPERVISOR: JOSE HUERTA

CALCULATED-DESIGNED BY: HUY HA
CHECKED BY: HONGLOAN T. LUONG

REVISED BY: HH
DATE REVISED: 04/30/12

LAST REVISION 00-00-00
DATE PLOTTED => 30-MAY-2012
TIME PLOTTED => 13:22

Dist	COUNTY	ROUTE	POST MILES TOTAL PROJECT	SHEET No.	TOTAL SHEETS
10	Mer	152	R6.0/R10.1	10	28

REGISTERED CIVIL ENGINEER 4/13/12 DATE

4/30/12
PLANS APPROVAL DATE

REGISTERED PROFESSIONAL ENGINEER HongLoan T. Luong No. 63864 Exp 9/30/12 CIVIL STATE OF CALIFORNIA

THE STATE OF CALIFORNIA OR ITS OFFICERS OR AGENTS SHALL NOT BE RESPONSIBLE FOR THE ACCURACY OR COMPLETENESS OF SCANNED COPIES OF THIS PLAN SHEET.

EXISTING DRAINAGE INLETS

LOCATION (Sta)	OFFSET DTBB (SIDE)
24+04.74	R†
54+56.6	L†
62+37.3	R†
96+07.6	L†
129+20.6	L†
145+41.0	L†
162+21.2	L†
180+07.7	R†

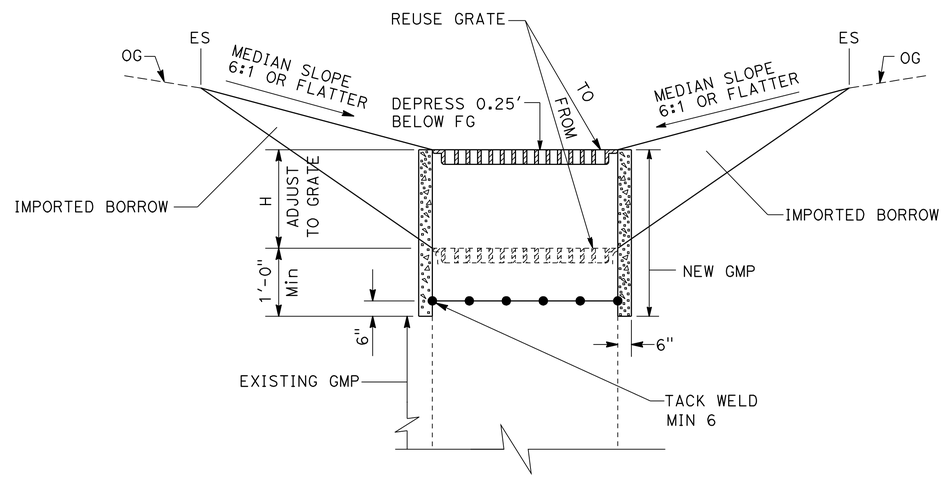

Sta 24+04.743
ADJUST INLET

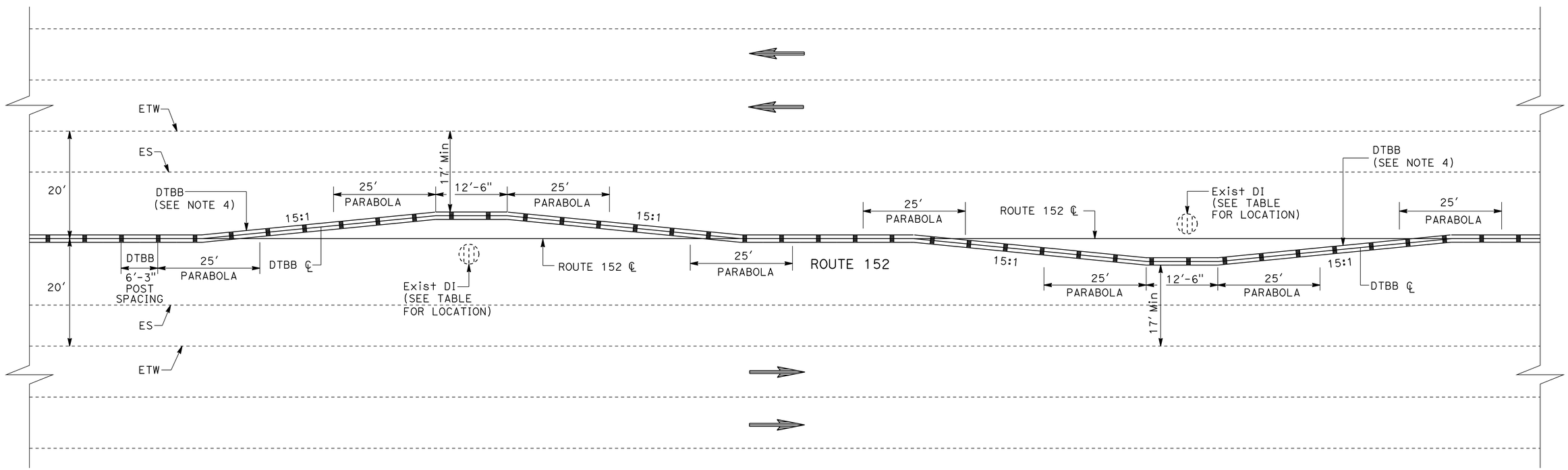

TYPICAL DOUBLE THRIE BEAM BARRIER AT EXISTING DRAINAGE INLETS

CONSTRUCTION DETAILS

NO SCALE **C-4**

REVISED BY	DATE REVISED
HH	04/30/12

CALCULATED-DESIGNED BY: HUY HA
CHECKED BY: HONGLOAN T. LUONG
FUNCTIONAL SUPERVISOR: JOSE HUERTA

STATE OF CALIFORNIA - DEPARTMENT OF TRANSPORTATION
Caltrans® DESIGN

LAST REVISION 00-00-00 | DATE PLOTTED => 30-MAY-2012 | TIME PLOTTED => 13:22

Dist	COUNTY	ROUTE	POST MILES TOTAL PROJECT	SHEET No.	TOTAL SHEETS
10	Mer	152	R6.0/R10.1	11	28

REGISTERED CIVIL ENGINEER 4/13/12 DATE

4/30/12
PLANS APPROVAL DATE

REGISTERED PROFESSIONAL ENGINEER HongLoan T. Luong No. 63864 Exp 9/30/12 CIVIL STATE OF CALIFORNIA

THE STATE OF CALIFORNIA OR ITS OFFICERS OR AGENTS SHALL NOT BE RESPONSIBLE FOR THE ACCURACY OR COMPLETENESS OF SCANNED COPIES OF THIS PLAN SHEET.

EXISTING DRAINAGE INLETS

LOCATION (Sta)	OFFSET DTBB (SIDE)
81+48.5	Lt
83+89.8	Rt

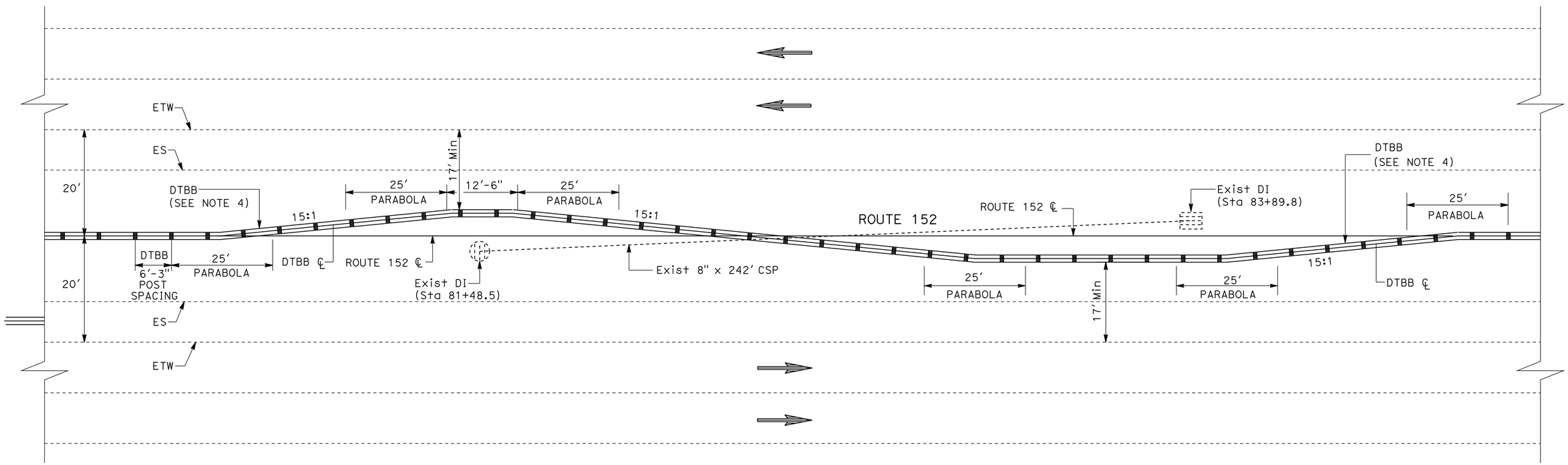

Sta 80+50 TO Sta 85+00

DOUBLE THRIE BEAM BARRIER AT EXISTING DRAINAGE INLETS

CONSTRUCTION DETAILS

NO SCALE **C-5**

CALCULATED-DESIGNED BY	HUY HA	REVISED BY	HH
CHECKED BY	HONGLOAN T. LUONG	DATE REVISED	04/30/12

FUNCTIONAL SUPERVISOR JOSE HUERTA

STATE OF CALIFORNIA - DEPARTMENT OF TRANSPORTATION **DESIGN**

Caltrans

LAST REVISION 00-00-00 | DATE PLOTTED => 30-MAY-2012 | TIME PLOTTED => 13:22

Dist	COUNTY	ROUTE	POST MILES TOTAL PROJECT	SHEET No.	TOTAL SHEETS
10	Mer	152	R6.0/R10.1	12	28

REGISTERED CIVIL ENGINEER 4/13/12 DATE

4/30/12
PLANS APPROVAL DATE

REGISTERED PROFESSIONAL ENGINEER HongLoan T. Luong No. 63864 Exp 9/30/12 CIVIL STATE OF CALIFORNIA

THE STATE OF CALIFORNIA OR ITS OFFICERS OR AGENTS SHALL NOT BE RESPONSIBLE FOR THE ACCURACY OR COMPLETENESS OF SCANNED COPIES OF THIS PLAN SHEET.

NOTES: (SHEETS 6 & 7 ONLY)

1. NESTED THRIE BEAM BARRIER DETAILS SHALL BE USED WHERE ONE POST CANNOT BE PLACED AT THE STANDARD SPACING DUE TO A CONFLICTING HIGHWAY FACILITY.
2. ALL RAIL ELEMENTS ARE 13'-6.5" LONG
3. SEE STANDARD PLANS FOR DETAILS NOT SHOWN.
4. SEE SECTION VIEWS ON SHEET C-7.

EXISTING CULVERTS

LOCATION (Sta)	ITEM	DESCRIPTION
24+04.7	CROSS CULVERT	30" RCP WITH GMP DI IN MEDIAN
54+56.6	CROSS CULVERT	18" CMP ON EASTBOUND WITH GMP DI IN MEDIAN
62+37.3	CROSS CULVERT	18" CMP ON WESTBOUND WITH GMP DI IN MEDIAN
81+48.5	CROSS CULVERT	18" RCP ON WESTBOUND WITH GCP DI IN MEDIAN
83+89.8	CROSS CULVERT	8" CSP WITH 12" X 12" GRATE DI IN MEDIAN
96+07.6	CROSS CULVERT	18" RCP ON EASTBOUND WITH GCP DI IN MEDIAN
129+20.6	CROSS CULVERT	18" RCP ON EASTBOUND WITH GCP DI IN MEDIAN
145+41.0	CROSS CULVERT	36" RCP WITH GMP DI IN MEDIAN
162+21.2	CROSS CULVERT	18" CMP ON WESTBOUND WITH GMP DI IN MEDIAN
180+07.7	CROSS CULVERT	42" RCP WITH GMP DI IN MEDIAN
220+77.0	CROSS CULVERT	18" RCP ON EASTBOUND WITH GCP DI IN MEDIAN

(SEE CONSTRUCTION DETAILS C-5 FOR EXISTING 8" x 242' CSP RUNNING LONGITUDINAL UNDERGROUND BETWEEN EXISTING DI AT Sta 81+48.477 AND Sta 83++89.813 AND ALSO SEE NOTE 1)

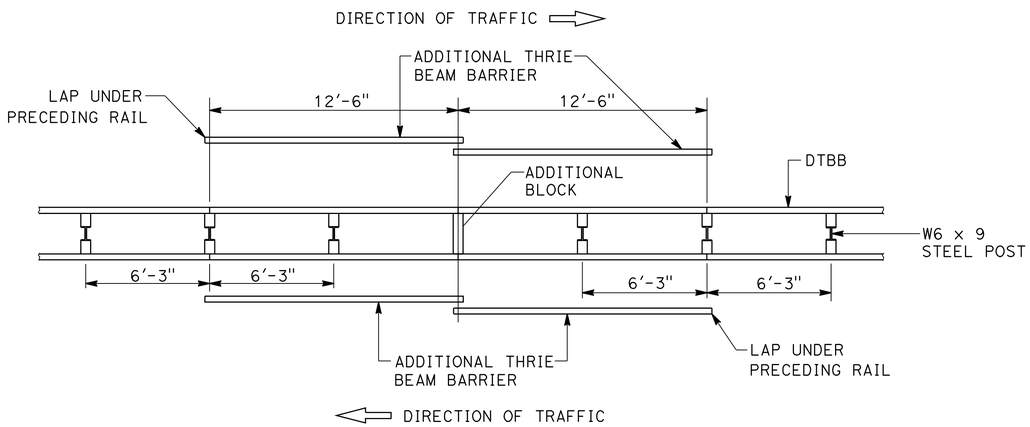

PLAN

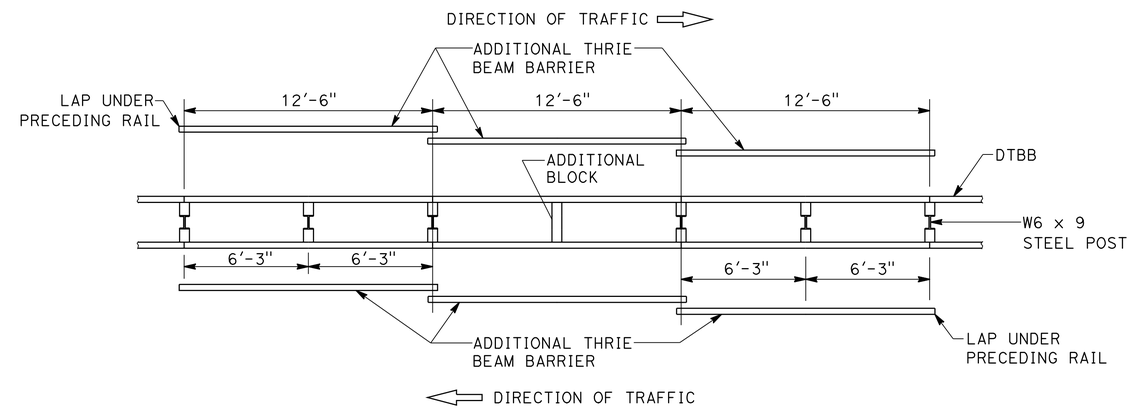

PLAN

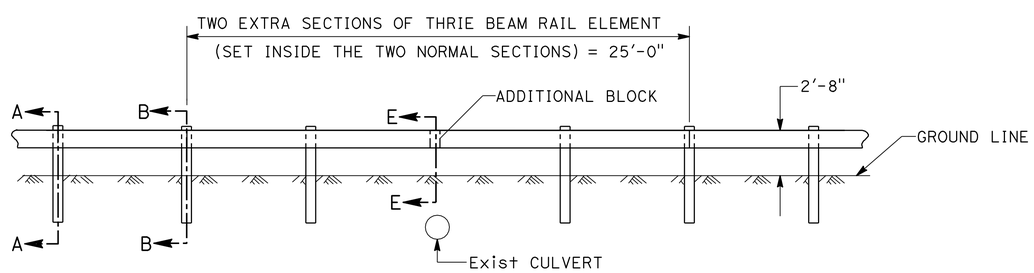

ELEVATION

CASE 1 - ONE POST OMITTED (SPLICE IN CENTER)

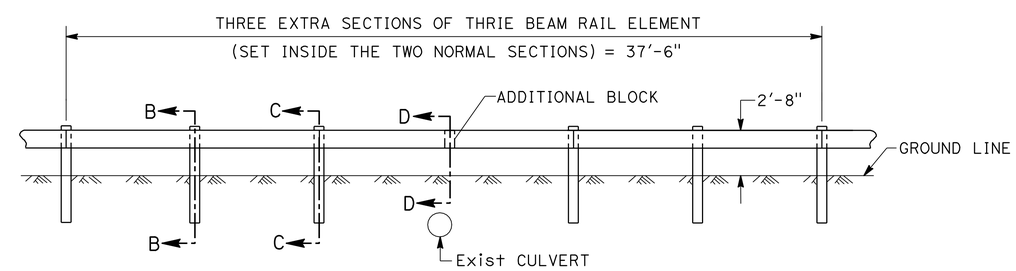

ELEVATION

CASE 2 - ONE POST OMITTED (SPLICE AT POSTS)

LONG SPAN NESTED DOUBLE THRIE BEAM BARRIER

CONSTRUCTION DETAILS

NO SCALE **C-6**

REVISED BY	DATE REVISED
HH	04/30/12

CALCULATED-DESIGNED BY: HUY HA
CHECKED BY: HONGLOAN T. LUONG
FUNCTIONAL SUPERVISOR: JOSE HUERTA

STATE OF CALIFORNIA - DEPARTMENT OF TRANSPORTATION
Caltrans
DESIGN

LAST REVISION 00-00-00
DATE PLOTTED => 30-MAY-2012
TIME PLOTTED => 13:23

Dist	COUNTY	ROUTE	POST MILES TOTAL PROJECT	SHEET No.	TOTAL SHEETS
10	Mer	152	R6.0/R10.1	13	28

REGISTERED CIVIL ENGINEER 4/13/12 DATE

4/30/12
PLANS APPROVAL DATE

REGISTERED PROFESSIONAL ENGINEER HongLoan T. Luong No. 63864 Exp. 9/30/12 CIVIL STATE OF CALIFORNIA

THE STATE OF CALIFORNIA OR ITS OFFICERS OR AGENTS SHALL NOT BE RESPONSIBLE FOR THE ACCURACY OR COMPLETENESS OF SCANNED COPIES OF THIS PLAN SHEET.

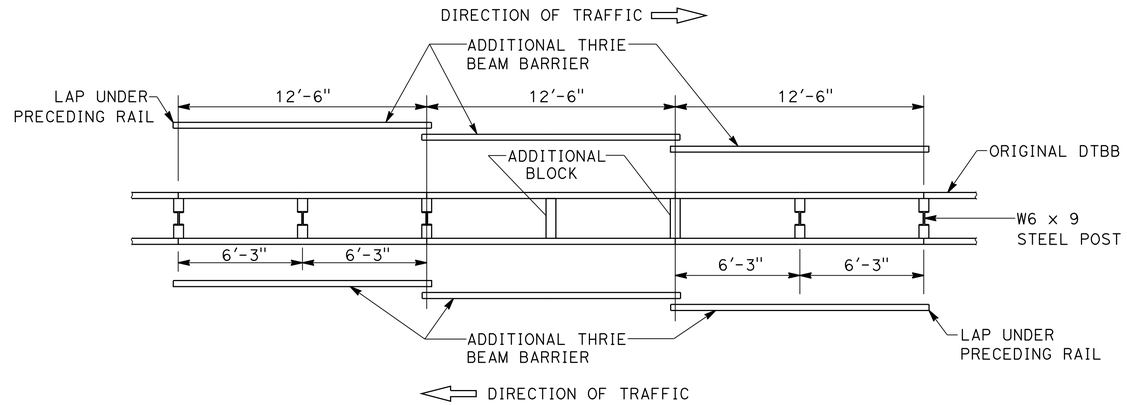

PLAN

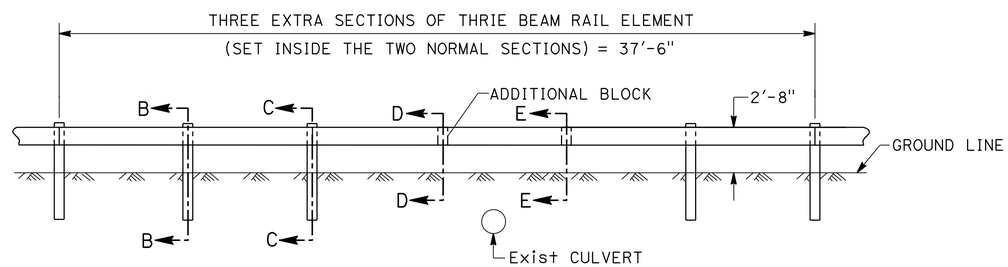

ELEVATION

CASE 3 - TWO POST OMITTED

LONG SPAN NESTED DOUBLE THRIE BEAM BARRIER

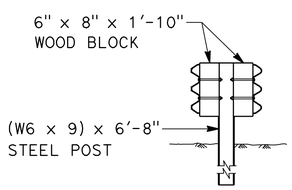

SECTION A-A

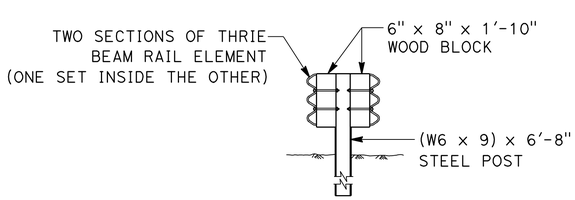

SECTION B-B

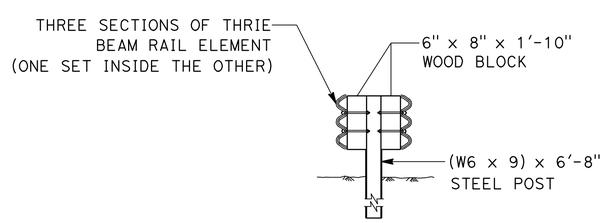

SECTION C-C

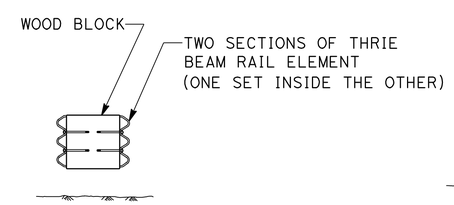

SECTION D-D

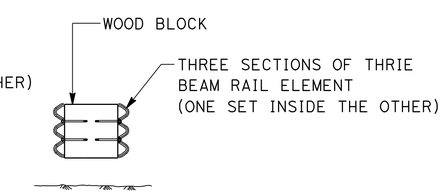

SECTION E-E

CONSTRUCTION DETAILS

NO SCALE **C-7**

STATE OF CALIFORNIA - DEPARTMENT OF TRANSPORTATION
Caltrans DESIGN

FUNCTIONAL SUPERVISOR: JOSE HUERTA
CALCULATED-DESIGNED BY: HUY HA
CHECKED BY: HONGLOAN T. LUONG
REVISED BY: HH
DATE REVISED: 04/30/12

LAST REVISION 00-00-00
DATE PLOTTED => 30-MAY-2012
TIME PLOTTED => 13:23

Dist	COUNTY	ROUTE	POST MILES TOTAL PROJECT	SHEET No.	TOTAL SHEETS
10	Mer	152	R6.0/R10.1	14	28

LICENSED LANDSCAPE ARCHITECT

4/30/12

PLANS APPROVAL DATE

LICENSED LANDSCAPE ARCHITECT R. BRADBURY COLE No. 4518 STATE OF CALIFORNIA Signature 11/30/12 Renewal Date 02-29-12 Date

THE STATE OF CALIFORNIA OR ITS OFFICERS OR AGENTS SHALL NOT BE RESPONSIBLE FOR THE ACCURACY OR COMPLETENESS OF SCANNED COPIES OF THIS PLAN SHEET.

NOTES: (THIS SHEET ONLY)

1. CUTOUT DIMENSIONS TO FIT SNUGLY AROUND METAL POST FOR DOUBLE THRIE BEAM BARRIER.
2. WEED CONTROL MAT (RUBBER) TILE MAY BE COMPRISED OF FOUR - 24" x 24" TILE MATS.
3. TRIM WEED CONTROL MAT (RUBBER) FLUSH WITH EDGE OF SHOULDER, PAVEMENT OR WEED MAT. FILL JOINTS AND OPENINGS WITH ADHESIVE CAULKING OR CRACK SEALANT.
4. SEE STANDARD PLANS FOR CORRESPONDING POST OFFSET DIMENSIONS FOR TERMINAL SYSTEM.
5. LAP WEED CONTROL MAT (RUBBER) IN DIRECTION OF WATER FLOW.
6. DIMENSION: 3'-0" OR GREATER. ALIGN WITH RAIL AT END SECTION.

LEGEND:

DIRECTION OF TRAFFIC

WEED CONTROL MAT (RUBBER)

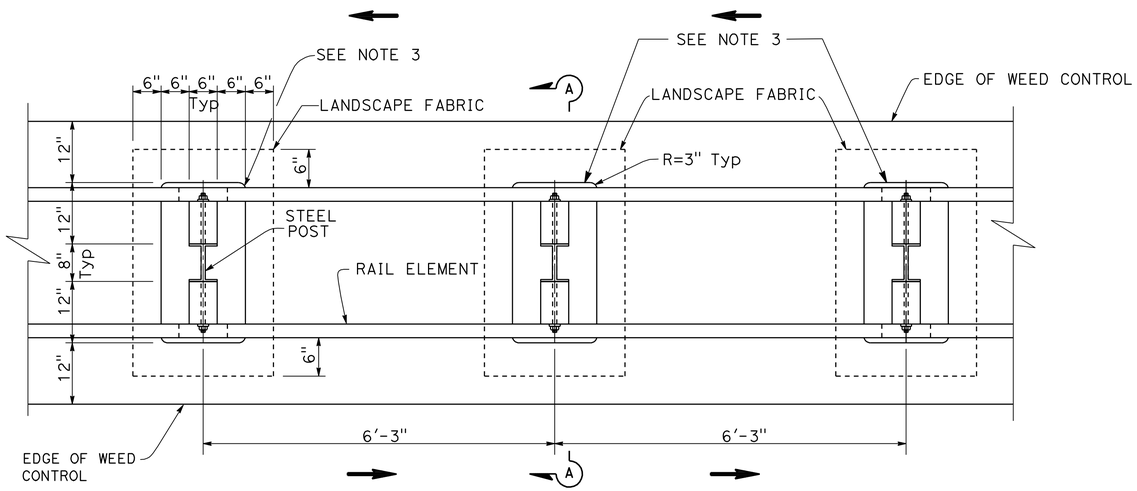

PLAN

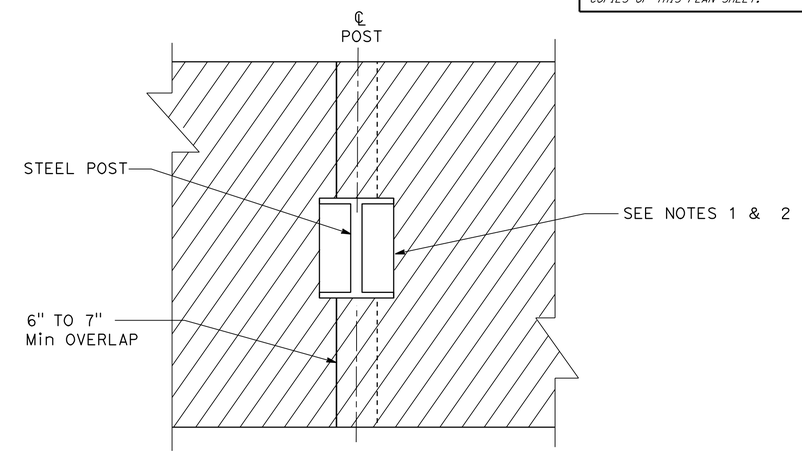

PLAN

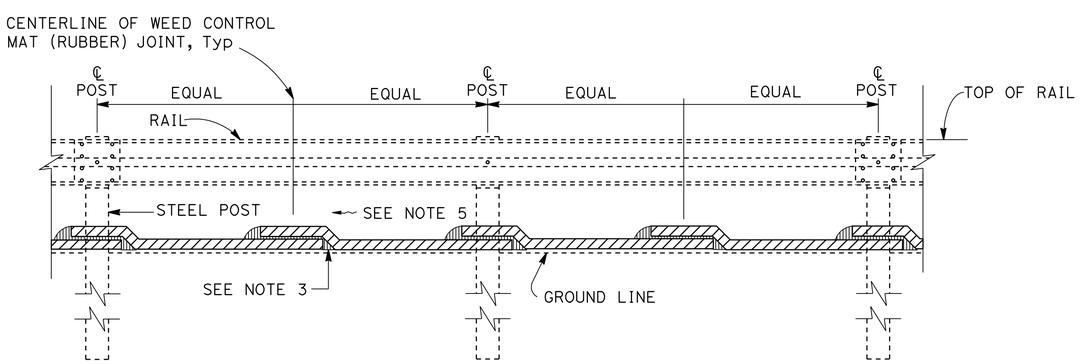

SECTION A-A

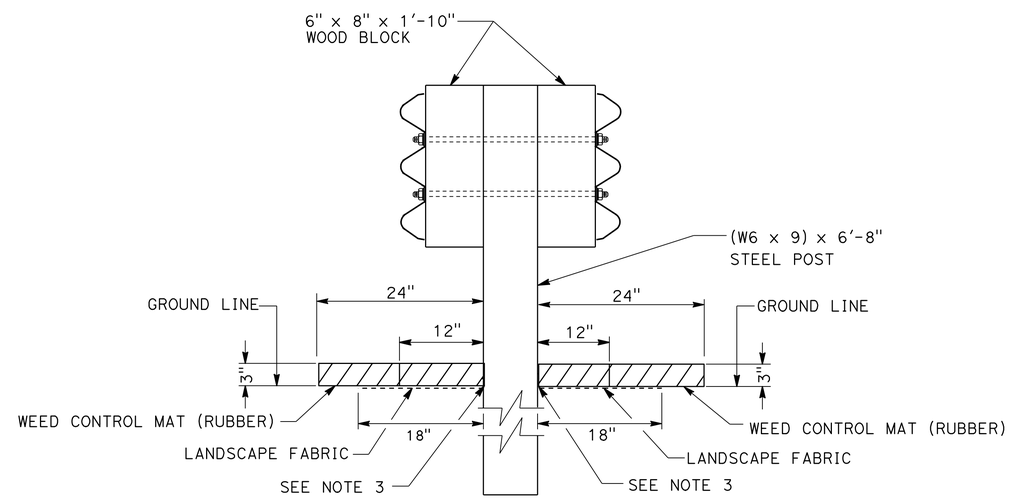

SECTION

WEED CONTROL MAT (RUBBER)
UNDER DOUBLE THRIE BEAM BARRIER

WEED CONTROL MAT (RUBBER)
TYPICAL TILE SECTION

CONSTRUCTION DETAILS

NO SCALE

C-8

REVISED BY	SA
DATE REVISED	04/30/12
CALCULATED-DESIGNED BY	SHERRY ALEXANDER
CHECKED BY	BRAD COLE
SENIOR LANDSCAPE ARCHITECT	BRAD COLE

STATE OF CALIFORNIA - DEPARTMENT OF TRANSPORTATION
Caltrans®
LANDSCAPE ARCHITECTURE

LAST REVISION 02-29-12
DATE PLOTTED => 30-MAY-2012
TIME PLOTTED => 13:23

Dist	COUNTY	ROUTE	POST MILES TOTAL PROJECT	SHEET No.	TOTAL SHEETS
10	Mer	152	R6.0/R10.1	15	28

REGISTERED CIVIL ENGINEER 4/13/12 DATE

4/30/12
PLANS APPROVAL DATE

REGISTERED PROFESSIONAL ENGINEER HongLoan T. Luong No. 63864 Exp 9/30/12 CIVIL STATE OF CALIFORNIA

THE STATE OF CALIFORNIA OR ITS OFFICERS OR AGENTS SHALL NOT BE RESPONSIBLE FOR THE ACCURACY OR COMPLETENESS OF SCANNED COPIES OF THIS PLAN SHEET.

STATIONARY MOUNTED CONSTRUCTION AREA SIGNS

SIGN No.	SIGN CODE FEDERAL	SIGN CODE CALIFORNIA	PANEL SIZE	SIGN MESSAGE	No. OF POST & SIZE	No. OF SIGNS
A	G20-1		90" x 48"	ROAD WORK NEXT 4 MILES	2 - 4" x 6"	2
B	G20-2		48" x 24"	END ROAD WORK	1 - 4" x 6"	2
C	W20-1		36" x 36"	ROAD WORK AHEAD	1 - 4" x 6"	2
D	G20-2		36" x 18"	END ROAD WORK	1 - 4" x 4"	2

NOTES: 1. EXACT SIGN LOCATIONS WILL BE DETERMINED BY THE ENGINEER.
2. SIGN CODES PER 2003 MUTCD (MANUAL ON UNIFORM TRAFFIC CONTROL DEVICES) AND CA SUPPLEMENT.

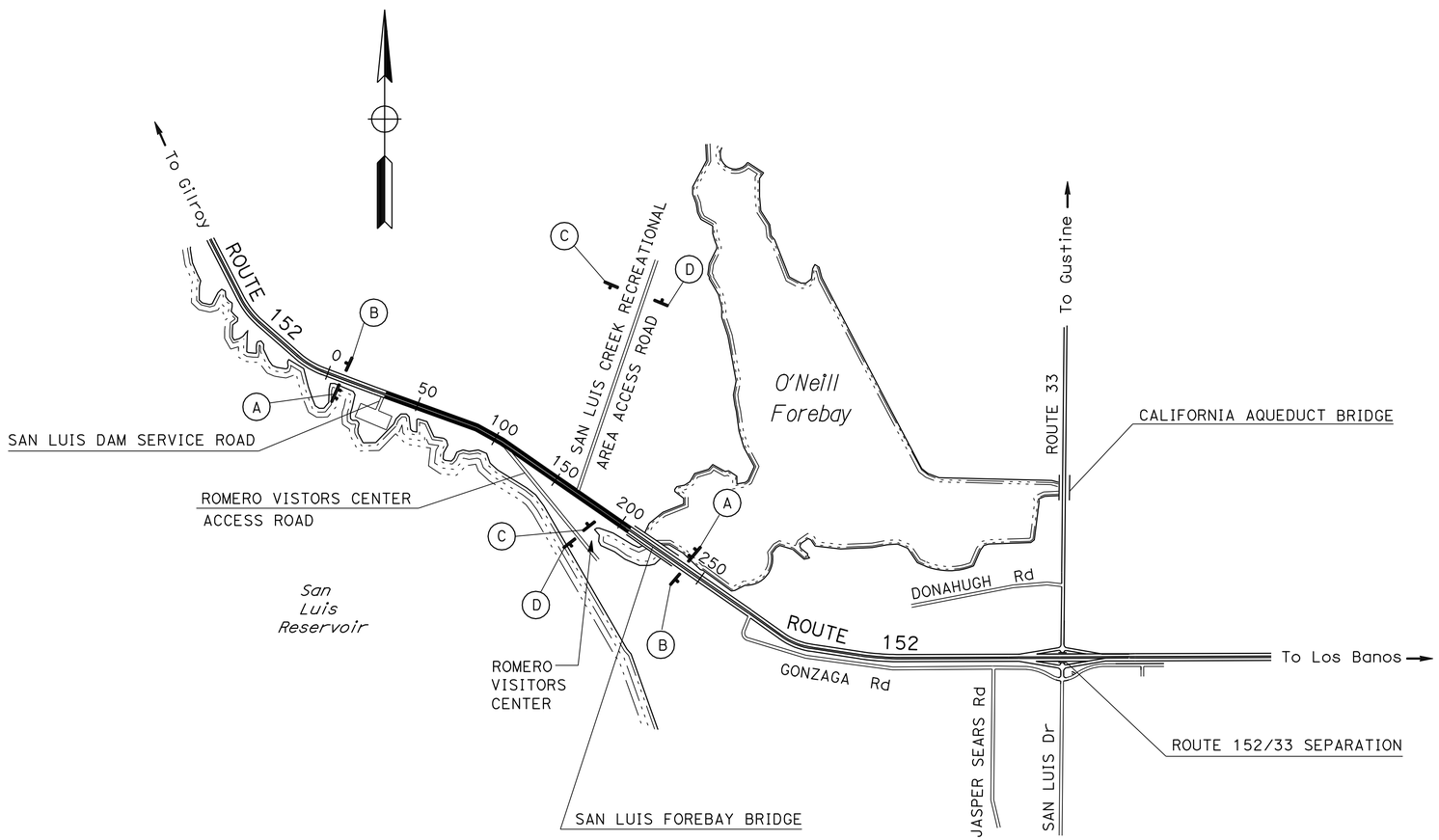

APPROVED FOR CONSTRUCTION AREA SIGN WORK ONLY

CONSTRUCTION AREA SIGNS

NO SCALE

CS-1

STATE OF CALIFORNIA - DEPARTMENT OF TRANSPORTATION
Caltrans
DESIGN

FUNCTIONAL SUPERVISOR: JOSE HUERTA
CALCULATED-DESIGNED BY: HUY HA
CHECKED BY: HONGLOAN T. LUONG
REVISED BY: HH
DATE REVISED: 04/30/12

LAST REVISION 00-00-00
DATE PLOTTED => 30-MAY-2012
TIME PLOTTED => 13:23

Dist	COUNTY	ROUTE	POST MILES TOTAL PROJECT	SHEET No.	TOTAL SHEETS
10	Mer	152	R6.0/R10.1	16	28

REGISTERED CIVIL ENGINEER 4/13/12 DATE

4/30/12
PLANS APPROVAL DATE

REGISTERED PROFESSIONAL ENGINEER HongLoan T. Luong No. 63864 Exp. 9/30/12 CIVIL STATE OF CALIFORNIA

THE STATE OF CALIFORNIA OR ITS OFFICERS OR AGENTS SHALL NOT BE RESPONSIBLE FOR THE ACCURACY OR COMPLETENESS OF SCANNED COPIES OF THIS PLAN SHEET.

NOTE:
(N) - NOT A SEPARATE PAY ITEM, FOR INFORMATION ONLY.

DOUBLE THRIE BEAM BARRIER ITEMS

LOCATION	OFFSET	DOUBLE THRIE BEAM BARRIER (STEEL POST)	CRASH CUSHION (TYPE CAT)	CRASH CUSHION (TYPE CAT) BACKUP	TRANSITION RAILING (TYPE DTB)	END CAP (TYPE TC)	OBJECT MARKER (TYPE P)	GUARD RAILING DELINEATOR
Sta TO Sta		LF	EA	EA	EA	EA	EA	EA
21+00.00 TO 54+00.00	℄	3264	1	1				
54+00.00 TO 62+50.00	Lt/Rt	854						
62+50.00 TO 108+43.75	℄	4550	1	1				
118+00.00 TO 163+00.00	Lt	4469	1	1				
163+00.00 TO 200+43.75	℄	3697	1	1				
212+40.00 TO 221+73.00	℄	894	1	1	1	1	2	6
TOTAL		17,728	5	5	1	1	2	6

TEMPORARY DRAINAGE INLET PROTECTION

LOCATION	EA
Sta	
19+32.6	1
24+04.7	1
54+56.6	1
62+37.3	1
81+48.5	1
83+89.8	1
96+07.6	1
108+85.9	1
129+20.6	1
145+41.0	1
162+21.2	1
180+07.7	1
200+70.4	1
207+21.0	1
209+82.0	1
220+77.0	1
TOTAL	16

ADJUST INLET

LOCATION	EA
Sta 24+04.743	1

REMOVE METAL BEAM GUARD RAILING

LOCATION	LF
Sta 221+73.00 (SAN LUIS FOREBAY BRIDGE)	80

IMPORTED BORROW

LOCATION	CY
Sta 21+00.00 TO Sta 54+00.00	1850

EROSION CONTROL (COMPOST BLANKET)

LOCATION	AREA (N)	PURE LIVE SEED (N)	CY
Sta TO Sta	ACRE	LBS	
21+00 TO 54+00 *	2.31	13.8	154.9
54+00 TO 221+73 *	4.67	27.8	313.1
		TOTAL	468.0

* SEE TYPICAL CROSS SECTIONS

WEED CONTROL MAT (RUBBER)

LOCATION	SQYD
Sta 21+00.00 TO Sta 221+73.00	7940

SUMMARY OF QUANTITIES
Q-1

STATE OF CALIFORNIA - DEPARTMENT OF TRANSPORTATION
Caltrans
DESIGN
FUNCTIONAL SUPERVISOR: JOSE HUERTA
CALCULATED-DESIGNED BY: HUY HA
CHECKED BY: HONGLOAN T. LUONG
REVISED BY: Hh
DATE REVISED: 04/30/12

LAST REVISION 00-00-00
DATE PLOTTED => 30-MAY-2012
TIME PLOTTED => 13:23

DIST	COUNTY	ROUTE	POST MILES TOTAL PROJECT	SHEET NO.	TOTAL SHEETS
10	Mer	152	R6.0/R10.1	17	28

Randell D. Hiatt
REGISTERED CIVIL ENGINEER

June 6, 2008
PLANS APPROVAL DATE

REGISTERED PROFESSIONAL ENGINEER
Randell D. Hiatt
No. C50200
Exp. 6-30-09
CIVIL
STATE OF CALIFORNIA

The State of California or its officers or agents shall not be responsible for the accuracy or completeness of electronic copies of this plan sheet.

To accompany plans dated 4/30/12

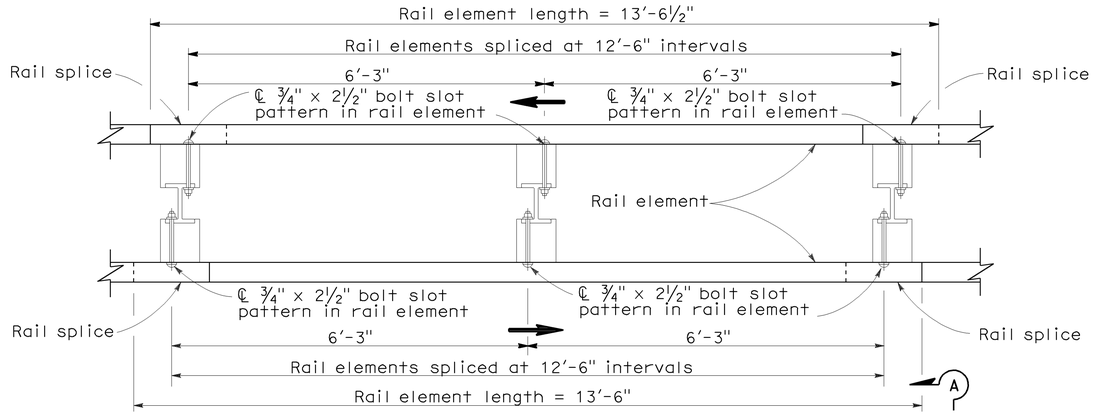

PLAN

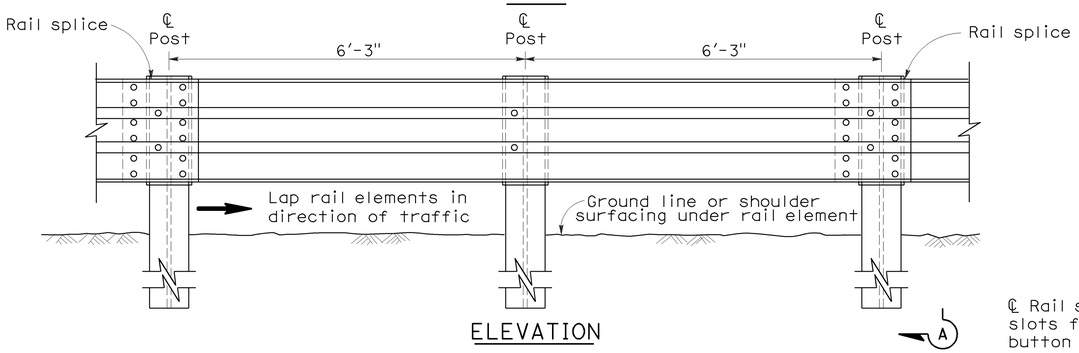

ELEVATION

DOUBLE THRIE BEAM BARRIER

(Steel post with notched wood or notched plastic blocks)
See Note 1

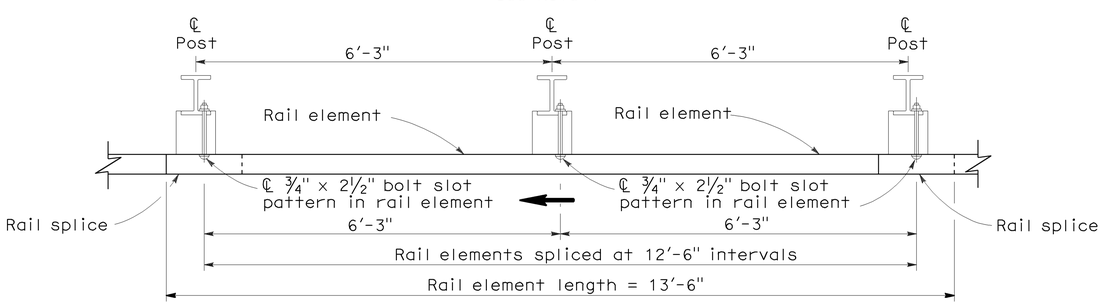

PLAN

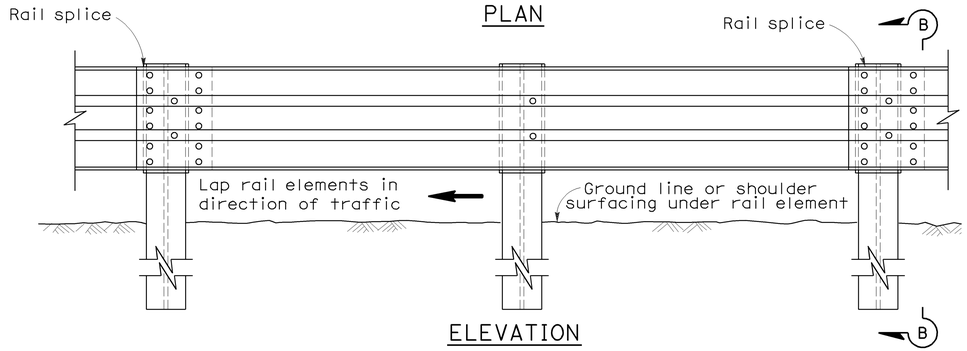

ELEVATION

SINGLE THRIE BEAM BARRIER

(Steel post with notched wood or notched plastic blocks)
See Note 1

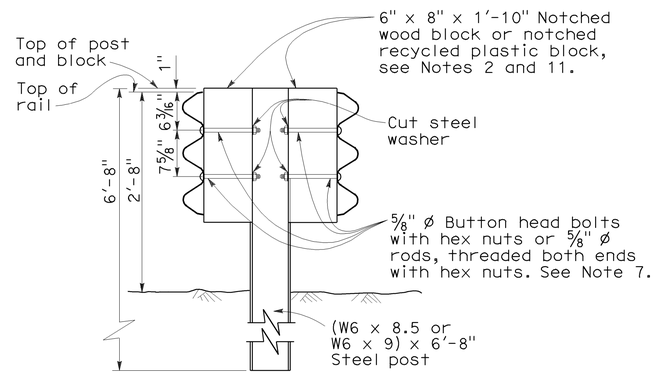

SECTION A-A

TYPICAL STEEL LINE POST INSTALLATION

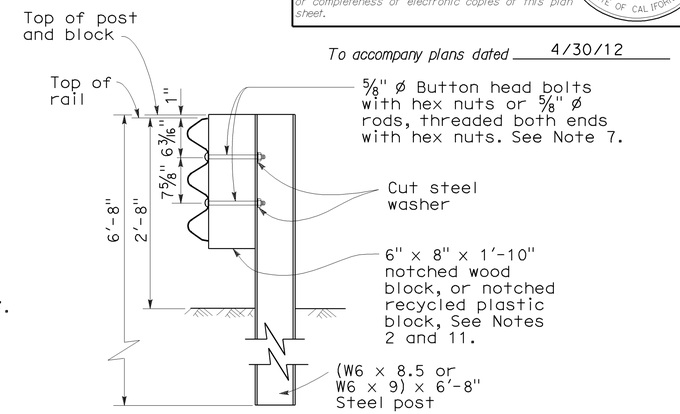

SECTION B-B

TYPICAL STEEL LINE POST INSTALLATION

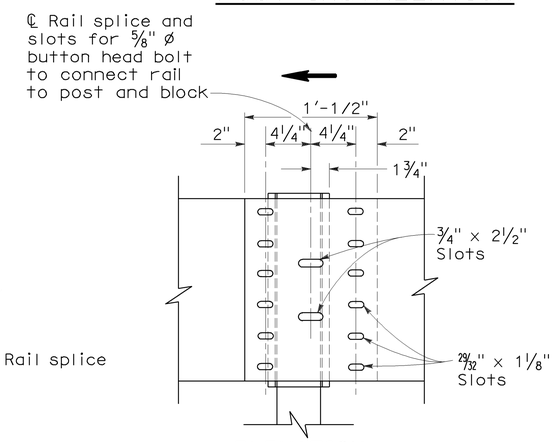

ELEVATION

RAIL ELEMENT SPLICE DETAIL

a) Connect the overlapped ends of the thrie beam rail elements with ⅝" ø x 1⅛" button head oval shoulder bolts inserted into the 29/32" x 1⅛" slots and bolted together with ⅝" ø x 1⅛" recessed hex nuts. Recess of hex nut points toward rail element. A total of 12 bolts and nuts are to be used at each rail splice connection.

b) The ends of the rail elements are to be overlapped in the direction of traffic (see details).

c) Where end cap is to be attached to the end of a rail element, a total of 4 of the above described splice bolts and nuts are to be used. Where a return cap is to be attached to the ends of rail elements, a total of 8 of the above described splice bolts and nuts are to be used.

NOTES:

1. For details of the cross section of the thrie beam rail element and details for wood post with wood block installations, see Standard Plan A78A.
2. For details of standard hardware, posts and blocks used to construct thrie beam barrier, see Revised Standard Plan RSP A78C1 and Standard Plan A78C2.
3. Thrie beam barrier post spacing to be 6'-3" center to center, except as otherwise noted.
4. Top of barrier rail to be 2'-8" above ground line or shoulder surfacing under the rail element.
5. For barrier end treatments and barrier connections, see Standard Plans A78E1, A78E2 and A78E3, Revised Standard Plans RSPs A78F1 and A78F2, Standard Plan A78G and Revised Standard Plan RSP A78H.
6. For connection to Concrete Barrier, see Revised Standard Plan RSP A78I.
7. Attach rail element to block and steel post with 2 bolts or rods on approaching traffic side of block and post web. No washer on rail face for rod or bolted connections to line post.
8. For details of thrie beam barrier on bridges, see Standard Plan A78D2. For details of thrie beam barrier at fixed objects, see Standard Plan A78D1.
9. Direction of traffic indicated by ⟶.
10. Notched face of block faces steel post.

STATE OF CALIFORNIA
DEPARTMENT OF TRANSPORTATION

THRIE BEAM BARRIER STANDARD BARRIER RAILING SECTION (STEEL POST WITH NOTCHED WOOD BLOCK OR NOTCHED RECYCLED PLASTIC BLOCK)

NO SCALE

RSP A78B DATED JUNE 6, 2008 SUPERSEDES STANDARD PLAN A78B DATED MAY 1, 2006 - PAGE 84 OF THE STANDARD PLANS BOOK DATED MAY 2006.

REVISED STANDARD PLAN RSP A78B

2006 REVISED STANDARD PLAN RSP A78B

5-14-08

DIST	COUNTY	ROUTE	POST MILES TOTAL PROJECT	SHEET No.	TOTAL SHEETS
10	Mer	152	R6.0/R10.1	18	28

Randell D. Hiatt
REGISTERED CIVIL ENGINEER

June 6, 2008
PLANS APPROVAL DATE

REGISTERED PROFESSIONAL ENGINEER
Randell D. Hiatt
No. C50200
Exp. 6-30-09
CIVIL
STATE OF CALIFORNIA

The State of California or its officers or agents shall not be responsible for the accuracy or completeness of electronic copies of this plan sheet.

To accompany plans dated 4/30/12

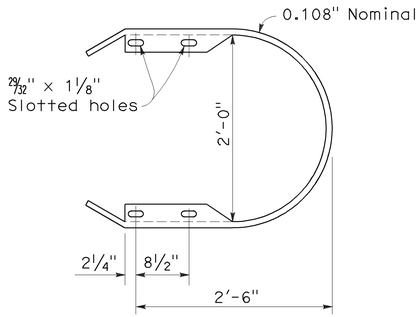

RETURN CAP
(TYPE TA)

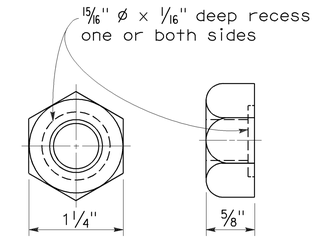

5/8" ø RECESS NUT

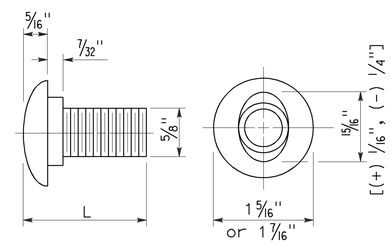

5/8" ø BUTTON HEAD BOLT

L	THREAD LENGTH
1 1/4"	full thread length
2"	full thread length
9 1/2"	4" Min thread length
18"	4" Min thread length

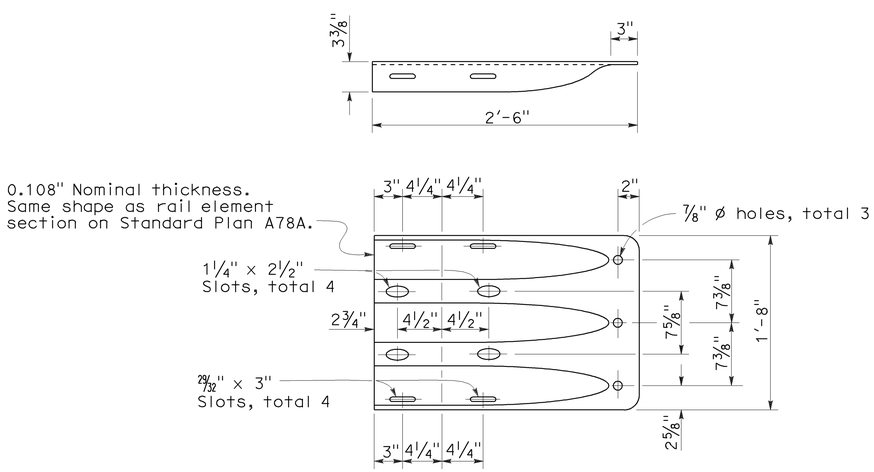

END CAP
(TYPE TC)

STATE OF CALIFORNIA
DEPARTMENT OF TRANSPORTATION

THRIE BEAM BARRIER STANDARD HARDWARE DETAILS

NO SCALE

RSP A78C1 DATED JUNE 6, 2008 SUPERSEDES STANDARD PLAN A78C1
DATED MAY 1, 2006 - PAGE 85 OF THE STANDARD PLANS BOOK DATED MAY 2006.

REVISED STANDARD PLAN RSP A78C1

2006 REVISED STANDARD PLAN RSP A78C1

4-21-08

DIST	COUNTY	ROUTE	POST MILES TOTAL PROJECT	SHEET NO.	TOTAL SHEETS
10	Mer	152	R6.0/R10.1	19	28

Randell D. Hiatt
REGISTERED CIVIL ENGINEER

June 6, 2008
PLANS APPROVAL DATE

REGISTERED PROFESSIONAL ENGINEER
Randell D. Hiatt
No. C50200
Exp. 6-30-09
CIVIL
STATE OF CALIFORNIA

The State of California or its officers or agents shall not be responsible for the accuracy or completeness of electronic copies of this plan sheet.

To accompany plans dated 4/30/12

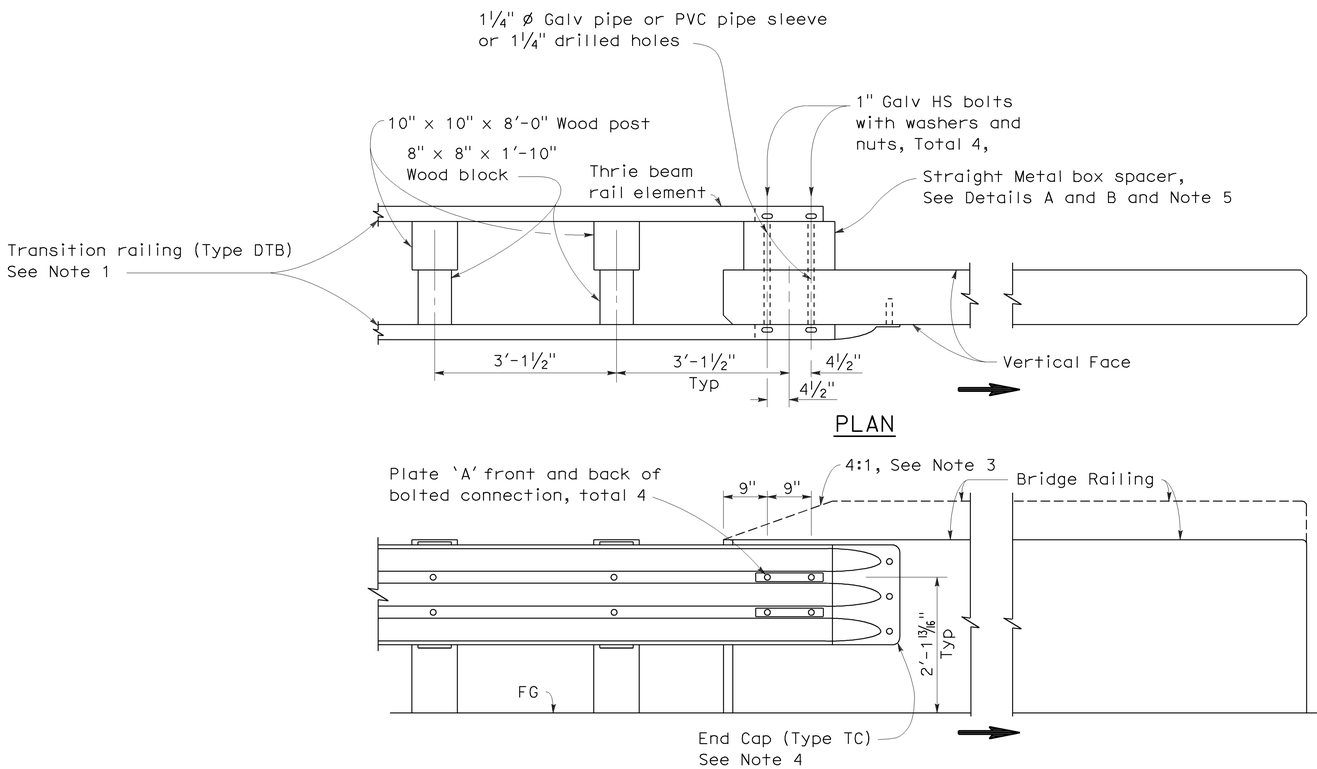

CONNECTION DETAIL 1A
See Note 2

DOUBLE THRIE BEAM BARRIER CONNECTION TO BRIDGE RAILING WITHOUT SIDEWALK

NOTES:

1. For additional details of Transition Railing (Type DTB), see Standard Plans A78K. Transition Railing (Type DTB) transitions the standard 12 gage double thrie beam barrier to a heavier gage double thrie beam railing section then to a heavier gage nested double thrie beam barrier section which then is connected to the concrete bridge railing.
2. For typical use of Connection Detail 1A, see Type 25A Connection Layout on Revised Standard Plan RSP A78H.
3. Where the height of the bridge railing exceeds the height of the thrie beam railing by more than 1" at Connection Detail 1A, taper the top of the end of the bridge railing at 4:1 to match the top elevation of the thrie beam railing.
4. For details of End Cap (Type TC), see Standard Plan A78C1.
5. See Standard Plan A78K for additional details regarding depth dimension for straight metal box spacer.
6. Direction of adjacent traffic indicated by ⟹.

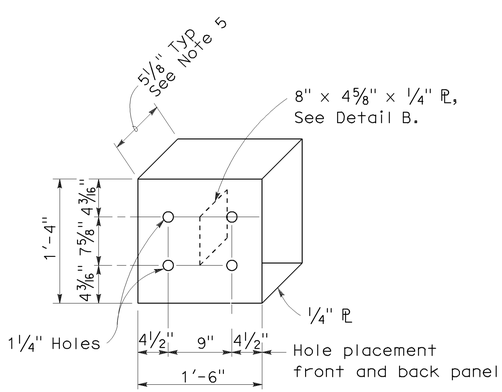

DETAIL A

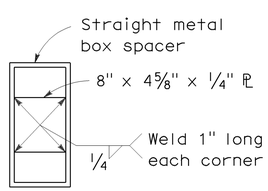

DETAIL B

STRAIGHT METAL BOX SPACER

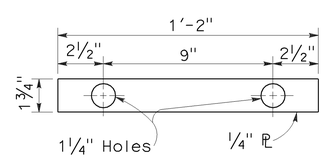

DETAIL C

PLATE 'A'

STATE OF CALIFORNIA
DEPARTMENT OF TRANSPORTATION

DOUBLE THRIE BEAM BARRIER CONNECTION TO BRIDGE RAILINGS WITHOUT SIDEWALKS

NO SCALE

RSP A78F1 DATED JUNE 6, 2008 SUPERSEDES STANDARD PLAN A78F1
DATED MAY 1, 2006 - PAGE 92 OF THE STANDARD PLANS BOOK DATED MAY 2006.

REVISED STANDARD PLAN RSP A78F1

2006 REVISED STANDARD PLAN RSP A78F1

12-10-07

DIST	COUNTY	ROUTE	POST MILES TOTAL PROJECT	SHEET NO.	TOTAL SHEETS
10	Mer	152	R6.0/R10.1	20	28

Randell D. Hiatt
REGISTERED CIVIL ENGINEER

June 6, 2008
PLANS APPROVAL DATE

REGISTERED PROFESSIONAL ENGINEER
Randell D. Hiatt
No. C50200
Exp. 6-30-09
CIVIL
STATE OF CALIFORNIA

The State of California or its officers or agents shall not be responsible for the accuracy or completeness of electronic copies of this plan sheet.

To accompany plans dated 4/30/12

NOTES:

1. Line post, blocks and hardware to be used are shown on Standard Plans A78A, A78B, A78C1, and A78C2.
2. Post spacing to be 6'-3" center to center, except as otherwise noted.
3. Except as noted, line posts are 6" x 8" x 6'-0" wood with 6" x 8" x 1'-10" wood blocks. (W6 x 9) steel posts, 6'-8" in length, with 6" x 8" x 1'-10" notched wood blocks or notched recycled plastic blocks may be used for 6" x 8" x 6'-0" wood posts with 6" x 8" x 1'-10" wood blocks where applicable and when specified.
4. Direction of adjacent traffic indicated by ⟶.
5. For Transition Railing (Type DTB) details, see Standard Plan A78K.
6. The 15:1 or flatter flare is measured off of the edge of traveled way.

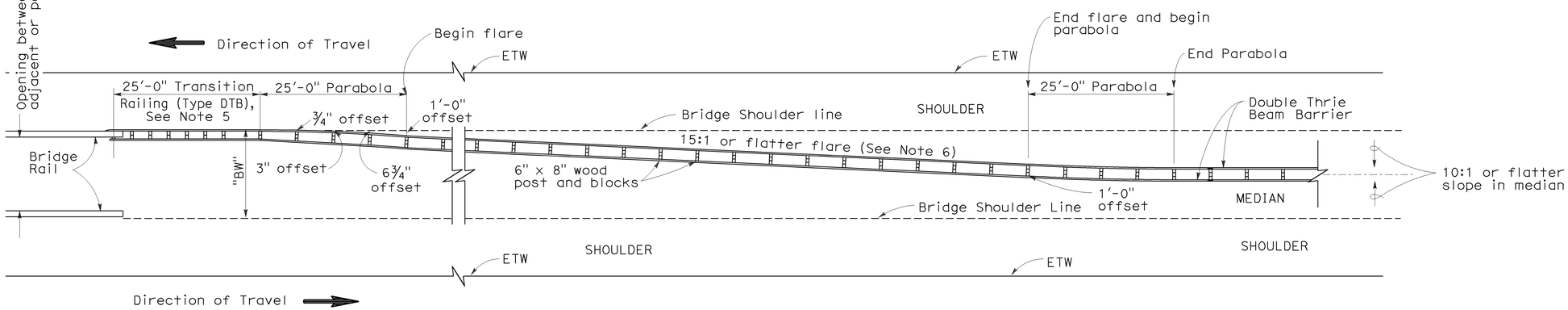

TYPE 25A CONNECTION LAYOUT

STATE OF CALIFORNIA
DEPARTMENT OF TRANSPORTATION

THRIE BEAM BARRIER TYPICAL LAYOUT FOR CONNECTION TO BRIDGE RAILING

RSP A78H DATED JUNE 6, 2008 SUPERSEDES STANDARD PLAN A78H
DATED MAY 1, 2006 - PAGE 95 OF THE STANDARD PLANS BOOK DATED MAY 2006.

REVISED STANDARD PLAN RSP A78H

2006 REVISED STANDARD PLAN RSP A78H

12-10-07

DIST	COUNTY	ROUTE	POST MILES TOTAL PROJECT	SHEET NO.	TOTAL SHEETS
10	Mer	152	R6.0/R10.1	21	28

Randell D. Hiatt
REGISTERED CIVIL ENGINEER

June 6, 2008
PLANS APPROVAL DATE

REGISTERED PROFESSIONAL ENGINEER
Randell D. Hiatt
No. C50200
Exp. 6-30-09
CIVIL
STATE OF CALIFORNIA

The State of California or its officers or agents shall not be responsible for the accuracy or completeness of electronic copies of this plan sheet.

To accompany plans dated 5/30/12

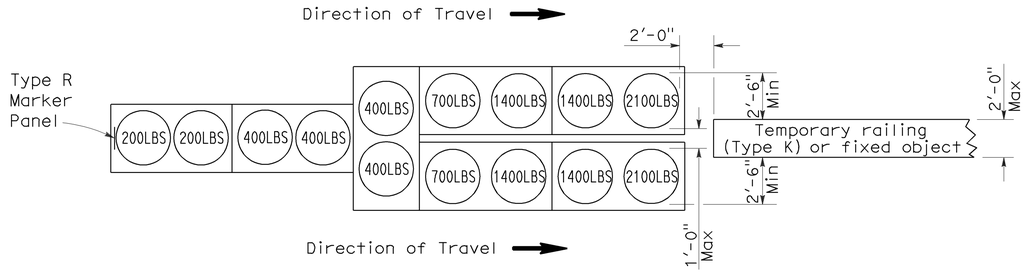

ARRAY 'TU14'

Approach speed 45 mph or more

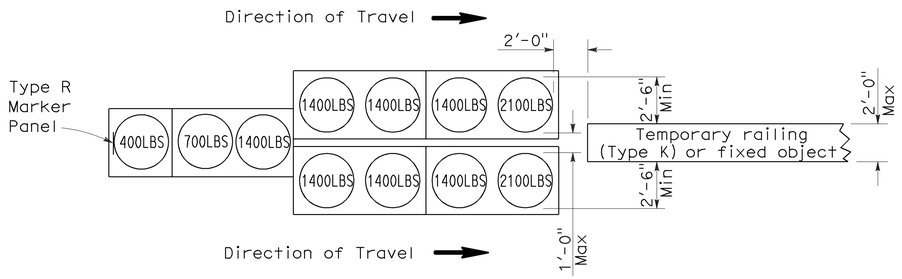

ARRAY 'TU11'

Approach speed less than 45 mph

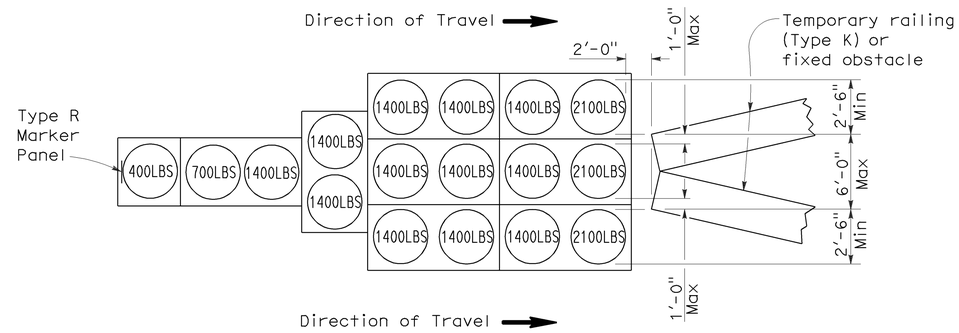

ARRAY 'TU17'

Approach speed less than 45 mph

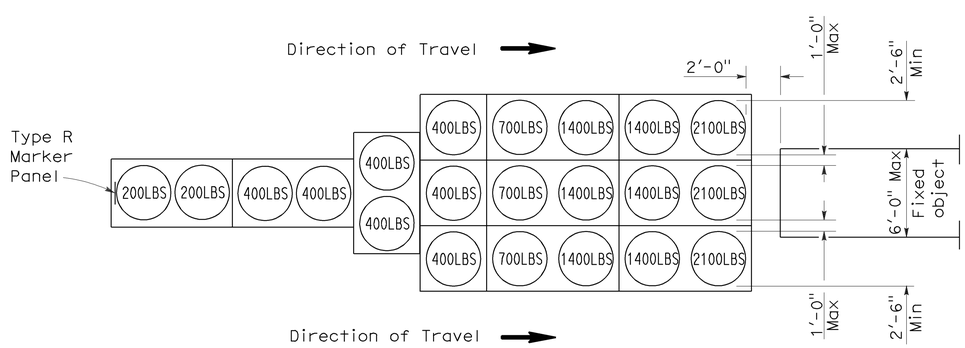

ARRAY 'TU21'

Approach speed 45 mph or more

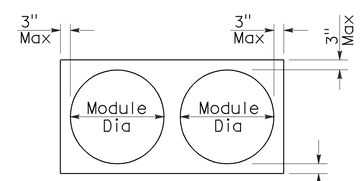

PLAN

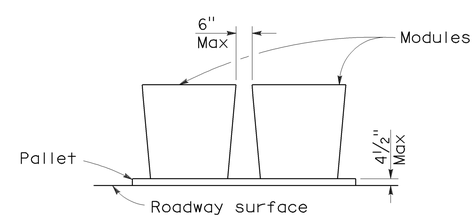

ELEVATION

CRASH CUSHION PALLET DETAIL

See Note 7

NOTES:

1. (XXX) Indicates sand filled module location and weight of sand in pounds for each module. Module spacing is based on the greater diameter of the module.
2. All sand weights are nominal.
3. Temporary crash cushion arrays shall not encroach on the traveled way.
4. Place the top of Type R marker panel 1" below the module lid.
5. Refer to Standard Plan A73B for marker details.
6. Approach speeds indicated conform to NCHRP 350 Report criteria.
7. Use of pallets is optional.

STATE OF CALIFORNIA
DEPARTMENT OF TRANSPORTATION

TEMPORARY CRASH CUSHION, SAND FILLED (UNIDIRECTIONAL)

NO SCALE

RSP T1A DATED JUNE 6, 2008 SUPERSEDES STANDARD PLAN T1A
DATED MAY 1, 2006 - PAGE 211 OF THE STANDARD PLANS BOOK DATED MAY 2006.

REVISED STANDARD PLAN RSP T1A

2006 REVISED STANDARD PLAN RSP T1A

DIST	COUNTY	ROUTE	POST MILES TOTAL PROJECT	SHEET NO.	TOTAL SHEETS
10	Mer	152	R6.0/R10.1	22	28

Randell D. Hiatt
REGISTERED CIVIL ENGINEER

June 6, 2008
PLANS APPROVAL DATE

REGISTERED PROFESSIONAL ENGINEER
Randell D. Hiatt
No. C50200
Exp. 6-30-09
CIVIL
STATE OF CALIFORNIA

The State of California or its officers or agents shall not be responsible for the accuracy or completeness of electronic copies of this plan sheet.

To accompany plans dated 4/30/12

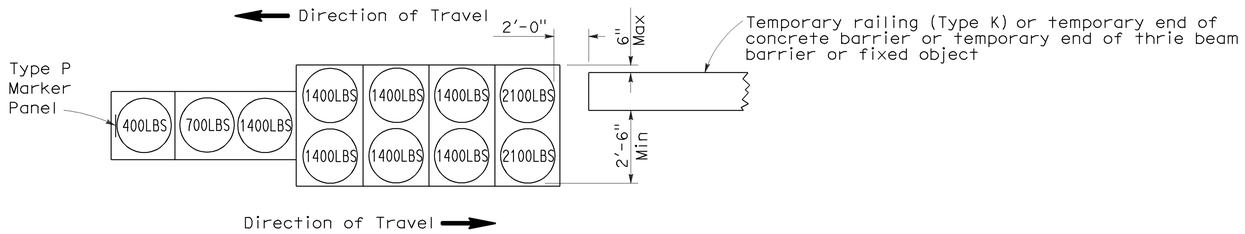

ARRAY 'TB11'

Approach speed less than 45 mph

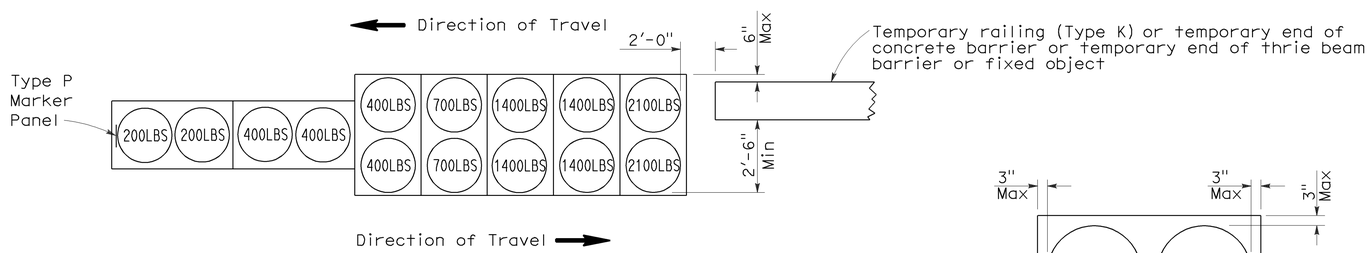

ARRAY 'TB14'

Approach speed 45 mph or more

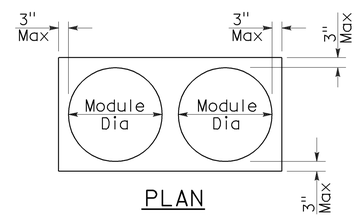

PLAN

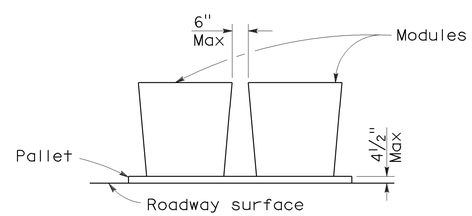

ELEVATION

CRASH CUSHION PALLET DETAIL

See Note 7

NOTES:

1. (XXX) Indicates sand filled module location and weight of sand in pounds for each module. Module spacing is based on the greater diameter of the module.
2. All sand weights are nominal.
3. Temporary crash cushion arrays shall not encroach on the traveled way.
4. Place the Type P marker panel so that the bottom of the panel rests upon the pallet.
5. Refer to Standard Plan A73B for marker details.
6. Approach speeds indicated conform to NCHRP 350 Report criteria.
7. Use of pallets is optional.

STATE OF CALIFORNIA
DEPARTMENT OF TRANSPORTATION

TEMPORARY CRASH CUSHION, SAND FILLED (BIDIRECTIONAL)

NO SCALE

RSP T1B DATED JUNE 6, 2008 SUPERSEDES STANDARD PLAN T1B
DATED MAY 1, 2006 - PAGE 212 OF THE STANDARD PLANS BOOK DATED MAY 2006.

REVISED STANDARD PLAN RSP T1B

2006 REVISED STANDARD PLAN RSP T1B

5-15-08

DIST	COUNTY	ROUTE	POST MILES TOTAL PROJECT	SHEET NO.	TOTAL SHEETS
10	Mer	152	R6.0.R10.1	23	28

Randell D. Hiatt
REGISTERED CIVIL ENGINEER

June 6, 2008
PLANS APPROVAL DATE

REGISTERED PROFESSIONAL ENGINEER
Randell D. Hiatt
No. C50200
Exp. 6-30-09
CIVIL
STATE OF CALIFORNIA

The State of California or its officers or agents shall not be responsible for the accuracy or completeness of electronic copies of this plan sheet.

To accompany plans dated 4/30/12

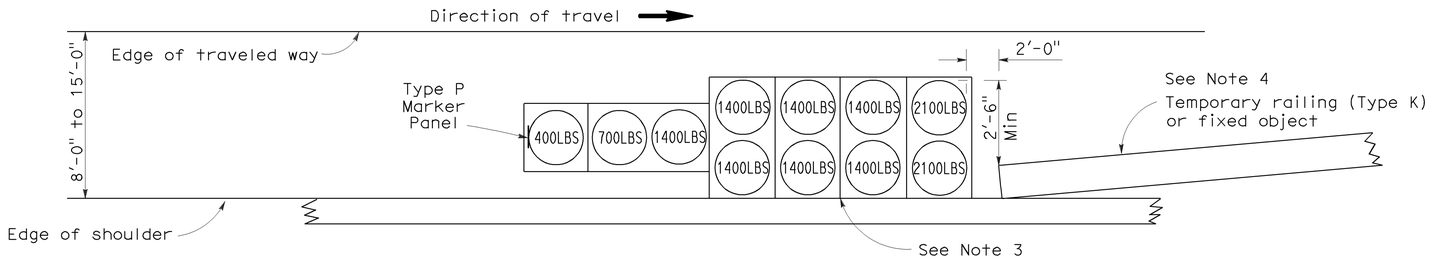

ARRAY 'TS11'

Approach speed less than 45 mph
See Note 9

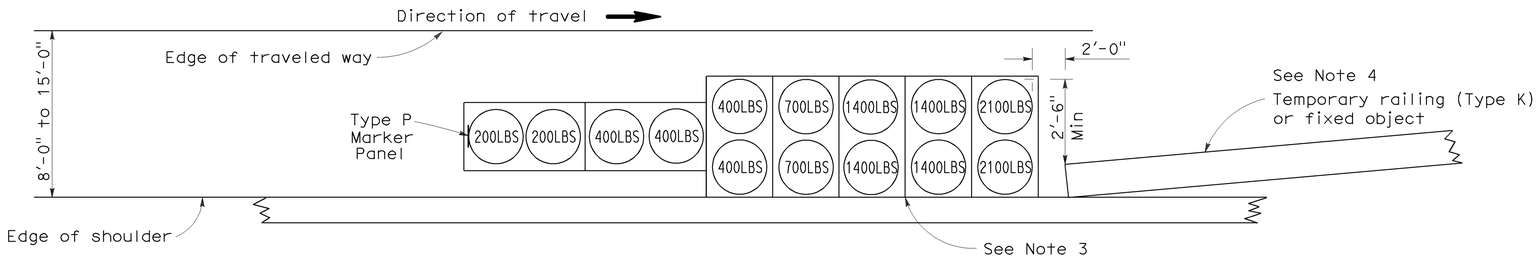

ARRAY 'TS14'

Approach speed 45 mph or more
See Note 9

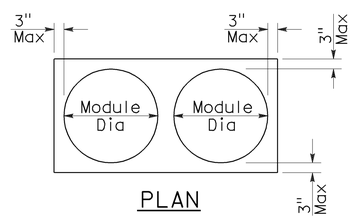

PLAN

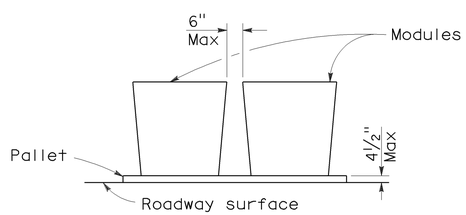

ELEVATION

CRASH CUSHION PALLET DETAIL

See Note 11

NOTES:

1. (XXX) Indicates sand filled module location and weight of sand in pounds for each module. Module spacing is based on the greater diameter of the module.
2. All sand weights are nominal.
3. The temporary crash cushion arrays shown on this plan shall be used only in locations where there will be traffic on one side of the temporary crash cushion array.
4. If the fixed object or approach end of the temporary railing is less than 15'-0" from the edge of traveled way, a temporary crash cushion is required in a construction or work zone.
5. Temporary crash cushion arrays shall not encroach on the traveled way.
6. Arrays for median shoulders shall conform to details shown on this plan for outside shoulders.
7. Place the Type P marker panel so that the bottom of the panel rests upon the pallet and faces traffic.
8. Refer to Standard Plan A73B for marker details.
9. For shoulder widths less than 8'-0", appropriate approved crash cushion protection, other than sand filled modules, shall be provided at fixed objects and at approach ends of temporary railing. The specific type of crash cushion shall be as shown on the project plans or as specified in the Special Provisions, or if not shown on the project plans or specified in the Special Provisions, shall be as approved by the Engineer.
10. Approach speeds indicated conform to NCHRP 350 Report criteria.
11. Use of pallets is optional.

STATE OF CALIFORNIA
DEPARTMENT OF TRANSPORTATION

TEMPORARY CRASH CUSHION, SAND FILLED (SHOULDER INSTALLATIONS)

NO SCALE

RSP T2 DATED JUNE 6, 2008 SUPERSEDES STANDARD PLAN T2
DATED MAY 1, 2006 - PAGE 213 OF THE STANDARD PLANS BOOK DATED MAY 2006.

REVISED STANDARD PLAN RSP T2

2006 REVISED STANDARD PLAN RSP T2

5-15-08

Dist	COUNTY	ROUTE	POST MILES TOTAL PROJECT	SHEET No.	TOTAL SHEETS
10	Mer	152	R6.0/R10.1	24	28

Randell D. Hiatt
REGISTERED CIVIL ENGINEER

May 20, 2011
PLANS APPROVAL DATE

REGISTERED PROFESSIONAL ENGINEER
Randell D. Hiatt
No. C50200
Exp. 6-30-11
CIVIL
STATE OF CALIFORNIA

The State of California or its officers or agents shall not be responsible for the accuracy or completeness of electronic copies of this plan sheet.

To accompany plans dated 4/30/12

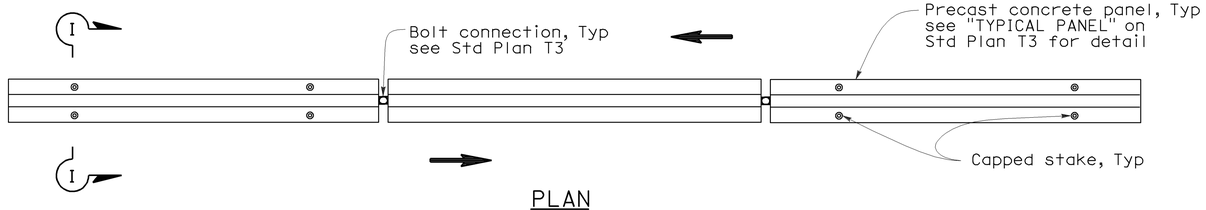

PLAN

RAILING STAKING CONFIGURATION FOR TWO-WAY TRAFFIC

See Note 1

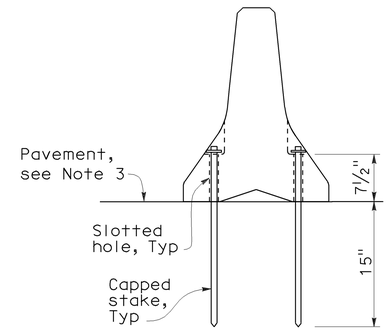

SECTION I-I

NOTES:

1. Where Type K Temporary Railing is placed as a temporary or long term barrier in two-way traffic on highways with less than 24" from the edge of traveled way, use four capped stakes per every other panel with end panels staked.
2. Where Type K Temporary Railing is placed 3" to 24" from the edge of an excavation on highways, use two capped stakes per panel along the traffic side.
3. Staked Type K Temporary Railing must be supported by at least 4" thick concrete, hot mix asphalt or existing asphalt concrete pavement.
4. The minimum yield strength for the washer must be 60,000 psi.
5. Direction of adjacent traffic indicated by ⟹.

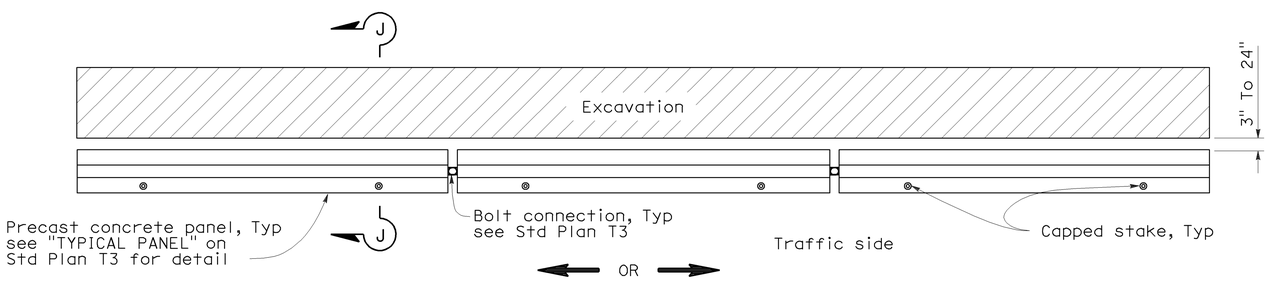

PLAN

RAILING STAKING CONFIGURATION ADJACENT TO AN EXCAVATION

See Note 2

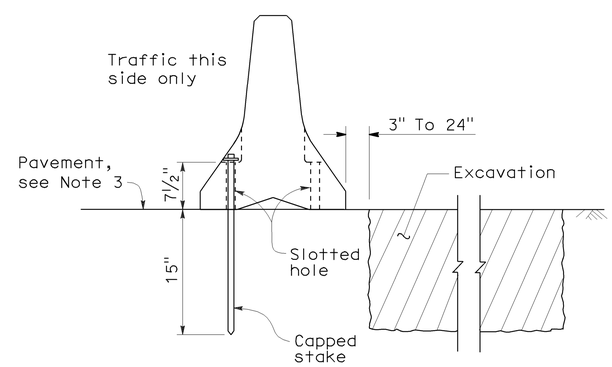

SECTION J-J

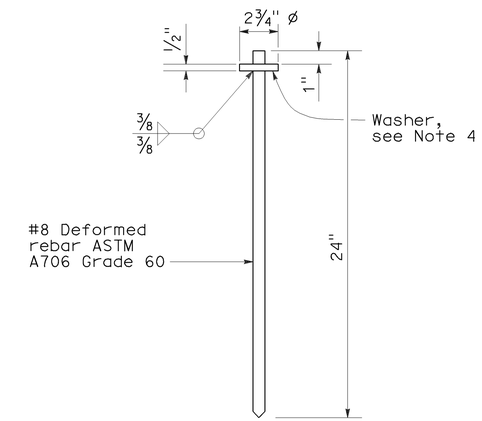

CAPPED STAKE DETAIL

STATE OF CALIFORNIA
DEPARTMENT OF TRANSPORTATION

TEMPORARY RAILING (TYPE K)

NO SCALE

NSP T3A DATED MAY 20, 2011 SUPPLEMENTS THE STANDARD PLANS BOOK DATED MAY 2006.

NEW STANDARD PLAN NSP T3A

2006 NEW STANDARD PLAN NSP T3A

DIST	COUNTY	ROUTE	POST MILES TOTAL PROJECT	SHEET NO.	TOTAL SHEETS
10	Mer	152	R6.0/R10.1	25	28

LICENSED LANDSCAPE ARCHITECT

August 15, 2008
PLANS Approval DATE

LICENSED LANDSCAPE ARCHITECT Robert B. Schott 3635 Signature 11-04-08 Renewal Date 08-11-08 Date STATE OF CALIFORNIA

The State of California or its officers or agents shall not be responsible for the accuracy or completeness of electronic copies of this plan sheet.

To accompany plans dated 4/30/12

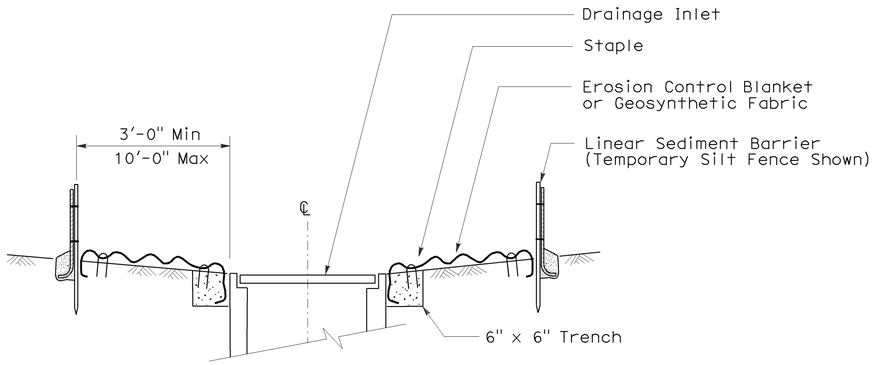

SECTION A-A

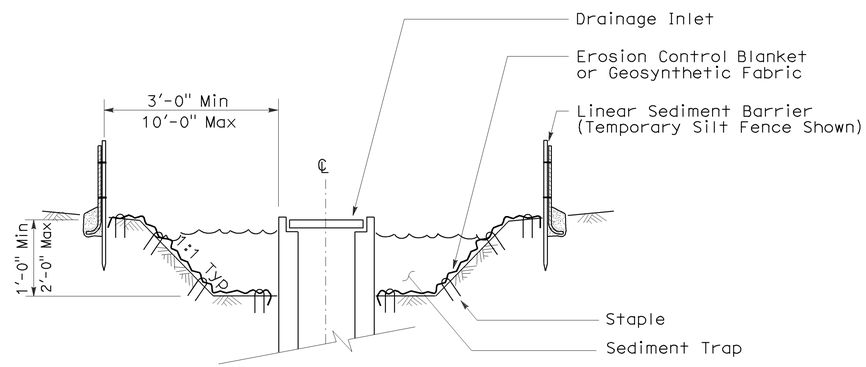

SECTION B-B

NOTES:

1. See Standard Plan T51 for Temporary Silt Fence.
2. Dimensions may vary to fit field conditions.

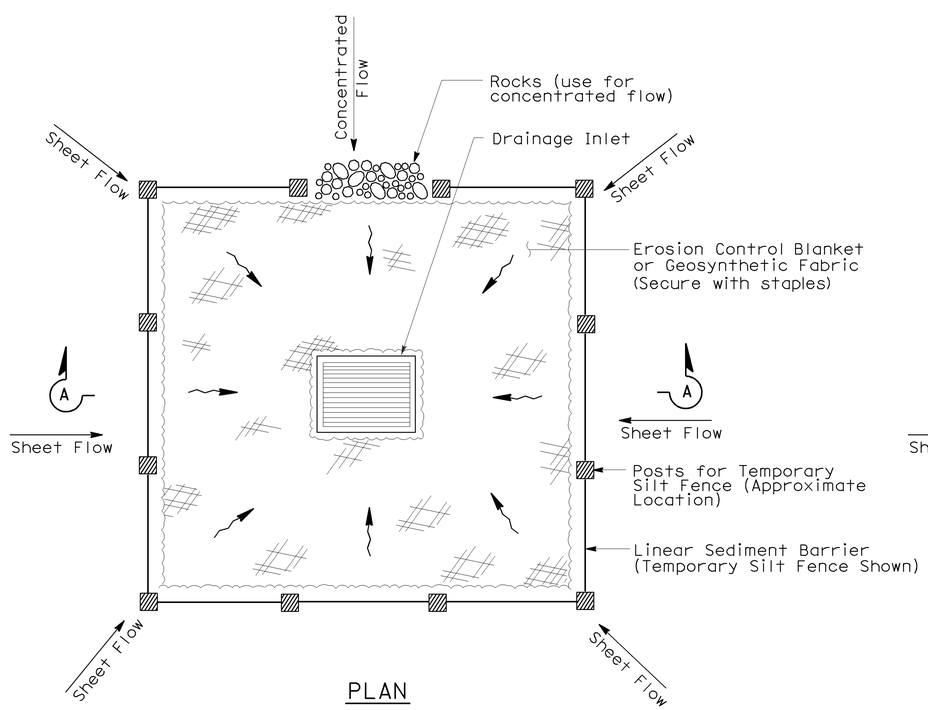

PLAN

TEMPORARY DRAINAGE INLET PROTECTION (TYPE 1)

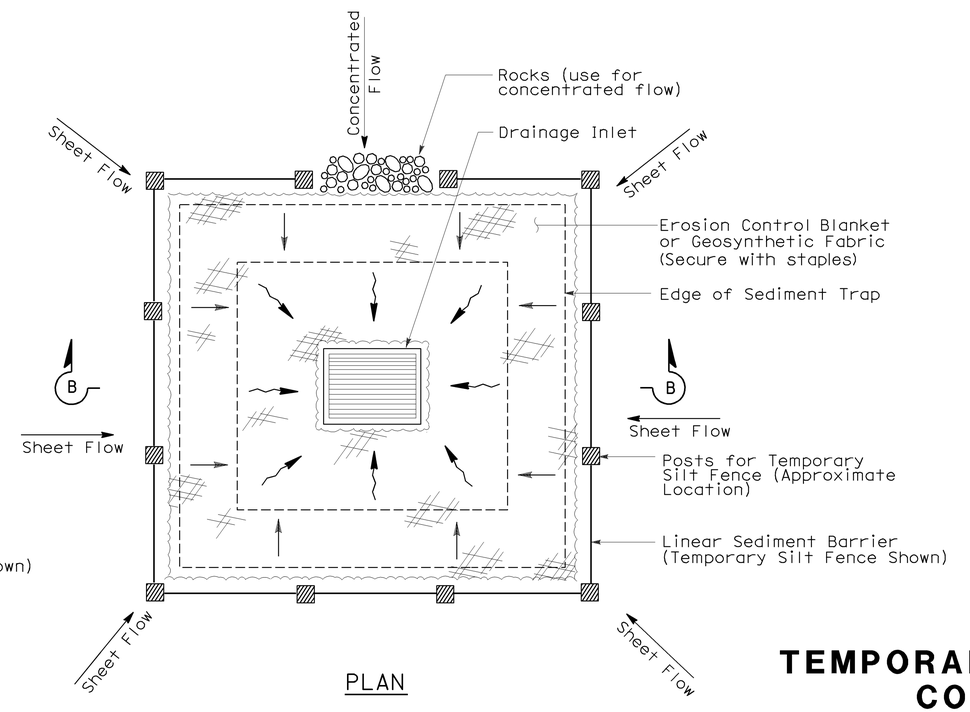

PLAN

TEMPORARY DRAINAGE INLET PROTECTION (TYPE 2) (EXCAVATED SEDIMENT TRAP)

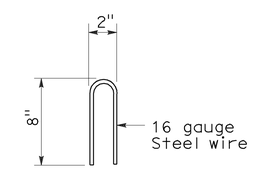

STAPLE DETAIL

STATE OF CALIFORNIA
DEPARTMENT OF TRANSPORTATION

TEMPORARY WATER POLLUTION CONTROL DETAILS (TEMPORARY DRAINAGE INLET PROTECTION)

NO SCALE

Nsp t61 dated august 15, 2008 supplements the standard plans book dated may 2006.

NEW STANDARD PLAN NSP T61

2006 NEW STANDARD PLAN NSP T61

7-11-08

DIST	COUNTY	ROUTE	POST MILES TOTAL PROJECT	SHEET NO.	TOTAL SHEETS
10	Mer	152	R6.0/R10.1	26	28

LICENSED LANDSCAPE ARCHITECT

August 15, 2008
PLANS APPROVAL DATE

The State of California or its officers or agents shall not be responsible for the accuracy or completeness of electronic copies of this plan sheet.

LICENSED LANDSCAPE ARCHITECT — Robert B. Schott — Signature — 11-04-08 Renewal Date — 08-11-08 Date — STATE OF CALIFORNIA

To accompany plans dated 4/30/12

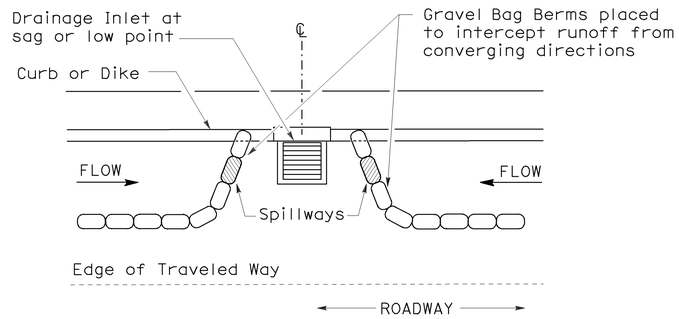

PLAN

CONFIGURATION FOR SAG POINT INLET (GRAVEL BAG BERM)

GRAVEL BAG BERM (TYPE 3A) SPACING TABLE

SLOPE OF ROADWAY (PERCENT)	1 to 3.9	4 to 5.9	6 to 7.9	8 to 10	10+
INTERVAL BETWEEN BERM	100′	75′	50′	25′	12′

For slope of less than 1%, install barriers only if erosion/sediment is prevalent

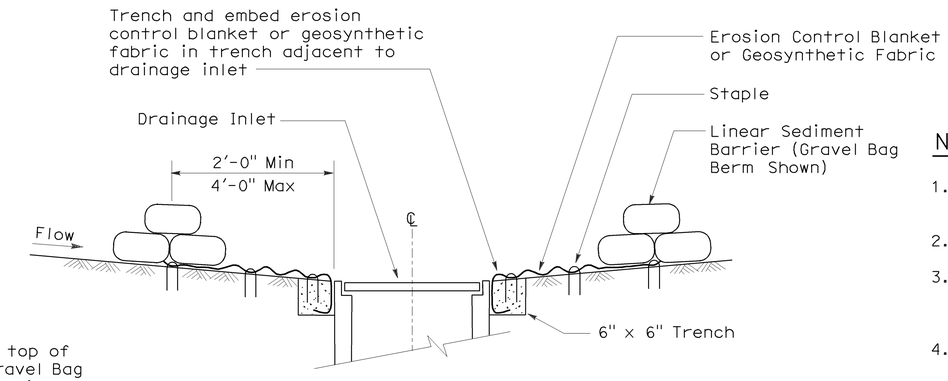

SECTION A-A

NOTES:

1. Place safety cones adjacent to drainage inlet protection.
2. Dimensions may vary to fit field conditions.
3. Install a minimum of 3 gravel bag berms upstream of each drainage inlet to be protected.
4. Position erosion control blanket or geosynthetic fabric at edge of concrete apron and secure in trench.
5. Erosion control blanket or geosynthetic fabric is not required if the area adjacent to the drainage inlet is vegetated or paved.

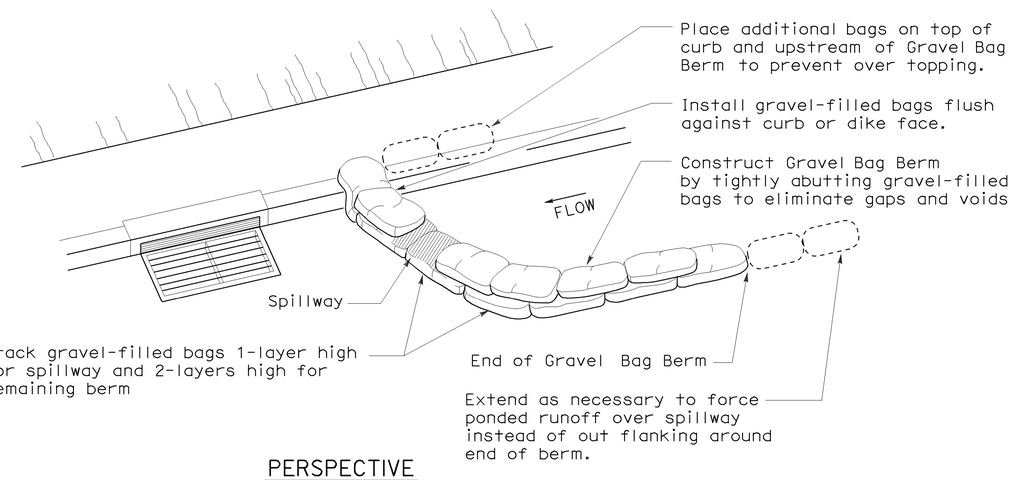

PERSPECTIVE

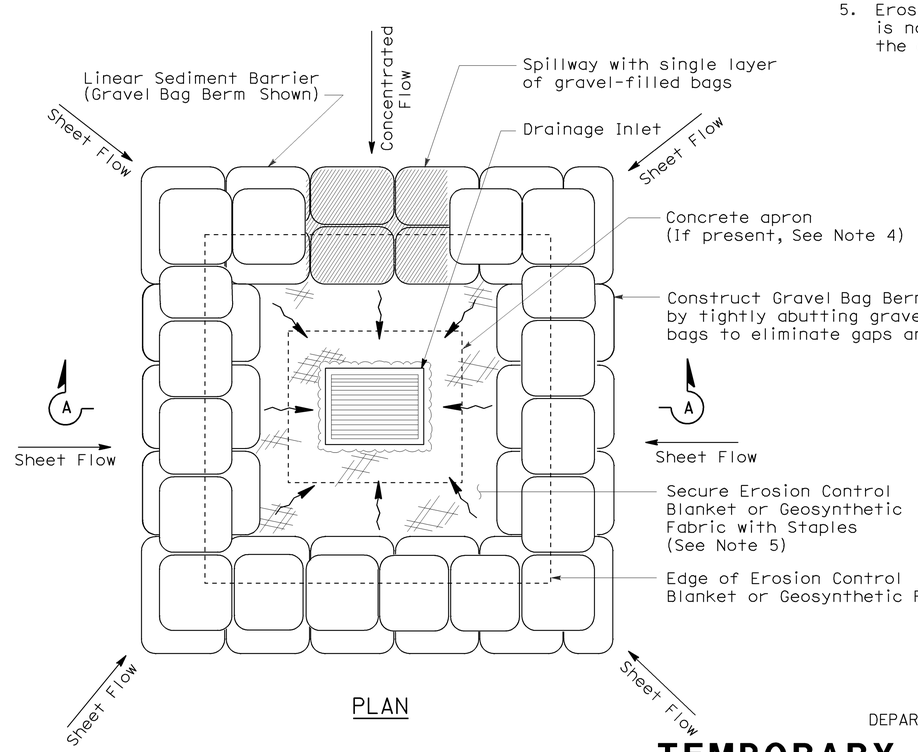

PLAN

TEMPORARY DRAINAGE INLET PROTECTION (TYPE 3B)

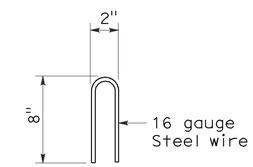

STAPLE DETAIL

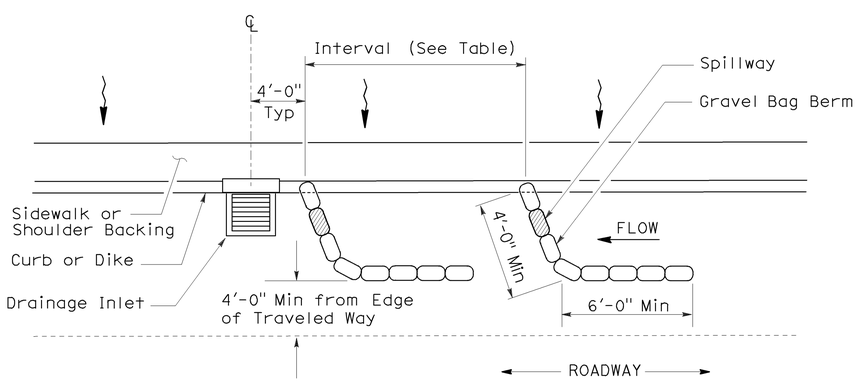

PLAN

TEMPORARY DRAINAGE INLET PROTECTION (TYPE 3A) (GRAVEL BAG BERM)

STATE OF CALIFORNIA
DEPARTMENT OF TRANSPORTATION

TEMPORARY WATER POLLUTION CONTROL DETAILS (TEMPORARY DRAINAGE INLET PROTECTION)

NO SCALE

NSP T62 DATED AUGUST 15, 2008 SUPPLEMENTS THE STANDARD PLANS BOOK DATED MAY 2006.

NEW STANDARD PLAN NSP T62

2006 NEW STANDARD PLAN NSP T62

7-11-08

DIST	COUNTY	ROUTE	POST MILES TOTAL PROJECT	SHEET NO.	TOTAL SHEETS
10	Mer	152	R6.0/R10.1	27	28

Robert B Schott
LICENSED LANDSCAPE ARCHITECT

August 15, 2008
PLANS APPROVAL DATE

LICENSED LANDSCAPE ARCHITECT
Robert B. Schott 3695
Signature
11-04-08
Renewal Date
08-11-08
Date
STATE OF CALIFORNIA

The State of California or its officers or agents shall not be responsible for the accuracy or completeness of electronic copies of this plan sheet.

To accompany plans dated 4/30/12

FLEXIBLE SEDIMENT BARRIER SPACING TABLE

SLOPE OF ROADWAY (PERCENT)	0 to 0.9	1 to 1.9	2 to 2.9	3 to 4	5+
INTERVAL BETWEEN BARRIERS	50′	35′	30′	25′	20′
ANGLE FROM FACE OF CURB	70°	70°	70°	45°	45°
SUGGESTED BARRIER LENGTH	6′	6′	6′	6′	6′

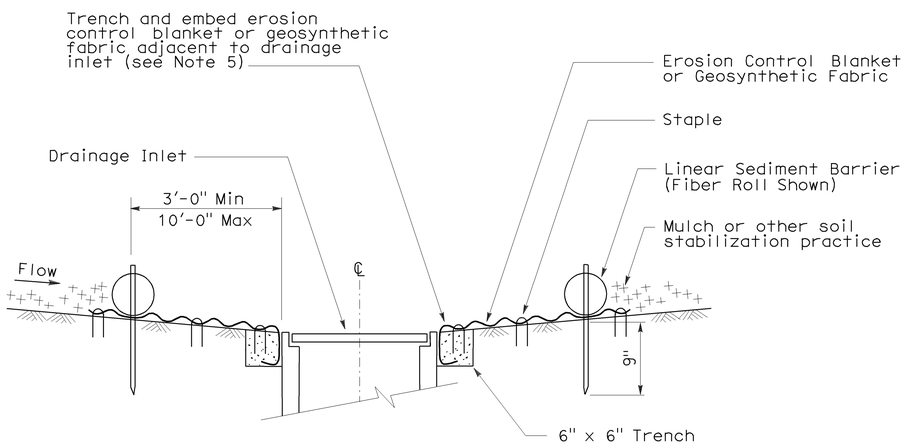

SECTION A-A

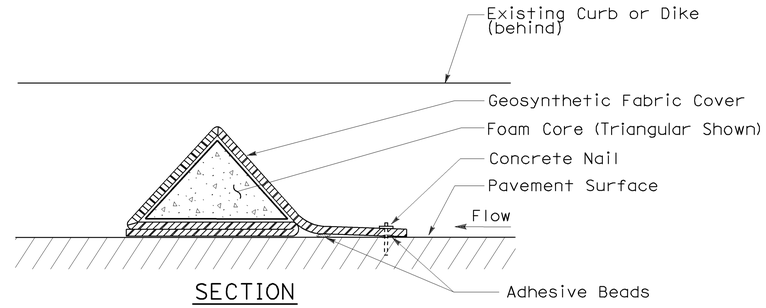

SECTION

FLEXIBLE SEDIMENT BARRIER DETAIL
(FOAM BARRIER SHOWN)

NOTES:

1. See Standard Plan T51 for Temporary Silt Fence.
2. Dimensions may vary to fit field conditions.
3. Install a minimum of 3 flexible sediment barriers upstream of each drainage inlet to be protected.
4. Position erosion control blanket or geosynthetic fabric at edge of concrete apron and secure in trench.
5. Erosion control blanket or geosynthetic fabric is not required if the area adjacent to the drainage inlet is vegetated.

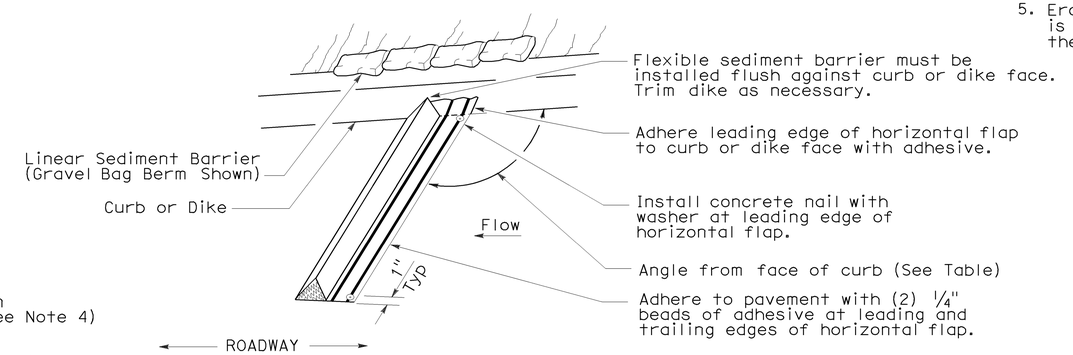

PERSPECTIVE

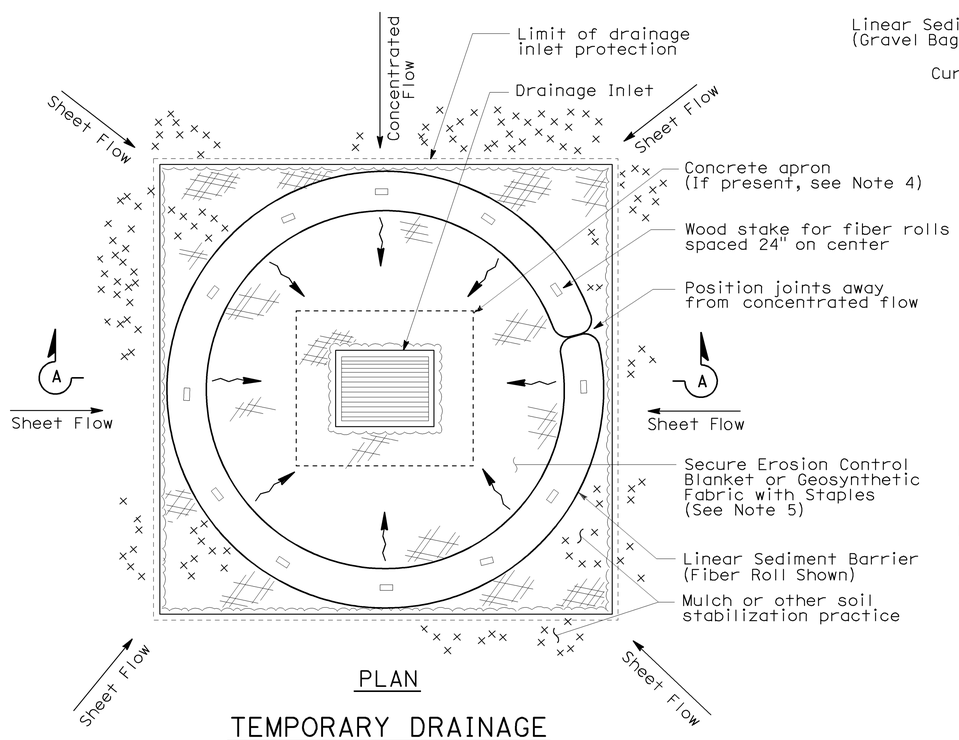

PLAN

TEMPORARY DRAINAGE
INLET PROTECTION (TYPE 4A)

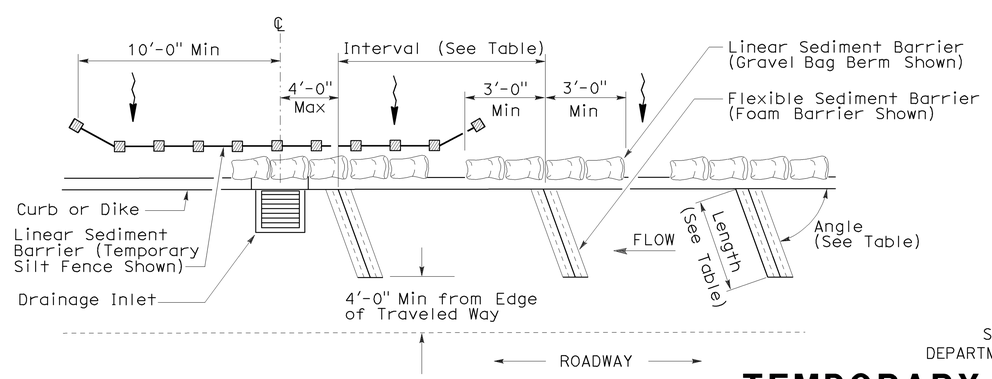

PLAN

TEMPORARY DRAINAGE
INLET PROTECTION (TYPE 4B)
FLEXIBLE SEDIMENT BARRIER

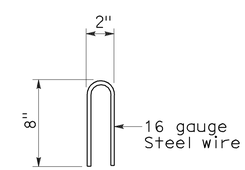

STAPLE DETAIL

STATE OF CALIFORNIA
DEPARTMENT OF TRANSPORTATION

TEMPORARY WATER POLLUTION CONTROL DETAILS (TEMPORARY DRAINAGE INLET PROTECTION)

NO SCALE

NSP T63 DATED AUGUST 15, 2008 SUPPLEMENTS
THE STANDARD PLANS BOOK DATED MAY 2006.

NEW STANDARD PLAN NSP T63

2006 NEW STANDARD PLAN NSP T63

7-11-08

DIST	COUNTY	ROUTE	POST MILES TOTAL PROJECT	SHEET NO.	TOTAL SHEETS
10	Mer	152	R6.0/R10.1	28	28

LICENSED LANDSCAPE ARCHITECT

August 15, 2008
PLANS APPROVAL DATE

LICENSED LANDSCAPE ARCHITECT
Robert B. Schott 3635
Signature
11-04-08
Renewal Date
08-11-08
Date
STATE OF CALIFORNIA

The State of California or its officers or agents shall not be responsible for the accuracy or completeness of electronic copies of this plan sheet.

To accompany plans dated 4/30/12

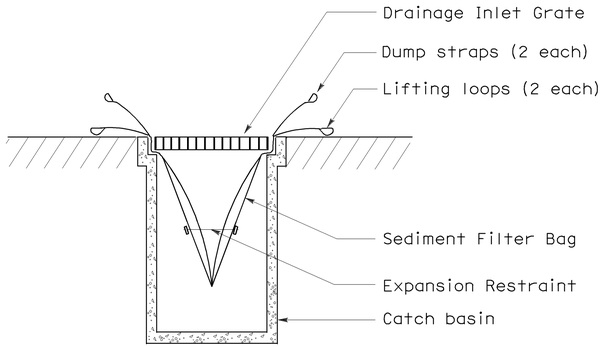

SECTION B-B

SEDIMENT FILTER BAG DETAIL

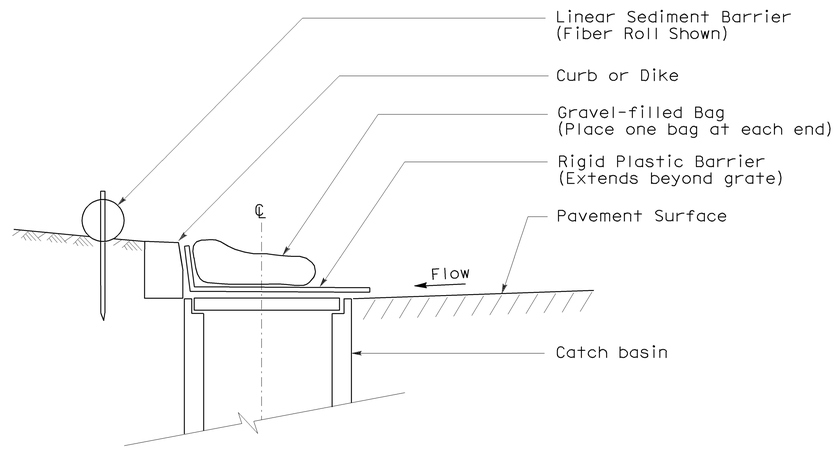

SECTION

TEMPORARY DRAINAGE INLET PROTECTION (TYPE 6A) (CATCH BASIN WITH GRATE)

NOTES:

1. See Standard Plan T51 for Temporary Silt Fence.
2. Dimensions may vary to fit field conditions.

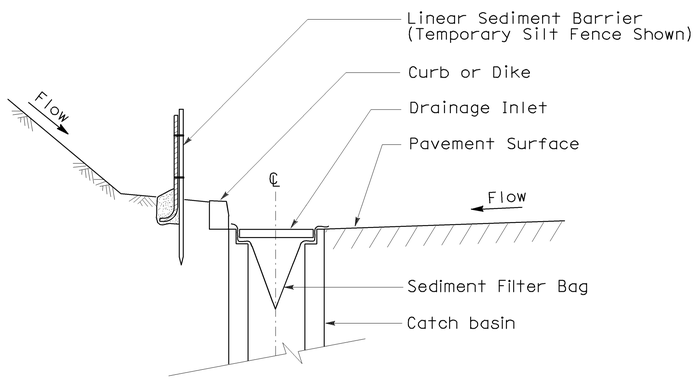

SECTION A-A

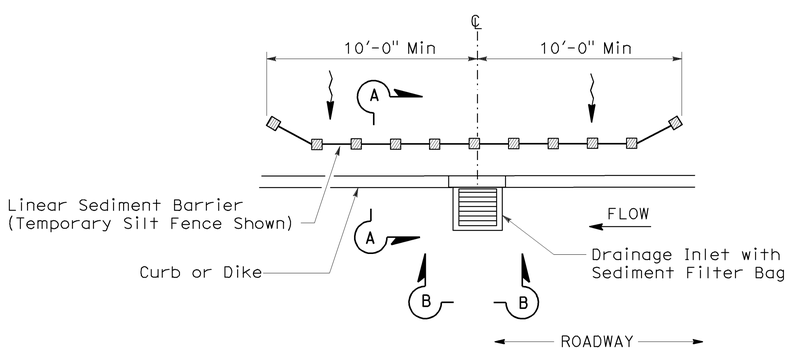

PLAN

TEMPORARY DRAINAGE INLET PROTECTION (TYPE 5) (SEDIMENT FILTER BAG)

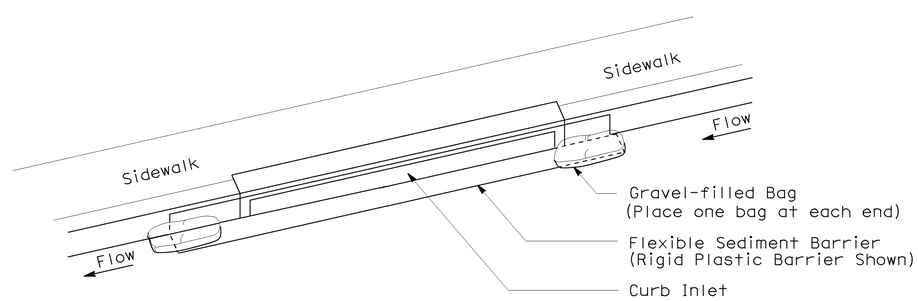

PERSPECTIVE

TEMPORARY DRAINAGE INLET PROTECTION (TYPE 6B) (CURB INLET WITHOUT GRATE)

STATE OF CALIFORNIA
DEPARTMENT OF TRANSPORTATION

TEMPORARY WATER POLLUTION CONTROL DETAILS (TEMPORARY DRAINAGE INLET PROTECTION)

NO SCALE

NSP T64 DATED AUGUST 15, 2008 SUPPLEMENTS
THE STANDARD PLANS BOOK DATED MAY 2006.

NEW STANDARD PLAN NSP T64

2006 NEW STANDARD PLAN NSP T64

7-11-08