Dist	COUNTY	ROUTE	POST MILES TOTAL PROJECT	SHEET No.	TOTAL SHEETS
10	Cal	4	32.2	1	17

INDEX OF PLANS

SHEET No.	DESCRIPTION
1	TITLE AND LOCATION MAP
2	TYPICAL CROSS SECTIONS
3	LAYOUT
4-6	DRAINAGE PLAN, PROFILES AND DETAILS
7	UTILITY PLAN
8	CONSTRUCTION AREA SIGNS
9-10	PAVEMENT DELINEATION AND SIGN PLAN AND QUANTITIES
11	SUMMARY OF QUANTITIES
12-13	PLANTING LIST AND PLAN
14-15	EROSION CONTROL LEGEND, PLAN AND QUANTITIES
16	TRAFFIC CONTROL SYSTEM PLAN
17	REVISED STANDARD PLAN

THIS STANDARD PLANS LIST APPLICABLE TO THIS CONTRACT IS INCLUDED IN THE NOTICE TO BIDDERS AND SPECIAL PROVISIONS BOOK

STATE OF CALIFORNIA

DEPARTMENT OF TRANSPORTATION

PROJECT PLANS FOR CONSTRUCTION ON

STATE HIGHWAY

IN CALAVERAS COUNTY
NEAR MURPHYS
AT 0.9 MILE EAST OF
UPPER UTICA POWERHOUSE ROAD

TO BE SUPPLEMENTED BY STANDARD PLANS DATED 2010

LOCATION OF CONSTRUCTION
Sta 25+00 PM 32.2

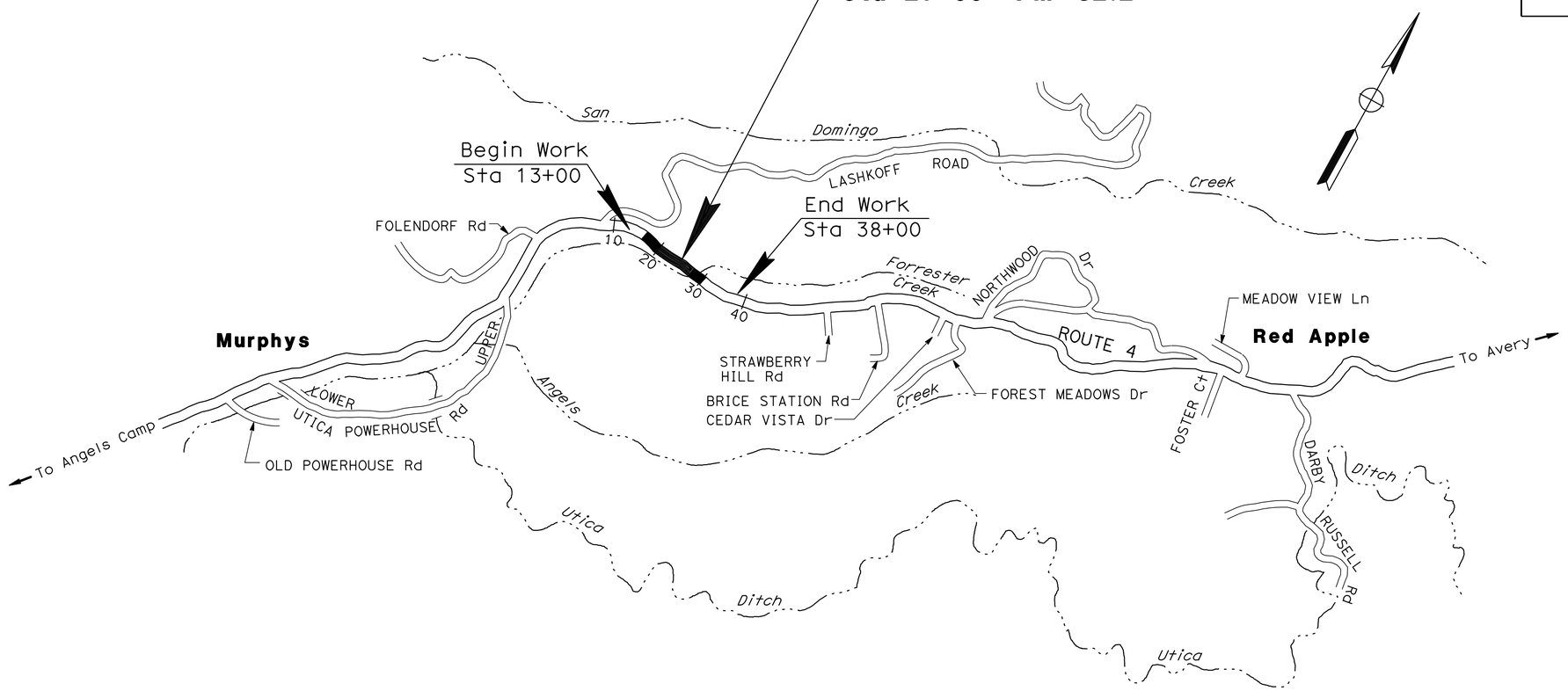

NO SCALE

Patricia L. Teczon 1/3/13
PROJECT ENGINEER DATE
REGISTERED CIVIL ENGINEER

January 14, 2013
PLANS APPROVAL DATE

REGISTERED PROFESSIONAL ENGINEER
Patricia Teczon
No. 37294
Exp. 6/30/14
CIVIL
STATE OF CALIFORNIA

THE STATE OF CALIFORNIA OR ITS OFFICERS OR AGENTS SHALL NOT BE RESPONSIBLE FOR THE ACCURACY OR COMPLETENESS OF SCANNED COPIES OF THIS PLAN SHEET.

PROJECT MANAGER: AJAIB BRAR
DESIGN ENGINEER: CAROLINE REYES

THE CONTRACTOR SHALL POSSESS THE CLASS (OR CLASSES) OF LICENSE AS SPECIFIED IN THE "NOTICE TO BIDDERS."

CONTRACT No.	10-0K6304
PROJECT ID	1000000089

LAST REVISION 00-00-00
DATE PLOTTED => 15-JAN-2013
TIME PLOTTED => 14:21

Dist	COUNTY	ROUTE	POST MILES TOTAL PROJECT	SHEET No.	TOTAL SHEETS
10	Cal	4	32.2	2	17

Patricia L. Teczon 1/3/13
REGISTERED CIVIL ENGINEER DATE

1/14/13
PLANS APPROVAL DATE

REGISTERED PROFESSIONAL ENGINEER Patricia Teczon No. 37294 Exp. 6/30/14 CIVIL STATE OF CALIFORNIA

THE STATE OF CALIFORNIA OR ITS OFFICERS OR AGENTS SHALL NOT BE RESPONSIBLE FOR THE ACCURACY OR COMPLETENESS OF SCANNED COPIES OF THIS PLAN SHEET.

NOTES:

1. DIMENSIONS OF THE PAVEMENT STRUCTURES (STRUCTURAL SECTIONS) ARE SUBJECT TO TOLERANCES SPECIFIED IN THE STANDARD SPECIFICATIONS.
2. FOR LOCATIONS OF HMA DIKE, SEE LAYOUT AND SUMMARY OF QUANTITIES.

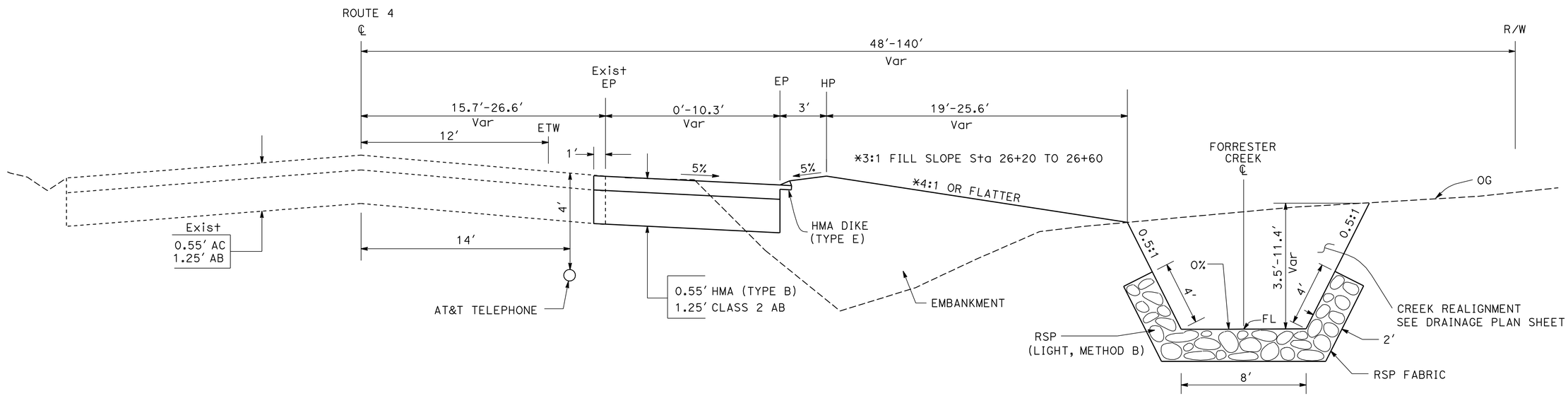

Sta 10+10.0 TO 11+95.0 FORRESTER CREEK

Sta 22+91.6 TO 28+31.4

ROUTE 4

TYPICAL CROSS SECTIONS

NO SCALE

X-1

STATE OF CALIFORNIA - DEPARTMENT OF TRANSPORTATION

Caltrans® **DESIGN**

FUNCTIONAL SUPERVISOR: CAROLINE REYES

CALCULATED-DESIGNED BY: PATRICIA TECZON

CHECKED BY: STEVE LAWRENCE

REVISED BY: SL

DATE REVISED: 12/18/12

LAST REVISION 00-00-00

DATE PLOTTED => 15-JAN-2013
TIME PLOTTED => 14:21

Dist	COUNTY	ROUTE	POST MILES TOTAL PROJECT	SHEET No.	TOTAL SHEETS
10	Cal	4	32.2	3	17

Patricia L. Teczon 1/3/13
REGISTERED CIVIL ENGINEER DATE

1/14/13
PLANS APPROVAL DATE

REGISTERED PROFESSIONAL ENGINEER Patricia Teczon No. 37294 Exp. 6/30/14 CIVIL STATE OF CALIFORNIA

THE STATE OF CALIFORNIA OR ITS OFFICERS OR AGENTS SHALL NOT BE RESPONSIBLE FOR THE ACCURACY OR COMPLETENESS OF SCANNED COPIES OF THIS PLAN SHEET.

NOTES:

1. FOR ACCURATE RIGHT OF WAY DATA, CONTACT RIGHT OF WAY ENGINEERING AT THE DISTRICT OFFICE.
2. FOR FORRESTER CREEK REALIGNMENT DETAILS SEE DRAINAGE PLAN SHEET.

LEGEND

- WIDENING
- ARCHAEOLOGICAL MONITORING AREA

CURVE DATA

No.	R	Δ	T	L
1	648.95′	28°11′60"	163.00′	319.40′
2	798.88′	16°30′48"	115.93′	230.25′

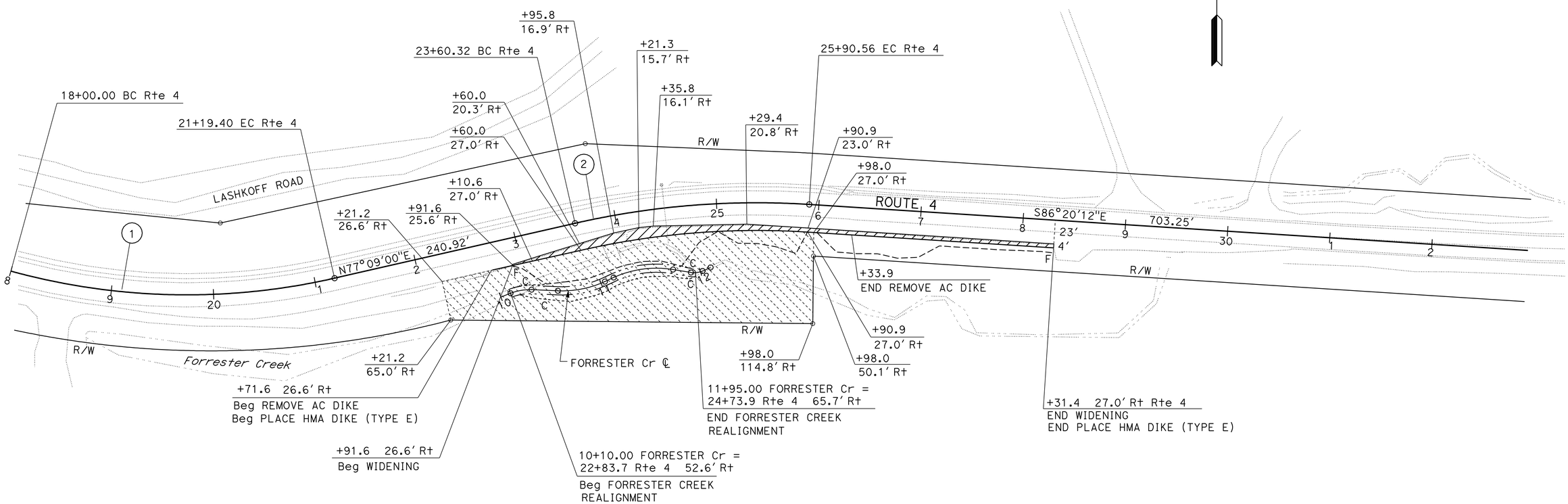

LAYOUT

SCALE: 1" = 50′

L-1

STATE OF CALIFORNIA - DEPARTMENT OF TRANSPORTATION
Caltrans
DESIGN

FUNCTIONAL SUPERVISOR: CAROLINE REYES
CALCULATED-DESIGNED BY: PATRICIA TECZON
CHECKED BY: STEVE LAWRENCE
REVISED BY: SL
DATE REVISED: 12/18/12

LAST REVISION 00-00-00
DATE PLOTTED => 15-JAN-2013
TIME PLOTTED => 14:21

Dist	COUNTY	ROUTE	POST MILES TOTAL PROJECT	SHEET No.	TOTAL SHEETS
10	Cal	4	32.2	4	17

Patricia L. Teczon 1/3/13
REGISTERED CIVIL ENGINEER DATE

1/14/13
PLANS APPROVAL DATE

REGISTERED PROFESSIONAL ENGINEER Patricia Teczon No. 37294 Exp. 6/30/14 CIVIL STATE OF CALIFORNIA

THE STATE OF CALIFORNIA OR ITS OFFICERS OR AGENTS SHALL NOT BE RESPONSIBLE FOR THE ACCURACY OR COMPLETENESS OF SCANNED COPIES OF THIS PLAN SHEET.

NOTE:

FOR ACCURATE RIGHT OF WAY DATA, CONTACT RIGHT OF WAY ENGINEERING AT THE DISTRICT OFFICE.

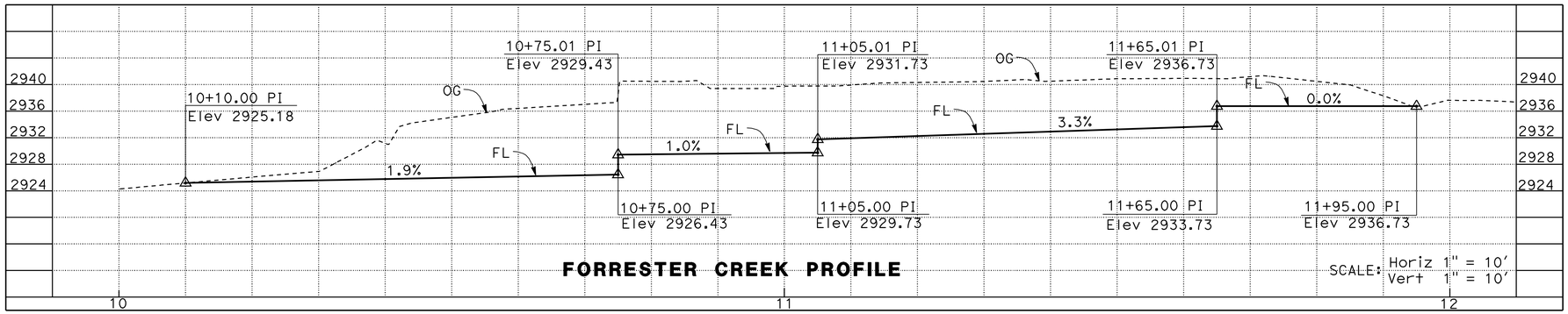

FORRESTER CREEK PROFILE

LEGEND

▨ - WIDENING

CURVE DATA

No.	R	Δ	T	L
3	50.00′	24°04′08"	10.66′	21.00′
4	100.00′	27°03′44"	24.06′	47.23′
5	100.00′	34°03′24"	30.63′	59.44′
6	20.00′	33°24′14"	6.00′	11.66′

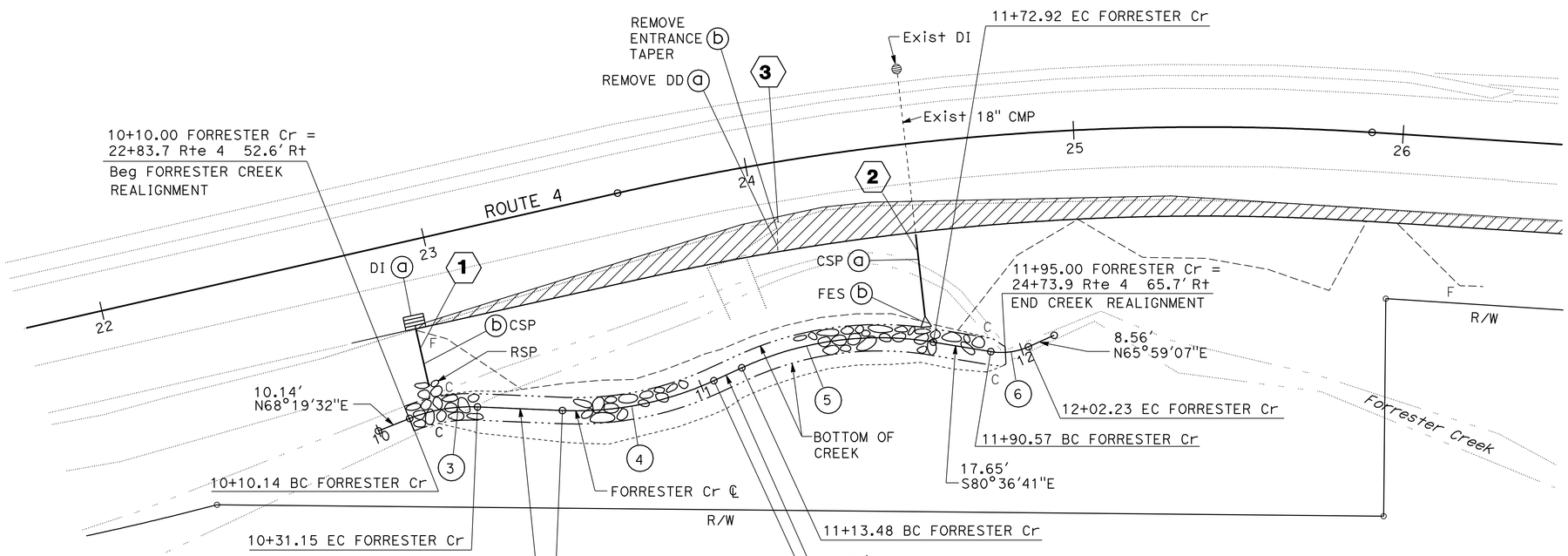

FORRESTER CREEK REALIGNMENT
SCALE: 1" = 20′

APPROVED FOR DRAINAGE WORK ONLY

DRAINAGE PLAN AND PROFILES

SCALE AS SHOWN

D-1

REVISED BY	HH
DATE REVISED	12/03/12
CALCULATED-DESIGNED BY	PATRICIA TECZON
CHECKED BY	STEVE LAWRENCE
FUNCTIONAL SUPERVISOR	CAROLINE REYES

STATE OF CALIFORNIA - DEPARTMENT OF TRANSPORTATION
Caltrans®
DESIGN

LAST REVISION 00-00-00
DATE PLOTTED => 15-JAN-2013
TIME PLOTTED => 14:21

Dist	COUNTY	ROUTE	POST MILES TOTAL PROJECT	SHEET No.	TOTAL SHEETS
10	Cal	4	32.2	5	17

Patricia L. Teczon 1/3/13
REGISTERED CIVIL ENGINEER DATE

1/14/13
PLANS APPROVAL DATE

REGISTERED PROFESSIONAL ENGINEER Patricia Teczon No. 37294 Exp. 6/30/14 CIVIL STATE OF CALIFORNIA

THE STATE OF CALIFORNIA OR ITS OFFICERS OR AGENTS SHALL NOT BE RESPONSIBLE FOR THE ACCURACY OR COMPLETENESS OF SCANNED COPIES OF THIS PLAN SHEET.

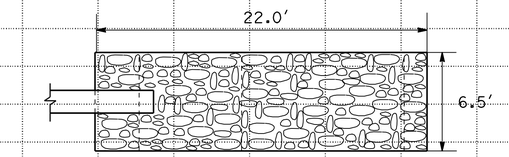

PLAN VIEW

RSP DETAIL

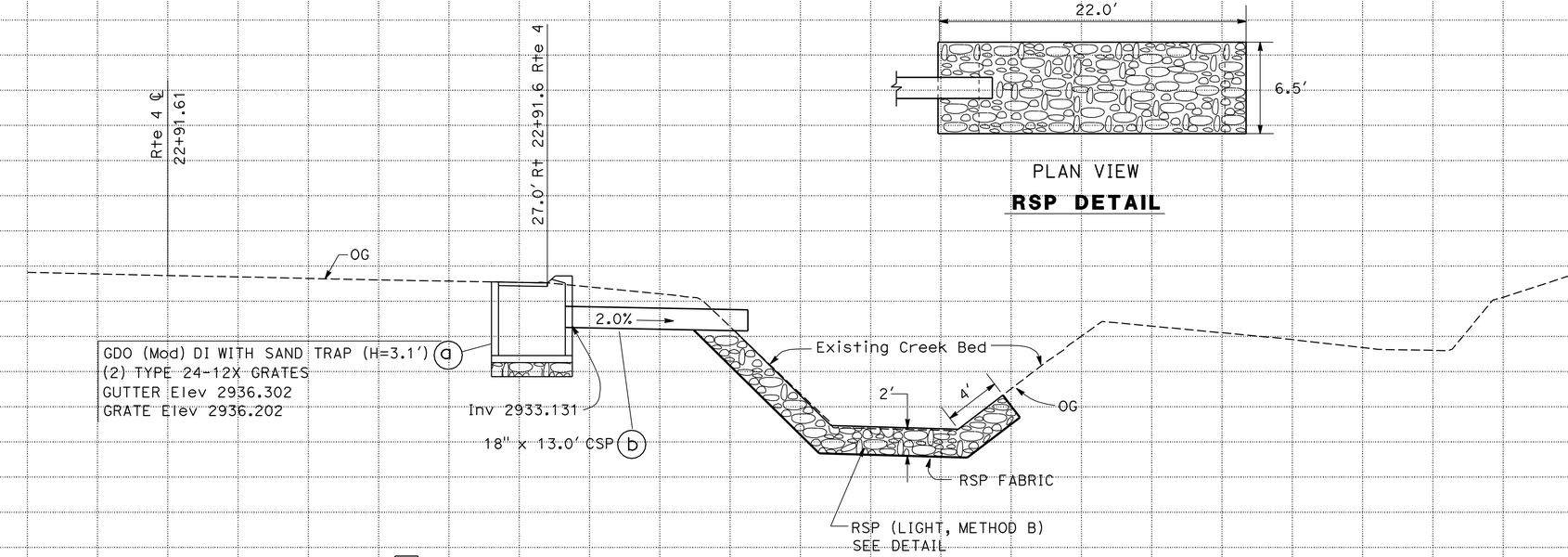

DRAINAGE SYSTEM No. 1

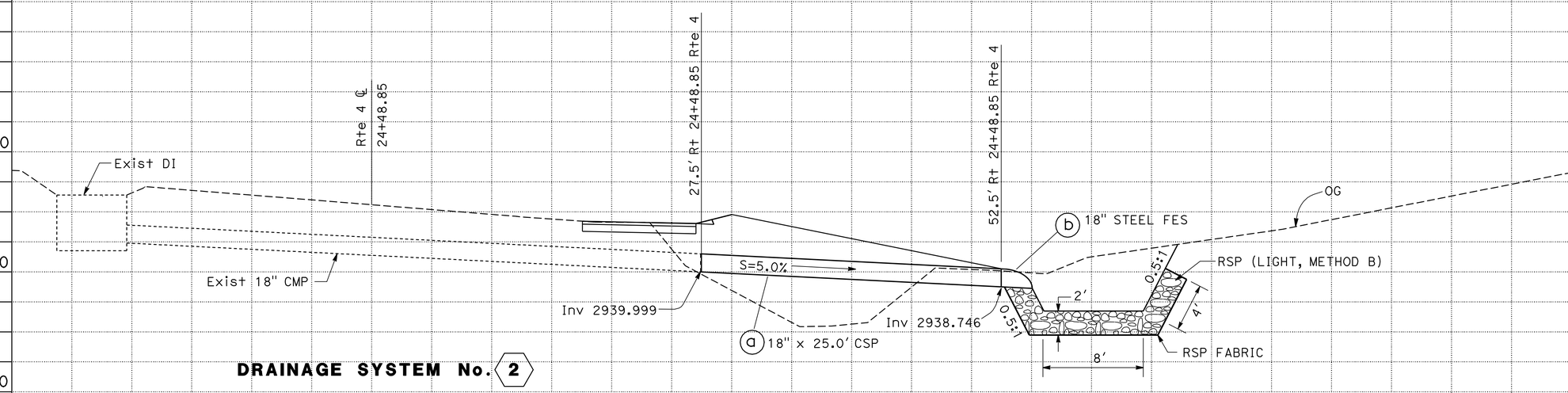

DRAINAGE SYSTEM No. 2

DRAINAGE PROFILES

SCALE: Horiz 1" = 5' Vert 1" = 5'

DP-1

Station		
CY	Exc	
	Emb	

STATE OF CALIFORNIA - DEPARTMENT OF TRANSPORTATION
Caltrans®
DESIGN

FUNCTIONAL SUPERVISOR: CAROLINE REYES
CALCULATED-DESIGNED BY: PATRICIA TECZON
CHECKED BY: STEVE LAWRENCE
REVISED BY: SL
DATE REVISED: 12/03/12

DATE PLOTTED => 15-JAN-2013
TIME PLOTTED => 14:21
LAST REVISION 00-00-00

Dist	COUNTY	ROUTE	POST MILES TOTAL PROJECT	SHEET No.	TOTAL SHEETS
10	Cal	4	32.2	6	17

Patricia L. Teczon 1/3/13
REGISTERED CIVIL ENGINEER DATE

1/14/13
PLANS APPROVAL DATE

REGISTERED PROFESSIONAL ENGINEER Patricia Teczon No. 37294 Exp. 6/30/14 CIVIL STATE OF CALIFORNIA

THE STATE OF CALIFORNIA OR ITS OFFICERS OR AGENTS SHALL NOT BE RESPONSIBLE FOR THE ACCURACY OR COMPLETENESS OF SCANNED COPIES OF THIS PLAN SHEET.

NOTES:

1. "H" IS THE DIFFERENCE IN Elev BETWEEN THE OUTLET PIPE FL AND THE NORMAL Gtr GRADE LINE UNDEPRESSED.
2. CURB SECTIONS SHALL MATCH ADJACENT CURB.
3. SET INLET SO THAT GRATE BARS ARE PARALLEL TO DIRECTION OF PRINCIPAL SURFACE FLOW.

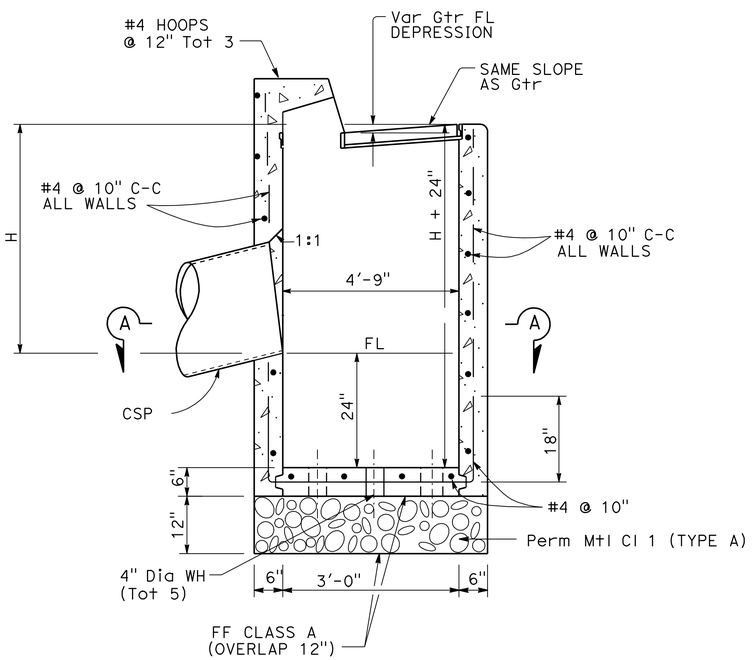

TYPE GDO (MOD) DI WITH SAND TRAP

FOR DETAILS NOT SHOWN SEE D74B OF THE Std PLANS

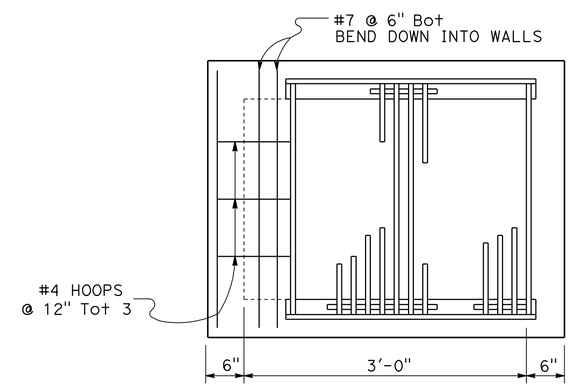

PLAN VIEW

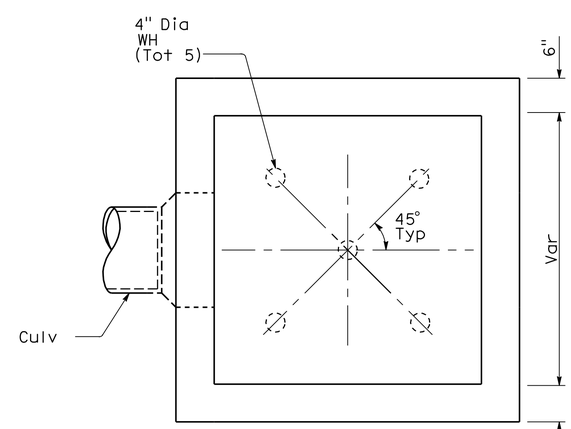

SECTION A-A

DRAINAGE DETAILS

NO SCALE **DD-1**

STATE OF CALIFORNIA - DEPARTMENT OF TRANSPORTATION	Caltrans® DESIGN
FUNCTIONAL SUPERVISOR	CAROLINE REYES
CALCULATED-DESIGNED BY	PATRICIA TECZON
CHECKED BY	STEVE LAWRENCE
REVISED BY	HH
DATE REVISED	12/18/12

LAST REVISION 00-00-00 | DATE PLOTTED => 15-JAN-2013 | TIME PLOTTED => 14:22

Dist	COUNTY	ROUTE	POST MILES TOTAL PROJECT	SHEET No.	TOTAL SHEETS
10	Cal	4	32.2	7	17

Patricia L. Teczon 1/3/13
REGISTERED CIVIL ENGINEER DATE

1/14/13
PLANS APPROVAL DATE

REGISTERED PROFESSIONAL ENGINEER Patricia Teczon No. 37294 Exp. 6/30/14 CIVIL STATE OF CALIFORNIA

THE STATE OF CALIFORNIA OR ITS OFFICERS OR AGENTS SHALL NOT BE RESPONSIBLE FOR THE ACCURACY OR COMPLETENESS OF SCANNED COPIES OF THIS PLAN SHEET.

NOTE:

FOR ACCURATE RIGHT OF WAY DATA, CONTACT
RIGHT OF WAY ENGINEERING AT THE DISTRICT OFFICE.

ABBREVIATIONS

CCWD - CALAVERAS COUNTY WATER DISTRICT
PG&E - PACIFIC GAS & ELECTRIC COMPANY
AT&T - AMERICAN TELEPHONE AND TELEGRAPH COMPANY

UTILITY LEGEND AND OWNERSHIP

EXISTING UNDERGROUND WATER LINE (CCWD)
EXISTING UNDERGROUND TELEPHONE LINE (AT&T)
EXISTING OVERHEAD UTILITY LINE (PG&E)
EXISTING OVERHEAD UTILITY LINE (AT&T)
- EXISTING UNDERGROUND ABANDONED TELEPHONE LINE (AT&T)

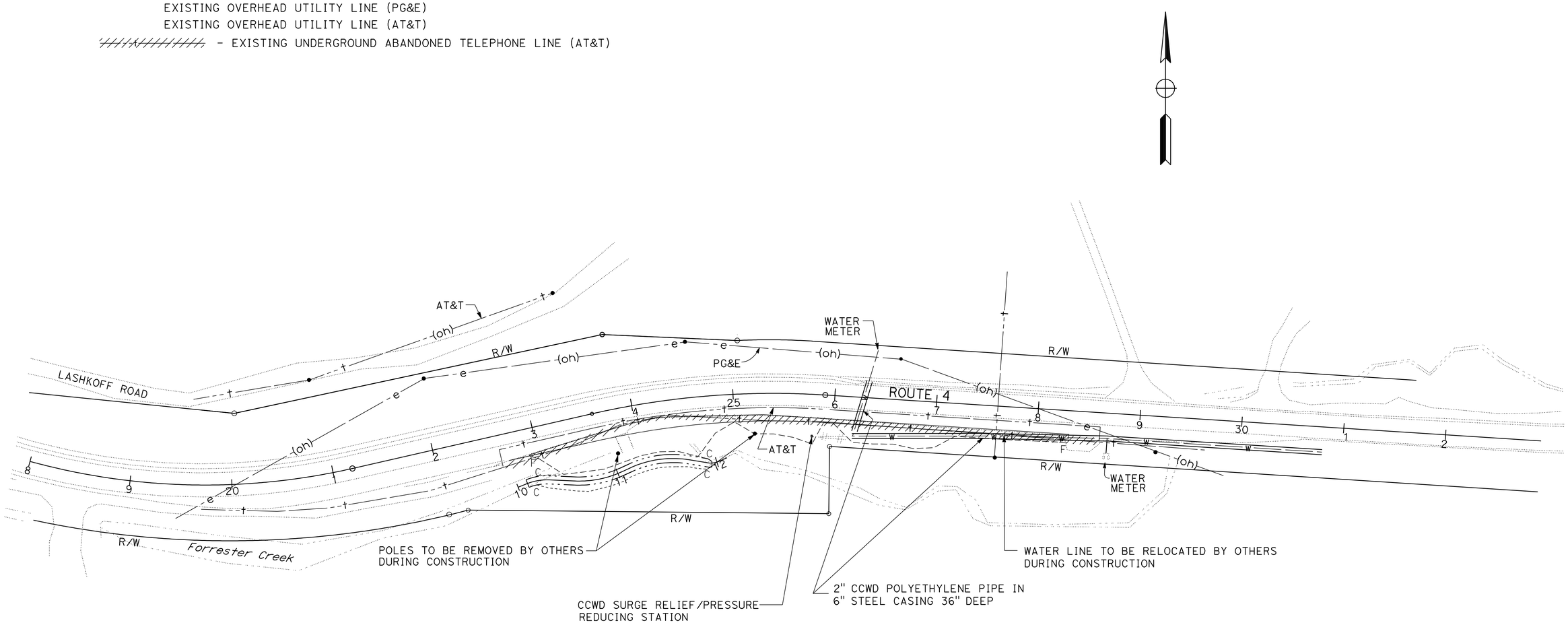

UTILITY PLAN

SCALE: 1" = 50'

U-1

APPROVED FOR UTILITY INFORMATION ONLY

STATE OF CALIFORNIA - DEPARTMENT OF TRANSPORTATION
Caltrans® DESIGN

FUNCTIONAL SUPERVISOR: CAROLINE REYES
CALCULATED-DESIGNED BY: PATRICIA TECZON
CHECKED BY: STEVE LAWRENCE
REVISED BY: SL
DATE REVISED: 12/18/12

LAST REVISION 00-00-00 | DATE PLOTTED => 15-JAN-2013 | TIME PLOTTED => 14:22

Dist	COUNTY	ROUTE	POST MILES TOTAL PROJECT	SHEET No.	TOTAL SHEETS
10	Cal	4	32.2	8	17

REGISTERED CIVIL ENGINEER 1/3/13 DATE

1/14/13
PLANS APPROVAL DATE

REGISTERED PROFESSIONAL ENGINEER HUE NGUYEN No. 74484 Exp. 12/31/13 CIVIL STATE OF CALIFORNIA

THE STATE OF CALIFORNIA OR ITS OFFICERS OR AGENTS SHALL NOT BE RESPONSIBLE FOR THE ACCURACY OR COMPLETENESS OF SCANNED COPIES OF THIS PLAN SHEET.

STATIONARY MOUNTED CONSTRUCTION AREA SIGNS

SIGN	SIGN CODE FEDERAL	SIGN CODE CALIFORNIA	QUANTITY	PANEL SIZE	No. OF POST AND SIZE	SIGN MESSAGE
A	W20-1		2	36" x 36"	1 - 4" x 6"	ROAD WORK AHEAD
B	G20-2		2	36" x 18"	1 - 4" x 4"	END ROAD WORK
C		C40	2	108" x 42"	2 - 4" x 6"	TRAFFIC FINES DOUBLED IN CONSTRUCTION ZONES

NOTE: EXACT SIGN LOCATIONS WILL BE DETERMINED BY THE ENGINEER.

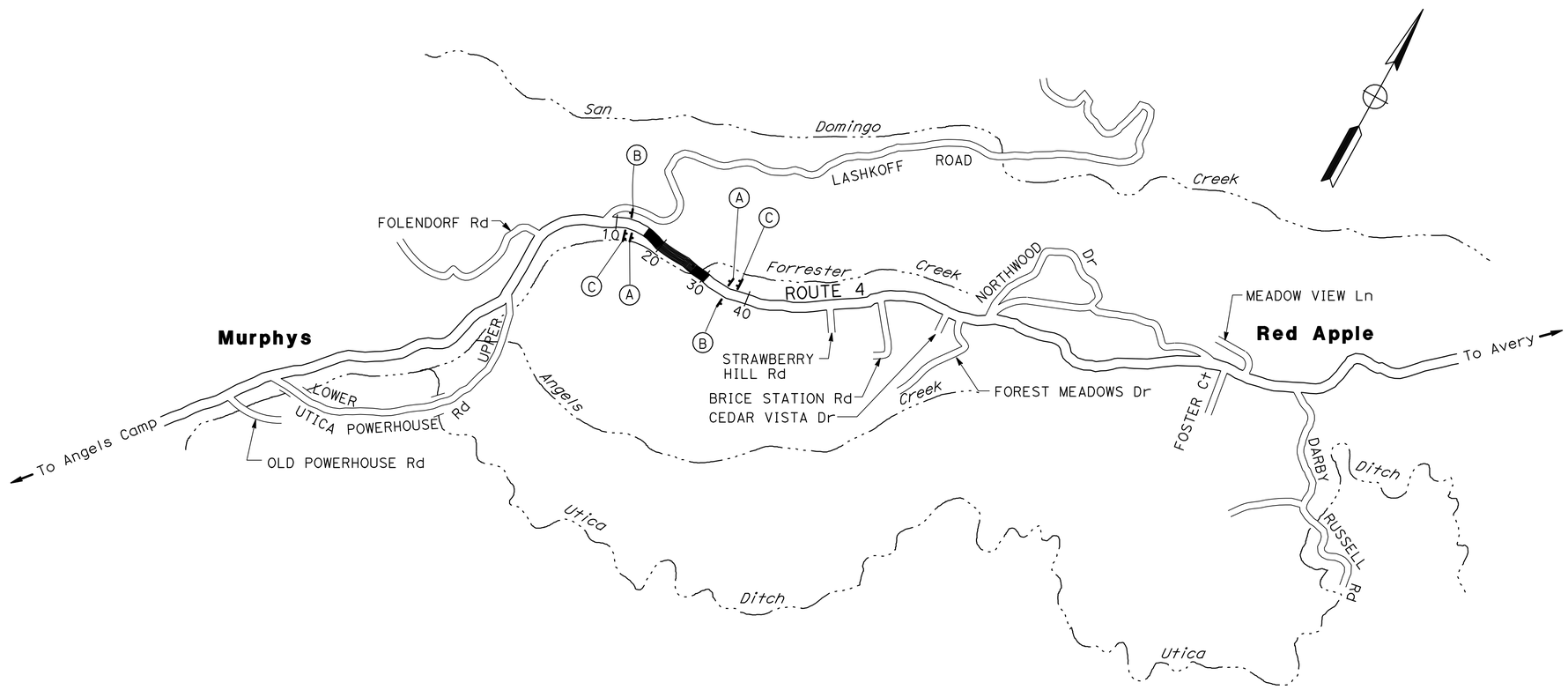

APPROVED FOR CONSTRUCTION AREA SIGN WORK ONLY

CONSTRUCTION AREA SIGNS

NO SCALE

CS-1

RT	12/03/12		
RT	11/27/12		
REVISED BY	DATE REVISED		
RAJINI TEKALKOTE	HUE NGUYEN		
CALCULATED-DESIGNED BY	CHECKED BY		
FUNCTIONAL SUPERVISOR	MOHAMMED QATAMI		

STATE OF CALIFORNIA - DEPARTMENT OF TRANSPORTATION

Caltrans® **TRAFFIC DESIGN**

LAST REVISION 00-00-00 | DATE PLOTTED => 15-JAN-2013 | TIME PLOTTED => 14:22

Dist	COUNTY	ROUTE	POST MILES TOTAL PROJECT	SHEET No.	TOTAL SHEETS
10	Cal	4	32.2	9	17

REGISTERED CIVIL ENGINEER 1/3/13 DATE

1/14/13 PLANS APPROVAL DATE

REGISTERED PROFESSIONAL ENGINEER HUE NGUYEN No. 74484 Exp. 12/31/13 CIVIL STATE OF CALIFORNIA

THE STATE OF CALIFORNIA OR ITS OFFICERS OR AGENTS SHALL NOT BE RESPONSIBLE FOR THE ACCURACY OR COMPLETENESS OF SCANNED COPIES OF THIS PLAN SHEET.

LEGEND:

- ⬟ - ROADSIDE SIGN
- Ⓧ - ROADSIDE SIGN No.
- E - DELINEATOR - TYPE E (CLASS 2)
- ■ - REMOVE ROADSIDE SIGN
- ▲ - REMAIN IN PLACE EXISTING ROADSIDE SIGN (TURNABLE METAL POST)
- ● - INSTALL ROADSIDE SIGN PANEL ON EXISTING POST
- - REMOVE THERMOPLASTIC TRAFFIC STRIPE DETAIL No.

NOTES:

1. FOR ACCURATE RIGHT OF WAY DATA, CONTACT RIGHT OF WAY ENGINEERING AT THE DISTRICT OFFICE.
2. SIGN LOCATIONS SHOWN ARE APPROXIMATE. EXACT LOCATIONS WILL BE DETERMINED BY THE ENGINEER.

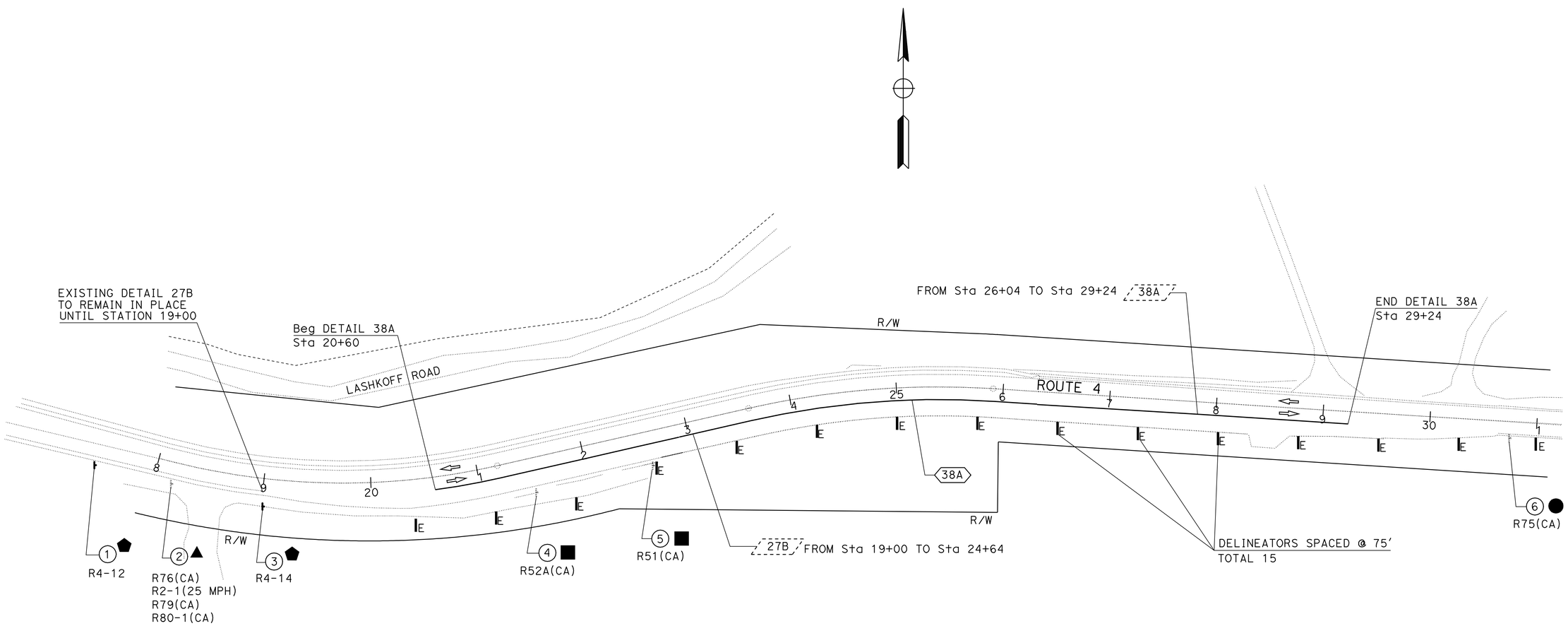

PAVEMENT DELINEATION AND SIGN PLAN

SCALE: 1" = 50'

PD-1

APPROVED FOR PAVEMENT DELINEATION AND SIGN WORK ONLY

STATE OF CALIFORNIA - DEPARTMENT OF TRANSPORTATION

Caltrans® **TRAFFIC DESIGN**

FUNCTIONAL SUPERVISOR: MOHAMMED QATAMI

CALCULATED-DESIGNED BY: RAJINI TEKALKOTE

CHECKED BY: HUE NGUYEN

REVISED BY: RT | DATE REVISED: 4/21/09

RT | 5/24/12

RT | 12/19/12

LAST REVISION 12-19-12

DATE PLOTTED => 15-JAN-2013
TIME PLOTTED => 14:22

BORDER LAST REVISED 7/2/2010

USERNAME => s123936
DGN FILE => a0k630na001.dgn

RELATIVE BORDER SCALE IS IN INCHES 0 1 2 3

UNIT 1512

PROJECT NUMBER & PHASE 10000000891

Dist	COUNTY	ROUTE	POST MILES TOTAL PROJECT	SHEET No.	TOTAL SHEETS
10	Cal	4	32.2	10	17

REGISTERED CIVIL ENGINEER 1/3/13 DATE

1/14/13
PLANS APPROVAL DATE

REGISTERED PROFESSIONAL ENGINEER HUE NGUYEN No. 74484 Exp 12/31/13 CIVIL STATE OF CALIFORNIA

THE STATE OF CALIFORNIA OR ITS OFFICERS OR AGENTS SHALL NOT BE RESPONSIBLE FOR THE ACCURACY OR COMPLETENESS OF SCANNED COPIES OF THIS PLAN SHEET.

ROADSIDE SIGN ITEMS

SIGN No. ○	SIGN CODE FEDERAL	SIGN CODE CALIFORNIA	SIGN MESSAGE	PANEL SIZE	SIGN PANEL AREA SQFT	No. OF POST AND SIZE	BACKGROUND SHEETING COLOR	BACKGROUND RETROREFLECTIVITY ASTM TYPE	LEGEND SHEETING COLOR	LEGEND RETROREFLECTIVITY ASTM TYPE	GRAFFITI FLOW STANDARD	GRAFFITI FLOW PREMIUM	FURNISH SINGLE SHEET ALUMINIUM SIGN UNFRAMED 0.063" SQFT	FURNISH SINGLE SHEET ALUMINIUM SIGN UNFRAMED 0.080" SQFT	ROADSIDE SIGN (TURNABLE METAL POST) (N) EA	ROADSIDE SIGN - ONE POST EA	REMOVE ROADSIDE SIGN EA	REMOVE ROADSIDE SIGN PANEL (N) EA	INSTALL ROADSIDE SIGN PANEL ON EXISTING POST EA	TREATED WOOD WASTE LB	REMARKS
1	R4-12		SLOW VEHICLES WITH 5 OR MORE FOLLOWING VEHICLES MUST USE TURN-OUT	42" x 24"	7.0	1 - 4" x 6"	WHITE	IX	BLACK			X	7.0			1					
2		R76	CHAINS REQUIRED												1						REMAIN IN PLACE
	R2-1(25 MPH)		SPEED LIMIT																		
		R79	AUTOS & PICKUPS SNOW TIRES OK-CARRY CHAINS																		
		R80-1	4-W DRIVE WITH SNOW TIRES OK-CARRY CHAINS																		
3	R4-14		SLOW VEHICLES MUST TURN OUT ↗	30" x 42"	8.75	1 - 4" x 6"	WHITE	IX	BLACK			X	8.75			1					
4		R52A	SLOWER TRAFFIC USE TURNOUTS TO ALLOW PASSING														1			80	
5		R51	TURNOUT														1			50	
6		R75	CHAINS REQUIRED 1 MILE AHEAD	48" x 42"	14.0		BLACK		WHITE	IX		X		14.0	1			1	1		SIGN POST REMAIN IN PLACE
												TOTAL	15.75	14.0		2	2		1	130	

(N): NOT A SEPARATE PAY ITEM, FOR INFORMATION ONLY.

PAVEMENT DELINEATION ITEMS

STATION LIMITS	REMOVE THERMOPLASTIC TRAFFIC STRIPE DETAIL 27B LF	REMOVE THERMOPLASTIC TRAFFIC STRIPE DETAIL 38A LF	THERMOPLASTIC TRAFFIC STRIPE (SPRAYABLE) DETAIL 38A LF	DELINEATOR (CLASS 2) TYPE E EA
STA 19+00 TO STA 24+64	564			
STA 20+60 TO STA 29+24			864	
STA 26+04 TO STA 29+24		640		
STA 20+50 TO STA 31+00				15
SUB-TOTAL	564	640	864	15
TOTAL	1204		864	15

PAVEMENT DELINEATION AND SIGN QUANTITIES

PDQ-1

REVISED BY	DATE REVISED
RT	12/19/12
RT	5/25/12
RT	5/29/09

RAJINI TEKALKOTE — HUE NGUYEN — CALCULATED-DESIGNED BY — CHECKED BY — FUNCTIONAL SUPERVISOR — MOHAMMED QATAMI

STATE OF CALIFORNIA - DEPARTMENT OF TRANSPORTATION
Caltrans® TRAFFIC DESIGN

LAST REVISION 12-19-12 | DATE PLOTTED => 15-JAN-2013 | TIME PLOTTED => 14:22

Dist	COUNTY	ROUTE	POST MILES TOTAL PROJECT	SHEET No.	TOTAL SHEETS
10	Cal	4	32.2	11	17

Patricia L. Teczon 1/3/13
REGISTERED CIVIL ENGINEER DATE

1/14/13
PLANS APPROVAL DATE

REGISTERED PROFESSIONAL ENGINEER Patricia Teczon No. 37294 Exp. 6/30/14 CIVIL STATE OF CALIFORNIA

THE STATE OF CALIFORNIA OR ITS OFFICERS OR AGENTS SHALL NOT BE RESPONSIBLE FOR THE ACCURACY OR COMPLETENESS OF SCANNED COPIES OF THIS PLAN SHEET.

NOTE:

1. (N) - NOT A SEPARATE PAY ITEM, FOR INFORMATION ONLY.

TEMPORARY DRAINAGE INLET PROTECTION

LOCATION STATION	EA
27.0' Rt 22+91.6 ROUTE 4	1

EARTHWORK SUMMARY

LOCATION STATION TO STATION	ROADWAY EXCAVATION	EMBANKMENT (N)
	CY	CY
22+91.6 TO 28+31.4 ROUTE 4	173	696
10+10 TO 11+95 FORRESTER CREEK	570	
TOTAL	743	

STRUCTURAL SECTION ITEMS

LOCATION STATION TO STATION	HMA (TYPE B)	CLASS 2 AB	TACK COAT
	TON	CY	TON
22+91.6 TO 28+31.4 ROUTE 4	118.5	134.7	0.09
HMA DIKE	22.9		0.01
TOTAL	141.4	134.7	0.10

PLACE HMA DIKE (TYPE E)

LOCATION STATION TO STATION	LF
22+71.6 TO 28+31.4 ROUTE 4	559.8

REMOVE AC DIKE

LOCATION STATION TO STATION	LF
22+71.6 TO 26+33.9 ROUTE 4	362.3

ROCK SLOPE PROTECTION

LOCATION STATION TO STATION	RSP (LIGHT, METHOD B)	RSP FABRIC (CLASS 8)
	CY	SQYD
10+10 TO 11+95 FORRESTER CREEK	223.8	503.6

DRAINAGE ITEMS

DRAINAGE SYSTEM No. ⬡	DRAINAGE UNIT ○	REMOVE DOWNDRAIN	REMOVE ENTRANCE TAPER	MINOR CONCRETE (MINOR STRUCTURE)	18" CSP (.064" THICK)	18" STEEL FES	Misc IRON & STEEL	PIPE JOINT CLASSIFICATION (N)	MAXIMUM COVER (N)	HEIGHT OF INLET (N)	DESCRIPTION	STATION	DRAINAGE SYSTEM No. ⬡	DRAINAGE UNIT ○
		EA	EA	CY	LF	EA	LB		Ft	Ft				
1	a			2.3			473			3.1	GDO (Mod) DI WITH SAND TRAP	27.0' Rt 22+91.6 Rte 4	1	a
	b				13.0			S	1.6		18"CSP			b
2	a				25.0			S	3.4		18" CSP		2	a
	b					1					18" STEEL FES	52.5' Rt 24+48.85 Rte 4		b
3	a	1									REMOVE 12" x 6' CSP DD	24+15.00 Rte 4	3	a
	b		1								REMOVE ENTRANCE TAPER			b
TOTAL		1	1	2.3	38.0	1	473							

SUMMARY OF QUANTITIES
Q-1

REVISED BY	DATE REVISED
SL	12/18/12

PATRICIA TECZON — CALCULATED-DESIGNED BY
STEVE LAWRENCE — CHECKED BY
CAROLINE REYES — FUNCTIONAL SUPERVISOR

STATE OF CALIFORNIA - DEPARTMENT OF TRANSPORTATION
Caltrans
DESIGN

LAST REVISION 00-00-00 | DATE PLOTTED => 15-JAN-2013 | TIME PLOTTED => 14:22

Dist	COUNTY	ROUTE	POST MILES TOTAL PROJECT	SHEET No.	TOTAL SHEETS
10	Cal	4	32.2	12	17

LICENSED LANDSCAPE ARCHITECT

1/14/13
PLANS APPROVAL DATE

LICENSED LANDSCAPE ARCHITECT William Duttera No. 4432 Signature 9/30/14 Renewal Date 01/03/13 Date STATE OF CALIFORNIA

THE STATE OF CALIFORNIA OR ITS OFFICERS OR AGENTS SHALL NOT BE RESPONSIBLE FOR THE ACCURACY OR COMPLETENESS OF SCANNED COPIES OF THIS PLAN SHEET.

ABBREVIATIONS

AMEND — AMENDMENT
B & B — BALLED AND BURLAPPED
Dia — DIAMETER
EA — EACH
LB — POUND
Oz — OUNCE
Ft — FOOT/FEET
SQFT — SQUARE FEET
SQYD — SQUARE YARD
CF — CUBIC FEET
Max — MAXIMUM
Min — MINIMUM
NCN — NO COMMON NAME
No. — NUMBER
Pkt — PACKET
PLT ESTB — PLANT ESTABLISHMENT
Pvmt — PAVEMENT
R/W — RIGHT OF WAY
SF — STATE FURNISHED
TRVD — TRAVELED

LEGEND

RUB URS - PLANT 2' FROM TOP OF CREEK BANK

PLANT LIST AND PLANTING SPECIFICATIONS

PLANT GROUP	PLANT No.	SYMBOL	BOTANICAL NAME	COMMON NAME	SIZE	QUANTITY EACH	HOLE SIZE (INCH) Dia	HOLE SIZE (INCH) DEPTH	BASIN TYPE	IRON SULFATE	SOIL AMEND ①	ORGANIC FERTILIZER ①⑤ PLANTING	ORGANIC FERTILIZER ①⑤ PLT ESTB	BASIN MULCH (CF)	STAKING	PLANTING LIMITS MINIMUM DISTANCE (ft) FROM ETW	Pvmt	FENCE	WALL	PAVED DITCH	EARTH DITCH	ON CENTER (ft)	REMARKS
I	1		ACER MACROPHYLLUM	BROADLEAF MAPLE	POT	8	12	18	1	—	½ CF	⅛ LB	⅛ LB	1 CF	—	30	—	20	20	20	⑦	⑦	TREE ⑨ ⑩ (I)(II)
	2		CALOCEDRUS DECURRENS	INCENSE CEDAR	POT	7	12	18	1	—	½ CF	⅛ LB	⅛ LB	1 CF	—	30	—	20	20	20	⑦	⑦	TREE ⑨ ⑩ (I)(II)
	3		CORNUS NUTTALLII	MOUNTAIN DOGWOOD	POT	12	12	18	1	—	½ CF	⅛ LB	⅛ LB	1 CF	—	30	—	20	20	10	⑦	⑦	TREE ⑨ ⑩ (I)(II)
	4		QUERCUS CHRYSOLEPIS	CANYON LIVE OAK	POT	6	12	18	1	—	½ CF	⅛ LB	⅛ LB	1 CF	—	30	—	15	15	10	⑦	⑦	TREE ⑨ ⑩ (I)(II)
	5		QUERCUS KELLOGGII	CALIFORNIA BLACK OAK	POT	9	12	18	1	—	½ CF	⅛ LB	⅛ LB	1 CF	—	30	—	20	20	20	⑦	⑦	TREE ⑨ ⑩ (I)(II)
	6		ROSA CALIFORNICA	CALIFORNIA WILD ROSE	POT	13	12	18	1	—	½ CF	⅛ LB	⅛ LB	1 CF	—	20	—	15	15	—	—	⑦	SHRUB ⑨ ⑩ (I)(II)
M	7		RUBUS URSINUS	CALIFORNIA BLACKBERRY	LINER	65	12	14	1	—	½ CF	⅛ LB	⅛ LB	1 CF	—	20	—	15	15	—	2	6	SHRUB ⑨ ⑩ (I)(II)
	8		SYMPHORICARPOS ALBUS	SNOWBERRY	LINER	51	12	14	1	—	½ CF	⅛ LB	⅛ LB	1 CF	—	20	—	10	10	—	—	⑦	SHRUB ⑨ ⑩ (I)(II)

APPLICABLE WHEN CIRCLED:

① - QUANTITIES SHOWN ARE "PER PLANT" UNLESS SHOWN AS SQFT OR SQYD APPLICATION RATES
2 - BASIN MULCH IS INCLUDED WITH MULCH QUANTITIES SHOWN ON PLANTING PLAN
3 - SUFFICIENT TO RECEIVE ROOT BALL AND AMENDMENTS IF REQUIRED
4 - SEE DETAIL
⑤ - SEE SPECIAL PROVISIONS
6 - SEE STANDARD SPECIFICATIONS
⑦ - AS SHOWN ON PLANS
8 - UNLESS OTHERWISE SHOWN ON PLANS
⑨ - FOLIAGE PROTECTOR REQUIRED
⑩ - ROOT PROTECTOR REQUIRED
11 - ROOT BARRIER REQUIRED
12 - STATE-FURNISHED

NOTES:

- UNDERLINED PORTIONS OF BOTANICAL NAME INDICATE ABBREVIATIONS USED ON PLANTING PLANS.
- SIZE OF PLANT (GROUP I) - 4" SQUARE X 14" LONG
- SIZE OF PLANT (GROUP M) - 2½" SQUARE X 10" LONG

(I) SOIL AMENDMENT MUST CONFORM TO SECTION 20-7.02D(9) OF THE 2010 STANDARD SPECIFICATIONS
(II) WATERING MUST CONFORM TO SECTION 20-1.03C OF THE 2010 STANDARD SPECIFICATIONS.

PLANT LIST PL-1

REVISED BY	DATE REVISED
BD	12/03/12

BILL DUTTERA — GUS ESCUTIA
CALCULATED-DESIGNED BY — CHECKED BY
SENIOR LANDSCAPE ARCHITECT — BRAD COLE

STATE OF CALIFORNIA - DEPARTMENT OF TRANSPORTATION
Caltrans® LANDSCAPE ARCHITECTURE

DATE PLOTTED => 15-JAN-2013
TIME PLOTTED => 14:22
LAST REVISION 11-07-12

Dist	COUNTY	ROUTE	POST MILES TOTAL PROJECT	SHEET No.	TOTAL SHEETS
10	Cal	4	32.2	13	17

LICENSED LANDSCAPE ARCHITECT

1/14/13
PLANS APPROVAL DATE

LICENSED LANDSCAPE ARCHITECT
William Duttera No. 4442
Signature
9/30/14
Renewal Date
01/03/13
Date
STATE OF CALIFORNIA

THE STATE OF CALIFORNIA OR ITS OFFICERS OR AGENTS SHALL NOT BE RESPONSIBLE FOR THE ACCURACY OR COMPLETENESS OF SCANNED COPIES OF THIS PLAN SHEET.

NOTE:

FOR ACCURATE RIGHT OF WAY DATA, CONTACT
RIGHT OF WAY ENGINEERING AT THE DISTRICT OFFICE.

LEGEND

RUB URS - PLANT 2' FROM TOP OF CREEK BANK

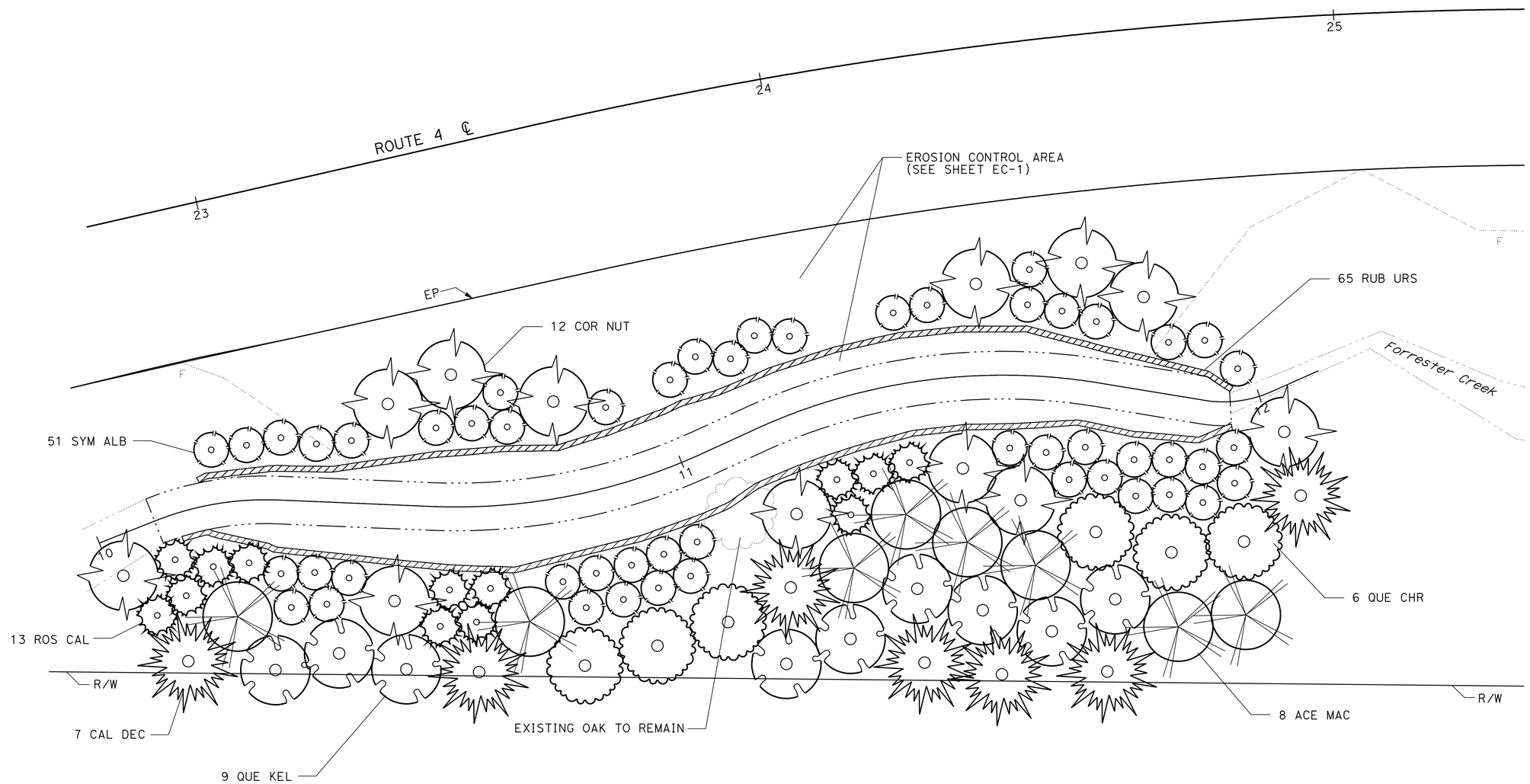

APPROVED FOR PLANTING WORK ONLY

PLANTING PLAN

SCALE: 1" = 10'

PP-1

STATE OF CALIFORNIA - DEPARTMENT OF TRANSPORTATION
Caltrans® LANDSCAPE ARCHITECTURE

SENIOR LANDSCAPE ARCHITECT: BRAD COLE
CALCULATED-DESIGNED BY: BILL DUTTERA
CHECKED BY: GUS ESCUTIA
REVISED BY: BD
DATE REVISED: 12/03/12

LAST REVISION 11-07-12
DATE PLOTTED => 15-JAN-2013
TIME PLOTTED => 14:22

Dist	COUNTY	ROUTE	POST MILES TOTAL PROJECT	SHEET No.	TOTAL SHEETS
10	Cal	4	32.2	14	17

LICENSED LANDSCAPE ARCHITECT

1/14/13
PLANS APPROVAL DATE

LICENSED LANDSCAPE ARCHITECT William Duttera No. 4442 Signature 09/30/14 Renewal Date 01/03/13 Date STATE OF CALIFORNIA

THE STATE OF CALIFORNIA OR ITS OFFICERS OR AGENTS SHALL NOT BE RESPONSIBLE FOR THE ACCURACY OR COMPLETENESS OF SCANNED COPIES OF THIS PLAN SHEET.

ABBREVIATIONS

RECP — ROLLED EROSION CONTROL PRODUCT

FIBER ROLLS

SEQUENCE	ITEM	MATERIAL		REMARKS
		DESCRIPTION	TYPE	
IN HYDROSEED AREAS FIBER ROLLS MUST BE INSTALLED BEFORE HYDROSEEDING.	FIBER ROLLS	FIBER ROLL	STRAW FILL 8" TO 10" Dia	TYPE 1 FIBER ROLL INSTALLATION

SEED MIX 1

BOTANICAL NAME (COMMON NAME)	PERCENT GERMINATION (MINIMUM)	POUNDS PURE LIVE SEED PER ACRE (SLOPE MEASUREMENT)
BROMUS CARINATUS (CALIFORNIA BROME)	50	8.0
CLARKIA PURPUREA (WINECUP CLARKIA)	50	3.0
ELYMUS GLAUCUS (BLUE WILDRYE)	50	8.0
ESCHSCHOLZIA CALIFORNICA (CALIFORNIA POPPY)	50	3.0
HORDEUM CALIFORICUM (CALIFORNIA BARLEY)	50	8.0
LUPINUS BICOLOR (MINIATURE LUPINE)	50	6.0
MELICA CALIFORNICA (CALIFORNIA MELIC)	50	5.0
VULPIA MICROSTACHYS (THREE WEEK FESCUE)	50	5.0

EROSION CONTROL TYPE 1

SEQUENCE	ITEM	MATERIAL		APPLICATION RATE
		DESCRIPTION	TYPE	
STEP 1	ROLLED EROSION CONTROL PRODUCT (NETTING)	NETTING	TYPE B*	
STEP 2	HYDROSEED	SEED	MIX 1	46 LB/ACRE
		FIBER	CELLULOSE	400 LB/ACRE
		FERTILIZER	ORGANIC**	100 LB/ACRE
		ALTERNATE FIBER	STRAW	1,000 LB/ACRE
STEP 3	HYDROMULCH	FIBER	CELLULOSE	800 LB/ACRE
		TACKIFIER	PSYLLIUM	180 LB/ACRE
		ALTERNATE FIBER	STRAW	1,000 LB/ACRE

*INSTALLATION OF TYPE B NETTING MUST CONFORM TO STANDARD PLAN H52. OVERLAPPING RECP EDGE MUST FACE DOWN STREAM OF WATER FLOW.

**FOR ORGANIC FERTILIZER INFORMATION SEE SPECIAL PROVISIONS.

EROSION CONTROL LEGEND
ECL-1

STATE OF CALIFORNIA - DEPARTMENT OF TRANSPORTATION
Caltrans® LANDSCAPE ARCHITECTURE

SENIOR LANDSCAPE ARCHITECT: BRAD COLE
CALCULATED-DESIGNED BY: BILL DUTTERA
CHECKED BY: GUS ESCUTIA
REVISED BY: BD
DATE REVISED: 12/03/12

LAST REVISION 11-07-12
DATE PLOTTED => 15-JAN-2013
TIME PLOTTED => 14:22

Dist	COUNTY	ROUTE	POST MILES TOTAL PROJECT	SHEET No.	TOTAL SHEETS
10	Cal	4	32.2	15	17

LICENSED LANDSCAPE ARCHITECT

1/14/13
PLANS APPROVAL DATE

LICENSED LANDSCAPE ARCHITECT
William Duttera No. 4432
Signature
09/30/14
Renewal Date
01/03/13
Date
STATE OF CALIFORNIA

THE STATE OF CALIFORNIA OR ITS OFFICERS OR AGENTS SHALL NOT BE RESPONSIBLE FOR THE ACCURACY OR COMPLETENESS OF SCANNED COPIES OF THIS PLAN SHEET.

NOTE:

FOR ACCURATE RIGHT OF WAY DATA, CONTACT RIGHT OF WAY ENGINEERING AT THE DISTRICT OFFICE.

LEGEND:

EROSION CONTROL TYPE 1

ROLLED EROSION CONTROL PRODUCT (NETTING), TYPE B WITH EROSION CONTROL, TYPE 1

ABBREVIATION:

RECP — ROLLED EROSION CONTROL PRODUCT

EROSION CONTROL QUANTITIES

DESCRIPTION	ROLLED EROSION CONTROL PRODUCT (NETTING)	HYDROSEED	HYDROMULCH	FIBER ROLLS
	SQFT	SQFT	SQFT	LF
EROSION CONTROL TYPE 1	4,067	12,135	12,135	
FIBER ROLLS				988
TOTAL	4,067	12,135	12,135	988

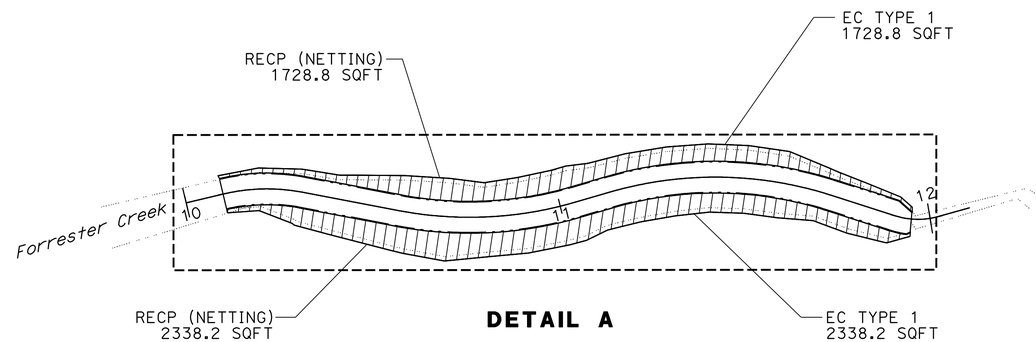

DETAIL A

CREEK BANK STABILIZATION

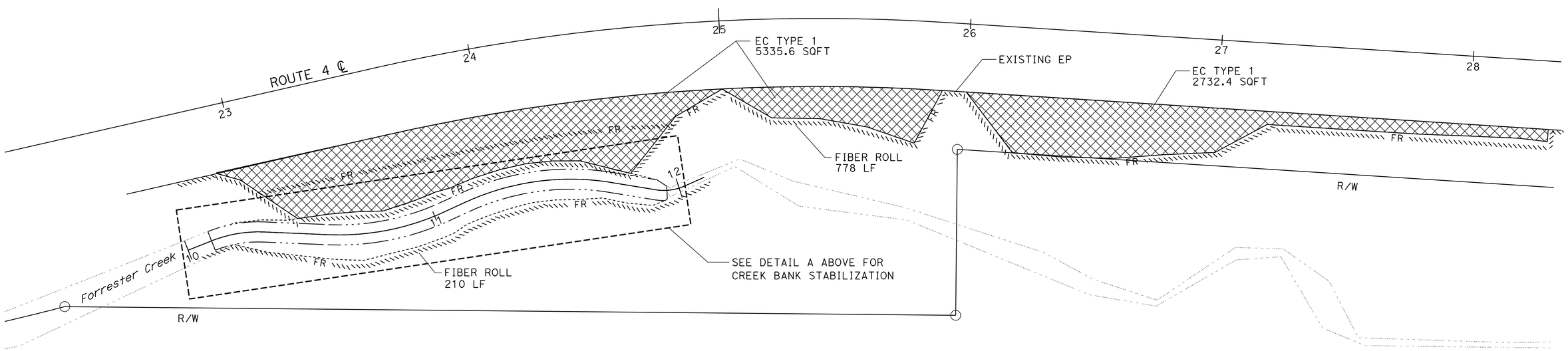

EROSION CONTROL PLAN AND QUANTITIES

SCALE: 1" = 20'

EC-1

APPROVED FOR EROSION CONTROL WORK ONLY

STATE OF CALIFORNIA - DEPARTMENT OF TRANSPORTATION
Caltrans® LANDSCAPE ARCHITECTURE

SENIOR LANDSCAPE ARCHITECT: BRAD COLE
CALCULATED-DESIGNED BY: BILL DUTTERA
CHECKED BY: GUS ESCUTIA
REVISED BY: BD
DATE REVISED: 12/03/12

LAST REVISION 11-07-12
DATE PLOTTED => 15-JAN-2013
TIME PLOTTED => 14:22

Dist	COUNTY	ROUTE	POST MILES TOTAL PROJECT	SHEET No.	TOTAL SHEETS
10	Cal	4	32.2	16	17

REGISTERED CIVIL ENGINEER 12-7-12 DATE

1/14/13
PLANS APPROVAL DATE

REGISTERED PROFESSIONAL ENGINEER Gurinderpal Bhullar No. C48815 Exp. 9-30-14 CIVIL STATE OF CALIFORNIA

THE STATE OF CALIFORNIA OR ITS OFFICERS OR AGENTS SHALL NOT BE RESPONSIBLE FOR THE ACCURACY OR COMPLETENESS OF SCANNED COPIES OF THIS PLAN SHEET.

NOTES:

Unless otherwise specified in the special provisions, all temporary warning signs shall have black legend on orange background.

California code are designated by (CA). Otherwise, Federal (MUTCD) codes are shown.

TYPICAL LANE CLOSURE WITH REVERSIBLE CONTROL

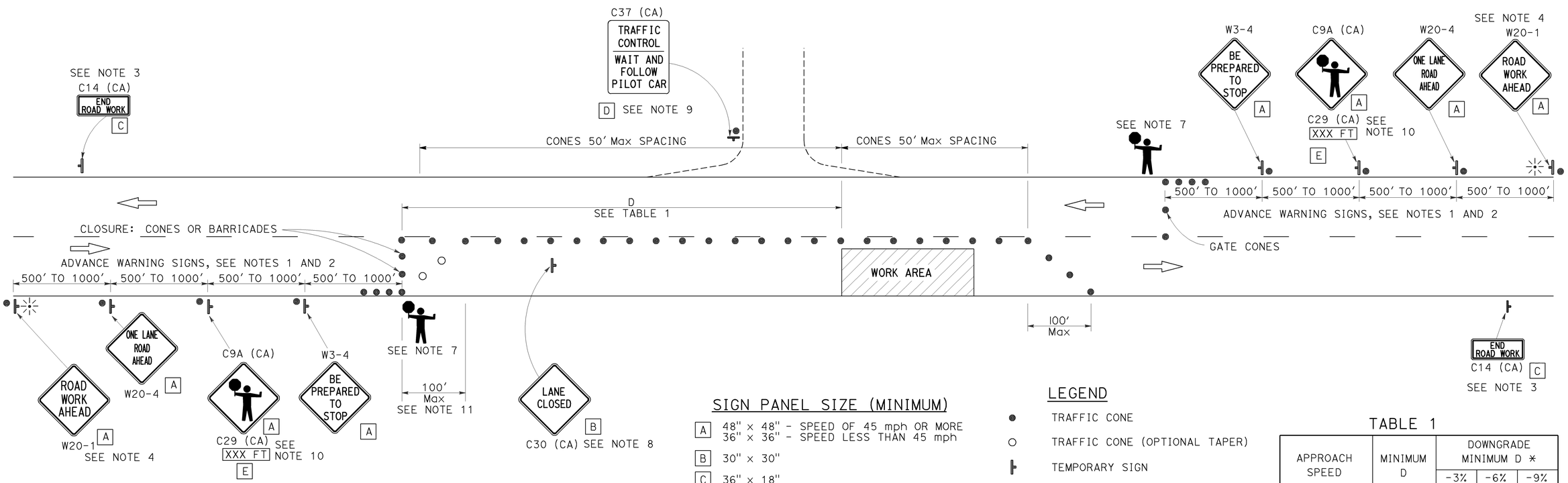

SIGN PANEL SIZE (MINIMUM)

- A: 48" x 48" - SPEED OF 45 mph OR MORE; 36" x 36" - SPEED LESS THAN 45 mph
- B: 30" x 30"
- C: 36" x 18"
- D: 36" x 42"
- E: 36" x 9"

LEGEND

- TRAFFIC CONE
- TRAFFIC CONE (OPTIONAL TAPER)
- TEMPORARY SIGN
- PORTABLE FLASHING BEACON
- FLAGGER

TABLE 1

APPROACH SPEED	MINIMUM D	DOWNGRADE MINIMUM D *		
		-3%	-6%	-9%
mph	ft	ft	ft	ft
25 AND BELOW	155	158	165	173
30	200	205	215	227
35	250	257	271	287
40	305	315	333	354
45	360	378	400	427
50	425	446	474	507
55	495	520	553	593
60	570	598	638	686
65	645	682	728	785

* USE ON SUSTAINED DOWNGRADE STEEPER THAN -3 PERCENT AND LONGER THAN 1 MILE.

NOTES:

1. Where approach speeds are low, advance warning signs may be placed at 300' spacing, and closer in urban areas.
2. Each advance warning sign in each direction of travel shall be equipped with at least two flags for daytime closure. Each flag shall be at least 16" x 16" in size and shall be orange or fluorescent red-orange in color. Flashing beacons shall be placed at the locations indicated for lane closure during hours of darkness.
3. A C14 (CA) "END ROAD WORK" sign, as appropriate, shall be placed at the end of the lane control unless the end of work area is obvious, or ends within a larger project's limits.
4. If the W20-1 sign would follow within 2000' of a stationary W20-1 or C11 (CA) "ROAD WORK NEXT _____MILES", use a W20-4 sign for the first advance warning sign.
5. All cones used for lane closures during the hours of darkness shall be fitted with retroreflective bands (or sleeves) as specified in the specifications.
6. Portable delineators, placed at one-half the spacing indicated for traffic cones, may be used instead of cones for daytime closures only.
7. Additional advance flaggers may be required. Flagger should stand in a conspicuous place, be visible to approaching traffic as well as approaching vehicles after the first vehicle has stopped. During the hours of darkness, the flagging-station and flagger shall be illuminated and clearly visible to approaching traffic. The illumination footprint of the lighting on the ground shall be at least 20' in diameter. Place a minimum of four cones at 50' intervals in advance of flagger station as shown.
8. Place C30 (CA) "LANE CLOSED" sign at 500' to 1000' intervals throughout extended work areas. They are optional if the work area is visible from the flagger station.
9. When a pilot car is used, place a C37 (CA) "TRAFFIC CONTROL-WAIT AND FOLLOW PILOT CAR" sign at all intersections within traffic control area. Signs shall be clean and visible at all times.
10. An optional C29 (CA) sign may be placed below the C9A (CA) sign.
11. Traffic cones or barricades may be placed on the optional taper as shown, barricades shall be Type I, II, or III.

STATE OF CALIFORNIA
DEPARTMENT OF TRANSPORTATION

TRAFFIC CONTROL SYSTEM FOR LANE CLOSURE ON TWO LANE CONVENTIONAL HIGHWAYS

NO SCALE

TCS-1

STATE OF CALIFORNIA - DEPARTMENT OF TRANSPORTATION
Caltrans

FUNCTIONAL SUPERVISOR | CALCULATED-DESIGNED BY | CHECKED BY | REVISED BY | DATE REVISED

LAST REVISION 00-00-00 | DATE PLOTTED => 10-DEC-2012 | TIME PLOTTED => 09:45

Dist	COUNTY	ROUTE	POST MILES TOTAL PROJECT	SHEET No.	TOTAL SHEETS
10	Cal	4	32.2	17	17

REGISTERED CIVIL ENGINEER

July 20, 2012
PLANS APPROVAL DATE

Raymond Don Tsztoo
No. C37332
Exp. 6-30-14
CIVIL
STATE OF CALIFORNIA
REGISTERED PROFESSIONAL ENGINEER

THE STATE OF CALIFORNIA OR ITS OFFICERS OR AGENTS SHALL NOT BE RESPONSIBLE FOR THE ACCURACY OR COMPLETENESS OF SCANNED COPIES OF THIS PLAN SHEET.

TO ACCOMPANY PLANS DATED 1/14/13

2010 REVISED STANDARD PLAN RSP D77B

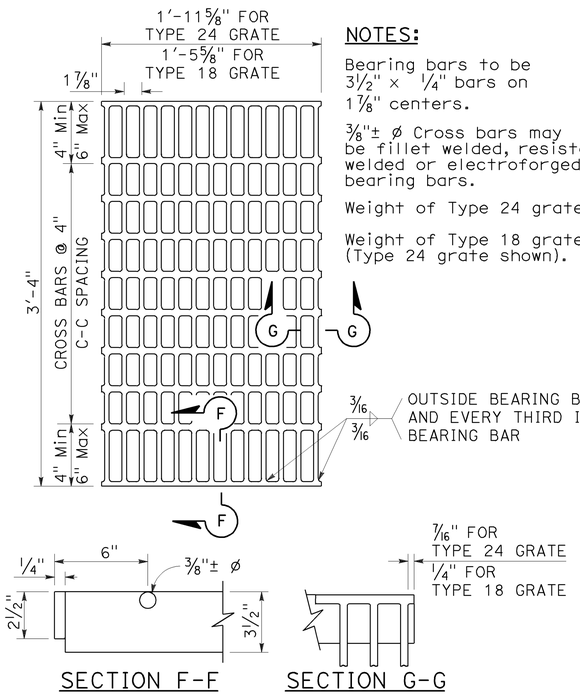

SECTION F-F SECTION G-G

TYPE 18-10 AND 24-13 GRATE

(Welded Steel)

NOTES:

Bearing bars to be 3½" × ¼" bars on 1⅞" centers.

⅜"± ø Cross bars may be fillet welded, resistance welded or electroforged to bearing bars.

Weight of Type 24 grate = 141 LBS.

Weight of Type 18 grate = 107 LBS. (Type 24 grate shown).

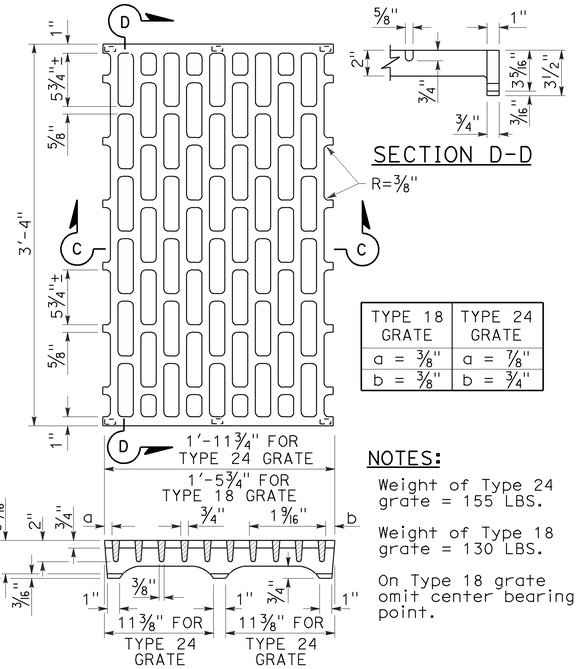

SECTION D-D

TYPE 18 GRATE	TYPE 24 GRATE
a = ⅜"	a = ⅞"
b = ⅜"	b = ¾"

NOTES:

Weight of Type 24 grate = 155 LBS.

Weight of Type 18 grate = 130 LBS.

On Type 18 grate omit center bearing point.

SECTION C-C

TYPE 18-8C AND 24-10C GRATE

(Cast ductile iron)

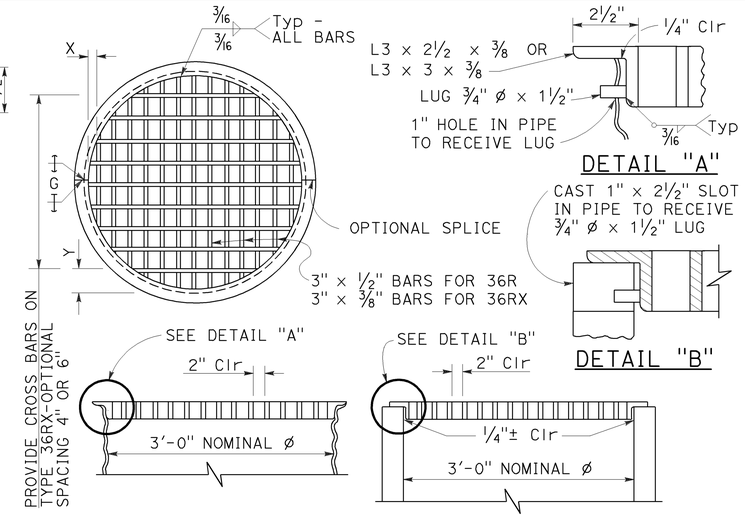

DETAIL "A"

DETAIL "B"

TYPE 36R AND 36RX GRATE DETAILS

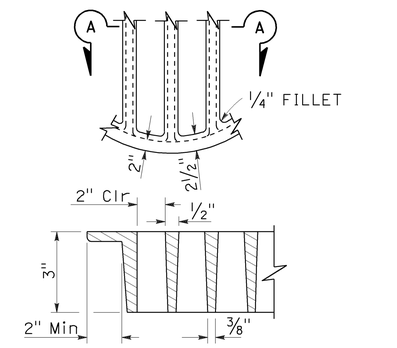

SECTION A-A

ALTERNATIVE CAST DUCTILE IRON GRATE OR CAST CARBON STEEL GRATE TYPE 36R AND 36RX

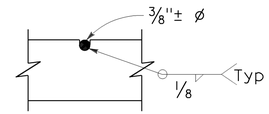

⅜"± ø Cross bars may be fillet welded, resistance welded or electroforged to bearing bars.

CROSS BAR DETAIL TYPE 36RX GRATE (WELDED STEEL)

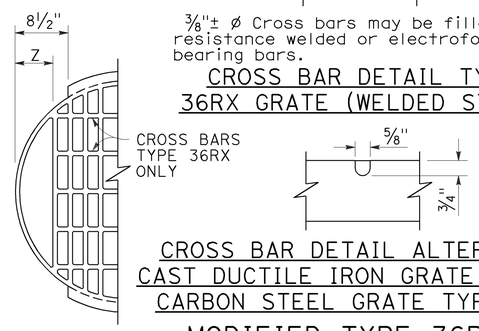

CROSS BAR DETAIL ALTERNATIVE CAST DUCTILE IRON GRATE OR CAST CARBON STEEL GRATE TYPE 36RX

MODIFIED TYPE 36R AND 36RX GRATE FOR ODI INLET

NOTES:

1. When alternative grates are allowed - Final pay based on alternative with the lesser weight.
2. Use frame shown on Standard Plan D74A, D74B or RSP D77A as appropriate.
3. When Type 24-10S, 24-12X or 24-13 grates are used with GDO Inlets, a ¼" × 3½" × 3'-4⅞" steel bar shall be welded across the center of inlet frame to separate the individual grates.
4. See Revised Standard Plan RSP D77A for connecting chain to welded grate and frame. When chain is required, do not use cast ductile iron grate.

BASIS FOR Misc IRON AND STEEL FINAL PAY WEIGHTS FOR DRAINAGE INLETS

INLET TYPE	GRATE TYPE	No. OF GRATES	WEIGHT LB
GDO (SEE NOTE 4)	24-10C	2	391
	24-10S	2	456
	24-12X	2	473
	24-13	2	374
G0,G0L,G1,G2, G3,G4 (TYPE 24)	24-10C	1	202
	24-10S	1	229
	24-12X	1	239
	24-13	1	188
G4 (TYPE 18) G5,G6	18-8S	1	187
	18-9X	1	187
	18-10	1	149
GT1,GT2	18-8S	2	374
	18-9X	2	374
	18-10	2	298
GT3,GT4	24-10C	2	404
	24-10S	2	458
	24-12X	2	478
	24-13	2	376
ODI	36RX (Mod)	1	196
GMP,GCP,GCPI	36RX	1	215
ODI	36R (Mod)	1	220
GMP,GCP,GCPI	36R	1	236
TRASH RACK			22
GRATE CHAIN			3

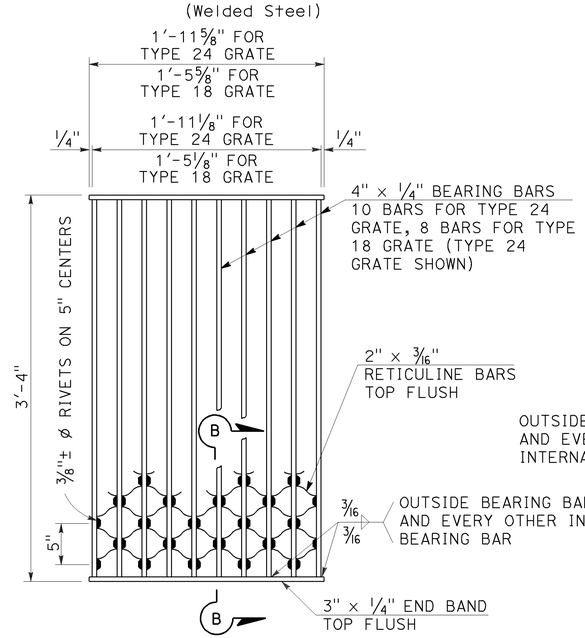

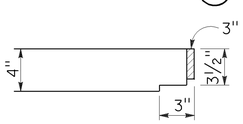

SECTION B-B

NOTES:

Weight of Type 24 grate = 182 LBS.
Weight of Type 18 grate = 145 LBS.

TYPE 18-8S AND 24-10S GRATE

(Welded Steel) Reticuline type

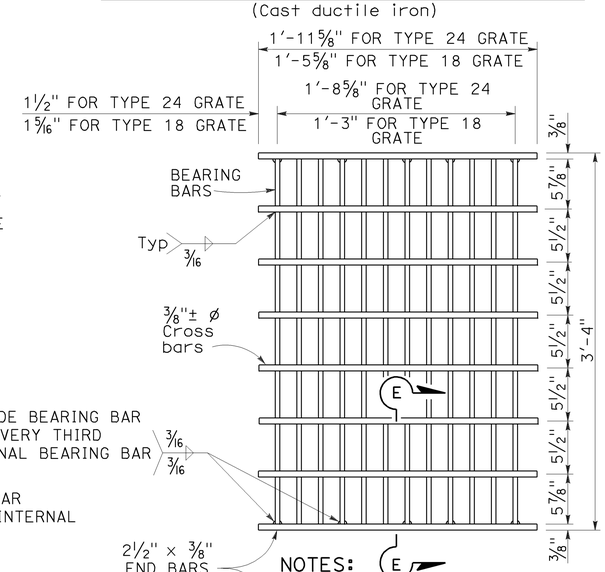

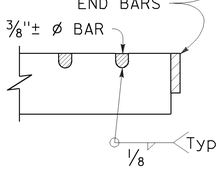

SECTION E-E

NOTES:

Bearing bars to be 3½" × ⅜" bars on 1⅞" centers.

12 Bars for Type 24 grate - 9 bars for Type 18 grates. (Type 24 grate shown).

Weight of Type 24 grate = 192 LBS.

Weight of Type 18 grate = 145 LBS.

⅜"± ø Cross bars may be fillet welded, resistance welded or electroforged to bearing bars.

TYPE 18-9X AND 24-12X GRATE

(Welded Steel)

GRATE BAR SPACING TABLE

TYPE	No. OF BARS	CLEAR BAR SPACING	X	Y 4" SPACING	Y 6" SPACING	Z
36R	13	2"	2⅛"	-	-	-
36RX (STEEL)	15	2"	9/16"	3¾"	5¾"	-
36RX (CAST)	13	2"	2⅛"	3¾"	5¾"	-
36R Mod	12	2"	2⅛"	-	-	5"
36RX Mod (STEEL)	13	2"	9/16"	3¾"	5¾"	5 11/16"
36RX Mod (CAST)	12	2"	2⅛"	3¾"	5¾"	5"

STATE OF CALIFORNIA
DEPARTMENT OF TRANSPORTATION

BICYCLE TRAVERSABLE GRATE DETAILS

NO SCALE

RSP D77B DATED JULY 20, 2012 SUPERSEDES STANDARD PLAN D77B DATED MAY 20, 2011 - PAGE 165 OF THE STANDARD PLANS BOOK DATED 2010.

REVISED STANDARD PLAN RSP D77B

4-17-12