Dist	COUNTY	ROUTE	POST MILES TOTAL PROJECT	SHEET No.	TOTAL SHEETS
10	Sta	5, 99	Var	1	83

ACNHP-X099(590)E

STATE OF CALIFORNIA
DEPARTMENT OF TRANSPORTATION

PROJECT PLANS FOR CONSTRUCTION ON
STATE HIGHWAY

IN STANISLAUS COUNTY AT VARIOUS LOCATIONS

TO BE SUPPLEMENTED BY STANDARD PLANS DATED 2010

INDEX OF PLANS

SHEET No.	DESCRIPTION
1	TITLE AND LOCATION MAP
2-3	LOCATIONS OF CONSTRUCTION
4-5	LAYOUT PLANS
6	CONSTRUCTION DETAILS
7	CONSTRUCTION AREA SIGN
8	SUMMARY OF QUANTITIES
9-64	ELECTRICAL PLANS
65-83	REVISED STANDARD PLANS

THE STANDARD PLANS LIST APPLICABLE TO THIS CONTRACT IS INCLUDED IN THE NOTICE TO BIDDERS AND SPECIAL PROVISIONS BOOK.

NOTE:

THE TABLE OF CONSTRUCTION IS SHOWN ON THE LOCATIONS OF CONSTRUCTION SHEETS.

LOCATION MAP

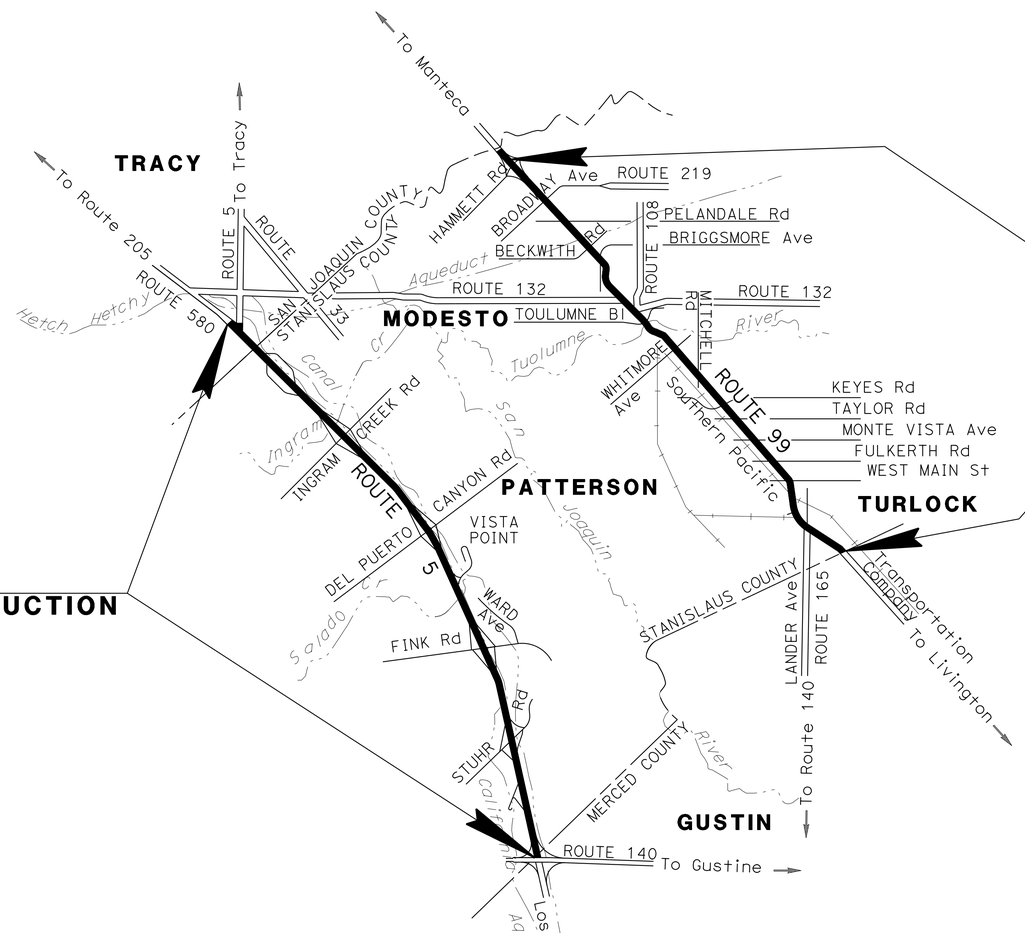

ROUTE 99
LOCATIONS OF CONSTRUCTION
No. 1 THROUGH 115
No. 148 THROUGH 152

ROUTE 5
LOCATIONS OF CONSTRUCTION
No. 116 THROUGH 147

Gurjot S. Gill 5-22-15
PROJECT ENGINEER DATE
REGISTERED CIVIL ENGINEER

REGISTERED PROFESSIONAL ENGINEER GURJOT GILL No. 71647 Exp. 12-31-15 CIVIL STATE OF CALIFORNIA

May 26, 2015
PLANS APPROVAL DATE

THE STATE OF CALIFORNIA OR ITS OFFICERS OR AGENTS SHALL NOT BE RESPONSIBLE FOR THE ACCURACY OR COMPLETENESS OF SCANNED COPIES OF THIS PLAN SHEET.

PROJECT MANAGER: SAM SHERMAN
DESIGN ENGINEER: ABDUL BAKER

THE CONTRACTOR SHALL POSSESS THE CLASS (OR CLASSES) OF LICENSE AS SPECIFIED IN THE "NOTICE TO BIDDERS."

NO SCALE

CONTRACT No.	10-0K3404
PROJECT ID	1014000166

LAST REVISION 05-21-15 DATE PLOTTED => 25-AUG-2015 TIME PLOTTED => 16:05

Dist	COUNTY	ROUTE	POST MILES TOTAL PROJECT	SHEET No.	TOTAL SHEETS
10	Sta	5, 99	Var	2	83

Gurjot S. Gill 5-22-15
REGISTERED CIVIL ENGINEER DATE

5-26-15
PLANS APPROVAL DATE

REGISTERED PROFESSIONAL ENGINEER GURJOT GILL No. 71647 Exp. 12-31-15 CIVIL STATE OF CALIFORNIA

THE STATE OF CALIFORNIA OR ITS OFFICERS OR AGENTS SHALL NOT BE RESPONSIBLE FOR THE ACCURACY OR COMPLETENESS OF SCANNED COPIES OF THIS PLAN SHEET.

LOCATIONS OF CONSTRUCTION

Loc No.	ROUTE	DIRECTION OF TRAVEL	PM	DESCRIPTION	LAYOUT SHEET	ELECTRICAL SHEET
1				DELETED LOCATION		
2	99	NB	R0.43	ON RAMP FROM TURLOCK REST AREA		E-1
3			R1.54	OFF RAMP TO LANDER Ave		E-2
4			R1.54	MAINLINE AT LANDER Ave		E-2
5			R1.78	ON RAMP FROM LANDER Ave		E-2
6			R3.32	OFF RAMP TO WEST MAIN St		E-3
7			R3.32	MAINLINE AT WEST MAIN St		E-3
8			R3.50	ON RAMP FROM WEST MAIN St		E-3
9			R4.32	OFF RAMP TO FULKERTH Rd		E-4
10			R4.62	MAINLINE AT FULKERTH Rd		E-4
11			R4.59	ON RAMP FROM FULKERTH Rd		E-4
12			R5.51	OFF RAMP TO WEST MONTE VISTA Ave		E-5
13			R5.51	MAINLINE AT WEST MONTE VISTA Ave		E-5
14			R5.67	ON RAMP FROM WEST MONTE VISTA Ave		E-5
15			R6.62	OFF RAMP TO WEST TAYLOR Rd		E-6
16			R6.62	MAINLINE AT WEST TAYLOR Rd		E-6
17			R6.82	ON RAMP FROM WEST TAYLOR Rd		E-6
18			R7.58	OFF RAMP TO EAST KEYES Rd		E-7
19			R7.58	MAINLINE AT EAST KEYES Rd OC		E-7
20			R8.07	ON RAMP FROM EAST KEYES Rd		E-8
21			R9.78	OFF RAMP TO MITCHELL Rd		E-9
22			R10.34	MAINLINE AT MITCHELL Rd		E-10
23			R10.34	ON RAMP FROM MITCHELL Rd		E-10
24			R10.61	MAINLINE AT EAST SERVICE Rd OC	L-1	E-11
25			R11.36	OFF RAMP TO PINE St/4th St		E-12
26			R11.46	ON RAMP FROM PINE St/4th St		E-12
27				DELETED LOCATION		
28			R11.73	OFF RAMP TO EAST WHITMORE Ave		E-13
29			R11.85	ON LOOP RAMP FROM EAST WHITMORE Ave		E-13
30			R11.78	MAINLINE AT EAST WHITMORE Ave		E-13
31			R13.15	OFF RAMP TO EAST HATCH Rd		E-14
32			R13.30	OFF RAMP TO BYSTRUM Rd/JOYCE Rd		E-15
33			R13.40	ON RAMP FROM BYSTRUM Rd/JOYCE Rd		E-15
34		SB	R13.49	OFF RAMP TO SOUTH 9th St		E-15
35		NB	R13.77	OFF RAMP TO SOUTH 9th St	L-2	E-16
36			R14.37	OFF RAMP TO CROWS LANDING Rd		E-17
37			R14.43	ON RAMP FROM CROWS LANDING Rd		E-17
38			R14.41	MAINLINE AT CROW LANDING Rd		E-17
39			R15.02	MAINLINE AT TUOLUMNE Blvd		E-18
40			R14.97	OFF RAMP TO TUOLUMNE Blvd		E-18
41			R15.02	ON RAMP FROM TUOLUMNE Blvd		E-18
42			R15.46	OFF RAMP TO 6th St AND G St		E-19
43			R15.70	MAINLINE AT G St TO I St		E-20
44				DELETED LOCATION		
45			R15.97	ON RAMP FROM 6th St AND I St		E-21
46			R16.07	MAINLINE AT K St		E-21
47				DELETED LOCATION		
48			R16.23	ON RAMP FROM 6th St AND L St		E-22
49			R16.66	OFF RAMP TO KANSAS Ave		E-23
50			R16.77	ON RAMP FROM KANSAS Ave		E-23
51			R16.77	MAINLINE AT KANSAS OC		E-23
52			M18.39	OFF RAMP TO WEST BRIGGSMORE Ave		E-25
53			M18.56	MAINLINE AT WEST BRIGGSMORE Ave OC		E-26
54			M18.68	ON RAMP FROM WEST BRIGGSMORE Ave		E-26
55			R19.99	OFF RAMP TO BECKWITH Rd		E-27
56			R20.48	MAINLINE AT BECKWITH Rd		E-28
57			R20.48	ON RAMP FROM BECKWITH Rd		E-28
58			R22.61	MAINLINE AT Jct Rte 219 EAST		E-29

Loc No.	ROUTE	DIRECTION OF TRAVEL	PM	DESCRIPTION	LAYOUT SHEET	ELECTRICAL SHEET
59	99	SB	R22.61	MAINLINE AT Jct Rte 219 EAST		E-29
60			R20.48	OFF RAMP TO BECKWITH Rd		E-28
61			R20.48	MAINLINE AT BECKWITH Rd		E-28
62			R19.99	ON RAMP FROM BECKWITH Rd		E-27
63			M18.68	OFF RAMP TO WEST BRIGGSMORE Ave		E-26
64			M18.56	MAINLINE AT WEST BRIGGSMORE Ave		E-26
65			M18.39	ON RAMP FROM WEST BRIGGSMORE Ave		E-25
66			R16.99	OFF RAMP TO KANSAS Ave		E-24
67			R16.93	ON RAMP FROM KANSAS Ave		E-24
68			R16.77	MAINLINE AT KANSAS Ave OC		E-23
69			R16.23	OFF RAMP TO 5th AND L St		E-22
70				DELETED LOCATION		
71			R16.07	MAINLINE AT K St		E-21
72			R16.07	OFF RAMP TO 5th AND I St		E-21
73				DELETED LOCATION		
74			R15.70	MAINLINE AT G St TO I St		E-20
75			R15.70	ON RAMP FROM 5th AND H St		E-20
76			R15.46	ON RAMP FROM 5th AND G St		E-19
77			R15.06	OFF RAMP TO TUOLUMNE Blvd		E-18
78			R15.03	ON RAMP FROM TUOLUMNE Blvd		E-18
79			R15.003	MAINLINE AT TUOLUMNE Blvd		E-18
80			R14.56	OFF RAMP TO CROWS LANDING Rd		E-17
81			R14.41	MAINLINE AT CROWS LANDING Rd		E-17
82			R14.37	ON RAMP FROM CROWS LANDING Rd		E-17
83			R13.49	OFF RAMP TO HATCH Rd		E-15
84			R13.62	OFF RAMP TO 9th St		E-16
85			R13.49	ON RAMP FROM 9th St		E-15
86			R13.15	ON RAMP FROM HATCH Rd		E-14
87			R13.15	ON RAMP FROM 9th St		E-14
88				DELETED LOCATION		
89			R11.78	OFF RAMP TO 2nd AND NORTH St		E-13
90			R11.78	MAINLINE AT SOUTH OF EAST WHITMORE Ave		E-13
91			R11.43	ON RAMP FROM 2nd Ave		E-12
92			R10.61	MAINLINE AT EAST SERVICE Rd OC	L-1	E-11
93			R10.34	OFF RAMP TO MITCHELL Rd		E-10
94			R10.34	MAINLINE AT MITCHELL Rd		E-10
95			R9.78	ON RAMP FROM MITCHELL Rd		E-9
96			R8.07	OFF RAMP TO EAST KEYES Rd		E-8
97			R7.58	MAINLINE AT EAST KEYES Rd OC		E-7
98			R7.58	ON RAMP FROM EAST KEYES Rd		E-7
99			R6.88	OFF RAMP TO WEST TAYLOR Rd		E-6
100			R6.88	MAINLINE AT WEST TAYLOR Rd		E-6
101			R6.70	ON RAMP FROM WEST TYLOR Rd		E-6
102			R5.77	OFF RAMP TO WEST MONTE VISTA Ave		E-5
103			R5.77	MAINLINE AT WEST MONTE VISTA Ave		E-5
104			R5.61	ON RAMP FROM WEST MONTE VISTA Ave		E-5
105			R4.75	OFF RAMP TO FULKERTH Rd		E-4
106			R4.42	MAINLINE AT FULKERTH Rd		E-4
107			R4.45	ON RAMP FROM FULKERTH Rd		E-4
108			R3.58	OFF RAMP TO WEST MAIN St		E-3
109			R3.36	MAINLINE AT WEST MAIN St		E-3
110			R3.36	ON RAMP FROM WEST MAIN St		E-3
111			R1.78	OFF RAMP TO LANDER Ave		E-2
112			R1.52	MAINLINE AT LANDER Ave		E-2
113			R1.52	ON RAMP FROM LANDER Ave		E-2
114			R0.43	OFF RAMP TO TURLOCK REST AREA		E-1
115				DELETED LOCATION		

REVISED BY | DATE REVISED
RAYMOND PRADO | GURJOT GILL
CALCULATED-DESIGNED BY | CHECKED BY
FUNCTIONAL SUPERVISOR
ABDUL BAKER

STATE OF CALIFORNIA - DEPARTMENT OF TRANSPORTATION
Caltrans
06-DESIGN

LOCATIONS OF CONSTRUCTION
LC-1

LAST REVISION 05-21-15 | DATE PLOTTED => 28-MAY-2015 TIME PLOTTED => 11:18

Dist	COUNTY	ROUTE	POST MILES TOTAL PROJECT	SHEET No.	TOTAL SHEETS
10	Sta	5, 99	Var	3	83

REGISTERED CIVIL ENGINEER 5-22-15 DATE

5-26-15
PLANS APPROVAL DATE

REGISTERED PROFESSIONAL ENGINEER GURJOT GILL No. 71647 Exp. 12-31-15 CIVIL STATE OF CALIFORNIA

THE STATE OF CALIFORNIA OR ITS OFFICERS OR AGENTS SHALL NOT BE RESPONSIBLE FOR THE ACCURACY OR COMPLETENESS OF SCANNED COPIES OF THIS PLAN SHEET.

LOCATIONS OF CONSTRUCTION (cont)

Loc No.	ROUTE	DIRECTION OF TRAVEL	PM	DESCRIPTION	LAYOUT SHEET	ELECTRICAL SHEET
116	5	SB	3.832	ON RAMP FROM VISTA POINT		E-32
117				DELETED LOCATION		
118				DELETED LOCATION		
119				DELETED LOCATION		
120		NB	10.58	OFF RAMP TO FINK Rd		E-33
121			10.60	MAINLINE AT FINK Rd		E-33
122			10.73	ON RAMP FROM FINK Rd		E-34
123			12.84	OFF RAMP TO VISTA POINT		E-35
124			15.73	OFF RAMP TO DEL PUERTO CANYON Rd		E-36
125				DELETED LOCATION		
126			15.88	ON RAMP FROM DEL PUERTO CANYON Rd		E-36
127			16.10	MAINLINE - DEL PUERTO CANYON Rd		E-37
128			22.84	OFF RAMP TO HOWARD Rd		E-38
129			23.00	MAINLINE AT HOWARD Rd/INGRAM Cr Rd		E-39
130			23.13	ON RAMP FROM HOWARD Rd		E-39
131				DELETED LOCATION		
132			27.097	OFF RAMP TO WESTERLY REST AREA		E-40
133				DELETED LOCATION		
134			27.20-28.05	FIBER OPTIC NORTH OF WESTERLY REST AREA		E-41,42,43
135				DELETED LOCATION		
136		SB	27.097	ON RAMP TO WESTERLY REST AREA		E-40
137				DELETED LOCATION		
138			23.14	OFF RAMP TO HOWARD Rd		E-39
139			23.00	MAINLINE AT HOWARD Rd/INGRAM Cr Rd		E-39
140			22.84	ON RAMP FROM HOWARD Rd		E-38
141			16.10	MAINLINE - DEL PUERTO CANYON Rd		E-37
142			16.01	OFF RAMP TO DEL PUERTO CANYON Rd		E-37
143				DELETED LOCATION		
144			15.82	ON RAMP FROM DEL PUERTO CANYON Rd		E-36
145			10.83	OFF RAMP TO FINK Rd		E-34
146			10.71	ON RAMP FROM FINK Rd		E-33
147			10.60	MAINLINE AT FINK Rd		E-33
148	99	NB	R24.09	OFF RAMP TO HAMMETT Rd		E-30
149				DELETED LOCATION		
150		NB	R24.46	ON RAMP FROM HAMMETT Rd		E-31
151		SB	R24.48	OFF RAMP TO HAMMETT Rd		E-31
152		SB	R24.09	ON RAMP FROM HAMMETT Rd		E-30

LOCATIONS OF CONSTRUCTION
LC-2

REVISED BY | DATE REVISED
RAYMOND PRADO | GURJOT GILL
CALCULATED-DESIGNED BY | CHECKED BY
FUNCTIONAL SUPERVISOR
ABDUL BAKER

STATE OF CALIFORNIA - DEPARTMENT OF TRANSPORTATION
Caltrans
06-DESIGN

LAST REVISION 05-21-15 | DATE PLOTTED => 28-MAY-2015 TIME PLOTTED => 11:18

Dist	COUNTY	ROUTE	POST MILES TOTAL PROJECT	SHEET No.	TOTAL SHEETS
10	Sta	5, 99	Var	4	83

REGISTERED CIVIL ENGINEER 5-22-15 DATE

5-26-15
PLANS APPROVAL DATE

REGISTERED PROFESSIONAL ENGINEER GURJOT GILL No. 71647 Exp. 12-31-15 CIVIL STATE OF CALIFORNIA

THE STATE OF CALIFORNIA OR ITS OFFICERS OR AGENTS SHALL NOT BE RESPONSIBLE FOR THE ACCURACY OR COMPLETENESS OF SCANNED COPIES OF THIS PLAN SHEET.

NOTES:

1. FOR ACCURATE RIGHT OF WAY DATA, CONTACT RIGHT OF WAY ENGINEERING AT THE DISTRICT OFFICE.
2. EXISTING UTILITY FACILITIES ARE NOT SHOWN ON THESE PLANS.
3. THE LOCATIONS OF WORK ARE FLEXIBLE AND MAYBE ADJUSTED TO MITIGATE ANY CONFLICTS WITH EXISTING UTILITY FACILITIES. EXISTING UTILITY FACILITIES ARE NOT INCLUDED ON THESE PLANS.

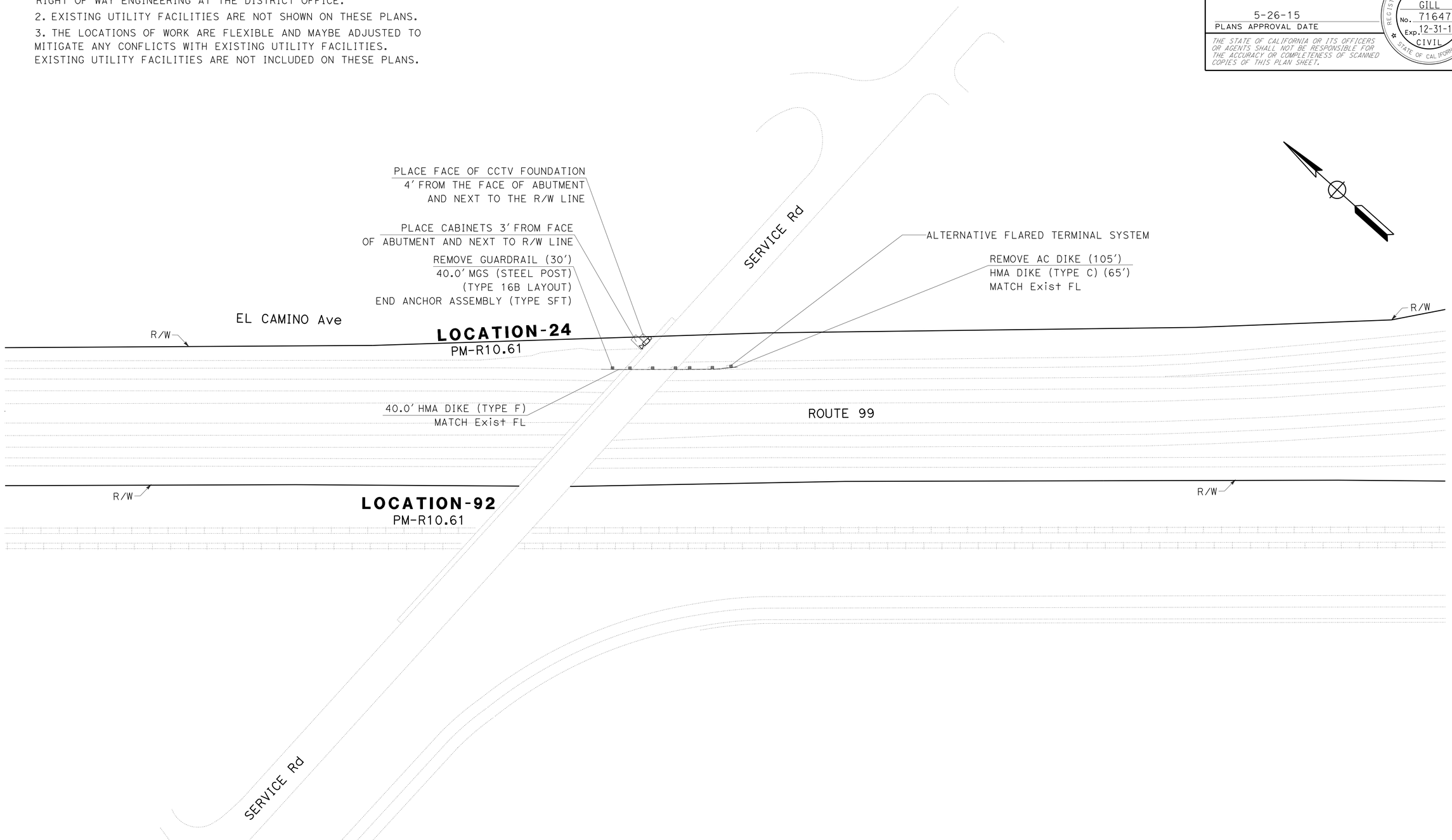

SCALE: 1'=50"

LAYOUT L-1

STATE OF CALIFORNIA - DEPARTMENT OF TRANSPORTATION
Caltrans
06-DESIGN

FUNCTIONAL SUPERVISOR: ABDUL BAKER
CALCULATED-DESIGNED BY: RAYMOND PRADO
CHECKED BY: GURJOT GILL
REVISED BY
DATE REVISED

LAST REVISION 05-21-15
DATE PLOTTED => 28-MAY-2015
TIME PLOTTED => 11:18

Dist	COUNTY	ROUTE	POST MILES TOTAL PROJECT	SHEET No.	TOTAL SHEETS
10	Sta	5, 99	Var	5	83

Gurjot S. Gill 5-22-15
REGISTERED CIVIL ENGINEER DATE

5-26-15
PLANS APPROVAL DATE

REGISTERED PROFESSIONAL ENGINEER GURJOT GILL No. 71647 Exp. 12-31-15 CIVIL STATE OF CALIFORNIA

THE STATE OF CALIFORNIA OR ITS OFFICERS OR AGENTS SHALL NOT BE RESPONSIBLE FOR THE ACCURACY OR COMPLETENESS OF SCANNED COPIES OF THIS PLAN SHEET.

NOTES:

1. FOR ACCURATE RIGHT OF WAY DATA, CONTACT RIGHT OF WAY ENGINEERING AT THE DISTRICT OFFICE.
2. EXISTING UTILITY FACILITIES ARE NOT SHOWN ON THESE PLANS.
3. THE LOCATIONS OF WORK ARE FLEXIBLE AND MAYBE ADJUSTED TO MITIGATE ANY CONFLICTS WITH EXISTING UTILITY FACILITIES. EXISTING UTILITY FACILITIES ARE NOT INCLUDED ON THESE PLANS.

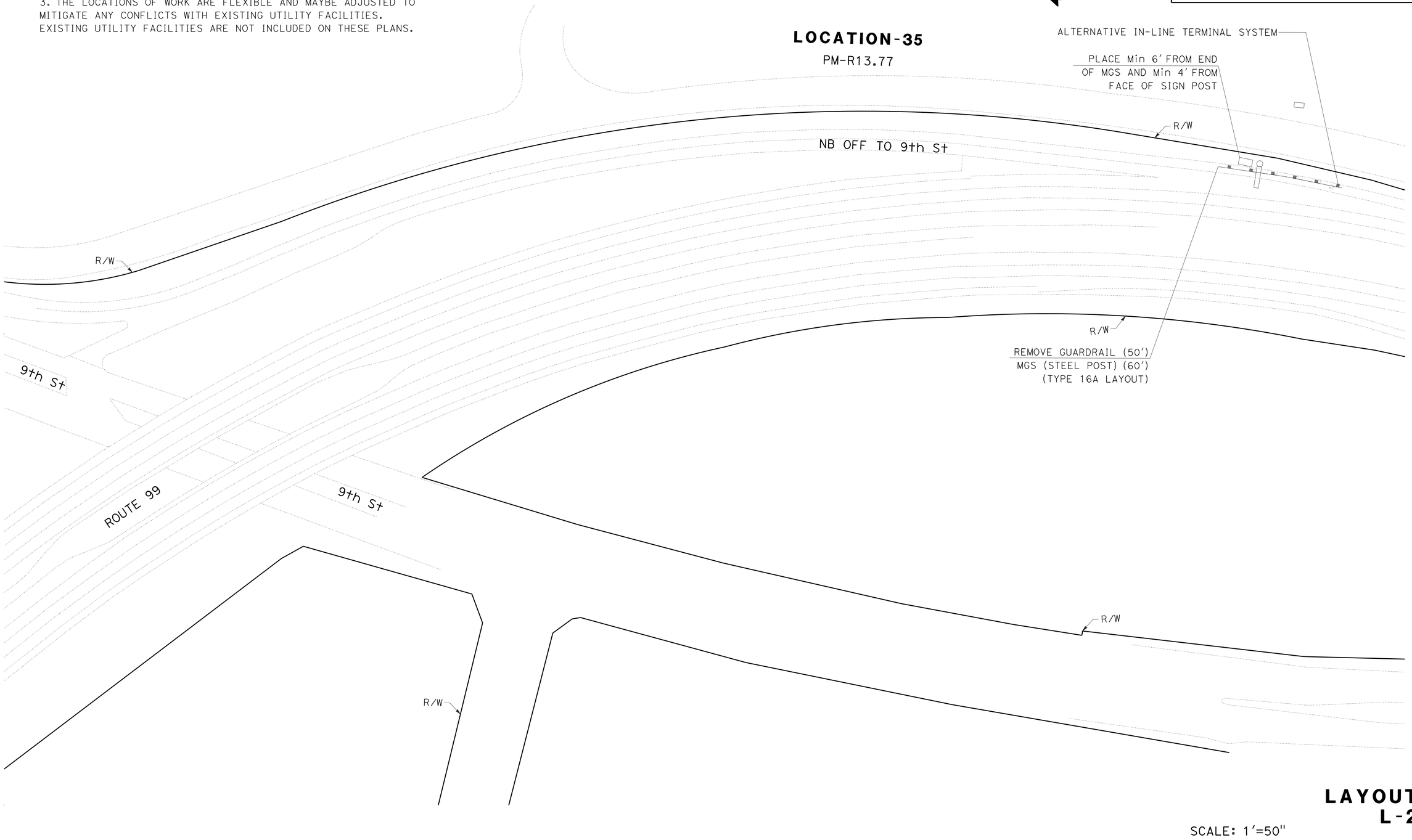

SCALE: 1'=50"

LAYOUT L-2

STATE OF CALIFORNIA - DEPARTMENT OF TRANSPORTATION
Caltrans®
06-DESIGN

FUNCTIONAL SUPERVISOR: ABDUL BAKER
CALCULATED-DESIGNED BY: RAYMOND PRADO
CHECKED BY: GURJOT GILL
REVISED BY
DATE REVISED

LAST REVISION 05-21-15
DATE PLOTTED => 28-MAY-2015
TIME PLOTTED => 11:18

Dist	COUNTY	ROUTE	POST MILES TOTAL PROJECT	SHEET No.	TOTAL SHEETS
10	Sta	5, 99	Var	6	83

Gurjot S. Gill 5-22-15
REGISTERED CIVIL ENGINEER DATE

5-26-15
PLANS APPROVAL DATE

REGISTERED PROFESSIONAL ENGINEER
GURJOT GILL
No. 71647
Exp. 12-31-15
CIVIL
STATE OF CALIFORNIA

THE STATE OF CALIFORNIA OR ITS OFFICERS OR AGENTS SHALL NOT BE RESPONSIBLE FOR THE ACCURACY OR COMPLETENESS OF SCANNED COPIES OF THIS PLAN SHEET.

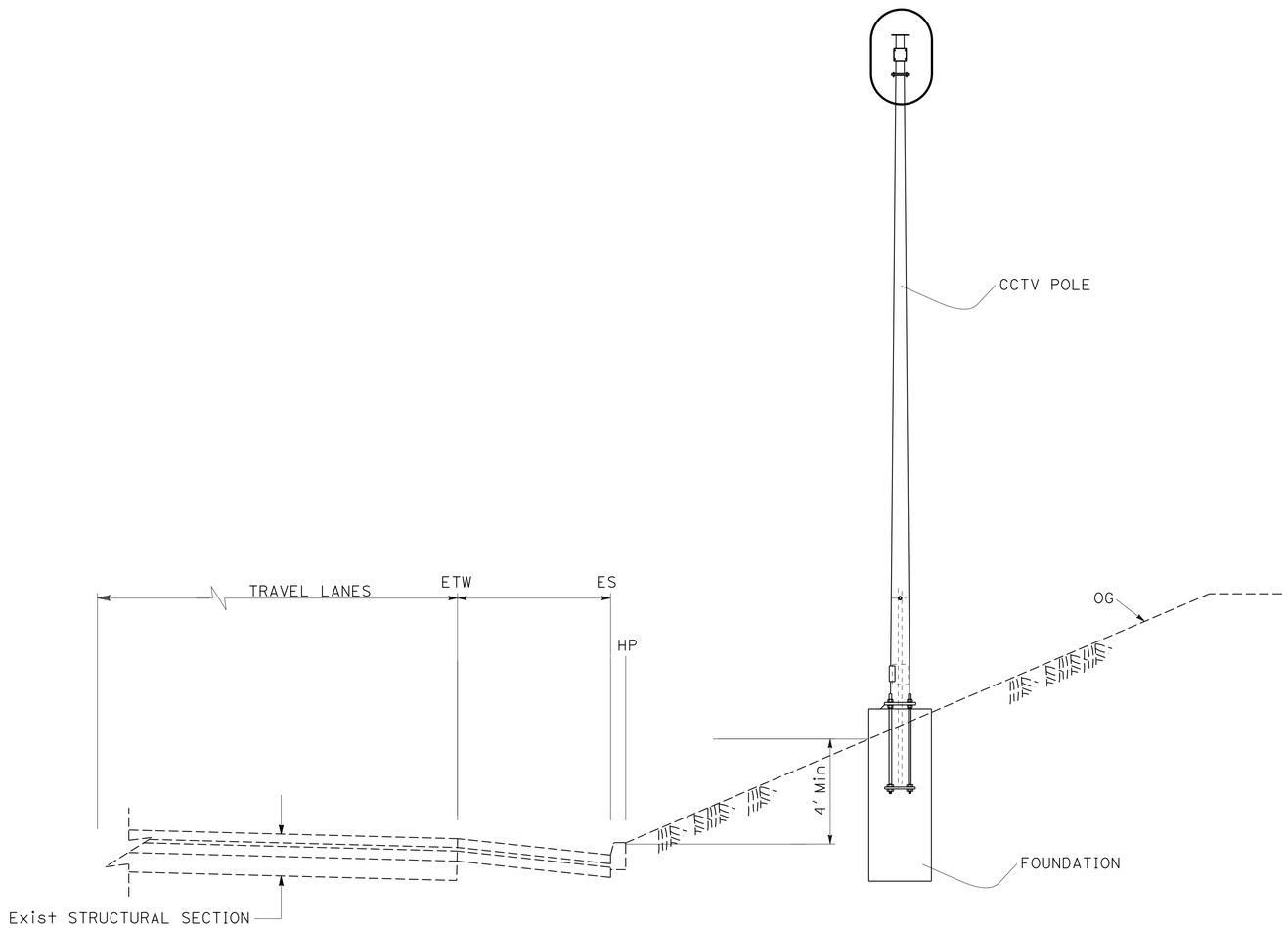

CCTV TYPICAL SECTION

SEE ELECTRICAL PLANS FOR MORE INFORMATION

CONSTRUCTION DETAIL

C-1

NO SCALE

STATE OF CALIFORNIA - DEPARTMENT OF TRANSPORTATION
Caltrans
06-DESIGN

FUNCTIONAL SUPERVISOR: ABDUL BAKER
CALCULATED-DESIGNED BY: RAYMOND PRADO
CHECKED BY: GURJOT GILL
REVISED BY
DATE REVISED

LAST REVISION 05-21-15
DATE PLOTTED => 28-MAY-2015
TIME PLOTTED => 11:18

Dist	COUNTY	LOCATION CODE	POST MILES TOTAL PROJECT	SHEET No.	TOTAL SHEETS
10	Sta	5, 99	Var	7	83

REGISTERED CIVIL ENGINEER 3-30-15 DATE

5-26-15
PLANS APPROVAL DATE

REGISTERED PROFESSIONAL ENGINEER HUE NGUYEN No. 74484 Exp. 12/31/15 CIVIL STATE OF CALIFORNIA

THE STATE OF CALIFORNIA OR ITS OFFICERS OR AGENTS SHALL NOT BE RESPONSIBLE FOR THE ACCURACY OR COMPLETENESS OF SCANNED COPIES OF THIS PLAN SHEET.

STATIONARY MOUNTED CONSTRUCTION AREA SIGNS

SIGN (X)	SIGN CODE FEDERAL	SIGN CODE CALIFORNIA	QUANTITY	PANEL SIZE	No. OF POST AND SIZE	SIGN MESSAGE
(A)	W20-1		138	48" x 48"	1 - 6" x 6"	ROAD WORK AHEAD
(B)	G20-2		144	36" x 18"	1 - 4" x 4"	END ROAD WORK
(C)		C40(CA)	2	108" x 42"	2 - 4" x 6"	TRAFFIC FINES DOUBLED IN CONSTRUCTION ZONES
(D)		CPFIS	4	132" x 84"	2 - 6" x 6"	CONSTRUCTION PROJECT FUNDING IDENTIFICATION SIGNS

NOTE:

LOCATION OF CONSTRUCTION AREA SIGNS ARE APPROXIMATE. EXACT LOCATIONS WILL BE DETERMINED BY THE ENGINEER.

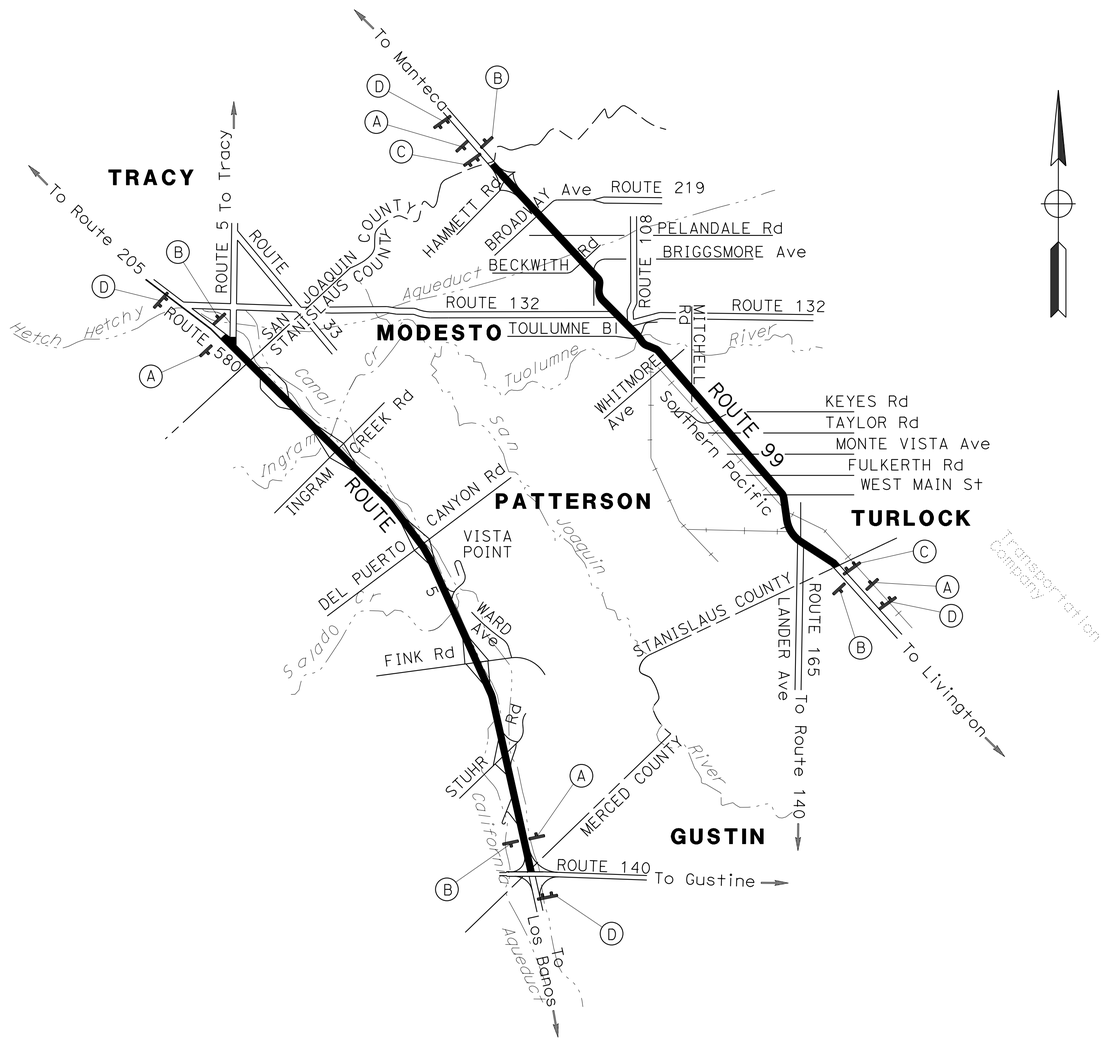

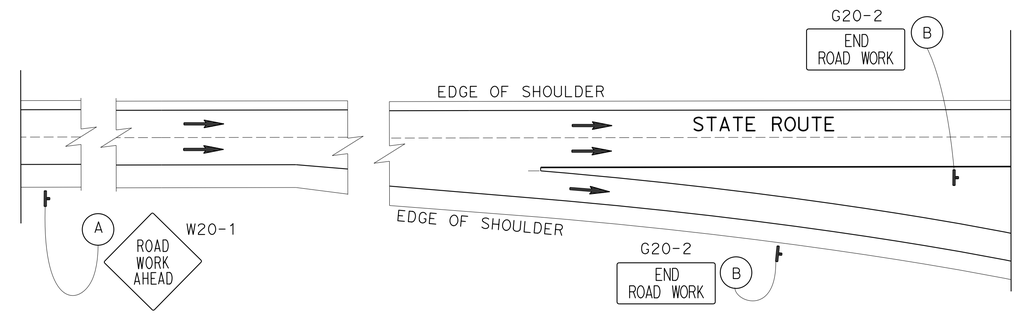

TYPICAL PLACEMENT OF CONSTRUCTION AREA SIGNS AT OFF RAMP/CONNECTOR

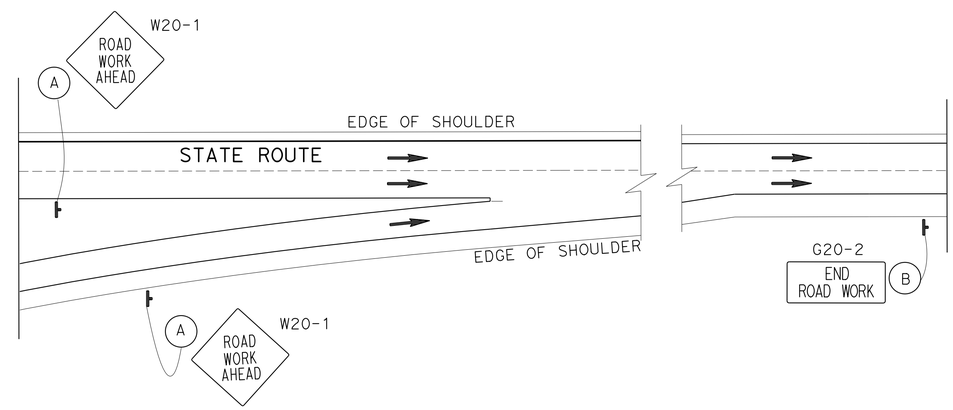

TYPICAL PLACEMENT OF CONSTRUCTION AREA SIGNS AT ON RAMP/CONNECTOR

APPROVED FOR CONSTRUCTION AREA SIGN WORK ONLY

CONSTRUCTION AREA SIGNS

NO SCALE

CS-1

STATE OF CALIFORNIA - DEPARTMENT OF TRANSPORTATION	Caltrans	TRAFFIC DESIGN	
FUNCTIONAL SUPERVISOR	MOHAMMED QATAMI		
CALCULATED-DESIGNED BY	FERNANDO LOPEZ	CHECKED BY	HUE NGUYEN
REVISED BY	RT	DATE REVISED	05-11-15

LAST REVISION 05-26-15 | DATE PLOTTED => 28-MAY-2015 | TIME PLOTTED => 11:18

BORDER LAST REVISED 7/2/2010 | USERNAME => s113541 | DGN FILE => 1014000166.dgn | RELATIVE BORDER SCALE IS IN INCHES 0 1 2 3 | UNIT 1512 | PROJECT NUMBER & PHASE 10140001661

Dist	COUNTY	ROUTE	POST MILES TOTAL PROJECT	SHEET No.	TOTAL SHEETS
10	Sta	5, 99	Var	8	83

REGISTERED CIVIL ENGINEER 5-22-15 DATE

5-26-15
PLANS APPROVAL DATE

REGISTERED PROFESSIONAL ENGINEER GURJOT GILL No. 71647 Exp. 12-31-15 CIVIL STATE OF CALIFORNIA

THE STATE OF CALIFORNIA OR ITS OFFICERS OR AGENTS SHALL NOT BE RESPONSIBLE FOR THE ACCURACY OR COMPLETENESS OF SCANNED COPIES OF THIS PLAN SHEET.

Temp DRAINAGE INLET PROTECTION

LOCATION NUMBER	PM	LOCATION DESCRIPTION	EA
NORTHBOUND Rte 99			
14	R5.67	ON-RAMP FROM MONTE VISTA Ave	1
22	R10.34	SR 99	1
25	R11.36	OFF-RAMP TO EL CAMINO Ave	1
28	R11.73	OFF-RAMP TO WHITMORE Ave	1
30	R11.78	SR 99	1
31	R13.15	SR 99	1
32	R13.30	OFF-RAMP TO JOYCE Ave	1
33	R13.40	ON-RAMP FROM BYSTRUM Rd/JOYCE Ave	1
36	R14.37	OFF-RAMP TO CROWS LANDING Rd	1
46	R16.07	ON-RAMP FROM 6th & I St	1
48	R16.23	ON-RAMP FROM 6th St & L St	1
49	R16.66	OFF-RAMP TO KANSAS Ave	1
SOUTHBOUND Rte 99			
103	R5.77	SR 99	1
100	R5.86	SR 99	1
34	R13.49	OFF-RAMP TO 9th St	1
82	R14.37	ON-RAMP FROM CROWS LANDING Rd	1
78	R15.03	ON-RAMP FROM TUOLUMNE BLVD	1
74	R15.70	ON-RAMP FROM 5th & H St	1
69	R16.23	OFF-RAMP TO MAZE St	1
68	R16.77	SR 99	1
		TOTAL	20

METAL BEAM AND ROADWAY QUANTITIES

Loc No.	SHEET	LOCATION DESCRIPTION	MIDWEST GUARDRAIL SYSTEM (STEEL POST)	REMOVE GUARDRAIL	ALTERNATIVE IN-LINE TERMINAL SYSTEM	ALTERNATIVE FLARED TERMINAL SYSTEM	END ANCHOR ASSEMBLY (TYPE SFT)	LAYOUT TYPE (N)	REMOVE AC DIKE	PLACE HMA DIKE (TYPE F)	PLACE HMA DIKE (TYPE C)	MINOR HMA	TREATED WOOD WASTE
			LF	LF	EA	EA	EA		LF	LF	LF	TON	LB
24	L-1	EAST SERVICE ROAD, NORTHBOUND Rte 99	40	30		1	1	16B	105.0	40.0	65.0	1.5	2200
35	L-2	SOUTH 9th STREET, NORTHBOUND Rte 99	60	50	1		1	16A				1.5	1440
TOTAL			100	80	1	1	2		105.0	40.0	65.0	3	3640

(N) NOT A SEPARATE PAY ITEM, FOR INFORMATION ONLY.

SUMMARY OF QUANTITIES
Q-1

RAYMOND PRADO — REVISED BY
GURJOT GILL — DATE REVISED
CALCULATED-DESIGNED BY
CHECKED BY
FUNCTIONAL SUPERVISOR
ABDUL BAKER

STATE OF CALIFORNIA - DEPARTMENT OF TRANSPORTATION
Caltrans
06-DESIGN

LAST REVISION 05-21-15 | DATE PLOTTED => 28-MAY-2015 TIME PLOTTED => 11:19

Dist	COUNTY	ROUTE	POST MILES TOTAL PROJECT	SHEET No.	TOTAL SHEETS
10	Sta	5,99	Var	9	83

REGISTERED ELECTRICAL ENGINEER 5/12/15 DATE

5-26-15
PLANS APPROVAL DATE

REGISTERED PROFESSIONAL ENGINEER ALVARO ARAICA No. E15558 Exp. 12/31/15 ELECTRICAL STATE OF CALIFORNIA

THE STATE OF CALIFORNIA OR ITS OFFICERS OR AGENTS SHALL NOT BE RESPONSIBLE FOR THE ACCURACY OR COMPLETENESS OF SCANNED COPIES OF THIS PLAN SHEET.

NOTES:

1. ALL PULL BOXES MUST BE No. 5(T) UNLESS NOTED OTHERWISE.
2. UTILITY COMPANY PULL BOX, CONDUCTORS AND RISER PER SERVING UTILITY REQUIREMENTS.
3. FOR ACCURATE RIGHT OF WAY DATA, CONTACT RIGHT OF WAY ENGINEERING AT THE DISTRICT OFFICE.
4. THE LOCATIONS OF WORK ARE FLEXIBLE AND MAYBE ADJUSTED TO MITIGATE ANY CONFLICTS WITH EXISTING UTILITY FACILITIES. EXISTING UTILITY FACILITIES ARE NOT INCLUDED ON THESE PLANS.

ABBREVIATIONS:

PG&E - PACIFIC GAS AND ELECTRIC COMPANY
SB ON L - SOUTHBOUND ON RAMP LEADING
SB ON T- SOUTHBOUND ON RAMP TRAILING
NB ON L - NORTHBOUND ON RAMP LEADING
NB ON T - NORTHBOUND ON RAMP TRAILING
STC - SCREENED TRANSMISSION CABLE
CCU - CAMERA CONTROL UNIT
MID - MODESTO IRRIGATION DISTRICT
TID - TURLOCK IRRIGATION DISTRCT
FDU - FIBER DISTRIBUTION UNIT
RX - RECEIVE
TX - TRANSMIT
SV - SPLICE VAULT
VCS - VEHICLE CLASSIFICATION STATION

BL - BLU
OR - ORANGE
GR - GREEN
BR - BROWN
SL - SLATE
WT - WHITE
RD - RED
BK - BLACK
YL - YELLOW
VL - VIOLET
RS - ROSE
AQ - AQUA

ABBREVIATIONS:

PROPOSED	Exist	
RWIS	RWIS	ROADSIDE WEATHER INFORMATION STATION
SV		SPLICE VAULT

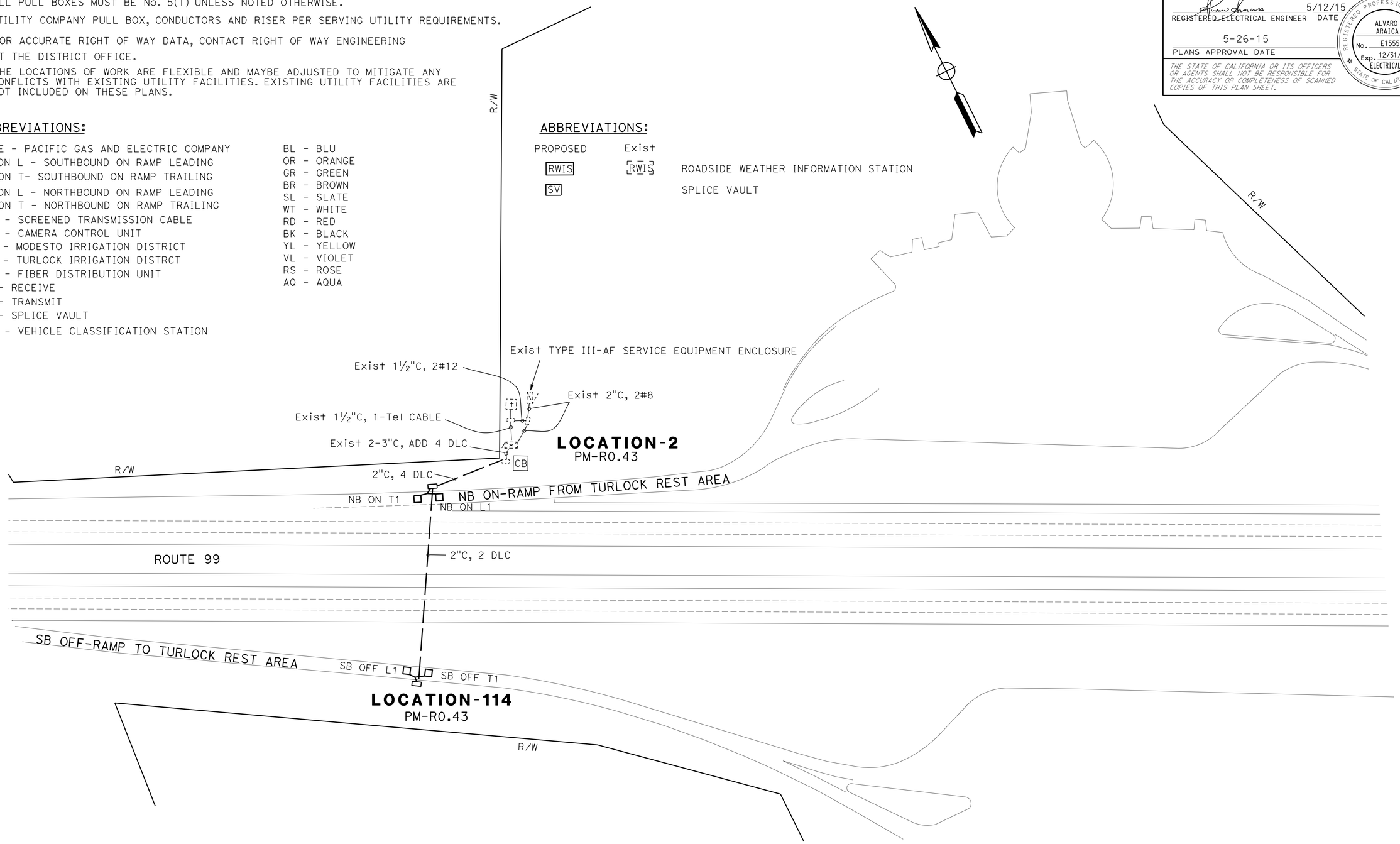

TRAFFIC MONITORING STATION

SCALE: 1"=50'

E-1

APPROVED FOR ELECTRICAL WORK ONLY

STATE OF CALIFORNIA - DEPARTMENT OF TRANSPORTATION
Caltrans ELECTRICAL DESIGN

FUNCTIONAL SUPERVISOR: ALI BAKHDOUD
CALCULATED-DESIGNED BY: ALVARO ARAICA
CHECKED BY: FRED IYASERE
REVISED BY: FI
DATE REVISED: 4-22-15

LAST REVISION 05-26-15
DATE PLOTTED => 28-MAY-2015
TIME PLOTTED => 08:59

Dist	COUNTY	ROUTE	POST MILES TOTAL PROJECT	SHEET No.	TOTAL SHEETS
10	Sta	5,99	Var	10	83

REGISTERED ELECTRICAL ENGINEER 5/12/15 DATE

5-26-15
PLANS APPROVAL DATE

REGISTERED PROFESSIONAL ENGINEER ALVARO ARAICA No. E15558 Exp. 12/31/15 ELECTRICAL STATE OF CALIFORNIA

THE STATE OF CALIFORNIA OR ITS OFFICERS OR AGENTS SHALL NOT BE RESPONSIBLE FOR THE ACCURACY OR COMPLETENESS OF SCANNED COPIES OF THIS PLAN SHEET.

LEGEND:

1. MODEL 334L CABINET FOR TMS. INSTALL WIRELESS MODEM AND DEPARTMENT-FURNISHED MODEL 2070E CONTROLLER UNIT.
2. Exist SIGNAL AND LIGHTING DETAILS NOT SHOWN.
3. COIL 10' SLACK OF DLC IN PB FOR FUTURE USE.

NOTES:

1. ALL PULL BOXES MUST BE No. 5(T) UNLESS NOTED OTHERWISE.
2. UTILITY COMPANY PULL BOX, CONDUCTORS AND RISER PER SERVING UTILITY REQUIREMENTS.
3. FOR ACCURATE RIGHT OF WAY DATA, CONTACT RIGHT OF WAY ENGINEERING AT THE DISTRICT OFFICE.
4. THE LOCATIONS OF WORK ARE FLEXIBLE AND MAYBE ADJUSTED TO MITIGATE ANY CONFLICTS WITH EXISTING UTILITY FACILITIES. EXISTING UTILITY FACILITIES ARE NOT INCLUDED ON THESE PLANS.

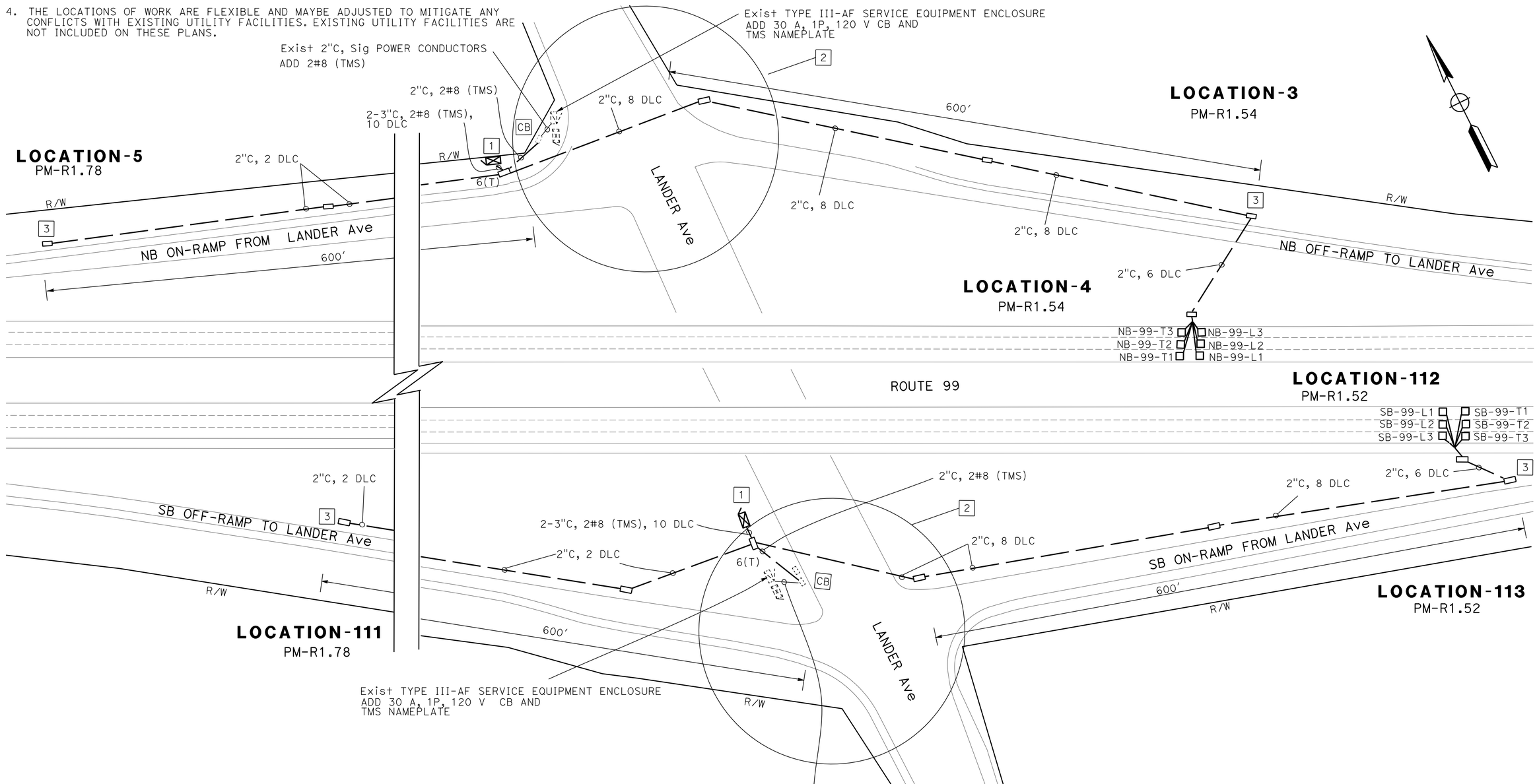

APPROVED FOR ELECTRICAL WORK ONLY

TRAFFIC MONITORING STATION

SCALE: 1"=50'

E-2

REVISED BY	DATE REVISED
FI	4-22-15

ALVARO ARAICA — CALCULATED-DESIGNED BY
FRED IYASERE — CHECKED BY
FUNCTIONAL SUPERVISOR: ALI BAKHDOUD

STATE OF CALIFORNIA - DEPARTMENT OF TRANSPORTATION
Caltrans® ELECTRICAL DESIGN

LAST REVISION 05-26-15 | DATE PLOTTED => 28-MAY-2015 | TIME PLOTTED => 08:59

Dist	COUNTY	ROUTE	POST MILES TOTAL PROJECT	SHEET No.	TOTAL SHEETS
10	Sta	5,99	Var	11	83

REGISTERED ELECTRICAL ENGINEER — DATE 5/12/15

PLANS APPROVAL DATE 5-26-15

REGISTERED PROFESSIONAL ENGINEER — ALVARO ARAICA — No. E15558 — Exp. 12/31/15 — ELECTRICAL — STATE OF CALIFORNIA

THE STATE OF CALIFORNIA OR ITS OFFICERS OR AGENTS SHALL NOT BE RESPONSIBLE FOR THE ACCURACY OR COMPLETENESS OF SCANNED COPIES OF THIS PLAN SHEET.

LEGEND:

1. MODEL 334L CABINET FOR TMS. INSTALL WIRELESS MODEM AND DEPARTMENT-FURNISHED MODEL 2070E CONTROLLER UNIT.
2. Exist SIGNAL AND LIGHTING DETAILS NOT SHOWN.
3. COIL 10′ SLACK OF DLC IN PB FOR FUTURE USE.

NOTES:

1. ALL PULL BOXES MUST BE No. 5(T) UNLESS NOTED OTHERWISE.
2. UTILITY COMPANY PULL BOX, CONDUCTORS AND RISER PER SERVING UTILITY REQUIREMENTS.
3. FOR ACCURATE RIGHT OF WAY DATA, CONTACT RIGHT OF WAY ENGINEERING AT THE DISTRICT OFFICE.
4. THE LOCATIONS OF WORK ARE FLEXIBLE AND MAYBE ADJUSTED TO MITIGATE ANY CONFLICTS WITH EXISTING UTILITY FACILITIES. EXISTING UTILITY FACILITIES ARE NOT INCLUDED ON THESE PLANS.

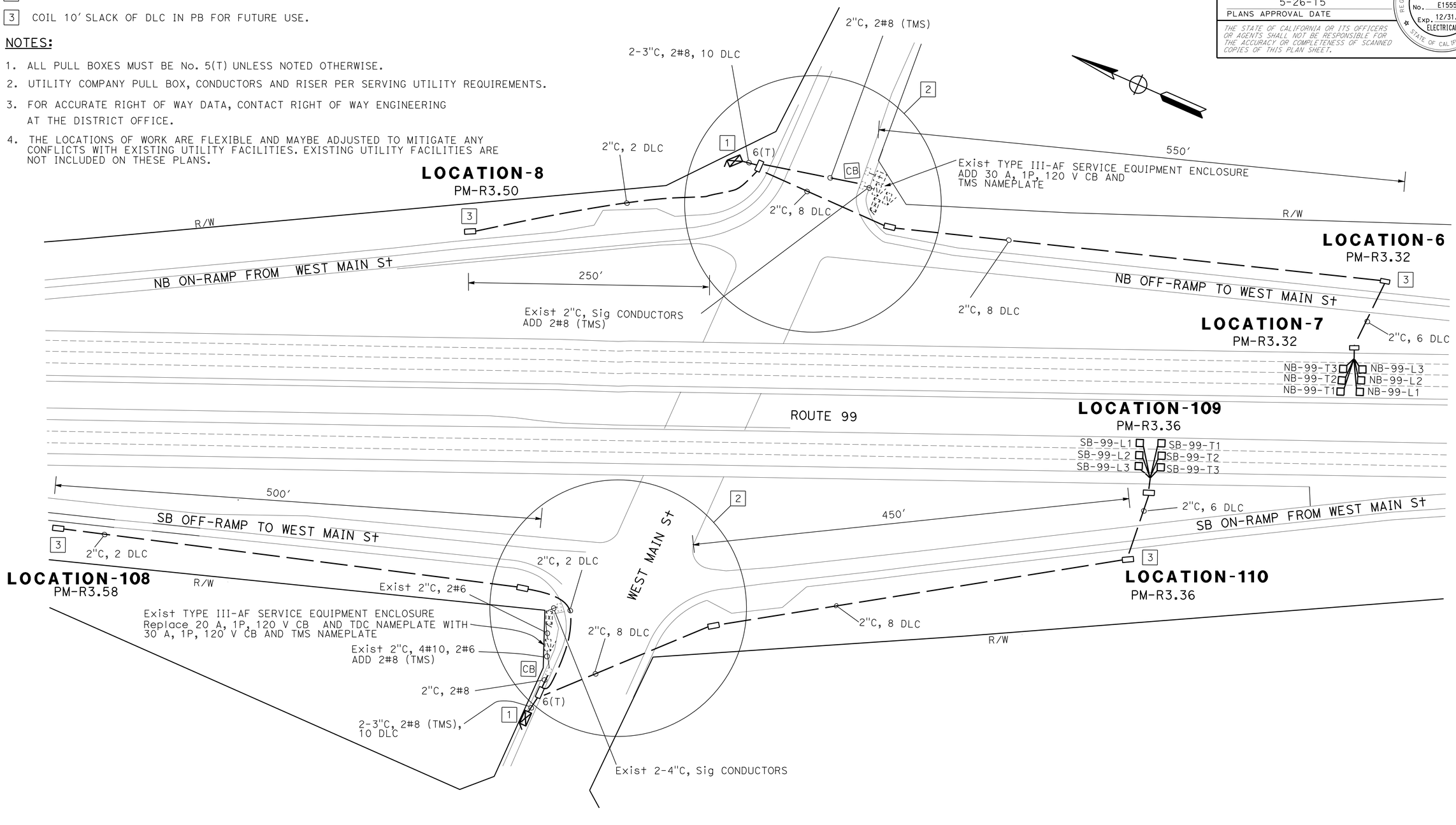

TRAFFIC MONITORING STATION

E-3

SCALE: 1"=50′

APPROVED FOR ELECTRICAL WORK ONLY

STATE OF CALIFORNIA - DEPARTMENT OF TRANSPORTATION

Caltrans® ELECTRICAL DESIGN

FUNCTIONAL SUPERVISOR: ALI BAKHDOUD

CALCULATED-DESIGNED BY: ALVARO ARAICA — CHECKED BY: FRED IYASERE

REVISED BY: FI — DATE REVISED: 4-22-15

LAST REVISION 05-26-15 — DATE PLOTTED => 28-MAY-2015 — TIME PLOTTED => 08:59

Dist	COUNTY	ROUTE	POST MILES TOTAL PROJECT	SHEET No.	TOTAL SHEETS
10	Sta	5,99	Var	12	83

REGISTERED ELECTRICAL ENGINEER 5/12/15 DATE

5-26-15
PLANS APPROVAL DATE

REGISTERED PROFESSIONAL ENGINEER ALVARO ARAICA No. E15558 Exp. 12/31/15 ELECTRICAL STATE OF CALIFORNIA

THE STATE OF CALIFORNIA OR ITS OFFICERS OR AGENTS SHALL NOT BE RESPONSIBLE FOR THE ACCURACY OR COMPLETENESS OF SCANNED COPIES OF THIS PLAN SHEET.

LEGEND:

1. MODEL 334L CABINET FOR TMS AND CCTV. INSTALL WIRELESS MODEM, VIDEO ENCODER UNIT, CCU AND DEPARTMENT-FURNISHED MODEL 2070E CONTROLLER UNIT.
2. Exist SIGNAL AND LIGHTING DETAILS NOT SHOWN.
3. PLACE CONDUIT 5 FEET AWAY FROM EXISTING ROUTE 99 TOE OF SLOPE.
4. COIL 100 FEET OF 2#8 INSIDE PULL BOX FOR FUTURE SERVICE CONNECTION.
5. COIL 100 FEET OF DLC INSIDE PULL BOX FOR FUTURE USE.

NOTES:

1. ALL PULL BOXES MUST BE No. 5(T) UNLESS NOTED OTHERWISE.
2. FOR ACCURATE RIGHT OF WAY DATA, CONTACT RIGHT OF WAY ENGINEERING AT THE DISTRICT OFFICE.
3. THE LOCATIONS OF WORK ARE FLEXIBLE AND MAYBE ADJUSTED TO MITIGATE ANY CONFLICTS WITH EXISTING UTILITY FACILITIES. EXISTING UTILITY FACILITIES ARE NOT INCLUDED ON THESE PLANS.

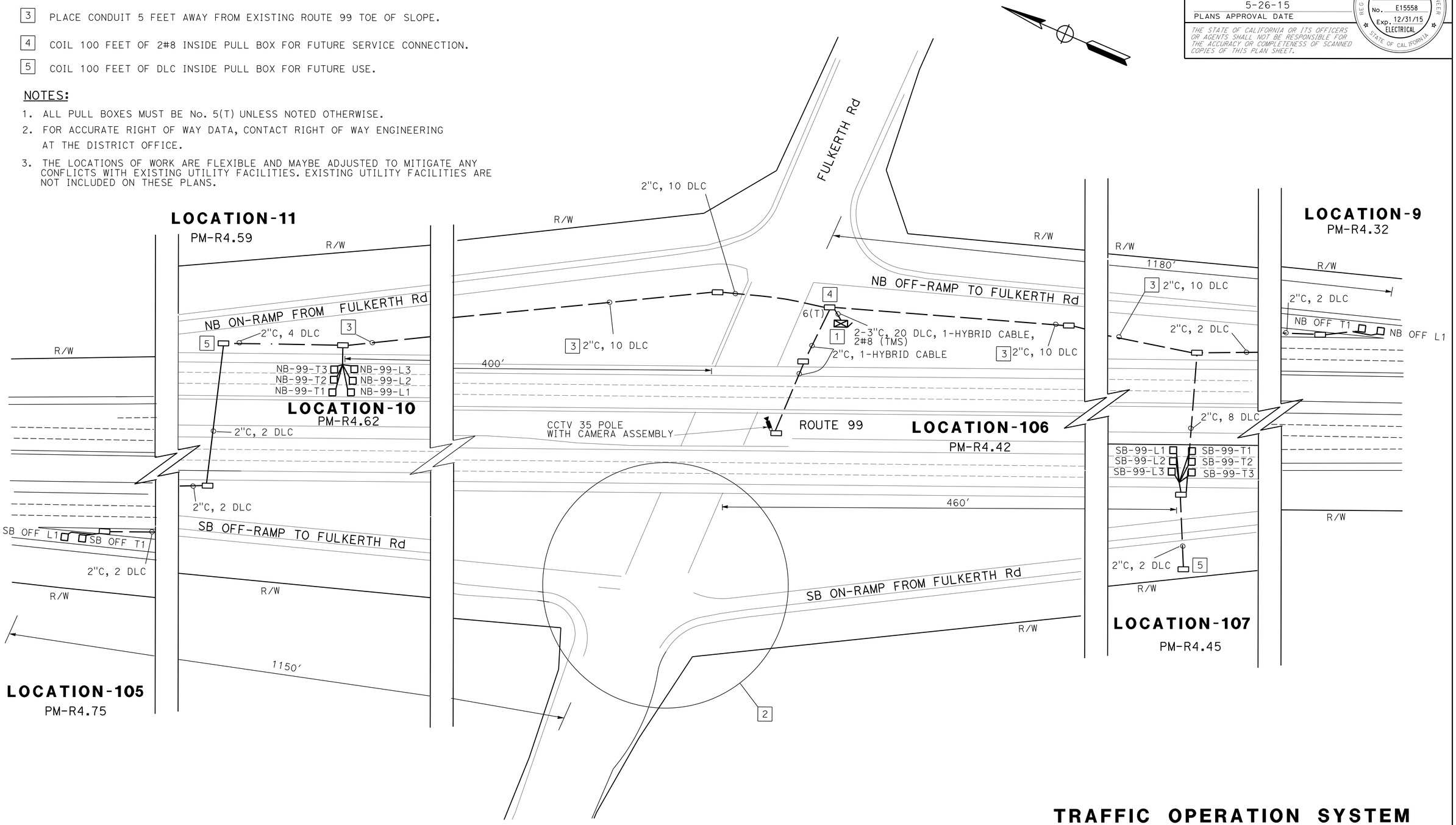

TRAFFIC OPERATION SYSTEM
E-4

SCALE: 1"=50'

APPROVED FOR ELECTRICAL WORK ONLY

STATE OF CALIFORNIA - DEPARTMENT OF TRANSPORTATION
Caltrans® ELECTRICAL DESIGN

FUNCTIONAL SUPERVISOR: ALI BAKHDOUD
CALCULATED-DESIGNED BY: ALVARO ARAICA
CHECKED BY: FRED IYASERE
REVISED BY: FI
DATE REVISED: 4-22-15

LAST REVISION: DATE PLOTTED => 28-MAY-2015 TIME PLOTTED => 08:59
05-26-15

Dist	COUNTY	ROUTE	POST MILES TOTAL PROJECT	SHEET No.	TOTAL SHEETS
10	Sta	5,99	Var	13	83

REGISTERED ELECTRICAL ENGINEER — DATE 5/12/15

PLANS APPROVAL DATE 5-26-15

REGISTERED PROFESSIONAL ENGINEER — ALVARO ARAICA — No. E15558 — Exp. 12/31/15 — ELECTRICAL — STATE OF CALIFORNIA

THE STATE OF CALIFORNIA OR ITS OFFICERS OR AGENTS SHALL NOT BE RESPONSIBLE FOR THE ACCURACY OR COMPLETENESS OF SCANNED COPIES OF THIS PLAN SHEET.

LEGEND:

1. MODEL 334L CABINET FOR TMS AND CCTV. INSTALL WIRELESS MODEM, VIDEO ENCODER UNIT, CCU AND DEPARTMENT-FURNISHED MODEL 2070E CONTROLLER UNIT.
2. Exist SIGNAL AND LIGHTING DETAILS NOT SHOWN.
3. COIL 10′ SLACK OF DLC IN PB FOR FUTURE USE.
4. MODEL 334L CABINET FOR TMS. INSTALL WIRELESS MODEM AND DEPARTMENT-FURNISHED MODEL 2070E CONTROLLER UNIT.

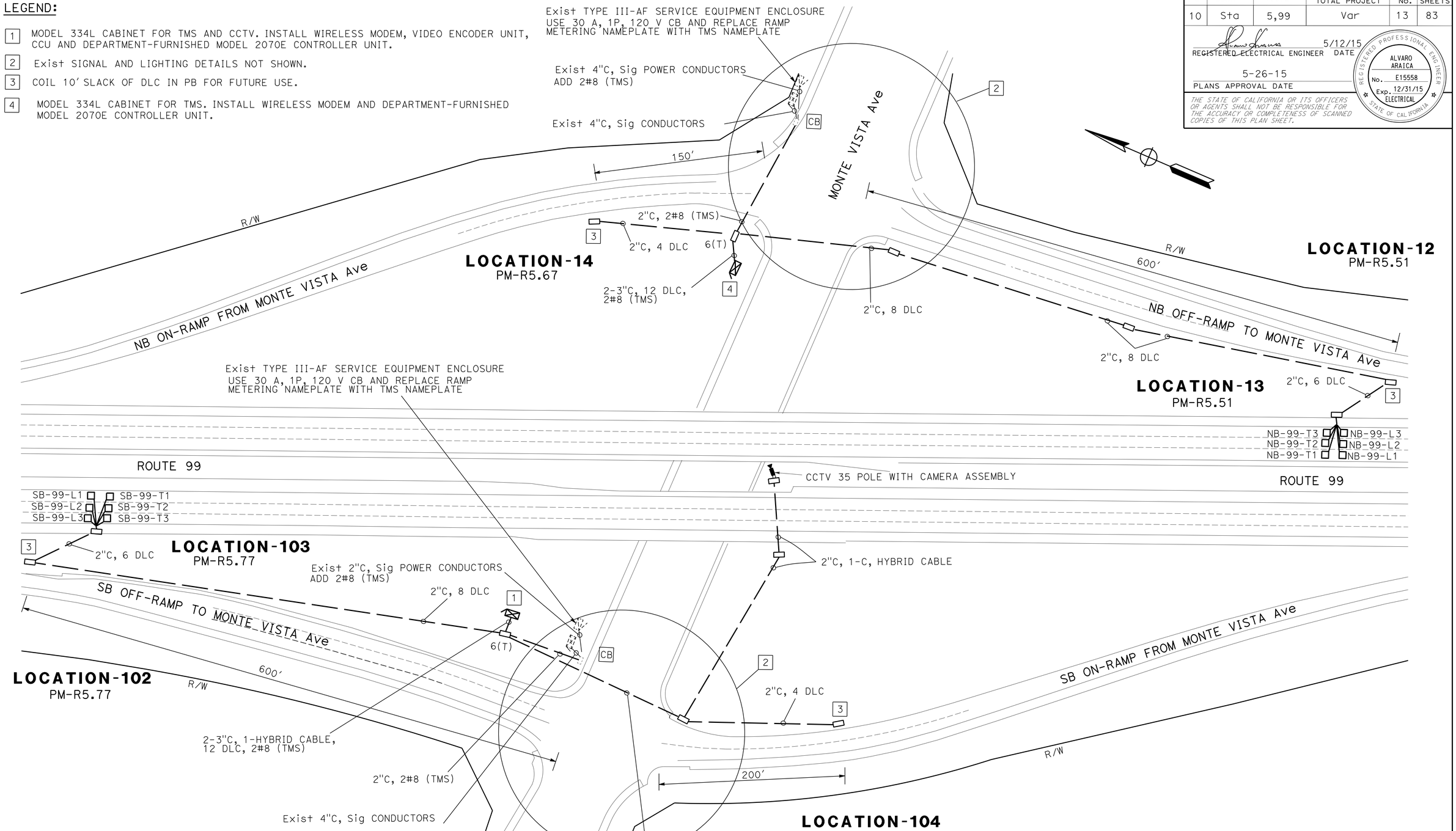

NOTES:

1. ALL PULL BOXES MUST BE No. 5(T) UNLESS NOTED OTHERWISE.
2. UTILITY COMPANY PULL BOX, CONDUCTORS AND RISER PER SERVING UTILITY REQUIREMENTS.
3. FOR ACCURATE RIGHT OF WAY DATA, CONTACT RIGHT OF WAY ENGINEERING AT THE DISTRICT OFFICE.
4. THE LOCATIONS OF WORK ARE FLEXIBLE AND MAYBE ADJUSTED TO MITIGATE ANY CONFLICTS WITH EXISTING UTILITY FACILITIES. EXISTING UTILITY FACILITIES ARE NOT INCLUDED ON THESE PLANS.

APPROVED FOR ELECTRICAL WORK ONLY

TRAFFIC OPERATION SYSTEM

SCALE: 1"=50′

E-5

REVISED BY	DATE REVISED
FI	4-22-15

CALCULATED-DESIGNED BY: ALVARO ARAICA
CHECKED BY: FRED IYASERE
FUNCTIONAL SUPERVISOR: ALI BAKHDOUD

STATE OF CALIFORNIA - DEPARTMENT OF TRANSPORTATION
Caltrans® ELECTRICAL DESIGN

LAST REVISION 05-26-15 | DATE PLOTTED => 28-MAY-2015 | TIME PLOTTED => 08:59

Dist	COUNTY	ROUTE	POST MILES TOTAL PROJECT	SHEET No.	TOTAL SHEETS
10	Sta	5,99	Var	14	83

REGISTERED ELECTRICAL ENGINEER 5/12/15 DATE

5-26-15
PLANS APPROVAL DATE

REGISTERED PROFESSIONAL ENGINEER ALVARO ARAICA No. E15558 Exp. 12/31/15 ELECTRICAL STATE OF CALIFORNIA

THE STATE OF CALIFORNIA OR ITS OFFICERS OR AGENTS SHALL NOT BE RESPONSIBLE FOR THE ACCURACY OR COMPLETENESS OF SCANNED COPIES OF THIS PLAN SHEET.

LEGEND:

1. 120/240 V, 1Ø, 3-WIRE TYPE III-AF SERVICE EQUIPMENT ENCLOSURE WITH THE FOLLOWING CIRCUIT BREAKERS.
   Ctid No. 1038099X006995L

AMPERES	VOLTS	POLES	NAMEPLATE	METER	PEC TYPE
100	240	2	MAIN	YES	-
30	120	1	TMS-NB	YES	-
30	120	1	TMS-SB	YES	-
30	240	2	LIGHTING	YES	-
15	120	1	Ltg CONTROL	YES	V
20	-	1	SPARE	YES	-
30	-	1	SPARE	YES	-

2. COIL 40 FEET OF 3#1/0 INSIDE PULL BOX.
3. MODEL 334L CABINET FOR TMS AND CCTV. INSTALL WIRELESS MODEM, VIDEO ENCODER UNIT, CCU AND DEPARTMENT-FURNISHED MODEL 2070E CONTROLLER UNIT.
4. COIL 10′ SLACK OF DLC IN PB FOR FUTURE USE.
5. MODEL 334L CABINET FOR TMS. INSTALL CONTRACTOR FURNISHED WIRELESS MODEM AND DEPARTMENT-FURNISHED MODEL 2070E CONTROLLER UNIT.
6. SP TID, 120/240 V, TYPE H SERVICE.

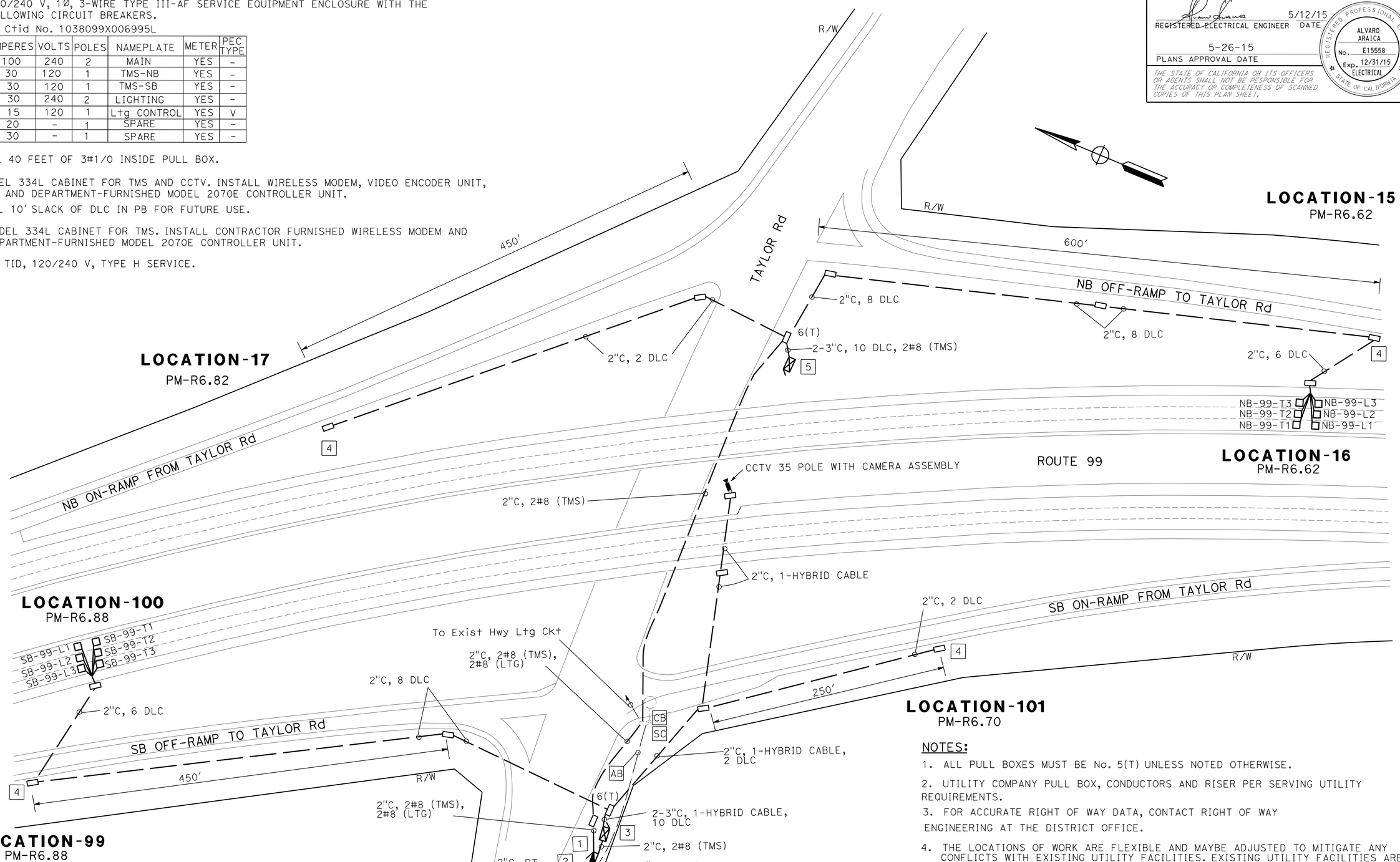

APPROVED FOR ELECTRICAL WORK ONLY

NOTES:

1. ALL PULL BOXES MUST BE No. 5(T) UNLESS NOTED OTHERWISE.
2. UTILITY COMPANY PULL BOX, CONDUCTORS AND RISER PER SERVING UTILITY REQUIREMENTS.
3. FOR ACCURATE RIGHT OF WAY DATA, CONTACT RIGHT OF WAY ENGINEERING AT THE DISTRICT OFFICE.
4. THE LOCATIONS OF WORK ARE FLEXIBLE AND MAYBE ADJUSTED TO MITIGATE ANY CONFLICTS WITH EXISTING UTILITY FACILITIES. EXISTING UTILITY FACILITIES ARE NOT INCLUDED ON THESE PLANS.

TRAFFIC OPERATION SYSTEM

SCALE: 1"=50′

E-6

REVISED BY	DATE REVISED
FI	4-22-15

ALVARO ARAICA — FRED IYASERE — CALCULATED-DESIGNED BY — CHECKED BY

FUNCTIONAL SUPERVISOR: ALI BAKHDOUD

STATE OF CALIFORNIA - DEPARTMENT OF TRANSPORTATION
Caltrans® ELECTRICAL DESIGN

LAST REVISION 05-26-15 | DATE PLOTTED => 28-MAY-2015 | TIME PLOTTED => 08:59

Dist	COUNTY	ROUTE	POST MILES TOTAL PROJECT	SHEET No.	TOTAL SHEETS
10	Sta	5,99	Var	15	83

REGISTERED ELECTRICAL ENGINEER 5/12/15 DATE

5-26-15
PLANS APPROVAL DATE

REGISTERED PROFESSIONAL ENGINEER ALVARO ARAICA No. E15558 Exp. 12/31/15 ELECTRICAL STATE OF CALIFORNIA

THE STATE OF CALIFORNIA OR ITS OFFICERS OR AGENTS SHALL NOT BE RESPONSIBLE FOR THE ACCURACY OR COMPLETENESS OF SCANNED COPIES OF THIS PLAN SHEET.

LEGENDS:

1. INSTALL TAMPER RESISTANT PB COVER AND CONCRETE COLLAR AS SHOWN ON DETAIL D SHEET E-48.
2. MODEL 334L CABINET FOR TMS. INSTALL WIRELESS MODEM AND DEPARTMENT-FURNISHED MODEL 2070E CONTROLLER UNIT.
3. COIL 10′ SLACK OF DLC IN PB FOR FUTURE USE.

NOTES:

1. ALL PULL BOXES MUST BE No. 5(T) UNLESS NOTED OTHERWISE.
2. FOR ACCURATE RIGHT OF WAY DATA, CONTACT RIGHT OF WAY ENGINEERING AT THE DISTRICT OFFICE.
3. THE LOCATIONS OF WORK ARE FLEXIBLE AND MAYBE ADJUSTED TO MITIGATE ANY CONFLICTS WITH EXISTING UTILITY FACILITIES. EXISTING UTILITY FACILITIES ARE NOT INCLUDED ON THESE PLANS.

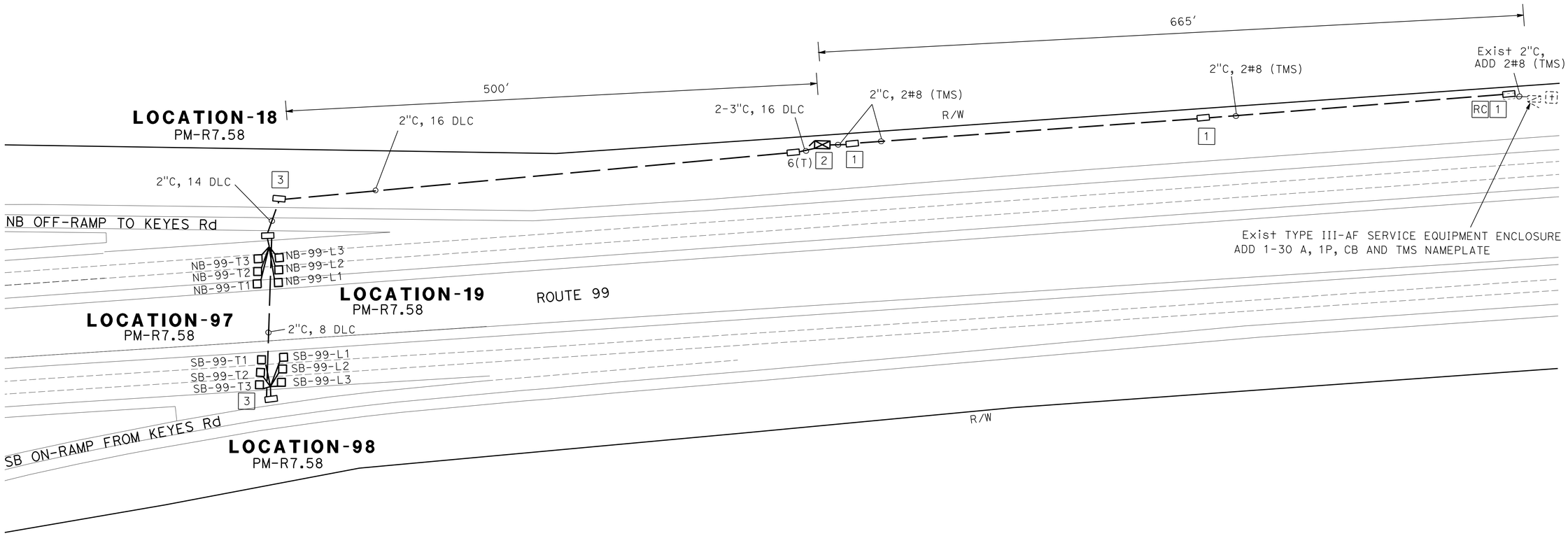

TRAFFIC MONITORING STATION

APPROVED FOR ELECTRICAL WORK ONLY

SCALE: 1"=50′

E-7

STATE OF CALIFORNIA - DEPARTMENT OF TRANSPORTATION
Caltrans® **ELECTRICAL DESIGN**

FUNCTIONAL SUPERVISOR: ALI BAKHDOUD

CALCULATED-DESIGNED BY: ALVARO ARAICA
CHECKED BY: FRED IYASERE

REVISED BY: FI
DATE REVISED: 4-22-15

LAST REVISION 05-26-15 | DATE PLOTTED => 28-MAY-2015 | TIME PLOTTED => 08:59

Dist	COUNTY	ROUTE	POST MILES TOTAL PROJECT	SHEET No.	TOTAL SHEETS
10	Sta	5,99	Var	16	83

REGISTERED ELECTRICAL ENGINEER 5/12/15 DATE

5-26-15
PLANS APPROVAL DATE

REGISTERED PROFESSIONAL ENGINEER ALVARO ARAICA No. E15558 Exp. 12/31/15 ELECTRICAL STATE OF CALIFORNIA

THE STATE OF CALIFORNIA OR ITS OFFICERS OR AGENTS SHALL NOT BE RESPONSIBLE FOR THE ACCURACY OR COMPLETENESS OF SCANNED COPIES OF THIS PLAN SHEET.

LEGEND:

1. INSTALL TAMPER RESISTANT PB COVER AND CONCRETE COLLAR AS SHOWN ON DETAIL D SHEET E-48.
2. MODEL 334L CABINET FOR TMS AND CCTV. INSTALL WIRELESS MODEM, VIDEO ENCODER UNIT, CCU AND DEPARTMENT-FURNISHED MODEL 2070E CONTROLLER UNIT.
3. COIL 10′ SLACK OF DLC IN PB FOR FUTURE USE.

NOTES:

1. ALL PULL BOXES MUST BE No. 5(T) UNLESS NOTED OTHERWISE.
2. FOR ACCURATE RIGHT OF WAY DATA, CONTACT RIGHT OF WAY ENGINEERING AT THE DISTRICT OFFICE.
3. THE LOCATIONS OF WORK ARE FLEXIBLE AND MAYBE ADJUSTED TO MITIGATE ANY CONFLICTS WITH EXISTING UTILITY FACILITIES. EXISTING UTILITY FACILITIES ARE NOT INCLUDED ON THESE PLANS.

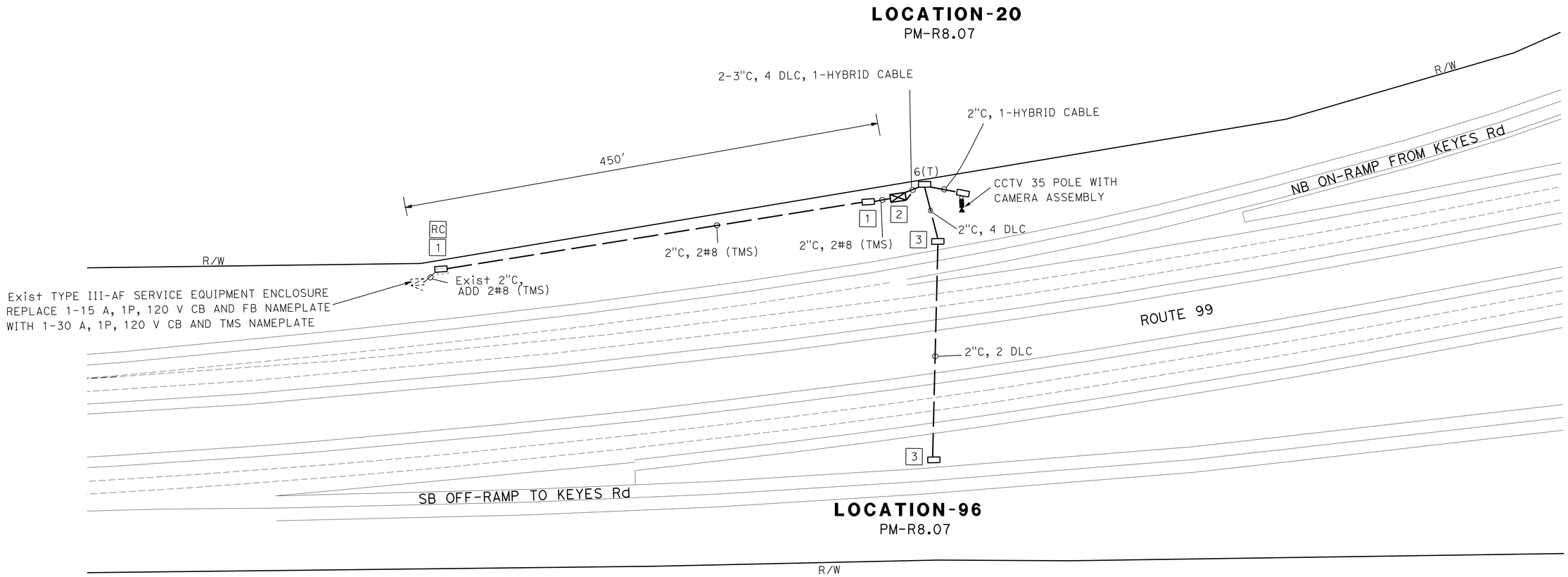

TRAFFIC OPERATION SYSTEM

E-8

SCALE: 1"=50′

APPROVED FOR ELECTRICAL WORK ONLY

STATE OF CALIFORNIA - DEPARTMENT OF TRANSPORTATION
Caltrans® ELECTRICAL DESIGN

FUNCTIONAL SUPERVISOR: ALI BAKHDOUD
CALCULATED-DESIGNED BY: ALVARO ARAICA
CHECKED BY: FRED IYASERE
REVISED BY: FI
DATE REVISED: 4-22-15

LAST REVISION 05-26-15 | DATE PLOTTED => 28-MAY-2015 | TIME PLOTTED => 08:59

Dist	COUNTY	ROUTE	POST MILES TOTAL PROJECT	SHEET No.	TOTAL SHEETS
10	Sta	5,99	Var	17	83

REGISTERED ELECTRICAL ENGINEER 5/12/15 DATE

5-26-15
PLANS APPROVAL DATE

REGISTERED PROFESSIONAL ENGINEER
ALVARO ARAICA
No. E15558
Exp. 12/31/15
ELECTRICAL
STATE OF CALIFORNIA

THE STATE OF CALIFORNIA OR ITS OFFICERS OR AGENTS SHALL NOT BE RESPONSIBLE FOR THE ACCURACY OR COMPLETENESS OF SCANNED COPIES OF THIS PLAN SHEET.

LEGEND:

1 120/240 V, 1Ø, 3-WIRE TYPE III-AR SERVICE EQUIPMENT ENCLOSURE WITH THE FOLLOWING CIRCUIT BREAKERS.

Ctid No. 1038099X009993L

AMPERES	VOLTS	POLES	NAMEPLATE	METER	PEC TYPE
100	240	2	MAIN	YES	-
30	120	1	TMS	YES	-
30	240	2	LIGHTING	YES	-
30	240	2	SIGN LIGHTING	YES	-
15	120	1	Ltg CONTROL	YES	V
15	120	1	SIGN CONTROL	YES	V
20	120	1	SPARE	YES	-
30	120	1	SPARE	YES	-

2 COIL 40 FEET OF 3#1/0 INSIDE PULL BOX.

3 MODEL 334L CABINET FOR TMS. INSTALL WIRELESS MODEM AND DEPARTMENT-FURNISHED MODEL 2070E CONTROLLER UNIT.

4 COIL 10' SLACK OF DLC IN PB FOR FUTURE USE.

5 SP TID, 120/240 V, TYPE H SERVICE.

NOTES:

1. ALL PULL BOXES MUST BE No. 5(T) UNLESS NOTED OTHERWISE.
2. UTILITY COMPANY PULL BOX, CONDUCTORS AND RISER PER SERVING UTILITY REQUIREMENTS.
3. FOR ACCURATE RIGHT OF WAY DATA, CONTACT RIGHT OF WAY ENGINEERING AT THE DISTRICT OFFICE.
4. THE LOCATIONS OF WORK ARE FLEXIBLE AND MAYBE ADJUSTED TO MITIGATE ANY CONFLICTS WITH EXISTING UTILITY FACILITIES. EXISTING UTILITY FACILITIES ARE NOT INCLUDED ON THESE PLANS.

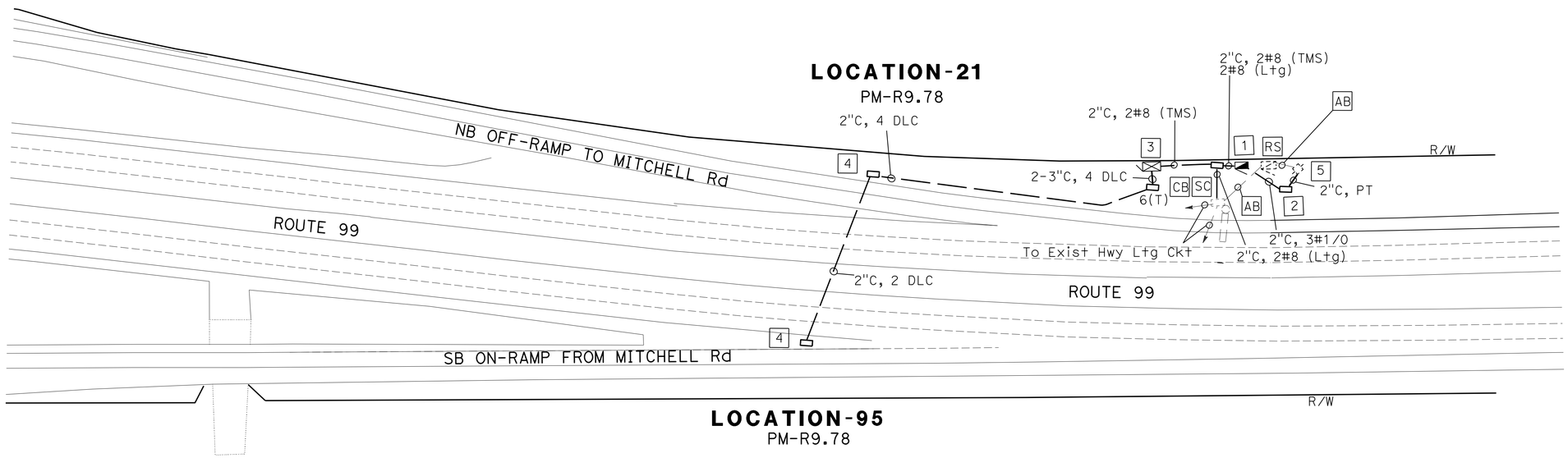

TRAFFIC MONITORING STATION
E-9

SCALE: 1"=50'

APPROVED FOR ELECTRICAL WORK ONLY

STATE OF CALIFORNIA - DEPARTMENT OF TRANSPORTATION
Caltrans® ELECTRICAL DESIGN

FUNCTIONAL SUPERVISOR: ALI BAKHDOUD
CALCULATED-DESIGNED BY: ALVARO ARAICA
CHECKED BY: FRED IYASERE
REVISED BY: FI
DATE REVISED: 4-22-15

LAST REVISION 05-26-15
DATE PLOTTED => 28-MAY-2015
TIME PLOTTED => 08:59

Dist	COUNTY	ROUTE	POST MILES TOTAL PROJECT	SHEET No.	TOTAL SHEETS
10	Sta	5,99	Var	18	83

REGISTERED ELECTRICAL ENGINEER 5/12/15 DATE

5-26-15
PLANS APPROVAL DATE

REGISTERED PROFESSIONAL ENGINEER ALVARO ARAICA No. E15558 Exp. 12/31/15 ELECTRICAL STATE OF CALIFORNIA

THE STATE OF CALIFORNIA OR ITS OFFICERS OR AGENTS SHALL NOT BE RESPONSIBLE FOR THE ACCURACY OR COMPLETENESS OF SCANNED COPIES OF THIS PLAN SHEET.

LEGEND:

1 120/240 V, 1Ø, 3-WIRE TYPE III-AF SERVICE EQUIPMENT ENCLOSURE WITH THE FOLLOWING CIRCUIT BREAKERS.

Ctid No. 1038099X010346L

AMPERES	VOLTS	POLES	NAMEPLATE	METER	PEC TYPE
100	240	2	MAIN	YES	-
30	120	1	TMS	YES	-
30	240	2	LIGHTING	YES	-
15	120	1	L+g CONTROL	YES	V
20	120	1	SPARE	YES	-
30	240	2	SPARE	YES	-
-	-	-	SPARE	YES	-

2 COIL 40 FEET OF 3#1/0 INSIDE PULL BOX.

3 MODEL 334L CABINET FOR TMS. INSTALL WIRELESS MODEM AND DEPARTMENT-FURNISHED MODEL 2070E CONTROLLER UNIT.

4 COIL 10′ SLACK OF DLC IN PB FOR FUTURE USE.

5 SP TID, 120/240 V, TYPE H SERVICE.

NOTES:

1. ALL PULL BOXES MUST BE No. 5(T) UNLESS NOTED OTHERWISE.
2. UTILITY COMPANY PULL BOX, CONDUCTORS AND RISER PER SERVING UTILITY REQUIREMENTS.
3. FOR ACCURATE RIGHT OF WAY DATA, CONTACT RIGHT OF WAY ENGINEERING AT THE DISTRICT OFFICE.
4. THE LOCATIONS OF WORK ARE FLEXIBLE AND MAYBE ADJUSTED TO MITIGATE ANY CONFLICTS WITH EXISTING UTILITY FACILITIES. EXISTING UTILITY FACILITIES ARE NOT INCLUDED ON THESE PLANS.

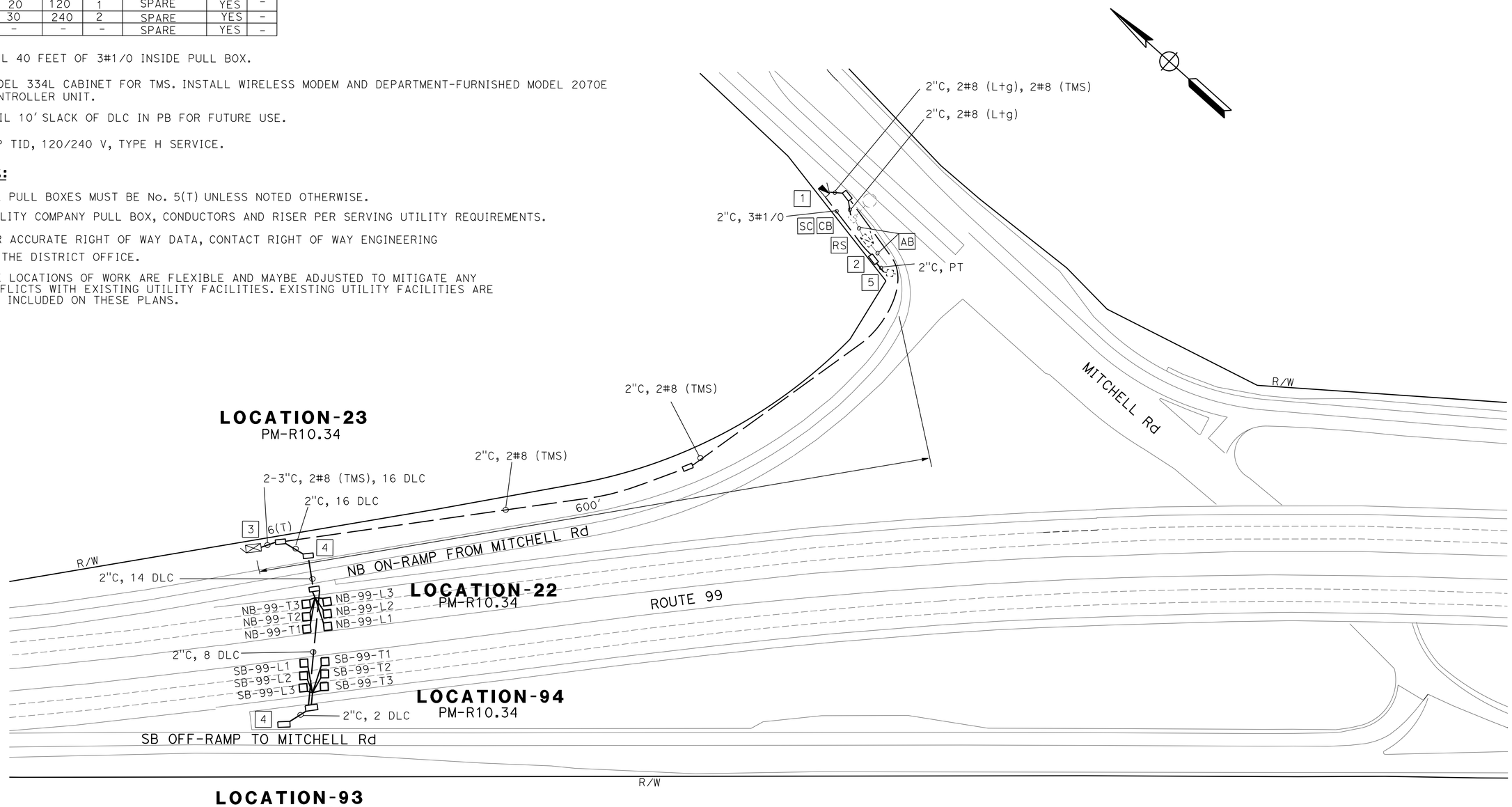

TRAFFIC MONITORING STATION

E-10

SCALE: 1"=50′

APPROVED FOR ELECTRICAL WORK ONLY

STATE OF CALIFORNIA - DEPARTMENT OF TRANSPORTATION
Caltrans® ELECTRICAL DESIGN

FUNCTIONAL SUPERVISOR: ALI BAKHDOUD
CALCULATED-DESIGNED BY: ALVARO ARAICA
CHECKED BY: FRED IYASERE
REVISED BY: FI
DATE REVISED: XX/XX/XX

LAST REVISION 05-26-15 DATE PLOTTED => 28-MAY-2015 TIME PLOTTED => 08:59

Dist	COUNTY	ROUTE	POST MILES TOTAL PROJECT	SHEET No.	TOTAL SHEETS
10	Sta	5,99	Var	19	83

REGISTERED ELECTRICAL ENGINEER 5/12/15 DATE

5-26-15
PLANS APPROVAL DATE

REGISTERED PROFESSIONAL ENGINEER ALVARO ARAICA No. E15558 Exp. 12/31/15 ELECTRICAL STATE OF CALIFORNIA

THE STATE OF CALIFORNIA OR ITS OFFICERS OR AGENTS SHALL NOT BE RESPONSIBLE FOR THE ACCURACY OR COMPLETENESS OF SCANNED COPIES OF THIS PLAN SHEET.

LEGEND:

1 120/240 V, 1Ø, 3-WIRE TYPE III-AR SERVICE EQUIPMENT ENCLOSURE WITH THE FOLLOWING CIRCUIT BREAKERS.

Ctid No. 1038099X010578T

AMPERES	VOLTS	POLES	NAMEPLATE	METER	PEC TYPE
100	240	2	MAIN	YES	-
30	120	1	TMS	YES	-
30	120	1	SPARE	YES	-
-	-	1	SPARE	YES	-
-	-	1	SPARE	YES	-

2 COIL 40 FEET OF 3#1/0 INSIDE PULL BOX.

3 MODEL 334L CABINET FOR TMS AND CCTV. INSTALL WIRELESS MODEM, VIDEO ENCODER UNIT, CCU AND DEPARTMENT-FURNISHED MODEL 2070E CONTROLLER UNIT.

4 SP TID, 120/240 V, TYPE H SERVICE.

NOTES:

1. ALL PULL BOXES MUST BE No. 5(T) UNLESS NOTED OTHERWISE.
2. UTILITY COMPANY PULL BOX, CONDUCTORS AND RISER PER SERVING UTILITY REQUIREMENTS.
3. FOR ACCURATE RIGHT OF WAY DATA, CONTACT RIGHT OF WAY ENGINEERING AT THE DISTRICT OFFICE.
4. THE LOCATIONS OF WORK ARE FLEXIBLE AND MAYBE ADJUSTED TO MITIGATE ANY CONFLICTS WITH EXISTING UTILITY FACILITIES. EXISTING UTILITY FACILITIES ARE NOT INCLUDED ON THESE PLANS.

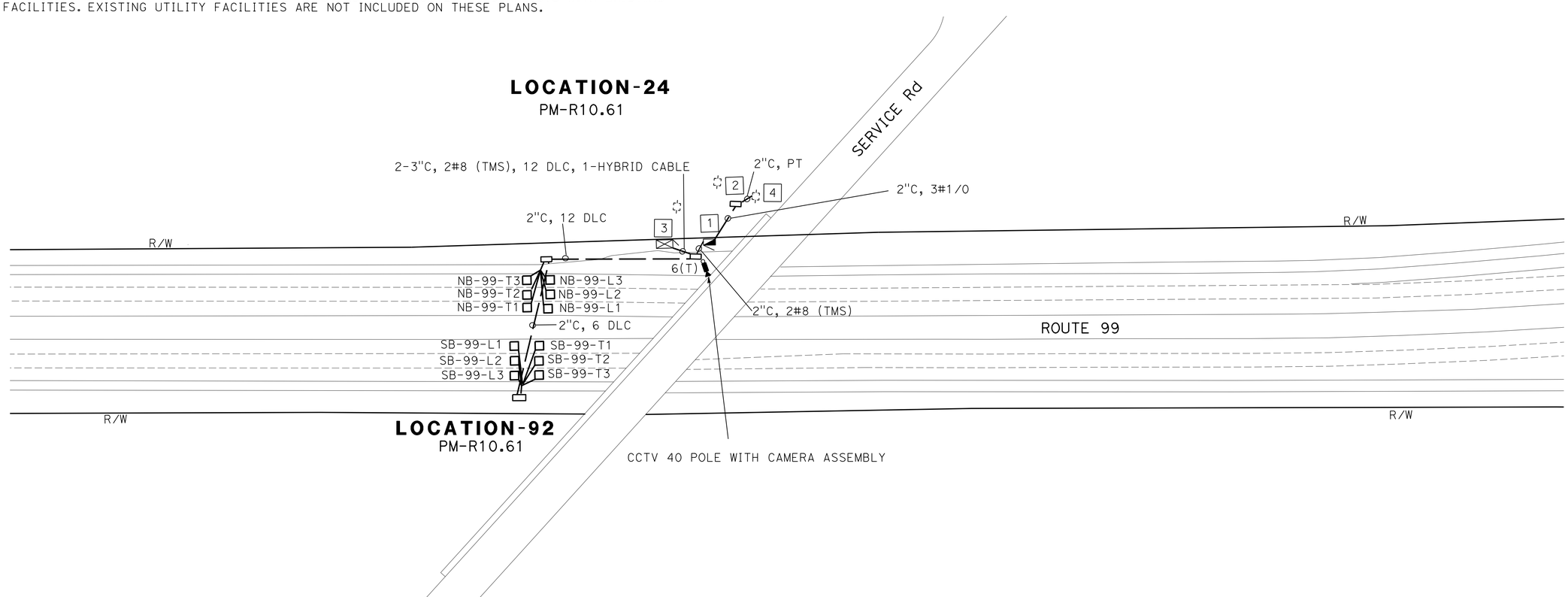

TRAFFIC OPERATION SYSTEM

E-11

SCALE: 1"=50'

APPROVED FOR ELECTRICAL WORK ONLY

STATE OF CALIFORNIA - DEPARTMENT OF TRANSPORTATION
Caltrans® ELECTRICAL DESIGN

FUNCTIONAL SUPERVISOR: ALI BAKHDOUD
CALCULATED-DESIGNED BY: ALVARO ARAICA
CHECKED BY: FRED IYASERE
REVISED BY: FI
DATE REVISED: 4-22-15

LAST REVISION 05-26-15
DATE PLOTTED => 28-MAY-2015
TIME PLOTTED => 09:00

Dist	COUNTY	ROUTE	POST MILES TOTAL PROJECT	SHEET No.	TOTAL SHEETS
10	Sta	5,99	Var	20	83

REGISTERED ELECTRICAL ENGINEER 5/12/15 DATE

5-26-15
PLANS APPROVAL DATE

REGISTERED PROFESSIONAL ENGINEER ALVARO ARAICA No. E15558 Exp. 12/31/15 ELECTRICAL STATE OF CALIFORNIA

THE STATE OF CALIFORNIA OR ITS OFFICERS OR AGENTS SHALL NOT BE RESPONSIBLE FOR THE ACCURACY OR COMPLETENESS OF SCANNED COPIES OF THIS PLAN SHEET.

LEGEND:

1 120/240 V, 1Ø, 3-WIRE TYPE III-AR SERVICE EQUIPMENT ENCLOSURE WITH THE FOLLOWING CIRCUIT BREAKERS.

Ctid No. 1038099X011338L

AMPERES	VOLTS	POLES	NAMEPLATE	METER	PEC TYPE
100	240	2	MAIN	YES	-
30	120	1	TMS	YES	-
30	240	2	LIGHTING	YES	-
15	120	1	Ltg CONTROL	YES	V
20	120	1	SPARE	YES	-
30	120	1	SPARE	YES	-
-	-	-	SPARE	YES	-

2 COIL 40 FEET OF 3#1/0 INSIDE PULL BOX.

3 CITY OF CERES IRRIGATION CONTROLLER MOUNTED ON WOOD POLE TO REMAIN IN PLACE.

4 MODEL 334L CABINET FOR TMS. INSTALL WIRELESS MODEM AND DEPARTMENT-FURNISHED MODEL 2070E CONTROLLER UNIT.

5 COIL 10' SLACK OF DLC IN PB FOR FUTURE USE.

NOTES:

1. ALL PULL BOXES MUST BE No. 5(T) UNLESS NOTED OTHERWISE.
2. UTILITY COMPANY PULL BOX, CONDUCTORS AND RISER PER SERVING UTILITY REQUIREMENTS.
3. FOR ACCURATE RIGHT OF WAY DATA, CONTACT RIGHT OF WAY ENGINEERING AT THE DISTRICT OFFICE.
4. THE LOCATIONS OF WORK ARE FLEXIBLE AND MAYBE ADJUSTED TO MITIGATE ANY CONFLICTS WITH EXISTING UTILITY FACILITIES. EXISTING UTILITY FACILITIES ARE NOT INCLUDED ON THESE PLANS.

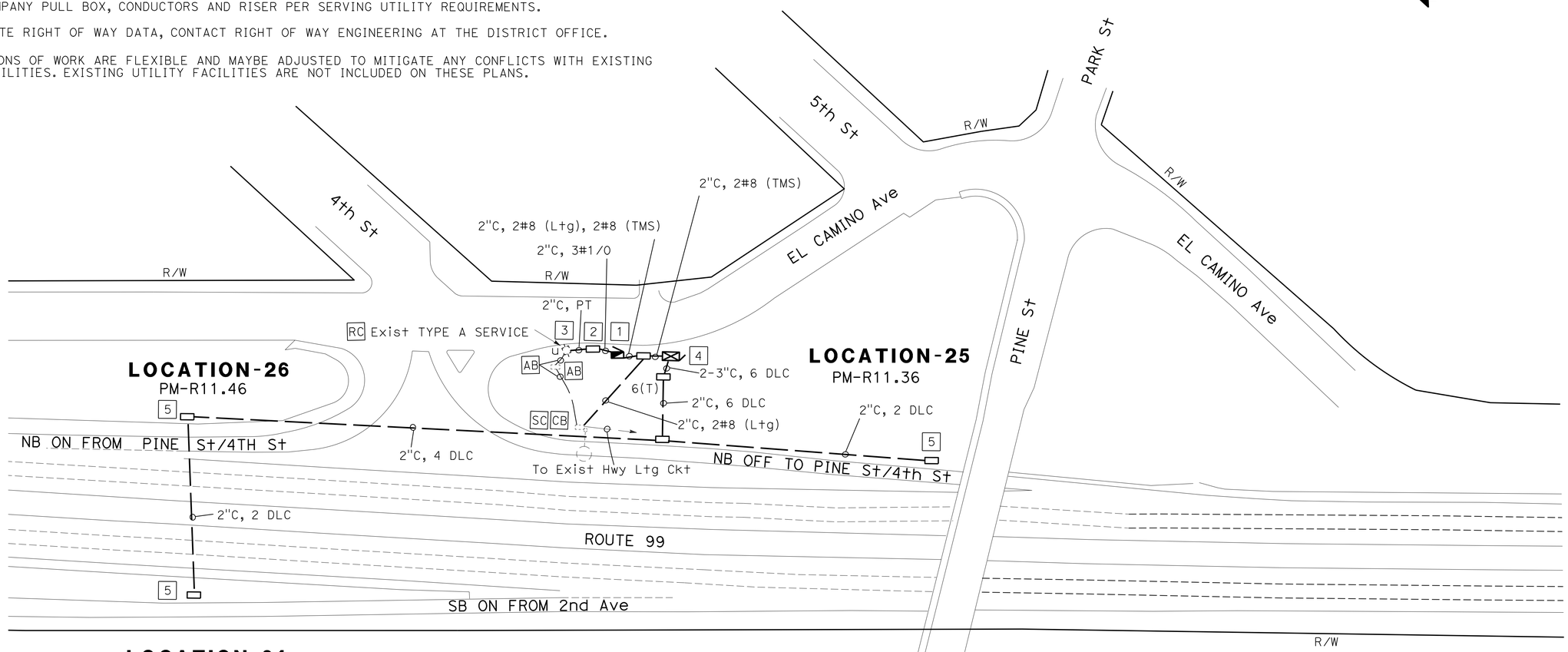

TRAFFIC MONITORING STATION

APPROVED FOR ELECTRICAL WORK ONLY

SCALE: 1"=50'

E-12

STATE OF CALIFORNIA - DEPARTMENT OF TRANSPORTATION
Caltrans® ELECTRICAL DESIGN

FUNCTIONAL SUPERVISOR: ALI BAKHDOUD
CALCULATED-DESIGNED BY: ALVARO ARAICA
CHECKED BY: FRED IYASERE
REVISED BY: FI
DATE REVISED: 4-22-15

LAST REVISION 05-26-15 | DATE PLOTTED => 28-MAY-2015 | TIME PLOTTED => 09:00

Dist	COUNTY	ROUTE	POST MILES TOTAL PROJECT	SHEET No.	TOTAL SHEETS
10	Sta	5,99	Var	21	83

REGISTERED ELECTRICAL ENGINEER 5/12/15 DATE

5-26-15
PLANS APPROVAL DATE

REGISTERED PROFESSIONAL ENGINEER ALVARO ARAICA No. E15558 Exp. 12/31/15 ELECTRICAL STATE OF CALIFORNIA

THE STATE OF CALIFORNIA OR ITS OFFICERS OR AGENTS SHALL NOT BE RESPONSIBLE FOR THE ACCURACY OR COMPLETENESS OF SCANNED COPIES OF THIS PLAN SHEET.

LEGEND:

1. MODEL 334L CABINET FOR TMS AND CCTV. INSTALL WIRELESS MODEM, VIDEO ENCODER UNIT, CCU AND DEPARTMENT-FURNISHED MODEL 2070E CONTROLLER UNIT.
2. Exist SIGNAL AND LIGHTING DETAILS NOT SHOWN.
3. COIL 10′ SLACK OF DLC IN PB FOR FUTURE USE.

NOTES:

1. ALL PULL BOXES MUST BE No. 5(T) UNLESS NOTED OTHERWISE.
2. FOR ACCURATE RIGHT OF WAY DATA, CONTACT RIGHT OF WAY ENGINEERING AT THE DISTRICT OFFICE.
3. THE LOCATIONS OF WORK ARE FLEXIBLE AND MAYBE ADJUSTED TO MITIGATE ANY CONFLICTS WITH EXISTING UTILITY FACILITIES. EXISTING UTILITY FACILITIES ARE NOT INCLUDED ON THESE PLANS.

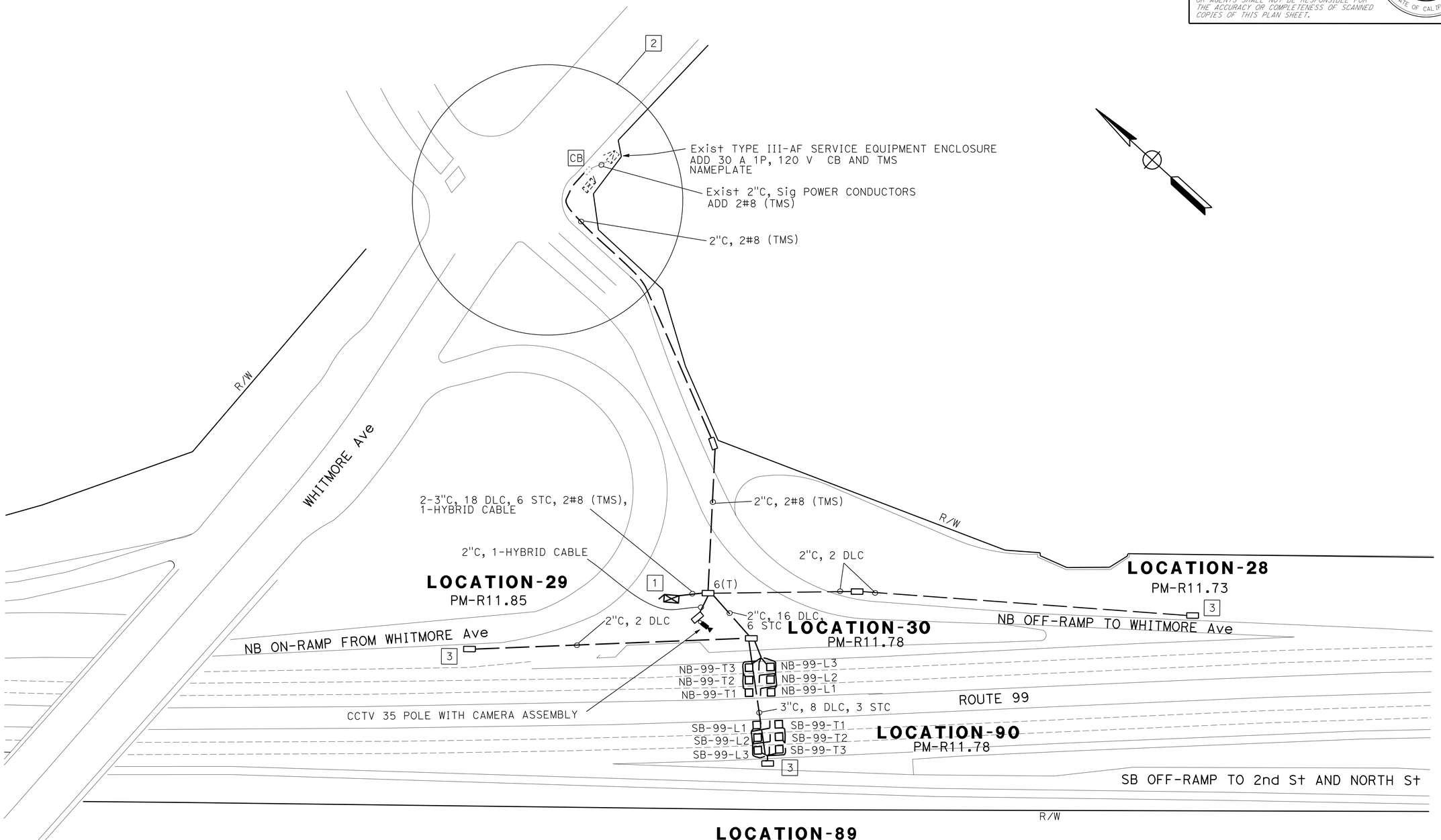

TRAFFIC OPERATION SYSTEM

APPROVED FOR ELECTRICAL WORK ONLY

SCALE: 1"=50′

E-13

STATE OF CALIFORNIA - DEPARTMENT OF TRANSPORTATION
Caltrans® **ELECTRICAL DESIGN**

FUNCTIONAL SUPERVISOR: ALI BAKHDOUD

CALCULATED-DESIGNED BY: ALVARO ARAICA
CHECKED BY: FRED IYASERE

REVISED BY: FI
DATE REVISED: 4-22-15

LAST REVISION 05-26-15 | DATE PLOTTED => 28-MAY-2015 TIME PLOTTED => 09:00

Dist	COUNTY	ROUTE	POST MILES TOTAL PROJECT	SHEET No.	TOTAL SHEETS
10	Sta	5,99	Var	22	83

REGISTERED ELECTRICAL ENGINEER 5/12/15 DATE

5-26-15
PLANS APPROVAL DATE

REGISTERED PROFESSIONAL ENGINEER ALVARO ARAICA No. E15558 Exp. 12/31/15 ELECTRICAL STATE OF CALIFORNIA

THE STATE OF CALIFORNIA OR ITS OFFICERS OR AGENTS SHALL NOT BE RESPONSIBLE FOR THE ACCURACY OR COMPLETENESS OF SCANNED COPIES OF THIS PLAN SHEET.

LEGEND:

1 COIL 10′ SLACK OF DLC IN PB FOR FUTURE USE.

NOTES:

1. ALL PULL BOXES MUST BE No. 5(T) UNLESS NOTED OTHERWISE.
2. FOR ACCURATE RIGHT OF WAY DATA, CONTACT RIGHT OF WAY ENGINEERING AT THE DISTRICT OFFICE.
3. THE LOCATIONS OF WORK ARE FLEXIBLE AND MAYBE ADJUSTED TO MITIGATE ANY CONFLICTS WITH EXISTING UTILITY FACILITIES. EXISTING UTILITY FACILITIES ARE NOT INCLUDED ON THESE PLANS.

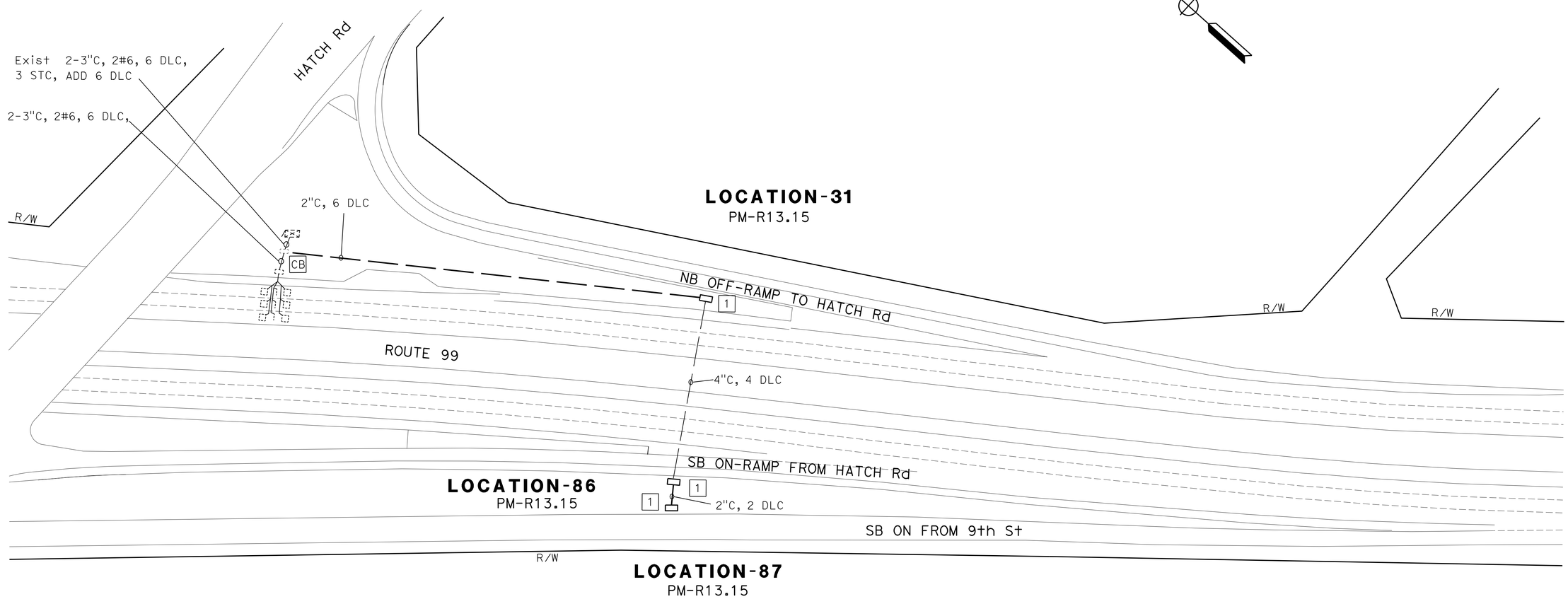

TRAFFIC MONITORING STATION

SCALE: 1"=50′

E-14

APPROVED FOR ELECTRICAL WORK ONLY

STATE OF CALIFORNIA - DEPARTMENT OF TRANSPORTATION
Caltrans® **ELECTRICAL DESIGN**

FUNCTIONAL SUPERVISOR: ALI BAKHDOUD
CALCULATED-DESIGNED BY: ALVARO ARAICA
CHECKED BY: FRED IYASERE
REVISED BY: FI
DATE REVISED: 4-22-15

LAST REVISION 05-26-15
DATE PLOTTED => 28-MAY-2015
TIME PLOTTED => 09:00

Dist	COUNTY	ROUTE	POST MILES TOTAL PROJECT	SHEET No.	TOTAL SHEETS
10	Sta	5,99	Var	23	83

REGISTERED ELECTRICAL ENGINEER 5/12/15 DATE

5-26-15
PLANS APPROVAL DATE

REGISTERED PROFESSIONAL ENGINEER ALVARO ARAICA No. E15558 Exp. 12/31/15 ELECTRICAL STATE OF CALIFORNIA

THE STATE OF CALIFORNIA OR ITS OFFICERS OR AGENTS SHALL NOT BE RESPONSIBLE FOR THE ACCURACY OR COMPLETENESS OF SCANNED COPIES OF THIS PLAN SHEET.

LEGEND:

1. INSTALL TAMPER RESISTANT PB COVER AND CONCRETE COLLAR AS SHOWN ON DETAIL D SHEET E-48.
2. MODEL 334L CABINET FOR TMS. INSTALL WIRELESS MODEM AND DEPARTMENT-FURNISHED MODEL 2070E CONTROLLER UNIT.
3. COIL 10' SLACK OF DLC IN PB FOR FUTURE USE.

NOTES:

1. ALL PULL BOXES MUST BE No. 5(T) UNLESS NOTED OTHERWISE.
2. UTILITY COMPANY PULL BOX, CONDUCTORS AND RISER PER SERVING UTILITY REQUIREMENTS.
3. FOR ACCURATE RIGHT OF WAY DATA, CONTACT RIGHT OF WAY ENGINEERING AT THE DISTRICT OFFICE.
4. THE LOCATIONS OF WORK ARE FLEXIBLE AND MAYBE ADJUSTED TO MITIGATE ANY CONFLICTS WITH EXISTING UTILITY FACILITIES. EXISTING UTILITY FACILITIES ARE NOT INCLUDED ON THESE PLANS.

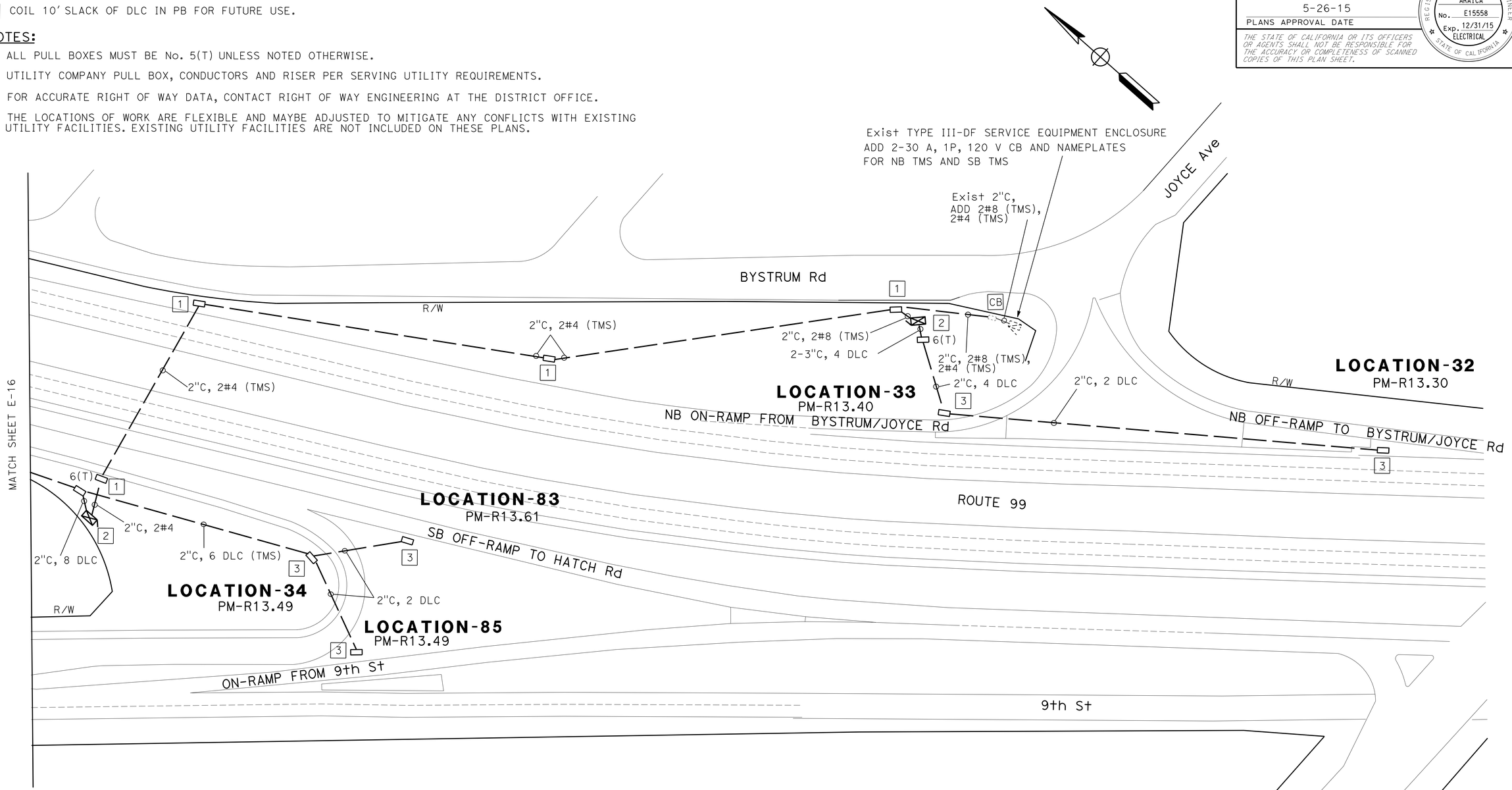

TRAFFIC MONITORING STATION

SCALE: 1"=50'

E-15

APPROVED FOR ELECTRICAL WORK ONLY

STATE OF CALIFORNIA - DEPARTMENT OF TRANSPORTATION
Caltrans® ELECTRICAL DESIGN

FUNCTIONAL SUPERVISOR: ALI BAKHDOUD
CALCULATED-DESIGNED BY: ALVARO ARAICA
CHECKED BY: FRED IYASERE
REVISED BY: FI
DATE REVISED: 4-22-15

LAST REVISION 05-26-15 | DATE PLOTTED => 28-MAY-2015 | TIME PLOTTED => 09:00

BORDER LAST REVISED 7/2/2010 | USERNAME => s113541 | DGN FILE => 1014000166ua015.dgn | RELATIVE BORDER SCALE IS IN INCHES 0 1 2 3 | UNIT 1515 | PROJECT NUMBER & PHASE 10140001661

Dist	COUNTY	ROUTE	POST MILES TOTAL PROJECT	SHEET No.	TOTAL SHEETS
10	Sta	5,99	Var	24	83

REGISTERED ELECTRICAL ENGINEER 5/12/15 DATE

5-26-15
PLANS APPROVAL DATE

REGISTERED PROFESSIONAL ENGINEER ALVARO ARAICA No. E15558 Exp. 12/31/15 ELECTRICAL STATE OF CALIFORNIA

THE STATE OF CALIFORNIA OR ITS OFFICERS OR AGENTS SHALL NOT BE RESPONSIBLE FOR THE ACCURACY OR COMPLETENESS OF SCANNED COPIES OF THIS PLAN SHEET.

LEGEND:

1 120/240 V, 1Ø, 3-WIRE TYPE III-AR SERVICE EQUIPMENT ENCLOSURE WITH THE FOLLOWING CIRCUIT BREAKERS.

Ctid No. 1038099X013761L

AMPERES	VOLTS	POLES	NAMEPLATE	METER	PEC TYPE
100	240	2	MAIN	YES	-
30	120	1	TMS	YES	-
20	240	2	LIGHTING	YES	-
15	120	1	Ltg CONTROL	YES	V
20	240	2	Ltg FUTURE	YES	V
20	240	2	SPARE	YES	-
-	-	-	SPARE	YES	-

2 COIL 40 FEET OF 3#1/0 INSIDE PULL BOX.

3 MODEL 334L CABINET FOR TMS. INSTALL WIRELESS MODEM AND DEPARTMENT-FURNISHED MODEL 2070E CONTROLLER UNIT.

4 COIL 10′ SLACK OF DLC IN PB FOR FUTURE USE.

5 SP TID, 120/240 V, TYPE H SERVICE.

NOTES:

1. ALL PULL BOXES MUST BE No. 5(T) UNLESS NOTED OTHERWISE.
2. UTILITY COMPANY PULL BOX, CONDUCTORS AND RISER PER SERVING UTILITY REQUIREMENTS.
3. FOR ACCURATE RIGHT OF WAY DATA, CONTACT RIGHT OF WAY ENGINEERING AT THE DISTRICT OFFICE.
4. THE LOCATIONS OF WORK ARE FLEXIBLE AND MAYBE ADJUSTED TO MITIGATE ANY CONFLICTS WITH EXISTING UTILITY FACILITIES. EXISTING UTILITY FACILITIES ARE NOT INCLUDED ON THESE PLANS.

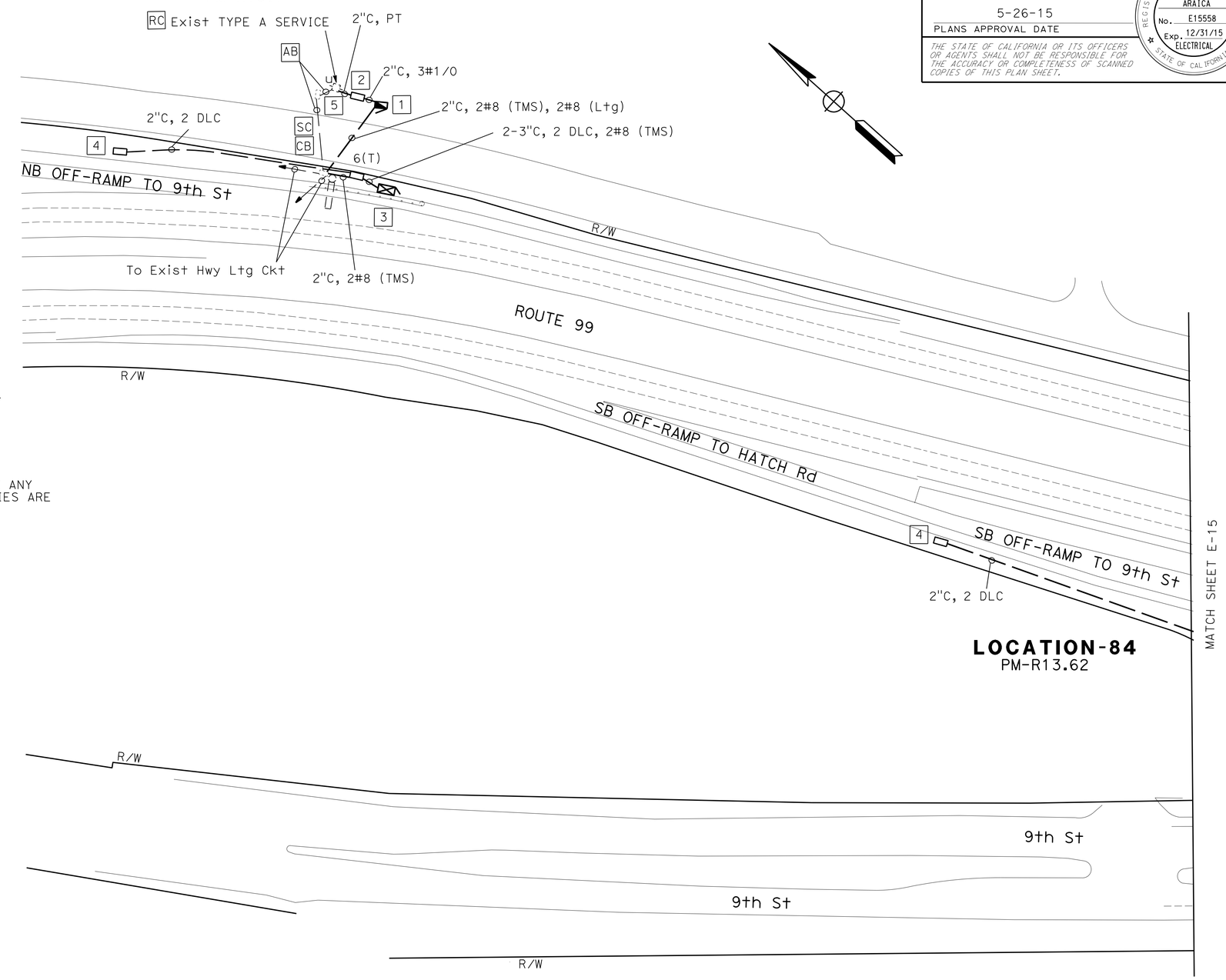

TRAFFIC MONITORING STATION

APPROVED FOR ELECTRICAL WORK ONLY

SCALE: 1"=50′

E-16

STATE OF CALIFORNIA - DEPARTMENT OF TRANSPORTATION
Caltrans® ELECTRICAL DESIGN

FUNCTIONAL SUPERVISOR: ALI BAKHDOUD
CALCULATED-DESIGNED BY: ALVARO ARAICA
CHECKED BY: FRED IYASERE
REVISED BY: FI
DATE REVISED: 4-22-15

LAST REVISION 05-26-15 | DATE PLOTTED => 28-MAY-2015 | TIME PLOTTED => 09:00

Dist	COUNTY	ROUTE	POST MILES TOTAL PROJECT	SHEET No.	TOTAL SHEETS
10	Sta	5,99	Var	25	83

REGISTERED ELECTRICAL ENGINEER 5/12/15 DATE

5-26-15
PLANS APPROVAL DATE

REGISTERED PROFESSIONAL ENGINEER ALVARO ARAICA No. E15558 Exp. 12/31/15 ELECTRICAL STATE OF CALIFORNIA

THE STATE OF CALIFORNIA OR ITS OFFICERS OR AGENTS SHALL NOT BE RESPONSIBLE FOR THE ACCURACY OR COMPLETENESS OF SCANNED COPIES OF THIS PLAN SHEET.

LEGEND:

1. MODEL 334L CABINET FOR TMS AND CCTV. INSTALL WIRELESS MODEM, VIDEO ENCODER UNIT, CCU AND DEPARTMENT-FURNISHED MODEL 2070E CONTROLLER UNIT.
2. COIL 10' SLACK OF DLC IN PB FOR FUTURE USE.

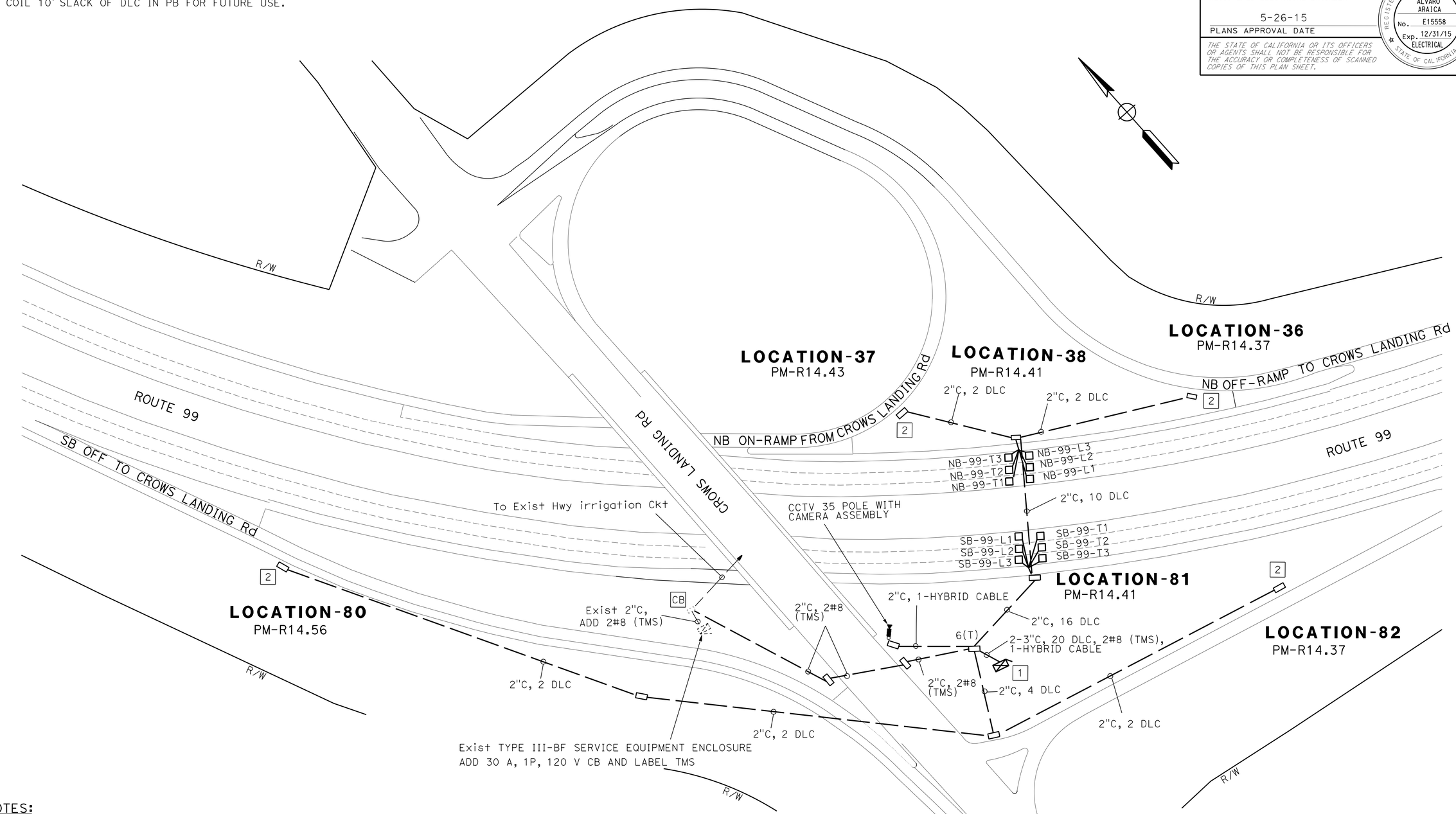

NOTES:

1. ALL PULL BOXES MUST BE No. 5(T) UNLESS NOTED OTHERWISE.
2. FOR ACCURATE RIGHT OF WAY DATA, CONTACT RIGHT OF WAY ENGINEERING AT THE DISTRICT OFFICE.
3. THE LOCATIONS OF WORK ARE FLEXIBLE AND MAYBE ADJUSTED TO MITIGATE ANY CONFLICTS WITH EXISTING UTILITY FACILITIES. EXISTING UTILITY FACILITIES ARE NOT INCLUDED ON THESE PLANS.

TRAFFIC OPERATION SYSTEM

APPROVED FOR ELECTRICAL WORK ONLY

SCALE: 1"=50'

E-17

STATE OF CALIFORNIA - DEPARTMENT OF TRANSPORTATION
Caltrans® **ELECTRICAL DESIGN**

FUNCTIONAL SUPERVISOR: ALI BAKHDOUD

CALCULATED-DESIGNED BY: ALVARO ARAICA
CHECKED BY: FRED IYASERE

REVISED BY: FI
DATE REVISED: 4-22-15

LAST REVISION 05-26-15 | DATE PLOTTED => 28-MAY-2015 | TIME PLOTTED => 09:00

Dist	COUNTY	ROUTE	POST MILES TOTAL PROJECT	SHEET No.	TOTAL SHEETS
10	Sta	5,99	Var	26	83

REGISTERED ELECTRICAL ENGINEER 5/12/15 DATE

5-26-15
PLANS APPROVAL DATE

REGISTERED PROFESSIONAL ENGINEER ALVARO ARAICA No. E15558 Exp. 12/31/15 ELECTRICAL STATE OF CALIFORNIA

THE STATE OF CALIFORNIA OR ITS OFFICERS OR AGENTS SHALL NOT BE RESPONSIBLE FOR THE ACCURACY OR COMPLETENESS OF SCANNED COPIES OF THIS PLAN SHEET.

LEGEND:

1 MODEL 334L CABINET FOR TMS. INSTALL WIRELESS MODEM AND DEPARTMENT-FURNISHED MODEL 2070E CONTROLLER UNIT.

2 COIL 10' SLACK OF DLC IN PB FOR FUTURE USE.

NOTES:

1. ALL PULL BOXES MUST BE No. 5(T) UNLESS NOTED OTHERWISE.
2. FOR ACCURATE RIGHT OF WAY DATA, CONTACT RIGHT OF WAY ENGINEERING AT THE DISTRICT OFFICE.
3. THE LOCATIONS OF WORK ARE FLEXIBLE AND MAYBE ADJUSTED TO MITIGATE ANY CONFLICTS WITH EXISTING UTILITY FACILITIES. EXISTING UTILITY FACILITIES ARE NOT INCLUDED ON THESE PLANS.

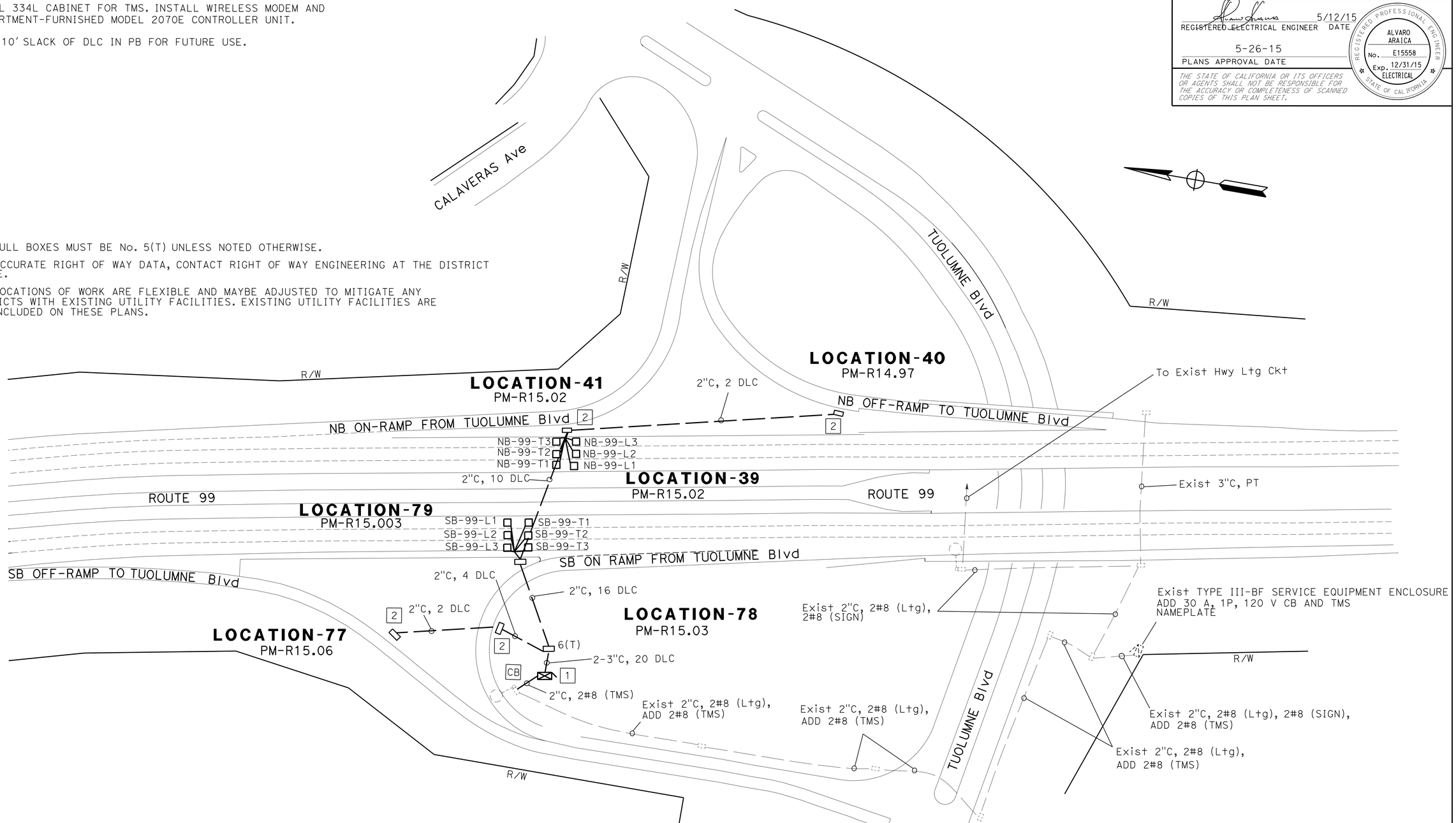

TRAFFIC OPERATION SYSTEM

E-18

SCALE: 1"=50'

APPROVED FOR ELECTRICAL WORK ONLY

STATE OF CALIFORNIA - DEPARTMENT OF TRANSPORTATION
Caltrans® ELECTRICAL DESIGN

FUNCTIONAL SUPERVISOR: ALI BAKHDOUD
CALCULATED-DESIGNED BY: ALVARO ARAICA
CHECKED BY: FRED IYASERE
REVISED BY: FI
DATE REVISED: 4-22-15

LAST REVISION 05-26-15
DATE PLOTTED => 28-MAY-2015
TIME PLOTTED => 09:00

Dist	COUNTY	ROUTE	POST MILES TOTAL PROJECT	SHEET No.	TOTAL SHEETS
10	Sta	5,99	Var	27	83

REGISTERED ELECTRICAL ENGINEER 5/12/15 DATE

PLANS APPROVAL DATE 5-26-15

REGISTERED PROFESSIONAL ENGINEER ALVARO ARAICA No. 15558 Exp. 12/31/15 ELECTRICAL STATE OF CALIFORNIA

THE STATE OF CALIFORNIA OR ITS OFFICERS OR AGENTS SHALL NOT BE RESPONSIBLE FOR THE ACCURACY OR COMPLETENESS OF SCANNED COPIES OF THIS PLAN SHEET.

LEGEND:

1. SP MID, 120/240 V. TYPE H SERVICE. CONDUCTOR AND RISER PER SERVING UTILITY REQUIREMENTS.
2. 120/240 V, 1Ø, 3-WIRE TYPE III-BF SERVICE EQUIPMENT ENCLOSURE WITH THE FOLLOWING CIRCUIT BREAKERS:

Ctid No. 1038099X015460T

AMPERES	VOLTS	POLES	NAMEPLATE	METER	PEC TYPE
100	240	2	MAIN BREAKER	YES	
30	120	1	TMS	YES	-
15	120	1	SPARE	YES	-
30	120	1	SPARE	YES	-
-	-	6	SPACE	YES	-

3. MODEL 334L CABINET FOR TMS. INSTALL WIRELESS MODEM AND DEPARTMENT-FURNISHED MODEL 2070E CONTROLLER UNIT.
4. COIL 10' SLACK OF DLC IN PB FOR FUTURE USE
5. PULL BOX PER SERVING UTILITY REQUIREMENTS.

NOTES:

1. FOR ACCURATE RIGHT OF WAY DATA, CONTACT RIGHT OF WAY ENGINEERING AT THE DISTRICT OFFICE.
2. ALL PULL BOXES MUST BE No. 5(T) UNLESS NOTED OTHERWISE.
3. THE LOCATIONS OF WORK ARE FLEXIBLE AND MAYBE ADJUSTED TO MITIGATE ANY CONFLICTS WITH EXISTING UTILITY FACILITIES. EXISTING UTILITY FACILITIES ARE NOT INCLUDED ON THESE PLANS.

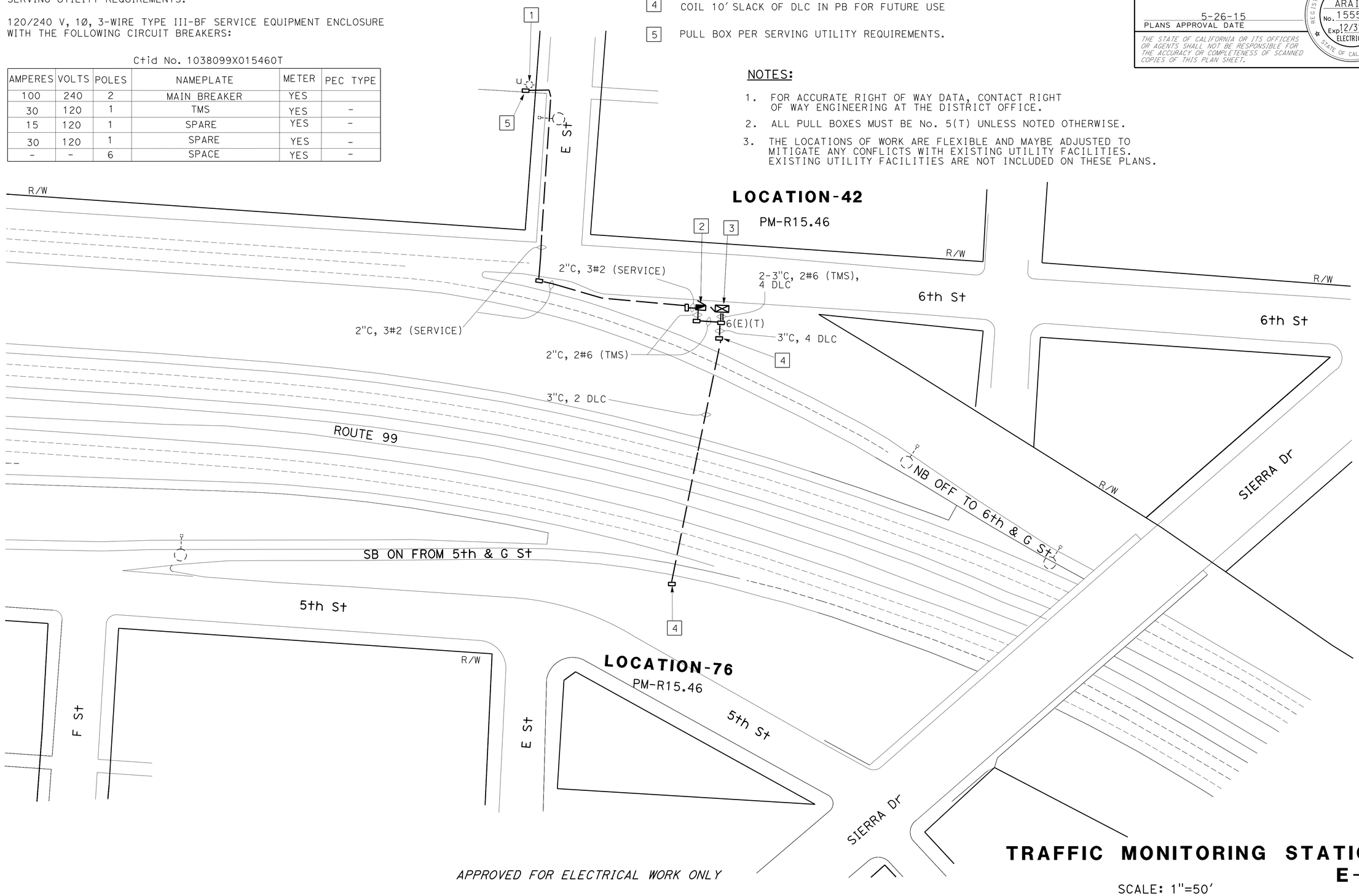

APPROVED FOR ELECTRICAL WORK ONLY

TRAFFIC MONITORING STATION E-19

SCALE: 1"=50'

STATE OF CALIFORNIA - DEPARTMENT OF TRANSPORTATION
Caltrans® ELECTRICAL DESIGN

FUNCTIONAL SUPERVISOR: ALI BAKHDOUD
CALCULATED-DESIGNED BY: FRED IYASERE
CHECKED BY: AL ARAICA
REVISED BY: FI
DATE REVISED: 5-6-15

LAST REVISION 05-26-15
DATE PLOTTED => 28-MAY-2015
TIME PLOTTED => 09:00

BORDER LAST REVISED 7/2/2010
USERNAME => s113541
DGN FILE => 1014000166ua019.dgn
RELATIVE BORDER SCALE IS IN INCHES 0 1 2 3
UNIT 1515
PROJECT NUMBER & PHASE 10140001661

Dist	COUNTY	ROUTE	POST MILES TOTAL PROJECT	SHEET No.	TOTAL SHEETS
10	Sta	5,99	Var	28	83

REGISTERED ELECTRICAL ENGINEER 5/12/15 DATE

5-26-15
PLANS APPROVAL DATE

REGISTERED PROFESSIONAL ENGINEER ALVARO ARAICA No. 15558 Exp. 12/31/15 ELECTRICAL STATE OF CALIFORNIA

THE STATE OF CALIFORNIA OR ITS OFFICERS OR AGENTS SHALL NOT BE RESPONSIBLE FOR THE ACCURACY OR COMPLETENESS OF SCANNED COPIES OF THIS PLAN SHEET.

LEGEND:

1. SP MID, 120/240 V. TYPE H SERVICE. CONDUCTOR AND RISER PER SERVING UTILITY REQUIREMENTS.
2. 120/240 V, 1Ø, 3-WIRE TYPE III-BF SERVICE EQUIPMENT ENCLOSURE WITH THE FOLLOWING CIRCUIT BREAKERS:

Ctid No. 1038099X156690L

AMPERES	VOLTS	POLES	NAMEPLATE	METER	PEC TYPE
100	240	2	MAIN BREAKER	YES	
30	120	1	TMS	YES	-
15	120	1	SPARE	YES	-
30	120	1	SPARE	YES	-
-	-	6	SPACE	YES	-

3. MODEL 334L CABINET FOR TMS AND CCTV. INSTALL WIRELESS MODEM, VIDEO ENCODER UNIT, CCU AND DEPARTMENT-FURNISHED MODEL 2070E CONTROLLER UNIT.
4. CCTV 35 POLE WITH CAMERA ASSEMBLY.
5. PULL BOX PER SERVING UTILITY REQUIREMENTS.

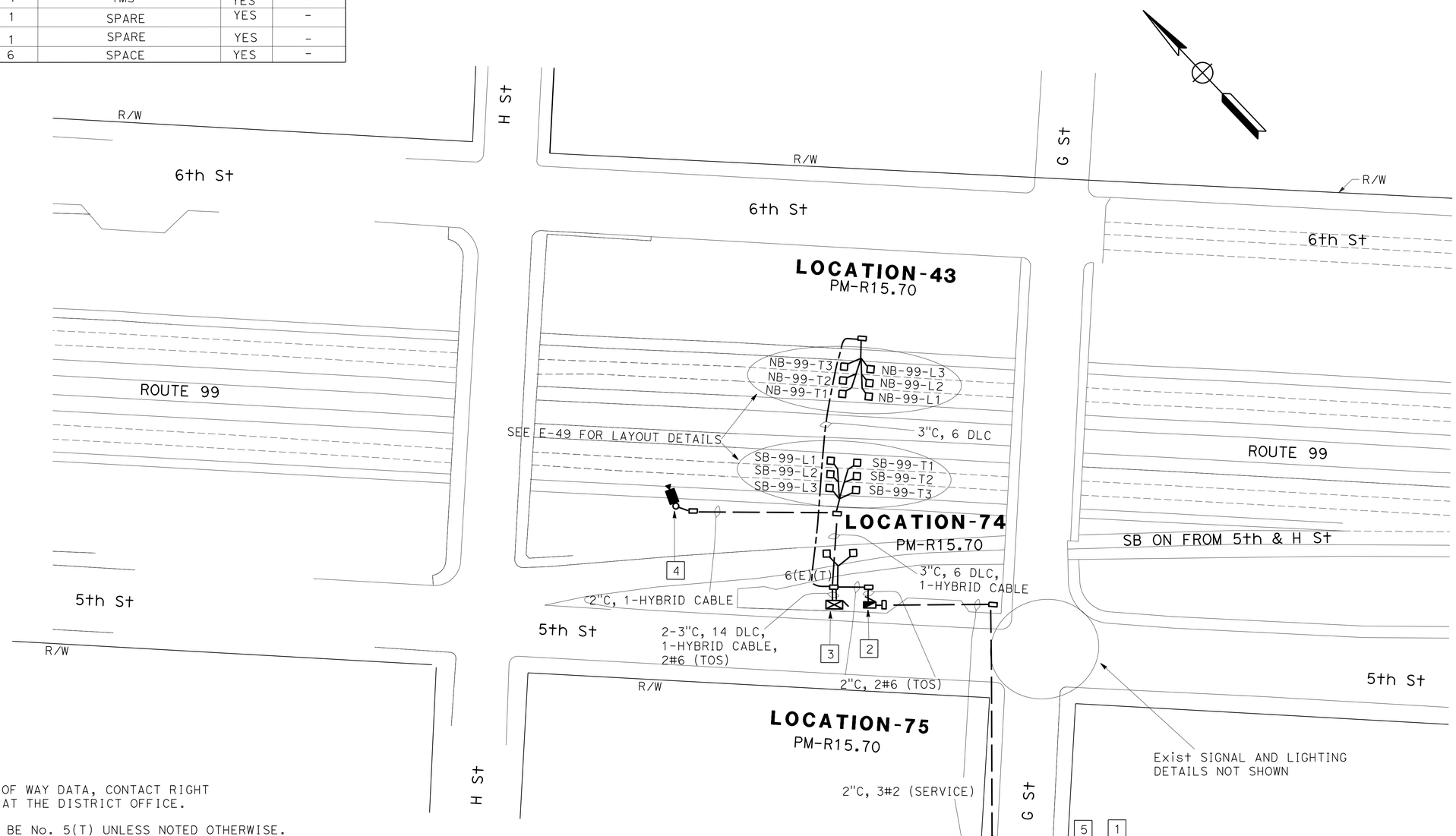

NOTES:

1. FOR ACCURATE RIGHT OF WAY DATA, CONTACT RIGHT OF WAY ENGINEERING AT THE DISTRICT OFFICE.
2. ALL PULL BOXES MUST BE No. 5(T) UNLESS NOTED OTHERWISE.
3. THE LOCATIONS OF WORK ARE FLEXIBLE AND MAYBE ADJUSTED TO MITIGATE ANY CONFLICTS WITH EXISTING UTILITY FACILITIES. EXISTING UTILITY FACILITIES ARE NOT INCLUDED ON THESE PLANS.

APPROVED FOR ELECTRICAL WORK ONLY

TRAFFIC OPERATION SYSTEM
E-20

SCALE: 1"=50'

STATE OF CALIFORNIA - DEPARTMENT OF TRANSPORTATION
Caltrans® ELECTRICAL DESIGN

FUNCTIONAL SUPERVISOR: ALI BAKHDOUD
CALCULATED-DESIGNED BY: FRED IYASERE
CHECKED BY: AL ARAICA
REVISED BY: FI
DATE REVISED: 5-6-15

LAST REVISION 05-26-15
DATE PLOTTED => 28-MAY-2015
TIME PLOTTED => 09:00

Dist	COUNTY	ROUTE	POST MILES TOTAL PROJECT	SHEET No.	TOTAL SHEETS
10	Sta	5,99	Var	29	83

REGISTERED ELECTRICAL ENGINEER 5/12/15 DATE

5-26-15
PLANS APPROVAL DATE

REGISTERED PROFESSIONAL ENGINEER ALVARO ARAICA No. 15558 Exp. 12/31/15 ELECTRICAL STATE OF CALIFORNIA

THE STATE OF CALIFORNIA OR ITS OFFICERS OR AGENTS SHALL NOT BE RESPONSIBLE FOR THE ACCURACY OR COMPLETENESS OF SCANNED COPIES OF THIS PLAN SHEET.

LEGEND:

1 Exist 120/240 V, 1Ø, 3-WIRE TYPE III-AF SERVICE EQUIPMENT ENCLOSURE WITH THE FOLLOWING CIRCUIT BREAKERS:

Ctid No. 1038099X160390L

AMPERES	VOLTS	POLES	NAMEPLATE	METER	PEC TYPE
100	240	2	MAIN BREAKER	YES	
30	240	2	HIGHWAY LIGHTING	YES	-
30	240	2	SIGN LIGHTING	YES	-
* 30	120	1	TMS	YES	-
-	-	3	SPACE	YES	-

* ADD CB AND NAMEPLATE AS INDICATED

2 MODEL 334L CABINET FOR TMS. INSTALL WIRELESS MODEM AND DEPARTMENT-FURNISHED MODEL 2070E CONTROLLER UNIT.

NOTES:

1. FOR ACCURATE RIGHT OF WAY DATA, CONTACT RIGHT OF WAY ENGINEERING AT THE DISTRICT OFFICE.
2. ALL PULL BOXES MUST BE No. 5(T) UNLESS NOTED OTHERWISE.
3. THE LOCATIONS OF WORK ARE FLEXIBLE AND MAYBE ADJUSTED TO MITIGATE ANY CONFLICTS WITH EXISTING UTILITY FACILITIES. EXISTING UTILITY FACILITIES ARE NOT INCLUDED ON THESE PLANS.

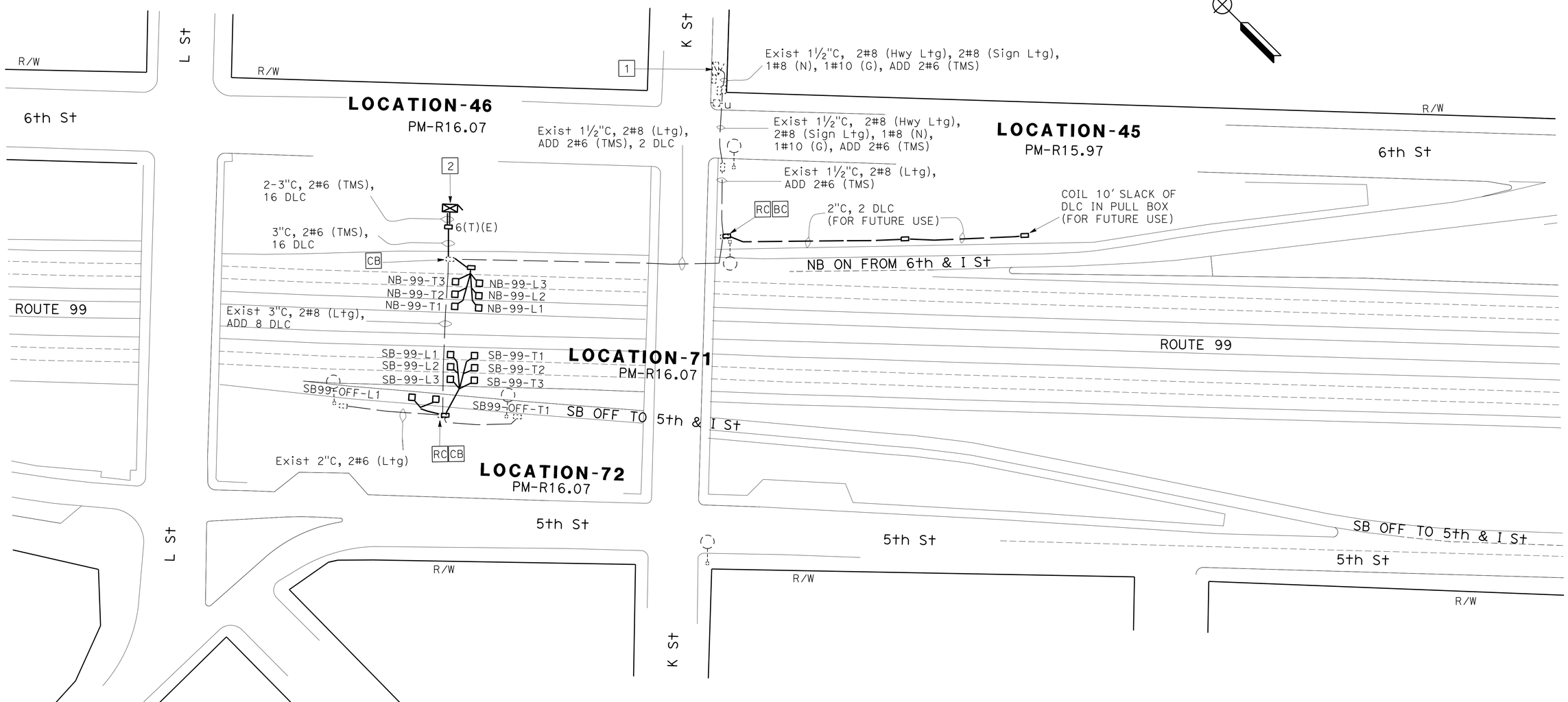

APPROVED FOR ELECTRICAL WORK ONLY

TRAFFIC MONITORING STATION

SCALE: 1"=50'

E-21

REVISED BY	DATE REVISED
F1	5-6-15

FRED IYASERE — AL ARAICA — CALCULATED-DESIGNED BY — CHECKED BY

FUNCTIONAL SUPERVISOR: ALI BAKHDOUD

STATE OF CALIFORNIA - DEPARTMENT OF TRANSPORTATION
Caltrans
ELECTRICAL DESIGN

LAST REVISION 05-26-15 | DATE PLOTTED => 28-MAY-2015 | TIME PLOTTED => 09:00

Dist	COUNTY	ROUTE	POST MILES TOTAL PROJECT	SHEET No.	TOTAL SHEETS
10	Sta	5,99	Var	30	83

REGISTERED ELECTRICAL ENGINEER DATE 5/12/15

PLANS APPROVAL DATE 5-26-15

REGISTERED PROFESSIONAL ENGINEER ALVARO ARAICA No. 15558 Exp. 12/31/15 ELECTRICAL STATE OF CALIFORNIA

THE STATE OF CALIFORNIA OR ITS OFFICERS OR AGENTS SHALL NOT BE RESPONSIBLE FOR THE ACCURACY OR COMPLETENESS OF SCANNED COPIES OF THIS PLAN SHEET.

LEGEND:

1 Exist 120/240 V, 1Ø, 3-WIRE TYPE III-BF SERVICE EQUIPMENT ENCLOSURE WITH THE FOLLOWING CIRCUIT BREAKERS:

Ctid No. 10380990016251L

AMPERES	VOLTS	POLES	NAMEPLATE	METER	PEC TYPE
100	240	2	MAIN BREAKER	YES	
30	240	2	HIGHWAY LIGHTING	YES	V
20	240	1	SIGN ILLUMINATION	YES	LC3
15	120	1	LIGHTING CONTROL	YES	-
20	120	1	TMS	YES	-
30	240	1	SPARE	YES	-
* 30	120	1	TMS SB	YES	-
-	-	6	SPACE	YES	-

* ADD CB AND NAMEPLATE AS INDICATED

2 MODEL 334L CABINET FOR TMS. INSTALL WIRELESS MODEM AND DEPARTMENT-FURNISHED MODEL 2070E CONTROLLER UNIT.

3 COIL 10' SLACK OF DLC IN PB FOR FUTURE USE.

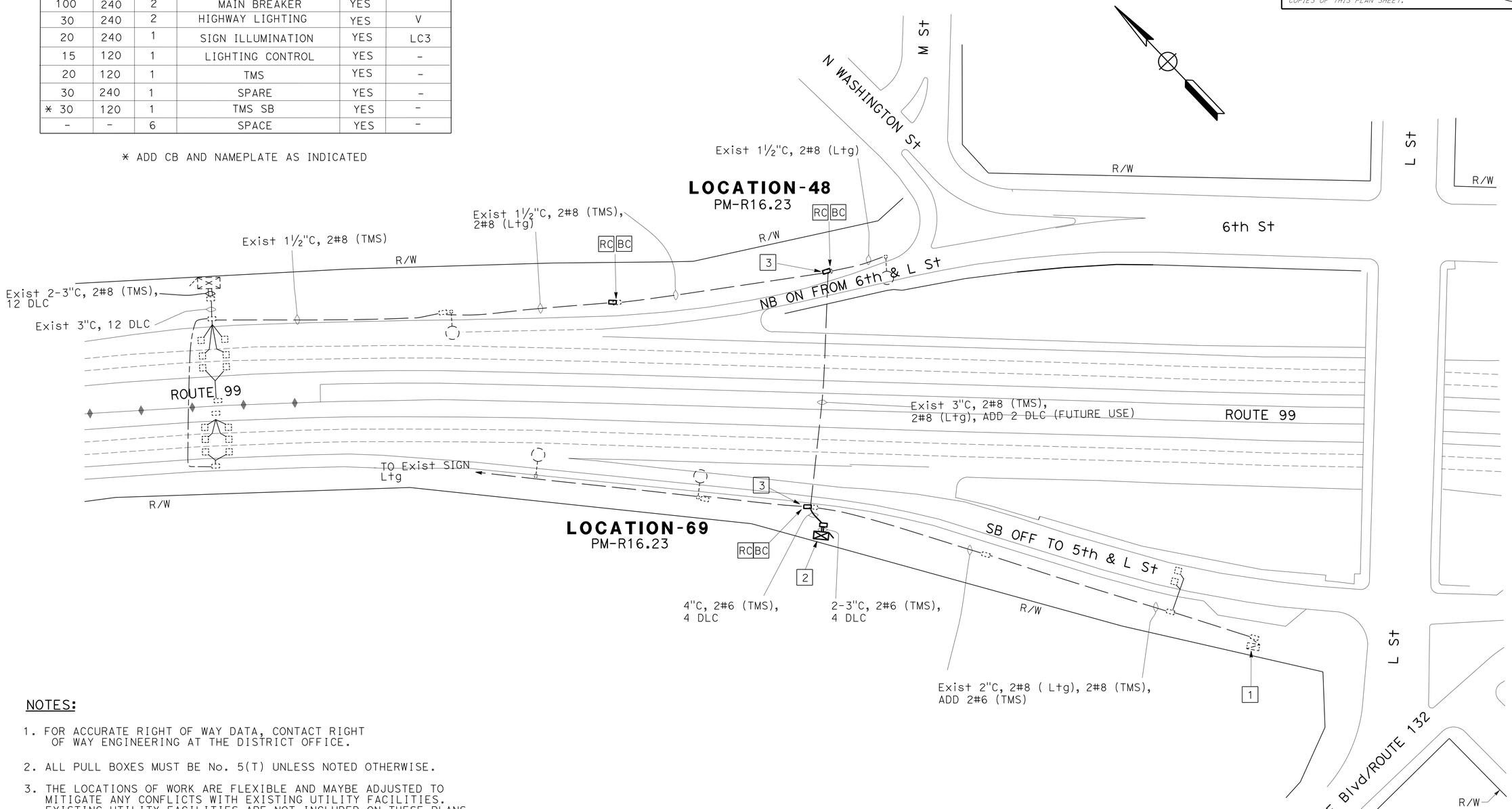

NOTES:

1. FOR ACCURATE RIGHT OF WAY DATA, CONTACT RIGHT OF WAY ENGINEERING AT THE DISTRICT OFFICE.
2. ALL PULL BOXES MUST BE No. 5(T) UNLESS NOTED OTHERWISE.
3. THE LOCATIONS OF WORK ARE FLEXIBLE AND MAYBE ADJUSTED TO MITIGATE ANY CONFLICTS WITH EXISTING UTILITY FACILITIES. EXISTING UTILITY FACILITIES ARE NOT INCLUDED ON THESE PLANS.

APPROVED FOR ELECTRICAL WORK ONLY

TRAFFIC MONITORING STATION

E-22

SCALE: 1"=50'

STATE OF CALIFORNIA - DEPARTMENT OF TRANSPORTATION

Caltrans

ELECTRICAL DESIGN

FUNCTIONAL SUPERVISOR: ALI BAKHDOUD

CALCULATED-DESIGNED BY: FRED IYASERE

CHECKED BY: AL ARAICA

REVISED BY: FI

DATE REVISED: 5-6-15

LAST REVISION 05-26-15

DATE PLOTTED => 28-MAY-2015

TIME PLOTTED => 09:00

Dist	COUNTY	ROUTE	POST MILES TOTAL PROJECT	SHEET No.	TOTAL SHEETS
10	Sta	5,99	Var	31	83

REGISTERED ELECTRICAL ENGINEER 5/12/15 DATE

5-26-15
PLANS APPROVAL DATE

REGISTERED PROFESSIONAL ENGINEER ALVARO ARAICA No. 15558 Exp. 12/31/15 ELECTRICAL STATE OF CALIFORNIA

THE STATE OF CALIFORNIA OR ITS OFFICERS OR AGENTS SHALL NOT BE RESPONSIBLE FOR THE ACCURACY OR COMPLETENESS OF SCANNED COPIES OF THIS PLAN SHEET.

LEGEND:

1 Exist 120/240 V, 1Ø, 3-WIRE, TYPE III-CF SERVICE EQUIPMENT ENCLOSURE WITH THE FOLLOWING CIRCUIT BREAKERS:

Ctid No. 10380990016700T

AMPERES	VOLTS	POLES	NAMEPLATE	METER	PEC TYPE
100	240	2	MAIN BREAKER	YES	-
50	120	1	TRAFFIC SIGNAL	YES	-
30	240	2	SPARE	YES	-
20	120	1	SPARE	YES	-
* 60	120	1	TOS (SUB PANEL)	YES	-
-	-	4	SPACE	-	-

* ADD CB AND NAMEPLATE AS INDICATED

Ctid No. 10380990016700L

AMPERES	VOLTS	POLES	NAMEPLATE	METER	PEC TYPE
100	240	2	MAIN BREAKER	YES	-
30	240	2	LIGHTING	YES	V
30	240	2	HIGHWAY LIGHTING	YES	V
20	240	2	SIGN ILLUMINATION	YES	LC3
15	120	1	LIGHTING CONTROL	YES	-
30	240	2	SPARE	YES	-
20	120	1	SPARE	YES	-
-	-	1	SPACE	-	-

2 TYPE III-AF SERVICE EQUIPMENT ENCLOSURE WITH THE FOLLOWING CIRCUIT BREAKERS:
SUB PANEL

AMPERES	VOLTS	POLES	NAMEPLATE	METER	PEC TYPE
60	240	2	MAIN BREAKER	-	-
30	120	1	TOS	-	-
30	120	1	SPARE	-	-
15	120	1	SPARE	-	-
-	-	6	SPACE	-	-

3 MODEL 334L CABINET FOR TMS AND CCTV. INSTALL WIRELESS MODEM, VIDEO ENCODER UNIT, CCU AND DEPARTMENT-FURNISHED MODEL 2070E CONTROLLER UNIT.

4 CCTV 35 POLE WITH CAMERA ASSEMBLY.

5 Exist 2"C, 2#6 (Sig), 2#8 (L+g), 2#8 (Hwy L+g), 2#8 (SIGN ILLUMINATION), ADD 2#2 (TOS SUB PANEL).

6 Exist 2"C, 2#8 (L+g), 2#8 (Hwy L+g), 2#8 (SIGN ILLUMINATION), ADD 2#2 (TOS SUB PANEL).

NOTES:

1. FOR ACCURATE RIGHT OF WAY DATA, CONTACT RIGHT OF WAY ENGINEERING AT THE DISTRICT OFFICE.
2. ALL PULL BOXES MUST BE No. 5(T) UNLESS NOTED OTHERWISE.
3. THE LOCATIONS OF WORK ARE FLEXIBLE AND MAYBE ADJUSTED TO MITIGATE ANY CONFLICTS WITH EXISTING UTILITY FACILITIES. EXISTING UTILITY FACILITIES ARE NOT INCLUDED ON THESE PLANS.

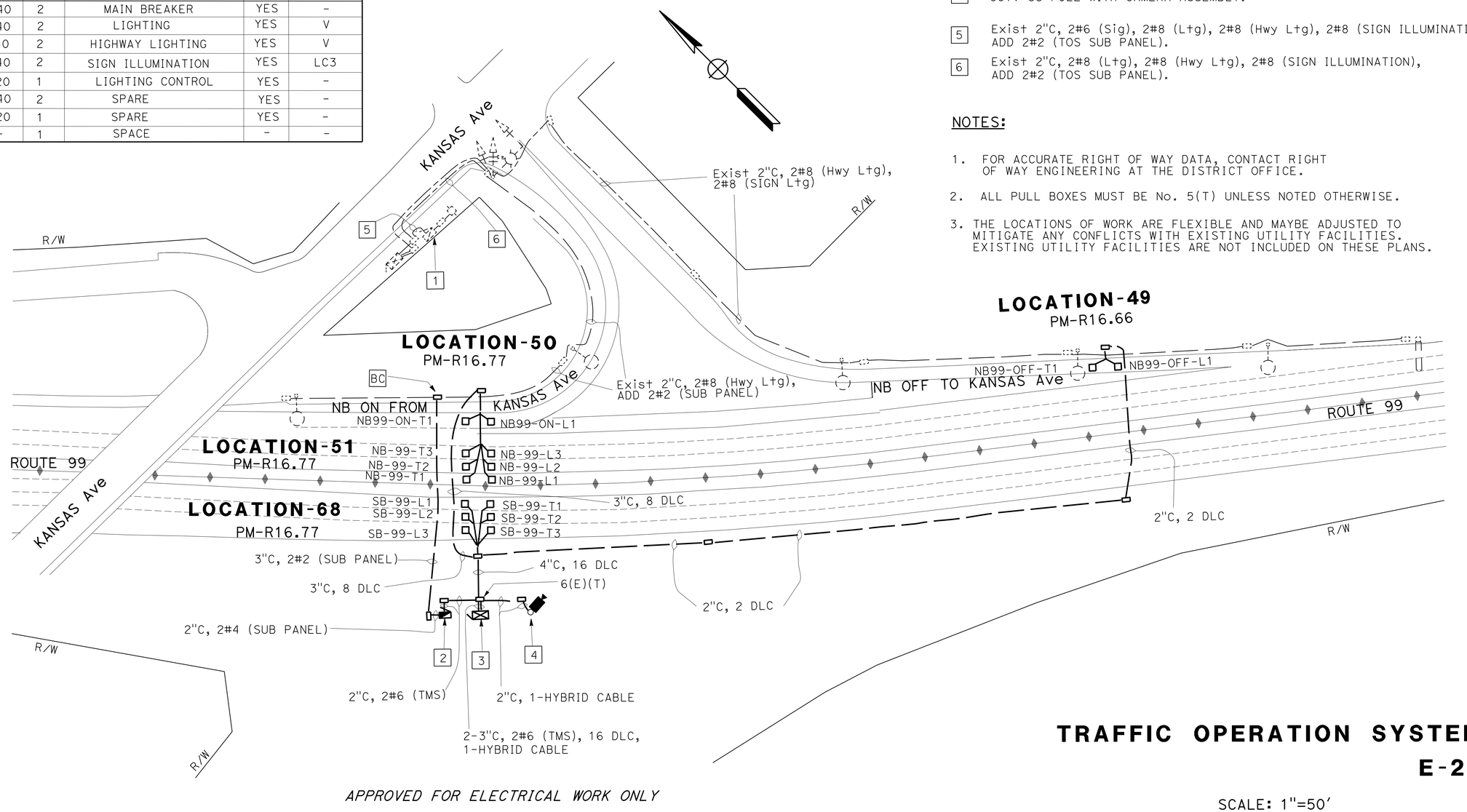

APPROVED FOR ELECTRICAL WORK ONLY

TRAFFIC OPERATION SYSTEM

E-23

SCALE: 1"=50'

STATE OF CALIFORNIA - DEPARTMENT OF TRANSPORTATION
Caltrans® ELECTRICAL DESIGN

FUNCTIONAL SUPERVISOR: ALI BAKHDOUD

CALCULATED-DESIGNED BY: FRED IYASERE
CHECKED BY: FRED IYASERE

REVISED BY: FI
DATE REVISED: 5-6-15

LAST REVISION 05-26-15 | DATE PLOTTED => 28-MAY-2015 | TIME PLOTTED => 09:00

Dist	COUNTY	ROUTE	POST MILES TOTAL PROJECT	SHEET No.	TOTAL SHEETS
10	Sta	5,99	Var	32	83

REGISTERED ELECTRICAL ENGINEER 5/12/15 DATE

5-26-15
PLANS APPROVAL DATE

REGISTERED PROFESSIONAL ENGINEER ALVARO ARAICA No. 15558 Exp. 12/31/15 ELECTRICAL STATE OF CALIFORNIA

THE STATE OF CALIFORNIA OR ITS OFFICERS OR AGENTS SHALL NOT BE RESPONSIBLE FOR THE ACCURACY OR COMPLETENESS OF SCANNED COPIES OF THIS PLAN SHEET.

LEGEND:

1 Exist 120/240 V, 1Ø, 3-WIRE, TYPE III-AF SERVICE EQUIPMENT ENCLOSURE WITH THE FOLLOWING CIRCUIT BREAKERS:

Ctid No. 10260490016930T

AMPERES	VOLTS	POLES	NAMEPLATE	METER	PEC TYPE
100	240	2	MAIN BREAKER	YES	-
50	120	1	TRAFFIC SIGNAL	YES	-
30	240	2	LIGHTING	NO	II
15	120	1	LIGHTING CONTROLS	YES	-
30	240	2	HIGHWAY LIGHTING	NO	II
20	240	2	SIGN LIGHTING	NO	LC3
* 30	120	1	TMS	YES	-
-	-	5	SPACES	YES	-

* ADD CB AND NAMEPLATE AS INDICATED

2 MODEL 334L CABINET FOR TMS. INSTALL WIRELESS MODEM AND DEPARTMENT-FURNISHED MODEL 2070E CONTROLLER UNIT.

NOTES:

1. FOR ACCURATE RIGHT OF WAY DATA, CONTACT RIGHT OF WAY ENGINEERING AT THE DISTRICT OFFICE.
2. ALL PULL BOXES MUST BE No. 5(T) UNLESS NOTED OTHERWISE.
3. THE LOCATIONS OF WORK ARE FLEXIBLE AND MAYBE ADJUSTED TO MITIGATE ANY CONFLICTS WITH EXISTING UTILITY FACILITIES. EXISTING UTILITY FACILITIES ARE NOT INCLUDED ON THESE PLANS.

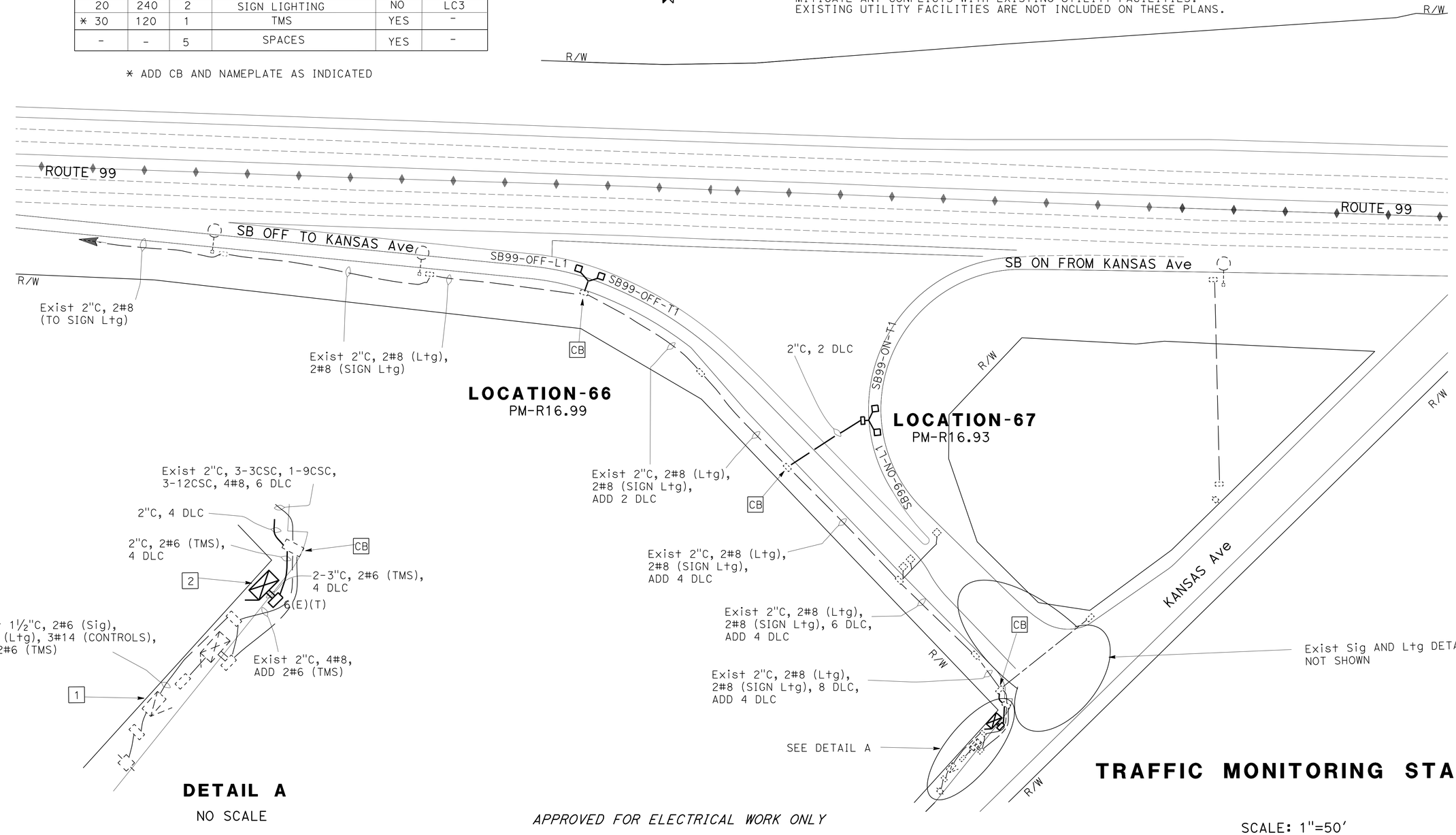

APPROVED FOR ELECTRICAL WORK ONLY

TRAFFIC MONITORING STATION

E-24

SCALE: 1"=50'

STATE OF CALIFORNIA - DEPARTMENT OF TRANSPORTATION
Caltrans® ELECTRICAL DESIGN

FUNCTIONAL SUPERVISOR: ALI BAKHDOUD
CALCULATED-DESIGNED BY: FRED IYASERE
CHECKED BY: AL ARAICA
REVISED BY: FI
DATE REVISED: 5-6-15

LAST REVISION 00-00-00 | DATE PLOTTED => 28-MAY-2015 | TIME PLOTTED => 09:00

Dist	COUNTY	ROUTE	POST MILES TOTAL PROJECT	SHEET No.	TOTAL SHEETS
10	Sta	5,99	Var	33	83

REGISTERED ELECTRICAL ENGINEER 5/12/15 DATE

5-26-15
PLANS APPROVAL DATE

REGISTERED PROFESSIONAL ENGINEER ALVARO ARAICA No. 15558 Exp. 12/31/15 ELECTRICAL STATE OF CALIFORNIA

THE STATE OF CALIFORNIA OR ITS OFFICERS OR AGENTS SHALL NOT BE RESPONSIBLE FOR THE ACCURACY OR COMPLETENESS OF SCANNED COPIES OF THIS PLAN SHEET.

LEGEND:

[1] MODEL 334L CABINET FOR TMS. INSTALL WIRELESS MODEM AND DEPARTMENT-FURNISHED MODEL 2070E CONTROLLER UNIT.

NOTES:

1. ALL PULL BOXES MUST BE No. 5(T) UNLESS NOTED OTHERWISE.
2. FOR ACCURATE RIGHT OF WAY DATA, CONTACT RIGHT OF WAY ENGINEERING AT THE DISTRICT OFFICE.
3. THE LOCATIONS OF WORK ARE FLEXIBLE AND MAYBE ADJUSTED TO MITIGATE ANY CONFLICTS WITH EXISTING UTILITY FACILITIES. EXISTING UTILITY FACILITIES ARE NOT INCLUDED ON THESE PLANS.

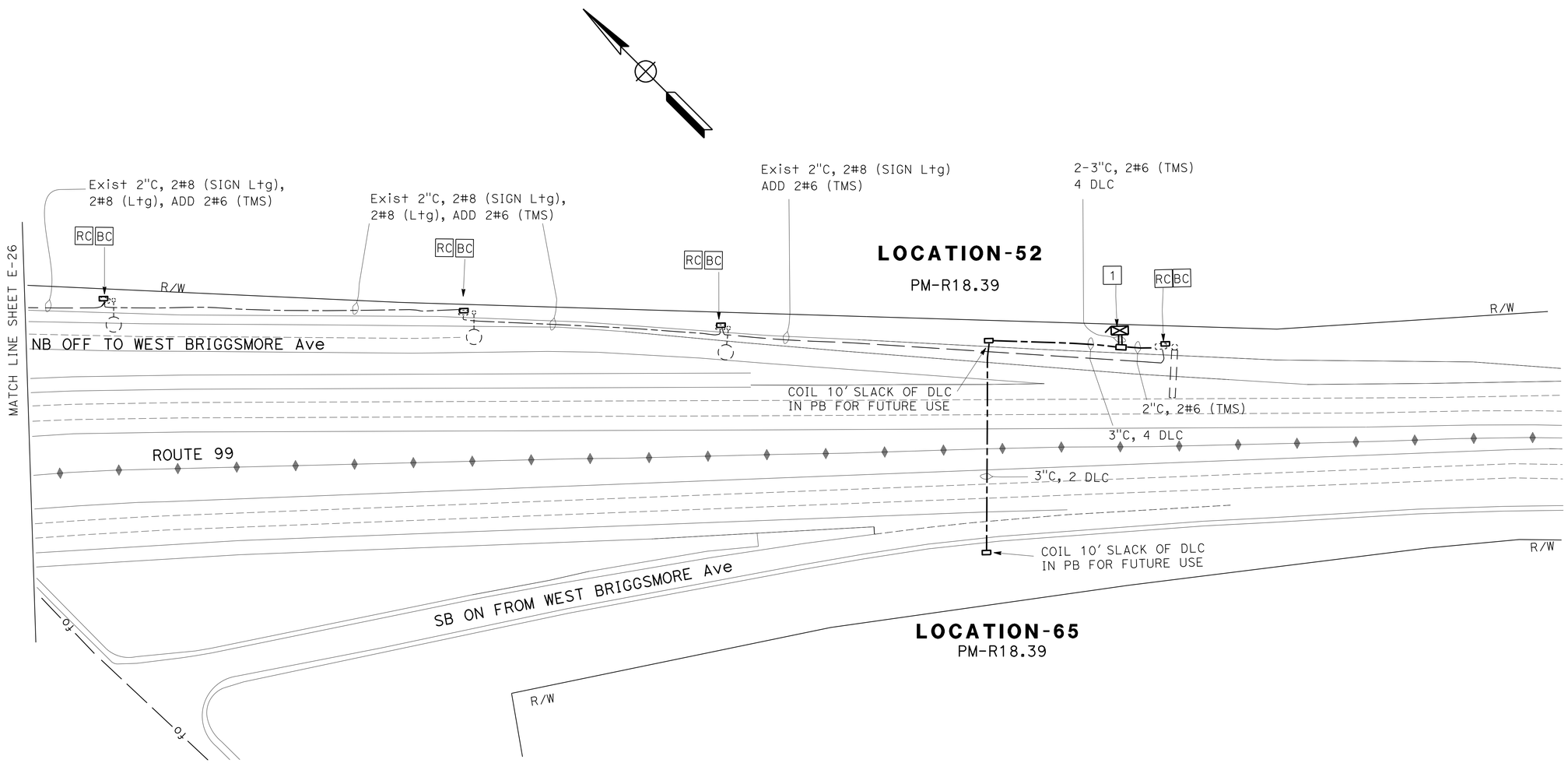

TRAFFIC MONITORING STATION E-25

SCALE: 1"=50'

APPROVED FOR ELECTRICAL WORK ONLY

STATE OF CALIFORNIA - DEPARTMENT OF TRANSPORTATION
Caltrans® ELECTRICAL DESIGN

FUNCTIONAL SUPERVISOR: ALI BAKHDOUD
CALCULATED-DESIGNED BY: FRED IYASERE
CHECKED BY: AL ARAICA
REVISED BY: FI
DATE REVISED: 5-6-15

LAST REVISION 05-26-15 | DATE PLOTTED => 28-MAY-2015 | TIME PLOTTED => 09:00

Dist	COUNTY	ROUTE	POST MILES TOTAL PROJECT	SHEET No.	TOTAL SHEETS
10	Sta	5,99	Var	34	83

REGISTERED ELECTRICAL ENGINEER 5/12/15 DATE

5-26-15
PLANS APPROVAL DATE

REGISTERED PROFESSIONAL ENGINEER ALVARO ARAICA No. 15558 Exp. 12/31/15 ELECTRICAL STATE OF CALIFORNIA

THE STATE OF CALIFORNIA OR ITS OFFICERS OR AGENTS SHALL NOT BE RESPONSIBLE FOR THE ACCURACY OR COMPLETENESS OF SCANNED COPIES OF THIS PLAN SHEET.

LEGEND:

1. Exist 120/240 V, 1Ø, 3-WIRE TYPE III-BF SERVICE EQUIPMENT ENCLOSURE WITH THE FOLLOWING CIRCUIT BREAKERS:

AMPERES	VOLTS	POLES	NAMEPLATE	METER	PEC TYPE
100	240	2	MAIN BREAKER	YES	-
100	240	2	MAIN BREAKER	-	-
50	120	1	SIGNAL #1	YES	-
30	120	1	SIGNAL #2	YES	-
20	120	1	CCTV	YES	-
40	240	2	Ckt #1	-	-
40	240	2	Ckt #2	-	-
40	240	2	Hwy Ltg	YES	-
40	240	2	SIGN Ltg	YES	
* 30	120	1	TMS OFF-RAMP	YES	-
20	120	1	SPARE	YES	-
-	-	1	SPACE	-	-

* ADD CB AND NAMEPLATE AS INDICATED

2. Exist MODEL 334L CABINET FOR Sig.
3. Exist MODEL 334L CABINET FOR CCTV.
4. MODEL 334L CABINET FOR TMS AND CCTV. INSTALL WIRELESS MODEM, VIDEO ENCODER UNIT, CCU AND DEPARTMENT-FURNISHED MODEL 2070E CONTROLLER UNIT.
5. RS Exist TYPE III-AF SERVICE EQUIPMENT ENCLOSURE. INSTALL A 120/240 V, 1Ø, 3-WIRE TYPE III-AF SERVICE EQUIPMENT ENCLOSURE ON Exist FOUNDATION WITH CIRCUIT BREAKERS AS SHOWN ON TABLE "A" ON THIS SHEET. COORDINATE SWITCHING OF CABINETS WITH SERVING UTILITY.
6. 2-1½"C 3#2, 3#1/0, 2#8, 2#10, ADD 2#6 (TOS).
7. CCTV 35 POLE WITH CAMERA ASSEMBLY.

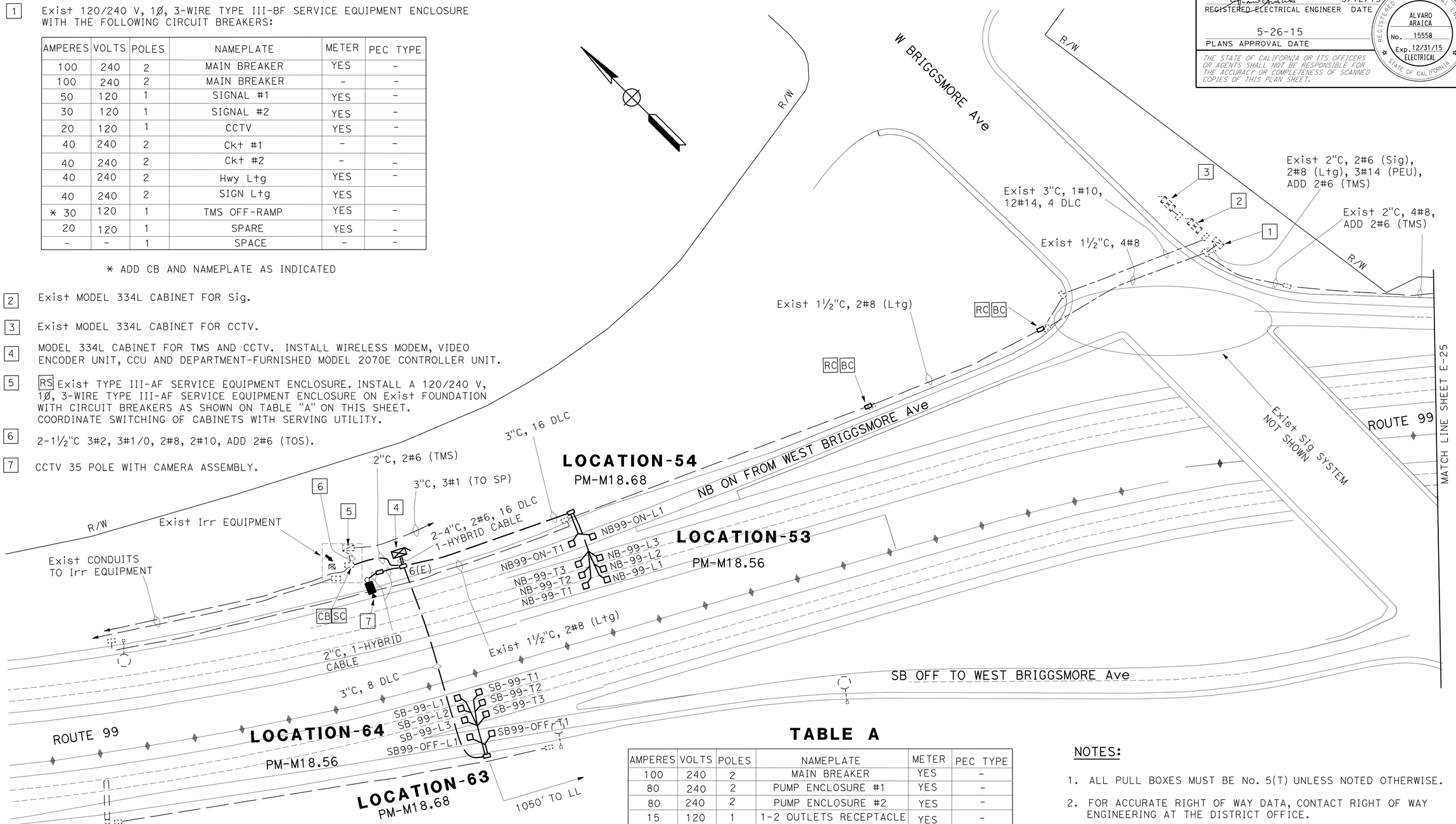

TABLE A

AMPERES	VOLTS	POLES	NAMEPLATE	METER	PEC TYPE
100	240	2	MAIN BREAKER	YES	-
80	240	2	PUMP ENCLOSURE #1	YES	-
80	240	2	PUMP ENCLOSURE #2	YES	-
15	120	1	1-2 OUTLETS RECEPTACLE	YES	-
15	120	1	CONTROLS	YES	-
30	120	1	TOS	YES	-
15	120	1	SPARE	YES	-
-	-	6	SPACES	-	-

NOTES:

1. ALL PULL BOXES MUST BE No. 5(T) UNLESS NOTED OTHERWISE.
2. FOR ACCURATE RIGHT OF WAY DATA, CONTACT RIGHT OF WAY ENGINEERING AT THE DISTRICT OFFICE.
3. THE LOCATIONS OF WORK ARE FLEXIBLE AND MAYBE ADJUSTED TO MITIGATE ANY CONFLICTS WITH EXISTING UTILITY FACILITIES. EXISTING UTILITY FACILITIES ARE NOT INCLUDED ON THESE PLANS.

TRAFFIC OPERATION SYSTEM
E-26

SCALE: 1"=50'

APPROVED FOR ELECTRICAL WORK ONLY

STATE OF CALIFORNIA - DEPARTMENT OF TRANSPORTATION
Caltrans®
ELECTRICAL DESIGN

FUNCTIONAL SUPERVISOR: ALI BAKHDOUD
CALCULATED-DESIGNED BY: FRED IYASERE
CHECKED BY: AL ARAICA
REVISED BY: FI
DATE REVISED: 05/06/15

LAST REVISION 05-26-15
DATE PLOTTED => 28-MAY-2015
TIME PLOTTED => 09:00

Dist	COUNTY	ROUTE	POST MILES TOTAL PROJECT	SHEET No.	TOTAL SHEETS
10	Sta	5,99	Var	35	83

REGISTERED ELECTRICAL ENGINEER 5/12/15 DATE

5-26-15
PLANS APPROVAL DATE

REGISTERED PROFESSIONAL ENGINEER ALVARO ARAICA No. 15558 Exp. 12/31/15 ELECTRICAL STATE OF CALIFORNIA

THE STATE OF CALIFORNIA OR ITS OFFICERS OR AGENTS SHALL NOT BE RESPONSIBLE FOR THE ACCURACY OR COMPLETENESS OF SCANNED COPIES OF THIS PLAN SHEET.

LEGEND:

1 120/240 V, 1Ø, 3-WIRE TYPE III-BF SERVICE EQUIPMENT ENCLOSURE WITH THE FOLLOWING CIRCUIT BREAKERS:

Ctid No. 1038099X020220L

AMPERES	VOLTS	POLES	NAMEPLATE	METER	PEC TYPE
100	240	2	MAIN BREAKER	YES	-
60	120	1	SB SIGNAL	YES	-
60	120	1	NB SIGNAL	YES	-
30	240	2	Ltg 1 (SB OFF AND NB ON)	YES	-
30	240	2	Ltg 2 (SB ON AND NB OFF)	YES	-
30	120	1	Ltg 3 (W. INTERSECTION)	YES	-
30	120	1	Ltg 4 (E. INTERSECTION)	YES	-
20	120	1	FB	YES	-
20	120	1	Irr	YES	-
30	120	1	TMS-OFF RAMP	YES	-
30	120	1	TMS-ON RAMP	YES	-
15	120	1	SPARE	YES	-
-	-	6	SPACE	-	-

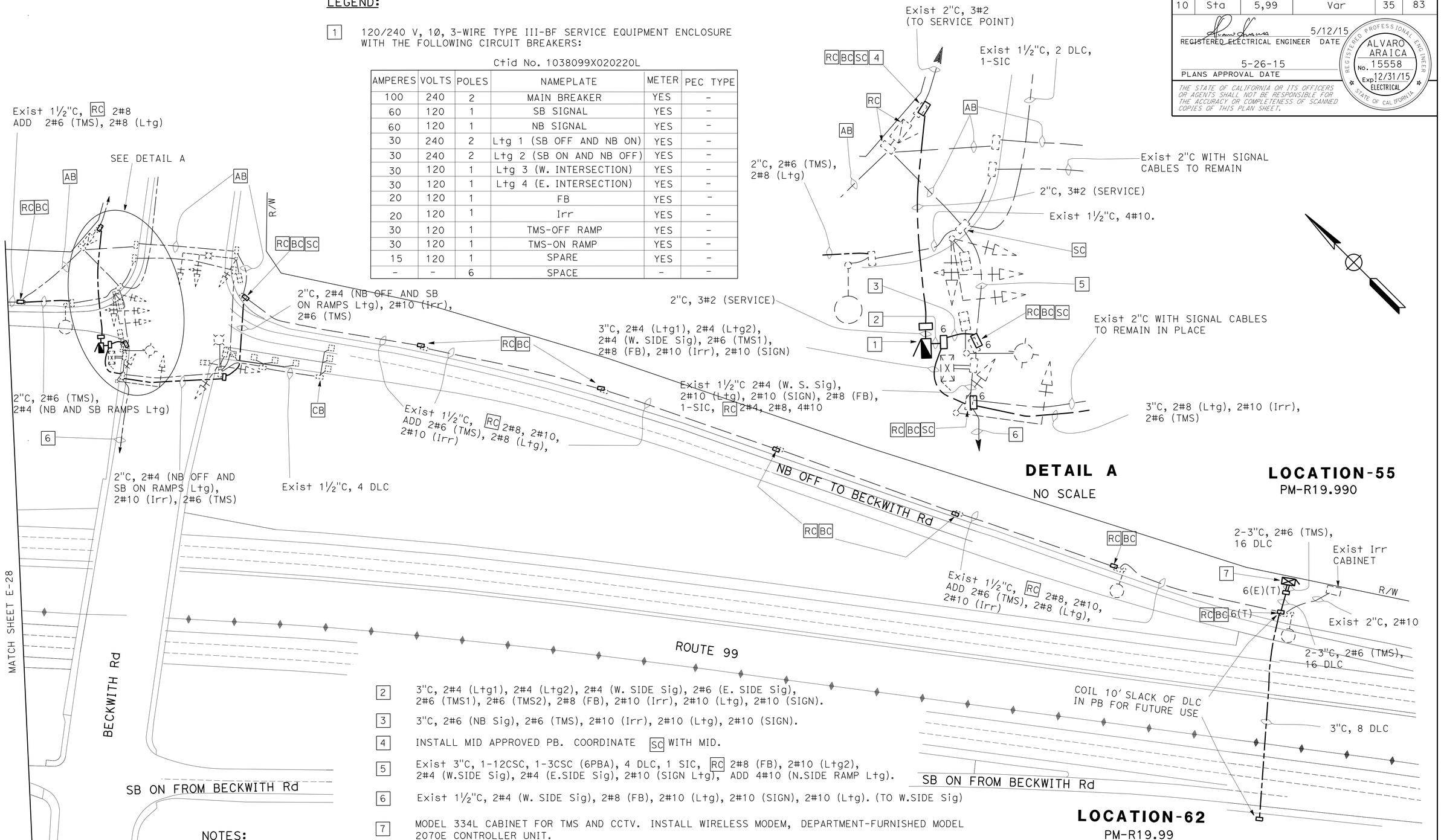

2 3"C, 2#4 (Ltg1), 2#4 (Ltg2), 2#4 (W. SIDE Sig), 2#6 (E. SIDE Sig), 2#6 (TMS1), 2#6 (TMS2), 2#8 (FB), 2#10 (Irr), 2#10 (Ltg), 2#10 (SIGN).

3 3"C, 2#6 (NB Sig), 2#6 (TMS), 2#10 (Irr), 2#10 (Ltg), 2#10 (SIGN).

4 INSTALL MID APPROVED PB. COORDINATE SC WITH MID.

5 Exist 3"C, 1-12CSC, 1-3CSC (6PBA), 4 DLC, 1 SIC, RC 2#8 (FB), 2#10 (Ltg2), 2#4 (W.SIDE Sig), 2#4 (E.SIDE Sig), 2#10 (SIGN Ltg), ADD 4#10 (N.SIDE RAMP Ltg).

6 Exist 1½"C, 2#4 (W. SIDE Sig), 2#8 (FB), 2#10 (Ltg), 2#10 (SIGN), 2#10 (Ltg). (TO W.SIDE Sig)

7 MODEL 334L CABINET FOR TMS AND CCTV. INSTALL WIRELESS MODEM, DEPARTMENT-FURNISHED MODEL 2070E CONTROLLER UNIT.

NOTES:

1. ALL PULL BOXES MUST BE No. 5(T) UNLESS NOTED OTHERWISE.
2. FOR ACCURATE RIGHT OF WAY DATA, CONTACT RIGHT OF WAY ENGINEERING AT THE DISTRICT OFFICE.
3. THE LOCATIONS OF WORK ARE FLEXIBLE AND MAYBE ADJUSTED TO MITIGATE ANY CONFLICTS WITH EXISTING UTILITY FACILITIES. EXISTING UTILITY FACILITIES ARE NOT INCLUDED ON THESE PLANS.

APPROVED FOR ELECTRICAL WORK ONLY

TRAFFIC MONITORING STATION E-27

SCALE: 1"=50'

STATE OF CALIFORNIA - DEPARTMENT OF TRANSPORTATION
Caltrans® ELECTRICAL DESIGN

FUNCTIONAL SUPERVISOR: ALI BAKHDOUD
CALCULATED-DESIGNED BY: FRED IYASERE
CHECKED BY: AL ARAICA
REVISED BY: FI
DATE REVISED: 04/21/15

LAST REVISION 05-26-15
DATE PLOTTED => 28-MAY-2015
TIME PLOTTED => 09:00

Dist	COUNTY	ROUTE	POST MILES TOTAL PROJECT	SHEET No.	TOTAL SHEETS
10	Sta	5,99	Var	36	83

REGISTERED ELECTRICAL ENGINEER 5/12/15 DATE

5-26-15
PLANS APPROVAL DATE

REGISTERED PROFESSIONAL ENGINEER ALVARO ARAICA No. 15558 Exp. 12/31/15 ELECTRICAL STATE OF CALIFORNIA

THE STATE OF CALIFORNIA OR ITS OFFICERS OR AGENTS SHALL NOT BE RESPONSIBLE FOR THE ACCURACY OR COMPLETENESS OF SCANNED COPIES OF THIS PLAN SHEET.

LEGEND:

1 CCTV 35 POLE WITH CAMERA ASSEMBLY.

2 MODEL 334L CABINET FOR TMS AND CCTV. INSTALL WIRELESS MODEM, VIDEO ENCODER UNIT, CCU AND DEPARTMENT-FURNISHED MODEL 2070E CONTROLLER UNIT.

NOTES:

1. ALL PULL BOXES MUST BE No. 5(T) UNLESS NOTED OTHERWISE.
2. FOR ACCURATE RIGHT OF WAY DATA, CONTACT RIGHT OF WAY ENGINEERING AT THE DISTRICT OFFICE.
3. THE LOCATIONS OF WORK ARE FLEXIBLE AND MAYBE ADJUSTED TO MITIGATE ANY CONFLICTS WITH EXISTING UTILITY FACILITIES. EXISTING UTILITY FACILITIES ARE NOT INCLUDED ON THESE PLANS.

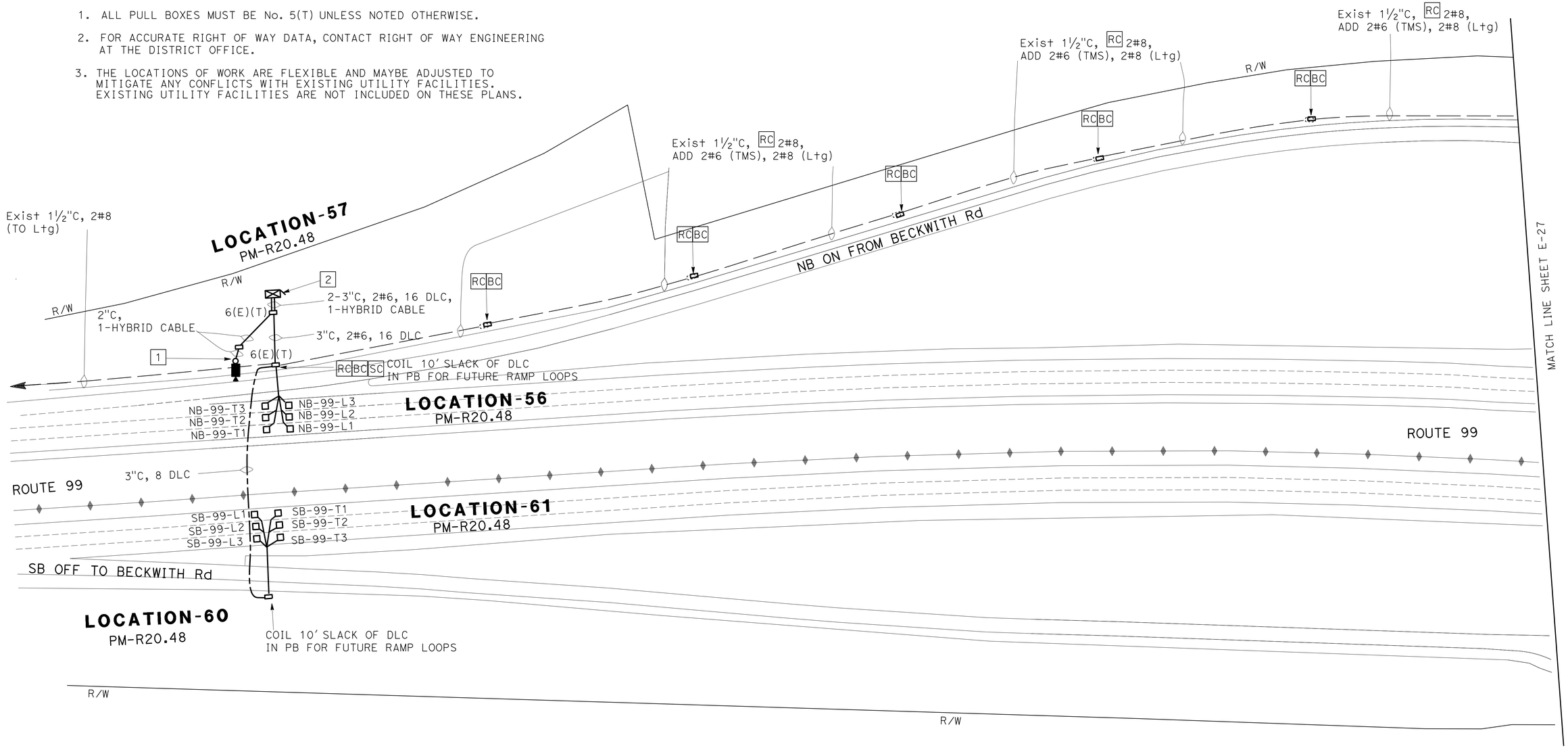

APPROVED FOR ELECTRICAL WORK ONLY

TRAFFIC OPERATION SYSTEM

SCALE: 1"=50'

E-28

REVISED BY	DATE REVISED
F1	05/06/15

FRED IYASERE — CALCULATED-DESIGNED BY
AL ARAICA — CHECKED BY
ALI BAKHDOUD — FUNCTIONAL SUPERVISOR

STATE OF CALIFORNIA - DEPARTMENT OF TRANSPORTATION
Caltrans
ELECTRICAL DESIGN

LAST REVISION 05-26-15 | DATE PLOTTED => 28-MAY-2015 | TIME PLOTTED => 09:00

Dist	COUNTY	ROUTE	POST MILES TOTAL PROJECT	SHEET No.	TOTAL SHEETS
10	Sta	5,99	Var	37	83

REGISTERED ELECTRICAL ENGINEER 5/12/15 DATE

5-26-15
PLANS APPROVAL DATE

REGISTERED PROFESSIONAL ENGINEER
ALVARO ARAICA
No. 15558
Exp. 12/31/15
ELECTRICAL
STATE OF CALIFORNIA

THE STATE OF CALIFORNIA OR ITS OFFICERS OR AGENTS SHALL NOT BE RESPONSIBLE FOR THE ACCURACY OR COMPLETENESS OF SCANNED COPIES OF THIS PLAN SHEET.

LEGEND:

[1] Exist MODEL 334L CABINET FOR VCS. INSTALL WIRELESS MODEM.

NOTES:

1. ALL PULL BOXES MUST BE No. 5(T) UNLESS NOTED OTHERWISE.
2. FOR ACCURATE RIGHT OF WAY DATA, CONTACT RIGHT OF WAY ENGINEERING AT THE DISTRICT OFFICE.
3. THE LOCATIONS OF WORK ARE FLEXIBLE AND MAYBE ADJUSTED TO MITIGATE ANY CONFLICTS WITH EXISTING UTILITY FACILITIES. EXISTING UTILITY FACILITIES ARE NOT INCLUDED ON THESE PLANS.

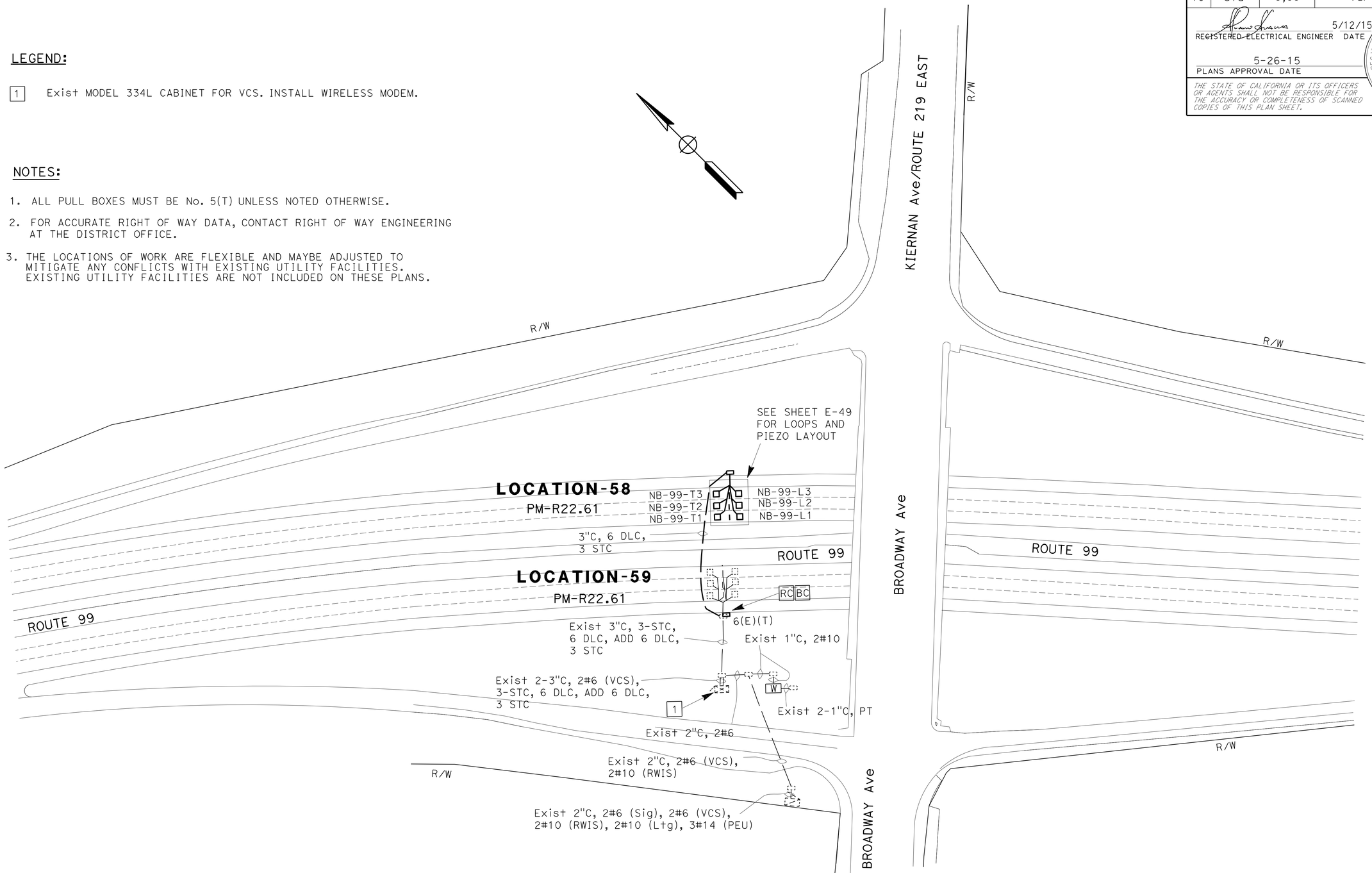

APPROVED FOR ELECTRICAL WORK ONLY

MODIFY VEHICLE CLASSIFICATION STATION

E-29

SCALE: 1"=50'

REVISED BY	DATE REVISED
FI	04/21/15

CALCULATED-DESIGNED BY: FRED IYASERE
CHECKED BY: AL ARAICA
FUNCTIONAL SUPERVISOR: ALI BAKHDOUD

STATE OF CALIFORNIA - DEPARTMENT OF TRANSPORTATION
Caltrans
ELECTRICAL DESIGN

LAST REVISION 05-26-15 | DATE PLOTTED => 28-MAY-2015 | TIME PLOTTED => 09:00

Dist	COUNTY	ROUTE	POST MILES TOTAL PROJECT	SHEET No.	TOTAL SHEETS
10	Sta	5,99	Var	38	83

REGISTERED ELECTRICAL ENGINEER 5/20/15 DATE

5-26-15
PLANS APPROVAL DATE

REGISTERED PROFESSIONAL ENGINEER ALVARO ARAICA No. 15558 Exp. 12/31/15 ELECTRICAL STATE OF CALIFORNIA

THE STATE OF CALIFORNIA OR ITS OFFICERS OR AGENTS SHALL NOT BE RESPONSIBLE FOR THE ACCURACY OR COMPLETENESS OF SCANNED COPIES OF THIS PLAN SHEET.

LEGEND:

1. MODEL 334L CABINET FOR TMS. INSTALL WIRELESS MODEM AND DEPARTMENT-FURNISHED MODEL 2070E CONTROLLER UNIT.
2. RS Exist TYPE 1-B POLE AND TYPE A SERVICE. COORDINATE WITH MID TO TRANSFER SERVICE TO NEW SERVICE EQUIPMENT ENCLOSURE.
3. SP-MID, TYPE H SERVICE.
4. BC SC PB PER SERVING UTILITY REQUIREMENTS. COORDINATE WITH MID. TO BE DONE BY MID.
5. 120/240 V, 1Ø, 3-WIRE TYPE III-BF SERVICE EQUIPMENT ENCLOSURE WITH THE FOLLOWING CIRCUIT BREAKERS:

Ctid No. 1038099X156690L

AMPERES	VOLTS	POLES	NAMEPLATE	METER	PEC TYPE
100	240	2	SERVICE DISCONNECT	YES	-
30	240	2	HIGHWAY LIGHTING	YES	-
15	120	1	LIGHTING CONTROL	YES	V
30	120	1	TMS-1	YES	-
30	120	1	TMS-2	YES	-
30	120	1	SPARE	YES	-
15	120	1	SPARE	YES	-
-	-	6	SPACE	YES	-

NOTES:

1. ALL PULL BOXES MUST BE No. 5(T) UNLESS NOTED OTHERWISE.
2. FOR ACCURATE RIGHT OF WAY DATA, CONTACT RIGHT OF WAY ENGINEERING AT THE DISTRICT OFFICE.
3. THE LOCATIONS OF WORK ARE FLEXIBLE AND MAYBE ADJUSTED TO MITIGATE ANY CONFLICTS WITH EXISTING UTILITY FACILITIES. EXISTING UTILITY FACILITIES ARE NOT INCLUDED ON THESE PLANS.

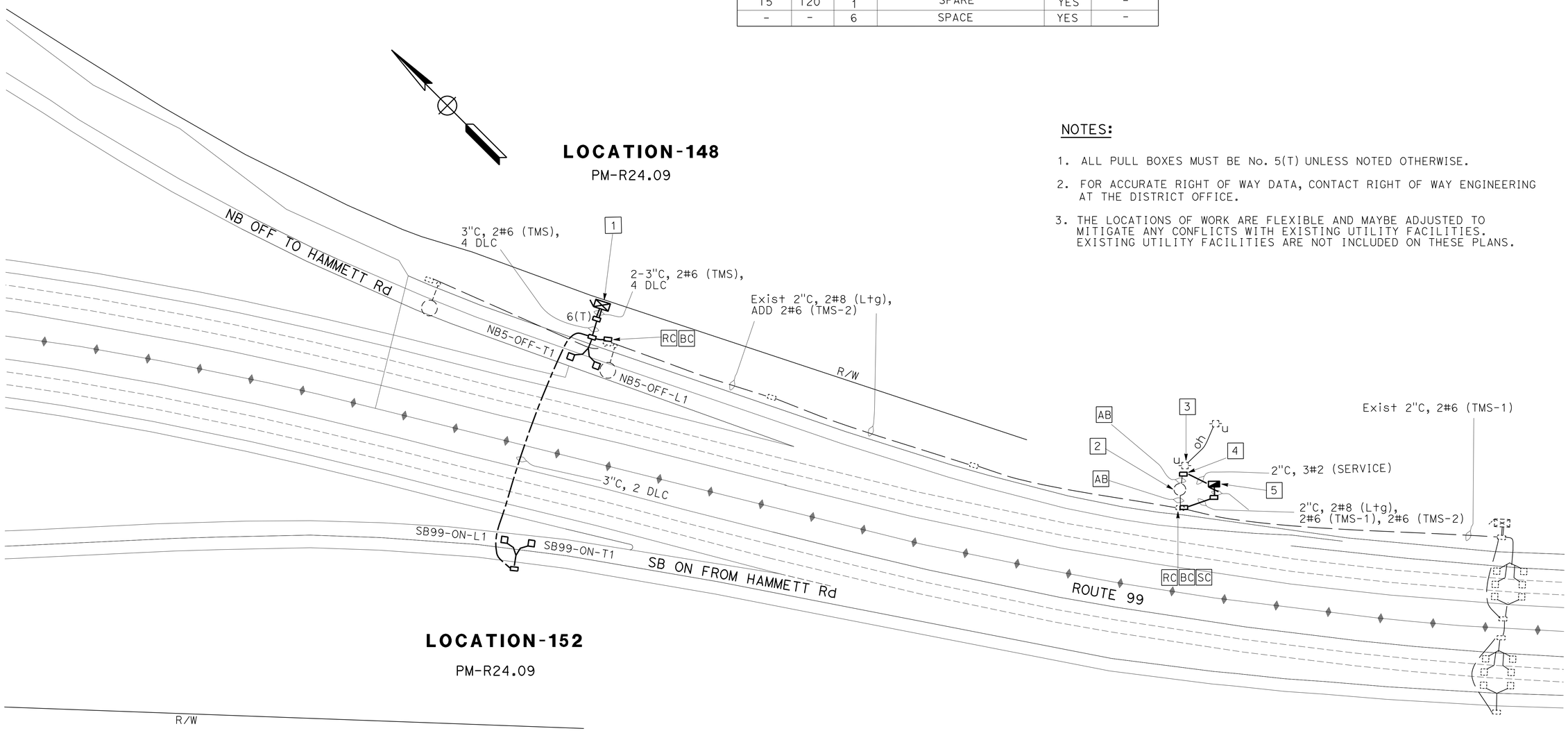

APPROVED FOR ELECTRICAL WORK ONLY

TRAFFIC MONITORING STATION E-30

SCALE: 1"=50'

STATE OF CALIFORNIA - DEPARTMENT OF TRANSPORTATION
Caltrans
ELECTRICAL DESIGN

FUNCTIONAL SUPERVISOR: ALI BAKHDOUD
CALCULATED-DESIGNED BY: FRED IYASERE
CHECKED BY: AL ARAICA
REVISED BY: FI
DATE REVISED: 05/06/15

LAST REVISION 05-26-15 | DATE PLOTTED => 28-MAY-2015 | TIME PLOTTED => 09:00

Dist	COUNTY	ROUTE	POST MILES TOTAL PROJECT	SHEET No.	TOTAL SHEETS
10	Sta	5,99	Var	39	83

REGISTERED ELECTRICAL ENGINEER 5/12/15 DATE

5-26-15
PLANS APPROVAL DATE

REGISTERED PROFESSIONAL ENGINEER ALVARO ARAICA No. 15558 Exp. 12/31/15 ELECTRICAL STATE OF CALIFORNIA

THE STATE OF CALIFORNIA OR ITS OFFICERS OR AGENTS SHALL NOT BE RESPONSIBLE FOR THE ACCURACY OR COMPLETENESS OF SCANNED COPIES OF THIS PLAN SHEET.

LEGEND:

1. RC Exist OH CONDUCTORS. COORDINATE WITH SERVING UTILITY.
2. RC Exist SERVICE POLE AND ATTACHED EQUIPMENT.
3. 120/240 V, 1Ø, 3-WIRE TYPE III-BF SERVICE EQUIPMENT ENCLOSURE WITH THE FOLLOWING CIRCUIT BREAKERS:

Ctid No. 1038099X244250L

AMPERES	VOLTS	POLES	NAMEPLATE	METER	PEC TYPE
100	240	2	MAIN BREAKER	YES	-
30	240	2	HIGHWAY LIGHTING	YES	-
15	120	1	LIGHTING CONTROL	YES	V
30	120	1	TMS	YES	-
30	120	1	SPARE	YES	-
15	120	1	SPARE	YES	-
-	-	6	SPACE	-	-

4. SP-MID, TYPE H SERVICE.
5. MODEL 334L CABINET FOR TMS AND CCTV. INSTALL WIRELESS MODEM, VIDEO ENCODER UNIT, CCU AND DEPARTMENT-FURNISHED MODEL 2070E CONTROLLER UNIT.
6. CCTV 35 POLE WITH CAMERA ASSEMBLY.

NOTES:

1. ALL PULL BOXES MUST BE No. 5(T) UNLESS NOTED OTHERWISE.
2. FOR ACCURATE RIGHT OF WAY DATA, CONTACT RIGHT OF WAY ENGINEERING AT THE DISTRICT OFFICE.
3. THE LOCATIONS OF WORK ARE FLEXIBLE AND MAYBE ADJUSTED TO MITIGATE ANY CONFLICTS WITH EXISTING UTILITY FACILITIES. EXISTING UTILITY FACILITIES ARE NOT INCLUDED ON THESE PLANS.

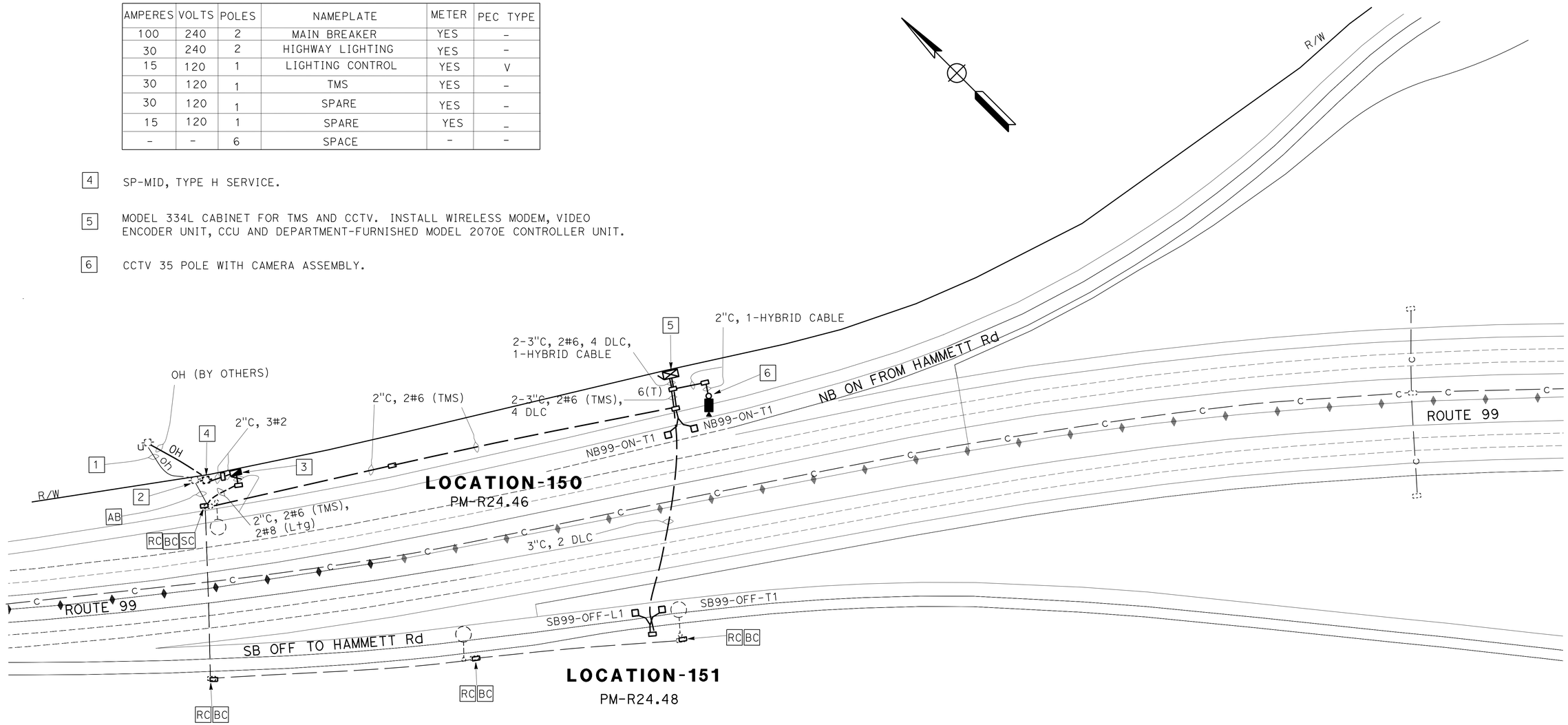

TRAFFIC OPERATION SYSTEM

E-31

APPROVED FOR ELECTRICAL WORK ONLY

SCALE: 1"=50'

STATE OF CALIFORNIA - DEPARTMENT OF TRANSPORTATION
Caltrans®
ELECTRICAL DESIGN

FUNCTIONAL SUPERVISOR: ALI BAKHDOUD
CALCULATED-DESIGNED BY: FRED IYASERE
CHECKED BY: AL ARAICA
REVISED BY: FI
DATE REVISED: 05/06/15

LAST REVISION 05-26-15
DATE PLOTTED => 28-MAY-2015
TIME PLOTTED => 09:00

Dist	COUNTY	ROUTE	POST MILES TOTAL PROJECT	SHEET No.	TOTAL SHEETS
10	Sta	5,99	Var	40	83

REGISTERED ELECTRICAL ENGINEER 5/20/15 DATE

5-26-15
PLANS APPROVAL DATE

REGISTERED PROFESSIONAL ENGINEER
ALVARO ARAICA
No. 15558
Exp. 12/31/15
ELECTRICAL
STATE OF CALIFORNIA

THE STATE OF CALIFORNIA OR ITS OFFICERS OR AGENTS SHALL NOT BE RESPONSIBLE FOR THE ACCURACY OR COMPLETENESS OF SCANNED COPIES OF THIS PLAN SHEET.

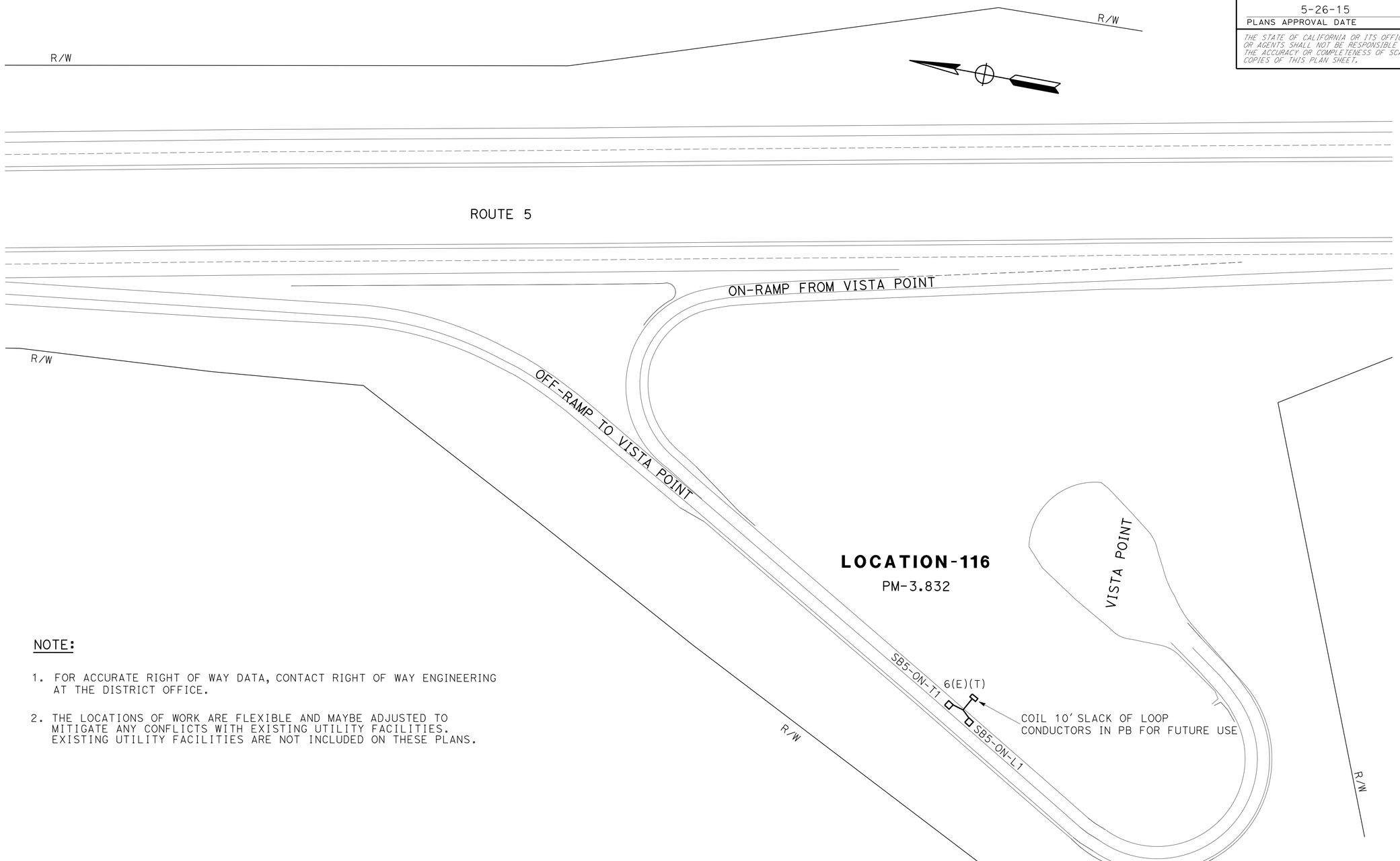

NOTE:

1. FOR ACCURATE RIGHT OF WAY DATA, CONTACT RIGHT OF WAY ENGINEERING AT THE DISTRICT OFFICE.

2. THE LOCATIONS OF WORK ARE FLEXIBLE AND MAYBE ADJUSTED TO MITIGATE ANY CONFLICTS WITH EXISTING UTILITY FACILITIES. EXISTING UTILITY FACILITIES ARE NOT INCLUDED ON THESE PLANS.

APPROVED FOR ELECTRICAL WORK ONLY

TRAFFIC MONITORING STATION

E-32

SCALE: 1"=50'

REVISED BY	DATE REVISED
FI	04/21/15

CALCULATED-DESIGNED BY: FRED IYASERE
CHECKED BY: AL ARAICA
FUNCTIONAL SUPERVISOR: ALI BAKHDOUD

STATE OF CALIFORNIA - DEPARTMENT OF TRANSPORTATION
Caltrans
ELECTRICAL DESIGN

LAST REVISION 05-26-15 | DATE PLOTTED => 28-MAY-2015 | TIME PLOTTED => 09:00

Dist	COUNTY	ROUTE	POST MILES TOTAL PROJECT	SHEET No.	TOTAL SHEETS
10	Sta	5,99	Var	41	83

REGISTERED ELECTRICAL ENGINEER 5/20/15 DATE

PLANS APPROVAL DATE 5-26-15

REGISTERED PROFESSIONAL ENGINEER ALVARO ARAICA No. 15558 Exp. 12/31/15 ELECTRICAL STATE OF CALIFORNIA

THE STATE OF CALIFORNIA OR ITS OFFICERS OR AGENTS SHALL NOT BE RESPONSIBLE FOR THE ACCURACY OR COMPLETENESS OF SCANNED COPIES OF THIS PLAN SHEET.

LEGEND:

1 120/240 V, 1Ø, 3-WIRE TYPE III-AF SERVICE EQUIPMENT ENCLOSURE WITH THE FOLLOWING CIRCUIT BREAKERS:

SUB PANEL

AMPERES	VOLTS	POLES	NAMEPLATE	METER	PEC TYPE
60	240	2	MAIN BREAKER	-	-
30	120	1	TMS-NB	-	-
30	120	1	TMS-SB	-	-
30	120	1	SPARE	-	-
15	120	1	SPARE	-	-
-	-	6	SPACE	-	-

2 MODEL 334L CABINET FOR TMS. INSTALL WIRELESS MODEM AND DEPARTMENT-FURNISHED MODEL 2070E CONTROLLER UNIT.

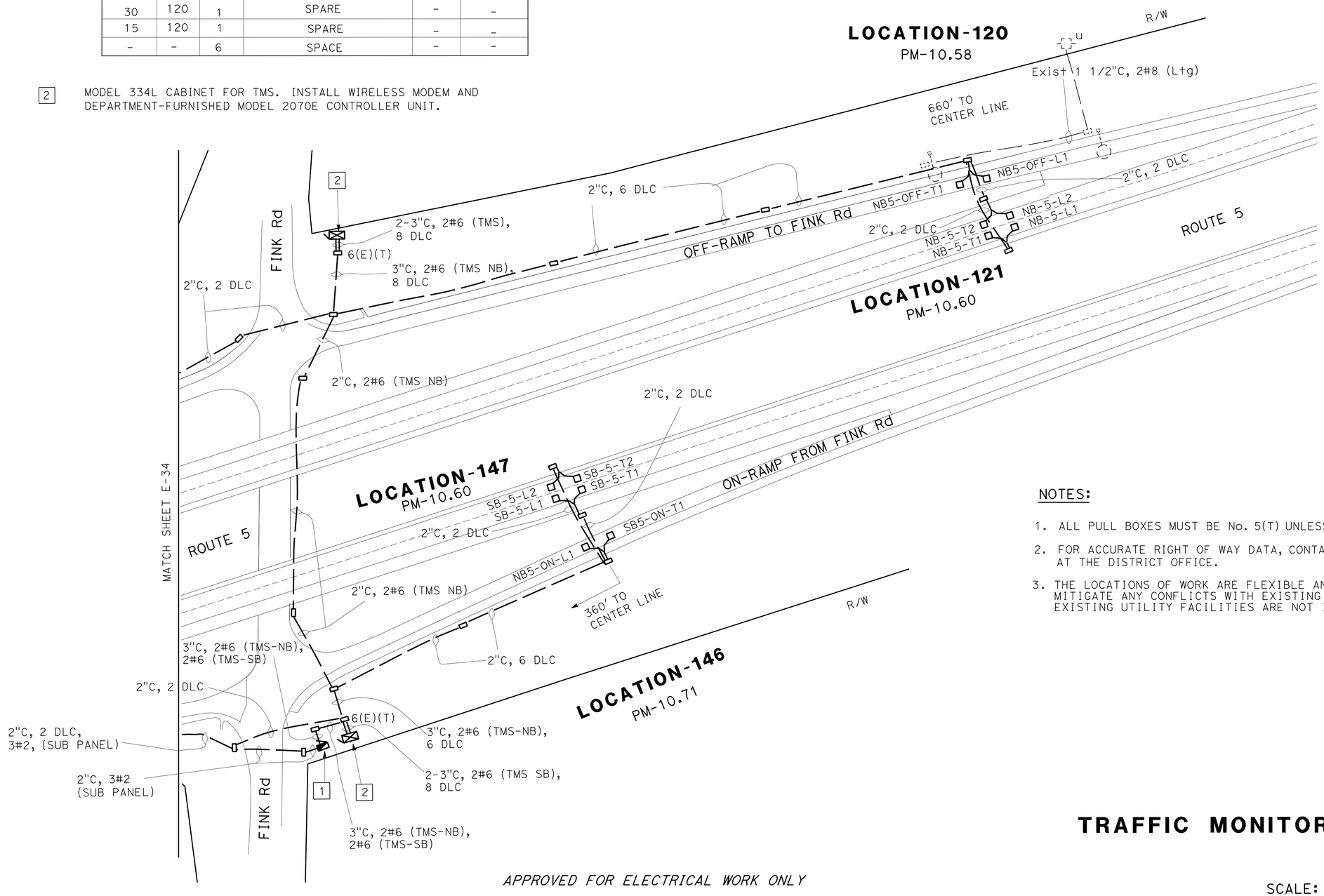

NOTES:

1. ALL PULL BOXES MUST BE No. 5(T) UNLESS NOTED OTHERWISE.
2. FOR ACCURATE RIGHT OF WAY DATA, CONTACT RIGHT OF WAY ENGINEERING AT THE DISTRICT OFFICE.
3. THE LOCATIONS OF WORK ARE FLEXIBLE AND MAYBE ADJUSTED TO MITIGATE ANY CONFLICTS WITH EXISTING UTILITY FACILITIES. EXISTING UTILITY FACILITIES ARE NOT INCLUDED ON THESE PLANS.

APPROVED FOR ELECTRICAL WORK ONLY

TRAFFIC MONITORING STATION

E-33

SCALE: 1"=50'

STATE OF CALIFORNIA - DEPARTMENT OF TRANSPORTATION

Caltrans

ELECTRICAL DESIGN

FUNCTIONAL SUPERVISOR: ALI BAKHDOUD

CALCULATED-DESIGNED BY: FRED IYASERE

CHECKED BY: ALVARO ARAICA

REVISED BY: FI

DATE REVISED: 05/06/15

LAST REVISION DATE PLOTTED => 28-MAY-2015 TIME PLOTTED => 09:00

05-26-15

Dist	COUNTY	ROUTE	POST MILES TOTAL PROJECT	SHEET No.	TOTAL SHEETS
10	Sta	5,99	Var	42	83

REGISTERED ELECTRICAL ENGINEER 5/20/15 DATE

PLANS APPROVAL DATE 5-26-15

REGISTERED PROFESSIONAL ENGINEER ALVARO ARAICA No. 15558 Exp. 12/31/15 ELECTRICAL STATE OF CALIFORNIA

THE STATE OF CALIFORNIA OR ITS OFFICERS OR AGENTS SHALL NOT BE RESPONSIBLE FOR THE ACCURACY OR COMPLETENESS OF SCANNED COPIES OF THIS PLAN SHEET.

LEGEND:

1 SP PG&E, 120/240 V.

2 RC Exist SERVICE POLE AND ATTACHED EQUIPMENT. INSTALL 25' SERVICE POLE AND TYPE H SERVICE.

3 120/240 V, 1Ø, 3-WIRE TYPE III-CF SERVICE EQUIPMENT ENCLOSURE WITH THE FOLLOWING CIRCUIT BREAKERS:

Ctid No. 1038005X010845L

AMPERES	VOLTS	POLES	NAMEPLATE	METER	PEC TYPE
100	240	2	MAIN BREAKER	YES	-
30	240	2	HIGHWAY LIGHTING	YES	V
15	120	1	LIGHTING CONTROL	YES	V
30	120	1	SPARE	YES	-
15	120	1	SPACE	YES	-
-	-	4	SPACE	YES	-

Ctid No. 1038005X010845T

AMPERES	VOLTS	POLES	NAMEPLATE	METER	PEC TYPE
100	240	2	MAIN BREAKER	YES	-
30	120	1	SUB PANEL	YES	-
30	120	1	SPARE	YES	-
15	120	1	SPARE	YES	-
-	-	6	SPACE	-	-

4 RC Exist OH CONDUCTORS. COORDINATE WITH SERVING UTILITY.

NOTES:

1. FOR ACCURATE RIGHT OF WAY DATA, CONTACT RIGHT OF WAY ENGINEERING AT THE DISTRICT OFFICE.
2. ALL PULL BOXES MUST BE No. 5(T) UNLESS NOTED OTHERWISE.
3. THE LOCATIONS OF WORK ARE FLEXIBLE AND MAYBE ADJUSTED TO MITIGATE ANY CONFLICTS WITH EXISTING UTILITY FACILITIES. EXISTING UTILITY FACILITIES ARE NOT INCLUDED ON THESE PLANS.

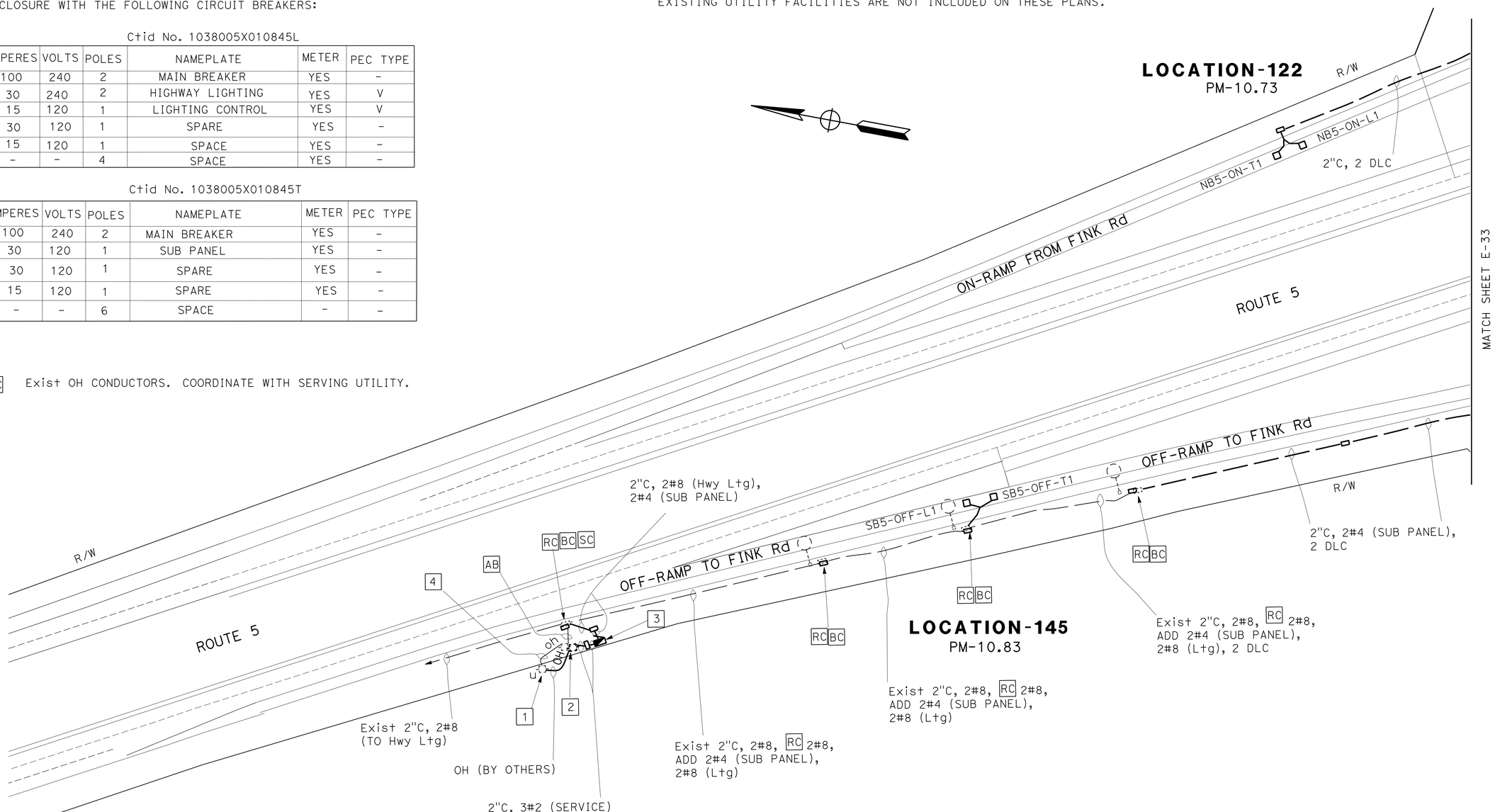

TRAFFIC MONITORING STATION

E-34

SCALE: 1"=50'

APPROVED FOR ELECTRICAL WORK ONLY

STATE OF CALIFORNIA - DEPARTMENT OF TRANSPORTATION

Caltrans® ELECTRICAL DESIGN

FUNCTIONAL SUPERVISOR: ALI BAKHDOUD

CALCULATED-DESIGNED BY: FRED IYASERE

CHECKED BY: ALVARO ARAICA

REVISED BY: FI

DATE REVISED: 04/21/15

LAST REVISION 05-26-15 | DATE PLOTTED => 28-MAY-2015 | TIME PLOTTED => 09:00

Dist	COUNTY	ROUTE	POST MILES TOTAL PROJECT	SHEET No.	TOTAL SHEETS
10	Sta	5,99	Var	43	83

REGISTERED ELECTRICAL ENGINEER 5/20/15 DATE

PLANS APPROVAL DATE 5-26-15

REGISTERED PROFESSIONAL ENGINEER ALVARO ARAICA No. 15558 Exp. 12/31/15 ELECTRICAL STATE OF CALIFORNIA

THE STATE OF CALIFORNIA OR ITS OFFICERS OR AGENTS SHALL NOT BE RESPONSIBLE FOR THE ACCURACY OR COMPLETENESS OF SCANNED COPIES OF THIS PLAN SHEET.

NOTES:

1. ALL PULL BOXES MUST BE No. 5(T) UNLESS NOTED OTHERWISE.
2. FOR ACCURATE RIGHT OF WAY DATA, CONTACT RIGHT OF WAY ENGINEERING AT THE DISTRICT OFFICE.
3. THE LOCATIONS OF WORK ARE FLEXIBLE AND MAYBE ADJUSTED TO MITIGATE ANY CONFLICTS WITH EXISTING UTILITY FACILITIES. EXISTING UTILITY FACILITIES ARE NOT INCLUDED ON THESE PLANS.

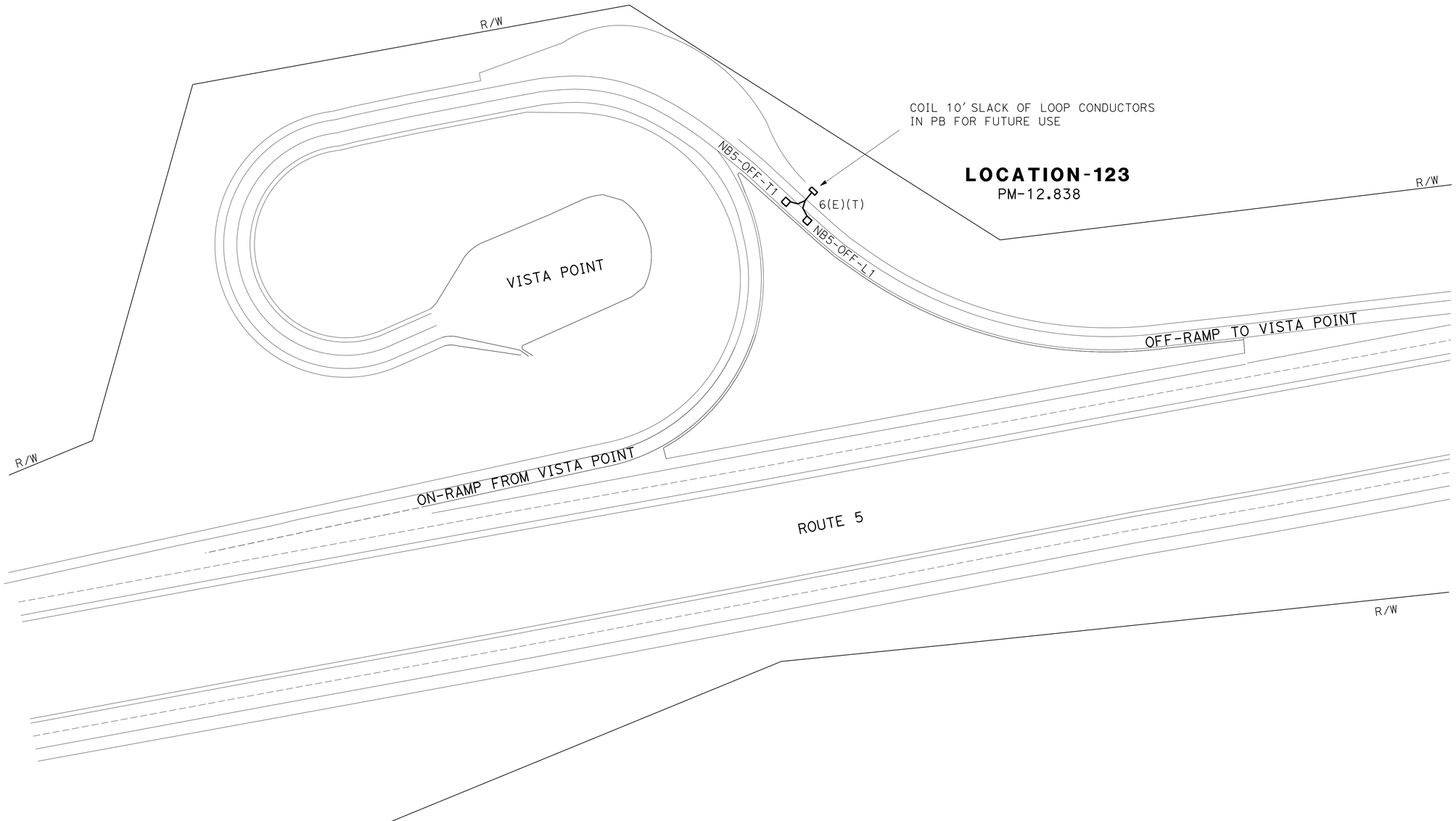

APPROVED FOR ELECTRICAL WORK ONLY

TRAFFIC MONITORING STATION

E-35

SCALE: 1"=50'

REVISED BY	DATE REVISED
FI	04/21/15

CALCULATED-DESIGNED BY: FRED IYASERE
CHECKED BY: AL ARAICA
FUNCTIONAL SUPERVISOR: ALI BAKHDOUD

STATE OF CALIFORNIA - DEPARTMENT OF TRANSPORTATION
Caltrans
ELECTRICAL DESIGN

LAST REVISION 05-26-15 | DATE PLOTTED => 28-MAY-2015 | TIME PLOTTED => 09:00

Dist	COUNTY	ROUTE	POST MILES TOTAL PROJECT	SHEET No.	TOTAL SHEETS
10	Sta	5,99	Var	44	83

REGISTERED ELECTRICAL ENGINEER 5/20/15 DATE

5-26-15
PLANS APPROVAL DATE

REGISTERED PROFESSIONAL ENGINEER ALVARO ARAICA No. 15558 Exp. 12/31/15 ELECTRICAL STATE OF CALIFORNIA

THE STATE OF CALIFORNIA OR ITS OFFICERS OR AGENTS SHALL NOT BE RESPONSIBLE FOR THE ACCURACY OR COMPLETENESS OF SCANNED COPIES OF THIS PLAN SHEET.

NOTES:

1. ALL PULL BOXES SHALL BE No. 5(T) UNLESS NOTED OTHERWISE.

LEGEND:

1 Exist 120/240 V, 1Ø, 3-WIRE SERVICE EQUIPMENT ENCLOSURE WITH THE FOLLOWING CIRCUIT BREAKERS:

Ctid No. 1038099X160390L

AMPERES	VOLTS	POLES	NAMEPLATE	METER	PEC TYPE
100	240	2	MAIN BREAKER	YES	
30	120	1	LIGHTING	YES	-
15	120	1	FB-SB	YES	-
* 60	240	2	SUB PANEL	YES	-
* 30	120	1	TMS-NB	YES	-
* 30	120	1	TMS-SB	YES	-
30	120	1	SPARE	YES	-
-	-	6	SPACE	YES	-

* ADD CB AND NAMEPLATE AS INDICATED

2 MODEL 334L CABINET FOR TMS. INSTALL WIRELESS MODEM AND DEPARTMENT-FURNISHED MODEL 2070E CONTROLLER UNIT.

3 Exist 1½"C RC 2#6, 2#8, 2#10, ADD 2#4 (SUB PANEL), 2#6 (Ltg), 2#10 (FB).

4 Exist 1½"C RC 2#6, 2#8, 2#10, ADD 2#4 (SUB PANEL), 2#6 (Ltg), 2#10 (FB), 2 DLC.

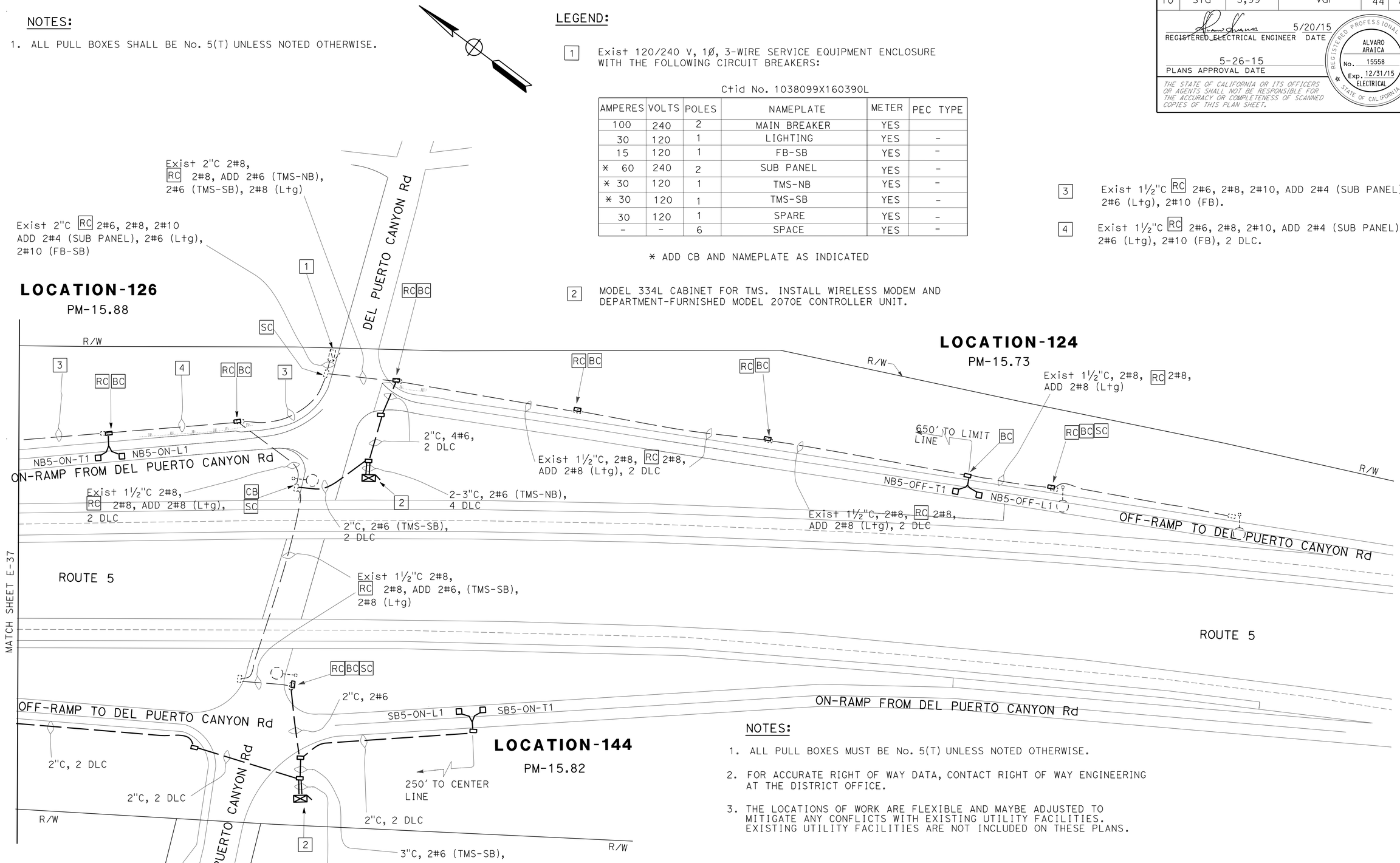

NOTES:

1. ALL PULL BOXES MUST BE No. 5(T) UNLESS NOTED OTHERWISE.
2. FOR ACCURATE RIGHT OF WAY DATA, CONTACT RIGHT OF WAY ENGINEERING AT THE DISTRICT OFFICE.
3. THE LOCATIONS OF WORK ARE FLEXIBLE AND MAYBE ADJUSTED TO MITIGATE ANY CONFLICTS WITH EXISTING UTILITY FACILITIES. EXISTING UTILITY FACILITIES ARE NOT INCLUDED ON THESE PLANS.

TRAFFIC MONITORING STATION E-36

APPROVED FOR ELECTRICAL WORK ONLY

SCALE: 1"=50'

STATE OF CALIFORNIA - DEPARTMENT OF TRANSPORTATION
Caltrans® ELECTRICAL DESIGN

REVISED BY	DATE REVISED
FI	05/06/15

FUNCTIONAL SUPERVISOR: ALI BAKHDOUD
CALCULATED-DESIGNED BY: FRED IYASERE
CHECKED BY: ALVARO ARAICA

LAST REVISION 05-26-15 | DATE PLOTTED => 28-MAY-2015 | TIME PLOTTED => 09:00

Dist	COUNTY	ROUTE	POST MILES TOTAL PROJECT	SHEET No.	TOTAL SHEETS
10	Sta	5,99	Var	45	83

REGISTERED ELECTRICAL ENGINEER 5/20/15 DATE

5-26-15
PLANS APPROVAL DATE

REGISTERED PROFESSIONAL ENGINEER ALVARO ARAICA No. 15558 Exp. 12/31/15 ELECTRICAL STATE OF CALIFORNIA

THE STATE OF CALIFORNIA OR ITS OFFICERS OR AGENTS SHALL NOT BE RESPONSIBLE FOR THE ACCURACY OR COMPLETENESS OF SCANNED COPIES OF THIS PLAN SHEET.

LEGEND:

1. CCTV 35 POLE WITH CAMERA ASSEMBLY.
2. ROADSIDE WEATHER INFORMATION SYSTEM WITH WIRELESS MODEM. SEE SHEET E-50 FOR DETAILS.
3. MODEL 334L CABINET FOR TMS AND CCTV. INSTALL WIRELESS MODEM, VIDEO ENCODER UNIT, CCU AND DEPARTMENT-FURNISHED MODEL 2070E CONTROLLER UNIT.
4. 120/240 V, 1Ø, 3-WIRE TYPE III-AF SERVICE EQUIPMENT ENCLOSURE WITH THE FOLLOWING CIRCUIT BREAKERS:

SUB PANEL

AMPERES	VOLTS	POLES	NAMEPLATE	METER	PEC TYPE
60	240	2	MAIN BREAKER	NO	-
30	120	1	TMS	NO	-
15	120	1	RWIS	NO	-
15	120	1	SPARE	NO	-
20	120	1	SPARE	NO	-
-	-	6	SPACE	NO	-

NOTES:

1. ALL PULL BOXES MUST BE No. 5(T) UNLESS NOTED OTHERWISE.
2. FOR ACCURATE RIGHT OF WAY DATA, CONTACT RIGHT OF WAY ENGINEERING AT THE DISTRICT OFFICE.
3. THE LOCATIONS OF WORK ARE FLEXIBLE AND MAYBE ADJUSTED TO MITIGATE ANY CONFLICTS WITH EXISTING UTILITY FACILITIES. EXISTING UTILITY FACILITIES ARE NOT INCLUDED ON THESE PLANS.

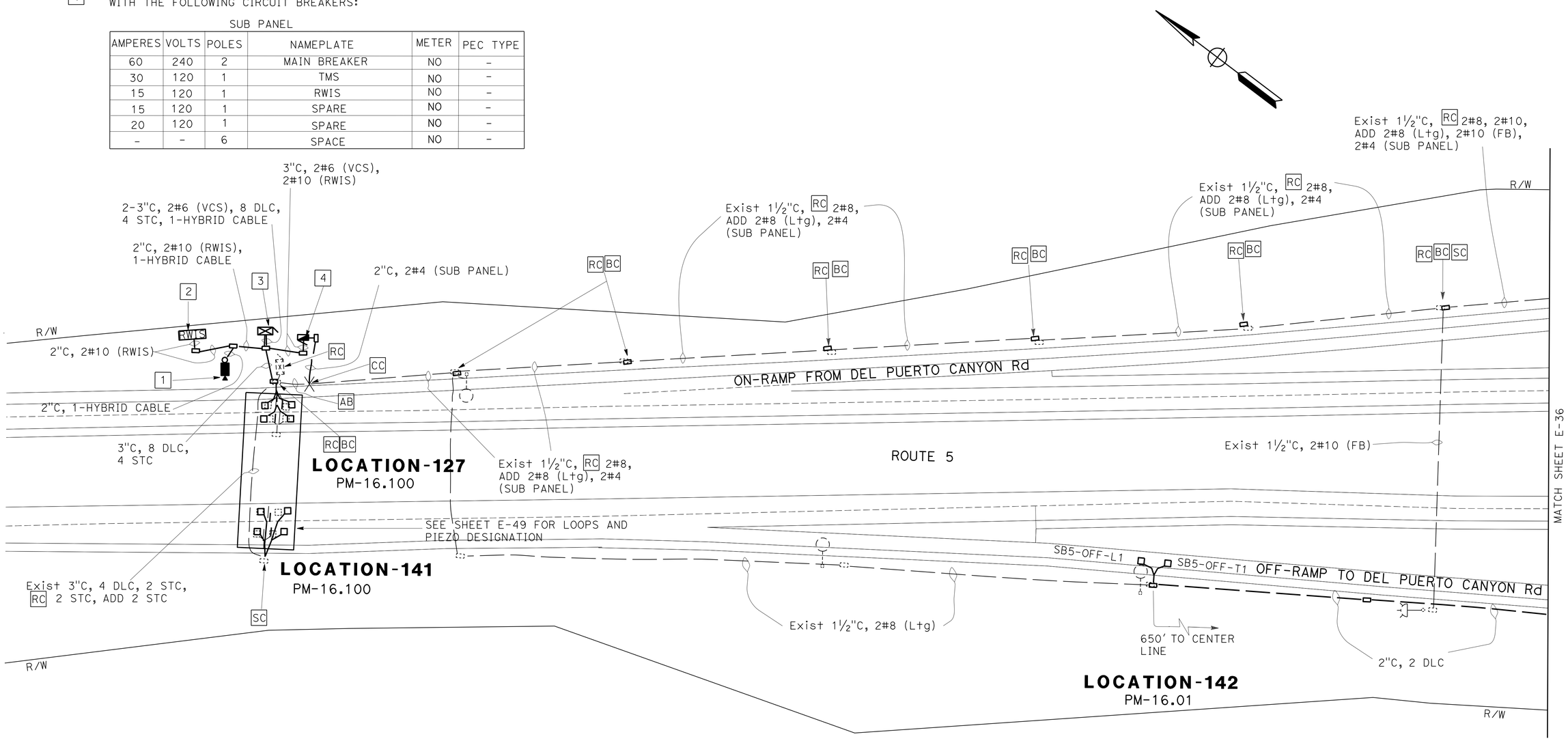

TRAFFIC MONITORING STATION
E-37

APPROVED FOR ELECTRICAL WORK ONLY

SCALE: 1"=50'

STATE OF CALIFORNIA - DEPARTMENT OF TRANSPORTATION
Caltrans® ELECTRICAL DESIGN

FUNCTIONAL SUPERVISOR: ALI BAKHDOUD
CALCULATED-DESIGNED BY: FRED IYASERE
CHECKED BY: ALVARO ARAICA
REVISED BY: FI
DATE REVISED: 05/06/15

LAST REVISION 05-26-15 | DATE PLOTTED => 28-MAY-2015 | TIME PLOTTED => 09:00

Dist	COUNTY	ROUTE	POST MILES TOTAL PROJECT	SHEET No.	TOTAL SHEETS
10	Sta	5,99	Var	46	83

REGISTERED ELECTRICAL ENGINEER 5/20/15 DATE

PLANS APPROVAL DATE 5-26-15

REGISTERED PROFESSIONAL ENGINEER ALVARO ARAICA No. 15558 Exp. 12/31/15 ELECTRICAL STATE OF CALIFORNIA

THE STATE OF CALIFORNIA OR ITS OFFICERS OR AGENTS SHALL NOT BE RESPONSIBLE FOR THE ACCURACY OR COMPLETENESS OF SCANNED COPIES OF THIS PLAN SHEET.

NOTES:

1. ALL PULL BOXES MUST BE No. 5(T) UNLESS NOTED OTHERWISE.
2. FOR ACCURATE RIGHT OF WAY DATA, CONTACT RIGHT OF WAY ENGINEERING AT THE DISTRICT OFFICE.
3. THE LOCATIONS OF WORK ARE FLEXIBLE AND MAYBE ADJUSTED TO MITIGATE ANY CONFLICTS WITH EXISTING UTILITY FACILITIES. EXISTING UTILITY FACILITIES ARE NOT INCLUDED ON THESE PLANS.

LEGEND:

[1] * Exist 120/240 V, 1Ø, 3-WIRE TYPE III-AF SERVICE EQUIPMENT ENCLOSURE WITH THE FOLLOWING CIRCUIT BREAKERS:

AMPERES	VOLTS	POLES	NAMEPLATE	METER	PEC TYPE
** 100	240	2	MAIN BREAKER	YES	-
40	240	2	HIGHWAY LIGHTING	YES	-
*** 30	120	1	TMS	YES	-
-	-	9	SPACES	YES	-

* RESET SERVICE EQUIPMENT ENCLOSURE AND TIGHTEN ANCHOR NUTS TO PROPER TORQUE.

** [RC] Exist 40 A, 2P MAIN BREAKER AND INSTALL 100 A, 2P MAIN BREAKER.

*** INSTALL AND LABEL CIRCUIT BREAKER AS SHOWN.

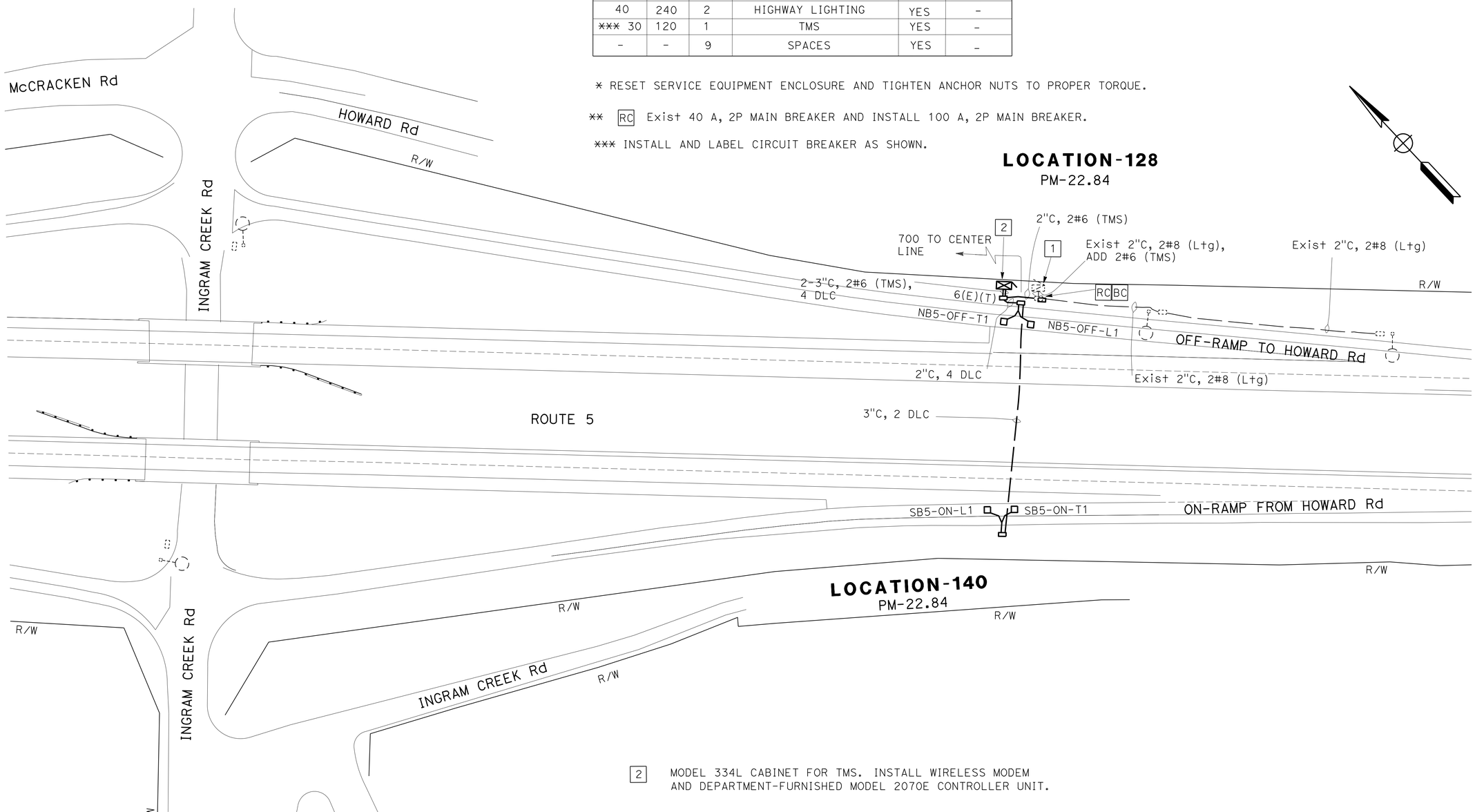

[2] MODEL 334L CABINET FOR TMS. INSTALL WIRELESS MODEM AND DEPARTMENT-FURNISHED MODEL 2070E CONTROLLER UNIT.

TRAFFIC MONITORING STATION
E-38

APPROVED FOR ELECTRICAL WORK ONLY

SCALE: 1"=50'

STATE OF CALIFORNIA - DEPARTMENT OF TRANSPORTATION
Caltrans
ELECTRICAL DESIGN

CALCULATED-DESIGNED BY	FRED IYASERE	REVISED BY	FI
CHECKED BY	AL ARAICA	DATE REVISED	05/06/15
FUNCTIONAL SUPERVISOR	ALI BAKHDOUD		

LAST REVISION 05-26-15 | DATE PLOTTED => 28-MAY-2015 | TIME PLOTTED => 09:00

Dist	COUNTY	ROUTE	POST MILES TOTAL PROJECT	SHEET No.	TOTAL SHEETS
10	Sta	5,99	Var	47	83

REGISTERED ELECTRICAL ENGINEER 5/20/15 DATE

5-26-15
PLANS APPROVAL DATE

REGISTERED PROFESSIONAL ENGINEER ALVARO ARAICA No. 15558 Exp. 12/31/15 ELECTRICAL STATE OF CALIFORNIA

THE STATE OF CALIFORNIA OR ITS OFFICERS OR AGENTS SHALL NOT BE RESPONSIBLE FOR THE ACCURACY OR COMPLETENESS OF SCANNED COPIES OF THIS PLAN SHEET.

LEGEND:

1 TO Exist SP PG&E, 120/240 V SERVICE.

2 120/240 V, 1Ø, 3-WIRE, TYPE III-CF SERVICE EQUIPMENT ENCLOSURE WITH THE FOLLOWING CIRCUIT BREAKERS:

Ctid No. 10380050231300L

AMPERES	VOLTS	POLES	NAMEPLATE	METER	PEC TYPE
100	240	2	MAIN BREAKER	YES	
30	240	2	HIGHWAY LIGHTING	YES	V
15	120	1	LIGHTING CONTROL	YES	V
15	120	1	SPARE	YES	-
20	120	1	SPARE	YES	-
-	-	6	SPACE	-	-

Ctid No. 10380050231300T

AMPERES	VOLTS	POLES	NAMEPLATE DESCRIPTION	METER	PEC TYPE
100	240	2	MAIN BREAKER	YES	-
30	120	1	TMS	YES	-
20	120	1	SPARE	YES	-
15	120	1	SPARE	YES	-
-	-	6	SPACE	-	-

3 MODEL 334L CABINET FOR TMS. INSTALL WIRELESS MODEM AND DEPARTMENT-FURNISHED MODEL 2070E CONTROLLER UNIT.

NOTES:

1. FOR ACCURATE RIGHT OF WAY DATA, CONTACT RIGHT OF WAY ENGINEERING AT THE DISTRICT OFFICE.
2. ALL PULL BOXES MUST BE No. 5(T) UNLESS NOTED OTHERWISE.
3. THE LOCATIONS OF WORK ARE FLEXIBLE AND MAYBE ADJUSTED TO MITIGATE ANY CONFLICTS WITH EXISTING UTILITY FACILITIES. EXISTING UTILITY FACILITIES ARE NOT INCLUDED ON THESE PLANS.

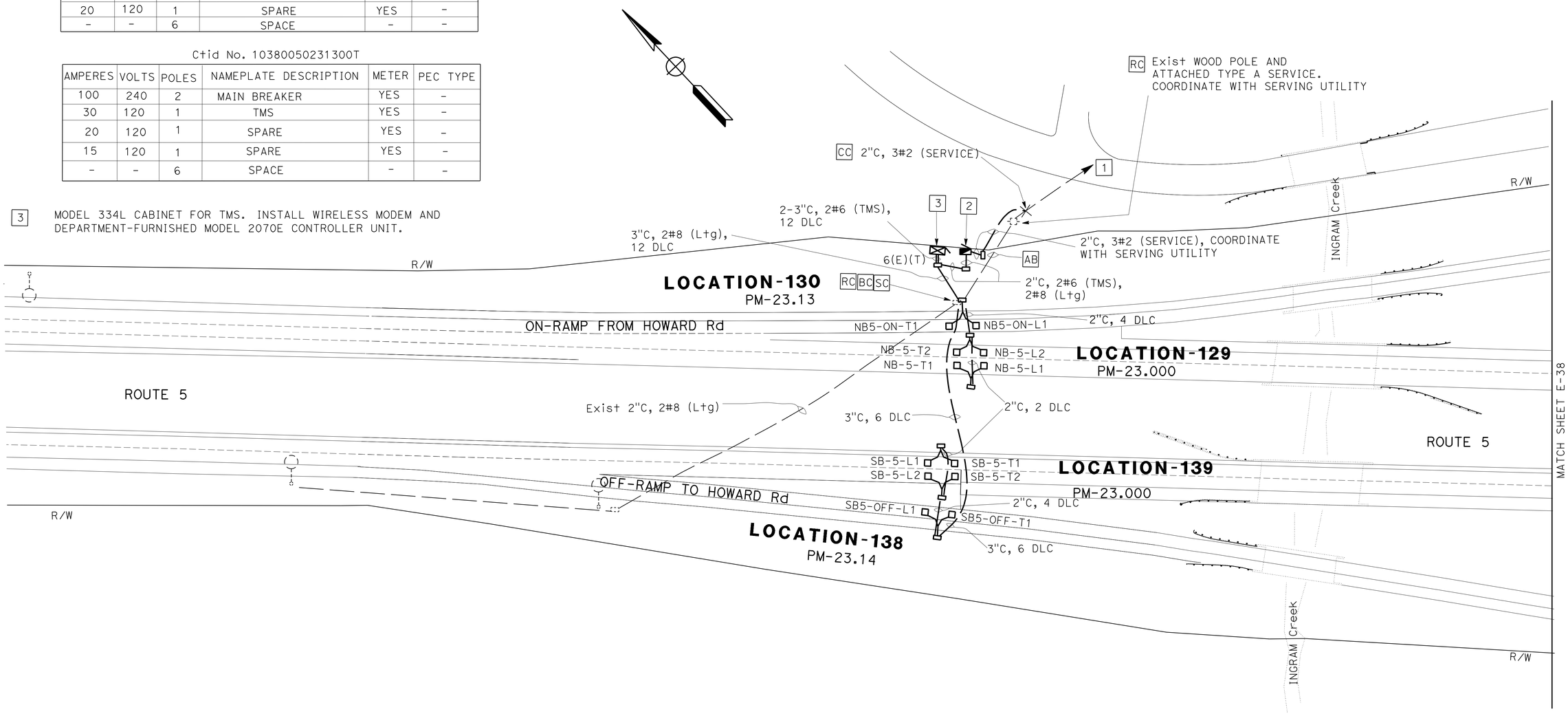

TRAFFIC MONITORING STATION E-39

APPROVED FOR ELECTRICAL WORK ONLY

SCALE: 1"=50'

REVISED BY	DATE REVISED
FI	05/06/15

FRED IYASERE — AL ARAICA — CALCULATED-DESIGNED BY — CHECKED BY — FUNCTIONAL SUPERVISOR — ALI BAKHDOUD

STATE OF CALIFORNIA - DEPARTMENT OF TRANSPORTATION
Caltrans ELECTRICAL DESIGN

LAST REVISION 05-26-15 — DATE PLOTTED => 28-MAY-2015 — TIME PLOTTED => 09:00

Dist	COUNTY	ROUTE	POST MILES TOTAL PROJECT	SHEET No.	TOTAL SHEETS
10	Sta	5,99	Var	48	83

REGISTERED ELECTRICAL ENGINEER 5/20/15 DATE

PLANS APPROVAL DATE 5-26-15

REGISTERED PROFESSIONAL ENGINEER ALVARO ARAICA No. 15558 Exp. 12/31/15 ELECTRICAL STATE OF CALIFORNIA

THE STATE OF CALIFORNIA OR ITS OFFICERS OR AGENTS SHALL NOT BE RESPONSIBLE FOR THE ACCURACY OR COMPLETENESS OF SCANNED COPIES OF THIS PLAN SHEET.

LEGEND:

1 Exist MODEL 334L CABINET FOR CCTV.

NOTES:

1. ALL PULL BOXES MUST BE No. 5(T) UNLESS NOTED OTHERWISE.
2. FOR ACCURATE RIGHT OF WAY DATA, CONTACT RIGHT OF WAY ENGINEERING AT THE DISTRICT OFFICE.
3. THE LOCATIONS OF WORK ARE FLEXIBLE AND MAYBE ADJUSTED TO MITIGATE ANY CONFLICTS WITH EXISTING UTILITY FACILITIES. EXISTING UTILITY FACILITIES ARE NOT INCLUDED ON THESE PLANS.

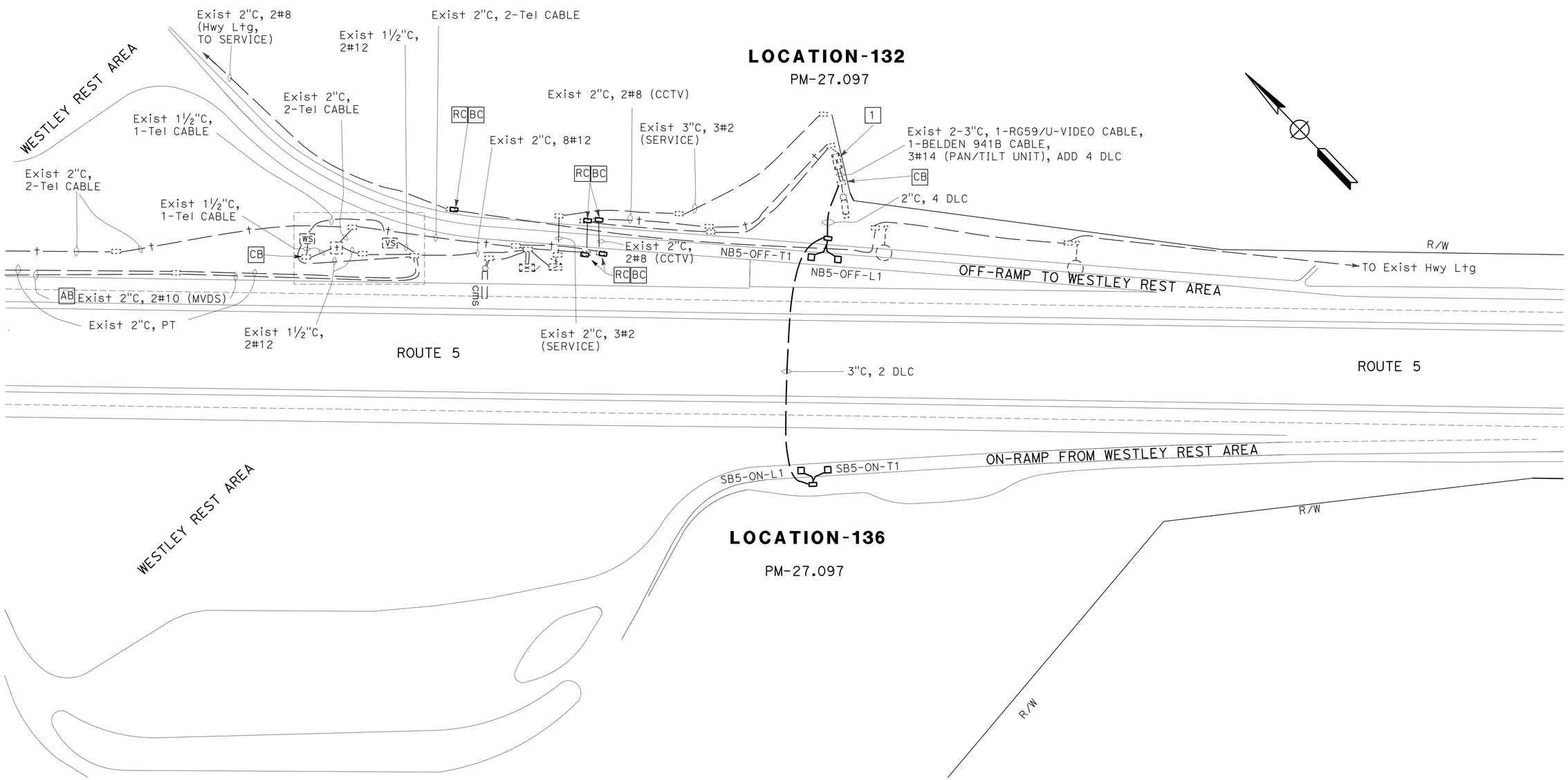

APPROVED FOR ELECTRICAL WORK ONLY

TRAFFIC MONITORING STATION

SCALE: 1"=50'

E-40

REVISED BY	DATE REVISED
F1	05/06/15

FRED IYASERE — AL ARAICA — CALCULATED-DESIGNED BY — CHECKED BY

FUNCTIONAL SUPERVISOR: ALI BAKHDOUD

STATE OF CALIFORNIA - DEPARTMENT OF TRANSPORTATION — Caltrans — ELECTRICAL DESIGN

LAST REVISION 05-26-13 — DATE PLOTTED => 28-MAY-2015 — TIME PLOTTED => 09:00

Dist	COUNTY	ROUTE	POST MILES TOTAL PROJECT	SHEET No.	TOTAL SHEETS
10	Sta	5,99	Var	49	83

REGISTERED ELECTRICAL ENGINEER 5/20/15 DATE

PLANS APPROVAL DATE 5-26-15

REGISTERED PROFESSIONAL ENGINEER ALVARO ARAICA No. 15558 Exp. 12/31/15 ELECTRICAL STATE OF CALIFORNIA

THE STATE OF CALIFORNIA OR ITS OFFICERS OR AGENTS SHALL NOT BE RESPONSIBLE FOR THE ACCURACY OR COMPLETENESS OF SCANNED COPIES OF THIS PLAN SHEET.

LEGEND:

1. FIBER OPTIC CONDUIT, SEE SHEET E-48 FOR INSTALLATION DETAILS.
2. SPLICE VAULT WITH SPLICE TRAY AND ENCLOSURE, SEE SHEET E-47 FOR DETAILS. COIL UNSED F/O CABLES IN VAULT.
3. Exist MODEL 334L CABINET FOR CMS. INSTALL FDU FOR FIBER OPTIC CABLE TERMINATION.
4. Exist MODEL 334L CABINET FOR CCTV. INSTALL FDU FOR FIBER OPTIC CABLE TERMINATION.
5. TELEPHONE DEMARCATION CABINET, TYPE B. INSTALL FDU FOR FIBER OPTIC CABLE TERMINATION.

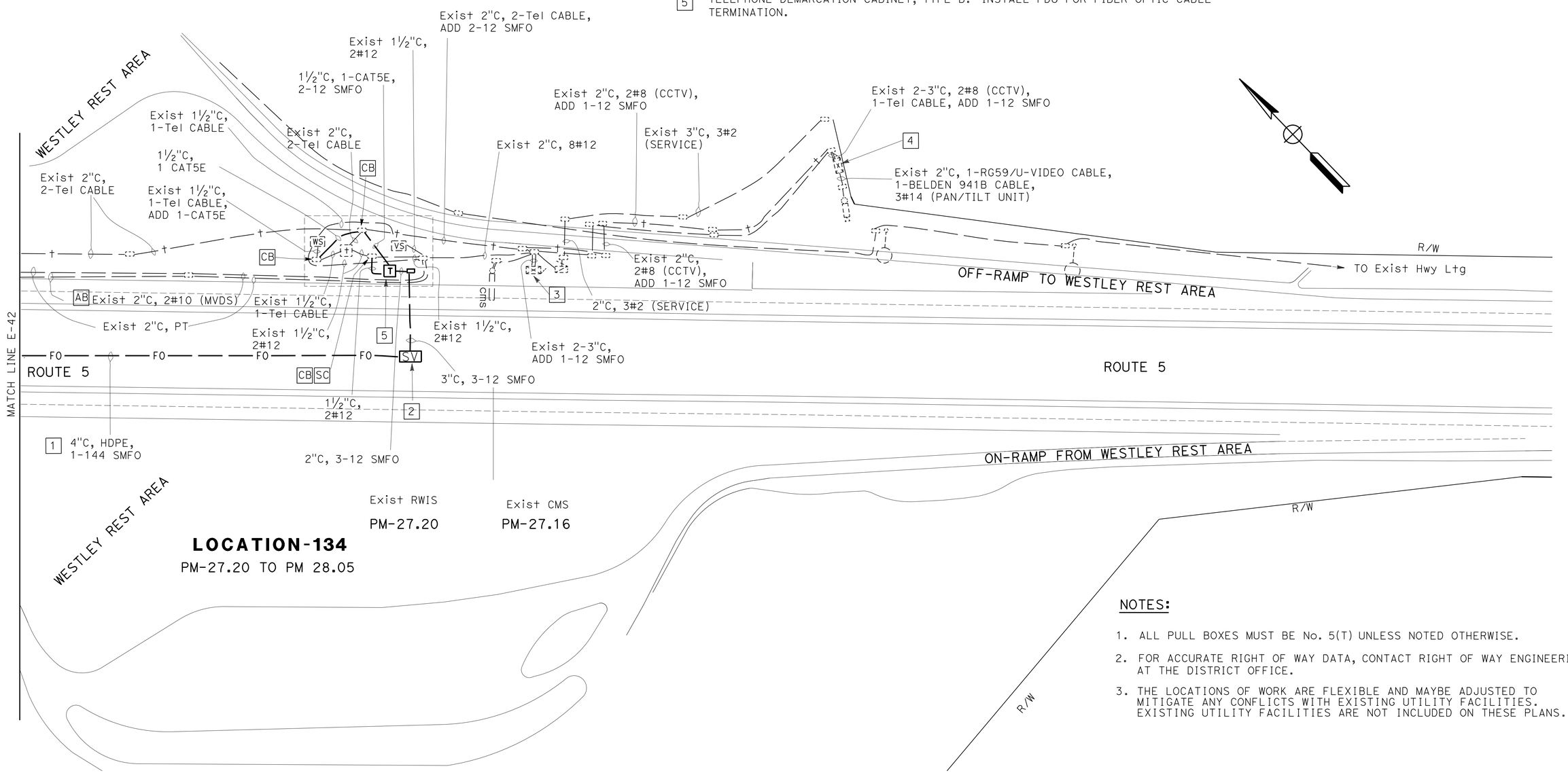

NOTES:

1. ALL PULL BOXES MUST BE No. 5(T) UNLESS NOTED OTHERWISE.
2. FOR ACCURATE RIGHT OF WAY DATA, CONTACT RIGHT OF WAY ENGINEERING AT THE DISTRICT OFFICE.
3. THE LOCATIONS OF WORK ARE FLEXIBLE AND MAYBE ADJUSTED TO MITIGATE ANY CONFLICTS WITH EXISTING UTILITY FACILITIES. EXISTING UTILITY FACILITIES ARE NOT INCLUDED ON THESE PLANS.

FIBER OPTIC SYSTEM
E-41

SCALE: 1"=50'

APPROVED FOR ELECTRICAL WORK ONLY

STATE OF CALIFORNIA - DEPARTMENT OF TRANSPORTATION
Caltrans ELECTRICAL DESIGN

FUNCTIONAL SUPERVISOR: ALI BAKHDOUD
CALCULATED-DESIGNED BY: FRED IYASERE
CHECKED BY: AL ARAICA
REVISED BY: FI
DATE REVISED: 04/22/15

LAST REVISION 05-26-15 | DATE PLOTTED => 28-MAY-2015 | TIME PLOTTED => 09:00

Dist	COUNTY	ROUTE	POST MILES TOTAL PROJECT	SHEET No.	TOTAL SHEETS
10	Sta	5,99	Var	50	83

REGISTERED ELECTRICAL ENGINEER 5/20/15 DATE

PLANS APPROVAL DATE 5-26-15

REGISTERED PROFESSIONAL ENGINEER ALVARO ARAICA No. 15558 Exp. 12/31/15 ELECTRICAL STATE OF CALIFORNIA

THE STATE OF CALIFORNIA OR ITS OFFICERS OR AGENTS SHALL NOT BE RESPONSIBLE FOR THE ACCURACY OR COMPLETENESS OF SCANNED COPIES OF THIS PLAN SHEET.

LEGEND:

1. FIBER OPTIC CONDUIT, SEE SHEET E-48 FOR INSTALLATION DETAILS.
2. SLICE VAULT, SEE SHEET E-47 FOR DETAILS.
3. MODEL 334L CABINET WITH FDU FOR FIBER OPTIC CABLE TERMINATION.

NOTES:

1. ALL PULL BOXES MUST BE No. 5(T) UNLESS NOTED OTHERWISE.
2. FOR ACCURATE RIGHT OF WAY DATA, CONTACT RIGHT OF WAY ENGINEERING AT THE DISTRICT OFFICE.
3. THE LOCATIONS OF WORK ARE FLEXIBLE AND MAYBE ADJUSTED TO MITIGATE ANY CONFLICTS WITH EXISTING UTILITY FACILITIES. EXISTING UTILITY FACILITIES ARE NOT INCLUDED ON THESE PLANS.

DETAIL A
NO SCALE

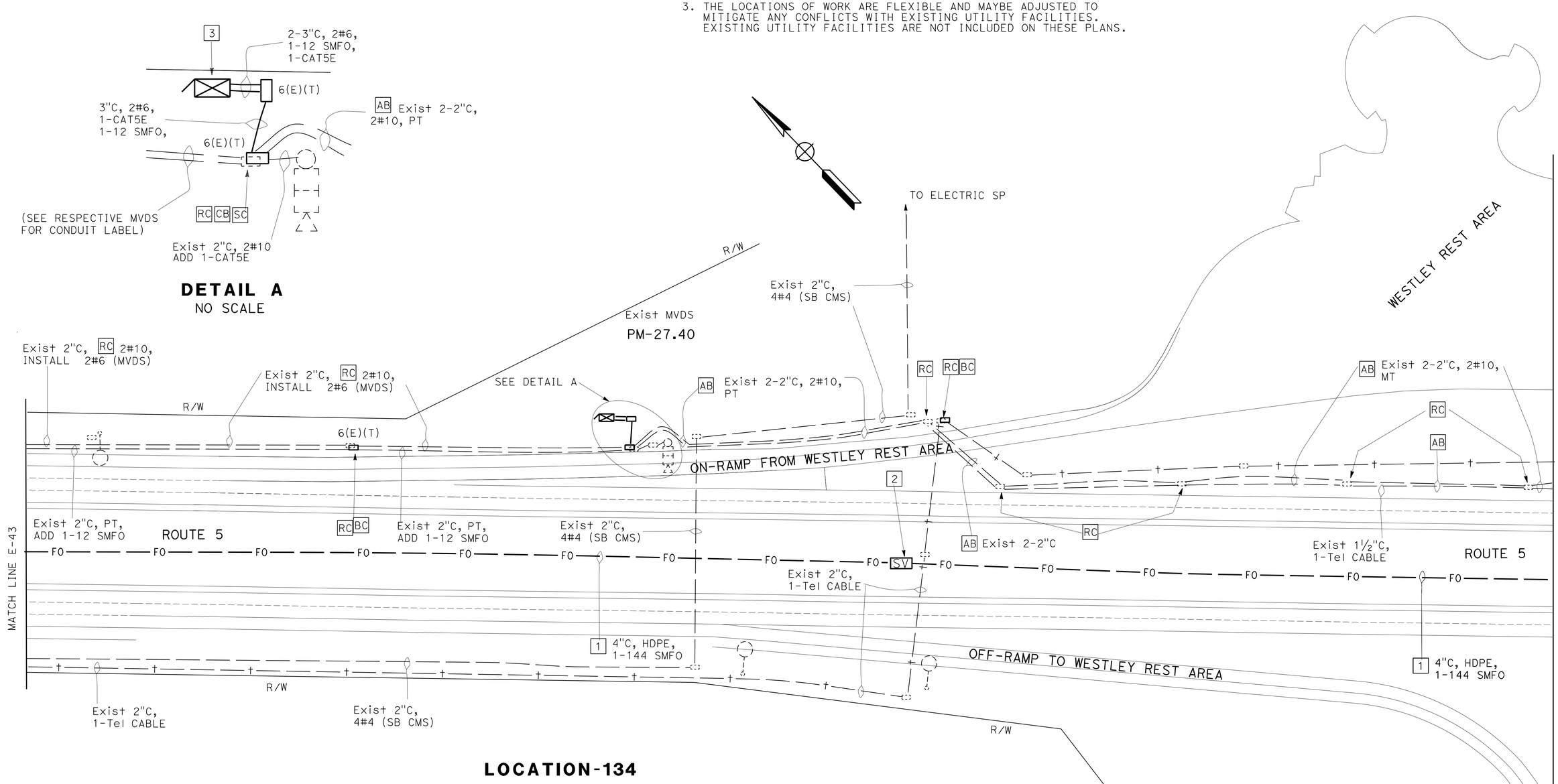

LOCATION-134
PM-27.20 TO PM 28.05

FIBER OPTIC SYSTEM

SCALE: 1"=50'

E-42

APPROVED FOR ELECTRICAL WORK ONLY

REVISED BY	DATE REVISED
FI	04/22/15

FRED IYASERE — AL ARAICA — CALCULATED-DESIGNED BY — CHECKED BY — FUNCTIONAL SUPERVISOR: ALI BAKHDOUD

STATE OF CALIFORNIA - DEPARTMENT OF TRANSPORTATION — Caltrans — ELECTRICAL DESIGN

LAST REVISION 00-00-00 — DATE PLOTTED => 28-MAY-2015 — TIME PLOTTED => 09:01

Dist	COUNTY	ROUTE	POST MILES TOTAL PROJECT	SHEET No.	TOTAL SHEETS
10	Sta	5,99	Var	51	83

REGISTERED ELECTRICAL ENGINEER 5/20/15 DATE

5-26-15
PLANS APPROVAL DATE

REGISTERED PROFESSIONAL ENGINEER ALVARO ARAICA No. 15558 Exp. 12/31/15 ELECTRICAL STATE OF CALIFORNIA

THE STATE OF CALIFORNIA OR ITS OFFICERS OR AGENTS SHALL NOT BE RESPONSIBLE FOR THE ACCURACY OR COMPLETENESS OF SCANNED COPIES OF THIS PLAN SHEET.

LEGEND:

1. SPLICE VAULT AT Sta PM 28.05. COORDINATE INSTALLATION WITH ENGINEER.
2. SPLICE VAULT WITH SPLICE TRAY AND ENCLOSURE, SEE SHEET E-47 FOR DETAILS.
3. SPLICE 2-12 SMFO TO 144 STRAND SMFO.
4. FIBER OPTIC CONDUIT, SEE SHEET E-48 FOR INSTALLATION DETAILS.
5. MODEL 334L CABINET WITH FDU FOR FIBER OPTIC CABLE TERMINATION.
6. Exist 120/240 V, 1Ø, 3-WIRE, TYPE III-AF SERVICE EQUIPMENT ENCLOSURE. ADD 4-1P, 30 A, CB FOR FOUR NB MVDS. INSTALL CB NAMEPLATE, RESPECTIVELY, AS CABINET/MVDS 37A, CABINET/MVDS 37B, CABINET/MVDS 37C, AND CABINET/MVDS 37D.
7. COIL 70' OF SLACK 1-144 SMFO IN SV.

NOTES:

1. ALL PULL BOXES MUST BE No. 5(T) UNLESS NOTED OTHERWISE.
2. FOR ACCURATE RIGHT OF WAY DATA, CONTACT RIGHT OF WAY ENGINEERING AT THE DISTRICT OFFICE.
3. THE LOCATIONS OF WORK ARE FLEXIBLE AND MAYBE ADJUSTED TO MITIGATE ANY CONFLICTS WITH EXISTING UTILITY FACILITIES. EXISTING UTILITY FACILITIES ARE NOT INCLUDED ON THESE PLANS.

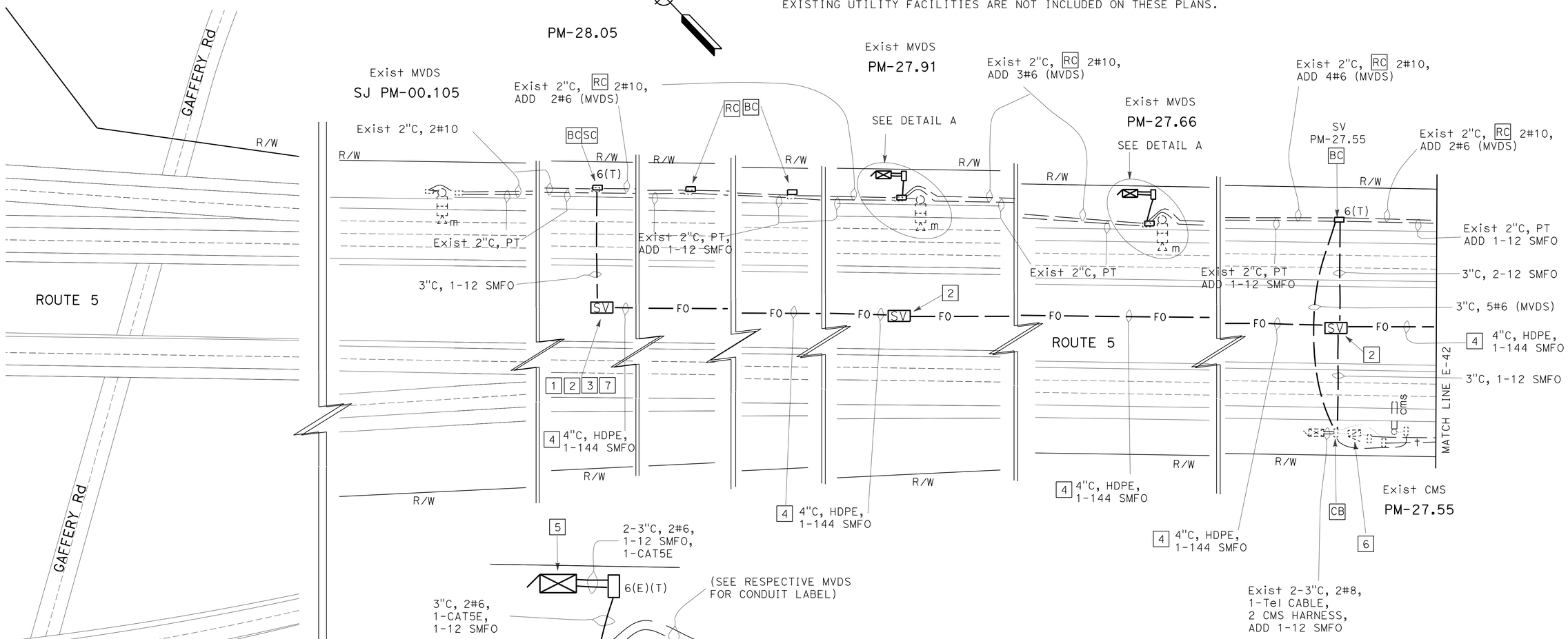

LOCATION-134

PM-27.20 TO PM 28.05

DETAIL A

NO SCALE

APPROVED FOR ELECTRICAL WORK ONLY

FIBER OPTIC SYSTEM

SCALE: 1"=50'

E-43

REVISED BY	DATE REVISED
FI	05/06/15

CALCULATED-DESIGNED BY: FRED IYASERE
CHECKED BY: AL ARAICA
FUNCTIONAL SUPERVISOR: ALI BAKHDOUD

STATE OF CALIFORNIA - DEPARTMENT OF TRANSPORTATION
Caltrans® **ELECTRICAL DESIGN**

LAST REVISION 00-00-00 | DATE PLOTTED => 28-MAY-2015 | TIME PLOTTED => 09:01

Dist	COUNTY	ROUTE	POST MILES TOTAL PROJECT	SHEET No.	TOTAL SHEETS
10	Sta	5,99	Var	52	83

REGISTERED ELECTRICAL ENGINEER 5/20/15 DATE

PLANS APPROVAL DATE 5-26-15

REGISTERED PROFESSIONAL ENGINEER ALVARO ARAICA No. 15558 Exp 12/31/15 ELECTRICAL STATE OF CALIFORNIA

THE STATE OF CALIFORNIA OR ITS OFFICERS OR AGENTS SHALL NOT BE RESPONSIBLE FOR THE ACCURACY OR COMPLETENESS OF SCANNED COPIES OF THIS PLAN SHEET.

NOTE:

BLOCK DIAGRAM SHOWS SPLICE VAULTS CONNECTING TO TRAFFIC OPERATION SYSTEMS. FOR COMPLETE AND EXACT LOCATIONS OF PB, CABINETS AND SPLICE VAULTS REFER TO SHEETS E-41 THROUGH E-43.

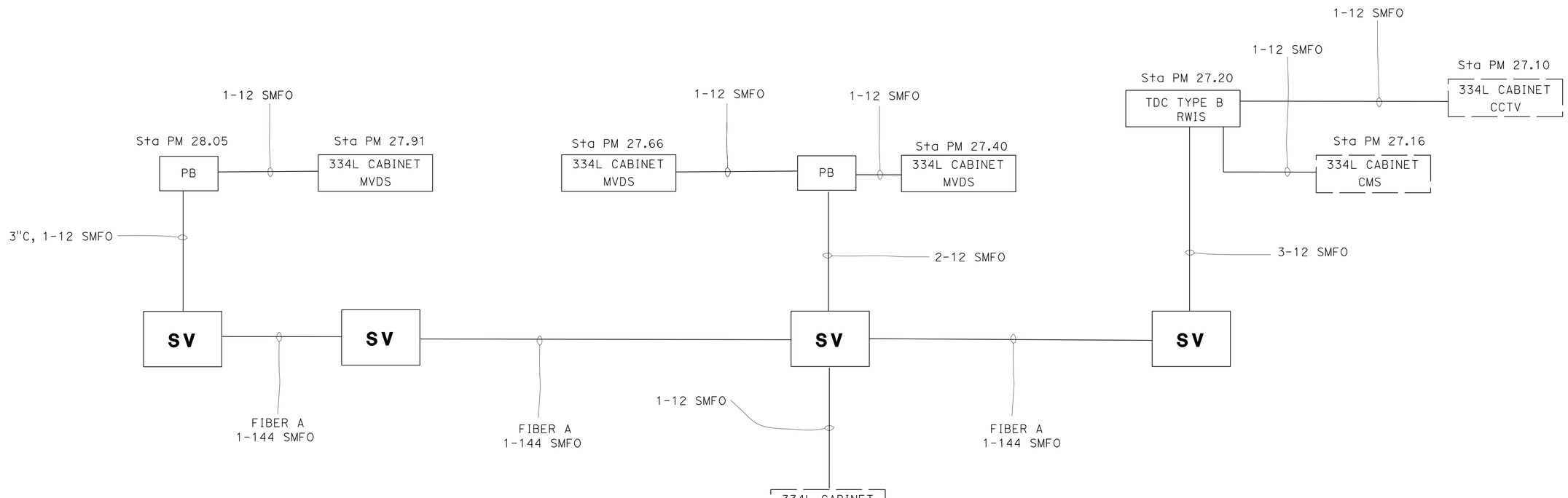

FIBER CABLE BLOCK DIAGRAM

FIBER OPTIC SYSTEM

E-44

NO SCALE

STATE OF CALIFORNIA - DEPARTMENT OF TRANSPORTATION

Caltrans® ELECTRICAL DESIGN

FUNCTIONAL SUPERVISOR: ALI BAKHDOUD

CALCULATED-DESIGNED BY: FRED IYASERE

CHECKED BY: AL ARAICA

REVISED BY: FI

DATE REVISED: 05/06/15

LAST REVISION 05-26-15 | DATE PLOTTED => 28-MAY-2015 | TIME PLOTTED => 09:01

Dist	COUNTY	ROUTE	POST MILES TOTAL PROJECT	SHEET No.	TOTAL SHEETS
10	Sta	5,99	Var	53	83

REGISTERED ELECTRICAL ENGINEER 5/20/15 DATE

5-26-15
PLANS APPROVAL DATE

REGISTERED PROFESSIONAL ENGINEER ALVARO ARAICA No. 15558 Exp. 12/31/15 ELECTRICAL STATE OF CALIFORNIA

THE STATE OF CALIFORNIA OR ITS OFFICERS OR AGENTS SHALL NOT BE RESPONSIBLE FOR THE ACCURACY OR COMPLETENESS OF SCANNED COPIES OF THIS PLAN SHEET.

NOTE:

1. FOR LEGEND AND ABBREVIATIONS REFER TO SHEET E-1.

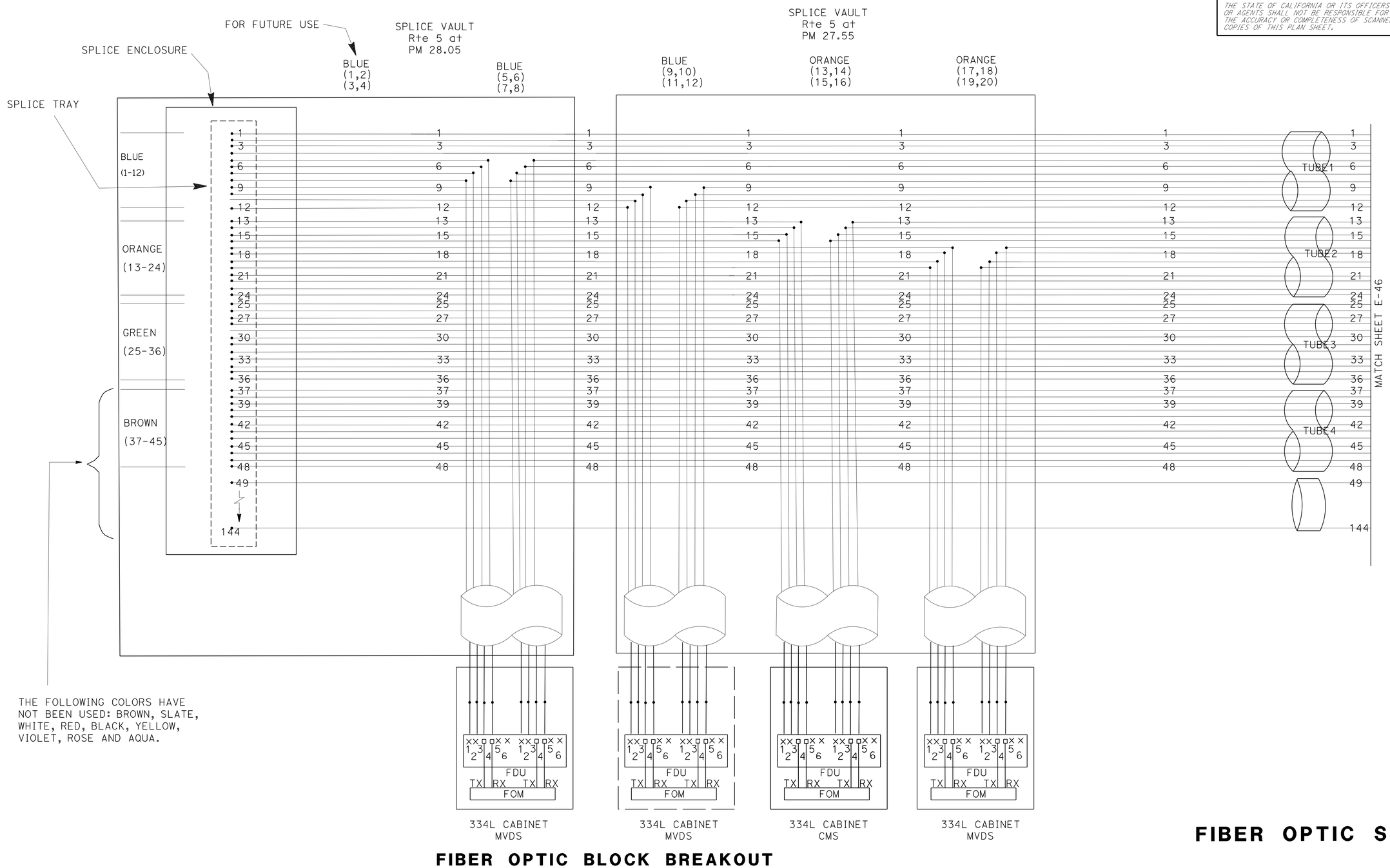

THE FOLLOWING COLORS HAVE NOT BEEN USED: BROWN, SLATE, WHITE, RED, BLACK, YELLOW, VIOLET, ROSE AND AQUA.

FIBER OPTIC BLOCK BREAKOUT

FIBER OPTIC SYSTEM

NO SCALE

E-45

STATE OF CALIFORNIA - DEPARTMENT OF TRANSPORTATION
Caltrans® ELECTRICAL DESIGN

FUNCTIONAL SUPERVISOR: ALI BAKHDOUD
CALCULATED-DESIGNED BY: FRED IYASERE
CHECKED BY: AL ARAICA
REVISED BY: FI
DATE REVISED: 05/06/15

LAST REVISION 05-26-15 | DATE PLOTTED => 28-MAY-2015 | TIME PLOTTED => 09:01

Dist	COUNTY	ROUTE	POST MILES TOTAL PROJECT	SHEET No.	TOTAL SHEETS
10	Sta	5,99	Var	54	83

REGISTERED ELECTRICAL ENGINEER 5/20/15 DATE

5-26-15
PLANS APPROVAL DATE

REGISTERED PROFESSIONAL ENGINEER ALVARO ARAICA No. 15558 Exp. 12/31/15 ELECTRICAL STATE OF CALIFORNIA

THE STATE OF CALIFORNIA OR ITS OFFICERS OR AGENTS SHALL NOT BE RESPONSIBLE FOR THE ACCURACY OR COMPLETENESS OF SCANNED COPIES OF THIS PLAN SHEET.

NOTE:

FOR LEGEND AND ABBREVIATIONS REFER TO SHEET E-1.

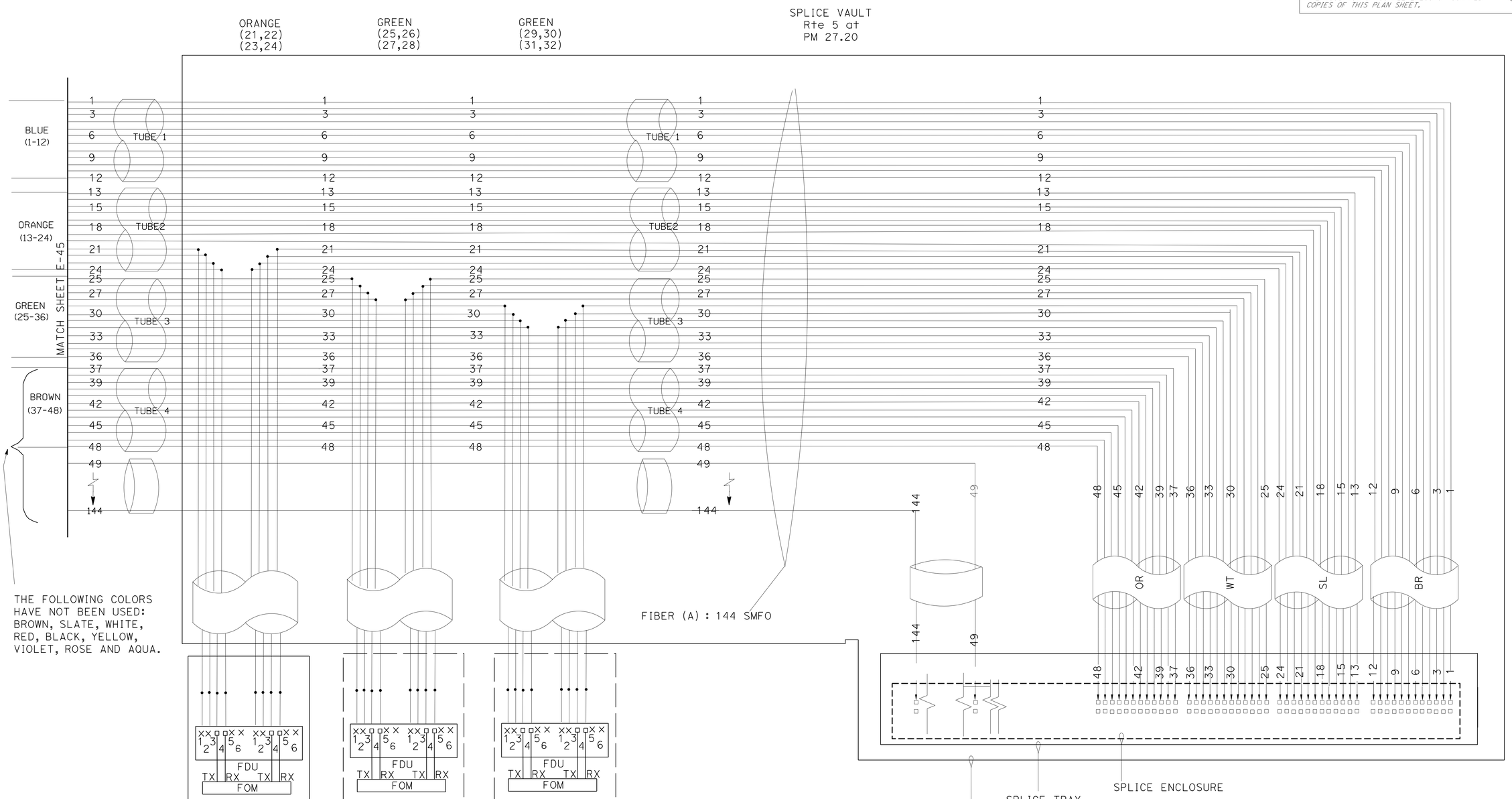

FIBER OPTIC SYSTEM

FIBER OPTIC BLOCK BREAKOUT

NO SCALE

E-46

REVISED BY	DATE REVISED
FI	04/22/15

FRED IYASERE — AL ARAICA — CALCULATED-DESIGNED BY — CHECKED BY — FUNCTIONAL SUPERVISOR: ALI BAKHDOUD

STATE OF CALIFORNIA - DEPARTMENT OF TRANSPORTATION — Caltrans — **ELECTRICAL DESIGN**

LAST REVISION 05-26-13 — DATE PLOTTED => 28-MAY-2015 — TIME PLOTTED => 09:01

Dist	COUNTY	ROUTE	POST MILES TOTAL PROJECT	SHEET No.	TOTAL SHEETS
10	Sta	5,99	Var	55	83

REGISTERED ELECTRICAL ENGINEER 5/20/15 DATE

PLANS APPROVAL DATE 5-26-15

REGISTERED PROFESSIONAL ENGINEER ALVARO ARAICA No. 15558 Exp. 12/31/15 ELECTRICAL STATE OF CALIFORNIA

THE STATE OF CALIFORNIA OR ITS OFFICERS OR AGENTS SHALL NOT BE RESPONSIBLE FOR THE ACCURACY OR COMPLETENESS OF SCANNED COPIES OF THIS PLAN SHEET.

LEGEND:

1. GALVANIZED CAST-IN ANGLE FRAME
2. TWO PIECE TRAFFIC RATED TORSION ASSISTED COVER, WITH PICK SLOTS AND BOLT DOWN HOLES. ALVANIZED AFTER FABRICATION
3. 12" DIAMETER DRAIN HOLE. LOCATE AT CENTER
4. 7/8" DIAMETER PULL IRONS (4 EA) Typ
5. 16" x 4" KNOCK-OUTS (8 EA) Typ

NOTES:

1. VAULT DESIGNED IN ACCORDANCE WITH AASHTO H-20-44 TRAFFIC BRIDGE LOADING USING 25.9 MPa COMPRESSIVE STRENGTH CONCRETE AND 413.7 Mpa YIELD STRENGHT ASTM A-706 STEEL REINFORCEMENT PER CALCULATIONS.
2. VAULT MUST BE PLACED ON A 12" BASE OF CRUSHED ROCK
3. EACH VAULT MUST COME PROVIDED WITH TWO SETS OF BOLT/LID REMOVERS.
4. ALL MOUNTING HARDWARE MUST BE GALVANIZED OR STAINLESS STEEL.

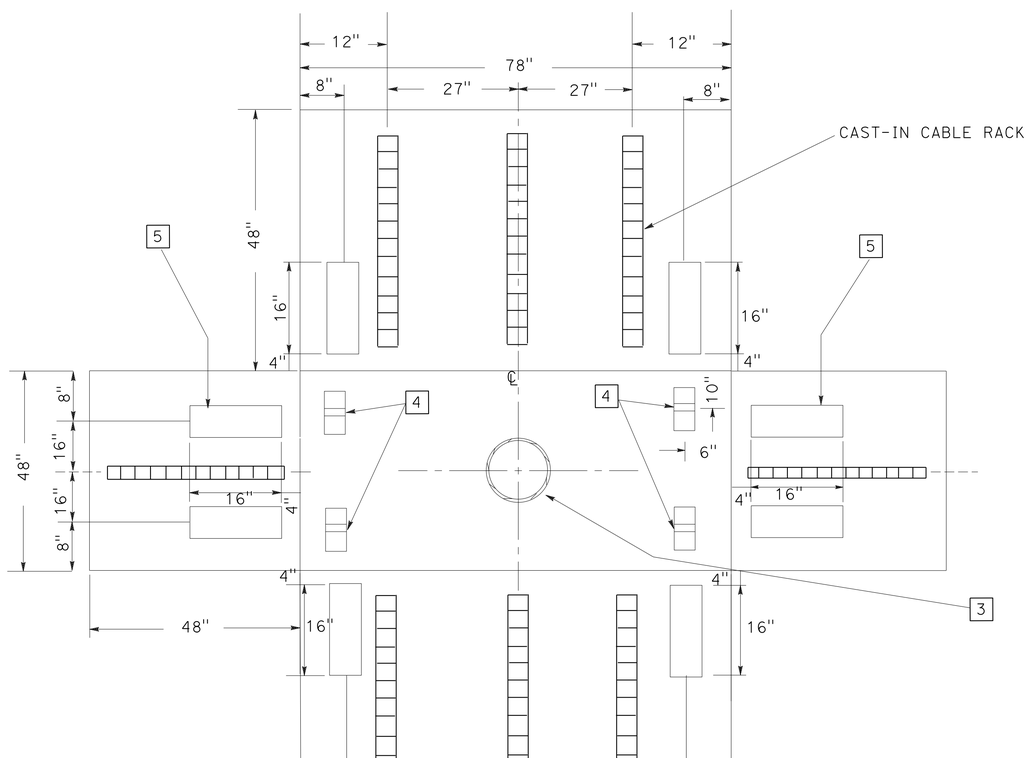

PLAN

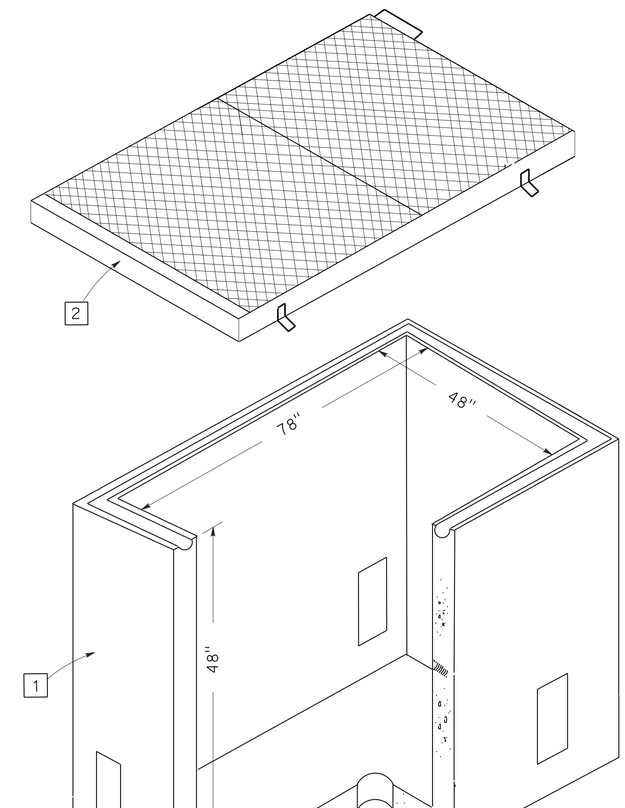

OBLIQUE VIEW

SPLICE VAULT DETAILS

ELECTRICAL DETAILS
E-47

NO SCALE

STATE OF CALIFORNIA - DEPARTMENT OF TRANSPORTATION
Caltrans® ELECTRICAL DESIGN

FUNCTIONAL SUPERVISOR: ALI BAKHDOUD
CALCULATED-DESIGNED BY: FRED IYASERE
CHECKED BY: AL ARAICA
REVISED BY: FI
DATE REVISED: 04/22/15

LAST REVISION 05-26-15 | DATE PLOTTED => 28-MAY-2015 | TIME PLOTTED => 09:01

Dist	COUNTY	ROUTE	POST MILES TOTAL PROJECT	SHEET No.	TOTAL SHEETS
10	Sta	5,99	Var	56	83

REGISTERED ELECTRICAL ENGINEER 5/20/15 DATE

5-26-15
PLANS APPROVAL DATE

REGISTERED PROFESSIONAL ENGINEER ALVARO ARAICA No. 15558 Exp. 12/31/15 ELECTRICAL STATE OF CALIFORNIA

THE STATE OF CALIFORNIA OR ITS OFFICERS OR AGENTS SHALL NOT BE RESPONSIBLE FOR THE ACCURACY OR COMPLETENESS OF SCANNED COPIES OF THIS PLAN SHEET.

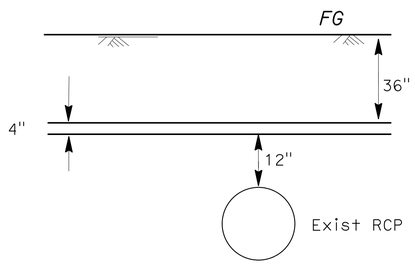

CONDUIT PLACEMENT ABOVE RCP PIPES

DETAIL A

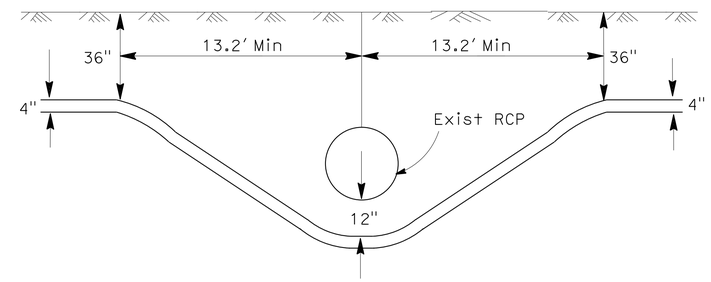

CONDUIT CROSSING EXISTING RCP PIPES

DETAIL B

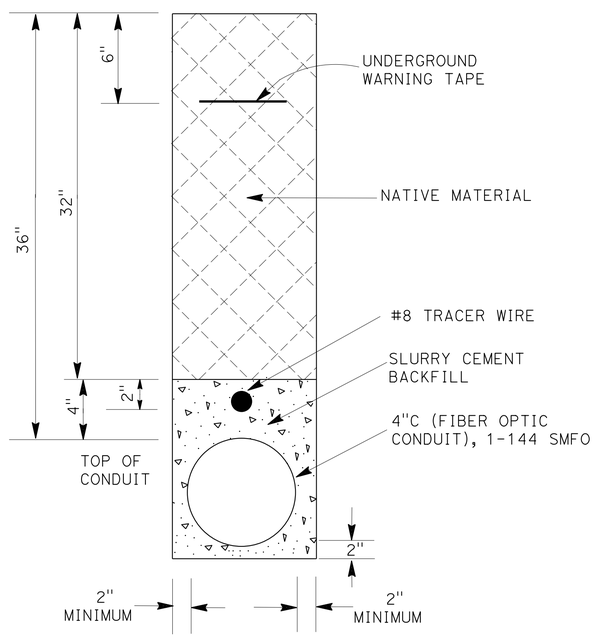

FIBER CONDUIT IN DIRT

DETAIL C

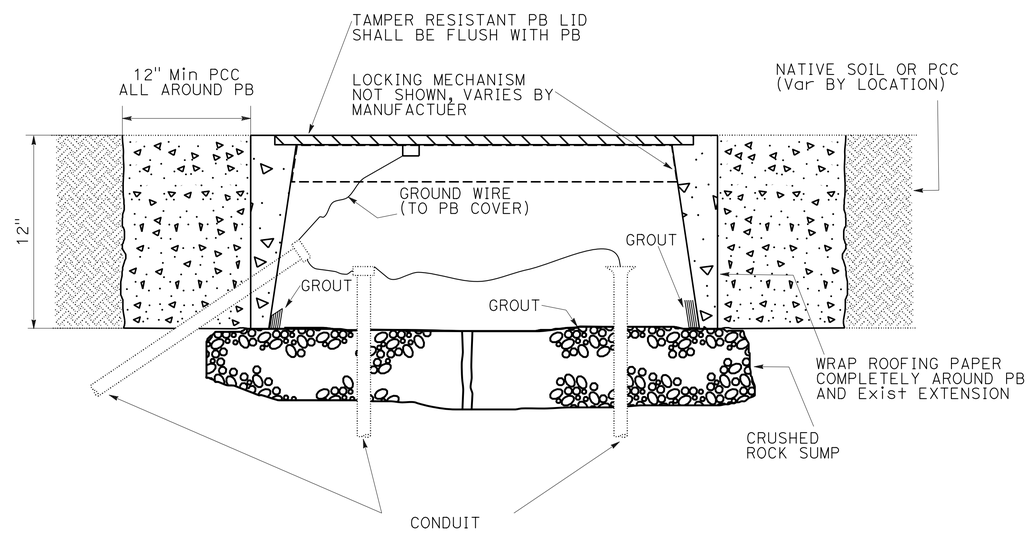

TAMPER RESISTANT PB COVER AND PB

DETAIL D

ELECTRICAL DETAILS
E-48

NO SCALE

STATE OF CALIFORNIA - DEPARTMENT OF TRANSPORTATION
Caltrans® **ELECTRICAL DESIGN**

FUNCTIONAL SUPERVISOR: ALI BAKHDOUD
CALCULATED-DESIGNED BY: FRED IYASERE
CHECKED BY: AL ARAICA
REVISED BY: FI
DATE REVISED: 04-22-15

LAST REVISION 05-26-15 | DATE PLOTTED => 28-MAY-2015 | TIME PLOTTED => 09:01

Dist	COUNTY	ROUTE	POST MILES TOTAL PROJECT	SHEET No.	TOTAL SHEETS
10	Sta	5,99	Var	57	83

REGISTERED ELECTRICAL ENGINEER 5/20/15 DATE

5-26-15
PLANS APPROVAL DATE

REGISTERED PROFESSIONAL ENGINEER ALVARO ARAICA No. 15558 Exp. 12/31/15 ELECTRICAL CALIFORNIA

THE STATE OF CALIFORNIA OR ITS OFFICERS OR AGENTS SHALL NOT BE RESPONSIBLE FOR THE ACCURACY OR COMPLETENESS OF SCANNED COPIES OF THIS PLAN SHEET.

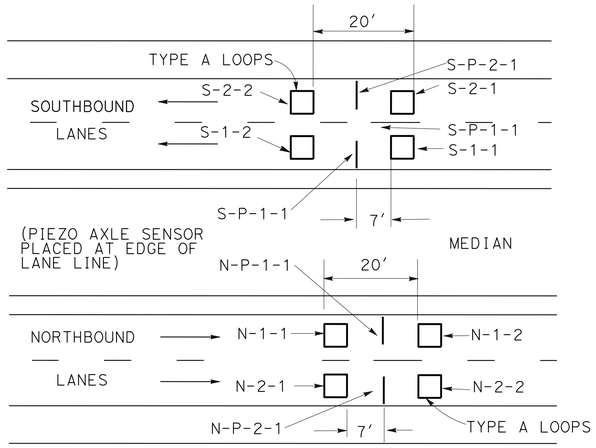

LOOP DETECTOR AND PIEZO AXLE SENSOR PLACEMENT AND DESIGNATION

DETAIL A

INDUCTIVE LOOP DETECTOR SENSOR DESIGNATION

N-1-E

- DIRECTION OF TRAFFIC
  - N - NORTHBOUND , S - SOUTHBOUND
  - E - EASTBOUND , W - WESTBOUND
- E - ENTERING
  L - LEAVING
- LANE NUMBER
  - 1 - FIRST LANE FROM LEFT
  - 2 - SECOND LANE

PIEZO AXLE SENSOR DESIGNATION

N-P-1-1

- DIRECTION OF TRAFFIC
  - N - NORTHBOUND, S - SOUTHBOUND
  - E - EASTBOUND, W - WESTBOUND
- PIEZO AXLE SENSOR
- 1 - FOR ALL PIEZO AXLE SENSORS
- LANE NUMBER
  - 1 - FIRST LANE FROM LEFT
  - 2 - SECOND LANE

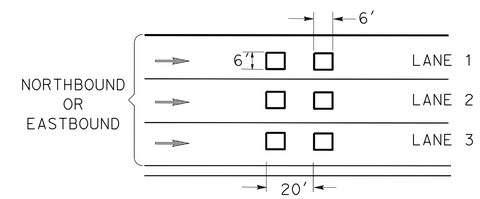

MAIN LINE DETECTOR LOOPS LAYOUT

N-1-E

- DIRECTION OF TRAFFIC
  - N - NORTHBOUND, S - SOUTHBOUND
  - E - EASTBOUND, W - WESTBOUND
- E - ENTERING
  L - LEAVING
- LANE NUMBER
  - 1 - FIRST LANE FROM LEFT
  - 2 - SECOND LANE

DETECTOR LOOP DESIGNATION

DETAIL C

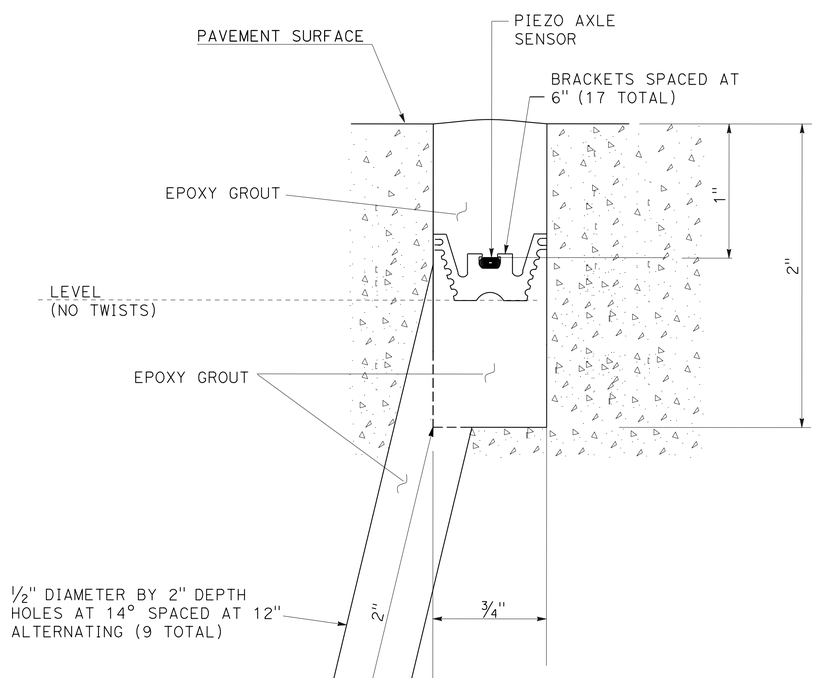

SECTION A-A

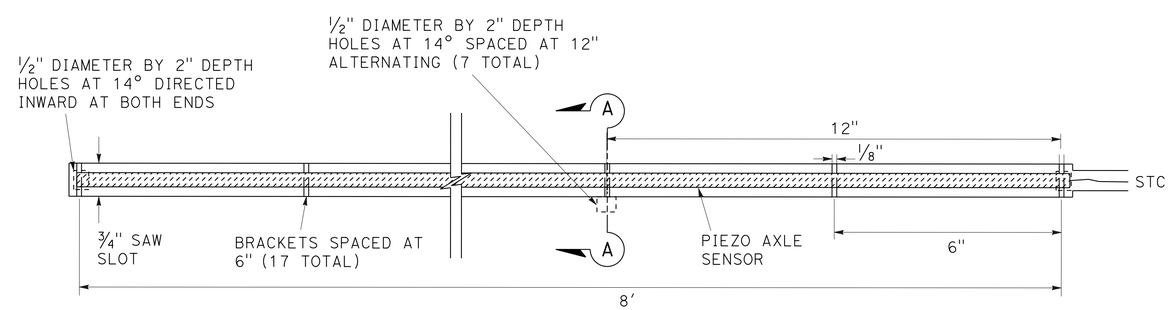

PIEZO AXLE SENSOR INSTALLATION

TOP VIEW
DETAIL E

NO SCALE

ELECTRICAL DETAILS

E-49

STATE OF CALIFORNIA - DEPARTMENT OF TRANSPORTATION
Caltrans® ELECTRICAL DESIGN

FUNCTIONAL SUPERVISOR: ALI BAKHDOUD
CALCULATED-DESIGNED BY: FRED IYASERE
CHECKED BY: AL ARAICA
REVISED BY: FI
DATE REVISED: 04/22/15

LAST REVISION 05-26-15
DATE PLOTTED => 28-MAY-2015
TIME PLOTTED => 09:01

Dist	COUNTY	LOCATION CODE	POST MILES TOTAL PROJECT	SHEET No.	TOTAL SHEETS
10	Sta	5,99	Var	58	83

REGISTERED ELECTRICAL ENGINEER 5/20/15 DATE

PLANS APPROVAL DATE 5-26-15

REGISTERED PROFESSIONAL ENGINEER ALVARO ARAICA No. 15558 Exp. 12/31/15 ELECTRICAL STATE OF CALIFORNIA

THE STATE OF CALIFORNIA OR ITS OFFICERS OR AGENTS SHALL NOT BE RESPONSIBLE FOR THE ACCURACY OR COMPLETENESS OF SCANNED COPIES OF THIS PLAN SHEET.

NOTES: (THIS SHEET ONLY)

1. ALL AC CONDUCTORS MUST BE #14 OR LARGER AND DC CONDUCTORS #18 OR LARGER.
2. 1#6 COPPER GROUND CONDUCTOR GOING THROUGH FOUNDATION MUST BE INSTALLED IN ½" CONDUIT.

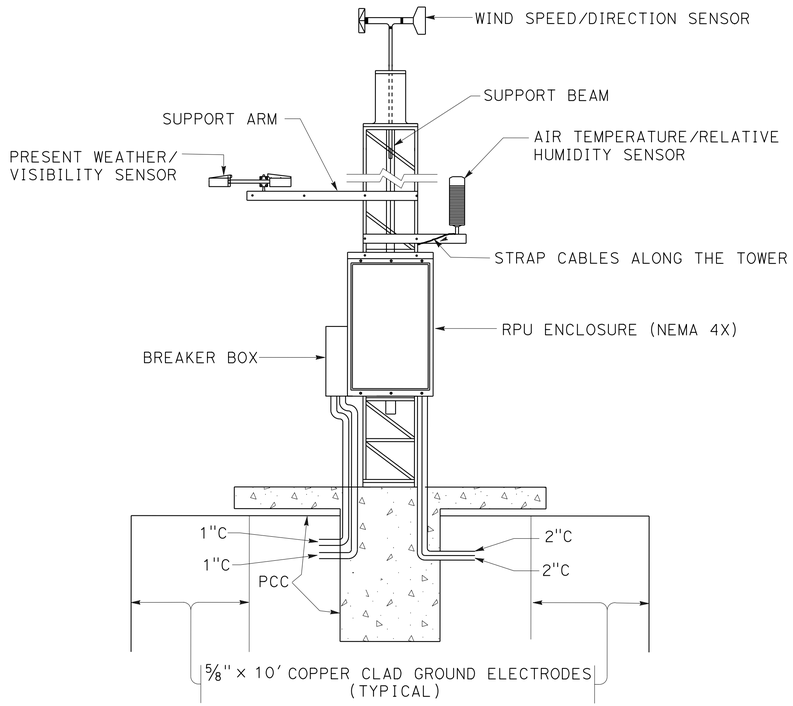

RWIS ASSEMBLY INSTALLATION

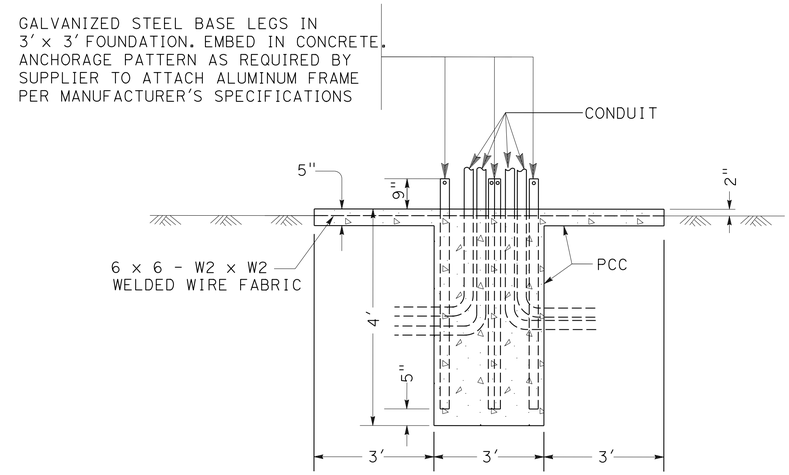

RWIS FOUNDATION DETAIL

SECTION A-A

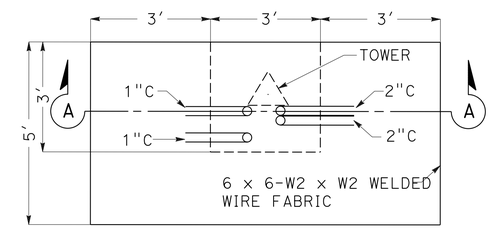

RWIS FOUNDATION DETAIL

PLAN VIEW

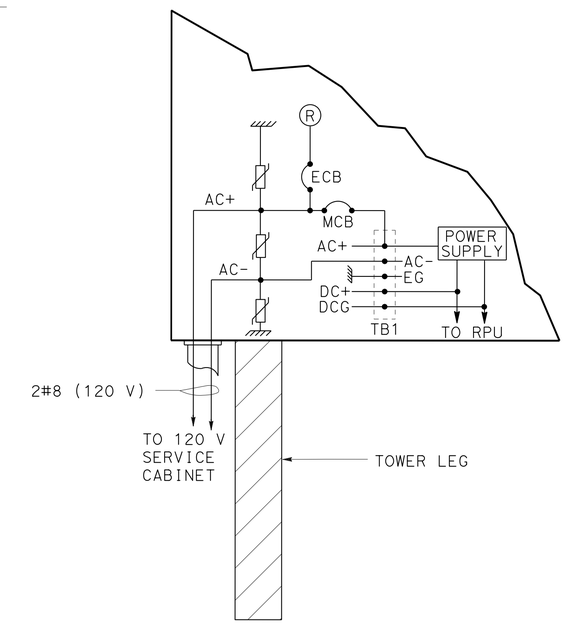

RWIS POWER CONNECTION

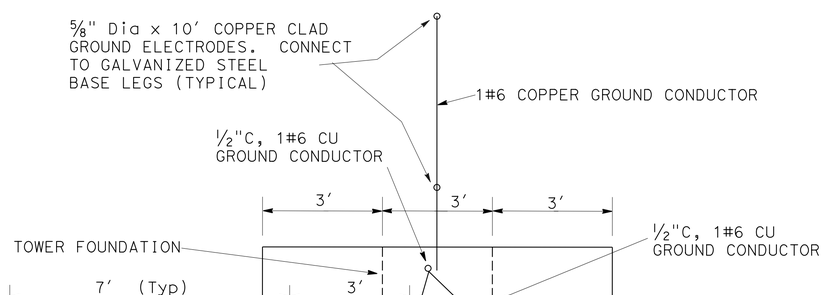

PLAN VIEW

RWIS GROUNDING DETAILS

ABBREVIATIONS:

RPU - REMOTE PROCESSING UNIT
VS - VISIBILITY SENSOR
MCB - 15 A, 1P, MAIN CB IN THE BREAKER BOX
ECB - 15 A, 1P, EQUIPMENT CB IN NEMA 4X ENCLOSURE
R - NEMA 15-15R DUPLEX RECEPTACLE
TB1 - 6 POSITION MINIMUM PHOENIX CONTACT #USK 10 OPEN CONSTRUCTION TERMINAL (OR EQUAL) BLOCK MOUNTED ON 9" DIN RAILING

LEGEND:

- EARTH OR EQUIPMENT GROUND
- SURGE PROTECTOR

ELECTRICAL DETAILS
E-50

NO SCALE

REVISED BY	DATE REVISED
FI	04/28/15

FRED IYASERE — AL ARAICA — CALCULATED-DESIGNED BY — CHECKED BY — FUNCTIONAL SUPERVISOR: ALI BAKHDOUD

STATE OF CALIFORNIA - DEPARTMENT OF TRANSPORTATION — Caltrans — ELECTRICAL DESIGN

Dist	COUNTY	ROUTE	POST MILES TOTAL PROJECT	SHEET No.	TOTAL SHEETS
10	Sta	5,99	Var	59	83

REGISTERED ELECTRICAL ENGINEER 5/20/15 DATE

5-26-15
PLANS APPROVAL DATE

REGISTERED PROFESSIONAL ENGINEER ALVARO ARAICA No. E15558 Exp. 12/31/15 ELECTRICAL STATE OF CALIFORNIA

THE STATE OF CALIFORNIA OR ITS OFFICERS OR AGENTS SHALL NOT BE RESPONSIBLE FOR THE ACCURACY OR COMPLETENESS OF SCANNED COPIES OF THIS PLAN SHEET.

NOTE:

THE QUANTITIES SHOWN IN TABLES ARE NOT SEPARATE PAY ITEMS, FOR INFORMATION ONLY. FOR COMPLETE ELECTRICAL WORK, SEE ELECTRICAL PLAN SHEETS.

TRAFFIC MONITORING STATION

SHEET No.	No.5(T) PB	No 6(T) PB	No.5(E) (T) PB	No. 5 PB WITH TAMPER RESISTANT PB COVER	WIRELESS MODEM	MODEL 334L CABINET	MODEL 334L CABINET FOUNDATION	TYPE III-AF SERVICE	TYPE III-AF FOUNDATION	TYPE A DETECTOR LOOP	No. 1/0 CONDUCTOR (AL)	No. 4 CONDUCTOR (AL)	No. 8 CONDUCTOR (Cu)	2" C TYPE 3	3" C TYPE 1	DLC
	EA										LF					
E-1	2	-	-	-	-	-	-	-	-	4	-	-	-	300	-	820
E-2	15	2	-	-	2	2	2	-	-	12	-	-	690	3127	60	16516
E-3	8	2	-	-	2	2	2	-	-	12	-	-	615	2490	60	13950
E-7	3	1	-	3	1	1	1	-	-	12	-	-	2050	1400	50	8980
E-9	3	1	-	-	1	1	1	1	1	-	330	-	330	575	40	1260
E-10	6	1	-	-	1	1	1	1	1	12	270	-	2400	1081	40	2408
E-12	5	1	-	-	1	1	1	1	1	-	300	-	400	1050	30	2882
E-14	2	-	-	-	-	-	-	-	-	-	-	-	-	-	-	2940
E-15	5	2	-	4	2	2	2	-	-	-	-	2202	1441	2163	60	3564
E-16	3	1	-	-	1	1	1	1	1	-	300	-	420	670	30	1060
E-19	5	1	1	3	-	1	1	1	1	-	850	90	-	420	30	680
E-21	3	1	-	-	-	1	1	-	-	14	-	930	-	200	30	2635

ELECTRICAL QUANTITIES
E-51

STATE OF CALIFORNIA - DEPARTMENT OF TRANSPORTATION
Caltrans® ELECTRICAL DESIGN

FUNCTIONAL SUPERVISOR: ALI BAKHDOUD
CALCULATED-DESIGNED BY: FRED IYASERE
CHECKED BY: ALVARO ARAICA
REVISED BY: FI
DATE REVISED: 02-19-15

LAST REVISION 05-26-15 | DATE PLOTTED => 28-MAY-2015 | TIME PLOTTED => 09:01

Dist	COUNTY	ROUTE	POST MILES TOTAL PROJECT	SHEET No.	TOTAL SHEETS
10	Sta	5,99	Var	60	83

REGISTERED ELECTRICAL ENGINEER 5/20/15 DATE

5-26-15
PLANS APPROVAL DATE

REGISTERED PROFESSIONAL ENGINEER ALVARO ARAICA No. E15558 Exp. 12/31/15 ELECTRICAL STATE OF CALIFORNIA

THE STATE OF CALIFORNIA OR ITS OFFICERS OR AGENTS SHALL NOT BE RESPONSIBLE FOR THE ACCURACY OR COMPLETENESS OF SCANNED COPIES OF THIS PLAN SHEET.

NOTE:

THE QUANTITIES SHOWN IN TABLES ARE NOT SEPARATE PAY ITEMS, FOR INFORMATION ONLY. FOR COMPLETE ELECTRICAL WORK, SEE ELECTRICAL PLAN SHEETS.

TRAFFIC MONITORING STATION

SHEET No.	No.5(T) PB	No 5(E) (T) PB	No.6(E) (T) PB	TYPE A LOOP	No. 5 PB WITH TAMPER RESISTANT PB COVER	WIRELESS MODEM	MODEL 334L CABINET	MODEL 334L CABINET FOUNDATION	TYPE III-BF CABINET	TYPE III-BF FOUNDATION	TYPE III-CF CABINET	TYPE III-CF FOUNDATION	CCTV 35 POLE FOUNDATION	CCTV 35 POLE
	EA													
E-24	2	-	-	2	-	1	1	1	-	-	-	-	-	-
E-25	3	-	1	-	3	1	1	1	-	-	-	-	-	-
E-27	10	-	1	-	5	1	1	1	1	1	-	-	-	-
E-30	1	-	1	4	-	-	1	1	-	-	-	-	-	-
E-32	1	-	-	2	-	-	-	-	-	-	-	-	-	-
E-33	12	-	2	4	8	-	1	1	1	1	-	-	-	-
E-34	5	-	-	2	5	-	-	-	1	1	-	-	-	-
E-35	1	-	-	2	-	-	-	-	-	-	-	-	-	-
E-36	12	1	1	6	11	-	2	2	-	-	-	-	-	-
E-37	10	-	1	4	8	-	1	1	1	1	-	-	1	1
E-38	3	-	1	4	-	-	1	1	-	-	-	-	-	-
E-39	3	-	1	4	1	-	1	1	-	-	1	1	-	-
E-40	2	-	-	4	-	-	-	-	-	-	-	-	-	-

ELECTRICAL QUANTITIES

E-52

STATE OF CALIFORNIA - DEPARTMENT OF TRANSPORTATION
Caltrans® ELECTRICAL DESIGN

FUNCTIONAL SUPERVISOR: ALI BAKHDOUD
CALCULATED-DESIGNED BY: FRED IYASERE
CHECKED BY: ALVARO ARAICA
REVISED BY: FI
DATE REVISED: 02-19-15

LAST REVISION 05-26-15
DATE PLOTTED => 28-MAY-2015
TIME PLOTTED => 09:01

Dist	COUNTY	ROUTE	POST MILES TOTAL PROJECT	SHEET No.	TOTAL SHEETS
10	Sta	5,99	Var	61	83

REGISTERED ELECTRICAL ENGINEER 5/20/15 DATE

5-26-15
PLANS APPROVAL DATE

REGISTERED PROFESSIONAL ENGINEER ALVARO ARAICA No. E15558 Exp. 12/31/15 ELECTRICAL STATE OF CALIFORNIA

THE STATE OF CALIFORNIA OR ITS OFFICERS OR AGENTS SHALL NOT BE RESPONSIBLE FOR THE ACCURACY OR COMPLETENESS OF SCANNED COPIES OF THIS PLAN SHEET.

NOTE:

THE QUANTITIES SHOWN IN TABLES ARE NOT SEPARATE PAY ITEMS, FOR INFORMATION ONLY, FOR COMPLETE ELECTRICAL WORK, SEE ELECTRICAL PLAN SHEETS.

TRAFFIC MONITORING STATION

SHEET No.	CAMERA ASSEMBLY	CAMERA CONTROL UNIT	VIDEO ENCODER UNIT	RWIS	RWIS FOUNDATION	FIBER OPTIC PB	FIBER OPTIC SPLICE VAULT	HYBRID CABLE	No. 1/0 CONDUCTOR (AL)	No. 2 CONDUCTOR (AL)	No. 4 CONDUCTOR (AL)	No. 8 CONDUCTOR (Cu)	CAT 5E CABLE	FO CONDUIT	1-144 SMFO	1-12 SMFO	2" C TYPE 3	3" C TYPE 1	DLC
	EA							LF											
E-24	-	-	-	-	-	-	-	-	-	-	120	-	-	-	-	-	50	30	2336
E-25	-	-	-	-	-	-	-	-	-	-	1920	910	-	-	-	-	50	30	1920
E-27	-	-	-	-	-	-	-	-	-	-	2760	3600	-	-	-	-	275	30	1800
E-30	-	-	-	-	-	-	-	-	-	-	1260	-	-	-	-	-	20	30	600
E-32	-	-	-	-	-	-	-	-	-	-	-	-	-	-	-	-	20	-	-
E-33	-	-	-	-	-	-	-	-	142	-	430	-	-	-	-	-	1700	30	2124
E-34	-	-	-	-	-	-	-	-	2700	-	-	1090	-	-	-	-	1060	-	1340
E-35	-	-	-	-	-	-	-	-	-	-	-	-	-	-	-	-	20	-	-
E-36	-	-	-	-	-	-	-	-	-	-	1764	125	-	-	-	-	-	60	2214
E-37	1	1	1	1	1	-	-	70	-	2460	50	1245	-	-	-	-	422	30	1124
E-38	-	-	-	-	-	-	-	-	-	-	140	-	-	-	-	-	30	30	640
E-39	-	-	-	-	-	-	-	-	-	-	140	-	-	-	-	-	190	30	1975
E-40	-	-	-	-	-	1	1	-	-	-	-	-	80	385	390	1005	30	-	690

ELECTRICAL QUANTITIES

E-53

STATE OF CALIFORNIA - DEPARTMENT OF TRANSPORTATION
Caltrans® ELECTRICAL DESIGN

FUNCTIONAL SUPERVISOR: ALI BAKHDOUD
CALCULATED-DESIGNED BY: FRED IYASERE
CHECKED BY: ALVARO ARAICA
REVISED BY: FI
DATE REVISED: 02-19-15

LAST REVISION 05-26-15
DATE PLOTTED => 28-MAY-2015
TIME PLOTTED => 09:01

Dist	COUNTY	ROUTE	POST MILES TOTAL PROJECT	SHEET No.	TOTAL SHEETS
10	Sta	5,99	Var	62	83

REGISTERED ELECTRICAL ENGINEER 5/20/15 DATE

5-26-15
PLANS APPROVAL DATE

REGISTERED PROFESSIONAL ENGINEER ALVARO ARAICA No. E15558 Exp. 12/31/15 ELECTRICAL STATE OF CALIFORNIA

THE STATE OF CALIFORNIA OR ITS OFFICERS OR AGENTS SHALL NOT BE RESPONSIBLE FOR THE ACCURACY OR COMPLETENESS OF SCANNED COPIES OF THIS PLAN SHEET.

NOTE:

THE QUANTITIES SHOWN IN TABLES ARE NOT SEPARATE PAY ITEMS, FOR INFORMATION ONLY. FOR COMPLETE ELECTRICAL WORK, SEE ELECTRICAL PLAN SHEETS.

TRAFFIC OPERATION SYSTEM

SHEET No.	No.5(T) PB	No.5(E) (T)PB	No 6(T) PB	No.6(E) (T)PB	No. 5 PB WITH TAMPER RESISTANT PB COVER	WIRELESS MODEM	MODEL 334L CABINET	MODEL 334L CABINET FOUNDATION	TYPE III-BF CABINET	TYPE III-BF FOUNDATION	TYPE III-AF CABINET	TYPE III-AF FOUNDATION	TYPE A DETECTOR LOOP	CCTV 35 FOUNDATION	CCTV 35 POLE
	EA														
E-4	10	-	2	-	-	2	2	2	-	-	-	-	20	1	1
E-5	11	-	2	-	-	2	2	2	-	-	-	-	12	1	1
E-6	14	-	2	-	-	2	2	2	-	-	1	1	12	1	1
E-8	3	-	1	-	2	1	1	1	-	-	-	-	-	1	1
E-11	5	-	1	-	-	1	1	1	-	-	1	1	12	1	1
E-13	6	-	1	-	-	1	1	1	-	-	-	-	12	1	1
E-17	11	-	1	-	-	-	1	1	-	-	-	-	12	1	1
E-18	5	-	1	-	-	-	1	1	-	-	-	-	12	-	-
E-20	3	-	1	-	4	-	1	1	-	-	-	-	14	1	1
E-22	2	2	1	-	-	-	1	1	-	-	-	-	-	-	-
E-23	6	2	-	1	5	1	1	1	-	-	-	-	16	1	1
E-26	2	1	-	1	-	1	1	1	-	-	-	-	16	1	1
E-28	2	-	1	1	5	-	1	1	-	-	-	-	8	1	1
E-31	5	-	-	-	5	-	1	1	1	1	-	-	12	-	-

STATE OF CALIFORNIA - DEPARTMENT OF TRANSPORTATION
Caltrans® ELECTRICAL DESIGN

FUNCTIONAL SUPERVISOR: ALI BAKHDOUD
CALCULATED-DESIGNED BY: FRED IYASERE
CHECKED BY: ALVARO ARAICA
REVISED BY: FI
DATE REVISED: 02-19-15

ELECTRICAL QUANTITIES
E-54

LAST REVISION 05-26-15
DATE PLOTTED => 28-MAY-2015
TIME PLOTTED => 09:01

Dist	COUNTY	ROUTE	POST MILES TOTAL PROJECT	SHEET No.	TOTAL SHEETS
10	Sta	5,99	Var	63	83

REGISTERED ELECTRICAL ENGINEER 5/20/15 DATE

5-26-15
PLANS APPROVAL DATE

REGISTERED PROFESSIONAL ENGINEER ALVARO ARAICA No. E15558 Exp. 12/31/15 ELECTRICAL STATE OF CALIFORNIA

THE STATE OF CALIFORNIA OR ITS OFFICERS OR AGENTS SHALL NOT BE RESPONSIBLE FOR THE ACCURACY OR COMPLETENESS OF SCANNED COPIES OF THIS PLAN SHEET.

NOTE:

THE QUANTITIES SHOWN IN TABLES ARE NOT SEPARATE PAY ITEMS, FOR INFORMATION ONLY. FOR COMPLETE ELECTRICAL WORK, SEE ELECTRICAL PLAN SHEETS.

TRAFFIC OPERATION SYSTEM

SHEET No.	CCTV 40 POLE	CCTV 40 FOUNDATION	CAMERA ASSEMBLY	CAMERA CONTROL UNIT	VIDEO ENCODER UNIT	PIEZO AXLE SENSOR	HYBRID CABLE	No. 1/0 CONDUCTOR (AL)	No. 2 CONDUCTOR (AL)	No. 4 CONDUCTOR (AL)	No. 8 CONDUCTOR (Cu)	2" C TYPE 3	3" C TYPE 1	DLC
	EA						LF							
E-4	-	-	1	1	1	-	407	-	-	-	1200	2121	100	11950
E-5	-	-	1	1	1	-	525	-	-	-	900	2488	100	14308
E-6	-	-	1	1	1	-	425	180	-	-	1935	3230	80	14080
E-8	-	-	-	-	-	-	125	-	-	-	1410	785	40	800
E-11	1	1	1	1	1	-	90	195	-	-	105	240	30	2172
E-13	-	-	1	1	1	6	100	-	-	-	1701	1343	60	2992
E-17	-	-	1	1	1	-	150	-	-	-	1170	2188	30	6499
E-18	-	-	-	-	-	-	-	-	-	-	2460	775	30	4150
E-20	-	-	1	1	1	-	200	1335	-	165	-	670	30	1410
E-22	-	-	-	-	-	-	-	-	-	910	-	100	30	2240
E-23	-	-	1	1	1	-	70	-	1250	100	-	780	30	3382
E-26	-	-	1	1	1	-	70	-	-	-	280	270	30	3120
E-28	-	-	1	1	1	-	70	-	-	2540	-	40	30	2040
E-31	-	-	1	1	1	1	70	-	-	1040	-	490	30	2200

ELECTRICAL QUANTITIES

E-55

STATE OF CALIFORNIA - DEPARTMENT OF TRANSPORTATION
Caltrans® ELECTRICAL DESIGN

FUNCTIONAL SUPERVISOR: ALI BAKHDOUD
CALCULATED-DESIGNED BY: FRED IYASERE
CHECKED BY: ALVARO ARAICA
REVISED BY: FI
DATE REVISED: 02-19-15

LAST REVISION 05-26-15
DATE PLOTTED => 28-MAY-2015
TIME PLOTTED => 09:01

Dist	COUNTY	ROUTE	POST MILES TOTAL PROJECT	SHEET No.	TOTAL SHEETS
10	Sta	5,99	Var	64	83

REGISTERED ELECTRICAL ENGINEER 5/20/15 DATE

5-26-15
PLANS APPROVAL DATE

REGISTERED PROFESSIONAL ENGINEER ALVARO ARAICA No. E15558 Exp. 12/31/15 ELECTRICAL STATE OF CALIFORNIA

THE STATE OF CALIFORNIA OR ITS OFFICERS OR AGENTS SHALL NOT BE RESPONSIBLE FOR THE ACCURACY OR COMPLETENESS OF SCANNED COPIES OF THIS PLAN SHEET.

NOTE:

THE QUANTITIES SHOWN IN TABLES ARE NOT SEPARATE PAY ITEMS, FOR INFORMATION ONLY. FOR COMPLETE ELECTRICAL WORK, SEE ELECTRICAL PLAN SHEETS.

FIBER OPTIC SYSTEM

SHEET No.	No.5(T) PB	No 5(E) (T) PB	No.6(E) (T) PB	FIBER OPTIC SPLICE VAULT	WIRELESS MODEM	MODEL 334L CABINET	MODEL 334L CABINET FOUNDATION	FDU	CAT 5E CABLE	FO CONDUIT	1-144 SMFO	1-12 SMFO	3" C TYPE 1
	EA								LF				
E-41	-	1	2	-	1	1	1	3	70	1510	1520	600	20
E-42	6	-	2	3	2	2	2	1	140	2805	1350	1260	-
E-43	-	-	-	-	-	-	-	3	-	-	-	-	-
E-44	-	-	-	-	-	-	-	-	-	-	-	-	-
E-45	-	-	-	-	-	-	-	-	-	-	-	-	-

MODIFY VEHICLE CLASSIFICATION STATION

SHEET No.	TYPE A LOOP	2" C TYPE 3	3" C TYPE 1	DLC
	EA	LF		
E-29	6	20	30	1350

STATE OF CALIFORNIA - DEPARTMENT OF TRANSPORTATION
Caltrans® ELECTRICAL DESIGN

FUNCTIONAL SUPERVISOR: ALI BAKHDOUD
CALCULATED-DESIGNED BY: FRED IYASERE
CHECKED BY: ALVARO ARAICA
REVISED BY: FI
DATE REVISED: 02-19-15

ELECTRICAL QUANTITIES
E-56

LAST REVISION 05-26-15 | DATE PLOTTED => 28-MAY-2015 | TIME PLOTTED => 09:01

M

Maint	MAINTENANCE
Max	MAXIMUM
MB	METAL BEAM
MBB	METAL BEAM BARRIER
MBGR	METAL BEAM GUARD RAILING
Med	MEDIAN
MGS	MIDWEST GUARDRAIL SYSTEM
MH	MANHOLE
Min	MINIMUM
Misc	MISCELLANEOUS
Misc I & S	MISCELLANEOUS IRON AND STEEL
Mkr	MARKER
Mod	MODIFIED,
	MODIFY
Mon	MONUMENT
MP	METAL PLATE
MPGR	METAL PLATE GUARD RAILING
MR	MOVEMENT RATING
MSE	MECHANICALLY STABILIZED EMBANKMENT
Mt	MOUNTAIN, MOUNT
Mtl	MATERIAL
MVP	MAINTENANCE VEHICLE PULLOUT

N

N	NORTH
NB	NORTHBOUND
No.	NUMBER (MUST HAVE PERIOD)
Nos.	NUMBERS (MUST HAVE PERIOD)
NPS	NOMINAL PIPE SIZE
NS	NEAR SIDE
NSP	NEW STANDARD PLAN
NTS	NOT TO SCALE

O

Oblr	OBLITERATE
OC	OVERCROSSING
OD	OUTSIDE DIAMETER
OF	OUTSIDE FACE
OG	ORIGINAL GROUND
OGAC	OPEN GRADED ASPHALT CONCRETE
OGFC	OPEN GRADED FRICTION COURSE
OH	OVERHEAD
OHWM	ORDINARY HIGH WATER MARK
O-O	OUT TO OUT
Opp	OPPOSITE
OSD	OVERSIDE DRAIN

P

P	PAGE
PAP	PERFORATED ALUMINUM PIPE
PB	PULL BOX
PC	POINT OF CURVATURE,
	PRECAST
PCC	POINT OF COMPOUND CURVE,
	PORTLAND CEMENT CONCRETE
PCMS	PORTABLE CHANGEABLE MESSAGE SIGN
PCP	PERFORATED CONCRETE PIPE,
	PRESTRESSED CONCRETE PIPE
PCVC	POINT OF COMPOUND VERTICAL CURVE
PEC	PERMIT TO ENTER AND CONSTRUCT
Ped	PEDESTRIAN
Ped OC	PEDESTRIAN OVERCROSSING
Ped UC	PEDESTRIAN UNDERCROSSING
Perm Mtl	PERMEABLE MATERIAL

P continued

PG	PROFILE GRADE
PI	POINT OF INTERSECTION
PJP	PARTIAL JOINT PENETRATION
Pkwy	PARKWAY
ℙ,PL	PLATE
P/L	PROPERTY LINE
PM	POST MILE,
	TIME FROM NOON TO MIDNIGHT
PN	PAVING NOTCH
POC	POINT OF HORIZONTAL CURVE
POT	POINT OF TANGENT
POVC	POINT OF VERTICAL CURVE
PP	PIPE PILE,
	PLASTIC PIPE,
	POWER POLE
PPL	PREFORMED PERMEABLE LINER
PPP	PERFORATED PLASTIC PIPE
PRC	POINT OF REVERSE CURVE
PRF	PAVEMENT REINFORCING FABRIC
PRVC	POINT OF REVERSE VERTICAL CURVE
PS&E	PLANS, SPECIFICATIONS AND ESTIMATES
PS, P/S	PRESTRESSED
PSP	PERFORATED STEEL PIPE
PT	POINT OF TANGENCY
PVC	POLYVINYL CHLORIDE
Pvmt	PAVEMENT

Q

Qty	QUANTITY

R

R	RADIUS
R & D	REMOVE AND DISPOSE
R & S	REMOVE AND SALVAGE
R/C	RATE OF CHANGE
RCA	REINFORCED CONCRETE ARCH
RCB	REINFORCED CONCRETE BOX
RCP	REINFORCED CONCRETE PIPE
RCPA	REINFORCED CONCRETE PIPE ARCH
Rd	ROAD
Reinf	REINFORCED,
	REINFORCEMENT,
	REINFORCING
Rel	RELOCATE
Repl	REPLACEMENT
Ret	RETAINING
Rev	REVISED, REVISION
Rdwy	ROADWAY
RHMA	RUBBERIZED HOT MIX ASPHALT
Riv	RIVER
RM	ROAD-MIXED
RP	RADIUS POINT,
	REFERENCE POINT
RR	RAILROAD
RSP	ROCK SLOPE PROTECTION,
	REVISED STANDARD PLAN
Rt	RIGHT
Rte	ROUTE
RW	REDWOOD,
	RETAINING WALL
R/W	RIGHT OF WAY
Rwy	RAILWAY

S

S	SOUTH,
	SUPPLEMENT
SAE	STRUCTURE APPROACH EMBANKMENT
Salv	SALVAGE
SAPP	STRUCTURAL ALUMINUM PLATE PIPE
SB	SOUTHBOUND
SC	SAND CUSHION
SCSP	SLOTTED CORRUGATED STEEL PIPE
SD	STORM DRAIN
Sec	SECOND,
	SECTION
Sep	SEPARATION
SG	SUBGRADE
Shld	SHOULDER
Sht	SHEET
Sim	SIMILAR
₤	STATION LINE
SM	SELECTED MATERIAL
Spec	SPECIAL,
	SPECIFICATIONS
SPP	SLOTTED PLASTIC PIPE
SS	SLOPE STAKE
SSBM	STRAP AND SADDLE BRACKET METHOD
SSD	STRUCTURAL SECTION DRAIN
SSPA	STRUCTURAL STEEL PLATE ARCH
SSPP	STRUCTURAL STEEL PLATE PIPE
SSPPA	STRUCTURAL STEEL PLATE PIPE ARCH
SSRP	STEEL SPIRAL RIB PIPE
St	STREET
Sta	STATION
STBB	SINGLE THRIE BEAM BARRIER
Std	STANDARD
Str	STRUCTURE
Surf	SURFACING
SW	SIDEWALK,
	SOUND WALL
Swr	SEWER
Sym	SYMMETRICAL
S4S	SURFACE 4 SIDES

T

T	SEMI-TANGENT
Tan	TANGENT
TBB	THRIE BEAM BARRIER
Tbr	TIMBER
TC	TOP OF CURB
TCB	TRAFFIC CONTROL BOX
TCE	TEMPORARY CONSTRUCTION EASEMENT
Tel	TELEPHONE
Temp	TEMPORARY
TG	TOP OF GRADE
Tot	TOTAL
TP	TELEPHONE POLE
TPB	TREATED PERMEABLE BASE
TPM	TREATED PERMEABLE MATERIAL
Trans	TRANSITION

T continued

TS	TRANSVERSE,
	TRAFFIC SIGNAL,
	TUBULAR STEEL
Typ	TYPICAL

U

UC	UNDERCROSSING
UD	UNDERDRAIN
UG	UNDERGROUND
UON	UNLESS OTHERWISE NOTED
UP	UNDERPASS

V

V	VALVE,
	DESIGN SPEED
Var	VARIABLE,
	VARIES
VC	VERTICAL CURVE
VCP	VITRIFIED CLAY PIPE
Vert	VERTICAL
Via	VIADUCT
Vol	VOLUME

W

W	WEST,
	WIDTH
WB	WESTBOUND
WH	WEEP HOLE
WM	WIRE MESH
WS	WATER SURFACE
WSP	WELDED STEEL PIPE
Wt	WEIGHT
WV	WATER VALVE
WW	WINGWALL
WWLOL	WINGWALL LAYOUT LINE

X

X Sec	CROSS SECTION
Xing	CROSSING

Y

Yr	YEAR
Yrs	YEARS

Dist	COUNTY	ROUTE	POST MILES TOTAL PROJECT	SHEET No.	TOTAL SHEETS
10	Sta	5,99	Var	65	83

Grace M. Tsushima
REGISTERED CIVIL ENGINEER

July 19, 2013
PLANS APPROVAL DATE

REGISTERED PROFESSIONAL ENGINEER
Grace M. Tsushima
No. C49814
Exp. 9-30-14
CIVIL
STATE OF CALIFORNIA

THE STATE OF CALIFORNIA OR ITS OFFICERS OR AGENTS SHALL NOT BE RESPONSIBLE FOR THE ACCURACY OR COMPLETENESS OF SCANNED COPIES OF THIS PLAN SHEET.

TO ACCOMPANY PLANS DATED 5-26-15

UNIT OF MEASUREMENT SYMBOLS:

Some of the symbols used in the project plan quantity tables and in the Bid Item List are:

TABLE A

SYMBOL USED	DEFINITIONS
ACRE	ACRE
CF	CUBIC FOOT
CY	CUBIC YARD
EA	EACH
GAL	GALLON
LB	POUND
LF	LINEAR FOOT
SQFT	SQUARE FOOT
SQYD	SQUARE YARD
STA	100 FEET
TAB	TABLET
TON	2,000 POUNDS

Some of the symbols used in the plans other than in the project plan quantity tables are:

TABLE B

SYMBOL USED	DEFINITIONS
ksi	KIPS PER SQUARE INCH
ksf	KIPS PER SQUARE FOOT
psi	POUNDS PER SQUARE INCH
psf	POUNDS PER SQUARE FOOT
lb/ft^3, pcf	POUNDS PER CUBIC FOOT
tsf	TONS PER SQUARE FOOT
mph, MPH *	MILES PER HOUR
ø	NOMINAL DIAMETER
oz	OUNCE
lb	POUND
kip	1,000 POUNDS
cal	CALORIE
ft	FOOT OR FEET
gal	GALLON

* For use on a sign panel only

STATE OF CALIFORNIA
DEPARTMENT OF TRANSPORTATION

ABBREVIATIONS (SHEET 2 OF 2)

NO SCALE

RSP A10B DATED JULY 19, 2013 SUPERSEDES STANDARD PLAN A10B DATED MAY 20, 2011 - PAGE 2 OF THE STANDARD PLANS BOOK DATED 2010.

REVISED STANDARD PLAN RSP A10B

2010 REVISED STANDARD PLAN RSP A10B

6-7-13

Dist	COUNTY	ROUTE	POST MILES TOTAL PROJECT	SHEET No.	TOTAL SHEETS
10	Sta	5,99	Var	66	83

Randell D. Hiatt
REGISTERED CIVIL ENGINEER

July 19, 2013
PLANS APPROVAL DATE

REGISTERED PROFESSIONAL ENGINEER
Randell D. Hiatt
No. C50200
Exp. 6-30-15
CIVIL
STATE OF CALIFORNIA

THE STATE OF CALIFORNIA OR ITS OFFICERS OR AGENTS SHALL NOT BE RESPONSIBLE FOR THE ACCURACY OR COMPLETENESS OF SCANNED COPIES OF THIS PLAN SHEET.

TO ACCOMPANY PLANS DATED 5-26-15

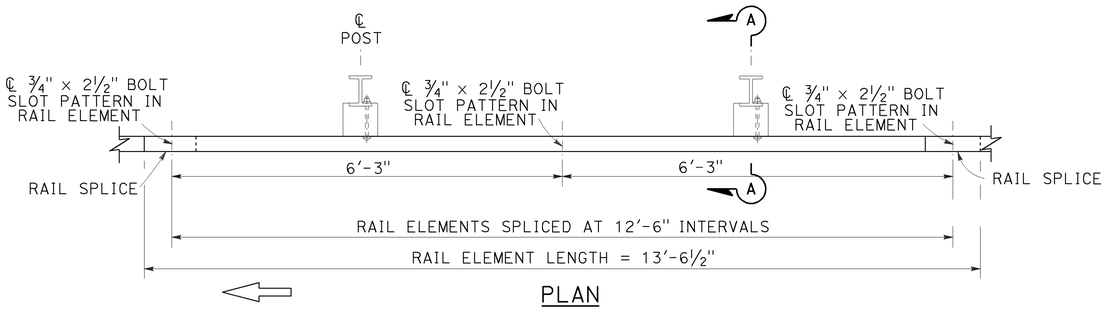

PLAN

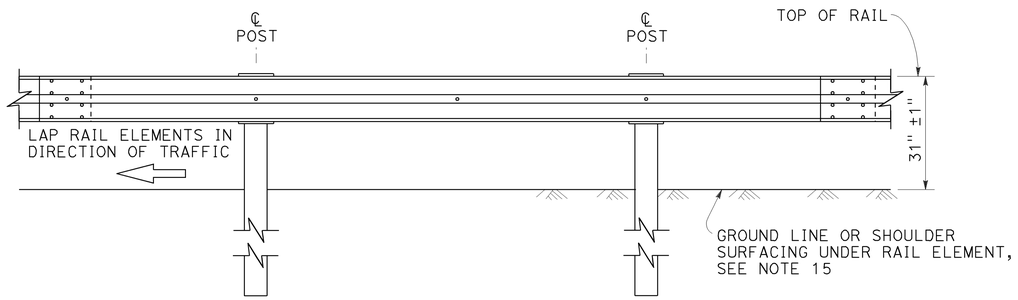

ELEVATION

MIDWEST GUARDRAIL SYSTEM WITH STEEL POSTS AND NOTCHED WOOD OR NOTCHED RECYCLED PLASTIC BLOCKS

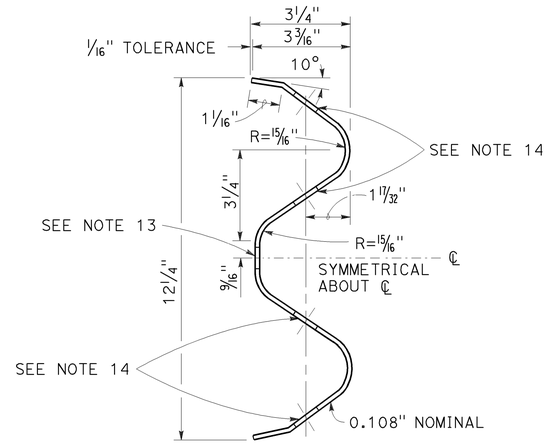

SECTION THRU RAIL ELEMENT

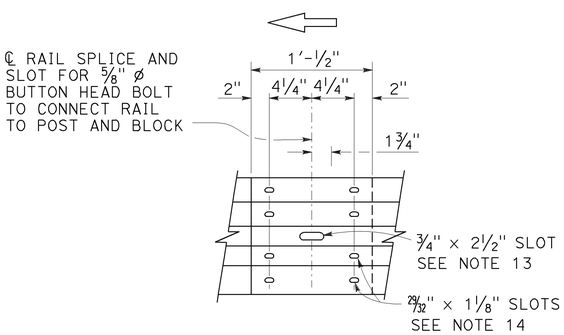

ELEVATION

RAIL ELEMENT SPLICE DETAIL

a) Connect the over lapped end of the rail elements with ⅝" ø × 1⅜" button head oval shoulder splice bolts inserted into the 29⁄32" × 1⅛" slots and bolted together with ⅝" ø recessed hex nuts. Recess of hex nut points toward rail element. A total of 8 bolts and nuts are to be used at each rail splice connection.

b) The ends of the rail elements are to be overlapped in the direction of traffic (see details).

c) Where end cap is to be attached to the end of a rail element, a total of 4 of the above described splice bolts and nuts are to be used.

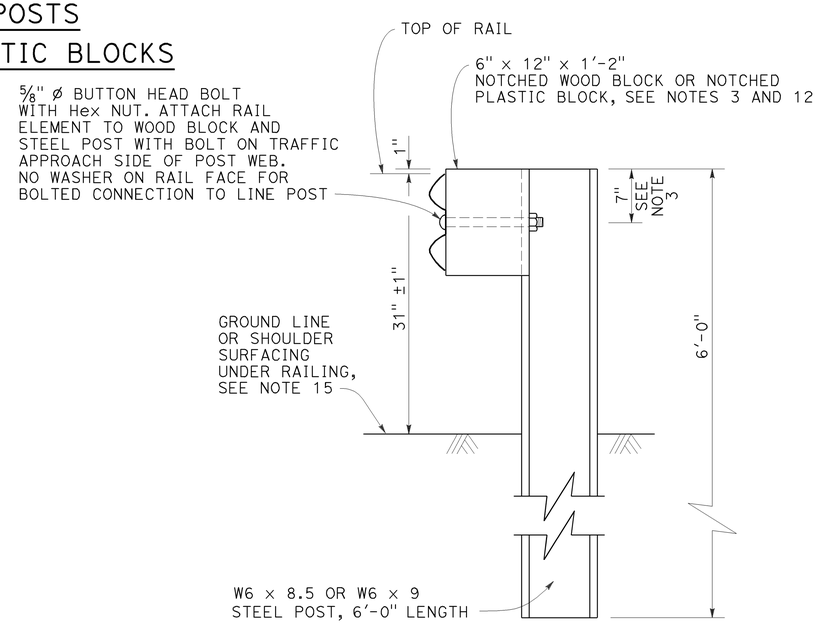

SECTION A-A

TYPICAL STEEL LINE POST INSTALLATION

See Note 4

NOTES:

1. For details of wood post installations, see Revised Standard Plan RSP A77L1.
2. For details of standard hardware used to construct MGS, see Revised Standard Plan RSP A77M1.
3. For details of steel posts and notched wood blocks used to construct MGS, see Revised Standard Plan RSP A77N2.
4. For additional installation details, see Revised Standard Plan RSP A77N3.
5. MGS post spacing to be 6'-3" center to center, except as otherwise noted.
6. For MGS typical layouts, see the A77P, A77Q and A77R Series of Standard Plans.
7. If railing is connected to terminal system end treatment, use 31" height terminal system end treatment.
8. For MGS end anchor details, see Revised Standard Plans RSP A77S1 and RSP A77T2.
9. For details of MGS transition to bridge railing, see Revised Standard Plan RSP A77U4.
10. For additional details of MGS connection to bridge railings, see Revised Standard Plans RSP A77U1, RSP A77U2 and RSP A77V1.
11. For dike positioning and MGS delineation details, see Revised Standard Plan RSP A77N4.
12. Notched face of block faces steel post.
13. Slotted hole for bolted connection of rail element to block and post. See "Section Thru Rail Element".
14. Slotted holes for splice bolts to overlap ends of rail element. See "Section Thru Rail Element".
15. Install posts in soil.

STATE OF CALIFORNIA
DEPARTMENT OF TRANSPORTATION

MIDWEST GUARDRAIL SYSTEM STANDARD RAILING SECTION (STEEL POST WITH NOTCHED WOOD OR NOTCHED RECYCLED PLASTIC BLOCK)

NO SCALE

RSP A77L2 DATED JULY 19, 2013 SUPPLEMENTS THE STANDARD PLANS BOOK DATED 2010.

REVISED STANDARD PLAN RSP A77L2

2010 REVISED STANDARD PLAN RSP A77L2

7-3-13

Dist	COUNTY	ROUTE	POST MILES TOTAL PROJECT	SHEET No.	TOTAL SHEETS
10	Sta	5,99	Var	67	83

Randell D. Hiatt
REGISTERED CIVIL ENGINEER

November 15, 2013
PLANS APPROVAL DATE

REGISTERED PROFESSIONAL ENGINEER
Randell D. Hiatt
No. C50200
Exp. 6-30-15
CIVIL
STATE OF CALIFORNIA

THE STATE OF CALIFORNIA OR ITS OFFICERS OR AGENTS SHALL NOT BE RESPONSIBLE FOR THE ACCURACY OR COMPLETENESS OF SCANNED COPIES OF THIS PLAN SHEET.

TO ACCOMPANY PLANS DATED 5-26-15

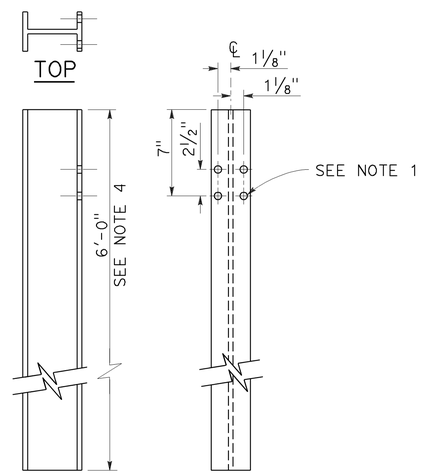

W6 x 9 OR W6 x 8.5
STEEL POST
See Note 4

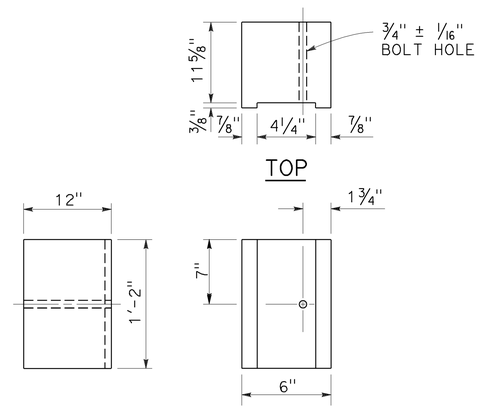

6" x 12"
NOTCHED WOOD BLOCK
See Notes 2 and 3

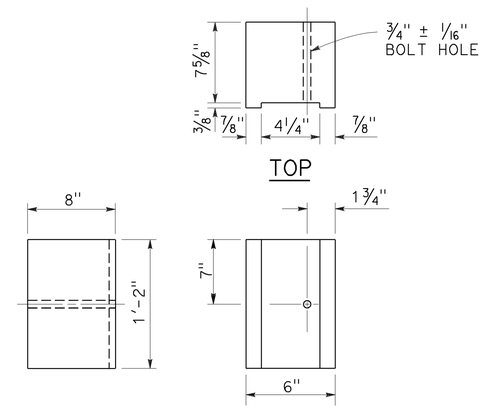

6" x 8"
NOTCHED WOOD BLOCK
Only for use with metal beam guard railing. See Note 5

NOTES:

1. All holes in steel post shall be 13/16" Dia maximum.
2. Dimensions shown for wood block are nominal.
3. Notched face of block faces steel post.
4. 6'-0" length posts to be used for typical roadway installation. See Revised Standard Plan RSP A77N3.
5. See Revised Standard Plan RSP A77L3 for use of 6" x 8" and 8" x 8" notched wood blocks.
6. This post and 8" x 12" block combination to be used for line post sections of MGS on narrow roadways and where strengthened line post sections of MGS are warranted to shield fixed objects.

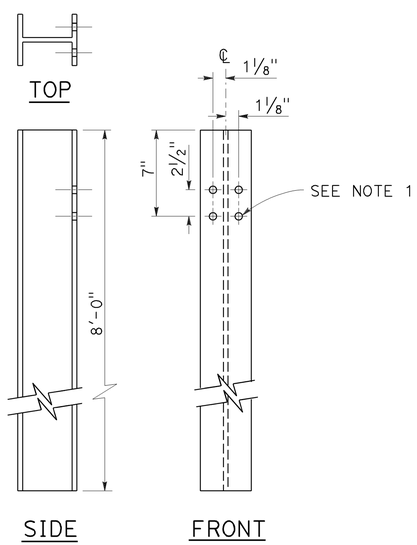

W6 x 15
STEEL POST
See Note 6

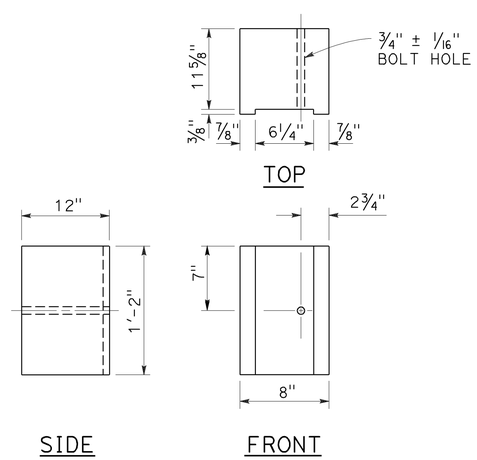

8" x 12"
NOTCHED WOOD BLOCK
See Notes 2 and 3

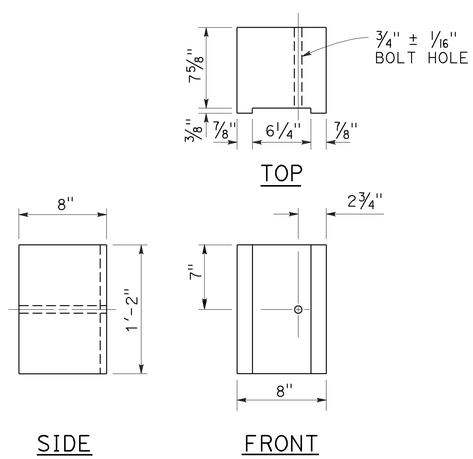

8" x 8"
NOTCHED WOOD BLOCK
Only for use with metal beam guard railing. See Note 5

STATE OF CALIFORNIA
DEPARTMENT OF TRANSPORTATION

MIDWEST GUARDRAIL SYSTEM STEEL POST AND NOTCHED WOOD BLOCK DETAILS

NO SCALE

RSP A77N2 DATED NOVEMBER 15, 2013 SUPERSEDES RSP A77N2
DATED JULY 19, 2013 THAT SUPPLEMENTS THE STANDARD PLANS BOOK DATED 2010.

REVISED STANDARD PLAN RSP A77N2

2010 REVISED STANDARD PLAN RSP A77N2

10-29-13

Dist	COUNTY	ROUTE	POST MILES TOTAL PROJECT	SHEET No.	TOTAL SHEETS
10	Sta	5,99	Var	68	83

Randell D. Hiatt
REGISTERED CIVIL ENGINEER

November 15, 2013
PLANS APPROVAL DATE

REGISTERED PROFESSIONAL ENGINEER
Randell D. Hiatt
No. C50200
Exp. 6-30-15
CIVIL
STATE OF CALIFORNIA

THE STATE OF CALIFORNIA OR ITS OFFICERS OR AGENTS SHALL NOT BE RESPONSIBLE FOR THE ACCURACY OR COMPLETENESS OF SCANNED COPIES OF THIS PLAN SHEET.

TO ACCOMPANY PLANS DATED 5-26-15

2010 REVISED STANDARD PLAN RSP A77N3

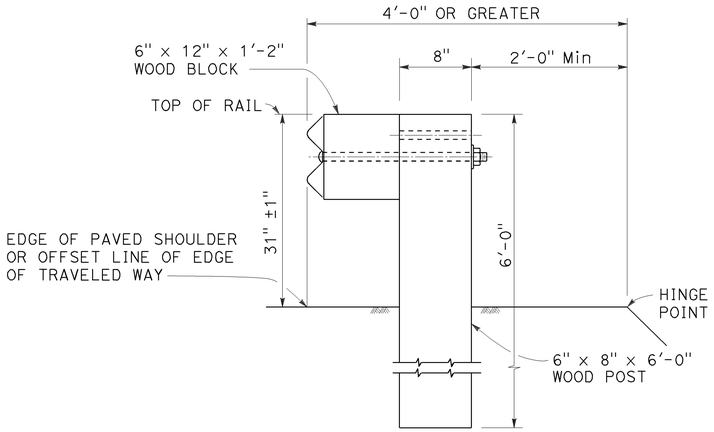

DETAIL A

TYPICAL ROADWAY INSTALLATION

See Note 1

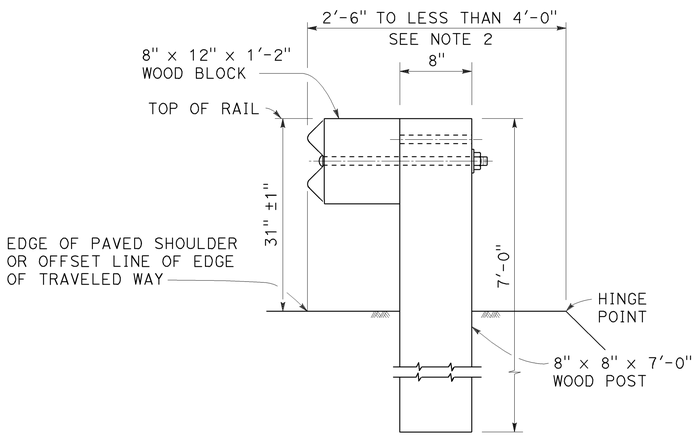

DETAIL B

NARROW ROADWAY INSTALLATION

See Note 1

POST EMBEDMENT

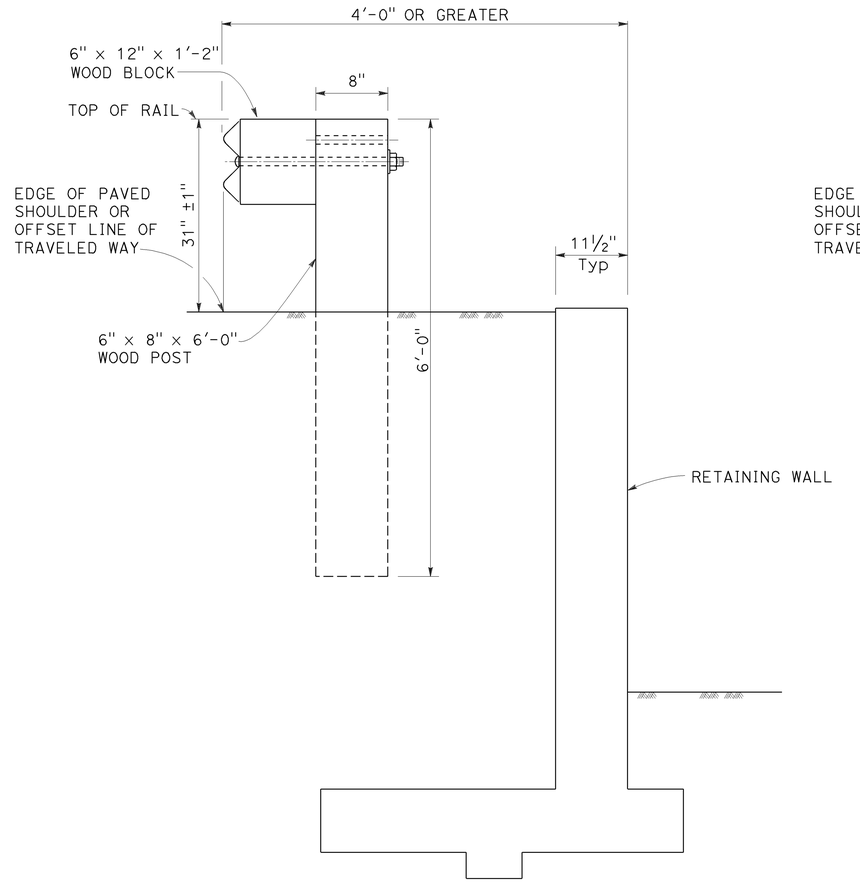

DETAIL C

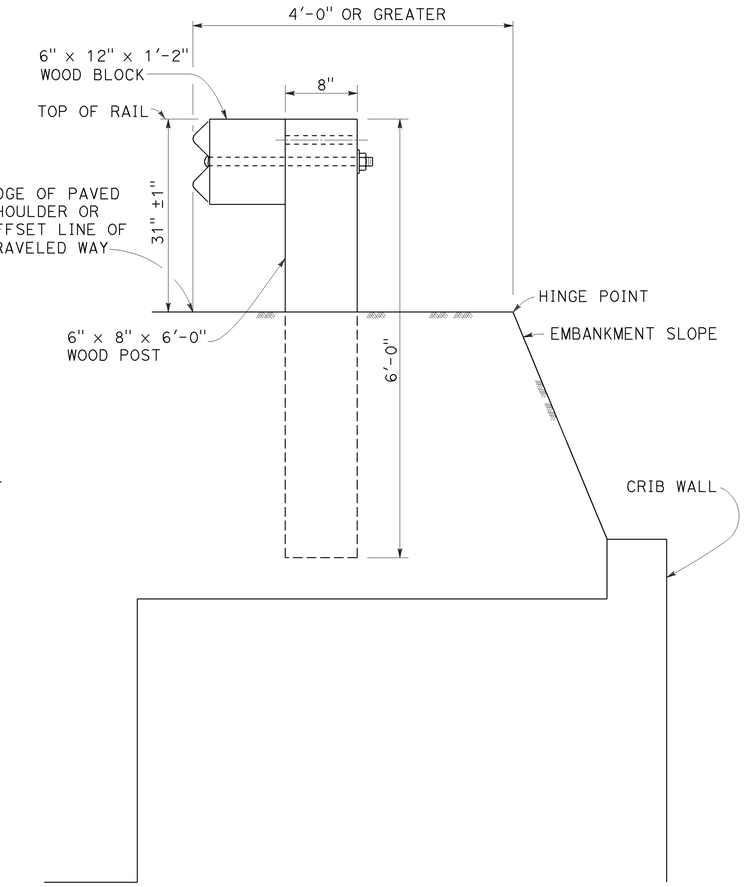

DETAIL D

INSTALLATION AT EARTH RETAINING WALLS

NOTES:

1. These installation details also applicable to steel line post installations. For Detail A, C, and D, where steel line post installations are constructed, W6 x 8.5 or W6 x 9 steel post, 6'-0" in length, with 6" x 12" x 1'-2" notched wood blocks or notched recycled plastic blocks are to be used in place of the size of wood post and wood block shown. For Detail B, where steel line post installations are constructed, W6 x 15 steel post, 8'-0" in length, with 8" x 12" x 1'-2" notched wood blocks or notched recycled plastic blocks are to be used in place of the size of wood post and wood block shown. For additional installation details, see Revised Standard Plan RSP A77L1 and RSP A77L2.
2. Where the distance between the face of the rail and the hinge point is less than 2'-6", see the Project Plans for special details.
3. For dike positioning with MGS installations, see Revised Standard Plan RSP A77N4.

STATE OF CALIFORNIA
DEPARTMENT OF TRANSPORTATION

MIDWEST GUARDRAIL SYSTEM TYPICAL LINE POST EMBEDMENT AND HINGE POINT OFFSET DETAILS

NO SCALE

RSP A77N3 DATED NOVEMBER 15, 2013 SUPERSEDES RSP A77N3
DATED JULY 19, 2013 THAT SUPPLEMENTS THE STANDARD PLANS BOOK DATED 2010.

REVISED STANDARD PLAN RSP A77N3

Dist	COUNTY	ROUTE	POST MILES TOTAL PROJECT	SHEET No.	TOTAL SHEETS
10	Sta	5,99	Var	69	83

Randell D. Hiatt
REGISTERED CIVIL ENGINEER

July 19, 2013
PLANS APPROVAL DATE

REGISTERED PROFESSIONAL ENGINEER
Randell D. Hiatt
No. C50200
Exp. 6-30-15
CIVIL
STATE OF CALIFORNIA

THE STATE OF CALIFORNIA OR ITS OFFICERS OR AGENTS SHALL NOT BE RESPONSIBLE FOR THE ACCURACY OR COMPLETENESS OF SCANNED COPIES OF THIS PLAN SHEET.

TO ACCOMPANY PLANS DATED 5-26-15

NOTES:

1. When necessary to place dike more than 7" in front of face of MGS, only Type C dike may be used. For dike details, see Revised Standard Plan RSP A87B.
2. For standard railing post embedment, see Revised Standard Plan RSP A77N3.
3. MGS delineation to be used where shown on the Project Plans.
4. When dike or curb is placed under MGS, the maximum height of the dike or curb shall be 6". Mountable dike should not be used. For dike and curb details, see Revised Standard Plans RSP A87A and RSP A87B.
5. For details of typical distance between the face of rail and hinge point, see Revised Standard Plan RSP A77N3.
6. For steel line posts, use 1/4 - 20 self-tapping screws in 0.22" diameter holes or 1/4" bolts in 9/32" diameter holes.

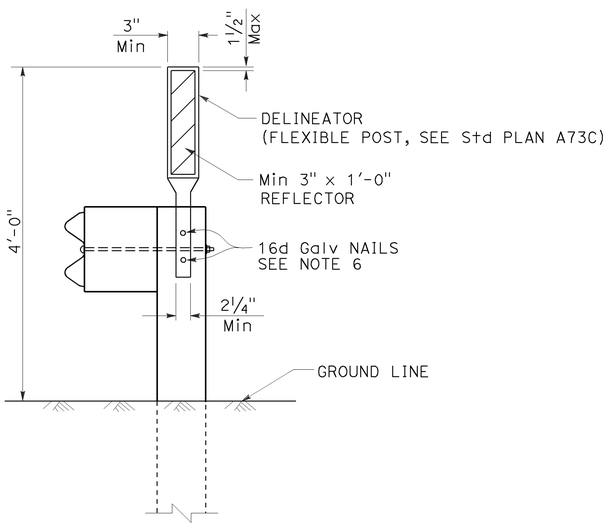

MGS DELINEATION
See Note 3

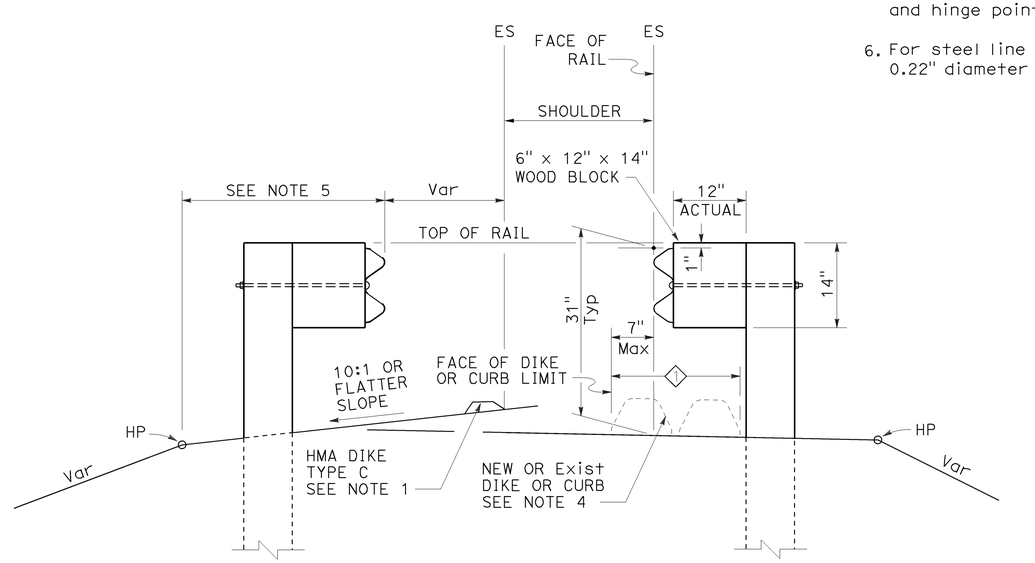

DIKE POSITIONING
See Note 1

1 PERMISSIBLE DIKE OR CURB PLACEMENT AREA

STATE OF CALIFORNIA
DEPARTMENT OF TRANSPORTATION

MIDWEST GUARDRAIL SYSTEM TYPICAL RAILING DELINEATION AND DIKE POSITIONING DETAILS

NO SCALE

RSP A77N4 DATED JULY 19, 2013 SUPPLEMENTS THE STANDARD PLANS BOOK DATED 2010.

REVISED STANDARD PLAN RSP A77N4

2010 REVISED STANDARD PLAN RSP A77N4

7-10-13

Dist	COUNTY	ROUTE	POST MILES TOTAL PROJECT	SHEET No.	TOTAL SHEETS
10	Sta	5,99	Var	70	83

Randell D. Hiatt
REGISTERED CIVIL ENGINEER

July 19, 2013
PLANS APPROVAL DATE

REGISTERED PROFESSIONAL ENGINEER
Randell D. Hiatt
No. C50200
Exp. 6-30-15
CIVIL
STATE OF CALIFORNIA

THE STATE OF CALIFORNIA OR ITS OFFICERS OR AGENTS SHALL NOT BE RESPONSIBLE FOR THE ACCURACY OR COMPLETENESS OF SCANNED COPIES OF THIS PLAN SHEET.

TO ACCOMPANY PLANS DATED 5-26-15

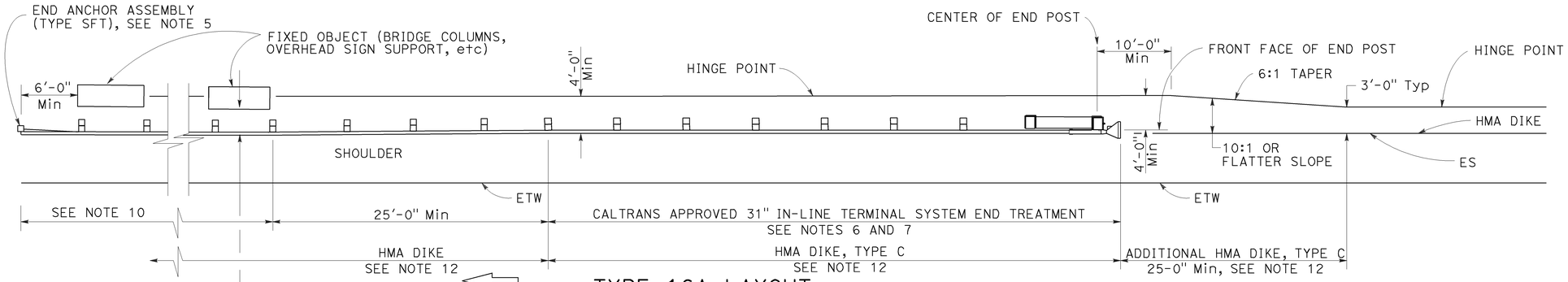

TYPE 16A LAYOUT

(MGS installation at roadside fixed object or objects with 31" in-line end treatment at traffic approach end of railing)
See Notes 11 and 12

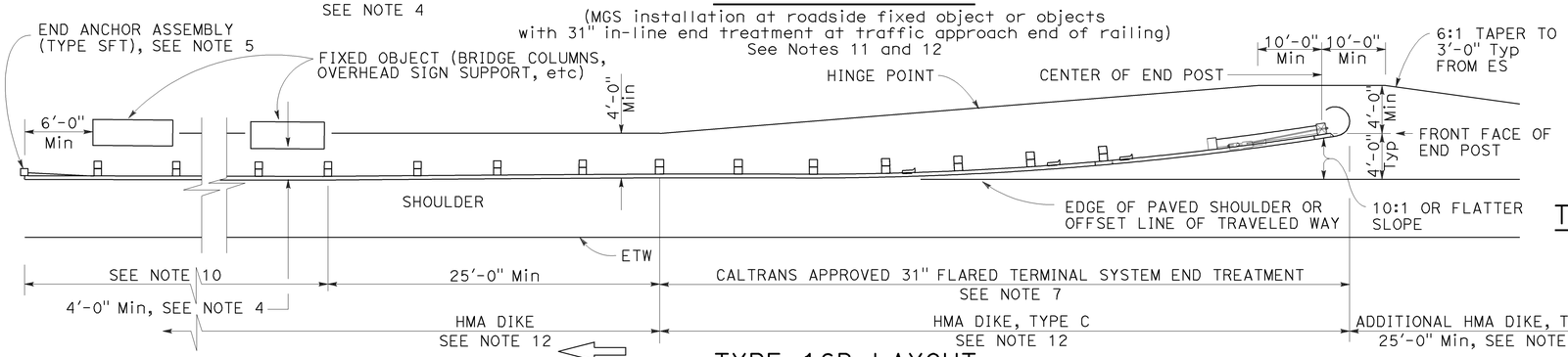

TYPE 16B LAYOUT

(MGS installation at roadside fixed object or objects with 31' flared end treatment at traffic approach end of railing)
See Notes 11 and 12

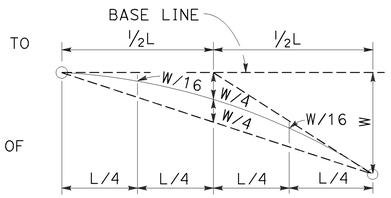

TYPIC AL PARABOLIC LAYOUT

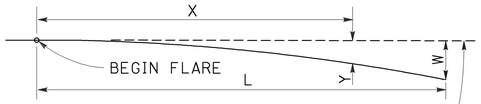

BASE LINE (EDGE OF PAVED SHOULDER OR OFFSET LINE OF EDGE OF TRAVELED WAY)

$$Y = \frac{WX^2}{L^2}$$

Y = OFFSET FROM BASE LINE
W = MAXIMUM OFFSET
X = DISTANCE ALONG BASE LINE
L = LENGTH OF FLARE

PARABOLIC FLARE OFFSETS

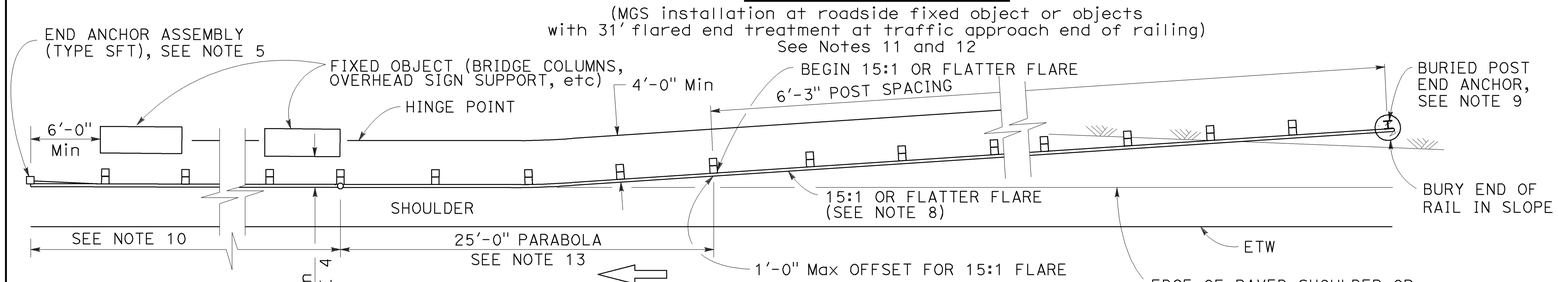

TYPE 16C LAYOUT

(MGS installation at roadside fixed object or objects with a buried end anchor treatment at traffic approach end of railing)
See Notes 11 and 12

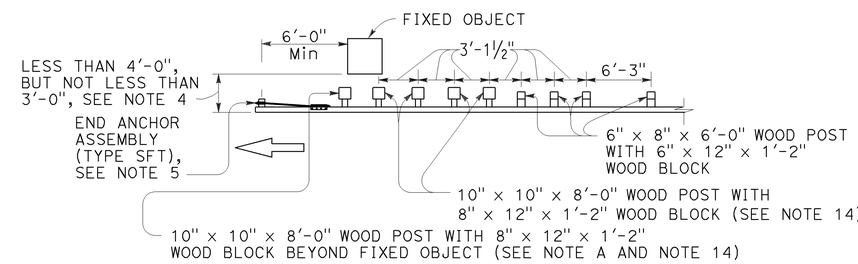

NOTE A: For a series of fixed objects (bridge columns, overhead sign supports, etc.) additional 10" x 10" x 8'-0" wood post with 8" x 12" x 1'-2" wood blocks at 3'-1½" center to center spacing are to be used between fixed objects.

STRENGTHENED MIDWEST GUARDRAIL SYSTEM SECTIONS FOR FIXED OBJECT

Use strengthened MGS sections with Types 16A, 16B or 16C layouts where minimum clearance between the face of the railing and fixed object(s) is less than 4'-0", but not less than 3'-0". See Note 4

NOTES:

1. Line post, blocks and hardware to be used are shown on Revised Standard Plans RSP A77L1, RSP A77L2, RSP A77M1, RSP A77N1 and RSP A77N2.
2. MGS post spacing to be 6'-3" center to center, except as otherwise noted.
3. Except as noted, line posts are 6" x 8" x 6'-0" wood with 6" x 12" x 1'-2" wood blocks. W6 x 8.5 or W6 x 9 steel posts, 6'-0" in length, with 6" x 12" x 1'-2" notched wood blocks or notched recycled plastic blocks may be used for 6" x 8" x 6'-0" wood line posts with 6" x 12" x 1'-2" wood blocks where applicable and when specified.
4. A 4'-0" minimum clearance is required between the face of the railing and the face of a fixed object located directly behind MGS sections with post spacing of 6'-3". Construct MGS as shown in the detail "Strengthened Midwest Guardrail System Sections for Fixed Object" on this plan, where the clearance between the face of the railing and the face of a fixed object is less than 4'-0", but not less than 3'-0". Where the clearance is less than 3'-0", a concrete wall or barrier should be constructed to shield the fixed object(s).
5. For End Anchor Assembly (Type SFT) details, see Revised Standard Plan RSP A77S1.
6. 31" in-line terminal system end treatments are used where site conditions will not accommodate a 31" flared end treatment.
7. The type of 31" terminal system to be used will be shown on the Project Plans.
8. The 15:1 or flatter flare used with Type 16C Layout is based on the edge of the paved shoulder or offset line of edge of the traveled way. The length of MGS within the 15:1 or flatter flare is based on site conditions and should be a length equal to multiples of 12'-6".
9. For details of the Buried Post End Anchor used with Type 16C Layout, see Revised Standard Plan RSP A77T2.
10. As site conditions dictate, construct additional MGS to shield fixed object(s). Additional MGS length equal to multiples of 12'-6". Post spacing at 6'-3" except as specified in Note 4.
11. Layout Types 16A, 16B or 16C are typically used where MGS is recommended to shield roadside fixed object(s) and a crashworthy 31" end treatment is required for only one direction of traffic.
12. Where placement of dike is required with MGS, see Revised Standard Plan RSP A77N4 for dike positioning details.
13. For typical flare offsets for 25'-0" length parabola with maximum offset of 1'-0", see Revised Standard Plan RSP A77P1.
14. W6 x 15 steel post, 8'-0" in length, with 8" x 12" x 1'-2" notched wood block or notched recycled plastic blocks may be used in place of the 10" x 10" x 8'-0" wood post with 8" x 12" x 1'-2" wood block shown in the detail "Strengthened Midwest Guardrail System Sections for Fixed Object".

STATE OF CALIFORNIA
DEPARTMENT OF TRANSPORTATION

MIDWEST GUARDRAIL SYSTEM TYPICAL LAYOUTS FOR ROADSIDE FIXED OBJECTS

NO SCALE

RSP A77R3 DATED JULY 19, 2013 SUPPLEMENTS THE STANDARD PLANS BOOK DATED 2010.

REVISED STANDARD PLAN RSP A77R3

2010 REVISED STANDARD PLAN RSP A77R3

6-20-13

Dist	COUNTY	ROUTE	POST MILES TOTAL PROJECT	SHEET No.	TOTAL SHEETS
10	Sta	5,99	Var	71	83

Randell D. Hiatt
REGISTERED CIVIL ENGINEER

November 15, 2013
PLANS APPROVAL DATE

REGISTERED PROFESSIONAL ENGINEER
Randell D. Hiatt
No. C50200
Exp. 6-30-15
CIVIL
STATE OF CALIFORNIA

THE STATE OF CALIFORNIA OR ITS OFFICERS OR AGENTS SHALL NOT BE RESPONSIBLE FOR THE ACCURACY OR COMPLETENESS OF SCANNED COPIES OF THIS PLAN SHEET.

TO ACCOMPANY PLANS DATED 5-26-15

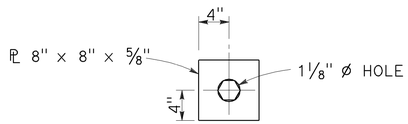

DETAIL "A"
CABLE CONNECTION
END PLATE

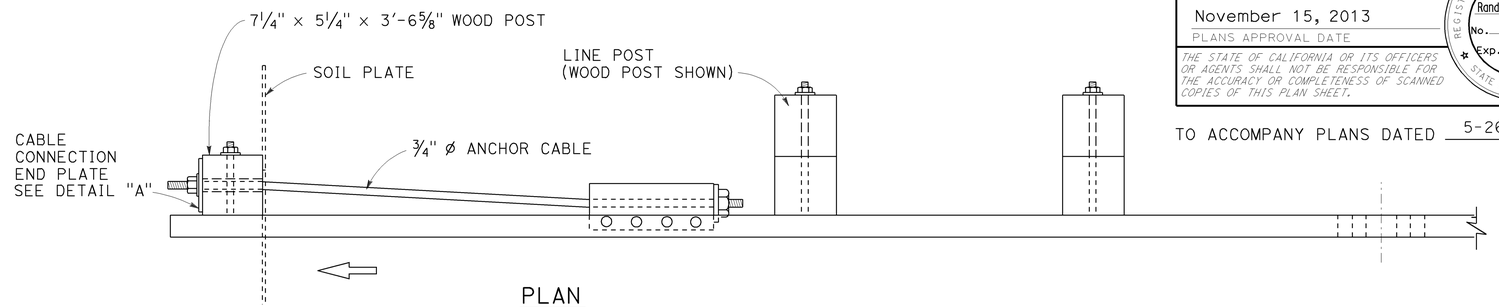

PLAN

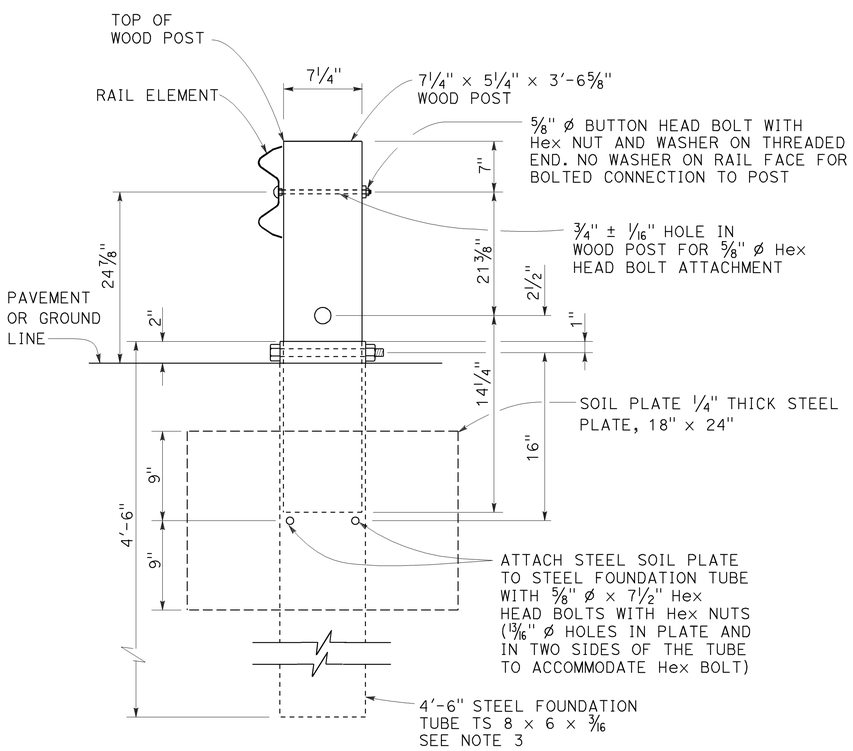

SECTION A-A

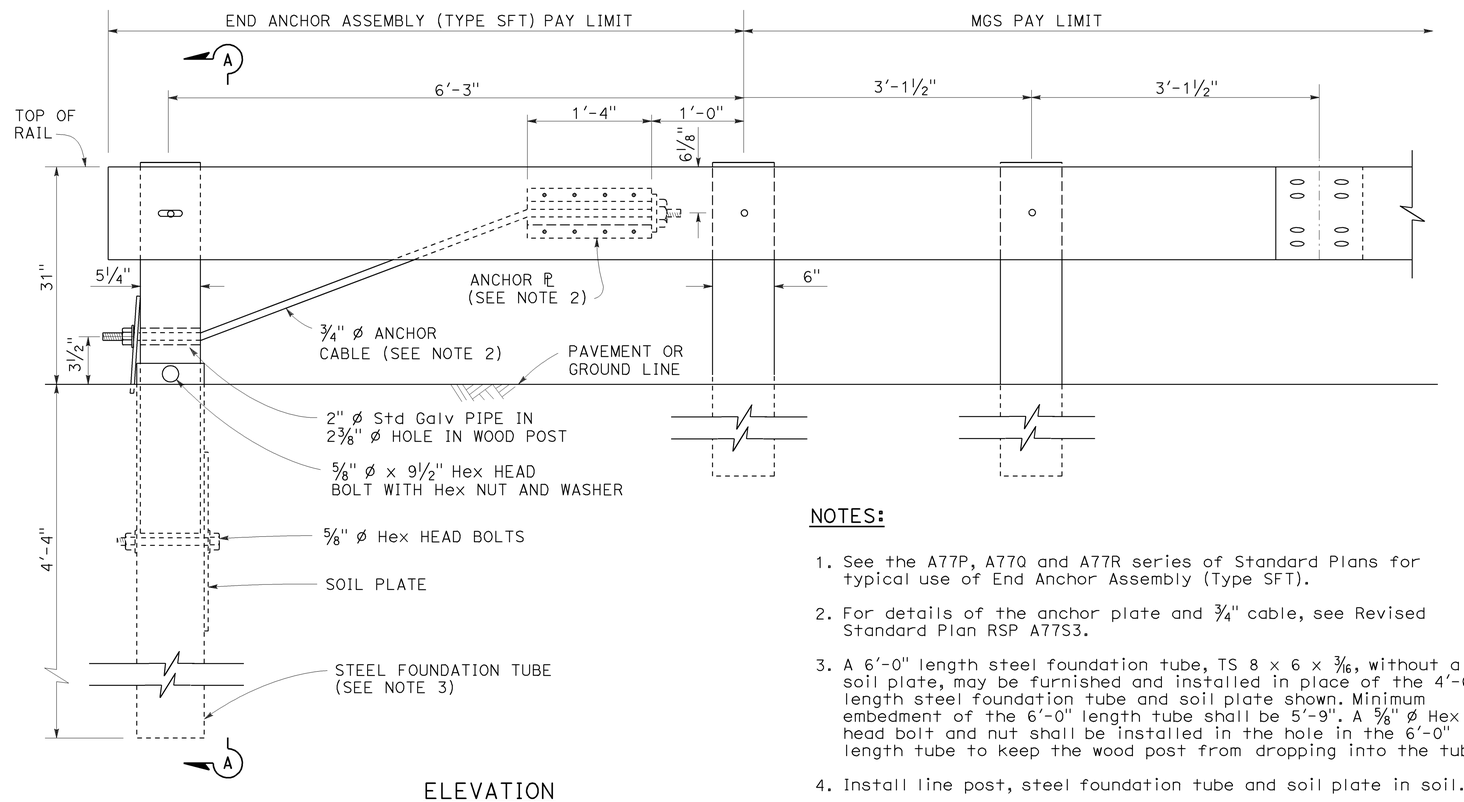

ELEVATION

END ANCHOR
ASSEMBLY (TYPE SFT)
See Note 1

NOTES:

1. See the A77P, A77Q and A77R series of Standard Plans for typical use of End Anchor Assembly (Type SFT).
2. For details of the anchor plate and 3/4" cable, see Revised Standard Plan RSP A77S3.
3. A 6'-0" length steel foundation tube, TS 8 x 6 x 3/16, without a soil plate, may be furnished and installed in place of the 4'-6" length steel foundation tube and soil plate shown. Minimum embedment of the 6'-0" length tube shall be 5'-9". A 5/8" ø Hex head bolt and nut shall be installed in the hole in the 6'-0" length tube to keep the wood post from dropping into the tube.
4. Install line post, steel foundation tube and soil plate in soil.

STATE OF CALIFORNIA
DEPARTMENT OF TRANSPORTATION

MIDWEST GUARDRAIL SYSTEM END ANCHOR ASSEMBLY (TYPE SFT)

NO SCALE

RSP A77S1 DATED NOVEMBER 15, 2013 SUPERSEDES RSP A77S1
DATED JULY 19, 2013 THAT SUPPLEMENTS THE STANDARD PLANS BOOK DATED 2010.

REVISED STANDARD PLAN RSP A77S1

2010 REVISED STANDARD PLAN RSP A77S1

10-4-13

Dist	COUNTY	ROUTE	POST MILES TOTAL PROJECT	SHEET No.	TOTAL SHEETS
10	Sta	5,99	Var	72	83

REGISTERED CIVIL ENGINEER

July 19, 2013
PLANS APPROVAL DATE

REGISTERED PROFESSIONAL ENGINEER
Michael Janzen
No. 44788
Exp. 03-31-14
CIVIL
STATE OF CALIFORNIA

THE STATE OF CALIFORNIA OR ITS OFFICERS OR AGENTS SHALL NOT BE RESPONSIBLE FOR THE ACCURACY OR COMPLETENESS OF SCANNED COPIES OF THIS PLAN SHEET.

TO ACCOMPANY PLANS DATED 5-26-15

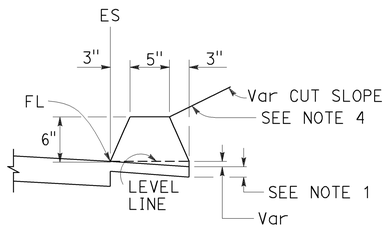

TYPE A
See Note 3

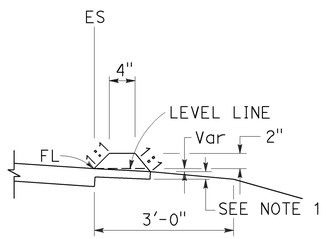

TYPE C

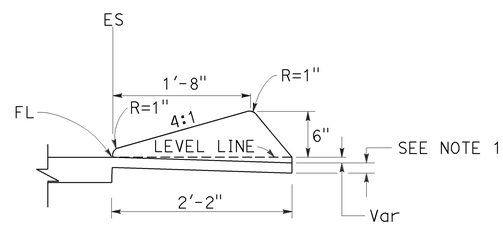

TYPE D

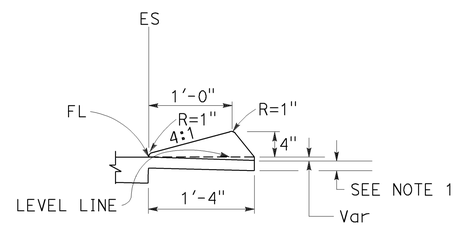

TYPE E

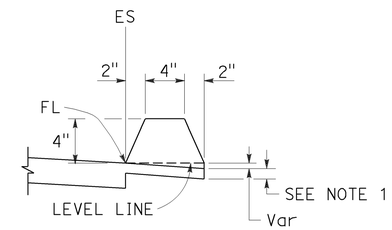

TYPE F
See Note 5

DIKES

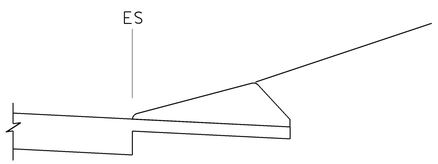

CASE C-1
Cut Slope

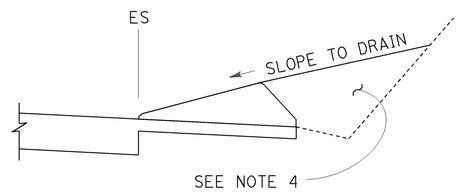

CASE C-2
Cut Slope

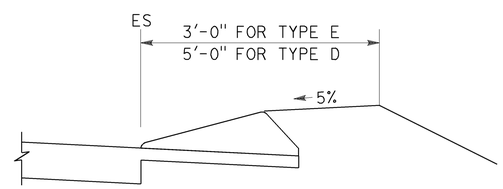

CASE F

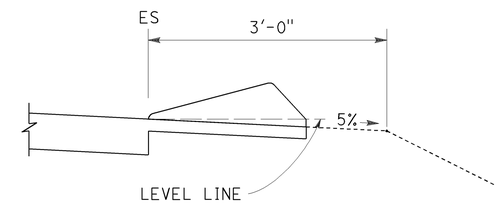

CASE R
See Note 2

TYPE D AND E BACKFILL DETAILS

NOTES:

1. For HMA shoulders only, extend top layer of HMA placed on the shoulder under dike with no joint at the ES. For projects with OGFC shoulders, do not extend OGFC under dike. See project plans for modified dike detail.
2. Case R applies to retrofit only projects where restrictive conditions do not provide enough width for Case F backfill.
3. Type A dike only to be used where restrictive slope conditions do not provide enough width to use Type D or Type E dike.
4. Fill and compact with excavated material to top of dike.
5. Use Type F dike, where dike is required with guard railing installations. See Revised Standard Plan RSP A77N4 for dike positioning details.

DIKE QUANTITIES

TYPE	CUBIC YARDS PER LINEAR FOOT
A	0.0135
C	0.0038
D	0.0293
E	0.0130
F	0.0066

Quantities based on 5% cross slope.

STATE OF CALIFORNIA
DEPARTMENT OF TRANSPORTATION

HOT MIX ASPHALT DIKES

NO SCALE

RSP A87B DATED JULY 19, 2013 SUPERSEDES STANDARD PLAN A87B DATED MAY 20, 2011 - PAGE 120 OF THE STANDARD PLANS BOOK DATED 2010.

REVISED STANDARD PLAN RSP A87B

2010 REVISED STANDARD PLAN RSP A87B

6-27-13

Dist	COUNTY	ROUTE	POST MILES TOTAL PROJECT	SHEET No.	TOTAL SHEETS
10	Sta	5,99	Var	73	83

REGISTERED CIVIL ENGINEER

July 19, 2013
PLANS APPROVAL DATE

REGISTERED PROFESSIONAL ENGINEER
Gurinderpal Bhullar
No. C48815
Exp. 9-30-14
CIVIL
STATE OF CALIFORNIA

THE STATE OF CALIFORNIA OR ITS OFFICERS OR AGENTS SHALL NOT BE RESPONSIBLE FOR THE ACCURACY OR COMPLETENESS OF SCANNED COPIES OF THIS PLAN SHEET.

TO ACCOMPANY PLANS DATED 5-26-15

2010 REVISED STANDARD PLAN RSP T9

TABLE 1

TAPER LENGTH CRITERIA AND CHANNELIZING DEVICE SPACING

SPEED (S)	MINIMUM TAPER LENGTH * FOR WIDTH OF OFFSET 12 FEET (W)				MAXIMUM CHANNELIZING DEVICE SPACING		
					X	Y	Z **
	TANGENT 2L	MERGING L	SHIFTING L/2	SHOULDER L/3	TAPER	TANGENT	CONFLICT
mph	ft	ft	ft	ft	ft	ft	ft
20	160	80	40	27	20	40	10
25	250	125	63	42	25	50	12
30	360	180	90	60	30	60	15
35	490	245	123	82	35	70	17
40	640	320	160	107	40	80	20
45	1080	540	270	180	45	90	22
50	1200	600	300	200	50	100	25
55	1320	660	330	220	55	110	27
60	1440	720	360	240	60	120	30
65	1560	780	390	260	65	130	32
70	1680	840	420	280	70	140	35

* - For other offsets, use the following merging taper length formula for L:
For speed of 40 mph or less, $L = WS^2/60$
For speed of 45 mph or more, $L = WS$

Where: L = Taper length in feet
W = Width of offset in feet
S = Posted speed limit, off-peak 85th-percentile speed prior to work starting, or the anticipated operating speed in mph

** - Use for taper and tangent sections where there are no pavement markings or where there is a conflict between existing pavement markings and channelizers (CA).

TABLE 2

LONGITUDINAL BUFFER SPACE AND FLAGGER STATION SPACING

SPEED *	Min D **	DOWNGRADE Min D ***		
		-3%	-6%	-9%
mph	ft	ft	ft	ft
20	115	116	120	126
25	155	158	165	173
30	200	205	215	227
35	250	257	271	287
40	305	315	333	354
45	360	378	400	427
50	425	446	474	507
55	495	520	553	593
60	570	598	638	686
65	645	682	728	785
70	730	771	825	891

* - Speed is posted speed limit, off-peak 85th-percentile speed prior to work starting, or the anticipated operating speed in mph

** - Longitudinal buffer space or flagger station spacing

*** - Use on sustained downgrade steeper than -3 percent and longer than 1 mile.

TABLE 3

ADVANCE WARNING SIGN SPACING

ROAD TYPE	DISTANCE BETWEEN SIGNS *		
	A	B	C
	ft	ft	ft
URBAN - 25 mph OR LESS	100	100	100
URBAN - MORE THAN 25 mph TO 40 mph	250	250	250
URBAN - MORE THAN 40 mph	350	350	350
RURAL	500	500	500
EXPRESSWAY / FREEWAY	1000	1500	2640

* - The distances are approximate, are intended for guidance purposes only, and should be applied with engineering judgment. These distances should be adjusted by the Engineer for field conditions, if necessary, by increasing or decreasing the recommmended distances.

STATE OF CALIFORNIA
DEPARTMENT OF TRANSPORTATION

TRAFFIC CONTROL SYSTEM TABLES FOR LANE AND RAMP CLOSURES

NO SCALE

RSP T9 DATED JULY 19, 2013 SUPERSEDES RSP T9 DATED APRIL 19, 2013 THAT SUPPLEMENTS THE STANDARD PLANS BOOK DATED 2010.

REVISED STANDARD PLAN RSP T9

4-30-13

Dist	COUNTY	ROUTE	POST MILES TOTAL PROJECT	SHEET No.	TOTAL SHEETS
10	Sta	5,99	Var	74	83

REGISTERED CIVIL ENGINEER

April 19, 2013
PLANS APPROVAL DATE

REGISTERED PROFESSIONAL ENGINEER Gurinderpal Bhullar No. C48815 Exp. 9-30-14 CIVIL STATE OF CALIFORNIA

THE STATE OF CALIFORNIA OR ITS OFFICERS OR AGENTS SHALL NOT BE RESPONSIBLE FOR THE ACCURACY OR COMPLETENESS OF SCANNED COPIES OF THIS PLAN SHEET.

TO ACCOMPANY PLANS DATED 5-26-15

NOTES:

See Revised Standard Plan RSP T9 for tables.

Use cone spacing X for taper segment, Y for tangent segment or Z for conflict situations, as approriate, per Table 1, unless X, Y, or Z cone spacing is shown on this sheet.

Unless otherwise specified in the special provisions, all temporary warning signs shall have black legend on fluorescent orange background.

California codes are designated by (CA). Otherwise, Federal (MUTCD) codes are shown.

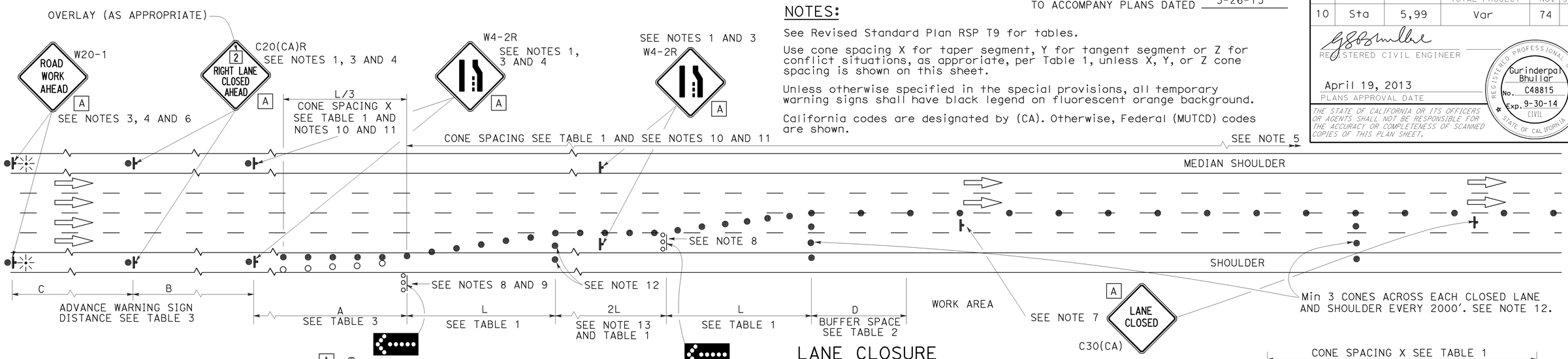

LANE CLOSURE

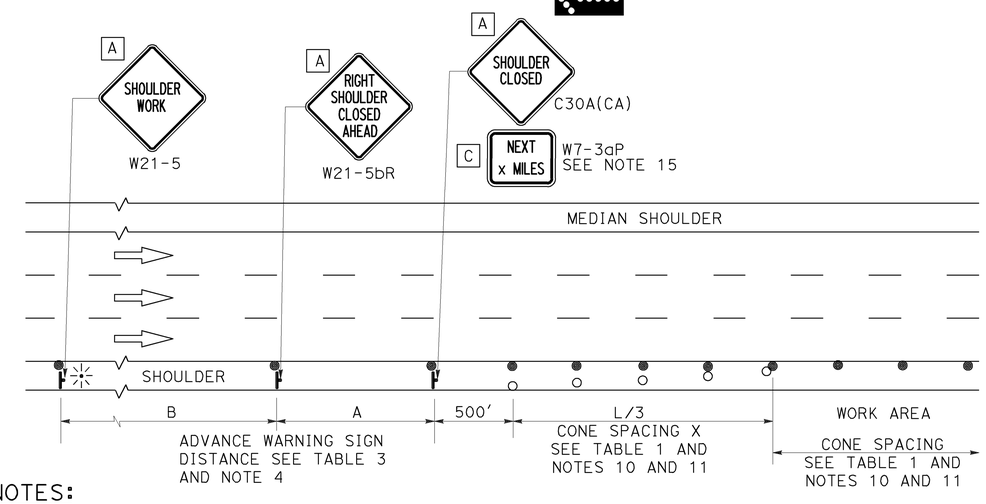

SHOULDER CLOSURE

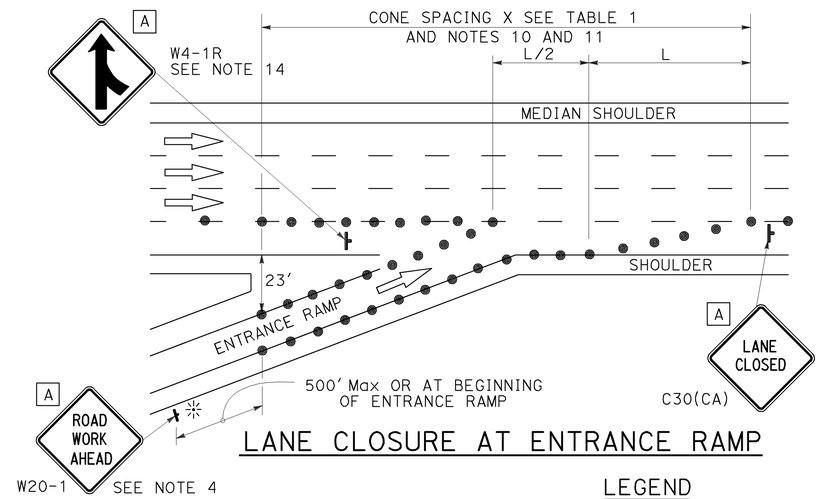

LANE CLOSURE AT ENTRANCE RAMP

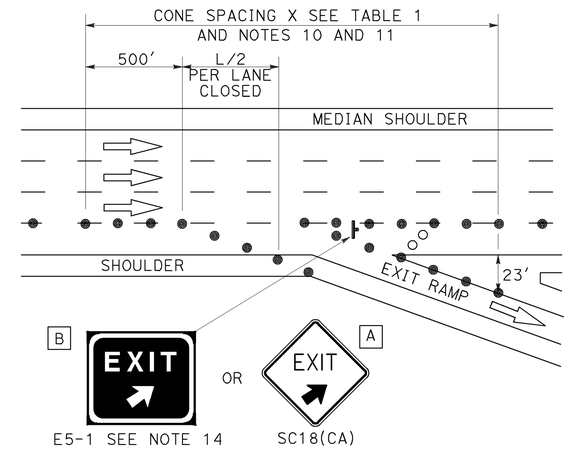

LANE CLOSURE AT EXIT RAMP

NOTES:

1. Median lane closures shall conform to the details as shown except that C20(CA)L and W4-2L signs shall be used.
2. At least one person shall be assigned to provide full time maintenance of traffic control devices for lane closures.
3. Duplicate sign installations are not required:
   a) On opposite shoulder if at least one-half of the available lanes remain open to traffic.
   b) In the median if the width of the median shoulder is less than 8' and the outside lanes are to be closed.
4. Each advance warning sign on each side of the roadway shall be equipped with at least two flags for daytime closure. Each flag shall be at least 16" x 16" in size and shall be orange or fluorescent red-orange in color. Flashing beacons shall be placed at the locations indicated for lane closure during hours of darkness.
5. A G20-2 "END ROAD WORK" sign, with minimum size of 48" x 24" as appropriate, shall be placed at the end of the lane closure unless the end of work area is obvious or ends within a larger project's limits.
6. If the W20-1 sign would follow within 2000' of a stationary W20-1 or G20-1 "ROAD WORK NEXT _____ MILES", use a C20(CA) sign for the first advance warning sign.
7. Place a C30(CA) sign every 2000' throughout length of lane closure.
8. One flashing arrow sign for each lane closed. The flashing arrow signs shall be Type I.
9. A minimum 1500' of sight distance shall be provided where possible for vehicles approaching the first flashing arrow sign. Lane closures shall not begin at top of crest vertical curve or on a horizontal curve.
10. All cones used for lane closures during the hours of darkness shall be fitted with retroreflective bands (or sleeves) as specified in the specifications.
11. Portable delineators, placed at one-half the spacing indicated for traffic cones may be used instead of cones for daytime closures only.
12. Unless otherwise specified in the special provisions, a minimum of 3 cones shall be placed transversely across each closed lane and shoulder at each location where a taper across a traffic lane ends and every 2000' as shown on the "Lane Closure" detail. Two Type II barricades may be used instead of the 3 cones. The transverse alignment of the cones or barricades on the closed shoulder may be shifted from the transverse alignment to provide access to the work.
13. Unless otherwise specified in the special provisions, the 2L tangent shown along lane lines shall be used between the L tapers required for each closed traffic lane.
14. Unless otherwise specified in the special provisions, the E5-1 or SC18(CA) and W4-1 signs shall be used as shown.
15. A W7-3aP "NEXT____ MILES" plaque must be used if theshoulder closure extends beyond the distance that can be perceived by road users.

LEGEND

- TRAFFIC CONE
- TRAFFIC CONE (OPTIONAL TAPER)
- TEMPORARY TRAFFIC CONTROL SIGN
- FLASHING ARROW SIGN (FAS)
- FAS SUPPORT OR TRAILER
- PORTABLE FLASHING BEACON

SIGN PANEL SIZE (Min)

A	48" x 48"
B	72" x 60"
C	36" x 30"

STATE OF CALIFORNIA
DEPARTMENT OF TRANSPORTATION

TRAFFIC CONTROL SYSTEM FOR LANE CLOSURE ON FREEWAYS AND EXPRESSWAYS

NO SCALE

RSP T10 DATED APRIL 19, 2013 SUPERSEDES STANDARD PLAN T10 DATED MAY 20, 2011 - PAGE 237 OF THE STANDARD PLANS BOOK DATED 2010.

REVISED STANDARD PLAN RSP T10

2010 REVISED STANDARD PLAN RSP T10

12-18-12

TO ACCOMPANY PLANS DATED 5-26-15

Dist	COUNTY	ROUTE	POST MILES TOTAL PROJECT	SHEET No.	TOTAL SHEETS
10	Sta	5,99	Var	75	83

REGISTERED CIVIL ENGINEER

April 19, 2013
PLANS APPROVAL DATE

REGISTERED PROFESSIONAL ENGINEER Gurinderpal Bhullar No. C48815 Exp. 9-30-14 CIVIL STATE OF CALIFORNIA

THE STATE OF CALIFORNIA OR ITS OFFICERS OR AGENTS SHALL NOT BE RESPONSIBLE FOR THE ACCURACY OR COMPLETENESS OF SCANNED COPIES OF THIS PLAN SHEET.

NOTES: See Revised Standard Plan RSP T9 for tables.

Use cone spacing X for taper segment, Y for tangent segment or Z for conflict situations, as approriate, per Table 1, unless X, Y, or Z cone spacing is shown on this sheet.

Unless otherwise specified in the special provisions, all temporary warning signs shall have black legend on fluorescent orange background.

California codes are designated by (CA). Otherwise, Federal (MUTCD) codes are shown.

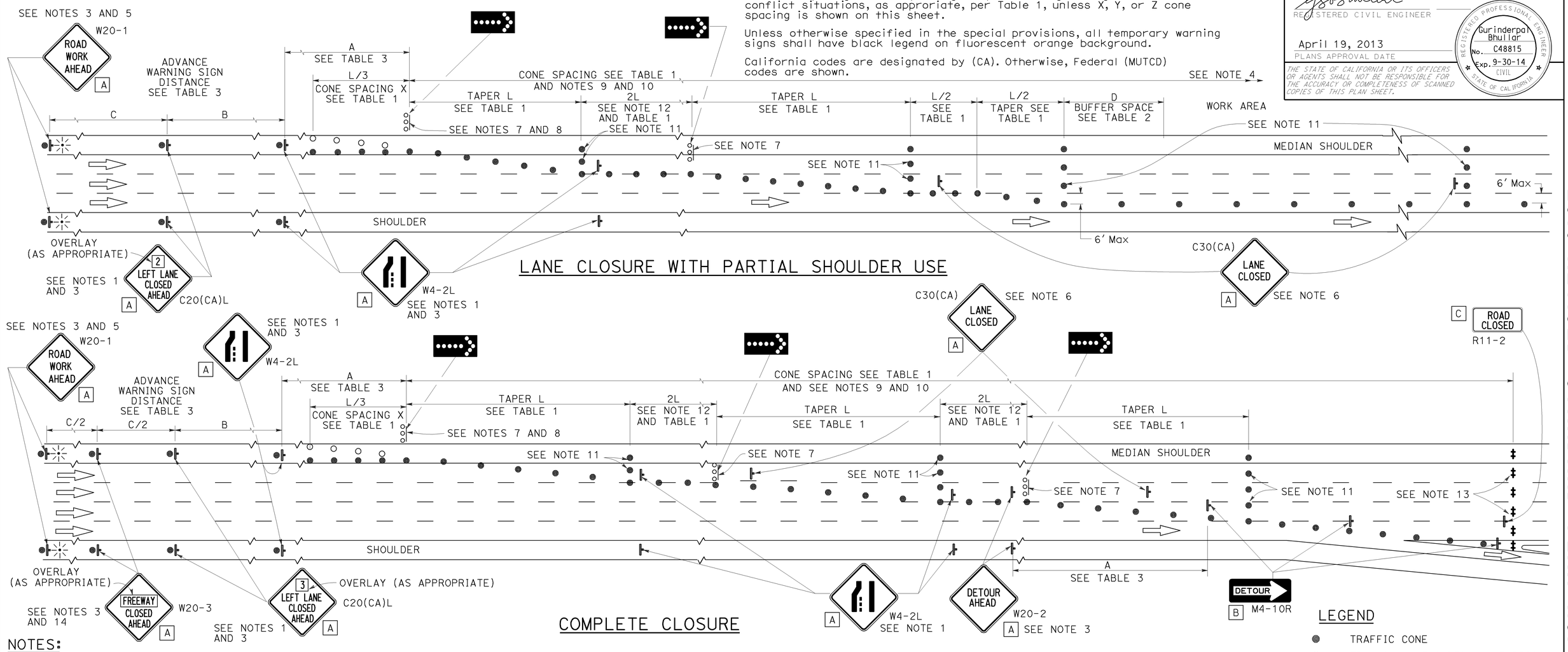

LANE CLOSURE WITH PARTIAL SHOULDER USE

COMPLETE CLOSURE

NOTES:

1. Lane closures on the right side using partial median shoulder as a traffic lane shall conform to the details as shown except that C20(CA)R and W4-2R signs shall be used.
2. At least one person shall be assigned to provide full time maintenance of traffic control devices for lane closures.
3. Each advance warning sign on each side of the roadway shall be equipped with at least two flags for daytime closure. Each flag shall be at least 16" X 16" in size and shall be orange or fluorescent red-orange in color. Flashing beacons shall be placed at the locations indicated for lane closure during hours of darkness.
4. A G20-2 "END ROAD WORK" sign, with minimum size of 48" x 24" as appropriate, shall be placed at the end of the lane closure unless the end of work area is obvious or ends within a larger project's limits.
5. If the W20-1 sign would follow within 2000' of a stationary W20-1 or G20-1 "ROAD WORK NEXT ___ MILES", use a C20(CA) sign for the first advance warning sign.
6. Place a C30(CA) sign every 2000' throughout length of lane closure.
7. One flashing arrow sign for each lane closed. The flashing arrow signs shall be Type I.
8. A minimum 1500' of sight distance shall be provided where possible for vehicles approaching the first flashing arrow sign. Lane closures shall not begin at the top of crest vertical curve or on a horizontal curve.
9. All cones used for lane closures during the hours of darkness shall be fitted with retroreflective bands (or sleeves) as specified in the specifications.
10. Portable delineators, placed at one-half the spacing indicated for traffic cones, may be used instead of cones for daytime closures only.
11. Unless otherwise specified in the special provisions, a minimum of 3 cones shall be placed transversely across each closed lane and shoulder at each location where a taper across a traffic lane ends and every 2000' as shown on the "Lane Closure With Partial Shoulder Use" detail. Two Type II barricades may be used instead of the 3 cones. The transverse alignment of the cones or barricades on the closed shoulder may be shifted from the transverse alignment to provide access to the work.
12. Unless otherwise specified in the special provisions, the 2L tangent shown along lane lines shall be used between the L tapers required for each closed traffic lane.
13. A minimum of Two Type II or III barricades shall be placed across each closed lane and shoulder at the location shown and every 2000' within the complete closure area. Within the complete closure area, the transverse alignment of the barricades on the closed shoulder may be shifted from the transverse alignment to provide access to the work.
14. When specified in the special provisions, a W20-2 "DETOUR AHEAD" sign is to be used in place of the W20-3 "FREEWAY CLOSED AHEAD" sign.

SIGN PANEL SIZE (Min)

A	48" x 48"
B	48" x 18"
C	48" x 30"

LEGEND

- TRAFFIC CONE
- TRAFFIC CONE (OPTIONAL TAPER)
- TEMPORARY TRAFFIC CONTROL SIGN
- FLASHING ARROW SIGN (FAS)
- FAS SUPPORT OR TRAILER
- PORTABLE FLASHING BEACON

STATE OF CALIFORNIA
DEPARTMENT OF TRANSPORTATION

TRAFFIC CONTROL SYSTEM FOR LANE CLOSURES ON FREEWAYS AND EXPRESSWAYS

NO SCALE

RSP T10A DATED APRIL 19, 2013 SUPERSEDES STANDARD PLAN T10A DATED MAY 20, 2011 - PAGE 238 OF THE STANDARD PLANS BOOK DATED 2010.

REVISED STANDARD PLAN RSP T10A

2010 REVISED STANDARD PLAN RSP T10A

12-18-12

Dist	COUNTY	ROUTE	POST MILES TOTAL PROJECT	SHEET No.	TOTAL SHEETS
10	Sta	5,99	Var	76	83

REGISTERED CIVIL ENGINEER

April 19, 2013
PLANS APPROVAL DATE

REGISTERED PROFESSIONAL ENGINEER Gurinderpal Bhullar No. C48815 Exp. 9-30-14 CIVIL STATE OF CALIFORNIA

THE STATE OF CALIFORNIA OR ITS OFFICERS OR AGENTS SHALL NOT BE RESPONSIBLE FOR THE ACCURACY OR COMPLETENESS OF SCANNED COPIES OF THIS PLAN SHEET.

TO ACCOMPANY PLANS DATED 5-26-15

TYPICAL RAMP CLOSURES

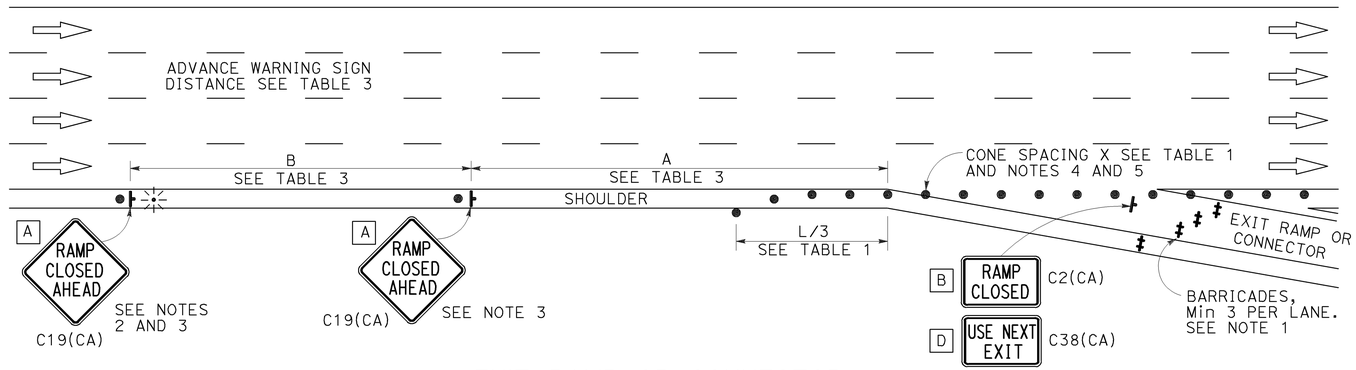

EXIT RAMP OR CONNECTOR

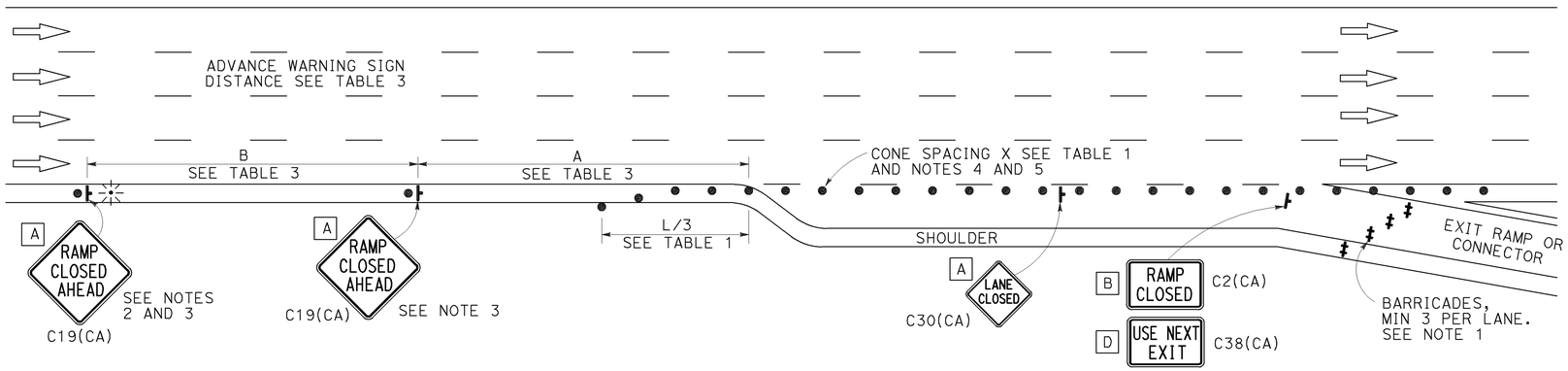

EXIT RAMP OR CONNECTOR WITH ADDITIONAL LANE

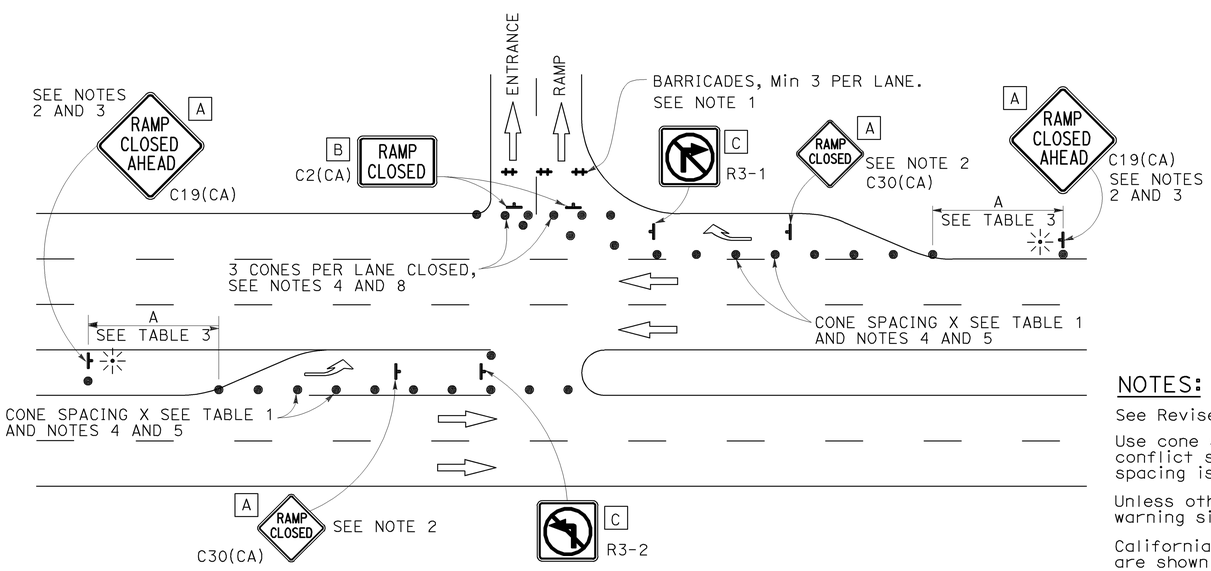

ENTRANCE RAMP WITH TURNING POCKETS

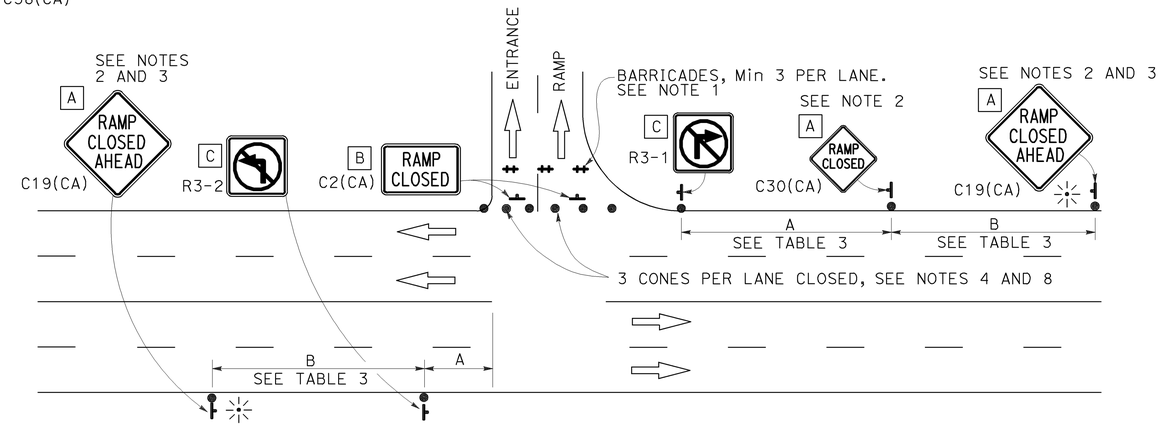

ENTRANCE RAMP WITHOUT TURNING POCKETS

SIGN PANEL SIZE (Min)

- A 48" × 48"
- B 48" × 30"
- C 36" × 36"
- D 48" × 36"

LEGEND

- TRAFFIC CONE
- TEMPORARY TRAFFIC CONTROL SIGN
- BARRICADES
- PORTABLE FLASHING BEACON

NOTES:

1. Barricades shall be Type I, II, or III for closures lasting one week or less and Type III for closures lasting longer than one week.
2. In addition to placing the C19(CA) "RAMP CLOSED AHEAD" and C30(CA) "RAMP CLOSED" signs, black on orange overlay plates with the word "CLOSED" may be mounted, as directed by the Engineer, on all guide signs that refer to the closed ramp. The letter size on the overlay shall be the same as the guide sign.
3. Each advance C19(CA) "RAMP CLOSED AHEAD" sign shall be equipped with at least two flags for daytime closure. Each flag shall be at least 16" x 16" in size and shall be orange or fluorescent red-orange in color. A flashing beacon shall be placed on top of the first C19(CA) sign during hours of darkness.
4. All cones used for ramp closures during the hours of darkness shall be fitted with retroreflective bands (or sleeves) as specified in the specifications.
5. Portable delineators, placed at one-half the spacing indicated for traffic cones, may be used instead of cones for daytime ramp closures only.
6. At least one person shall be assigned to provide full time maintenance of traffic control devices, unless otherwise directed by the Engineer.
7. The existing "EXIT" signs shall be covered during ramp closures.
8. A minimum of 3 cones shall be placed transversely across each closed lane and shoulder.

NOTES:

See Revised Standard Plan RSP T9 for tables.

Use cone spacing X for taper segment, Y for tangent segment or Z for conflict situations, as approriate, per Table 1, unless X, Y, or Z cone spacing is shown on this sheet.

Unless otherwise specified in the special provisions, all temporary warning signs shall have black legend on fluorescent orange background.

California codes are designated by (CA). Otherwise, Federal (MUTCD) codes are shown.

STATE OF CALIFORNIA
DEPARTMENT OF TRANSPORTATION

TRAFFIC CONTROL SYSTEM FOR RAMP CLOSURE

NO SCALE

RSP T14 DATED APRIL 19, 2013 SUPERSEDES STANDARD PLAN T14
DATED MAY 20, 2011 - PAGE 242 OF THE STANDARD PLANS BOOK DATED 2010.

REVISED STANDARD PLAN RSP T14

2010 REVISED STANDARD PLAN RSP T14

12-18-12

Dist	COUNTY	ROUTE	POST MILES TOTAL PROJECT	SHEET No.	TOTAL SHEETS
10	Sta	5,99	Var	77	83

Theresa Gabriel
REGISTERED ELECTRICAL ENGINEER

July 19, 2013
PLANS APPROVAL DATE

REGISTERED PROFESSIONAL ENGINEER Theresa Aziz Gabriel No. E15129 Exp. 6-30-14 ELECTRICAL STATE OF CALIFORNIA

THE STATE OF CALIFORNIA OR ITS OFFICERS OR AGENTS SHALL NOT BE RESPONSIBLE FOR THE ACCURACY OR COMPLETENESS OF SCANNED COPIES OF THIS PLAN SHEET.

TO ACCOMPANY PLANS DATED 5-26-15

LEGEND:

AB	ABANDON. IF APPLIED TO CONDUIT, REMOVE CONDUCTORS
BC	INSTALL PULL BOX IN EXISTING CONDUIT RUN
BP	PEDESTRIAN BARRICADE, TYPE AS INDICATED ON PLAN
CB	INSTALL CONDUIT INTO EXISTING PULL BOX
CC	CONNECT NEW AND EXISTING CONDUIT. REMOVE EXISTING CONDUCTORS AND INSTALL CONDUCTORS AS INDICATED
CF	CONDUIT TO REMAIN FOR FUTURE USE. REMOVE CONDUCTORS. INSTALL PULL TAPE
DH	DETECTOR HANDHOLE
FA	FOUNDATION TO BE ABANDONED
IS	INSTALL SIGN ON SIGNAL MAST ARM
NS	NO SLIP BASE ON STANDARD
PEC	PHOTOELECTRIC CONTROL
PEU	PHOTOELECTRIC UNIT
RC	EQUIPMENT OR MATERIAL TO BE REMOVED AND BECOME THE PROPERTY OF THE CONTRACTOR
RE	REMOVE ELECTROLIER, FUSES AND BALLAST. TAPE ENDS OF CONDUCTORS
RL	RELOCATE EQUIPMENT
RR	REMOVE AND REUSE EQUIPMENT
RS	REMOVE AND SALVAGE EQUIPMENT
SC	SPLICE NEW TO EXISTING CONDUCTORS
SD	SERVICE DISCONNECT
TSP	TELEPHONE SERVICE POINT

ABBREVIATIONS

APS	ACCESSIBLE PEDESTRIAN SIGNAL
BBS	BATTERY BACKUP SYSTEM
BC	BOLT CIRCLE
BPB	BICYCLE PUSH BUTTON
C	CONDUIT
CB	CIRCUIT BREAKER
CCTV	CLOSED CIRCUIT TELEVISION
Ckt	CIRCUIT
CMS	CHANGEABLE MESSAGE SIGN
Ctid	CALTRANS IDENTIFICATION
Comm	COMMUNICATION
DLC	LOOP DETECTOR LEAD-IN CABLE
EMS	EXTINGUISHABLE MESSAGE SIGN
EVUC	EMERGENCY VEHICLE UNIT CABLE
EVUD	EMERGENCY VEHICLE UNIT DETECTOR
FB	FLASHING BEACON
FBCA	FLASHING BEACON CONTROL ASSEMBLY
FBS	FLASHING BEACON WITH SLIP BASE
FO	FIBER OPTIC
G	EQUIPMENT GROUNDING CONDUCTOR
GB	GROUND BUS
GFCI	GROUND FAULT CIRCUIT INTERRUPTER
HAR	HIGHWAY ADVISORY RADIO
Hex	HEXAGONAL
HPS	HIGH PRESSURE SODIUM
IISNS	INTERNALLY ILLUMINATED STREET NAME SIGN
ISL	INDUCTION SIGN LIGHTING
LED	LIGHT EMITTING DIODE
LMA	LUMINAIRE MAST ARM
LPS	LOW PRESSURE SODIUM
Ltg	LIGHTING
Lum	LUMINAIRE
M	METERED
MAT	MAST ARM MOUNTING TOP ATTACHMENT
MAS	MAST ARM MOUNTING SIDE ATTACHMENT
M/M	MULTIPLE TO MULTIPLE TRANSFORMER
Mtg	MOUNTING
MV	MERCURY VAPOR LIGHTING FIXTURE
MVDS	MICROWAVE VEHICLE DETECTION SYSTEM
N	NEUTRAL (GROUNDED CONDUCTOR)
NB	NEUTRAL BUS
NC	NORMALLY CLOSE
NO	NORMALLY OPEN
P	CIRCUIT BREAKER'S POLE
PB	PULL BOX
PBA	PUSH BUTTON ASSEMBLY
PEC	PHOTOELECTRIC CONTROL
Ped	PEDESTRIAN
PEU	PHOTOELECTRIC UNIT
PT	CONDUIT WITH PULL TAPE
RE	RELOCATED EQUIPMENT
RM	RAMP METERING
RWIS	ROADSIDE WEATHER INFORMATION SYSTEM
SB	SLIP BASE
SIC	SIGNAL INTERCONNECT CABLE
Sig	SIGNAL
SMA	SIGNAL MAST ARM
SNS	STREET NAME SIGN
SP	SERVICE POINT
TDC	TELEPHONE DEMARCATION CABINET
TMS	TRAFFIC MONITORING STATION
TOS	TRAFFIC OPERATIONS SYSTEM
Veh	VEHICLE
VIVDS	VIDEO IMAGE VEHICLE DETECTION SYSTEM
WIM	WEIGH-IN-MOTION
Xfmr	TRANSFORMER

SOFFIT AND WALL MOUNTED LUMINAIRES

PENDANT, 70 W HPS UNLESS OTHERWISE SPECIFIED

FLUSH, 70 W HPS UNLESS OTHERWISE SPECIFIED

WALL SURFACE, 70 W HPS UNLESS OTHERWISE SPECIFIED

EXISTING SOFFIT OR WALL LUMINAIRE TO REMAIN UNMODIFIED

EXISTING SOFFIT OR WALL LUMINAIRE TO BE MODIFIED AS SPECIFIED

NOTE:

Arrow indicates "street side" of luminaire.

COMMONLY USED SYMBOLS FOR UNITED STATES CUSTOMARY UNITS OF MEASUREMENT:

SYMBOL USED	DEFINITIONS
Ω	OHMS
min	MINUTE
s	SECOND
bps	BITS PER SECOND
Bps	BYTES PER SECOND
A	AMPERE
V	VOLT
V(dc)	VOLT (DIRECT CURRENT)
V(ac)	VOLT (ALTERNATING CURRENT)
FC	FOOT - CANDLE
W	WATTS
VA	VOLT-AMPERE
M	MEGA
k	KILO
m	MILLI
μ	MICRO
P	PICO
Hz	HERTZ

MISCELLANEOUS ELECTROLIERS

NEW	EXISTING	
		LUMINAIRE ON WOOD POLE
		NON-STANDARD ELECTROLIER (SEE PROJECT NOTES OR PROJECT PLANS)
		CITY ELECTROLIER
		ELECTROLIER FOUNDATION (FUTURE INSTALLATION)

NOTES:

1. HPS luminaires shall be 310 W HPS when installed on Type 21, 21D, 30, 31 and 32 Standards, unless otherwise specified. HPS luminaires shall be 200 W when installed on other type standards or poles, unless otherwise specified.
2. LED luminaires shall be 235 W when installed on Type 21, 21D, 30, 31 and 32 Standards, unless otherwise specified. LED luminaires shall be 165 W when installed on other type standards or poles, unless otherwise specified.
3. Luminaires shall be the cutoff type, ANSI Type III medium cutoff lighting distribution, unless otherwise specified.

STANDARD ELECTROLIER

NEW	EXISTING	STANDARD TYPE
		15
		15D
		15 STRUCTURE
		15D STRUCTURE
		21
		21D
		21 STRUCTURE
		21D STRUCTURE
		30
		31
		32

STATE OF CALIFORNIA
DEPARTMENT OF TRANSPORTATION

ELECTRICAL SYSTEMS (LEGEND AND ABBREVIATIONS)

NO SCALE

RSP ES-1A DATED JULY 19, 2013 SUPERSEDES STANDARD PLAN ES-1A DATED MAY 20, 2011 - PAGE 425 OF THE STANDARD PLANS BOOK DATED 2010.

REVISED STANDARD PLAN RSP ES-1A

2010 REVISED STANDARD PLAN RSP ES-1A

7-15-13

Dist	COUNTY	ROUTE	POST MILES TOTAL PROJECT	SHEET No.	TOTAL SHEETS
10	Sta	5,99	Var	78	83

Theresa Gabriel
REGISTERED ELECTRICAL ENGINEER

July 19, 2013
PLANS APPROVAL DATE

REGISTERED PROFESSIONAL ENGINEER Theresa Aziz Gabriel No. E15129 Exp. 6-30-14 ELECTRICAL STATE OF CALIFORNIA

THE STATE OF CALIFORNIA OR ITS OFFICERS OR AGENTS SHALL NOT BE RESPONSIBLE FOR THE ACCURACY OR COMPLETENESS OF SCANNED COPIES OF THIS PLAN SHEET.

TO ACCOMPANY PLANS DATED 5-26-15

CONDUIT

NEW	EXISTING	
		LIGHTING CONDUIT, UNLESS OTHERWISE INDICATED OR NOTED
		TRAFFIC SIGNAL CONDUIT
C	c	COMMUNICATION CONDUIT
T	t	TELEPHONE CONDUIT
F	f	FIRE ALARM CONDUIT
FO	fo	FIBER OPTIC CONDUIT
		CONDUIT TERMINATION
R	r	CONDUIT RISER ATTACHED TO THE STRUCTURE OR SERVICE POLE

SERVICE EQUIPMENT

NEW	EXISTING	
OH	oh	OVERHEAD LINES
U	U	WOOD POLE, "U" INDICATES UTILITY OWNED
		POLE GUY WITH ANCHOR
		UTILITY TRANSFORMER - GROUND MOUNTED
III	III	SERVICE EQUIPMENT ENCLOSURE TYPE. DOOR INDICATES FRONT OF ENCLOSURE
T	t	TELEPHONE DEMARCATION CABINET

POLE-MOUNTED SERVICE DESIGNATION

TYPE H SERVICE, 28'-10" — TYPE OF INSTALLATION AND POLE HEIGHT ABOVE GRADE

FLASHING BEACON

NEW	EXISTING	
R	R	FLASHING BEACON (ONE VEHICLE SIGNAL HEAD WITH BACKPLATE AND VISOR) "R" INDICATES RED INDICATION, "Y" INDICATES YELLOW INDICATION
Y Y	Y Y	FLASHING BEACON WITH TYPE 15-FBS STANDARD AND A SIGN.
R R	R R	FLASHING BEACON WITH TYPES 9, 9A OR 9B SIGN UNLESS OTHERWISE SPECIFIED OR INDICATED

SIGNAL EQUIPMENT

NEW	EXISTING	
C	C	PEDESTRIAN SIGNAL HEAD "C" INDICATES COUNTDOWN PEDESTRIAN HEAD
		PUSH BUTTON ASSEMBLY POST
		PEDESTRIAN BARRICADE
		VEHICLE SIGNAL HEAD (WITH BACKPLATE AND 3-SECTIONS: RED, YELLOW AND GREEN)
		VEHICLE SIGNAL HEAD WITH ANGLE VISOR
PV	PV	MODIFICATIONS OF BASIC SYMBOL: "L" INDICATES ALL NON-ARROW SECTIONS LOUVERED "LG" INDICATES LOUVERED GREEN SECTION ONLY "PV" INDICATES ALL 12" SECTIONS PROGRAMMED VISIBILITY "8" INDICATES ALL 8" SECTIONS (ONLY WHEN SPECIFIED)
		VEHICLE SIGNAL HEAD CONSISTING OF RED, YELLOW AND GREEN LEFT ARROW SECTIONS
		VEHICLE SIGNAL HEAD CONSISTING OF RED AND YELLOW SECTIONS WITH AN UP GREEN ARROW SECTION
		VEHICLE SIGNAL HEAD (5 SECTION) CONSISTING OF RED, YELLOW AND GREEN SECTIONS WITH YELLOW AND GREEN RIGHT ARROW SECTIONS
		TYPE 15TS STANDARD WITH VEHICLE SIGNAL HEAD AND LUMINAIRE
		TYPE 21TS STANDARD WITH VEHICLE SIGNAL HEAD AND LUMINAIRE
		STANDARD WITH LUMINAIRE AND SIGNAL MAST ARMS AND ATTACHED VEHICLE SIGNAL HEADS
		TYPE 1 STANDARD WITH ATTACHED VEHICLE SIGNAL HEADS
		STANDARD WITH A SIGNAL MAST ARM, ATTACHED VEHICLE SIGNAL HEADS AND INTERNALLY ILLUMINATED STREET NAME SIGN
		CONTROLLER ASSEMBLY. DOOR INDICATES FRONT OF CABINET

SIGNAL EQUIPMENT Cont

NEW	EXISTING	
		GUARD POST
		TYPE 1 STANDARD WITH RAMP METERING SIGN
		OPTICAL DETECTOR FOR THE EMERGENCY VEHICLE DETECTION SYSTEM

NOTES:

1. All signal sections shall be 12" unless shown otherwise.
2. Signal heads shall be provided with backplates unless shown otherwise.

ILLUMINATED OVERHEAD SIGN

NEW	EXISTING	
		SINGLE POST, SINGLE ILLUMINATED SIGN, BALANCED BUTTERFLY
		SINGLE POST, DOUBLE ILLUMINATED SIGN, BALANCED BUTTERFLY
		SINGLE POST, SINGLE ILLUMINATED SIGN, FULL CANTILEVER
		DOUBLE POST, SINGLE ILLUMINATED SIGN
		SINGLE ILLUMINATED SIGN MOUNTED ON STRUCTURE
		DOUBLE POST, SINGLE ILLUMINATED SIGN WITH ELECTROLIER

STATE OF CALIFORNIA
DEPARTMENT OF TRANSPORTATION

ELECTRICAL SYSTEMS (LEGEND AND ABBREVIATIONS)

NO SCALE

RSP ES-1B DATED JULY 19, 2013 SUPERSEDES STANDARD PLAN ES-1B DATED MAY 20, 2011 - PAGE 426 OF THE STANDARD PLANS BOOK DATED 2010.

REVISED STANDARD PLAN RSP ES-1B

2010 REVISED STANDARD PLAN RSP ES-1B

7-15-13

Dist	COUNTY	ROUTE	POST MILES TOTAL PROJECT	SHEET No.	TOTAL SHEETS
10	Sta	5,99	Var	79	83

Theresa Gabriel
REGISTERED ELECTRICAL ENGINEER

July 19, 2013
PLANS APPROVAL DATE

REGISTERED PROFESSIONAL ENGINEER
Theresa Aziz Gabriel
No. E15129
Exp. 6-30-14
ELECTRICAL
STATE OF CALIFORNIA

THE STATE OF CALIFORNIA OR ITS OFFICERS OR AGENTS SHALL NOT BE RESPONSIBLE FOR THE ACCURACY OR COMPLETENESS OF SCANNED COPIES OF THIS PLAN SHEET.

TO ACCOMPANY PLANS DATED 5-26-15

EQUIPMENT IDENTIFICATION

ILLUMINATED SIGN IDENTIFICATION NUMBER:

SIGN No. 12345

10 ISL SCI 1.0

- SIGN NUMBER - PLACE ON POST OR STRUCTURE
- TRANSFORMER RATING (kVA)
- LIGHTING CONTROL TYPE
- NUMBER AND TYPE OF FIXTURES

DO NOT PLACE ON STANDARD OR STRUCTURE

ELECTROLIER OR EQUIPMENT IDENTIFICATION NUMBER:

12345 - 15'-0"

- MAST ARM LENGTH, IF SHOWN. DO NOT PLACE ON STANDARD OR STRUCTURE
- EQUIPMENT NUMBER - PLACE ON STANDARD OR STRUCTURE. EXISTING EQUIPMENT NUMBERS ARE SHOWN IN PARENTHESIS

CONDUIT AND CONDUCTOR IDENTIFICATION:

1½"C, 2#10, 15#14, 2 DLC, 12P#18

- PAIR
- NUMBER AND SIZE OF CONDUCTORS AND CABLES
- SIZE OF CONDUIT IN INCHES

ø1, ø2, ø2P, etc.	TRAFFIC PHASE IDENTIFICATION FOR SIGNAL FACES, DETECTORS AND PHASE DIAGRAMS
1 2 3	LEGEND NUMBERS
A B C	EQUIPMENT, SIGNAL POLES, INSTALLATION OR ITEMS
1 2 3	CONDUIT RUN NUMBERS

SIGNAL AND LIGHTING STANDARD (TYPICAL DESIGNATION):

19A - 3 - 100

- WIND VELOCITY = 100 mph
- CASE 3 ARM LOADING
- STANDARD TYPE
- STANDARD PLAN SHEET NUMBER
- DETAIL, NUMBER, SECTION, TYPE OR ELEVATION

MISCELLANEOUS EQUIPMENT

NEW	EXISTING	
CMS	cms	CHANGEABLE MESSAGE SIGN
		CLOSED CIRCUIT TELEVISION CAMERA
		HIGHWAY ADVISORY RADIO POLE AND ANTENNA
EMS	ems	EXTINGUISHABLE MESSAGE SIGN
M V	m v	DETECTION DEVICE M = MICROWAVE SENSOR V = VIDEO IMAGE SENSOR

WIRING DIAGRAM LEGEND

- EXTERNAL CONDUCTOR
- CONDUCTOR OR BUS
- TIE POINT
- CONTACTOR COIL
- CONTACTOR, NO CONTACT
- TERMINAL BLOCKS
- CONTACTOR, NC CONTACT
- ENCLOSURE BOND
- GROUNDING ELECTRODE
- CIRCUIT BREAKER
- RECEPTACLE

PULL BOXES

NEW	EXISTING	
		PULL BOX, No. 5 UNLESS OTHERWISE INDICATED OR NOTED
3	9A(21)	PULL BOX, ADDITIONAL DESIGNATIONS OR DESCRIPTIONS

3 No. 3½ PULL BOX
5 No. 5 PULL BOX
6 No. 6 PULL BOX
7 No. 7 (CEILING PULL BOX)
8 No. 8 (PENDANT SOFFIT PULL BOX)
9 No. 9 PULL BOX
9A No. 9A PULL BOX

(C) COMMUNICATIONS PULL BOX
(E) PULL BOX WITH EXTENSION
(S) SPRINKLER CONTROL PULL BOX
(21) ANCHOR BOLTS AND CONDUIT FOR FUTURE INSTALLATION OF TYPE 21 STANDARD
(T) TRAFFIC PULL BOX

VEHICLE DETECTORS

5 J 9 U

- VEHICLE DETECTOR DESIGNATION
- U = UPPER
  L = LOWER
- SLOT NUMBER IN INPUT FILE
- INPUT FILE (I OR J)
- PHASE

NEW	EXISTING	
		TYPE A DETECTOR LOOP. OUTLINE OF SAWCUT SHOWN
		TYPE B DETECTOR LOOP. OUTLINE OF SAWCUT SHOWN
		TYPE C DETECTOR LOOP. OUTLINE OF SAWCUT SHOWN
		TYPE D DETECTOR LOOP. OUTLINE OF SAWCUT SHOWN
		TYPE E DETECTOR LOOP. OUTLINE OF SAWCUT SHOWN
		TYPE Q DETECTOR LOOP. OUTLINE OF SAWCUT SHOWN
		MAGNETIC DETECTOR
DH	dh	DETECTOR HANDHOLE
		MICROWAVE OR VIDEO DETECTION ZONE

STATE OF CALIFORNIA
DEPARTMENT OF TRANSPORTATION

ELECTRICAL SYSTEMS (LEGEND AND ABBREVIATIONS)

NO SCALE

RSP ES-1C DATED JULY 19, 2013 SUPERSEDES STANDARD PLAN ES-1C DATED MAY 20, 2011 - PAGE 427 OF THE STANDARD PLANS BOOK DATED 2010.

REVISED STANDARD PLAN RSP ES-1C

2010 REVISED STANDARD PLAN RSP ES-1C

7-11-13

Dist	COUNTY	ROUTE	POST MILES TOTAL PROJECT	SHEET No.	TOTAL SHEETS
10	Sta	5,99	Var	80	83

Theresa Gabriel
REGISTERED ELECTRICAL ENGINEER

July 19, 2013
PLANS APPROVAL DATE

REGISTERED PROFESSIONAL ENGINEER
Theresa Aziz Gabriel
No. E15129
Exp. 6-30-14
ELECTRICAL
STATE OF CALIFORNIA

THE STATE OF CALIFORNIA OR ITS OFFICERS OR AGENTS SHALL NOT BE RESPONSIBLE FOR THE ACCURACY OR COMPLETENESS OF SCANNED COPIES OF THIS PLAN SHEET.

TO ACCOMPANY PLANS DATED 5-26-15

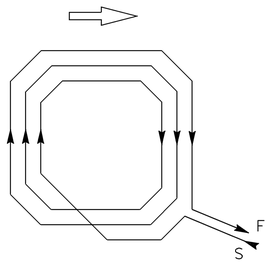

WINDING DETAIL

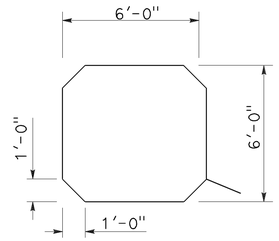

SAWCUT DETAIL

TYPE A LOOP DETECTOR CONFIGURATION

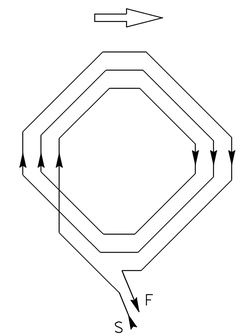

WINDING DETAIL

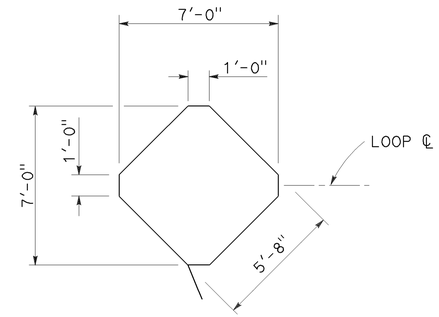

SAWCUT DETAIL

TYPE B LOOP DETECTOR CONFIGURATION

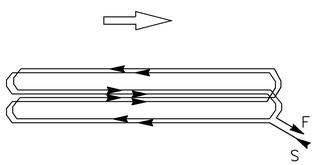

WINDING DETAIL

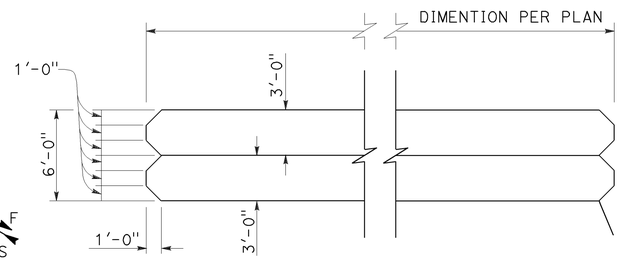

SAWCUT DETAIL

TYPE C LOOP DETECTOR CONFIGURATION

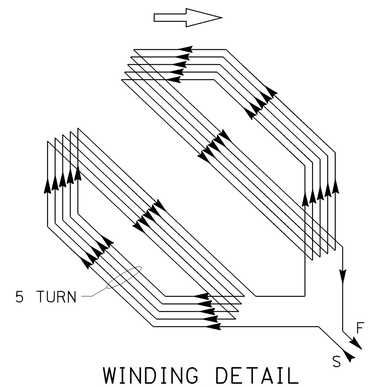

WINDING DETAIL

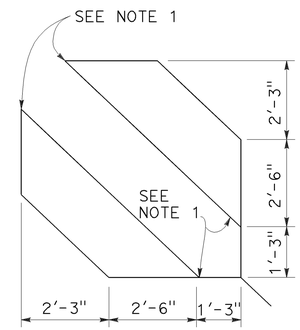

SAWCUT DETAIL

TYPE D LOOP DETECTOR CONFIGURATION

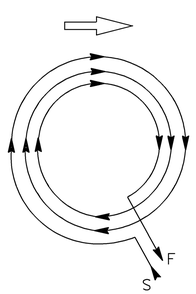

WINDING DETAIL

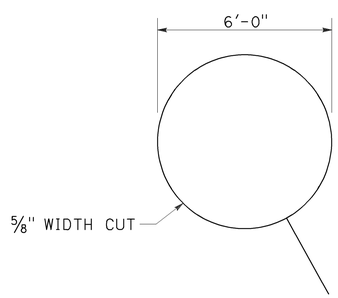

SAWCUT DETAIL

TYPE E LOOP DETECTOR CONFIGURATION

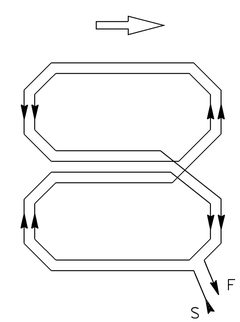

WINDING DETAIL

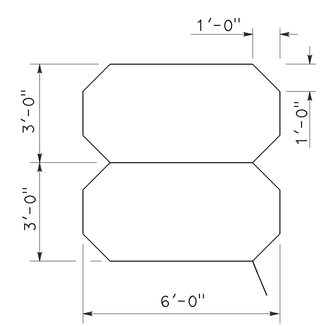

SAWCUT DETAIL

TYPE Q LOOP DETECTOR CONFIGURATION

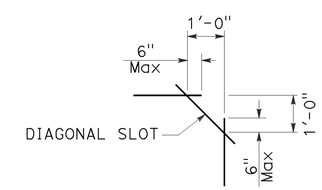

PLAN VIEW OF DIAGONAL SLOT AT CORNERS

NOTES:

1. Round corners of acute angle sawcuts to prevent damage to conductors.
2. Typical distance separating loops from edge to edge is 10' for Type A, B, D and E installation in single lane.

STATE OF CALIFORNIA
DEPARTMENT OF TRANSPORTATION

ELECTRICAL SYSTEMS (DETECTORS)

NO SCALE

RSP ES-5B DATED JULY 19, 2013 SUPERSEDES STANDARD PLAN ES-5B DATED MAY 20, 2011 - PAGE 449 OF THE STANDARD PLANS BOOK DATED 2010.

REVISED STANDARD PLAN RSP ES-5B

2010 REVISED STANDARD PLAN RSP ES-5B

7-9-13

Dist	COUNTY	ROUTE	POST MILES TOTAL PROJECT	SHEET No.	TOTAL SHEETS
10	Sta	5,99	Var	81	83

Theresa Gabriel
REGISTERED ELECTRICAL ENGINEER

July 19, 2013
PLANS APPROVAL DATE

REGISTERED PROFESSIONAL ENGINEER Theresa Aziz Gabriel No. E15129 Exp. 6-30-14 ELECTRICAL STATE OF CALIFORNIA

THE STATE OF CALIFORNIA OR ITS OFFICERS OR AGENTS SHALL NOT BE RESPONSIBLE FOR THE ACCURACY OR COMPLETENESS OF SCANNED COPIES OF THIS PLAN SHEET.

TO ACCOMPANY PLANS DATED 5-26-15

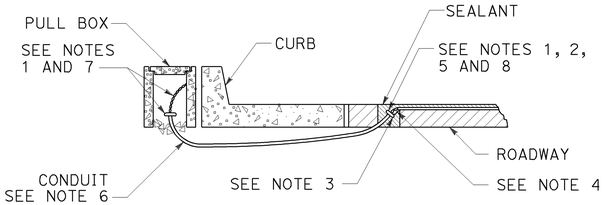

TYPE A
CURB TERMINATION DETAIL

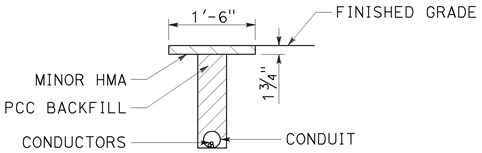

"T" TRENCH
DETAIL T

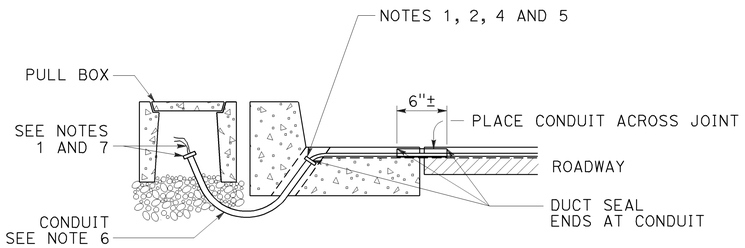

CROSS SECTION

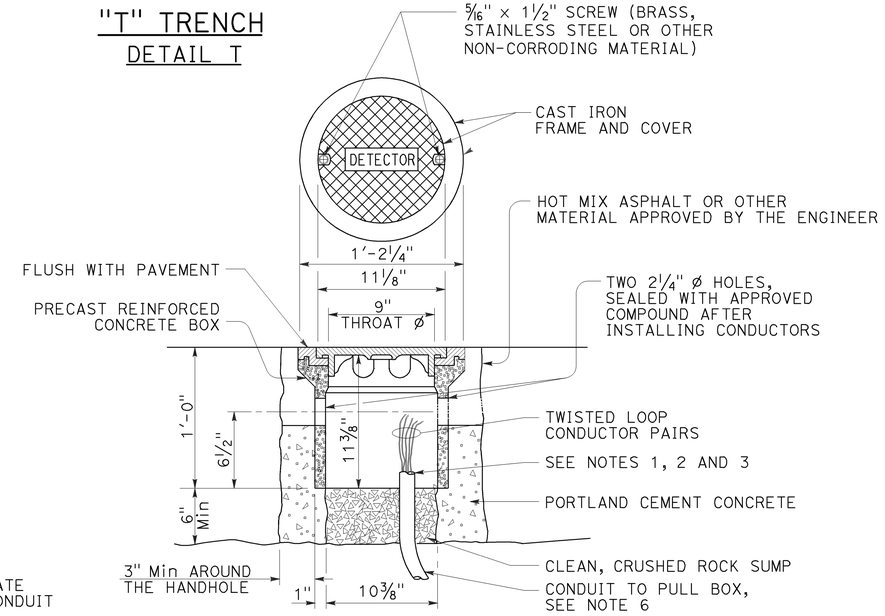

DETECTOR HANDHOLE DETAIL

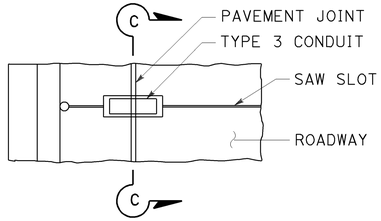

PLAN VIEW

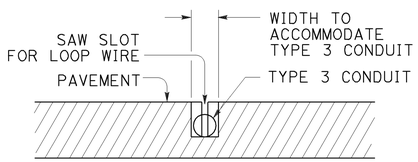

SECTION C-C

TYPE B
CURB TERMINATION DETAIL

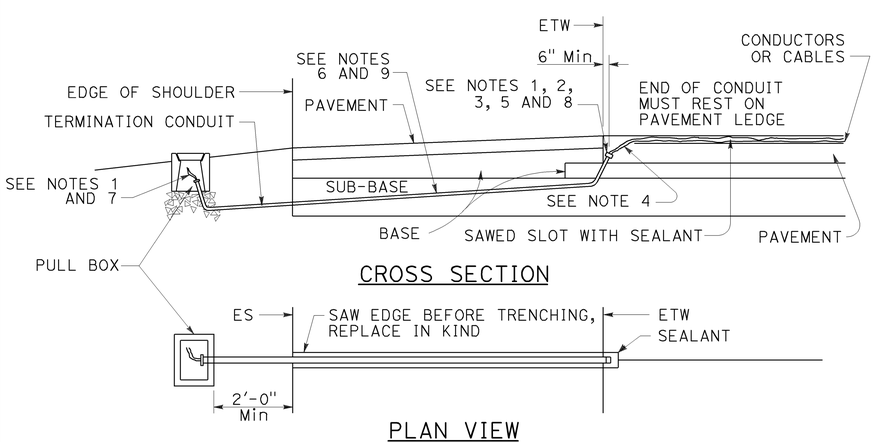

CROSS SECTION

PLAN VIEW

SHOULDER TERMINATION DETAILS

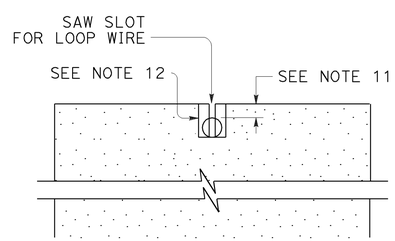

SECTION A-A

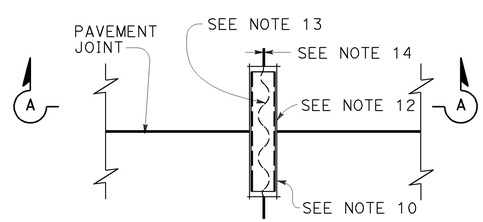

PLAN VIEW

TYPICAL LOOP LEAD-IN DETAIL AT PAVEMENT JOINT

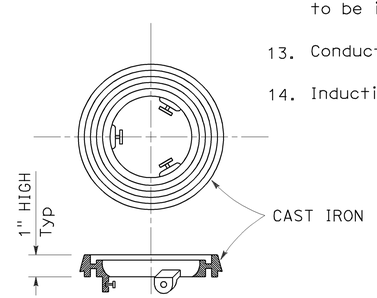

LOCKING GRADE RING

NOTES:

1. Bushing shall be used at end of conduit.
2. Tape detector conductors or cables 3" each side of bushings.
3. Install duct seal compound to each end of termination conduit before installing sealant.
4. Round all sharp edges where detector conductors or cables have to pass.
5. End of conduit shall be 3⅛" below roadway surface.
6.

Conduit size	Loop conductors
1"C minimum	1 to 2 pairs
1½"C minimum	3 to 4 pairs
2"C minimum	5 or more pairs

7. Splice detector conductors or cables to detector lead-in-cable.
8. Location of detector handhole when shown on plans.
9. When the shoulder and traveled way are paved with the same material and there is no joint between them, the conduit shall extend only 2'-0" into the shoulder pavement.
10. ¾"C, Type 3 conduit 6" long minimum, plug both ends with duct compound to keep out sealant.
11. ½" Minimum between top of conduit and pavement surface.
12. Sawcut shall not exceed 1" in width and ⅛" longer than conduit to be installed.
13. Conductors with ½" minimum slack inside conduit.
14. Inductive loop detector saw slot.

STATE OF CALIFORNIA
DEPARTMENT OF TRANSPORTATION

ELECTRICAL SYSTEMS (CURB TERMINATION AND HANDHOLE)

NO SCALE

RSP ES-5D DATED JULY 19, 2013 SUPERSEDES STANDARD PLAN ES-5D DATED MAY 20, 2011 - PAGE 451 OF THE STANDARD PLANS BOOK DATED 2010.

REVISED STANDARD PLAN RSP ES-5D

2010 REVISED STANDARD PLAN RSP ES-5D

7-9-13

DIST	COUNTY	ROUTE	POST MILES TOTAL PROJECT	SHEET NO.	TOTAL SHEETS
10	Sta	5,99	Var	82	83

Theresa Gabriel
REGISTERED ELECTRICAL ENGINEER

July 19, 2013
PLANS APPROVAL DATE

REGISTERED PROFESSIONAL ENGINEER
Theresa Aziz Gabriel
No. E15129
Exp. 6-30-14
ELECTRICAL
STATE OF CALIFORNIA

THE STATE OF CALIFORNIA OR ITS OFFICERS OR AGENTS SHALL NOT BE RESPONSIBLE FOR THE ACCURACY OR COMPLETENESS OF SCANNED COPIES OF THIS PLAN SHEET.

TO ACCOMPANY PLANS DATED 5-26-15

2010 REVISED STANDARD PLAN RSP ES-8B

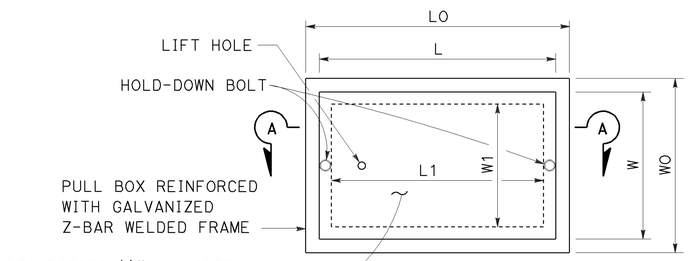

TOP VIEW

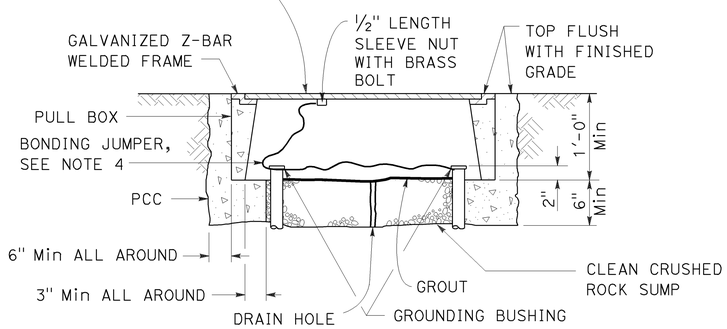

SECTION A-A

No. 3½(T), No. 5(T) AND No. 6(T) TRAFFIC PULL BOX

NOTES:

1. Traffic pull box shall be provided with steel cover and special concrete footing. Steel cover shall have embossed non-skid pattern.
2. Steel reinforcing shall be as regularly used in the standard products of the respective manufacturer.
3. Pull box covers shall be marked as follows: "SERVICE" Service circuits between service point and service disconnect; "SPRINKLER-CONTROL" Sprinkler control circuits, 50 V or less; "CALTRANS" On all pull boxes, except pull boxes marked "SPRINKLER-CONTROL"; and "TELEPHONE" Telephone service.
   - A) No. 3½(T) pull box.
     - 1) "SIGNAL" - Traffic signal circuits with or without lighting or sign lighting circuits.
     - 2) "LIGHTING" - Lighting or sign lighting circuits where voltage is under 600 V.
   - B) No. 5(T) or 6(T) pull box.
     - 1) "TRAFFIC SIGNAL" - Traffic signal circuits with or without lighting or sign lighting circuits.
     - 2) "LIGHTING" - Lighting or sign lighting circuits where voltage is under 600 V.
     - 3) "LIGHTING-HIGH VOLTAGE" - Lighting or sign lighting circuits where voltage is above 600 V.
     - 4) "IRRIGATION" - Circuits to irrigation controller 120 V or more.
     - 5) "RAMP METER" - Ramp meter circuits.
     - 6) "COUNT STATION" - Count or speed monitor circuits.
     - 7) "COMMUNICATION" - Communication circuits.
     - 8) "TOS COMMUNICATIONS" - TOS communications line.
     - 9) "TOS POWER" - TOS power.
     - 10) "TDC POWER" - Telephone demarcation cabinet power.
     - 11) "CCTV" - Closed circuit television circuits.
     - 12) "TMS" - Traffic monitoring station circuits.
     - 13) "CMS" - Changeable message sign circuits.
     - 14) "HAR" - Highway advisory radio circuits.
     - 15) "BOOSTER PUMP" - Booster pump circuit.
4. Bonding jumper for metal covers shall be 3' long, minimum.
5. The nominal dimensions of the opening in which the cover sets shall be the same as the cover dimensions except the length and width dimensions shall be ⅛" greater.
6. Covers and boxes shall be interchangeable with California standard male and female gages. When interchanged with a standard male or female gage, the top surfaces shall be flush within ⅛".

DIMENSION TABLE

PULL BOX	PULL BOX						COVER				
	MINIMUM * THICKNESS	MINIMUM DEPTH BOX AND EXTENSION	WO	LO	L1	W1	L **	W **	R	EDGE THICKNESS	EDGE TAPER
No. 3½(T)	1½"	1'-0"	1'-5"± 1"	1'-8⅞"±	1'-2½"±	10⅝"± 1"	1'-8"±	1'-1¾"±	0"	½"	NONE
No. 5(T)	1¾"	1'-0"	1'-11½"± 1"	2'-5½"±	1'-7"±	1'-1"± 1"	2'-3"±	1'-4"±	0"	½"	NONE
No. 6(T)	2"	1'-0"	2'-6"± 1"	2'-11½"±	1'-11½"±	1'-5"± 1"	2'-9"±	1'-8"±	0"	½"	NONE

* EXCLUDING CONDUIT WEB ** TOP DIMENSION

STATE OF CALIFORNIA
DEPARTMENT OF TRANSPORTATION

ELECTRICAL SYSTEMS (TRAFFIC PULL BOX)

NO SCALE

RSP ES-8B DATED JULY 19, 2013 SUPERSEDES RSP ES-8B DATED JANUARY 20, 2012 THAT SUPPLEMENTS THE STANDARD PLANS BOOK DATED 2010.

REVISED STANDARD PLAN RSP ES-8B

7-15-13

Dist	COUNTY	ROUTE	POST MILES TOTAL PROJECT	SHEET No.	TOTAL SHEETS
10	Sta	5,99	Var	83	83

REGISTERED CIVIL ENGINEER

November 15, 2013
PLANS APPROVAL DATE

REGISTERED PROFESSIONAL ENGINEER
Stanley P. Johnson
No. C57793
Exp. 3-31-14
CIVIL
STATE OF CALIFORNIA

THE STATE OF CALIFORNIA OR ITS OFFICERS OR AGENTS SHALL NOT BE RESPONSIBLE FOR THE ACCURACY OR COMPLETENESS OF SCANNED COPIES OF THIS PLAN SHEET.

TO ACCOMPANY PLANS DATED 5-26-15

2010 REVISED STANDARD PLAN RSP ES-16B

POLE TYPE	POLE DATA				BASE PLATE DATA				CIDH	
	HEIGHT "h"	Min OD		THICKNESS	"C"	THICKNESS	ANCHOR BOLT SIZE	BC = BOLT CIRCLE	Dia	"d"
		BASE	TOP							
CCTV 25	25′	7⅜"	3¾"	0.1793"	1′-1"	1"	1½" ø x 36"	11½"	2′-6"	7′-0"
CCTV 30	30′	8"			1′-1½"			1′-0"		7′-6"
CCTV 35	35′	8⅝"			1′-2"			1′-1"		8′-0"
CCTV 40	40′	9⅜"			1′-3"			1′-1½"		8′-6"
CCTV 45	45′	10"						1′-2"		

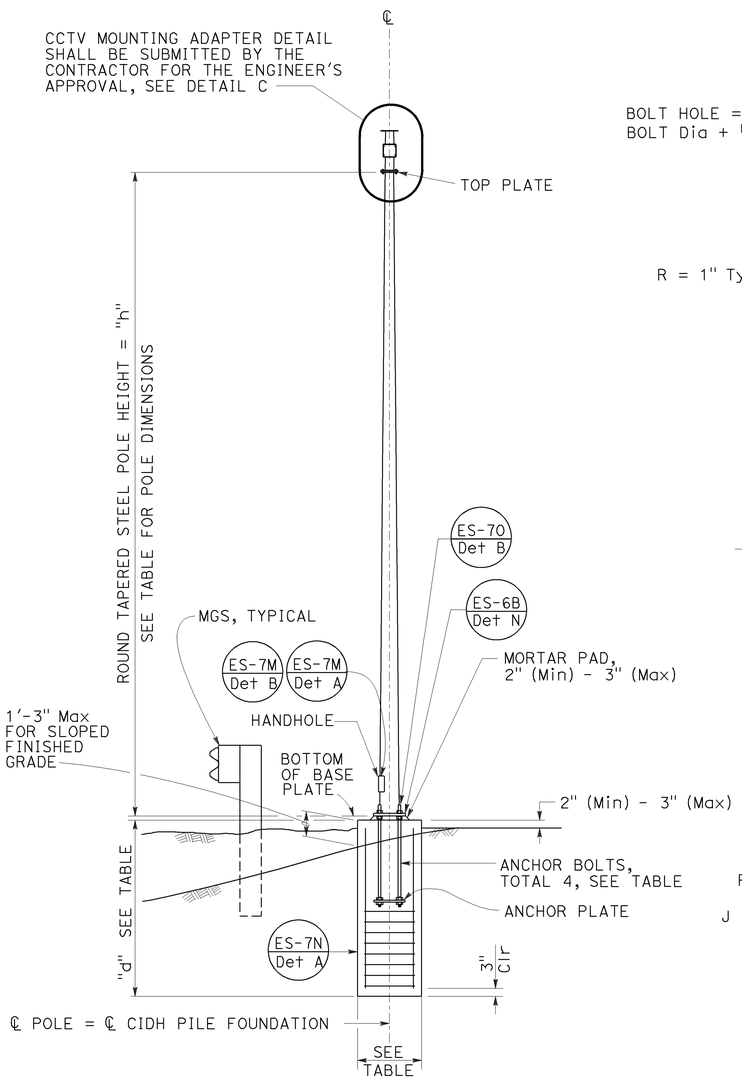

ELEVATION A

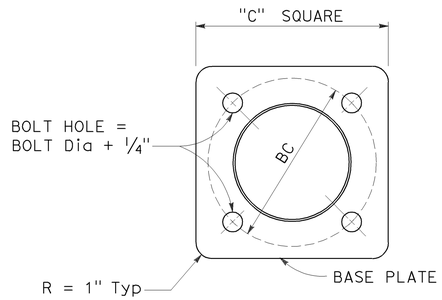

BASE PLATE

DETAIL A

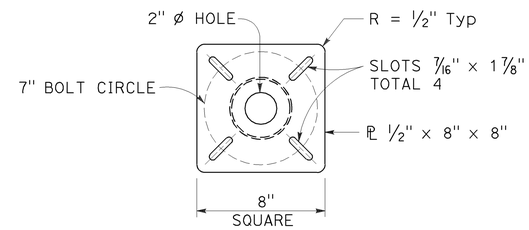

TOP PLATE

DETAIL B

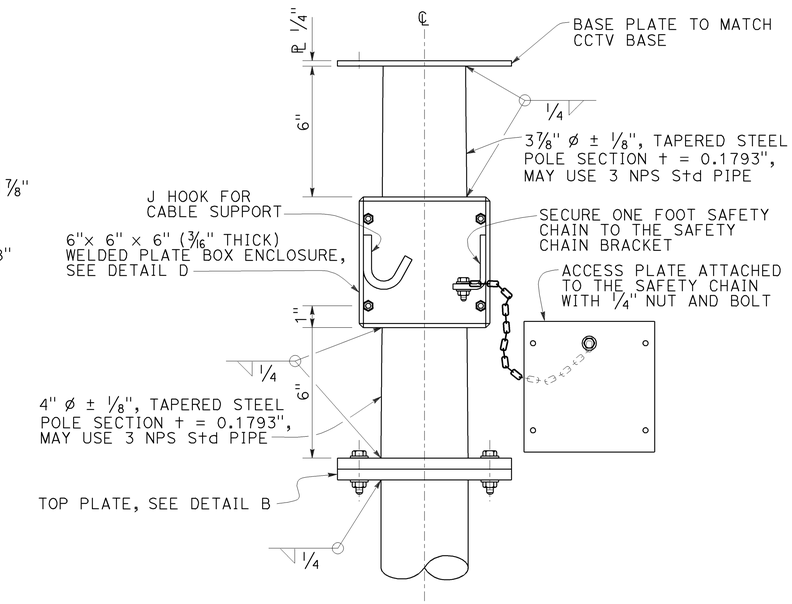

CLOSED CIRCUIT TELEVISION MOUNTING ADAPTER

DETAIL C

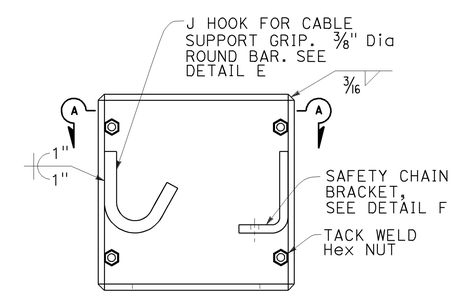

BOX ENCLOSURE

DETAIL D

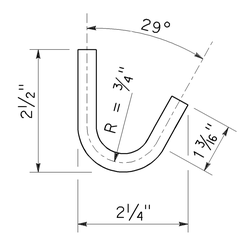

J HOOK

DETAIL E

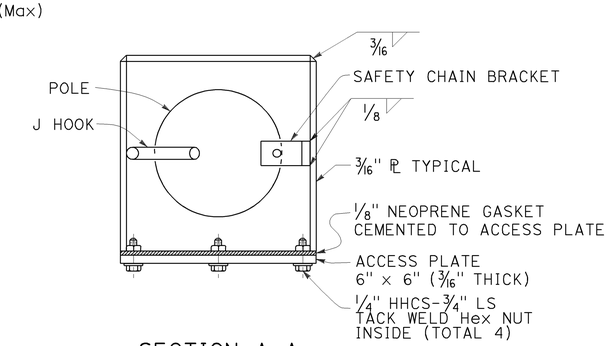

SECTION A-A

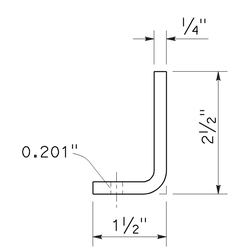

SAFETY CHAIN BRACKET

DETAIL F

NOTES:

1. The Contractor shall verify controlling field dimensions before ordering or fabricating any material.
2. During pole installation, the post shall be raked as necessary with the use of leveling nuts to provide a plumb pole axis.
3. Wind Loadings (3-second gust): 100 mph
4. Unit Stresses (Structural Steel):
   a. fy = 55,000 psi (tapered steel tube and anchor bolts)
   b. fy = 50,000 psi (unless otherwise noted)
5. Unit Stresses (Reinforced Concrete):
   a. f′c = 3,625 psi
   b. fy = 60,000 psi

STATE OF CALIFORNIA
DEPARTMENT OF TRANSPORTATION

ELECTRICAL SYSTEMS (CLOSED CIRCUIT TELEVISION, 25' TO 45' POLE)

NO SCALE

RSP ES-16B DATED NOVEMBER 15, 2013 SUPERSEDES STANDARD PLAN ES-16B DATED MAY 20, 2011 - PAGE 501 OF THE STANDARD PLANS BOOK DATED 2010.

REVISED STANDARD PLAN RSP ES-16B

10-4-13