Dist	COUNTY	ROUTE	KILOMETER POST TOTAL PROJECT	SHEET No.	TOTAL SHEETS
10	Mer	99	25.4/27.8	13	293

REGISTERED CIVIL ENGINEER 12-12-08 DATE

3-9-09
PLANS APPROVAL DATE

REGISTERED PROFESSIONAL ENGINEER PETROS IYASU DEMOZ No. 61652 Exp. 6/30/09 CIVIL STATE OF CALIFORNIA

THE STATE OF CALIFORNIA OR ITS OFFICERS OR AGENTS SHALL NOT BE RESPONSIBLE FOR THE ACCURACY OR COMPLETENESS OF ELECTRONIC COPIES OF THIS PLAN SHEET.

NOTE: FOR COMPLETE RIGHT OF WAY AND ACCURATE ACCESS DATA, SEE RIGHT OF WAY RECORD MAPS AT DISTRICT OFFICE.

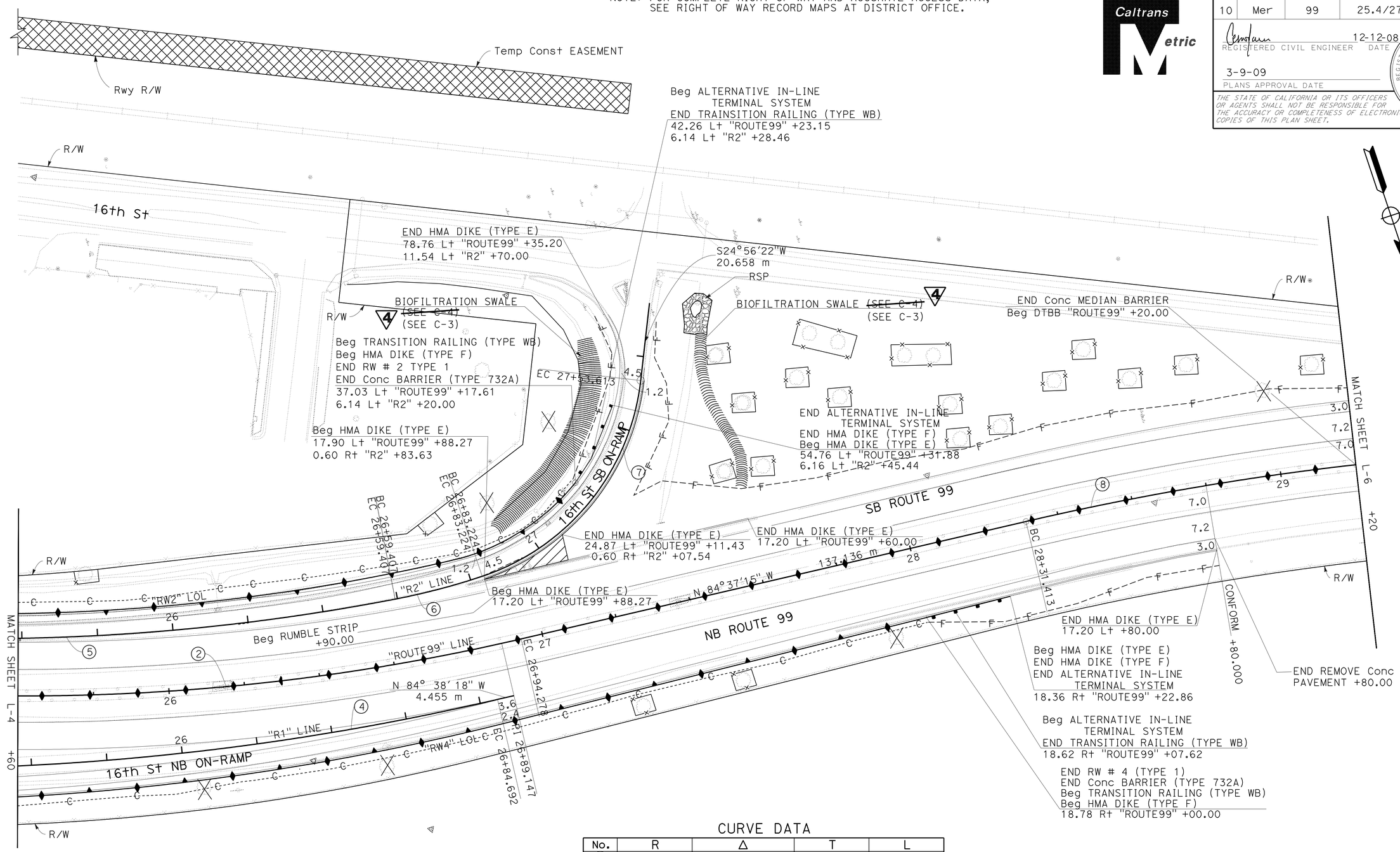

CURVE DATA

No.	R	Δ	T	L
2	579.000	48°16'21"	259.438	487.814
4	704.250	23°03'38"	143.669	283.450
5	579.000	12°14'56"	62.127	123.781
6	180.000	07°34'53"	11.926	23.817
7	62.000	65°02'55"	39.535	70.389
8	762.000	19°17'30"	129.510	256.569

4 **REVISED PER ADDENDUM No. 4 DATED SEPTEMBER 16, 2009**

ALL DIMENSIONS ARE IN METERS UNLESS OTHERWISE SHOWN.

LAYOUT

SCALE 1:500

L-5

STATE OF CALIFORNIA - DEPARTMENT OF TRANSPORTATION
Caltrans
06-DESIGN

FUNCTIONAL SUPERVISOR: JAMES ESPINOSA
CALCULATED-DESIGNED BY: SAL JARAMILLO
CHECKED BY: PETROS DEMOZ
REVISED BY
DATE REVISED

LAST REVISION 12-12-08
DATE PLOTTED => 15-SEP-2009
TIME PLOTTED => 06:05

Dist	COUNTY	ROUTE	KILOMETER POST TOTAL PROJECT	SHEET No.	TOTAL SHEETS
10	Mer	99	25.4/27.8	24	293

REGISTERED CIVIL ENGINEER 12-12-08 DATE

3-9-09
PLANS APPROVAL DATE

REGISTERED PROFESSIONAL ENGINEER PETROS IYASU DEMOZ No. 61652 Exp. 6/30/09 CIVIL STATE OF CALIFORNIA

THE STATE OF CALIFORNIA OR ITS OFFICERS OR AGENTS SHALL NOT BE RESPONSIBLE FOR THE ACCURACY OR COMPLETENESS OF ELECTRONIC COPIES OF THIS PLAN SHEET.

Caltrans Metric

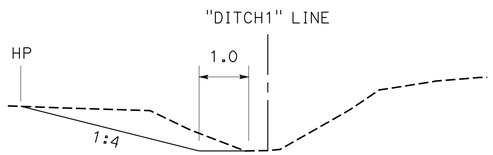

DITCH WIDENING
SECTION C-C

NO SCALE

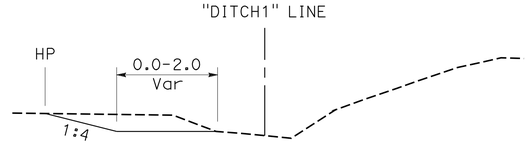

BIOFILTRATION SWALE
SECTION B-B

NO SCALE

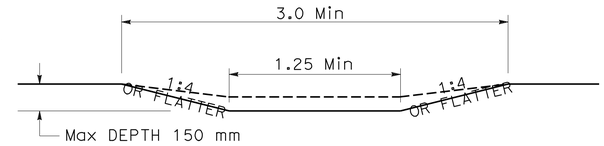

BIOFILTRATION SWALE
SECTION A-A

NO SCALE

CURVE DATA

No.	R	Δ	T	L
1	37.850	45°22'58"	15.826	29.980
2	24.774	81°02'16"	21.173	35.039
3	133.400	19°54'26"	23.411	46.349

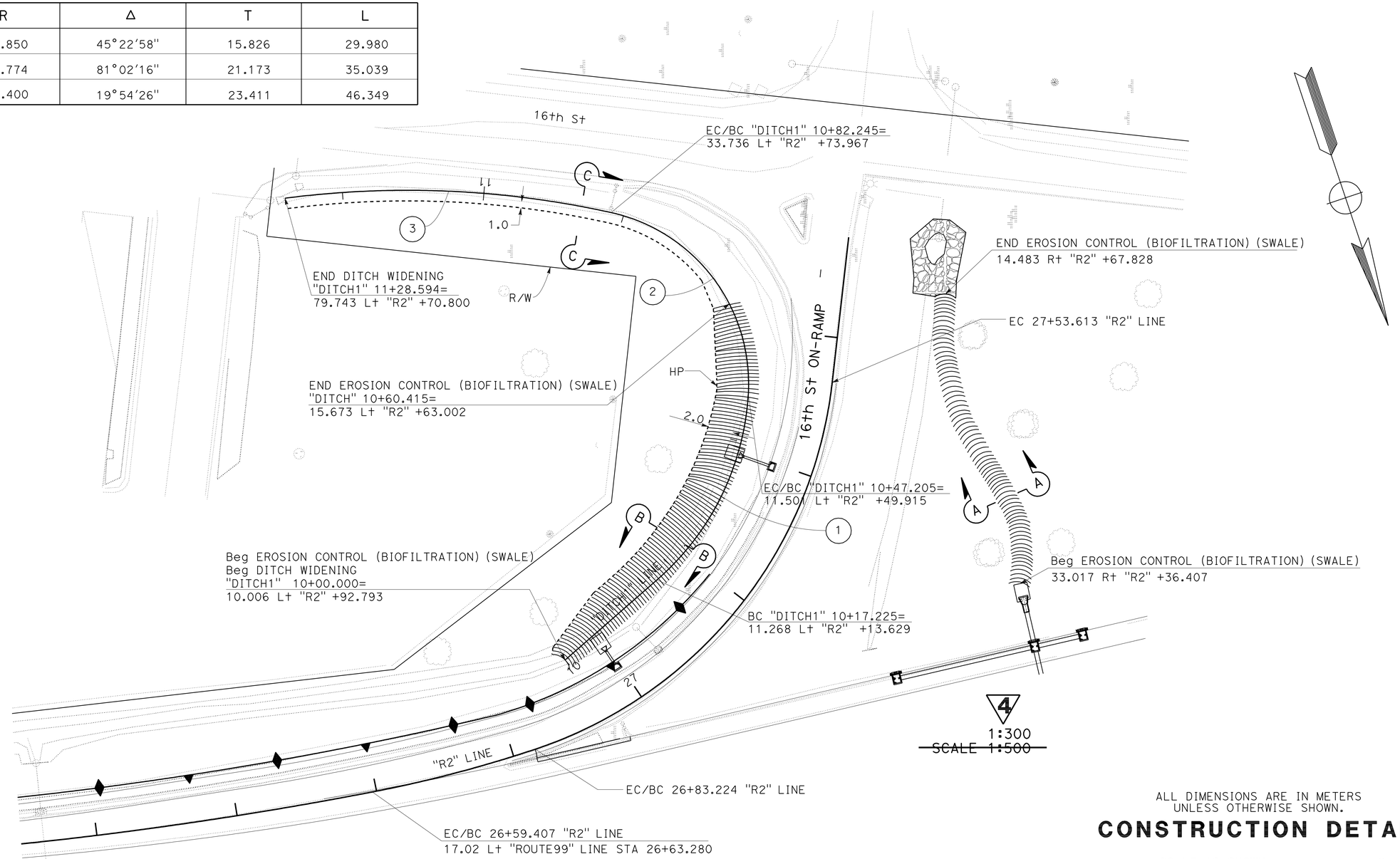

4
1:300
~~SCALE 1:500~~

ALL DIMENSIONS ARE IN METERS
UNLESS OTHERWISE SHOWN.

CONSTRUCTION DETAIL

SCALE AS SHOWN

C-3

4 **REVISED PER ADDENDUM No. 4 DATED SEPTEMBER 16, 2009**

STATE OF CALIFORNIA - DEPARTMENT OF TRANSPORTATION
Caltrans
06-DESIGN

FUNCTIONAL SUPERVISOR: JAMES ESPINOSA

CALCULATED-DESIGNED BY: SAL JARAMILLO
CHECKED BY: PETROS DEMOZ

REVISED BY
DATE REVISED

LAST REVISION 12-12-08
DATE PLOTTED => 15-SEP-2009
TIME PLOTTED => 06:05

Dist	COUNTY	ROUTE	KILOMETER POST TOTAL PROJECT	SHEET No.	TOTAL SHEETS
10	Mer	99	25.4/27.8	206	293

REGISTERED CIVIL ENGINEER 12-12-08 DATE

3-9-09
PLANS APPROVAL DATE

REGISTERED PROFESSIONAL ENGINEER PETROS IYASU DEMOZ No. 61652 Exp. 6/30/09 CIVIL STATE OF CALIFORNIA

THE STATE OF CALIFORNIA OR ITS OFFICERS OR AGENTS SHALL NOT BE RESPONSIBLE FOR THE ACCURACY OR COMPLETENESS OF ELECTRONIC COPIES OF THIS PLAN SHEET.

Caltrans Metric

RETAINING WALLS (TYPE 1)

STATION	STRUCTURE EXCAVATION (RETAINING WALL)	STRUCTURE BACKFILL (RETAINING WALL)	STRUCTURAL CONCRETE, RETAINING WALL	BAR REINFORCING STEEL (RETAINING WALL)	PREPARE AND STAIN CONCRETE	ARCHITECTURAL SURFACE (COBBLESTONE TEXTURED) (CONCRETE)
	m^3	m^3	m^3 4	Kg	m^2	m^2
19+18.38 TO 19+29.05 ON "ROUTE99" "RW1"	34	22	17 ~~16~~	871	4	4
21+66.75 TO 27+06.09 ON "RW2" LOL	4 075	6 938	2 497 ~~2 460~~	302 888	2 540	2 540
21+06.00 TO 24+08.20 ON "RW3" LOL	858	2 175	860 ~~840~~	75 128	885	885
21+48.00 TO 28+07.56 ON "RW4" LOL	4 753	9 032	3 288 ~~3 243~~	408 577	3 425	3 425
14+99.86 TO 15+28.52 ON "ROUTE99" "RW5"	120	100	52 ~~50~~	2 400	36	36
TOTAL	9 840	18 267	6 714 ~~6 609~~	789 864	** 6 899	** 6 899

2

** - SEE STRUCTURE PLANS SHEET 2 OF 39 FOR MORE QUANTITIES.

GEOSYNTHETIC REINFORCED EMBANKMENT

STATION	m^2
21+24.35 TO 27+84.06 ON "GRER1" LOL RW # 6	3 207
21+41.76 TO 27+75.94 ON "GREL1" LOL RW # 7	2 851
TOTAL	6 058

4 REVISED PER ADDENDUM No. 4 DATED SEPTEMBER 16, 2009

2 REVISED PER ADDENDUM No. 2 DATED AUGUST 28, 2009

RETAINING WALL QUANTITIES

R-41

STATE OF CALIFORNIA - DEPARTMENT OF TRANSPORTATION
Caltrans 06-DESIGN

FUNCTIONAL SUPERVISOR JAMES ESPINOSA

CALCULATED-DESIGNED BY SAL JARAMILLO
CHECKED BY PETROS DEMOZ

REVISED BY
DATE REVISED

LAST REVISION 12-12-08 DATE PLOTTED => 15-SEP-2009 TIME PLOTTED => 06:05

DIST	COUNTY	ROUTE	KILOMETER POST TOTAL PROJECT	SHEET No	TOTAL SHEETS
10	Mer	99	25.4/27.8	261	293

REGISTERED CIVIL ENGINEER 11-14-08 DATE

3-9-09
PLANS APPROVAL DATE

REGISTERED PROFESSIONAL ENGINEER Keith Stillmunkes No. 68878 Exp. 9-30-2009 CIVIL STATE OF CALIFORNIA

The State of California or its officers or agents shall not be responsible for the accuracy or completeness of electronic copies of this plan sheet.

Notes:

1. For abutment footing layout and dimensions, see "ABUTMENT FOOTING LAYOUT" sheet.
2. For Section A-A see "Abutment Details No.1" sheet.

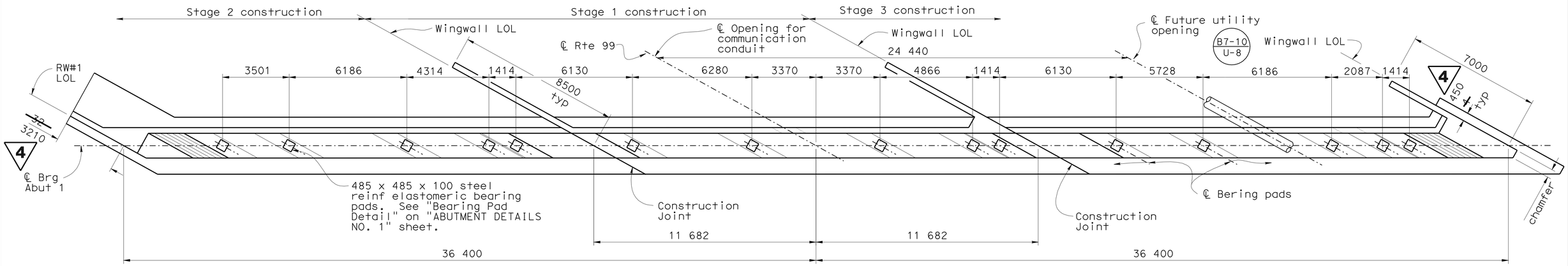

PLAN
1:100

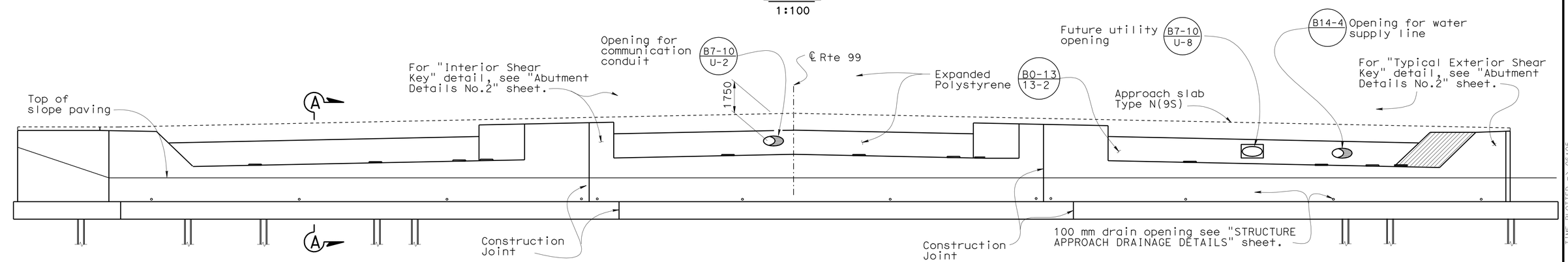

All piles not shown

ELEVATION
1:100

4 REVISED PER ADDENDUM No. 4 DATED SEPTEMBER 16, 2009

DESIGN	BY Keith Stillmunkes	CHECKED Wendy Hou	
DETAILS	BY Bruno Jenko	CHECKED Wendy Hou	
QUANTITIES	BY WH/KS	CHECKED ST/DD/RD	

STATE OF CALIFORNIA
DEPARTMENT OF TRANSPORTATION

DIVISION OF ENGINEERING SERVICES
STRUCTURE DESIGN
DESIGN BRANCH 7

BRIDGE NO. 39-0230
KILOMETER POST 26.62

WEST MERCED OVERHEAD (REPLACE)
ABUTMENT 1 LAYOUT

ALL DIMENSIONS ARE IN MILLIMETERS UNLESS OTHERWISE SHOWN

ORIGINAL SCALE IN MILLIMETERS FOR REDUCED PLANS 0 10 20 30 40 50 60 70 80 90 100

CU 10
EA 0K0201

DISREGARD PRINTS BEARING EARLIER REVISION DATES 11-10-08 11-11-08

REVISION DATES

SHEET 7 OF 39

FILE => 39-0230-f-abt1-lo.add

STRUCTURES DESIGN DETAIL SHEET (METRIC) (REV.03-17-04)

USERNAME => trlenard DATE PLOTTED => 15-SEP-2009 TIME PLOTTED => 06:05

DIST	COUNTY	ROUTE	KILOMETER POST TOTAL PROJECT	SHEET No	TOTAL SHEETS
10	Mer	99	25.4/27.8	262	293

REGISTERED CIVIL ENGINEER 11-14-08 DATE

3-9-09
PLANS APPROVAL DATE

REGISTERED PROFESSIONAL ENGINEER Keith Stillmunkes No. 68878 Exp. 9-30-2009 CIVIL STATE OF CALIFORNIA

The State of California or its officers or agents shall not be responsible for the accuracy or completeness of electronic copies of this plan sheet.

Notes:

1. For Abutment footing layout and dimensions, see "ABUTMENT FOOTING LAYOUT" sheet.
2. For Section A-A see "Abutment Details No.1" sheet.

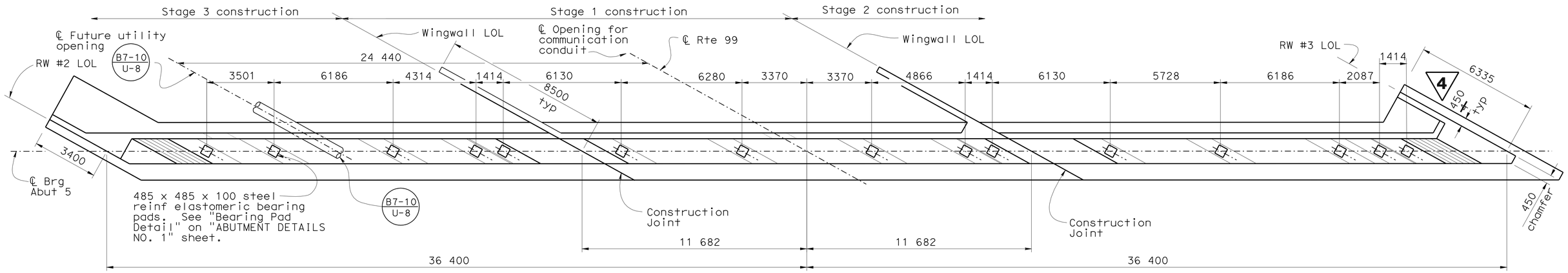

PLAN
1:100

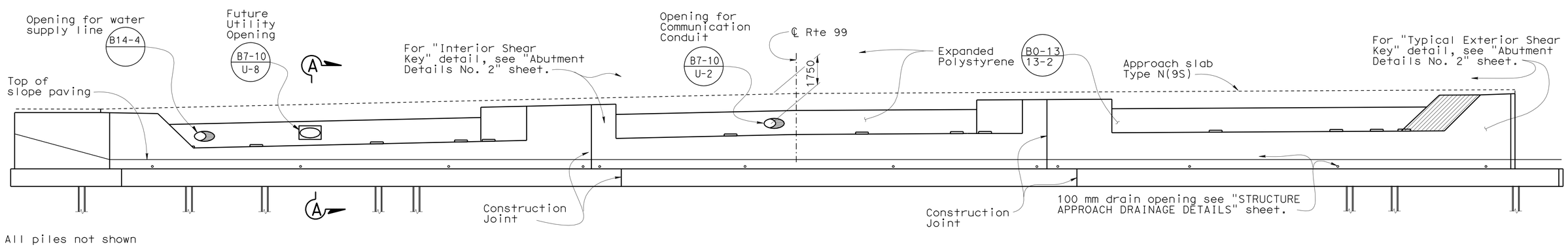

All piles not shown

ELEVATION
1:100

4 REVISED PER ADDENDUM No. 4 DATED SEPTEMBER 16, 2009

Caltrans Metric

	BY	CHECKED
DESIGN	Keith Stillmunkes	Wendy Hou
DETAILS	Bruno Jenko	Wendy Hou
QUANTITIES	WH/KS	ST/DD/RD

STATE OF CALIFORNIA
DEPARTMENT OF TRANSPORTATION

DIVISION OF ENGINEERING SERVICES
STRUCTURE DESIGN
DESIGN BRANCH 7

BRIDGE NO. 39-0230
KILOMETER POST 26.62

WEST MERCED OVERHEAD (REPLACE)
ABUTMENT 5 LAYOUT

ALL DIMENSIONS ARE IN MILLIMETERS UNLESS OTHERWISE SHOWN

ORIGINAL SCALE IN MILLIMETERS FOR REDUCED PLANS 0 10 20 30 40 50 60 70 80 90 100

CU 10
EA 0K0201

DISREGARD PRINTS BEARING EARLIER REVISION DATES

REVISION DATES: 11-10-08 11-11-08

SHEET 8 OF 39

FILE => 39-0230-f-abt5-lo.add

STRUCTURES DESIGN DETAIL SHEET (METRIC) (REV.03-17-04)

USERNAME => friemard DATE PLOTTED => 15-SEP-2009 TIME PLOTTED => 06:05

DIST	COUNTY	ROUTE	KILOMETER POST TOTAL PROJECT	SHEET No	TOTAL SHEETS
10	Mer	99	25.4/27.8	263	293

REGISTERED CIVIL ENGINEER 11-14-08 DATE

3-9-09
PLANS APPROVAL DATE

REGISTERED PROFESSIONAL ENGINEER Keith Stillmunkes No. 68878 Exp. 9-30-2009 CIVIL STATE OF CALIFORNIA

The State of California or its officers or agents shall not be responsible for the accuracy or completeness of electronic copies of this plan sheet.

Notes:

I - denotes steel vertical pile

↧ - denotes steel battered 1:3 pile

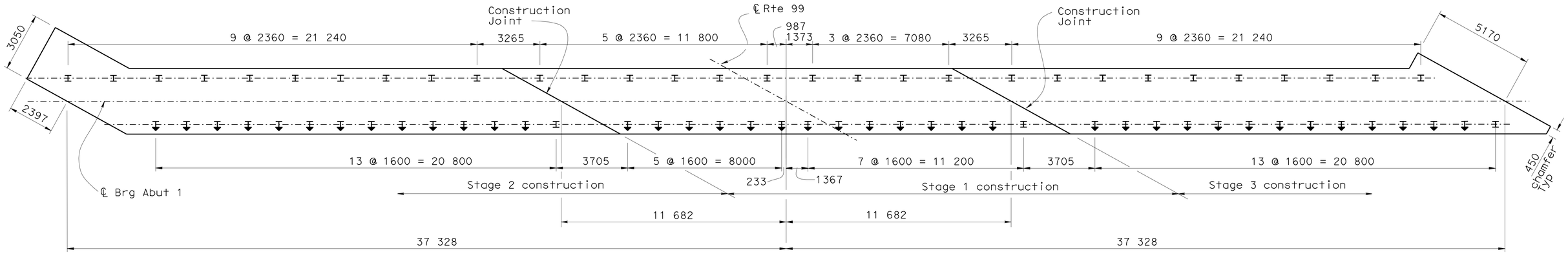

FOOTING PLAN
(ABUTMENT 1)
1:100

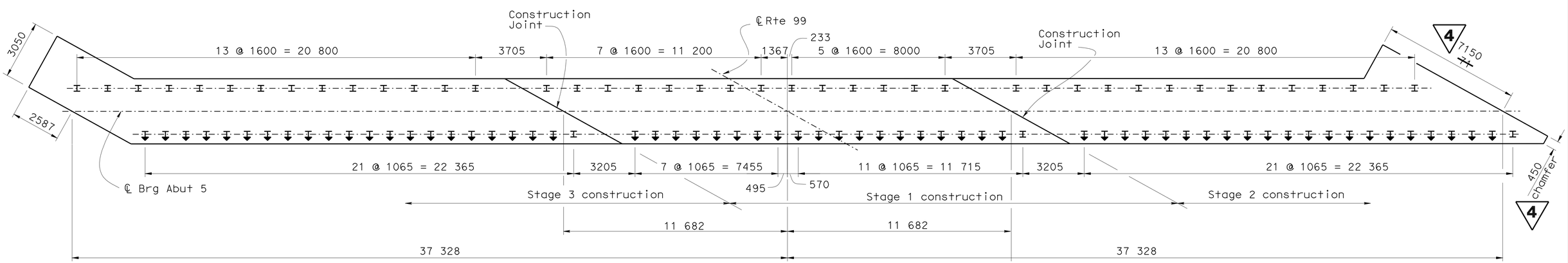

FOOTING PLAN
(ABUTMENT 5)
1:100

4 **REVISED PER ADDENDUM No. 4 DATED SEPTEMBER 16, 2009**

Caltrans Metric

	BY	CHECKED
DESIGN	Keith Stillmunkes	Wendy Hou
DETAILS	Bruno Jenko	Wendy Hou
QUANTITIES	WH/KS	ST/DD/RD

STATE OF CALIFORNIA
DEPARTMENT OF TRANSPORTATION

DIVISION OF ENGINEERING SERVICES
STRUCTURE DESIGN
DESIGN BRANCH 7

BRIDGE NO. 39-0230
KILOMETER POST 26.62

WEST MERCED OVERHEAD (REPLACE)
ABUTMENT FOOTING LAYOUT

ALL DIMENSIONS ARE IN MILLIMETERS UNLESS OTHERWISE SHOWN

ORIGINAL SCALE IN MILLIMETERS FOR REDUCED PLANS 0 10 20 30 40 50 60 70 80 90 100

CU 10
EA 0K0201

DISREGARD PRINTS BEARING EARLIER REVISION DATES

REVISION DATES: 11-10-08 11-11-08

SHEET 9 OF 39

FILE => 39-0230-f-abt-ft-1o.add

STRUCTURES DESIGN DETAIL SHEET (METRIC) (REV.03-17-04)

USERNAME => trlenard DATE PLOTTED => 15-SEP-2009 TIME PLOTTED => 06:05

DIST	COUNTY	ROUTE	KILOMETER POST TOTAL PROJECT	SHEET No	TOTAL SHEETS
10	Mer	99	25.4/27.8	274	293

REGISTERED CIVIL ENGINEER 11-14-08 DATE

3-9-09
PLANS APPROVAL DATE

REGISTERED PROFESSIONAL ENGINEER Keith Stillmunkes No. 68878 Exp. 9-30-2009 CIVIL STATE OF CALIFORNIA

The State of California or its officers or agents shall not be responsible for the accuracy or completeness of electronic copies of this plan sheet.

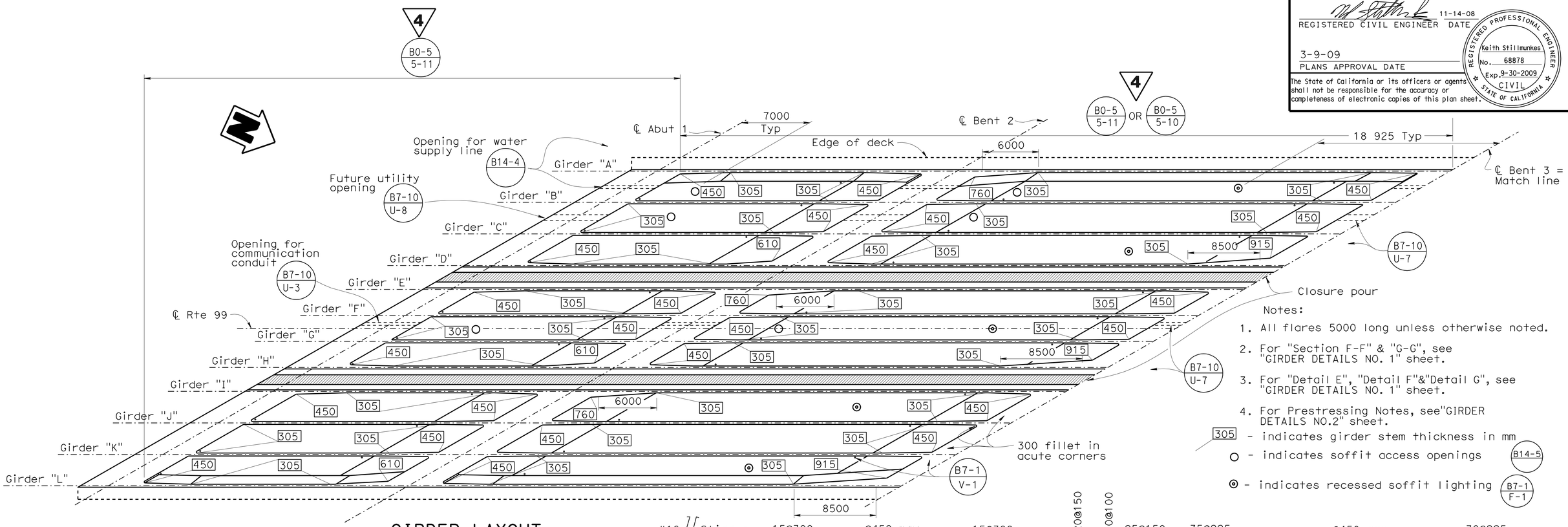

Notes:

1. All flares 5000 long unless otherwise noted.
2. For "Section F-F" & "G-G", see "GIRDER DETAILS NO. 1" sheet.
3. For "Detail E", "Detail F"&"Detail G", see "GIRDER DETAILS NO. 1" sheet.
4. For Prestressing Notes, see"GIRDER DETAILS NO.2" sheet.

305 - indicates girder stem thickness in mm

○ - indicates soffit access openings B14-5

⊙ - indicates recessed soffit lighting B7-1 / F-1

GIRDER LAYOUT

1:200

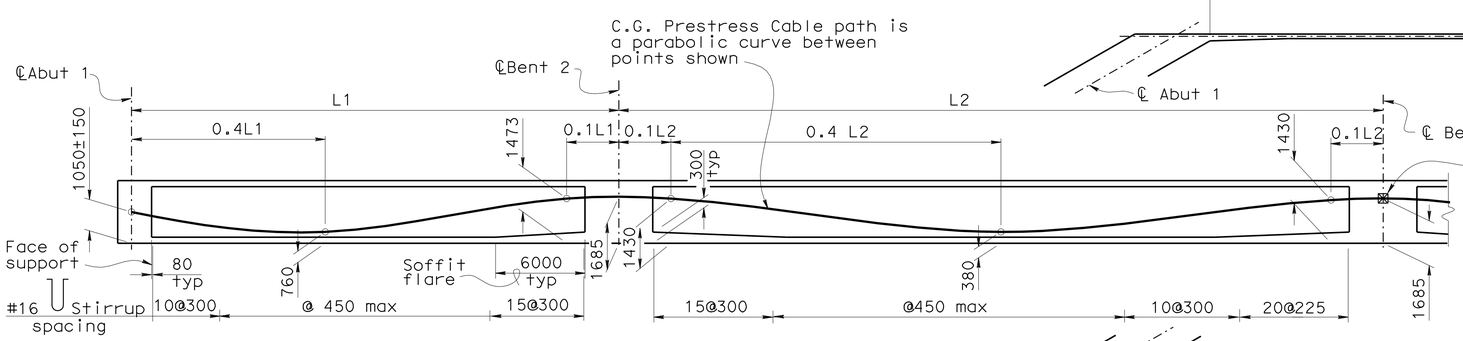

TYPICAL LONGITUDINAL SECTION & STIRRUP SPACING GIRDER B, C, F, G, J & K

No scale

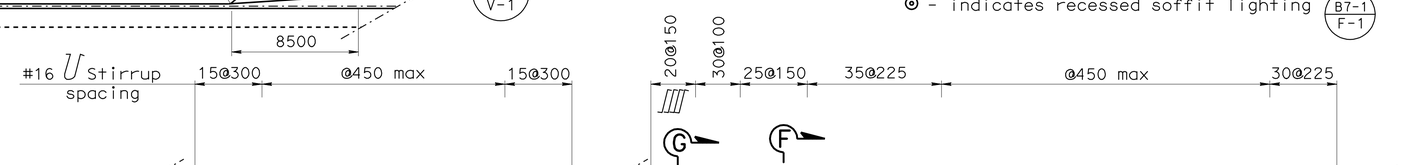

GIRDER A & I

1:200

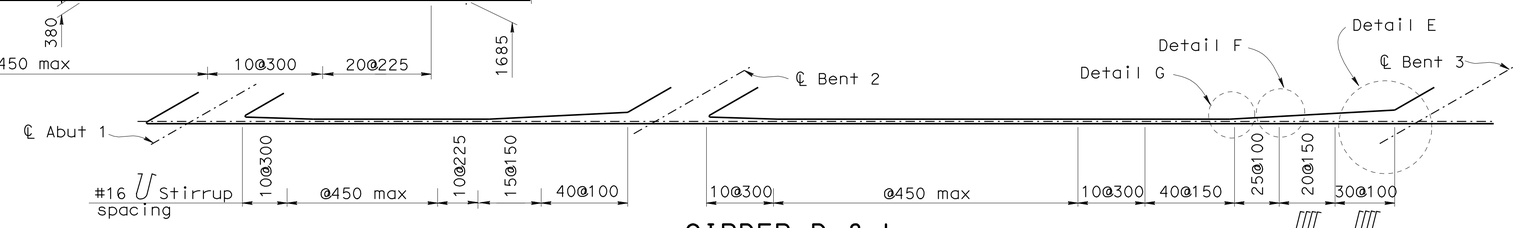

GIRDER D & L

1:200

4 REVISED PER ADDENDUM No. 4 DATED SEPTEMBER 16, 2009

DESIGN	BY Keith Stillmunkes	CHECKED Wendy Hou	
DETAILS	BY Bruno Jenko	CHECKED Wendy Hou	
QUANTITIES	BY WH/KS	CHECKED ST/DD/RD	

STATE OF CALIFORNIA DEPARTMENT OF TRANSPORTATION

DIVISION OF ENGINEERING SERVICES STRUCTURE DESIGN DESIGN BRANCH 7

BRIDGE NO. 39-0230
KILOMETER POST 26.62

WEST MERCED OVERHEAD (REPLACE)
GIRDER LAYOUT SPAN 1 & 2

Caltrans Metric

ALL DIMENSIONS ARE IN MILLIMETERS UNLESS OTHERWISE SHOWN

ORIGINAL SCALE IN MILLIMETERS FOR REDUCED PLANS 0 10 20 30 40 50 60 70 80 90 100

CU 10
EA 0K0201

DISREGARD PRINTS BEARING EARLIER REVISION DATES

REVISION DATES: 3-29-06 3-31-08 6-13-08 11-10-08

SHEET 20 OF 39

FILE => 39-0230-1-g_1o1.add

STRUCTURES DESIGN DETAIL SHEET (METRIC) (REV.03-17-04)

USERNAME => trlenard DATE PLOTTED => 15-SEP-2009 TIME PLOTTED => 08:06

DIST	COUNTY	ROUTE	KILOMETER POST TOTAL PROJECT	SHEET No	TOTAL SHEETS
10	Mer	99	25.4/27.8	275	293

REGISTERED CIVIL ENGINEER 11-14-08 DATE

3-9-09
PLANS APPROVAL DATE

REGISTERED PROFESSIONAL ENGINEER Keith Stillmunkes No. 68878 Exp. 9-30-2009 CIVIL STATE OF CALIFORNIA

The State of California or its officers or agents shall not be responsible for the accuracy or completeness of electronic copies of this plan sheet.

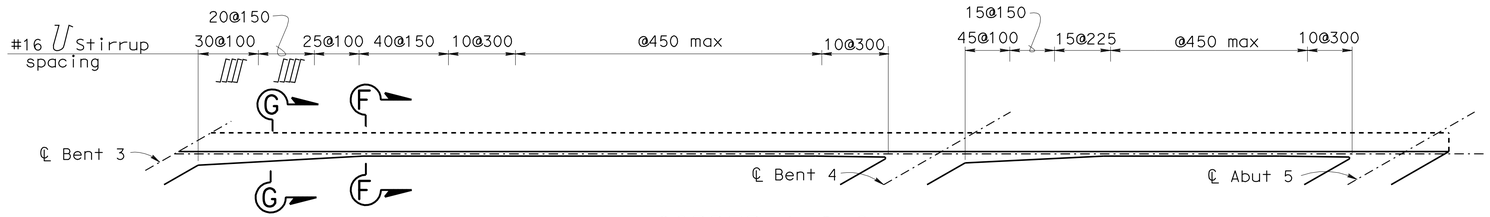

GIRDER A & I
1:200

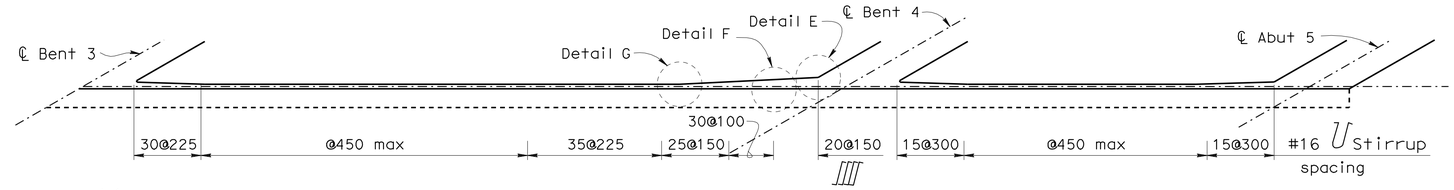

GIRDER D & L
1:200

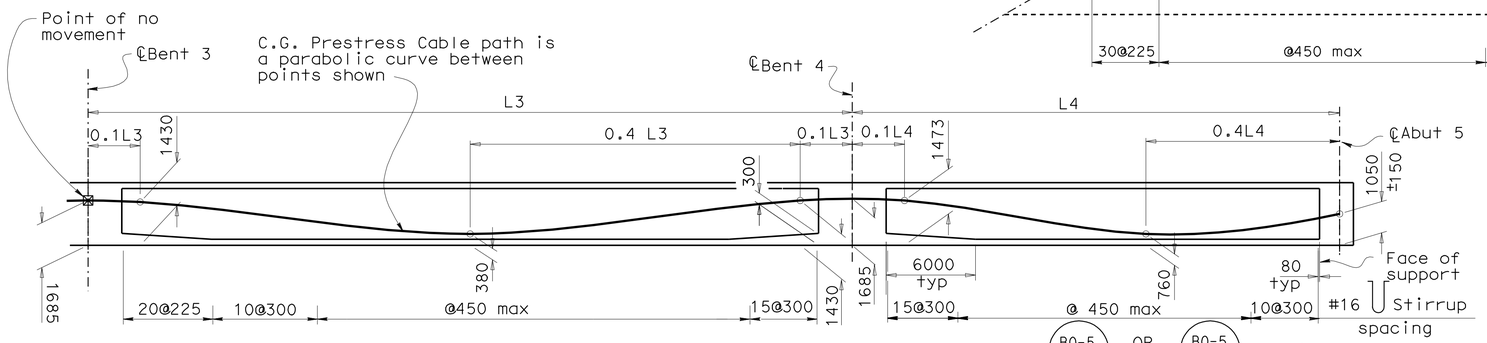

TYPICAL LONGITUDINAL SECTION & STIRRUP SPACING GIRDER B, C, F, G, J & K
No scale

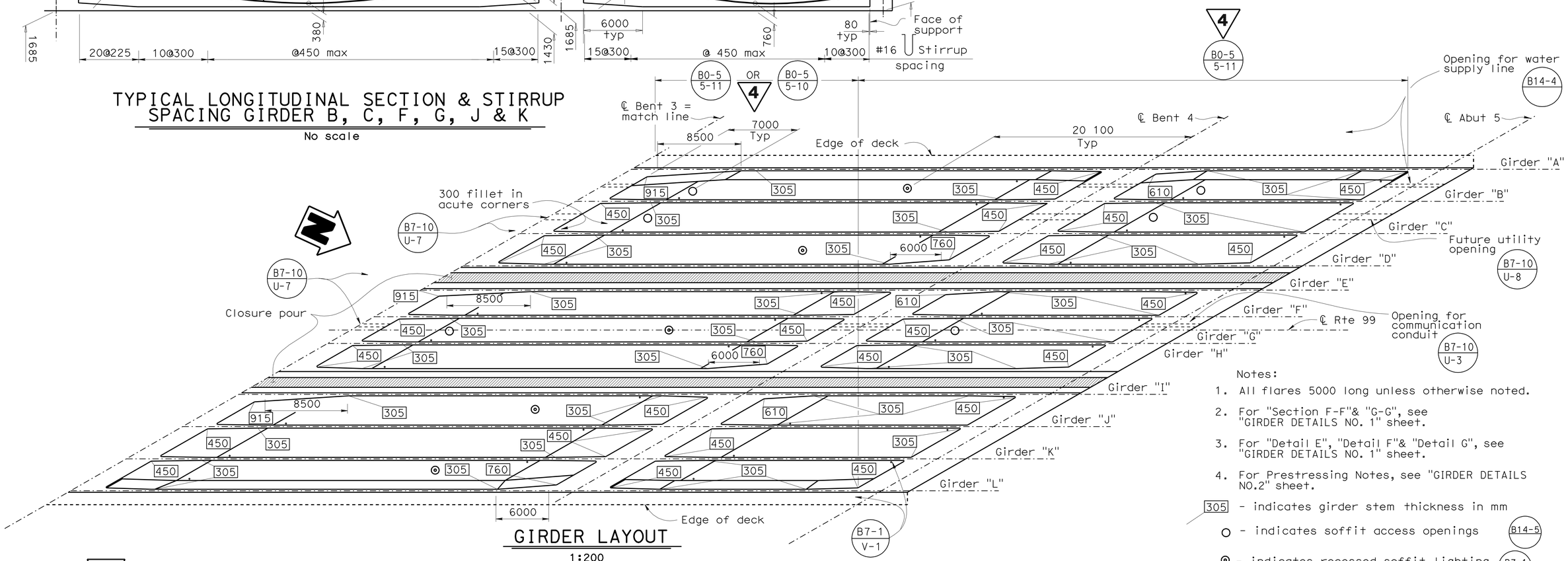

GIRDER LAYOUT
1:200

Notes:

1. All flares 5000 long unless otherwise noted.
2. For "Section F-F"& "G-G", see "GIRDER DETAILS NO. 1" sheet.
3. For "Detail E", "Detail F"& "Detail G", see "GIRDER DETAILS NO. 1" sheet.
4. For Prestressing Notes, see "GIRDER DETAILS NO.2" sheet.

305 - indicates girder stem thickness in mm

○ - indicates soffit access openings B14-5

⊙ - indicates recessed soffit lighting B7-1 F-1

4 REVISED PER ADDENDUM No. 4 DATED SEPTEMBER 16, 2009

Caltrans Metric

	BY	CHECKED
DESIGN	Keith Stillmunkes	Wendy Hou
DETAILS	Sandra McNealy	Wendy Hou
QUANTITIES	WH/KS	ST/DD/RD

STATE OF CALIFORNIA
DEPARTMENT OF TRANSPORTATION

DIVISION OF ENGINEERING SERVICES
STRUCTURE DESIGN
DESIGN BRANCH 7

BRIDGE NO. 39-0230
KILOMETER POST 26.62

WEST MERCED OVERHEAD (REPLACE)
GIRDER LAYOUT SPAN 3 & 4

ALL DIMENSIONS ARE IN MILLIMETERS UNLESS OTHERWISE SHOWN

ORIGINAL SCALE IN MILLIMETERS FOR REDUCED PLANS 0 10 20 30 40 50 60 70 80 90 100

CU 10
EA 0K0201

DISREGARD PRINTS BEARING EARLIER REVISION DATES

REVISION DATES 4-4-06 3-11-08 4-17-08 10-11-08

SHEET 21 OF 39

STRUCTURES DESIGN DETAIL SHEET (METRIC) (REV.03-17-04)

FILE => 39-0230-1-g_lo2.add

USERNAME => trlenard DATE PLOTTED => 15-SEP-2009 TIME PLOTTED => 06:06

RELEASED 3-26-97

DIST.	COUNTY	ROUTE	KILOMETER POST TOTAL PROJECT	SHEET NO.	TOTAL SHEETS
10	Mer	99	25.4/27.8	287	293

Caltrans Metric

11-14-08
REGISTERED ENGINEER - CIVIL

3-9-09
PLANS APPROVAL DATE

REGISTERED PROFESSIONAL ENGINEER Keith Stillmunkes No. 68878 Exp. 9-30-2009 CIVIL STATE OF CALIFORNIA

The State of California or its officers or agents shall not be responsible for the accuracy or completeness of electronic copies of this plan sheet.

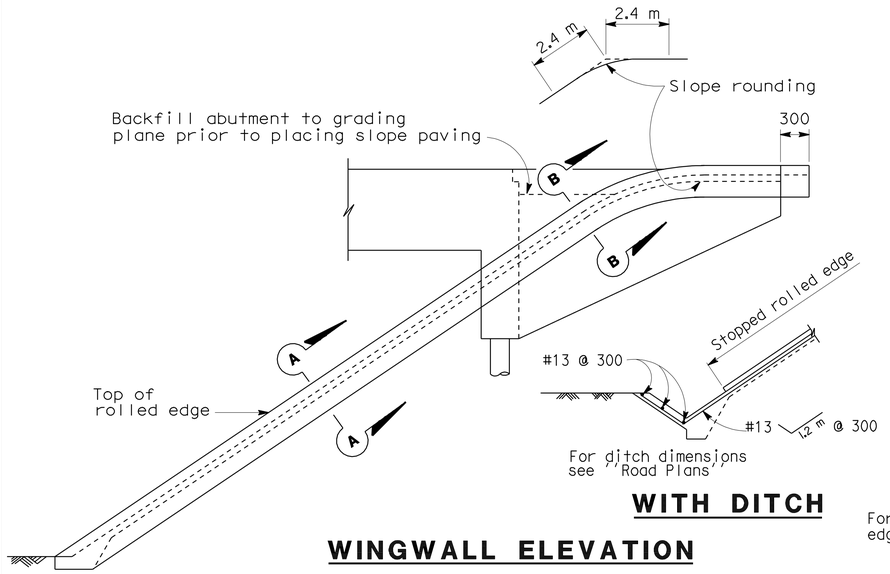

WITH DITCH

WINGWALL ELEVATION

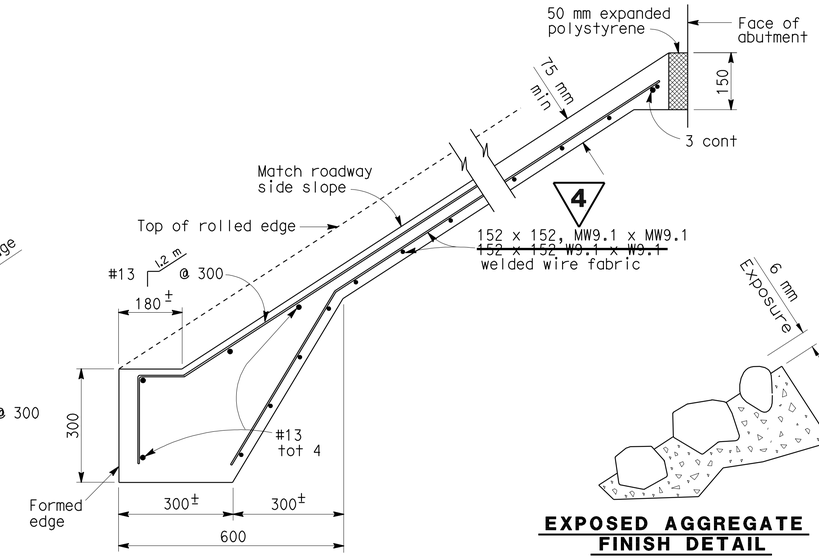

TYPICAL SECTION - CONCRETE PAVING

EXPOSED AGGREGATE FINISH DETAIL

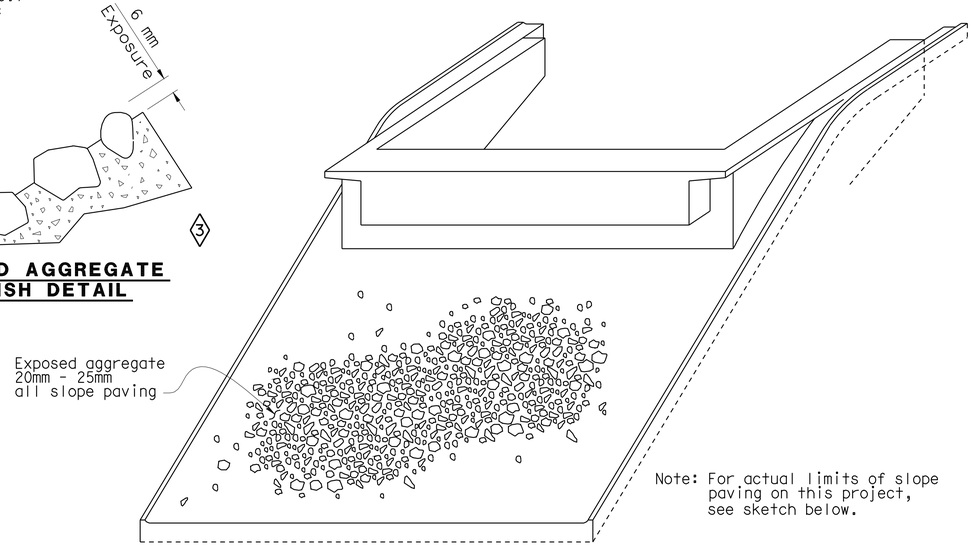

Note: For actual limits of slope paving on this project, see sketch below.

PICTORIAL VIEW OF TYPICAL INSTALLATION

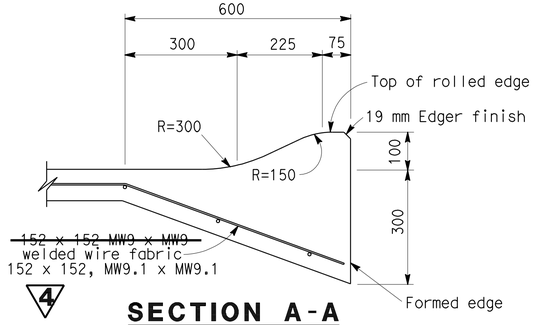

4

SECTION A-A

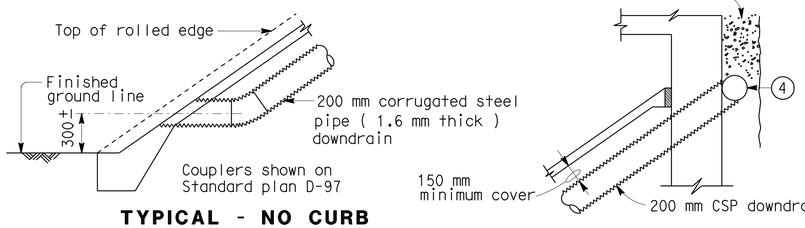

TYPICAL - NO CURB

TYPICAL - DRAIN CONNECTION

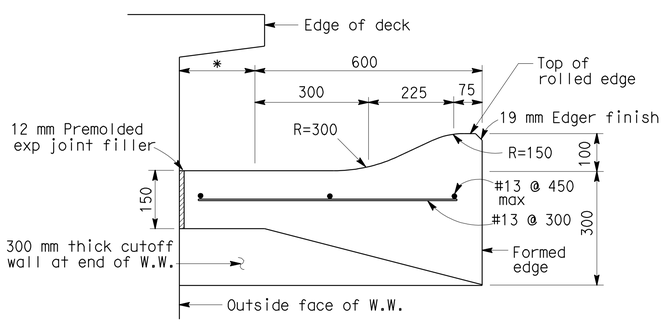

SECTION B-B

* This dimension becomes zero when edge of deck is at outside face of W.W.

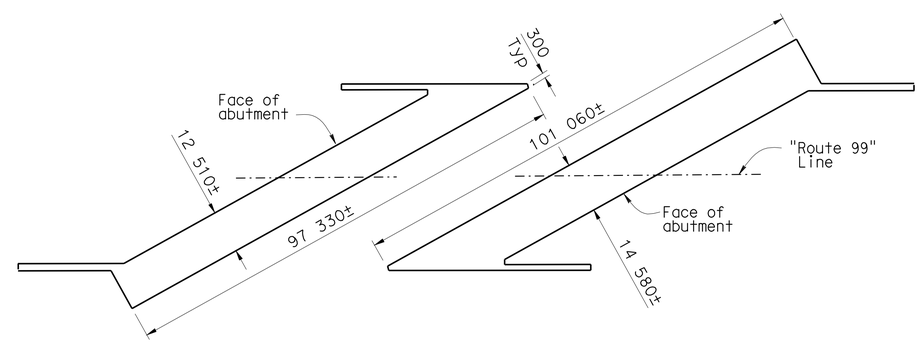

LIMITS OF SLOPE PAVING & DRAINAGE LAYOUT

(4) 200 mm perforated steel pipe (1.6 mm thick) underdrain behind abutment. Connect to downdrain as shown on limits of Slope Paving & Drainage layout.

4 REVISED PER ADDENDUM No. 4 DATED SEPTEMBER 16, 2009

SPECIAL DETAIL

NO SCALE
ALL DIMENSIONS ARE IN MILLIMETERS UNLESS OTHERWISE SHOWN

STANDARD DRAWING

FILE NO. XS 22-11	DESIGN	BY	CHECKED	APPROVAL RECOMMENDED BY
DRAWING DATE Revised	DETAILS	BY R. YEE	CHECKED	DESIGN SUPERVISOR
	SUBMITTED BY C.W. PURKISS			

1 Modified detail
2 Deleted detail
3 Added detail

STATE OF CALIFORNIA
DEPARTMENT OF TRANSPORTATION

DIVISION OF STRUCTURES
STRUCTURE DESIGN 7

BRIDGE NO. 39-0230
KILOMETER POST 26.62

WEST MERCED OVERHEAD (REPLACE)
SLOPE PAVING - FULL SLOPE

DS OSD 2147A (METRIC) (REV. 2/25/97)

ORIGINAL SCALE IN MILLIMETERS FOR REDUCED PLANS 0 10 20 30 40 50 60 70 80 90 100

CU 10
EA 0K0201

DISREGARD PRINTS BEARING EARLIER REVISION DATES 6-24-08

REVISION DATES (PRELIMINARY STAGE ONLY)

SHEET 33 OF 39

USERNAME => trlenard
39-0230-s-sp.add
XS2211.DGN

DATE PLOTTED => 15-SEP-2009 TIME PLOTTED => 06:06