Dist	COUNTY	ROUTE	POST MILES TOTAL PROJECT	SHEET No.	TOTAL SHEETS
10	SJ	12	0.1/R4.4	19	130

REGISTERED CIVIL ENGINEER 4/16/12 DATE

12-24-12
PLANS APPROVAL DATE

REGISTERED PROFESSIONAL ENGINEER RICHARD BOYER No. 75844 Exp 6/30/14 CIVIL STATE OF CALIFORNIA

THE STATE OF CALIFORNIA OR ITS OFFICERS OR AGENTS SHALL NOT BE RESPONSIBLE FOR THE ACCURACY OR COMPLETENESS OF SCANNED COPIES OF THIS PLAN SHEET.

3

NOTES:

1. THE CONTRACTOR SHALL VERIFY ALL CONTROLLING FIELD DIMENSIONS BEFORE ORDERING OR FABRICATING ANY MATERIALS.
2. DRAINAGE WICKS SHALL BE INSTALLED AT A TRIANGULAR SPACING OF 5′ AND TO A DEPTH OF 60′.
3. HORIZONTAL STRIP DRAINS SHALL BE PLACED AS SHOWN ON PLANS OR AS DIRECTED BY THE ENGINEER.

ABBREVIATIONS:

TCE - TEMPORARY CONSTRUCTION EASEMENT
GRE - GEOSYNTHETIC REINFORCED EMBANKMENT
RHMA - RUBBERIZED HOT MIX ASPHALT

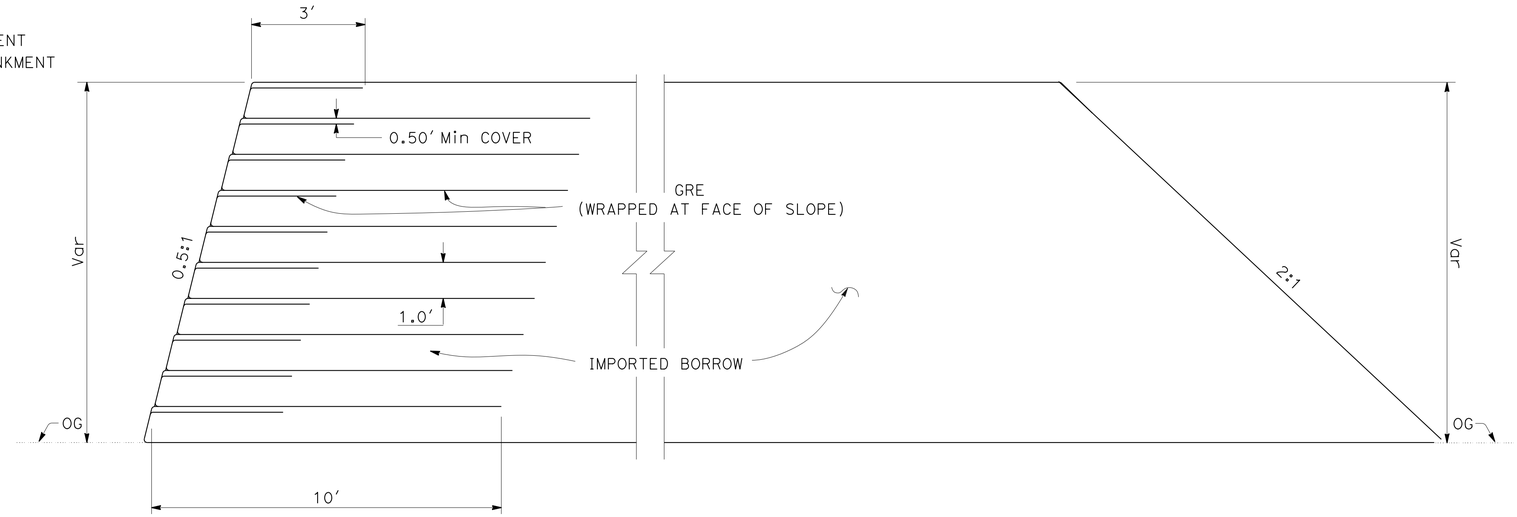

GEOSYNTHETIC REINFORCED FABRIC INSTALLATION FOR SURCHARGE

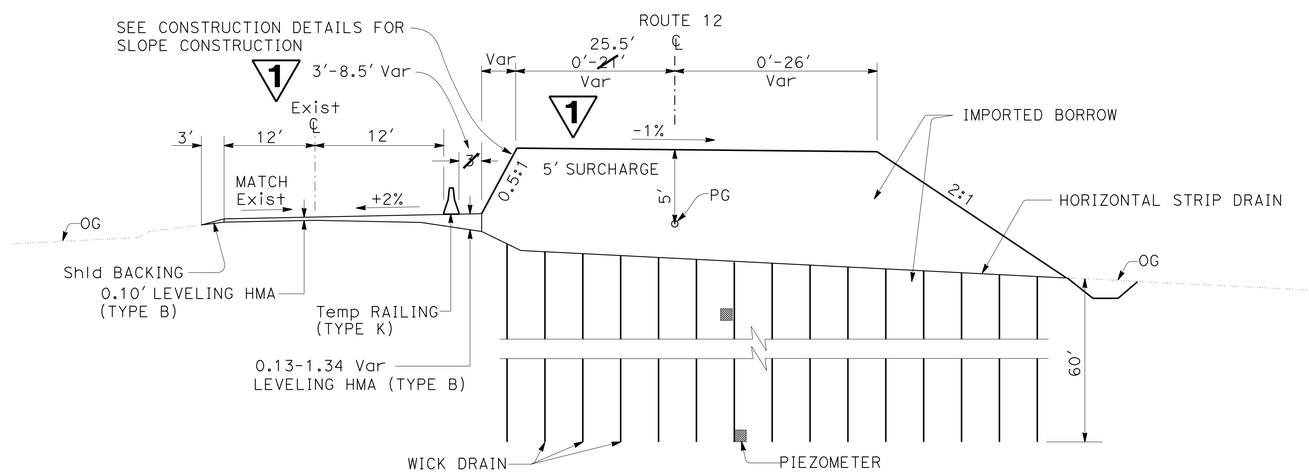

3 **REVISED PER ADDENDUM No. 3 DATED JUNE 19, 2013**

1 **REVISED PER ADDENDUM No. 1 DATED JUNE 3, 2013**

ROUTE 12 CONSOLIDATION
STAGE 1

Sta 105+00 TO Sta 129+59
Sta 131+51 TO Sta 179+49
Sta 180+54 TO Sta 233+86
Sta 234+93 TO Sta 319+37

CONSTRUCTION DETAILS

NO SCALE

C-1

STATE OF CALIFORNIA - DEPARTMENT OF TRANSPORTATION
Caltrans® DESIGN

FUNCTIONAL SUPERVISOR: NOMER GUITERREZ
CALCULATED-DESIGNED BY: OSAMA ABDEL-MAGIED
CHECKED BY: RICHARD BOYER
REVISED BY: OA
DATE REVISED: 04/30/12

LAST REVISION 00-00-00
DATE PLOTTED => 18-JUN-2013
TIME PLOTTED => 10:34

Dist	COUNTY	ROUTE	POST MILES TOTAL PROJECT	SHEET No.	TOTAL SHEETS
10	SJ	12	0.1/R4.4	20	130

REGISTERED CIVIL ENGINEER 4/16/12 DATE

12-24-12
PLANS APPROVAL DATE

REGISTERED PROFESSIONAL ENGINEER RICHARD BOYER No. 75844 Exp. 6/30/14 CIVIL STATE OF CALIFORNIA

THE STATE OF CALIFORNIA OR ITS OFFICERS OR AGENTS SHALL NOT BE RESPONSIBLE FOR THE ACCURACY OR COMPLETENESS OF SCANNED COPIES OF THIS PLAN SHEET.

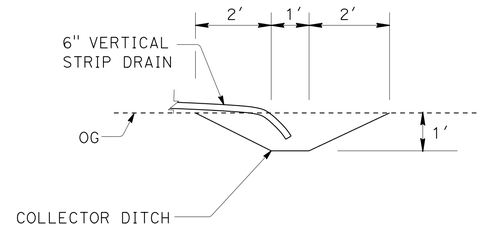

SECTION A-A

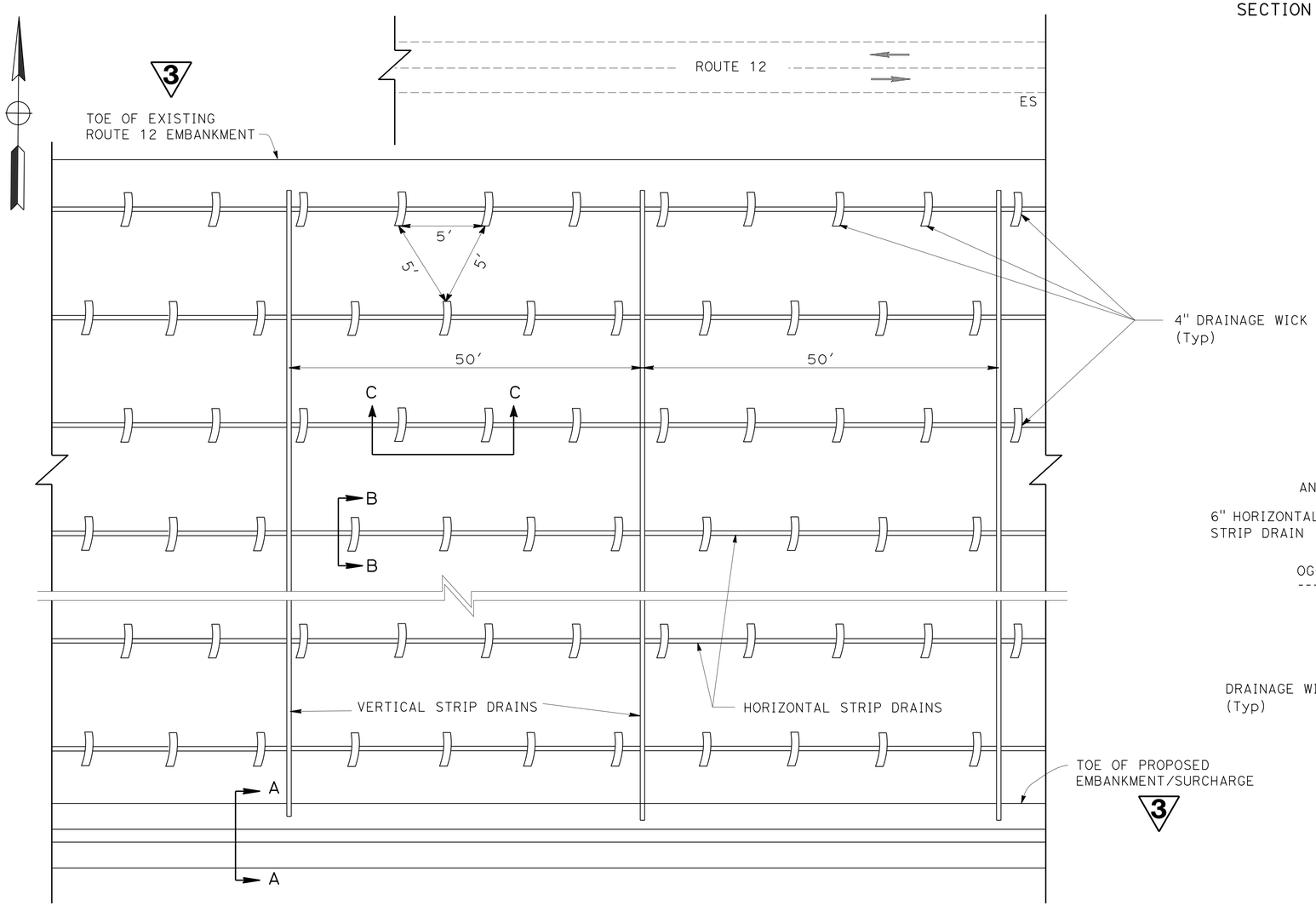

PLAN

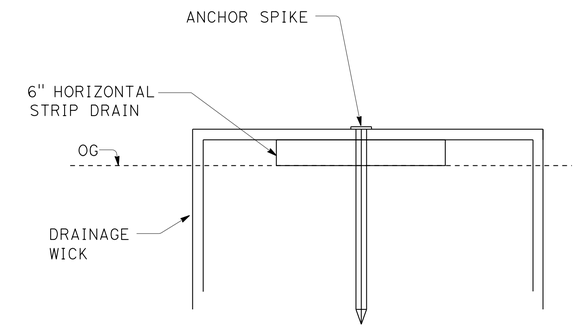

SECTION B-B

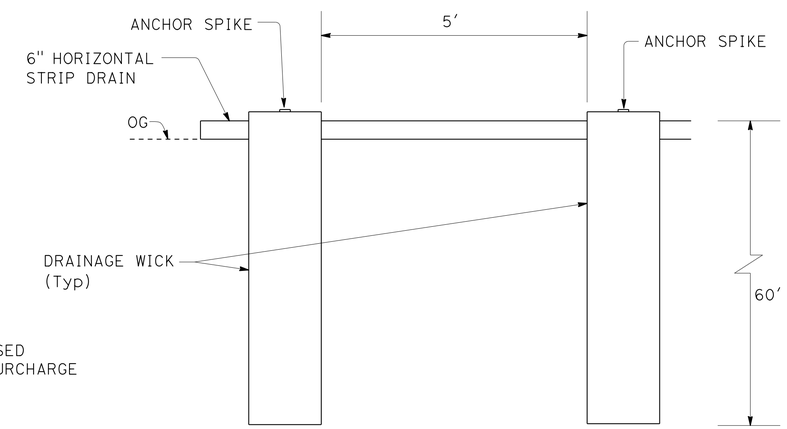

SECTION C-C

3 **REVISED PER ADDENDUM No. 3 DATED JUNE 19, 2013**

DRAINAGE WICK / STRIP DRAIN

CONSTRUCTION DETAILS

NO SCALE

C-2

STATE OF CALIFORNIA - DEPARTMENT OF TRANSPORTATION
Caltrans® DESIGN

FUNCTIONAL SUPERVISOR: NOMER GUITERREZ
CALCULATED-DESIGNED BY: OSAMA ABDEL-MAGIED
CHECKED BY: RICHARD BOYER
REVISED BY: OA
DATE REVISED: 04/20/12

LAST REVISION 00-00-00 | DATE PLOTTED => 18-JUN-2013 | TIME PLOTTED => 10:39

Dist	COUNTY	ROUTE	POST MILES TOTAL PROJECT	SHEET No.	TOTAL SHEETS
10	SJ	12	0.1/R4.4	64	130

REGISTERED CIVIL ENGINEER — DATE 4/16/12

12-24-12
PLANS APPROVAL DATE

RICHARD BOYER No. 75844 Exp. 6/30/14 CIVIL — REGISTERED PROFESSIONAL ENGINEER — STATE OF CALIFORNIA

THE STATE OF CALIFORNIA OR ITS OFFICERS OR AGENTS SHALL NOT BE RESPONSIBLE FOR THE ACCURACY OR COMPLETENESS OF SCANNED COPIES OF THIS PLAN SHEET.

3 1

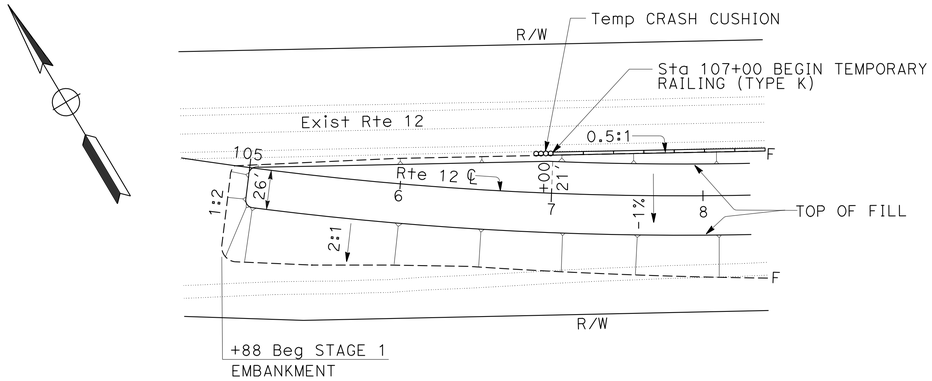

STATION 105+00

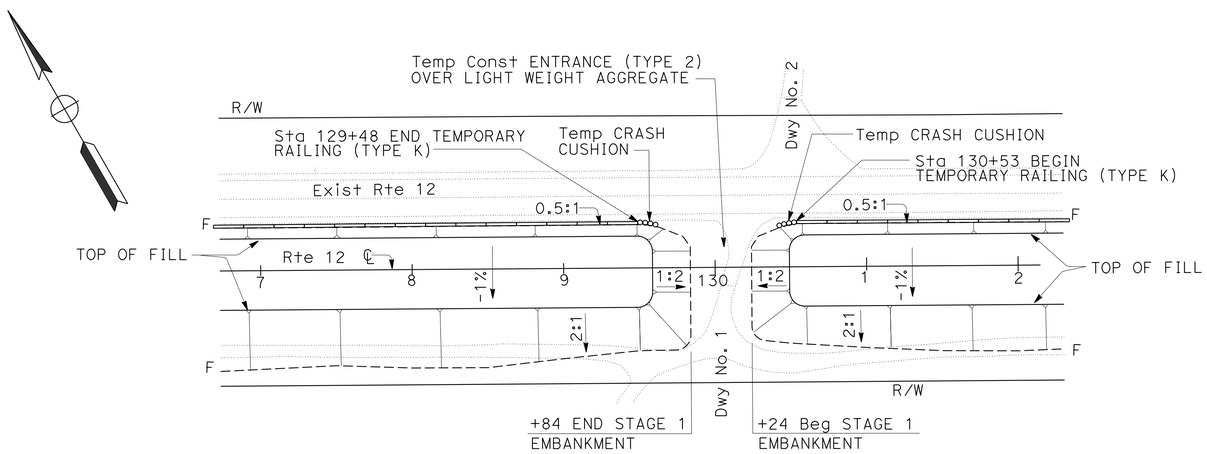

STATION 130+00

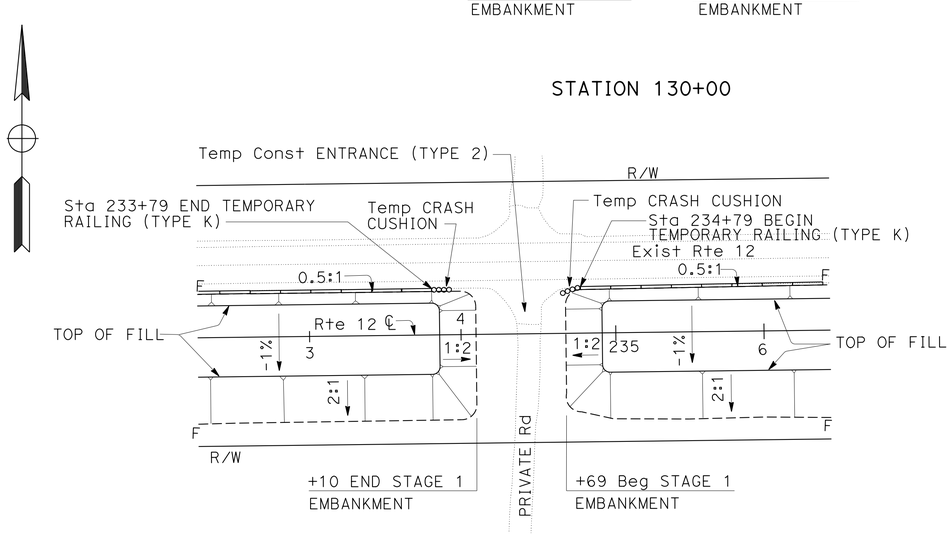

STATION 234+44

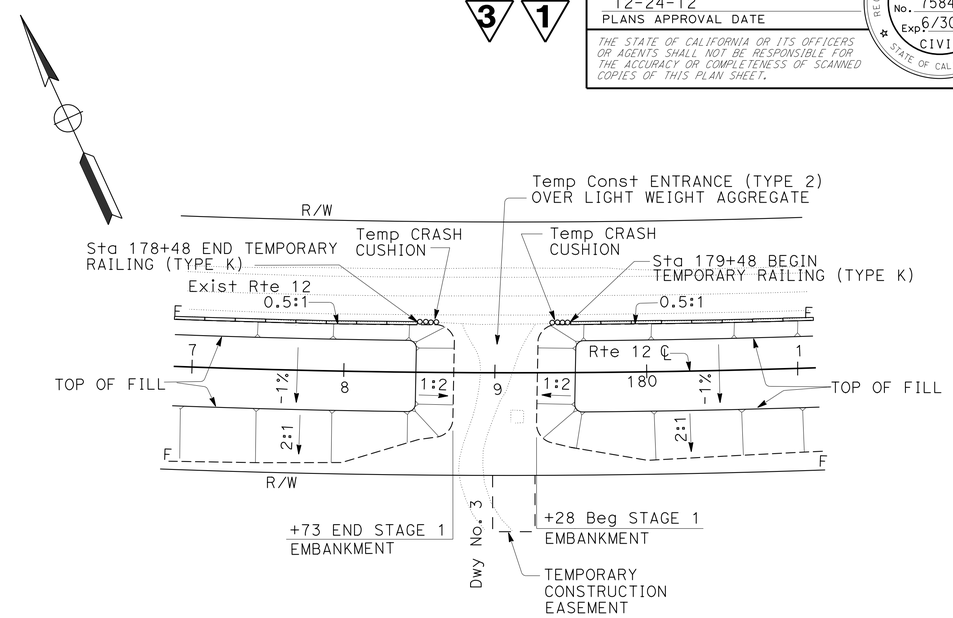

STATION 179+00

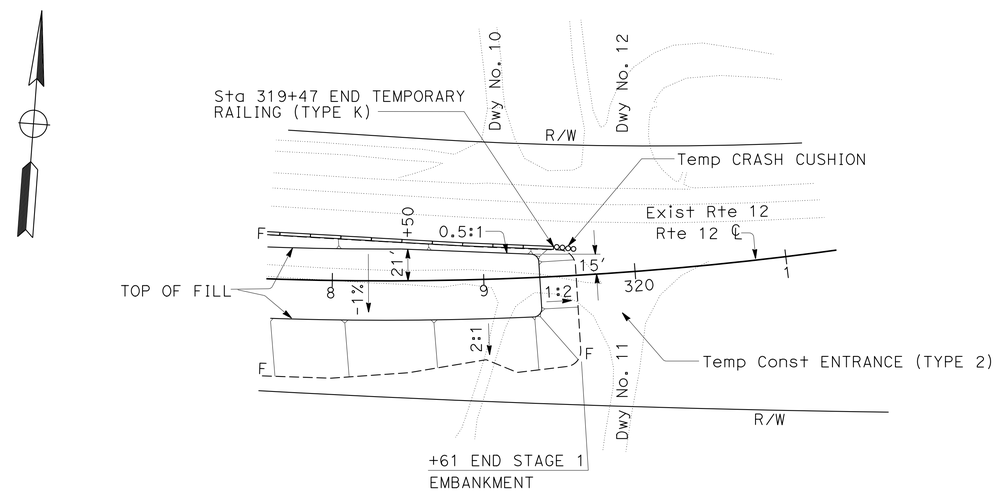

STATION 319+37

STAGE 1 EMBANKMENT

3 **REVISED PER ADDENDUM No. 3 DATED JUNE 19, 2013**

1 **REVISED PER ADDENDUM No. 1 DATED JUNE 3, 2013**

STAGE CONSTRUCTION DETAILS

NO SCALE

SCD-1

STATE OF CALIFORNIA - DEPARTMENT OF TRANSPORTATION
Caltrans® DESIGN

FUNCTIONAL SUPERVISOR: NOMER GUITERREZ
CALCULATED-DESIGNED BY: OSAMA ABDEL-MAGIED
CHECKED BY: RICHARD BOYER
REVISED BY: OA
DATE REVISED: 04/27/12

LAST REVISION 00-00-00 | DATE PLOTTED => 18-JUN-2013 | TIME PLOTTED => 12:42