DIST.	COUNTY	ROUTE	POST MILES TOTAL PROJECT	SHEET NO.	TOTAL SHEETS
10	SJ	5	25.0/32.7	1001	1132

Allen Wang 7/28/10
REGISTERED ENGINEER - CIVIL

10-11-10
PLANS APPROVAL DATE

REGISTERED PROFESSIONAL ENGINEER ALLEN WANG No. C 66503 Exp. 06/30/12 CIVIL STATE OF CALIFORNIA

The State of California or its officers or agents shall not be responsible for the accuracy or completeness of electronic copies of this plan sheet.

SAN JOAQUIN COUNCIL OF GOVERNMENTS
555 E. WEBER AVENUE
STOCKTON, CA 95202

RAJAPPAN & MEYER
CONSULTING ENGINEERS, INC.
1038 LEIGH AVE, SUITE 100
SAN JOSE, CA 95126

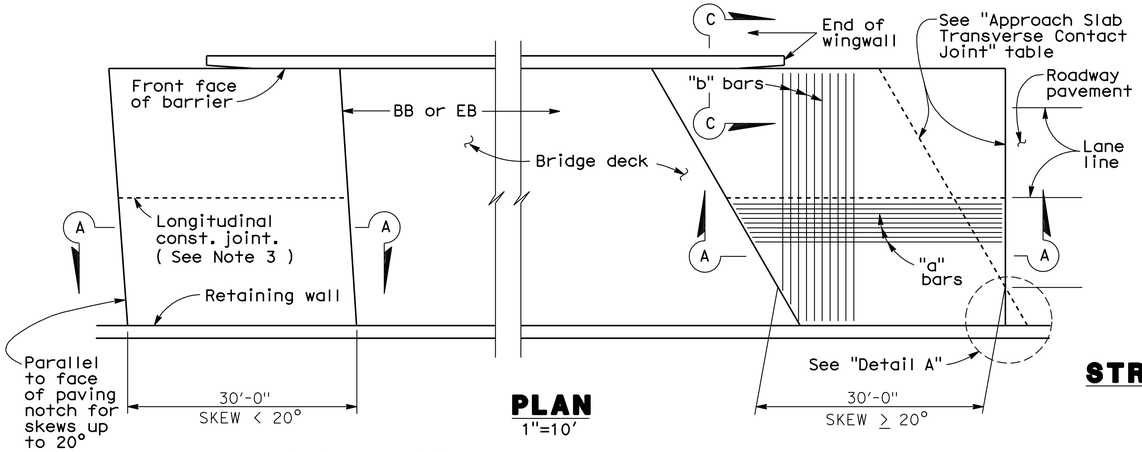

PLAN
1"=10'

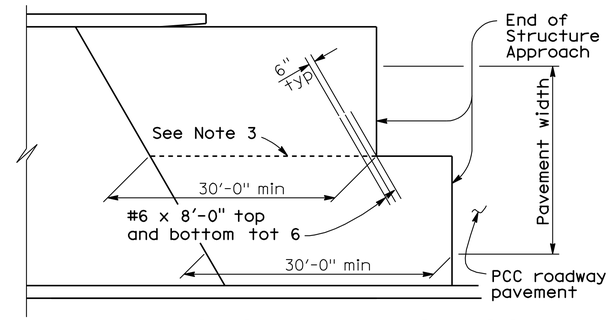

STRUCTURE APPROACH - END STAGGER DETAIL
No Scale

APPROACH SLAB TRANSVERSE CONTACT JOINT		
APPROACH SKEW	WITH AC ROADWAY PAVEMENT	WITH PCC ROADWAY PAVEMENT
< 20°	Parallel to face of paving notch	Parallel to face of paving notch
20° - 45°	Parallel to face of P N use (Detail A)	Stagger lines 24' to 36' apart
> 45°	Parallel to face of P N use (Detail A)	Stagger at each lane line

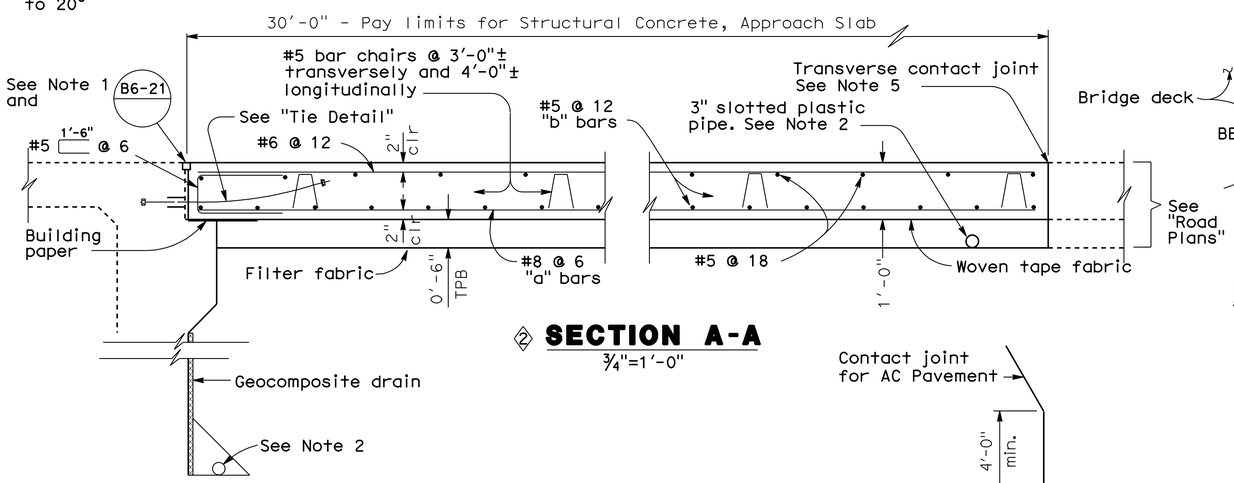

② SECTION A-A
¾"=1'-0"

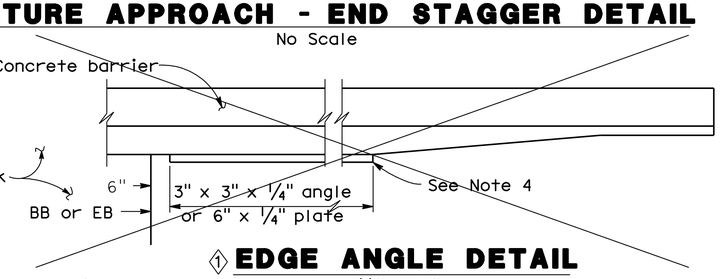

① EDGE ANGLE DETAIL
½"=1'-0"

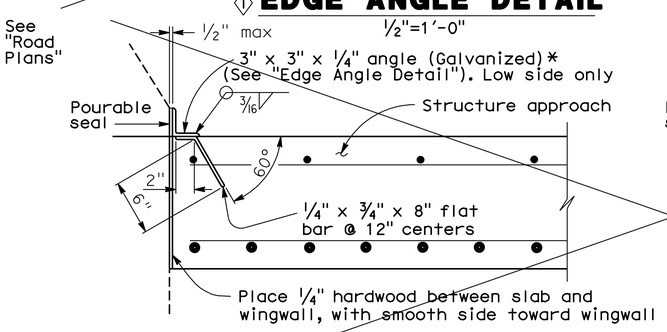

*(TO BE USED WITH TYPE 25 OR TYPE 27 CONCRETE BARRIER)

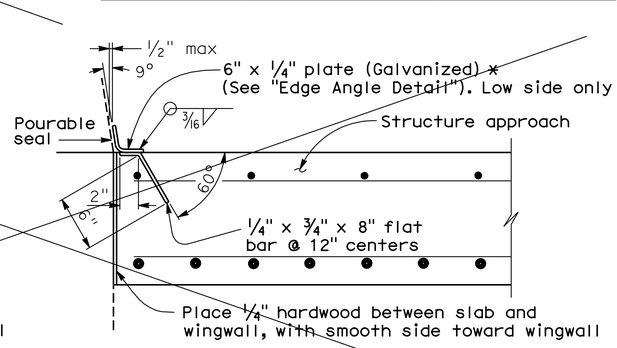

*(TO BE USED WITH TYPE 732 OR TYPE 736 CONCRETE BARRIER)

① DETAIL B
1½"=1'-0"

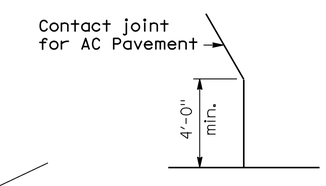

DETAIL A
No Scale

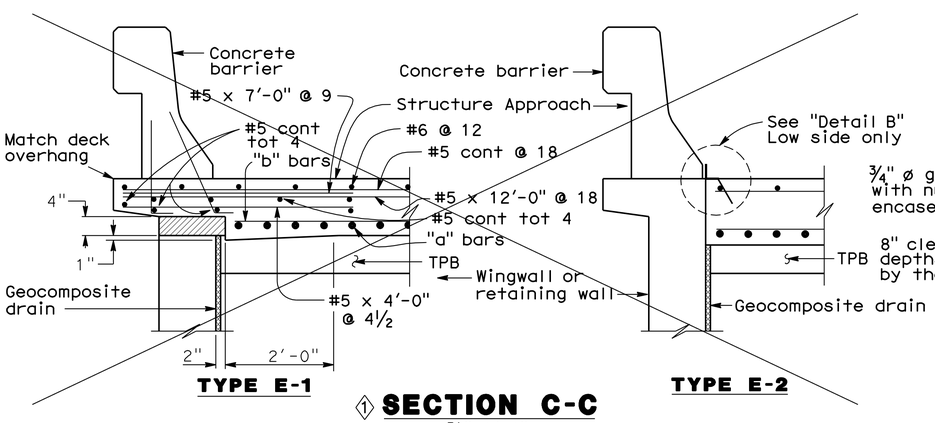

① SECTION C-C
¾"=1'-0"

Note: (Type E-1 to be used,unless otherwise shown on plans)
The Contractor shall verify all controlling field dimensions before ordering or fabricating any material

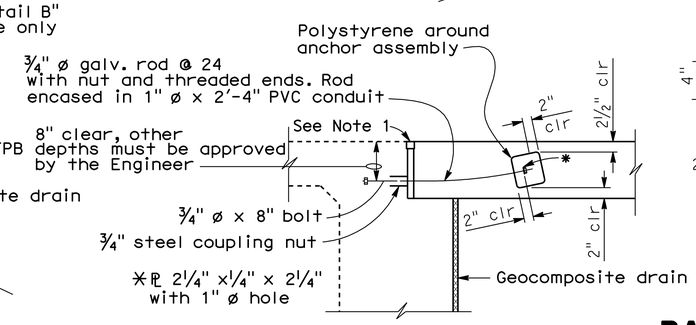

TIE DETAIL
¾"=1'-0"

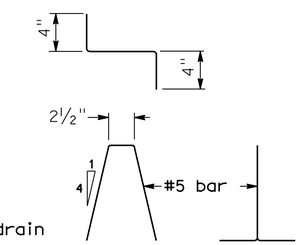

BAR CHAIR DETAIL
1½"=1'-0"

NOTES:

1. For details not noted or shown,see Structure Plans.
2. For drainage details,see "Structure Approach Drainage Details" sheet.
3. Longitudinal construction joints,when permitted by the Engineer,shall be located on lane lines.
4. End angle or plate at beginning of barrier transition, end of wingwall or end of structure approach, as applicable.
5. For transverse contact joint with new PCC paving, refer to Standard Plan P10.
6. At the contractor's option,approach slab transverse reinforcement may be placed parallel to paving notch. Spacing of transverse reinforcement is measured along ℄ roadway.

Polystyrene to be removed.

SPECIAL DETAILS

STANDARD DRAWING

FILE NO. xs3-180e

APPROVED BY M. Ha
RESPONSIBLE TECHNICAL SPECIALIST
APPROVAL DATE 8-12-08

RELEASED BY O. Alcantara
RESPONSIBLE OFFICE CHIEF
RELEASE DATE Revised

① Detail Deleted
② Detail Modified

STATE OF CALIFORNIA
DEPARTMENT OF TRANSPORTATION

DIVISION OF ENGINEERING SERVICES

BRIDGE NO. 29-0192
POST MILE 29.19

TELEGRAPH AVENUE UC (WIDEN)
STRUCTURE APPROACH TYPE N(30D)

DS OSD 2147A (ENGLISH STANDARD DRAWING "XS" BORDER REV. 01/11/08)

ORIGINAL SCALE IN INCHES FOR REDUCED PLANS 0 1 2 3

CU 06240
EA 0G4701

DISREGARD PRINTS BEARING EARLIER REVISION DATES

REVISION DATES (PRELIMINARY STAGE ONLY) 10/16/09 12/4/09 1/18/10 4/23/10 6/11/10 7/28/10

SHEET 17 OF 28

USERNAME => trlenard

29-0192-s-sa_n30d.dgn

DATE PLOTTED => 13-OCT-2010 TIME PLOTTED => 13:16

DIST.	COUNTY	ROUTE	POST MILES TOTAL PROJECT	SHEET NO.	TOTAL SHEETS
10	SJ	5	25.0/32.7	1002	1132

Allen Wang 7/28/10
REGISTERED ENGINEER - CIVIL

10-11-10
PLANS APPROVAL DATE

REGISTERED PROFESSIONAL ENGINEER ALLEN WANG No. C 66503 Exp. 06/30/12 CIVIL STATE OF CALIFORNIA

The State of California or its officers or agents shall not be responsible for the accuracy or completeness of electronic copies of this plan sheet.

SAN JOAQUIN COUNCIL OF GOVERNMENTS
555 E. WEBER AVENUE
STOCKTON, CA 95202

RAJAPPAN & MEYER
CONSULTING ENGINEERS, INC.
1038 LEIGH AVE, SUITE 100
SAN JOSE, CA 95126

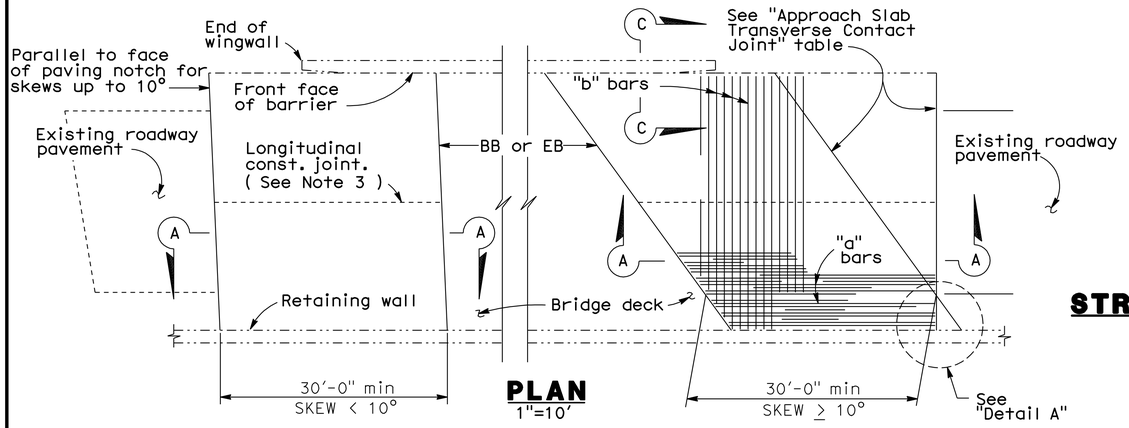

PLAN
1"=10'

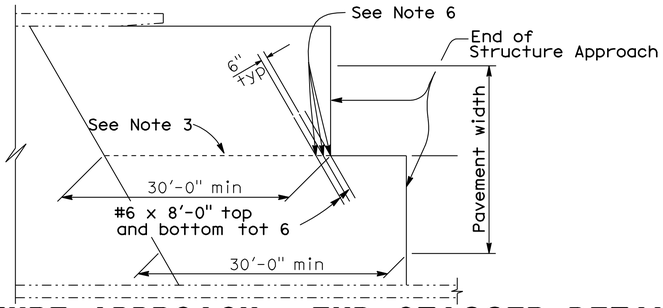

STRUCTURE APPROACH - END STAGGER DETAIL
No Scale

APPROACH SLAB TRANSVERSE CONTACT JOINT		
APPROACH SKEW	WITH AC ROADWAY PAVEMENT	WITH PCC ROADWAY PAVEMENT
< 10°	Parallel to face of paving notch	Parallel to face of paving notch
10° - 45°	Parallel to face of P N use (Detail A)	Stagger lines 24' to 36' apart
> 45°	Parallel to face of P N use (Detail A)	Stagger at each lane line

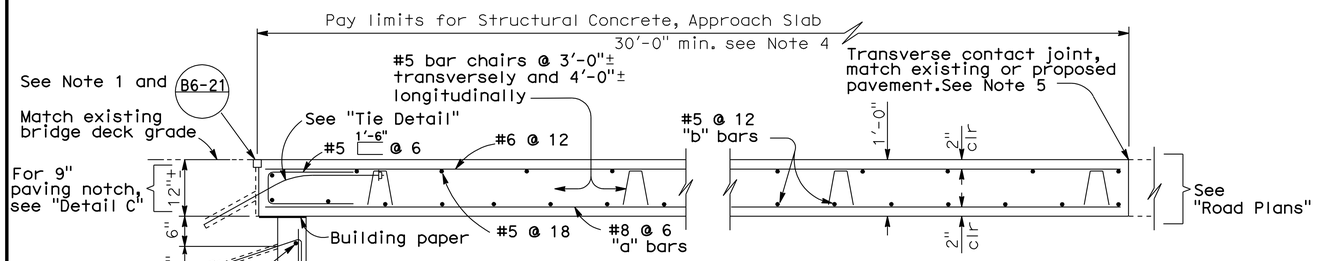

SECTION A-A
¾" = 1'-0"

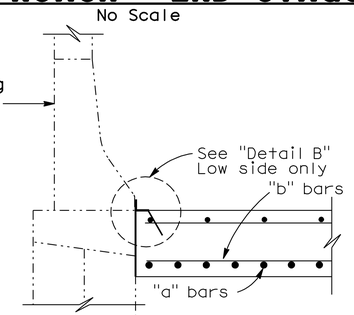

① SECTION C-C
¾" = 1'-0"

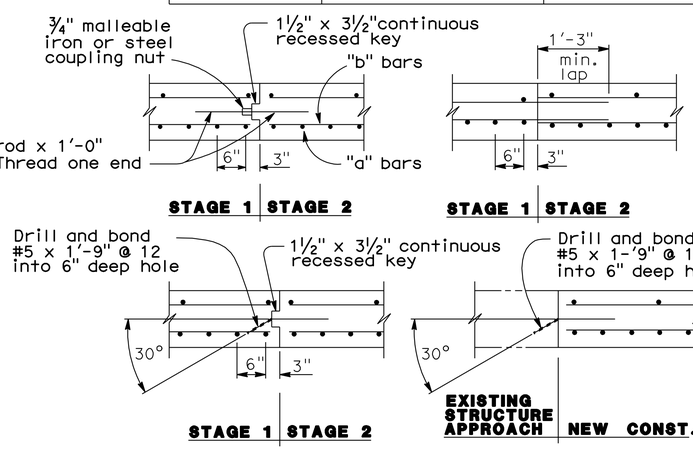

LONGITUDINAL CONSTRUCTION JOINT ALTERNATIVES
¾" = 1'-0"

NOTES:
1. For details not shown or noted, see Structure Plans. Adjust bar reinforcement to clear a sawcut for sealed joint,when required.
2. Space to avoid existing prestress anchorages and main reinforcement.
3. Longitudinal construction joints,when permitted by the Engineer,shall be located on lane lines.
4. Transverse contact joint shall be a minimum of 5'-0" from an existing or constructed weakened plane joint.
5. For transverse contact joint with new PCC paving. refer to Standard Plan P10.
6. Couplers are required for stage construction.
7. End angle or plate at beginning of barrier transition, end of wingwall or end of structure approach as applicable.

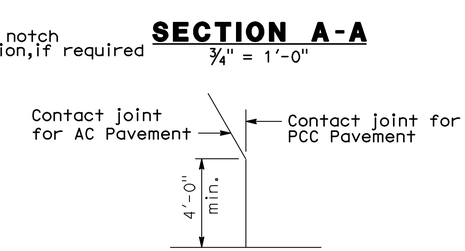

DETAIL A
No Scale

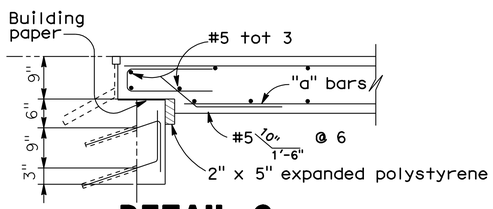

DETAIL C
¾" = 1'-0"

NOTE: For details not shown,see "Section A-A".

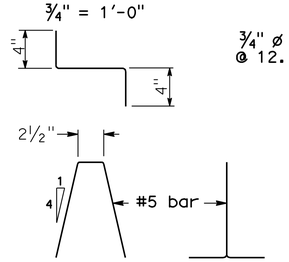

BAR CHAIR DETAIL
1½" = 1'-0"

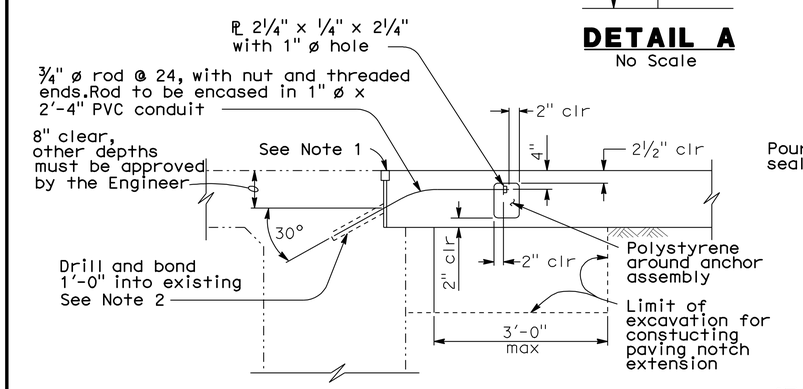

TIE DETAIL
¾" = 1'-0"

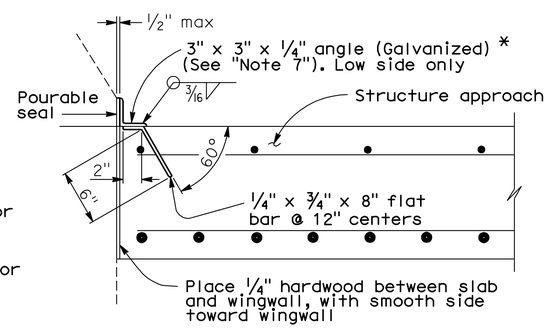

* (TO BE USED WITH TYPE 25 OR TYPE 27 CONCRETE BARRIER)

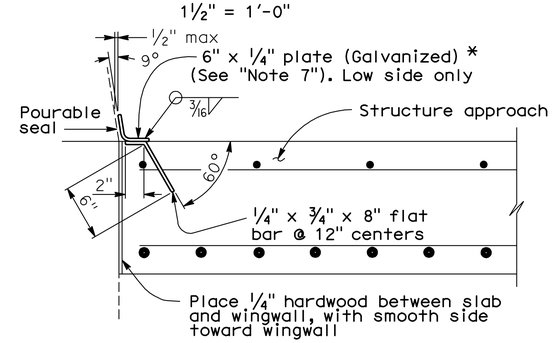

* (TO BE USED WITH TYPE 732 OR TYPE 736 CONCRETE BARRIER)

DETAIL B
1½" = 1'-0"

Note:
The Contractor shall verify all controlling field dimensions before ordering or fabricating any material

SPECIAL DETAILS

STANDARD DRAWING				
RELEASE DATE Revised	DESIGN	BY M. TRAFFALIS	CHECKED E. THORKILDSEN	RELEASED BY
FILE NO. xs3-140e	DETAILS	BY R. YEE	CHECKED E. THORKILDSEN	
	SUBMITTED	BY M. HA	DRAWING DATE 8/92	OFFICE CHIEF

① Detail Modified

STATE OF CALIFORNIA
DEPARTMENT OF TRANSPORTATION

DIVISION OF ENGINEERING SERVICES

BRIDGE NO. 29-0192
POST MILE 29.19

TELEGRAPH AVENUE UC (WIDEN)
STRUCTURE APPROACH TYPE R(30D)

DS OSD 2147A (ENGLISH) (REV. X/XX/XX)

ORIGINAL SCALE IN INCHES FOR REDUCED PLANS 0 1 2 3

CU 06240
EA 0G4701

DISREGARD PRINTS BEARING EARLIER REVISION DATES

REVISION DATES (PRELIMINARY STAGE ONLY) 10/16/09 12/4/09 1/18/10 4/23/10 6/11/10 7/28/10

SHEET 18 OF 28

USERNAME => trlenard

29-0192-s-sa_r30d.dgn

DATE PLOTTED => 13-OCT-2010 TIME PLOTTED => 13:16

DIST.	COUNTY	ROUTE	POST MILES TOTAL PROJECT	SHEET NO.	TOTAL SHEETS
10	SJ	5	25.0/32.7	1003	1132

Allen Wang 7/28/10
REGISTERED ENGINEER - CIVIL

10-11-10
PLANS APPROVAL DATE

REGISTERED PROFESSIONAL ENGINEER
ALLEN WANG
No. C 66503
Exp. 06/30/12
CIVIL
STATE OF CALIFORNIA

The State of California or its officers or agents shall not be responsible for the accuracy or completeness of electronic copies of this plan sheet.

SAN JOAQUIN COUNCIL OF GOVERNMENTS
555 E. WEBER AVENUE
STOCKTON, CA 95202

RAJAPPAN & MEYER
CONSULTING ENGINEERS, INC.
1038 LEIGH AVE, SUITE 100
SAN JOSE, CA 95126

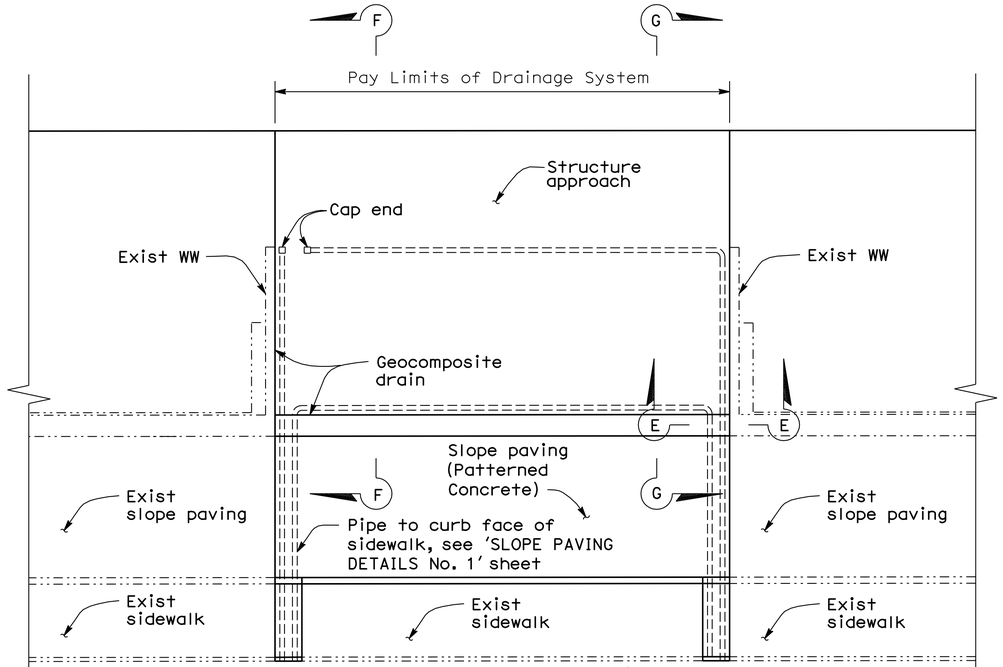

1 **TYPICAL PLAN**
1/8" = 1'-0"
(Abut 1 shown, Abut 2 similar)

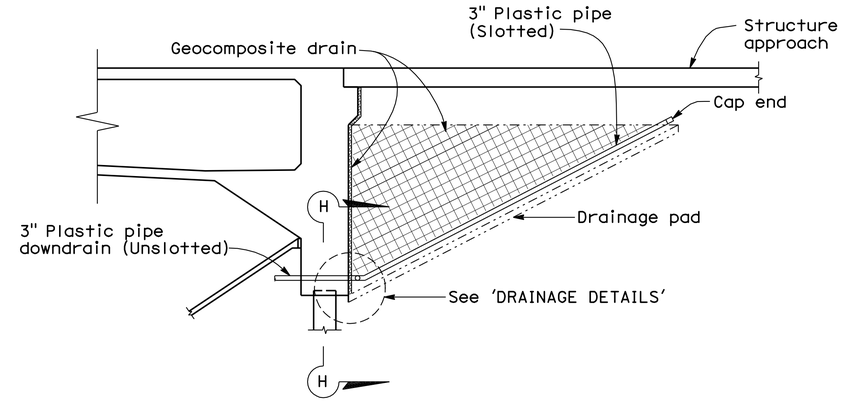

1 **SECTION F-F**
1/4" = 1'-0"

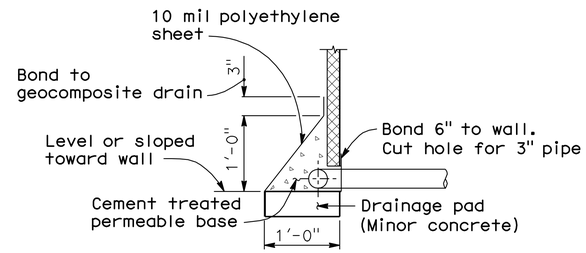

SECTION

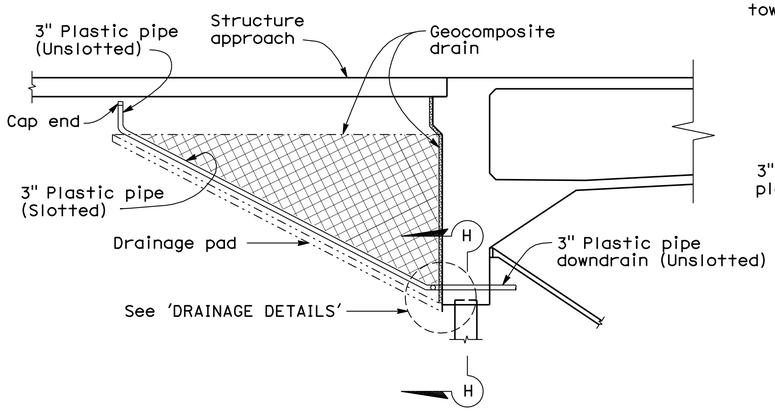

1 **SECTION G-G**
1/4" = 1'-0"

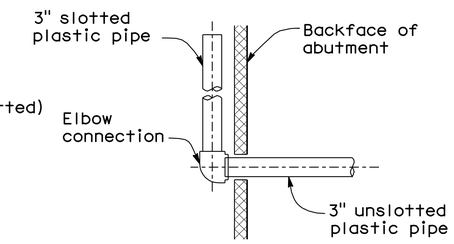

PLAN

3 **ABUTMENT DRAINAGE DETAILS**
1" = 1'-0"

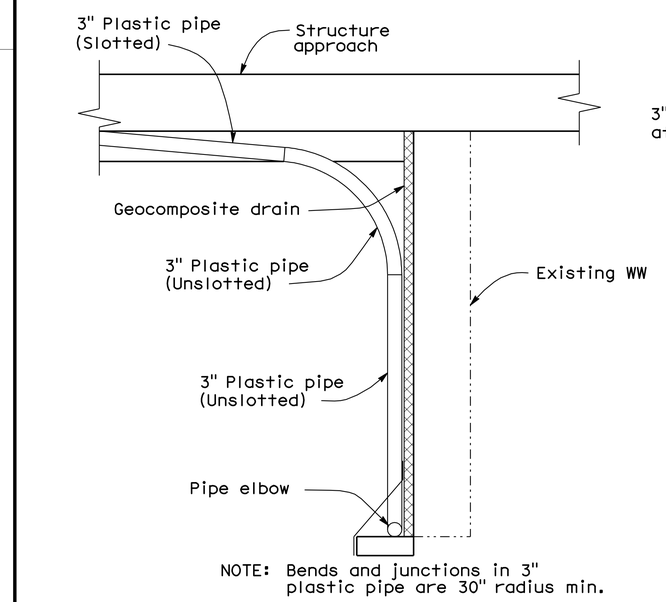

NOTE: Bends and junctions in 3" plastic pipe are 30" radius min.

1 **SECTION E-E**
3/4" = 1'-0"

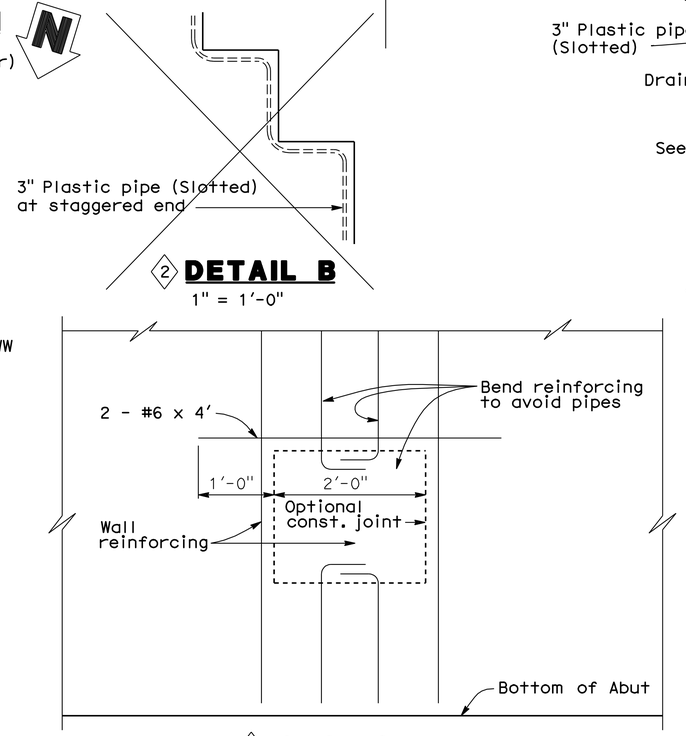

2 **DETAIL B**
1" = 1'-0"

1 **SECTION H-H**
1" = 1'-0"

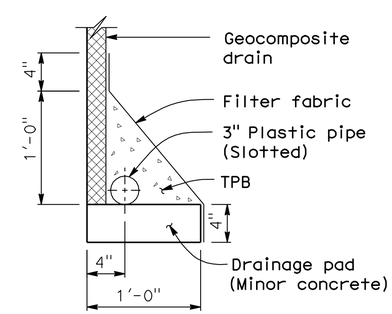

WITHOUT FOOTING

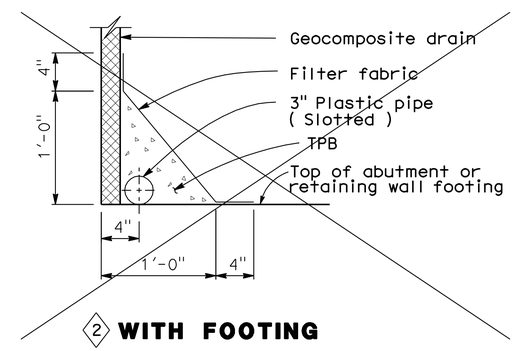

2 **WITH FOOTING**

DRAINAGE DETAILS
1 1/2" = 1'-0"

Note:
The Contractor shall verify all controlling field dimensions before ordering or fabricating any material

SPECIAL DETAILS

STANDARD DRAWING				
RELEASE DATE Revised	DESIGN	BY M. TRAFFALIS	CHECKED E. THORKILDSEN	RELEASED BY
FILE NO. xs3-110e	DETAILS	BY R. YEE	CHECKED E. THORKILDSEN	
	SUBMITTED	BY M. HA	DRAWING DATE 4/98	OFFICE CHIEF

1 Detail Modified
2 Detail Deleted
3 Detail Added

STATE OF CALIFORNIA
DEPARTMENT OF TRANSPORTATION

DIVISION OF ENGINEERING SERVICES

BRIDGE NO. 29-0192
POST MILE 29.19

TELEGRAPH AVENUE UC (WIDEN)
STRUCTURE APPROACH DRAINAGE DETAILS

DS OSD 2147A (ENGLISH) (REV. X/XX/XX)

ORIGINAL SCALE IN INCHES FOR REDUCED PLANS 0 1 2 3

CU 06240
EA 0G4701

DISREGARD PRINTS BEARING EARLIER REVISION DATES

REVISION DATES (PRELIMINARY STAGE ONLY) 10/16/09 12/4/09 1/18/10 4/23/10 6/11/10 7/28/10

SHEET 19 OF 28

USERNAME => trlenard

29-0192-s-sadd.dgn

DATE PLOTTED => 13-OCT-2010 TIME PLOTTED => 13:17

DIST	COUNTY	ROUTE	POST MILES TOTAL PROJECT	SHEET No	TOTAL SHEETS
10	SJ	5	25.0/32.7	1004	1132

REGISTERED CIVIL ENGINEER 7/28/10 DATE

10-11-10
PLANS APPROVAL DATE

REGISTERED PROFESSIONAL ENGINEER ALLEN WANG No. C 66503 Exp. 06/30/12 CIVIL STATE OF CALIFORNIA

The State of California or its officers or agents shall not be responsible for the accuracy or completeness of scanned copies of this plan sheet.

SAN JOAQUIN COUNCIL OF GOVERNMENTS
555 E. WEBER AVENUE
STOCKTON, CA 95202

RAJAPPAN & MEYER
CONSULTING ENGINEERS, INC.
1038 LEIGH AVE, SUITE 100
SAN JOSE, CA 95126

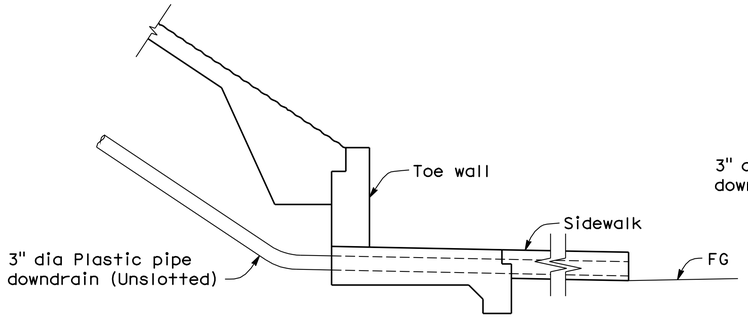

TYPICAL - WITH SIDEWALK

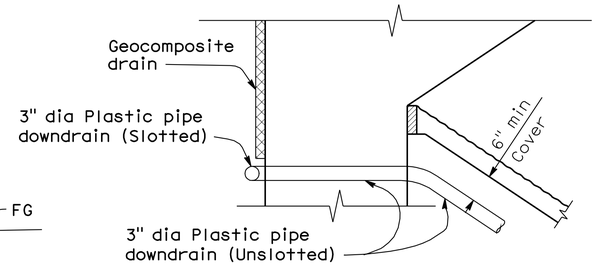

TYPICAL - DRAIN CONNECTION

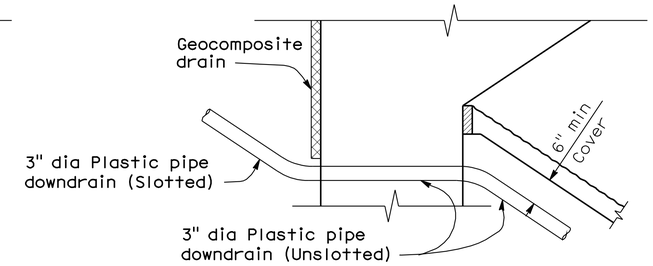

TYPICAL - DRAIN CONNECTION

DRAINAGE DETAILS

3/4" = 1'-0"

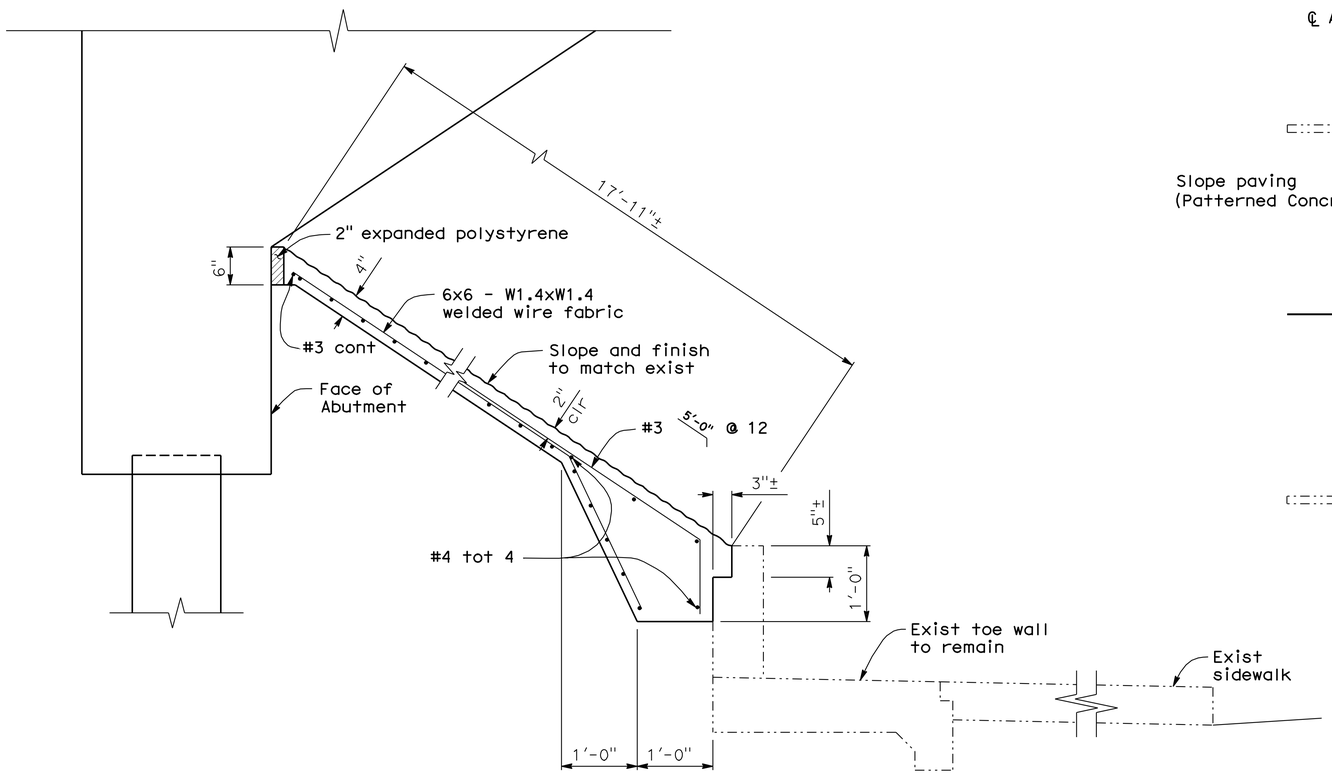

TYPICAL SECTION - CONCRETE PAVING

1" = 1'-0"

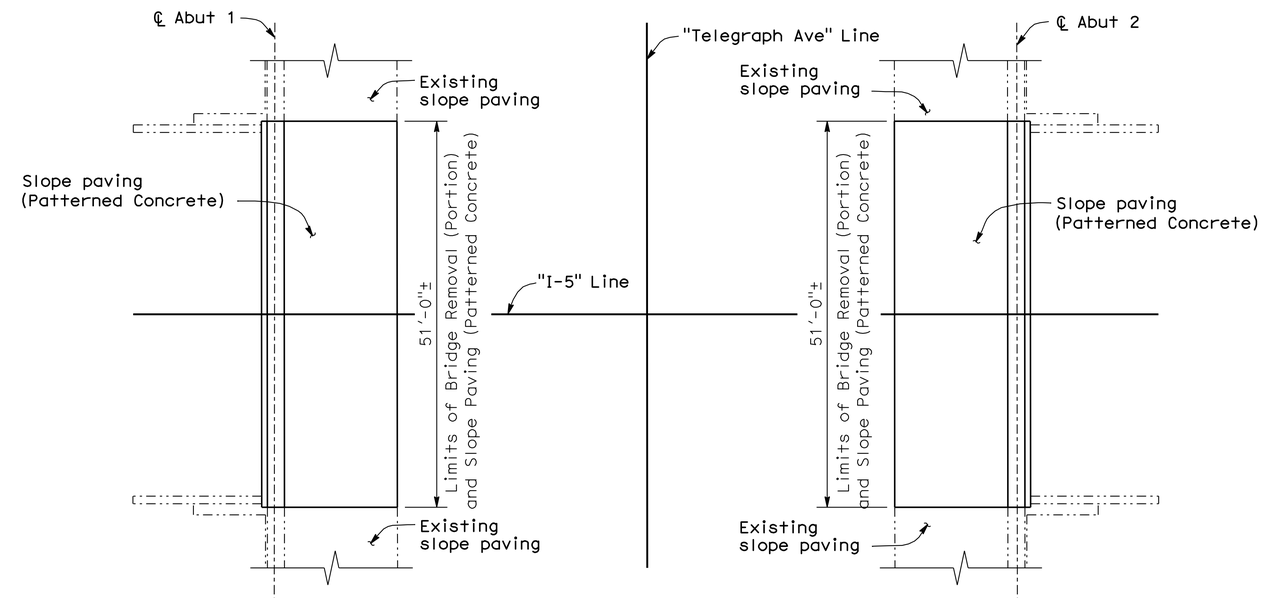

LIMITS OF SLOPE PAVING

1" = 10'-0"

Notes:

1. New slope paving shall match height of existing slope paving.
2. New preformed grooves on the outsides of interior slope to coincide with the existing preformed groove near the outside face of existing exterior girder.
3. Abutment 1 shown, Abutment 2 similar.
4. Remove a 2'-0" strip of toe wall and sidewalk and place a 3" dia plastic pipe (unslotted) to discharge through curb face.
5. Reconstruct toe wall and sidewalk. Connect new toe wall to existing toe wall per 'SECTION B-B' on 'SLOPE PAVING DETAILS No. 2' sheet.
6. For 'TOE WALL RECONSTRUCTION PLAN', see 'SLOPE PAVING DETAILS No. 2' sheet.

Note:
The Contractor shall verify all controlling field dimensions before ordering or fabricating any material

DESIGN OVERSIGHT John Fujimoto
8-2-10
SIGN OFF DATE

	BY	CHECKED
DESIGN	A. WANG	P. SHINN
DETAILS	W. Y. TAN	P. SHINN
QUANTITIES	W. Y. TAN	G. WOLDETSADIK

PREPARED FOR THE STATE OF CALIFORNIA DEPARTMENT OF TRANSPORTATION

A. WANG
PROJECT ENGINEER

BRIDGE NO. 29-0192
POST MILE 29.19

TELEGRAPH AVENUE UC (WIDEN)
SLOPE PAVING DETAILS No. 1

DESIGN DETAIL SHEET (ENGLISH) (REV. 06-01-09)

ORIGINAL SCALE IN INCHES FOR REDUCED PLANS 0 1 2 3

CU 06240
EA 0G4701

DISREGARD PRINTS BEARING EARLIER REVISION DATES

REVISION DATES (PRELIMINARY STAGE ONLY) 10/16/09 12/4/09 1/18/10 4/23/10 6/17/10 7/28/10

SHEET 20 OF 28

FILE => 29-0192-t-slpdet01.dgn

USERNAME => trlenard DATE PLOTTED => 13-OCT-2010 TIME PLOTTED => 13:17

DIST	COUNTY	ROUTE	POST MILES TOTAL PROJECT	SHEET No	TOTAL SHEETS
10	SJ	5	25.0/32.7	1005	1132

REGISTERED CIVIL ENGINEER 7/28/10 DATE

10-11-10
PLANS APPROVAL DATE

REGISTERED PROFESSIONAL ENGINEER ALLEN WANG No. C 66503 Exp. 06/30/12 CIVIL STATE OF CALIFORNIA

The State of California or its officers or agents shall not be responsible for the accuracy or completeness of scanned copies of this plan sheet.

SAN JOAQUIN COUNCIL OF GOVERNMENTS
555 E. WEBER AVENUE
STOCKTON, CA 95202

RAJAPPAN & MEYER
CONSULTING ENGINEERS, INC.
1038 LEIGH AVE, SUITE 100
SAN JOSE, CA 95126

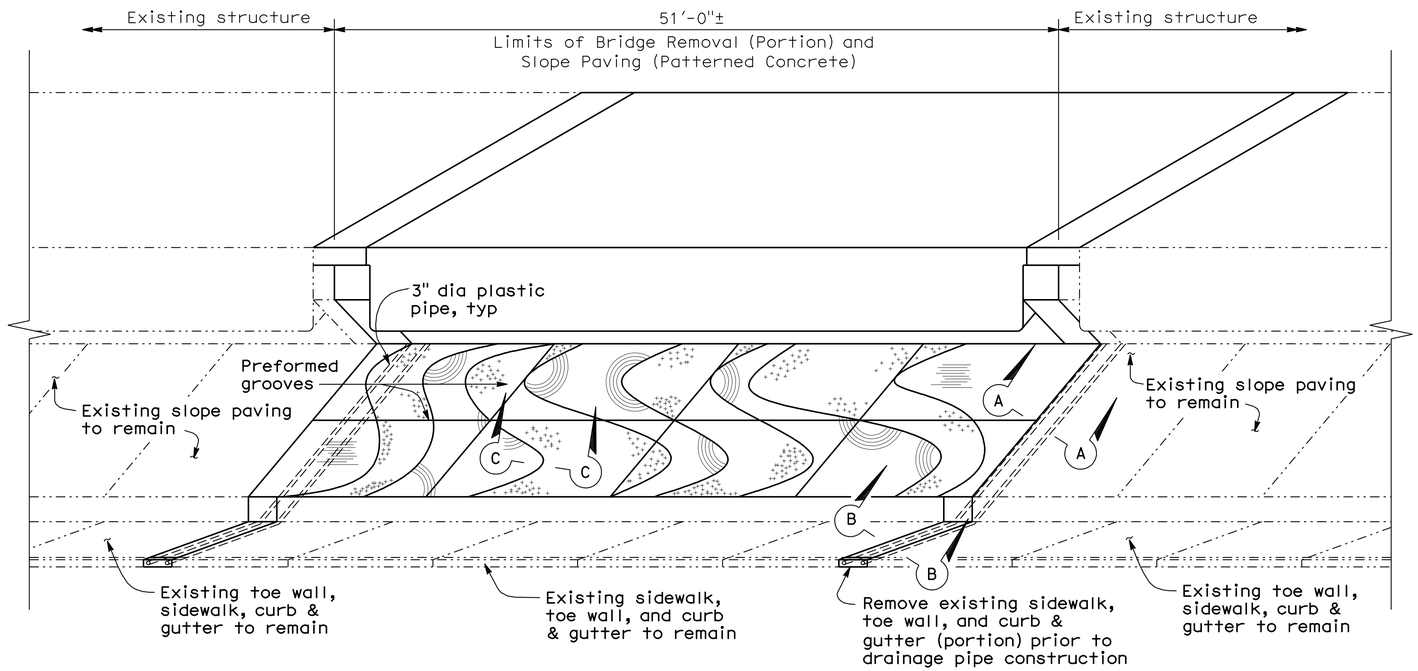

PICTORIAL VIEW OF TYPICAL INSTALLATION

No Scale

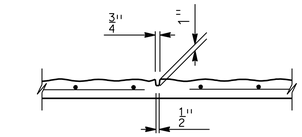

PREFORMED GROOVE

1" = 1'-0"

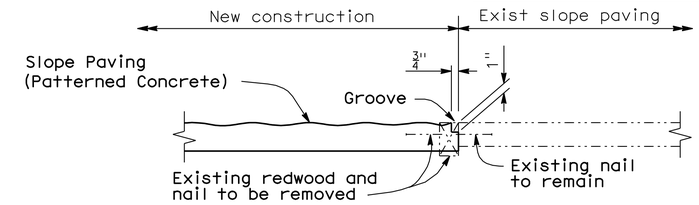

SECTION A-A

No Scale

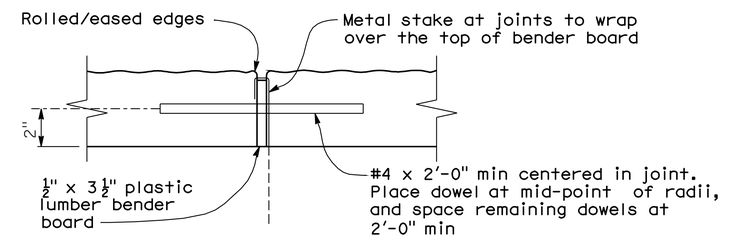

SECTION C-C

3" = 1'-0"

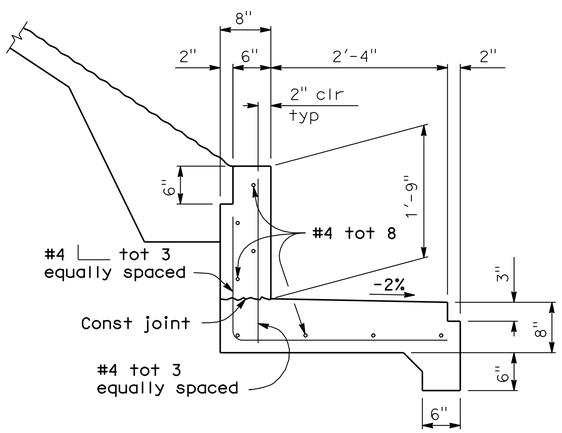

TOE WALL DETAIL

1" = 1'-0"

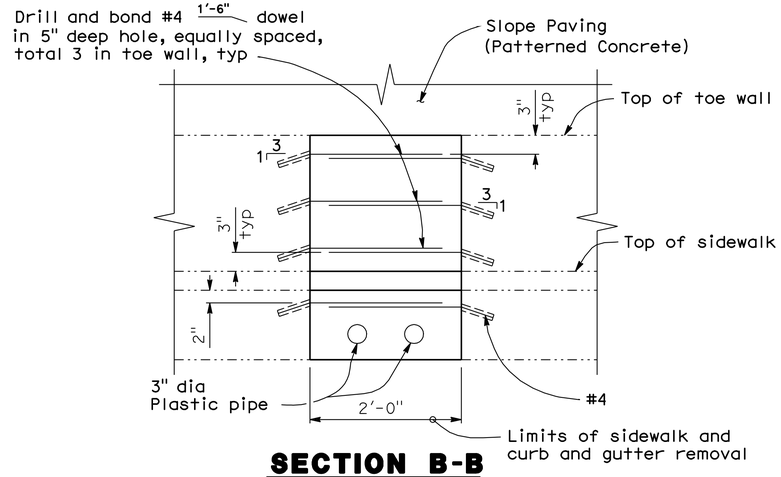

SECTION B-B

1" = 1'-0"

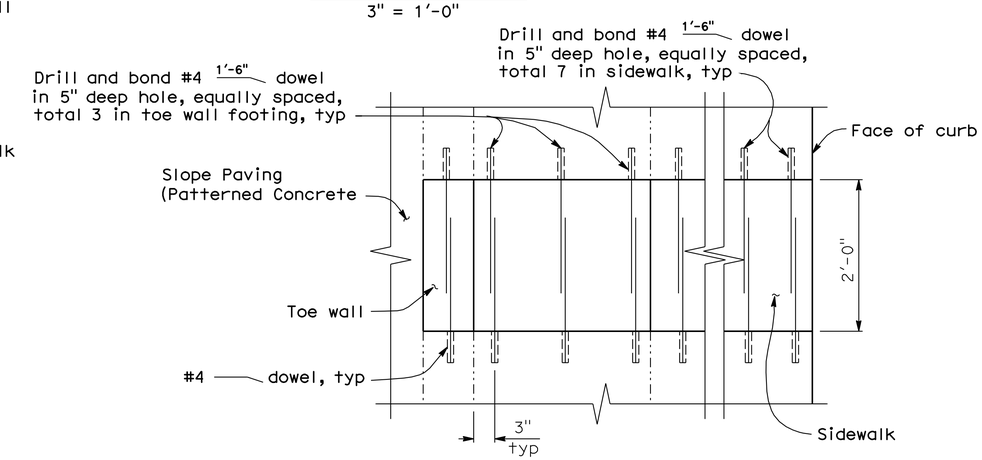

TOE WALL RECONSTRUCTION PLAN

1" = 1'-0"

Note:
The Contractor shall verify all controlling field dimensions before ordering or fabricating any material

Notes:

1. For slope paving aesthetics at Abut 2, see 'SLOPE PAVING DETAILS No. 3' sheet.
2. For slope paving aesthetics at Abut 1, see 'SLOPE PAVING DETAILS No. 4' sheet.

Legend:

-·-·-·- Indicates existing structure

DESIGN OVERSIGHT John Fujimoto
8-2-10
SIGN OFF DATE

	BY	CHECKED
DESIGN	A. WANG	P. SHINN
DETAILS	W. Y. TAN	P. SHINN
QUANTITIES	W. Y. TAN	G. WOLDETSADIK

PREPARED FOR THE STATE OF CALIFORNIA DEPARTMENT OF TRANSPORTATION

A. WANG
PROJECT ENGINEER

BRIDGE NO. 29-0192
POST MILE 29.19

TELEGRAPH AVENUE UC (WIDEN)
SLOPE PAVING DETAILS No. 2

DESIGN DETAIL SHEET (ENGLISH) (REV. 06-01-09)

ORIGINAL SCALE IN INCHES FOR REDUCED PLANS 0 1 2 3

CU 06240
EA 0G4701

DISREGARD PRINTS BEARING EARLIER REVISION DATES

REVISION DATES (PRELIMINARY STAGE ONLY) 10/16/09 12/14/09 1/18/10 4/28/10 6/17/10 7/28/10

SHEET 21 OF 28

FILE => 29-0192-t-slpdet02.dgn

USERNAME => friehard DATE PLOTTED => 13-OCT-2010 TIME PLOTTED => 13:17

DIST	COUNTY	ROUTE	POST MILES TOTAL PROJECT	SHEET No	TOTAL SHEETS
10	SJ	5	25.0/32.7	1006	1132

REGISTERED CIVIL ENGINEER — 7/28/10 DATE

10-11-10
PLANS APPROVAL DATE

REGISTERED PROFESSIONAL ENGINEER — ALLEN WANG — No. C 66503 — Exp. 06/30/12 — CIVIL — STATE OF CALIFORNIA

The State of California or its officers or agents shall not be responsible for the accuracy or completeness of scanned copies of this plan sheet.

SAN JOAQUIN COUNCIL OF GOVERNMENTS
555 E. WEBER AVENUE
STOCKTON, CA 95202

RAJAPPAN & MEYER
CONSULTING ENGINEERS, INC.
1038 LEIGH AVE, SUITE 100
SAN JOSE, CA 95126

DERIVI CONSTRUCTION & ARCHITECTURE, INC.
924 N. YOSEMITE STREET
STOCKTON, CA 95203

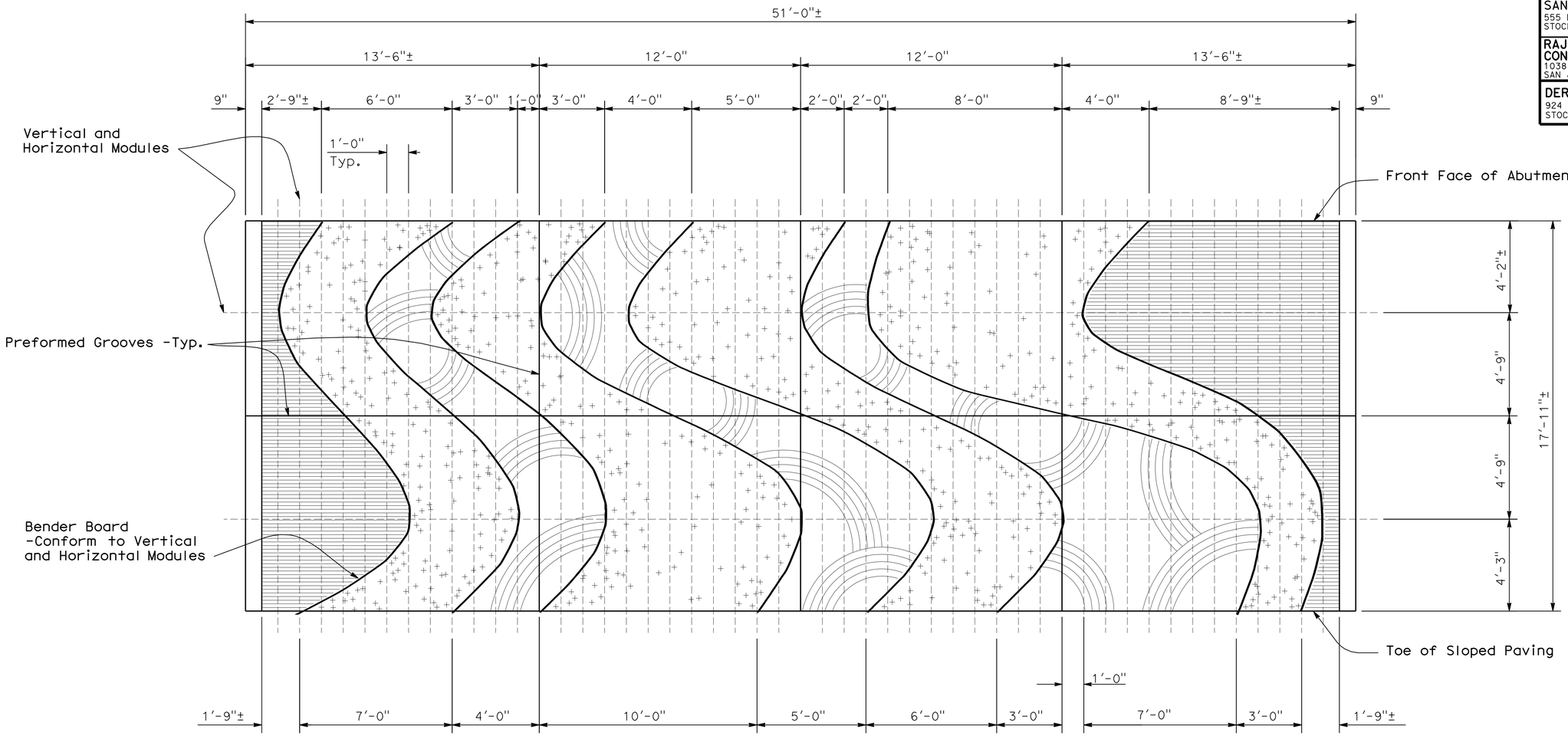

NORTH ELEVATION

3/8" = 1'-0"

Pattern Legend

- Curved Plastic Lumber Bender Board (½" width x 3½" depth) between Concrete Patterns
- Concrete Pattern A Vertical Rough Broom Finish
- Concrete Pattern B Horizontal Scored Metal Rake Tooling (1" on center +/- x ½"Depth Max) over Horizontal Rough Broom Finish
- Concrete Pattern C Randomly Seeded Aggregate (40% of Surface Covered) with 1 ½"-2" Aggregate
- Concrete Pattern D 5-Prong Rake Tooling (4" on center x ½" Depth Max) Score in Arcs over Vertical Rough Broom Finish -Start and End Points Shall Not Overlap Other Patterns -Pattern Shown is Schematic

Note:
The Contractor shall verify all controlling field dimensions before ordering or fabricating any material

DESIGN OVERSIGHT — John Fujimoto
8-2-10
SIGN OFF DATE

	BY	CHECKED
DESIGN	C. D. B. FRANKEL	W. Y. TAN
DETAILS	C. D. B. FRANKEL	W. Y. TAN
QUANTITIES	W. Y. TAN	G. WOLDETSADIK

PREPARED FOR THE STATE OF CALIFORNIA DEPARTMENT OF TRANSPORTATION

A. WANG
PROJECT ENGINEER

BRIDGE NO. 29-0192
POST MILE 29.19

TELEGRAPH AVENUE UC (WIDEN)
SLOPE PAVING DETAILS No. 3

DESIGN DETAIL SHEET (ENGLISH) (REV. 06-01-09)

ORIGINAL SCALE IN INCHES FOR REDUCED PLANS 0 1 2 3

CU 06240
EA 0G4701

DISREGARD PRINTS BEARING EARLIER REVISION DATES → REVISION DATES (PRELIMINARY STAGE ONLY) 10/16/09 12/4/09 1/18/10 4/28/10 6/17/10 7/28/10

SHEET 22 OF 28

FILE => 29-0192-t-slpdet03.dgn

USERNAME => trlenard DATE PLOTTED => 18-OCT-2010 TIME PLOTTED => 09:00

DIST	COUNTY	ROUTE	POST MILES TOTAL PROJECT	SHEET No	TOTAL SHEETS
10	SJ	5	25.0/32.7	1007	1132

REGISTERED CIVIL ENGINEER 7/28/10 DATE

10-11-10
PLANS APPROVAL DATE

REGISTERED PROFESSIONAL ENGINEER ALLEN WANG No. C 66503 Exp. 06/30/12 CIVIL STATE OF CALIFORNIA

The State of California or its officers or agents shall not be responsible for the accuracy or completeness of scanned copies of this plan sheet.

SAN JOAQUIN COUNCIL OF GOVERNMENTS
555 E. WEBER AVENUE
STOCKTON, CA 95202

RAJAPPAN & MEYER
CONSULTING ENGINEERS, INC.
1038 LEIGH AVE, SUITE 100
SAN JOSE, CA 95126

DERIVI CONSTRUCTION & ARCHITECTURE, INC.
924 N. YOSEMITE STREET
STOCKTON, CA 95203

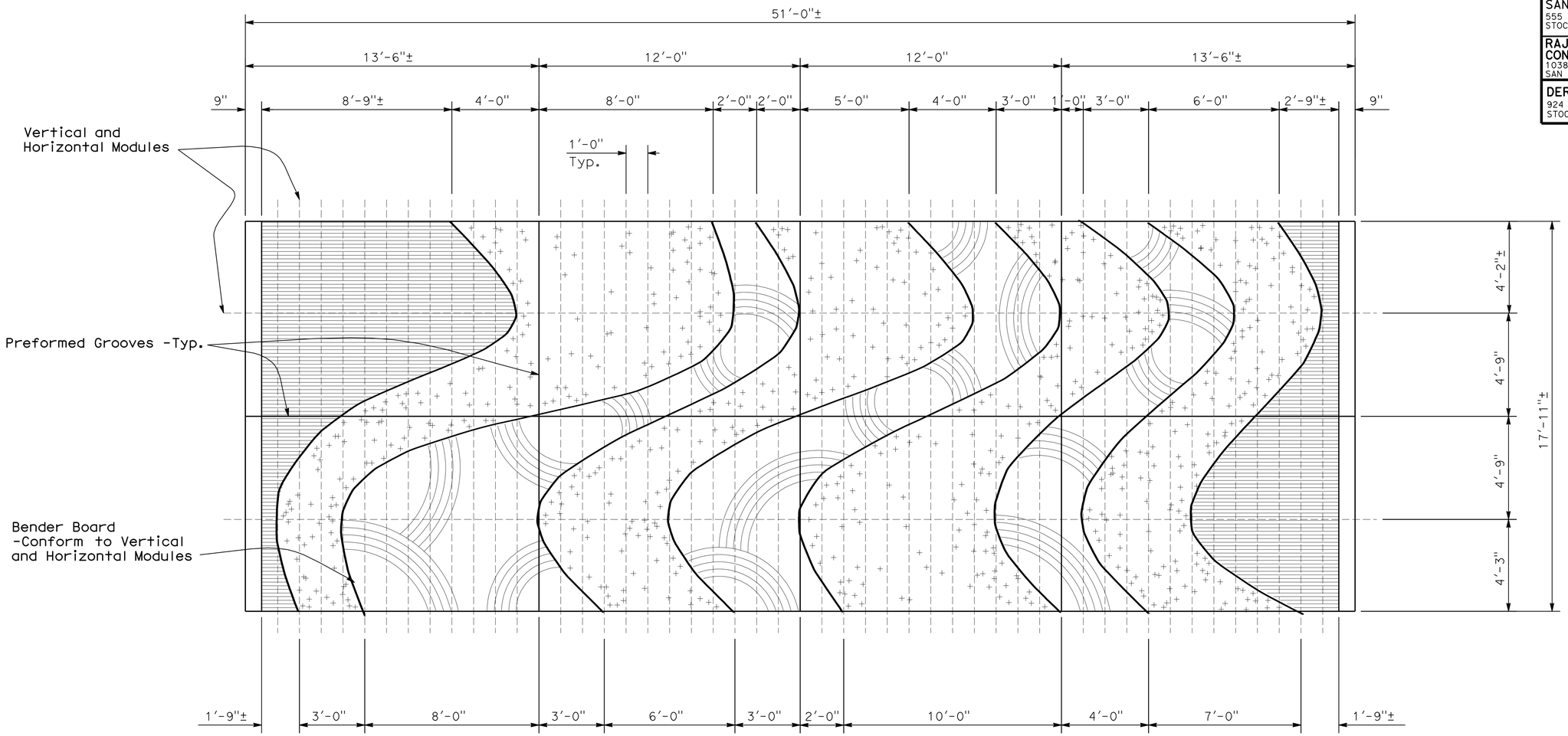

SOUTH ELEVATION

3/8" = 1'-0"

Pattern Legend

- Curved Plastic Lumber Bender Board (½" width x 3½" depth) between Concrete Patterns
- Concrete Pattern A Vertical Rough Broom Finish
- Concrete Pattern B Horizontal Scored Metal Rake Tooling (1" on center +/- x ½"Depth Max) over Horizontal Rough Broom Finish
- Concrete Pattern C Randomly Seeded Aggregate (40% of Surface Covered) with 1 ½"-2" Aggregate
- Concrete Pattern D 5-Prong Rake Tooling (4" on center x ½" Depth Max) Score in Arcs over Vertical Rough Broom Finish
  -Start and End Points Shall Not Overlap Other Patterns
  -Pattern Shown is Schematic

Note:
The Contractor shall verify all controlling field dimensions before ordering or fabricating any material

DESIGN OVERSIGHT John Fujimoto
8-2-10
SIGN OFF DATE

	BY	CHECKED
DESIGN	C. D. B. FRANKEL	W. Y. TAN
DETAILS	C. D. B. FRANKEL	W. Y. TAN
QUANTITIES	W. Y. TAN	G. WOLDETSADIK

PREPARED FOR THE STATE OF CALIFORNIA DEPARTMENT OF TRANSPORTATION

A. WANG
PROJECT ENGINEER

BRIDGE NO. 29-0192
POST MILE 29.19

TELEGRAPH AVENUE UC (WIDEN)
SLOPE PAVING DETAILS No. 4

DESIGN DETAIL SHEET (ENGLISH) (REV. 06-01-09)

ORIGINAL SCALE IN INCHES FOR REDUCED PLANS 0 1 2 3

CU 06240
EA 0G4701

DISREGARD PRINTS BEARING EARLIER REVISION DATES

REVISION DATES (PRELIMINARY STAGE ONLY): 10/16/09 12/4/09 1/18/10 4/23/10 6/13/10 7/28/10

SHEET 23 OF 28

FILE => 29-0192-t-slpdet04.dgn

USERNAME => trlenard DATE PLOTTED => 18-OCT-2010 TIME PLOTTED => 09:00

DIST.	COUNTY	ROUTE	POST MILES TOTAL PROJECT	SHEET NO.	TOTAL SHEETS
10	SJ	5	25.0/32.7	1008	1132

Allen Wang 7/28/10
REGISTERED ENGINEER - CIVIL

10-11-10
PLANS APPROVAL DATE

REGISTERED PROFESSIONAL ENGINEER
ALLEN WANG
No. C 66503
Exp. 06/30/12
CIVIL
STATE OF CALIFORNIA

The State of California or its officers or agents shall not be responsible for the accuracy or completeness of electronic copies of this plan sheet.

SAN JOAQUIN COUNCIL OF GOVERNMENTS
555 E. WEBER AVENUE
STOCKTON, CA 95202

RAJAPPAN & MEYER
CONSULTING ENGINEERS, INC.
1038 LEIGH AVE, SUITE 100
SAN JOSE, CA 95126

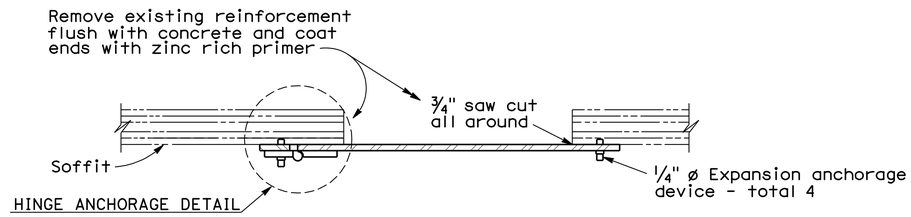

SECTION A-A

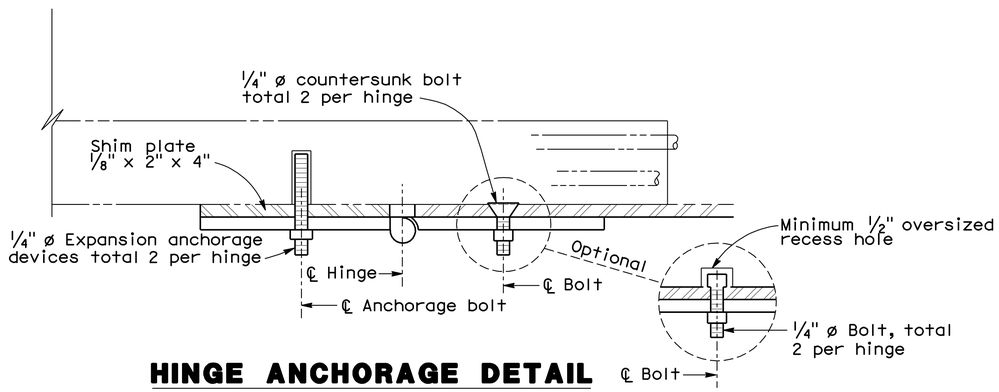

HINGE ANCHORAGE DETAIL

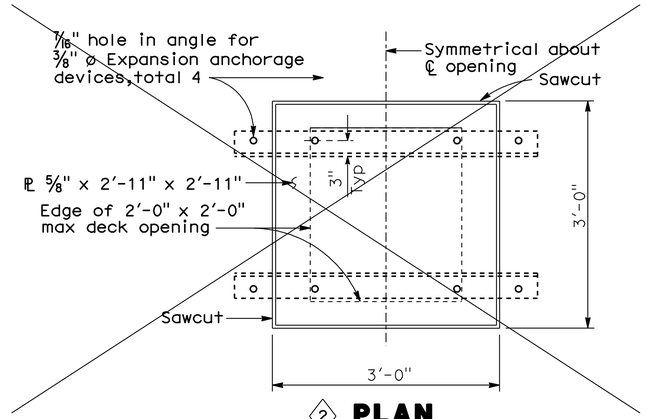

2 PLAN

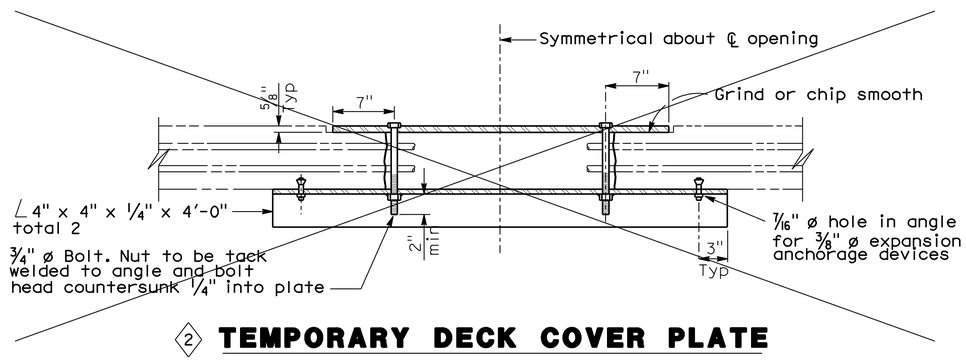

2 TEMPORARY DECK COVER PLATE

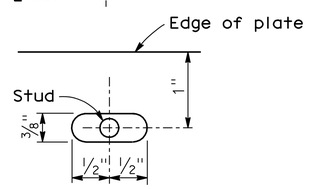

DETAIL A

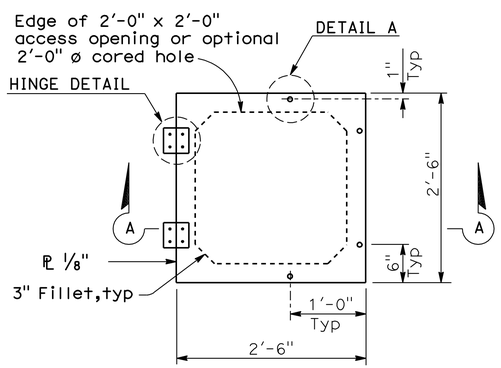

PLAN

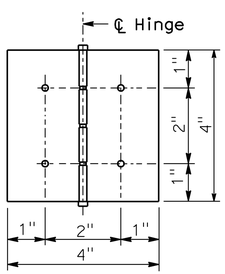

HINGE DETAIL

SOFFIT ACCESS DOOR ASSEMBLY

Note: Soffit access door opening direction to be determined by the Engineer

NOTES:

1. Non-removable pin in hinge.
2. Hinge assembly to be galvanized, brass or stainless steel.
3. Use thread locking system for all hinge nuts.
4. Hinge assembly to be minimum 1/8" thick.

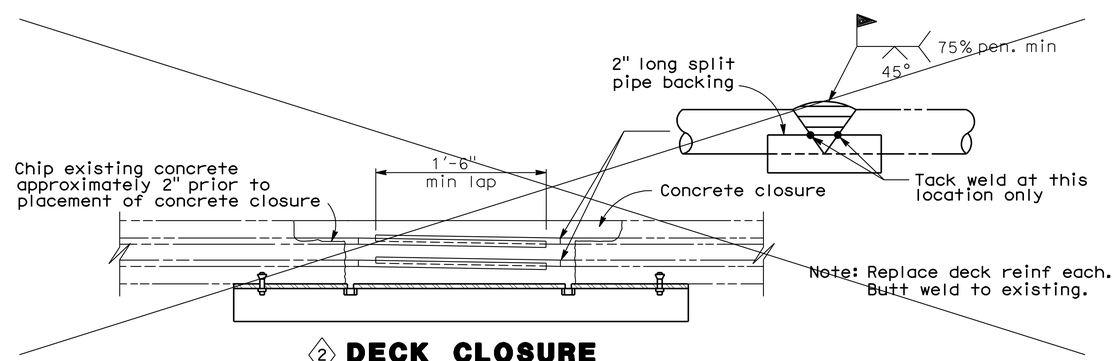

2 DECK CLOSURE

NO SCALE
SPECIAL DETAILS 1

Note:
The Contractor shall verify all controlling field dimensions before ordering or fabricating any material

STANDARD DRAWING				
RELEASE DATE Revised	DESIGN	BY PAT HIPLEY	CHECKED ROBIN ROGERSON	RELEASED BY
FILE NO. xs1-310	DETAILS	BY R. YEE	CHECKED PAT HIPLEY	
	SUBMITTED	BY RAY ZELINSKI	DRAWING DATE 10/92	OFFICE CHIEF

1 Sheet Title Revised
2 Detail Deleted

STATE OF CALIFORNIA
DEPARTMENT OF TRANSPORTATION

DIVISION OF ENGINEERING SERVICES

BRIDGE NO. 29-0192
POST MILE 29.19

TELEGRAPH AVENUE UC (WIDEN)
SOFFIT OPENINGS

DS OSD 2147A (ENGLISH) (REV. X/XX/XX)

ORIGINAL SCALE IN INCHES FOR REDUCED PLANS 0 1 2 3

CU 06240
EA 0G4701

DISREGARD PRINTS BEARING EARLIER REVISION DATES

REVISION DATES (PRELIMINARY STAGE ONLY): 10/16/09 12/4/09 1/18/10 4/23/10 6/11/10 7/28/10

SHEET 24 OF 28

USERNAME => trlenard

29-0192-y-so.dgn

DATE PLOTTED => 13-OCT-2010 TIME PLOTTED => 13:17

REFERENCE: CALTRANS SOIL & ROCK LOGGING, CLASSIFICATION, AND PRESENTATION MANUAL (JUNE 2007)

DIST	COUNTY	ROUTE	POST MILES TOTAL PROJECT	SHEET No	TOTAL SHEETS
10	SJ	5	25.0/32.7	1009	1132

GEOTECHNICAL PROFESSIONAL — DATE 7/28/10

10-11-10
PLANS APPROVAL DATE

REGISTERED PROFESSIONAL ENGINEER — GARY PARIKH — No. G.E. 666 — Exp. 12/31/11 — GEOTECHNICAL — STATE OF CALIFORNIA

The State of California or its officers or agents shall not be responsible for the accuracy or completeness of scanned copies of this plan sheet.

SAN JOAQUIN COUNCIL OF GOVERNMENTS
555 EAST WEBER AVENUE
STOCKTON, CALIFORNIA 95202

PARIKH CONSULTANTS, INC.
2360 QUME DRIVE, SUITE A
SAN JOSE, CA 95131

CEMENTATION

Description	Criteria
Weak	Crumbles or breaks with handling or little finger pressure.
Moderate	Crumbles or breaks with considerable finger pressure.
Strong	Will not crumble or break with finger pressure.

CONSISTENCY OF COHESIVE SOILS

Description	Unconfined Compressive Strength (tsf)	Pocket Penetrometer Measurement (tsf)	Torvane Measurement (tsf)	Field Approximation
Very Soft	< 0.25	< 0.25	< 0.12	Easily penetrated several inches by fist
Soft	0.25 to 0.50	0.25 to 0.50	0.12 to 0.25	Easily penetrated several inches by thumb
Medium Stiff	0.50 to 1.0	0.50 to 1.0	0.25 to 0.50	Penetrated several inches by thumb with moderate effort
Stiff	1 to 2	1 to 2	0.50 to 1.0	Readily indented by thumb but penetrated only with great effort
Very Stiff	2 to 4	2 to 4	1.0 to 2.0	Readily indented by thumbnail
Hard	> 4.0	> 4.0	> 2.0	Indented by thumbnail with difficulty

BOREHOLE IDENTIFICATION

Symbol	Hole Type	Description
Size	A	Auger Boring
Size	R P	Rotary drilled boring Rotary percussion boring (air)
Size	R	Rotary drilled diamond core
Size	HD HA	Hand driven (1-inch soil tube) Hand Auger
●	D	Dynamic Cone Penetration Boring
▲	CPT	Cone Penetration Test (ASTM D 5778-95)
⬚	O	Other

Note: Size in inches.

PLASTICITY OF FINE-GRAINED SOILS

Description	Criteria
Nonplastic	A 1/8-inch thread cannot be rolled at any water content.
Low	The thread can barely be rolled and the lump cannot be formed when drier than the plastic limit.
Medium	The thread is easy to roll and not much time is required to reach the plastic limit. The thread cannot be rerolled after reaching the plastic limit. The lump crumbles when drier than the plastic limit.
High	It takes considerable time rolling and kneading to reach the plastic limit. The thread can be rerolled several times after reaching the plastic limit. The lump can be formed without crumbling when drier than the plastic limit.

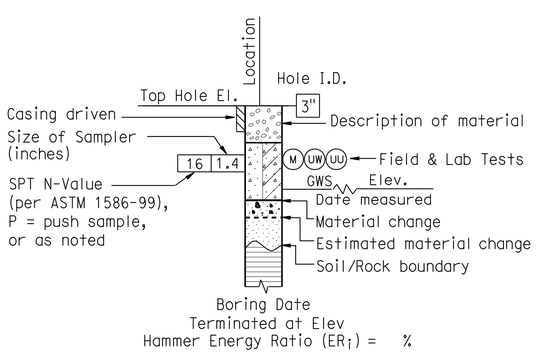

ROTARY BORING

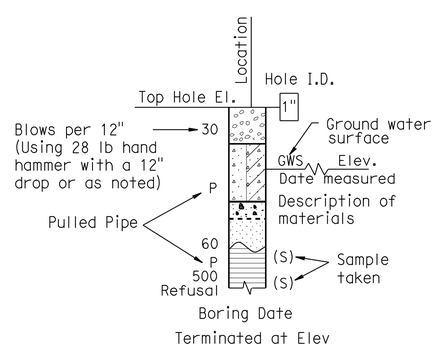

HAND BORING

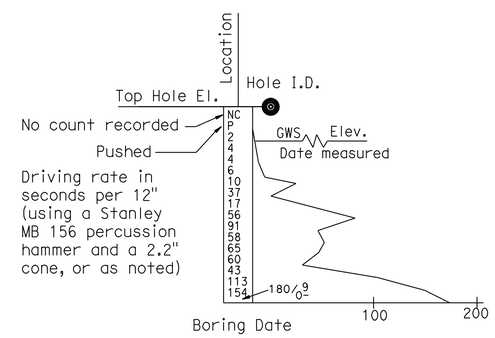

DYNAMIC CONE PENETRATION BORING

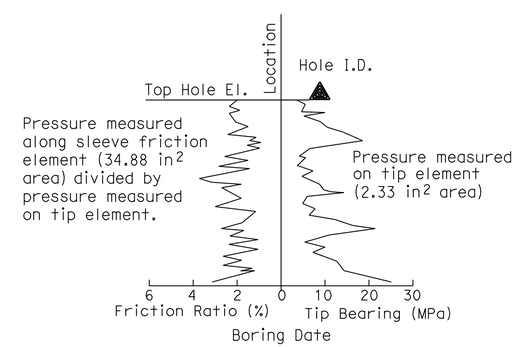

CONE PENETRATION TEST (CPT) SOUNDING

DESIGN OVERSIGHT — John Fujimoto 8-2-10 SIGN OFF DATE	DRAWN BY: O. GOUTHIER CHECKED BY: D. WANG	S. DUDDU - A. R. BHARADWAJ FIELD INVESTIGATION BY: DATE: MARCH 2009 - APRIL 2009	PREPARED FOR THE STATE OF CALIFORNIA DEPARTMENT OF TRANSPORTATION	A. LAM PROJECT ENGINEER	BRIDGE NO. 29-0192 POST MILES 29.19

TELEGRAPH AVENUE UC (WIDEN)
SOIL LEGEND 1 OF 2

OGS CIVIL LOG OF TEST BORINGS SHEET (ENGLISH) (REV. 06-01-09)

ORIGINAL SCALE IN INCHES FOR REDUCED PLANS 0 1 2 3

CU 06240
EA 0G4701

DISREGARD PRINTS BEARING EARLIER REVISION DATES → REVISION DATES: 10/18/09 12/04/09 01/18/10 04/28/10 06/11/10 7/28/10

SHEET 25 OF 28

FILE => 29-0192-z-ltb01.dgn

USERNAME => trlenard DATE PLOTTED => 13-OCT-2010 TIME PLOTTED => 13:17

REFERENCE: CALTRANS SOIL & ROCK LOGGING, CLASSIFICATION, AND PRESENTATION MANUAL (JUNE 2007)

DIST	COUNTY	ROUTE	POST MILES TOTAL PROJECT	SHEET No	TOTAL SHEETS
10	SJ	5	25.0/32.7	1010	1132

GEOTECHNICAL PROFESSIONAL — 7/28/10 DATE

10-11-10
PLANS APPROVAL DATE

REGISTERED PROFESSIONAL ENGINEER — GARY PARIKH — No. G.E. 666 — Exp. 12/31/11 — GEOTECHNICAL — STATE OF CALIFORNIA

The State of California or its officers or agents shall not be responsible for the accuracy or completeness of scanned copies of this plan sheet.

SAN JOAQUIN COUNCIL OF GOVERNMENTS
555 EAST WEBER AVENUE
STOCKTON, CALIFORNIA 95202

PARIKH CONSULTANTS, INC.
2360 QUME DRIVE, SUITE A
SAN JOSE, CA 95131

GROUP SYMBOLS AND NAMES

Graphic/Symbol	Group Names	Graphic/Symbol	Group Names
GW	Well-graded GRAVEL Well-graded GRAVEL with SAND	CL	Lean CLAY Lean CLAY with SAND Lean CLAY with GRAVEL SANDY lean CLAY SANDY lean CLAY with GRAVEL GRAVELLY lean CLAY GRAVELLY lean CLAY with SAND
GP	Poorly graded GRAVEL Poorly graded GRAVEL with SAND		
GW-GM	Well-graded GRAVEL with SILT Well-graded GRAVEL with SILT and SAND	CL-ML	SILTY CLAY SILTY CLAY with SAND SILTY CLAY with GRAVEL SANDY SILTY CLAY SANDY SILTY CLAY with GRAVEL GRAVELLY SILTY CLAY GRAVELLY SILTY CLAY with SAND
GW-GC	Well-graded GRAVEL with CLAY (or SILTY CLAY) Well-graded GRAVEL with CLAY and SAND (or SILTY CLAY and SAND)		
GP-GM	Poorly graded GRAVEL with SILT Poorly graded GRAVEL with SILT and SAND	ML	SILT SILT with SAND SILT with GRAVEL SANDY SILT SANDY SILT with GRAVEL GRAVELLY SILT GRAVELLY SILT with SAND
GP-GC	Poorly graded GRAVEL with CLAY (or SILTY CLAY) Poorly graded GRAVEL with CLAY and SAND (or SILTY CLAY and SAND)		
GM	SILTY GRAVEL SILTY GRAVEL with SAND	OL	ORGANIC lean CLAY ORGANIC lean CLAY with SAND ORGANIC lean CLAY with GRAVEL SANDY ORGANIC lean CLAY SANDY ORGANIC lean CLAY with GRAVEL GRAVELLY ORGANIC lean CLAY GRAVELLY ORGANIC lean CLAY with SAND
GC	CLAYEY GRAVEL CLAYEY GRAVEL with SAND		
GC-GM	SILTY, CLAYEY GRAVEL SILTY, CLAYEY GRAVEL with SAND	OL	ORGANIC SILT ORGANIC SILT with SAND ORGANIC SILT with GRAVEL SANDY ORGANIC SILT SANDY ORGANIC SILT with GRAVEL GRAVELLY ORGANIC SILT GRAVELLY ORGANIC SILT with SAND
SW	Well-graded SAND Well-graded SAND with GRAVEL		
SP	Poorly graded SAND Poorly graded SAND with GRAVEL	CH	Fat CLAY Fat CLAY with SAND Fat CLAY with GRAVEL SANDY fat CLAY SANDY fat CLAY with GRAVEL GRAVELLY fat CLAY GRAVELLY fat CLAY with SAND
SW-SM	Well-graded SAND with SILT Well-graded SAND with SILT and GRAVEL		
SW-SC	Well-graded SAND with CLAY (or SILTY CLAY) Well-graded SAND with CLAY and GRAVEL (or SILTY CLAY and GRAVEL)	MH	Elastic SILT Elastic SILT with SAND Elastic SILT with GRAVEL SANDY elastic SILT SANDY elastic SILT with GRAVEL GRAVELLY elastic SILT GRAVELLY elastic SILT with SAND
SP-SM	Poorly graded SAND with SILT Poorly graded SAND with SILT and GRAVEL		
SP-SC	Poorly graded SAND with CLAY (or SILTY CLAY) Poorly graded SAND with CLAY and GRAVEL (or SILTY CLAY and GRAVEL)	OH	ORGANIC fat CLAY ORGANIC fat CLAY with SAND ORGANIC fat CLAY with GRAVEL SANDY ORGANIC fat CLAY SANDY ORGANIC fat CLAY with GRAVEL GRAVELLY ORGANIC fat CLAY GRAVELLY ORGANIC fat CLAY with SAND
SM	SILTY SAND SILTY SAND with GRAVEL		
SC	CLAYEY SAND CLAYEY SAND with GRAVEL	OH	ORGANIC elastic SILT ORGANIC elastic SILT with SAND ORGANIC elastic SILT with GRAVEL SANDY ORGANIC elastic SILT SANDY ORGANIC elastic SILT with GRAVEL GRAVELLY ORGANIC elastic SILT GRAVELLY ORGANIC elastic SILT with SAND
SC-SM	SILTY, CLAYEY SAND SILTY, CLAYEY SAND with GRAVEL		
PT	PEAT	OL/OH	ORGANIC SOIL ORGANIC SOIL with SAND ORGANIC SOIL with GRAVEL SANDY ORGANIC SOIL SANDY ORGANIC SOIL with GRAVEL GRAVELLY ORGANIC SOIL GRAVELLY ORGANIC SOIL with SAND
	COBBLES COBBLES and BOULDERS BOULDERS		

FIELD AND LABORATORY TESTING

- (C) Consolidation (ASTM D 2435)
- (CL) Collapse Potential (ASTM D 5333)
- (CP) Compaction Curve (CTM 216)
- (CR) Corrosivity Testing (CTM 643, CTM 422, CTM 417)
- (CU) Consolidated Undrained Triaxial (ASTM D 4767)
- (DS) Direct Shear (ASTM D 3080)
- (EI) Expansion Index (ASTM D 4829)
- (M) Moisture Content (ASTM D 2216)
- (OC) Organic Content-% (ASTM D 2974)
- (P) Permeability (CTM 220)
- (PA) Particle Size Analysis (ASTM D 422)
- (PI) Plasticity Index (AASHTO T 90) Liquid Limit (AASHTO T 89)
- (PL) Point Load Index (ASTM D 5731)
- (PM) Pressure Meter
- (PP) Pocket Penetrometer
- (R) R-Value (CTM 301)
- (SE) Sand Equivalent (CTM 217)
- (SG) Specific Gravity (AASHTO T 100)
- (SL) Shrinkage Limit (ASTM D 427)
- (SW) Swell Potential (ASTM D 4546)
- (TV) Pocket Torvane
- (UC) Unconfined Compression-Soil (ASTM D 2166) Unconfined Compression-Rock (ASTM D 2938)
- (UU) Unconsolidated Undrained Triaxial (ASTM D 2850)
- (UW) Unit Weight (ASTM D 4767)
- (VS) Vane Shear (AASHTO T 223)

APPARENT DENSITY OF COHESIONLESS SOILS

Description	SPT N_{60} (Blows / 12 inches)
Very loose	0 - 4
Loose	5 - 10
Medium Dense	11 - 30
Dense	31 - 50
Very Dense	> 50

MOISTURE

Description	Criteria
Dry	Absence of moisture, dusty, dry to the touch
Moist	Damp but no visible water
Wet	Visible free water, usually soil is below water table

PERCENT OR PROPORTION OF SOILS

Description	Criteria
Trace	Particles are present but estimated to be less than 5%
Few	5 to 10%
Little	15 to 25%
Some	30 to 45%
Mostly	50 to 100%

PARTICLE SIZE

Description		Size
Boulder		> 12"
Cobble		3" to 12"
Gravel	Coarse	3/4" to 3"
	Fine	No. 4 to 3/4"
Sand	Coarse	No. 10 to No. 4
	Medium	No. 40 to No. 10
	Fine	No. 200 to No. 40

DESIGN OVERSIGHT — John Fujimoto
8-2-10
SIGN OFF DATE

DRAWN BY: O. GOUTHIER
CHECKED BY: D. WANG

S. DUDDU - A. R. BHARADWAJ
FIELD INVESTIGATION BY:
DATE: MARCH 2009 - APRIL 2009

PREPARED FOR THE STATE OF CALIFORNIA DEPARTMENT OF TRANSPORTATION

A. LAM
PROJECT ENGINEER

BRIDGE NO. 29-0192
POST MILES 29.19

TELEGRAPH AVENUE UC (WIDEN)
SOIL LEGEND 2 OF 2

OGS CIVIL LOG OF TEST BORINGS SHEET (ENGLISH) (REV. 06-01-09)

ORIGINAL SCALE IN INCHES FOR REDUCED PLANS 0 1 2 3

CU 06240
EA 0G4701

DISREGARD PRINTS BEARING EARLIER REVISION DATES — REVISION DATES: 10/18/09 12/04/09 01/18/10 04/23/10 06/11/10 7/28/10

SHEET 26 OF 28

FILE => 29-0192-z-ltb02.dgn

USERNAME => rtrenard DATE PLOTTED => 13-OCT-2010 TIME PLOTTED => 13:17

DIST	COUNTY	ROUTE	POST MILES TOTAL PROJECT	SHEET No	TOTAL SHEETS
10	SJ	5	25.0/32.7	1011	1132

GEOTECHNICAL PROFESSIONAL — DATE 7/28/10

PLANS APPROVAL DATE 10-11-10

REGISTERED PROFESSIONAL ENGINEER — GARY PARIKH — No. G.E. 666 — Exp. 12/31/11 — GEOTECHNICAL — STATE OF CALIFORNIA

The State of California or its officers or agents shall not be responsible for the accuracy or completeness of scanned copies of this plan sheet.

SAN JOAQUIN COUNCIL OF GOVERNMENTS
555 EAST WEBER AVENUE
STOCKTON, CALIFORNIA 95202

PARIKH CONSULTANTS, INC.
2360 QUME DRIVE, SUITE A
SAN JOSE, CA 95131

BENCHMARK:
The horizontal coordinates values are in the California Coordinate System (CCS 83) Zone 3, Epoch Date 2007.00, in U.S. survey feet. The vertical control values are based on the North American Vertical Datum of 1988 (NAVD88) in U.S. survey feet, height modernization survey station, (2007.00) and GEOID03 was used for the adjustment.

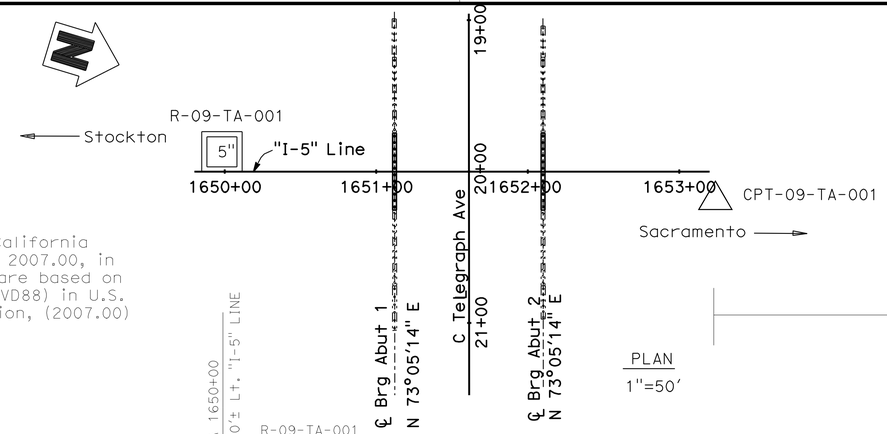

PLAN
1"=50'

ALL DIMENSIONS ARE IN FEET UNLESS OTHERWISE SHOWN

DESIGN OVERSIGHT John Fujimoto — 8-2-10 SIGN OFF DATE	DRAWN BY O. GOUTHIER	S. DUDDU - A. R. BHARADWAJ FIELD INVESTIGATION BY:	PREPARED FOR THE STATE OF CALIFORNIA DEPARTMENT OF TRANSPORTATION	A. LAM PROJECT ENGINEER	BRIDGE NO. 29-0192
	CHECKED BY D. WANG	DATE: MARCH 2009 - APRIL 2009			POST MILES 29.19

TELEGRAPH AVENUE UC (WIDEN)
LOG OF TEST BORINGS 1 OF 2

OGS GEOTECHNICAL LOG OF TEST BORINGS SHEET (ENGLISH) (REV. 06-01-09)

ORIGINAL SCALE IN INCHES FOR REDUCED PLANS 0 1 2 3

CU 06240
EA 0G4701

DISREGARD PRINTS BEARING EARLIER REVISION DATES

REVISION DATES: 10/16/09 12/04/09 01/18/10 04/28/10 06/17/10 7/28/10

SHEET 27 OF 28

FILE => 29-0192-z-1tb03.dgn

USERNAME => trmguye DATE PLOTTED => 13-OCT-2010 TIME PLOTTED => 15:11

DIST.	COUNTY	ROUTE	POST MILES - TOTAL PROJECT	Sheet No.	Total Sheets
10	SJ	5	28.3/29.6	173	173

OFFICE OR ENGINEERING GEOLOGY - DIV. OF NEW TECH., MATLS. & RESEARCH

R.W. 9-26-94

CERTIFIED ENGINEERING GEOLOGIST - PROJECT GEOLOGIST — PLANS APPROVAL DATE

TELEGRAPH AVE. UNDERCROSSING

LOG OF TEST BORINGS

NOTE: THIS LOG OF TEST BORINGS IS AVAILABLE ON MICROFILM AT OFFICE OF STRUCTURES DESIGN SACRAMENTO, CALIFORNIA

CU: 10207
EA: 4120U1

BRIDGE No. 29-192R/L

REGISTERED GEOLOGIST — R.W. FOX — No. 78 — Exp. 6-30-94 — CERTIFIED ENGINEERING GEOLOGIST — STATE OF CALIFORNIA

REGISTERED PROFESSIONAL ENGINEER — GARY PARIKH — No. G.E. 666 — Exp. 12/31/11 — GEOTECHNICAL — STATE OF CALIFORNIA

10	SJ	5	25.3/32.7	1132	1132

September 5, 1997

TO ACCOMPANY PLANS DATED 10-11-10

DIVISION OF ENGINEERING SERVICES – GEOTECHNICAL SERVICES

As-Built Log of Test Borings sheet is considered an informational document only. As such, the State of California registration seal with signature, license number and registration certificate expiration date confirm that this is a true and accurate copy of the original document. This drawing is available and presented only for the convenience of any bidder, contractor or other interested party.

DIST.	COUNTY	ROUTE	POST MILES-TOTAL PROJECT	Sheet No.	Total Sheets
10	SJ	5	25.0/32.7	1012	1132

REGISTERED CIVIL ENGINEER — DATE 7/28/10

TELEGRAPH AVENUE UC (WIDEN)

LOG OF TEST BORINGS 2 OF 2

NOTE: A COPY OF THIS LOG OF TEST BORINGS IS AVAILABLE AT OFFICE OF STRUCTURE MAINTENANCE AND INVESTIGATIONS, SACRAMENTO, CALIFORNIA

CU: 06240
EA: 0G4701

BRIDGE No. 29-0192

Sheet 28 of 28

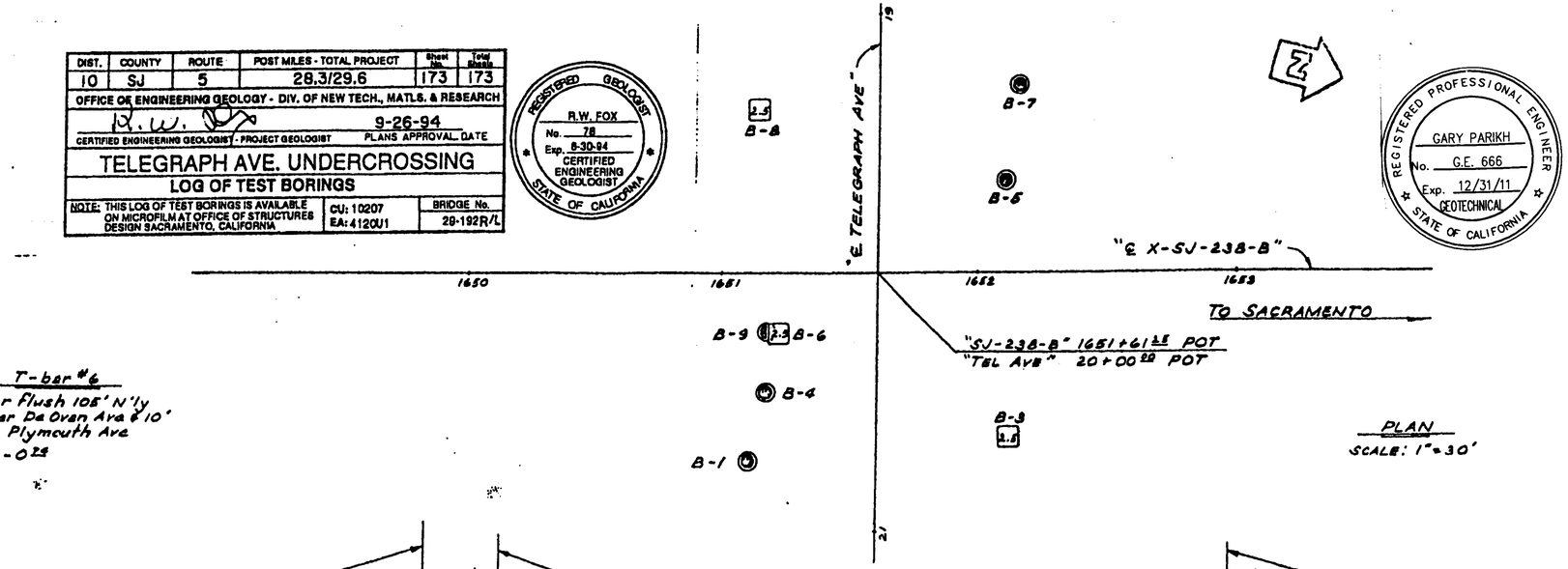

PLAN
SCALE: 1"=30'

NOTE: Cone penetrometer boring "B-2" between B-6 & B-9 (not shown) pushed from EL. -12.2 to EL. -96 (old wall).
Rotary boring "B-6" intersected wall at EL. -76.

NO CHANGES

AS BUILT

CORRECTIONS BY EYAD GHANI / T. LAM

CONTRACT NO. 4120U4

DATE 1/22/97 4/4/97

IN BRIDGE GEOLOGY SECTION

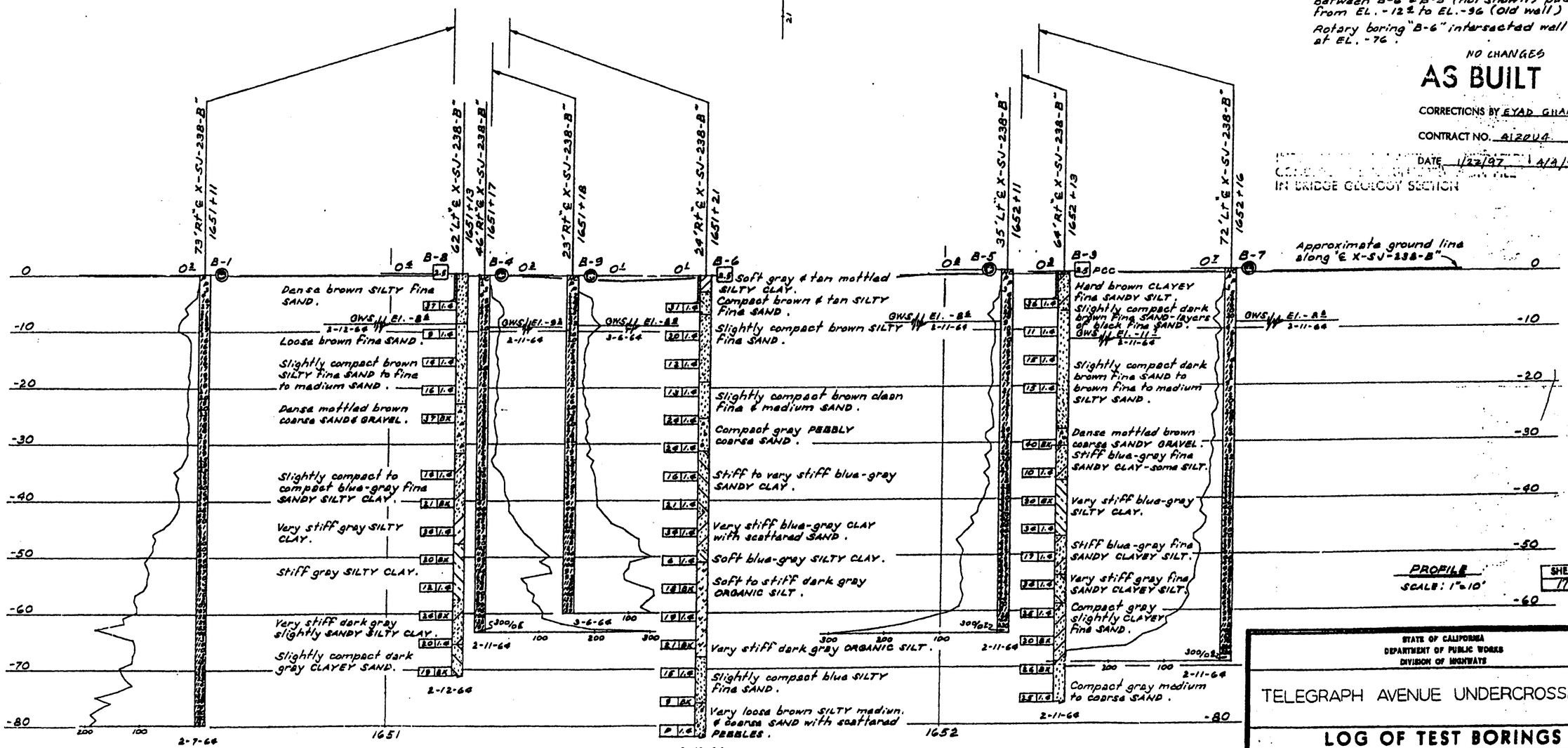

PROFILE
SCALE: 1"=10'

SHEET 17 OF 17

STATE OF CALIFORNIA
DEPARTMENT OF PUBLIC WORKS
DIVISION OF HIGHWAYS

TELEGRAPH AVENUE UNDERCROSSING

LOG OF TEST BORINGS

SCALE AS Noted | BRIDGE 29-192R/L | FILE | DRAWING 29192-8

FILENAME => 29-0192-z-1tb04.tif

DIST	COUNTY	ROUTE	POST MILES TOTAL PROJECT	SHEET No	TOTAL SHEETS
10	SJ	5	25.0/32.7	1013	1132

REGISTERED STRUCTURAL ENGINEER — DATE 7/28/10

PHILIP SHINN No. S 4967 Exp. 12/31/10 STRUCTURAL — REGISTERED PROFESSIONAL ENGINEER — STATE OF CALIFORNIA

10-11-10
PLANS APPROVAL DATE

The State of California or its officers or agents shall not be responsible for the accuracy or completeness of scanned copies of this plan sheet.

RAJAPPAN & MEYER CONSULTING ENGINEERS, INC.
1038 LEIGH AVE, SUITE 100
SAN JOSE, CA 95126

SAN JOAQUIN COUNCIL OF GOVERNMENTS
555 E. WEBER AVENUE
STOCKTON, CA 95202

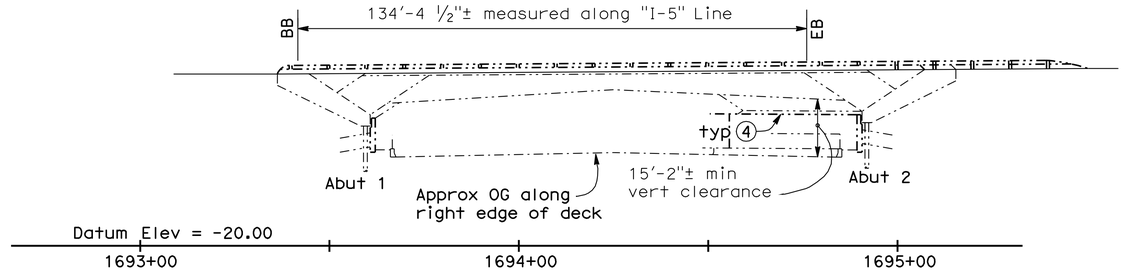

MIRRORED ELEVATION
1" = 20'

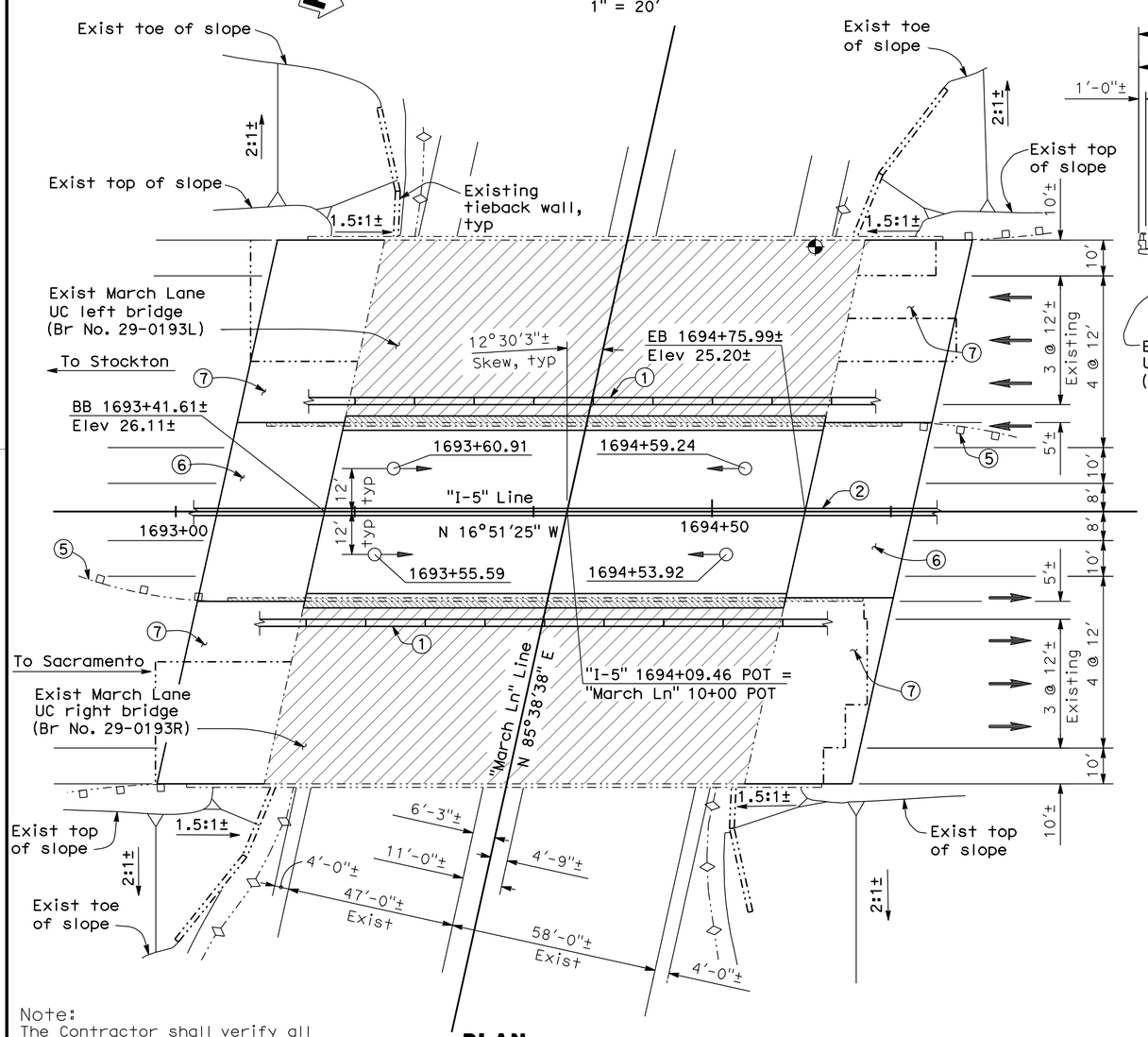

PLAN
1" = 20'

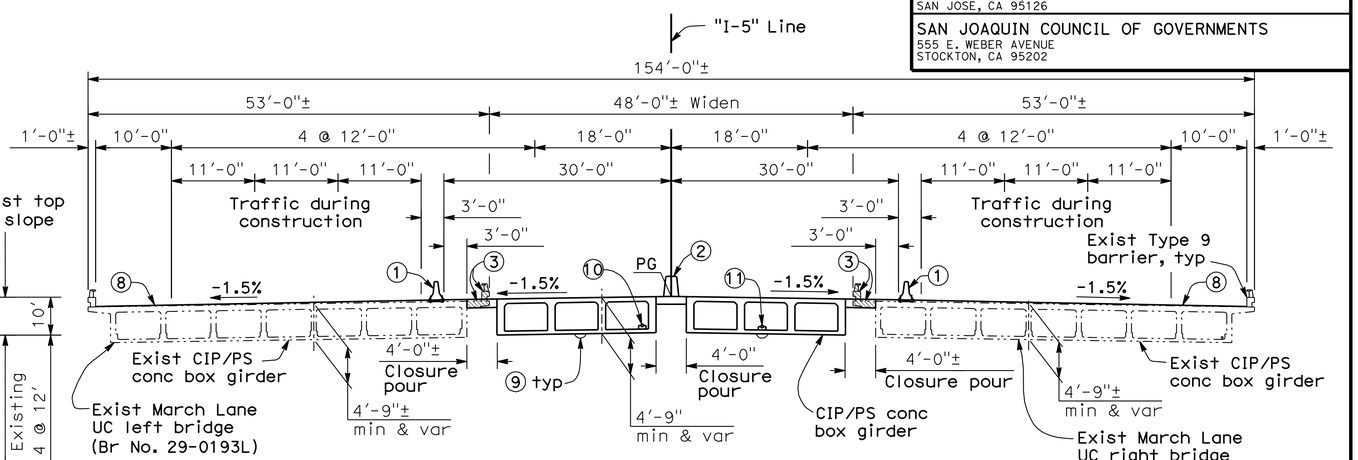

TYPICAL SECTION
1" = 10'

NOTES:

1. Temporary railing Type K (anchored), see "Road Plans"
2. Concrete barrier Type 60A (Mod)
3. Remove existing overhang and salvage existing barrier railing Type 9
4. Remove top of exist tieback wall (portion) between bridges
5. Remove exist bridge approach guard railing, see "Road Plans"
6. Structure approach Type N(30D)
7. Structure approach Type R(30D)
8. Polyester concrete overlay
9. Soffit lighting, see "Road Plans"
10. 4" dia. fiber optic conduit, see "Road Plans"
11. 1½" dia. soffit lighting conduit, see "Road Plans"
12. For Quantities, see "General Notes" sheet

- Bridge removal (portion)
- Indicates limits of Prepare Concrete Bridge Deck Surface, Furnish and Place Polyester Concrete Overlay with longitudinal grooving
- Indicates point of minimum vertical clearance
- Indicates existing structure
- Indicates existing bridge approach guard railing Type 8
- Indicates existing concrete barrier
- Indicates soffit lighting, see 'Electrical Plans'

Note:
The Contractor shall verify all controlling field dimensions before ordering or fabricating any material

John Fujimoto
DESIGN OVERSIGHT — John Fujimoto
8-2-10
SIGN OFF DATE

	BY		CHECKED	
DESIGN	BY	P. SHINN	CHECKED	A. WANG
DETAILS	BY	G. WOLDETSADIK	CHECKED	A. WANG
QUANTITIES	BY	G. WOLDETSADIK	CHECKED	W. Y. TAN

LOAD & RESISTANCE FACTOR DESIGN — LIVE LOADING: HL93 W/ LOW-BOY AND PERMIT DESIGN VEHICLE
LAYOUT — BY P. SHINN — CHECKED A. WANG
SPECIFICATIONS — BY K. HARIRSAZ — PLANS AND SPECS COMPARED K. HARIRSAZ

PREPARED FOR THE STATE OF CALIFORNIA DEPARTMENT OF TRANSPORTATION

P. SHINN
PROJECT ENGINEER

BRIDGE NO. 29-0193
POST MILES 29.99

MARCH LANE UNDERCROSSING (WIDEN)
GENERAL PLAN

DESIGN GENERAL PLAN SHEET (ENGLISH) (REV. 06-01-09)

ORIGINAL SCALE IN INCHES FOR REDUCED PLANS 0 1 2 3

CU 06240
EA 0G4701

DISREGARD PRINTS BEARING EARLIER REVISION DATES — REVISION DATES (PRELIMINARY STAGE ONLY) 6/2/09 9/4/09 10/16/09 12/4/09 1/15/10 4/21/10 6/11/10 7/28/10

SHEET 1 OF 20

FILE => 29-0193-a-gp01.dgn

USERNAME => trrmguye DATE PLOTTED => 13-OCT-2010 TIME PLOTTED => 15:11

DIST	COUNTY	ROUTE	POST MILES TOTAL PROJECT	SHEET No	TOTAL SHEETS
10	SJ	5	25.0/32.7	1014	1132

REGISTERED STRUCTURAL ENGINEER — DATE 7/28/10

PHILIP SHINN No. S 4967 Exp. 12/31/10 STRUCTURAL — REGISTERED PROFESSIONAL ENGINEER — STATE OF CALIFORNIA

10-11-10
PLANS APPROVAL DATE

The State of California or its officers or agents shall not be responsible for the accuracy or completeness of scanned copies of this plan sheet.

RAJAPPAN & MEYER
CONSULTING ENGINEERS, INC.
1038 LEIGH AVE, SUITE 100
SAN JOSE, CA 95126

SAN JOAQUIN COUNCIL OF GOVERNMENTS
555 E. WEBER AVENUE
STOCKTON, CA 95202

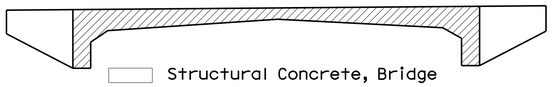

CONCRETE STRENGTH AND TYPE LIMITS

No Scale

GENERAL NOTES
LOAD AND RESISTANCE FACTOR DESIGN

DESIGN: AASHTO LRFD Bridge Design Specifications, 4th edition with California Amendments, preface dated December 2008; except that earth retaining structures abutments, bridge (including barrier and railing) details taken from Standard Plans March 2006 and earlier versions, Standard Bridge Details XS sheets, etc. are designed using Bridge Design Specifications (1996 AASHTO with Revisions by Caltrans).

SEISMIC DESIGN: Caltrans Seismic Design Criteria (SDC), Version 1.4 dated June, 2006

DEAD LOAD: Includes 35 psf for future wearing surface

LIVE LOADING: HL93 with Low-Boy and permit design vehicle

SEISMIC LOADING: SDC ARS Curve for Soil Profile Type D
Magnitude group 7.00
Peak Rock Acceleration 0.2g

REINFORCED CONCRETE: fy = 60 ksi
f'c = 4 ksi unless otherwise noted.
n = 8

PRESTRESSED CONCRETE: See "Pretressing Notes" on "GIRDER LAYOUT" sheet.

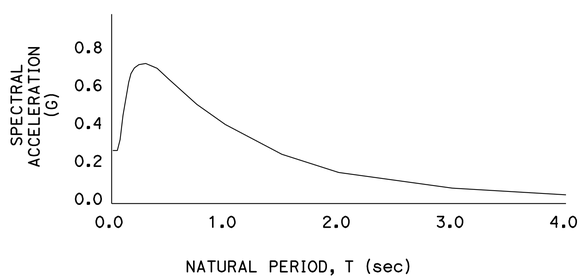

ARS DESIGN CURVE

No Scale

Note:
The Contractor shall verify all controlling field dimensions before ordering or fabricating any material

STANDARD PLANS DATED MAY, 2006

	A10A	Acronyms and Abbreviations (Sheet 1 of 2)
	A10B	Acronyms and Abbreviations (Sheet 2 of 2)
	A10C	Symbols (Sheet 1 of 2)
	A10D	Symbols (Sheet 2 of 2)
	A62B	Limits of Payment for Excavation and Backfill - Bridge Surcharge and Wall
	A62-C	Limits of payment for Excavation and Backfill - Bridge
RSP	A76A	Concrete Barrier Type 60
	B0-3	Bridge Details
	B0-5	Bridge Details
RSP	B2-8	Pile Details Class 200
RSP	B6-21	Joint Seals (Maximum Movement Rating = 2")
	B7-1	Box Girder Details
	B7-10	Utility Opening - Box Girder
	B8-5	Cast-in-place Prestressed Girder Details

Standard Plan Sheet No.
Detail No.

MARCH LANE UC #29-0193
QUANTITIES

PUBLIC SAFETY PLAN	LUMP	SUM
REMOVE CONCRETE DECK SURFACE	7,940	SQFT
SALVAGE METAL BRIDGE RAILING	359	LF
PREPARE CONCRETE BRIDGE DECK SURFACE	13,180	SQFT
BRIDGE REMOVAL (PORTION), LOCATION G	LUMP	SUM
STRUCTURE EXCAVATION (BRIDGE)	64	CY
STRUCTURE BACKFILL (BRIDGE)	60	CY
AGGREGATE BASE (APPROACH SLAB)	24	CY
GROOVE POLYESTER CONCRETE OVERLAY	1,460	SQYD
FURNISH PILING (CLASS 200)(ALTERNATIVE W)	1,929	LF
DRIVE PILE (CLASS 200)(ALTERNATIVE W)	24	EA
PRESTRESSING CAST-IN-PLACE CONCRETE	LUMP	SUM
STRUCTURAL CONCRETE, BRIDGE	765	CY
STRUCTURAL CONCRETE, APPROACH SLAB (TYPE N)	112	CY
STRUCTURAL CONCRETE, APPROACH SLAB (TYPE R)	236	CY
PAVING NOTCH EXTENSION	50	CF
DRILL AND BOND DOWEL	180	LF
FURNISH POLYESTER CONCRETE OVERLAY	1,100	CF
PLACE POLYESTER CONCRETE OVERLAY	13,180	SQFT
JOINT SEAL (MR 1")	316	LF
BAR REINFORCING STEEL (BRIDGE)	129,700	LB
CONCRETE BARRIER (TYPE 60A MODIFIED)	195	LF

INDEX TO BRIDGE PLANS

SHEET NO.	TITLE
1.	GENERAL PLAN
2.	GENERAL NOTES
3.	DECK GRADES
4.	FOUNDATION PLAN
5.	ABUTMENT 1 LAYOUT
6.	ABUTMENT 2 LAYOUT
7.	ABUTMENT DETAILS NO. 1
8.	ABUTMENT DETAILS NO. 2
9.	ABUTMENT DETAILS NO. 3
10.	TYPICAL SECTION
11.	GIRDER LAYOUT
12.	LIMITS OF STRUCTURE APPROACH
13.	STRUCTURE APPROACH TYPE N(30D)
14.	STRUCTURE APPROACH TYPE R(30D)
15.	STRUCTURE APPROACH DRAINAGE DETAILS
16.	SOIL LEGEND 1 OF 2
17.	SOIL LEGEND 2 OF 2
18.	LOG OF TEST BORINGS 1 OF 3
19.	LOG OF TEST BORINGS 2 OF 3
20.	LOG OF TEST BORINGS 3 OF 3

DESIGN OVERSIGHT John Fujimoto
8-2-10
SIGN OFF DATE

	BY		CHECKED	
DESIGN	BY	P. SHINN	CHECKED	A. WANG
DETAILS	BY	G. WOLDETSADIK	CHECKED	A. WANG
QUANTITIES	BY	G. WOLDETSADIK	CHECKED	W. Y. TAN

PREPARED FOR THE STATE OF CALIFORNIA DEPARTMENT OF TRANSPORTATION

P. SHINN
PROJECT ENGINEER

BRIDGE NO. 29-0193
POST MILE 29.99

MARCH LANE UNDERCROSSING (WIDEN)
GENERAL NOTES

DESIGN DETAIL SHEET (ENGLISH) (REV. 06-01-09)

ORIGINAL SCALE IN INCHES FOR REDUCED PLANS 0 1 2 3

CU 06240
EA 0G4701

DISREGARD PRINTS BEARING EARLIER REVISION DATES

REVISION DATES (PRELIMINARY STAGE ONLY) 10/16/09 12/4/09 1/15/10 4/21/10 6/11/10 7/28/10

SHEET 2 OF 20

FILE => 29-0193-b-gnotes.dgn

USERNAME => rrmmguye DATE PLOTTED => 13-OCT-2010 TIME PLOTTED => 15:11

DIST	COUNTY	ROUTE	POST MILES TOTAL PROJECT	SHEET No	TOTAL SHEETS
10	SJ	5	25.0/32.7	1015	1132

REGISTERED STRUCTURAL ENGINEER — DATE 7/28/10

PLANS APPROVAL DATE 10-11-10

REGISTERED PROFESSIONAL ENGINEER — PHILIP SHINN — No. S 4967 — Exp. 12/31/10 — STRUCTURAL — STATE OF CALIFORNIA

The State of California or its officers or agents shall not be responsible for the accuracy or completeness of scanned copies of this plan sheet.

RAJAPPAN & MEYER
CONSULTING ENGINEERS, INC.
1038 LEIGH AVE, SUITE 100
SAN JOSE, CA 95126

SAN JOAQUIN COUNCIL OF GOVERNMENTS
555 E. WEBER AVENUE
STOCKTON, CA 95202

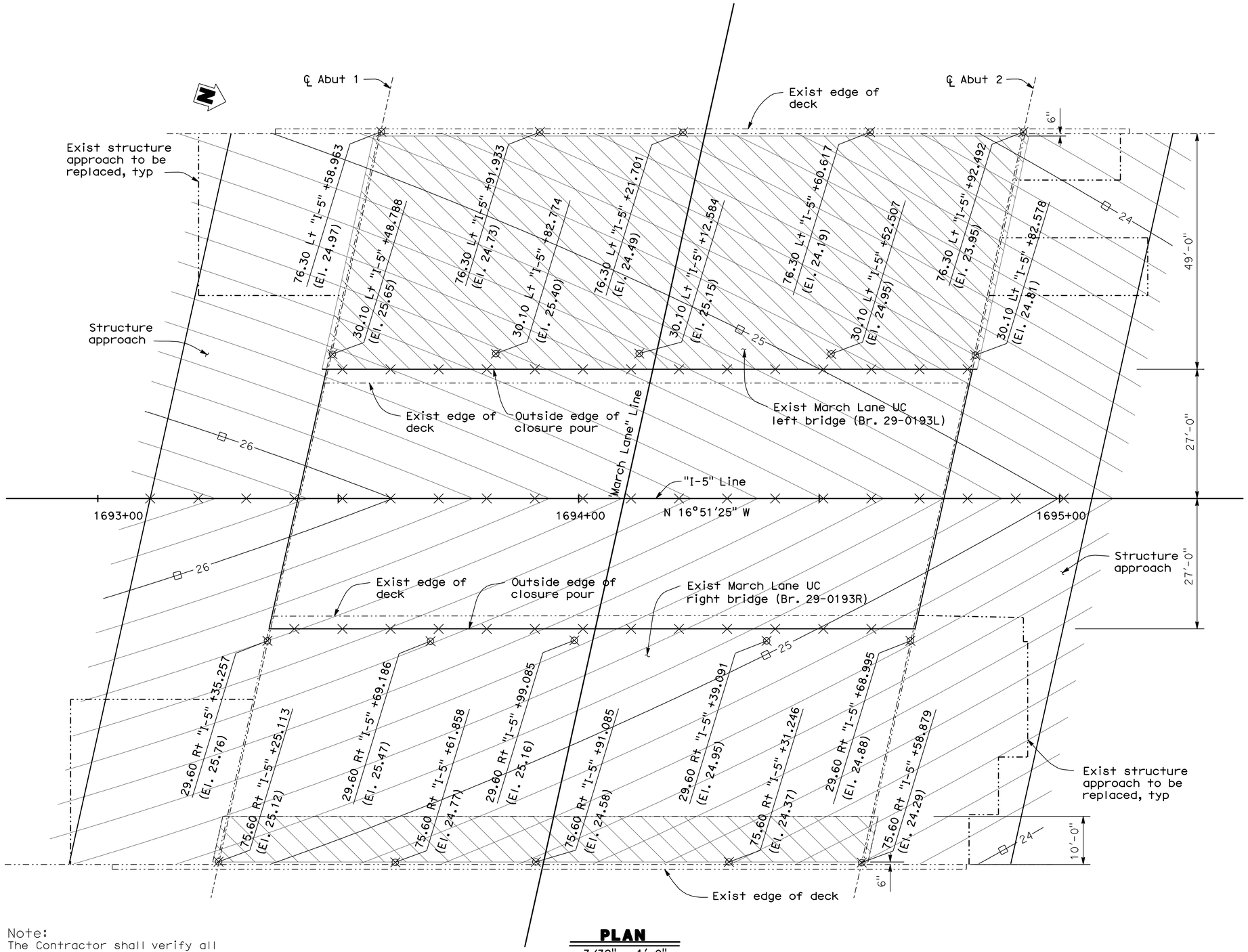

PLAN
3/32" = 1'-0"

Note:
The Contractor shall verify all controlling field dimensions before ordering or fabricating any material

NOTES:

1. indicates existing structure
2. indicates limits of remove concrete deck surface
3. indicates surveyed existing top of deck elevation
4. indicates even foot contours
5. indicates 10ft intervals measured along "I-5 Line"
6. Contour interval = 0.1ft
7. Contours do not include camber or falsework settlement.
8. Maximum grinding on top of existing deck should not greater than 3/4".
9. Contours shown at existing bridge indicate top of polyester concrete overlay.
10. Contour shown at widening and structure approach indicate finish concrete deck elevation.
11. For limits of prepare concrete bridge deck surface and polyester concrete overlay with longitudinal grooving, see "General Plan" and "Typical Section" sheets.

DESIGN OVERSIGHT — John Fujimoto — 8-2-10 — SIGN OFF DATE

DESIGN	BY P. SHINN	CHECKED A. WANG	
DETAILS	BY G. WOLDETSADIK	CHECKED A. WANG	
QUANTITIES	BY G. WOLDETSADIK	CHECKED W. Y. TAN	

PREPARED FOR THE STATE OF CALIFORNIA DEPARTMENT OF TRANSPORTATION

P. SHINN — PROJECT ENGINEER

BRIDGE NO. 29-0193 — POST MILE 29.99

MARCH LANE UNDERCROSSING (WIDEN)
DECK GRADES

DESIGN DETAIL SHEET (ENGLISH) (REV. 06-01-09)

ORIGINAL SCALE IN INCHES FOR REDUCED PLANS 0 1 2 3

CU 06240
EA 0G4701

DISREGARD PRINTS BEARING EARLIER REVISION DATES — REVISION DATES (PRELIMINARY STAGE ONLY) 10/16/09 12/4/09 1/15/10 4/21/10 6/11/10 7/28/10

SHEET 3 OF 20

FILE => 29-0193-d-dg01.dgn

USERNAME => trmmguye DATE PLOTTED => 13-OCT-2010 TIME PLOTTED => 15:12

DIST	COUNTY	ROUTE	POST MILES TOTAL PROJECT	SHEET No	TOTAL SHEETS
10	SJ	5	25.0/32.7	1016	1132

REGISTERED STRUCTURAL ENGINEER — DATE 7/28/10

PLANS APPROVAL DATE 10-11-10

REGISTERED PROFESSIONAL ENGINEER — PHILIP SHINN — No. S 4967 — Exp. 12/31/10 — STRUCTURAL — STATE OF CALIFORNIA

The State of California or its officers or agents shall not be responsible for the accuracy or completeness of scanned copies of this plan sheet.

RAJAPPAN & MEYER
CONSULTING ENGINEERS, INC.
1038 LEIGH AVE, SUITE 100
SAN JOSE, CA 95126

SAN JOAQUIN COUNCIL OF GOVERNMENTS
555 E. WEBER AVENUE
STOCKTON, CA 95202

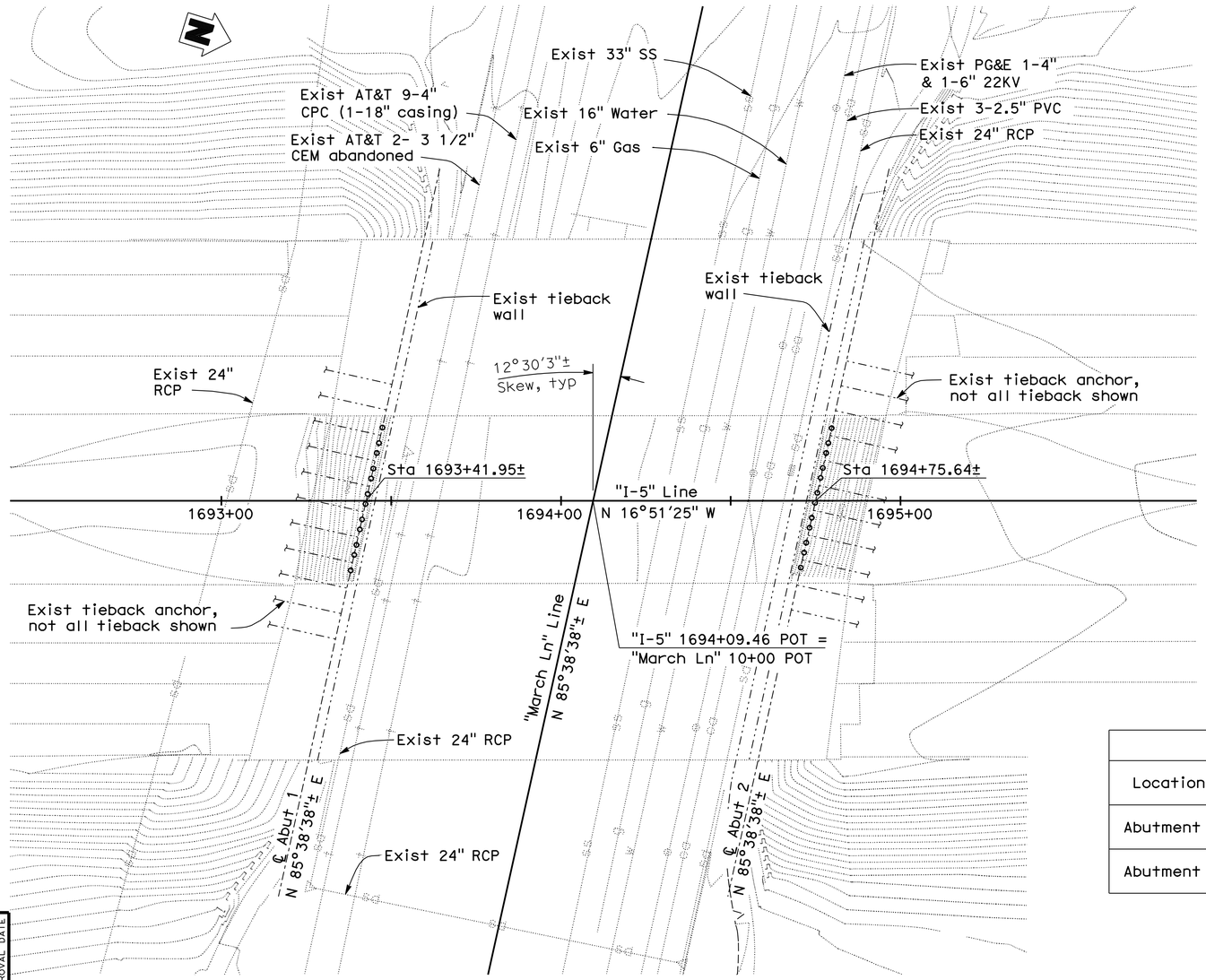

PLAN
1" = 20'

NOTES:

1. All abutments center lines are parallel to existing abutment.

◌ Indicates piles, not all piles shown

X 22.3 Indicates spot elevation

BENCH MARK AND DATUM

Monument	Coordinates		Elev	Caltrans Description/Location
	Northing	Easting		
80	2181992.25	6318698.58	24.87	IRON PIPE W/ "MVE CONTROL" CAP
82	2182142.04	6318483.90	23.80	IRON PIPE W/ "MVE CONTROL" CAP

NOTE:

There is a vertical datum difference between the project datum (NAVD 88) and the as-built datum (NGVD 29). The following conversion was used in design:
Datum Conversion: Elev (NAVD 88) = Elev (NGVD 29) + 2.37′

PILE DATA TABLE

Location	Pile Type	Design Loading (Service) (kips)	Nominal Resistance (kips)		Design Tip Elev	Specified Tip Elev	Nominal Driving Resistance Required (kips)
			Compression	Tension			
Abutment 1	Class 200 Alt 'W'	170	260	0	-57.5(a),-7.0(c)	-68.5	260
Abutment 2	Class 200 Alt 'W'	170	260	0	-69.5(a),-7.5(c)	-69.5	260

NOTES:

1. Design tip elevations for Abutments are controlled by (a) Compression, (c) Lateral Load,
2. The specified tip elevation shall not be raised above the design tip elevation for lateral load.
3. The specified tip elevation has been selected to keep the same pile length for "ease of pile fabrication."

GEOTECHNICAL PROFESSIONAL APPROVAL DATE 1/15/10

Note:
The Contractor shall verify all controlling field dimensions before ordering or fabricating any material

DESIGN OVERSIGHT John Fujimoto — 8-2-10 — SIGN OFF DATE

SCALE: AS SHOWN | VERT.DATUM NAVD88 | HORZ.DATUM CCS83, (2007.00), ZONE 3
PHOTOGRAMMETRY AS OF: (N/A) FIELD SURVEYS | ALIGNMENT TIES APPROVED GPS REPORT DATED 7-6-09
SURVEYED BY RYAN VANCE | DRAFTED BY MIKE KORDAZAKIS
FIELD CHECKED BY JEFF CISSELL | CHECKED BY KEVIN LANG

DESIGN BY P. SHINN | CHECKED A. WANG
DETAILS BY G. WOLDETSADIK | CHECKED A. WANG
QUANTITIES BY G. WOLDETSADIK | CHECKED W. Y. TAN

PREPARED FOR THE STATE OF CALIFORNIA DEPARTMENT OF TRANSPORTATION

P. SHINN
PROJECT ENGINEER

BRIDGE NO. 29-0193
POST MILE 29.99

MARCH LANE UNDERCROSSING (WIDEN)
FOUNDATION PLAN

FOUNDATION PLAN SHEET (ENGLISH) (REV. 06-01-09)

ORIGINAL SCALE IN INCHES FOR REDUCED PLANS 0 1 2 3

CU 06240
EA 0G4701

DISREGARD PRINTS BEARING EARLIER REVISION DATES

REVISION DATES (PRELIMINARY STAGE ONLY): 6/2/09 9/4/09 10/16/09 12/4/09 1/15/10 4/21/10 6/11/10 7/28/10

SHEET 4 OF 20

FILE => 29-0193-e-fp101.dgn

USERNAME => trmnguye DATE PLOTTED => 13-OCT-2010 TIME PLOTTED => 15:12

DIST	COUNTY	ROUTE	POST MILES TOTAL PROJECT	SHEET No	TOTAL SHEETS
10	SJ	5	25.0/32.7	1017	1132

REGISTERED STRUCTURAL ENGINEER — DATE 7/28/10

PLANS APPROVAL DATE 10-11-10

REGISTERED PROFESSIONAL ENGINEER — PHILIP SHINN — No. S 4967 — Exp. 12/31/10 — STRUCTURAL — STATE OF CALIFORNIA

The State of California or its officers or agents shall not be responsible for the accuracy or completeness of scanned copies of this plan sheet.

RAJAPPAN & MEYER CONSULTING ENGINEERS, INC.
1038 LEIGH AVE, SUITE 100
SAN JOSE, CA 95126

SAN JOAQUIN COUNCIL OF GOVERNMENTS
555 E. WEBER AVENUE
STOCKTON, CA 95202

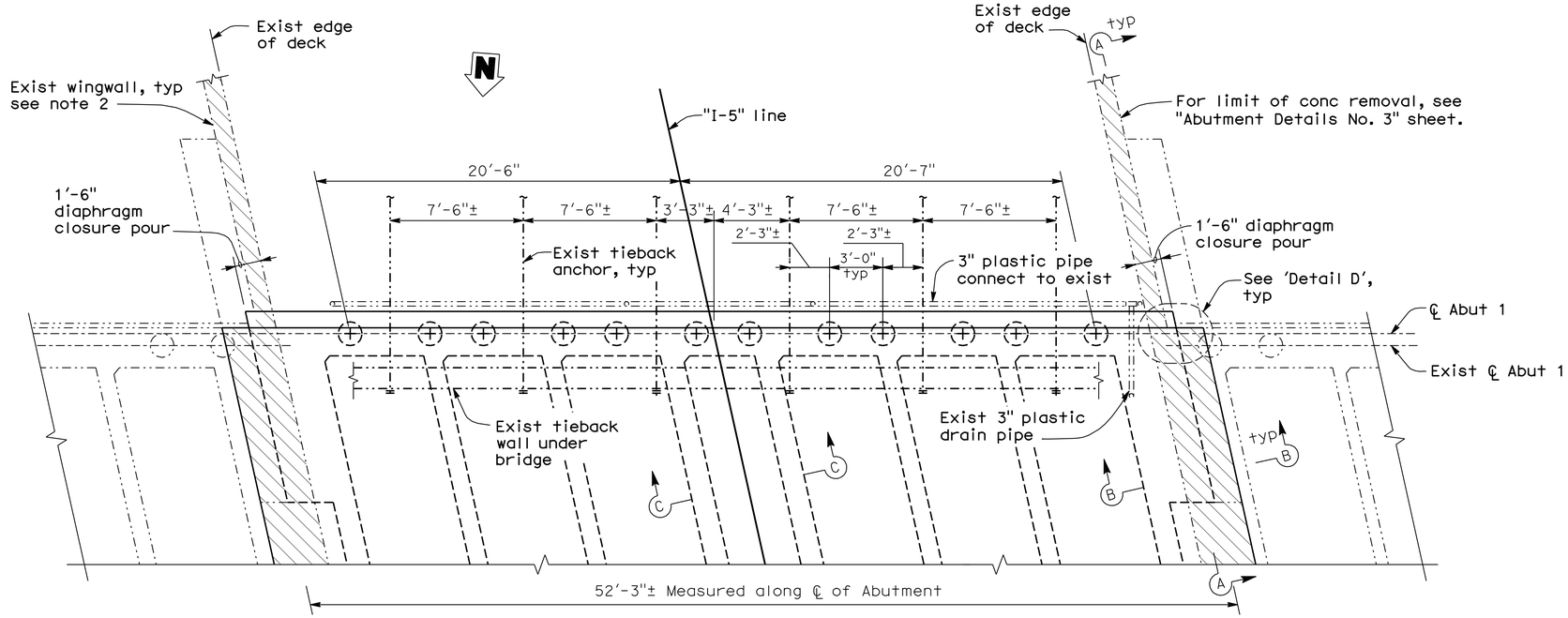

PLAN
1/4" = 1'-0"

NOTES:

1. The contractor shall verify all the existing tieback locations before the Abutment construction.
2. For typical Abutment sections, see "Abutment Details No. 1" sheet.
3. For Sections A-A, B-B, C-C and 'Detail D' see "Abutment Details No. 2" sheet.
4. Saw cut 2" deep before removal portion of tieback wall. Cut line shall be parallel to bridge soffit.
5. Cut off the tieback tendon before remove tieback assembly.

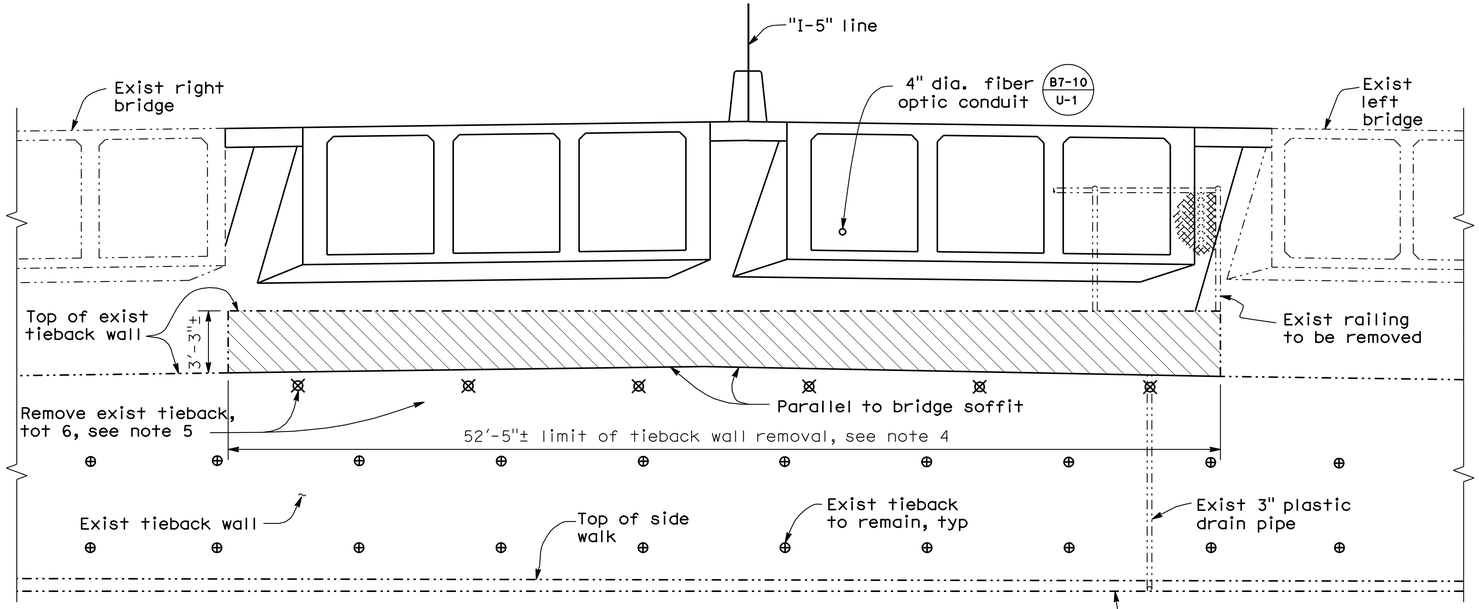

ELEVATION
1/4" = 1'-0"

Indicates existing structure

Indicates concrete removal

Indicates existing tieback to be removed

Note:
The Contractor shall verify all controlling field dimensions before ordering or fabricating any material

DESIGN OVERSIGHT — John Fujimoto — 8-2-10 — SIGN OFF DATE

	BY		CHECKED	
DESIGN	BY	P. SHINN	CHECKED	A. WANG
DETAILS	BY	G. WOLDETSADIK	CHECKED	A. WANG
QUANTITIES	BY	G. WOLDETSADIK	CHECKED	W. Y. TAN

PREPARED FOR THE STATE OF CALIFORNIA DEPARTMENT OF TRANSPORTATION

P. SHINN — PROJECT ENGINEER

BRIDGE NO. 29-0193 — POST MILE 29.99

MARCH LANE UNDERCROSSING (WIDEN)
ABUTMENT 1 LAYOUT

DESIGN DETAIL SHEET (ENGLISH) (REV. 06-01-09)

ORIGINAL SCALE IN INCHES FOR REDUCED PLANS 0 1 2 3

CU 06240
EA 0G4701

DISREGARD PRINTS BEARING EARLIER REVISION DATES — REVISION DATES (PRELIMINARY STAGE ONLY) 10/16/09 12/4/09 1/15/10 4/21/10 6/11/10 7/28/10

SHEET 5 OF 20

FILE => 29-0193-f-a01_1o1.dgn

USERNAME => trmnguye DATE PLOTTED => 13-OCT-2010 TIME PLOTTED => 15:12

DIST	COUNTY	ROUTE	POST MILES TOTAL PROJECT	SHEET No	TOTAL SHEETS
10	SJ	5	25.0/32.7	1018	1132

REGISTERED STRUCTURAL ENGINEER — DATE 7/28/10

PLANS APPROVAL DATE 10-11-10

REGISTERED PROFESSIONAL ENGINEER — PHILIP SHINN — No. S 4967 — Exp. 12/31/10 — STRUCTURAL — STATE OF CALIFORNIA

The State of California or its officers or agents shall not be responsible for the accuracy or completeness of scanned copies of this plan sheet.

RAJAPPAN & MEYER CONSULTING ENGINEERS, INC.
1038 LEIGH AVE, SUITE 100
SAN JOSE, CA 95126

SAN JOAQUIN COUNCIL OF GOVERNMENTS
555 E. WEBER AVENUE
STOCKTON, CA 95202

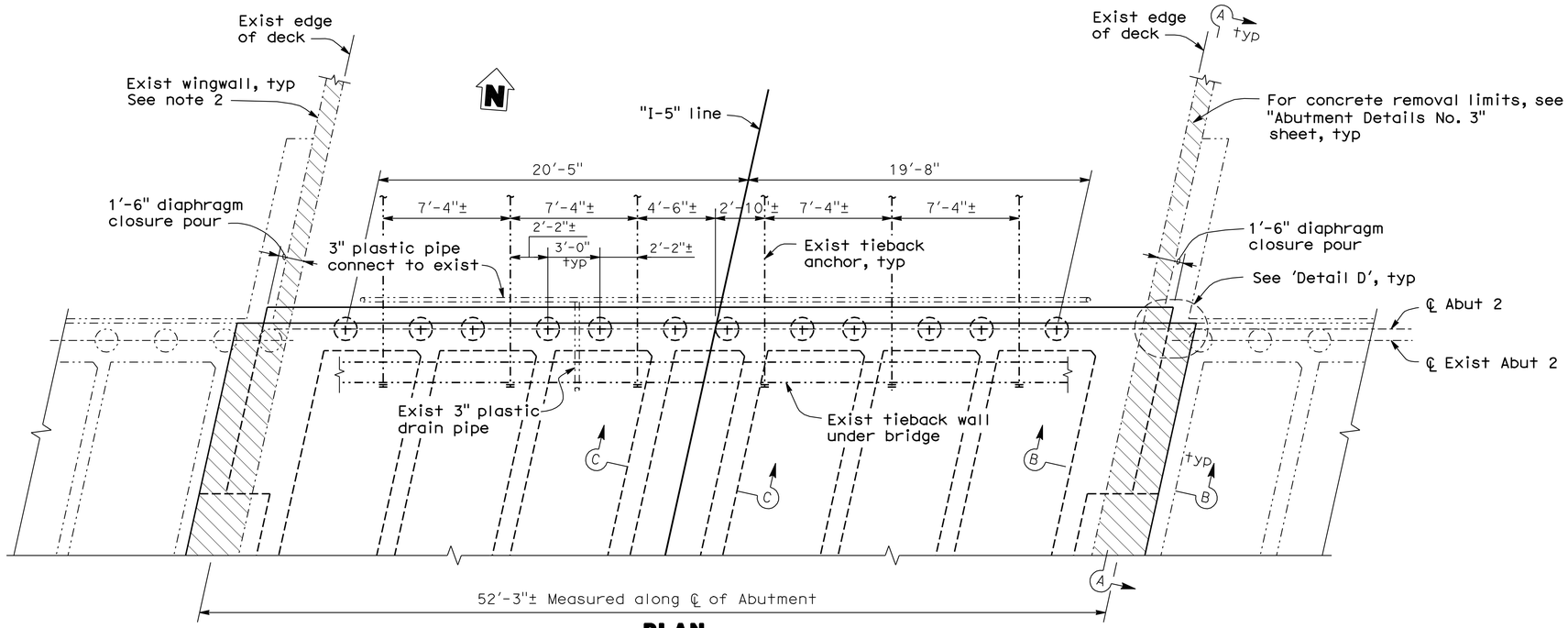

PLAN
1/4" = 1'-0"

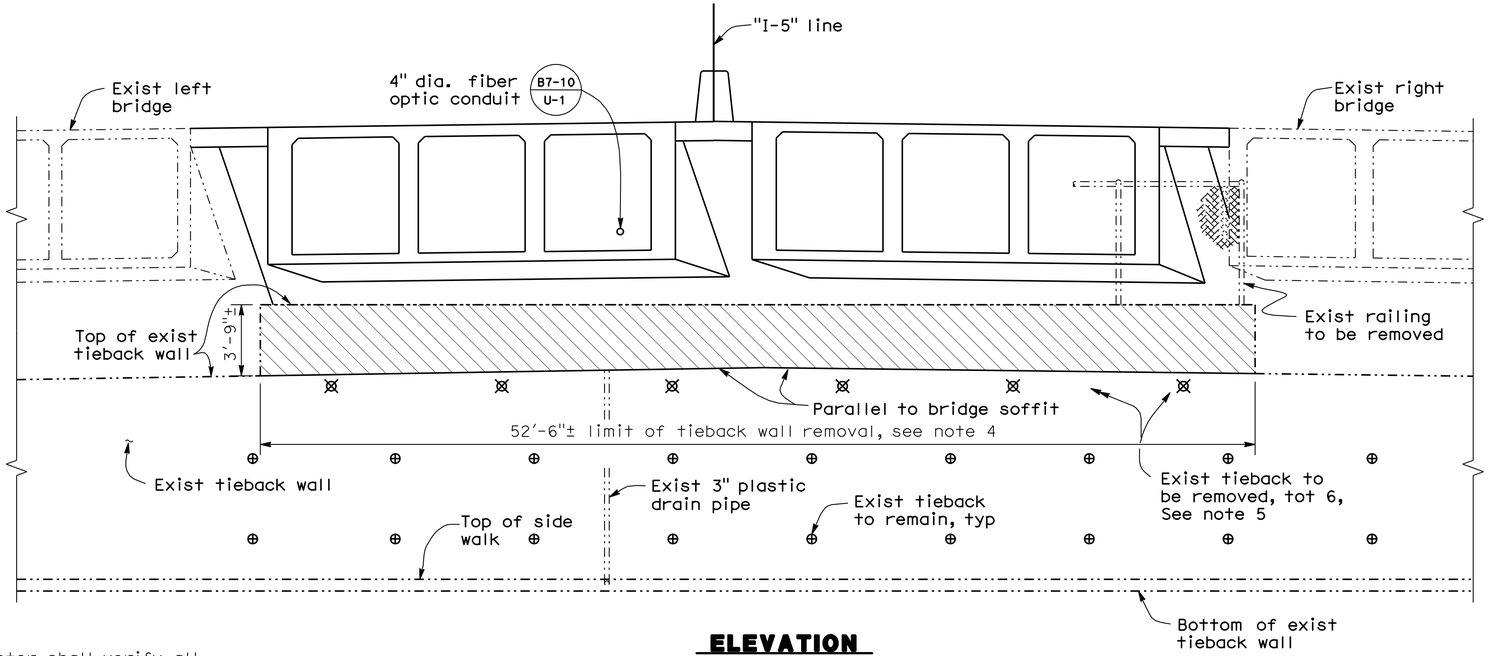

ELEVATION
1/4" = 1'-0"

NOTES:

1. The contractor shall verify all the existing tieback locations before the Abutment construction.
2. For typical abutment section, see "Abutment Details No. 1" sheet.
3. For 'Section A-A', 'Section B-B',`Section C-C' and `Detail D' see "Abutment Details No. 2" sheet.
4. Saw cut 2" deep before removal portion of tieback wall. Cut line shall be parallel to bridge soffit.
5. Cut off the tieback tendon before remove tieback assembly.

Indicates existing structure

Indicates concrete removal

Indicates existing tieback to be removed

Note:
The Contractor shall verify all controlling field dimensions before ordering or fabricating any material

DESIGN OVERSIGHT John Fujimoto — 8-2-10 SIGN OFF DATE

	BY		CHECKED
DESIGN	P. SHINN		A. WANG
DETAILS	G. WOLDETSADIK		A. WANG
QUANTITIES	G. WOLDETSADIK		W. Y. TAN

PREPARED FOR THE STATE OF CALIFORNIA DEPARTMENT OF TRANSPORTATION

P. SHINN — PROJECT ENGINEER

BRIDGE NO. 29-0193
POST MILE 29.99

MARCH LANE UNDERCROSSING (WIDEN)
ABUTMENT 2 LAYOUT

DESIGN DETAIL SHEET (ENGLISH) (REV. 06-01-09)

ORIGINAL SCALE IN INCHES FOR REDUCED PLANS 0 1 2 3

CU 06240
EA 0G4701

DISREGARD PRINTS BEARING EARLIER REVISION DATES

REVISION DATES (PRELIMINARY STAGE ONLY): 10/16/09 12/4/09 1/15/10 4/21/10 6/11/10 7/28/10

SHEET 6 OF 20

FILE => 29-0193-f-a02_lo1.dgn

USERNAME => frmguye DATE PLOTTED => 13-OCT-2010 TIME PLOTTED => 15:12

DIST	COUNTY	ROUTE	POST MILES TOTAL PROJECT	SHEET No	TOTAL SHEETS
10	SJ	5	25.0/32.7	1019	1132

REGISTERED STRUCTURAL ENGINEER — DATE 7/28/10

PLANS APPROVAL DATE 10-11-10

REGISTERED PROFESSIONAL ENGINEER — PHILIP SHINN — No. S 4967 — Exp. 12/31/10 — STRUCTURAL — STATE OF CALIFORNIA

The State of California or its officers or agents shall not be responsible for the accuracy or completeness of scanned copies of this plan sheet.

RAJAPPAN & MEYER
CONSULTING ENGINEERS, INC.
1038 LEIGH AVE, SUITE 100
SAN JOSE, CA 95126

SAN JOAQUIN COUNCIL OF GOVERNMENTS
555 E. WEBER AVENUE
STOCKTON, CA 95202

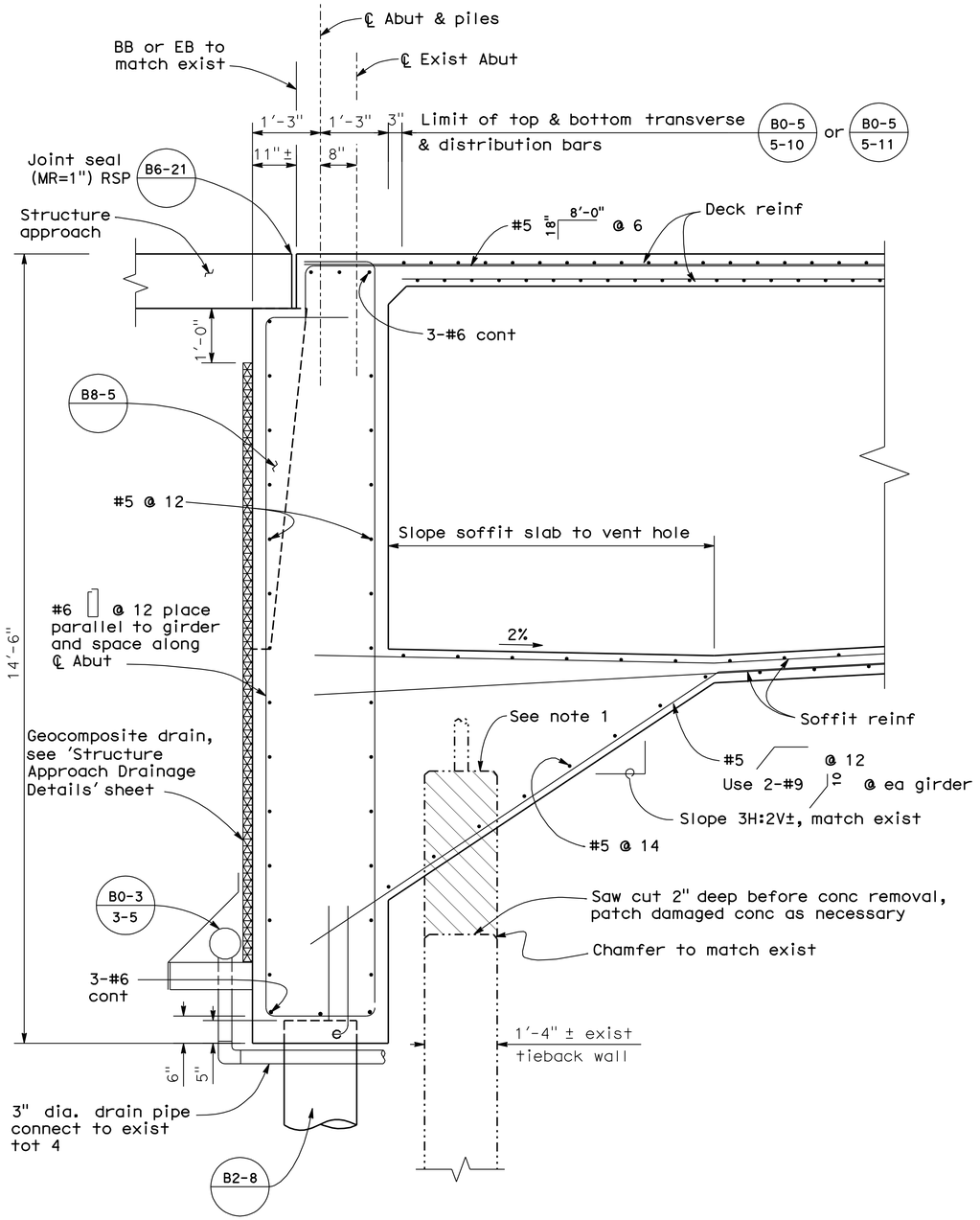

TYPICAL ABUTMENT SECTION

3/4" = 1'-0"

Note:
The Contractor shall verify all controlling field dimensions before ordering or fabricating any material

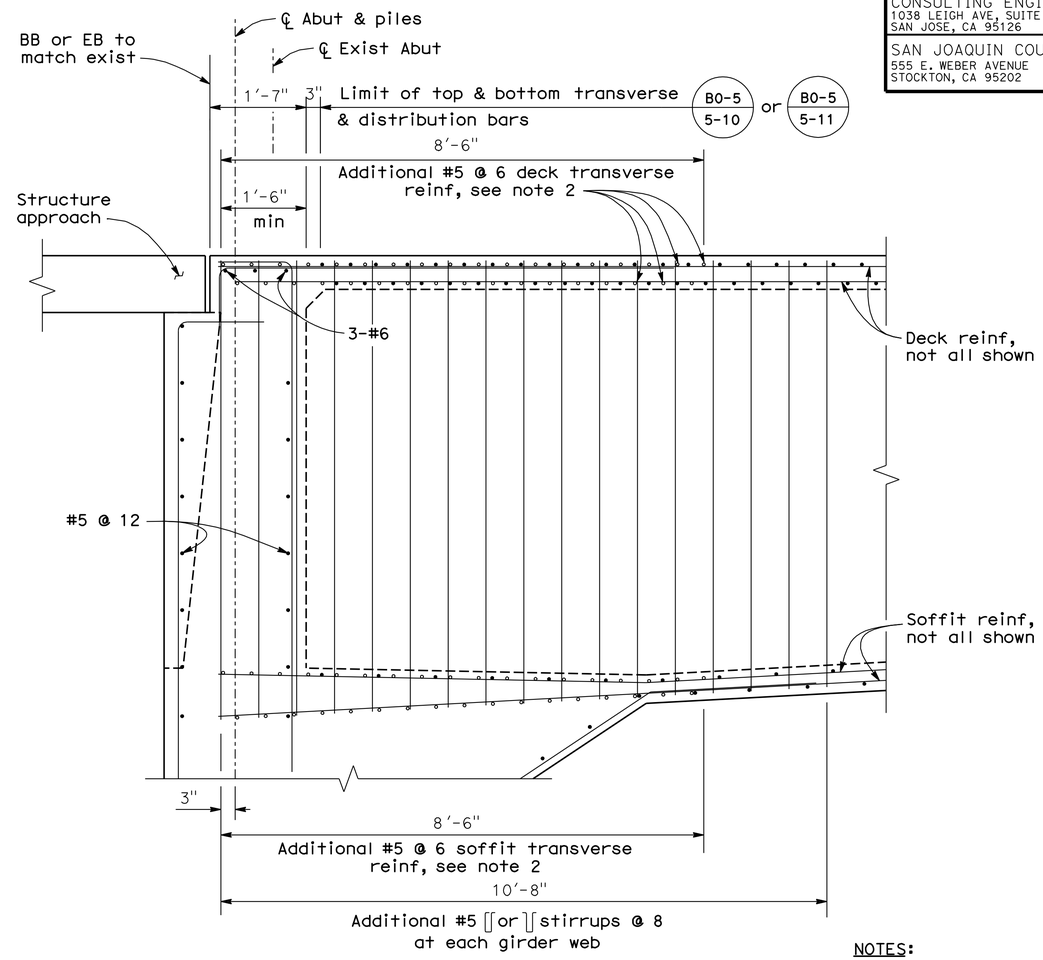

END DIAPHRAGM

3/4" = 1'-0"

NOTES:

1. Remove portion of tieback wall, see "Abutment Layout" sheet.
2. Place top and bottom staggered parallel to ℄ Abut and space along "I-5" Line between face of exterior girders.

Indicates existing structure

Indicates concrete removal

Additional transverse reinforcement

DESIGN OVERSIGHT John Fujimoto — 8-2-10 SIGN OFF DATE	DESIGN	BY P. SHINN	CHECKED A. WANG	PREPARED FOR THE STATE OF CALIFORNIA DEPARTMENT OF TRANSPORTATION	P. SHINN PROJECT ENGINEER
	DETAILS	BY G. WOLDETSADIK	CHECKED A. WANG		
	QUANTITIES	BY G. WOLDETSADIK	CHECKED W. Y. TAN		

BRIDGE NO. 29-0193 — POST MILE 29.99

MARCH LANE UNDERCROSSING (WIDEN)

ABUTMENT DETAILS NO. 1

DESIGN DETAIL SHEET (ENGLISH) (REV. 06-01-09)

ORIGINAL SCALE IN INCHES FOR REDUCED PLANS 0 1 2 3

CU 06240
EA 0G4701

DISREGARD PRINTS BEARING EARLIER REVISION DATES

REVISION DATES (PRELIMINARY STAGE ONLY): 10/16/09 12/4/09 1/15/10 4/21/10 6/11/10 7/28/10

SHEET 7 OF 20

FILE => 29-0193-f-adt01.dgn

USERNAME => trimmgye DATE PLOTTED => 13-OCT-2010 TIME PLOTTED => 15:18

DIST	COUNTY	ROUTE	POST MILES TOTAL PROJECT	SHEET No	TOTAL SHEETS
10	SJ	5	25.0/32.7	1020	1132

REGISTERED STRUCTURAL ENGINEER — DATE 7/28/10

PLANS APPROVAL DATE 10-11-10

REGISTERED PROFESSIONAL ENGINEER — PHILIP SHINN — No. S 4967 — Exp. 12/31/10 — STRUCTURAL — STATE OF CALIFORNIA

The State of California or its officers or agents shall not be responsible for the accuracy or completeness of scanned copies of this plan sheet.

RAJAPPAN & MEYER
CONSULTING ENGINEERS, INC.
1038 LEIGH AVE, SUITE 100
SAN JOSE, CA 95126

SAN JOAQUIN COUNCIL OF GOVERNMENTS
555 E. WEBER AVENUE
STOCKTON, CA 95202

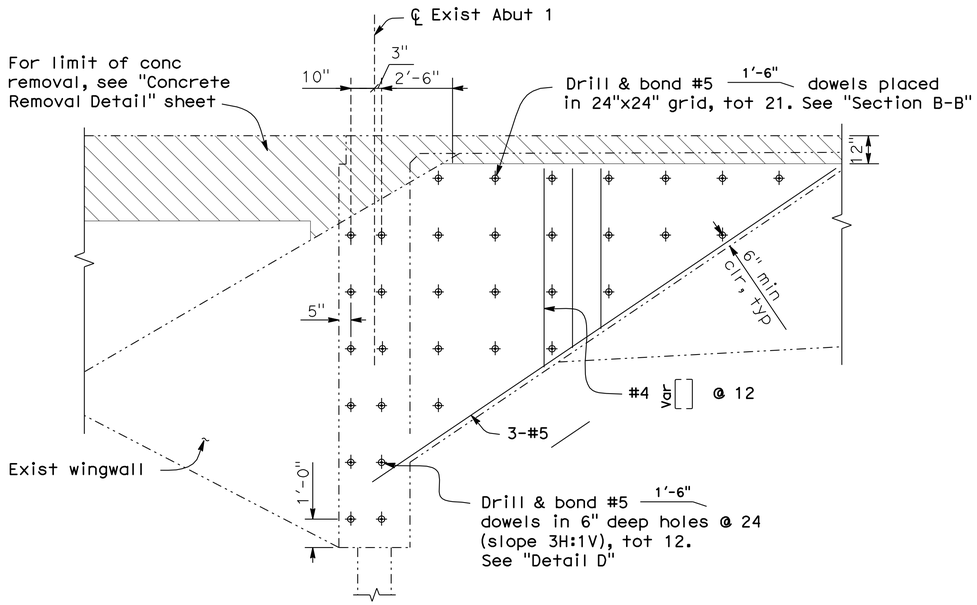

SECTION A-A
3/8" = 1'-0"

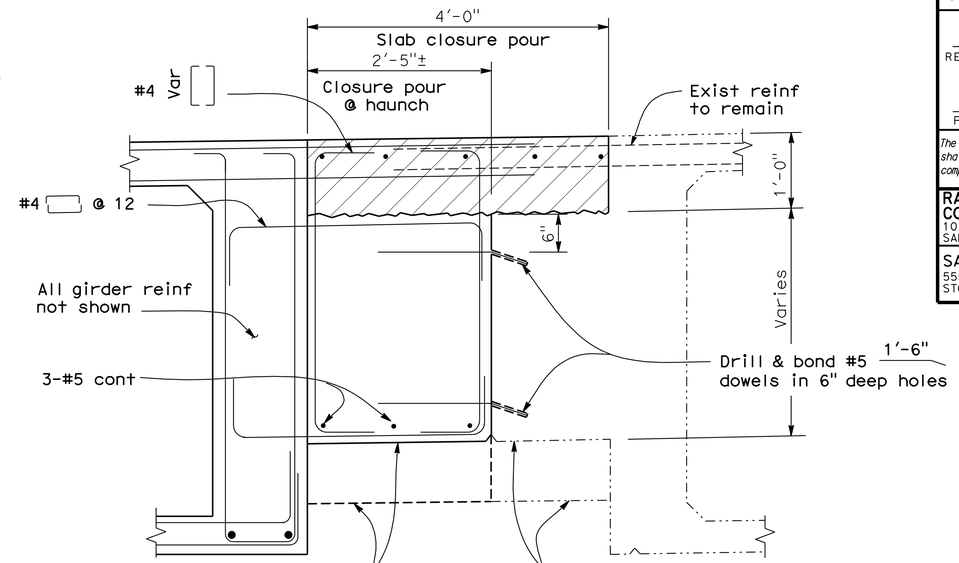

SECTION B-B
1" = 1'-0"

NOTES:

1. Section A-A, Section B-B, Section C-C and Detail D for west side of Abutment 1 (inside widen) shown, for other locations are similar.

Indicates existing structure

Indicates concrete removal

Indicates drill and bond

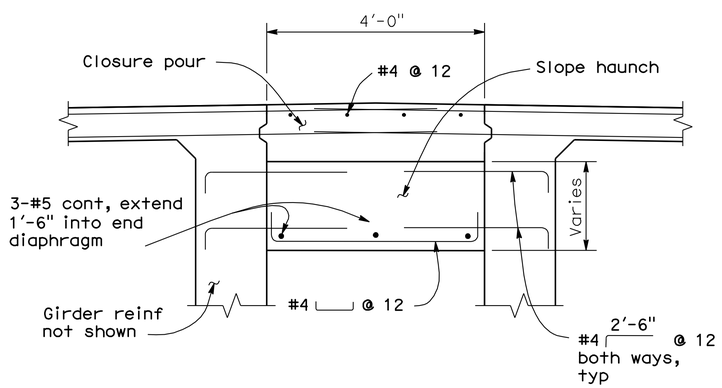

SECTION C-C
3/4" = 1'-0"

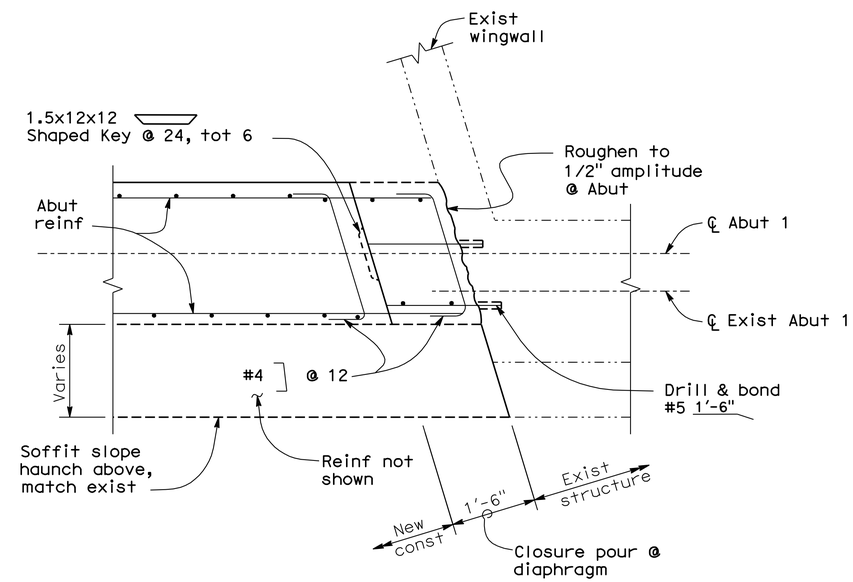

DETAIL D
3/4" = 1'-0"

Note:
The Contractor shall verify all controlling field dimensions before ordering or fabricating any material

DESIGN OVERSIGHT John Fujimoto — 8-2-10 SIGN OFF DATE

DESIGN	BY P. SHINN	CHECKED A. WANG	
DETAILS	BY G. WOLDETSADIK	CHECKED A. WANG	
QUANTITIES	BY G. WOLDETSADIK	CHECKED W. Y. TAN	

PREPARED FOR THE STATE OF CALIFORNIA DEPARTMENT OF TRANSPORTATION

P. SHINN — PROJECT ENGINEER

BRIDGE NO. 29-0193 — POST MILE 29.99

MARCH LANE UNDERCROSSING (WIDEN)
ABUTMENT DETAILS NO. 2

DESIGN DETAIL SHEET (ENGLISH) (REV. 06-01-09)

ORIGINAL SCALE IN INCHES FOR REDUCED PLANS 0 1 2 3

CU 06240
EA 0G4701

DISREGARD PRINTS BEARING EARLIER REVISION DATES

REVISION DATES (PRELIMINARY STAGE ONLY) 10/16/09 12/4/09 1/15/10 4/21/10 6/11/10 7/28/10

SHEET 8 OF 20

FILE => 29-0193-f-adt02.dgn

USERNAME => trimmguye DATE PLOTTED => 13-OCT-2010 TIME PLOTTED => 15:12

DIST	COUNTY	ROUTE	POST MILES TOTAL PROJECT	SHEET No	TOTAL SHEETS
10	SJ	5	25.0/32.7	1021	1132

REGISTERED STRUCTURAL ENGINEER — DATE 7/28/10

10-11-10
PLANS APPROVAL DATE

REGISTERED PROFESSIONAL ENGINEER — PHILIP SHINN — No. S 4967 — Exp. 12/31/10 — STRUCTURAL — STATE OF CALIFORNIA

The State of California or its officers or agents shall not be responsible for the accuracy or completeness of scanned copies of this plan sheet.

RAJAPPAN & MEYER
CONSULTING ENGINEERS, INC.
1038 LEIGH AVE, SUITE 100
SAN JOSE, CA 95126

SAN JOAQUIN COUNCIL OF GOVERNMENTS
555 E. WEBER AVENUE
STOCKTON, CA 95202

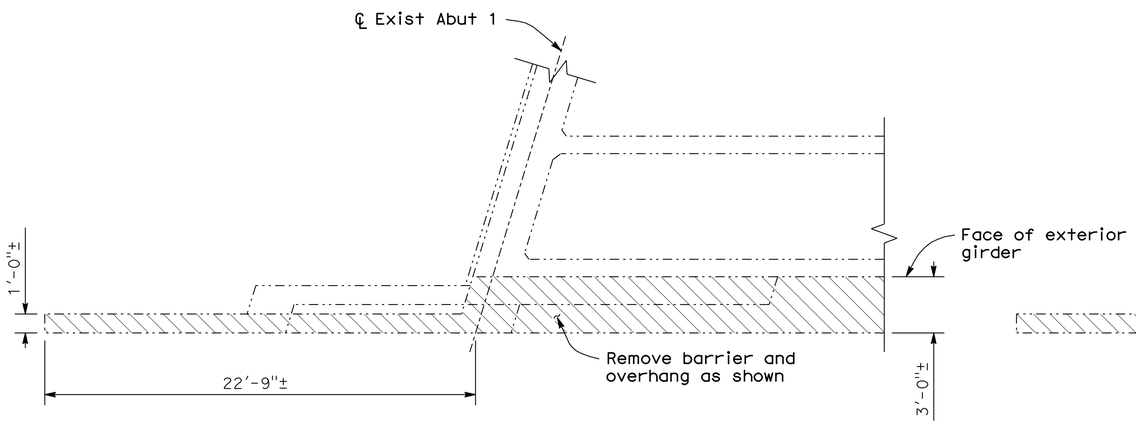

PLAN
1/4" = 1'-0"

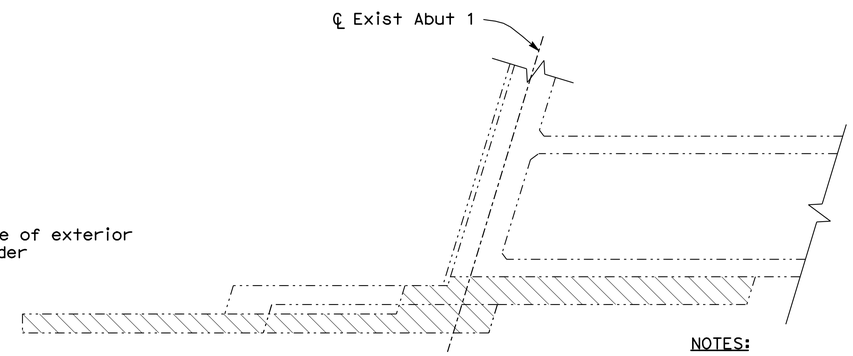

SECTION A-A
1/4" = 1'-0"

NOTES:

1. For location of concrete removal, see "General Plan" sheet.
2. Concrete removal detail at west side of Abutment 1 shown, the other locations are similar.

-·-·-·- Indicates existing structure

▨ Indicates concrete removal

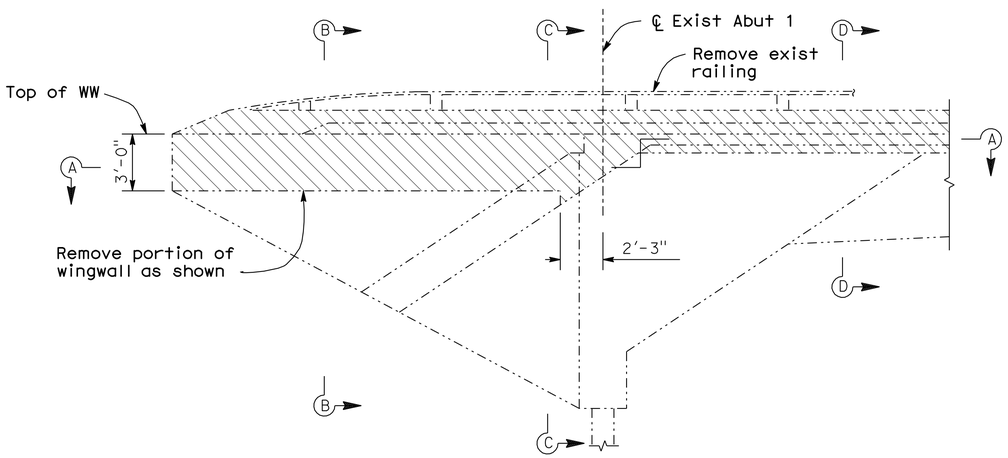

ELEVATION
1/4" = 1'-0"

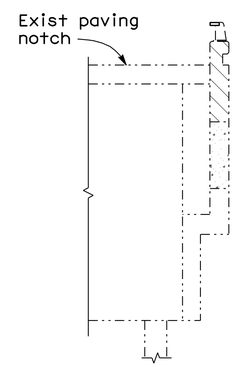

SECTION B-B
1/4" = 1'-0"

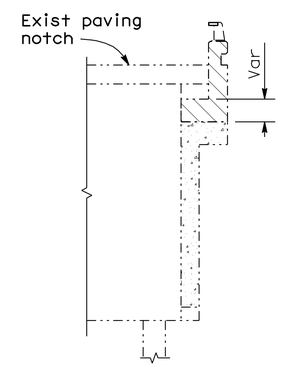

SECTION C-C
1/4" = 1'-0"

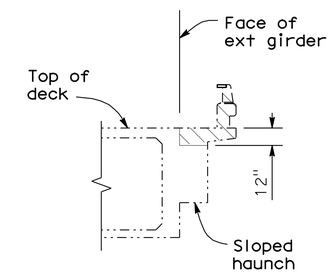

SECTION D-D
1/4" = 1'-0"

Note:
The Contractor shall verify all controlling field dimensions before ordering or fabricating any material

DESIGN OVERSIGHT — John Fujimoto
8-2-10
SIGN OFF DATE

	BY		CHECKED
DESIGN	P. SHINN		A. WANG
DETAILS	G. WOLDETSADIK		A. WANG
QUANTITIES	G. WOLDETSADIK		W. Y. TAN

PREPARED FOR THE STATE OF CALIFORNIA DEPARTMENT OF TRANSPORTATION

P. SHINN
PROJECT ENGINEER

BRIDGE NO. 29-0193
POST MILE 29.99

MARCH LANE UNDERCROSSING (WIDEN)
ABUTMENT DETAILS NO. 3

DESIGN DETAIL SHEET (ENGLISH) (REV. 06-01-09)

ORIGINAL SCALE IN INCHES FOR REDUCED PLANS 0 1 2 3

CU 06240
EA 0G4701

DISREGARD PRINTS BEARING EARLIER REVISION DATES → REVISION DATES (PRELIMINARY STAGE ONLY) 10/16/09 12/4/09 1/15/10 4/21/10 6/11/10 7/28/10

SHEET 9 OF 20

FILE => 29-0193-f-adt03.dgn

USERNAME => frmnguye DATE PLOTTED => 13-OCT-2010 TIME PLOTTED => 15:12

DIST	COUNTY	ROUTE	POST MILES TOTAL PROJECT	SHEET No	TOTAL SHEETS
10	SJ	5	25.0/32.7	1022	1132

REGISTERED STRUCTURAL ENGINEER — DATE 7/28/10

PLANS APPROVAL DATE 10-11-10

REGISTERED PROFESSIONAL ENGINEER — PHILIP SHINN — No. S 4967 — Exp. 12/31/10 — STRUCTURAL — STATE OF CALIFORNIA

The State of California or its officers or agents shall not be responsible for the accuracy or completeness of scanned copies of this plan sheet.

RAJAPPAN & MEYER
CONSULTING ENGINEERS, INC.
1038 LEIGH AVE, SUITE 100
SAN JOSE, CA 95126

SAN JOAQUIN COUNCIL OF GOVERNMENTS
555 E. WEBER AVENUE
STOCKTON, CA 95202

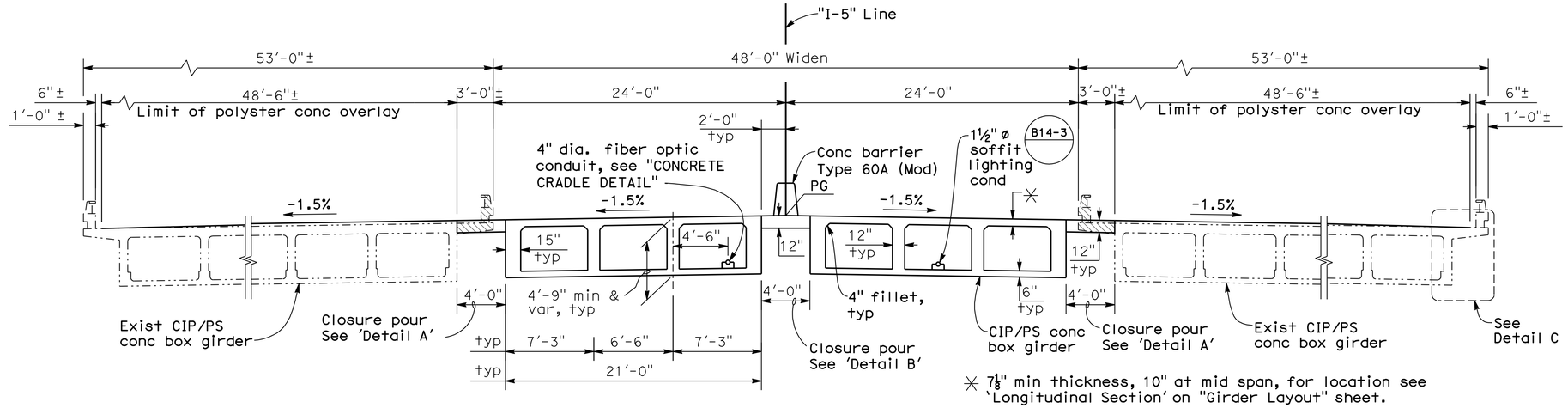

✳ 7⅛" min thickness, 10" at mid span, for location see 'Longitudinal Section' on "Girder Layout" sheet.

TYPICAL SECTION
3/16" = 1'-0"

NOTES:

1. Transverse deck reinf shall not be bent within the closure pour

Indicates existing structure

Indicates concrete removal

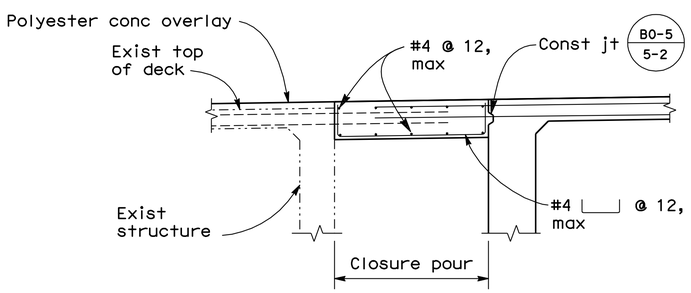

Note: Left side closure pour detail shown, right side similar.

DETAIL A
1/2" = 1'-0"

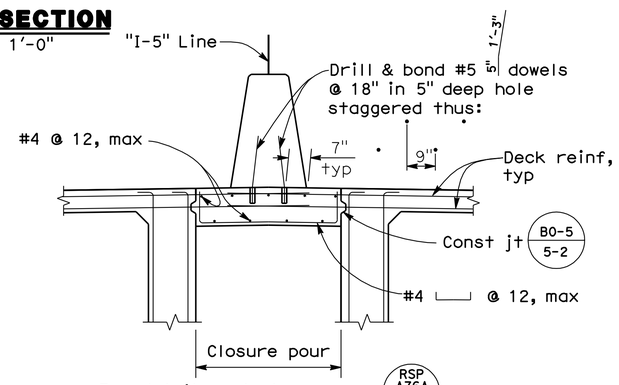

For details not shown, see RSP A76A -

DETAIL B
1/2" = 1'-0"

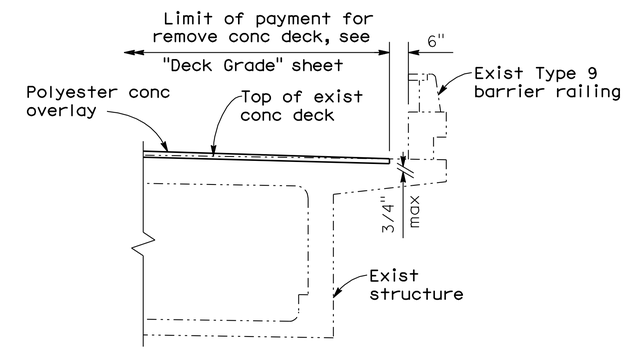

DETAIL C
1/2" = 1'-0"

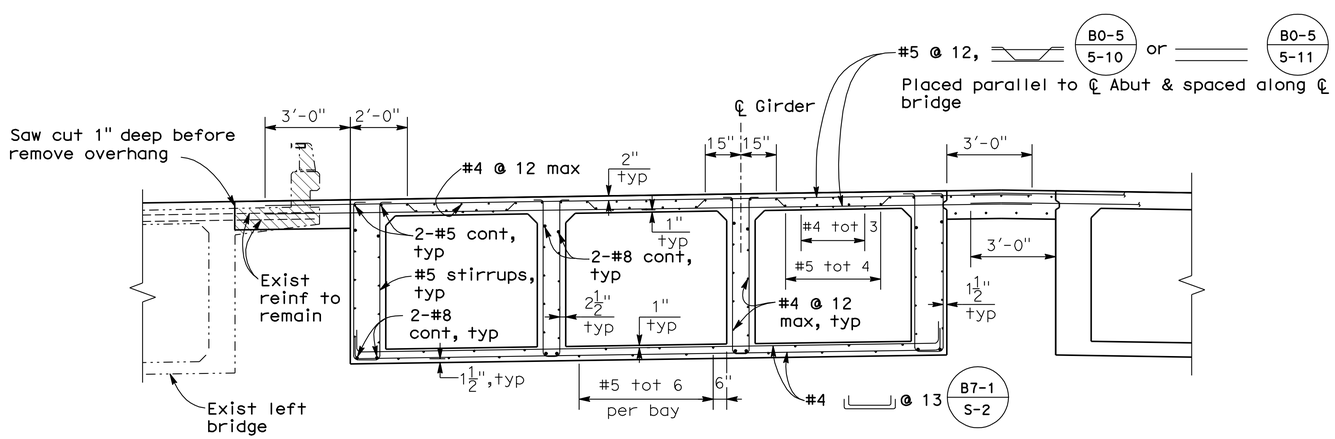

PARTIAL TYPICAL SECTION
3/8" = 1'-0"

B0-5 - B7-1 - B8-5 -

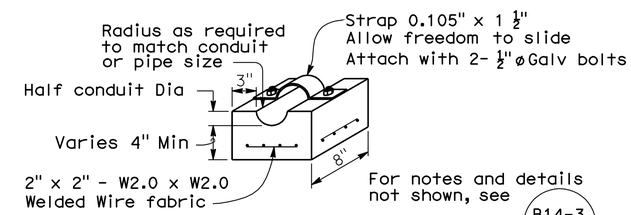

CONCRETE CRADLE DETAIL
No Scale

Note:
The Contractor shall verify all controlling field dimensions before ordering or fabricating any material

DESIGN OVERSIGHT — John Fujimoto — 8-2-10 — SIGN OFF DATE

	BY		CHECKED	
DESIGN	BY	P. SHINN	CHECKED	A. WANG
DETAILS	BY	G. WOLDETSADIK	CHECKED	A. WANG
QUANTITIES	BY	G. WOLDETSADIK	CHECKED	W. Y. TAN

PREPARED FOR THE STATE OF CALIFORNIA DEPARTMENT OF TRANSPORTATION

P. SHINN — PROJECT ENGINEER

BRIDGE NO. 29-0193 — POST MILE 29.99

MARCH LANE UNDERCROSSING (WIDEN)
TYPICAL SECTION

DESIGN DETAIL SHEET (ENGLISH) (REV. 06-01-09)

ORIGINAL SCALE IN INCHES FOR REDUCED PLANS 0 1 2 3

CU 06240
EA 0G4701

DISREGARD PRINTS BEARING EARLIER REVISION DATES

REVISION DATES (PRELIMINARY STAGE ONLY): 10/16/09 12/4/09 1/15/10 4/21/10 6/11/10 7/28/10

SHEET 10 OF 20

FILE => 29-0193-k-ts01.dgn

USERNAME => trlemard DATE PLOTTED => 18-OCT-2010 TIME PLOTTED => 11:56

DIST	COUNTY	ROUTE	POST MILES TOTAL PROJECT	SHEET No	TOTAL SHEETS
10	SJ	5	25.0/32.7	1023	1132

REGISTERED STRUCTURAL ENGINEER — DATE 7/28/10

PLANS APPROVAL DATE 10-11-10

REGISTERED PROFESSIONAL ENGINEER — PHILIP SHINN — No. S 4967 — Exp. 12/31/10 — STRUCTURAL — STATE OF CALIFORNIA

The State of California or its officers or agents shall not be responsible for the accuracy or completeness of scanned copies of this plan sheet.

RAJAPPAN & MEYER CONSULTING ENGINEERS, INC.
1038 LEIGH AVE, SUITE 100
SAN JOSE, CA 95126

SAN JOAQUIN COUNCIL OF GOVERNMENTS
555 E. WEBER AVENUE
STOCKTON, CA 95202

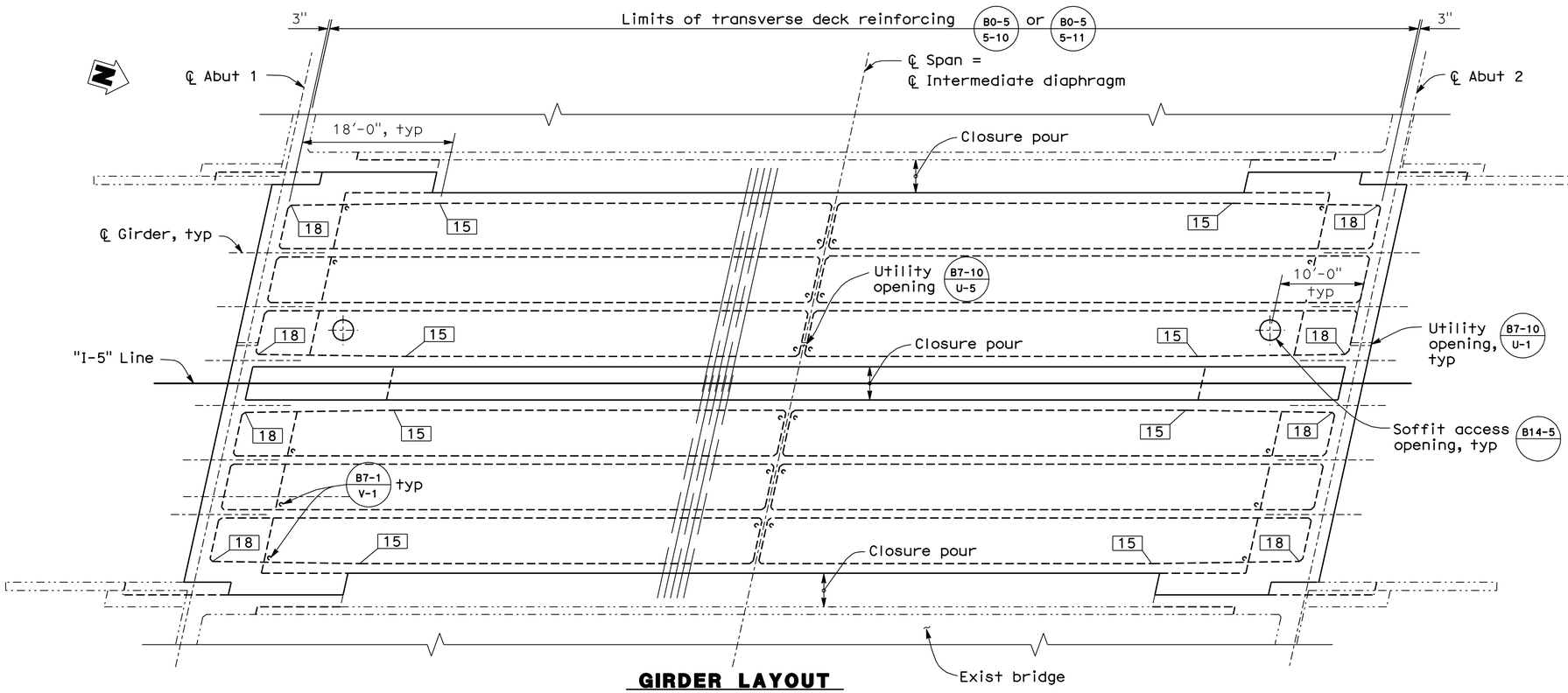

GIRDER LAYOUT

1/8" = 1'-0"

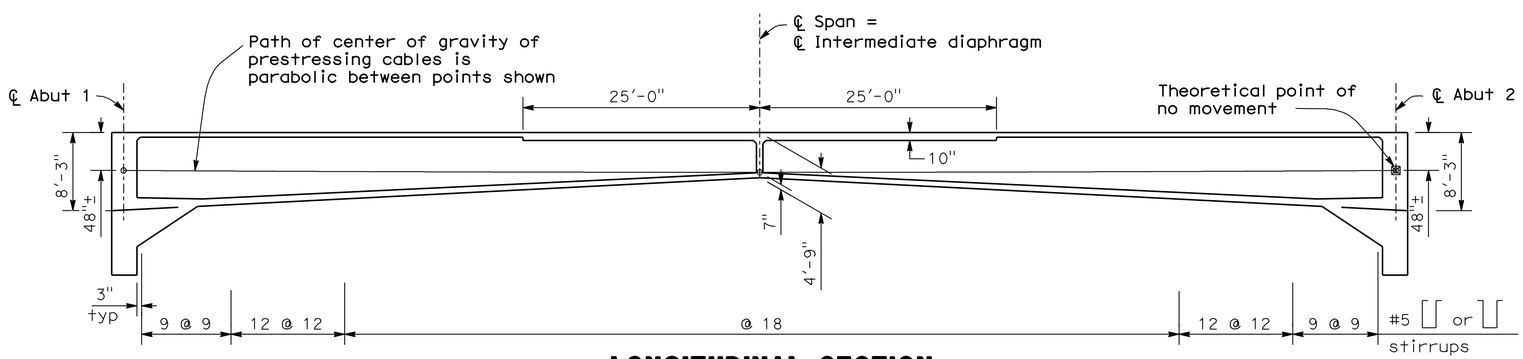

LONGITUDINAL SECTION

1/8" = 1'-0"

PRESTRESSING NOTES

270 Ksi Low Relaxation Strand:

P_{jack} = 19,600 kips

Anchor Set = 3/8 in

Total number of girders = 8

Distribution of prestress force (Pjack) between girders shall not exceed the ratio of 3:2. Maximum final force variation between girders shall not exceed 725 kips.

Concrete: fc = 5.0 ksi @ 28 days
fci= 4.0 ksi @ time of stressing

Contractor shall submit elongation calculations based on initial stress at point of no movement at ⊠ = 0.992 times the Jacking stress.

One end stressing shall be performed from Abutment 1.
Friction coefficient (rigid galvanized ducts):
Friction curvature (μ) = 0.15
Friction wobble (K) = 0.0002 (1/ft)

Indicates girder width in inches. Girder stem width = 12" unless otherwise noted.

Indicates existing structure.

⊠ Indicates point of no movement.

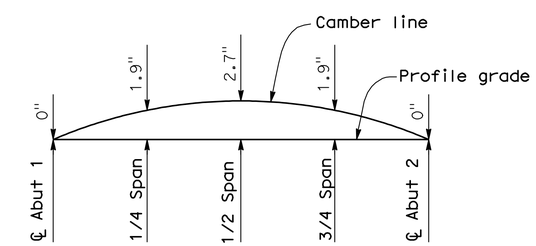

Does not include allowance for falsework deflection or settlements.

CAMBER DIAGRAM

No Scale

Falsework Release:

Falsework shall be removed as soon as permitted by the specifications. Closure pour shall not be placed sooner than 60 days after the falsework has been removed.

Note:
The Contractor shall verify all controlling field dimensions before ordering or fabricating any material

DESIGN OVERSIGHT — John Fujimoto — 8-2-10 — SIGN OFF DATE

	BY		CHECKED	
DESIGN	BY	P. SHINN	CHECKED	A. WANG
DETAILS	BY	G. WOLDETSADIK	CHECKED	A. WANG
QUANTITIES	BY	G. WOLDETSADIK	CHECKED	W. Y. TAN

PREPARED FOR THE STATE OF CALIFORNIA DEPARTMENT OF TRANSPORTATION

P. SHINN — PROJECT ENGINEER

BRIDGE NO. 29-0193
POST MILE 29.99

MARCH LANE UNDERCROSSING (WIDEN)

GIRDER LAYOUT

DESIGN DETAIL SHEET (ENGLISH) (REV. 06-01-09)

ORIGINAL SCALE IN INCHES FOR REDUCED PLANS 0 1 2 3

CU 06240
EA 0G4701

DISREGARD PRINTS BEARING EARLIER REVISION DATES — REVISION DATES (PRELIMINARY STAGE ONLY): 10/16/09 12/4/09 1/15/10 4/21/10 6/11/10 7/28/10

SHEET 11 OF 20

FILE => 29-0193-I-g_lo01.dgn

USERNAME => trimguye DATE PLOTTED => 13-OCT-2010 TIME PLOTTED => 15:13

DIST	COUNTY	ROUTE	POST MILES TOTAL PROJECT	SHEET No	TOTAL SHEETS
10	SJ	5	25.0/32.7	1024	1132

REGISTERED STRUCTURAL ENGINEER — DATE 7/28/10

10-11-10
PLANS APPROVAL DATE

REGISTERED PROFESSIONAL ENGINEER — PHILIP SHINN — No. S 4967 — Exp. 12/31/10 — STRUCTURAL — STATE OF CALIFORNIA

The State of California or its officers or agents shall not be responsible for the accuracy or completeness of scanned copies of this plan sheet.

RAJAPPAN & MEYER CONSULTING ENGINEERS, INC.
1038 LEIGH AVE, SUITE 100
SAN JOSE, CA 95126

SAN JOAQUIN COUNCIL OF GOVERNMENTS
555 E. WEBER AVENUE
STOCKTON, CA 95202

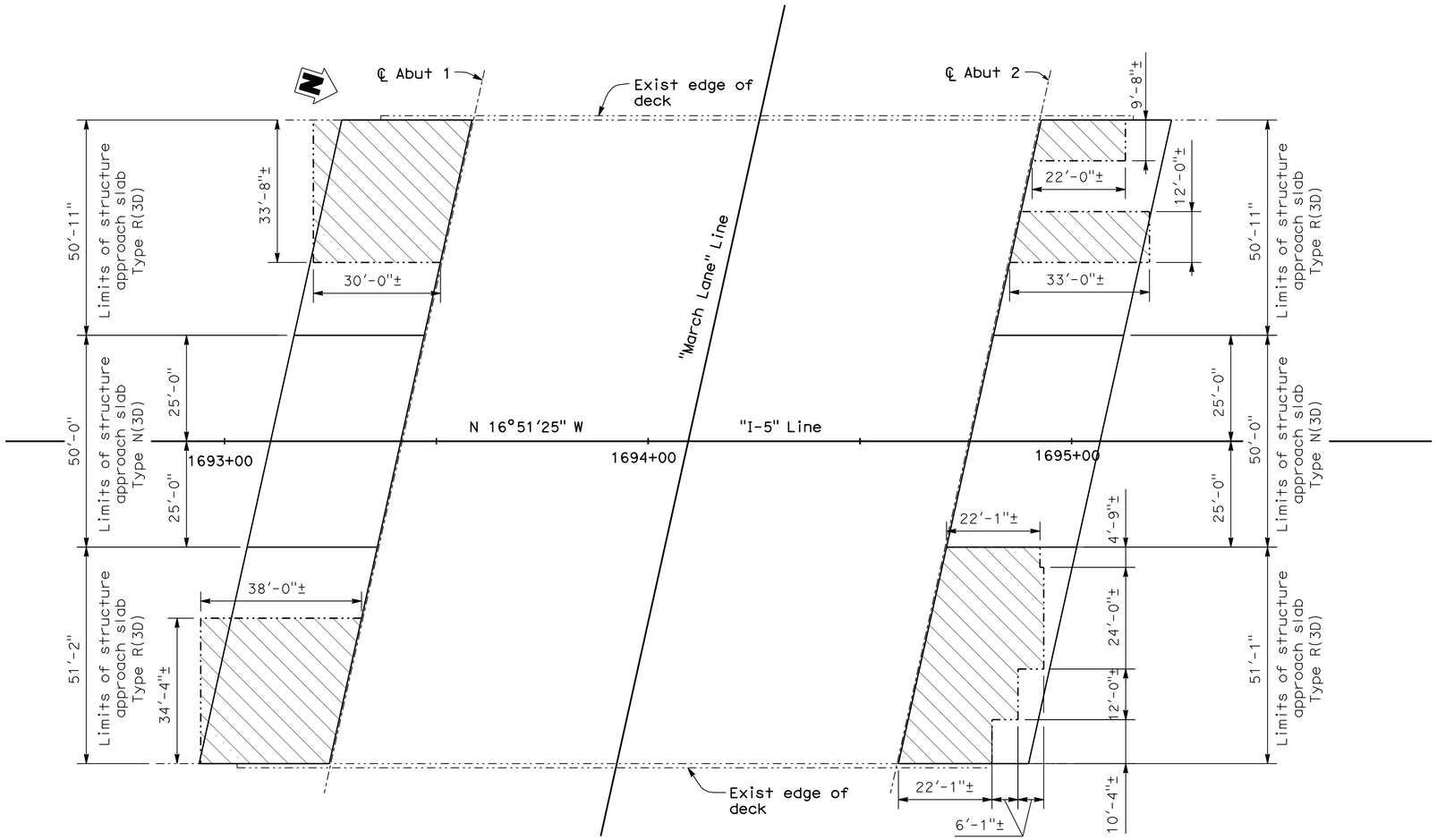

PLAN
1/16" = 1'-0"

NOTES:

1. For details not shown, see "Structure Approach Type N(30D)" and "Structure Approach Type R(30D)" sheets

Indicates limits of existing approach slab removal

Note:
The Contractor shall verify all controlling field dimensions before ordering or fabricating any material

DESIGN OVERSIGHT — John Fujimoto
8-2-10
SIGN OFF DATE

DESIGN	BY P. SHINN	CHECKED A. WANG	
DETAILS	BY G. WOLDETSADIK	CHECKED A. WANG	
QUANTITIES	BY G. WOLDETSADIK	CHECKED W. Y. TAN	

PREPARED FOR THE STATE OF CALIFORNIA DEPARTMENT OF TRANSPORTATION

P. SHINN
PROJECT ENGINEER

BRIDGE NO. 29-0193
POST MILE 29.99

MARCH LANE UNDERCROSSING (WIDEN)
LIMITS OF STRUCTURE APPROACH

DESIGN DETAIL SHEET (ENGLISH) (REV. 06-01-09)

ORIGINAL SCALE IN INCHES FOR REDUCED PLANS 0 1 2 3

CU 06240
EA 0G4701

DISREGARD PRINTS BEARING EARLIER REVISION DATES — REVISION DATES (PRELIMINARY STAGE ONLY) 10/16/09 12/4/09 1/15/10 4/21/10 6/11/10 7/28/10

SHEET 12 OF 20

FILE => 29-0193-s-lsa.dgn

USERNAME => rtrimmgye DATE PLOTTED => 13-OCT-2010 TIME PLOTTED => 15:13

DIST.	COUNTY	ROUTE	POST MILES TOTAL PROJECT	SHEET NO.	TOTAL SHEETS
10	SJ	5	25.0/32.7	1025	1132

REGISTERED ENGINEER - STRUCTURAL 7/28/10

PHILIP SHINN No. S 4967 Exp. 12/31/10 STRUCTURAL REGISTERED PROFESSIONAL ENGINEER STATE OF CALIFORNIA

10-11-10
PLANS APPROVAL DATE

The State of California or its officers or agents shall not be responsible for the accuracy or completeness of electronic copies of this plan sheet.

SAN JOAQUIN COUNCIL OF GOVERNMENTS
555 E. WEBER AVENUE
STOCKTON, CA 95202

RAJAPPAN & MEYER
CONSULTING ENGINEERS, INC.
1038 LEIGH AVE, SUITE 100
SAN JOSE, CA 95126

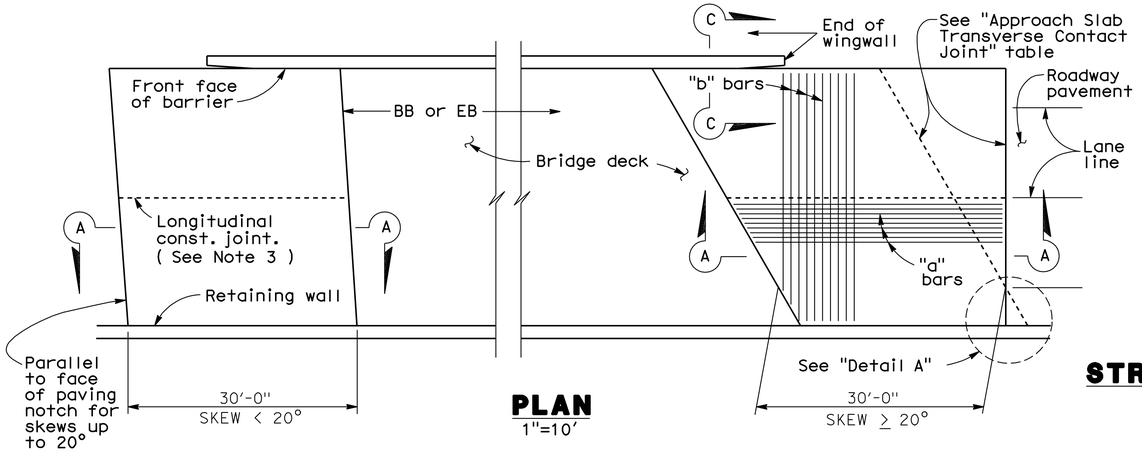

PLAN
1"=10'

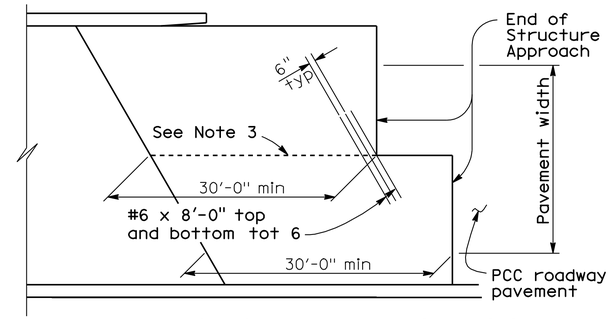

STRUCTURE APPROACH - END STAGGER DETAIL
No Scale

APPROACH SLAB TRANSVERSE CONTACT JOINT		
APPROACH SKEW	WITH AC ROADWAY PAVEMENT	WITH PCC ROADWAY PAVEMENT
< 20°	Parallel to face of paving notch	Parallel to face of paving notch
20° - 45°	Parallel to face of P N use (Detail A)	Stagger lines 24' to 36' apart
> 45°	Parallel to face of P N use (Detail A)	Stagger at each lane line

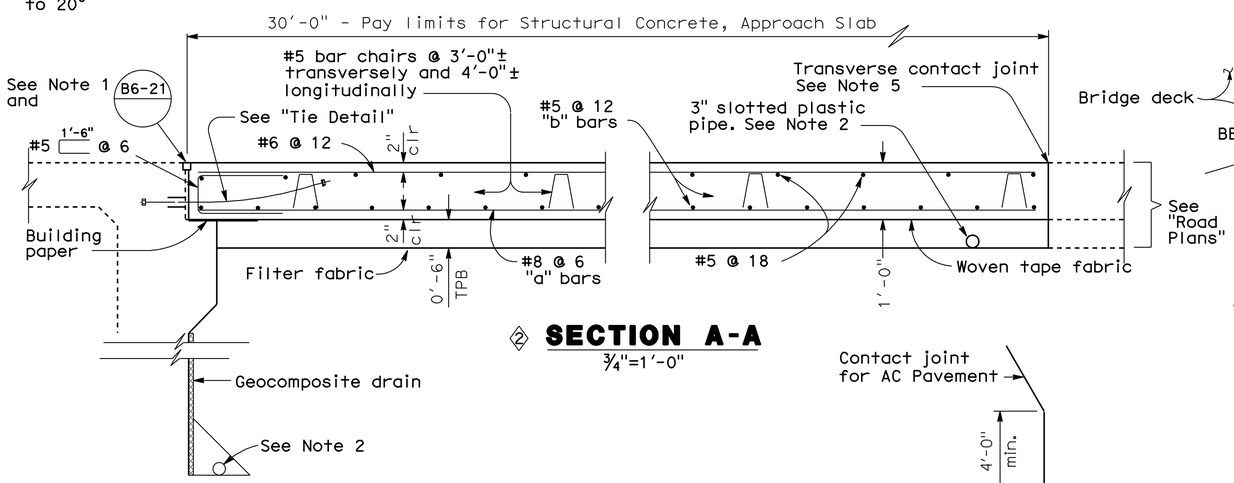

② SECTION A-A
¾"=1'-0"

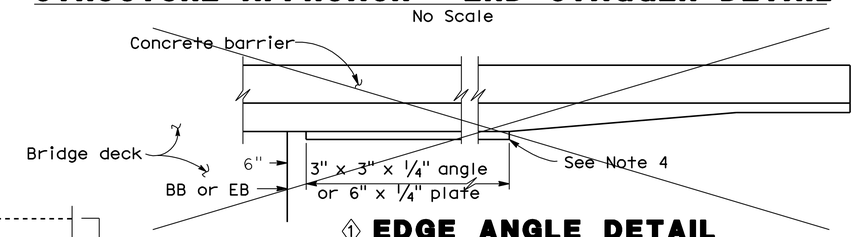

① EDGE ANGLE DETAIL
½"=1'-0"

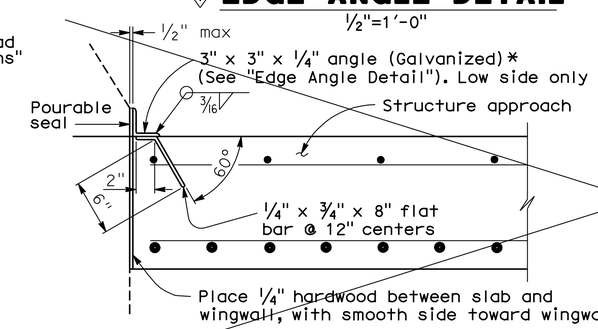

*(TO BE USED WITH TYPE 25 OR TYPE 27 CONCRETE BARRIER)

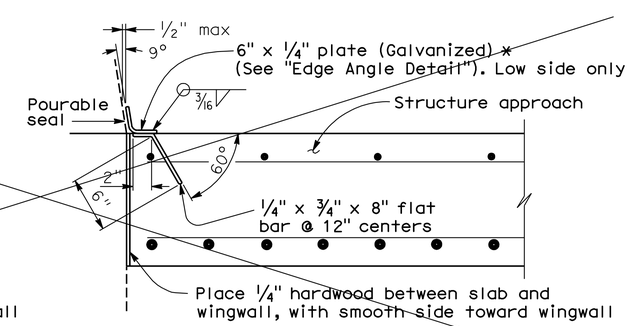

*(TO BE USED WITH TYPE 732 OR TYPE 736 CONCRETE BARRIER)

① DETAIL B
1½"=1'-0"

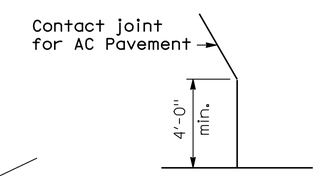

DETAIL A
No Scale

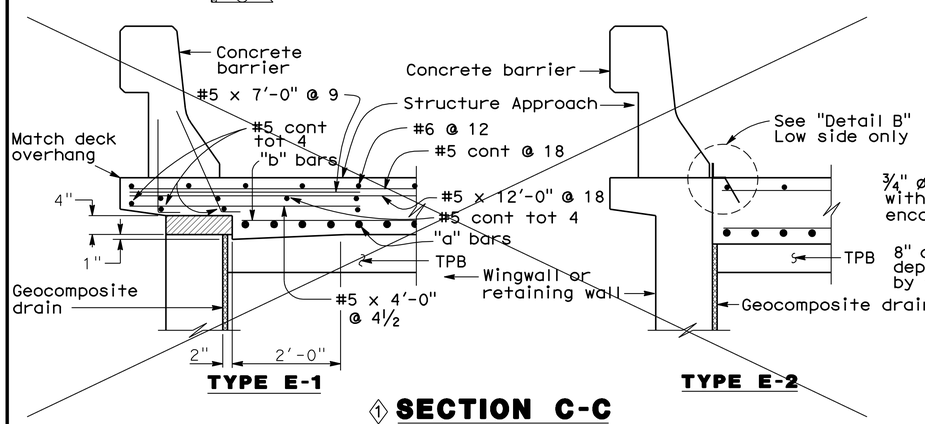

① SECTION C-C
¾"=1'-0"

Note:
The Contractor shall verify all controlling field dimensions before ordering or fabricating any material

(Type E-1 to be used, unless otherwise shown on plans)

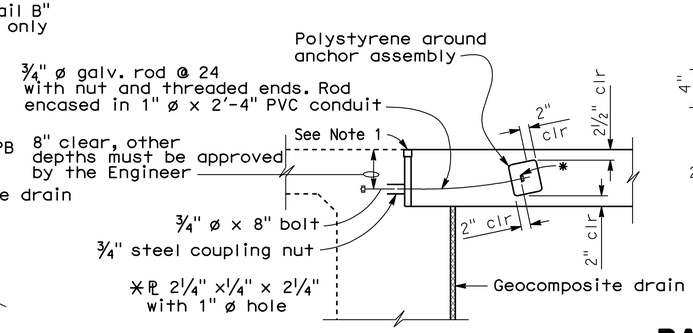

TIE DETAIL
¾"=1'-0"

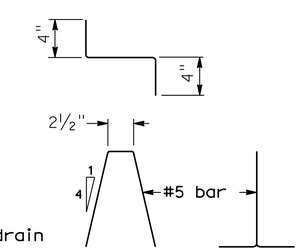

BAR CHAIR DETAIL
1½"=1'-0"

NOTES:

1. For details not noted or shown, see Structure Plans.
2. For drainage details, see "Structure Approach Drainage Details" sheet.
3. Longitudinal construction joints, when permitted by the Engineer, shall be located on lane lines.
4. End angle or plate at beginning of barrier transition, end of wingwall or end of structure approach, as applicable.
5. For transverse contact joint with new PCC paving, refer to Standard Plan P10.
6. At the contractor's option, approach slab transverse reinforcement may be placed parallel to paving notch. Spacing of transverse reinforcement is measured along ℄ roadway.

Polystyrene to be removed.

SPECIAL DETAILS

STANDARD DRAWING

FILE NO. xs3-180e

APPROVED BY M. Ha — RESPONSIBLE TECHNICAL SPECIALIST
APPROVAL DATE 8-12-08

RELEASED BY O. Alcantara — RESPONSIBLE OFFICE CHIEF
RELEASE DATE Revised

① Detail Deleted
② Detail Modified

STATE OF CALIFORNIA
DEPARTMENT OF TRANSPORTATION

DIVISION OF ENGINEERING SERVICES

BRIDGE NO. 29-0193
POST MILE 29.99

MARCH LANE UNDERCROSSING (WIDEN)
STRUCTURE APPROACH TYPE N(30D)

DS OSD 2147A (ENGLISH STANDARD DRAWING "XS" BORDER REV. 01/11/08)

ORIGINAL SCALE IN INCHES FOR REDUCED PLANS 0 1 2 3

CU 06240
EA 0G4701

DISREGARD PRINTS BEARING EARLIER REVISION DATES

REVISION DATES (PRELIMINARY STAGE ONLY) 10/16/09 12/4/09 1/18/10 4/21/10 6/11/10 7/28/10

SHEET 13 OF 20

USERNAME => trmnguye

29-0193-s-sa_n_30d.dgn

DATE PLOTTED => 13-OCT-2010 TIME PLOTTED => 15:13

DIST.	COUNTY	ROUTE	POST MILES TOTAL PROJECT	SHEET NO.	TOTAL SHEETS
10	SJ	5	25.0/32.7	1026	1132

REGISTERED ENGINEER - STRUCTURAL 7/28/10

PHILIP SHINN No. S 4967 Exp. 12/31/10 STRUCTURAL REGISTERED PROFESSIONAL ENGINEER STATE OF CALIFORNIA

10-11-10
PLANS APPROVAL DATE

The State of California or its officers or agents shall not be responsible for the accuracy or completeness of electronic copies of this plan sheet.

SAN JOAQUIN COUNCIL OF GOVERNMENTS
555 E. WEBER AVENUE
STOCKTON, CA 95202

RAJAPPAN & MEYER
CONSULTING ENGINEERS, INC.
1038 LEIGH AVE, SUITE 100
SAN JOSE, CA 95126

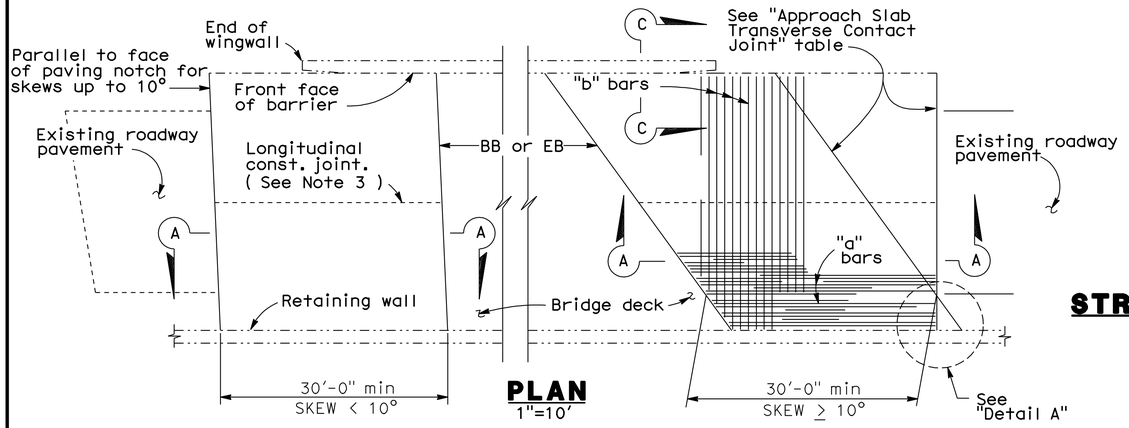

PLAN
1"=10'

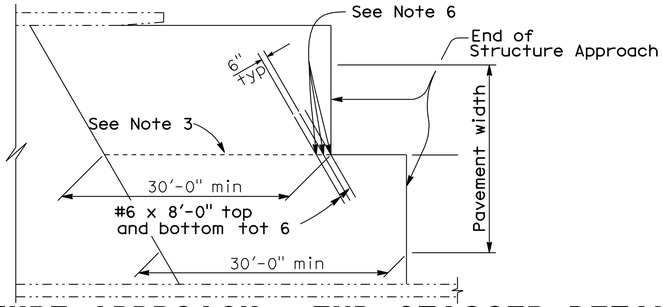

STRUCTURE APPROACH - END STAGGER DETAIL
No Scale

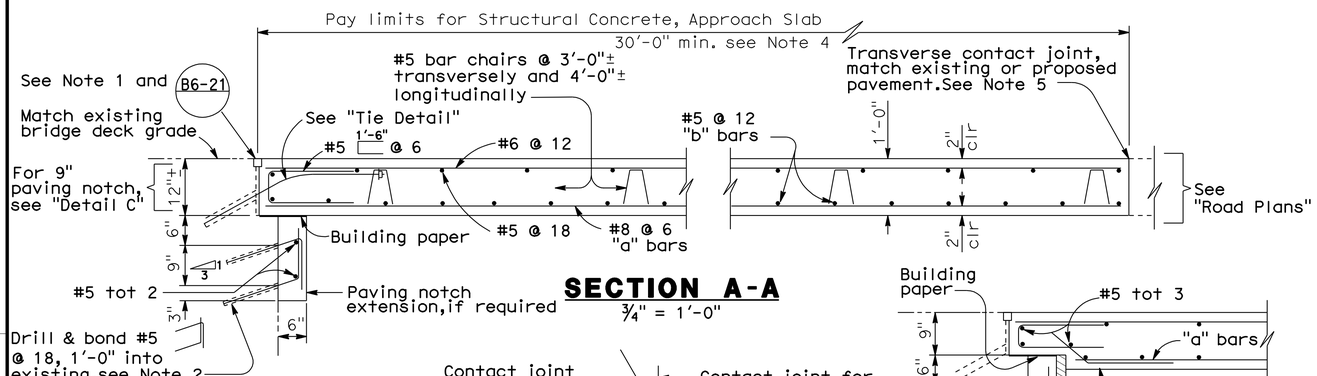

SECTION A-A
¾" = 1'-0"

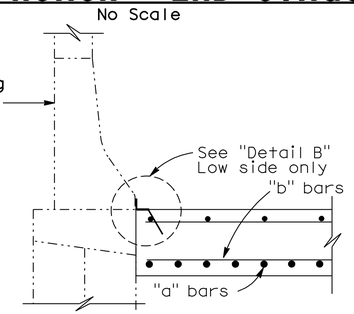

① SECTION C-C
¾" = 1'-0"

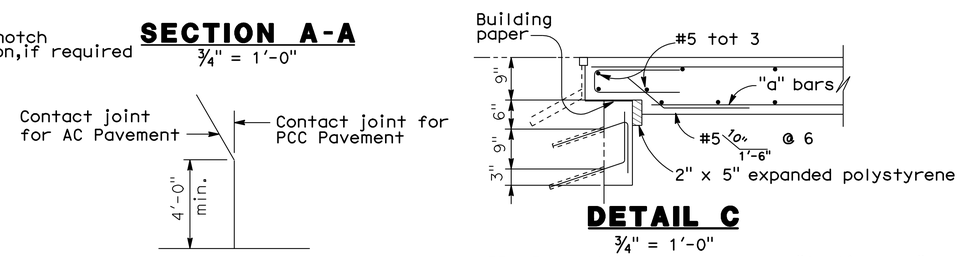

DETAIL C
¾" = 1'-0"

NOTE: For details not shown,see "Section A-A".

DETAIL A
No Scale

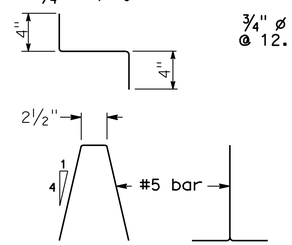

BAR CHAIR DETAIL
1½" = 1'-0"

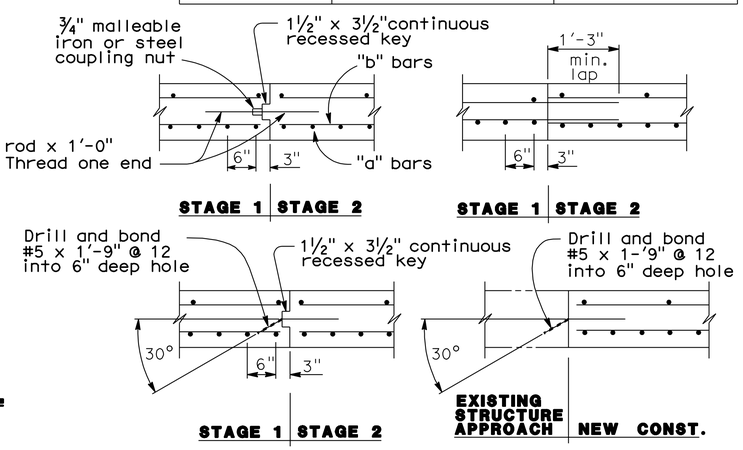

LONGITUDINAL CONSTRUCTION JOINT ALTERNATIVES
¾" = 1'-0"

APPROACH SLAB TRANSVERSE CONTACT JOINT		
APPROACH SKEW	WITH AC ROADWAY PAVEMENT	WITH PCC ROADWAY PAVEMENT
< 10°	Parallel to face of paving notch	Parallel to face of paving notch
10° - 45°	Parallel to face of P N use (Detail A)	Stagger lines 24' to 36' apart
> 45°	Parallel to face of P N use (Detail A)	Stagger at each lane line

NOTES:

1. For details not shown or noted, see Structure Plans. Adjust bar reinforcement to clear a sawcut for sealed joint,when required.
2. Space to avoid existing prestress anchorages and main reinforcement.
3. Longitudinal construction joints,when permitted by the Engineer,shall be located on lane lines.
4. Transverse contact joint shall be a minimum of 5'-0" from an existing or constructed weakened plane joint.
5. For transverse contact joint with new PCC paving. refer to Standard Plan P10.
6. Couplers are required for stage construction.
7. End angle or plate at beginning of barrier transition, end of wingwall or end of structure approach as applicable.

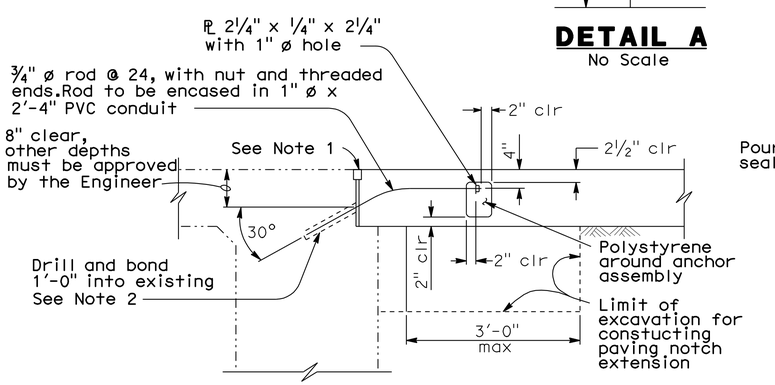

TIE DETAIL
¾" = 1'-0"

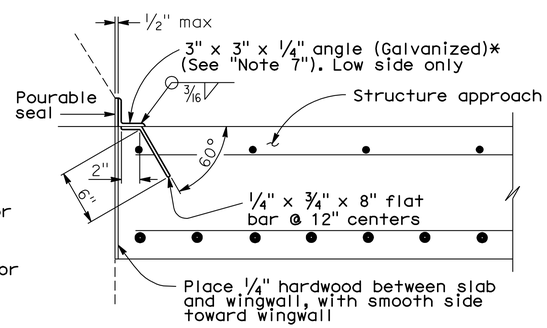

* (TO BE USED WITH TYPE 25 OR TYPE 27 CONCRETE BARRIER)

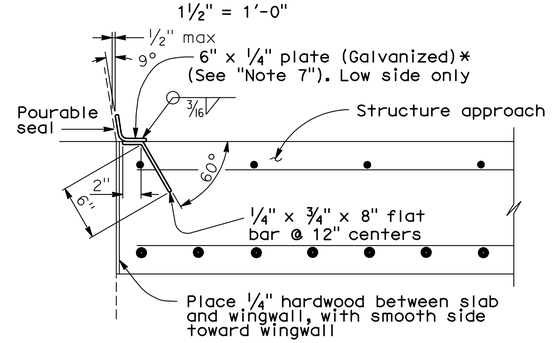

* (TO BE USED WITH TYPE 732 OR TYPE 736 CONCRETE BARRIER)

DETAIL B
1½" = 1'-0"

Note:
The Contractor shall verify all controlling field dimensions before ordering or fabricating any material

SPECIAL DETAILS

STANDARD DRAWING				
RELEASE DATE Revised	DESIGN	BY M. TRAFFALIS	CHECKED E. THORKILDSEN	RELEASED BY
FILE NO. xs3-140e	DETAILS	BY R. YEE	CHECKED E. THORKILDSEN	
	SUBMITTED	BY M. HA	DRAWING DATE 8/92	OFFICE CHIEF

① Detail Modified

STATE OF CALIFORNIA
DEPARTMENT OF TRANSPORTATION

DIVISION OF ENGINEERING SERVICES

BRIDGE NO. 29-0193
POST MILE 29.99

MARCH LANE UNDERCROSSING (WIDEN)
STRUCTURE APPROACH TYPE R(30D)

DS OSD 2147A (ENGLISH) (REV. X/XX/XX)

ORIGINAL SCALE IN INCHES FOR REDUCED PLANS 0 1 2 3

CU 06240
EA 0G4701

DISREGARD PRINTS BEARING EARLIER REVISION DATES

REVISION DATES (PRELIMINARY STAGE ONLY) 10/16/09 12/4/09 1/18/10 4/21/10 6/11/10 7/28/10

SHEET 14 OF 20

USERNAME => trmnguye

29-0193-s-sa_r_30d

DATE PLOTTED => 13-OCT-2010 TIME PLOTTED => 15:13

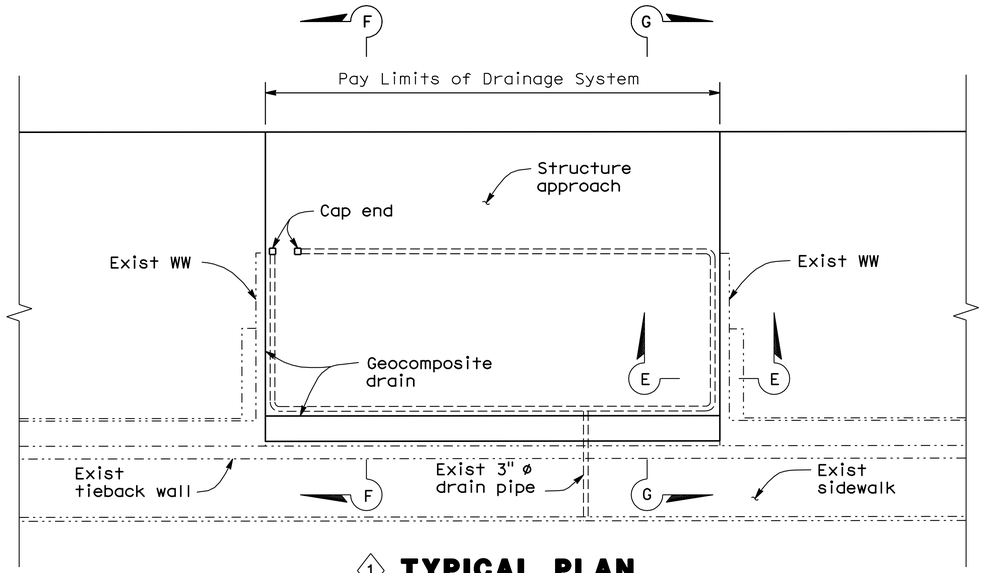

1 **TYPICAL PLAN**
1/8" = 1'-0"

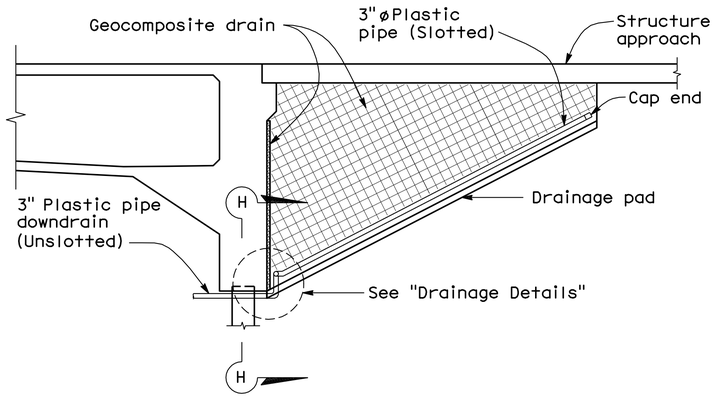

1 **SECTION F-F**
1/4" = 1'-0"

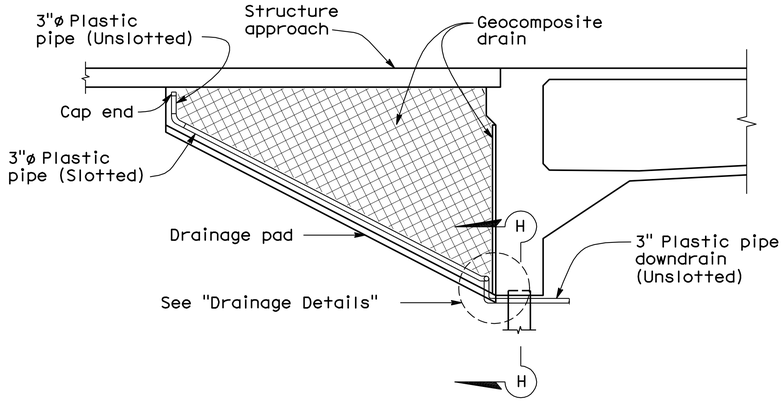

1 **SECTION G-G**
1/4" = 1'-0"

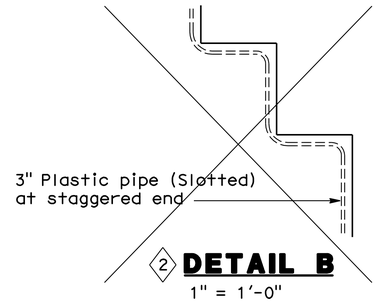

2 **DETAIL B**
1" = 1'-0"

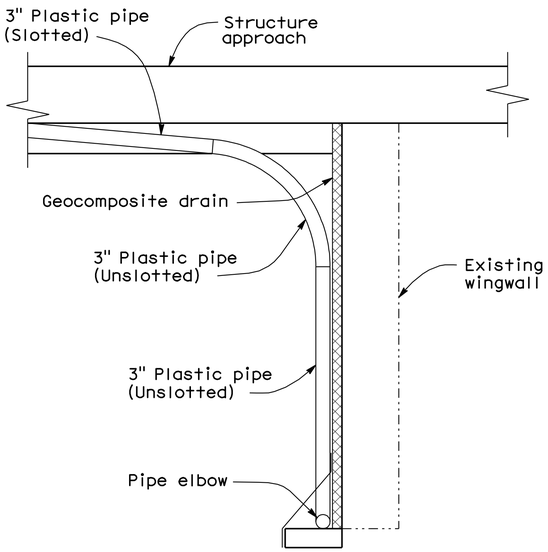

NOTE: Bends and junctions in 3" plastic pipe are 30" radius min.

1 **SECTION E-E**
3/4" = 1'-0"

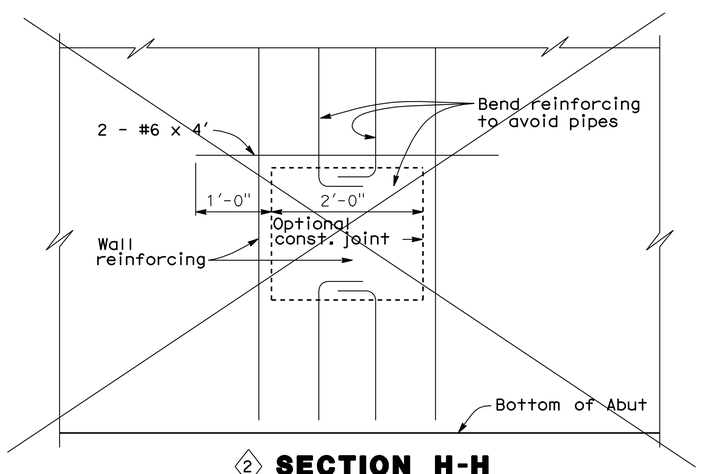

2 **SECTION H-H**
1" = 1'-0"

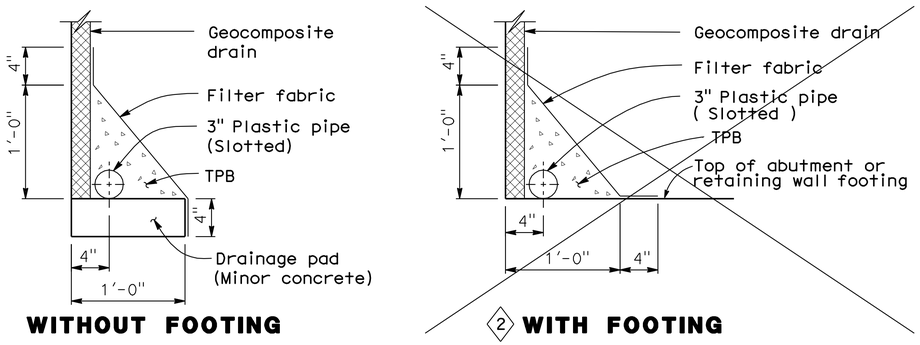

WITHOUT FOOTING — 2 **WITH FOOTING**

DRAINAGE DETAILS
1 1/2" = 1'-0"

Note:
The Contractor shall verify all controlling field dimensions before ordering or fabricating any material

DIST.	COUNTY	ROUTE	POST MILES TOTAL PROJECT	SHEET NO.	TOTAL SHEETS
10	SJ	5	25.0/32.7	1027	1132

REGISTERED ENGINEER - STRUCTURAL 7/28/10
PHILIP SHINN No. S 4967 Exp. 12/31/10 STRUCTURAL STATE OF CALIFORNIA
10-11-10
PLANS APPROVAL DATE

The State of California or its officers or agents shall not be responsible for the accuracy or completeness of electronic copies of this plan sheet.

SAN JOAQUIN COUNCIL OF GOVERNMENTS
555 E. WEBER AVENUE
STOCKTON, CA 95202

RAJAPPAN & MEYER
CONSULTING ENGINEERS, INC.
1038 LEIGH AVE, SUITE 100
SAN JOSE, CA 95126

SPECIAL DETAILS

STANDARD DRAWING

RELEASE DATE Revised	DESIGN	BY M. TRAFFALIS	CHECKED E. THORKILDSEN	RELEASED BY
	DETAILS	BY R. YEE	CHECKED E. THORKILDSEN	
FILE NO. xs3-110e	SUBMITTED	BY M. HA	DRAWING DATE 4/98	OFFICE CHIEF

1 Detail Modified
2 Detail Deleted

STATE OF CALIFORNIA
DEPARTMENT OF TRANSPORTATION

DIVISION OF ENGINEERING SERVICES

BRIDGE NO. 29-0193
POST MILE 29.11

MARCH LANE UNDERCROSSING (WIDEN)
STRUCTURE APPROACH DRAINAGE DETAILS

DS OSD 2147A (ENGLISH) (REV. X/XX/XX)

ORIGINAL SCALE IN INCHES FOR REDUCED PLANS 0 1 2 3

CU 06240
EA 0G4701

DISREGARD PRINTS BEARING EARLIER REVISION DATES

REVISION DATES (PRELIMINARY STAGE ONLY): 10/16/09 12/4/09 1/18/10 4/21/10 6/14/10 7/28/10

SHEET 15 OF 20

USERNAME => trmnguye

29-0193-s-sadd.dgn

DATE PLOTTED => 13-OCT-2010 TIME PLOTTED => 15:14

REFERENCE: CALTRANS SOIL & ROCK LOGGING, CLASSIFICATION, AND PRESENTATION MANUAL (JUNE 2007)

DIST	COUNTY	ROUTE	POST MILES TOTAL PROJECT	SHEET No	TOTAL SHEETS
10	SJ	5	25.0/32.7	1028	1132

GEOTECHNICAL PROFESSIONAL — DATE 7/28/10

PLANS APPROVAL DATE 10-11-10

REGISTERED PROFESSIONAL ENGINEER — GARY PARIKH — No. G.E. 666 — Exp. 12/31/11 — GEOTECHNICAL — STATE OF CALIFORNIA

The State of California or its officers or agents shall not be responsible for the accuracy or completeness of scanned copies of this plan sheet.

SAN JOAQUIN COUNCIL OF GOVERNMENTS
555 EAST WEBER AVENUE
STOCKTON, CALIFORNIA 95202

PARIKH CONSULTANTS, INC.
2360 QUME DRIVE, SUITE A
SAN JOSE, CA 95131

CEMENTATION

Description	Criteria
Weak	Crumbles or breaks with handling or little finger pressure.
Moderate	Crumbles or breaks with considerable finger pressure.
Strong	Will not crumble or break with finger pressure.

CONSISTENCY OF COHESIVE SOILS

Description	Unconfined Compressive Strength (tsf)	Pocket Penetrometer Measurement (tsf)	Torvane Measurement (tsf)	Field Approximation
Very Soft	< 0.25	< 0.25	< 0.12	Easily penetrated several inches by fist
Soft	0.25 to 0.50	0.25 to 0.50	0.12 to 0.25	Easily penetrated several inches by thumb
Medium Stiff	0.50 to 1.0	0.50 to 1.0	0.25 to 0.50	Penetrated several inches by thumb with moderate effort
Stiff	1 to 2	1 to 2	0.50 to 1.0	Readily indented by thumb but penetrated only with great effort
Very Stiff	2 to 4	2 to 4	1.0 to 2.0	Readily indented by thumbnail
Hard	> 4.0	> 4.0	> 2.0	Indented by thumbnail with difficulty

BOREHOLE IDENTIFICATION

Symbol	Hole Type	Description
Size	A	Auger Boring
Size	R P	Rotary drilled boring Rotary percussion boring (air)
Size	R	Rotary drilled diamond core
Size	HD HA	Hand driven (1-inch soil tube) Hand Auger
●	D	Dynamic Cone Penetration Boring
▲	CPT	Cone Penetration Test (ASTM D 5778-95)
⬚	O	Other

Note: Size in inches.

PLASTICITY OF FINE-GRAINED SOILS

Description	Criteria
Nonplastic	A 1/8-inch thread cannot be rolled at any water content.
Low	The thread can barely be rolled and the lump cannot be formed when drier than the plastic limit.
Medium	The thread is easy to roll and not much time is required to reach the plastic limit. The thread cannot be rerolled after reaching the plastic limit. The lump crumbles when drier than the plastic limit.
High	It takes considerable time rolling and kneading to reach the plastic limit. The thread can be rerolled several times after reaching the plastic limit. The lump can be formed without crumbling when drier than the plastic limit.

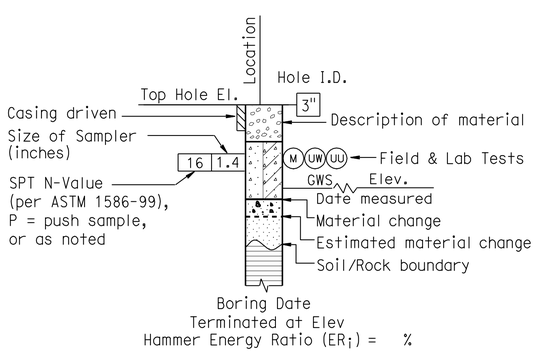

ROTARY BORING

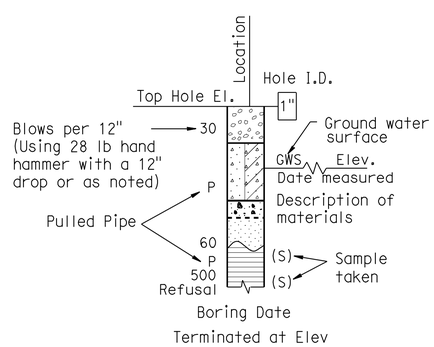

HAND BORING

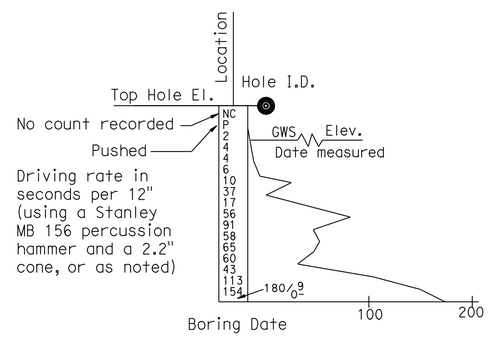

DYNAMIC CONE PENETRATION BORING

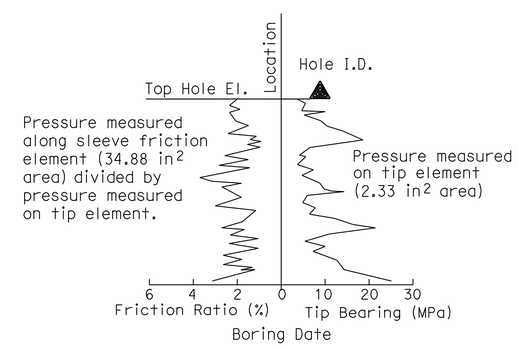

CONE PENETRATION TEST (CPT) SOUNDING

DESIGN OVERSIGHT John Fujimoto — SIGN OFF DATE 8-2-10	DRAWN BY O. GOUTHIER	S. DUDDU - A. R. BHARADWAJ — FIELD INVESTIGATION BY: DATE: MARCH 2009 - APRIL 2009	PREPARED FOR THE STATE OF CALIFORNIA DEPARTMENT OF TRANSPORTATION	A. LAM — PROJECT ENGINEER	BRIDGE NO. 29-0193 — POST MILES 29.99
	CHECKED BY D. WANG				

MARCH LANE UC (WIDEN)
SOIL LEGEND 1 OF 2

OGS CIVIL LOG OF TEST BORINGS SHEET (ENGLISH) (REV. 06-01-09)

ORIGINAL SCALE IN INCHES FOR REDUCED PLANS 0 1 2 3

CU 06240
EA 0G4701

DISREGARD PRINTS BEARING EARLIER REVISION DATES — REVISION DATES 10/16/09 12/04/09 01/15/10 04/23/10 06/14/10 7/28/10

SHEET 16 OF 20

FILE => 29-0193-z-1tb01.dgn

USERNAME => trmguye DATE PLOTTED => 13-OCT-2010 TIME PLOTTED => 15:14

REFERENCE: CALTRANS SOIL & ROCK LOGGING, CLASSIFICATION, AND PRESENTATION MANUAL (JUNE 2007)

DIST	COUNTY	ROUTE	POST MILES TOTAL PROJECT	SHEET No	TOTAL SHEETS
10	SJ	5	25.0/32.7	1029	1132

GEOTECHNICAL PROFESSIONAL — DATE 7/28/10

PLANS APPROVAL DATE 10-11-10

REGISTERED PROFESSIONAL ENGINEER — GARY PARIKH — No. G.E. 666 — Exp. 12/31/11 — GEOTECHNICAL — STATE OF CALIFORNIA

The State of California or its officers or agents shall not be responsible for the accuracy or completeness of scanned copies of this plan sheet.

SAN JOAQUIN COUNCIL OF GOVERNMENTS
555 EAST WEBER AVENUE
STOCKTON, CALIFORNIA 95202

PARIKH CONSULTANTS, INC.
2360 QUME DRIVE, SUITE A
SAN JOSE, CA 95131

GROUP SYMBOLS AND NAMES

Graphic/Symbol	Group Names	Graphic/Symbol	Group Names
GW	Well-graded GRAVEL Well-graded GRAVEL with SAND	CL	Lean CLAY Lean CLAY with SAND Lean CLAY with GRAVEL SANDY lean CLAY SANDY lean CLAY with GRAVEL GRAVELLY lean CLAY GRAVELLY lean CLAY with SAND
GP	Poorly graded GRAVEL Poorly graded GRAVEL with SAND		
GW-GM	Well-graded GRAVEL with SILT Well-graded GRAVEL with SILT and SAND	CL-ML	SILTY CLAY SILTY CLAY with SAND SILTY CLAY with GRAVEL SANDY SILTY CLAY SANDY SILTY CLAY with GRAVEL GRAVELLY SILTY CLAY GRAVELLY SILTY CLAY with SAND
GW-GC	Well-graded GRAVEL with CLAY (or SILTY CLAY) Well-graded GRAVEL with CLAY and SAND (or SILTY CLAY and SAND)		
GP-GM	Poorly graded GRAVEL with SILT Poorly graded GRAVEL with SILT and SAND	ML	SILT SILT with SAND SILT with GRAVEL SANDY SILT SANDY SILT with GRAVEL GRAVELLY SILT GRAVELLY SILT with SAND
GP-GC	Poorly graded GRAVEL with CLAY (or SILTY CLAY) Poorly graded GRAVEL with CLAY and SAND (or SILTY CLAY and SAND)		
GM	SILTY GRAVEL SILTY GRAVEL with SAND	OL	ORGANIC lean CLAY ORGANIC lean CLAY with SAND ORGANIC lean CLAY with GRAVEL SANDY ORGANIC lean CLAY SANDY ORGANIC lean CLAY with GRAVEL GRAVELLY ORGANIC lean CLAY GRAVELLY ORGANIC lean CLAY with SAND
GC	CLAYEY GRAVEL CLAYEY GRAVEL with SAND		
GC-GM	SILTY, CLAYEY GRAVEL SILTY, CLAYEY GRAVEL with SAND	OL	ORGANIC SILT ORGANIC SILT with SAND ORGANIC SILT with GRAVEL SANDY ORGANIC SILT SANDY ORGANIC SILT with GRAVEL GRAVELLY ORGANIC SILT GRAVELLY ORGANIC SILT with SAND
SW	Well-graded SAND Well-graded SAND with GRAVEL		
SP	Poorly graded SAND Poorly graded SAND with GRAVEL	CH	Fat CLAY Fat CLAY with SAND Fat CLAY with GRAVEL SANDY fat CLAY SANDY fat CLAY with GRAVEL GRAVELLY fat CLAY GRAVELLY fat CLAY with SAND
SW-SM	Well-graded SAND with SILT Well-graded SAND with SILT and GRAVEL		
SW-SC	Well-graded SAND with CLAY (or SILTY CLAY) Well-graded SAND with CLAY and GRAVEL (or SILTY CLAY and GRAVEL)	MH	Elastic SILT Elastic SILT with SAND Elastic SILT with GRAVEL SANDY elastic SILT SANDY elastic SILT with GRAVEL GRAVELLY elastic SILT GRAVELLY elastic SILT with SAND
SP-SM	Poorly graded SAND with SILT Poorly graded SAND with SILT and GRAVEL		
SP-SC	Poorly graded SAND with CLAY (or SILTY CLAY) Poorly graded SAND with CLAY and GRAVEL (or SILTY CLAY and GRAVEL)	OH	ORGANIC fat CLAY ORGANIC fat CLAY with SAND ORGANIC fat CLAY with GRAVEL SANDY ORGANIC fat CLAY SANDY ORGANIC fat CLAY with GRAVEL GRAVELLY ORGANIC fat CLAY GRAVELLY ORGANIC fat CLAY with SAND
SM	SILTY SAND SILTY SAND with GRAVEL		
SC	CLAYEY SAND CLAYEY SAND with GRAVEL	OH	ORGANIC elastic SILT ORGANIC elastic SILT with SAND ORGANIC elastic SILT with GRAVEL SANDY ORGANIC elastic SILT SANDY ORGANIC elastic SILT with GRAVEL GRAVELLY ORGANIC elastic SILT GRAVELLY ORGANIC elastic SILT with SAND
SC-SM	SILTY, CLAYEY SAND SILTY, CLAYEY SAND with GRAVEL		
PT	PEAT	OL/OH	ORGANIC SOIL ORGANIC SOIL with SAND ORGANIC SOIL with GRAVEL SANDY ORGANIC SOIL SANDY ORGANIC SOIL with GRAVEL GRAVELLY ORGANIC SOIL GRAVELLY ORGANIC SOIL with SAND
	COBBLES COBBLES and BOULDERS BOULDERS		

FIELD AND LABORATORY TESTING

- (C) Consolidation (ASTM D 2435)
- (CL) Collapse Potential (ASTM D 5333)
- (CP) Compaction Curve (CTM 216)
- (CR) Corrosivity Testing (CTM 643, CTM 422, CTM 417)
- (CU) Consolidated Undrained Triaxial (ASTM D 4767)
- (DS) Direct Shear (ASTM D 3080)
- (EI) Expansion Index (ASTM D 4829)
- (M) Moisture Content (ASTM D 2216)
- (OC) Organic Content-% (ASTM D 2974)
- (P) Permeability (CTM 220)
- (PA) Particle Size Analysis (ASTM D 422)
- (PI) Plasticity Index (AASHTO T 90) Liquid Limit (AASHTO T 89)
- (PL) Point Load Index (ASTM D 5731)
- (PM) Pressure Meter
- (PP) Pocket Penetrometer
- (R) R-Value (CTM 301)
- (SE) Sand Equivalent (CTM 217)
- (SG) Specific Gravity (AASHTO T 100)
- (SL) Shrinkage Limit (ASTM D 427)
- (SW) Swell Potential (ASTM D 4546)
- (TV) Pocket Torvane
- (UC) Unconfined Compression-Soil (ASTM D 2166) Unconfined Compression-Rock (ASTM D 2938)
- (UU) Unconsolidated Undrained Triaxial (ASTM D 2850)
- (UW) Unit Weight (ASTM D 4767)
- (VS) Vane Shear (AASHTO T 223)

APPARENT DENSITY OF COHESIONLESS SOILS

Description	SPT N_{60} (Blows / 12 inches)
Very loose	0 - 4
Loose	5 - 10
Medium Dense	11 - 30
Dense	31 - 50
Very Dense	> 50

MOISTURE

Description	Criteria
Dry	Absence of moisture, dusty, dry to the touch
Moist	Damp but no visible water
Wet	Visible free water, usually soil is below water table

PERCENT OR PROPORTION OF SOILS

Description	Criteria
Trace	Particles are present but estimated to be less than 5%
Few	5 to 10%
Little	15 to 25%
Some	30 to 45%
Mostly	50 to 100%

PARTICLE SIZE

Description		Size
Boulder		> 12"
Cobble		3" to 12"
Gravel	Coarse	3/4" to 3"
	Fine	No. 4 to 3/4"
Sand	Coarse	No. 10 to No. 4
	Medium	No. 40 to No. 10
	Fine	No. 200 to No. 40

DESIGN OVERSIGHT — John Fujimoto — 8-2-10 SIGN OFF DATE

DRAWN BY: O. GOUTHIER
CHECKED BY: D. WANG

S. DUDDU - A. R. BHARADWAJ
FIELD INVESTIGATION BY:
DATE: MARCH 2009 - APRIL 2009

PREPARED FOR THE STATE OF CALIFORNIA DEPARTMENT OF TRANSPORTATION

A. LAM
PROJECT ENGINEER

BRIDGE NO. 29-0193
POST MILES 29.99

MARCH LANE UC (WIDEN)
SOIL LEGEND 2 OF 2

OGS CIVIL LOG OF TEST BORINGS SHEET (ENGLISH) (REV. 06-01-09)

ORIGINAL SCALE IN INCHES FOR REDUCED PLANS 0 1 2 3

CU 06240
EA 0G4701

DISREGARD PRINTS BEARING EARLIER REVISION DATES

REVISION DATES: 10/16/09 12/04/09 01/25/10 04/28/10 06/11/10 7/28/10

SHEET 17 OF 20

FILE => 29-0193-z-1tb02.dgn

USERNAME => trmguye DATE PLOTTED => 13-OCT-2010 TIME PLOTTED => 15:14

DIST	COUNTY	ROUTE	POST MILES TOTAL PROJECT	SHEET No	TOTAL SHEETS
10	SJ	5	25.0/32.7	1030	1132

GEOTECHNICAL PROFESSIONAL — DATE 7/28/10

PLANS APPROVAL DATE 10-11-10

REGISTERED PROFESSIONAL ENGINEER — GARY PARIKH — No. G.E. 666 — Exp. 12/31/11 — GEOTECHNICAL — STATE OF CALIFORNIA

The State of California or its officers or agents shall not be responsible for the accuracy or completeness of scanned copies of this plan sheet.

SAN JOAQUIN COUNCIL OF GOVERNMENTS
555 EAST WEBER AVENUE
STOCKTON, CALIFORNIA 95202

PARIKH CONSULTANTS, INC.
2360 QUME DRIVE, SUITE A
SAN JOSE, CA 95131

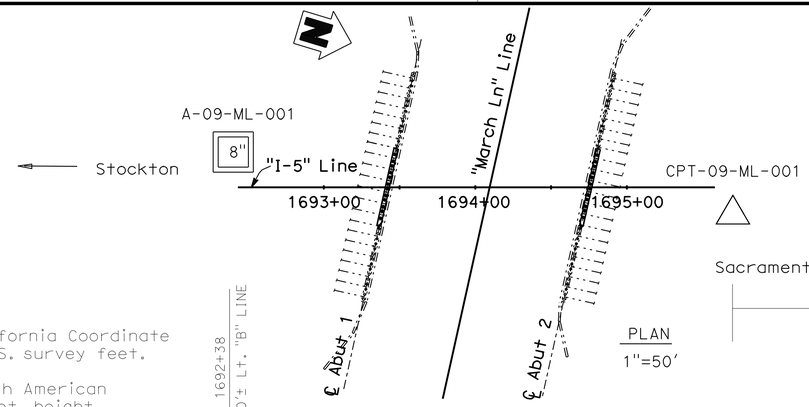

BENCHMARK:
The horizontal coordinates values are in the California Coordinate System (CCS 83) Zone 3, Epoch Date 2007.00, in U.S. survey feet.

The vertical control values are based on the North American Vertical Datum of 1988 (NAVD88) in U.S. survey feet, height modernization survey station, (2007.00) and GEOID03 was used for the adjustment.

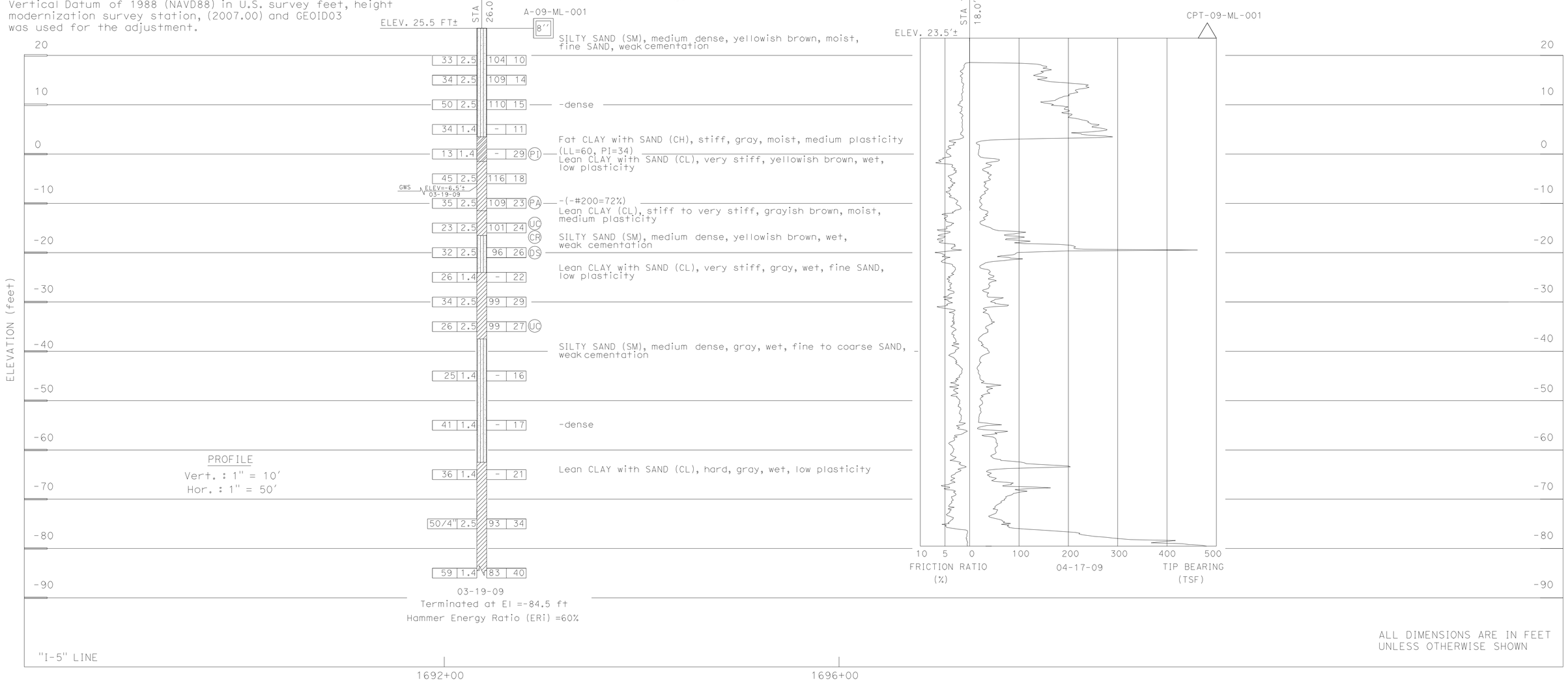

ALL DIMENSIONS ARE IN FEET UNLESS OTHERWISE SHOWN

DESIGN OVERSIGHT — John Fujimoto — 8-2-10 — SIGN OFF DATE

DRAWN BY: O. GOUTHIER
CHECKED BY: D. WANG

S. DUDDU - A. R. BHARADWAJ
FIELD INVESTIGATION BY:
DATE: MARCH 2009 - APRIL 2009

PREPARED FOR THE STATE OF CALIFORNIA DEPARTMENT OF TRANSPORTATION

A. LAM
PROJECT ENGINEER

BRIDGE NO. 29-0193
POST MILES 29.99

MARCH LANE UC (WIDEN)
LOG OF TEST BORINGS 1 OF 3

OGS GEOTECHNICAL LOG OF TEST BORINGS SHEET (ENGLISH) (REV. 06-01-09)

ORIGINAL SCALE IN INCHES FOR REDUCED PLANS 0 1 2 3

CU 06240
EA 0G4701

DISREGARD PRINTS BEARING EARLIER REVISION DATES → 10/16/09 12/04/09 01/15/10 04/23/10 06/11/10 7/28/10

SHEET 18 OF 20

FILE => 29-0193-z-1tb03.dgn

USERNAME => trmnguye DATE PLOTTED => 13-OCT-2010 TIME PLOTTED => 15:14

DIST.	COUNTY	ROUTE	SECTION	SHEET NO.	TOTAL SHEETS
10	SJ	5	0.5/25.5	357	392

GARY PARIKH
DATE ASSIGNED September 5, 1967

TO ACCOMPANY PLANS DATED 10-11-10

DIVISION OF ENGINEERING SERVICES – GEOTECHNICAL SERVICES

As-Built Log of Test Borings sheet is considered an informational document only. As such, the State of California registration seal with signature, license number and registration certificate expiration date confirm that this is a true and accurate copy of the original document. This drawing is available and presented only for the convenience of any bidder, contractor or other interested party.

DIST.	COUNTY	ROUTE	POST MILES–TOTAL PROJECT	Sheet No.	Total Sheets
10	SJ	5	25.0/32.7	1031	1132

REGISTERED CIVIL ENGINEER — DATE 7/28/10

REGISTERED PROFESSIONAL ENGINEER — GARY PARIKH — No. G.E. 666 — Exp. 12/31/11 — GEOTECHNICAL — STATE OF CALIFORNIA

MARCH LANE UC (WIDEN)

LOG OF TEST BORINGS 2 OF 3

NOTE: A COPY OF THIS LOG OF TEST BORINGS IS AVAILABLE AT OFFICE OF STRUCTURE MAINTENANCE AND INVESTIGATIONS, SACRAMENTO, CALIFORNIA

CU: 06240
EA: 0G4701

BRIDGE No. 29-0193

Sheet 19 of 20

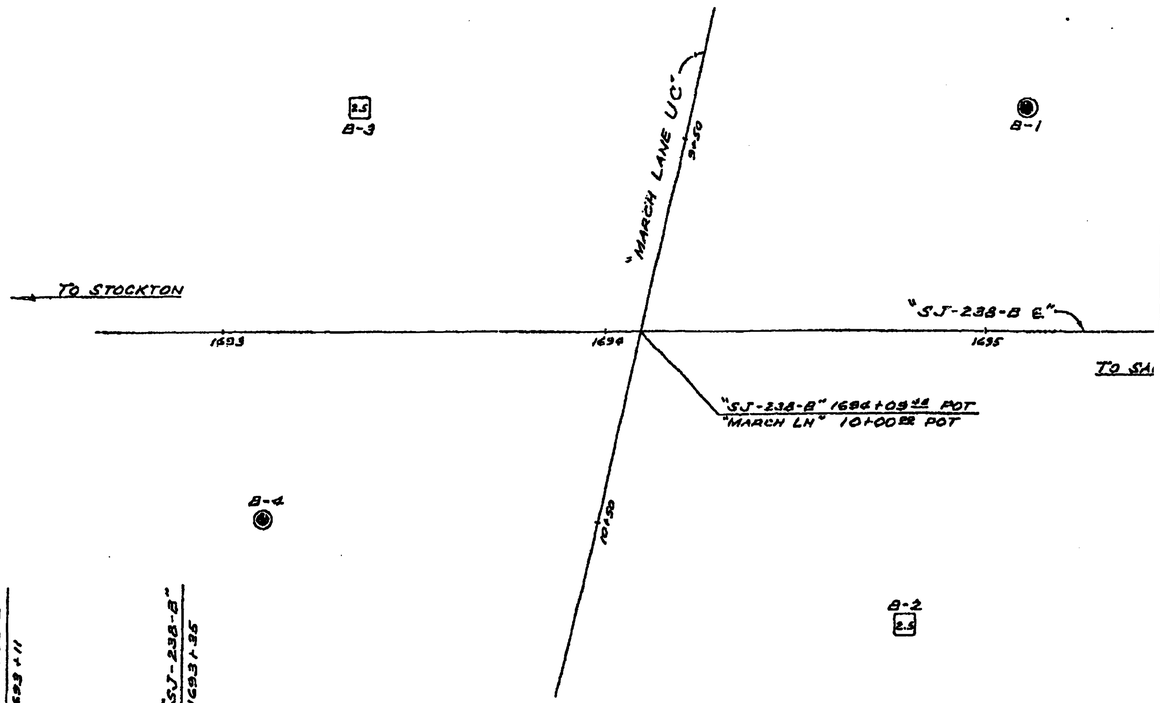

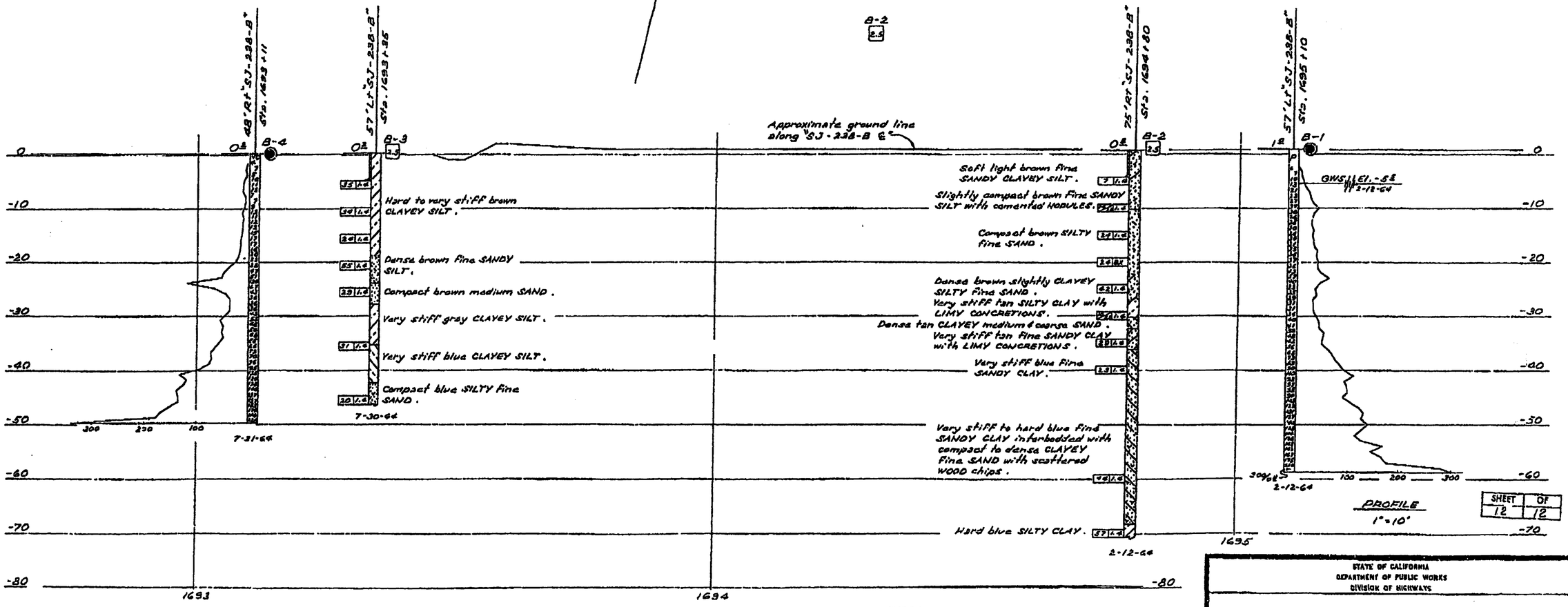

SHEET 12 OF 12

LEGEND OF BORING OPERATIONS

LEGEND OF EARTH MATERIALS

NOTE: Classification of earth material as shown on this sheet is based upon field inspection and is not to be construed to imply mechanical analysis.

AS BUILT PLANS
Contract No. 10-080924
Date Completed
Document No.

CONFIRMATION OF HYDRAULIC NEEDS ON STRUCTURES CLOSE TO FINISHED GRADE SITE LINES

IN BRIDGE GEOLOGY SECTION

STATE OF CALIFORNIA
DEPARTMENT OF PUBLIC WORKS
DIVISION OF HIGHWAYS

MARCH LANE UNDERCROSSING

LOG OF TEST BORINGS

SCALE As Noted | BRIDGE 29-193 3/4 | FILE | DRAWING 29193-8

FILENAME => 29-0193-z-ltb04.tif

DIST.	COUNTY	ROUTE	POST MILES-TOTAL PROJECT	Sheet No.	Total Sheets
10	SJ	5	25.0/32.7	1032	1132

DIVISION OF ENGINEERING SERVICES - GEOTECHNICAL SERVICES

As-Built Log of Test Borings sheet is considered an informational document only. As such, the State of California registration seal with signature, license number and registration certificate expiration date confirm that this is a true and accurate copy of the original document. This drawing is available and presented only for the convenience of any bidder, contractor or other interested party.

REGISTERED CIVIL ENGINEER — DATE 7/28/10

REGISTERED PROFESSIONAL ENGINEER — GARY PARIKH — No. G.E. 666 — Exp. 12/31/11 — GEOTECHNICAL — STATE OF CALIFORNIA

MARCH LANE UC (WIDEN)

LOG OF TEST BORINGS 3 OF 3

NOTE: A COPY OF THIS LOG OF TEST BORINGS IS AVAILABLE AT OFFICE OF STRUCTURE MAINTENANCE AND INVESTIGATIONS, SACRAMENTO, CALIFORNIA

CU: 06240 EA: 0G4701

BRIDGE No. 29-0193

Sheet 20 of 20

TO ACCOMPANY PLANS DATED 10-11-10

Design Pile Loading: 45 Tons
Pile Type: Class I (Raymond Step taper used)
Total No. of Piles: 60
Lineal Ft Piles; Plans: 2,940
Lineal Ft Piles; As Built: 2,700.6
Hammer: Raymond 65CH

Remarks:
All piles predrilled to O.G.

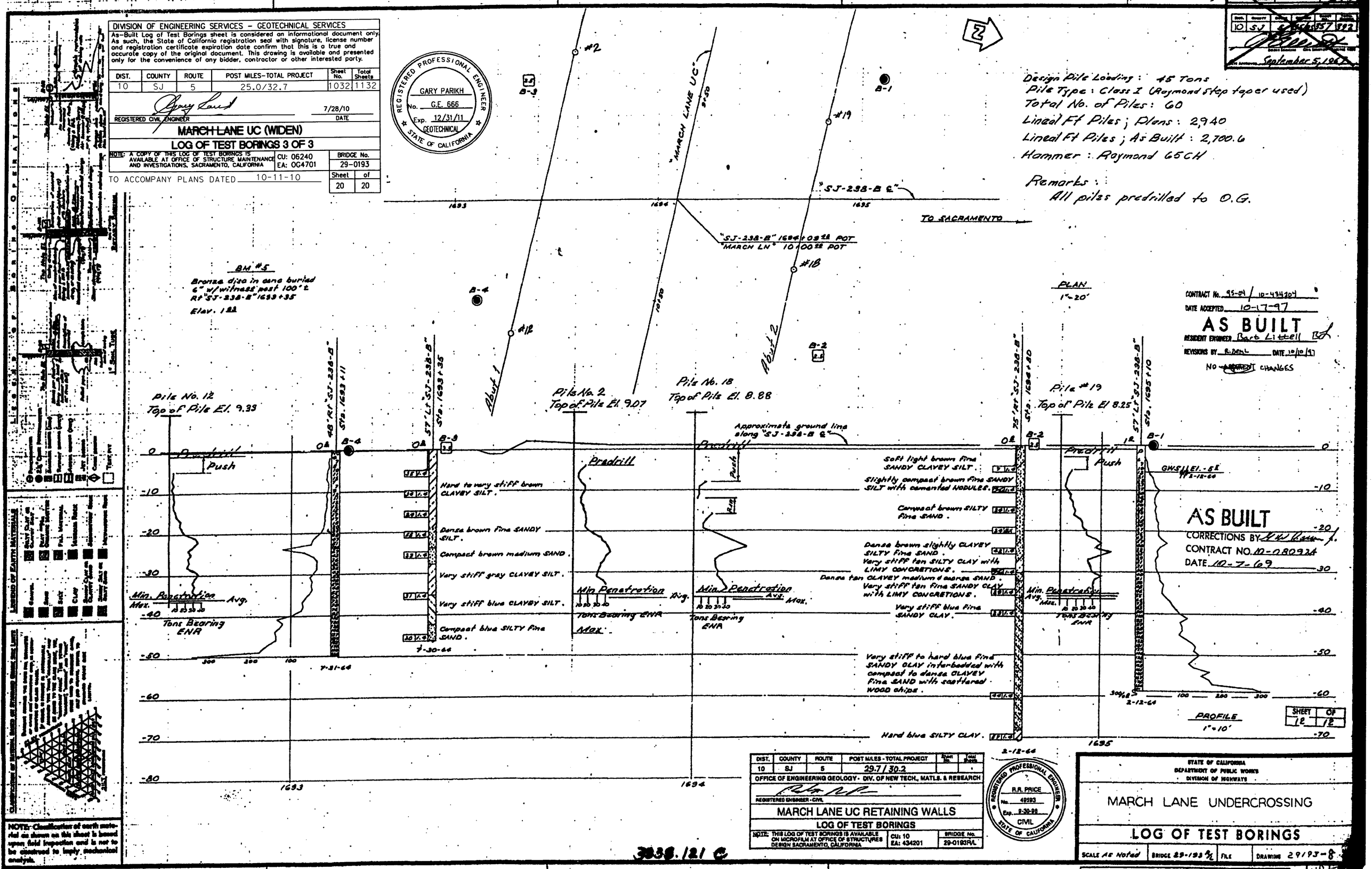

CONTRACT No. 95-04 / 10-434204
DATE ACCEPTED 10-17-97

AS BUILT
RESIDENT ENGINEER Bart Littell
REVISIONS BY R. Deal DATE 10/10/97
NO CHANGES

AS BUILT
CORRECTIONS BY
CONTRACT NO. 10-080924
DATE 10-7-69

LEGEND OF BORING OPERATIONS

LEGEND OF EARTH MATERIALS

CLASSIFICATION OF EARTH, ROCK AND ENGINEERING SOIL TEST LIMITS

NOTE: Classification of earth material as shown on this sheet is based upon field inspection and is not to be construed to imply mechanical analysis.

DIST.	COUNTY	ROUTE	POST MILES - TOTAL PROJECT	Sheet No.	Total Sheets
10	SJ	5	29.7 / 30.2		

OFFICE OF ENGINEERING GEOLOGY - DIV. OF NEW TECH., MATLS. & RESEARCH

REGISTERED ENGINEER - CIVIL

MARCH LANE UC RETAINING WALLS

LOG OF TEST BORINGS

NOTE: THIS LOG OF TEST BORINGS IS AVAILABLE ON MICROFILM AT OFFICE OF STRUCTURES DESIGN SACRAMENTO, CALIFORNIA

CU: 10 EA: 434201

BRIDGE No. 29-0193R/L

2-12-64

REGISTERED PROFESSIONAL ENGINEER — R.R. PRICE — No. 49593 — Exp. 9-30-98 — CIVIL — STATE OF CALIFORNIA

STATE OF CALIFORNIA
DEPARTMENT OF PUBLIC WORKS
DIVISION OF HIGHWAYS

MARCH LANE UNDERCROSSING

LOG OF TEST BORINGS

SCALE As Noted | BRIDGE 29-193 R/L | FILE | DRAWING 29/93-8

3038.121 C

FILENAME =>-29-0193-z-ltb05.tif

DIST	COUNTY	ROUTE	POST MILES TOTAL PROJECT	SHEET No	TOTAL SHEETS
10	SJ	5	25.0/32.7	1033	1132

R E Sennett 7/28/10
REGISTERED CIVIL ENGINEER DATE

10-11-10
PLANS APPROVAL DATE

REGISTERED PROFESSIONAL ENGINEER Robert Sennett No. 3976 Exp. 12/31/10 STRUCTURAL STATE OF CALIFORNIA

The State of California or its officers or agents shall not be responsible for the accuracy or completeness of scanned copies of this plan sheet.

SAN JOAQUIN COUNCIL OF GOVERMENT
555 E. WEBER AVENUE
STOCKTON, CA 95202

MGE ENGINEERING, INC.
7415 GREENHAVEN DRIVE, SUITE 100
SACRAMENTO, CA 95831

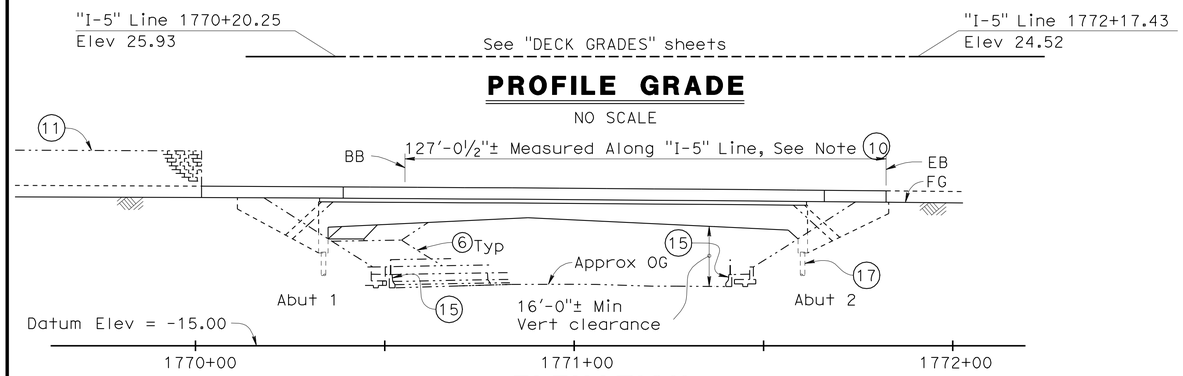

ELEVATION

1" = 20'

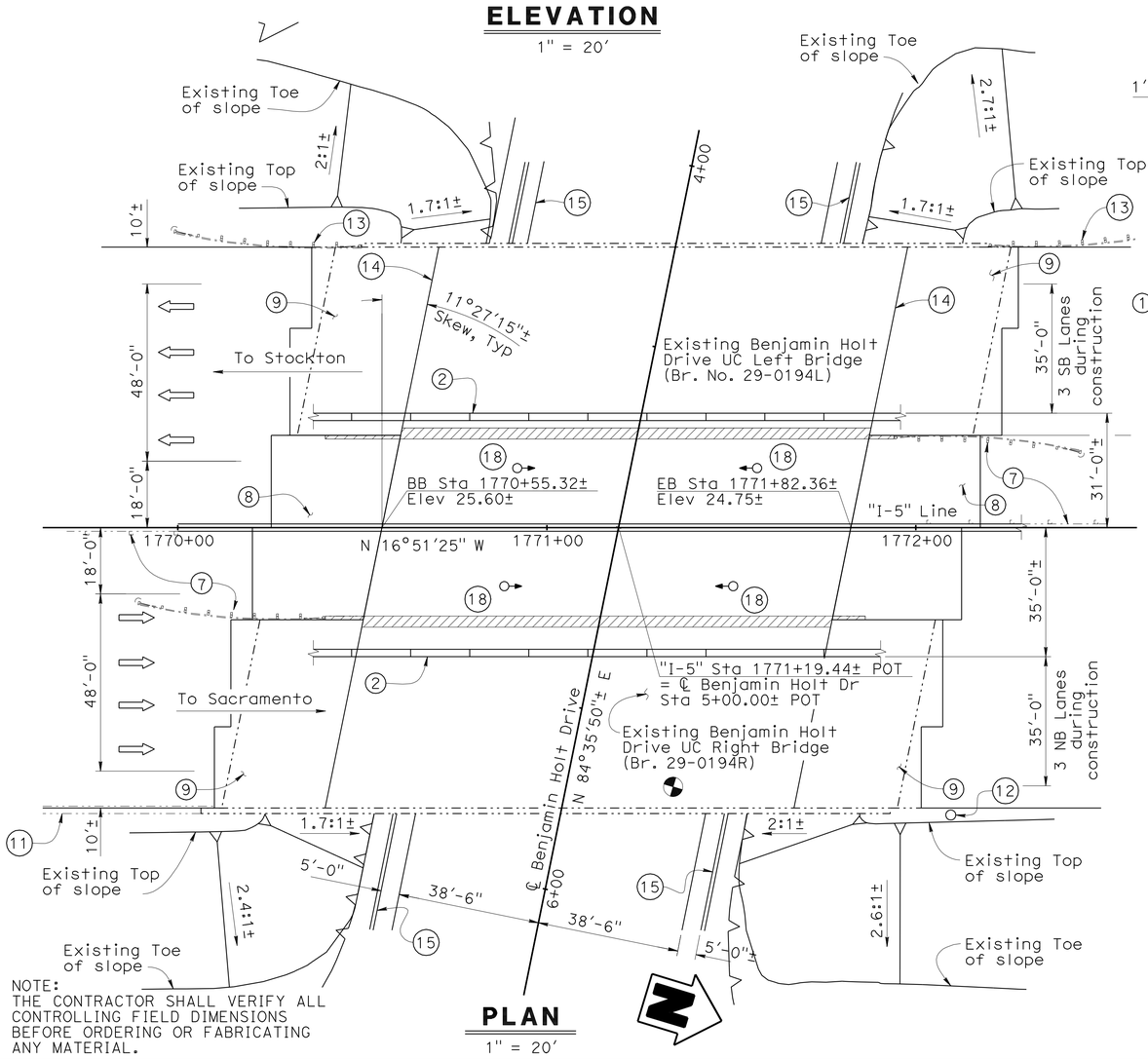

NOTE:
THE CONTRACTOR SHALL VERIFY ALL CONTROLLING FIELD DIMENSIONS BEFORE ORDERING OR FABRICATING ANY MATERIAL.

PLAN

1" = 20'

LEGEND:

- Bridge Removal (Portion)
- Indicates Point of Minimum Vertical Clearance
- Indicates Existing Structure
- Indicates Direction of Traffic
- Indicates Soffit Lighting, see Electrical Plans

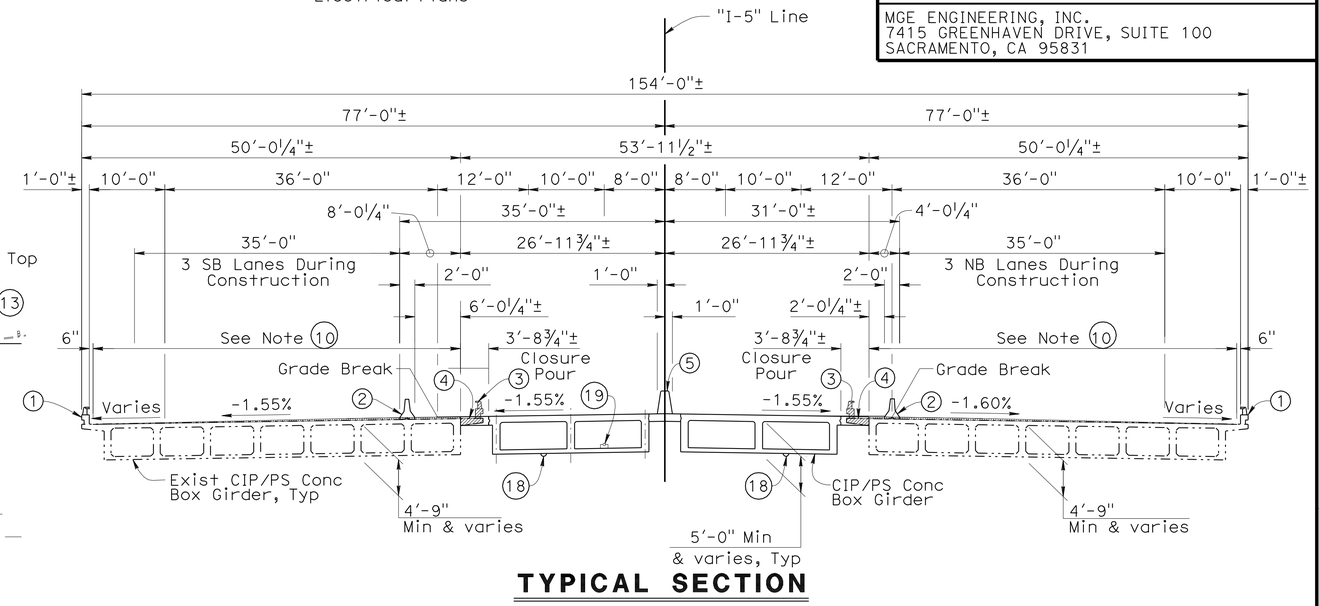

TYPICAL SECTION

1" = 10'

NOTES:

1. Existing Type 9 Barrier to remain
2. Temporary Railing Type K, see Road Plans
3. Salvage Existing Type 9 Barrier Railing
4. Remove Existing Overhang
5. Concrete Barrier Type 60A (MOD)
6. Remove Existing Slope Paving (Portion) between Bridges and reconstruct
7. Remove Existing Bridge Approach Guard Railing at Median, see Road Plans
8. Structure Approach Type N(30D)
9. Structure Approach Type R(30D)
10. Limits of Prepare concrete Bridge Deck Surface, Furnish and Place Polyester Concrete Overlay with Longitudinal Grooving
11. Existing Concrete Barrier Type 27R with Masonry Block Soundwall
12. Existing Overhead Sign
13. Existing Bridge Approach Guard Railing
14. Remove and Replace Existing Joint Seal, Full Width
15. Existing Concrete Barrier (Type 50D - Mod) with Wrought Iron Railing
16. For General Notes, Index to Plans and Quantities, see "GENERAL NOTES" sheet
17. For Pile Data Table, see "FOUNDATION PLAN" sheet
18. Soffit Lighting locations:

"I-5" Station	Offset
1770+89.68	16', Rt
1771+49.20	16', Rt
1770+93.20	16', Lt
1771+55.68	16', Lt

19. 4"Ø Fiber Optic Conduit (Future), see Electrical Plans.

John Fujimoto DESIGN OVERSIGHT John Fujimoto	DESIGN	BY P. Zhao	CHECKED T. Swenson	LOAD & RESISTANCE FACTOR DESIGN	LIVE LOADING: HL93 w/ "LOW-BOY" AND PERMIT DESIGN VEHICLE
8-2-10 SIGN OFF DATE	DETAILS	BY P. Zhao	CHECKED T. Swenson	LAYOUT BY R. Sennett	CHECKED T. Swenson
	QUANTITIES	BY D. Vang	CHECKED B. Bhattiprolu	SPECIFICATIONS BY R. Sennett	PLANS AND SPECS COMPARED

PREPARED FOR THE STATE OF CALIFORNIA DEPARTMENT OF TRANSPORTATION

Robert Sennett
PROJECT ENGINEER

BRIDGE NO. 29-0194
POST MILES 31.45

BENJAMIN HOLT DRIVE UC (WIDEN)

GENERAL PLAN

DESIGN GENERAL PLAN SHEET (ENGLISH) (REV. 06-01-09)

ORIGINAL SCALE IN INCHES FOR REDUCED PLANS 0 1 2 3

CU 06240
EA 0G4704

DISREGARD PRINTS BEARING EARLIER REVISION DATES

REVISION DATES (PRELIMINARY STAGE ONLY): 06/02/09 09/04/09 10/16/09 12/04/09 01/15/10 04/23/10 06/24/10 07/28/10

SHEET 1 OF 26

FILE => 29-0194rl-a-gp01.dgn

USERNAME => rtmartin DATE PLOTTED => 13-OCT-2010 TIME PLOTTED => 15:03

DIST	COUNTY	ROUTE	POST MILES TOTAL PROJECT	SHEET No	TOTAL SHEETS
10	SJ	5	25.0/32.7	1034	1132

REGISTERED CIVIL ENGINEER 7/28/10 DATE

10-11-10
PLANS APPROVAL DATE

REGISTERED PROFESSIONAL ENGINEER Robert Sennett No. 3976 Exp. 12/31/10 STRUCTURAL STATE OF CALIFORNIA

The State of California or its officers or agents shall not be responsible for the accuracy or completeness of scanned copies of this plan sheet.

SAN JOAQUIN COUNCIL OF GOVERNMENT
555 E. WEBER AVENUE
STOCKTON, CA 95202

MGE ENGINEERING, INC.
7415 GREENHAVEN DRIVE, SUITE 100
SACRAMENTO, CA 95831

INDEX TO BRIDGE PLANS

SHEET No.	TITLE
1	GENERAL PLAN
2	GENERAL NOTES
3	DECK GRADES No. 1
4	DECK GRADES No. 2
5	DECK GRADES No. 3
6	FOUNDATION PLAN
7	ABUTMENT LAYOUT
8	ABUTMENT DETAILS No. 1
9	ABUTMENT DETAILS No. 2
10	ABUTMENT DETAILS No. 3
11	TYPICAL SECTION
12	GIRDER LAYOUT
13	GIRDER REINFORCEMENT
14	LIMITS OF STRUCTURE APPROACH
15	STRUCTURE APPROACH TYPE N(30D)
16	STRUCTURE APPROACH TYPE R(30D)
17	STRUCTURE APPROACH DRAINAGE DETAILS
18	SLOPE PAVING DETAILS No. 1
19	SLOPE PAVING DETAILS No. 2
20	SLOPE PAVING DETAILS No. 3
21	SLOPE PAVING DETAILS No. 4
22	SOIL LEGEND 1 OF 2
23	SOIL LEGEND 2 OF 2
24	LOG OF TEST BORINGS
25	AS - BUILT LOG OF TEST BORINGS (1998)
26	AS - BUILT LOG OF TEST BORINGS (1967)

STANDARD PLANS

DATED MAY 2006

	A10A	ACRONYMS AND ABBREVIATIONS (SHEET 1 OF 2)
	A10B	ACRONYMS AND ABBREVIATIONS (SHEET 2 OF 2)
	A10C	SYMBOLS (SHEET 1 OF 2)
	A10D	SYMBOLS (SHEET 2 OF 2)
	A62C	LIMITS OF PAYMENT FOR EXCAVATION AND BACKFILL BRIDGE
RSP	A76A	CONCRETE BARRIER TYPE 60
	B0-3	BRIDGE DETAILS
	B0-5	BRIDGE DETAILS
	B2-5	PILE DETAILS CALSS 90 AND CLASS 140
RSP	B6-21	JOINT SEALS (MAXIMUM MOVEMENT RATING = 2")
	B7-1	BOX GIRDER DETAILS
	B8-5	CAST-IN-PLACE PRESTRESSED GIRDER DETAILS
	B14-3	COMMUNICATION AND SPRINKLER CONTROL CONDUITS (CONDUIT LESS THAN 4")
	B14-5	WATER SUPPLY LINE (DETAILS)
	ES-9B	ELECTRICAL SYSTEMS

GENERAL NOTES
LOAD AND RESISTANCE FACTOR DESIGN

DESIGN: AASHTO LRFD Bridge Design Specifications, 4th edition and the Caltrans Amendments, preface dated Dec. 2008; except that Abutments, Concrete Barrier Type 60A (Mod), Structural Approacl Type N(30D) and Structural Approach R(30D) are designed using Bridge Design Specifications (1996 AASHTO with Revisions by Caltrans)

SEISMIC DESIGN: Caltrans Seismic Design Criteria (SDC) Version 1.4 dated June 2006

DEAD LOAD: Includes 35 psf for future wearing surface

LIVE LOADING: HL93 with "Low-Boy" and Permit Design Vehicle

SEISMIC LOADING: Soil Profile Type D
Magnitude group 7.25 ± 0.25
Peak Rock Acceleration 0.2g

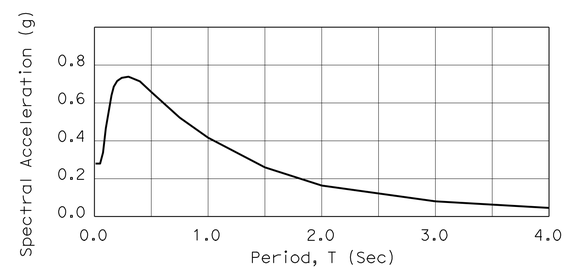

CONCRETE: fy = 60 ksi
fc′ = 3.6 ksi (Except as shown "Concrete Strength and Type Limits" Diagram)
n = 8
See "Prestressing Notes" on "GIRDER LAYOUT" sheet.

BENJAMIN HOLT DRIVE UC No. 29-0194
QUANTITIES:

PUBLIC SAFETY PLAN	LUMP	SUM
REMOVE CONCRETE DECK SURFACE	3,100	SQFT
SALVAGE METAL BRIDGE RAILING	350	LF
PREPARE CONCRETE BRIDGE DECK SURFACE	12,330	SQFT
BRIDGE REMOVAL (PORTION), LOCATION J	LUMP	SUM
STRUCTURE EXCAVATION (BRIDGE)	185	CY
STRUCTURE BACKFILL (BRIDGE)	60	CY
AGGREGATE BASE (APPROACH SLAB)	24	CY
GROOVE POLYESTER CONCRETE OVERLAY	1,370	SQYD
FURNISH PILING (CLASS 140)(ALTERNATIVE W)	1,963	LF
DRIVE PILE (CLASS 140)(ALTERNATIVE W)	28	EA
PRESTRESSING CAST-IN-PLACE CONCRETE	LUMP	SUM
STRUCTURAL CONCRETE, BRIDGE	680	CY
STRUCTURAL CONCRETE, APPROACH SLAB (TYPE N)	120	CY
STRUCTURAL CONCRETE, APPROACH SLAB (TYPE R)	240	CY
PAVING NOTCH EXTENSION	150	CF
DRILL AND BOND DOWEL	570	LF
FURNISH POLYESTER CONCRETE OVERLAY	1,350	CF
PLACE POLYESTER CONCRETE OVERLAY	12,330	SQFT
JOINT SEAL (MR 1")	310	LF
BAR REINFORCING STEEL (BRIDGE)	137,000	LB
SLOPE PAVING (PATTERNED CONCRETE)	20	CY
CONCRETE BARRIER (TYPE 60A MODIFIED)	187	LF

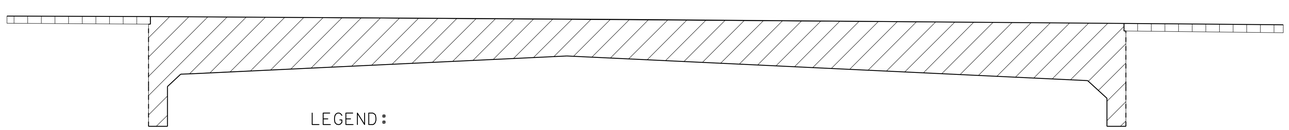

LEGEND:

Indicates Structural Concrete, Bridge (5.0 ksi @ 28 days)

Indicates Structural Concrete, Approach Slab

NOTE:
THE CONTRACTOR SHALL VERIFY ALL CONTROLLING FIELD DIMENSIONS BEFORE ORDERING OR FABRICATING ANY MATERIAL.

CONCRETE STRENGTH AND TYPE LIMITS

NO SCALE

DESIGN OVERSIGHT John Fujimoto
8-2-10
SIGN OFF DATE

	BY	CHECKED
DESIGN	P. Zhao	T. Swenson
DETAILS	P. Zhao	T. Swenson
QUANTITIES	D. Vang	B. Bhattiprolu

PREPARED FOR THE STATE OF CALIFORNIA DEPARTMENT OF TRANSPORTATION

Robert Sennett
PROJECT ENGINEER

BRIDGE NO. 29-0194
POST MILE 31.45

BENJAMIN HOLT DRIVE UC (WIDEN)
GENERAL NOTES

DESIGN DETAIL SHEET (ENGLISH) (REV. 06-01-09)

ORIGINAL SCALE IN INCHES FOR REDUCED PLANS 0 1 2 3

CU 06240
EA 0G4701

DISREGARD PRINTS BEARING EARLIER REVISION DATES

REVISION DATES (PRELIMINARY STAGE ONLY) 10/16/09 12/04/09 01/15/10 04/23/10 06/11/10 07/28/10

SHEET 2 OF 26

FILE => 29-0194rl-a-itp.dgn

USERNAME => trmartin DATE PLOTTED => 14-OCT-2010 TIME PLOTTED => 07:10

DIST	COUNTY	ROUTE	POST MILES TOTAL PROJECT	SHEET No	TOTAL SHEETS
10	SJ	5	25.0/32.7	1035	1132

R E Sennett 7/28/10
REGISTERED CIVIL ENGINEER DATE

10-11-10
PLANS APPROVAL DATE

REGISTERED PROFESSIONAL ENGINEER Robert Sennett No. 3976 Exp. 12/31/10 STRUCTURAL STATE OF CALIFORNIA

The State of California or its officers or agents shall not be responsible for the accuracy or completeness of scanned copies of this plan sheet.

SAN JOAQUIN COUNCIL OF GOVERNMENT
555 E. WEBER AVENUE
STOCKTON, CA 95202

MGE ENGINEERING, INC.
7415 GREENHAVEN DRIVE, SUITE 100
SACRAMENTO, CA 95831

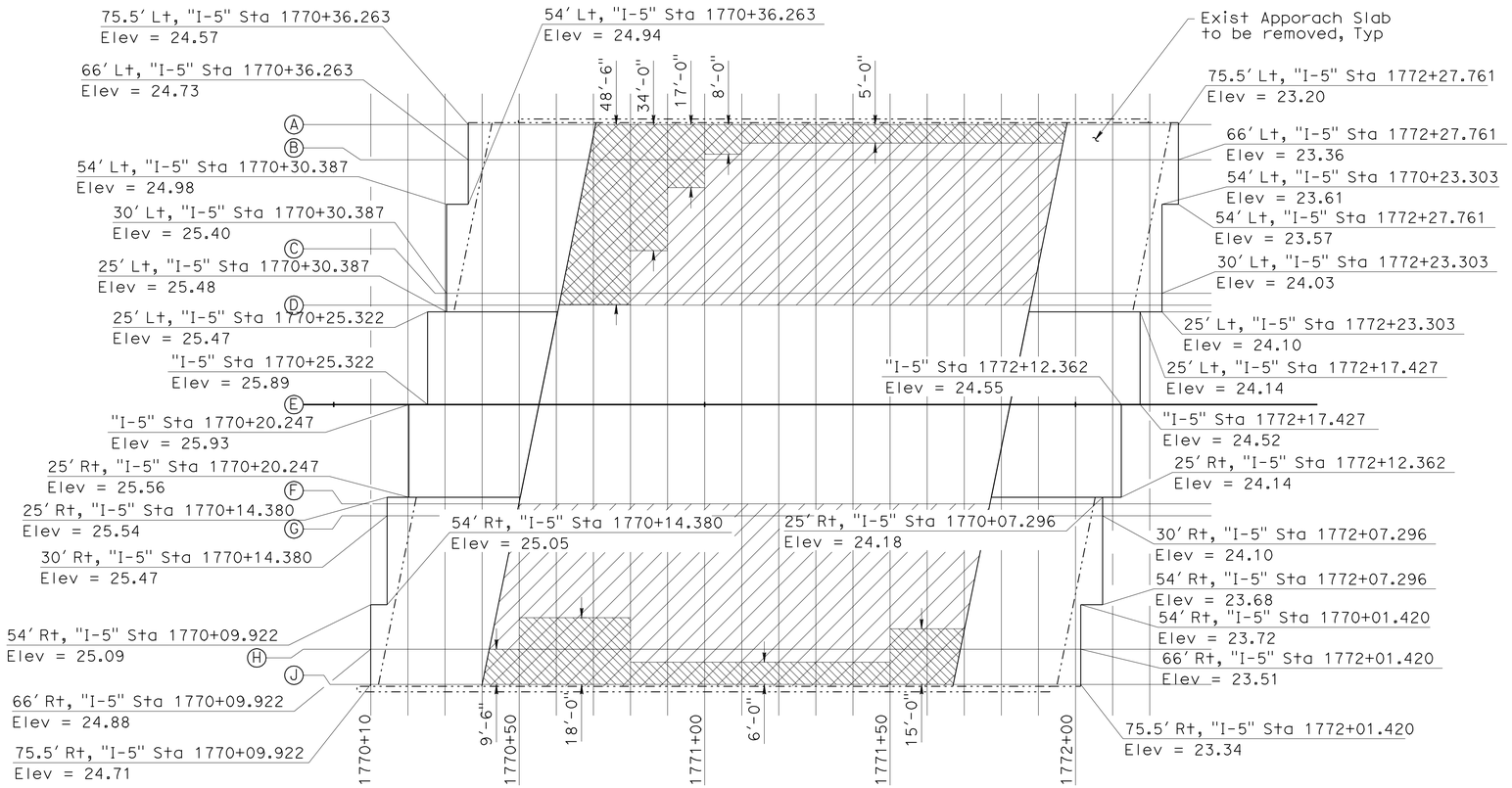

PLAN

SCALE: 1" = 20'

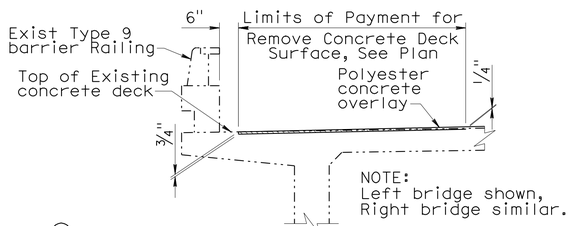

DETAIL 1

1/4" = 1'-0"

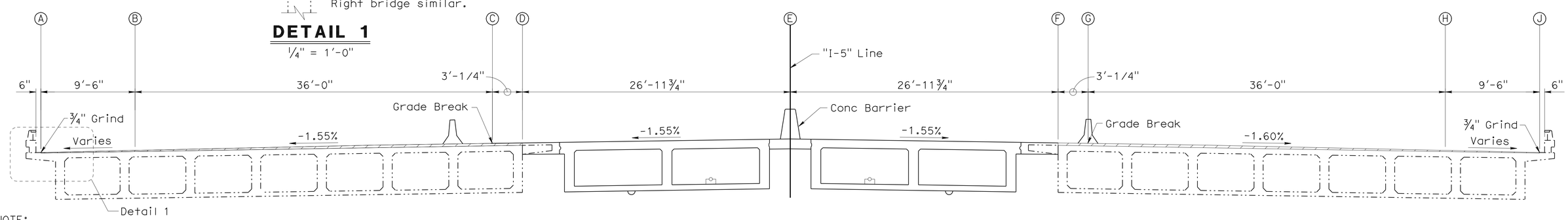

TYPICAL SECTION

NO SCALE

NOTES:

1. Deck grades shown do not include camber and falsework settlement.
2. Approach slabs shown are for illustration only.
3. See Road Plans for finish grade beyond approach slabs.

LEGEND:

-·-·-·- Indicates Existing Structure

Indicates limits of Prepare Concrete Bridge Deck Surface and Furnish and Place Polyester Concrete Overlay with Longitudinal Grooving.

Indicates Approx Limits of Remove Concrete Deck Surface.

NOTE:
THE CONTRACTOR SHALL VERIFY ALL CONTROLLING FIELD DIMENSIONS BEFORE ORDERING OR FABRICATING ANY MATERIAL.

John Fujimoto
DESIGN OVERSIGHT John Fujimoto
8-2-10
SIGN OFF DATE

	BY	CHECKED
DESIGN	P. Zhao	T. Swenson
DETAILS	P. Zhao	T. Swenson
QUANTITIES	D. Vang	B. Bhattiprolu

PREPARED FOR THE STATE OF CALIFORNIA DEPARTMENT OF TRANSPORTATION

Robert Sennett
PROJECT ENGINEER

BRIDGE NO. 29-0194
POST MILE 31.45

BENJAMIN HOLT DRIVE UC (WIDEN)

DECK GRADES No. 1

DESIGN DETAIL SHEET (ENGLISH) (REV. 06-01-09)

ORIGINAL SCALE IN INCHES FOR REDUCED PLANS 0 1 2 3

CU 06240
EA 0G4701

DISREGARD PRINTS BEARING EARLIER REVISION DATES

REVISION DATES (PRELIMINARY STAGE ONLY) 10/16/09 12/04/09 01/15/10 04/23/10 06/11/10 07/28/10

SHEET 3 OF 26

FILE => 29-0194r1-d-dc01.dgn

USERNAME => rrmartin DATE PLOTTED => 14-OCT-2010 TIME PLOTTED => 07:11

"I-5" Line Station	Line	Offset from "I-5" Line (ft)	Proposed Top of Deck/Overlay Elev (ft)	Existing Top of Deck Elev (ft)
1770+10.00	A	75.50 L+	N/A	N/A
	B	66.00 L+	N/A	N/A
	C	30.00 L+	N/A	N/A
	D	26.98 L+	N/A	N/A
	E	0.00	N/A	N/A
	F	26.98 R+	N/A	N/A
	G	30.00 R+	N/A	N/A
	H	66.00 R+	24.88	N/A
	J	75.50 R+	24.71	N/A
1770+20.00	A	75.50 L+	N/A	N/A
	B	66.00 L+	N/A	N/A
	C	30.00 L+	N/A	N/A
	D	26.98 L+	N/A	N/A
	E	0.00	25.93	N/A
	F	26.98 R+	25.47	N/A
	G	30.00 R+	25.41	N/A
	H	66.00 R+	24.80	N/A
	J	75.50 R+	24.64	N/A
1770+30.00	A	75.50 L+	N/A	N/A
	B	66.00 L+	N/A	N/A
	C	30.00 L+	25.40	N/A
	D	26.98 L+	25.45	N/A
	E	0.00	25.83	N/A
	F	26.98 R+	25.38	N/A
	G	30.00 R+	25.32	N/A
	H	66.00 R+	24.73	N/A
	J	75.50 R+	24.57	N/A
1770+40.00	A	75.50 L+	24.54	N/A
	B	66.00 L+	24.70	N/A
	C	30.00 L+	25.30	N/A
	D	26.98 L+	25.35	N/A
	E	0.00	25.73	N/A
	F	26.98 R+	25.28	N/A
	G	30.00 R+	25.24	N/A
	H	66.00 R+	24.66	24.57
	J	75.50 R+	24.44	24.44
1770+50.00	A	75.50 L+	24.47	N/A
	B	66.00 L+	24.62	N/A
	C	30.00 L+	25.19	N/A
	D	26.98 L+	25.24	N/A
	E	0.00	25.63	N/A
	F	26.98 R+	25.22	25.13
	G	30.00 R+	25.17	25.09
	H	66.00 R+	24.59	24.57
	J	75.50 R+	24.44	24.44
1770+60.00	A	75.50 L+	24.40	N/A
	B	66.00 L+	24.54	N/A
	C	30.00 L+	25.10	24.92
	D	26.98 L+	25.15	24.96
	E	0.00	25.57	N/A
	F	26.98 R+	25.15	25.04
	G	30.00 R+	25.10	25.00
	H	66.00 R+	24.53	24.48
	J	75.50 R+	24.34	24.34
1770+70.00	A	75.50 L+	24.33	24.33
	B	66.00 L+	24.48	24.47
	C	30.00 L+	25.04	25.02
	D	26.98 L+	25.08	25.06
	E	0.00	25.50	N/A
	F	26.98 R+	25.08	24.98
	G	30.00 R+	25.04	24.93
	H	66.00 R+	24.46	24.39
	J	75.50 R+	24.24	24.24

"I-5" Line Station	Line	Offset from "I-5" Line (ft)	Proposed Top of Deck/Overlay Elev (ft)	Existing Top of Deck Elev (ft)
1770+80.00	A	75.50 L+	24.27	24.27
	B	66.00 L+	24.41	24.41
	C	30.00 L+	24.97	24.92
	D	26.98 L+	25.02	24.97
	E	0.00	25.43	N/A
	F	26.98 R+	25.02	24.90
	G	30.00 R+	24.97	24.85
	H	66.00 R+	24.39	24.32
	J	75.50 R+	24.18	24.18
1770+90.00	A	75.50 L+	24.18	24.18
	B	66.00 L+	24.34	24.32
	C	30.00 L+	24.90	24.82
	D	26.98 L+	24.95	24.86
	E	0.00	25.37	N/A
	F	26.98 R+	24.95	24.81
	G	30.00 R+	24.90	24.77
	H	66.00 R+	24.33	24.24
	J	75.50 R+	24.10	24.10
1771+00.00	A	75.50 L+	24.11	24.11
	B	66.00 L+	24.28	24.24
	C	30.00 L+	24.84	24.72
	D	26.98 L+	24.88	24.76
	E	0.00	25.30	N/A
	F	26.98 R+	24.88	24.73
	G	30.00 R+	24.84	24.69
	H	66.00 R+	24.26	24.18
	J	75.50 R+	24.05	24.05
1771+10.00	A	75.50 L+	23.98	23.98
	B	66.00 L+	24.21	24.12
	C	30.00 L+	24.77	24.65
	D	26.98 L+	24.82	24.70
	E	0.00	25.23	N/A
	F	26.98 R+	24.82	24.68
	G	30.00 R+	24.77	24.63
	H	66.00 R+	24.19	24.13
	J	75.50 R+	23.99	23.99
1771+20.00	A	75.50 L+	23.93	23.93
	B	66.00 L+	24.14	24.07
	C	30.00 L+	24.70	24.61
	D	26.98 L+	24.75	24.66
	E	0.00	25.17	N/A
	F	26.98 R+	24.75	24.59
	G	30.00 R+	24.70	24.55
	H	66.00 R+	24.13	24.04
	J	75.50 R+	23.91	23.91
1771+30.00	A	75.50 L+	23.84	23.84
	B	66.00 L+	24.08	23.98
	C	30.00 L+	24.64	24.52
	D	26.98 L+	24.68	24.57
	E	0.00	25.10	N/A
	F	26.98 R+	24.68	24.50
	G	30.00 R+	24.64	24.46
	H	66.00 R+	24.06	23.99
	J	75.50 R+	23.87	23.87
1771+40.00	A	75.50 L+	23.78	23.78
	B	66.00 L+	24.01	23.92
	C	30.00 L+	24.57	24.45
	D	26.98 L+	24.62	24.50
	E	0.00	25.03	N/A
	F	26.98 R+	24.62	24.46
	G	30.00 R+	24.57	24.42
	H	66.00 R+	23.99	23.95
	J	75.50 R+	23.82	23.82

DIST	COUNTY	ROUTE	POST MILES TOTAL PROJECT	SHEET No	TOTAL SHEETS
10	SJ	5	25.0/32.7	1036	1132

REGISTERED CIVIL ENGINEER 7/28/10 DATE

10-11-10
PLANS APPROVAL DATE

REGISTERED PROFESSIONAL ENGINEER Robert Sennett No. 3976 Exp. 12/31/10 STRUCTURAL STATE OF CALIFORNIA

The State of California or its officers or agents shall not be responsible for the accuracy or completeness of scanned copies of this plan sheet.

SAN JOAQUIN COUNCIL OF GOVERNMENT
555 E. WEBER AVENUE
STOCKTON, CA 95202

MGE ENGINEERING, INC.
7415 GREENHAVEN DRIVE, SUITE 100
SACRAMENTO, CA 95831

NOTE:
All Existing top of deck elevations are approximate.

NOTE:
THE CONTRACTOR SHALL VERIFY ALL CONTROLLING FIELD DIMENSIONS BEFORE ORDERING OR FABRICATING ANY MATERIAL.

DESIGN OVERSIGHT John Fujimoto
8-2-10
SIGN OFF DATE

	BY	CHECKED
DESIGN	P. Zhao	T. Swenson
DETAILS	P. Zhao	T. Swenson
QUANTITIES	D. Vang	B. Bhattiprolu

PREPARED FOR THE STATE OF CALIFORNIA DEPARTMENT OF TRANSPORTATION

Robert Sennett
PROJECT ENGINEER

BRIDGE NO. 29-0194
POST MILE 31.45

BENJAMIN HOLT DRIVE UC (WIDEN)
DECK GRADES No. 2

DESIGN DETAIL SHEET (ENGLISH) (REV. 06-01-09)

ORIGINAL SCALE IN INCHES FOR REDUCED PLANS 0 1 2 3

CU 06240
EA 0G4701

DISREGARD PRINTS BEARING EARLIER REVISION DATES

REVISION DATES (PRELIMINARY STAGE ONLY) 10/15/09 12/04/09 01/15/10 04/23/10 06/11/10 07/28/10

SHEET 4 OF 26

FILE => 29-0194rl-d-dc02.dgn

USERNAME => ttmartin DATE PLOTTED => 13-OCT-2010 TIME PLOTTED => 15:03

DIST	COUNTY	ROUTE	POST MILES TOTAL PROJECT	SHEET No	TOTAL SHEETS
10	SJ	5	25.0/32.7	1037	1132

REGISTERED CIVIL ENGINEER 7/28/10 DATE

10-11-10
PLANS APPROVAL DATE

REGISTERED PROFESSIONAL ENGINEER Robert Sennett No. 3976 Exp. 12/31/10 STRUCTURAL STATE OF CALIFORNIA

The State of California or its officers or agents shall not be responsible for the accuracy or completeness of scanned copies of this plan sheet.

SAN JOAQUIN COUNCIL OF GOVERNMENT
555 E. WEBER AVENUE
STOCKTON, CA 95202

MGE ENGINEERING, INC.
7415 GREENHAVEN DRIVE, SUITE 100
SACRAMENTO, CA 95831

"I-5" Line Station	Line	Offset from "I-5" Line (ft)	Proposed Top of Deck/Overlay Elev (ft)	Existing Top of Deck Elev (ft)
1771+50.00	A	75.50 L†	23.71	23.71
	B	66.00 L†	23.94	23.85
	C	30.00 L†	24.50	24.39
	D	26.98 L†	24.55	24.44
	E	0.00	24.97	N/A
	F	26.98 R†	24.55	24.42
	G	30.00 R†	24.50	24.39
	H	66.00 R†	23.93	23.91
	J	75.50 R†	23.79	23.79
1771+60.00	A	75.50 L†	23.61	23.61
	B	66.00 L†	23.88	23.76
	C	30.00 L†	24.44	24.33
	D	26.98 L†	24.48	24.38
	E	0.00	24.90	N/A
	F	26.98 R†	24.48	24.36
	G	30.00 R†	24.44	24.32
	H	66.00 R†	23.86	23.80
	J	75.50 R†	23.67	23.67
1771+70.00	A	75.50 L†	23.55	23.55
	B	66.00 L†	23.81	23.70
	C	30.00 L†	24.37	24.28
	D	26.98 L†	24.42	24.33
	E	0.00	24.83	N/A
	F	26.98 R†	24.42	24.30
	G	30.00 R†	24.37	24.26
	H	66.00 R†	23.79	23.74
	J	75.50 R†	23.60	23.60
1771+80.00	A	75.50 L†	23.52	23.52
	B	66.00 L†	23.74	23.66
	C	30.00 L†	24.30	24.20
	D	26.98 L†	24.35	24.25
	E	0.00	24.77	N/A
	F	26.98 R†	24.35	24.25
	G	30.00 R†	24.30	24.21
	H	66.00 R†	23.73	N/A
	J	75.50 R†	23.57	N/A

"I-5" Line Station	Line	Offset from "I-5" Line (ft)	Proposed Top of Deck/Overlay Elev (ft)	Existing Top of Deck Elev (ft)
1771+90.00	A	75.50 L†	23.46	23.46
	B	66.00 L†	23.68	23.60
	C	30.00 L†	24.24	24.11
	D	26.98 L†	24.28	24.15
	E	0.00	24.70	N/A
	F	26.98 R†	24.28	N/A
	G	30.00 R†	24.24	N/A
	H	66.00 R†	23.62	N/A
	J	75.50 R†	23.46	N/A
1772+00.00	A	75.50 L†	23.46	23.44
	B	66.00 L†	23.61	23.56
	C	30.00 L†	24.18	N/A
	D	26.98 L†	24.22	N/A
	E	0.00	24.63	N/A
	F	26.98 R†	24.21	N/A
	G	30.00 R†	24.16	N/A
	H	66.00 R†	23.53	N/A
	J	75.50 R†	23.36	N/A
1772+10.00	A	75.50 L†	23.38	N/A
	B	66.00 L†	23.52	N/A
	C	30.00 L†	24.12	N/A
	D	26.98 L†	24.15	N/A
	E	0.00	24.57	N/A
	F	26.98 R†	N/A	N/A
	G	30.00 R†	N/A	N/A
	H	66.00 R†	N/A	N/A
	J	75.50 R†	N/A	N/A
1772+20.00	A	75.50 L†	23.29	N/A
	B	66.00 L†	23.44	N/A
	C	30.00 L†	24.07	N/A
	D	26.98 L†	24.08	N/A
	E	0.00	N/A	N/A
	F	26.98 R†	N/A	N/A
	G	30.00 R†	N/A	N/A
	H	66.00 R†	N/A	N/A
	J	75.50 R†	N/A	N/A

NOTE:
All Existing top of deck elevations are approximate.

NOTE:
THE CONTRACTOR SHALL VERIFY ALL CONTROLLING FIELD DIMENSIONS BEFORE ORDERING OR FABRICATING ANY MATERIAL.

DESIGN OVERSIGHT John Fujimoto
8-2-10
SIGN OFF DATE

	BY	CHECKED
DESIGN	P. Zhao	T. Swenson
DETAILS	P. Zhao	T. Swenson
QUANTITIES	D. Vang	B. Bhattiprolu

PREPARED FOR THE STATE OF CALIFORNIA DEPARTMENT OF TRANSPORTATION

Robert Sennett
PROJECT ENGINEER

BRIDGE NO. 29-0194
POST MILE 31.45

BENJAMIN HOLT DRIVE UC (WIDEN)
DECK GRADES No. 3

DESIGN DETAIL SHEET (ENGLISH) (REV. 06-01-09)

ORIGINAL SCALE IN INCHES FOR REDUCED PLANS 0 1 2 3

CU 06240
EA 0G4701

DISREGARD PRINTS BEARING EARLIER REVISION DATES

REVISION DATES (PRELIMINARY STAGE ONLY) 10/14/09 12/04/09 01/15/10 04/23/10 06/17/10 07/28/10

SHEET 5 OF 26

FILE => 29-0194rl-d-dc03.dgn

USERNAME => trmartin DATE PLOTTED => 13-OCT-2010 TIME PLOTTED => 15:03

DIST	COUNTY	ROUTE	POST MILES TOTAL PROJECT	SHEET No	TOTAL SHEETS
10	SJ	5	25.0/32.7	1038	1132

REGISTERED CIVIL ENGINEER — DATE 7/28/10

PLANS APPROVAL DATE 10-11-10

REGISTERED PROFESSIONAL ENGINEER — Robert Sennett No. 3976 Exp. 12/31/10 STRUCTURAL — STATE OF CALIFORNIA

The State of California or its officers or agents shall not be responsible for the accuracy or completeness of scanned copies of this plan sheet.

SAN JOAQUIN COUNCIL OF GOVERNMENT
555 E. WEBER AVENUE
STOCKTON, CA 95202

MGE ENGINEERING, INC.
7415 GREENHAVEN DRIVE, SUITE 100
SACRAMENTO, CA 95831

LEGEND

+	Indicates Existing Pile
◌	Indicates New Pile
23.2 x	Indicates spot elevation, Typ
—·—·—·—	Indicates Existing Footing

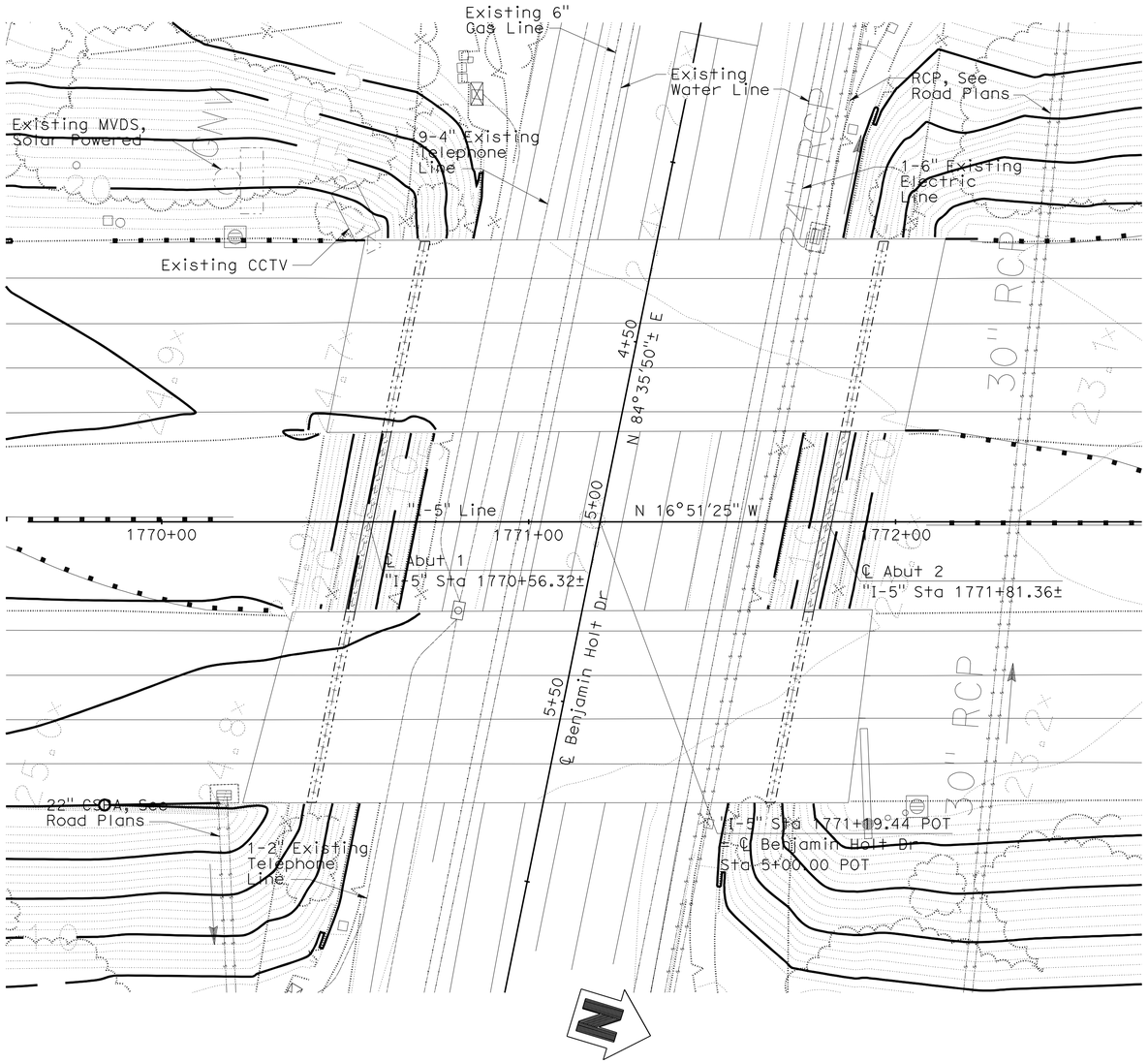

PLAN

1" = 20'

PILE DATA TABLE

Location	Pile Type	Nominal Resistance, (kips)		Design Tip Elevations (ft)	Specified Tip Elevations (ft)	Nominal Driving Resistance Required (kips)
		Compression	Tension			
Abut 1	Class 140 Alternative "W"	280	0	-53.5 (a) -8.0 (b)	-59.5	280
Abut 2	Class 140 Alternative "W"	280	0	-59.5 (a) -9.0 (b)	-59.5	280

Note: Design tip elevations are controlled by (a) Compression; (b) Lateral Load

BENCH MARK AND DATUM

Monument	Coordinates		Elevation	Description/Location
	Northing	Easting		
52	2189364.43	6316011.54	2.64	PK Nail
53	2189517.06	6316250.51	23.14	Iron Pipe w/ "MVE CONTROL" Cap
104M	2189104.21	6316449.80	24.77	Iron Pipe w/ "MVE CONTROL" Cap

NOTE:

There is a vertical datum difference between the project datum (NAVD 88) and the as-built datum (NGVD 29). The following conversion was used in design: Datum Conversion: Elev (NAVD 88) = Elev (NGVD 29) + 1.57′

GEOTECHNICAL PROFESSIONAL APPROVAL DATE 1/15/10

NOTE:
THE CONTRACTOR SHALL VERIFY ALL CONTROLLING FIELD DIMENSIONS BEFORE ORDERING OR FABRICATING ANY MATERIAL.

NOTES

1. Match bottom elevation of widening abutment diaphragm with existing abutment diaphragm.
2. Utilities shown are for illustrative purposes only, verify with Road Plans.

DESIGN OVERSIGHT John Fujimoto — 8-2-10 SIGN OFF DATE

SCALE: 1" = 20′ | VERT.DATUM NAVD88 | HORZ.DATUM CCS83, (2007.00), ZONE 3
PHOTOGRAMMETRY AS OF: (N/A) FIELD SURVEYS | ALIGNMENT TIES APPROVED GPS REPORT DATED 7-6-09
SURVEYED BY RYAN VANCE | DRAFTED BY MIKE KORDAZAKIS
FIELD CHECKED BY JEFF CISSELL | CHECKED BY KEVIN LANG

	BY	CHECKED
DESIGN	P. Zhao	T. Swenson
DETAILS	P. Zhao	T. Swenson
QUANTITIES	D. Vang	B. Bhattiprolu

PREPARED FOR THE STATE OF CALIFORNIA DEPARTMENT OF TRANSPORTATION

Robert Sennett
PROJECT ENGINEER

BRIDGE NO. 29-0194
POST MILE 31.45

BENJAMIN HOLT DRIVE UC (WIDEN)
FOUNDATION PLAN

FOUNDATION PLAN SHEET (ENGLISH) (REV. 06-01-09)

ORIGINAL SCALE IN INCHES FOR REDUCED PLANS 0 1 2 3

CU 06240
EA 0G4701

DISREGARD PRINTS BEARING EARLIER REVISION DATES → REVISION DATES (PRELIMINARY STAGE ONLY) 06/08/09 10/14/09 12/04/09 01/15/10 04/23/10 06/17/10 07/28/10

SHEET 6 OF 26

FILE => 29-0194rl-e-fp101.dgn

USERNAME => frlenard DATE PLOTTED => 18-OCT-2010 TIME PLOTTED => 11:56

DIST	COUNTY	ROUTE	POST MILES TOTAL PROJECT	SHEET No	TOTAL SHEETS
10	SJ	5	25.0/32.7	1039	1132

REGISTERED CIVIL ENGINEER 7/28/10 DATE

10-11-10
PLANS APPROVAL DATE

REGISTERED PROFESSIONAL ENGINEER Robert Sennett No. 3976 Exp. 12/31/10 STRUCTURAL STATE OF CALIFORNIA

The State of California or its officers or agents shall not be responsible for the accuracy or completeness of scanned copies of this plan sheet.

SAN JOAQUIN COUNCIL OF GOVERNMENT
555 E. WEBER AVENUE
STOCKTON, CA 95202

MGE ENGINEERING, INC.
7415 GREENHAVEN DRIVE, SUITE 100
SACRAMENTO, CA 95831

LEGEND

-·-·-·- Indicates Existing Structure

Bridge Removal (Portion)

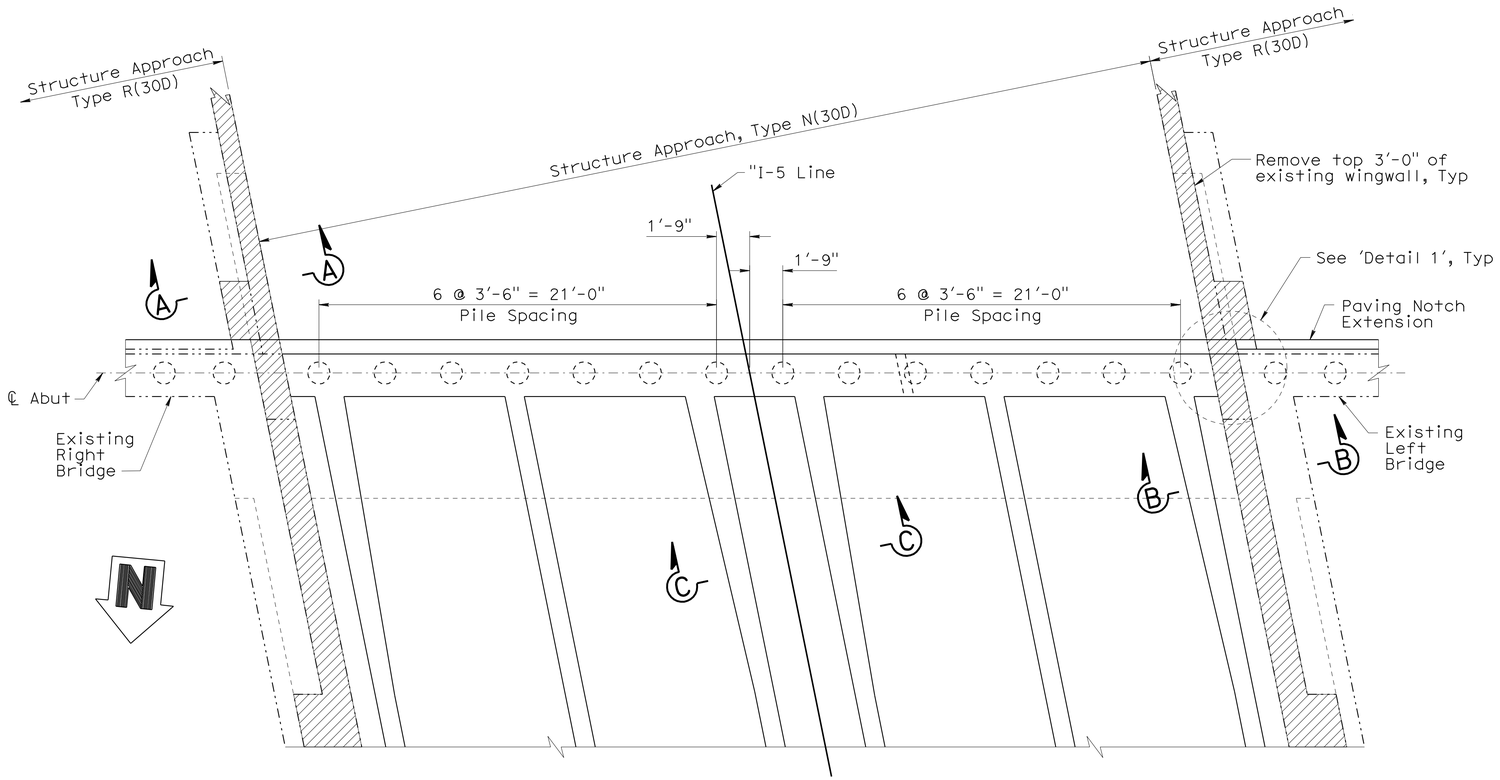

PLAN

1/4" = 1'-0"

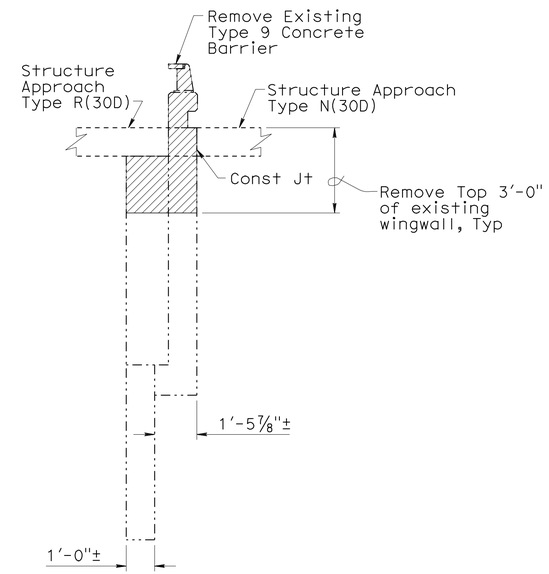

SECTION A-A

3/8" = 1'-0"

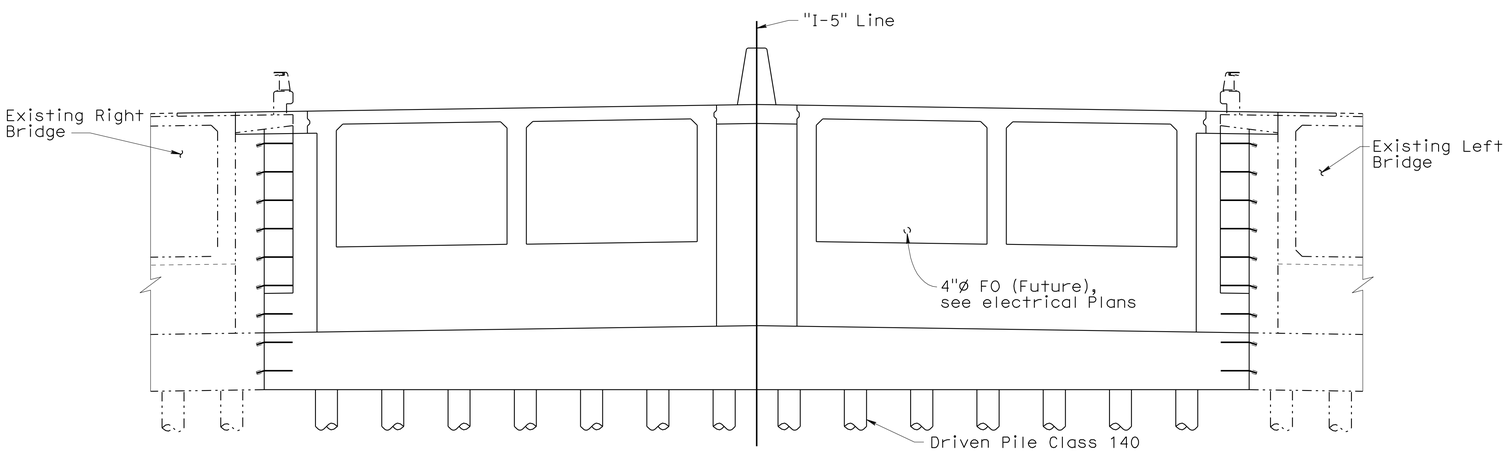

ELEVATION

1/4" = 1'-0"

Alt W, see B2-5 / -

NOTE:
THE CONTRACTOR SHALL VERIFY ALL CONTROLLING FIELD DIMENSIONS BEFORE ORDERING OR FABRICATING ANY MATERIAL.

NOTES:

1. For Sections B-B, C-C and Detail 1, see "ABUTMENT DETAILS No. 2" sheet.
2. Abutment 1 shown, Abutment 2 similar.

John Fujimoto
DESIGN OVERSIGHT — John Fujimoto
8-2-10
SIGN OFF DATE

	BY	CHECKED
DESIGN	P. Zhao	T. Swenson
DETAILS	P. Zhao	T. Swenson
QUANTITIES	D. Vang	B. Bhattiprolu

PREPARED FOR THE STATE OF CALIFORNIA DEPARTMENT OF TRANSPORTATION

Robert Sennett
PROJECT ENGINEER

BRIDGE NO. 29-0194
POST MILE 31.45

BENJAMIN HOLT DRIVE UC (WIDEN)
ABUTMENT LAYOUT

DESIGN DETAIL SHEET (ENGLISH) (REV. 06-01-09)

ORIGINAL SCALE IN INCHES FOR REDUCED PLANS 0 1 2 3

CU 06240
EA 0G4701

DISREGARD PRINTS BEARING EARLIER REVISION DATES

REVISION DATES (PRELIMINARY STAGE ONLY): 10/15/09 12/04/09 01/15/10 04/23/10 06/11/10 07/28/10

SHEET 7 OF 26

FILE => 29-0194rl-f-a01_lo1.dgn

USERNAME => trsttrk DATE PLOTTED => 13-OCT-2010 TIME PLOTTED => 15:22

DIST	COUNTY	ROUTE	POST MILES TOTAL PROJECT	SHEET No	TOTAL SHEETS
10	SJ	5	25.0/32.7	1040	1132

REGISTERED CIVIL ENGINEER 7/28/10 DATE

10-11-10
PLANS APPROVAL DATE

The State of California or its officers or agents shall not be responsible for the accuracy or completeness of scanned copies of this plan sheet.

REGISTERED PROFESSIONAL ENGINEER Robert Sennett No. 3976 Exp. 12/31/10 STRUCTURAL STATE OF CALIFORNIA

SAN JOAQUIN COUNCIL OF GOVERNMENT
555 E. WEBER AVENUE
STOCKTON, CA 95202

MGE ENGINEERING, INC.
7415 GREENHAVEN DRIVE, SUITE 100
SACRAMENTO, CA 95831

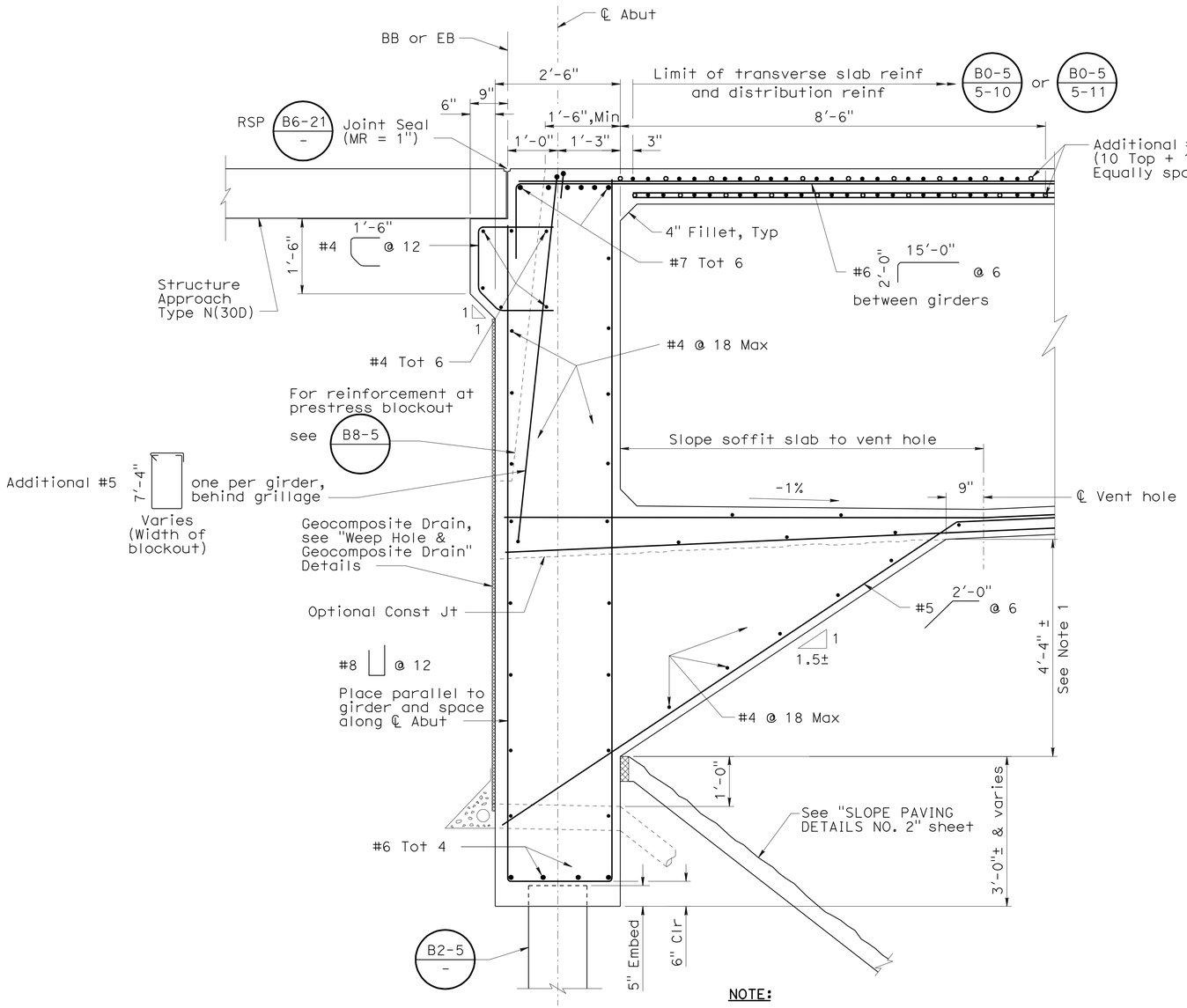

NOTE:

1. Match existing haunch geometry.

TYPICAL ABUTMENT SECTION

3/4" = 1'-0"

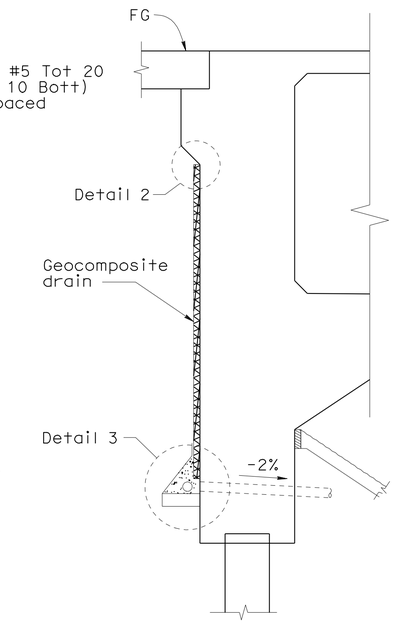

ABUTMENT SECTION

1/2" = 1'-0"

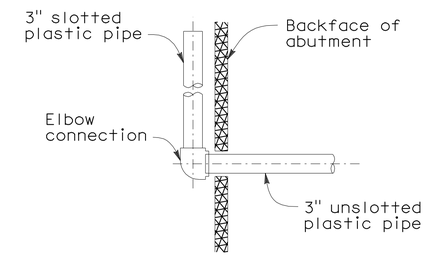

SECTION M-M

1" = 1'-0"

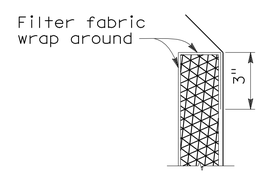

DETAIL 2

No Scale

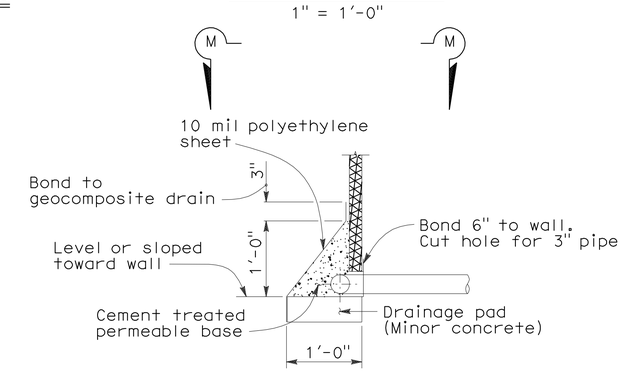

DETAIL 3

1" = 1'-0"

GEOCOMPOSITE DRAIN

NOTE:
THE CONTRACTOR SHALL VERIFY ALL CONTROLLING FIELD DIMENSIONS BEFORE ORDERING OR FABRICATING ANY MATERIAL.

DESIGN OVERSIGHT John Fujimoto
8-2-10
SIGN OFF DATE

	BY	CHECKED
DESIGN	P. Zhao	T. Swenson
DETAILS	P. Zhao	T. Swenson
QUANTITIES	D. Vang	B. Bhattiprolu

PREPARED FOR THE STATE OF CALIFORNIA DEPARTMENT OF TRANSPORTATION

Robert Sennett
PROJECT ENGINEER

BRIDGE NO. 29-0194
POST MILE 31.45

BENJAMIN HOLT DRIVE UC (WIDEN)
ABUTMENT DETAILS No. 1

DESIGN DETAIL SHEET (ENGLISH) (REV. 06-01-09)

ORIGINAL SCALE IN INCHES FOR REDUCED PLANS 0 1 2 3

CU 06240
EA 0G4701

DISREGARD PRINTS BEARING EARLIER REVISION DATES

REVISION DATES (PRELIMINARY STAGE ONLY) 10/15/09 12/04/09 01/12/10 04/23/10 06/17/10 07/28/10

SHEET 8 OF 26

FILE => 29-0194r1-f-a01dt01.dgn

USERNAME => frstrk DATE PLOTTED => 13-OCT-2010 TIME PLOTTED => 15:22

DIST	COUNTY	ROUTE	POST MILES TOTAL PROJECT	SHEET No	TOTAL SHEETS
10	SJ	5	25.0/32.7	1041	1132

REGISTERED CIVIL ENGINEER — DATE 7/28/10

10-11-10
PLANS APPROVAL DATE

REGISTERED PROFESSIONAL ENGINEER — Robert Sennett — No. 3976 — Exp. 12/31/10 — STRUCTURAL — STATE OF CALIFORNIA

The State of California or its officers or agents shall not be responsible for the accuracy or completeness of scanned copies of this plan sheet.

SAN JOAQUIN COUNCIL OF GOVERNMENT
555 E. WEBER AVENUE
STOCKTON, CA 95202

MGE ENGINEERING, INC.
7415 GREENHAVEN DRIVE, SUITE 100
SACRAMENTO, CA 95831

LEGEND

-·-·-·- Indicates Existing Structure

Bridge Removal (Portion)

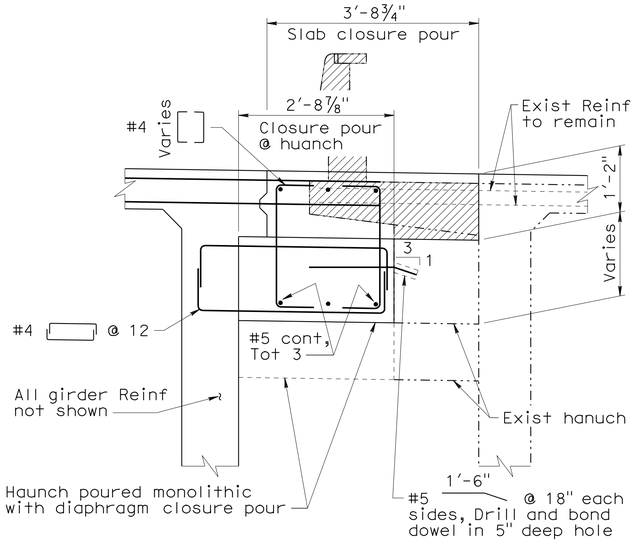

SECTION B-B

¾" = 1'-0"

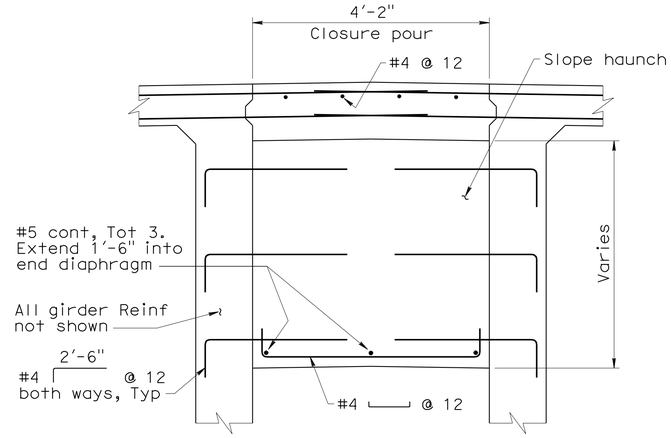

SECTION C-C

¾" = 1'-0"

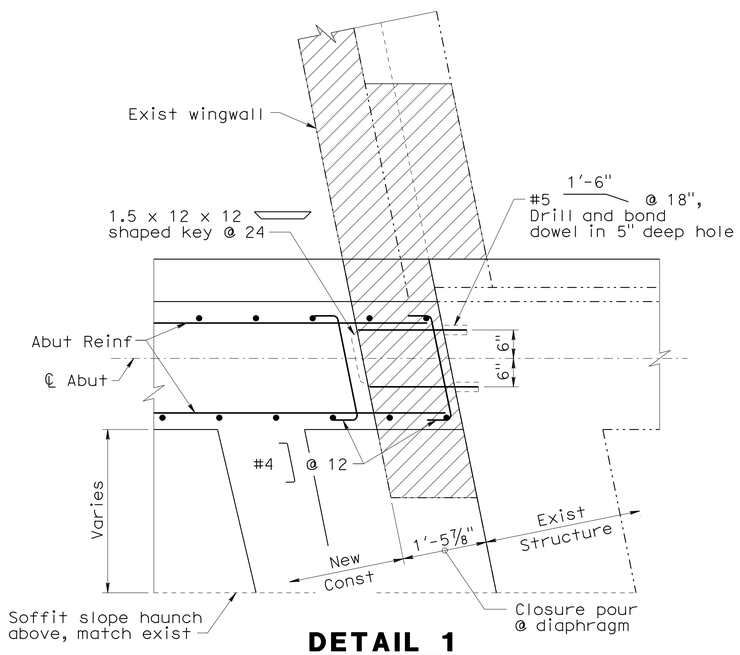

DETAIL 1

¾" = 1'-0"

NOTE:
THE CONTRACTOR SHALL VERIFY ALL CONTROLLING FIELD DIMENSIONS BEFORE ORDERING OR FABRICATING ANY MATERIAL.

DESIGN OVERSIGHT — John Fujimoto
8-2-10
SIGN OFF DATE

	BY	CHECKED
DESIGN	P. Zhao	T. Swenson
DETAILS	P. Zhao	T. Swenson
QUANTITIES	D. Vang	B. Bhattiprolu

PREPARED FOR THE STATE OF CALIFORNIA DEPARTMENT OF TRANSPORTATION

Robert Sennett
PROJECT ENGINEER

BRIDGE NO. 29-0194
POST MILE 31.45

BENJAMIN HOLT DRIVE UC (WIDEN)
ABUTMENT DETAILS No. 2

DESIGN DETAIL SHEET (ENGLISH) (REV. 06-01-09)

ORIGINAL SCALE IN INCHES FOR REDUCED PLANS 0 1 2 3

CU 06240
EA 0G4701

DISREGARD PRINTS BEARING EARLIER REVISION DATES → REVISION DATES (PRELIMINARY STAGE ONLY) 10/16/09 12/04/09 01/18/10 04/23/10 06/17/10 07/28/10

SHEET 9 OF 26

FILE => 29-0194rl-f-a01dt02.dgn

USERNAME => trstrk DATE PLOTTED => 13-OCT-2010 TIME PLOTTED => 15:23

DIST	COUNTY	ROUTE	POST MILES TOTAL PROJECT	SHEET No	TOTAL SHEETS
10	SJ	5	25.0/32.7	1042	1132

REGISTERED CIVIL ENGINEER 7/28/10 DATE

10-11-10
PLANS APPROVAL DATE

REGISTERED PROFESSIONAL ENGINEER Robert Sennett No. 3976 Exp. 12/31/10 STRUCTURAL STATE OF CALIFORNIA

The State of California or its officers or agents shall not be responsible for the accuracy or completeness of scanned copies of this plan sheet.

SAN JOAQUIN COUNCIL OF GOVERNMENT
555 E. WEBER AVENUE
STOCKTON, CA 95202

MGE ENGINEERING, INC.
7415 GREENHAVEN DRIVE, SUITE 100
SACRAMENTO, CA 95831

LEGEND:

Bridge Removal (Portion)

Indicates Exist Structure

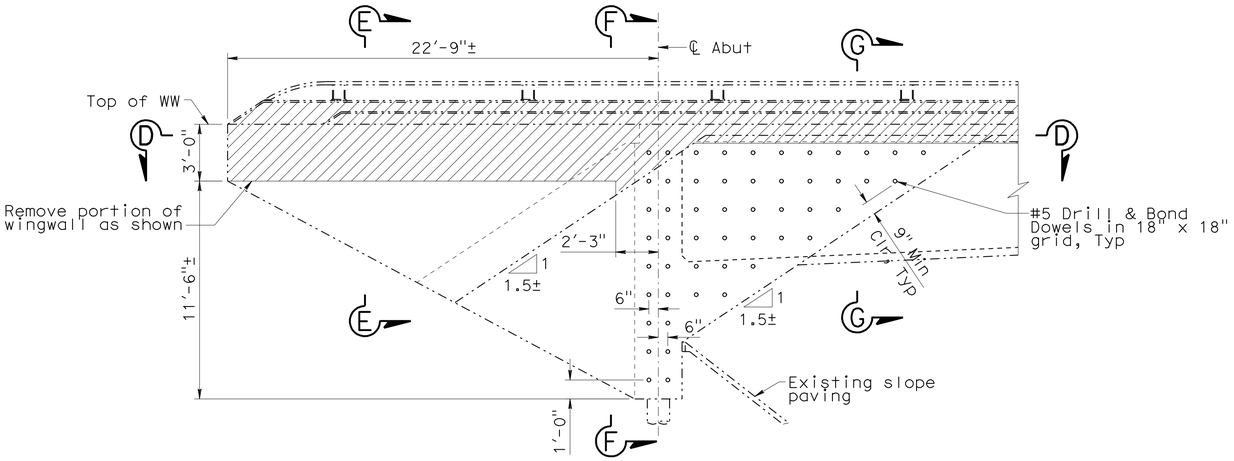

EXIST WINGWALL ELEVATION

1/4" = 1'-0"

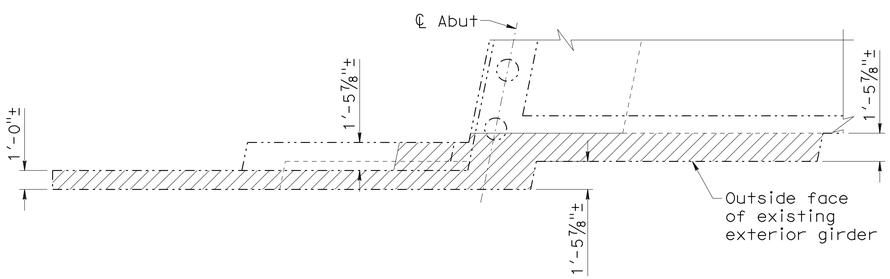

SECTION D-D

1/4" = 1'-0"

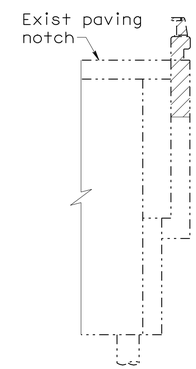

SECTION E-E

1/4" = 1'-0"

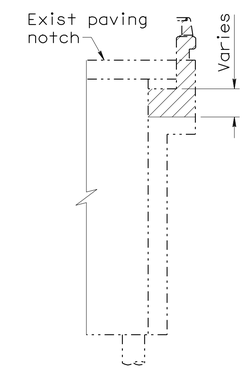

SECTION F-F

1/4" = 1'-0"

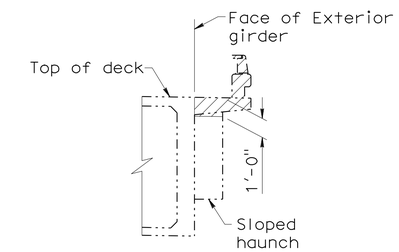

SECTION G-G

1/4" = 1'-0"

NOTE:
THE CONTRACTOR SHALL VERIFY ALL CONTROLLING FIELD DIMENSIONS BEFORE ORDERING OR FABRICATING ANY MATERIAL.

DESIGN OVERSIGHT John Fujimoto
8-2-10
SIGN OFF DATE

	BY	CHECKED
DESIGN	P. Zhao	T. Swenson
DETAILS	P. Zhao	T. Swenson
QUANTITIES	D. Vang	B. Bhattiprolu

PREPARED FOR THE STATE OF CALIFORNIA DEPARTMENT OF TRANSPORTATION

Robert Sennett
PROJECT ENGINEER

BRIDGE NO. 29-0194
POST MILE 31.45

BENJAMIN HOLT DRIVE UC (WIDEN)

ABUTMENT DETAILS No. 3

DESIGN DETAIL SHEET (ENGLISH) (REV. 06-01-09)

ORIGINAL SCALE IN INCHES FOR REDUCED PLANS 0 1 2 3

CU 06240
EA 0G4701

DISREGARD PRINTS BEARING EARLIER REVISION DATES → REVISION DATES (PRELIMINARY STAGE ONLY) 10/16/09 12/04/09 01/18/10 04/23/10 06/17/10 07/28/10

SHEET 10 OF 26

FILE => 29-0194rl-f-a01dt03.dgn

USERNAME => trsttk DATE PLOTTED => 13-OCT-2010 TIME PLOTTED => 15:23

DIST	COUNTY	ROUTE	POST MILES TOTAL PROJECT	SHEET No	TOTAL SHEETS
10	SJ	5	25.0/32.7	1043	1132

REGISTERED CIVIL ENGINEER 7/28/10 DATE

10-11-10
PLANS APPROVAL DATE

REGISTERED PROFESSIONAL ENGINEER Robert Sennett No. 3976 Exp. 12/31/10 STRUCTURAL STATE OF CALIFORNIA

The State of California or its officers or agents shall not be responsible for the accuracy or completeness of scanned copies of this plan sheet.

SAN JOAQUIN COUNCIL OF GOVERNMENT
555 E. WEBER AVENUE
STOCKTON, CA 95202

MGE ENGINEERING, INC.
7415 GREENHAVEN DRIVE, SUITE 100
SACRAMENTO, CA 95831

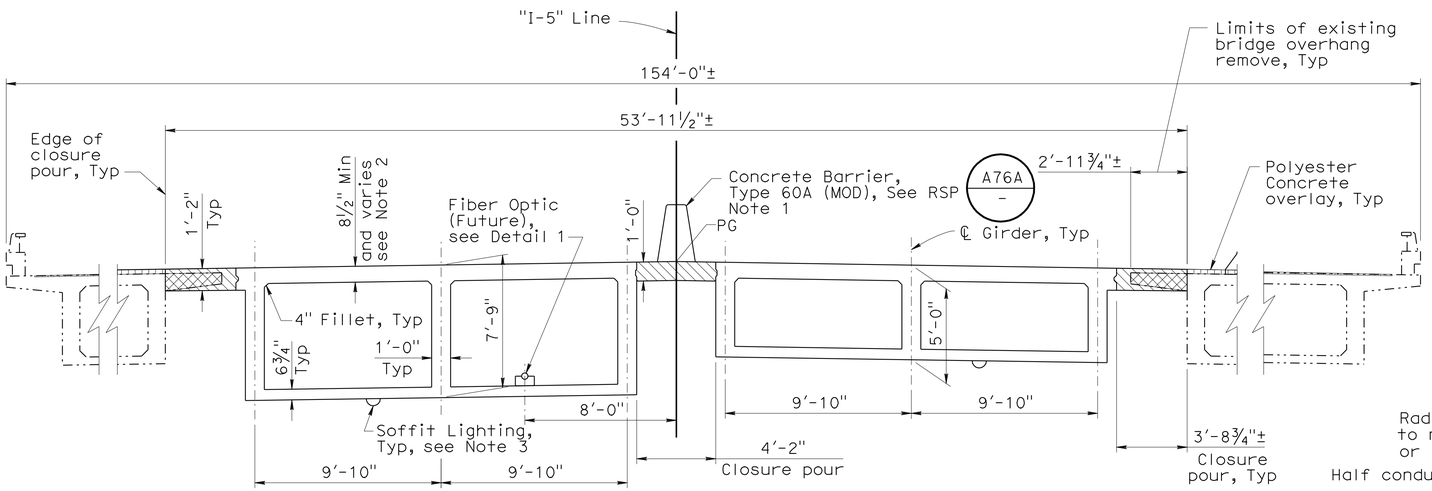

AT ABUTMENT **AT CENTER SPAN**

TYPICAL SECTION

¼" = 1'-0"

LEGEND

- Bridge Removal (Portion)
- Indicates Closure Pour
- Polyester Concrete Overlay
- Indicates Existing Structure

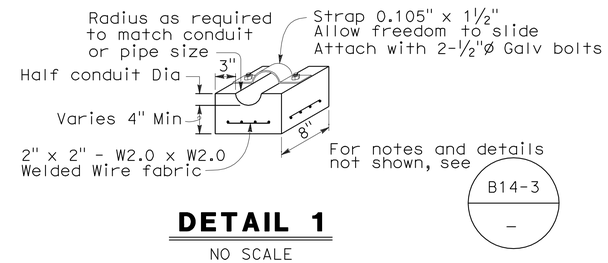

DETAIL 1

NO SCALE

FALSEWORK RELEASE

Falsework shall be released as soon as permitted by the specifications. Closure pour shall not be placed sooner than 60 days after the falsework has been released.

NOTES:

1. For Concrete Barrier Type 60A (MOD) details, see "GIRDER REINFORCEMENT" sheet.
2. For thickness of deck slab, see "GIRDER LAYOUT" sheet.
3. For soffit lighting, see "Electrical Plans".
4. For additional soffit Reinf, see "GIRDER REINFORCEMENT" sheet.
5. Transverse deck reinf shall not be bent within the closure pour.

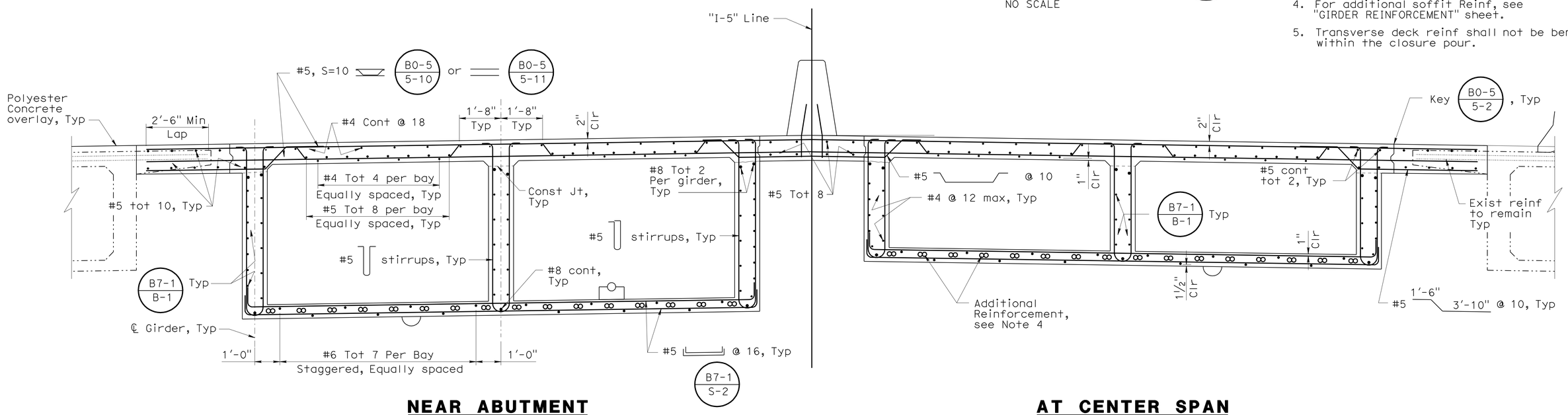

NEAR ABUTMENT **AT CENTER SPAN**

PART TYPICAL SECTION

½" = 1'-0"

B0-5 - B7-1 - B8-5 - A76A -

NOTE:
THE CONTRACTOR SHALL VERIFY ALL CONTROLLING FIELD DIMENSIONS BEFORE ORDERING OR FABRICATING ANY MATERIAL.

DESIGN OVERSIGHT John Fujimoto 8-2-10 SIGN OFF DATE	DESIGN	BY P. Zhao	CHECKED T. Swenson
	DETAILS	BY P. Zhao	CHECKED T. Swenson
	QUANTITIES	BY D. Vang	CHECKED B. Bhattiprolu

PREPARED FOR THE STATE OF CALIFORNIA DEPARTMENT OF TRANSPORTATION

Robert Sennett
PROJECT ENGINEER

BRIDGE NO. 29-0194
POST MILE 31.45

BENJAMIN HOLT DRIVE UC (WIDEN)

TYPICAL SECTION

DESIGN DETAIL SHEET (ENGLISH) (REV. 06-01-09)

ORIGINAL SCALE IN INCHES FOR REDUCED PLANS 0 1 2 3

CU 06240
EA 0G4701

DISREGARD PRINTS BEARING EARLIER REVISION DATES

REVISION DATES (PRELIMINARY STAGE ONLY) 10/16/09 12/04/09 01/18/10 04/23/10 06/17/10 07/28/10

SHEET 11 OF 26

FILE => 29-0194rl-k-ts01.dgn

USERNAME => trsttk DATE PLOTTED => 13-OCT-2010 TIME PLOTTED => 15:23

DIST	COUNTY	ROUTE	POST MILES TOTAL PROJECT	SHEET No	TOTAL SHEETS
10	SJ	5	25.0/32.7	1044	1132

REGISTERED CIVIL ENGINEER 7/28/10 DATE

10-11-10
PLANS APPROVAL DATE

The State of California or its officers or agents shall not be responsible for the accuracy or completeness of scanned copies of this plan sheet.

REGISTERED PROFESSIONAL ENGINEER Robert Sennett No. 3976 Exp. 12/31/10 STRUCTURAL STATE OF CALIFORNIA

SAN JOAQUIN COUNCIL OF GOVERNMENT
555 E. WEBER AVENUE
STOCKTON, CA 95202

MGE ENGINEERING, INC.
7415 GREENHAVEN DRIVE, SUITE 100
SACRAMENTO, CA 95831

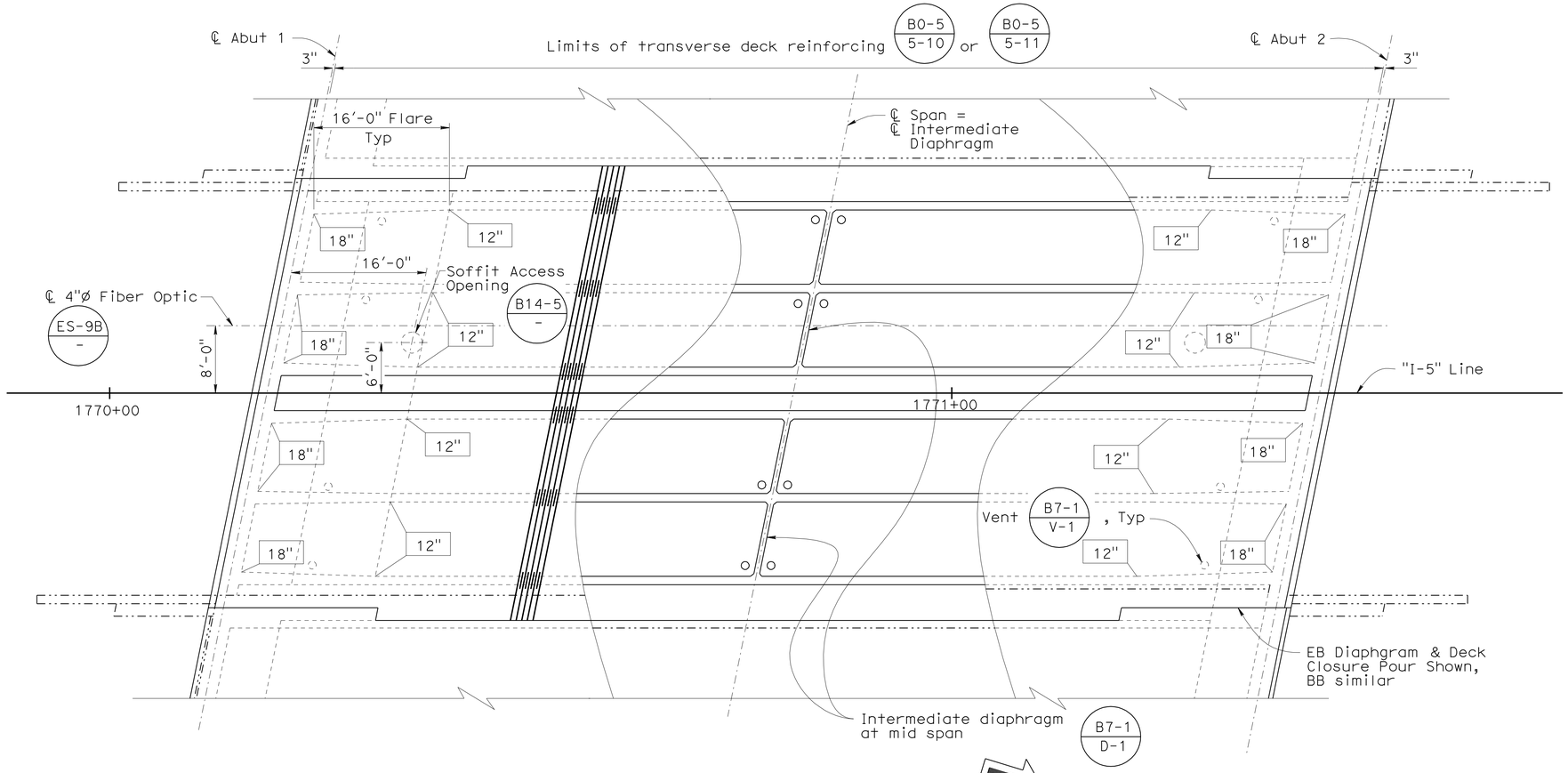

GIRDER LAYOUT

B0-5 / - B7-1 / - B8-5 / -

1/8" =1'-0"

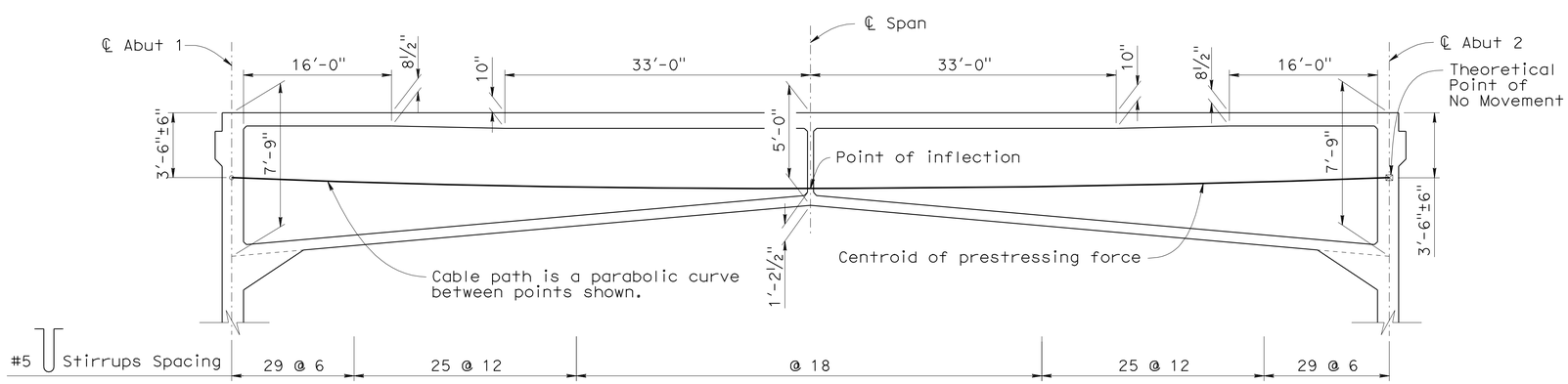

NOTE:
THE CONTRACTOR SHALL VERIFY ALL CONTROLLING FIELD DIMENSIONS BEFORE ORDERING OR FABRICATING ANY MATERIAL.

LONGITUDINAL SECTION

1/8" = 1'-0" (H); 1/4" = 1'-0" (V)

LEGEND

12" Indicates Girder Width in inches

Indicates Exist Structure

NOTES:

1. For concrete strength and type limits, see "General Notes" sheet.
2. For camber diagram, see "Girder Reinforcement" sheet.

PRESTRESSING NOTES

270 KSI Low Relaxation Strand:

P_{jack} = 17200 kips

Anchor Set = 3/8 in

Total Number of Girders = 6

Distribution of prestress force (Pjack) between girders shall not exceed the ratio of 3:2. Maximum final force variation between girders shall not exceed 725 kips.

Concrete: f'_c = 5000 psi @ 28 days

f'_{ci} = 3750 psi @ time of stressing

Contractor shall submit elongation calculations based on initial stress at

⊠ = 0.965 times jacking stress.

One end stressing shall be performed from Abutment 1 end only.

Prestress force design is based on friction coefficient μ = 0.15, k = 0.0002/ft and modified for curvature

John Fujimoto
DESIGN OVERSIGHT John Fujimoto
8-2-10
SIGN OFF DATE

	BY	CHECKED
DESIGN	P. Zhao	T. Swenson
DETAILS	P. Zhao	T. Swenson
QUANTITIES	D. Vang	B. Bhattiprolu

PREPARED FOR THE STATE OF CALIFORNIA DEPARTMENT OF TRANSPORTATION

Robert Sennett
PROJECT ENGINEER

BRIDGE NO. 29-0194
POST MILE 31.45

BENJAMIN HOLT DRIVE UC (WIDEN)

GIRDER LAYOUT

DESIGN DETAIL SHEET (ENGLISH) (REV. 06-01-09)

ORIGINAL SCALE IN INCHES FOR REDUCED PLANS 0 1 2 3

CU 06240
EA 0G4701

DISREGARD PRINTS BEARING EARLIER REVISION DATES

REVISION DATES (PRELIMINARY STAGE ONLY): 10/26/09 12/04/09 01/25/10 04/23/10 06/21/10 07/28/10

SHEET 12 OF 26

FILE => 29-0194r1-1-g_lo01.dgn

USERNAME => trsttk DATE PLOTTED => 13-OCT-2010 TIME PLOTTED => 15:23

DIST	COUNTY	ROUTE	POST MILES TOTAL PROJECT	SHEET No	TOTAL SHEETS
10	SJ	5	25.0/32.7	1045	1132

REGISTERED CIVIL ENGINEER — DATE 7/28/10

10-11-10
PLANS APPROVAL DATE

REGISTERED PROFESSIONAL ENGINEER — Robert Sennett — No. 3976 — Exp. 12/31/10 — STRUCTURAL — STATE OF CALIFORNIA

The State of California or its officers or agents shall not be responsible for the accuracy or completeness of scanned copies of this plan sheet.

SAN JOAQUIN COUNCIL OF GOVERNMENT
555 E. WEBER AVENUE
STOCKTON, CA 95202

MGE ENGINEERING, INC.
7415 GREENHAVEN DRIVE, SUITE 100
SACRAMENTO, CA 95831

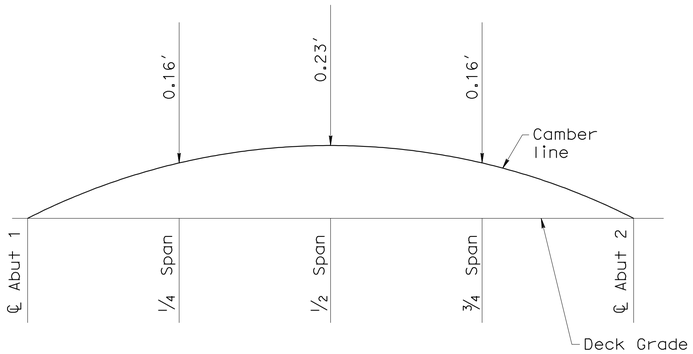

NOTE: Camber does not include allowance for Falsework Settlement

CAMBER DIAGRAM

No Scale

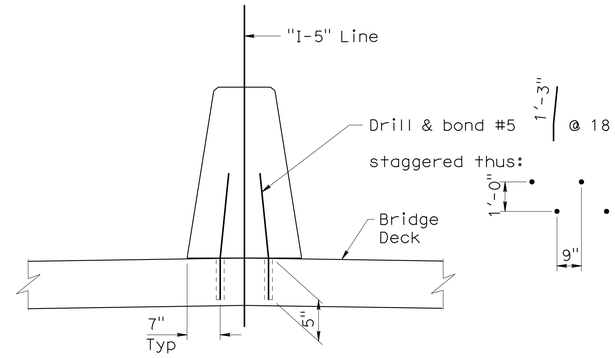

For details not shown, see RSP A76A -

CONCRETE BARRIER TYPE 60A (MOD)

No Scale

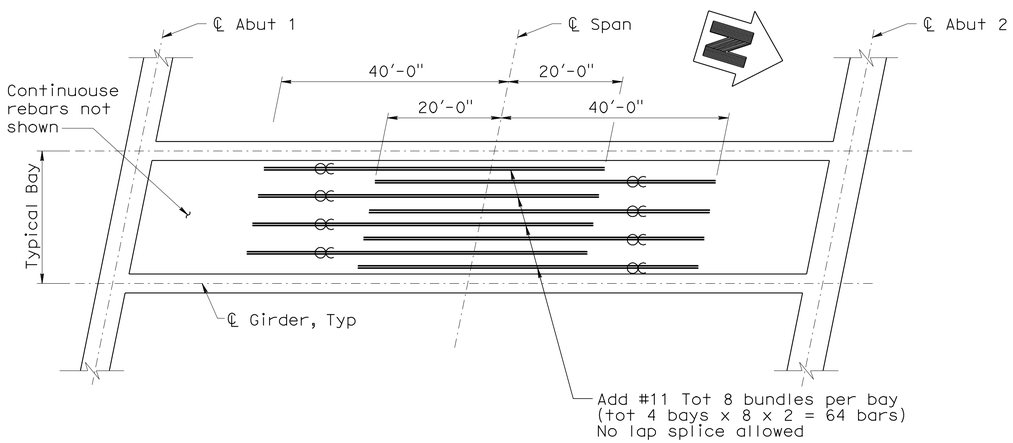

Indicate bundled bars

ADDITIONAL BOTTOM GIRDER REINFORCEMENT

No Scale

NOTE:
THE CONTRACTOR SHALL VERIFY ALL CONTROLLING FIELD DIMENSIONS BEFORE ORDERING OR FABRICATING ANY MATERIAL.

DESIGN OVERSIGHT — John Fujimoto
8-2-10
SIGN OFF DATE

	BY	CHECKED
DESIGN	P. Zhao	T. Swenson
DETAILS	P. Zhao	T. Swenson
QUANTITIES	D. Vang	B. Bhattiprolu

PREPARED FOR THE STATE OF CALIFORNIA DEPARTMENT OF TRANSPORTATION

Robert Sennett
PROJECT ENGINEER

BRIDGE NO. 29-0194
POST MILE 31.45

BENJAMIN HOLT DRIVE UC (WIDEN)
GIRDER REINFORCEMENT

DESIGN DETAIL SHEET (ENGLISH) (REV. 06-01-09)

ORIGINAL SCALE IN INCHES FOR REDUCED PLANS 0 1 2 3

CU 06240
EA 0G4701

DISREGARD PRINTS BEARING EARLIER REVISION DATES → REVISION DATES (PRELIMINARY STAGE ONLY) 10/16/09 12/04/09 01/28/10 04/23/10 06/17/10 07/28/10

SHEET 13 OF 26

FILE => 29-0194r1-1-gdt01.dgn

USERNAME => trsttk DATE PLOTTED => 13-OCT-2010 TIME PLOTTED => 15:23

DIST	COUNTY	ROUTE	POST MILES TOTAL PROJECT	SHEET No	TOTAL SHEETS
10	SJ	5	25.0/32.7	1046	1132

REGISTERED CIVIL ENGINEER 7/28/10 DATE

10-11-10
PLANS APPROVAL DATE

REGISTERED PROFESSIONAL ENGINEER Robert Sennett No. 3976 Exp. 12/31/10 STRUCTURAL STATE OF CALIFORNIA

The State of California or its officers or agents shall not be responsible for the accuracy or completeness of scanned copies of this plan sheet.

SAN JOAQUIN COUNCIL OF GOVERNMENT
555 E. WEBER AVENUE
STOCKTON, CA 95202

MGE ENGINEERING, INC.
7415 GREENHAVEN DRIVE, SUITE 100
SACRAMENTO, CA 95831

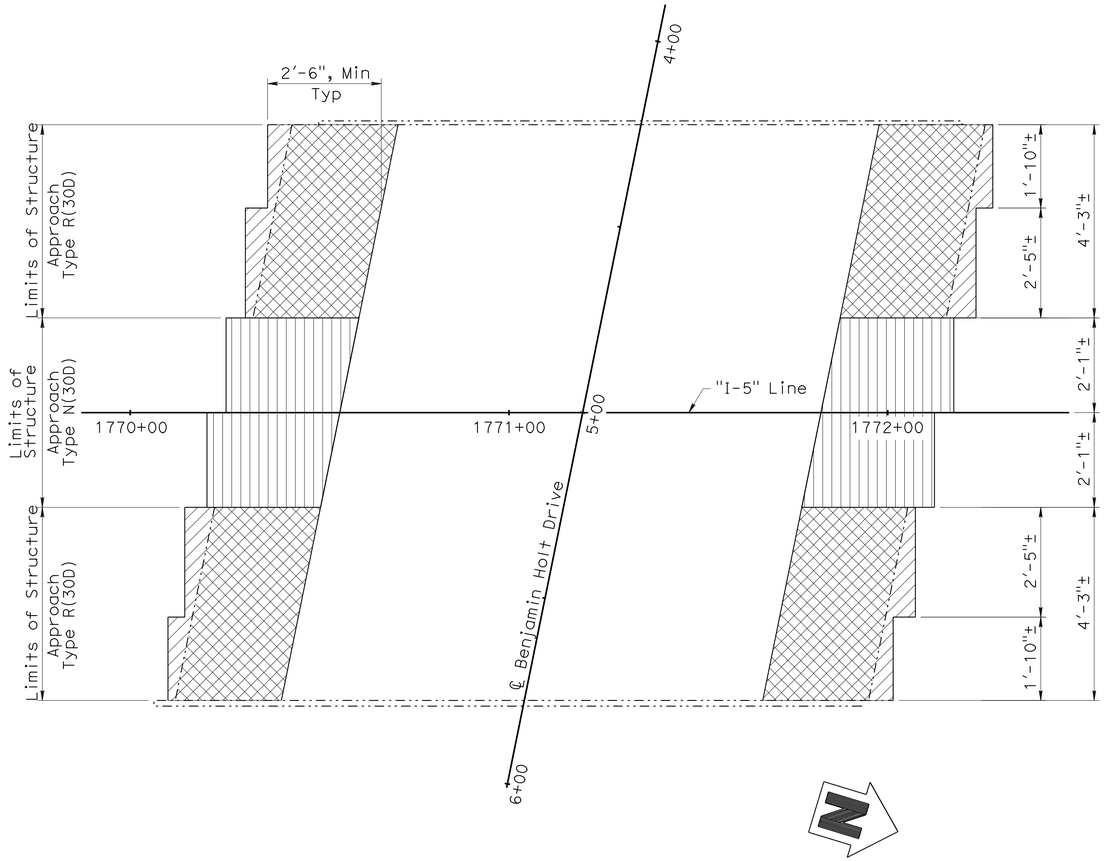

STRUCTURE APPROACH PLAN

SCALE: 1" = 20'

LEGEND

- Indicates Exist approach slab removal
- Indicates pay limits of Structure Approach Type N(30D)
- Indicates pay limits of Structure Approach Type R(30D)
- Indicates Existing structure

NOTE:

Longitudinal construction joints shall be at lane lines as required for roadway staging, see Road Plans. See 'STRUCTURE APPROACH' sheets for details.

NOTE:
THE CONTRACTOR SHALL VERIFY ALL CONTROLLING FIELD DIMENSIONS BEFORE ORDERING OR FABRICATING ANY MATERIAL.

DESIGN OVERSIGHT John Fujimoto
8-2-10
SIGN OFF DATE

	BY	CHECKED
DESIGN	P. Zhao	T. Swenson
DETAILS	P. Zhao	T. Swenson
QUANTITIES	D. Vang	B. Bhattiprolu

PREPARED FOR THE STATE OF CALIFORNIA DEPARTMENT OF TRANSPORTATION

Robert Sennett
PROJECT ENGINEER

BRIDGE NO. 29-0194
POST MILE 31.45

BENJAMIN HOLT DRIVE UC (WIDEN)
LIMITS OF STRUCTURE APPROACH

DESIGN DETAIL SHEET (ENGLISH) (REV. 06-01-09)

ORIGINAL SCALE IN INCHES FOR REDUCED PLANS 0 1 2 3

CU 06240
EA 0G4701

DISREGARD PRINTS BEARING EARLIER REVISION DATES

REVISION DATES (PRELIMINARY STAGE ONLY) 10/16/09 12/04/09 01/15/10 04/23/10 06/17/10 07/28/10

SHEET 14 OF 26

FILE => 29-0194rl-s-sadd00.dgn

USERNAME => trpierce DATE PLOTTED => 14-OCT-2010 TIME PLOTTED => 07:37

DIST	COUNTY	ROUTE	POST MILES TOTAL PROJECT	SHEET No	TOTAL SHEETS
10	SJ	5	25.0/32.7	1047	1132

REGISTERED CIVIL ENGINEER 7/28/10 DATE

10-11-10
PLANS APPROVAL DATE

The State of California or its officers or agents shall not be responsible for the accuracy or completeness of scanned copies of this plan sheet.

REGISTERED PROFESSIONAL ENGINEER Robert Sennett No. 3976 Exp. 12/31/10 STRUCTURAL STATE OF CALIFORNIA

SAN JOAQUIN COUNCIL OF GOVERNMENT
555 E. WEBER AVENUE
STOCKTON, CA 95202

MGE ENGINEERING, INC.
7415 GREENHAVEN DRIVE, SUITE 100
SACRAMENTO, CA 95831

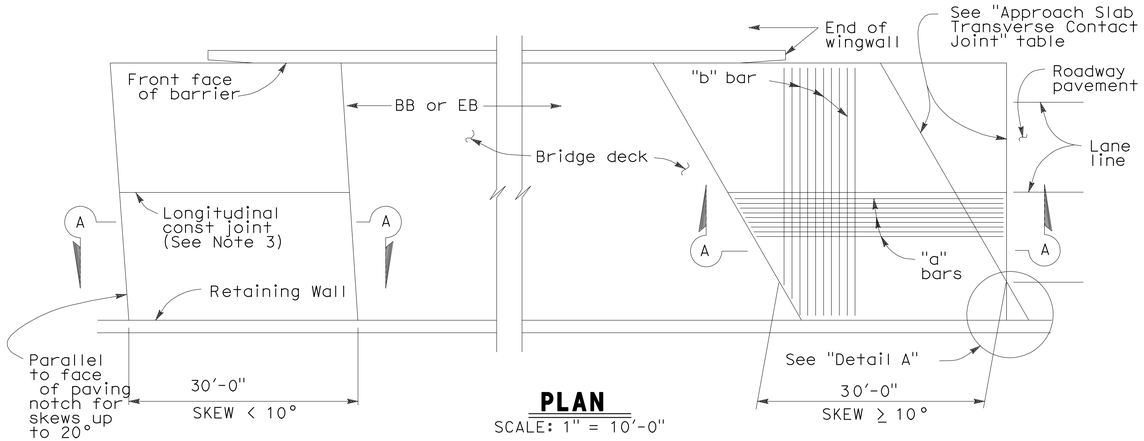

PLAN
SCALE: 1" = 10'-0"

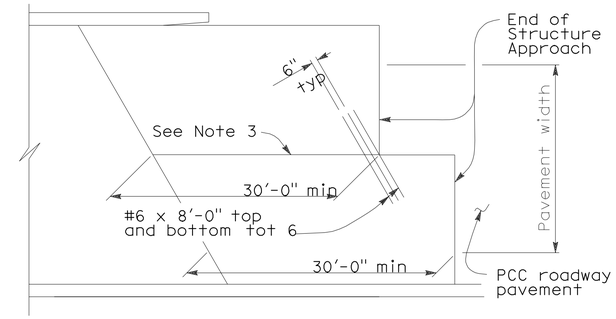

STRUCTURE APPROACH - END STAGGER DETAIL
No Scale

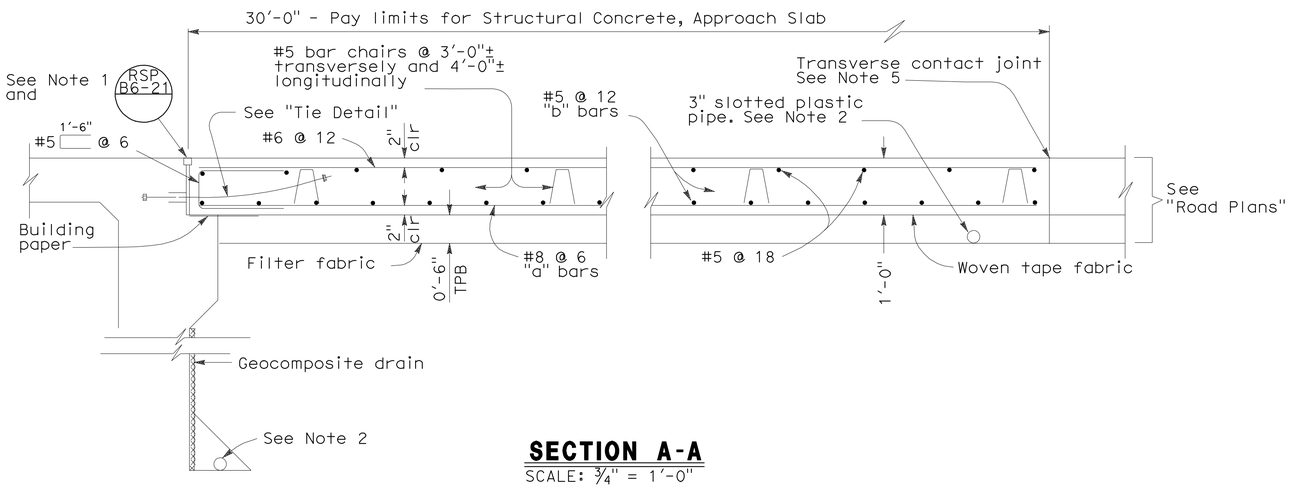

SECTION A-A
SCALE: 3/4" = 1'-0"

APPROACH SLAB TRANSVERSE CONTACT JOINT		
APPROACH SKEW	WITH AC ROADWAY PAVEMENT	WITH PCC ROADWAY PAVEMENT
< 10°	Parallel to face of paving notch	Parallel to face of paving notch
10°- 45°	Parallel to face of P N use (Detail A)	Stagger lines 24' to 36' apart.
> 45°	Parallel to face of P N use (Detail A)	Stagger at each lane line.

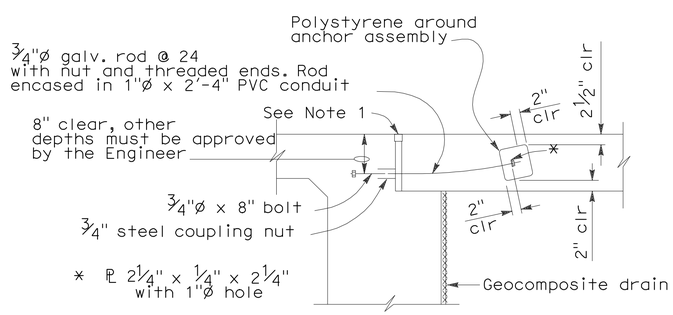

TIE DETAIL

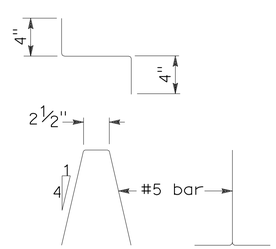

BAR CHAIR DETAIL

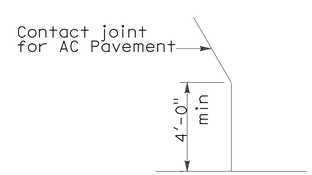

DETAIL A

NOTES:
1. For details not noted or shown, see Structure Plans.
2. For drainage details, see "Structure Approach Drainage Details" sheet.
3. Longitudinal construction joints, when permitted by the Engineer, shall be located on lane lines.
4. End angle or plate at beginning of barrier transition, end of wingwall or end of structure approach, as applicable.
5. For transverse contact joint with new PCC paving, refer to Standard Plan P10.
6. At the contractor's option, approach slab transverse reinforcement may be placed parallel to paving notch. Spacing of transverse reinforcement is measured along ℄ roadway.

NOTE:
THE CONTRACTOR SHALL VERIFY ALL CONTROLLING FIELD DIMENSIONS BEFORE ORDERING OR FABRICATING ANY MATERIAL.

DESIGN OVERSIGHT John Fujimoto
8-2-10
SIGN OFF DATE

	BY	CHECKED
DESIGN	P. Zhao	T. Swenson
DETAILS	P. Zhao	T. Swenson
QUANTITIES	D. Vang	B. Bhattiprolu

PREPARED FOR THE STATE OF CALIFORNIA DEPARTMENT OF TRANSPORTATION

Robert Sennett
PROJECT ENGINEER

BRIDGE NO. 29-0194
POST MILE 31.45

BENJAMIN HOLT DRIVE UC (WIDEN)
STRUCTURE APPROACH TYPE N(30D)

DESIGN DETAIL SHEET (ENGLISH) (REV. 06-01-09)

ORIGINAL SCALE IN INCHES FOR REDUCED PLANS 0 1 2 3

CU 06240
EA 0G4701

DISREGARD PRINTS BEARING EARLIER REVISION DATES

REVISION DATES (PRELIMINARY STAGE ONLY) 10/16/09 12/04/09 01/18/10 04/23/10 06/11/10 07/28/10

SHEET 15 OF 26

FILE => 29-0194rl-s-sadd01.dgn

USERNAME => trpierce DATE PLOTTED => 14-OCT-2010 TIME PLOTTED => 07:37

DIST.	COUNTY	ROUTE	MILE POST TOTAL PROJECT	SHEET NO.	TOTAL SHEETS
10	SJ	5	25.0/32.7	1048	1132

REGISTERED CIVIL ENGINEER — DATE 7/28/10

10-11-10
PLANS APPROVAL DATE

REGISTERED PROFESSIONAL ENGINEER — Robert Sennett — No. 3976 — Exp. 12/31/10 — STRUCTURAL — STATE OF CALIFORNIA

The State of California or its officers or agents shall not be responsible for the accuracy or completeness of electronic copies of this plan sheet.

SAN JOAQUIN COUNCIL OF GOVERNMENT
555 E. WEBER AVENUE
STOCKTON, CA 95202

MGE ENGINEERING, INC.
7415 GREENHAVEN DRIVE, SUITE 100
SACRAMENTO, CA 95831

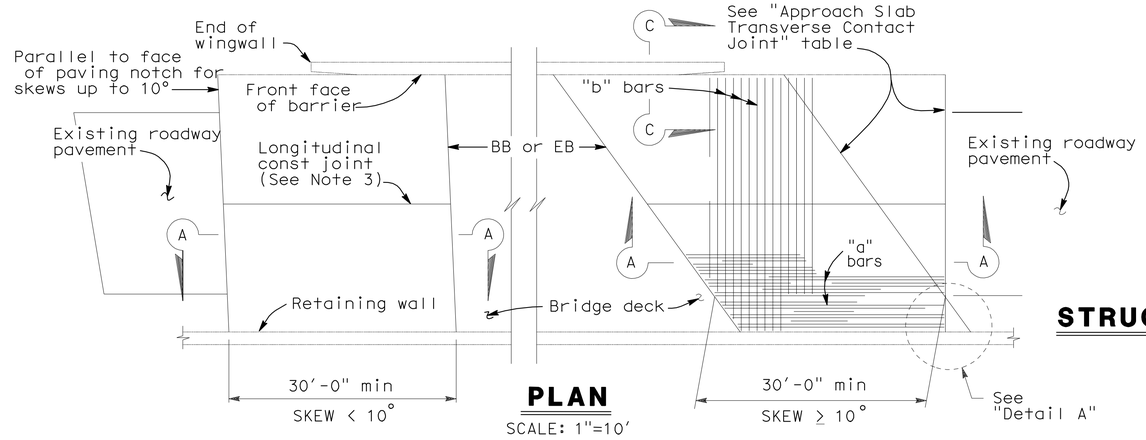

PLAN

SCALE: 1"=10'

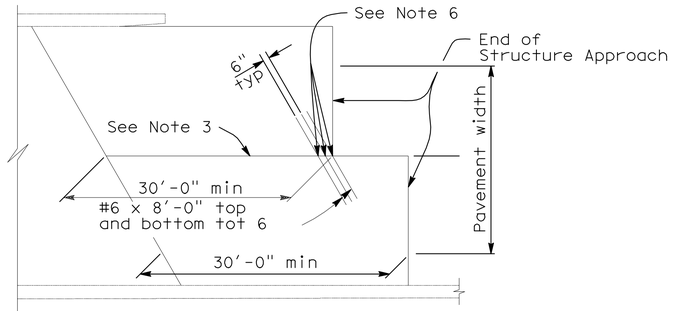

STRUCTURE APPROACH - END STAGGER DETAIL

NO SCALE

APPROACH SLAB TRANSVERSE CONTACT JOINT		
APPROACH SKEW	WITH AC ROADWAY PAVEMENT	WITH PCC ROADWAY PAVEMENT
< 10 °	Parallel to face of paving notch	Parallel to face of paving notch
10°- 45°	Parallel to face of P N use (Detail A)	Stagger lines 24' to 36' apart
> 45 °	Parallel to face of P N use (Detail A)	Stagger at each lane line

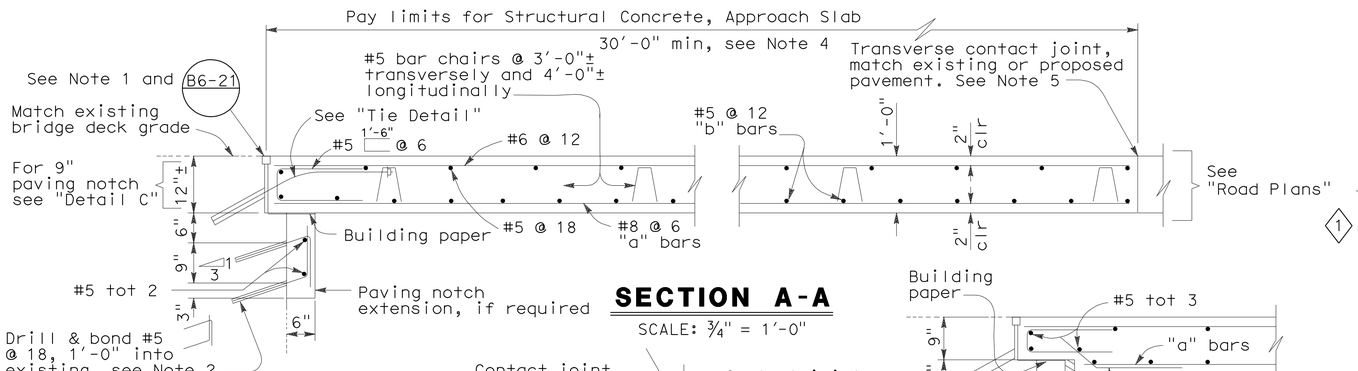

SECTION A-A

SCALE: 3/4" = 1'-0"

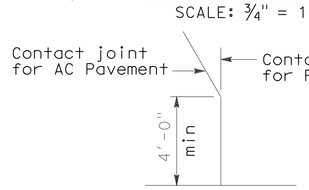

DETAIL A

NO SCALE

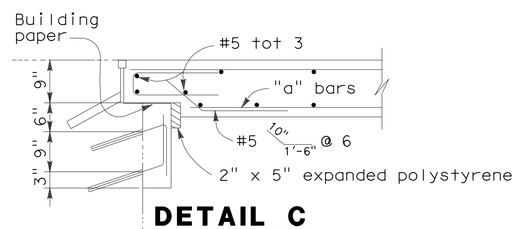

DETAIL C

SCALE: 3/4" = 1'-0"

NOTE: For details not shown, see "Section A-A".

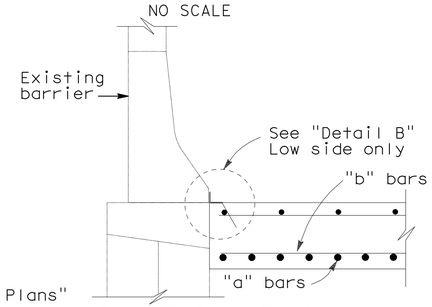

1 SECTION C-C

SCALE: 3/4" = 1'-0"

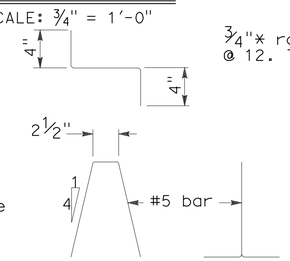

BAR CHAIR DETAIL

SCALE: 1½" = 1'-0"

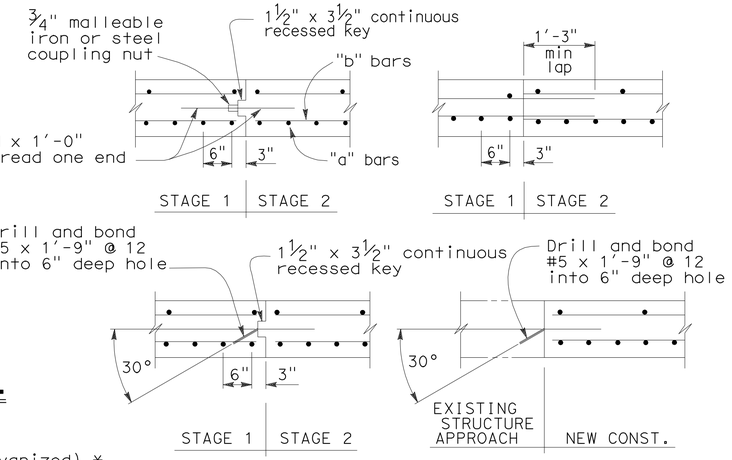

LONGITUDINAL CONSTRUCTION JOINT ALTERNATIVES

SCALE: 3/4" = 1'-0"

NOTES:

1. For details not shown or noted, see Structure Plans. Adjust bar reinforcement to clear a sawcut for sealed joint, when required.
2. Space to avoid existing prestress anchorages and main reinforcement.
3. Longitudinal construction joints, when permitted by the Engineer, shall be located on lane lines.
4. Transverse contact joint shall be a minimum of 5'-0" from an existing or constructed weakened plane joint
5. For transverse contact joint with new PCC paving, refer to Standard Plan P10.
6. Couplers are required for stage construction.
7. End angle or plate at beginning of barrier transition, end of wingwall or end of structure approach as applicable.

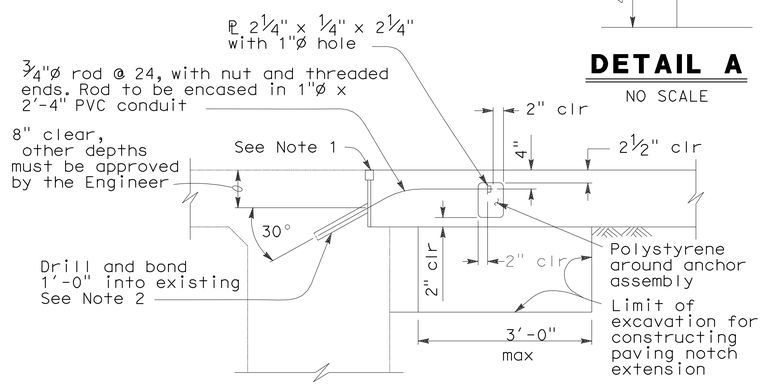

TIE DETAIL

SCALE: 3/4" = 1'-0"

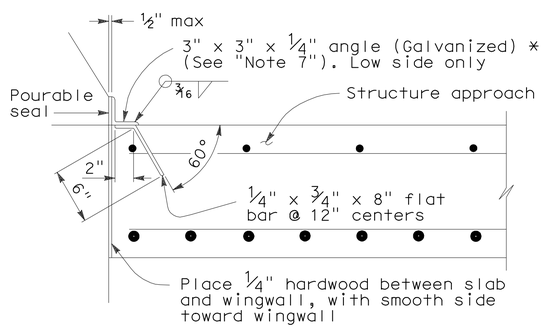

*** (TO BE USED WITH TYPE 25 OR TYPE 27 CONCRETE BARRIER)**

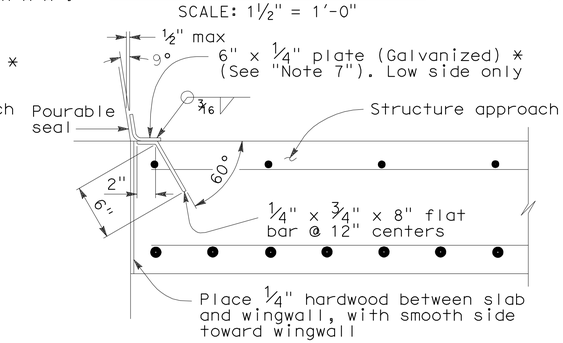

*** (TO BE USED WITH TYPE 732 OR TYPE 736 CONCRETE BARRIER)**

DETAIL B

SCALE: 1½" = 1'-0"

NOTE:
THE CONTRACTOR SHALL VERIFY ALL CONTROLLING FIELD DIMENSIONS BEFORE ORDERING OR FABRICATING ANY MATERIAL.

STANDARD DRAWING				
RELEASE DATE 3/14/05	DESIGN	BY M.TRAFFALIS	CHECKED E.THORKILDSEN	RELEASED BY
FILE NO. xs3-140e	DETAILS	BY R.YEE	CHECKED E.THORKILDSEN	OFFICE CHIEF
	SUBMITTED	BY M.HA	DRAWING DATE 8/92	

1 Detail Modified

STATE OF CALIFORNIA
DEPARTMENT OF TRANSPORTATION

DIVISION OF ENGINEERING SERVICES

BRIDGE NO. 29-0194R/L
MILE POST 31.45

BENJAMIN HOLT DRIVE UC (WIDEN)

STRUCTURE APPROACH TYPE R(30D)

DS OSD 2147A (ENGLISH) (REV. X/XX/XX)

ORIGINAL SCALE IN INCHES FOR REDUCED PLANS 0 1 2 3

CU 06240
EA 10-0G4701

DISREGARD PRINTS BEARING EARLIER REVISION DATES

REVISION DATES (PRELIMINARY STAGE ONLY): 10/16/09 12/04/09 01/25/10 04/23/10 06/17/10 07/28/10

SHEET 16 OF 26

USERNAME => trmikesl

29-0194rl-s-sadd02

DATE PLOTTED => 14-OCT-2010 TIME PLOTTED => 07:46

DIST	COUNTY	ROUTE	POST MILES TOTAL PROJECT	SHEET No	TOTAL SHEETS
10	SJ	5	25.0/32.7	1049	1132

REGISTERED CIVIL ENGINEER 7/28/10 DATE

10-11-10
PLANS APPROVAL DATE

REGISTERED PROFESSIONAL ENGINEER Robert Sennett No. 3976 Exp. 12/31/10 STRUCTURAL STATE OF CALIFORNIA

The State of California or its officers or agents shall not be responsible for the accuracy or completeness of scanned copies of this plan sheet.

SAN JOAQUIN COUNCIL OF GOVERNMENT
555 E. WEBER AVENUE
STOCKTON, CA 95202

MGE ENGINEERING, INC.
7415 GREENHAVEN DRIVE, SUITE 100
SACRAMENTO, CA 95831

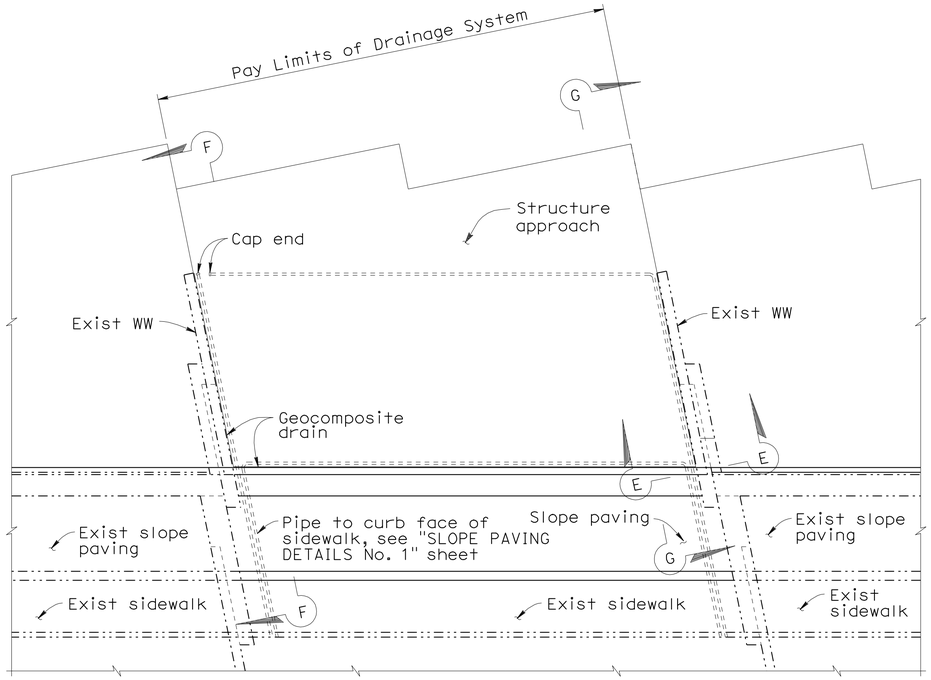

For pipe layout at staggered end, see "Detail B."

TYPICAL PLAN

1/8" = 1'-0"

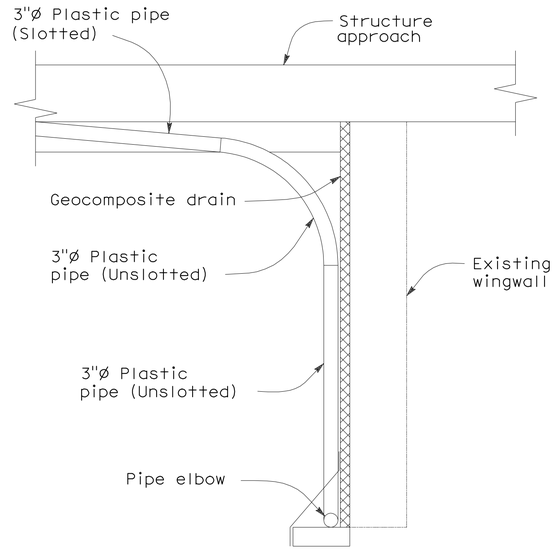

NOTE: Bends and junctions in 3"ø plastic pipe are 30" radius min.

SECTION E-E

3/4" = 1'-0"

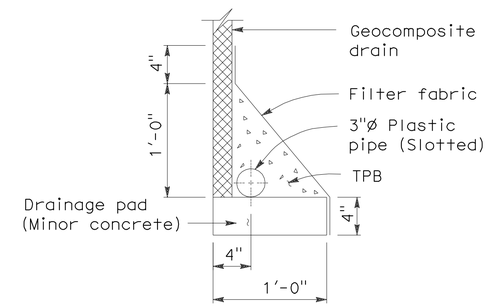

WITHOUT FOOTING

DRAINAGE DETAILS

1 1/2" = 1'-0"

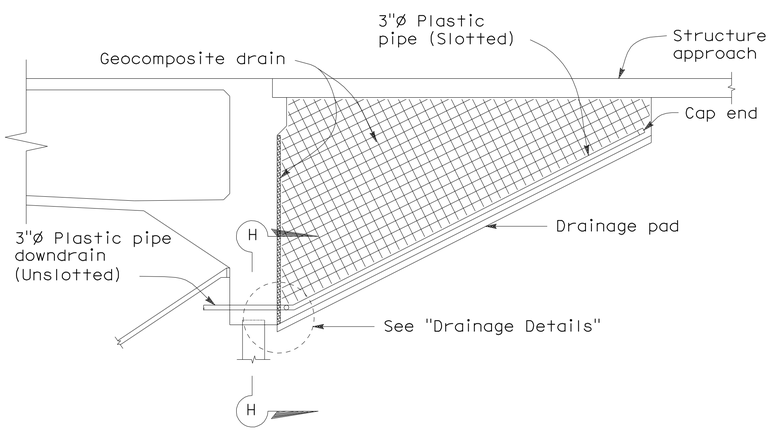

SECTION F-F

1/4" = 1'-0"

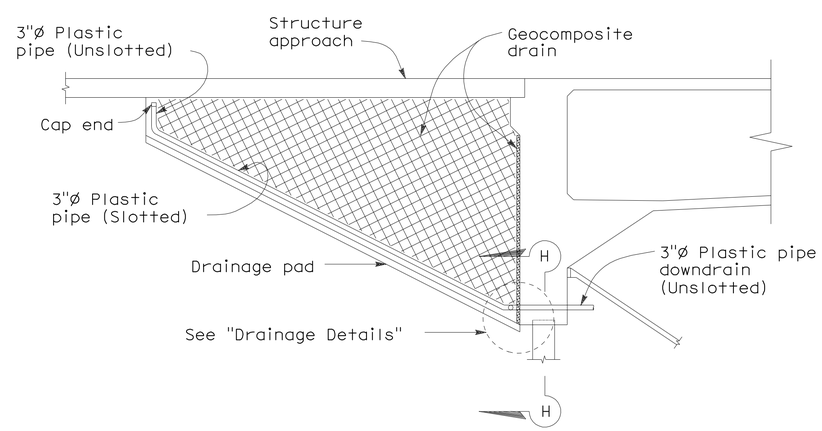

SECTION G-G

1/4" = 1'-0"

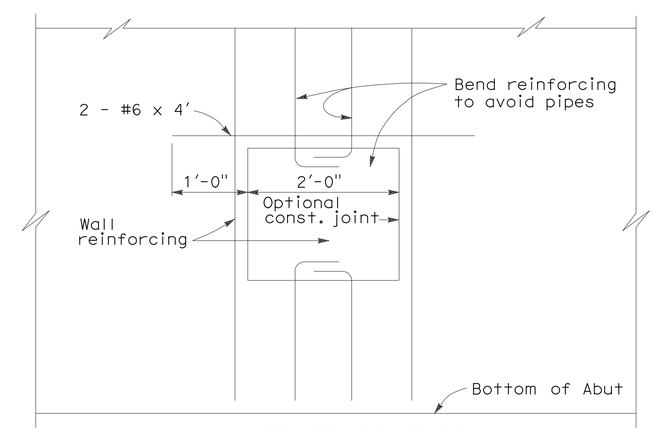

SECTION H-H

1" = 1'-0"

NOTE:
THE CONTRACTOR SHALL VERIFY ALL CONTROLLING FIELD DIMENSIONS BEFORE ORDERING OR FABRICATING ANY MATERIAL.

DESIGN OVERSIGHT John Fujimoto
8-2-10
SIGN OFF DATE

	BY	CHECKED
DESIGN	P. Zhao	T. Swenson
DETAILS	P. Zhao	T. Swenson
QUANTITIES	D. Vang	B. Bhattiprolu

PREPARED FOR THE STATE OF CALIFORNIA DEPARTMENT OF TRANSPORTATION

Robert Sennett
PROJECT ENGINEER

BRIDGE NO. 29-0194
POST MILE 31.45

BENJAMIN HOLT DRIVE UC (WIDEN)
STRUCTURE APPROACH DRAINAGE DETAILS

DESIGN DETAIL SHEET (ENGLISH) (REV. 06-01-09)

ORIGINAL SCALE IN INCHES FOR REDUCED PLANS 0 1 2 3

CU 06240
EA 0G4701

DISREGARD PRINTS BEARING EARLIER REVISION DATES

REVISION DATES (PRELIMINARY STAGE ONLY) 10/16/09 12/04/09 01/18/10 04/23/10 06/17/10 07/28/10

SHEET 17 OF 26

FILE => 29-0194rl-s-sadd03.dgn

USERNAME => trmikes1 DATE PLOTTED => 14-OCT-2010 TIME PLOTTED => 08:06

DIST	COUNTY	ROUTE	POST MILES TOTAL PROJECT	SHEET No	TOTAL SHEETS
10	SJ	5	25.0/32.7	1050	1132

REGISTERED CIVIL ENGINEER — DATE 7/28/10

10-11-10
PLANS APPROVAL DATE

REGISTERED PROFESSIONAL ENGINEER — Robert Sennett — No. 3976 — Exp. 12/31/10 — STRUCTURAL — STATE OF CALIFORNIA

The State of California or its officers or agents shall not be responsible for the accuracy or completeness of scanned copies of this plan sheet.

SAN JOAQUIN COUNCIL OF GOVERNMENT
555 E. WEBER AVENUE
STOCKTON, CA 95202

MGE ENGINEERING, INC.
7415 GREENHAVEN DRIVE, SUITE 100
SACRAMENTO, CA 95831

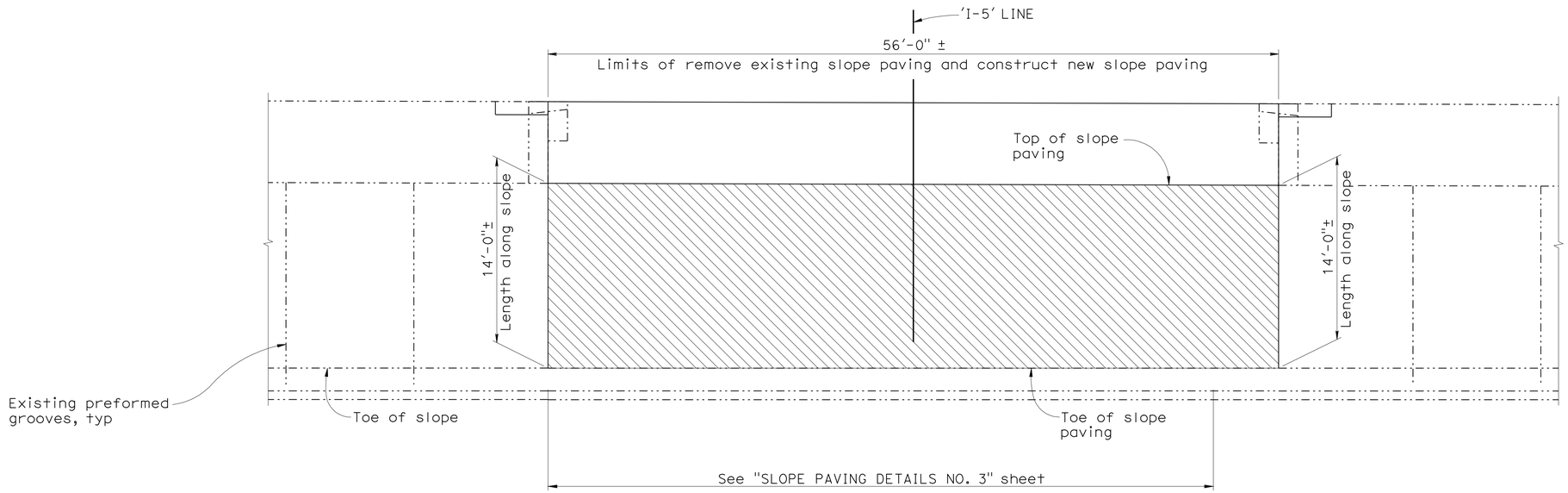

SCHEMATIC SLOPE PAVING LAYOUT-INTERIOR WIDENING

SCALE: 1" = 5'

Notes:

1. New slope paving shall match height of existing slope paving.
2. Abutment 1 shown, Abutment 2 similar.
3. For Abutment Drainage Details, see "SLOPE PAVING DETAILS NO. 2"

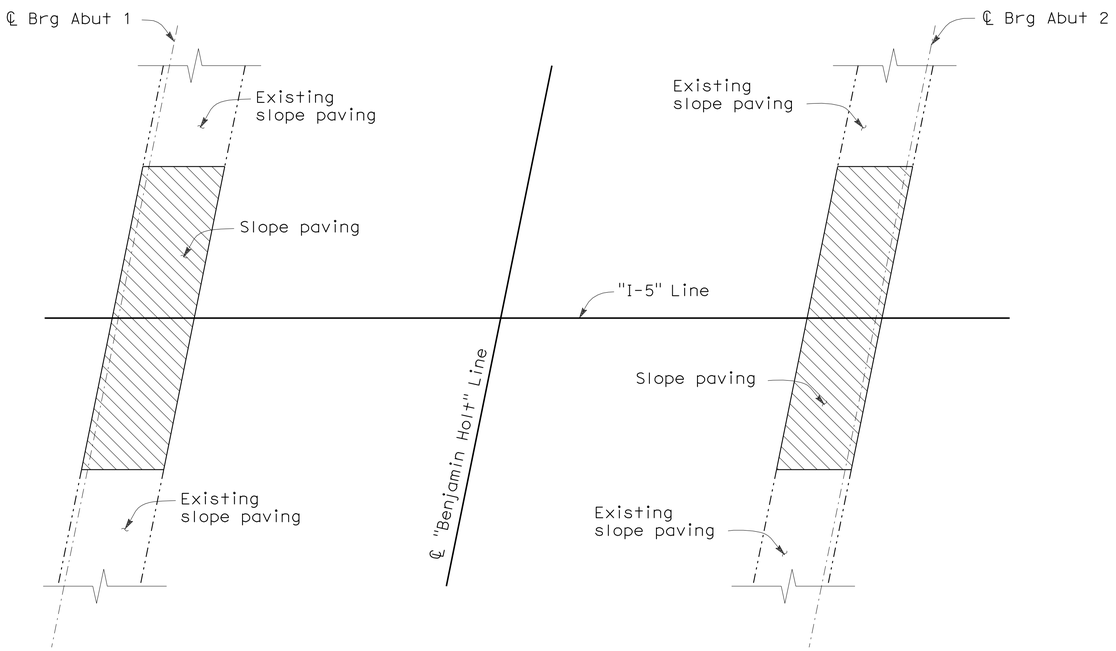

LEGEND

Indicates limits of Bridge Removal (Portion) and Slope Paving (Patterned Concrete)

LIMITS OF SLOPE PAVING

No Scale

NOTE:
THE CONTRACTOR SHALL VERIFY ALL CONTROLLING FIELD DIMENSIONS BEFORE ORDERING OR FABRICATING ANY MATERIAL.

DESIGN OVERSIGHT — John Fujimoto
8-2-10
SIGN OFF DATE

	BY	CHECKED
DESIGN	P. Zhao	T. Swenson
DETAILS	P. Zhao	T. Swenson
QUANTITIES	D. Vang	B. Bhattiprolu

PREPARED FOR THE STATE OF CALIFORNIA DEPARTMENT OF TRANSPORTATION

Robert Sennett
PROJECT ENGINEER

BRIDGE NO. 29-0194
POST MILE 31.45

BENJAMIN HOLT DRIVE UC (WIDEN)
SLOPE PAVING DETAILS No. 1

DESIGN DETAIL SHEET (ENGLISH) (REV. 06-01-09)

ORIGINAL SCALE IN INCHES FOR REDUCED PLANS 0 1 2 3

CU 06240
EA 0G4701

DISREGARD PRINTS BEARING EARLIER REVISION DATES

REVISION DATES (PRELIMINARY STAGE ONLY): 10/16/09 12/04/09 01/13/10 04/23/10 06/17/10 07/28/10

SHEET 18 OF 26

FILE => 29-0194rl-v-slpd01.dgn

USERNAME => trpierce DATE PLOTTED => 14-OCT-2010 TIME PLOTTED => 07:37

DIST	COUNTY	ROUTE	POST MILES TOTAL PROJECT	SHEET No	TOTAL SHEETS
10	SJ	5	25.0/32.7	1051	1132

REGISTERED CIVIL ENGINEER 7/28/10 DATE

10-11-10
PLANS APPROVAL DATE

REGISTERED PROFESSIONAL ENGINEER
Robert Sennett
No. 3976
Exp. 12/31/10
STRUCTURAL
STATE OF CALIFORNIA

The State of California or its officers or agents shall not be responsible for the accuracy or completeness of scanned copies of this plan sheet.

SAN JOAQUIN COUNCIL OF GOVERNMENT
555 E. WEBER AVENUE
STOCKTON, CA 95202

MGE ENGINEERING, INC.
7415 GREENHAVEN DRIVE, SUITE 100
SACRAMENTO, CA 95831

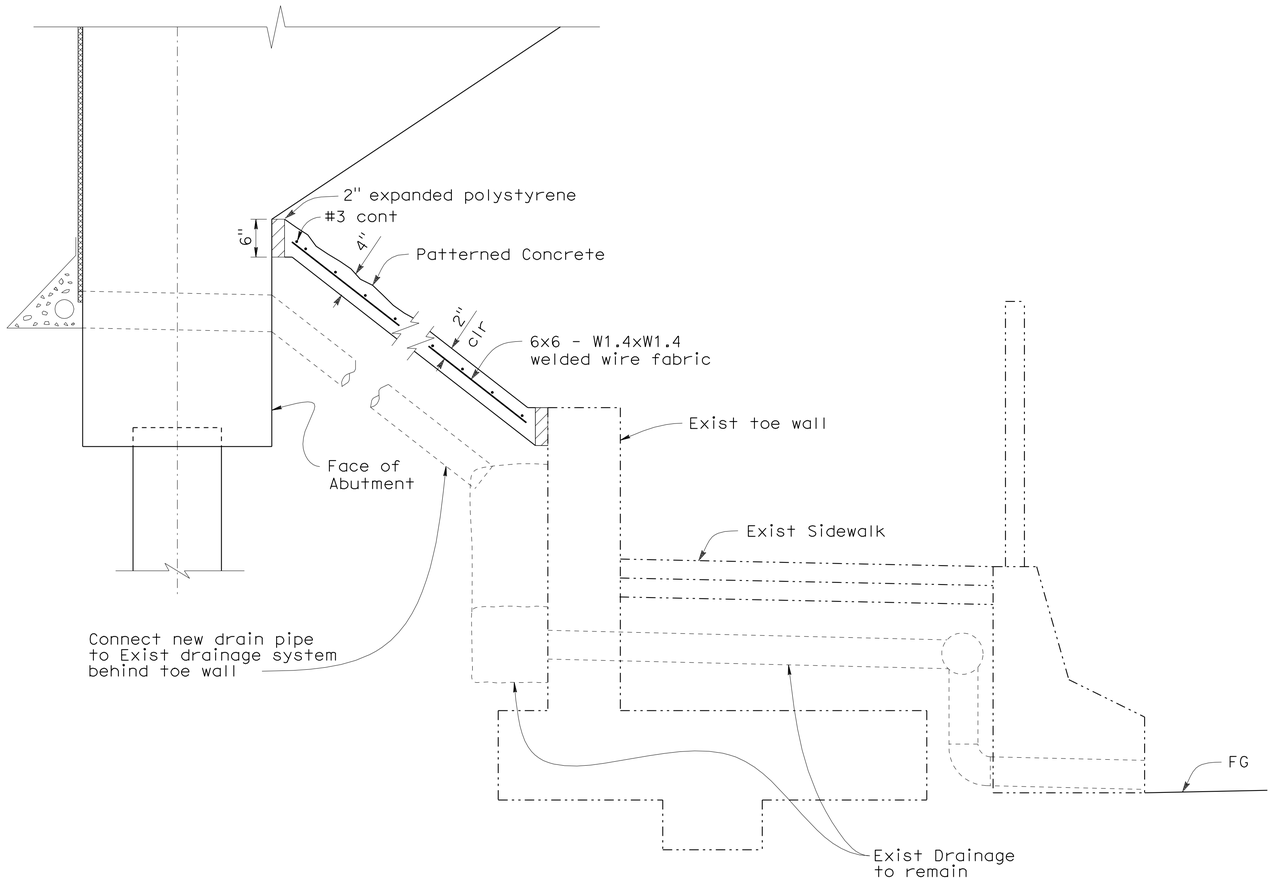

TYPICAL SECTION - CONCRETE PAVING

SCALE: 1" = 1'-0"

NOTE:
THE CONTRACTOR SHALL VERIFY ALL CONTROLLING FIELD DIMENSIONS BEFORE ORDERING OR FABRICATING ANY MATERIAL.

DESIGN OVERSIGHT John Fujimoto
8-2-10
SIGN OFF DATE

	BY	CHECKED
DESIGN	P. Zhao	T. Swenson
DETAILS	P. Zhao	T. Swenson
QUANTITIES	D. Vang	B. Bhattiprolu

PREPARED FOR THE
STATE OF CALIFORNIA
DEPARTMENT OF TRANSPORTATION

Robert Sennett
PROJECT ENGINEER

BRIDGE NO. 29-0194
POST MILE 31.45

BENJAMIN HOLT DRIVE UC (WIDEN)
SLOPE PAVING DETAILS No. 2

DESIGN DETAIL SHEET (ENGLISH) (REV. 06-01-09)

ORIGINAL SCALE IN INCHES FOR REDUCED PLANS 0 1 2 3

CU 06240
EA 0G4701

DISREGARD PRINTS BEARING EARLIER REVISION DATES
REVISION DATES (PRELIMINARY STAGE ONLY) 10/16/09 12/04/09 01/18/10 04/23/10 06/17/10 07/28/10

SHEET 19 OF 26

FILE => 29-0194rl-v-slpd02.dgn

USERNAME => trpierce DATE PLOTTED => 14-OCT-2010 TIME PLOTTED => 07:37

DIST	COUNTY	ROUTE	POST MILES TOTAL PROJECT	SHEET No	TOTAL SHEETS
10	SJ	5	25.0/32.7	1052	1132

REGISTERED CIVIL ENGINEER — DATE 7/28/10

10-11-10
PLANS APPROVAL DATE

REGISTERED PROFESSIONAL ENGINEER — Robert Sennett — No. 3976 — Exp. 12/31/10 — STRUCTURAL — STATE OF CALIFORNIA

The State of California or its officers or agents shall not be responsible for the accuracy or completeness of scanned copies of this plan sheet.

SAN JOAQUIN COUNCIL OF GOVERNMENT
555 E. WEBER AVENUE
STOCKTON, CA 95202

MGE ENGINEERING, INC.
7415 GREENHAVEN DRIVE, SUITE 100
SACRAMENTO, CA 95831

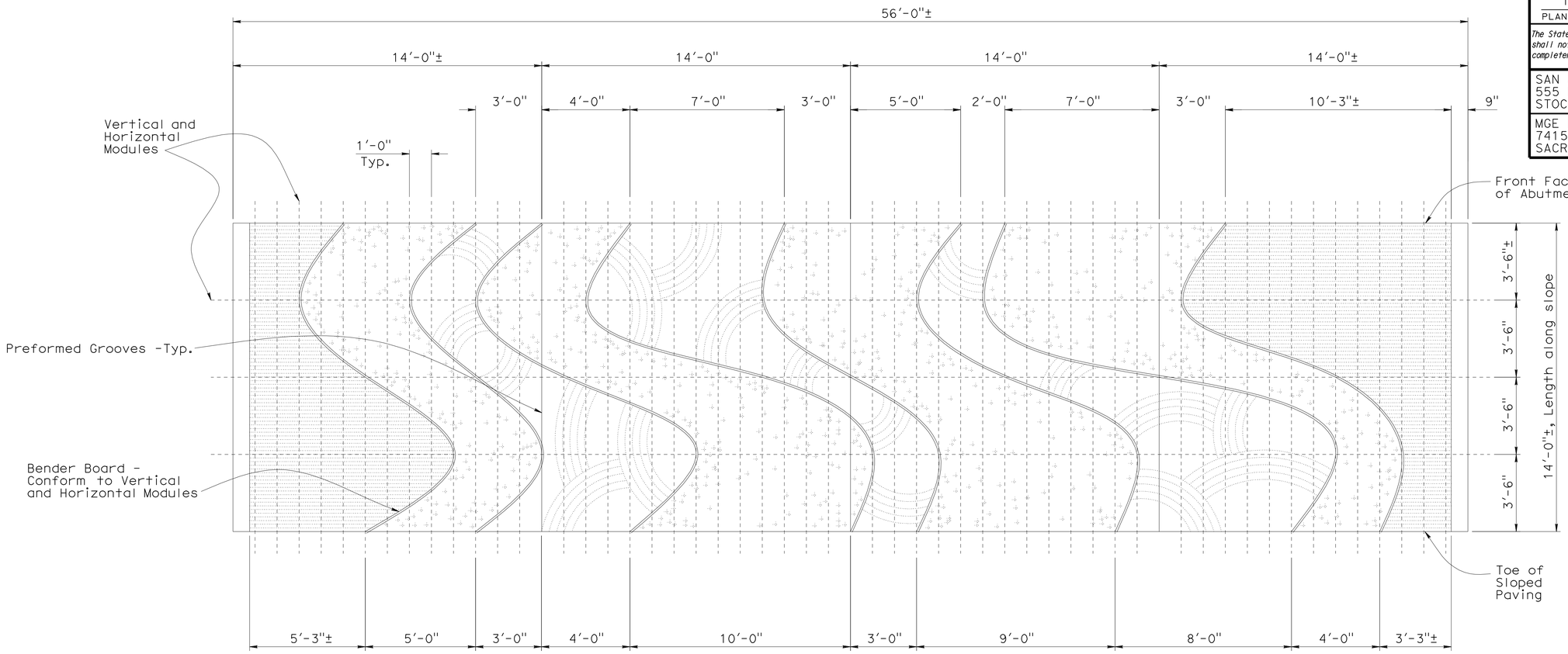

NORTH ELEVATION

SCALE: 3/8" = 1'-0"

Pattern Legend

- Curved Plastic Lumber Bender Board (1/2" width x 3½" depth) Between Concrete Patterns
- Concrete Pattern A Vertical Rough Broom Finish
- Concrete Pattern B Horizontal Scored Metal Rake Tooling (1" on center +/- x ½"Depth Max) over Horizontal Rough Broom Finish
- Concrete Pattern C Randomly Seeded Aggregate (40% of Surface Covered) with 1 ½"-2" Aggregate
- Concrete Pattern D 5-Prong Rake Tooling (4" on center x ½" Depth Max) Score in Arcs over Vertical Rough Broom Finish -Start and End Points Shall Not Overlap Other Patterns-Pattern Shown is Schematic

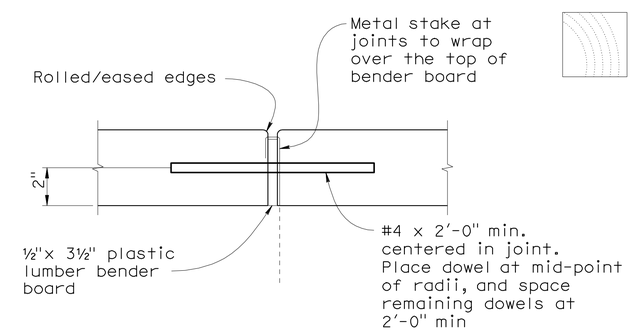

DOWEL DETAIL

SCALE: 3" = 1'-0"

NOTE:
THE CONTRACTOR SHALL VERIFY ALL CONTROLLING FIELD DIMENSIONS BEFORE ORDERING OR FABRICATING ANY MATERIAL.

DESIGN OVERSIGHT — John Fujimoto
8-2-10
SIGN OFF DATE

	BY	CHECKED
DESIGN	P. Zhao	T. Swenson
DETAILS	P. Zhao	T. Swenson
QUANTITIES	D. Vang	B. Bhattiprolu

PREPARED FOR THE STATE OF CALIFORNIA DEPARTMENT OF TRANSPORTATION

Robert Sennett
PROJECT ENGINEER

BRIDGE NO. 29-0194
POST MILE 31.45

BENJAMIN HOLT DRIVE UC (WIDEN)
SLOPE PAVING DETAILS No. 3

DESIGN DETAIL SHEET (ENGLISH) (REV. 06-01-09)

ORIGINAL SCALE IN INCHES FOR REDUCED PLANS 0 1 2 3

CU 06240
EA 0G4701

DISREGARD PRINTS BEARING EARLIER REVISION DATES — REVISION DATES (PRELIMINARY STAGE ONLY) 10/16/09 12/04/09 01/13/10 04/23/10 06/11/10 07/28/10

SHEET 20 OF 26

FILE => 29-0194rl-v-slpd03.dgn

USERNAME => friehard DATE PLOTTED => 18-OCT-2010 TIME PLOTTED => 09:00

DIST	COUNTY	ROUTE	POST MILES TOTAL PROJECT	SHEET No	TOTAL SHEETS
10	SJ	5	25.0/32.7	1053	1132

REGISTERED CIVIL ENGINEER — DATE 7/28/10

10-11-10
PLANS APPROVAL DATE

REGISTERED PROFESSIONAL ENGINEER — Robert Sennett — No. 3976 — Exp. 12/31/10 — STRUCTURAL — STATE OF CALIFORNIA

The State of California or its officers or agents shall not be responsible for the accuracy or completeness of scanned copies of this plan sheet.

SAN JOAQUIN COUNCIL OF GOVERNMENT
555 E. WEBER AVENUE
STOCKTON, CA 95202

MGE ENGINEERING, INC.
7415 GREENHAVEN DRIVE, SUITE 100
SACRAMENTO, CA 95831

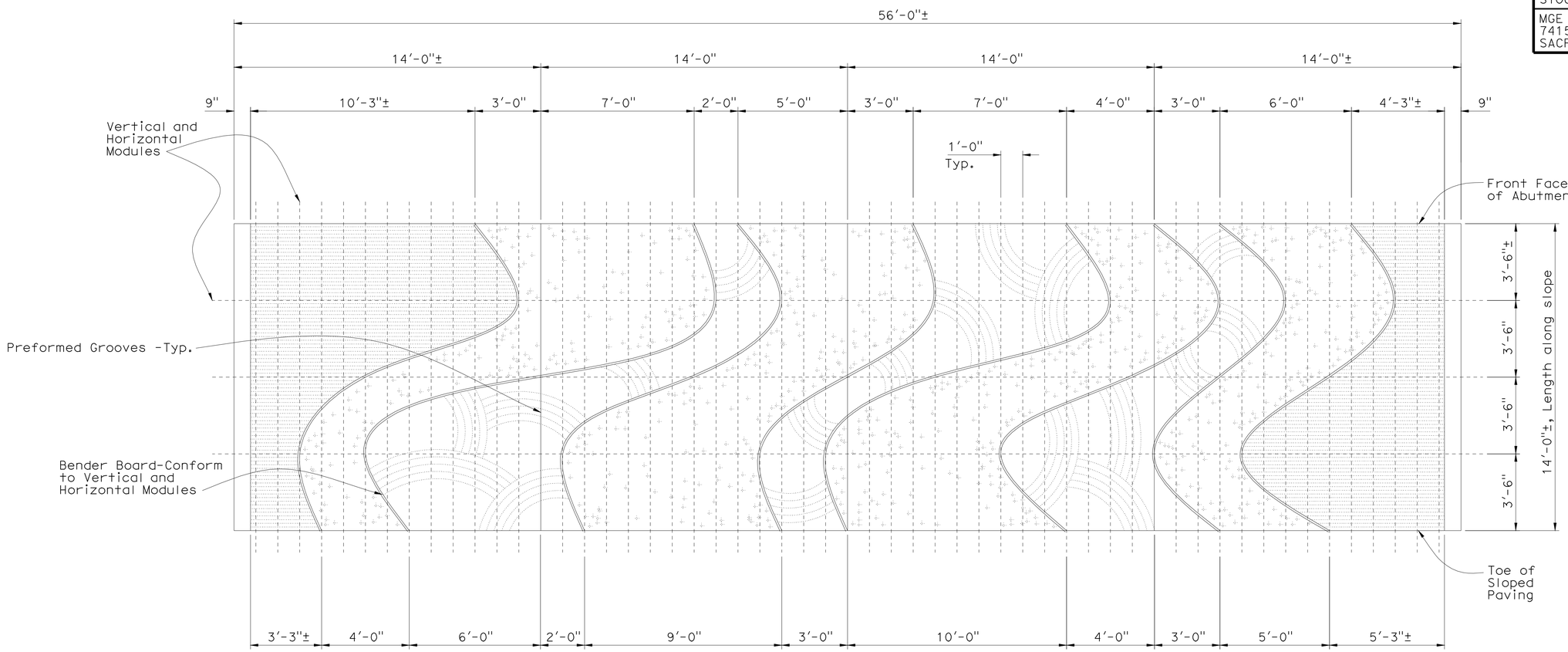

SOUTH ELEVATION

SCALE: 3/8" = 1'-0"

Pattern Legend

- Curved Plastic Lumber Bender Board (1/2" width x 3½" depth) Between Concrete Patterns
- Concrete Pattern A Vertical Rough Broom Finish
- Concrete Pattern B Horizontal Scored Metal Rake Tooling (1" on center +/- x ½"Depth Max) over Horizontal Rough Broom Finish
- Concrete Pattern C Randomly Seeded Aggregate (40% of Surface Covered) with 1 ½"-2" Aggregate
- Concrete Pattern D 5-Prong Rake Tooling (4" on center x ½" Depth Max) Score in Arcs over Vertical Rough Broom Finish -Start and End Points Shall Not Overlap Other Patterns -Pattern Shown is Schematic

NOTE:
THE CONTRACTOR SHALL VERIFY ALL CONTROLLING FIELD DIMENSIONS BEFORE ORDERING OR FABRICATING ANY MATERIAL.

DESIGN OVERSIGHT — John Fujimoto
8-2-10
SIGN OFF DATE

	BY	CHECKED
DESIGN	P. Zhao	T. Swenson
DETAILS	P. Zhao	T. Swenson
QUANTITIES	D. Vang	B. Bhattiprolu

PREPARED FOR THE STATE OF CALIFORNIA DEPARTMENT OF TRANSPORTATION

Robert Sennett
PROJECT ENGINEER

BRIDGE NO. 29-0194
POST MILE 31.45

BENJAMIN HOLT DRIVE UC (WIDEN)
SLOPE PAVING DETAILS No. 4

DESIGN DETAIL SHEET (ENGLISH) (REV. 06-01-09)

ORIGINAL SCALE IN INCHES FOR REDUCED PLANS 0 1 2 3

CU 06240
EA 0G4701

DISREGARD PRINTS BEARING EARLIER REVISION DATES

REVISION DATES (PRELIMINARY STAGE ONLY): 10/15/09 12/04/09 01/13/10 04/23/10 06/17/10 07/28/10

SHEET 21 OF 26

FILE => 29-0194rl-v-slpd04.dgn

USERNAME => friehard DATE PLOTTED => 18-OCT-2010 TIME PLOTTED => 09:00

REFERENCE: CALTRANS SOIL & ROCK LOGGING, CLASSIFICATION, AND PRESENTATION MANUAL (JUNE 2007)

DIST	COUNTY	ROUTE	POST MILES TOTAL PROJECT	SHEET No	TOTAL SHEETS
10	SJ	5	25.0/32.7	1054	1132

GEOTECHNICAL PROFESSIONAL — DATE 7/28/10

10-11-10
PLANS APPROVAL DATE

REGISTERED PROFESSIONAL ENGINEER — GARY PARIKH — No. G.E. 666 — Exp. 12/31/11 — GEOTECHNICAL — STATE OF CALIFORNIA

The State of California or its officers or agents shall not be responsible for the accuracy or completeness of scanned copies of this plan sheet.

SAN JOAQUIN COUNCIL OF GOVERNMENTS
555 EAST WEBER AVENUE
STOCKTON, CALIFORNIA 95202

PARIKH CONSULTANTS, INC.
2360 QUME DRIVE, SUITE A
SAN JOSE, CA 95131

CEMENTATION

Description	Criteria
Weak	Crumbles or breaks with handling or little finger pressure.
Moderate	Crumbles or breaks with considerable finger pressure.
Strong	Will not crumble or break with finger pressure.

CONSISTENCY OF COHESIVE SOILS

Description	Unconfined Compressive Strength (tsf)	Pocket Penetrometer Measurement (tsf)	Torvane Measurement (tsf)	Field Approximation
Very Soft	< 0.25	< 0.25	< 0.12	Easily penetrated several inches by fist
Soft	0.25 to 0.50	0.25 to 0.50	0.12 to 0.25	Easily penetrated several inches by thumb
Medium Stiff	0.50 to 1.0	0.50 to 1.0	0.25 to 0.50	Penetrated several inches by thumb with moderate effort
Stiff	1 to 2	1 to 2	0.50 to 1.0	Readily indented by thumb but penetrated only with great effort
Very Stiff	2 to 4	2 to 4	1.0 to 2.0	Readily indented by thumbnail
Hard	> 4.0	> 4.0	> 2.0	Indented by thumbnail with difficulty

BOREHOLE IDENTIFICATION

Symbol	Hole Type	Description
Size	A	Auger Boring
Size	R P	Rotary drilled boring Rotary percussion boring (air)
Size	R	Rotary drilled diamond core
Size	HD HA	Hand driven (1-inch soil tube) Hand Auger
●	D	Dynamic Cone Penetration Boring
▲	CPT	Cone Penetration Test (ASTM D 5778-95)
⬚	O	Other

Note: Size in inches.

PLASTICITY OF FINE-GRAINED SOILS

Description	Criteria
Nonplastic	A 1/8-inch thread cannot be rolled at any water content.
Low	The thread can barely be rolled and the lump cannot be formed when drier than the plastic limit.
Medium	The thread is easy to roll and not much time is required to reach the plastic limit. The thread cannot be rerolled after reaching the plastic limit. The lump crumbles when drier than the plastic limit.
High	It takes considerable time rolling and kneading to reach the plastic limit. The thread can be rerolled several times after reaching the plastic limit. The lump can be formed without crumbling when drier than the plastic limit.

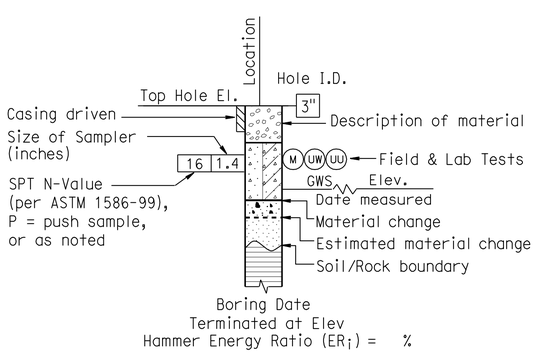

ROTARY BORING

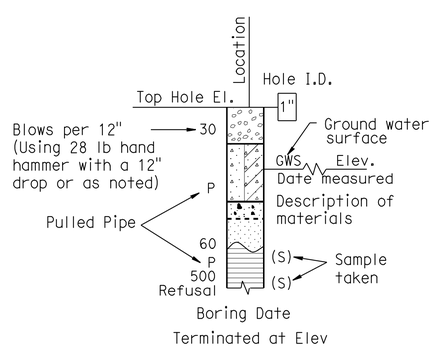

HAND BORING

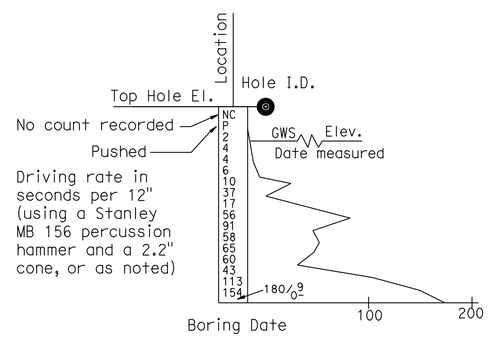

DYNAMIC CONE PENETRATION BORING

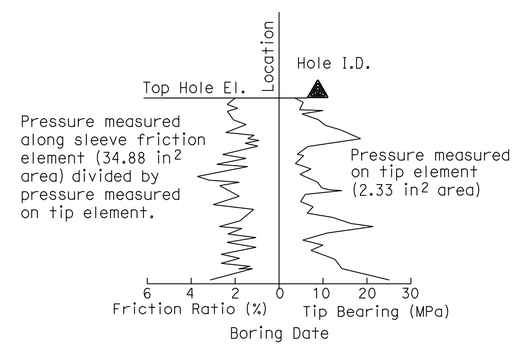

CONE PENETRATION TEST (CPT) SOUNDING

DESIGN OVERSIGHT	DRAWN BY O. GOUTHIER	S. DUDDU - A. R. BHARADWAJ FIELD INVESTIGATION BY:	PREPARED FOR THE STATE OF CALIFORNIA DEPARTMENT OF TRANSPORTATION	A. LAM PROJECT ENGINEER	BRIDGE NO. 29-0194 POST MILES 31.45
SIGN OFF DATE	CHECKED BY D. WANG	DATE: MARCH 2009 - APRIL 2009			

WEST BENJAMIN HOLT DRIVE UC (WIDEN)

SOIL LEGEND 1 OF 2

OGS CIVIL LOG OF TEST BORINGS SHEET (ENGLISH) (REV. 06-01-09)

ORIGINAL SCALE IN INCHES FOR REDUCED PLANS 0 1 2 3

CU 06240
EA 0G4701

DISREGARD PRINTS BEARING EARLIER REVISION DATES

REVISION DATES: 10/18/09 12/04/09 01/18/10 04/28/10 06/11/10 7/28/10

SHEET 22 OF 26

FILE => 29-0194-z-1tb01.dgn

USERNAME => tripierce DATE PLOTTED => 14-OCT-2010 TIME PLOTTED => 07:38

REFERENCE: CALTRANS SOIL & ROCK LOGGING, CLASSIFICATION, AND PRESENTATION MANUAL (JUNE 2007)

DIST	COUNTY	ROUTE	POST MILES TOTAL PROJECT	SHEET No	TOTAL SHEETS
10	SJ	5	25.0/32.7	1055	1132

GEOTECHNICAL PROFESSIONAL — DATE 7/28/10

PLANS APPROVAL DATE 10-11-10

REGISTERED PROFESSIONAL ENGINEER — GARY PARIKH — No. G.E. 666 — Exp. 12/31/11 — GEOTECHNICAL — STATE OF CALIFORNIA

The State of California or its officers or agents shall not be responsible for the accuracy or completeness of scanned copies of this plan sheet.

SAN JOAQUIN COUNCIL OF GOVERNMENTS
555 EAST WEBER AVENUE
STOCKTON, CALIFORNIA 95202

PARIKH CONSULTANTS, INC.
2360 QUME DRIVE, SUITE A
SAN JOSE, CA 95131

GROUP SYMBOLS AND NAMES

Graphic/Symbol	Group Names	Graphic/Symbol	Group Names
GW	Well-graded GRAVEL Well-graded GRAVEL with SAND	CL	Lean CLAY Lean CLAY with SAND Lean CLAY with GRAVEL SANDY lean CLAY SANDY lean CLAY with GRAVEL GRAVELLY lean CLAY GRAVELLY lean CLAY with SAND
GP	Poorly graded GRAVEL Poorly graded GRAVEL with SAND		
GW-GM	Well-graded GRAVEL with SILT Well-graded GRAVEL with SILT and SAND	CL-ML	SILTY CLAY SILTY CLAY with SAND SILTY CLAY with GRAVEL SANDY SILTY CLAY SANDY SILTY CLAY with GRAVEL GRAVELLY SILTY CLAY GRAVELLY SILTY CLAY with SAND
GW-GC	Well-graded GRAVEL with CLAY (or SILTY CLAY) Well-graded GRAVEL with CLAY and SAND (or SILTY CLAY and SAND)		
GP-GM	Poorly graded GRAVEL with SILT Poorly graded GRAVEL with SILT and SAND	ML	SILT SILT with SAND SILT with GRAVEL SANDY SILT SANDY SILT with GRAVEL GRAVELLY SILT GRAVELLY SILT with SAND
GP-GC	Poorly graded GRAVEL with CLAY (or SILTY CLAY) Poorly graded GRAVEL with CLAY and SAND (or SILTY CLAY and SAND)		
GM	SILTY GRAVEL SILTY GRAVEL with SAND	OL	ORGANIC lean CLAY ORGANIC lean CLAY with SAND ORGANIC lean CLAY with GRAVEL SANDY ORGANIC lean CLAY SANDY ORGANIC lean CLAY with GRAVEL GRAVELLY ORGANIC lean CLAY GRAVELLY ORGANIC lean CLAY with SAND
GC	CLAYEY GRAVEL CLAYEY GRAVEL with SAND		
GC-GM	SILTY, CLAYEY GRAVEL SILTY, CLAYEY GRAVEL with SAND	OL	ORGANIC SILT ORGANIC SILT with SAND ORGANIC SILT with GRAVEL SANDY ORGANIC SILT SANDY ORGANIC SILT with GRAVEL GRAVELLY ORGANIC SILT GRAVELLY ORGANIC SILT with SAND
SW	Well-graded SAND Well-graded SAND with GRAVEL		
SP	Poorly graded SAND Poorly graded SAND with GRAVEL	CH	Fat CLAY Fat CLAY with SAND Fat CLAY with GRAVEL SANDY fat CLAY SANDY fat CLAY with GRAVEL GRAVELLY fat CLAY GRAVELLY fat CLAY with SAND
SW-SM	Well-graded SAND with SILT Well-graded SAND with SILT and GRAVEL		
SW-SC	Well-graded SAND with CLAY (or SILTY CLAY) Well-graded SAND with CLAY and GRAVEL (or SILTY CLAY and GRAVEL)	MH	Elastic SILT Elastic SILT with SAND Elastic SILT with GRAVEL SANDY elastic SILT SANDY elastic SILT with GRAVEL GRAVELLY elastic SILT GRAVELLY elastic SILT with SAND
SP-SM	Poorly graded SAND with SILT Poorly graded SAND with SILT and GRAVEL		
SP-SC	Poorly graded SAND with CLAY (or SILTY CLAY) Poorly graded SAND with CLAY and GRAVEL (or SILTY CLAY and GRAVEL)	OH	ORGANIC fat CLAY ORGANIC fat CLAY with SAND ORGANIC fat CLAY with GRAVEL SANDY ORGANIC fat CLAY SANDY ORGANIC fat CLAY with GRAVEL GRAVELLY ORGANIC fat CLAY GRAVELLY ORGANIC fat CLAY with SAND
SM	SILTY SAND SILTY SAND with GRAVEL		
SC	CLAYEY SAND CLAYEY SAND with GRAVEL	OH	ORGANIC elastic SILT ORGANIC elastic SILT with SAND ORGANIC elastic SILT with GRAVEL SANDY ORGANIC elastic SILT SANDY ORGANIC elastic SILT with GRAVEL GRAVELLY ORGANIC elastic SILT GRAVELLY ORGANIC elastic SILT with SAND
SC-SM	SILTY, CLAYEY SAND SILTY, CLAYEY SAND with GRAVEL		
PT	PEAT	OL/OH	ORGANIC SOIL ORGANIC SOIL with SAND ORGANIC SOIL with GRAVEL SANDY ORGANIC SOIL SANDY ORGANIC SOIL with GRAVEL GRAVELLY ORGANIC SOIL GRAVELLY ORGANIC SOIL with SAND
	COBBLES COBBLES and BOULDERS BOULDERS		

FIELD AND LABORATORY TESTING

- (C) Consolidation (ASTM D 2435)
- (CL) Collapse Potential (ASTM D 5333)
- (CP) Compaction Curve (CTM 216)
- (CR) Corrosivity Testing (CTM 643, CTM 422, CTM 417)
- (CU) Consolidated Undrained Triaxial (ASTM D 4767)
- (DS) Direct Shear (ASTM D 3080)
- (EI) Expansion Index (ASTM D 4829)
- (M) Moisture Content (ASTM D 2216)
- (OC) Organic Content-% (ASTM D 2974)
- (P) Permeability (CTM 220)
- (PA) Particle Size Analysis (ASTM D 422)
- (PI) Plasticity Index (AASHTO T 90) Liquid Limit (AASHTO T 89)
- (PL) Point Load Index (ASTM D 5731)
- (PM) Pressure Meter
- (PP) Pocket Penetrometer
- (R) R-Value (CTM 301)
- (SE) Sand Equivalent (CTM 217)
- (SG) Specific Gravity (AASHTO T 100)
- (SL) Shrinkage Limit (ASTM D 427)
- (SW) Swell Potential (ASTM D 4546)
- (TV) Pocket Torvane
- (UC) Unconfined Compression-Soil (ASTM D 2166) Unconfined Compression-Rock (ASTM D 2938)
- (UU) Unconsolidated Undrained Triaxial (ASTM D 2850)
- (UW) Unit Weight (ASTM D 4767)
- (VS) Vane Shear (AASHTO T 223)

APPARENT DENSITY OF COHESIONLESS SOILS

Description	SPT N_{60} (Blows / 12 inches)
Very loose	0 - 4
Loose	5 - 10
Medium Dense	11 - 30
Dense	31 - 50
Very Dense	> 50

MOISTURE

Description	Criteria
Dry	Absence of moisture, dusty, dry to the touch
Moist	Damp but no visible water
Wet	Visible free water, usually soil is below water table

PERCENT OR PROPORTION OF SOILS

Description	Criteria
Trace	Particles are present but estimated to be less than 5%
Few	5 to 10%
Little	15 to 25%
Some	30 to 45%
Mostly	50 to 100%

PARTICLE SIZE

Description		Size
Boulder		> 12"
Cobble		3" to 12"
Gravel	Coarse	3/4" to 3"
	Fine	No. 4 to 3/4"
Sand	Coarse	No. 10 to No. 4
	Medium	No. 40 to No. 10
	Fine	No. 200 to No. 40

DESIGN OVERSIGHT

SIGN OFF DATE

DRAWN BY O. GOUTHIER

CHECKED BY D. WANG

S. DUDDU - A. R. BHARADWAJ
FIELD INVESTIGATION BY:
DATE: MARCH 2009 - APRIL 2009

PREPARED FOR THE STATE OF CALIFORNIA DEPARTMENT OF TRANSPORTATION

A. LAM
PROJECT ENGINEER

BRIDGE NO. 29-0194
POST MILES 31.45

WEST BENJAMIN HOLT DRIVE UC (WIDEN)

SOIL LEGEND 2 OF 2

OGS CIVIL LOG OF TEST BORINGS SHEET (ENGLISH) (REV. 06-01-09)

ORIGINAL SCALE IN INCHES FOR REDUCED PLANS 0 1 2 3

CU 06240
EA 0G4701

DISREGARD PRINTS BEARING EARLIER REVISION DATES

REVISION DATES: 10/15/09 12/04/09 01/15/10 04/23/10 06/11/10 7/28/10

SHEET 23 OF 26

FILE => 29-0194-z-ltb02.dgn

USERNAME => rtpierce DATE PLOTTED => 14-OCT-2010 TIME PLOTTED => 07:38

DIST	COUNTY	ROUTE	POST MILES TOTAL PROJECT	SHEET No	TOTAL SHEETS
10	SJ	5	25.0/32.7	1056	1132

GEOTECHNICAL PROFESSIONAL — DATE 7/28/10

PLANS APPROVAL DATE 10-11-10

REGISTERED PROFESSIONAL ENGINEER — GARY PARIKH — No. G.E. 666 — Exp. 12/31/11 — GEOTECHNICAL — STATE OF CALIFORNIA

The State of California or its officers or agents shall not be responsible for the accuracy or completeness of scanned copies of this plan sheet.

SAN JOAQUIN COUNCIL OF GOVERNMENTS
555 EAST WEBER AVENUE
STOCKTON, CALIFORNIA 95202

PARIKH CONSULTANTS, INC.
2360 QUME DRIVE, SUITE A
SAN JOSE, CA 95131

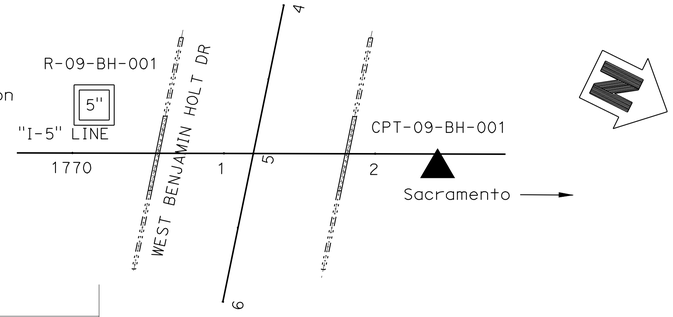

PLAN
1"=50'

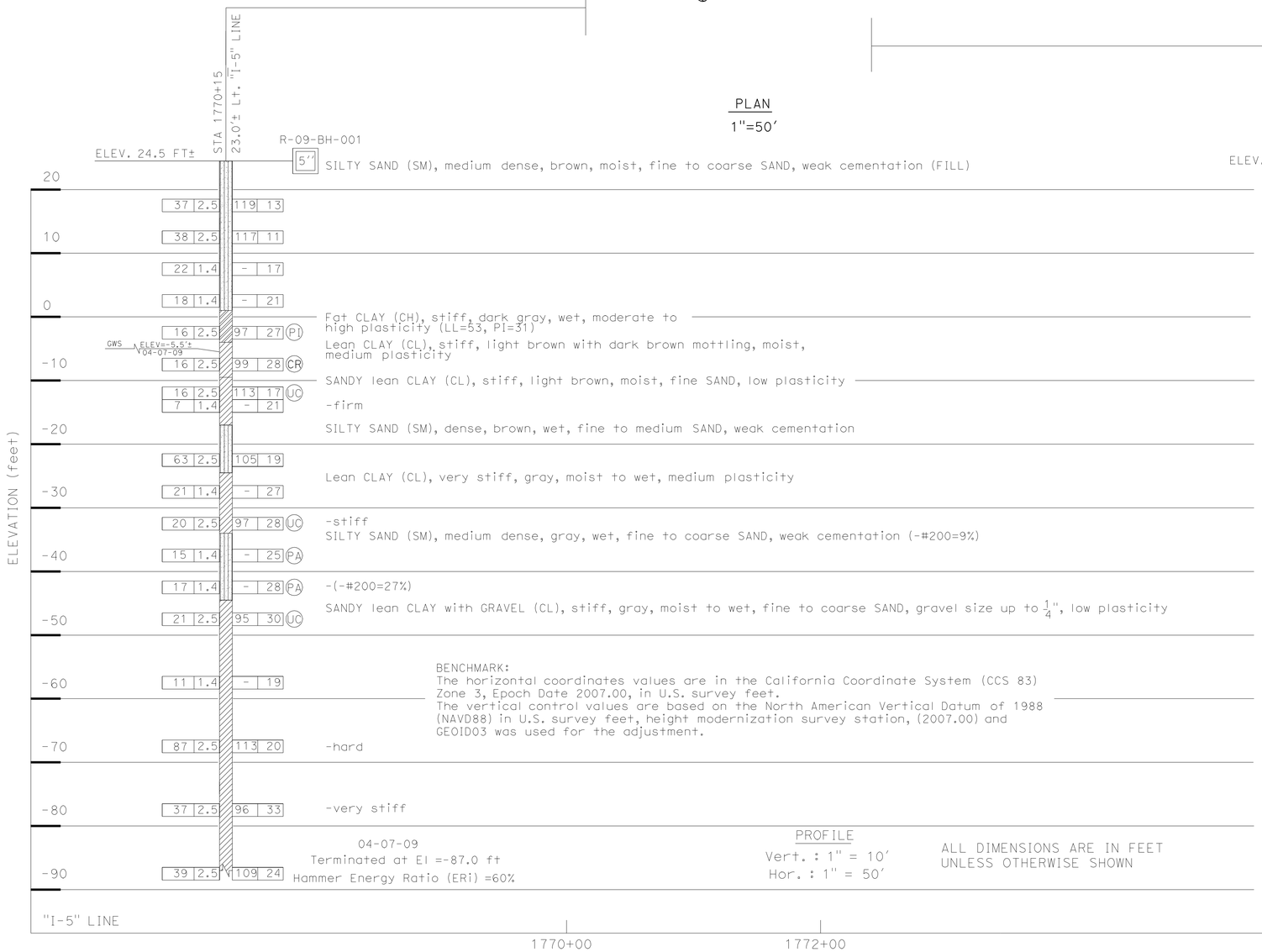

PROFILE
Vert. : 1" = 10'
Hor. : 1" = 50'

ALL DIMENSIONS ARE IN FEET UNLESS OTHERWISE SHOWN

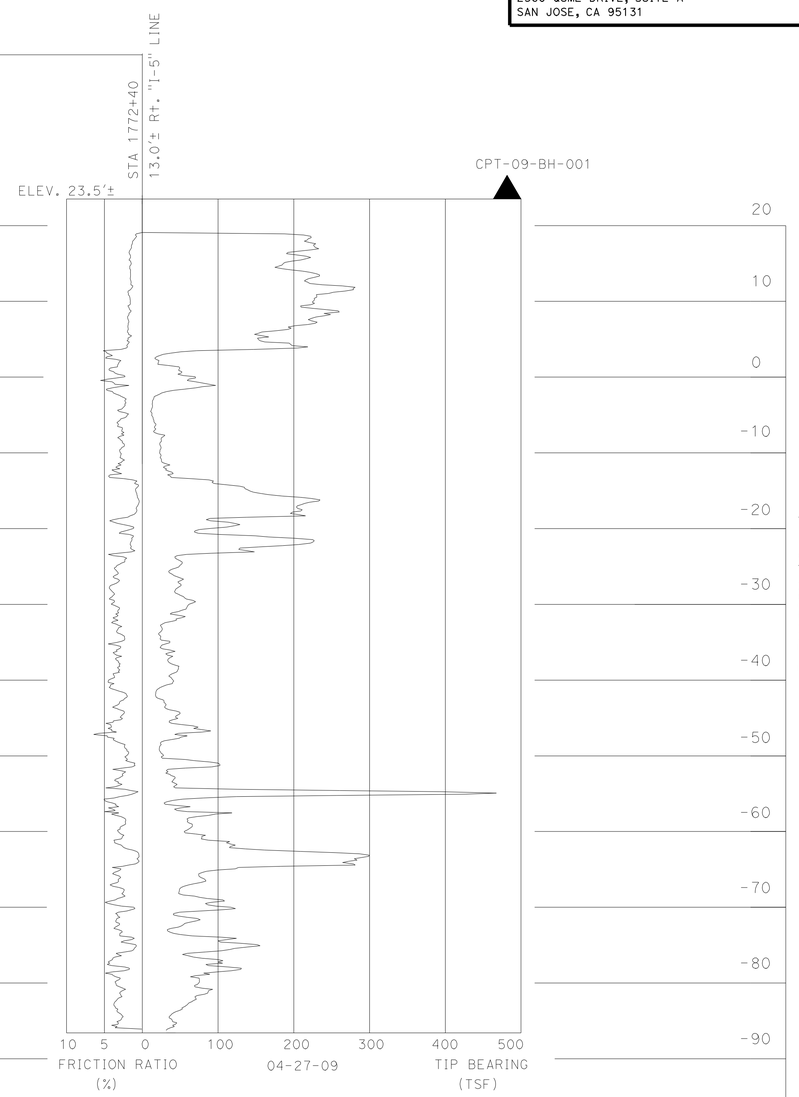

DESIGN OVERSIGHT	DRAWN BY	O. GOUTHIER	S. DUDDU - A. R. BHARADWAJ	PREPARED FOR THE STATE OF CALIFORNIA DEPARTMENT OF TRANSPORTATION	A. LAM
SIGN OFF DATE	CHECKED BY	D. WANG	FIELD INVESTIGATION BY: DATE: MARCH 2009 - APRIL 2009		PROJECT ENGINEER

BRIDGE NO. 29-0194 — POST MILES 31.45

WEST BENJAMIN HOLT DRIVE UC (WIDEN)

LOG OF TEST BORINGS 1 OF 3

OGS GEOTECHNICAL LOG OF TEST BORINGS SHEET (ENGLISH) (REV. 06-01-09)

ORIGINAL SCALE IN INCHES FOR REDUCED PLANS 0 1 2 3

CU 06240
EA 0G4701

DISREGARD PRINTS BEARING EARLIER REVISION DATES → REVISION DATES 10/15/09 12/04/09 01/15/10 04/23/10 06/11/10 7/28/10

SHEET 24 OF 26

FILE => 29-0194-z-ltb03.dgn

USERNAME => rtmikesi DATE PLOTTED => 14-OCT-2010 TIME PLOTTED => 12:42

DIVISION OF ENGINEERING SERVICES - GEOTECHNICAL SERVICES					
As-Built Log of Test Borings sheet is considered an informational document only. As such, the State of California registration seal with signature, license number and registration certificate expiration date confirm that this is a true and accurate copy of the original document. This drawing is available and presented only for the convenience of any bidder, contractor or other interested party.					
DIST.	COUNTY	ROUTE	POST MILES-TOTAL PROJECT	Sheet No.	Total Sheets
10	SJ	5	25.0/32.7	1057	1132

REGISTERED CIVIL ENGINEER — DATE 7/28/10

Registered Professional Engineer — GARY PARIKH — No. G.E. 666 — Exp. 12/31/11 — GEOTECHNICAL — State of California

BENJAMIN HOLT DRIVE ~~UNDERCROSSING~~ (WIDEN)

LOG OF TEST BORINGS 2 OF 3

NOTE: A COPY OF THIS LOG OF TEST BORINGS IS AVAILABLE AT OFFICE OF STRUCTURE MAINTENANCE AND INVESTIGATIONS, SACRAMENTO, CALIFORNIA

CU: 06240 — EA: 0G4701 — BRIDGE No. 29-0194 — Sheet 25 of 26

TO ACCOMPANY PLANS DATED 10-11-10

DIST.	COUNTY	ROUTE	SECTION	SHEET No.	TOTAL SHEETS
X	SJ	5	25.5/31.5	380	392

DATE APPROVED September 5, 1967

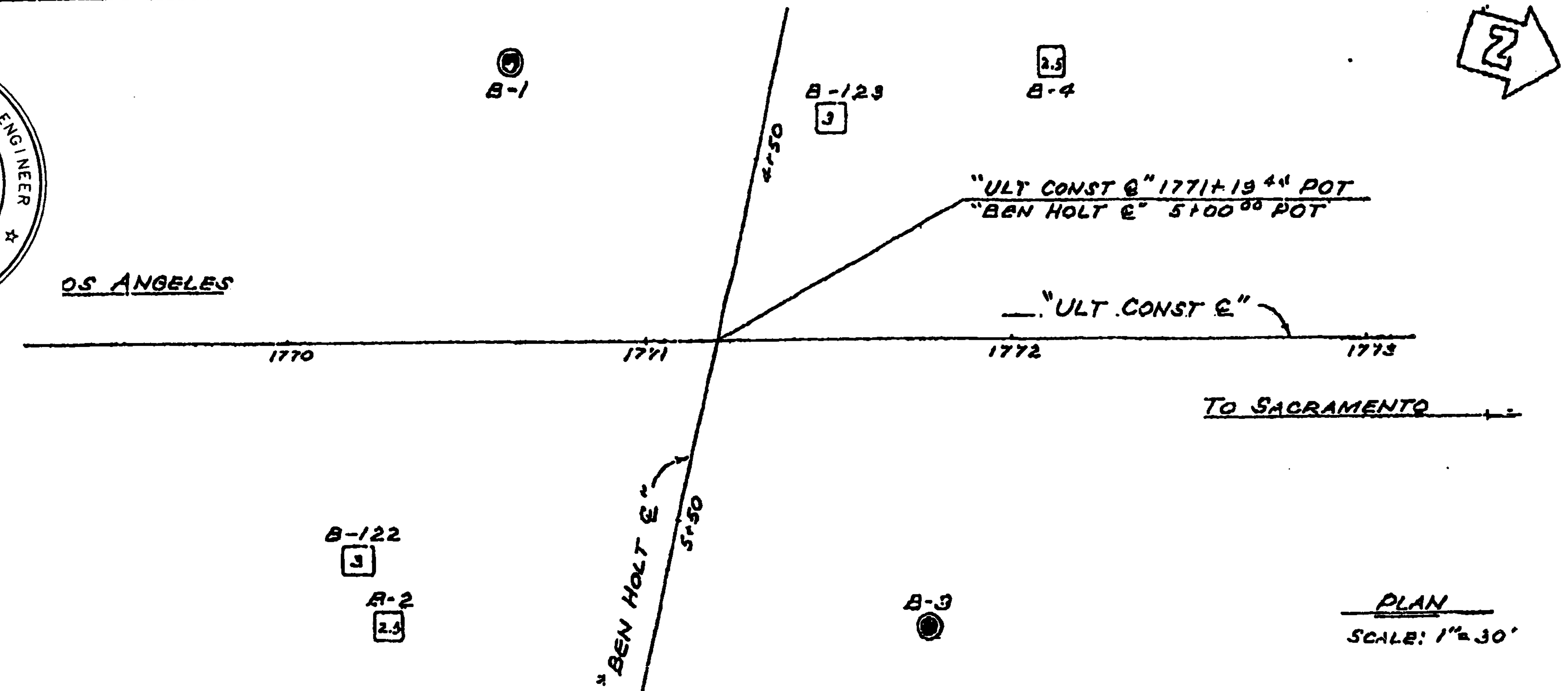

PLAN

SCALE: 1" = 30'

NOTE: Borings B-122 & B-123 were drilled by the Materials and Research Department.

PROFILE

SCALE: 1" = 10'

INFORMATION ON ACTUAL FOUNDATION CONDITIONS ENCOUNTERED IS ON FILE IN BRIDGE GEOLOGY SECTION

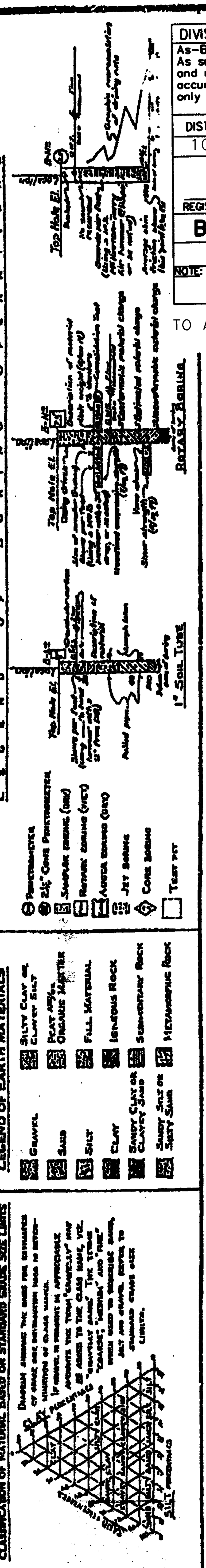

NOTE: Classification of earth material as shown on this sheet is based upon field inspection and is not to be construed to imply mechanical analysis.

SHEET	OF
12	12

AS BUILT PLANS
Contract No. 10-080924
Date Completed ______
Document No. 00000689

STATE OF CALIFORNIA
DEPARTMENT OF PUBLIC WORKS
DIVISION OF HIGHWAYS

BENJAMIN HOLT DRIVE UC

LOG OF TEST BORINGS

SCALE As Noted — BRIDGE 29-194 R/L — FILE — DRAWING 29194-8

FILENAME => 29-0194-z-ltb04.tif

Disregard prints bearing earlier numbers → PREL. DRAWING NO. PR-29/94-

BENCHMARK

CALTRANS 57.2mm BRASS DISK "632", EL. 0.116m, 6.062 Lt "BL2" STATION 16+70.237, NORTHING 667368.588, EASTING 1925376.705 AND CALTRANS 19mm ROD IN MONUMENT BOX "526", EL. 0.032m, 0.518 Lt "BR1" STATION 13+88.280, NORTHING 667346.548, EASTING 1925095.081. ELEVATIONS ARE BASED ON THE CITY STOCKTON BENCHMARK LIST, DATED OCTOBER, 1992, WHICH REFERS TO NGVD LEVEL DATUM OF 1929.

NO CORRECTIONS THIS SHEET

AS BUILT

CORRECTIONS BY D.R. SMALL RHT

CONTRACT NO. 10-448344

DATE 11-8-00 7-18-01

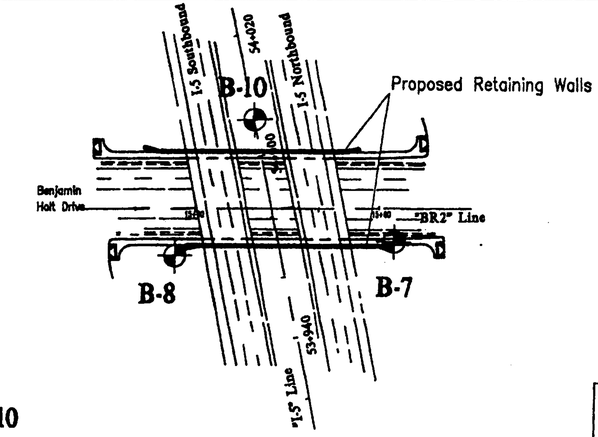

Caltrans Metric

DIST	COUNTY	ROUTE	KILOMETER POST TOTAL PROJECT	SHEET NO.	TOTAL SHEETS

REGISTERED PROFESSIONAL ENGINEER

PLANS APPROVAL DATE

REGISTERED PROFESSIONAL ENGINEER — No. — Exp. — GEOTECHNICAL — STATE OF CALIFORNIA

ESPAÑA Geotechnical Consulting
502 Giuseppe Ct, Ste 11, Roseville, CA 95678 (916) 773-2600 FAX (916) 782-4846

The State of California or its officers or agents shall not be responsible for the accuracy or completeness of electronic copies of this plan sheet.

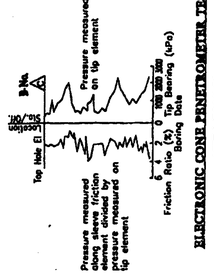

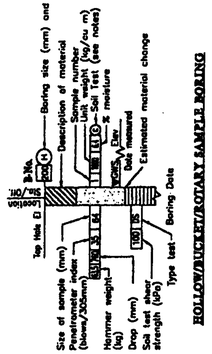

NOTES:

1. TYPES OF BORINGS: B Bucket Auger; R Rotary Wash; C Cone Penetrometer; H Hollow Stem Auger; T Test Pit
2. SOIL TEST DESIGNATIONS: AL Atterberg Limits; CA Chemical analysis; M Max. dry density; R R-value; CN Consolidation; SA Sieve analysis; P Pocket penetrometer; D Direct shear; UC Unconfined compression; E Expansion Index; UU Unconsolidated undrained triaxial

LEGEND OF EARTH MATERIALS

CL, Lean Clay; ML, Silt; OL, Organic Clay or Silt; CH, Fat Clay; MH, Elastic Silt; OH, Organic Clay or Silt; CW, Well-Graded Gravel; CP, Poorly-Graded Gravel; GM, Silty Gravel; GC, Clayey Gravel; SW, Well-Graded Sand; SP, Poorly-Graded Sand; SM, Silty Sand; SC, Clayey Sand; Sandstone; Shale; Claystone; Siltstone

RELATIVE DENSITY AND CONSISTENCY CLASSIFICATION ASTM D1586

Sand and Gravels	Blows/305mm
Consistency	
Very loose	0 – 4
Loose	4 – 10
Medium dense	10 – 30
Dense	30 – 50
Very dense	Over 50

Clays and Silts	Blows/305mm
Consistency	
Very soft	0 – 2
Soft	2 – 4
Firm	4 – 8
Stiff	8 – 15
Very stiff	15 – 30
Hard	Over 30

PLAN

Scale - 1:2000

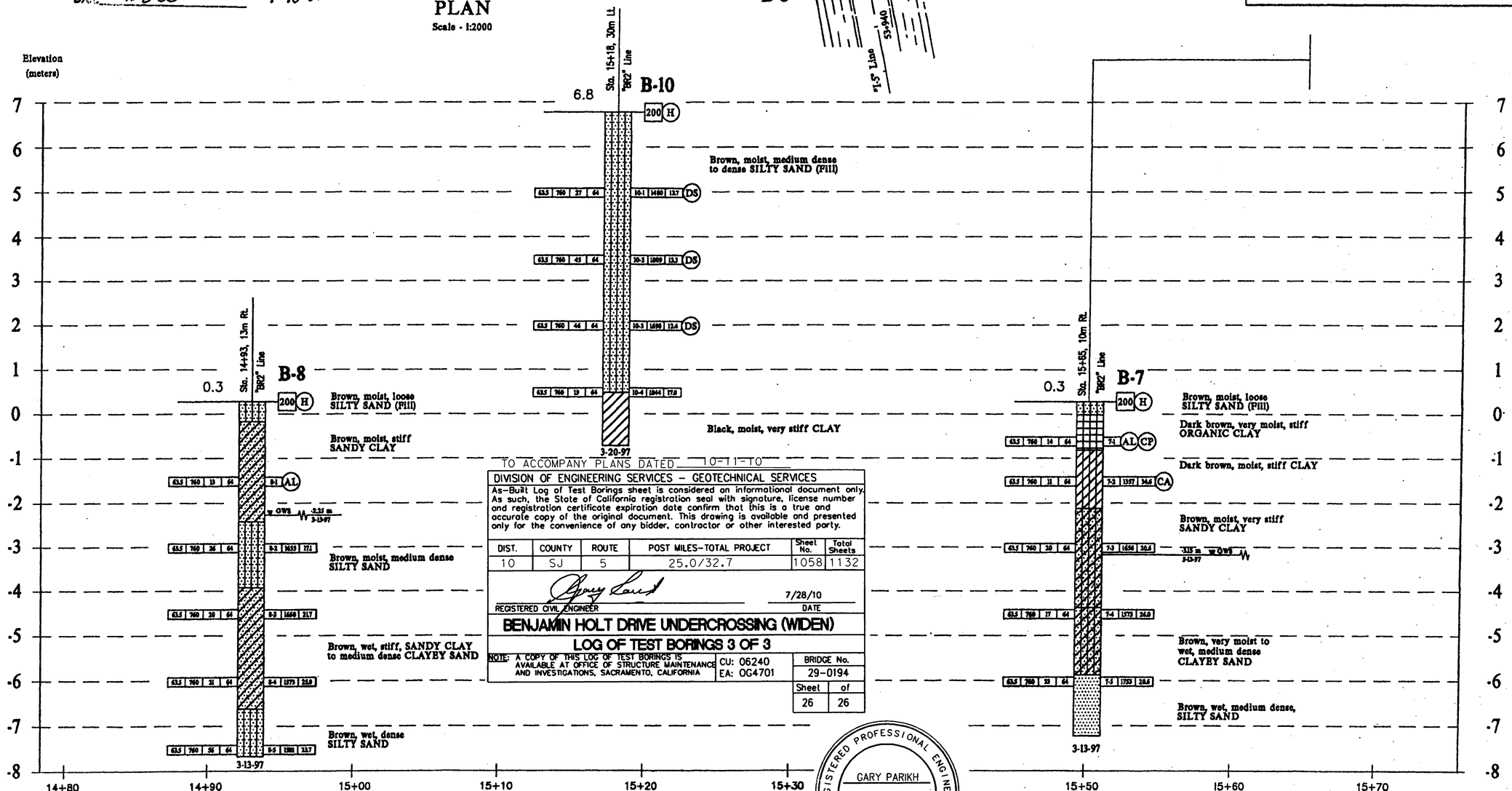

TO ACCOMPANY PLANS DATED 10-11-10

DIVISION OF ENGINEERING SERVICES – GEOTECHNICAL SERVICES

As-Built Log of Test Borings sheet is considered an informational document only. As such, the State of California registration seal with signature, license number and registration certificate expiration date confirm that this is a true and accurate copy of the original document. This drawing is available and presented only for the convenience of any bidder, contractor or other interested party.

DIST.	COUNTY	ROUTE	POST MILES-TOTAL PROJECT	Sheet No.	Total Sheets
10	SJ	5	25.0/32.7	1058	1132

REGISTERED CIVIL ENGINEER — DATE 7/28/10

BENJAMIN HOLT DRIVE UNDERCROSSING (WIDEN)

LOG OF TEST BORINGS 3 OF 3

NOTE: A COPY OF THIS LOG OF TEST BORINGS IS AVAILABLE AT OFFICE OF STRUCTURE MAINTENANCE AND INVESTIGATIONS, SACRAMENTO, CALIFORNIA

CU: 06240
EA: 0G4701

BRIDGE No.	
29-0194	
Sheet	of
26	26

REGISTERED PROFESSIONAL ENGINEER — GARY PARIKH — No. G.E. 666 — Exp. 12/31/11 — GEOTECHNICAL — STATE OF CALIFORNIA

PROFILE

Stationing: "BR2" Line, meters
1:150 (Horizontal)
1:50 (Vertical)

CALTRANS DESIGN OVERSIGHT — DATE 10-7-98

DRAWN BY A. WORCESTER

CHECKED BY C. ESPAÑA

S. HARVEY — FIELD INVESTIGATOR — DATE 3/97

PREPARED FOR THE STATE OF CALIFORNIA DEPARTMENT OF TRANSPORTATION

Carlos España — PROJECT ENGINEER

BRIDGE NO. 29-212 R/L

POST KILOMETER 49.9

BEN HOLT/I-5 RETAINING WALLS
LOG OF TEST BORINGS

ORIGINAL SCALE IN MILLIMETERS FOR REDUCED PLANS 0 20 40 60 80

CU 10115
EA 4483U1

DISREGARD PRINTS BEARING EARLIER REVISION DATES

REVISION DATES (PRELIMINARY STAGE ONLY) 5/15/97 11/3/97 4/12/98 8/14/98

SHEET 4 OF 4

FILENAME => 29-0194-z-1tb05.tif

DIST	COUNTY	ROUTE	POST MILES TOTAL PROJECT	SHEET No	TOTAL SHEETS
10	SJ	5	25.0/32.7	1059	1132

REGISTERED STRUCTURAL ENGINEER — DATE 7/28/10

PHILIP SHINN No. S 4967 Exp. 12/31/10 STRUCTURAL — REGISTERED PROFESSIONAL ENGINEER — STATE OF CALIFORNIA

10-11-10
PLANS APPROVAL DATE

The State of California or its officers or agents shall not be responsible for the accuracy or completeness of scanned copies of this plan sheet.

RAJAPPAN & MEYER
CONSULTING ENGINEERS, INC.
1038 LEIGH AVE, SUITE 100
SAN JOSE, CA 95126

SAN JOAQUIN COUNCIL OF GOVERNMENTS
555 E. WEBER AVENUE
STOCKTON, CA 95202

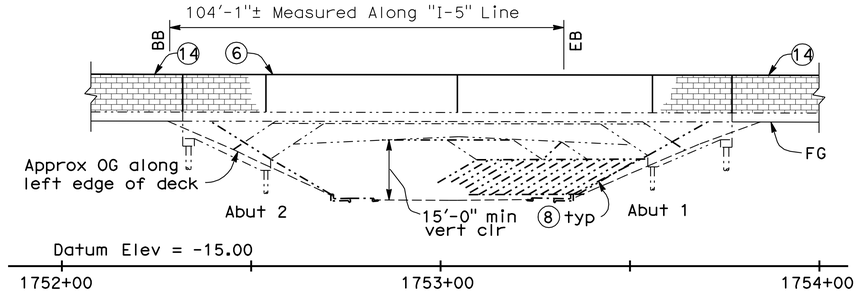

MIRRORED ELEVATION

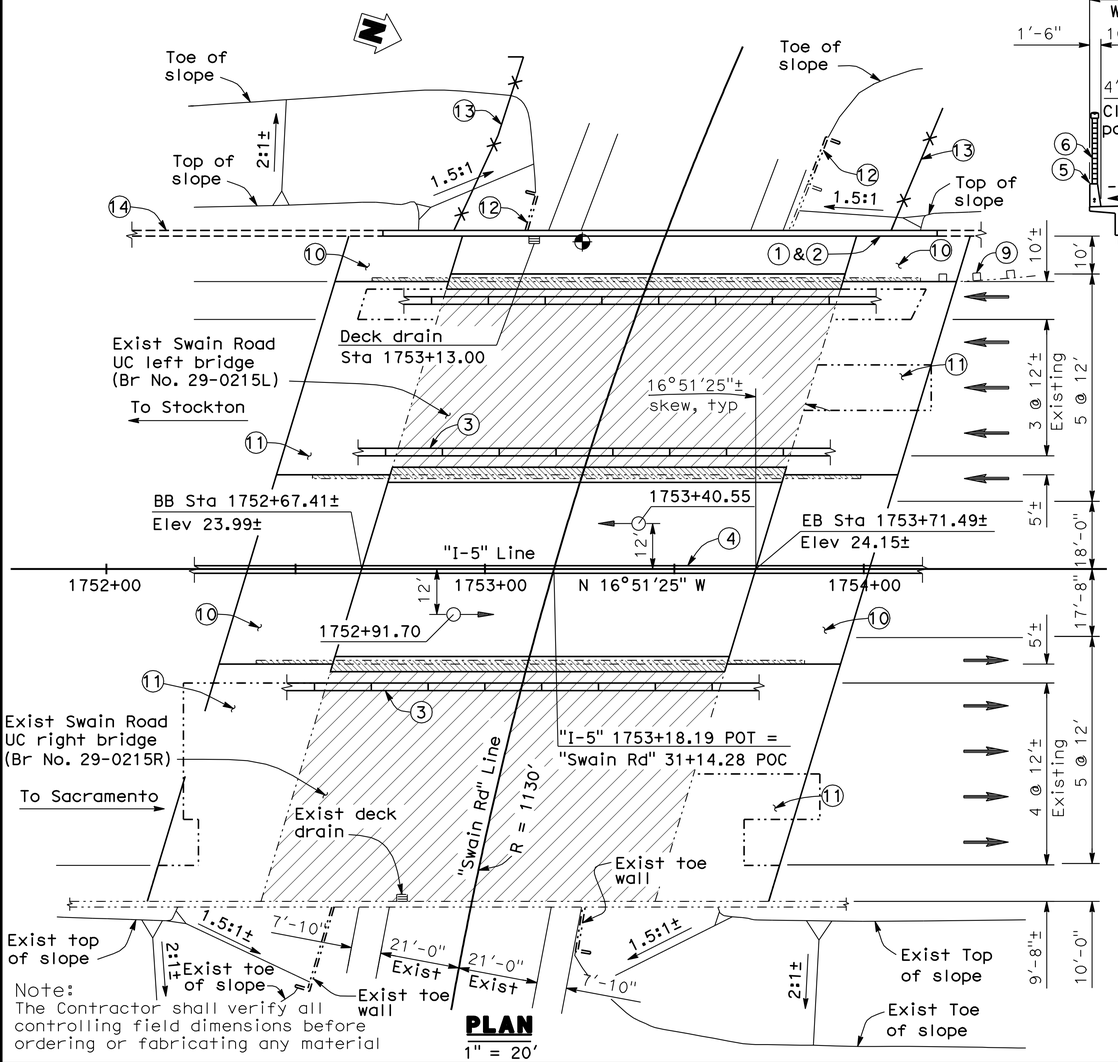

Note:
The Contractor shall verify all controlling field dimensions before ordering or fabricating any material

PLAN
1" = 20'

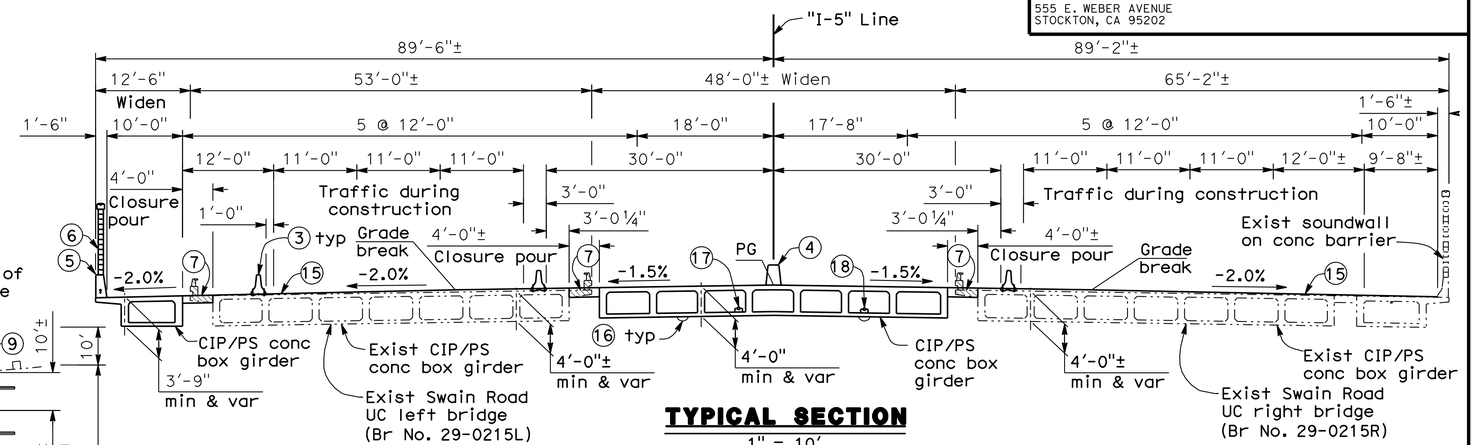

TYPICAL SECTION
1" = 10'

NOTES:

1. Paint bridge number
2. Paint bridge name and year completed
3. Temporary railing Type K (anchored), see "Road Plans"
4. Concrete barrier Type 60A (mod)
5. Concrete barrier Type 736 (mod) with 2" dia. conduit 1½" dia. with pull wire and soffit lighting conduits
6. Masonry sound wall
7. Remove existing overhang and salvage existing barrier railing Type 9
8. Remove exist slope paving (portion) and re-construct
9. Remove exist bridge approach guard railing, see "Road Plans"
10. Structure approach Type N(30D)
11. Structure approach Type R(30D)
12. Extend exist toe wall
13. Chain link fence, see "Road Plans"
14. Sound wall, see "Road Plans"
15. Polyester concrete overlay
16. Soffit lighting, see "Road Plans"
17. 4" dia. fiber optic conduit, see "Road Plans"
18. 1½" dia. soffit lighting conduit, see "Road Plans"
19. For quantities, see 'General Notes' sheet

LEGEND:

- Bridge Removal (Portion)
- Indicates limits of prepare concrete bridge deck surface, and furnish and place polyester concrete overlay
- Indicates point of minimum vertical clearance
- Indicates existing structure
- Indicates existing bridge approach guard railing type 8
- Indicates chain link fence
- Indicates soffit lighting, see 'Electrical Plans'

DESIGN OVERSIGHT John Fujimoto	DESIGN	BY P. SHINN	CHECKED A. WANG	LOAD & RESISTANCE FACTOR DESIGN	LIVE LOADING: HL93 W/"LOW-BOY" AND PERMIT DESIGN VEHICLE
8-2-10 SIGN OFF DATE	DETAILS	BY G. WOLDETSADIK	CHECKED A. WANG	LAYOUT BY P. SHINN	CHECKED A. WANG
	QUANTITIES	BY G. WOLDETSADIK	CHECKED W. Y. TAN	SPECIFICATIONS BY K. HARIRSAZ	PLANS AND SPECS COMPARED K. HARIRSAZ

PREPARED FOR THE STATE OF CALIFORNIA DEPARTMENT OF TRANSPORTATION

P. SHINN
PROJECT ENGINEER

BRIDGE NO. 29-0215
POST MILES 31.11

SWAIN ROAD UNDERCROSSING (WIDEN)
GENERAL PLAN

DESIGN GENERAL PLAN SHEET (ENGLISH) (REV. 06-01-09)

ORIGINAL SCALE IN INCHES FOR REDUCED PLANS 0 1 2 3

CU 06240
EA 0G4701

DISREGARD PRINTS BEARING EARLIER REVISION DATES

REVISION DATES (PRELIMINARY STAGE ONLY): 6/2/09 9/4/09 10/16/09 12/4/09 1/15/10 4/21/10 6/11/10 7/28/10

SHEET 1 OF 27

FILE => 29-0215-a-gp01.dgn

USERNAME => trhenard DATE PLOTTED => 18-OCT-2010 TIME PLOTTED => 09:00

DIST	COUNTY	ROUTE	POST MILES TOTAL PROJECT	SHEET No	TOTAL SHEETS
10	SJ	5	25.0/32.7	1060	1132

REGISTERED STRUCTURAL ENGINEER — DATE 7/28/10

PLANS APPROVAL DATE 10-11-10

REGISTERED PROFESSIONAL ENGINEER — PHILIP SHINN — No. S 4967 — Exp. 12/31/10 — STRUCTURAL — STATE OF CALIFORNIA

The State of California or its officers or agents shall not be responsible for the accuracy or completeness of scanned copies of this plan sheet.

RAJAPPAN & MEYER
CONSULTING ENGINEERS, INC.
1038 LEIGH AVE, SUITE 100
SAN JOSE, CA 95126

SAN JOAQUIN COUNCIL OF GOVERNMENTS
555 E. WEBER AVENUE
STOCKTON, CA 95202

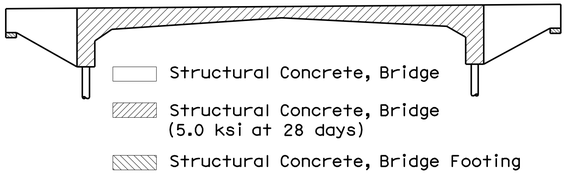

CONCRETE STRENGTH AND TYPE LIMITS

No Scale

GENERAL NOTES
LOAD AND RESISTANCE FACTOR DESIGN

DESIGN: AASHTO LRFD Bridge Design Specifications, 4th edition with California Amendments, preface dated December 2008; except that earth retaining structures, abutments, bridge (including barrier and railing) details taken from Standard Plans March 2006 and earlier versions, Standard Bridge Details XS sheets, etc. are designed using Bridge Design Specifications (1996 AASHTO with Revisions by Caltrans).

SEISMIC DESIGN: Caltrans Seismic Design Criteria (SDC), Version 1.4 dated June, 2006

DEAD LOAD: Includes 35 psf for future wearing surface

LIVE LOAD: HL93 with "Low-Boy" and permit design vehicle

SEISMIC LOAD: SDC ARS Curve for Soil Profile Type D
Magnitude group 7.00
Peak Rock Acceleration 0.2g

REINFORCED CONCRETE: fy = 60 ksi
f'c = 4.0 ksi unless otherwise noted.
n = 8

PRESTRESSED CONCRETE: See "Pretressing Notes" on "GIRDER LAYOUT" sheet.

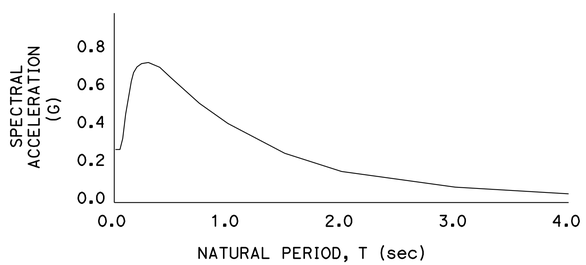

ARS DESIGN CURVE

No Scale

Note:
The Contractor shall verify all controlling field dimensions before ordering or fabricating any material

STANDARD PLANS DATED MAY, 2006

	A10A	Acronyms and Abbreviations (Sheet 1 of 2)
	A10B	Acronyms and Abbreviations (Sheet 2 of 2)
	A10C	Symbols (Sheet 1 of 2)
	A10D	Symbols (Sheet 2 of 2)
	A62B	Limits of Payment for Excavation and Backfill - Bridge Surcharge and Wall
	A62-C	Limits of payment for Excavation and Backfill - Bridge
RSP	A76A	Concrete Barrier Type 60
	B0-3	Bridge Details
	B0-5	Bridge Details
RSP	B2-8	Pile Details Class 200
RSP	B6-21	Joint Seals (Maximum Movement Rating = 2")
	B7-1	Box Girder Details
	B7-6	Deck Drains Details
	B7-10	Utility Opening - Box Girder
	B8-5	Cast-in-place Prestressed Girder Details

Standard Plan Sheet No.
Detail No.

SWAIN ROAD UC #29-0215
QUANTITIES

PUBLIC SAFETY PLAN	LUMP	SUM
SALVAGE METAL BRIDGE RAILING	436	LF
PREPARE CONCRETE BRIDGE DECK SURFACE	11,215	SQFT
BRIDGE REMOVAL (PORTION), LOCATION I	LUMP	SUM
STRUCTURE EXCAVATION (BRIDGE)	142	CY
STRUCTURE BACKFILL (BRIDGE)	100	CY
AGGREGATE BASE (APPROACH SLAB)	26	CY
FURNISH PILING (CLASS 200) (ALTERNATIVE X)(MODIFIED)	1,769	LF
DRIVE PILE (CLASS 200)(ALTERNATIVE X)(MODIFIED)	34	EA
PRESTRESSING CAST-IN-PLACE CONCRETE	LUMP	SUM
STRUCTURAL CONCRETE, BRIDGE FOOTING	3	CY
STRUCTURAL CONCRETE, BRIDGE	740	CY
STRUCTURAL CONCRETE, APPROACH SLAB (TYPE N)	138	CY
STRUCTURAL CONCRETE, APPROACH SLAB (TYPE R)	253	CY
PAVING NOTCH EXTENSION	85	CF
DRILL AND BOND DOWEL	170	LF
FURNISH POLYESTER CONCRETE OVERLAY	1,400	CF
PLACE POLYESTER CONCRETE OVERLAY	11,215	SQFT
SOUND WALL (MASONRY BLOCK)	1,640	SQFT
JOINT SEAL (MR 1")	374	LF
BAR REINFORCING STEEL (BRIDGE)	135,500	LB
SLOPE PAVING (PATTERNED CONCRETE)	66	CY
BRIDGE DECK DRAINAGE SYSTEM	1,570	LB
CONCRETE BARRIER (TYPE 60A MODIFIED)	164	LF
CONCRETE BARRIER (TYPE 736 MODIFIED)	98	LF
CONCRETE BARRIER (TYPE 736A MODIFIED)	48	LF

INDEX TO PLANS

SHEET NO.	TITLE
1.	GENERAL PLAN
2.	GENERAL NOTES
3.	DECK GRADES
4.	FOUNDATION PLAN
5.	ABUTMENT LAYOUT
6.	ABUTMENT DETAILS NO. 1
7.	ABUTMENT DETAILS NO. 2
8.	ABUTMENT DETAILS NO. 3
9.	ABUTMENT DETAILS NO. 4
10.	TYPICAL SECTION
11.	GIRDER LAYOUT
12.	LIMITS OF STRUCTURE APPROACH
13.	SOUNDWALL DETAILS
14.	DECK DRAINAGE DETAILS
15.	STRUCTURE APPROACH TYPE N(30D)
16.	STRUCTURE APPROACH TYPE R(30D)
17.	STRUCTURE APPROACH DRAINAGE DETAILS
18.	SLOPE PAVING DETAILS NO. 1
19.	SLOPE PAVING DETAILS NO. 2
20.	SLOPE PAVING DETAILS NO. 3
21.	SLOPE PAVING DETAILS NO. 4
22.	SLOPE PAVING DETAILS NO. 5
23.	SOIL LEGEND 1 OF 2
24.	SOIL LEGEND 2 OF 2
25.	LOG OF TEST BORINGS 1 OF 3
26.	LOG OF TEST BORINGS 2 OF 3
27.	LOG OF TEST BORINGS 3 OF 3

DESIGN OVERSIGHT — John Fujimoto — 8-2-10 — SIGN OFF DATE

	BY		CHECKED
DESIGN	BY	P. SHINN	CHECKED A. WANG
DETAILS	BY	G. WOLDETSADIK	CHECKED A. WANG
QUANTITIES	BY	G. WOLDETSADIK	CHECKED W. Y. TAN

PREPARED FOR THE STATE OF CALIFORNIA DEPARTMENT OF TRANSPORTATION

P. SHINN — PROJECT ENGINEER

BRIDGE NO. 29-0215
POST MILE 31.11

SWAIN ROAD UNDERCROSSING (WIDEN)
GENERAL NOTES

DESIGN DETAIL SHEET (ENGLISH) (REV. 06-01-09)

ORIGINAL SCALE IN INCHES FOR REDUCED PLANS 0 1 2 3

CU 06240
EA 0G4701

DISREGARD PRINTS BEARING EARLIER REVISION DATES → REVISION DATES (PRELIMINARY STAGE ONLY) 10/16/09 12/4/09 1/15/10 4/21/10 6/11/10 7/28/10

SHEET 2 OF 27

FILE => 29-0215-b-gnotes.dgn

USERNAME => trmikesl DATE PLOTTED => 14-OCT-2010 TIME PLOTTED => 12:42

DIST	COUNTY	ROUTE	POST MILES TOTAL PROJECT	SHEET No	TOTAL SHEETS
10	SJ	5	25.0/32.7	1061	1132

REGISTERED STRUCTURAL ENGINEER — DATE 7/28/10

PLANS APPROVAL DATE 10-11-10

REGISTERED PROFESSIONAL ENGINEER — PHILIP SHINN — No. S 4967 — Exp. 12/31/10 — STRUCTURAL — STATE OF CALIFORNIA

The State of California or its officers or agents shall not be responsible for the accuracy or completeness of scanned copies of this plan sheet.

RAJAPPAN & MEYER CONSULTING ENGINEERS, INC.
1038 LEIGH AVE, SUITE 100
SAN JOSE, CA 95126

SAN JOAQUIN COUNCIL OF GOVERNMENTS
555 E. WEBER AVENUE
STOCKTON, CA 95202

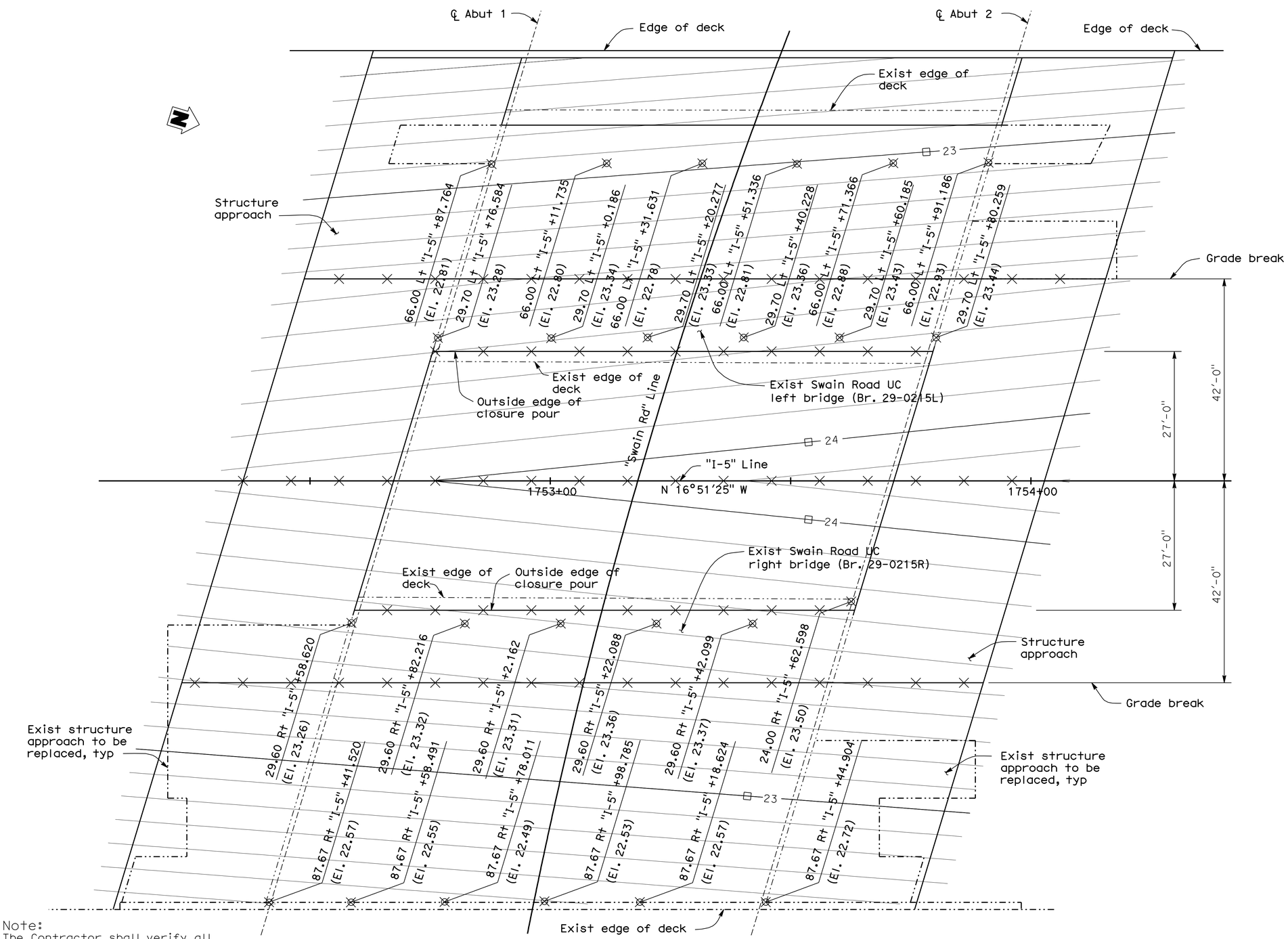

PLAN
3/32" = 1'-0"

Note:
The Contractor shall verify all controlling field dimensions before ordering or fabricating any material

NOTES:

1. indicates existing structure
2. ⊠ indicates surveyed existing top of deck elevation
3. □ indicates even foot contours
4. × indicates 10ft intervals measured along "I-5 Line"
5. Contour interval = 0.1ft
6. Contours do not include camber or falsework settlement.
7. Maximum grinding on top of existing deck should not greater than 3/4".
8. Contours shown at existing bridge indicate top of polyester concrete overlay.
9. Contour shown at widening and structure approach indicate finish concrete deck elevation.
10. For limit of polyester concrete overlay, see "General Plan" and "Typical Section" sheets.

DESIGN OVERSIGHT — John Fujimoto — 8-2-10 — SIGN OFF DATE

DESIGN	BY P. SHINN	CHECKED A. WANG	
DETAILS	BY G. WOLDETSADIK	CHECKED A. WANG	
QUANTITIES	BY G. WOLDETSADIK	CHECKED W. Y. TAN	

PREPARED FOR THE STATE OF CALIFORNIA DEPARTMENT OF TRANSPORTATION

P. SHINN — PROJECT ENGINEER

CU 06240
EA 0G4701

BRIDGE NO. 29-0215
POST MILE 31.11

SWAIN ROAD UNDERCROSSING (WIDEN)
DECK GRADES

DISREGARD PRINTS BEARING EARLIER REVISION DATES — REVISION DATES (PRELIMINARY STAGE ONLY) 10/16/09 12/4/09 1/15/10 4/21/10 6/11/10 7/28/10

SHEET 3 OF 27

DESIGN DETAIL SHEET (ENGLISH) (REV. 06-01-09)

ORIGINAL SCALE IN INCHES FOR REDUCED PLANS 0 1 2 3

FILE => 29-0215-d-dg01.dgn

USERNAME => trmikest DATE PLOTTED => 14-OCT-2010 TIME PLOTTED => 12:43

DIST	COUNTY	ROUTE	POST MILES TOTAL PROJECT	SHEET No	TOTAL SHEETS
10	SJ	5	25.0/32.7	1062	1132

REGISTERED STRUCTURAL ENGINEER — DATE 7/28/10

PLANS APPROVAL DATE 10-11-10

REGISTERED PROFESSIONAL ENGINEER — PHILIP SHINN — No. S 4967 — Exp. 12/31/10 — STRUCTURAL — STATE OF CALIFORNIA

The State of California or its officers or agents shall not be responsible for the accuracy or completeness of scanned copies of this plan sheet.

SAN JOAQUIN COUNCIL OF GOVERNMENTS
555 E. WEBER AVENUE
STOCKTON, CA 95202

RAJAPPAN & MEYER
CONSULTING ENGINEERS, INC.
1038 LEIGH AVE, SUITE 100
SAN JOSE, CA 95126

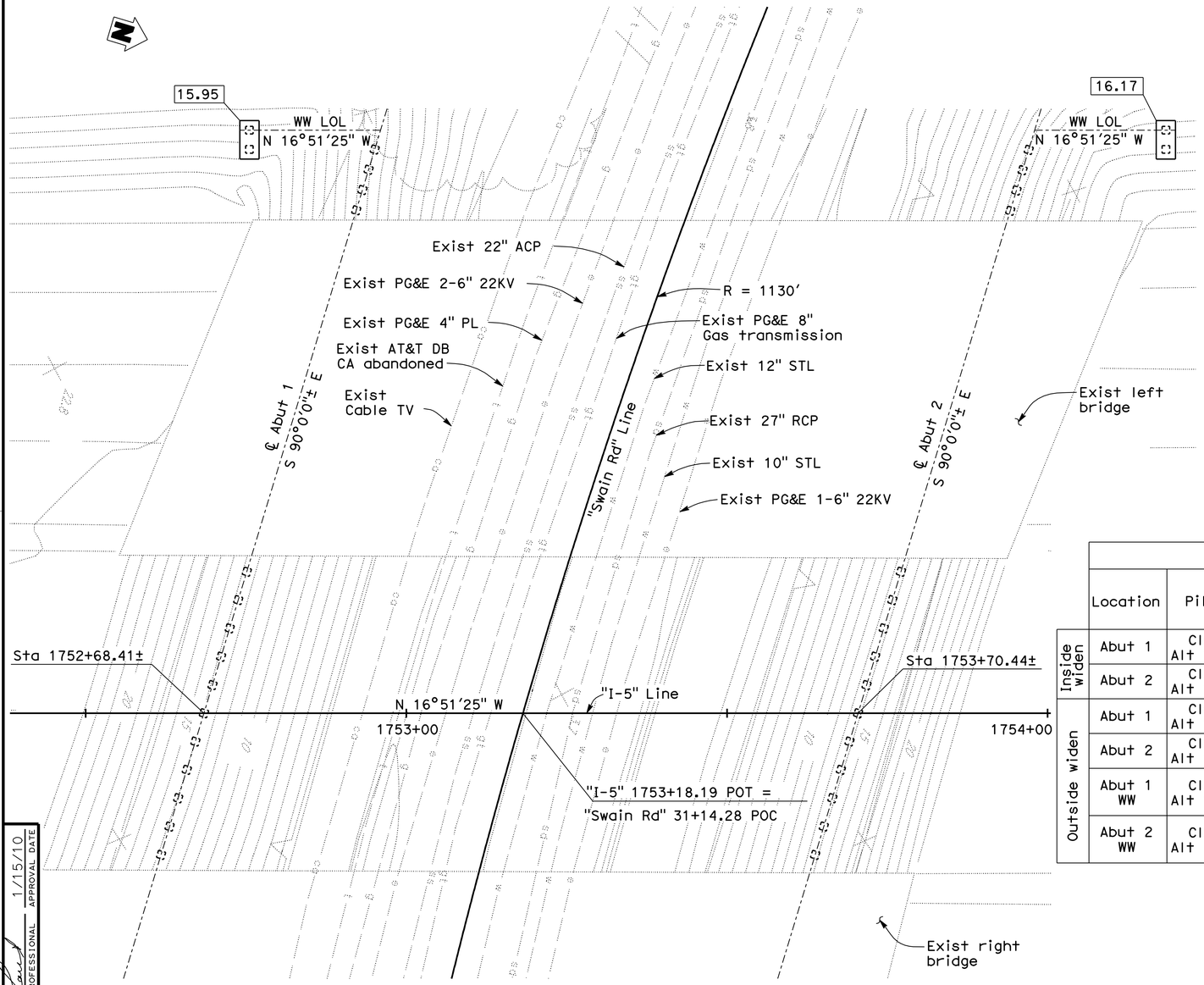

PLAN
1" = 10'

Note:
The Contractor shall verify all controlling field dimensions before ordering or fabricating any material

GEOTECHNICAL PROFESSIONAL — APPROVAL DATE 1/15/10

NOTES:

1. All abutment center lines are parallel and on center line of existing abutment.
2. Utilities shown are for illustrative purposes only, verify with Road Plans

⊡ Indicates piles, not all piles shown
X 22.3 Indicates spot elevation
▭ Indicates bottom of footing elevation

BENCH MARK AND DATUM

Monument	Coordinates		Elev	Caltrans Description/Location
	Northing	Easting		
107	2187789.40	6316774.42	22.68	PK NAIL
108	2187780.90	6317296.00	2.73	CUT X

NOTE:

There is a vertical datum difference between the project datum (NAVD 88) and the as-built datum (NGVD 29). The following conversion was used in design:
Datum Conversion: Elev (NAVD 88) = Elev (NGVD 29) + 2.37'

ABUTMENT PILE DATA TABLE

	Location	Pile Type	Design Loading (Service, kips)	Nominal Resistance (kips)		Design Tip elev (ft)	Specified Tip elev (ft)	Nominal Driving Resistance Required (kips)
				Compression	Tension			
Inside widen	Abut 1	Class 200 Alt 'X' (Mod)	150	260	0	-45.0(a),-9.0(c)	-45.7	260
Inside widen	Abut 2	Class 200 Alt 'X' (Mod)	150	260	0	-45.5(a),-6.5(c)	-45.5	260
Outside widen	Abut 1	Class 200 Alt 'X' (Mod)	150	300	0	-44.0(a),-11(d)	-44.0	300
Outside widen	Abut 2	Class 200 Alt 'X' (Mod)	150	300	0	-32.0(a),-10(d)	-43.8	300
Outside widen	Abut 1 WW	Class 200 Alt 'X' (Mod)	20	40	20	-7.5(a),-12.5(b) -7.5(c),-8.0(d)	-12.5	40
Outside widen	Abut 2 WW	Class 200 Alt 'X' (Mod)	20	40	20	-4.5(a),-9.5(b) -4.5(c),-6.0(d)	-12.3	40

NOTES:

1. Design tip elevations for Abutments are controlled by (a) Compression (Service Limit), (b) Compression (Extreme Limit), (c) Tension (Extreme Limit), (d) Lateral Load.
2. The specified tip elevation shall not be raised above the design tip elevation for lateral load.
3. The specified tip elevation has been selected to keep the same pile length for "ease of pile fabrication."

DESIGN OVERSIGHT — John Fujimoto — 8-2-10 — SIGN OFF DATE

SCALE: AS SHOWN	VERT.DATUM NAVD88	HORZ.DATUM CCS83, (2007.00), ZONE 3	
PHOTOGRAMMETRY AS OF: (N/A) FIELD SURVEYS	ALIGNMENT TIES APPROVED GPS REPORT DATED 7-6-09		
SURVEYED BY RYAN VANCE	DRAFTED BY MIKE KORDAZAKIS		
FIELD CHECKED BY JEFF CISSELL	CHECKED BY KEVIN LANG		

DESIGN	BY P. SHINN	CHECKED A. WANG	
DETAILS	BY G. WOLDETSADIK	CHECKED A. WANG	
QUANTITIES	BY G. WOLDETSADIK	CHECKED W. Y. TAN	

PREPARED FOR THE STATE OF CALIFORNIA DEPARTMENT OF TRANSPORTATION

P. SHINN — PROJECT ENGINEER

BRIDGE NO. 29-0215 — POST MILE 31.11

SWAIN ROAD UNDERCROSSING (WIDEN)
FOUNDATION PLAN

FOUNDATION PLAN SHEET (ENGLISH) (REV. 06-01-09)

ORIGINAL SCALE IN INCHES FOR REDUCED PLANS 0 1 2 3

CU 06240
EA 0G4701

DISREGARD PRINTS BEARING EARLIER REVISION DATES

REVISION DATES (PRELIMINARY STAGE ONLY) 6/2/09 9/4/09 10/16/09 12/4/09 1/15/10 4/21/10 6/11/10 7/28/10

SHEET 4 OF 27

FILE => 29-0215-e-fp101.dgn

USERNAME => trmikesi DATE PLOTTED => 14-OCT-2010 TIME PLOTTED => 12:43

DIST	COUNTY	ROUTE	POST MILES TOTAL PROJECT	SHEET No	TOTAL SHEETS
10	SJ	5	25.0/32.7	1063	1132

REGISTERED STRUCTURAL ENGINEER — DATE 7/28/10

10-11-10
PLANS APPROVAL DATE

REGISTERED PROFESSIONAL ENGINEER — PHILIP SHINN — No. S 4967 — Exp. 12/31/10 — STRUCTURAL — STATE OF CALIFORNIA

The State of California or its officers or agents shall not be responsible for the accuracy or completeness of scanned copies of this plan sheet.

RAJAPPAN & MEYER
CONSULTING ENGINEERS, INC.
1038 LEIGH AVE, SUITE 100
SAN JOSE, CA 95126

SAN JOAQUIN COUNCIL OF GOVERNMENTS
555 E. WEBER AVENUE
STOCKTON, CA 95202

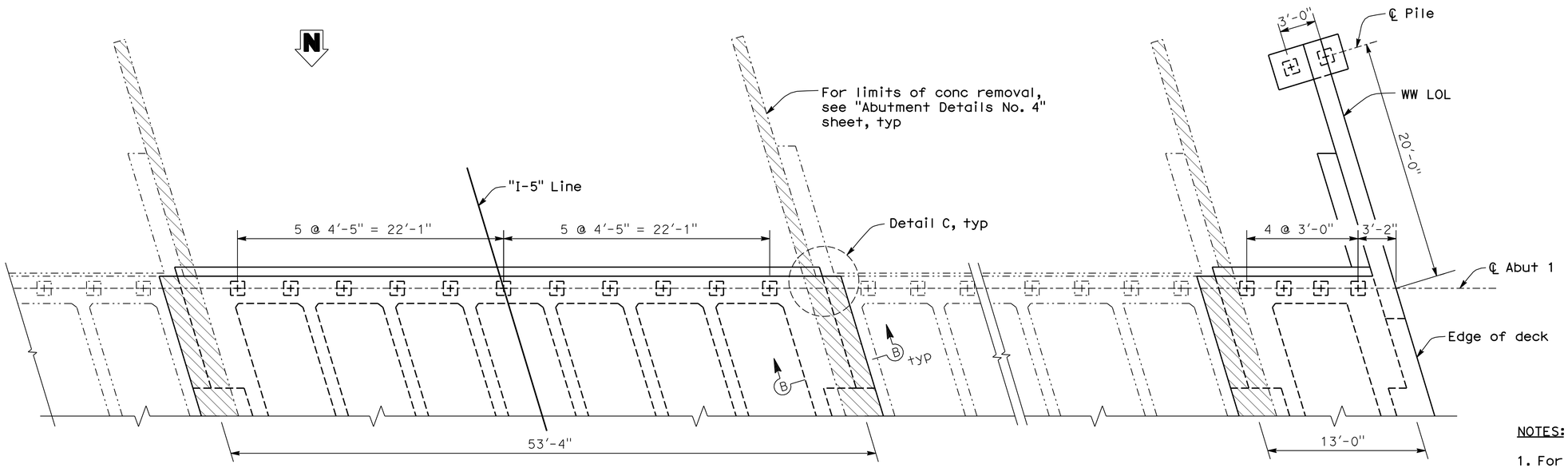

Note: Abutment 1 shown, abutment 2 similar

PLAN
1" = 5'

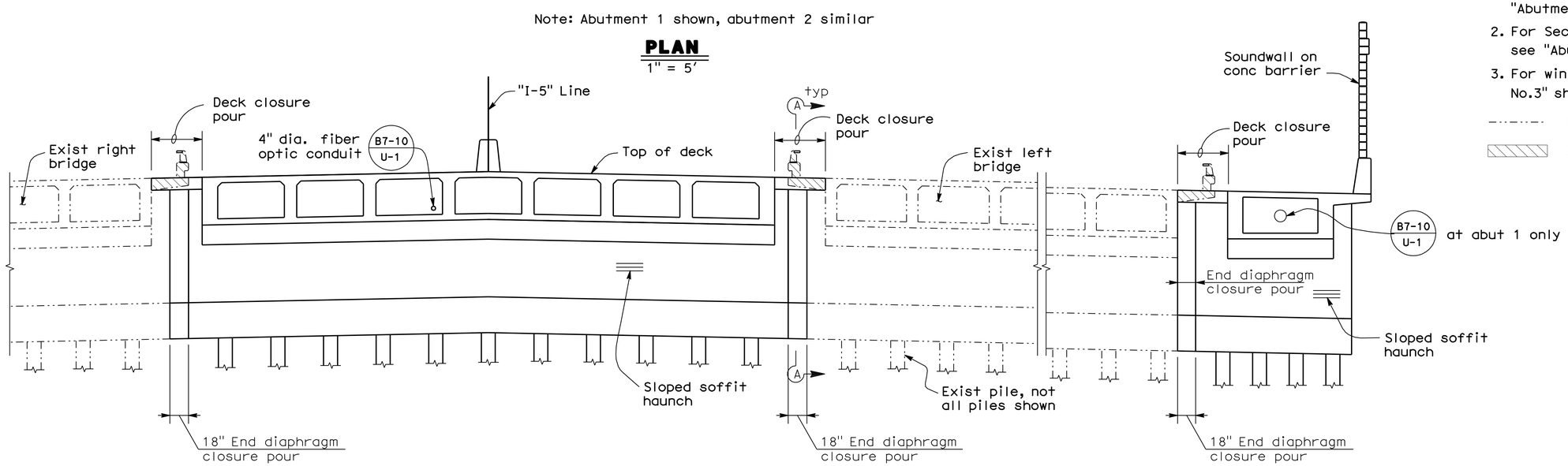

Note: Abutment 1 shown, abutment 2 similar

ELEVATION
1" = 5'

NOTES:

1. For typical abutment section, see "Abutment Details No.1" sheet
2. For Section A-A, Section B-B and Detail C see "Abutment Details No.2" sheet
3. For wingwall details see " Abutment Details No.3" sheet

Indicates existing structure

Indicates concrete removal

Note:
The Contractor shall verify all controlling field dimensions before ordering or fabricating any material

DESIGN OVERSIGHT — John Fujimoto
8-2-10
SIGN OFF DATE

DESIGN	BY P. SHINN	CHECKED A. WANG	
DETAILS	BY G. WOLDETSADIK	CHECKED A. WANG	
QUANTITIES	BY G. WOLDETSADIK	CHECKED W. Y. TAN	

PREPARED FOR THE STATE OF CALIFORNIA DEPARTMENT OF TRANSPORTATION

P. SHINN
PROJECT ENGINEER

BRIDGE NO. 29-0215
POST MILE 31.11

SWAIN ROAD UNDERCROSSING (WIDEN)
ABUTMENT LAYOUT

DESIGN DETAIL SHEET (ENGLISH) (REV. 06-01-09)

ORIGINAL SCALE IN INCHES FOR REDUCED PLANS 0 1 2 3

CU 06240
EA 0G4701

DISREGARD PRINTS BEARING EARLIER REVISION DATES

REVISION DATES (PRELIMINARY STAGE ONLY): 10/16/09 12/14/09 1/15/10 4/21/10 6/11/10 7/28/10

SHEET 5 OF 27

FILE => 29-0215-f-a01_lo1.dgn

USERNAME => rtmikes1 DATE PLOTTED => 14-OCT-2010 TIME PLOTTED => 12:43

DIST	COUNTY	ROUTE	POST MILES TOTAL PROJECT	SHEET No	TOTAL SHEETS
10	SJ	5	25.0/32.7	1064	1132

REGISTERED STRUCTURAL ENGINEER — DATE 7/28/10

PHILIP SHINN No. S 4967 Exp. 12/31/10 STRUCTURAL — REGISTERED PROFESSIONAL ENGINEER — STATE OF CALIFORNIA

10-11-10
PLANS APPROVAL DATE

The State of California or its officers or agents shall not be responsible for the accuracy or completeness of scanned copies of this plan sheet.

RAJAPPAN & MEYER CONSULTING ENGINEERS, INC.
1038 LEIGH AVE, SUITE 100
SAN JOSE, CA 95126

SAN JOAQUIN COUNCIL OF GOVERNMENTS
555 E. WEBER AVENUE
STOCKTON, CA 95202

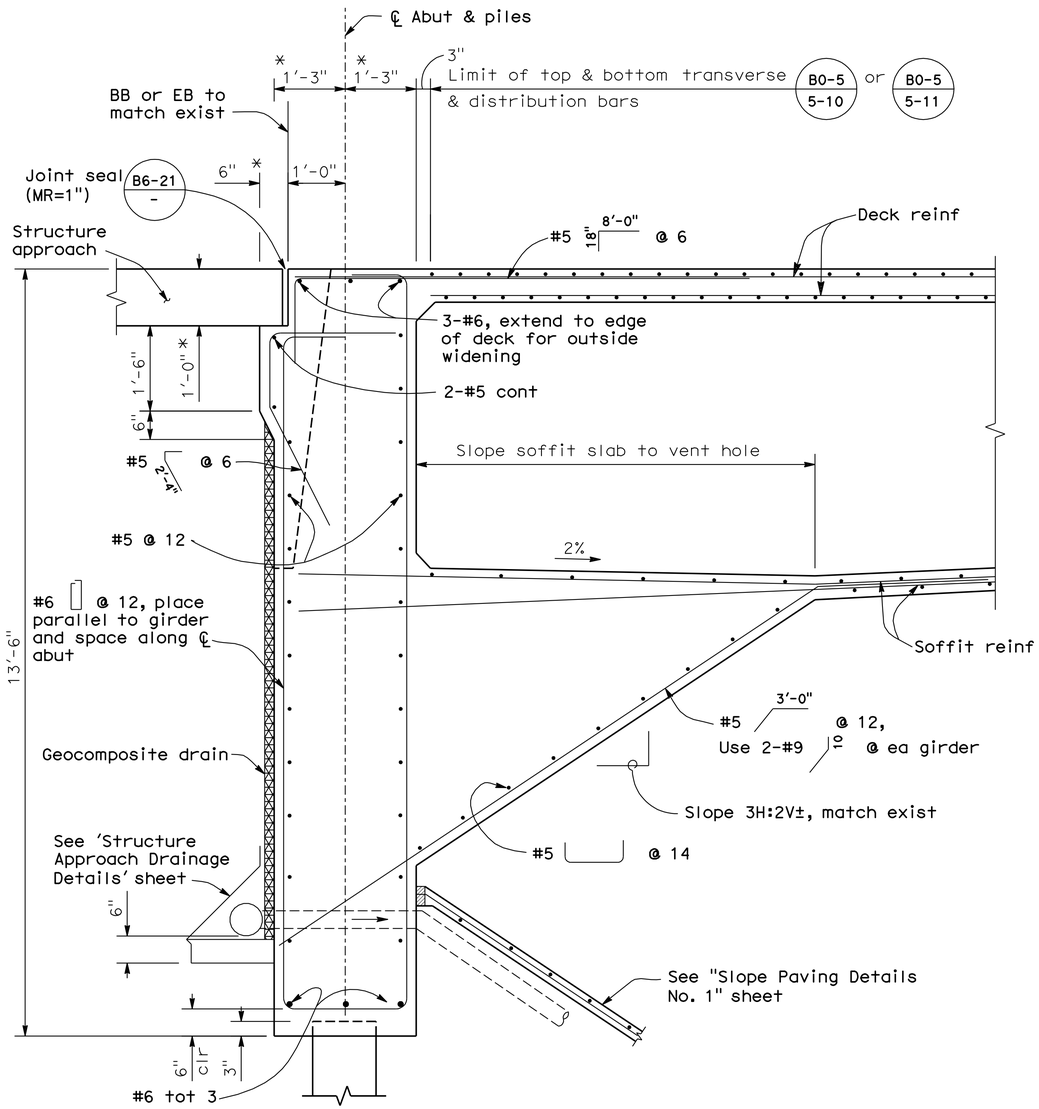

* Indicates dimension to match existing

TYPICAL ABUTMENT SECTION (B8-5 / -)

3/4" = 1'-0"

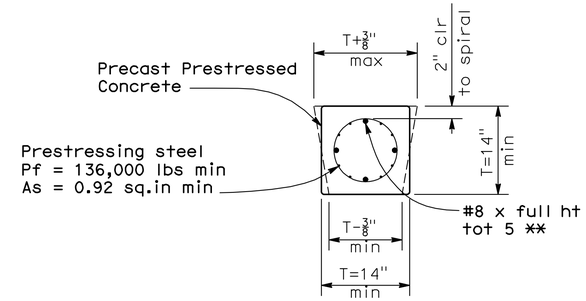

** To be in place when pile is cast

SECTION X-X

No Scale

Note:
For notes and additional details not shown, see B2-8 / -

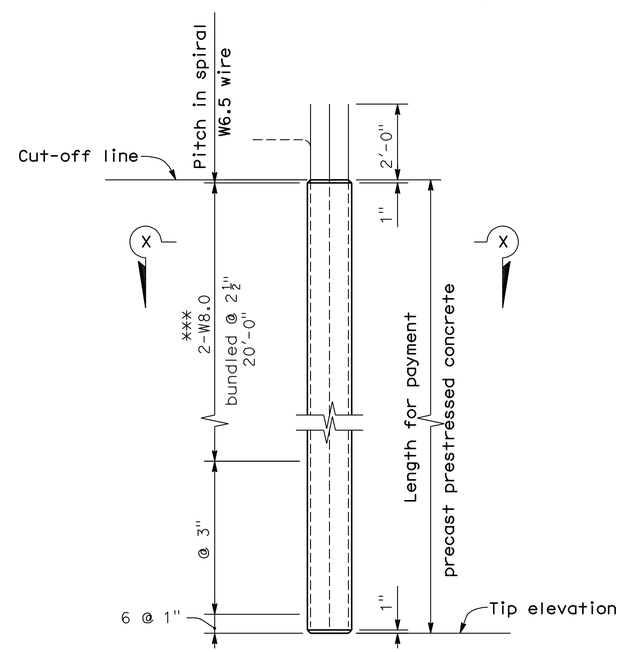

ALTERNATIVE "X"

*** W11 @ 1¾" may be substituted

CLASS 200 MODIFIED PILE

No Scale

Note:
The Contractor shall verify all controlling field dimensions before ordering or fabricating any material

DESIGN OVERSIGHT John Fujimoto
8-2-10
SIGN OFF DATE

	BY		CHECKED	
DESIGN	BY	P. SHINN	CHECKED	A. WANG
DETAILS	BY	G. WOLDETSADIK	CHECKED	A. WANG
QUANTITIES	BY	G. WOLDETSADIK	CHECKED	W. Y. TAN

PREPARED FOR THE STATE OF CALIFORNIA DEPARTMENT OF TRANSPORTATION

P. SHINN
PROJECT ENGINEER

BRIDGE NO. 29-0215
POST MILE 31.11

SWAIN ROAD UNDERCROSSING (WIDEN)
ABUTMENT DETAILS NO. 1

DESIGN DETAIL SHEET (ENGLISH) (REV. 06-01-09)

ORIGINAL SCALE IN INCHES FOR REDUCED PLANS 0 1 2 3

CU 06240
EA 0G4701

DISREGARD PRINTS BEARING EARLIER REVISION DATES — REVISION DATES (PRELIMINARY STAGE ONLY) 10/16/09 12/4/09 1/15/10 4/21/10 6/11/10 7/28/10

SHEET 6 OF 27

FILE => 29-0215-f-a01dt01.dgn

USERNAME => trmikes1 DATE PLOTTED => 14-OCT-2010 TIME PLOTTED => 12:43

DIST	COUNTY	ROUTE	POST MILES TOTAL PROJECT	SHEET No	TOTAL SHEETS
10	SJ	5	25.0/32.7	1065	1132

REGISTERED STRUCTURAL ENGINEER — DATE 7/28/10

PLANS APPROVAL DATE 10-11-10

REGISTERED PROFESSIONAL ENGINEER — PHILIP SHINN — No. S 4967 — Exp. 12/31/10 — STRUCTURAL — STATE OF CALIFORNIA

The State of California or its officers or agents shall not be responsible for the accuracy or completeness of scanned copies of this plan sheet.

RAJAPPAN & MEYER
CONSULTING ENGINEERS, INC.
1038 LEIGH AVE, SUITE 100
SAN JOSE, CA 95126

SAN JOAQUIN COUNCIL OF GOVERNMENTS
555 E. WEBER AVENUE
STOCKTON, CA 95202

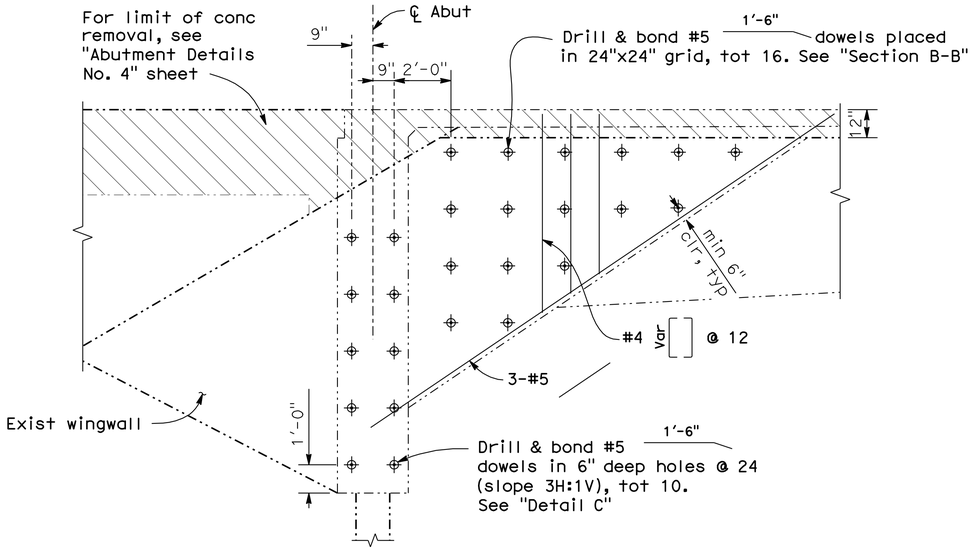

SECTION A-A
3/8" = 1'-0"

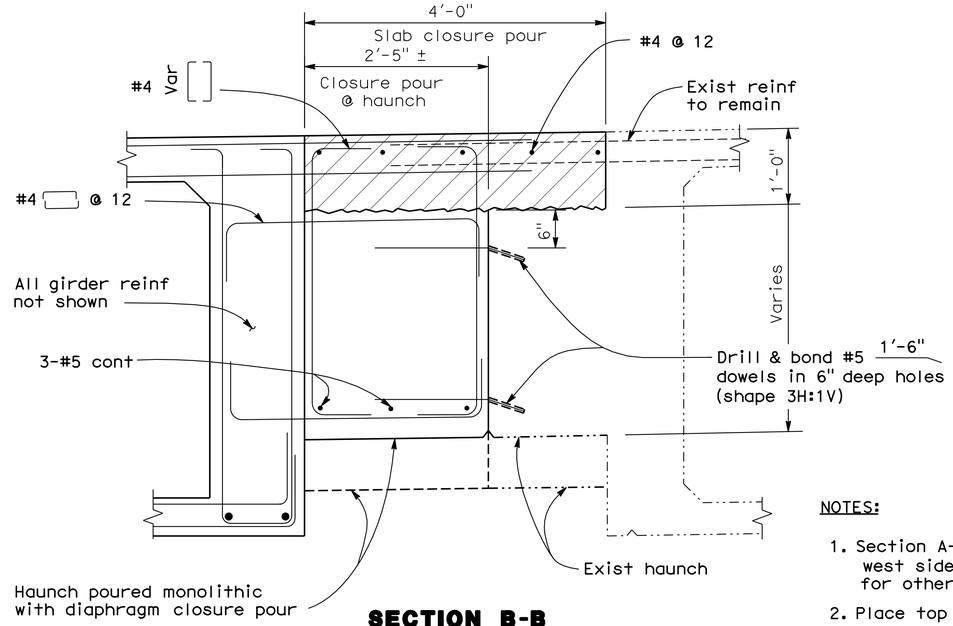

SECTION B-B
1" = 1'-0"

NOTES:

1. Section A-A, Section B-B and Detail C for west side of abutment 1 (inside widen) shown, for other locations are similar.
2. Place top and bottom staggered parallel to ℄ Abut and space along "I-5" Line between face of exterior girders.

-·-·-·- Indicates existing structure

Indicates concrete removal

Indicates drill & bond dowel

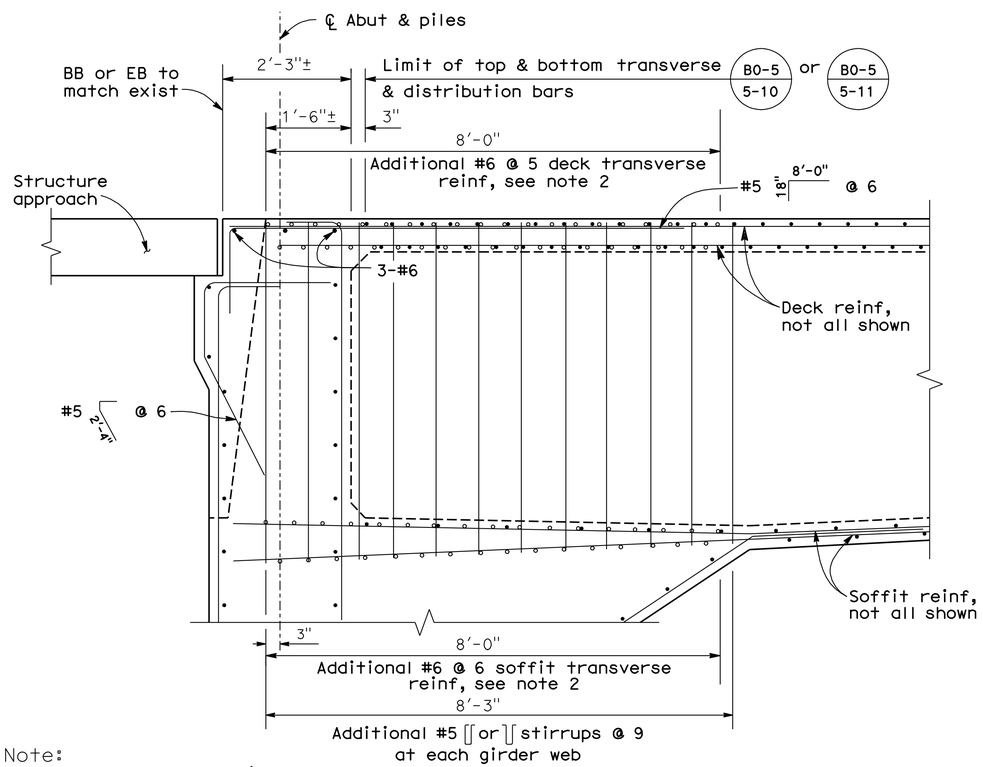

END DIAPHRAGM
3/4" = 1'-0"

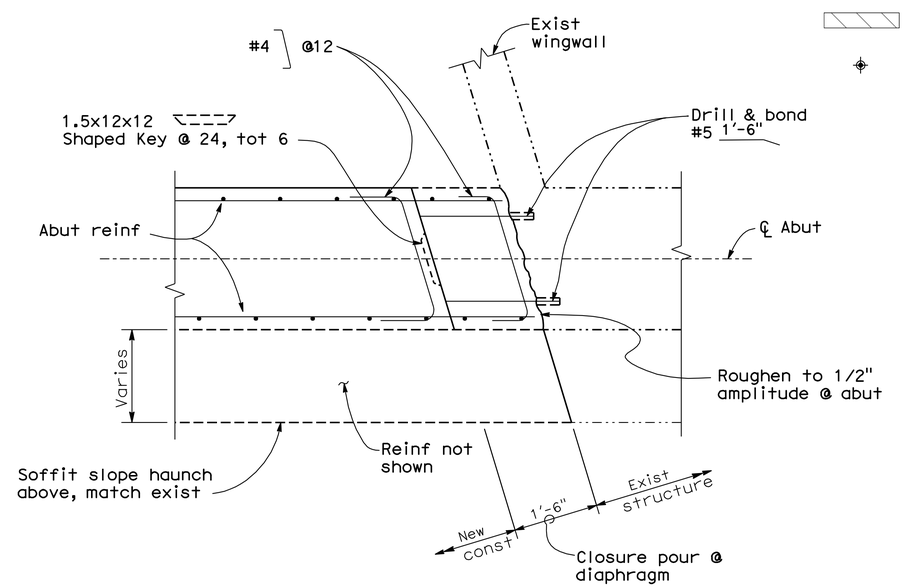

DETAIL C
3/4" = 1'-0"

Note:
The Contractor shall verify all controlling field dimensions before ordering or fabricating any material

DESIGN OVERSIGHT John Fujimoto — 8-2-10 SIGN OFF DATE

	BY		CHECKED
DESIGN	P. SHINN		A. WANG
DETAILS	G. WOLDETSADIK		A. WANG
QUANTITIES	G. WOLDETSADIK		W. Y. TAN

PREPARED FOR THE STATE OF CALIFORNIA DEPARTMENT OF TRANSPORTATION

P. SHINN — PROJECT ENGINEER

BRIDGE NO. 29-0215 — POST MILE 31.11

SWAIN ROAD UNDERCROSSING (WIDEN)
ABUTMENT DETAILS NO. 2

DESIGN DETAIL SHEET (ENGLISH) (REV. 06-01-09)

ORIGINAL SCALE IN INCHES FOR REDUCED PLANS 0 1 2 3

CU 06240
EA 0G4701

DISREGARD PRINTS BEARING EARLIER REVISION DATES — REVISION DATES (PRELIMINARY STAGE ONLY): 10/16/09 12/4/09 1/15/10 4/21/10 6/11/10 7/28/10

SHEET 7 OF 27

FILE => 29-0215-f-a01dt02.dgn

USERNAME => trmikest DATE PLOTTED => 14-OCT-2010 TIME PLOTTED => 12:43

DIST	COUNTY	ROUTE	POST MILES TOTAL PROJECT	SHEET No	TOTAL SHEETS
10	SJ	5	25.0/32.7	1066	1132

REGISTERED STRUCTURAL ENGINEER — DATE 7/28/10

PHILIP SHINN No. S 4967 Exp. 12/31/10 STRUCTURAL — REGISTERED PROFESSIONAL ENGINEER — STATE OF CALIFORNIA

10-11-10
PLANS APPROVAL DATE

The State of California or its officers or agents shall not be responsible for the accuracy or completeness of scanned copies of this plan sheet.

RAJAPPAN & MEYER
CONSULTING ENGINEERS, INC.
1038 LEIGH AVE, SUITE 100
SAN JOSE, CA 95126

SAN JOAQUIN COUNCIL OF GOVERNMENTS
555 E. WEBER AVENUE
STOCKTON, CA 95202

NOTES:

1. Abutment 2 Wingwall details shown, Abutment 1 details similar.
2. For Concrete barrier details, see "Soundwall Details" sheet.

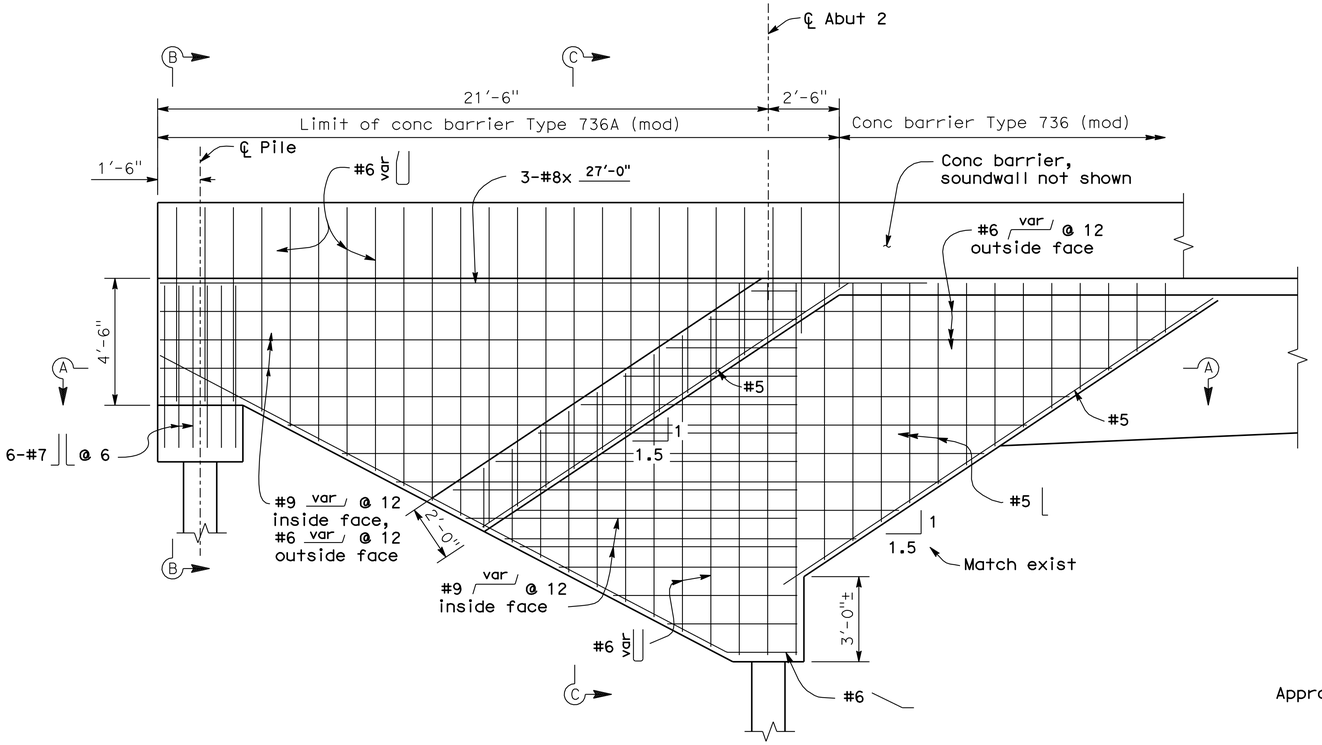

WINGWALL ELEVATION
3/8" = 1'-0"

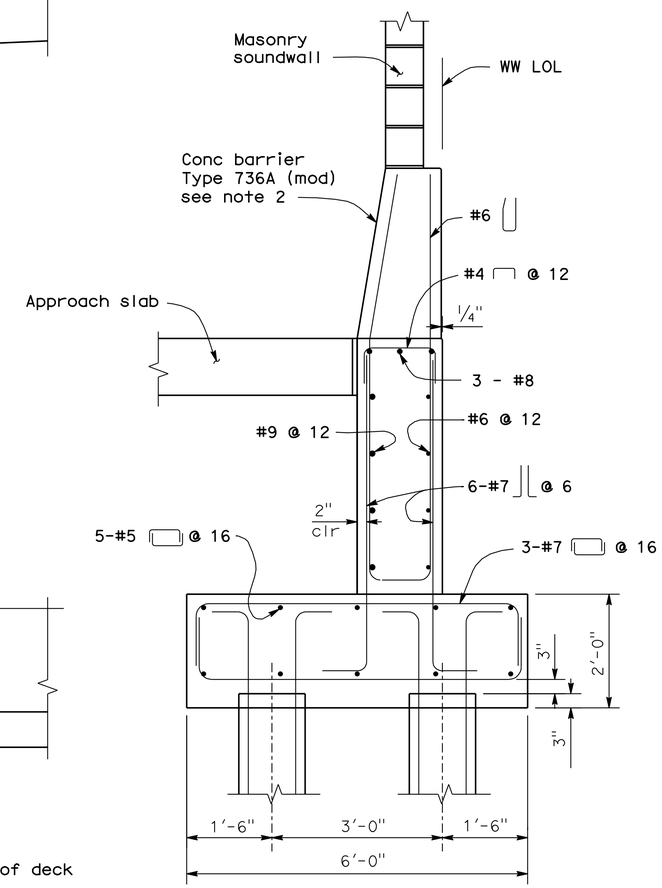

SECTION B-B
3/4" = 1'-0"

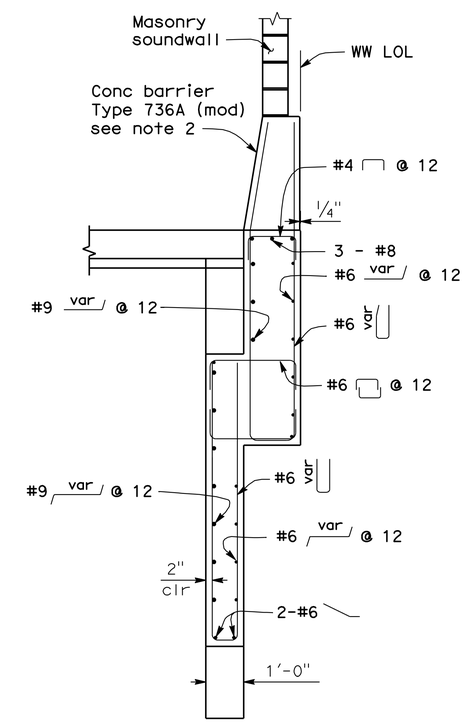

SECTION C-C
1/2" = 1'-0"

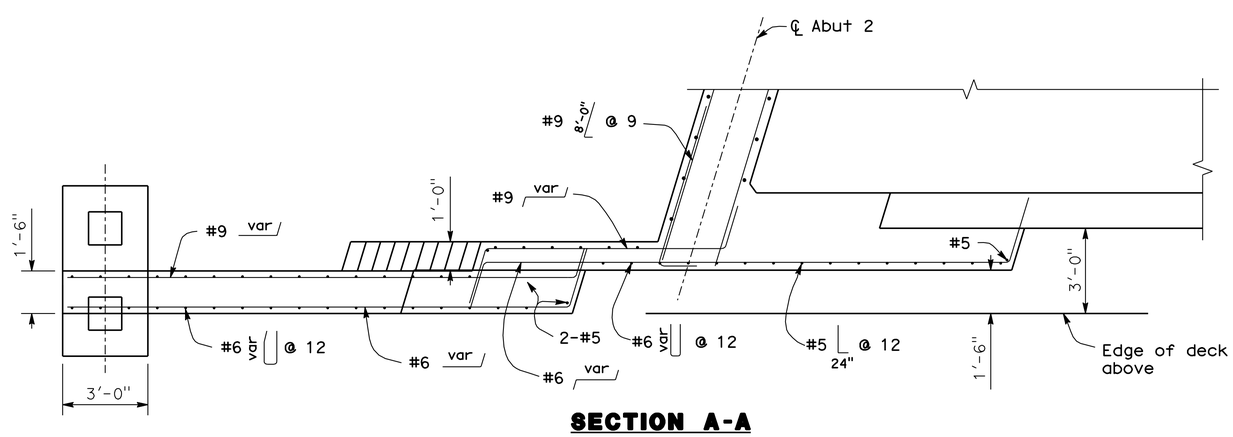

SECTION A-A
3/8" = 1'-0"

Note:
The Contractor shall verify all controlling field dimensions before ordering or fabricating any material

DESIGN	BY P. SHINN	CHECKED A. WANG	
DETAILS	BY G. WOLDETSADIK	CHECKED A. WANG	
QUANTITIES	BY G. WOLDETSADIK	CHECKED W. Y. TAN	

DESIGN OVERSIGHT John Fujimoto
8-2-10
SIGN OFF DATE

PREPARED FOR THE STATE OF CALIFORNIA DEPARTMENT OF TRANSPORTATION

P. SHINN
PROJECT ENGINEER

BRIDGE NO. 29-0215
POST MILE 31.11

SWAIN ROAD UNDERCROSSING (WIDEN)
ABUTMENT DETAILS NO. 3

DESIGN DETAIL SHEET (ENGLISH) (REV. 06-01-09)

ORIGINAL SCALE IN INCHES FOR REDUCED PLANS 0 1 2 3

CU 06240
EA 0G4701

DISREGARD PRINTS BEARING EARLIER REVISION DATES

REVISION DATES (PRELIMINARY STAGE ONLY): 10/16/09 12/4/09 1/15/10 4/21/10 6/11/10 7/28/10

SHEET 8 OF 27

FILE => 29-0215-f-a01dt03.dgn

USERNAME => trmikes1 DATE PLOTTED => 14-OCT-2010 TIME PLOTTED => 12:43

DIST	COUNTY	ROUTE	POST MILES TOTAL PROJECT	SHEET No	TOTAL SHEETS
10	SJ	5	25.0/32.7	1067	1132

REGISTERED STRUCTURAL ENGINEER — DATE 7/28/10

10-11-10
PLANS APPROVAL DATE

REGISTERED PROFESSIONAL ENGINEER — PHILIP SHINN — No. S 4967 — Exp. 12/31/10 — STRUCTURAL — STATE OF CALIFORNIA

The State of California or its officers or agents shall not be responsible for the accuracy or completeness of scanned copies of this plan sheet.

RAJAPPAN & MEYER
CONSULTING ENGINEERS, INC.
1038 LEIGH AVE, SUITE 100
SAN JOSE, CA 95126

SAN JOAQUIN COUNCIL OF GOVERNMENTS
555 E. WEBER AVENUE
STOCKTON, CA 95202

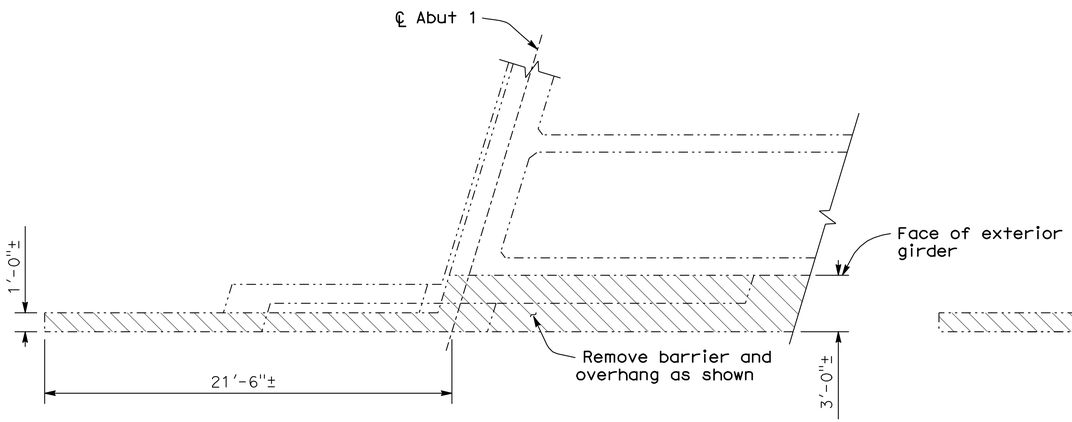

PLAN
1/4" = 1'-0"

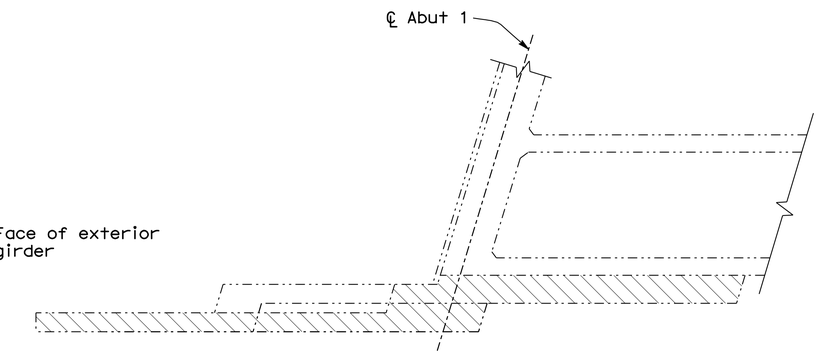

SECTION A-A
1/4" = 1'-0"

NOTES:

1. For location of concrete removal, see "General Plan" sheet.
2. Concrete removal details at west side of abutment 1 (inside widen) shown, for the other locations are similar.

Indicates existing structure

Indicates concrete removal

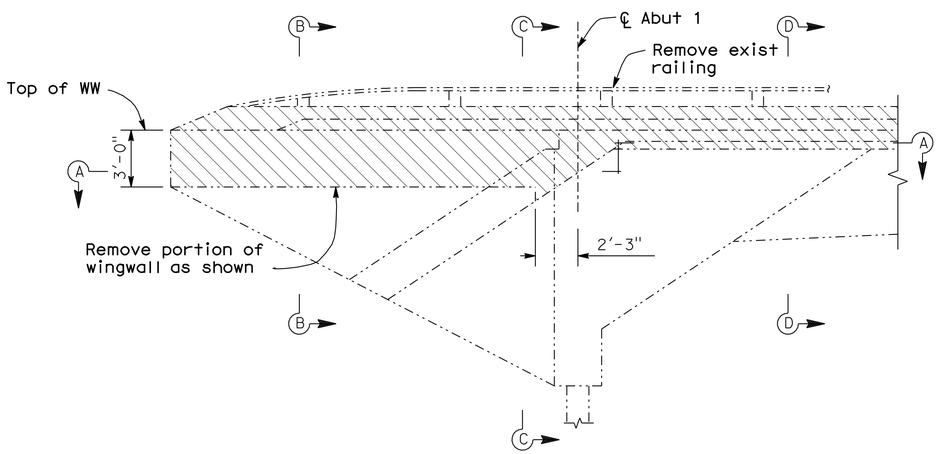

ELEVATION
1/4" = 1'-0"

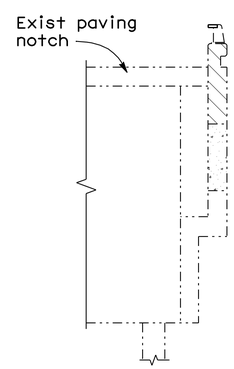

SECTION B-B
1/4" = 1'-0"

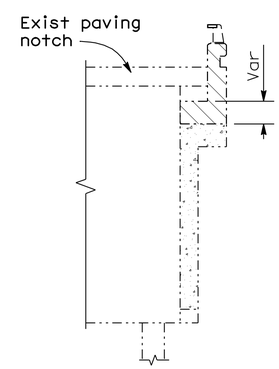

SECTION C-C
1/4" = 1'-0"

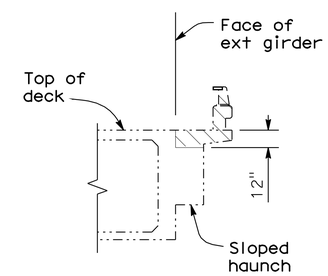

SECTION D-D
1/4" = 1'-0"

Note:
The Contractor shall verify all controlling field dimensions before ordering or fabricating any material

DESIGN OVERSIGHT — John Fujimoto
8-2-10
SIGN OFF DATE

DESIGN	BY P. SHINN	CHECKED A. WANG	
DETAILS	BY G. WOLDETSADIK	CHECKED A. WANG	
QUANTITIES	BY G. WOLDETSADIK	CHECKED W. Y. TAN	

PREPARED FOR THE STATE OF CALIFORNIA DEPARTMENT OF TRANSPORTATION

P. SHINN
PROJECT ENGINEER

BRIDGE NO. 29-0215
POST MILE 31.11

SWAIN ROAD UNDERCROSSING (WIDEN)
ABUTMENT DETAILS NO. 4

DESIGN DETAIL SHEET (ENGLISH) (REV. 06-01-09)

ORIGINAL SCALE IN INCHES FOR REDUCED PLANS 0 1 2 3

CU 06240
EA 0G4701

DISREGARD PRINTS BEARING EARLIER REVISION DATES → 10/16/09 12/4/09 1/15/10 4/21/10 6/11/10 7/28/10

SHEET 9 OF 27

FILE => 29-0215-f-a01dt04.dgn

USERNAME => trmikest DATE PLOTTED => 14-OCT-2010 TIME PLOTTED => 12:44

DIST	COUNTY	ROUTE	POST MILES TOTAL PROJECT	SHEET No	TOTAL SHEETS
10	SJ	5	25.0/32.7	1068	1132

REGISTERED STRUCTURAL ENGINEER — DATE 7/28/10

PLANS APPROVAL DATE 10-11-10

REGISTERED PROFESSIONAL ENGINEER — PHILIP SHINN — No. S 4967 — Exp. 12/31/10 — STRUCTURAL — STATE OF CALIFORNIA

The State of California or its officers or agents shall not be responsible for the accuracy or completeness of scanned copies of this plan sheet.

RAJAPPAN & MEYER
CONSULTING ENGINEERS, INC.
1038 LEIGH AVE, SUITE 100
SAN JOSE, CA 95126

SAN JOAQUIN COUNCIL OF GOVERNMENTS
555 E. WEBER AVENUE
STOCKTON, CA 95202

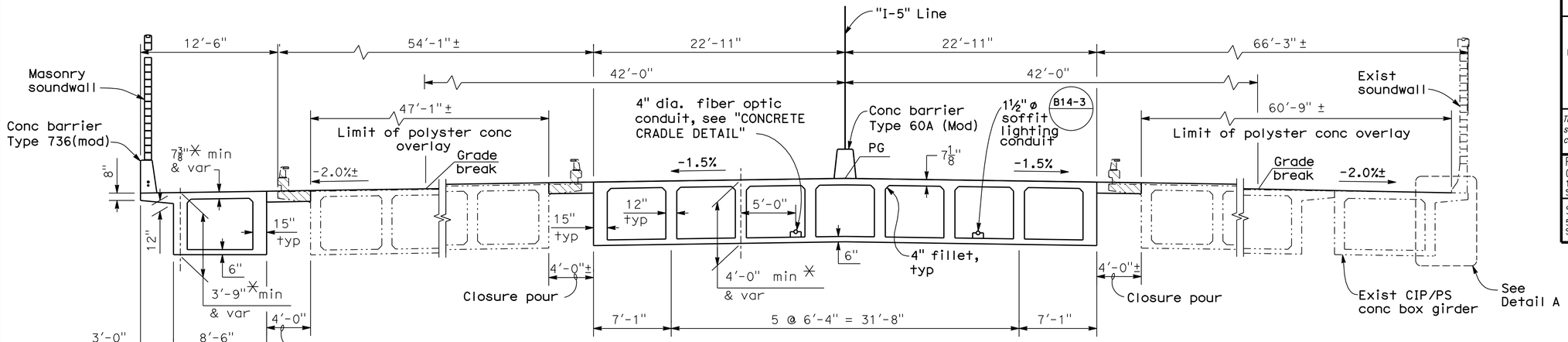

✳ For more information, see 'Girder Dimensions Table' on "Girder Layout" sheet.

TYPICAL SECTION
3/16" = 1'-0"

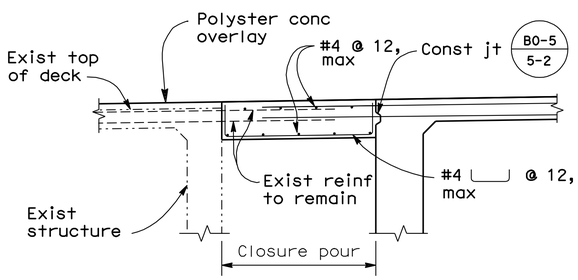

Note: One location closure pour detail shown, other locations are similar.

CLOSURE POUR DETAIL
1/2" = 1'-0"

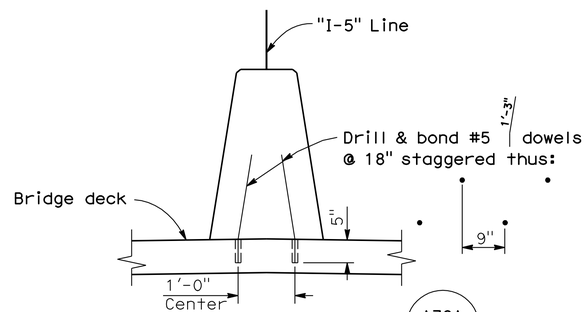

For details not shown, see A76A

CONCRETE BARRIER TYPE 60A (MOD)
3/4" = 1'-0"

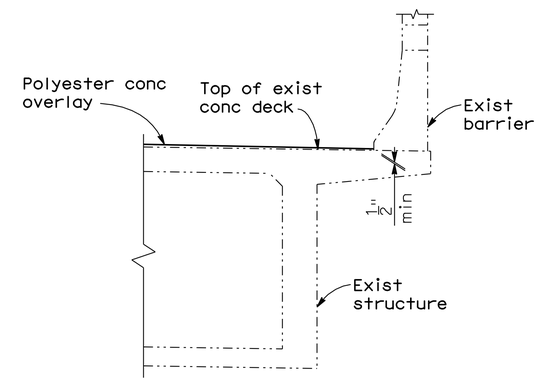

DETAIL A
1/2" = 1'-0"

NOTES:

1. For concrete barrier and soundwall details, see "Soundwall Details" sheet.
2. All dimensions are measured normal to I-5 Line.

Indicates existing structure

Indicates concrete removal

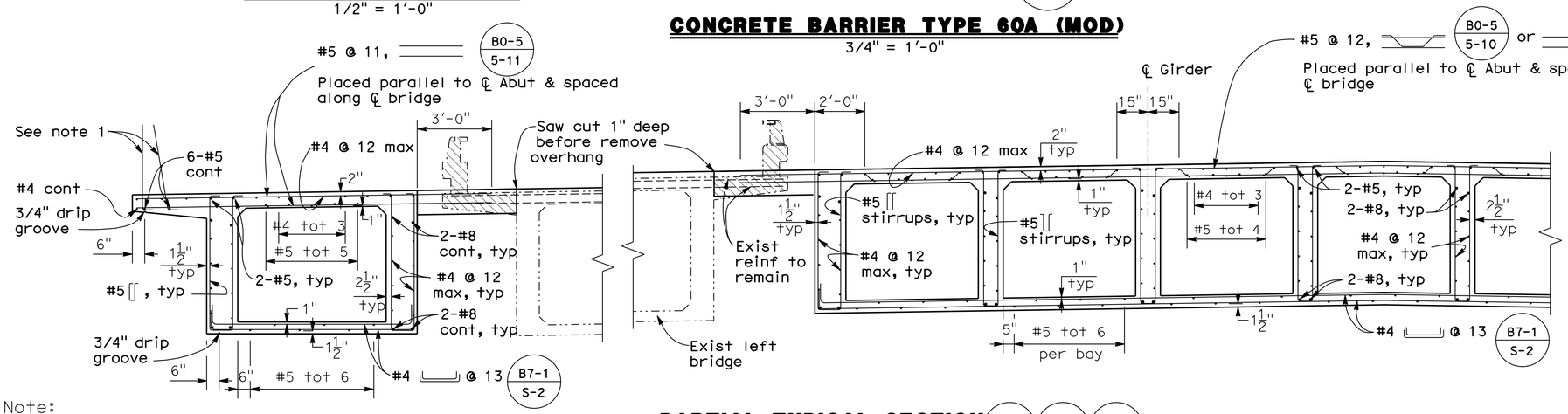

PARTIAL TYPICAL SECTION
3/8" = 1'-0"

B0-5 - B7-1 - B8-5 -

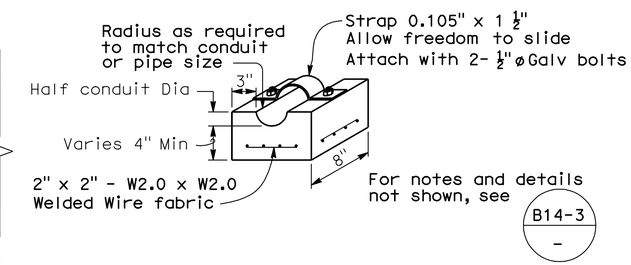

CONCRETE CRADLE DETAIL
No Scale

Note:
The Contractor shall verify all controlling field dimensions before ordering or fabricating any material

DESIGN OVERSIGHT John Fujimoto — 8-2-10 SIGN OFF DATE

	BY		CHECKED
DESIGN	P. SHINN		A. WANG
DETAILS	G. WOLDETSADIK		A. WANG
QUANTITIES	G. WOLDETSADIK		W. Y. TAN

PREPARED FOR THE STATE OF CALIFORNIA DEPARTMENT OF TRANSPORTATION

P. SHINN — PROJECT ENGINEER

BRIDGE NO. 29-0215 — POST MILE 31.11

SWAIN ROAD UNDERCROSSING (WIDEN)
TYPICAL SECTION

DESIGN DETAIL SHEET (ENGLISH) (REV. 06-01-09)

ORIGINAL SCALE IN INCHES FOR REDUCED PLANS 0 1 2 3

CU 06240
EA 0G4701

DISREGARD PRINTS BEARING EARLIER REVISION DATES — REVISION DATES (PRELIMINARY STAGE ONLY): 10/16/09 12/4/09 1/15/10 4/21/10 6/11/10 7/28/10

SHEET 10 OF 19

FILE => 29-0215-k-ts01.dgn

USERNAME => trmikest DATE PLOTTED => 14-OCT-2010 TIME PLOTTED => 12:44

DIST	COUNTY	ROUTE	POST MILES TOTAL PROJECT	SHEET No	TOTAL SHEETS
10	SJ	5	25.0/32.7	1069	1132

REGISTERED STRUCTURAL ENGINEER — DATE 7/28/10

PLANS APPROVAL DATE 10-11-10

REGISTERED PROFESSIONAL ENGINEER — PHILIP SHINN — No. S 4967 — Exp. 12/31/10 — STRUCTURAL — STATE OF CALIFORNIA

The State of California or its officers or agents shall not be responsible for the accuracy or completeness of scanned copies of this plan sheet.

RAJAPPAN & MEYER CONSULTING ENGINEERS, INC.
1038 LEIGH AVE, SUITE 100
SAN JOSE, CA 95126

SAN JOAQUIN COUNCIL OF GOVERNMENTS
555 E. WEBER AVENUE
STOCKTON, CA 95202

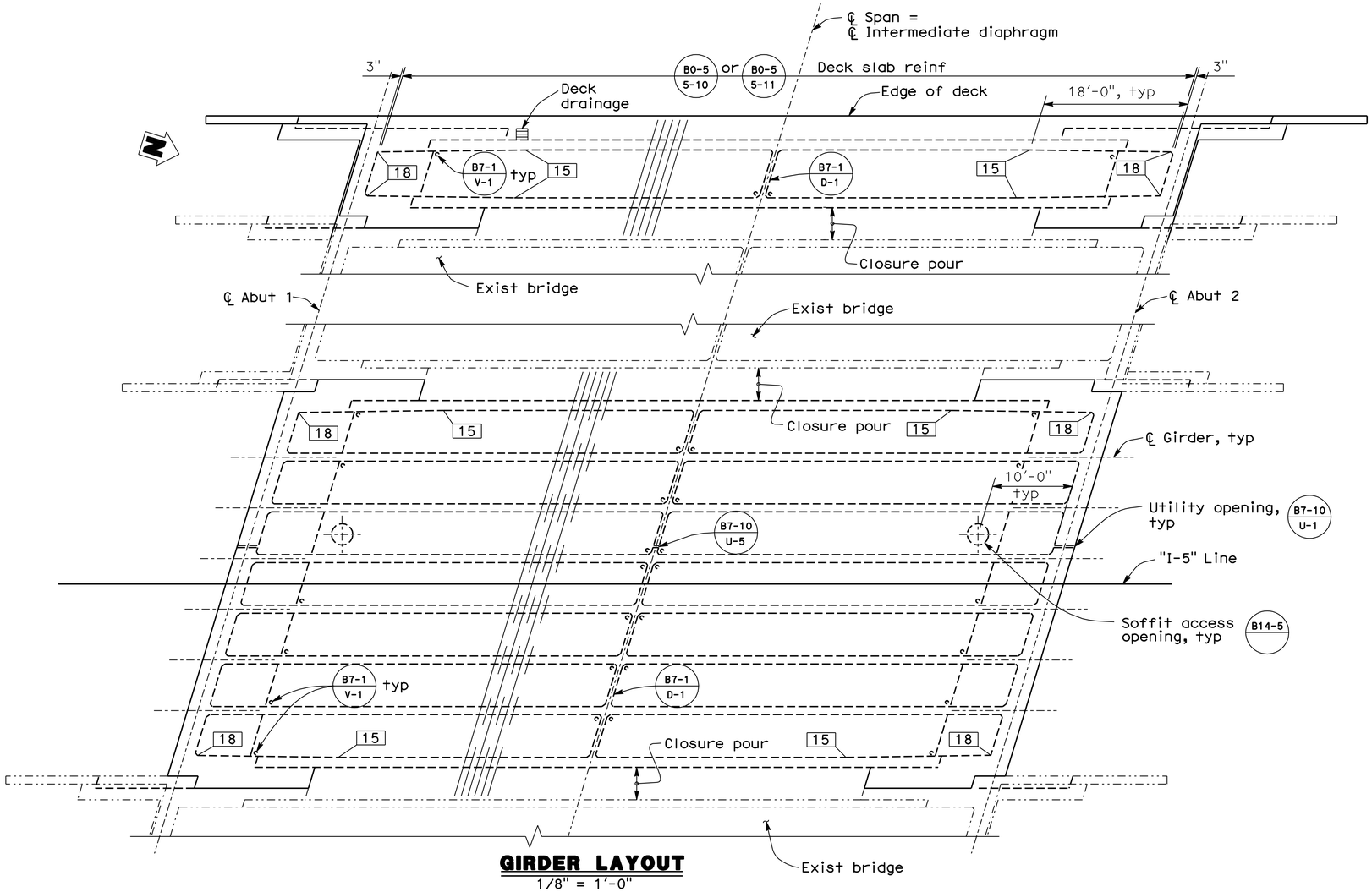

GIRDER LAYOUT

1/8" = 1'-0"

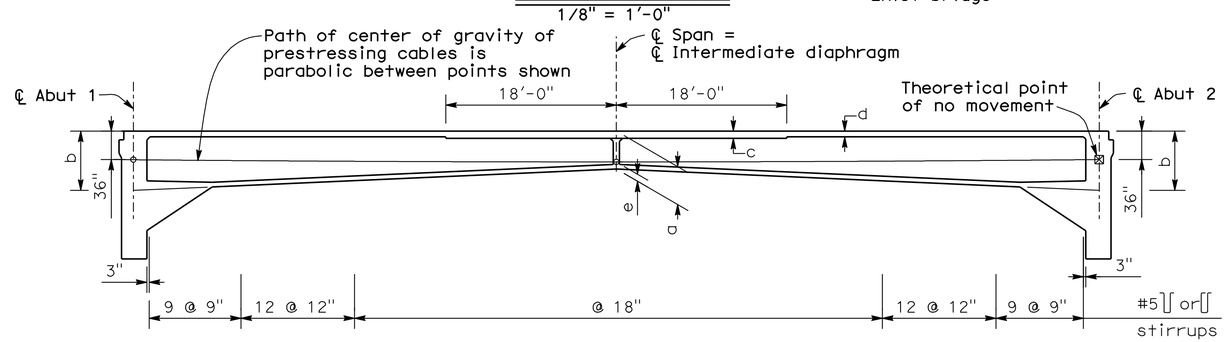

LONGITUDINAL SECTION

1/8" = 1'-0"

Note:
The Contractor shall verify all controlling field dimensions before ordering or fabricating any material

PRESTRESSING NOTES

270 Ksi Low Relaxation Strand:

P_{jack} (i) Inside Widening = 12,500 kips
Total number of girders = 8

(ii) Outside Widening = 4,550 kips
Total number of girders = 2

Anchor Set = 3/8 in

Distribution of prestress force (Pjack) between girders shall not exceed the ratio of 3:2. Maximum final force variation between girders shall not exceed 725 kips.

Concrete: fc = 5.0 ksi @ 28 days
fci = 4.0 ksi @ time of stressing

Contractor shall submit elongation calculations based on initial stress at point of no movement at ⊠ = 0.956 times the Jacking stress.

One end stressing shall be performed from Abutment 1.
Friction coefficient (rigid galvanized ducts):
Friction curvature (μ)= 0.15
Friction wobble (K)= 0.0002 (1/ft)

Indicates girder width in inches. Girder stem width = 12" unless otherwise noted.

Indicates exist structure.

⊠ Indicates point of no movement.

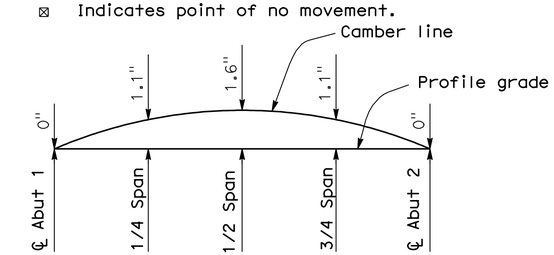

Does not include allowance for falsework deflection or settlements.

CAMBER DIAGRAM

No Scale

Falsework Release:

Falsework shall be removed as soon as permitted by the specifications. Closure pour shall not be placed sooner than 60 days after the falsework has been removed.

Girder Dimensions Table

Location	Girder	a	b	c	d	e
Inside Widening	All	4'-0"	6'-3"	7 1/8"	7 1/8"	9"
Outside Widening	Exterior	3'-9"	5'-9"	9"	7 3/8"	8"
	Interior	3'-11"	5'-11"			

DESIGN OVERSIGHT — John Fujimoto — 8-2-10 — SIGN OFF DATE

	BY		CHECKED
DESIGN	BY	P. SHINN	CHECKED A. WANG
DETAILS	BY	G. WOLDETSADIK	CHECKED A. WANG
QUANTITIES	BY	G. WOLDETSADIK	CHECKED W. Y. TAN

PREPARED FOR THE STATE OF CALIFORNIA DEPARTMENT OF TRANSPORTATION

P. SHINN — PROJECT ENGINEER

BRIDGE NO. 29-0215 — POST MILE 31.11

SWAIN ROAD UNDERCROSSING (WIDEN)

GIRDER LAYOUT

DESIGN DETAIL SHEET (ENGLISH) (REV. 06-01-09)

ORIGINAL SCALE IN INCHES FOR REDUCED PLANS 0 1 2 3

CU 06240
EA 0G4701

DISREGARD PRINTS BEARING EARLIER REVISION DATES

REVISION DATES (PRELIMINARY STAGE ONLY) 10/16/09 12/4/09 1/15/10 4/21/10 6/11/10 7/28/10

SHEET 11 OF 27

FILE => 29-0215-I-g_1o01.dgn

USERNAME => trmikes1 DATE PLOTTED => 14-OCT-2010 TIME PLOTTED => 12:44

DIST	COUNTY	ROUTE	POST MILES TOTAL PROJECT	SHEET No	TOTAL SHEETS
10	SJ	5	25.0/32.7	1070	1132

REGISTERED STRUCTURAL ENGINEER — DATE 7/28/10

10-11-10
PLANS APPROVAL DATE

REGISTERED PROFESSIONAL ENGINEER — PHILIP SHINN — No. S 4967 — Exp. 12/31/10 — STRUCTURAL — STATE OF CALIFORNIA

The State of California or its officers or agents shall not be responsible for the accuracy or completeness of scanned copies of this plan sheet.

RAJAPPAN & MEYER
CONSULTING ENGINEERS, INC.
1038 LEIGH AVE, SUITE 100
SAN JOSE, CA 95126

SAN JOAQUIN COUNCIL OF GOVERNMENTS
555 E. WEBER AVENUE
STOCKTON, CA 95202

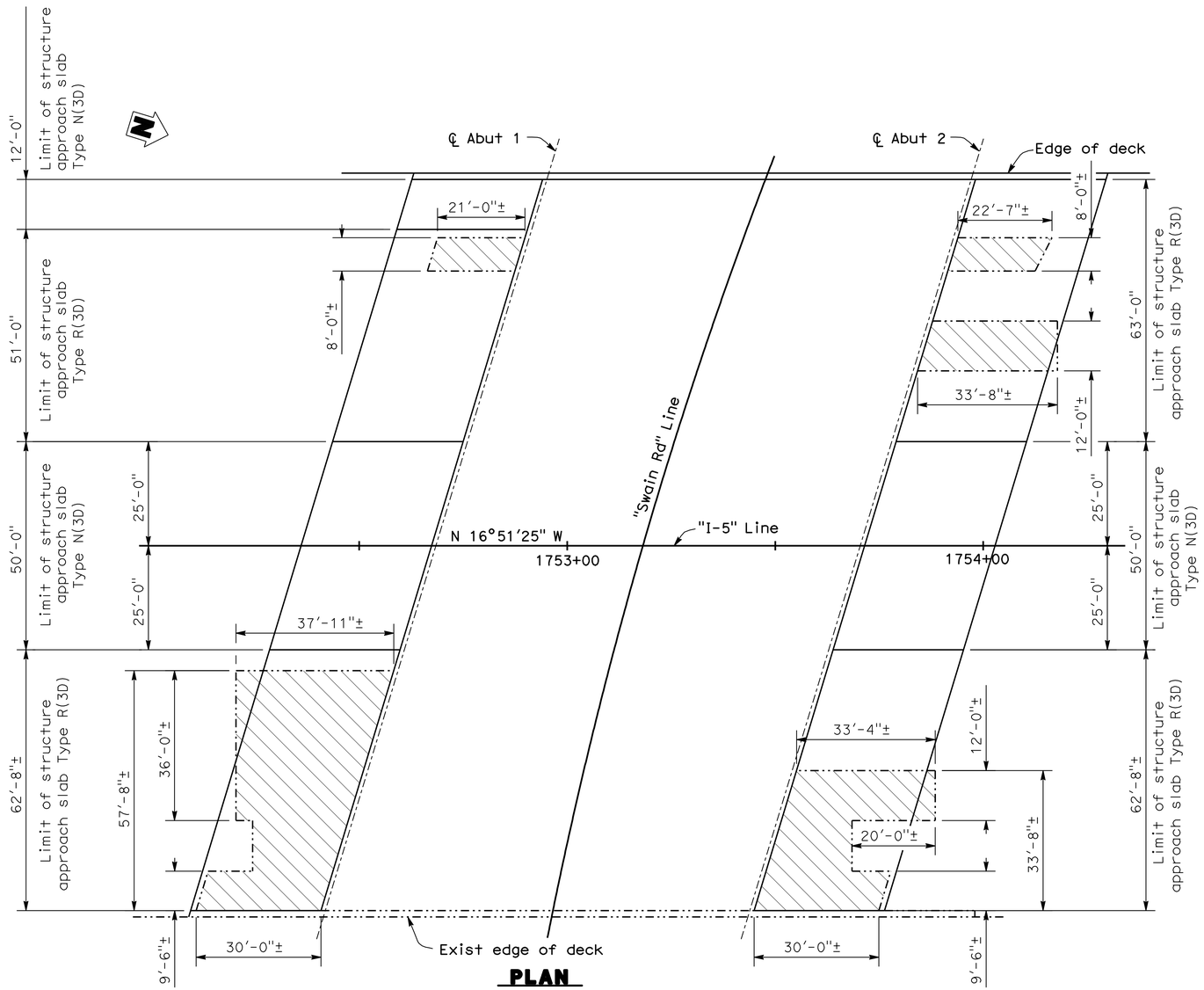

PLAN
1/16" = 1'-0"

NOTES:

1. For details not shown, see "Structure Approach Type N(30D)" and "Structure Approach Type R(30D)" sheets

Indicates limits of existing approach slab removal

Note:
The Contractor shall verify all controlling field dimensions before ordering or fabricating any material

DESIGN OVERSIGHT John Fujimoto	DESIGN	BY P. SHINN	CHECKED A. WANG	PREPARED FOR THE STATE OF CALIFORNIA DEPARTMENT OF TRANSPORTATION	P. SHINN PROJECT ENGINEER
8-2-10 SIGN OFF DATE	DETAILS	BY G. WOLDETSADIK	CHECKED A. WANG		
	QUANTITIES	BY G. WOLDETSADIK	CHECKED W. Y. TAN		

BRIDGE NO. 29-0215
POST MILE 31.11

SWAIN ROAD UNDERCROSSING (WIDEN)
LIMITS OF STRUCTURE APPROACH

DESIGN DETAIL SHEET (ENGLISH) (REV. 06-01-09)

ORIGINAL SCALE IN INCHES FOR REDUCED PLANS 0 1 2 3

CU 06240
EA 0G4701

DISREGARD PRINTS BEARING EARLIER REVISION DATES — REVISION DATES (PRELIMINARY STAGE ONLY) 10/16/09 12/4/09 1/15/10 4/21/10 6/11/10 7/28/10

SHEET 12 OF 27

FILE => 29-0215-q-lsa.dgn

USERNAME => trmikest DATE PLOTTED => 14-OCT-2010 TIME PLOTTED => 12:44

DIST	COUNTY	ROUTE	POST MILES TOTAL PROJECT	SHEET No	TOTAL SHEETS
10	SJ	5	25.0/32.7	1071	1132

REGISTERED STRUCTURAL ENGINEER — DATE 7/28/10

PHILIP SHINN No. S 4967 Exp. 12/31/10 STRUCTURAL — REGISTERED PROFESSIONAL ENGINEER — STATE OF CALIFORNIA

10-11-10
PLANS APPROVAL DATE

The State of California or its officers or agents shall not be responsible for the accuracy or completeness of scanned copies of this plan sheet.

RAJAPPAN & MEYER
CONSULTING ENGINEERS, INC.
1038 LEIGH AVE, SUITE 100
SAN JOSE, CA 95126

SAN JOAQUIN COUNCIL OF GOVERNMENTS
555 E. WEBER AVENUE
STOCKTON, CA 95202

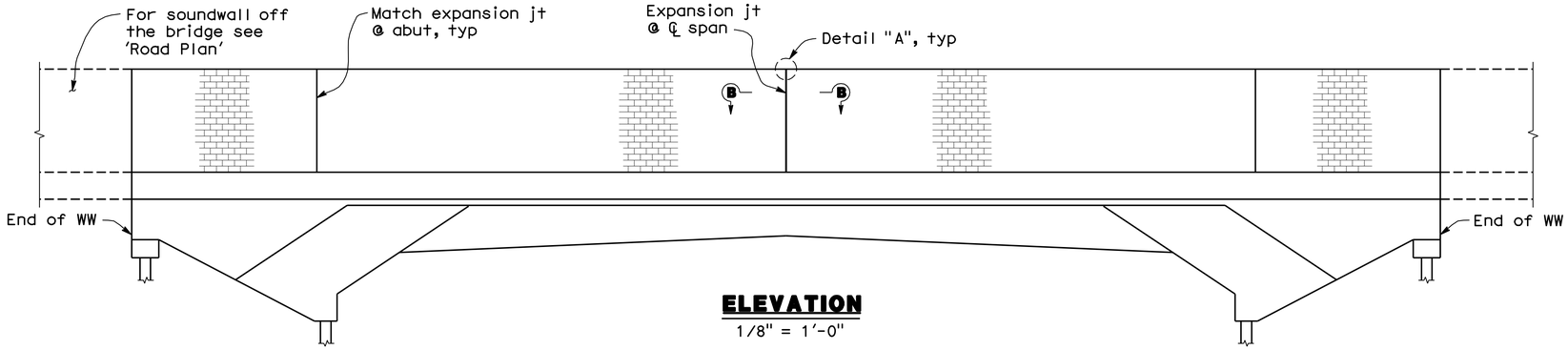

ELEVATION
1/8" = 1'-0"

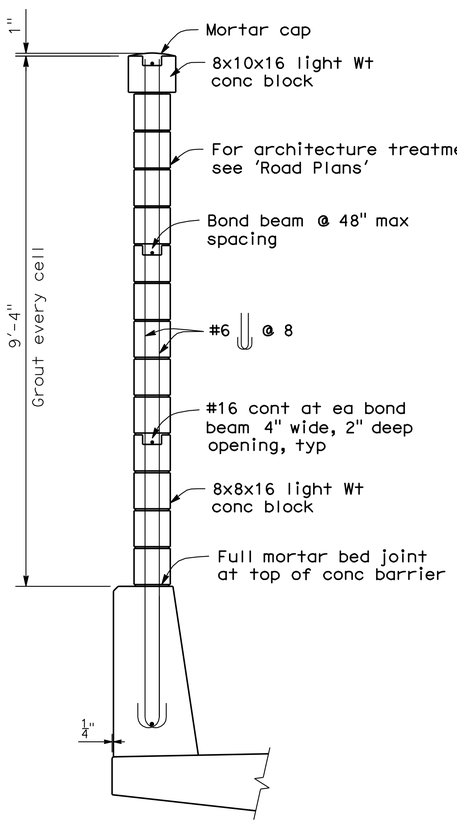

TYPICAL SOUNDWALL SECTION
3/4" = 1'-0"

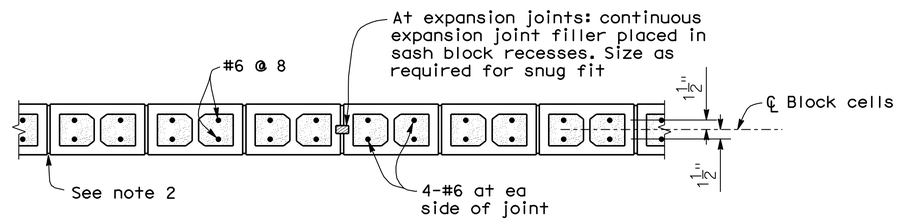

SECTION B-B
1" = 1'-0"

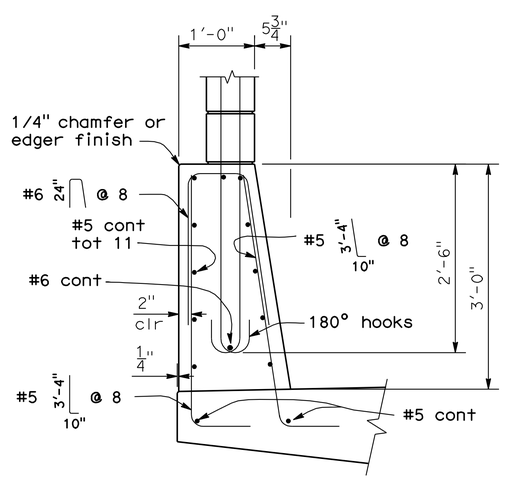

TYPE 736 (MOD)

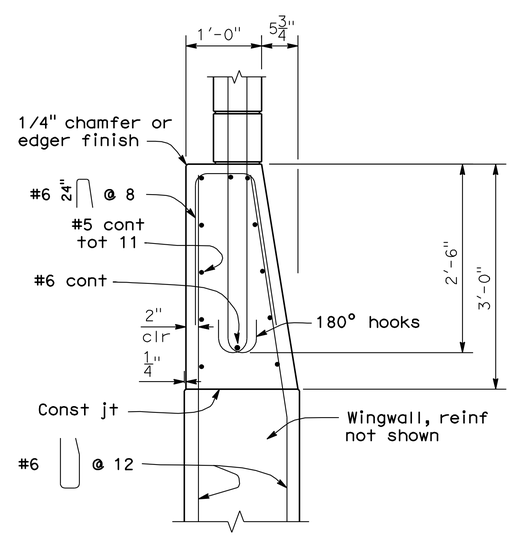

TYPE 736A (MOD)

CONCRETE BARRIER DETAILS
1" = 1'-0"

Notes:

1. When blocks are laid in stacked bond, ladder type, galvanized joint reinforcement shall be provided. A minimum of 0.07"-0.14" wire continuous at 4'-0" maximum to be used. Locate reinforcement in joints that are at the approximate midpoint between bond beams.

2. Horizontal joints shall be tooled concave or may be weathered. Vertical joints shall be tooled concave or may be raked.

DESIGN NOTES:

DESIGN
International Building Code, 2006 Edition and the Bridge Design Specifications.

DESIGN WIND LOAD
37 psf

DESIGN SEISMIC LOAD
2.0 Dead load

REINFORCED CONCRETE
f'c = 3.6 ksi
fy = 60 ksi

CONCRETE MASONRY
f'm = 2500 psi
fb = 830 psi
fs = 24,000 psi
n = 15.5

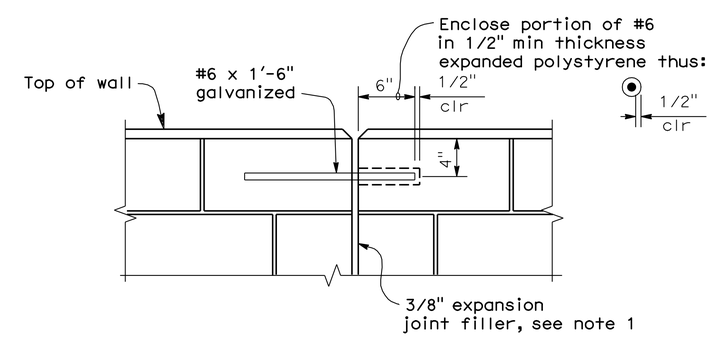

DETAIL A
No Scale

Note:
The Contractor shall verify all controlling field dimensions before ordering or fabricating any material

DESIGN OVERSIGHT — John Fujimoto
8-2-10
SIGN OFF DATE

DESIGN	BY P. SHINN	CHECKED A. WANG	
DETAILS	BY G. WOLDETSADIK	CHECKED A. WANG	
QUANTITIES	BY G. WOLDETSADIK	CHECKED W. Y. TAN	

PREPARED FOR THE STATE OF CALIFORNIA DEPARTMENT OF TRANSPORTATION

P. SHINN
PROJECT ENGINEER

BRIDGE NO. 29-0215
POST MILE 31.11

SWAIN ROAD UNDERCROSSING (WIDEN)
SOUNDWALL DETAILS

DESIGN DETAIL SHEET (ENGLISH) (REV. 06-01-09)

ORIGINAL SCALE IN INCHES FOR REDUCED PLANS 0 1 2 3

CU 06240
EA 0G4701

DISREGARD PRINTS BEARING EARLIER REVISION DATES

REVISION DATES (PRELIMINARY STAGE ONLY): 10/16/09 12/4/09 1/15/10 4/21/10 6/11/10 7/28/10

SHEET 13 OF 27

FILE => 29-0215-q-swdt01.dgn

USERNAME => trmikesl DATE PLOTTED => 14-OCT-2010 TIME PLOTTED => 12:44

DIST	COUNTY	ROUTE	POST MILES TOTAL PROJECT	SHEET No	TOTAL SHEETS
10	SJ	5	25.0/32.7	1072	1132

REGISTERED STRUCTURAL ENGINEER — DATE 7/28/10

10-11-10
PLANS APPROVAL DATE

REGISTERED PROFESSIONAL ENGINEER — PHILIP SHINN — No. S 4967 — Exp. 12/31/10 — STRUCTURAL — STATE OF CALIFORNIA

The State of California or its officers or agents shall not be responsible for the accuracy or completeness of scanned copies of this plan sheet.

RAJAPPAN & MEYER
CONSULTING ENGINEERS, INC.
1038 LEIGH AVE, SUITE 100
SAN JOSE, CA 95126

SAN JOAQUIN COUNCIL OF GOVERNMENTS
555 E. WEBER AVENUE
STOCKTON, CA 95202

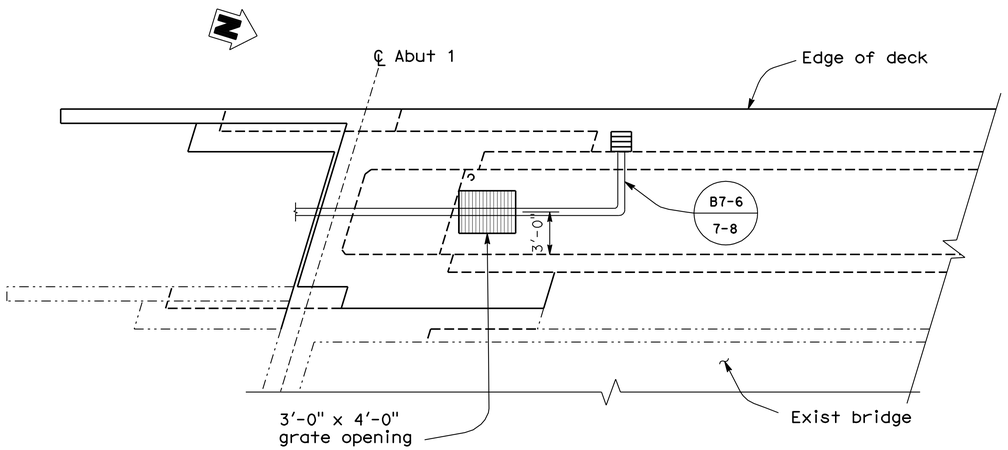

PLAN - DRAIN
3/16" = 1'-0"

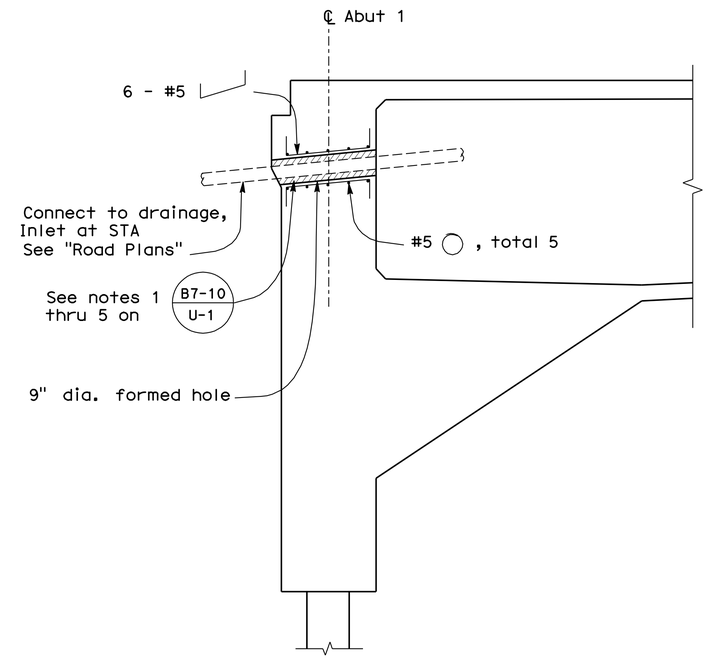

DRAIN OPENING AT ABUTMENT 1
1/2" = 1'-0"

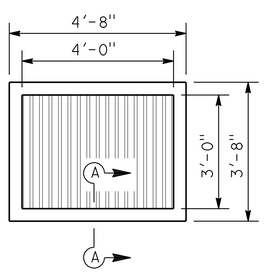

PLAN - SOFFIT GRATE
1/2" = 1'-0"

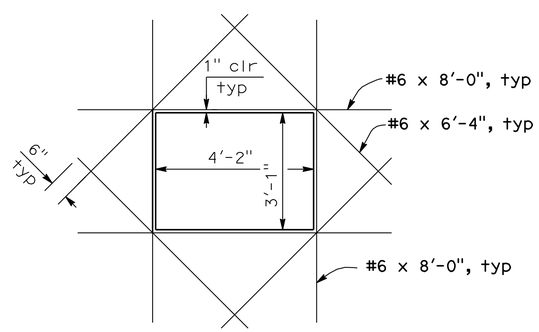

SOFFIT GRATE REINFORCEMENT DETAILS
1/2" = 1'-0"

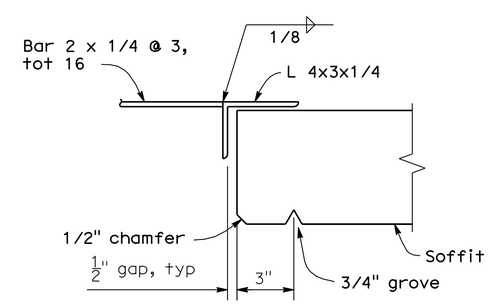

SECTION A-A
No Scale

Note:
The Contractor shall verify all controlling field dimensions before ordering or fabricating any material

DESIGN OVERSIGHT — John Fujimoto
8-2-10
SIGN OFF DATE

	BY		CHECKED	
DESIGN	BY	P. SHINN	CHECKED	A. WANG
DETAILS	BY	G. WOLDETSADIK	CHECKED	A. WANG
QUANTITIES	BY	G. WOLDETSADIK	CHECKED	W. Y. TAN

PREPARED FOR THE STATE OF CALIFORNIA DEPARTMENT OF TRANSPORTATION

P. SHINN
PROJECT ENGINEER

BRIDGE NO. 29-0215
POST MILE 31.11

SWAIN ROAD UNDERCROSSING (WIDEN)
DECK DRAINAGE DETAILS

DESIGN DETAIL SHEET (ENGLISH) (REV. 06-01-09)

ORIGINAL SCALE IN INCHES FOR REDUCED PLANS 0 1 2 3

CU 06240
EA 0G4701

DISREGARD PRINTS BEARING EARLIER REVISION DATES

REVISION DATES (PRELIMINARY STAGE ONLY): 10/16/09 12/4/09 1/15/10 4/21/10 6/11/10 7/28/10

SHEET 14 OF 27

FILE => 29-0215-r-ddet01.dgn

USERNAME => rtmrikes; DATE PLOTTED => 14-OCT-2010 TIME PLOTTED => 12:44

DIST.	COUNTY	ROUTE	POST MILES TOTAL PROJECT	SHEET NO.	TOTAL SHEETS
10	SJ	5	25.0/32.7	1073	1132

REGISTERED ENGINEER - STRUCTURAL 7/28/10

PHILIP SHINN No. S 4967 Exp. 12/31/10 STRUCTURAL REGISTERED PROFESSIONAL ENGINEER STATE OF CALIFORNIA

10-11-10
PLANS APPROVAL DATE

The State of California or its officers or agents shall not be responsible for the accuracy or completeness of electronic copies of this plan sheet.

SAN JOAQUIN COUNCIL OF GOVERNMENTS
555 E. WEBER AVENUE
STOCKTON, CA 95202

RAJAPPAN & MEYER
CONSULTING ENGINEERS, INC.
1038 LEIGH AVE, SUITE 100
SAN JOSE, CA 95126

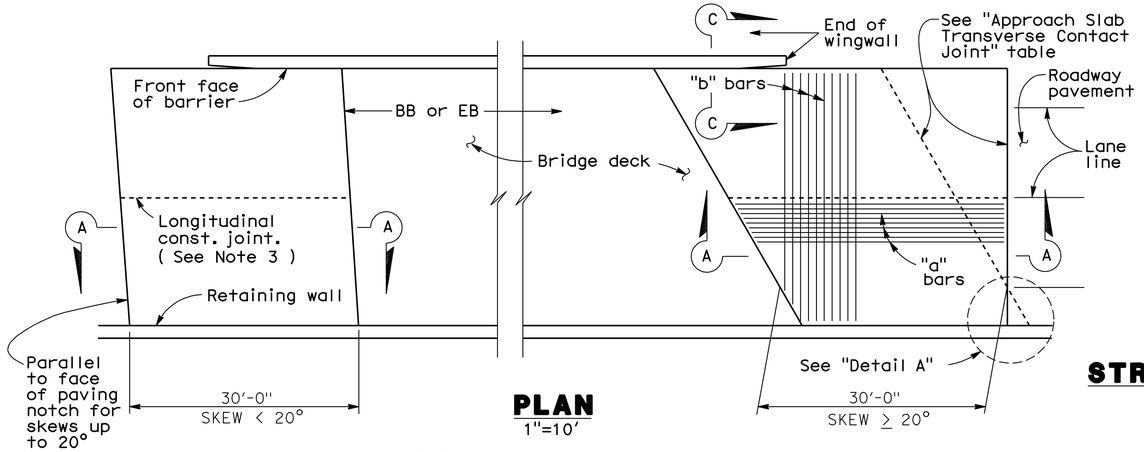

PLAN
1"=10'

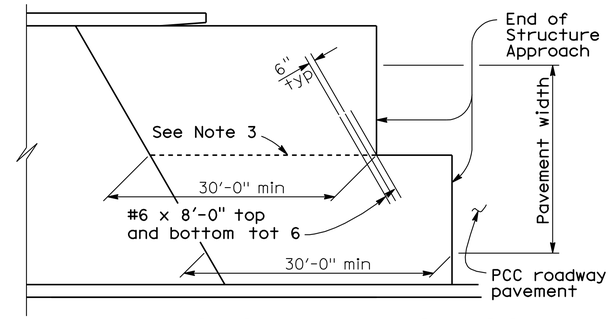

STRUCTURE APPROACH - END STAGGER DETAIL
No Scale

APPROACH SLAB TRANSVERSE CONTACT JOINT		
APPROACH SKEW	WITH AC ROADWAY PAVEMENT	WITH PCC ROADWAY PAVEMENT
< 20°	Parallel to face of paving notch	Parallel to face of paving notch
20° - 45°	Parallel to face of P N use (Detail A)	Stagger lines 24' to 36' apart
> 45°	Parallel to face of P N use (Detail A)	Stagger at each lane line

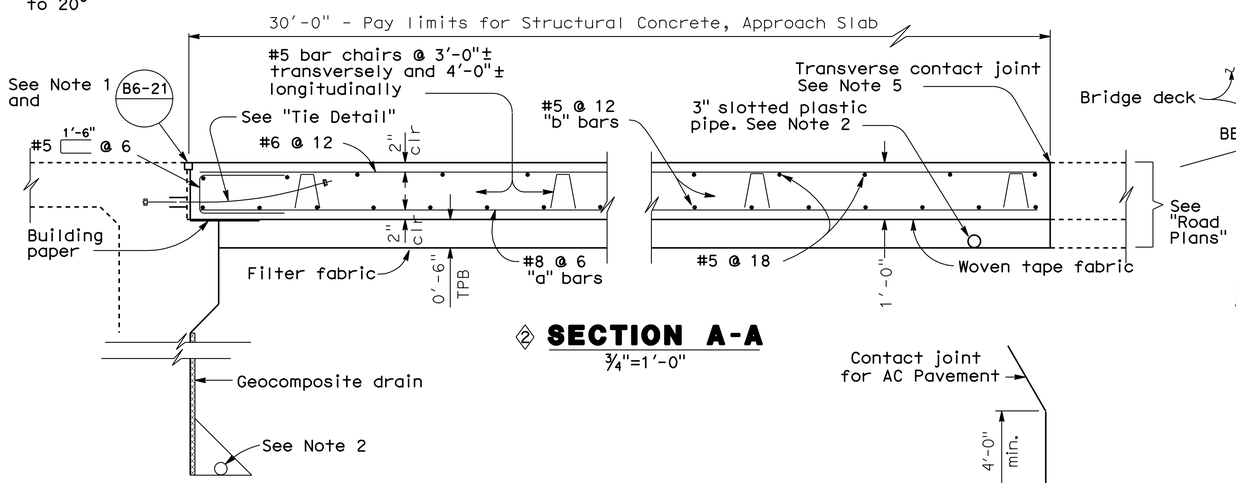

② SECTION A-A
¾"=1'-0"

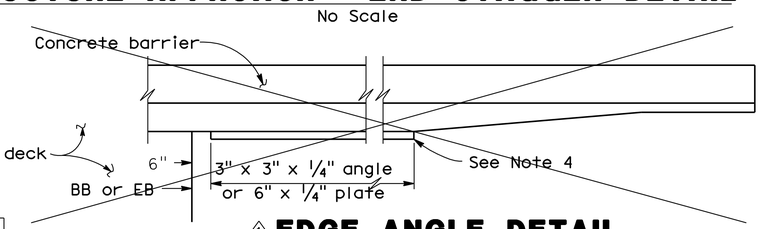

① EDGE ANGLE DETAIL
½"=1'-0"

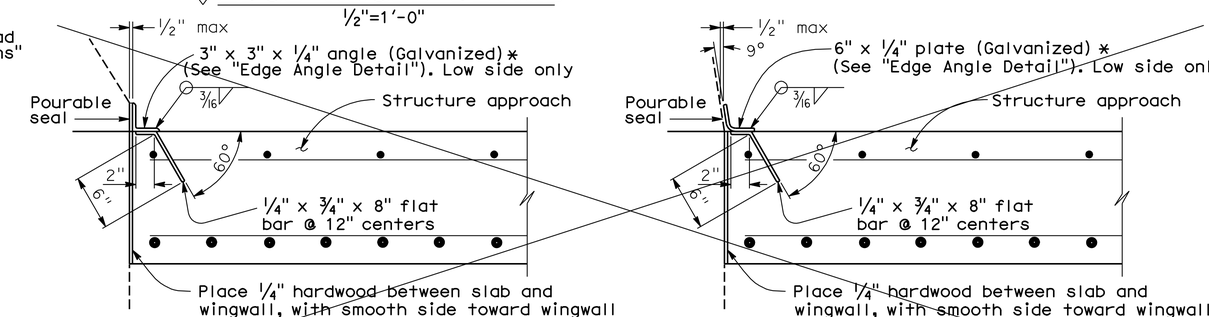

*(TO BE USED WITH TYPE 25 OR TYPE 27 CONCRETE BARRIER)

*(TO BE USED WITH TYPE 732 OR TYPE 736 CONCRETE BARRIER)

① DETAIL B
1½"=1'-0"

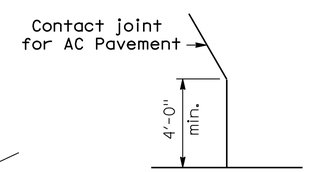

DETAIL A
No Scale

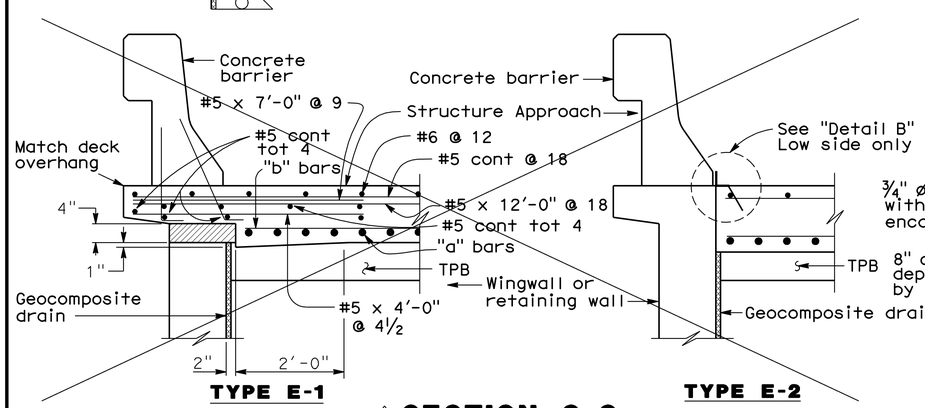

① SECTION C-C
¾"=1'-0"

Note: (Type E-1 to be used, unless otherwise shown on plans)
The Contractor shall verify all controlling field dimensions before ordering or fabricating any material

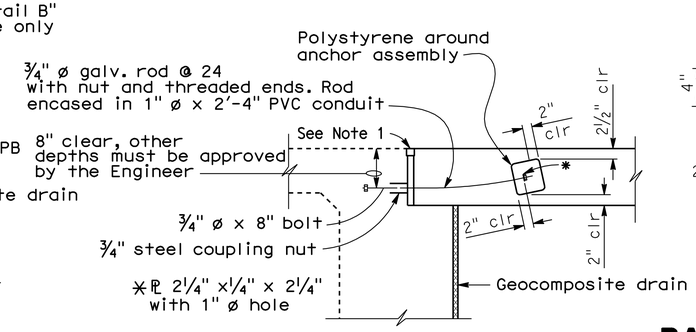

TIE DETAIL
¾"=1'-0"

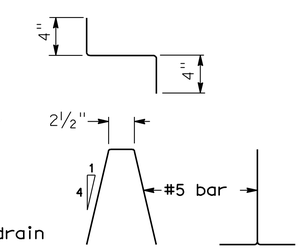

BAR CHAIR DETAIL
1½"=1'-0"

NOTES:

1. For details not noted or shown, see Structure Plans.
2. For drainage details, see "Structure Approach Drainage Details" sheet.
3. Longitudinal construction joints, when permitted by the Engineer, shall be located on lane lines.
4. End angle or plate at beginning of barrier transition, end of wingwall or end of structure approach, as applicable.
5. For transverse contact joint with new PCC paving, refer to Standard Plan P10.
6. At the contractor's option, approach slab transverse reinforcement may be placed parallel to paving notch. Spacing of transverse reinforcement is measured along ℄ roadway.

Polystyrene to be removed.

SPECIAL DETAILS

STANDARD DRAWING

FILE NO. xs3-180e

APPROVED BY M. Ha (RESPONSIBLE TECHNICAL SPECIALIST)
APPROVAL DATE 8-12-08

RELEASED BY O. Alcantara (RESPONSIBLE OFFICE CHIEF)
RELEASE DATE Revised

① Detail Deleted
② Detail Modified

STATE OF CALIFORNIA
DEPARTMENT OF TRANSPORTATION

DIVISION OF ENGINEERING SERVICES

BRIDGE NO. 29-0215
POST MILE 31.11

SWAIN ROAD UNDERCROSSING (WIDEN)
STRUCTURE APPROACH TYPE N(30D)

DS OSD 2147A (ENGLISH STANDARD DRAWING "XS" BORDER REV. 01/11/08)

ORIGINAL SCALE IN INCHES FOR REDUCED PLANS 0 1 2 3

CU 06240
EA 0G4701

DISREGARD PRINTS BEARING EARLIER REVISION DATES

REVISION DATES (PRELIMINARY STAGE ONLY) 10/16/09 12/4/09 1/18/10 4/27/10 6/11/10 7/28/10

SHEET 15 OF 27

USERNAME => trmikesl

29-0215-s-sq_n30d.dgn

DATE PLOTTED => 14-OCT-2010 TIME PLOTTED => 12:45

DIST.	COUNTY	ROUTE	POST MILES TOTAL PROJECT	SHEET NO.	TOTAL SHEETS
10	SJ	5	25.0/32.7	1074	1132

REGISTERED ENGINEER - STRUCTURAL 7/28/10

10-11-10
PLANS APPROVAL DATE

REGISTERED PROFESSIONAL ENGINEER PHILIP SHINN No. S 4967 Exp. 12/31/10 STRUCTURAL STATE OF CALIFORNIA

The State of California or its officers or agents shall not be responsible for the accuracy or completeness of electronic copies of this plan sheet.

SAN JOAQUIN COUNCIL OF GOVERNMENTS
555 E. WEBER AVENUE
STOCKTON, CA 95202

RAJAPPAN & MEYER
CONSULTING ENGINEERS, INC.
1038 LEIGH AVE, SUITE 100
SAN JOSE, CA 95126

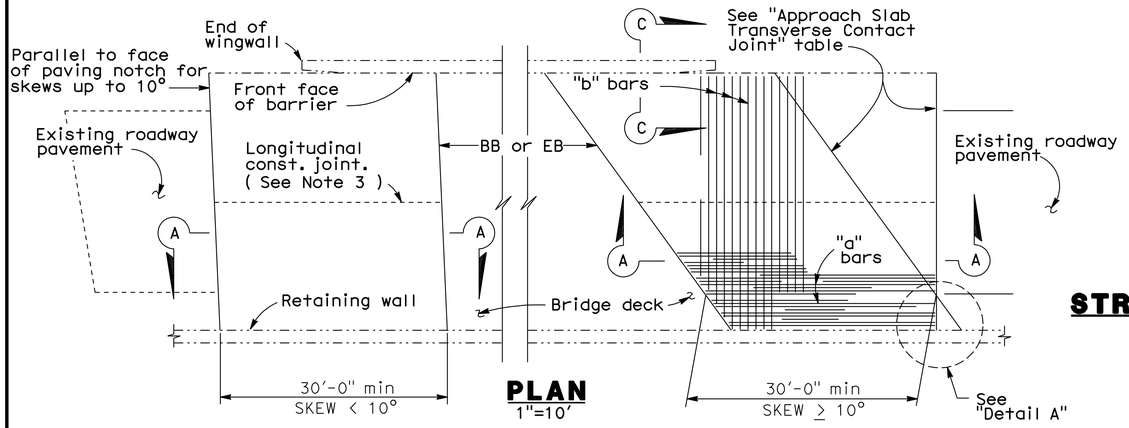

PLAN
1"=10'

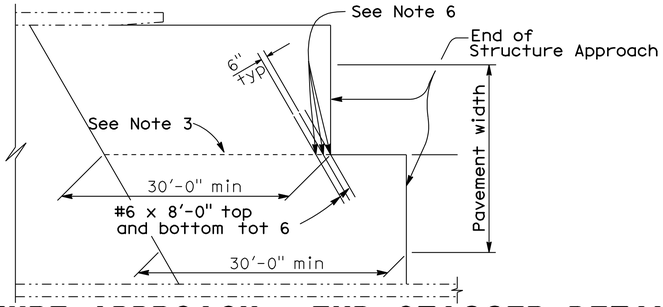

STRUCTURE APPROACH - END STAGGER DETAIL
No Scale

APPROACH SLAB TRANSVERSE CONTACT JOINT		
APPROACH SKEW	WITH AC ROADWAY PAVEMENT	WITH PCC ROADWAY PAVEMENT
< 10°	Parallel to face of paving notch	Parallel to face of paving notch
10° - 45°	Parallel to face of P N use (Detail A)	Stagger lines 24' to 36' apart
> 45°	Parallel to face of P N use (Detail A)	Stagger at each lane line

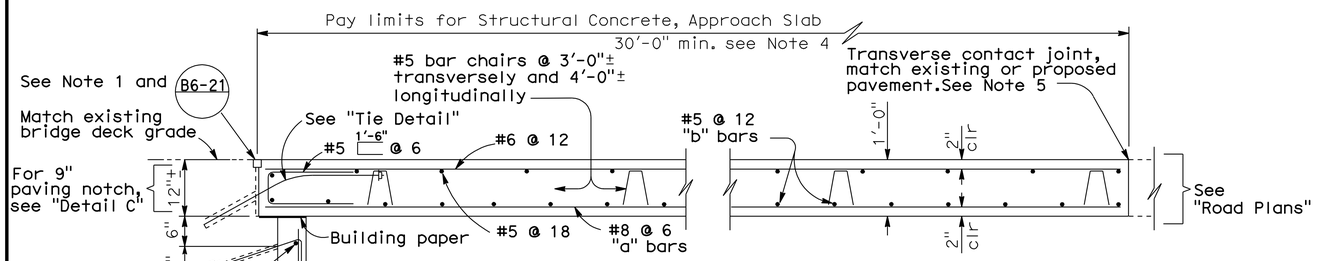

SECTION A-A
¾" = 1'-0"

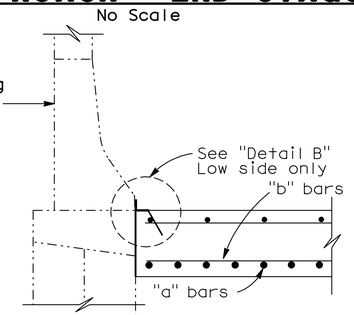

① SECTION C-C
¾" = 1'-0"

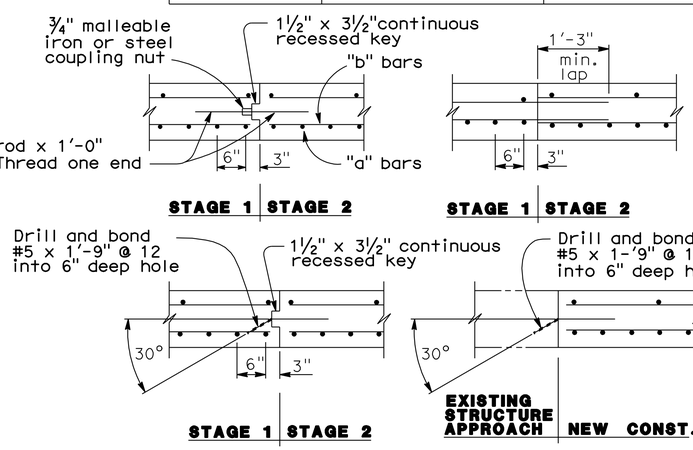

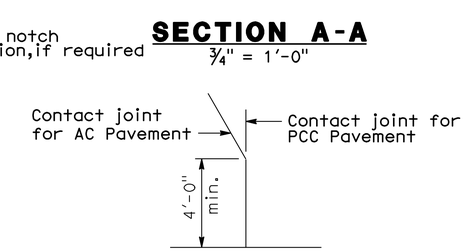

DETAIL A
No Scale

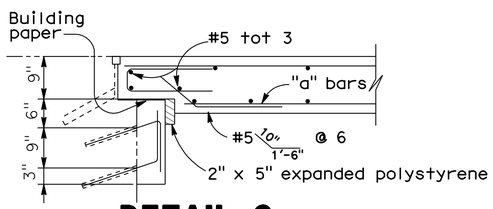

DETAIL C
¾" = 1'-0"

NOTE: For details not shown,see "Section A-A".

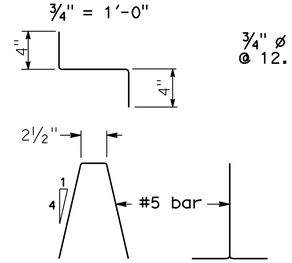

BAR CHAIR DETAIL
1½" = 1'-0"

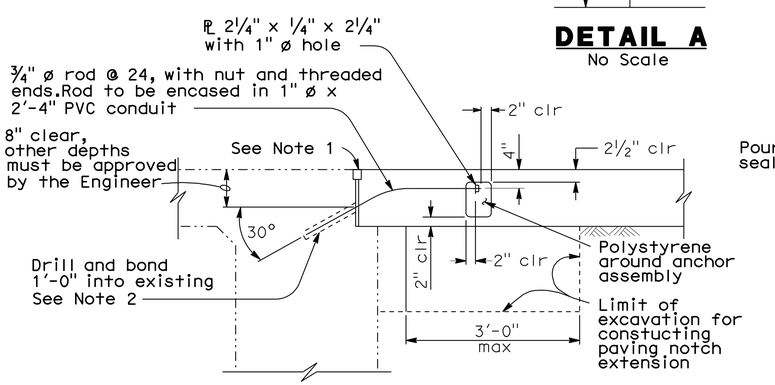

TIE DETAIL
¾" = 1'-0"

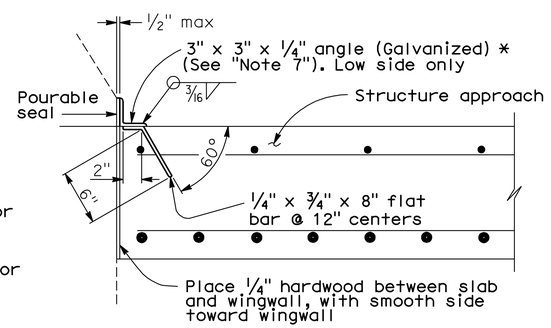

* (TO BE USED WITH TYPE 25 OR TYPE 27 CONCRETE BARRIER)

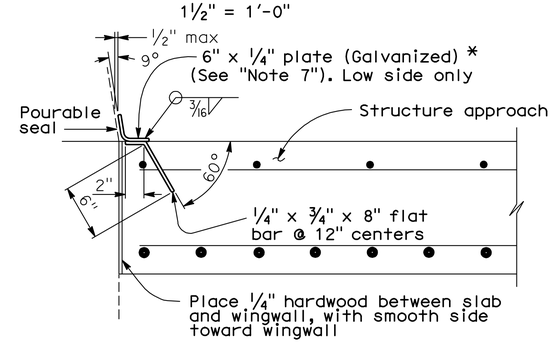

* (TO BE USED WITH TYPE 732 OR TYPE 736 CONCRETE BARRIER)

DETAIL B
1½" = 1'-0"

LONGITUDINAL CONSTRUCTION JOINT ALTERNATIVES
¾" = 1'-0"

NOTES:

1. For details not shown or noted, see Structure Plans. Adjust bar reinforcement to clear a sawcut for sealed joint,when required.
2. Space to avoid existing prestress anchorages and main reinforcement.
3. Longitudinal construction joints,when permitted by the Engineer,shall be located on lane lines.
4. Transverse contact joint shall be a minimum of 5'-0" from an existing or constructed weakened plane joint.
5. For transverse contact joint with new PCC paving. refer to Standard Plan P10.
6. Couplers are required for stage construction.
7. End angle or plate at beginning of barrier transition, end of wingwall or end of structure approach as applicable.

Note:
The Contractor shall verify all controlling field dimensions before ordering or fabricating any material

SPECIAL DETAILS

STANDARD DRAWING				
RELEASE DATE Revised	DESIGN	BY M. TRAFFALIS	CHECKED E. THORKILDSEN	RELEASED BY
FILE NO. xs3-140e	DETAILS	BY R. YEE	CHECKED E. THORKILDSEN	
	SUBMITTED	BY M. HA	DRAWING DATE 8/92	OFFICE CHIEF

① Detail Modified

STATE OF CALIFORNIA
DEPARTMENT OF TRANSPORTATION

DIVISION OF ENGINEERING SERVICES

BRIDGE NO. 29-0215
POST MILE 31.11

SWAIN ROAD UNDERCROSSING (WIDEN)
STRUCTURE APPROACH TYPE R(30D)

DS OSD 2147A (ENGLISH) (REV. X/XX/XX)

ORIGINAL SCALE IN INCHES FOR REDUCED PLANS 0 1 2 3

CU 06240
EA 0G4701

DISREGARD PRINTS BEARING EARLIER REVISION DATES

REVISION DATES (PRELIMINARY STAGE ONLY) 10/16/09 12/4/09 1/18/10 4/27/10 6/17/10 7/28/10

SHEET 16 OF 27

USERNAME => trmikesl

29-0215-s-sa_r30d.dgn

DATE PLOTTED => 14-OCT-2010 TIME PLOTTED => 12:45

DIST.	COUNTY	ROUTE	POST MILES TOTAL PROJECT	SHEET NO.	TOTAL SHEETS
10	SJ	5	25.0/32.7	1075	1132

REGISTERED ENGINEER - STRUCTURAL 7/28/10

10-11-10
PLANS APPROVAL DATE

REGISTERED PROFESSIONAL ENGINEER PHILIP SHINN No. S 4967 Exp. 12/31/10 STRUCTURAL STATE OF CALIFORNIA

The State of California or its officers or agents shall not be responsible for the accuracy or completeness of electronic copies of this plan sheet.

SAN JOAQUIN COUNCIL OF GOVERNMENTS
555 E. WEBER AVENUE
STOCKTON, CA 95202

RAJAPPAN & MEYER
CONSULTING ENGINEERS, INC.
1038 LEIGH AVE, SUITE 100
SAN JOSE, CA 95126

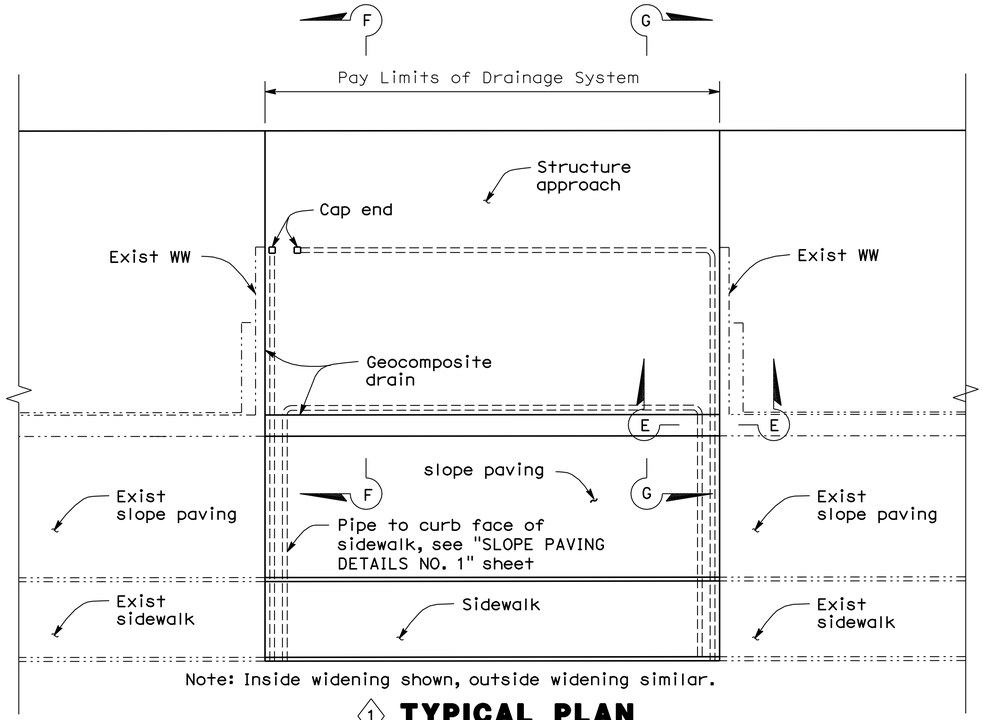

Note: Inside widening shown, outside widening similar.

1 **TYPICAL PLAN**
1/8" = 1'-0"

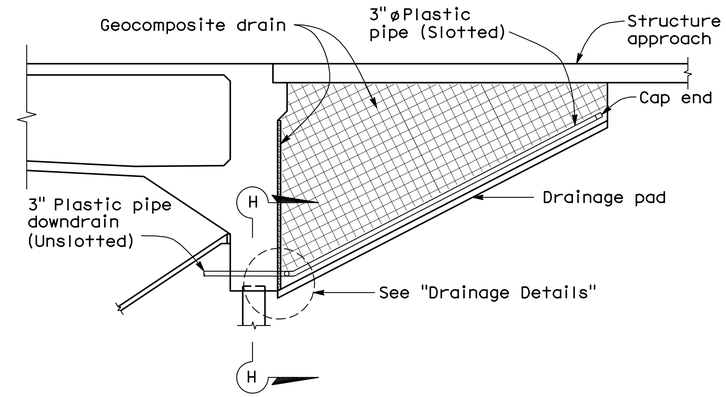

1 **SECTION F-F**
1/4" = 1'-0"

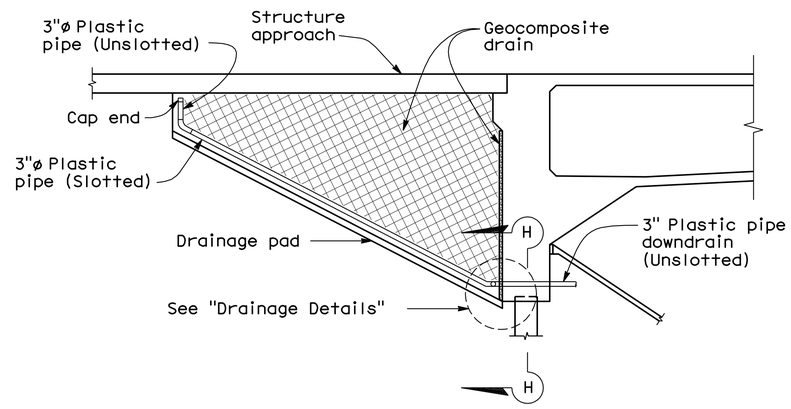

1 **SECTION G-G**
1/4" = 1'-0"

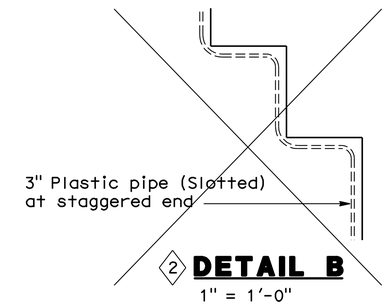

2 **DETAIL B**
1" = 1'-0"

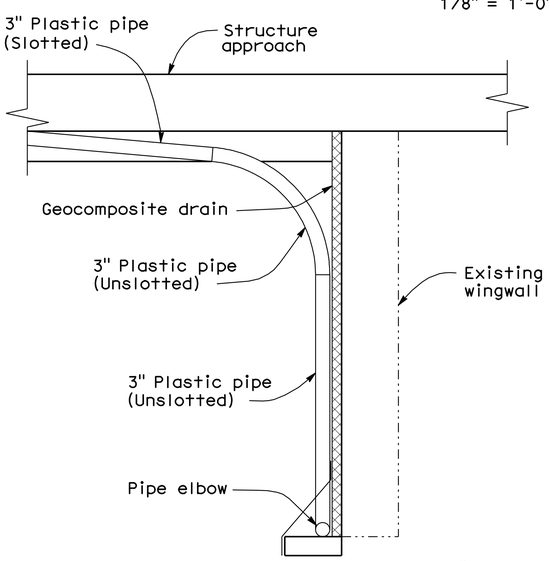

NOTE: Bends and junctions in 3" plastic pipe are 30" radius min.

1 **SECTION E-E**
3/4" = 1'-0"

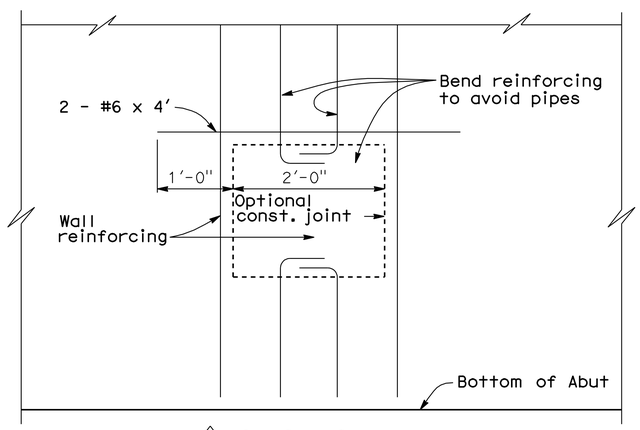

1 **SECTION H-H**
1" = 1'-0"

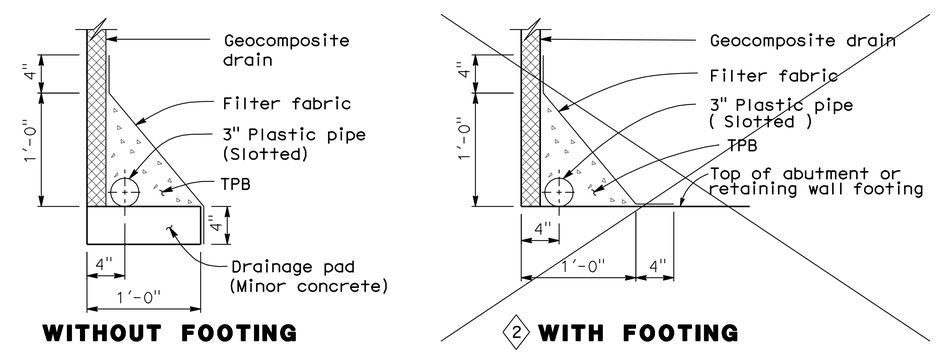

WITHOUT FOOTING 2 **WITH FOOTING**

DRAINAGE DETAILS
1 1/2" = 1'-0"

SPECIAL DETAILS

Note:
The Contractor shall verify all controlling field dimensions before ordering or fabricating any material

STANDARD DRAWING				
RELEASE DATE Revised	DESIGN	BY M. TRAFFALIS	CHECKED E. THORKILDSEN	RELEASED BY
FILE NO. xs3-110e	DETAILS	BY R. YEE	CHECKED E. THORKILDSEN	
	SUBMITTED	BY M. HA	DRAWING DATE 4/98	OFFICE CHIEF

1 Detail Modified
2 Detail Deleted

STATE OF CALIFORNIA
DEPARTMENT OF TRANSPORTATION

DIVISION OF ENGINEERING SERVICES

BRIDGE NO. 29-0215
POST MILE 31.11

SWAIN ROAD UNDERCROSSING (WIDEN)
STRUCTURE APPROACH DRAINAGE DETAILS

DS OSD 2147A (ENGLISH) (REV. X/XX/XX)

ORIGINAL SCALE IN INCHES FOR REDUCED PLANS 0 1 2 3

CU 06240
EA 0G4701

DISREGARD PRINTS BEARING EARLIER REVISION DATES

REVISION DATES (PRELIMINARY STAGE ONLY) 10/16/09 12/4/09 1/18/10 4/21/10 6/11/10 7/28/10

SHEET 17 OF 27

USERNAME => trmikesl

29-0215-s-sadd.dgn

DATE PLOTTED => 14-OCT-2010 TIME PLOTTED => 12:45

DIST	COUNTY	ROUTE	POST MILES TOTAL PROJECT	SHEET No	TOTAL SHEETS
10	SJ	5	25.0/32.7	1076	1132

REGISTERED STRUCTURAL ENGINEER — DATE 7/28/10

PLANS APPROVAL DATE 10-11-10

REGISTERED PROFESSIONAL ENGINEER — PHILIP SHINN — No. S 4967 — Exp. 12/31/10 — STRUCTURAL — STATE OF CALIFORNIA

The State of California or its officers or agents shall not be responsible for the accuracy or completeness of scanned copies of this plan sheet.

RAJAPPAN & MEYER CONSULTING ENGINEERS, INC.
1038 LEIGH AVE, SUITE 100
SAN JOSE, CA 95126

SAN JOAQUIN COUNCIL OF GOVERNMENTS
555 E. WEBER AVENUE
STOCKTON, CA 95202

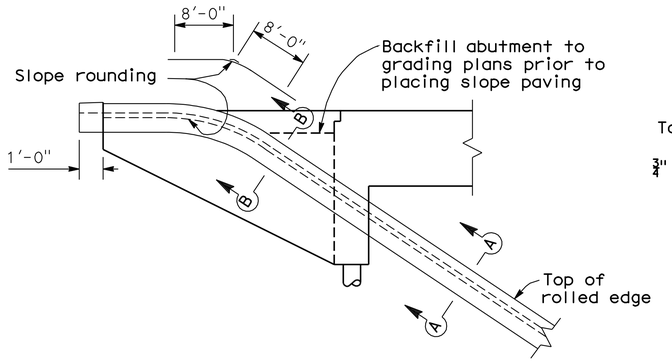

WINGWALL ELEVATION
No Scale

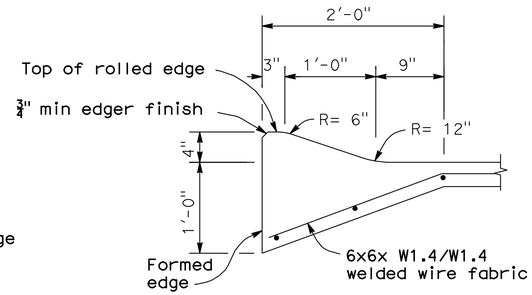

SECTION A-A
No Scale

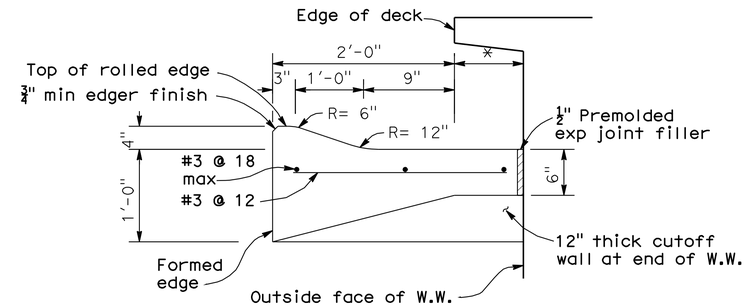

* This dimension becomes zero when edge of deck is at outside face of W.W.

SECTION B-B
No Scale

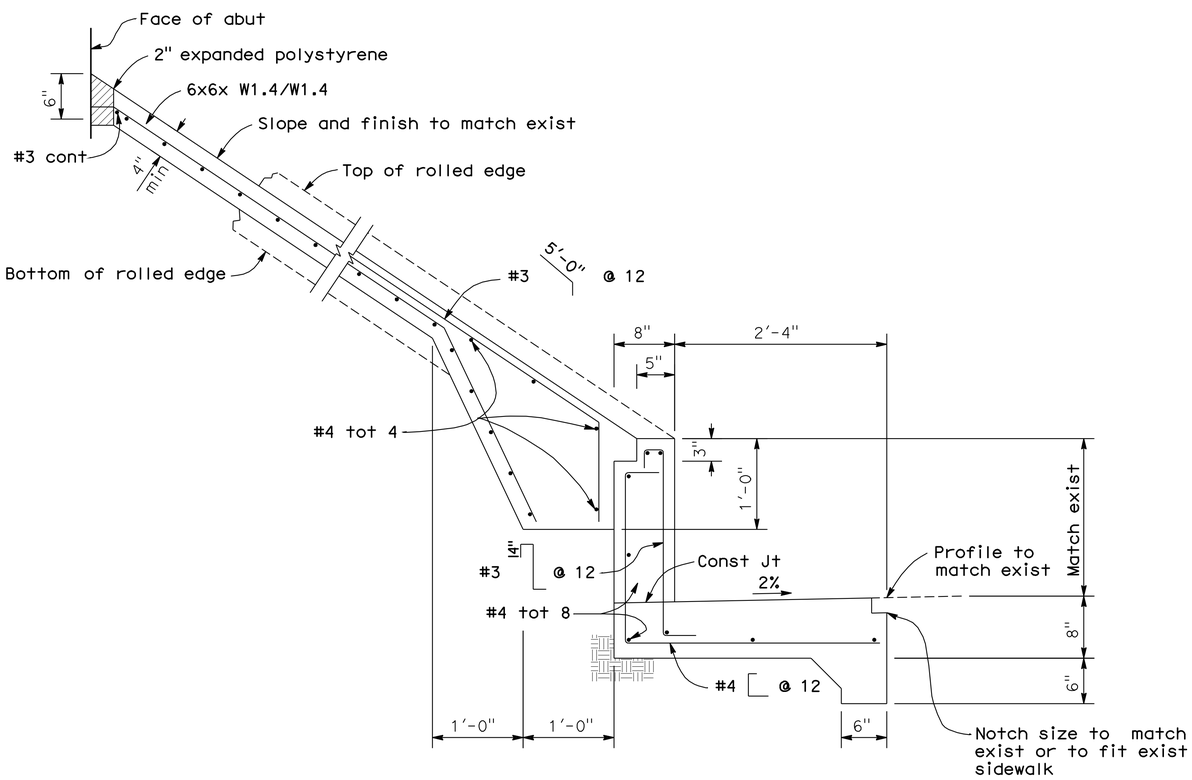

TYPICAL SECTION - CONCRETE PAVING
No Scale

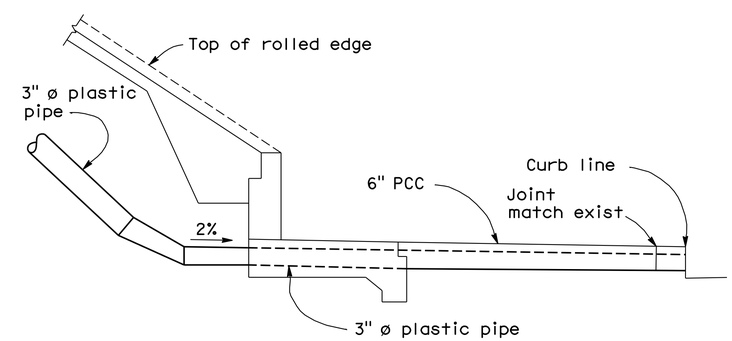

DRAINAGE DETAILS
No Scale

Note:
The Contractor shall verify all controlling field dimensions before ordering or fabricating any material

DESIGN OVERSIGHT John Fujimoto — 8-2-10 SIGN OFF DATE

DESIGN	BY	P. SHINN	CHECKED	A. WANG
DETAILS	BY	G. WOLDETSADIK	CHECKED	A. WANG
QUANTITIES	BY	G. WOLDETSADIK	CHECKED	W. Y. TAN

PREPARED FOR THE STATE OF CALIFORNIA DEPARTMENT OF TRANSPORTATION

P. SHINN — PROJECT ENGINEER

BRIDGE NO. 29-0215 — POST MILE 31.11

SWAIN ROAD UNDERCROSSING (WIDEN)
SLOPE PAVING DETAIL NO. 1

DESIGN DETAIL SHEET (ENGLISH) (REV. 06-01-09)

ORIGINAL SCALE IN INCHES FOR REDUCED PLANS 0 1 2 3

CU 06240
EA 0G4701

DISREGARD PRINTS BEARING EARLIER REVISION DATES — REVISION DATES (PRELIMINARY STAGE ONLY) 10/16/09 12/4/09 1/15/10 4/21/10 6/11/10 7/28/10

SHEET 18 OF 27

FILE => 29-0215-t-slpdet01.dgn

USERNAME => frmikest DATE PLOTTED => 14-OCT-2010 TIME PLOTTED => 12:35

DIST	COUNTY	ROUTE	POST MILES TOTAL PROJECT	SHEET No	TOTAL SHEETS
10	SJ	5	25.0/32.7	1077	1132

REGISTERED STRUCTURAL ENGINEER — DATE 7/28/10

PLANS APPROVAL DATE 10-11-10

The State of California or its officers or agents shall not be responsible for the accuracy or completeness of scanned copies of this plan sheet.

REGISTERED PROFESSIONAL ENGINEER — PHILIP SHINN — No. S 4967 — Exp. 12/31/10 — STRUCTURAL — STATE OF CALIFORNIA

RAJAPPAN & MEYER
CONSULTING ENGINEERS, INC.
1038 LEIGH AVE, SUITE 100
SAN JOSE, CA 95126

SAN JOAQUIN COUNCIL OF GOVERNMENTS
555 E. WEBER AVENUE
STOCKTON, CA 95202

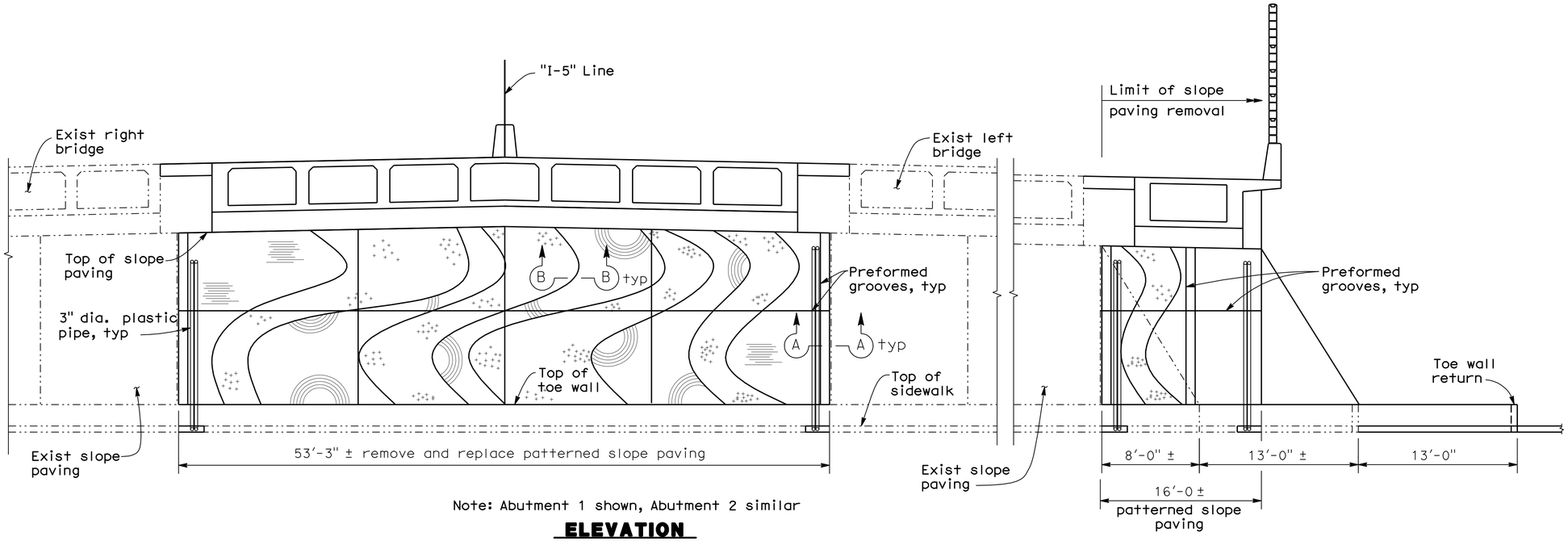

Note: Abutment 1 shown, Abutment 2 similar

ELEVATION
1" = 5'

NOTES:

1. For patterned slope paving. see "Slope Paving Details No. 3, No. 4 and No. 5" sheets.

Indicates existing structure

Indicates concrete removal

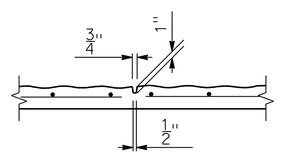

PREFORMED GROOVE
1" = 1'-0"

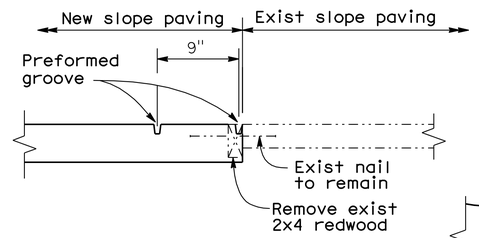

SECTION A-A
No Scale

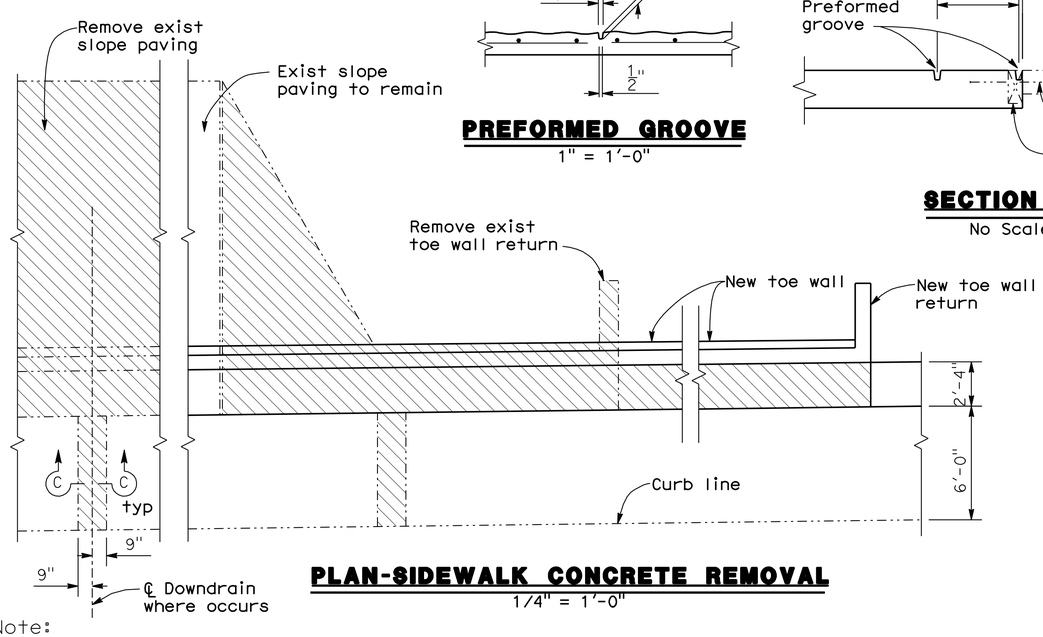

PLAN-SIDEWALK CONCRETE REMOVAL
1/4" = 1'-0"

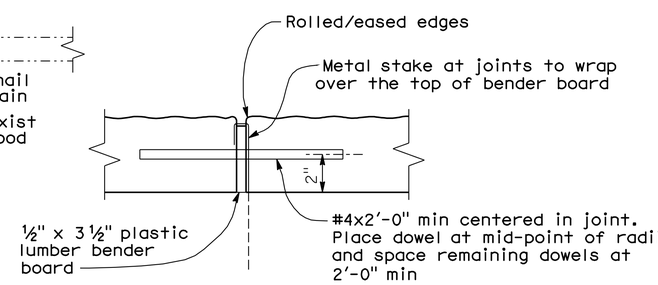

SECTION B-B
1" = 1'-0"

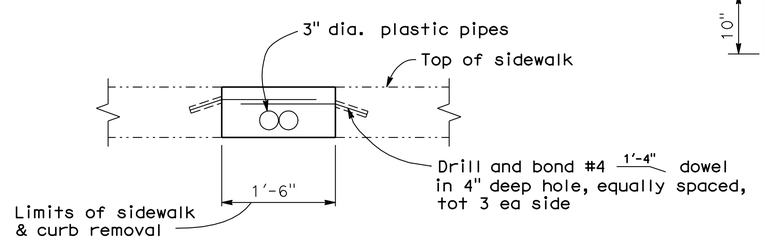

SECTION C-C
1" = 1'-0"

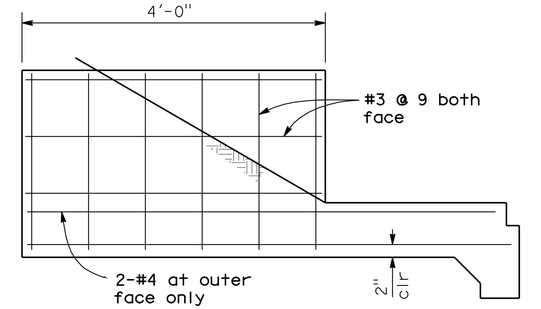

ELEVATION

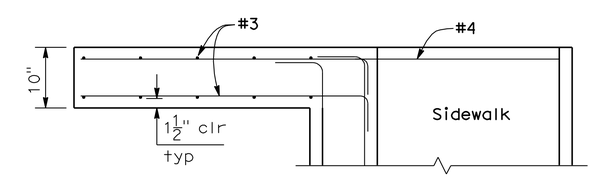

PLAN

TOE WALL RETURN
1" = 1'-0"

Note:
The Contractor shall verify all controlling field dimensions before ordering or fabricating any material

DESIGN OVERSIGHT — John Fujimoto — 8-2-10 — SIGN OFF DATE

	BY		CHECKED
DESIGN	P. SHINN		A. WANG
DETAILS	G. WOLDETSADIK		A. WANG
QUANTITIES	G. WOLDETSADIK		W. Y. TAN

PREPARED FOR THE STATE OF CALIFORNIA DEPARTMENT OF TRANSPORTATION

P. SHINN — PROJECT ENGINEER

BRIDGE NO. 29-0215 — POST MILE 31.11

SWAIN ROAD UNDERCROSSING (WIDEN)
SLOPE PAVING DETAILS NO. 2

DESIGN DETAIL SHEET (ENGLISH) (REV. 06-01-09)

ORIGINAL SCALE IN INCHES FOR REDUCED PLANS 0 1 2 3

CU 06240
EA 0G4701

DISREGARD PRINTS BEARING EARLIER REVISION DATES — REVISION DATES (PRELIMINARY STAGE ONLY) 10/16/09 12/4/09 1/15/10 4/21/10 6/11/10 7/28/10

SHEET 19 OF 27

FILE => 29-0215-t-slpdet02.dgn

USERNAME => trmikes1 DATE PLOTTED => 14-OCT-2010 TIME PLOTTED => 12:35

DIST	COUNTY	ROUTE	POST MILES TOTAL PROJECT	SHEET No	TOTAL SHEETS
10	SJ	5	25.0/32.7	1078	1132

REGISTERED STRUCTURAL ENGINEER — DATE 7/28/10

PLANS APPROVAL DATE 10-11-10

REGISTERED PROFESSIONAL ENGINEER — PHILIP SHINN — No. S 4967 — Exp. 12/31/10 — STRUCTURAL — STATE OF CALIFORNIA

The State of California or its officers or agents shall not be responsible for the accuracy or completeness of scanned copies of this plan sheet.

RAJAPPAN & MEYER CONSULTING ENGINEERS, INC.
1038 LEIGH AVE, SUITE 100
SAN JOSE, CA 95126

SAN JOAQUIN COUNCIL OF GOVERNMENTS
555 E. WEBER AVENUE
STOCKTON, CA 95202

DERIVI CONSTRUCTION & ARCHITECTURE, INC.
924 N. YOSEMITE STREET
STOCKTON, CA 95203

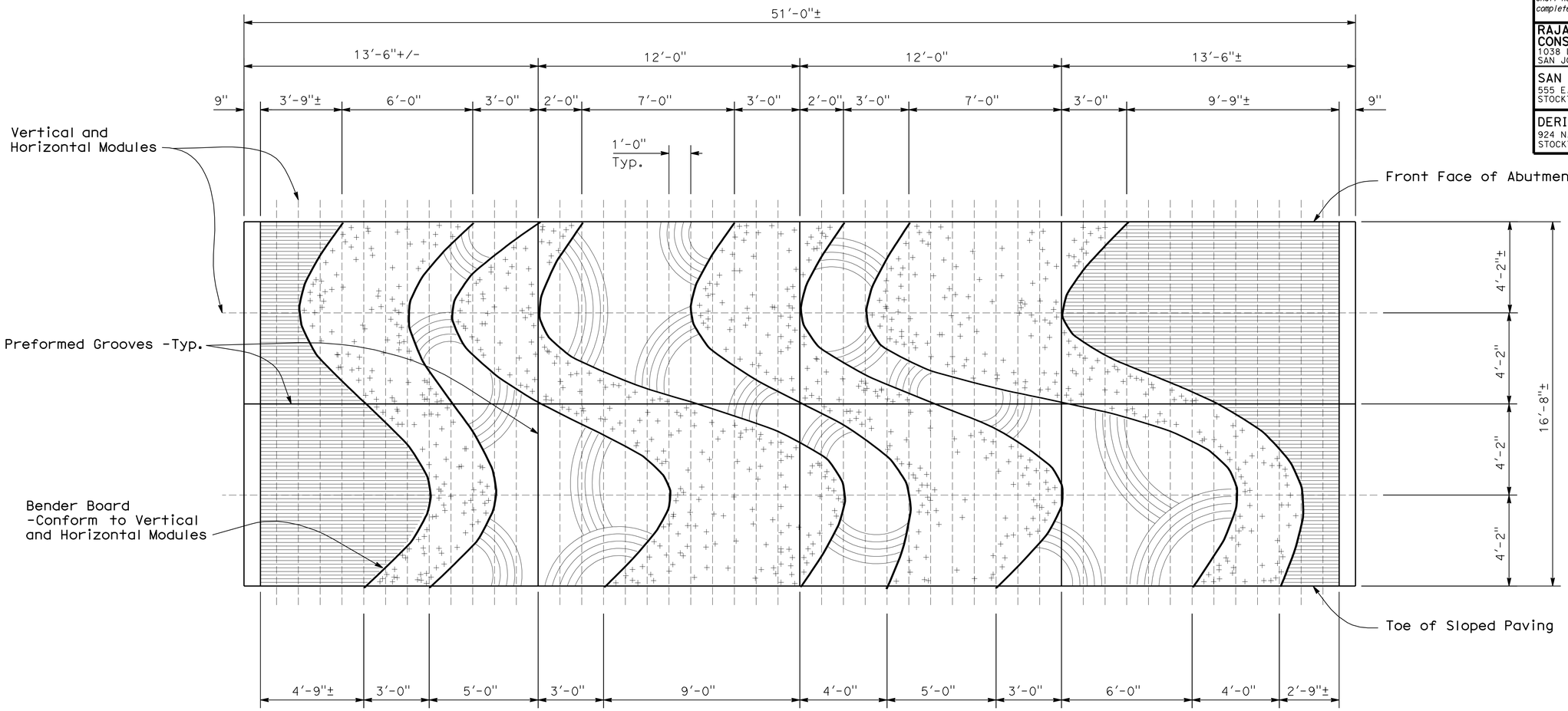

NORTH ELEVATION

3/8" = 1'-0"

Pattern Legend

- Curved Plastic Lumber Bender board (½" Width x 3½" depth) between concrete Patterns
- Concrete Pattern A Vertical Rough Broom Finish
- Concrete Pattern B Horizontal Scored Metal Rake Tooling (1" on center +/- x ½"Depth Max) over Horizontal Rough Broom Finish
- Concrete Pattern C Randomly Seeded Aggregate (40% of Surface Covered) with 1 ½"-2" Aggregate
- Concrete Pattern D 5-Prong Rake Tooling (4" on center x ½" Depth Max) Score in Arcs over Vertical Rough Broom Finish
  -Start and End Points Shall Not Overlap Other Patterns
  -Pattern Shown is Schematic

Note:
The Contractor shall verify all controlling field dimensions before ordering or fabricating any material

DESIGN OVERSIGHT — John Fujimoto — 8-2-10 — SIGN OFF DATE

	BY	CHECKED
DESIGN	C. D. B. FRANKEL	G. WOLDETSADIK
DETAILS	C. D. B. FRANKEL	G. WOLDETSADIK
QUANTITIES	G. WOLDETSADIK	W. Y. TAN

PREPARED FOR THE STATE OF CALIFORNIA DEPARTMENT OF TRANSPORTATION

P. SHINN — PROJECT ENGINEER

BRIDGE NO. 29-0215 — POST MILE 31.11

SWAIN ROAD UNDERCROSSING (WIDEN)
SLOPE PAVING DETAILS No. 3

DESIGN DETAIL SHEET (ENGLISH) (REV. 06-01-09)

ORIGINAL SCALE IN INCHES FOR REDUCED PLANS 0 1 2 3

CU 06240
EA 0G4701

DISREGARD PRINTS BEARING EARLIER REVISION DATES

REVISION DATES (PRELIMINARY STAGE ONLY) 12/4/09 1/15/10 4/21/10 6/17/10 7/28/10

SHEET 20 OF 27

FILE => 29-0215-t-slpdet03.dgn

USERNAME => trmikesi DATE PLOTTED => 14-OCT-2010 TIME PLOTTED => 12:35

DIST	COUNTY	ROUTE	POST MILES TOTAL PROJECT	SHEET No	TOTAL SHEETS
10	SJ	5	25.0/32.7	1079	1132

REGISTERED STRUCTURAL ENGINEER — DATE 7/28/10

PLANS APPROVAL DATE 10-11-10

REGISTERED PROFESSIONAL ENGINEER — PHILIP SHINN — No. S 4967 — Exp. 12/31/10 — STRUCTURAL — STATE OF CALIFORNIA

The State of California or its officers or agents shall not be responsible for the accuracy or completeness of scanned copies of this plan sheet.

RAJAPPAN & MEYER CONSULTING ENGINEERS, INC.
1038 LEIGH AVE, SUITE 100
SAN JOSE, CA 95126

SAN JOAQUIN COUNCIL OF GOVERNMENTS
555 E. WEBER AVENUE
STOCKTON, CA 95202

DERIVI CONSTRUCTION & ARCHITECTURE, INC.
924 N. YOSEMITE STREET
STOCKTON, CA 95203

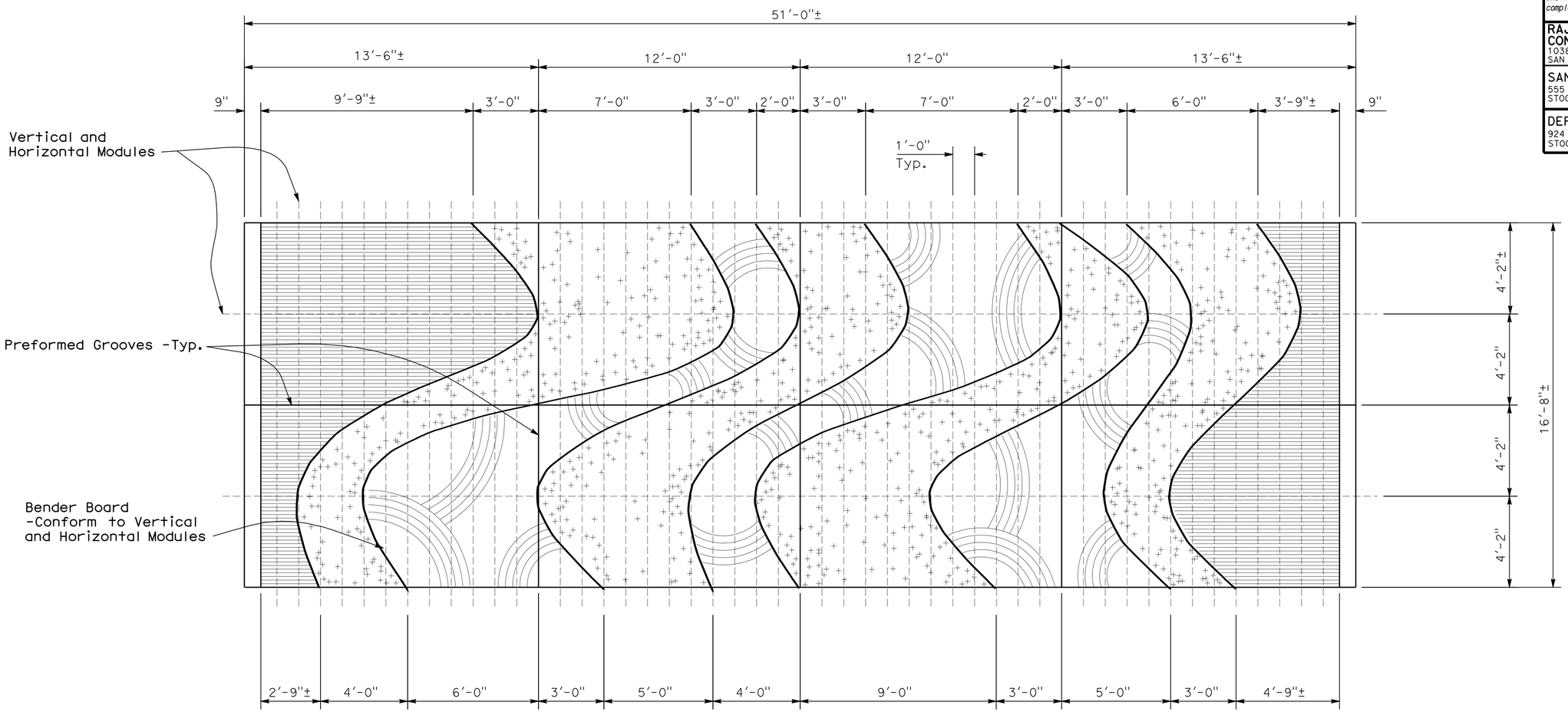

SOUTH ELEVATION

3/8" = 1'-0"

Pattern Legend

- Curved Plastic Lumber Bender board (½" Width x 3½" depth) between concrete Patterns
- Concrete Pattern A Vertical Rough Broom Finish
- Concrete Pattern B Horizontal Scored Metal Rake Tooling (1" on center +/- x ½"Depth Max) over Horizontal Rough Broom Finish
- Concrete Pattern C Randomly Seeded Aggregate (40% of Surface Covered) with 1 ½"-2" Aggregate
- Concrete Pattern D 5-Prong Rake Tooling (4" on center x ½" Depth Max) Score in Arcs over Vertical Rough Broom Finish -Start and End Points Shall Not Overlap Other Patterns -Pattern Shown is Schematic

Note:
The Contractor shall verify all controlling field dimensions before ordering or fabricating any material

DESIGN OVERSIGHT John Fujimoto — 8-2-10 SIGN OFF DATE

	BY	CHECKED
DESIGN	C. D. B. FRANKEL	G. WOLDETSADIK
DETAILS	C. D. B. FRANKEL	G. WOLDETSADIK
QUANTITIES	G. WOLDETSADIK	W. Y. TAN

PREPARED FOR THE STATE OF CALIFORNIA DEPARTMENT OF TRANSPORTATION

P. SHINN — PROJECT ENGINEER

BRIDGE NO. 29-0215 — POST MILE 31.11

SWAIN ROAD UNDERCROSSING (WIDEN)
SLOPE PAVING DETAILS No. 4

DESIGN DETAIL SHEET (ENGLISH) (REV. 06-01-09)

ORIGINAL SCALE IN INCHES FOR REDUCED PLANS 0 1 2 3

CU 06240
EA 0G4701

DISREGARD PRINTS BEARING EARLIER REVISION DATES

REVISION DATES (PRELIMINARY STAGE ONLY): 12/4/09 1/18/10 4/21/10 6/17/10 7/28/10

SHEET 21 OF 27

FILE => 29-0215-t-slpdet04.dgn

USERNAME => trmikest DATE PLOTTED => 14-OCT-2010 TIME PLOTTED => 12:35

DIST	COUNTY	ROUTE	POST MILES TOTAL PROJECT	SHEET No	TOTAL SHEETS
10	SJ	5	25.0/32.7	1080	1132

REGISTERED STRUCTURAL ENGINEER — DATE 7/28/10

10-11-10
PLANS APPROVAL DATE

REGISTERED PROFESSIONAL ENGINEER — PHILIP SHINN — No. S 4967 — Exp. 12/31/10 — STRUCTURAL — STATE OF CALIFORNIA

The State of California or its officers or agents shall not be responsible for the accuracy or completeness of scanned copies of this plan sheet.

RAJAPPAN & MEYER
CONSULTING ENGINEERS, INC.
1038 LEIGH AVE, SUITE 100
SAN JOSE, CA 95126

SAN JOAQUIN COUNCIL OF GOVERNMENTS
555 E. WEBER AVENUE
STOCKTON, CA 95202

DERIVI CONSTRUCTION & ARCHITECTURE, INC.
924 N. YOSEMITE STREET
STOCKTON, CA 95203

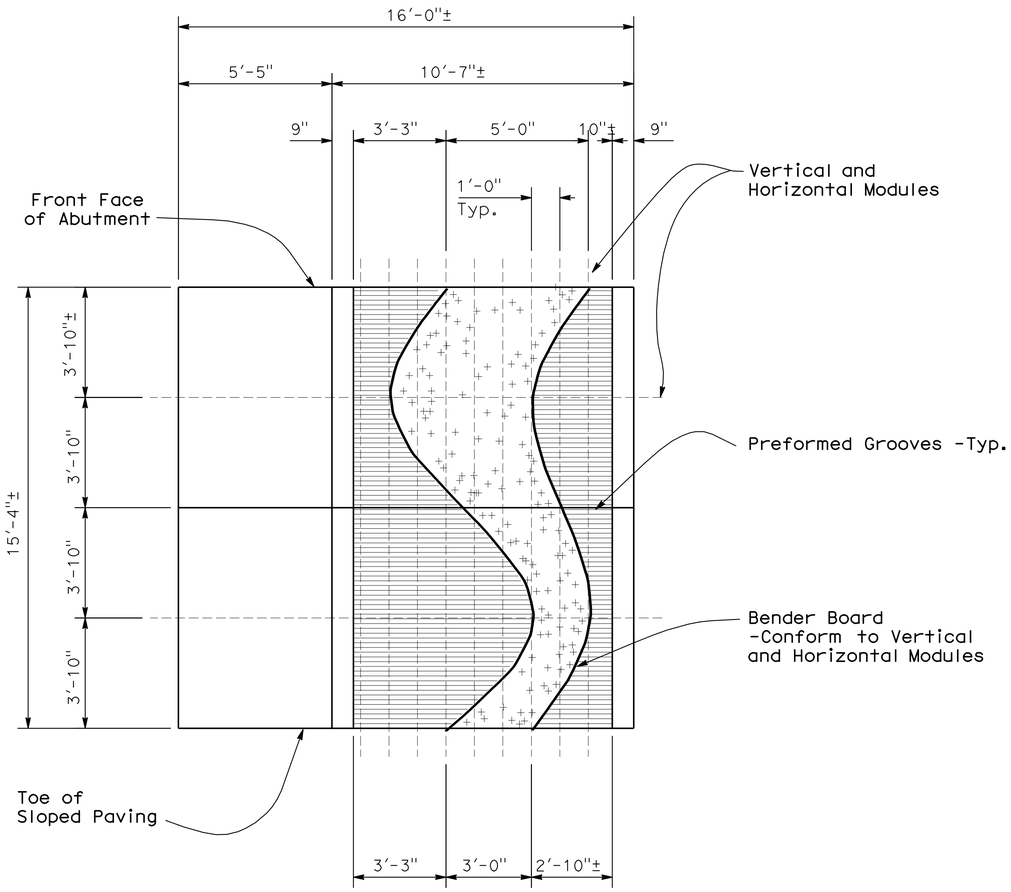

NORTHWEST ELEVATION

3/8" = 1'-0"

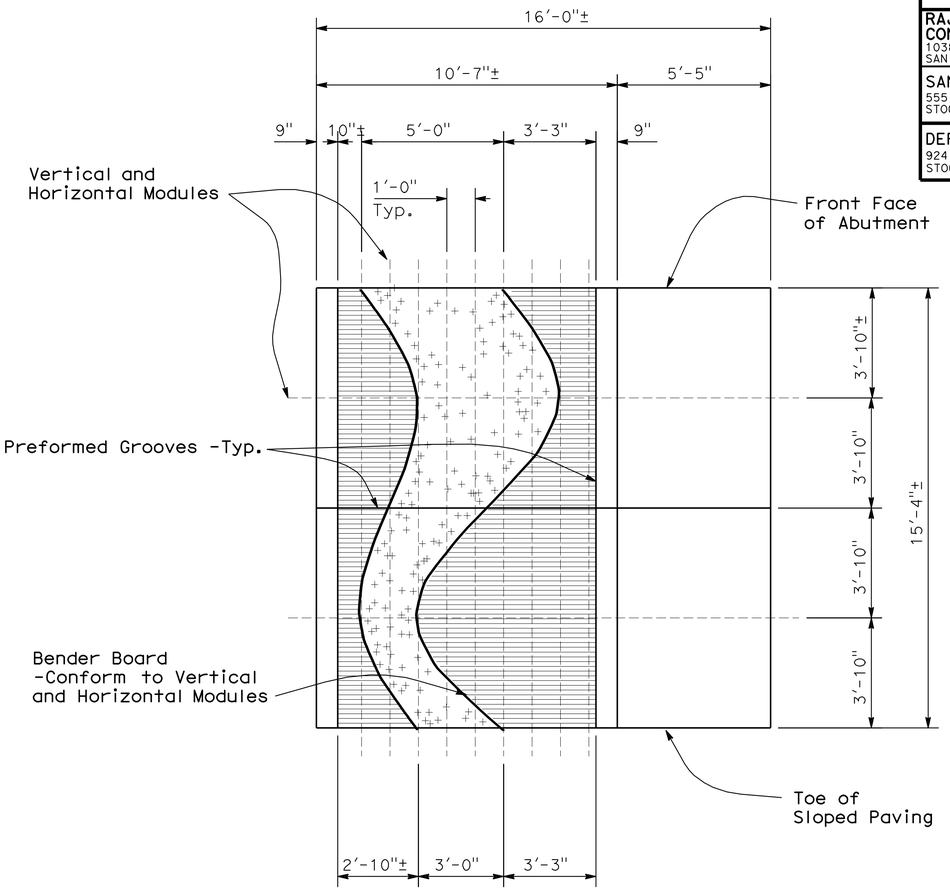

SOUTHWEST ELEVATION

3/8" = 1'-0"

Pattern Legend

- Curved Plastic Lumber Bender board (½" Width x 3½" depth) between concrete Patterns
- Concrete Pattern A Vertical Rough Broom Finish
- Concrete Pattern B Horizontal Scored Metal Rake Tooling (1" on center +/- x ½"Depth Max) over Horizontal Rough Broom Finish
- Concrete Pattern C Randomly Seeded Aggregate (40% of Surface Covered) with 1 ½"-2" Aggregate
- Concrete Pattern D 5-Prong Rake Tooling (4" on center x ½" Depth Max) Score in Arcs over Vertical Rough Broom Finish
  -Start and End Points Shall Not Overlap Other Patterns
  -Pattern Shown is Schematic

Note:
The Contractor shall verify all controlling field dimensions before ordering or fabricating any material

DESIGN OVERSIGHT — John Fujimoto
8-2-10
SIGN OFF DATE

	BY	CHECKED
DESIGN	C. D. B. FRANKEL	G. WOLDETSADIK
DETAILS	C. D. B. FRANKEL	G. WOLDETSADIK
QUANTITIES	G. WOLDETSADIK	W. Y. TAN

PREPARED FOR THE STATE OF CALIFORNIA DEPARTMENT OF TRANSPORTATION

P. SHINN
PROJECT ENGINEER

BRIDGE NO. 29-0215
POST MILE 31.11

SWAIN ROAD UNDERCROSSING (WIDEN)
SLOPE PAVING DETAILS NO. 5

DESIGN DETAIL SHEET (ENGLISH) (REV. 06-01-09)

ORIGINAL SCALE IN INCHES FOR REDUCED PLANS 0 1 2 3

CU 06240
EA 0G4701

DISREGARD PRINTS BEARING EARLIER REVISION DATES

REVISION DATES (PRELIMINARY STAGE ONLY): 12/4/09 1/18/10 4/21/10 6/11/10 7/28/10

SHEET 22 OF 27

FILE => 29-0215-t-slpdet05.dgn

USERNAME => trmikes1 DATE PLOTTED => 14-OCT-2010 TIME PLOTTED => 12:35

REFERENCE: CALTRANS SOIL & ROCK LOGGING, CLASSIFICATION, AND PRESENTATION MANUAL (JUNE 2007)

DIST	COUNTY	ROUTE	POST MILES TOTAL PROJECT	SHEET No	TOTAL SHEETS
10	SJ	5	25.0/32.7	1081	1132

GEOTECHNICAL PROFESSIONAL — DATE 7/28/10

10-11-10
PLANS APPROVAL DATE

REGISTERED PROFESSIONAL ENGINEER — GARY PARIKH — No. G.E. 666 — Exp. 12/31/11 — GEOTECHNICAL — STATE OF CALIFORNIA

The State of California or its officers or agents shall not be responsible for the accuracy or completeness of scanned copies of this plan sheet.

SAN JOAQUIN COUNCIL OF GOVERNMENTS
555 EAST WEBER AVENUE
STOCKTON, CALIFORNIA 95202

PARIKH CONSULTANTS, INC.
2360 QUME DRIVE, SUITE A
SAN JOSE, CA 95131

CEMENTATION

Description	Criteria
Weak	Crumbles or breaks with handling or little finger pressure.
Moderate	Crumbles or breaks with considerable finger pressure.
Strong	Will not crumble or break with finger pressure.

CONSISTENCY OF COHESIVE SOILS

Description	Unconfined Compressive Strength (tsf)	Pocket Penetrometer Measurement (tsf)	Torvane Measurement (tsf)	Field Approximation
Very Soft	< 0.25	< 0.25	< 0.12	Easily penetrated several inches by fist
Soft	0.25 to 0.50	0.25 to 0.50	0.12 to 0.25	Easily penetrated several inches by thumb
Medium Stiff	0.50 to 1.0	0.50 to 1.0	0.25 to 0.50	Penetrated several inches by thumb with moderate effort
Stiff	1 to 2	1 to 2	0.50 to 1.0	Readily indented by thumb but penetrated only with great effort
Very Stiff	2 to 4	2 to 4	1.0 to 2.0	Readily indented by thumbnail
Hard	> 4.0	> 4.0	> 2.0	Indented by thumbnail with difficulty

BOREHOLE IDENTIFICATION

Symbol	Hole Type	Description
Size	A	Auger Boring
Size	R P	Rotary drilled boring Rotary percussion boring (air)
Size	R	Rotary drilled diamond core
Size	HD HA	Hand driven (1-inch soil tube) Hand Auger
●	D	Dynamic Cone Penetration Boring
▲	CPT	Cone Penetration Test (ASTM D 5778-95)
⬚	O	Other

Note: Size in inches.

PLASTICITY OF FINE-GRAINED SOILS

Description	Criteria
Nonplastic	A 1/8-inch thread cannot be rolled at any water content.
Low	The thread can barely be rolled and the lump cannot be formed when drier than the plastic limit.
Medium	The thread is easy to roll and not much time is required to reach the plastic limit. The thread cannot be rerolled after reaching the plastic limit. The lump crumbles when drier than the plastic limit.
High	It takes considerable time rolling and kneading to reach the plastic limit. The thread can be rerolled several times after reaching the plastic limit. The lump can be formed without crumbling when drier than the plastic limit.

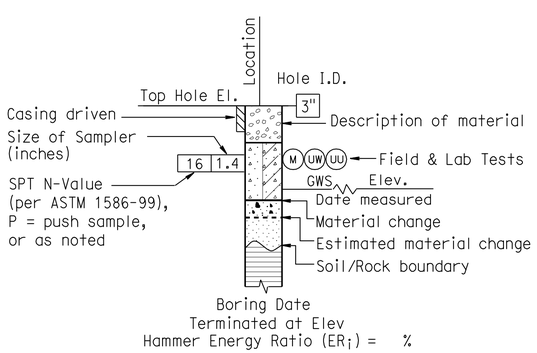

ROTARY BORING

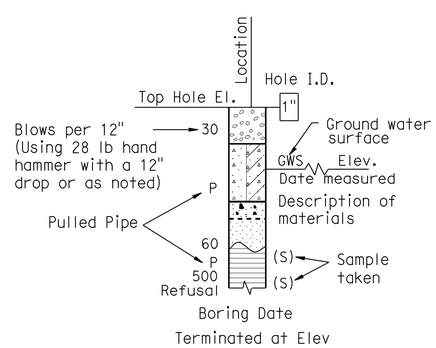

HAND BORING

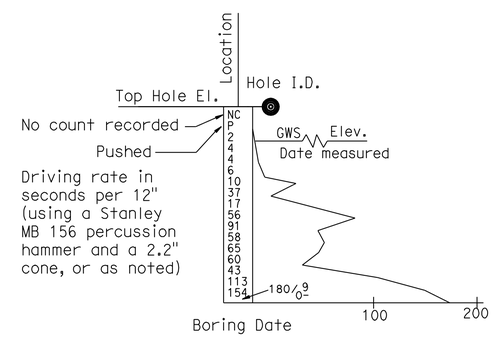

DYNAMIC CONE PENETRATION BORING

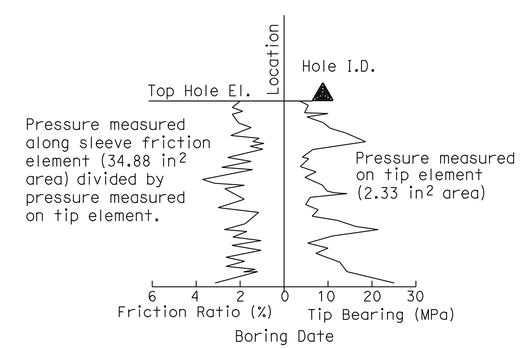

CONE PENETRATION TEST (CPT) SOUNDING

DESIGN OVERSIGHT — John Fujimoto
8-2-10
SIGN OFF DATE

DRAWN BY: O. GOUTHIER
CHECKED BY: D. WANG

S. DUDDU - A. R. BHARADWAJ
FIELD INVESTIGATION BY:
DATE: MARCH 2009 - APRIL 2009

PREPARED FOR THE STATE OF CALIFORNIA DEPARTMENT OF TRANSPORTATION

A. LAM
PROJECT ENGINEER

BRIDGE NO. 29-0215
POST MILES 31.11

SWAIN ROAD UC (WIDEN)
SOIL LEGEND 1 OF 2

OGS CIVIL LOG OF TEST BORINGS SHEET (ENGLISH) (REV. 06-01-09)

ORIGINAL SCALE IN INCHES FOR REDUCED PLANS 0 1 2 3

CU 06240
EA 0G4701

DISREGARD PRINTS BEARING EARLIER REVISION DATES
REVISION DATES: 10/18/09 12/04/09 01/18/10 04/28/10 06/11/10 7/28/10

SHEET 23 OF 27

FILE => 29-0215-z-ltb01.dgn

USERNAME => ttmirkes1 DATE PLOTTED => 14-OCT-2010 TIME PLOTTED => 12:35

REFERENCE: CALTRANS SOIL & ROCK LOGGING, CLASSIFICATION, AND PRESENTATION MANUAL (JUNE 2007)

DIST	COUNTY	ROUTE	POST MILES TOTAL PROJECT	SHEET No	TOTAL SHEETS
10	SJ	5	25.0/32.7	1082	1132

GEOTECHNICAL PROFESSIONAL — DATE 7/28/10

PLANS APPROVAL DATE 10-11-10

REGISTERED PROFESSIONAL ENGINEER — GARY PARIKH — No. G.E. 666 — Exp. 12/31/11 — GEOTECHNICAL — STATE OF CALIFORNIA

The State of California or its officers or agents shall not be responsible for the accuracy or completeness of scanned copies of this plan sheet.

SAN JOAQUIN COUNCIL OF GOVERNMENTS
555 EAST WEBER AVENUE
STOCKTON, CALIFORNIA 95202

PARIKH CONSULTANTS, INC.
2360 QUME DRIVE, SUITE A
SAN JOSE, CA 95131

GROUP SYMBOLS AND NAMES

Graphic/Symbol	Group Names	Graphic/Symbol	Group Names
GW	Well-graded GRAVEL Well-graded GRAVEL with SAND	CL	Lean CLAY Lean CLAY with SAND Lean CLAY with GRAVEL SANDY lean CLAY SANDY lean CLAY with GRAVEL GRAVELLY lean CLAY GRAVELLY lean CLAY with SAND
GP	Poorly graded GRAVEL Poorly graded GRAVEL with SAND		
GW-GM	Well-graded GRAVEL with SILT Well-graded GRAVEL with SILT and SAND	CL-ML	SILTY CLAY SILTY CLAY with SAND SILTY CLAY with GRAVEL SANDY SILTY CLAY SANDY SILTY CLAY with GRAVEL GRAVELLY SILTY CLAY GRAVELLY SILTY CLAY with SAND
GW-GC	Well-graded GRAVEL with CLAY (or SILTY CLAY) Well-graded GRAVEL with CLAY and SAND (or SILTY CLAY and SAND)		
GP-GM	Poorly graded GRAVEL with SILT Poorly graded GRAVEL with SILT and SAND	ML	SILT SILT with SAND SILT with GRAVEL SANDY SILT SANDY SILT with GRAVEL GRAVELLY SILT GRAVELLY SILT with SAND
GP-GC	Poorly graded GRAVEL with CLAY (or SILTY CLAY) Poorly graded GRAVEL with CLAY and SAND (or SILTY CLAY and SAND)		
GM	SILTY GRAVEL SILTY GRAVEL with SAND	OL	ORGANIC lean CLAY ORGANIC lean CLAY with SAND ORGANIC lean CLAY with GRAVEL SANDY ORGANIC lean CLAY SANDY ORGANIC lean CLAY with GRAVEL GRAVELLY ORGANIC lean CLAY GRAVELLY ORGANIC lean CLAY with SAND
GC	CLAYEY GRAVEL CLAYEY GRAVEL with SAND		
GC-GM	SILTY, CLAYEY GRAVEL SILTY, CLAYEY GRAVEL with SAND	OL	ORGANIC SILT ORGANIC SILT with SAND ORGANIC SILT with GRAVEL SANDY ORGANIC SILT SANDY ORGANIC SILT with GRAVEL GRAVELLY ORGANIC SILT GRAVELLY ORGANIC SILT with SAND
SW	Well-graded SAND Well-graded SAND with GRAVEL		
SP	Poorly graded SAND Poorly graded SAND with GRAVEL	CH	Fat CLAY Fat CLAY with SAND Fat CLAY with GRAVEL SANDY fat CLAY SANDY fat CLAY with GRAVEL GRAVELLY fat CLAY GRAVELLY fat CLAY with SAND
SW-SM	Well-graded SAND with SILT Well-graded SAND with SILT and GRAVEL		
SW-SC	Well-graded SAND with CLAY (or SILTY CLAY) Well-graded SAND with CLAY and GRAVEL (or SILTY CLAY and GRAVEL)	MH	Elastic SILT Elastic SILT with SAND Elastic SILT with GRAVEL SANDY elastic SILT SANDY elastic SILT with GRAVEL GRAVELLY elastic SILT GRAVELLY elastic SILT with SAND
SP-SM	Poorly graded SAND with SILT Poorly graded SAND with SILT and GRAVEL		
SP-SC	Poorly graded SAND with CLAY (or SILTY CLAY) Poorly graded SAND with CLAY and GRAVEL (or SILTY CLAY and GRAVEL)	OH	ORGANIC fat CLAY ORGANIC fat CLAY with SAND ORGANIC fat CLAY with GRAVEL SANDY ORGANIC fat CLAY SANDY ORGANIC fat CLAY with GRAVEL GRAVELLY ORGANIC fat CLAY GRAVELLY ORGANIC fat CLAY with SAND
SM	SILTY SAND SILTY SAND with GRAVEL		
SC	CLAYEY SAND CLAYEY SAND with GRAVEL	OH	ORGANIC elastic SILT ORGANIC elastic SILT with SAND ORGANIC elastic SILT with GRAVEL SANDY ORGANIC elastic SILT SANDY ORGANIC elastic SILT with GRAVEL GRAVELLY ORGANIC elastic SILT GRAVELLY ORGANIC elastic SILT with SAND
SC-SM	SILTY, CLAYEY SAND SILTY, CLAYEY SAND with GRAVEL		
PT	PEAT	OL/OH	ORGANIC SOIL ORGANIC SOIL with SAND ORGANIC SOIL with GRAVEL SANDY ORGANIC SOIL SANDY ORGANIC SOIL with GRAVEL GRAVELLY ORGANIC SOIL GRAVELLY ORGANIC SOIL with SAND
	COBBLES COBBLES and BOULDERS BOULDERS		

FIELD AND LABORATORY TESTING

- (C) Consolidation (ASTM D 2435)
- (CL) Collapse Potential (ASTM D 5333)
- (CP) Compaction Curve (CTM 216)
- (CR) Corrosivity Testing (CTM 643, CTM 422, CTM 417)
- (CU) Consolidated Undrained Triaxial (ASTM D 4767)
- (DS) Direct Shear (ASTM D 3080)
- (EI) Expansion Index (ASTM D 4829)
- (M) Moisture Content (ASTM D 2216)
- (OC) Organic Content-% (ASTM D 2974)
- (P) Permeability (CTM 220)
- (PA) Particle Size Analysis (ASTM D 422)
- (PI) Plasticity Index (AASHTO T 90) Liquid Limit (AASHTO T 89)
- (PL) Point Load Index (ASTM D 5731)
- (PM) Pressure Meter
- (PP) Pocket Penetrometer
- (R) R-Value (CTM 301)
- (SE) Sand Equivalent (CTM 217)
- (SG) Specific Gravity (AASHTO T 100)
- (SL) Shrinkage Limit (ASTM D 427)
- (SW) Swell Potential (ASTM D 4546)
- (TV) Pocket Torvane
- (UC) Unconfined Compression-Soil (ASTM D 2166) Unconfined Compression-Rock (ASTM D 2938)
- (UU) Unconsolidated Undrained Triaxial (ASTM D 2850)
- (UW) Unit Weight (ASTM D 4767)
- (VS) Vane Shear (AASHTO T 223)

APPARENT DENSITY OF COHESIONLESS SOILS

Description	SPT N_{60} (Blows / 12 inches)
Very loose	0 - 4
Loose	5 - 10
Medium Dense	11 - 30
Dense	31 - 50
Very Dense	> 50

MOISTURE

Description	Criteria
Dry	Absence of moisture, dusty, dry to the touch
Moist	Damp but no visible water
Wet	Visible free water, usually soil is below water table

PERCENT OR PROPORTION OF SOILS

Description	Criteria
Trace	Particles are present but estimated to be less than 5%
Few	5 to 10%
Little	15 to 25%
Some	30 to 45%
Mostly	50 to 100%

PARTICLE SIZE

Description		Size
Boulder		> 12"
Cobble		3" to 12"
Gravel	Coarse	3/4" to 3"
	Fine	No. 4 to 3/4"
Sand	Coarse	No. 10 to No. 4
	Medium	No. 40 to No. 10
	Fine	No. 200 to No. 40

DESIGN OVERSIGHT — John Fujimoto — 8-2-10 SIGN OFF DATE

DRAWN BY O. GOUTHIER
CHECKED BY D. WANG

S. DUDDU - A. R. BHARADWAJ
FIELD INVESTIGATION BY:
DATE: MARCH 2009 - APRIL 2009

PREPARED FOR THE STATE OF CALIFORNIA DEPARTMENT OF TRANSPORTATION

A. LAM
PROJECT ENGINEER

BRIDGE NO. 29-0215
POST MILES 31.11

SWAIN ROAD UC (WIDEN)
SOIL LEGEND 2 OF 2

OGS CIVIL LOG OF TEST BORINGS SHEET (ENGLISH) (REV. 06-01-09)

ORIGINAL SCALE IN INCHES FOR REDUCED PLANS 0 1 2 3

CU 06240
EA 0G4701

DISREGARD PRINTS BEARING EARLIER REVISION DATES — REVISION DATES: 10/15/09 12/04/09 01/15/10 04/23/10 06/11/10 7/28/10

SHEET 24 OF 27

FILE => 29-0215-z-ltb02.dgn

USERNAME => trmikes1 DATE PLOTTED => 14-OCT-2010 TIME PLOTTED => 12:36

DIST	COUNTY	ROUTE	POST MILES TOTAL PROJECT	SHEET No	TOTAL SHEETS
10	SJ	5	25.0/32.7	1083	1132

GEOTECHNICAL PROFESSIONAL — DATE 7/28/10

PLANS APPROVAL DATE 10-11-10

REGISTERED PROFESSIONAL ENGINEER — GARY PARIKH — No. G.E. 666 — Exp. 12/31/11 — GEOTECHNICAL — STATE OF CALIFORNIA

The State of California or its officers or agents shall not be responsible for the accuracy or completeness of scanned copies of this plan sheet.

SAN JOAQUIN COUNCIL OF GOVERNMENTS
555 EAST WEBER AVENUE
STOCKTON, CALIFORNIA 95202

PARIKH CONSULTANTS, INC.
2360 QUME DRIVE, SUITE A
SAN JOSE, CA 95131

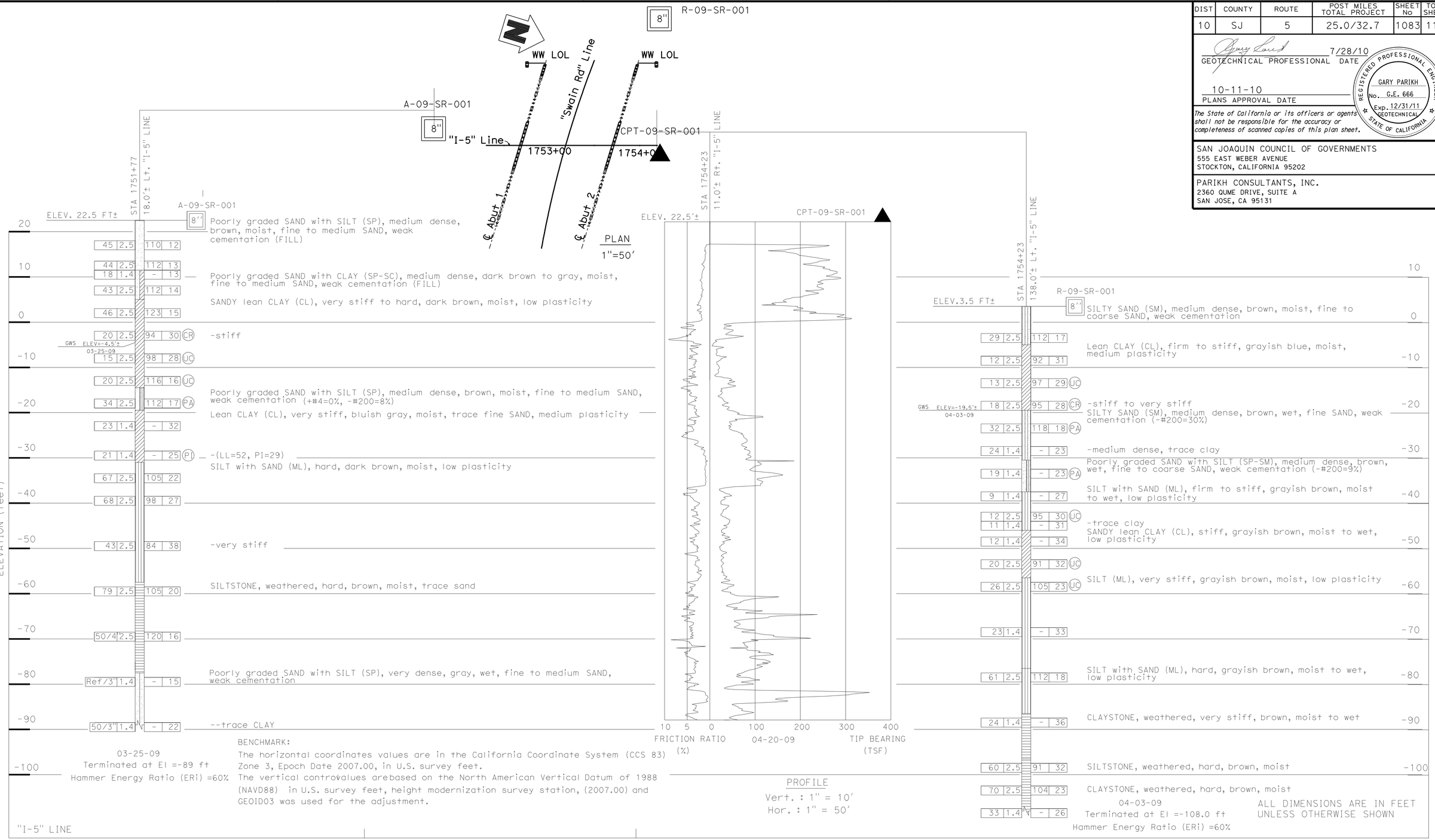

BENCHMARK:
The horizontal coordinates values are in the California Coordinate System (CCS 83) Zone 3, Epoch Date 2007.00, in U.S. survey feet.
The vertical controvalues arebased on the North American Vertical Datum of 1988 (NAVD88) in U.S. survey feet, height modernization survey station, (2007.00) and GEOID03 was used for the adjustment.

DESIGN OVERSIGHT — John Fujimoto — 8-2-10 — SIGN OFF DATE

DRAWN BY	O. GOUTHIER	S. DUDDU - A. R. BHARADWAJ	FIELD INVESTIGATION BY:
CHECKED BY	D. WANG	DATE: MARCH 2009 - APRIL 2009	

PREPARED FOR THE STATE OF CALIFORNIA DEPARTMENT OF TRANSPORTATION

A. LAM — PROJECT ENGINEER

BRIDGE NO. 29-0215
POST MILES 31.11

SWAIN ROAD UC (WIDEN)
LOG OF TEST BORINGS 1 OF 3

CU 06240
EA 0G4701

DISREGARD PRINTS BEARING EARLIER REVISION DATES — REVISION DATES: 10/18/09, 12/04/09, 01/18/10, 04/28/10, 06/14/10, 7/28/10

SHEET 25 OF 27

OGS GEOTECHNICAL LOG OF TEST BORINGS SHEET (ENGLISH) (REV. 06-01-09)

ORIGINAL SCALE IN INCHES FOR REDUCED PLANS 0 1 2 3

FILE => 29-0215-z-1tb03.dgn

USERNAME => trmikes1 DATE PLOTTED => 14-OCT-2010 TIME PLOTTED => 12:36

BENCHMARK

CALTRANS 57.2 mm BRASS DISK "1746", EL 5.431 m, STATION "I-5" 532+20.25, NORTHING 666617.712, EASTING 1925473.269 AND CALTRANS 57.2 mm BRASS DISK "1755", EL 6.352 m, STATION "I-5" 534+92.71, NORTHING 666878.451, EASTING 1925394.210. ELEVATIONS ARE BASED ON THE CITY OF STOCKTON BENCHMARK LIST DATED OCTOBER, 1992, WHICH REFERS TO NGVD SEA LEVEL DATUM OF 1929.

TO ACCOMPANY PLANS DATED 10-11-10

DIVISION OF ENGINEERING SERVICES - GEOTECHNICAL SERVICES

As-Built Log of Test Borings sheet is considered an informational document only. As such, the State of California registration seal with signature, license number and registration certificate expiration date confirm that this is a true and accurate copy of the original document. This drawing is available and presented only for the convenience of any bidder, contractor or other interested party.

DIST.	COUNTY	ROUTE	POST MILES-TOTAL PROJECT	Sheet No.	Total Sheets
10	SJ	5	25.0/32.7	1084	1132

REGISTERED CIVIL ENGINEER — DATE 7/28/10

SWAIN ROAD UC (WIDEN)

LOG OF TEST BORINGS 2 OF 3

NOTE: A COPY OF THIS LOG OF TEST BORINGS IS AVAILABLE AT OFFICE OF STRUCTURE MAINTENANCE AND INVESTIGATIONS, SACRAMENTO, CALIFORNIA

CU: 06240
EA: 0G4701

BRIDGE No.	
29-0215	
Sheet	of
26	27

REGISTERED PROFESSIONAL ENGINEER — GARY PARIKH — No. G.E. 666 — Exp. 12/31/11 — GEOTECHNICAL — STATE OF CALIFORNIA

Caltrans Metric

DIST	COUNTY	ROUTE	KILOMETER POST TOTAL PROJECT	SHEET NO.	TOTAL SHEETS

REGISTERED PROFESSIONAL ENGINEER

PLANS APPROVAL DATE

REGISTERED PROFESSIONAL ENGINEER — No. — Exp. — GEOTECHNICAL — STATE OF CALIFORNIA

ESPAÑA GEOTECHNICAL CONSULTING
502 GIUSEPPE CT, SUITE 11
ROSEVILLE, CA 95678
EGC PROJECT NO. F187-5

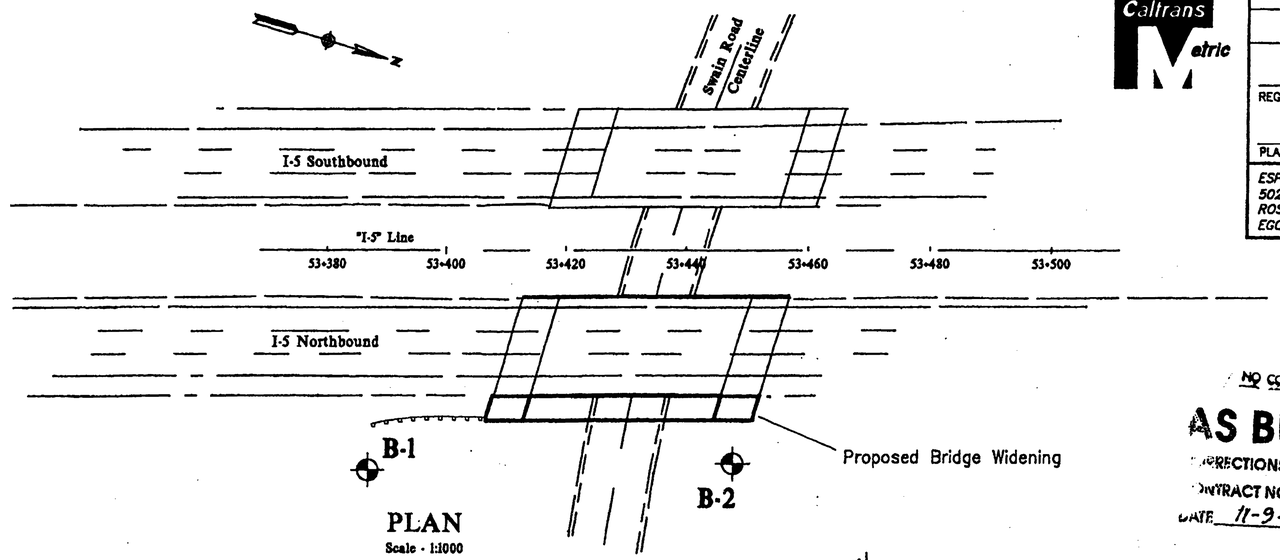

PLAN
Scale - 1:1000

NO CORRECTIONS THIS SHEET

AS BUILT
CORRECTIONS BY D.R. SMALL RHT
CONTRACT NO. 10-448344
DATE 11-9-00 7-18-01

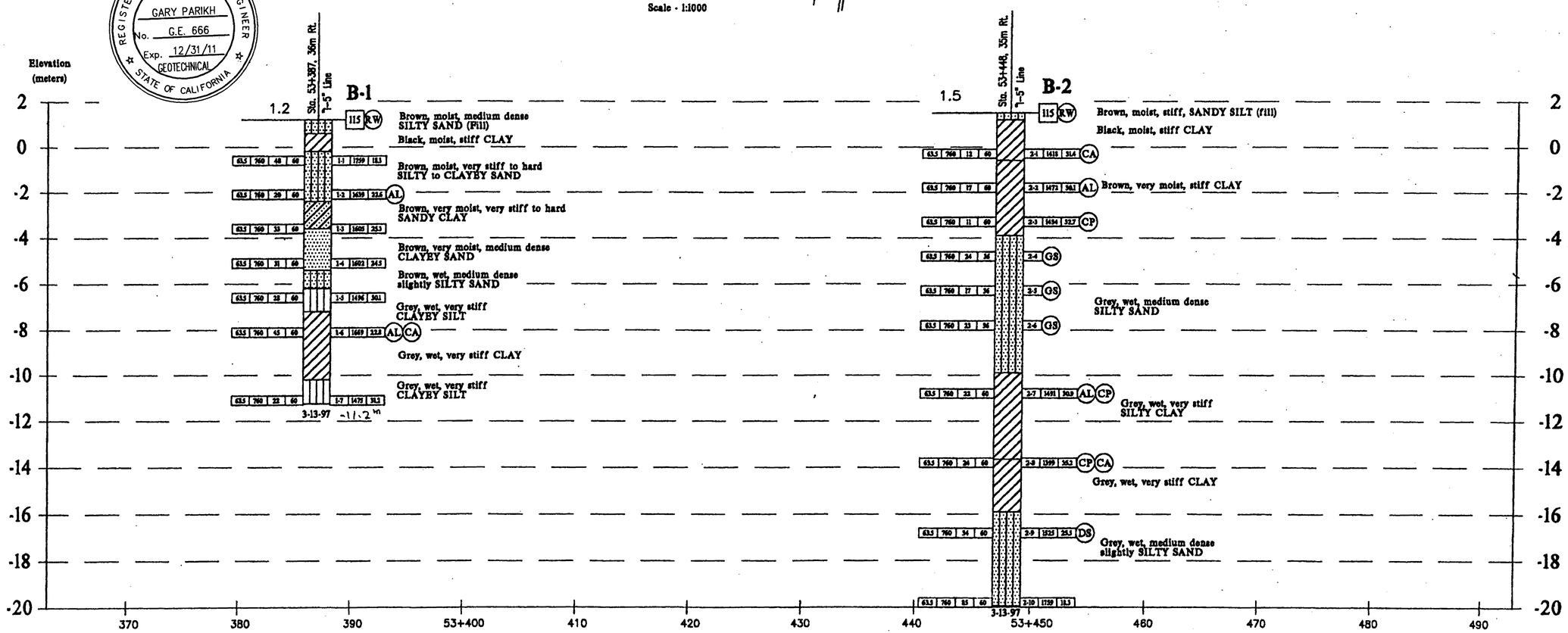

PROFILE
Stationing: "I-5" Line, meters
1:200 (Horizontal)
1:100 (Vertical)

LEGEND OF BORING OPERATIONS

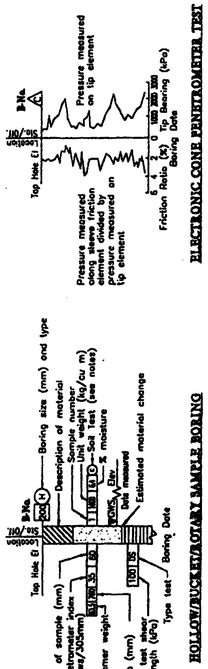

NOTES:

1. TYPES OF BORINGS: Rotary Wash; Cone Penetrometer; Hollow Stem Auger; Test Pit
2. SOIL SAMPLER: 50mm Sampler: 76mm OD by 50mm ID, split barrel sampler, 63.5 kg hammer, rope and cathead
3. SOIL TEST DESIGNATIONS: Atterberg limits; Chemical analysis; Max. dry density; R-value; Consolidation; Sieve analysis; Pocket penetrometer; Unconfined compression; Unconsolidated undrained triaxial

LEGEND OF EARTH MATERIALS

CL, Lean Clay; ML, Silt; OL, Organic Clay or Silt; CH, Fat Clay; MH, Elastic Silt; OH, Organic Clay or Silt; Organic Material, Sawdust, etc.; GC, Clayey Gravel; SW, Well-Graded Sand; SP, Poorly-Graded Sand; SM, Silty Sand; SC, Clayey Sand; Sandstone; Granitic Rock; Claystone; Siltstone; GM, Silty Gravel

all soil classification according to Unified Soil Classification System and ASTM D2488

RELATIVE DENSITY AND CONSISTENCY CLASSIFICATION

Sand and Gravels — ASTM D1586 76mm OD x 50mm ID (SPT)

Consistency	Blows/305mm	Blows/305mm
Very loose	0 – 4	0 – 7
Loose	4 – 10	7 – 17
Medium dense	10 – 30	17 – 50
Dense	30 – 50	50 – 86
Very dense	Over 50	Over 86

Clays and Silts

Consistency	Blows/305mm	Blows/305mm
Very soft	0 – 2	0 – 3
Soft	2 – 4	3 – 5
Firm	4 – 8	5 – 9
Stiff	8 – 15	9 – 18
Very stiff	15 – 30	18 – 38
Hard	Over 30	Over 38

DESIGN OVERSIGHT 10-7-98 SIGN OFF DATE	DRAWN BY D. KOELZER	FIELD INVESTIGATOR S. HARVEY	PREPARED FOR THE STATE OF CALIFORNIA DEPARTMENT OF TRANSPORTATION
	CHECKED BY C. ESPANA	DATE 3/97	

CARLOS ESPAÑA — PROJECT ENGINEER

BRIDGE NO. 29-215R/L
POST KILOMETER 47.9

SWAIN ROAD UNDERCROSSING (WIDEN)

LOG OF TEST BORINGS

ORIGINAL SCALE IN MILLIMETERS FOR REDUCED PLANS 0 20 40 60 80

CU 10115
EA 4483U1

DISREGARD PRINTS BEARING EARLIER REVISION DATES

REVISION DATES (PRELIMINARY STAGE ONLY) 5/8/97 11/3/97 5/1/98 5/5/98 8/12/98

SHEET 15 OF 16

FILENAME => 29-0215-z-ltb04.tif

TO ACCOMPANY PLANS DATED 10-11-10

DIVISION OF ENGINEERING SERVICES – GEOTECHNICAL SERVICES

As-Built Log of Test Borings sheet is considered an informational document only. As such, the State of California registration seal with signature, license number and registration certificate expiration date confirm that this is a true and accurate copy of the original document. This drawing is available and presented only for the convenience of any bidder, contractor or other interested party.

DIST.	COUNTY	ROUTE	POST MILES–TOTAL PROJECT	Sheet No.	Total Sheets
10	SJ	5	25.0/32.7	1085	1132

REGISTERED CIVIL ENGINEER — DATE 7/28/10

REGISTERED PROFESSIONAL ENGINEER — GARY PARIKH — No. G.E. 666 — Exp. 12/31/11 — GEOTECHNICAL — STATE OF CALIFORNIA

SWAIN ROAD UC (WIDEN)

LOG OF TEST BORINGS 3 OF 3

NOTE: A COPY OF THIS LOG OF TEST BORINGS IS AVAILABLE AT OFFICE OF STRUCTURE MAINTENANCE AND INVESTIGATIONS, SACRAMENTO, CALIFORNIA

CU: 06240
EA: 0G4701

BRIDGE No. 29-0215

Sheet 27 of 27

19	SJ	5	[illegible]	[illegible]	[illegible]

September 5, 1967

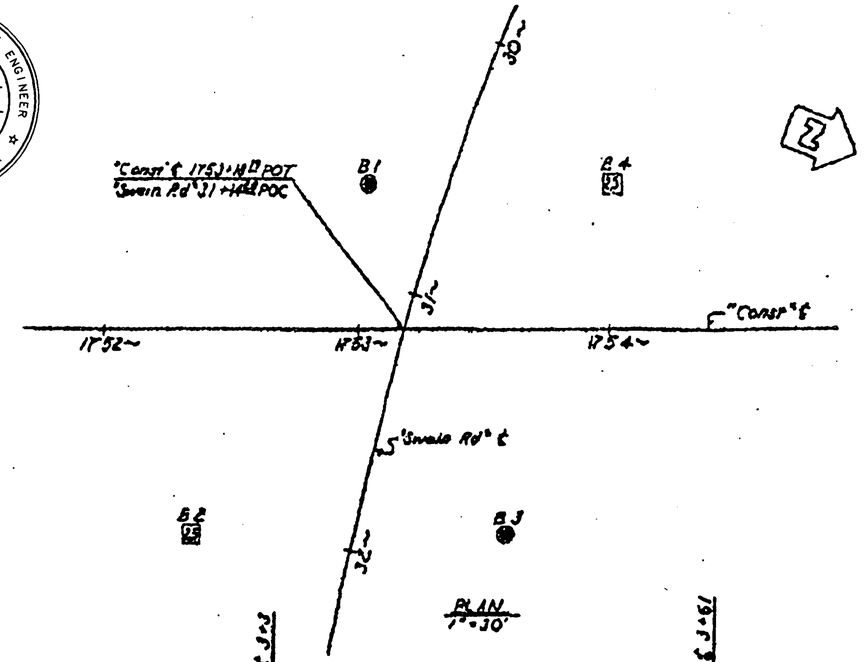

AS BUILT PLANS
Contract No. 10-080924
Date Completed
Document No. 00000619

IN BRIDGE GEOLOGY SECTION

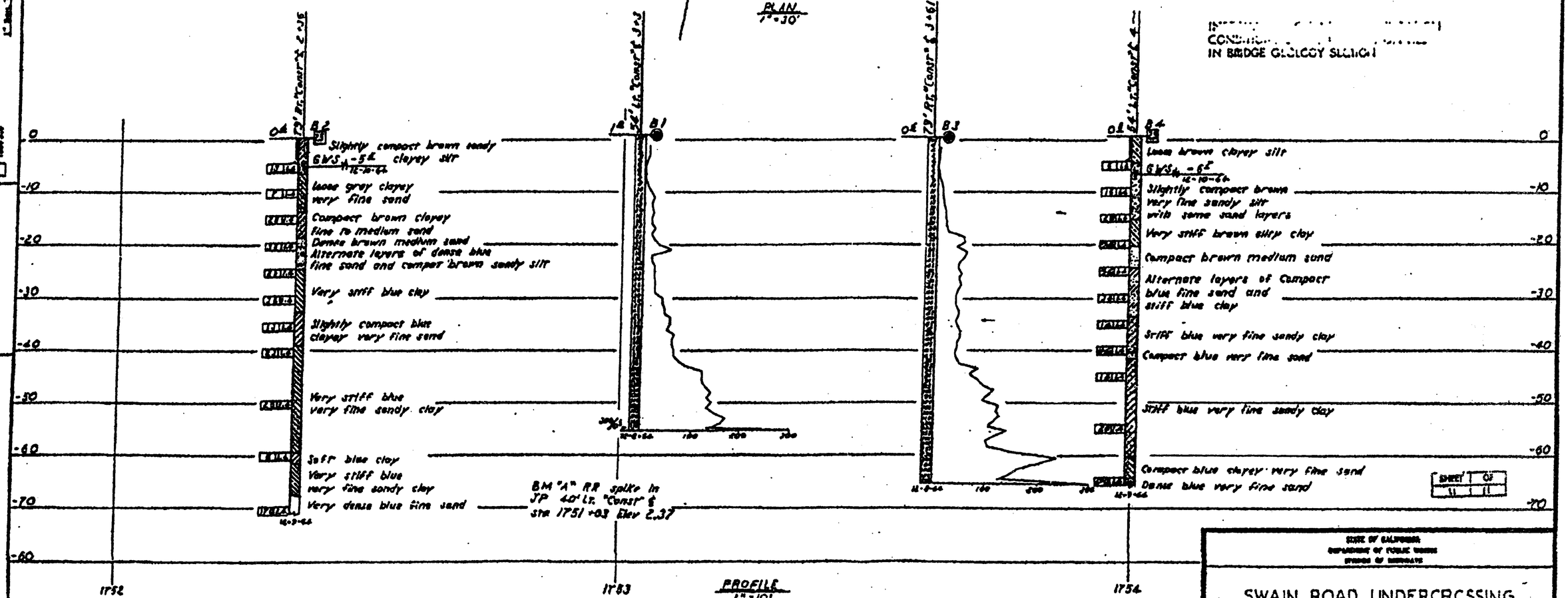

STATE OF CALIFORNIA
DEPARTMENT OF PUBLIC WORKS
DIVISION OF HIGHWAYS

SWAIN ROAD UNDERCROSSING

LOG OF TEST BORINGS

SCALE As shown | BRIDGE 29-215 R/L | FILE | DRAWING 29215-7

FILENAME => 29-0215-z-1tb05.tif

DIST	COUNTY	ROUTE	POST MILES TOTAL PROJECT	SHEET No	TOTAL SHEETS
10	SJ	5	25.0/32.7	1086	1132

REGISTERED CIVIL ENGINEER 7/28/10 DATE

10-11-10
PLANS APPROVAL DATE

REGISTERED PROFESSIONAL ENGINEER RONALD L OEN No. 46945 Exp. 9/30/11 CIVIL STATE OF CALIFORNIA

The State of California or its officers or agents shall not be responsible for the accuracy or completeness of scanned copies of this plan sheet.

SAN JOAQUIN COUNCIL OF GOVERNMENTS
555 E. WEBER AVENUE
STOCKTON, CA 95202

BIGGS CARDOSA ASSOCIATES INC.
865 THE ALAMEDA
SAN JOSE, CALIFORNIA 95126

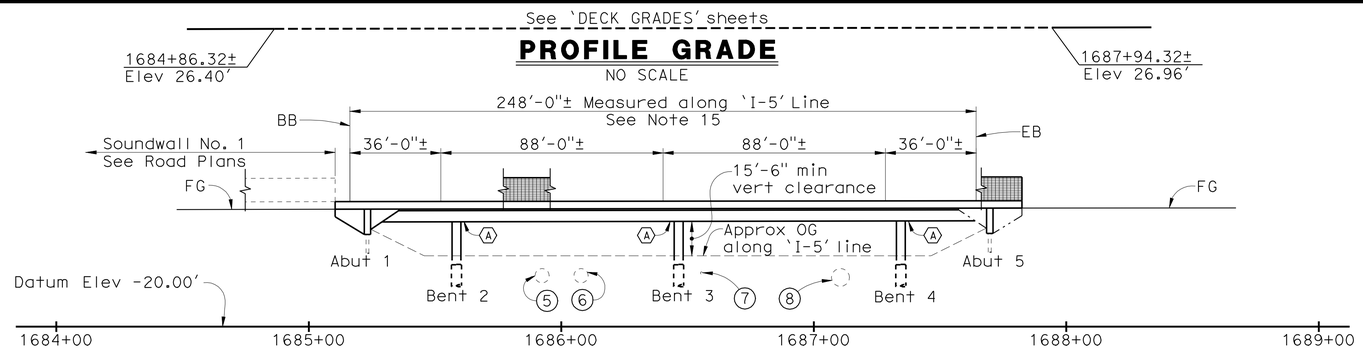

MIRRORED ELEVATION

1" = 30'

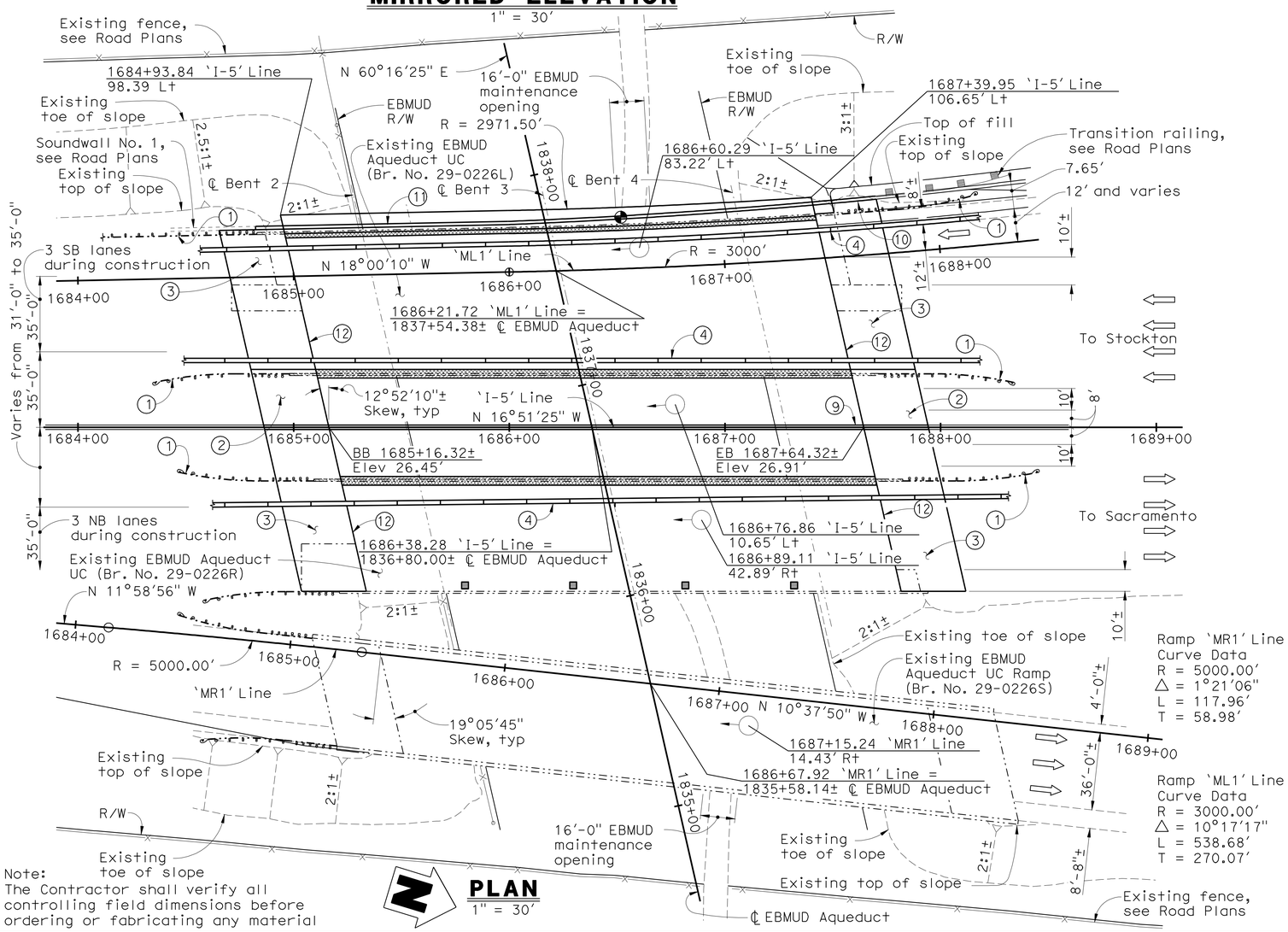

Note:
The Contractor shall verify all controlling field dimensions before ordering or fabricating any material

PLAN

1" = 30'

Legend:

- Bridge Removal (Portion)
- Closure Pour
- Indicates deck drain, see 'DECK DRAIN PLAN' sheet
- Indicates point of minimum vertical clearance
- Indicates existing structure
- Indicates direction of traffic
- Indicates soffit lights, see Electrical Plans

Notes:

(A) Bent cap retrofit, see 'BENT DETAILS No. 3' sheet.

(1) Remove existing Bridge Approach Guard Railings, see Road Plans.

(2) Structure Approach Type N(30D).

(3) Structure Approach Type R(30D).

(4) Temporary Railing Type K, see Road Plans.

(5) Existing 67"± dia waterline (EBMUD), see Road Plans.

(6) Existing 65"± dia waterline (EBMUD), see Road Plans.

(7) Existing 10"± dia petroleum line (Kinder Morgan), see Road Plans.

(8) Existing 87"± dia waterline (EBMUD), see Road Plans.

(9) Concrete Barrier Type 60A (Mod).

(10) Paint "Bridge No. 29-0226L" and "EBMUD Aqueduct UC".

(11) Soundwall, see 'SOUNDWALL DETAILS' sheet.

(12) Remove and replace existing Joint Seal.

13. For General Notes and Quantities and Index to Bridge Plans see 'GENERAL NOTES' sheet.

14. For Pile Data Table, see 'FOUNDATION PLAN' sheet.

15. Indicates limits of Prepare Concrete Bridge Deck Surface and Furnish and Place Polyester Concrete Overlay.

16. For Typical Section, see 'GENERAL PLAN No. 2' sheet.

DESIGN OVERSIGHT John Fujimoto	DESIGN	BY T. SWENSON	CHECKED A. NOTARO	LOAD & RESISTANCE FACTOR DESIGN	LIVE LOADING: HL93 W/"LOW-BOY" AND PERMIT DESIGN VEHICLE
8-2-10 SIGN OFF DATE	DETAILS	BY T. SWENSON	CHECKED A. NOTARO	LAYOUT BY T. SWENSON	CHECKED G. JEYARAMAN
	QUANTITIES	BY J. YIP	CHECKED P. GONGIDI	SPECIFICATIONS BY F. ARON	PLANS AND SPECS COMPARED A. NOTARO

PREPARED FOR THE STATE OF CALIFORNIA DEPARTMENT OF TRANSPORTATION

JOHN A. ALCIATI
PROJECT ENGINEER

BRIDGE NO. 29-0226
POST MILES 29.83

EBMUD AQUEDUCT UC (WIDEN)

GENERAL PLAN No. 1

DESIGN GENERAL PLAN SHEET (ENGLISH) (REV. 6-01-09)

ORIGINAL SCALE IN INCHES FOR REDUCED PLANS 0 1 2 3

CU 06240
EA 0G4701

DISREGARD PRINTS BEARING EARLIER REVISION DATES

REVISION DATES (PRELIMINARY STAGE ONLY) 6/2/09 9/4/09 10/16/09 12/4/09 1/15/10 4/23/10 5/28/10 6/11/10 7/28/10

SHEET 1 OF 34

FILE => 29-0226-a-gp01.dgn

USERNAME => trmikest DATE PLOTTED => 14-OCT-2010 TIME PLOTTED => 12:36

20060485TC) 20060485

DIST	COUNTY	ROUTE	POST MILES TOTAL PROJECT	SHEET No	TOTAL SHEETS
10	SJ	5	25.0/32.7	1087	1132

REGISTERED CIVIL ENGINEER 7/28/10 DATE

10-11-10
PLANS APPROVAL DATE

REGISTERED PROFESSIONAL ENGINEER RONALD L OEN No. 46945 Exp. 9/30/11 CIVIL STATE OF CALIFORNIA

The State of California or its officers or agents shall not be responsible for the accuracy or completeness of scanned copies of this plan sheet.

SAN JOAQUIN COUNCIL OF GOVERNMENTS
555 E. WEBER AVENUE
STOCKTON, CA 95202

BIGGS CARDOSA ASSOCIATES INC.
865 THE ALAMEDA
SAN JOSE, CALIFORNIA 95126

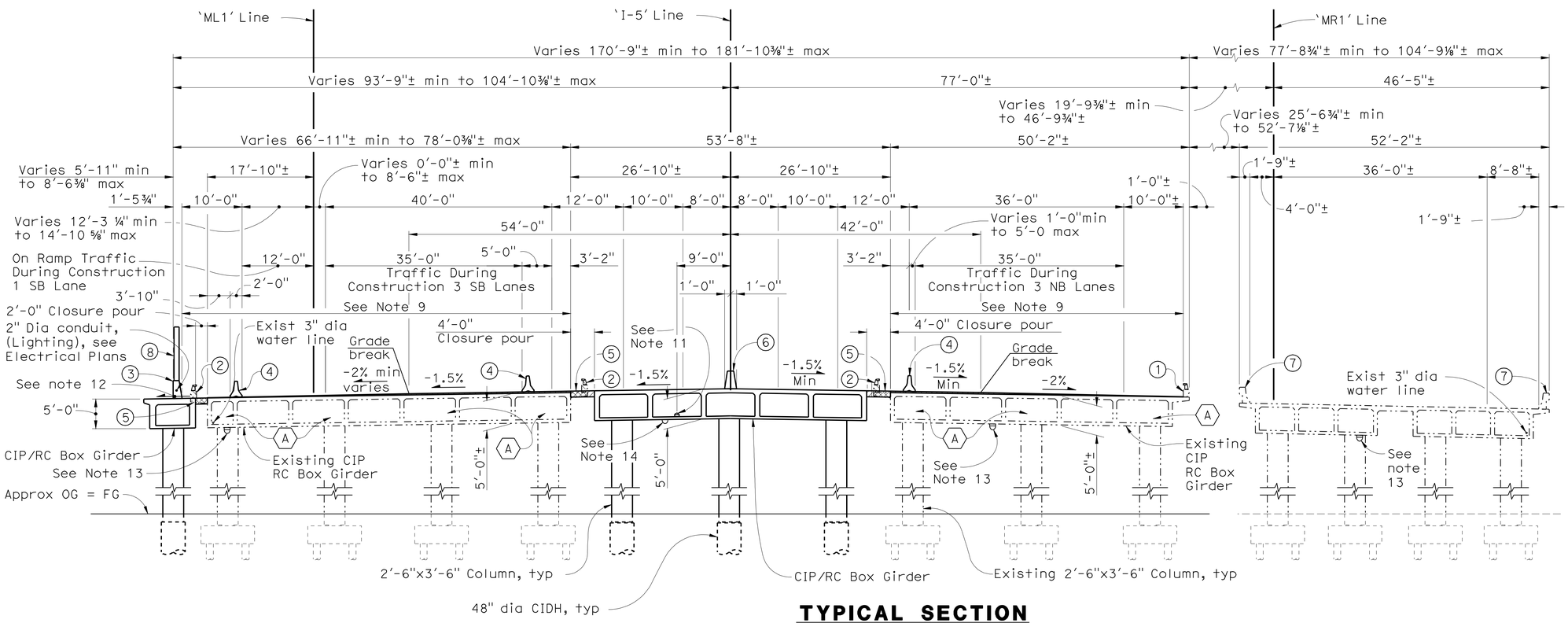

TYPICAL SECTION

1" = 10'

Notes:

(A) Bent Cap Retrofit. See `BENT DETAILS No. 3' sheet.
(1) Existing Type 9 Barrier Railing.
(2) Remove and salvage existing Barrier Railing Type 9.
(3) Concrete Barrier Type 736 (Mod).
(4) Temporary Railing Type K, see Road Plans.
(5) Remove existing overhang.
(6) Concrete Barrier Type 60A (Mod).
(7) Existing Concrete Barrier Type 25
(8) Sound Wall (Masonry Block)

9. Minimum and maximum dimensions shown in typical section are measured perpendicular to `I-5' Line at BB and EB
10. For Legend, see `GENERAL PLAN No. 1' sheet.
11. 4" Fiber Optic Line, see Electrical Plans.
12. 2% Minimum and varies, slope to match slope of polyester concrete overlay on existing bridge.
13. Surface Mounted Soffit Light, see Electrical Plans.
14. Soffit Light, see Electrical Plans.

Legend:

Bridge Removal (Portion)
Closure pour

Note:
The Contractor shall verify all controlling field dimensions before ordering or fabricating any material

DESIGN OVERSIGHT John Fujimoto 8-2-10 SIGN OFF DATE	DESIGN	BY T. SWENSON	CHECKED A. NOTARO	LOAD & RESISTANCE FACTOR DESIGN	LIVE LOADING: HL93 W/"LOW-BOY" AND PERMIT DESIGN VEHICLE
	DETAILS	BY T. SWENSON	CHECKED A. NOTARO	LAYOUT BY T. SWENSON	CHECKED G. JEYARAMAN
	QUANTITIES	BY J. YIP	CHECKED P. GONGIDI	SPECIFICATIONS BY F. ARON	PLANS AND SPECS COMPARED A. NOTARO

PREPARED FOR THE STATE OF CALIFORNIA DEPARTMENT OF TRANSPORTATION

JOHN A. ALCIATI
PROJECT ENGINEER

BRIDGE NO. 29-0226
POST MILES 29.83

EBMUD AQUEDUCT UC (WIDEN)
GENERAL PLAN No. 2

DESIGN GENERAL PLAN SHEET (ENGLISH) (REV. 6-01-09)

ORIGINAL SCALE IN INCHES FOR REDUCED PLANS 0 1 2 3

CU 06240
EA 0G4701

DISREGARD PRINTS BEARING EARLIER REVISION DATES

REVISION DATES (PRELIMINARY STAGE ONLY) 6/2/09 9/14/09 10/16/09 12/14/09 1/15/10 4/23/10 5/28/10 6/11/10 7/1/10 7/28/10

SHEET 2 OF 34

FILE => 29-0226-a-gp02.dgn

USERNAME => trmikest DATE PLOTTED => 14-OCT-2010 TIME PLOTTED => 12:36

20060048 (20060048526)

DIST	COUNTY	ROUTE	POST MILES TOTAL PROJECT	SHEET No	TOTAL SHEETS
10	SJ	5	25.0/32.7	1088	1132

REGISTERED CIVIL ENGINEER 7/28/10 DATE

10-11-10
PLANS APPROVAL DATE

REGISTERED PROFESSIONAL ENGINEER RONALD L OEN No. 46945 Exp. 9/30/11 CIVIL STATE OF CALIFORNIA

The State of California or its officers or agents shall not be responsible for the accuracy or completeness of scanned copies of this plan sheet.

SAN JOAQUIN COUNCIL OF GOVERNMENTS
555 E. WEBER AVENUE
STOCKTON, CA 95202

BIGGS CARDOSA ASSOCIATES INC.
865 THE ALAMEDA
SAN JOSE, CALIFORNIA 95126

GENERAL NOTES
LOAD & RESISTANCE FACTOR DESIGN

DESIGN: AASHTO LRFD Bridge Design Specifications, 4th Edition, and Caltrans Amendments preface dated December 2008; except that Geotechnical Design of Deep Foundations, Concrete barrier Type 60A (Mod), Concrete Barrier 736 (Mod), Structure Approach Type N (30D), and Structure Approach Type R (30D) arc designed using Bridge Design Specifications (1996 AASHTO with Revisions by Caltrans)

SEISMIC LOADING: Caltrans Seismic Design Criteria (SDC) Version 1.4, dated June 2006

DEAD LOAD: Includes 35 psf for future wearing surface.

LIVE LOAD: HL93 with "Low Boy" and permit design load

SEISMIC LOAD: Soil Profile Type D
Magnitude Group 7.25 ± 0.25
Peak Rock Acceleration 0.2g

CONCRETE: fy = 60 ksi
f'c = 3.6 ksi (Except as shown on 'Concrete Strength and Type Limits diagram)'

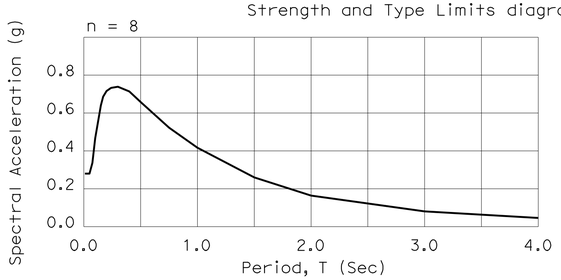

STANDARD PLANS DATED MAY 2006

	A10A	ACRONYMS AND ABBREVIATIONS (SHEET 1 OF 2)
	A10B	ACRONYMS AND ABBREVIATIONS (SHEET 2 OF 2)
	A10C	SYMBOLS (SHEET 1 OF 2)
	A10D	SYMBOLS (SHEET 2 OF 2)
	A62B	LIMITS OF PAYMENT FOR EXCAVATION AND BACKFILL - BRIDGE SURCHARGE AND WALL
	A62C	LIMITS OF PAYMENT FOR EXCAVATION AND BACKFILL - BRIDGE SURCHARGE AND WALL
RSP	A76A	CONCRETE BARRIER TYPE 60
	B0-1	BRIDGE DETAILS
	B0-3	BRIDGE DETAILS
	B0-5	BRIDGE DETAILS
	B0-13	BRIDGE DETAILS
	B2-3	16" AND 24" CAST-IN-DRILL-HOLE CONCRETE PILE
RSP	B6-21	JOINT SEALS (MAXIMUM MOVEMENT RATING = 2")
	B7-1	BOX GIRDER DETAILS
	B7-6	DECK DRAINS TYPES D-1 & D-2
	B7-10	UTILITY OPENING - BOX GIRDER
	B11-56	CONCRETE BARRIER TYPE 736

ABBREVIATIONS

RC	Reinforcement Concrete
ksi	Kips per Square Inch

INDEX TO BRIDGE PLANS

SHEET NO.	TITLE
1	GENERAL PLAN No. 1
2	GENERAL PLAN No. 2
3	GENERAL NOTES No. 1
4	GENERAL NOTES No. 2
5	DECK GRADES No. 1
6	DECK GRADES No. 2
7	DECK GRADES No. 3
8	DECK GRADES No. 4
9	DECK GRADES No. 5
10	FOUNDATION PLAN
11	ABUTMENT PLAN AND ELEVATION
12	ABUTMENT DETAILS No. 1
13	ABUTMENT DETAILS No. 2
14	BENT DETAILS No. 1
15	BENT DETAILS No. 2
16	BENT DETAILS No. 3
17	BENT DETAILS No. 4
18	TYPICAL SECTION
19	GIRDER LAYOUT No. 1
20	GIRDER LAYOUT No. 2
21	DECK REINFORCEMENT PLAN
22	SOFFIT REINFORCEMENT PLAN
23	DECK DRAIN PLAN
24	DECK DRAIN DETAILS
25	LIMITS OF STRUCTURE APPROACH
26	SOUNDWALL DETAILS
27	SOFFIT OPENINGS
28	STRUCTURE APPROACH TYPE N (30D)
29	STRUCTURE APPROACH TYPE R (30D)
30	STRUCTURE APPROACH DRAINAGE DETAILS
31	SOIL LEGEND 1 OF 2
32	SOIL LEGEND 2 OF 2
33	LOG OF TEST BORINGS 1 OF 2
34	LOG OF TEST BORINGS 2 OF 2

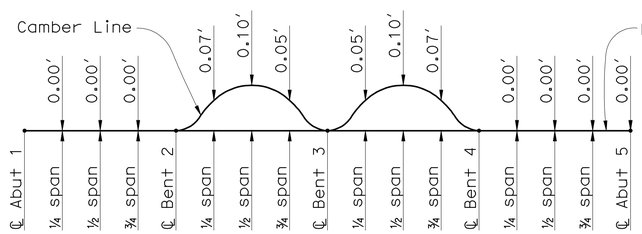

(Does not include allowance for falsework settlement)

CAMBER DIAGRAM - OUTSIDE WIDENING

NO SCALE

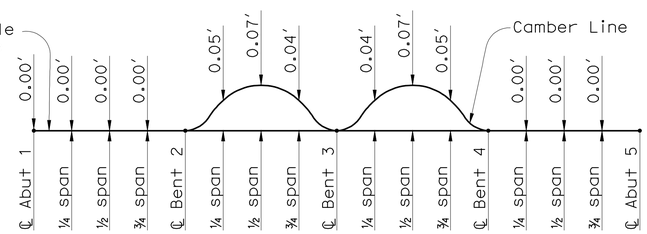

(Does not include allowance for falsework settlement)

CAMBER DIAGRAM - INSIDE WIDENING

NO SCALE

The soundwall dead load is distributed on the left/right side of the bridge with 50% of the moment and 50% of the shear forces to the exterior girder and 50% of the moment and 50% of the shear to the first interior girder.

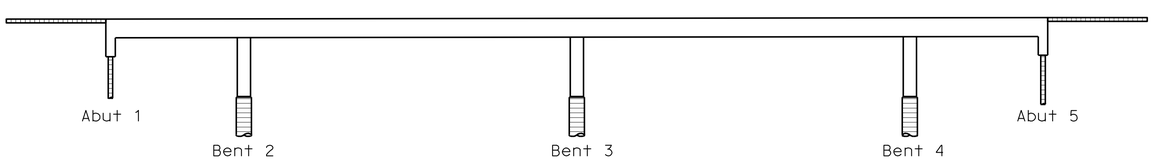

Structural Concrete, Bridge (f'c = 4.0 ksi at 28 days)

CIDH Concrete (f'c = 3.6 ksi at 28 days)

Structural Concrete, Approach Slab (f'c = 3.6 ksi at 28 days)

CONCRETE STRENGTH AND TYPE LIMITS

1" = 20'

Note:
The Contractor shall verify all controlling field dimensions before ordering or fabricating any material

EBMUD AQUEDUCT UC #29-0226
QUANTITIES

PUBLIC SAFETY PLAN	LUMP	SUM
REMOVE CONCRETE DECK SURFACE	2,070	SQFT
SALVAGE METAL BRIDGE RAILING	820	LF
PREPARE CONCRETE BRIDGE DECK SURFACE	28,500	SQFT
ACCESS OPENING, SOFFIT	42	EA
BRIDGE REMOVAL (PORTION), LOCATION F	LUMP	SUM
STRUCTURE EXCAVATION (BRIDGE)	100	CY
STRUCTURE BACKFILL (BRIDGE)	75	CY
AGGREGATE BASE (APPROACH SLAB)	27	CY
24" CAST-IN-DRILLED-HOLE CONCRETE PILING	634	LF
48" CAST-IN-DRILLED-HOLE CONCRETE PILING	824	LF
PRESTRESSING(HIGH STRENGTH THREADED RODS)	LUMP	SUM
STRUCTURAL CONCRETE, BRIDGE	1,270	CY
STRUCTURAL CONCRETE, APPROACH SLAB (TYPE N)	128	CY
STRUCTURAL CONCRETE, APPROACH SLAB (TYPE R)	268	CY
PAVING NOTCH EXTENSION	190	CF
DIAPHRAGM BOLSTER	42	EA
DRILL AND BOND DOWEL	120	LF
FURNISH POLYESTER CONCRETE OVERLAY	6,200	CF
PLACE POLYESTER CONCRETE OVERLAY	28,500	SQFT
CORE AND PRESSURE GROUT HIGH STRENGTH THREADED ROD	260	LF
CORE CONCRETE (8")	4	LF
SOUND WALL (MASONRY BLOCK)	2,870	SQFT
JOINT SEAL (MR 1")	360	LF
BAR REINFORCING STEEL (BRIDGE)	515,000	LB
BRIDGE DECK DRAINAGE SYSTEM	7,800	LB
CONCRETE BARRIER (TYPE 60A MODIFIED)	308	LF
CONCRETE BARRIER (TYPE 736 MODIFIED)	308	LF

DESIGN OVERSIGHT John Fujimoto
8-2-10
SIGN OFF DATE

	BY	CHECKED
DESIGN	T. SWENSON	A. NOTARO
DETAILS	T. SWENSON	A. NOTARO
QUANTITIES	J. YIP	P. GONGIDI

PREPARED FOR THE STATE OF CALIFORNIA DEPARTMENT OF TRANSPORTATION

JOHN A. ALCIATI
PROJECT ENGINEER

BRIDGE NO. 29-0226
POST MILES 29.83

EBMUD AQUEDUCT UC (WIDEN)
GENERAL NOTES No. 1

DESIGN DETAIL SHEET (ENGLISH) (REV. 6-01-09)

ORIGINAL SCALE IN INCHES FOR REDUCED PLANS 0 1 2 3

CU 06240
EA 0G4701

DISREGARD PRINTS BEARING EARLIER REVISION DATES

REVISION DATES (PRELIMINARY STAGE ONLY) 10/16/09 12/4/09 1/15/10 4/23/10 5/28/10 6/11/10 7/28/10

SHEET 3 OF 34

FILE => 29-0226-a-itp01.dgn

USERNAME => trpbits DATE PLOTTED => 14-OCT-2010 TIME PLOTTED => 07:32 2006048 (2006048S3C)

EBMUD NOTES

1. Requests for encroachment rights or for other uses of the District's aqueduct properties shall be directed to the Manager of Water Supply Division, P.O. Box 228, Stockton, California 95201. Property uses shall only be permitted subject to appropriate written permit, license, easement, or lease agreement.
2. Requests for property uses shall be in writing and accompanied by a completed application, plan and profile drawings of the area and work involved. District aqueduct stationing and adjacent above-ground structures must be shown. Applicant's horizontal and vertical control must be correlated to the District's. Drawings and maps shall be full size or half-size (11x17inch). Application must include complete insurance documentation.
3. The applicant must agree to indemnify and hold harmless the District from any loss, claim, or liability which may arise by reason of applicant's use of District property and may be required to provide insurance coverage.
4. All requests for uses of District property must be consistent with requirements and limitations set forth by Procedure 718 and will be reviewed and approved on a case-by-case basis.
5. District land and facilities shall be restored to a condition as good as that which existed before applicant's entry on the right-of-way.
6. Applicant's use of property shall not increase District costs or interfere with District access, operations, maintenance, or repair of its facilities.
7. The applicant must pay the District the appraised value of the easement or lease, if appropriate, for the rights granted to the applicant. Appropriate environmental documentation must be completed in accordance with the California Environmental Quality Act before the rights can be granted.
8. For any District-approved encroachment, the applicant must pay the District for any of the following measures, as needed:
   a. Design of structural protective measures
   b. Design of fences or other structures
   c. Corrosion control protective measures
   d. District engineering, plan review, and inspection of activities
   e. Environmental documentation
   f. Application, permit or license fees.
9. The plan for the execution of the work must be approved by the District.
10. The type and weight of equipment working over the aqueduct must be approved by the District.
11. The use of vibratory compaction equipment is prohibited on the aqueduct right-of-way.
12. A minimum of 48 hours notice must be given to the District before work commences. To contact the District by telephone, call: The Aqueduct Section's Stockton Office at (209) 946-8000.
13. A preconstruction meeting is required prior to start of work.
14. No building or portions of buildings shall be constructed on the property. No other types of structures shall be constructed unless specific approval is given by the District.
15. No longitudinal encroachments such as drainage ditches; gas, phone, or electrical lines; pipelines, or roads will be permitted. All property line fences (including footings) must be located completely outside the aqueduct property lines.
16. No pile driving will be allowed within 100 feet of the aqueducts.
17. Railroad, freeway and highway crossings of the aqueduct right-of-way shall be on permanent bridges with a minimum vertical clearance of 14 feet 6 inches between the finished ground surface and the underside of the bridge. Crossings on grade will be over structurally-encased aqueducts with a sleeve for a fourth aqueduct.
18. Street and road crossings constructed on grade shall incorporate protection of the aqueducts. Protective measures will be designed by the District or by applicant's licensed engineer to District standards with specific District approval of each design. Existing aqueduct protective measures such as concrete slabs shall not be cut, penetrated, or otherwise disturbed. If a protective measure is cut, penetrated, or disturbed, it shall be replaced with a new protective measure, designed by a District engineer or applicant's licensed engineer to District standards with specific District approval of design.
19. Traffic control fences or approved barriers shall be installed along each side of the street, road or trail before opening to the public.
20. Temporary construction fences and barricades shall be installed by contractor as directed by the District.
21. No geotechnical exploration such as drilling or boring shall be allowed on an Aqueduct right-of-way.
22. Any changes in finished grade must be approved by the Aqueduct Section. Earthfills or cuts on adjacent property shall not encroach onto District property except where authorized for vehicular crossings on grade and where the District determines that there will be no detrimental effect on the aqueducts or their maintenance.
23. Pipeline crossings shall be perpendicular to the aqueducts and on a constant grade across District property. Sanitary sewers, water lines or petroleum product lines crossing above the aqueducts must be encased in a steel or polyvinyl chloride (PVC) conduit or reinforced concrete with a minimum vertical clearance of two (2) feet between the pipeline and the top of District aqueducts unless other protective measures are provided. Under no circumstances will the minimum clearance be less than one foot.
24. All pipelines crossing below the aqueducts must be encased in a steel or reinforced concrete conduit and provide a minimum of two (2) feet of clearance between the casing and the bottom of the District aqueducts.
25. On pressurized pipe crossings, shutoff valves shall be provided outside and adjacent to both sides of District property.
26. At the point of crossing, steel pipeline crossings and steel casings shall incorporate electrolysis test leads, bond leads, and leads necessary for interference testing. Corrosion control devices, when required, must be approved by the District.
27. Cathodic protection for steel encasements must be installed as follows:
   - Provide a dielectric coating to the exterior surface of the steel casing within the District's right-of-way, 16 mil epoxy or equivalent.
   - Provide galvanic protection to the portion of the steel casing within the District's right-of-way in accordance with the National Association of Corrosion Engineers RP-01-69.
   - If the carrier pipe is constructed of ductile iron or steel, provide electrical isolation between the carrier and casing using casing insulators; redwood skids are not permitted.
   - Provide test results to the District demonstrating the adequacy of the cathodic protection system, and the adequacy of the electrical isolation of the carrier (if metallic) from the casing. The District reserves the right to witness any such tests.
28. Gravity drainage of District property shall be maintained. Open channels constructed across the right-of-way shall be paved with reinforced concrete. Headwalls, inlets, and other appurtenances shall be located outside District property. Drainage facilities shall be provided outside the District's property at the top and/or toe of fill slopes or cuts constructed adjacent to District property to assure adequate drainage.
29. Overhead electrical power conductors across the property shall be a minimum of 30 feet above ground. Communication and cable TV crossings shall be a minimum of 20 feet above the ground. Supporting poles or towers shall be located outside the aqueduct right-of-way.
30. Buried electrical cables passing over the aqueducts shall be installed in PVC conduit and encased in red concrete across the entire width of the right-of-way. In some cases, PVC-coated steel conduit with a red concrete cap may be substituted. All other buried cables shall be installed in conduit and marked in the appropriate Underground Service Alert (USA) colored marking materials across the entire width of the aqueduct right-of-way. The minimum vertical clearance between the conduit and the top of the District's aqueducts is two (2) feet unless other protective measures are provided. Under no circumstances will the minimum vertical clearance be less than one foot.
31. Electrical or telecommunications cables passing under the aqueducts shall be encased in conduit and marked at both edges of the aqueduct right-of-way with the appropriate USA color coded markers. The minimum vertical clearance between the conduit and the bottom of the District's aqueducts is two feet. For directional bored conduits the minimum vertical clearance is five feet.
32. Vehicular parking and storage of equipment or material on aqueduct property are specifically prohibited.
33. Extraction of oil and gas from aqueduct properties may be permitted under appropriate lease agreements.
34. All District survey monuments and markers shall be undisturbed. If any District survey markers or monuments must be disturbed, they will be replaced or relocated by the District at applicant's expense prior to the start of any ground disturbing work.
35. All aqueduct crossings involving mechanical excavation on the right-of-way require potholing of all three aqueducts at the site of the proposed crossing. Visible reference markings showing the aqueduct alignments and depths to top of pipe shall be maintained for the duration of any mechanical excavation on District property. Entry permits are required for pothole work.
36. All grading or excavating of the right-of-way requires USA notification and the maintenance of a current inquiry identification number.
37. Certified six-sack mix is the minimum acceptable concrete batch to be used on the aqueduct right-of-way. Concrete compression strength shall be 3,000 pounds per square inch (PSI) or better at 28 days. If samples do not reach 3,000 PSI at 28 days, entire section of slab or encasement related to that sample must be removed and replaced at applicant's expense.
38. Each truckload of concrete to be placed on the aqueduct right-of-way may be sampled by the District. No water may be added to the mix after sampling.
39. Maximum allowable slump for protective slabs is three inches. All concrete exceeding three inches will be rejected and cannot be used on the aqueduct right-of-way.
40. No traffic will be allowed over protective slabs until 3,000 PSI is reached.
41. All work areas shall be inspected by the District for final approval. As-built drawing submittals are required for District approval.

Note:
The Contractor shall verify all controlling field dimensions before ordering or fabricating any material

DIST	COUNTY	ROUTE	POST MILES TOTAL PROJECT	SHEET No	TOTAL SHEETS
10	SJ	5	25.0/32.7	1089	1132

REGISTERED CIVIL ENGINEER — DATE 7/28/10

PLANS APPROVAL DATE 10-11-10

REGISTERED PROFESSIONAL ENGINEER — RONALD L OEN — No. 46945 — Exp. 9/30/11 — CIVIL — STATE OF CALIFORNIA

The State of California or its officers or agents shall not be responsible for the accuracy or completeness of scanned copies of this plan sheet.

SAN JOAQUIN COUNCIL OF GOVERNMENTS
555 E. WEBER AVENUE
STOCKTON, CA 95202

BIGGS CARDOSA ASSOCIATES INC.
865 THE ALAMEDA
SAN JOSE, CALIFORNIA 95126

DESIGN OVERSIGHT John Fujimoto
SIGN OFF DATE 8-2-10

	BY	CHECKED
DESIGN	T. SWENSON	A. NOTARO
DETAILS	T. SWENSON	A. NOTARO
QUANTITIES	J. YIP	P. GONGIDI

PREPARED FOR THE STATE OF CALIFORNIA DEPARTMENT OF TRANSPORTATION

JOHN A. ALCIATI
PROJECT ENGINEER

BRIDGE NO. 29-0226
POST MILES 29.83

EBMUD AQUEDUCT UC (WIDEN)
GENERAL NOTES No. 2

DESIGN DETAIL SHEET (ENGLISH) (REV. 6-01-09)

ORIGINAL SCALE IN INCHES FOR REDUCED PLANS 0 1 2 3

CU 06240
EA 0G4701

DISREGARD PRINTS BEARING EARLIER REVISION DATES

REVISION DATES (PRELIMINARY STAGE ONLY): 10/16/09, 12/4/09, 1/15/10, 4/23/10, 5/28/10, 6/11/10, 7/28/10

SHEET 4 OF 34

FILE => 29-0226-a-itp02.dgn

2006048 (2006048S4C)

USERNAME => trphils DATE PLOTTED => 14-OCT-2010 TIME PLOTTED => 07:33

DIST	COUNTY	ROUTE	POST MILES TOTAL PROJECT	SHEET No	TOTAL SHEETS
10	SJ	5	25.0/32.7	1090	1132

REGISTERED CIVIL ENGINEER — DATE 7/28/10

REGISTERED PROFESSIONAL ENGINEER RONALD L OEN No. 46945 Exp. 9/30/11 CIVIL STATE OF CALIFORNIA

PLANS APPROVAL DATE 10-11-10

The State of California or its officers or agents shall not be responsible for the accuracy or completeness of scanned copies of this plan sheet.

SAN JOAQUIN COUNCIL OF GOVERNMENTS
555 E. WEBER AVENUE
STOCKTON, CA 95202

BIGGS CARDOSA ASSOCIATES INC.
865 THE ALAMEDA
SAN JOSE, CALIFORNIA 95126

Legend:

- Indicates Limits of Prepare Concrete Deck Surface, and Furnish and Place Polyester Concrete Overlay
- Indicates Limits of Remove Concrete Deck Surface

Notes:

1. Deck grades shown do not include camber and falsework settlement
2. Approach slabs shown are for illustration only
3. See Road Plans for finish grade beyond approach slabs

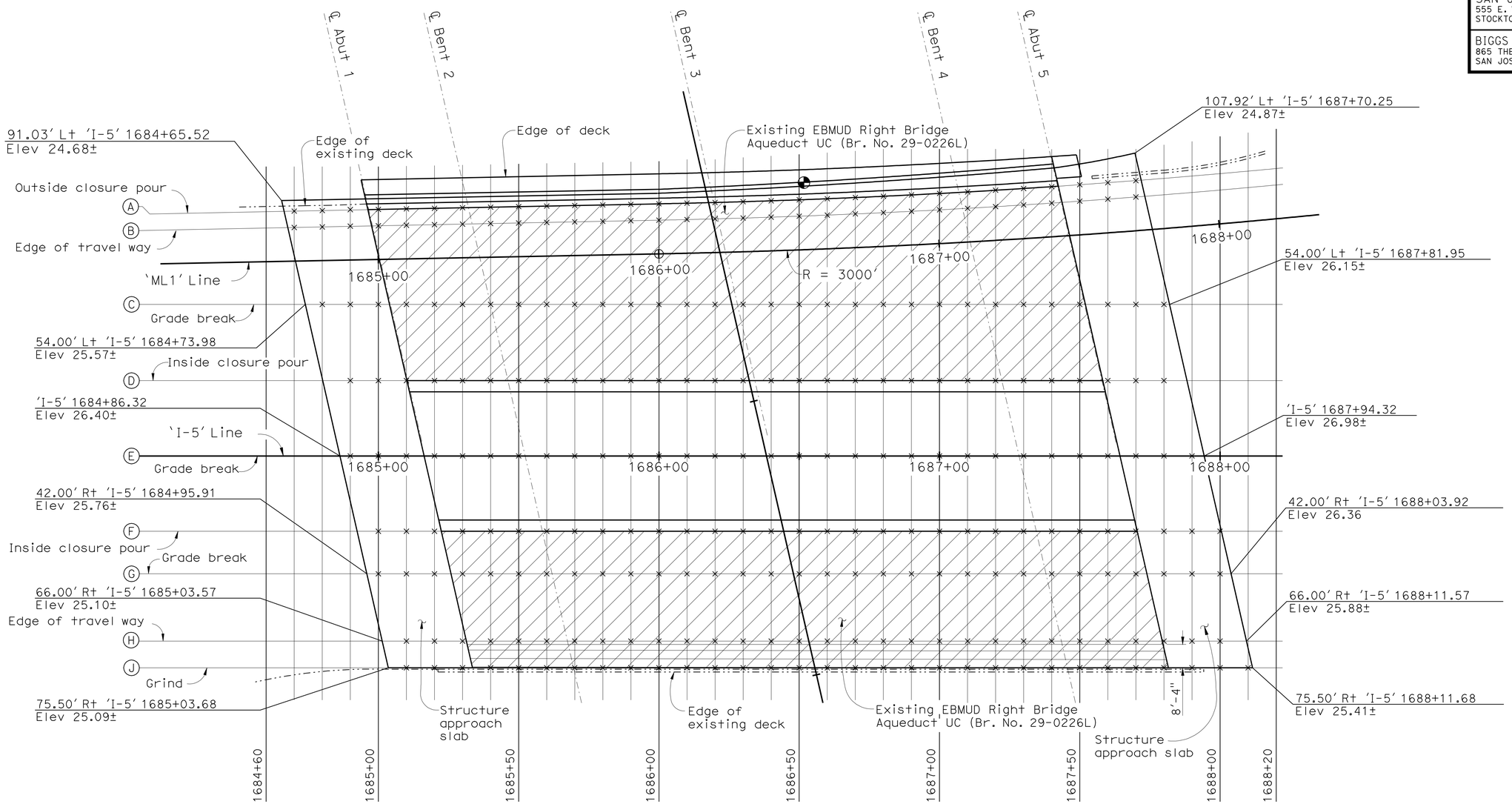

PLAN
1" = 20'

Note:
The Contractor shall verify all controlling field dimensions before ordering or fabricating any material

DESIGN OVERSIGHT John Fujimoto — 8-2-10 SIGN OFF DATE

	BY	CHECKED
DESIGN	T. SWENSON	A. NOTARO
DETAILS	T. SWENSON	A. NOTARO
QUANTITIES	J. YIP	P. GONGIDI

PREPARED FOR THE STATE OF CALIFORNIA DEPARTMENT OF TRANSPORTATION

JOHN A. ALCIATI
PROJECT ENGINEER

BRIDGE NO. 29-0226
POST MILES 29.83

EBMUD AQUEDUCT UC (WIDEN)
DECK GRADES No. 1

DESIGN DETAIL SHEET (ENGLISH) (REV. 6-01-09)

ORIGINAL SCALE IN INCHES FOR REDUCED PLANS 0 1 2 3

CU 06240
EA 0G4701

FILE => 29-0226-d-dkg04.dgn

DISREGARD PRINTS BEARING EARLIER REVISION DATES

REVISION DATES (PRELIMINARY STAGE ONLY): 10/16/09 12/4/09 1/15/10 4/23/10 5/28/10 6/11/10 7/28/10

SHEET 5 OF 34

USERNAME => trphlis DATE PLOTTED => 14-OCT-2010 TIME PLOTTED => 07:33

20060048 (20060485410)

DIST	COUNTY	ROUTE	POST MILES TOTAL PROJECT	SHEET No	TOTAL SHEETS
10	SJ	5	25.0/32.7	1091	1132

REGISTERED CIVIL ENGINEER 7/28/10 DATE

10-11-10
PLANS APPROVAL DATE

REGISTERED PROFESSIONAL ENGINEER RONALD L OEN No. 46945 Exp. 9/30/11 CIVIL STATE OF CALIFORNIA

The State of California or its officers or agents shall not be responsible for the accuracy or completeness of scanned copies of this plan sheet.

SAN JOAQUIN COUNCIL OF GOVERNMENTS
555 E. WEBER AVENUE
STOCKTON, CA 95202

BIGGS CARDOSA ASSOCIATES INC.
865 THE ALAMEDA
SAN JOSE, CALIFORNIA 95126

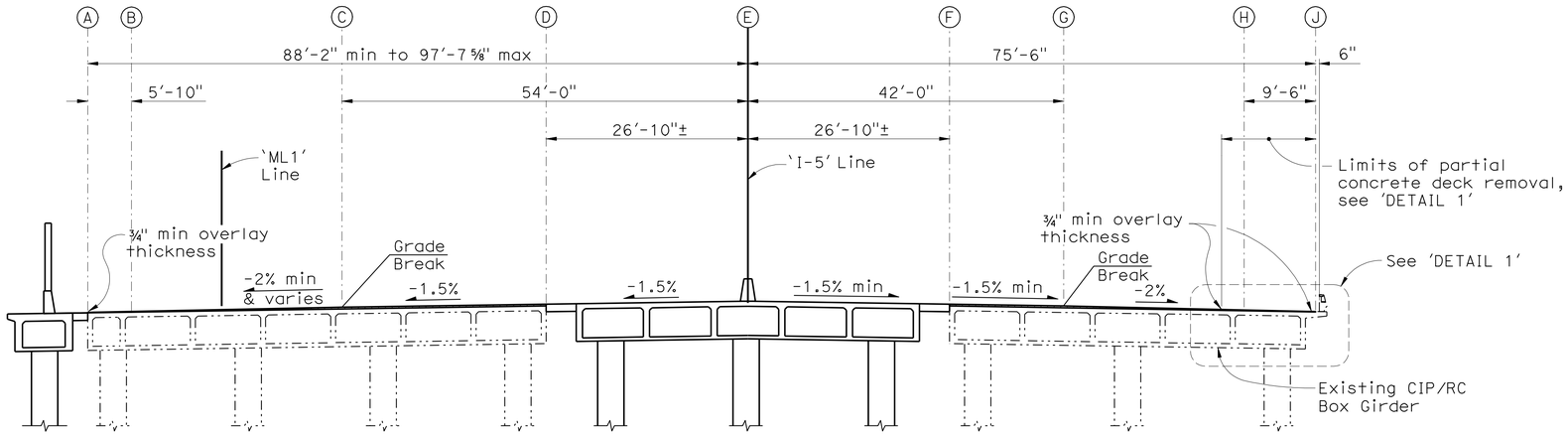

TYPICAL SECTION
1" = 10'

Legend:

Indicates limits of prepare concrete bridge deck surface and furnish and place polyester concrete overlay

Bridge Removal (Portion)

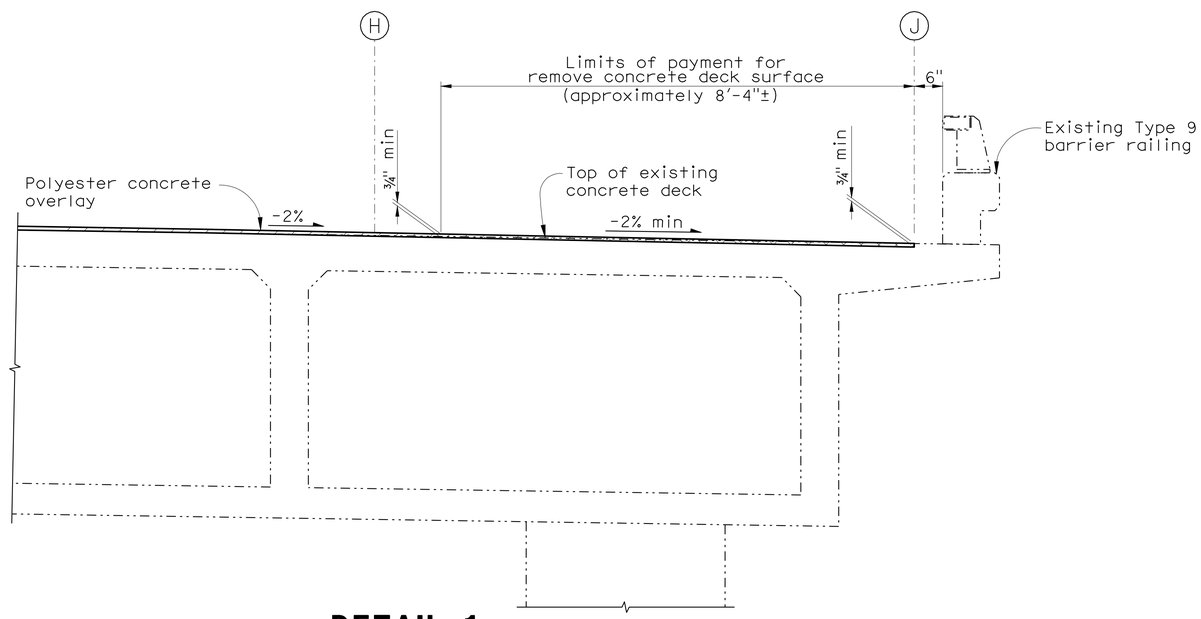

DETAIL 1
3/4" = 1'-0"

Note:
The Contractor shall verify all controlling field dimensions before ordering or fabricating any material

DESIGN OVERSIGHT John Fujimoto
8-2-10
SIGN OFF DATE

	BY	CHECKED
DESIGN	T. SWENSON	A. NOTARO
DETAILS	T. SWENSON	A. NOTARO
QUANTITIES	J. YIP	P. GONGIDI

PREPARED FOR THE STATE OF CALIFORNIA DEPARTMENT OF TRANSPORTATION

JOHN A. ALCIATI
PROJECT ENGINEER

BRIDGE NO. 29-0226
POST MILES 29.83

EBMUD AQUEDUCT UC (WIDEN)
DECK GRADES No. 2

DESIGN DETAIL SHEET (ENGLISH) (REV. 6-01-09)

ORIGINAL SCALE IN INCHES FOR REDUCED PLANS 0 1 2 3

CU 06240
EA 0G4701

DISREGARD PRINTS BEARING EARLIER REVISION DATES

REVISION DATES (PRELIMINARY STAGE ONLY) 10/16/09 12/4/09 1/15/10 4/23/10 5/28/10 6/11/10 7/28/10

SHEET 6 OF 34

FILE => 29-0226-d-dkg05.dgn

USERNAME => trphlis DATE PLOTTED => 14-OCT-2010 TIME PLOTTED => 07:33

2006048 (2006048SSC)

DIST	COUNTY	ROUTE	POST MILES TOTAL PROJECT	SHEET No	TOTAL SHEETS
10	SJ	5	25.0/32.7	1092	1132

REGISTERED CIVIL ENGINEER 7/28/10 DATE

10-11-10
PLANS APPROVAL DATE

REGISTERED PROFESSIONAL ENGINEER RONALD L OEN No. 46945 Exp. 9/30/11 CIVIL STATE OF CALIFORNIA

The State of California or its officers or agents shall not be responsible for the accuracy or completeness of scanned copies of this plan sheet.

SAN JOAQUIN COUNCIL OF GOVERNMENTS
555 E. WEBER AVENUE
STOCKTON, CA 95202

BIGGS CARDOSA ASSOCIATES INC.
865 THE ALAMEDA
SAN JOSE, CALIFORNIA 95126

'I-5' Line Station	Line	Offset from 'I-5' Line (ft)	Proposed Top of Deck/Overlay Elev (ft)	Existing Top of Deck Elev (ft)
1684+70	A	87.24 Lt	24.77	N/A
	B	81.40 Lt	24.91	N/A
	C	54.00 Lt	N/A	N/A
	D	26.83 Lt	N/A	N/A
	E	0.00	N/A	N/A
	F	26.83 Lt	N/A	N/A
	G	42.00 Rt	N/A	N/A
	H	66.00 Rt	N/A	N/A
	J	75.50 Rt	N/A	N/A
1684+80	A	87.44 Lt	24.79	N/A
	B	81.60 Lt	24.93	N/A
	C	54.00 Lt	25.58	N/A
	D	26.83 Lt	N/A	N/A
	E	0.00	N/A	N/A
	F	26.83 Lt	N/A	N/A
	G	42.00 Rt	N/A	N/A
	H	66.00 Rt	N/A	N/A
	J	75.50 Rt	N/A	N/A
1684+90	A	87.64 Lt	24.80	N/A
	B	81.80 Lt	24.94	N/A
	C	54.00 Lt	25.59	N/A
	D	26.83 Lt	26.00	N/A
	E	0.00	26.40	N/A
	F	26.83 Rt	N/A	N/A
	G	42.00 Rt	N/A	N/A
	H	66.00 Rt	N/A	N/A
	J	75.50 Rt	N/A	N/A
1685+00	A	87.84 Lt	24.82	24.75
	B	82.00 Lt	24.95	24.83
	C	54.00 Lt	25.61	N/A
	D	26.83 Lt	26.02	N/A
	E	0.00	26.42	N/A
	F	26.83 Lt	26.00	N/A
	G	42.00 Rt	25.76	N/A
	H	66.00 Rt	N/A	N/A
	J	75.50 Rt	N/A	N/A
1685+10	A	88.04 Lt	24.90	24.84
	B	82.20 Lt	25.02	24.91
	C	54.00 Lt	25.63	25.27
	D	26.83 Lt	26.04	25.62
	E	0.00	26.44	N/A
	F	26.83 Rt	26.02	N/A
	G	42.00 Rt	25.78	N/A
	H	66.00 Rt	25.30	N/A
	J	75.50 Rt	24.99	N/A
1685+20	A	88.24 Lt	24.91	24.85
	B	82.40 Lt	25.04	24.93
	C	54.00 Lt	25.65	25.35
	D	26.83 Lt	26.06	25.75
	E	0.00	26.46	N/A
	F	26.83 Lt	26.04	N/A
	G	42.00 Rt	25.80	N/A
	H	66.00 Rt	25.32	N/A
	J	75.50 Rt	25.15	N/A

'I-5' Line Station	Line	Offset from 'I-5' Line (ft)	Proposed Top of Deck/Overlay Elev (ft)	Existing Top of Deck Elev (ft)
1685+30	A	88.44 Lt	24.93	24.87
	B	82.60 Lt	25.06	24.96
	C	54.00 Lt	25.67	25.41
	D	26.83 Lt	26.08	25.84
	E	0.00	26.48	N/A
	F	26.83 Lt	26.06	25.73
	G	42.00 Rt	25.82	25.49
	H	66.00 Rt	25.34	25.12
	J	75.50 Rt	24.97	N/A
1685+40	A	88.64 Lt	24.94	24.88
	B	82.80 Lt	25.07	24.97
	C	54.00 Lt	25.69	25.44
	D	26.83 Lt	26.09	25.88
	E	0.00	26.50	N/A
	F	26.83 Lt	26.08	25.82
	G	42.00 Rt	25.84	25.59
	H	66.00 Rt	25.36	25.14
	J	75.50 Rt	25.07	25.07
1685+50	A	88.84 Lt	24.91	24.85
	B	83.00 Lt	25.05	24.95
	C	54.00 Lt	25.70	25.44
	D	26.83 Lt	26.11	25.90
	E	0.00	26.51	N/A
	F	26.83 Rt	26.10	25.90
	G	42.00 Rt	25.86	25.66
	H	66.00 Rt	25.38	25.28
	J	75.50 Rt	25.13	25.13
1685+60	A	89.04 Lt	24.91	24.85
	B	83.20 Lt	25.05	24.95
	C	54.00 Lt	25.72	25.42
	D	26.83 Lt	26.13	25.87
	E	0.00	26.53	N/A
	F	26.83 Rt	26.12	25.91
	G	42.00 Rt	25.88	25.70
	H	66.00 Rt	25.40	25.36
	J	75.50 Rt	25.23	25.23
1685+70	A	89.24 Lt	24.95	24.89
	B	83.40 Lt	25.08	24.98
	C	54.00 Lt	25.74	25.42
	D	26.83 Lt	26.15	25.83
	E	0.00	26.55	N/A
	F	26.83 Rt	26.14	25.87
	G	42.00 Rt	25.90	25.67
	H	66.00 Rt	25.42	25.34
	J	75.50 Rt	25.22	25.22
1685+80	A	89.44 Lt	24.92	24.86
	B	83.60 Lt	25.06	24.95
	C	54.00 Lt	25.76	25.43
	D	26.83 Lt	26.17	25.87
	E	0.00	26.57	N/A
	F	26.83 Rt	26.15	25.87
	G	42.00 Rt	25.92	25.64
	H	66.00 Rt	25.44	25.28
	J	75.50 Rt	25.14	25.14

'I-5' Line Station	Line	Offset from 'I-5' Line (ft)	Proposed Top of Deck/Overlay Elev (ft)	Existing Top of Deck Elev (ft)
1685+90	A	89.64 Lt	24.93	24.87
	B	83.80 Lt	25.07	24.96
	C	54.00 Lt	25.78	25.44
	D	26.83 Rt	26.19	25.87
	E	0.00	26.59	N/A
	F	26.83 Rt	26.17	25.87
	G	42.00 Rt	25.94	25.64
	H	66.00 Rt	25.46	25.29
	J	75.50 Rt	25.15	25.15
1686+00	A	89.84 Lt	24.94	24.88
	B	84.00 Lt	25.08	24.98
	C	54.00 Lt	25.80	25.47
	D	26.83 Lt	26.20	25.92
	E	0.00	26.61	N/A
	F	26.83 Rt	26.19	25.91
	G	42.00 Rt	25.96	25.68
	H	66.00 Rt	25.48	25.31
	J	75.50 Rt	25.17	25.17
1686+10	A	90.05 Lt	25.03	24.97
	B	84.22 Lt	25.16	25.07
	C	54.00 Lt	25.81	25.56
	D	26.83 Lt	26.22	26.01
	E	0.00	26.62	N/A
	F	26.83 Rt	26.21	25.96
	G	42.00 Rt	25.98	25.73
	H	66.00 Rt	25.50	25.36
	J	75.50 Rt	25.22	25.22
1686+20	A	90.31 Lt	25.09	25.03
	B	84.47 Lt	25.21	25.13
	C	54.00 Lt	25.83	25.62
	D	26.83 Lt	26.26	26.09
	E	0.00	26.64	N/A
	F	26.83 Rt	26.23	25.98
	G	42.00 Rt	26.00	25.74
	H	66.00 Rt	25.52	25.37
	J	75.50 Rt	25.22	25.22

Note:
The Contractor shall verify all controlling field dimensions before ordering or fabricating any material

DESIGN OVERSIGHT John Fujimoto
8-2-10
SIGN OFF DATE

	BY	CHECKED
DESIGN	T. SWENSON	A. NOTARO
DETAILS	T. SWENSON	A. NOTARO
QUANTITIES	J. YIP	P. GONGIDI

PREPARED FOR THE STATE OF CALIFORNIA DEPARTMENT OF TRANSPORTATION

JOHN A. ALCIATI
PROJECT ENGINEER

BRIDGE NO. 29-0226
POST MILES 29.83

EBMUD AQUEDUCT UC (WIDEN)
DECK GRADES No. 3

DESIGN DETAIL SHEET (ENGLISH) (REV. 6-01-09)

ORIGINAL SCALE IN INCHES FOR REDUCED PLANS 0 1 2 3

CU 06240
EA 0G4701

DISREGARD PRINTS BEARING EARLIER REVISION DATES

REVISION DATES (PRELIMINARY STAGE ONLY) 12/4/09 1/15/10 4/23/10 5/28/10 6/11/10 7/28/10

SHEET 7 OF 34

FILE => 29-0226-d-dkg06.dgn

USERNAME => trphtis DATE PLOTTED => 14-OCT-2010 TIME PLOTTED => 07:33

20060485 (20060485SEC)

DIST	COUNTY	ROUTE	POST MILES TOTAL PROJECT	SHEET No	TOTAL SHEETS
10	SJ	5	25.0/32.7	1093	1132

REGISTERED CIVIL ENGINEER 7/28/10 DATE

10-11-10
PLANS APPROVAL DATE

REGISTERED PROFESSIONAL ENGINEER RONALD L OEN No. 46945 Exp. 9/30/11 CIVIL STATE OF CALIFORNIA

The State of California or its officers or agents shall not be responsible for the accuracy or completeness of scanned copies of this plan sheet.

SAN JOAQUIN COUNCIL OF GOVERNMENTS
555 E. WEBER AVENUE
STOCKTON, CA 95202

BIGGS CARDOSA ASSOCIATES INC.
865 THE ALAMEDA
SAN JOSE, CALIFORNIA 95126

'I-5' Line Station	Line	Offset from 'I-5' Line (ft)	Proposed Top of Deck/Overlay Elev (ft)	Existing Top of Deck Elev (ft)
1686+30	A	90.59 L+	25.11	25.05
	B	84.76 L+	25.23	25.15
	C	54.00 L+	25.85	25.66
	D	26.83 L+	26.26	26.12
	E	0.00	26.66	N/A
	F	26.83 R+	26.25	26.08
	G	42.00 R+	26.02	25.83
	H	66.00 R+	25.54	25.37
	J	75.50 R+	25.28	25.28
1686+40	A	90.91 L+	25.13	25.07
	B	85.07 L+	25.25	25.16
	C	54.00 L+	25.87	25.66
	D	26.83 L+	26.28	26.09
	E	0.00	26.68	N/A
	F	26.83 R+	26.27	26.13
	G	42.00 R+	26.04	25.89
	H	66.00 R+	25.56	25.45
	J	75.50 R+	25.36	25.36
1686+50	A	91.26 L+	25.10	25.04
	B	85.43 L+	25.23	25.13
	C	54.00 L+	25.89	25.64
	D	26.83 L+	26.30	26.07
	E	0.00	26.70	N/A
	F	26.83 R+	26.29	26.16
	G	42.00 R+	26.06	25.91
	H	66.00 R+	25.58	25.48
	J	75.50 R+	25.37	25.37
1686+60	A	91.65 L+	25.06	25.00
	B	85.81 L+	25.19	25.09
	C	54.00 L+	25.91	25.60
	D	26.83 L+	26.31	26.04
	E	0.00	26.72	N/A
	F	26.83 R+	26.31	26.12
	G	42.00 R+	26.08	25.89
	H	66.00 R+	25.60	25.53
	J	75.50 R+	25.39	25.39
1686+70	A	92.07 L+	25.05	24.99
	B	86.23 L+	25.19	25.09
	C	54.00 L+	25.92	25.62
	D	26.83 L+	26.33	26.07
	E	0.00	26.73	N/A
	F	26.83 R+	26.33	26.09
	G	42.00 R+	26.10	25.86
	H	66.00 R+	25.62	25.46
	J	75.50 R+	25.36	25.36
1686+80	A	92.52 L+	25.03	24.97
	B	86.68 L+	25.17	25.07
	C	54.00 L+	25.94	25.60
	D	26.83 L+	26.35	26.05
	E	0.00	26.75	N/A
	F	26.83 R+	26.35	26.06
	G	42.00 R+	26.12	25.83
	H	66.00 R+	25.64	25.47
	J	75.50 R+	25.33	25.33

'I-5' Line Station	Line	Offset from 'I-5' Line (ft)	Proposed Top of Deck/Overlay Elev (ft)	Existing Top of Deck Elev (ft)
1686+90	A	93.01 L+	25.07	25.01
	B	87.17 L+	25.20	25.10
	C	54.00 L+	25.96	25.62
	D	26.83 L+	26.37	26.04
	E	0.00	26.77	N/A
	F	26.83 R+	26.36	26.04
	G	42.00 R+	26.14	25.81
	H	66.00 R+	25.66	25.42
	J	75.50 R+	25.32	25.32
1687+00	A	93.53 L+	25.10	25.04
	B	87.69 L+	25.23	25.13
	C	54.00 L+	25.98	25.66
	D	26.83 L+	26.39	26.09
	E	0.00	26.79	N/A
	F	26.83 R+	26.38	26.03
	G	42.00 R+	26.15	25.81
	H	66.00 R+	25.67	25.41
	J	75.50 R+	25.33	25.33
1687+10	A	94.08 L+	25.18	25.12
	B	88.24 L+	25.30	25.21
	C	54.00 L+	26.00	25.73
	D	26.83 L+	26.40	26.14
	E	0.00	26.81	N/A
	F	26.83 R+	26.40	26.07
	G	42.00 R+	26.17	25.84
	H	66.00 R+	25.69	25.42
	J	75.50 R+	25.32	25.32
1687+20	A	94.67 L+	25.18	25.12
	B	88.83 L+	25.30	25.21
	C	54.00 L+	26.02	25.74
	D	26.83 L+	26.42	26.16
	E	0.00	26.83	N/A
	F	26.83 R+	26.42	26.14
	G	42.00 R+	26.19	25.89
	H	66.00 R+	25.71	25.42
	J	75.50 R+	25.34	25.34
1687+30	A	95.29 L+	25.17	25.11
	B	89.45 L+	25.29	25.20
	C	54.00 L+	26.03	25.75
	D	26.83 L+	26.44	26.18
	E	0.00	26.84	N/A
	F	26.83 R+	26.44	26.19
	G	42.00 R+	26.21	25.94
	H	66.00 R+	25.73	25.50
	J	75.50 R+	25.40	25.40
1687+40	A	95.95 L+	25.16	25.10
	B	90.10 L+	25.29	25.19
	C	54.00 L+	26.05	25.77
	D	26.83 L+	26.46	26.21
	E	0.00	26.86	N/A
	F	26.83 R+	26.46	26.22
	G	42.00 R+	26.23	25.98
	H	66.00 R+	25.75	25.56
	J	75.50 R+	25.46	25.46

'I-5' Line Station	Line	Offset from 'I-5' Line (ft)	Proposed Top of Deck/Overlay Elev (ft)	Existing Top of Deck Elev (ft)
1687+50	A	96.64 L+	25.13	25.07
	B	90.79 L+	25.26	25.17
	C	54.00 L+	26.07	25.79
	D	26.83 R+	26.48	26.21
	E	0.00	26.88	N/A
	F	26.83 R+	26.48	26.17
	G	42.00 R+	26.25	25.94
	H	66.00 R+	25.77	25.59
	J	75.50 R+	25.45	25.45
1687+60	A	97.36 L+	25.08	25.02
	B	91.51 L+	25.21	25.10
	C	54.00 L+	26.09	N/A
	D	26.83 L+	26.50	N/A
	E	0.00	26.90	N/A
	F	26.83 R+	26.50	26.17
	G	42.00 R+	26.27	25.96
	H	66.00 R+	25.79	25.58
	J	75.50 R+	25.49	25.49
1687+70	A	98.12 L+	25.06	25.00
	B	92.26 L+	25.19	25.08
	C	54.00 L+	26.11	N/A
	D	26.83 L+	26.51	N/A
	E	0.00	26.92	N/A
	F	26.83 R+	26.52	26.17
	G	42.00 R+	26.29	25.94
	H	66.00 R+	25.81	25.56
	J	75.50 R+	25.42	25.42
1687+80	A	N/A	N/A	N/A
	B	N/A	N/A	N/A
	C	54.00 L+	26.13	N/A
	D	26.83 L+	26.53	N/A
	E	0.00	26.94	N/A
	F	26.83 R+	26.54	N/A
	G	42.00 R+	26.31	N/A
	H	66.00 R+	25.83	N/A
	J	75.50 R+	25.41	25.41

Note:
The Contractor shall verify all controlling field dimensions before ordering or fabricating any material

DESIGN OVERSIGHT John Fujimoto
8-2-10
SIGN OFF DATE

	BY	CHECKED
DESIGN	T. SWENSON	A. NOTARO
DETAILS	T. SWENSON	A. NOTARO
QUANTITIES	J. YIP	P. GONGIDI

PREPARED FOR THE STATE OF CALIFORNIA DEPARTMENT OF TRANSPORTATION

JOHN A. ALCIATI
PROJECT ENGINEER

BRIDGE NO. 29-0226
POST MILES 29.83

EBMUD AQUEDUCT UC (WIDEN)
DECK GRADES No. 4

DESIGN DETAIL SHEET (ENGLISH) (REV. 6-01-09)

ORIGINAL SCALE IN INCHES FOR REDUCED PLANS 0 1 2 3

CU 06240
EA 0G4701

DISREGARD PRINTS BEARING EARLIER REVISION DATES

REVISION DATES (PRELIMINARY STAGE ONLY) 12/4/09 1/15/10 4/23/10 5/28/10 6/11/10 7/28/10

SHEET 8 OF 34

FILE => 29-0226-d-dkg07.dgn

USERNAME => trphtis DATE PLOTTED => 14-OCT-2010 TIME PLOTTED => 07:33

20060485(C) 20060485

'I-5' Line Station	Line	Offset from 'I-5' Line (ft)	Proposed Top of Deck/Overlay Elev (ft)	Existing Top of Deck Elev (ft)
1687+90	A	N/A	N/A	N/A
	B	N/A	N/A	N/A
	C	54.00 Lt	N/A	N/A
	D	26.83 Lt	N/A	N/A
	E	0.00	26.95	N/A
	F	26.83 Rt	26.56	N/A
	G	42.00 Rt	26.33	N/A
	H	66.00 Rt	25.85	N/A
	J	75.50 Rt	25.41	N/A
1688+00	A	N/A	N/A	N/A
	B	N/A	N/A	N/A
	C	54.00 Lt	N/A	N/A
	D	26.83 Lt	N/A	N/A
	E	0.00	N/A	N/A
	F	26.83 Rt	26.57	N/A
	G	42.00 Rt	26.35	N/A
	H	66.00 Rt	25.87	N/A
	J	75.50 Rt	25.41	N/A
1688+10	A	N/A	N/A	N/A
	B	N/A	N/A	N/A
	C	54.00 Lt	N/A	N/A
	D	26.83 Lt	N/A	N/A
	E	0.00	N/A	N/A
	F	26.83 Rt	N/A	N/A
	G	42.00 Rt	N/A	N/A
	H	66.00 Rt	25.88	N/A
	J	75.50 Rt	25.41	N/A

DIST	COUNTY	ROUTE	POST MILES TOTAL PROJECT	SHEET No	TOTAL SHEETS
10	SJ	5	25.0/32.7	1094	1132

REGISTERED CIVIL ENGINEER 7/28/10 DATE

REGISTERED PROFESSIONAL ENGINEER RONALD L OEN No. 46945 Exp. 9/30/11 CIVIL STATE OF CALIFORNIA

10-11-10
PLANS APPROVAL DATE

The State of California or its officers or agents shall not be responsible for the accuracy or completeness of scanned copies of this plan sheet.

SAN JOAQUIN COUNCIL OF GOVERNMENTS
555 E. WEBER AVENUE
STOCKTON, CA 95202

BIGGS CARDOSA ASSOCIATES INC.
865 THE ALAMEDA
SAN JOSE, CALIFORNIA 95126

Note:
The Contractor shall verify all controlling field dimensions before ordering or fabricating any material

DESIGN OVERSIGHT John Fujimoto
8-2-10
SIGN OFF DATE

	BY	CHECKED
DESIGN	T. SWENSON	A. NOTARO
DETAILS	T. SWENSON	A. NOTARO
QUANTITIES	J. YIP	P. GONGIDI

PREPARED FOR THE STATE OF CALIFORNIA DEPARTMENT OF TRANSPORTATION

JOHN A. ALCIATI
PROJECT ENGINEER

BRIDGE NO. 29-0226
POST MILES 29.83

EBMUD AQUEDUCT UC (WIDEN)
DECK GRADES No. 5

DESIGN DETAIL SHEET (ENGLISH) (REV. 6-01-09)

ORIGINAL SCALE IN INCHES FOR REDUCED PLANS 0 1 2 3

CU 06240
EA 0G4701

DISREGARD PRINTS BEARING EARLIER REVISION DATES

REVISION DATES (PRELIMINARY STAGE ONLY) 12/4/09 1/15/10 4/23/10 5/28/10 6/11/10 7/28/10

SHEET 9 OF 34

FILE => 29-0226-d-dkg08.dgn

USERNAME => trphlis DATE PLOTTED => 14-OCT-2010 TIME PLOTTED => 07:34

20060048 (20060485BC)

DIST	COUNTY	ROUTE	POST MILES TOTAL PROJECT	SHEET No	TOTAL SHEETS
10	SJ	5	25.0/32.7	1095	1132

REGISTERED CIVIL ENGINEER — DATE 7/28/10

PLANS APPROVAL DATE 10-11-10

REGISTERED PROFESSIONAL ENGINEER RONALD L OEN No. 46945 Exp. 9/30/11 CIVIL STATE OF CALIFORNIA

The State of California or its officers or agents shall not be responsible for the accuracy or completeness of scanned copies of this plan sheet.

SAN JOAQUIN COUNCIL OF GOVERNMENTS
555 E. WEBER AVENUE
STOCKTON, CA 95202

BIGGS CARDOSA ASSOCIATES INC.
865 THE ALAMEDA
SAN JOSE, CALIFORNIA 95126

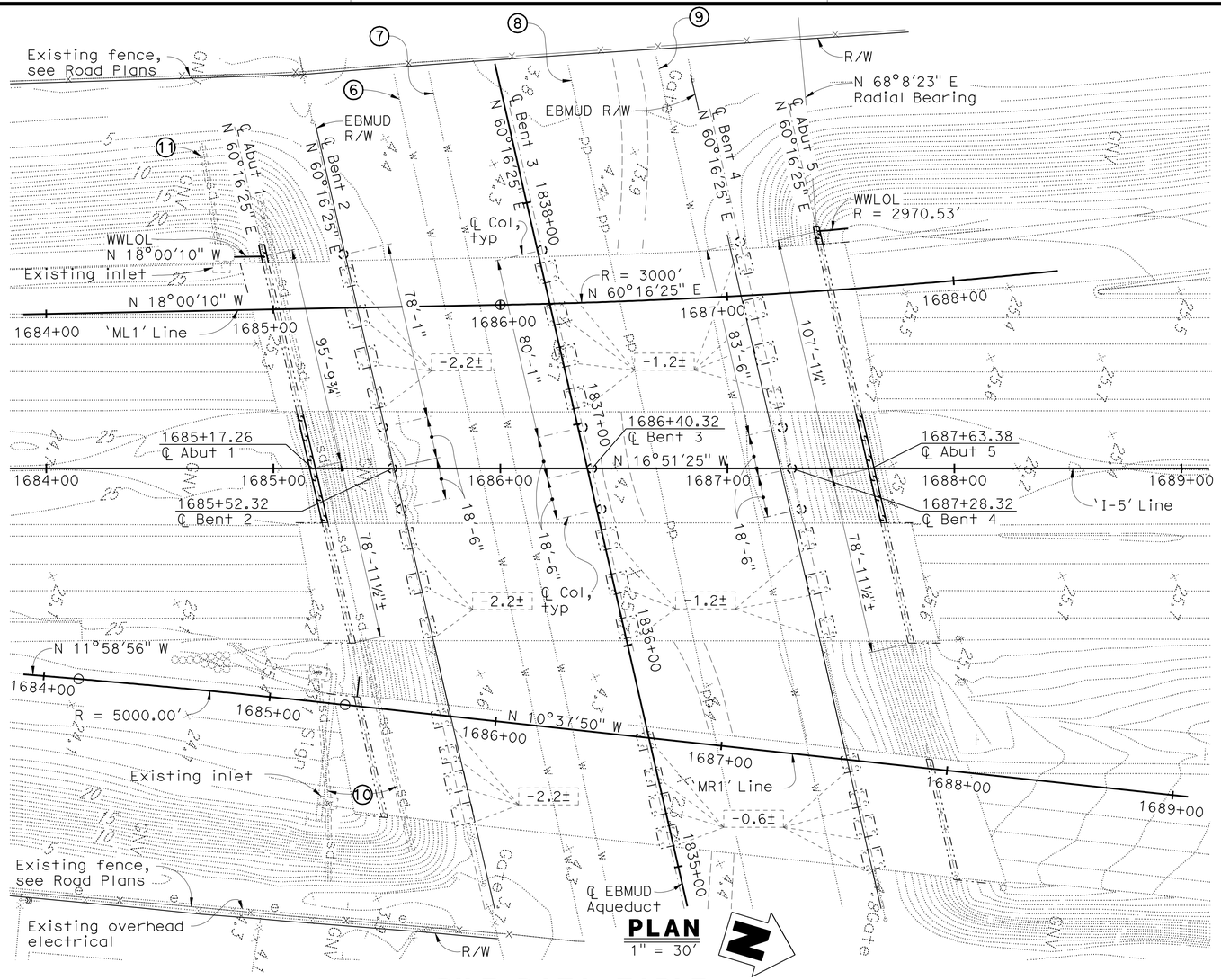

Notes:

1. X.X'± — Indicates bottom of existing footing elevation.
2. × 25.5 — Indicates spot elevation, typical.
3. Indicates CIDH pile.
4. Indicates existing piles.
5. Utilities are shown for illustrative purposes only, verify with Road Plans.

(6) Existing 67"± dia waterline (EBMUD), see Road Plans.

(7) Existing 65"± dia waterline (EBMUD), see Road Plans.

(8) Existing 10"± dia petroleum line (Kinder Morgan), see Road Plans.

(9) Existing 87"± dia waterline (EBMUD), see Road Plans.

(10) Existing 18"± dia Storm Drain, see Road Plans.

(11) Existing 8"± dia Storm Drain, see Road Plans.

PILE DATA TABLE

Location	Type	Nominal Resistance		Cut-off Elevation (NAVD 88) (ft)	Design Tip Elev (ft)	Specified Tip Elev (ft)
		Compression	Tension			
Abutment 1	24" Dia CIDH	320 kips	N/A	Varies	-30(a), -25.0(b)	-30.0
Bent 2	48" Dia CIDH	1530 kips	N/A	3.8	-62.5(a), -39.0(b), -26.5(c)	-62.5
Bent 3	48" Dia CIDH	1850 kips	N/A	2.5	-70.5(a), -39.0(b), -27(c)	-70.5
Bent 4	48" Dia CIDH	1530 kips	N/A	3.5	-63.0(a), -39.0(b), -24.5(c)	-63.0
Abutment 5	24" Dia CIDH	320 kips	N/A	Varies	-27.5(a), -25.0(b)	-27.5

Notes:
1. Design tip elevations for Abutments are controlled by (a) Compression, (b) Lateral Load.
2. Design tip elevations for Bents are controlled by (a) Compression, (b) Lateral load.
3. The specified tip elevation shall not be raised above the design tip elevation for lateral load.

BENCH MARK AND DATUM

Monument	Coordinates		Elev	Description/Location
	Northing	Easting		
93	2181220.57	6318670.26	4.05	Iron pipe with 'MVE CONTROL' cap
94	2181522.53	6319060.40	3.86	Iron pipe with 'MVE CONTROL' cap

Note: There is a vertical datum difference between the project datum (NAVD 88) and the as-built datum (NGVD 29).
The following conversion was used in design:
Datum Conversion: Elev (NAVD 88) = Elev (NGVD 29) + 1.80'

GEOTECHNICAL PROFESSIONAL — APPROVAL DATE 1/15/10

Note:
The Contractor shall verify all controlling field dimensions before ordering or fabricating any material

DESIGN OVERSIGHT John Fujimoto — SIGN OFF DATE 8-2-10

SCALE: AS SHOWN	VERT.DATUM NAVD88	HORZ.DATUM CCS83,(2007.00), ZONE 3		DESIGN	BY T. SWENSON	CHECKED A. NOTARO	
PHOTOGRAMMETRY AS OF:(N/A) FIELD SURVEYS	ALIGNMENT TIES APPROVED GPS REPORT DATED 7-6-09			DETAILS	BY T. SWENSON	CHECKED A. NOTARO	
SURVEYED BY RYAN VANCE	DRAFTED BY MIKE KORDAZAKIS			QUANTITIES	BY J. YIP	CHECKED P GONGIDI	
FIELD CHECKED BY JEFF CISSELL	CHECKED BY KEVIN LANG						

PREPARED FOR THE STATE OF CALIFORNIA DEPARTMENT OF TRANSPORTATION

JOHN A. ALCIATI
PROJECT ENGINEER

BRIDGE NO. 29-0226
POST MILE 29.83

EBMUD AQUEDUCT UC (WIDEN)
FOUNDATION PLAN

FOUNDATION PLAN SHEET (ENGLISH) (REV. 6-01-09)

ORIGINAL SCALE IN INCHES FOR REDUCED PLANS 0 1 2 3

CU 06240
EA 0G4701

DISREGARD PRINTS BEARING EARLIER REVISION DATES

REVISION DATES (PRELIMINARY STAGE ONLY) 6/2/09 9/4/09 10/16/09 12/4/09 1/15/10 4/23/10 5/28/10 6/11/10 7/28/10

SHEET 10 OF 34

FILE => 29-0226-e-fp01.dgn

USERNAME => trphils DATE PLOTTED => 14-OCT-2010 TIME PLOTTED => 07:34 2006048 (2006048S9C)

DIST	COUNTY	ROUTE	POST MILES TOTAL PROJECT	SHEET No	TOTAL SHEETS
10	SJ	5	25.0/32.7	1096	1132

REGISTERED CIVIL ENGINEER 7/28/10 DATE

10-11-10
PLANS APPROVAL DATE

REGISTERED PROFESSIONAL ENGINEER RONALD L OEN No. 46945 Exp. 9/30/11 CIVIL STATE OF CALIFORNIA

The State of California or its officers or agents shall not be responsible for the accuracy or completeness of scanned copies of this plan sheet.

SAN JOAQUIN COUNCIL OF GOVERNMENTS
555 E. WEBER AVENUE
STOCKTON, CA 95202

BIGGS CARDOSA ASSOCIATES INC.
865 THE ALAMEDA
SAN JOSE, CALIFORNIA 95126

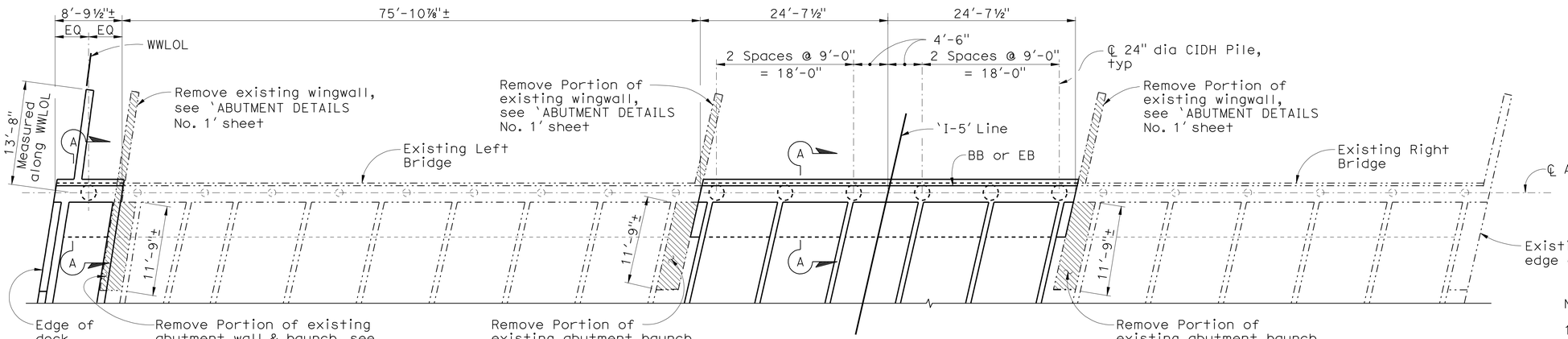

ABUTMENT PLAN

1/8" = 1'-0"

Notes:

1. Barriers not shown for clarity.
2. Sound wall not shown for clarity.
3. For details not shown, see 'ABUTMENT DETAILS No. 1' and 'ABUTMENT DETAILS No. 2' sheets
4. Abutment 5 plan and elevation shown, Abutment 1 plan and elevation similar.
5. For 'Section A-A', see 'ABUTMENT DETAILS No. 2' sheet.

Legend:

- Indicates CIDH pile
- Indicates existing pile
- Indicates Bridge Removal (Portion)
- Indicates Closure Pour.

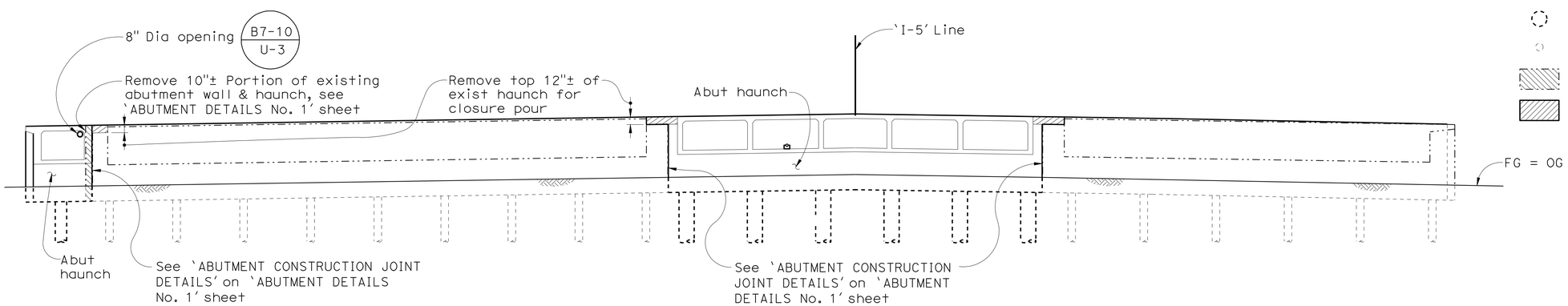

ABUTMENT ELEVATION

1/8" = 1'-0"

Note:
The Contractor shall verify all controlling field dimensions before ordering or fabricating any material

DESIGN OVERSIGHT John Fujimoto
8-2-10
SIGN OFF DATE

	BY	CHECKED
DESIGN	T. SWENSON	A. NOTARO
DETAILS	T. SWENSON	A. NOTARO
QUANTITIES	J. YIP	P. GONGIDI

PREPARED FOR THE STATE OF CALIFORNIA DEPARTMENT OF TRANSPORTATION

JOHN A. ALCIATI
PROJECT ENGINEER

BRIDGE NO. 29-0226
POST MILES 29.83

EBMUD AQUEDUCT UC (WIDEN)
ABUTMENT PLAN AND ELEVATION

DESIGN DETAIL SHEET (ENGLISH) (REV. 6-01-09)

ORIGINAL SCALE IN INCHES FOR REDUCED PLANS 0 1 2 3

CU 06240
EA 0G4701

DISREGARD PRINTS BEARING EARLIER REVISION DATES

REVISION DATES (PRELIMINARY STAGE ONLY) 10/16/09 12/4/09 1/15/10 4/23/10 5/28/10 6/11/10 7/28/10

SHEET 11 OF 34

FILE => 29-0226-h-a10-lo1.dgn

USERNAME => trphtis DATE PLOTTED => 14-OCT-2010 TIME PLOTTED => 07:34

20060048 (20060485 10C)

DIST	COUNTY	ROUTE	POST MILES TOTAL PROJECT	SHEET No	TOTAL SHEETS
10	SJ	5	25.0/32.7	1097	1132

REGISTERED CIVIL ENGINEER 7/28/10 DATE

10-11-10
PLANS APPROVAL DATE

REGISTERED PROFESSIONAL ENGINEER RONALD L OEN No. 46945 Exp. 9/30/11 CIVIL STATE OF CALIFORNIA

The State of California or its officers or agents shall not be responsible for the accuracy or completeness of scanned copies of this plan sheet.

SAN JOAQUIN COUNCIL OF GOVERNMENTS
555 E. WEBER AVENUE
STOCKTON, CA 95202

BIGGS CARDOSA ASSOCIATES INC.
865 THE ALAMEDA
SAN JOSE, CALIFORNIA 95126

Notes:

1. Barriers and Soundwall not shown for clarity.
2. For 'SECTION B-B, & D-D', see 'ABUTMENT DETAILS No. 2' sheet.

Legend:

Indicates Bridge Removal (Portion)

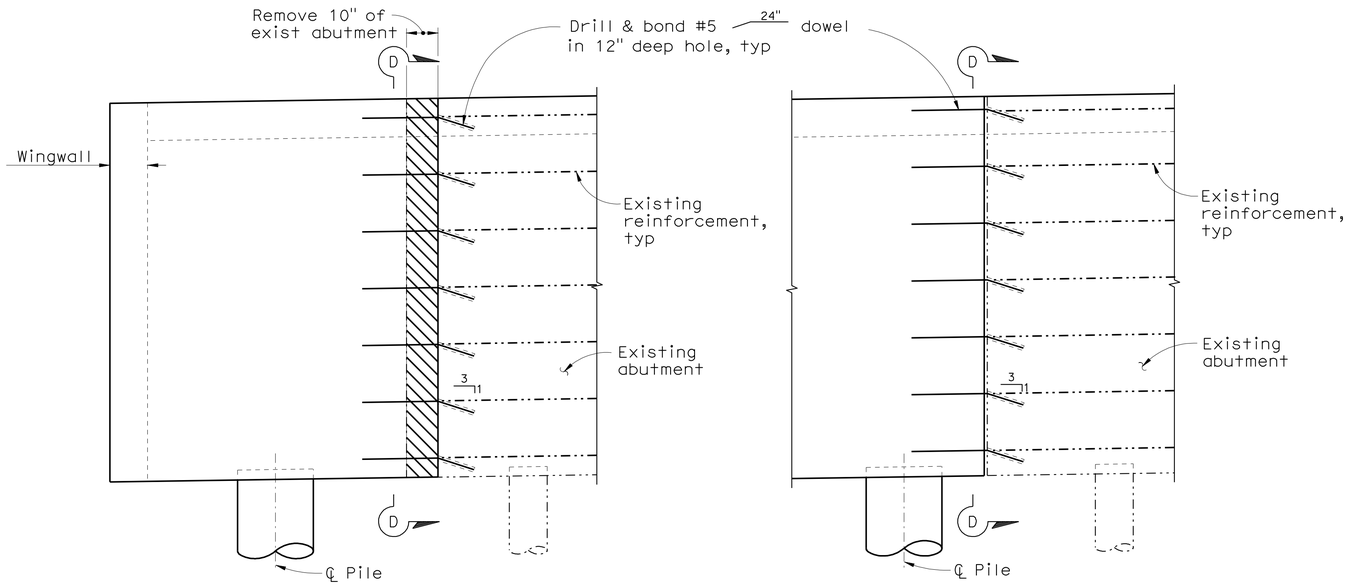

EXTERIOR WIDENING CONSTRUCTION JOINT

INTERIOR WIDENING CONSTRUCTION JOINT

ABUTMENT CONSTRUCTION JOINT DETAILS

1/2" = 1'-0"

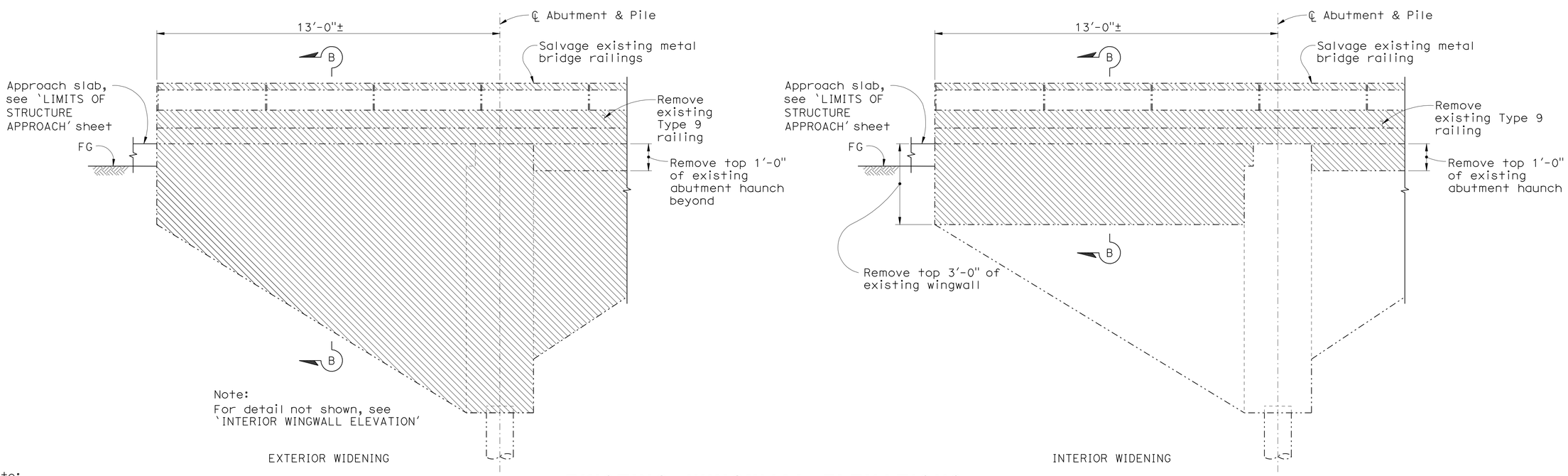

EXTERIOR WIDENING

INTERIOR WIDENING

EXISTING WINGWALL ELEVATIONS

1/2" = 1'-0"

Note:
The Contractor shall verify all controlling field dimensions before ordering or fabricating any material

John Fujimoto
DESIGN OVERSIGHT John Fujimoto
8-2-10
SIGN OFF DATE

	BY	CHECKED
DESIGN	T. SWENSON	A. NOTARO
DETAILS	T. SWENSON	A. NOTARO
QUANTITIES	J. YIP	P. GONGIDI

PREPARED FOR THE STATE OF CALIFORNIA DEPARTMENT OF TRANSPORTATION

JOHN A. ALCIATI
PROJECT ENGINEER

BRIDGE NO. 29-0226
POST MILES 29.83

EBMUD AQUEDUCT UC (WIDEN)
ABUTMENT DETAILS No. 1

DESIGN DETAIL SHEET (ENGLISH) (REV. 6-01-09)

ORIGINAL SCALE IN INCHES FOR REDUCED PLANS 0 1 2 3

CU 06240
EA 0G4701

DISREGARD PRINTS BEARING EARLIER REVISION DATES

REVISION DATES (PRELIMINARY STAGE ONLY) 10/16/09 12/4/09 1/15/10 4/23/10 5/28/10 6/11/10 7/28/10

SHEET 12 OF 34

FILE => 29-0226-h-a11d1.dgn

USERNAME => trphlis DATE PLOTTED => 14-OCT-2010 TIME PLOTTED => 07:34

2006048 (2006048S11C)

DIST	COUNTY	ROUTE	POST MILES TOTAL PROJECT	SHEET No	TOTAL SHEETS
10	SJ	5	25.0/32.7	1098	1132

REGISTERED CIVIL ENGINEER 7/28/10 DATE

10-11-10
PLANS APPROVAL DATE

The State of California or its officers or agents shall not be responsible for the accuracy or completeness of scanned copies of this plan sheet.

REGISTERED PROFESSIONAL ENGINEER RONALD L OEN No. 46945 Exp. 9/30/11 CIVIL STATE OF CALIFORNIA

SAN JOAQUIN COUNCIL OF GOVERNMENTS
555 E. WEBER AVENUE
STOCKTON, CA 95202

BIGGS CARDOSA ASSOCIATES INC.
865 THE ALAMEDA
SAN JOSE, CALIFORNIA 95126

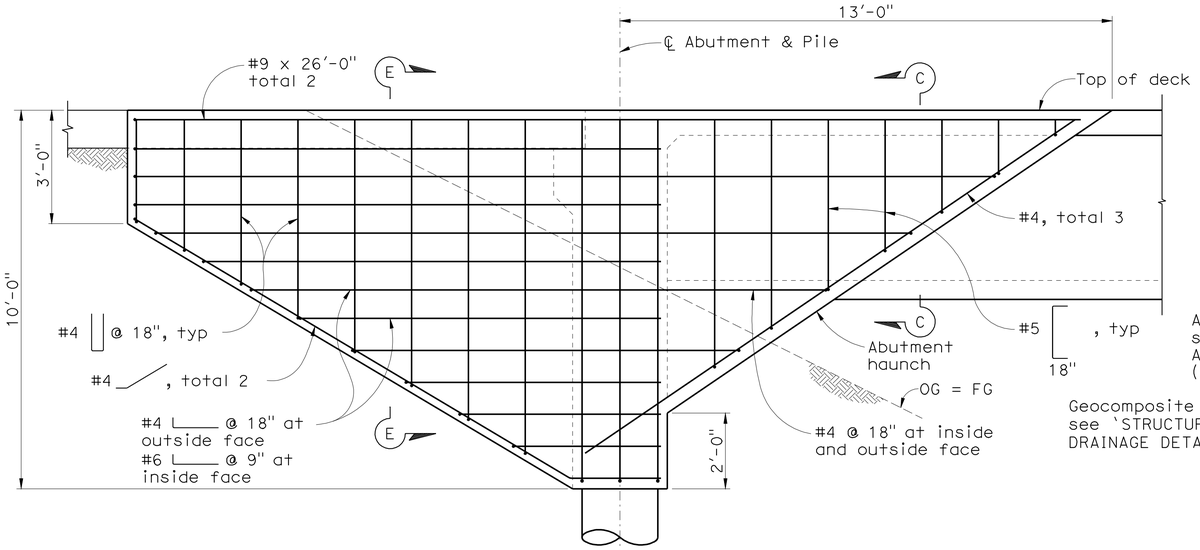

WINGWALL ELEVATION
1/2" = 1'-0"

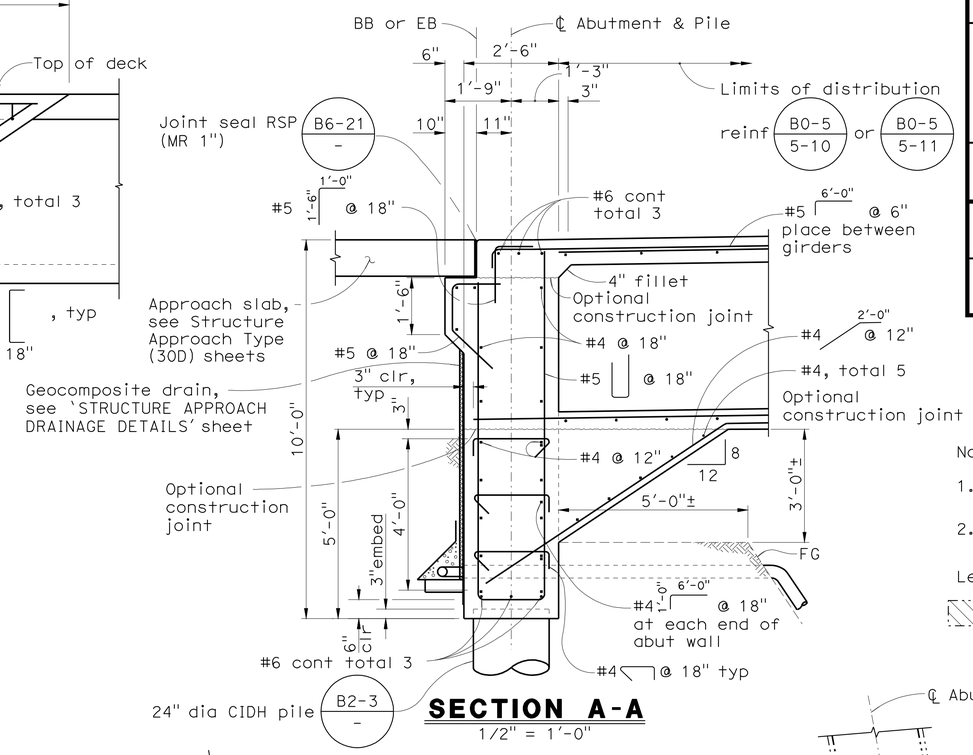

SECTION A-A
1/2" = 1'-0"

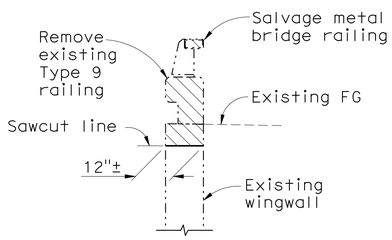

SECTION B-B
1/2" = 1'-0"

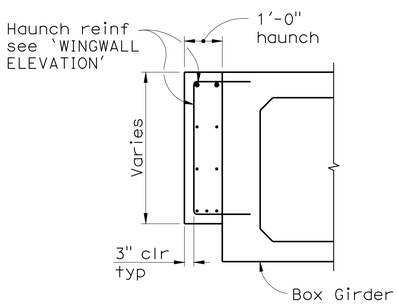

SECTION C-C
1/2" = 1'-0"

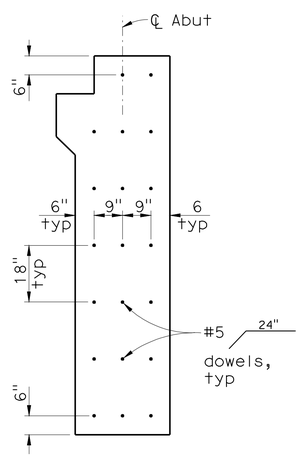

SECTION D-D
1/2" = 1'-0"

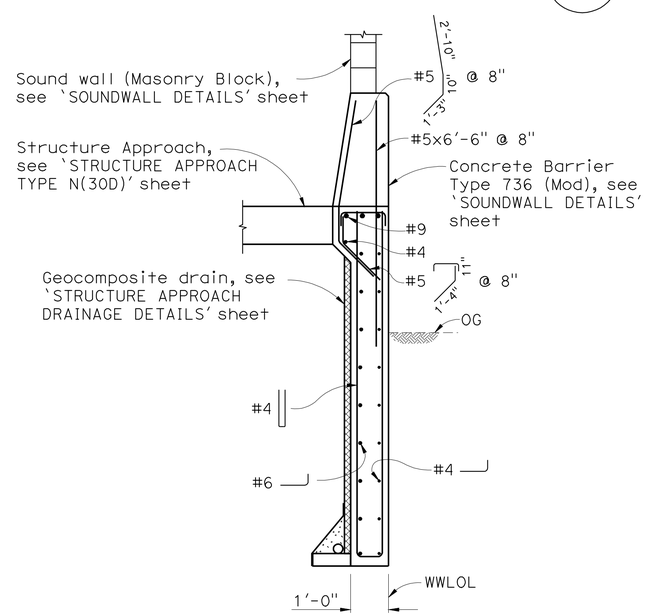

SECTION E-E
1/2" = 1'-0"

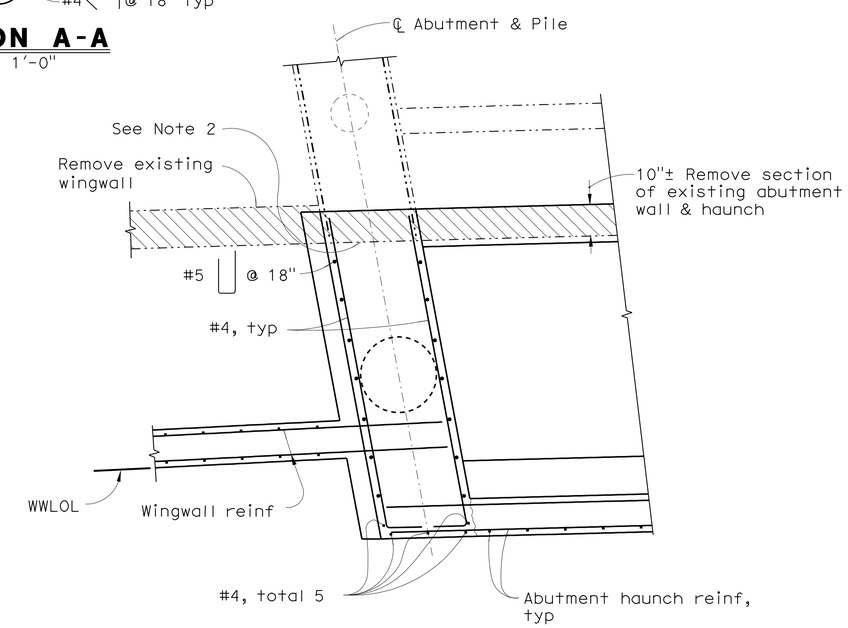

ABUTMENT CORNER DETAIL
1/2" = 1'-0"

Notes:

1. Barriers and Soundwall not shown for clarity.
2. Dowels not shown for clarity

Legend:

Indicates Bridge Removal (Portion)

Note:
The Contractor shall verify all controlling field dimensions before ordering or fabricating any material

DESIGN OVERSIGHT John Fujimoto
8-2-10
SIGN OFF DATE

	BY	CHECKED
DESIGN	T. SWENSON	A. NOTARO
DETAILS	T. SWENSON	A. NOTARO
QUANTITIES	J. YIP	P. GONGIDI

PREPARED FOR THE STATE OF CALIFORNIA DEPARTMENT OF TRANSPORTATION

JOHN A. ALCIATI
PROJECT ENGINEER

BRIDGE NO. 29-0226
POST MILES 29.83

EBMUD AQUEDUCT UC (WIDEN)
ABUTMENT DETAILS No. 2

DESIGN DETAIL SHEET (ENGLISH) (REV. 6-01-09)

ORIGINAL SCALE IN INCHES FOR REDUCED PLANS 0 1 2 3

CU 06240
EA 0G4701

DISREGARD PRINTS BEARING EARLIER REVISION DATES

REVISION DATES (PRELIMINARY STAGE ONLY): 10/16/09 12/4/09 1/15/10 4/23/10 5/28/10 6/11/10 7/28/10

SHEET 13 OF 34

FILE => 29-0226-h-a12d2.dgn

USERNAME => rtostrk DATE PLOTTED => 13-OCT-2010 TIME PLOTTED => 17:02

(2006048512C) 2006048

DIST	COUNTY	ROUTE	POST MILES TOTAL PROJECT	SHEET No	TOTAL SHEETS
10	SJ	5	25.0/32.7	1099	1132

REGISTERED CIVIL ENGINEER — DATE 7/28/10

PLANS APPROVAL DATE 10-11-10

REGISTERED PROFESSIONAL ENGINEER RONALD L OEN No. 46945 Exp. 9/30/11 CIVIL STATE OF CALIFORNIA

The State of California or its officers or agents shall not be responsible for the accuracy or completeness of scanned copies of this plan sheet.

SAN JOAQUIN COUNCIL OF GOVERNMENTS
555 E. WEBER AVENUE
STOCKTON, CA 95202

BIGGS CARDOSA ASSOCIATES INC.
865 THE ALAMEDA
SAN JOSE, CALIFORNIA 95126

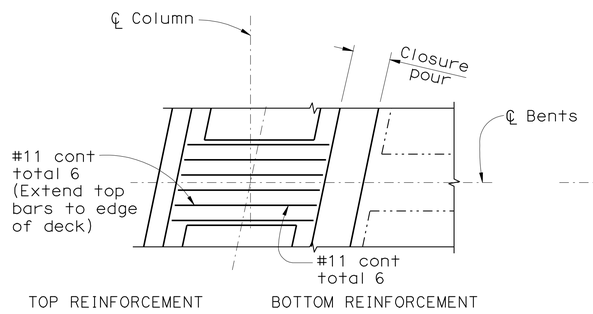

EXTERIOR WIDENING

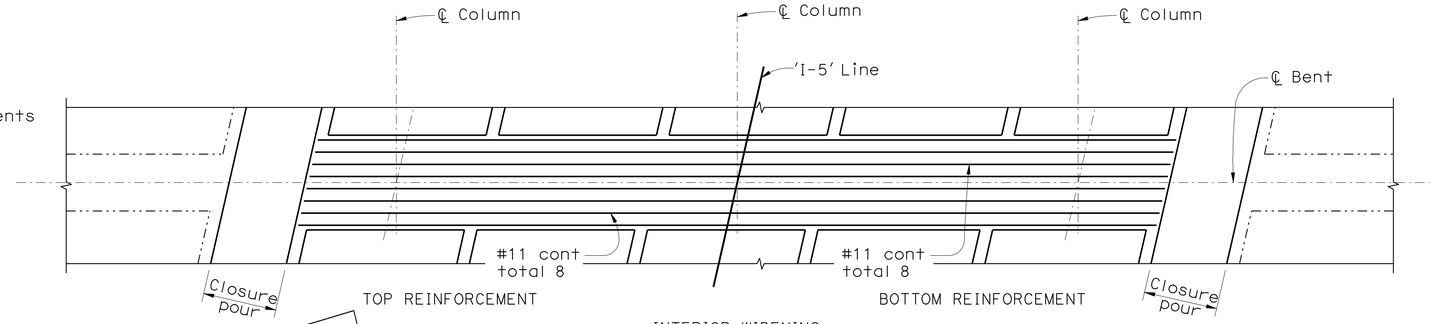

INTERIOR WIDENING

PLAN

1/4" = 1'-0"

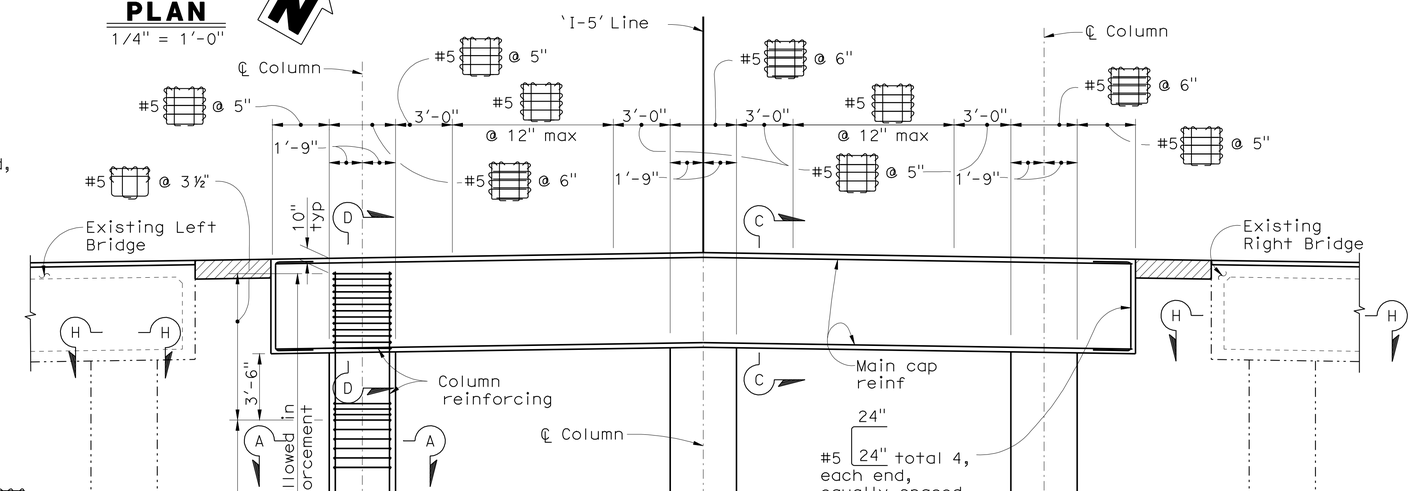

INTERIOR WIDENING

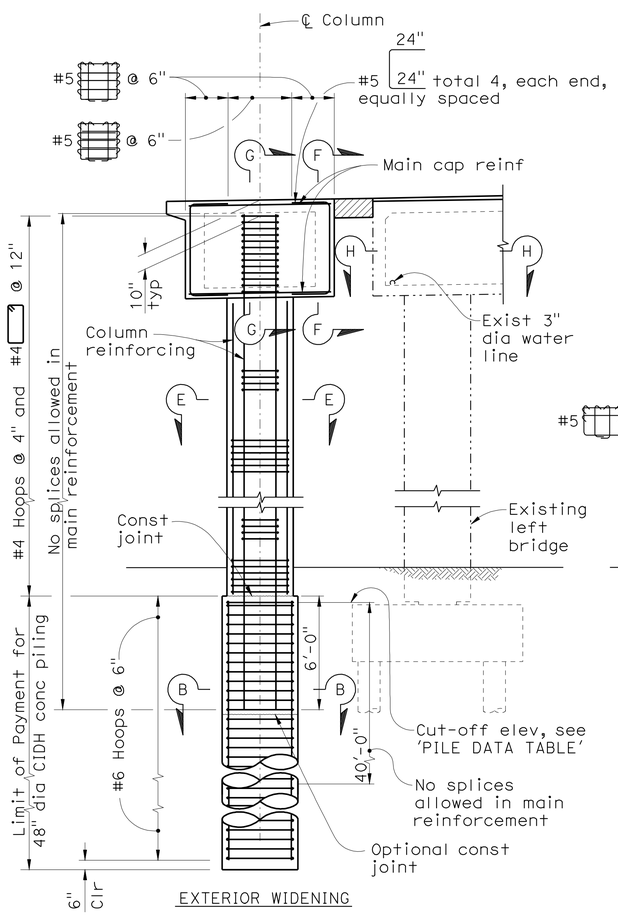

EXTERIOR WIDENING

ELEVATION

1/4" = 1'-0"

Legend:

Closure pour

Notes:

1. Barriers not shown for clarity.
2. Soundwall not shown for clarity.
3. For 'SECTION A-A, B-B, C-C, D-D and E-E' see 'BENT DETAILS No. 2' sheet.
4. For 'SECTION F-F, G-G and H-H' see 'BENT DETAILS No. 3' sheet.
5. For 'FOOTING KEY DETAIL' see 'BENT DETAILS No. 2' sheet.
6. For 'PILE DATA TABLE' see 'FOUNDATION PLAN' sheet.
7. Bent 2 shown, Bent 3 and 4 similar.
8. No splices allowed in column main reinforcement.
9. Orient bent cap stirrups parallel to girders.

Note:
The Contractor shall verify all controlling field dimensions before ordering or fabricating any material

DESIGN OVERSIGHT John Fujimoto — 8-2-10 SIGN OFF DATE

	BY	CHECKED
DESIGN	T. SWENSON	A. NOTARO
DETAILS	T. SWENSON	A. NOTARO
QUANTITIES	J. YIP	P. GONGIDI

PREPARED FOR THE STATE OF CALIFORNIA DEPARTMENT OF TRANSPORTATION

JOHN A. ALCIATI
PROJECT ENGINEER

BRIDGE NO. 29-0226
POST MILES 29.83

EBMUD AQUEDUCT UC (WIDEN)

BENT DETAILS No. 1

DESIGN DETAIL SHEET (ENGLISH) (REV. 6-01-09)

ORIGINAL SCALE IN INCHES FOR REDUCED PLANS 0 1 2 3

CU 06240
EA 0G4701

DISREGARD PRINTS BEARING EARLIER REVISION DATES

REVISION DATES (PRELIMINARY STAGE ONLY): 10/16/09 12/4/09 1/15/10 4/23/10 5/28/10 6/11/10 7/1/10 7/28/10

SHEET 14 OF 34

FILE => 29-0226-j-b13d1.dgn

USERNAME => trstrk DATE PLOTTED => 13-OCT-2010 TIME PLOTTED => 17:02

20060485130 20060485

DIST	COUNTY	ROUTE	POST MILES TOTAL PROJECT	SHEET No	TOTAL SHEETS
10	SJ	5	25.0/32.7	1100	1132

REGISTERED CIVIL ENGINEER 7/28/10 DATE

10-11-10
PLANS APPROVAL DATE

REGISTERED PROFESSIONAL ENGINEER RONALD L OEN No. 46945 Exp. 9/30/11 CIVIL STATE OF CALIFORNIA

The State of California or its officers or agents shall not be responsible for the accuracy or completeness of scanned copies of this plan sheet.

SAN JOAQUIN COUNCIL OF GOVERNMENTS
555 E. WEBER AVENUE
STOCKTON, CA 95202

BIGGS CARDOSA ASSOCIATES INC.
865 THE ALAMEDA
SAN JOSE, CALIFORNIA 95126

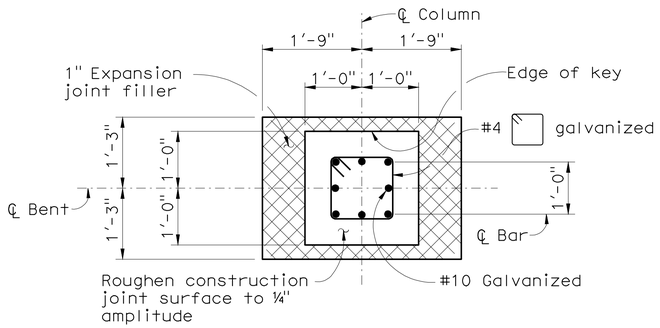

FOOTING KEY DETAIL
3/4" = 1'-0"

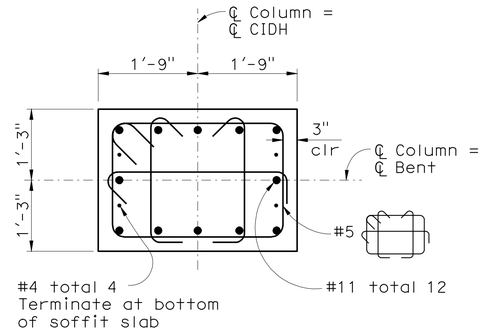

SECTION A-A
3/4" = 1'-0"

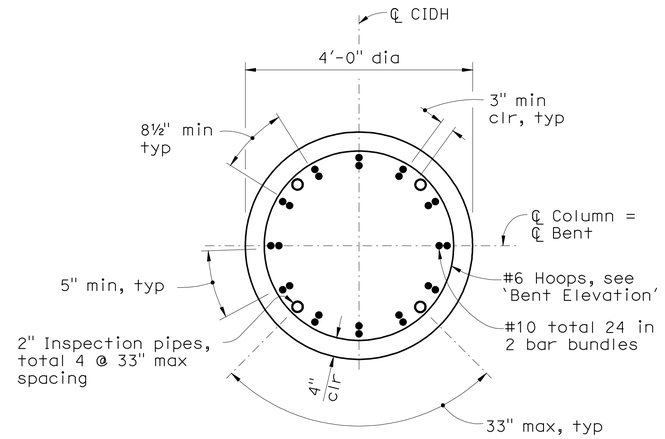

SECTION B-B
3/4" = 1'-0"

Legend:

Expanded Polystyrene

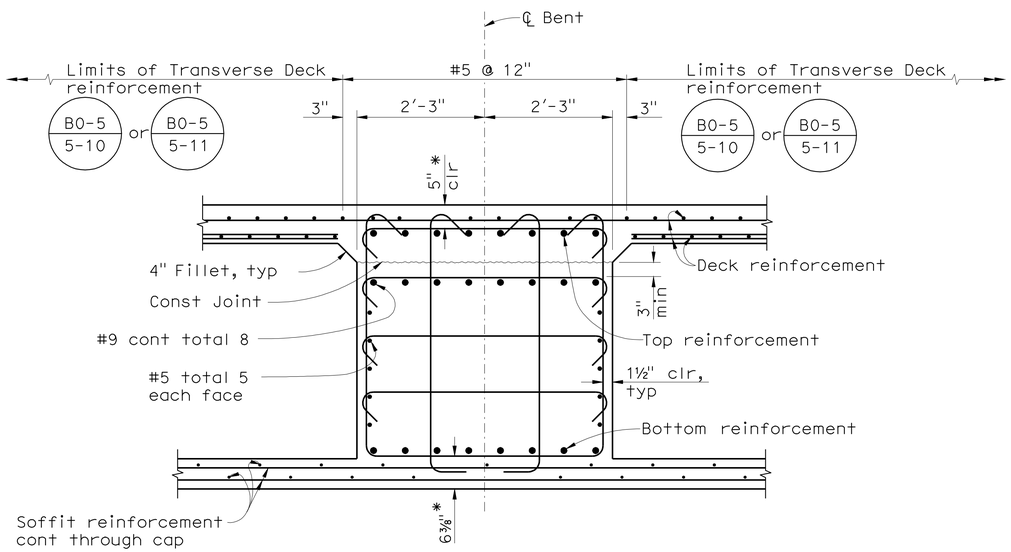

Note:
* Indicates clearance to main cap bars.

SECTION C-C
3/4" = 1'-0"

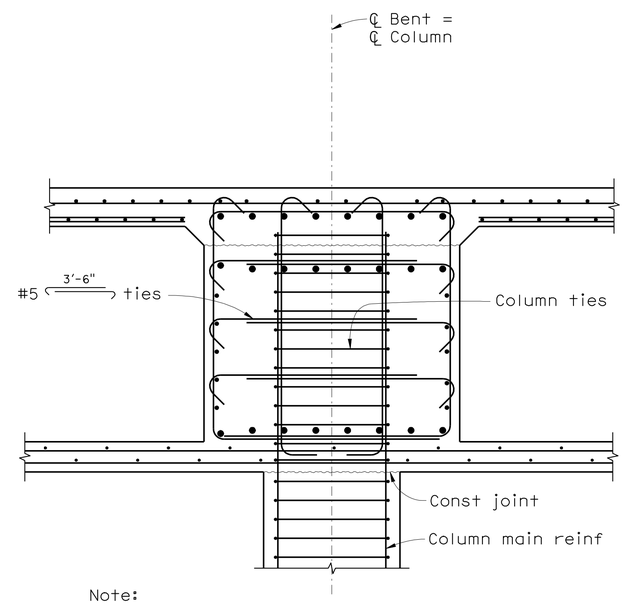

Note:
See 'SECTION C-C' for details not noted.

SECTION D-D
3/4" = 1'-0"

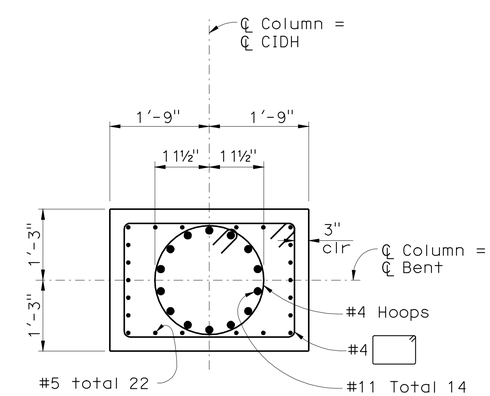

SECTION E-E
3/4" = 1'-0"

Note:
The Contractor shall verify all controlling field dimensions before ordering or fabricating any material

DESIGN OVERSIGHT John Fujimoto
8-2-10
SIGN OFF DATE

	BY	CHECKED
DESIGN	T. SWENSON	A. NOTARO
DETAILS	T. SWENSON	A. NOTARO
QUANTITIES	J. YIP	P. GONGIDI

PREPARED FOR THE STATE OF CALIFORNIA DEPARTMENT OF TRANSPORTATION

JOHN A. ALCIATI
PROJECT ENGINEER

BRIDGE NO. 29-0226
POST MILES 29.83

EBMUD AQUEDUCT UC (WIDEN)
BENT DETAILS No. 2

DESIGN DETAIL SHEET (ENGLISH) (REV. 6-01-09)

ORIGINAL SCALE IN INCHES FOR REDUCED PLANS 0 1 2 3

CU 06240
EA 0G4701

DISREGARD PRINTS BEARING EARLIER REVISION DATES

REVISION DATES (PRELIMINARY STAGE ONLY) 10/16/09 12/4/09 1/15/10 4/23/10 5/28/10 6/28/10 7/28/10

SHEET 15 OF 34

FILE => 29-0226-j-b14d2.dgn

USERNAME => trstrk DATE PLOTTED => 13-OCT-2010 TIME PLOTTED => 17:02 12006048 (20060485140)