'I-5' Line Station	Line	Offset from 'I-5' Line (ft)	Proposed Top of Deck/Overlay Elev (ft)	Existing Top of Deck Elev (ft)
1670+30	A	81.50 Lt	24.22	N/A
	B	78.00 Lt	24.34	N/A
	C	30.00 Lt	See Road Plans	N/A
	D	24.29 Lt	See Road Plans	N/A
	E	0.00	See Road Plans	N/A
	F	24.29 Rt	See Road Plans	N/A
	G	30.00 Rt	See Road Plans	N/A
	H	78.00 Rt	See Road Plans	N/A
	J	81.50 Rt	See Road Plans	N/A
1670+40	A	81.50 Lt	24.24	N/A
	B	78.00 Lt	24.36	N/A
	C	30.00 Lt	25.04	N/A
	D	24.29 Lt	25.13	N/A
	E	0.00	25.50	N/A
	F	24.29 Rt	25.09	N/A
	G	30.00 Rt	See Road Plans	N/A
	H	78.00 Rt	See Road Plans	N/A
	J	81.50 Rt	See Road Plans	N/A
1670+50	A	81.50 Lt	24.25	N/A
	B	78.00 Lt	24.38	N/A
	C	30.00 Lt	25.06	N/A
	D	24.29 Lt	25.15	N/A
	E	0.00	25.52	N/A
	F	24.29 Rt	25.11	N/A
	G	30.00 Rt	25.01	N/A
	H	78.00 Rt	24.32	N/A
	J	81.50 Rt	24.23	N/A
1670+60	A	81.50 Lt	24.27	N/A
	B	78.00 Lt	24.39	N/A
	C	30.00 Lt	25.08	N/A
	D	24.29 Lt	25.17	N/A
	E	0.00	25.53	N/A
	F	24.29 Rt	25.13	N/A
	G	30.00 Rt	25.03	N/A
	H	78.00 Rt	24.34	N/A
	J	81.50 Rt	24.24	N/A
1670+70	A	81.50 Lt	24.29±	24.29±
	B	78.00 Lt	24.41	24.35±
	C	30.00 Lt	25.10	25.04±
	D	24.29 Lt	25.19	25.14±
	E	0.00	25.55	N/A
	F	24.29 Rt	25.14	25.04±
	G	30.00 Rt	25.04	N/A
	H	78.00 Rt	24.35	N/A
	J	81.50 Rt	24.26	N/A
1670+80	A	81.50 Lt	24.33±	24.33±
	B	78.00 Lt	24.45	24.39±
	C	30.00 Lt	25.13	25.07±
	D	24.29 Lt	25.22	25.16±
	E	0.00	25.58	N/A
	F	24.29 Rt	25.16	25.06±
	G	30.00 Rt	25.06	25.00±
	H	78.00 Rt	24.37	24.31±
	J	81.50 Rt	24.28±	24.28±

'I-5' Line Station	Line	Offset from 'I-5' Line (ft)	Proposed Top of Deck/Overlay Elev (ft)	Existing Top of Deck Elev (ft)
1670+90	A	81.50 Lt	24.37±	24.37±
	B	78.00 Lt	24.49	24.43±
	C	30.00 Lt	25.17	25.11±
	D	24.29 Lt	25.26	25.20±
	E	0.00	25.62	N/A
	F	24.29 Rt	25.20	25.13±
	G	30.00 Rt	25.10	25.04±
	H	78.00 Rt	24.39	24.33±
	J	81.50 Rt	24.29±	24.29±
1671+00	A	81.50 Lt	24.39±	24.39±
	B	78.00 Lt	24.51	24.45±
	C	30.00 Lt	25.17	25.11±
	D	24.29 Lt	25.26	25.21±
	E	0.00	25.62	N/A
	F	24.29 Rt	25.23	25.16±
	G	30.00 Rt	25.13	25.07±
	H	78.00 Rt	24.40	24.34±
	J	81.50 Rt	24.29±	24.29±
1671+10	A	81.50 Lt	24.41±	24.41±
	B	78.00 Lt	24.52	24.46±
	C	30.00 Lt	25.18	25.12±
	D	24.29 Lt	25.27	25.22±
	E	0.00	25.63	N/A
	F	24.29 Rt	25.24	25.18±
	G	30.00 Rt	25.15	25.09±
	H	78.00 Rt	24.42	24.36±
	J	81.50 Rt	24.31±	24.31±
1671+20	A	81.50 Lt	24.42±	24.42±
	B	78.00 Lt	24.54	24.48±
	C	30.00 Lt	25.19	25.13±
	D	24.29 Lt	25.28	25.23±
	E	0.00	25.64	N/A
	F	24.29 Rt	25.22	25.15±
	G	30.00 Rt	25.12	25.06±
	H	78.00 Rt	24.42	24.36±
	J	81.50 Rt	24.30±	24.30±
1671+30	A	81.50 Lt	24.46±	24.46±
	B	78.00 Lt	24.56	24.50±
	C	30.00 Lt	25.22	25.16±
	D	24.29 Lt	25.31	25.26±
	E	0.00	25.67	N/A
	F	24.29 Rt	25.26	25.19±
	G	30.00 Rt	25.16	25.10±
	H	78.00 Rt	24.42	24.36±
	J	81.50 Rt	24.32±	24.32±
1671+40	A	81.50 Lt	24.51±	24.51±
	B	78.00 Lt	24.62	24.56±
	C	30.00 Lt	25.26	25.20±
	D	24.29 Lt	25.35	25.30±
	E	0.00	25.71	N/A
	F	24.29 Rt	25.31	25.24±
	G	30.00 Rt	25.21	25.15±
	H	78.00 Rt	24.45	24.39±
	J	81.50 Rt	24.33±	24.33±

Note:
The Engineer may adjust the proposed top of deck/overlay elevations (including approach slabs) as needed if the existing top of deck elevations determined from the construction survey differ from the elevations shown on the plans.

DIST	COUNTY	ROUTE	POST MILES TOTAL PROJECT	SHEET No	TOTAL SHEETS
10	SJ	5	25.0/32.7	824	1132

REGISTERED CIVIL ENGINEER 7/28/10 DATE

10-11-10
PLANS APPROVAL DATE

REGISTERED PROFESSIONAL ENGINEER RONALD L OEN No. 46945 Exp. 9/30/11 CIVIL STATE OF CALIFORNIA

The State of California or its officers or agents shall not be responsible for the accuracy or completeness of scanned copies of this plan sheet.

SAN JOAQUIN COUNCIL OF GOVERNMENTS
555 E. WEBER AVENUE
STOCKTON, CA 95202

BIGGS CARDOSA ASSOCIATES INC.
865 THE ALAMEDA
SAN JOSE, CALIFORNIA 95126

'I-5' Line Station	Line	Offset from 'I-5' Line (ft)	Proposed Top of Deck/Overlay Elev (ft)	Existing Top of Deck Elev (ft)
1671+50	A	81.50 Lt	24.53±	24.53±
	B	78.00 Lt	24.65	24.59±
	C	30.00 Lt	25.30	25.24±
	D	24.29 Lt	25.39	25.33±
	E	0.00	25.75	N/A
	F	24.29 Rt	25.36	25.30±
	G	30.00 Rt	25.27	25.21±
	H	78.00 Rt	24.49	24.43±
	J	81.50 Rt	24.38±	24.38±
1671+60	A	81.50 Lt	24.55±	24.55±
	B	78.00 Lt	24.67	24.61±
	C	30.00 Lt	25.29	25.23±
	D	24.29 Lt	25.38	25.32±
	E	0.00	25.74	N/A
	F	24.29 Rt	25.37	25.31±
	G	30.00 Rt	25.28	25.22±
	H	78.00 Rt	24.53	24.47±
	J	81.50 Rt	24.41±	24.41±
1671+70	A	81.50 Lt	24.58±	24.58±
	B	78.00 Lt	24.70	24.64±
	C	30.00 Lt	25.29	25.23±
	D	24.29 Lt	25.38	25.31±
	E	0.00	25.74	N/A
	F	24.29 Rt	25.37	25.32±
	G	30.00 Rt	25.28	25.22±
	H	78.00 Rt	24.55	24.49±
	J	81.50 Rt	24.43±	24.43±

Note:
The Contractor shall verify all controlling field dimensions before ordering or fabricating any material

1 REVISED PER ADDENDUM No. 1 DATED MARCH 28, 2011

DESIGN OVERSIGHT John Fujimoto
3-11-11
SIGN OFF DATE

	BY	CHECKED
DESIGN	R. OEN	A. NOTARO
DETAILS	R. YAMANE	A. NOTARO
QUANTITIES	C. TOGAN	D. ROSELLINI

PREPARED FOR THE STATE OF CALIFORNIA DEPARTMENT OF TRANSPORTATION

JOHN A. ALCIATI
PROJECT ENGINEER

BRIDGE NO. 29-0174
POST MILES 29.56

CALAVERAS RIVER BRIDGE (WIDEN)
DECK GRADES No. 3

DESIGN DETAIL SHEET (ENGLISH) (REV. 6-01-09)

ORIGINAL SCALE IN INCHES FOR REDUCED PLANS 0 1 2 3

CU 06240
EA 0G4701

DISREGARD PRINTS BEARING EARLIER REVISION DATES

REVISION DATES (PRELIMINARY STAGE ONLY) 10/16/09 12/4/09 1/15/10 4/23/10 6/11/10 7/28/10

SHEET 7 OF 60

FILE => 29-0174-d-dkg03.add

USERNAME => trmikes1 DATE PLOTTED => 25-MAR-2011 TIME PLOTTED => 06:33

20060048 (20060485TB)

'I-5' Line Station	Line	Offset from 'I-5' Line (ft)	Proposed Top of Deck/Overlay Elev (ft)	Existing Top of Deck Elev (ft)
1671+80	A	81.50 Lt	24.60±	24.60±
	B	78.00 Lt	24.72	24.66±
	C	30.00 Lt	25.31	25.25±
	D	24.29 Lt	25.40	25.34±
	E	0.00	25.76	N/A
	F	24.29 Rt	25.37	25.29±
	G	30.00 Rt	25.27	25.21±
	H	78.00 Rt	24.55	24.49±
	J	81.50 Rt	24.43±	24.43±
1671+90	A	81.50 Lt	24.63±	24.63±
	B	78.00 Lt	24.75	24.69±
	C	30.00 Lt	25.34	25.28±
	D	24.29 Lt	25.43	25.36±
	E	0.00	25.79	N/A
	F	24.29 Rt	25.40	25.33±
	G	30.00 Rt	25.31	25.25±
	H	78.00 Rt	24.58	24.52±
	J	81.50 Rt	24.46±	24.46±
1672+00	A	81.50 Lt	24.63±	24.63±
	B	78.00 Lt	24.76	24.70±
	C	30.00 Lt	25.37	25.31±
	D	24.29 Lt	25.46	25.39±
	E	0.00	25.82	N/A
	F	24.29 Rt	25.43	25.36±
	G	30.00 Rt	25.34	25.28±
	H	78.00 Rt	24.62	24.56±
	J	81.50 Rt	24.51±	24.51±
1672+10	A	81.50 Lt	24.63±	24.63±
	B	78.00 Lt	24.75	24.69±
	C	30.00 Lt	25.39	25.33±
	D	24.29 Lt	25.48	25.42±
	E	0.00	25.84	N/A
	F	24.29 Rt	25.45	25.38±
	G	30.00 Rt	25.35	25.29±
	H	78.00 Rt	24.66	24.60±
	J	81.50 Rt	24.55±	24.55±
1672+20	A	81.50 Lt	24.69±	24.69±
	B	78.00 Lt	24.79	24.73±
	C	30.00 Lt	25.40	25.34±
	D	24.29 Lt	25.49	25.43±
	E	0.00	25.86	N/A
	F	24.29 Rt	25.50	25.46±
	G	30.00 Rt	25.41	25.35±
	H	78.00 Rt	24.71	24.65±
	J	81.50 Rt	24.60±	24.60±
1672+30	A	81.50 Lt	24.67±	24.67±
	B	78.00 Lt	24.79	24.73±
	C	30.00 Lt	25.42	25.36±
	D	24.29 Lt	25.51	25.44±
	E	0.00	25.89	N/A
	F	24.29 Rt	25.53	25.49±
	G	30.00 Rt	25.44	25.38±
	H	78.00 Rt	24.70	24.64±
	J	81.50 Rt	24.58±	24.58±

'I-5' Line Station	Line	Offset from 'I-5' Line (ft)	Proposed Top of Deck/Overlay Elev (ft)	Existing Top of Deck Elev (ft)
1672+40	A	81.50 Lt	24.73±	24.73±
	B	78.00 Lt	24.85	24.79±
	C	30.00 Lt	25.45	25.39±
	D	24.29 Lt	25.54	25.48±
	E	0.00	25.91	N/A
	F	24.29 Rt	25.55	25.52±
	G	30.00 Rt	25.46	25.40±
	H	78.00 Rt	24.72	24.66±
	J	81.50 Rt	24.59±	24.59±
1672+50	A	81.50 Lt	24.73±	24.73±
	B	78.00 Lt	24.85	24.79±
	C	30.00 Lt	25.49	25.43±
	D	24.29 Lt	25.58	25.52±
	E	0.00	25.94	N/A
	F	24.29 Rt	25.57	25.53±
	G	30.00 Rt	25.48	25.42±
	H	78.00 Rt	24.72	24.66±
	J	81.50 Rt	24.60±	24.60±
1672+60	A	81.50 Lt	24.71±	24.71±
	B	78.00 Lt	24.84	24.78±
	C	30.00 Lt	25.49	25.43±
	D	24.29 Lt	25.58	25.52±
	E	0.00	25.94	N/A
	F	24.29 Rt	25.57	25.53±
	G	30.00 Rt	25.48	25.42±
	H	78.00 Rt	24.76	24.70±
	J	81.50 Rt	24.64±	24.64±
1672+70	A	81.50 Lt	24.72±	24.72±
	B	78.00 Lt	24.85	24.79±
	C	30.00 Lt	25.50	25.44±
	D	24.29 Lt	25.59	25.53±
	E	0.00	25.95	N/A
	F	24.29 Rt	25.57	25.52±
	G	30.00 Rt	25.48	25.42±
	H	78.00 Rt	24.74	24.68±
	J	81.50 Rt	24.63±	24.63±
1672+80	A	81.50 Lt	24.77±	24.77±
	B	78.00 Lt	24.89	24.83±
	C	30.00 Lt	25.55	25.49±
	D	24.29 Lt	25.64	25.58±
	E	0.00	26.00	N/A
	F	24.29 Rt	25.60	25.55±
	G	30.00 Rt	25.50	25.44±
	H	78.00 Rt	24.75	24.69±
	J	81.50 Rt	24.63±	24.63±
1672+90	A	81.50 Lt	24.81±	24.81±
	B	78.00 Lt	24.93	24.87±
	C	30.00 Lt	25.58	25.52±
	D	24.29 Lt	25.67	25.61±
	E	0.00	26.03	N/A
	F	24.29 Rt	25.63	25.57±
	G	30.00 Rt	25.53	25.47±
	H	78.00 Rt	24.82	24.76±
	J	81.50 Rt	24.71±	24.71±

Note:
The Engineer may adjust the proposed top of deck/overlay elevations (including approach slabs) as needed if the existing top of deck elevations determined from the construction survey differ from the elevations shown on the plans.

DIST	COUNTY	ROUTE	POST MILES TOTAL PROJECT	SHEET No	TOTAL SHEETS
10	SJ	5	25.0/32.7	825	1132

REGISTERED CIVIL ENGINEER 7/28/10 DATE

10-11-10
PLANS APPROVAL DATE

REGISTERED PROFESSIONAL ENGINEER RONALD L OEN No. 46945 Exp. 9/30/11 CIVIL STATE OF CALIFORNIA

The State of California or its officers or agents shall not be responsible for the accuracy or completeness of scanned copies of this plan sheet.

SAN JOAQUIN COUNCIL OF GOVERNMENTS
555 E. WEBER AVENUE
STOCKTON, CA 95202

BIGGS CARDOSA ASSOCIATES INC.
865 THE ALAMEDA
SAN JOSE, CALIFORNIA 95126

'I-5' Line Station	Line	Offset from 'I-5' Line (ft)	Proposed Top of Deck/Overlay Elev (ft)	Existing Top of Deck Elev (ft)
1673+00	A	81.50 Lt	24.84±	24.84±
	B	78.00 Lt	24.96	24.90±
	C	30.00 Lt	25.60	25.54±
	D	24.29 Lt	25.69	25.63±
	E	0.00	26.05	N/A
	F	24.29 Rt	25.65	25.59±
	G	30.00 Rt	25.55	25.49±
	H	78.00 Rt	24.85	24.79±
	J	81.50 Rt	24.74±	24.74±
1673+10	A	81.50 Lt	24.84±	24.84±
	B	78.00 Lt	24.96	24.90±
	C	30.00 Lt	25.60	25.54±
	D	24.29 Lt	25.69	25.63±
	E	0.00	26.05	N/A
	F	24.29 Rt	25.68	25.63±
	G	30.00 Rt	25.59	25.53±
	H	78.00 Rt	24.88	24.82±
	J	81.50 Rt	24.77±	24.77±
1673+20	A	81.50 Lt	24.84±	24.84±
	B	78.00 Lt	24.96	24.90±
	C	30.00 Lt	25.61	25.55±
	D	24.29 Lt	25.70	25.64±
	E	0.00	26.06	N/A
	F	24.29 Rt	25.67	25.62±
	G	30.00 Rt	25.58	25.52±
	H	78.00 Rt	24.88	24.82±
	J	81.50 Rt	24.77±	24.77±
1673+30	A	81.50 Lt	24.87±	24.87±
	B	78.00 Lt	25.00	24.94±
	C	30.00 Lt	25.62	25.56±
	D	24.29 Lt	25.71	25.65±
	E	0.00	26.07	N/A
	F	24.29 Rt	25.70	25.66±
	G	30.00 Rt	25.61	25.55±
	H	78.00 Rt	24.90	24.84±
	J	81.50 Rt	24.79±	24.79±

Note:
The Contractor shall verify all controlling field dimensions before ordering or fabricating any material

1 REVISED PER ADDENDUM No. 1 DATED MARCH 28, 2011

DESIGN OVERSIGHT John Fujimoto
3-11-11
SIGN OFF DATE

	BY	CHECKED
DESIGN	R. OEN	A. NOTARO
DETAILS	R. YAMANE	A. NOTARO
QUANTITIES	C. TOGAN	D. ROSELLINI

PREPARED FOR THE STATE OF CALIFORNIA DEPARTMENT OF TRANSPORTATION

JOHN A. ALCIATI
PROJECT ENGINEER

BRIDGE NO. 29-0174
POST MILES 29.56

CALAVERAS RIVER BRIDGE (WIDEN)
DECK GRADES No. 4

DESIGN DETAIL SHEET (ENGLISH) (REV. 6-01-09)

ORIGINAL SCALE IN INCHES FOR REDUCED PLANS 0 1 2 3

CU 06240
EA 0G4701

DISREGARD PRINTS BEARING EARLIER REVISION DATES

REVISION DATES (PRELIMINARY STAGE ONLY) 10/16/09 12/4/09 1/15/10 4/23/10 6/11/10 7/28/10

SHEET 8 OF 60

FILE => 29-0174-d-dkg04.add

USERNAME => trmikes1 DATE PLOTTED => 25-MAR-2011 TIME PLOTTED => 06:33

20060048 (20060485B8)

'I-5' Line Station	Line	Offset from 'I-5' Line (ft)	Proposed Top of Deck/Overlay Elev (ft)	Existing Top of Deck Elev (ft)
1673+40	A	81.50 L†	24.89±	24.89±
	B	78.00 L†	25.02	24.96±
	C	30.00 L†	25.66	25.60±
	D	24.29 L†	25.75	25.68±
	E	0.00	26.11	N/A
	F	24.29 R†	25.70	25.64±
	G	30.00 R†	25.60	25.54±
	H	78.00 R†	24.93	24.87±
	J	81.50 R†	24.82±	24.82±
1673+50	A	81.50 L†	24.90±	24.90±
	B	78.00 L†	25.04	24.98±
	C	30.00 L†	25.69	25.63±
	D	24.29 L†	25.78	25.72±
	E	0.00	26.14	N/A
	F	24.29 R†	25.75	25.70±
	G	30.00 R†	25.66	25.60±
	H	78.00 R†	24.94	24.88±
	J	81.50 R†	24.83±	24.83±
1673+60	A	81.50 L†	24.93±	24.93±
	B	78.00 L†	25.06	25.00±
	C	30.00 L†	25.71	25.65±
	D	24.29 L†	25.80	25.74±
	E	0.00	26.16	N/A
	F	24.29 R†	25.77	25.71±
	G	30.00 R†	25.68	25.62±
	H	78.00 R†	24.98	24.92±
	J	81.50 R†	24.87±	24.87±
1673+70	A	81.50 L†	24.94±	24.94±
	B	78.00 L†	25.07	25.01±
	C	30.00 L†	25.72	25.66±
	D	24.29 L†	25.81	25.76±
	E	0.00	26.17	N/A
	F	24.29 R†	25.80	25.75±
	G	30.00 R†	25.71	25.65±
	H	78.00 R†	25.00	24.94±
	J	81.50 R†	24.89±	24.89±
1673+80	A	81.50 L†	24.99±	24.99±
	B	78.00 L†	25.11	25.05±
	C	30.00 L†	25.73	25.67±
	D	24.29 L†	25.82	25.76±
	E	0.00	26.18	N/A
	F	24.29 R†	25.80	25.75±
	G	30.00 R†	25.71	25.65±
	H	78.00 R†	25.02	24.96±
	J	81.50 R†	24.91±	24.91±
1673+90	A	81.50 L†	24.98±	24.98±
	B	78.00 L†	25.12	25.06±
	C	30.00 L†	25.73	25.67±
	D	24.29 L†	25.82	25.75±
	E	0.00	26.18	N/A
	F	24.29 R†	25.80	25.75±
	G	30.00 R†	25.71	25.65±
	H	78.00 R†	24.99	24.96±
	J	81.50 R†	24.90±	24.90±

'I-5' Line Station	Line	Offset from 'I-5' Line (ft)	Proposed Top of Deck/Overlay Elev (ft)	Existing Top of Deck Elev (ft)
1674+00	A	81.50 L†	25.06±	25.06±
	B	78.00 L†	25.17	25.11±
	C	30.00 L†	25.76	25.70±
	D	24.29 L†	25.85	25.78±
	E	0.00	26.21	N/A
	F	24.29 R†	25.82	25.76±
	G	30.00 R†	25.72	25.66±
	H	78.00 R†	25.05	24.99±
	J	81.50 R†	24.94±	24.94±
1674+10	A	81.50 L†	25.05±	25.05±
	B	78.00 L†	25.17	25.11±
	C	30.00 L†	25.78	25.72±
	D	24.29 L†	25.87	25.81±
	E	0.00	26.23	N/A
	F	24.29 R†	25.83	25.76±
	G	30.00 R†	25.73	25.67±
	H	78.00 R†	25.07	25.01±
	J	81.50 R†	24.98±	24.98±
1674+20	A	81.50 L†	25.04±	25.04±
	B	78.00 L†	25.17	25.11±
	C	30.00 L†	25.78	25.72±
	D	24.29 L†	25.87	25.80±
	E	0.00	26.23	N/A
	F	24.29 R†	25.86	25.81±
	G	30.00 R†	25.77	25.71±
	H	78.00 R†	25.06	25.00±
	J	81.50 R†	24.96±	24.96±
1674+30	A	81.50 L†	25.10±	25.10±
	B	78.00 L†	25.22	25.16±
	C	30.00 L†	25.78	25.72±
	D	24.29 L†	25.87	25.80±
	E	0.00	26.23	N/A
	F	24.29 R†	25.87	25.82±
	G	30.00 R†	25.78	25.72±
	H	78.00 R†	25.05	24.99±
	J	81.50 R†	24.95±	24.95±
1674+40	A	81.50 L†	25.09±	25.09±
	B	78.00 L†	25.21	25.15±
	C	30.00 L†	25.82	25.76±
	D	24.29 L†	25.91	25.83±
	E	0.00	26.27	N/A
	F	24.29 R†	25.89	25.85±
	G	30.00 R†	25.80	25.74±
	H	78.00 R†	25.05	24.99±
	J	81.50 R†	24.94±	24.94±
1674+50	A	81.50 L†	25.09±	25.09±
	B	78.00 L†	25.21	25.15±
	C	30.00 L†	25.83	25.77±
	D	24.29 L†	25.92	25.84±
	E	0.00	26.28	N/A
	F	24.29 R†	25.90	25.86±
	G	30.00 R†	25.81	25.75±
	H	78.00 R†	25.08	25.02±
	J	81.50 R†	24.98±	24.98±

Note:
1
The Engineer may adjust the proposed top of deck/overlay elevations (including approach slabs) as needed if the existing top of deck elevations determined from the construction survey differ from the elevations shown on the plans.

DIST	COUNTY	ROUTE	POST MILES TOTAL PROJECT	SHEET No	TOTAL SHEETS
10	SJ	5	25.0/32.7	826	1132

REGISTERED CIVIL ENGINEER 7/28/10 DATE

10-11-10
PLANS APPROVAL DATE

REGISTERED PROFESSIONAL ENGINEER RONALD L OEN No. 46945 Exp. 9/30/11 CIVIL STATE OF CALIFORNIA

The State of California or its officers or agents shall not be responsible for the accuracy or completeness of scanned copies of this plan sheet.

SAN JOAQUIN COUNCIL OF GOVERNMENTS
555 E. WEBER AVENUE
STOCKTON, CA 95202

BIGGS CARDOSA ASSOCIATES INC.
865 THE ALAMEDA
SAN JOSE, CALIFORNIA 95126

'I-5' Line Station	Line	Offset from 'I-5' Line (ft)	Proposed Top of Deck/Overlay Elev (ft)	Existing Top of Deck Elev (ft)
1674+60	A	81.50 L†	25.06±	25.06±
	B	78.00 L†	25.19	25.13±
	C	30.00 L†	25.83	25.77±
	D	24.29 L†	25.92	25.85±
	E	0.00	26.28	N/A
	F	24.29 R†	25.91	25.86±
	G	30.00 R†	25.82	25.76±
	H	78.00 R†	25.10	25.04±
	J	81.50 R†	25.00±	25.00±
1674+70	A	81.50 L†	25.09±	25.09±
	B	78.00 L†	25.22	25.16±
	C	30.00 L†	25.85	25.79±
	D	24.29 L†	25.94	25.87±
	E	0.00	26.30	N/A
	F	24.29 R†	25.91	25.85±
	G	30.00 R†	25.81	25.75±
	H	78.00 R†	25.10	25.04±
	J	81.50 R†	25.00±	25.00±
1674+80	A	81.50 L†	25.12±	25.12±
	B	78.00 L†	25.24	25.18±
	C	30.00 L†	25.86	25.80±
	D	24.29 L†	25.95	25.88±
	E	0.00	26.31	N/A
	F	24.29 R†	25.91	25.85±
	G	30.00 R†	25.81	25.75±
	H	78.00 R†	25.09	25.03±
	J	81.50 R†	24.99±	24.99±
1674+90	A	81.50 L†	25.17±	25.17±
	B	78.00 L†	25.28	25.22±
	C	30.00 L†	25.88	25.82±
	D	24.29 L†	25.97	25.90±
	E	0.00	26.33	N/A
	F	24.29 R†	25.91	25.86±
	G	30.00 R†	25.81	25.75±
	H	78.00 R†	25.10	25.04±
	J	81.50 R†	24.99±	24.99±

Note:
The Contractor shall verify all controlling field dimensions before ordering or fabricating any material

1 **REVISED PER ADDENDUM No. 1 DATED MARCH 28, 2011**

DESIGN OVERSIGHT John Fujimoto
3-11-11
SIGN OFF DATE

	BY	CHECKED
DESIGN	R. OEN	A. NOTARO
DETAILS	R. YAMANE	A. NOTARO
QUANTITIES	C. TOGAN	D. ROSELLINI

PREPARED FOR THE STATE OF CALIFORNIA DEPARTMENT OF TRANSPORTATION

JOHN A. ALCIATI
PROJECT ENGINEER

BRIDGE NO. 29-0174
POST MILES 29.56

CALAVERAS RIVER BRIDGE (WIDEN)
DECK GRADES No. 5

DESIGN DETAIL SHEET (ENGLISH) (REV. 6-01-09)

ORIGINAL SCALE IN INCHES FOR REDUCED PLANS 0 1 2 3

CU 06240
EA 0G4701

DISREGARD PRINTS BEARING EARLIER REVISION DATES

REVISION DATES (PRELIMINARY STAGE ONLY) 10/16/09 12/4/09 1/15/10 4/23/10 6/11/10 7/28/10

SHEET 9 OF 60

FILE => 29-0174-d-dkg05.add

USERNAME => trmikes1 DATE PLOTTED => 25-MAR-2011 TIME PLOTTED => 06:33

20060048 (20060485B)

'I-5' Line Station	Line	Offset from 'I-5' Line (ft)	Proposed Top of Deck/Overlay Elev (ft)	Existing Top of Deck Elev (ft)
1675+00	A	81.50 L†	25.11±	25.11±
	B	78.00 L†	25.23	25.17±
	C	30.00 L†	25.89	25.83±
	D	24.29 L†	25.98	25.92±
	E	0.00	26.34	N/A
	F	24.29 R†	25.94	25.89±
	G	30.00 R†	25.84	25.78±
	H	78.00 R†	25.09	25.03±
	J	81.50 R†	24.99±	24.99±
1675+10	A	81.50 L†	25.11±	25.11±
	B	78.00 L†	25.23	25.17±
	C	30.00 L†	25.87	25.81±
	D	24.29 L†	25.96	25.90±
	E	0.00	26.34	N/A
	F	24.29 R†	25.98	25.94±
	G	30.00 R†	25.89	25.83±
	H	78.00 R†	25.12	25.06±
	J	81.50 R†	25.02±	25.02±
1675+20	A	81.50 L†	25.16±	25.16±
	B	78.00 L†	25.26	25.20±
	C	30.00 L†	25.87	25.81±
	D	24.29 L†	25.96	25.89±
	E	0.00	26.34	N/A
	F	24.29 R†	25.96	25.91±
	G	30.00 R†	25.87	25.81±
	H	78.00 R†	25.17	25.11±
	J	81.50 R†	25.06±	25.06±
1675+30	A	81.50 L†	25.17±	25.17±
	B	78.00 L†	25.29	25.23±
	C	30.00 L†	25.87	25.81±
	D	24.29 L†	25.96	25.88±
	E	0.00	26.35	N/A
	F	24.29 R†	25.94	25.87±
	G	30.00 R†	25.84	25.78±
	H	78.00 R†	25.19	25.13±
	J	81.50 R†	25.08±	25.08±
1675+40	A	81.50 L†	25.21±	25.21±
	B	78.00 L†	25.33	25.27±
	C	30.00 L†	25.91	25.85±
	D	24.29 L†	26.00	25.93±
	E	0.00	26.36	N/A
	F	24.29 R†	25.97	25.93±
	G	30.00 R†	25.87	25.81±
	H	78.00 R†	25.18	25.12±
	J	81.50 R†	25.07±	25.07±
1675+50	A	81.50 L†	25.21±	25.21±
	B	78.00 L†	25.32	25.26±
	C	30.00 L†	25.93	25.87±
	D	24.29 L†	26.02	25.96±
	E	0.00	26.38	N/A
	F	24.29 R†	25.96	25.91±
	G	30.00 R†	25.86	25.80±
	H	78.00 R†	25.18	25.12±
	J	81.50 R†	25.08±	25.08±

'I-5' Line Station	Line	Offset from 'I-5' Line (ft)	Proposed Top of Deck/Overlay Elev (ft)	Existing Top of Deck Elev (ft)
1675+60	A	81.50 L†	25.22±	25.22±
	B	78.00 L†	25.33	25.27±
	C	30.00 L†	25.93	25.87±
	D	24.29 L†	26.02	25.96±
	E	0.00	26.38	N/A
	F	24.29 R†	26.00	25.97±
	G	30.00 R†	25.91	25.85±
	H	78.00 R†	25.17	25.11±
	J	81.50 R†	25.07±	25.07±
1675+70	A	81.50 L†	25.24±	25.21±
	B	78.00 L†	25.35	N/A
	C	30.00 L†	25.94	25.88±
	D	24.29 L†	26.03	25.96±
	E	0.00	26.39	N/A
	F	24.29 R†	26.00	25.94±
	G	30.00 R†	25.90	25.84±
	H	78.00 R†	25.19	25.13±
	J	81.50 R†	25.09±	25.09±
1675+80	A	81.50 L†	25.26	N/A
	B	78.00 L†	25.37	N/A
	C	30.00 L†	25.96	N/A
	D	24.29 L†	26.05	25.97±
	E	0.00	26.41	N/A
	F	24.29 R†	26.01	25.93±
	G	30.00 R†	25.89	25.83±
	H	78.00 R†	25.23	25.17±
	J	81.50 R†	25.12±	25.12±
1675+90	A	81.50 L†	25.27	N/A
	B	78.00 L†	25.39	N/A
	C	30.00 L†	25.97	N/A
	D	24.29 L†	26.06	N/A
	E	0.00	26.43	N/A
	F	24.29 R†	26.03	25.93±
	G	30.00 R†	25.90	25.84±
	H	78.00 R†	25.24	25.18±
	J	81.50 R†	25.14±	25.14±
1676+00	A	81.50 L†	25.29	N/A
	B	78.00 L†	25.40	N/A
	C	30.00 L†	25.99	N/A
	D	24.29 L†	26.08	N/A
	E	0.00	26.45	N/A
	F	24.29 R†	26.05	N/A
	G	30.00 R†	25.92	N/A
	H	78.00 R†	25.26	25.20±
	J	81.50 R†	25.16±	25.16±
1676+10	A	81.50 L†	See Road Plans	N/A
	B	78.00 L†	See Road Plans	N/A
	C	30.00 L†	26.01	N/A
	D	24.29 L†	26.10	N/A
	E	0.00	26.46	N/A
	F	24.29 R†	26.07	N/A
	G	30.00 R†	25.94	N/A
	H	78.00 R†	25.28	N/A
	J	81.50 R†	25.18	N/A

Note:
The Engineer may adjust the proposed top of deck/overlay elevations (including approach slabs) as needed if the existing top of deck elevations determined from the construction survey differ from the elevations shown on the plans.

'I-5' Line Station	Line	Offset from 'I-5' Line (ft)	Proposed Top of Deck/Overlay Elev (ft)	Existing Top of Deck Elev (ft)
1676+20	A	81.50 L†	See Road Plans	N/A
	B	78.00 L†	See Road Plans	N/A
	C	30.00 L†	See Road Plans	N/A
	D	24.29 L†	See Road Plans	N/A
	E	0.00	26.48	N/A
	F	24.29 R†	26.09	N/A
	G	30.00 R†	25.96	N/A
	H	78.00 R†	25.30	N/A
	J	81.50 R†	25.20	N/A
1676+30	A	81.50 L†	See Road Plans	N/A
	B	78.00 L†	See Road Plans	N/A
	C	30.00 L†	See Road Plans	N/A
	D	24.29 L†	See Road Plans	N/A
	E	0.00	See Road Plans	N/A
	F	24.29 R†	26.10	N/A
	G	30.00 R†	25.97	N/A
	H	78.00 R†	25.32	N/A
	J	81.50 R†	25.21	N/A

DIST	COUNTY	ROUTE	POST MILES TOTAL PROJECT	SHEET No	TOTAL SHEETS
10	SJ	5	25.0/32.7	827	1132

REGISTERED CIVIL ENGINEER 7/28/10 DATE

10-11-10
PLANS APPROVAL DATE

REGISTERED PROFESSIONAL ENGINEER RONALD L OEN No. 46945 Exp. 9/30/11 CIVIL STATE OF CALIFORNIA

The State of California or its officers or agents shall not be responsible for the accuracy or completeness of scanned copies of this plan sheet.

SAN JOAQUIN COUNCIL OF GOVERNMENTS
555 E. WEBER AVENUE
STOCKTON, CA 95202

BIGGS CARDOSA ASSOCIATES INC.
865 THE ALAMEDA
SAN JOSE, CALIFORNIA 95126

Note:
The Contractor shall verify all controlling field dimensions before ordering or fabricating any material

1 REVISED PER ADDENDUM No. 1 DATED MARCH 28, 2011

DESIGN OVERSIGHT John Fujimoto
3-11-11
SIGN OFF DATE

	BY	CHECKED
DESIGN	R. OEN	A. NOTARO
DETAILS	R. YAMANE	A. NOTARO
QUANTITIES	C. TOGAN	D. ROSELLINI

PREPARED FOR THE STATE OF CALIFORNIA DEPARTMENT OF TRANSPORTATION

JOHN A. ALCIATI
PROJECT ENGINEER

BRIDGE NO. 29-0174
POST MILES 29.56

CALAVERAS RIVER BRIDGE (WIDEN)
DECK GRADES No. 6

DESIGN DETAIL SHEET (ENGLISH) (REV. 6-01-09)

ORIGINAL SCALE IN INCHES FOR REDUCED PLANS 0 1 2 3

CU 06240
EA 0G4701

DISREGARD PRINTS BEARING EARLIER REVISION DATES

REVISION DATES (PRELIMINARY STAGE ONLY) 12/4/09 1/15/10 4/23/10 6/11/10 7/28/10

SHEET 10 OF 60

FILE => 29-0174-d-dkg06.add

USERNAME => trmikes1 DATE PLOTTED => 25-MAR-2011 TIME PLOTTED => 06:33

20060048 (20060485108)

DIST	COUNTY	ROUTE	POST MILES TOTAL PROJECT	SHEET No	TOTAL SHEETS
10	SJ	5	25.0/32.7	834	1132

REGISTERED CIVIL ENGINEER 7/28/10 DATE

10-11-10
PLANS APPROVAL DATE

REGISTERED PROFESSIONAL ENGINEER RONALD L OEN No. 46945 Exp. 9/30/11 CIVIL STATE OF CALIFORNIA

The State of California or its officers or agents shall not be responsible for the accuracy or completeness of scanned copies of this plan sheet.

SAN JOAQUIN COUNCIL OF GOVERNMENTS
555 E. WEBER AVENUE
STOCKTON, CA 95202

BIGGS CARDOSA ASSOCIATES INC.
865 THE ALAMEDA
SAN JOSE, CALIFORNIA 95126

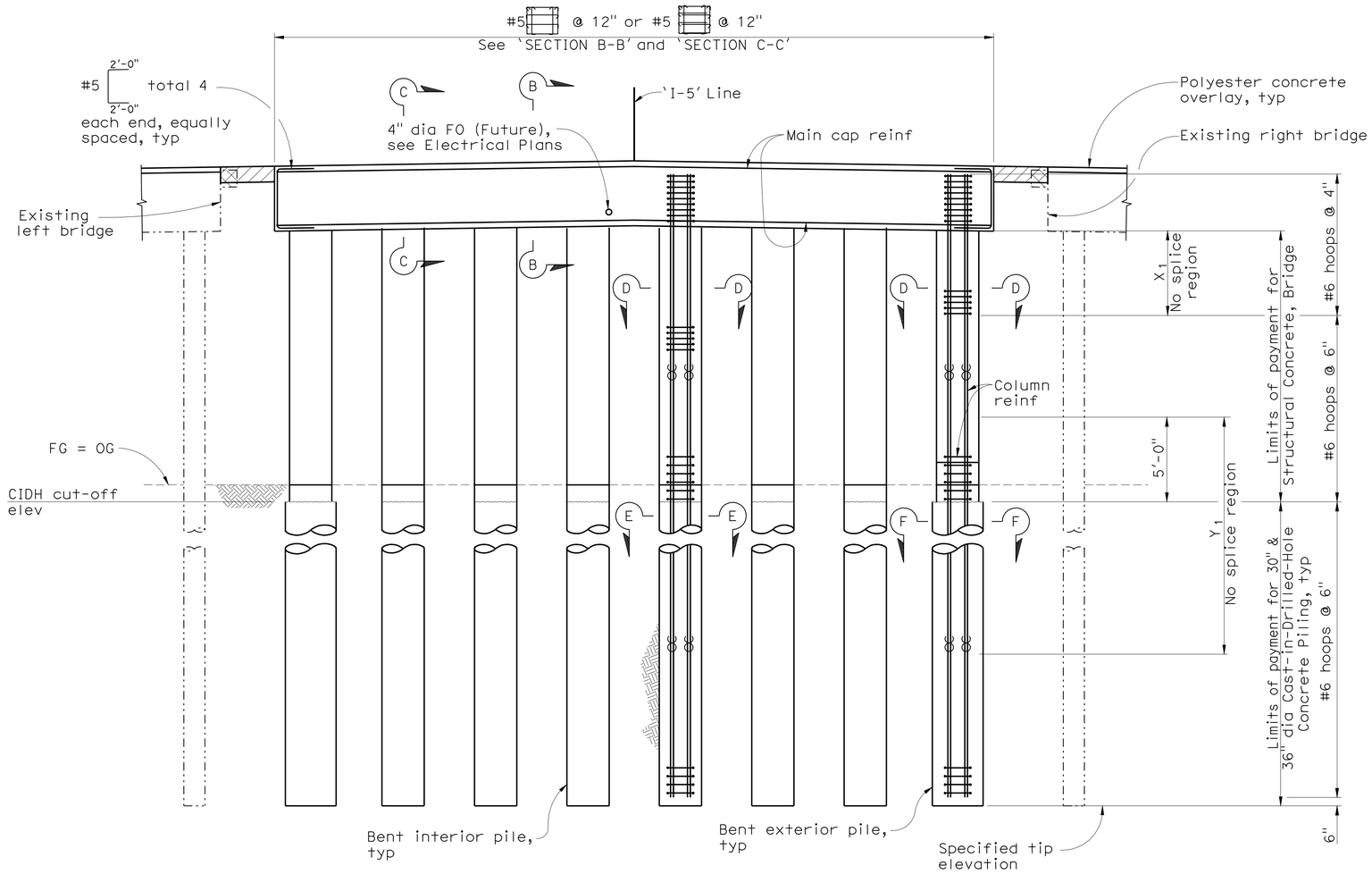

ELEVATION
1/4" = 1'-0"

Note:
1. No splices permitted in the main cap reinforcement.
2. Barriers not shown for clarity.
3. For 'SECTION B-B', 'SECTION C-C', 'SECTION D-D', 'SECTION E-E' and 'SECTION F-F', see 'BENT DETAILS No. 2' sheet.
4. Column and CIDH hoops shall utilize ultimate butt splices only.
5. Splices in column and CIDH main reinforcement outside no-splice regions shall be ultimate butt splices.
6. Bent stirrups shall be oriented parallel with 'I-5' Line and spaced along ℄ Bent.
7. Formwork used to form the column extensions shall not extend more than 5'-0" below the CIDH cut-off elevation. (1)

Legend:

Bridge Removal (Portion)

Closure Pour

Indicates bundled bars.

	X_1	Y_1
Bent 3	5'-0"	25'-0"
Bent 10	5'-0"	25'-0"

Note:
The Contractor shall verify all controlling field dimensions before ordering or fabricating any material

(1) **REVISED PER ADDENDUM No. 1 DATED MARCH 28, 2011**

DESIGN OVERSIGHT John Fujimoto
3-11-11
SIGN OFF DATE

	BY	CHECKED
DESIGN	R. OEN	A. NOTARO
DETAILS	R. YAMANE	A. NOTARO
QUANTITIES	C. TOGAN	D. ROSELLINI

PREPARED FOR THE STATE OF CALIFORNIA DEPARTMENT OF TRANSPORTATION

JOHN A. ALCIATI
PROJECT ENGINEER

BRIDGE NO. 29-0174
POST MILES 29.56

CALAVERAS RIVER BRIDGE (WIDEN)
BENTS 3 & 10 LAYOUT

DESIGN DETAIL SHEET (ENGLISH) (REV. 6-01-09)

ORIGINAL SCALE IN INCHES FOR REDUCED PLANS 0 1 2 3

CU 06240
EA 0G4701

DISREGARD PRINTS BEARING EARLIER REVISION DATES

REVISION DATES (PRELIMINARY STAGE ONLY) 10/16/09 12/4/09 1/15/10 4/23/10 6/11/10 7/28/10

SHEET 17 OF 60

FILE => 29-0174-j-b17-lo3.add

USERNAME => trmikesl DATE PLOTTED => 25-MAR-2011 TIME PLOTTED => 06:34

20060485178) 20060485

DIST	COUNTY	ROUTE	POST MILES TOTAL PROJECT	SHEET No	TOTAL SHEETS
10	SJ	5	25.0/32.7	835	1132

REGISTERED CIVIL ENGINEER 7/28/10 DATE

10-11-10
PLANS APPROVAL DATE

REGISTERED PROFESSIONAL ENGINEER RONALD L OEN No. 46945 Exp. 9/30/11 CIVIL STATE OF CALIFORNIA

The State of California or its officers or agents shall not be responsible for the accuracy or completeness of scanned copies of this plan sheet.

SAN JOAQUIN COUNCIL OF GOVERNMENTS
555 E. WEBER AVENUE
STOCKTON, CA 95202

BIGGS CARDOSA ASSOCIATES INC.
865 THE ALAMEDA
SAN JOSE, CALIFORNIA 95126

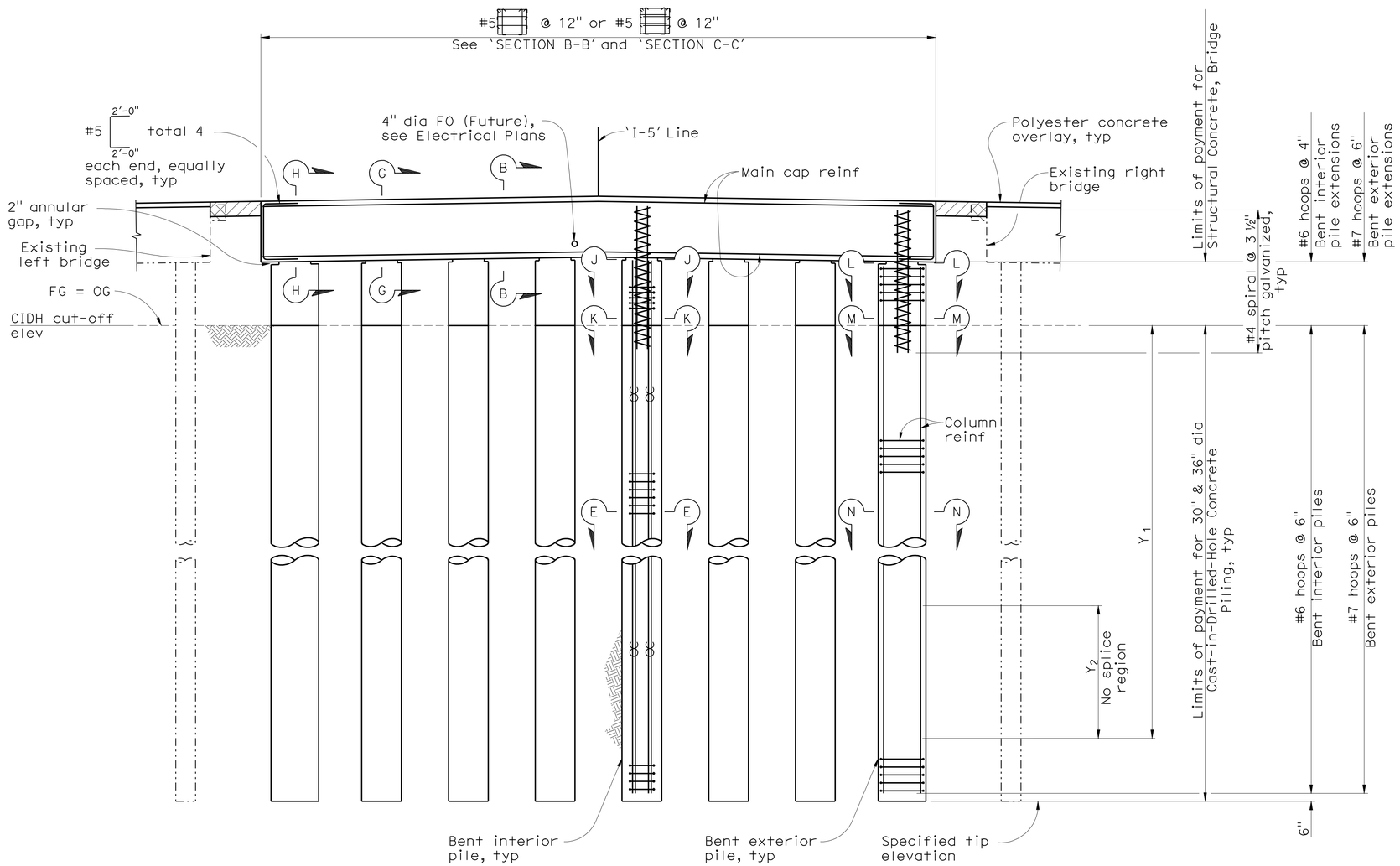

ELEVATION
1/4" = 1'-0"

Notes:
1. No splices permitted in the main cap reinforcement.
2. Barriers not shown for clarity.
3. For 'SECTION B-B' and 'SECTION E-E', see 'BENT DETAILS No. 2' sheet.
4. For 'SECTION G-G', 'SECTION H-H', 'SECTION J-J', 'SECTION K-K', 'SECTION L-L', 'SECTION M-M' and 'SECTION N-N', see 'BENT DETAILS No. 3' sheet.
5. Column and CIDH hoops shall utilize ultimate butt splices only.
6. Splices in column and CIDH main reinforcement outside no-splice regions shall be ultimate butt splices.
7. Bent stirrups shall be oriented parallel with 'I-5' Line and spaced along ℄ Bent.
8. Formwork used to form the column extensions shall not extend more than 5'-0" below the CIDH cut-off elevation. (1)

Legend:

- Bridge Removal (Portion)
- Closure Pour
- Indicates bundled bars.

	Y_1	Y_2
Bent 4	27'-0"	23'-0"
Bent 9	16'-0"	12'-0"

Note:
The Contractor shall verify all controlling field dimensions before ordering or fabricating any material

(1) **REVISED PER ADDENDUM No. 1 DATED MARCH 28, 2011**

DESIGN OVERSIGHT John Fujimoto
3-11-11
SIGN OFF DATE

	BY	CHECKED
DESIGN	R. OEN	A. NOTARO
DETAILS	R. YAMANE	A. NOTARO
QUANTITIES	C. TOGAN	D. ROSELLINI

PREPARED FOR THE STATE OF CALIFORNIA DEPARTMENT OF TRANSPORTATION

JOHN A. ALCIATI
PROJECT ENGINEER

BRIDGE NO. 29-0174
POST MILES 29.56

CALAVERAS RIVER BRIDGE (WIDEN)
BENTS 4 & 9 LAYOUT

DESIGN DETAIL SHEET (ENGLISH) (REV. 6-01-09)

ORIGINAL SCALE IN INCHES FOR REDUCED PLANS 0 1 2 3

CU 06240
EA 0G4701

DISREGARD PRINTS BEARING EARLIER REVISION DATES → 4/23/10 6/11/10 7/28/10

REVISION DATES (PRELIMINARY STAGE ONLY)

SHEET 18 OF 60

FILE => 29-0174-j-b18-lo4.add

USERNAME => trmikest DATE PLOTTED => 25-MAR-2011 TIME PLOTTED => 06:34

2006048 (2006048S1/8)

DIST	COUNTY	ROUTE	POST MILES TOTAL PROJECT	SHEET No	TOTAL SHEETS
10	SJ	5	25.0/32.7	836	1132

REGISTERED CIVIL ENGINEER 7/28/10 DATE

10-11-10
PLANS APPROVAL DATE

REGISTERED PROFESSIONAL ENGINEER RONALD L OEN No. 46945 Exp. 9/30/11 CIVIL STATE OF CALIFORNIA

The State of California or its officers or agents shall not be responsible for the accuracy or completeness of scanned copies of this plan sheet.

SAN JOAQUIN COUNCIL OF GOVERNMENTS
555 E. WEBER AVENUE
STOCKTON, CA 95202

BIGGS CARDOSA ASSOCIATES INC.
865 THE ALAMEDA
SAN JOSE, CALIFORNIA 95126

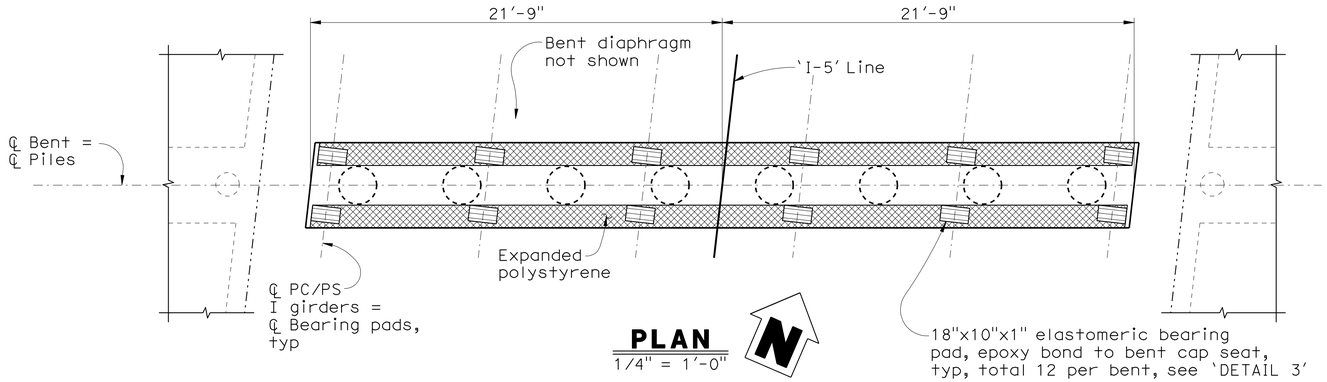

PLAN
1/4" = 1'-0"

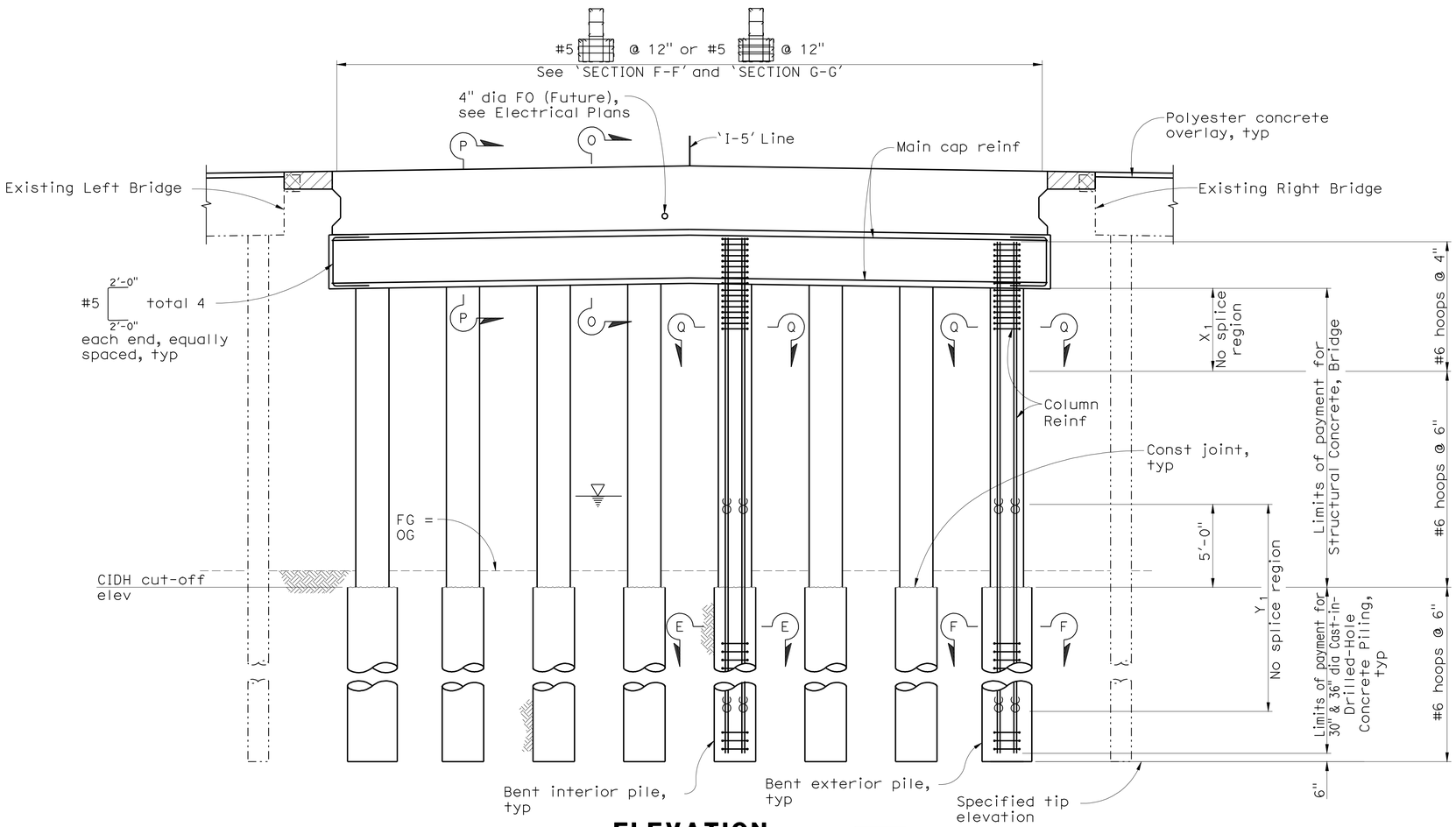

ELEVATION
1/4" = 1'-0"

Notes:
1. No splices permitted in the main cap reinforcement.
2. Barriers not shown for clarity.
3. For 'SECTION E-E' and 'SECTION F-F', see 'BENT DETAILS No. 2' sheet.
4. For 'SECTION O-O', 'SECTION P-P', 'SECTION Q-Q', and 'DETAIL 3', see 'BENT DETAILS No. 4' sheet.
5. Column and CIDH hoops shall utilize ultimate butt splices only.
6. Splices in column and CIDH main reinforcement outside no-splice regions shall be ultimate butt splices.
7. Bent stirrups shall be oriented parallel with 'I-5' Line and spaced along ℄ Bent.
8. 1 Formwork used to form the column extensions shall not extend more than 5'-0" below the CIDH cut-off elevation.

Legend:
- Bridge Removal (Portion)
- Closure Pour
- Expanded polystyrene
- Indicates bundled bars.

	X_1	Y_1
Bent 5	5'-0"	30'-0"
Bent 6	5'-0"	25'-0"
Bent 7	5'-0"	20'-0"
Bent 8	5'-0"	20'-0"

Note:
The Contractor shall verify all controlling field dimensions before ordering or fabricating any material

1 **REVISED PER ADDENDUM No. 1 DATED MARCH 28, 2011**

DESIGN OVERSIGHT John Fujimoto
3-11-11
SIGN OFF DATE

	BY	CHECKED
DESIGN	R. OEN	A. NOTARO
DETAILS	R. YAMANE	A. NOTARO
QUANTITIES	C. TOGAN	D. ROSELLINI

PREPARED FOR THE STATE OF CALIFORNIA DEPARTMENT OF TRANSPORTATION

JOHN A. ALCIATI
PROJECT ENGINEER

BRIDGE NO. 29-0174
POST MILES 29.56

CALAVERAS RIVER BRIDGE (WIDEN)
BENTS 5, 6, 7 & 8 LAYOUT

DESIGN DETAIL SHEET (ENGLISH) (REV. 6-01-09)

ORIGINAL SCALE IN INCHES FOR REDUCED PLANS 0 1 2 3

CU 06240
EA 0G4701

DISREGARD PRINTS BEARING EARLIER REVISION DATES

REVISION DATES (PRELIMINARY STAGE ONLY) 10/16/09 12/4/09 1/15/10 4/23/10 6/11/10 7/28/10

SHEET 19 OF 60

FILE => 29-0174-j-b19-1o5.dds

USERNAME => trmikes1 DATE PLOTTED => 25-MAR-2011 TIME PLOTTED => 06:34

2006048 (20060485188)

DIST	COUNTY	ROUTE	POST MILES TOTAL PROJECT	SHEET No	TOTAL SHEETS
10	SJ	5	25.0/32.7	837	1132

REGISTERED CIVIL ENGINEER 7/28/10 DATE

10-11-10
PLANS APPROVAL DATE

REGISTERED PROFESSIONAL ENGINEER RONALD L OEN No. 46945 Exp. 9/30/11 CIVIL STATE OF CALIFORNIA

The State of California or its officers or agents shall not be responsible for the accuracy or completeness of scanned copies of this plan sheet.

SAN JOAQUIN COUNCIL OF GOVERNMENTS
555 E. WEBER AVENUE
STOCKTON, CA 95202

BIGGS CARDOSA ASSOCIATES INC.
865 THE ALAMEDA
SAN JOSE, CALIFORNIA 95126

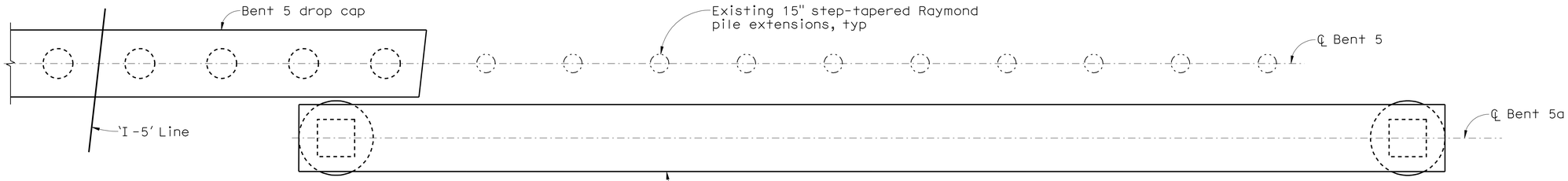

PLAN
1/4" = 1'-0"

Note:
Superstructure not shown for clarity

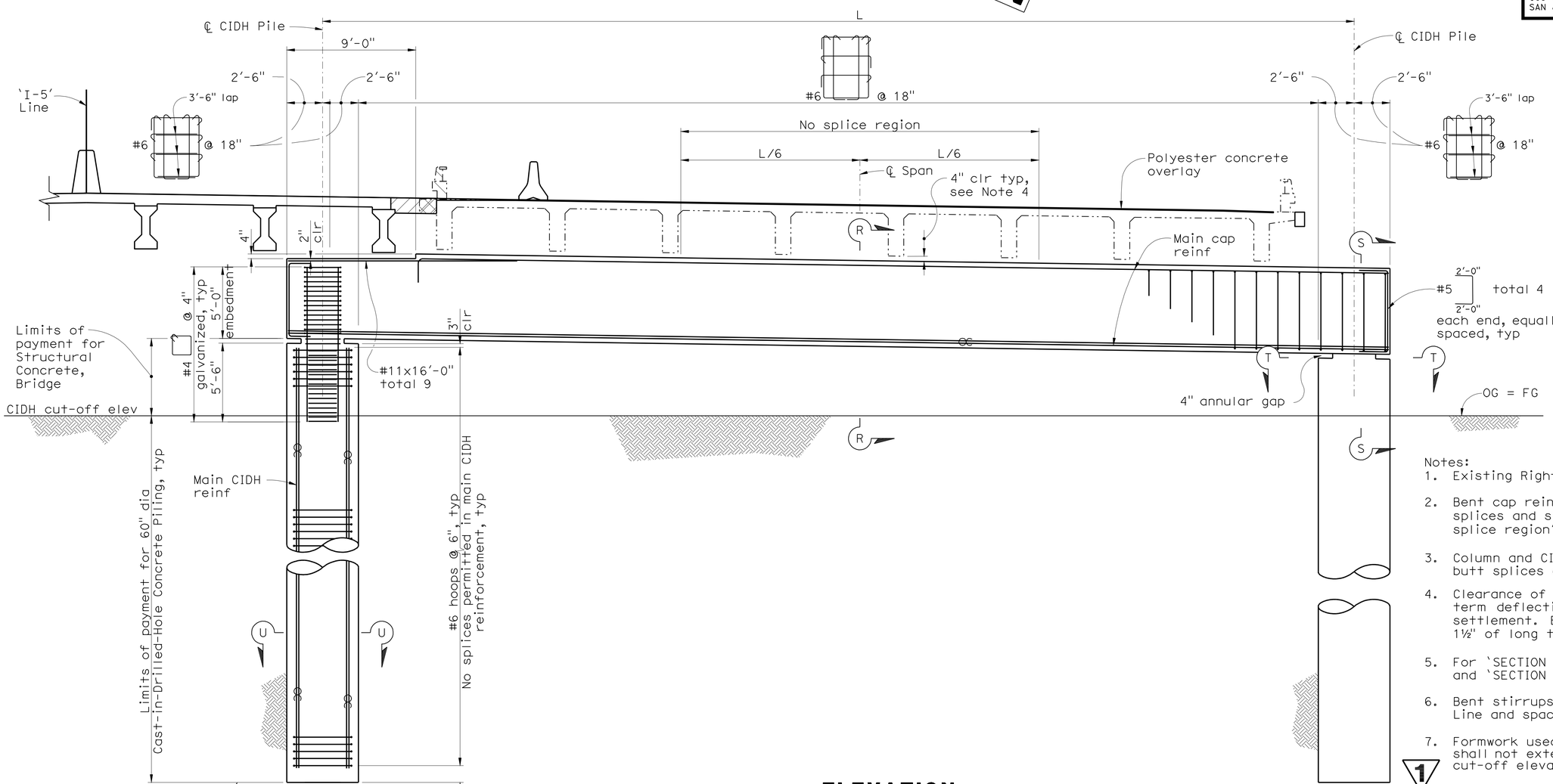

ELEVATION
1/4" = 1'-0"

Legend:
- Bridge Removal (Portion)
- Closure pour
- Indicates bundled bars

Notes:
1. Existing Right Bridge shown, Left Bridge similar.
2. Bent cap reinforcement splices shall be service splices and shall be located outside the 'No splice region' indicated.
3. Column and CIDH hoops shall utilize ultimate butt splices only.
4. Clearance of bent cap required is after all long term deflection and does not account for falsework settlement. Bent 5a cap beam shall account for 1½" of long term defelction at ℄ Span.
5. For 'SECTION R-R', 'SECTION S-S', 'SECTION T-T', and 'SECTION U-U', see 'BENT DETAILS No. 5' sheet.
6. Bent stirrups shall be oriented parallel with 'I-5' Line and spaced along ℄ Bent 5a.
7. Formwork used to form the column extensions shall not extend more than 5'-0" below the CIDH cut-off elevation.

Note:
The Contractor shall verify all controlling field dimensions before ordering or fabricating any material

1 REVISED PER ADDENDUM No. 1 DATED MARCH 28, 2011

DESIGN OVERSIGHT John Fujimoto
3-11-11
SIGN OFF DATE

	BY	CHECKED
DESIGN	R. OEN	A. NOTARO
DETAILS	R. YAMANE	A. NOTARO
QUANTITIES	C. TOGAN	D. ROSELLINI

PREPARED FOR THE STATE OF CALIFORNIA DEPARTMENT OF TRANSPORTATION

JOHN A. ALCIATI
PROJECT ENGINEER

BRIDGE NO. 29-0174
POST MILES 29.56

CALAVERAS RIVER BRIDGE (WIDEN)
BENT 5a LAYOUT

DESIGN DETAIL SHEET (ENGLISH) (REV. 6-01-09)

ORIGINAL SCALE IN INCHES FOR REDUCED PLANS 0 1 2 3

CU 06240
EA 0G4701

DISREGARD PRINTS BEARING EARLIER REVISION DATES

REVISION DATES (PRELIMINARY STAGE ONLY): 10/16/09 12/4/09 1/15/10 4/23/10 6/11/10 7/28/10

SHEET 20 OF 60

FILE => 29-0174-j-b20-1o6.dd

USERNAME => trmikest DATE PLOTTED => 25-MAR-2011 TIME PLOTTED => 08:34

20060485198 20060485198

DIST	COUNTY	ROUTE	POST MILES TOTAL PROJECT	SHEET NO.	TOTAL SHEETS
10	SJ	5	25.0/32.7	872	1132

REGISTERED CIVIL ENGINEER 7/28/10

PLANS APPROVAL DATE 10-11-10

REGISTERED PROFESSIONAL ENGINEER RONALD L OEN No. 46945 Exp. 9/30/11 CIVIL STATE OF CALIFORNIA

The State of California or its officers or agents shall not be responsible for the accuracy or completeness of scanned copies of this plan sheet.

SAN JOAQUIN COUNCIL OF GOVERNMENTS
555 E. WEBER AVENUE
STOCKTON, CA 95202

BIGGS CARDOSA ASSOCIATES INC.
865 THE ALAMEDA
SAN JOSE, CALIFORNIA 95126

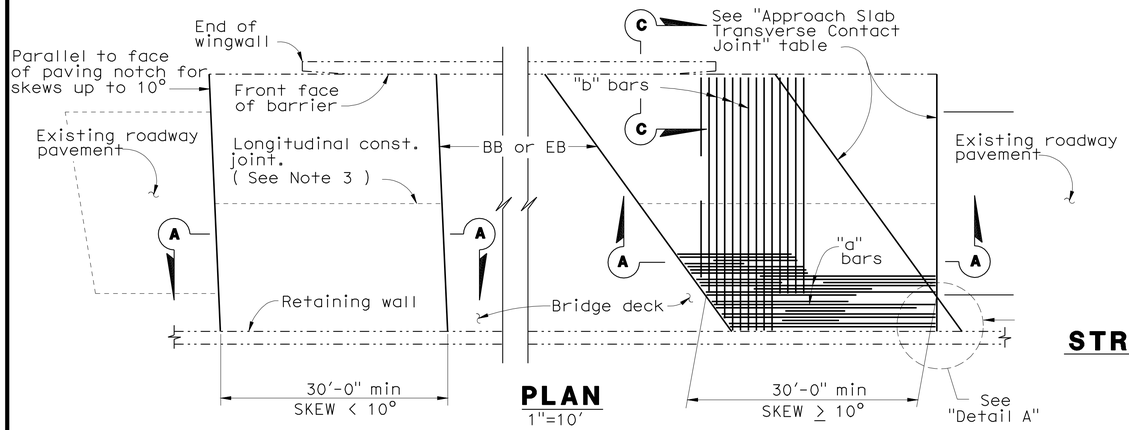

PLAN
1"=10'

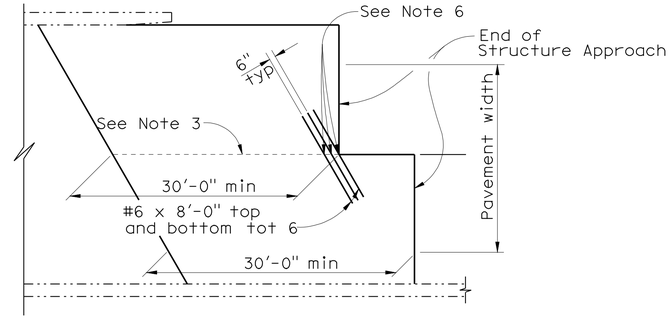

STRUCTURE APPROACH - END STAGGER DETAIL
No Scale

APPROACH SLAB TRANSVERSE CONTACT JOINT		
APPROACH SKEW	WITH AC ROADWAY PAVEMENT	WITH PCC ROADWAY PAVEMENT
< 10°	Parallel with face of paving notch	Parallel with face of paving notch
10° - 45°	Parallel with face of P N use (Detail A)	Stagger lines 24' to 36' apart
> 45°	Parallel with face of P N use (Detail A)	Stagger at each lane line

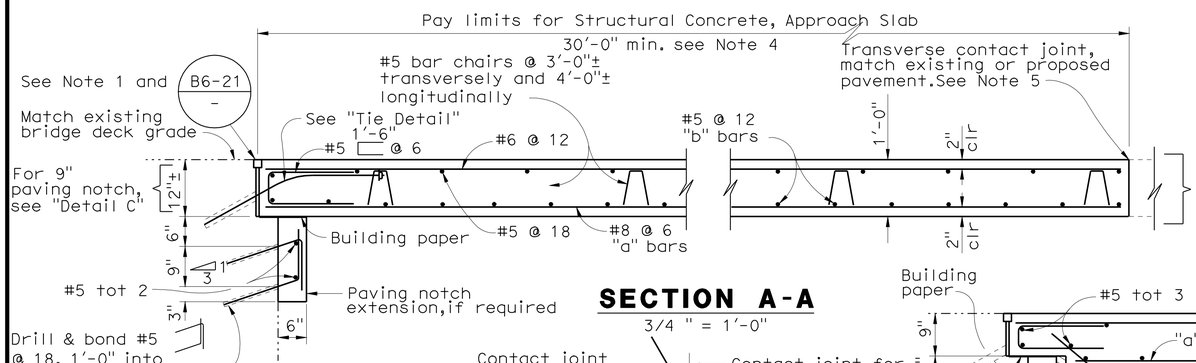

SECTION A-A
3/4 " = 1'-0"

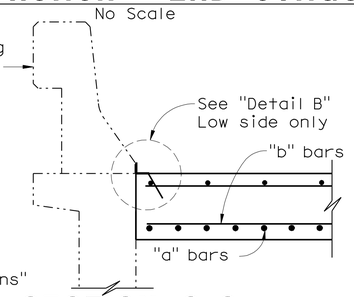

SECTION C-C
3/4 " = 1'-0"

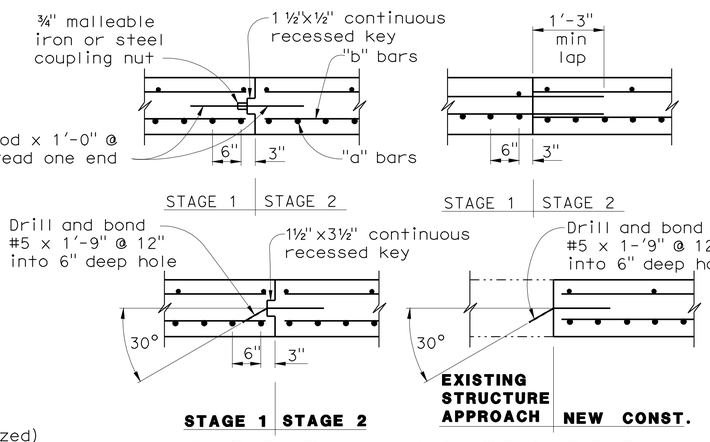

LONGITUDINAL CONSTRUCTION JOINT ALTERNATIVES
3/4 " = 1'-0"

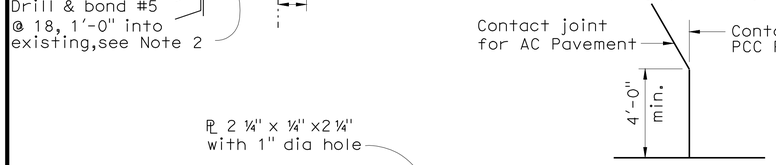

DETAIL A
No Scale

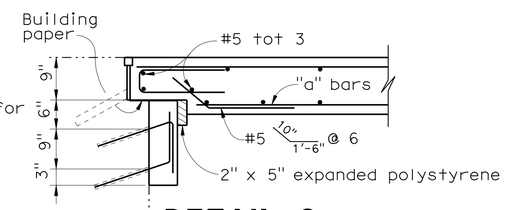

DETAIL C
3/4 " = 1'-0"

NOTE: For details not shown, see "Section A-A".

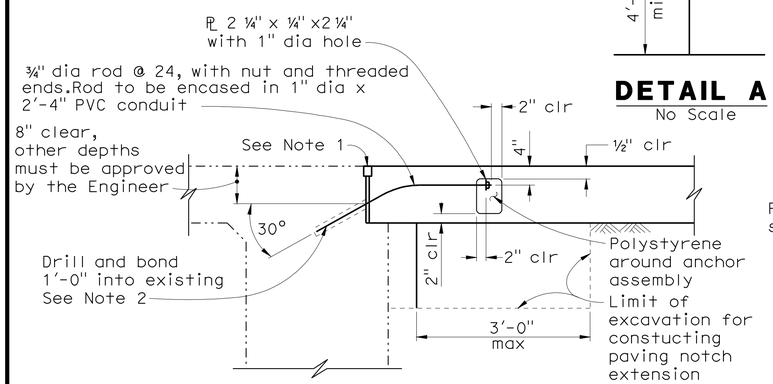

TIE DETAIL
3/4 " = 1'-0"

Note:
The Contractor shall verify all controlling field dimensions before ordering or fabricating any material

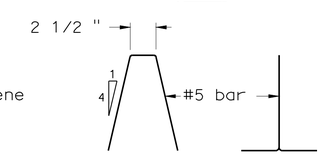

BAR CHAIR DETAIL
1 1/2 " = 1'-0"

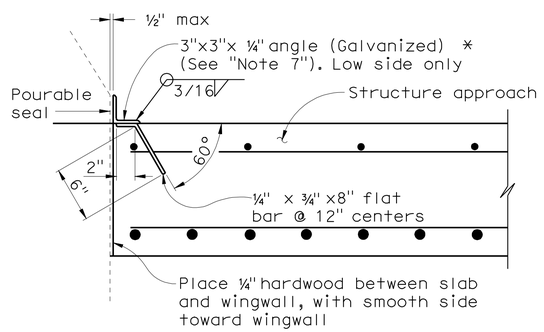

*(TO BE USED WITH TYPE 25 OR TYPE 27 CONCRETE BARRIER)

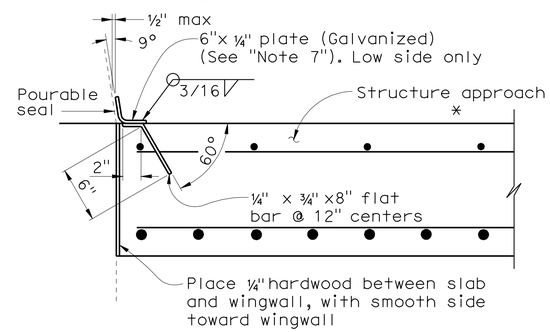

*(TO BE USED WITH TYPE 732 OR TYPE 736 CONCRETE BARRIER)

DETAIL B
1 1/2 " = 1'-0"

NOTES:

1. For details not shown or noted, see Structure Plans. Adjust bar reinforcement to clear a sawcut for sealed joint, when required.
2. Space to avoid existing prestress anchorages and main reinforcement.
3. Longitudinal construction joints, when permitted by the Engineer, shall be located on lane lines.
4. Transverse contact joint shall be a minimum of 5'-0" from an existing or constructed weakened plane joint.
5. For transverse contact joint with new PCC paving. refer to Standard Plan P10.
6. Couplers are required for stage construction.
7. End angle or plate at beginning of barrier transition, end of wingwall or end of structure approach as applicable.

1 **REVISED PER ADDENDUM No. 1 DATED MARCH 28, 2011**

STANDARD DRAWING

RELEASE DATE 3/14/05	DESIGN	BY M. TRAFFALIS	CHECKED E. THORKILDSEN	RELEASED BY
	DETAILS	BY R. YEE	CHECKED E. THORKILDSEN	
FILE NO. xs3-140e	SUBMITTED	BY M. HA	DRAWING DATE 8/92	OFFICE CHIEF

1

ORIGINAL SCALE IN INCHES FOR REDUCED PLANS 0 1 2 3

STATE OF CALIFORNIA DEPARTMENT OF TRANSPORTATION

DIVISION OF ENGINEERING SERVICES

CU 06240
EA 0G4701

BRIDGE NO. 29-0174
POST MILE 29.56

CALAVERAS RIVER BRIDGE (WIDEN)
STRUCTURE APPROACH TYPE R(30D)

DISREGARD PRINTS BEARING EARLIER REVISION DATES

REVISION DATES (PRELIMINARY STAGE ONLY) 10/16/09 12/4/09 1/15/10 4/23/10 6/11/10 7/28/10

SHEET 55 OF 60

USERNAME => trmartin

29-0174-t-sadet01

USERNAME => trmartin DATE PLOTTED => 25-MAR-2011 TIME PLOTTED => 07:51 (20060485538)

DIST	COUNTY	ROUTE	POST MILES TOTAL PROJECT	SHEET No	TOTAL SHEETS
10	SJ	5	25.0/32.7	881	1132

7/28/10
DATE

10-11-10
PLANS APPROVAL DATE

REGISTERED PROFESSIONAL ENGINEER RONALD L OEN No. 46945 Exp. 9/30/11 CIVIL STATE OF CALIFORNIA

The State of California or its officers or agents shall not be responsible for the accuracy or completeness of scanned copies of this plan sheet.

SAN JOAQUIN COUNCIL OF GOVERNMENTS
555 E. WEBER AVENUE
STOCKTON, CA 95202

BIGGS CARDOSA ASSOCIATES INC.
865 THE ALAMEDA
SAN JOSE, CALIFORNIA 95126

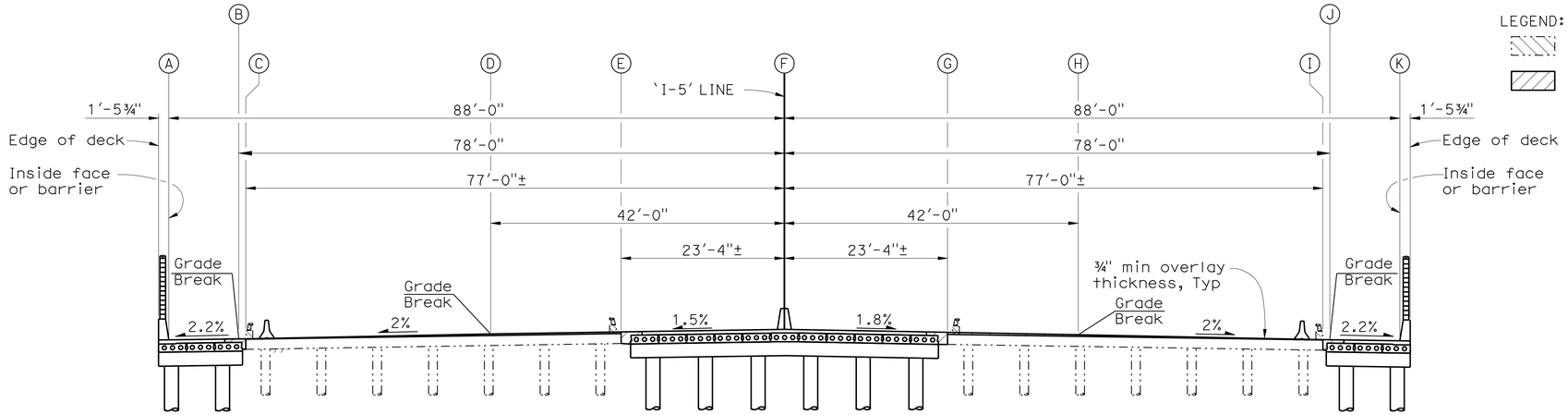

TYPICAL SECTION

1" = 10'

1

NOTE:
THE ENGINEER MAY ADJUST THE PROPOSED TOP OF DECK/OVERLAY ELEVATIONS (INCLUDING APPROACH SLABS) AS NEEDED IF THE EXISTING TOP OF DECK ELEVATIONS DETERMINED FROM THE CONSTRUCTION SURVEY DIFFER FROM THE ELEVATIONS SHOWN ON THE PLANS.

1

`I-5' LINE STATION	LINE	OFFSET FROM `I-5' LINE (Ft)	PROPOSED TOP OF DECK/OVERLAY Elev (Ft)	EXISTING TOP OF DECK Elev (Ft)
1745+80	A	88.00 Lt	19.60	N/A
	B	78.00 Lt	19.82	N/A
	C	77.00 Lt	19.84	N/A
	D	42.00 Lt	N/A	N/A
	E	23.33 Lt	N/A	N/A
	F	0.00	N/A	N/A
	G	23.33 Rt	N/A	N/A
	H	42.00 Rt	N/A	N/A
	I	77.00 Rt	N/A	N/A
	J	78.00 Rt	N/A	N/A
	K	88.00 Rt	N/A	N/A
1745+90	A	88.00 Lt	19.70	N/A
	B	78.00 Lt	19.92	N/A
	C	77.00 Lt	19.94	N/A
	D	42.00 Lt	N/A	N/A
	E	23.33 Lt	N/A	N/A
	F	0.00	N/A	N/A
	G	23.33 Rt	N/A	N/A
	H	42.00 Rt	N/A	N/A
	I	77.00 Rt	N/A	N/A
	J	78.00 Rt	N/A	N/A
	K	88.00 Rt	N/A	N/A
1746+00	A	88.00 Lt	19.79	N/A
	B	78.00 Lt	20.01	N/A
	C	77.00 Lt	20.03	N/A
	D	42.00 Lt	20.73	N/A
	E	23.33 Lt	21.01	N/A
	F	0.00	N/A	N/A
	G	23.33 Rt	N/A	N/A
	H	42.00 Rt	N/A	N/A
	I	77.00 Rt	N/A	N/A
	J	78.00 Rt	N/A	N/A
	K	88.00 Rt	N/A	N/A

`I-5' LINE STATION	LINE	OFFSET FROM `I-5' LINE (Ft)	PROPOSED TOP OF DECK/OVERLAY Elev (Ft)	EXISTING TOP OF DECK Elev (Ft)
1746+10	A	88.00 Lt	19.88	N/A
	B	78.00 Lt	20.10	N/A
	C	77.00 Lt	20.12	20.00±
	D	42.00 Lt	20.82	N/A
	E	23.33 Lt	21.10	N/A
	F	0.00	21.45	N/A
	G	23.33 Rt	N/A	N/A
	H	42.00 Rt	N/A	N/A
	I	77.00 Rt	N/A	N/A
	J	78.00 Rt	N/A	N/A
	K	88.00 Rt	N/A	N/A
1746+20	A	88.00 Lt	19.97	N/A
	B	78.00 Lt	20.19	N/A
	C	77.00 Lt	20.21	20.08±
	D	42.00 Lt	20.91	N/A
	E	23.33 Lt	21.19	N/A
	F	0.00	21.54	N/A
	G	23.33 Rt	21.12	N/A
	H	42.00 Rt	N/A	N/A
	I	77.00 Rt	N/A	N/A
	J	78.00 Rt	N/A	N/A
	K	88.00 Rt	N/A	N/A
1746+30	A	88.00 Lt	20.06	N/A
	B	78.00 Lt	20.28	N/A
	C	77.00 Lt	20.30	20.19±
	D	42.00 Lt	21.00	20.59±
	E	23.33 Lt	21.28	20.93±
	F	0.00	21.63	N/A
	G	23.33 Rt	21.21	N/A
	H	42.00 Rt	20.87	N/A
	I	77.00 Rt	N/A	N/A
	J	78.00 Rt	N/A	N/A
	K	88.00 Rt	N/A	N/A

`I-5' LINE STATION	LINE	OFFSET FROM `I-5' LINE (Ft)	PROPOSED TOP OF DECK/OVERLAY Elev (Ft)	EXISTING TOP OF DECK Elev (Ft)
1746+40	A	88.00 Lt	20.14	N/A
	B	78.00 Lt	20.36	N/A
	C	77.00 Lt	20.38	20.28±
	D	42.00 Lt	21.08	20.69±
	E	23.33 Lt	21.36	21.06±
	F	0.00	21.71	N/A
	G	23.33 Rt	21.29	N/A
	H	42.00 Rt	20.96	N/A
	I	77.00 Rt	20.26	N/A
	J	78.00 Rt	20.24	N/A
	K	88.00 Rt	20.02	N/A
1746+50	A	88.00 Lt	20.23	N/A
	B	78.00 Lt	20.45	N/A
	C	77.00 Lt	20.47	20.32±
	D	42.00 Lt	21.17	20.77±
	E	23.33 Lt	21.45	21.18±
	F	0.00	21.80	N/A
	G	23.33 Rt	21.38	21.09±
	H	42.00 Rt	21.04	N/A
	I	77.00 Rt	20.34	N/A
	J	78.00 Rt	20.32	N/A
	K	88.00 Rt	20.10	N/A
1746+60	A	88.00 Lt	20.31	N/A
	B	78.00 Lt	20.53	N/A
	C	77.00 Lt	20.55	20.40±
	D	42.00 Lt	21.25	20.83±
	E	23.33 Lt	21.53	21.24±
	F	0.00	21.88	N/A
	G	23.33 Rt	21.46	21.15±
	H	42.00 Rt	21.12	20.76±
	I	77.00 Rt	20.42	N/A
	J	78.00 Rt	20.40	N/A
	K	88.00 Rt	20.18	N/A

NOTE:
The Contractor shall verify all controlling field dimensions before ordering or fabricating any material

1 **REVISED PER ADDENDUM No. 1 DATED MARCH 28, 2011**

John Fujimoto
DESIGN OVERSIGHT John Fujimoto
3-11-11
SIGN OFF DATE

	BY	CHECKED
DESIGN	M. THOMAS	A. NOTARO
DETAILS	S. SUMPTER	A. NOTARO
QUANTITIES	S. SUMPTER	S. OGHUMU

PREPARED FOR THE STATE OF CALIFORNIA DEPARTMENT OF TRANSPORTATION

JOHN A. ALCIATI
PROJECT ENGINEER

BRIDGE NO. 29-0175
POST MILES 31.00

FOURTEEN MILE SLOUGH BRIDGE (WIDEN)
DECK GRADES No. 2

DESIGN DETAIL SHEET (ENGLISH) (REV. 6-01-09)

ORIGINAL SCALE IN INCHES FOR REDUCED PLANS 0 1 2 3

CU 06240
EA 0G4701

FILE => 29-0175-d-dkg02.add

DISREGARD PRINTS BEARING EARLIER REVISION DATES

REVISION DATES (PRELIMINARY STAGE ONLY) 10/16/09 12/4/09 1/15/10 4/23/10 6/11/10 7/28/10

SHEET 4 OF 26

USERNAME => trmartin DATE PLOTTED => 25-MAR-2011 TIME PLOTTED => 07:51
2006048 (2006048S4D)

'I-5' LINE STATION	LINE	OFFSET FROM 'I-5' LINE (Ft)	PROPOSED TOP OF DECK/OVERLAY Elev (Ft)	EXISTING TOP OF DECK Elev (Ft)
1746+70	A	88.00 L+	20.39	N/A
	B	78.00 L+	20.61	N/A
	C	77.00 L+	20.63	20.49±
	D	42.00 L+	21.33	21.92±
	E	23.33 L+	21.61	21.30±
	F	0.00	21.96	N/A
	G	23.33 R+	21.54	21.25±
	H	42.00 R+	21.20	20.84±
	I	77.00 R+	20.50	20.35±
	J	78.00 R+	20.48	N/A
	K	88.00 R+	20.26	N/A
1746+80	A	88.00 L+	20.47	N/A
	B	78.00 L+	20.69	N/A
	C	77.00 L+	20.71	20.58±
	D	42.00 L+	21.41	21.02±
	E	23.33 L+	21.69	21.37±
	F	0.00	22.04	N/A
	G	23.33 R+	21.62	21.33±
	H	42.00 R+	21.28	20.94±
	I	77.00 R+	20.58	20.44±
	J	78.00 R+	20.56	N/A
	K	88.00 R+	20.34	N/A
1746+90	A	88.00 L+	20.54	N/A
	B	78.00 L+	20.76	N/A
	C	77.00 L+	20.78	20.63±
	D	42.00 L+	21.48	21.11±
	E	23.33 L+	21.76	21.45±
	F	0.00	22.11	N/A
	G	23.33 R+	21.69	21.39±
	H	42.00 R+	21.36	21.01±
	I	77.00 R+	20.66	20.52±
	J	78.00 R+	20.64	N/A
	K	88.00 R+	20.42	N/A
1747+00	A	88.00 L+	20.62	N/A
	B	78.00 L+	20.84	N/A
	C	77.00 L+	20.86	20.73±
	D	42.00 L+	21.56	21.18±
	E	23.33 L+	21.84	21.49±
	F	0.00	22.19	N/A
	G	23.33 R+	21.77	21.50±
	H	42.00 R+	21.43	21.09±
	I	77.00 R+	20.73	20.60±
	J	78.00 R+	20.71	N/A
	K	88.00 R+	20.49	N/A
1747+10	A	88.00 L+	20.69	N/A
	B	78.00 L+	20.91	N/A
	C	77.00 L+	20.93	20.78±
	D	42.00 L+	21.63	21.28±
	E	23.33 L+	21.91	21.62±
	F	0.00	22.26	N/A
	G	23.33 R+	21.84	21.57±
	H	42.00 R+	21.51	21.20±
	I	77.00 R+	20.81	20.68±
	J	78.00 R+	20.79	N/A
	K	88.00 R+	20.57	N/A

'I-5' LINE STATION	LINE	OFFSET FROM 'I-5' LINE (Ft)	PROPOSED TOP OF DECK/OVERLAY Elev (Ft)	EXISTING TOP OF DECK Elev (Ft)
1747+20	A	88.00 L+	20.77	N/A
	B	78.00 L+	20.99	N/A
	C	77.00 L+	21.01	20.85±
	D	42.00 L+	21.71	21.36±
	E	23.33 L+	21.99	21.74±
	F	0.00	22.34	N/A
	G	23.33 R+	21.92	21.62±
	H	42.00 R+	21.58	21.27±
	I	77.00 R+	20.88	20.77±
	J	78.00 R+	20.86	N/A
	K	88.00 R+	20.64	N/A
1747+30	A	88.00 L+	20.84	N/A
	B	78.00 L+	21.06	N/A
	C	77.00 L+	21.08	20.94±
	D	42.00 L+	21.78	21.47±
	E	23.33 L+	22.06	21.79±
	F	0.00	22.41	N/A
	G	23.33 R+	21.99	21.71±
	H	42.00 R+	21.65	21.32±
	I	77.00 R+	20.95	20.83±
	J	78.00 R+	20.93	N/A
	K	88.00 R+	20.71	N/A
1747+40	A	88.00 L+	20.90	N/A
	B	78.00 L+	21.12	N/A
	C	77.00 L+	21.14	21.02±
	D	42.00 L+	21.84	21.53±
	E	23.33 L+	22.12	21.87±
	F	0.00	22.47	N/A
	G	23.33 R+	22.05	21.80±
	H	42.00 R+	21.72	21.42±
	I	77.00 R+	21.02	20.90±
	J	78.00 R+	21.00	N/A
	K	88.00 R+	20.78	N/A
1747+50	A	88.00 L+	20.97	N/A
	B	78.00 L+	21.19	N/A
	C	77.00 L+	21.21	21.08±
	D	42.00 L+	21.91	21.58±
	E	23.33 L+	22.19	21.92±
	F	0.00	22.54	N/A
	G	23.33 R+	22.12	21.84±
	H	42.00 R+	21.79	21.49±
	I	77.00 R+	21.09	20.98±
	J	78.00 R+	21.07	N/A
	K	88.00 R+	20.85	N/A
1747+60	A	88.00 L+	21.04	N/A
	B	78.00 L+	21.26	N/A
	C	77.00 L+	21.28	21.15±
	D	42.00 L+	21.98	21.63±
	E	23.33 L+	22.26	21.95±
	F	0.00	22.61	N/A
	G	23.33 R+	22.19	21.92±
	H	42.00 R+	21.85	21.54±
	I	77.00 R+	21.15	21.04±
	J	78.00 R+	21.13	N/A
	K	88.00 R+	20.91	N/A

NOTE:
THE ENGINEER MAY ADJUST THE PROPOSED TOP OF DECK/OVERLAY ELEVATIONS (INCLUDING APPROACH SLABS) AS NEEDED IF THE EXISTING TOP OF DECK ELEVATIONS DETERMINED FROM THE CONSTRUCTION SURVEY DIFFER FROM THE ELEVATIONS SHOWN ON THE PLANS.

1

DIST	COUNTY	ROUTE	POST MILES TOTAL PROJECT	SHEET No	TOTAL SHEETS
10	SJ	5	25.0/32.7	882	1132

REGISTERED CIVIL ENGINEER 7/28/10 DATE

10-11-10
PLANS APPROVAL DATE

REGISTERED PROFESSIONAL ENGINEER RONALD L OEN No. 46945 Exp. 9/30/11 CIVIL STATE OF CALIFORNIA

The State of California or its officers or agents shall not be responsible for the accuracy or completeness of scanned copies of this plan sheet.

SAN JOAQUIN COUNCIL OF GOVERNMENTS
555 E. WEBER AVENUE
STOCKTON, CA 95202

BIGGS CARDOSA ASSOCIATES INC.
865 THE ALAMEDA
SAN JOSE, CALIFORNIA 95126

'I-5' LINE STATION	LINE	OFFSET FROM 'I-5' LINE (Ft)	PROPOSED TOP OF DECK/OVERLAY ELEV (Ft)	EXISTING TOP OF DECK Elev (Ft)
1747+70	A	88.00 L+	21.10	N/A
	B	78.00 L+	21.32	N/A
	C	77.00 L+	21.34	21.20±
	D	42.00 L+	22.04	21.71±
	E	23.33 L+	22.32	21.99±
	F	0.00	22.67	N/A
	G	23.33 R+	22.25	22.00±
	H	42.00 R+	21.92	21.65±
	I	77.00 R+	21.22	21.12±
	J	78.00 R+	21.20	N/A
	K	88.00 R+	20.98	N/A
1747+80	A	88.00 L+	21.16	N/A
	B	78.00 L+	21.38	N/A
	C	77.00 L+	21.40	21.25±
	D	42.00 L+	22.10	21.75±
	E	23.33 L+	22.38	22.08±
	F	0.00	22.73	N/A
	G	23.33 R+	22.31	22.03±
	H	42.00 R+	21.98	21.70±
	I	77.00 R+	21.28	21.20±
	J	78.00 R+	21.26	N/A
	K	88.00 R+	21.04	N/A
1747+90	A	88.00 L+	21.22	N/A
	B	78.00 L+	21.44	N/A
	C	77.00 L+	21.46	21.31±
	D	42.00 L+	22.16	21.74±
	E	23.33 L+	22.44	22.15±
	F	0.00	22.79	N/A
	G	23.33 R+	22.37	22.12±
	H	42.00 R+	22.04	21.73±
	I	77.00 R+	21.34	21.24±
	J	78.00 R+	21.32	N/A
	K	88.00 R+	21.10	N/A

Note:
The Contractor shall verify all controlling field dimensions before ordering or fabricating any material

1 **REVISED PER ADDENDUM No. 1 DATED MARCH 28, 2011**

DESIGN OVERSIGHT John Fujimoto
3-11-11
SIGN OFF DATE

	BY	CHECKED
DESIGN	M. THOMAS	A. NOTARO
DETAILS	S. SUMPTER	A. NOTARO
QUANTITIES	S. SUMPTER	S. OGHUMU

PREPARED FOR THE STATE OF CALIFORNIA DEPARTMENT OF TRANSPORTATION

JOHN A. ALCIATI
PROJECT ENGINEER

BRIDGE NO. 29-0175
POST MILES 31.00

FOURTEEN MILE SLOUGH BRIDGE (WIDEN)
DECK GRADES No. 3

DESIGN DETAIL SHEET (ENGLISH) (REV. 6-01-09)

ORIGINAL SCALE IN INCHES FOR REDUCED PLANS 0 1 2 3

CU 06240
EA 0G4701

DISREGARD PRINTS BEARING EARLIER REVISION DATES

REVISION DATES (PRELIMINARY STAGE ONLY) 12/4/09 1/15/10 4/23/10 6/11/10 7/28/10

SHEET 5 OF 26

FILE => 29-0175-d-dkg03.add

USERNAME => trmartin DATE PLOTTED => 25-MAR-2011 TIME PLOTTED => 07:51

20060485 (20060485SD)

'I-5' LINE STATION	LINE	OFFSET FROM 'I-5' LINE (Ft)	PROPOSED TOP OF DECK/OVERLAY Elev (Ft)	EXISTING TOP OF DECK Elev (Ft)
1748+00	A	88.00 L+	21.28	N/A
	B	78.00 L+	21.50	N/A
	C	77.00 L+	21.52	21.39±
	D	42.00 L+	22.22	21.82±
	E	23.33 L+	22.50	22.17±
	F	0.00	22.85	N/A
	G	23.33 R+	22.43	22.19±
	H	42.00 R+	22.10	21.81±
	I	77.00 R+	21.40	21.30±
	J	78.00 R+	21.38	N/A
	K	88.00 R+	21.16	N/A
1748+10	A	88.00 L+	21.34	N/A
	B	78.00 L+	21.56	N/A
	C	77.00 L+	21.58	21.43±
	D	42.00 L+	22.28	21.94±
	E	23.33 L+	22.56	22.25±
	F	0.00	22.91	N/A
	G	23.33 R+	22.49	22.18±
	H	42.00 R+	22.15	21.86±
	I	77.00 R+	21.45	21.37±
	J	78.00 R+	21.43	N/A
	K	88.00 R+	21.21	N/A
1748+20	A	88.00 L+	21.39	N/A
	B	78.00 L+	21.61	N/A
	C	77.00 L+	21.63	21.52±
	D	42.00 L+	22.33	21.96±
	E	23.33 L+	22.61	22.33±
	F	0.00	22.96	N/A
	G	23.33 R+	22.54	22.22±
	H	42.00 R+	22.21	21.88±
	I	77.00 R+	21.51	21.40±
	J	78.00 R+	21.49	N/A
	K	88.00 R+	21.27	N/A
1748+30	A	88.00 L+	21.45	N/A
	B	78.00 L+	21.67	N/A
	C	77.00 L+	21.69	N/A
	D	42.00 L+	22.39	22.03±
	E	23.33 L+	22.67	22.40±
	F	0.00	23.02	N/A
	G	23.33 R+	22.60	22.31±
	H	42.00 R+	22.26	21.92±
	I	77.00 R+	21.56	21.42±
	J	78.00 R+	21.54	N/A
	K	88.00 R+	21.32	N/A
1748+40	A	88.00 L+	21.50	N/A
	B	78.00 L+	21.72	N/A
	C	77.00 L+	21.74	N/A
	D	42.00 L+	22.44	N/A
	E	23.33 L+	22.72	22.47±
	F	0.00	23.07	N/A
	G	23.33 R+	22.65	22.37±
	H	42.00 R+	22.31	21.98±
	I	77.00 R+	21.61	21.47±
	J	78.00 R+	21.59	N/A
	K	88.00 R+	21.37	N/A

'I-5' LINE STATION	LINE	OFFSET FROM 'I-5' LINE (Ft)	PROPOSED TOP OF DECK/OVERLAY Elev (Ft)	EXISTING TOP OF DECK Elev (Ft)
1748+50	A	88.00 L+	N/A	N/A
	B	78.00 L+	21.77	N/A
	C	77.00 L+	21.79	N/A
	D	42.00 L+	22.49	N/A
	E	23.33 L+	22.77	N/A
	F	0.00	23.12	N/A
	G	23.33 R+	22.70	22.39±
	H	42.00 R+	22.36	22.03±
	I	77.00 R+	21.66	21.54±
	J	78.00 R+	21.64	N/A
	K	88.00 R+	21.42	N/A
1748+60	A	88.00 L+	N/A	N/A
	B	78.00 L+	N/A	N/A
	C	77.00 L+	N/A	N/A
	D	42.00 L+	22.54	N/A
	E	23.33 L+	22.82	N/A
	F	0.00	23.17	N/A
	G	23.33 R+	22.75	N/A
	H	42.00 R+	22.41	22.07±
	I	77.00 R+	21.71	21.60±
	J	78.00 R+	21.69	N/A
	K	88.00 R+	21.47	N/A
1748+70	A	88.00 L+	N/A	N/A
	B	78.00 L+	N/A	N/A
	C	77.00 L+	N/A	N/A
	D	42.00 L+	N/A	N/A
	E	23.33 L+	22.86	N/A
	F	0.00	23.21	N/A
	G	23.33 R+	22.79	N/A
	H	42.00 R+	22.46	N/A
	I	77.00 R+	21.76	21.66±
	J	78.00 R+	21.74	N/A
	K	88.00 R+	21.52	N/A
1748+80	A	88.00 L+	N/A	N/A
	B	78.00 L+	N/A	N/A
	C	77.00 L+	N/A	N/A
	D	42.00 L+	N/A	N/A
	E	23.33 L+	N/A	N/A
	F	0.00	23.26	N/A
	G	23.33 R+	22.84	N/A
	H	42.00 R+	22.50	N/A
	I	77.00 R+	21.80	N/A
	J	78.00 R+	21.78	N/A
	K	88.00 R+	21.56	N/A
1748+90	A	88.00 L+	N/A	N/A
	B	78.00 L+	N/A	N/A
	C	77.00 L+	N/A	N/A
	D	42.00 L+	N/A	N/A
	E	23.33 L+	N/A	N/A
	F	0.00	N/A	N/A
	G	23.33 R+	N/A	N/A
	H	42.00 R+	22.55	N/A
	I	77.00 R+	21.85	N/A
	J	78.00 R+	21.83	N/A
	K	88.00 R+	21.61	N/A

NOTE:
THE ENGINEER MAY ADJUST THE PROPOSED TOP OF DECK/OVERLAY ELEVATIONS (INCLUDING APPROACH SLABS) AS NEEDED IF THE EXISTING TOP OF DECK ELEVATIONS DETERMINED FROM THE CONSTRUCTION SURVEY DIFFER FROM THE ELEVATIONS SHOWN ON THE PLANS.

1

DIST	COUNTY	ROUTE	POST MILES TOTAL PROJECT	SHEET No	TOTAL SHEETS
10	SJ	5	25.0/32.7	883	1132

REGISTERED CIVIL ENGINEER 7/28/10 DATE

10-11-10
PLANS APPROVAL DATE

REGISTERED PROFESSIONAL ENGINEER RONALD L OEN No. 46945 Exp. 9/30/11 CIVIL STATE OF CALIFORNIA

The State of California or its officers or agents shall not be responsible for the accuracy or completeness of scanned copies of this plan sheet.

SAN JOAQUIN COUNCIL OF GOVERNMENTS
555 E. WEBER AVENUE
STOCKTON, CA 95202

BIGGS CARDOSA ASSOCIATES INC.
865 THE ALAMEDA
SAN JOSE, CALIFORNIA 95126

'I-5' LINE STATION	LINE	OFFSET FROM 'I-5' LINE (Ft)	PROPOSED TOP OF DECK/OVERLAY Elev (Ft)	EXISTING TOP OF DECK Elev (Ft)
1749+00	A	88.00 L+	N/A	N/A
	B	78.00 L+	N/A	N/A
	C	77.00 L+	N/A	N/A
	D	42.00 L+	N/A	N/A
	E	23.33 L+	N/A	N/A
	F	0.00	N/A	N/A
	G	23.33 R+	N/A	N/A
	H	42.00 R+	N/A	N/A
	I	77.00 R+	21.89	N/A
	J	78.00 R+	21.87	N/A
	K	88.00 R+	21.65	N/A
1749+10	A	88.00 L+	N/A	N/A
	B	78.00 L+	N/A	N/A
	C	77.00 L+	N/A	N/A
	D	42.00 L+	N/A	N/A
	E	23.33 L+	N/A	N/A
	F	0.00	N/A	N/A
	G	23.33 R+	N/A	N/A
	H	42.00 R+	N/A	N/A
	I	77.00 R+	N/A	N/A
	J	78.00 R+	N/A	N/A
	K	88.00 R+	21.69	N/A

NOTE:
The Contractor shall verify all controlling field dimensions before ordering or fabricating any material

1 **REVISED PER ADDENDUM No. 1 DATED MARCH 28, 2011**

DESIGN OVERSIGHT John Fujimoto
3-11-11
SIGN OFF DATE

	BY	CHECKED
DESIGN	M. THOMAS	A. NOTARO
DETAILS	S. SUMPTER	A. NOTARO
QUANTITIES	S. SUMPTER	S. OGHUMU

PREPARED FOR THE STATE OF CALIFORNIA DEPARTMENT OF TRANSPORTATION

JOHN A. ALCIATI
PROJECT ENGINEER

BRIDGE NO. 29-0175
POST MILES 31.00

FOURTEEN MILE SLOUGH BRIDGE (WIDEN)
DECK GRADES No. 4

DESIGN DETAIL SHEET (ENGLISH) (REV. 6-01-09)

ORIGINAL SCALE IN INCHES FOR REDUCED PLANS 0 1 2 3

CU 06240
EA 0G4701

FILE => 29-0175-d-dkg04.add

DISREGARD PRINTS BEARING EARLIER REVISION DATES

REVISION DATES (PRELIMINARY STAGE ONLY) 12/4/09 1/15/10 4/23/10 6/11/10 7/28/10

SHEET 6 OF 26

USERNAME => trmartin DATE PLOTTED => 25-MAR-2011 TIME PLOTTED => 07:51
2006048 (2006048S6D)

1 REVISED PER ADDENDUM No. 1 DATED MARCH 28, 2011

DIST	COUNTY	ROUTE	POST MILES TOTAL PROJECT	SHEET No	TOTAL SHEETS
10	SJ	5	25.0/32.7	888	1132

REGISTERED CIVIL ENGINEER 7/28/10 DATE

10-11-10
PLANS APPROVAL DATE

REGISTERED PROFESSIONAL ENGINEER RONALD L OEN No. 46945 Exp. 9/30/11 CIVIL STATE OF CALIFORNIA

The State of California or its officers or agents shall not be responsible for the accuracy or completeness of scanned copies of this plan sheet.

SAN JOAQUIN COUNCIL OF GOVERNMENTS
555 E. WEBER AVENUE
STOCKTON, CA 95202

BIGGS CARDOSA ASSOCIATES INC.
865 THE ALAMEDA
SAN JOSE, CALIFORNIA 95126

NOTES:
1. For 'SECTION A-A', 'SECTION B-B', 'SECTION C-C', 'SECTION D-D', 'SECTION E-E' and 'SECTION F-F', see 'BENT DETAILS' sheet.
2. Orient bent cap stirrups parallel to 'I-5' Line.
3. Bent cap stirrup spacing measured along ℄ Bent.
4. Formwork used to form the column extensions shall not extend more than 5'-0" below the CIDH cut-off elevation.

LEGEND:
- Indicates existing structure
- Indicates 2-bar bundles
- Closure pour

1

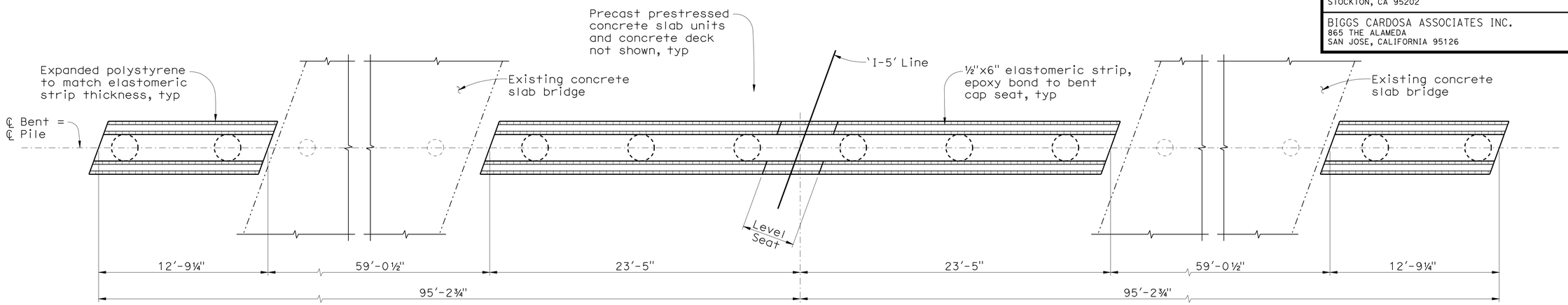

BENT PLAN
1/4" = 1'-0"

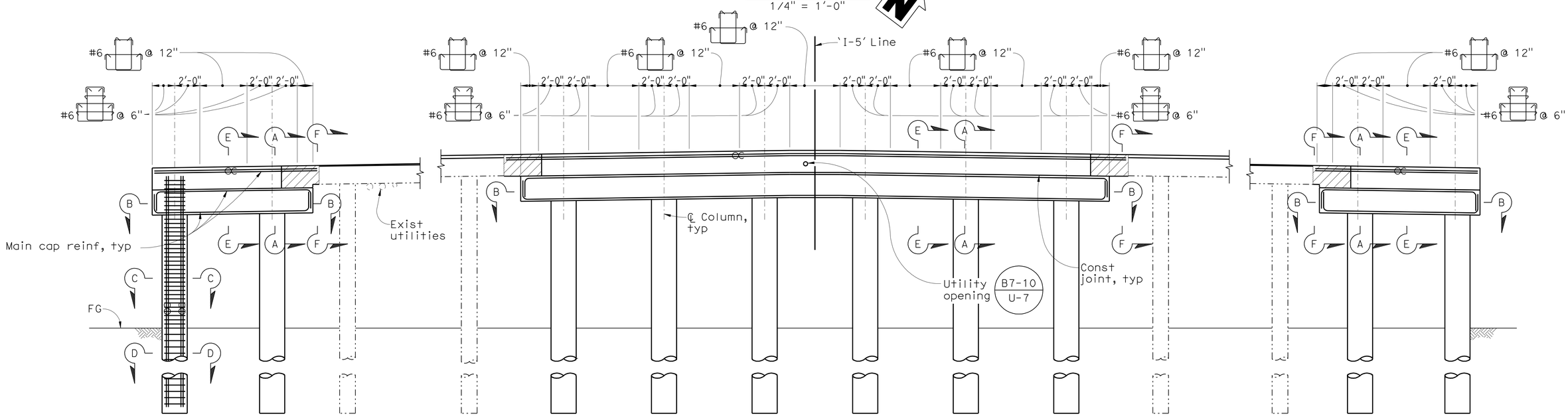

BENT ELEVATION
1/4" = 1'-0"

Note:
The Contractor shall verify all controlling field dimensions before ordering or fabricating any material

DESIGN OVERSIGHT John Fujimoto
3-11-11
SIGN OFF DATE

	BY	CHECKED
DESIGN	M. THOMAS	A. NOTARO
DETAILS	S. SUMPTER	A. NOTARO
QUANTITIES	S. SUMPTER	S. OGHUMU

PREPARED FOR THE STATE OF CALIFORNIA DEPARTMENT OF TRANSPORTATION

JOHN A. ALCIATI
PROJECT ENGINEER

BRIDGE NO. 29-0175
POST MILES 31.00

FOURTEEN MILE SLOUGH BRIDGE (WIDEN)
BENT LAYOUT

DESIGN DETAIL SHEET (ENGLISH) (REV. 6-01-09)

ORIGINAL SCALE IN INCHES FOR REDUCED PLANS 0 1 2 3

CU 06240
EA 0G4701

DISREGARD PRINTS BEARING EARLIER REVISION DATES

REVISION DATES (PRELIMINARY STAGE ONLY): 10/16/09 12/4/09 1/15/10 4/23/10 6/11/10 7/28/10

SHEET 11 OF 26

FILE => 29-0175-j-b11-lo1.add

USERNAME => p.trmorth DATE PLOTTED => 25-MAR-2011 TIME PLOTTED => 07:45 2006048 (2006048S110)

DIST	COUNTY	ROUTE	POST MILES TOTAL PROJECT	SHEET NO.	TOTAL SHEETS
10	SJ	5	25.0/32.7	896	1132

REGISTERED CIVIL ENGINEER 7/28/10

PLANS APPROVAL DATE 10-11-10

REGISTERED PROFESSIONAL ENGINEER RONALD L OEN No. 46945 Exp.9/30/11 CIVIL STATE OF CALIFORNIA

The State of California or its officers or agents shall not be responsible for the accuracy or completeness of scanned copies of this plan sheet.

SAN JOAQUIN COUNCIL OF GOVERNMENTS
555 E. WEBER AVENUE
STOCKTON, CA 95202

BIGGS CARDOSA ASSOCIATES INC.
865 THE ALAMEDA
SAN JOSE, CALIFORNIA 95126

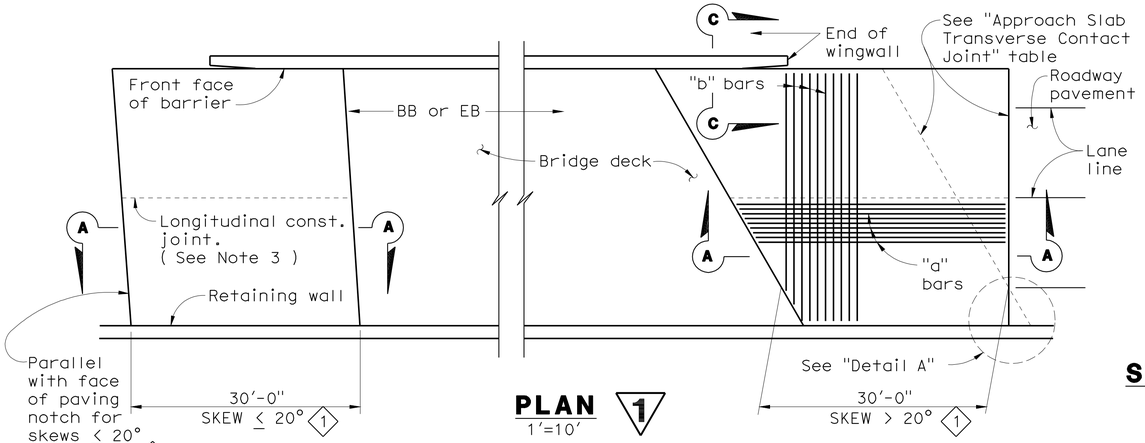

PLAN 1

1'=10'

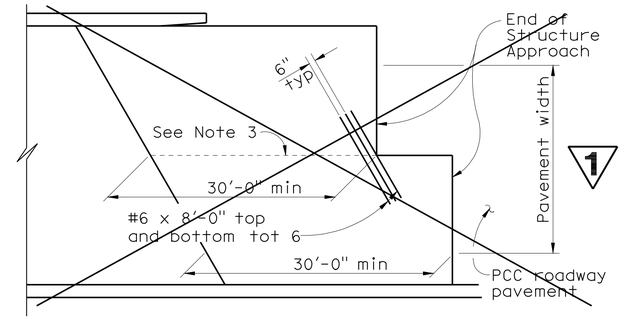

STRUCTURE APPROACH - END STAGGER DETAIL

No Scale

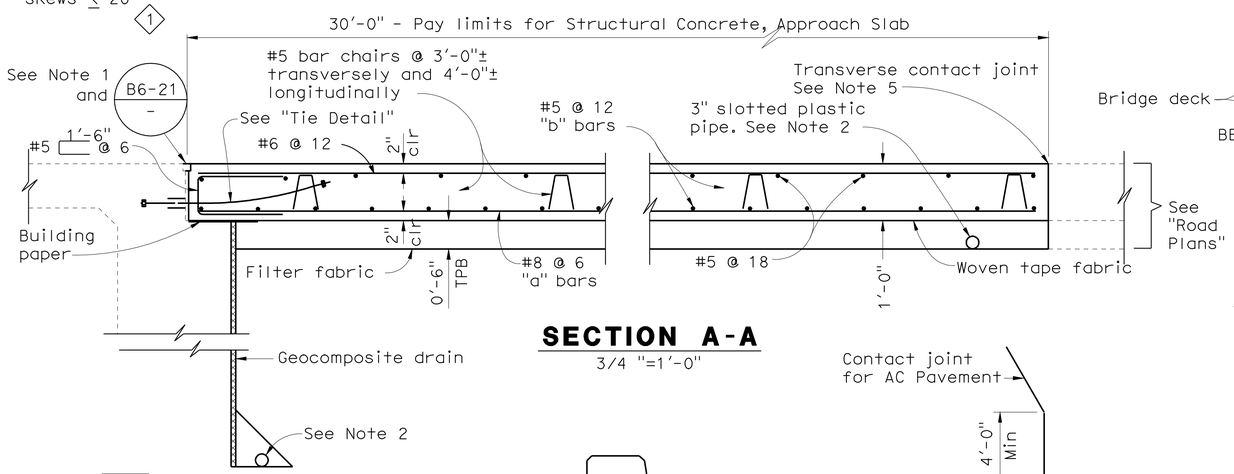

SECTION A-A

3/4 "=1'-0"

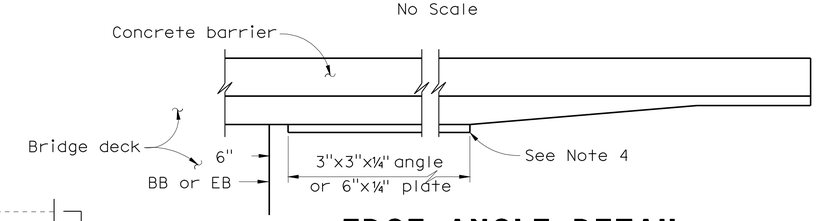

EDGE ANGLE DETAIL

1/2 "=1'-0"

APPROACH SLAB TRANSVERSE CONTACT JOINT 1		
APPROACH SKEW	WITH AC ROADWAY PAVEMENT	WITH PCC ROADWAY PAVEMENT
≤ 20°	Parallel with face of paving notch	Parallel with face of paving notch
> 20°-45°	Parallel with face of P N use (Detail A)	Stagger lines 24' to 36' apart
> 45°	Parallel with face of P N use (Detail A)	Stagger at each lane line

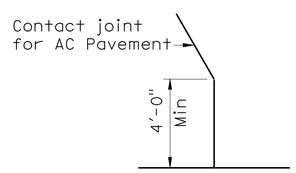

DETAIL A

No Scale

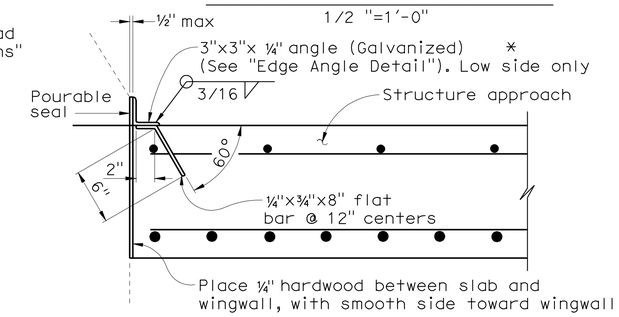

(TO*BE USED WITH TYPE 25 OR TYPE 27 CONCRETE BARRIER)

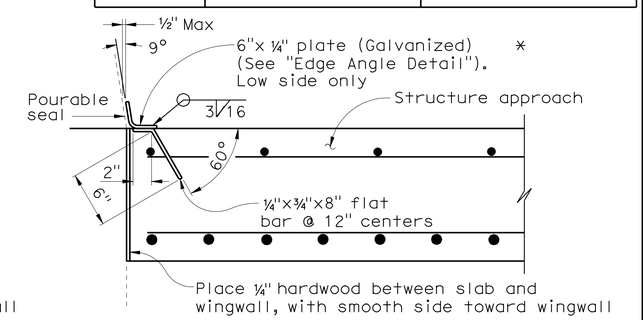

(TO*BE USED WITH TYPE 732 OR TYPE 736 CONCRETE BARRIER)

DETAIL B

1 1/2 "=1'-0"

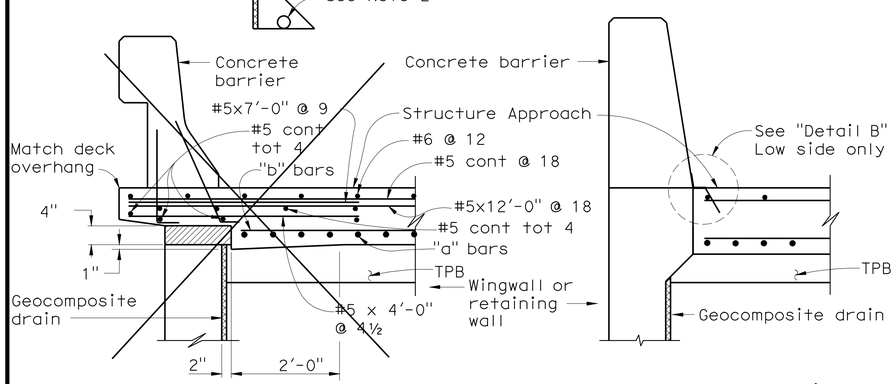

TYPE E-1 3

TYPE E-2 2

SECTION C-C

3/4"=1'-0"

(Type E-1 to be used,unless otherwise shown on plans)

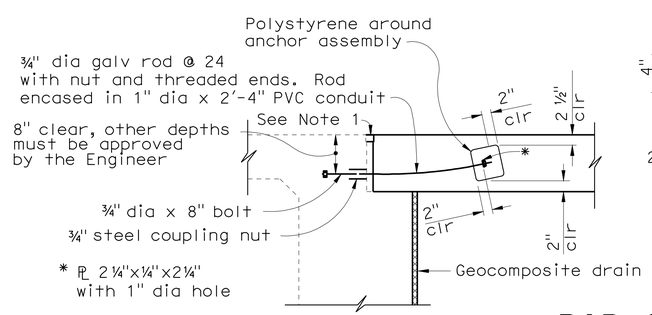

TIE DETAIL

3/4" =1'-0"

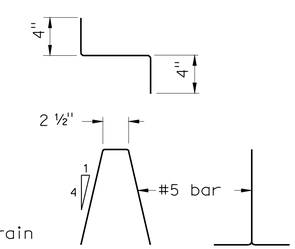

BAR CHAIR DETAIL

1 1/2 "=1'-0"

NOTES:

1. For details not noted or shown,see Structure Plans.
2. For drainage details,see "Structure Approach Drainage Details" sheet.
3. Longitudinal construction joints,when permitted by the Engineer,shall be located on lane lines.
4. End angle or plate at beginning of barrier transition, end of wingwall or end of structure approach, as applicable.
5. For transverse contact joint with new PCC paving, refer to Standard Plan P10.
6. At the contractor's option,approach slab transverse reinforcement may be placed parallel to paving notch. Spacing of transverse reinforcement is measured along ℄ roadway.

Polystyrene to be removed.

SPECIAL DETAILS

1 REVISED PER ADDENDUM No. 1 DATED MARCH 28, 2011

STANDARD DRAWING

FILE NO. xs3-180e

APPROVED BY M. Ha (RESPONSIBLE TECHNICAL SPECIALIST)
APPROVAL DATE REVISED

RELEASED BY O. Alcantara (RESPONSIBLE OFFICE CHIEF)
RELEASE DATE 8-12-08

1 Revised skew
2 Revised detail
3 Details not used

STATE OF CALIFORNIA DEPARTMENT OF TRANSPORTATION

DIVISION OF ENGINEERING SERVICES

BRIDGE NO. 29-0175
POST MILES 31.00

FOURTEEN MILE SLOUGH BRIDGE (WIDEN)
STRUCTURE APPROACH TYPE N(30D)

DS OSD 2147A (ENGLISH STANDARD DRAWING "XS" BORDER REV. 01/11/08)

ORIGINAL SCALE IN INCHES FOR REDUCED PLANS 0 1 2 3

CU 06240
EA 0G4701

DISREGARD PRINTS BEARING EARLIER REVISION DATES

REVISION DATES (PRELIMINARY STAGE ONLY) 10/16/09 12/4/09 1/15/10 4/23/10 6/11/10 7/28/10

SHEET 19 OF 26

USERNAME => trmartin

29-0175-t-sadd.dgn

USERNAME => trmartin DATE PLOTTED => 25-MAR-2011 TIME PLOTTED => 07:45

20060048 (1BI)

DIST	COUNTY	ROUTE	POST MILES TOTAL PROJECT	SHEET NO.	TOTAL SHEETS
10	SJ	5	25.0/32.7	897	1132

REGISTERED CIVIL ENGINEER 7/28/10

PLANS APPROVAL DATE 10-11-10

REGISTERED PROFESSIONAL ENGINEER RONALD L OEN No. 46945 Exp. 9/30/11 CIVIL STATE OF CALIFORNIA

The State of California or its officers or agents shall not be responsible for the accuracy or completeness of scanned copies of this plan sheet.

SAN JOAQUIN COUNCIL OF GOVERNMENTS
555 E. WEBER AVENUE
STOCKTON, CA 95202

BIGGS CARDOSA ASSOCIATES INC.
865 THE ALAMEDA
SAN JOSE, CALIFORNIA 95126

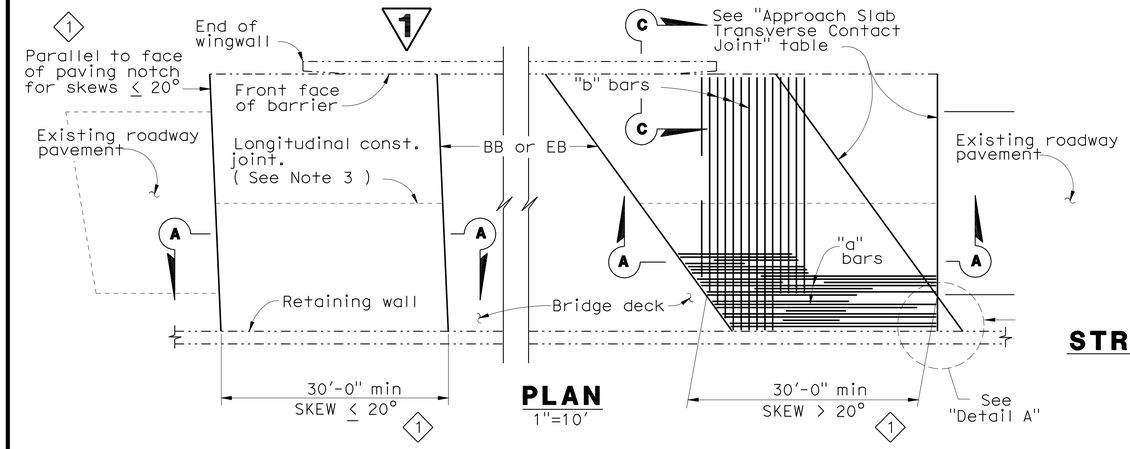

PLAN
1"=10'

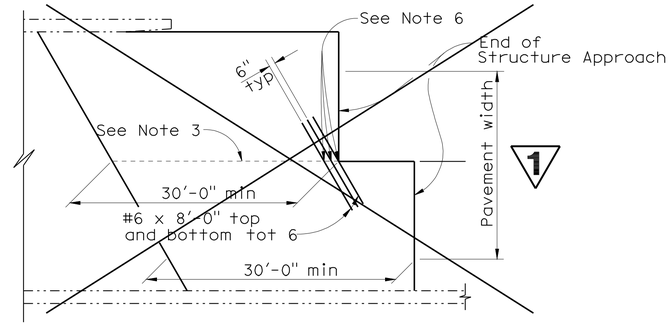

STRUCTURE APPROACH - END STAGGER DETAIL
No Scale

APPROACH SLAB TRANSVERSE CONTACT JOINT 1		
APPROACH SKEW	WITH AC ROADWAY PAVEMENT	WITH PCC ROADWAY PAVEMENT
≤ 20°	Parallel with face of paving notch	Parallel with face of paving notch
> 20° - 45°	Parallel with face of P N use (Detail A)	Stagger lines 24' to 36' apart
> 45°	Parallel with face of P N use (Detail A)	Stagger at each lane line

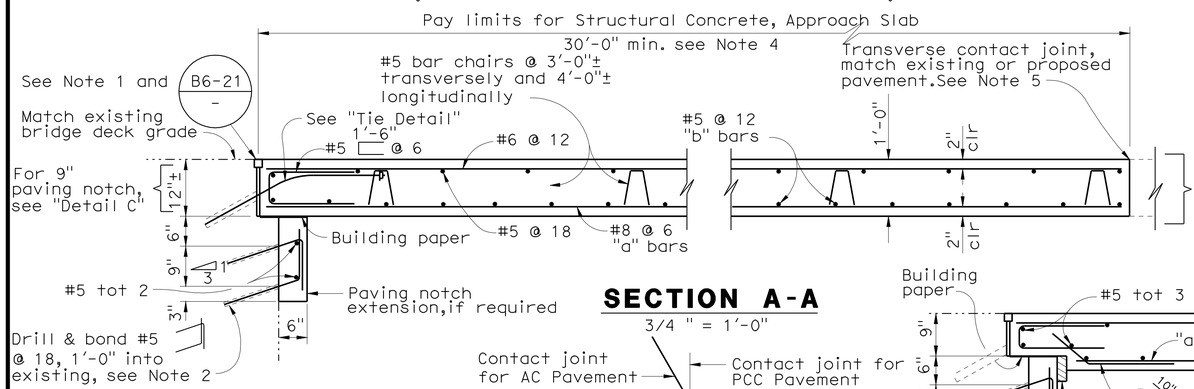

SECTION A-A
3/4 " = 1'-0"

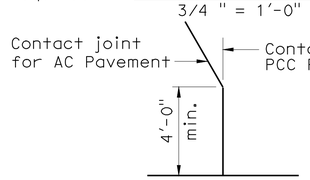

DETAIL A
No Scale

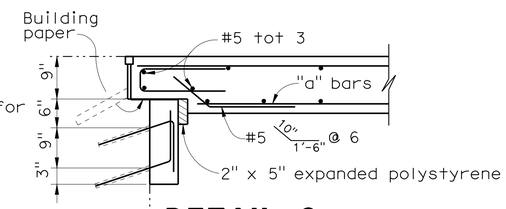

DETAIL C
3/4 " = 1'-0"

NOTE: For details not shown,see "Section A-A".

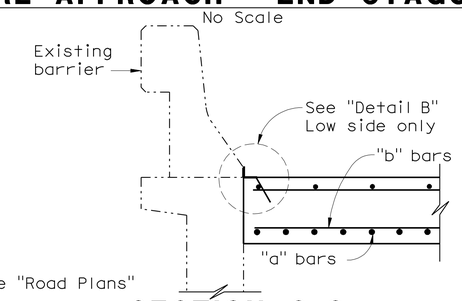

SECTION C-C
3/4 " = 1'-0"

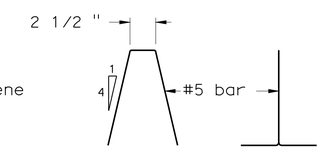

BAR CHAIR DETAIL
1 1/2 " = 1'-0"

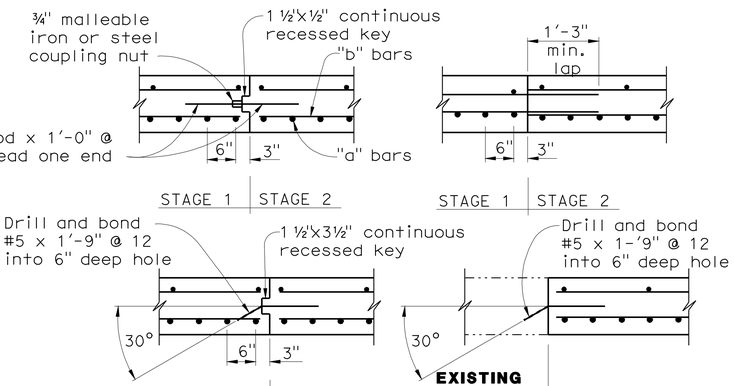

LONGITUDINAL CONSTRUCTION JOINT ALTERNATIVES
3/4 " = 1'-0"

NOTES:

1. For details not shown or noted, see Structure Plans. Adjust bar reinforcement to clear a sawcut for sealed joint when required.
2. Space to avoid existing prestress anchorages and main reinforcement.
3. Longitudinal construction joints,when permitted by the Engineer, shall be located on lane lines.
4. Transverse contact joint shall be a minimum of 5'-0" from an existing or constructed weakened plane joint.
5. For transverse contact joint with new PCC paving. refer to Standard Plan P10.
6. Couplers are required for stage construction.
7. End angle or plate at beginning of barrier transition, end of wingwall or end of structure approach as applicable.

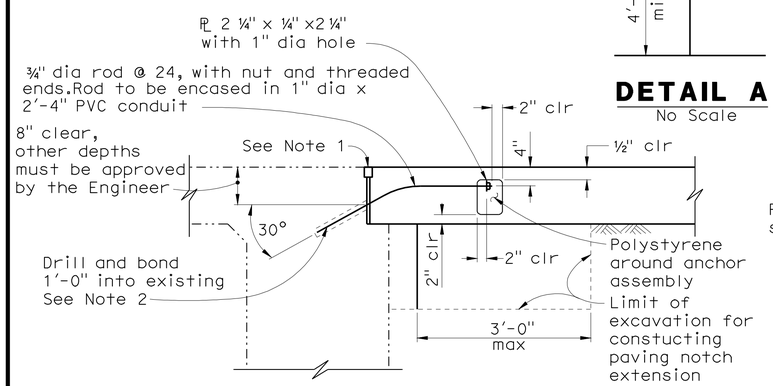

TIE DETAIL
3/4 " = 1'-0"

NOTE:
The Contractor shall verify all controlling field dimensions before ordering or fabricating any material

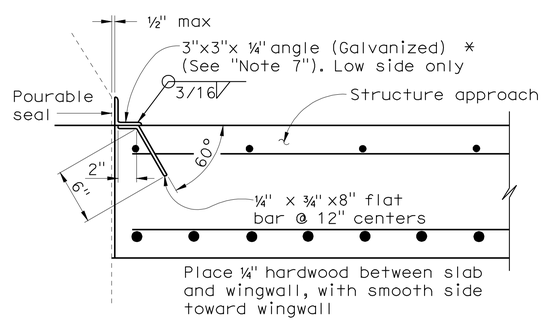

*(TO BE USED WITH TYPE 25 OR TYPE 27 CONCRETE BARRIER)

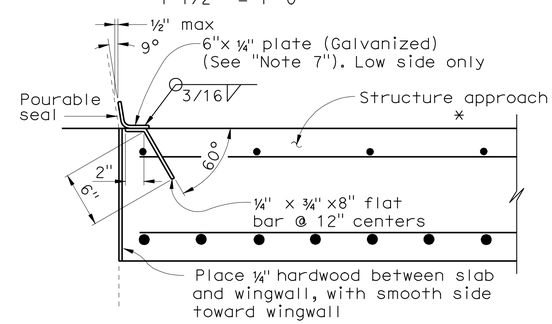

*(TO BE USED WITH TYPE 732 OR TYPE 736 CONCRETE BARRIER)

DETAIL B
1 1/2 " = 1'-0"

1 REVISED PER ADDENDUM No. 1 DATED MARCH 28, 2011

STANDARD DRAWING				
RELEASE DATE 3/14/05	DESIGN BY M. TRAFFALIS	CHECKED E. THORKILDSEN	RELEASED BY	
	DETAILS BY R. YEE 1	CHECKED E. THORKILDSEN		
FILE NO. xs3-140e	SUBMITTED BY M. HA	DRAWING DATE 8/92	OFFICE CHIEF	

1 Revised skew
2 Detail not used

ORIGINAL SCALE IN INCHES FOR REDUCED PLANS 0 1 2 3

STATE OF CALIFORNIA
DEPARTMENT OF TRANSPORTATION

DIVISION OF ENGINEERING SERVICES

CU 06240
EA 0G4701

BRIDGE NO. 29-0175
POST MILE 31.00

FOURTEEN MILE SLOUGH BRIDGE (WIDEN)

STRUCTURE APPROACH TYPE R(30D)

DISREGARD PRINTS BEARING EARLIER REVISION DATES

REVISION DATES (PRELIMINARY STAGE ONLY) 10/16/09 12/4/09 1/15/10 4/23/10 6/11/10 7/28/10

SHEET 20 OF 26

USERNAME => trmikesl

29-0175-t-sadet1.d

USERNAME => trmikesl DATE PLOTTED => 25-MAR-2011 TIME PLOTTED => 09:51 20060485 (20060485200)

DIST	COUNTY	ROUTE	POST MILES TOTAL PROJECT	SHEET No	TOTAL SHEETS
10	SJ	5	25.0/32.7	907	1132

R E Sennett 7/28/10
REGISTERED CIVIL ENGINEER DATE

10-11-10
PLANS APPROVAL DATE

REGISTERED PROFESSIONAL ENGINEER Robert Sennett No. 3976 Exp. 12/31/10 STRUCTURAL STATE OF CALIFORNIA

The State of California or its officers or agents shall not be responsible for the accuracy or completeness of scanned copies of this plan sheet.

SAN JOAQUIN COUNCIL OF GOVERMENT
555 E. WEBER AVENUE
STOCKTON, CA 95202

MGE ENGINEERING, INC.
7415 GREENHAVEN DRIVE, SUITE 100
SACRAMENTO, CA 95831

"I-5" LINE STATION	LINE	OFFSET FROM "I-5" LINE (Ft)	PROPOSED TOP OF DECK/OVERLAY Elev (Ft)	EXISTING TOP OF DECK Elev (Ft)
1616+10	A	75.50 Lt	23.69	N/A
	B	66.00 Lt	23.88	N/A
	C	30.00 Lt	24.42	N/A
	D	24.00 Lt	24.53	N/A
	E	0.00	24.95	N/A
	F	12.83 Rt	24.72	N/A
	G	30.00 Rt	24.42	N/A
	H	66.00 Rt	23.88	N/A
	J	75.50 Rt	23.72	N/A
1616+20	A	75.50 Lt	23.69	N/A
	B	66.00 Lt	23.88	N/A
	C	30.00 Lt	24.42	N/A
	D	24.00 Lt	24.53	N/A
	E	0.00	24.95	N/A
	F	12.83 Rt	24.72	N/A
	G	30.00 Rt	24.42	N/A
	H	66.00 Rt	23.88	N/A
	J	75.50 Rt	23.72	N/A
1616+30	A	75.50 Lt	23.69	N/A
	B	66.00 Lt	23.88	N/A
	C	30.00 Lt	24.42	N/A
	D	24.00 Lt	24.53	N/A
	E	0.00	24.95	N/A
	F	12.83 Rt	24.72	N/A
	G	30.00 Rt	24.42	N/A
	H	66.00 Rt	23.88	N/A
	J	75.50 Rt	23.72	N/A
1616+40	A	75.50 Lt	23.69	23.69
	B	66.00 Lt	23.87	23.80
	C	30.00 Lt	24.41	24.25
	D	24.00 Lt	24.51	24.32
	E	0.00	24.93	N/A
	F	12.83 Rt	24.71	24.67
	G	30.00 Rt	24.41	24.41
	H	66.00 Rt	23.87	23.86
	J	75.50 Rt	23.72	23.72

"I-5" LINE STATION	LINE	OFFSET FROM "I-5" LINE (Ft)	PROPOSED TOP OF DECK/OVERLAY Elev (Ft)	EXISTING TOP OF DECK ELEV (Ft)
1616+50	A	75.50 Lt	23.56	23.56
	B	66.00 Lt	23.81	23.70
	C	30.00 Lt	24.35	24.20
	D	24.00 Lt	24.46	24.29
	E	0.00	24.89	N/A
	F	12.83 Rt	24.68	24.58
	G	30.00 Rt	24.38	24.34
	H	66.00 Rt	23.84	23.83
	J	75.50 Rt	23.69	23.69
1616+60	A	75.50 Lt	23.50	23.50
	B	66.00 Lt	23.74	23.64
	C	30.00 Lt	24.28	24.16
	D	24.00 Lt	24.39	24.24
	E	0.00	24.82	N/A
	F	12.83 Rt	24.61	24.54
	G	30.00 Rt	24.32	24.28
	H	66.00 Rt	23.78	23.75
	J	75.50 Rt	23.61	23.61
1616+70	A	75.50 Lt	23.46	23.46
	B	66.00 Lt	23.66	23.59
	C	30.00 Lt	24.20	24.10
	D	24.00 Lt	24.31	24.18
	E	0.00	24.74	N/A
	F	12.83 Rt	24.53	24.45
	G	30.00 Rt	24.25	24.19
	H	66.00 Rt	23.71	23.66
	J	75.50 Rt	23.52	23.52
1616+80	A	75.50 Lt	23.40	23.40
	B	66.00 Lt	23.59	23.53
	C	30.00 Lt	24.13	24.04
	D	24.00 Lt	24.24	24.13
	E	0.00	24.68	N/A
	F	12.83 Rt	24.48	24.41
	G	30.00 Rt	24.20	24.16
	H	66.00 Rt	23.66	23.63
	J	75.50 Rt	23.49	23.49

NOTES: 1

1. THE ENGINEER MAY ADJUST THE PROPOSED TOP OF DECK/OVERLAY ELEVATIONS (INCLUDING APPROACH SLABS) AS NEEDED IF THE EXISTING TOP OF DECK ELEVATIONS DETERMINED FROM THE CONSTRUCTION SURVEY DIFFER FROM THE ELEVATIONS SHOWN ON THE PLANS.
2. EXIST DECK ELEVATIONS ARE APPROXIMATE.

"I-5" LINE STATION	LINE	OFFSET FROM "I-5" LINE (Ft)	PROPOSED TOP OF DECK/OVERLAY Elev (Ft)	EXISTING TOP OF DECK Elev (Ft)
1616+90	A	75.50 Lt	23.37	23.37
	B	66.00 Lt	23.55	23.50
	C	30.00 Lt	24.09	24.00
	D	24.00 Lt	24.20	24.08
	E	0.00	24.65	N/A
	F	12.83 Rt	24.44	24.38
	G	30.00 Rt	24.17	24.13
	H	66.00 Rt	23.63	23.60
	J	75.50 Rt	23.46	23.46
1617+00.00	A	75.50 Lt	23.36	23.36
	B	66.00 Lt	23.53	23.49
	C	30.00 Lt	24.07	23.98
	D	24.00 Lt	24.18	24.06
	E	0.00	24.63	N/A
	F	12.83 Rt	24.42	24.36
	G	30.00 Rt	24.15	24.11
	H	66.00 Rt	23.61	23.59
	J	75.50 Rt	23.45	23.45

NOTE:
THE CONTRACTOR SHALL VERIFY ALL CONTROLLING FIELD DIMENSIONS BEFORE ORDERING OR FABRICATING ANY MATERIAL.

1 REVISED PER ADDENDUM No. 1 DATED MARCH 28, 2011

John Fujimoto
DESIGN OVERSIGHT John Fujimoto

3-11-11
SIGN OFF DATE

DESIGN DETAIL SHEET (ENGLISH) (REV. 06-01-09)

	BY	CHECKED
DESIGN	P. Zhao	D. Chan
DETAILS	P. Zhao	D. Chan
QUANTITIES	R. Huang	S. Kotamala

ORIGINAL SCALE IN INCHES FOR REDUCED PLANS 0 1 2 3

PREPARED FOR THE STATE OF CALIFORNIA DEPARTMENT OF TRANSPORTATION

Robert Sennett
PROJECT ENGINEER

CU 06240
EA 0G4701

BRIDGE NO. 29-0189
POST MILE 28.53

COUNTRY CLUB BLVD UC (WIDEN)
DECK GRADES NO. 2

DISREGARD PRINTS BEARING EARLIER REVISION DATES

REVISION DATES (PRELIMINARY STAGE ONLY) 10/16/09 12/04/09 01/15/10 04/23/10 06/11/10 07/28/10

SHEET 4 OF 28

FILE => 29-0189rl-d-dc02.add

USERNAME => trmartin DATE PLOTTED => 25-MAR-2011 TIME PLOTTED => 07:46

DIST	COUNTY	ROUTE	POST MILES TOTAL PROJECT	SHEET No	TOTAL SHEETS
10	SJ	5	25.0/32.7	908	1132

REGISTERED CIVIL ENGINEER 7/28/10 DATE

10-11-10
PLANS APPROVAL DATE

REGISTERED PROFESSIONAL ENGINEER Robert Sennett No. 3976 Exp. 12/31/10 STRUCTURAL STATE OF CALIFORNIA

The State of California or its officers or agents shall not be responsible for the accuracy or completeness of scanned copies of this plan sheet.

SAN JOAQUIN COUNCIL OF GOVERMENT
555 E. WEBER AVENUE
STOCKTON, CA 95202

MGE ENGINEERING, INC.
7415 GREENHAVEN DRIVE, SUITE 100
SACRAMENTO, CA 95831

"I-5" LINE STATION	LINE	OFFSET FROM "I-5" LINE (Ft)	PROPOSED TOP OF DECK/OVERLAY Elev (FT)	EXISTING TOP OF DECK Elev (Ft)
1617+10.00	A	75.50 Lt	23.37	23.37
	B	66.00 Lt	23.54	23.49
	C	30.00 Lt	24.08	23.95
	D	24.00 Lt	24.19	24.03
	E	0.00	24.63	N/A
	F	12.83 Rt	24.43	24.34
	G	30.00 Rt	24.15	24.09
	H	66.00 Rt	23.61	23.57
	J	75.50 Rt	23.43	23.43
1617+20.00	A	75.50 Lt	23.37	23.37
	B	66.00 Lt	23.56	23.50
	C	30.00 Lt	24.10	23.99
	D	24.00 Lt	24.21	24.08
	E	0.00	24.65	N/A
	F	12.83 Rt	24.45	24.34
	G	30.00 Rt	24.17	24.10
	H	66.00 Rt	23.63	23.61
	J	75.50 Rt	23.47	23.47
1617+30.00	A	75.50 Lt	23.42	23.42
	B	66.00 Lt	23.60	23.55
	C	30.00 Lt	24.14	24.04
	D	24.00 Lt	24.25	24.12
	E	0.00	24.69	N/A
	F	12.83 Rt	24.49	24.37
	G	30.00 Rt	24.21	24.12
	H	66.00 Rt	23.67	23.61
	J	75.50 Rt	23.48	23.48
1617+40.00	A	75.50 Lt	23.48	23.48
	B	66.00 Lt	23.67	23.60
	C	30.00 Lt	24.21	24.07
	D	24.00 Lt	24.32	24.15
	E	0.00	24.75	N/A
	F	12.83 Rt	24.54	24.43
	G	30.00 Rt	24.26	24.19
	H	66.00 Rt	23.72	23.67
	J	75.50 Rt	23.53	23.53

"I-5" LINE STATION	LINE	OFFSET FROM "I-5" LINE (Ft)	PROPOSED TOP OF DECK/OVERLAY Elev (Ft)	EXISTING TOP OF DECK Elev (Ft)
1617+50.00	A	75.50 Lt	23.56	23.56
	B	66.00 Lt	23.75	23.68
	C	30.00 Lt	24.29	24.14
	D	24.00 Lt	24.40	24.21
	E	0.00	24.83	N/A
	F	12.83 Rt	24.62	24.52
	G	30.00 Rt	24.34	24.27
	H	66.00 Rt	23.80	23.76
	J	75.50 Rt	23.63	23.63
1617+60.00	A	75.50 Lt	23.64	23.64
	B	66.00 Lt	23.80	24.75
	C	30.00 Lt	24.34	24.17
	D	24.00 Lt	24.45	24.24
	E	0.00	24.88	N/A
	F	12.83 Rt	24.67	24.56
	G	30.00 Rt	24.39	24.32
	H	66.00 Rt	23.85	23.82
	J	75.50 Rt	23.68	23.68
1617+70.00	A	75.50 Lt	23.69	N/A
	B	66.00 Lt	23.84	N/A
	C	30.00 Lt	24.38	N/A
	D	24.00 Lt	24.49	N/A
	E	0.00	24.90	N/A
	F	12.83 Rt	24.68	N/A
	G	30.00 Rt	24.40	N/A
	H	66.00 Rt	23.86	N/A
	J	75.50 Rt	23.67	N/A
1617+80.00	A	75.50 Lt	23.69	N/A
	B	66.00 Lt	23.84	N/A
	C	30.00 Lt	24.38	N/A
	D	24.00 Lt	24.48	N/A
	E	0.00	24.90	N/A
	F	12.83 Rt	24.69	N/A
	G	30.00 Rt	24.41	N/A
	H	66.00 Rt	23.87	N/A
	J	75.50 Rt	23.67	N/A

NOTES: 1

1. THE ENGINEER MAY ADJUST THE PROPOSED TOP OF DECK/OVERLAY ELEVATIONS (INCLUDING APPROACH SLABS) AS NEEDED IF THE EXISTING TOP OF DECK ELEVATIONS DETERMINED FROM THE CONSTRUCTION SURVEY DIFFER FROM THE ELEVATIONS SHOWN ON THE PLANS.

2. EXIST DECK ELEVATIONS ARE APPROXIMATE.

"I-5" LINE STATION	LINE	OFFSET FROM "I-5" LINE (Ft)	PROPOSED TOP OF DECK/OVERLAY Elev (Ft)	EXISTING TOP OF DECK Elev (Ft)
1617+90.00	A	75.50 Lt	23.69	N/A
	B	66.00 Lt	23.84	N/A
	C	30.00 Lt	24.38	N/A
	D	24.00 Lt	24.48	N/A
	E	0.00	24.90	N/A
	F	12.83 Rt	24.69	N/A
	G	30.00 Rt	24.41	N/A
	H	66.00 Rt	23.87	N/A
	J	75.50 Rt	23.67	N/A
1618+00.00	A	75.50 Lt	23.69	N/A
	B	66.00 Lt	23.84	N/A
	C	30.00 Lt	24.38	N/A
	D	24.00 Lt	24.48	N/A
	E	0.00	24.90	N/A
	F	12.83 Rt	24.69	N/A
	G	30.00 Rt	24.41	N/A
	H	66.00 Rt	23.87	N/A
	J	75.50 Rt	23.67	N/A

NOTE:
THE CONTRACTOR SHALL VERIFY ALL CONTROLLING FIELD DIMENSIONS BEFORE ORDERING OR FABRICATING ANY MATERIAL.

1 REVISED PER ADDENDUM No. 1 DATED MARCH 28, 2011

John Fujimoto
DESIGN OVERSIGHT John Fujimoto
3-11-11
SIGN OFF DATE

	BY	CHECKED
DESIGN	P. Zhao	D. Chan
DETAILS	P. Zhao	D. Chan
QUANTITIES	R. Huang	S. Kotamala

PREPARED FOR THE STATE OF CALIFORNIA DEPARTMENT OF TRANSPORTATION

Robert Sennett
PROJECT ENGINEER

BRIDGE NO. 29-0189
POST MILE 28.53

COUNTRY CLUB BLVD UC (WIDEN)
DECK GRADES NO. 3

DESIGN DETAIL SHEET (ENGLISH) (REV. 06-01-09)

ORIGINAL SCALE IN INCHES FOR REDUCED PLANS 0 1 2 3

CU 06240
EA 0G4701

DISREGARD PRINTS BEARING EARLIER REVISION DATES

REVISION DATES (PRELIMINARY STAGE ONLY) 10/16/09 12/04/09 01/15/10 04/23/10 06/11/10 07/28/10

SHEET 5 OF 28

FILE => 29-0189rl-d-dc03.add

USERNAME => trmartin DATE PLOTTED => 25-MAR-2011 TIME PLOTTED => 07:46

DIST	COUNTY	ROUTE	POST MILES TOTAL PROJECT	SHEET No	TOTAL SHEETS
10	SJ	5	25.0/32.7	922	1132

REGISTERED CIVIL ENGINEER — DATE 7/28/10

10-11-10
PLANS APPROVAL DATE

REGISTERED PROFESSIONAL ENGINEER — Robert Sennett — No. 3976 — Exp. 12/31/10 — STRUCTURAL — STATE OF CALIFORNIA

The State of California or its officers or agents shall not be responsible for the accuracy or completeness of scanned copies of this plan sheet.

SAN JOAQUIN COUNCIL OF GOVERMENT
555 E. WEBER AVENUE
STOCKTON, CA 95202

MGE ENGINEERING, INC.
7415 GREENHAVEN DRIVE, SUITE 100
SACRAMENTO, CA 95831

1

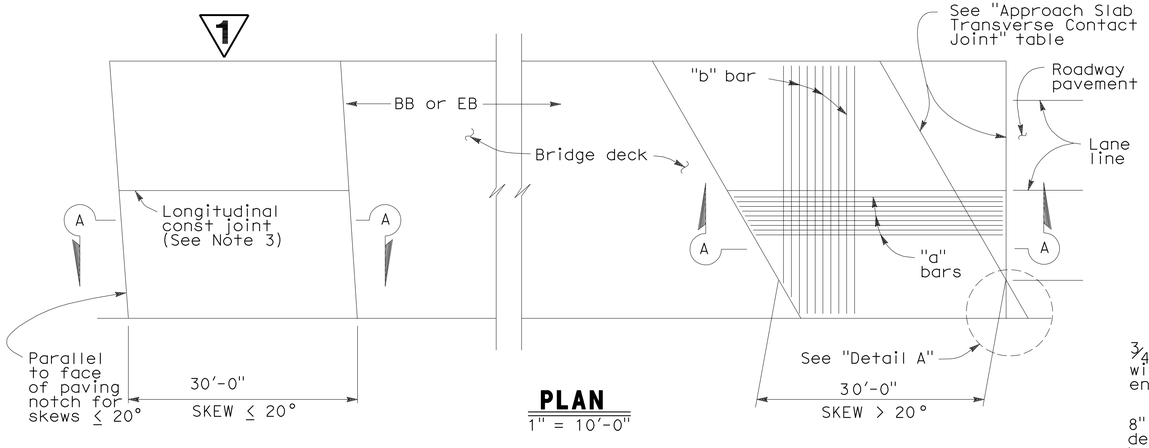

PLAN
1" = 10'-0"

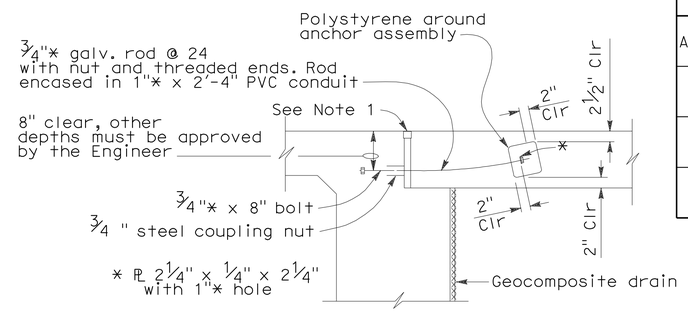

TIE DETAIL

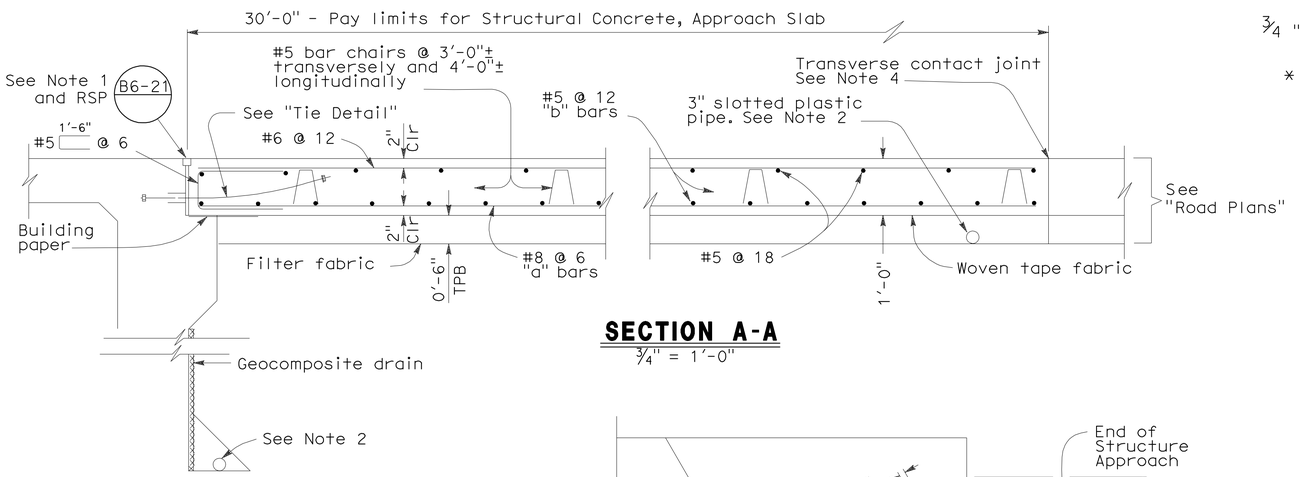

SECTION A-A
¾" = 1'-0"

APPROACH SLAB TRANSVERSE CONTACT JOINT		
APPROACH SKEW	WITH AC ROADWAY PAVEMENT	WITH PCC ROADWAY PAVEMENT
≤ 20°	Parallel to face of paving notch	Parallel to face of paving notch
> 20° - 45°	Parallel to face of P N use (Detail A)	Stagger lines 24' to 36' apart.
> 45°	Parallel to face of P N use (Detail A)	Stagger at each lane line.

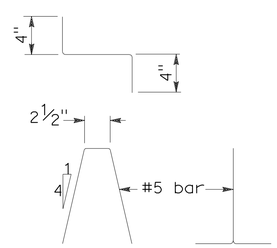

BAR CHAIR DETAIL

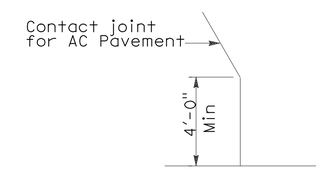

DETAIL A

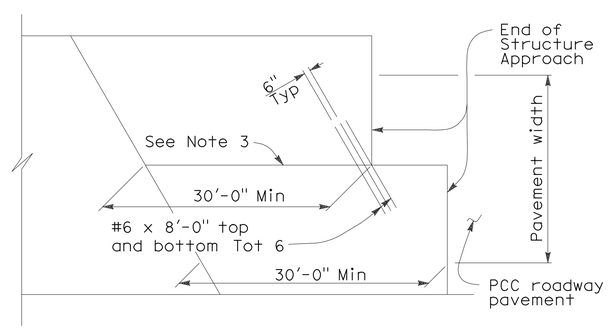

STRUCTURE APPROACH - END STAGGER DETAIL
NO SCALE

NOTES:

1. For details not noted or shown, see Structure Plans.
2. For drainage details, see "Structure Approach Drainage Details" sheet.
3. Longitudinal construction joints, when permitted by the Engineer, shall be located on lane lines.
4. For transverse contact joint with new PCC paving, refer to Standard Plan P10.
5. At the contractor's option, approach slab transverse reinforcement may be placed parallel to paving notch. Spacing of transverse reinforcement is measured along ℄ roadway.

NOTE:
THE CONTRACTOR SHALL VERIFY ALL CONTROLLING FIELD DIMENSIONS BEFORE ORDERING OR FABRICATING ANY MATERIAL.

1 **REVISED PER ADDENDUM No. 1 DATED MARCH 28, 2011**

DESIGN OVERSIGHT — John Fujimoto
3-11-11
SIGN OFF DATE

	BY	CHECKED
DESIGN	P. Zhao	D. Chan
DETAILS	P. Zhao	D. Chan
QUANTITIES	R. Huang	S. Kotamala

PREPARED FOR THE STATE OF CALIFORNIA DEPARTMENT OF TRANSPORTATION

Robert Sennett
PROJECT ENGINEER

BRIDGE NO. 29-0189
POST MILE 28.53

COUNTRY CLUB BLVD UC (WIDEN)
STRUCTURE APPROACH TYPE N(30D)

DESIGN DETAIL SHEET (ENGLISH) (REV. 06-01-09)

ORIGINAL SCALE IN INCHES FOR REDUCED PLANS 0 1 2 3

CU 06240
EA 0G4701

DISREGARD PRINTS BEARING EARLIER REVISION DATES
REVISION DATES (PRELIMINARY STAGE ONLY) 10/16/09 12/04/09 01/15/10 04/23/10 06/11/10 07/28/10

SHEET 19 OF 28

FILE => 29-0189rl-s-sadd01.add

USERNAME => trmartin DATE PLOTTED => 25-MAR-2011 TIME PLOTTED => 07:46

DIST.	COUNTY	ROUTE	MILE POST TOTAL PROJECT	SHEET NO.	TOTAL SHEETS
10	SJ	5	25.0/32.7	923	1132

REGISTERED CIVIL ENGINEER 7/28/10 DATE

10-11-10
PLANS APPROVAL DATE

REGISTERED PROFESSIONAL ENGINEER Robert Sennett No. 3976 Exp. 12/31/10 STRUCTURAL STATE OF CALIFORNIA

The State of California or its officers or agents shall not be responsible for the accuracy or completeness of electronic copies of this plan sheet.

MGE ENGINEERING, INC.
7415 GREENHAVEN DRIVE, SUITE 100
SACRAMENTO, CA 95831

SAN JOAQUIN COUNCIL OF GOVERMENT
555 E. WEBER AVENUE
STOCKTON, CA 95202

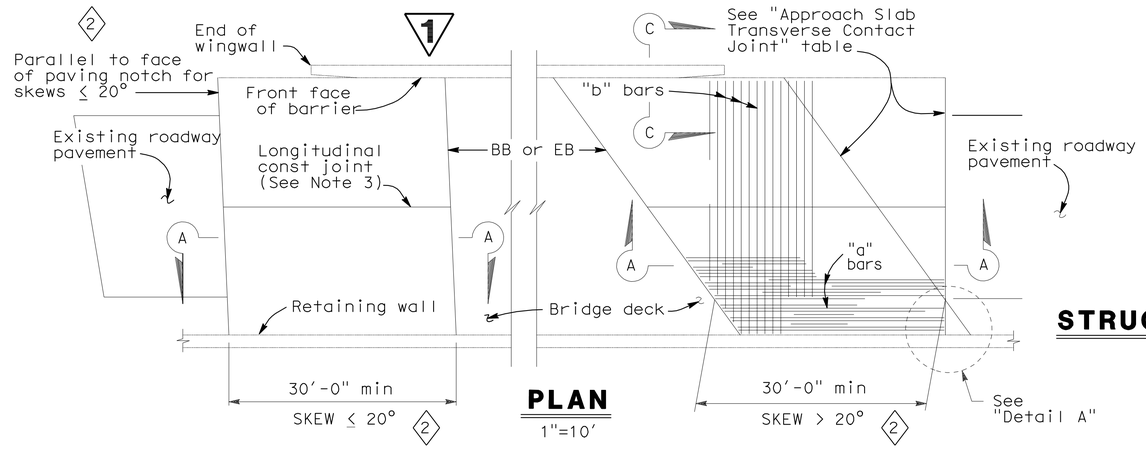

PLAN

1"=10'

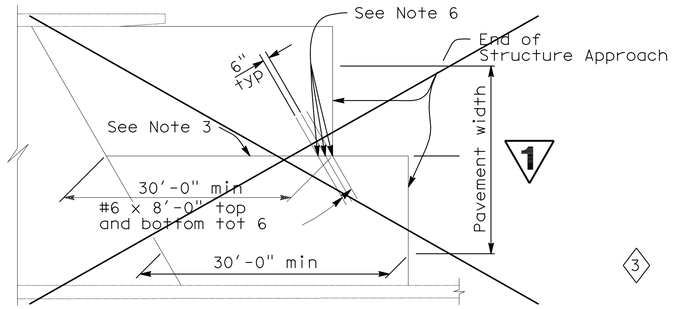

STRUCTURE APPROACH - END STAGGER DETAIL

APPROACH SLAB TRANSVERSE CONTACT JOINT		
APPROACH SKEW	WITH AC ROADWAY PAVEMENT	WITH PCC ROADWAY PAVEMENT
≤ 20°	Parallel to face of paving notch	Parallel to face of paving notch
> 20° - 45°	Parallel to face of P N use (Detail A)	Stagger lines 24' to 36' apart
> 45 °	Parallel to face of P N use (Detail A)	Stagger at each lane line

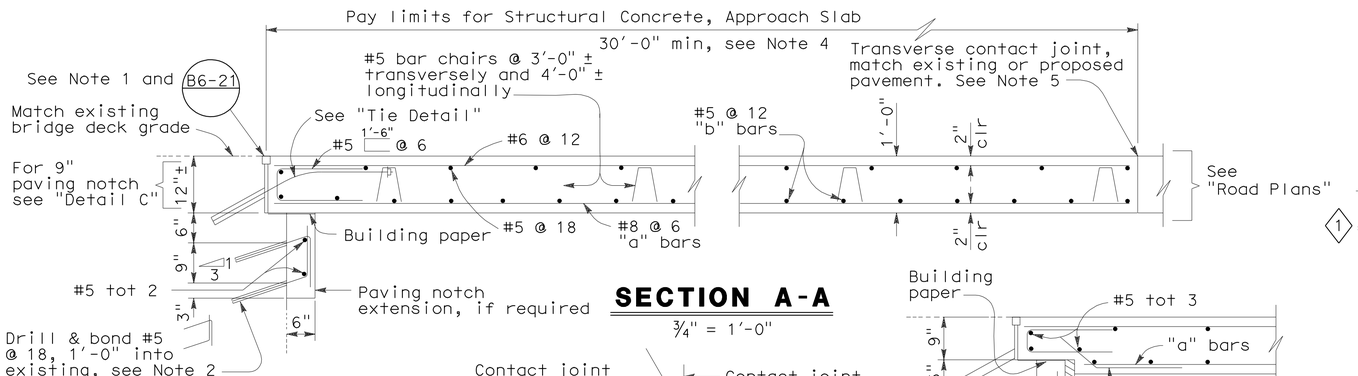

SECTION A-A

¾" = 1'-0"

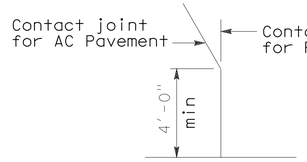

DETAIL A

NO SCALE

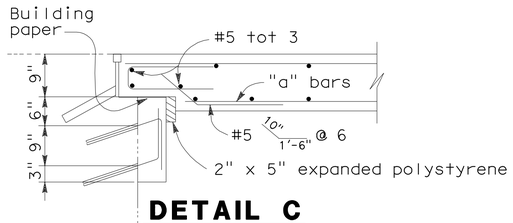

DETAIL C

¾" = 1'-0"

NOTE: For details not shown, see "Section A-A".

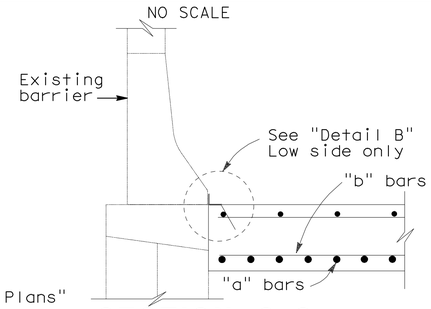

SECTION C-C

¾" = 1'-0"

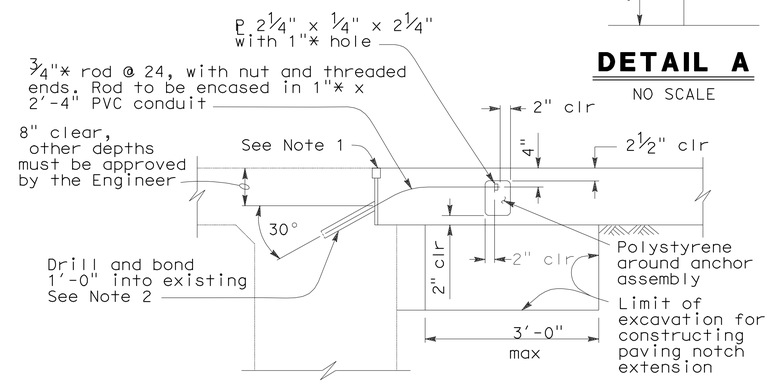

TIE DETAIL

¾" = 1'-0"

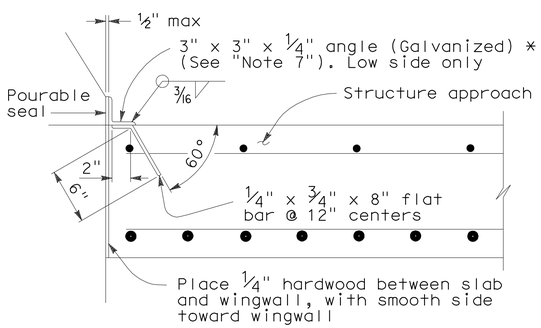

* (TO BE USED WITH TYPE 25 OR TYPE 27 CONCRETE BARRIER)

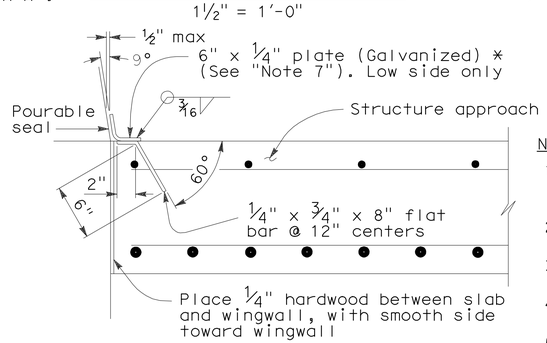

* (TO BE USED WITH TYPE 732 OR TYPE 736 CONCRETE BARRIER)

DETAIL B

1½" = 1'-0"

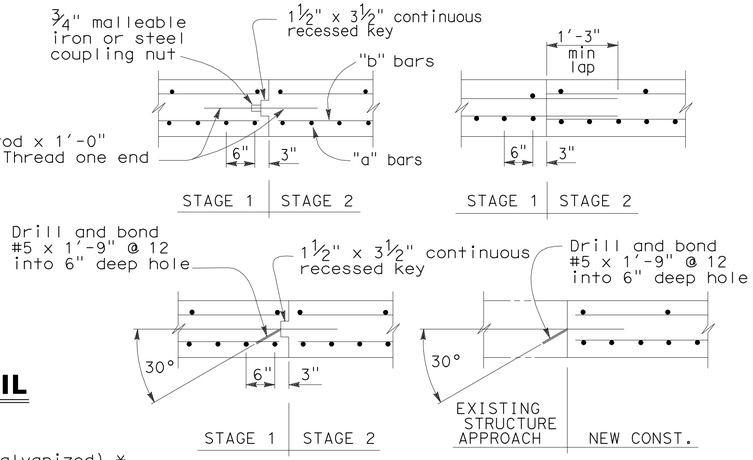

BAR CHAIR DETAIL

1½" = 1'-0"

LONGITUDINAL CONSTRUCTION JOINT ALTERNATIVES

¾" = 1'-0"

NOTES:

1. For details not shown or noted, see Structure Plans. Adjust bar reinforcement to clear a sawcut for sealed joint, when required.
2. Space to avoid existing prestress anchorages and main reinforcement.
3. Longitudinal construction joints, when permitted by the Engineer, shall be located on lane lines.
4. Transverse contact joint shall be a minimum of 5'-0" from an existing or constructed weakened plane joint.
5. For transverse contact joint with new PCC paving, refer to Standard Plan P10.
6. Couplers are required for stge construction.
7. End angle or plate at beginning of barrier transition, end of wingwall or end of structure approach as applicable.

NOTE:
THE CONTRACTOR SHALL VERIFY ALL CONTROLLING FIELD DIMENSIONS BEFORE ORDERING OR FABRICATING ANY MATERIAL.

REVISED PER ADDENDUM No. 1 DATED MARCH 28, 2011

STANDARD DRAWING				
RELEASE DATE 3/14/05	DESIGN	BY M.TRAFFALIS	CHECKED E.THORKILDSEN	RELEASED BY
FILE NO. xs3-140e	DETAILS	BY R.YEE	CHECKED E.THORKILDSEN	OFFICE CHIEF
	SUBMITTED	BY M.HA	DRAWING DATE 8/92	

1 Detail Modified
2 Revised skew
3 Detail not used

STATE OF CALIFORNIA
DEPARTMENT OF TRANSPORTATION

DIVISION OF ENGINEERING SERVICES

BRIDGE NO. 29-0189 R/L
MILE POST 28.53

COUNTRY CLUB BLVD UC (WIDEN)
STRUCTURE APPROACH TYPE R(30D)

DS OSD 2147A (ENGLISH) (REV. X/XX/XX)

ORIGINAL SCALE IN INCHES FOR REDUCED PLANS 0 1 2 3

CU 06240
EA 10-0G4701

DISREGARD PRINTS BEARING EARLIER REVISION DATES

REVISION DATES (PRELIMINARY STAGE ONLY) 10/16/09 12/04/09 01/13/10 06/14/10 07/28/10

SHEET 20 OF 28

USERNAME => trmikesl

29-0189rl-s-sadd02

DATE PLOTTED => 25-MAR-2011 TIME PLOTTED => 06:59

'I-5' Line Station	Line	Offset from 'I-5' Line (ft)	Proposed Top of Deck/Overlay Elev (ft)	Existing Top of Deck Elev (ft)
1627+40	A	75.50 L+	21.63	N/A
	B	66.00 L+	21.81	N/A
	C	42.00 L+	22.24	N/A
	D	27.00 L+	22.48	N/A
	E	0.00	22.91	N/A
	F	27.00 R+	22.50	N/A
	G	42.00 R+	22.28	N/A
	H	66.00 R+	21.90	N/A
	J	75.50 R+	21.74	N/A
1627+50	A	75.50 L+	21.62	N/A
	B	66.00 L+	21.79	N/A
	C	42.00 L+	22.22	N/A
	D	27.00 L+	22.46	N/A
	E	0.00	22.89	N/A
	F	27.00 R+	22.49	N/A
	G	42.00 R+	22.26	N/A
	H	66.00 R+	21.88	N/A
	J	75.50 R+	21.73	N/A
1627+60	A	75.50 L+	21.60	N/A
	B	66.00 L+	21.78	N/A
	C	42.00 L+	22.21	N/A
	D	27.00 L+	22.45	N/A
	E	0.00	22.88	N/A
	F	27.00 R+	22.47	N/A
	G	42.00 R+	22.25	N/A
	H	66.00 R+	21.86	N/A
	J	75.50 R+	21.71	N/A
1627+70	A	75.50 L+	21.56	21.53±
	B	66.00 L+	21.76	21.65±
	C	42.00 L+	22.19	22.10±
	D	27.00 L+	22.43	22.33±
	E	0.00	22.86	N/A
	F	27.00 R+	22.45	22.28±
	G	42.00 R+	22.23	22.03±
	H	66.00 R+	21.85	21.71±
	J	75.50 R+	21.68	21.64±
1627+80	A	75.50 L+	21.55	21.51±
	B	66.00 L+	21.74	21.64±
	C	42.00 L+	22.17	22.07±
	D	27.00 L+	22.41	22.33±
	E	0.00	22.84	N/A
	F	27.00 R+	22.44	22.26±
	G	42.00 R+	22.21	21.99±
	H	66.00 R+	21.83	21.69±
	J	75.50 R+	21.66	21.60±
1627+90	A	75.50 L+	21.54	21.51±
	B	66.00 L+	21.73	21.62±
	C	42.00 L+	22.16	22.04±
	D	27.00 L+	22.40	22.31±
	E	0.00	22.83	N/A
	F	27.00 R+	22.42	22.23±
	G	42.00 R+	22.20	21.96±
	H	66.00 R+	21.81	21.68±
	J	75.50 R+	21.64	21.58±

'I-5' Line Station	Line	Offset from 'I-5' Line (ft)	Proposed Top of Deck/Overlay Elev (ft)	Existing Top of Deck Elev (ft)
1628+00	A	75.50 L+	21.53	21.47±
	B	66.00 L+	21.71	21.60±
	C	42.00 L+	22.14	22.03±
	D	27.00 L+	22.38	22.26±
	E	0.00	22.81	N/A
	F	27.00 R+	22.40	22.20±
	G	42.00 R+	22.18	21.94±
	H	66.00 R+	21.80	21.64±
	J	75.50 R+	21.62	21.52±
1628+10	A	75.50 L+	21.51	21.47±
	B	66.00 L+	21.69	21.58±
	C	42.00 L+	22.12	21.99±
	D	27.00 L+	22.36	22.23±
	E	0.00	22.79	N/A
	F	27.00 R+	22.39	22.18±
	G	42.00 R+	22.16	21.93±
	H	66.00 R+	21.78	21.63±
	J	75.50 R+	21.60	21.53±
1628+20	A	75.50 L+	21.49	21.43±
	B	66.00 L+	21.68	21.56±
	C	42.00 L+	22.11	21.97±
	D	27.00 L+	22.35	22.20±
	E	0.00	22.78	N/A
	F	27.00 R+	22.37	22.15±
	G	42.00 R+	22.15	21.90±
	H	66.00 R+	21.76	21.61±
	J	75.50 R+	21.58	21.52±
1628+30	A	75.50 L+	21.47	21.41±
	B	66.00 L+	21.66	21.53±
	C	42.00 L+	22.09	21.94±
	D	27.00 L+	22.33	22.16±
	E	0.00	22.76	N/A
	F	27.00 R+	22.35	22.14±
	G	42.00 R+	22.13	21.88±
	H	66.00 R+	21.75	21.61±
	J	75.50 R+	21.56	21.52±
1628+40	A	75.50 L+	21.46	21.43±
	B	66.00 L+	21.64	21.55±
	C	42.00 L+	22.07	21.97±
	D	27.00 L+	22.31	22.20±
	E	0.00	22.74	N/A
	F	27.00 R+	22.34	22.14±
	G	42.00 R+	22.11	21.88±
	H	66.00 R+	21.73	21.61±
	J	75.50 R+	21.54	21.50±
1628+50	A	75.50 L+	21.45	21.42±
	B	66.00 L+	21.63	21.54±
	C	42.00 L+	22.06	21.96±
	D	27.00 L+	22.30	22.20±
	E	0.00	22.73	N/A
	F	27.00 R+	22.32	22.11±
	G	42.00 R+	22.10	21.87±
	H	66.00 R+	21.71	21.60±
	J	75.50 R+	21.52	21.50±

Note: 1
The Engineer may adjust the proposed top of deck/overlay elevations (including approach slabs) as needed if the existing top of deck elevations determined from the construction survey differ from the elevations shown on the plans.

DIST	COUNTY	ROUTE	POST MILES TOTAL PROJECT	SHEET No	TOTAL SHEETS
10	SJ	5	25.0/32.7	935	1132

REGISTERED CIVIL ENGINEER 7/28/10 DATE

10-11-10
PLANS APPROVAL DATE

REGISTERED PROFESSIONAL ENGINEER RONALD L OEN No. 46945 Exp. 9/30/11 CIVIL STATE OF CALIFORNIA

The State of California or its officers or agents shall not be responsible for the accuracy or completeness of scanned copies of this plan sheet.

SAN JOAQUIN COUNCIL OF GOVERNMENTS
555 E. WEBER AVENUE
STOCKTON, CA 95202

BIGGS CARDOSA ASSOCIATES INC.
865 THE ALAMEDA
SAN JOSE, CALIFORNIA 95126

'I-5' Line Station	Line	Offset from 'I-5' Line (ft)	Proposed Top of Deck/Overlay Elev (ft)	Existing Top of Deck Elev (ft)
1628+60	A	75.50 L+	21.44	21.42±
	B	66.00 L+	21.61	21.53±
	C	42.00 L+	22.04	21.94±
	D	27.00 L+	22.28	22.20±
	E	0.00	22.71	N/A
	F	27.00 R+	22.30	22.14±
	G	42.00 R+	22.08	21.89±
	H	66.00 R+	21.70	21.61±
	J	75.50 R+	21.50	21.50±
1628+70	A	75.50 L+	21.42	21.38±
	B	66.00 L+	21.59	21.52±
	C	42.00 L+	22.02	21.88±
	D	27.00 L+	22.26	22.14±
	E	0.00	22.69	N/A
	F	27.00 R+	22.29	22.13±
	G	42.00 R+	22.06	21.88±
	H	66.00 R+	21.68	21.57±
	J	75.50 R+	21.47	21.46±
1628+80	A	75.50 L+	21.41	N/A
	B	66.00 L+	21.58	N/A
	C	42.00 L+	22.01	N/A
	D	27.00 L+	22.25	N/A
	E	0.00	22.68	N/A
	F	27.00 R+	22.27	N/A
	G	42.00 R+	22.05	N/A
	H	66.00 R+	21.66	N/A
	J	75.50 R+	21.45	N/A
1628+90	A	75.50 L+	21.39	N/A
	B	66.00 L+	21.56	N/A
	C	42.00 L+	21.99	N/A
	D	27.00 L+	22.23	N/A
	E	0.00	22.66	N/A
	F	27.00 R+	22.25	N/A
	G	42.00 R+	22.03	N/A
	H	66.00 R+	21.65	N/A
	J	75.50 R+	21.43	N/A

Note:
The Contractor shall verify all controlling field dimensions before ordering or fabricating any material

1 **REVISED PER ADDENDUM No. 1 DATED MARCH 28, 2011**

DESIGN OVERSIGHT John Fujimoto
3-11-11
SIGN OFF DATE

	BY	CHECKED
DESIGN	R. OEN	M. THOMAS
DETAILS	D. UPADHYAY	R. CASTRO
QUANTITIES	D. UPADHYAY	R. CASTRO

PREPARED FOR THE STATE OF CALIFORNIA DEPARTMENT OF TRANSPORTATION

JOHN A. ALCIATI
PROJECT ENGINEER

BRIDGE NO. 29-0190
POST MILES 28.75

MICHIGAN AVENUE UC (WIDEN)
DECK GRADES No. 2

DESIGN DETAIL SHEET (ENGLISH) (REV. 6-01-09)

ORIGINAL SCALE IN INCHES FOR REDUCED PLANS 0 1 2 3

CU 06240
EA 0G4701

FILE => 29-0190-d-dkg02.add

DISREGARD PRINTS BEARING EARLIER REVISION DATES

REVISION DATES (PRELIMINARY STAGE ONLY) 10/16/09 12/4/09 1/15/10 4/23/10 6/11/10 7/28/10

SHEET 4 OF 24

USERNAME => trmikes1 DATE PLOTTED => 25-MAR-2011 TIME PLOTTED => 07:00

20060048 (20060485A)

DIST	COUNTY	ROUTE	POST MILES TOTAL PROJECT	SHEET No	TOTAL SHEETS
10	SJ	5	25.0/32.7	941	1132

REGISTERED CIVIL ENGINEER 7/28/10 DATE

10-11-10
PLANS APPROVAL DATE

REGISTERED PROFESSIONAL ENGINEER RONALD L OEN No. 46945 Exp. 9/30/11 CIVIL STATE OF CALIFORNIA

The State of California or its officers or agents shall not be responsible for the accuracy or completeness of scanned copies of this plan sheet.

SAN JOAQUIN COUNCIL OF GOVERNMENTS
555 E. WEBER AVENUE
STOCKTON, CA 95202

BIGGS CARDOSA ASSOCIATES INC.
865 THE ALAMEDA
SAN JOSE, CALIFORNIA 95126

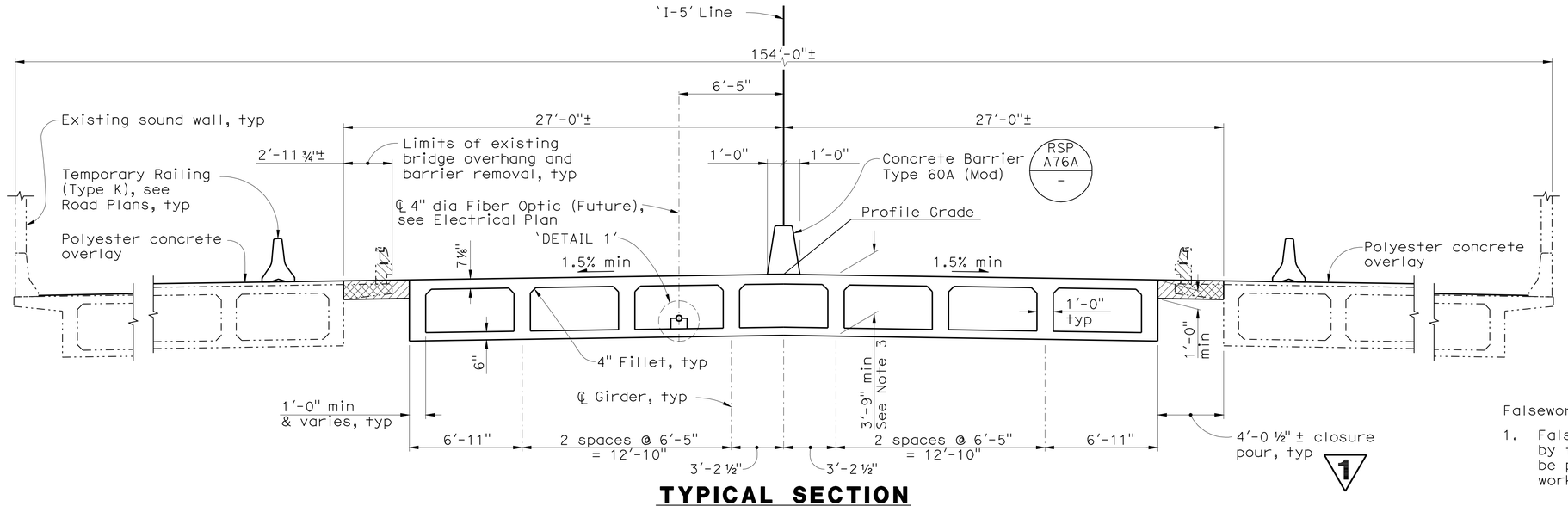

TYPICAL SECTION

1/4" = 1'-0"

Falsework Release Notes:

1. Falsework shall be released as soon as permitted by the specifications. Closure pour shall not be placed sooner than 60 days after the falsework has been released.

Notes:

1. All dimensions are measured normal to 'I-5' Line.
2. Transverse deck and soffit reinforcement shall be placed and spaced normal to 'I-5 Line'
3. Depth of superstructure at mid-span shown. Depth of superstructure at ℄ of abutment = 6'-3".
4. For 'DETAIL 1' see 'GIRDER LAYOUT' sheet.

Bridge Removal (Portion)

Closure pour

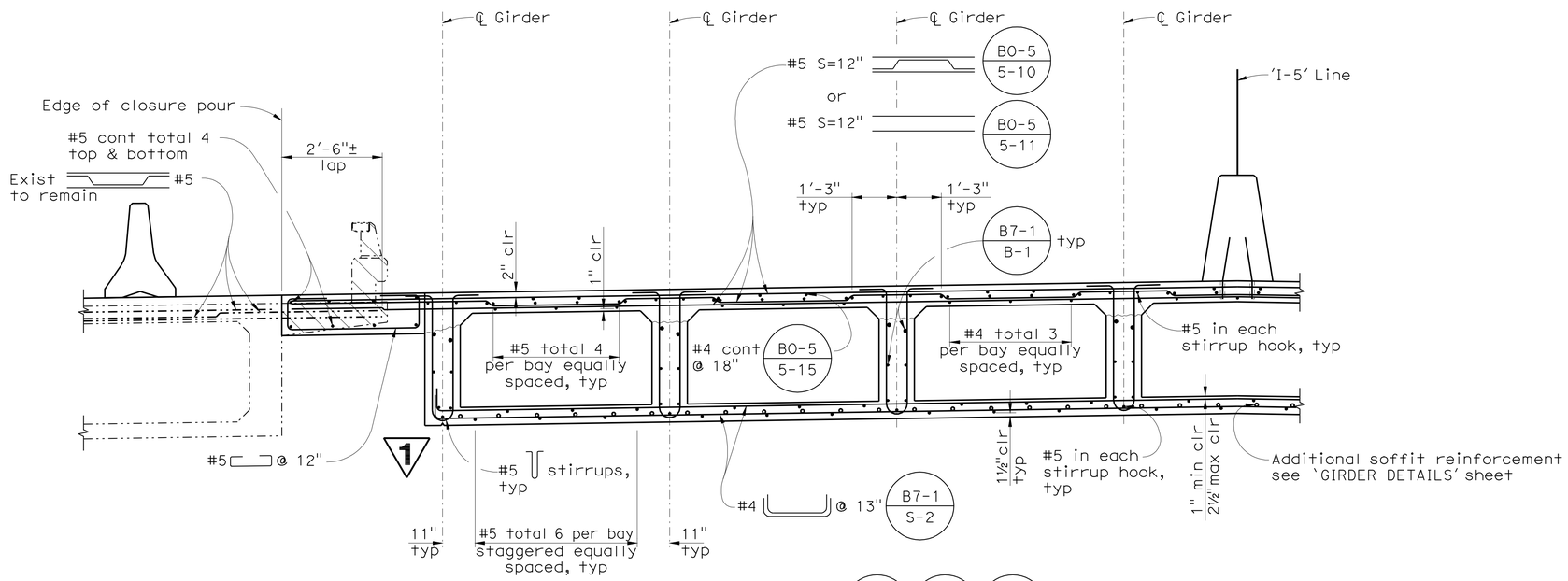

PARTIAL TYPICAL SECTION

1/2" = 1'-0"

BO-5 - B7-1 - B8-5 -

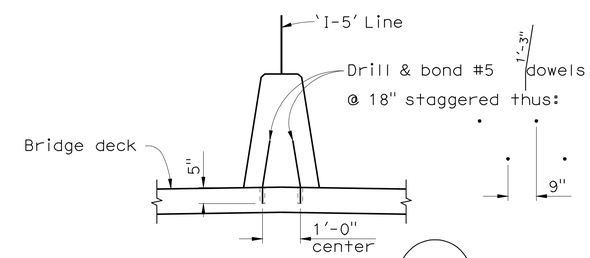

For details not shown, see A76A -

CONCRETE BARRIER TYPE 60A (MOD)

NO SCALE

Note:
The Contractor shall verify all controlling field dimensions before ordering or fabricating any material

1 REVISED PER ADDENDUM No. 1 DATED MARCH 28, 2011

DESIGN OVERSIGHT John Fujimoto
3-11-11
SIGN OFF DATE

	BY	CHECKED
DESIGN	R. OEN	M. THOMAS
DETAILS	D. UPADHYAY	R. CASTRO
QUANTITIES	D. UPADHYAY	R. CASTRO

PREPARED FOR THE STATE OF CALIFORNIA DEPARTMENT OF TRANSPORTATION

JOHN A. ALCIATI
PROJECT ENGINEER

BRIDGE NO. 29-0190
POST MILES 28.75

MICHIGAN AVENUE UC (WIDEN)
TYPICAL SECTION

DESIGN DETAIL SHEET (ENGLISH) (REV. 6-01-09)

ORIGINAL SCALE IN INCHES FOR REDUCED PLANS 0 1 2 3

CU 06240
EA 0G4701

FILE => 29-0190-m-ts1.add

DISREGARD PRINTS BEARING EARLIER REVISION DATES

REVISION DATES (PRELIMINARY STAGE ONLY) 10/16/09 12/4/09 1/15/10 4/23/10 6/11/10 7/28/10

SHEET 10 OF 24

USERNAME => trmikes1 DATE PLOTTED => 25-MAR-2011 TIME PLOTTED => 07:00

20060485 10A) (20060485

DIST	COUNTY	ROUTE	POST MILES TOTAL PROJECT	SHEET NO.	TOTAL SHEETS
10	SJ	5	25.0/32.7	945	1132

REGISTERED CIVIL ENGINEER 7/28/10

PLANS APPROVAL DATE 10-11-10

REGISTERED PROFESSIONAL ENGINEER RONALD L OEN No. 46945 Exp. 9/30/11 CIVIL STATE OF CALIFORNIA

The State of California or its officers or agents shall not be responsible for the accuracy or completeness of scanned copies of this plan sheet.

SAN JOAQUIN COUNCIL OF GOVERNMENTS
555 E. WEBER AVENUE
STOCKTON, CA 95202

BIGGS CARDOSA ASSOCIATES INC.
865 THE ALAMEDA
SAN JOSE, CALIFORNIA 95126

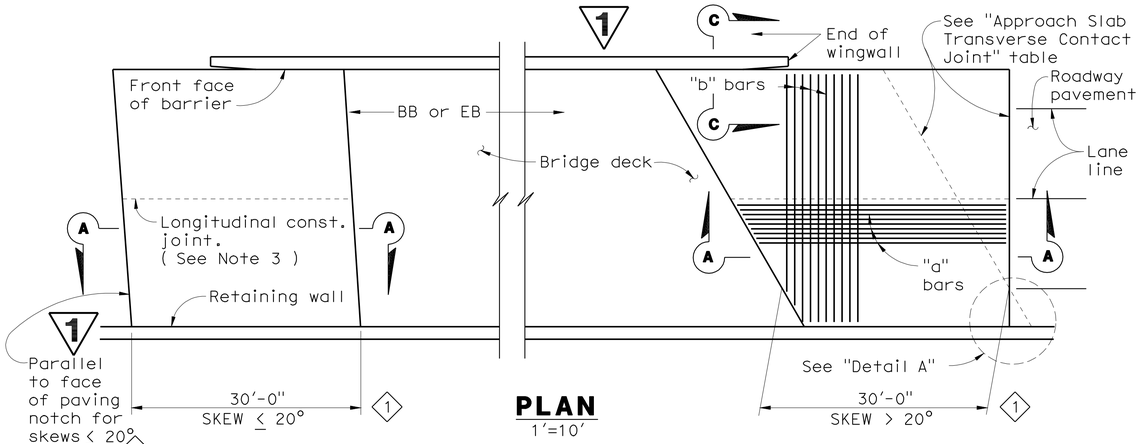

PLAN
1'=10'

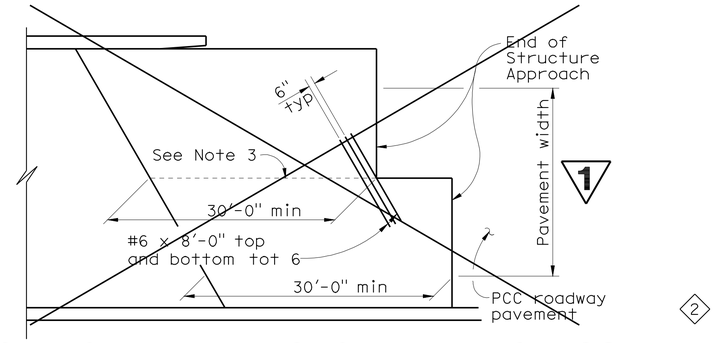

STRUCTURE APPROACH - END STAGGER DETAIL
No Scale

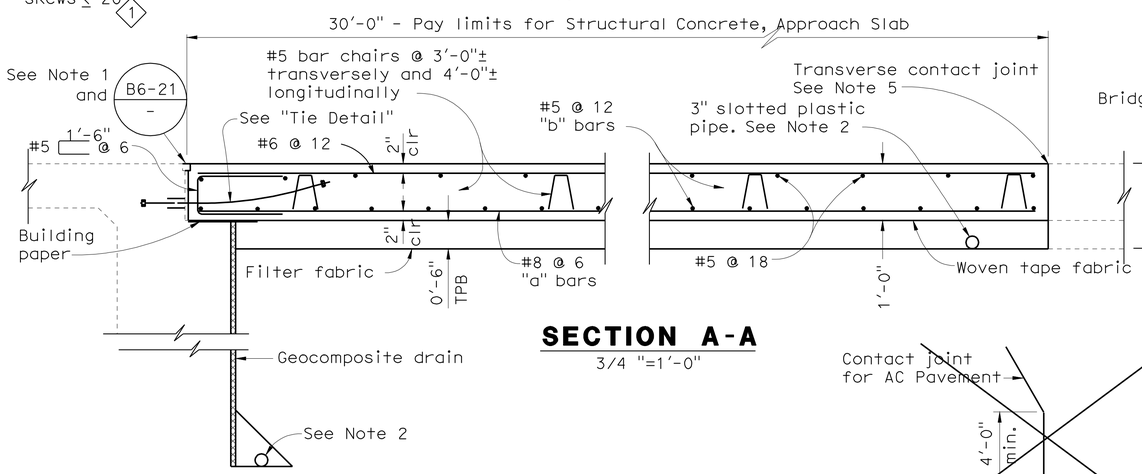

SECTION A-A
3/4 "=1'-0"

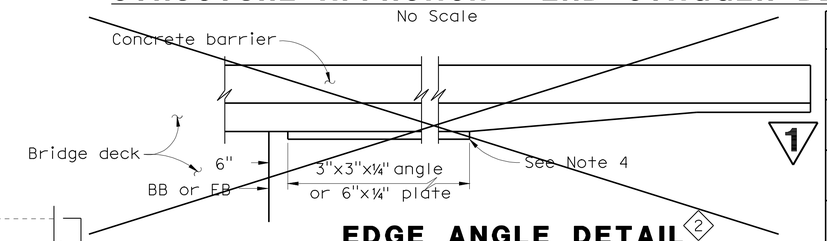

EDGE ANGLE DETAIL
1/2 "=1'-0"

APPROACH SLAB TRANSVERSE CONTACT JOINT (1)		
APPROACH SKEW	WITH AC ROADWAY PAVEMENT	WITH PCC ROADWAY PAVEMENT
≤ 20°	Parallel to face of paving notch	Parallel to face of paving notch
> 20°-45°	Parallel to face of P N use (Detail A)	Stagger lines 24' to 36' apart
> 45°	Parallel to face of P N use (Detail A)	Stagger at each lane line

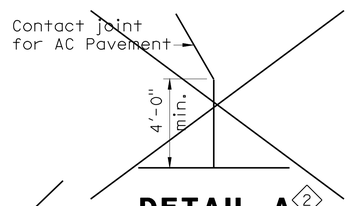

DETAIL A (2)
No Scale

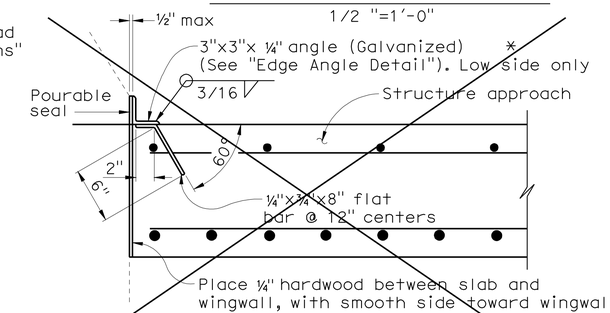

(TO BE USED WITH TYPE 25 OR TYPE 27 CONCRETE BARRIER)

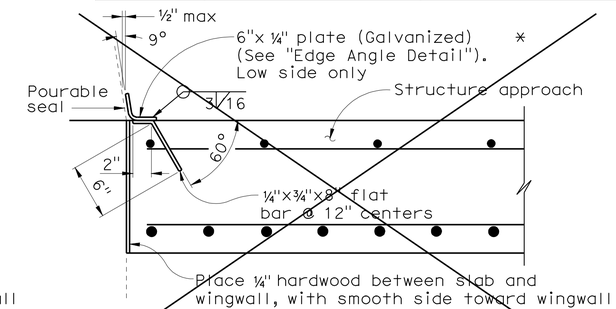

(TO BE USED WITH TYPE 732 OR TYPE 736 CONCRETE BARRIER)

DETAIL B (2)
1 1/2 "=1'-0"

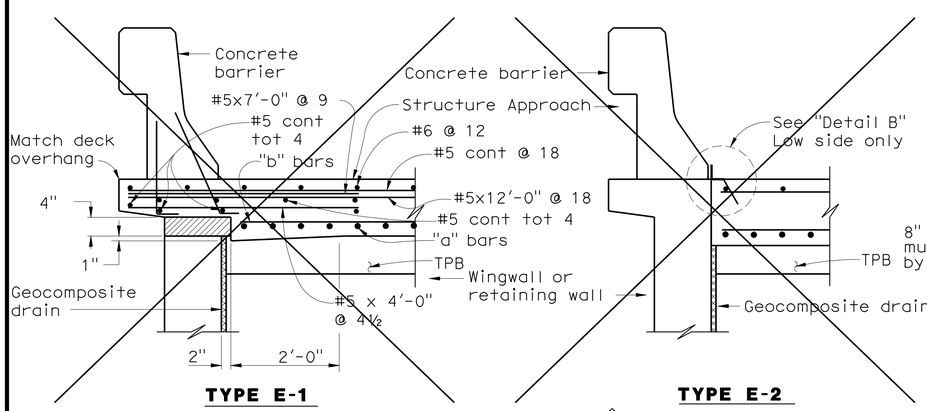

TYPE E-1 **TYPE E-2**

SECTION C-C (2)
3/4"=1'-0"

(Type E-1 to be used,unless otherwise shown on plans)

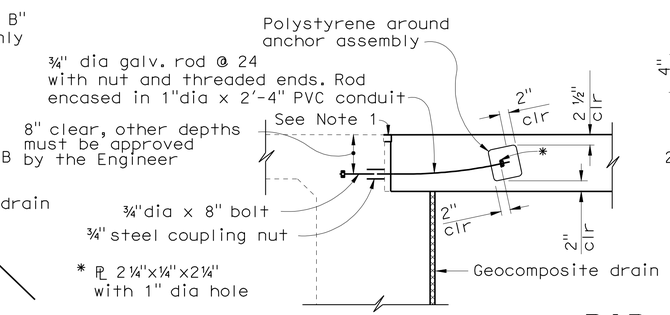

TIE DETAIL
3/4 "=1'-0"

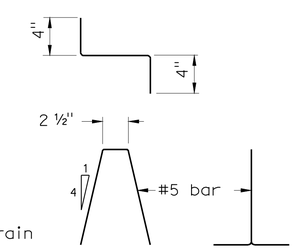

BAR CHAIR DETAIL
1 1/2 "=1'-0"

NOTES:

1. For details not noted or shown,see Structure Plans.
2. For drainage details,see "Structure Approach Drainage Details" sheet.
3. Longitudinal construction joints,when permitted by the Engineer,shall be located on lane lines.
4. End angle or plate at beginning of barrier transition, end of wingwall or end of structure approach, as applicable.
5. For transverse contact joint with new PCC paving, refer to Standard Plan P10.
6. At the contractor's option,approach slab transverse reinforcement may be placed parallel to paving notch. Spacing of transverse reinforcement is measured along ℄ roadway.

Polystyrene to be removed.

SPECIAL DETAILS

(1) REVISED PER ADDENDUM No. 1 DATED MARCH 28, 2011

STANDARD DRAWING

FILE NO. xs3-180e

APPROVED BY M. Ha (RESPONSIBLE TECHNICAL SPECIALIST)
APPROVAL DATE REVISED

RELEASED BY O. Alcantara (RESPONSIBLE OFFICE CHIEF)
RELEASE DATE 8-12-08

(1) Revised skew
(2) Detail not used

STATE OF CALIFORNIA
DEPARTMENT OF TRANSPORTATION

DIVISION OF ENGINEERING SERVICES

BRIDGE NO. 29-0190
POST MILES 28.75

MICHIGAN AVE UC (WIDEN)

STRUCTURE APPROACH TYPE N(30D)

DS OSD 2147A (ENGLISH STANDARD DRAWING "XS" BORDER REV. 01/11/08)

ORIGINAL SCALE IN INCHES FOR REDUCED PLANS 0 1 2 3

CU 06240
EA 0G4701

DISREGARD PRINTS BEARING EARLIER REVISION DATES

REVISION DATES (PRELIMINARY STAGE ONLY) 10/16/09 12/4/09 1/15/10 4/23/10 6/11/10 7/28/10

SHEET 14 OF 24

USERNAME => trmikesl

29-0190-t-sadd.dds

USERNAME => trmikesl DATE PLOTTED => 25-MAR-2011 TIME PLOTTED => 07:00

(20080485141) 20080418A

DIST	COUNTY	ROUTE	POST MILES TOTAL PROJECT	SHEET NO.	TOTAL SHEETS
10	SJ	5	25.0/32.7	946	1132

REGISTERED CIVIL ENGINEER 7/28/10

10-11-10
PLANS APPROVAL DATE

REGISTERED PROFESSIONAL ENGINEER RONALD L OEN No. 46945 Exp. 9/30/11 CIVIL STATE OF CALIFORNIA

The State of California or its officers or agents shall not be responsible for the accuracy or completeness of scanned copies of this plan sheet.

BIGGS CARDOSA ASSOCIATES INC.
865 THE ALAMEDA
SAN JOSE, CALIFORNIA 95126

ALAMEDA COUNTY CONGESTION MANAGEMENT AGENCY
1333 BROADWAY, SUITE 220
OAKLAND, CA 94612

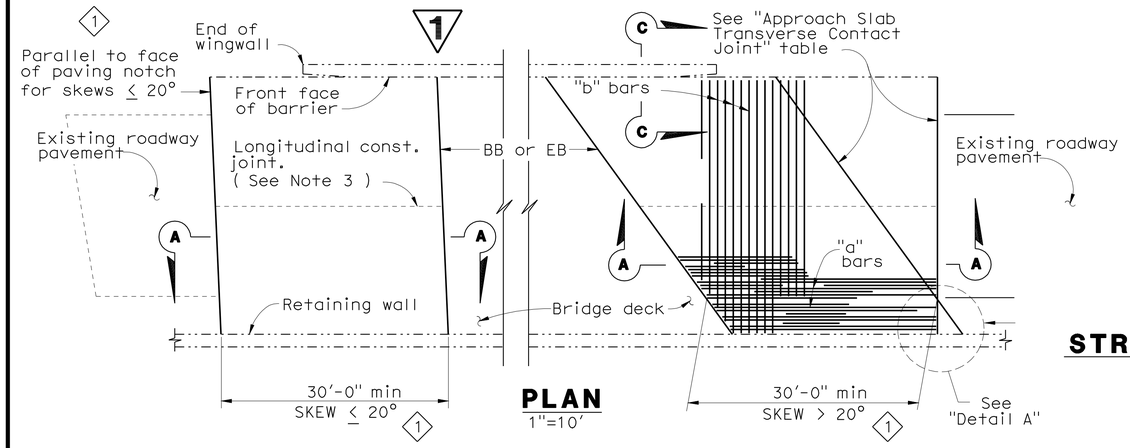

PLAN
1"=10'

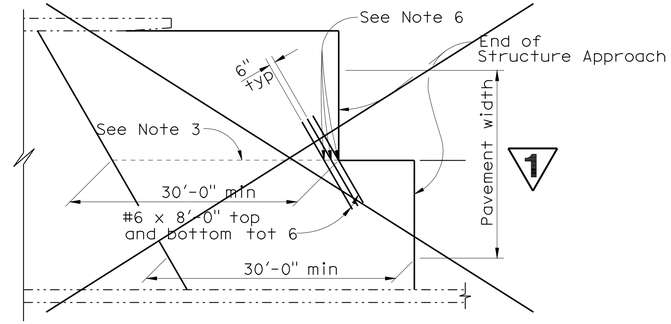

STRUCTURE APPROACH - END STAGGER DETAIL
2

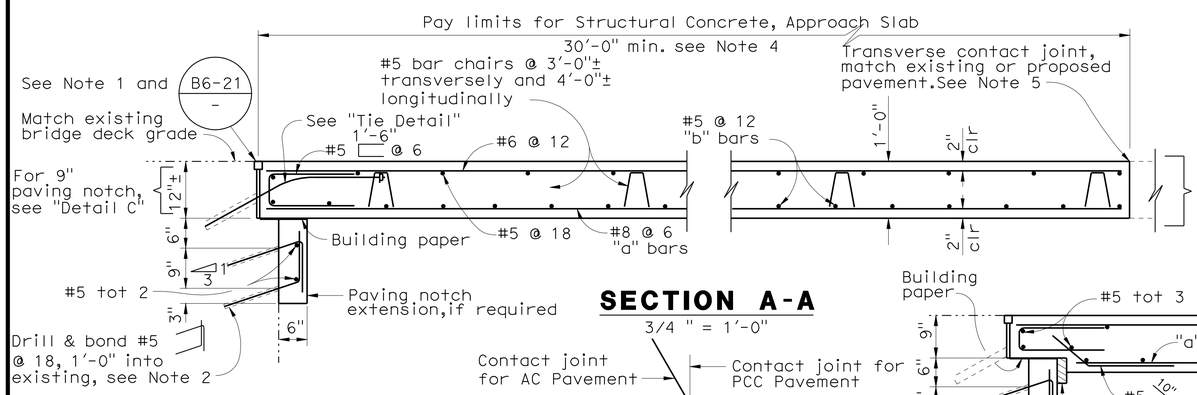

SECTION A-A
3/4 " = 1'-0"

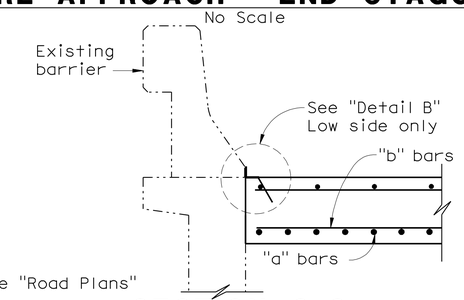

SECTION C-C
3/4 " = 1'-0"

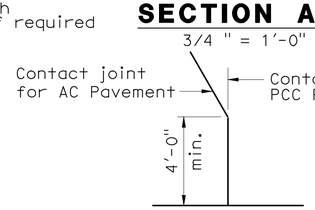

DETAIL A
No Scale

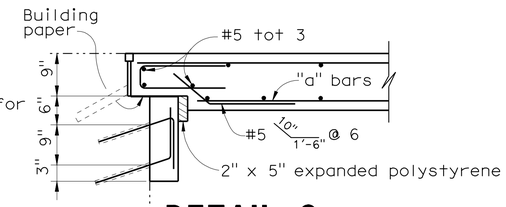

DETAIL C
3/4 " = 1'-0"

NOTE: For details not shown,see "Section A-A".

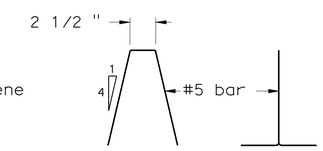

BAR CHAIR DETAIL
1 1/2 " = 1'-0"

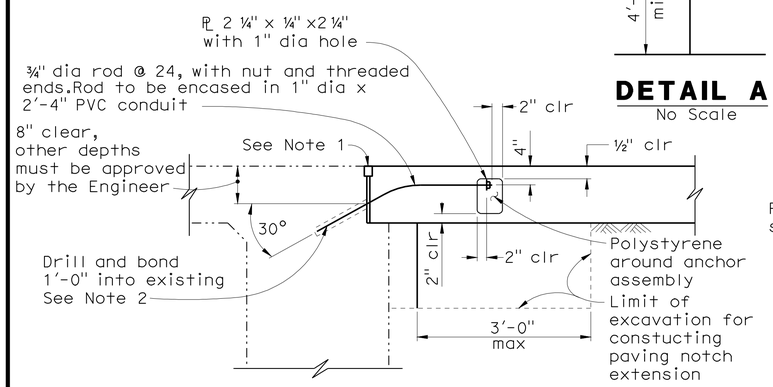

TIE DETAIL
3/4 " = 1'-0"

NOTE:
THE CONTRACTOR SHALL VERIFY ALL CONTROLLING FIELD DIMENSIONS BEFORE ORDERING OR FABRICATING ANY MATERIAL.

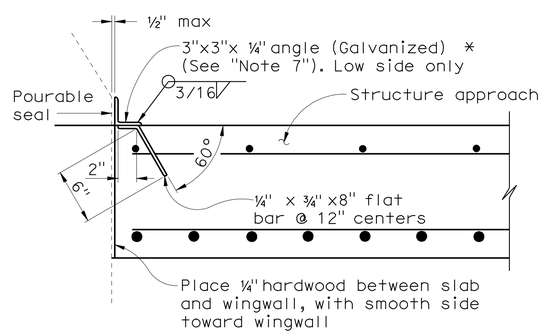

*(TO BE USED WITH TYPE 25 OR TYPE 27 CONCRETE BARRIER)

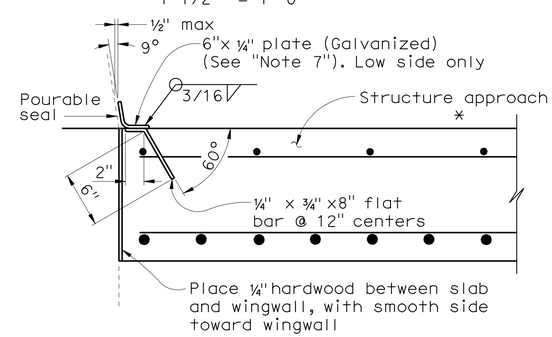

*(TO BE USED WITH TYPE 732 OR TYPE 736 CONCRETE BARRIER)

DETAIL B
1 1/2 " = 1'-0"

APPROACH SKEW	WITH AC ROADWAY PAVEMENT	WITH PCC ROADWAY PAVEMENT
≤ 20°	Parallel with face of paving notch	Parallel with face of paving notch
> 20° - 45°	Parallel with face of P N use (Detail A)	Stagger lines 24' to 36' apart
> 45°	Parallel with face of P N use (Detail A)	Stagger at each lane line

APPROACH SLAB TRANSVERSE CONTACT JOINT 1

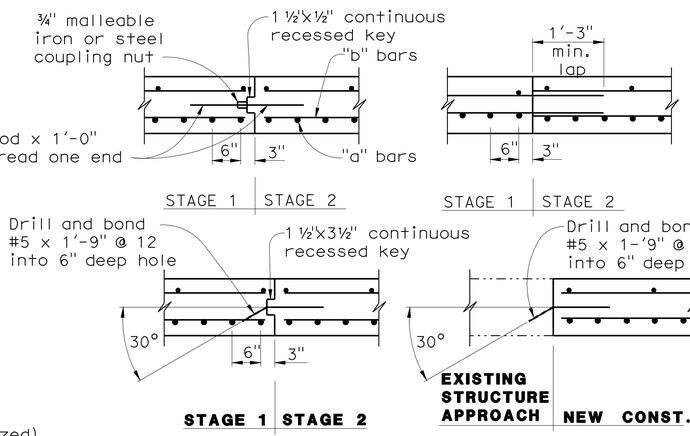

LONGITUDINAL CONSTRUCTION JOINT ALTERNATIVES
3/4 " = 1'-0"

NOTES:

1. For details not shown or noted,see Structure Plans. Adjust bar reinforcement to clear a sawcut for sealed joint,when required.
2. Space to avoid existing prestress anchorages and main reinforcement.
3. Longitudinal construction joints,when permitted by the Engineer,shall be located on lane lines.
4. Transverse contact joint shall be a minimum of 5'-0" from an existing or constructed weakened plane joint.
5. For transverse contact joint with new PCC paving. refer to Standard Plan P10.
6. Couplers are required for stage construction.
7. End angle or plate at beginning of barrier transition, end of wingwall or end of structure approach as applicable.

1 REVISED PER ADDENDUM No. 1 DATED MARCH 28, 2011

STANDARD DRAWING				
RELEASE DATE 3/14/05	DESIGN	BY M. TRAFFALIS	CHECKED E. THORKILDSEN	RELEASED BY
FILE NO. xs3-140e	DETAILS	BY R. YEE	CHECKED E. THORKILDSEN	OFFICE CHIEF
	SUBMITTED	BY M. HA	DRAWING DATE 8/92	

1 Revised skew
2 Detail not used

STATE OF CALIFORNIA
DEPARTMENT OF TRANSPORTATION

DIVISION OF ENGINEERING SERVICES

BRIDGE NO. 29-0190
POST MILE 28.75

MICHIGAN AVE UC (WIDEN)
STRUCTURE APPROACH TYPE R(30D)

DS OSD 2147A (CADD) (REV. 4/07)

ORIGINAL SCALE IN INCHES FOR REDUCED PLANS 0 1 2 3

CU 06240
EA 0G4701

DISREGARD PRINTS BEARING EARLIER REVISION DATES

REVISION DATES (PRELIMINARY STAGE ONLY) 10/16/09 12/4/09 1/15/10 4/23/10 6/11/10 7/28/10

SHEET 15 OF 24

USERNAME => trmikesl

29-0190-t-sadet1.d

USERNAME => trmikesl DATE PLOTTED => 25-MAR-2011 TIME PLOTTED => 07:00 2006048A (2006048151)

DIST	COUNTY	ROUTE	POST MILES TOTAL PROJECT	SHEET No	TOTAL SHEETS
10	SJ	5	25.0/32.7	960	1132

REGISTERED CIVIL ENGINEER 7/28/10 DATE

10-11-10
PLANS APPROVAL DATE

REGISTERED PROFESSIONAL ENGINEER ALLEN WANG No. C 66503 Exp. 06/30/12 CIVIL STATE OF CALIFORNIA

The State of California or its officers or agents shall not be responsible for the accuracy or completeness of scanned copies of this plan sheet.

SAN JOAQUIN COUNCIL OF GOVERNMENTS
555 E. WEBER AVENUE
STOCKTON, CA 95202

RAJAPPAN & MEYER CONSULTING ENGINEERS, INC.
1038 LEIGH AVE, SUITE 100
SAN JOSE, CA 95126

"I-5" Line Station	Line	Offset from "I-5" Line (ft)	Proposed Top of Deck/Overlay Elev (ft)	Existing Top of Deck Elev (ft)
1639+10	A	75.50 Lt	21.46	N/A
	B	30.00 Lt	22.09	N/A
	C	27.00 Lt	22.14	N/A
	D	0.00	22.63	N/A
	E	27.00 Rt	22.21	N/A
	F	30.00 Rt	22.17	N/A
	G	75.50 Rt	21.51	N/A
1639+20	A	75.50 Lt	21.49	N/A
	B	30.00 Lt	22.11	N/A
	C	27.00 Lt	22.16	N/A
	D	0.00	22.64	N/A
	E	27.00 Rt	22.23	N/A
	F	30.00 Rt	22.18	N/A
	G	75.50 Rt	21.53	N/A
1639+30	A	75.50 Lt	21.51	N/A
	B	30.00 Lt	22.12	N/A
	C	27.00 Lt	22.17	N/A
	D	0.00	22.66	N/A
	E	27.00 Rt	22.25	N/A
	F	30.00 Rt	22.20	N/A
	G	75.50 Rt	21.55	N/A
1639+40	A	75.50 Lt	21.52	21.46±
	B	30.00 Lt	22.13	22.06±
	C	27.00 Lt	22.18	22.12±
	D	0.00	22.68	N/A
	E	27.00 Rt	22.26	22.20±
	F	30.00 Rt	22.22	22.15±
	G	75.50 Rt	21.59	21.52±
1639+50	A	75.50 Lt	21.53	21.47±
	B	30.00 Lt	22.11	22.05±
	C	27.00 Lt	22.17	22.09±
	D	0.00	22.70	N/A
	E	27.00 Rt	22.28	22.22±
	F	30.00 Rt	22.23	22.17±
	G	75.50 Rt	21.60	21.54±
1639+60	A	75.50 Lt	21.51	21.45±
	B	30.00 Lt	22.10	22.03±
	C	27.00 Lt	22.16	22.08±
	D	0.00	22.72	N/A
	E	27.00 Rt	22.27	22.21±
	F	30.00 Rt	22.22	22.16±
	G	75.50 Rt	21.59	21.53±
1639+70	A	75.50 Lt	21.52	21.46±
	B	30.00 Lt	22.09	22.03±
	C	27.00 Lt	22.15	22.07±
	D	0.00	22.74	N/A
	E	27.00 Rt	22.28	22.21±
	F	30.00 Rt	22.22	22.16±
	G	75.50 Rt	21.60	21.54±
1639+80	A	75.50 Lt	21.53	21.47±
	B	30.00 Lt	22.08	22.02±
	C	27.00 Lt	22.15	22.06±
	D	0.00	22.75	N/A
	E	27.00 Rt	22.28	22.21±
	F	30.00 Rt	22.23	22.17±
	G	75.50 Rt	21.60	21.54±

"I-5" Line Station	Line	Offset from "I-5" Line (ft)	Proposed Top of Deck/Overlay Elev (ft)	Existing Top of Deck Elev (ft)
1639+90	A	75.50 Lt	21.56	21.50±
	B	30.00 Lt	22.10	22.04±
	C	27.00 Lt	22.17	22.08±
	D	0.00	22.77	N/A
	E	27.00 Rt	22.30	22.23±
	F	30.00 Rt	22.24	22.18±
	G	75.50 Rt	21.59	21.53±
1640+00	A	75.50 Lt	21.58	21.52±
	B	30.00 Lt	22.13	22.07±
	C	27.00 Lt	22.20	22.11±
	D	0.00	22.79	N/A
	E	27.00 Rt	22.32	22.25±
	F	30.00 Rt	22.27	22.20±
	G	75.50 Rt	21.61	21.55±
1640+10	A	75.50 Lt	21.61	21.55±
	B	30.00 Lt	22.16	22.10±
	C	27.00 Lt	22.23	22.14±
	D	0.00	22.81	N/A
	E	27.00 Rt	22.34	22.27±
	F	30.00 Rt	22.29	22.22±
	G	75.50 Rt	21.64	21.58±
1640+20	A	75.50 Lt	21.66	21.60±
	B	30.00 Lt	22.21	22.15±
	C	27.00 Lt	22.27	22.19±
	D	0.00	22.83	N/A
	E	27.00 Rt	22.38	22.31±
	F	30.00 Rt	22.33	22.26±
	G	75.50 Rt	21.69	21.63±
1640+30	A	75.50 Lt	21.71	21.65±
	B	30.00 Lt	22.24	22.18±
	C	27.00 Lt	22.30	22.22±
	D	0.00	22.85	N/A
	E	27.00 Rt	22.42	22.36±
	F	30.00 Rt	22.37	22.31±
	G	75.50 Rt	21.74	21.68±
1640+40	A	75.50 Lt	21.73	21.67±
	B	30.00 Lt	22.27	22.21±
	C	27.00 Lt	22.33	22.26±
	D	0.00	22.87	N/A
	E	27.00 Rt	22.45	22.39±
	F	30.00 Rt	22.41	22.35±
	G	75.50 Rt	21.77	21.71±
1640+50	A	75.50 Lt	21.78	21.71±
	B	30.00 Lt	22.30	22.23±
	C	27.00 Lt	22.35	22.28±
	D	0.00	22.88	N/A
	E	27.00 Rt	22.47	22.39±
	F	30.00 Rt	22.42	22.36±
	G	75.50 Rt	21.77	21.70±
1640+60	A	75.50 Lt	21.80	N/A
	B	30.00 Lt	22.31	N/A
	C	27.00 Lt	22.37	N/A
	D	0.00	22.90	N/A
	E	27.00 Rt	22.49	N/A
	F	30.00 Rt	22.44	N/A
	G	75.50 Rt	21.78	N/A

"I-5" Line Station	Line	Offset from "I-5" Line (ft)	Proposed Top of Deck/Overlay Elev (ft)	Existing Top of Deck Elev (ft)
1640+70	A	75.50 Lt	21.82	N/A
	B	30.00 Lt	22.32	N/A
	C	27.00 Lt	22.38	N/A
	D	0.00	22.92	N/A
	E	27.00 Rt	22.51	N/A
	F	30.00 Rt	22.46	N/A
	G	75.50 Rt	21.80	N/A
1640+80	A	75.50 Lt	21.85	N/A
	B	30.00 Lt	22.34	N/A
	C	27.00 Lt	22.40	N/A
	D	0.00	22.94	N/A
	E	27.00 Rt	22.53	N/A
	F	30.00 Rt	22.48	N/A
	G	75.50 Rt	21.82	N/A

Note: 1

1. The Engineer may adjust the proposed top of deck/overlay elevations (including approach slabs) as needed if the existing top of deck elevations determined from the construction survey differ from the elevations shown on the plans.

Note:
The Contractor shall verify all controlling field dimensions before ordering or fabricating any material

1 REVISED PER ADDENDUM No. 1 DATED MARCH 28, 2011

DESIGN OVERSIGHT John Fujimoto
3-11-11
SIGN OFF DATE

	BY	CHECKED
DESIGN	A. WANG	P. SHINN
DETAILS	W. Y. TAN	P. SHINN
QUANTITIES	W. Y. TAN	G. WOLDETSADIK

PREPARED FOR THE STATE OF CALIFORNIA DEPARTMENT OF TRANSPORTATION

A. WANG
PROJECT ENGINEER

BRIDGE NO. 29-0191
POST MILE 28.97

ALPINE AVENUE UC (WIDEN)
DECK GRADES No. 3

DESIGN DETAIL SHEET (ENGLISH) (REV. 06-01-09)

ORIGINAL SCALE IN INCHES FOR REDUCED PLANS 0 1 2 3

CU 06240
EA 0G4701

DISREGARD PRINTS BEARING EARLIER REVISION DATES

REVISION DATES (PRELIMINARY STAGE ONLY): 10/16/09 12/14/09 1/18/10 5/21/10 6/11/10 7/28/10

SHEET 5 OF 29

FILE => 29-0191-d-dg03.add

USERNAME => ttmirkes1 DATE PLOTTED => 25-MAR-2011 TIME PLOTTED => 07:01

DIST.	COUNTY	ROUTE	POST MILES TOTAL PROJECT	SHEET NO.	TOTAL SHEETS
10	SJ	5	25.0/32.7	973	1132

REGISTERED ENGINEER - CIVIL 7/28/10

10-11-10
PLANS APPROVAL DATE

REGISTERED PROFESSIONAL ENGINEER ALLEN WANG No. C 66503 Exp. 06/30/12 CIVIL STATE OF CALIFORNIA

The State of California or its officers or agents shall not be responsible for the accuracy or completeness of electronic copies of this plan sheet.

SAN JOAQUIN COUNCIL OF GOVERNMENTS
555 E. WEBER AVENUE
STOCKTON, CA 95202

RAJAPPAN & MEYER
CONSULTING ENGINEERS, INC.
1038 LEIGH AVE, SUITE 100
SAN JOSE, CA 95126

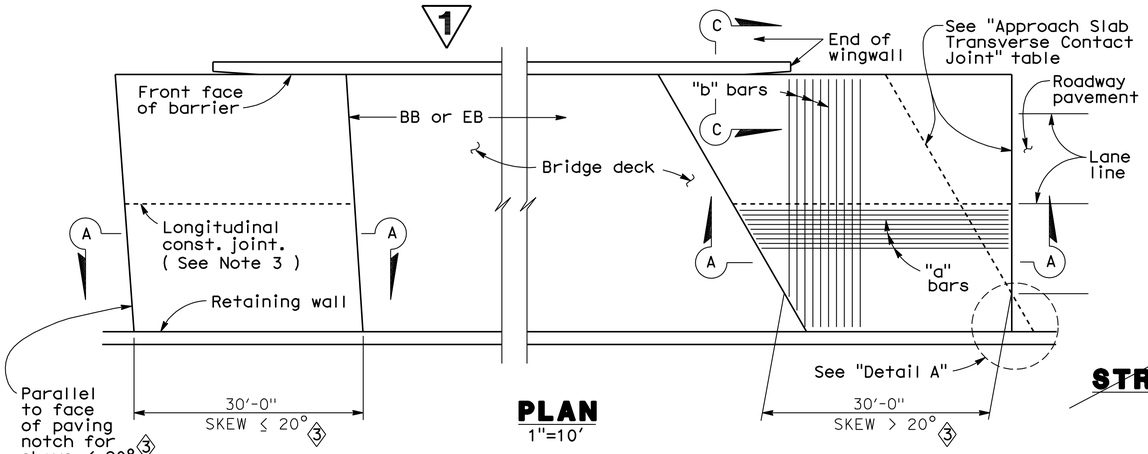

PLAN
1"=10'

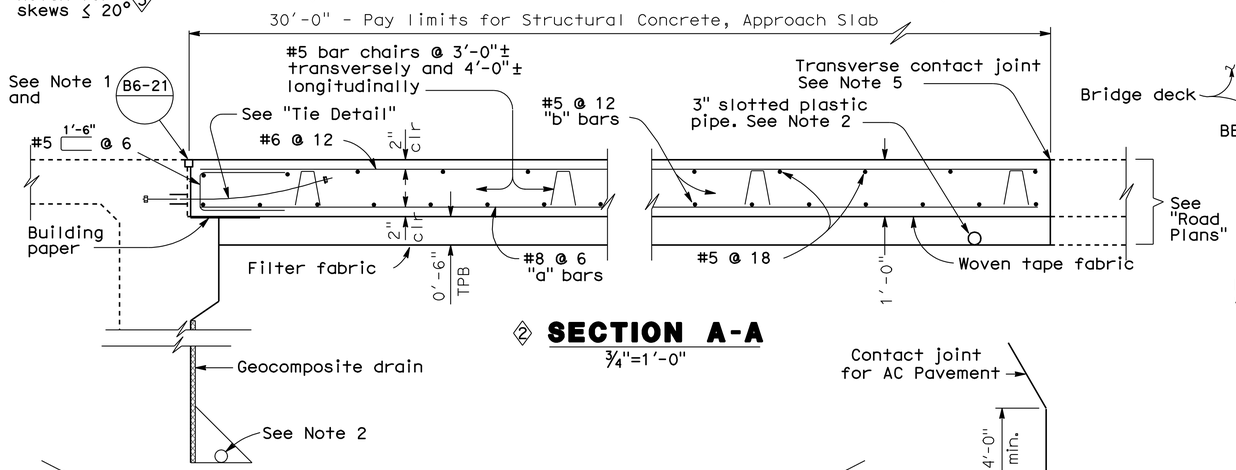

2 SECTION A-A
¾"=1'-0"

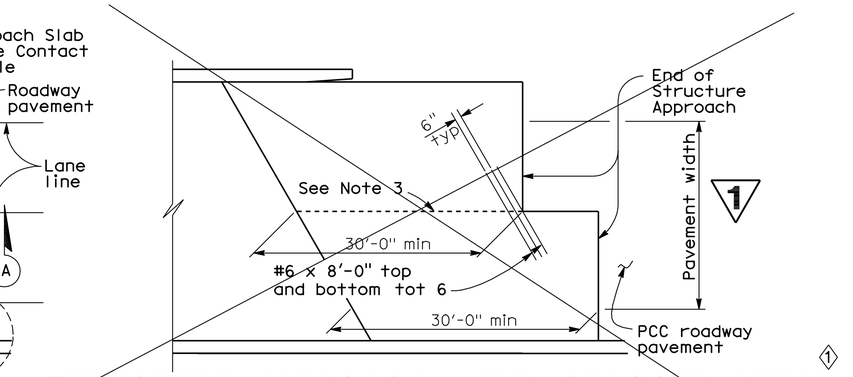

STRUCTURE APPROACH - END STAGGER DETAIL 1
No Scale

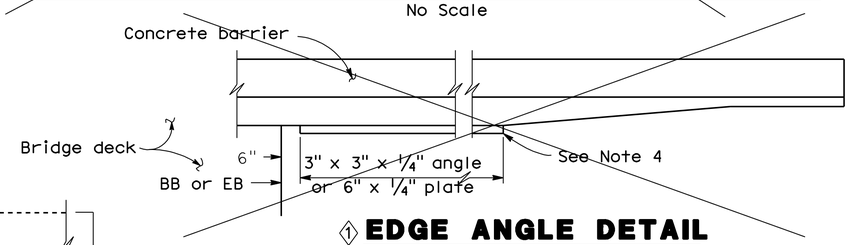

1 EDGE ANGLE DETAIL
½"=1'-0"

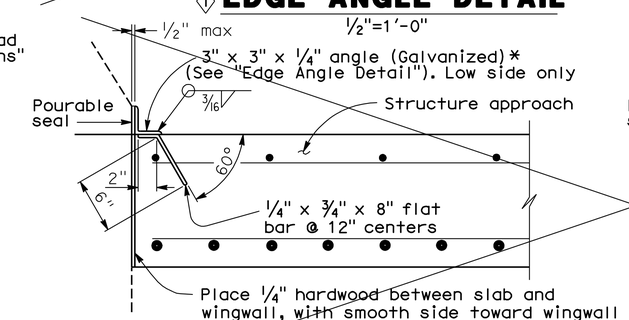

*(TO BE USED WITH TYPE 25 OR TYPE 27 CONCRETE BARRIER)

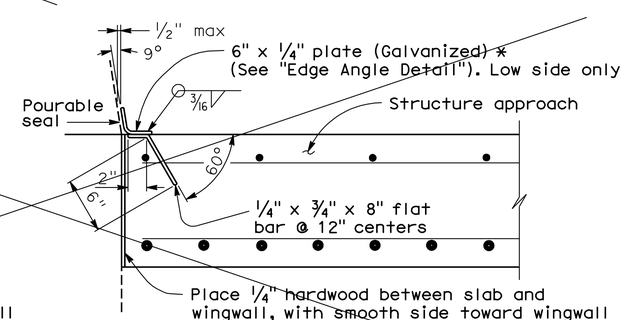

*(TO BE USED WITH TYPE 732 OR TYPE 736 CONCRETE BARRIER)

1 DETAIL B
1½"=1'-0"

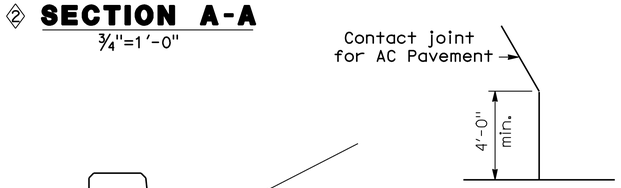

DETAIL A
No Scale

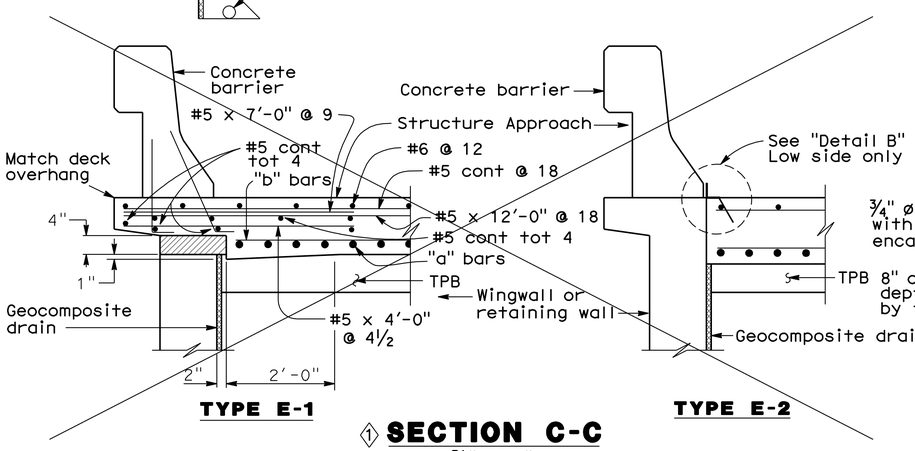

1 SECTION C-C
¾"=1'-0"

(Type E-1 to be used,unless otherwise shown on plans)

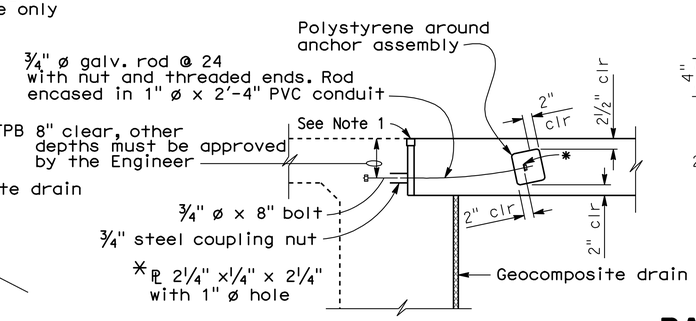

TIE DETAIL
¾"=1'-0"

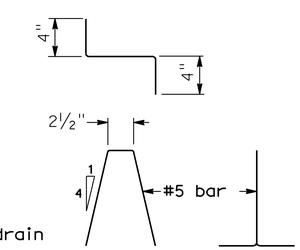

BAR CHAIR DETAIL
1½"=1'-0"

APPROACH SLAB TRANSVERSE CONTACT JOINT 3		
APPROACH SKEW	WITH AC ROADWAY PAVEMENT	WITH PCC ROADWAY PAVEMENT
≤ 20°	Parallel to face of paving notch	Parallel to face of paving notch
> 20° - 45°	Parallel to face of P N use (Detail A)	Stagger lines 24' to 36' apart
> 45°	Parallel to face of P N use (Detail A)	Stagger at each lane line

NOTES:

1. For details not noted or shown,see Structure Plans.
2. For drainage details,see "Structure Approach Drainage Details" sheet.
3. Longitudinal construction joints,when permitted by the Engineer,shall be located on lane lines.
4. End angle or plate at beginning of barrier transition, end of wingwall or end of structure approach, as applicable.
5. For transverse contact joint with new PCC paving, refer to Standard Plan P10.
6. At the contractor's option,approach slab transverse reinforcement may be placed parallel to paving notch. Spacing of transverse reinforcement is measured along ℄ roadway.

Polystyrene to be removed.

SPECIAL DETAILS

Note:
The Contractor shall verify all controlling field dimensions before ordering or fabricating any material

1 REVISED PER ADDENDUM No. 1 DATED MARCH 28, 2011

STANDARD DRAWING

FILE NO. xs3-180e

APPROVED BY M. Ha (RESPONSIBLE TECHNICAL SPECIALIST)
APPROVAL DATE 8-12-08

RELEASED BY O. Alcantara (RESPONSIBLE OFFICE CHIEF)
RELEASE DATE Revised

1 Detail Deleted
2 Detail Modified
3 Skew Revised

STATE OF CALIFORNIA
DEPARTMENT OF TRANSPORTATION

DIVISION OF ENGINEERING SERVICES

BRIDGE NO. 29-0191
POST MILE 28.97

ALPINE AVENUE UC (WIDEN)
STRUCTURE APPROACH TYPE N(30D)

DS OSD 2147A (ENGLISH STANDARD DRAWING "XS" BORDER REV. 01/11/08)

ORIGINAL SCALE IN INCHES FOR REDUCED PLANS 0 1 2 3

CU 06240
EA 0G4701

DISREGARD PRINTS BEARING EARLIER REVISION DATES

REVISION DATES (PRELIMINARY STAGE ONLY) 10/16/09 12/4/09 1/18/10 5/7/10 6/11/10 7/28/10

SHEET 18 OF 29

USERNAME => trmnguye

29-0191-s-sa_n30d.add

DATE PLOTTED => 25-MAR-2011 TIME PLOTTED => 08:03

DIST.	COUNTY	ROUTE	POST MILES TOTAL PROJECT	SHEET NO.	TOTAL SHEETS
10	SJ	5	25.0/32.7	974	1132

REGISTERED ENGINEER - CIVIL 7/28/10

10-11-10
PLANS APPROVAL DATE

REGISTERED PROFESSIONAL ENGINEER ALLEN WANG No. C 66503 Exp. 06/30/12 CIVIL STATE OF CALIFORNIA

The State of California or its officers or agents shall not be responsible for the accuracy or completeness of electronic copies of this plan sheet.

SAN JOAQUIN COUNCIL OF GOVERNMENTS
555 E. WEBER AVENUE
STOCKTON, CA 95202

RAJAPPAN & MEYER
CONSULTING ENGINEERS, INC.
1038 LEIGH AVE, SUITE 100
SAN JOSE, CA 95126

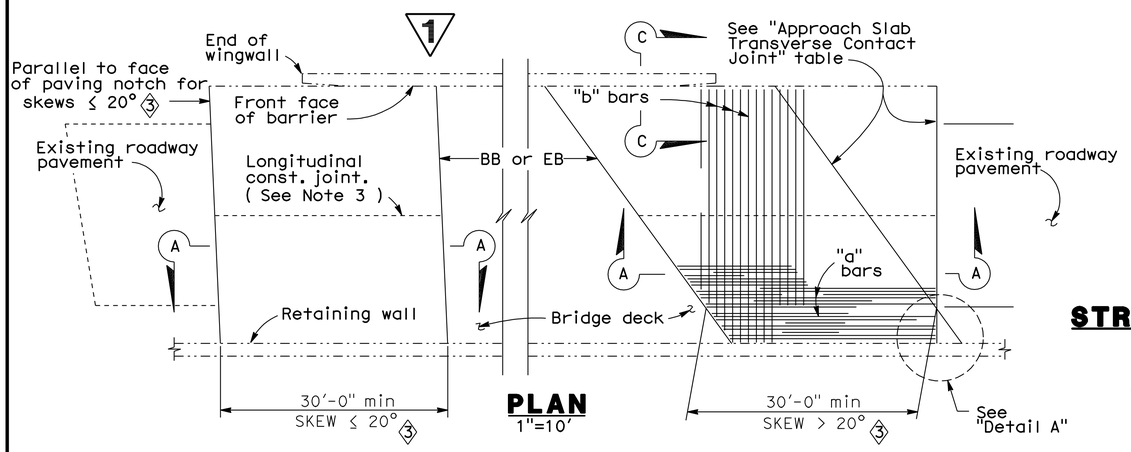

PLAN
1"=10'

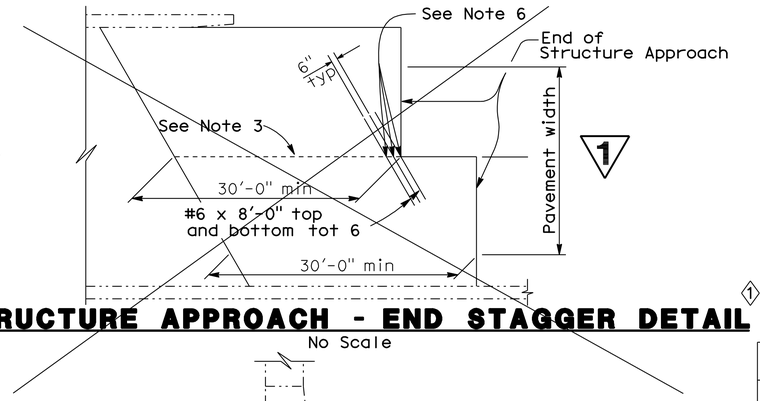

STRUCTURE APPROACH - END STAGGER DETAIL 1
No Scale

APPROACH SKEW	WITH AC ROADWAY PAVEMENT	WITH PCC ROADWAY PAVEMENT
≤ 20°	Parallel to face of paving notch	Parallel to face of paving notch
> 20° - 45°	Parallel to face of P N use (Detail A)	Stagger lines 24' to 36' apart
> 45°	Parallel to face of P N use (Detail A)	Stagger at each lane line

APPROACH SLAB TRANSVERSE CONTACT JOINT 3

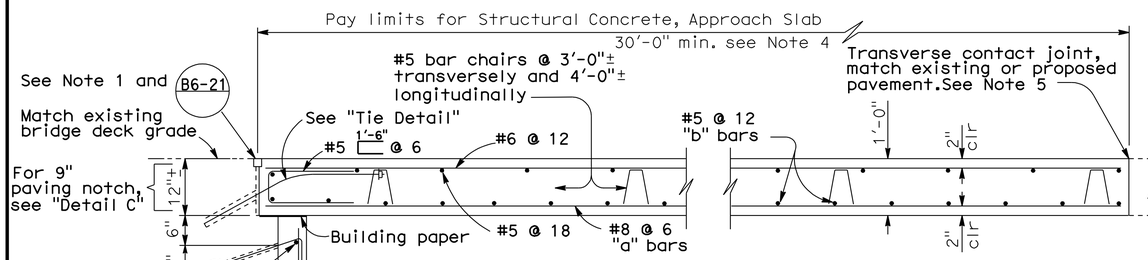

SECTION A-A
¾" = 1'-0"

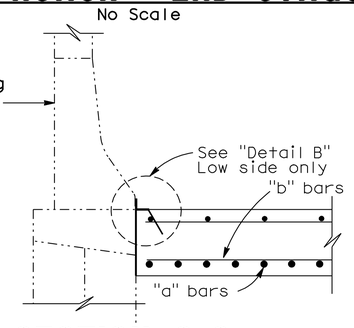

SECTION C-C 2 1
¾" = 1'-0"

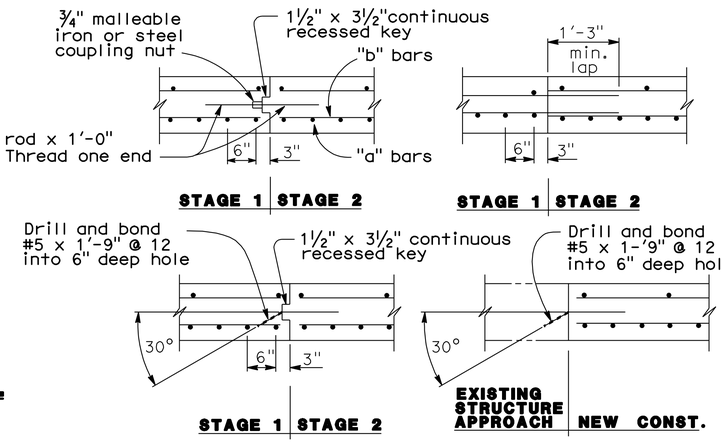

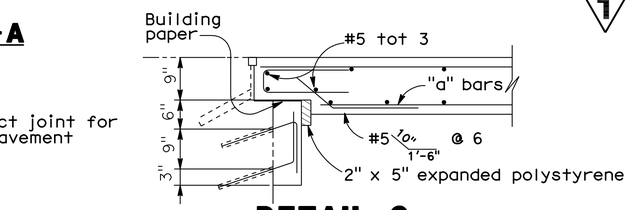

DETAIL C
¾" = 1'-0"

NOTE: For details not shown,see "Section A-A".

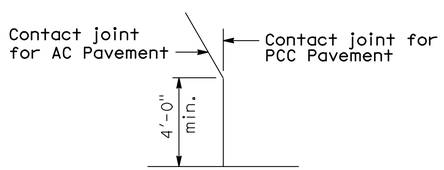

DETAIL A
No Scale

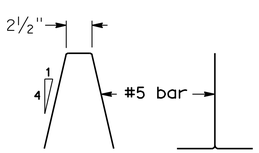

BAR CHAIR DETAIL
1½" = 1'-0"

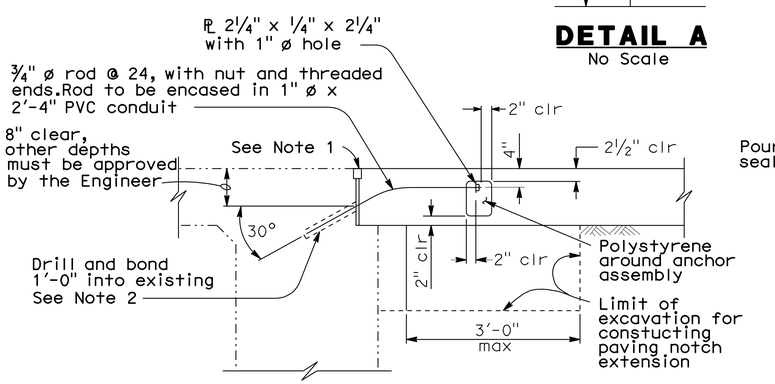

TIE DETAIL
¾" = 1'-0"

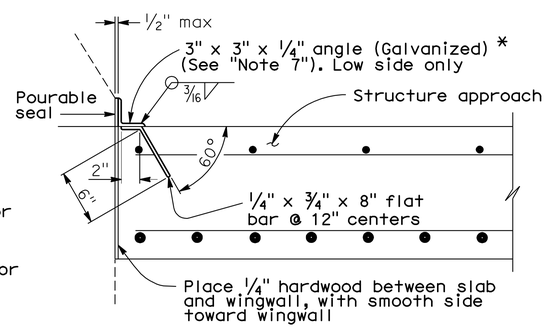

* (TO BE USED WITH TYPE 25 OR TYPE 27 CONCRETE BARRIER)

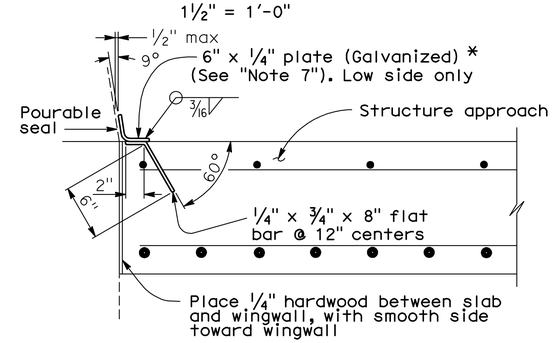

* (TO BE USED WITH TYPE 732 OR TYPE 736 CONCRETE BARRIER)

DETAIL B
1½" = 1'-0"

LONGITUDINAL CONSTRUCTION JOINT ALTERNATIVES
¾" = 1'-0"

NOTES:

1. For details not shown or noted, see Structure Plans. Adjust bar reinforcement to clear a sawcut for sealed joint,when required.
2. Space to avoid existing prestress anchorages and main reinforcement.
3. Longitudinal construction joints,when permitted by the Engineer,shall be located on lane lines.
4. Transverse contact joint shall be a minimum of 5'-0" from an existing or constructed weakened plane joint.
5. For transverse contact joint with new PCC paving. refer to Standard Plan P10.
6. Couplers are required for stage construction.
7. End angle or plate at beginning of barrier transition, end of wingwall or end of structure approach as applicable.

Note:
The Contractor shall verify all controlling field dimensions before ordering or fabricating any material

1 REVISED PER ADDENDUM No. 1 DATED MARCH 28, 2011

SPECIAL DETAILS

STANDARD DRAWING				
RELEASE DATE Revised	DESIGN	BY M. TRAFFALIS	CHECKED E. THORKILDSEN	RELEASED BY
FILE NO. xs3-140e	DETAILS	BY R. YEE	CHECKED E. THORKILDSEN	
	SUBMITTED	BY M. HA	DRAWING DATE 8/92	OFFICE CHIEF

1 Detail Deleted
2 Detail Modified
3 Skew Revised 1

STATE OF CALIFORNIA
DEPARTMENT OF TRANSPORTATION

DIVISION OF ENGINEERING SERVICES

BRIDGE NO. 29-0191
POST MILE 28.97

ALPINE AVENUE UC (WIDEN)
STRUCTURE APPROACH TYPE R(30D)

DS OSD 2147A (ENGLISH) (REV. X/XX/XX)

ORIGINAL SCALE IN INCHES FOR REDUCED PLANS 0 1 2 3

CU 06240
EA 0G4701

DISREGARD PRINTS BEARING EARLIER REVISION DATES

REVISION DATES (PRELIMINARY STAGE ONLY) 10/16/09 12/4/09 1/18/10 5/27/10 6/11/10 7/28/10

SHEET 19 OF 29

USERNAME => trmnguye

29-0191-s-sa_r30d.add

DATE PLOTTED => 25-MAR-2011 TIME PLOTTED => 07:57

DIST	COUNTY	ROUTE	POST MILES TOTAL PROJECT	SHEET No	TOTAL SHEETS
10	SJ	5	25.0/32.7	989	1132

REGISTERED CIVIL ENGINEER 7/28/10 DATE

10-11-10
PLANS APPROVAL DATE

The State of California or its officers or agents shall not be responsible for the accuracy or completeness of scanned copies of this plan sheet.

REGISTERED PROFESSIONAL ENGINEER ALLEN WANG No. C 66503 Exp. 06/30/12 CIVIL STATE OF CALIFORNIA

SAN JOAQUIN COUNCIL OF GOVERNMENTS
555 E. WEBER AVENUE
STOCKTON, CA 95202

RAJAPPAN & MEYER
CONSULTING ENGINEERS, INC.
1038 LEIGH AVE, SUITE 100
SAN JOSE, CA 95126

"I-5" Line Station	Line	Offset from "I-5" Line (ft)	Proposed Top of Deck/Overlay Elev (ft)	Existing Top of Deck Elev (ft)
1650+90	A	101.89 L†	21.56	N/A
	B	54.00 L†	22.52	N/A
	C	27.00 L†	22.94	N/A
	D	0.00	23.37	N/A
	E	27.00 R†	22.97	N/A
	F	54.00 R†	22.56	N/A
	G	106.50 R†	21.51	N/A
1651+00	A	101.41 L†	21.55	N/A
	B	54.00 L†	22.50	N/A
	C	27.00 L†	22.93	N/A
	D	0.00	23.35	N/A
	E	27.00 R†	22.95	N/A
	F	54.00 R†	22.54	N/A
	G	105.74 R†	21.51	N/A
1651+10	A	100.92 L†	21.55	N/A
	B	54.00 L†	22.49	N/A
	C	27.00 L†	22.92	N/A
	D	0.00	23.35	N/A
	E	27.00 R†	22.94	N/A
	F	54.00 R†	22.52	N/A
	G	104.99 R†	21.50	N/A
1651+20	A	100.44 L†	21.54	21.46±
	B	54.00 L†	22.47	22.12±
	C	27.00 L†	22.89	22.54±
	D	0.00	23.32	N/A
	E	27.00 R†	22.91	22.54±
	F	54.00 R†	22.51	22.14±
	G	104.23 R†	21.50	21.38±
1651+30	A	99.96 L†	21.53	21.43±
	B	54.00 L†	22.45	22.07±
	C	27.00 L†	22.88	22.47±
	D	0.00	23.30	N/A
	E	27.00 R†	22.89	22.51±
	F	54.00 R†	22.49	22.11±
	G	103.47 R†	21.50	21.33±
1651+40	A	99.47 L†	21.53	21.41±
	B	54.00 L†	22.44	22.04±
	C	27.00 L†	22.86	22.46±
	D	0.00	23.28	N/A
	E	27.00 R†	22.87	22.48±
	F	54.00 R†	22.47	22.04±
	G	102.72 R†	21.49	21.37±
1651+50	A	98.99 L†	21.52	21.36±
	B	54.00 L†	22.42	22.01±
	C	27.00 L†	22.84	22.44±
	D	0.00	23.26	N/A
	E	27.00 R†	22.85	22.48±
	F	54.00 R†	22.45	22.03±
	G	101.96 R†	21.49	21.36±
1651+60	A	98.51 L†	21.52	21.35±
	B	54.00 L†	22.41	22.03±
	C	27.00 L†	22.82	22.40±
	D	0.00	23.24	N/A
	E	27.00 R†	22.84	22.42±
	F	54.00 R†	22.43	22.00±
	G	101.20 R†	21.49	21.35±

"I-5" Line Station	Line	Offset from "I-5" Line (ft)	Proposed Top of Deck/Overlay Elev (ft)	Existing Top of Deck Elev (ft)
1651+70	A	98.02 L†	21.51	21.37±
	B	54.00 L†	22.39	22.03±
	C	27.00 L†	22.81	22.41±
	D	0.00	23.22	N/A
	E	27.00 R†	22.82	22.38±
	F	54.00 R†	22.41	21.98±
	G	100.45 R†	21.48	21.32±
1651+80	A	97.54 L†	21.51	21.38±
	B	54.00 L†	22.38	22.02±
	C	27.00 L†	22.79	22.42±
	D	0.00	23.20	N/A
	E	27.00 R†	22.80	22.34±
	F	54.00 R†	22.39	21.93±
	G	99.69 R†	21.48	21.36±
1651+90	A	97.06 L†	21.50	21.40±
	B	54.00 L†	22.36	22.03±
	C	27.00 L†	22.77	22.43±
	D	0.00	23.18	N/A
	E	27.00 R†	22.78	22.39±
	F	54.00 R†	22.37	21.95±
	G	98.93 R†	21.48	21.38±
1652+00	A	96.57 L†	21.49	21.41±
	B	54.00 L†	22.35	22.05±
	C	27.00 L†	22.76	22.43±
	D	0.00	23.17	N/A
	E	27.00 R†	22.76	22.38±
	F	54.00 R†	22.36	21.96±
	G	98.17 R†	21.47	21.39±
1652+10	A	96.09 L†	21.49	21.42±
	B	54.00 L†	22.33	22.07±
	C	27.00 L†	22.74	22.41±
	D	0.00	23.15	N/A
	E	27.00 R†	22.74	22.36±
	F	54.00 R†	22.34	21.97±
	G	97.42 R†	21.47	21.40±
1652+20	A	95.61 L†	21.48	N/A
	B	54.00 L†	22.31	N/A
	C	27.00 L†	22.72	N/A
	D	0.00	23.13	N/A
	E	27.00 R†	22.72	N/A
	F	54.00 R†	22.32	N/A
	G	96.66 R†	21.47	N/A
1652+30	A	95.12 L†	21.48	N/A
	B	54.00 L†	22.30	N/A
	C	27.00 L†	22.70	N/A
	D	0.00	23.11	N/A
	E	27.00 R†	22.71	N/A
	F	54.00 R†	22.30	N/A
	G	95.90 R†	21.46	N/A
1652+40	A	94.64 L†	21.47	N/A
	B	54.00 L†	22.28	N/A
	C	27.00 L†	22.69	N/A
	D	0.00	23.09	N/A
	E	27.00 R†	22.69	N/A
	F	54.00 R†	22.28	N/A
	G	95.15 R†	21.46	N/A

Note: 1

1. The Engineer may adjust the proposed top of deck/overlay elevations (including approach slabs) as needed if the existing top of deck elevations determined from the construction survey differ from the elevations shown on the plans.

Note:
The Contractor shall verify all controlling field dimensions before ordering or fabricating any material

1 REVISED PER ADDENDUM No. 1 DATED MARCH 28, 2011

DESIGN OVERSIGHT John Fujimoto
3-11-11
SIGN OFF DATE

	BY	CHECKED
DESIGN	A. WANG	P. SHINN
DETAILS	W. Y. TAN	P. SHINN
QUANTITIES	W. Y. TAN	G. WOLDETSADIK

PREPARED FOR THE STATE OF CALIFORNIA DEPARTMENT OF TRANSPORTATION

A. WANG
PROJECT ENGINEER

BRIDGE NO. 29-0192
POST MILE 29.19

TELEGRAPH AVENUE UC (WIDEN)
DECK GRADES No. 3

DESIGN DETAIL SHEET (ENGLISH) (REV. 06-01-09)

ORIGINAL SCALE IN INCHES FOR REDUCED PLANS 0 1 2 3

CU 06240
EA 0G4701

DISREGARD PRINTS BEARING EARLIER REVISION DATES

REVISION DATES (PRELIMINARY STAGE ONLY) 10/15/09 12/1/09 1/15/10 4/23/10 6/11/10 7/28/10

SHEET 5 OF 28

FILE => 29-0192-d-dg03.add

USERNAME => trmmguye DATE PLOTTED => 25-MAR-2011 TIME PLOTTED => 07:57

DIST.	COUNTY	ROUTE	POST MILES TOTAL PROJECT	SHEET NO.	TOTAL SHEETS
10	SJ	5	25.0/32.7	1001	1132

REGISTERED ENGINEER - CIVIL 7/28/10

10-11-10
PLANS APPROVAL DATE

REGISTERED PROFESSIONAL ENGINEER ALLEN WANG No. C 66503 Exp. 06/30/12 CIVIL STATE OF CALIFORNIA

The State of California or its officers or agents shall not be responsible for the accuracy or completeness of electronic copies of this plan sheet.

SAN JOAQUIN COUNCIL OF GOVERNMENTS
555 E. WEBER AVENUE
STOCKTON, CA 95202

RAJAPPAN & MEYER
CONSULTING ENGINEERS, INC.
1038 LEIGH AVE, SUITE 100
SAN JOSE, CA 95126

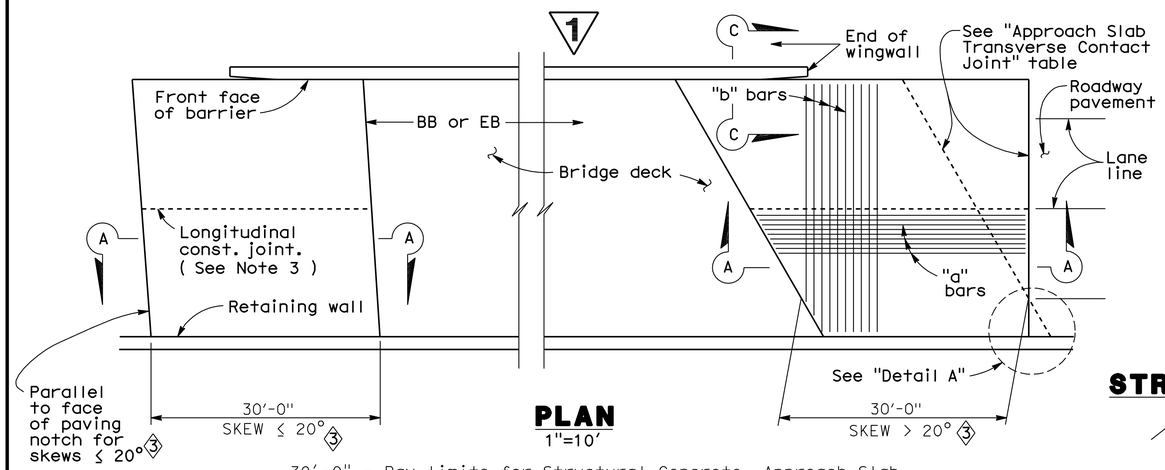

PLAN
1"=10'

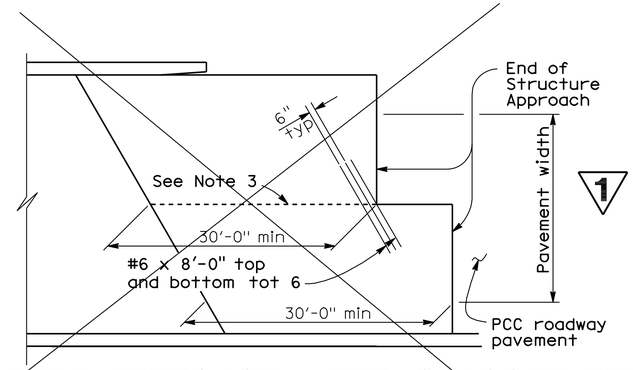

1 STRUCTURE APPROACH - END STAGGER DETAIL
No Scale

APPROACH SLAB TRANSVERSE CONTACT JOINT 3		
APPROACH SKEW	WITH AC ROADWAY PAVEMENT	WITH PCC ROADWAY PAVEMENT
≤ 20°	Parallel to face of paving notch	Parallel to face of paving notch
> 20° - 45°	Parallel to face of P N use (Detail A)	Stagger lines 24' to 36' apart
> 45°	Parallel to face of P N use (Detail A)	Stagger at each lane line

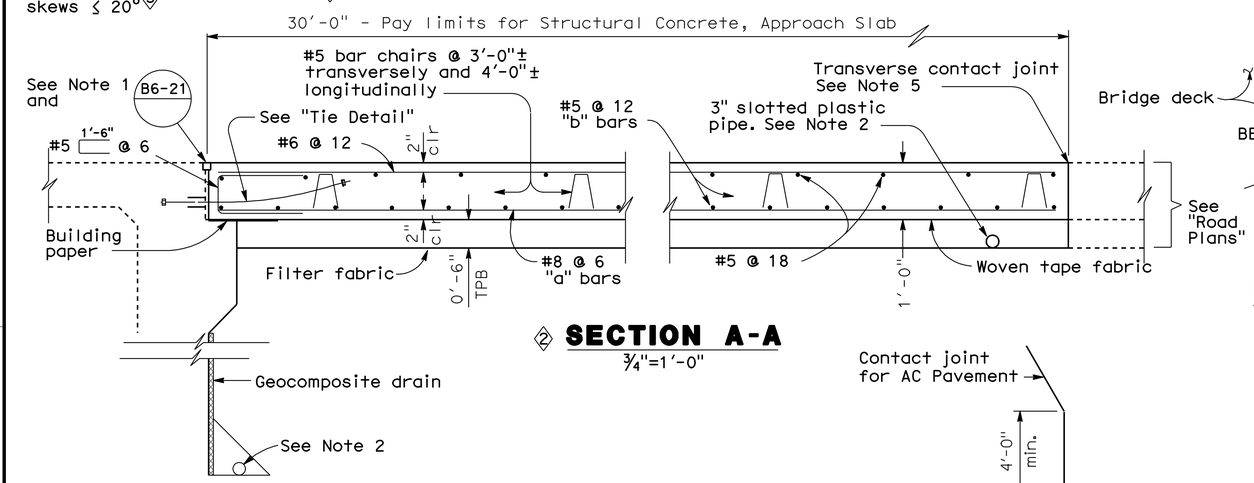

2 SECTION A-A
¾"=1'-0"

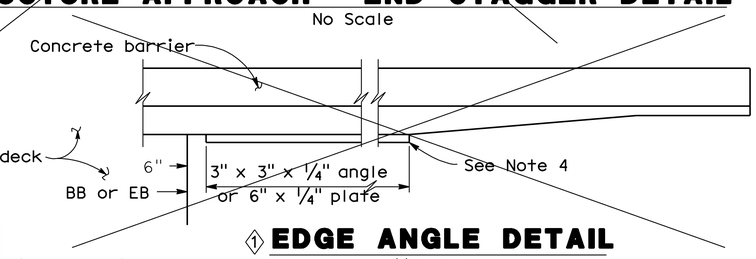

1 EDGE ANGLE DETAIL
½"=1'-0"

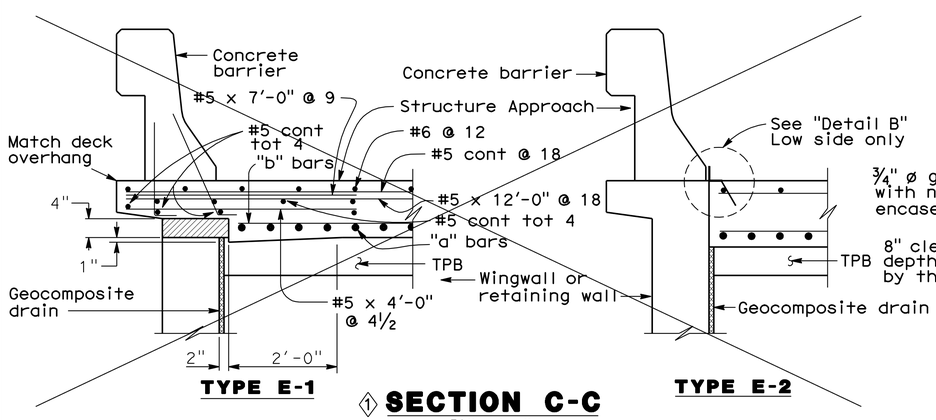

TYPE E-1 TYPE E-2

1 SECTION C-C
¾"=1'-0"

(Type E-1 to be used,unless otherwise shown on plans)

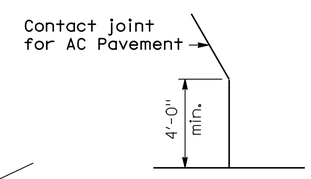

DETAIL A
No Scale

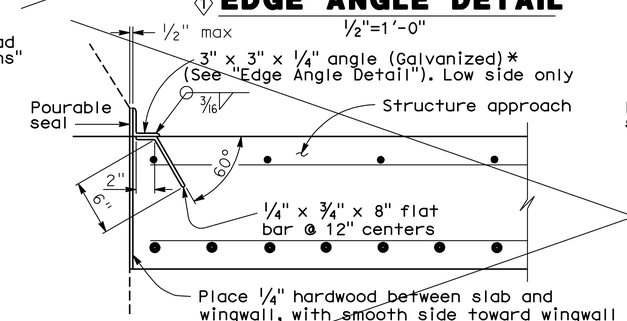

*(TO BE USED WITH TYPE 25 OR TYPE 27 CONCRETE BARRIER)

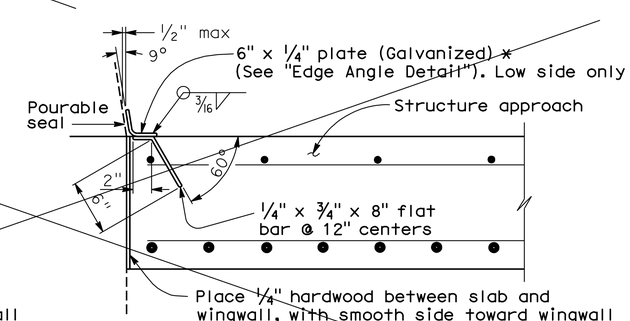

*(TO BE USED WITH TYPE 732 OR TYPE 736 CONCRETE BARRIER)

1 DETAIL B
1½"=1'-0"

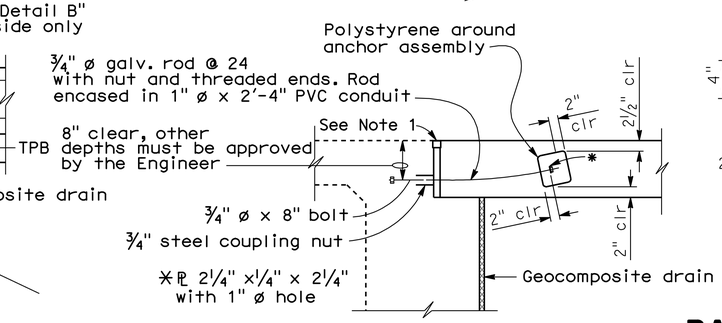

TIE DETAIL
¾"=1'-0"

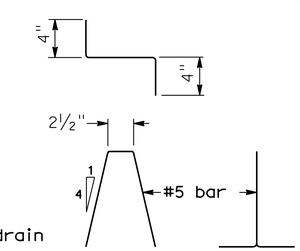

BAR CHAIR DETAIL
1½"=1'-0"

NOTES:

1. For details not noted or shown,see Structure Plans.
2. For drainage details,see "Structure Approach Drainage Details" sheet.
3. Longitudinal construction joints,when permitted by the Engineer,shall be located on lane lines.
4. End angle or plate at beginning of barrier transition, end of wingwall or end of structure approach, as applicable.
5. For transverse contact joint with new PCC paving, refer to Standard Plan P10.
6. At the contractor's option,approach slab transverse reinforcement may be placed parallel to paving notch. Spacing of transverse reinforcement is measured along ℄ roadway.

Polystyrene to be removed.

SPECIAL DETAILS

Note:
The Contractor shall verify all controlling field dimensions before ordering or fabricating any material

1 REVISED PER ADDENDUM No. 1 DATED MARCH 28, 2011

STANDARD DRAWING

FILE NO. xs3-180e

APPROVED BY M. Ha RESPONSIBLE TECHNICAL SPECIALIST
APPROVAL DATE 8-12-08

RELEASED BY O. Alcantara RESPONSIBLE OFFICE CHIEF
RELEASE DATE Revised

1 Detail Deleted
2 Detail Modified
3 Skew Revised
1

STATE OF CALIFORNIA DEPARTMENT OF TRANSPORTATION

DIVISION OF ENGINEERING SERVICES

BRIDGE NO. 29-0192
POST MILE 29.19

TELEGRAPH AVENUE UC (WIDEN)
STRUCTURE APPROACH TYPE N(30D)

DS OSD 2147A (ENGLISH STANDARD DRAWING "XS" BORDER REV. 01/11/08)

ORIGINAL SCALE IN INCHES FOR REDUCED PLANS 0 1 2 3

CU 06240
EA 0G4701

DISREGARD PRINTS BEARING EARLIER REVISION DATES

REVISION DATES (PRELIMINARY STAGE ONLY) 10/16/09 12/4/09 1/18/10 4/23/10 6/11/10 7/28/10

SHEET 17 OF 28

USERNAME => trmnguye

29-0192-s-sa_n30d.add

DATE PLOTTED => 25-MAR-2011 TIME PLOTTED => 07:57

DIST.	COUNTY	ROUTE	POST MILES TOTAL PROJECT	SHEET NO.	TOTAL SHEETS
10	SJ	5	25.0/32.7	1002	1132

REGISTERED ENGINEER - CIVIL 7/28/10

10-11-10
PLANS APPROVAL DATE

REGISTERED PROFESSIONAL ENGINEER ALLEN WANG No. C 66503 Exp. 06/30/12 CIVIL STATE OF CALIFORNIA

The State of California or its officers or agents shall not be responsible for the accuracy or completeness of electronic copies of this plan sheet.

SAN JOAQUIN COUNCIL OF GOVERNMENTS
555 E. WEBER AVENUE
STOCKTON, CA 95202

RAJAPPAN & MEYER
CONSULTING ENGINEERS, INC.
1038 LEIGH AVE, SUITE 100
SAN JOSE, CA 95126

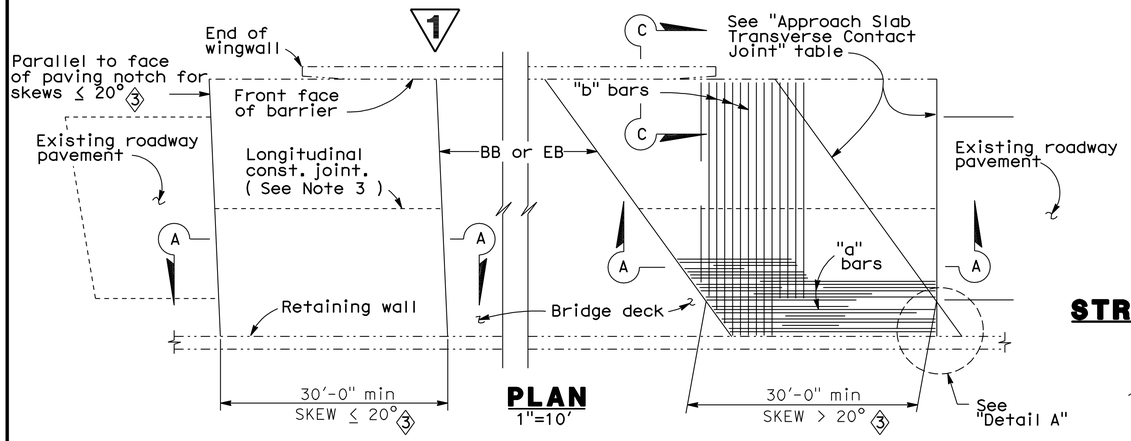

PLAN
1"=10'

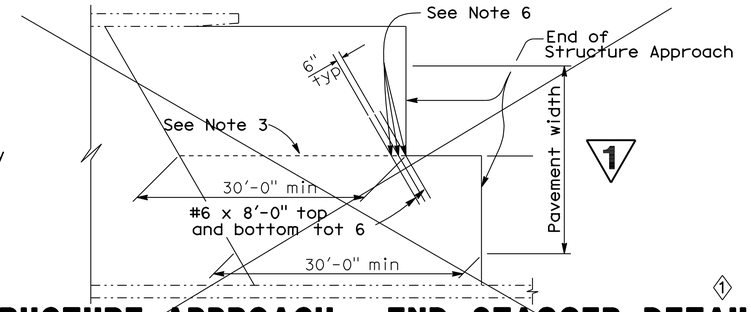

STRUCTURE APPROACH - END STAGGER DETAIL
1
No Scale

APPROACH SLAB TRANSVERSE CONTACT JOINT 3		
APPROACH SKEW	WITH AC ROADWAY PAVEMENT	WITH PCC ROADWAY PAVEMENT
≤ 20°	Parallel to face of paving notch	Parallel to face of paving notch
> 20° - 45°	Parallel to face of P N use (Detail A)	Stagger lines 24' to 36' apart
> 45°	Parallel to face of P N use (Detail A)	Stagger at each lane line

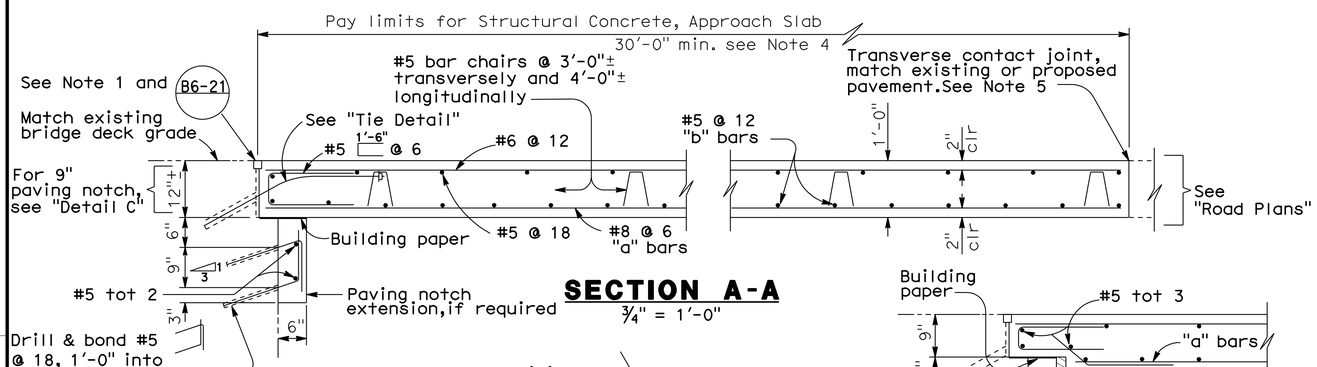

SECTION A-A
¾" = 1'-0"

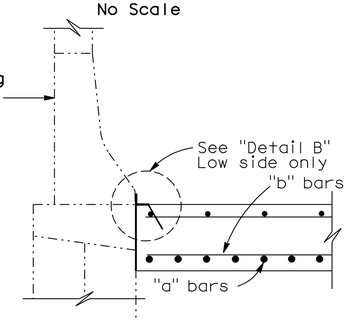

2 SECTION C-C
¾" = 1'-0"

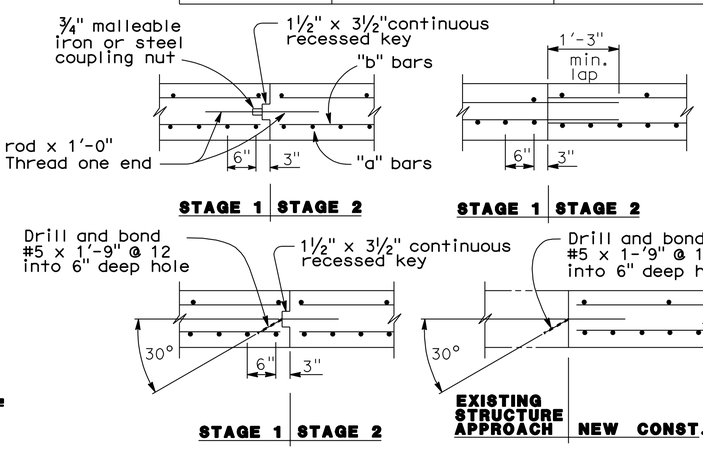

LONGITUDINAL CONSTRUCTION JOINT ALTERNATIVES
¾" = 1'-0"

NOTES:

1. For details not shown or noted, see Structure Plans. Adjust bar reinforcement to clear a sawcut for sealed joint,when required.
2. Space to avoid existing prestress anchorages and main reinforcement.
3. Longitudinal construction joints,when permitted by the Engineer,shall be located on lane lines.
4. Transverse contact joint shall be a minimum of 5'-0" from an existing or constructed weakened plane joint.
5. For transverse contact joint with new PCC paving. refer to Standard Plan P10.
6. Couplers are required for stage construction.
7. End angle or plate at beginning of barrier transition, end of wingwall or end of structure approach as applicable.

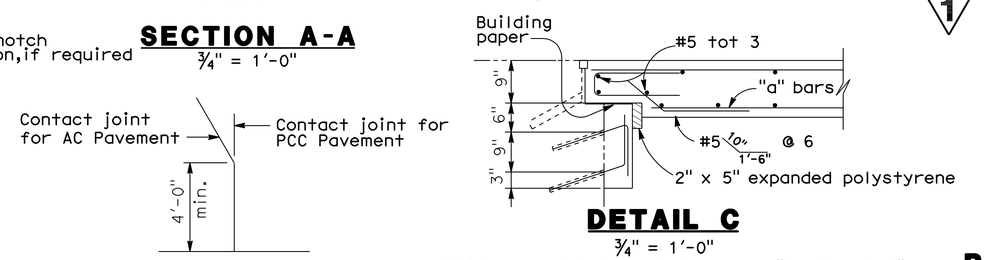

DETAIL A
No Scale

DETAIL C
¾" = 1'-0"

NOTE: For details not shown,see "Section A-A".

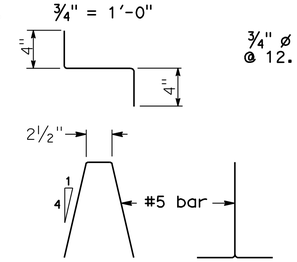

BAR CHAIR DETAIL
1½" = 1'-0"

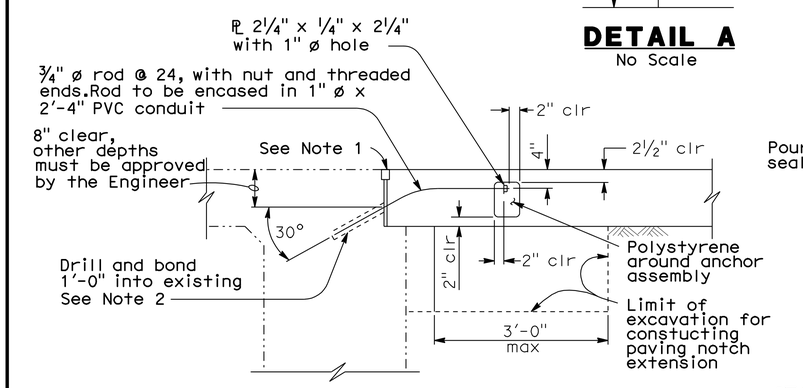

TIE DETAIL
¾" = 1'-0"

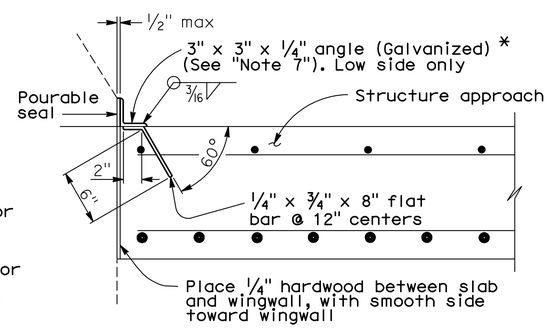

* (TO BE USED WITH TYPE 25 OR TYPE 27 CONCRETE BARRIER)

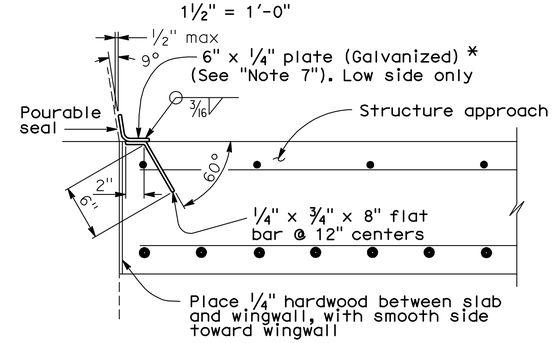

* (TO BE USED WITH TYPE 732 OR TYPE 736 CONCRETE BARRIER)

DETAIL B
1½" = 1'-0"

Note:
The Contractor shall verify all controlling field dimensions before ordering or fabricating any material

1 REVISED PER ADDENDUM No. 1 DATED MARCH 28, 2011

SPECIAL DETAILS

STANDARD DRAWING				
RELEASE DATE Revised	DESIGN	BY M. TRAFFALIS	CHECKED E. THORKILDSEN	RELEASED BY
FILE NO. xs3-140e	DETAILS	BY R. YEE	CHECKED E. THORKILDSEN	
	SUBMITTED	BY M. HA	DRAWING DATE 8/92	OFFICE CHIEF

1 Detail Deleted
2 Detail Modified
3 Skew Revised
1

STATE OF CALIFORNIA
DEPARTMENT OF TRANSPORTATION

DIVISION OF ENGINEERING SERVICES

BRIDGE NO. 29-0192
POST MILE 29.19

TELEGRAPH AVENUE UC (WIDEN)
STRUCTURE APPROACH TYPE R(30D)

DS OSD 2147A (ENGLISH) (REV. X/XX/XX)

ORIGINAL SCALE IN INCHES FOR REDUCED PLANS 0 1 2 3

CU 06240
EA 0G4701

DISREGARD PRINTS BEARING EARLIER REVISION DATES

REVISION DATES (PRELIMINARY STAGE ONLY) 10/16/09 12/4/09 1/18/10 4/23/10 6/11/10 7/28/10

SHEET 18 OF 28

USERNAME => trmnguye
29-0192-s-sa_r30d.add

DATE PLOTTED => 25-MAR-2011 TIME PLOTTED => 07:57

DIST	COUNTY	ROUTE	POST MILES TOTAL PROJECT	SHEET No	TOTAL SHEETS
10	SJ	5	25.0/32.7	1015	1132

REGISTERED STRUCTURAL ENGINEER — DATE 7/28/10

PLANS APPROVAL DATE 10-11-10

REGISTERED PROFESSIONAL ENGINEER — PHILIP SHINN — No. S 4967 — Exp. 12/31/10 — STRUCTURAL — STATE OF CALIFORNIA

The State of California or its officers or agents shall not be responsible for the accuracy or completeness of scanned copies of this plan sheet.

RAJAPPAN & MEYER
CONSULTING ENGINEERS, INC.
1038 LEIGH AVE, SUITE 100
SAN JOSE, CA 95126

SAN JOAQUIN COUNCIL OF GOVERNMENTS
555 E. WEBER AVENUE
STOCKTON, CA 95202

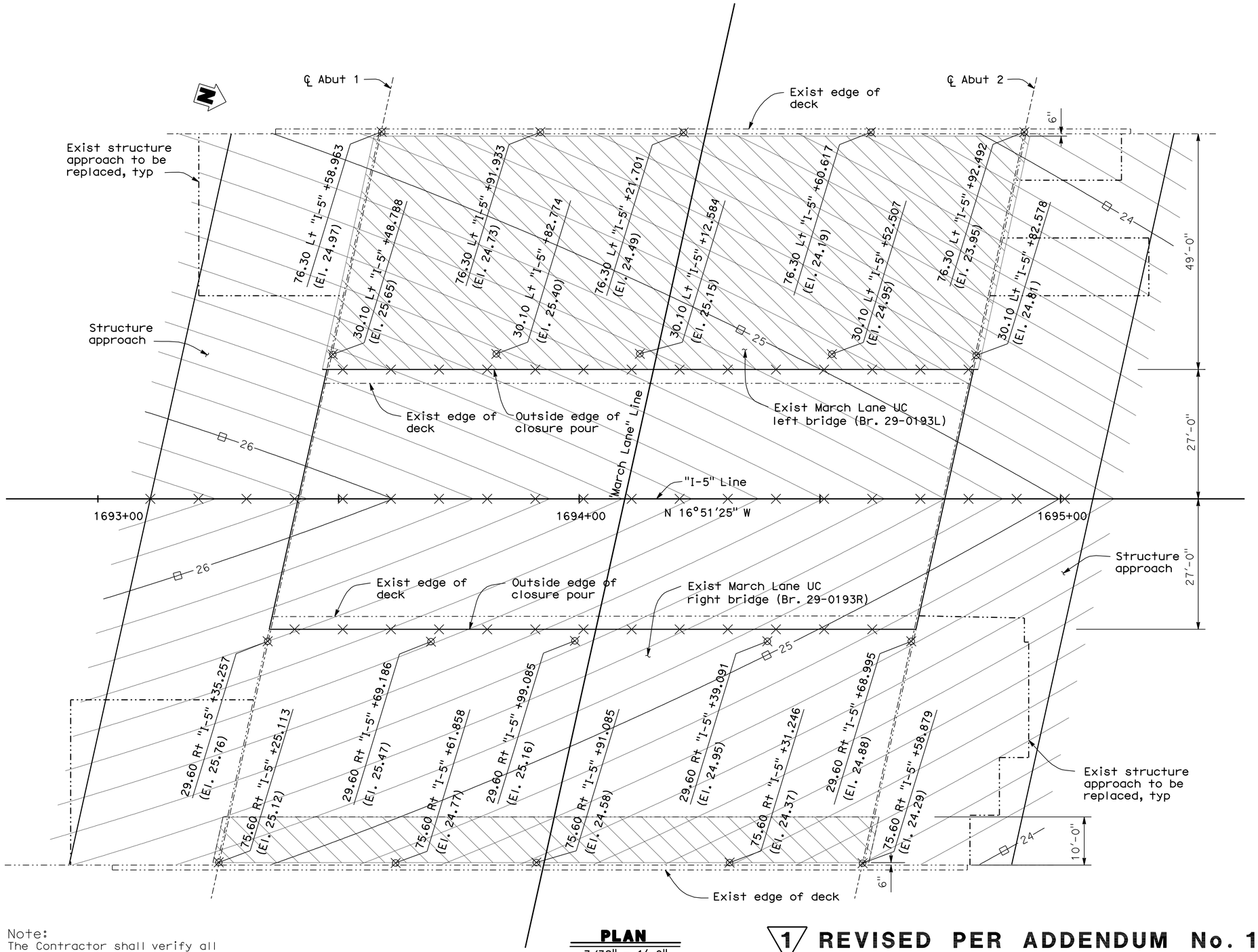

PLAN
3/32" = 1'-0"

NOTES:

1. indicates existing structure
2. indicates limits of remove concrete deck surface
3. indicates surveyed existing top of deck elevation
4. indicates even foot contours
5. indicates 10ft intervals measured along "I-5 Line"
6. Contour interval = 0.1ft
7. Contours do not include camber or falsework settlement.
8. Maximum grinding on top of existing deck should not greater than 3/4".
9. Contours shown at existing bridge indicate top of polyester concrete overlay.
10. Contour shown at widening and structure approach indicate finish concrete deck elevation.
11. For limits of prepare concrete bridge deck surface and polyester concrete overlay with longitudinal grooving, see "General Plan" and "Typical Section" sheets.
12. (1) The Engineer may adjust the proposed top of deck/overlay elevations (including approach slabs) as needed if the existing top of deck elevations determined from the construction survey differ from the elevations shown on the plans.

Note:
The Contractor shall verify all controlling field dimensions before ordering or fabricating any material

(1) REVISED PER ADDENDUM No. 1 DATED MARCH 28, 2011

DESIGN OVERSIGHT John Fujimoto — SIGN OFF DATE 3-11-11

	BY		CHECKED	
DESIGN	BY	P. SHINN	CHECKED	A. WANG
DETAILS	BY	G. WOLDETSADIK	CHECKED	A. WANG
QUANTITIES	BY	G. WOLDETSADIK	CHECKED	W. Y. TAN

PREPARED FOR THE STATE OF CALIFORNIA DEPARTMENT OF TRANSPORTATION

P. SHINN — PROJECT ENGINEER

BRIDGE NO. 29-0193 — POST MILE 29.99

MARCH LANE UNDERCROSSING (WIDEN)
DECK GRADES

DESIGN DETAIL SHEET (ENGLISH) (REV. 06-01-09)

ORIGINAL SCALE IN INCHES FOR REDUCED PLANS 0 1 2 3

CU 06240
EA 0G4701

DISREGARD PRINTS BEARING EARLIER REVISION DATES — REVISION DATES (PRELIMINARY STAGE ONLY): 10/16/09 12/4/09 1/15/10 4/21/10 6/11/10 7/28/10

SHEET 3 OF 20

FILE => 29-0193-d-dg01.dgn

USERNAME => trmmguye DATE PLOTTED => 25-MAR-2011 TIME PLOTTED => 07:58

DIST	COUNTY	ROUTE	POST MILES TOTAL PROJECT	SHEET No	TOTAL SHEETS
10	SJ	5	25.0/32.7	1024	1132

REGISTERED STRUCTURAL ENGINEER — DATE 7/28/10

PLANS APPROVAL DATE 10-11-10

REGISTERED PROFESSIONAL ENGINEER — PHILIP SHINN — No. S 4967 — Exp. 12/31/10 — STRUCTURAL — STATE OF CALIFORNIA

The State of California or its officers or agents shall not be responsible for the accuracy or completeness of scanned copies of this plan sheet.

RAJAPPAN & MEYER CONSULTING ENGINEERS, INC.
1038 LEIGH AVE, SUITE 100
SAN JOSE, CA 95126

SAN JOAQUIN COUNCIL OF GOVERNMENTS
555 E. WEBER AVENUE
STOCKTON, CA 95202

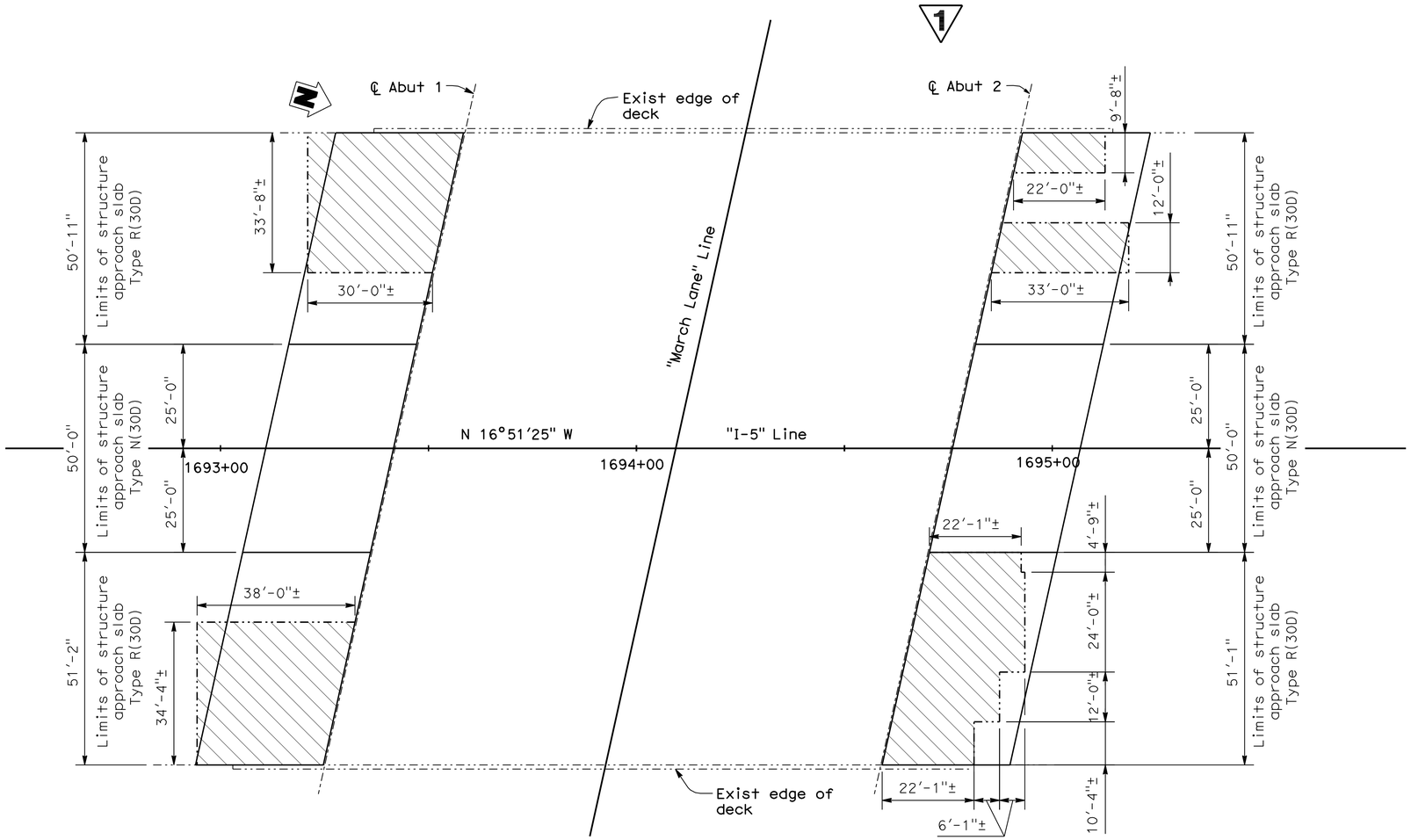

PLAN
1/16" = 1'-0"

NOTES:

1. For details not shown, see "Structure Approach Type N(30D)" and "Structure Approach Type R(30D)" sheets

Indicates limits of existing approach slab removal

1 **REVISED PER ADDENDUM No. 1 DATED MARCH 28, 2011**

Note:
The Contractor shall verify all controlling field dimensions before ordering or fabricating any material

DESIGN	BY P. SHINN	CHECKED A. WANG		
DETAILS	BY G. WOLDETSADIK	CHECKED A. WANG		
QUANTITIES	BY G. WOLDETSADIK	CHECKED W. Y. TAN		

DESIGN OVERSIGHT — John Fujimoto — 3-11-11 SIGN OFF DATE

PREPARED FOR THE STATE OF CALIFORNIA DEPARTMENT OF TRANSPORTATION

P. SHINN — PROJECT ENGINEER

CU 06240
EA 0G4701

BRIDGE NO. 29-0193
POST MILE 29.99

MARCH LANE UNDERCROSSING (WIDEN)
LIMITS OF STRUCTURE APPROACH

DISREGARD PRINTS BEARING EARLIER REVISION DATES — REVISION DATES (PRELIMINARY STAGE ONLY): 10/16/09 12/4/09 1/15/10 4/21/10 6/11/10 7/28/10

SHEET 12 OF 20

DESIGN DETAIL SHEET (ENGLISH) (REV. 06-01-09)

ORIGINAL SCALE IN INCHES FOR REDUCED PLANS 0 1 2 3

FILE => 29-0193-s-lsa.add

USERNAME => trimmguye DATE PLOTTED => 25-MAR-2011 TIME PLOTTED => 07:58

DIST.	COUNTY	ROUTE	POST MILES TOTAL PROJECT	SHEET NO.	TOTAL SHEETS
10	SJ	5	25.0/32.7	1025	1132

REGISTERED ENGINEER - STRUCTURAL 7/28/10

PHILIP SHINN No. S 4967 Exp. 12/31/10 STRUCTURAL REGISTERED PROFESSIONAL ENGINEER STATE OF CALIFORNIA

10-11-10
PLANS APPROVAL DATE

The State of California or its officers or agents shall not be responsible for the accuracy or completeness of electronic copies of this plan sheet.

SAN JOAQUIN COUNCIL OF GOVERNMENTS
555 E. WEBER AVENUE
STOCKTON, CA 95202

RAJAPPAN & MEYER
CONSULTING ENGINEERS, INC.
1038 LEIGH AVE, SUITE 100
SAN JOSE, CA 95126

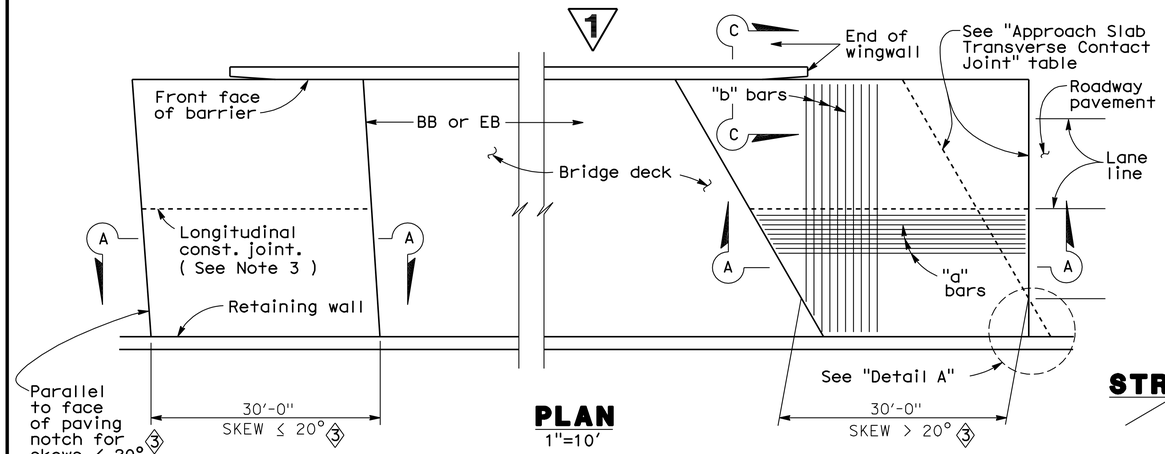

PLAN
1"=10'

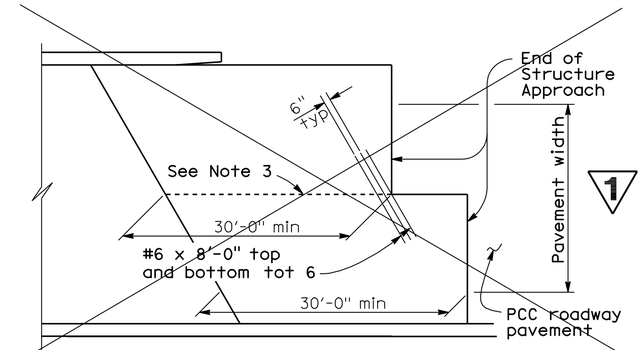

STRUCTURE APPROACH - END STAGGER DETAIL
No Scale

APPROACH SLAB TRANSVERSE CONTACT JOINT 3		
APPROACH SKEW	WITH AC ROADWAY PAVEMENT	WITH PCC ROADWAY PAVEMENT
≤ 20°	Parallel to face of paving notch	Parallel to face of paving notch
> 20° - 45°	Parallel to face of P N use (Detail A)	Stagger lines 24' to 36' apart
> 45°	Parallel to face of P N use (Detail A)	Stagger at each lane line

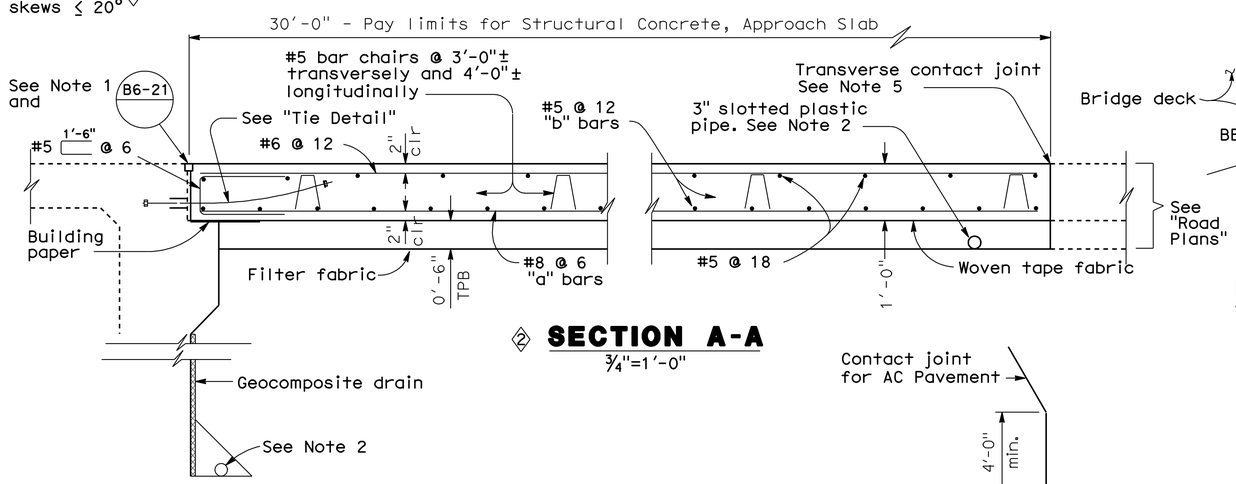

2 SECTION A-A
¾"=1'-0"

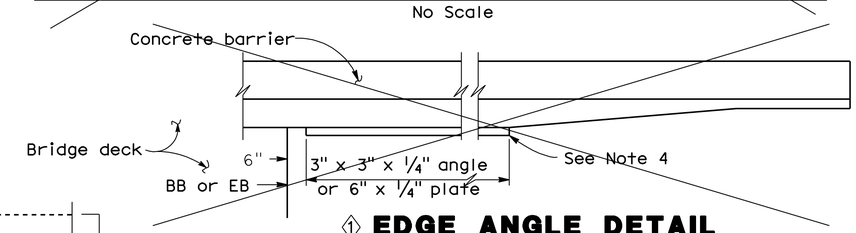

1 EDGE ANGLE DETAIL
½"=1'-0"

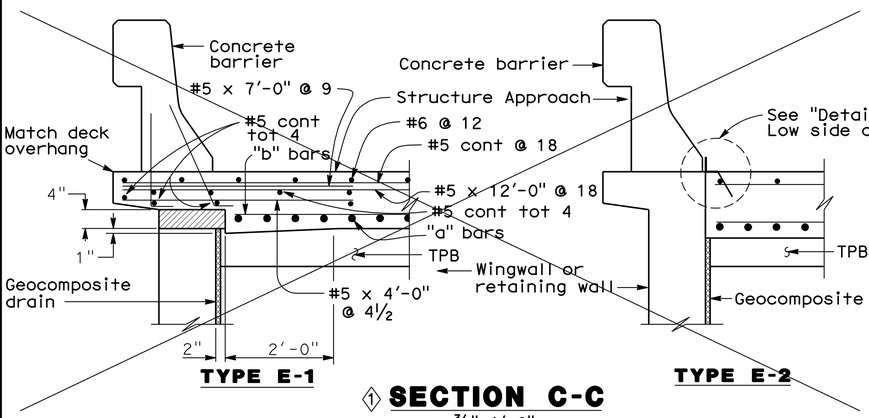

1 SECTION C-C
¾"=1'-0"

(Type E-1 to be used, unless otherwise shown on plans)

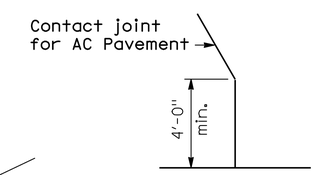

DETAIL A
No Scale

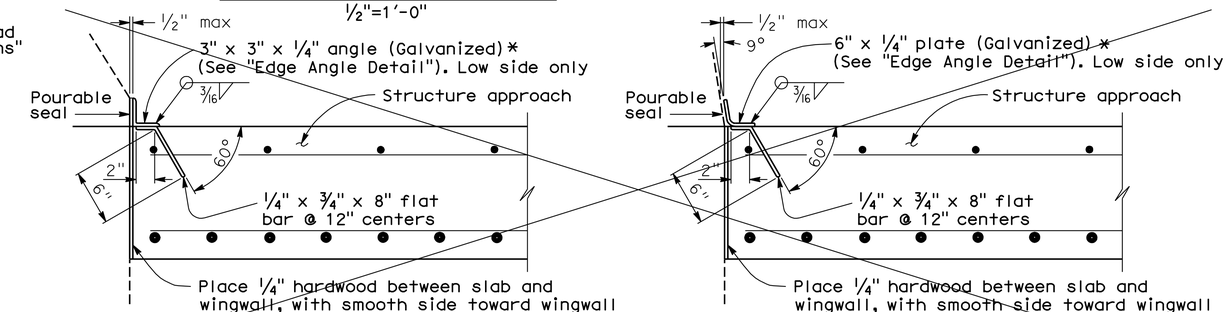

*(TO BE USED WITH TYPE 25 OR TYPE 27 CONCRETE BARRIER)

*(TO BE USED WITH TYPE 732 OR TYPE 736 CONCRETE BARRIER)

1 DETAIL B
1½"=1'-0"

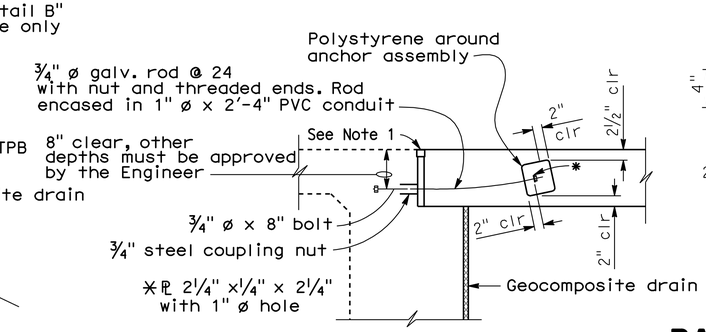

TIE DETAIL
¾"=1'-0"

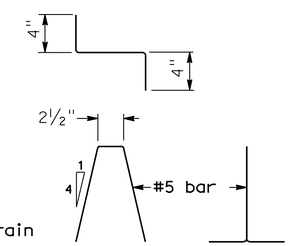

BAR CHAIR DETAIL
1½"=1'-0"

NOTES:

1. For details not noted or shown, see Structure Plans.
2. For drainage details, see "Structure Approach Drainage Details" sheet.
3. Longitudinal construction joints, when permitted by the Engineer, shall be located on lane lines.
4. End angle or plate at beginning of barrier transition, end of wingwall or end of structure approach, as applicable.
5. For transverse contact joint with new PCC paving, refer to Standard Plan P10.
6. At the contractor's option, approach slab transverse reinforcement may be placed parallel to paving notch. Spacing of transverse reinforcement is measured along ℄ roadway.

Polystyrene to be removed.

SPECIAL DETAILS

Note:
The Contractor shall verify all controlling field dimensions before ordering or fabricating any material

1 REVISED PER ADDENDUM No. 1 DATED MARCH 28, 2011

STANDARD DRAWING

FILE NO. xs3-180e

APPROVED BY M. Ha — RESPONSIBLE TECHNICAL SPECIALIST
APPROVAL DATE 8-12-08

RELEASED BY O. Alcantara — RESPONSIBLE OFFICE CHIEF
RELEASE DATE Revised

1 Detail Deleted
2 Detail Modified
3 Skew Revised
1

STATE OF CALIFORNIA
DEPARTMENT OF TRANSPORTATION

DIVISION OF ENGINEERING SERVICES

BRIDGE NO. 29-0193
POST MILE 29.99

MARCH LANE UNDERCROSSING (WIDEN)
STRUCTURE APPROACH TYPE N(30D)

DS OSD 2147A (ENGLISH STANDARD DRAWING "XS" BORDER REV. 01/11/08)

ORIGINAL SCALE IN INCHES FOR REDUCED PLANS 0 1 2 3

CU 06240
EA 0G4701

DISREGARD PRINTS BEARING EARLIER REVISION DATES

REVISION DATES (PRELIMINARY STAGE ONLY) 10/16/09 12/4/09 1/18/10 4/21/10 6/11/10 7/28/10

SHEET 13 OF 20

USERNAME => trmnguye

29-0193-s-sa_n_30d.add

DATE PLOTTED => 25-MAR-2011 TIME PLOTTED => 07:58

DIST.	COUNTY	ROUTE	POST MILES TOTAL PROJECT	SHEET NO.	TOTAL SHEETS
10	SJ	5	25.0/32.7	1026	1132

REGISTERED ENGINEER - STRUCTURAL 7/28/10

PHILIP SHINN No. S 4967 Exp. 12/31/10 STRUCTURAL REGISTERED PROFESSIONAL ENGINEER STATE OF CALIFORNIA

10-11-10
PLANS APPROVAL DATE

The State of California or its officers or agents shall not be responsible for the accuracy or completeness of electronic copies of this plan sheet.

SAN JOAQUIN COUNCIL OF GOVERNMENTS
555 E. WEBER AVENUE
STOCKTON, CA 95202

RAJAPPAN & MEYER
CONSULTING ENGINEERS, INC.
1038 LEIGH AVE, SUITE 100
SAN JOSE, CA 95126

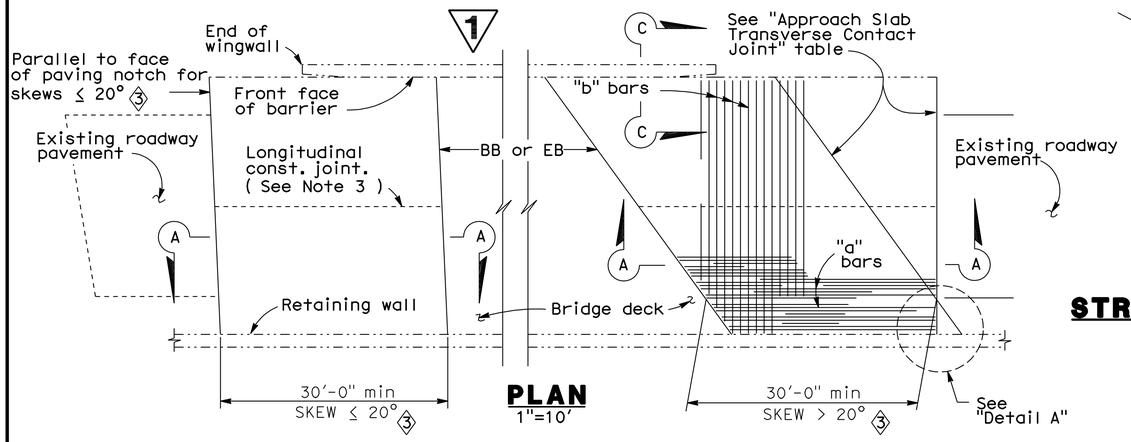

PLAN
1"=10'

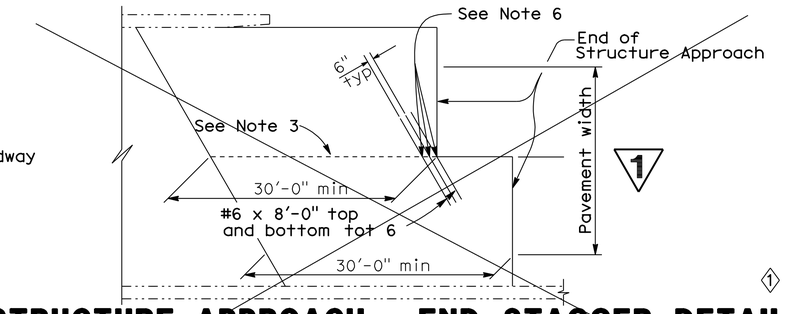

STRUCTURE APPROACH - END STAGGER DETAIL
No Scale

APPROACH SLAB TRANSVERSE CONTACT JOINT 3		
APPROACH SKEW	WITH AC ROADWAY PAVEMENT	WITH PCC ROADWAY PAVEMENT
≤ 20°	Parallel to face of paving notch	Parallel to face of paving notch
> 20° - 45°	Parallel to face of P N use (Detail A)	Stagger lines 24' to 36' apart
> 45°	Parallel to face of P N use (Detail A)	Stagger at each lane line

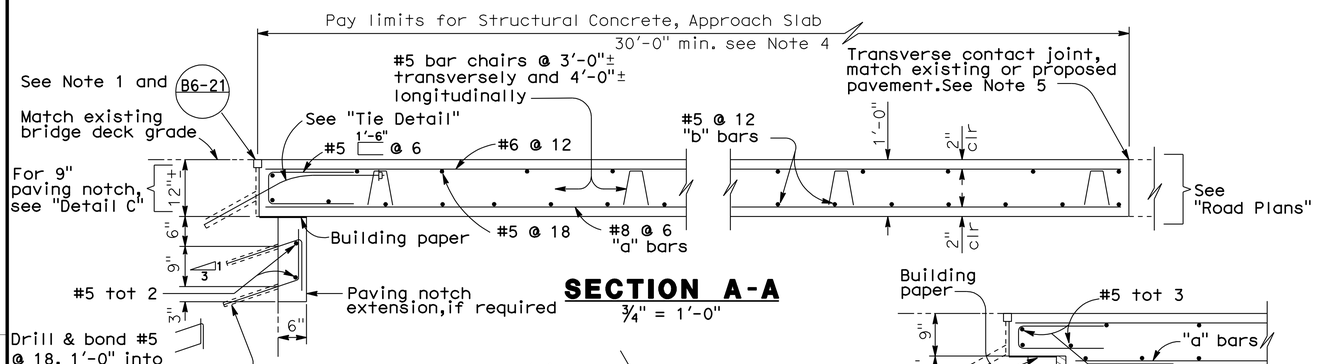

SECTION A-A
¾" = 1'-0"

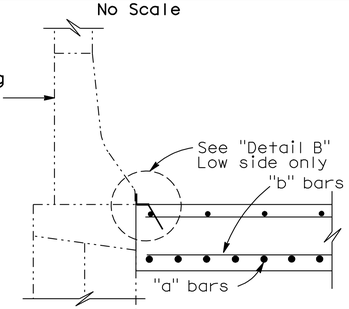

2 SECTION C-C
¾" = 1'-0"

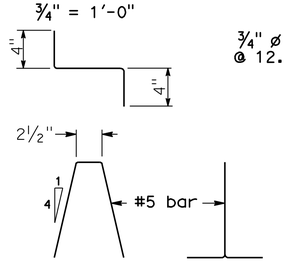

BAR CHAIR DETAIL
1½" = 1'-0"

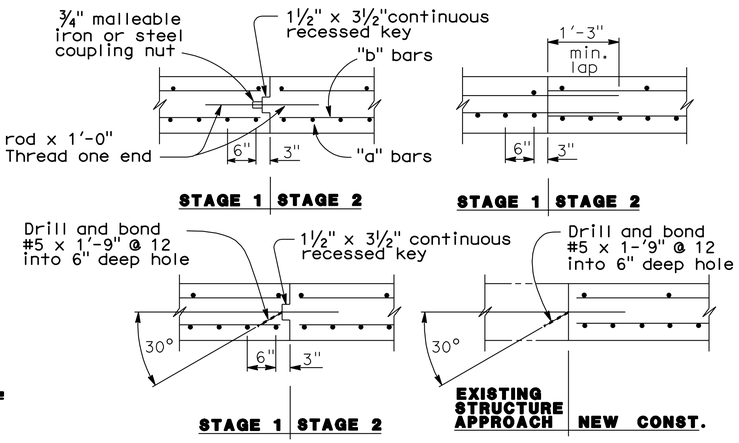

LONGITUDINAL CONSTRUCTION JOINT ALTERNATIVES
¾" = 1'-0"

NOTES:

1. For details not shown or noted, see Structure Plans. Adjust bar reinforcement to clear a sawcut for sealed joint,when required.
2. Space to avoid existing prestress anchorages and main reinforcement.
3. Longitudinal construction joints,when permitted by the Engineer,shall be located on lane lines.
4. Transverse contact joint shall be a minimum of 5'-0" from an existing or constructed weakened plane joint.
5. For transverse contact joint with new PCC paving. refer to Standard Plan P10.
6. Couplers are required for stage construction.
7. End angle or plate at beginning of barrier transition, end of wingwall or end of structure approach as applicable.

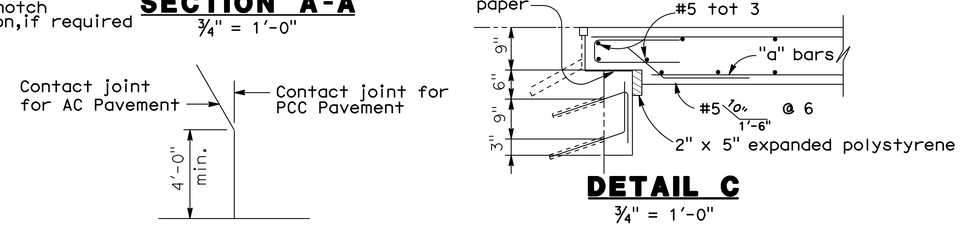

DETAIL A
No Scale

DETAIL C
¾" = 1'-0"

NOTE: For details not shown,see "Section A-A".

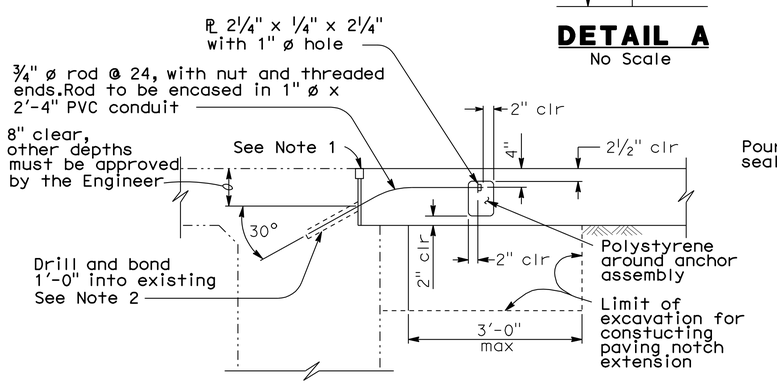

TIE DETAIL
¾" = 1'-0"

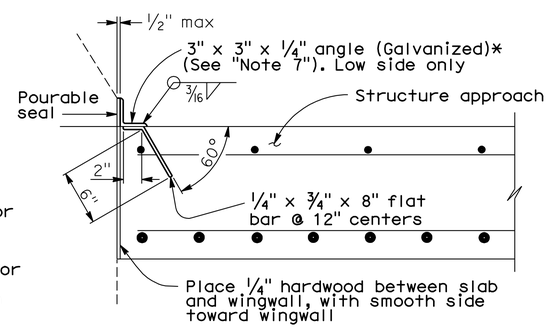

* (TO BE USED WITH TYPE 25 OR TYPE 27 CONCRETE BARRIER)

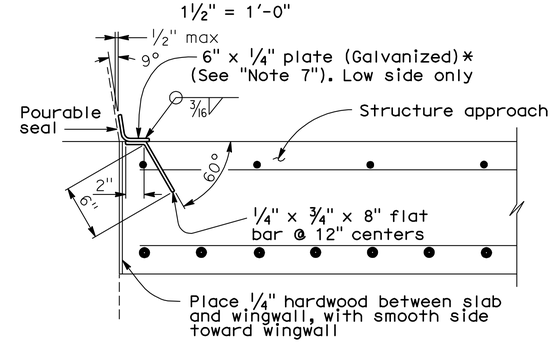

* (TO BE USED WITH TYPE 732 OR TYPE 736 CONCRETE BARRIER)

DETAIL B
1½" = 1'-0"

Note:
The Contractor shall verify all controlling field dimensions before ordering or fabricating any material

1 REVISED PER ADDENDUM No. 1 DATED MARCH 28, 2011

SPECIAL DETAILS

STANDARD DRAWING				
RELEASE DATE Revised	DESIGN	BY M. TRAFFALIS	CHECKED E. THORKILDSEN	RELEASED BY
FILE NO. xs3-140e	DETAILS	BY R. YEE	CHECKED E. THORKILDSEN	
	SUBMITTED	BY M. HA	DRAWING DATE 8/92	OFFICE CHIEF

1 Detail Deleted
2 Detail Modified
3 Skew Revised 1

STATE OF CALIFORNIA
DEPARTMENT OF TRANSPORTATION

DIVISION OF ENGINEERING SERVICES

BRIDGE NO. 29-0193
POST MILE 29.99

MARCH LANE UNDERCROSSING (WIDEN)
STRUCTURE APPROACH TYPE R(30D)

DS OSD 2147A (ENGLISH) (REV. X/XX/XX)

ORIGINAL SCALE IN INCHES FOR REDUCED PLANS 0 1 2 3

CU 06240
EA 0G4701

DISREGARD PRINTS BEARING EARLIER REVISION DATES

REVISION DATES (PRELIMINARY STAGE ONLY) 10/16/09 12/4/09 1/18/10 4/21/10 6/11/10 7/28/10

SHEET 14 OF 20

USERNAME => trmnguye

29-0193-s-sa_r_30d.dgn

DATE PLOTTED => 25-MAR-2011 TIME PLOTTED => 07:58

DIST	COUNTY	ROUTE	POST MILES TOTAL PROJECT	SHEET No	TOTAL SHEETS
10	SJ	5	25.0/32.7	1036	1132

REGISTERED CIVIL ENGINEER 7/28/10 DATE

10-11-10
PLANS APPROVAL DATE

REGISTERED PROFESSIONAL ENGINEER Robert Sennett No. 3976 Exp. 12/31/10 STRUCTURAL STATE OF CALIFORNIA

The State of California or its officers or agents shall not be responsible for the accuracy or completeness of scanned copies of this plan sheet.

SAN JOAQUIN COUNCIL OF GOVERNMENT
555 E. WEBER AVENUE
STOCKTON, CA 95202

MGE ENGINEERING, INC.
7415 GREENHAVEN DRIVE, SUITE 100
SACRAMENTO, CA 95831

"I-5" Line Station	Line	Offset from "I-5" Line (ft)	Proposed Top of Deck/Overlay Elev (ft)	Existing Top of Deck Elev (ft)
1770+10.00	A	75.50 L+	N/A	N/A
	B	66.00 L+	N/A	N/A
	C	30.00 L+	N/A	N/A
	D	26.98 L+	N/A	N/A
	E	0.00	N/A	N/A
	F	26.98 R+	N/A	N/A
	G	30.00 R+	N/A	N/A
	H	66.00 R+	24.88	N/A
	J	75.50 R+	24.71	N/A
1770+20.00	A	75.50 L+	N/A	N/A
	B	66.00 L+	N/A	N/A
	C	30.00 L+	N/A	N/A
	D	26.98 L+	N/A	N/A
	E	0.00	25.93	N/A
	F	26.98 R+	25.47	N/A
	G	30.00 R+	25.41	N/A
	H	66.00 R+	24.80	N/A
	J	75.50 R+	24.64	N/A
1770+30.00	A	75.50 L+	N/A	N/A
	B	66.00 L+	N/A	N/A
	C	30.00 L+	25.40	N/A
	D	26.98 L+	25.45	N/A
	E	0.00	25.83	N/A
	F	26.98 R+	25.38	N/A
	G	30.00 R+	25.32	N/A
	H	66.00 R+	24.73	N/A
	J	75.50 R+	24.57	N/A
1770+40.00	A	75.50 L+	24.54	N/A
	B	66.00 L+	24.70	N/A
	C	30.00 L+	25.30	N/A
	D	26.98 L+	25.35	N/A
	E	0.00	25.73	N/A
	F	26.98 R+	25.28	N/A
	G	30.00 R+	25.24	N/A
	H	66.00 R+	24.66	24.57
	J	75.50 R+	24.44	24.44
1770+50.00	A	75.50 L+	24.47	N/A
	B	66.00 L+	24.62	N/A
	C	30.00 L+	25.19	N/A
	D	26.98 L+	25.24	N/A
	E	0.00	25.63	N/A
	F	26.98 R+	25.22	25.13
	G	30.00 R+	25.17	25.09
	H	66.00 R+	24.59	24.57
	J	75.50 R+	24.44	24.44
1770+60.00	A	75.50 L+	24.40	N/A
	B	66.00 L+	24.54	N/A
	C	30.00 L+	25.10	24.92
	D	26.98 L+	25.15	24.96
	E	0.00	25.57	N/A
	F	26.98 R+	25.15	25.04
	G	30.00 R+	25.10	25.00
	H	66.00 R+	24.53	24.48
	J	75.50 R+	24.34	24.34
1770+70.00	A	75.50 L+	24.33	24.33
	B	66.00 L+	24.48	24.47
	C	30.00 L+	25.04	25.02
	D	26.98 L+	25.08	25.06
	E	0.00	25.50	N/A
	F	26.98 R+	25.08	24.98
	G	30.00 R+	25.04	24.93
	H	66.00 R+	24.46	24.39
	J	75.50 R+	24.24	24.24

"I-5" Line Station	Line	Offset from "I-5" Line (ft)	Proposed Top of Deck/Overlay Elev (ft)	Existing Top of Deck Elev (ft)
1770+80.00	A	75.50 L+	24.27	24.27
	B	66.00 L+	24.41	24.41
	C	30.00 L+	24.97	24.92
	D	26.98 L+	25.02	24.97
	E	0.00	25.43	N/A
	F	26.98 R+	25.02	24.90
	G	30.00 R+	24.97	24.85
	H	66.00 R+	24.39	24.32
	J	75.50 R+	24.18	24.18
1770+90.00	A	75.50 L+	24.18	24.18
	B	66.00 L+	24.34	24.32
	C	30.00 L+	24.90	24.82
	D	26.98 L+	24.95	24.86
	E	0.00	25.37	N/A
	F	26.98 R+	24.95	24.81
	G	30.00 R+	24.90	24.77
	H	66.00 R+	24.33	24.24
	J	75.50 R+	24.10	24.10
1771+00.00	A	75.50 L+	24.11	24.11
	B	66.00 L+	24.28	24.24
	C	30.00 L+	24.84	24.72
	D	26.98 L+	24.88	24.76
	E	0.00	25.30	N/A
	F	26.98 R+	24.88	24.73
	G	30.00 R+	24.84	24.69
	H	66.00 R+	24.26	24.18
	J	75.50 R+	24.05	24.05
1771+10.00	A	75.50 L+	23.98	23.98
	B	66.00 L+	24.21	24.12
	C	30.00 L+	24.77	24.65
	D	26.98 L+	24.82	24.70
	E	0.00	25.23	N/A
	F	26.98 R+	24.82	24.68
	G	30.00 R+	24.77	24.63
	H	66.00 R+	24.19	24.13
	J	75.50 R+	23.99	23.99
1771+20.00	A	75.50 L+	23.93	23.93
	B	66.00 L+	24.14	24.07
	C	30.00 L+	24.70	24.61
	D	26.98 L+	24.75	24.66
	E	0.00	25.17	N/A
	F	26.98 R+	24.75	24.59
	G	30.00 R+	24.70	24.55
	H	66.00 R+	24.13	24.04
	J	75.50 R+	23.91	23.91
1771+30.00	A	75.50 L+	23.84	23.84
	B	66.00 L+	24.08	23.98
	C	30.00 L+	24.64	24.52
	D	26.98 L+	24.68	24.57
	E	0.00	25.10	N/A
	F	26.98 R+	24.68	24.50
	G	30.00 R+	24.64	24.46
	H	66.00 R+	24.06	23.99
	J	75.50 R+	23.87	23.87
1771+40.00	A	75.50 L+	23.78	23.78
	B	66.00 L+	24.01	23.92
	C	30.00 L+	24.57	24.45
	D	26.98 L+	24.62	24.50
	E	0.00	25.03	N/A
	F	26.98 R+	24.62	24.46
	G	30.00 R+	24.57	24.42
	H	66.00 R+	23.99	23.95
	J	75.50 R+	23.82	23.82

Notes: 1

1. The Engineer may adjust the proposed top of deck/overlay elevations (including approach slabs) as needed if the existing top of deck elevations determined from the construction survey differ from the elevations shown on the plans.

2. Exist deck elevations are approximate.

1 **REVISED PER ADDENDUM No. 1 DATED MARCH 28, 2011**

NOTE:
THE CONTRACTOR SHALL VERIFY ALL CONTROLLING FIELD DIMENSIONS BEFORE ORDERING OR FABRICATING ANY MATERIAL.

John Fujimoto
DESIGN OVERSIGHT John Fujimoto
3-11-11
SIGN OFF DATE

	BY	CHECKED
DESIGN	P. Zhao	T. Swenson
DETAILS	P. Zhao	T. Swenson
QUANTITIES	D. Vang	B. Bhattiprolu

PREPARED FOR THE STATE OF CALIFORNIA DEPARTMENT OF TRANSPORTATION

Robert Sennett
PROJECT ENGINEER

BRIDGE NO. 29-0194
POST MILE 31.45

BENJAMIN HOLT DRIVE UC (WIDEN)
DECK GRADES No. 2

DESIGN DETAIL SHEET (ENGLISH) (REV. 06-01-09)

ORIGINAL SCALE IN INCHES FOR REDUCED PLANS 0 1 2 3

CU 06240
EA 0G4701

DISREGARD PRINTS BEARING EARLIER REVISION DATES

REVISION DATES (PRELIMINARY STAGE ONLY) 10/16/09 12/04/09 01/15/10 04/23/10 06/11/10 07/28/10

SHEET 4 OF 26

FILE => 29-0194rl-d-dc02.add

USERNAME => ttrmnguye DATE PLOTTED => 25-MAR-2011 TIME PLOTTED => 07:59

DIST	COUNTY	ROUTE	POST MILES TOTAL PROJECT	SHEET No	TOTAL SHEETS
10	SJ	5	25.0/32.7	1037	1132

REGISTERED CIVIL ENGINEER 7/28/10 DATE

10-11-10
PLANS APPROVAL DATE

REGISTERED PROFESSIONAL ENGINEER Robert Sennett No. 3976 Exp. 12/31/10 STRUCTURAL STATE OF CALIFORNIA

The State of California or its officers or agents shall not be responsible for the accuracy or completeness of scanned copies of this plan sheet.

SAN JOAQUIN COUNCIL OF GOVERNMENT
555 E. WEBER AVENUE
STOCKTON, CA 95202

MGE ENGINEERING, INC.
7415 GREENHAVEN DRIVE, SUITE 100
SACRAMENTO, CA 95831

"I-5" Line Station	Line	Offset from "I-5" Line (ft)	Proposed Top of Deck/Overlay Elev (ft)	Existing Top of Deck Elev (ft)
1771+50.00	A	75.50 L†	23.71	23.71
	B	66.00 L†	23.94	23.85
	C	30.00 L†	24.50	24.39
	D	26.98 L†	24.55	24.44
	E	0.00	24.97	N/A
	F	26.98 R†	24.55	24.42
	G	30.00 R†	24.50	24.39
	H	66.00 R†	23.93	23.91
	J	75.50 R†	23.79	23.79
1771+60.00	A	75.50 L†	23.61	23.61
	B	66.00 L†	23.88	23.76
	C	30.00 L†	24.44	24.33
	D	26.98 L†	24.48	24.38
	E	0.00	24.90	N/A
	F	26.98 R†	24.48	24.36
	G	30.00 R†	24.44	24.32
	H	66.00 R†	23.86	23.80
	J	75.50 R†	23.67	23.67
1771+70.00	A	75.50 L†	23.55	23.55
	B	66.00 L†	23.81	23.70
	C	30.00 L†	24.37	24.28
	D	26.98 L†	24.42	24.33
	E	0.00	24.83	N/A
	F	26.98 R†	24.42	24.30
	G	30.00 R†	24.37	24.26
	H	66.00 R†	23.79	23.74
	J	75.50 R†	23.60	23.60
1771+80.00	A	75.50 L†	23.52	23.52
	B	66.00 L†	23.74	23.66
	C	30.00 L†	24.30	24.20
	D	26.98 L†	24.35	24.25
	E	0.00	24.77	N/A
	F	26.98 R†	24.35	24.25
	G	30.00 R†	24.30	24.21
	H	66.00 R†	23.73	N/A
	J	75.50 R†	23.57	N/A

"I-5" Line Station	Line	Offset from "I-5" Line (ft)	Proposed Top of Deck/Overlay Elev (ft)	Existing Top of Deck Elev (ft)
1771+90.00	A	75.50 L†	23.46	23.46
	B	66.00 L†	23.68	23.60
	C	30.00 L†	24.24	24.11
	D	26.98 L†	24.28	24.15
	E	0.00	24.70	N/A
	F	26.98 R†	24.28	N/A
	G	30.00 R†	24.24	N/A
	H	66.00 R†	23.62	N/A
	J	75.50 R†	23.46	N/A
1772+00.00	A	75.50 L†	23.46	23.44
	B	66.00 L†	23.61	23.56
	C	30.00 L†	24.18	N/A
	D	26.98 L†	24.22	N/A
	E	0.00	24.63	N/A
	F	26.98 R†	24.21	N/A
	G	30.00 R†	24.16	N/A
	H	66.00 R†	23.53	N/A
	J	75.50 R†	23.36	N/A
1772+10.00	A	75.50 L†	23.38	N/A
	B	66.00 L†	23.52	N/A
	C	30.00 L†	24.12	N/A
	D	26.98 L†	24.15	N/A
	E	0.00	24.57	N/A
	F	26.98 R†	N/A	N/A
	G	30.00 R†	N/A	N/A
	H	66.00 R†	N/A	N/A
	J	75.50 R†	N/A	N/A
1772+20.00	A	75.50 L†	23.29	N/A
	B	66.00 L†	23.44	N/A
	C	30.00 L†	24.07	N/A
	D	26.98 L†	24.08	N/A
	E	0.00	N/A	N/A
	F	26.98 R†	N/A	N/A
	G	30.00 R†	N/A	N/A
	H	66.00 R†	N/A	N/A
	J	75.50 R†	N/A	N/A

Notes: 1

1. The Engineer may adjust the proposed top of deck/overlay elevations (including approach slabs) as needed if the existing top of deck elevations determined from the construction survey differ from the elevations shown on the plans.

2. Exist deck elevations are approximate.

NOTE:
THE CONTRACTOR SHALL VERIFY ALL CONTROLLING FIELD DIMENSIONS BEFORE ORDERING OR FABRICATING ANY MATERIAL.

1 REVISED PER ADDENDUM No. 1 DATED MARCH 28, 2011

DESIGN OVERSIGHT John Fujimoto
3-11-11
SIGN OFF DATE

	BY	CHECKED
DESIGN	P. Zhao	T. Swenson
DETAILS	P. Zhao	T. Swenson
QUANTITIES	D. Vang	B. Bhattiprolu

PREPARED FOR THE STATE OF CALIFORNIA DEPARTMENT OF TRANSPORTATION

Robert Sennett
PROJECT ENGINEER

BRIDGE NO. 29-0194
POST MILE 31.45

BENJAMIN HOLT DRIVE UC (WIDEN)
DECK GRADES No. 3

DESIGN DETAIL SHEET (ENGLISH) (REV. 06-01-09)

ORIGINAL SCALE IN INCHES FOR REDUCED PLANS 0 1 2 3

CU 06240
EA 0G4701

DISREGARD PRINTS BEARING EARLIER REVISION DATES

REVISION DATES (PRELIMINARY STAGE ONLY) 10/16/09 12/04/09 01/18/10 04/23/10 06/17/10 07/28/10

SHEET 5 OF 26

FILE => 29-0194rl-d-dc03.add

USERNAME => trcarol DATE PLOTTED => 25-MAR-2011 TIME PLOTTED => 08:12

DIST	COUNTY	ROUTE	POST MILES TOTAL PROJECT	SHEET No	TOTAL SHEETS
10	SJ	5	25.0/32.7	1046	1132

REGISTERED CIVIL ENGINEER 7/28/10 DATE

10-11-10
PLANS APPROVAL DATE

REGISTERED PROFESSIONAL ENGINEER Robert Sennett No. 3976 Exp. 12/31/10 STRUCTURAL STATE OF CALIFORNIA

The State of California or its officers or agents shall not be responsible for the accuracy or completeness of scanned copies of this plan sheet.

SAN JOAQUIN COUNCIL OF GOVERNMENT
555 E. WEBER AVENUE
STOCKTON, CA 95202

MGE ENGINEERING, INC.
7415 GREENHAVEN DRIVE, SUITE 100
SACRAMENTO, CA 95831

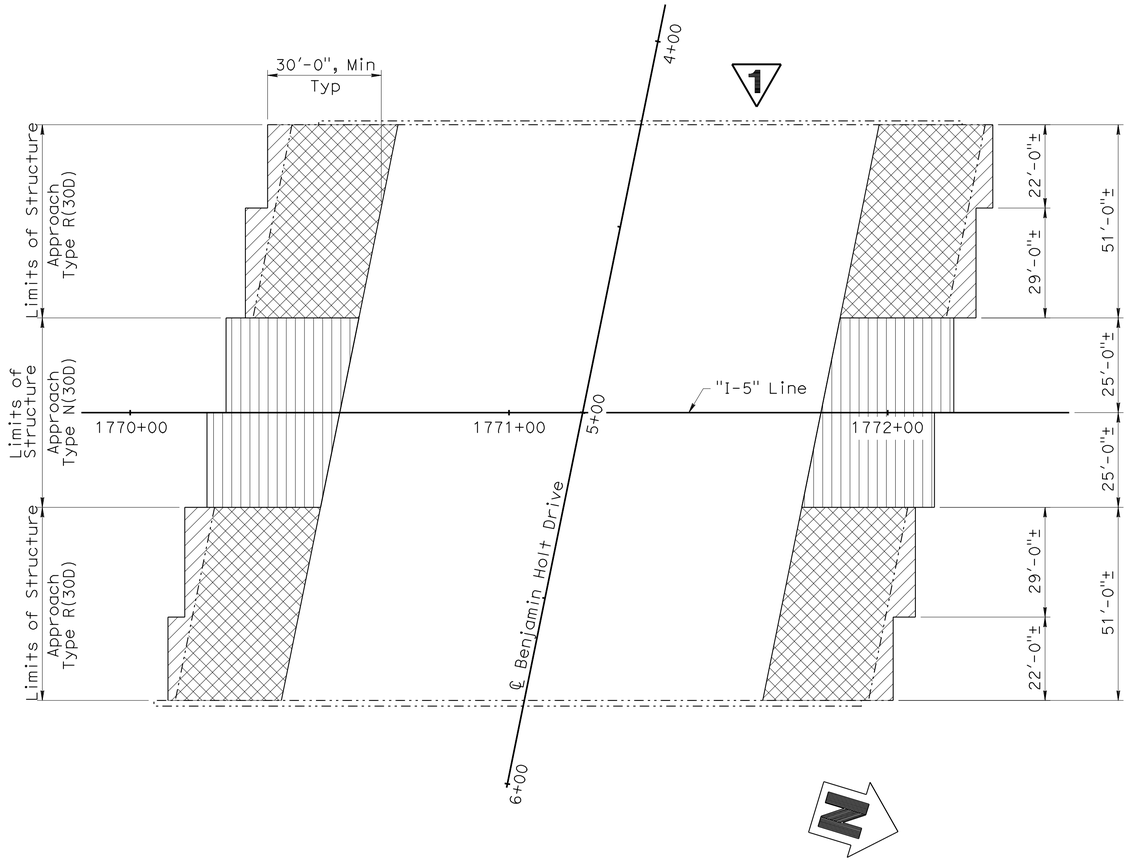

STRUCTURE APPROACH PLAN

SCALE: 1" = 20'

LEGEND

- Indicates Exist approach slab removal
- Indicates pay limits of Structure Approach Type N(30D)
- Indicates pay limits of Structure Approach Type R(30D)
- Indicates Existing structure

NOTE:

Longitudinal construction joints shall be at lane lines as required for roadway staging, see Road Plans. See 'STRUCTURE APPROACH' sheets for details.

NOTE:
THE CONTRACTOR SHALL VERIFY ALL CONTROLLING FIELD DIMENSIONS BEFORE ORDERING OR FABRICATING ANY MATERIAL.

1 REVISED PER ADDENDUM No. 1 DATED MARCH 28, 2011

DESIGN OVERSIGHT John Fujimoto
3-11-11
SIGN OFF DATE

	BY	CHECKED
DESIGN	P. Zhao	T. Swenson
DETAILS	P. Zhao	T. Swenson
QUANTITIES	D. Vang	B. Bhattiprolu

PREPARED FOR THE STATE OF CALIFORNIA DEPARTMENT OF TRANSPORTATION

Robert Sennett
PROJECT ENGINEER

BRIDGE NO. 29-0194
POST MILE 31.45

BENJAMIN HOLT DRIVE UC (WIDEN)
LIMITS OF STRUCTURE APPROACH

DESIGN DETAIL SHEET (ENGLISH) (REV. 06-01-09)

ORIGINAL SCALE IN INCHES FOR REDUCED PLANS 0 1 2 3

CU 06240
EA 0G4701

DISREGARD PRINTS BEARING EARLIER REVISION DATES

REVISION DATES (PRELIMINARY STAGE ONLY) 10/16/09 12/04/09 01/15/10 04/23/10 06/17/10 07/28/10

SHEET 14 OF 26

FILE => 29-0194rl-s-sadd00.add

USERNAME => trcarol DATE PLOTTED => 25-MAR-2011 TIME PLOTTED => 08:12

DIST	COUNTY	ROUTE	POST MILES TOTAL PROJECT	SHEET No	TOTAL SHEETS
10	SJ	5	25.0/32.7	1047	1132

REGISTERED CIVIL ENGINEER 7/28/10 DATE

10-11-10
PLANS APPROVAL DATE

The State of California or its officers or agents shall not be responsible for the accuracy or completeness of scanned copies of this plan sheet.

REGISTERED PROFESSIONAL ENGINEER Robert Sennett No. 3976 Exp. 12/31/10 STRUCTURAL STATE OF CALIFORNIA

SAN JOAQUIN COUNCIL OF GOVERNMENT
555 E. WEBER AVENUE
STOCKTON, CA 95202

MGE ENGINEERING, INC.
7415 GREENHAVEN DRIVE, SUITE 100
SACRAMENTO, CA 95831

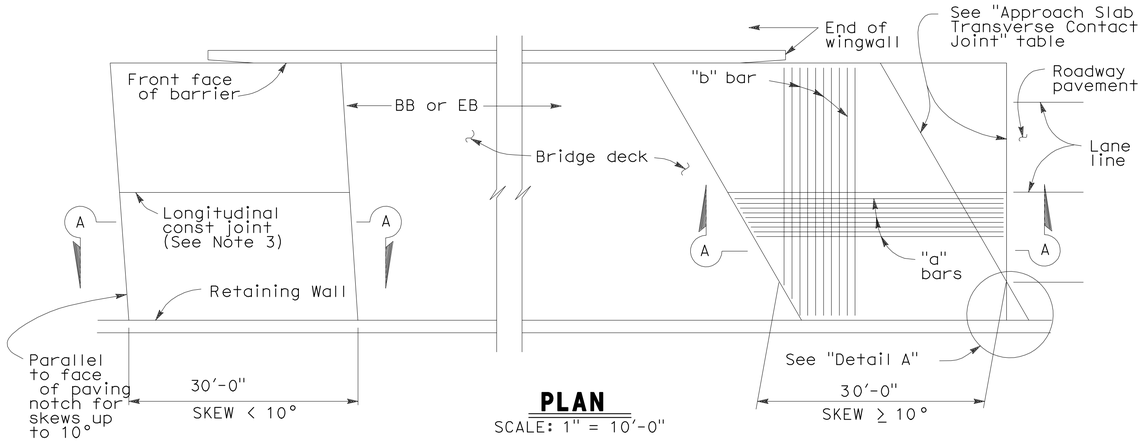

PLAN
SCALE: 1" = 10'-0"

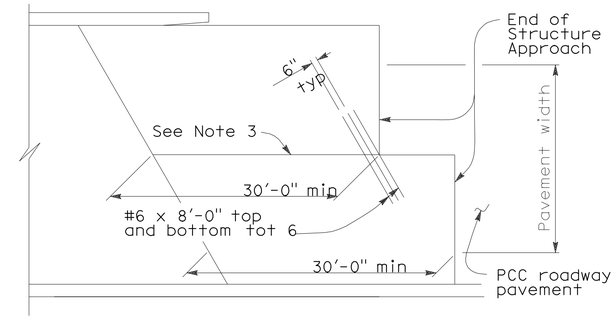

STRUCTURE APPROACH - END STAGGER DETAIL
No Scale

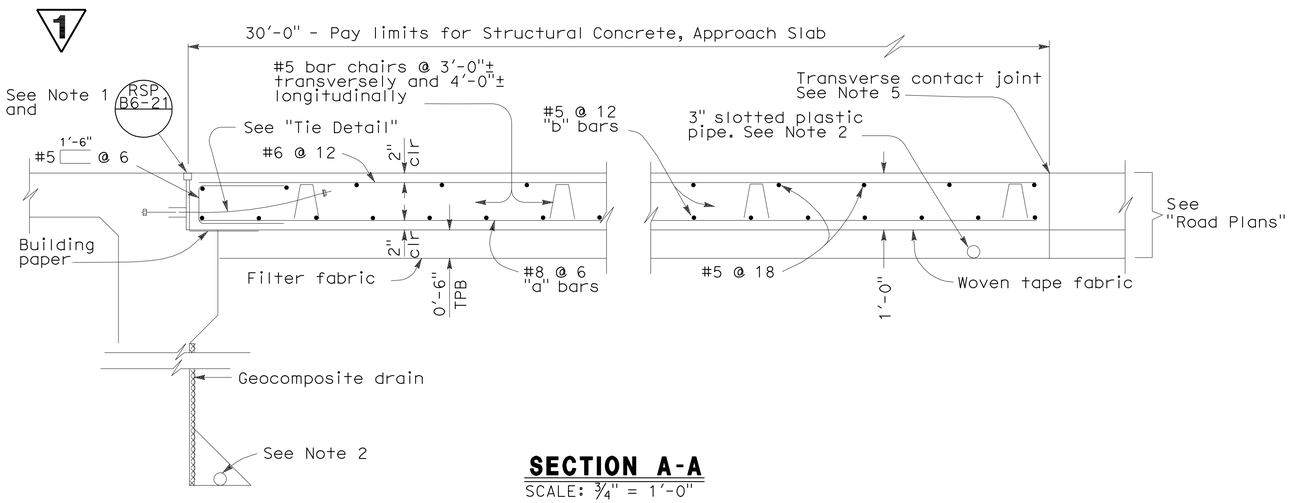

SECTION A-A
SCALE: ¾" = 1'-0"

APPROACH SLAB TRANSVERSE CONTACT JOINT		
APPROACH SKEW	WITH AC ROADWAY PAVEMENT	WITH PCC ROADWAY PAVEMENT
< 10°	Parallel to face of paving notch	Parallel to face of paving notch
10°- 45°	Parallel to face of P N use (Detail A)	Stagger lines 24' to 36' apart.
> 45°	Parallel to face of P N use (Detail A)	Stagger at each lane line.

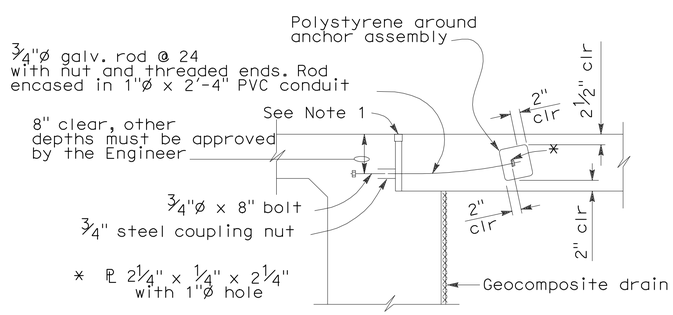

TIE DETAIL

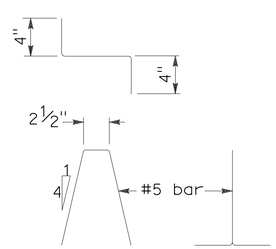

BAR CHAIR DETAIL

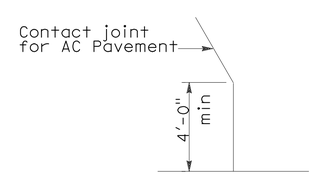

DETAIL A

NOTES:
1. For details not noted or shown, see Structure Plans.
2. For drainage details, see "Structure Approach Drainage Details" sheet.
3. Longitudinal construction joints, when permitted by the Engineer, shall be located on lane lines.
4. End angle or plate at beginning of barrier transition, end of wingwall or end of structure approach, as applicable.
5. For transverse contact joint with new PCC paving, refer to Standard Plan P10.
6. At the contractor's option, approach slab transverse reinforcement may be placed parallel to paving notch. Spacing of transverse reinforcement is measured along ℄ roadway.

NOTE:
THE CONTRACTOR SHALL VERIFY ALL CONTROLLING FIELD DIMENSIONS BEFORE ORDERING OR FABRICATING ANY MATERIAL.

1 REVISED PER ADDENDUM No. 1 DATED MARCH 28, 2011

DESIGN OVERSIGHT John Fujimoto
3-11-11
SIGN OFF DATE

	BY	CHECKED
DESIGN	P. Zhao	T. Swenson
DETAILS	P. Zhao	T. Swenson
QUANTITIES	D. Vang	B. Bhattiprolu

PREPARED FOR THE STATE OF CALIFORNIA DEPARTMENT OF TRANSPORTATION

Robert Sennett
PROJECT ENGINEER

BRIDGE NO. 29-0194
POST MILE 31.45

BENJAMIN HOLT DRIVE UC (WIDEN)
STRUCTURE APPROACH TYPE N(30D)

DESIGN DETAIL SHEET (ENGLISH) (REV. 06-01-09)

ORIGINAL SCALE IN INCHES FOR REDUCED PLANS 0 1 2 3

CU 06240
EA 0G4701

DISREGARD PRINTS BEARING EARLIER REVISION DATES

REVISION DATES (PRELIMINARY STAGE ONLY) 10/16/09 12/04/09 01/15/10 04/23/10 06/11/10 07/28/10

SHEET 15 OF 26

FILE => 29-0194rl-s-sadd01.add

USERNAME => trcarol DATE PLOTTED => 25-MAR-2011 TIME PLOTTED => 08:12

DIST	COUNTY	ROUTE	POST MILES TOTAL PROJECT	SHEET No	TOTAL SHEETS
10	SJ	5	25.0/32.7	1061	1132

REGISTERED STRUCTURAL ENGINEER — DATE 7/28/10

PLANS APPROVAL DATE 10-11-10

REGISTERED PROFESSIONAL ENGINEER — PHILIP SHINN — No. S 4967 — Exp. 12/31/10 — STRUCTURAL — STATE OF CALIFORNIA

The State of California or its officers or agents shall not be responsible for the accuracy or completeness of scanned copies of this plan sheet.

RAJAPPAN & MEYER CONSULTING ENGINEERS, INC.
1038 LEIGH AVE, SUITE 100
SAN JOSE, CA 95126

SAN JOAQUIN COUNCIL OF GOVERNMENTS
555 E. WEBER AVENUE
STOCKTON, CA 95202

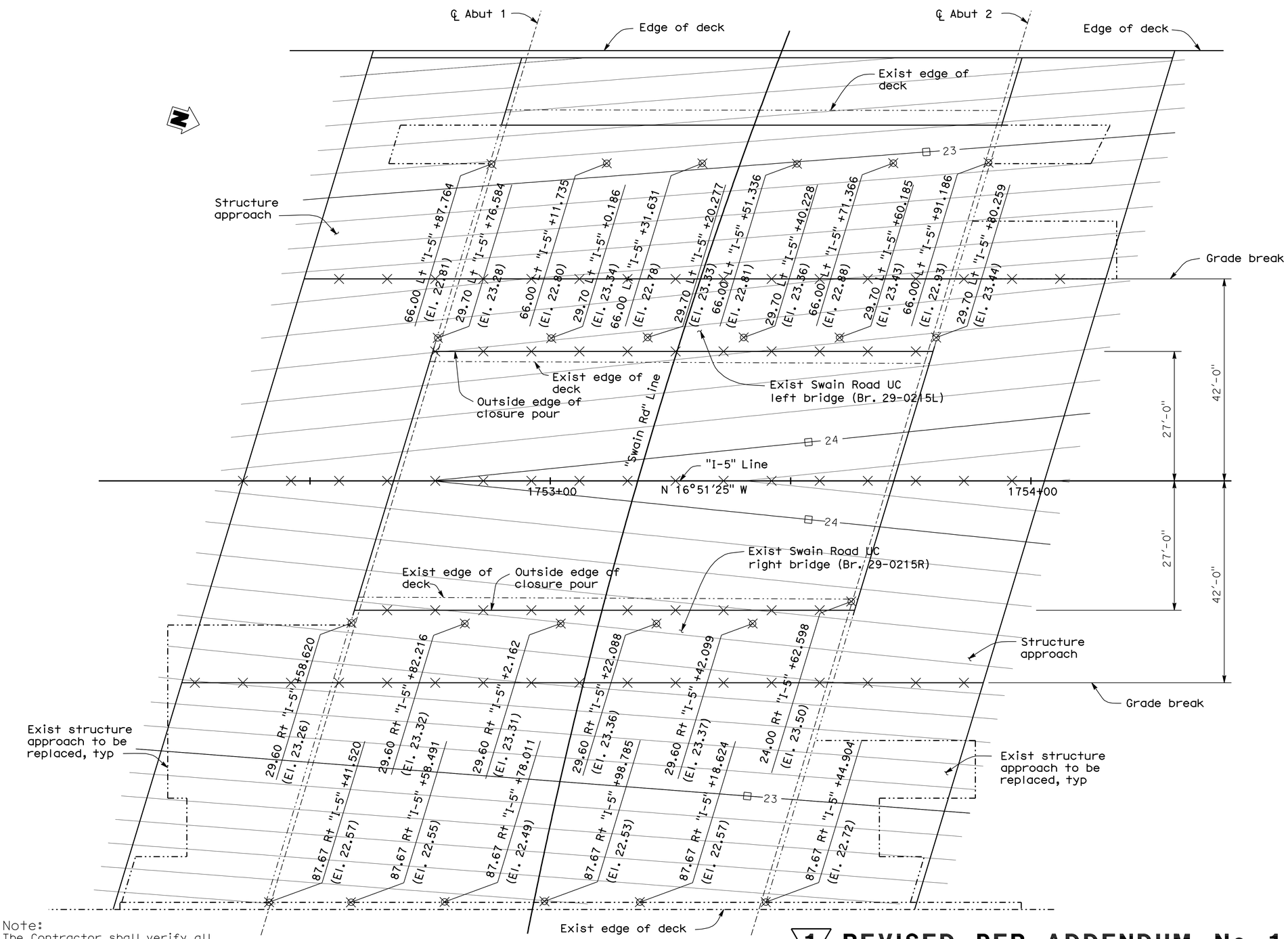

PLAN
3/32" = 1'-0"

Note:
The Contractor shall verify all controlling field dimensions before ordering or fabricating any material

NOTES:

1. indicates existing structure
2. indicates surveyed existing top of deck elevation
3. indicates even foot contours
4. indicates 10ft intervals measured along "I-5 Line"
5. Contour interval = 0.1ft
6. Contours do not include camber or falsework settlement.
7. Maximum grinding on top of existing deck should not greater than 3/4".
8. Contours shown at existing bridge indicate top of polyester concrete overlay.
9. Contour shown at widening and structure approach indicate finish concrete deck elevation.
10. For limit of polyester concrete overlay, see "General Plan" and "Typical Section" sheets.
11. (1) The Engineer may adjust the proposed top of deck/overlay elevations (including approach slabs) as needed if the existing top of deck elevations determined from the construction survey differ from the elevations shown on the plans.

(1) **REVISED PER ADDENDUM No. 1 DATED MARCH 28, 2011**

DESIGN OVERSIGHT — John Fujimoto
3-11-11
SIGN OFF DATE

	BY		CHECKED	
DESIGN	BY	P. SHINN	CHECKED	A. WANG
DETAILS	BY	G. WOLDETSADIK	CHECKED	A. WANG
QUANTITIES	BY	G. WOLDETSADIK	CHECKED	W. Y. TAN

PREPARED FOR THE STATE OF CALIFORNIA DEPARTMENT OF TRANSPORTATION

P. SHINN
PROJECT ENGINEER

CU 06240
EA 0G4701

BRIDGE NO. 29-0215
POST MILE 31.11

SWAIN ROAD UNDERCROSSING (WIDEN)
DECK GRADES

DISREGARD PRINTS BEARING EARLIER REVISION DATES

REVISION DATES (PRELIMINARY STAGE ONLY): 10/16/09 12/4/09 1/15/10 4/21/10 6/11/10 7/28/10

SHEET 3 OF 27

DESIGN DETAIL SHEET (ENGLISH) (REV. 06-01-09)

ORIGINAL SCALE IN INCHES FOR REDUCED PLANS 0 1 2 3

FILE => 29-0215-d-dg01.add

USERNAME => trcarol DATE PLOTTED => 25-MAR-2011 TIME PLOTTED => 08:12

DIST	COUNTY	ROUTE	POST MILES TOTAL PROJECT	SHEET No	TOTAL SHEETS
10	SJ	5	25.0/32.7	1070	1132

REGISTERED STRUCTURAL ENGINEER — DATE 7/28/10

10-11-10
PLANS APPROVAL DATE

REGISTERED PROFESSIONAL ENGINEER — PHILIP SHINN — No. S 4967 — Exp. 12/31/10 — STRUCTURAL — STATE OF CALIFORNIA

The State of California or its officers or agents shall not be responsible for the accuracy or completeness of scanned copies of this plan sheet.

RAJAPPAN & MEYER
CONSULTING ENGINEERS, INC.
1038 LEIGH AVE, SUITE 100
SAN JOSE, CA 95126

SAN JOAQUIN COUNCIL OF GOVERNMENTS
555 E. WEBER AVENUE
STOCKTON, CA 95202

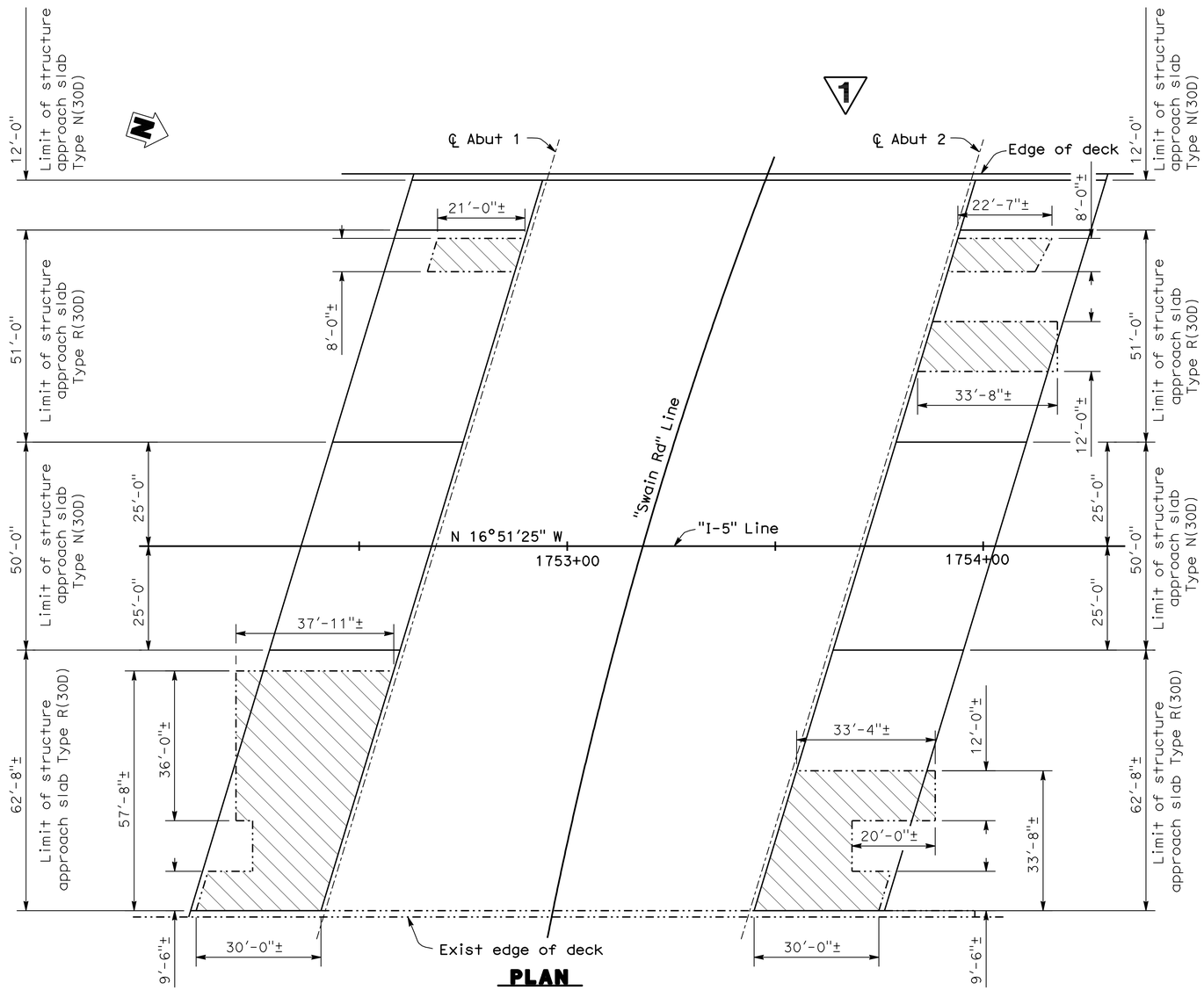

PLAN
1/16" = 1'-0"

NOTES:

1. For details not shown, see "Structure Approach Type N(30D)" and "Structure Approach Type R(30D)" sheets

Indicates limits of existing approach slab removal

Note:
The Contractor shall verify all controlling field dimensions before ordering or fabricating any material

1 REVISED PER ADDENDUM No. 1 DATED MARCH 28, 2011

DESIGN OVERSIGHT — John Fujimoto
3-11-11
SIGN OFF DATE

	BY		CHECKED	
DESIGN	BY	P. SHINN	CHECKED	A. WANG
DETAILS	BY	G. WOLDETSADIK	CHECKED	A. WANG
QUANTITIES	BY	G. WOLDETSADIK	CHECKED	W. Y. TAN

PREPARED FOR THE STATE OF CALIFORNIA DEPARTMENT OF TRANSPORTATION

P. SHINN
PROJECT ENGINEER

BRIDGE NO. 29-0215
POST MILE 31.11

SWAIN ROAD UNDERCROSSING (WIDEN)
LIMITS OF STRUCTURE APPROACH

DESIGN DETAIL SHEET (ENGLISH) (REV. 06-01-09)

ORIGINAL SCALE IN INCHES FOR REDUCED PLANS 0 1 2 3

CU 06240
EA 0G4701

DISREGARD PRINTS BEARING EARLIER REVISION DATES — REVISION DATES (PRELIMINARY STAGE ONLY) 10/16/09 12/4/09 1/15/10 4/21/10 6/11/10 7/28/10

SHEET 12 OF 27

FILE => 29-0215-q-lsa.add

USERNAME => trcarol DATE PLOTTED => 25-MAR-2011 TIME PLOTTED => 08:12

DIST.	COUNTY	ROUTE	POST MILES TOTAL PROJECT	SHEET NO.	TOTAL SHEETS
10	SJ	5	25.0/32.7	1073	1132

REGISTERED ENGINEER - STRUCTURAL 7/28/10

PHILIP SHINN No. S 4967 Exp. 12/31/10 STRUCTURAL — REGISTERED PROFESSIONAL ENGINEER — STATE OF CALIFORNIA

10-11-10
PLANS APPROVAL DATE

The State of California or its officers or agents shall not be responsible for the accuracy or completeness of electronic copies of this plan sheet.

SAN JOAQUIN COUNCIL OF GOVERNMENTS
555 E. WEBER AVENUE
STOCKTON, CA 95202

RAJAPPAN & MEYER
CONSULTING ENGINEERS, INC.
1038 LEIGH AVE, SUITE 100
SAN JOSE, CA 95126

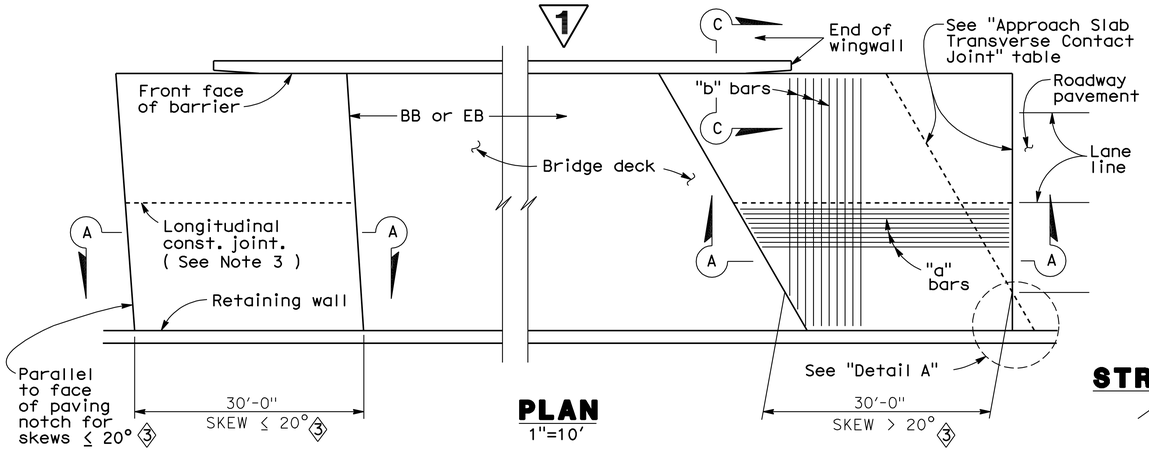

PLAN
1"=10'

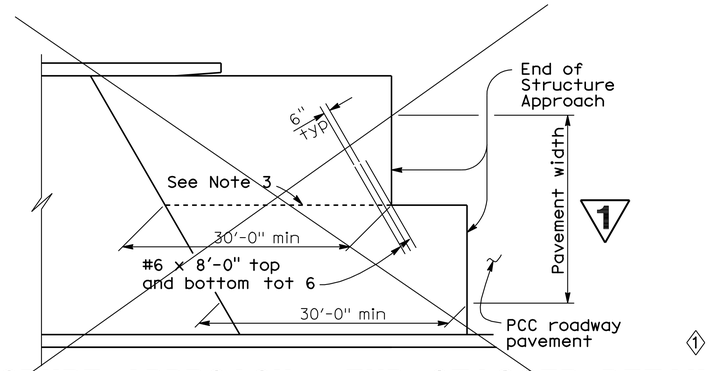

STRUCTURE APPROACH - END STAGGER DETAIL
No Scale

APPROACH SLAB TRANSVERSE CONTACT JOINT 3		
APPROACH SKEW	WITH AC ROADWAY PAVEMENT	WITH PCC ROADWAY PAVEMENT
≤ 20°	Parallel to face of paving notch	Parallel to face of paving notch
> 20° - 45°	Parallel to face of P N use (Detail A)	Stagger lines 24' to 36' apart
> 45°	Parallel to face of P N use (Detail A)	Stagger at each lane line

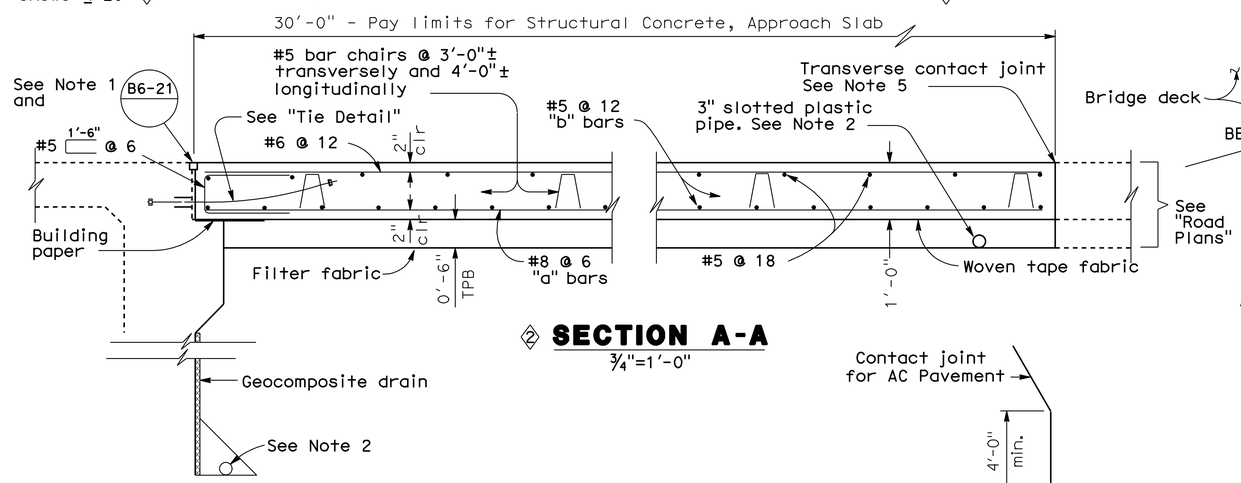

2 SECTION A-A
¾"=1'-0"

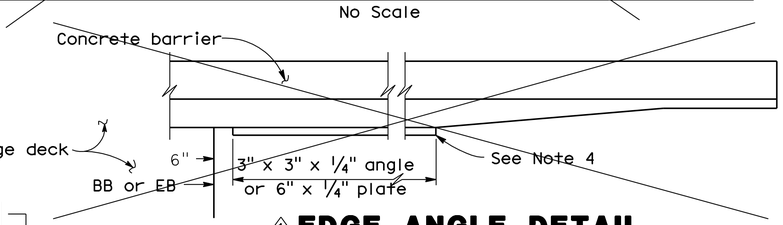

1 EDGE ANGLE DETAIL
½"=1'-0"

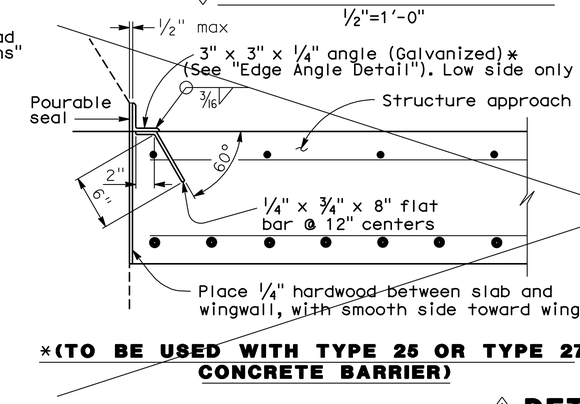

*(TO BE USED WITH TYPE 25 OR TYPE 27 CONCRETE BARRIER)

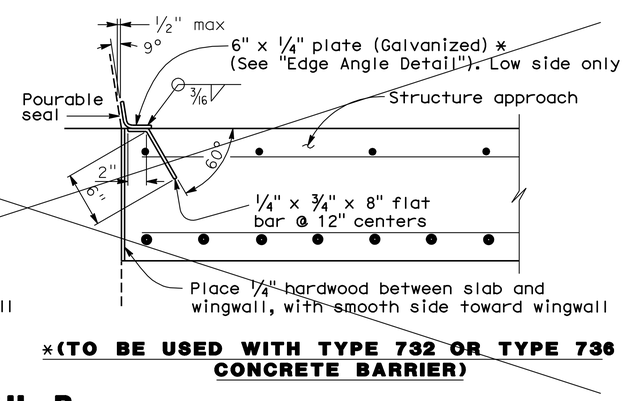

*(TO BE USED WITH TYPE 732 OR TYPE 736 CONCRETE BARRIER)

1 DETAIL B
1½"=1'-0"

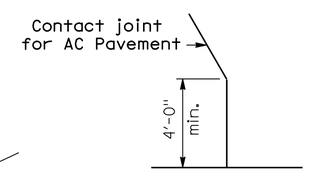

DETAIL A
No Scale

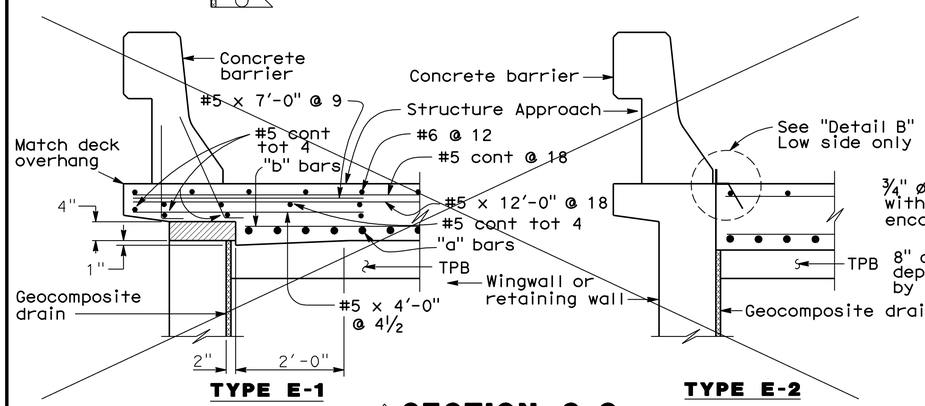

1 SECTION C-C
¾"=1'-0"

Note:
The Contractor shall verify all controlling field dimensions before ordering or fabricating any material

(Type E-1 to be used, unless otherwise shown on plans)

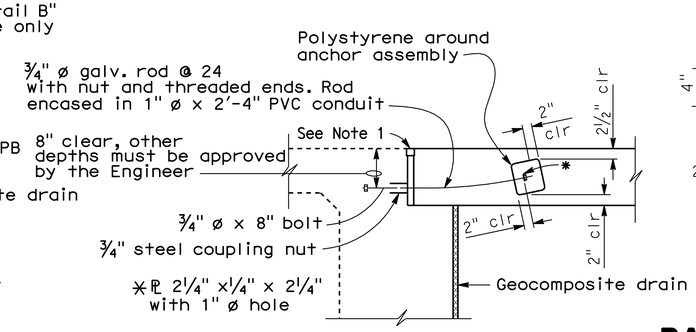

TIE DETAIL
¾"=1'-0"

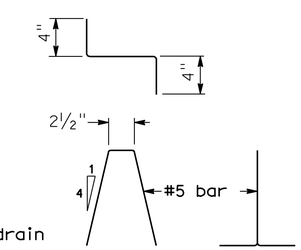

BAR CHAIR DETAIL
1½"=1'-0"

NOTES:

1. For details not noted or shown, see Structure Plans.
2. For drainage details, see "Structure Approach Drainage Details" sheet.
3. Longitudinal construction joints, when permitted by the Engineer, shall be located on lane lines.
4. End angle or plate at beginning of barrier transition, end of wingwall or end of structure approach, as applicable.
5. For transverse contact joint with new PCC paving, refer to Standard Plan P10.
6. At the contractor's option, approach slab transverse reinforcement may be placed parallel to paving notch. Spacing of transverse reinforcement is measured along ℄ roadway.

Polystyrene to be removed.

1 REVISED PER ADDENDUM No. 1 DATED MARCH 28, 2011

SPECIAL DETAILS

STANDARD DRAWING

FILE NO. xs3-180e

APPROVED BY M. Ha — RESPONSIBLE TECHNICAL SPECIALIST
APPROVAL DATE 8-12-08

RELEASED BY O. Alcantara — RESPONSIBLE OFFICE CHIEF
RELEASE DATE Revised

1 Detail Deleted
2 Detail Modified
3 Skew Revised

STATE OF CALIFORNIA
DEPARTMENT OF TRANSPORTATION

DIVISION OF ENGINEERING SERVICES

BRIDGE NO. 29-0215
POST MILE 31.11

SWAIN ROAD UNDERCROSSING (WIDEN)
STRUCTURE APPROACH TYPE N(30D)

DS OSD 2147A (ENGLISH STANDARD DRAWING "XS" BORDER REV. 01/11/08)

ORIGINAL SCALE IN INCHES FOR REDUCED PLANS 0 1 2 3

CU 06240
EA 0G4701

DISREGARD PRINTS BEARING EARLIER REVISION DATES

REVISION DATES (PRELIMINARY STAGE ONLY) 10/16/09 12/4/09 1/18/10 4/27/10 6/11/10 7/28/10

SHEET 15 OF 27

USERNAME => trmikesl

29-0215-s-sa_n30d.add

DATE PLOTTED => 25-MAR-2011 TIME PLOTTED => 07:48

DIST.	COUNTY	ROUTE	POST MILES TOTAL PROJECT	SHEET NO.	TOTAL SHEETS
10	SJ	5	25.0/32.7	1074	1132

REGISTERED ENGINEER - STRUCTURAL 7/28/10

PHILIP SHINN No. S 4967 Exp. 12/31/10 STRUCTURAL STATE OF CALIFORNIA REGISTERED PROFESSIONAL ENGINEER

10-11-10
PLANS APPROVAL DATE

The State of California or its officers or agents shall not be responsible for the accuracy or completeness of electronic copies of this plan sheet.

SAN JOAQUIN COUNCIL OF GOVERNMENTS
555 E. WEBER AVENUE
STOCKTON, CA 95202

RAJAPPAN & MEYER
CONSULTING ENGINEERS, INC.
1038 LEIGH AVE, SUITE 100
SAN JOSE, CA 95126

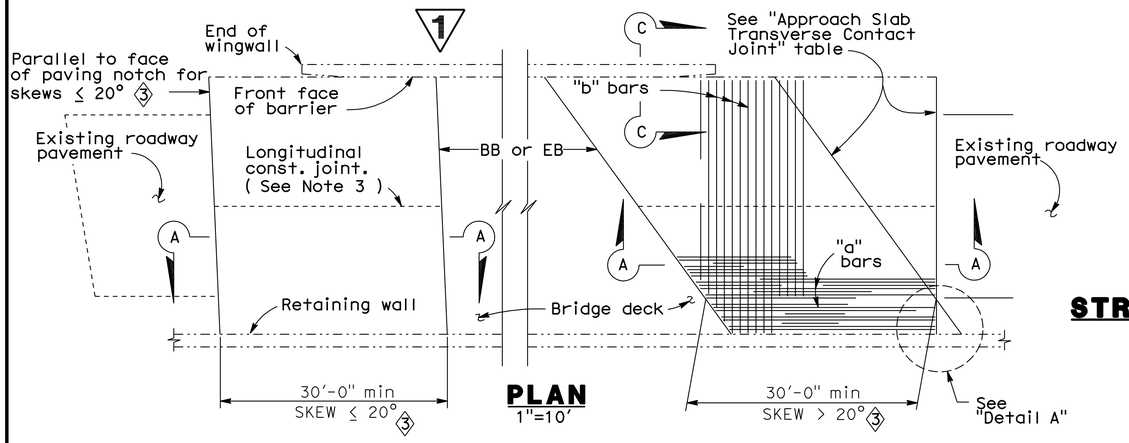

PLAN
1"=10'

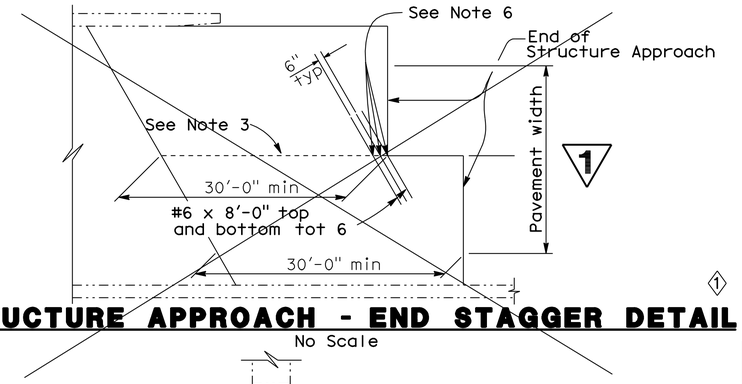

STRUCTURE APPROACH - END STAGGER DETAIL
No Scale

APPROACH SLAB TRANSVERSE CONTACT JOINT 3		
APPROACH SKEW	WITH AC ROADWAY PAVEMENT	WITH PCC ROADWAY PAVEMENT
≤ 20°	Parallel to face of paving notch	Parallel to face of paving notch
> 20° - 45°	Parallel to face of P N use (Detail A)	Stagger lines 24' to 36' apart
> 45°	Parallel to face of P N use (Detail A)	Stagger at each lane line

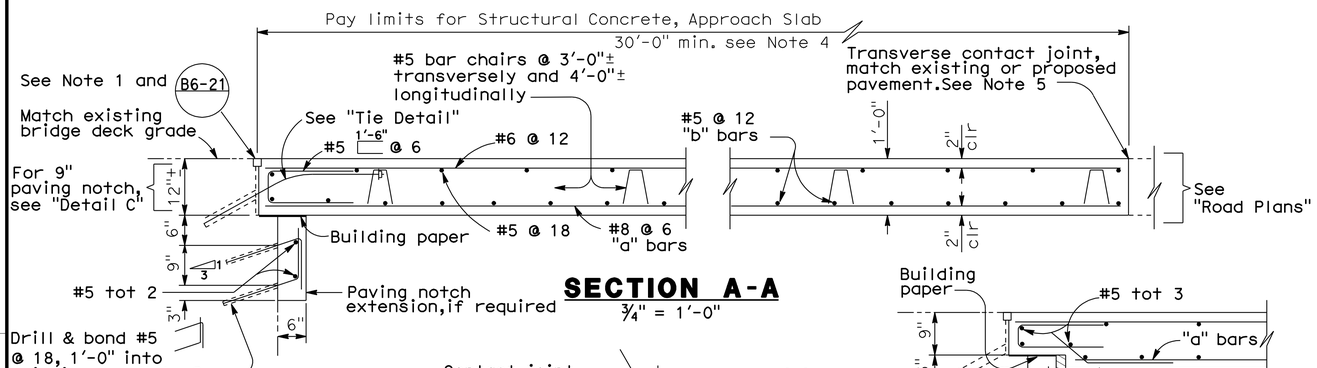

SECTION A-A
¾" = 1'-0"

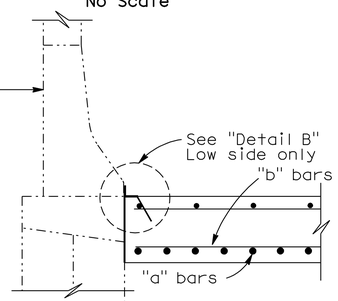

2 SECTION C-C
¾" = 1'-0"

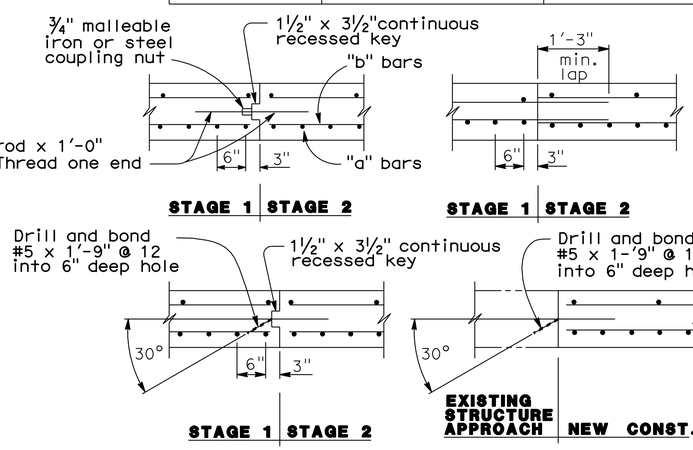

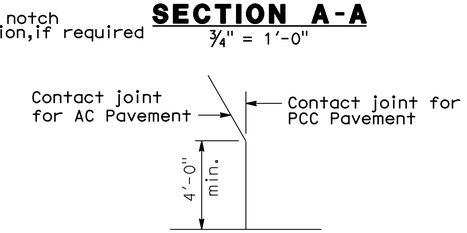

DETAIL A
No Scale

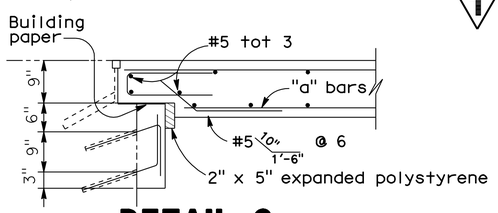

DETAIL C
¾" = 1'-0"

NOTE: For details not shown,see "Section A-A".

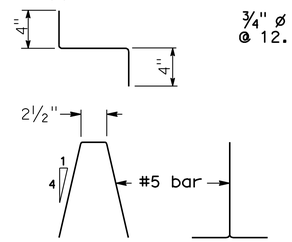

BAR CHAIR DETAIL
1½" = 1'-0"

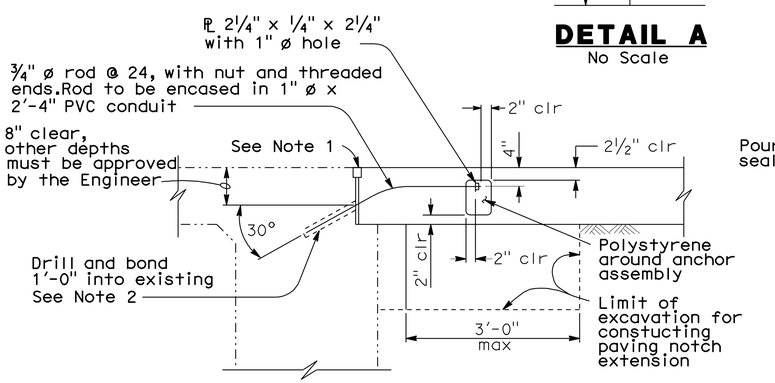

TIE DETAIL
¾" = 1'-0"

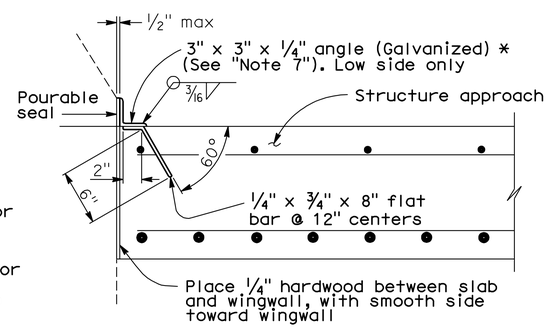

* (TO BE USED WITH TYPE 25 OR TYPE 27 CONCRETE BARRIER)

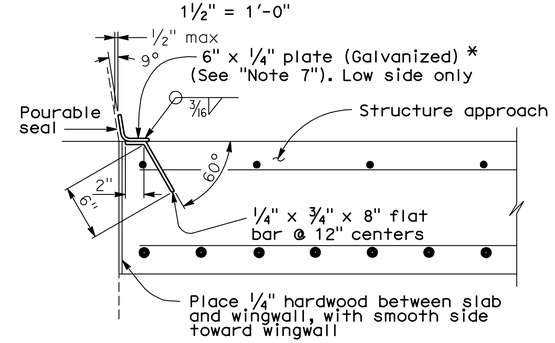

* (TO BE USED WITH TYPE 732 OR TYPE 736 CONCRETE BARRIER)

LONGITUDINAL CONSTRUCTION JOINT ALTERNATIVES
¾" = 1'-0"

NOTES:

1. For details not shown or noted, see Structure Plans. Adjust bar reinforcement to clear a sawcut for sealed joint,when required.
2. Space to avoid existing prestress anchorages and main reinforcement.
3. Longitudinal construction joints,when permitted by the Engineer,shall be located on lane lines.
4. Transverse contact joint shall be a minimum of 5'-0" from an existing or constructed weakened plane joint.
5. For transverse contact joint with new PCC paving. refer to Standard Plan P10.
6. Couplers are required for stage construction.
7. End angle or plate at beginning of barrier transition, end of wingwall or end of structure approach as applicable.

Note:
The Contractor shall verify all controlling field dimensions before ordering or fabricating any material

1 REVISED PER ADDENDUM No. 1 DATED MARCH 28, 2011

DETAIL B
1½" = 1'-0"

SPECIAL DETAILS

STANDARD DRAWING				
RELEASE DATE Revised	DESIGN	BY M. TRAFFALIS	CHECKED E. THORKILDSEN	RELEASED BY
FILE NO. xs3-140e	DETAILS	BY R. YEE	CHECKED E. THORKILDSEN	
	SUBMITTED	BY M. HA	DRAWING DATE 8/92	OFFICE CHIEF

1 Detail Deleted
2 Detail Modified
3 Skew Revised

STATE OF CALIFORNIA
DEPARTMENT OF TRANSPORTATION

DIVISION OF ENGINEERING SERVICES

BRIDGE NO. 29-0215
POST MILE 31.11

SWAIN ROAD UNDERCROSSING (WIDEN)
STRUCTURE APPROACH TYPE R(30D)

DS OSD 2147A (ENGLISH) (REV. X/XX/XX)

ORIGINAL SCALE IN INCHES FOR REDUCED PLANS 0 1 2 3

CU 06240
EA 0G4701

DISREGARD PRINTS BEARING EARLIER REVISION DATES

REVISION DATES (PRELIMINARY STAGE ONLY) 10/16/09 12/4/09 1/18/10 4/27/10 6/17/10 7/28/10

SHEET 16 OF 27

USERNAME => trmikesl

29-0215-s-sa_r30d.dgn

DATE PLOTTED => 25-MAR-2011 TIME PLOTTED => 07:48

'I-5' Line Station	Line	Offset from 'I-5' Line (ft)	Proposed Top of Deck/Overlay Elev (ft)	Existing Top of Deck Elev (ft)
1684+70	A	87.24 L+	24.77	N/A
	B	81.40 L+	24.91	N/A
	C	54.00 L+	N/A	N/A
	D	26.83 L+	N/A	N/A
	E	0.00	N/A	N/A
	F	26.83 L+	N/A	N/A
	G	42.00 R+	N/A	N/A
	H	66.00 R+	N/A	N/A
	J	75.50 R+	N/A	N/A
1684+80	A	87.44 L+	24.79	N/A
	B	81.60 L+	24.93	N/A
	C	54.00 L+	25.58	N/A
	D	26.83 L+	N/A	N/A
	E	0.00	N/A	N/A
	F	26.83 L+	N/A	N/A
	G	42.00 R+	N/A	N/A
	H	66.00 R+	N/A	N/A
	J	75.50 R+	N/A	N/A
1684+90	A	87.64 L+	24.80	N/A
	B	81.80 L+	24.94	N/A
	C	54.00 L+	25.59	N/A
	D	26.83 L+	26.00	N/A
	E	0.00	26.40	N/A
	F	26.83 R+	N/A	N/A
	G	42.00 R+	N/A	N/A
	H	66.00 R+	N/A	N/A
	J	75.50 R+	N/A	N/A
1685+00	A	87.84 L+	24.82	24.75±
	B	82.00 L+	24.95	24.83±
	C	54.00 L+	25.61	N/A
	D	26.83 L+	26.02	N/A
	E	0.00	26.42	N/A
	F	26.83 L+	26.00	N/A
	G	42.00 R+	25.76	N/A
	H	66.00 R+	N/A	N/A
	J	75.50 R+	N/A	N/A
1685+10	A	88.04 L+	24.90	24.84±
	B	82.20 L+	25.02	24.91±
	C	54.00 L+	25.63	25.27±
	D	26.83 L+	26.04	25.62±
	E	0.00	26.44	N/A
	F	26.83 R+	26.02	N/A
	G	42.00 R+	25.78	N/A
	H	66.00 R+	25.30	N/A
	J	75.50 R+	24.99	N/A
1685+20	A	88.24 L+	24.91	24.85±
	B	82.40 L+	25.04	24.93±
	C	54.00 L+	25.65	25.35±
	D	26.83 L+	26.06	25.75±
	E	0.00	26.46	N/A
	F	26.83 L+	26.04	N/A
	G	42.00 R+	25.80	N/A
	H	66.00 R+	25.32	N/A
	J	75.50 R+	25.15	N/A

'I-5' Line Station	Line	Offset from 'I-5' Line (ft)	Proposed Top of Deck/Overlay Elev (ft)	Existing Top of Deck Elev (ft)
1685+30	A	88.44 L+	24.93	24.87±
	B	82.60 L+	25.06	24.96±
	C	54.00 L+	25.67	25.41±
	D	26.83 L+	26.08	25.84±
	E	0.00	26.48	N/A
	F	26.83 L+	26.06	25.73±
	G	42.00 R+	25.82	25.49±
	H	66.00 R+	25.34	25.12±
	J	75.50 R+	24.97	N/A
1685+40	A	88.64 L+	24.94	24.88±
	B	82.80 L+	25.07	24.97±
	C	54.00 L+	25.69	25.44±
	D	26.83 L+	26.09	25.88±
	E	0.00	26.50	N/A
	F	26.83 L+	26.08	25.82±
	G	42.00 R+	25.84	25.59±
	H	66.00 R+	25.36	25.14±
	J	75.50 R+	25.07	25.07±
1685+50	A	88.84 L+	24.91	24.85±
	B	83.00 L+	25.05	24.95±
	C	54.00 L+	25.70	25.44±
	D	26.83 L+	26.11	25.90±
	E	0.00	26.51	N/A
	F	26.83 R+	26.10	25.90±
	G	42.00 R+	25.86	25.66±
	H	66.00 R+	25.38	25.28±
	J	75.50 R+	25.13	25.13±
1685+60	A	89.04 L+	24.91	24.85±
	B	83.20 L+	25.05	24.95±
	C	54.00 L+	25.72	25.42±
	D	26.83 L+	26.13	25.87±
	E	0.00	26.53	N/A
	F	26.83 R+	26.12	25.91±
	G	42.00 R+	25.88	25.70±
	H	66.00 R+	25.40	25.36±
	J	75.50 R+	25.23	25.23±
1685+70	A	89.24 L+	24.95	24.89±
	B	83.40 L+	25.08	24.98±
	C	54.00 L+	25.74	25.42±
	D	26.83 L+	26.15	25.83±
	E	0.00	26.55	N/A
	F	26.83 R+	26.14	25.87±
	G	42.00 R+	25.90	25.67±
	H	66.00 R+	25.42	25.34±
	J	75.50 R+	25.22	25.22±
1685+80	A	89.44 L+	24.92	24.86±
	B	83.60 L+	25.06	24.95±
	C	54.00 L+	25.76	25.43±
	D	26.83 L+	26.17	25.87±
	E	0.00	26.57	N/A
	F	26.83 R+	26.15	25.87±
	G	42.00 R+	25.92	25.64±
	H	66.00 R+	25.44	25.28±
	J	75.50 R+	25.14	25.14±

Note:
The Engineer may adjust the proposed top of deck/overlay elevations (including approach slabs) as needed if the existing top of deck elevations determined from the construction survey differ from the elevations shown on the plans.

DIST	COUNTY	ROUTE	POST MILES TOTAL PROJECT	SHEET No	TOTAL SHEETS
10	SJ	5	25.0/32.7	1092	1132

REGISTERED CIVIL ENGINEER 7/28/10 DATE

10-11-10
PLANS APPROVAL DATE

REGISTERED PROFESSIONAL ENGINEER RONALD L OEN No. 46945 Exp. 9/30/11 CIVIL STATE OF CALIFORNIA

The State of California or its officers or agents shall not be responsible for the accuracy or completeness of scanned copies of this plan sheet.

SAN JOAQUIN COUNCIL OF GOVERNMENTS
555 E. WEBER AVENUE
STOCKTON, CA 95202

BIGGS CARDOSA ASSOCIATES INC.
865 THE ALAMEDA
SAN JOSE, CALIFORNIA 95126

'I-5' Line Station	Line	Offset from 'I-5' Line (ft)	Proposed Top of Deck/Overlay Elev (ft)	Existing Top of Deck Elev (ft)
1685+90	A	89.64 L+	24.93	24.87±
	B	83.80 L+	25.07	24.96±
	C	54.00 L+	25.78	25.44±
	D	26.83 R+	26.19	25.87±
	E	0.00	26.59	N/A
	F	26.83 R+	26.17	25.87±
	G	42.00 R+	25.94	25.64±
	H	66.00 R+	25.46	25.29±
	J	75.50 R+	25.15	25.15±
1686+00	A	89.84 L+	24.94	24.88±
	B	84.00 L+	25.08	24.98±
	C	54.00 L+	25.80	25.47±
	D	26.83 L+	26.20	25.92±
	E	0.00	26.61	N/A
	F	26.83 R+	26.19	25.91±
	G	42.00 R+	25.96	25.68±
	H	66.00 R+	25.48	25.31±
	J	75.50 R+	25.17	25.17±
1686+10	A	90.05 L+	25.03	24.97±
	B	84.22 L+	25.16	25.07±
	C	54.00 L+	25.81	25.56±
	D	26.83 L+	26.22	26.01±
	E	0.00	26.62	N/A
	F	26.83 R+	26.21	25.96±
	G	42.00 R+	25.98	25.73±
	H	66.00 R+	25.50	25.36±
	J	75.50 R+	25.22	25.22±
1686+20	A	90.31 L+	25.09	25.03±
	B	84.47 L+	25.21	25.13±
	C	54.00 L+	25.83	25.62±
	D	26.83 L+	26.26	26.09±
	E	0.00	26.64	N/A
	F	26.83 R+	26.23	25.98±
	G	42.00 R+	26.00	25.74±
	H	66.00 R+	25.52	25.37±
	J	75.50 R+	25.22	25.22±

Note:
The Contractor shall verify all controlling field dimensions before ordering or fabricating any material

1 REVISED PER ADDENDUM No. 1 DATED MARCH 28, 2011

DESIGN OVERSIGHT John Fujimoto
3-11-11
SIGN OFF DATE

	BY	CHECKED
DESIGN	T. SWENSON	A. NOTARO
DETAILS	T. SWENSON	A. NOTARO
QUANTITIES	J. YIP	P. GONGIDI

PREPARED FOR THE STATE OF CALIFORNIA DEPARTMENT OF TRANSPORTATION

JOHN A. ALCIATI
PROJECT ENGINEER

BRIDGE NO. 29-0226
POST MILES 29.83

EBMUD AQUEDUCT UC (WIDEN)
DECK GRADES No. 3

DESIGN DETAIL SHEET (ENGLISH) (REV. 6-01-09)

ORIGINAL SCALE IN INCHES FOR REDUCED PLANS 0 1 2 3

CU 06240
EA 0G4701

DISREGARD PRINTS BEARING EARLIER REVISION DATES

REVISION DATES (PRELIMINARY STAGE ONLY) 12/4/09 1/15/10 4/23/10 5/28/10 6/11/10 7/28/10

SHEET 7 OF 34

FILE => 29-0226-d-dkg06.add

USERNAME => trmikes1 DATE PLOTTED => 25-MAR-2011 TIME PLOTTED => 07:48

20060048 (20060485SC)

'I-5' Line Station	Line	Offset from 'I-5' Line (ft)	Proposed Top of Deck/Overlay Elev (ft)	Existing Top of Deck Elev (ft)
1686+30	A	90.59 L+	25.11	25.05±
	B	84.76 L+	25.23	25.15±
	C	54.00 L+	25.85	25.66±
	D	26.83 L+	26.26	26.12±
	E	0.00	26.66	N/A
	F	26.83 R+	26.25	26.08±
	G	42.00 R+	26.02	25.83±
	H	66.00 R+	25.54	25.37±
	J	75.50 R+	25.28	25.28±
1686+40	A	90.91 L+	25.13	25.07±
	B	85.07 L+	25.25	25.16±
	C	54.00 L+	25.87	25.66±
	D	26.83 L+	26.28	26.09±
	E	0.00	26.68	N/A
	F	26.83 R+	26.27	26.13±
	G	42.00 R+	26.04	25.89±
	H	66.00 R+	25.56	25.45±
	J	75.50 R+	25.36	25.36±
1686+50	A	91.26 L+	25.10	25.04±
	B	85.43 L+	25.23	25.13±
	C	54.00 L+	25.89	25.64±
	D	26.83 L+	26.30	26.07±
	E	0.00	26.70	N/A
	F	26.83 R+	26.29	26.16±
	G	42.00 R+	26.06	25.91±
	H	66.00 R+	25.58	25.48±
	J	75.50 R+	25.37	25.37±
1686+60	A	91.65 L+	25.06	25.00±
	B	85.81 L+	25.19	25.09±
	C	54.00 L+	25.91	25.60±
	D	26.83 L+	26.31	26.04±
	E	0.00	26.72	N/A
	F	26.83 R+	26.31	26.12±
	G	42.00 R+	26.08	25.89±
	H	66.00 R+	25.60	25.53±
	J	75.50 R+	25.39	25.39±
1686+70	A	92.07 L+	25.05	24.99±
	B	86.23 L+	25.19	25.09±
	C	54.00 L+	25.92	25.62±
	D	26.83 L+	26.33	26.07±
	E	0.00	26.73	N/A
	F	26.83 R+	26.33	26.09±
	G	42.00 R+	26.10	25.86±
	H	66.00 R+	25.62	25.46±
	J	75.50 R+	25.36	25.36±
1686+80	A	92.52 L+	25.03	24.97±
	B	86.68 L+	25.17	25.07±
	C	54.00 L+	25.94	25.60±
	D	26.83 L+	26.35	26.05±
	E	0.00	26.75	N/A
	F	26.83 R+	26.35	26.06±
	G	42.00 R+	26.12	25.83±
	H	66.00 R+	25.64	25.47±
	J	75.50 R+	25.33	25.33±

'I-5' Line Station	Line	Offset from 'I-5' Line (ft)	Proposed Top of Deck/Overlay Elev (ft)	Existing Top of Deck Elev (ft)
1686+90	A	93.01 L+	25.07	25.01±
	B	87.17 L+	25.20	25.10±
	C	54.00 L+	25.96	25.62±
	D	26.83 L+	26.37	26.04±
	E	0.00	26.77	N/A
	F	26.83 R+	26.36	26.04±
	G	42.00 R+	26.14	25.81±
	H	66.00 R+	25.66	25.42±
	J	75.50 R+	25.32	25.32±
1687+00	A	93.53 L+	25.10	25.04±
	B	87.69 L+	25.23	25.13±
	C	54.00 L+	25.98	25.66±
	D	26.83 L+	26.39	26.09±
	E	0.00	26.79	N/A
	F	26.83 R+	26.38	26.03±
	G	42.00 R+	26.15	25.81±
	H	66.00 R+	25.67	25.41±
	J	75.50 R+	25.33	25.33±
1687+10	A	94.08 L+	25.18	25.12±
	B	88.24 L+	25.30	25.21±
	C	54.00 L+	26.00	25.73±
	D	26.83 L+	26.40	26.14±
	E	0.00	26.81	N/A
	F	26.83 R+	26.40	26.07±
	G	42.00 R+	26.17	25.84±
	H	66.00 R+	25.69	25.42±
	J	75.50 R+	25.32	25.32±
1687+20	A	94.67 L+	25.18	25.12±
	B	88.83 L+	25.30	25.21±
	C	54.00 L+	26.02	25.74±
	D	26.83 L+	26.42	26.16±
	E	0.00	26.83	N/A
	F	26.83 R+	26.42	26.14±
	G	42.00 R+	26.19	25.89±
	H	66.00 R+	25.71	25.42±
	J	75.50 R+	25.34	25.34±
1687+30	A	95.29 L+	25.17	25.11±
	B	89.45 L+	25.29	25.20±
	C	54.00 L+	26.03	25.75±
	D	26.83 L+	26.44	26.18±
	E	0.00	26.84	N/A
	F	26.83 R+	26.44	26.19±
	G	42.00 R+	26.21	25.94±
	H	66.00 R+	25.73	25.50±
	J	75.50 R+	25.40	25.40±
1687+40	A	95.95 L+	25.16	25.10±
	B	90.10 L+	25.29	25.19±
	C	54.00 L+	26.05	25.77±
	D	26.83 L+	26.46	26.21±
	E	0.00	26.86	N/A
	F	26.83 R+	26.46	26.22±
	G	42.00 R+	26.23	25.98±
	H	66.00 R+	25.75	25.56±
	J	75.50 R+	25.46	25.46±

Note:
The Engineer may adjust the proposed top of deck/overlay elevations (including approach slabs) as needed if the existing top of deck elevations determined from the construction survey differ from the elevations shown on the plans.

DIST	COUNTY	ROUTE	POST MILES TOTAL PROJECT	SHEET No	TOTAL SHEETS
10	SJ	5	25.0/32.7	1093	1132

REGISTERED CIVIL ENGINEER 7/28/10 DATE

10-11-10
PLANS APPROVAL DATE

REGISTERED PROFESSIONAL ENGINEER RONALD L OEN No. 46945 Exp. 9/30/11 CIVIL STATE OF CALIFORNIA

The State of California or its officers or agents shall not be responsible for the accuracy or completeness of scanned copies of this plan sheet.

SAN JOAQUIN COUNCIL OF GOVERNMENTS
555 E. WEBER AVENUE
STOCKTON, CA 95202

BIGGS CARDOSA ASSOCIATES INC.
865 THE ALAMEDA
SAN JOSE, CALIFORNIA 95126

'I-5' Line Station	Line	Offset from 'I-5' Line (ft)	Proposed Top of Deck/Overlay Elev (ft)	Existing Top of Deck Elev (ft)
1687+50	A	96.64 L+	25.13	25.07±
	B	90.79 L+	25.26	25.17±
	C	54.00 L+	26.07	25.79±
	D	26.83 R+	26.48	26.21±
	E	0.00	26.88	N/A
	F	26.83 R+	26.48	26.17±
	G	42.00 R+	26.25	25.94±
	H	66.00 R+	25.77	25.59±
	J	75.50 R+	25.45	25.45±
1687+60	A	97.36 L+	25.08	25.02±
	B	91.51 L+	25.21	25.10±
	C	54.00 L+	26.09	N/A
	D	26.83 L+	26.50	N/A
	E	0.00	26.90	N/A
	F	26.83 R+	26.50	26.17±
	G	42.00 R+	26.27	25.96±
	H	66.00 R+	25.79	25.58±
	J	75.50 R+	25.49	25.49±
1687+70	A	98.12 L+	25.06	25.00±
	B	92.26 L+	25.19	25.08±
	C	54.00 L+	26.11	N/A
	D	26.83 L+	26.51	N/A
	E	0.00	26.92	N/A
	F	26.83 R+	26.52	26.17±
	G	42.00 R+	26.29	25.94±
	H	66.00 R+	25.81	25.56±
	J	75.50 R+	25.42	25.42±
1687+80	A	N/A	N/A	N/A
	B	N/A	N/A	N/A
	C	54.00 L+	26.13	N/A
	D	26.83 L+	26.53	N/A
	E	0.00	26.94	N/A
	F	26.83 R+	26.54	N/A
	G	42.00 R+	26.31	N/A
	H	66.00 R+	25.83	N/A
	J	75.50 R+	25.41	25.41±

Note:
The Contractor shall verify all controlling field dimensions before ordering or fabricating any material

1 REVISED PER ADDENDUM No. 1 DATED MARCH 28, 2011

DESIGN OVERSIGHT John Fujimoto
3-11-11
SIGN OFF DATE

	BY	CHECKED
DESIGN	T. SWENSON	A. NOTARO
DETAILS	T. SWENSON	A. NOTARO
QUANTITIES	J. YIP	P. GONGIDI

PREPARED FOR THE STATE OF CALIFORNIA DEPARTMENT OF TRANSPORTATION

JOHN A. ALCIATI
PROJECT ENGINEER

BRIDGE NO. 29-0226
POST MILES 29.83

EBMUD AQUEDUCT UC (WIDEN)
DECK GRADES No. 4

DESIGN DETAIL SHEET (ENGLISH) (REV. 6-01-09)

ORIGINAL SCALE IN INCHES FOR REDUCED PLANS 0 1 2 3

CU 06240
EA 0G4701

DISREGARD PRINTS BEARING EARLIER REVISION DATES

REVISION DATES (PRELIMINARY STAGE ONLY) 12/4/09 1/15/10 4/23/10 5/28/10 6/11/10 7/28/10

SHEET 8 OF 34

FILE => 29-0226-d-dkg07.add

USERNAME => trmikes1 DATE PLOTTED => 25-MAR-2011 TIME PLOTTED => 07:49

20060485(C) 20060485

'I-5' Line Station	Line	Offset from 'I-5' Line (ft)	Proposed Top of Deck/Overlay Elev (ft)	Existing Top of Deck Elev (ft)
1687+90	A	N/A	N/A	N/A
	B	N/A	N/A	N/A
	C	54.00 Lt	N/A	N/A
	D	26.83 Lt	N/A	N/A
	E	0.00	26.95	N/A
	F	26.83 Rt	26.56	N/A
	G	42.00 Rt	26.33	N/A
	H	66.00 Rt	25.85	N/A
	J	75.50 Rt	25.41	N/A
1688+00	A	N/A	N/A	N/A
	B	N/A	N/A	N/A
	C	54.00 Lt	N/A	N/A
	D	26.83 Lt	N/A	N/A
	E	0.00	N/A	N/A
	F	26.83 Rt	26.57	N/A
	G	42.00 Rt	26.35	N/A
	H	66.00 Rt	25.87	N/A
	J	75.50 Rt	25.41	N/A
1688+10	A	N/A	N/A	N/A
	B	N/A	N/A	N/A
	C	54.00 Lt	N/A	N/A
	D	26.83 Lt	N/A	N/A
	E	0.00	N/A	N/A
	F	26.83 Rt	N/A	N/A
	G	42.00 Rt	N/A	N/A
	H	66.00 Rt	25.88	N/A
	J	75.50 Rt	25.41	N/A

Note: 1
The Engineer may adjust the proposed top of deck/overlay elevations (including approach slabs) as needed if the existing top of deck elevations determined from the construction survey differ from the elevations shown on the plans.

DIST	COUNTY	ROUTE	POST MILES TOTAL PROJECT	SHEET No	TOTAL SHEETS
10	SJ	5	25.0/32.7	1094	1132

REGISTERED CIVIL ENGINEER 7/28/10 DATE

10-11-10
PLANS APPROVAL DATE

REGISTERED PROFESSIONAL ENGINEER RONALD L OEN No. 46945 Exp. 9/30/11 CIVIL STATE OF CALIFORNIA

The State of California or its officers or agents shall not be responsible for the accuracy or completeness of scanned copies of this plan sheet.

SAN JOAQUIN COUNCIL OF GOVERNMENTS
555 E. WEBER AVENUE
STOCKTON, CA 95202

BIGGS CARDOSA ASSOCIATES INC.
865 THE ALAMEDA
SAN JOSE, CALIFORNIA 95126

Note:
The Contractor shall verify all controlling field dimensions before ordering or fabricating any material

1 **REVISED PER ADDENDUM No. 1 DATED MARCH 28, 2011**

DESIGN OVERSIGHT John Fujimoto
3-11-11
SIGN OFF DATE

	BY	CHECKED
DESIGN	T. SWENSON	A. NOTARO
DETAILS	T. SWENSON	A. NOTARO
QUANTITIES	J. YIP	P. GONGIDI

PREPARED FOR THE STATE OF CALIFORNIA DEPARTMENT OF TRANSPORTATION

JOHN A. ALCIATI
PROJECT ENGINEER

BRIDGE NO. 29-0226
POST MILES 29.83

EBMUD AQUEDUCT UC (WIDEN)
DECK GRADES No. 5

DESIGN DETAIL SHEET (ENGLISH) (REV. 6-01-09)

ORIGINAL SCALE IN INCHES FOR REDUCED PLANS 0 1 2 3

CU 06240
EA 0G4701

DISREGARD PRINTS BEARING EARLIER REVISION DATES

REVISION DATES (PRELIMINARY STAGE ONLY) 12/4/09 1/15/10 4/23/10 5/28/10 6/11/10 7/28/10

SHEET 9 OF 34

FILE => 29-0226-d-dkg08.add

USERNAME => trmikest DATE PLOTTED => 25-MAR-2011 TIME PLOTTED => 07:49

20060048 (20060485BC)

DIST	COUNTY	ROUTE	POST MILES TOTAL PROJECT	SHEET No	TOTAL SHEETS
10	SJ	5	25.0/32.7	1099	1132

REGISTERED CIVIL ENGINEER — DATE 7/28/10

PLANS APPROVAL DATE 10-11-10

REGISTERED PROFESSIONAL ENGINEER RONALD L OEN No. 46945 Exp. 9/30/11 CIVIL STATE OF CALIFORNIA

The State of California or its officers or agents shall not be responsible for the accuracy or completeness of scanned copies of this plan sheet.

SAN JOAQUIN COUNCIL OF GOVERNMENTS
555 E. WEBER AVENUE
STOCKTON, CA 95202

BIGGS CARDOSA ASSOCIATES INC.
865 THE ALAMEDA
SAN JOSE, CALIFORNIA 95126

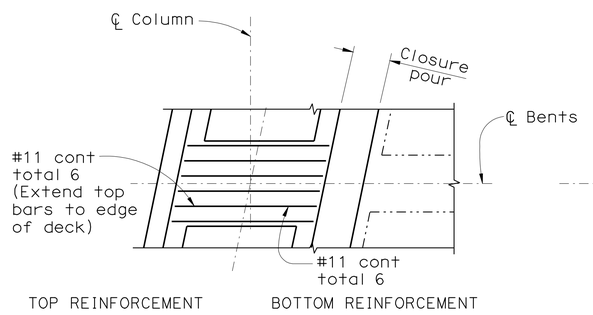

EXTERIOR WIDENING

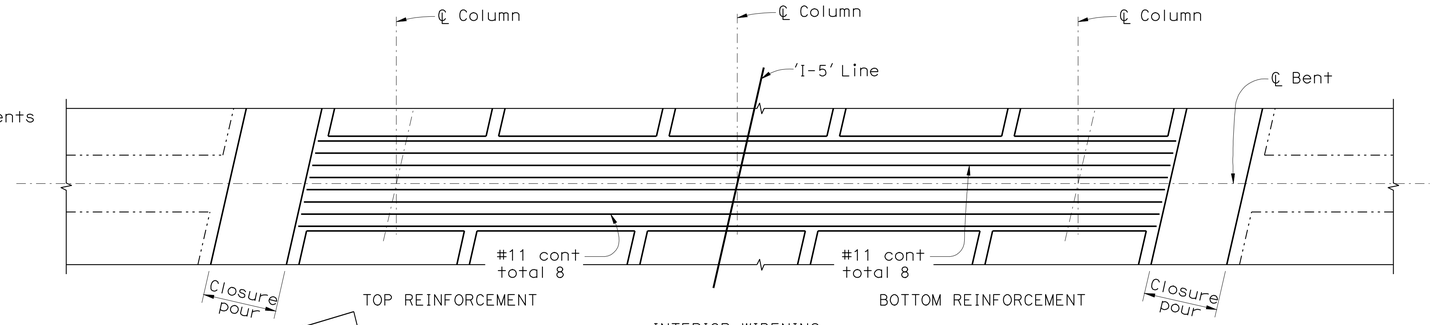

INTERIOR WIDENING

PLAN
1/4" = 1'-0"

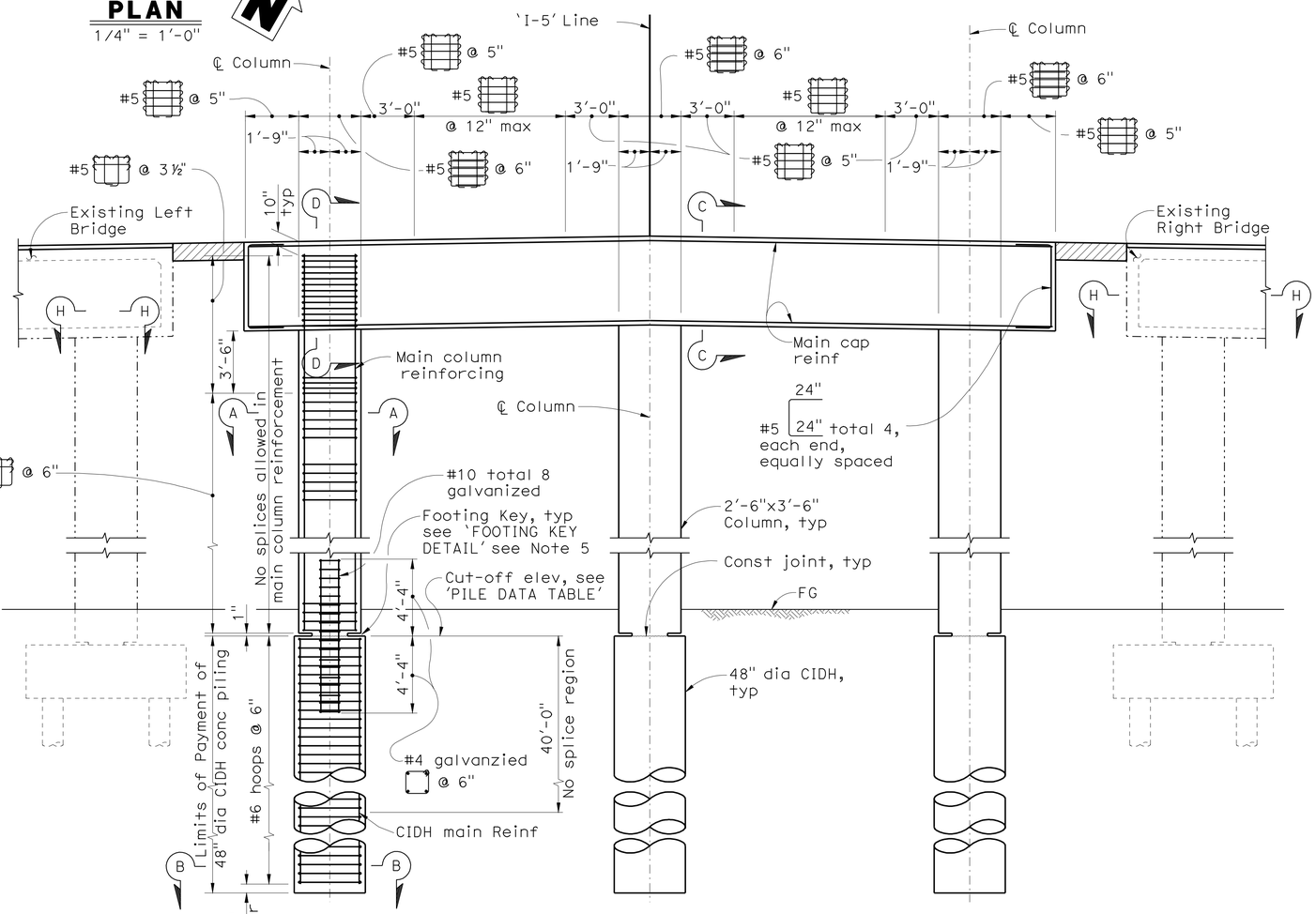

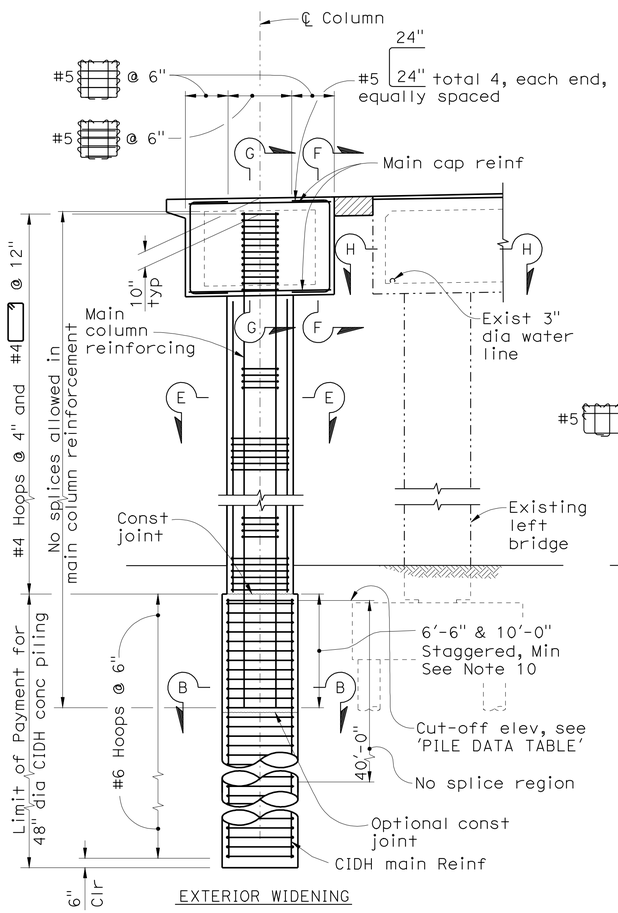

EXTERIOR WIDENING

INTERIOR WIDENING

ELEVATION
1/4" = 1'-0"

LEGEND:

Closure pour

NOTES:

1. Barriers not shown for clarity.
2. Soundwall not shown for clarity.
3. For 'SECTION A-A, B-B, C-C, D-D and E-E' see 'BENT DETAILS No. 2' sheet.
4. For 'SECTION F-F, G-G and H-H' see 'BENT DETAILS No. 3' sheet.
5. For 'FOOTING KEY DETAIL' see 'BENT DETAILS No. 2' sheet.
6. For 'PILE DATA TABLE' see 'FOUNDATION PLAN' sheet.
7. Bent 2 shown, Bent 3 and 4 similar.
8. No splices allowed in main column reinforcement.
9. Orient bent cap stirrups parallel to girders.
10. Main column Reinf extension shall alternate 6'-6" and 10'-0" below top of CIDH.
11. No splices allowed in main cap reinforcement.
12. Column and CIDH hoops shall utilize ultimate butt splices only.
13. Splices in CIDH main Reinf outside no splice regions shall be ultimate butt splices.

1

Note:
The Contractor shall verify all controlling field dimensions before ordering or fabricating any material

1 **REVISED PER ADDENDUM No. 1 DATED MARCH 28, 2011**

DESIGN OVERSIGHT John Fujimoto — 3-11-11 SIGN OFF DATE

	BY	CHECKED
DESIGN	T. SWENSON	A. NOTARO
DETAILS	T. SWENSON	A. NOTARO
QUANTITIES	J. YIP	P. GONGIDI

PREPARED FOR THE STATE OF CALIFORNIA DEPARTMENT OF TRANSPORTATION

JOHN A. ALCIATI, PROJECT ENGINEER

BRIDGE NO. 29-0226 — POST MILES 29.83

EBMUD AQUEDUCT UC (WIDEN)
BENT DETAILS No. 1

DESIGN DETAIL SHEET (ENGLISH) (REV. 6-01-09)

ORIGINAL SCALE IN INCHES FOR REDUCED PLANS 0 1 2 3

CU 06240
EA 0G4701

DISREGARD PRINTS BEARING EARLIER REVISION DATES

REVISION DATES (PRELIMINARY STAGE ONLY): 10/16/09 12/4/09 1/15/10 4/23/10 5/28/10 6/11/10 7/1/10 7/28/10

SHEET 14 OF 34

FILE => 29-0226-j-b13d1.dwg

USERNAME => trmikesi DATE PLOTTED => 25-MAR-2011 TIME PLOTTED => 09:58

(20060485130)

DIST	COUNTY	ROUTE	POST MILES TOTAL PROJECT	SHEET No	TOTAL SHEETS
10	SJ	5	25.0/32.7	1100	1132

REGISTERED CIVIL ENGINEER 7/28/10 DATE

10-11-10
PLANS APPROVAL DATE

REGISTERED PROFESSIONAL ENGINEER RONALD L OEN No. 46945 Exp. 9/30/11 CIVIL STATE OF CALIFORNIA

The State of California or its officers or agents shall not be responsible for the accuracy or completeness of scanned copies of this plan sheet.

SAN JOAQUIN COUNCIL OF GOVERNMENTS
555 E. WEBER AVENUE
STOCKTON, CA 95202

BIGGS CARDOSA ASSOCIATES INC.
865 THE ALAMEDA
SAN JOSE, CALIFORNIA 95126

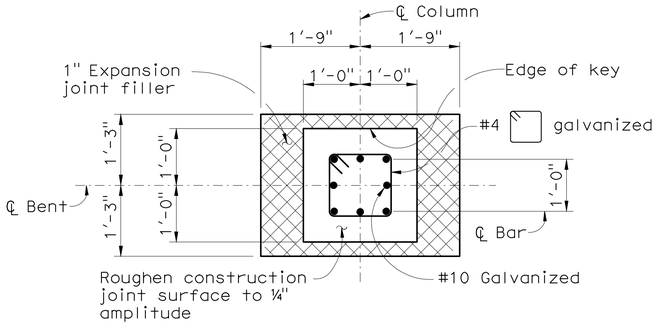

FOOTING KEY DETAIL
3/4" = 1'-0"

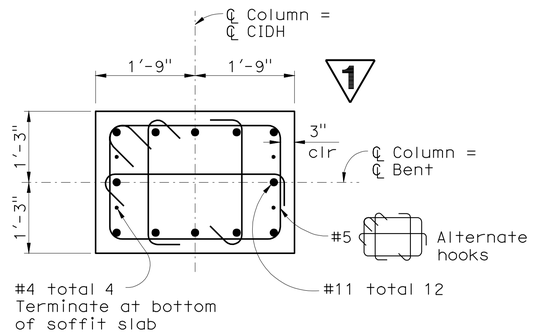

SECTION A-A
3/4" = 1'-0"

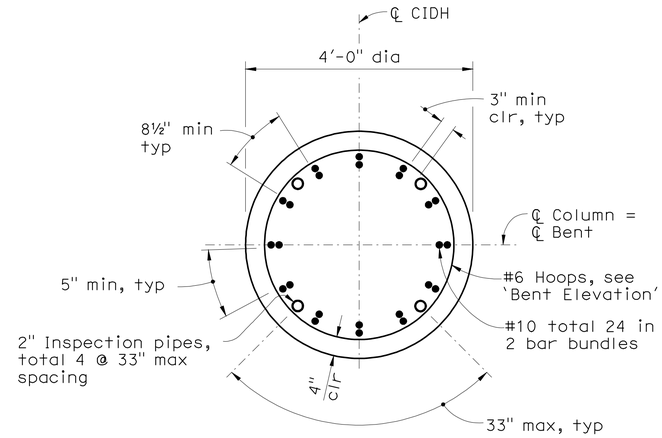

SECTION B-B
3/4" = 1'-0"

LEGEND:

Expanded Polystyrene

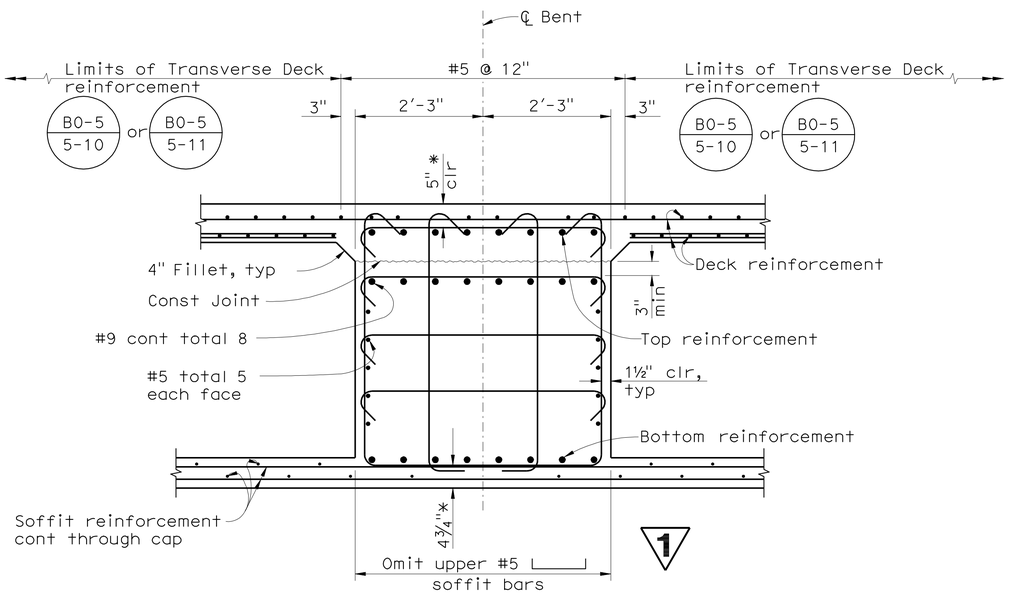

Note:
* Indicates clearance to main cap bars.

SECTION C-C
3/4" = 1'-0"

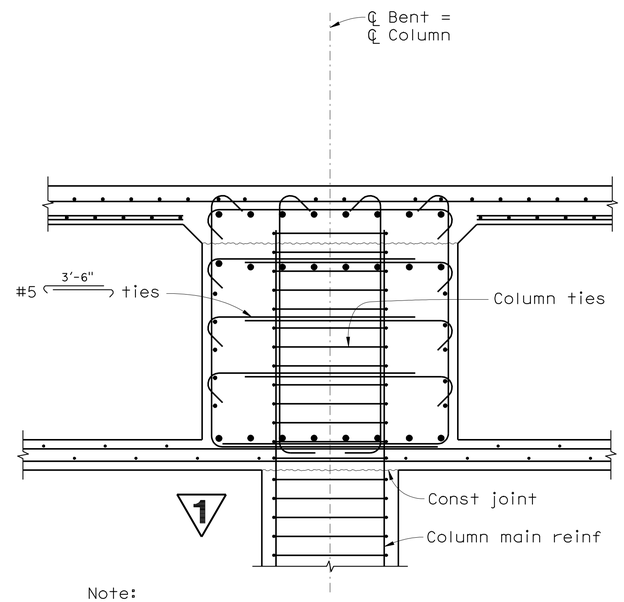

Note:
See 'SECTION C-C' for details not noted.

SECTION D-D
3/4" = 1'-0"

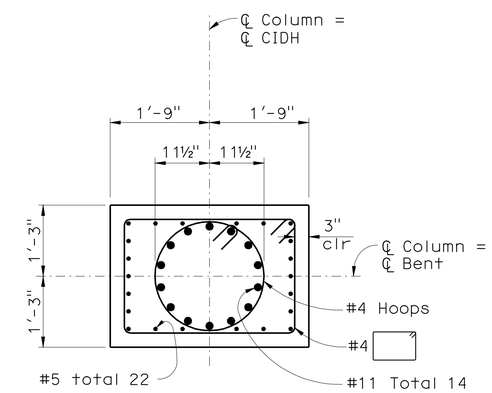

SECTION E-E
3/4" = 1'-0"

Note:
The Contractor shall verify all controlling field dimensions before ordering or fabricating any material

1 REVISED PER ADDENDUM No. 1 DATED MARCH 28, 2011

DESIGN OVERSIGHT John Fujimoto
3-11-11
SIGN OFF DATE

	BY	CHECKED
DESIGN	T. SWENSON	A. NOTARO
DETAILS	T. SWENSON	A. NOTARO
QUANTITIES	J. YIP	P. GONGIDI

PREPARED FOR THE STATE OF CALIFORNIA DEPARTMENT OF TRANSPORTATION

JOHN A. ALCIATI
PROJECT ENGINEER

BRIDGE NO. 29-0226
POST MILES 29.83

EBMUD AQUEDUCT UC (WIDEN)
BENT DETAILS No. 2

DESIGN DETAIL SHEET (ENGLISH) (REV. 6-01-09)

ORIGINAL SCALE IN INCHES FOR REDUCED PLANS 0 1 2 3

CU 06240
EA 0G4701

DISREGARD PRINTS BEARING EARLIER REVISION DATES

REVISION DATES (PRELIMINARY STAGE ONLY) 10/16/09 12/4/09 1/15/10 4/23/10 5/28/10 6/28/10 7/28/10

SHEET 15 OF 34

FILE => 29-0226-j-b14d2.dgn

USERNAME => jrmartin DATE PLOTTED => 25-MAR-2011 TIME PLOTTED => 08:02

20060048 (20060485140)

DIST	COUNTY	ROUTE	POST MILES TOTAL PROJECT	SHEET No	TOTAL SHEETS
10	SJ	5	25.0/32.7	1103	1132

REGISTERED CIVIL ENGINEER — DATE 7/28/10

PLANS APPROVAL DATE 10-11-10

REGISTERED PROFESSIONAL ENGINEER RONALD L OEN No. 46945 Exp. 9/30/11 CIVIL STATE OF CALIFORNIA

The State of California or its officers or agents shall not be responsible for the accuracy or completeness of scanned copies of this plan sheet.

SAN JOAQUIN COUNCIL OF GOVERNMENTS
555 E. WEBER AVENUE
STOCKTON, CA 95202

BIGGS CARDOSA ASSOCIATES INC.
865 THE ALAMEDA
SAN JOSE, CALIFORNIA 95126

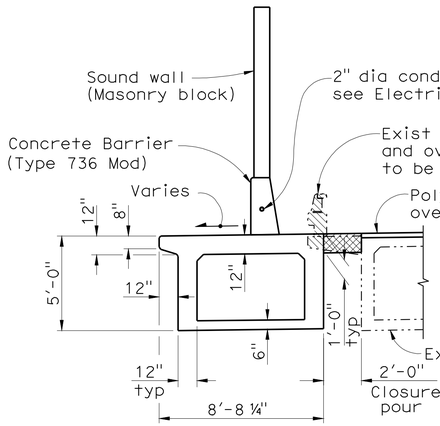

TYPICAL SECTION - EXTERIOR WIDENING

1/4" = 1'-0"

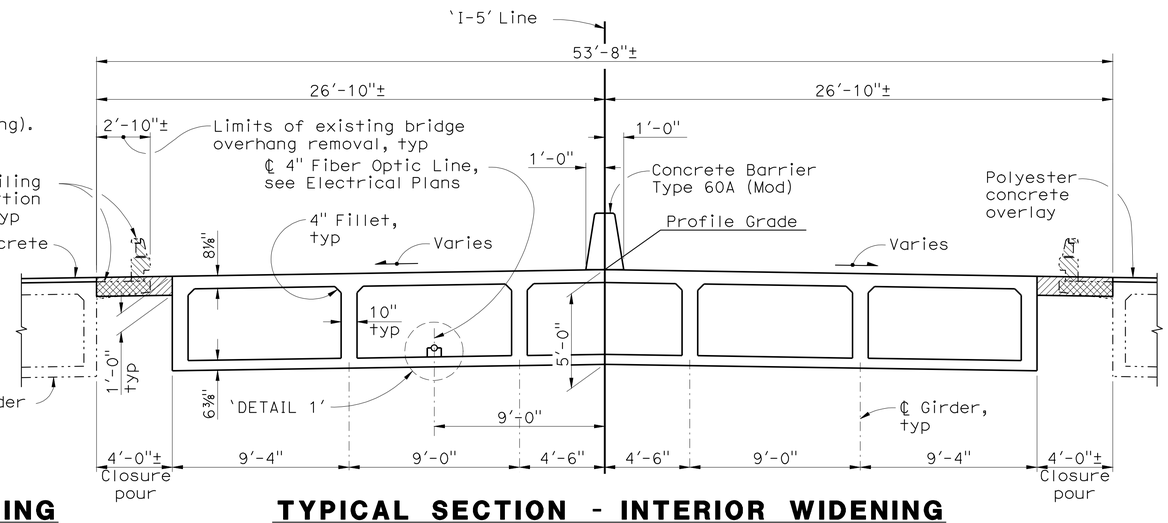

TYPICAL SECTION - INTERIOR WIDENING

1/4" = 1'-0"

NOTES:

1. All dimensions are measured normal to 'I-5' Line.
2. Transverse deck & soffit reinforcement shall be placed parallel to C ⊥but & spaced normal to 'I-5' Line.
3. For 'DETAIL 1' see 'GIRDER LAYOUT No. 2' sheet.

LEGEND:

Bridge Removal (Portion)

Closure Pour

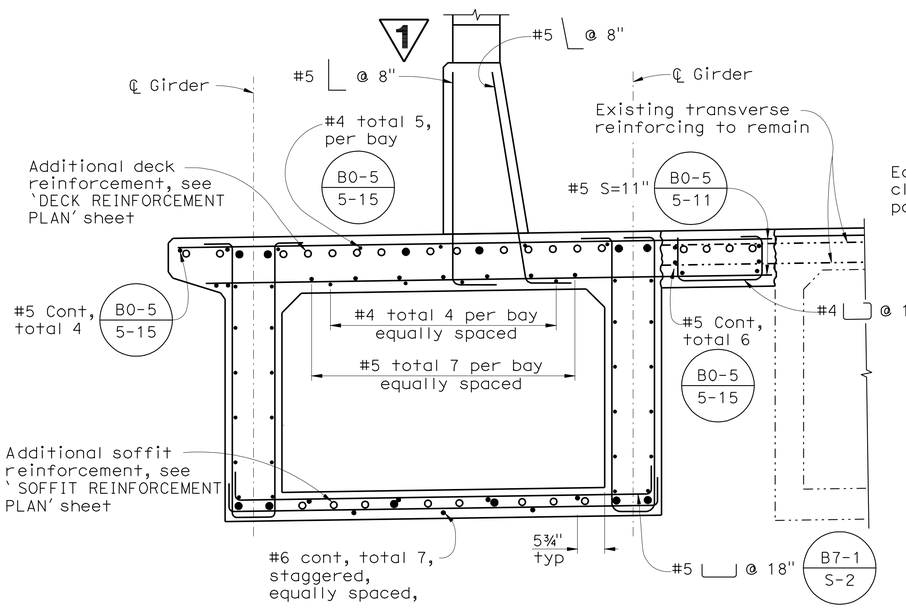

PARTIAL TYPICAL SECTION - EXTERIOR WIDENING

3/4" = 1'-0"

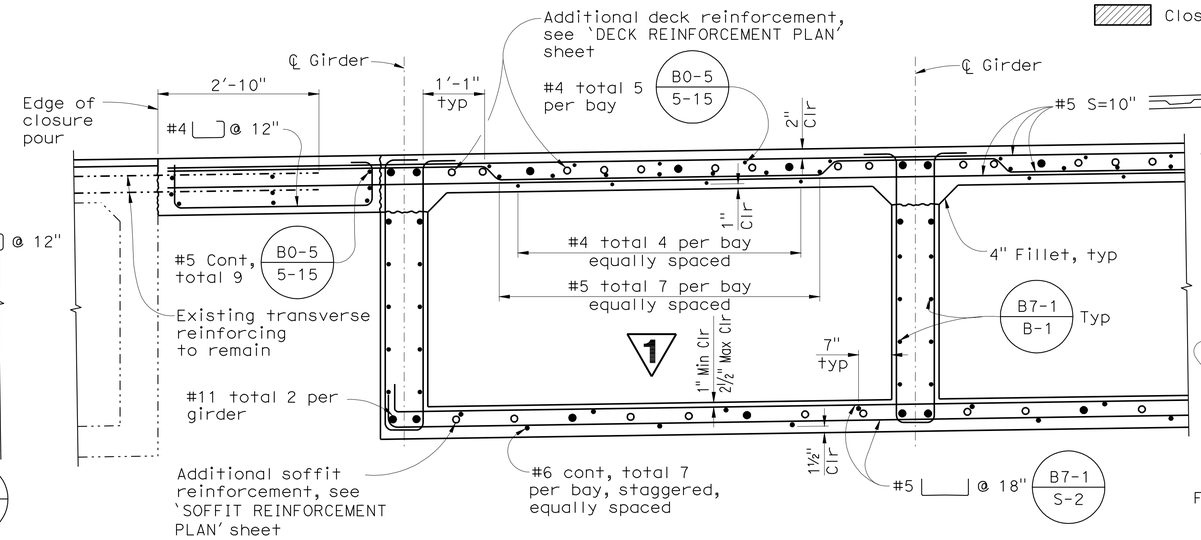

PARTIAL TYPICAL SECTION - INTERIOR WIDENING

3/4" = 1'-0"

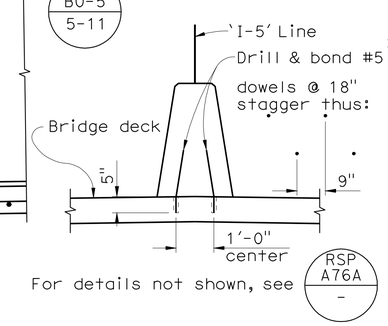

CONCRETE BARRIER TYPE 60A (MOD)

NO SCALE

FALSEWORK RELEASE NOTES

ALTERNATIVE 1:
Falsework shall be released as soon as permitted by the specifications. Closure pour shall not be placed sooner than 60 days after the falsework has been released.

ALTERNATIVE 2:
Falsework shall not be released less than 28 days after the last concrete has been placed. Closure pour shall not be placed sooner than 14 days after the falsework has been released.

When falsework release alternative 2 is used, camber values are 0.75 times those shown.

Note:
The Contractor shall verify all controlling field dimensions before ordering or fabricating any material

1 REVISED PER ADDENDUM No. 1 DATED MARCH 28, 2011

DESIGN OVERSIGHT John Fujimoto — 3-11-11 SIGN OFF DATE

	BY	CHECKED
DESIGN	T. SWENSON	A. NOTARO
DETAILS	T. SWENSON	A. NOTARO
QUANTITIES	J. YIP	P. GONGIDI

PREPARED FOR THE STATE OF CALIFORNIA DEPARTMENT OF TRANSPORTATION

JOHN A. ALCIATI, PROJECT ENGINEER

BRIDGE NO. 29-0226 — POST MILES 29.83

EBMUD AQUEDUCT UC (WIDEN)

TYPICAL SECTION

DESIGN DETAIL SHEET (ENGLISH) (REV. 6-01-09)

ORIGINAL SCALE IN INCHES FOR REDUCED PLANS 0 1 2 3

CU 06240
EA 0G4701

DISREGARD PRINTS BEARING EARLIER REVISION DATES

REVISION DATES (PRELIMINARY STAGE ONLY): 10/16/09 12/4/09 1/15/10 4/23/10 5/28/10 6/11/10 7/28/10

SHEET 18 OF 34

FILE => 29-0226-m-ts1.add

USERNAME => trmartin DATE PLOTTED => 25-MAR-2011 TIME PLOTTED => 08:02

2006048 (2006048S17C)

DIST	COUNTY	ROUTE	POST MILES TOTAL PROJECT	SHEET No	TOTAL SHEETS
10	SJ	5	25.0/32.7	1109	1132

REGISTERED CIVIL ENGINEER 7/28/10 DATE

10-11-10
PLANS APPROVAL DATE

REGISTERED PROFESSIONAL ENGINEER RONALD L OEN No. 46945 Exp. 9/30/11 CIVIL STATE OF CALIFORNIA

The State of California or its officers or agents shall not be responsible for the accuracy or completeness of scanned copies of this plan sheet.

SAN JOAQUIN COUNCIL OF GOVERNMENTS
555 E. WEBER AVENUE
STOCKTON, CA 95202

BIGGS CARDOSA ASSOCIATES INC.
865 THE ALAMEDA
SAN JOSE, CALIFORNIA 95126

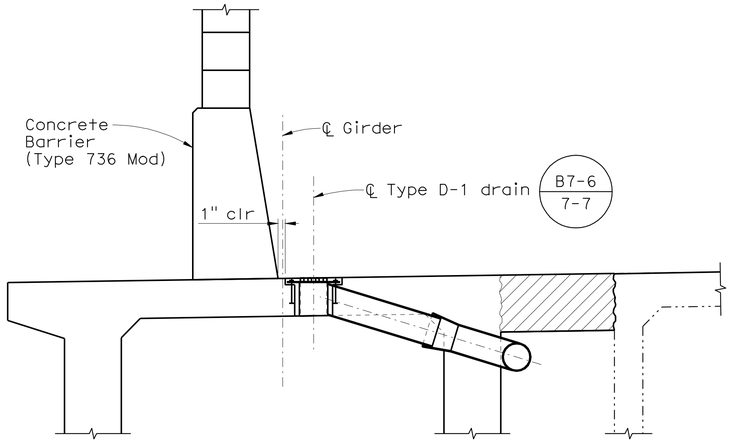

Deck Drain on Exterior Widening

SECTION A-A
3/4" = 1'-0"

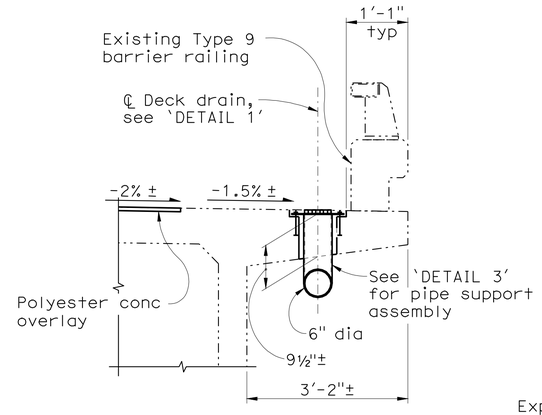

Deck Drain on Existing Right Bridge

SECTION B-B
3/4" = 1'-0"

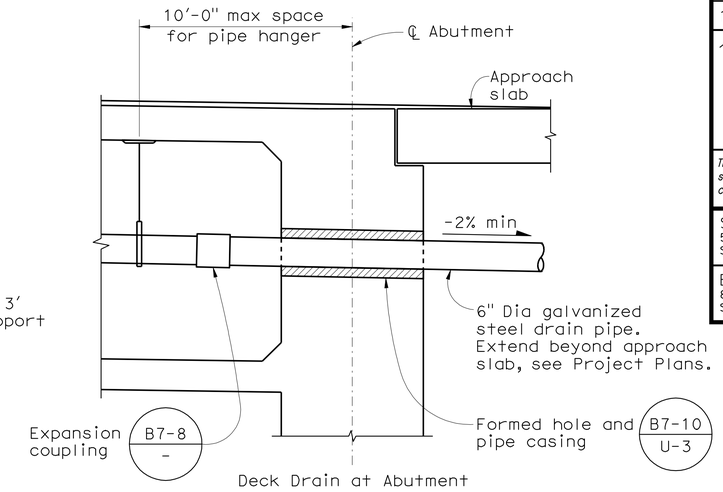

Deck Drain at Abutment

SECTION C-C
3/4" = 1'-0"

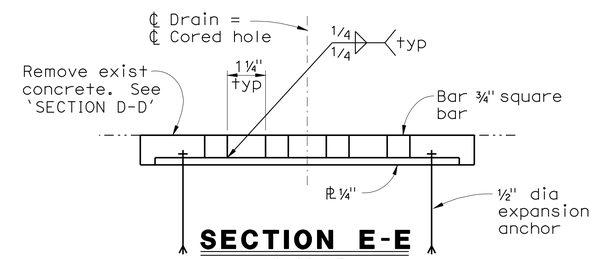

SECTION E-E
NO SCALE

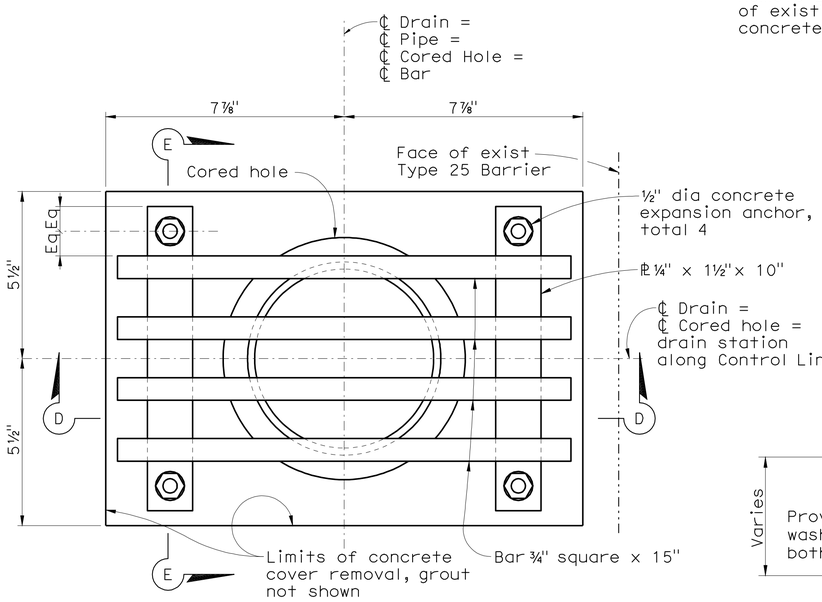

DECK DRAIN - DETAIL 1
NO SCALE

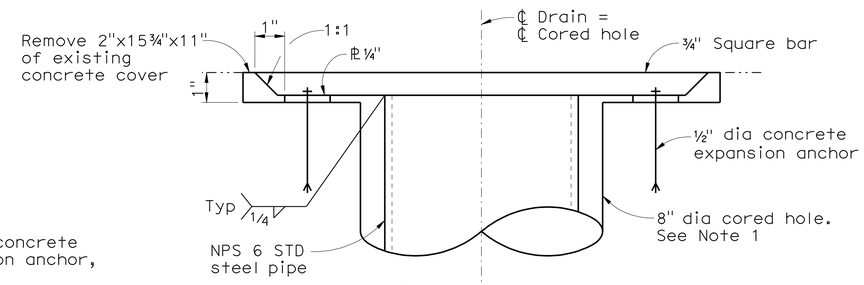

Deck Drain Notes:
1. Field locate drain to minimize damage to exist overhang top mat reinf.

SECTION D-D
NO SCALE

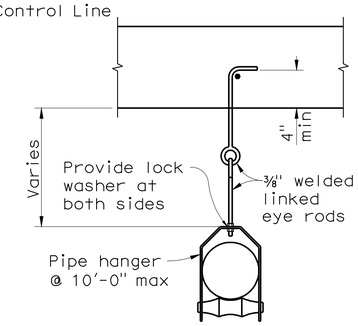

DETAIL 2
NO SCALE

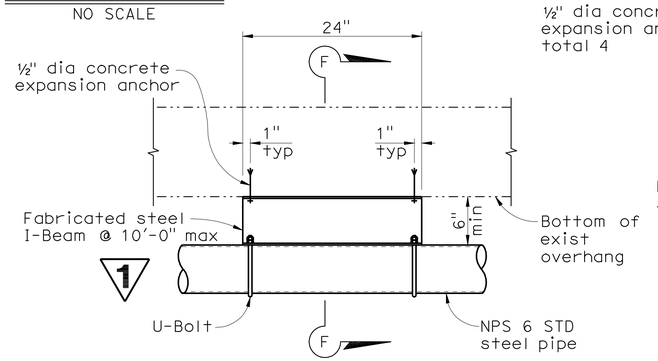

PIPE SUPPORT ASSEMBLY - DETAIL 3
NO SCALE

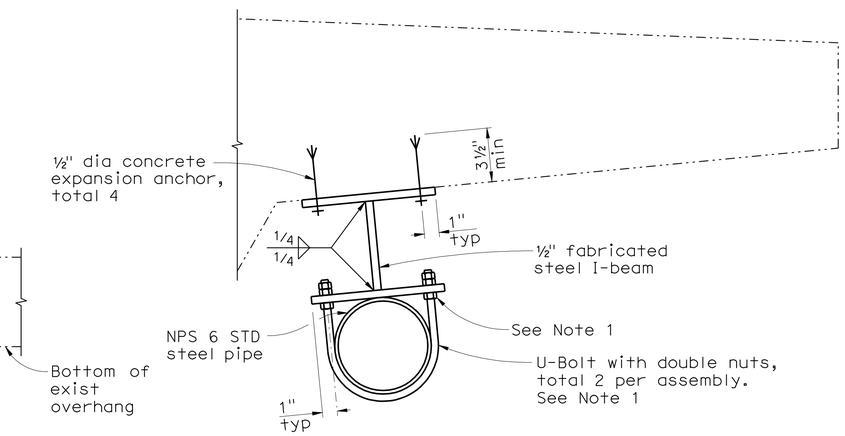

Pipe Support Assembly Note: 1

1. At pipe support assemblies, loosely clamp double nuts to provide ¼" clearance between pipe and flange of steel I-beam.

SECTION F-F
NO SCALE

Note:
The Contractor shall verify all controlling field dimensions before ordering or fabricating any material

1 REVISED PER ADDENDUM No. 1 DATED MARCH 28, 2011

DESIGN OVERSIGHT John Fujimoto
3-11-11
SIGN OFF DATE

	BY	CHECKED
DESIGN	T. SWENSON	A. NOTARO
DETAILS	T. SWENSON	A. NOTARO
QUANTITIES	J. YIP	P. GONGIDI

PREPARED FOR THE STATE OF CALIFORNIA DEPARTMENT OF TRANSPORTATION

JOHN A. ALCIATI
PROJECT ENGINEER

BRIDGE NO. 29-0226
POST MILES 29.83

EBMUD AQUEDUCT UC (WIDEN)
DECK DRAIN DETAILS

DESIGN DETAIL SHEET (ENGLISH) (REV. 6-01-09)

ORIGINAL SCALE IN INCHES FOR REDUCED PLANS 0 1 2 3

CU 06240
EA 0G4701

DISREGARD PRINTS BEARING EARLIER REVISION DATES

REVISION DATES (PRELIMINARY STAGE ONLY) 10/16/09 12/4/09 1/15/10 4/23/10 5/28/10 6/11/10 7/1/10 7/28/10

SHEET 24 OF 34

FILE => 29-0226-s-ddet01.add

USERNAME => trmikes1 DATE PLOTTED => 25-MAR-2011 TIME PLOTTED => 08:05

20060485230 20060485

DIST	COUNTY	ROUTE	POST MILES TOTAL PROJECT	SHEET No	TOTAL SHEETS
10	SJ	5	25.0/32.7	1111	1132

REGISTERED CIVIL ENGINEER 7/28/10 DATE

10-11-10
PLANS APPROVAL DATE

REGISTERED PROFESSIONAL ENGINEER RONALD L OEN No. 46945 Exp. 9/30/11 CIVIL STATE OF CALIFORNIA

The State of California or its officers or agents shall not be responsible for the accuracy or completeness of scanned copies of this plan sheet.

SAN JOAQUIN COUNCIL OF GOVERNMENTS
555 E. WEBER AVENUE
STOCKTON, CA 95202

BIGGS CARDOSA ASSOCIATES INC.
865 THE ALAMEDA
SAN JOSE, CALIFORNIA 95126

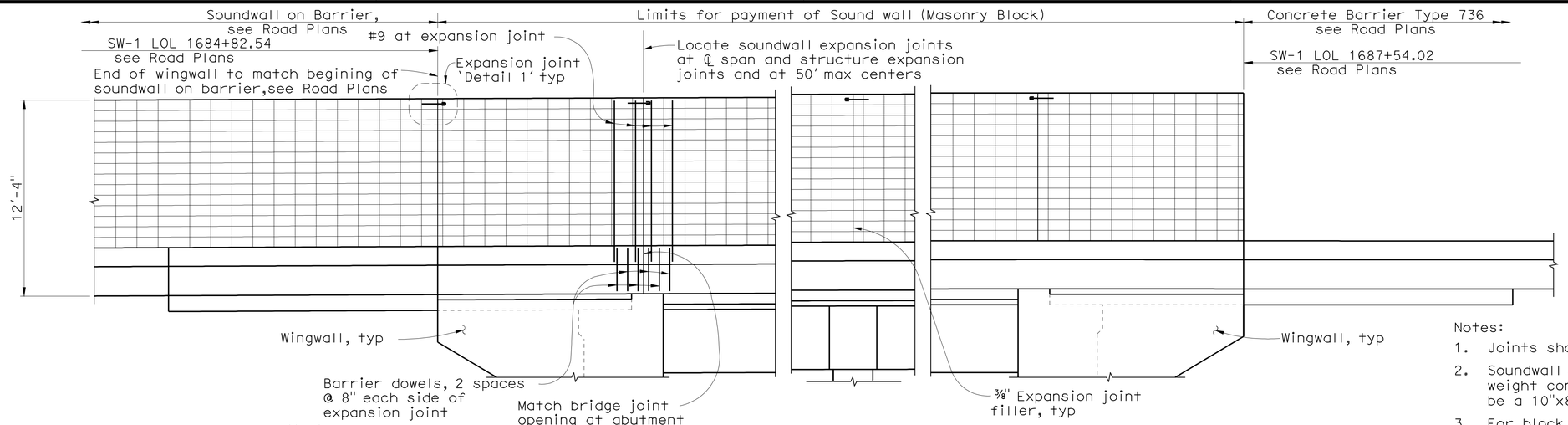

MIRRORED SOUNDWALL ELEVATION

1/4" = 1'-0"

Notes:

1. Joints shall be tooled concave
2. Soundwall shall be constructed with 8" x 8" x 16" light weight concrete block (running bond), except top block shall be a 10"x8"x16" light-weight concrete block
3. For block texture and pattern, see Road Plans
4. Fulltime special inspection shall be performed during the construction of the soundwall

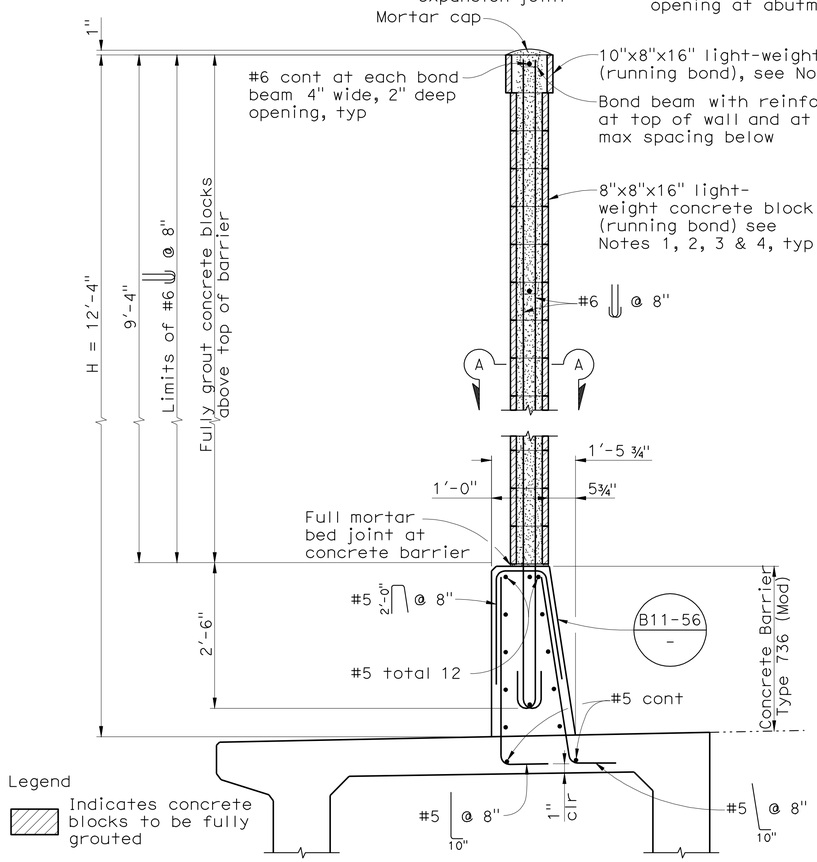

TYPICAL SECTION 1

3/4" = 1'-0"

Note:
The Contractor shall verify all controlling field dimensions before ordering or fabricating any material

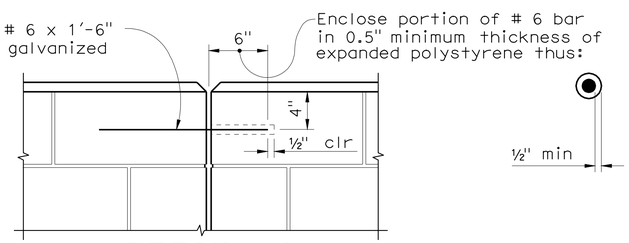

DETAIL 1

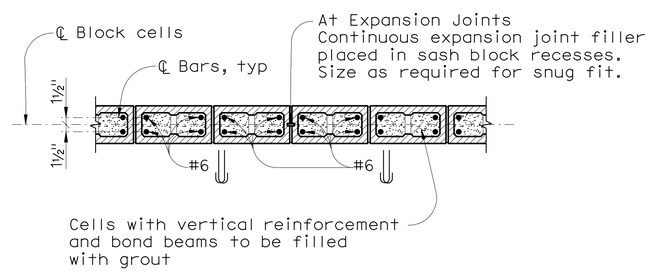

SECTION A-A 1

3/4" = 1'-0"

DESIGN NOTES

DESIGN

Uniform Building Code, 1997 Edition and the Bridge Design Specifications.

DESIGN WIND LOAD

37 PSF

DESIGN SEISMIC LOAD

2.0 Dead load

REINFORCED CONCRETE

f'c = 3250 PSI
fy = 60 KSI

CONCRETE MASONRY HIGH STRENGTH

f'm = 2500 PSI
fb = 830 PSI
fs = 24000 PSI
n = 15.5

LOAD FACTORS AND LOAD COMBINATIONS

Working Stress Design (WSD) — Percentage of unit stress

Group 1: D + E + SC	100%
Group 2: D + W + SC + E	100%
Group 3: D + 0.71 EQD + E	100%

Where:

D = Dead load
E = Lateral earth pressure
SC = Live load surcharge
W = Wind load
EQD = Seismic dead load

Load Factor Design (LFD)

Group A: βD+1.7 E+1.7 SC
Group B: βD+1.7 E+1.3 W
Group C: βD+1.3 E+1.0 EQE
Group D: βD+1.3 E+1.0 EQD
Group E: βD+1.1 E+0.85 (EQE+EQD)

Where : β = 0.9 or 1.2, whichever controls in design
D = Dead load
E = Lateral earth pressure
SC = Live load surcharge
W = Wind load
EQD = Seismic dead load
EQE = Seismic earth load

STRENGTH REDUCTION FACTORS

Reinforced concrete:
For flexure ——— Ø=0.90
For shear ——— Ø=0.85
Concrete masonry:
For flexure ———
For shear ——— Ø=0.80
Ø=0.60
Foundations :
See "RETAINING WALL WITH SOUNDWALL" sheets.

1 REVISED PER ADDENDUM No. 1 DATED MARCH 28, 2011

DESIGN OVERSIGHT John Fujimoto
3-11-11
SIGN OFF DATE

	BY	CHECKED
DESIGN	T. SWENSON	A. NOTARO
DETAILS	T. SWENSON	A. NOTARO
QUANTITIES	J. YIP	P. GONGIDI

PREPARED FOR THE STATE OF CALIFORNIA DEPARTMENT OF TRANSPORTATION

JOHN A. ALCIATI
PROJECT ENGINEER

BRIDGE NO. 29-0226
POST MILES 29.83

EBMUD AQUEDUCT UC (WIDEN)
SOUNDWALL DETAILS

DESIGN DETAIL SHEET (ENGLISH) (REV. 6-01-09)

ORIGINAL SCALE IN INCHES FOR REDUCED PLANS 0 1 2 3

CU 06240
EA 0G4701

DISREGARD PRINTS BEARING EARLIER REVISION DATES

REVISION DATES (PRELIMINARY STAGE ONLY) 10/16/09 12/4/09 1/15/10 4/23/10 5/28/10 6/11/10 7/1/10 7/28/10

SHEET 26 OF 34

FILE => 29-0226-t-swdet.add

USERNAME => trmikest DATE PLOTTED => 25-MAR-2011 TIME PLOTTED => 10:02

20060048 (20060485250)

DIST	COUNTY	ROUTE	POST MILES TOTAL PROJECT	SHEET NO.	TOTAL SHEETS
10	SJ	5	25.0/32.7	1113	1132

REGISTERED CIVIL ENGINEER 7/28/10

PLANS APPROVAL DATE 10-11-10

REGISTERED PROFESSIONAL ENGINEER RONALD L OEN No. 46945 Exp. 9/30/11 CIVIL STATE OF CALIFORNIA

The State of California or its officers or agents shall not be responsible for the accuracy or completeness of scanned copies of this plan sheet.

SAN JOAQUIN COUNCIL OF GOVERNMENTS
555 E. WEBER AVENUE
STOCKTON, CA 95202

BIGGS CARDOSA ASSOCIATES INC.
865 THE ALAMEDA
SAN JOSE, CALIFORNIA 95126

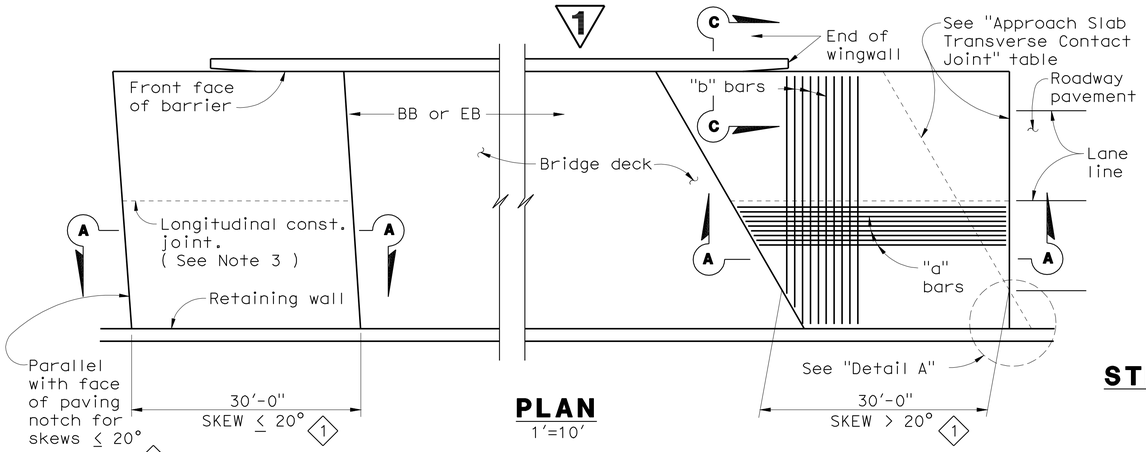

PLAN
1'=10'

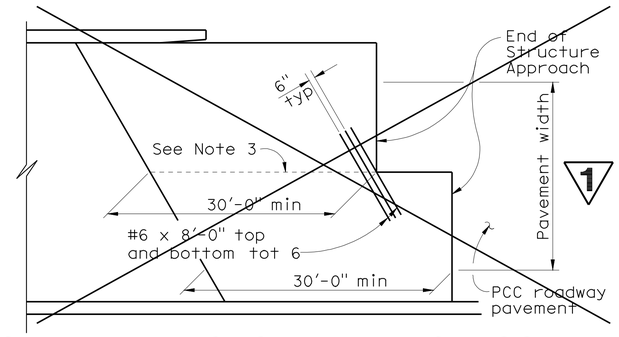

STRUCTURE APPROACH - END STAGGER DETAIL
No Scale

APPROACH SLAB TRANSVERSE CONTACT JOINT (1)		
APPROACH SKEW	WITH AC ROADWAY PAVEMENT	WITH PCC ROADWAY PAVEMENT
≤ 20°	Parallel with face of paving notch	Parallel with face of paving notch
> 20°-45°	Parallel with face of P N use (Detail A)	Stagger lines 24' to 36' apart
> 45°	Parallel with face of P N use (Detail A)	Stagger at each lane line

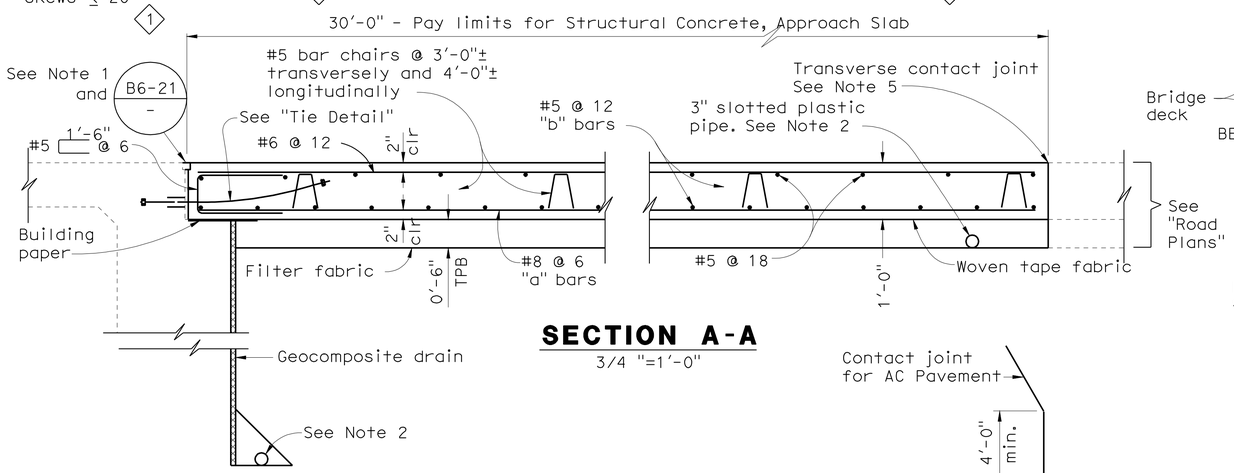

SECTION A-A
3/4 "=1'-0"

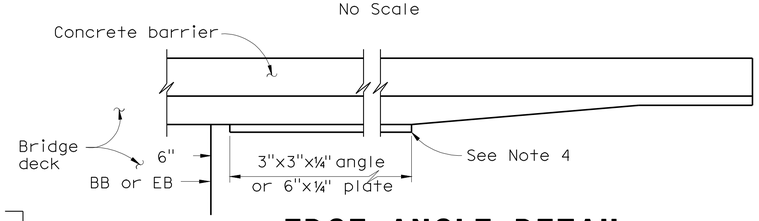

EDGE ANGLE DETAIL
1/2 "=1'-0"

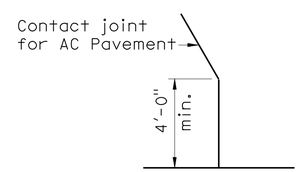

DETAIL A
No Scale

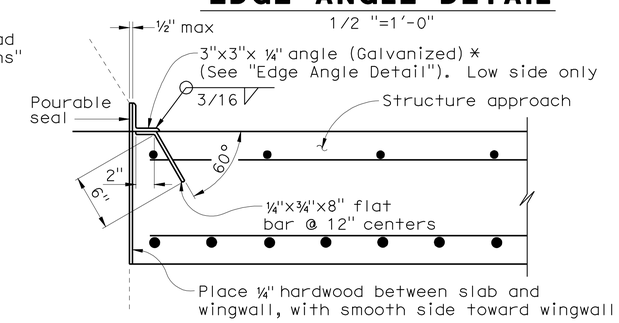

(TO * BE USED WITH TYPE 25 OR TYPE 27 CONCRETE BARRIER)

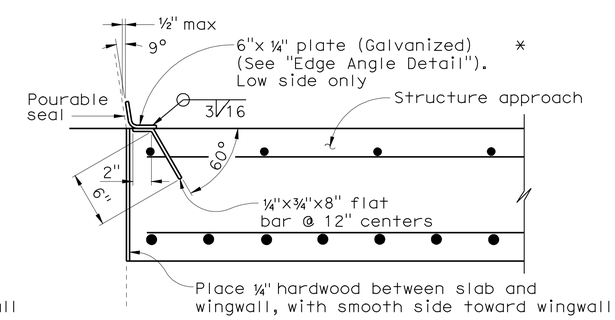

(TO * BE USED WITH TYPE 732 OR TYPE 736 CONCRETE BARRIER)

DETAIL B
1 1/2 "=1'-0"

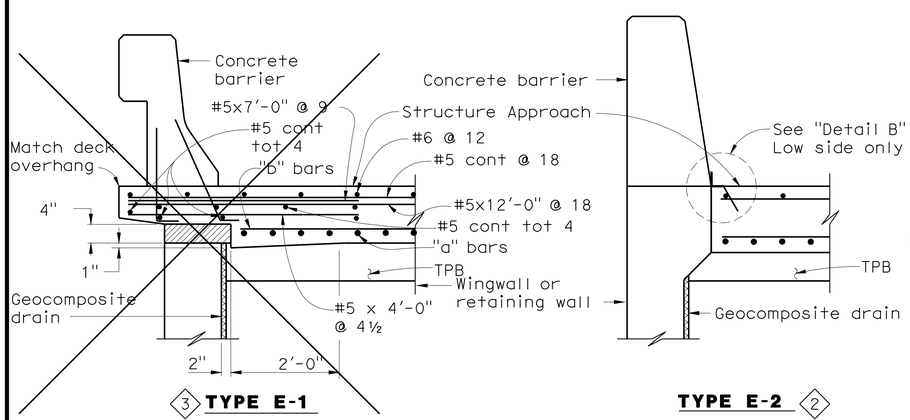

(3) **TYPE E-1** **TYPE E-2** (2)

SECTION C-C
3/4"=1'-0"

(Type E-1 to be used,unless otherwise shown on plans)

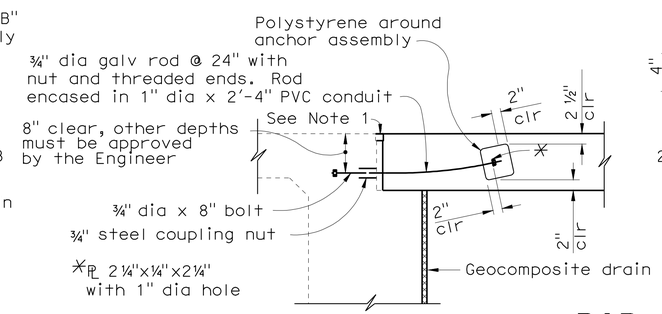

TIE DETAIL

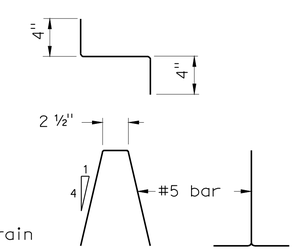

BAR CHAIR DETAIL
1 1/2 "=1'-0"

NOTES:

1. For details not noted or shown,see Structure Plans.
2. For drainage details, see "Structure Approach Drainage Details" sheet.
3. Longitudinal construction joints,when permitted by the Engineer, shall be located on lane lines.
4. End angle or plate at beginning of barrier transition, end of wingwall or end of structure approach, as applicable.
5. For transverse contact joint with new PCC paving, refer to Standard Plan P10.
6. At the contractor's option,approach slab transverse reinforcement may be placed parallel with paving notch. Spacing of transverse reinforcement is measured along ℄ roadway.

Polystyrene to be removed.

(1) **REVISED PER ADDENDUM No. 1 DATED MARCH 28, 2011**

STANDARD DRAWING

FILE NO. xs3-180e

APPROVED BY M. Ha (RESPONSIBLE TECHNICAL SPECIALIST) — APPROVAL DATE 8-12-08

RELEASED BY O. Alcantara (RESPONSIBLE OFFICE CHIEF) — RELEASE DATE 8-12-08

(1) Revised skew (3) Detail not used
(2) Revised detail (1)

STATE OF CALIFORNIA DEPARTMENT OF TRANSPORTATION

DIVISION OF ENGINEERING SERVICES

BRIDGE NO. 29-0226
POST MILES 29.83

EBMUD AQUEDUCT UC (WIDEN)
STRUCTURE APPROACH TYPE N(30D)

DS OSD 2147A (ENGLISH STANDARD DRAWING "XS" BORDER REV. 01/11/08)

ORIGINAL SCALE IN INCHES FOR REDUCED PLANS 0 1 2 3

CU 06240
EA 0G4701

DISREGARD PRINTS BEARING EARLIER REVISION DATES

REVISION DATES (PRELIMINARY STAGE ONLY) 10/16/09 12/4/09 1/15/10 4/23/10 5/28/10 6/11/10 7/28/10

SHEET 28 OF 34

USERNAME => trmikesl

29-0226-v-sad01.add

USERNAME => trmikesl DATE PLOTTED => 25-MAR-2011 TIME PLOTTED => 08:06 20060048 (20060048S2(C))

DIST	COUNTY	ROUTE	POST MILES TOTAL PROJECT	SHEET NO.	TOTAL SHEETS
10	SJ	5	25.0/32.7	1114	1132

REGISTERED CIVIL ENGINEER 7/28/10

PLANS APPROVAL DATE 10-11-10

REGISTERED PROFESSIONAL ENGINEER RONALD L OEN No. 46945 Exp. 9/30/11 CIVIL STATE OF CALIFORNIA

The State of California or its officers or agents shall not be responsible for the accuracy or completeness of scanned copies of this plan sheet.

SAN JOAQUIN COUNCIL OF GOVERNMENTS
555 E. WEBER AVENUE
STOCKTON, CA 95202

BIGGS CARDOSA ASSOCIATES INC.
865 THE ALAMEDA
SAN JOSE, CALIFORNIA 95126

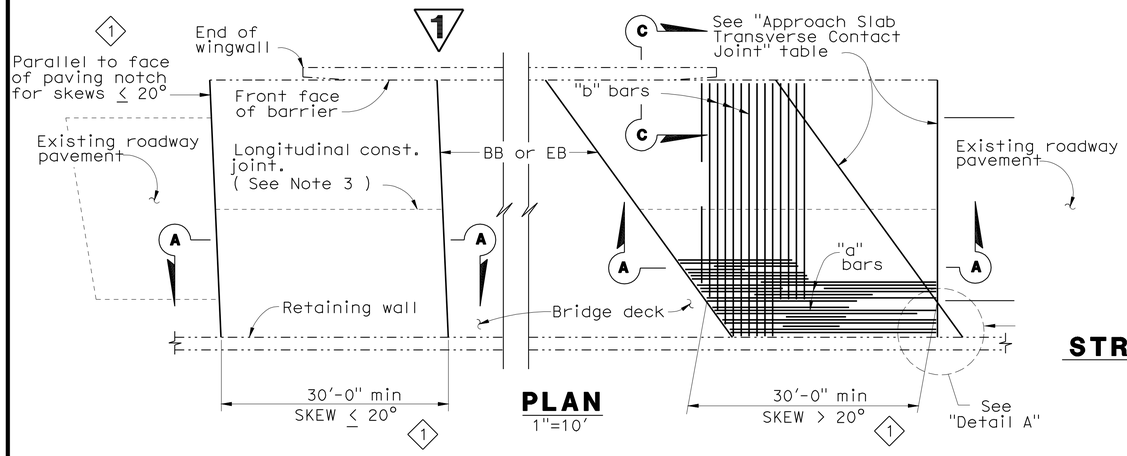

PLAN
1"=10'

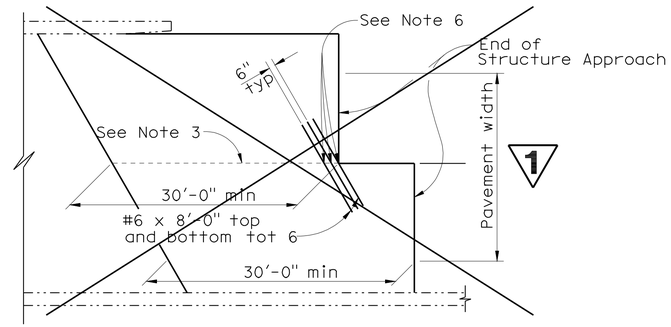

STRUCTURE APPROACH - END STAGGER DETAIL
No Scale

APPROACH SLAB TRANSVERSE CONTACT JOINT

APPROACH SKEW	WITH AC ROADWAY PAVEMENT	WITH PCC ROADWAY PAVEMENT
≤ 20°	Parallel with face of paving notch	Parallel with face of paving notch
> 20° - 45°	Parallel with face of P N use (Detail A)	Stagger lines 24' to 36' apart
> 45°	Parallel with face of P N use (Detail A)	Stagger at each lane line

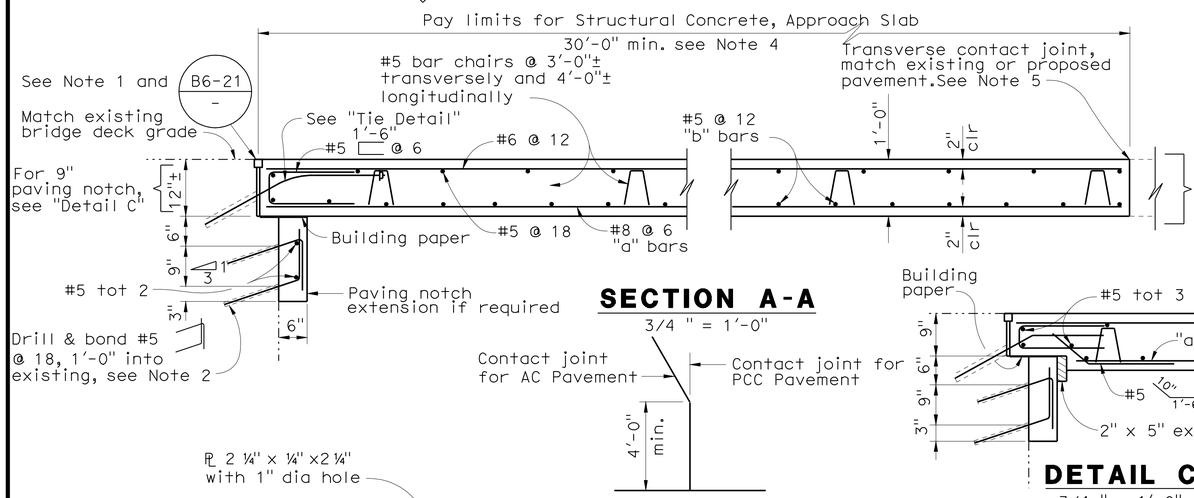

SECTION A-A
3/4 " = 1'-0"

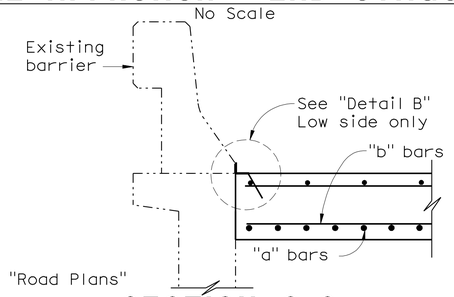

SECTION C-C
3/4 " = 1'-0"

DETAIL A
No Scale

DETAIL C
3/4 " = 1'-0"

NOTE: For details not shown,see "Section A-A".

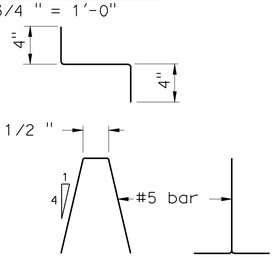

BAR CHAIR DETAIL
1 1/2 " = 1'-0"

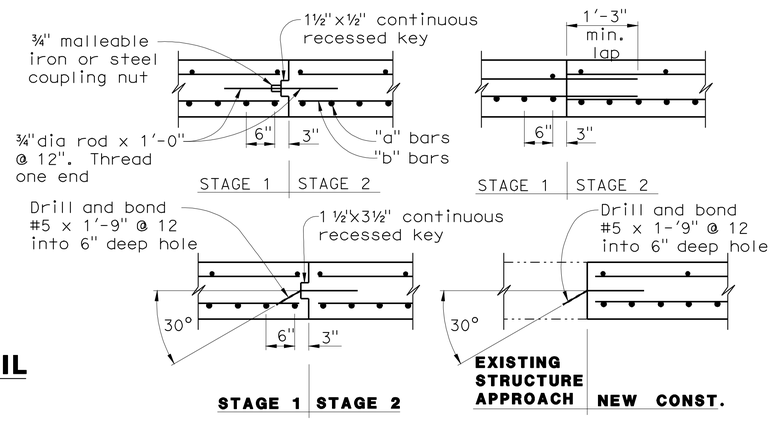

LONGITUDINAL CONSTRUCTION JOINT ALTERNATIVES
3/4 " = 1'-0"

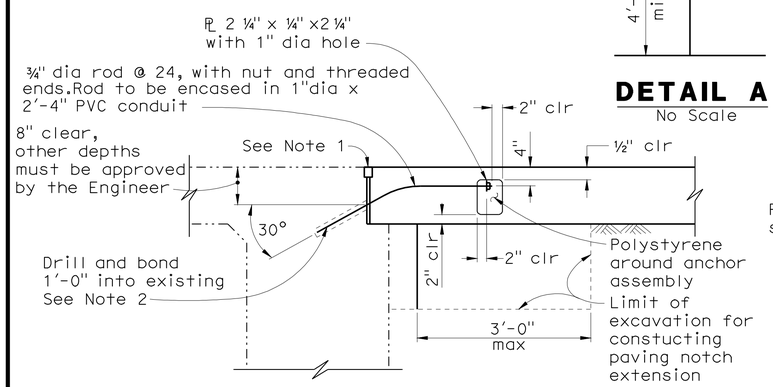

TIE DETAIL
3/4 " = 1'-0"

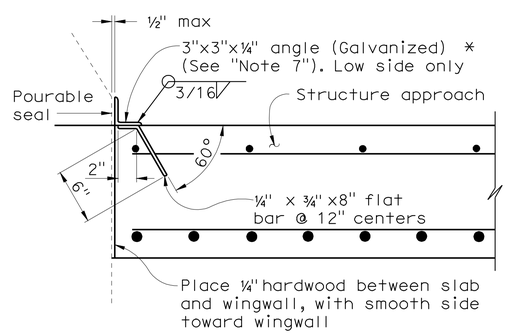

*(TO BE USED WITH TYPE 25 OR TYPE 27 CONCRETE BARRIER)

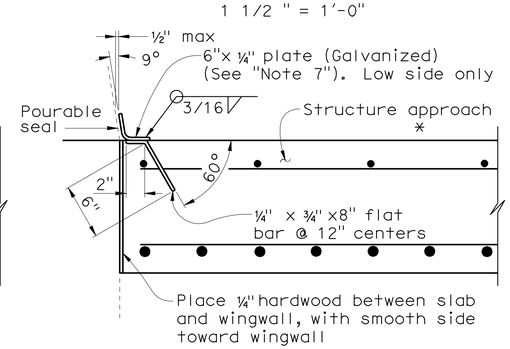

*(TO BE USED WITH TYPE 732 OR TYPE 736 CONCRETE BARRIER)

DETAIL B
1 1/2 " = 1'-0"

NOTES:

1. For details not shown or noted,see Structure Plans. Adjust bar reinforcement to clear a sawcut for sealed joint,when required.
2. Space to avoid existing prestress anchorages and main reinforcement.
3. Longitudinal construction joints,when permitted by the Engineer,shall be located on lane lines.
4. Transverse contact joint shall be a minimum of 5'-0" from an existing or constructed weakened plane joint.
5. For transverse contact joint with new PCC paving. refer to Standard Plan P10.
6. Couplers are required for stage construction.
7. End angle or plate at beginning of barrier transition, end of wingwall or end of structure approach as applicable.

Note:
The Contractor shall verify all controlling field dimensions before ordering or fabricating any material

1 REVISED PER ADDENDUM No. 1 DATED MARCH 28, 2011

STANDARD DRAWING				
RELEASE DATE 3/14/05	DESIGN	BY M. TRAFFALIS	CHECKED E. THORKILDSEN	RELEASED BY
	DETAILS	BY R. YEE	CHECKED E. THORKILDSEN	
FILE NO. xs3-140e	SUBMITTED	BY M. HA	DRAWING DATE 8/92	OFFICE CHIEF

1 Revised skew
2 Detail not used

ORIGINAL SCALE IN INCHES FOR REDUCED PLANS 0 1 2 3

STATE OF CALIFORNIA
DEPARTMENT OF TRANSPORTATION

DIVISION OF ENGINEERING SERVICES

CU 06240
EA 0G4701

BRIDGE NO. 29-0226
POST MILE 29.83

EBMUD AQUEDUCT UC (WIDEN)
STRUCTURE APPROACH TYPE R(30D)

DISREGARD PRINTS BEARING EARLIER REVISION DATES

REVISION DATES (PRELIMINARY STAGE ONLY): 10/16/09 12/4/09 1/15/10 4/23/10 5/28/10 6/11/10 7/28/10

SHEET 29 OF 34

USERNAME => trmikesl

29-0226-v-sad02.add

USERNAME => trmikesl DATE PLOTTED => 25-MAR-2011 TIME PLOTTED => 10:05 2006048 [2006048528C]