DIST	COUNTY	ROUTE	POST MILES TOTAL PROJECT	SHEET No	TOTAL SHEETS
10	SJ	99	6.9/10.6	607	639

REGISTERED CIVIL ENGINEER 2-6-12 DATE

6-11-12
PLANS APPROVAL DATE

REGISTERED PROFESSIONAL ENGINEER TITUS KENG No. 45226 Exp. 9-30-12 CIVIL STATE OF CALIFORNIA

The State of California or its officers or agents shall not be responsible for the accuracy or completeness of electronic copies of this plan sheet.

SAN JOAQUIN COUNCIL OF GOVERNMENTS
555 E. WEBER AVE.
STOCKTON, CA 95202

HDR ENGINEERING, INC.
2365 IRON POINT ROAD, SUITE 300
FOLSOM, CA 95630

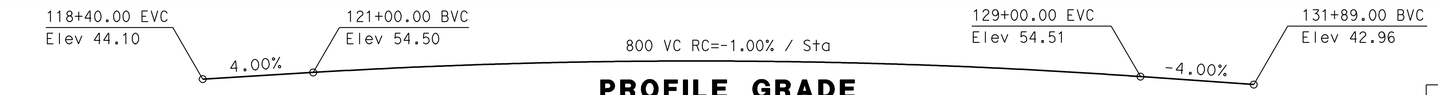

PROFILE GRADE

No Scale

CURVE DATA				
No.	R	Δ	T	L
8	4765.00′	11°18′59"	472.10′	941.12′
20	9115.00′	1°04′54"	86.04′	172.07′
18	3000.00′	4°35′14"	120.16′	240.19′

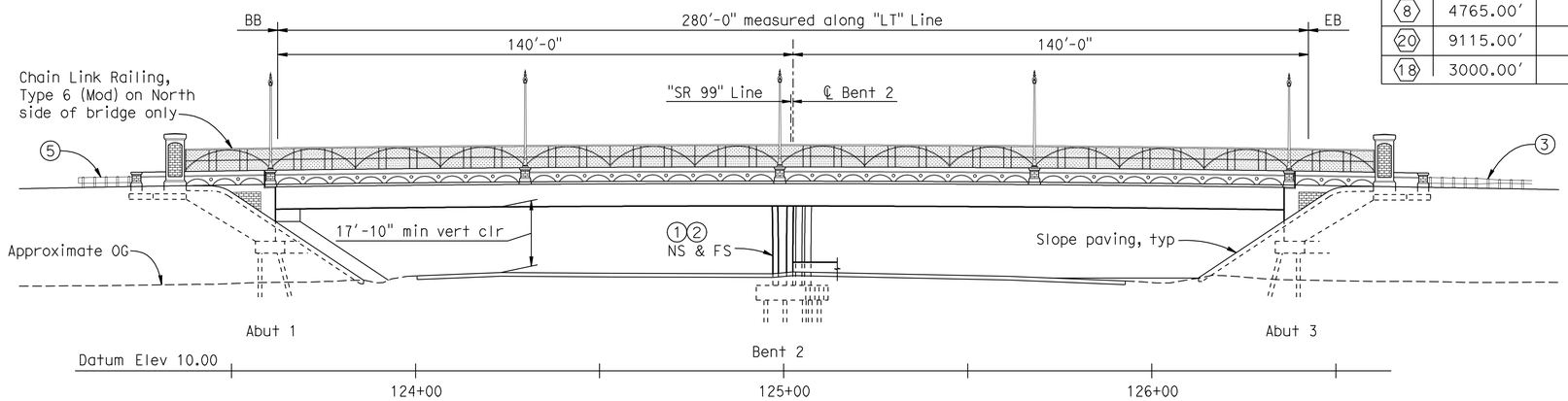

MIRRORED ELEVATION

1" = 20′

*Assumed traffic opening for falsework.
**Space for future widening.

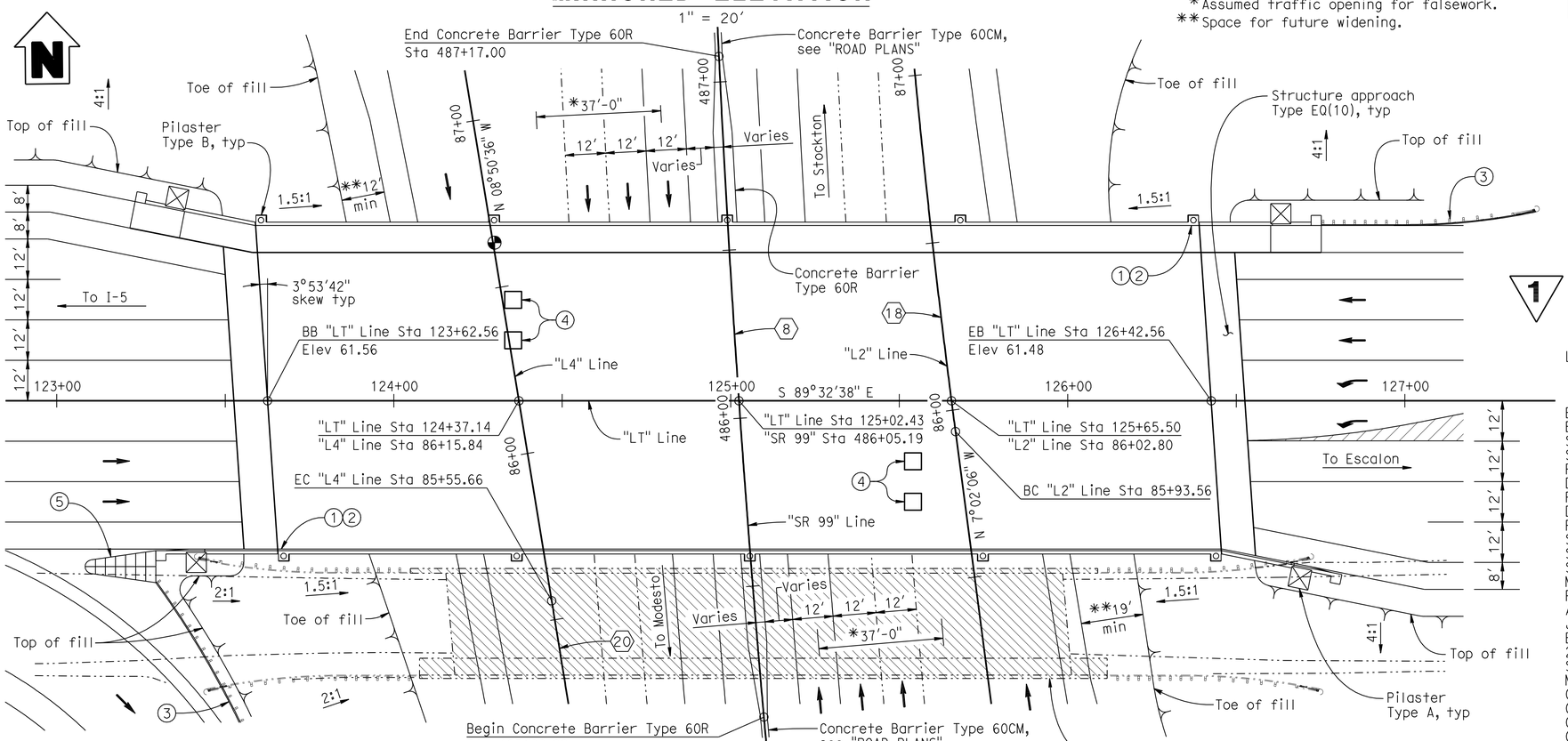

PLAN

1" = 20′

Note:
The Contractor shall verify all controlling field dimensions before ordering or fabricating any materials.

LEGEND:

1. Paint "Bridge No. 29-0331" & year of construction.
2. Paint "Lathrop Road Overcrossing".
3. MBGR, see "ROAD PLANS".
4. Preformed loop detectors, see "ROAD PLANS".
5. Crash cushion, see "ROAD PLANS".

——— Indicates new structure.
-·-·- Indicates existing structure.
◕ Indicates point of minimum vertical clearance.
▨ Bridge removal.
← Indicates direction of traffic.

NOTES:

1. For "INDEX TO PLANS", "GENERAL NOTES" and "CALTRANS STANDARD PLANS", see "DECK CONTOURS" sheet.
2. Exist Lathrop Road OC Bridge No. 29-0136 Location A, PM 9.2 to be removed after new bridge is complete.
3. Exist North Manteca OC Bridge No. 29-0126S Location B, PM 8.80to be removed after new bridge is complete. See "DEMOLITION DETAILS NO. 2" sheet.
4. For pilaster locations, see "GIRDER LAYOUT" sheet.

1 REVISED PER ADDENDUM No. 1 DATED AUGUST 27, 2012

LATHROP ROAD OC — BRIDGE NO 29-0331

QUANTITIES

BRIDGE REMOVAL, LOCATION A	LUMP	SUM
BRIDGE REMOVAL, LOCATION B	LUMP	SUM
STRUCTURE EXCAVATION (BRIDGE)	979	CY
STRUCTURE BACKFILL (BRIDGE)	678	CY
FURNISH PILING (CLASS 140) ALTERNATIVE X	4,280 ~~3,213~~	LF
DRIVE PILE (CLASS 140) ALTERNATIVE X	90 ~~54~~	EA
FURNISH PILING (CLASS 200) ALTERNATIVE X	3,213 ~~4,280~~	LF
DRIVE PILE (CLASS 200) ALTERNATIVE X	54 ~~90~~	EA
PRESTRESSING CAST-IN-PLACE CONCRETE	LUMP	SUM
STRUCTURAL CONCRETE, BRIDGE FOOTING	295	CY
STRUCTURAL CONCRETE, BRIDGE	2,251	CY
STRUCTURAL CONCRETE, APPROACH SLAB(TYPE EQ)	54	CY
MINOR CONCRETE (MINOR STRUCTURE)	12	CY*
PILASTER	103	CY
ARCHITECTURAL TREATMENT (BRICK TEXTURE)	470	SQFT
JOINT SEAL (MR 2")	195	LF
BAR REINFORCING STEEL (BRIDGE)	541,105	LB
20" WELDED STEEL PIPE CASING (BRIDGE)	405	LF
SLOPE PAVING (CONCRETE BRICK TEXTURE)	75	CY
MISCELLANEOUS METAL (BRIDGE)	870	LB
CHAIN LINK RAILING (TYPE 6) (MODIFIED)	323	LF
CONCRETE BARRIER (TYPE 26 MODIFIED)	353	LF
CONCRETE BARRIER (TYPE 60R)	217	LF
CONCRETE BARRIER (TYPE 736 MODIFIED)	353	LF

* FOR ADDITIONAL QUANTITIES SEE DQ-9

Reza Erfanian
DESIGN OVERSIGHT Reza Erfanian
2/13/12
SIGN OFF DATE

	BY	CHECKED
DESIGN	T. KENG	S PERVAIZ
DETAILS	J VOUGHT	J MANISCALCO
QUANTITIES	T KENG	E GAHAN

LOAD & RESISTANCE FACTOR DESIGN — LIVE LOADING: HL93 W/"LOW-BOY"; PERMIT DESIGN VEHICLE

	BY	CHECKED
LAYOUT	T KENG	S PERVAIZ
SPECIFICATIONS	T KENG	PLANS AND SPECS COMPARED J MANISCALCO

PREPARED FOR THE STATE OF CALIFORNIA DEPARTMENT OF TRANSPORTATION

JOHN A. KLEMUNES, JR.
PROJECT ENGINEER

BRIDGE NO. 29-0331
POST MILES 9.18

LATHROP ROAD OVERCROSSING
GENERAL PLAN NO. 1

DESIGN GENERAL PLAN SHEET (ENGLISH) (REV.7/16/10)

ORIGINAL SCALE IN INCHES FOR REDUCED PLANS 0 1 2 3

UNIT: 1455
PROJECT NUMBER & PHASE: 10000204421
CONTRACT NO.: 10-0E6131

DISREGARD PRINTS BEARING EARLIER REVISION DATES — REVISION DATES: 12-22-10, 6-18-11, 11-2-11, 2-6-12

SHEET 1 OF 33

FILE => 29-0331-a-gp01.add

USERNAME => s12614 DATE PLOTTED => 24-AUG-2012 TIME PLOTTED => 14:41