Dist	COUNTY	ROUTE	POST MILES TOTAL PROJECT	SHEET No.	TOTAL SHEETS
10	SJ	99	10.6/14.9	19	504

REGISTERED CIVIL ENGINEER — DATE 7/15/11

10-17-11
PLANS APPROVAL DATE

REGISTERED PROFESSIONAL ENGINEER — JOHN A. KLEMUNES No. 60728 Exp. 12-31-12 CIVIL — STATE OF CALIFORNIA

THE STATE OF CALIFORNIA OR ITS OFFICERS OR AGENTS SHALL NOT BE RESPONSIBLE FOR THE ACCURACY OR COMPLETENESS OF SCANNED COPIES OF THIS PLAN SHEET.

HDR ENGINEERING, INC.
2365 IRON POINT ROAD
SUITE 300
FOLSOM, CA 95630-8709

SAN JOAQUIN COUNCIL
OF GOVERNMENTS
555 E. WEBER AVE.
STOCKTON, CA 95202

NOTE:

FOR ACCURATE RIGHT OF WAY DATA, CONTACT
RIGHT OF WAY ENGINEERING AT THE DISTRICT OFFICE.

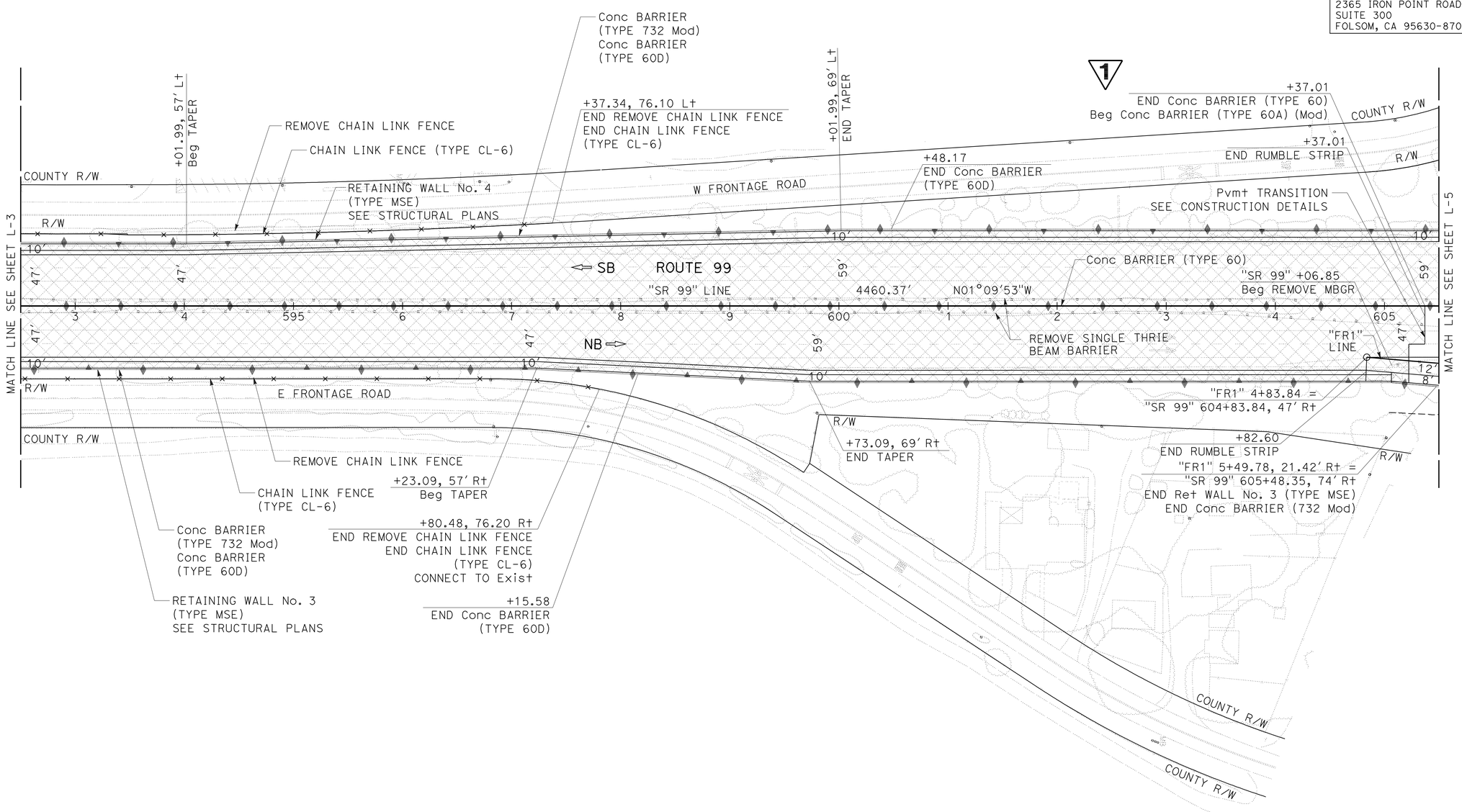

LAYOUT
SCALE: 1" = 50'

1 REVISED PER ADDENDUM No. 1 DATED APRIL 11, 2012

L-4

STATE OF CALIFORNIA - DEPARTMENT OF TRANSPORTATION
Caltrans

CONSULTANT FUNCTIONAL SUPERVISOR: JOHN A. KLEMUNES
CALCULATED-DESIGNED BY: JAROSLAW J. KUSZ
CHECKED BY: TRY V. KHOU
REVISED BY
DATE REVISED

LAST REVISION 00-00-00
DATE PLOTTED => 11-APR-2012
TIME PLOTTED => 16:05

Dist	COUNTY	ROUTE	POST MILES TOTAL PROJECT	SHEET No.	TOTAL SHEETS
10	SJ	99	10.6/14.9	20	504

REGISTERED CIVIL ENGINEER 7/15/11 DATE

10-17-11
PLANS APPROVAL DATE

REGISTERED PROFESSIONAL ENGINEER JOHN A. KLEMUNES No. 60728 Exp. 12-31-12 CIVIL STATE OF CALIFORNIA

THE STATE OF CALIFORNIA OR ITS OFFICERS OR AGENTS SHALL NOT BE RESPONSIBLE FOR THE ACCURACY OR COMPLETENESS OF SCANNED COPIES OF THIS PLAN SHEET.

HDR ENGINEERING, INC.
2365 IRON POINT ROAD
SUITE 300
FOLSOM, CA 95630-8709

SAN JOAQUIN COUNCIL OF GOVERNMENTS
555 E. WEBER AVE.
STOCKTON, CA 95202

NOTES:

1. FOR ACCURATE RIGHT OF WAY DATA, CONTACT RIGHT OF WAY ENGINEERING AT THE DISTRICT OFFICE.
2. FOR TURNER STATION OVERHEAD STRUCTURE REPLACEMENT, SEE STRUCTURAL PLANS.
3. SEE CONSTRUCTION DETAIL SHEET C-1 FOR REMOVAL ITEMS.
4. INSTALL WEED CONTROL MAT (RUBBER) UNDER METAL BEAM GUARD RAILING (SEE CONSTRUCTION DETAILS).

CURVE DATA

No.	R	Δ	T	L
1	2984.28′	03°11′39″	83.21′	166.37′
2	3000′	03°11′29″	83.57′	167.10′
3	180′	175°11′45″	4290.93′	550.39′
4	189′	175°04′07″	4388.99′	577.49′

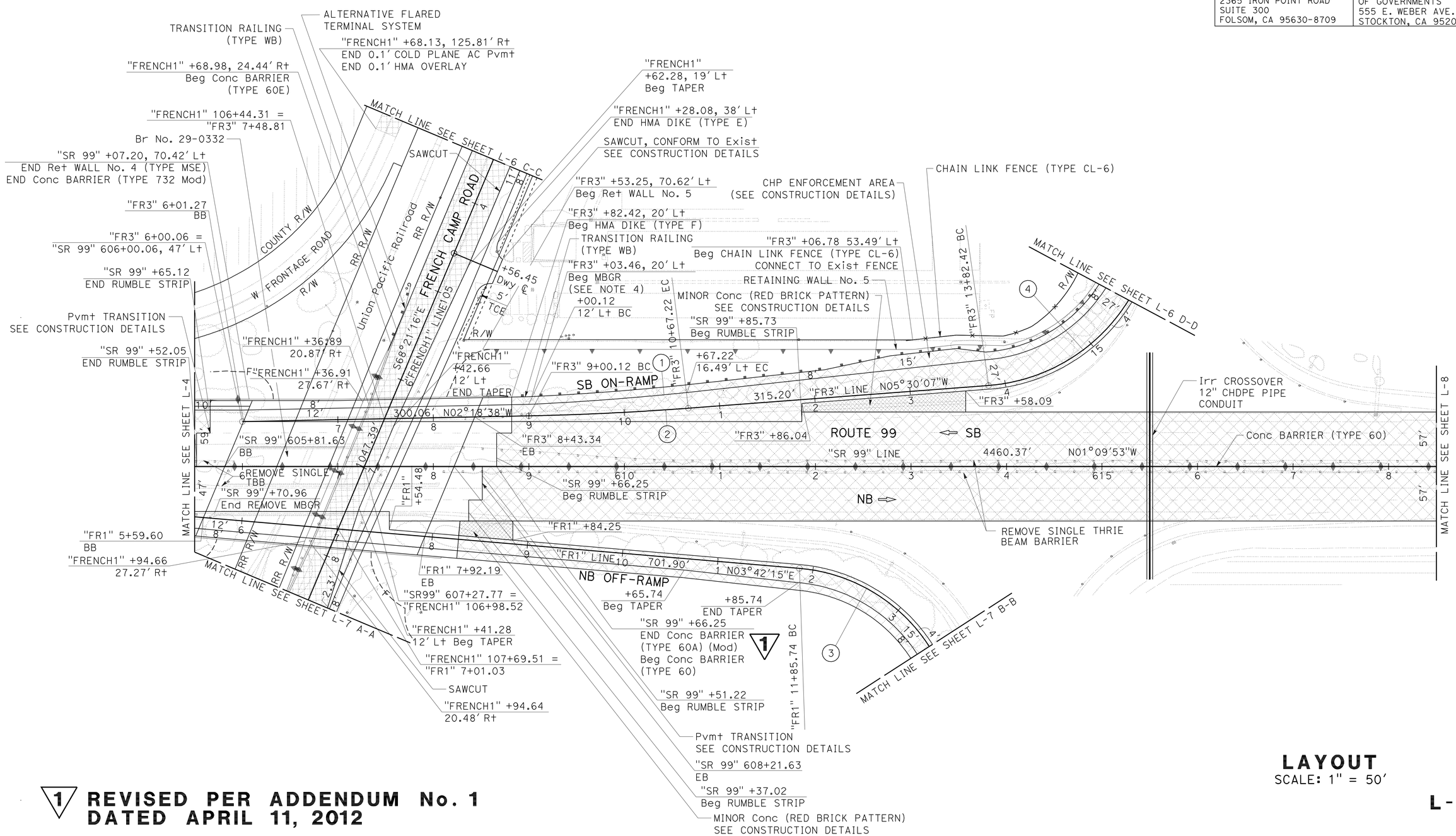

LAYOUT
SCALE: 1" = 50′

L-5

1 REVISED PER ADDENDUM No. 1 DATED APRIL 11, 2012

REVISED BY | DATE REVISED
JAROSLAW J. KUSZ | TRY V. KHOU
CALCULATED-DESIGNED BY | CHECKED BY
CONSULTANT FUNCTIONAL SUPERVISOR: JOHN A. KLEMUNES
STATE OF CALIFORNIA - DEPARTMENT OF TRANSPORTATION
Caltrans

LAST REVISION 00-00-00 | DATE PLOTTED => 11-APR-2012 | TIME PLOTTED => 16:05

Dist	COUNTY	ROUTE	POST MILES TOTAL PROJECT	SHEET No.	TOTAL SHEETS
10	SJ	99	10.6/14.9	115	504

REGISTERED CIVIL ENGINEER 7/15/11 DATE

10-17-11
PLANS APPROVAL DATE

REGISTERED PROFESSIONAL ENGINEER
LUKE L. GREBE
No. 65021
Exp. 6-30-13
CIVIL
STATE OF CALIFORNIA

THE STATE OF CALIFORNIA OR ITS OFFICERS OR AGENTS SHALL NOT BE RESPONSIBLE FOR THE ACCURACY OR COMPLETENESS OF SCANNED COPIES OF THIS PLAN SHEET.

HDR ENGINEERING, INC.
2365 IRON POINT ROAD
SUITE 300
FOLSOM, CA 95630-8709

SAN JOAQUIN COUNCIL
OF GOVERNMENTS
555 E. WEBER AVE.
STOCKTON, CA 95202

NOTE:

FOR ACCURATE RIGHT OF WAY DATA, CONTACT
RIGHT OF WAY ENGINEERING AT THE DISTRICT OFFICE.

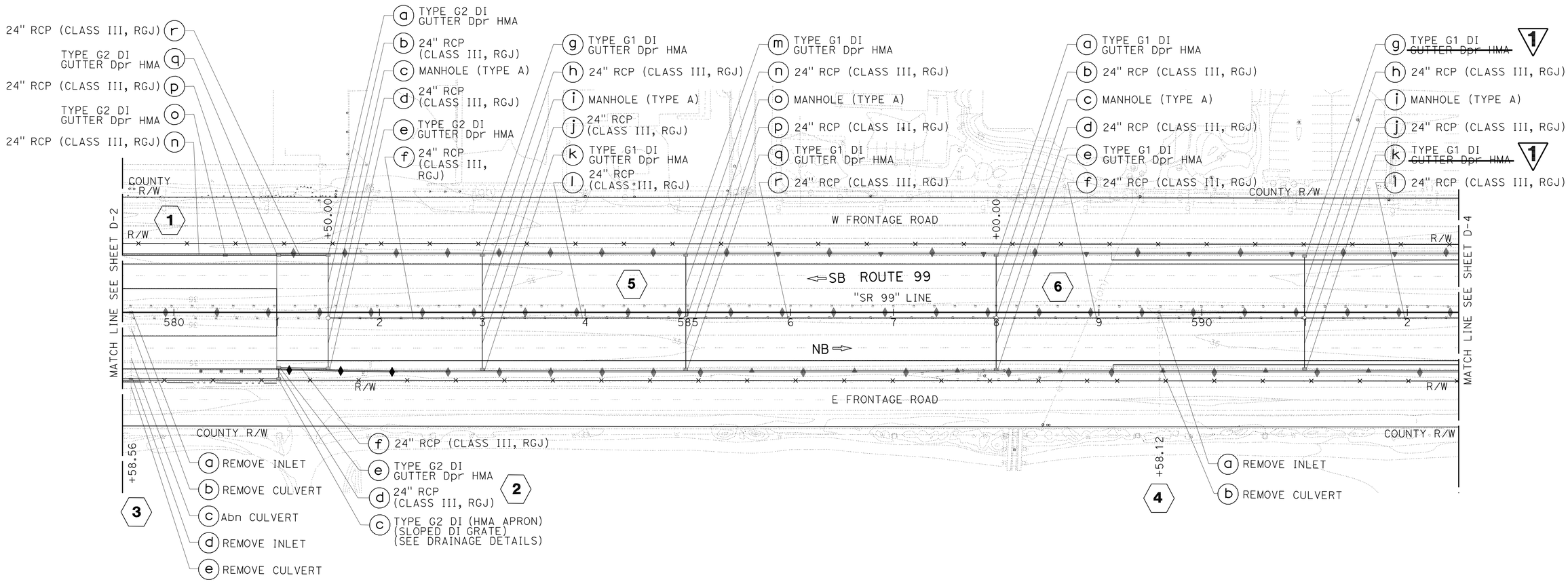

1 **REVISED PER ADDENDUM No. 1 DATED APRIL 11, 2012**

THIS PLAN ACCURATE FOR DRAINAGE WORK ONLY.

DRAINAGE PLAN

SCALE: 1" = 50'

D-3

STATE OF CALIFORNIA - DEPARTMENT OF TRANSPORTATION

Caltrans

CONSULTANT FUNCTIONAL SUPERVISOR: JOHN A. KLEMUNES

CALCULATED-DESIGNED BY: LUKE L. GREBE

CHECKED BY: TRY V. KHOU

REVISED BY

DATE REVISED

LAST REVISION 00-00-00

DATE PLOTTED => 11-APR-2012
TIME PLOTTED => 11:06

Dist	COUNTY	ROUTE	POST MILES TOTAL PROJECT	SHEET No.	TOTAL SHEETS
10	SJ	99	10.6/14.9	116	504

REGISTERED CIVIL ENGINEER 7/15/11 DATE

10-17-11
PLANS APPROVAL DATE

REGISTERED PROFESSIONAL ENGINEER LUKE L. GREBE No. 65021 Exp. 6-30-13 CIVIL STATE OF CALIFORNIA

THE STATE OF CALIFORNIA OR ITS OFFICERS OR AGENTS SHALL NOT BE RESPONSIBLE FOR THE ACCURACY OR COMPLETENESS OF SCANNED COPIES OF THIS PLAN SHEET.

HDR ENGINEERING, INC.
2365 IRON POINT ROAD
SUITE 300
FOLSOM, CA 95630-8709

SAN JOAQUIN COUNCIL OF GOVERNMENTS
555 E. WEBER AVE.
STOCKTON, CA 95202

NOTE:

FOR ACCURATE RIGHT OF WAY DATA, CONTACT RIGHT OF WAY ENGINEERING AT THE DISTRICT OFFICE.

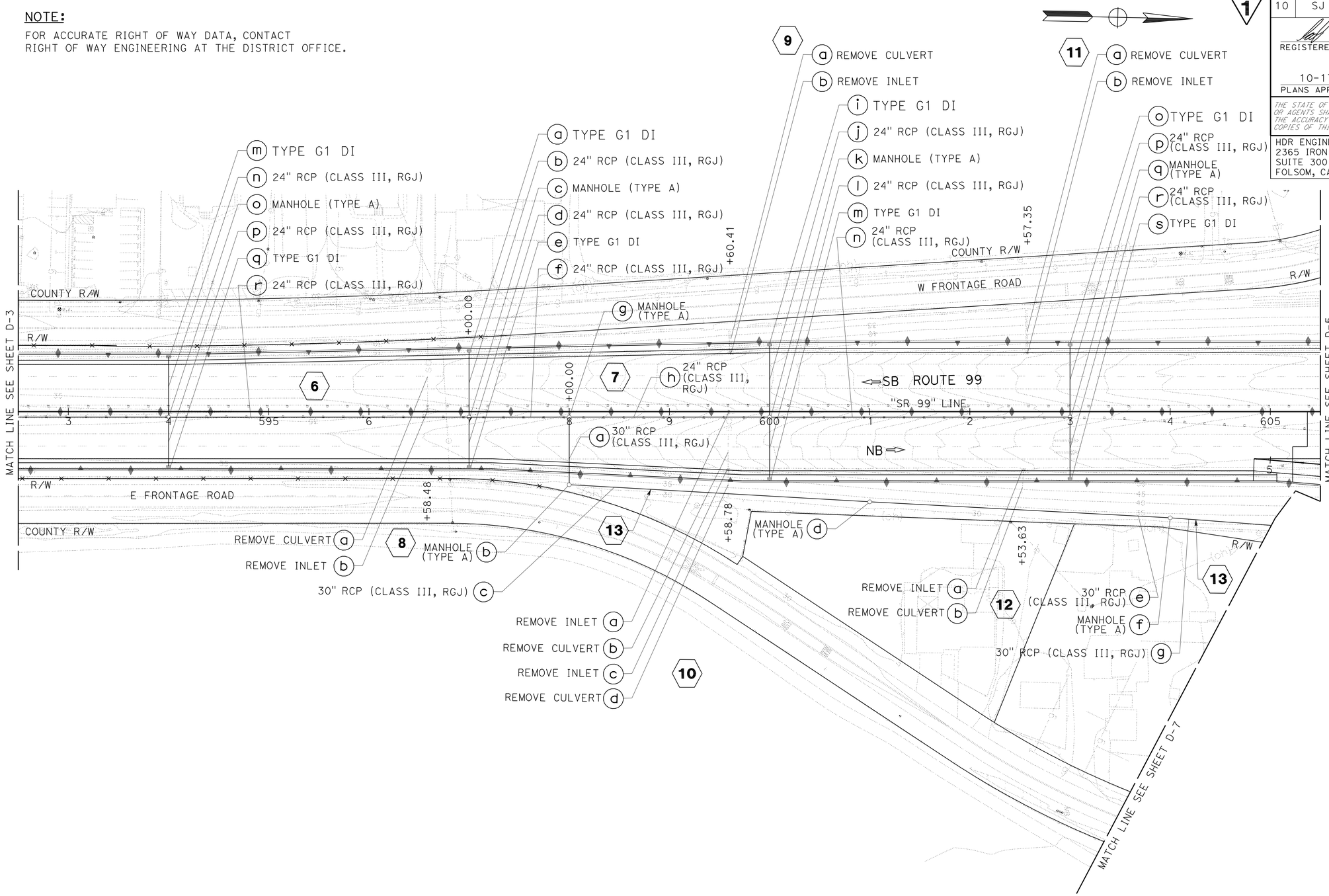

1 REVISED PER ADDENDUM No. 1 DATED APRIL 11, 2012

THIS PLAN ACCURATE FOR DRAINAGE WORK ONLY.

DRAINAGE PLAN

SCALE: 1" = 50'

D-4

STATE OF CALIFORNIA - DEPARTMENT OF TRANSPORTATION
Caltrans

CONSULTANT FUNCTIONAL SUPERVISOR: JOHN A. KLEMUNES

CALCULATED-DESIGNED BY: LUKE L. GREBE
CHECKED BY: TRY V. KHOU

REVISED BY
DATE REVISED

LAST REVISION 00-00-00
DATE PLOTTED => 11-APR-2012
TIME PLOTTED => 11:09

Dist	COUNTY	ROUTE	POST MILES TOTAL PROJECT	SHEET No.	TOTAL SHEETS
10	SJ	99	10.6/14.9	248	504

REGISTERED CIVIL ENGINEER 7/15/11 DATE

10-17-11
PLANS APPROVAL DATE

REGISTERED PROFESSIONAL ENGINEER JOHN A. KLEMUNES No. 60728 Exp. 12-31-12 CIVIL STATE OF CALIFORNIA

THE STATE OF CALIFORNIA OR ITS OFFICERS OR AGENTS SHALL NOT BE RESPONSIBLE FOR THE ACCURACY OR COMPLETENESS OF SCANNED COPIES OF THIS PLAN SHEET.

HDR ENGINEERING, INC.
2365 IRON POINT ROAD
SUITE 300
FOLSOM, CA 95630-8709

SAN JOAQUIN COUNCIL
OF GOVERNMENTS
555 E. WEBER AVE.
STOCKTON, CA 95202

PAVEMENT STRUCTURE QUANTITIES SUMMARY

LOCATION STATION TO STATION	HOT MIX ASPHALT (TYPE A)	CLASS 2 AGGREGATE BASE	RUBBERIZED HOT MIX ASPHALT (GAP GRADED)	CONCRETE PAVEMENT (RAMP TERMINI)	COLD PLANE ASPHALT CONCRETE PAVEMENT	TACK COAT
	TON	CY	TON	CY	SQYD	TON
"SR 99" LINE 562+00.00 TO 581+00.00	1,658	1,286	1,105		12,115	7
"SR 99" LINE 581+00.00 TO 623+20.00	21,574	29,109	3,327			21
"SR 99" LINE 624+18.13 TO 651+22.69			2,145		18,346	13
"SR 99" LINE 652+01.19 TO 661+93.48			808		7,030	5
"SR 99" LINE 662+62.09 TO 743+91.60	513	402	6,676		55,854	42
"SR 99" LINE 743+91.60 TO 751+24.00			616		4,686	4
"SR 99" LINE 751+24.00 TO 787+32.81			2,895			18
"FR1" LINE	1,709	2,695	285	382		2
"FR2" LINE	3,880	5,571	647			4
"FR3" LINE	2,490	3,310	371			2
"FR4" LINE	1,635	3,349	393	393		2
"FRENCH1" LINE	1,590	838			6,898	
"FRENCH1" LINE 101+73.41 TO 103+68.13 R†	53				792	
"FRENCH1" LINE 111+99.19 TO 112+03.96 R†	19				274	
"WFR" LINE	425	452				
"EFR" LINE	399	424				
DETOUR QUANTITIES	1440	145				
HOT MIX ASPHALT DIKE	131					
HOT MIX ASPHALT (Misc AREA)	61					
BASIN B20		12				
BASIN B21		4				
BASIN B22		4				
TOTAL	37,577	47,601	19,268	775	105,995	120

CRASH CUSHION, SAND FILLED

STATION LIMITS	TYPE U21
	EA
"FR4" 25+41.41	1
TOTAL	1

EARTHWORK QUANTITIES SUMMARY

LOCATION	ROADWAY EXCAVATION	EMBANKMENT (N)	IMPORTED BORROW	IMPORTED BORROW (MSE WALLS)
	CY	CY	CY	CY
"SR 99" 562+00.00 TO "SR 99" 581+00.00 MAINLINE	1,974	419		
"SR 99" 581+00.00 TO "SR 99" 605+81.63 MAINLINE	2,875			73,190
"SR 99" 608+21.63 TO "SR 99" 623+20.00 MAINLINE	6,541	36,041		
"SR 99" 667+00.00 TO "SR 99" 701+75.00 DITCH GRADING	1,126	62		
"FR1" NB LOOP OFF-RAMP	16,847	40,285		
"FR2" NB ON-RAMP	4,534	12,450		
"FR3" SB LOOP ON-RAMP	3,390	19,459		
"FR4" SB OFF-RAMP	2,886	5,660		
"FRENCH1" FRENCH CAMP ROAD	6,067	37		
"WFR"	411	51		
"ERF"	208	150		
BASIN B20	23,933			
BASIN B21	6,191			
BASIN B22	7,547			
DETOUR QUANTITIES	1,860			
TOTAL	86,390		46,574	73,190

MINOR CONCRETE

STATION LIMITS	MINOR CONCRETE (CURB)		
	TYPE A1-6 CURB	TYPE A2-6 CURB	GUTTER
	CY	CY	CY
"FR1" 16+18.13 TO "FR1" 22+70.59 L†	17		
"FR2" 5+35.92 TO "FR2" 8+82.48 L†	9		
"FR3" 18+11.07 TO "FR3" 22+93.48 R†	13		
"FR4" 9+48.42 TO "FR4" 11+67.83 R†	5		
"FR2" 8+82.48 TO "FR2" 12+03.95 L†		19	
"FR4" 11+67.83 TO "FR4" 14+47.84 R†		16	
RETAINING WALL No. 5			15
SUBTOTAL	44	35	15
TOTAL		94	

MINOR CONCRETE (RED BRICK PATTERN)

STATION LIMITS	MINOR CONCRETE
	CY
NB OFF-RAMP / "FR1" LINE	18
SB ON-RAMP / "FR3" LINE	49
NB ON-RAMP / "FR2" LINE	39
"FR1" TO "FR2" / RAISED MEDIAN	55
"FR3" TO "FR4" / RAISED MEDIAN	47
TOTAL	208

1 SEAL PAVEMENT JOINT

LOCATION	LF
"FR4" 9+50.42	76
"FR4" 12+50.42	34
"FR1" 19+77.97	36
"FR1" 22+68.52	72
TOTAL	218

PLACE HOT MIX ASPHALT (Misc AREA)

LOCATION	PLACE HOT MIX ASPHALT (Misc AREA)
	SQYD
"SR 99" 563+50.00, 65.80′ L†	34
"SR 99" 578+00.00, 65.24′ R†	34
"SR 99" 581+02.00, 65.46′ R†	34
"FRENCH1" 105+41.00, 64.05′ L†	34
"SR 99" LINE 623+45.00, 55.00′ L†	82
"SR 99" LINE 624+40.73, 55.60′ L†	55
TOTAL	273

1 REVISED PER ADDENDUM No. 1 DATED APRIL 11, 2012

SUMMARY OF QUANTITIES

Q-1

REVISED BY | DATE REVISED
JIGNESH I. RATHOD | TRY V. KHOU
CALCULATED-DESIGNED BY | CHECKED BY
CONSULTANT FUNCTIONAL SUPERVISOR
JOHN A. KLEMUNES
STATE OF CALIFORNIA - DEPARTMENT OF TRANSPORTATION
Caltrans

LAST REVISION 00-00-00 | DATE PLOTTED => 10-APR-2012 | TIME PLOTTED => 10:52

Dist	COUNTY	ROUTE	POST MILES TOTAL PROJECT	SHEET No.	TOTAL SHEETS
10	SJ	99	10.6/14.9	249	504

REGISTERED CIVIL ENGINEER 7/15/11 DATE

10-17-11
PLANS APPROVAL DATE

REGISTERED PROFESSIONAL ENGINEER JOHN A. KLEMUNES No. 60728 Exp. 12-31-12 CIVIL STATE OF CALIFORNIA

THE STATE OF CALIFORNIA OR ITS OFFICERS OR AGENTS SHALL NOT BE RESPONSIBLE FOR THE ACCURACY OR COMPLETENESS OF SCANNED COPIES OF THIS PLAN SHEET.

HDR ENGINEERING, INC.
2365 IRON POINT ROAD
SUITE 300
FOLSOM, CA 95630-8709

SAN JOAQUIN COUNCIL
OF GOVERNMENTS
555 E. WEBER AVE.
STOCKTON, CA 95202

RETAINING WALL (TYPE 1A)

STATION LIMITS	STRUCTURAL CONCRETE (RETAINING WALL)	BAR REINFORCING STEEL (RETAINING WALL)	STRUCTURE EXCAVATION (RETAINING WALL)	STRUCTURE BACKFILL (RETAINING WALL)	PERVIOUS BACKFILL MATERIAL (RETAINING WALL)
	CY	LB	CY	CY	CY
"RW1" 585+00.00 TO "RW1" 589+13.80	163	11,126	279	917	35
"RW2" 585+00.00 TO "RW2" 589+12.31	155	10,900	256	822	30
"RW5" 8+53.25 TO "RW5" 16+31.55	1,306	199,704	2,541	3,362	317
TOTAL	1,624	221,730	3,076	5,101	382

CONCRETE BARRIER 1

STATION LIMITS	CONCRETE BARRIER (TYPE 60)	CONCRETE BARRIER (TYPE 60M)	CONCRETE BARRIER (TYPE 60A) (Mod)	CONCRETE BARRIER (TYPE 60C)	CONCRETE BARRIER (TYPE 60CM)	CONCRETE BARRIER (TYPE 60D)	CONCRETE BARRIER (TYPE 60E)	CONCRETE BARRIER (TYPE 732A)	REMOVE CONCRETE BARRIER (TYPE K)
	LF	LF	LF	LF	LF	LF	LF	LF	LF
"SR 99" 576+00.00 TO "SR 99" 579+50.00		350							
"SR 99" 579+50.00 TO "SR 99" 581+00.00		150							
"SR 99" 581+00.00 TO "SR 99" 592+50.00	1,150								
"SR 99" 592+50.00 TO "SR 99" 605+37.01	1,287								
"SR 99" 605+37.01 TO "SR 99" 608+66.25			330						
"SR 99" 608+66.25 TO "SR 99" 618+50.00	984								
"SR 99" 618+50.00 TO "SR 99" 619+00.00	50								
"SR 99" 619+00.00 TO "SR 99" 623+20.00				420					
"SR 99" 623+20.00 TO "SR 99" 623+55.39					35				
"SR 99" 623+55.39 TO "SR 99" 624+18.08			63						
"SR 99" 624+18.08 TO "SR 99" 627+50.00					332				
"SR 99" 581+00.00 TO "SR 99" 585+00.00				400					
"SR 99" 581+00.00 TO "SR 99" 585+00.00				400					
"SR 99" 585+00.00 TO "SR 99" 598+15.58 R†						1,316		414	
"SR 99" 585+00.00 TO "SR 99" 600+48.47 L†						1,548		412	
"FRENCH1" 105+37.03 TO "FRENCH1" 108+62.57 R†							358		
"SR 99" 622+90.14 TO "SR 99" 627+50.00									460
"SR 99" 623+00.00 TO "SR 99" 627+59.19									459
"SR 99" 625+02.50 TO "SR 99" 628+82.35 L†									380
TOTAL	3,471	500	393	1,220	367	2,864	358	826	1,299

CHAIN LINK FENCE (TYPE CL-6)

STATION LIMITS	CHAIN LINK FENCE (TYPE CL-6)
	LF
"SR 99" 564+50.00 TO "SR 99" 565+50.00 L†	100
"SR 99" 565+50.00 TO "SR 99" 579+50.00 BOTH	1,750
"SR 99" 579+50.00 TO "SR 99" 592+50.00 BOTH	2,600
"SR 99" 592+50.00 TO "SR 99" 597+37.34 L†	488
"SR 99" 592+50.00 TO "SR 99" 597+80.48 R†	531
"SR 99" 672+66.33 TO "SR 99" 693+11.25 L†	2,084
"SR 99" 688+08.96 TO "SR 99" 701+75.25 R†	1,395
"FRENCH1" 99+47.20 L† TO "FR4" 23+86.26 R†	1,556
"FR3" 13+06.78 TO "FR3" 19+53.26 L†	466
"FRENCH1" 114+05.38 TO "FR2" 22+98.07 R†	1,981
"FR2" 23+66.93 TO "SR 99" 635+08.63 R†	1,069
TOTAL	14,020

PLACE HOT MIX ASPHALT DIKE

STATION LIMITS	TYPE C	TYPE D	TYPE E	TYPE F	HOT MIX ASPHALT (TYPE A) *
	LF	LF	LF	LF	TON
"SR 99" 564+00.00 TO "SR 99" 581+00.00 L†		1,700			100
"FR3" 17+89.67 TO "FRENCH1" 104+28.08 L†			761		20
"FR3" 8+82.42 TO "FR3"17+05.24 L†				781	11
"FR3" 17+05.24 TO "FR3"17+89.67 L†	75				
TOTAL	75	1,700	761	781	131

* QUANTITIES INCLUDED IN PAVEMENT STRUCTURE QUANTITIES SUMMARY ITEMS

SUMMARY OF QUANTITIES

1 REVISED PER ADDENDUM No. 1 DATED APRIL 11, 2012

Q-2

STATE OF CALIFORNIA - DEPARTMENT OF TRANSPORTATION
Caltrans

CONSULTANT FUNCTIONAL SUPERVISOR: JOHN A. KLEMUNES
CALCULATED-DESIGNED BY: JIGNESH I. RATHOD
CHECKED BY: TRY V. KHOU
REVISED BY / DATE REVISED

LAST REVISION 00-00-00 | DATE PLOTTED => 11-APR-2012 | TIME PLOTTED => 16:06

NOTE:

1. Tie bars, dowel bars, and reinforcement are not shown in joint seal details, see Revised Standard Plans RSP P1, RSP P3, RSP P10, RSP P35, RSP P45, or RSP P46 as applicable.

DIST	COUNTY	ROUTE	POST MILES TOTAL PROJECT	SHEET NO.	TOTAL SHEETS
10	SJ	99	10.6/14.9	361A	504

1

REGISTERED CIVIL ENGINEER

May 15, 2009
PLANS APPROVAL DATE

REGISTERED PROFESSIONAL ENGINEER
William K. Farnbach
No. C49042
Exp. 9-30-10
CIVIL
STATE OF CALIFORNIA

The State of California or its officers or agents shall not be responsible for the accuracy or completeness of electronic copies of this plan sheet.

To accompany plans dated 10-17-11

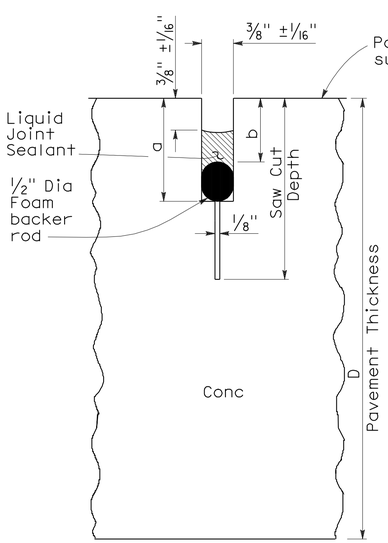

LIQUID SEALANT

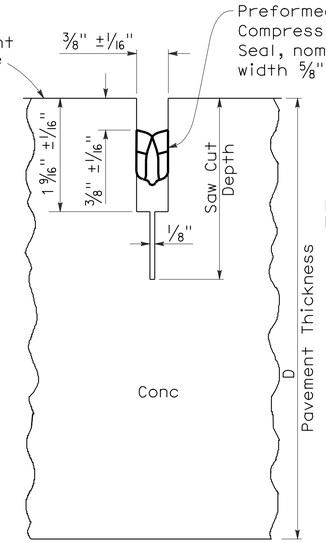

COMPRESSION SEAL

TYPE A1

Transverse Contraction Joints

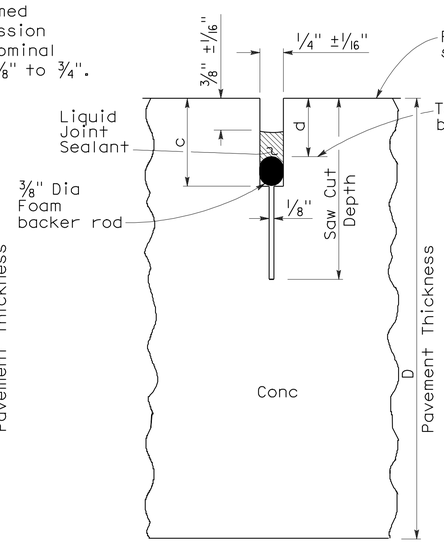

LIQUID SEALANT

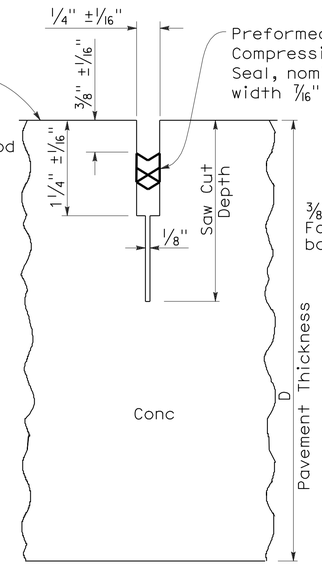

COMPRESSION SEAL

TYPE A2

Longitudinal Contraction Joints

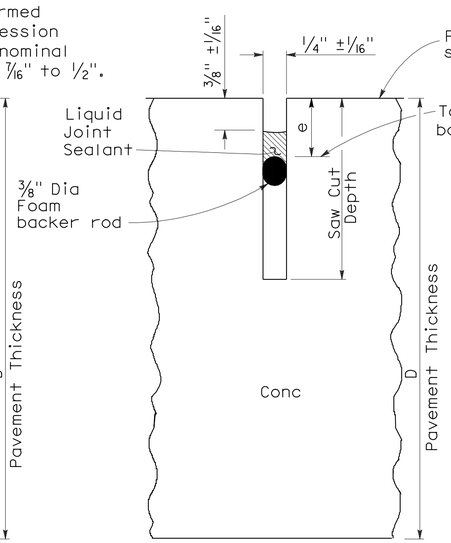

LIQUID SEALANT

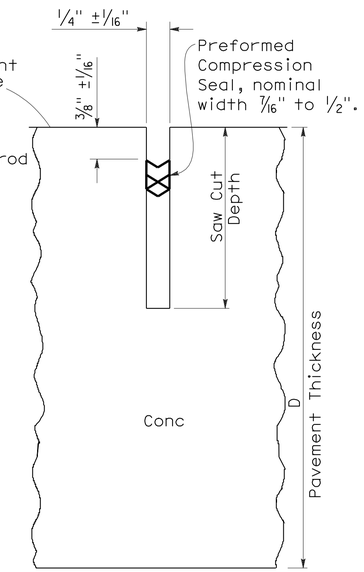

COMPRESSION SEAL

TYPE B

Longitudinal or Transverse Contraction Joint

LIQUID SEALANT RESERVOIR DEPTH

LIQUID SEALANT MATERIAL	3/8" Joint Width Type A1		1/4" Joint Width Type A2		1/4" Joint Width Type B
	DIMENSION		DIMENSION		DIMENSION
	a	b	c	d	e
SILCONE	1" ±1/16"	5/8" ±1/16"	15/16" ±1/16"	9/16" ±1/16"	9/16" ±1/16"
ASPHALT RUBBER	1 3/16" ±1/16"	3/4" ±1/16"	1 1/16" ±1/16"	11/16" ±1/16"	11/16" ±1/16"

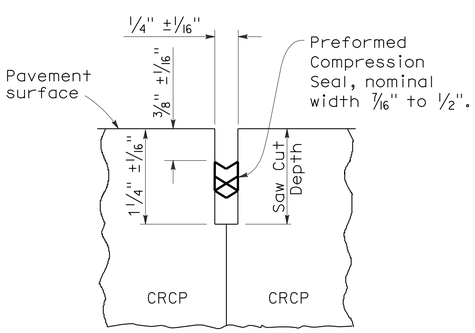

COMPRESSION SEAL

TYPE C

Transverse and Longitudinal Construction Joints
(For CRCP)

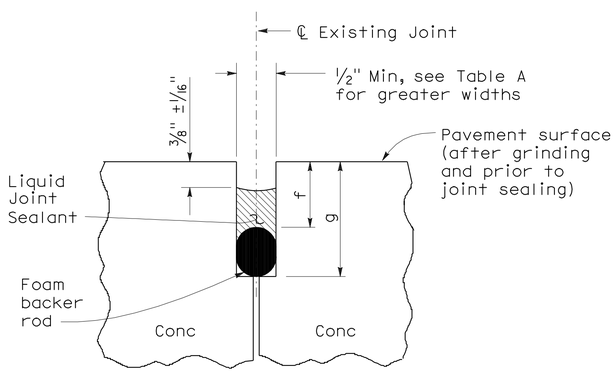

LIQUID SEALANT

TYPE R

Retrofit Transverse and Longitudinal Joints

TABLE A (TYPE R JOINT)

Sawn Joint Width	Backer Rod Diameter ± 1/16"	DIMENSION "f"	DIMENSION "g"
1"	1 5/16"	7/8"	2 1/4"
7/8"	1 3/16"	13/16"	2"
3/4"	1"	3/4"	1 3/4"
5/8"	7/8"	11/16"	1 1/2"
1/2"	11/16"	5/8"	1 1/4"

STATE OF CALIFORNIA
DEPARTMENT OF TRANSPORTATION

CONCRETE PAVEMENT-JOINT DETAILS

NO SCALE

1 **ADDED PER ADDENDUM No. 1 DATED APRIL 11, 2012**

RSP P20 DATED MAY 15, 2009 SUPERSEDES STANDARD PLAN P20
DATED MAY 1, 2006 - PAGE 128 OF THE STANDARD PLANS BOOK DATED MAY 2006.

REVISED STANDARD PLAN RSP P20

2006 REVISED STANDARD PLAN RSP P20

5-8-09

DIST	COUNTY	ROUTE	POST MILES TOTAL PROJECT	SHEET No	TOTAL SHEETS
10	SJ	99	10.6/14.9	400	504

REGISTERED CIVIL ENGINEER 6-24-11 DATE

10-17-11
PLANS APPROVAL DATE

REGISTERED PROFESSIONAL ENGINEER SHARIQ PERVAIZ No. C67068 Exp. 9-30-12 CIVIL STATE OF CALIFORNIA

The State of California or its officers or agents shall not be responsible for the accuracy or completeness of electronic copies of this plan sheet.

SAN JOAQUIN COUNCIL OF GOVERNMENTS
555 E. WEBER AVE.
STOCKTON, CA 95202

HDR ENGINEERING, INC.
2365 IRON POINT ROAD, SUITE 300
FOLSOM, CA 95630

LONE TREE SLOUGH BRIDGE (WIDEN) BR NO 29-0023

QUANTITIES

PREPARE CONCRETE BRIDGE DECK SURFACE	2,852	SQFT
BRIDGE REMOVAL (PORTION)	LUMP	SUM
STRUCTURE EXCAVATION (BRIDGE)	37	CY
STRUCTURE BACKFILL (BRIDGE)	21	CY
GROOVE POLYESTER CONCRETE OVERLAY	265	SQYD
FURNISH PILING (CLASS 90)(ALTERNATIVE X)	325	LF
DRIVE PILE (CLASS 90) (ALTERNATIVE X)	10	EA
FURNISH PILING (CLASS 140)	436	LF
DRIVE PILE (CLASS 140)	8	EA
STRUCTURAL CONCRETE, BRIDGE	121	CY
DRILL AND BOND DOWEL	47	LF
FURNISH POLYESTER CONCRETE OVERLAY	178	CF
PLACE POLYESTER CONCRETE OVERLAY	2,852	SQFT
BAR REINFORCING STEEL (BRIDGE)	24,096	LB
CONCRETE (SLOPE PROTECTION)	14	CY
CONCRETE BARRIER (TYPE 60A) (MODIFIED)	63	LF
CONCRETE BARRIER (TYPE 732)	87	LF

1

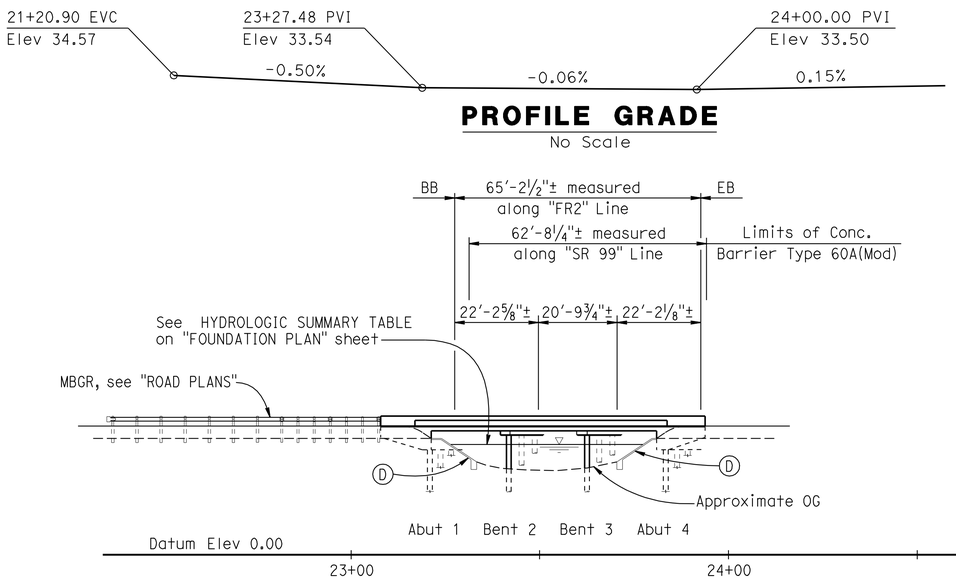

PROFILE GRADE

No Scale

ELEVATION

1" = 20'

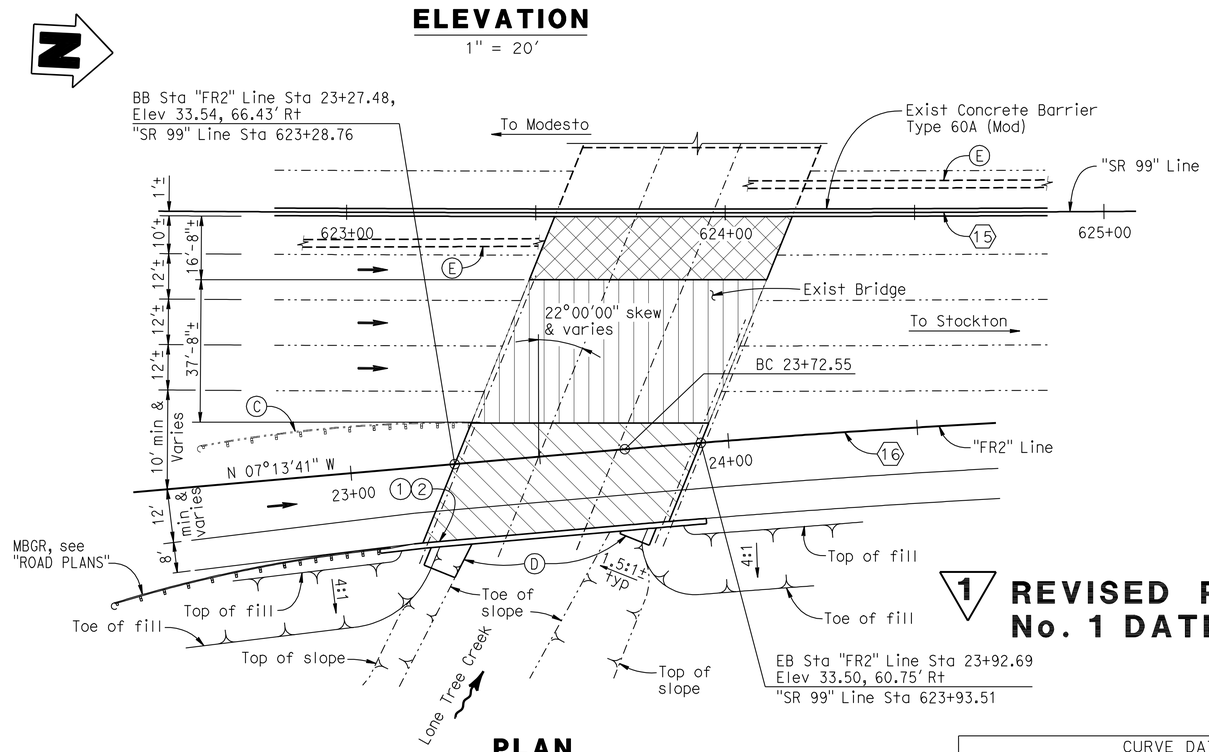

PLAN

1" = 20'

1 REVISED PER ADDENDUM No. 1 DATED APRIL 11, 2012

CURVE DATA				
No.	R	Δ	T	L
16	3000.00	3°15'33"	85.35	170.65
15	20000.00	1°39'37"	289.78	579.52

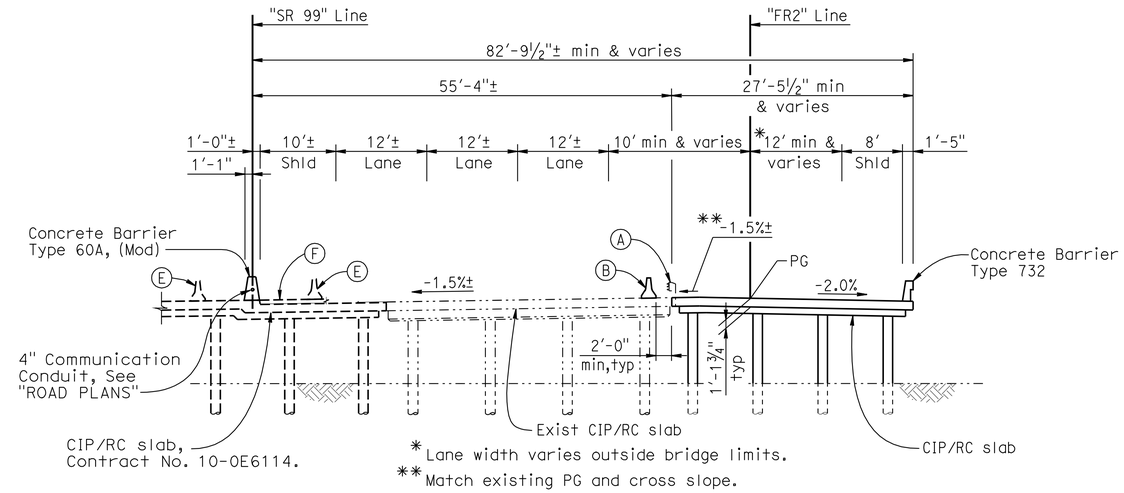

* Lane width varies outside bridge limits.
** Match existing PG and cross slope.

TYPICAL SECTION

1" = 10'

NOTES:
1. For "GENERAL NOTES" & "INDEX TO PLANS", see "DECK CONTOURS" sheet.
2. For "PILE DATA", see "FOUNDATION PLAN" sheet.

LEGEND:

- (1) Paint "Bridge No. 29-0023".
- (2) Paint "Lone Tree Slough Bridge".
- (A) Existing Metal Beam Bridge Railing to be removed and post to be salvaged.
- (B) Concrete Barrier (Type K), see "ROAD PLANS".
- (C) Existing Metal Beam Guard Railing to be removed, see "ROAD PLANS".
- (D) Concrete slope protection, see "Concrete Slope Protection" sheet.
- (E) Interim Concrete Barrier (Type K), See Contract No. 10-0E6114.
- (F) Interim AC Overlay to be removed prior to placing ¾" polyester concrete overlay, See "ROAD PLANS".
- Indicates new structure.
- Indicates existing structure.
- Indicates new structure, see Contract No. 10-0E6114.
- Prepare concrete bridge deck surface and place ¾" polyester concrete overlay.
- Indicates limits of prepare concrete deck surface and place ¾" min polyester concrete overlay, and tine polyester concrete overlay.
- Indicates limits of groove existing polyester concrete overlay.

Note:
The Contractor shall verify all controlling field dimensions before ordering or fabricating any materials.

DESIGN OVERSIGHT Reza Erfanian 7/12/11 SIGN OFF DATE	DESIGN	BY S PERVAIZ	CHECKED P CHENG	LOAD & RESISTANCE FACTOR DESIGN	LIVE LOADING: HL93 W/"LOW-BOY"; PERMIT DESIGN VEHICLE
	DETAILS	BY J VOUGHT	CHECKED P CHENG	LAYOUT BY S PERVAIZ	CHECKED T KENG
	QUANTITIES	BY K SANFORD	CHECKED E GAHAN	SPECIFICATIONS BY T KENG	PLANS AND SPECS COMPARED J MANISCALCO

PREPARED FOR THE STATE OF CALIFORNIA DEPARTMENT OF TRANSPORTATION

JOHN A. KLEMUNES, JR.
PROJECT ENGINEER

BRIDGE NO. 29-0023
POST MILES 11.80

LONE TREE SLOUGH BRIDGE (WIDEN)
GENERAL PLAN

DESIGN GENERAL PLAN SHEET (ENGLISH) (REV.7/16/10)

ORIGINAL SCALE IN INCHES FOR REDUCED PLANS 0 1 2 3

UNIT: 1455
PROJECT NUMBER & PHASE: 10000204411 CONTRACT NO.: 10-0E6121

DISREGARD PRINTS BEARING EARLIER REVISION DATES → 5-3-10 2-4-11 5-18-11 6-24-11

SHEET 1 OF 19

FILE => 29-0023-a-gp01.add

USERNAME => s124496 DATE PLOTTED => 10-APR-2012 TIME PLOTTED => 10:54

DIST	COUNTY	ROUTE	POST MILES TOTAL PROJECT	SHEET No	TOTAL SHEETS
10	SJ	99	10.6/14.9	401	504

REGISTERED CIVIL ENGINEER 6-24-11 DATE

10-17-11
PLANS APPROVAL DATE

REGISTERED PROFESSIONAL ENGINEER SHARIQ PERVAIZ No. C67068 Exp. 9-30-12 CIVIL STATE OF CALIFORNIA

The State of California or its officers or agents shall not be responsible for the accuracy or completeness of electronic copies of this plan sheet.

SAN JOAQUIN COUNCIL OF GOVERNMENTS
555 E. WEBER AVE.
STOCKTON, CA 95202

HDR ENGINEERING, INC.
2365 IRON POINT ROAD, SUITE 300
FOLSOM, CA 95630

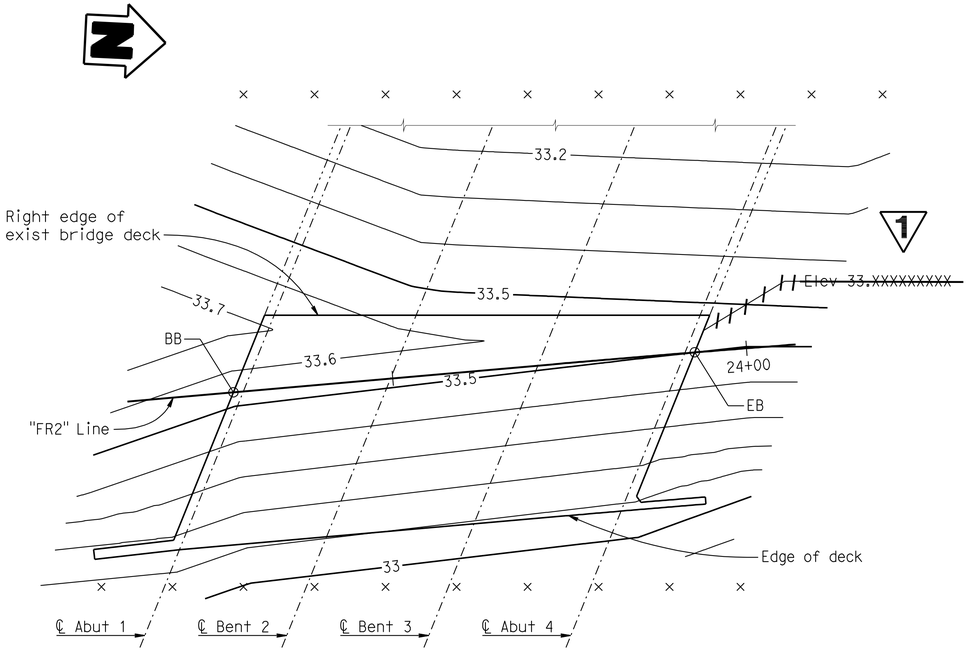

PARTIAL PLAN - DECK CONTOURS

3/32" = 1'-0"

NOTES:

1. × - Indicates 10' intervals along "SR 99" Line.
2. Contour interval = 0.1'.
3. Contours do not include camber or allowance for falsework settlement.
4. Contours are developed to match existing grade & cross slope at edge of deck and indicate top of concrete deck elevation.

1 **REVISED PER ADDENDUM No. 1 DATED APRIL 11, 2012**

INDEX TO PLANS:

1. GENERAL PLAN
2. DECK CONTOURS
3. FOUNDATION PLAN
4. ABUTMENT 1 LAYOUT
5. ABUTMENT 4 LAYOUT
6. ABUTMENT DETAILS NO. 1
7. ABUTMENT DETAILS NO. 2
8. BENT DETAILS
9. TYPICAL SECTION
10. SLAB REINFORCEMENT NO. 1
11. SLAB REINFORCEMENT NO. 2
12. SLAB REINFORCEMENT DETAILS
13. CONCRETE SLOPE PROTECTION DETAILS
14. LOG OF TEST BORINGS NO. 1
15. LOG OF TEST BORINGS NO. 2
16. LOG OF TEST BORINGS NO. 3
17. LOG OF TEST BORINGS NO. 4
18. LOG OF TEST BORINGS NO. 5
19. AS-BUILT LOG OF TEST BORINGS

CALTRANS STANDARD PLANS DATED MAY 2006

A10A	ACRONYMS AND ABBREVIATIONS (SHEET 1 OF 2)
A10B	ACRONYMS AND ABBREVIATIONS (SHEET 2 OF 2)
A10C	SYMBOLS (SHEET 1 of 2)
A10D	SYMBOLS (SHEET 2 of 2)
A62C	LIMITS OF PAYMENT FOR EXCAVATION AND BACKFILL BRIDGE
RSP A76A	CONCRETE BARRIER TYPE 60
B0-1	BRIDGE DETAILS
B0-3	BRIDGE DETAILS
B2-5	PILE DETAILS CLASS 90 AND CLASS 140
B11-55	CONCRETE BARRIER TYPE 732

STANDARD PLAN SHEET NO.

DETAIL NO.

Structural Concrete, Bridge

PC/PS Concrete Pile (Class 140), see "BENT DETAILS" Sheet

PC/PS Concrete Pile (Class 90), Alternative X, see B2-5

CONCRETE STRENGTH AND TYPE LIMITS

No Scale

GENERAL NOTES
LOAD AND RESISTANCE FACTOR DESIGN

DESIGN:
AASHTO LRFD Bridge Design Specifications, 4th Edition and the Caltrans Amendments, preface dated Dec 2008; except that bridge (incl. barrier and railing) details taken from Standard Plans March 2006 and earlier versions, Standard Bridge Details XS sheets, etc) are designed using Bridge Design Specifications (96 AASHTO w/Revisions by Caltrans).

SEISMIC DESIGN:
Caltrans Seismic Design Criteria (SDC), Version 1.4 July 2006.

DEAD LOAD
Includes 35 psf for future wearing surface.

LIVE LOADING:
HL93 and permit design load.

SEISMIC LOADING:
CALTRANS SDC ARS Curve: Figure B.7
(Soil Profile Type D) Magnitude = 6.5± 0.25
(Spectrum Peak Rock Acceleration = 0.2 g)

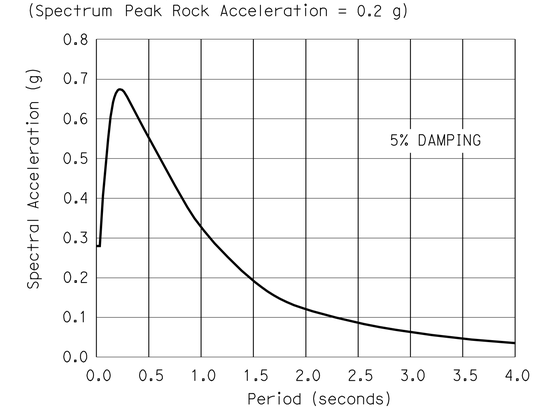

DESIGN A.R.S. CURVE

REINFORCED CONCRETE:
f_y = 60 ksi
f'_c= 3.6 ksi, unless otherwise noted.
n = 8

PILES:
See "Pile Data Table" on "FOUNDATION PLAN" sheet.

Note:
The Contractor shall verify all controlling field dimensions before ordering or fabricating any materials.

Reza Erfanian
DESIGN OVERSIGHT Reza Erfanian
6/24/11
SIGN OFF DATE

	BY	CHECKED
DESIGN	S PERVAIZ	P CHENG
DETAILS	J VOUGHT	P CHENG
QUANTITIES	K SANFORD	E GAHAN

PREPARED FOR THE STATE OF CALIFORNIA DEPARTMENT OF TRANSPORTATION

JOHN A. KLEMUNES, JR.
PROJECT ENGINEER

BRIDGE NO. 29-0023
POST MILE 11.80

LONE TREE SLOUGH BRIDGE (WIDEN)
DECK CONTOURS

DESIGN DETAIL SHEET (ENGLISH) (REV.7/16/10)

ORIGINAL SCALE IN INCHES FOR REDUCED PLANS 0 1 2 3

UNIT: 1455
PROJECT NUMBER & PHASE: 10000204411 CONTRACT NO.: 10-0E6121

DISREGARD PRINTS BEARING EARLIER REVISION DATES

REVISION DATES: 5-3-10 2-4-11 5-18-11 6-24-11

SHEET 2 OF 19

FILE => 29-0023-d-dc01.add

USERNAME => s124196 DATE PLOTTED => 10-APR-2012 TIME PLOTTED => 10:54

DIST	COUNTY	ROUTE	POST MILES TOTAL PROJECT	SHEET No	TOTAL SHEETS
10	SJ	99	10.6/14.9	402	504

REGISTERED CIVIL ENGINEER 6-24-11 DATE

10-17-11
PLANS APPROVAL DATE

REGISTERED PROFESSIONAL ENGINEER SHARIQ PERVAIZ No. C67068 Exp. 9-30-12 CIVIL STATE OF CALIFORNIA

The State of California or its officers or agents shall not be responsible for the accuracy or completeness of electronic copies of this plan sheet.

SAN JOAQUIN COUNCIL OF GOVERNMENTS
555 E. WEBER AVE.
STOCKTON, CA 95202

HDR ENGINEERING, INC.
2365 IRON POINT ROAD, SUITE 300
FOLSOM, CA 95630

PILE DATA TABLE

Location	Pile Type	Nominal Resistance Compression (kips)	Nominal Resistance Tension (kips)	Design Tip Elevations (ft)	Specified Tip Elevation (ft)	Nominal Driving Resistance (kips)
Abut 1	Class 90 Alt 'X'	140	0	-5.0 (a)	-5.0	140
Bent 2 & 3	PC/PS Conc Pile Class 140	280	0	-23.0 (a)(b)	-23.0	310
Abut 4	Class 90 Alt 'X'	140	0	-5.0 (a)	-5.0	140

Design tip elevations for Abutments are controlled by: (a) Compression.
Design tip elevations for Bents are controlled by: (a) Compression (Strength Limit), (b) Scour, respectively.

ABUTMENTS & BENTS ℄ STATIONS

(A) "FR2" Line Sta 23+28.88
(B) "FR2" Line Sta 23+49.70
(C) "FR2" Line Sta 23+70.51
(D) "FR2" Line Sta 23+91.29

1

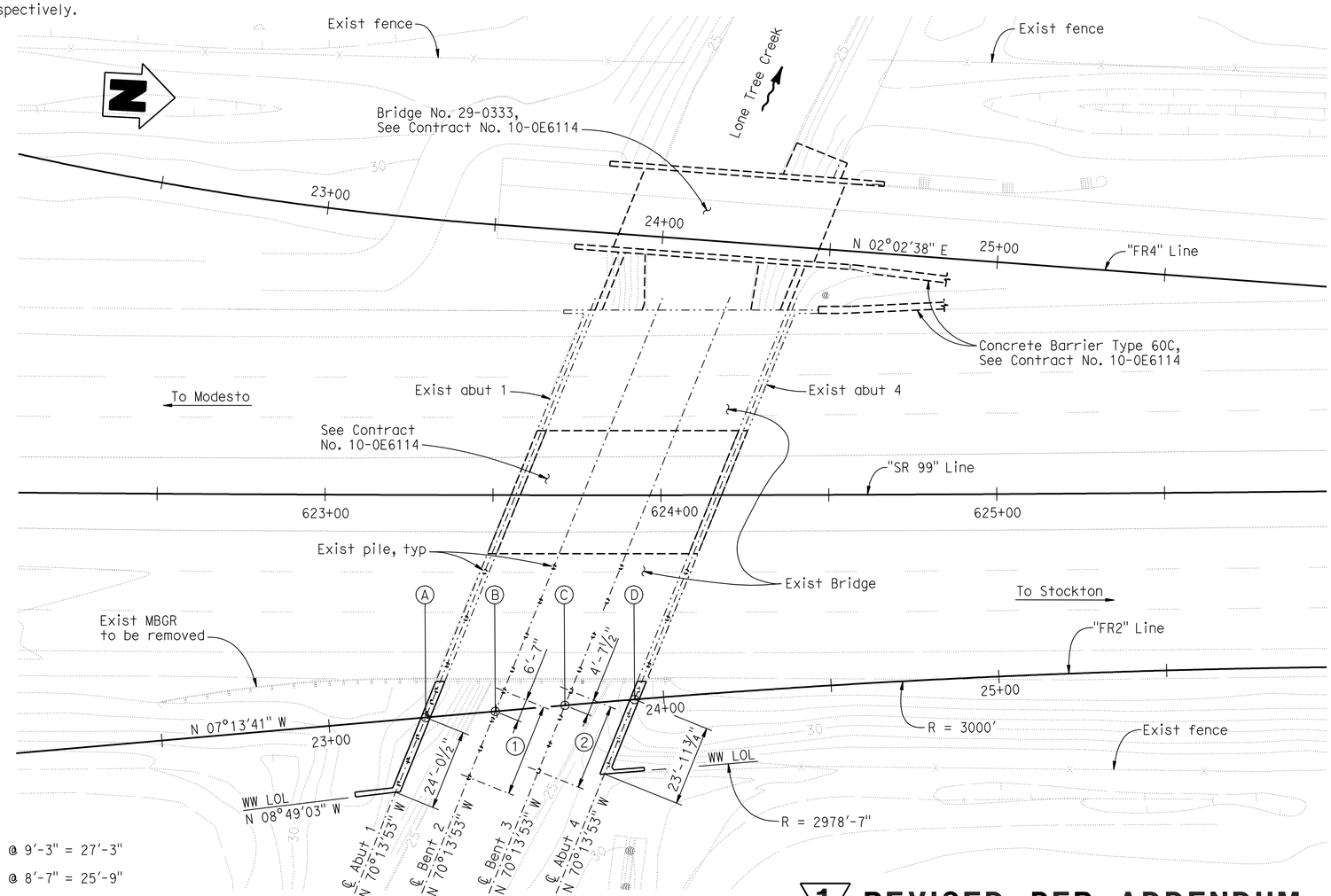

(1) 3 spaces @ 9'-3" = 27'-3"
(2) 3 spaces @ 8'-7" = 25'-9"

PLAN
1" = 20'

1 REVISED PER ADDENDUM No. 1 DATED APRIL 11, 2012

HYDROLOGIC SUMMARY TABLE

Drainage Area: 86.0 Square Miles

	Design Flood	Base Flood	Overtopping Flood
Frequence (Years)	50	100	N/A
Discharge (Cubic Feet per Second)	840	955	2855
Water Surface Elevation at Bridge (Feet)	29.58	30.00	N/A

Flood plain data are based upon information available when the plans were prepared and are shown to meet federal requirements. The accuracy of said information is not warranted by the State and Interested or affected parties should make their own investigation.

BENCH MARKS

BENCHMARK# 658 ELEV. 33.00 Ft
DESCRIPTION: KSN CONTROL POINT, ½" REBAR WITH YELLOW CAP STAMPED "KSN CONTROL", LOCATED AT APPROXIMATE CENTERLINE STATION 625+67, ON THE NORTHBOUND MAINLINE, ON THE OUTSIDE SHOULDER, 1' EAST OF THE EDGE OF PAVEMENT, 205' NORTH OF THE END OF THE CENTERLINE OF LONE TREE CREEK.
NGVD 29, N2138213.81, E6354203.76.

BENCHMARK# 699 ELEV. 31.83 Ft
DESCRIPTION: KSN CONTROL POINT, ½" REBAR WITH YELLOW CAP STAMPED "KSN CONTROL", LOCATED APPROXIMATE CENTERLINE STATION 625+50, ON THE SOUTHBOUND MAINLINE, ON THE OUTSIDE SHOULDER, 3' WEST OF THE EDGE OF PAVEMENT, 140' NORTH OF THE CENTERLINE OF LONE TREE CREEK.
NGVD 29, N2138191.62, E6354088.62.

NOTES:
1. See "ROAD PLANS" for type and locations of all existing and proposed utilities.
2. Location of existing utilities shown are approximate. The Contractor shall verify locations of all affected utilities prior to performing any excavation.
3. Not all piles shown here.

LEGEND:
---- Indicates new structure, See Contract No. 10-0E6114.
-·-·- Indicates existing structure.
= Indicates driven piles at abutments.
= Indicates driven piles at bents.

GEOTECHNICAL PROFESSIONAL 6-20-11 APPROVAL DATE

Note:
The Contractor shall verify all controlling field dimensions before ordering or fabricating any materials.

DESIGN OVERSIGHT Reza Erfanian
6/24/11
SIGN OFF DATE

SCALE: 1" = 40'	VERT.DATUM NGVD29	HORZ.DATUM NAD1983	
PHOTOGRAMMETRY AS OF: 08/09/2007	ALIGNMENT TIES		
SURVEYED	BY AERIAL PHOTOMAPPING SERVICES	DRAFTED	BY KSN
FIELD CHECKED	BY KRIS F. NEHMER	CHECKED	BY KRIS F. NEHMER

	BY	CHECKED
DESIGN	S PERVAIZ	P CHENG
DETAILS	J VOUGHT	P CHENG
QUANTITIES	K SANFORD	E GAHAN

PREPARED FOR THE STATE OF CALIFORNIA DEPARTMENT OF TRANSPORTATION

JOHN A. KLEMUNES, JR.
PROJECT ENGINEER

BRIDGE NO. 29-0023
POST MILE 11.80

LONE TREE SLOUGH BRIDGE (WIDEN)
FOUNDATION PLAN

FOUNDATION PLAN SHEET (ENGLISH) (REV.7/16/10)

ORIGINAL SCALE IN INCHES FOR REDUCED PLANS 0 1 2 3

UNIT: 1455
PROJECT NUMBER & PHASE: 10000204411 CONTRACT NO.: 10-0E6121

DISREGARD PRINTS BEARING EARLIER REVISION DATES

REVISION DATES 5-3-10 2-4-11 5-18-11 6-24-11 SHEET 3 OF 19

FILE => 29-0023-e-fp01.add

USERNAME => s124196 DATE PLOTTED => 10-APR-2012 TIME PLOTTED => 10:55

DIST	COUNTY	ROUTE	POST MILES TOTAL PROJECT	SHEET No	TOTAL SHEETS
10	SJ	99	10.6/14.9	408	504

REGISTERED CIVIL ENGINEER 6-24-11 DATE

10-17-11
PLANS APPROVAL DATE

REGISTERED PROFESSIONAL ENGINEER SHARIQ PERVAIZ No. C67068 Exp. 9-30-12 CIVIL STATE OF CALIFORNIA

The State of California or its officers or agents shall not be responsible for the accuracy or completeness of electronic copies of this plan sheet.

SAN JOAQUIN COUNCIL OF GOVERNMENTS
555 E. WEBER AVE.
STOCKTON, CA 95202

HDR ENGINEERING, INC.
2365 IRON POINT ROAD, SUITE 300
FOLSOM, CA 95630

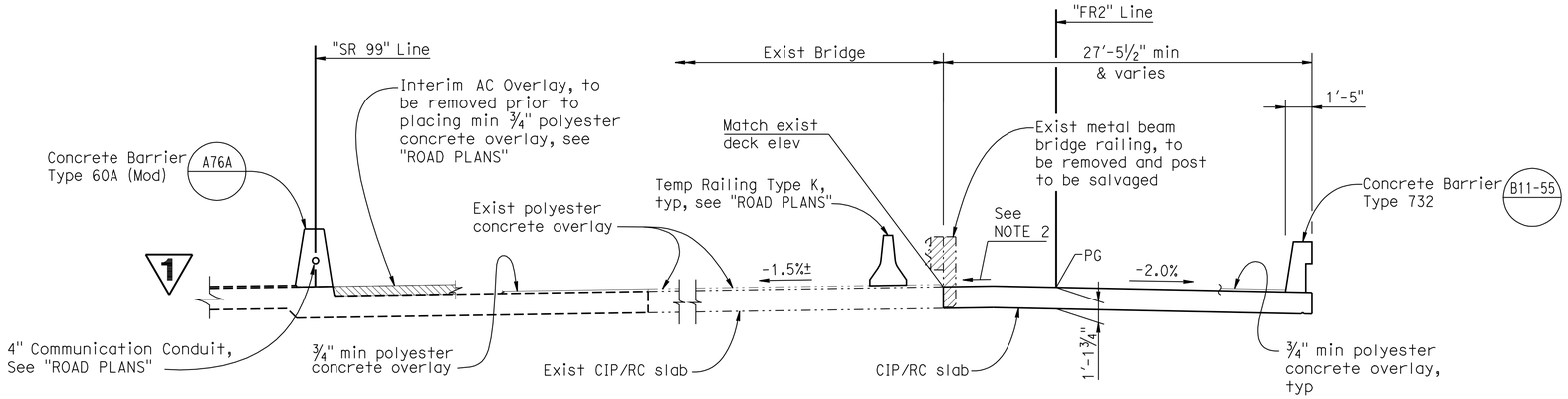

TYPICAL SECTION

¼" = 1'-0"

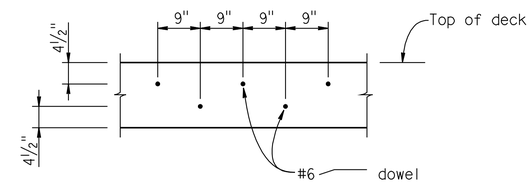

DOWEL LAYOUT

¾" = 1'-0"

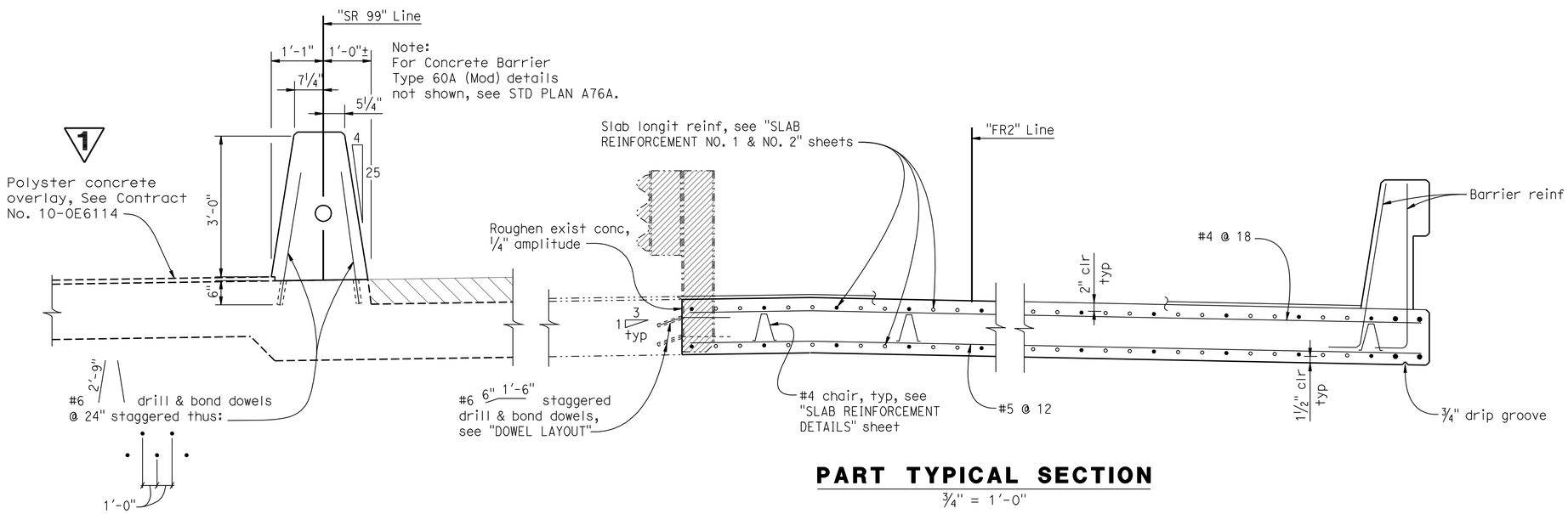

Note:
For Concrete Barrier Type 60A (Mod) details not shown, see STD PLAN A76A.

PART TYPICAL SECTION

¾" = 1'-0"

NOTES:

1. For additional information, see "SLAB REINFORCEMENT DETAILS" sheet.
2. Match existing grade and cross slope.

LEGEND:

- Indicates limits of bridge removal (portion).
- Indicates existing structure.
- Indicates new structure.
- • Indicates continuous bar.
- ∘ Indicates partial length bar.
- Indicates new structure, See Contract No. 10-0E6114

1 REVISED PER ADDENDUM No. 1 DATED APRIL 11, 2012

Note:
The Contractor shall verify all controlling field dimensions before ordering or fabricating any materials.

DESIGN OVERSIGHT Reza Erfanian	DESIGN	BY S PERVAIZ	CHECKED P CHENG
6/24/11 SIGN OFF DATE	DETAILS	BY J VOUGHT	CHECKED P CHENG
	QUANTITIES	BY K SANFORD	CHECKED E GAHAN

PREPARED FOR THE STATE OF CALIFORNIA DEPARTMENT OF TRANSPORTATION

JOHN A. KLEMUNES, JR.
PROJECT ENGINEER

BRIDGE NO. 29-0023
POST MILE 11.80

LONE TREE SLOUGH BRIDGE (WIDEN)

TYPICAL SECTION

DESIGN DETAIL SHEET (ENGLISH) (REV.7/16/10)

ORIGINAL SCALE IN INCHES FOR REDUCED PLANS 0 1 2 3

UNIT: 1455
PROJECT NUMBER & PHASE: 10000204411 CONTRACT NO.: 10-0E6121

DISREGARD PRINTS BEARING EARLIER REVISION DATES

REVISION DATES: 5-3-10 2-4-11 5-18-11 6-24-11

SHEET 9 OF 19

FILE => 29-0023-k-ts01.add

USERNAME => s124496 DATE PLOTTED => 10-APR-2012 TIME PLOTTED => 10:55

DIST	COUNTY	ROUTE	POST MILES TOTAL PROJECT	SHEET No	TOTAL SHEETS
10	SJ	99	10.6/14.9	413	504

REGISTERED CIVIL ENGINEER — DATE: 6-24-11

PROFESSIONAL GEOLOGIST — William E. Nichols — No. 2229 — Exp. 1-31-12 — CERTIFIED ENGINEERING GEOLOGIST — STATE OF CALIFORNIA

10-17-11
PLANS APPROVAL DATE

The State of California or its officers or agents shall not be responsible for the accuracy or completeness of electronic copies of this plan sheet.

1

SAN JOAQUIN COUNCIL OF GOVERNMENTS
555 E. WEBER AVE.
STOCKTON, CA 95202

BLACKBURN CONSULTING
2491 BOATMAN AVENUE
WEST SACRAMENTO, CA 95691 FILE No. 1201.7b

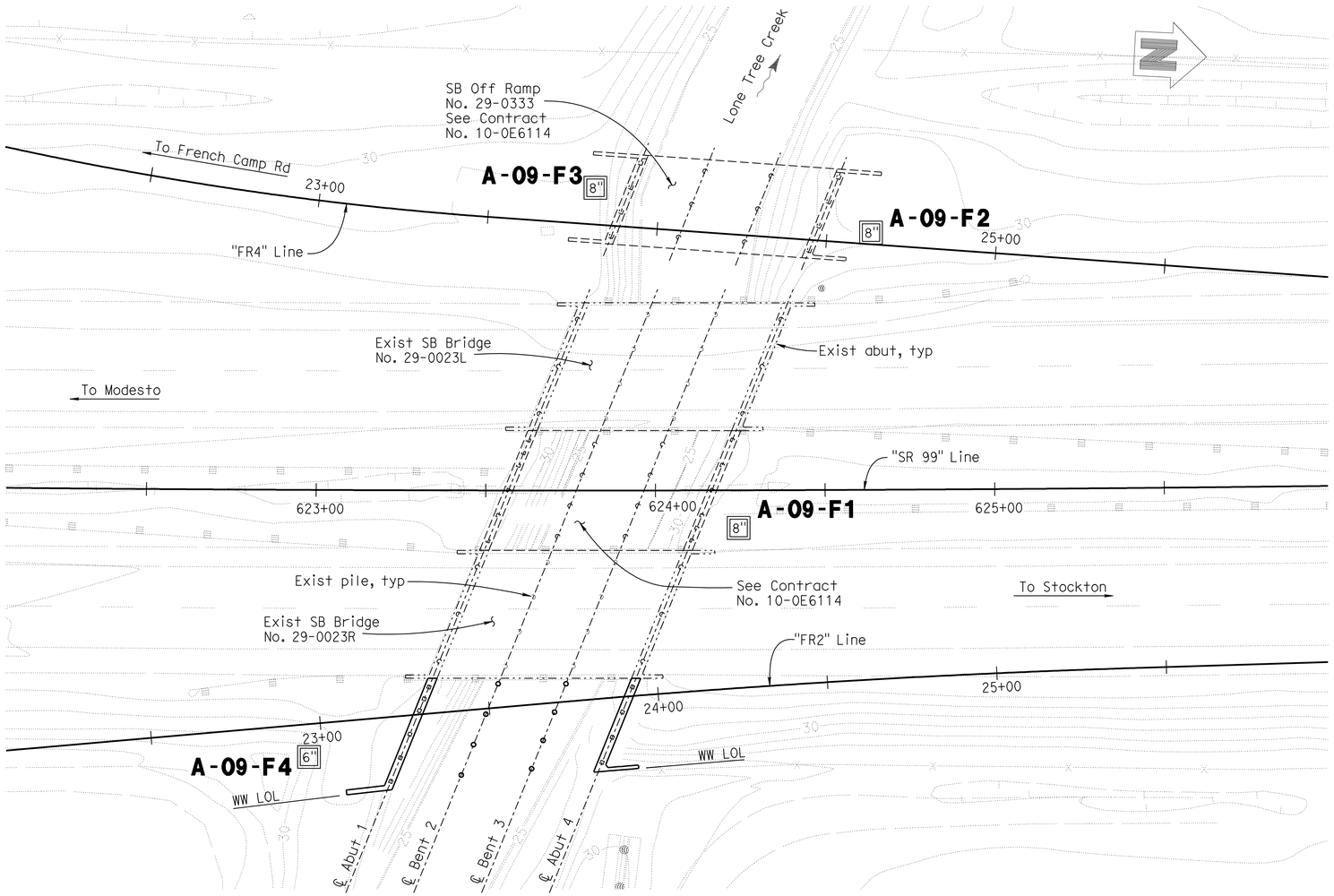

PLAN
1" = 20'

Legend:

---- Indicates new structure, See contract No. 10-0E6114.
-·-·- Indicates existing structure.
▫ Indicates driven piles at abutments.
∘ Indicates driven piles at bents.

1 **REVISED PER ADDENDUM No. 1 DATED APRIL 11, 2012**

Reza Erfanian
DESIGN OVERSIGHT Reza Erfanian
6/24/11
SIGN OFF DATE

DRAWN BY M ROBERTSON
CHECKED BY A SHINNEFIELD
A WOOD
FIELD INVESTIGATION BY:
DATE: March, August 2009

PREPARED FOR THE STATE OF CALIFORNIA DEPARTMENT OF TRANSPORTATION

JOHN A. KLEMUNES, JR.
PROJECT ENGINEER

BRIDGE NO. 29-0023
POST MILE 11.80

LONE TREE SLOUGH BRIDGE (WIDEN)
LOG OF TEST BORINGS NO. 1

GS GEOLOGIST LOG OF TEST BORINGS SHEET (ENGLISH) (REV. 7/16/10)

ORIGINAL SCALE IN INCHES FOR REDUCED PLANS 0 1 2 3

UNIT: 1455
PROJECT NUMBER & PHASE: 10000204411 CONTRACT NO.: 10-0E6121

DISREGARD PRINTS BEARING EARLIER REVISION DATES

REVISION DATES: 3-10-10 2-04-11 5-18-11 6-24-11

SHEET 14 OF 19

FILE => 29-0023-z-1tb01.add

USERNAME => s124496 DATE PLOTTED => 10-APR-2012 TIME PLOTTED => 10:55

DIST	COUNTY	ROUTE	POST MILES TOTAL PROJECT	SHEET No	TOTAL SHEETS
10	SJ	99	10.6/14.9	448	504

REGISTERED CIVIL ENGINEER 6-24-11 DATE

10-17-11
PLANS APPROVAL DATE

REGISTERED PROFESSIONAL ENGINEER SHARIQ PERVAIZ No. C67068 Exp. 9-30-12 CIVIL STATE OF CALIFORNIA

The State of California or its officers or agents shall not be responsible for the accuracy or completeness of electronic copies of this plan sheet.

SAN JOAQUIN COUNCIL OF GOVERNMENTS
555 E. WEBER AVE.
STOCKTON, CA 95202

HDR ENGINEERING, INC.
2365 IRON POINT ROAD, SUITE 300
FOLSOM, CA 95630

NOTE:

1. For MSE Walls "GENERAL NOTES", see "MECHANICALLY STABILIZED EMBANKMENT DETAIL No. 2" sheet.

LEGEND:

- Indicates new construction.
- Indicates existing feature.
- Indicates direction of traffic.
- * Indicates top of wall elevation, see "WALL PANEL LAYOUT" sheets.
- ** Indicates top of leveling pad, elevation, see "WALL PANEL LAYOUT" sheets.
- (A) 18" dia exist storm drain to be removed, see "ROAD PLANS".
- (B) Drainage Inlet, typ, see "ROAD PLANS" for locations. See "MSE WALL DETAILS NO. 3" sheet for details.

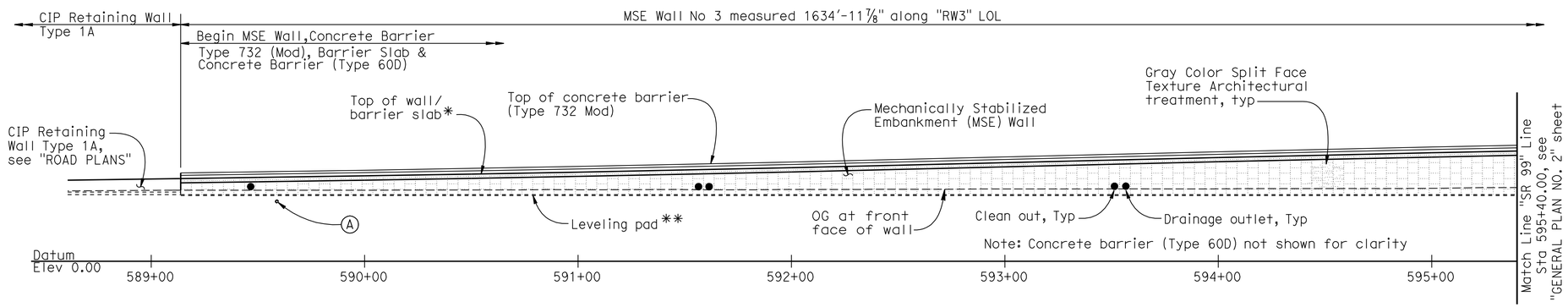

PART ELEVATION

1" = 30'

MSE WALL NO. 3 BR NO 29E0004

QUANTITIES

MECHANICALLY STABILIZED EMBANKMENT, LOCATION A	27,356	SQFT
STRUCTURAL CONCRETE, BARRIER SLAB	766	CY
CONCRETE BARRIER (TYPE 732 MODIFIED)	1,635	LF

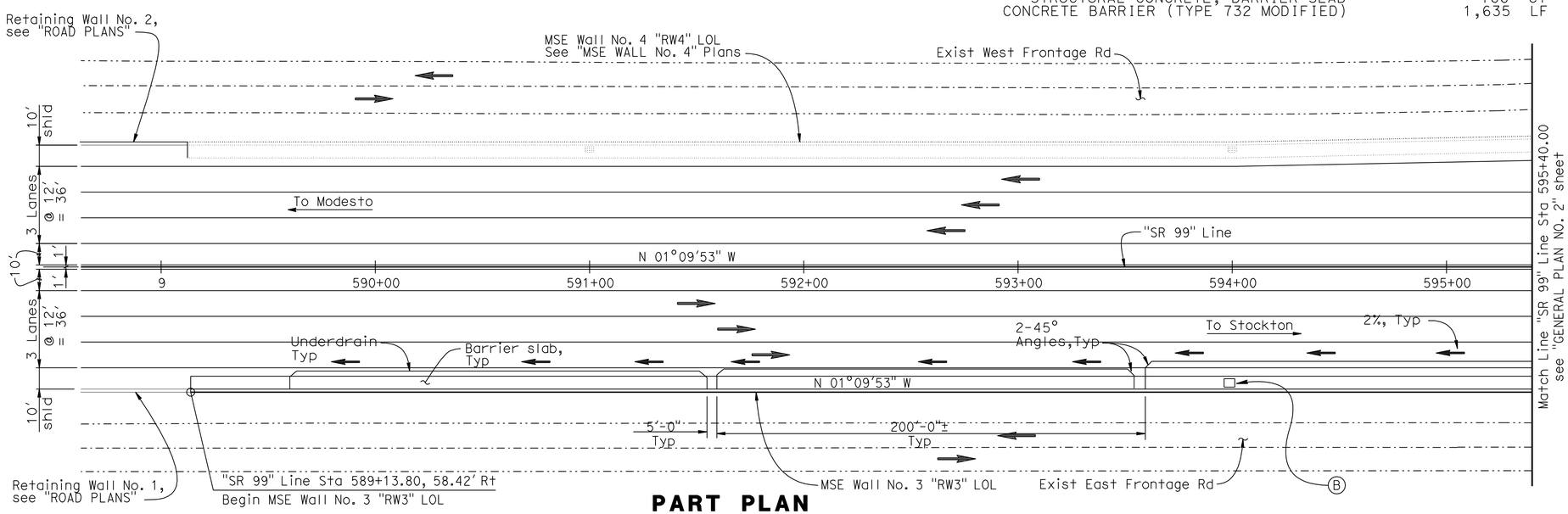

PART PLAN

1" = 30'

1 REVISED PER ADDENDUM No. 1 DATED APRIL 11, 2012

Note:
The Contractor shall verify all controlling field dimensions before ordering or fabricating any materials.

INDEX TO PLANS:

1. GENERAL PLAN NO. 1
2. GENERAL PLAN NO. 2
3. GENERAL PLAN NO. 3
4. FOUNDATION PLAN NO. 1
5. FOUNDATION PLAN NO. 2
6. FOUNDATION PLAN NO. 3
7. WALL PANEL LAYOUT No. 1
8. WALL PANEL LAYOUT No. 2
9. WALL PANEL LAYOUT No. 3
10. WALL PANEL LAYOUT No. 4
11. WALL PANEL LAYOUT No. 5
12. WALL PANEL LAYOUT No. 6
13. WALL PANEL LAYOUT No. 7
14. WALL PANEL LAYOUT No. 8
15. MSE WALL DETAILS NO. 1
16. MSE WALL DETAILS NO. 2
17. MSE WALL DETAILS NO. 3
18. MECHANICALLY STABILIZED EMBANKMENT - DETAIL No. 1
19. MECHANICALLY STABILIZED EMBANKMENT - DETAIL No. 2
20. MECHANICALLY STABILIZED EMBANKMENT - DETAIL No. 3
21. MECHANICALLY STABILIZED EMBANKMENT - DETAIL No. 4
22. MECHANICALLY STABILIZED EMBANKMENT - DETAIL No. 5
23. MECHANICALLY STABILIZED EMBANKMENT - DETAIL No. 6
24. LOG OF TEST BORINGS NO. 1
25. LOG OF TEST BORINGS NO. 2
26. LOG OF TEST BORINGS NO. 3
27. LOG OF TEST BORINGS NO. 4
28. LOG OF TEST BORINGS NO. 5

CALTRANS STANDARD PLANS DATED MAY 2006

	A10A	ACRONYMS AND ABBREVIATIONS (SHEET 1 OF 2)
	A10B	ACRONYMS AND ABBREVIATIONS (SHEET 2 OF 2)
	A10C	SYMBOLS (SHEET 1 of 2)
	A10D	SYMBOLS (SHEET 2 of 2)
RSP	A76A	CONCRETE BARRIER TYPE 60
	B11-55	CONCRETE BARRIER TYPE 732

STANDARD PLAN SHEET No.
DETAIL No.

Reza Erfanian DESIGN OVERSIGHT Reza Erfanian 6/24/11 SIGN OFF DATE	DESIGN BY S PERVAIZ	CHECKED T KENG	LOAD & RESISTANCE FACTOR DESIGN	LIVE LOADING: HS20-44 AND ALTERNATIVE AND PERMIT DESIGN VEHICLE	
	DETAILS BY J VOUGHT	CHECKED T KENG	LAYOUT BY S PERVAIZ	CHECKED T KENG	
	QUANTITIES BY T KENG	CHECKED J VOUGHT	SPECIFICATIONS BY T KENG	PLANS AND SPECS COMPARED J MANISCALCO	

PREPARED FOR THE STATE OF CALIFORNIA DEPARTMENT OF TRANSPORTATION

JOHN A. KLEMUNES, JR.
PROJECT ENGINEER

BRIDGE NO. 29E0004
POST MILES 10.97

MSE WALL NO. 3
GENERAL PLAN NO. 1

DESIGN GENERAL PLAN SHEET (ENGLISH) (REV.7/16/10)

ORIGINAL SCALE IN INCHES FOR REDUCED PLANS 0 1 2 3

UNIT: 1455
PROJECT NUMBER & PHASE: 10000204411 CONTRACT NO.: 10-0E6121

DISREGARD PRINTS BEARING EARLIER REVISION DATES

REVISION DATES: 5-3-10 2-4-11 5-18-11 6-24-11

SHEET 1 OF 28

FILE => 29e0004-a-gp01.add

USERNAME => s124496 DATE PLOTTED => 10-APR-2012 TIME PLOTTED => 10:55

DIST	COUNTY	ROUTE	POST MILES TOTAL PROJECT	SHEET No	TOTAL SHEETS
10	SJ	99	10.6/14.9	449	504

REGISTERED CIVIL ENGINEER 6-24-11 DATE

10-17-11
PLANS APPROVAL DATE

REGISTERED PROFESSIONAL ENGINEER SHARIQ PERVAIZ No. C67068 Exp. 9-30-12 CIVIL STATE OF CALIFORNIA

The State of California or its officers or agents shall not be responsible for the accuracy or completeness of electronic copies of this plan sheet.

SAN JOAQUIN COUNCIL OF GOVERNMENTS
555 E. WEBER AVE.
STOCKTON, CA 95202

HDR ENGINEERING, INC.
2365 IRON POINT ROAD, SUITE 300
FOLSOM, CA 95630

Note: Concrete barrier (Type 60D) not shown for clarity

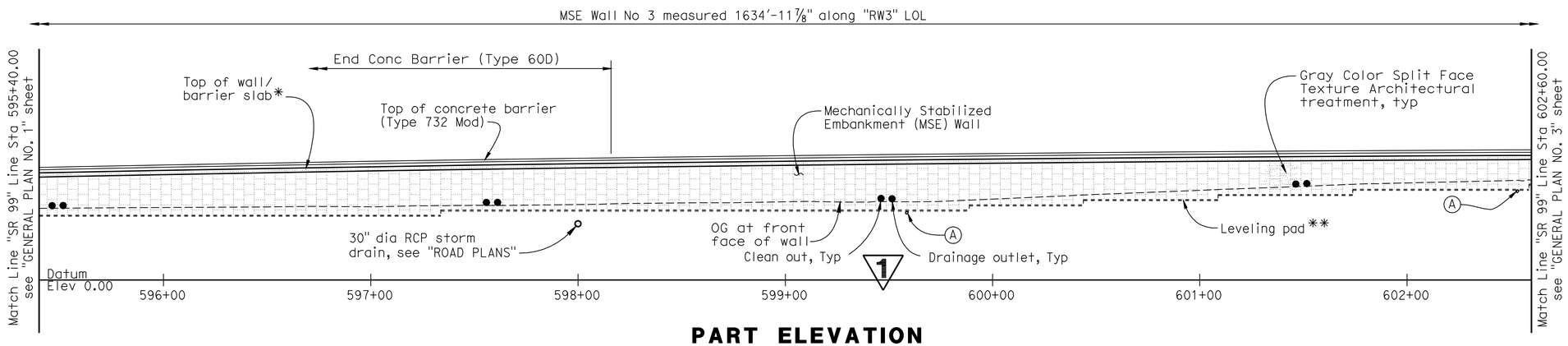

PART ELEVATION

1" = 30'

NOTES:

1. For MSE Walls "GENERAL NOTES", see "MECHANICALLY STABILIZED EMBANKMENT DETAIL No. 2" sheet.

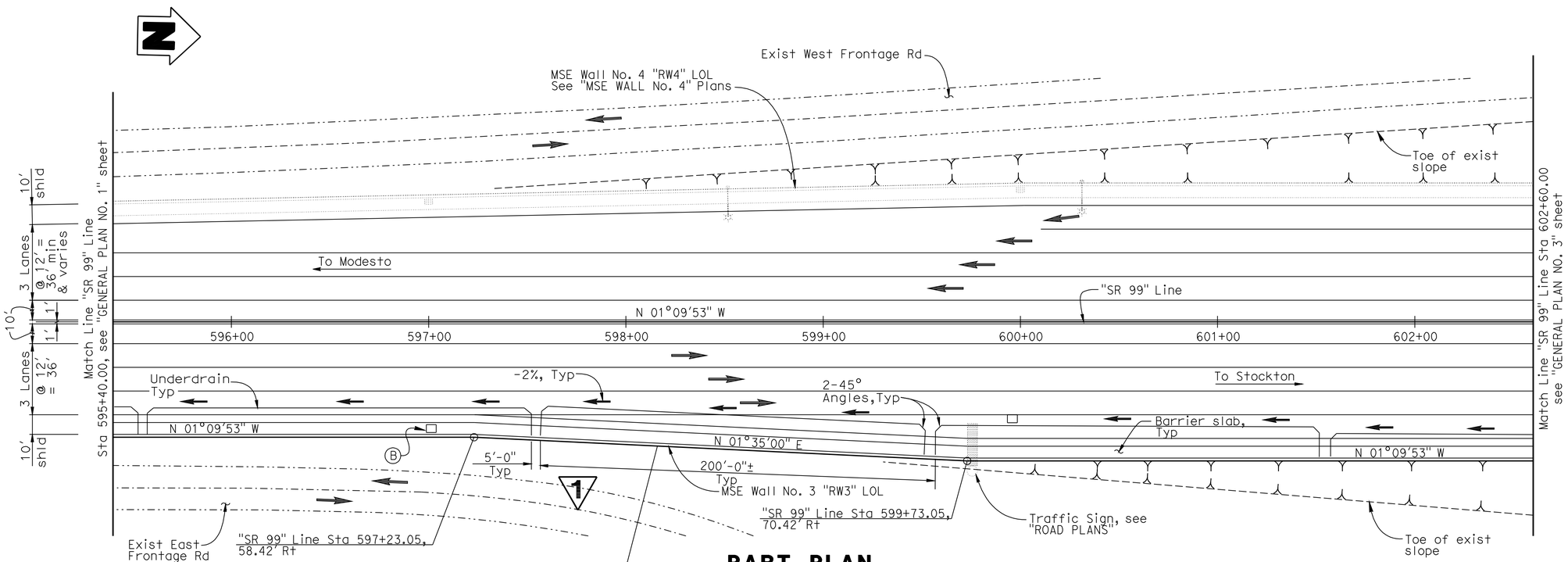

PART PLAN

1" = 30'

LEGEND:

———	Indicates new construction.
—·—·—	Indicates existing feature.
➡	Indicates direction of traffic.
*	Indicates top of wall elevation, see "WALL PANEL LAYOUT" sheets.
**	Indicates top of leveling pad, elevation, see "WALL PANEL LAYOUT" sheets.
Ⓐ	18" dia exist storm drain to be removed, see "ROAD PLANS".
Ⓑ	Drainage Inlet, typ, see "ROAD PLANS" for locations. See "MSE WALL DETAILS NO. 3" sheet for details.

Note:
The Contractor shall verify all controlling field dimensions before ordering or fabricating any materials.

1 REVISED PER ADDENDUM No. 1 DATED APRIL 11, 2012

Reza Erfanian DESIGN OVERSIGHT Reza Erfanian 6/24/11 SIGN OFF DATE	DESIGN	BY S PERVAIZ	CHECKED T KENG	LOAD & RESISTANCE FACTOR DESIGN	LIVE LOADING: HS20-44 AND ALTERNATIVE AND PERMIT DESIGN VEHICLE		
	DETAILS	BY J VOUGHT	CHECKED T KENG	LAYOUT	BY S PERVAIZ	CHECKED T KENG	
	QUANTITIES	BY T KENG	CHECKED J VOUGHT	SPECIFICATIONS	BY T KENG	PLANS AND SPECS COMPARED J MANISCALCO	

PREPARED FOR THE STATE OF CALIFORNIA DEPARTMENT OF TRANSPORTATION

JOHN A. KLEMUNES, JR.
PROJECT ENGINEER

BRIDGE NO. 29E0004
POST MILES 10.97

MSE WALL NO. 3
GENERAL PLAN NO. 2

DESIGN GENERAL PLAN SHEET (ENGLISH) (REV.7/16/10)

ORIGINAL SCALE IN INCHES FOR REDUCED PLANS 0 1 2 3

UNIT: 1455
PROJECT NUMBER & PHASE: 10000204411 CONTRACT NO.: 10-0E6121

DISREGARD PRINTS BEARING EARLIER REVISION DATES

REVISION DATES				SHEET	OF
5-3-10	2-8-11	5-18-11	6-24-11	2	28

FILE => 29e0004-a-gp02.add

USERNAME => s124496 DATE PLOTTED => 10-APR-2012 TIME PLOTTED => 11:22

DIST	COUNTY	ROUTE	POST MILES TOTAL PROJECT	SHEET No	TOTAL SHEETS
10	SJ	99	10.6/14.9	450	504

REGISTERED CIVIL ENGINEER 6-24-11 DATE

10-17-11
PLANS APPROVAL DATE

REGISTERED PROFESSIONAL ENGINEER SHARIQ PERVAIZ No. C67068 Exp. 9-30-12 CIVIL STATE OF CALIFORNIA

The State of California or its officers or agents shall not be responsible for the accuracy or completeness of electronic copies of this plan sheet.

SAN JOAQUIN COUNCIL OF GOVERNMENTS
555 E. WEBER AVE.
STOCKTON, CA 95202

HDR ENGINEERING, INC.
2365 IRON POINT ROAD, SUITE 300
FOLSOM, CA 95630

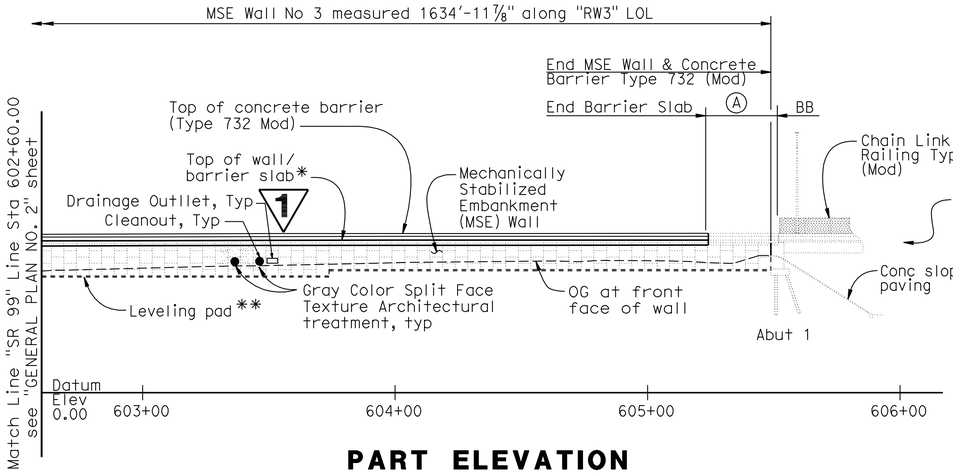

PART ELEVATION

1" = 30'

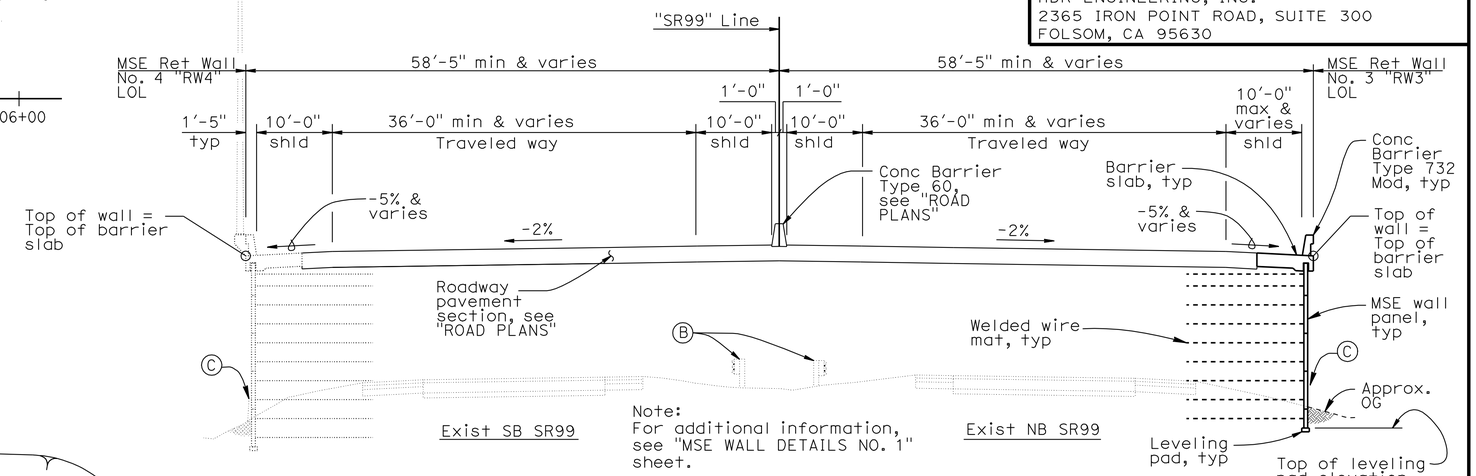

Note:
For additional information, see "MSE WALL DETAILS NO. 1" sheet.

TYPICAL SECTION

1" = 10'

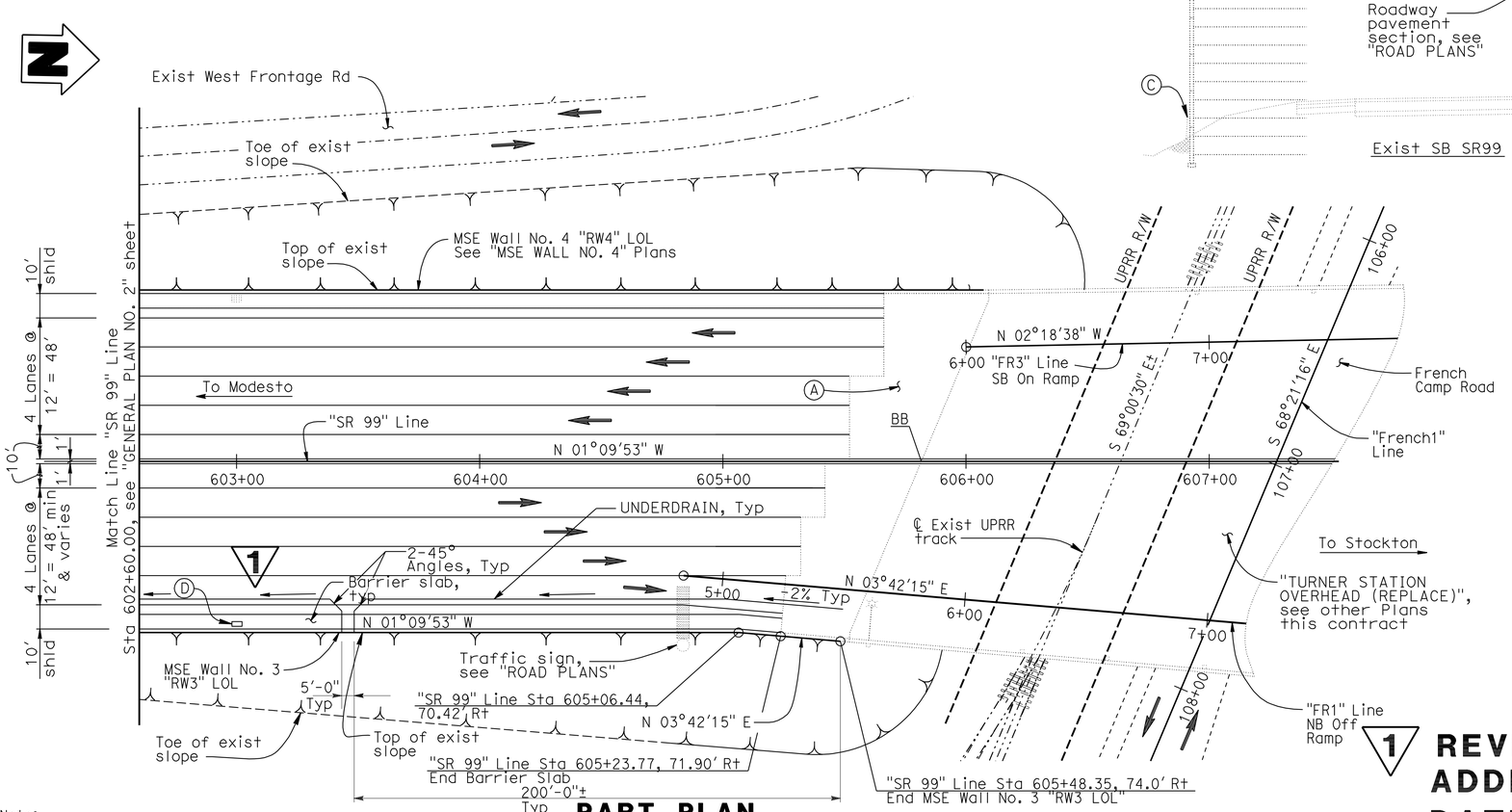

PART PLAN

1" = 30'

Note:
The Contractor shall verify all controlling field dimensions before ordering or fabricating any materials.

NOTES:

1. For MSE Walls "GENERAL NOTES", see "MECHANICALLY STABILIZED EMBANKMENT DETAIL No. 2" sheet.
2. For Traffic Staging, see 'ROAD PLANS'.

LEGEND:

———	Indicates new construction.
-·-·-·-	Indicates existing feature.
→	Indicates direction of traffic.
*	Indicates top of wall elevation, see "WALL PANEL LAYOUT" sheets.
**	Indicates top of leveling pad, elevation, see "WALL PANEL LAYOUT" sheets.
(A)	Structure Approach Type N(30S), see "TURNER STATION OVERHEAD (REPLACE)" PLANS.
(B)	Exist TBB to be removed, see "ROAD PLANS".
(C)	Concrete Barrier Type 60D, where occurs, see "ROAD PLANS". (A76A)
(D)	Drainage Inlet, typ, see "ROAD PLANS" for locations. See "MSE WALL DETAILS NO. 3" sheet for details.

1 REVISED PER ADDENDUM No. 1 DATED APRIL 11, 2012

Reza Erfanian
DESIGN OVERSIGHT Reza Erfanian
6/24/11
SIGN OFF DATE

	BY	CHECKED				
DESIGN	S PERVAIZ	T KENG	LOAD & RESISTANCE FACTOR DESIGN	LIVE LOADING: HS20-44 AND ALTERNATIVE AND PERMIT DESIGN VEHICLE		
DETAILS	J VOUGHT	T KENG	LAYOUT	S PERVAIZ	T KENG	
QUANTITIES	T KENG	J VOUGHT	SPECIFICATIONS	T KENG	PLANS AND SPECS COMPARED	J MANISCALCO

PREPARED FOR THE STATE OF CALIFORNIA DEPARTMENT OF TRANSPORTATION

JOHN A. KLEMUNES, JR.
PROJECT ENGINEER

BRIDGE NO. 29E0004
POST MILES 10.97

MSE WALL NO. 3
GENERAL PLAN NO. 3

DESIGN GENERAL PLAN SHEET (ENGLISH) (REV.7/16/10)

ORIGINAL SCALE IN INCHES FOR REDUCED PLANS 0 1 2 3

UNIT: 1455
PROJECT NUMBER & PHASE: 10000204411 CONTRACT NO.: 10-0E6121

DISREGARD PRINTS BEARING EARLIER REVISION DATES

REVISION DATES: 5-3-10 2-4-11 5-18-11 6-24-11

SHEET 3 OF 28

FILE => 29e0004-a-gp03.add

USERNAME => s124496 DATE PLOTTED => 10-APR-2012 TIME PLOTTED => 10:55

DIST.	COUNTY	ROUTE	POST MILES TOTAL PROJECT	SHEET NO.	TOTAL SHEETS
10	SJ	99	10.6/14.9	470	504

REGISTERED ENGINEER - CIVIL 6-24-11

10-17-11
PLANS APPROVAL DATE

REGISTERED PROFESSIONAL ENGINEER SHARIQ PERVAIZ No. C67068 Exp. 9-30-12 CIVIL STATE OF CALIFORNIA

The State of California or its officers or agents shall not be responsible for the accuracy or completeness of electronic copies of this plan sheet.

SAN JOAQUIN COUNCIL OF GOVERNMENTS
555 E. WEBER AVE.
STOCKTON, CA 95202

HDR ENGINEERING, INC.
2365 IRON POINT ROAD, SUITE 300
FOLSOM, CA 95630

1

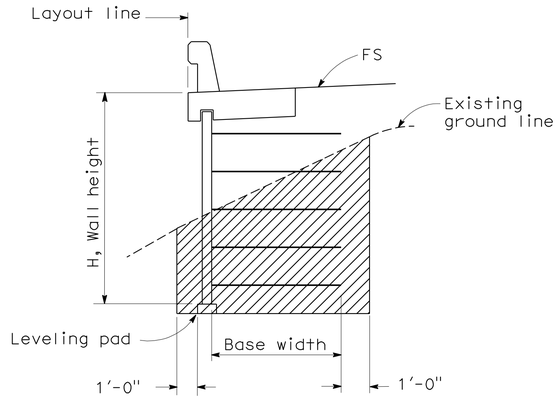

LIMITS OF EXCAVATION 2

No Scale

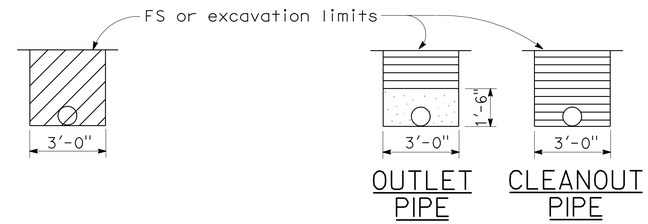

EXCAVATION BACKFILL

OUTLET OR CLEANOUT PIPE FOR UNDERDRAIN

No Scale

ABBREVIATIONS

OG	Original ground
FS	Planned finished surface
GP	Planned grading plane

LEGEND

- Limits of structure excavation
- Limits of structure backfill
- Limits of permeable material

NOTES:

1. Limits to FS except to GP when in roadway section.
2. 3 Locate 4"Ø Min smoothed wall PVC or 8" Min Corrugated HDPE perforated underdrain such that it drains 6" ± above FG at face of wall.
3. Maximum spacing of outlet pipes is 200 ft.
4. At sags in profile of underdrain, install outlet pipe for each direction of flow.
5. For Details not shown, see D102 .

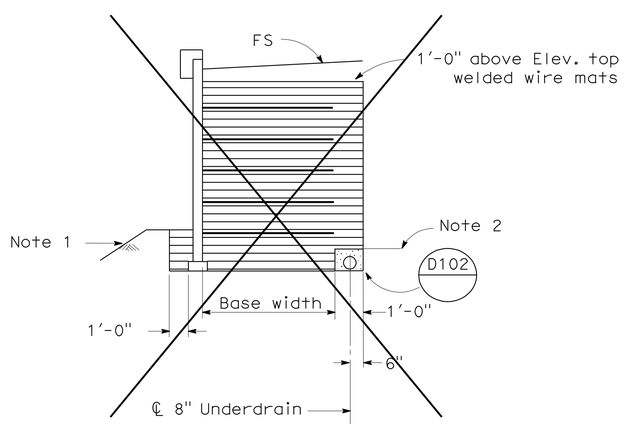

SLOPING FINISHED SURFACE 1

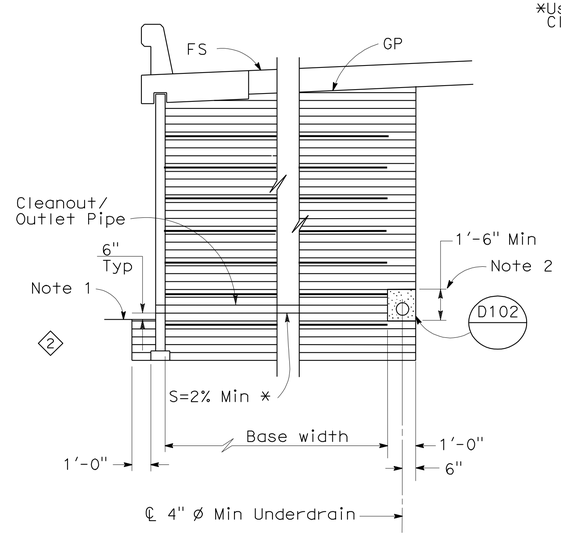

ROADWAY SECTION WITH BASE WIDTH 16' OR GREATER

*Use Reverse Slope for Cleanout Pipe.

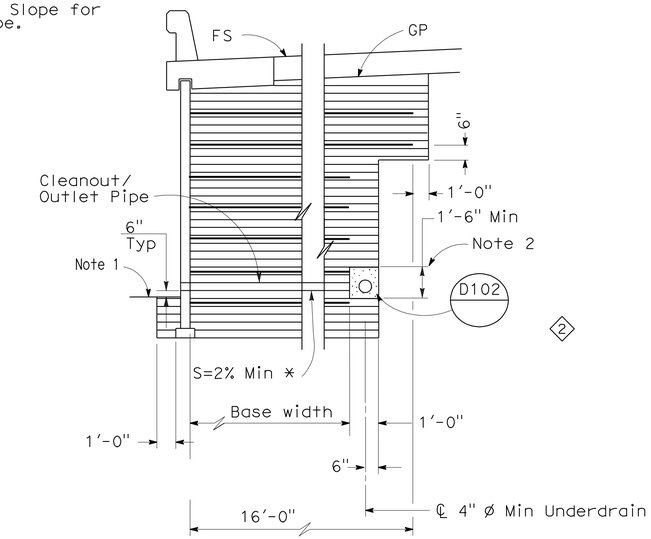

ROADWAY SECTION WITH BASE WIDTH LESS THAN 16'

LIMITS OF BACKFILL

No Scale

1 REVISED PER ADDENDUM No. 1 DATED APRIL 11, 2012

STANDARD DRAWING

FILE NO. xs13-020-6e

APPROVED BY K. GRISWELL — RESPONSIBLE TECHNICAL SPECIALIST
APPROVAL DATE 5-6-08

RELEASED BY ROBERTO LACALLE — RESPONSIBLE OFFICE CHIEF
RELEASE DATE 5-6-08

1 Deleted Detail
2 Revised Detail
3 Revised Detail

STATE OF CALIFORNIA DEPARTMENT OF TRANSPORTATION

DIVISION OF ENGINEERING SERVICES

BRIDGE NO. 29E0004
POST MILE 10.97

MSE RETAINING WALL NO. 3

MECHANICALLY STABILIZED EMBANKMENT

DETAIL NO. 6

DS OSD 2147A (ENGLISH STANDARD DRAWING "XS" BORDER REV. 01/11/08)

ORIGINAL SCALE IN INCHES FOR REDUCED PLANS 0 1 2 3

UNIT: 1455
PROJECT NUMBER & PHASE: 10000204411 CONTRACT NO.: 10-0E6121

DISREGARD PRINTS BEARING EARLIER REVISION DATES

REVISION DATES: 5-3-10 2-4-11 5-19-11 6-24-11

SHEET 23 OF 28

DIST	COUNTY	ROUTE	POST MILES TOTAL PROJECT	SHEET No	TOTAL SHEETS
10	SJ	99	10.6/14.9	476	504

REGISTERED CIVIL ENGINEER 6-24-11 DATE

10-17-11
PLANS APPROVAL DATE

REGISTERED PROFESSIONAL ENGINEER SHARIQ PERVAIZ No. C67068 Exp. 9-30-12 CIVIL STATE OF CALIFORNIA

The State of California or its officers or agents shall not be responsible for the accuracy or completeness of electronic copies of this plan sheet.

SAN JOAQUIN COUNCIL OF GOVERNMENTS
555 E. WEBER AVE.
STOCKTON, CA 95202

HDR ENGINEERING, INC.
2365 IRON POINT ROAD, SUITE 300
FOLSOM, CA 95630

NOTES:

1. For MSE Walls "GENERAL NOTES", see "MECHANICALLY STABILIZED EMBANKMENT DETAIL No. 2" sheet.

LEGEND:

- Indicates new construction.
- Indicates existing feature.
- Indicates direction of traffic.
- * Indicates top of wall elevation, see "WALL PANEL LAYOUT" sheets.
- ** Indicates top of leveling pad, elevation, see "WALL PANEL LAYOUT" sheets.
- (A) Drainage Inlet, typ, see "ROAD PLANS" for locations. See "MSE WALL DETAILS NO. 3" sheet for details.

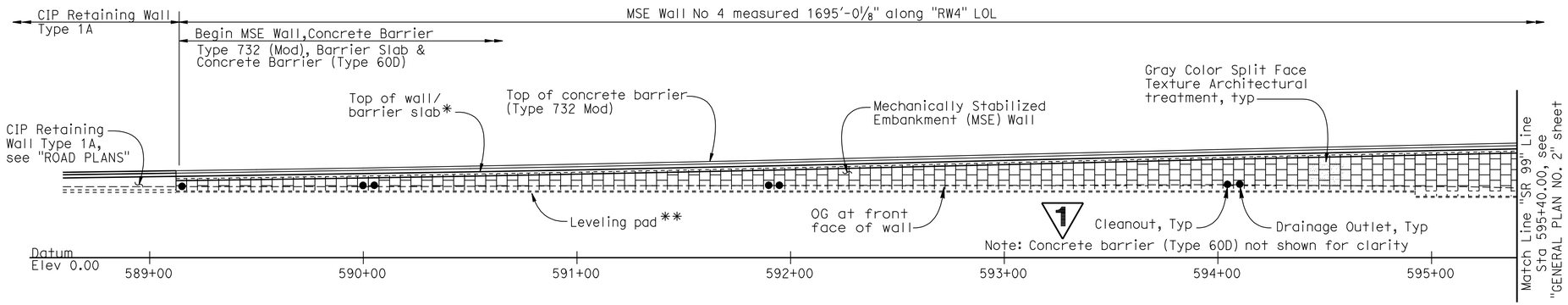

PART ELEVATION

1" = 30'

MSE WALL NO. 4

BR NO 29E0005

QUANTITIES

MECHANICALLY STABILIZED EMBANKMENT, LOCATION B	27,872	SQFT
STRUCTURAL CONCRETE, BARRIER SLAB	787	CY
CONCRETE BARRIER (TYPE 732 MODIFIED)	1,696	LF

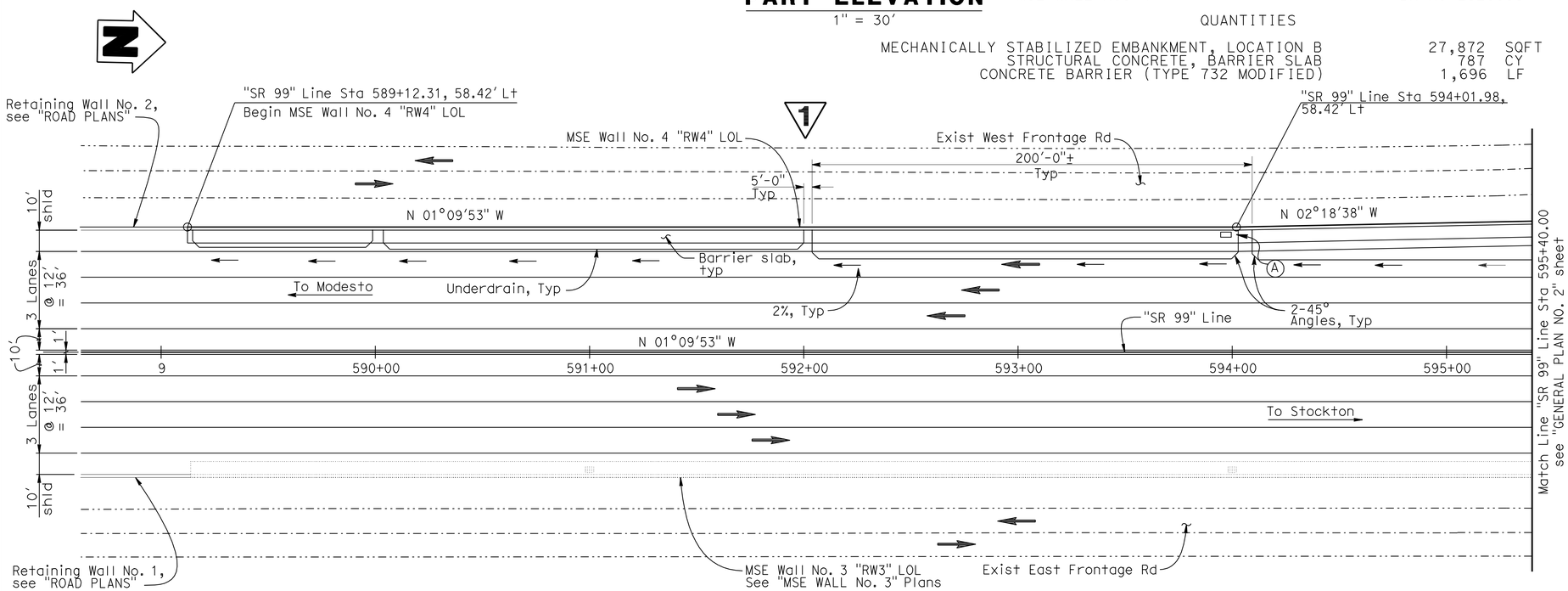

PART PLAN

1" = 30'

Note:
The Contractor shall verify all controlling field dimensions before ordering or fabricating any materials.

1 REVISED PER ADDENDUM No. 1 DATED APRIL 11, 2012

INDEX TO PLANS:

1. GENERAL PLAN NO. 1
2. GENERAL PLAN NO. 2
3. GENERAL PLAN NO. 3
4. FOUNDATION PLAN NO. 1
5. FOUNDATION PLAN NO. 2
6. FOUNDATION PLAN NO. 3
7. WALL PANEL LAYOUT No. 1
8. WALL PANEL LAYOUT No. 2
9. WALL PANEL LAYOUT No. 3
10. WALL PANEL LAYOUT No. 4
11. WALL PANEL LAYOUT No. 5
12. WALL PANEL LAYOUT No. 6
13. WALL PANEL LAYOUT No. 7
14. WALL PANEL LAYOUT No. 8
15. WALL PANEL LAYOUT No. 9
16. MSE WALL DETAILS NO. 1
17. MSE WALL DETAILS NO. 2
18. MSE WALL DETAILS NO. 3
19. MECHANICALLY STABILIZED EMBANKMENT - DETAIL No. 1
20. MECHANICALLY STABILIZED EMBANKMENT - DETAIL No. 2
21. MECHANICALLY STABILIZED EMBANKMENT - DETAIL No. 3
22. MECHANICALLY STABILIZED EMBANKMENT - DETAIL No. 4
23. MECHANICALLY STABILIZED EMBANKMENT - DETAIL No. 5
24. MECHANICALLY STABILIZED EMBANKMENT - DETAIL No. 6
25. LOG OF TEST BORINGS NO. 1
26. LOG OF TEST BORINGS NO. 2
27. LOG OF TEST BORINGS NO. 3
28. LOG OF TEST BORINGS NO. 4
29. LOG OF TEST BORINGS NO. 5

CALTRANS STANDARD PLANS DATED MAY 2006

A10A	ACRONYMS AND ABBREVIATIONS (SHEET 1 OF 2)
A10B	ACRONYMS AND ABBREVIATIONS (SHEET 2 OF 2)
A10C	SYMBOLS (SHEET 1 of 2)
A10D	SYMBOLS (SHEET 2 of 2)
RSP A76A	CONCRETE BARRIER TYPE 60
B11-55	CONCRETE BARRIER TYPE 732

STANDARD PLAN SHEET NO.
DETAIL NO.

DESIGN OVERSIGHT Reza Erfanian 6/24/11 SIGN OFF DATE	DESIGN	BY S PERVAIZ	CHECKED T KENG	LOAD & RESISTANCE FACTOR DESIGN	LIVE LOADING: HS20-44 AND ALTERNATIVE AND PERMIT DESIGN VEHICLE
	DETAILS	BY J VOUGHT	CHECKED T KENG	LAYOUT BY S PERVAIZ	CHECKED T KENG
	QUANTITIES	BY T KENG	CHECKED J VOUGHT	SPECIFICATIONS BY T KENG	PLANS AND SPECS COMPARED J MANISCALCO

PREPARED FOR THE STATE OF CALIFORNIA DEPARTMENT OF TRANSPORTATION

JOHN A. KLEMUNES, JR.
PROJECT ENGINEER

BRIDGE NO. 29E0005
POST MILES 10.97

MSE WALL NO. 4
GENERAL PLAN NO. 1

DESIGN GENERAL PLAN SHEET (ENGLISH) (REV.7/16/10)

ORIGINAL SCALE IN INCHES FOR REDUCED PLANS 0 1 2 3

UNIT: 1455
PROJECT NUMBER & PHASE: 10000204411
CONTRACT NO.: 10-0E6121

DISREGARD PRINTS BEARING EARLIER REVISION DATES

REVISION DATES: 5-3-10 2-4-11 5-13-11 6-24-11

SHEET 1 OF 29

FILE => 29e0005-a-gp01.add

USERNAME => s124496 DATE PLOTTED => 10-APR-2012 TIME PLOTTED => 10:55

DIST	COUNTY	ROUTE	POST MILES TOTAL PROJECT	SHEET No	TOTAL SHEETS
10	SJ	99	10.6/14.9	477	504

REGISTERED CIVIL ENGINEER 6-24-11 DATE

10-17-11
PLANS APPROVAL DATE

REGISTERED PROFESSIONAL ENGINEER SHARIQ PERVAIZ No. C67068 Exp. 9-30-12 CIVIL STATE OF CALIFORNIA

The State of California or its officers or agents shall not be responsible for the accuracy or completeness of electronic copies of this plan sheet.

SAN JOAQUIN COUNCIL OF GOVERNMENTS
555 E. WEBER AVE.
STOCKTON, CA 95202

HDR ENGINEERING, INC.
2365 IRON POINT ROAD, SUITE 300
FOLSOM, CA 95630

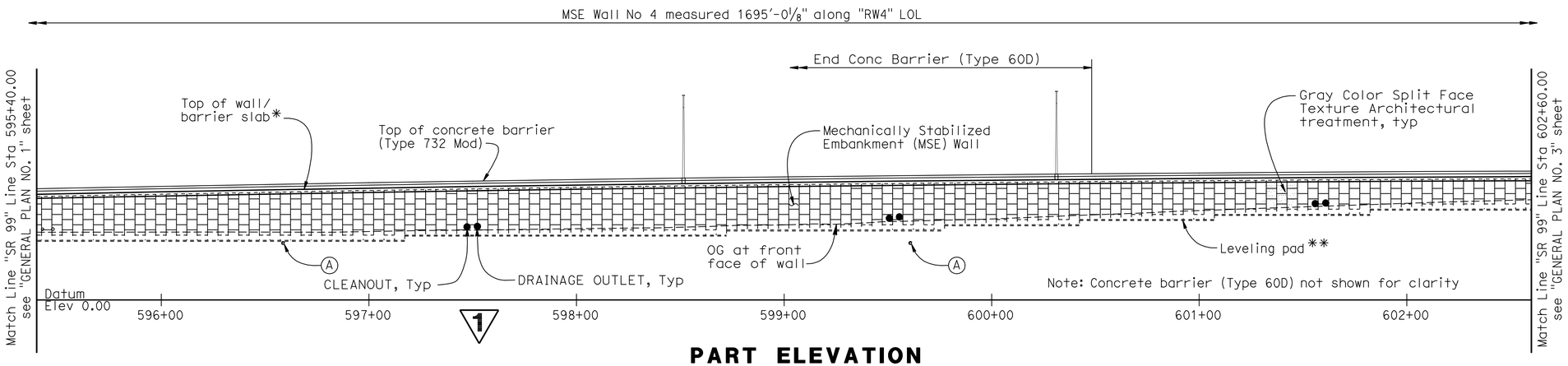

PART ELEVATION
1" = 30'

NOTES:

1. For MSE Walls "GENERAL NOTES", see "MECHANICALLY STABILIZED EMBANKMENT DETAIL No. 2" sheet.

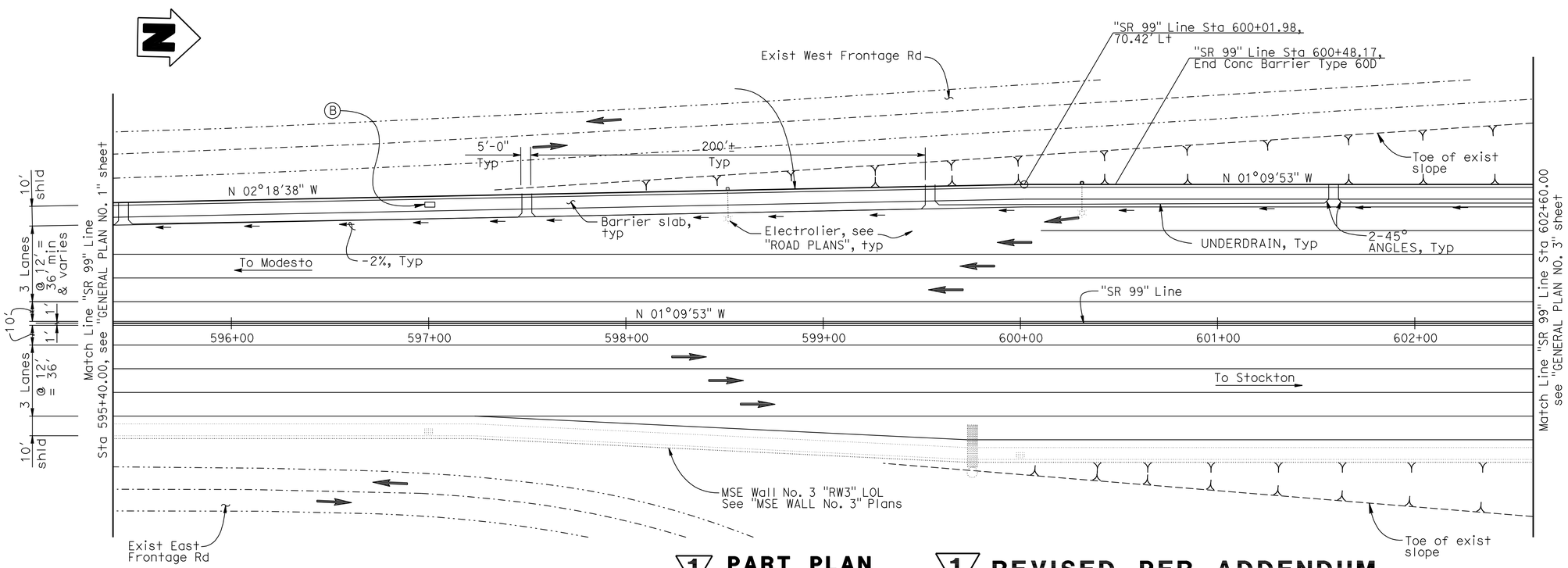

PART PLAN
1" = 30'

LEGEND:

- ——— Indicates new construction.
- -·-·- Indicates existing feature.
- ➡ Indicates direction of traffic.
- * Indicates top of wall elevation, see "WALL PANEL LAYOUT" sheets.
- ** Indicates top of leveling pad, elevation, see "WALL PANEL LAYOUT" sheets.
- Ⓐ 18" dia exist storm drain to be removed, see "ROAD PLANS".
- Ⓑ Drainage Inlet, typ, see "ROAD PLANS" for locations. See "MSE WALL DETAILS NO. 3" sheet for details.

REVISED PER ADDENDUM No. 1 DATED APRIL 11, 2012

Note:
The Contractor shall verify all controlling field dimensions before ordering or fabricating any materials.

DESIGN OVERSIGHT Reza Erfanian 6/24/11 SIGN OFF DATE	DESIGN	BY S PERVAIZ	CHECKED T KENG	LOAD & RESISTANCE FACTOR DESIGN	LIVE LOADING: HS20-44 AND ALTERNATIVE AND PERMIT DESIGN VEHICLE
	DETAILS	BY J VOUGHT	CHECKED T KENG	LAYOUT BY S PERVAIZ	CHECKED T KENG
	QUANTITIES	BY T KENG	CHECKED J VOUGHT	SPECIFICATIONS BY T KENG	PLANS AND SPECS COMPARED J MANISCALCO

PREPARED FOR THE STATE OF CALIFORNIA DEPARTMENT OF TRANSPORTATION

JOHN A. KLEMUNES, JR.
PROJECT ENGINEER

BRIDGE NO. 29E0005
POST MILES 10.97

MSE WALL NO. 4
GENERAL PLAN NO. 2

DESIGN GENERAL PLAN SHEET (ENGLISH) (REV.7/16/10)

ORIGINAL SCALE IN INCHES FOR REDUCED PLANS 0 1 2 3

UNIT: 1455
PROJECT NUMBER & PHASE: 10000204411 CONTRACT NO.: 10-0E6121

DISREGARD PRINTS BEARING EARLIER REVISION DATES

REVISION DATES: 5-3-10 2-4-11 5-19-11 6-24-11

SHEET 2 OF 29

FILE => 29e0005-a-gp02.ddd

USERNAME => s124496 DATE PLOTTED => 10-APR-2012 TIME PLOTTED => 10:55

DIST	COUNTY	ROUTE	POST MILES TOTAL PROJECT	SHEET No	TOTAL SHEETS
10	SJ	99	10.6/14.9	478	504

REGISTERED CIVIL ENGINEER — DATE 6-24-11

10-17-11
PLANS APPROVAL DATE

REGISTERED PROFESSIONAL ENGINEER — SHARIQ PERVAIZ — No. C67068 — Exp. 9-30-12 — CIVIL — STATE OF CALIFORNIA

The State of California or its officers or agents shall not be responsible for the accuracy or completeness of electronic copies of this plan sheet.

SAN JOAQUIN COUNCIL OF GOVERNMENTS
555 E. WEBER AVE.
STOCKTON, CA 95202

HDR ENGINEERING, INC.
2365 IRON POINT ROAD, SUITE 300
FOLSOM, CA 95630

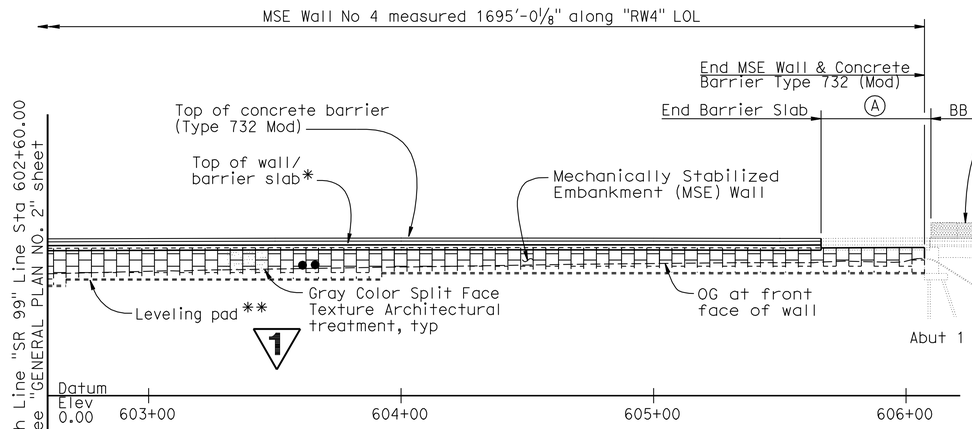

PART ELEVATION

1" = 30'

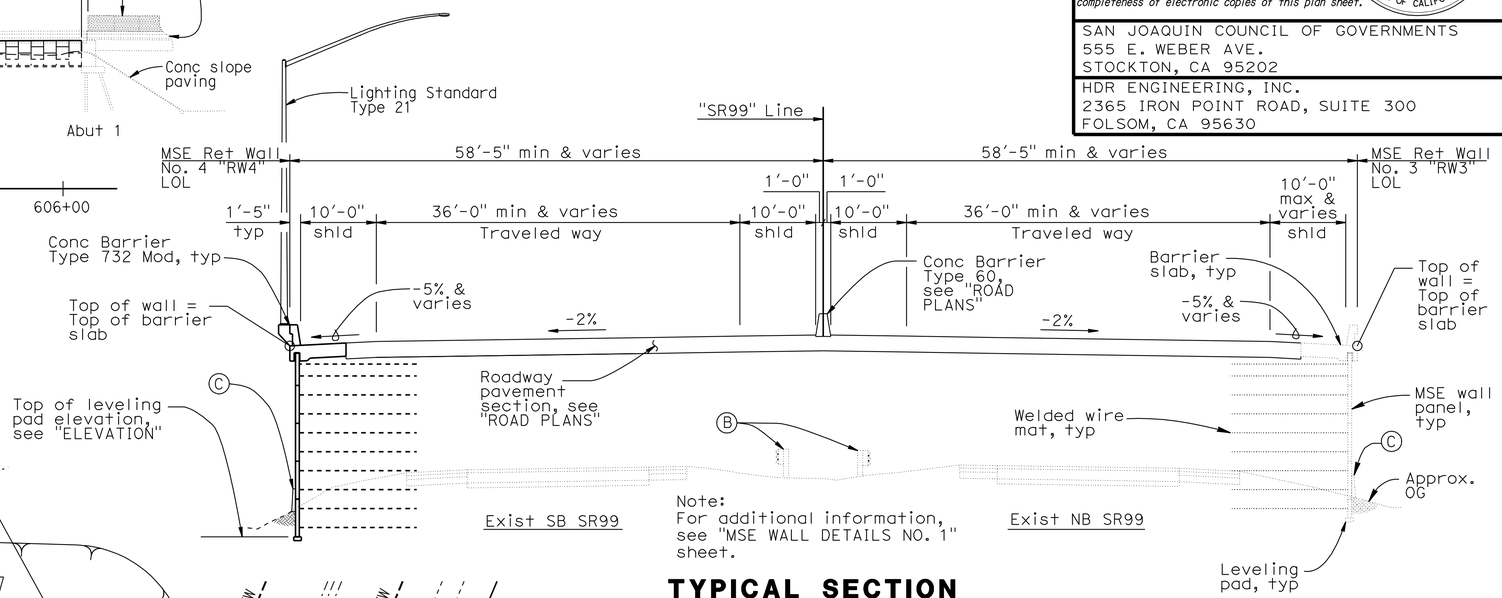

Note:
For additional information, see "MSE WALL DETAILS NO. 1" sheet.

TYPICAL SECTION

1" = 10'

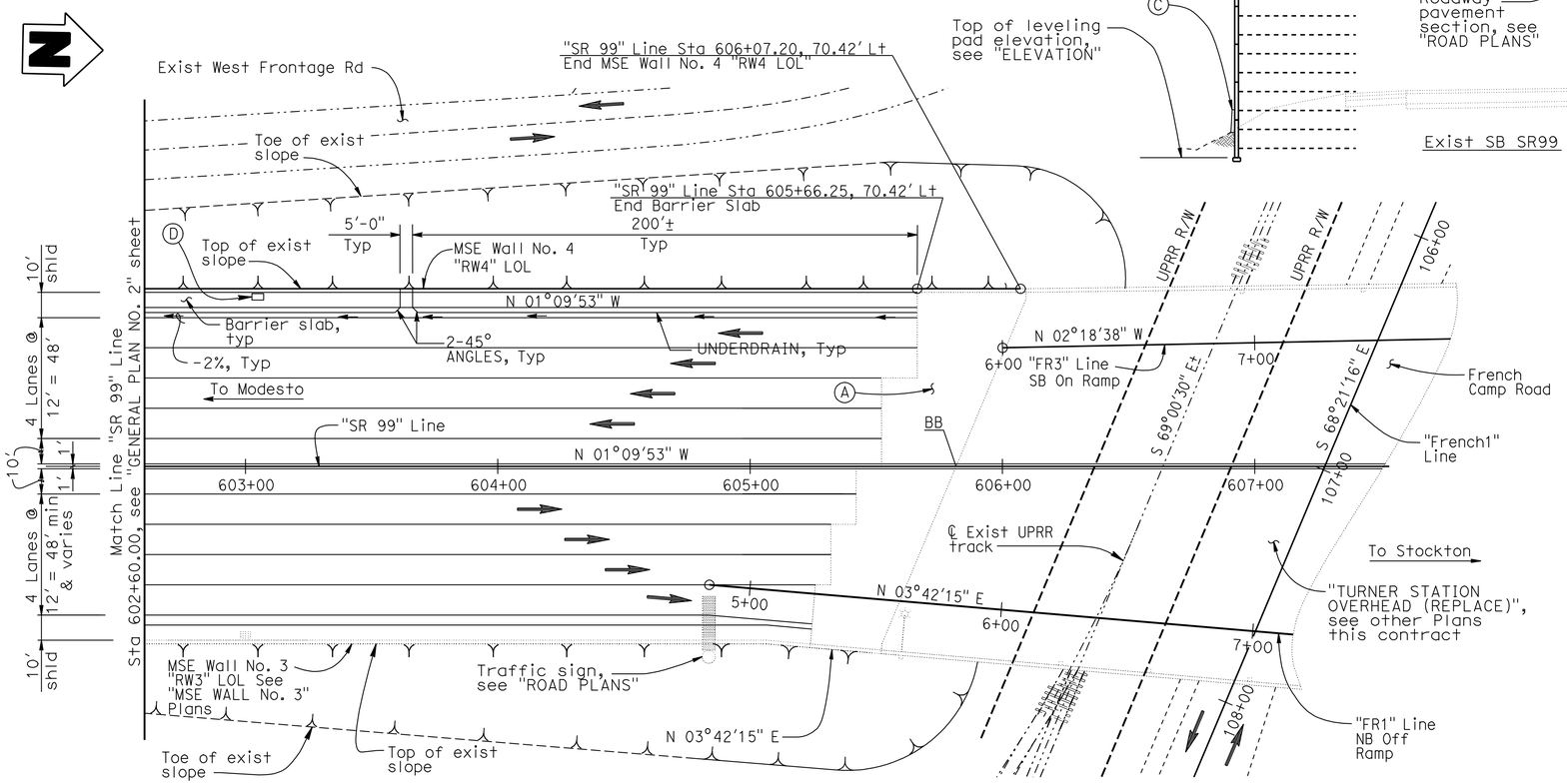

PART PLAN

1" = 30'

REVISED PER ADDENDUM No. 1 DATED APRIL 11, 2012

NOTES:

1. For MSE Walls "GENERAL NOTES", see "MECHANICALLY STABILIZED EMBANKMENT DETAIL No. 2" sheet.
2. For Traffic Staging, see 'ROAD PLANS'.

LEGEND:

- Indicates new construction.
- Indicates existing feature.
- Indicates direction of traffic.
- * Indicates top of wall elevation, see "WALL PANEL LAYOUT" sheets.
- ** Indicates top of leveling pad, elevation, see "WALL PANEL LAYOUT" sheets.
- (A) Structure Approach Type N(30S), see "TURNER STATION OVERHEAD (REPLACE)" PLANS.
- (B) Exist TBB to be removed, see "ROAD PLANS".
- (C) Concrete Barrier Type 60D, where occurs, see "ROAD PLANS". A76A
- (D) Drainage Inlet, typ, see "ROAD PLANS" for locations. See "MSE WALL DETAILS NO. 3" sheet for details.

Note:
The Contractor shall verify all controlling field dimensions before ordering or fabricating any materials.

DESIGN OVERSIGHT Reza Erfanian	DESIGN	BY S PERVAIZ	CHECKED T KENG	LOAD & RESISTANCE FACTOR DESIGN	LIVE LOADING: HS20-44 AND ALTERNATIVE AND PERMIT DESIGN VEHICLE
6/24/11 SIGN OFF DATE	DETAILS	BY J VOUGHT	CHECKED T KENG	LAYOUT BY S PERVAIZ	CHECKED T KENG
	QUANTITIES	BY T KENG	CHECKED J VOUGHT	SPECIFICATIONS BY T KENG	PLANS AND SPECS COMPARED J MANISCALCO

PREPARED FOR THE STATE OF CALIFORNIA DEPARTMENT OF TRANSPORTATION

JOHN A. KLEMUNES, JR.
PROJECT ENGINEER

BRIDGE NO. 29E0005
POST MILES 10.97

MSE WALL NO. 4
GENERAL PLAN NO. 3

DESIGN GENERAL PLAN SHEET (ENGLISH) (REV.7/16/10)

ORIGINAL SCALE IN INCHES FOR REDUCED PLANS 0 1 2 3

UNIT: 1455
PROJECT NUMBER & PHASE: 10000204411 CONTRACT NO.: 10-0E6121

DISREGARD PRINTS BEARING EARLIER REVISION DATES

REVISION DATES: 5-3-10 2-4-11 5-18-11 6-24-11

SHEET 3 OF 29

FILE => 29e0005-a-gp03.add

USERNAME => s124196 DATE PLOTTED => 10-APR-2012 TIME PLOTTED => 10:55

DIST.	COUNTY	ROUTE	POST MILES TOTAL PROJECT	SHEET NO.	TOTAL SHEETS
10	SJ	99	10.6/14.9	499	504

REGISTERED ENGINEER - CIVIL 6-24-11

PLANS APPROVAL DATE 10-17-11

REGISTERED PROFESSIONAL ENGINEER SHARIQ PERVAIZ No. C67068 Exp. 9-30-12 CIVIL STATE OF CALIFORNIA

The State of California or its officers or agents shall not be responsible for the accuracy or completeness of electronic copies of this plan sheet.

SAN JOAQUIN COUNCIL OF GOVERNMENTS
555 E. WEBER AVE.
STOCKTON, CA 95202

HDR ENGINEERING, INC.
2365 IRON POINT ROAD, SUITE 300
FOLSOM, CA 95630

1

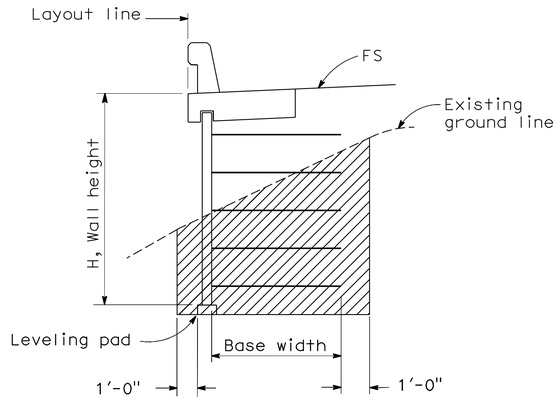

LIMITS OF EXCAVATION 2

No Scale

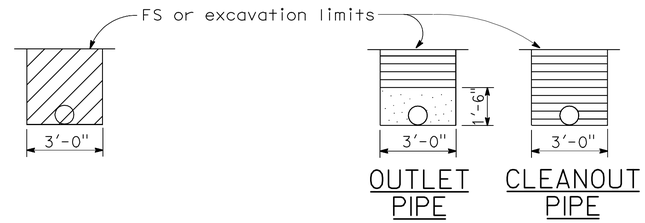

EXCAVATION BACKFILL

OUTLET OR CLEANOUT PIPE FOR UNDERDRAIN

No Scale

ABBREVIATIONS

OG	Original ground
FS	Planned finished surface
GP	Planned grading plane

LEGEND

- Limits of structure excavation
- Limits of structure backfill
- Limits of permeable material

NOTES:

1. Limits to FS except to GP when in roadway section.
3. 2. Locate 4"Ø Min smoothed wall PVC or 8" Min Corrugated HDPE perforated underdrain such that it drains 6" ± above FG at face of wall.
3. Maximum spacing of outlet pipes is 200 ft.
4. At sags in profile of underdrain, install outlet pipe for each direction of flow.
5. For Details not shown, see D102.

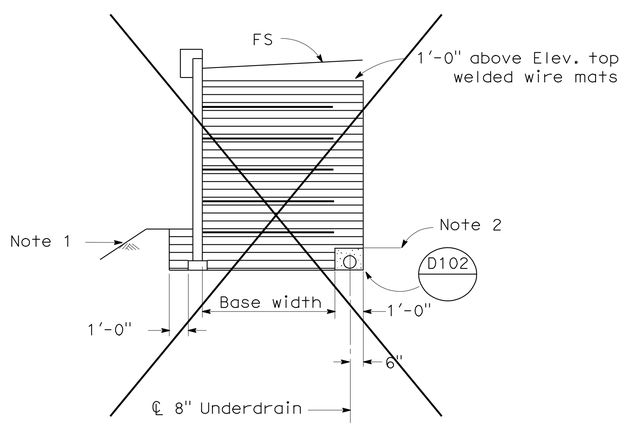

SLOPING FINISHED SURFACE 1

*Use Reverse Slope for Cleanout Pipe.

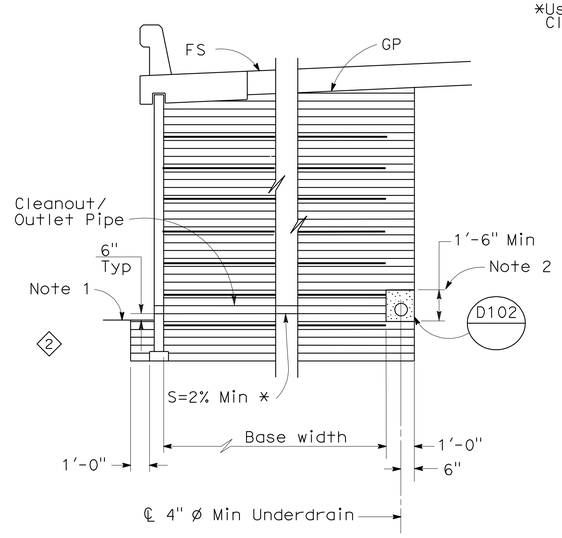

ROADWAY SECTION WITH BASE WIDTH 16' OR GREATER

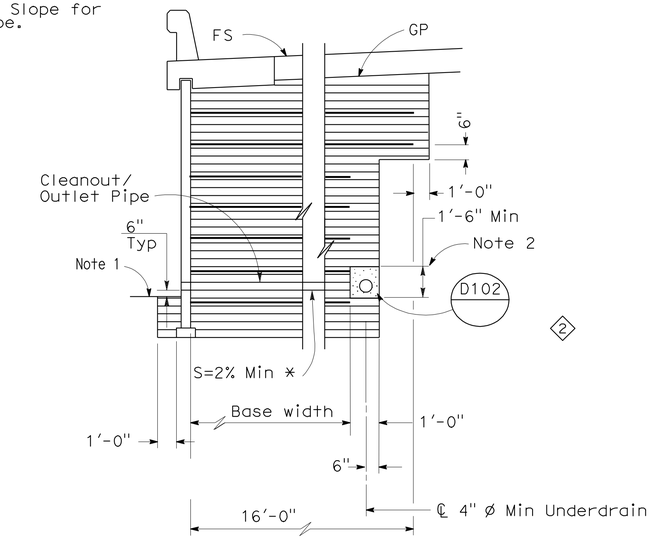

ROADWAY SECTION WITH BASE WIDTH LESS THAN 16'

LIMITS OF BACKFILL

No Scale

1 REVISED PER ADDENDUM No. 1 DATED APRIL 11, 2012

STANDARD DRAWING

FILE NO. xs13-020-6e

APPROVED BY K. GRISWELL, RESPONSIBLE TECHNICAL SPECIALIST — APPROVAL DATE 5-6-08

RELEASED BY ROBERTO LACALLE, RESPONSIBLE OFFICE CHIEF — RELEASE DATE 5-6-08

1 Deleted Detail
2 Revised Detail
3 Revised Detail

STATE OF CALIFORNIA DEPARTMENT OF TRANSPORTATION

DIVISION OF ENGINEERING SERVICES

BRIDGE NO. 29E0005

POST MILE 10.97

MSE RETAINING WALL NO. 4

MECHANICALLY STABILIZED EMBANKMENT

DETAIL NO. 6

DS OSD 2147A (ENGLISH STANDARD DRAWING "XS" BORDER REV. 01/11/08)

ORIGINAL SCALE IN INCHES FOR REDUCED PLANS 0 1 2 3

UNIT: 1455
PROJECT NUMBER & PHASE: 10000204411 CONTRACT NO.: 10-0E6121

DISREGARD PRINTS BEARING EARLIER REVISION DATES

REVISION DATES: 5-3-10 2-4-11 5-19-11 6-24-11

SHEET 24 OF 29

USERNAME => s124496

29e0005-g-msedt09.dgn

DATE PLOTTED => 10-APR-2012 TIME PLOTTED => 11:45