Dist	COUNTY	ROUTE	POST MILES TOTAL PROJECT	SHEET No.	TOTAL SHEETS
10	SJ	88	6.1/8.9	1	63

STATE OF CALIFORNIA

DEPARTMENT OF TRANSPORTATION

ACHSNHPG-P088(061)E

PROJECT PLANS FOR CONSTRUCTION ON

STATE HIGHWAY

IN SAN JOAQUIN COUNTY
NEAR WATERLOO
AT VARIOUS LOCATIONS
FROM CALAVERAS RIVER BRIDGE
TO BEAR CREEK BRIDGE

TO BE SUPPLEMENTED BY STANDARD PLANS DATED MAY 2010

INDEX OF PLANS

SHEET No.	DESCRIPTION
1	TITLE AND LOCATION MAP
2	TYPICAL CROSS SECTIONS
3-6	LAYOUTS
7-9	PROFILES
10-17	CONSTRUCTION DETAILS
18-28	DRAINAGE PLANS, PROFILES, DETAILS AND QUANTITIES
29-32	UTILITY PLANS
33	CONSTRUCTION AREA SIGNS
34-37	TRAFFIC HANDLING PLANS AND QUANTITIES
38-39	PAVEMENT DELINEATION AND SIGN PLAN AND QUANTITIES
40	SUMMARY OF QUANTITIES
41-45	EROSION CONTROL LEGEND, PLANS AND QUANTITIES
46-59	REVISED STANDARD PLANS

STRUCTURE PLANS

60	GENERAL PLAN, INDEX
61-63	BRIDGE DETAILS

THE STANDARD PLANS LIST APPLICABLE TO THIS CONTRACT IS INCLUDED IN THE NOTICE TO BIDDERS AND SPECIAL PROVISIONS BOOK.

LOCATION MAP

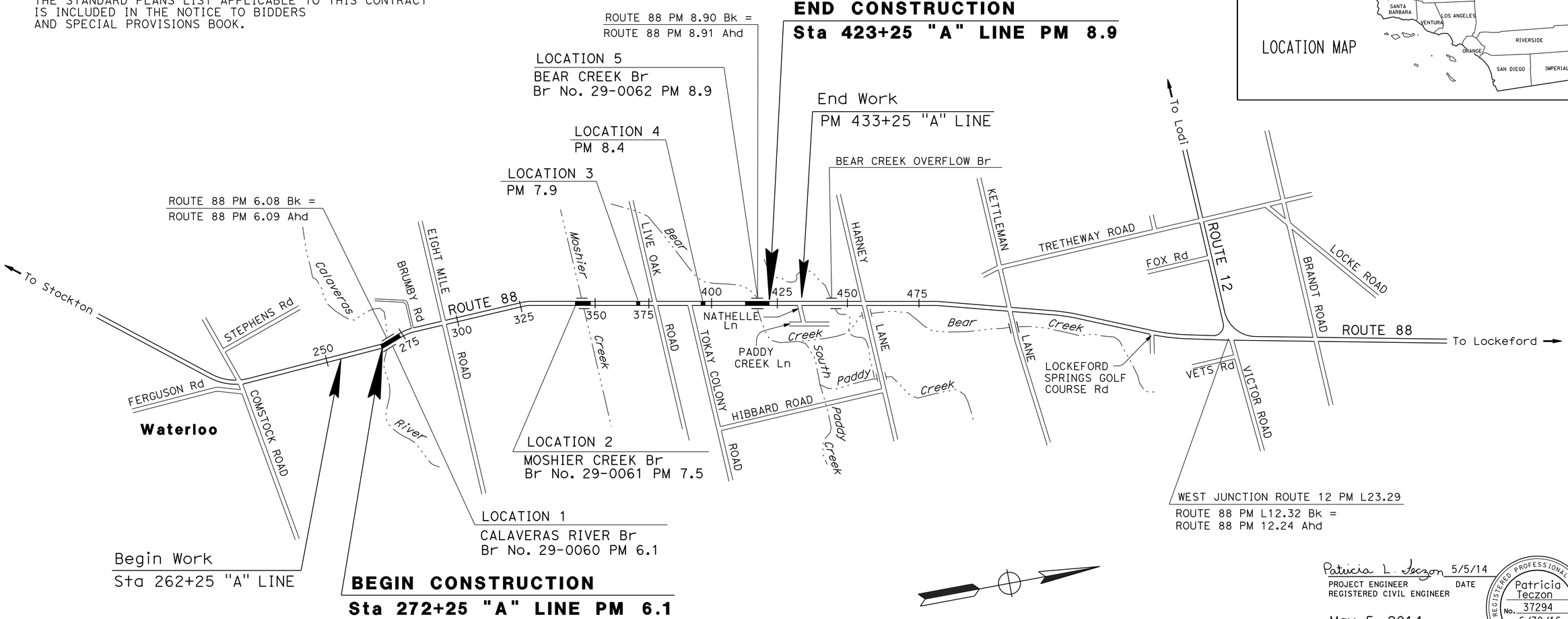

Patricia L. Teczon 5/5/14
PROJECT ENGINEER DATE
REGISTERED CIVIL ENGINEER

May 5, 2014
PLANS APPROVAL DATE

REGISTERED PROFESSIONAL ENGINEER
Patricia Teczon
No. 37294
Exp. 6/30/16
CIVIL
STATE OF CALIFORNIA

THE STATE OF CALIFORNIA OR ITS OFFICERS OR AGENTS SHALL NOT BE RESPONSIBLE FOR THE ACCURACY OR COMPLETENESS OF SCANNED COPIES OF THIS PLAN SHEET.

THE CONTRACTOR SHALL POSSESS THE CLASS (OR CLASSES) OF LICENSE AS SPECIFIED IN THE "NOTICE TO BIDDERS."

NO SCALE

PROJECT MANAGER	SAM SHERMAN
DESIGN ENGINEER	CAROLINE REYES

CONTRACT No.	10-0A8304
PROJECT ID	1000000009

LAST REVISION 00-00-00
DATE PLOTTED => 16-JUN-2014
TIME PLOTTED => 13:41

Dist	COUNTY	ROUTE	POST MILES TOTAL PROJECT	SHEET No.	TOTAL SHEETS
10	SJ	88	6.1/8.9	2	63

Patricia L. Teczon 5/5/14
REGISTERED CIVIL ENGINEER DATE

5-5-14
PLANS APPROVAL DATE

REGISTERED PROFESSIONAL ENGINEER Patricia Teczon No. 37294 Exp 6/30/16 CIVIL STATE OF CALIFORNIA

THE STATE OF CALIFORNIA OR ITS OFFICERS OR AGENTS SHALL NOT BE RESPONSIBLE FOR THE ACCURACY OR COMPLETENESS OF SCANNED COPIES OF THIS PLAN SHEET.

NOTE:

1. DIMENSIONS OF THE PAVEMENT STRUCTURES (STRUCTURAL SECTIONS) ARE SUBJECT TO TOLERANCES SPECIFIED IN THE STANDARD SPECIFICATIONS.

STRUCTURAL SECTION TABLE

LOCATION	Sta TO Sta	STRUCTURAL SECTION
"B" LINE	100+10.7 TO 100+50.0	0.35' HMA (TYPE A) OVER 0.50' CI 2 AB
"B" LINE	100+50.0 TO 101+08.7	0.50' CI 2 AB
"C" LINE	200+10.8 TO 200+50.7	0.35' HMA (TYPE A) OVER 0.50' CI 2 AB
"C" LINE	200+50.7 TO 201+51.4	0.50' CI 2 AB
"D" LINE	300+15.9 TO 300+43.7	0.35' HMA (TYPE A) OVER 0.50' CI 2 AB
"D" LINE	300+43.7 TO 301+19.9	0.50' CI 2 AB
"E" LINE	100+16.0 TO 100+56.7	0.35' HMA (TYPE A) OVER 0.50' CI 2 AB
"E" LINE	100+56.7 TO 101+59.1	0.50' CI 2 AB
"F" LINE	200+17.2 TO 200+46.0	0.35' HMA (TYPE A) OVER 0.50' CI 2 AB
"F" LINE	200+46.0 TO 201+70.1	0.50' CI 2 AB
"G" LINE	400+15.3 TO 400+54.6	0.35' HMA (TYPE A) OVER 0.50' CI 2 AB
"G" LINE	400+54.6 TO 401+03.4	0.50' CI 2 AB

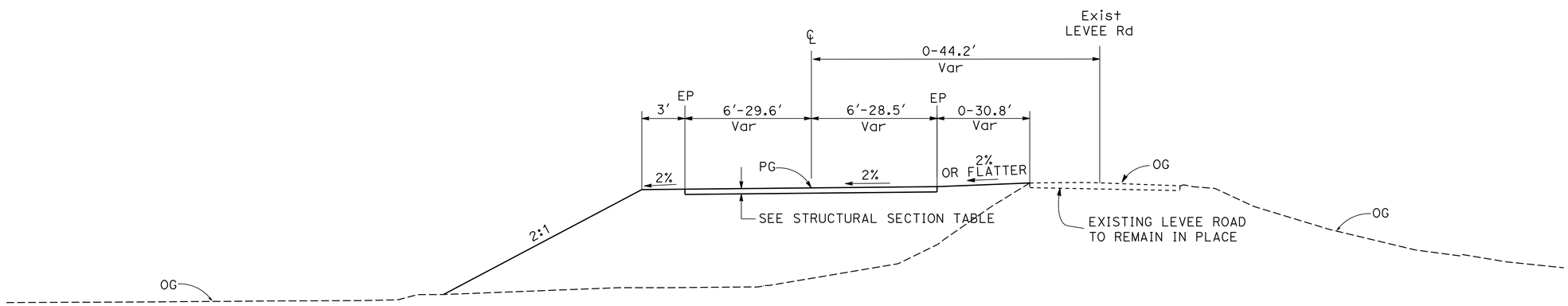

LEVEE ROADS AND DRIVEWAYS

"B" LINE Sta 100+10.7 TO 101+08.7
"C" LINE Sta 200+10.8 TO 201+51.4
"D" LINE Sta 300+15.9 TO 301+19.9
"E" LINE Sta 100+16.0 TO 101+59.1
"F" LINE Sta 200+17.2 TO 201+70.1
"G" LINE Sta 400+15.3 TO 401+03.4

TYPICAL CROSS SECTIONS

NO SCALE

X-1

STATE OF CALIFORNIA - DEPARTMENT OF TRANSPORTATION
Caltrans® DESIGN

FUNCTIONAL SUPERVISOR: CAROLINE REYES
CALCULATED-DESIGNED BY: HAI HOANG
CHECKED BY: PATRICIA TECZON
REVISED BY: HH
DATE REVISED: 05/05/14

LAST REVISION 00-00-00
DATE PLOTTED => 22-MAY-2014
TIME PLOTTED => 13:24

Dist	COUNTY	ROUTE	POST MILES TOTAL PROJECT	SHEET No.	TOTAL SHEETS
10	SJ	88	6.1/8.9	3	63

Patricia L. Teczon 5/5/14
REGISTERED CIVIL ENGINEER DATE

5-5-14
PLANS APPROVAL DATE

REGISTERED PROFESSIONAL ENGINEER Patricia Teczon No. 37294 Exp 6/30/16 CIVIL STATE OF CALIFORNIA

THE STATE OF CALIFORNIA OR ITS OFFICERS OR AGENTS SHALL NOT BE RESPONSIBLE FOR THE ACCURACY OR COMPLETENESS OF SCANNED COPIES OF THIS PLAN SHEET.

NOTE:

FOR ACCURATE RIGHT OF WAY DATA, CONTACT RIGHT OF WAY ENGINEERING AT THE DISTRICT OFFICE.

LEGEND

- Temp FENCE (TYPE ESA)
- CRASH CUSHION (QUADGUARD)
- P RESET OBJECT MARKER
- PM RESET MILEPOST MARKER
- REMOVE FENCE/GATE

ABBREVIATION

SSJDD - SACRAMENTO SAN JOAQUIN DRAINAGE DISTRICT

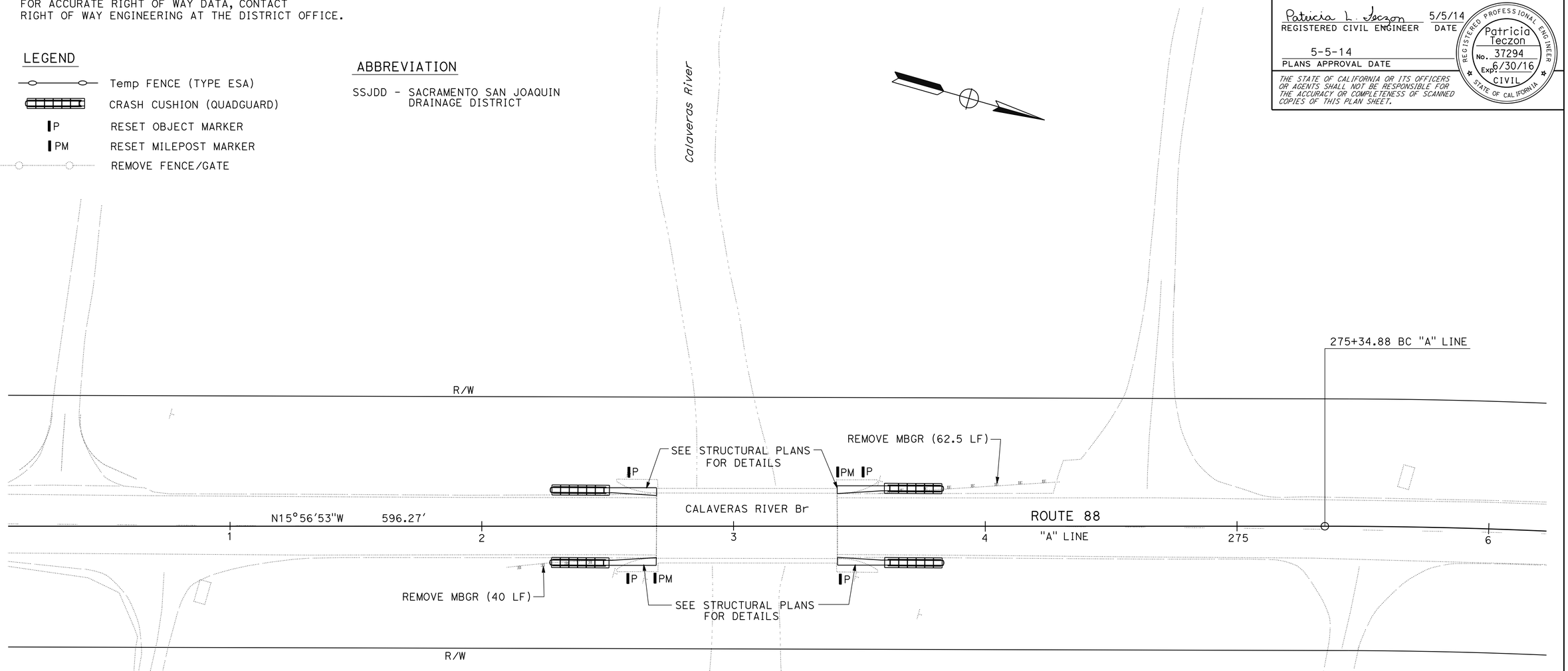

LOCATION 1

LAYOUT
SCALE: 1' = 20'

L-1

HH	05/05/14
REVISED BY	DATE REVISED
HAI HOANG	PATRICIA TECZON
CALCULATED-DESIGNED BY	CHECKED BY
FUNCTIONAL SUPERVISOR	CAROLINE REYES

STATE OF CALIFORNIA - DEPARTMENT OF TRANSPORTATION
Caltrans
DESIGN

LAST REVISION 00-00-00 | DATE PLOTTED => 22-MAY-2014 | TIME PLOTTED => 13:24

Dist	COUNTY	ROUTE	POST MILES TOTAL PROJECT	SHEET No.	TOTAL SHEETS
10	SJ	88	6.1/8.9	4	63

Patricia L. Teczon 5/5/14
REGISTERED CIVIL ENGINEER DATE

5-5-14
PLANS APPROVAL DATE

REGISTERED PROFESSIONAL ENGINEER Patricia Teczon No. 37294 Exp 6/30/16 CIVIL STATE OF CALIFORNIA

THE STATE OF CALIFORNIA OR ITS OFFICERS OR AGENTS SHALL NOT BE RESPONSIBLE FOR THE ACCURACY OR COMPLETENESS OF SCANNED COPIES OF THIS PLAN SHEET.

NOTE:

FOR ACCURATE RIGHT OF WAY DATA, CONTACT RIGHT OF WAY ENGINEERING AT THE DISTRICT OFFICE.

CURVE DATA

No. ⊕	R	Δ	T	L
1	39′	54°26′29"	20.06′	37.06′
2	75′	39°17′19"	26.77′	51.43′
3	50′	59°39′50"	28.67′	52.07′
4	65′	43°45′55"	26.11′	49.65′

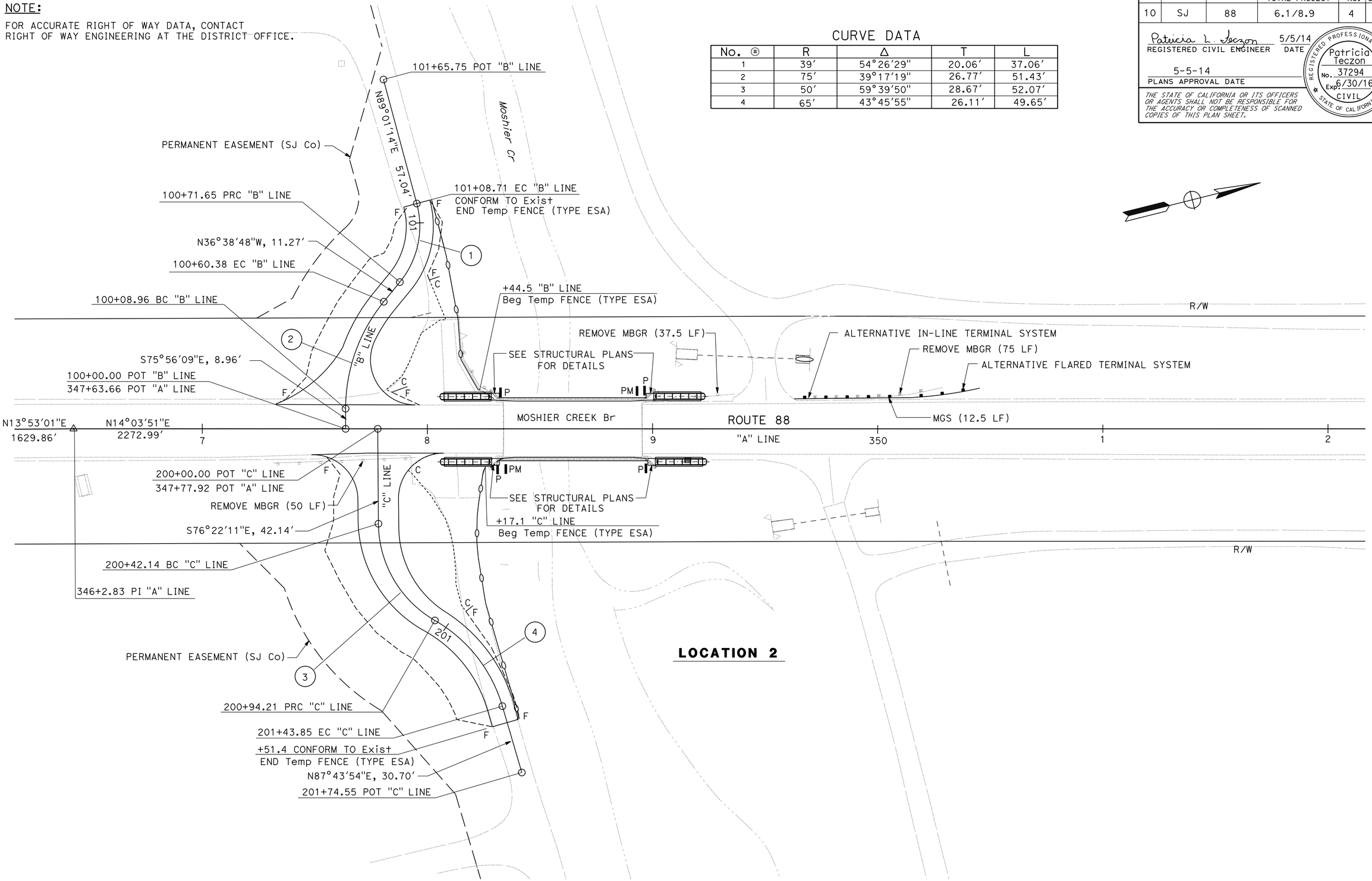

LAYOUT

SCALE: 1" = 20′

L-2

HAI HOANG	PATRICIA TECZON	HH	09/27/12
CALCULATED-DESIGNED BY	CHECKED BY	REVISED BY	DATE REVISED
FUNCTIONAL SUPERVISOR	CAROLINE REYES		

STATE OF CALIFORNIA - DEPARTMENT OF TRANSPORTATION

Caltrans® **DESIGN**

LAST REVISION 00-00-00 | DATE PLOTTED => 22-MAY-2014 | TIME PLOTTED => 13:24

Dist	COUNTY	ROUTE	POST MILES TOTAL PROJECT	SHEET No.	TOTAL SHEETS
10	SJ	88	6.1/8.9	5	63

Patricia L. Teczon 5/5/14
REGISTERED CIVIL ENGINEER DATE

5-5-14
PLANS APPROVAL DATE

REGISTERED PROFESSIONAL ENGINEER Patricia Teczon No. 37294 Exp. 6/30/16 CIVIL STATE OF CALIFORNIA

THE STATE OF CALIFORNIA OR ITS OFFICERS OR AGENTS SHALL NOT BE RESPONSIBLE FOR THE ACCURACY OR COMPLETENESS OF SCANNED COPIES OF THIS PLAN SHEET.

NOTE:

FOR ACCURATE RIGHT OF WAY DATA, CONTACT RIGHT OF WAY ENGINEERING AT THE DISTRICT OFFICE.

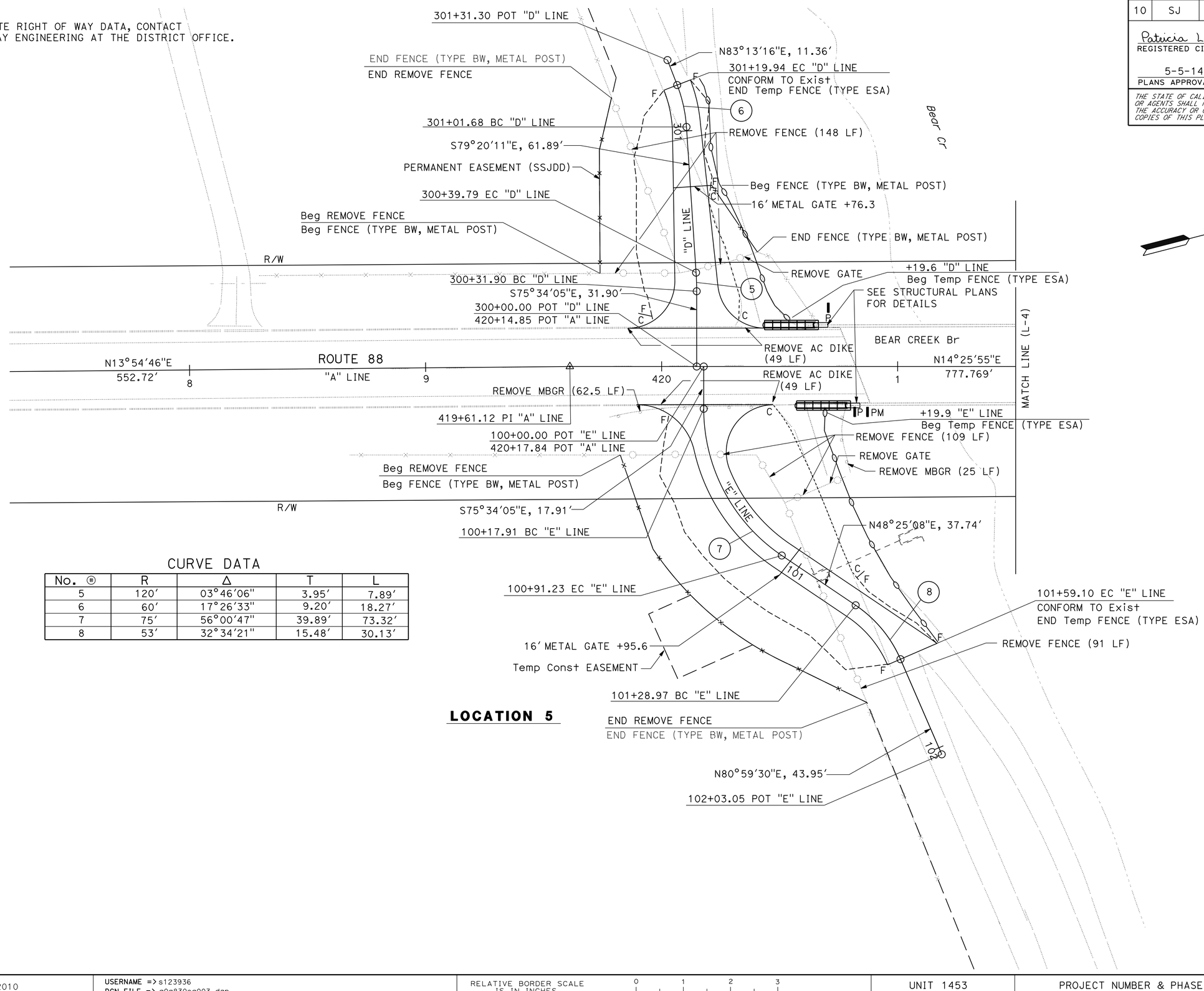

LOCATION 5

CURVE DATA

No. ⊕	R	Δ	T	L
5	120'	03°46'06"	3.95'	7.89'
6	60'	17°26'33"	9.20'	18.27'
7	75'	56°00'47"	39.89'	73.32'
8	53'	32°34'21"	15.48'	30.13'

LAYOUT

SCALE: 1' = 20'

L-3

REVISED BY	DATE REVISED
HH	02/20/13

HAI HOANG — PATRICIA TECZON — CALCULATED-DESIGNED BY — CHECKED BY

FUNCTIONAL SUPERVISOR: CAROLINE REYES

STATE OF CALIFORNIA - DEPARTMENT OF TRANSPORTATION — DESIGN — Caltrans

LAST REVISION 00-00-00 — DATE PLOTTED => 22-MAY-2014 — TIME PLOTTED => 13:24

Dist	COUNTY	ROUTE	POST MILES TOTAL PROJECT	SHEET No.	TOTAL SHEETS
10	SJ	88	6.1/8.9	6	63

Patricia L. Teczon 5/5/14
REGISTERED CIVIL ENGINEER DATE

5-5-14
PLANS APPROVAL DATE

REGISTERED PROFESSIONAL ENGINEER Patricia Teczon No. 37294 Exp 6/30/16 CIVIL STATE OF CALIFORNIA

THE STATE OF CALIFORNIA OR ITS OFFICERS OR AGENTS SHALL NOT BE RESPONSIBLE FOR THE ACCURACY OR COMPLETENESS OF SCANNED COPIES OF THIS PLAN SHEET.

NOTE:

FOR ACCURATE RIGHT OF WAY DATA, CONTACT RIGHT OF WAY ENGINEERING AT THE DISTRICT OFFICE.

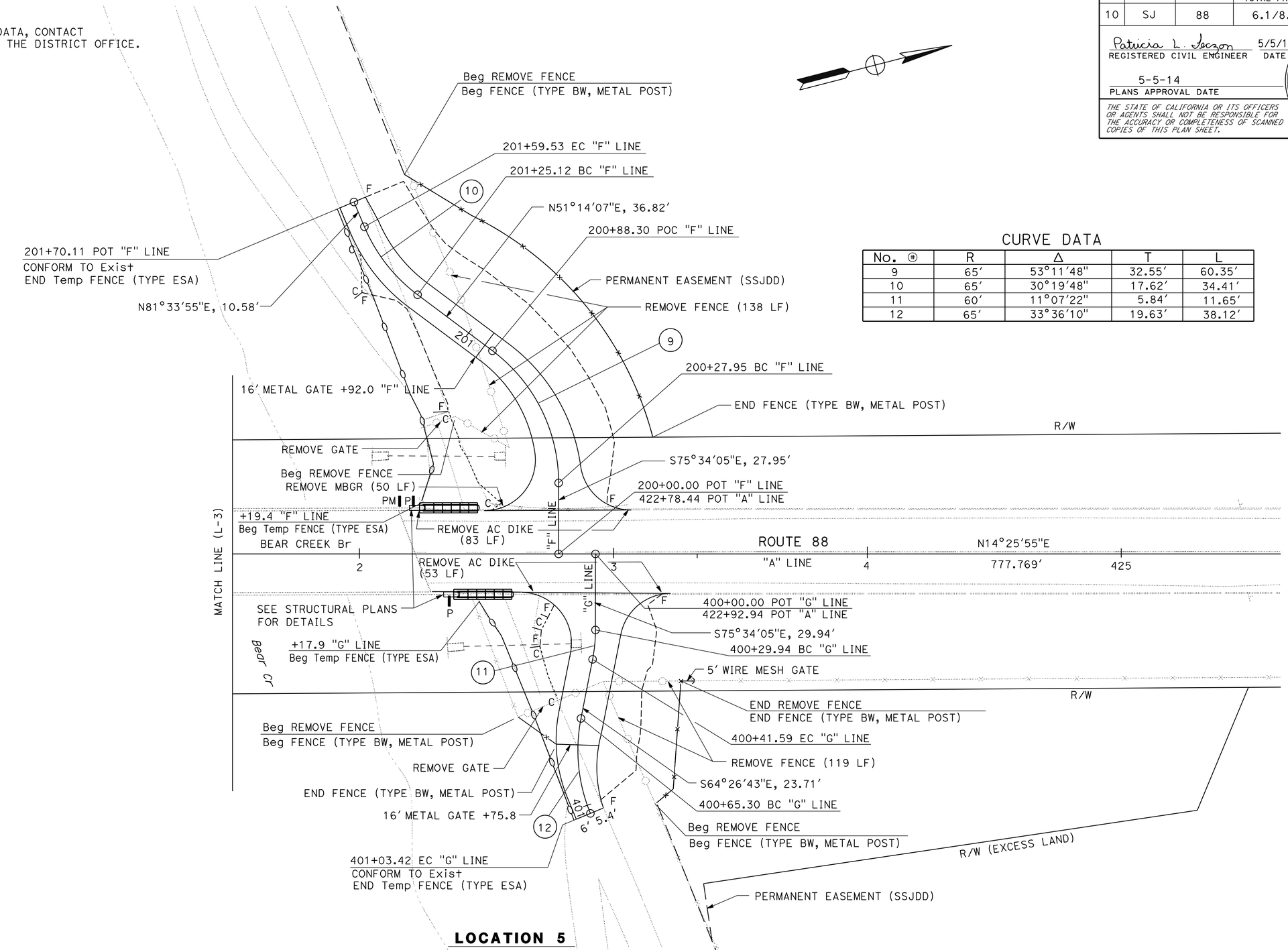

LOCATION 5

CURVE DATA

No. ⊕	R	Δ	T	L
9	65'	53°11'48"	32.55'	60.35'
10	65'	30°19'48"	17.62'	34.41'
11	60'	11°07'22"	5.84'	11.65'
12	65'	33°36'10"	19.63'	38.12'

LAYOUT

SCALE: 1' = 20'

L-4

HAI HOANG	REVISED BY
HH	02/20/13
PATRICIA TECZON	DATE REVISED
CALCULATED-DESIGNED BY	FUNCTIONAL SUPERVISOR
CHECKED BY	CAROLINE REYES

STATE OF CALIFORNIA - DEPARTMENT OF TRANSPORTATION
Caltrans
DESIGN

LAST REVISION 00-00-00
DATE PLOTTED => 30-MAY-2014
TIME PLOTTED => 07:31

Dist	COUNTY	ROUTE	POST MILES TOTAL PROJECT	SHEET No.	TOTAL SHEETS
10	SJ	88	6.1/8.9	7	63

Patricia L. Teczon 5/5/14
REGISTERED CIVIL ENGINEER DATE

5-5-14
PLANS APPROVAL DATE

REGISTERED PROFESSIONAL ENGINEER Patricia Teczon No. 37294 Exp 6/30/16 CIVIL STATE OF CALIFORNIA

THE STATE OF CALIFORNIA OR ITS OFFICERS OR AGENTS SHALL NOT BE RESPONSIBLE FOR THE ACCURACY OR COMPLETENESS OF SCANNED COPIES OF THIS PLAN SHEET.

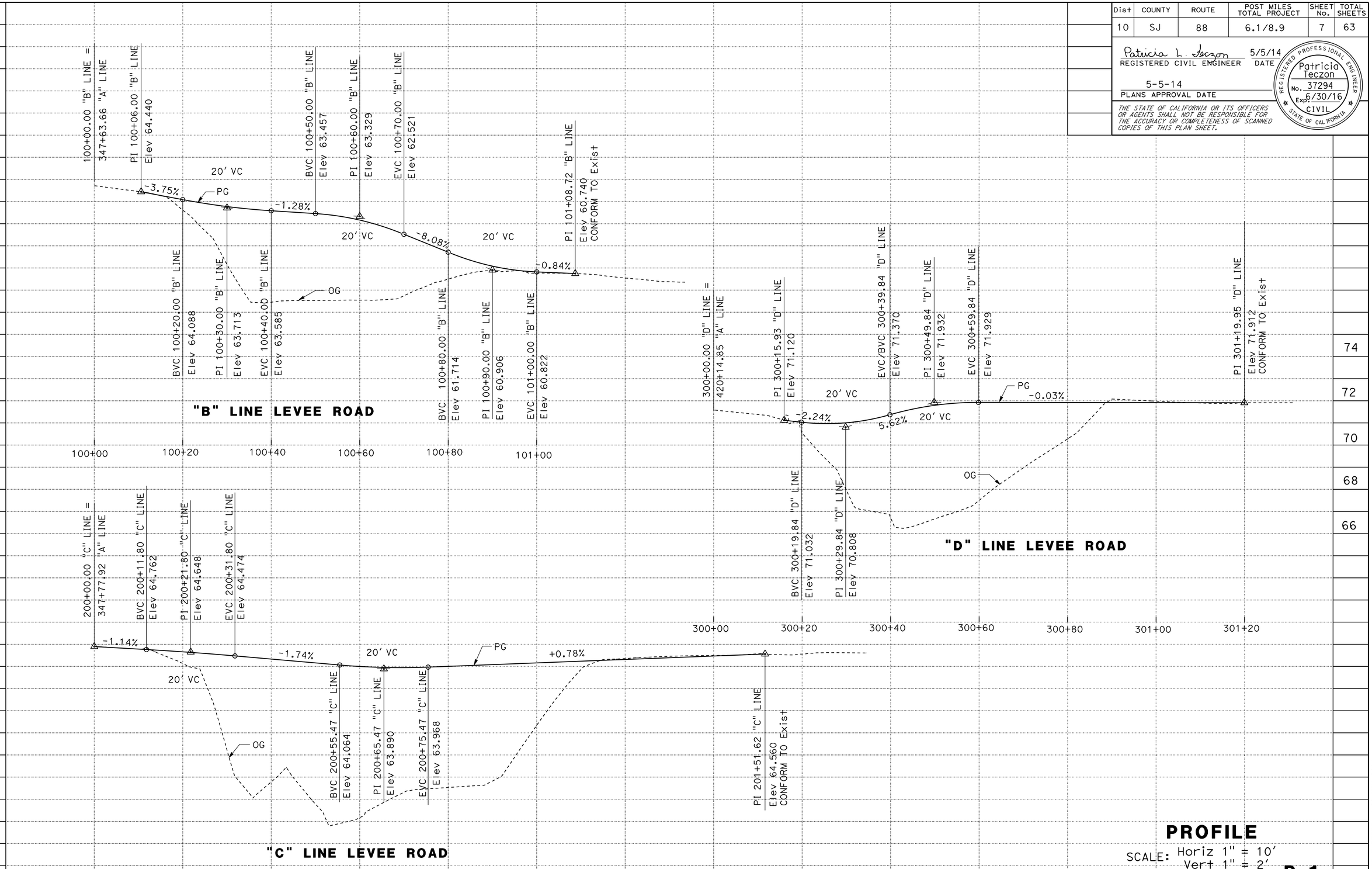

PROFILE

SCALE: Horiz 1" = 10'
Vert 1" = 2'

P-1

HI	08/23/12
REVISED BY	DATE REVISED
HAI HOANG	PAT TECZON
CALCULATED-DESIGNED BY	CHECKED BY
FUNCTIONAL SUPERVISOR	CAROLINE REYES

STATE OF CALIFORNIA - DEPARTMENT OF TRANSPORTATION
Caltrans® DESIGN

LAST REVISION 00-00-00 | DATE PLOTTED => 22-MAY-2014 | TIME PLOTTED => 13:24

Dist	COUNTY	ROUTE	POST MILES TOTAL PROJECT	SHEET No.	TOTAL SHEETS
10	SJ	88	6.1/8.9	8	63

Patricia L. Teczon 5/5/14
REGISTERED CIVIL ENGINEER DATE

5-5-14
PLANS APPROVAL DATE

REGISTERED PROFESSIONAL ENGINEER Patricia Teczon No. 37294 Exp 6/30/16 CIVIL STATE OF CALIFORNIA

THE STATE OF CALIFORNIA OR ITS OFFICERS OR AGENTS SHALL NOT BE RESPONSIBLE FOR THE ACCURACY OR COMPLETENESS OF SCANNED COPIES OF THIS PLAN SHEET.

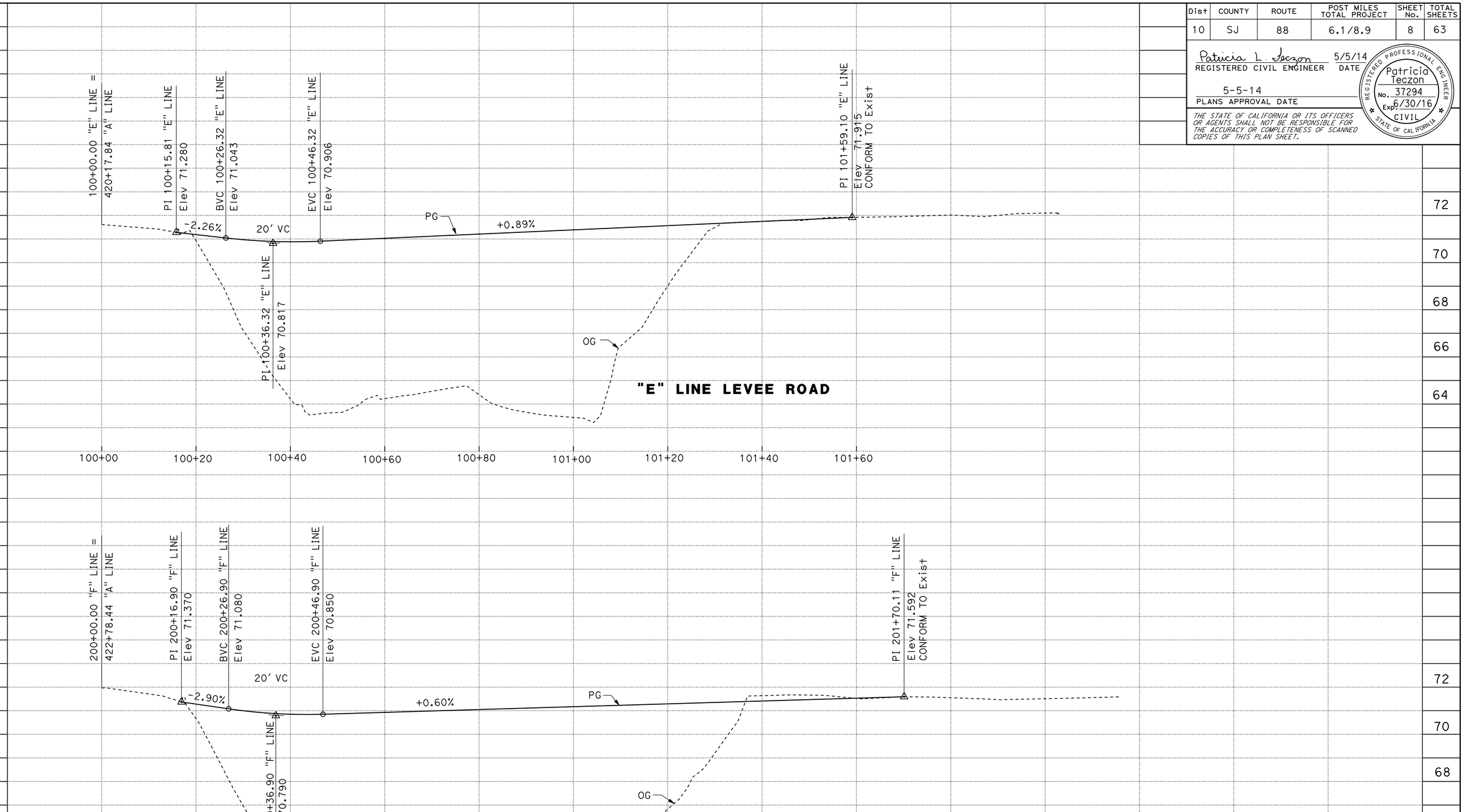

PROFILE

SCALE: Horiz 1" = 10'
Vert 1" = 2'

P-2

STATION	200+00	200+20	200+40	200+60	200+80	201+00	201+20	201+40	201+60	TOTAL
CY Exc										
CY Emb										

REVISED BY	DATE REVISED
HI	08/23/12

HAI HOANG
PAT TECZON

CALCULATED-DESIGNED BY
CHECKED BY

FUNCTIONAL SUPERVISOR
CAROLINE REYES

STATE OF CALIFORNIA - DEPARTMENT OF TRANSPORTATION
Caltrans
DESIGN

LAST REVISION 00-00-00
DATE PLOTTED => 22-MAY-2014
TIME PLOTTED => 13:24

Dist	COUNTY	ROUTE	POST MILES TOTAL PROJECT	SHEET No.	TOTAL SHEETS
10	SJ	88	6.1/8.9	9	63

Patricia L. Teczon 5/5/14
REGISTERED CIVIL ENGINEER DATE

5-5-14
PLANS APPROVAL DATE

REGISTERED PROFESSIONAL ENGINEER
Patricia Teczon
No. 37294
Exp 6/30/16
CIVIL
STATE OF CALIFORNIA

THE STATE OF CALIFORNIA OR ITS OFFICERS OR AGENTS SHALL NOT BE RESPONSIBLE FOR THE ACCURACY OR COMPLETENESS OF SCANNED COPIES OF THIS PLAN SHEET.

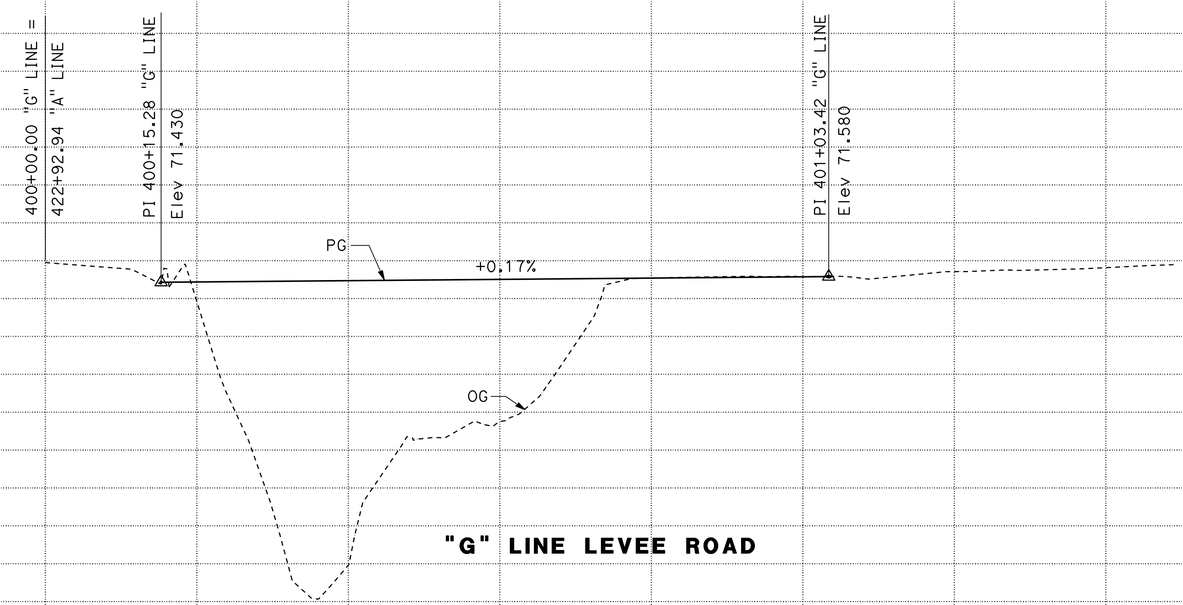

PROFILE

SCALE: Horiz 1' = 10'
Vert 1" = 2'

P-3

STATION	400+00	400+20	400+40	400+60	400+80	401+00	TOTAL
CY Exc							
CY Emb							

STATE OF CALIFORNIA - DEPARTMENT OF TRANSPORTATION
Caltrans® DESIGN

FUNCTIONAL SUPERVISOR: CAROLINE REYES
CALCULATED-DESIGNED BY: HAI HOANG
CHECKED BY: PAT TECZON
REVISED BY: HI
DATE REVISED: 08/23/12

LAST REVISION 00-00-00
DATE PLOTTED => 22-MAY-2014
TIME PLOTTED => 13:24

Dist	COUNTY	ROUTE	POST MILES TOTAL PROJECT	SHEET No.	TOTAL SHEETS
10	SJ	88	6.1/8.9	10	63

Patricia L. Teczon 5/5/14
REGISTERED CIVIL ENGINEER DATE

5-5-14
PLANS APPROVAL DATE

REGISTERED PROFESSIONAL ENGINEER Patricia Teczon No. 37294 Exp. 6/30/16 CIVIL STATE OF CALIFORNIA

THE STATE OF CALIFORNIA OR ITS OFFICERS OR AGENTS SHALL NOT BE RESPONSIBLE FOR THE ACCURACY OR COMPLETENESS OF SCANNED COPIES OF THIS PLAN SHEET.

NOTES: (THIS SHEET ONLY)

1. ALL PIPE TO BE SCHEDULE 40, EXCEPT THE HINGE POST SET IN CONCRETE SHALL BE SCHEDULE 80.
2. THE MOVING HINGE POST SHALL BE CAPPED WITH A 1/4" WELDED STEEL CAP.
3. ALL OPEN VERTICAL POST SHALL BE FILLED WITH CONCRETE TO THE TOP AND CROWNED 3/8" IN THE CENTER SO THAT WATER WILL RUN OFF THE TOP AND NOT DRAIN INTO PIPE.
4. GATES AND ALL COMPONENTS THEREOF SHALL BE PAINTED THE COLOR "FEDERAL SAFETY RED".

LEGEND

CRASH CUSHION (QUADGUARD)

TABLE OF PIPE SIZES

SYMBOL	PIPE DIAMETER
A	1 1/2"
B	3"
C	4"

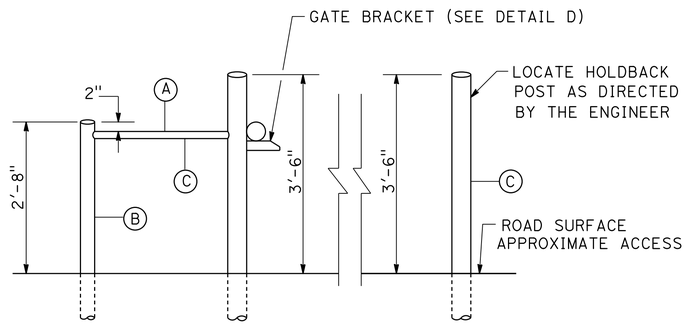

LEFT SIDE ELEVATION

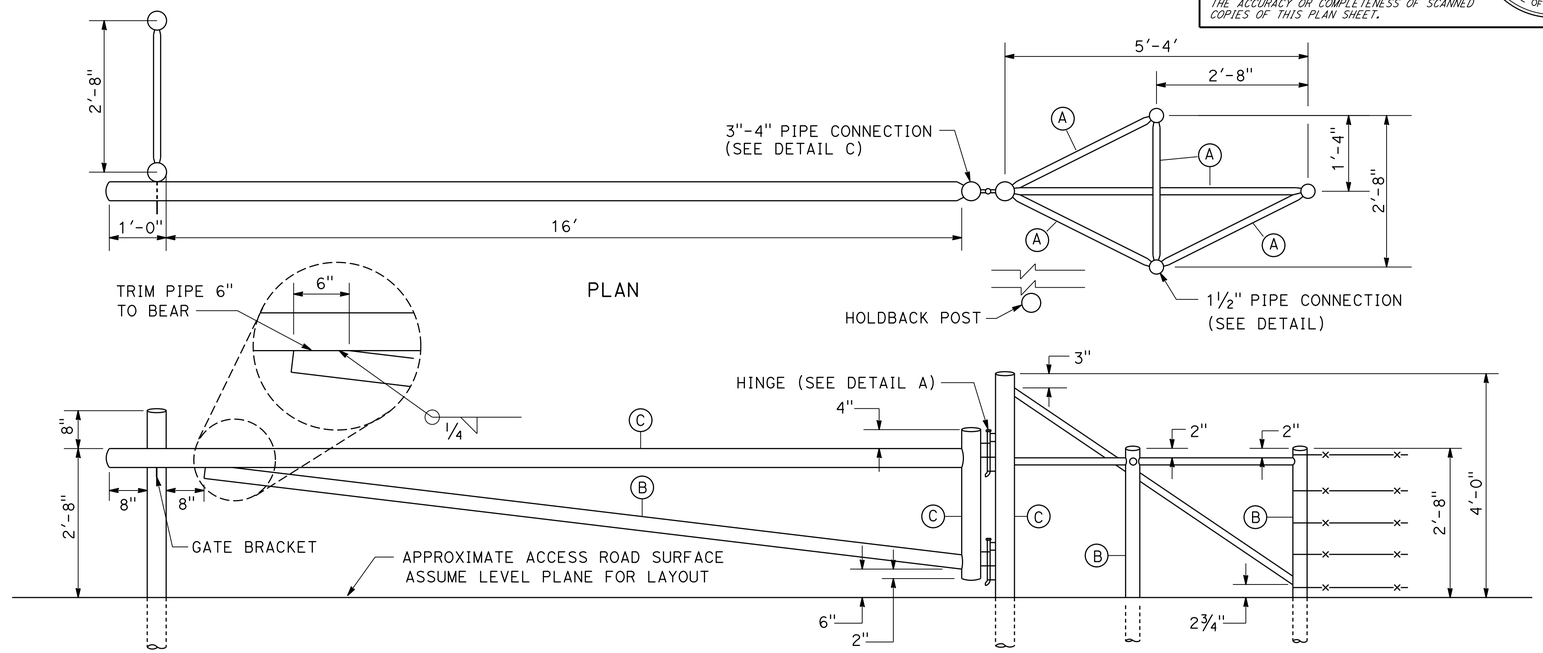

PLAN

ELEVATION

METAL GATE

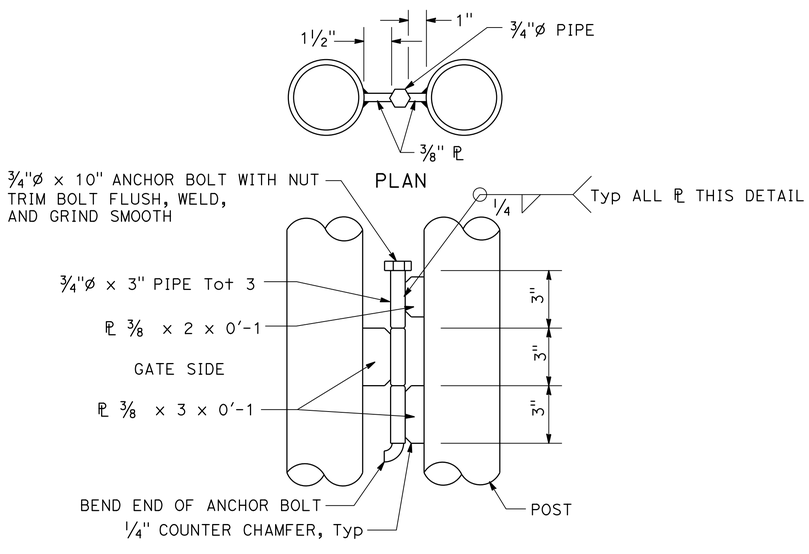

ELEVATION

DETAIL A
(HINGE)

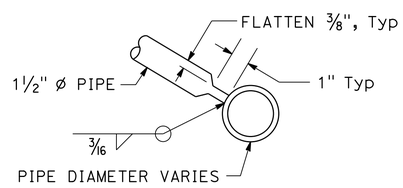

DETAIL B
(1 1/2"ø PIPE CONNECTION)

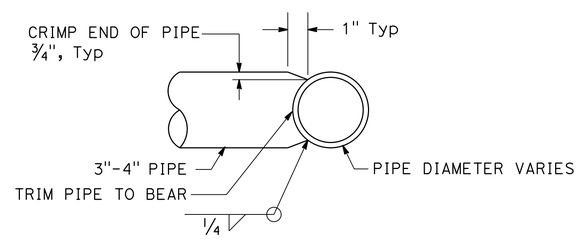

DETAIL C
(3"-4"ø PIPE CONNECTION)

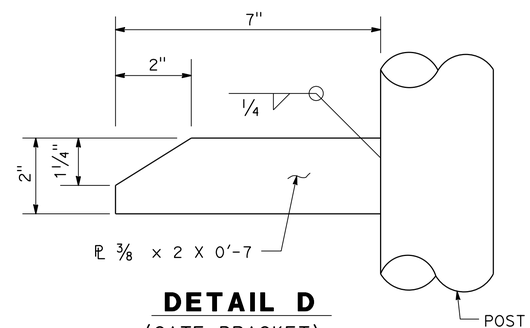

DETAIL D
(GATE BRACKET)

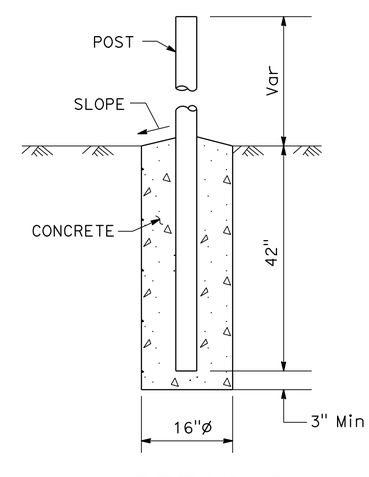

DETAIL E
(POST ANCHOR)

CONSTRUCTION DETAILS
NO SCALE

C-1

HAI HOANG	HH
PATRICIA TECZON	06/06/12
CALCULATED-DESIGNED BY	REVISED BY
CHECKED BY	DATE REVISED
FUNCTIONAL SUPERVISOR	
CAROLINE REYES	

STATE OF CALIFORNIA - DEPARTMENT OF TRANSPORTATION
Caltrans® DESIGN

LAST REVISION 00-00-00
DATE PLOTTED => 22-MAY-2014
TIME PLOTTED => 13:24

Dist	COUNTY	ROUTE	POST MILES TOTAL PROJECT	SHEET No.	TOTAL SHEETS
10	SJ	88	6.1/8.9	11	63

Patricia L. Teczon 5/5/14
REGISTERED CIVIL ENGINEER DATE

5-5-14
PLANS APPROVAL DATE

REGISTERED PROFESSIONAL ENGINEER Patricia Teczon No. 37294 Exp 6/30/16 CIVIL STATE OF CALIFORNIA

THE STATE OF CALIFORNIA OR ITS OFFICERS OR AGENTS SHALL NOT BE RESPONSIBLE FOR THE ACCURACY OR COMPLETENESS OF SCANNED COPIES OF THIS PLAN SHEET.

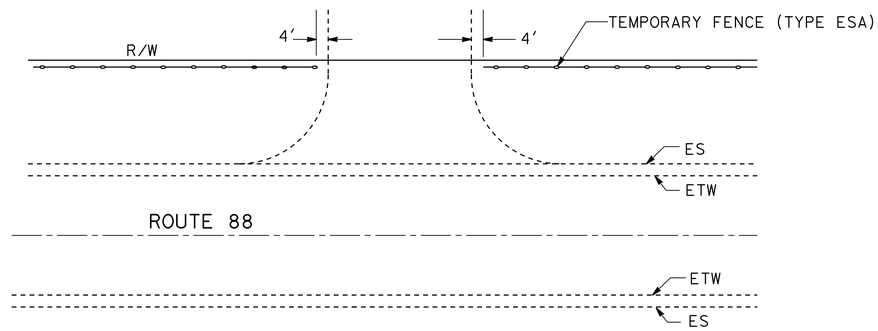

TYPICAL TEMPORARY FENCE (TYPE ESA)
PLACEMENT AT DRIVEWAYS

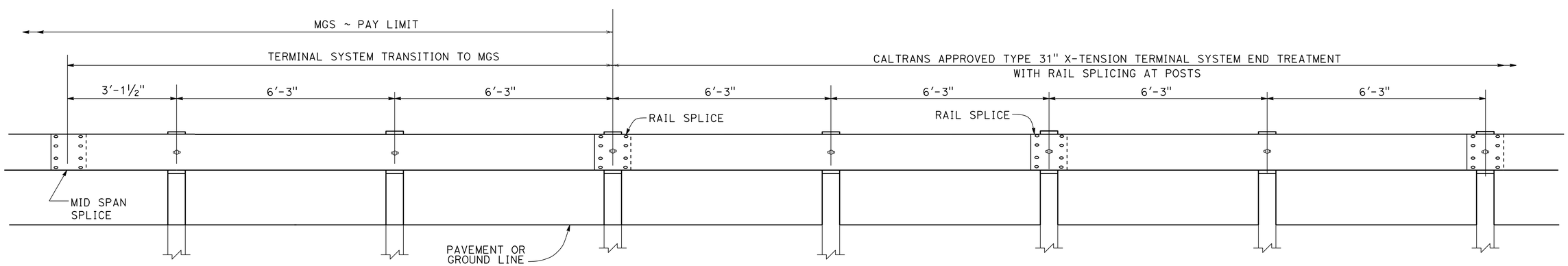

TRANSITION DETAIL FOR TYPE 31" X-TENSION TERMINAL SYSTEM END TREATMENT
WITH RAIL SPLICING AT POSTS TO MIDWEST GUARDRAIL SYSTEM

NOTE: USE 15'-7½" LENGTH RAIL

CONSTRUCTION DETAILS

NO SCALE

C-2

STATE OF CALIFORNIA - DEPARTMENT OF TRANSPORTATION
Caltrans® DESIGN

FUNCTIONAL SUPERVISOR: CAROLINE REYES
CALCULATED-DESIGNED BY: HAI HOANG
CHECKED BY: PATRICIA TECZON
REVISED BY: HH
DATE REVISED: 04/10/12

LAST REVISION 00-00-00
DATE PLOTTED => 22-MAY-2014
TIME PLOTTED => 13:24

Dist	COUNTY	ROUTE	POST MILES TOTAL PROJECT	SHEET No.	TOTAL SHEETS
10	SJ	88	6.1/8.9	12	63

Patricia L. Teczon 5/5/14
REGISTERED CIVIL ENGINEER DATE

5-5-14
PLANS APPROVAL DATE

REGISTERED PROFESSIONAL ENGINEER Patricia Teczon No. 37294 Exp. 6/30/16 CIVIL STATE OF CALIFORNIA

THE STATE OF CALIFORNIA OR ITS OFFICERS OR AGENTS SHALL NOT BE RESPONSIBLE FOR THE ACCURACY OR COMPLETENESS OF SCANNED COPIES OF THIS PLAN SHEET.

NOTE:

FOR ACCURATE RIGHT OF WAY DATA, CONTACT RIGHT OF WAY ENGINEERING AT THE DISTRICT OFFICE.

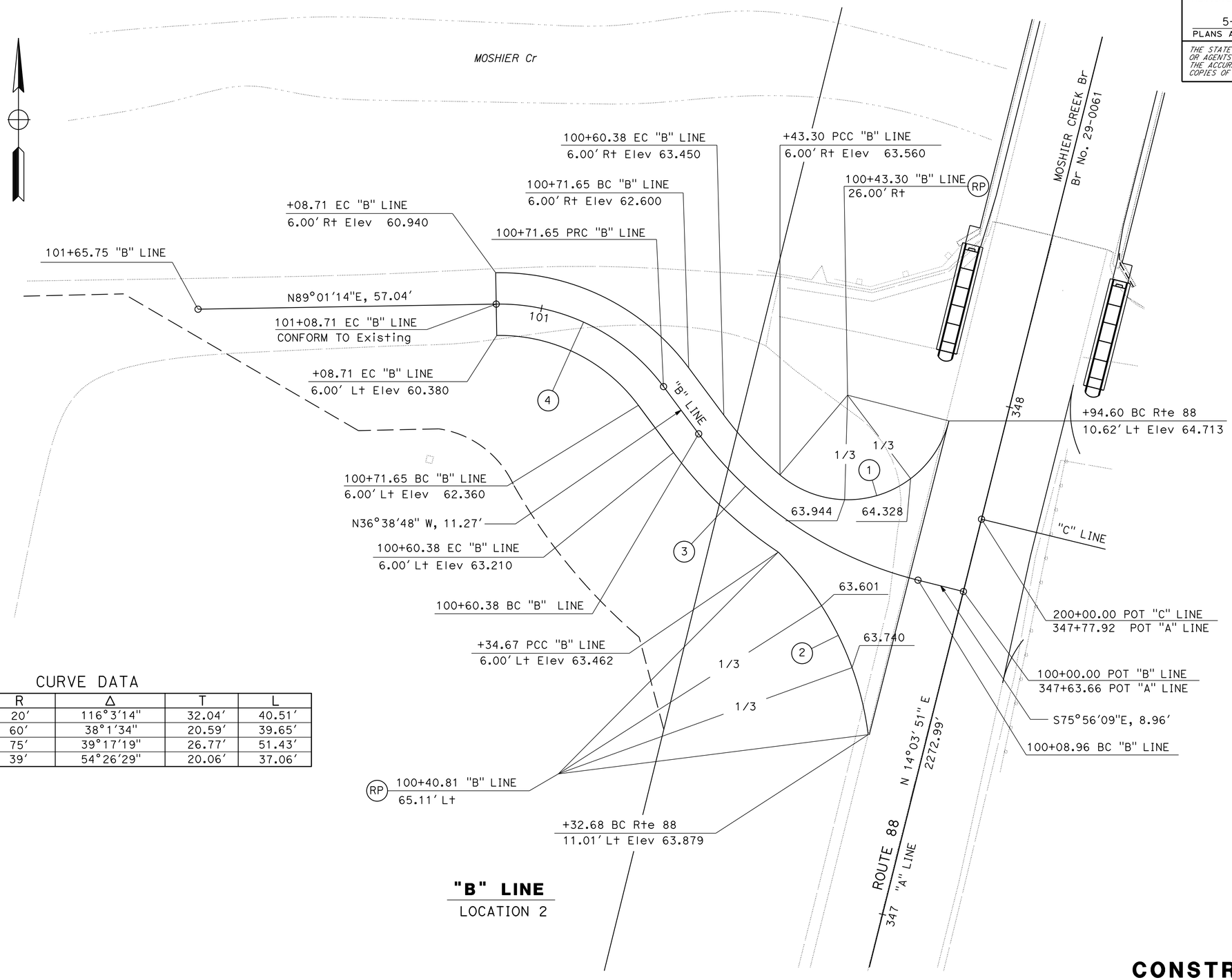

"B" LINE
LOCATION 2

CURVE DATA

No. ⊕	R	Δ	T	L
1	20'	116°3'14"	32.04'	40.51'
2	60'	38°1'34"	20.59'	39.65'
3	75'	39°17'19"	26.77'	51.43'
4	39'	54°26'29"	20.06'	37.06'

CONSTRUCTION DETAILS

SCALE: 1" = 10'

C-3

STATE OF CALIFORNIA - DEPARTMENT OF TRANSPORTATION
Caltrans®
DESIGN

FUNCTIONAL SUPERVISOR: CAROLINE REYES
CALCULATED-DESIGNED BY: INGRID STEWART
CHECKED BY: PATRICIA TECZON
REVISED BY: IS
DATE REVISED: 08/23/12

LAST REVISION 00-00-00
DATE PLOTTED => 22-MAY-2014
TIME PLOTTED => 13:24

Dist	COUNTY	ROUTE	POST MILES TOTAL PROJECT	SHEET No.	TOTAL SHEETS
10	SJ	88	6.1/8.9	13	63

Patricia L. Teczon 5/5/14
REGISTERED CIVIL ENGINEER DATE

5-5-14
PLANS APPROVAL DATE

REGISTERED PROFESSIONAL ENGINEER Patricia Teczon No. 37294 Exp 6/30/16 CIVIL STATE OF CALIFORNIA

THE STATE OF CALIFORNIA OR ITS OFFICERS OR AGENTS SHALL NOT BE RESPONSIBLE FOR THE ACCURACY OR COMPLETENESS OF SCANNED COPIES OF THIS PLAN SHEET.

NOTE:

FOR ACCURATE RIGHT OF WAY DATA, CONTACT RIGHT OF WAY ENGINEERING AT THE DISTRICT OFFICE.

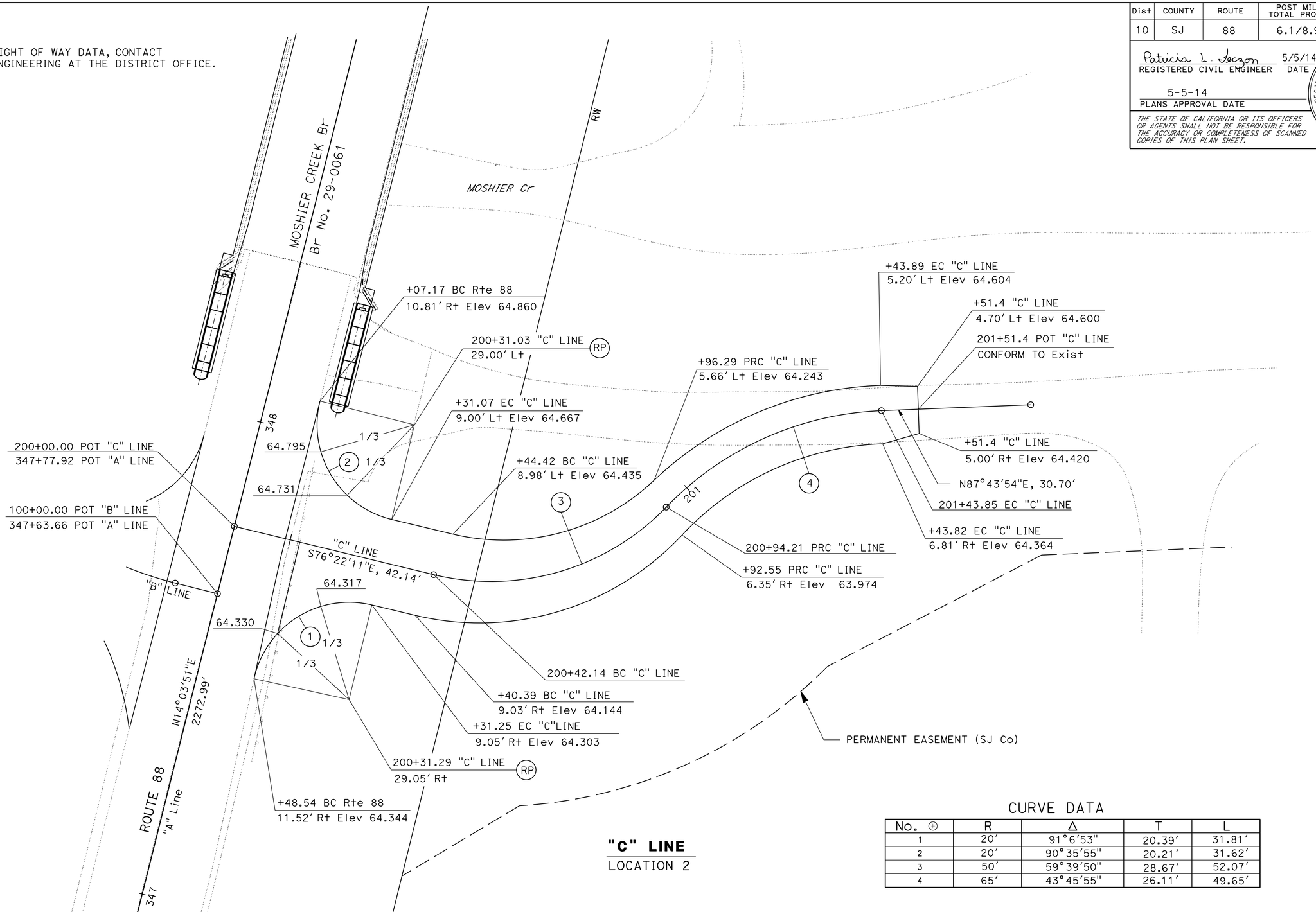

"C" LINE
LOCATION 2

CURVE DATA

No. ⊛	R	Δ	T	L
1	20'	91°6'53"	20.39'	31.81'
2	20'	90°35'55"	20.21'	31.62'
3	50'	59°39'50"	28.67'	52.07'
4	65'	43°45'55"	26.11'	49.65'

CONSTRUCTION DETAILS

SCALE: 1" = 10'

C-4

STATE OF CALIFORNIA - DEPARTMENT OF TRANSPORTATION
Caltrans® DESIGN

FUNCTIONAL SUPERVISOR: CAROLINE REYES

CALCULATED-DESIGNED BY: INGRID STEWART
CHECKED BY: PATRICIA TECZON

REVISED BY: IS
DATE REVISED: 08/29/12

LAST REVISION: 00-00-00
DATE PLOTTED => 22-MAY-2014
TIME PLOTTED => 13:24

Dist	COUNTY	ROUTE	POST MILES TOTAL PROJECT	SHEET No.	TOTAL SHEETS
10	SJ	88	6.1/8.9	14	63

Patricia L. Teczon 5/5/14
REGISTERED CIVIL ENGINEER DATE

5-5-14
PLANS APPROVAL DATE

REGISTERED PROFESSIONAL ENGINEER Patricia Teczon No. 37294 Exp 6/30/16 CIVIL STATE OF CALIFORNIA

THE STATE OF CALIFORNIA OR ITS OFFICERS OR AGENTS SHALL NOT BE RESPONSIBLE FOR THE ACCURACY OR COMPLETENESS OF SCANNED COPIES OF THIS PLAN SHEET.

NOTE:

FOR ACCURATE RIGHT OF WAY DATA, CONTACT
RIGHT OF WAY ENGINEERING AT THE DISTRICT OFFICE.

CURVE DATA

No. ⊕	R	Δ	T	L
1	20′	83°28′39"	17.84′	29.14′
2	20′	90°43′15"	20.25′	31.67′
3	120′	3°45′46"	3.95′	7.89′
4	60′	17°26′57"	9.20′	18.27′

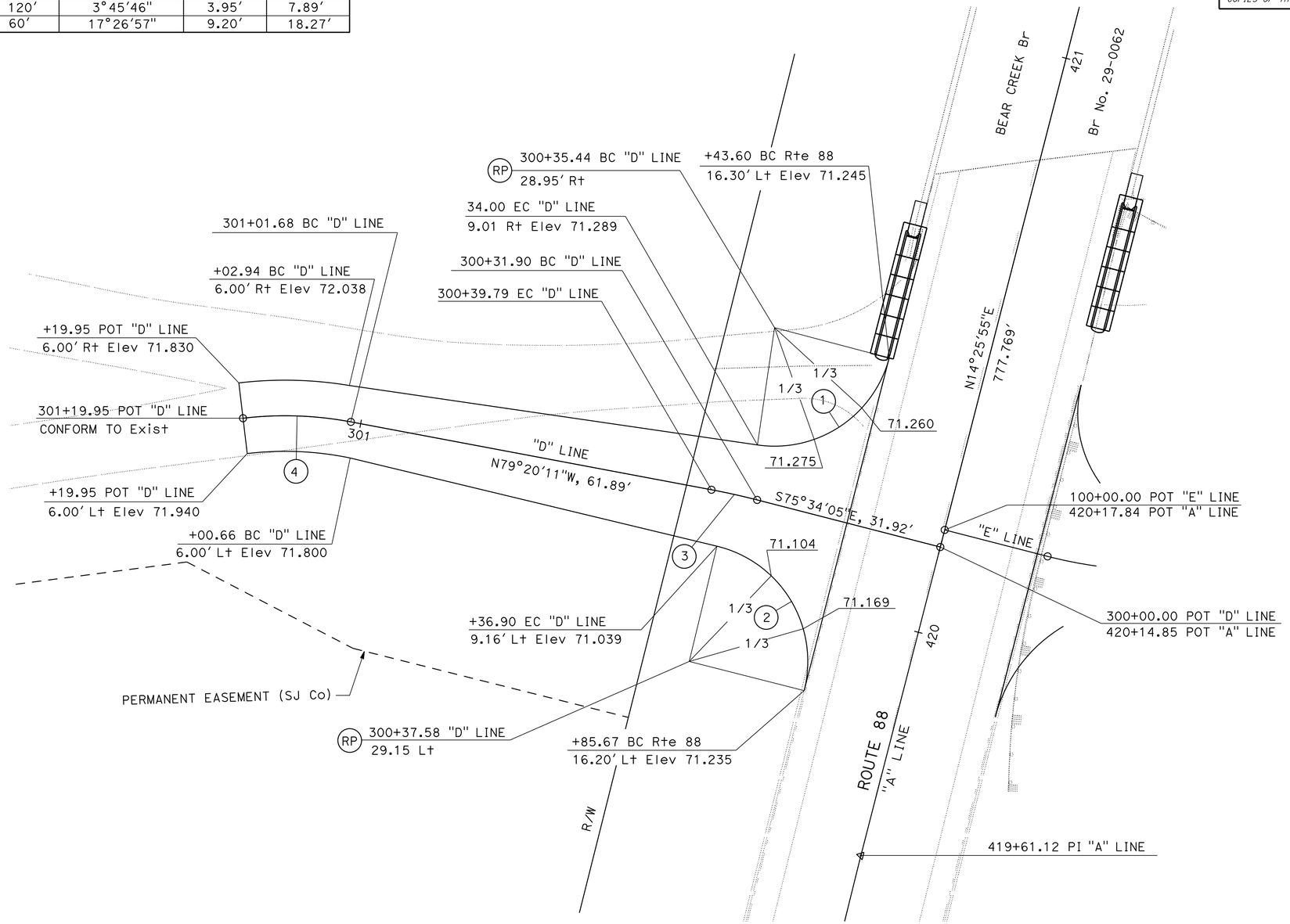

"D" LINE
LOCATION 5

CONSTRUCTION DETAILS

SCALE: 1" = 10′

C-5

STATE OF CALIFORNIA - DEPARTMENT OF TRANSPORTATION
Caltrans® **DESIGN**

FUNCTIONAL SUPERVISOR: CAROLINE REYES
CALCULATED-DESIGNED BY: INGRID STEWART
CHECKED BY: PATRICIA TECZON
REVISED BY: IS
DATE REVISED: 02/19/13

LAST REVISION 00-00-00
DATE PLOTTED => 22-MAY-2014
TIME PLOTTED => 14:29

Dist	COUNTY	ROUTE	POST MILES TOTAL PROJECT	SHEET No.	TOTAL SHEETS
10	SJ	88	6.1/8.9	15	63

Patricia L. Teczon 5/5/14
REGISTERED CIVIL ENGINEER DATE

5-5-14
PLANS APPROVAL DATE

REGISTERED PROFESSIONAL ENGINEER Patricia Teczon No. 37294 Exp 6/30/16 CIVIL STATE OF CALIFORNIA

THE STATE OF CALIFORNIA OR ITS OFFICERS OR AGENTS SHALL NOT BE RESPONSIBLE FOR THE ACCURACY OR COMPLETENESS OF SCANNED COPIES OF THIS PLAN SHEET.

NOTE:

FOR ACCURATE RIGHT OF WAY DATA, CONTACT RIGHT OF WAY ENGINEERING AT THE DISTRICT OFFICE.

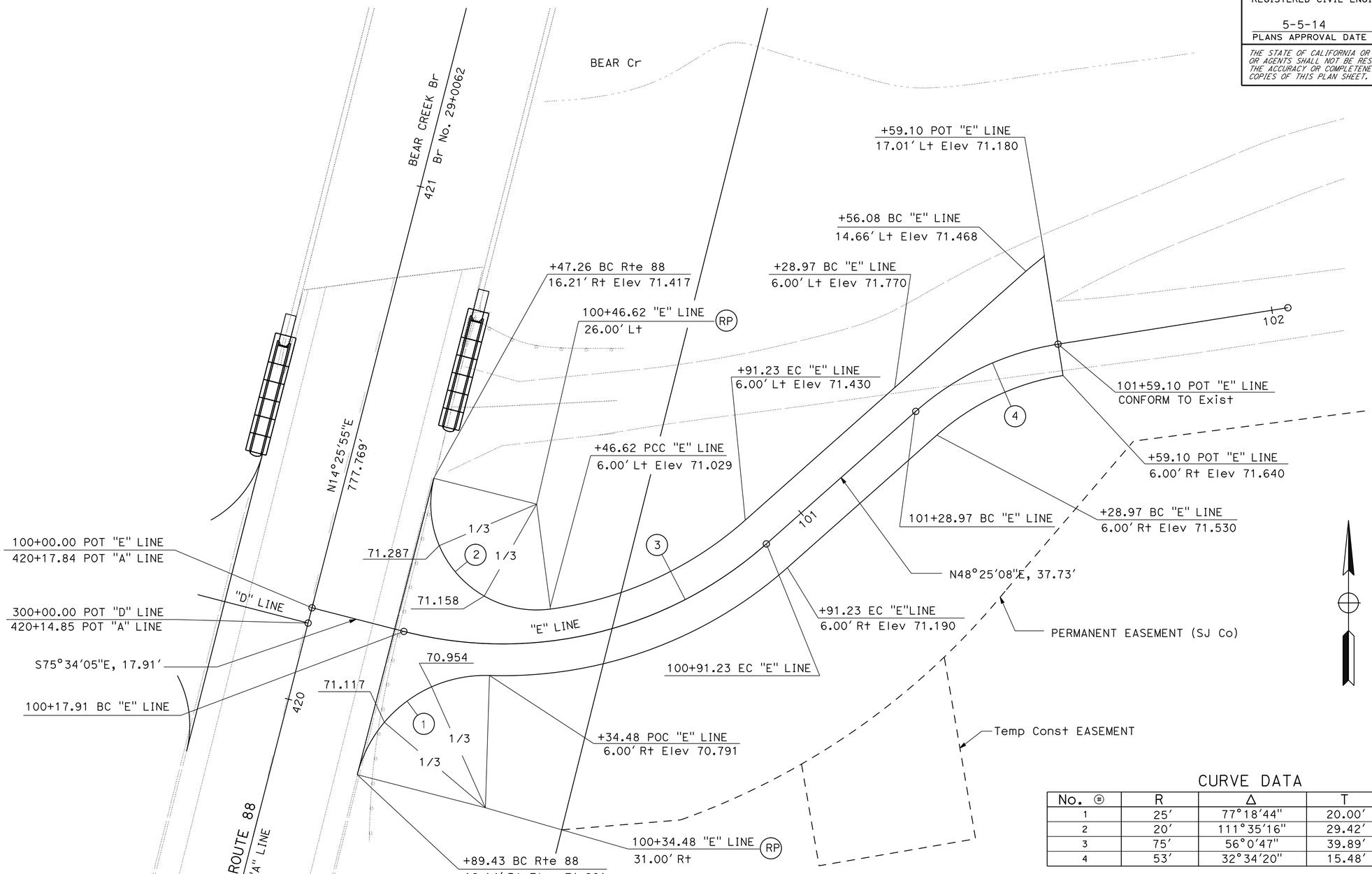

CURVE DATA

No. ⊕	R	Δ	T	L
1	25'	77°18'44"	20.00'	33.74'
2	20'	111°35'16"	29.42'	38.95'
3	75'	56°0'47"	39.89'	73.32'
4	53'	32°34'20"	15.48'	30.13'

"E" LINE
LOCATION 5

CONSTRUCTION DETAILS

SCALE: 1" = 10'

C-6

STATE OF CALIFORNIA - DEPARTMENT OF TRANSPORTATION
Caltrans® **DESIGN**

FUNCTIONAL SUPERVISOR: CAROLINE REYES
CALCULATED-DESIGNED BY: INGRID STEWART
CHECKED BY: PATRICIA TECZON
REVISED BY: IS
DATE REVISED: 02/19/13

LAST REVISION 00-00-00 | DATE PLOTTED => 22-MAY-2014 | TIME PLOTTED => 13:24

Dist	COUNTY	ROUTE	POST MILES TOTAL PROJECT	SHEET No.	TOTAL SHEETS
10	SJ	88	6.1/8.9	16	63

Patricia L. Teczon 5/5/14
REGISTERED CIVIL ENGINEER DATE

5-5-14
PLANS APPROVAL DATE

REGISTERED PROFESSIONAL ENGINEER Patricia Teczon No. 37294 Exp 6/30/16 CIVIL STATE OF CALIFORNIA

THE STATE OF CALIFORNIA OR ITS OFFICERS OR AGENTS SHALL NOT BE RESPONSIBLE FOR THE ACCURACY OR COMPLETENESS OF SCANNED COPIES OF THIS PLAN SHEET.

NOTE:

FOR ACCURATE RIGHT OF WAY DATA, CONTACT
RIGHT OF WAY ENGINEERING AT THE DISTRICT OFFICE.

CURVE DATA

No. ⊕	R	Δ	T	L
1	20′	82°26′29"	17.52′	28.78′
2	20′	98°53′49"	23.37′	34.52′
3	65′	53°11′48"	32.55′	60.35′
4	65′	30°19′48"	17.62′	34.41′

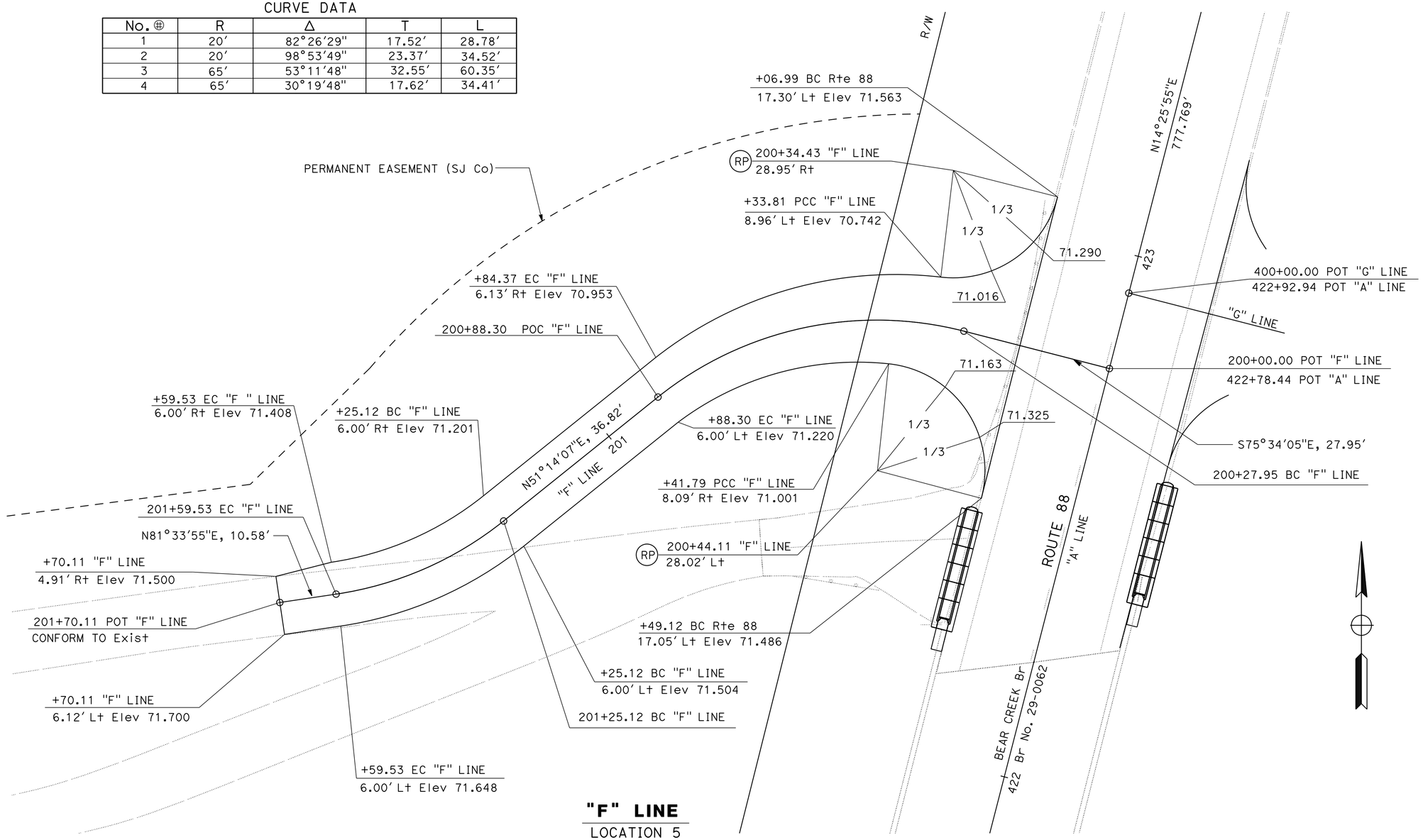

"F" LINE
LOCATION 5

CONSTRUCTION DETAILS

SCALE: 1" = 10′

C-7

REVISED BY	DATE REVISED
IS	02/19/13

INGRID STEWART
PATRICIA TECZON

CALCULATED-DESIGNED BY
CHECKED BY

FUNCTIONAL SUPERVISOR
CAROLINE REYES

STATE OF CALIFORNIA - DEPARTMENT OF TRANSPORTATION
Caltrans
DESIGN

LAST REVISION 00-00-00
DATE PLOTTED => 22-MAY-2014
TIME PLOTTED => 13:24

Dist	COUNTY	ROUTE	POST MILES TOTAL PROJECT	SHEET No.	TOTAL SHEETS
10	SJ	88	6.1/8.9	17	63

Patricia L. Teczon 5/5/14
REGISTERED CIVIL ENGINEER DATE

5-5-14
PLANS APPROVAL DATE

REGISTERED PROFESSIONAL ENGINEER Patricia Teczon No. 37294 Exp 6/30/16 CIVIL STATE OF CALIFORNIA

THE STATE OF CALIFORNIA OR ITS OFFICERS OR AGENTS SHALL NOT BE RESPONSIBLE FOR THE ACCURACY OR COMPLETENESS OF SCANNED COPIES OF THIS PLAN SHEET.

NOTE:

FOR ACCURATE RIGHT OF WAY DATA, CONTACT RIGHT OF WAY ENGINEERING AT THE DISTRICT OFFICE.

CURVE DATA

No. ⊕	R	Δ	T	L
1	20′	100°21′00"	23.98′	35.03′
2	20′	78°41′17"	16.40′	27.47′
3	60′	11°6′46"	5.84′	11.65′
4	65′	33°36′13"	19.63′	38.12′

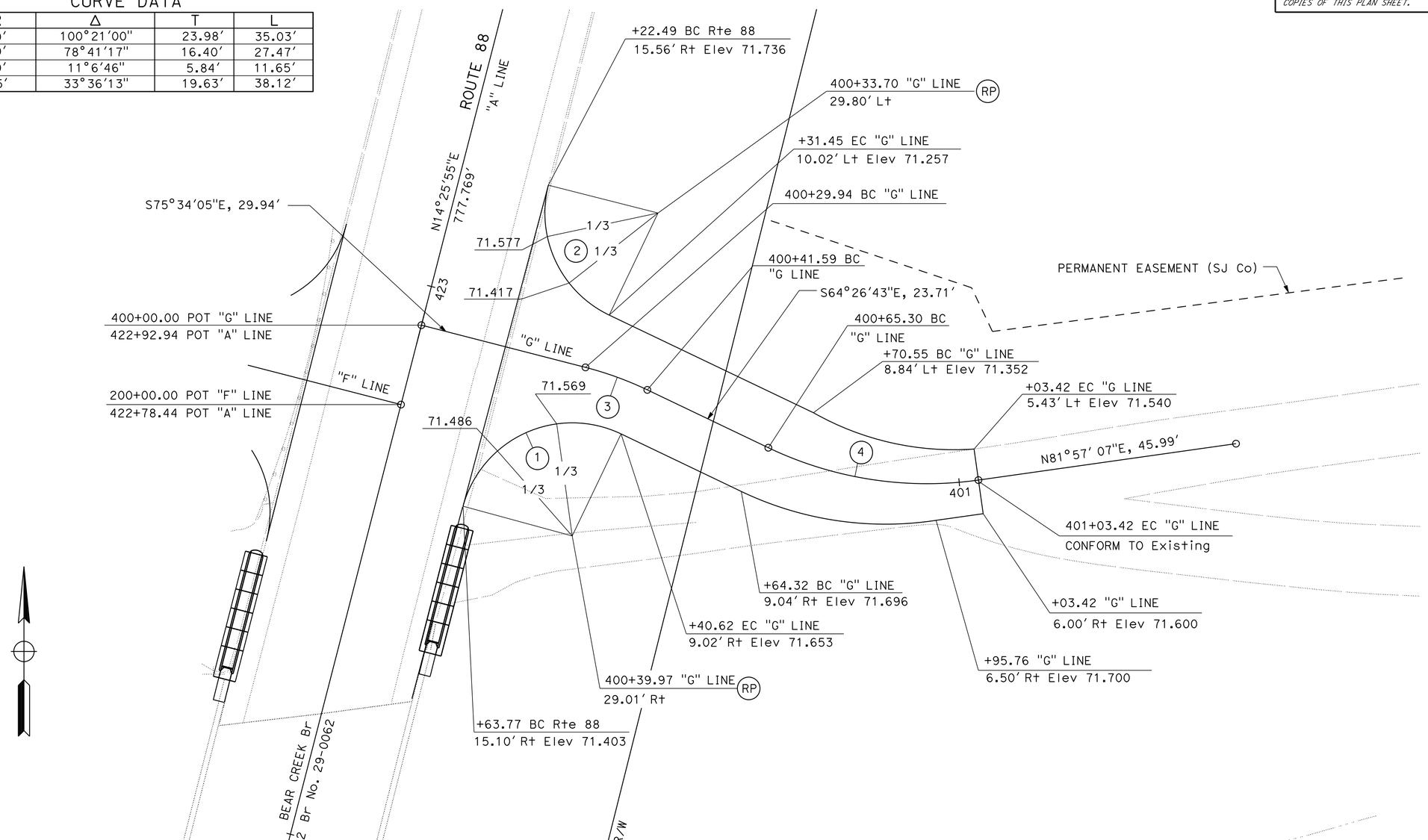

"G" LINE
LOCATION 5

CONSTRUCTION DETAILS

SCALE: 1′ = 10"

C-8

REVISED BY	DATE REVISED
IS	02/19/13

INGRID STEWART — PATRICIA TECZON — CALCULATED-DESIGNED BY — CHECKED BY

FUNCTIONAL SUPERVISOR: CAROLINE REYES

STATE OF CALIFORNIA - DEPARTMENT OF TRANSPORTATION — Caltrans — DESIGN

LAST REVISION 00-00-00 — DATE PLOTTED => 22-MAY-2014 — TIME PLOTTED => 13:24

Dist	COUNTY	ROUTE	POST MILES TOTAL PROJECT	SHEET No.	TOTAL SHEETS
10	SJ	88	6.1/8.9	18	62

Patricia L. Teczon 5/5/14
REGISTERED CIVIL ENGINEER DATE

5-5-14
PLANS APPROVAL DATE

REGISTERED PROFESSIONAL ENGINEER Patricia Teczon No. 37294 Exp 6/30/16 CIVIL STATE OF CALIFORNIA

THE STATE OF CALIFORNIA OR ITS OFFICERS OR AGENTS SHALL NOT BE RESPONSIBLE FOR THE ACCURACY OR COMPLETENESS OF SCANNED COPIES OF THIS PLAN SHEET.

NOTE:

FOR ACCURATE RIGHT OF WAY DATA, CONTACT RIGHT OF WAY ENGINEERING AT THE DISTRICT OFFICE.

LEGEND:

Temp FENCE (TYPE ESA)

ABBREVIATION:

RCP(RGJ) - RCP (RUBBER GASKETED JOINT)

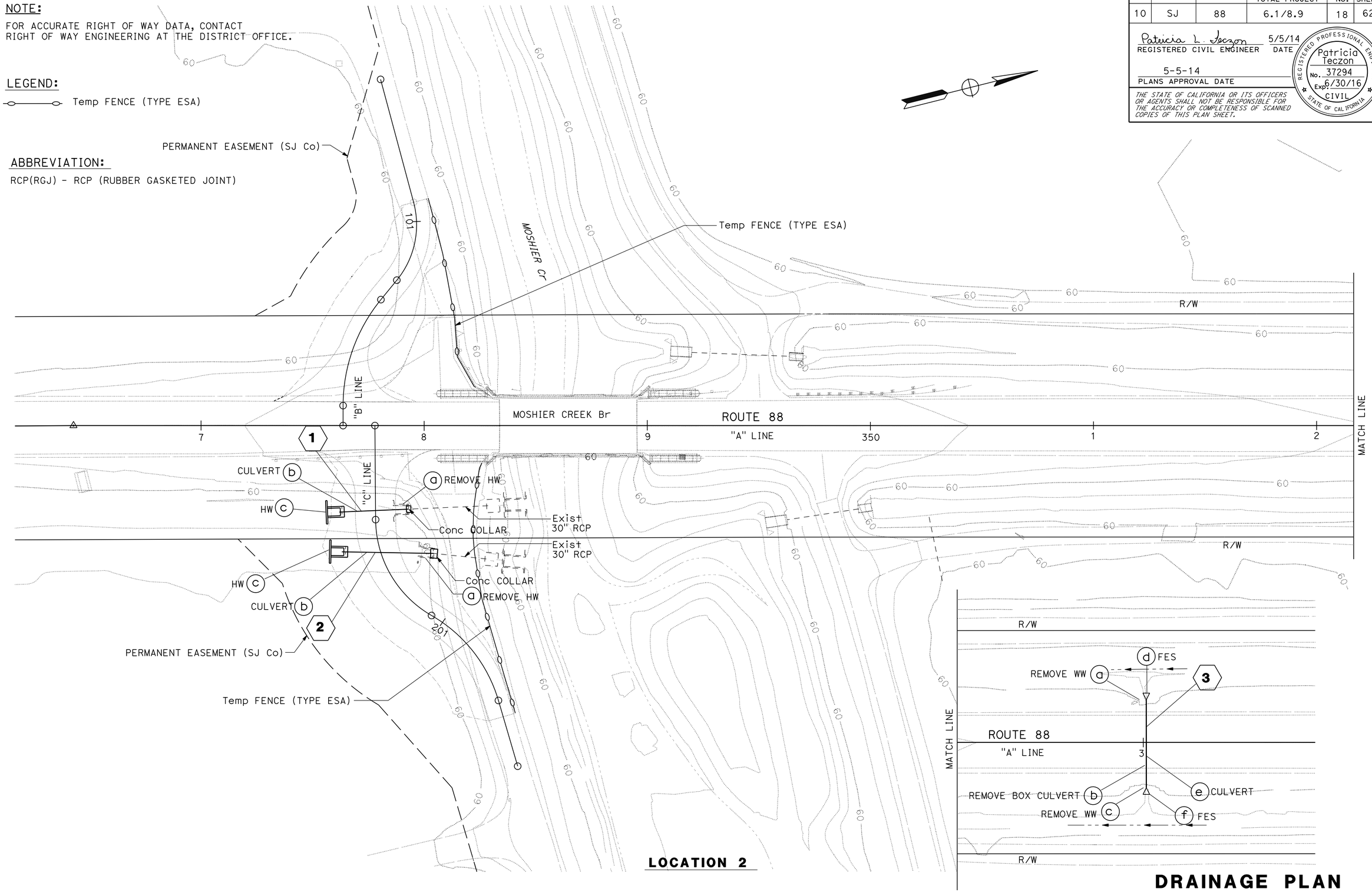

LOCATION 2

APPROVED FOR DRAINAGE WORK ONLY

DRAINAGE PLAN

SCALE: 1' = 20'

D-1

REVISED BY	DATE REVISED
HH	09/27/12

HAI HOANG
PATRICIA TECZON
CALCULATED-DESIGNED BY
CHECKED BY
FUNCTIONAL SUPERVISOR
CAROLINE REYES

STATE OF CALIFORNIA - DEPARTMENT OF TRANSPORTATION
Caltrans
DESIGN

LAST REVISION 00-00-00
DATE PLOTTED => 22-MAY-2014
TIME PLOTTED => 13:24

Dist	COUNTY	ROUTE	POST MILES TOTAL PROJECT	SHEET No.	TOTAL SHEETS
10	SJ	88	6.1/8.9	19	63

Patricia L. Teczon 5/5/14
REGISTERED CIVIL ENGINEER DATE

5-5-14
PLANS APPROVAL DATE

REGISTERED PROFESSIONAL ENGINEER Patricia Teczon No. 37294 Exp 6/30/16 CIVIL STATE OF CALIFORNIA

THE STATE OF CALIFORNIA OR ITS OFFICERS OR AGENTS SHALL NOT BE RESPONSIBLE FOR THE ACCURACY OR COMPLETENESS OF SCANNED COPIES OF THIS PLAN SHEET.

NOTE:

FOR ACCURATE RIGHT OF WAY DATA, CONTACT RIGHT OF WAY ENGINEERING AT THE DISTRICT OFFICE.

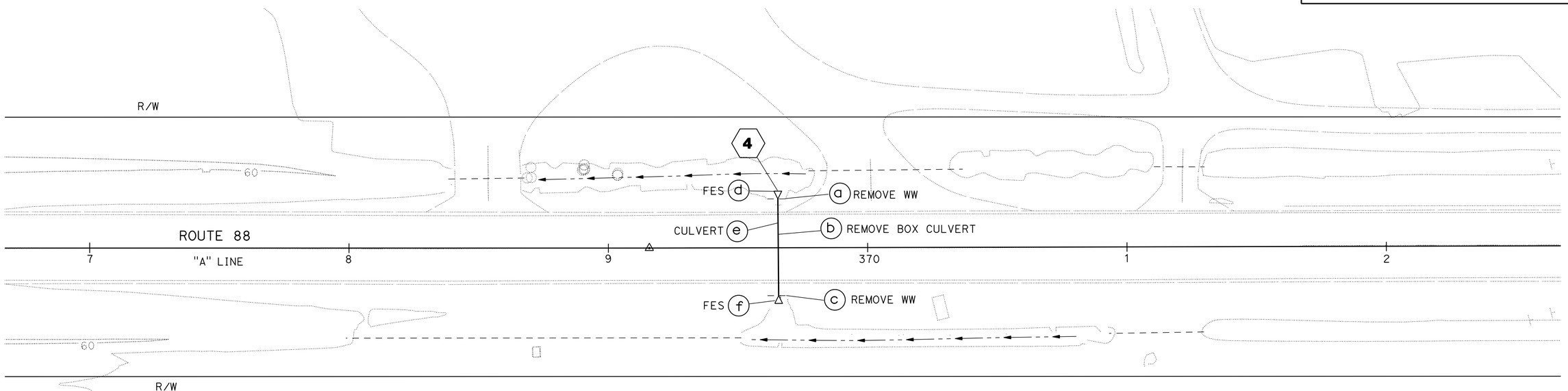

LOCATION 3

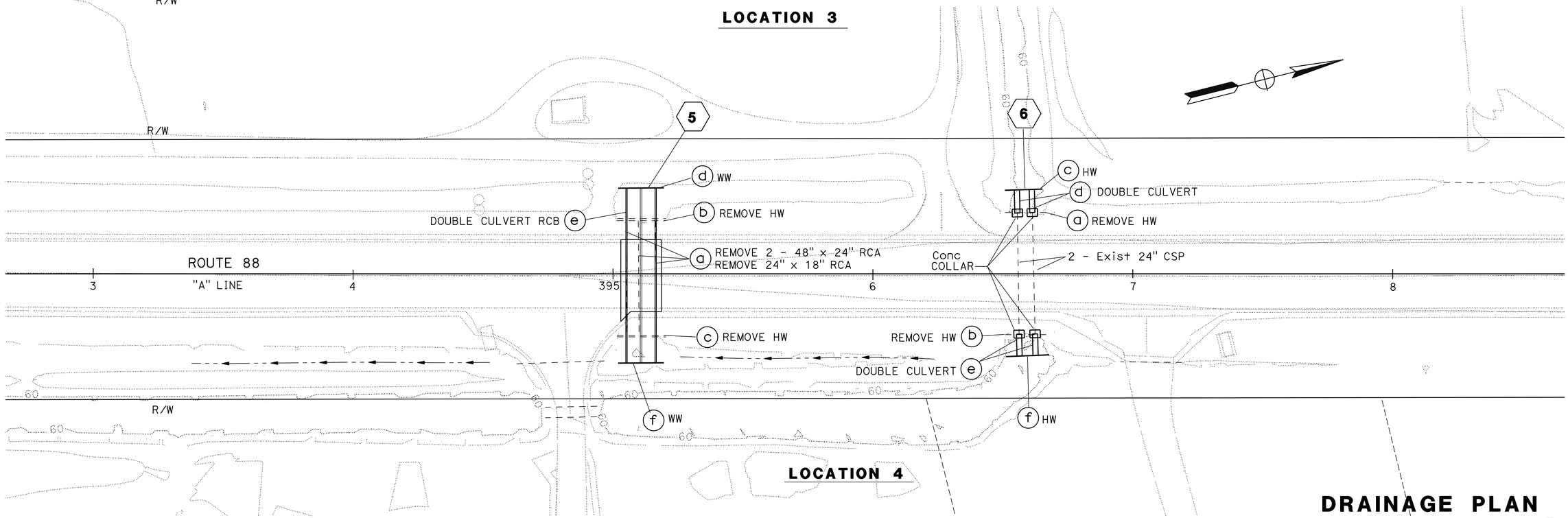

LOCATION 4

APPROVED FOR DRAINAGE WORK ONLY

DRAINAGE PLAN

SCALE: 1' = 20'

D-2

REVISED BY	DATE REVISED
HH	09/27/11

HAI HOANG — PATRICIA TECZON — CALCULATED-DESIGNED BY — CHECKED BY

FUNCTIONAL SUPERVISOR: CAROLINE REYES

STATE OF CALIFORNIA - DEPARTMENT OF TRANSPORTATION — Caltrans — DESIGN

LAST REVISION 00-00-00 — DATE PLOTTED => 22-MAY-2014 — TIME PLOTTED => 13:24

Dist	COUNTY	ROUTE	POST MILES TOTAL PROJECT	SHEET No.	TOTAL SHEETS
10	SJ	88	6.1/8.9	20	63

Patricia L. Teczon 5/5/14
REGISTERED CIVIL ENGINEER DATE

5-5-14
PLANS APPROVAL DATE

REGISTERED PROFESSIONAL ENGINEER Patricia Teczon No. 37294 Exp 6/30/16 CIVIL STATE OF CALIFORNIA

THE STATE OF CALIFORNIA OR ITS OFFICERS OR AGENTS SHALL NOT BE RESPONSIBLE FOR THE ACCURACY OR COMPLETENESS OF SCANNED COPIES OF THIS PLAN SHEET.

NOTE:

FOR ACCURATE RIGHT OF WAY DATA, CONTACT RIGHT OF WAY ENGINEERING AT THE DISTRICT OFFICE.

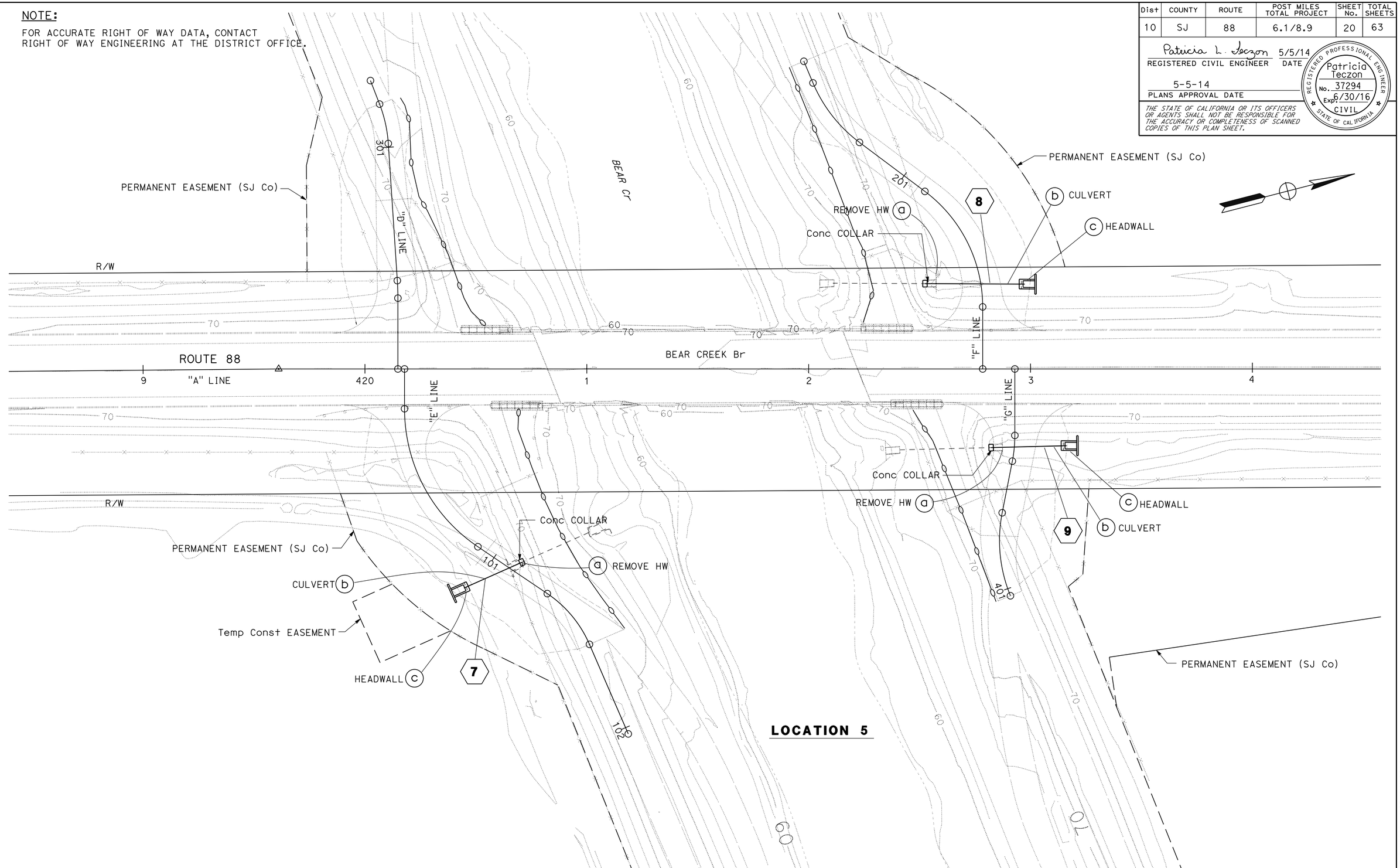

APPROVED FOR DRAINAGE WORK ONLY

DRAINAGE PLAN

SCALE: 1' = 20'

D-3

REVISED BY	DATE REVISED
HH	02/19/13

CALCULATED-DESIGNED BY: HAI HOANG
CHECKED BY: PATRICIA TECZON
FUNCTIONAL SUPERVISOR: CAROLINE REYES

STATE OF CALIFORNIA - DEPARTMENT OF TRANSPORTATION
Caltrans®
DESIGN

LAST REVISION 00-00-00
DATE PLOTTED => 22-MAY-2014
TIME PLOTTED => 14:54

Dist	COUNTY	ROUTE	POST MILES TOTAL PROJECT	SHEET No.	TOTAL SHEETS
10	SJ	88	6.1/8.9	21	63

Patricia L. Teczon 5/5/14
REGISTERED CIVIL ENGINEER DATE

5-5-14
PLANS APPROVAL DATE

REGISTERED PROFESSIONAL ENGINEER Patricia Teczon No. 37294 Exp. 6/30/16 CIVIL STATE OF CALIFORNIA

THE STATE OF CALIFORNIA OR ITS OFFICERS OR AGENTS SHALL NOT BE RESPONSIBLE FOR THE ACCURACY OR COMPLETENESS OF SCANNED COPIES OF THIS PLAN SHEET.

ABBREVIATION:

RCP(RGJ) - RCP (RUBBER GASKETED JOINT)

LEGEND:

MINOR CONCRETE (BACKFILL)

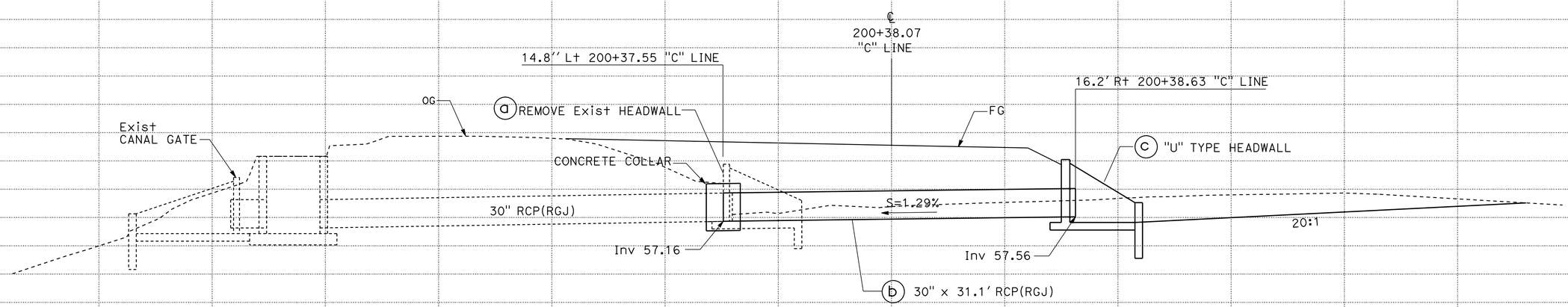

DRAINAGE SYSTEM No. 1
Skew = 2°0'00"

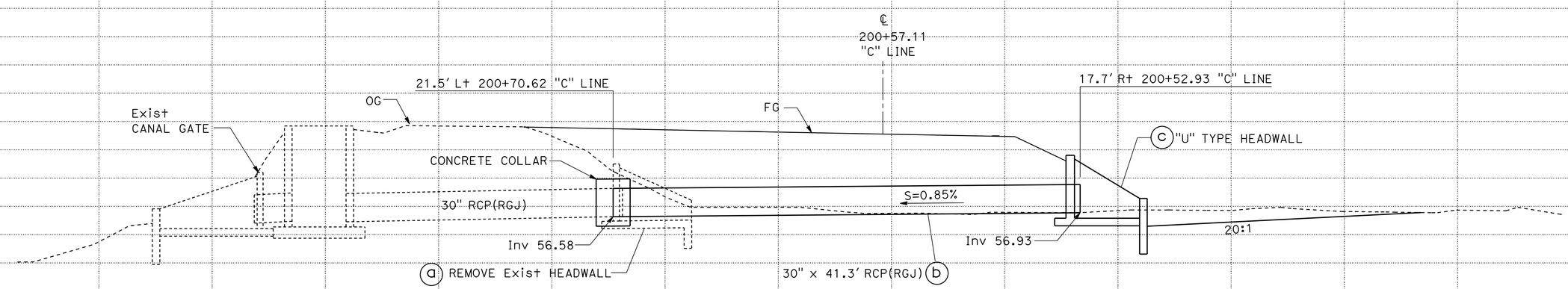

DRAINAGE SYSTEM No. 2
Skew = 18°35'56

DRAINAGE PROFILES

SCALE: Horiz 1" = 5'
Vert 1" = 5'

DP-1

STATION	
CY	Exc
	Emb

TOTAL

STATE OF CALIFORNIA - DEPARTMENT OF TRANSPORTATION
Caltrans® DESIGN

FUNCTIONAL SUPERVISOR: CAROLINE REYES
CALCULATED-DESIGNED BY: HAI HOANG
CHECKED BY: PATRICIA TECZON
REVISED BY: HI
DATE REVISED: 05/05/14

LAST REVISION 00-00-00
DATE PLOTTED => 22-MAY-2014
TIME PLOTTED => 13:25

Dist	COUNTY	ROUTE	POST MILES TOTAL PROJECT	SHEET No.	TOTAL SHEETS
10	SJ	88	6.1/8.9	22	63

Patricia L. Teczon 5/5/14
REGISTERED CIVIL ENGINEER DATE

5-5-14
PLANS APPROVAL DATE

REGISTERED PROFESSIONAL ENGINEER Patricia Teczon No. 37294 Exp 6/30/16 CIVIL STATE OF CALIFORNIA

THE STATE OF CALIFORNIA OR ITS OFFICERS OR AGENTS SHALL NOT BE RESPONSIBLE FOR THE ACCURACY OR COMPLETENESS OF SCANNED COPIES OF THIS PLAN SHEET.

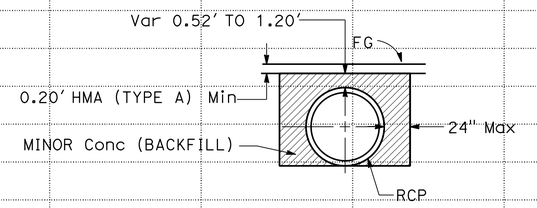

MINOR CONCRETE (BACKFILL)

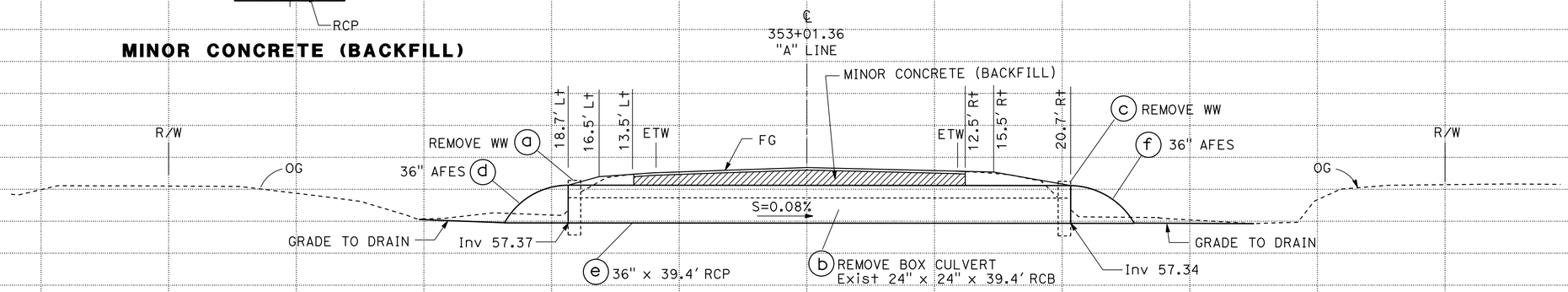

DRAINAGE SYSTEM No. 3

Skew = 0°02'16"

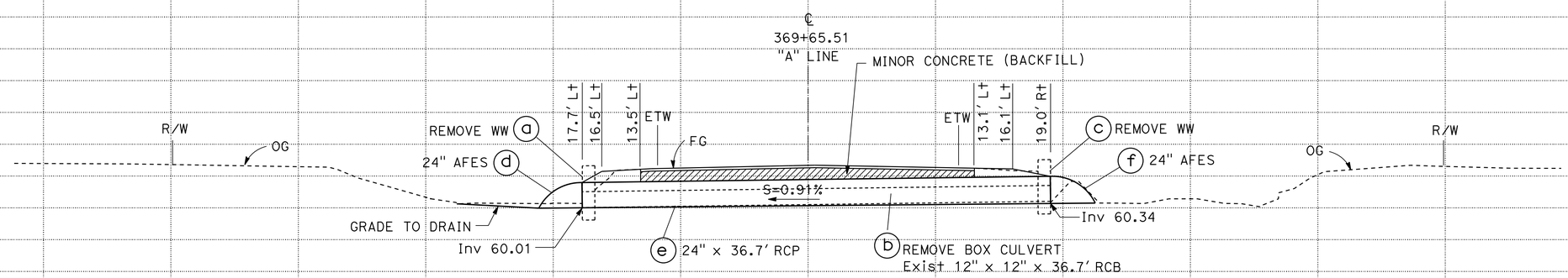

DRAINAGE SYSTEM No. 4

Skew = 0°20'49"

DRAINAGE PROFILES

SCALE: Horiz 1" = 5'
Vert 1" = 5'

DP-2

REVISED BY	DATE REVISED
HI	08/01/12

CALCULATED-DESIGNED BY: HAI HOANG
CHECKED BY: PATRICIA TECZON
FUNCTIONAL SUPERVISOR: CAROLINE REYES

STATE OF CALIFORNIA - DEPARTMENT OF TRANSPORTATION
Caltrans® DESIGN

STATION		TOTAL
CY	Exc	
	Emb	

LAST REVISION 00-00-00
DATE PLOTTED => 22-MAY-2014
TIME PLOTTED => 13:25

Dist	COUNTY	ROUTE	POST MILES TOTAL PROJECT	SHEET No.	TOTAL SHEETS
10	SJ	88	6.1/8.9	23	63

Patricia L. Teczon 5/5/14
REGISTERED CIVIL ENGINEER DATE

5-5-14
PLANS APPROVAL DATE

REGISTERED PROFESSIONAL ENGINEER Patricia Teczon No. 37294 Exp 6/30/16 CIVIL STATE OF CALIFORNIA

THE STATE OF CALIFORNIA OR ITS OFFICERS OR AGENTS SHALL NOT BE RESPONSIBLE FOR THE ACCURACY OR COMPLETENESS OF SCANNED COPIES OF THIS PLAN SHEET.

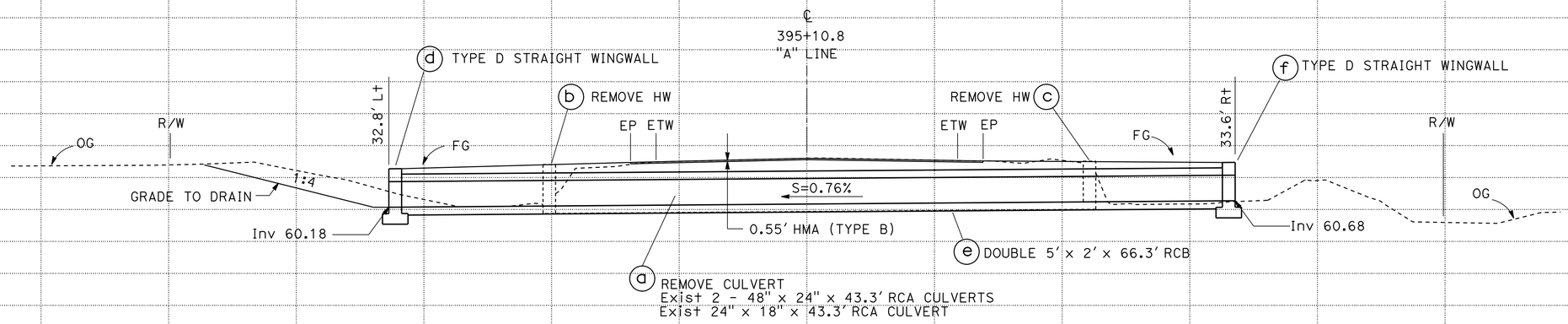

DRAINAGE SYSTEM No. 5

Skew = 0°00'33"

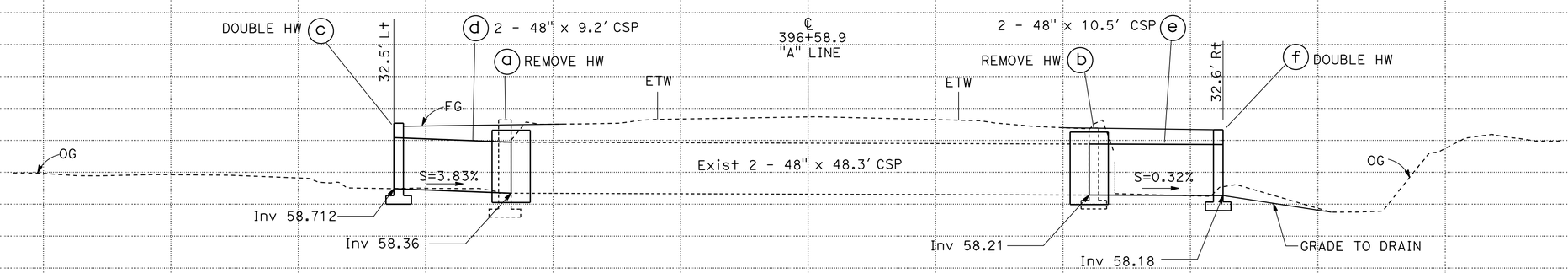

DRAINAGE SYSTEM No. 6

Skew = 0°47'50"

DRAINAGE PROFILES

SCALE: Horiz 1" = 5'
Vert 1" = 5'

DP-3

STATION		
CY	Exc	
	Emb	

TOTAL

STATE OF CALIFORNIA - DEPARTMENT OF TRANSPORTATION
Caltrans® DESIGN

FUNCTIONAL SUPERVISOR: CAROLINE REYES
CALCULATED-DESIGNED BY: HAI HOANG
CHECKED BY: PATRICIA TECZON
REVISED BY: HI
DATE REVISED: 09/18/12

LAST REVISION 00-00-00
DATE PLOTTED => 22-MAY-2014
TIME PLOTTED => 13:25

Dist	COUNTY	ROUTE	POST MILES TOTAL PROJECT	SHEET No.	TOTAL SHEETS
10	SJ	88	6.1/8.9	24	63

Patricia L. Teczon 5/5/14
REGISTERED CIVIL ENGINEER DATE

5-5-14
PLANS APPROVAL DATE

REGISTERED PROFESSIONAL ENGINEER Patricia Teczon No. 37294 Exp 6/30/16 CIVIL STATE OF CALIFORNIA

THE STATE OF CALIFORNIA OR ITS OFFICERS OR AGENTS SHALL NOT BE RESPONSIBLE FOR THE ACCURACY OR COMPLETENESS OF SCANNED COPIES OF THIS PLAN SHEET.

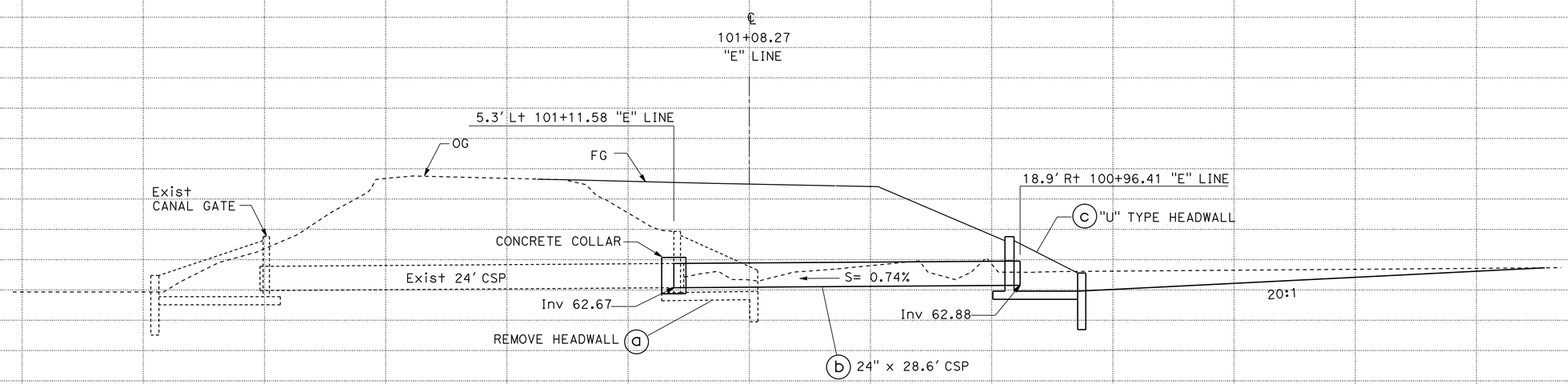

DRAINAGE SYSTEM No. 7

Skew = 32°04'59"

DRAINAGE PROFILES

SCALE: Horiz 1" = 5'
Vert 1" = 5'

DP-4

STATION		TOTAL
CY	Exc	
	Emb	

STATE OF CALIFORNIA - DEPARTMENT OF TRANSPORTATION
Caltrans® DESIGN

FUNCTIONAL SUPERVISOR: CAROLINE REYES
CALCULATED-DESIGNED BY: HAI HOANG
CHECKED BY: PATRICIA TECZON
REVISED BY: HI
DATE REVISED: 07/31/12

LAST REVISION 00-00-00
DATE PLOTTED => 22-MAY-2014
TIME PLOTTED => 13:25

Dist	COUNTY	ROUTE	POST MILES TOTAL PROJECT	SHEET No.	TOTAL SHEETS
10	SJ	88	6.1/8.9	25	63

Patricia L. Teczon 5/5/14
REGISTERED CIVIL ENGINEER DATE

5-5-14
PLANS APPROVAL DATE

REGISTERED PROFESSIONAL ENGINEER Patricia Teczon No. 37294 Exp 6/30/16 CIVIL STATE OF CALIFORNIA

THE STATE OF CALIFORNIA OR ITS OFFICERS OR AGENTS SHALL NOT BE RESPONSIBLE FOR THE ACCURACY OR COMPLETENESS OF SCANNED COPIES OF THIS PLAN SHEET.

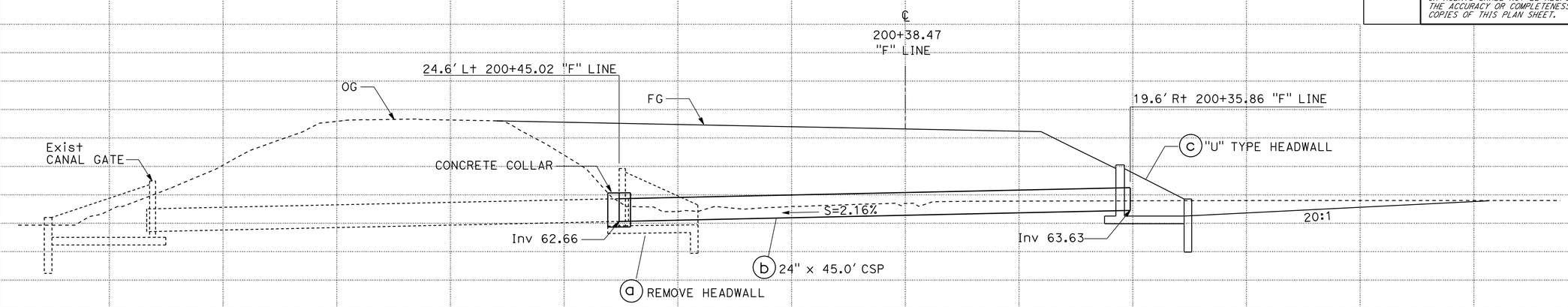

DRAINAGE SYSTEM No. 8
Skew = 09°28'08"

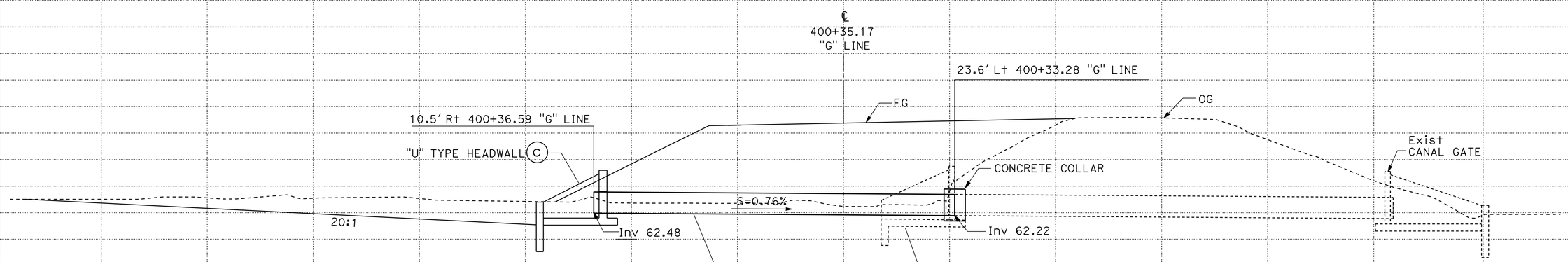

DRAINAGE SYSTEM No. 9
Skew = 06°24'53"

DRAINAGE PROFILES

SCALE: Horiz 1" = 5'
Vert 1" = 5'

DP-5

REVISED BY	DATE REVISED
HI	08/02/12

HAI HOANG — PATRICIA TECZON
CALCULATED-DESIGNED BY — CHECKED BY
FUNCTIONAL SUPERVISOR — CAROLINE REYES

STATE OF CALIFORNIA - DEPARTMENT OF TRANSPORTATION
Caltrans® DESIGN

STATION		TOTAL
CY	Exc	
	Emb	

LAST REVISION 00-00-00 | DATE PLOTTED => 22-MAY-2014 | TIME PLOTTED => 13:25

Dist	COUNTY	ROUTE	POST MILES TOTAL PROJECT	SHEET No.	TOTAL SHEETS
10	SJ	88	6.1/8.9	26	63

Patricia L. Teczon 5/5/14
REGISTERED CIVIL ENGINEER DATE

5-5-14
PLANS APPROVAL DATE

REGISTERED PROFESSIONAL ENGINEER Patricia Teczon No. 37294 Exp 6/30/16 CIVIL STATE OF CALIFORNIA

THE STATE OF CALIFORNIA OR ITS OFFICERS OR AGENTS SHALL NOT BE RESPONSIBLE FOR THE ACCURACY OR COMPLETENESS OF SCANNED COPIES OF THIS PLAN SHEET.

NOTES:

1. WHERE PIPE OF DIFFERENT DIAMENTERS ARE JOINED WITH A CONCRETE COLLAR. "L" SHALL BE THOSE OF THE LARGER PIPE. D=D1 OR D2 WHICHEVER IS GREATER.
2. JOIN PIPES AT INVERTS WHERE THE SLOPE OF THE DOWNSTREAM PIPE. AND JOIN PIPES AT SOFFIT WHERE THE SLOPE OF THE UPSTREAM PIPE IS GREATER THAN THE SLOPE OF THE DOWNSTREAM PIPE.
3. "B" BARS TO BE LOCKED AROUND LONGITUDUNAL REINFORCEMENT. ROTATE BARS AS NECESSARY.
4. CONCRETE COLLAR SHOWN IS ADEQUATE FOR UP TO 40 FEET OF FILL.
5. FOR PIPE SIZE NOT LISTED USE NEXT LARGER.

D	L	T	"a"	"b"
12"	1.0′	4"	@12"	@12"
18"	1.0′	5"	@12"	@12"
24"	1.0′	6"	@12"	@12"
36"	1.5′	10"	@12"	@12"
42"	1.5′	10"	@12"	@12"
48"	1.5′	10"	@12"	@12"
60"	1.75′	11"	@12"	@12"
72"	2.0′	12"	@6"	@6"

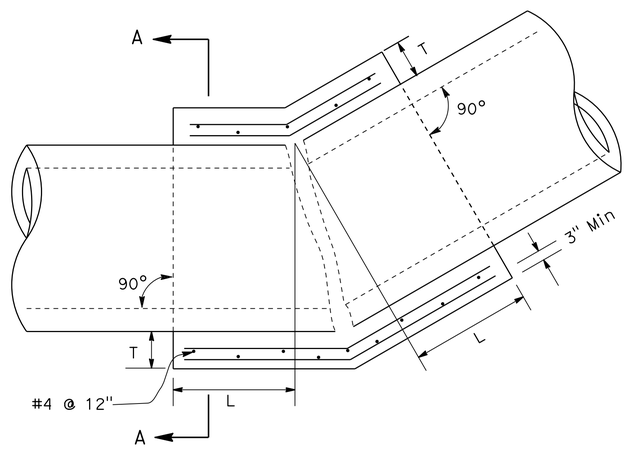

PLAN

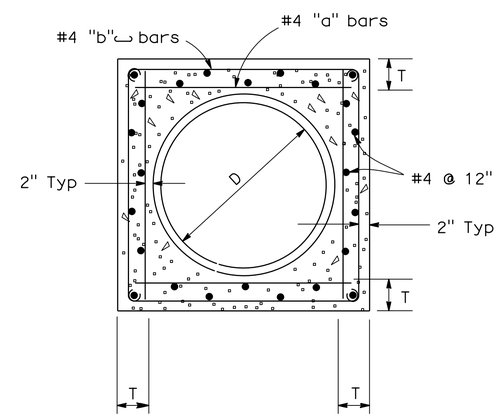

SECTION A-A

CONCRETE COLLAR

DRAINAGE DETAILS
DD-1

STATE OF CALIFORNIA - DEPARTMENT OF TRANSPORTATION
Caltrans DESIGN

FUNCTIONAL SUPERVISOR: CAROLINE REYES
CALCULATED-DESIGNED BY: HAI HOANG
CHECKED BY: PATRICIA TECZON
REVISED BY: HI
DATE REVISED: 07/31/12

LAST REVISION 00-00-00
DATE PLOTTED => 22-MAY-2014
TIME PLOTTED => 13:25

Dist	COUNTY	ROUTE	POST MILES TOTAL PROJECT	SHEET No.	TOTAL SHEETS
10	SJ	88	6.1/8.9	27	63

Patricia L. Teczon 5/5/14
REGISTERED CIVIL ENGINEER DATE

5-5-14
PLANS APPROVAL DATE

REGISTERED PROFESSIONAL ENGINEER Patricia Teczon No. 37294 Exp. 6/30/16 CIVIL STATE OF CALIFORNIA

THE STATE OF CALIFORNIA OR ITS OFFICERS OR AGENTS SHALL NOT BE RESPONSIBLE FOR THE ACCURACY OR COMPLETENESS OF SCANNED COPIES OF THIS PLAN SHEET.

DIMENSIONS AND QUANTITIES
REINFORCED CONCRETE U-HEADWALL

SYMBOL	LANDSIDE HEADWALL LEVEE SLOPE (1 ON 2)					WATERSIDE HEADWALL LEVEE SLOPE (1 ON 3)				
PIPE DIAMETER (D)	12"	15"-18"	24"	30"	36"	12"	15"-18"	24"	30"	36"
H	3'-6"	4'-0"	4'-6"	5'-0"	5'-6"	3'-6"	4'-0"	4'-6"	5'-0"	5'-6"
L	5'-8"	6'-2"	6'-8"	7'-2"	7'-8"	7'-5"	8'-2"	8'-11"	9'-8"	10'-5"
T	0'-8"	0'-8"	0'-8"	0'-8"	0'-8"	0'-8"	0'-8"	0'-8"	0'-8"	0'-8"
E	0'-4"	0'-4"	0'-4"	0'-4"	0'-4"	0'-4"	0'-4"	0'-4"	0'-4"	0'-4"
A	2'-0"	2'-6"	3'-0"	3'-6"	4'-0"	2'-0"	2'-6"	3'-0"	3'-6"	4'-0"
B	2'-0"	2'-6"	3'-0"	3'-6"	4'-0"	3'-0"	3'-6"	4'-0"	4'-6"	5'-0"
C	2'-6"	2'-6"	2'-6"	2'-6"	2'-6"	2'-6"	2'-6"	2'-6"	2'-6"	2'-8"

NOTE: USE #4 REBAR @ 12" O.C. TYPICAL

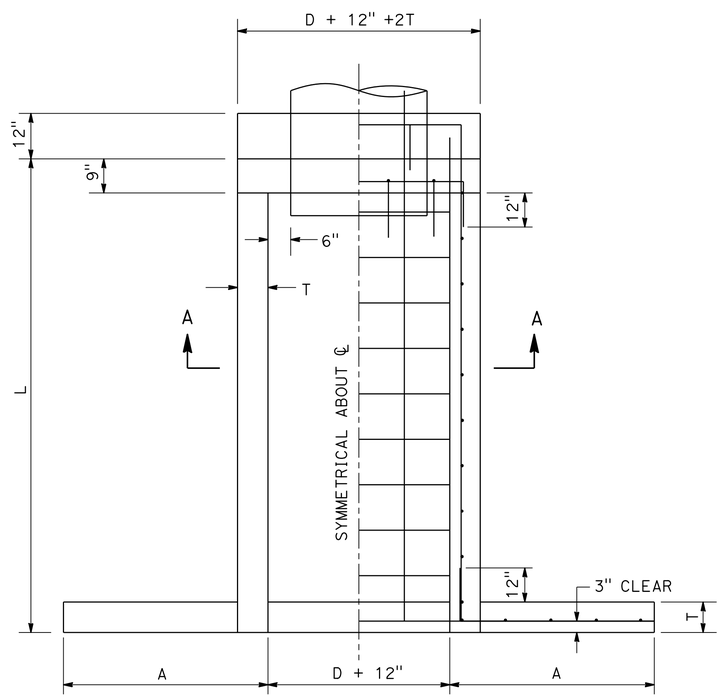

PLAN VIEW

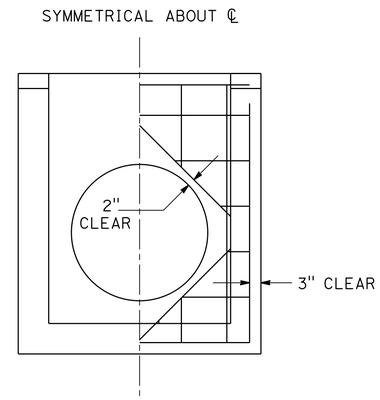

SECTION A-A

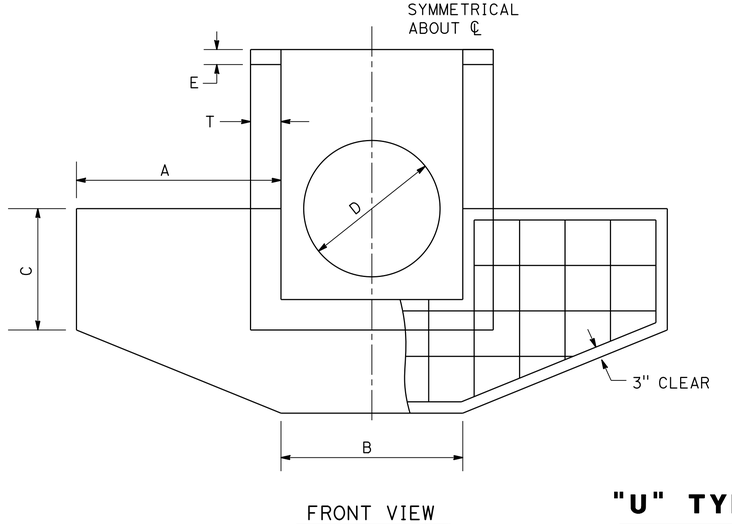

FRONT VIEW

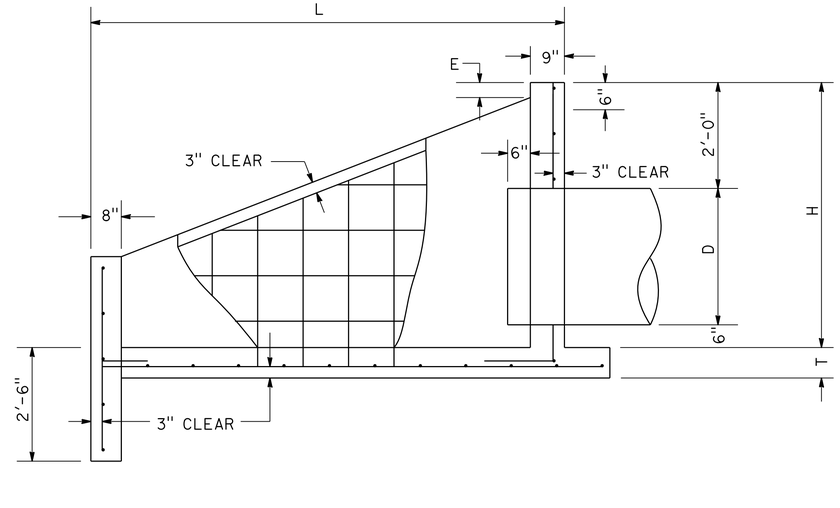

SIDE VIEW

"U" TYPE HEADWALL DETAIL

DRAINAGE DETAILS
NO SCALE

DD-2

STATE OF CALIFORNIA - DEPARTMENT OF TRANSPORTATION
Caltrans® DESIGN

FUNCTIONAL SUPERVISOR: CAROLINE REYES
CALCULATED-DESIGNED BY: INGRID STEWART
CHECKED BY: PATRICIA TECZON
REVISED BY: IS
DATE REVISED: 09/17/12

LAST REVISION 00-00-00
DATE PLOTTED => 22-MAY-2014
TIME PLOTTED => 13:25

Dist	COUNTY	ROUTE	POST MILES TOTAL PROJECT	SHEET No.	TOTAL SHEETS
10	SJ	88	6.1/8.9	28	63

Patricia L. Teczon 5/5/14
REGISTERED CIVIL ENGINEER DATE

5-5-14
PLANS APPROVAL DATE

REGISTERED PROFESSIONAL ENGINEER Patricia Teczon No. 37294 Exp. 6/30/16 CIVIL STATE OF CALIFORNIA

THE STATE OF CALIFORNIA OR ITS OFFICERS OR AGENTS SHALL NOT BE RESPONSIBLE FOR THE ACCURACY OR COMPLETENESS OF SCANNED COPIES OF THIS PLAN SHEET.

NOTES:

1. (N) - FOR INFORMATION ONLY, NOT A SEPARATE PAY ITEM.
2. * - TOTAL INCLUDED IN STRUCTURAL SECTION ITEMS.

ABBREVIATION:

RCP(RGJ) - RCP (RUBBER GASKETED JOINT)

DRAINAGE ITEMS

DRAINAGE SHEET No.	DRAINAGE SYSTEM No. ⬡	DRAINAGE UNIT ○	REMOVE CULVERT	REMOVE BOX CULVERT	REMOVE HEADWALL	REMOVE WINGWALL	24" RCP	36" RCP	30" RCP (CLASS III, RGJ)	24" CSP (0.109" THICK)	48" CSP (0.109" THICK)	24" AFES	36" AFES	STRUCTURAL CONCRETE	MINOR CONCRETE (MINOR STRUCTURE)	CONCRETE BACKFILL (PIPE TRENCH)	HMA (TYPE A)	PIPE JPOINT CLASSIFICATION (N)	MAXIMUM COVER (N)	STRUCTURAL Conc, BOX CULVERT	BAR REINFORCING STEEL	DESCRIPTION	STATION	DRAINAGE SYSTEM No. ⬡	DRAINAGE UNIT ○
			LF	EA	EA	EA	LF			LF		EA		CY	CY	CY	TON			CY	LB				
D-1	1	a			1																	REMOVE HEADWALL	14.8′ L+ 200+37.55 "C" LINE	1	a
		b							31.1									S	4.5′			RCP (RGJ), Conc COLLAR			b
		c													3.3							"U" TYPE HEADWALL	16.2′ R+ 200+38.63 "C" LINE		c
D-1	2	a			1																	REMOVE HEADWALL	21.5′ L+ 200+70.62 "C" LINE	2	a
		b							41.3									S	5.3′			RCP (RGJ), Conc COLLAR			b
		c													3.3							"U" TYPE HEADWALL	17.7′ R+ 200+52.93 "C" LINE		c
D-1	3	a				1																REMOVE WINGWALL		3	a
		b		1																		REMOVE BOX CULVERT			b
		c				1																REMOVE WINGWALL			c
		d											1									36" AFES	18.7′ L+ 353+01.36 "A" LINE		d
		e						39.4								19.9	2.7	S	1.4′			36" RCP			e
		f											1									36"AFES	20.7′ R+ 353+01.36 "A" LINE		f
D-2	4	a				1																REMOVE WINGWALL		4	a
		b		1																		REMOVE BOX CULVERT			b
		c				1																REMOVE WINGWALL			c
		d										1										24" AFES	17.7′ L+ 369+65.51 "A" LINE		d
		e					36.7									13.6	2.4	S	1.1′			24′ RCP			e
		f										1										24" AFES	19.0′ R+ 369+65.51 "A" LINE		f
D-2	5	a	129.9																			REMOVE CULVERT		5	a
		b			1																	REMOVE HEADWALL			b
		c			1																	REMOVE HEADWALL			c
		d												2.7							255.8	TYPE D STRAIGHT WINGWALL	32.8′ L+ 395+10.8 "A" LINE		d
		e															17.8		1.0′	41.5	8,818	DOUBLE RCB			e
		f												2.7							255.8	TYPE D STRAIGHT WINGWALL	33.6′ R+ 395+10.8 "A" LINE		f
D-2	6	a			1																	REMOVE HEADWALL		6	a
		b			1																	REMOVE HEADWALL			b
		c													3.65						3,680	DOUBLE HW	32.5′ L+ 396+58.9 "A" LINE		c
		d									18.4							S				2 - 48" CSP			d
		e									21.0							S				2 - 48" CSP			e
		f													3.65						4,200	DOUBLE HW	32.6′ R+ 396+58.9 "A" LINE		f
D-3	7	a			1																	REMOVE HEADWALL	5.3′ L+ 101+11.58 "E" LINE	7	a
		b								28.6								S				24" CSP, Conc COLLAR			b
		c													2.8							"U" TYPE HEADWALL	18.9′ R+ 100+96.41 "E" LINE		c
D-3	8	a			1																	REMOVE HEADWALL	24.6′ L+ 200+45.02 "F" LINE	8	a
		b								45.0								S				24" CSP, Conc COLLAR			b
		c													2.8							"U" TYPE HEADWALL	19.6′ R+ 200+35.86 "F" LINE		c
D-3	9	a			1																	REMOVE HEADWALL	23.6′ L+ 400+33.28 "G" LINE	9	a
		b								34.0								S				24" CSP			b
		c													2.8							"U" TYPE HEADWALL	10.5′ R+ 400+36.59 "G" LINE		c
			129.9	2	9	4	36.7	39.4	72.4	107.6	39.4	2	2	5.4	22.3	33.5	22.9*			41.5	17,209.6	SHEET TOTAL			

DRAINAGE QUANTITIES DQ-1

REVISED BY	DATE REVISED
IS	05/05/14

INGRID STEWART — PATRICIA TECZON
CALCULATED-DESIGNED BY — CHECKED BY
FUNCTIONAL SUPERVISOR: CAROLINE REYES

STATE OF CALIFORNIA - DEPARTMENT OF TRANSPORTATION
Caltrans® DESIGN

LAST REVISION 00-00-00 | DATE PLOTTED => 22-MAY-2014 | TIME PLOTTED => 13:25

Dist	COUNTY	ROUTE	POST MILES TOTAL PROJECT	SHEET No.	TOTAL SHEETS
10	SJ	88	6.1/8.9	29	63

Patricia L. Teczon 5/5/14
REGISTERED CIVIL ENGINEER DATE

5-5-14
PLANS APPROVAL DATE

REGISTERED PROFESSIONAL ENGINEER Patricia Teczon No. 37294 Exp. 6/30/16 CIVIL STATE OF CALIFORNIA

THE STATE OF CALIFORNIA OR ITS OFFICERS OR AGENTS SHALL NOT BE RESPONSIBLE FOR THE ACCURACY OR COMPLETENESS OF SCANNED COPIES OF THIS PLAN SHEET.

NOTE:

FOR ACCURATE RIGHT OF WAY DATA, CONTACT RIGHT OF WAY ENGINEERING AT THE DISTRICT OFFICE.

ABBREVIATIONS:

AT&T - AMERICAN TELEPHONE AND TELEGRAPH
PG&E - PACIFIC GAS AND ELECTRIC

LEGEND

- Temp FENCE (TYPE ESA)
- UNDERGROUND TELEPHONE (AT&T)
- OVERHEAD TELEPHONE (AT&T)
- UNDERGOUND ELECTRICAL (PG&E)
- OVERHEAD ELECTRICAL (PG&E)
- JOINT OVERHEAD (PG&E & AT&T)
- ABANDONED UTILITY

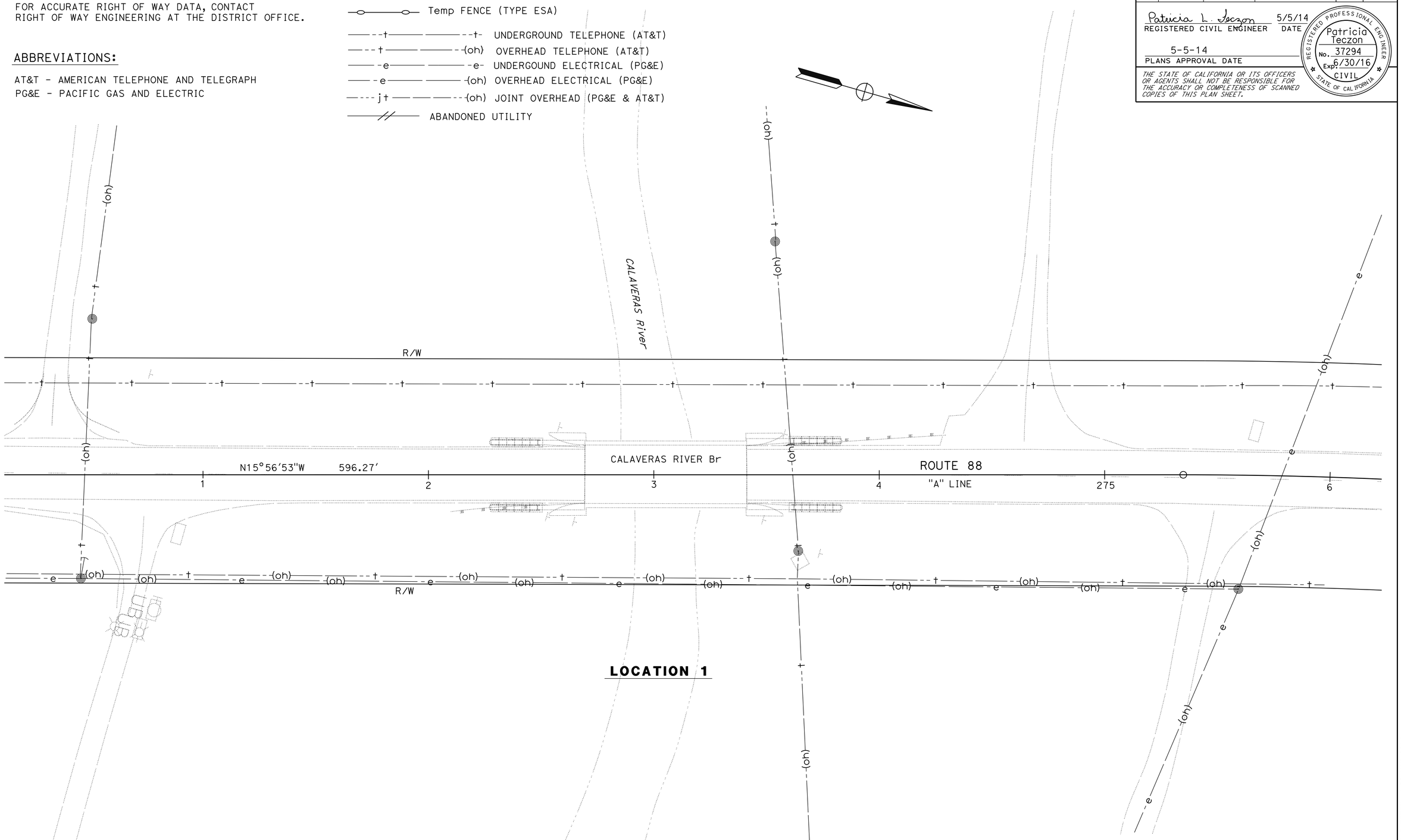

LOCATION 1

APPROVED FOR UTILITY INFORMATION ONLY

UTILITY PLAN

SCALE: 1' = 20'

U-1

STATE OF CALIFORNIA - DEPARTMENT OF TRANSPORTATION
Caltrans® **DESIGN**

FUNCTIONAL SUPERVISOR: CAROLINE REYES
CALCULATED-DESIGNED BY: STEVE LAWRENCE
CHECKED BY: PATRICIA TECZON
REVISED BY: SL
DATE REVISED: 10/01/12

LAST REVISION: 00-00-00
DATE PLOTTED => 22-MAY-2014
TIME PLOTTED => 13:25

Dist	COUNTY	ROUTE	POST MILES TOTAL PROJECT	SHEET No.	TOTAL SHEETS
10	SJ	88	6.1/8.9	30	63

Patricia L. Teczon 5/5/14
REGISTERED CIVIL ENGINEER DATE

5-5-14
PLANS APPROVAL DATE

REGISTERED PROFESSIONAL ENGINEER Patricia Teczon No. 37294 Exp 6/30/16 CIVIL STATE OF CALIFORNIA

THE STATE OF CALIFORNIA OR ITS OFFICERS OR AGENTS SHALL NOT BE RESPONSIBLE FOR THE ACCURACY OR COMPLETENESS OF SCANNED COPIES OF THIS PLAN SHEET.

NOTE:

FOR ACCURATE RIGHT OF WAY DATA, CONTACT RIGHT OF WAY ENGINEERING AT THE DISTRICT OFFICE.

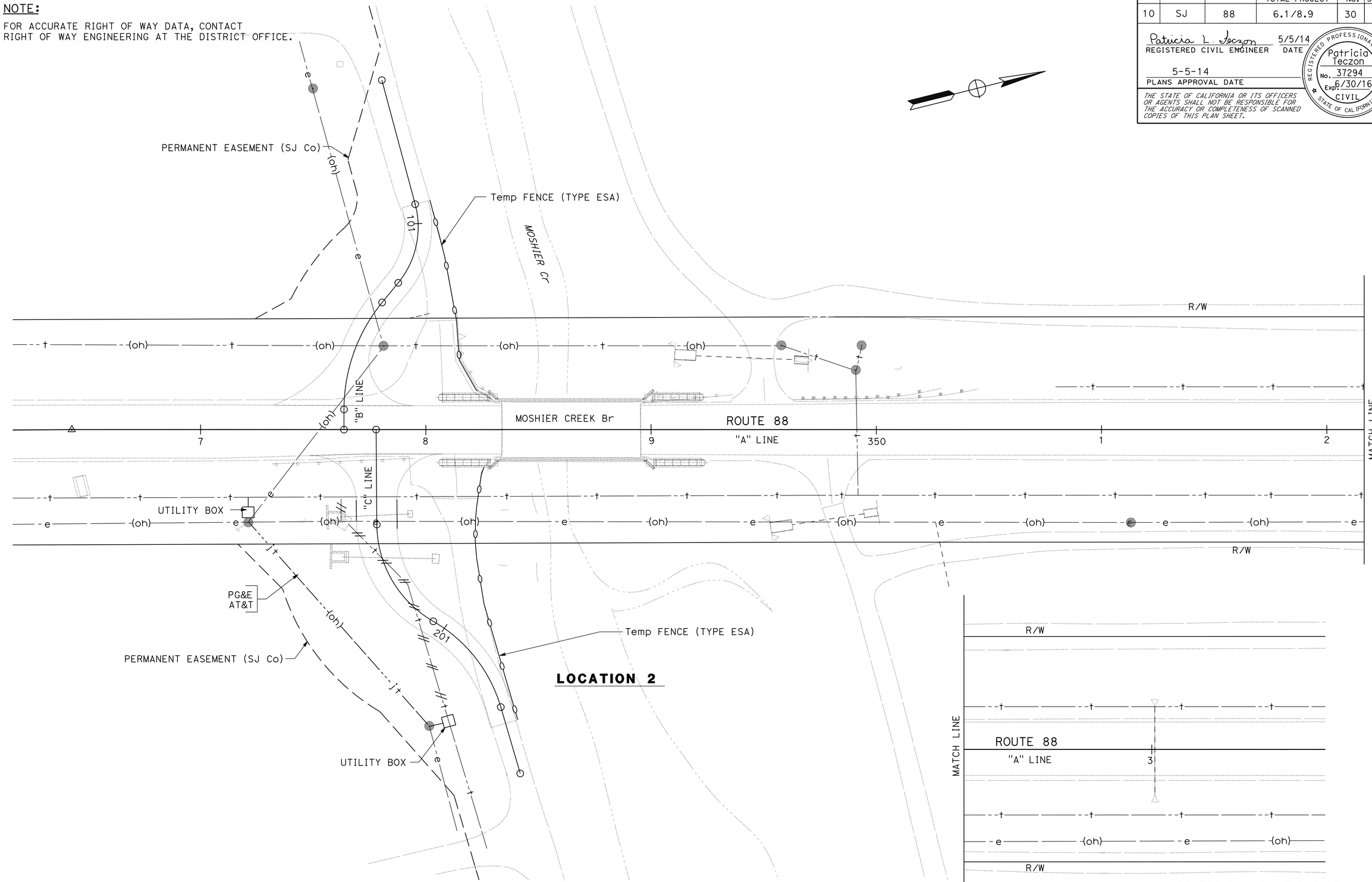

APPROVED FOR UTILITY INFORMATION ONLY

UTILITY PLAN

SCALE: 1' = 20'

U-2

STATE OF CALIFORNIA - DEPARTMENT OF TRANSPORTATION
Caltrans
DESIGN

FUNCTIONAL SUPERVISOR: CAROLINE REYES
CALCULATED-DESIGNED BY: STEVE LAWRENCE
CHECKED BY: PATRICIA TECZON
REVISED BY: SL
DATE REVISED: 02/19/13

LAST REVISION: 00-00-00
DATE PLOTTED => 22-MAY-2014
TIME PLOTTED => 13:25

Dist	COUNTY	ROUTE	POST MILES TOTAL PROJECT	SHEET No.	TOTAL SHEETS
10	SJ	88	6.1/8.9	31	63

Patricia L. Teczon 5/5/14
REGISTERED CIVIL ENGINEER DATE

5-5-14
PLANS APPROVAL DATE

REGISTERED PROFESSIONAL ENGINEER Patricia Teczon No. 37294 Exp. 6/30/16 CIVIL STATE OF CALIFORNIA

THE STATE OF CALIFORNIA OR ITS OFFICERS OR AGENTS SHALL NOT BE RESPONSIBLE FOR THE ACCURACY OR COMPLETENESS OF SCANNED COPIES OF THIS PLAN SHEET.

NOTE:

FOR ACCURATE RIGHT OF WAY DATA, CONTACT RIGHT OF WAY ENGINEERING AT THE DISTRICT OFFICE.

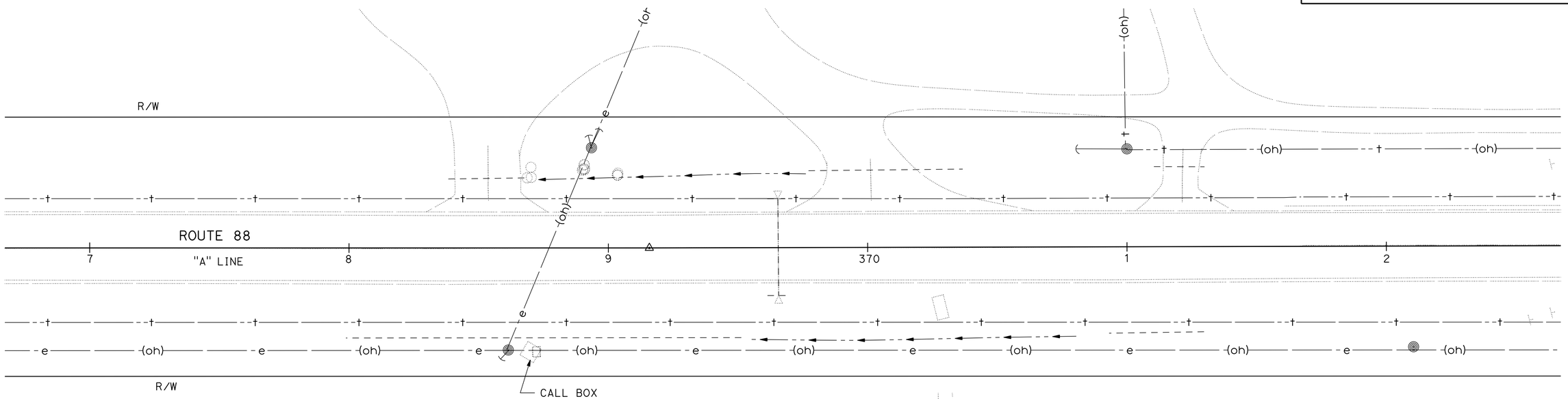

LOCATION 3

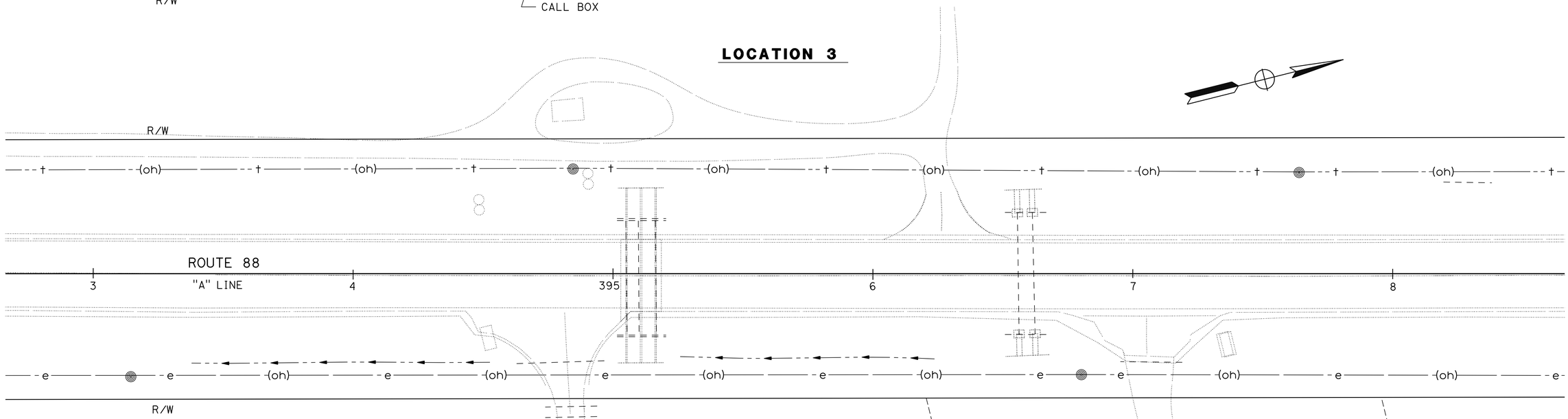

LOCATION 4

APPROVED FOR UTILITY INFORMATION ONLY

UTILITY PLAN

SCALE: 1' = 20'

U-3

STATE OF CALIFORNIA - DEPARTMENT OF TRANSPORTATION
Caltrans® **DESIGN**

FUNCTIONAL SUPERVISOR: CAROLINE REYES

CALCULATED-DESIGNED BY: STEVE LAWRENCE
CHECKED BY: PATRICIA TECZON

REVISED BY: SL
DATE REVISED: 09/27/12

LAST REVISION 00-00-00
DATE PLOTTED => 22-MAY-2014
TIME PLOTTED => 13:25

Dist	COUNTY	ROUTE	POST MILES TOTAL PROJECT	SHEET No.	TOTAL SHEETS
10	SJ	88	6.1/8.9	32	63

Patricia L. Teczon 5/5/14
REGISTERED CIVIL ENGINEER DATE

5-5-14
PLANS APPROVAL DATE

REGISTERED PROFESSIONAL ENGINEER Patricia Teczon No. 37294 Exp 6/30/16 CIVIL STATE OF CALIFORNIA

THE STATE OF CALIFORNIA OR ITS OFFICERS OR AGENTS SHALL NOT BE RESPONSIBLE FOR THE ACCURACY OR COMPLETENESS OF SCANNED COPIES OF THIS PLAN SHEET.

NOTE:

FOR ACCURATE RIGHT OF WAY DATA, CONTACT RIGHT OF WAY ENGINEERING AT THE DISTRICT OFFICE.

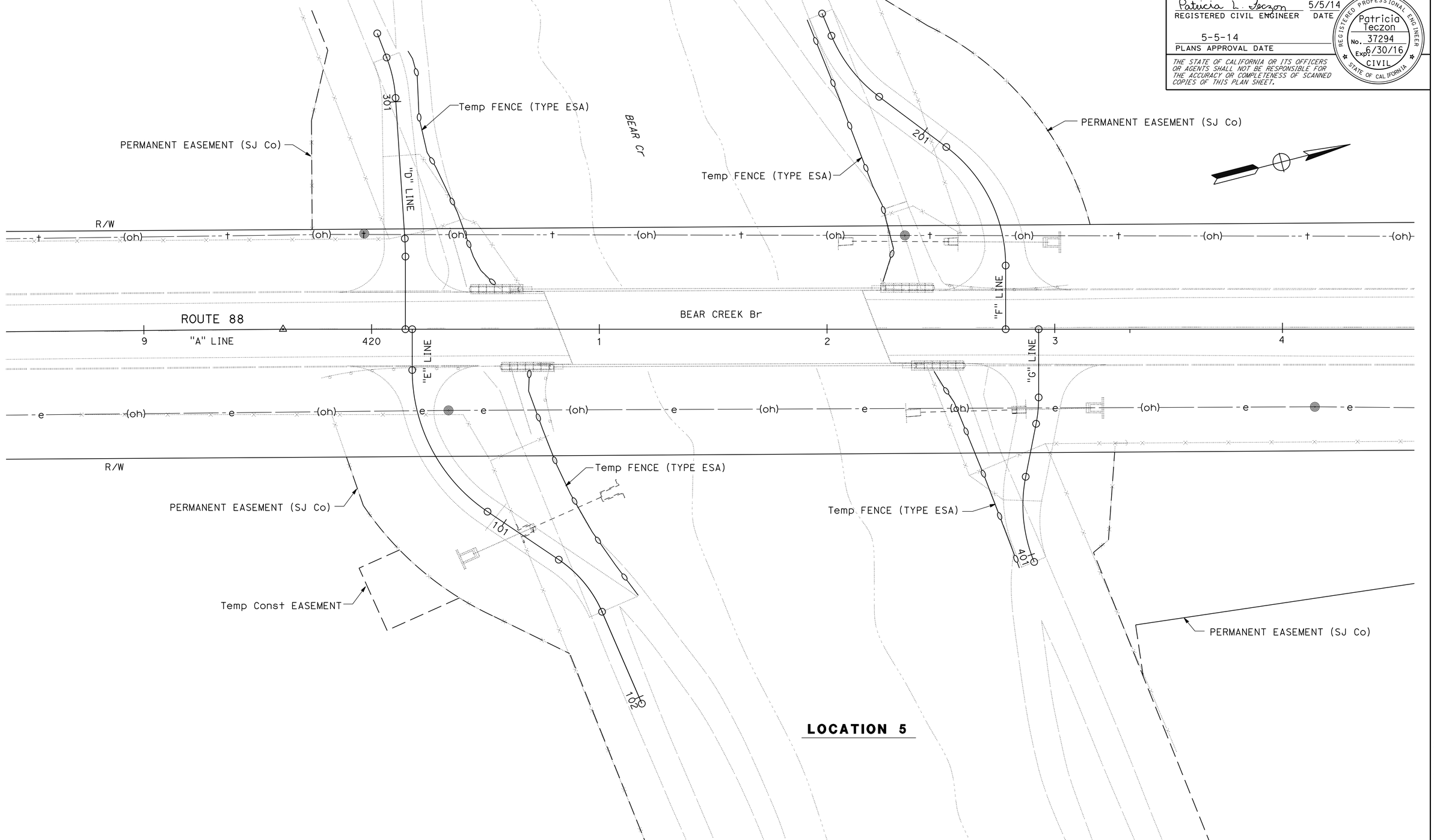

LOCATION 5

APPROVED FOR UTILITY INFORMATION ONLY

UTILITY PLAN

SCALE: 1' = 20'

U-4

STATE OF CALIFORNIA - DEPARTMENT OF TRANSPORTATION
Caltrans® **DESIGN**

FUNCTIONAL SUPERVISOR: CAROLINE REYES

CALCULATED-DESIGNED BY: STEVE LAWRENCE
CHECKED BY: PATRICIA TECZON

REVISED BY: SL
DATE REVISED: 02/19/13

LAST REVISION 00-00-00
DATE PLOTTED => 22-MAY-2014
TIME PLOTTED => 13:25

Dist	COUNTY	ROUTE	POST MILES TOTAL PROJECT	SHEET No.	TOTAL SHEETS
10	SJ	88	6.1/8.9	33	63

REGISTERED CIVIL ENGINEER 5-5-14 DATE

5-5-14
PLANS APPROVAL DATE

REGISTERED PROFESSIONAL ENGINEER HUE NGUYEN No. 74484 Exp. 12/31/15 CIVIL STATE OF CALIFORNIA

THE STATE OF CALIFORNIA OR ITS OFFICERS OR AGENTS SHALL NOT BE RESPONSIBLE FOR THE ACCURACY OR COMPLETENESS OF SCANNED COPIES OF THIS PLAN SHEET.

STATIONARY MOUNTED CONSTRUCTION AREA SIGNS

SIGN (X)	SIGN CODE FEDERAL	SIGN CODE CALIFORNIA	PANEL SIZE	SIGN MESSAGE	NUMBER OF POSTS AND SIZE	NUMBER OF SIGNS
(A)	W20-1		48" x 48"	ROAD WORK AHEAD	1 - 6" x 6"	4
(B)	G20-2		36" x 18"	END ROAD WORK	1 - 4" x 4"	2
(C)	W20-1		36" x 36"	ROAD WORK AHEAD	1 - 4" x 6"	2
(D)	G20-1		60" x 36"	ROAD WORK NEXT XX MILES	2 - 4" x 6"	2
(E)		C40	72" x 36"	TRAFFIC FINES DOUBLED IN CONSTRUCTION ZONES	2 - 4" x 6"	2
(F)		CPFIS	90" x 60"	CONSTRUCTION PROJECT FUNDING INFORMATION SIGN	2 - 6" x 6"	2

NOTES:

1. SIGN LOCATIONS SHOWN ARE APPROXIMATE. EXACT LOCATIONS WILL BE DETERMINED BY THE ENGINEER.
2. SEE TH SHEETS FOR ADDITIONAL CONSTRUCTION AREA SIGNS.

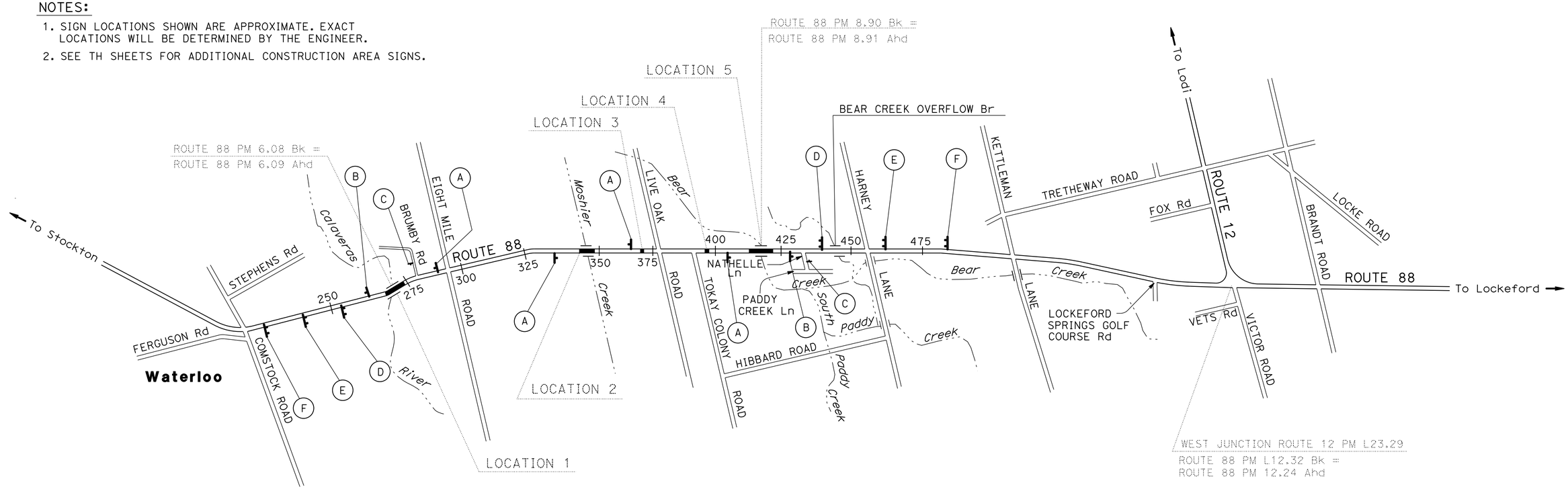

APPROVED FOR CONSTRUCTION AREA SIGN WORK ONLY

CONSTRUCTION AREA SIGNS

NO SCALE

CS-1

REVISED BY	RT
DATE REVISED	09/27/12
	RT
	08/09/12
CALCULATED-DESIGNED BY	RAJINI TEKALKOTE
CHECKED BY	HUE NGUYEN
FUNCTIONAL SUPERVISOR	MOHAMMED QATAMI

STATE OF CALIFORNIA - DEPARTMENT OF TRANSPORTATION

Caltrans® **TRAFFIC DESIGN**

LAST REVISION 00-00-00 | DATE PLOTTED => 22-MAY-2014 | TIME PLOTTED => 13:25

Dist	COUNTY	ROUTE	POST MILES TOTAL PROJECT	SHEET No.	TOTAL SHEETS
10	SJ	88	6.1/8.9	34	63

REGISTERED CIVIL ENGINEER 5-5-14 DATE

5-5-14
PLANS APPROVAL DATE

REGISTERED PROFESSIONAL ENGINEER HUE NGUYEN No. 74484 Exp. 12/31/15 CIVIL STATE OF CALIFORNIA

THE STATE OF CALIFORNIA OR ITS OFFICERS OR AGENTS SHALL NOT BE RESPONSIBLE FOR THE ACCURACY OR COMPLETENESS OF SCANNED COPIES OF THIS PLAN SHEET.

LEGEND:

- TEMPORARY RAILING (TYPE K)
- CRASH CUSHION (QUADGUARD)
- REMOVE YELLOW THERMOPLASTIC TRAFFIC STRIPE DETAIL No. (HAZARDOUS WASTE)
- REMOVE THERMOPLASTIC TRAFFIC STRIPE DETAIL No.
- TEMPORARY TRAFFIC STRIPE (TAPE) DETAIL No.
- CONSTRUCTION AREA SIGN No.
- CONSTRUCTION AREA SIGN (ONE-POST)
- CHANNELIZERS (SURFACE MOUNTED)
- TEMPORARY CRASH CUSHION (ARRAY "TS14")
- PORTABLE CHANGEABLE MESSAGE SIGN (PCMS)
- TEMPORARY CONSTRUCTION AREA SIGN TO REMAIN IN PLACE FROM PREVIOUS STAGE
- OBJECT MARKER (TYPE P)

NOTES:

1. EXACT LOCATIONS OF CONSTRUCTION AREA SIGNS WILL BE DETERMINED BY THE ENGINEER.
2. SEE CONSTRUCTION AREA SIGN PLAN SHEET FOR ADDITIONAL SIGNS.
3. COVER ALL CONFLICTING ROADSIDE SIGNS.
4. FOR ACCURATE RIGHT OF WAY DATA, CONTACT RIGHT OF WAY ENGINEERING AT THE DISTRICT OFFICE.
5. CONTRACTOR SHALL MAINTAIN ACCESS TO ALL DRIVEWAYS AT ALL TIMES.

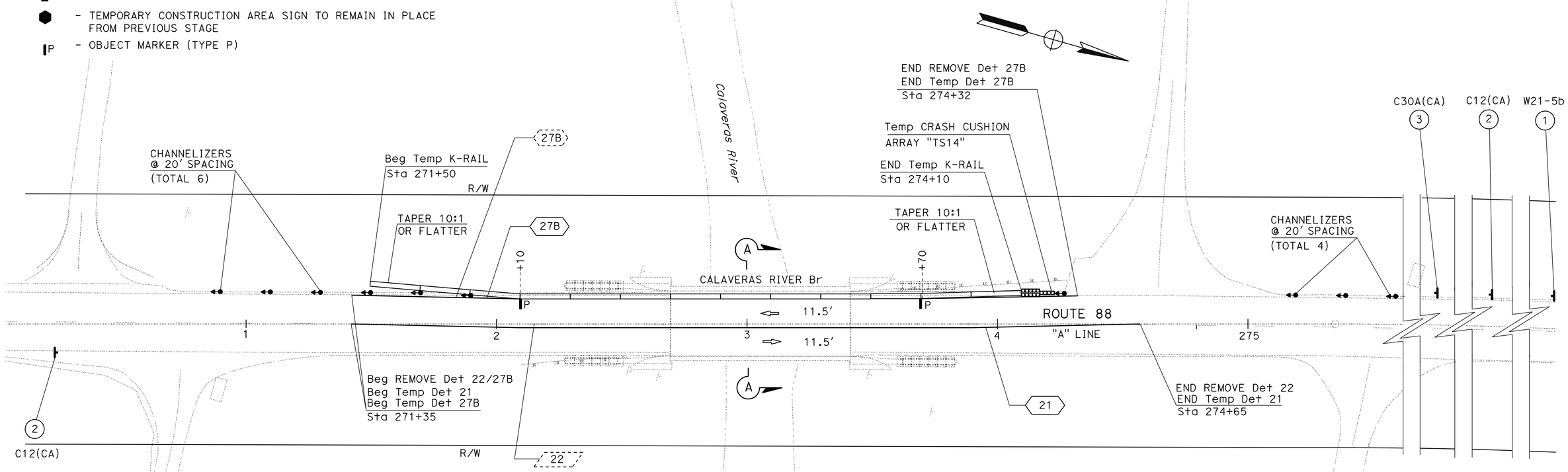

LOCATION 1

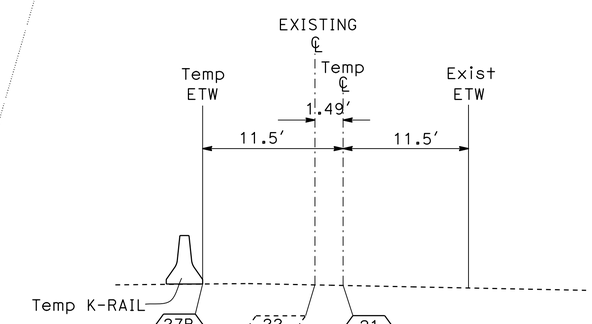

ROUTE 88
SECTION A-A
NO SCALE

TRAFFIC HANDLING PLAN (CALAVERAS RIVER BRIDGE STAGE 1)

SCALE: 1' = 20'

TH-1

APPROVED FOR TRAFFIC HANDLING WORK ONLY

STATE OF CALIFORNIA - DEPARTMENT OF TRANSPORTATION
Caltrans® **TRAFFIC DESIGN**

FUNCTIONAL SUPERVISOR: MOHAMMED QATAMI
CALCULATED-DESIGNED BY: RAJINI TEKALKOTE
CHECKED BY: HUE NGUYEN
REVISED BY: RT
DATE REVISED: 05/05/14

LAST REVISION 00-00-00
DATE PLOTTED => 22-MAY-2014
TIME PLOTTED => 13:25

Dist	COUNTY	ROUTE	POST MILES TOTAL PROJECT	SHEET No.	TOTAL SHEETS
10	SJ	88	6.1/8.9	35	63

REGISTERED CIVIL ENGINEER 5-5-14 DATE

5-5-14
PLANS APPROVAL DATE

REGISTERED PROFESSIONAL ENGINEER HUE NGUYEN No. 74484 Exp. 12/31/15 CIVIL STATE OF CALIFORNIA

THE STATE OF CALIFORNIA OR ITS OFFICERS OR AGENTS SHALL NOT BE RESPONSIBLE FOR THE ACCURACY OR COMPLETENESS OF SCANNED COPIES OF THIS PLAN SHEET.

NOTE:

FOR ACCURATE RIGHT OF WAY DATA, CONTACT RIGHT OF WAY ENGINEERING AT THE DISTRICT OFFICE.

ROUTE 88
SECTION B-B
NO SCALE

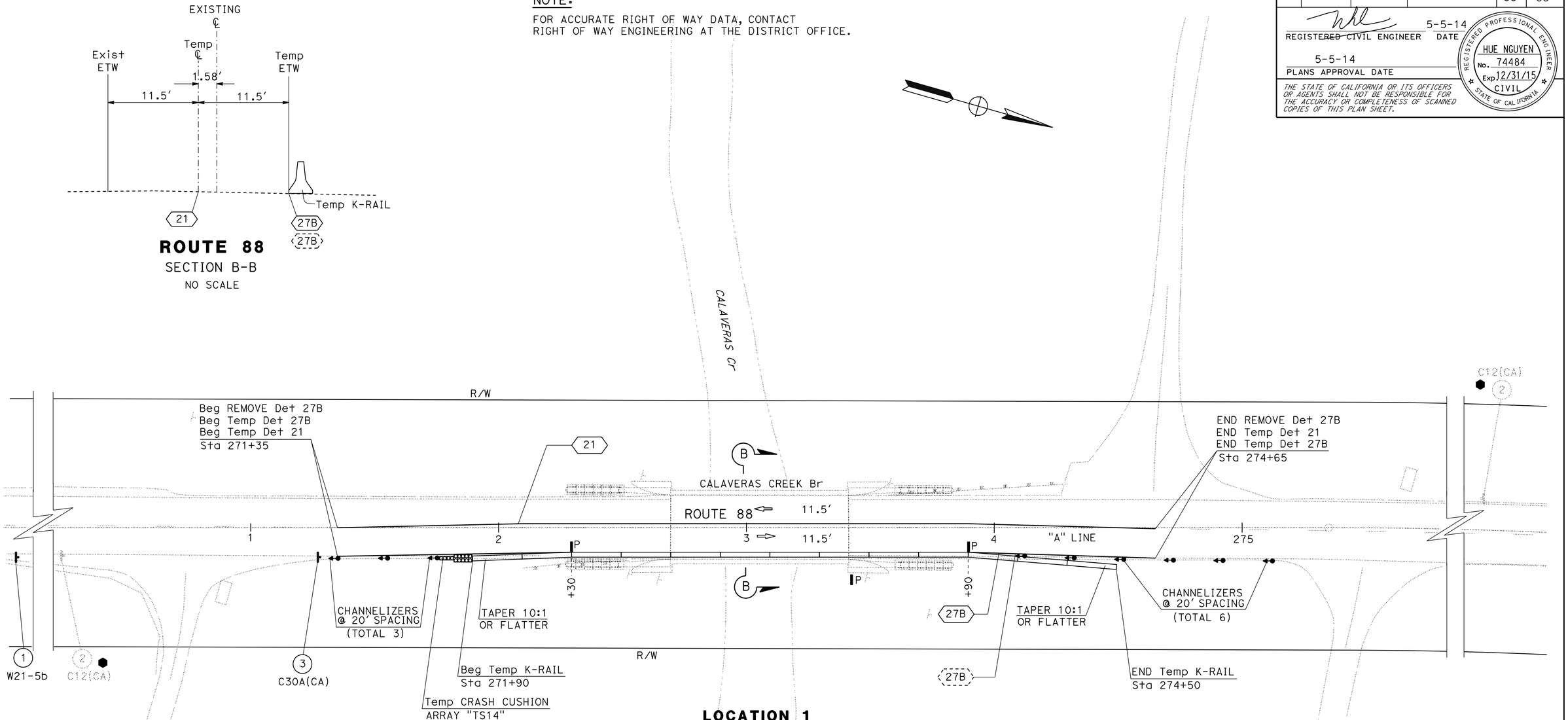

LOCATION 1

TRAFFIC HANDLING PLAN (CALAVERAS RIVER BRIDGE STAGE 2)

SCALE: 1′ = 20′ **TH-2**

APPROVED FOR TRAFFIC HANDLING WORK ONLY

REVISED BY	DATE REVISED
RT	05/05/14

CALCULATED-DESIGNED BY: RAJINI TEKALKOTE
CHECKED BY: HUE NGUYEN
FUNCTIONAL SUPERVISOR: MOHAMMED QATAMI

STATE OF CALIFORNIA - DEPARTMENT OF TRANSPORTATION
Caltrans® **TRAFFIC DESIGN**

LAST REVISION 00-00-00
DATE PLOTTED => 22-MAY-2014
TIME PLOTTED => 13:25

Dist	COUNTY	ROUTE	POST MILES TOTAL PROJECT	SHEET No.	TOTAL SHEETS
10	SJ	88	6.1/8.9	36	63

REGISTERED CIVIL ENGINEER 5-5-14 DATE

5-5-14
PLANS APPROVAL DATE

REGISTERED PROFESSIONAL ENGINEER HUE NGUYEN No. 74484 Exp. 12/31/15 CIVIL STATE OF CALIFORNIA

THE STATE OF CALIFORNIA OR ITS OFFICERS OR AGENTS SHALL NOT BE RESPONSIBLE FOR THE ACCURACY OR COMPLETENESS OF SCANNED COPIES OF THIS PLAN SHEET.

NOTES:

1. FOR ACCURATE RIGHT OF WAY DATA, CONTACT RIGHT OF WAY ENGINEERING AT THE DISTRICT OFFICE.
2. PLACE PCMS A & B PRIOR TO CLOSURE WITH THE FOLLOWING MESSAGE:

ONE LANE AHEAD	→	FROM 0/00 THRU 0/00

3. FOR ONE LANE TRAFFIC CONTROL REFER TO STANDARD PLAN T13.

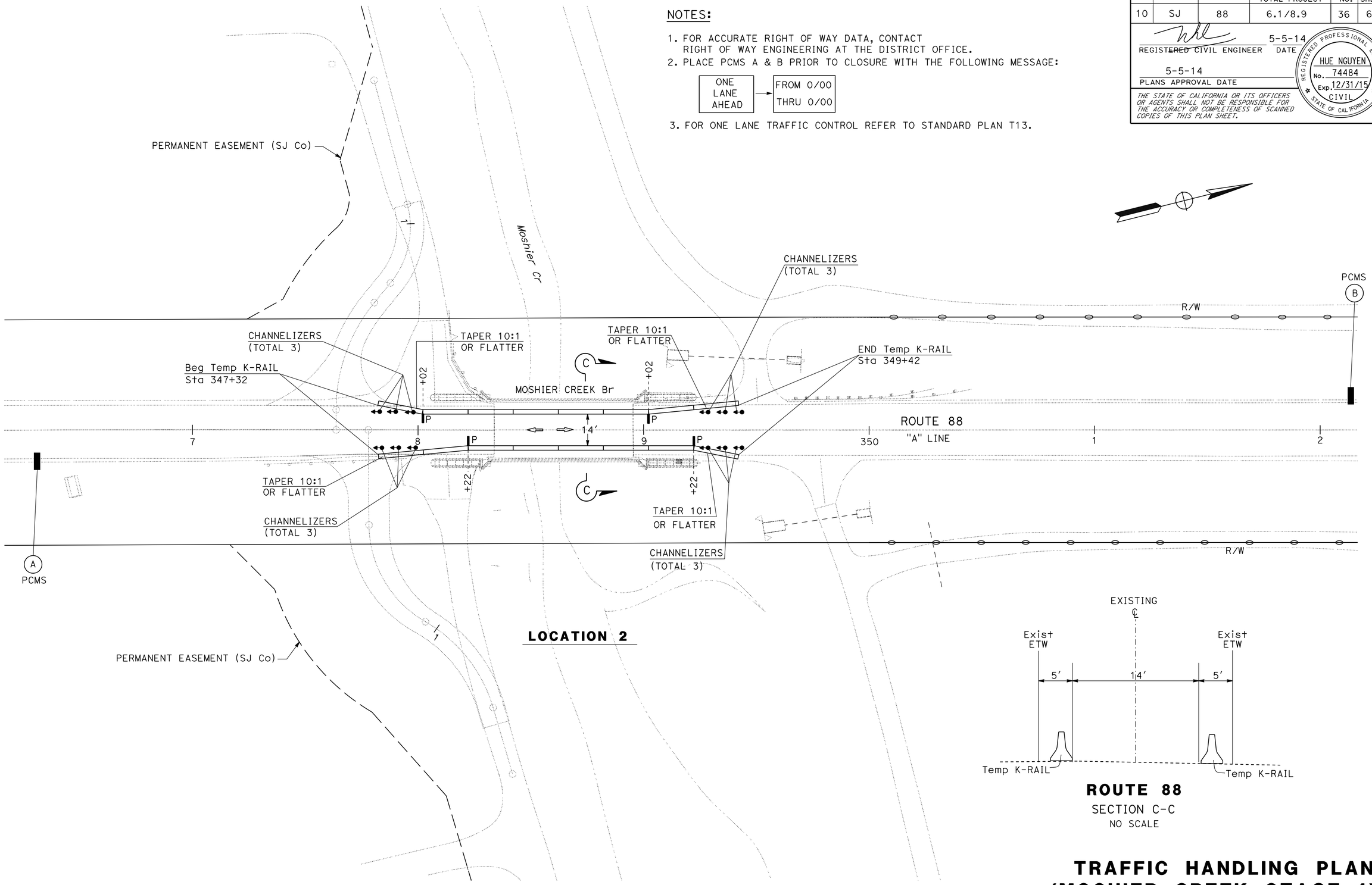

ROUTE 88
SECTION C-C
NO SCALE

TRAFFIC HANDLING PLAN (MOSHIER CREEK STAGE 1)

SCALE: 1" = 20'

TH-3

APPROVED FOR TRAFFIC HANDLING WORK ONLY

STATE OF CALIFORNIA - DEPARTMENT OF TRANSPORTATION
Caltrans
TRAFFIC DESIGN

FUNCTIONAL SUPERVISOR: MOHAMMED QATAMI
CALCULATED-DESIGNED BY: RAJINI TEKALKOTE
CHECKED BY: HUE NGUYEN
REVISED BY: RT
DATE REVISED: 05/05/14

LAST REVISION 00-00-00
DATE PLOTTED => 22-MAY-2014
TIME PLOTTED => 13:25

Dist	COUNTY	ROUTE	POST MILES TOTAL PROJECT	SHEET No.	TOTAL SHEETS
10	SJ	88	6.1/8.9	37	63

REGISTERED CIVIL ENGINEER 5-5-14 DATE

5-5-14
PLANS APPROVAL DATE

REGISTERED PROFESSIONAL ENGINEER HUE NGUYEN No. 74484 Exp. 12/31/15 CIVIL STATE OF CALIFORNIA

THE STATE OF CALIFORNIA OR ITS OFFICERS OR AGENTS SHALL NOT BE RESPONSIBLE FOR THE ACCURACY OR COMPLETENESS OF SCANNED COPIES OF THIS PLAN SHEET.

CONSTRUCTION AREA SIGNS (STATIONARY MOUNTED)

SHEET No.	SIGN No.	SIGN CODE FEDERAL	SIGN CODE CALIFORNIA	PANEL SIZE	SIGN MESSAGE	No. OF POST AND SIZE	No. OF SIGN EA
TH-1 TH-2	1	W21-5b		36" x 36"	RIGHT SHOULDER CLOSED 1000 FT	1 - 4" x 6"	2
	2		C12	36" x 36"	NARROW LANE	1 - 4" x 6"	2
	3		C30A	36" x 36"	SHOULDER CLOSED	1 - 4" x 6"	2
						TOTAL	6

NOTES:

1. EXACT LOCATIONS OF CONSTRUCTION AREA SIGNS WILL BE DETERMINED BY THE ENGINEER.
2. FOR ADDITIONAL CONSTRUCTION AREA SIGNS, SEE SHEET CS-1.
3. ALL EXISTING CONSTRUCTION AREA SIGNS SHALL REMAIN IN PLACE UNLESS DETERMINED OTHERWISE BY THE ENGINEER.

TEMPORARY PAVEMENT DELINEATION

SHEET No.	STAGE No.	STATION LIMITS	REMOVE THERMOPLASTIC TRAFFIC STRIPE HAZARDOUS WASTE 4" YELLOW DETAIL 22	REMOVE THERMOPLASTIC TRAFFIC STRIPE 4" WHITE DETAIL 27B	REMOVE PAVEMENT MARKER	TEMPORARY TRAFFIC STRIPE TAPE 4" YELLOW DETAIL 21	TEMPORARY TRAFFIC STRIPE TAPE 4" WHITE DETAIL 27B	REMOVE TAPE TRAFFIC STRIPE (N)	TEMPORARY RAILING (TYPE K)	TEMPORARY CRASH CUSHION MODULE ARRAY "TS14"	CHANNELIZER (SURFACE-MOUNTED)
			LF		EA	LF		LF	LF	EA	EA
TH-1	1	Sta 271+35 TO Sta 274+65	660	297	30	330	297	627	260	14	10
TH-2	2	Sta 271+35 TO Sta 274+65		330		330	330	660	260	14	9
TH-3	1	Sta 347+82 TO Sta 349+42							320		12
		SUBTOTAL	660	627	30	660	627		840	28	31
		TOTAL	660	627	30	1287			840	28	31

(N) - NOT A SEPARATE PAY ITEM, FOR INFORMATION ONLY.

TRAFFIC HANDLING QUANTITIES
THQ-1

STATE OF CALIFORNIA - DEPARTMENT OF TRANSPORTATION
Caltrans® TRAFFIC DESIGN

FUNCTIONAL SUPERVISOR: MOHAMMED QATAMI
CALCULATED-DESIGNED BY: RAJINI TEKALKOTE
CHECKED BY: HUE NGUYEN
REVISED BY: RT
DATE REVISED: 05/05/14

LAST REVISION 00-00-00
DATE PLOTTED => 22-MAY-2014
TIME PLOTTED => 13:25

Dist	COUNTY	ROUTE	POST MILES TOTAL PROJECT	SHEET No.	TOTAL SHEETS
10	SJ	88	6.1/8.9	38	63

REGISTERED CIVIL ENGINEER 5-5-14 DATE

5-5-14
PLANS APPROVAL DATE

REGISTERED PROFESSIONAL ENGINEER HUE NGUYEN No. 74484 Exp. 12/31/15 CIVIL STATE OF CALIFORNIA

THE STATE OF CALIFORNIA OR ITS OFFICERS OR AGENTS SHALL NOT BE RESPONSIBLE FOR THE ACCURACY OR COMPLETENESS OF SCANNED COPIES OF THIS PLAN SHEET.

NOTE:

FOR ACCURATE RIGHT OF WAY DATA, CONTACT RIGHT OF WAY ENGINEERING AT THE DISTRICT OFFICE.

LEGEND:

XX - THERMOPLASTIC TRAFFIC STRIPE DETAIL No. (SPRAYABLE)

XX - ROADSIDE SIGN No.

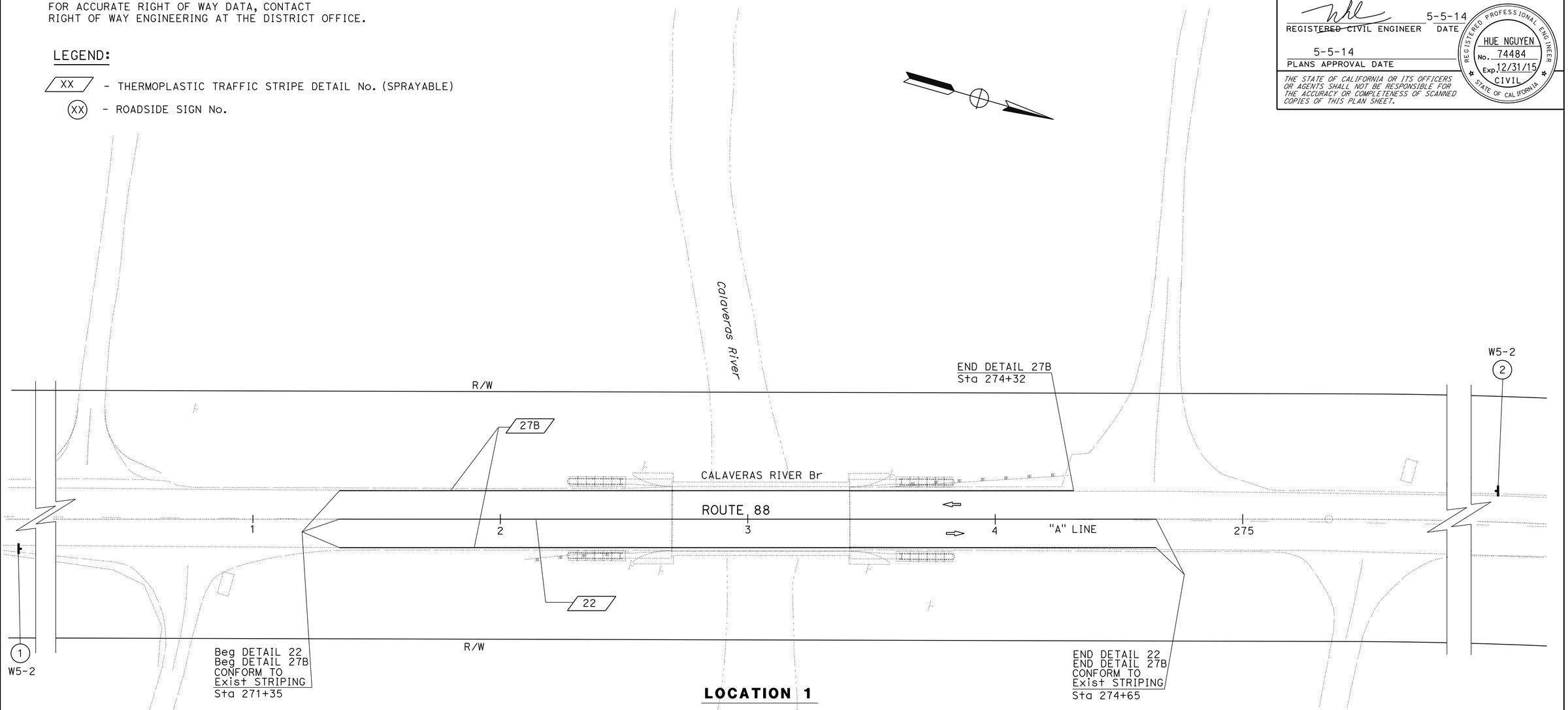

PAVEMENT DELINEATION AND SIGN PLAN (CALAVERAS RIVER BRIDGE)

APPROVED FOR PAVEMENT DELINEATION AND SIGN WORK ONLY

SCALE: 1' = 20'

PD-1

RT	05/05/14
REVISED BY	DATE REVISED
RAJINI TEKALKOTE	HUE NGUYEN
CALCULATED-DESIGNED BY	CHECKED BY
FUNCTIONAL SUPERVISOR	MOHAMMED QATAMI

STATE OF CALIFORNIA - DEPARTMENT OF TRANSPORTATION
Caltrans
TRAFFIC DESIGN

LAST REVISION 00-00-00
DATE PLOTTED => 22-MAY-2014
TIME PLOTTED => 13:25

Dist	COUNTY	ROUTE	POST MILES TOTAL PROJECT	SHEET No.	TOTAL SHEETS
10	SJ	88	6.1/8.9	39	63

REGISTERED CIVIL ENGINEER 5-5-14 DATE

5-5-14
PLANS APPROVAL DATE

REGISTERED PROFESSIONAL ENGINEER HUE NGUYEN No. 74484 Exp. 12/31/15 CIVIL STATE OF CALIFORNIA

THE STATE OF CALIFORNIA OR ITS OFFICERS OR AGENTS SHALL NOT BE RESPONSIBLE FOR THE ACCURACY OR COMPLETENESS OF SCANNED COPIES OF THIS PLAN SHEET.

PAVEMENT DELINEATION ITEMS

SHEET No.	STATION LIMITS	DETAIL No.	PAVEMENT MARKER (RETROREFLECTIVE)	THERMOPLASTIC TRAFFIC STRIPE (SPRAYABLE)	
			TYPE D	4" SOLID YELLOW	4" SOLID WHITE
			EA	LF	
PD-1	Sta 271+35 TO Sta 274+65	22	30	330	
		27B			627
SUBTOTAL			30	330	627
TOTAL			30	957	

ROADSIDE SIGN ITEMS

SIGN No. ⊗	SIGN CODE		SIGN MESSAGE	PANEL SIZE	BACKGROUND		LEGEND		GRAFFITI FLOW		FURNISH SINGLE SHEET ALUMINIUM SIGN	ROADSIDE SIGN ONE-POST
	FEDERAL	CALIFORNIA			SHEETING COLOR	RETROREFLECTIVITY ASTM TYPE	SHEETING COLOR	RETROREFLECTIVITY ASTM TYPE	STANDARD	PREMIUM	UNFRAMED 0.063"	
											SQFT	EA
1	W5-2		NARROW BRIDGE	36" x 36"	YELLOW	IV	BLACK			X	9	1
2	W5-2		NARROW BRIDGE	36" x 36"	YELLOW	IV	BLACK			X	9	1
TOTAL											18	2

PAVEMENT DELINEATION AND SIGN QUANTITIES

PDQ-1

STATE OF CALIFORNIA - DEPARTMENT OF TRANSPORTATION
Caltrans® TRAFFIC DESIGN

FUNCTIONAL SUPERVISOR: MOHAMMED QATAMI
CALCULATED-DESIGNED BY: RAJINI TEKALKOTE
CHECKED BY: HUE NGUYEN
REVISED BY: RT
DATE REVISED: 05/05/124

LAST REVISION 00-00-00
DATE PLOTTED => 22-MAY-2014
TIME PLOTTED => 13:25

Dist	COUNTY	ROUTE	POST MILES TOTAL PROJECT	SHEET No.	TOTAL SHEETS
10	SJ	88	6.1/8.9	40	63

Patricia L. Teczon 5/5/14
REGISTERED CIVIL ENGINEER DATE

5-5-14
PLANS APPROVAL DATE

REGISTERED PROFESSIONAL ENGINEER Patricia Teczon No. 37294 Exp. 6/30/16 CIVIL STATE OF CALIFORNIA

THE STATE OF CALIFORNIA OR ITS OFFICERS OR AGENTS SHALL NOT BE RESPONSIBLE FOR THE ACCURACY OR COMPLETENESS OF SCANNED COPIES OF THIS PLAN SHEET.

METAL BEAM GUARD RAILING ITEMS

LOCATION No.	STATION TO STATION	SIDE	MGS	REMOVE GUARD-RAIL	ALTERNATIVE IN-LINE TERMINAL SYSTEM	CRASH CUSHION (QUADGUARD MODEL QS2406Y)	ALTERNATIVE FLARED TERMINAL SYSTEM	(N) REMOVE CABLE ANCHOR TEMINAL SYSTEM	TREATED WOOD WASTE	MGS LAYOUT
			LF	LF	EA	EA	EA	EA	LB	
1	"A" LINE 272+10.0 TO 272+50.0	R+		40				1	477	
	"A" LINE 273+57.4 TO 274+19.9	L+		62.5				1	749	
	"A" LINE 272+30.0 TO 273+80.0	R+/L+				4				
2	"A" LINE 347+31.8 TO 347+81.8	R+		50				1	613	
	"A" LINE 348+96.0 TO 349+33.5	L+		37.5				1	477	
	"A" LINE 349+62.8 TO 350+25.3	L+		75				1	749	
	"A" LINE 349+62.8 TO 350+62.8	L+	12.5		1		1			11H
	"A" LINE 348+10.0 TO 349+25.0	R+/L+				4				
5	"A" LINE 419+77.6 TO 420+40.1	R+		62.5				1	749	
	"A" LINE 420+78.6 TO 420+80.0	R+		25				1	341	
	"A" LINE 422+52.2 TO 423+02.2	L+		50				1	613	
	"A" LINE 420+45.0 TO 422+65.0	R+/L+				4				
TOTAL			12.5	402.5	1	12	1		4768	

EARTHWORK SUMMARY

LOCATION No.	LOCATION STATION TO STATION	ROADWAY EXCAVATION	ROADWAY EMBANKMENT (N)	IMPORTED BORROW
		CY	CY	CY
2	"B" LINE 100+10.6 TO 101+08.7	16	181	
	"C" LINE 200+11.8 TO 201+51.4	14	528	
5	"D" LINE 300+15.9 TO 301+19.9	12	244	
	"E" LINE 100+15.8 TO 101+59.1	17	874	
	"F" LINE 200+16.9 TO 201+70.1	18	867	
	"G" LINE 400+15.3 TO 401+03.4	18	245	
TOTAL		95		2849

FENCE ITEMS

LOCATION No.	LAYOUT SHEET No.	STATION TO STATION	SIDE	REMOVE FENCE	FENCE (TYPE BW, METAL POST)
				LF	LF
5	L-3	"A" LINE 419+73.9 TO 420+26.9	L+	133	
	L-3	"A" LINE 419+73.9 TO 419+78.7	L+		75
	L-3	"A" LINE 420+19.3 TO 420+40.6	L+		36
	L-3	"A" LINE 419+82.5 TO 420+77.9	R+	109	
	L-3	"A" LINE 419+82.5 TO 420+87.0	R+		157
	L-3	"A" LINE 420+52.2 TO 420+87.0	R+	91	
	L-4	"A' LINE 422+20.9 TO 422+59.0	L+	138	
	L-4	"A" LINE 422+17.7 TO 423+15.5	L+		147
	L-4	"A" LINE 422+62.5 TO 423+26.6	R+	119	
	L-4	"A" LINE 422+62.5 TO 422+77.5	R+		18
	L-4	"A" LINE 423+16.5 TO 423+26.6	R+		52
TOTAL				590	485

TRAFFIC MANAGEMENT SYSTEM ELEMENTS (EXISTING)

PM	Dir	LOCATION	TYPE	DESCRIPTION
6.5	EB & WB	EIGHT MILE Rd	SIGNAL	SIGNAL
6.7	WB	EAST OF EIGHT MILE Rd	FB	FLASHING BEACON

TEMPORARY FENCE (TYPE ESA)

LOCATION No.	STATION TO STATION	SIDE	LF
NOT APPLICABLE	"A" LINE 306+80 TO 332+14	L+	2534
	"A" LINE 306+80 TO 332+14	R+	2534
2	"B" LINE 100+44.5 TO 101+08.7	L+	89
	"C" LINE 200+17.1 TO 201+51.4	R+	117
5	"D" LINE 300+19.6 TO 301+19.9	L+	109
	"E" LINE 100+19.9 TO 101+59.1	R+	111
	"F" LINE 200+19.4 TO 201+70.1	L+	123
	"G" LINE 400+17.9 TO 401+03.4	R+	95
TOTAL			5712

STRUCTURAL SECTION ITEMS

LOCATION No.	STATION TO STATION	HMA (TYPE A)	CLASS 2 AB
		TON	CY
2	"B" LINE 100+10.7 TO 100+50.0	22.2	15.8
	"B" LINE 100+50.0 TO 101+08.7		13.1
	"C" LINE 200+10.8 TO 200+50.7	23.2	16.6
	"C" LINE 200+50.7 TO 201+51.4		24.6
5	"D" LINE 300+15.9 TO 300+43.7	17.2	12.3
	"D" LINE 300+43.7 TO 301+19.9		19.8
	"E" LINE 100+16.0 TO 100+56.7	18.9	13.5
	"E" LINE 100+56.7 TO 101+59.1		25.0
	"F" LINE 200+17.2 TO 200+46.0	17.4	12.4
	"F" LINE 200+46.0 TO 201+70.1		29.0
	"G" LINE 400+15.3 TO 400+54.6	23.4	16.7
	"G" LINE 400+54.6 TO 401+03.4		14.5
3, 4	DRAINAGE	22.9	
TOTAL		145.2	213.3

GATES

LOCATION No.	LAYOUT SHEET No.	LOCATION	16' METAL GATE	5' WIRE MESH GATE
5	L-3	"D" LINE 300+76.3	1	
	L-3	"E" LINE 100+95.6	1	
	L-4	"F" LINE 200+92.0	1	
	L-4	"G" LINE 400+75.8	1	
	L-4	"A" LINE 423+29.1 R+		1
TOTAL			4	1

REMOVE GATE

LOCATION No.	LAYOUT SHEET No.	STATION	EA
5	L-3	"A" LINE 420+35.2, 46.5' L+	1
	L-3	"A" LINE 420+71.4, 49.2' R+	1
	L-4	"A" LINE 422+31.6, 51.8' L+	1
	L-4	"A" LINE 422+72.3, 60.2' R+	1
TOTAL			4

NOTE:
(N) - NOT A SEPARATE PAY ITEM, FOR INFORMATION ONLY.

REMOVE ASPHALT CONCRETE DIKE

LOCATION No.	STATION TO STATION	SIDE	LF
5	"A" LINE 419+85.7 TO 420+35.2	L+	49.0
	"A" LINE 419+99.9 TO 420+47.1	R+	49.0
	"A" LINE 422+23.5 TO 423+05.8	L+	83.0
	"A" LINE 422+68.3 TO 423+18.8	R+	53.0
TOTAL			234.0

RESET MILEPOST MARKER

LOCATION No.	LOCATION	SIDE	EA
1	"A" LINE 272+69	R+	1
	"A" LINE 273+41	L+	1
2	"A" LINE 348+35	R+	1
	"A" LINE 348+95	L+	1
5	"A" LINE 420+88	R+	1
	"A" LINE 422+15	L+	1
TOTAL			6

RESET OBJECT MARKER

LOCATION No.	LOCATION	SIDE	EA
1	"A" LINE 272+58	R+	1
	"A" LINE 272+58	L+	1
	"A" LINE 273+60	R+	1
	"A" LINE 273+60	L+	1
2	"A" LINE 348+28	R+	1
	"A" LINE 348+28	L+	1
	"A" LINE 349+00	R+	1
	"A" LINE 349+00	L+	1
5	"A" LINE 420+66	R+	1
	"A" LINE 420+66	L+	1
	"A" LINE 422+25	R+	1
	"A" LINE 422+25	L+	1
TOTAL			12

SUMMARY OF QUANTITIES
Q-1

REVISED BY	DATE REVISED
HH	02/20/13

CALCULATED-DESIGNED BY: HAI HOANG
CHECKED BY: PATRICIA TECZON
FUNCTIONAL SUPERVISOR: CAROLINE REYES

STATE OF CALIFORNIA - DEPARTMENT OF TRANSPORTATION
Caltrans® DESIGN

LAST REVISION 00-00-00
DATE PLOTTED => 22-MAY-2014
TIME PLOTTED => 13:25

Dist	COUNTY	ROUTE	POST MILES TOTAL PROJECT	SHEET No.	TOTAL SHEETS
10	SJ	88	6.1/8.9	41	63

LICENSED LANDSCAPE ARCHITECT

5-5-14
PLANS APPROVAL DATE

LICENSED LANDSCAPE ARCHITECT
William Duttera No. 4442
Signature
09/30/14
Renewal Date
05/05/14
Date
STATE OF CALIFORNIA

THE STATE OF CALIFORNIA OR ITS OFFICERS OR AGENTS SHALL NOT BE RESPONSIBLE FOR THE ACCURACY OR COMPLETENESS OF SCANNED COPIES OF THIS PLAN SHEET.

SEED MIX

BOTANICAL NAME (COMMON NAME)	PERCENT GERMINATION (MINIMUM)	POUND PURE LIVE SEED PER ACRE (SLOPE MEASUREMENT)
ELYMUS GLAUCUS * (BLUE WILDRYE)	85	6
ESCHSCHOLZIA CALIFORNICA * (CALIFORNIA POPPY)	80	3
HORDEUM VULGARE * (COMMON BARLEY)	85	3
NASSELLA PULCHRA * (PURPLE NEEDLE GRASS)	85	1
TRIFOLIUM HIRTUM* (ROSE CLOVER)	80	1
VULPIA MICROSTACHYS * (SMALL FESCUE)	90	6

* SEED PRODUCED IN CALIFORNIA ONLY.

EROSION CONTROL

SEQUENCE	ITEM	MATERIAL		APPLICATION RATE	REMARKS
		DESCRIPTION	TYPE		
STEP 1	FIBER ROLLS	FIBER ROLLS	8" TO 10" Dia		TYPE 1 FIBER ROLL INSTALLATION
STEP 2	HYDROSEED	SEED	MIX	20 LB/ACRE	
		FIBER	CELLULOSE	400 LB/ACRE	
		FERTILIZER	ORGANIC	100 LB/ACRE	
		ALTERNATE FIBER	STRAW	1000 LB/ACRE	
STEP 3	HYDROMULCH	FIBER	CELLULOSE	800 LB/ACRE	
		TACKIFIER	PSYLLIUM	400 LB/ACRE	
		ALTERNATE FIBER	STRAW	1000 LB/ACRE	

EROSION CONTROL LEGEND
ECL-1

STATE OF CALIFORNIA - DEPARTMENT OF TRANSPORTATION
Caltrans® LANDSCAPE ARCHITECTURE

SENIOR LANDSCAPE ARCHITECT: BRAD COLE
CALCULATED-DESIGNED BY: ROBYN FONG
CHECKED BY: WILLIAM DUTTERA
REVISED BY: RF
DATE REVISED: 05/05/14

LAST REVISION 00-00-00
DATE PLOTTED => 22-MAY-2014
TIME PLOTTED => 13:25

Dist	COUNTY	ROUTE	POST MILES TOTAL PROJECT	SHEET No.	TOTAL SHEETS
10	SJ	88	6.1/8.9	42	63

LICENSED LANDSCAPE ARCHITECT

5-5-14

PLANS APPROVAL DATE

LICENSED LANDSCAPE ARCHITECT William Duttera No. 4442 Signature 09/30/14 Renewal Date 05/05/14 Date STATE OF CALIFORNIA

THE STATE OF CALIFORNIA OR ITS OFFICERS OR AGENTS SHALL NOT BE RESPONSIBLE FOR THE ACCURACY OR COMPLETENESS OF SCANNED COPIES OF THIS PLAN SHEET.

NOTE:

FOR ACCURATE RIGHT OF WAY DATA, CONTACT RIGHT OF WAY ENGINEERING AT THE DISTRICT OFFICE.

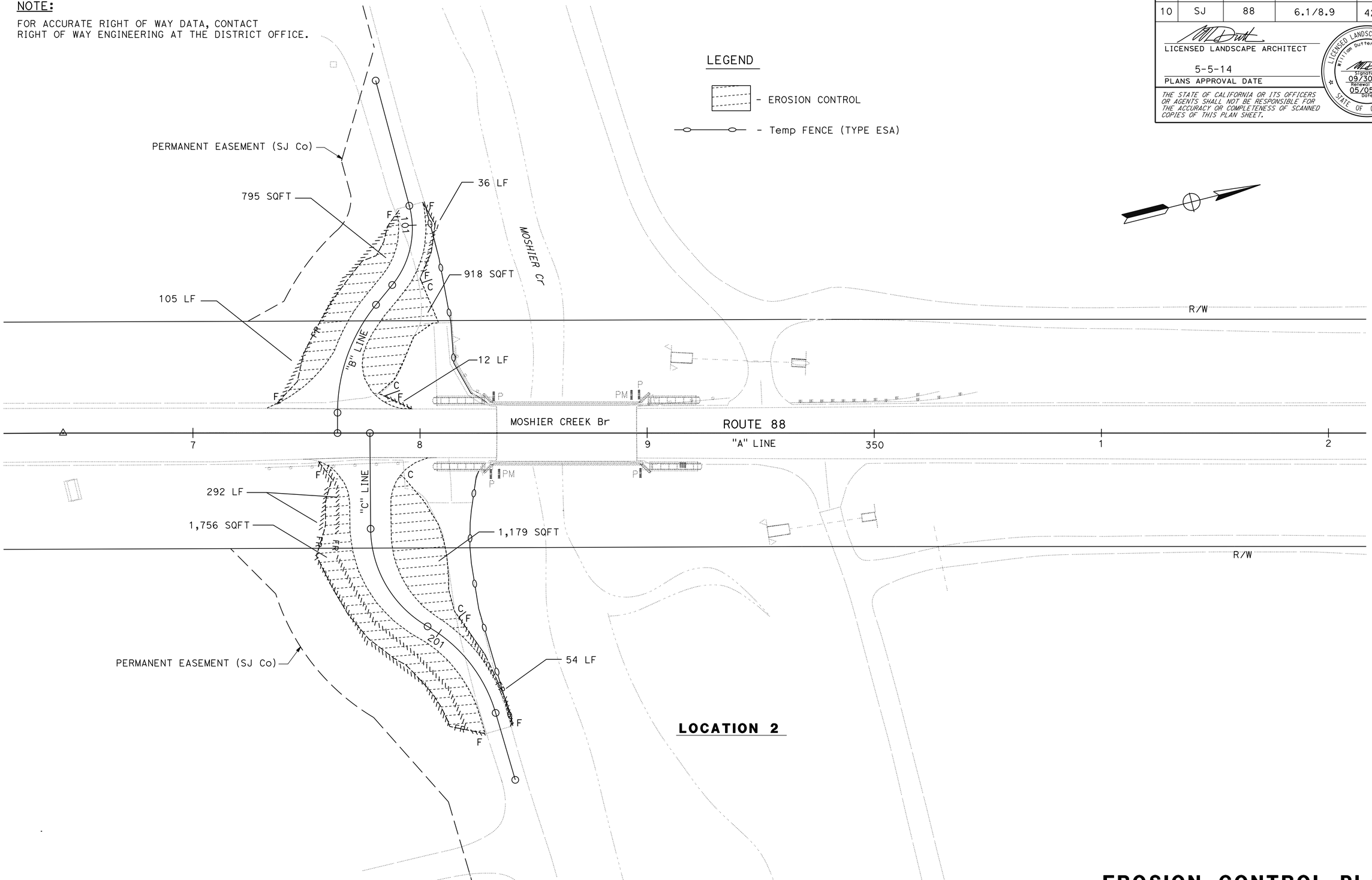

EROSION CONTROL PLAN

SCALE: 1" = 20'

EC-1

APPROVED FOR EROSION CONTROL WORK ONLY

STATE OF CALIFORNIA - DEPARTMENT OF TRANSPORTATION

Caltrans® LANDSCAPE ARCHITECTURE

SENIOR LANDSCAPE ARCHITECT: BRAD COLE

CALCULATED-DESIGNED BY: ROBYN FONG

CHECKED BY: WILLIAM DUTTERA

REVISED BY: RF

DATE REVISED: 05/05/14

LAST REVISION: 00-00-00

DATE PLOTTED => 22-MAY-2014

TIME PLOTTED => 13:25

Dist	COUNTY	ROUTE	POST MILES TOTAL PROJECT	SHEET No.	TOTAL SHEETS
10	SJ	88	6.1/8.9	43	63

LICENSED LANDSCAPE ARCHITECT

5-5-14
PLANS APPROVAL DATE

LICENSED LANDSCAPE ARCHITECT
William Duttera No. 4442
Signature
09/30/14
Renewal Date
05/05/14
Date
STATE OF CALIFORNIA

THE STATE OF CALIFORNIA OR ITS OFFICERS OR AGENTS SHALL NOT BE RESPONSIBLE FOR THE ACCURACY OR COMPLETENESS OF SCANNED COPIES OF THIS PLAN SHEET.

NOTE:

FOR ACCURATE RIGHT OF WAY DATA, CONTACT RIGHT OF WAY ENGINEERING AT THE DISTRICT OFFICE.

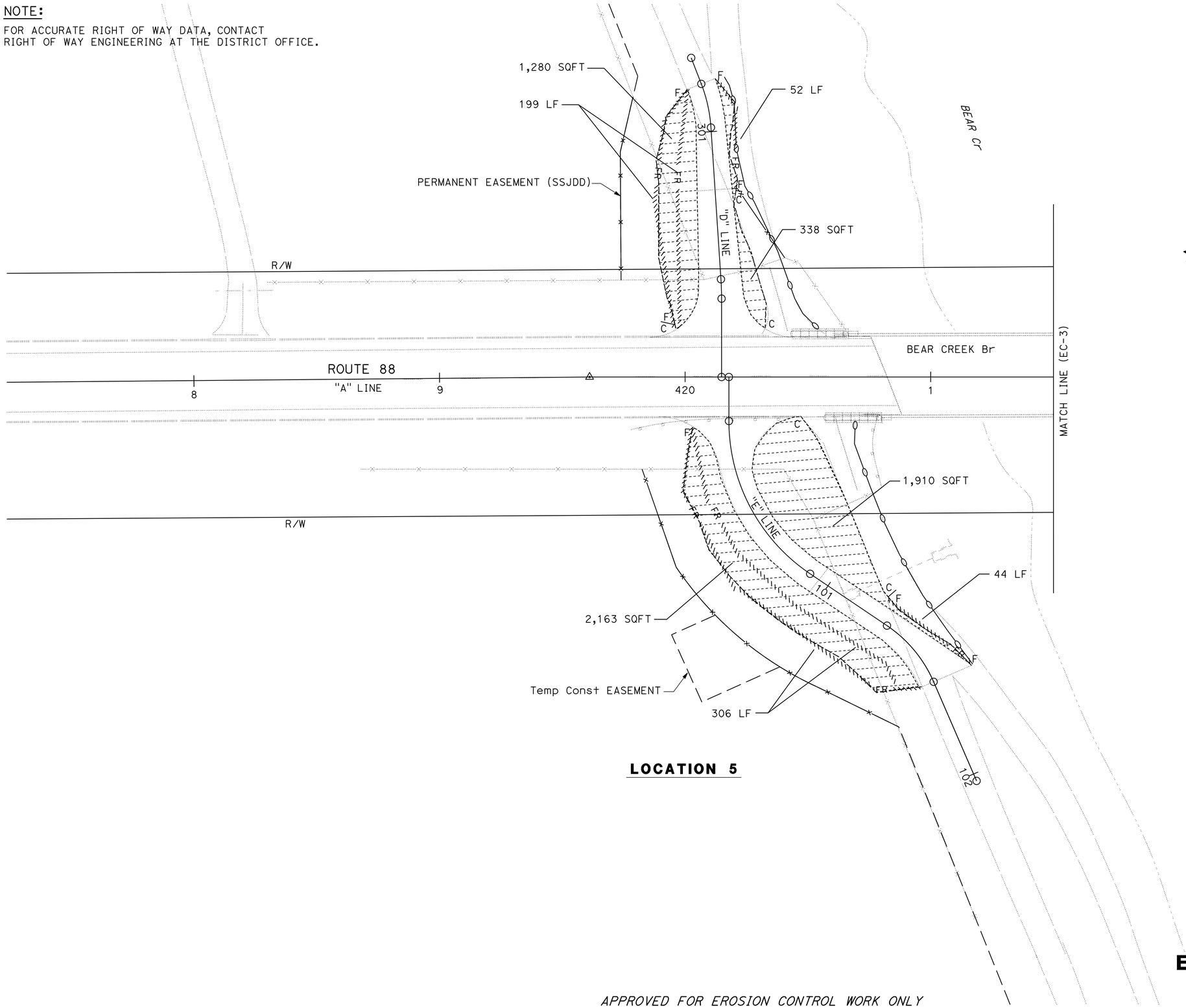

LOCATION 5

APPROVED FOR EROSION CONTROL WORK ONLY

EROSION CONTROL PLAN

SCALE: 1" = 20'

EC-2

REVISED BY	DATE REVISED
RF	10/01/12

ROBYN FONG
WILLIAM DUTTERA
CALCULATED-DESIGNED BY
CHECKED BY
SENIOR LANDSCAPE ARCHITECT
BRAD COLE

STATE OF CALIFORNIA - DEPARTMENT OF TRANSPORTATION
Caltrans® LANDSCAPE ARCHITECTURE

LAST REVISION 00-00-00
DATE PLOTTED => 30-MAY-2014
TIME PLOTTED => 07:28

Dist	COUNTY	ROUTE	POST MILES TOTAL PROJECT	SHEET No.	TOTAL SHEETS
10	SJ	88	6.1/8.9	44	63

LICENSED LANDSCAPE ARCHITECT

5-5-04
PLANS APPROVAL DATE

LICENSED LANDSCAPE ARCHITECT
William Duttera No. 4442
Signature
09/30/14
Renewal Date
05/05/14
Date
STATE OF CALIFORNIA

THE STATE OF CALIFORNIA OR ITS OFFICERS OR AGENTS SHALL NOT BE RESPONSIBLE FOR THE ACCURACY OR COMPLETENESS OF SCANNED COPIES OF THIS PLAN SHEET.

NOTE:

FOR ACCURATE RIGHT OF WAY DATA, CONTACT RIGHT OF WAY ENGINEERING AT THE DISTRICT OFFICE.

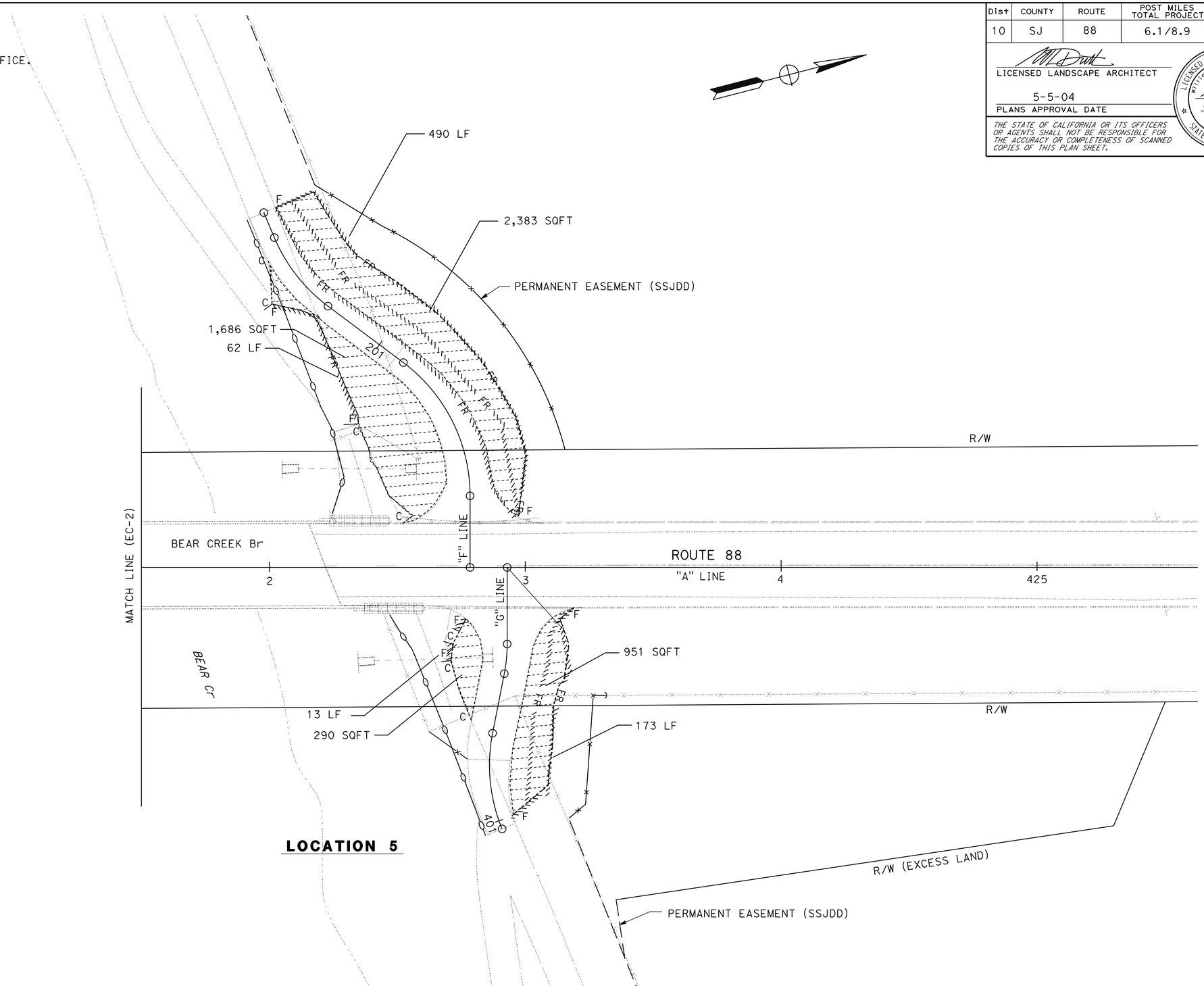

LOCATION 5

APPROVED FOR EROSION CONTROL WORK ONLY

EROSION CONTROL PLAN

SCALE: 1" = 20'

EC-3

REVISED BY	RF
DATE REVISED	10/01/12
CALCULATED-DESIGNED BY	ROBYN FONG
CHECKED BY	WILLIAM DUTTERA
SENIOR LANDSCAPE ARCHITECT	BRAD COLE

STATE OF CALIFORNIA - DEPARTMENT OF TRANSPORTATION
Caltrans® LANDSCAPE ARCHITECTURE

LAST REVISION 00-00-00
DATE PLOTTED => 30-MAY-2014
TIME PLOTTED => 07:28

Dist	COUNTY	ROUTE	POST MILES TOTAL PROJECT	SHEET No.	TOTAL SHEETS
10	SJ	88	6.1/8.9	45	63

LICENSED LANDSCAPE ARCHITECT

5-5-14

PLANS APPROVAL DATE

LICENSED LANDSCAPE ARCHITECT
William Duttera No. 4442
Signature
09/30/14
Renewal Date
05/05/14
Date
STATE OF CALIFORNIA

THE STATE OF CALIFORNIA OR ITS OFFICERS OR AGENTS SHALL NOT BE RESPONSIBLE FOR THE ACCURACY OR COMPLETENESS OF SCANNED COPIES OF THIS PLAN SHEET.

EROSION CONTROL QUANTITIES

LOCATION No.	SHEET No.	DESCRIPTION	FIBER ROLLS	HYDROSEED	HYDROMULCH
			LF	SQFT	SQFT
2	EC-1	EROSION CONTROL	499	4,648	4,648
5	EC-2	EROSION CONTRO	601	5,691	5,691
	EC-3	EROSION CONTROL	738	5,310	5,310
TOTAL			1,838	15,649	15,649

EROSION CONTROL QUANTITIES

ECQ-1

STATE OF CALIFORNIA - DEPARTMENT OF TRANSPORTATION
Caltrans® LANDSCAPE ARCHITECTURE

SENIOR LANDSCAPE ARCHITECT: BRAD COLE

CALCULATED-DESIGNED BY: ROBYN FONG
CHECKED BY: WILLIAM DUTTERA

REVISED BY: RF
DATE REVISED: 10/01/12

LAST REVISION 00-00-00
DATE PLOTTED => 30-MAY-2014
TIME PLOTTED => 07:29

M

Maint	MAINTENANCE
Max	MAXIMUM
MB	METAL BEAM
MBB	METAL BEAM BARRIER
MBGR	METAL BEAM GUARD RAILING
Med	MEDIAN
MGS	MIDWEST GUARDRAIL SYSTEM
MH	MANHOLE
Min	MINIMUM
Misc	MISCELLANEOUS
Misc I & S	MISCELLANEOUS IRON AND STEEL
Mkr	MARKER
Mod	MODIFIED,
	MODIFY
Mon	MONUMENT
MP	METAL PLATE
MPGR	METAL PLATE GUARD RAILING
MR	MOVEMENT RATING
MSE	MECHANICALLY STABILIZED EMBANKMENT
Mt	MOUNTAIN, MOUNT
Mtl	MATERIAL
MVP	MAINTENANCE VEHICLE PULLOUT

N

N	NORTH
NB	NORTHBOUND
No.	NUMBER (MUST HAVE PERIOD)
Nos.	NUMBERS (MUST HAVE PERIOD)
NPS	NOMINAL PIPE SIZE
NS	NEAR SIDE
NSP	NEW STANDARD PLAN
NTS	NOT TO SCALE

O

Oblr	OBLITERATE
OC	OVERCROSSING
OD	OUTSIDE DIAMETER
OF	OUTSIDE FACE
OG	ORIGINAL GROUND
OGAC	OPEN GRADED ASPHALT CONCRETE
OGFC	OPEN GRADED FRICTION COURSE
OH	OVERHEAD
OHWM	ORDINARY HIGH WATER MARK
O-O	OUT TO OUT
Opp	OPPOSITE
OSD	OVERSIDE DRAIN

P

P	PAGE
PAP	PERFORATED ALUMINUM PIPE
PB	PULL BOX
PC	POINT OF CURVATURE,
	PRECAST
PCC	POINT OF COMPOUND CURVE,
	PORTLAND CEMENT CONCRETE
PCMS	PORTABLE CHANGEABLE MESSAGE SIGN
PCP	PERFORATED CONCRETE PIPE,
	PRESTRESSED CONCRETE PIPE
PCVC	POINT OF COMPOUND VERTICAL CURVE
PEC	PERMIT TO ENTER AND CONSTRUCT
Ped	PEDESTRIAN
Ped OC	PEDESTRIAN OVERCROSSING
Ped UC	PEDESTRIAN UNDERCROSSING
Perm Mtl	PERMEABLE MATERIAL

P continued

PG	PROFILE GRADE
PI	POINT OF INTERSECTION
PJP	PARTIAL JOINT PENETRATION
Pkwy	PARKWAY
ℙ,PL	PLATE
P/L	PROPERTY LINE
PM	POST MILE,
	TIME FROM NOON TO MIDNIGHT
PN	PAVING NOTCH
POC	POINT OF HORIZONTAL CURVE
POT	POINT OF TANGENT
POVC	POINT OF VERTICAL CURVE
PP	PIPE PILE,
	PLASTIC PIPE,
	POWER POLE
PPL	PREFORMED PERMEABLE LINER
PPP	PERFORATED PLASTIC PIPE
PRC	POINT OF REVERSE CURVE
PRF	PAVEMENT REINFORCING FABRIC
PRVC	POINT OF REVERSE VERTICAL CURVE
PS&E	PLANS, SPECIFICATIONS AND ESTIMATES
PS, P/S	PRESTRESSED
PSP	PERFORATED STEEL PIPE
PT	POINT OF TANGENCY
PVC	POLYVINYL CHLORIDE
Pvmt	PAVEMENT

Q

Qty	QUANTITY

R

R	RADIUS
R & D	REMOVE AND DISPOSE
R & S	REMOVE AND SALVAGE
R/C	RATE OF CHANGE
RCA	REINFORCED CONCRETE ARCH
RCB	REINFORCED CONCRETE BOX
RCP	REINFORCED CONCRETE PIPE
RCPA	REINFORCED CONCRETE PIPE ARCH
Rd	ROAD
Reinf	REINFORCED,
	REINFORCEMENT,
	REINFORCING
Rel	RELOCATE
Repl	REPLACEMENT
Ret	RETAINING
Rev	REVISED, REVISION
Rdwy	ROADWAY
RHMA	RUBBERIZED HOT MIX ASPHALT
Riv	RIVER
RM	ROAD-MIXED
RP	RADIUS POINT,
	REFERENCE POINT
RR	RAILROAD
RSP	ROCK SLOPE PROTECTION,
	REVISED STANDARD PLAN
Rt	RIGHT
Rte	ROUTE
RW	REDWOOD,
	RETAINING WALL
R/W	RIGHT OF WAY
Rwy	RAILWAY

S

S	SOUTH,
	SUPPLEMENT
SAE	STRUCTURE APPROACH EMBANKMENT
Salv	SALVAGE
SAPP	STRUCTURAL ALUMINUM PLATE PIPE
SB	SOUTHBOUND
SC	SAND CUSHION
SCSP	SLOTTED CORRUGATED STEEL PIPE
SD	STORM DRAIN
Sec	SECOND,
	SECTION
Sep	SEPARATION
SG	SUBGRADE
Shld	SHOULDER
Sht	SHEET
Sim	SIMILAR
℄	STATION LINE
SM	SELECTED MATERIAL
Spec	SPECIAL,
	SPECIFICATIONS
SPP	SLOTTED PLASTIC PIPE
SS	SLOPE STAKE
SSBM	STRAP AND SADDLE BRACKET METHOD
SSD	STRUCTURAL SECTION DRAIN
SSPA	STRUCTURAL STEEL PLATE ARCH
SSPP	STRUCTURAL STEEL PLATE PIPE
SSPPA	STRUCTURAL STEEL PLATE PIPE ARCH
SSRP	STEEL SPIRAL RIB PIPE
St	STREET
Sta	STATION
STBB	SINGLE THRIE BEAM BARRIER
Std	STANDARD
Str	STRUCTURE
Surf	SURFACING
SW	SIDEWALK,
	SOUND WALL
Swr	SEWER
Sym	SYMMETRICAL
S4S	SURFACE 4 SIDES

T

T	SEMI-TANGENT
Tan	TANGENT
TBB	THRIE BEAM BARRIER
Tbr	TIMBER
TC	TOP OF CURB
TCB	TRAFFIC CONTROL BOX
TCE	TEMPORARY CONSTRUCTION EASEMENT
Tel	TELEPHONE
Temp	TEMPORARY
TG	TOP OF GRADE
Tot	TOTAL
TP	TELEPHONE POLE
TPB	TREATED PERMEABLE BASE
TPM	TREATED PERMEABLE MATERIAL
Trans	TRANSITION

T continued

TS	TRANSVERSE,
	TRAFFIC SIGNAL,
	TUBULAR STEEL
Typ	TYPICAL

U

UC	UNDERCROSSING
UD	UNDERDRAIN
UG	UNDERGROUND
UON	UNLESS OTHERWISE NOTED
UP	UNDERPASS

V

V	VALVE,
	DESIGN SPEED
Var	VARIABLE,
	VARIES
VC	VERTICAL CURVE
VCP	VITRIFIED CLAY PIPE
Vert	VERTICAL
Via	VIADUCT
Vol	VOLUME

W

W	WEST,
	WIDTH
WB	WESTBOUND
WH	WEEP HOLE
WM	WIRE MESH
WS	WATER SURFACE
WSP	WELDED STEEL PIPE
Wt	WEIGHT
WV	WATER VALVE
WW	WINGWALL
WWLOL	WINGWALL LAYOUT LINE

X

X Sec	CROSS SECTION
Xing	CROSSING

Y

Yr	YEAR
Yrs	YEARS

Dist	COUNTY	ROUTE	POST MILES TOTAL PROJECT	SHEET No.	TOTAL SHEETS
10	SJ	88	6.1/8.9	46	63

Grace M. Tsushima
REGISTERED CIVIL ENGINEER

July 19, 2013
PLANS APPROVAL DATE

REGISTERED PROFESSIONAL ENGINEER
Grace M. Tsushima
No. C49814
Exp. 9-30-14
CIVIL
STATE OF CALIFORNIA

THE STATE OF CALIFORNIA OR ITS OFFICERS OR AGENTS SHALL NOT BE RESPONSIBLE FOR THE ACCURACY OR COMPLETENESS OF SCANNED COPIES OF THIS PLAN SHEET.

TO ACCOMPANY PLANS DATED 5-5-14

UNIT OF MEASUREMENT SYMBOLS:

Some of the symbols used in the project plan quantity tables and in the Bid Item List are:

TABLE A

SYMBOL USED	DEFINITIONS
ACRE	ACRE
CF	CUBIC FOOT
CY	CUBIC YARD
EA	EACH
GAL	GALLON
LB	POUND
LF	LINEAR FOOT
SQFT	SQUARE FOOT
SQYD	SQUARE YARD
STA	100 FEET
TAB	TABLET
TON	2,000 POUNDS

Some of the symbols used in the plans other than in the project plan quantity tables are:

TABLE B

SYMBOL USED	DEFINITIONS
ksi	KIPS PER SQUARE INCH
ksf	KIPS PER SQUARE FOOT
psi	POUNDS PER SQUARE INCH
psf	POUNDS PER SQUARE FOOT
lb/ft^3, pcf	POUNDS PER CUBIC FOOT
tsf	TONS PER SQUARE FOOT
mph, MPH *	MILES PER HOUR
ø	NOMINAL DIAMETER
oz	OUNCE
lb	POUND
kip	1,000 POUNDS
cal	CALORIE
ft	FOOT OR FEET
gal	GALLON

* For use on a sign panel only

STATE OF CALIFORNIA
DEPARTMENT OF TRANSPORTATION

ABBREVIATIONS (SHEET 2 OF 2)

NO SCALE

RSP A10B DATED JULY 19, 2013 SUPERSEDES STANDARD PLAN A10B DATED MAY 20, 2011 - PAGE 2 OF THE STANDARD PLANS BOOK DATED 2010.

REVISED STANDARD PLAN RSP A10B

2010 REVISED STANDARD PLAN RSP A10B

6-7-13

Dist	COUNTY	ROUTE	POST MILES TOTAL PROJECT	SHEET No.	TOTAL SHEETS
10	SJ	88	6.1/8.9	47	63

Randell D. Hiatt
REGISTERED CIVIL ENGINEER

July 19, 2013
PLANS APPROVAL DATE

REGISTERED PROFESSIONAL ENGINEER
Randell D. Hiatt
No. C50200
Exp. 6-30-15
CIVIL
STATE OF CALIFORNIA

THE STATE OF CALIFORNIA OR ITS OFFICERS OR AGENTS SHALL NOT BE RESPONSIBLE FOR THE ACCURACY OR COMPLETENESS OF SCANNED COPIES OF THIS PLAN SHEET.

TO ACCOMPANY PLANS DATED 5-5-14

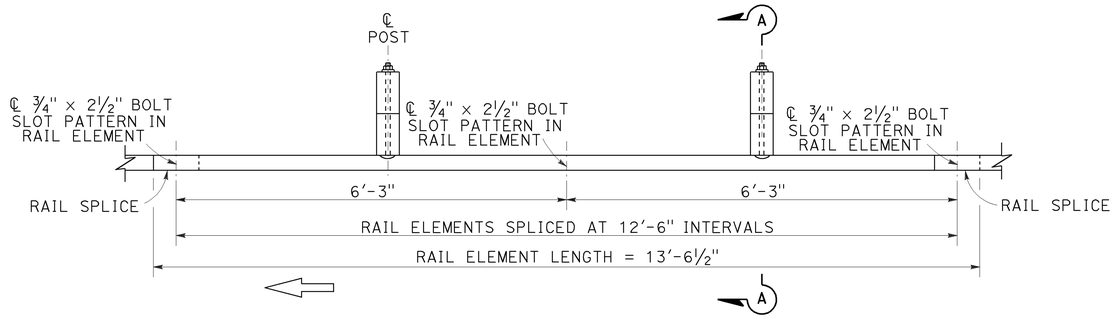

PLAN

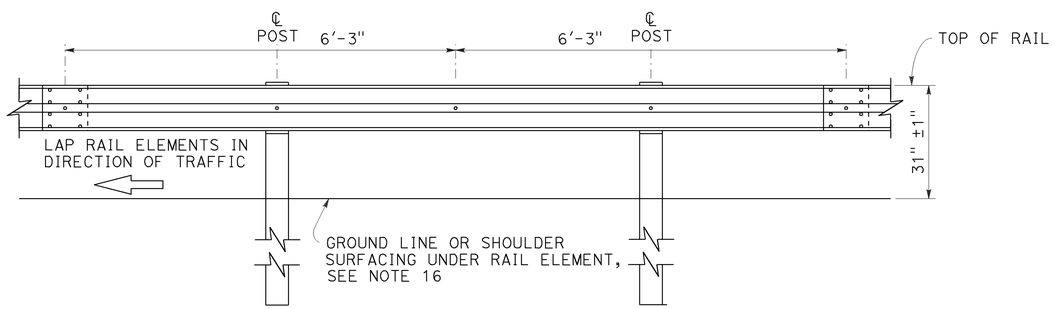

ELEVATION

MIDWEST GUARDRAIL SYSTEM WITH WOOD POST AND BLOCKS

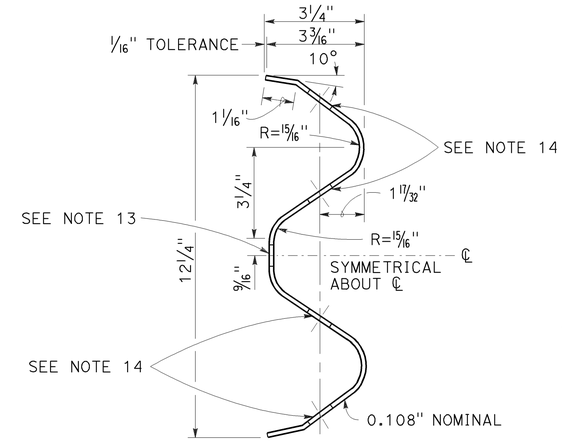

SECTION THRU RAIL ELEMENT

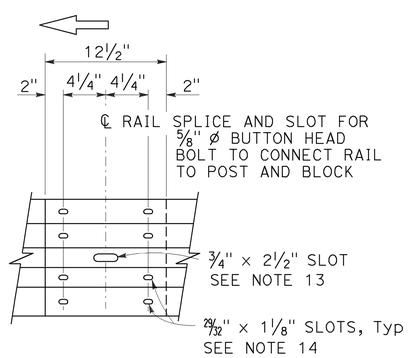

ELEVATION

RAIL ELEMENT SPLICE DETAIL

a) Connect the over lapped end of the rail elements with ⅝" ø × 1⅜" button head oval shoulder splice bolts inserted into the 29⁄32" × 1⅛" slots and bolted together with ⅝" ø recessed hex nuts. Recess of hex nut points toward rail element. A total of 8 bolts and nuts are to be used at each rail splice connection.

b) The ends of the rail elements are to be overlapped in the direction of traffic (see details).

c) Where end cap is to be attached to the end of a rail element, a total of 4 of the above described splice bolts and nuts are to be used.

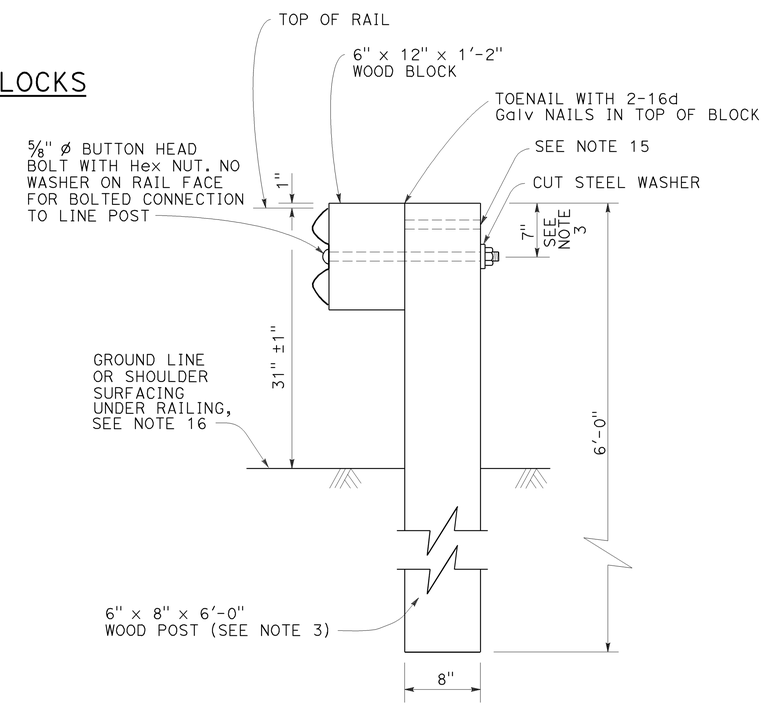

SECTION A-A

TYPICAL WOOD LINE POST INSTALLATION

See Note 4

NOTES:

1. For details of steel post installations, see Revised Standard Plan RSP A77L2.
2. For details of standard hardware used to construct MGS, see Revised Standard Plan RSP A77M1.
3. For details of wood posts and wood blocks used to construct MGS, see Revised Standard Plan RSP A77N1.
4. For additional installation details, see Revised Standard Plan RSP A77N3.
5. MGS post spacing to be 6'-3" center to center, except as otherwise noted.
6. For MGS typical layouts, see the A77P, A77Q and A77R Series of Standard Plans.
7. If railing is connected to terminal system end treatment, use 31" height terminal system end treatment.
8. For MGS end anchor details, see Revised Standard Plans RSP A77S1 and RSP A77T2.
9. For details of MGS transition to bridge railing, see Revised Standard Plan RSP A77U4.
10. For additional details of MSG connection to bridge railing, see Revised Standard Plans RSP A77U1, RSP A77U2 and RSP A77V1.
11. For MGS connection details to abutments and walls, see Revised Standard Plan RSP A77U3.
12. For typical MGS delineation and dike positioning details, see Revised Standard Plan RSP A77N4.
13. Slotted hole for bolted connection of rail element to block and post. See "Section Thru Rail Element".
14. Slotted holes for splice bolts to overlap ends of rail element. See "Section Thru Rail Element".
15. Additional hole in uppermost portion of line post is for potential future adjustments of railing height. See Revised Standard Plan RSP A77N1.
16. Install posts in soil.

STATE OF CALIFORNIA
DEPARTMENT OF TRANSPORTATION

MIDWEST GUARDRAIL SYSTEM STANDARD RAILING SECTION (WOOD POST WITH WOOD BLOCK)

NO SCALE

RSP A77L1 DATED JULY 19, 2013 SUPPLEMENTS STANDARD PLANS BOOK DATED 2010.

REVISED STANDARD PLAN RSP A77L1

2010 REVISED STANDARD PLAN RSP A77L1

7-3-13

Dist	COUNTY	ROUTE	POST MILES TOTAL PROJECT	SHEET No.	TOTAL SHEETS
10	SJ	88	6.1/8.9	48	63

Randell D. Hiatt
REGISTERED CIVIL ENGINEER

July 19, 2013
PLANS APPROVAL DATE

REGISTERED PROFESSIONAL ENGINEER
Randell D. Hiatt
No. C50200
Exp. 6-30-15
CIVIL
STATE OF CALIFORNIA

THE STATE OF CALIFORNIA OR ITS OFFICERS OR AGENTS SHALL NOT BE RESPONSIBLE FOR THE ACCURACY OR COMPLETENESS OF SCANNED COPIES OF THIS PLAN SHEET.

TO ACCOMPANY PLANS DATED 5-5-14

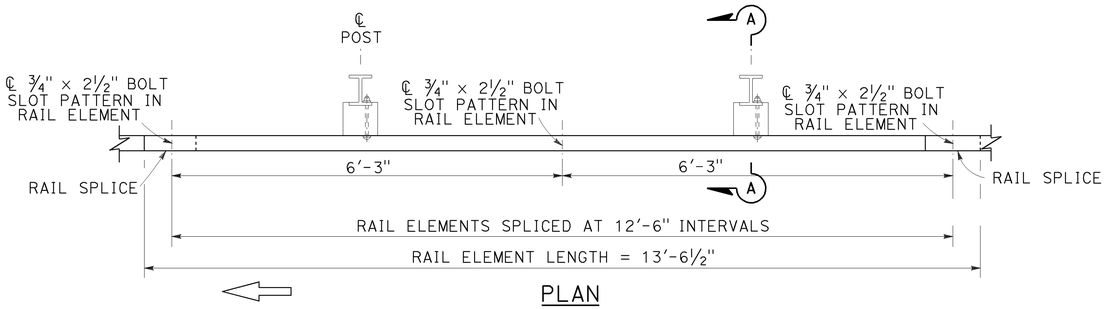

PLAN

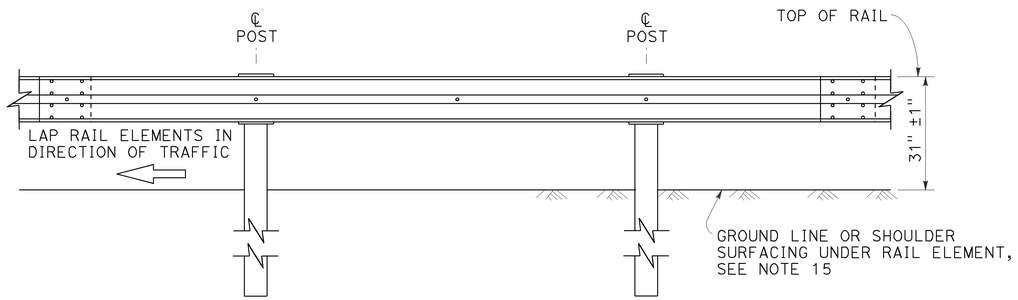

ELEVATION

MIDWEST GUARDRAIL SYSTEM WITH STEEL POSTS AND NOTCHED WOOD OR NOTCHED RECYCLED PLASTIC BLOCKS

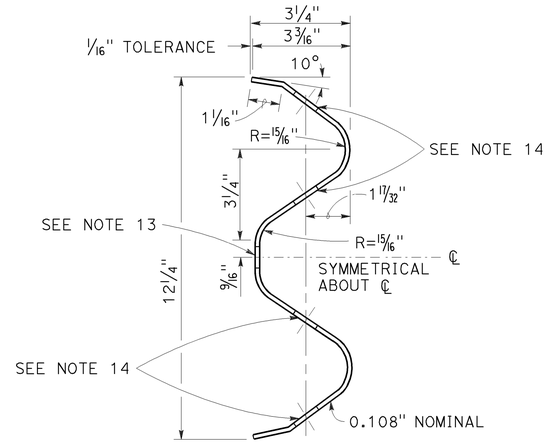

SECTION THRU RAIL ELEMENT

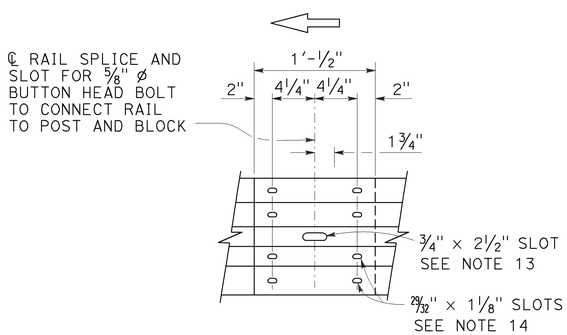

ELEVATION

RAIL ELEMENT SPLICE DETAIL

a) Connect the over lapped end of the rail elements with ⅝" ø × 1⅜" button head oval shoulder splice bolts inserted into the 29⁄32" × 1⅛" slots and bolted together with ⅝" ø recessed hex nuts. Recess of hex nut points toward rail element. A total of 8 bolts and nuts are to be used at each rail splice connection.

b) The ends of the rail elements are to be overlapped in the direction of traffic (see details).

c) Where end cap is to be attached to the end of a rail element, a total of 4 of the above described splice bolts and nuts are to be used.

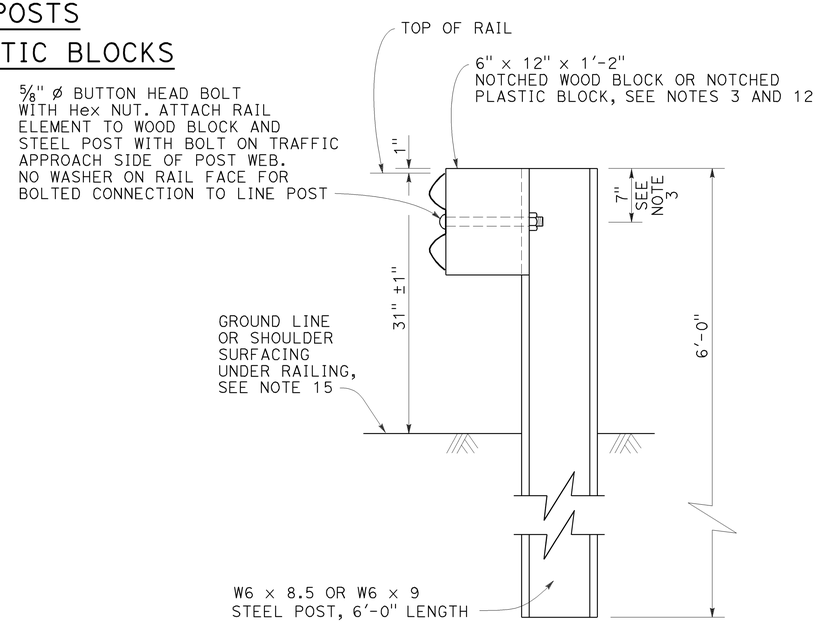

SECTION A-A

TYPICAL STEEL LINE POST INSTALLATION

See Note 4

NOTES:

1. For details of wood post installations, see Revised Standard Plan RSP A77L1.
2. For details of standard hardware used to construct MGS, see Revised Standard Plan RSP A77M1.
3. For details of steel posts and notched wood blocks used to construct MGS, see Revised Standard Plan RSP A77N2.
4. For additional installation details, see Revised Standard Plan RSP A77N3.
5. MGS post spacing to be 6'-3" center to center, except as otherwise noted.
6. For MGS typical layouts, see the A77P, A77Q and A77R Series of Standard Plans.
7. If railing is connected to terminal system end treatment, use 31" height terminal system end treatment.
8. For MGS end anchor details, see Revised Standard Plans RSP A77S1 and RSP A77T2.
9. For details of MGS transition to bridge railing, see Revised Standard Plan RSP A77U4.
10. For additional details of MGS connection to bridge railings, see Revised Standard Plans RSP A77U1, RSP A77U2 and RSP A77V1.
11. For dike positioning and MGS delineation details, see Revised Standard Plan RSP A77N4.
12. Notched face of block faces steel post.
13. Slotted hole for bolted connection of rail element to block and post. See "Section Thru Rail Element".
14. Slotted holes for splice bolts to overlap ends of rail element. See "Section Thru Rail Element".
15. Install posts in soil.

STATE OF CALIFORNIA
DEPARTMENT OF TRANSPORTATION

MIDWEST GUARDRAIL SYSTEM STANDARD RAILING SECTION (STEEL POST WITH NOTCHED WOOD OR NOTCHED RECYCLED PLASTIC BLOCK)

NO SCALE

RSP A77L2 DATED JULY 19, 2013 SUPPLEMENTS THE STANDARD PLANS BOOK DATED 2010.

REVISED STANDARD PLAN RSP A77L2

2010 REVISED STANDARD PLAN RSP A77L2

7-3-13

Dist	COUNTY	ROUTE	POST MILES TOTAL PROJECT	SHEET No.	TOTAL SHEETS
10	SJ	88	6.1/8.9	49	63

Randell D. Hiatt
REGISTERED CIVIL ENGINEER

July 19, 2013
PLANS APPROVAL DATE

REGISTERED PROFESSIONAL ENGINEER
Randell D. Hiatt
No. C50200
Exp. 6-30-15
CIVIL
STATE OF CALIFORNIA

THE STATE OF CALIFORNIA OR ITS OFFICERS OR AGENTS SHALL NOT BE RESPONSIBLE FOR THE ACCURACY OR COMPLETENESS OF SCANNED COPIES OF THIS PLAN SHEET.

TO ACCOMPANY PLANS DATED 5-5-14

2010 REVISED STANDARD PLAN RSP A77L3

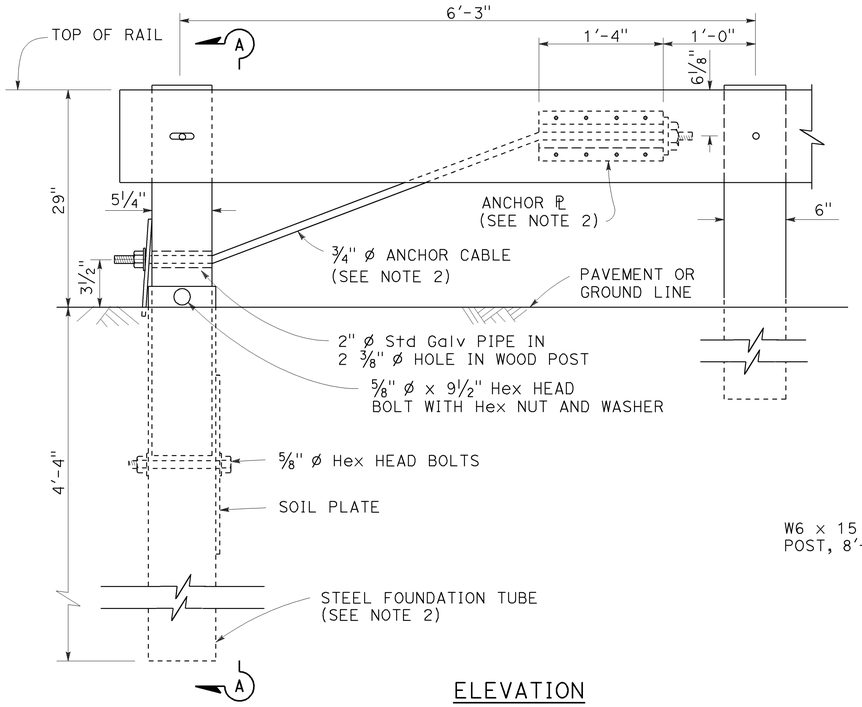

ELEVATION
END ANCHOR
ASSEMBLY (TYPE SFT)

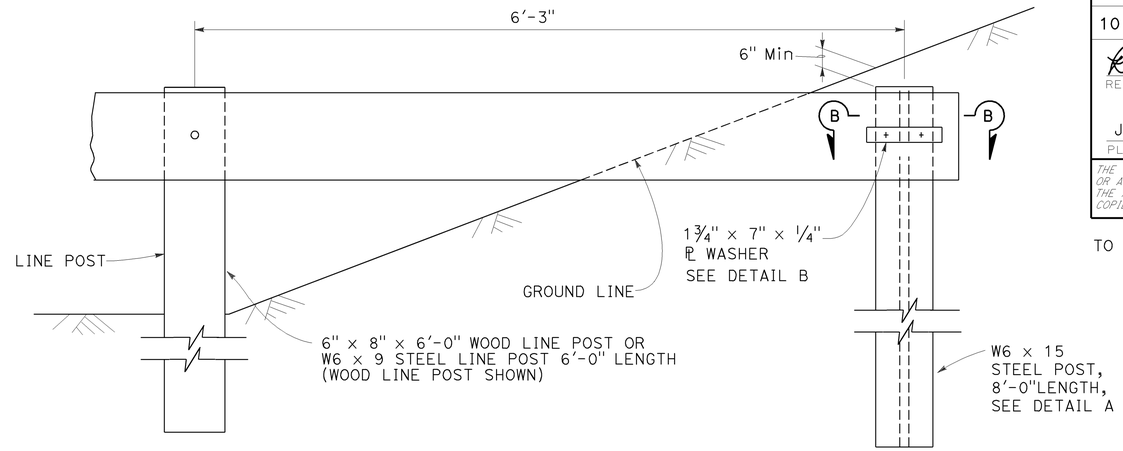

BURIED POST END ANCHOR

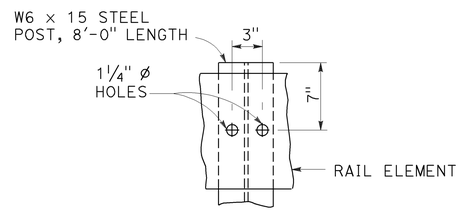

DETAIL A

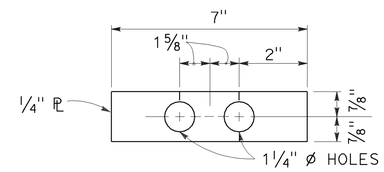

DETAIL B

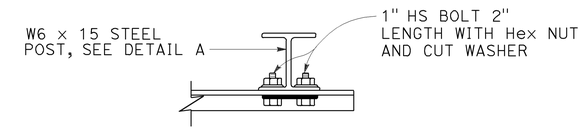

SECTION B-B

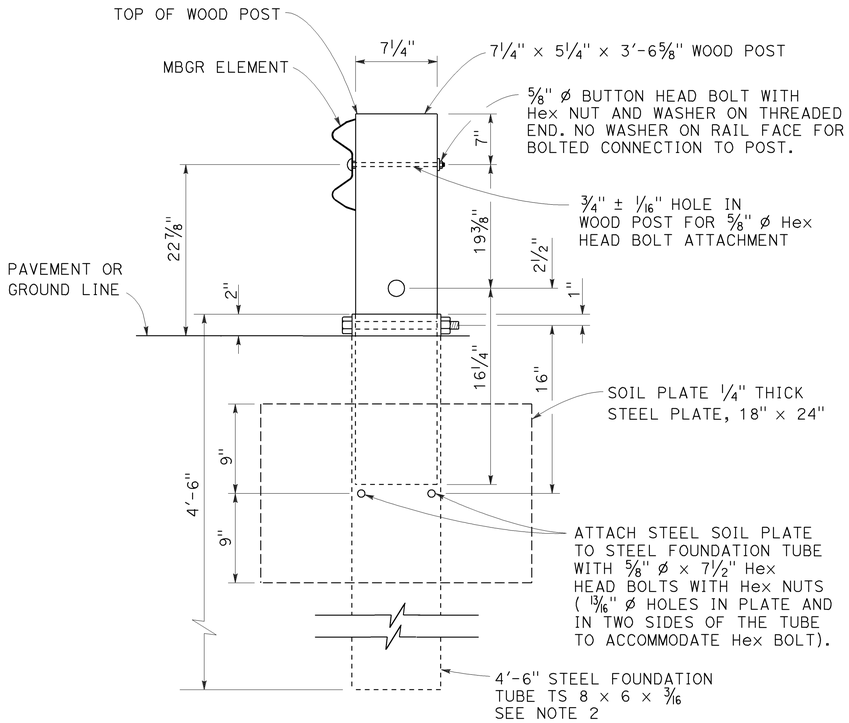

SECTION A-A

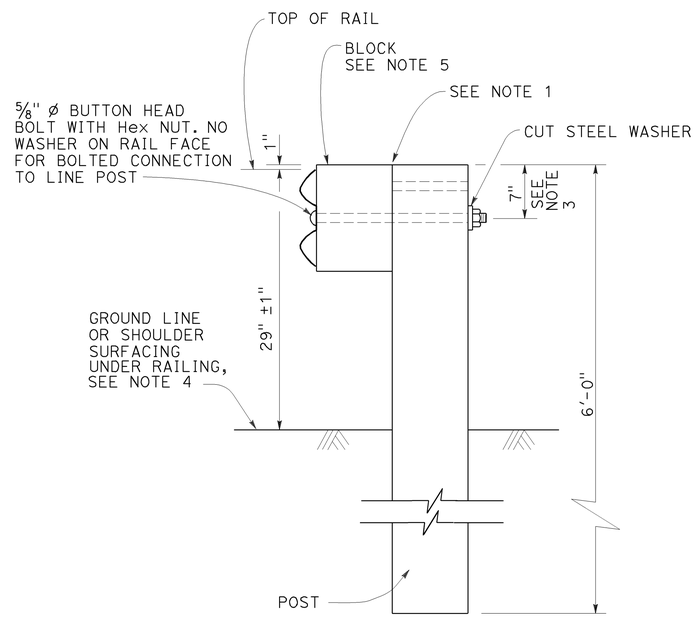

TYPICAL LINE
POST INSTALLATION

NOTES:

1. For wood post and wood block, toenail with 2-16d Galv nails in top of block. For steel post and notched wood or plastic block, notched face of block faces steel post.
2. A 6'-0" Length steel foundation tube, TS 8 x 6 x 3/16, without a soil plate, may be furnished and installed in place of the 4'-6" length steel foundation tube and soil plate shown, Minimum embadment of the 6'-0" length tube shall be 5'-9". A 5/8" ø Hex head bolt and nut shall be installed in the hole in the 6'-0" length tube to keep the wood post from dropping into the tube.
3. To connect railing to 27" terminal system end treatment, transition the top of railing height at a ratio of 120:1 to terminal system end treatment height plus one 12'-6" standard railing section at the transitioned height for a horizontal connection to the end treatment.
4. Install posts in soil.
5. See Revised Standard Plans RSP A77N1 and RSP A77N2 for details.
6. Holes excavation in the slope to construct the buried post end anchor shall be backfilled with selected earth, placed in layers approximately 1'-0" thick. Each layer shall be moistened and thoroughly compacted.

STATE OF CALIFORNIA
DEPARTMENT OF TRANSPORTATION

METAL BEAM GUARD RAILING RECONSTRUCT INSTALLATION

NO SCALE

RSP A77L3 DATED JULY 19, 2013 SUPPLEMENTS THE STANDARD PLANS BOOK DATED 2010.

REVISED STANDARD PLAN RSP A77L3

7-16-13

Dist	COUNTY	ROUTE	POST MILES TOTAL PROJECT	SHEET No.	TOTAL SHEETS
10	SJ	88	6.1/8.9	50	63

Randell D. Hiatt
REGISTERED CIVIL ENGINEER

July 19, 2013
PLANS APPROVAL DATE

REGISTERED PROFESSIONAL ENGINEER
Randell D. Hiatt
No. C50200
Exp. 6-30-15
CIVIL
STATE OF CALIFORNIA

THE STATE OF CALIFORNIA OR ITS OFFICERS OR AGENTS SHALL NOT BE RESPONSIBLE FOR THE ACCURACY OR COMPLETENESS OF SCANNED COPIES OF THIS PLAN SHEET.

TO ACCOMPANY PLANS DATED 5-5-14

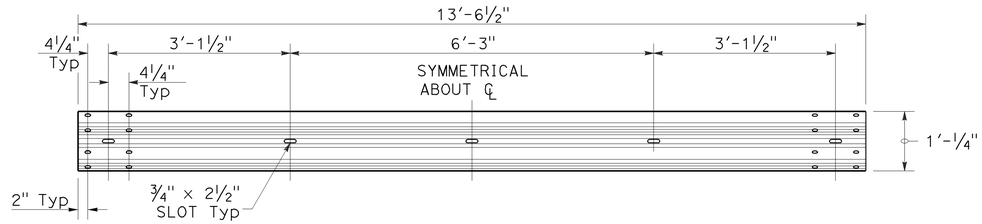

TYPICAL RAIL ELEMENT

NOTE:

1. Slotted holes for splice bolts to overlap ends of rail element.

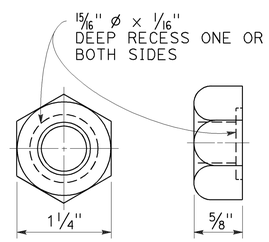

⅝" ø RECESS NUT

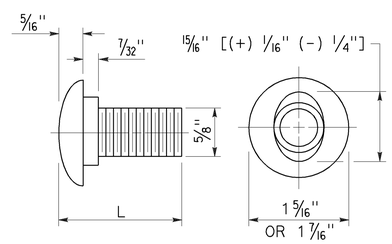

⅝" ø BUTTON HEAD BOLT

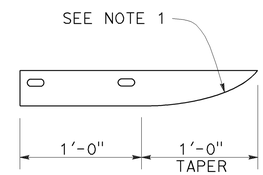

PLAN

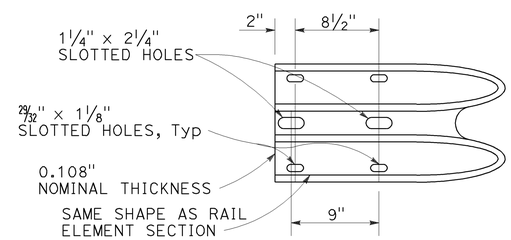

ELEVATION

END CAP
(TYPE A)

BUTTON HEAD BOLT

L	THREAD LENGTH
1⅜"	FULL THREAD LENGTH
2"	FULL THREAD LENGTH
10"	4" Min THREAD LENGTH
18"	4" Min THREAD LENGTH
20"	4" Min THREAD LENGTH
22"	4" Min THREAD LENGTH
26"	4" Min THREAD LENGTH
36"	4" Min THREAD LENGTH
** 2¾"	2" Min THREAD LENGTH
** 19"	4" Min THREAD LENGTH

** For nested rail applications.

STATE OF CALIFORNIA
DEPARTMENT OF TRANSPORTATION

MIDWEST GUARDRAIL SYSTEM STANDARD HARDWARE

NO SCALE

RSP A77M1 DATED JULY 19, 2013 SUPPLEMENTS THE STANDARD PLANS BOOK DATED 2010.

REVISED STANDARD PLAN RSP A77M1

2010 REVISED STANDARD PLAN RSP A77M1

7-3-13

Dist	COUNTY	ROUTE	POST MILES TOTAL PROJECT	SHEET No.	TOTAL SHEETS
10	SJ	88	6.1/8.9	51	63

Randell D. Hiatt
REGISTERED CIVIL ENGINEER

July 19, 2013
PLANS APPROVAL DATE

REGISTERED PROFESSIONAL ENGINEER
Randell D. Hiatt
No. C50200
Exp. 6-30-15
CIVIL
STATE OF CALIFORNIA

THE STATE OF CALIFORNIA OR ITS OFFICERS OR AGENTS SHALL NOT BE RESPONSIBLE FOR THE ACCURACY OR COMPLETENESS OF SCANNED COPIES OF THIS PLAN SHEET.

TO ACCOMPANY PLANS DATED 5-5-14

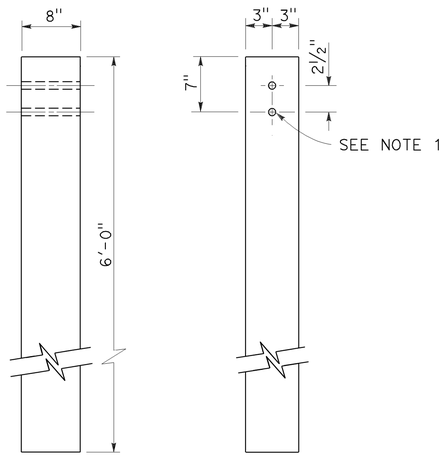

SIDE FRONT

6" x 8" WOOD POST
See Note 3

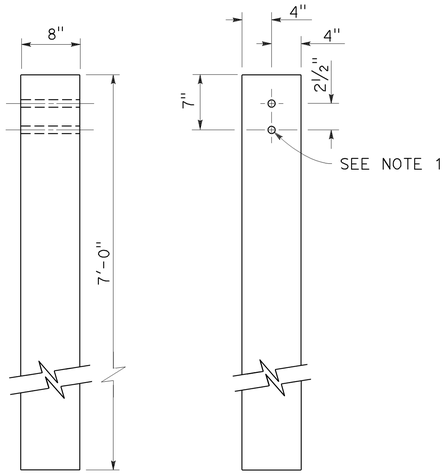

SIDE FRONT

8" x 8" WOOD POST
See Note 4

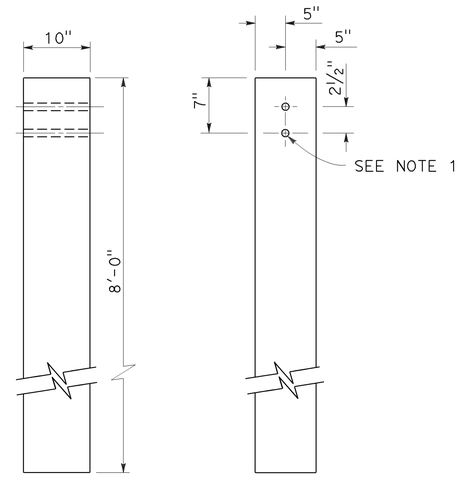

SIDE FRONT

10" x 10" WOOD POST
See Note 5

NOTES:

1. All holes in wood posts and blocks shall be ¾" Dia ± 1/16".
2. Dimensions shown for wood post are nominal.
3. This post and block combination used for standard line post sections of MGS.
4. This post and 8" x 12" block combination used for line post sections of MGS on narrow roadways.
5. This post and 8" x 12" block combination is typically used where strengthened line post sections of MGS are warranted to shield fixed objects.
6. See Revised Standard Plan RSP A77L3 for use of 6" x 8" and 8" x 8" wood blocks.

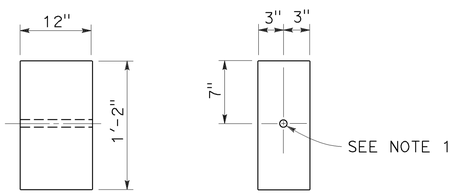

SIDE FRONT

6" x 12" WOOD BLOCK
See Note 3

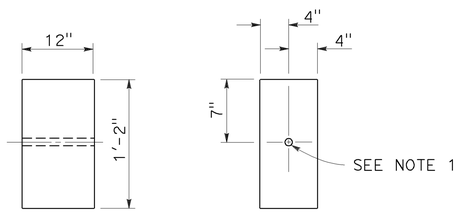

SIDE FRONT

8" x 12" WOOD BLOCK

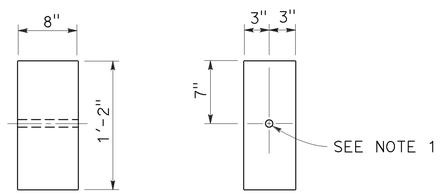

SIDE FRONT

6" x 8" WOOD BLOCK
Only for use with metal beam guard rail see Note 6

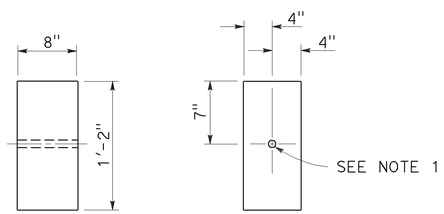

SIDE FRONT

8" x 8" WOOD BLOCK
Only for use with metal beam guard rail see Note 6

STATE OF CALIFORNIA
DEPARTMENT OF TRANSPORTATION

MIDWEST GUARDRAIL SYSTEM WOOD POST AND WOOD BLOCK DETAILS

NO SCALE

RSP A77N1 DATED JULY 19, 2013 SUPPLEMENTS THE STANDARD PLANS BOOK DATED 2010.

REVISED STANDARD PLAN RSP A77N1

2010 REVISED STANDARD PLAN RSP A77N1

7-3-13

Dist	COUNTY	ROUTE	POST MILES TOTAL PROJECT	SHEET No.	TOTAL SHEETS
10	SJ	88	6.1/8.9	52	63

Randell D. Hiatt
REGISTERED CIVIL ENGINEER

November 15, 2013
PLANS APPROVAL DATE

REGISTERED PROFESSIONAL ENGINEER
Randell D. Hiatt
No. C50200
Exp. 6-30-15
CIVIL
STATE OF CALIFORNIA

THE STATE OF CALIFORNIA OR ITS OFFICERS OR AGENTS SHALL NOT BE RESPONSIBLE FOR THE ACCURACY OR COMPLETENESS OF SCANNED COPIES OF THIS PLAN SHEET.

TO ACCOMPANY PLANS DATED 5-5-14

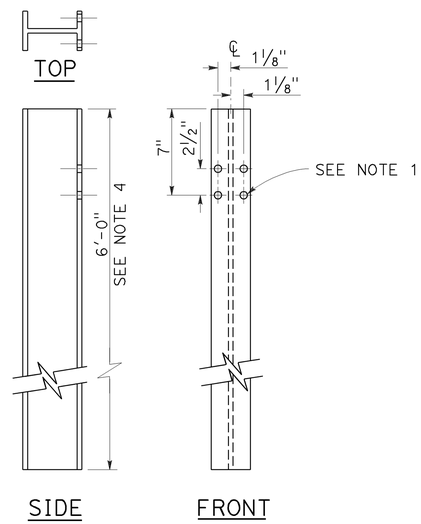

W6 x 9 OR W6 x 8.5
STEEL POST
See Note 4

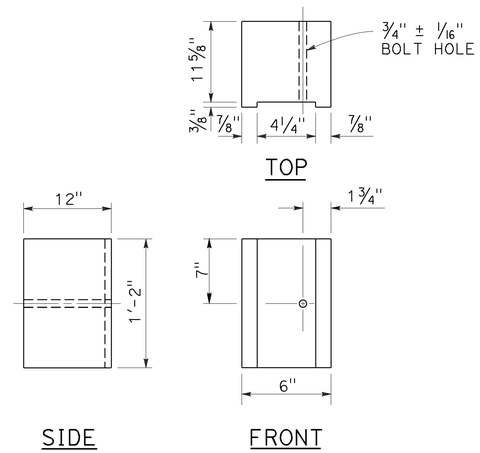

6" x 12"
NOTCHED WOOD BLOCK
See Notes 2 and 3

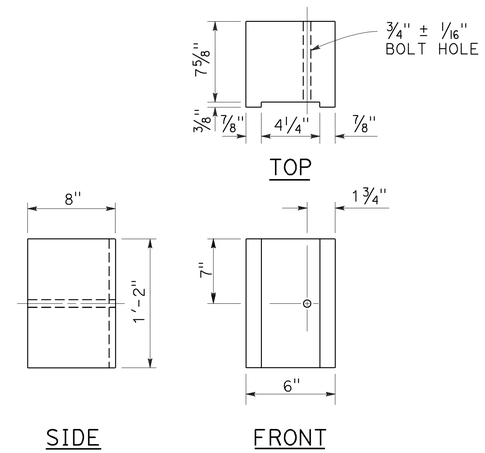

6" x 8"
NOTCHED WOOD BLOCK
Only for use with metal beam guard railing. See Note 5

NOTES:

1. All holes in steel post shall be 13/16" Dia maximum.
2. Dimensions shown for wood block are nominal.
3. Notched face of block faces steel post.
4. 6'-0" length posts to be used for typical roadway installation. See Revised Standard Plan RSP A77N3.
5. See Revised Standard Plan RSP A77L3 for use of 6" x 8" and 8" x 8" notched wood blocks.
6. This post and 8" x 12" block combination to be used for line post sections of MGS on narrow roadways and where strengthened line post sections of MGS are warranted to shield fixed objects.

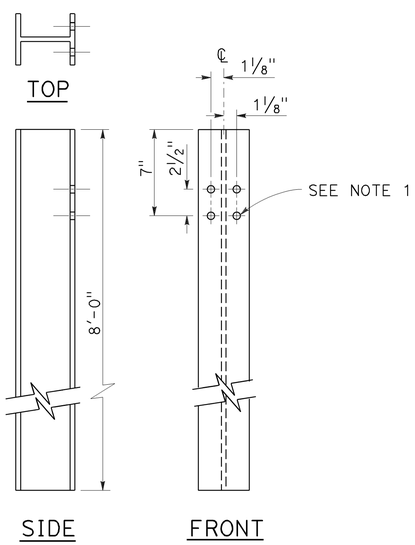

W6 x 15
STEEL POST
See Note 6

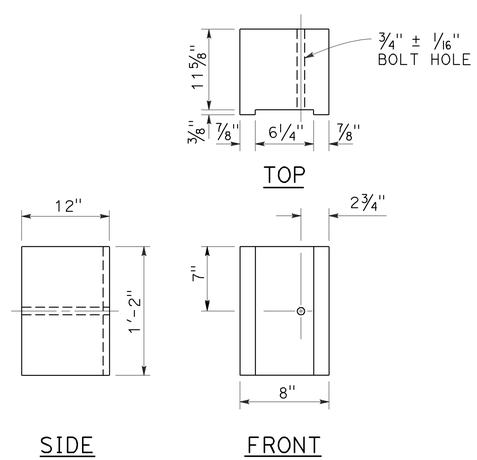

8" x 12"
NOTCHED WOOD BLOCK
See Notes 2 and 3

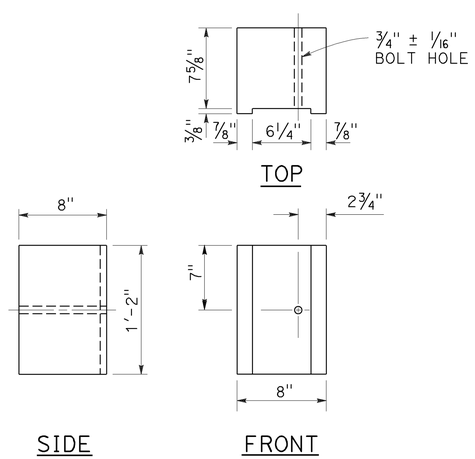

8" x 8"
NOTCHED WOOD BLOCK
Only for use with metal beam guard railing. See Note 5

STATE OF CALIFORNIA
DEPARTMENT OF TRANSPORTATION

MIDWEST GUARDRAIL SYSTEM STEEL POST AND NOTCHED WOOD BLOCK DETAILS

NO SCALE

RSP A77N2 DATED NOVEMBER 15, 2013 SUPERSEDES RSP A77N2
DATED JULY 19, 2013 THAT SUPPLEMENTS THE STANDARD PLANS BOOK DATED 2010.

REVISED STANDARD PLAN RSP A77N2

2010 REVISED STANDARD PLAN RSP A77N2

10-29-13

Dist	COUNTY	ROUTE	POST MILES TOTAL PROJECT	SHEET No.	TOTAL SHEETS
10	SJ	88	6.1/8.9	53	63

Randell D. Hiatt
REGISTERED CIVIL ENGINEER

November 15, 2013
PLANS APPROVAL DATE

REGISTERED PROFESSIONAL ENGINEER
Randell D. Hiatt
No. C50200
Exp. 6-30-15
CIVIL
STATE OF CALIFORNIA

THE STATE OF CALIFORNIA OR ITS OFFICERS OR AGENTS SHALL NOT BE RESPONSIBLE FOR THE ACCURACY OR COMPLETENESS OF SCANNED COPIES OF THIS PLAN SHEET.

TO ACCOMPANY PLANS DATED 5-5-14

2010 REVISED STANDARD PLAN RSP A77N3

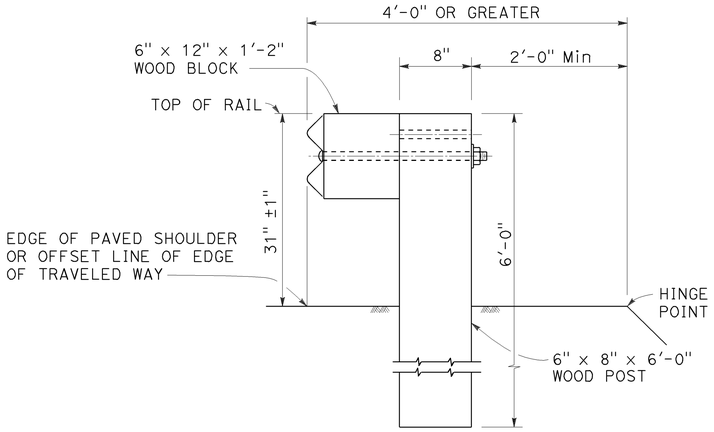

DETAIL A

TYPICAL ROADWAY INSTALLATION

See Note 1

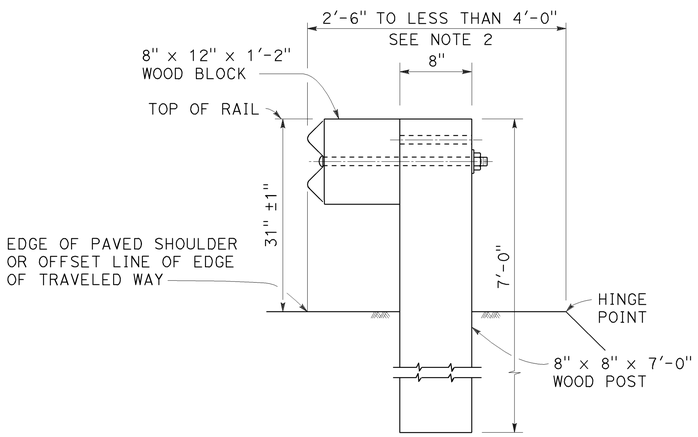

DETAIL B

NARROW ROADWAY INSTALLATION

See Note 1

POST EMBEDMENT

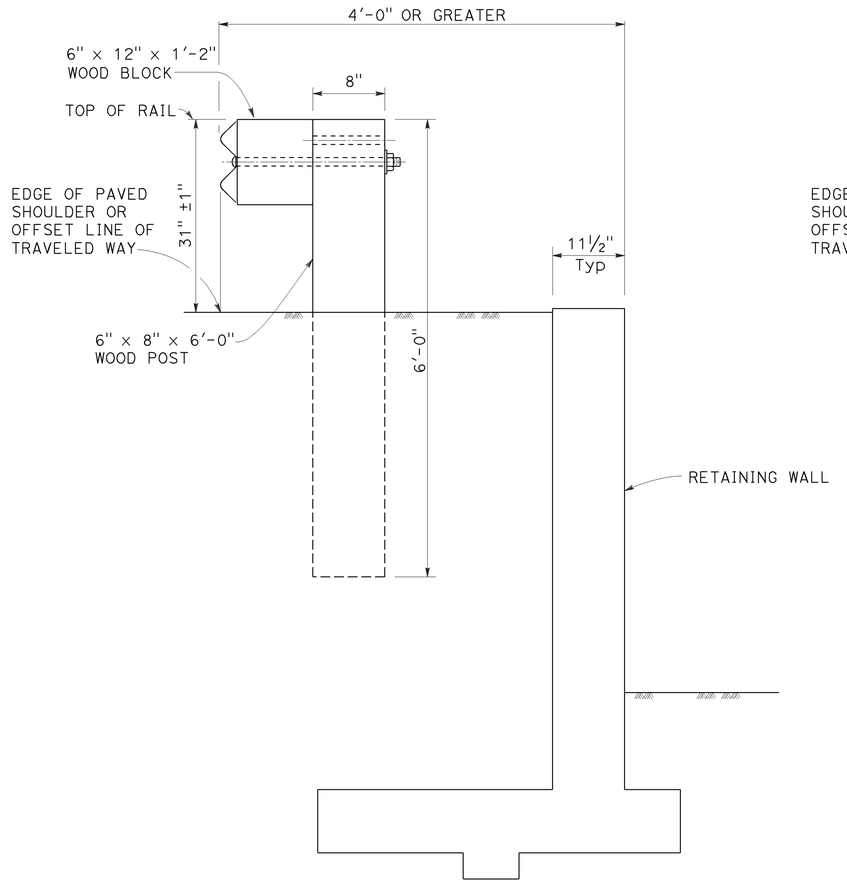

DETAIL C

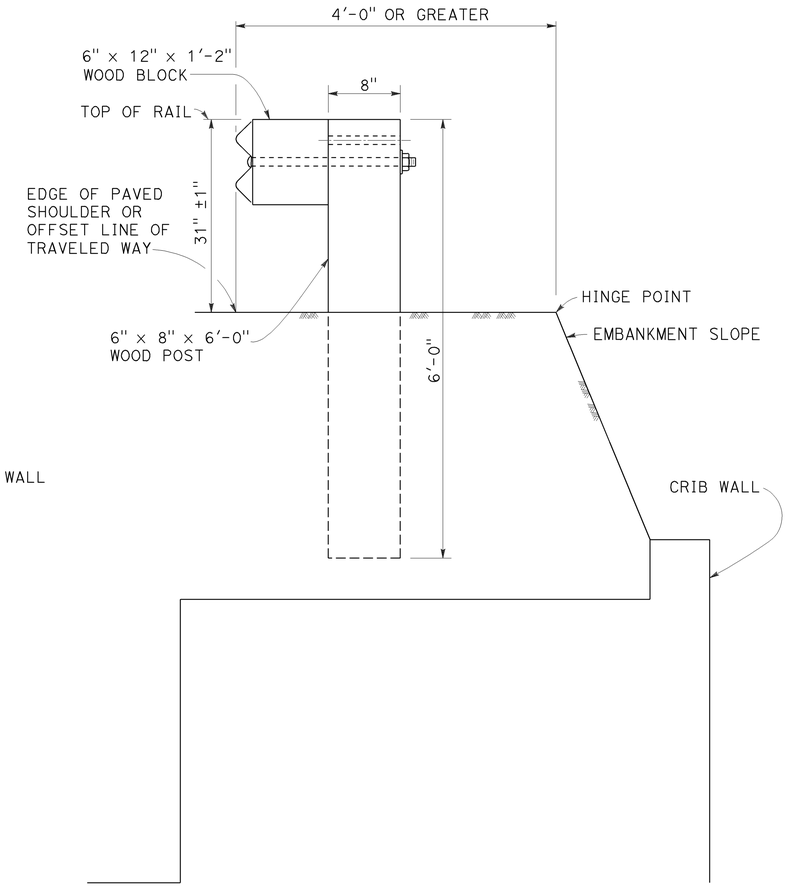

DETAIL D

INSTALLATION AT EARTH RETAINING WALLS

NOTES:

1. These installation details also applicable to steel line post installations. For Detail A, C, and D, where steel line post installations are constructed, W6 x 8.5 or W6 x 9 steel post, 6'-0" in length, with 6" x 12" x 1'-2" notched wood blocks or notched recycled plastic blocks are to be used in place of the size of wood post and wood block shown. For Detail B, where steel line post installations are constructed, W6 x 15 steel post, 8'-0" in length, with 8" x 12" x 1'-2" notched wood blocks or notched recycled plastic blocks are to be used in place of the size of wood post and wood block shown. For additional installation details, see Revised Standard Plan RSP A77L1 and RSP A77L2.
2. Where the distance between the face of the rail and the hinge point is less than 2'-6", see the Project Plans for special details.
3. For dike positioning with MGS installations, see Revised Standard Plan RSP A77N4.

STATE OF CALIFORNIA
DEPARTMENT OF TRANSPORTATION

MIDWEST GUARDRAIL SYSTEM TYPICAL LINE POST EMBEDMENT AND HINGE POINT OFFSET DETAILS

NO SCALE

RSP A77N3 DATED NOVEMBER 15, 2013 SUPERSEDES RSP A77N3
DATED JULY 19, 2013 THAT SUPPLEMENTS THE STANDARD PLANS BOOK DATED 2010.

REVISED STANDARD PLAN RSP A77N3

10-29-13

Dist	COUNTY	ROUTE	POST MILES TOTAL PROJECT	SHEET No.	TOTAL SHEETS
10	SJ	88	6.1/8.9	54	63

Randell D. Hiatt
REGISTERED CIVIL ENGINEER

July 19, 2013
PLANS APPROVAL DATE

REGISTERED PROFESSIONAL ENGINEER
Randell D. Hiatt
No. C50200
Exp. 6-30-15
CIVIL
STATE OF CALIFORNIA

THE STATE OF CALIFORNIA OR ITS OFFICERS OR AGENTS SHALL NOT BE RESPONSIBLE FOR THE ACCURACY OR COMPLETENESS OF SCANNED COPIES OF THIS PLAN SHEET.

TO ACCOMPANY PLANS DATED 5-5-14

NOTES:

1. When necessary to place dike more than 7" in front of face of MGS, only Type C dike may be used. For dike details, see Revised Standard Plan RSP A87B.
2. For standard railing post embedment, see Revised Standard Plan RSP A77N3.
3. MGS delineation to be used where shown on the Project Plans.
4. When dike or curb is placed under MGS, the maximum height of the dike or curb shall be 6". Mountable dike should not be used. For dike and curb details, see Revised Standard Plans RSP A87A and RSP A87B.
5. For details of typical distance between the face of rail and hinge point, see Revised Standard Plan RSP A77N3.
6. For steel line posts, use 1/4 - 20 self-tapping screws in 0.22" diameter holes or 1/4" bolts in 9/32" diameter holes.

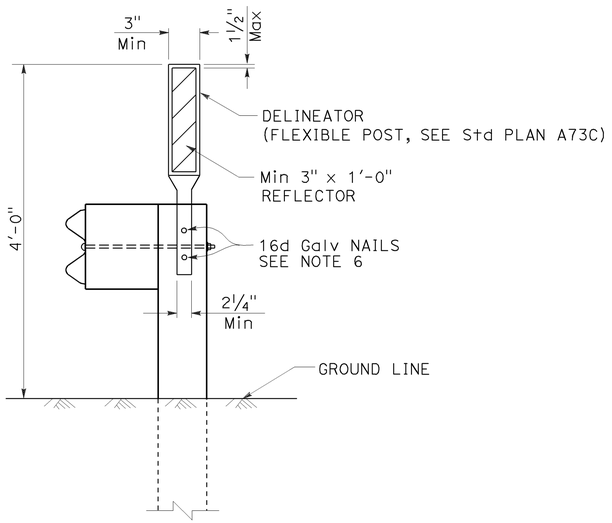

MGS DELINEATION
See Note 3

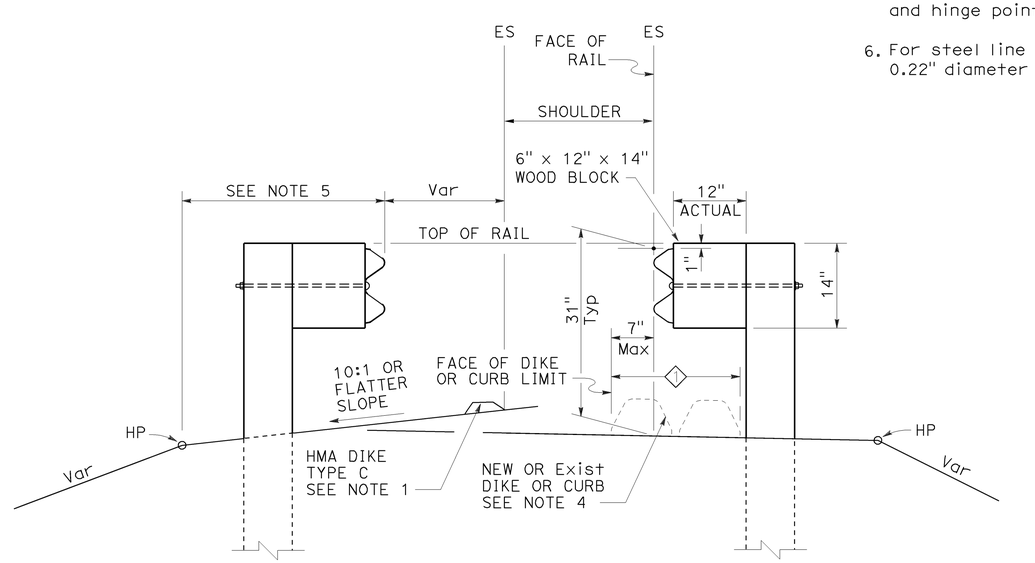

DIKE POSITIONING
See Note 1

1 PERMISSIBLE DIKE OR CURB PLACEMENT AREA

STATE OF CALIFORNIA
DEPARTMENT OF TRANSPORTATION

MIDWEST GUARDRAIL SYSTEM TYPICAL RAILING DELINEATION AND DIKE POSITIONING DETAILS

NO SCALE

RSP A77N4 DATED JULY 19, 2013 SUPPLEMENTS THE STANDARD PLANS BOOK DATED 2010.

REVISED STANDARD PLAN RSP A77N4

2010 REVISED STANDARD PLAN RSP A77N4

7-10-13

Dist	COUNTY	ROUTE	POST MILES TOTAL PROJECT	SHEET No.	TOTAL SHEETS
10	SJ	88	6.1/8.9	55	63

Randell D. Hiatt
REGISTERED CIVIL ENGINEER

July 19, 2013
PLANS APPROVAL DATE

REGISTERED PROFESSIONAL ENGINEER
Randell D. Hiatt
No. C50200
Exp. 6-30-15
CIVIL
STATE OF CALIFORNIA

THE STATE OF CALIFORNIA OR ITS OFFICERS OR AGENTS SHALL NOT BE RESPONSIBLE FOR THE ACCURACY OR COMPLETENESS OF SCANNED COPIES OF THIS PLAN SHEET.

TO ACCOMPANY PLANS DATED 5-5-14

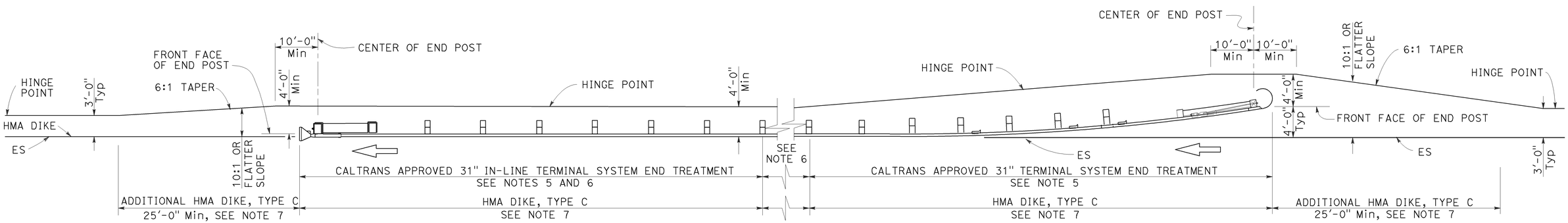

TYPE 11H LAYOUT

(Embankment MGS installation with 31" flared end treatment
and 31" in-line treatment at the ends of railing)
See Notes 4 and 7

NOTES:

1. Line post, blocks and hardware to be used are shown on Revised Standard Plans RSP A77L1, RSP A77L2, RSP A77M1, RSP A77N1 and RSP A77N2.
2. MGS post spacing to be 6'-3" center to center, except as otherwise noted.
3. Except as noted, line posts are 6" x 8" x 6'-0" wood with 6" x 12" x 1'-2" wood blocks. W6 x 8.5 or W6 x 9 steel posts, 6'-0" in length, with 6" x 12" x 1'-2" notched wood blocks or plastic blocks may be used for 6" x 8" x 6'-0" wood post with 6" x 12" x 1'-2" wood blocks where applicable and when specified.
4. Layout Types 11D through 11L, shown on the A77P Series of Standard Plans, are typically used where MGS is recommended to shield embankment slopes and a crashworthy 31" end treatment is required for both directions of traffic.
5. The type of 31" terminal system end treatment to be used will be shown on the Project Plans.
6. Dependent on site conditions (embankment height and side slope), construction of additional MGS (length equal to multiples of 12'-6" with 6'-3" post spacing) may be advisable.
7. Where placement of dike is required with MGS installations, see Revised Standard Plan RSP A77N4 for dike positioning details.

STATE OF CALIFORNIA
DEPARTMENT OF TRANSPORTATION

MIDWEST GUARDRAIL SYSTEM TYPICAL LAYOUTS FOR EMBANKMENTS

NO SCALE

RSP A77P4 DATED JULY 19, 2013 SUPPLEMENTS THE STANDARD PLANS BOOK DATED 2010.

REVISED STANDARD PLAN RSP A77P4

2010 REVISED STANDARD PLAN RSP A77P4

Dist	COUNTY	ROUTE	POST MILES TOTAL PROJECT	SHEET No.	TOTAL SHEETS
10	SJ	88	6.1/8.9	56	63

Raymond Don Tsztoo
REGISTERED CIVIL ENGINEER

October 19, 2012
PLANS APPROVAL DATE

REGISTERED PROFESSIONAL ENGINEER
Raymond Don Tsztoo
No. C37332
Exp. 6-30-14
CIVIL
STATE OF CALIFORNIA

THE STATE OF CALIFORNIA OR ITS OFFICERS OR AGENTS SHALL NOT BE RESPONSIBLE FOR THE ACCURACY OR COMPLETENESS OF SCANNED COPIES OF THIS PLAN SHEET.

TO ACCOMPANY PLANS DATED 5-5-14

2010 REVISED STANDARD PLAN RSP A86D

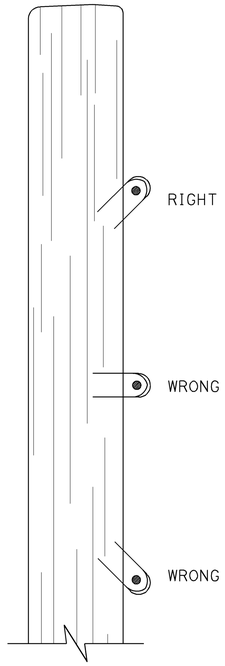

DRIVE STAPLES AT ANGLE

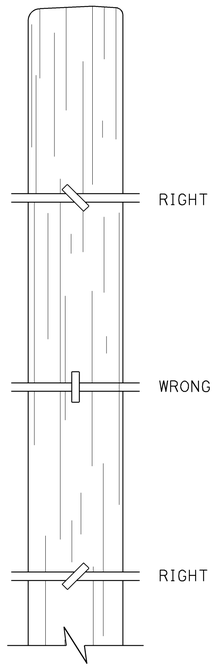

DO NOT DRIVE STAPLES PARALLEL TO SIDE OF POST

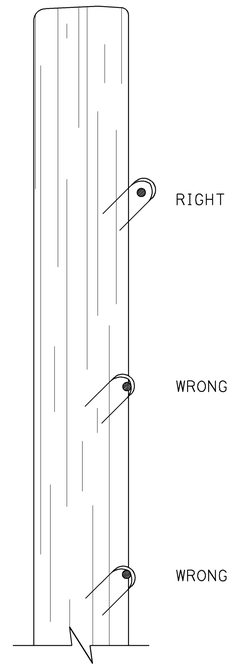

LEAVE WIRE LOOSE IN STAPLE

LINE POST STAPLING DETAILS

(Apply to rectangular/square and round posts)
Do not staple vertical wire in wire mesh.

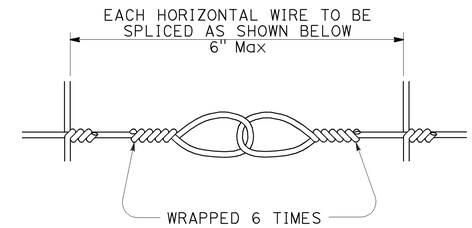

SPLICE DETAIL FOR BARBED WIRE/WIRE MESH FENCE

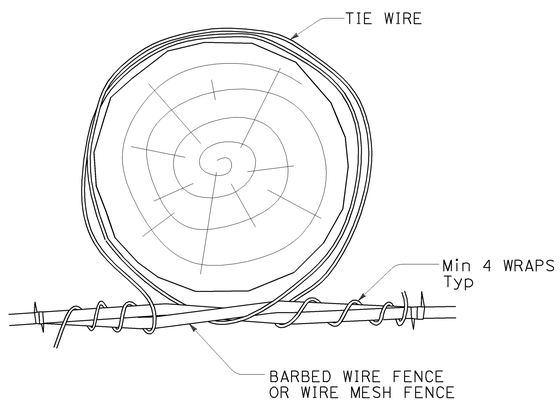

OPTION A

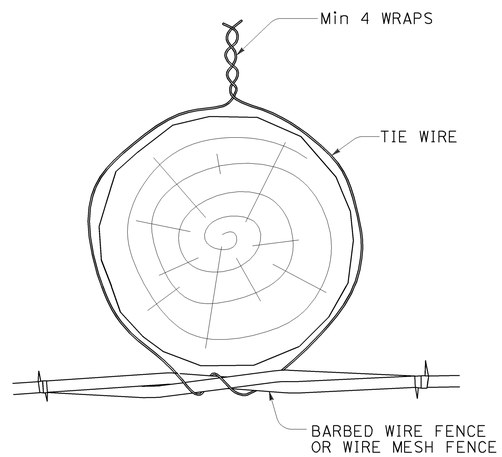

OPTION B

LINE POST WIRE TIE OPTION DETAILS

(Option details also apply to rectangular/square posts)

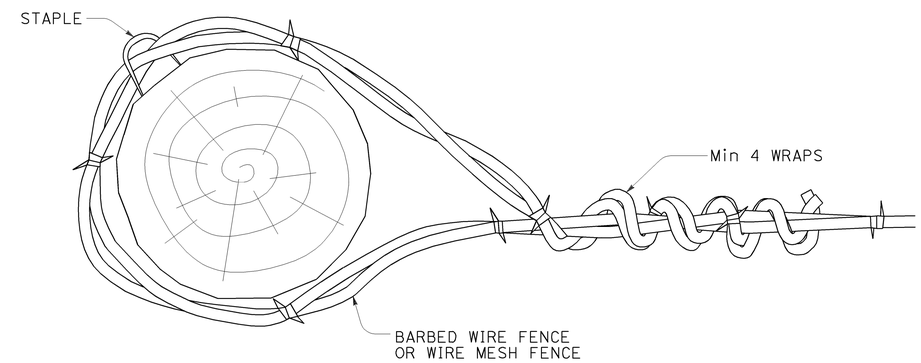

END, LATCH, PULL, AND CORNER POST DETAIL

(Also applies to rectangular/square posts)

STATE OF CALIFORNIA
DEPARTMENT OF TRANSPORTATION

BARBED WIRE AND WIRE MESH FENCE - MISCELLANEOUS DETAILS

NO SCALE

RSP A86D DATED OCTOBER 19, 2012 SUPPLEMENTS THE STANDARD PLANS BOOK DATED 2010.

REVISED STANDARD PLAN RSP A86D

10-9-12

Dist	COUNTY	ROUTE	POST MILES TOTAL PROJECT	SHEET No.	TOTAL SHEETS
10	SJ	88	6.1/8.9	57	63

REGISTERED CIVIL ENGINEER

July 19, 2013
PLANS APPROVAL DATE

REGISTERED PROFESSIONAL ENGINEER
Gurinderpal Bhullar
No. C48815
Exp. 9-30-14
CIVIL
STATE OF CALIFORNIA

THE STATE OF CALIFORNIA OR ITS OFFICERS OR AGENTS SHALL NOT BE RESPONSIBLE FOR THE ACCURACY OR COMPLETENESS OF SCANNED COPIES OF THIS PLAN SHEET.

TO ACCOMPANY PLANS DATED 5-5-14

2010 REVISED STANDARD PLAN RSP T9

TABLE 1

TAPER LENGTH CRITERIA AND CHANNELIZING DEVICE SPACING

SPEED (S)	MINIMUM TAPER LENGTH * FOR WIDTH OF OFFSET 12 FEET (W)				MAXIMUM CHANNELIZING DEVICE SPACING		
					X	Y	Z **
	TANGENT 2L	MERGING L	SHIFTING L/2	SHOULDER L/3	TAPER	TANGENT	CONFLICT
mph	ft	ft	ft	ft	ft	ft	ft
20	160	80	40	27	20	40	10
25	250	125	63	42	25	50	12
30	360	180	90	60	30	60	15
35	490	245	123	82	35	70	17
40	640	320	160	107	40	80	20
45	1080	540	270	180	45	90	22
50	1200	600	300	200	50	100	25
55	1320	660	330	220	55	110	27
60	1440	720	360	240	60	120	30
65	1560	780	390	260	65	130	32
70	1680	840	420	280	70	140	35

* - For other offsets, use the following merging taper length formula for L:
For speed of 40 mph or less, $L = WS^2/60$
For speed of 45 mph or more, $L = WS$

Where: L = Taper length in feet
W = Width of offset in feet
S = Posted speed limit, off-peak 85th-percentile speed prior to work starting, or the anticipated operating speed in mph

** - Use for taper and tangent sections where there are no pavement markings or where there is a conflict between existing pavement markings and channelizers (CA).

TABLE 2

LONGITUDINAL BUFFER SPACE AND FLAGGER STATION SPACING

SPEED *	Min D **	DOWNGRADE Min D ***		
		-3%	-6%	-9%
mph	ft	ft	ft	ft
20	115	116	120	126
25	155	158	165	173
30	200	205	215	227
35	250	257	271	287
40	305	315	333	354
45	360	378	400	427
50	425	446	474	507
55	495	520	553	593
60	570	598	638	686
65	645	682	728	785
70	730	771	825	891

* - Speed is posted speed limit, off-peak 85th-percentile speed prior to work starting, or the anticipated operating speed in mph

** - Longitudinal buffer space or flagger station spacing

*** - Use on sustained downgrade steeper than -3 percent and longer than 1 mile.

TABLE 3

ADVANCE WARNING SIGN SPACING

ROAD TYPE	DISTANCE BETWEEN SIGNS *		
	A	B	C
	ft	ft	ft
URBAN - 25 mph OR LESS	100	100	100
URBAN - MORE THAN 25 mph TO 40 mph	250	250	250
URBAN - MORE THAN 40 mph	350	350	350
RURAL	500	500	500
EXPRESSWAY / FREEWAY	1000	1500	2640

* - The distances are approximate, are intended for guidance purposes only, and should be applied with engineering judgment. These distances should be adjusted by the Engineer for field conditions, if necessary, by increasing or decreasing the recommmended distances.

STATE OF CALIFORNIA
DEPARTMENT OF TRANSPORTATION

TRAFFIC CONTROL SYSTEM TABLES FOR LANE AND RAMP CLOSURES

NO SCALE

RSP T9 DATED JULY 19, 2013 SUPERSEDES RSP T9 DATED APRIL 19, 2013 THAT SUPPLEMENTS THE STANDARD PLANS BOOK DATED 2010.

REVISED STANDARD PLAN RSP T9

Dist	COUNTY	ROUTE	POST MILES TOTAL PROJECT	SHEET No.	TOTAL SHEETS
10	SJ	88	6.1/8.9	58	63

REGISTERED CIVIL ENGINEER

July 18, 2014
PLANS APPROVAL DATE

REGISTERED PROFESSIONAL ENGINEER Gurinderpal Bhullar No. C48815 Exp. 9-30-14 CIVIL STATE OF CALIFORNIA

THE STATE OF CALIFORNIA OR ITS OFFICERS OR AGENTS SHALL NOT BE RESPONSIBLE FOR THE ACCURACY OR COMPLETENESS OF SCANNED COPIES OF THIS PLAN SHEET.

TO ACCOMPANY PLANS DATED 5-5-14

NOTES:

See Revised Standard Plan RSP T9 for tables.

Use cone spacing X for taper segment, Y for tangent segment or Z for conflict situations, as approriate, per Table 1, unless X, Y, or Z cone spacing is shown on this sheet.

Unless otherwise specified in the special provisions, all temporary warning signs shall have black legend on fluorescent orange background.

California codes are designated by (CA). Otherwise, Federal (MUTCD) codes are shown.

TYPICAL LANE CLOSURE WITH REVERSIBLE CONTROL

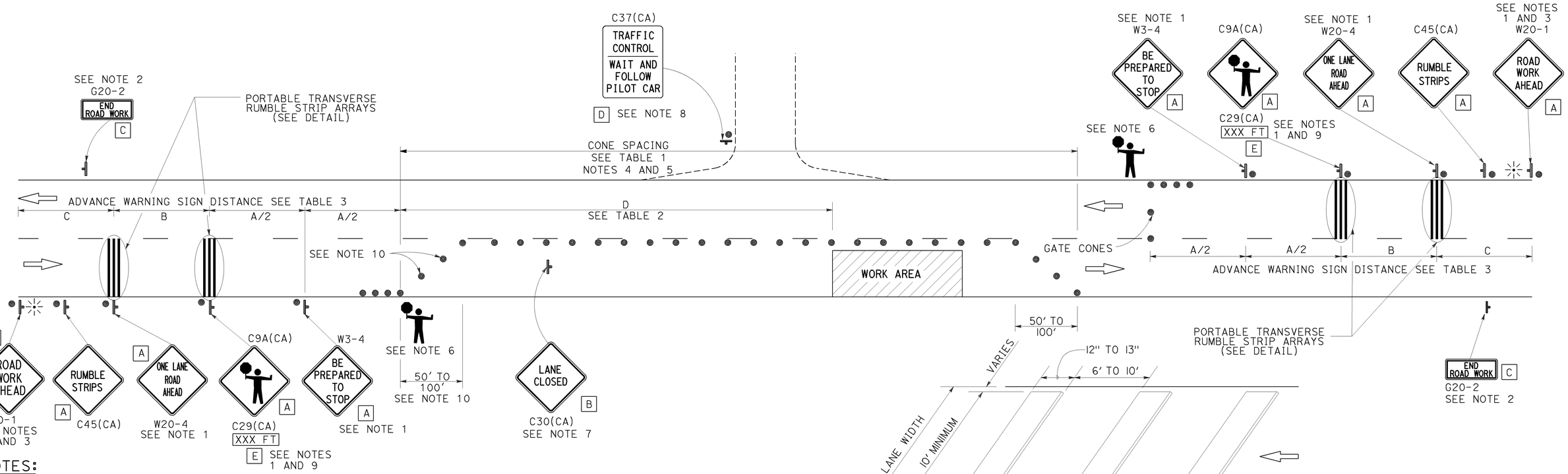

PORTABLE TRANSVERSE RUMBLE STRIP ARRAY DETAIL

NOTES:

1. Each advance warning sign in each direction of travel shall be equipped with at least two flags for daytime closure. Each flag shall be at least 16" x 16" in size and shall be orange or fluorescent red-orange in color. Flashing beacons shall be placed at the locations indicated for lane closure during hours of darkness.
2. A G20-2 "END ROAD WORK" sign, as appropriate, shall be placed at the end of the lane control unless the end of work area is obvious, or ends within a larger project's limits.
3. If the W20-1 sign would follow within 2000' of a stationary W20-1 or G20-1 "ROAD WORK NEXT _____ MILES", use a W20-4 sign for the first advance warning sign.
4. All cones used for lane closures during the hours of darkness shall be fitted with retroreflective bands (or sleeves) as specified in the specifications.
5. Portable delineators, placed at one-half the spacing indicated for traffic cones, may be used instead of cones for daytime closures only.
6. Additional advance flaggers may be required. Flagger should stand in a conspicuous place, be visible to approaching traffic as well as approaching vehicles after the first vehicle has stopped. During the hours of darkness, the flagging-station and flagger shall be illuminated and clearly visible to approaching traffic. The illumination footprint of the lighting on the ground shall be at least 20' in diameter. Place a minimum of four cones at 50' intervals in advance of flagger station as shown.
7. Place C30(CA) "LANE CLOSED" sign at 500' to 1000' intervals throughout extended work areas. They are optional if the work area is visible from the flagger station.
8. When a pilot car is used, place a C37(CA) "TRAFFIC CONTROL-WAIT AND FOLLOW PILOT CAR" sign with black legend on white background at all intersections, driveways and alleys without a flagger within traffic control area. Signs shall be clean and visible at all times. Where traffic can not be effectively self-regulated, at least one flagger shall be used at each intersection within traffic control area.
9. An optional C29(CA) sign may be placed below the C9A(CA) sign.
10. Either traffic cones or barricades shall be placed on the taper. Barricades shall be Type I, II, or III.
11. The color of the portable transverse rumble strips shall be black or orange. Use 2 arrays, each array shall consist of 3 rumble strips.
12. Portable transverse rumble strips shall not be placed on sharp horizontal or vertical curves nor shall they be placed through pedestrian crossings.
13. If the portable transverse rumble strips become out of alignment (skewed) by more than 6 inches, measured from one end to the other, they shall be readjusted to bring the placement back to the original location.

LEGEND

- TRAFFIC CONE
- TEMPORARY TRAFFIC CONTROL SIGN
- PORTABLE FLASHING BEACON
- FLAGGER

SIGN PANEL SIZE (Min)

A	48" x 48"
B	30" x 30"
C	36" x 18"
D	36" x 42"
E	20" x 7"

STATE OF CALIFORNIA
DEPARTMENT OF TRANSPORTATION

TRAFFIC CONTROL SYSTEM FOR LANE CLOSURE ON TWO LANE CONVENTIONAL HIGHWAYS

NO SCALE

RSP T13 DATED JULY 18, 2014 SUPERSEDES RSP T13 DATED APRIL 19, 2013 AND STANDARD PLAN T13 DATED MAY 20, 2011 - PAGE 241 OF THE STANDARD PLANS BOOK DATED 2010.

REVISED STANDARD PLAN RSP T13

2010 REVISED STANDARD PLAN RSP T13

6-19-14

Dist	COUNTY	ROUTE	POST MILES TOTAL PROJECT	SHEET No.	TOTAL SHEETS
10	SJ	88	6.1/8.9	59	63

REGISTERED CIVIL ENGINEER

November 15, 2013
PLANS APPROVAL DATE

REGISTERED PROFESSIONAL ENGINEER
Tillat Satter
No. C42892
Exp. 3-31-14
CIVIL
STATE OF CALIFORNIA

THE STATE OF CALIFORNIA OR ITS OFFICERS OR AGENTS SHALL NOT BE RESPONSIBLE FOR THE ACCURACY OR COMPLETENESS OF SCANNED COPIES OF THIS PLAN SHEET.

TO ACCOMPANY PLANS DATED 5-5-14

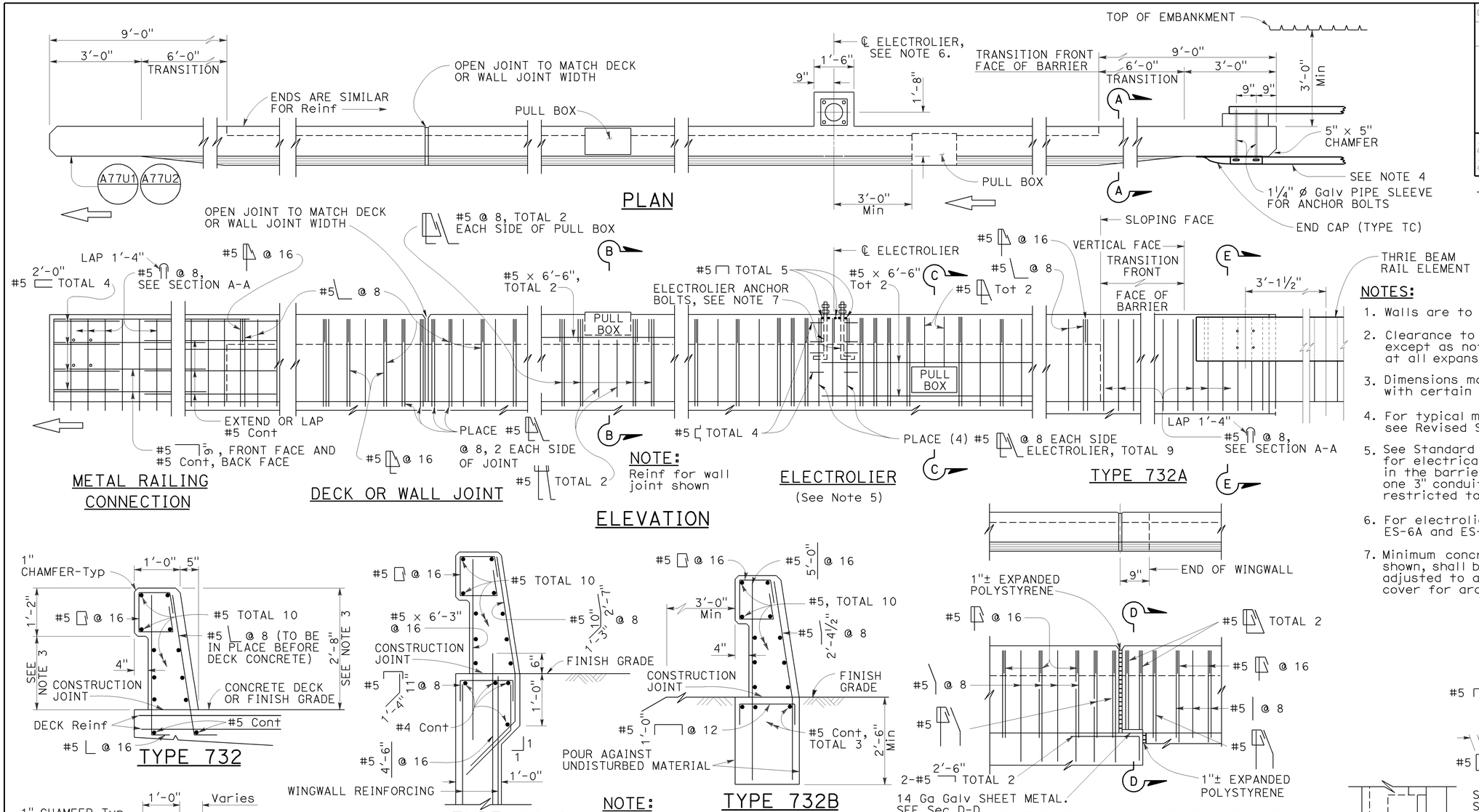

NOTES:

1. Walls are to be backfilled before barrier is placed.
2. Clearance to reinforcing steel in barrier to be 1", except as noted. Longitudinal reinforcement to stop at all expansion joints.
3. Dimensions may vary with roadway cross slope and with certain thickness of surfacing. See Project Plans.
4. For typical metal railing connection details not shown, see Revised Standard Plans RSP A77U1 and RSP A77U2.
5. See Standard Plans ES-9A, ES-9B, ES-9C, ES-9D and ES-9E for electrical details. The maximum number of conduits in the barrier is limited to two 2" conduits along with one 3" conduit. When a 3" conduit is used, it is restricted to the base of the barrier.
6. For electrolier mounting details, See Standard Plans ES-6A and ES-6B.
7. Minimum concrete edge distance, to the reinforcing shown, shall be maintained. Edge distance may be adjusted to accommodate increase in concrete cover for architectual treatment.

NOTE: Types 732A and 732B are similar to Type 732 except as noted.

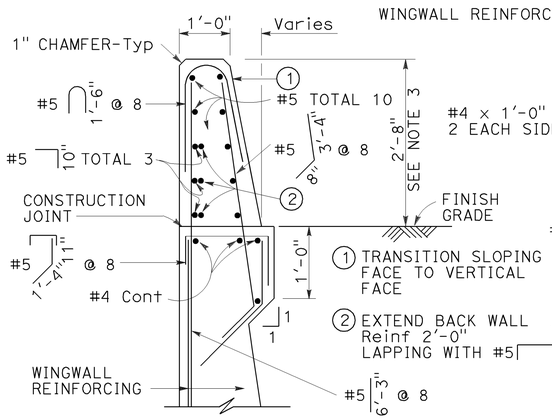

Details shown for barrier anchorage to Type 732A. Anchorage for barrier Types 732 and 732A are similar to their respective details.

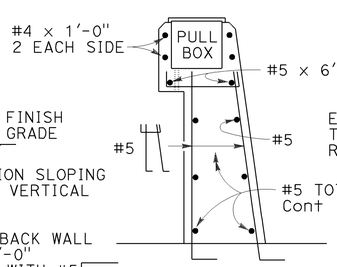

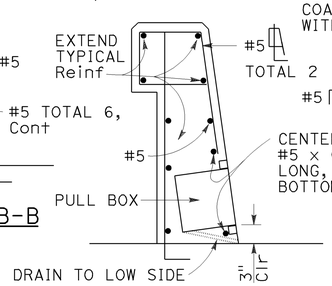

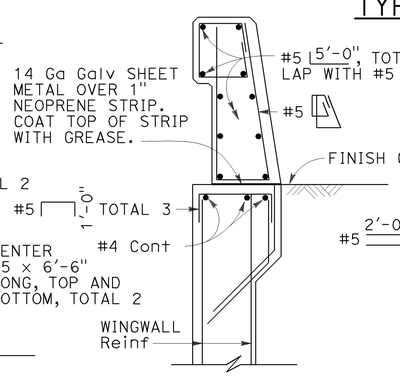

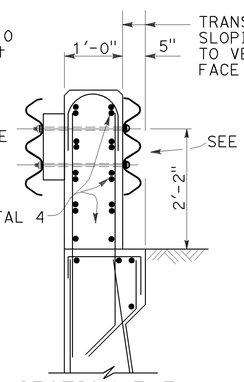

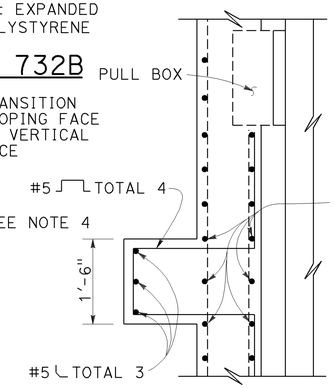

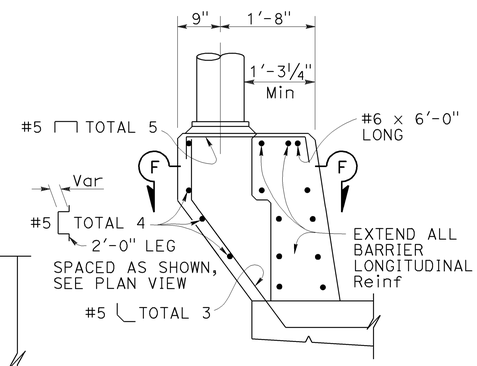

STATE OF CALIFORNIA
DEPARTMENT OF TRANSPORTATION

CONCRETE BARRIER TYPE 732

NO SCALE

RSP B11-55 DATED NOVEMBER 15, 2013 SUPERSEDES
RSP B11-55 DATED JULY 19, 2013 AND STANDARD PLAN B11-55
DATED MAY 20, 2011 - PAGE 297 OF THE STANDARD PLANS BOOK DATED 2010.

REVISED STANDARD PLAN RSP B11-55

2010 REVISED STANDARD PLAN RSP B11-55

10-4-13

DIST	COUNTY	ROUTE	POST MILES TOTAL PROJECT	SHEET No.	TOTAL SHEETS
10	SJ	88	6.1/8.9	60	63

REGISTERED CIVIL ENGINEER 5-05-14 DATE

5-5-14
PLANS APPROVAL DATE

REGISTERED PROFESSIONAL ENGINEER ALMAN MALAK No. C73369 Exp. 12-31-2014 CIVIL STATE OF CALIFORNIA

The State of California or its officers or agents shall not be responsible for the accuracy or completeness of electronic copies of this plan sheet.

Note:

For QUADGUARD SYSTEMS, (CRASH CUSHIONS), see ROADWAY PLANS

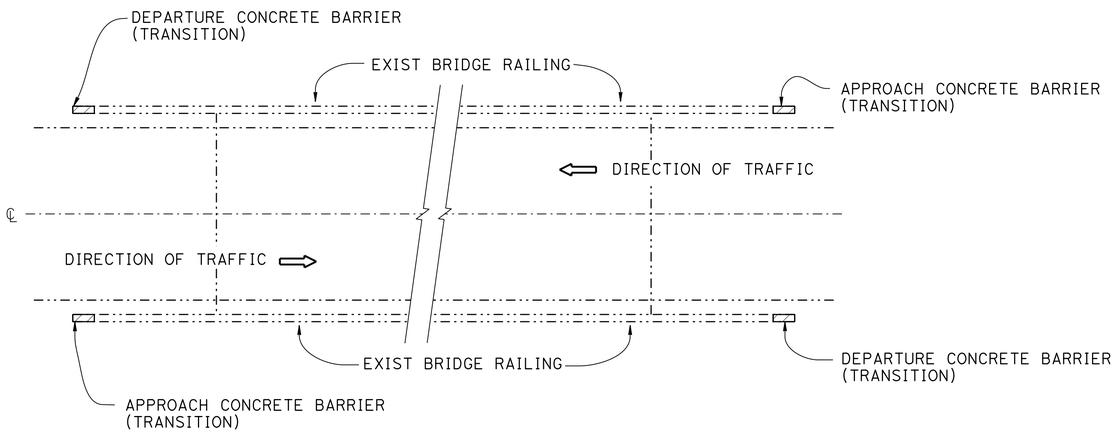

(TYPICAL) FOR TWO-WAY BRIDGES

(CALAVERAS RIVER BRIDGE & BEAR RIVER BRIDGE)
NO SCALE

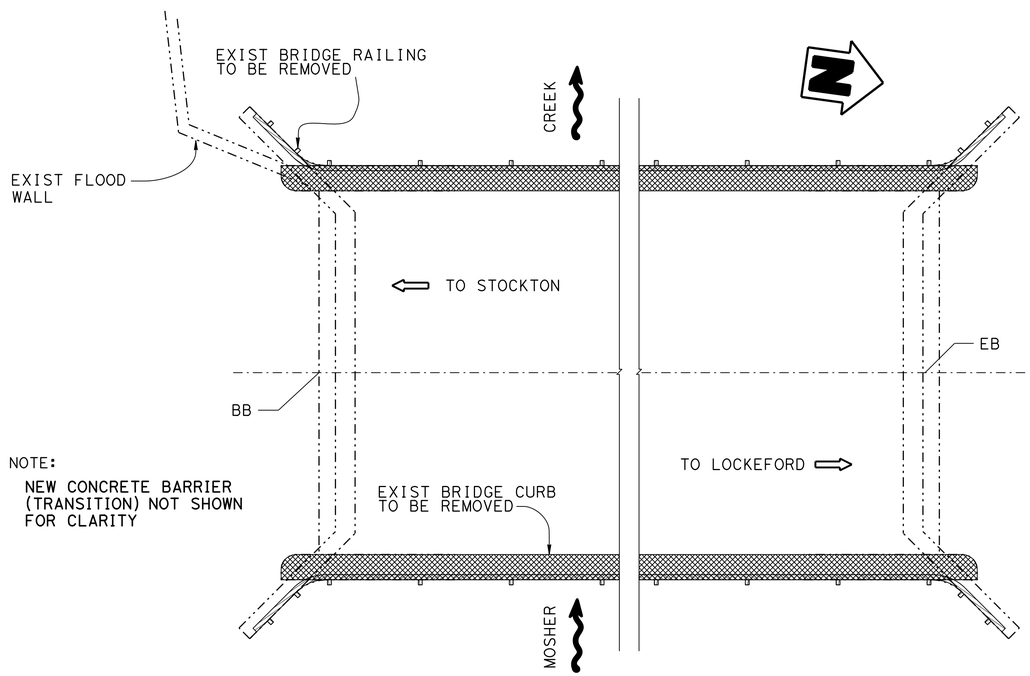

NOTE:
NEW CONCRETE BARRIER (TRANSITION) NOT SHOWN FOR CLARITY

MOSHIER SLOUGH BRIDGE BR.NO. 29-0061

NO SCALE

LEGEND

- Existing structure
- New construction
- Concrete removal
- Metal rail removal

INDEX TO PLANS

SHEET No.	TITLE
1.	CONCRETE BARRIER TRANSITION - GENERAL PLAN, INDEX
2.	CALAVERAS RIVER BRIDGE - CONCRETE BARRIER TRANSITION DETAILS
3.	MOSHIER SLOUGH BRIDGE - CONCRETE BARRIER TRANSITION DETAILS
4.	BEAR CREEK BRIDGE - CONCRETE BARRIER TRANSITION DETAILS

STANDARD PLANS 2010

A10A	ABBREVIATIONS (SHEET 1 OF 2)
RSP A10B	ABBREVIATIONS (SHEET 2 OF 2)
B11-55	CONCRETE BARRIER TYPE 732

NOTES:

1. See "ROADWAY PLANS" for site locations.
2. Existing utilities to be protected by contractor.
3. For K Rail and traffic handling, see ROADWAY PLANS

CALAVERAS RIVER BRIDGE — BRIDGE NO. 29-0060

QUANTITIES

LEAD COMPLIANCE PLAN	LUMP SUM
WORK AREA MONITORING (BRIDGE)	LUMP SUM
BRIDGE REMOVAL (PORTION), LOCATION A	LUMP SUM
CONCRETE BARRIER (TRANSITION)	96 LF

MOSHIER SLOUGH BRIDGE — BRIDGE NO. 29-0061

QUANTITIES

LEAD COMPLIANCE PLAN	LUMP SUM
WORK AREA MONITORING (BRIDGE)	LUMP SUM
BRIDGE REMOVAL (PORTION), LOCATION B	LUMP SUM
CONCRETE BARRIER (TRANSITION)	36 LF
CONCRETE BARRIER (TYPE 732 MODIFIED)	124 LF

BEAR CREEK BRIDGE — BRIDGE NO. 29-0062

QUANTITIES

CONCRETE BARRIER (TRANSITION)	16 LF

NO SCALE

X
DESIGN ENGINEER

	BY	CHECKED			
DESIGN	N KANEPATHIPILLAI	A MALAK	LOAD & RESISTANCE FACTOR DESIGN	LIVE LOADING: HL93 W/"LOW-BOY"; PERMIT DESIGN VEHICLE	
DETAILS	P WELLS	N KANEPATHIPILLAI	LAYOUT	P WELLS	A MALAK
QUANTITIES	N KANEPATHIPILLAI	A MALAK	SPECIFICATIONS	JIM CORRADO	JIM CORRADO

STATE OF CALIFORNIA
DEPARTMENT OF TRANSPORTATION

DIVISION OF ENGINEERING SERVICES
STRUCTURE DESIGN
SPECIAL DESIGN BRANCH

BRIDGE NO. 29-0061
POST MILE 6.1/8.9

CONCRETE BARRIER TRANSITION
GENERAL PLAN, INDEX

ORIGINAL SCALE IN INCHES FOR REDUCED PLANS 0 1 2 3

UNIT: 3619
PROJECT NUMBER & PHASE: 1000000009
CONTRACT NO.: 10-0A8301

DISREGARD PRINTS BEARING EARLIER REVISION DATES

REVISION DATES: 4/23/14 5-02-14 5-05-14

SHEET 1 OF 4

FILE => 10-0a8301-a-gp01.dgn

STRUCTURES DESIGN GENERAL PLAN SHEET (ENGLISH) (REV.09-01-10)

USERNAME => s123936 DATE PLOTTED => 22-MAY-2014 TIME PLOTTED => 13:25

DIST	COUNTY	ROUTE	POST MILES TOTAL PROJECT	SHEET No.	TOTAL SHEETS
10	SJ	88	6.1/8.9	61	63

REGISTERED CIVIL ENGINEER — DATE 5-05-14

5-5-14
PLANS APPROVAL DATE

The State of California or its officers or agents shall not be responsible for the accuracy or completeness of electronic copies of this plan sheet.

REGISTERED PROFESSIONAL ENGINEER — AIMAN MALAK — No. C73369 — Exp. 12-31-2014 — CIVIL — STATE OF CALIFORNIA

NOTES:

1. Clearance to reinforcing steel in barrier to be 1" except as noted. Longitudinal reinforcement to stop at all expansion joints.
2. See "CONCRETE BARRIER TRANSITION - GENERAL PLAN, INDEX" sheet for transition barrier layout.
3. For QUADGAUARD SYSTEM, (not shown), see "ROADWAY PLANS".
4. FG is top of 3½± AC overlay on bridge deck.

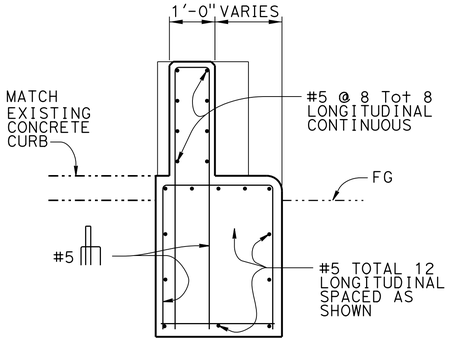

SECTION A-A
NO SCALE

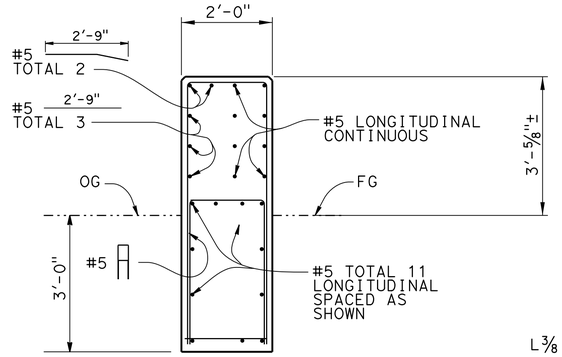

SECTION B-B
NO SCALE

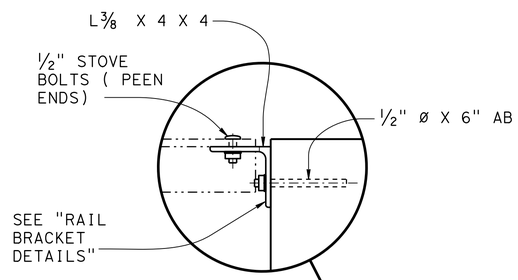

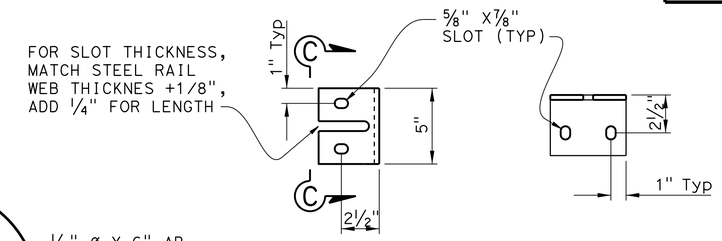

RAIL BRACKET DETAILS
NO SCALE

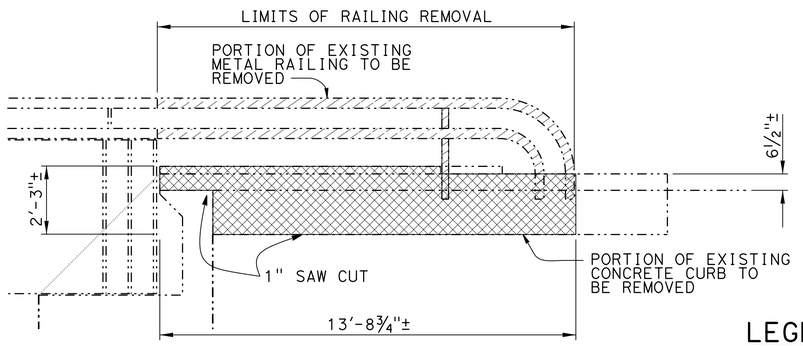

DEMOLITION ELEVATION
NO SCALE

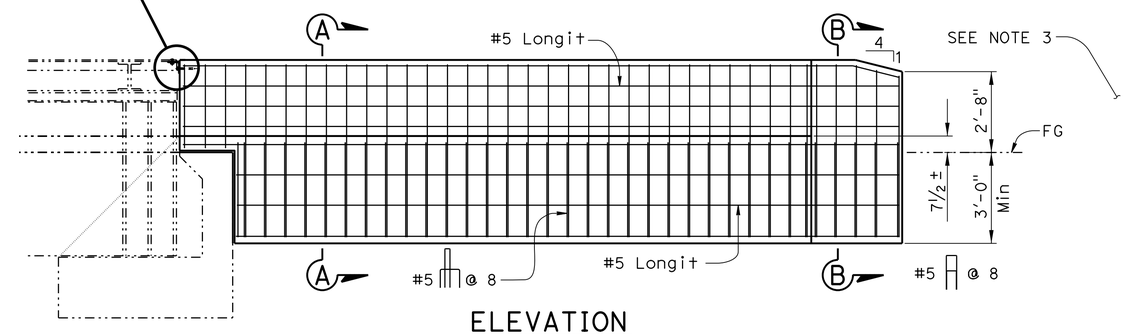

ELEVATION
NO SCALE

LEGEND

- Existing structure
- New construction
- Concrete removal
- Metal rail removal

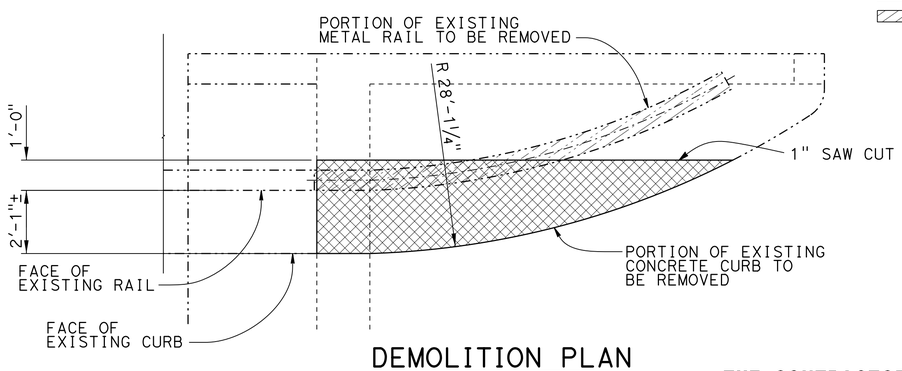

DEMOLITION PLAN
NO SCALE

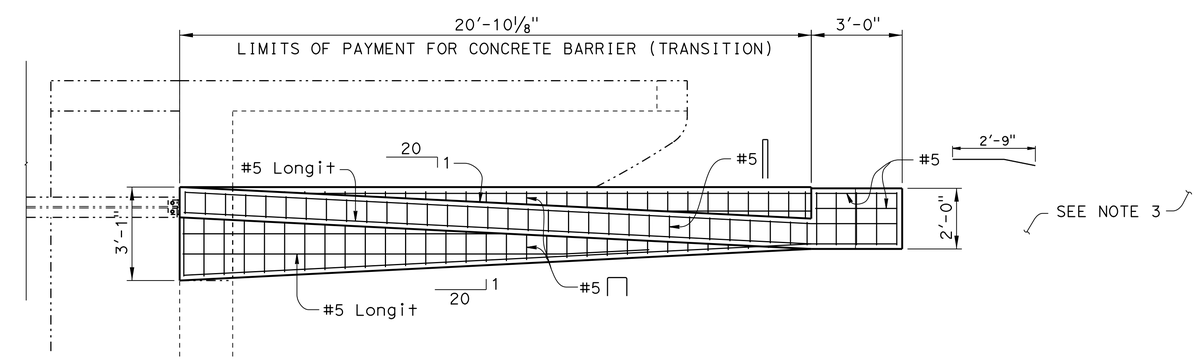

PLAN
NO SCALE

THE CONTRACTOR SHALL VERIFY ALL CONTROLLING FIELD DIMENSIONS BEFORE ORDERING OR FABRICATING ANY MATERIAL.

	BY	CHECKED
DESIGN	N KANEPATHIPILLAI	A MALAK
DETAILS	P WELLS	N KANEPATHIPILLAI
QUANTITIES	N KANEPATHIPILLAI	A MALAK

STATE OF CALIFORNIA
DEPARTMENT OF TRANSPORTATION

DIVISION OF ENGINEERING SERVICES
STRUCTURE DESIGN
SPECIAL DESIGN BRANCH

BRIDGE NO. 29-0060
POST MILE 6.11

CALAVERAS RIVER BRIDGE
CONCRETE BARRIER TRANSITION DETAILS

STRUCTURES DESIGN SPECIAL DESIGN SHEET (ENGLISH) (REV. 09-01-10)

ORIGINAL SCALE IN INCHES FOR REDUCED PLANS 0 1 2 3

UNIT: 3619
PROJECT NUMBER & PHASE: 1000000009
CONTRACT NO.: 10-0A8301

DISREGARD PRINTS BEARING EARLIER REVISION DATES

REVISION DATES: 7-16-12, 4-15-14

SHEET 2 OF 4

FILE => 10-0a8301-u-miscdt01.dgn

USERNAME => s123936 DATE PLOTTED => 22-MAY-2014 TIME PLOTTED => 13:25

DIST	COUNTY	ROUTE	POST MILES TOTAL PROJECT	SHEET No.	TOTAL SHEETS
10	SJ	88	6.1/8.9	62	63

REGISTERED CIVIL ENGINEER — DATE 5-05-14

5-5-14
PLANS APPROVAL DATE

The State of California or its officers or agents shall not be responsible for the accuracy or completeness of electronic copies of this plan sheet.

REGISTERED PROFESSIONAL ENGINEER — ALIMAN MALAK — No. C73369 — Exp. 12-31-2014 — CIVIL — STATE OF CALIFORNIA

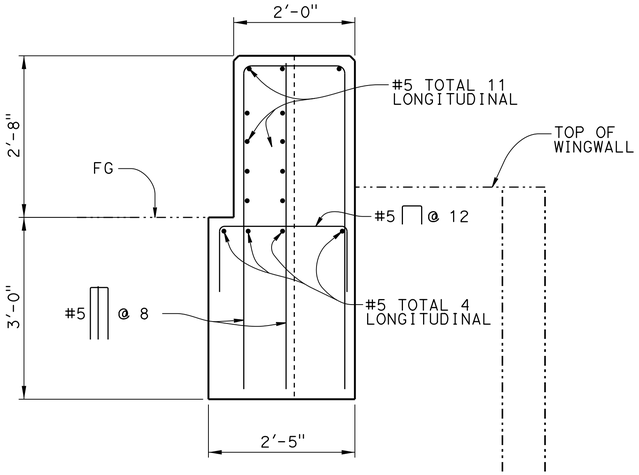

SECTION A-A
NO SCALE

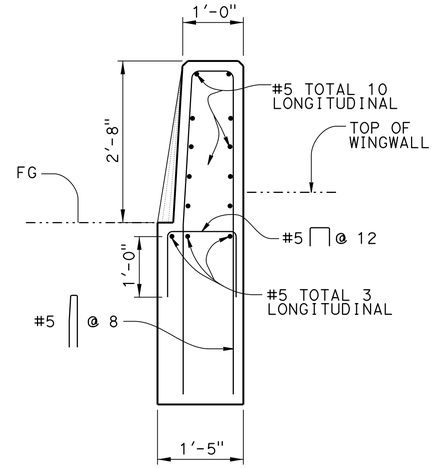

SECTION B-B
NO SCALE

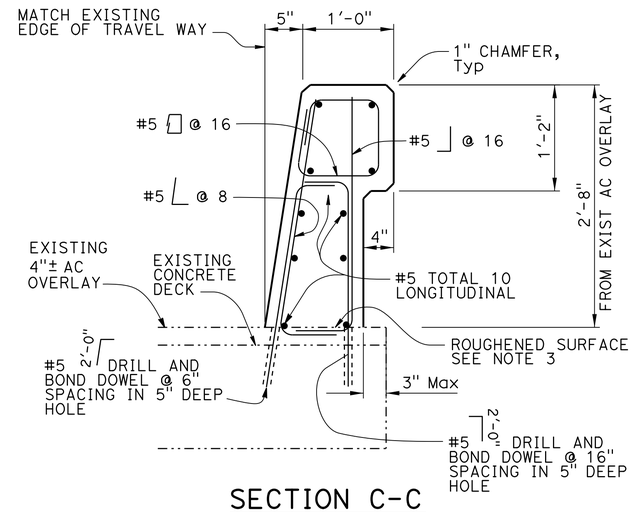

SECTION C-C
NO SCALE

NOTES:

1. Avoid existing reinforcement when drilling.
2. Clearance to reinforcing steel in barrier to be 1", except as noted. Longitudinal reinforcement to stop at all expansion joints.
3. Roughen existing bridge deck surface before casting new concrete against existing concrete.
4. See "CONCRETE BARRIER TRANSITION - GENERAL PLAN, INDEX" sheet for bridge identification.
5. For QUADGAUARD SYSTEM, (not shown), see "ROADWAY PLANS".
6. Exposed existing reinforcement holes to be magnesium phosphate concrete.
7. FG is top of existing 4"± AC overlay.

LEGEND

- Existing structure
- New construction
- Concrete removal
- Metal rail removal

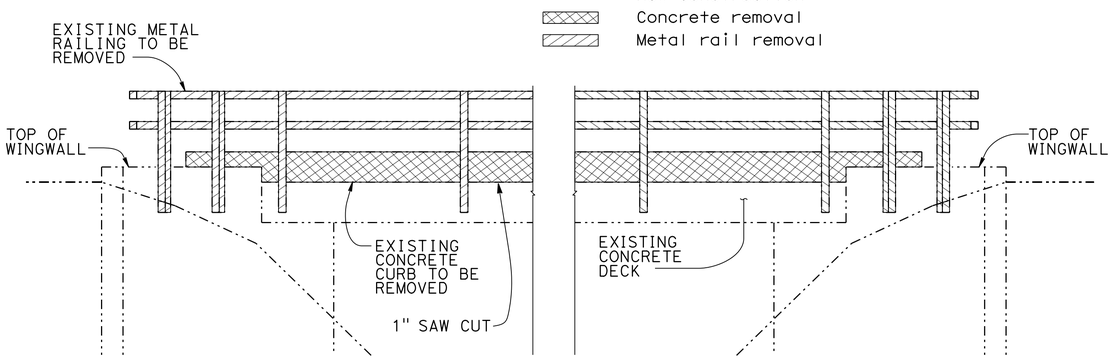

DEMOLITION ELEVATION
NO SCALE

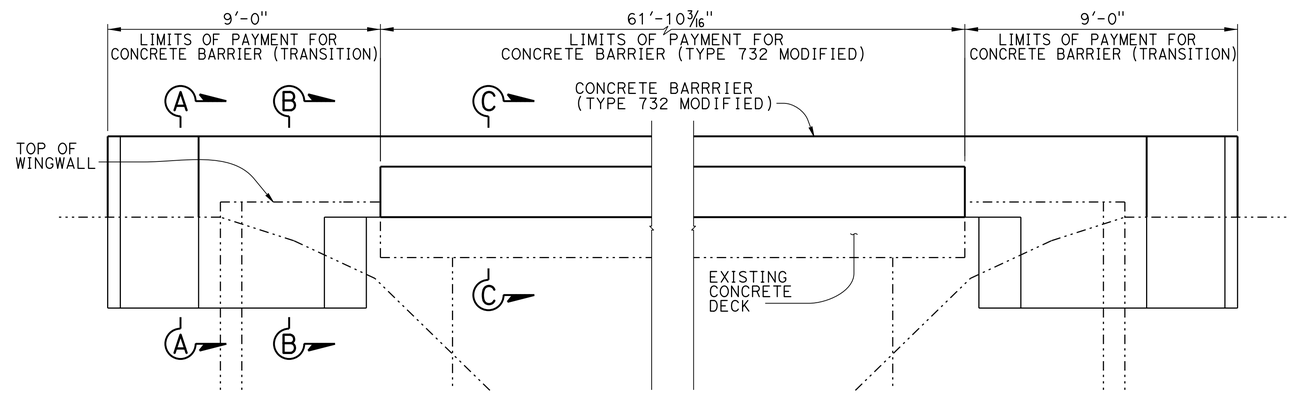

ELEVATION
NO SCALE

NOTE:

All sides of bridge similar except for Abut 1 left where flood wall is existing.

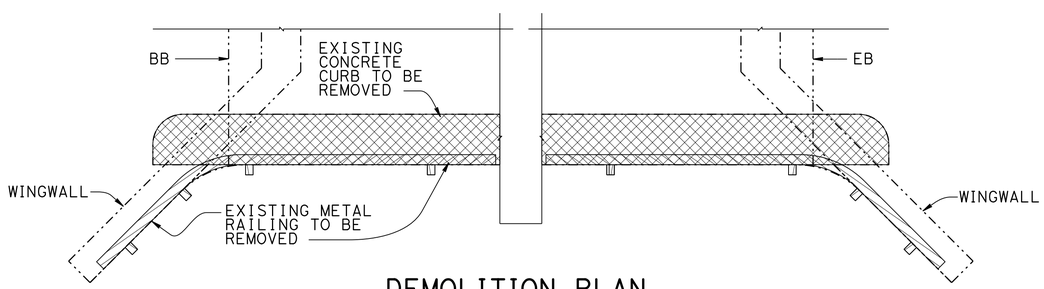

DEMOLITION PLAN
NO SCALE

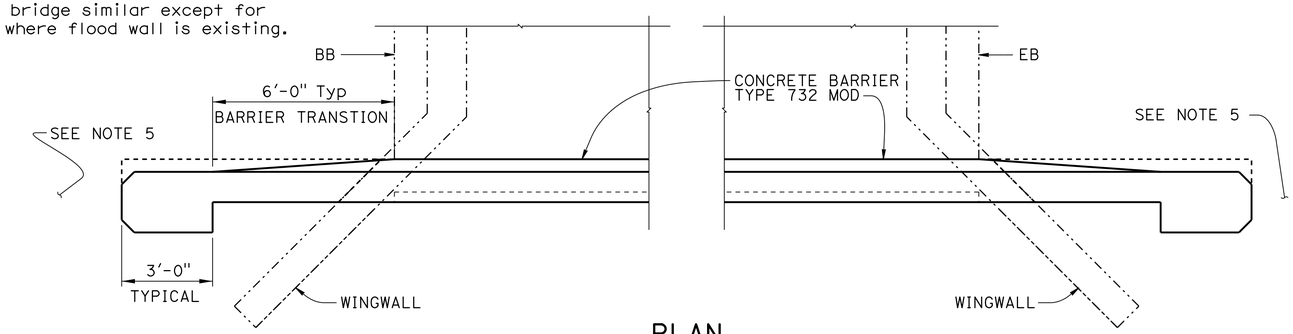

PLAN
NO SCALE

THE CONTRACTOR SHALL VERIFY ALL CONTROLLING FIELD DIMENSIONS BEFORE ORDERING OR FABRICATING ANY MATERIAL.

	BY	CHECKED
DESIGN	N KANEPATHIPILLAI	A MALAK
DETAILS	P WELLS	N KANEPATHIPILLAI
QUANTITIES	N KANEPATHIPILLAI	A MALAK

STATE OF CALIFORNIA
DEPARTMENT OF TRANSPORTATION

DIVISION OF ENGINEERING SERVICES
STRUCTURE DESIGN
SPECIAL DESIGN BRANCH

BRIDGE NO. 29-0061
POST MILE 7.5

MOSHIER SLOUGH BRIDGE
CONCRETE BARRIER TRANSITION DETAILS

STRUCTURES DESIGN SPECIAL DESIGN SHEET (ENGLISH) (REV. 09-01-10)

ORIGINAL SCALE IN INCHES FOR REDUCED PLANS 0 1 2 3

UNIT: 3619
PROJECT NUMBER & PHASE: 1000000009
CONTRACT NO.: 10-0A8301

DISREGARD PRINTS BEARING EARLIER REVISION DATES

REVISION DATES: 7-13-12 4-15-14

SHEET 3 OF 4

FILE => 10-0a8301-u-miscdt02.dgn

USERNAME => s123936 DATE PLOTTED => 22-MAY-2014 TIME PLOTTED => 13:25

DIST	COUNTY	ROUTE	POST MILES TOTAL PROJECT	SHEET No.	TOTAL SHEETS
10	SJ	88	6.1/8.9	63	63

REGISTERED CIVIL ENGINEER — DATE 5-05-14

5-5-14
PLANS APPROVAL DATE

REGISTERED PROFESSIONAL ENGINEER — ALIMAN MALAK — No. C73369 — Exp. 12-31-2014 — CIVIL — STATE OF CALIFORNIA

The State of California or its officers or agents shall not be responsible for the accuracy or completeness of electronic copies of this plan sheet.

NOTES:

1. Clearance to reinforcing steel in barrier to be 1" except as noted. Longitudinal reinforcement to stop at all expansion joints.
2. See "CONCRETE BARRIER TRANSITION - GENERAL PLAN, INDEX" sheet for transition barrier layout.
3. For QUADGAUARD SYSTEM, (not shown), see "ROADWAY PLANS".

LEGEND

Existing structure
New construction

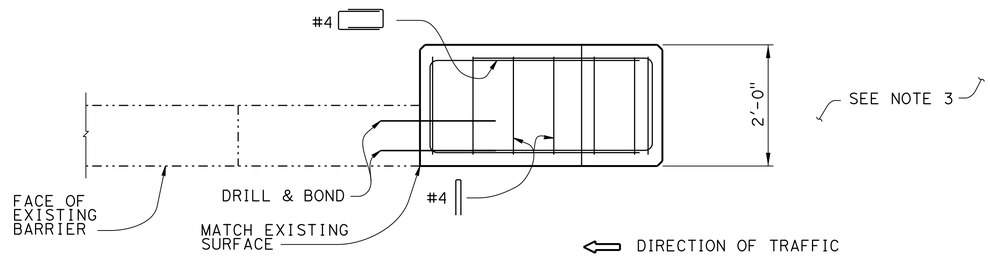

PLAN
NO SCALE

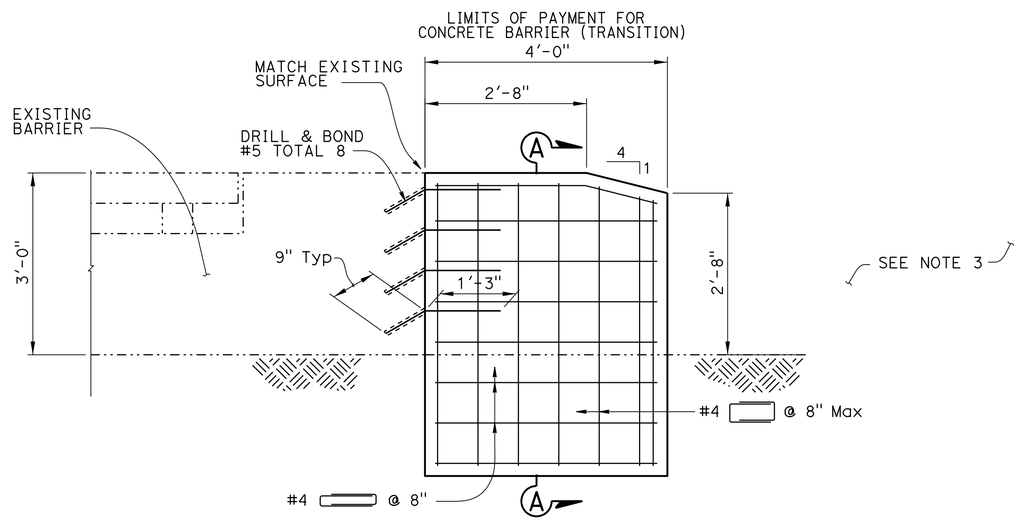

ELEVATION
NO SCALE

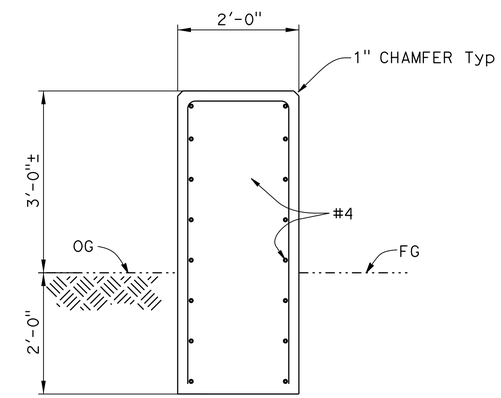

SECTION A-A
NO SCALE

THE CONTRACTOR SHALL VERIFY ALL CONTROLLING FIELD DIMENSIONS BEFORE ORDERING OR FABRICATING ANY MATERIAL.

	BY	CHECKED
DESIGN	N KANEPATHIPILLAI	A MALAK
DETAILS	P WELLS	N KANEPATHIPILLAI
QUANTITIES	N KANEPATHIPILLAI	A MALAK

STATE OF CALIFORNIA
DEPARTMENT OF TRANSPORTATION

DIVISION OF ENGINEERING SERVICES
STRUCTURE DESIGN
SPECIAL DESIGN BRANCH

BRIDGE NO. 29-0062
POST MILE 8.93

BEAR CREEK BRIDGE
CONCRETE BARRIER TRANSITION DETAILS

STRUCTURES DESIGN SPECIAL DESIGN SHEET (ENGLISH) (REV. 09-01-10)

ORIGINAL SCALE IN INCHES FOR REDUCED PLANS 0 1 2 3

UNIT: 3619
PROJECT NUMBER & PHASE: 1000000009
CONTRACT NO.: 10-0A8301

DISREGARD PRINTS BEARING EARLIER REVISION DATES

REVISION DATES: 4-15-14

SHEET 4 OF 4

FILE => 10-0a8301-u-miscdt03.dgn

USERNAME => s123936 DATE PLOTTED => 22-MAY-2014 TIME PLOTTED => 13:25