Dist	COUNTY	ROUTE	POST MILES TOTAL PROJECT	SHEET No.	TOTAL SHEETS
09	Iny	395	R20.3/R22.3	1	43

STATE OF CALIFORNIA

DEPARTMENT OF TRANSPORTATION

ACHSNHP-P395(252)E

PROJECT PLANS FOR CONSTRUCTION ON
STATE HIGHWAY

IN INYO COUNTY NEAR COSO JUNCTION
FROM ROSE VALLEY RANCH ROAD
TO 1.0 MILES NORTH OF LOS ANGELES AQUEDUCT
BRIDGE No. 48-0015L

TO BE SUPPLEMENTED BY STANDARD PLANS DATED 2010

INDEX OF PLANS

SHEET No.	DESCRIPTION
1	TITLE AND LOCATION MAP
2-4	TYPICAL CROSS SECTIONS
5-8	LAYOUTS
9-11	CONSTRUCTION DETAILS
12-15	DRAINAGE PROFILES
16	DRAINAGE DETAILS
17	DRAINAGE QUANTITIES
18	CONSTRUCTION AREA SIGNS
19-20	STAGE CONSTRUCTION AND TRAFFIC HANDLING PLAN
21	SUMMARY OF QUANTITIES
22	EROSION CONTROL QUANTITIEAS AND LEGEND
23-37	REVISED STANDARD PLANS

STRUCTURE PLANS

38-43	LOS ANGELES AQUEDUCT BRIDGE Br No. 48-0015L

THE STANDARD PLANS LIST
APPLICABLE TO THIS CONTRACT
IS INCLUDED IN THE NOTICE TO BIDDERS
AND SPECIAL PROVISIONS BOOK.

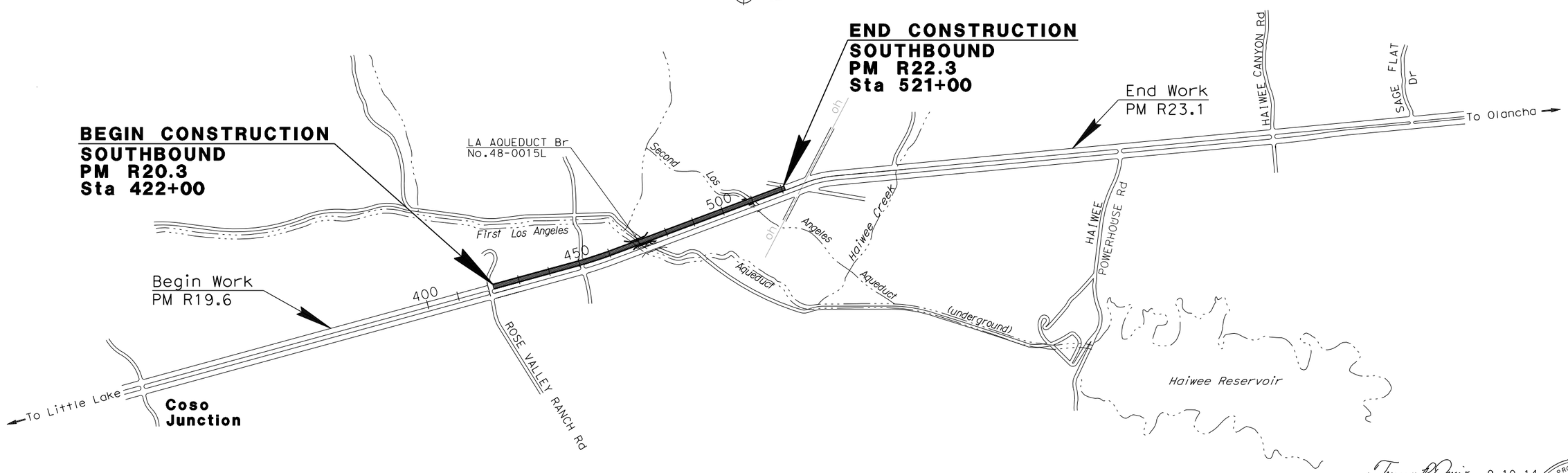

NO SCALE

THE CONTRACTOR SHALL POSSESS THE CLASS (OR CLASSES) OF LICENSE AS SPECIFIED IN THE "NOTICE TO BIDDERS."

Truman P. Denio 9-10-14
PROJECT ENGINEER DATE
REGISTERED CIVIL ENGINEER

December 8, 2014
PLANS APPROVAL DATE

REGISTERED PROFESSIONAL ENGINEER
TRUMAN DENIO
No. 34556
Exp. 9-30-15
CIVIL
STATE OF CALIFORNIA

THE STATE OF CALIFORNIA OR ITS OFFICERS OR AGENTS SHALL NOT BE RESPONSIBLE FOR THE ACCURACY OR COMPLETENESS OF SCANNED COPIES OF THIS PLAN SHEET.

CONTRACT No.	**09-351204**
PROJECT ID	**0900020058**

PROJECT MANAGER: CEDRIK ZEMITIS
DESIGN ENGINEER: TRUMAN DENIO

LAST REVISION 09-10-14
DATE PLOTTED => 4/22/2015
TIME PLOTTED => 11:38:13 AM

Dist	COUNTY	ROUTE	POST MILES TOTAL PROJECT	SHEET No.	TOTAL SHEETS
09	Iny	395	R20.3/R22.3	2	43

Truman P. Denio 9-10-14
REGISTERED CIVIL ENGINEER DATE

12-8-14
PLANS APPROVAL DATE

REGISTERED PROFESSIONAL ENGINEER TRUMAN DENIO No. 34556 Exp. 9-30-15 CIVIL STATE OF CALIFORNIA

THE STATE OF CALIFORNIA OR ITS OFFICERS OR AGENTS SHALL NOT BE RESPONSIBLE FOR THE ACCURACY OR COMPLETENESS OF SCANNED COPIES OF THIS PLAN SHEET.

NOTES:

1. DIMENSIONS OF THE PAVEMENT STRUCTURES (STRUCTURAL SECTIONS) ARE SUBJECT TO TOLERANCES SPECIFIED IN THE STANDARD SPECIFICATIONS.
2. SUPERELEVATIONS AS SHOWN OR AS DIRECTED BY THE ENGINEER.
3. OVERLAND EQUIPMENT AND VEHICLE ACCESS PROHIBITED BEYOND CP.
4. LOCATE Temp FENCE (REINFORCED SILT) AT CRZ LIMITS (30' FROM ETW) OR 10' BEYOND CP, WHICHEVER IS GREATER.
5. OVERLAND EQUIPMENT AND VEHICLE ACCESS PROHIBITED. WORK TO BE DONE FROM #1 LANE.

ABBREVIATIONS:

TL - TRIM LINE
CRZ - CLEAR RECOVERY ZONE

TYPICAL STRUCTURAL SECTION

1 — 0.50' HMA (TYPE A)
0.50' Cl 2 AB

DESIGN DESIGNATION

ADT (2014) = 6240	D = 85.34%
ADT (2034) = 8240	TI_{20} = 11.0
DHV (2014) = 950	V = 65 mph
DHV (2034) = 1260	T = 8.7%

PAVEMENT CLIMATE REGION
DESERT

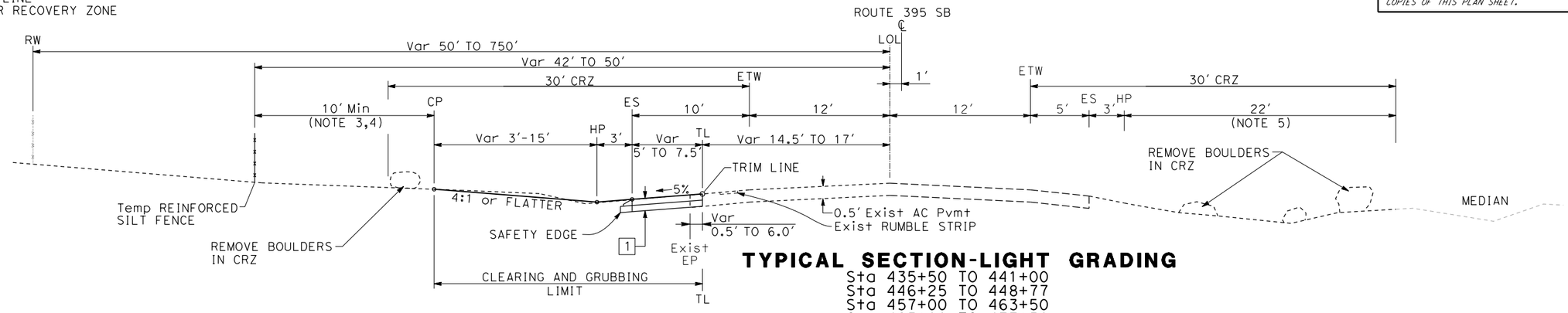

TYPICAL SECTION-LIGHT GRADING

Sta 435+50 TO 441+00
Sta 446+25 TO 448+77
Sta 457+00 TO 463+50
Sta 465+00 TO 477+50
Sta 519+00 TO 521+00

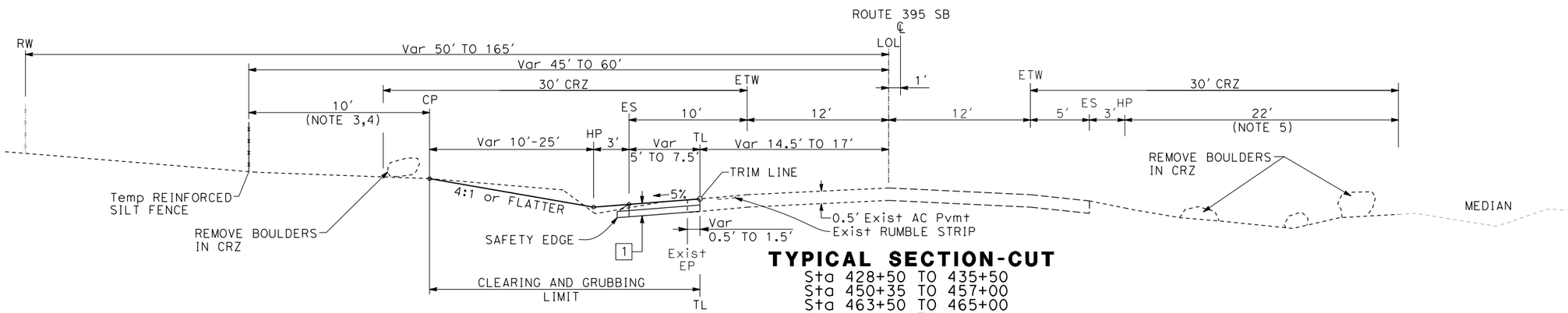

TYPICAL SECTION-CUT

Sta 428+50 TO 435+50
Sta 450+35 TO 457+00
Sta 463+50 TO 465+00
Sta 477+50 TO 484+74.88
Sta 500+72.48 TO 503+00

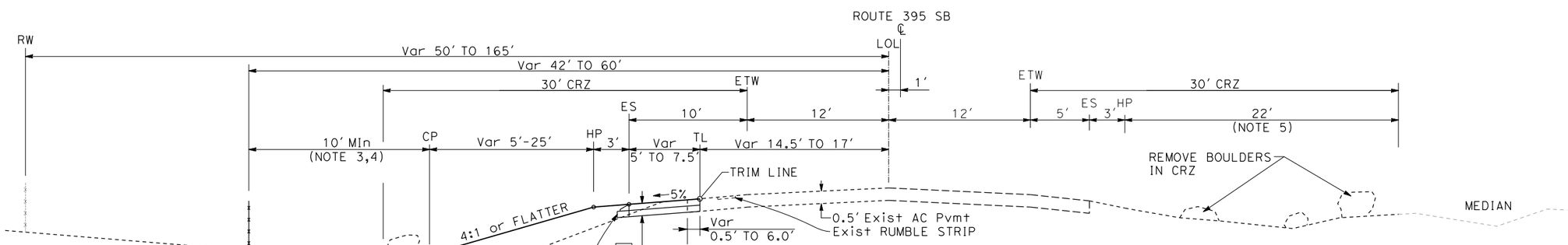

TYPICAL SECTION-FILL

Sta 422+00 TO 428+50
Sta 503+00 TO 505+00
Sta 509+00 TO 512+50

TYPICAL CROSS SECTIONS

NO SCALE

X-1

REVISED BY	DATE REVISED
KONSTANTIN GREKOV	TRUMAN DENIO
CALCULATED-DESIGNED BY	CHECKED BY
FUNCTIONAL SUPERVISOR	TRUMAN DENIO

STATE OF CALIFORNIA - DEPARTMENT OF TRANSPORTATION
Caltrans® PROJECT COORDINATION

LAST REVISION 09-10-14 | DATE PLOTTED => 1/26/2015 TIME PLOTTED => 3:02:38 PM

Dist	COUNTY	ROUTE	POST MILES TOTAL PROJECT	SHEET No.	TOTAL SHEETS
09	Iny	395	R20.3/R22.3	3	43

Truman P. Denio 9-10-14
REGISTERED CIVIL ENGINEER DATE

12-8-14
PLANS APPROVAL DATE

REGISTERED PROFESSIONAL ENGINEER
TRUMAN DENIO
No. 34556
Exp. 9-30-15
CIVIL
STATE OF CALIFORNIA

THE STATE OF CALIFORNIA OR ITS OFFICERS OR AGENTS SHALL NOT BE RESPONSIBLE FOR THE ACCURACY OR COMPLETENESS OF SCANNED COPIES OF THIS PLAN SHEET.

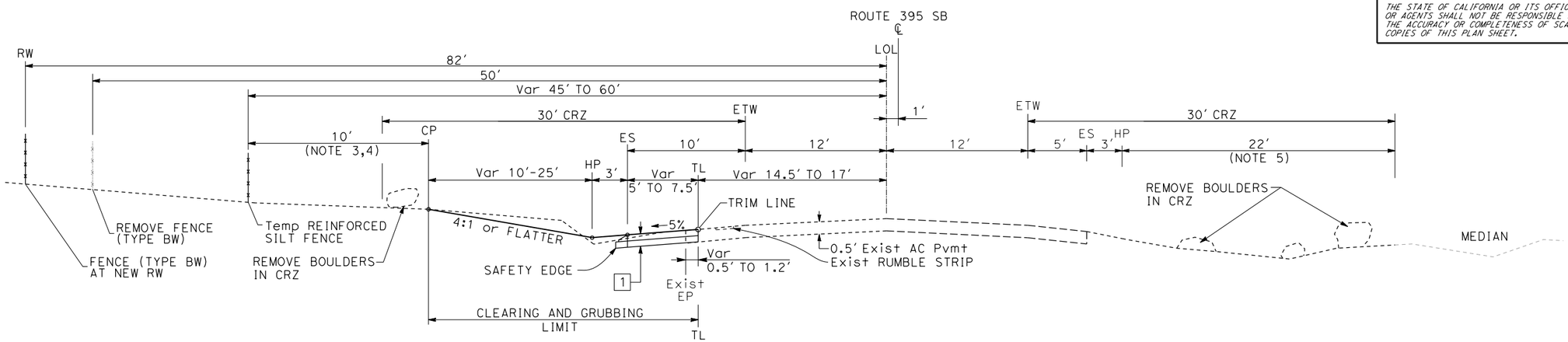

TYPICAL SECTION-CUT

Sta 484+74.88 TO 487+00
Sta 491+50 TO 494+00
Sta 495+50 TO 498+00
Sta 500+00 TO 500+72.48

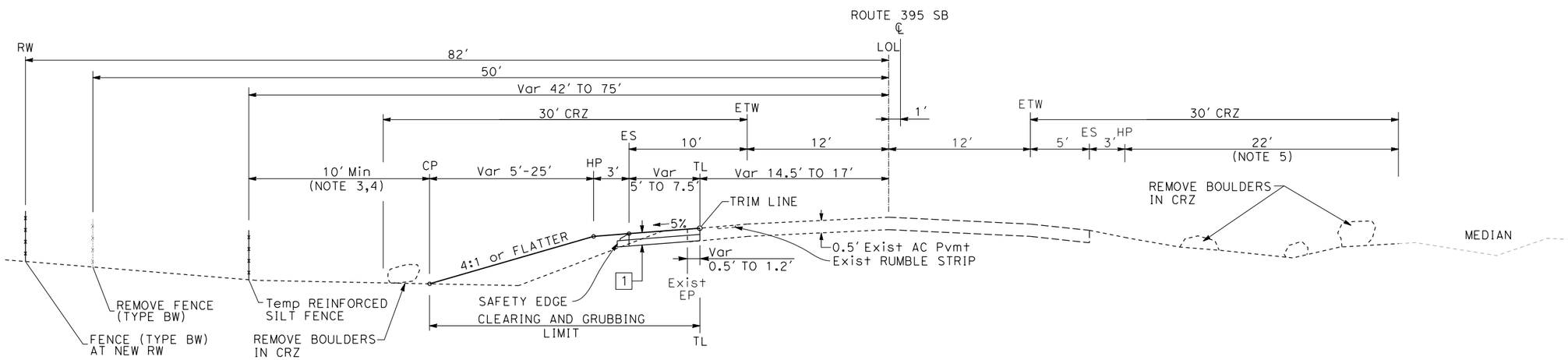

TYPICAL SECTION-FILL

Sta 487+00 TO 491+50
Sta 494+00 TO 495+50
Sta 498+00 TO 500+00

TYPICAL CROSS SECTIONS

NO SCALE

X-2

REVISED BY	DATE REVISED
KONSTANTIN GREKOV	TRUMAN DENIO
CALCULATED-DESIGNED BY	CHECKED BY
FUNCTIONAL SUPERVISOR	TRUMAN DENIO

STATE OF CALIFORNIA - DEPARTMENT OF TRANSPORTATION
Caltrans® PROJECT COORDINATION

LAST REVISION 09-10-14
DATE PLOTTED => 1/26/2015
TIME PLOTTED => 3:03:07 PM

Dist	COUNTY	ROUTE	POST MILES TOTAL PROJECT	SHEET No.	TOTAL SHEETS
09	Iny	395	R20.3/R22.3	4	43

Truman P. Denio 9-10-14
REGISTERED CIVIL ENGINEER DATE

12-8-14
PLANS APPROVAL DATE

REGISTERED PROFESSIONAL ENGINEER TRUMAN DENIO No. 34556 Exp. 9-30-15 CIVIL STATE OF CALIFORNIA

THE STATE OF CALIFORNIA OR ITS OFFICERS OR AGENTS SHALL NOT BE RESPONSIBLE FOR THE ACCURACY OR COMPLETENESS OF SCANNED COPIES OF THIS PLAN SHEET.

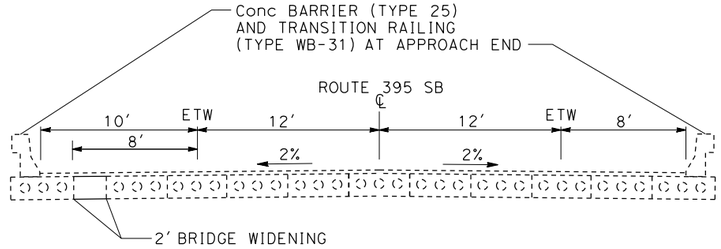

BRIDGE #48-0015L TYPICAL SECTION
Sta 471+41.67

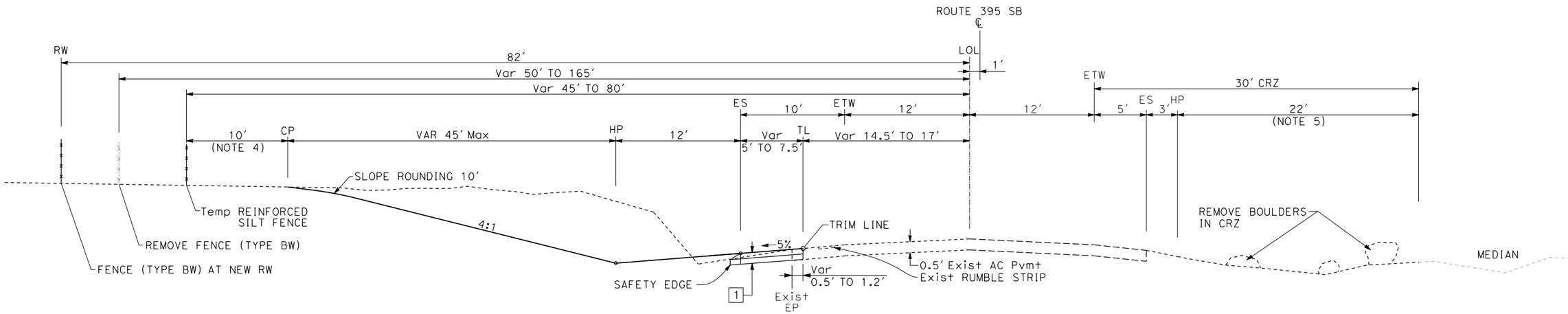

TYPICAL SECTION-HEAVY GRADING
Sta 512+50 TO 519+00

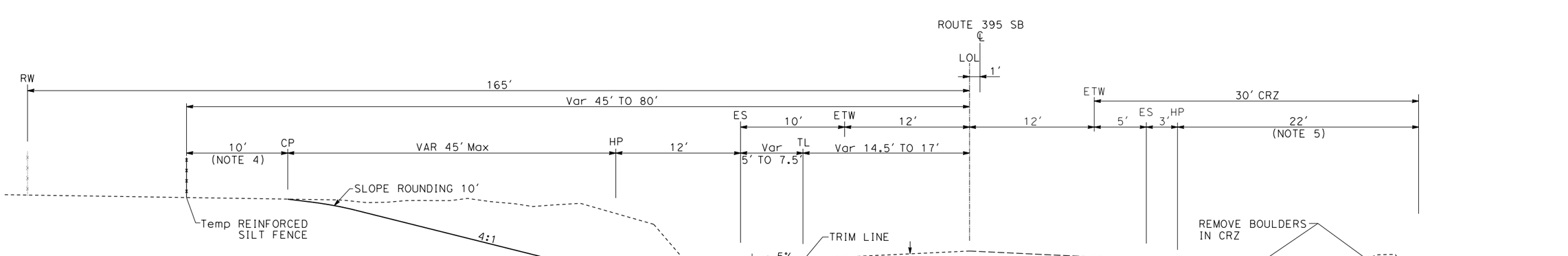

TYPICAL SECTION-HEAVY GRADING
Sta 505+00 TO 509+00

TYPICAL CROSS SECTIONS
NO SCALE

X-3

STATE OF CALIFORNIA - DEPARTMENT OF TRANSPORTATION
Caltrans® PROJECT COORDINATION

FUNCTIONAL SUPERVISOR: TRUMAN DENIO
CALCULATED-DESIGNED BY: KONSTANTIN GREKOV
CHECKED BY: TRUMAN DENIO
REVISED BY
DATE REVISED

LAST REVISION 09-10-14
DATE PLOTTED => 1/26/2015
TIME PLOTTED => 3:03:19 PM

Dist	COUNTY	ROUTE	POST MILES TOTAL PROJECT	SHEET No.	TOTAL SHEETS
09	Iny	395	R20.3/R22.3	5	43

REGISTERED CIVIL ENGINEER 9-10-14 DATE

12-8-14
PLANS APPROVAL DATE

REGISTERED PROFESSIONAL ENGINEER TRUMAN DENIO No. 34556 Exp. 9-30-15 CIVIL STATE OF CALIFORNIA

THE STATE OF CALIFORNIA OR ITS OFFICERS OR AGENTS SHALL NOT BE RESPONSIBLE FOR THE ACCURACY OR COMPLETENESS OF SCANNED COPIES OF THIS PLAN SHEET.

NOTE:

1. FOR ACCURATE RIGHT OF WAY DATA, CONTACT RIGHT OF WAY ENGINEERING AT THE DISTRICT OFFICE.
2. NB LANES NOT SHOWN.
3. INSTALL SIGNS AS SHOWN ON THE PLAN, IN ADDITION TO SIGNS PLACED EVERY 100 FEET APART ALONG THE ENTIRE LENGTH.

LEGEND:

--- TRIM LINE

CONSTRUCTION STAGING, DUFF AND LOCAL TOPSOIL Temp STOCKPILING AREA.

CONSTRUCTION STAGING, DUFF AND LOCAL TOPSOIL Temp STOCKPILING AREA. EROSION CONTROL (TYPE 1).

CONCRETE BACKFILL (PIPE TRENCH)

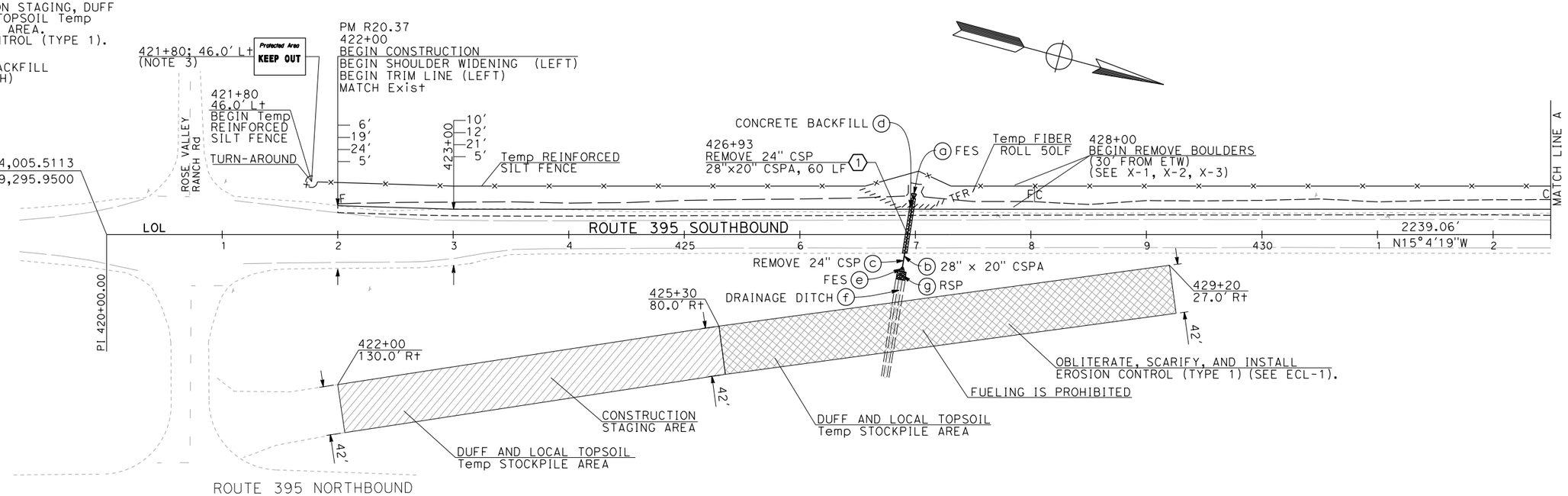

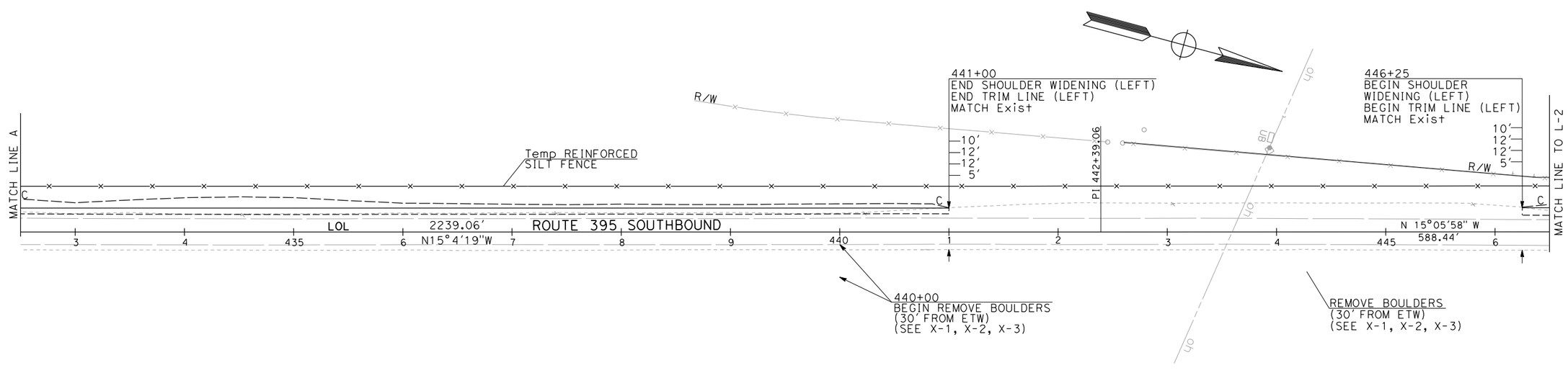

LAYOUT L-1

SCALE: 1" = 50'

STATE OF CALIFORNIA - DEPARTMENT OF TRANSPORTATION
Caltrans PROJECT COORDINATION

FUNCTIONAL SUPERVISOR: TRUMAN DENIO
CALCULATED-DESIGNED BY: KONSTANTIN GREKOV
CHECKED BY: TRUMAN DENIO
REVISED BY
DATE REVISED

LAST REVISION 09-10-14
DATE PLOTTED => 1/26/2015
TIME PLOTTED => 3:08:34 PM

Dist	COUNTY	ROUTE	POST MILES TOTAL PROJECT	SHEET No.	TOTAL SHEETS
09	Iny	395	R20.3/R22.3	6	43

REGISTERED CIVIL ENGINEER 9-10-14 DATE

12-8-14
PLANS APPROVAL DATE

REGISTERED PROFESSIONAL ENGINEER TRUMAN DENIO No. 34556 Exp. 9-30-15 CIVIL STATE OF CALIFORNIA

THE STATE OF CALIFORNIA OR ITS OFFICERS OR AGENTS SHALL NOT BE RESPONSIBLE FOR THE ACCURACY OR COMPLETENESS OF SCANNED COPIES OF THIS PLAN SHEET.

NOTE:

1. FOR ACCURATE RIGHT OF WAY DATA, CONTACT RIGHT OF WAY ENGINEERING AT THE DISTRICT OFFICE.

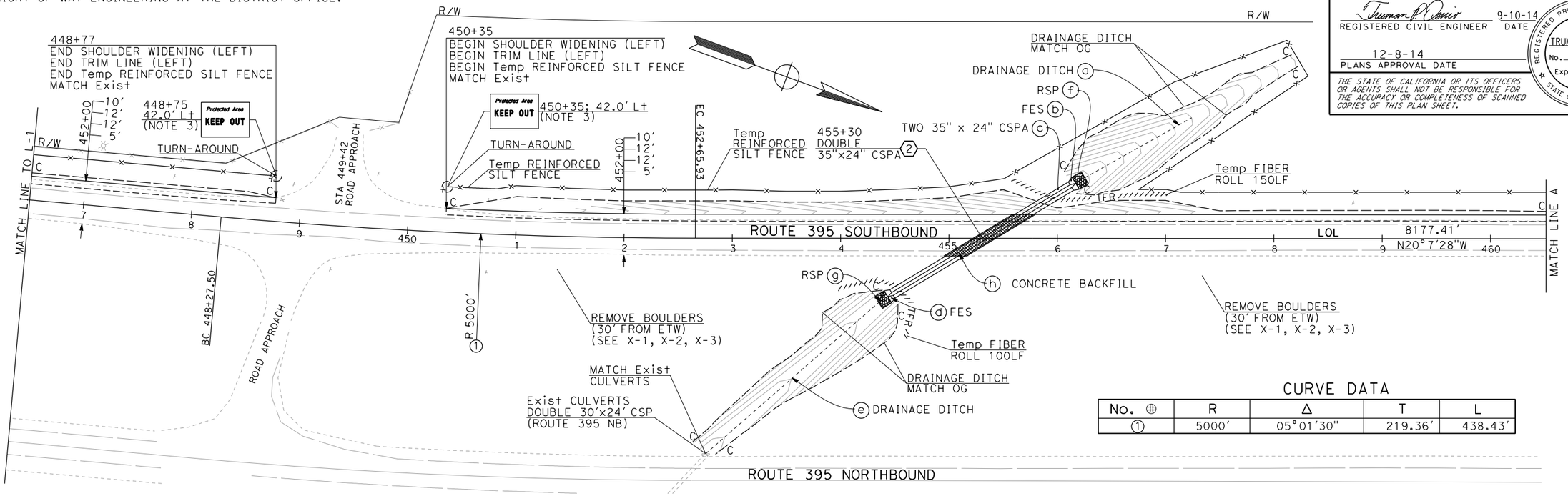

CURVE DATA

No. ⊕	R	Δ	T	L
1	5000'	05°01'30"	219.36'	438.43'

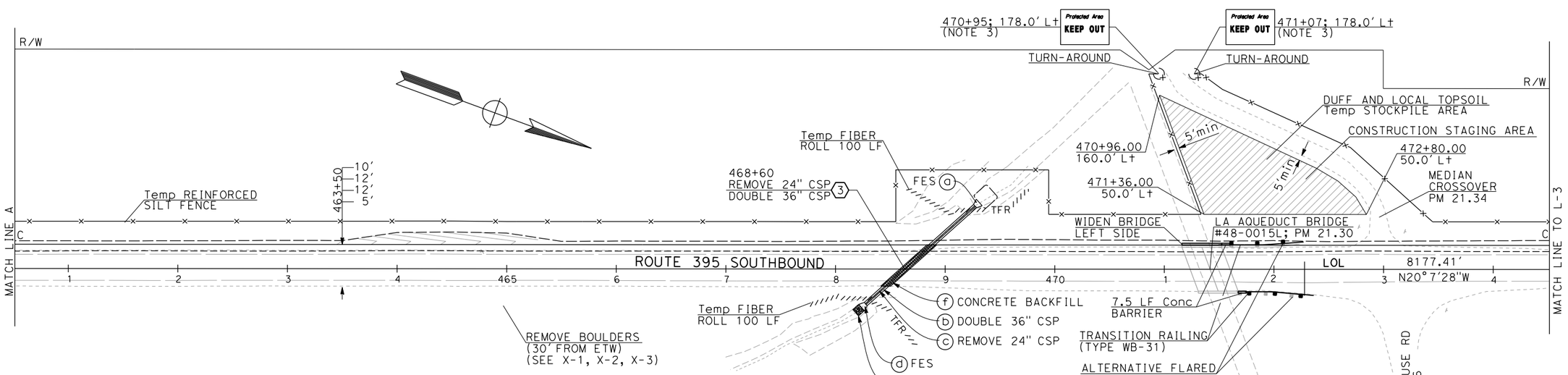

LAYOUT L-2

SCALE: 1" = 50'

REVISED BY | DATE REVISED

KONSTANTIN GREKOV | TRUMAN DENIO

CALCULATED-DESIGNED BY | CHECKED BY

FUNCTIONAL SUPERVISOR | TRUMAN DENIO

STATE OF CALIFORNIA - DEPARTMENT OF TRANSPORTATION

Caltrans® PROJECT COORDINATION

LAST REVISION 09-10-14 | DATE PLOTTED => 12/31/2014 | TIME PLOTTED => 11:16:37 AM

Dist	COUNTY	ROUTE	POST MILES TOTAL PROJECT	SHEET No.	TOTAL SHEETS
09	Iny	395	R20.3/R22.3	7	43

Truman P. Denio 9-10-14
REGISTERED CIVIL ENGINEER DATE

12-8-14
PLANS APPROVAL DATE

REGISTERED PROFESSIONAL ENGINEER
TRUMAN DENIO
No. 34556
Exp. 9-30-15
CIVIL
STATE OF CALIFORNIA

THE STATE OF CALIFORNIA OR ITS OFFICERS OR AGENTS SHALL NOT BE RESPONSIBLE FOR THE ACCURACY OR COMPLETENESS OF SCANNED COPIES OF THIS PLAN SHEET.

NOTE:

1. FOR ACCURATE RIGHT OF WAY DATA, CONTACT RIGHT OF WAY ENGINEERING AT THE DISTRICT OFFICE.

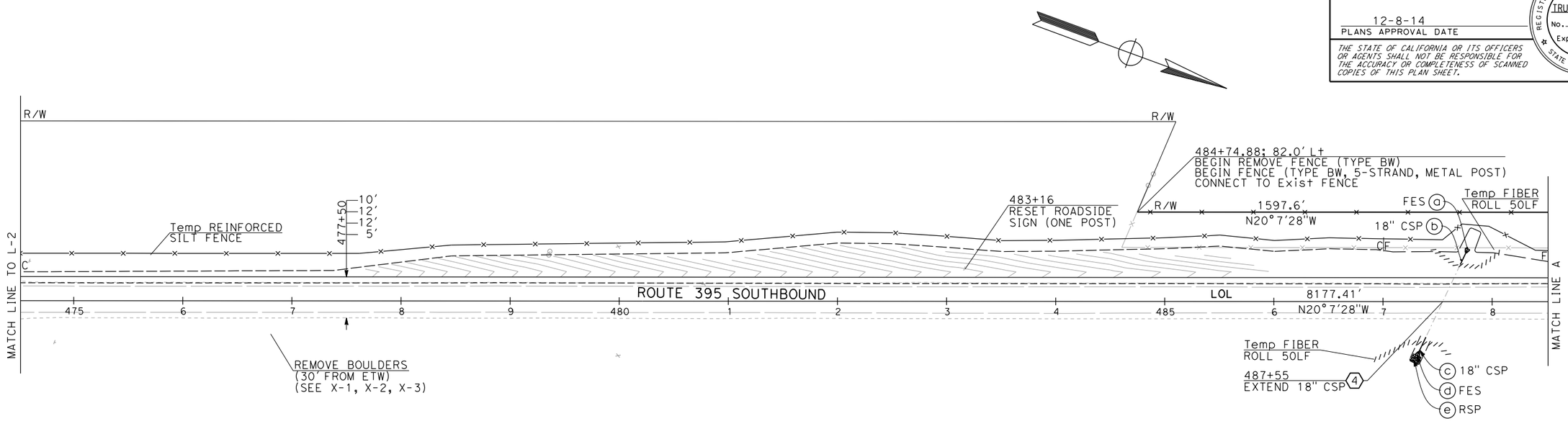

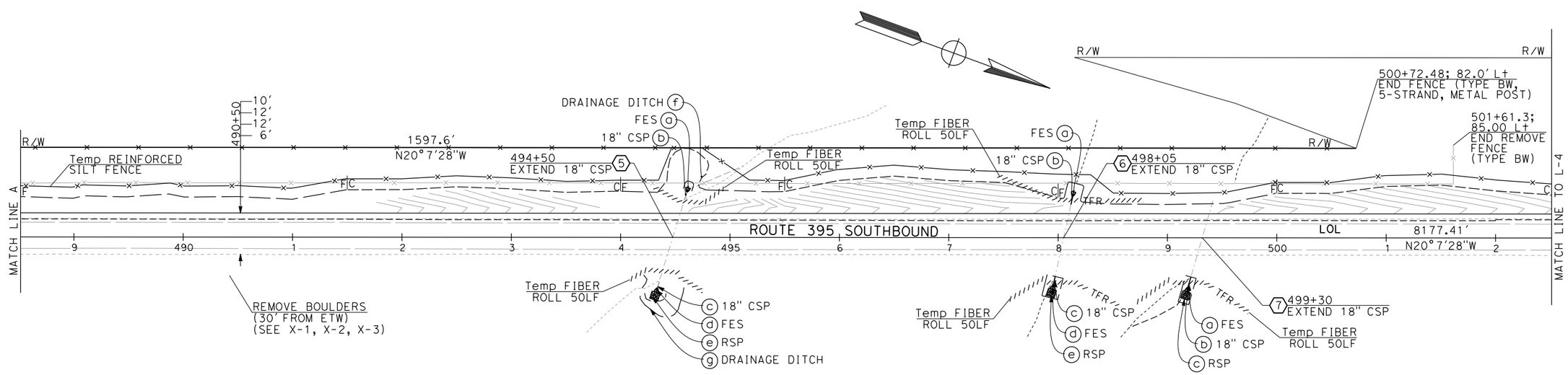

LAYOUT L-3

SCALE: 1" = 50'

STATE OF CALIFORNIA - DEPARTMENT OF TRANSPORTATION
Caltrans® PROJECT COORDINATION

FUNCTIONAL SUPERVISOR: TRUMAN DENIO
CALCULATED-DESIGNED BY: KONSTANTIN GREKOV
CHECKED BY: TRUMAN DENIO
REVISED BY
DATE REVISED

LAST REVISION 09-10-14
DATE PLOTTED => 12/31/2014
TIME PLOTTED => 11:21:15 AM

Dist	COUNTY	ROUTE	POST MILES TOTAL PROJECT	SHEET No.	TOTAL SHEETS
09	Iny	395	R20.3/R22.3	8	43

Truman P. Denio 9-10-14
REGISTERED CIVIL ENGINEER DATE

12-8-14
PLANS APPROVAL DATE

REGISTERED PROFESSIONAL ENGINEER TRUMAN DENIO No. 34556 Exp. 9-30-15 CIVIL STATE OF CALIFORNIA

THE STATE OF CALIFORNIA OR ITS OFFICERS OR AGENTS SHALL NOT BE RESPONSIBLE FOR THE ACCURACY OR COMPLETENESS OF SCANNED COPIES OF THIS PLAN SHEET.

NOTE:

1. FOR ACCURATE RIGHT OF WAY DATA, CONTACT RIGHT OF WAY ENGINEERING AT THE DISTRICT OFFICE.

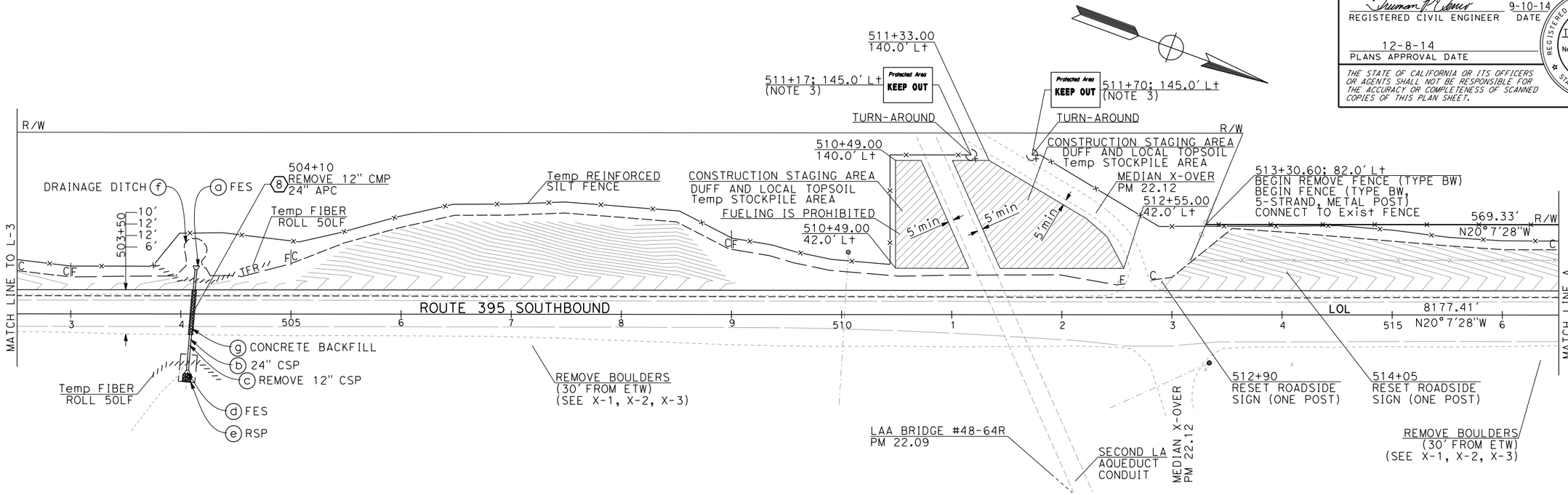

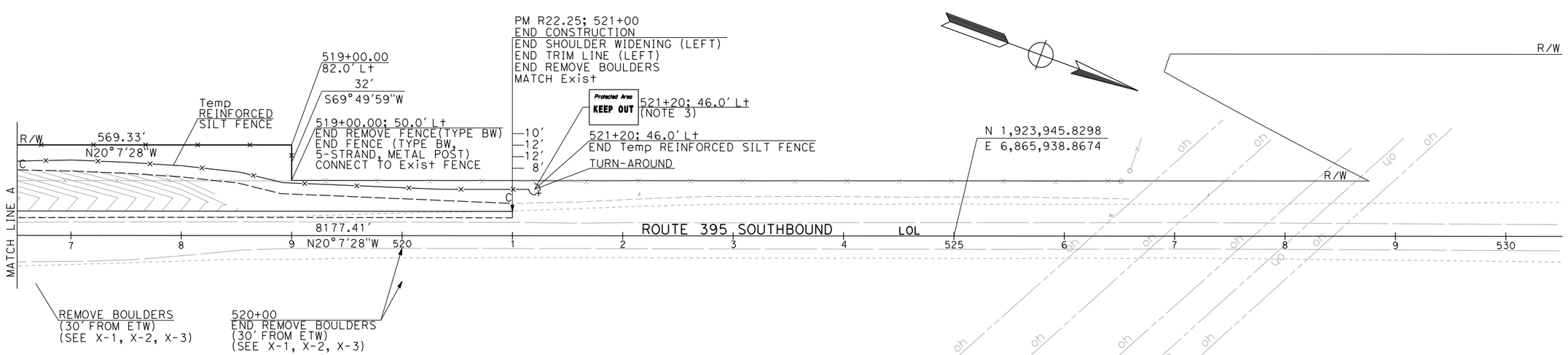

LAYOUT L-4

SCALE: 1" = 50'

STATE OF CALIFORNIA - DEPARTMENT OF TRANSPORTATION
Caltrans® PROJECT COORDINATION

FUNCTIONAL SUPERVISOR: TRUMAN DENIO
CALCULATED-DESIGNED BY: KONSTANTIN GREKOV
CHECKED BY: TRUMAN DENIO
REVISED BY / DATE REVISED

LAST REVISION 09-10-14
DATE PLOTTED => 12/31/2014
TIME PLOTTED => 11:23:00 AM

Dist	COUNTY	ROUTE	POST MILES TOTAL PROJECT	SHEET No.	TOTAL SHEETS
09	Iny	395	R20.3/R22.3	9	43

Truman P. Denio 9-10-14
REGISTERED CIVIL ENGINEER DATE

12-8-14
PLANS APPROVAL DATE

REGISTERED PROFESSIONAL ENGINEER
TRUMAN DENIO
No. 34556
Exp. 9-30-15
CIVIL
STATE OF CALIFORNIA

THE STATE OF CALIFORNIA OR ITS OFFICERS OR AGENTS SHALL NOT BE RESPONSIBLE FOR THE ACCURACY OR COMPLETENESS OF SCANNED COPIES OF THIS PLAN SHEET.

LEGEND:

- COLLECT DUFF AND UPPER 0.5' OF LOCAL TOPSOIL
- EMBANKMENT (LOCAL TOPSOIL) AND DUFF PLACEMENT

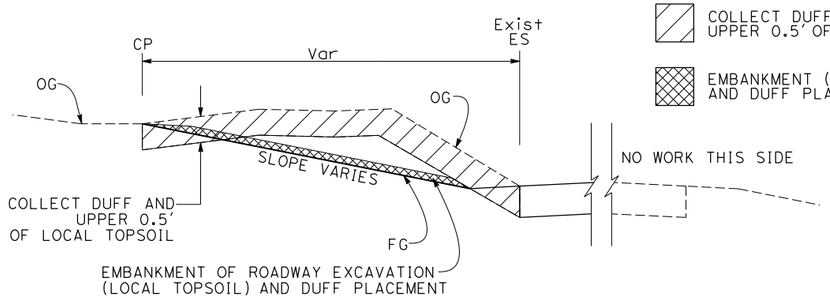

LOCAL TOP SOIL AND DUFF DETAIL-CUT
STA Lt 422+00 TO Lt 521+00

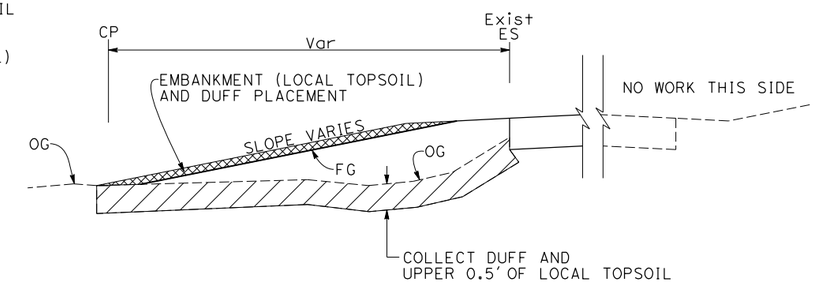

LOCAL TOP SOIL AND DUFF DETAIL-FILL
STA Lt 422+00 TO Lt 521+00

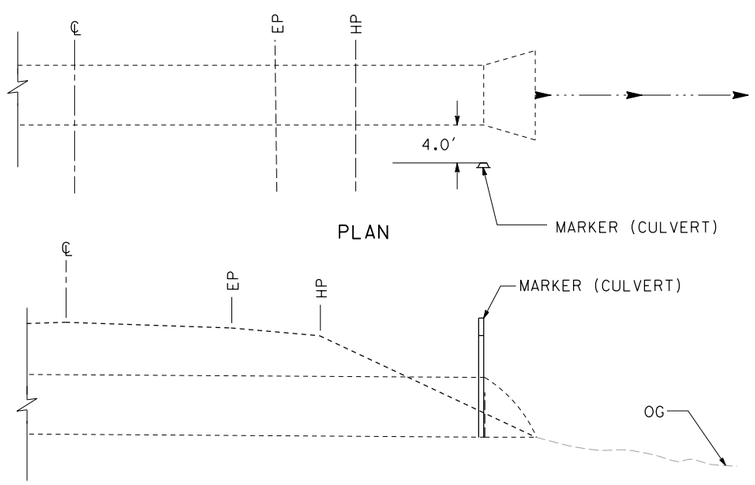

TYPICAL MARKER (CULVERT) PLACEMENT

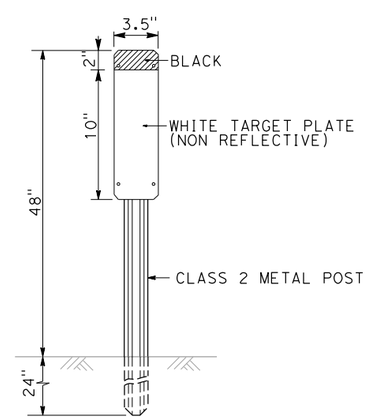

MARKER (CULVERT) PLATE AND POST DETAIL

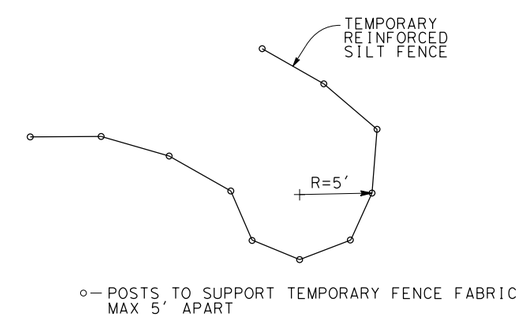

TEMPORARY REINFORCED SILT FENCE TURN-AROUND DETAIL
NO SCALE

CONSTRUCTION DETAILS
NO SCALE

C-1

REVISED BY	DATE REVISED
KONSTANTIN GREKOV	TRUMAN DENIO
CALCULATED-DESIGNED BY	CHECKED BY
FUNCTIONAL SUPERVISOR	TRUMAN DENIO

STATE OF CALIFORNIA - DEPARTMENT OF TRANSPORTATION
Caltrans® PROJECT COORDINATION

LAST REVISION 09-10-14 | DATE PLOTTED => 12/31/2014 | TIME PLOTTED => 11:25:58 AM

Dist	COUNTY	ROUTE	POST MILES TOTAL PROJECT	SHEET No.	TOTAL SHEETS
09	Iny	395	R20.3/R22.3	10	43

Truman P. Denio 9-10-14
REGISTERED CIVIL ENGINEER DATE

12-8-14
PLANS APPROVAL DATE

REGISTERED PROFESSIONAL ENGINEER TRUMAN DENIO No. 34556 Exp. 9-30-15 CIVIL STATE OF CALIFORNIA

THE STATE OF CALIFORNIA OR ITS OFFICERS OR AGENTS SHALL NOT BE RESPONSIBLE FOR THE ACCURACY OR COMPLETENESS OF SCANNED COPIES OF THIS PLAN SHEET.

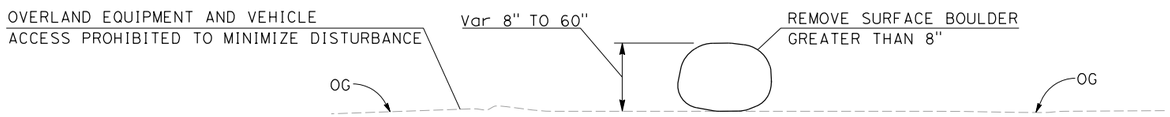

SURFACE BOULDER

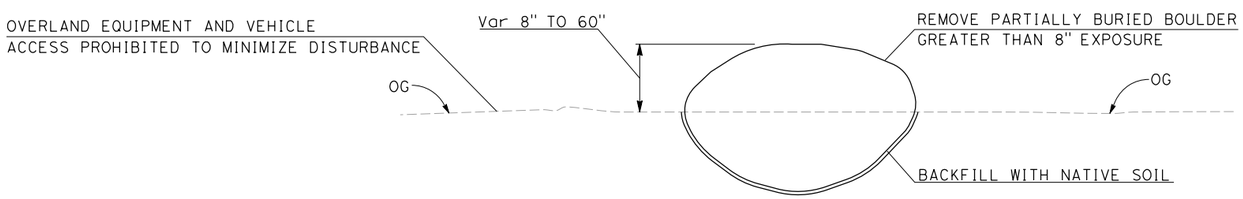

PARTIALLY BURIED BOULDER
BOULDER REMOVAL

REMOVE BOULDERS

LOCATION	SIZE OF THE EXPOSED BOULDERS			
	LEFT SIDE		RIGHT SIDE	
Sta	8"-36"	36"-60"	8"-36"	36"-60"
	No.	No.	No.	No.
422+00 to 424+00	-	-	3	-
424+00 to 426+00	-	-	2	-
426+00 to 428+00	-	-	2	-
428+00 to 430+00	2	-	-	-
430+00 to 432+00	13	10	-	-
432+00 to 434+00	62	6	-	-
434+00 to 436+00	93	42	-	-
436+00 to 438+00	109	30	2	-
438+00 to 440+00	14	1	2	-
440+00 to 442+00	8	-	22	8
442+00 to 444+00	45	2	128	8
444+00 to 446+00	5	-	156	7
446+00 to 448+00	3	-	1	-
448+00 to 450+00	6	-	10	-
450+00 to 452+00	11	-	6	-
452+00 to 454+00	6	-	-	-
454+00 to 456+00	3	-	4	-
456+00 to 458+00	1	-	2	-
458+00 to 460+00	7	-	14	-
460+00 to 462+00	25	-	16	-
462+00 to 464+00	22	-	51	2
464+00 to 466+00	17	-	35	-
466+00 to 468+00	5	-	11	1
468+00 to 470+00	-	-	32	-
470+00 to 472+00	-	-	5	5
472+00 to 474+00	-	-	-	-
474+00 to 476+00	24	15	195	16
476+00 to 478+00	38	17	143	26
478+00 to 480+00	270	68	415	98
480+00 to 482+00	60	44	131	70
482+00 to 484+00	-	-	193	50
484+00 to 486+00	-	-	92	24
486+00 to 488+00	7	-	98	32
488+00 to 490+00	60	45	159	20
490+00 to 492+00	125	37	215	73
492+00 to 494+00	51	5	103	21
494+00 to 496+00	53	10	114	34
496+00 to 498+00	33	7	218	107
498+00 to 500+00	24	3	70	30
500+00 to 502+00	15	-	90	8
502+00 to 504+00	5	-	90	7
504+00 to 506+00	29	12	12	1
506+00 to 508+00	-	-	7	-
508+00 to 510+00	-	-	14	1
510+00 to 512+00	1	-	2	-
512+00 to 514+00	-	1	8	2
514+00 to 516+00	-	-	99	4
516+00 to 518+00	15	8	21	9
518+00 to 520+00	8	-	40	1
TOTAL	1,275	363	3,033	665

NOTE: TOTALS ARE SHOWN FOR INFORMATION ONLY

CONSTRUCTION DETAILS
NO SCALE

C-2

STATE OF CALIFORNIA - DEPARTMENT OF TRANSPORTATION
Caltrans® PROJECT COORDINATION

FUNCTIONAL SUPERVISOR: TRUMAN DENIO
CALCULATED-DESIGNED BY: KONSTANTIN GREKOV
CHECKED BY: TRUMAN DENIO
REVISED BY
DATE REVISED

LAST REVISION 09-10-14
DATE PLOTTED => 12/31/2014
TIME PLOTTED => 11:27:01 AM

Dist	COUNTY	ROUTE	POST MILES TOTAL PROJECT	SHEET No.	TOTAL SHEETS
09	Iny	395	R20.3/R22.3	11	43

Truman P. Denio 9-10-14
REGISTERED CIVIL ENGINEER DATE

12-8-14
PLANS APPROVAL DATE

REGISTERED PROFESSIONAL ENGINEER TRUMAN DENIO No. 34556 Exp. 9-30-15 CIVIL STATE OF CALIFORNIA

THE STATE OF CALIFORNIA OR ITS OFFICERS OR AGENTS SHALL NOT BE RESPONSIBLE FOR THE ACCURACY OR COMPLETENESS OF SCANNED COPIES OF THIS PLAN SHEET.

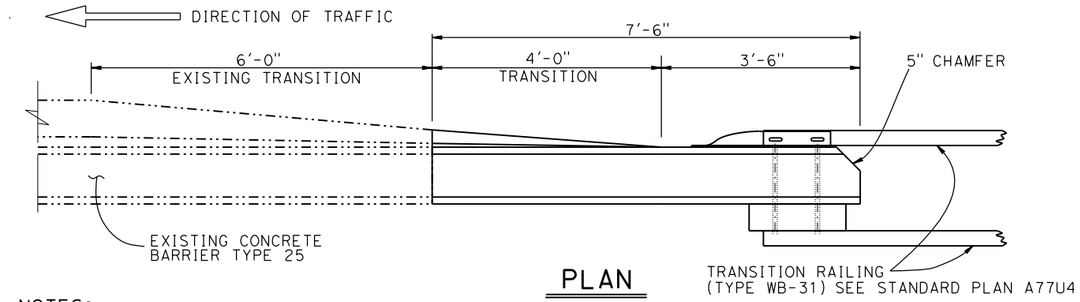

PLAN
3/4" = 1'-0"

NOTES:
1. RIGHT SIDE SHOWN, LEFT SIDE SIMILAR.
2. THE CONTRACTOR SHALL VERIFY ALL CONTROLLING FIELD DIMENSIONS BEFORE ORDERING OR FABRICATING ANY MATERIAL.

CONCRETE BARRIER

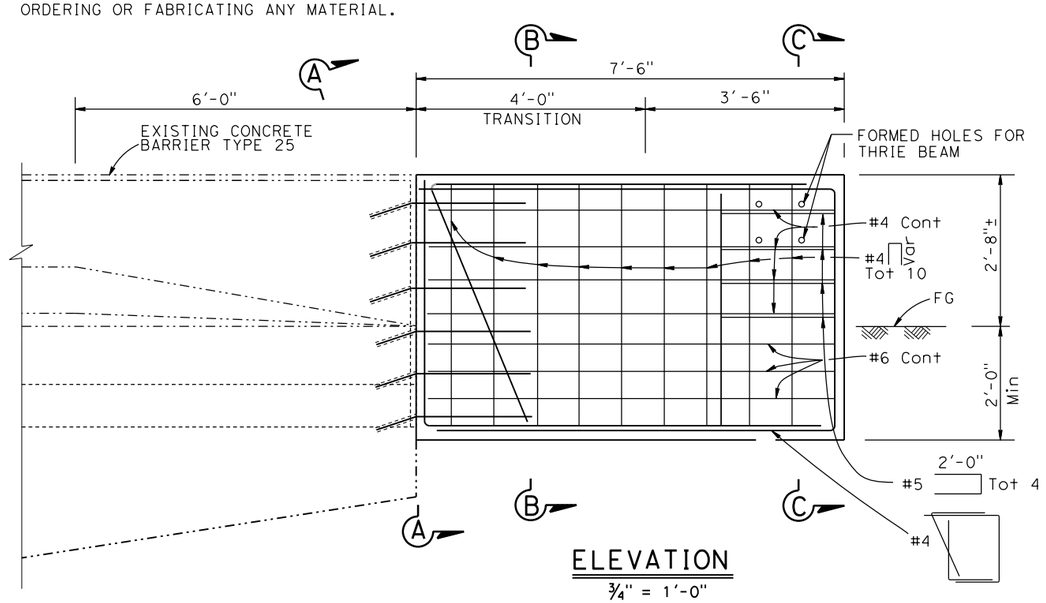

ELEVATION
3/4" = 1'-0"

NOTES:
1. CL HIGHWAY STATIONING:
   STA 471+41.67 = MIDSPAN OF BRIDGE.
2. FOR MGS DETAILS SEE STANDARD PLANS.

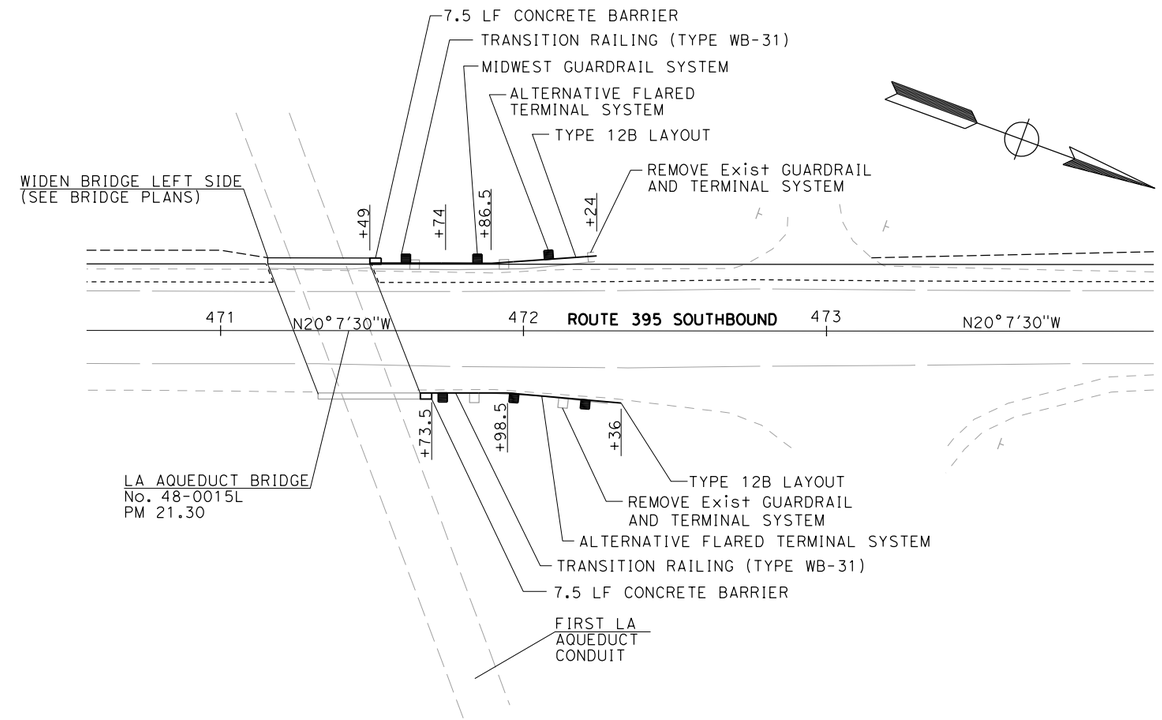

CONCRETE BARRIER AND RAILING
Sta 471+66

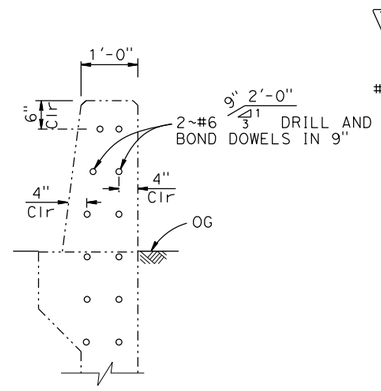

SECTION A-A
3/4" = 1'-0"

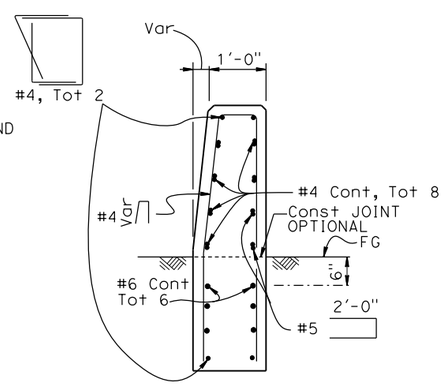

SECTION B-B
3/4" = 1'-0"

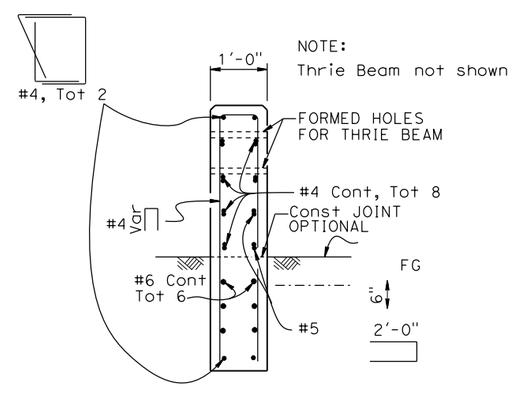

SECTION C-C
3/4" = 1'-0"

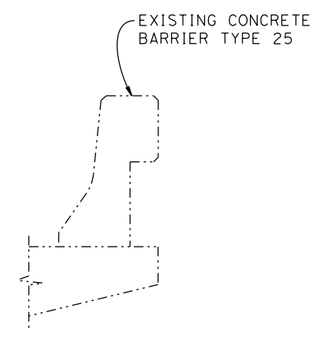

CONCRETE BARRIER TYPE 25
3/4" = 1'-0"

CONSTRUCTION DETAILS
NO SCALE

C-3

STATE OF CALIFORNIA - DEPARTMENT OF TRANSPORTATION
Caltrans® PROJECT COORDINATION

FUNCTIONAL SUPERVISOR: TRUMAN DENIO
CALCULATED-DESIGNED BY: KONSTANTIN GREKOV
CHECKED BY: TRUMAN DENIO
REVISED BY
DATE REVISED

LAST REVISION 09-10-14
DATE PLOTTED => 12/31/2014
TIME PLOTTED => 11:28:26 AM

Dist	COUNTY	ROUTE	POST MILES TOTAL PROJECT	SHEET No.	TOTAL SHEETS
09	Iny	395	R20.3/R22.3	12	43

Truman P. Denio 9-10-14
REGISTERED CIVIL ENGINEER DATE

12-8-14
PLANS APPROVAL DATE

REGISTERED PROFESSIONAL ENGINEER TRUMAN DENIO No. 34556 Exp. 9-30-15 CIVIL STATE OF CALIFORNIA

THE STATE OF CALIFORNIA OR ITS OFFICERS OR AGENTS SHALL NOT BE RESPONSIBLE FOR THE ACCURACY OR COMPLETENESS OF SCANNED COPIES OF THIS PLAN SHEET.

LEGEND:

- CONCRETE BACKFILL (PIPE TRENCH)
- ROCK SLOP PROTECTION (RSP)

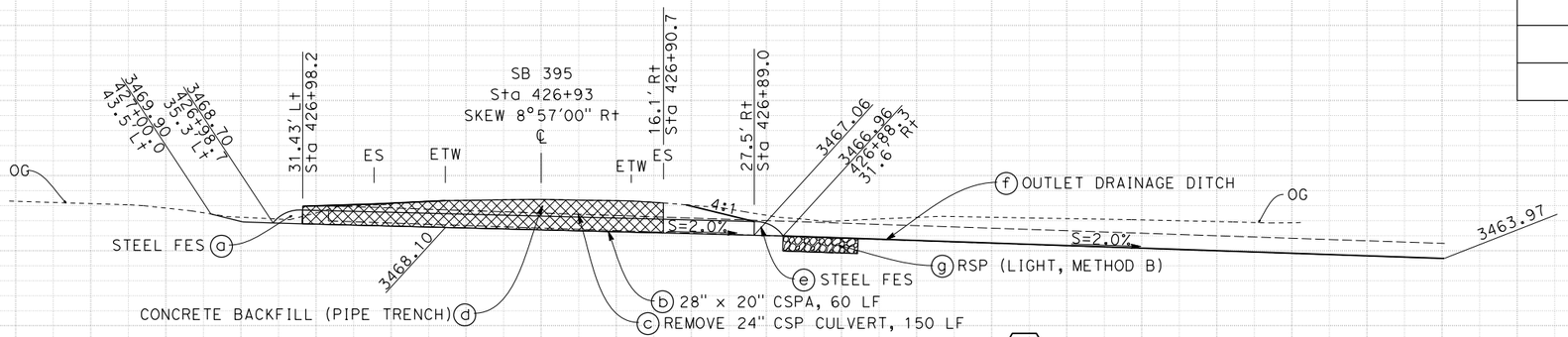

DRAINAGE SYSTEM No. 1
Sta 426+93

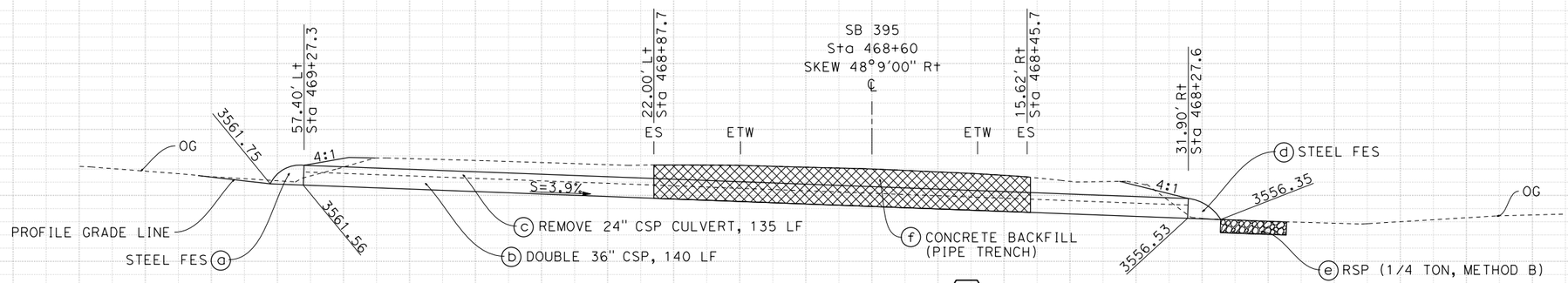

DRAINAGE SYSTEM No. 3
Sta 468+60

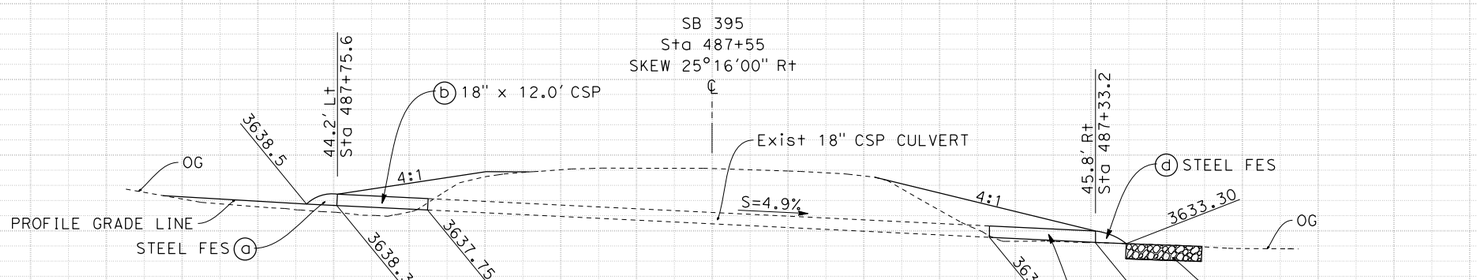

DRAINAGE SYSTEM No. 4
Sta 487+55

APPROVED FOR DRAINAGE WORK ONLY

DRAINAGE PROFILE
SCALE: Horiz 1"=10'
Vert 1"=10'

DP-1

STATION		TOTAL
CY	Exc	
	Emb	

STATE OF CALIFORNIA - DEPARTMENT OF TRANSPORTATION
Caltrans® PROJECT COORDINATION

FUNCTIONAL SUPERVISOR: TRUMAN DENIO
CALCULATED-DESIGNED BY: KONSTANTIN GREKOV
CHECKED BY: TRUMAN DENIO
REVISED BY / DATE REVISED

LAST REVISION 09-10-14
DATE PLOTTED => 12/31/2014
TIME PLOTTED => 2:36:49 PM

Dist	COUNTY	ROUTE	POST MILES TOTAL PROJECT	SHEET No.	TOTAL SHEETS
09	Iny	395	R20.3/R22.3	13	43

Truman P. Denio 9-10-14
REGISTERED CIVIL ENGINEER DATE

12-8-14
PLANS APPROVAL DATE

REGISTERED PROFESSIONAL ENGINEER
TRUMAN DENIO
No. 34556
Exp. 9-30-15
CIVIL
STATE OF CALIFORNIA

THE STATE OF CALIFORNIA OR ITS OFFICERS OR AGENTS SHALL NOT BE RESPONSIBLE FOR THE ACCURACY OR COMPLETENESS OF SCANNED COPIES OF THIS PLAN SHEET.

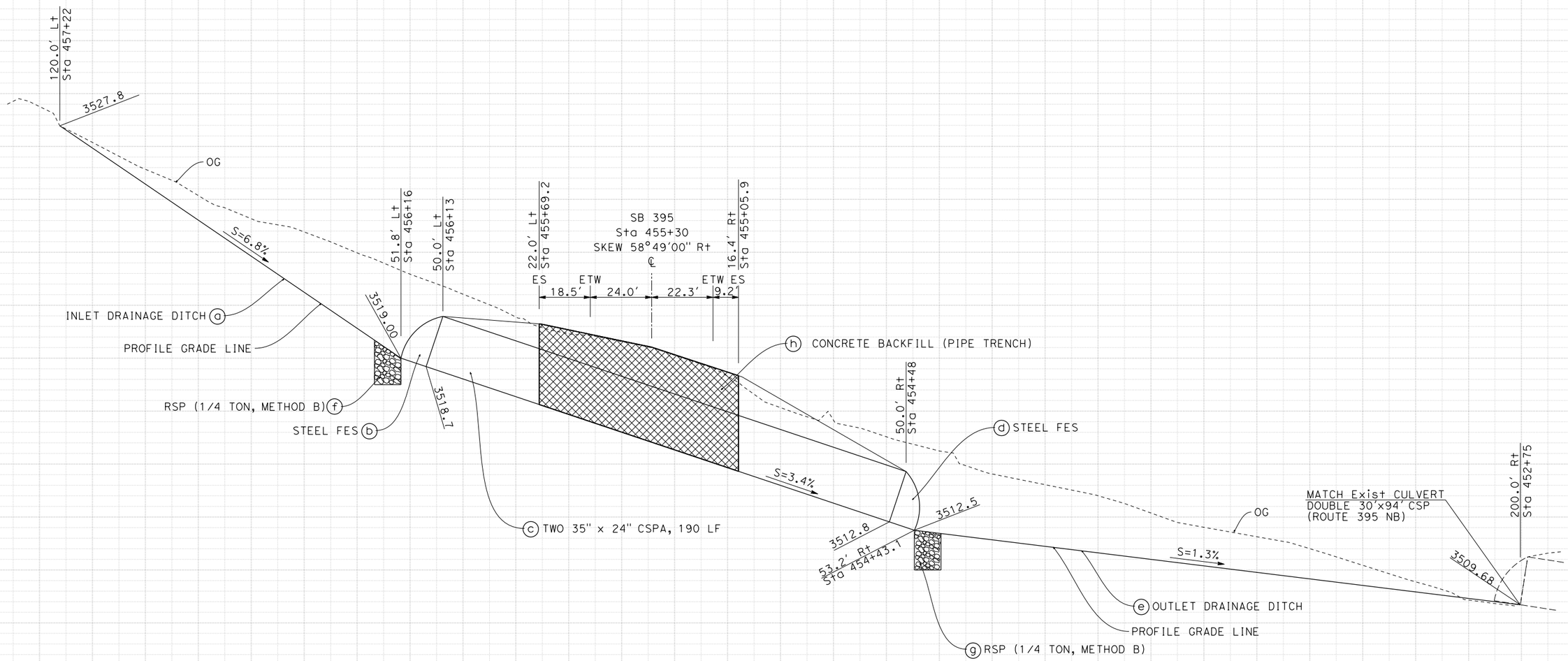

DRAINAGE SYSTEM No. (2)
Sta 455+30

APPROVED FOR DRAINAGE WORK ONLY

DRAINAGE PROFILE
SCALE: Horiz 1"=20'
Vert 1"=2'
DP-2

STATION		TOTAL
CY	Exc	
	Emb	

STATE OF CALIFORNIA - DEPARTMENT OF TRANSPORTATION
Caltrans® PROJECT COORDINATION

FUNCTIONAL SUPERVISOR: TRUMAN DENIO
CALCULATED-DESIGNED BY: KONSTANTIN GREKOV
CHECKED BY: TRUMAN DENIO
REVISED BY
DATE REVISED

LAST REVISION 09-10-14
DATE PLOTTED => 12/31/2014
TIME PLOTTED => 2:37:21 PM

Dist	COUNTY	ROUTE	POST MILES TOTAL PROJECT	SHEET No.	TOTAL SHEETS
09	Iny	395	R20.3/R22.3	14	43

Truman P. Denio 9-10-14
REGISTERED CIVIL ENGINEER DATE

12-8-14
PLANS APPROVAL DATE

REGISTERED PROFESSIONAL ENGINEER
TRUMAN DENIO
No. 34556
Exp. 9-30-15
CIVIL
STATE OF CALIFORNIA

THE STATE OF CALIFORNIA OR ITS OFFICERS OR AGENTS SHALL NOT BE RESPONSIBLE FOR THE ACCURACY OR COMPLETENESS OF SCANNED COPIES OF THIS PLAN SHEET.

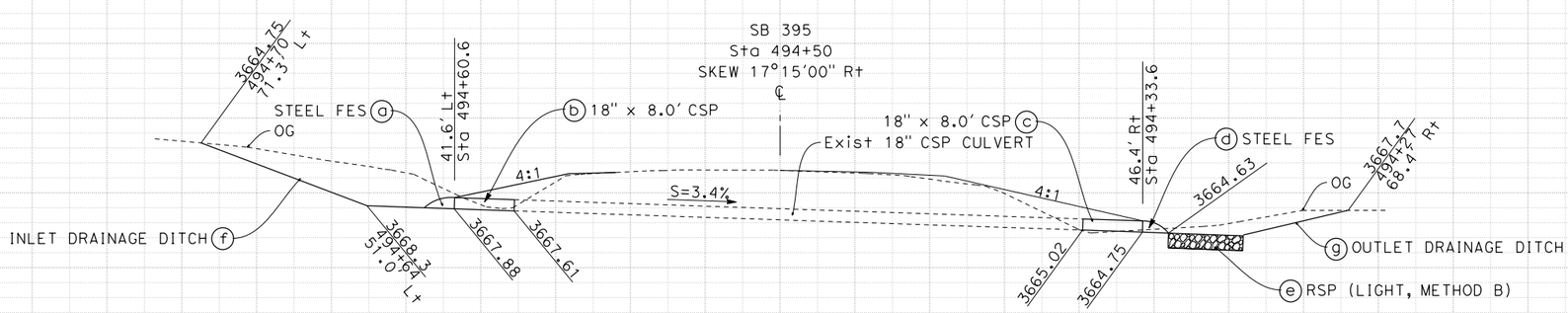

DRAINAGE SYSTEM No. 5
Sta 494+50

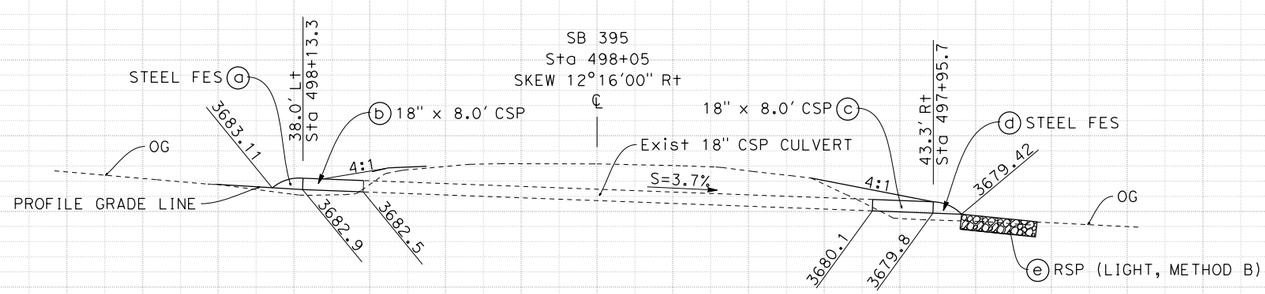

DRAINAGE SYSTEM No. 6
Sta 498+05

APPROVED FOR DRAINAGE WORK ONLY

DRAINAGE PROFILE
SCALE: Horiz 1"=10'
Vert 1"=10'

DP-3

STATION		TOTAL
CY	Exc	
	Emb	

REVISED BY | DATE REVISED
KONSTANTIN GREKOV | TRUMAN DENIO
CALCULATED-DESIGNED BY | CHECKED BY
FUNCTIONAL SUPERVISOR: TRUMAN DENIO
STATE OF CALIFORNIA - DEPARTMENT OF TRANSPORTATION
Caltrans® PROJECT COORDINATION

LAST REVISION 09-10-14 | DATE PLOTTED => 12/31/2014 TIME PLOTTED => 3:01:15 PM

Dist	COUNTY	ROUTE	POST MILES TOTAL PROJECT	SHEET No.	TOTAL SHEETS
09	Iny	395	R20.3/R22.3	15	43

REGISTERED CIVIL ENGINEER 9-10-14 DATE

12-8-14
PLANS APPROVAL DATE

REGISTERED PROFESSIONAL ENGINEER TRUMAN DENIO No. 34556 Exp. 9-30-15 CIVIL STATE OF CALIFORNIA

THE STATE OF CALIFORNIA OR ITS OFFICERS OR AGENTS SHALL NOT BE RESPONSIBLE FOR THE ACCURACY OR COMPLETENESS OF SCANNED COPIES OF THIS PLAN SHEET.

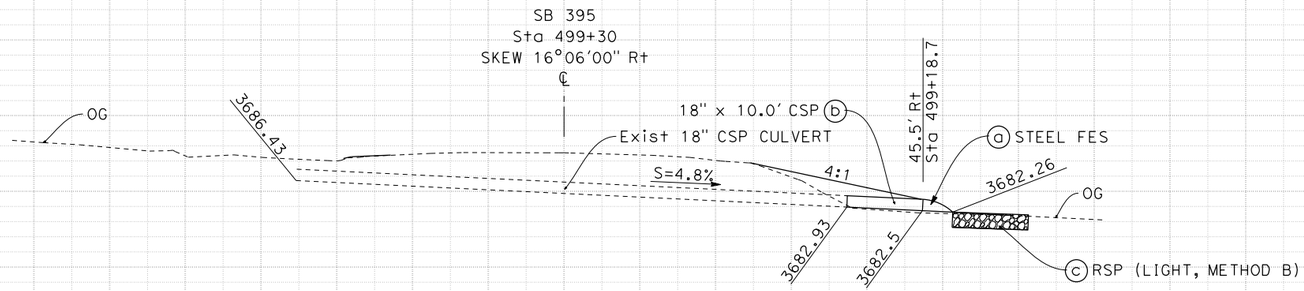

DRAINAGE SYSTEM No. 7
Sta 499+30

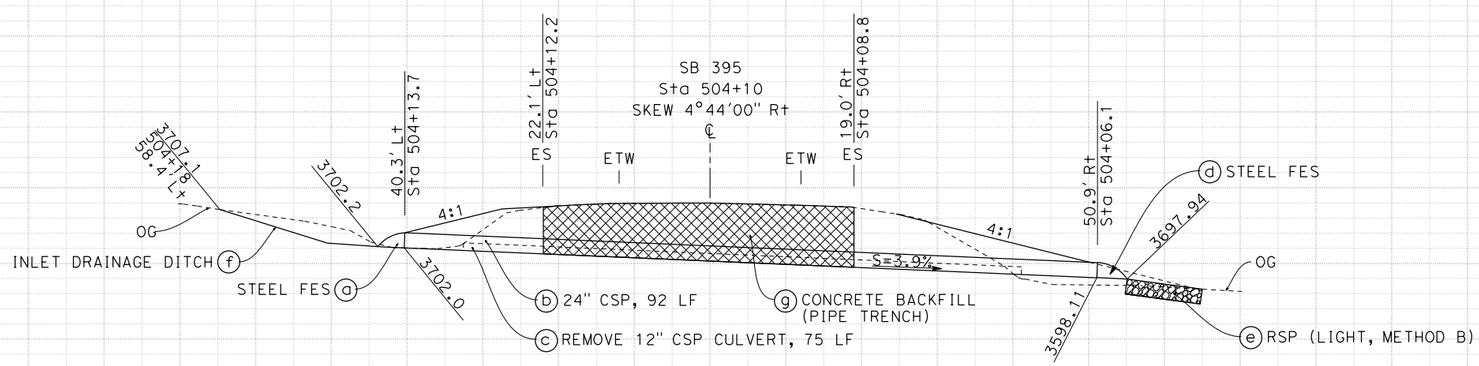

DRAINAGE SYSTEM No. 8
Sta 504+10

APPROVED FOR DRAINAGE WORK ONLY

DRAINAGE PROFILE
SCALE: Horiz 1"=10'
Vert 1"=10'

DP-4

STATION		TOTAL
CY	Exc	
	Emb	

REVISED BY | DATE REVISED

KONSTANTIN GREKOV | TRUMAN DENIO

CALCULATED-DESIGNED BY | CHECKED BY

FUNCTIONAL SUPERVISOR: TRUMAN DENIO

STATE OF CALIFORNIA - DEPARTMENT OF TRANSPORTATION
Caltrans® PROJECT COORDINATION

LAST REVISION 09-10-14 | DATE PLOTTED => 12/31/2014 TIME PLOTTED => 3:01:28 PM

Dist	COUNTY	ROUTE	POST MILES TOTAL PROJECT	SHEET No.	TOTAL SHEETS
09	Iny	395	R20.3/R22.3	16	43

REGISTERED CIVIL ENGINEER 9-10-14 DATE

12-8-14
PLANS APPROVAL DATE

REGISTERED PROFESSIONAL ENGINEER TRUMAN DENIO No. 34556 Exp. 9-30-15 CIVIL STATE OF CALIFORNIA

THE STATE OF CALIFORNIA OR ITS OFFICERS OR AGENTS SHALL NOT BE RESPONSIBLE FOR THE ACCURACY OR COMPLETENESS OF SCANNED COPIES OF THIS PLAN SHEET.

NOTE:
1. STRUCTURAL BACKFILL SHALL INCLUDE MATERIAL FROM FOOTING EXCAVATION, CULVERT EXCAVATION, DRAINAGE EXCAVATION, CUT AND DITCH EXCAVATION.

ABBREVIATIONS:
HMA-A - HOT MIX ASPHALT (TYPE A)

LEGEND:
- ROCK SLOP PROTECTION (RSP)
- CONCRETE BACKFILL (PIPE TRENCH)

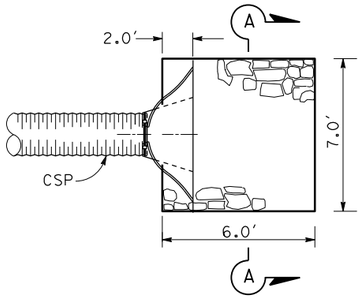

PLAN
TYPICAL OUTLET ENERGY DISSIPATOR

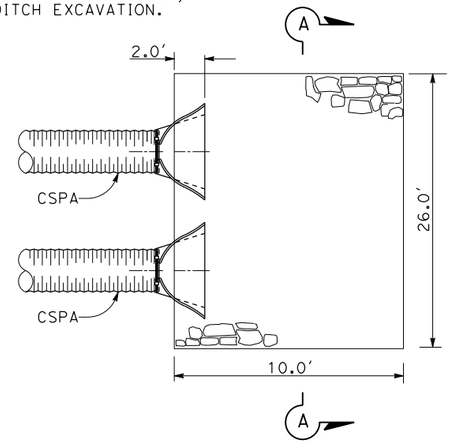

PLAN
ENERGY DISSIPATOR 2 (f)(g)

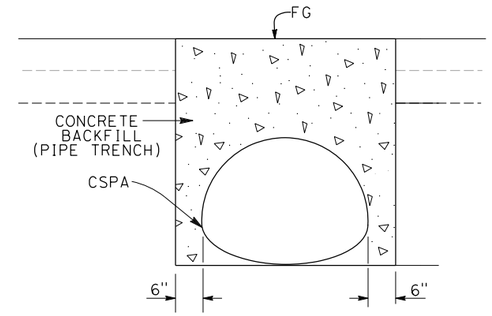

ARCH PIPE
CONCRETE BACKFILL (PIPE TRENCH) DETAIL 1 (d) 2 (h)

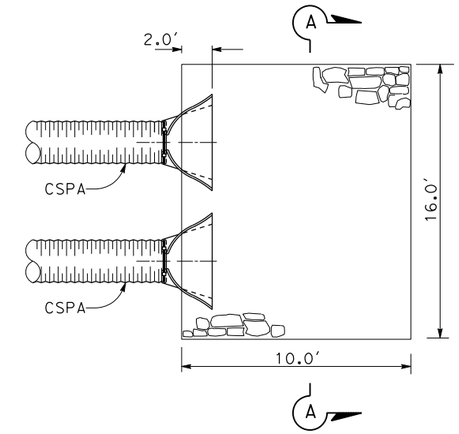

PLAN
ENERGY DISSIPATOR 3 (e)

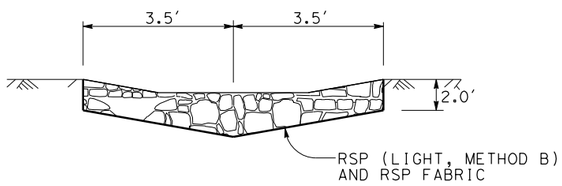

SECTION A-A
TYPICAL OUTLET ENERGY DISSIPATOR

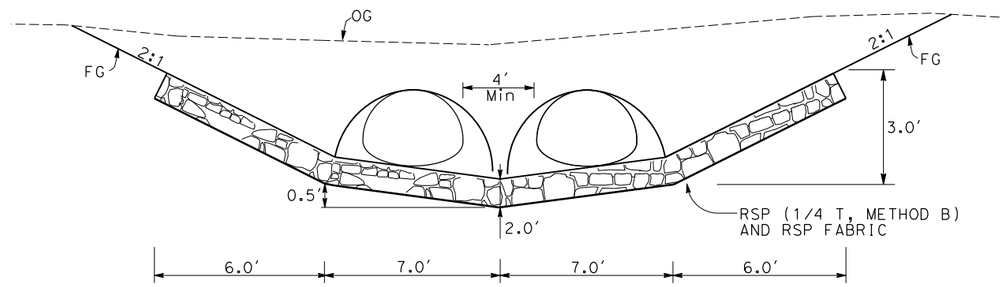

SECTION A-A
ROCK SLOPE PROTECTION (1/4 T, METHOD B) 2 (f)(g)

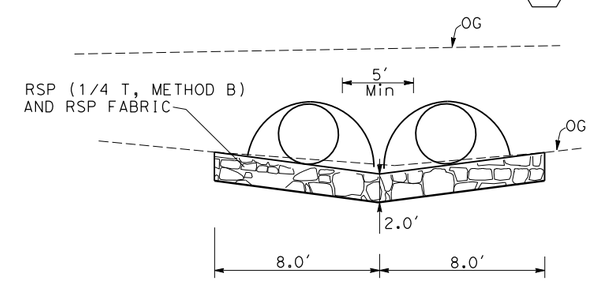

SECTION A-A
ROCK SLOPE PROTECTION (1/4 T, METHOD B) 3 (e)

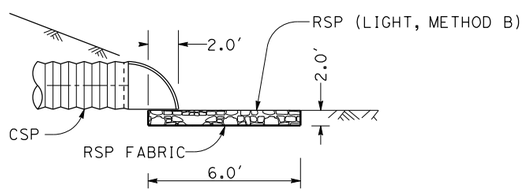

PROFILE
TYPICAL OUTLET ENERGY DISSIPATOR
1 (g) 4 (e) 5 (e) 6 (e) 7 (c) 8 (e)

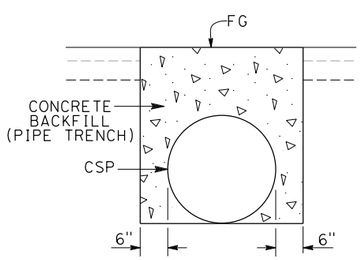

PIPE
CONCRETE BACKFILL (PIPE TRENCH) DETAIL
3 (f) 8 (g)

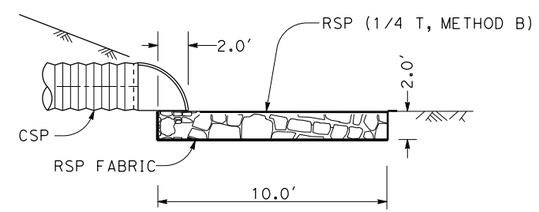

PROFILE
ENERGY DISSIPATOR 2 (f)(g)

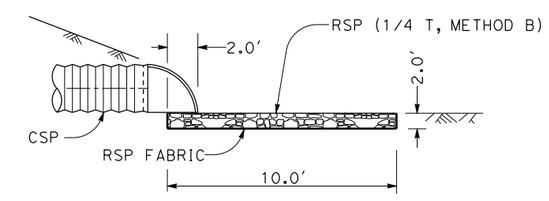

PROFILE
ENERGY DISSIPATOR 3 (e)

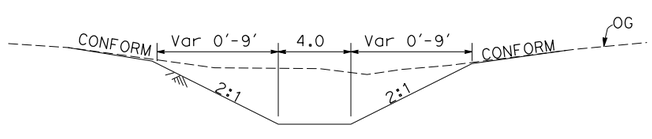

OUTLET DRAINAGE DITCH
1 (f) 5 (f)(g) 8 (f)

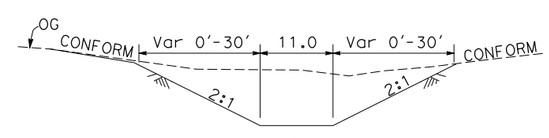

INLET AND OUTLET DRAINAGE DITCH 2 (a)(e)

DRAINAGE DETAILS
NO SCALE
DD-1

STATE OF CALIFORNIA - DEPARTMENT OF TRANSPORTATION
Caltrans® PROJECT COORDINATION

FUNCTIONAL SUPERVISOR: TRUMAN DENIO
CALCULATED-DESIGNED BY: KONSTANTIN GREKOV
CHECKED BY: TRUMAN DENIO
REVISED BY
DATE REVISED

LAST REVISION 09-10-14
DATE PLOTTED => 12/31/2014
TIME PLOTTED => 3:15:45 PM

NOTES:
1. ALL JOINTS ARE STANDARD JOINT TYPE.

DRAINAGE QUANTITIES

DRAINAGE SHEET No.	DRAINAGE SYSTEM No. ⬡	DRAINAGE UNIT ○	DITCH EXCAVATION CY	CONCRETE BACKFILL (PIPE TRENCH) CY	REMOVE CULVERT LF	18" CSP (.109" THICK) LF	24" CSP (.138" THICK) LF	28" X 20" CSP ARCH (.138" THICK) LF	36" CSP (138" THICK) LF	35" X 24" CSP ARCH (.109" THICK) LF	18" STEEL FLARED END SECTION EA	24" STEEL FLARED END SECTION EA	28" X 20" STEEL FLARED END PIPE ARCH SECTION EA	36" STEEL FLARED END SECTION EA	35" X 24" STEEL FLARED END PIPE ARCH SECTION EA	RSP (1/4 T, METHOD B) CY	RSP (LIGHT, METHOD B) (CY) CY	RSP FABRIC (CLASS 8) SQYD	DESCRIPTION	STATION	DRAINAGE SHEET No.	DRAINAGE SYSTEM No. ⬡	DRAINAGE UNIT ○
DP-1	1	a											1						STEEL FLARED END SECTION	426+93.00	DP-1	1	a
		b						60.0											28" x 20" CSPA	PM 20.46			b
		c			150														REMOVE CULVERT				c
		d		15.3															CONCRETE BACKFILL				d
		e											1						STEEL FLARED END SECTION				e
		f	150.0																OUTLET DITCH				f
		g															3.0	80.0	ROCK SLOPE PROTECTION				g
DP-2	2	a	650.0																INLET DITCH	455+30.00	DP-2	2	a
		b													2				STEEL FLARED END SECTION	PM 21.00			b
		c								380.0									35" x 24" CSPA				c
		d													2				STEEL FLARED END SECTION				d
		e	500.0																OUTLET DITCH				e
		f														20.0		350.0	ROCK SLOPE PROTECTION				f
		g														20.0		350.0	ROCK SLOPE PROTECTION				g
		h		68.1															CONCRETE BACKFILL				h
DP-1	3	a												2					STEEL FLARED END SECTION	468+60.00	DP-1	3	a
		b							280.0										36" CSP	PM 21.25			b
		c			135.0														REMOVE EXISTING CULVERT				c
		d												2					STEEL FLARED END SECTION				d
		e														12.0		220.0	ROCK SLOPE PROTECTION				e
		f		86.6															CONCRETE BACKFILL				f
DP-1	4	a									1								STEEL FLARED END SECTION	487+55.00	DP-1	4	a
		b				12.0													18" CSP	PM 21.61			b
		c				14.0													18" CSP				c
		d									1								STEEL FLARED END SECTION				d
		e															3.0	80.0	ROCK SLOPE PROTECTION				e
DP-3	5	a									1								STEEL FLARED END SECTION	494+50.00	DP-3	5	a
		b				8.0													18" CSP	PM 21.74			b
		c				8.0													18" CSP				c
		d									1								STEEL FLARED END SECTION				d
		e															3.0	80.0	ROCK SLOPE PROTECTION				e
		f	35.0																INLET DITCH				f
		g	5.0																OUTLET DITCH				g
DP-3	6	a									1								STEEL FLARED END SECTION	498+05.00	DP-3	6	a
		b				8.0													18" CSP	PM 21.81			b
		c				8.0													18" CSP				c
		d									1								STEEL FLARED END SECTION				d
		e															3.0	80.0	ROCK SLOPE PROTECTION				e
DP-4	7	a									1								STEEL FLARED END SECTION	499+30.00	DP-4	7	a
		b				10.0													18" CSP	PM 21.83			b
		c															3.0	80.0	ROCK SLOPE PROTECTION				c
DP-4	8	a										1							STEEL FLARED END SECTION	504+10.00	DP-4	8	a
		b					92.0												24" CSP	PM 21.93			b
		c			75.0														REMOVE EXISTING CULVERT				c
		d										1							STEEL FLARED END SECTION				d
		e															3.0	80.0	ROCK SLOPE PROTECTION				e
		f	10.0																INLET DITCH				f
		g		40.1															CONCRETE BACKFILL				g
TOTAL			1,350	210.0	360.0	68.0	92.0	60.0	280.0	380.0	7	2	2	4	4	52.0	18.0	1,400	TOTAL				

(N) - NOT A SEPARATE PAY ITEM, FOR INFORMATION ONLY

Dist	COUNTY	ROUTE	POST MILES TOTAL PROJECT	SHEET No.	TOTAL SHEETS
09	Iny	395	R20.3/R22.3	17	43

Truman P. Denio 9-10-14
REGISTERED CIVIL ENGINEER DATE

12-8-14
PLANS APPROVAL DATE

REGISTERED PROFESSIONAL ENGINEER TRUMAN DENIO No. 34556 Exp. 9-30-15 CIVIL STATE OF CALIFORNIA

THE STATE OF CALIFORNIA OR ITS OFFICERS OR AGENTS SHALL NOT BE RESPONSIBLE FOR THE ACCURACY OR COMPLETENESS OF SCANNED COPIES OF THIS PLAN SHEET.

REVISED BY | DATE REVISED
KONSTANTIN GREKOV | TRUMAN DENIO
CALCULATED-DESIGNED BY | CHECKED BY
FUNCTIONAL SUPERVISOR | TRUMAN DENIO
STATE OF CALIFORNIA - DEPARTMENT OF TRANSPORTATION
Caltrans® PROJECT COORDINATION

DRAINAGE QUANTITIES
NO SCALE **DQ-1**

LAST REVISION 09-10-14 | DATE PLOTTED => 12/31/2014 TIME PLOTTED => 3:16:05 PM

Dist	COUNTY	ROUTE	POST MILES TOTAL PROJECT	SHEET No.	TOTAL SHEETS
09	Iny	395	R20.3/R22.3	18	43

REGISTERED CIVIL ENGINEER 9-10-14 DATE

12-8-14
PLANS APPROVAL DATE

REGISTERED PROFESSIONAL ENGINEER TRUMAN DENIO No. 34556 Exp. 9-30-15 CIVIL STATE OF CALIFORNIA

THE STATE OF CALIFORNIA OR ITS OFFICERS OR AGENTS SHALL NOT BE RESPONSIBLE FOR THE ACCURACY OR COMPLETENESS OF SCANNED COPIES OF THIS PLAN SHEET.

NOTES:

1. LOCATION AND POSITION OF CONSTRUCTION AREA SIGNS AND PORTABLE CHANGEABLE MESSAGE SIGNS ARE APPROXIMATE. EXACT LOCATION TO BE DETERMINED BY THE ENGINEER.
2. FOR ADDITIONAL CONSTRUCTION AREA SIGNS SEE STAGE CONSTRUCTION AND TRAFFIC HANDLING PLAN.

LEGEND:

- CONSTRUCTION AREA SIGNS
- PORTABLE CHANGEABLE MESSAGE SIGNS
- FLASHING BEACON (PORTABLE)

Ⓐ TRAFFIC FINES DOUBLED IN CONSTRUCTION ZONES — C40 (CA) 144" x 60" ON 4" X 6" POSTS

Ⓑ ROAD WORK AHEAD — W20-1 48" x 48" ON 6" x 6" POST

Ⓒ END ROAD WORK — G20-2 36" x 18" 4" x 4" POSTS

Ⓓ ROAD WORK AHEAD — W20-1 36" x 36" ON 6" x 6" POST

Ⓔ ROAD WORK AHEAD — W20-1 48" x 48" ON 6" x 6" POST

STATIONARY MOUNTED CONSTRUCTION AREA SIGNS

TYPE	SIGN PANEL			POSTS			NUMBER OF SIGNS	FLASHING BEACON (PORTABLE)
	CODE	SIZE	MESSAGE	SIZE	SINGLE	DOUBLE		
Ⓐ	C40(CA)	144" x 60"	TRAFFIC FINES DOUBLED IN CONSTRUCTION ZONES	4" X 6"		X	1	
Ⓑ	W20-1	48" x 48"	ROAD WORK AHEAD	4" X 6"	X			1
Ⓒ	G20-2	36" x 18"	END ROAD WORK	4" X 6"	X		9	
Ⓓ	W20-1	36" x 36"	ROAD WORK AHEAD	4" X 6"	X		7	
Ⓔ	W20-1	48" x 48"	ROAD WORK AHEAD	4" X 6"	X		1	
				TOTAL				1

PORTABLE CHANGEABLE MESSAGE SIGNS

MESSAGING FOR SHOULDER CLOSURE		
FIRST FRAME	SECOND FRAME	THIRD FRAME
ROAD WORK AHEAD	REDUCE SPEED	SHOULDER CLOSED AHEAD
MESSAGING FOR LANE CLOSURE		
FIRST FRAME	SECOND FRAME	THIRD FRAME
ROAD WORK AHEAD	REDUCE SPEED	LANE CLOSED AHEAD

PORTABLE CHANGEABLE MESSAGE SIGN

No. OF SIGNS
1

NOTES:

1. PORTABLE CHANGEABLE MESSAGE SIGN LOCATIONS TO BE CONFIRMED BY THE ENGINEER BEFORE THE ACTUAL CLOSURE.
2. ALTERNATE MESSAGES MUST BE APPROVED BY THE ENGINEER.
3. MESSAGE MAY BE ALTERED BY THE ENGINEER.
4. WHEN CONSTRUCTION OPERATIONS ARE NOT ACTIVELY IN PROGRESS, PORTABLE CHANGEABLE MESSAGE SIGNS MUST NOT DISPLAY A MESSAGE UNLESS DIRECTED BY THE ENGINEER.

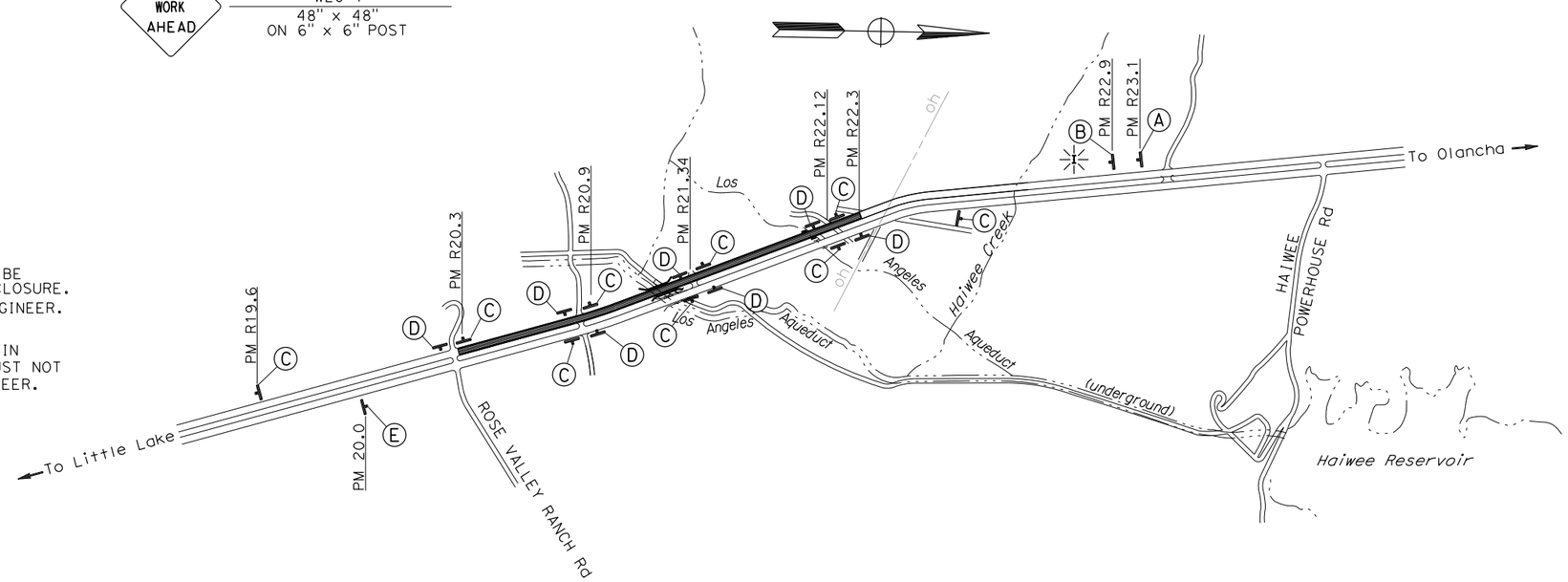

APPROVED FOR CONSTRUCTION AREA SIGN WORK ONLY.

CONSTRUCTION AREA SIGNS

NO SCALE

CS-1

STATE OF CALIFORNIA - DEPARTMENT OF TRANSPORTATION
Caltrans® PROJECT COORDINATION

FUNCTIONAL SUPERVISOR: TRUMAN DENIO
CALCULATED-DESIGNED BY: KONSTANTIN GREKOV
CHECKED BY: TRUMAN DENIO
REVISED BY
DATE REVISED

LAST REVISION 09-10-14
DATE PLOTTED => 12/31/2014
TIME PLOTTED => 3:16:37 PM

Dist	COUNTY	ROUTE	POST MILES TOTAL PROJECT	SHEET No.	TOTAL SHEETS
09	Iny	395	R20.3/R22.3	19	43

Truman P. Denio 9-10-14
REGISTERED CIVIL ENGINEER DATE

12-8-14
PLANS APPROVAL DATE

REGISTERED PROFESSIONAL ENGINEER TRUMAN DENIO No. 34556 Exp. 9-30-15 CIVIL STATE OF CALIFORNIA

THE STATE OF CALIFORNIA OR ITS OFFICERS OR AGENTS SHALL NOT BE RESPONSIBLE FOR THE ACCURACY OR COMPLETENESS OF SCANNED COPIES OF THIS PLAN SHEET.

NOTES:

1. EXACT LOCATIONS OF CONSTRUCTION AREA SIGNS TO BE DETERMINED BY THE ENGINEER.
2. FOR ADDITIONAL CONSTRUCTION AREA SIGNS SEE SHEET CS-1.
3. NB LANES NOT SHOWN.
4. FOR SIGN DETAILS SEE SHEET SC-2

LEGEND:

- TRAFFIC FLOW DIRECTION
- CHANNELIZER (SURFACE MOUNTED)
- (X) STATIONARY MOUNTED CONSTRUCTION AREA SIGN

STAGE 1

1. INSTALL K-RAIL, CRASH CUSHIONS & CHANNELIZERS.
2. PLACE STAGE 1 TRAFFIC HANDLING.
3. WIDEN BRIDGE (LEFT SIDE)
4. CONSTRUCT NEW CONCRETE BARRIER TRANSITION.
5. INSTALL MIDWEST TRANSITION RAILING (TYPE WB-31).
6. INSTALL MIDWEST GUARDRAIL SYSTEM(STEEL POST)
7. INSTALL ALTERNATIVE FLARED TERMINAL SYSTEM
8. REMOVE STAGE 1 TRAFFIC HANDLING.
9. REMOVE K-RAIL, CRASH CUSHIONS & CHANNELIZERS.

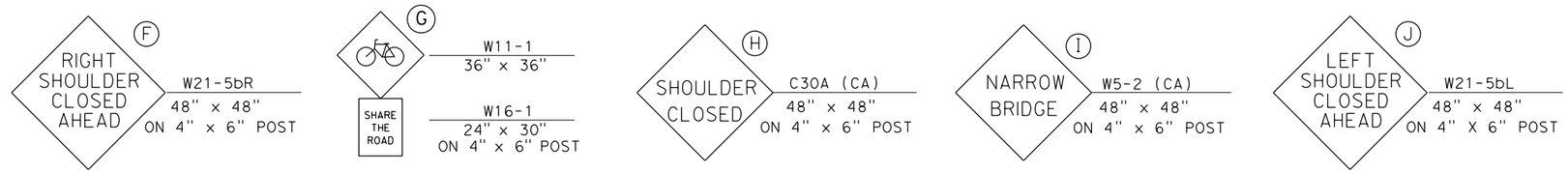

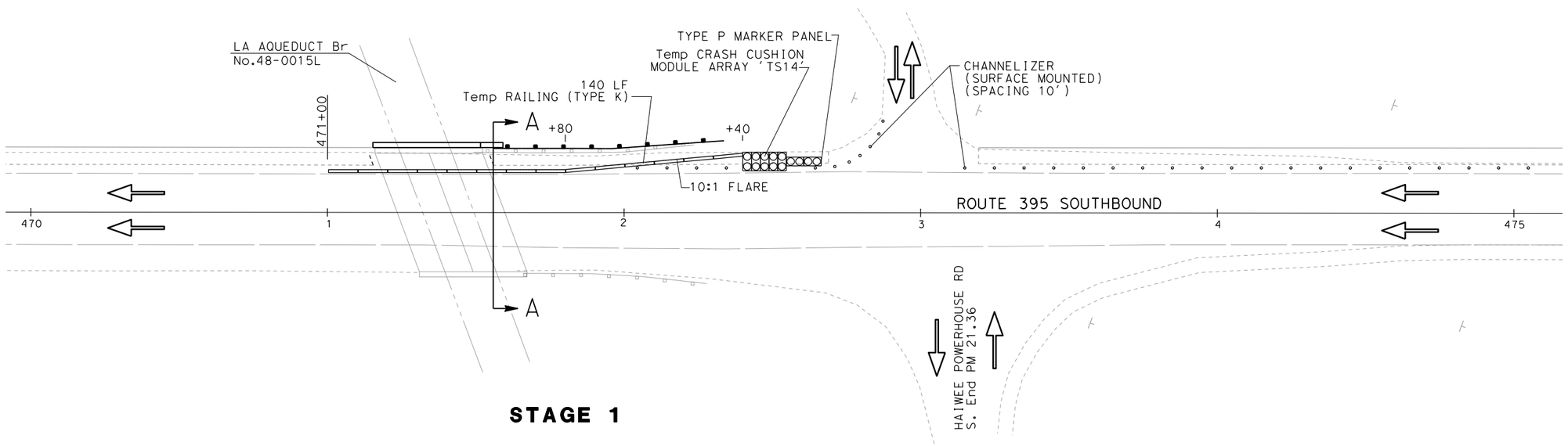

STAGE 1

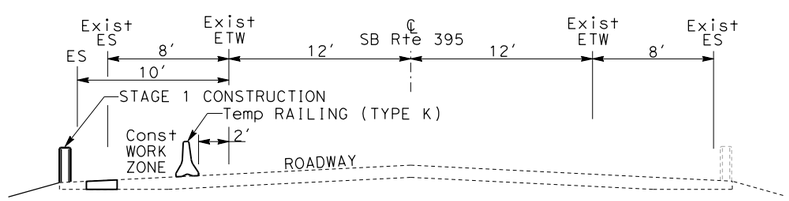

SOUTHBOUND ROUTE 395

SECTION A-A

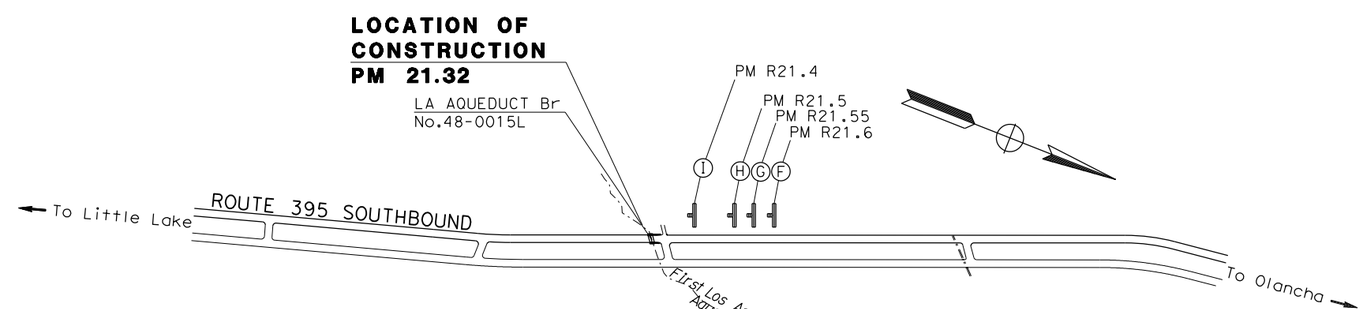

STAGE 1 SIGNS

APPROVED FOR STAGE CONSTRUCTION AND TRAFFIC HANDLING ONLY.

STAGE CONSTRUCTION AND TRAFFIC HANDLING PLAN

NO SCALE

SC-1

STATE OF CALIFORNIA - DEPARTMENT OF TRANSPORTATION
Caltrans® PROJECT COORDINATION

FUNCTIONAL SUPERVISOR: TRUMAN DENIO
CALCULATED-DESIGNED BY: KONSTANTIN GREKOV
CHECKED BY: TRUMAN DENIO
REVISED BY / DATE REVISED

LAST REVISION 09-10-14
DATE PLOTTED => 12/31/2014
TIME PLOTTED => 3:17:06 PM

Dist	COUNTY	ROUTE	POST MILES TOTAL PROJECT	SHEET No.	TOTAL SHEETS
09	Iny	395	R20.3/R22.3	20	43

REGISTERED CIVIL ENGINEER 9-10-14 DATE

12-8-14
PLANS APPROVAL DATE

REGISTERED PROFESSIONAL ENGINEER TRUMAN DENIO No. 34556 Exp. 9-30-15 CIVIL STATE OF CALIFORNIA

THE STATE OF CALIFORNIA OR ITS OFFICERS OR AGENTS SHALL NOT BE RESPONSIBLE FOR THE ACCURACY OR COMPLETENESS OF SCANNED COPIES OF THIS PLAN SHEET.

NOTES:

1. EXACT LOCATIONS OF CONSTRUCTION AREA SIGNS TO BE DETERMINED BY THE ENGINEER.
2. FOR ADDITIONAL CONSTRUCTION AREA SIGNS SEE SHEETS CS-1.
3. NB LANES NOT SHOWN.

STAGE 2

1. INSTALL K-RAIL, CRASH CUSHIONS & CHANNELIZERS.
2. PLACE STAGE 2 TRAFFIC HANDLING.
3. CONSTRUCT NEW CONCRETE BARRIER TRANSITION.
4. INSTALL MIDWEST TRANSITION RAILING (TYPE WB-31).
5. INSTALL ALTERNATIVE FLARED TERMINAL SYSTEM
6. REMOVE STAGE 2 TRAFFIC HANDLING.
7. REMOVE K-RAIL, CRASH CUSHIONS & CHANNELIZERS.

STATIONARY MOUNTED CONSTRUCTION AREA SIGNS

PM	TYPE	LEFT	RIGHT	SIGN PANEL CODE	SIGN PANEL SIZE	SIGN PANEL MESSAGE	POSTS SIZE	POSTS SINGLE	POSTS DOUBLE	NUMBER OF SIGNS	NOTES
R21.40 SB	F		X	W21-5b R	48" x 48"	RIGHT SHOULDER CLOSED AHEAD	4" x 6"	X		1	STAGE 1 ONLY
R21.50 SB	G		X	W11-1	36" x 36"	BICYCLE SYMBOL	4" x 6"	X		1	BOTH STAGES
			X	W16-1	24" x 30"	SHARE THE ROAD					
R21.55 SB	H		X	C30A	48" x 48"	SHOULDER CLOSED	4" x 6"	X		1	BOTH STAGES
R21.60 SB	I		X	W5-2 (CA)	48" x 48"	NARROW BRIDGE	4" x 6"	X		1	BOTH STAGES
R21.40 SB	J		X	W21-5b L	48" x 48"	LEFT SHOULDER CLOSED AHEAD	4" x 6"	X		1	STAGE 2 ONLY

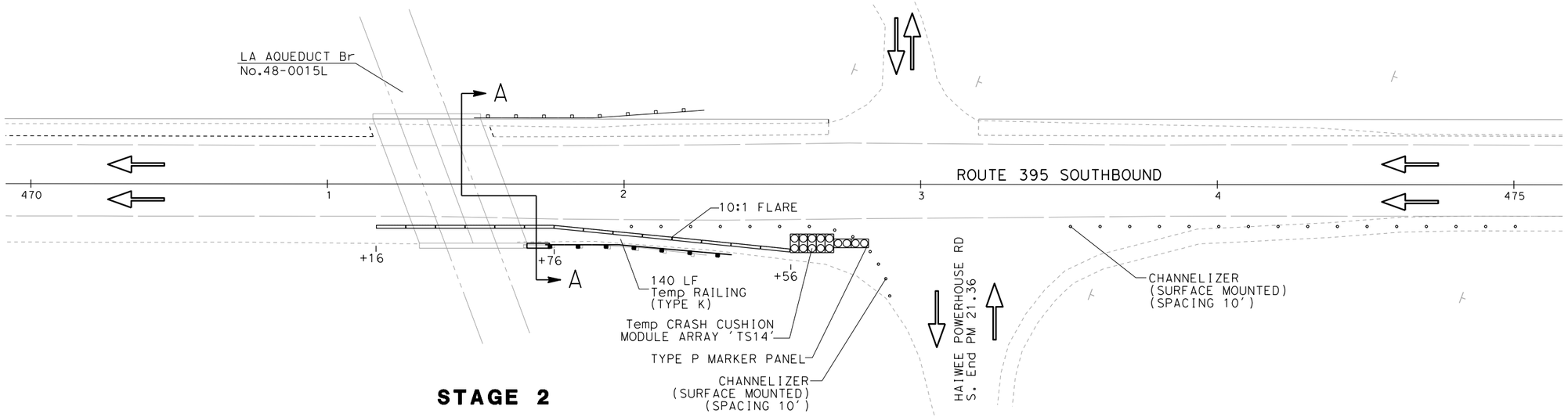

STAGE 2

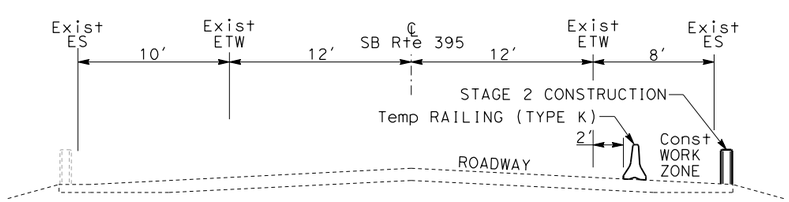

SOUTHBOUND ROUTE 395

SECTION A-A

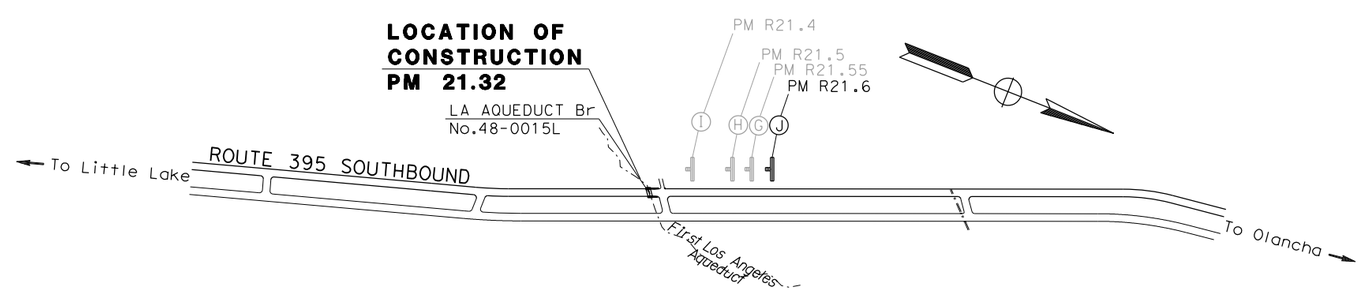

STAGE 2 SIGNS

APPROVED FOR STAGE CONSTRUCTION AND TRAFFIC HANDLING ONLY.

STAGE CONSTRUCTION AND TRAFFIC HANDLING PLAN

NO SCALE

SC-2

STATE OF CALIFORNIA - DEPARTMENT OF TRANSPORTATION
Caltrans PROJECT COORDINATION

FUNCTIONAL SUPERVISOR: TRUMAN DENIO
CALCULATED-DESIGNED BY: KONSTANTIN GREKOV
CHECKED BY: TRUMAN DENIO
REVISED BY
DATE REVISED

LAST REVISION 09-10-14
DATE PLOTTED => 12/31/2014
TIME PLOTTED => 3:17:31 PM

Dist	COUNTY	ROUTE	POST MILES TOTAL PROJECT	SHEET No.	TOTAL SHEETS
09	Iny	395	R20.3/R22.3	21	43

REGISTERED CIVIL ENGINEER 9-10-14 DATE

12-8-14
PLANS APPROVAL DATE

REGISTERED PROFESSIONAL ENGINEER TRUMAN DENIO No. 34556 Exp. 9-30-15 CIVIL STATE OF CALIFORNIA

THE STATE OF CALIFORNIA OR ITS OFFICERS OR AGENTS SHALL NOT BE RESPONSIBLE FOR THE ACCURACY OR COMPLETENESS OF SCANNED COPIES OF THIS PLAN SHEET.

NOTE:
(N) - NOT A SEPARATE PAY ITEM, FOR INFORMATION ONLY.

ABBREVIATIONS:
HMA-A - HOTMIX ASPHALT (TYPE A)

RAILING

LOCATION DESCRIPTION		CONCRETE BARRIER		TRANSITION RAILING (TYPE WB-31)		ALTERNATIVE FLARED TERMINAL SYSTEM			MIDWEST GUARDRAIL SYSTEM (STEEL SPOST)		REMOVE GUARDRAIL
		EA(N)	LF	EA	LF	STA	LF	EA	STA	LF	LF
SB APPROACH	L†	1	7.5	1	25.0	471+86.5 TO 472+24.0	37.5	1	471+74.0 TO 471+86.5	12.5	75.0
	R†	1	7.5	1	25.0	471+91.0 TO 472+28.5	37.5	1			63.0
TOTAL			15.0	2				2		12.5	138.0

FLASHING BEACON (PORTABLE)

LOCATION DESCRIPTION	EA
SEE SHEET CS-1	1
TOTAL	1

ROADWAY QUANTITIES

STATION TO STATION /LOCATION	HMA-A	TACK COAT	CLASS 2 AGGREGATE BASE	ROADWAY EXCAVATION	EMBANKMENT (N)
	TON	TON	CY	CY	CY
422+00 TO 521+00	2,150	2.7	1,100	2,300	350
SAFETY EDGE	200	0.1	200		
LOCAL TOPSOIL EXCAVATION				2,200	2,200
TOTAL	2,350	2.8	1,300	4,500	

DELINEATOR (CLASS 2)

STATION TO STATION	LENGTH	L†	R†	DELINEATOR (CLASS 2)
				TYPE F
	LF (N)			EA
422+00 TO 521+00	9,900	X		32
TOTAL				32

NOTES:
1. TYPE F DELINEATORS SHOULD BE INSTALLED ACROSS FROM THE Exist TYPE G DELINEATORS THAT ARE LOCATED ON THE NUMBER 1 LANE SIDE.
2. TYPE F DELINEATORS SHOULD BE PAIRED WITH TYPE G Exist DELINEATORS ACROSS FROM EACH OTHER.

CHANNELIZER (SURFACE MOUNTED)

LOCATION DESCRIPTION		EA
STAGE 1	Sta 472+00 - 475+00 L†	31
STAGE 2	Sta 472+00 - 475+00 R†	29
TOTAL		60

MARKERS

DRAINAGE SYSTEM	REMOVE MARKER (CULVERT) (N)	MARKER (CULVERT) EA		REMARKS
		LT	RT	
1	2	1	1	PLACE ON CLASS 2 METAL POST
2	2	1	1	PLACE ON CLASS 2 METAL POST
3	2	1	1	PLACE ON CLASS 2 METAL POST
4	2	1	1	PLACE ON CLASS 2 METAL POST
5	2	1	1	PLACE ON CLASS 2 METAL POST
6	2	1	1	PLACE ON CLASS 2 METAL POST
7	2	1	1	PLACE ON CLASS 2 METAL POST
8	2	1	1	PLACE ON CLASS 2 METAL POST
SUBTOTAL		8	8	
TOTAL		16		

TEMPORARY FIBER ROLL

DRAINAGE SYSTEM	TEMPORARY FIBER ROLL LF	
	LT	RT
1	50	
2	150	100
3	100	100
4	50	50
5	50	50
6	50	50
7		50
8	50	50
SUBTOTAL	500	450
TOTAL	950	

REMOVE DELINEATOR

STATION TO STATION	LENGTH	L†	R†	REMOVE DELINEATOR
	LF (N)			EA
422+00 TO 521+00	9,900	X		32
TOTAL				32

TEMPORARY CRASH CUSHION MODULE

LOCATION DESCRIPTION		EA
STAGE 1	Sta 472+00 - 473+00 L†	14
STAGE 2	Sta 472+00 - 473+00 R†	14
TOTAL		28

TEMPORARY REINFORCED SILT FENCE

LOCATION DESCRIPTION	L†	R†	LF
Sta 421+80 TO 448+77	X		2,700
Sta 450+35 TO 511+33	X		6,800
Sta 511+70 TO 521+20	X		1,000
TOTAL			10,500

TEMPORARY RAILING (TYPE K)

LOCATION DESCRIPTION		LF
STAGE 1	Sta 471+00 - 472+40 L†	140
STAGE 2	Sta 471+16 - 472+56 R†	140
TOTAL		280

REMOVE FENCE (TYPE BW)

LOCATION DESCRIPTION	L†	R†	LF
Sta 484+74.88 - 501+61.3	X		1,780
Sta 513+30.60 - 519+00	X		620
TOTAL			2,400

TREATED WOOD WASTE

LOCATION DESCRIPTION	No. (N)	POSTS SIZE	POSTS WEIGHT
			LB
Sta 441+50 TO 472+30 REMOVE GUARDRAIL	32	8"x8"	3200
TOTAL			3200

SIGN SUMMARY

STATION	RESET ROADSIDE SIGN (ONE POST)	TYPE III BARRICADE	REMARKS
	EA	EA	
483+16	1	1	PLACE Exist PANELS ON THE TYPE III BARICADE DURING SHOULDER WORKS.
512+90	1	1	
514+05	1	1	
TOTAL	3	3	

PAINT TRAFFIC STRIPE (2-COAT)

LOCATION	L†	R†	DETAIL 27B
			LF
Sta 421+50 TO 521+50	X		10,000
TOTAL			10,000

FENCE (TYPE BW, 5 STRAND, METAL POST)

LOCATION DESCRIPTION	L†	R†	LF
Sta 484+74.88 - 500+72.48	X		1,598
Sta 513+30.60 - 519+00	X		602
TOTAL			2,200

SUMMARY OF QUANTITIES
Q-1

STATE OF CALIFORNIA - DEPARTMENT OF TRANSPORTATION
Caltrans® PROJECT COORDINATION

FUNCTIONAL SUPERVISOR: TRUMAN DENIO
CALCULATED-DESIGNED BY: KONSTANTIN GREKOV
CHECKED BY: TRUMAN DENIO
REVISED BY / DATE REVISED

LAST REVISION 09-10-14
DATE PLOTTED => 12/31/2014
TIME PLOTTED => 3:18:01 PM

Dist	COUNTY	ROUTE	POST MILES TOTAL PROJECT	SHEET No.	TOTAL SHEETS
09	INY	395	20.3/22.3	22	43

LICENSED LANDSCAPE ARCHITECT

12-8-14
PLANS APPROVAL DATE

LICENSED LANDSCAPE ARCHITECT James S. Hibbert III, LA 5156 Signature 5-31-15 Renewal Date Date STATE OF CALIFORNIA

THE STATE OF CALIFORNIA OR ITS OFFICERS OR AGENTS SHALL NOT BE RESPONSIBLE FOR THE ACCURACY OR COMPLETENESS OF SCANNED COPIES OF THIS PLAN SHEET.

SEED MIX

SEED	BOTANICAL NAME (COMMON NAME)	PERCENT GERMINATION (MINIMUM)	POUNDS PURE LIVE SEED PER ACRE (SLOPE MEASUREMENT)
MIX 1	ACHNATHERUM HYMENOIDES (INDIAN RICE GRASS)	70	4
	ATRIPLEX CANESCENS (FOURWING SALT BUSH)	20	2
	ATRIPLEX POLYCARPA (DESERT SPINACH)	30	2
	CHRYSOTHAMNUS NAUSEOSUS (RABBIT BRUSH)	25	2
	ENCELIA FARINOSA (BRITTLEBUSH)	50	2
	ERIOGONUM FASICULATUM (CALIFORNIA BUCKWHEAT)	70	2
	LARREA TRIDENTATA (CREOSOTE BUSH)	25	2

EROSION CONTROL TYPE 1

SEQUENCE	ITEM	MATERIAL		APPLICATION RATE	DEPTH
		DESCRIPTION	TYPE		
STEP 1	DUFF	DUFF			
STEP 2	INCORPORATE MATERIALS	DUFF			15 INCHES
STEP 3	DRY SEED	SEED	MIX 1	16 LBS/ACRE	
STEP 4	STRAW	STRAW	RICE	2 TONS/ACRE	
STEP 5	INCORPORATE MATERIALS	STRAW			

ROADWAY EROSION CONTROL QUANTITIES

LOCATION			DESCRIPTION	AREA (N)	DUFF	EROSION CONTROL (DRY SEED)	STRAW	INCORPORATE MATERIALS	
								DUFF	STRAW
STATION	L†	R†		SQFT	ACRE	SQFT	SQFT	SQFT	SQFT
422+00 TO 441+00	X		EROSION CONTROL TYPE 1	6,500	0.15	6,500	6,500	6,500	6,500
450+30 TO 460+50	X		EROSION CONTROL TYPE 1	7,000	0.16	7,000	7,000	7,000	7,000
464+00 TO 465+60	X		EROSION CONTROL TYPE 1	1,300	0.03	1,300	1,300	1,300	1,300
477+10 TO 521+10	X		EROSION CONTROL TYPE 1	104,000	2.39	104,000	104,000	104,000	104,000
			TOTAL	118,800	2.73	118,800	118,800	237,600	

(N) - NOT A SEPARATE PAY ITEM, FOR INFORMATION ONLY

EROSION CONTROL QUANTITIES AND LEGEND ECL-1

STATE OF CALIFORNIA - DEPARTMENT OF TRANSPORTATION
Caltrans
DESIGN

SENIOR LANDSCAPE ARCHITECT: RON FLORY
CALCULATED-DESIGNED BY: JIM HIBBERT
CHECKED BY: TRUMAN DENIO
REVISED BY
DATE REVISED

LAST REVISION 07-01-14
DATE PLOTTED => 12/31/2014
TIME PLOTTED => 3:23:45 PM

M

Maint	MAINTENANCE
Max	MAXIMUM
MB	METAL BEAM
MBB	METAL BEAM BARRIER
MBGR	METAL BEAM GUARD RAILING
Med	MEDIAN
MGS	MIDWEST GUARDRAIL SYSTEM
MH	MANHOLE
Min	MINIMUM
Misc	MISCELLANEOUS
Misc I & S	MISCELLANEOUS IRON AND STEEL
Mkr	MARKER
Mod	MODIFIED, MODIFY
Mon	MONUMENT
MP	METAL PLATE
MPGR	METAL PLATE GUARD RAILING
MR	MOVEMENT RATING
MSE	MECHANICALLY STABILIZED EMBANKMENT
Mt	MOUNTAIN, MOUNT
Mtl	MATERIAL
MVP	MAINTENANCE VEHICLE PULLOUT

N

N	NORTH
NB	NORTHBOUND
No.	NUMBER (MUST HAVE PERIOD)
Nos.	NUMBERS (MUST HAVE PERIOD)
NPS	NOMINAL PIPE SIZE
NS	NEAR SIDE
NSP	NEW STANDARD PLAN
NTS	NOT TO SCALE

O

Oblr	OBLITERATE
OC	OVERCROSSING
OD	OUTSIDE DIAMETER
OF	OUTSIDE FACE
OG	ORIGINAL GROUND
OGAC	OPEN GRADED ASPHALT CONCRETE
OGFC	OPEN GRADED FRICTION COURSE
OH	OVERHEAD
OHWM	ORDINARY HIGH WATER MARK
O-O	OUT TO OUT
Opp	OPPOSITE
OSD	OVERSIDE DRAIN

P

p	PAGE
PAP	PERFORATED ALUMINUM PIPE
PB	PULL BOX
PC	POINT OF CURVATURE, PRECAST
PCC	POINT OF COMPOUND CURVE, PORTLAND CEMENT CONCRETE
PCMS	PORTABLE CHANGEABLE MESSAGE SIGN
PCP	PERFORATED CONCRETE PIPE, PRESTRESSED CONCRETE PIPE
PCVC	POINT OF COMPOUND VERTICAL CURVE
PEC	PERMIT TO ENTER AND CONSTRUCT
Ped	PEDESTRIAN
Ped OC	PEDESTRIAN OVERCROSSING
Ped UC	PEDESTRIAN UNDERCROSSING
Perm Mtl	PERMEABLE MATERIAL

P continued

PG	PROFILE GRADE
PI	POINT OF INTERSECTION
PJP	PARTIAL JOINT PENETRATION
Pkwy	PARKWAY
ℙ,PL	PLATE
P/L	PROPERTY LINE
PM	POST MILE, TIME FROM NOON TO MIDNIGHT
PN	PAVING NOTCH
POC	POINT OF HORIZONTAL CURVE
POT	POINT OF TANGENT
POVC	POINT OF VERTICAL CURVE
PP	PIPE PILE, PLASTIC PIPE, POWER POLE
PPL	PREFORMED PERMEABLE LINER
PPP	PERFORATED PLASTIC PIPE
PRC	POINT OF REVERSE CURVE
PRF	PAVEMENT REINFORCING FABRIC
PRVC	POINT OF REVERSE VERTICAL CURVE
PS&E	PLANS, SPECIFICATIONS AND ESTIMATES
PS, P/S	PRESTRESSED
PSP	PERFORATED STEEL PIPE
PT	POINT OF TANGENCY
PVC	POLYVINYL CHLORIDE
Pvmt	PAVEMENT

Q

Qty	QUANTITY

R

R	RADIUS
R & D	REMOVE AND DISPOSE
R & S	REMOVE AND SALVAGE
R/C	RATE OF CHANGE
RCA	REINFORCED CONCRETE ARCH
RCB	REINFORCED CONCRETE BOX
RCP	REINFORCED CONCRETE PIPE
RCPA	REINFORCED CONCRETE PIPE ARCH
Rd	ROAD
Reinf	REINFORCED, REINFORCEMENT, REINFORCING
Rel	RELOCATE
Repl	REPLACEMENT
Ret	RETAINING
Rev	REVISED, REVISION
Rdwy	ROADWAY
RHMA	RUBBERIZED HOT MIX ASPHALT
Riv	RIVER
RM	ROAD-MIXED
RP	RADIUS POINT, REFERENCE POINT
RR	RAILROAD
RSP	ROCK SLOPE PROTECTION, REVISED STANDARD PLAN
Rt	RIGHT
Rte	ROUTE
RW	REDWOOD, RETAINING WALL
R/W	RIGHT OF WAY
Rwy	RAILWAY

S

S	SOUTH, SUPPLEMENT
SAE	STRUCTURE APPROACH EMBANKMENT
Salv	SALVAGE
SAPP	STRUCTURAL ALUMINUM PLATE PIPE
SB	SOUTHBOUND
SC	SAND CUSHION
SCSP	SLOTTED CORRUGATED STEEL PIPE
SD	STORM DRAIN
Sec	SECOND, SECTION
Sep	SEPARATION
SG	SUBGRADE
Shld	SHOULDER
Sht	SHEET
Sim	SIMILAR
℄	STATION LINE
SM	SELECTED MATERIAL
Spec	SPECIAL, SPECIFICATIONS
SPP	SLOTTED PLASTIC PIPE
SS	SLOPE STAKE
SSBM	STRAP AND SADDLE BRACKET METHOD
SSD	STRUCTURAL SECTION DRAIN
SSPA	STRUCTURAL STEEL PLATE ARCH
SSPP	STRUCTURAL STEEL PLATE PIPE
SSPPA	STRUCTURAL STEEL PLATE PIPE ARCH
SSRP	STEEL SPIRAL RIB PIPE
St	STREET
Sta	STATION
STBB	SINGLE THRIE BEAM BARRIER
Std	STANDARD
Str	STRUCTURE
Surf	SURFACING
SW	SIDEWALK, SOUND WALL
Swr	SEWER
Sym	SYMMETRICAL
S4S	SURFACE 4 SIDES

T

T	SEMI-TANGENT
Tan	TANGENT
TBB	THRIE BEAM BARRIER
Tbr	TIMBER
TC	TOP OF CURB
TCB	TRAFFIC CONTROL BOX
TCE	TEMPORARY CONSTRUCTION EASEMENT
Tel	TELEPHONE
Temp	TEMPORARY
TG	TOP OF GRADE
Tot	TOTAL
TP	TELEPHONE POLE
TPB	TREATED PERMEABLE BASE
TPM	TREATED PERMEABLE MATERIAL
Trans	TRANSITION

T continued

TS	TRANSVERSE, TRAFFIC SIGNAL, TUBULAR STEEL
Typ	TYPICAL

U

UC	UNDERCROSSING
UD	UNDERDRAIN
UG	UNDERGROUND
UON	UNLESS OTHERWISE NOTED
UP	UNDERPASS

V

V	VALVE, DESIGN SPEED
Var	VARIABLE, VARIES
VC	VERTICAL CURVE
VCP	VITRIFIED CLAY PIPE
Vert	VERTICAL
Via	VIADUCT
Vol	VOLUME

W

W	WEST, WIDTH
WB	WESTBOUND
WH	WEEP HOLE
WM	WIRE MESH
WS	WATER SURFACE
WSP	WELDED STEEL PIPE
Wt	WEIGHT
WV	WATER VALVE
WW	WINGWALL
WWLOL	WINGWALL LAYOUT LINE

X

X Sec	CROSS SECTION
Xing	CROSSING

Y

Yr	YEAR
Yrs	YEARS

Dist	COUNTY	ROUTE	POST MILES TOTAL PROJECT	SHEET No.	TOTAL SHEETS
09	Iny	395	R20.3/R22.3	23	43

Grace M. Tsushima
REGISTERED CIVIL ENGINEER

July 19, 2013
PLANS APPROVAL DATE

REGISTERED PROFESSIONAL ENGINEER
Grace M. Tsushima
No. C49814
Exp. 9-30-14
CIVIL
STATE OF CALIFORNIA

THE STATE OF CALIFORNIA OR ITS OFFICERS OR AGENTS SHALL NOT BE RESPONSIBLE FOR THE ACCURACY OR COMPLETENESS OF SCANNED COPIES OF THIS PLAN SHEET.

TO ACCOMPANY PLANS DATED 12-8-14

UNIT OF MEASUREMENT SYMBOLS:

Some of the symbols used in the project plan quantity tables and in the Bid Item List are:

TABLE A

SYMBOL USED	DEFINITIONS
ACRE	ACRE
CF	CUBIC FOOT
CY	CUBIC YARD
EA	EACH
GAL	GALLON
LB	POUND
LF	LINEAR FOOT
SQFT	SQUARE FOOT
SQYD	SQUARE YARD
STA	100 FEET
TAB	TABLET
TON	2,000 POUNDS

Some of the symbols used in the plans other than in the project plan quantity tables are:

TABLE B

SYMBOL USED	DEFINITIONS
ksi	KIPS PER SQUARE INCH
ksf	KIPS PER SQUARE FOOT
psi	POUNDS PER SQUARE INCH
psf	POUNDS PER SQUARE FOOT
lb/ft^3, pcf	POUNDS PER CUBIC FOOT
tsf	TONS PER SQUARE FOOT
mph, MPH *	MILES PER HOUR
ø	NOMINAL DIAMETER
oz	OUNCE
lb	POUND
kip	1,000 POUNDS
cal	CALORIE
ft	FOOT OR FEET
gal	GALLON

* For use on a sign panel only

STATE OF CALIFORNIA
DEPARTMENT OF TRANSPORTATION

ABBREVIATIONS (SHEET 2 OF 2)

NO SCALE

RSP A10B DATED JULY 19, 2013 SUPERSEDES STANDARD PLAN A10B DATED MAY 20, 2011 - PAGE 2 OF THE STANDARD PLANS BOOK DATED 2010.

REVISED STANDARD PLAN RSP A10B

2010 REVISED STANDARD PLAN RSP A10B

6-7-13

Dist	COUNTY	ROUTE	POST MILES TOTAL PROJECT	SHEET No.	TOTAL SHEETS
09	Iny	395	R20.3/R22.3	24	43

Randell D. Hiatt
REGISTERED CIVIL ENGINEER

July 19, 2013
PLANS APPROVAL DATE

REGISTERED PROFESSIONAL ENGINEER
Randell D. Hiatt
No. C50200
Exp. 6-30-15
CIVIL
STATE OF CALIFORNIA

THE STATE OF CALIFORNIA OR ITS OFFICERS OR AGENTS SHALL NOT BE RESPONSIBLE FOR THE ACCURACY OR COMPLETENESS OF SCANNED COPIES OF THIS PLAN SHEET.

TO ACCOMPANY PLANS DATED 12-8-14

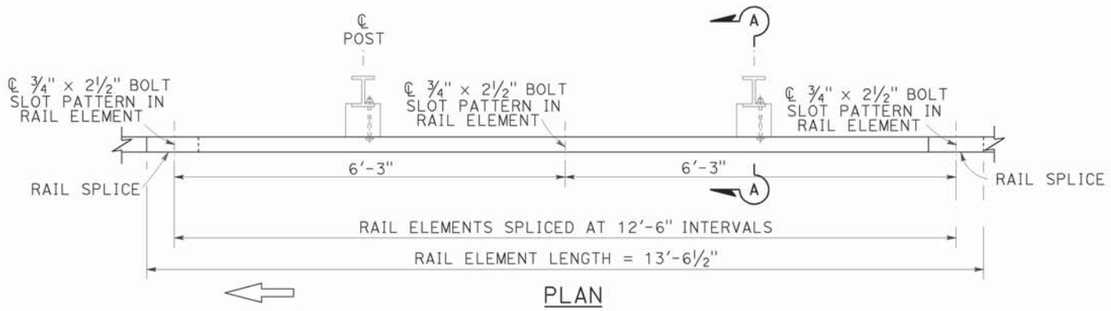

PLAN

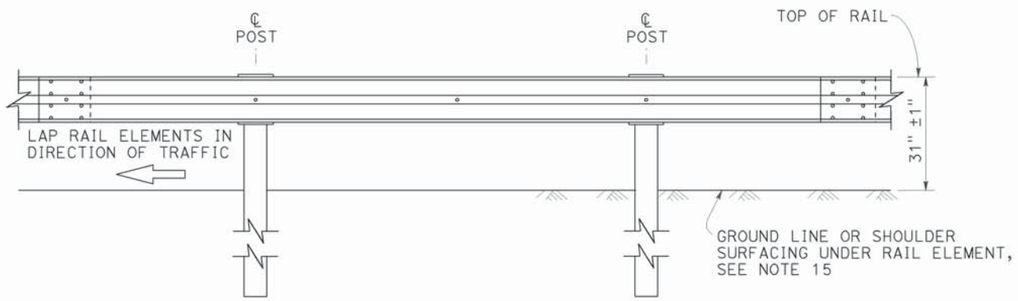

ELEVATION

MIDWEST GUARDRAIL SYSTEM WITH STEEL POSTS AND NOTCHED WOOD OR NOTCHED RECYCLED PLASTIC BLOCKS

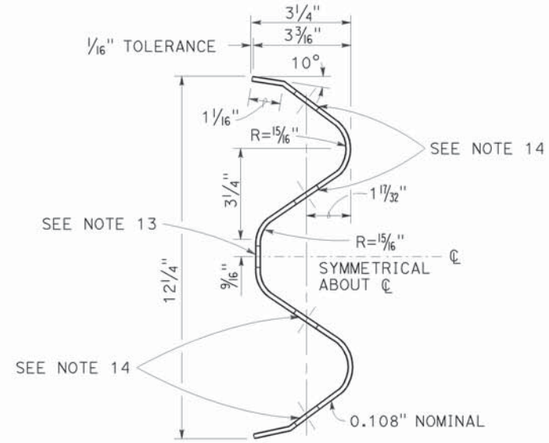

SECTION THRU RAIL ELEMENT

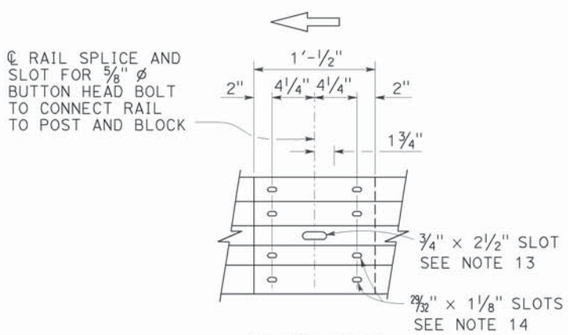

ELEVATION

RAIL ELEMENT SPLICE DETAIL

a) Connect the over lapped end of the rail elements with ⅝" ø × 1⅜" button head oval shoulder splice bolts inserted into the 29/32" × 1⅛" slots and bolted together with ⅝" ø recessed hex nuts. Recess of hex nut points toward rail element. A total of 8 bolts and nuts are to be used at each rail splice connection.

b) The ends of the rail elements are to be overlapped in the direction of traffic (see details).

c) Where end cap is to be attached to the end of a rail element, a total of 4 of the above described splice bolts and nuts are to be used.

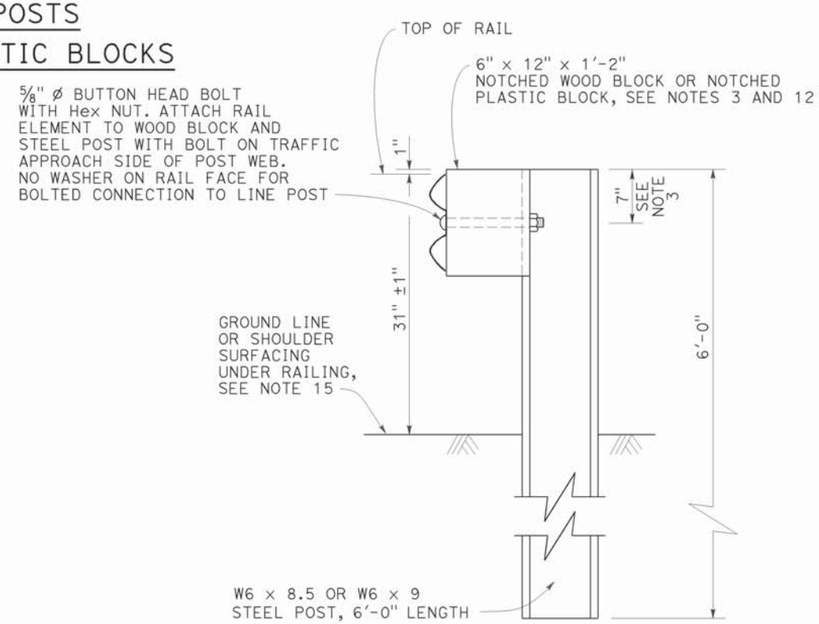

SECTION A-A

TYPICAL STEEL LINE POST INSTALLATION

See Note 4

NOTES:

1. For details of wood post installations, see Revised Standard Plan RSP A77L1.
2. For details of standard hardware used to construct MGS, see Revised Standard Plan RSP A77M1.
3. For details of steel posts and notched wood blocks used to construct MGS, see Revised Standard Plan RSP A77N2.
4. For additional installation details, see Revised Standard Plan RSP A77N3.
5. MGS post spacing to be 6'-3" center to center, except as otherwise noted.
6. For MGS typical layouts, see the A77P, A77Q and A77R Series of Standard Plans.
7. If railing is connected to terminal system end treatment, use 31" height terminal system end treatment.
8. For MGS end anchor details, see Revised Standard Plans RSP A77S1 and RSP A77T2.
9. For details of MGS transition to bridge railing, see Revised Standard Plan RSP A77U4.
10. For additional details of MGS connection to bridge railings, see Revised Standard Plans RSP A77U1, RSP A77U2 and RSP A77V1.
11. For dike positioning and MGS delineation details, see Revised Standard Plan RSP A77N4.
12. Notched face of block faces steel post.
13. Slotted hole for bolted connection of rail element to block and post. See "Section Thru Rail Element".
14. Slotted holes for splice bolts to overlap ends of rail element. See "Section Thru Rail Element".
15. Install posts in soil.

STATE OF CALIFORNIA
DEPARTMENT OF TRANSPORTATION

MIDWEST GUARDRAIL SYSTEM STANDARD RAILING SECTION (STEEL POST WITH NOTCHED WOOD OR NOTCHED RECYCLED PLASTIC BLOCK)

NO SCALE

RSP A77L2 DATED JULY 19, 2013 SUPPLEMENTS THE STANDARD PLANS BOOK DATED 2010.

REVISED STANDARD PLAN RSP A77L2

2010 REVISED STANDARD PLAN RSP A77L2

Dist	COUNTY	ROUTE	POST MILES TOTAL PROJECT	SHEET No.	TOTAL SHEETS
09	Iny	395	R20.3/R22.3	25	43

Randell D. Hiatt
REGISTERED CIVIL ENGINEER

July 19, 2013
PLANS APPROVAL DATE

REGISTERED PROFESSIONAL ENGINEER
Randell D. Hiatt
No. C50200
Exp. 6-30-15
CIVIL
STATE OF CALIFORNIA

THE STATE OF CALIFORNIA OR ITS OFFICERS OR AGENTS SHALL NOT BE RESPONSIBLE FOR THE ACCURACY OR COMPLETENESS OF SCANNED COPIES OF THIS PLAN SHEET.

TO ACCOMPANY PLANS DATED 12-8-14

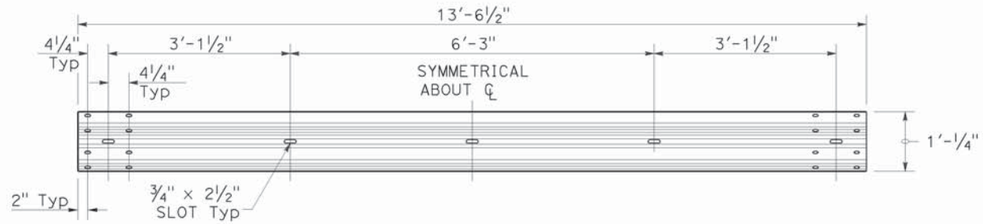

TYPICAL RAIL ELEMENT

NOTE:

1. Slotted holes for splice bolts to overlap ends of rail element.

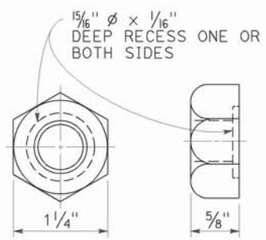

⅝" ø RECESS NUT

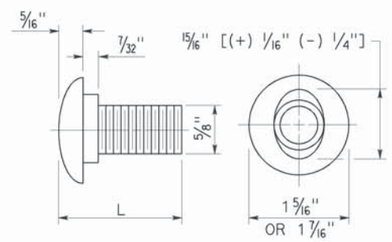

⅝" ø BUTTON HEAD BOLT

BUTTON HEAD BOLT

L	THREAD LENGTH
1⅜"	FULL THREAD LENGTH
2"	FULL THREAD LENGTH
10"	4" Min THREAD LENGTH
18"	4" Min THREAD LENGTH
20"	4" Min THREAD LENGTH
22"	4" Min THREAD LENGTH
26"	4" Min THREAD LENGTH
36"	4" Min THREAD LENGTH
** 2¾"	2" Min THREAD LENGTH
** 19"	4" Min THREAD LENGTH

** For nested rail applications.

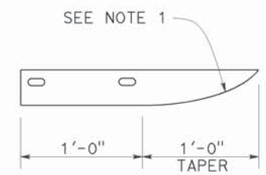

PLAN

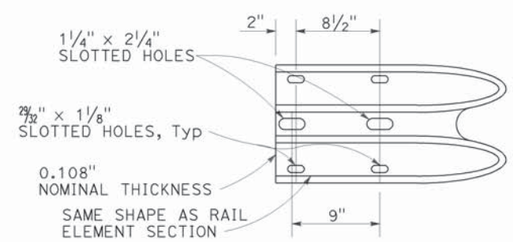

ELEVATION

END CAP

(TYPE A)

STATE OF CALIFORNIA
DEPARTMENT OF TRANSPORTATION

MIDWEST GUARDRAIL SYSTEM STANDARD HARDWARE

NO SCALE

RSP A77M1 DATED JULY 19, 2013 SUPPLEMENTS THE STANDARD PLANS BOOK DATED 2010.

REVISED STANDARD PLAN RSP A77M1

2010 REVISED STANDARD PLAN RSP A77M1

7-3-13

Dist	COUNTY	ROUTE	POST MILES TOTAL PROJECT	SHEET No.	TOTAL SHEETS
09	Iny	395	R20.3/R22.3	26	43

Randell D. Hiatt
REGISTERED CIVIL ENGINEER

November 15, 2013
PLANS APPROVAL DATE

REGISTERED PROFESSIONAL ENGINEER
Randell D. Hiatt
No. C50200
Exp. 6-30-15
CIVIL
STATE OF CALIFORNIA

THE STATE OF CALIFORNIA OR ITS OFFICERS OR AGENTS SHALL NOT BE RESPONSIBLE FOR THE ACCURACY OR COMPLETENESS OF SCANNED COPIES OF THIS PLAN SHEET.

TO ACCOMPANY PLANS DATED 12-8-14

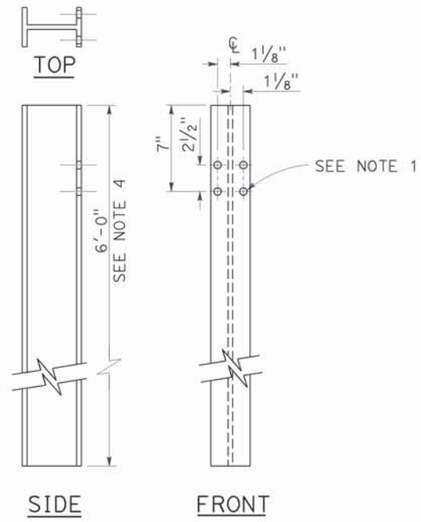

W6 x 9 OR W6 x 8.5
STEEL POST
See Note 4

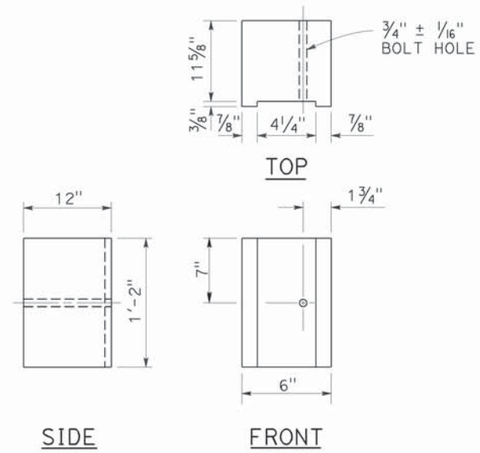

6" x 12"
NOTCHED WOOD BLOCK
See Notes 2 and 3

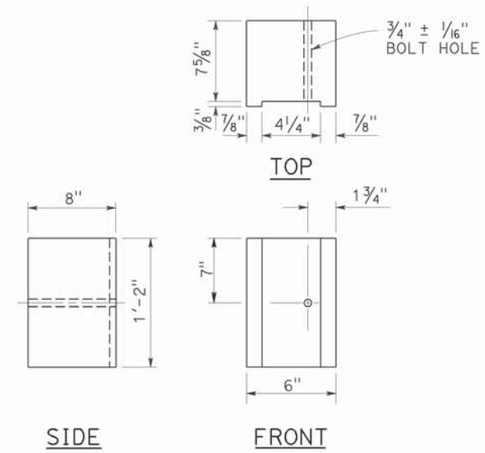

6" x 8"
NOTCHED WOOD BLOCK
Only for use with metal beam guard railing. See Note 5

NOTES:

1. All holes in steel post shall be 13/16" Dia maximum.
2. Dimensions shown for wood block are nominal.
3. Notched face of block faces steel post.
4. 6'-0" length posts to be used for typical roadway installation. See Revised Standard Plan RSP A77N3.
5. See Revised Standard Plan RSP A77L3 for use of 6" x 8" and 8" x 8" notched wood blocks.
6. This post and 8" x 12" block combination to be used for line post sections of MGS on narrow roadways and where strengthened line post sections of MGS are warranted to shield fixed objects.

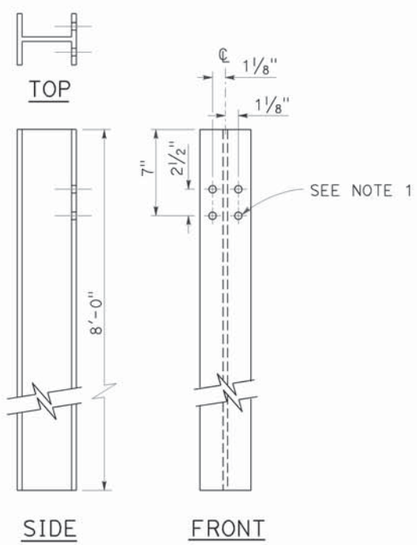

W6 x 15
STEEL POST
See Note 6

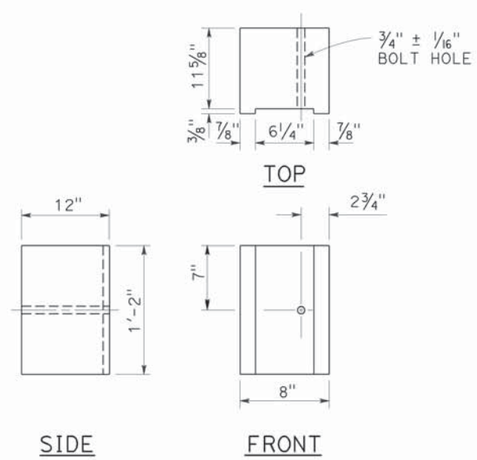

8" x 12"
NOTCHED WOOD BLOCK
See Notes 2 and 3

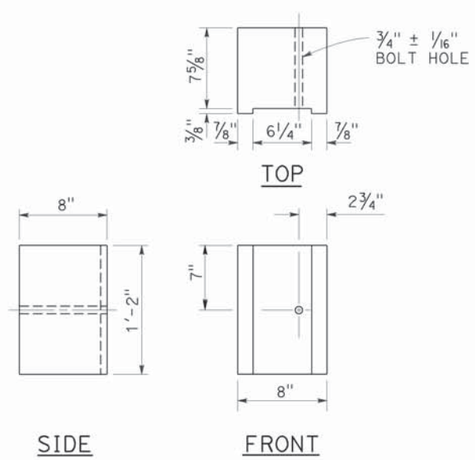

8" x 8"
NOTCHED WOOD BLOCK
Only for use with metal beam guard railing. See Note 5

STATE OF CALIFORNIA
DEPARTMENT OF TRANSPORTATION

MIDWEST GUARDRAIL SYSTEM STEEL POST AND NOTCHED WOOD BLOCK DETAILS

NO SCALE

RSP A77N2 DATED NOVEMBER 15, 2013 SUPERSEDES RSP A77N2 DATED JULY 19, 2013 THAT SUPPLEMENTS THE STANDARD PLANS BOOK DATED 2010.

REVISED STANDARD PLAN RSP A77N2

2010 REVISED STANDARD PLAN RSP A77N2

10-29-13

Dist	COUNTY	ROUTE	POST MILES TOTAL PROJECT	SHEET No.	TOTAL SHEETS
09	Iny	395	R20.3/R22.3	27	43

Randell D. Hiatt
REGISTERED CIVIL ENGINEER

November 15, 2013
PLANS APPROVAL DATE

REGISTERED PROFESSIONAL ENGINEER
Randell D. Hiatt
No. C50200
Exp. 6-30-15
CIVIL
STATE OF CALIFORNIA

THE STATE OF CALIFORNIA OR ITS OFFICERS OR AGENTS SHALL NOT BE RESPONSIBLE FOR THE ACCURACY OR COMPLETENESS OF SCANNED COPIES OF THIS PLAN SHEET.

TO ACCOMPANY PLANS DATED 12-8-14

2010 REVISED STANDARD PLAN RSP A77N3

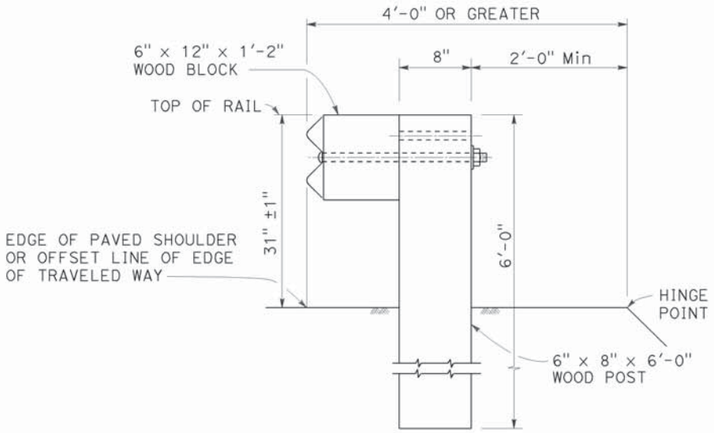

DETAIL A

TYPICAL ROADWAY INSTALLATION

See Note 1

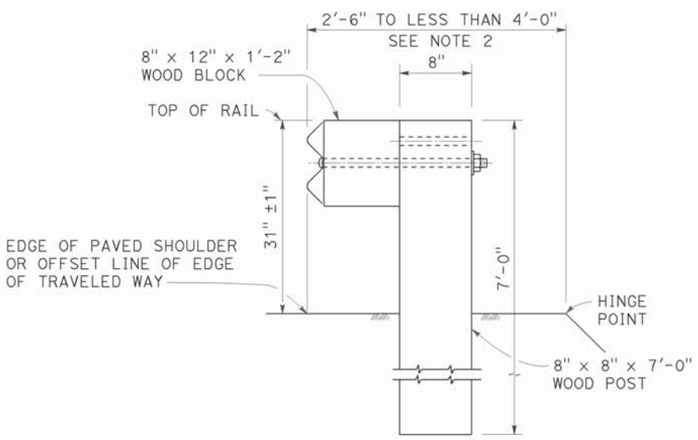

DETAIL B

NARROW ROADWAY INSTALLATION

See Note 1

POST EMBEDMENT

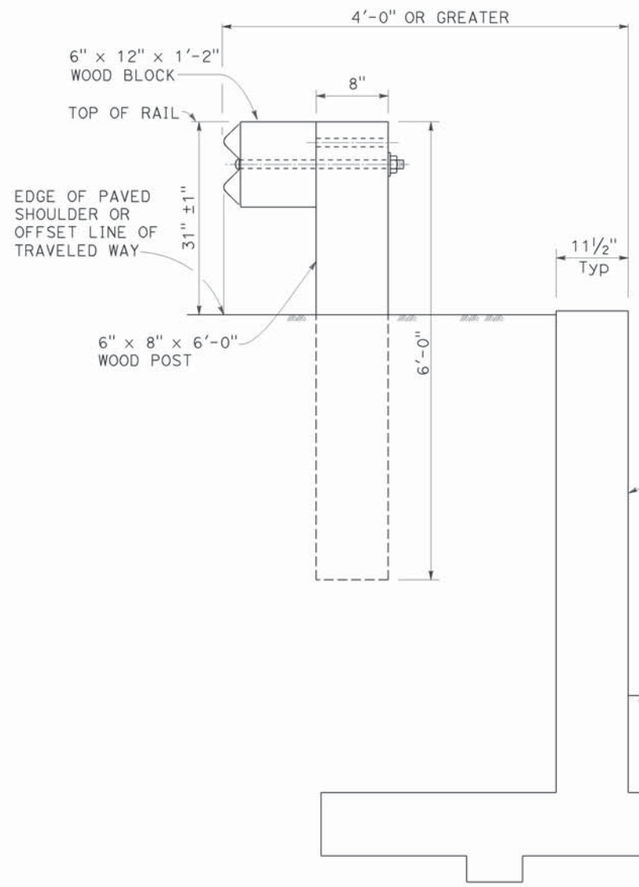

DETAIL C

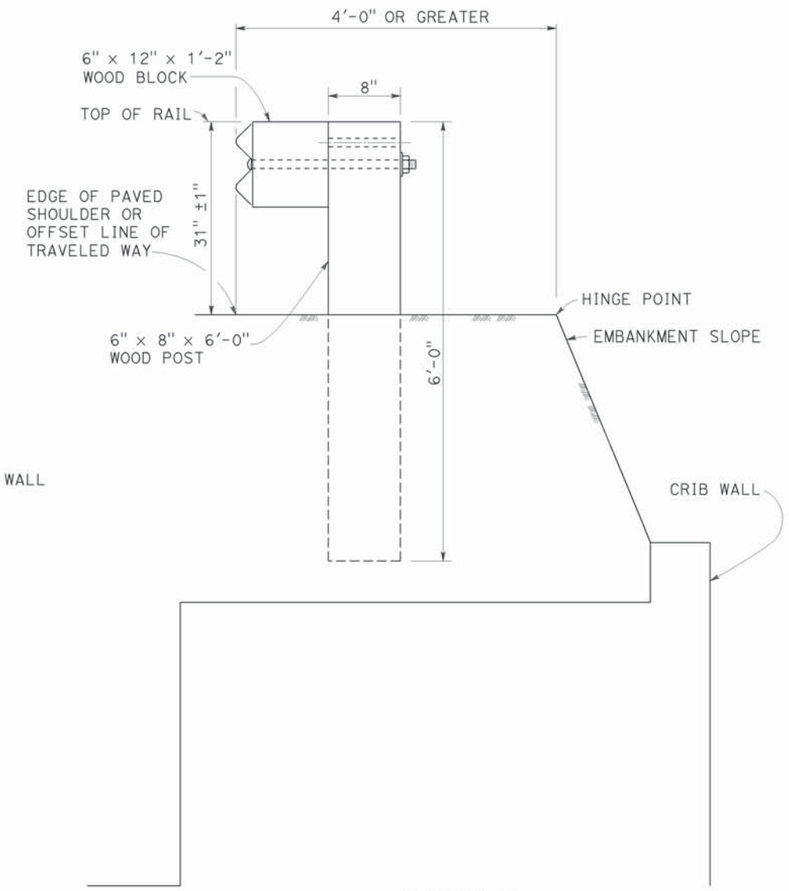

DETAIL D

INSTALLATION AT EARTH RETAINING WALLS

NOTES:

1. These installation details also applicable to steel line post installations. For Detail A, C, and D, where steel line post installations are constructed, W6 x 8.5 or W6 x 9 steel post, 6'-0" in length, with 6" x 12" x 1'-2" notched wood blocks or notched recycled plastic blocks are to be used in place of the size of wood post and wood block shown. For Detail B, where steel line post installations are constructed, W6 x 15 steel post, 8'-0" in length, with 8" x 12" x 1'-2" notched wood blocks or notched recycled plastic blocks are to be used in place of the size of wood post and wood block shown. For additional installation details, see Revised Standard Plan RSP A77L1 and RSP A77L2.
2. Where the distance between the face of the rail and the hinge point is less than 2'-6", see the Project Plans for special details.
3. For dike positioning with MGS installations, see Revised Standard Plan RSP A77N4.

STATE OF CALIFORNIA
DEPARTMENT OF TRANSPORTATION

MIDWEST GUARDRAIL SYSTEM TYPICAL LINE POST EMBEDMENT AND HINGE POINT OFFSET DETAILS

NO SCALE

RSP A77N3 DATED NOVEMBER 15, 2013 SUPERSEDES RSP A77N3 DATED JULY 19, 2013 THAT SUPPLEMENTS THE STANDARD PLANS BOOK DATED 2010.

REVISED STANDARD PLAN RSP A77N3

10-29-13

Dist	COUNTY	ROUTE	POST MILES TOTAL PROJECT	SHEET No.	TOTAL SHEETS
09	Iny	395	R20.3/R22.3	28	43

Randell D. Hiatt
REGISTERED CIVIL ENGINEER

July 19, 2013
PLANS APPROVAL DATE

REGISTERED PROFESSIONAL ENGINEER
Randell D. Hiatt
No. C50200
Exp. 6-30-15
CIVIL
STATE OF CALIFORNIA

THE STATE OF CALIFORNIA OR ITS OFFICERS OR AGENTS SHALL NOT BE RESPONSIBLE FOR THE ACCURACY OR COMPLETENESS OF SCANNED COPIES OF THIS PLAN SHEET.

TO ACCOMPANY PLANS DATED 12-8-14

NOTES:

1. When necessary to place dike more than 7" in front of face of MGS, only Type C dike may be used. For dike details, see Revised Standard Plan RSP A87B.
2. For standard railing post embedment, see Revised Standard Plan RSP A77N3.
3. MGS delineation to be used where shown on the Project Plans.
4. When dike or curb is placed under MGS, the maximum height of the dike or curb shall be 6". Mountable dike should not be used. For dike and curb details, see Revised Standard Plans RSP A87A and RSP A87B.
5. For details of typical distance between the face of rail and hinge point, see Revised Standard Plan RSP A77N3.
6. For steel line posts, use 1/4 - 20 self-tapping screws in 0.22" diameter holes or 1/4" bolts in 9/32" diameter holes.

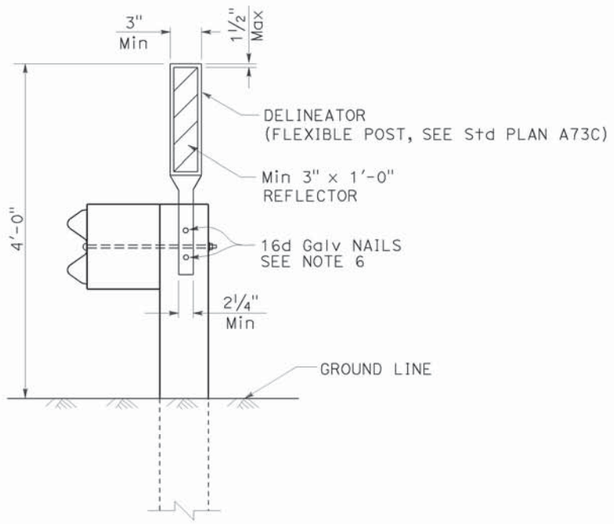

MGS DELINEATION
See Note 3

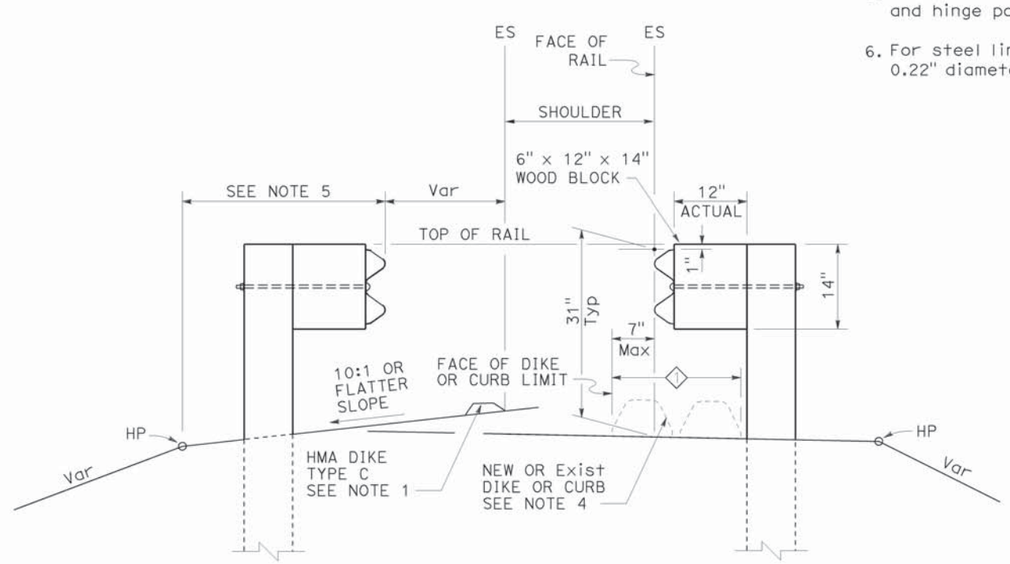

DIKE POSITIONING
See Note 1

1 PERMISSIBLE DIKE OR CURB PLACEMENT AREA

STATE OF CALIFORNIA
DEPARTMENT OF TRANSPORTATION

MIDWEST GUARDRAIL SYSTEM TYPICAL RAILING DELINEATION AND DIKE POSITIONING DETAILS

NO SCALE

RSP A77N4 DATED JULY 19, 2013 SUPPLEMENTS THE STANDARD PLANS BOOK DATED 2010.

REVISED STANDARD PLAN RSP A77N4

2010 REVISED STANDARD PLAN RSP A77N4

7-10-13

Dist	COUNTY	ROUTE	POST MILES TOTAL PROJECT	SHEET No.	TOTAL SHEETS
09	Iny	395	R20.3/R22.3	29	43

Randell D. Hiatt
REGISTERED CIVIL ENGINEER

July 19, 2013
PLANS APPROVAL DATE

REGISTERED PROFESSIONAL ENGINEER
Randell D. Hiatt
No. C50200
Exp. 6-30-15
CIVIL
STATE OF CALIFORNIA

THE STATE OF CALIFORNIA OR ITS OFFICERS OR AGENTS SHALL NOT BE RESPONSIBLE FOR THE ACCURACY OR COMPLETENESS OF SCANNED COPIES OF THIS PLAN SHEET.

TO ACCOMPANY PLANS DATED 12-8-14

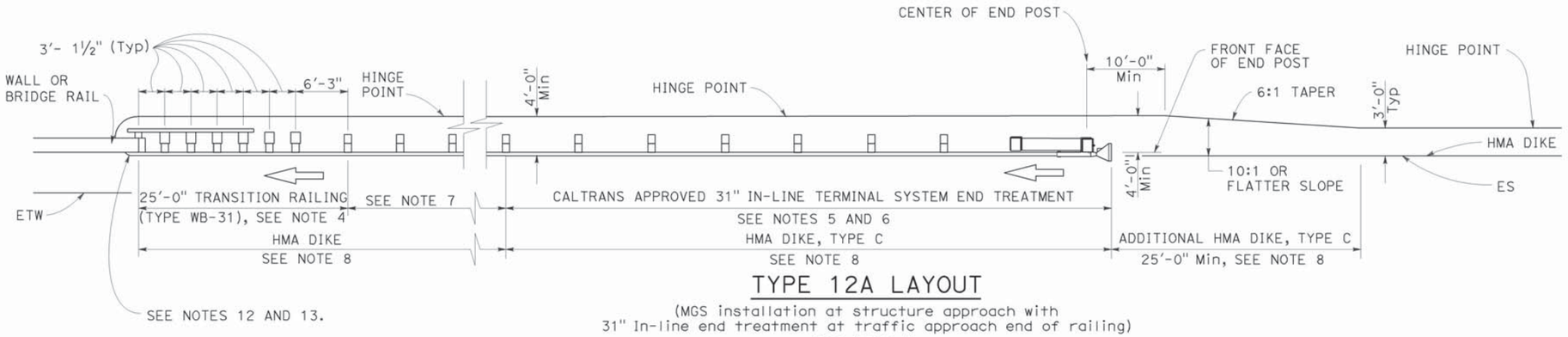

TYPE 12A LAYOUT

(MGS installation at structure approach with
31" In-line end treatment at traffic approach end of railing)
See Notes 9

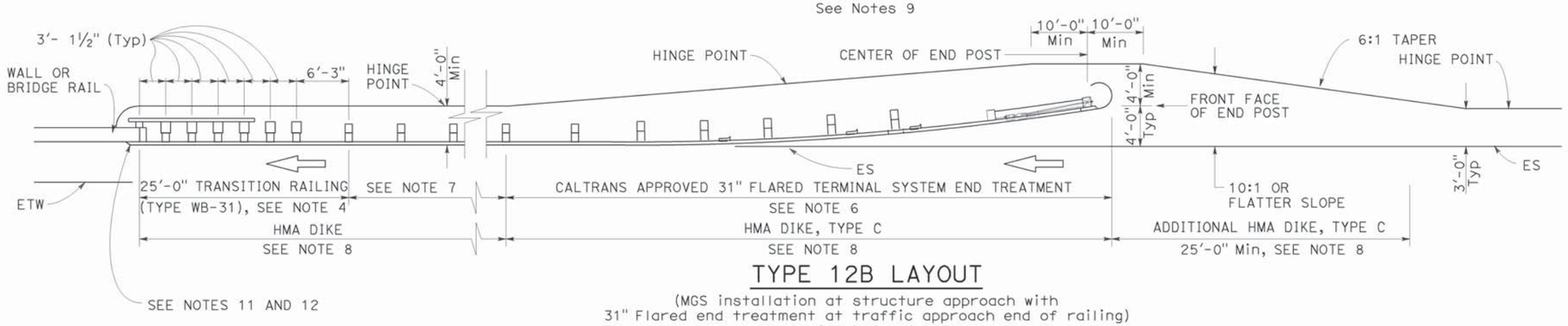

TYPE 12B LAYOUT

(MGS installation at structure approach with
31" Flared end treatment at traffic approach end of railing)
See Notes 9

NOTES:

1. Line post, blocks and hardware to be used are shown on Revised Standard Plans RSP A77L1, RSP A77L2, RSP A77M1, RSP A77N1 and RSP A77N2.
2. MGS post spacing to be 6'-3" center to center, except as otherwise noted.
3. Except as noted, line posts are 6" x 8" x 6'-0" wood with 6" x 12" x 1'-2" wood blocks. W6 x 8.5 or W6 x 9 steel posts, 6'-0" in length, with 6" x 12" x 1'-2" notched wood blocks or plastic blocks may be used for 6" x 8" x 6'-0" wood posts with 6" x 12" x 1'-2" wood blocks where applicable and when specified.
4. For Transition Railing (Type WB-31) details for Types 12A and 12B Layouts, see Revised Standard Plan RSP A77U4.
5. 31" in-line terminal system end treatments are used where site conditions will not accommodate a 31" flared end treatment.
6. The type 31" of terminal system end treatment to be used will be shown on the Project Plans.
7. Dependent on site conditions (embankment height, side slopes, or other fixed objects), it may be advisable to construct additional guard railing (a length equal to multiples of 12'-6" with 6'-3" post spacing) between the transition railing and end treatment. A 12.5 degree angle of departure can be drawn on the Project Plans from the edge of traveled way through the outer most point of the fixed object to determine the additional length of railing needed.
8. Where placement of dike is required with guard railing installations, see Revised Standard Plan RSP A77N4 for dike positioning details.
9. Type 12A or Type 12B Layouts are typically used:
   a. To the right of approaching traffic, at the end of a structure, on two-lane conventional highway where the roadbed width across the structure is less than 40 feet.
   b. To the left of approaching traffic, at the end of a structure, on two-lane conventional highway where the roadbed width across the structure is less than 40 feet.
   c. To the right of approaching traffic at the end of each structure on multilane freeways or expressways with separate adjacent or parallel bridges.
   d. To the right of approaching traffic at the end of the structure on multilane freeways or expressways with decked median on the bridge.
10. See Revised Standard Plan RSP A77Q3 for typical layout used left of approaching traffic at the ends of each structure on multilane freeways or expressways with separate adjacent or parallel bridges.
11. For additional details of typical connections to bridge rail, see Connection Detail AA on Revised Standard Plans RSP A77U1 and RSP A77U2 and Connection Detail FF on Revised Standard Plans RSP A77V1 and RSP A77V2.
12. For additional details of a typical connection to walls or abutments, see Revised Standard Plan RSP A77U3.

STATE OF CALIFORNIA
DEPARTMENT OF TRANSPORTATION

MIDWEST GUARDRAIL SYSTEM TYPICAL LAYOUTS FOR STRUCTURE APPROACH

NO SCALE

RSP A77Q1 DATED JULY 19, 2013 SUPPLEMENTS THE STANDARD PLANS BOOK DATED 2010.

REVISED STANDARD PLAN RSP A77Q1

2010 REVISED STANDARD PLAN RSP A77Q1

Dist	COUNTY	ROUTE	POST MILES TOTAL PROJECT	SHEET No.	TOTAL SHEETS
09	Iny	395	R20.3/R22.3	30	43

Randell D. Hiatt
REGISTERED CIVIL ENGINEER

July 19, 2013
PLANS APPROVAL DATE

REGISTERED PROFESSIONAL ENGINEER
Randell D. Hiatt
No. C50200
Exp. 6-30-15
CIVIL
STATE OF CALIFORNIA

THE STATE OF CALIFORNIA OR ITS OFFICERS OR AGENTS SHALL NOT BE RESPONSIBLE FOR THE ACCURACY OR COMPLETENESS OF SCANNED COPIES OF THIS PLAN SHEET.

TO ACCOMPANY PLANS DATED 12-8-14

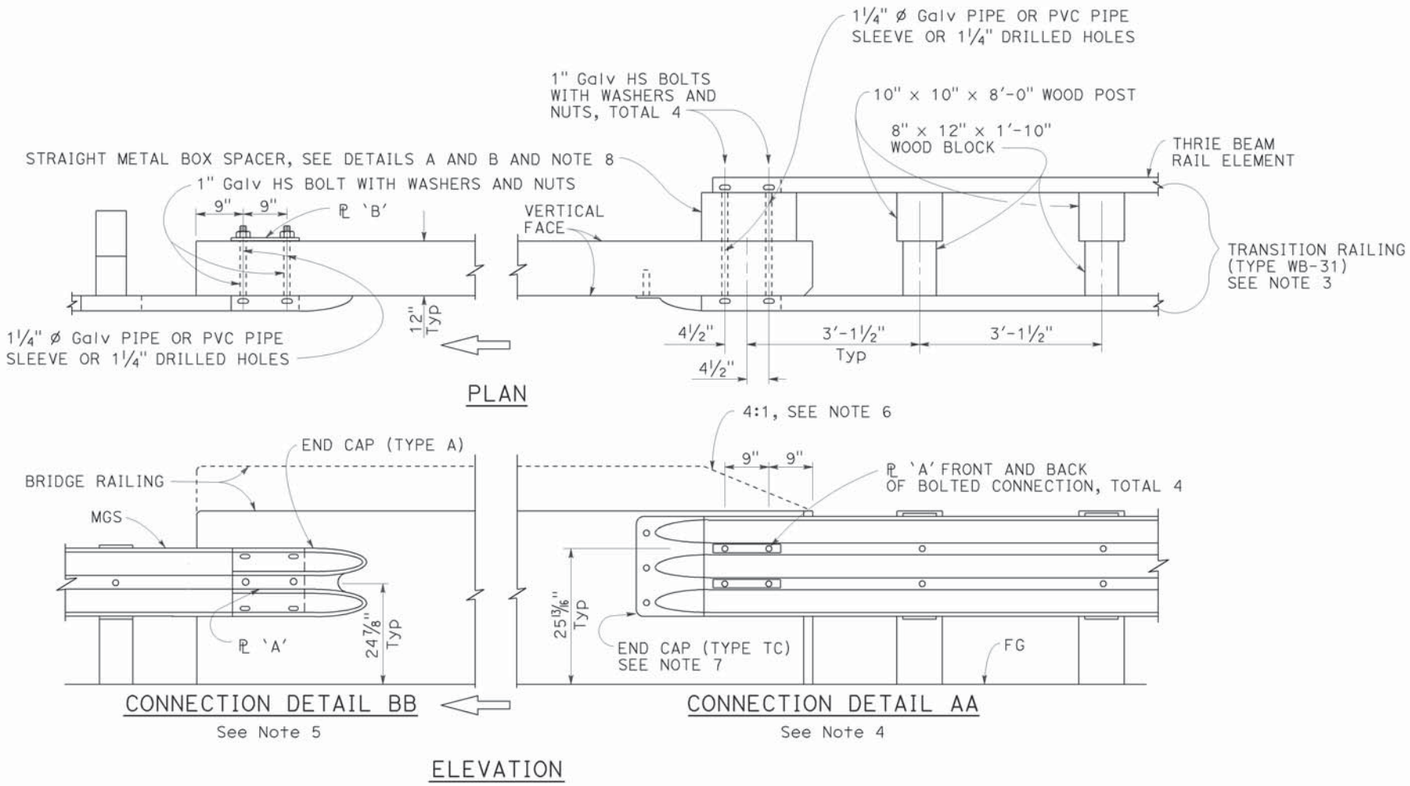

MIDWEST GUARDRAIL SYSTEM CONNECTION TO BRIDGE RAILING WITHOUT SIDEWALK

NOTES:

1. See Revised Standard Plan RSP A77U2 for additional connection details to bridges without sidewalks.
2. Additional details of posts, blocks and hardware are shown on Revised Standard Plans RSP A77M1, RSP A77N1 and RSP A77N2.
3. For additional details of Transition Railing (Type WB-31), see Revised Standard Plan RSP A77U4. Transition Railing (Type WB-31) transitions the 12 gauge MGS railing section to a heavier gage nested thrie beam railing section which is connected to the concrete bridge railing.
4. For typical use of Connection Detail AA, see Layout Types 12A and 12B on Revised Standard Plan RSP A77Q1, Layout Types 12C and 12D on Revised Standard Plan RSP A77Q2, and Layout Type 12E on Revised Standard Plan RSP A77Q3.
5. For typical use of Connection Detail BB, see Layout Type 12D (structure departure railing connection) on Revised Standard Plan RSP A77Q2 and Layout Type 12DD on Revised Standard Plan RSP A77Q5.
6. Where the height of the bridge railing exceeds the height of the thrie beam railing by more than 1" at Connection Detail AA, taper the top of the end of the bridge railing at 4:1 to match the top elevation of the thrie beam rail.
7. For details of End Cap (Type TC), see Revised Standard Plan RSP A77U4.
8. See Revised Standard Plan RSP A77U4 for additional details regarding depth dimension for straight metal box spacer.

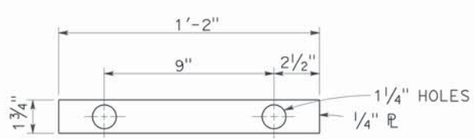

PLATE 'A'

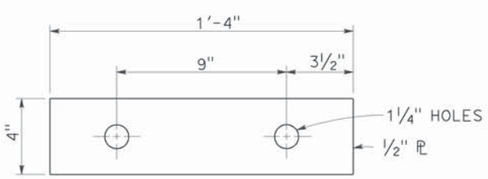

PLATE 'B'
(For backside of connection BB)

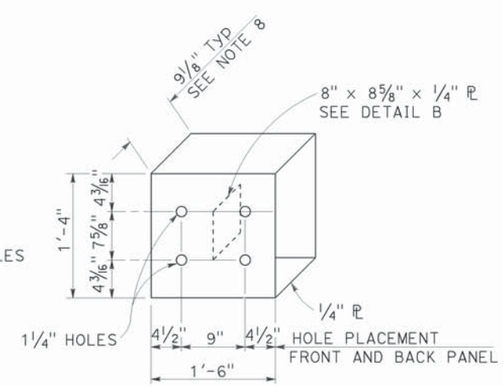

DETAIL A

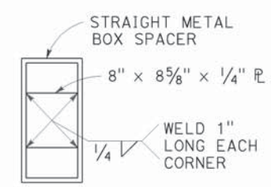

DETAIL B

STRAIGHT METAL BOX SPACER

STATE OF CALIFORNIA
DEPARTMENT OF TRANSPORTATION

MIDWEST GUARDRAIL SYSTEM CONNECTIONS TO BRIDGE RAILINGS WITHOUT SIDEWALKS DETAILS No. 1

NO SCALE

RSP A77U1 DATED JULY 19, 2013 SUPPLEMENTS THE STANDARD PLANS BOOK DATED 2010.

REVISED STANDARD PLAN RSP A77U1

2010 REVISED STANDARD PLAN RSP A77U1

Dist	COUNTY	ROUTE	POST MILES TOTAL PROJECT	SHEET No.	TOTAL SHEETS
09	Iny	395	R20.3/R22.3	31	43

Randell D. Hiatt
REGISTERED CIVIL ENGINEER

November 15, 2013
PLANS APPROVAL DATE

REGISTERED PROFESSIONAL ENGINEER Randell D. Hiatt No. C50200 Exp. 6-30-15 CIVIL STATE OF CALIFORNIA

THE STATE OF CALIFORNIA OR ITS OFFICERS OR AGENTS SHALL NOT BE RESPONSIBLE FOR THE ACCURACY OR COMPLETENESS OF SCANNED COPIES OF THIS PLAN SHEET.

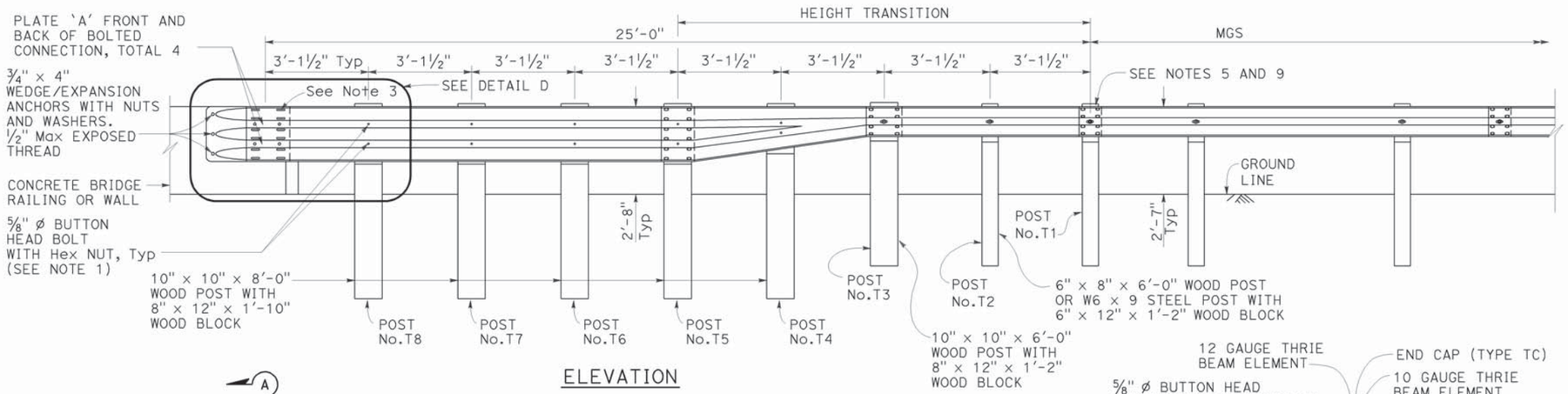

ELEVATION

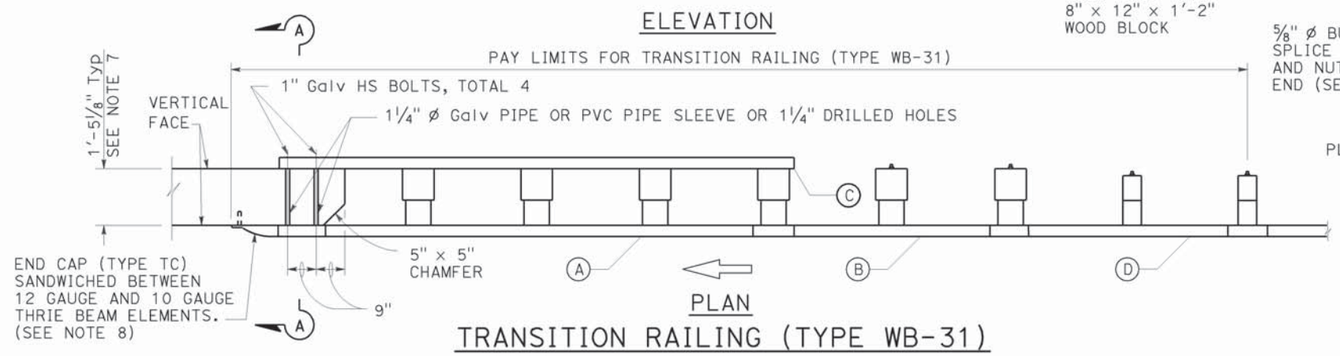

PLAN

TRANSITION RAILING (TYPE WB-31)

(No Blockout Attachment)

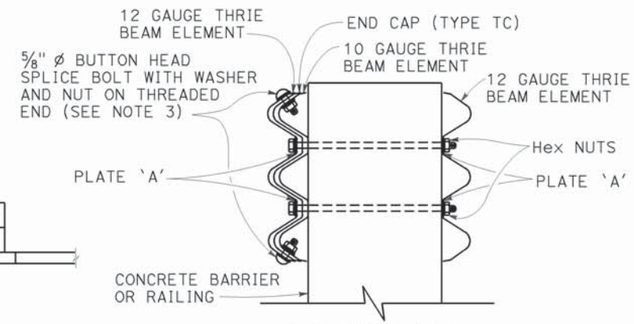

SECTION A-A

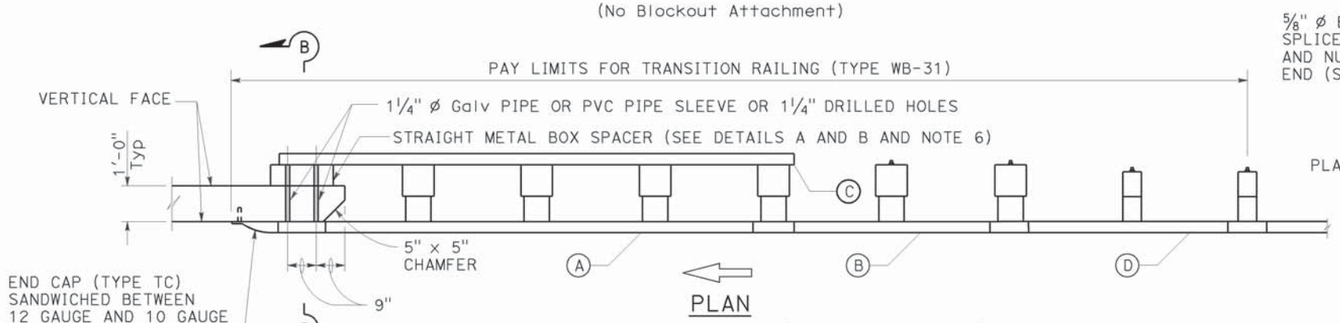

PLAN

TRANSITION RAILING (TYPE WB-31)

(Blockout Attachment)

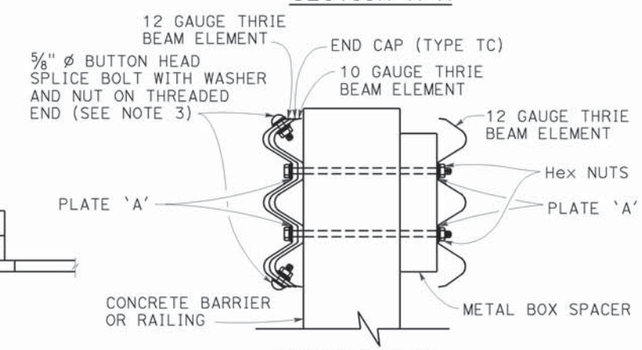

SECTION B-B

LEGEND:

- (A) NESTED THRIE BEAM ELEMENTS (ONE 12 GAUGE ELEMENT NESTED OVER ONE 10 GAUGE ELEMENT).
- (B) ONE ASYMMETRICAL 10 GAUGE "W" BEAM TO THRIE BEAM ELEMENT.
- (C) ONE 12 GAUGE THRIE BEAM ELEMENT.
- (D) ONE 10 GAUGE "W" BEAM RAIL ELEMENT (7'-3 1/2" LENGTH)

10 GAUGE = 0.138" THICK
12 GAUGE = 0.108" THICK

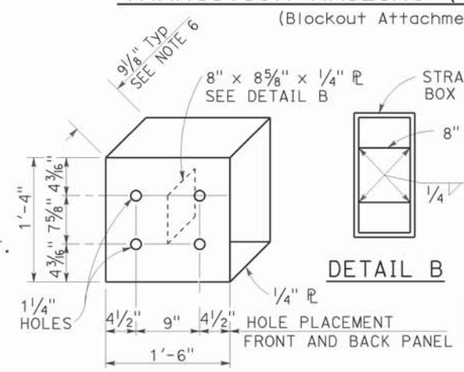

DETAIL A

STRAIGHT METAL BOX SPACER

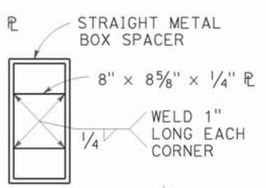

DETAIL B

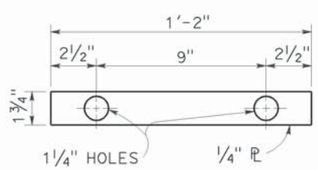

DETAIL C

PLATE 'A'

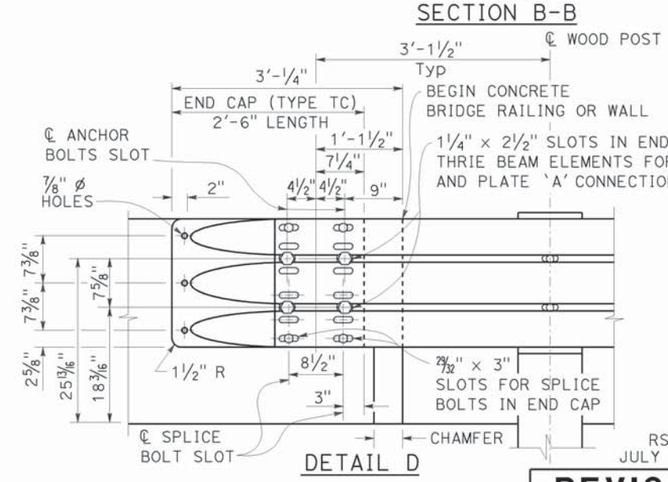

DETAIL D

NOTES:

TO ACCOMPANY PLANS DATED 12-8-14

1. Use 5/8" ø Button head bolts and hex nuts for connections to posts. No washer on rail face for bolted connections to post.
2. The nested rail elements, end cap, and 'W' beam to thrie beam element may be spliced together prior to bolting the elements to the wood post and concrete barrier or railing.
3. Exterior splice bolt holes for rail element splices at Post No. T5 and the connection to the concrete barrier or railing shall be the standard 29/32" x 1 1/8" slot size. Interior splice bolt holes at these locations may be increased up to 1 1/4" ø. Only the top 4 and the bottom 4 splice bolts with washers and nuts are required for rail splices at Post No. T5 and the connection to the concrete barrier or railing.
4. The top elevation of Posts No. T2 through No. T7 shall not project more than 1" above the top elevation of the rail element.
5. Typically, the railing connected to Transition Railing (Type WB-31) will be either standard railing section of MGS with height transition ratio of 150:1 or a Caltrans approved 31" end treatment attached to Post No. T1.
6. The depth of the metal box spacer varies from the 9 1/8" to 1 1/2" and is dependent on the width of the concrete railing or wall. The combined dimension for the depth of the metal box spacer plus the width of railing or wall is typically 21 1/8". Where the space between the backside of the concrete railing or wall and the rear thrie beam element is less than 1 1/2", metal plates similar to Plate 'A' are to be used as spacers.
7. Where the width of the concrete railing or wall is greater than 17 1/8", wood blocks are to be used to fill the space created between the backside of Posts No. T5 through No. T8 and the rear thrie beam element. These wood blocks shall be 8" in width and 1'-2" in length. The dimension between the front thrie beam element and the rear thrie beam element is to match the width of the concrete railing or wall.
8. End cap may be installed over 12 gauge and 10 gauge thrie beam elements where transition railing is installed on the departure end of bridge railing.
9. Conform standard railing section height to 31" at Post No. T1 using height transition ratio of 150:1.

STATE OF CALIFORNIA
DEPARTMENT OF TRANSPORTATION

MIDWEST GUARDRAIL SYSTEM TRANSITION RAILING (TYPE WB-31)

NO SCALE

RSP A77U4 DATED NOVEMBER 15, 2013 SUPERSEDES RSP A77U4 DATED JULY 19, 2013 THAT SUPPLEMENTS THE STANDARD PLANS BOOK DATED 2010.

REVISED STANDARD PLAN RSP A77U4

2010 REVISED STANDARD PLAN RSP A77U4

10-4-13

Dist	COUNTY	ROUTE	POST MILES TOTAL PROJECT	SHEET No.	TOTAL SHEETS
09	Iny	395	R20.3/R22.3	32	43

Raymond Don Tsztoo
REGISTERED CIVIL ENGINEER

October 19, 2012
PLANS APPROVAL DATE

REGISTERED PROFESSIONAL ENGINEER
Raymond Don Tsztoo
No. C37332
Exp. 6-30-14
CIVIL
STATE OF CALIFORNIA

THE STATE OF CALIFORNIA OR ITS OFFICERS OR AGENTS SHALL NOT BE RESPONSIBLE FOR THE ACCURACY OR COMPLETENESS OF SCANNED COPIES OF THIS PLAN SHEET.

TO ACCOMPANY PLANS DATED 12-8-14

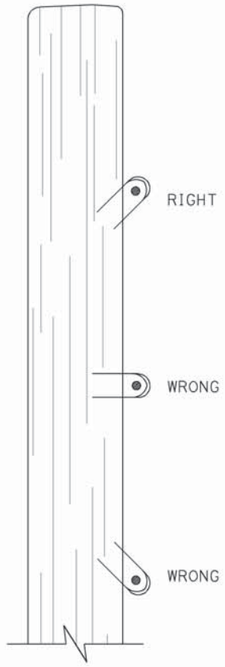

DRIVE STAPLES AT ANGLE

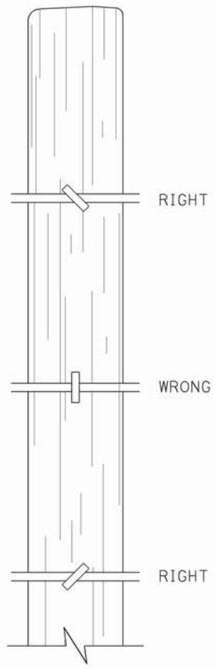

DO NOT DRIVE STAPLES PARALLEL TO SIDE OF POST

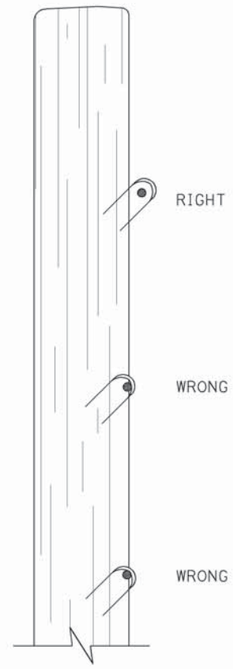

LEAVE WIRE LOOSE IN STAPLE

LINE POST STAPLING DETAILS

(Apply to rectangular/square and round posts)
Do not staple vertical wire in wire mesh.

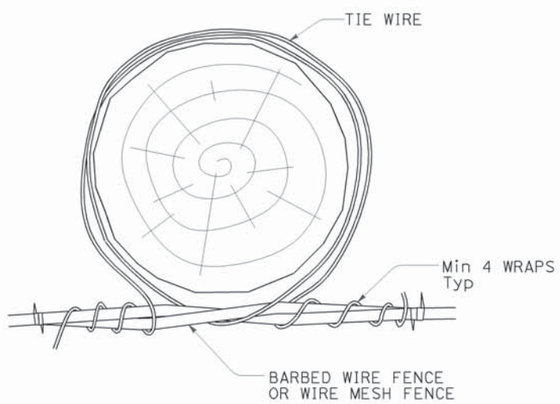

OPTION A

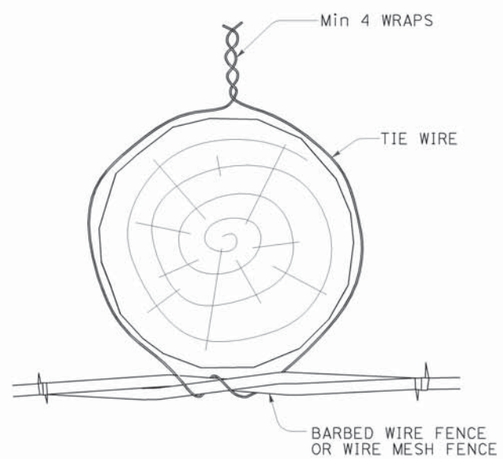

OPTION B

LINE POST WIRE TIE OPTION DETAILS

(Option details also apply to rectangular/square posts)

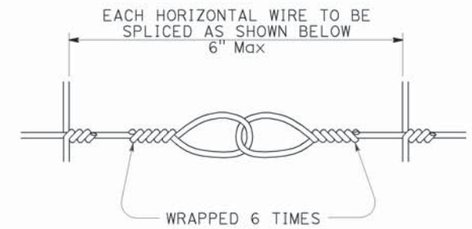

SPLICE DETAIL FOR BARBED WIRE/WIRE MESH FENCE

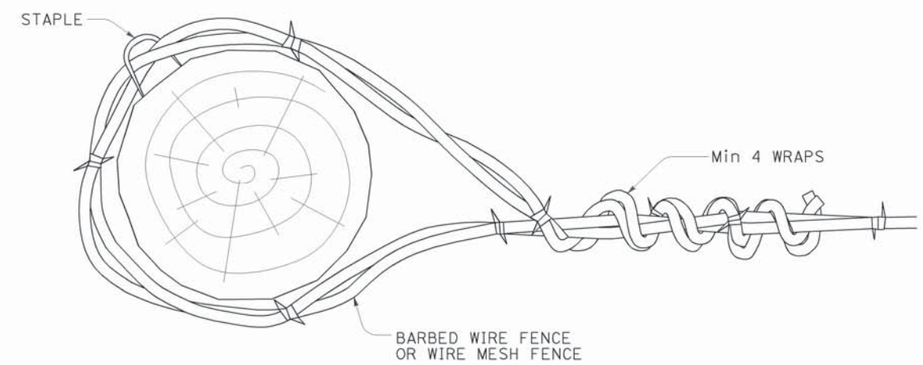

END, LATCH, PULL, AND CORNER POST DETAIL

(Also applies to rectangular/square posts)

STATE OF CALIFORNIA
DEPARTMENT OF TRANSPORTATION

BARBED WIRE AND WIRE MESH FENCE - MISCELLANEOUS DETAILS

NO SCALE

RSP A86D DATED OCTOBER 19, 2012 SUPPLEMENTS THE STANDARD PLANS BOOK DATED 2010.

REVISED STANDARD PLAN RSP A86D

2010 REVISED STANDARD PLAN RSP A86D

10-9-12

DIST	COUNTY	ROUTE	POST MILES TOTAL PROJECT	SHEET No.	TOTAL SHEETS
09	Iny	395	R20.3/R22.3	33	43

REGISTERED CIVIL ENGINEER

November 15, 2013
PLANS APPROVAL DATE

REGISTERED PROFESSIONAL ENGINEER Cornelis M. Hakim No. C55610 Exp. 12-31-14 CIVIL STATE OF CALIFORNIA

THE STATE OF CALIFORNIA OR ITS OFFICERS OR AGENTS SHALL NOT BE RESPONSIBLE FOR THE ACCURACY OR COMPLETENESS OF SCANNED COPIES OF THIS PLAN SHEET.

TO ACCOMPANY PLANS DATED 12-8-14

2010 REVISED STANDARD PLAN RSP P74

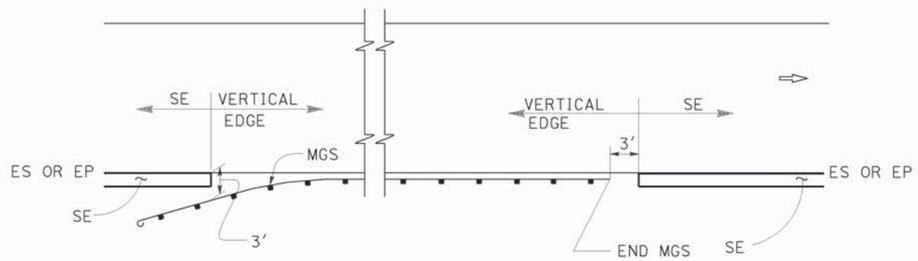

MGS

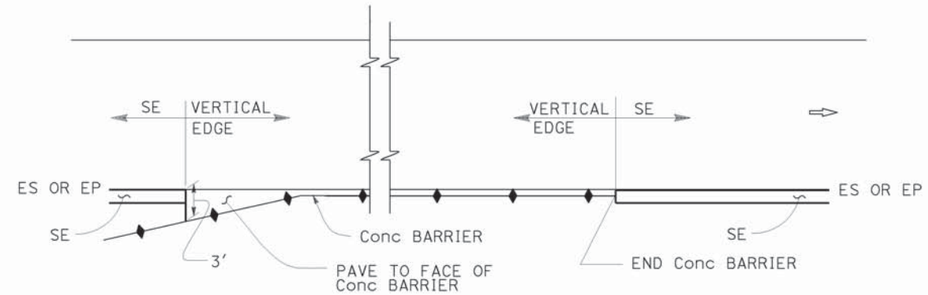

CONCRETE BARRIER

ABBREVIATIONS:

SE SAFETY EDGE

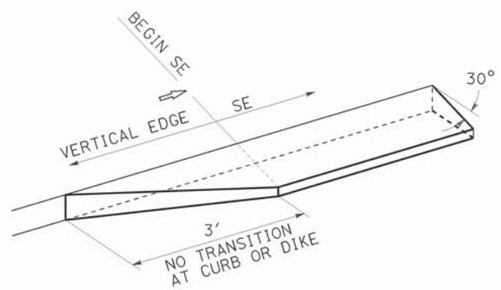

TRANSITION DETAIL FOR CONCRETE ONLY

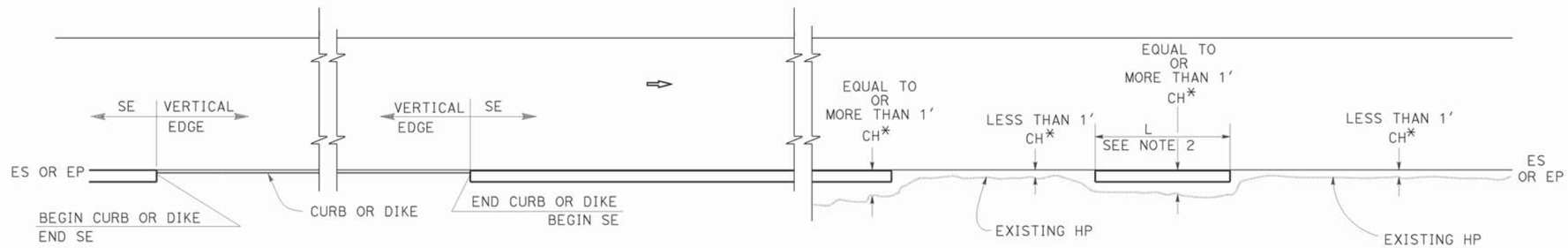

CURB OR DIKE

NARROW SIDE SLOPE

* CH = Distance from ES or EP to existing HP.

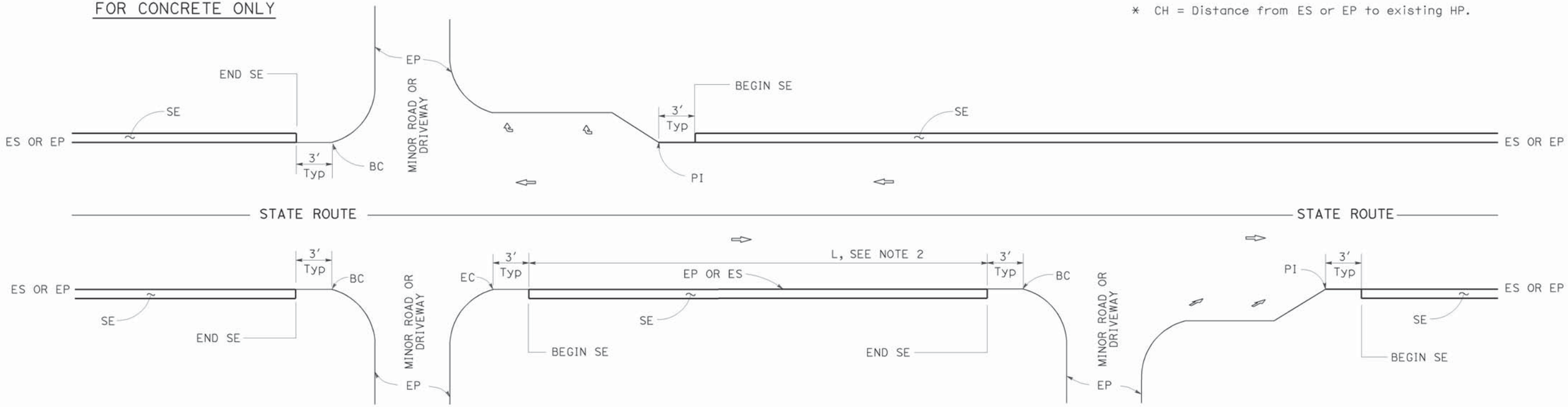

INTERSECTION

MINOR ROADWAY OR DRIVEWAY

DRIVEWAY AND INTERSECTION

NOTES:

1. For details not shown, see Revised Standard Plans RSP P75 and RSP P76.
2. Safety edge is optional when L is less than 30′.

STATE OF CALIFORNIA
DEPARTMENT OF TRANSPORTATION

PAVEMENT EDGE TREATMENTS

NO SCALE

RSP P74 DATED NOVEMBER 15, 2013 SUPERSEDES RSP P74 DATED JANUARY 20, 2012 THAT SUPPLEMENTS THE STANDARD PLANS BOOK DATED 2010.

REVISED STANDARD PLAN RSP P74

10-11-13

DIST	COUNTY	ROUTE	POST MILES TOTAL PROJECT	SHEET No.	TOTAL SHEETS
09	Iny	395	R20.3/R22.3	34	43

REGISTERED CIVIL ENGINEER

November 15, 2013
PLANS APPROVAL DATE

REGISTERED PROFESSIONAL ENGINEER
Cornelis M. Hakim
No. C55610
Exp. 12-31-14
CIVIL
STATE OF CALIFORNIA

THE STATE OF CALIFORNIA OR ITS OFFICERS OR AGENTS SHALL NOT BE RESPONSIBLE FOR THE ACCURACY OR COMPLETENESS OF SCANNED COPIES OF THIS PLAN SHEET.

TO ACCOMPANY PLANS DATED 12-8-14

LEGEND:

- HMA PAVEMENT
- HMA OR CONCRETE PAVEMENT
- CONCRETE PAVEMENT

ABBREVIATIONS:

SE SAFETY EDGE
TT TOTAL THICKNESS OF SE
HW HINGE WIDTH, DISTANCE FROM ES OR EP TO HP

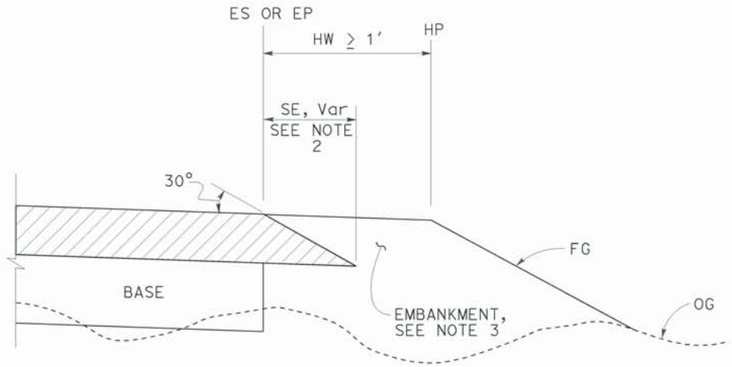

CASE K
Safety Edge - Fill Section, HW ≥ 1′

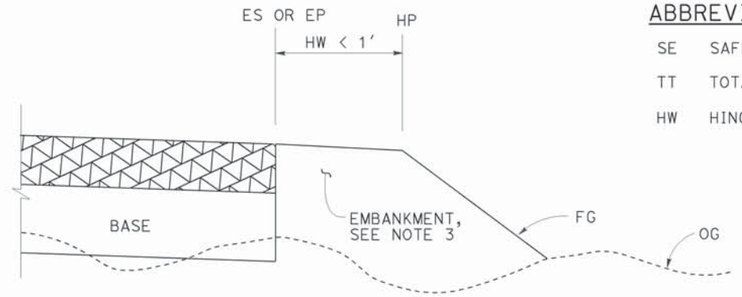

CASE L
Vertical Edge - Fill Section, HW < 1′

FILL SECTION

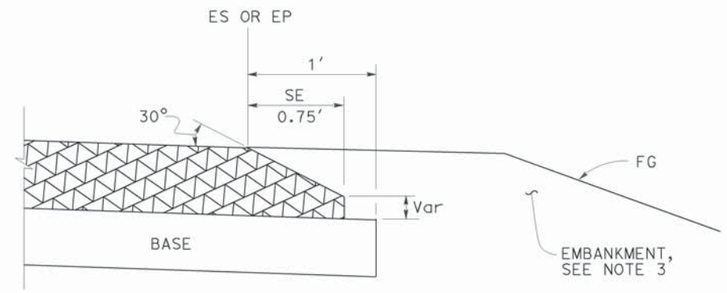

DETAIL "B"
For HMA pavement thickness more than 0.43′ or concrete pavement

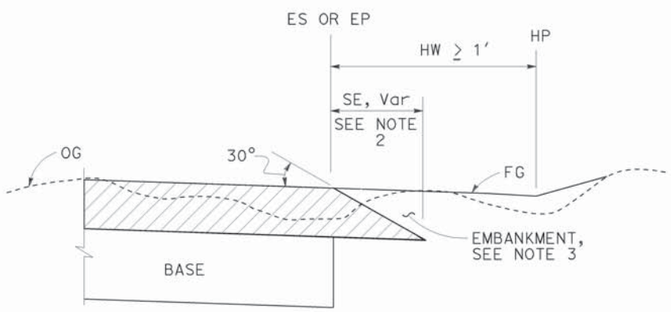

CASE M
Safety Edge - Cut Section, HW ≥ 1′

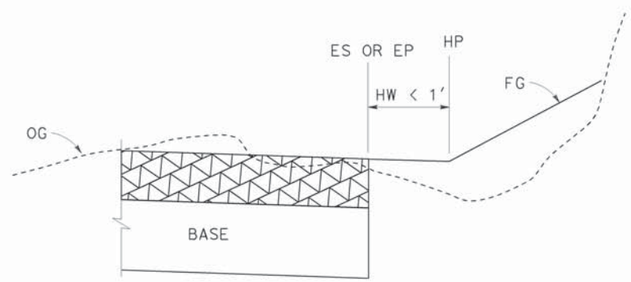

CASE N
Vertical Edge - Cut Section, HW < 1′

CUT SECTION

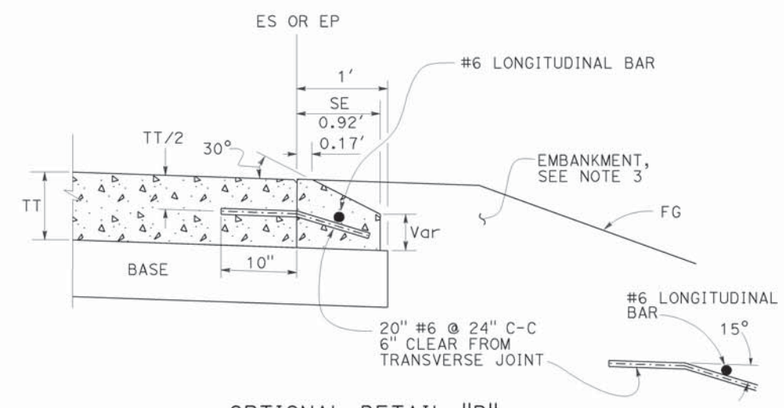

OPTIONAL DETAIL "B"
For concrete pavement
See Note 4

NOTES:

1. For limits of safety edge and vertical edge treatments, see Revised Standard Plan RSP P74
2. Details shown for HMA pavement thickness less than 0.43′. See Detail "B" for HMA pavement thickness more than 0.43′ or concrete pavement.
3. For locations and limits of embankment see project plans.
4. Safety edge transverse joint must match pavement transverse joint. End of #6 longitudinal bar must be 2" ±½" clear from transverse joint.
5. Safety edge is not needed in the area of MGS, barrier, right turn lane and acceleration lane. See Revised Standard Plan RSP P74.

STATE OF CALIFORNIA
DEPARTMENT OF TRANSPORTATION

PAVEMENT EDGE TREATMENTS-NEW CONSTRUCTION

NO SCALE

RSP P76 DATED NOVEMBER 15, 2013 SUPERSEDES RSP P76 DATED JANUARY 20, 2012 THAT SUPPLEMENTS THE STANDARD PLANS BOOK DATED 2010.

REVISED STANDARD PLAN RSP P76

2010 REVISED STANDARD PLAN RSP P76

10-4-13

Dist	COUNTY	ROUTE	POST MILES TOTAL PROJECT	SHEET No.	TOTAL SHEETS
09	Iny	395	R20.3/R22.3	35	43

REGISTERED CIVIL ENGINEER

July 19, 2013
PLANS APPROVAL DATE

REGISTERED PROFESSIONAL ENGINEER
Gurinderpal Bhullar
No. C48815
Exp. 9-30-14
CIVIL
STATE OF CALIFORNIA

THE STATE OF CALIFORNIA OR ITS OFFICERS OR AGENTS SHALL NOT BE RESPONSIBLE FOR THE ACCURACY OR COMPLETENESS OF SCANNED COPIES OF THIS PLAN SHEET.

TO ACCOMPANY PLANS DATED 12-8-14

2010 REVISED STANDARD PLAN RSP T9

TABLE 1

TAPER LENGTH CRITERIA AND CHANNELIZING DEVICE SPACING

SPEED (S)	MINIMUM TAPER LENGTH * FOR WIDTH OF OFFSET 12 FEET (W)				MAXIMUM CHANNELIZING DEVICE SPACING		
					X	Y	Z **
	TANGENT 2L	MERGING L	SHIFTING L/2	SHOULDER L/3	TAPER	TANGENT	CONFLICT
mph	ft	ft	ft	ft	ft	ft	ft
20	160	80	40	27	20	40	10
25	250	125	63	42	25	50	12
30	360	180	90	60	30	60	15
35	490	245	123	82	35	70	17
40	640	320	160	107	40	80	20
45	1080	540	270	180	45	90	22
50	1200	600	300	200	50	100	25
55	1320	660	330	220	55	110	27
60	1440	720	360	240	60	120	30
65	1560	780	390	260	65	130	32
70	1680	840	420	280	70	140	35

* - For other offsets, use the following merging taper length formula for L:
For speed of 40 mph or less, $L = WS^2/60$
For speed of 45 mph or more, $L = WS$

Where: L = Taper length in feet
W = Width of offset in feet
S = Posted speed limit, off-peak 85th-percentile speed prior to work starting, or the anticipated operating speed in mph

** - Use for taper and tangent sections where there are no pavement markings or where there is a conflict between existing pavement markings and channelizers (CA).

TABLE 2

LONGITUDINAL BUFFER SPACE AND FLAGGER STATION SPACING

SPEED *	Min D **	DOWNGRADE Min D ***		
		-3%	-6%	-9%
mph	ft	ft	ft	ft
20	115	116	120	126
25	155	158	165	173
30	200	205	215	227
35	250	257	271	287
40	305	315	333	354
45	360	378	400	427
50	425	446	474	507
55	495	520	553	593
60	570	598	638	686
65	645	682	728	785
70	730	771	825	891

* - Speed is posted speed limit, off-peak 85th-percentile speed prior to work starting, or the anticipated operating speed in mph

** - Longitudinal buffer space or flagger station spacing

*** - Use on sustained downgrade steeper than -3 percent and longer than 1 mile.

TABLE 3

ADVANCE WARNING SIGN SPACING

ROAD TYPE	DISTANCE BETWEEN SIGNS *		
	A	B	C
	ft	ft	ft
URBAN - 25 mph OR LESS	100	100	100
URBAN - MORE THAN 25 mph TO 40 mph	250	250	250
URBAN - MORE THAN 40 mph	350	350	350
RURAL	500	500	500
EXPRESSWAY / FREEWAY	1000	1500	2640

* - The distances are approximate, are intended for guidance purposes only, and should be applied with engineering judgment. These distances should be adjusted by the Engineer for field conditions, if necessary, by increasing or decreasing the recommmended distances.

STATE OF CALIFORNIA
DEPARTMENT OF TRANSPORTATION

TRAFFIC CONTROL SYSTEM TABLES FOR LANE AND RAMP CLOSURES

NO SCALE

RSP T9 DATED JULY 19, 2013 SUPERSEDES RSP T9 DATED APRIL 19, 2013 THAT SUPPLEMENTS THE STANDARD PLANS BOOK DATED 2010.

REVISED STANDARD PLAN RSP T9

Dist	COUNTY	ROUTE	POST MILES TOTAL PROJECT	SHEET No.	TOTAL SHEETS
09	Iny	395	R20.3/R22.3	36	43

REGISTERED CIVIL ENGINEER

April 19, 2013
PLANS APPROVAL DATE

REGISTERED PROFESSIONAL ENGINEER Gurinderpal Bhullar No. C48815 Exp. 9-30-14 CIVIL STATE OF CALIFORNIA

THE STATE OF CALIFORNIA OR ITS OFFICERS OR AGENTS SHALL NOT BE RESPONSIBLE FOR THE ACCURACY OR COMPLETENESS OF SCANNED COPIES OF THIS PLAN SHEET.

TO ACCOMPANY PLANS DATED 12-8-14

NOTES:

See Revised Standard Plan RSP T9 for tables.

Use cone spacing X for taper segment, Y for tangent segment or Z for conflict situations, as approriate, per Table 1, unless X, Y, or Z cone spacing is shown on this sheet.

Unless otherwise specified in the special provisions, all temporary warning signs shall have black legend on fluorescent orange background.

California codes are designated by (CA). Otherwise, Federal (MUTCD) codes are shown.

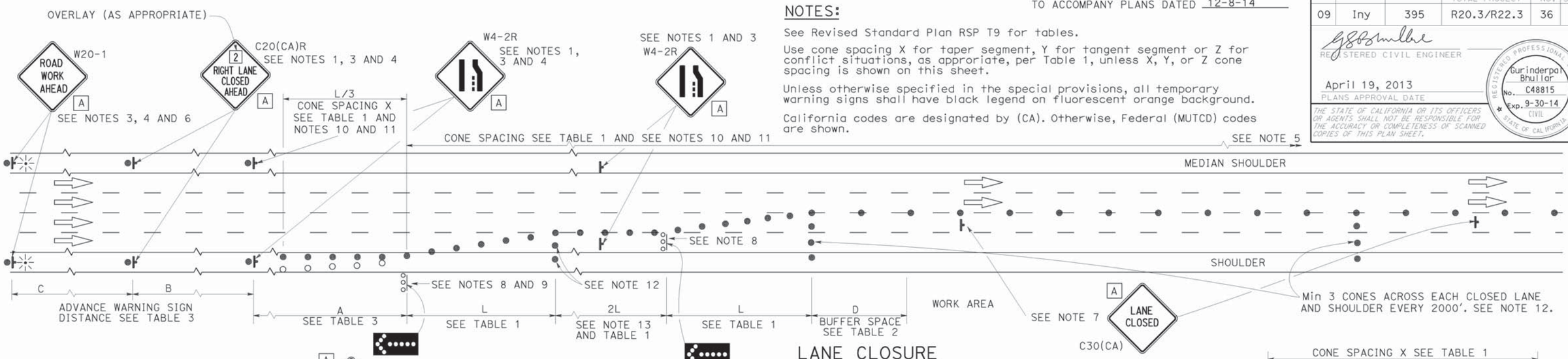

LANE CLOSURE

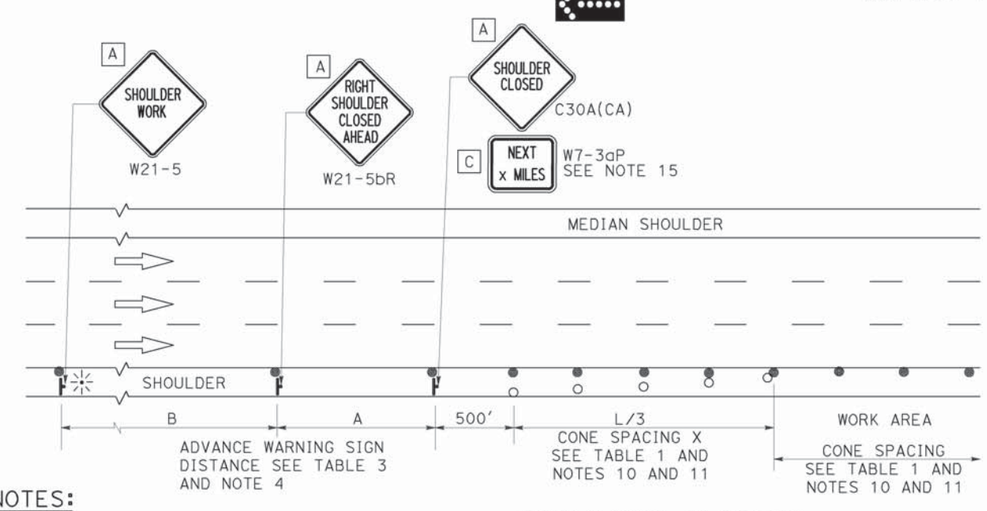

SHOULDER CLOSURE

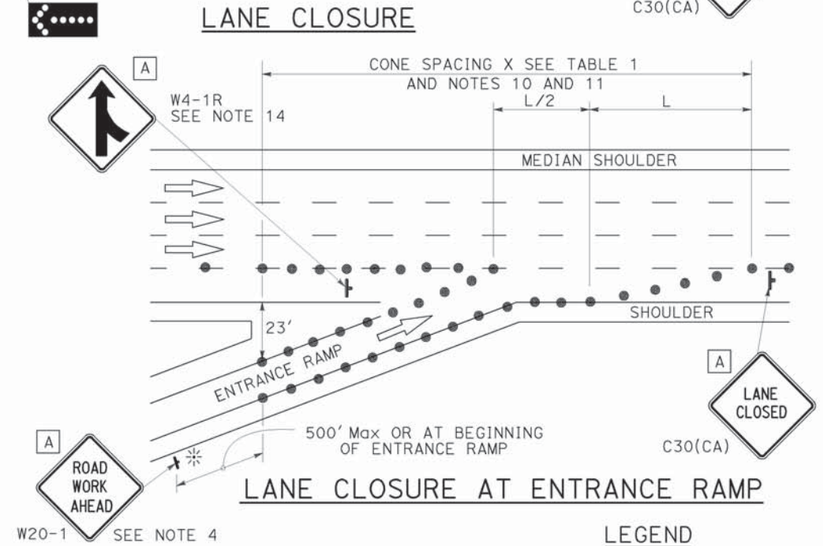

LANE CLOSURE AT ENTRANCE RAMP

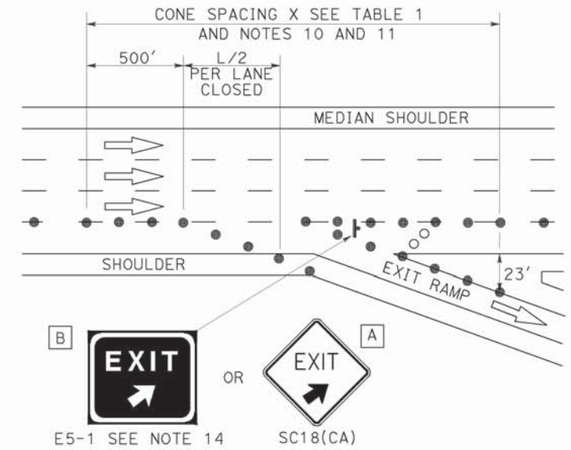

LANE CLOSURE AT EXIT RAMP

NOTES:

1. Median lane closures shall conform to the details as shown except that C20(CA)L and W4-2L signs shall be used.
2. At least one person shall be assigned to provide full time maintenance of traffic control devices for lane closures.
3. Duplicate sign installations are not required:
   a) On opposite shoulder if at least one-half of the available lanes remain open to traffic.
   b) In the median if the width of the median shoulder is less than 8' and the outside lanes are to be closed.
4. Each advance warning sign on each side of the roadway shall be equipped with at least two flags for daytime closure. Each flag shall be at least 16" x 16" in size and shall be orange or fluorescent red-orange in color. Flashing beacons shall be placed at the locations indicated for lane closure during hours of darkness.
5. A G20-2 "END ROAD WORK" sign, with minimum size of 48" x 24" as appropriate, shall be placed at the end of the lane closure unless the end of work area is obvious or ends within a larger project's limits.
6. If the W20-1 sign would follow within 2000' of a stationary W20-1 or G20-1 "ROAD WORK NEXT _____ MILES", use a C20(CA) sign for the first advance warning sign.
7. Place a C30(CA) sign every 2000' throughout length of lane closure.
8. One flashing arrow sign for each lane closed. The flashing arrow signs shall be Type I.
9. A minimum 1500' of sight distance shall be provided where possible for vehicles approaching the first flashing arrow sign. Lane closures shall not begin at top of crest vertical curve or on a horizontal curve.
10. All cones used for lane closures during the hours of darkness shall be fitted with retroreflective bands (or sleeves) as specified in the specifications.
11. Portable delineators, placed at one-half the spacing indicated for traffic cones may be used instead of cones for daytime closures only.
12. Unless otherwise specified in the special provisions, a minimum of 3 cones shall be placed transversely across each closed lane and shoulder at each location where a taper across a traffic lane ends and every 2000' as shown on the "Lane Closure" detail. Two Type II barricades may be used instead of the 3 cones. The transverse alignment of the cones or barricades on the closed shoulder may be shifted from the transverse alignment to provide access to the work.
13. Unless otherwise specified in the special provisions, the 2L tangent shown along lane lines shall be used between the L tapers required for each closed traffic lane.
14. Unless otherwise specified in the special provisions, the E5-1 or SC18(CA) and W4-1 signs shall be used as shown.
15. A W7-3aP "NEXT____ MILES" plaque must be used if theshoulder closure extends beyond the distance that can be perceived by road users.

LEGEND

- TRAFFIC CONE
- TRAFFIC CONE (OPTIONAL TAPER)
- TEMPORARY TRAFFIC CONTROL SIGN
- FLASHING ARROW SIGN (FAS)
- FAS SUPPORT OR TRAILER
- PORTABLE FLASHING BEACON

SIGN PANEL SIZE (Min)

A	48" x 48"
B	72" x 60"
C	36" x 30"

STATE OF CALIFORNIA
DEPARTMENT OF TRANSPORTATION

TRAFFIC CONTROL SYSTEM FOR LANE CLOSURE ON FREEWAYS AND EXPRESSWAYS

NO SCALE

RSP T10 DATED APRIL 19, 2013 SUPERSEDES STANDARD PLAN T10 DATED MAY 20, 2011 - PAGE 237 OF THE STANDARD PLANS BOOK DATED 2010.

REVISED STANDARD PLAN RSP T10

2010 REVISED STANDARD PLAN RSP T10

12-18-12

Dist	COUNTY	ROUTE	POST MILES TOTAL PROJECT	SHEET No.	TOTAL SHEETS
09	Iny	395	R20.3/R22.3	37	43

REGISTERED CIVIL ENGINEER

April 19, 2013
PLANS APPROVAL DATE

REGISTERED PROFESSIONAL ENGINEER Gurinderpal Bhullar No. C48815 Exp. 9-30-14 CIVIL STATE OF CALIFORNIA

THE STATE OF CALIFORNIA OR ITS OFFICERS OR AGENTS SHALL NOT BE RESPONSIBLE FOR THE ACCURACY OR COMPLETENESS OF SCANNED COPIES OF THIS PLAN SHEET.

TO ACCOMPANY PLANS DATED 12-8-14

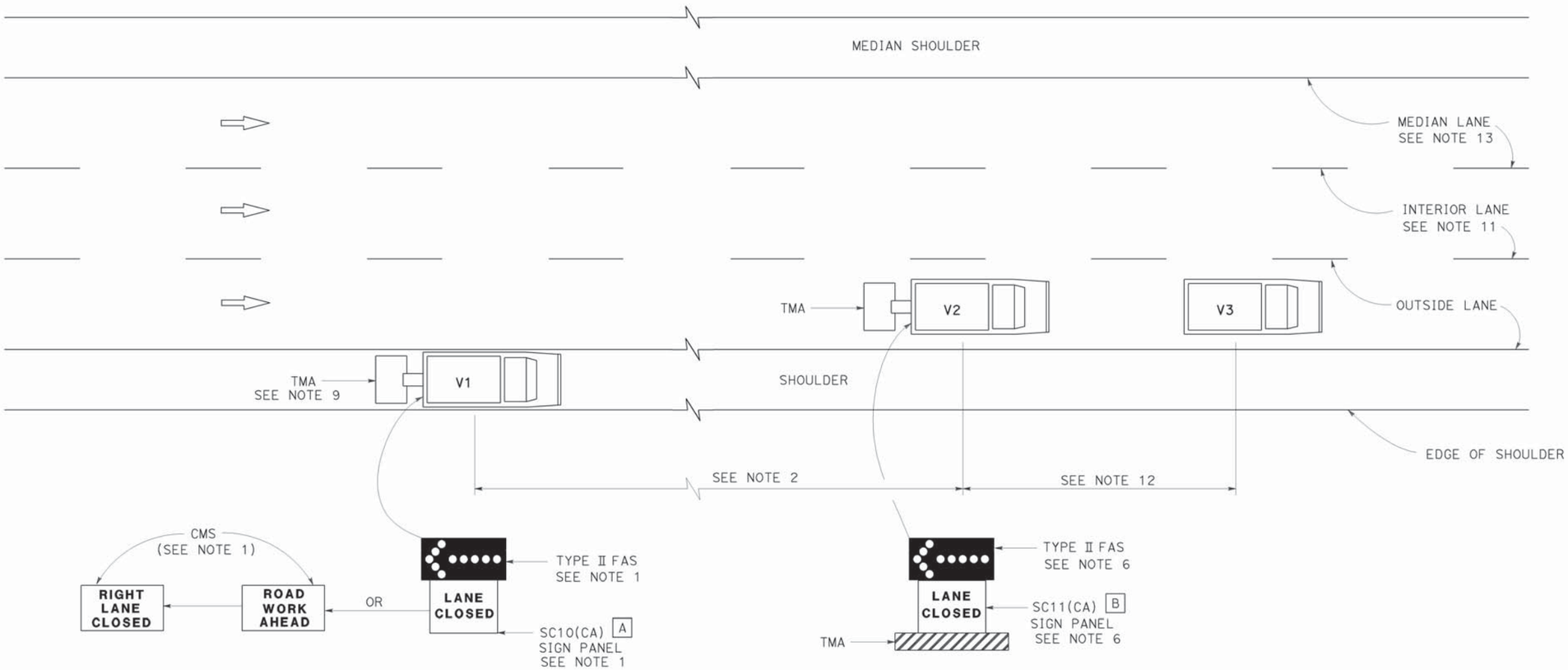

MOVING LANE CLOSURE ON MEDIAN LANE OR OUTSIDE LANE OF MULTILANE HIGHWAYS

SIGN PANEL SIZE (Min)

A 66" x 36"

B 54" x 42"

LEGEND

V1	SIGN VEHICLE
V2	SHADOW VEHICLE
V3	WORK/APPLICATION VEHICLE
	FLASHING ARROW SIGN (FAS)
CMS	CHANGEABLE MESSAGE SIGN
TMA	TRUCK-MOUNTED ATTENUATOR

NOTES:

1. Either a changeable message sign or a SC10(CA) sign panel and a Type II flashing arrow sign shall be mounted on the rear of sign vehicle V1. The changeable message sign shall be sequenced to show the "ROAD WORK AHEAD" message first, followed by the "RIGHT LANE CLOSED" message. For median lane closure, the flashing arrow symbol shall be reversed with the arrowhead on the right and the changeable message sign shall show "LEFT LANE CLOSED".
2. If traffic queues develop, sign vehicle V1 should be positioned upstream from the end of queue. Sign vehicle V1 shall be positioned where highly visible when shoulders are not available.
3. A minimum sight distance of 1500′ should be provided in advance of sign vehicle V1.
4. Sign vehicle V1 should remain at the beginning of horizontal or vertical curves until the other vehicles (V2 and V3) are far enough beyond the curve to resume the minimum sight distance of 1500′.
5. Vehicle-mounted sign panels shall have Type III or above retroreflective sheeting, black on white, or black on fluorescent orange, with 6" minimum series D letters per Caltrans sign specifications.
6. Shadow vehicle V2 shall be equipped with a truck-mounted attenuator. The sign panel shown and a Type II flashing arrow sign shall be mounted on the rear of shadow vehicle V2. For median lane closure the flashing arrow sign symbol shall be displayed with the arrowhead on the right.
7. All vehicles used for lane closures shall be equipped with two-way radios, and the vehicle operators shall maintain communication during the work or application operation.
8. All vehicles shall be equipped with flashing or rotating amber lights.
9. If sign vehicle V1 encroaches into the traffic lane due to insufficient shoulder width, sign vehicle V1 shall be equipped with a truck-mounted attenuator. Sign vehicle V1 shall stay as close to the edge of shoulder as practicable.
10. Where workers would be on foot in the work area, a stationary type lane closure (Revised Standard Plan T10, T11, etc., as applicable) shall be used instead of this plan.
11. For moving lane closure on interior lane of multilane highways, use Revised Standard Plan T16.
12. The spacing between work vehicle(s) and the shadow vehicles, and between each shadow vehicle should be minimized to deter road users from driving in between.
13. When the work/application vehicle V3 occupies the median lane, sign vehicle V1 should drive in the median shoulder and indicate left lane closed ahead.

STATE OF CALIFORNIA
DEPARTMENT OF TRANSPORTATION

TRAFFIC CONTROL SYSTEM FOR MOVING LANE CLOSURE ON MULTILANE HIGHWAYS

NO SCALE

RSP T15 DATED APRIL 19, 2013 SUPERSEDES STANDARD PLAN T15
DATED MAY 20, 2011 - PAGE 243 OF THE STANDARD PLANS BOOK DATED 2010.

REVISED STANDARD PLAN RSP T15

2010 REVISED STANDARD PLAN RSP T15

DIST	COUNTY	ROUTE	POST MILES TOTAL PROJECT	SHEET No.	TOTAL SHEETS
09	Iny	395	R20.3/R22.3	38	43

REGISTERED CIVIL ENGINEER 8-21-14 DATE

12-8-14
PLANS APPROVAL DATE

REGISTERED PROFESSIONAL ENGINEER M. VAN DE POL No. 35610 Exp. 09/31/2015 CIVIL STATE OF CALIFORNIA

The State of California or its officers or agents shall not be responsible for the accuracy or completeness of electronic copies of this plan sheet.

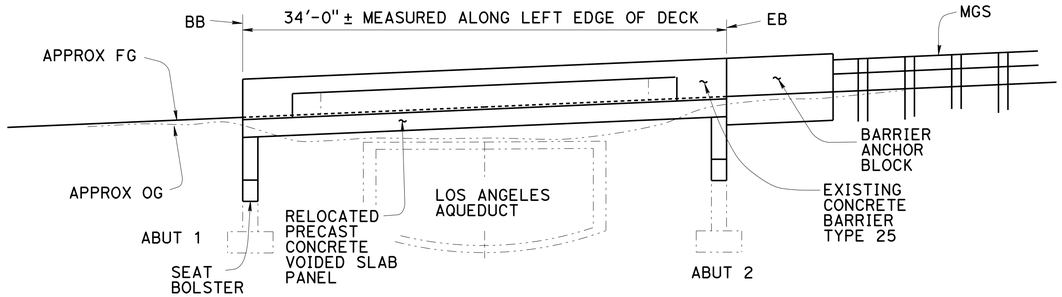

MIRROR ELEVATION

3/16" = 1'-0"

QUANTITIES

RELOCATE PRECAST CONCRETE VOIDED SLAB PANEL	LUMP SUM	
TRANSVERSE DECK STRENGTHENING	180	LF
REMOVE ASPHALT CONCRETE SURFACING	141	SQFT
CORE CONCRETE (3")	6	LF
STRUCTURE EXCAVATION (BRIDGE)	3	CY
STRUCTURE BACKFILL (BRIDGE)	3	CY
HOT MIX ASPHALT (BRIDGE)	3	TON
PRESTRESSING (TRANSVERSE TIE ROD)	30	LB
STRUCTURAL CONCRETE, BRIDGE	4	CY
DRILL AND BOND DOWEL	46	LF
BAR REINFORCING STEEL (BRIDGE)	2,333	LB

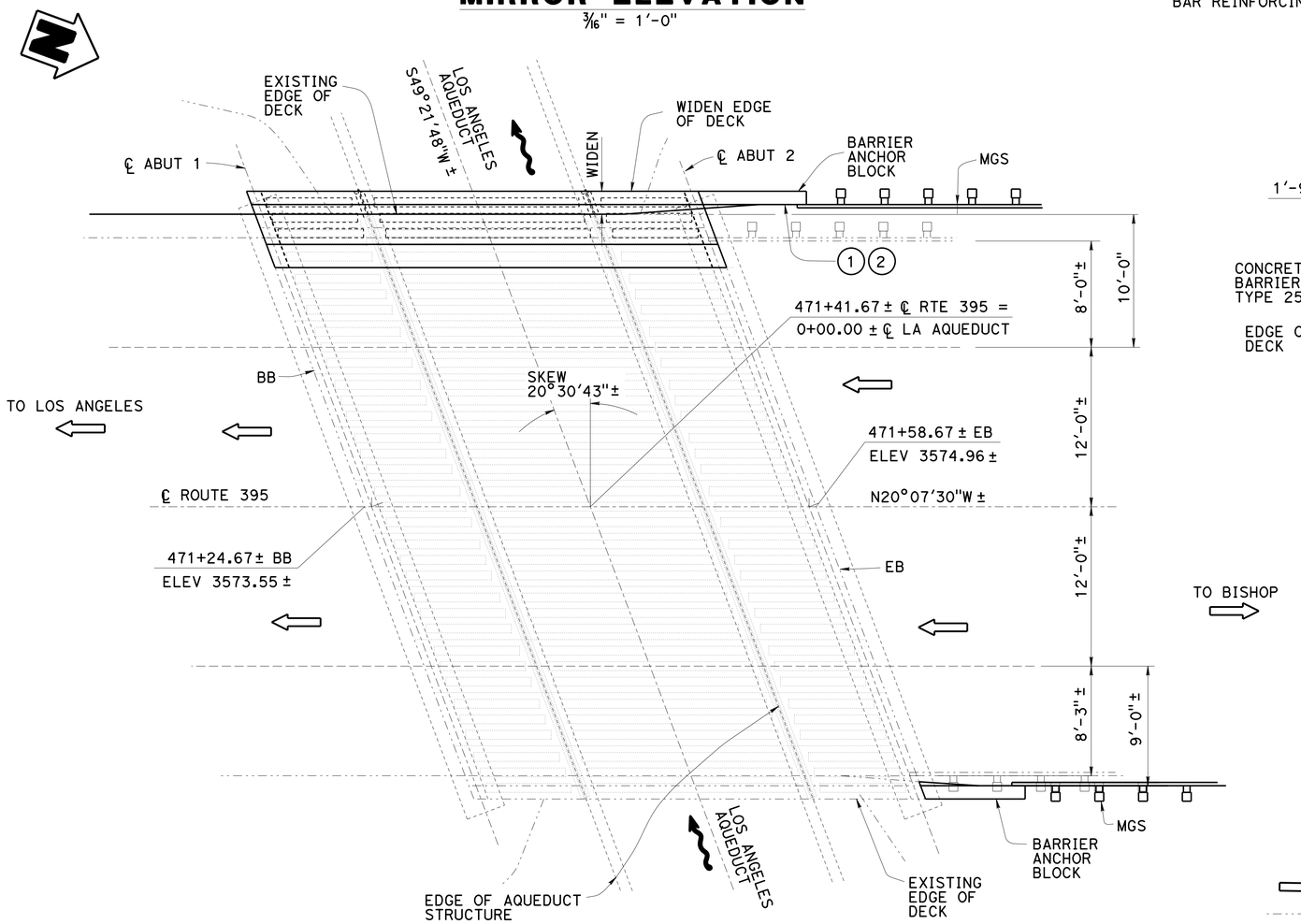

PLAN

3/16" = 1'-0"

TEMPORARY RAILING TYPE K NOT SHOWN, SEE "ROADWAY PLANS"

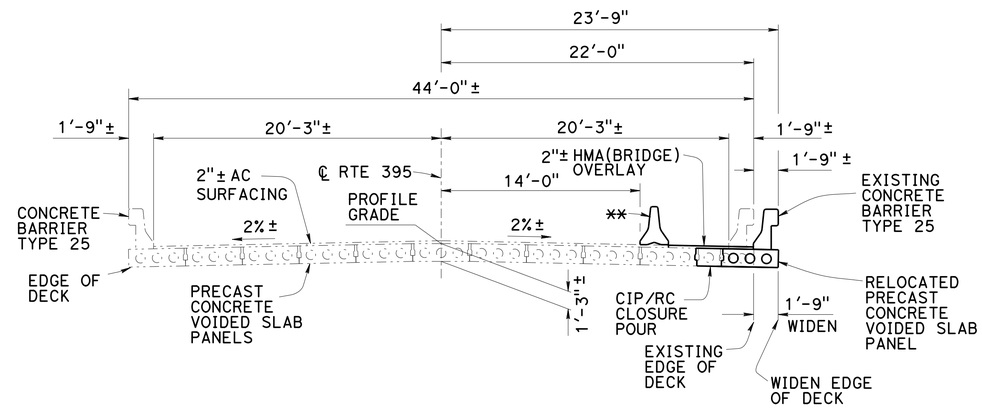

TYPICAL SECTION

3/16" = 1'-0"

NOTES
SECTION LOOKING SOUTHBOUND
** TEMPORARY RAILING TYPE K SEE "ROADWAY PLANS"

NOTE:
VERIFY ALL CONTROLLING FIELD DIMENSIONS BEFORE ORDERING OR FABRICATING ANY MATERIAL.

LEGEND

- DENOTES TRAFFIC DIRECTION
- DENOTES EXISTING STRUCTURE
- DENOTES NEW CONSTRUCTION
- (1) PAINT "LOS ANGELES AQUEDUCT BRIDGE"
- (2) PAINT "Br. No. 48-0015L"

NOTES
FOR INDEX TO PLANS, STANDARD PLANS LIST GENERAL NOTES AND CONCRETE TYPE LIMITS, SEE "INDEX TO PLANS" SHEET
FOR MGS AND BARRIER ANCHOR BLOCKS, SEE "ROADWAY PLANS"

GORDON DANKE
DESIGN ENGINEER

	BY	CHECKED
DESIGN	M. VAN DE POL	P. NORBOE
DETAILS	M. VAN DE POL	P. NORBOE
QUANTITIES	M. VAN DE POL	P. NORBOE

LOAD & RESISTANCE FACTOR DESIGN — LIVE LOADING: HL93 W/"LOW-BOY": PERMIT DESIGN VEHICLE
LAYOUT — BY M. VAN DE POL — CHECKED P. NORBOE
SPECIFICATIONS — BY Tina Chen — PLANS AND SPECS COMPARED Tina Chen

ORIGINAL SCALE IN INCHES FOR REDUCED PLANS 0 1 2 3

STATE OF CALIFORNIA
DEPARTMENT OF TRANSPORTATION

DIVISION OF ENGINEERING SERVICES
STRUCTURE DESIGN
DESIGN BRANCH 9

BRIDGE NO. 48-0015L
POST MILE 21.30

LOS ANGELES AQUEDUCT BRIDGE (WIDEN)
GENERAL PLAN

UNIT: 3594
PROJECT NUMBER & PHASE: 0900020058 1
CONTRACT NO.: 09-351204

DISREGARD PRINTS BEARING EARLIER REVISION DATES
REVISION DATES 08-05-14
SHEET 1 OF 6

USERNAME => s12614 DATE PLOTTED => 24-DEC-2014 TIME PLOTTED => 07:34

STRUCTURES DESIGN GENERAL PLAN SHEET (ENGLISH) (REV.09-01-10)

FILE => 48-0015l-a-gp.dgn

DIST	COUNTY	ROUTE	POST MILES TOTAL PROJECT	SHEET No.	TOTAL SHEETS
09	Iny	395	R20.3/R22.3	39	43

REGISTERED CIVIL ENGINEER 8-21-14 DATE

12-8-14
PLANS APPROVAL DATE

REGISTERED PROFESSIONAL ENGINEER
M. VAN DE POL
No. 35610
Exp. 09/31/2015
CIVIL
STATE OF CALIFORNIA

The State of California or its officers or agents shall not be responsible for the accuracy or completeness of electronic copies of this plan sheet.

INDEX TO PLANS

SHEET No.	TITLE
1	GENERAL PLAN No. 1
2	INDEX TO PLANS
3	DETAILS No. 1
4	DETAILS No. 2
5	DETAILS No. 3
6	DETAILS No. 4

GENERAL NOTES
LOAD AND RESISTANCE FACTOR DESIGN

DESIGN:
AASHTO LRFD Bridge Design Specifications, 4th edition
and the California Amendments, Preface dated November 2011.

SEISMIC DESIGN:
Caltrans Seismic Design Criteria (SDC), Version 1.7 dated April 2013.

DEAD LOAD:
Includes 35 psf for wearing surface.

LIVE LOADING:
HL93 and permit design load.

SEISMIC LOADING:
Soil profile type D
Magnitude group 6.0 ± 0.25
Peak Rock Acceleration 0.20 g
See ARS curves for operating basis EQ (Return Period = 50 yrs)
and MCE (Return Period = 950 yrs)

CONCRETE:
fy = 60 ksi
f'c = 3.6 ksi
n = 8
See Concrete Strength And Type Limits

TRANSVERSE TIE RODS:
fy = 50 ksi

STANDARD PLANS DATED 2010

	A10A	ACRONYMS AND ABBREVIATIONS (A-L)
RSP	A10B	ACRONYMS AND ABBREVIATIONS (M-Z)
	A10C	LINES AND SYMBOLS
	A10D	LINES AND SYMBOLS
	A10E	LINES AND SYMBOLS
	B0-1	BRIDGE DETAILS

STANDARD PLAN SHEET No.

DETAIL No.

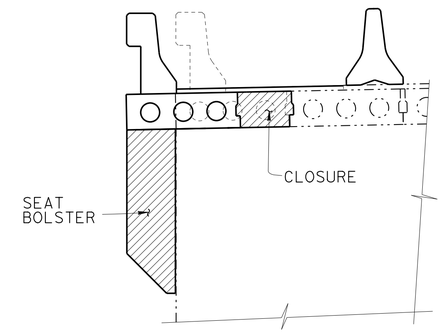

Structural Concrete, Bridge
(f'c = 4,000 psi @ 28 days)

CONCRETE STRENGTH AND TYPE LIMITS
no scale

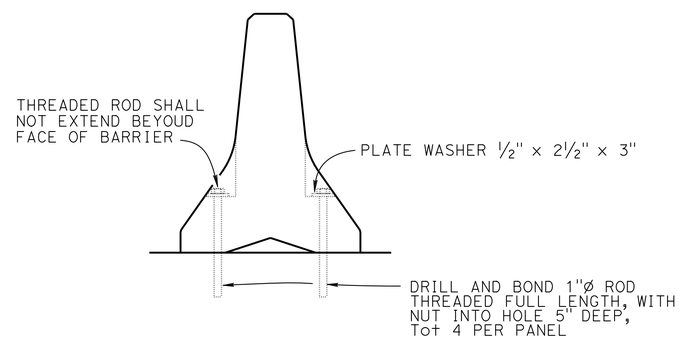

TYPE K RAILING ATTACHMENT
NO SCALE

DESIGN	BY M. VAN DE POL	CHECKED P. NORBOE	
DETAILS	BY M. VAN DE POL	CHECKED P. NORBOE	
QUANTITIES	BY M. VAN DE POL	CHECKED P. NORBOE	

STATE OF CALIFORNIA
DEPARTMENT OF TRANSPORTATION

DIVISION OF ENGINEERING SERVICES
STRUCTURE DESIGN
DESIGN BRANCH 9

BRIDGE NO. 48-0015L
POST MILE 21.30

LOS ANGELES AQUEDUCT BRIDGE (WIDEN)
INDEX TO PLANS

STRUCTURES DESIGN DETAIL SHEET (ENGLISH) (REV. 09-01-10)

ORIGINAL SCALE IN INCHES FOR REDUCED PLANS 0 1 2 3

UNIT: 3594
PROJECT NUMBER & PHASE: 0900020058 1
CONTRACT NO.: 09-351204

DISREGARD PRINTS BEARING EARLIER REVISION DATES

REVISION DATES: 08-05-14

SHEET 2 OF 6

FILE => 48-0015l-a-itp.dgn

USERNAME => s121614 DATE PLOTTED => 24-DEC-2014 TIME PLOTTED => 07:35

DIST	COUNTY	ROUTE	POST MILES TOTAL PROJECT	SHEET No.	TOTAL SHEETS
09	Iny	395	R20.3/R22.3	40	43

REGISTERED CIVIL ENGINEER 8-21-14 DATE

12-8-14
PLANS APPROVAL DATE

REGISTERED PROFESSIONAL ENGINEER M. VAN DE POL No. 35610 Exp. 09/31/2015 CIVIL STATE OF CALIFORNIA

The State of California or its officers or agents shall not be responsible for the accuracy or completeness of electronic copies of this plan sheet.

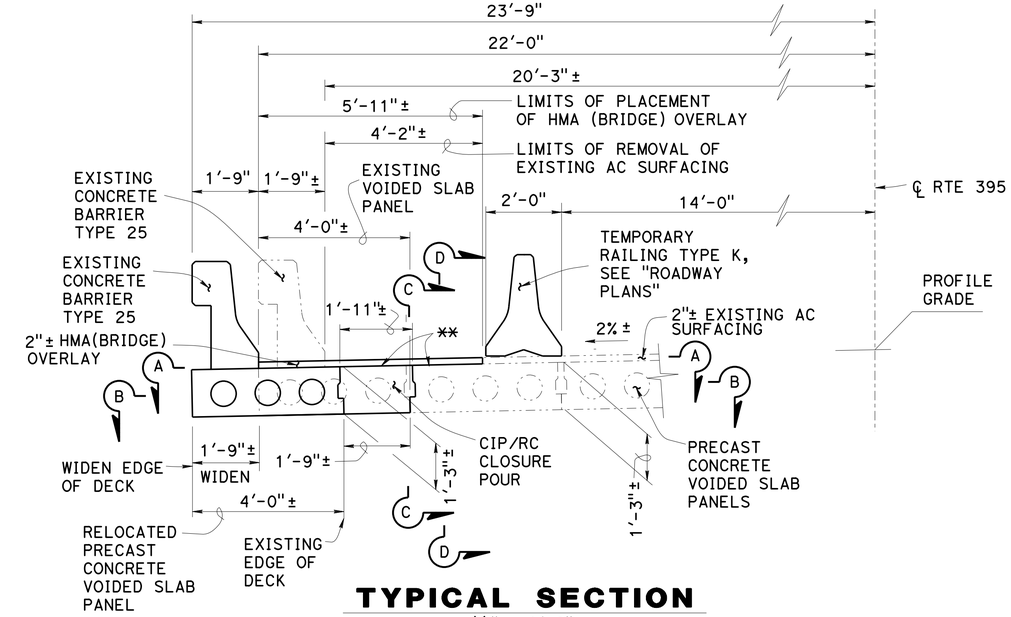

** MATCH EXISTING GRADE AND CROSS SLOPE
MATCH EXISTING AC THICKNESS

PROFILE GRADE

TYPICAL SECTION

½" = 1'-0"

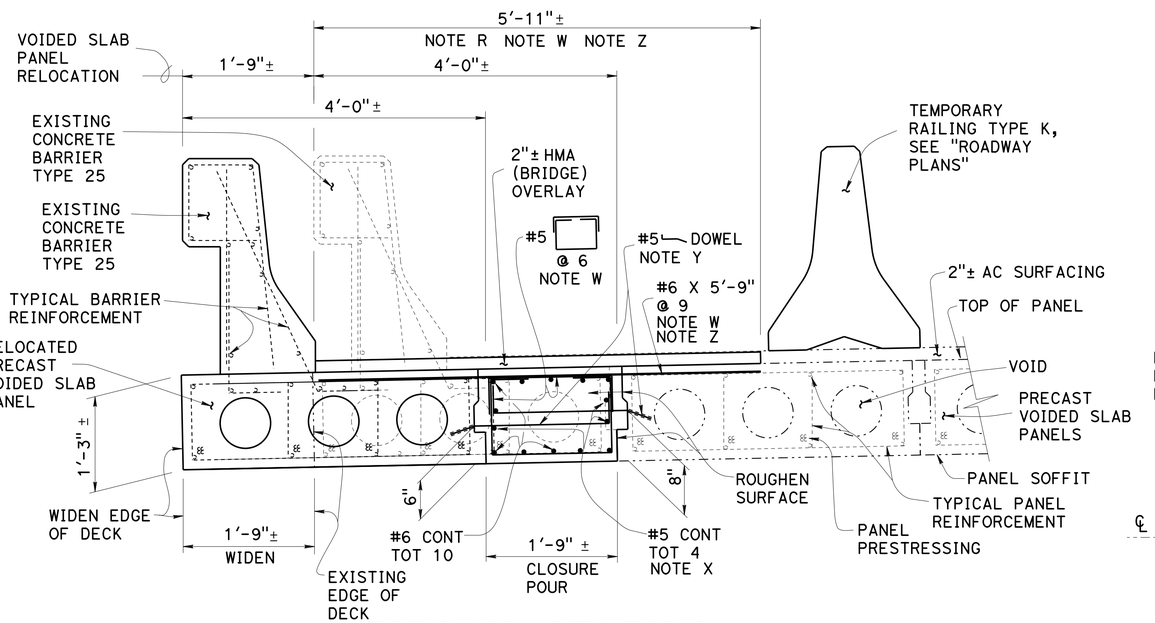

TYPICAL SECTION

1" = 1'-0"

FOR SECTION B-B, SECTION C-C AND SECTION D-D, SEE "DETAILS No. 2" SHEET

FOR REMOVAL DETAILS, SEE "DETAILS No. 4" SHEET

NOTE:
VERIFY ALL CONTROLLING FIELD DIMENSIONS BEFORE ORDERING OR FABRICATING ANY MATERIAL.

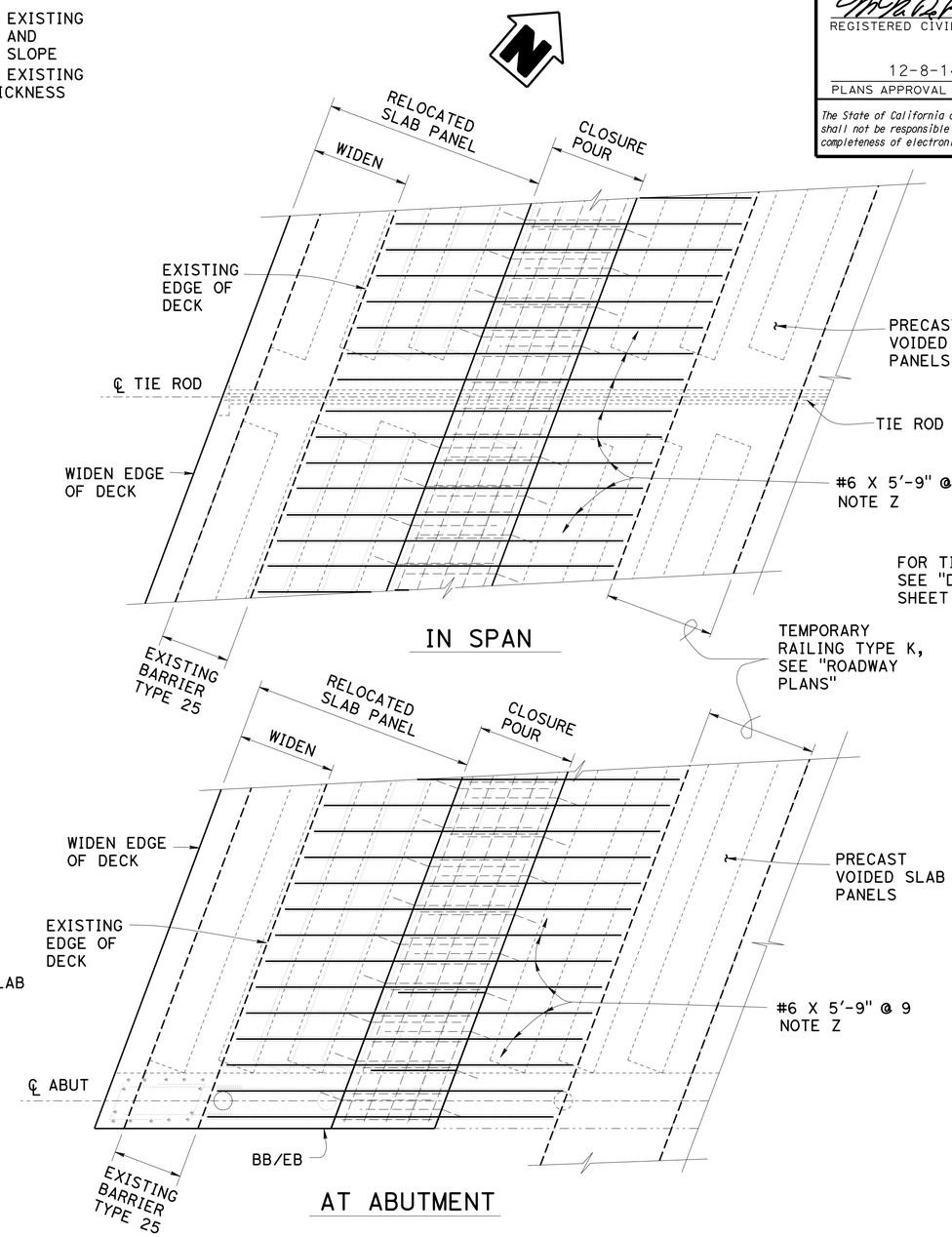

FOR TIE ROD DETAILS, SEE "DETAILS No. 2" SHEET

SECTIONS A-A

¾" = 1'-0"

NOTE R
LIMIT OF PREPARE CONCRETE BRIDGE DECK AND PLACE HMA (BRIDGE) OVERLAY

NOTE W
PLACE REINFORCEMENT PARALLEL TO ABUTMENTS AND SPACE ALONG CENTERLINE OF BRIDGE

NOTE X
ADJUST REINFORCEMENT TO CLEAR PANEL TIE BARS

NOTE Y
DRILL AND BOND DOWELS IN 4" DEEP HOLE @ 9. STAGGER DOWELS. SEE SECTION C-C. ADJUST TO CLEAR PANEL PRESTRESSING HOLE SLOPE 1:3

NOTE Z
PLACE TRANSVERSE DECK STRENGTHENING. FOR DETAILS, SEE SECTION D-D ON "DETAILS No 2" SHEET

CLOSURE POUR CONCRETE SHALL EXTEND INTO PANEL KEYWAYS. SEE REMOVAL DETAILS ON "DETAILS No. 4" SHEET

DENOTES EXISTING STRUCTURE
DENOTES NEW CONSTRUCTION

	BY	CHECKED
DESIGN	M. VAN DE POL	P. NORBOE
DETAILS	M. VAN DE POL	P. NORBOE
QUANTITIES	M. VAN DE POL	P. NORBOE

STATE OF CALIFORNIA
DEPARTMENT OF TRANSPORTATION

DIVISION OF ENGINEERING SERVICES
STRUCTURE DESIGN
DESIGN BRANCH 9

BRIDGE NO. 48-0015L
POST MILE 21.30

LOS ANGELES AQUEDUCT BRIDGE (WIDEN)

DETAILS No. 1

STRUCTURES DESIGN DETAIL SHEET (ENGLISH) (REV. 09-01-10)

ORIGINAL SCALE IN INCHES FOR REDUCED PLANS 0 1 2 3

UNIT: 3594
PROJECT NUMBER & PHASE: 0900020058 1
CONTRACT NO.: 09-351204

DISREGARD PRINTS BEARING EARLIER REVISION DATES

REVISION DATES: 08-05-14

SHEET 3 OF 6

FILE => 48-0015l-b-dets01.dgn

USERNAME => s121614 DATE PLOTTED => 24-DEC-2014 TIME PLOTTED => 07:35

DIST	COUNTY	ROUTE	POST MILES TOTAL PROJECT	SHEET No.	TOTAL SHEETS
09	Iny	395	R20.3/R22.3	41	43

REGISTERED CIVIL ENGINEER 8-21-14 DATE

12-8-14
PLANS APPROVAL DATE

REGISTERED PROFESSIONAL ENGINEER M. VAN DE POL No. 35610 Exp. 09/31/2015 CIVIL STATE OF CALIFORNIA

The State of California or its officers or agents shall not be responsible for the accuracy or completeness of electronic copies of this plan sheet.

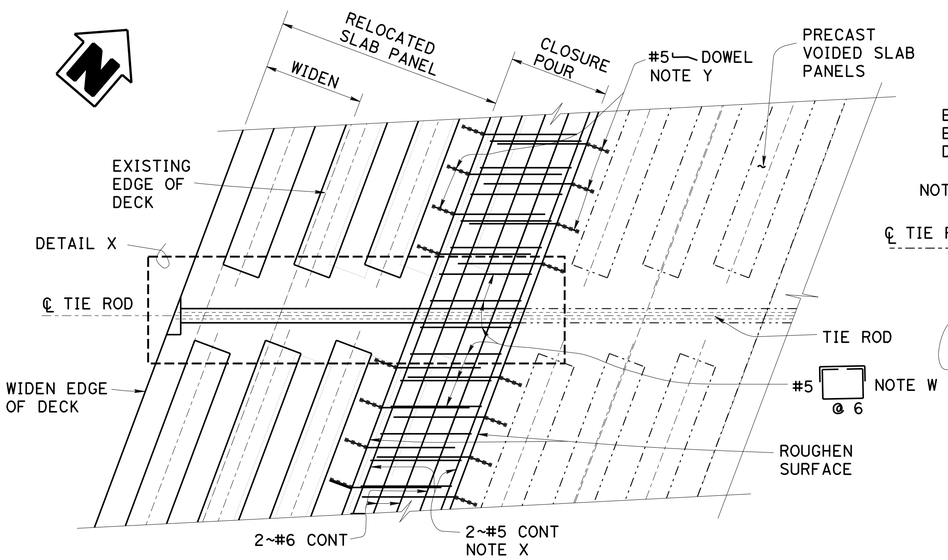

IN SPAN

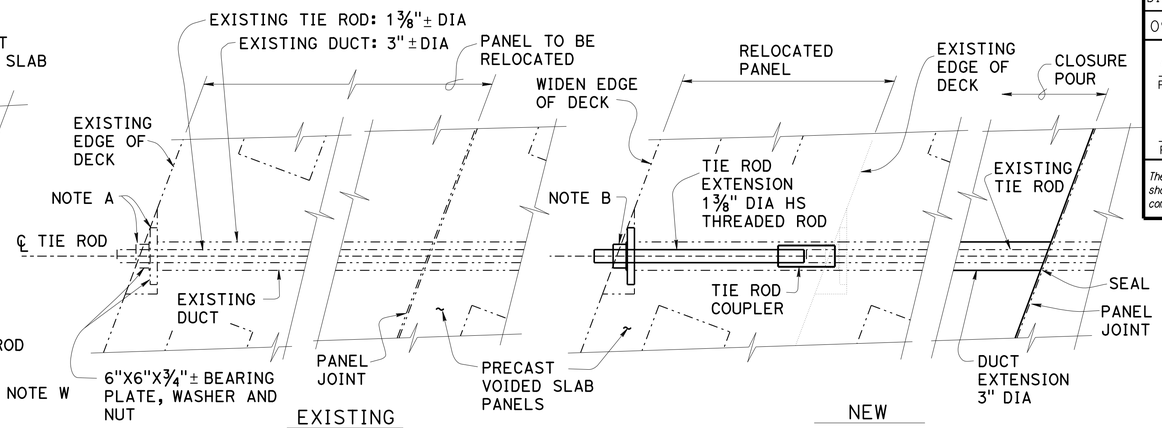

EXISTING REMOVAL

NEW

DETAIL X

NO SCALE

TRANSVERSE TIE ROD COUPLING AND EXTENSION DETAILS

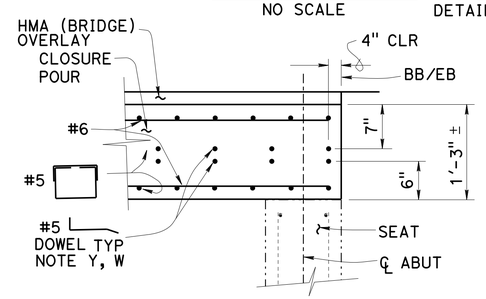

SECTION C-C

1" = 1'-0"

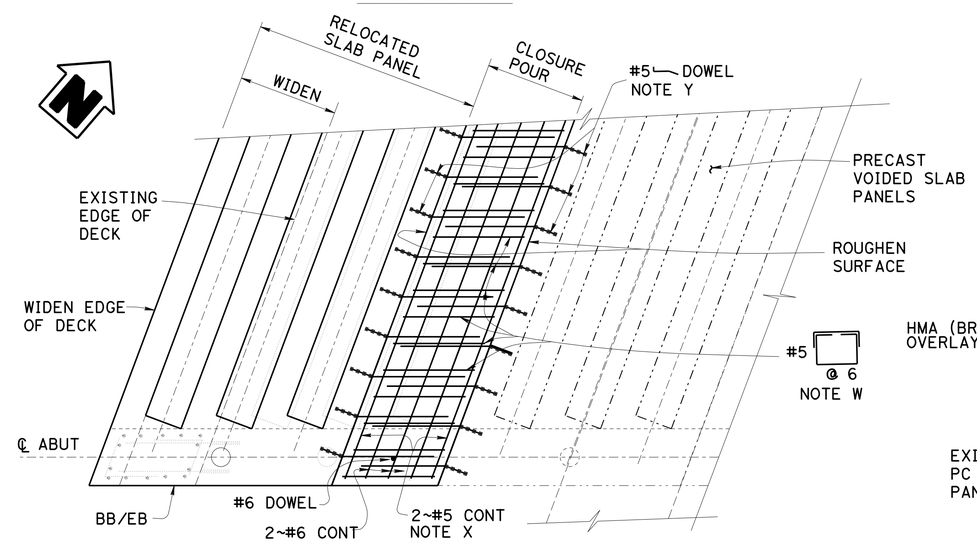

AT ABUTMENT

PANEL VERTICAL DOWELS NOT SHOWN

SECTIONS B-B

¾" = 1'-0"

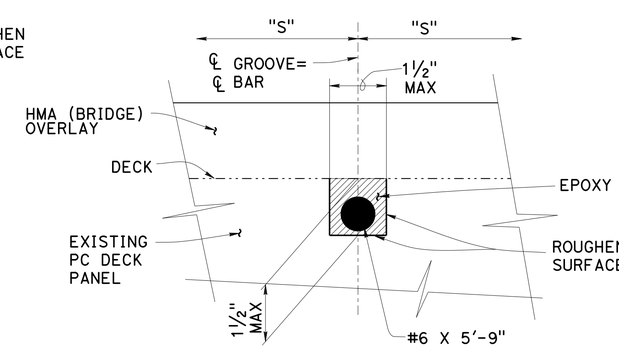

BAR REINFORCEMENT

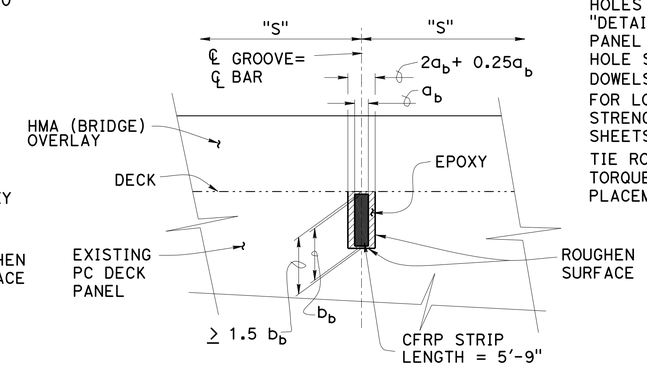

ALTENATIVE RECTANGULAR (CFRP) STRIP

DENOTES LIMITS OF SAWCUTTING TRANSVERSE GROOVES

GROOVE SPACING "S" 9" TYP, 4" MIN CLEAR FROM BB/EB. ADJUST TO CLEAR TIE RODS SEE NOTE W

a_b= HORIZONTAL DIMENSION FOR CROSS SECTIONAL AREA ≥ 0.11 IN2

b_b= 0.63" OR EQUIVALENT

SECTIONS D-D

NO SCALE

TRANSVERSE DECK STRENGTHENING

REMOVE AND REPLACE AC SURFACING, SEE "DETAILS No. 1" SHEET

CENTER REINFORCEMENT/CFRP STRIP IN GROOVE

NOTES

FOR LOCATIONS OF SECTION B-B, SECTION C-C AND SECTION D-D, SEE "DETAILS No. 1" SHEET

FOR REMOVAL DETAILS, SEE "DETAILS No. 4" SHEET

NOTE A
EXISTING ANCHORAGE TO BE REMOVED TO FACILITATE COUPLING OF TIE ROD. EXISTING BEARING PLATE MAY BE REUSED AT NEW ANCHORAGE LOCATION

NOTE B
NEW ANCHORAGE: 6"X6"X¾" BEARING PLATE, WASHER AND NUT SEE NOTE A

NOTE W
PLACE PARALLEL TO ABUTMENTS AND SPACE ALONG CENTERLINE OF BRIDGE

NOTE X
ADJUST TO CLEAR PANEL TIE RODS

NOTE Y
DRILL AND BOND DOWELS IN 4" DEEP HOLES @ 9. SEE "TYPICAL SECTION" ON "DETAIL No. 1" SHEET. ADJUST TO CLEAR PANEL PRESTRESSING AND TIE RODS. HOLE SLOPE 1:3 SEE SECTION C-C
DOWELS MAY BE STAGGERED
FOR LOCATIONS AND LIMITS OF DECK STRENGTHENING, SEE OTHER DETAIL SHEETS
TIE ROD TORQUE = 500 FTLBS TYP
TORQUE 7 DAYS MINIMUM AFTER PLACEMENT OF CLOSURE POUR CONCRETE

AC SURFACING SHALL BE FULLY REMOVED FROM PANELS PRIOR TO SAWCUTTING GROOVES FOR TRANSVERSE STRENGTHENING

NOTE:
VERIFY ALL CONTROLLING FIELD DIMENSIONS BEFORE ORDERING OR FABRICATING ANY MATERIAL.

DENOTES EXISTING STRUCTURE
DENOTES NEW CONSTRUCTION

	BY	CHECKED
DESIGN	M. VAN DE POL	P. NORBOE
DETAILS	M. VAN DE POL	P. NORBOE
QUANTITIES	M. VAN DE POL	P. NORBOE

STATE OF CALIFORNIA
DEPARTMENT OF TRANSPORTATION

DIVISION OF ENGINEERING SERVICES
STRUCTURE DESIGN
DESIGN BRANCH 9

BRIDGE NO. 48-0015L
POST MILE 21.30

LOS ANGELES AQUEDUCT BRIDGE (WIDEN)

DETAILS No. 2

STRUCTURES DESIGN DETAIL SHEET (ENGLISH) (REV. 09-01-10)

ORIGINAL SCALE IN INCHES FOR REDUCED PLANS 0 1 2 3

UNIT: 3594
PROJECT NUMBER & PHASE: 0900020058 1
CONTRACT NO.: 09-351204

DISREGARD PRINTS BEARING EARLIER REVISION DATES

REVISION DATES 08-05-14

SHEET 4 OF 6

FILE => 48-0015l-b-dets02.dgn

USERNAME => s121614 DATE PLOTTED => 24-DEC-2014 TIME PLOTTED => 07:35

DIST	COUNTY	ROUTE	POST MILES TOTAL PROJECT	SHEET No.	TOTAL SHEETS
09	Iny	395	R20.3/R22.3	42	43

REGISTERED CIVIL ENGINEER 8-21-14 DATE

12-8-14
PLANS APPROVAL DATE

REGISTERED PROFESSIONAL ENGINEER M. VAN DE POL No. 35610 Exp. 09/31/2015 CIVIL STATE OF CALIFORNIA

The State of California or its officers or agents shall not be responsible for the accuracy or completeness of electronic copies of this plan sheet.

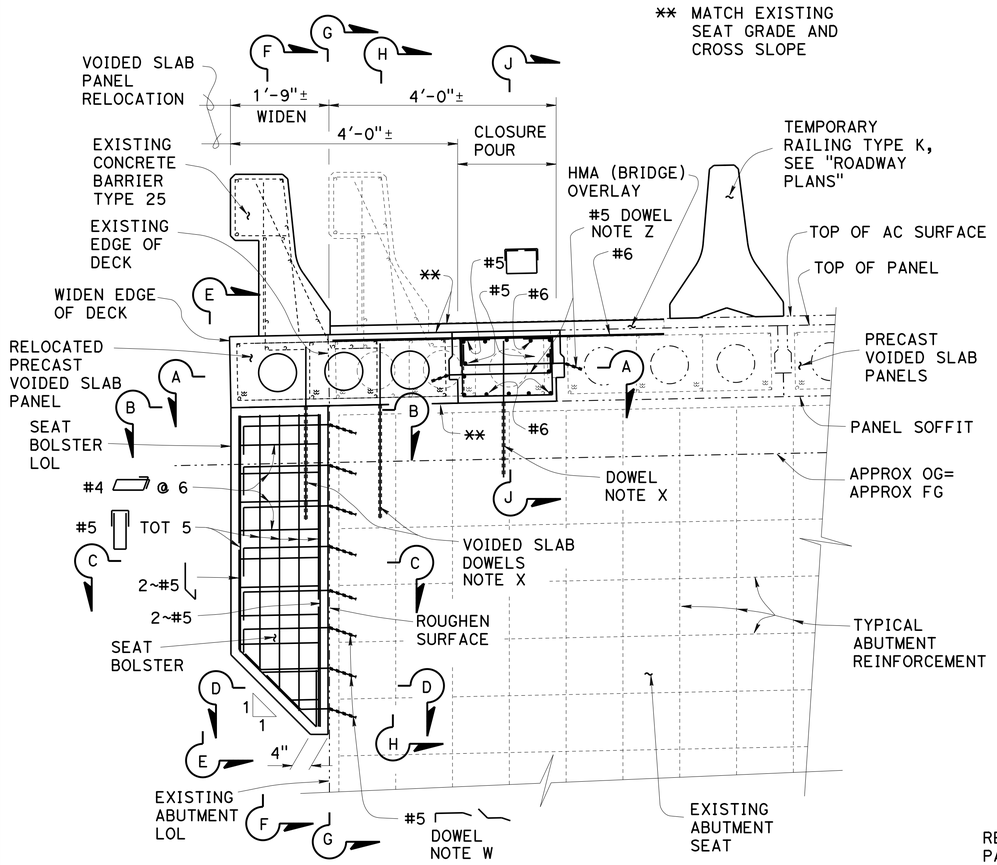

ABUTMENT ELEVATION

LOOKING ALONG ℄ BRIDGE

¾" = 1'-0"

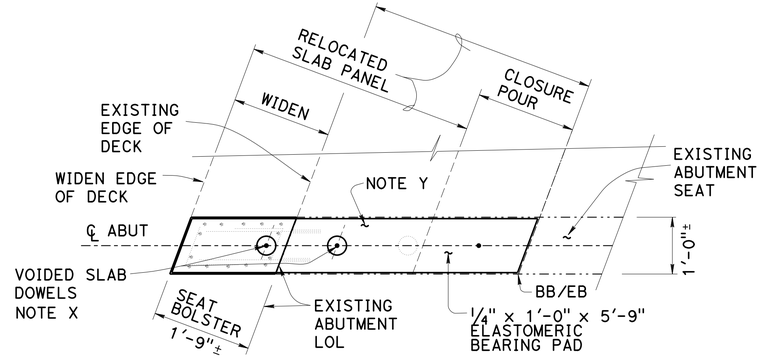

SECTION B-B

¾" = 1'-0"

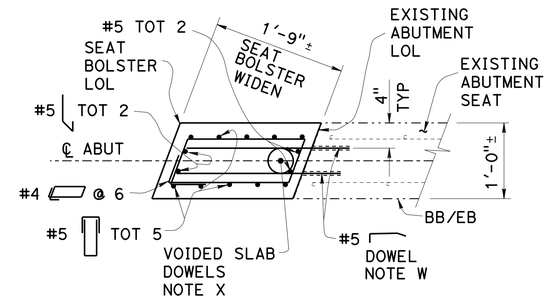

SECTION C-C

1" = 1'-0"

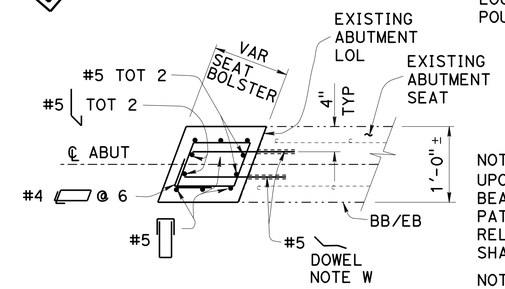

SECTION D-D

1" = 1'-0"

NOTES

ABUTMENT 2 SHOWN
ABUTMENT 1 SIMILAR

FOR OTHER DETAILS, SEE "DETAILS No. 1" SHEET

FOR REMOVAL DETAILS, SEE "DETAILS No. 4" SHEET

ROUGHEN ALL CONTACT SURFACES TO ¼" MIN MAGNITUDE

NOTE W
DRILL AND BOND DOWELS IN 6" DEEP HOLE @ 9
HOLE SLOPE 1:3

NOTE X
#6 X 2'-6" DOWELS TYP. HOLE DEPTH 1'-6" TYP
DOWELS IN SEAT BOLSTER ARE CAST WITH BOLSTER
DOWELS IN EXISTING SEAT ARE BONDED IN DRILLED HOLES
DOWELS LOCATIONS TO MATCH FORMED HOLES IN PANELS
DOWELS IN CLOSURE POUR TO BE LOCATED AT CENTERLINE OF CLOSURE POUR
FORMED HOLES IN PANELS SHALL BE CLEANED PRIOR TO RECEIVING GROUT
DRILL AND BOND DOWEL LOCATIONS MAY BE ADJUSTED AS APPROVED BY THE ENGINEER

NOTE Y
UPON REMOVAL OF EXISTING PANEL, BEARING SURFACE SHALL BE CLEANED PATCHED AND LEVELED TO RECEIVE RELOCATED PANEL. SEAT EXTENSION SHALL MATCH EXISTING SEAT SURFACE

NOTE Z
FOR CLOSURE POUR DOWEL DETAILS, SEE "DETAILS No. 2" SHEET

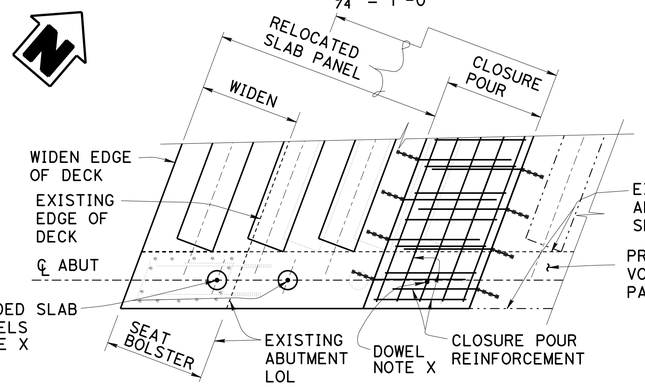

SECTION A-A

¾" = 1'-0"

PRECAST SLAB PANEL REINFORCEMENT NOT SHOWN

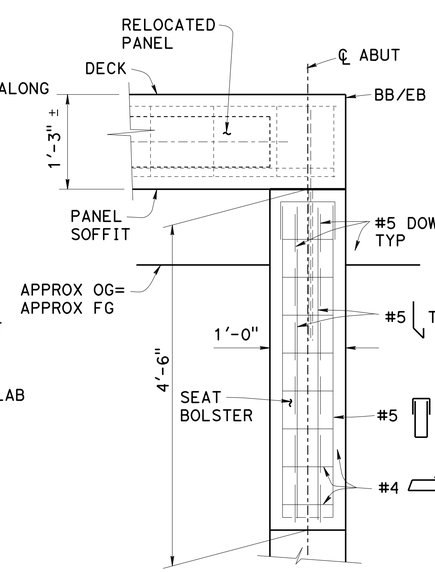

SECTION E-E

1" = 1'-0"

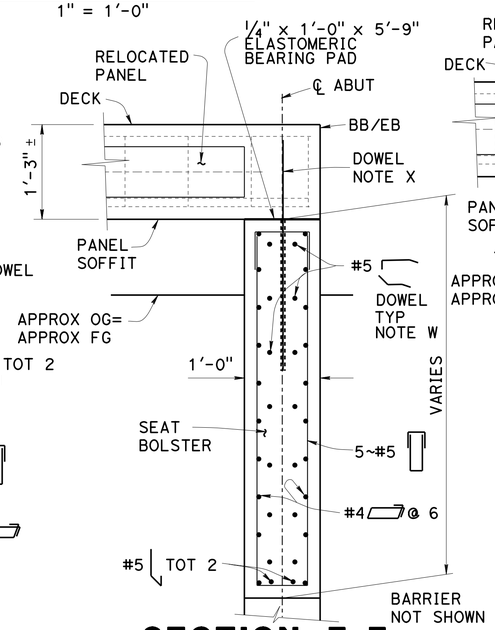

SECTION F-F

1" = 1'-0"

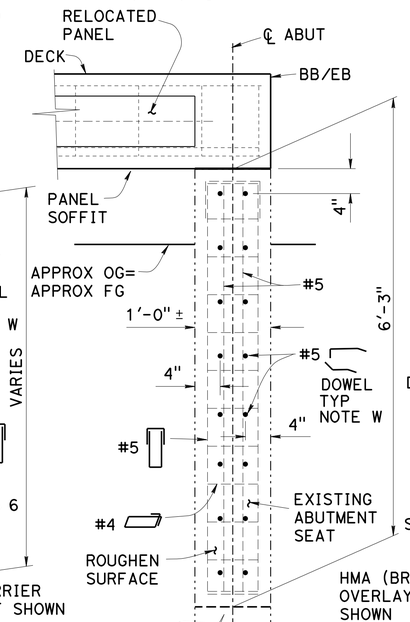

SECTION G-G

1" = 1'-0"

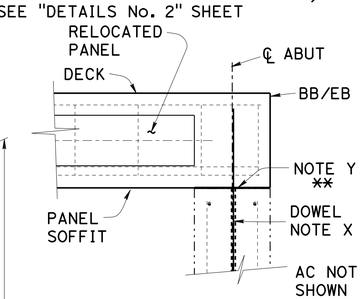

SECTION H-H

1" = 1'-0"

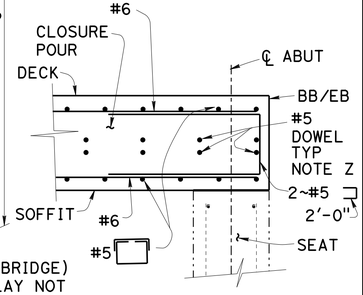

SECTION J-J

1" = 1'-0"

NOTE:
VERIFY ALL CONTROLLING FIELD DIMENSIONS BEFORE ORDERING OR FABRICATING ANY MATERIAL.

-·-·-·- DENOTES EXISTING STRUCTURE
——— DENOTES NEW CONSTRUCTION

	BY	CHECKED
DESIGN	M. VAN DE POL	P. NORBOE
DETAILS	M. VAN DE POL	P. NORBOE
QUANTITIES	M. VAN DE POL	P. NORBOE

STATE OF CALIFORNIA
DEPARTMENT OF TRANSPORTATION

DIVISION OF ENGINEERING SERVICES
STRUCTURE DESIGN
DESIGN BRANCH 9

BRIDGE NO. 48-0015L
POST MILE 21.30

LOS ANGELES AQUEDUCT BRIDGE (WIDEN)

DETAILS No. 3

STRUCTURES DESIGN DETAIL SHEET (ENGLISH) (REV. 09-01-10)

ORIGINAL SCALE IN INCHES FOR REDUCED PLANS 0 1 2 3

UNIT: 3594
PROJECT NUMBER & PHASE: 0900020058 1
CONTRACT NO.: 09-351204

DISREGARD PRINTS BEARING EARLIER REVISION DATES

REVISION DATES: 08-05-14

SHEET 5 OF 6

FILE => 48-0015l-b-dets03.dgn

USERNAME => s121614 DATE PLOTTED => 24-DEC-2014 TIME PLOTTED => 07:35

DIST	COUNTY	ROUTE	POST MILES TOTAL PROJECT	SHEET No.	TOTAL SHEETS
09	Iny	395	R20.3/R22.3	43	43

REGISTERED CIVIL ENGINEER 8-21-14 DATE

12-8-14
PLANS APPROVAL DATE

REGISTERED PROFESSIONAL ENGINEER M. VAN DE POL No. 35610 Exp. 09/31/2015 CIVIL STATE OF CALIFORNIA

The State of California or its officers or agents shall not be responsible for the accuracy or completeness of electronic copies of this plan sheet.

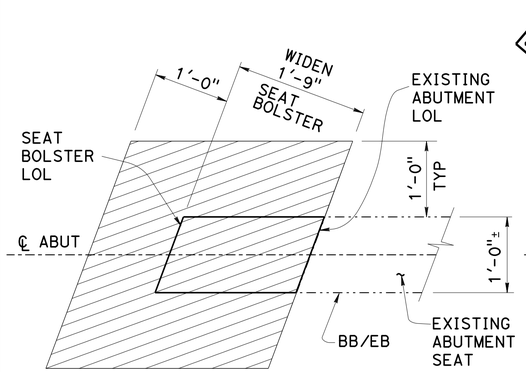

PLAN SEAT BOLSTER

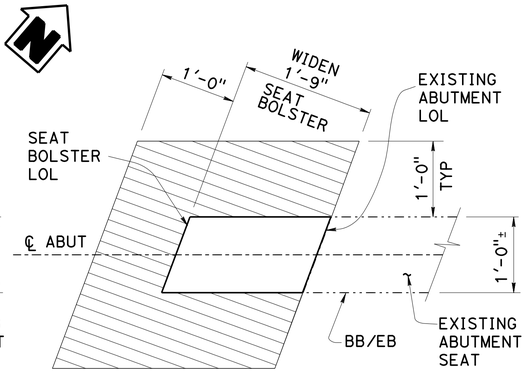

PLAN SEAT BOLSTER

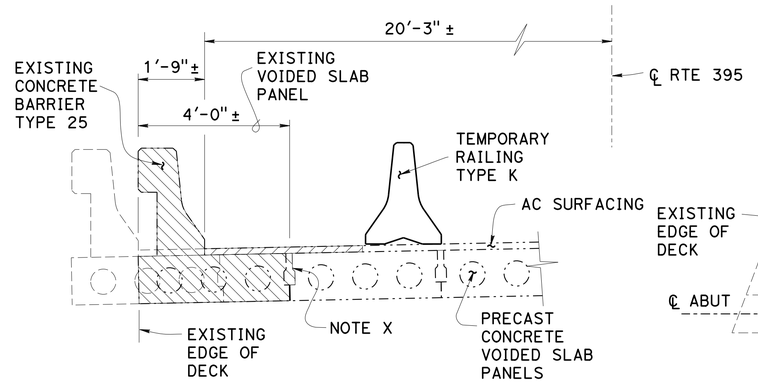

TYPICAL SECTION

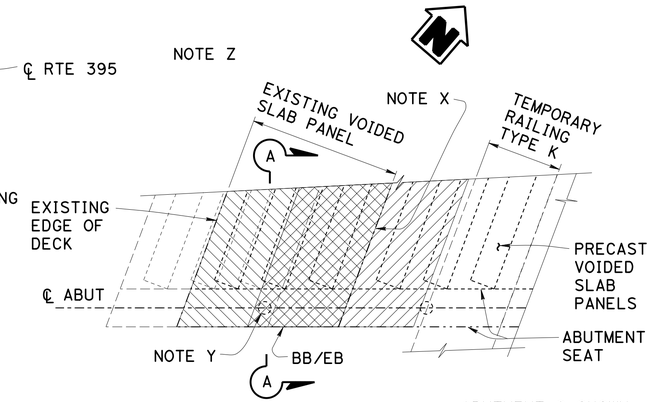

PART PLAN

ABUTMENT 2 SHOWN
ABUTMENT 1 SIMILAR
BY OPPOSITE HAND

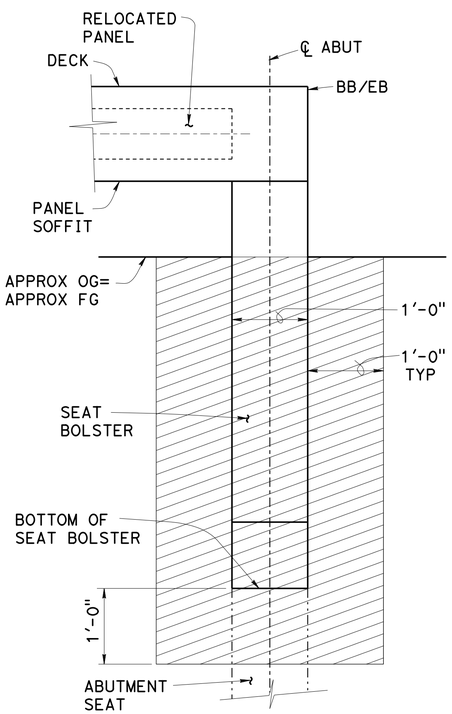

ELEVATION EXCAVATION SEAT BOLSTER

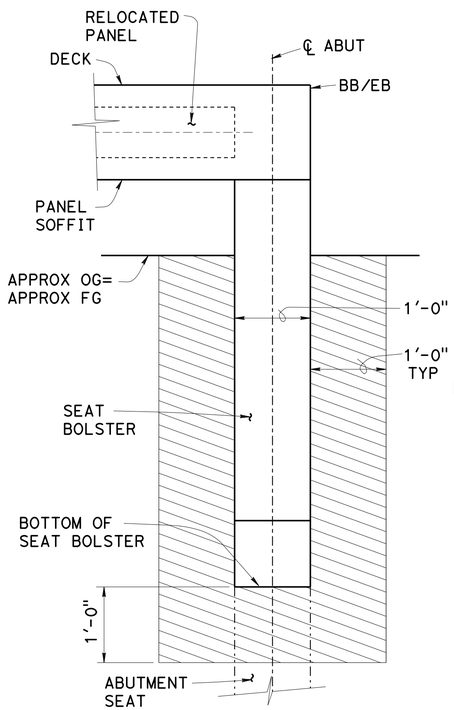

ELEVATION BACKFILL SEAT BOLSTER

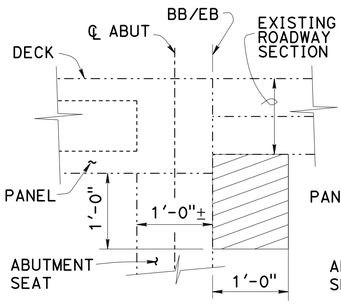

SECTION EXCAVATION

PANEL RELOCATION VERTICAL DOWEL REMOVAL

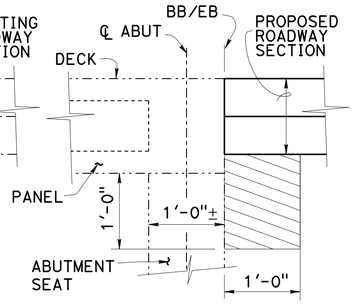

SECTION BACKFILL

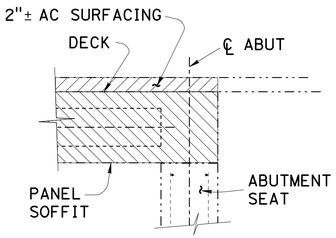

SECTION A-A

DENOTES RELOCATE PANEL LIMITS

DENOTES LIMITS OF REMOVAL OF AC SURFACING

RELOCATE DETAILS

½" = 1'-0"

FOR ADDITIONAL DETAILS, SEE "DETAILS No. 1" SHEET

FOR TEMPORARY RAILING TYPE K, SEE "ROADWAY PLANS"

NOTE X
SAW CUT JOINT BETWEEN PANEL TO BE RELOCATED AND RETAINED PANEL TO BREAK BOND. TIE RODS, BAR REINFORCEMENT AND PRESTRESSING SHALL NOT BE CUT. GROUT SHALL BE REMOVED FROM KEYWAYS. KEYWAY SURFACES SHALL BE CLEANED AND ROUGHENED. FULL DEPTH SAW CUT SHALL NOT BE USED

NOTE Y
CORE AROUND EXISTING PANEL VERTICAL DOWELS TO BREAK BOND. DOWELS SHALL BE REMOVED TO FACILITATE PANEL RELOCATION
CORE HOLE DIAMETER = 3" MAX
PANEL BAR REINFORCEMENT AND PRESTRESSING SHALL NOT BE DAMAGED. REMOVE DOWELS FLUSH WITH SURFACE OF EXISTING SEAT

NOTE Z
FOR TRANSVERSE TIE ROD LOCATIONS-
EXPOSE AND REMOVE TRANSVERSE TIE ROD ANCHORAGE. IF TIE ROD IS GROUTED IN PLACE, CORE AROUND TIE RODS TO BREAK BOND. TIE ROD SHALL BE RETAINED FOR COUPLING AND EXTENSION
CORE HOLE DIAMETER = 3" MAX
PANEL BAR REINFORCEMENT AND PRESTRESSING SHALL NOT BE DAMAGED.

DENOTES LIMITS OF STRUCTURE EXCAVATION

DENOTES LIMITS OF STRUCTURE BACKFILL

EXCAVATION AND BACKFILL DETAILS

NO SCALE

BARRIER NOT SHOWN

HMA (BRIDGE) OVERLAY NOT SHOWN

DENOTES EXISTING STRUCTURE

DENOTES NEW CONSTRUCTION

NOTE:
VERIFY ALL CONTROLLING FIELD DIMENSIONS BEFORE ORDERING OR FABRICATING ANY MATERIAL.

	BY	CHECKED
DESIGN	M. VAN DE POL	P. NORBOE
DETAILS	M. VAN DE POL	P. NORBOE
QUANTITIES	M. VAN DE POL	P. NORBOE

STATE OF CALIFORNIA
DEPARTMENT OF TRANSPORTATION

DIVISION OF ENGINEERING SERVICES
STRUCTURE DESIGN
DESIGN BRANCH 9

BRIDGE NO. 48-0015L
POST MILE 21.30

LOS ANGELES AQUEDUCT BRIDGE (WIDEN)

DETAILS No. 4

STRUCTURES DESIGN DETAIL SHEET (ENGLISH) (REV. 09-01-10)

ORIGINAL SCALE IN INCHES FOR REDUCED PLANS 0 1 2 3

UNIT: 3594
PROJECT NUMBER & PHASE: 0900020058 1 CONTRACT NO.: 09-351204

DISREGARD PRINTS BEARING EARLIER REVISION DATES

REVISION DATES 08-05-14

SHEET 6 OF 6

FILE => 48-0015l-b-dets04.dgn

USERNAME => s127614 DATE PLOTTED => 24-DEC-2014 TIME PLOTTED => 07:35