ACIM-040-2(055)151E

Dist	COUNTY	ROUTE	POST MILES TOTAL PROJECT	SHEET No.	TOTAL SHEETS
08	SBd	40	R151.7/R153.3	1	51

STATE OF CALIFORNIA
DEPARTMENT OF TRANSPORTATION

PROJECT PLANS FOR CONSTRUCTION ON
STATE HIGHWAY
IN SAN BERNARDINO COUNTY
NEAR NEEDLES
FROM 0.4 MILE WEST OF WHALE MOUNTAIN WASH BRIDGE TO 0.1 MILE WEST OF PARK MOABI ROAD OVERCROSSING

TO BE SUPPLEMENTED BY STANDARD PLANS DATED MAY 2006

INDEX OF PLANS

SHEET No.	DESCRIPTION
1	TITLE AND LOCATION MAP
2	TYPICAL CROSS SECTIONS
3-8	LAYOUTS
9-11	CONSTRUCTION DETAILS
12	TEMPORARY WATER POLLUTION CONTROL QUANTITIES
13-18	EROSION CONTROL PLAN
19-24	CONTOUR GRADING
25-28	DRAINAGE PLAN, PROFILES, DETAILS AND QUANTITIES
29	UTILITY PLAN
30	CONSTRUCTION AREA SIGNS
31-34	TRAFFIC HANDLING PLAN AND STAGE CONSTRUCTION
35	TRAFFIC HANDLING QUANTITIES
36	PAVEMENT DELINEATION AND QUANTITIES
37	SIGN QUANTITIES
38-41	SUMMARY OF QUANTITIES
42-51	REVISED AND NEW STANDARD PLANS

THE STANDARD PLANS LIST APPLICABLE TO THIS CONTRACT IS INCLUDED IN THE NOTICE TO BIDDERS AND SPECIAL PROVISIONS BOOK.

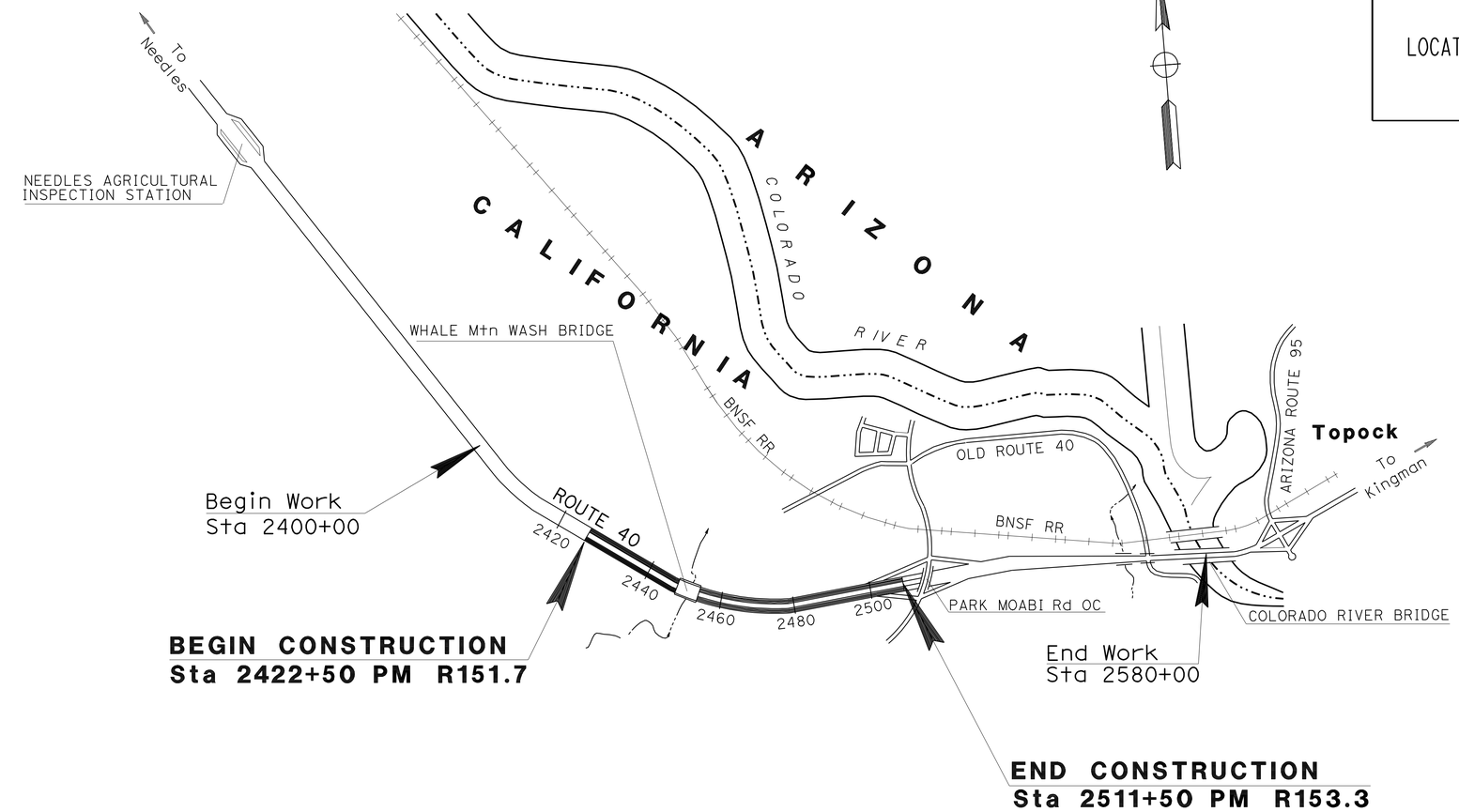

NO SCALE

LOCATION MAP

PROJECT ENGINEER REGISTERED CIVIL ENGINEER — DATE 4-29-10

August 23, 2010
PLANS APPROVAL DATE

REGISTERED PROFESSIONAL ENGINEER — DUNG HUY PHAN — No. C 73061 — Exp. 12/30/10 — CIVIL — STATE OF CALIFORNIA

THE STATE OF CALIFORNIA OR ITS OFFICERS OR AGENTS SHALL NOT BE RESPONSIBLE FOR THE ACCURACY OR COMPLETENESS OF SCANNED COPIES OF THIS PLAN SHEET.

PROJECT MANAGER: M MOLLAZADEH
DESIGN ENGINEER: D PHAN

THE CONTRACTOR SHALL POSSESS THE CLASS (OR CLASSES) OF LICENSE AS SPECIFIED IN THE "NOTICE TO BIDDERS."

CONTRACT No.	08-489304
PROJECT ID	0800000775

LAST REVISION 04-27-10
DATE PLOTTED => 25-JAN-2011
TIME PLOTTED => 10:39

Dist	COUNTY	ROUTE	POST MILES TOTAL PROJECT	SHEET No.	TOTAL SHEETS
08	SBd	40	R151.7/R153.3	2	51

REGISTERED CIVIL ENGINEER 4-29-10 DATE

8-23-10
PLANS APPROVAL DATE

REGISTERED PROFESSIONAL ENGINEER DUNG HUY PHAN No. C 73061 Exp. 12/30/10 CIVIL STATE OF CALIFORNIA

THE STATE OF CALIFORNIA OR ITS OFFICERS OR AGENTS SHALL NOT BE RESPONSIBLE FOR THE ACCURACY OR COMPLETENESS OF SCANNED COPIES OF THIS PLAN SHEET.

NOTES:

1. DIMENSIONS OF THE STRUCTURAL SECTIONS ARE SUBJECT TO TOLERANCES SPECIFIED IN THE STANDARD SPECIFICATIONS.
2. SUPERELEVATIONS AS SHOWN OR AS DIRECTED BY THE ENGINEER.
3. SEE LAYOUT SHEETS FOR LOCATIONS OF WIDENING AND STRUCTURAL SECTION EDGE DRAIN SYSTEM.
4. SEE 2006 STD PLAN SHEET D99B (TYPE E) FOR EDGE DRAIN OUTLET DETAIL.
5. ALL EDGE DRAIN OUTLETS WILL BE CONNECTING TO EXISTING DRAINAGE FACILITIES (PIPE CULVERT).
6. SEE LAYOUT SHEETS AND SHEET Q-2 FOR LOCATIONS OF HMA DIKE.
7. FROM STA 2422+50 TO STA 2429+18, IMPROVEMENT CENTER LINE OF ROUTE 40 SHIFTS TO THE RIGHT A DISTANCE OF 39 FT (SEE SHEET L-1).

DESIGN DESIGNATIONS (ROUTE 40)

ADT (2012) =	14 300	D = 60%	
ADT (2032) =	26 600	T = 27%	
DHV =	2 340	V = 65 MPH	
ESAL =	81 240 000	TI 20 = 15	

STRUCTURAL SECTION NOTES:

1. Exist PAVEMENT
   0.85′ AC
   0.85′ AB
   MEMBRANE
2. COLD PLANE AC 0.20′ Max
   0.50′ HMA-C
3. 0.45′ HMA-C
   1.85′ AB (CLASS 2)

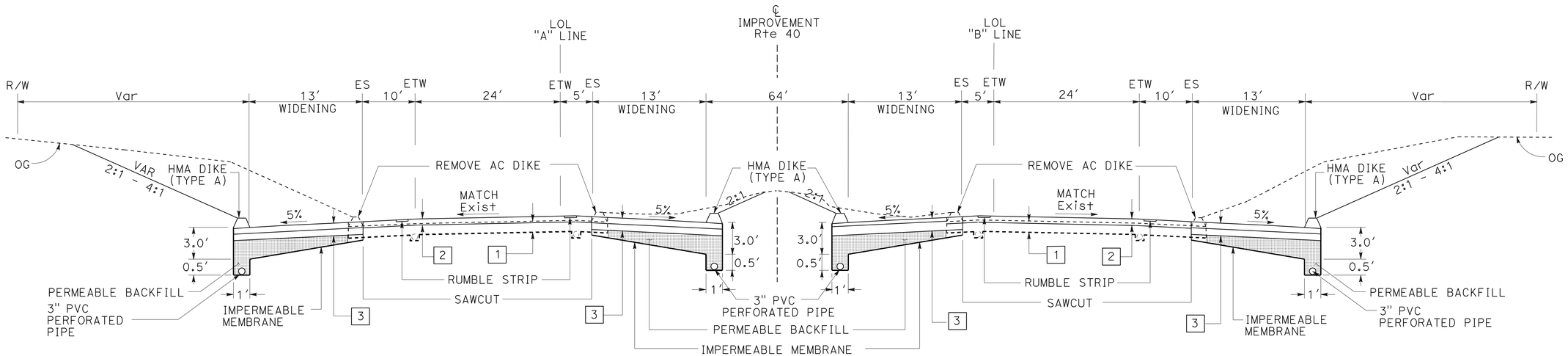

WESTBOUND **EASTBOUND**

STA 2422+50 TO 2511+50 (SEE NOTE 3)

WIDENING AND HMA OVERLAY AT CUT SLOPE

ROUTE 40

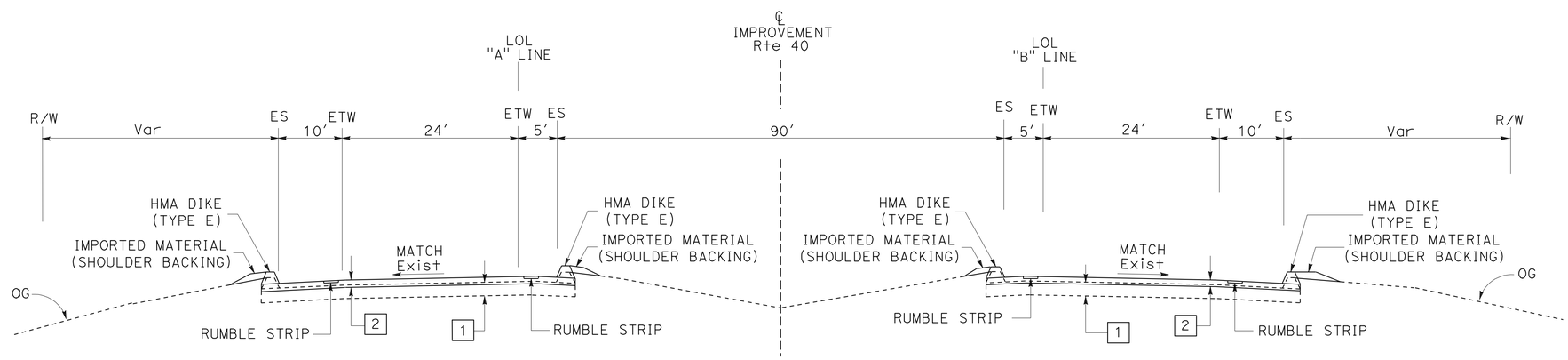

WESTBOUND **EASTBOUND**

STA 2422+50 TO 2511+50

HMA OVERLAY AT FILL SLOPE

ROUTE 40

TYPICAL CROSS SECTIONS

NO SCALE

X-1

STATE OF CALIFORNIA - DEPARTMENT OF TRANSPORTATION
Caltrans® DESIGN DIVISION

FUNCTIONAL SUPERVISOR: RENEE SASSE
CALCULATED-DESIGNED BY: DUNG HUY PHAN
CHECKED BY: ANH PHAN
REVISED BY
DATE REVISED

LAST REVISION 04-27-10 | DATE PLOTTED => 26-AUG-2010 | TIME PLOTTED => 15:07

Dist	COUNTY	ROUTE	POST MILES TOTAL PROJECT	SHEET No.	TOTAL SHEETS
08	SBd	40	R151.7/R153.3	3	51

REGISTERED CIVIL ENGINEER 4-29-10 DATE

8-23-10
PLANS APPROVAL DATE

REGISTERED PROFESSIONAL ENGINEER DUNG HUY PHAN No. C 73061 Exp. 12/30/10 CIVIL STATE OF CALIFORNIA

THE STATE OF CALIFORNIA OR ITS OFFICERS OR AGENTS SHALL NOT BE RESPONSIBLE FOR THE ACCURACY OR COMPLETENESS OF SCANNED COPIES OF THIS PLAN SHEET.

NOTE:

1. FOR COMPLETE RIGHT OF WAY AND ACCURATE ACCESS DATA, SEE RIGHT OF WAY RECORD MAPS AT DISTRICT OFFICE.

LEGEND:

SHOULDER WIDENING

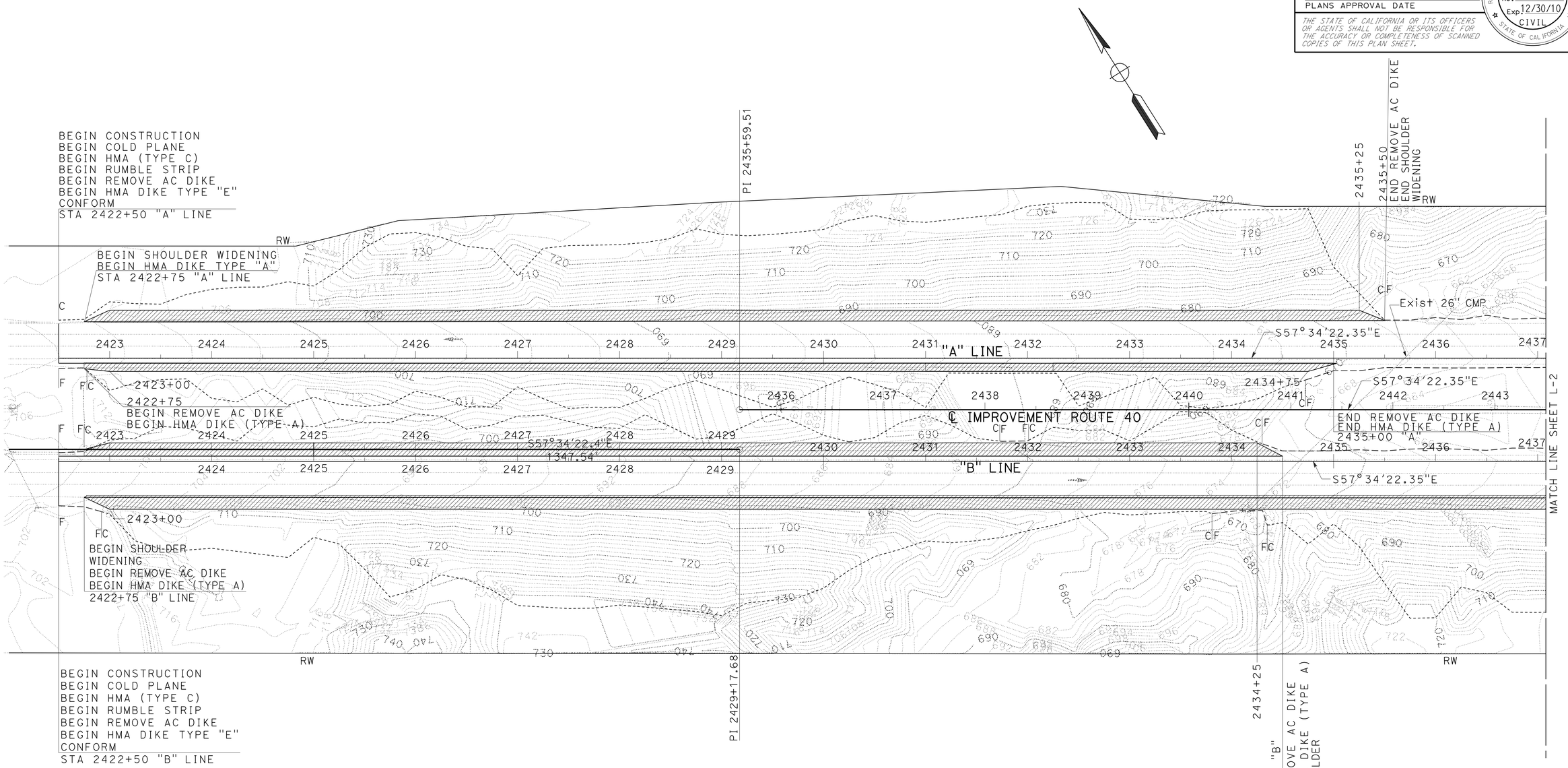

LAYOUT

SCALE: 1" = 50' **L-1**

STATE OF CALIFORNIA - DEPARTMENT OF TRANSPORTATION
Caltrans® DESIGN DIVISION

FUNCTIONAL SUPERVISOR: RENEE SASSE
CALCULATED-DESIGNED BY: DUNG HUY PHAN
CHECKED BY: ANH PHAN
REVISED BY
DATE REVISED

LAST REVISION 04-27-10
DATE PLOTTED => 26-AUG-2010
TIME PLOTTED => 15:07

Dist	COUNTY	ROUTE	POST MILES TOTAL PROJECT	SHEET No.	TOTAL SHEETS
08	SBd	40	R151.7/R153.3	4	51

REGISTERED CIVIL ENGINEER 4-29-10 DATE

8-23-10
PLANS APPROVAL DATE

REGISTERED PROFESSIONAL ENGINEER DUNG HUY PHAN No. C 73061 Exp. 12/30/10 CIVIL STATE OF CALIFORNIA

THE STATE OF CALIFORNIA OR ITS OFFICERS OR AGENTS SHALL NOT BE RESPONSIBLE FOR THE ACCURACY OR COMPLETENESS OF SCANNED COPIES OF THIS PLAN SHEET.

NOTE:

1. FOR COMPLETE RIGHT OF WAY AND ACCURATE ACCESS DATA, SEE RIGHT OF WAY RECORD MAPS AT DISTRICT OFFICE.

CURVE DATA

No. O	R	Δ	T	L
1	4948.55′	37°7′46"	1661.97′	3206.80′
2	4999.08′	37°7′46"	1678.94′	3239.55′
3	5049.60′	37°7′46"	1695.91′	3272.29′

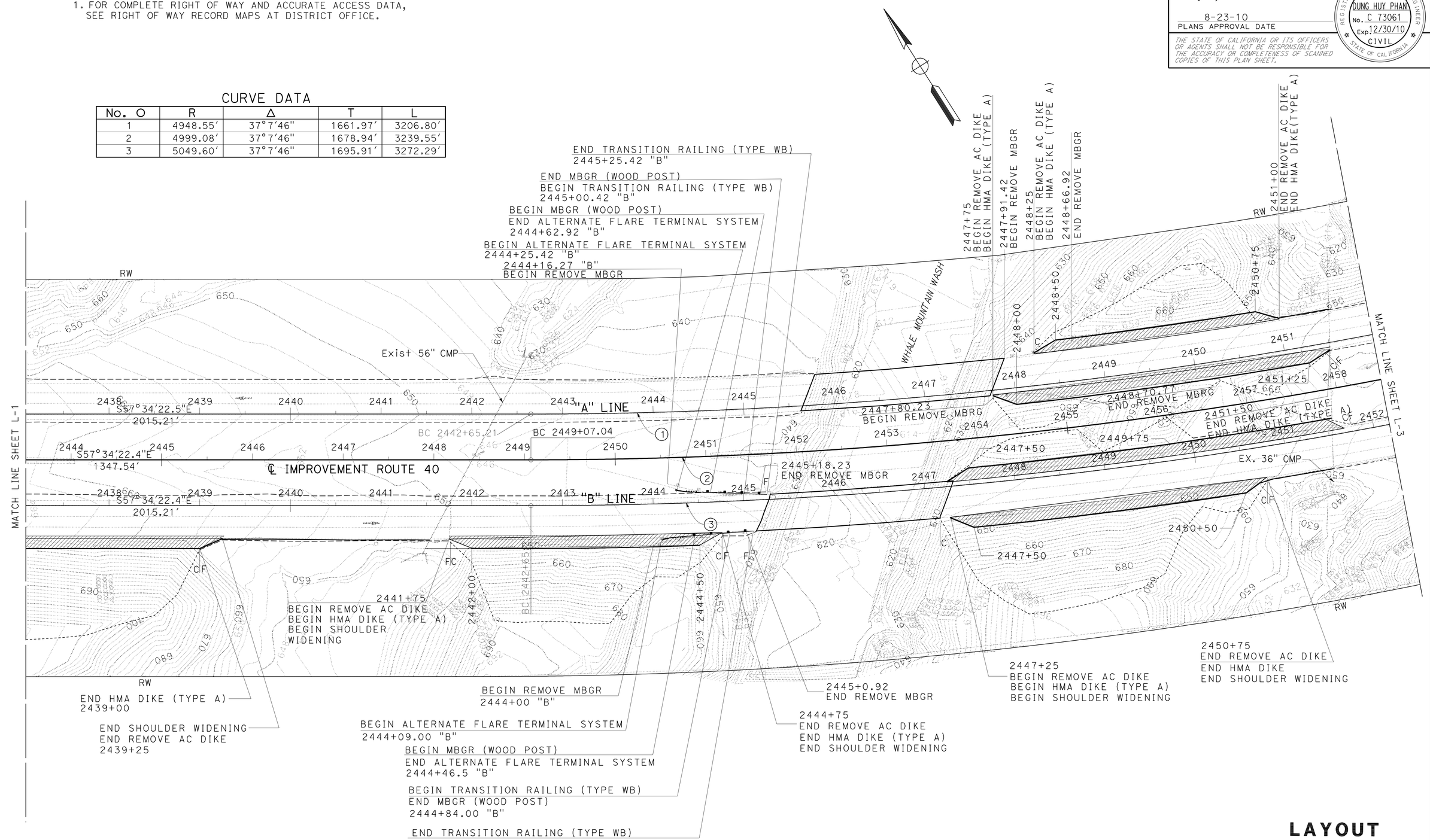

LAYOUT

SCALE: 1" = 50′ **L-2**

REVISED BY	DATE REVISED

DUNG HUY PHAN — CALCULATED-DESIGNED BY
ANH PHAN — CHECKED BY
RENEE SASSE — FUNCTIONAL SUPERVISOR

STATE OF CALIFORNIA - DEPARTMENT OF TRANSPORTATION
Caltrans®
DESIGN DIVISION

LAST REVISION 04-27-10 | DATE PLOTTED => 26-AUG-2010 | TIME PLOTTED => 15:07

Dist	COUNTY	ROUTE	POST MILES TOTAL PROJECT	SHEET No.	TOTAL SHEETS
08	SBd	40	R151.7/R153.3	5	51

REGISTERED CIVIL ENGINEER 4-29-10 DATE

8-23-10
PLANS APPROVAL DATE

REGISTERED PROFESSIONAL ENGINEER DUNG HUY PHAN No. C 73061 Exp. 12/30/10 CIVIL STATE OF CALIFORNIA

THE STATE OF CALIFORNIA OR ITS OFFICERS OR AGENTS SHALL NOT BE RESPONSIBLE FOR THE ACCURACY OR COMPLETENESS OF SCANNED COPIES OF THIS PLAN SHEET.

NOTE:

1. FOR COMPLETE RIGHT OF WAY AND ACCURATE ACCESS DATA, SEE RIGHT OF WAY RECORD MAPS AT DISTRICT OFFICE.

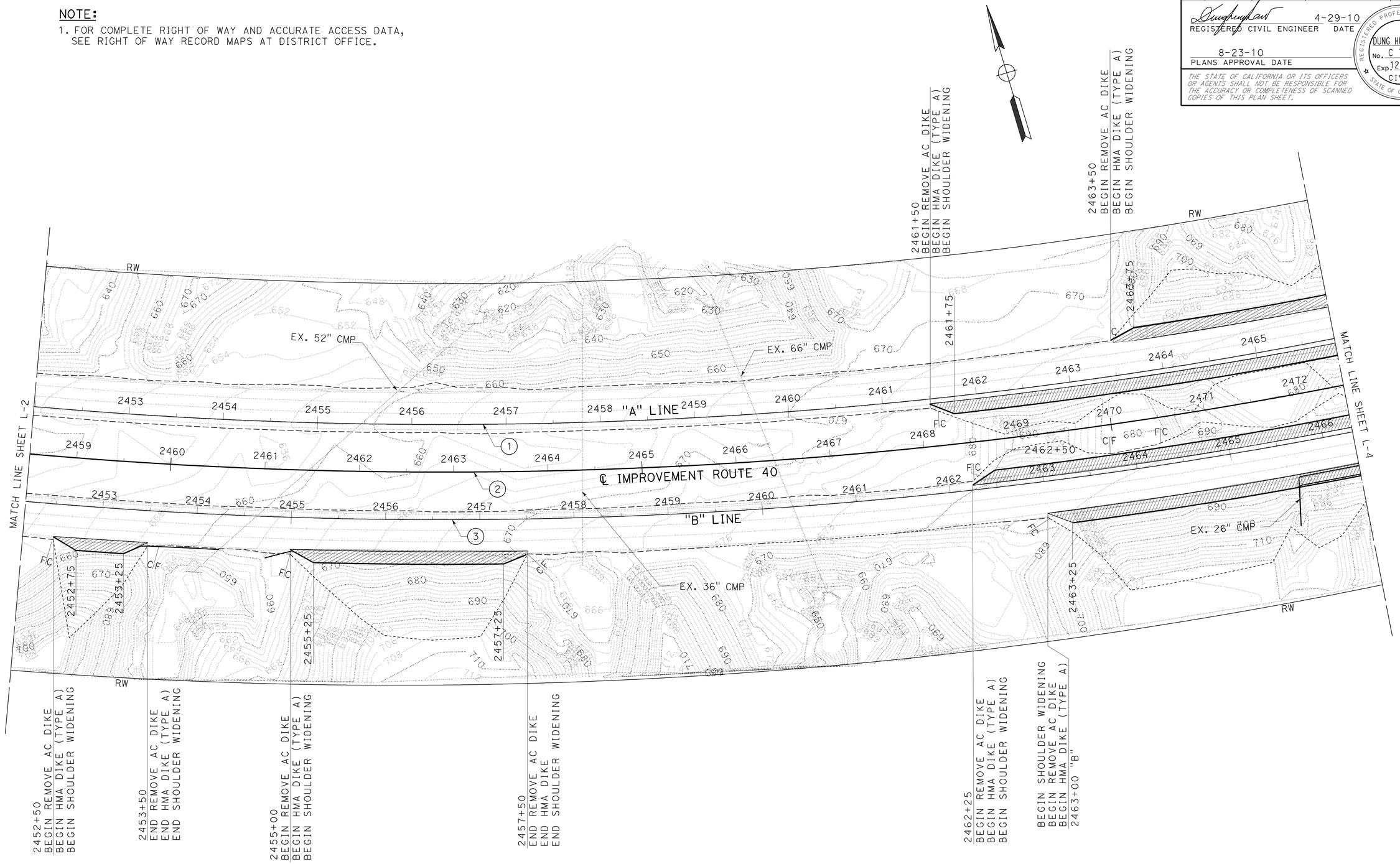

LAYOUT

SCALE: 1" = 50'

L-3

STATE OF CALIFORNIA - DEPARTMENT OF TRANSPORTATION
DESIGN DIVISION

FUNCTIONAL SUPERVISOR: RENEE SASSE

CALCULATED-DESIGNED BY: DUNG HUY PHAN
CHECKED BY: ANH PHAN

REVISED BY | DATE REVISED

LAST REVISION 04-27-10 | DATE PLOTTED => 26-AUG-2010 | TIME PLOTTED => 15:07

BORDER LAST REVISED 4/11/2008 | RELATIVE BORDER SCALE IS IN INCHES 0 1 2 3 | USERNAME => trphils | DGN FILE => 848930ea003.dgn | CU 08220 | EA 489301

Dist	COUNTY	ROUTE	POST MILES TOTAL PROJECT	SHEET No.	TOTAL SHEETS
08	SBd	40	R151.7/R153.3	6	51

REGISTERED CIVIL ENGINEER 4-29-10 DATE

8-23-10
PLANS APPROVAL DATE

REGISTERED PROFESSIONAL ENGINEER
DUNG HUY PHAN
No. C 73061
Exp. 12/30/10
CIVIL
STATE OF CALIFORNIA

THE STATE OF CALIFORNIA OR ITS OFFICERS OR AGENTS SHALL NOT BE RESPONSIBLE FOR THE ACCURACY OR COMPLETENESS OF SCANNED COPIES OF THIS PLAN SHEET.

NOTE:

1. FOR COMPLETE RIGHT OF WAY AND ACCURATE ACCESS DATA, SEE RIGHT OF WAY RECORD MAPS AT DISTRICT OFFICE.

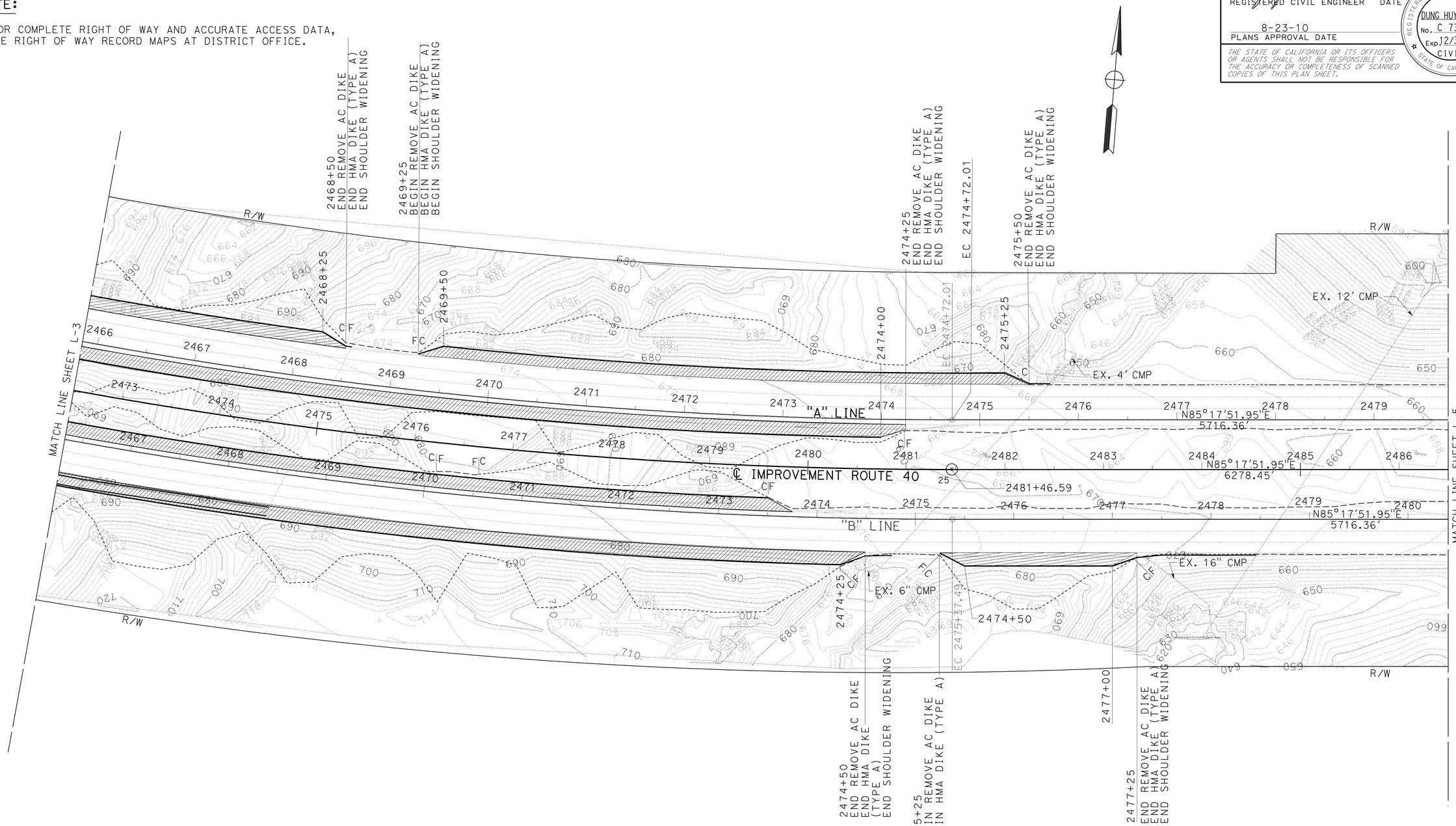

LAYOUT

SCALE: 1" = 50' **L-4**

REVISED BY	DATE REVISED
DUNG HUY PHAN	ANH PHAN

CALCULATED-DESIGNED BY
CHECKED BY

FUNCTIONAL SUPERVISOR
RENEE SASSE

STATE OF CALIFORNIA - DEPARTMENT OF TRANSPORTATION
Caltrans
DESIGN DIVISION

LAST REVISION 04-27-10
DATE PLOTTED => 26-AUG-2010
TIME PLOTTED => 16:00

Dist	COUNTY	ROUTE	POST MILES TOTAL PROJECT	SHEET No.	TOTAL SHEETS
08	SBd	40	R151.7/R153.3	7	51

REGISTERED CIVIL ENGINEER 4-29-10 DATE

8-23-10
PLANS APPROVAL DATE

REGISTERED PROFESSIONAL ENGINEER DUNG HUY PHAN No. C 73061 Exp. 12/30/10 CIVIL STATE OF CALIFORNIA

THE STATE OF CALIFORNIA OR ITS OFFICERS OR AGENTS SHALL NOT BE RESPONSIBLE FOR THE ACCURACY OR COMPLETENESS OF SCANNED COPIES OF THIS PLAN SHEET.

NOTE:

1. FOR COMPLETE RIGHT OF WAY AND ACCURATE ACCESS DATA, SEE RIGHT OF WAY RECORD MAPS AT DISTRICT OFFICE.

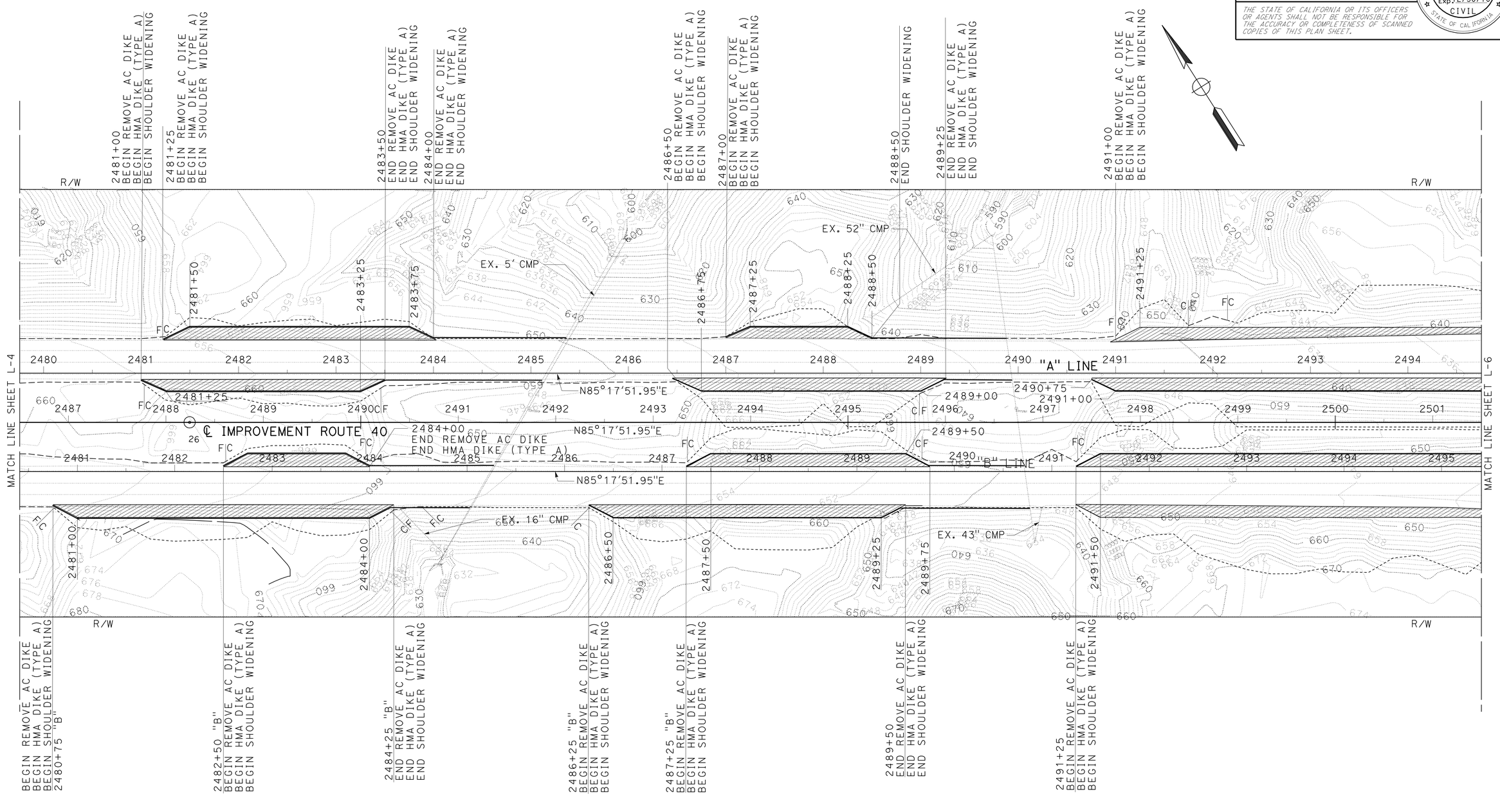

LAYOUT

SCALE: 1" = 50' **L-5**

STATE OF CALIFORNIA - DEPARTMENT OF TRANSPORTATION
Caltrans® DESIGN DIVISION

FUNCTIONAL SUPERVISOR: RENEE SASSE
CALCULATED-DESIGNED BY: DUNG HUY PHAN
CHECKED BY: ANH PHAN
REVISED BY
DATE REVISED

LAST REVISION DATE PLOTTED => 26-AUG-2010
04-27-10 TIME PLOTTED => 16:00

BORDER LAST REVISED 4/11/2008
RELATIVE BORDER SCALE IS IN INCHES 0 1 2 3
USERNAME => trlim
DGN FILE => 848930ea005.dgn
CU 08220
EA 489301

Dist	COUNTY	ROUTE	POST MILES TOTAL PROJECT	SHEET No.	TOTAL SHEETS
08	SBd	40	R151.7/R153.3	8	51

REGISTERED CIVIL ENGINEER 4-29-10 DATE

8-23-10
PLANS APPROVAL DATE

REGISTERED PROFESSIONAL ENGINEER
DUNG HUY PHAN
No. C 73061
Exp. 12/30/10
CIVIL
STATE OF CALIFORNIA

THE STATE OF CALIFORNIA OR ITS OFFICERS OR AGENTS SHALL NOT BE RESPONSIBLE FOR THE ACCURACY OR COMPLETENESS OF SCANNED COPIES OF THIS PLAN SHEET.

NOTE:

1. FOR COMPLETE RIGHT OF WAY AND ACCURATE ACCESS DATA, SEE RIGHT OF WAY RECORD MAPS AT DISTRICT OFFICE.

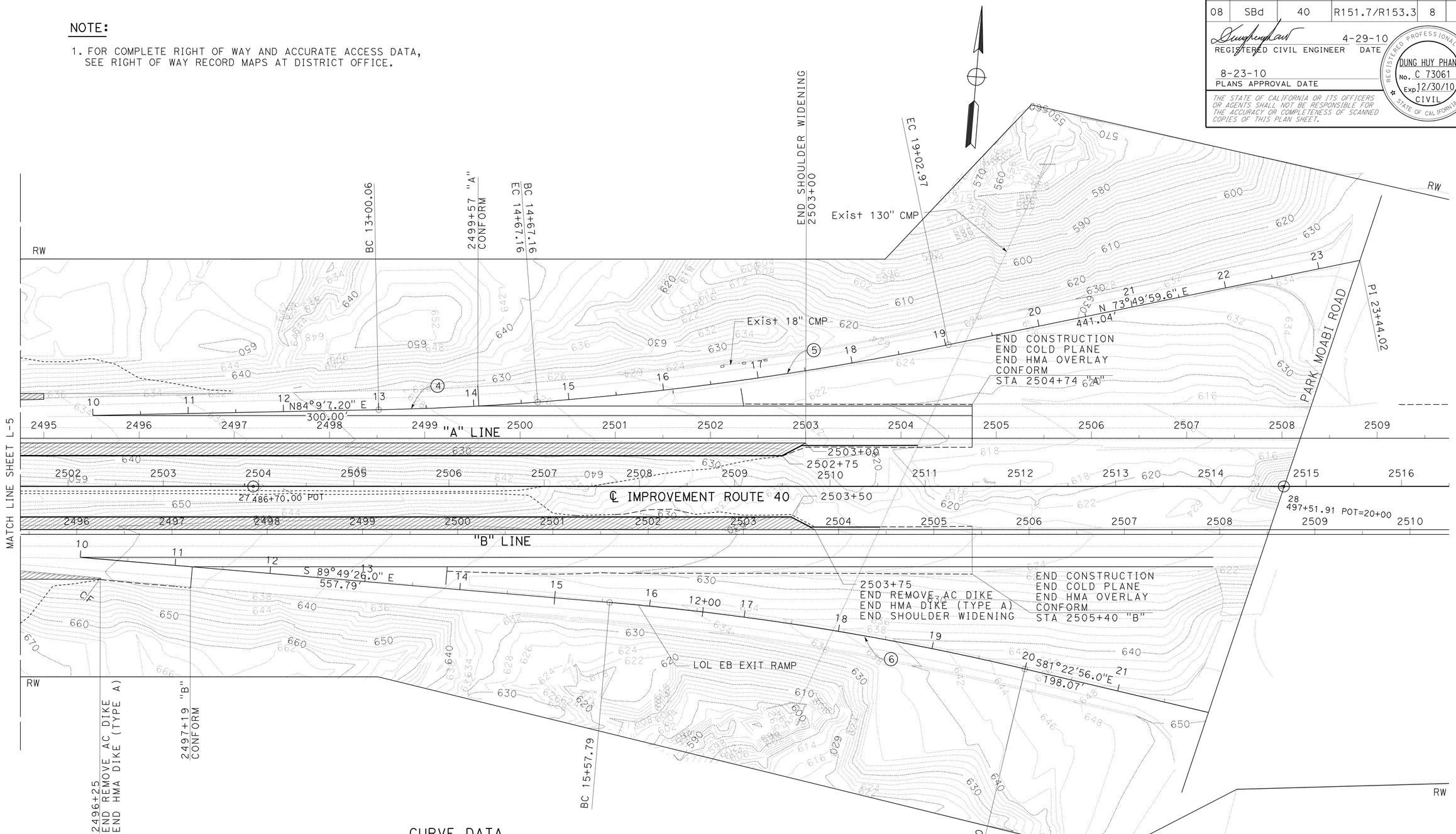

CURVE DATA

No. O	R	Δ	T	L
4	3000.00′	3°11′29"	83.57′	167.10′
5	3446.99′	7°14′39"	218.20′	435.82′
6	2999.99′	8°26′30"	221.40′	442.00′

LAYOUT

SCALE: 1" = 50′

L-6

REVISED BY	DATE REVISED
DUNG HUY PHAN	ANH PHAN
CALCULATED-DESIGNED BY	CHECKED BY
FUNCTIONAL SUPERVISOR	RENEE SASSE

STATE OF CALIFORNIA - DEPARTMENT OF TRANSPORTATION
Caltrans
DESIGN DIVISION

LAST REVISION 04-27-10 | DATE PLOTTED => 26-AUG-2010 | TIME PLOTTED => 14:59

Dist	COUNTY	ROUTE	POST MILES TOTAL PROJECT	SHEET No.	TOTAL SHEETS
08	SBd	40	R151.7/R153.3	9	51

REGISTERED CIVIL ENGINEER 4-29-10 DATE

8-23-10
PLANS APPROVAL DATE

REGISTERED PROFESSIONAL ENGINEER DUNG HUY PHAN No. C 73061 Exp. 12/30/10 CIVIL STATE OF CALIFORNIA

THE STATE OF CALIFORNIA OR ITS OFFICERS OR AGENTS SHALL NOT BE RESPONSIBLE FOR THE ACCURACY OR COMPLETENESS OF SCANNED COPIES OF THIS PLAN SHEET.

NOTES:

1. DEPENDENT DIMENSIONS WILL BE VERIFIED IN THE FIELD BEFORE FABRICATING ANY END CONNECTION TO CONFORM WITH EXISTING PAVED CONDITIONS.
2. FOR LOCATIONS OF OVERSIDE DRAIN GUTTER FLARE, SEE LAYOUT SHEETS.

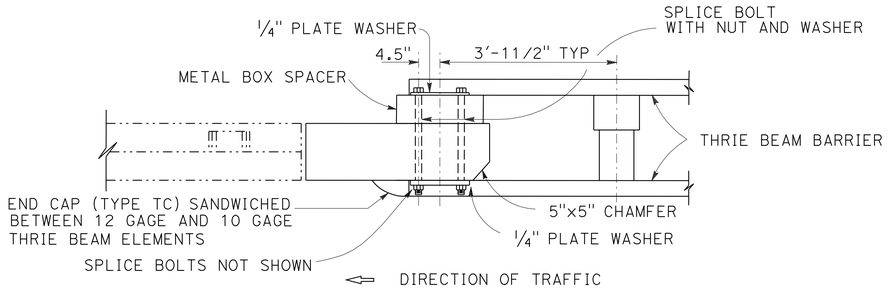

PLAN

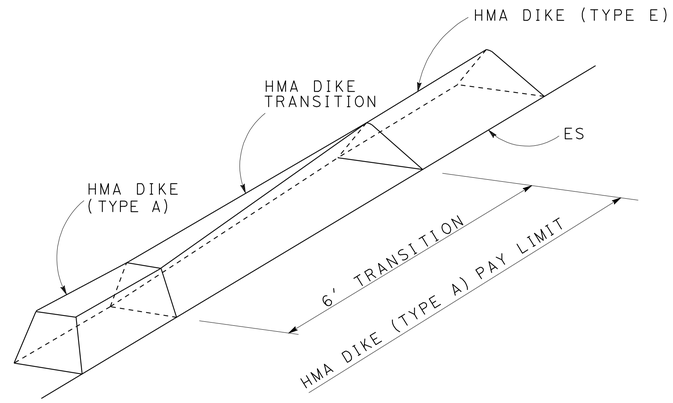

HMA DIKE TRANSITION

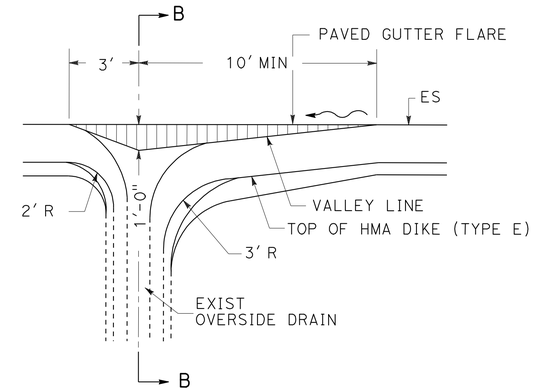

PLAN

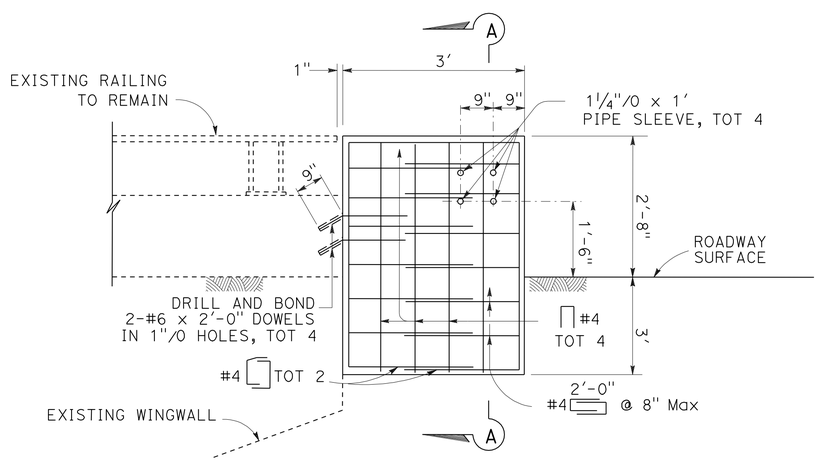

ELEVATION

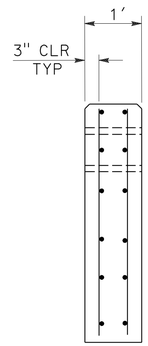

SECTION A-A

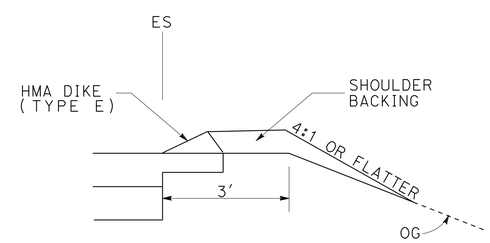

TYPICAL SHOULDER BACKING AT FILL SECTION

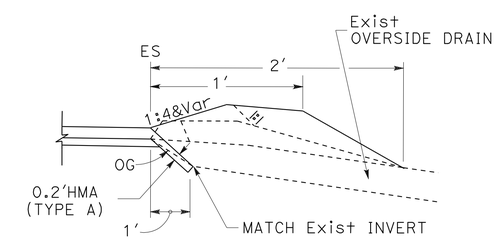

SECTION B-B

OVERSIDE DRAIN MODIFY PAVED GUTTER FLARE

PCC ANCHORAGE BLOCK DETAILS FOR TRANSITION RAILING TO EXISTING BRIDGE RAILING WHALE MOUNTAIN WASH BRIDGE (Br No. 54-0668)

CONSTRUCTION DETAILS

NO SCALE

C-1

STATE OF CALIFORNIA - DEPARTMENT OF TRANSPORTATION
Caltrans DESIGN DIVISION

FUNCTIONAL SUPERVISOR: RENEE SASSE

CALCULATED-DESIGNED BY: DUNG HUY PHAN
CHECKED BY: ANH PHAN

REVISED BY | DATE REVISED

LAST REVISION 04-27-10 | DATE PLOTTED => 26-AUG-2010 | TIME PLOTTED => 14:59

Dist	COUNTY	ROUTE	POST MILES TOTAL PROJECT	SHEET No.	TOTAL SHEETS
08	SBd	40	R151.7/R153.3	10	51

REGISTERED CIVIL ENGINEER 4-29-10 DATE

8-23-10
PLANS APPROVAL DATE

REGISTERED PROFESSIONAL ENGINEER DUNG HUY PHAN No. C 73061 Exp. 12/30/10 CIVIL STATE OF CALIFORNIA

THE STATE OF CALIFORNIA OR ITS OFFICERS OR AGENTS SHALL NOT BE RESPONSIBLE FOR THE ACCURACY OR COMPLETENESS OF SCANNED COPIES OF THIS PLAN SHEET.

NOTE:

1. FOR LOCATION OF WHALE MOUNTAIN WASH BRIDGE L/R, SEE LAYOUT SHEET L-2.

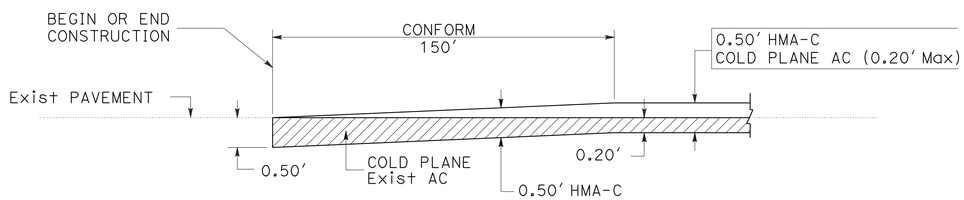

BEGINNING OR ENDING PAVEMENT CONFORM DETAIL

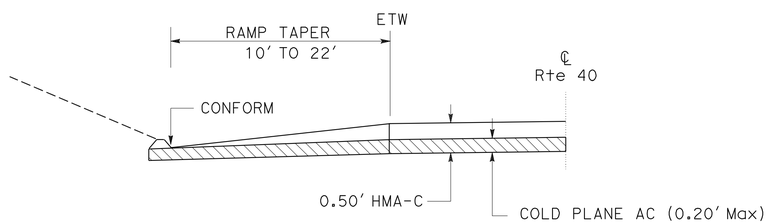

OVERLAY CONFORM DETAIL AT PARK MOABI Rd OC WESTBOUND ON-RAMP

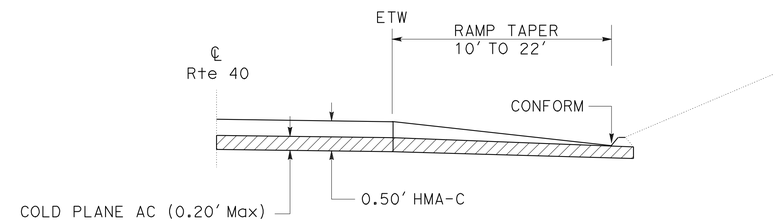

OVERLAY CONFORM DETAIL AT PARK MOABI Rd OC EASTBOUND OFF-RAMP

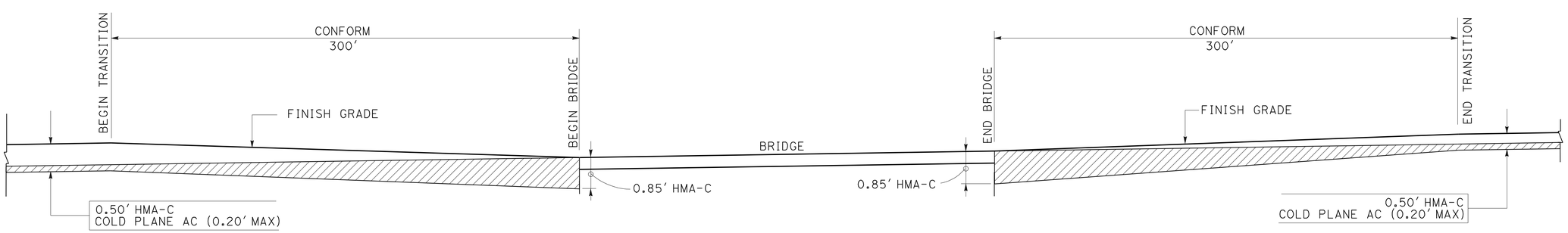

TYPICAL PAVEMENT CONFORM DETAIL AT WHALE MOUNTAIN WASH BRIDGE L/R

CONSTRUCTION DETAILS

NO SCALE

C-2

STATE OF CALIFORNIA - DEPARTMENT OF TRANSPORTATION
Caltrans® DESIGN DIVISION

FUNCTIONAL SUPERVISOR: RENEE SASSE
CALCULATED-DESIGNED BY: DUNG HUY PHAN
CHECKED BY: ANH PHAN
REVISED BY
DATE REVISED

LAST REVISION 04-27-10
DATE PLOTTED => 26-AUG-2010
TIME PLOTTED => 14:59

Dist	COUNTY	ROUTE	POST MILES TOTAL PROJECT	SHEET No.	TOTAL SHEETS
08	SBd	40	R151.7/R153.3	11	51

REGISTERED CIVIL ENGINEER 4-29-10 DATE

8-23-10
PLANS APPROVAL DATE

REGISTERED PROFESSIONAL ENGINEER
DUNG HUY PHAN
No. C 73061
Exp. 12/30/10
CIVIL
STATE OF CALIFORNIA

THE STATE OF CALIFORNIA OR ITS OFFICERS OR AGENTS SHALL NOT BE RESPONSIBLE FOR THE ACCURACY OR COMPLETENESS OF SCANNED COPIES OF THIS PLAN SHEET.

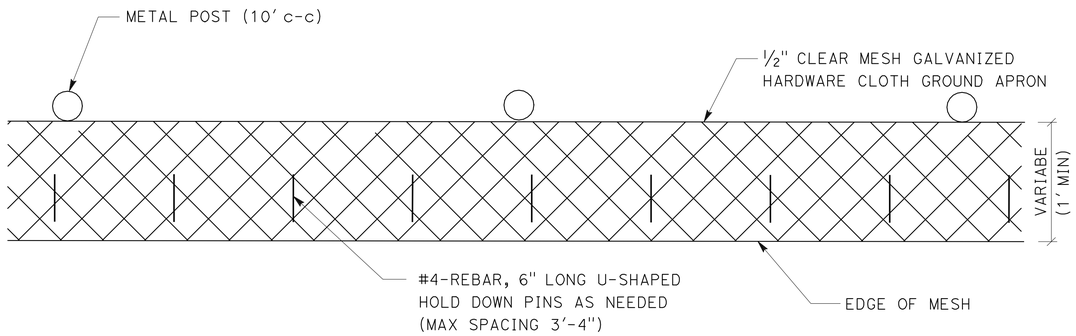

PLAN VIEW

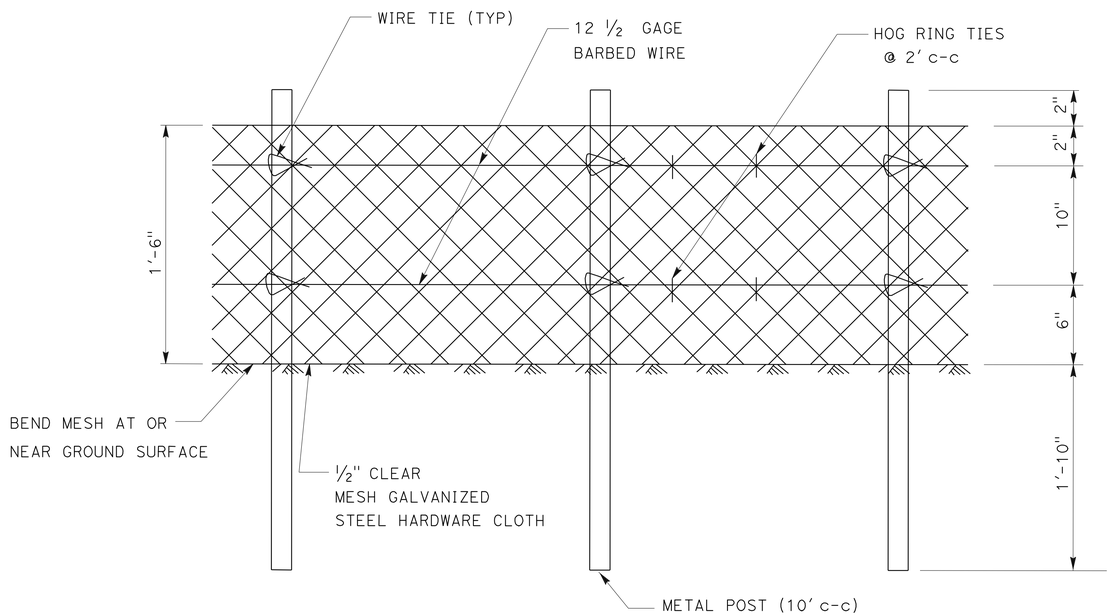

FRONT VIEW

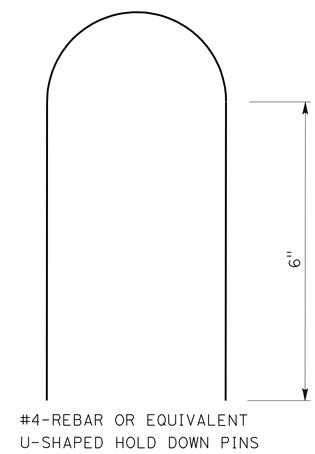

PIN DETAIL

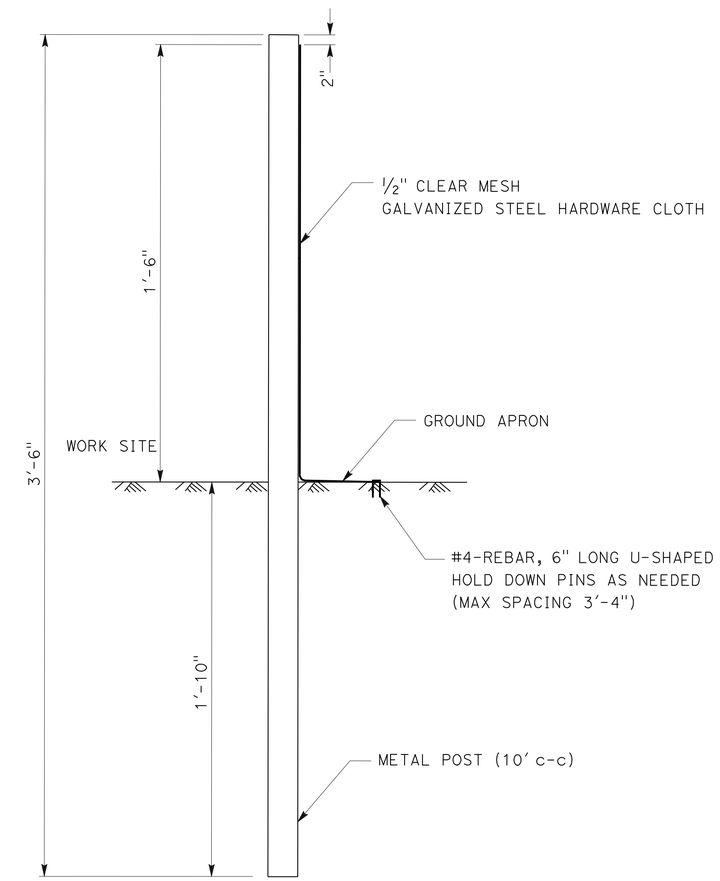

X-SECTION

CONSTRUCTION DETAILS
(TEMPORARY FENCE DESERT TORTOISE)

NO SCALE

C-3

REVISED BY	DATE REVISED

CALCULATED-DESIGNED BY: DUNG HUY PHAN
CHECKED BY: ANH PHAN
FUNCTIONAL SUPERVISOR: RENEE SASSE

STATE OF CALIFORNIA - DEPARTMENT OF TRANSPORTATION
Caltrans
DESIGN DIVISION

LAST REVISION 04-27-10 | DATE PLOTTED => 26-AUG-2010 | TIME PLOTTED => 14:59

Dist	COUNTY	ROUTE	POST MILES TOTAL PROJECT	SHEET No.	TOTAL SHEETS
08	SBd	40	R151.7/R153.3	12	51

Touhida Haider 4-29-10
REGISTERED CIVIL ENGINEER DATE

8-23-10
PLANS APPROVAL DATE

REGISTERED PROFESSIONAL ENGINEER
TOUHIDA HAIDER
No. C 74470
Exp. 12/31/11
CIVIL
STATE OF CALIFORNIA

THE STATE OF CALIFORNIA OR ITS OFFICERS OR AGENTS SHALL NOT BE RESPONSIBLE FOR THE ACCURACY OR COMPLETENESS OF SCANNED COPIES OF THIS PLAN SHEET.

TEMPORARY CONSTRUCTION SITE BMPs

TEMPORARY CONSTRUCTION SITE BMPs	UNIT	QUANTITIES
TEMPORARY FIBER ROLL	LF	17,800
TEMPORARY DRAINAGE INLET PROTECTION	EA	3
TEMPORARY CONCRETE WASHOUT BIN	EA	1

TEMPORARY WATER POLLUTION CONTROL QUANTITIES

WPCQ-1

REVISED BY | DATE REVISED
TOUHIDA HAIDER | PAUL LAMBERT
CALCULATED-DESIGNED BY | CHECKED BY
FUNCTIONAL SUPERVISOR: PAUL LAMBERT
STATE OF CALIFORNIA - DEPARTMENT OF TRANSPORTATION
Caltrans® DESIGN DIVISION

LAST REVISION 04-27-10 | DATE PLOTTED => 26-AUG-2010 | TIME PLOTTED => 14:59

Dist	COUNTY	ROUTE	POST MILES TOTAL PROJECT	SHEET No.	TOTAL SHEETS
08	SBd	40	R151.7/R153.3	13	51

4-29-10
LICENSED LANDSCAPE ARCHITECT

8-23-10
PLANS APPROVAL DATE

LICENSED LANDSCAPE ARCHITECT
Matthew Harry Hall
Signature
OCT 31, 2011
Renewal Date
4-05-10
Date
STATE OF CALIFORNIA

THE STATE OF CALIFORNIA OR ITS OFFICERS OR AGENTS SHALL NOT BE RESPONSIBLE FOR THE ACCURACY OR COMPLETENESS OF SCANNED COPIES OF THIS PLAN SHEET.

QUANTITY TABLE

SHEETS	COMPOST (INCORPORATED)	EROSION CONTROL (SEEDING)	EROSION CONTROL (POLYMER STABILIZED FIBER MATRIX)	MOVE-IN/MOVE-OUT
	SQYD	ACRE	ACRE	EA
EC-1	22,700	4.7	4.7	
EC-2	8,600	1.8	1.8	
EC-3	6,300	1.3	1.3	
EC-4	9,200	1.9	1.9	
EC-5	6,700	1.4	1.4	
EC-6	5,200	1.1	1.1	
TOTAL	58,700	12.2	12.2	4

LEGEND:

EROSION CONTROL (TYPE 1)

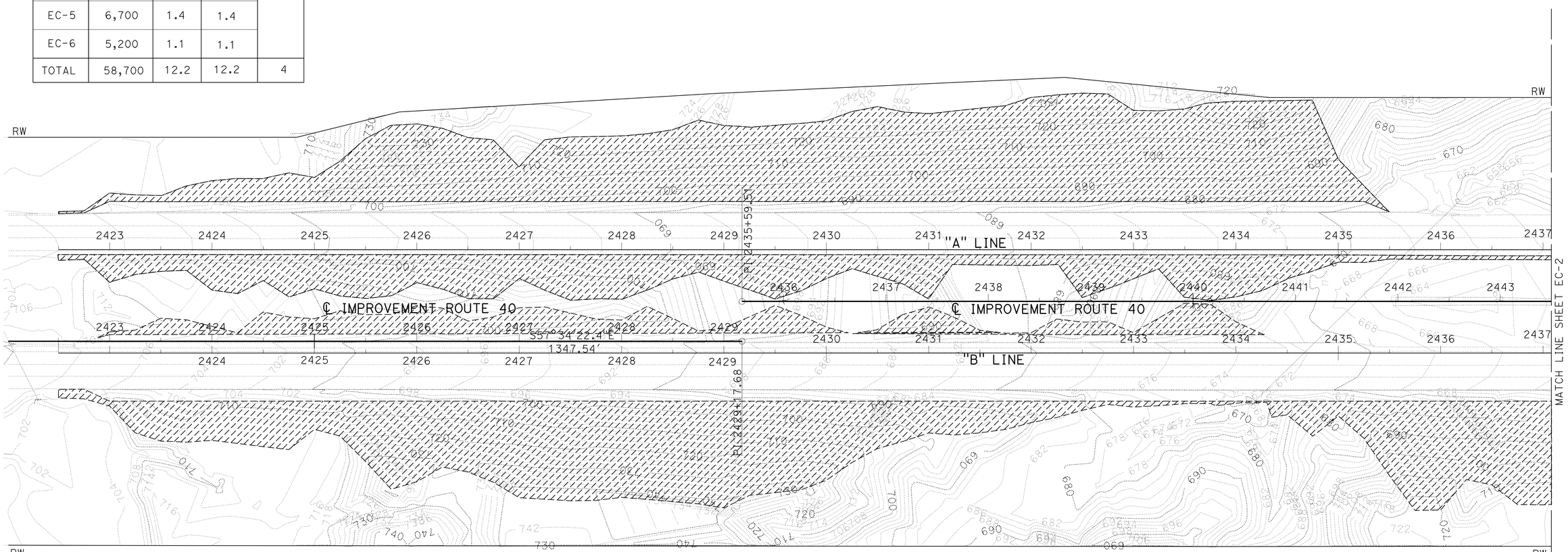

EROSION CONTROL PLAN

SCALE: 1" = 50'

EC-1

THIS PLAN ACCURATE FOR EROSION CONTROL WORK ONLY.

STATE OF CALIFORNIA - DEPARTMENT OF TRANSPORTATION
Caltrans® LANDSCAPE ARCHITECTURE

SENIOR LANDSCAPE ARCHITECT: BYRON STROUT
CALCULATED-DESIGNED BY: LORENA SALVADOR
CHECKED BY: MIKE BABICH
REVISED BY
DATE REVISED

LAST REVISION 04-27-10
DATE PLOTTED => 26-AUG-2010
TIME PLOTTED => 14:59

Dist	COUNTY	ROUTE	POST MILES TOTAL PROJECT	SHEET No.	TOTAL SHEETS
08	SBd	40	R151.7/R153.3	14	51

4-29-10
LICENSED LANDSCAPE ARCHITECT

8-23-10
PLANS APPROVAL DATE

LICENSED LANDSCAPE ARCHITECT
Matthew Harry Hall
Signature
OCT 31, 2011
Renewal date
4-05-10
Date
STATE OF CALIFORNIA

THE STATE OF CALIFORNIA OR ITS OFFICERS OR AGENTS SHALL NOT BE RESPONSIBLE FOR THE ACCURACY OR COMPLETENESS OF SCANNED COPIES OF THIS PLAN SHEET.

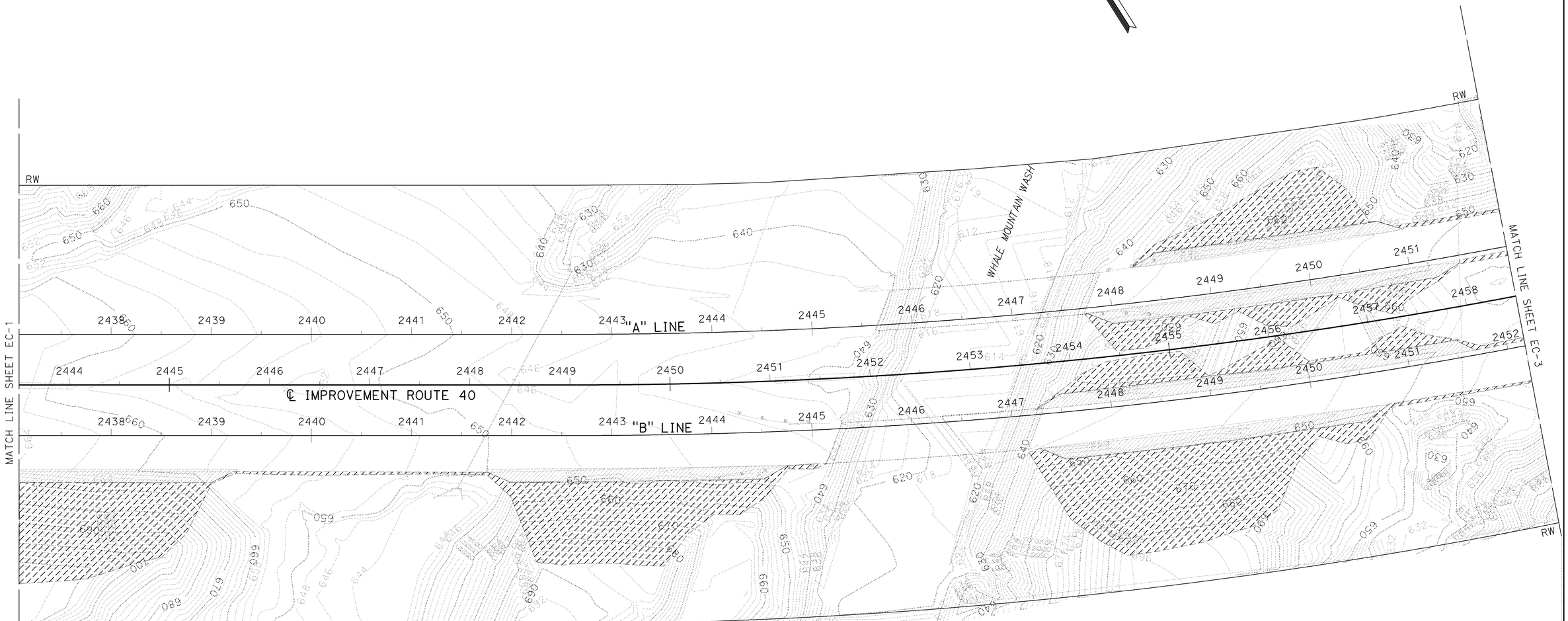

EROSION CONTROL PLAN

THIS PLAN ACCURATE FOR EROSIN CONTROL WORK ONLY.

SCALE: 1" = 50'

EC-2

STATE OF CALIFORNIA - DEPARTMENT OF TRANSPORTATION
Caltrans® LANDSCAPE ARCHITECTURE

SENIOR LANDSCAPE ARCHITECT: BYRON STROUT
CALCULATED-DESIGNED BY: LORENA SALVADOR
CHECKED BY: MIKE BABICH
REVISED BY
DATE REVISED

LAST REVISION 04-27-10
DATE PLOTTED => 26-AUG-2010
TIME PLOTTED => 14:59

Dist	COUNTY	ROUTE	POST MILES TOTAL PROJECT	SHEET No.	TOTAL SHEETS
08	SBd	40	R151.7/R153.3	15	51

4-29-10
LICENSED LANDSCAPE ARCHITECT

8-23-10
PLANS APPROVAL DATE

LICENSED LANDSCAPE ARCHITECT
Matthew Harry Hart
Signature
OCT 31, 2011
Renewal Date
4-05-10
Date
STATE OF CALIFORNIA

THE STATE OF CALIFORNIA OR ITS OFFICERS OR AGENTS SHALL NOT BE RESPONSIBLE FOR THE ACCURACY OR COMPLETENESS OF SCANNED COPIES OF THIS PLAN SHEET.

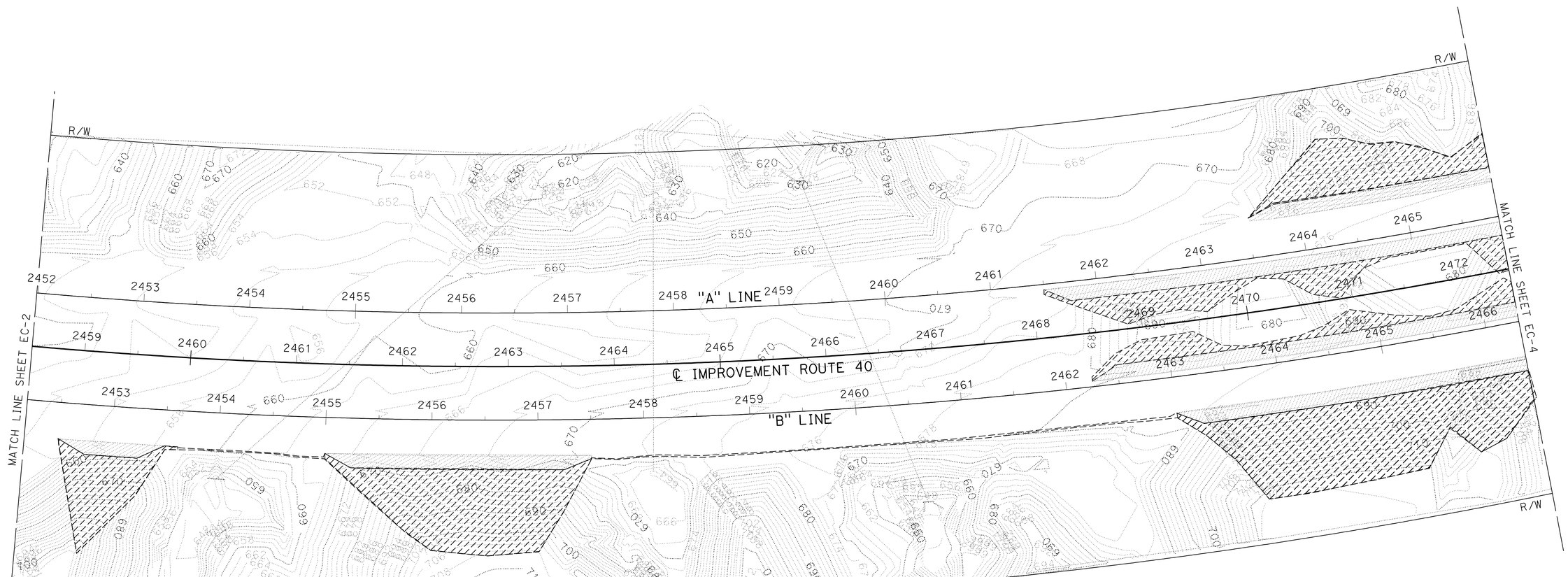

EROSION CONTROL PLAN

SCALE: 1" = 50'

THIS PLAN ACCURATE FOR EROSION CONTROL WORK ONLY

EC-3

STATE OF CALIFORNIA - DEPARTMENT OF TRANSPORTATION
Caltrans® LANDSCAPE ARCHITECTURE

SENIOR LANDSCAPE ARCHITECT: BYRON STROUT
CALCULATED-DESIGNED BY: LORENA SALVADOR
CHECKED BY: MIKE BABICH
REVISED BY
DATE REVISED

LAST REVISION 04-27-10
DATE PLOTTED => 26-AUG-2010
TIME PLOTTED => 15:29

Dist	COUNTY	ROUTE	POST MILES TOTAL PROJECT	SHEET No.	TOTAL SHEETS
08	SBd	40	R151.7/R153.3	16	51

4-29-10
REGISTERED CIVIL ENGINEER DATE

8-23-10
PLANS APPROVAL DATE

LICENSED LANDSCAPE ARCHITECT
Matthew Harry Hale No. 2343
Signature
OCT 31, 2011
Renewal Date
4-05-10
Date
STATE OF CALIFORNIA

THE STATE OF CALIFORNIA OR ITS OFFICERS OR AGENTS SHALL NOT BE RESPONSIBLE FOR THE ACCURACY OR COMPLETENESS OF SCANNED COPIES OF THIS PLAN SHEET.

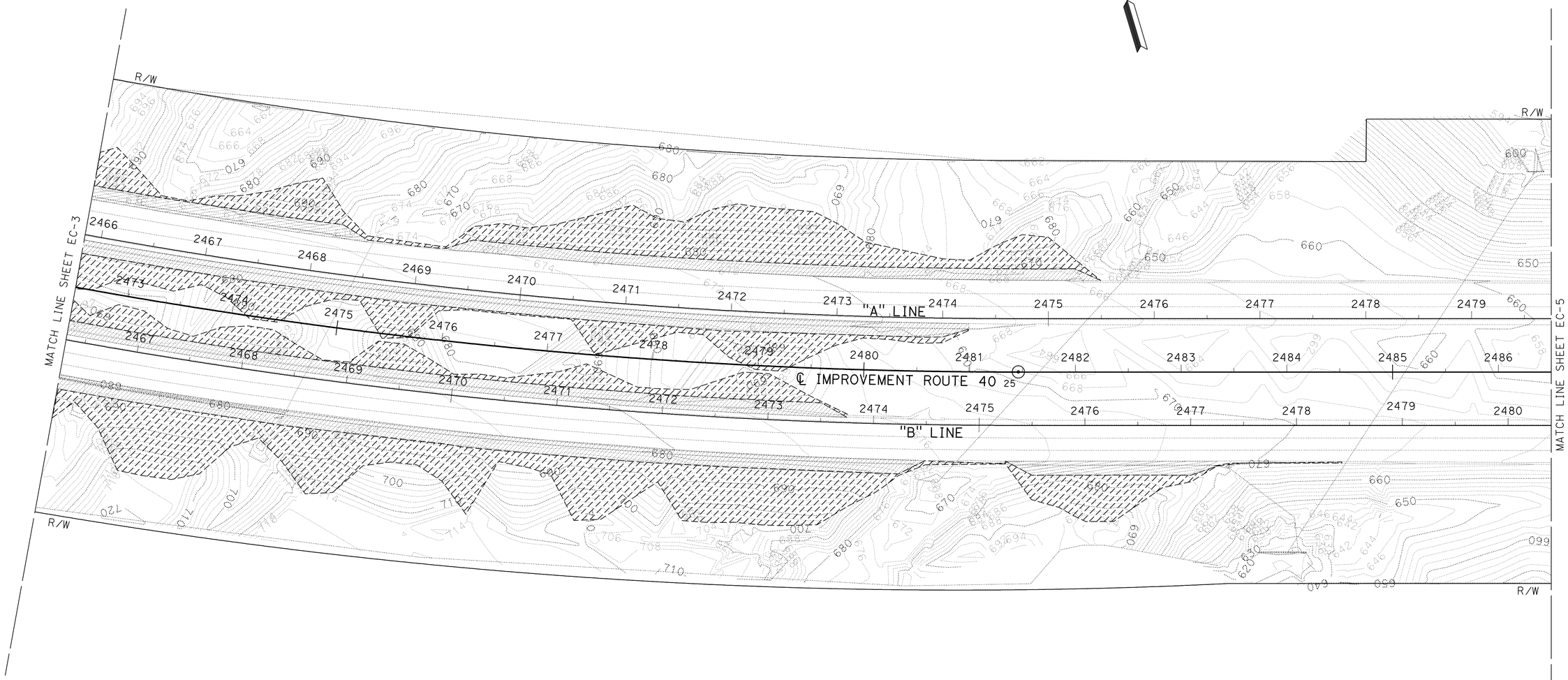

EROSION CONTROL PLAN

SCALE: 1" = 50'

THIS PLAN ACCURATE FOR EROSION CONTROL WORK ONLY

EC-4

STATE OF CALIFORNIA - DEPARTMENT OF TRANSPORTATION
Caltrans® LANDSCAPE ARCHITECTURE

SENIOR LANDSCAPE ARCHITECT: BYRON STROUT
CALCULATED-DESIGNED BY: LORENA SALVADOR
CHECKED BY: MIKE BABICH
REVISED BY
DATE REVISED

LAST REVISION 04-27-10
DATE PLOTTED => 26-AUG-2010
TIME PLOTTED => 15:29

BORDER LAST REVISED 4/11/2008
RELATIVE BORDER SCALE IS IN INCHES 0 1 2 3
USERNAME => trstrk
DGN FILE => 848930ge004.dgn
CU 08340
EA 489301

Dist	COUNTY	ROUTE	POST MILES TOTAL PROJECT	SHEET No.	TOTAL SHEETS
08	SBd	40	R151.7/R153.3	17	51

4-29-10
LICENSED LANDSCAPE ARCHITECT

8-23-10
PLANS APPROVAL DATE

LICENSED LANDSCAPE ARCHITECT
Matthew Harry Hall, No. 2500
Signature
OCT 31, 2011
Renewal Date
4-05-10
Date
STATE OF CALIFORNIA

THE STATE OF CALIFORNIA OR ITS OFFICERS OR AGENTS SHALL NOT BE RESPONSIBLE FOR THE ACCURACY OR COMPLETENESS OF SCANNED COPIES OF THIS PLAN SHEET.

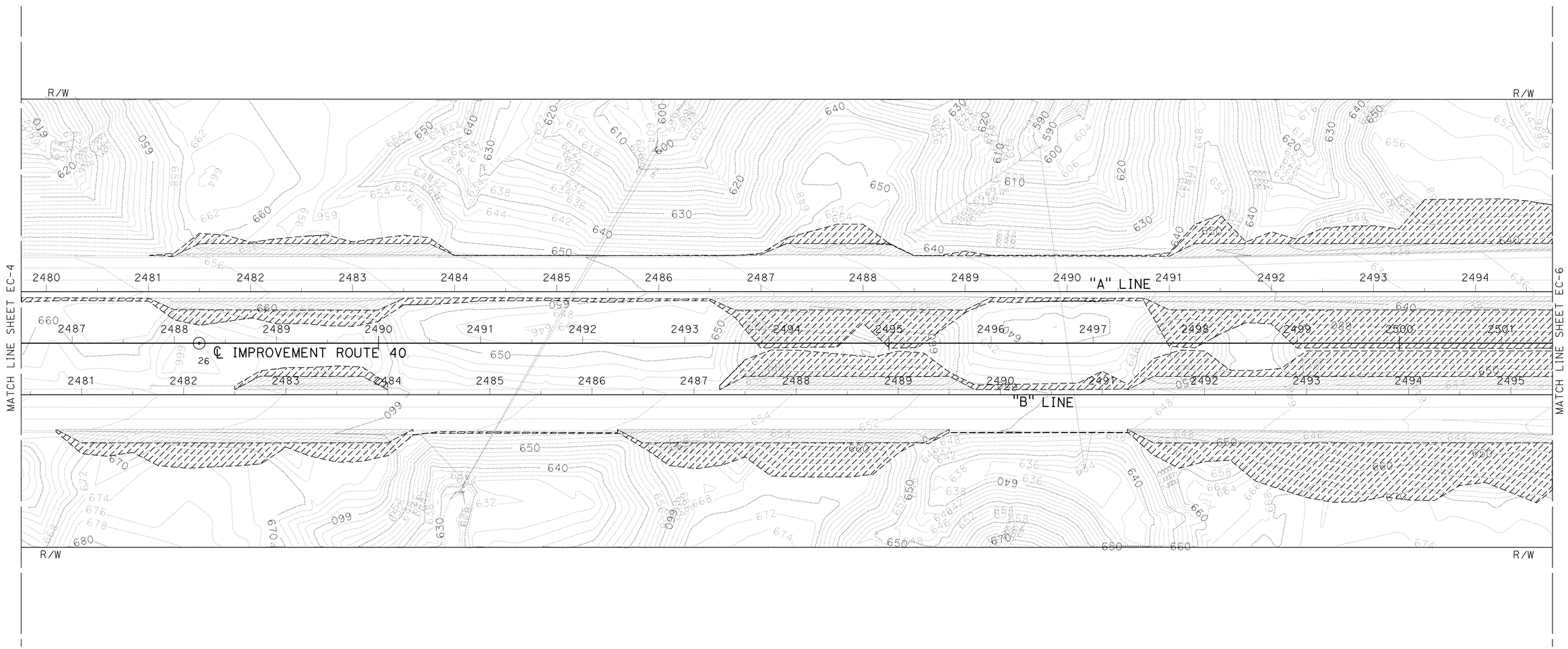

EROSION CONTROL PLAN

SCALE: 1" = 50'

THIS PLAN ACCURATE FOR EROSION CONTROL WORK ONLY

EC-5

STATE OF CALIFORNIA - DEPARTMENT OF TRANSPORTATION
Caltrans® LANDSCAPE ARCHITECTURE

SENIOR LANDSCAPE ARCHITECT: BYRON STROUT
CALCULATED-DESIGNED BY: LORENA SALVADOR
CHECKED BY: MIKE BABICH
REVISED BY
DATE REVISED

LAST REVISION 04-27-10
DATE PLOTTED => 26-AUG-2010
TIME PLOTTED => 15:29

Dist	COUNTY	ROUTE	POST MILES TOTAL PROJECT	SHEET No.	TOTAL SHEETS
08	SBd	40	R151.7/R153.3	18	51

4-29-10
LICENSED LANDSCAPE ARCHITECT

8-23-10
PLANS APPROVAL DATE

LICENSED LANDSCAPE ARCHITECT
Matthew Harry Hall
No. 4848
Signature
OCT 31, 2011
Renewal Date
4-05-10
Date
STATE OF CALIFORNIA

THE STATE OF CALIFORNIA OR ITS OFFICERS OR AGENTS SHALL NOT BE RESPONSIBLE FOR THE ACCURACY OR COMPLETENESS OF SCANNED COPIES OF THIS PLAN SHEET.

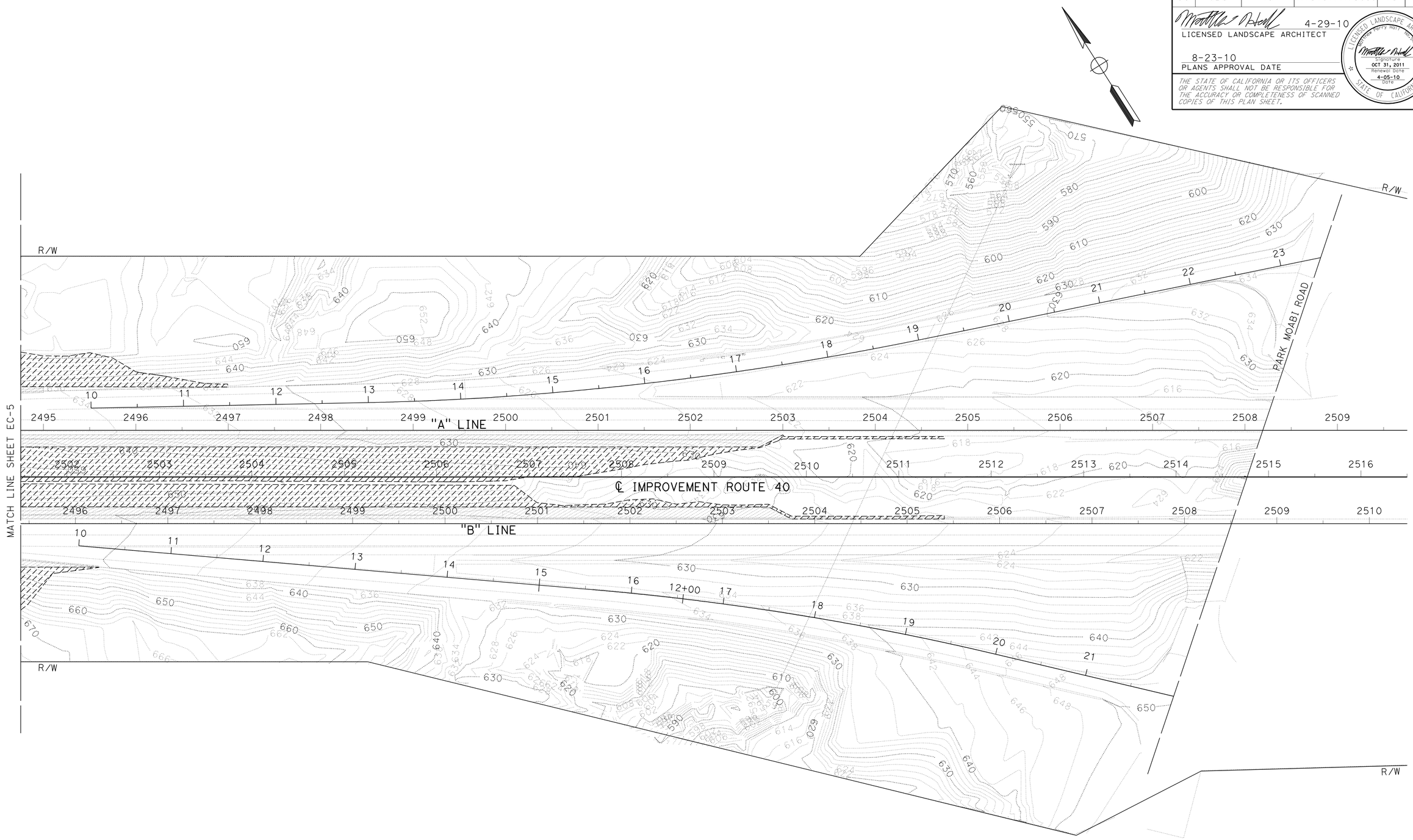

EROSION CONTROL PLAN

SCALE: 1" = 50'

EC-6

THIS PLAN ACCURATE FOR EROSION CONTROL WORK ONLY

REVISED BY	LORENA SALVADOR
DATE REVISED	MIKE BABICH
CALCULATED-DESIGNED BY	SENIOR LANDSCAPE ARCHITECT
CHECKED BY	BYRON STROUT

STATE OF CALIFORNIA - DEPARTMENT OF TRANSPORTATION
Caltrans
LANDSCAPE ARCHITECTURE

LAST REVISION 04-27-10
DATE PLOTTED => 26-AUG-2010
TIME PLOTTED => 15:29

Dist	COUNTY	ROUTE	POST MILES TOTAL PROJECT	SHEET No.	TOTAL SHEETS
08	SBd	40	R151.7/R153.3	19	51

REGISTERED CIVIL ENGINEER DATE 4-29-10

8-23-10
PLANS APPROVAL DATE

REGISTERED PROFESSIONAL ENGINEER
DUNG HUY PHAN
No. C 73061
Exp. 12/30/10
CIVIL
STATE OF CALIFORNIA

THE STATE OF CALIFORNIA OR ITS OFFICERS OR AGENTS SHALL NOT BE RESPONSIBLE FOR THE ACCURACY OR COMPLETENESS OF SCANNED COPIES OF THIS PLAN SHEET.

NOTE:

1. FOR COMPLETE RIGHT OF WAY AND ACCURATE ACCESS DATA, SEE RIGHT OF WAY RECORD MAPS AT DISTRICT OFFICE.

LEGEND:

SHOULDER WIDENING

FILL

CUT

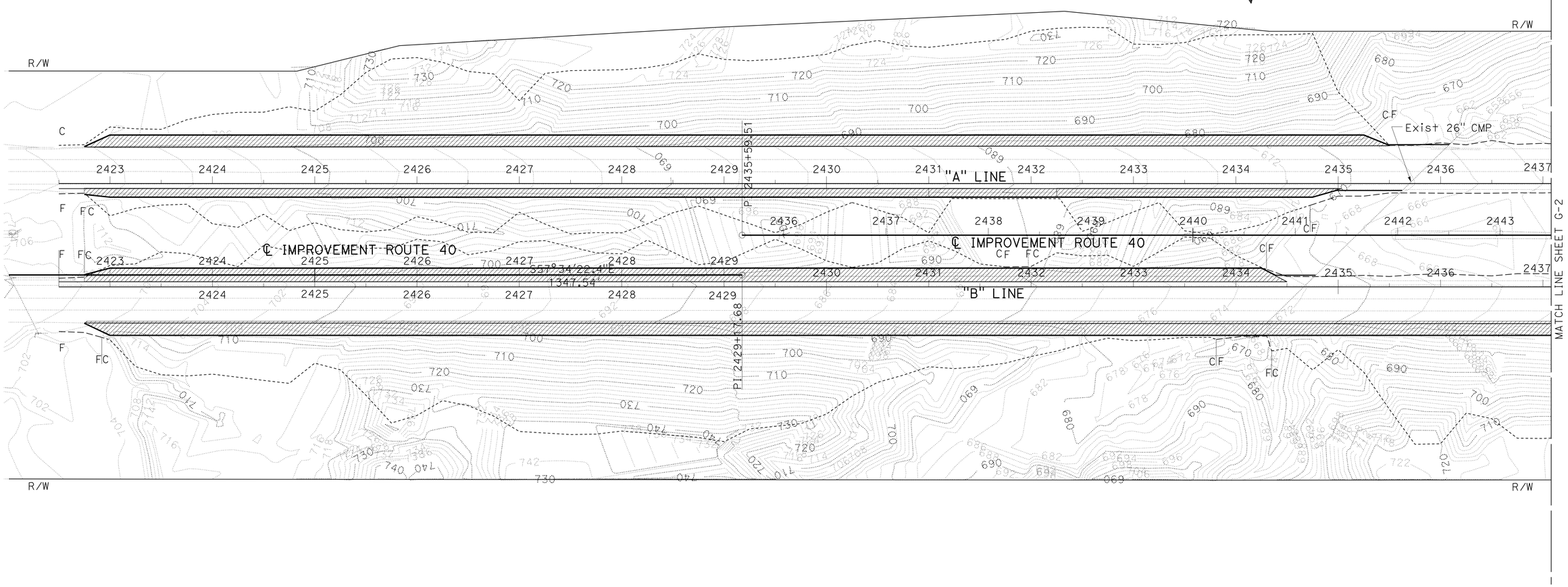

CONTOUR GRADING

SCALE: 1" = 50'

G-1

THIS PLAN ACCURATE FOR CONTOUR GRADING WORK ONLY

STATE OF CALIFORNIA - DEPARTMENT OF TRANSPORTATION
Caltrans
DESIGN DIVISION

FUNCTIONAL SUPERVISOR: RENEE SASSE

CALCULATED-DESIGNED BY: DUNG HUY PHAN
CHECKED BY: ANH PHAN

REVISED BY
DATE REVISED

LAST REVISION 04-27-10
DATE PLOTTED => 26-AUG-2010
TIME PLOTTED => 15:29

Dist	COUNTY	ROUTE	POST MILES TOTAL PROJECT	SHEET No.	TOTAL SHEETS
08	SBd	40	R151.7/R153.3	20	51

REGISTERED CIVIL ENGINEER 4-29-10 DATE

8-23-10
PLANS APPROVAL DATE

REGISTERED PROFESSIONAL ENGINEER
DUNG HUY PHAN
No. C 73061
Exp. 12/30/10
CIVIL
STATE OF CALIFORNIA

THE STATE OF CALIFORNIA OR ITS OFFICERS OR AGENTS SHALL NOT BE RESPONSIBLE FOR THE ACCURACY OR COMPLETENESS OF SCANNED COPIES OF THIS PLAN SHEET.

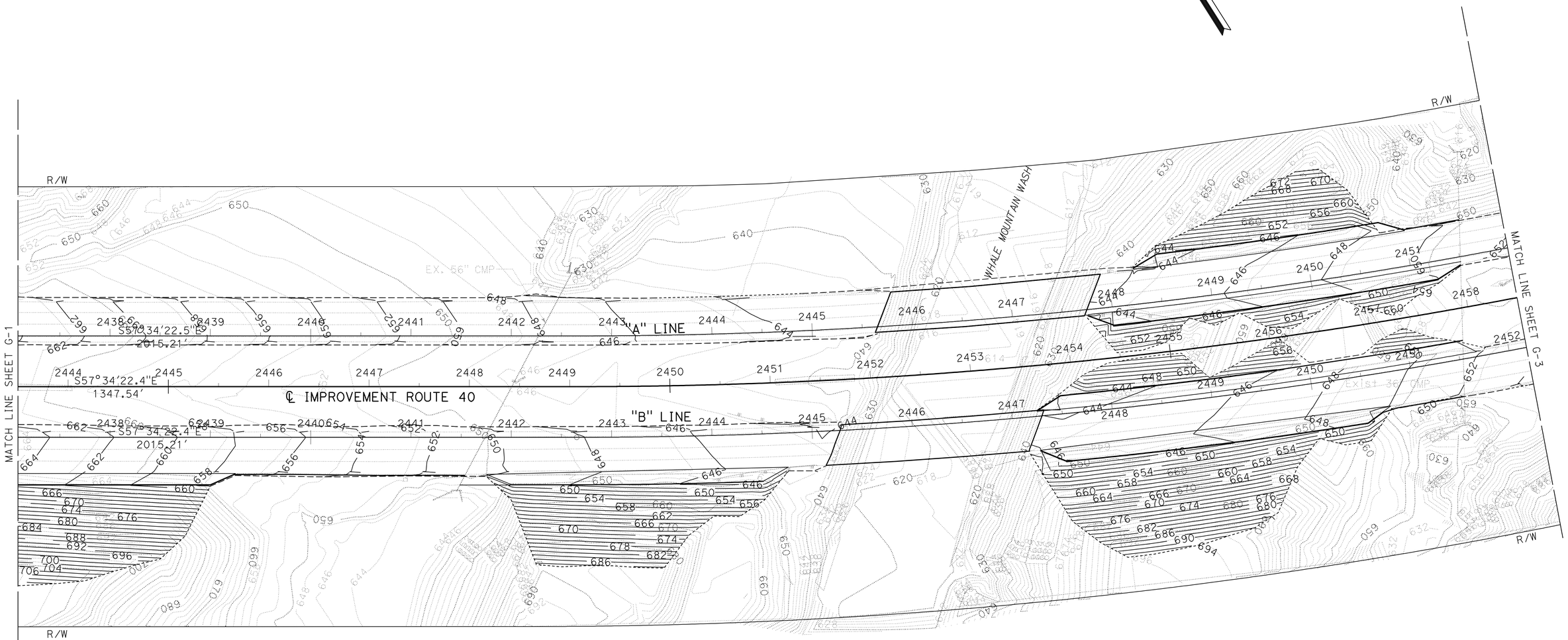

CONTOUR GRADING

SCALE: 1" = 50'

G-2

THIS PLAN ACCURATE FOR CONTOUR GRADING WORK ONLY

STATE OF CALIFORNIA - DEPARTMENT OF TRANSPORTATION
Caltrans® DESIGN DIVISION

FUNCTIONAL SUPERVISOR: RENEE SASSE

CALCULATED-DESIGNED BY: DUNG HUY PHAN
CHECKED BY: ANH PHAN

REVISED BY
DATE REVISED

LAST REVISION 04-27-10
DATE PLOTTED => 26-AUG-2010
TIME PLOTTED => 15:30

BORDER LAST REVISED 4/11/2008

RELATIVE BORDER SCALE IS IN INCHES 0 1 2 3

USERNAME => trstrk
DGN FILE => 848930ha002.dgn

CU 08220

EA 489301

Dist	COUNTY	ROUTE	POST MILES TOTAL PROJECT	SHEET No.	TOTAL SHEETS
08	SBd	40	R151.7/R153.3	21	51

REGISTERED CIVIL ENGINEER 4-29-10 DATE

8-23-10
PLANS APPROVAL DATE

REGISTERED PROFESSIONAL ENGINEER
DUNG HUY PHAN
No. C 73061
Exp. 12/30/10
CIVIL
STATE OF CALIFORNIA

THE STATE OF CALIFORNIA OR ITS OFFICERS OR AGENTS SHALL NOT BE RESPONSIBLE FOR THE ACCURACY OR COMPLETENESS OF SCANNED COPIES OF THIS PLAN SHEET.

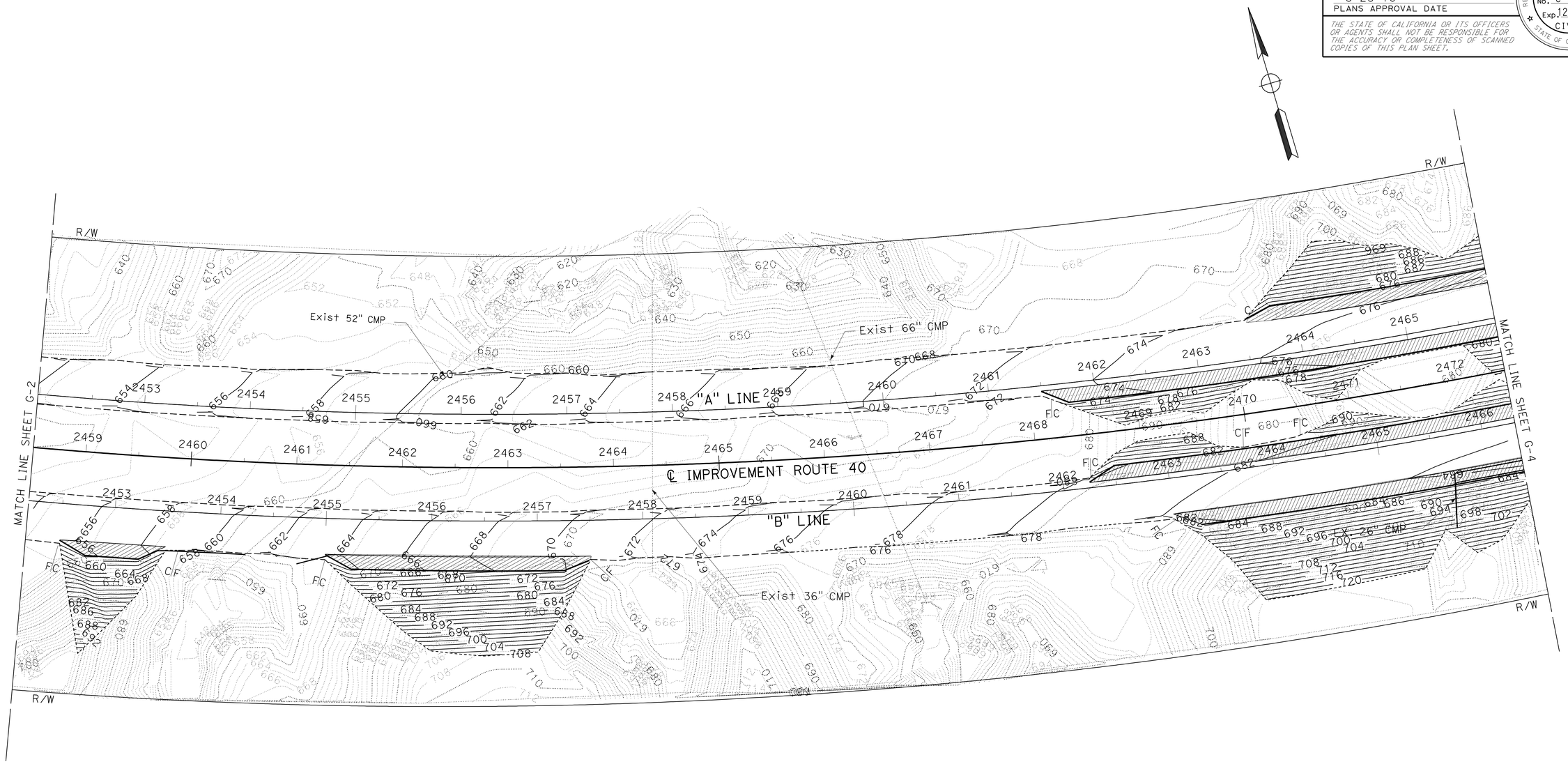

CONTOUR GRADING

SCALE: 1" = 50'

G-3

THIS PLAN ACCURATE FOR CONTOUR GRADING WORK ONLY

STATE OF CALIFORNIA - DEPARTMENT OF TRANSPORTATION
Caltrans
DESIGN DIVISION

FUNCTIONAL SUPERVISOR: RENEE SASSE

CALCULATED-DESIGNED BY: DUNG HUY PHAN
CHECKED BY: ANH PHAN

REVISED BY
DATE REVISED

LAST REVISION 04-27-10
DATE PLOTTED => 26-AUG-2010
TIME PLOTTED => 15:30

Dist	COUNTY	ROUTE	POST MILES TOTAL PROJECT	SHEET No.	TOTAL SHEETS
08	SBd	40	R151.7/R153.3	22	51

REGISTERED CIVIL ENGINEER 4-29-10 DATE

8-23-10
PLANS APPROVAL DATE

REGISTERED PROFESSIONAL ENGINEER
DUNG HUY PHAN
No. C 73061
Exp. 12/30/10
CIVIL
STATE OF CALIFORNIA

THE STATE OF CALIFORNIA OR ITS OFFICERS OR AGENTS SHALL NOT BE RESPONSIBLE FOR THE ACCURACY OR COMPLETENESS OF SCANNED COPIES OF THIS PLAN SHEET.

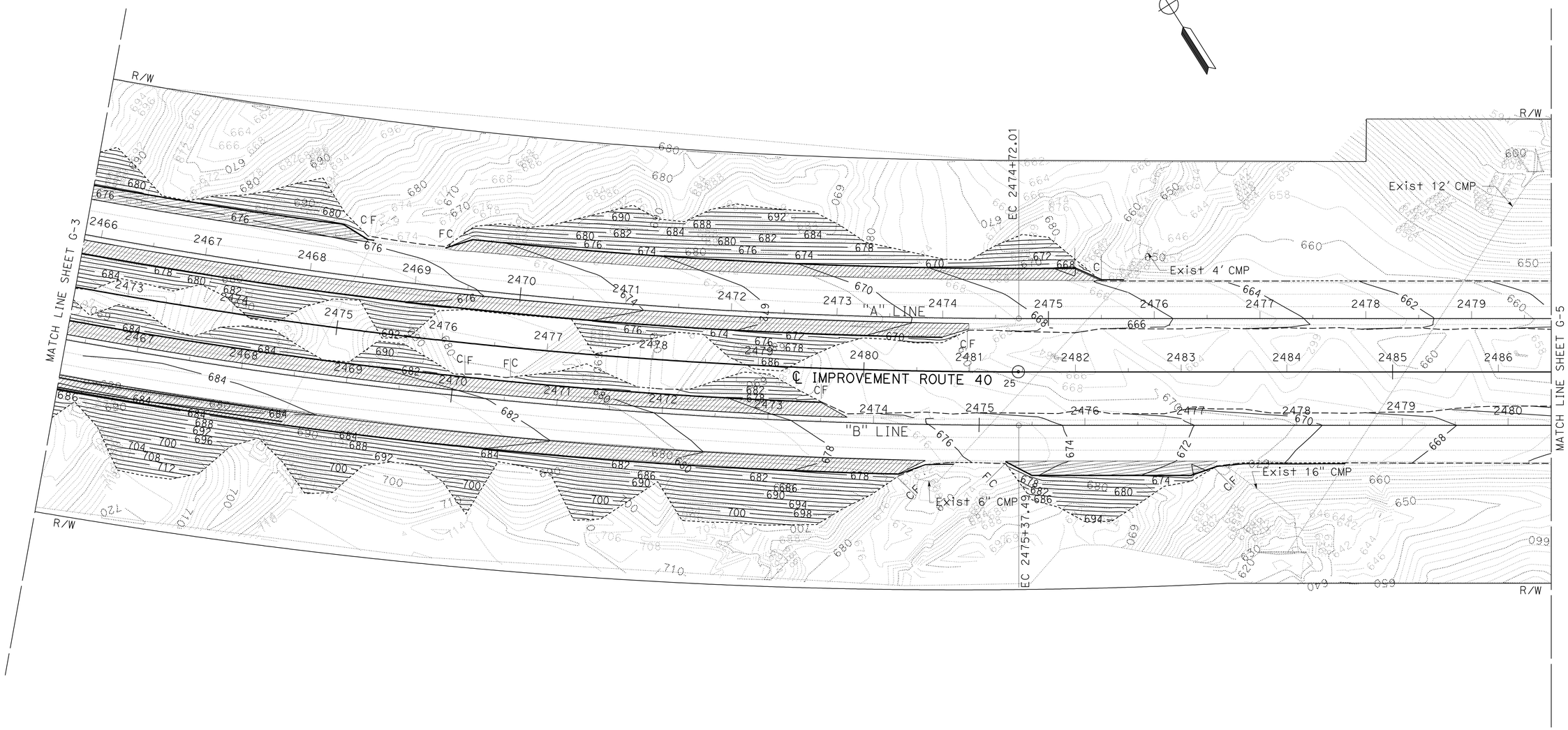

CONTOUR GRADING

SCALE: 1" = 50'

G-4

THIS PLAN ACCURATE FOR CONTOUR GRADING WORK ONLY

STATE OF CALIFORNIA - DEPARTMENT OF TRANSPORTATION
Caltrans
DESIGN DIVISION

FUNCTIONAL SUPERVISOR: RENEE SASSE

CALCULATED-DESIGNED BY: DUNG HUY PHAN
CHECKED BY: ANH PHAN

REVISED BY
DATE REVISED

LAST REVISION 04-27-10
DATE PLOTTED => 26-AUG-2010
TIME PLOTTED => 15:30

BORDER LAST REVISED 4/11/2008
RELATIVE BORDER SCALE IS IN INCHES 0 1 2 3
USERNAME => trstrk
DGN FILE => 848930ha004.dgn
CU 08220
EA 489301

Dist	COUNTY	ROUTE	POST MILES TOTAL PROJECT	SHEET No.	TOTAL SHEETS
08	SBd	40	R151.7/R153.3	23	51

REGISTERED CIVIL ENGINEER 4-29-10 DATE

8-23-10
PLANS APPROVAL DATE

REGISTERED PROFESSIONAL ENGINEER
DUNG HUY PHAN
No. C 73061
Exp. 12/30/10
CIVIL
STATE OF CALIFORNIA

THE STATE OF CALIFORNIA OR ITS OFFICERS OR AGENTS SHALL NOT BE RESPONSIBLE FOR THE ACCURACY OR COMPLETENESS OF SCANNED COPIES OF THIS PLAN SHEET.

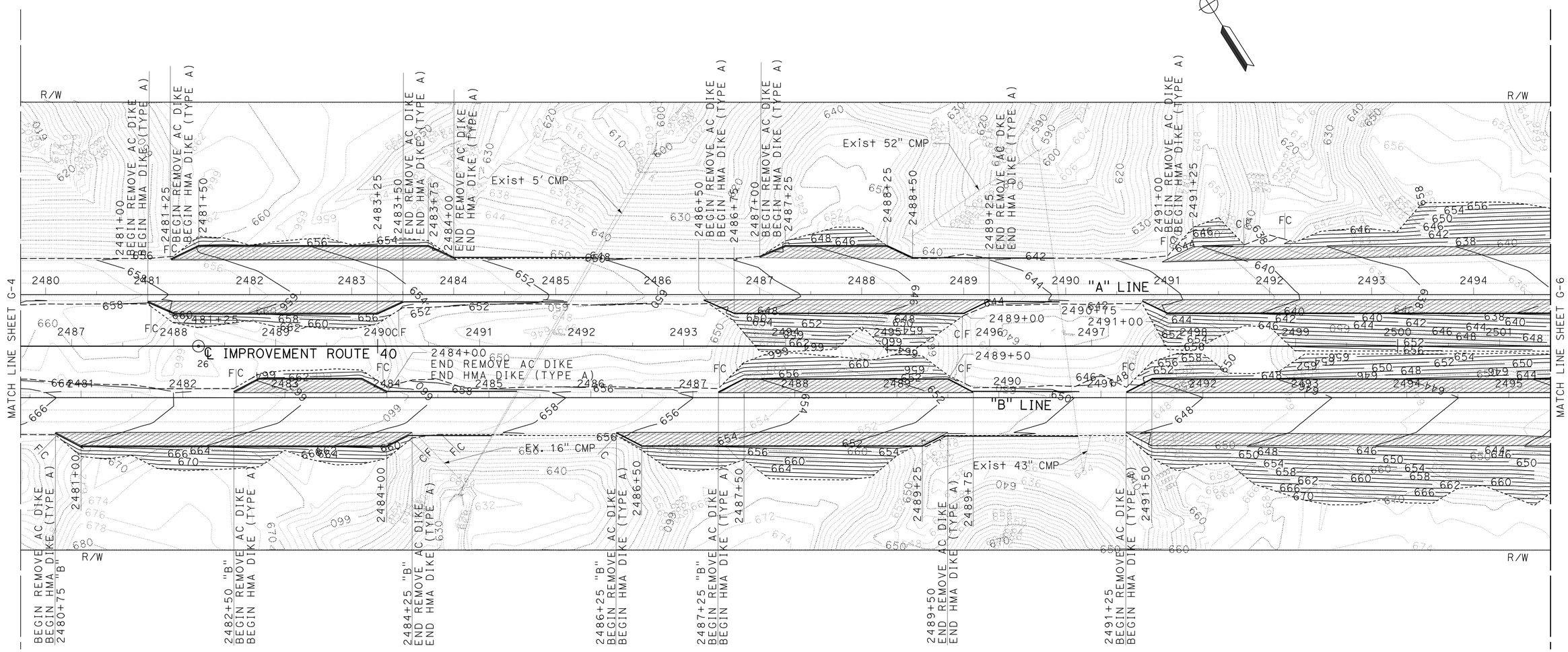

CONTOUR GRADING

SCALE: 1" = 50'

G-5

THIS PLAN ACCURATE FOR CONTOUR GRADING WORK ONLY

STATE OF CALIFORNIA - DEPARTMENT OF TRANSPORTATION
Caltrans® DESIGN DIVISION

FUNCTIONAL SUPERVISOR: RENEE SASSE
CALCULATED-DESIGNED BY: DUNG HUY PHAN
CHECKED BY: ANH PHAN
REVISED BY
DATE REVISED

LAST REVISION DATE PLOTTED => 26-AUG-2010
TIME PLOTTED => 15:30
04-27-10

Dist	COUNTY	ROUTE	POST MILES TOTAL PROJECT	SHEET No.	TOTAL SHEETS
08	SBd	40	R151.7/R153.3	24	51

REGISTERED CIVIL ENGINEER 4-29-10 DATE

8-23-10
PLANS APPROVAL DATE

REGISTERED PROFESSIONAL ENGINEER
DUNG HUY PHAN
No. C 73061
Exp. 12/30/10
CIVIL
STATE OF CALIFORNIA

THE STATE OF CALIFORNIA OR ITS OFFICERS OR AGENTS SHALL NOT BE RESPONSIBLE FOR THE ACCURACY OR COMPLETENESS OF SCANNED COPIES OF THIS PLAN SHEET.

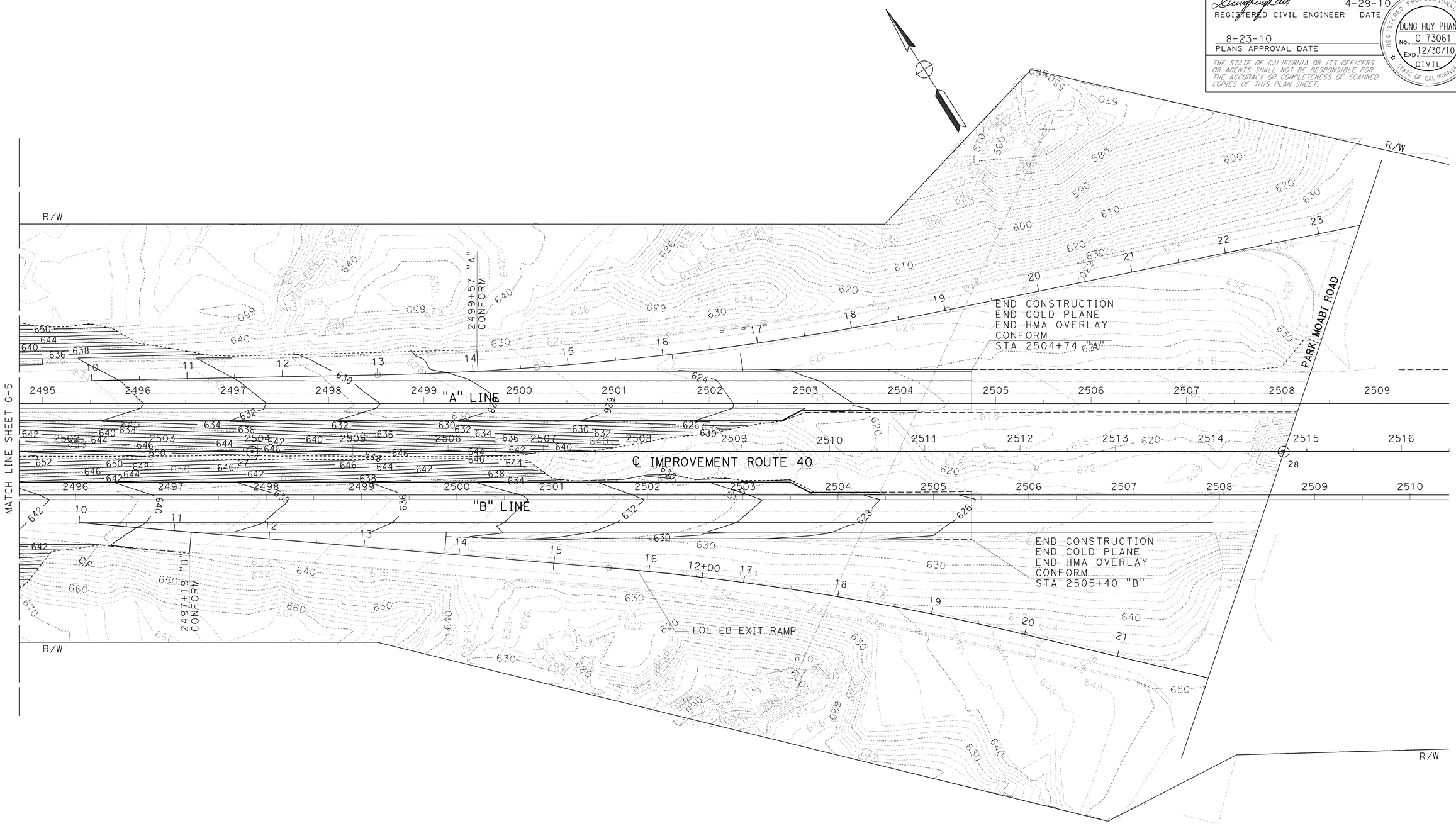

CONTOUR GRADING

SCALE: 1" = 50'

G-6

THIS PLAN ACCURATE FOR CONTOUR GRADING WORK ONLY

STATE OF CALIFORNIA - DEPARTMENT OF TRANSPORTATION
Caltrans
DESIGN DIVISION

FUNCTIONAL SUPERVISOR: RENEE SASSE

CALCULATED-DESIGNED BY: DUNG HUY PHAN
CHECKED BY: ANH PHAN

REVISED BY
DATE REVISED

LAST REVISION 04-27-10
DATE PLOTTED => 26-AUG-2010
TIME PLOTTED => 15:30

Dist	COUNTY	ROUTE	POST MILES TOTAL PROJECT	SHEET No.	TOTAL SHEETS
08	SBd	40	R151.7/R153.3	25	51

REGISTERED CIVIL ENGINEER 4-29-10 DATE

8-23-10
PLANS APPROVAL DATE

REGISTERED PROFESSIONAL ENGINEER
DUNG HUY PHAN
No. C 73061
Exp. 12/30/10
CIVIL
STATE OF CALIFORNIA

THE STATE OF CALIFORNIA OR ITS OFFICERS OR AGENTS SHALL NOT BE RESPONSIBLE FOR THE ACCURACY OR COMPLETENESS OF SCANNED COPIES OF THIS PLAN SHEET.

NOTE:

1. FOR COMPLETE RIGHT OF WAY AND ACCURATE ACCESS DATA, SEE RIGHT OF WAY RECORD MAPS AT DISTRICT OFFICE.

LEGEND:

(No) DRAINAGE SYSTEM NUMBER
(⊗) DRAINAGE ITEM

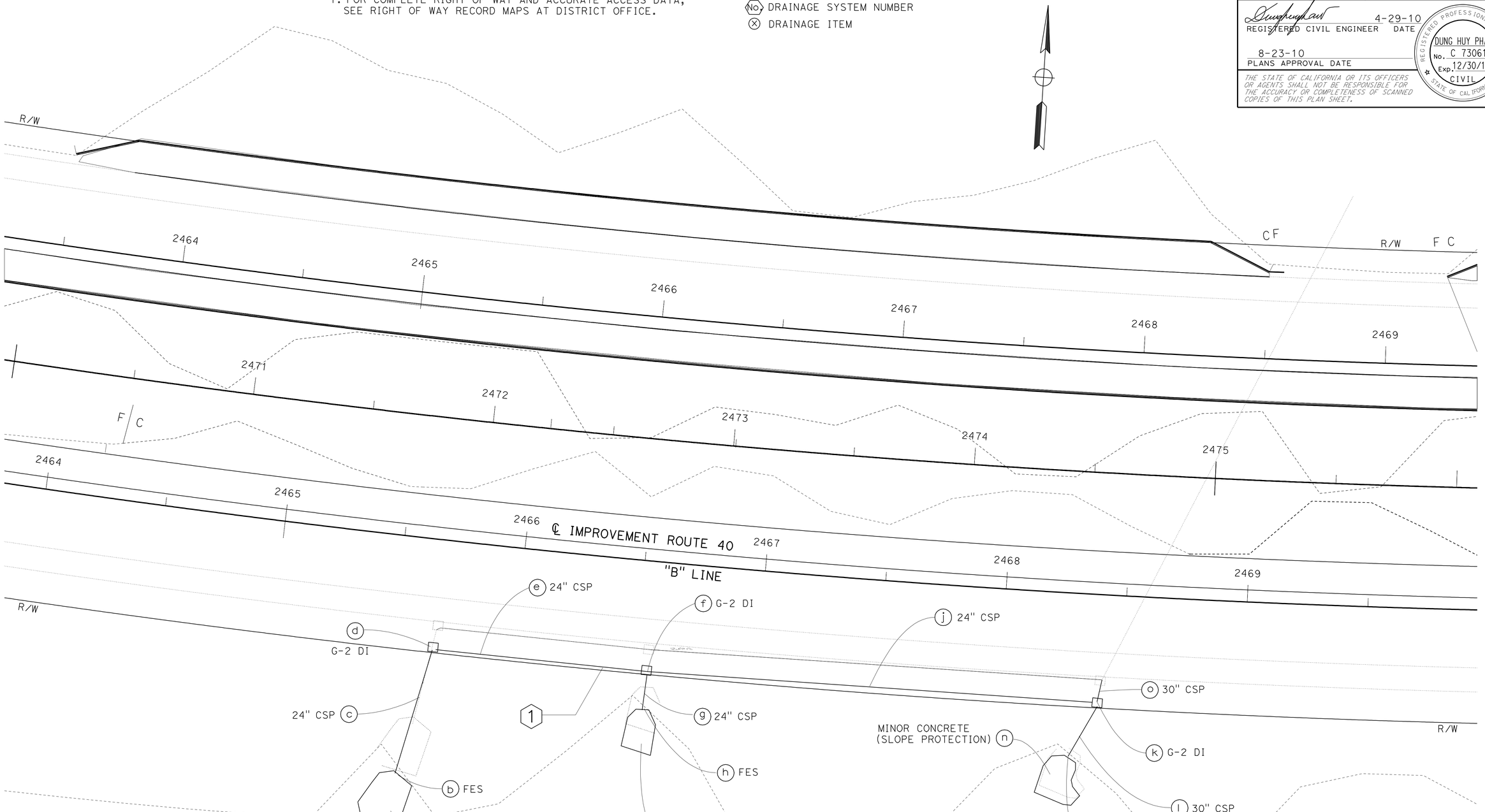

DRAINAGE PLAN

SCALE: 1" = 20'

D-1

THIS PLAN ACCURATE FOR DRAINAGE WORK ONLY

REVISED BY | DATE REVISED
DUNG HUY PHAN | ANH PHAN
CALCULATED-DESIGNED BY | CHECKED BY
FUNCTIONAL SUPERVISOR
RENEE SASSE
STATE OF CALIFORNIA - DEPARTMENT OF TRANSPORTATION
Caltrans
DESIGN DIVISION

LAST REVISION 04-27-10 | DATE PLOTTED => 12-OCT-2010 | TIME PLOTTED => 12:47

Dist	COUNTY	ROUTE	POST MILES TOTAL PROJECT	SHEET No.	TOTAL SHEETS
08	SBd	40	R151.7/R153.3	26	51

REGISTERED CIVIL ENGINEER 4-29-10 DATE

8-23-10
PLANS APPROVAL DATE

REGISTERED PROFESSIONAL ENGINEER
DUNG HUY PHAN
No. C 73061
Exp. 12/30/10
CIVIL
STATE OF CALIFORNIA

THE STATE OF CALIFORNIA OR ITS OFFICERS OR AGENTS SHALL NOT BE RESPONSIBLE FOR THE ACCURACY OR COMPLETENESS OF SCANNED COPIES OF THIS PLAN SHEET.

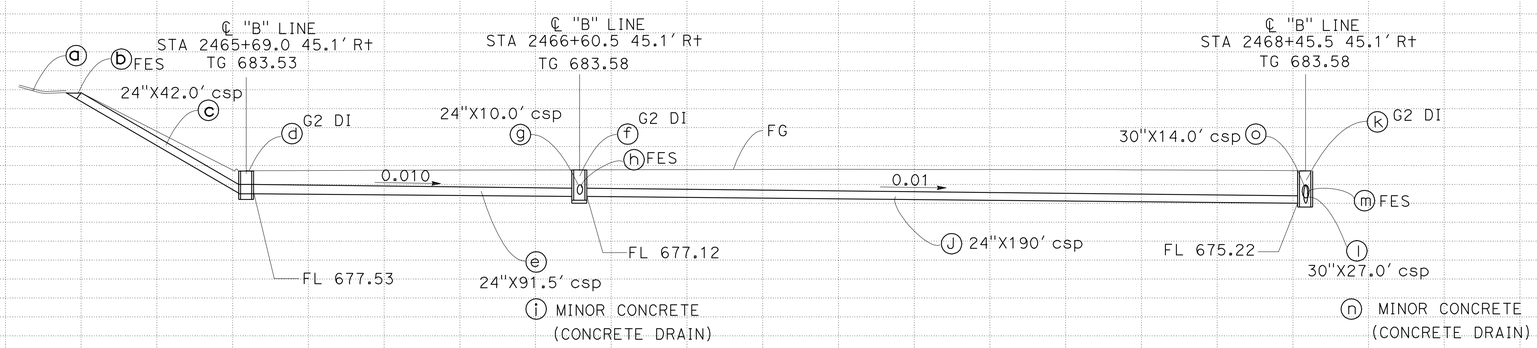

DRAINAGE SYSTEM NO. 1
ROUTE 40
℄ "B" LINE
STA 2465+69.0 45.1′ TO STA 2468+45.5

DRAINAGE PROFILES

SCALE: 1" = 20′ Horiz
1" = 5′ Vert

DP-1

STATION
CY Exc
Emb
TOTAL

DUNG HUY PHAN — REVISED BY
ANH PHAN — DATE REVISED
CALCULATED-DESIGNED BY
CHECKED BY
FUNCTIONAL SUPERVISOR
RENEE SASSE

STATE OF CALIFORNIA - DEPARTMENT OF TRANSPORTATION
Caltrans
DESIGN DIVISION

LAST REVISION 04-27-10
DATE PLOTTED => 26-AUG-2010
TIME PLOTTED => 14:46

BORDER LAST REVISED 4/11/2008
RELATIVE BORDER SCALE IS IN INCHES 0 1 2 3
USERNAME => trmariak
DGN FILE => 848930ib001.dgn
CU 08220
EA 489301

Dist	COUNTY	ROUTE	POST MILES TOTAL PROJECT	SHEET No.	TOTAL SHEETS
08	SBd	40	R151.7/R153.3	27	51

REGISTERED CIVIL ENGINEER 4-29-10 DATE

8-23-10
PLANS APPROVAL DATE

REGISTERED PROFESSIONAL ENGINEER DUNG HUY PHAN No. C 73061 Exp. 12/30/10 CIVIL STATE OF CALIFORNIA

THE STATE OF CALIFORNIA OR ITS OFFICERS OR AGENTS SHALL NOT BE RESPONSIBLE FOR THE ACCURACY OR COMPLETENESS OF SCANNED COPIES OF THIS PLAN SHEET.

NOTE:

1. LIMITS OF CONCRETE DRAINS WILL BE DETERMINED BY THE ENGINEER.

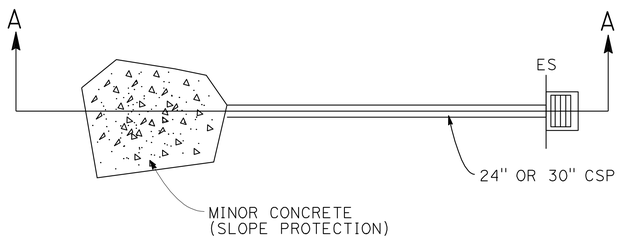

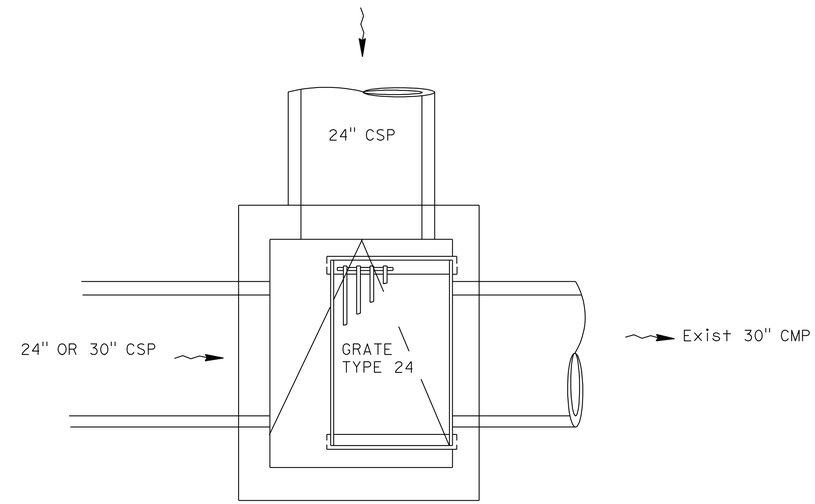

TYPICAL PLAN

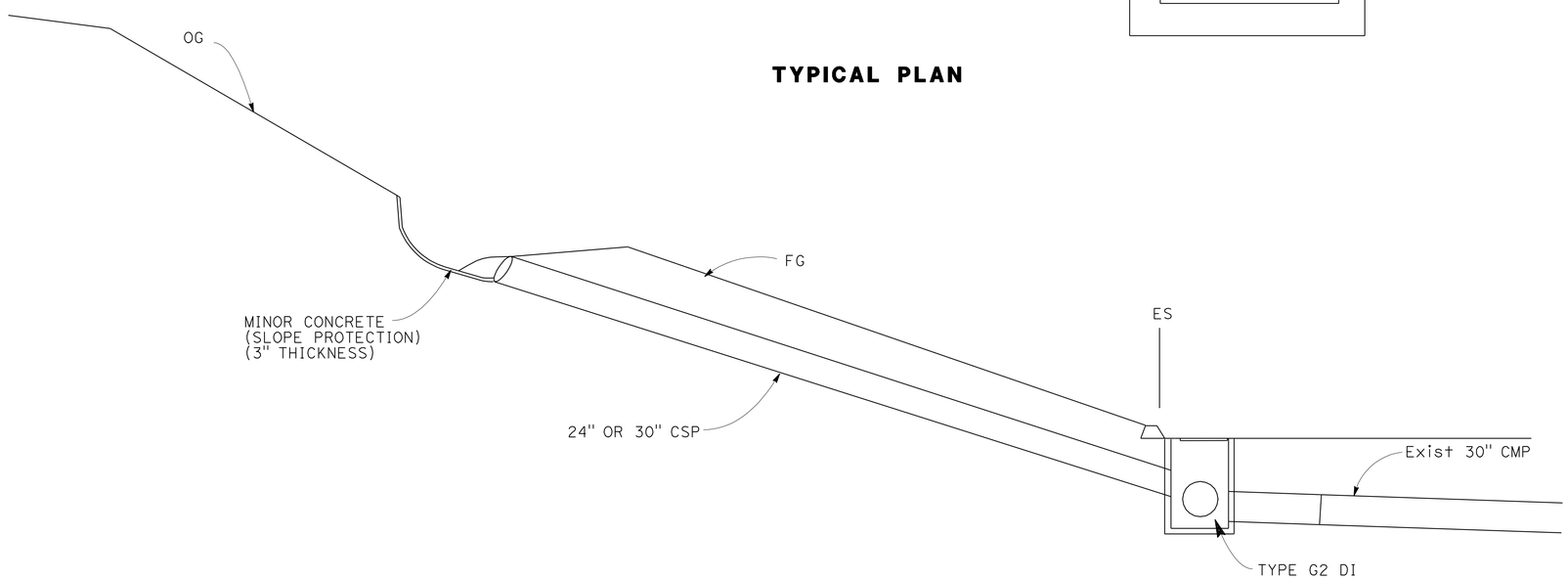

TYPICAL CROSS SECTION A-A

DRAINAGE DETAILS

NO SCALE **DD-1**

STATE OF CALIFORNIA - DEPARTMENT OF TRANSPORTATION
Caltrans® DESIGN DIVISION

FUNCTIONAL SUPERVISOR: RENEE SASSE

CALCULATED-DESIGNED BY: DUNG HUY PHAN
CHECKED BY: ANH PHAN

REVISED BY | DATE REVISED

LAST REVISION 04-27-10 | DATE PLOTTED => 12-OCT-2010 | TIME PLOTTED => 12:47

Dist	COUNTY	ROUTE	POST MILES TOTAL PROJECT	SHEET No.	TOTAL SHEETS
08	SBd	40	R151.7/R153.3	28	51

REGISTERED CIVIL ENGINEER 4-29-10 DATE

8-23-10
PLANS APPROVAL DATE

REGISTERED PROFESSIONAL ENGINEER DUNG HUY PHAN No. C 73061 Exp. 12/30/10 CIVIL STATE OF CALIFORNIA

THE STATE OF CALIFORNIA OR ITS OFFICERS OR AGENTS SHALL NOT BE RESPONSIBLE FOR THE ACCURACY OR COMPLETENESS OF ELECTRONIC COPIES OF THIS PLAN SHEET.

DRAINAGE QUANTITIES

DRAINAGE PLAN SHEET No.	DRAINAGE SYSTEM No. ⬡	DRAINAGE UNIT ○	(N) DRAINAGE INLET (TYPE G2)	(N) FRAME & GRATE (TYPE 24-9)	MISC IRON & STEEL	CORRUGATED STEEL PIPE (CSP) 24"	CORRUGATED STEEL PIPE (CSP) 30"	STEEL FLARED END SECTION (FES) 24"	STEEL FLARED END SECTION (FES) 30"	MINOR CONCRETE (SLOPE PROTECTION)	MINOR CONCRETE (MINOR STRUCTURE) *	(N) HEIGHT OF INLET "H"	(N) TOP OF GRATE ELEVATION	DESCRIPTION	STATION	DRAINAGE UNIT ○	DRAINAGE SYSTEM No. ⬡	DRAINAGE PLAN SHEET No.
			EA		LB	LF		EA		CY		LF						
D-1	1	a								2.5				CONCRETE DRAIN		a	1	D-1
		b						1						24" FES		b		
		c				42.0								24" CSP		c		
		d	1	1	263						2.07	6.0	683.53	G2 INLET	"B" LINE 2465+69.0	d		
		e				91.5								24" CSP		e		
		f	1	1	263						2.19	6.46	683.58	G2 INLET	"B" LINE 2466+60.5	f		
		g				10.0								24" CSP		g		
		h						1						24" FES		h		
		i								2.5				CONCRETE DRAIN		i		
		j				190.0								24" CSP		j		
		k	1	1	263						2.68	8.36	683.58	G2 INLET	"B" LINE 2468+49.5	k		
		l					27							30" CSP		l		
		m							1					30" FES		m		
		n								2.5				CONCRETE DRAIN		n		
	1	o					14							30" CSP		o	1	
SHEET TOTAL			3	3	789	333.5	41	2	1	7.5	6.94	20.82	2050.49		SHEET TOTAL			

(N): NOT A SEPARATE PAY ITEM, FOR INFORMATION ONLY.
* SEE SHEET Q-3 FOR ADDITIONAL QUANTITIES.

CALCULATED-DESIGNED BY: DUNG HUY PHAN
CHECKED BY: ANH PHAN
REVISED BY
DATE REVISED
SUPERVISING ENGINEER: RENEE SASSE
STATE OF CALIFORNIA - DEPARTMENT OF TRANSPORTATION
Caltrans DESIGN DIVISION

DRAINAGE QUANTITIES

DQ-1

LAST REVISION 04-27-10
DATE PLOTTED => 12-OCT-2010
TIME PLOTTED => 12:47

Dist	COUNTY	ROUTE	POST MILES TOTAL PROJECT	SHEET No.	TOTAL SHEETS
08	SBd	40	R151.7/R153.3	29	51

REGISTERED CIVIL ENGINEER 4-29-10 DATE

8-23-10
PLANS APPROVAL DATE

REGISTERED PROFESSIONAL ENGINEER
DUNG HUY PHAN
No. C 73061
Exp. 12/30/10
CIVIL
STATE OF CALIFORNIA

THE STATE OF CALIFORNIA OR ITS OFFICERS OR AGENTS SHALL NOT BE RESPONSIBLE FOR THE ACCURACY OR COMPLETENESS OF SCANNED COPIES OF THIS PLAN SHEET.

NOTES:

1. LOCATIONS OF UTILITY FACILITIES SHOWN ON THIS PLAN ARE APPROXIMATE AND SHALL BE VERIFIED BY THE CONTRACTOR PRIOR TO CONSTRUCTION.
2. UTILITY OWNERSHIP ON THIS PLAN: SOUTHERN CALIFORNIA GAS COMPANY(SCGC).
3. CONSIDERATTION SHALL BE GIVEN TO THE SAFETY OF THE PIPELINE DURING THE DESIGN AND CONSTRUCTION STAGE.
4. NO MECAHNICAL EQUIPMENT WILL BE PERMITTED TO OPERATE WITHIN THREE FEET OF THE PIPELINE, AND ANY CLOSER WORK MUST BE DONE BY HAND.
5. ARRANGEMENT FOR SOMEONE TO STAND-BY AND OBSERVE SHALL BE MADE BY CALLING (951) 845-0712 TWO WORKING DAYS PRIOR TO THE START OF CONSTRUCTION.
6. UPON REQUEST, AT LEAST TWO (2) WORKING DAYS PRIOR TO THE START OF CONSTRUCTION, THE SOUTHERN CALIFORNIA GAS COMPANY WILL LOCATE AND MARK THE ACTIVE UNDERGROUND FACILITIES FOR CONTRACTOR AT NO COST. PLEASE CALL UNDERGOUND SERVICE ALERT (USA) AT (800) 422-4133.

UTILITY INFORMATION TABLE

No.	STATION	OFFSET FROM CL Rte 40	DEPTH (FT)	DESCRIPTION	OWNER
①	2481+07.6	90.56 Ft R+	16.0	30" Nat. GAS LINE	So. CALI. GAS COMPANY
②	2481+14.3	83.32 Ft R+	17.0	30" Nat. GAS LINE	So. CALI. GAS COMPANY
③	2481+45.6	45.29 Ft R+	15.0	30" Nat. GAS LINE	So. CALI. GAS COMPANY
④	2481+68.1	22.40 Ft R+	17.0	30" Nat. GAS LINE	So. CALI. GAS COMPANY
⑤	2482+3.3	15.72 Ft L+	14.0	30" Nat. GAS LINE	So. CALI. GAS COMPANY
⑥	2482+23.0	39.95 Ft L+	15.5	30" Nat. GAS LINE	So. CALI. GAS COMPANY
⑦	2482+48.5	62.44 Ft L+	17.0	30" Nat. GAS LINE	So. CALI. GAS COMPANY
⑧	2482+63.7	92.00 Ft L+	20.0	30" Nat. GAS LINE	So. CALI. GAS COMPANY

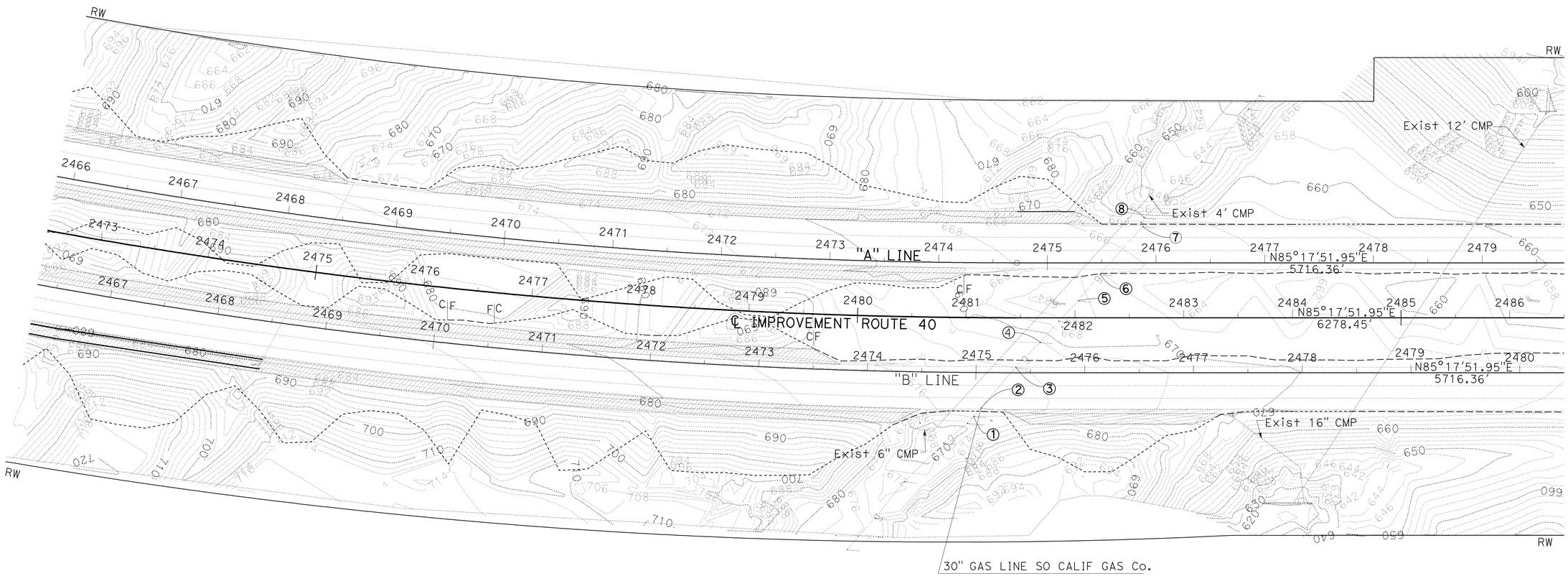

UTILITY PLAN

SCALE: 1" = 50' **U-1**

THIS PLAN ACCURATE FOR UTILITIES ONLY.

STATE OF CALIFORNIA DEPARTMENT OF TRANSPORTATION
DESIGN DIVISION
Caltrans

FUNCTIONAL SUPERVISOR: RENEE SASSE
CALCULATED-DESIGNED BY: DUNG HUY PHAN
CHECKED BY: ANH PHAN
REVISED BY
DATE REVISED

LAST REVISION 04-27-10
DATE PLOTTED => 26-AUG-2010
TIME PLOTTED => 15:22

Dist	COUNTY	ROUTE	POST MILES TOTAL PROJECT	SHEET No.	TOTAL SHEETS
08	SBd	40	R151.7/R153.3	30	51

REGISTERED CIVIL ENGINEER 4-29-10 DATE

8-23-10
PLANS APPROVAL DATE

REGISTERED PROFESSIONAL ENGINEER OSCAR ALEJANDRE No. C70863 Exp. 6/30/11 CIVIL STATE OF CALIFORNIA

THE STATE OF CALIFORNIA OR ITS OFFICERS OR AGENTS SHALL NOT BE RESPONSIBLE FOR THE ACCURACY OR COMPLETENESS OF SCANNED COPIES OF THIS PLAN SHEET.

NOTES:

1) LOCATIONS OF THE CONSTRUCTION AREA SIGNS ARE APPROXIMATE. THE EXACT LOCATIONS WILL BE DETERMINED BY THE ENGINEER.

2) SEE STANDARD PLANS T-10 FOR SHOULDER AND LANE CLOSURE.

3) CONSTRUCTION AREA SIGNS IN TRAFFIC HANDLING SHEETS TO BE PAID UNDER CONSTRUCTION AREA SIGNS ITEM.

LEGEND:

- CONSTRUCTION AREA SIGNS (1 POST)
- CONSTRUCTION AREA SIGNS (2 POSTS)
- WORK AREA
- (X) CONSTRUCTION AREA SIGN NUMBER

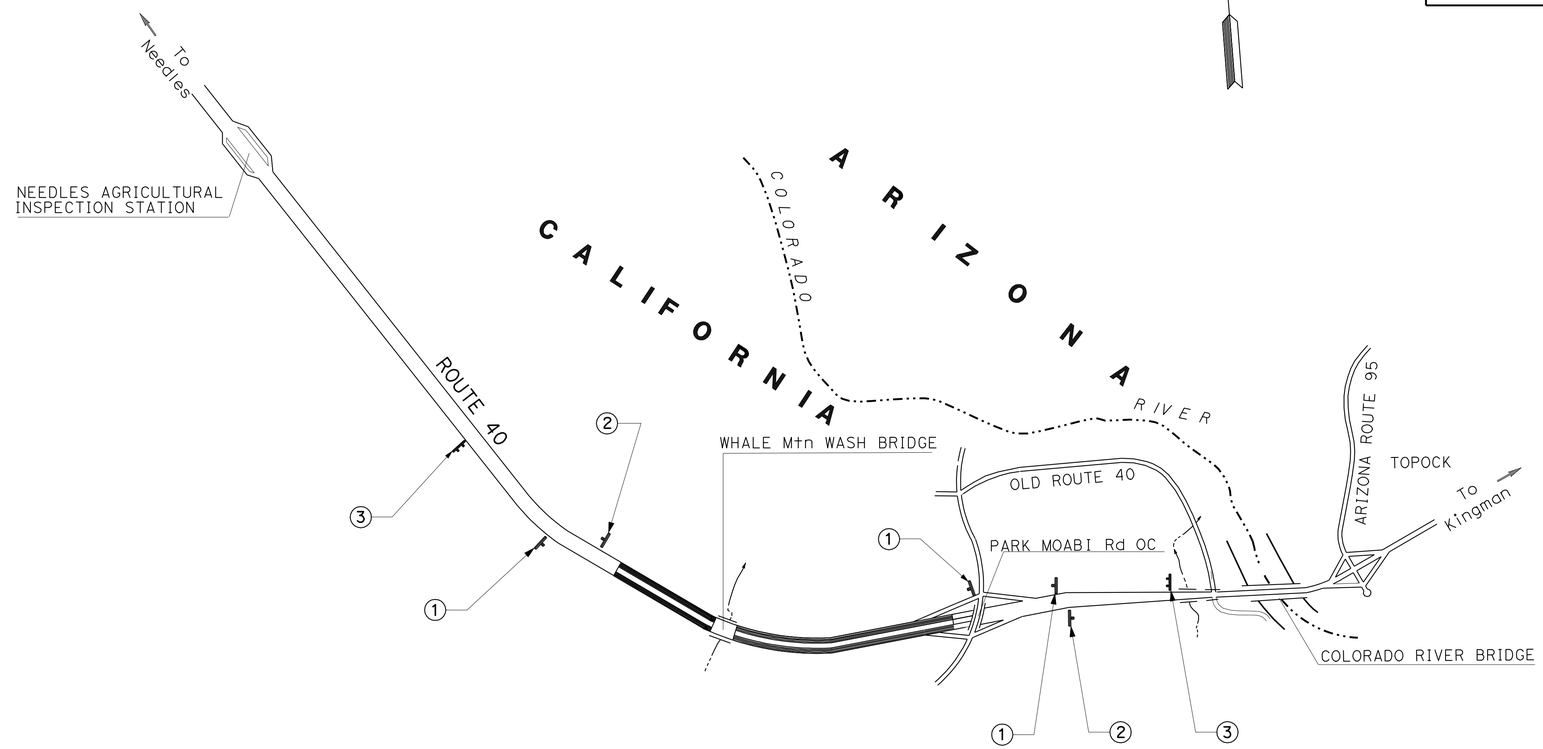

CONSTRUCTION AREA SIGNS (STATIONARY MOUNTED)

SIGN NUMBER	SIGN CODE	SIGN MESSAGE	PANEL SIZE	NO. OF POST AND SIZE	No. OF SIGNS
1	W20-1	ROAD WORK AHEAD	48" X 48"	1 - 4" X 6"	3
2	G20-2	END ROAD WORK	48" X 24"	1 - 4" X 4"	2
3	C40(CA)	TRAFFIC FINES DOUBLE IN CONSTRUCTION ZONES	144" X 60"	2 - 6" X 8"	2

PORTABLE CHANGEABLE MESSAGE SIGN

EA
2

THIS PLAN ACCURATE FOR CONSTRUCTION AREA SIGNS ONLY

CONSTRUCTION AREA SIGNS

NO SCALE

CS-1

STATE OF CALIFORNIA - DEPARTMENT OF TRANSPORTATION
Caltrans
TRAFFIC DESIGN

FUNCTIONAL SUPERVISOR: LARRY SARTORI
CALCULATED-DESIGNED BY: OSCAR ALEJANDRE
CHECKED BY: DARYUSH NAMI
REVISED BY
DATE REVISED

LAST REVISION 04-27-10 | DATE PLOTTED => 26-AUG-2010 | TIME PLOTTED => 15:22

Dist	COUNTY	ROUTE	POST MILES TOTAL PROJECT	SHEET No.	TOTAL SHEETS
08	SBd	40	R151.7/R153.3	31	51

REGISTERED CIVIL ENGINEER 4-29-10 DATE

8-23-10
PLANS APPROVAL DATE

REGISTERED PROFESSIONAL ENGINEER OSCAR ALEJANDRE No. C70863 Exp. 6/30/11 CIVIL STATE OF CALIFORNIA

THE STATE OF CALIFORNIA OR ITS OFFICERS OR AGENTS SHALL NOT BE RESPONSIBLE FOR THE ACCURACY OR COMPLETENESS OF SCANNED COPIES OF THIS PLAN SHEET.

NOTES:

1) LOCATIONS OF THE CONSTRUCTION AREA SIGNS WILL BE DETERMINED BY THE ENGINEER.
2) SEE STANDARD PLAN T-10 FOR SHOULDER AND LANE CLOSURE.
3) TRAFFIC CONES PLACED DURING STAGE 1 PHASE 2 PAID UNDER TRAFFIC CONTROL (SEE LAY OUT SHEETS FOR LOCATIONS)
4) TRAFFIC CONES PLACED DURING STAGE 2 PHASE 2 PAID UNDER TRAFFIC CONTROL (SEE LAY OUT SHEETS FOR LOCATIONS)
5) TEMPORARY RAILING (TYPE K) BREAK AT WHALE MOUNTAIN WASH BRIDGE AS DIRECTED BY THE ENGINEER.

LEGEND:

- WORK AREA
- DIRECTION OF TRAVEL
- TEMPORARY RAILING (TYPE K)

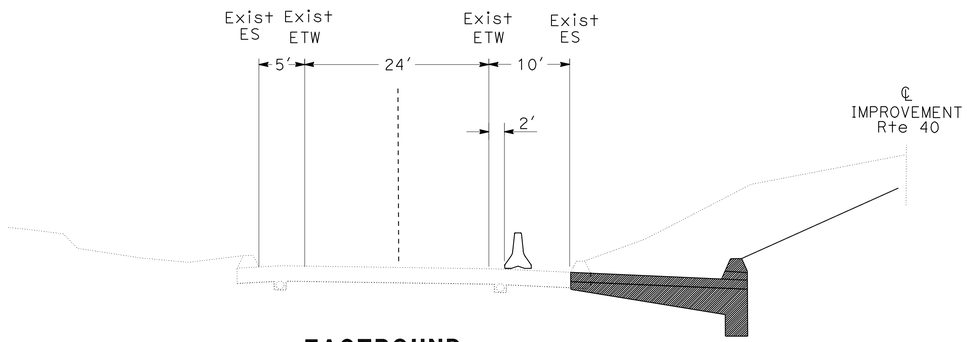

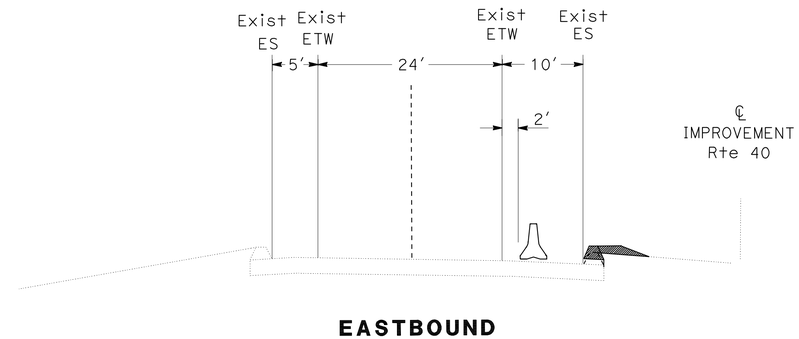

A-A SECTION
ROUTE 40
STA 2422+50 TO STA 2511+50

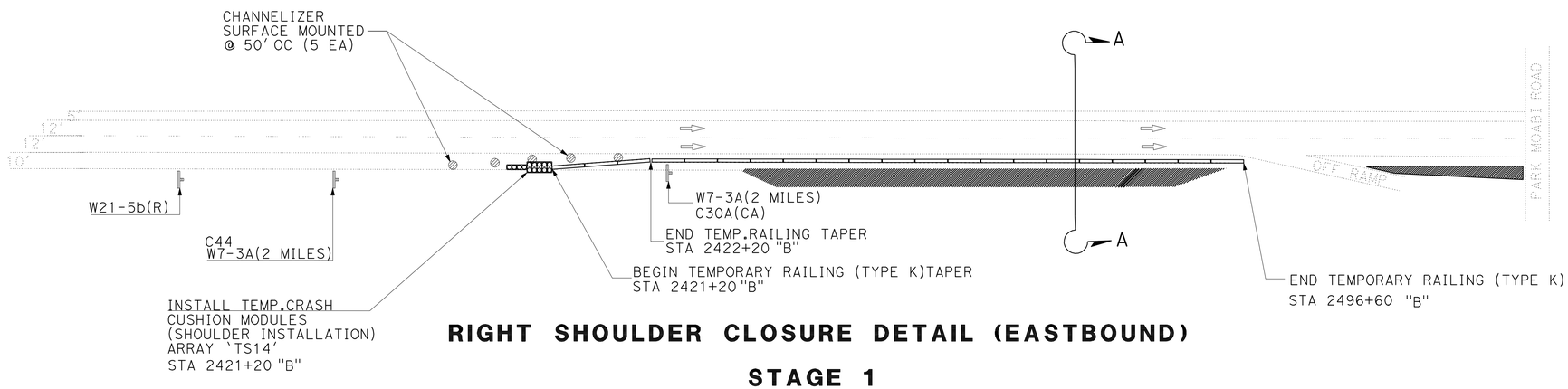

RIGHT SHOULDER CLOSURE DETAIL (EASTBOUND)

STAGE 1
PHASE 1

CONSTRUCTION AREA SIGNS (STATIONARY MOUNTED)

SIGN CODE	SIGN MESSAGE	PANEL SIZE	No. OF POST AND SIZE	No. OF SIGNS
W21-5b(R)	RIGHT SHOULDER CLOSED AHEAD	48" X 48"	1-6"x6"	1
C30A(CA) W7-3A(2 MILES)	SHOULDER CLOSED/NEXT 2 MILES	48" X 48"	1-6"x6"	1
		24" X 18"		
C44 W7-3A(2 MILES)	TRUCKS ENTERING-EXITING/NEXT 2 MILES	48" X 48"	1-6"x6"	1
		24" X 18"		

THIS PLAN ACCURATE FOR TRAFFIC HANDLING AND STAGE CONSTRUCTION ONLY

TRAFFIC HANDLING PLAN AND STAGE CONSTRUCTION

NO SCALE

TH-1

LAST REVISION 04-27-10 | DATE PLOTTED => 26-AUG-2010 | TIME PLOTTED => 15:22

STATE OF CALIFORNIA - DEPARTMENT OF TRANSPORTATION
Caltrans
TRAFFIC DESIGN

FUNCTIONAL SUPERVISOR: LARRY SARTORI
CALCULATED-DESIGNED BY: OSCAR ALEJANDRE
CHECKED BY: DARYUSH NAMI
REVISED BY
DATE REVISED

Dist	COUNTY	ROUTE	POST MILES TOTAL PROJECT	SHEET No.	TOTAL SHEETS
08	SBd	40	R151.7/R153.3	32	51

REGISTERED CIVIL ENGINEER 4-29-10 DATE

8-23-10
PLANS APPROVAL DATE

REGISTERED PROFESSIONAL ENGINEER
OSCAR ALEJANDRE
No. C70863
Exp. 6/30/11
CIVIL
STATE OF CALIFORNIA

THE STATE OF CALIFORNIA OR ITS OFFICERS OR AGENTS SHALL NOT BE RESPONSIBLE FOR THE ACCURACY OR COMPLETENESS OF SCANNED COPIES OF THIS PLAN SHEET.

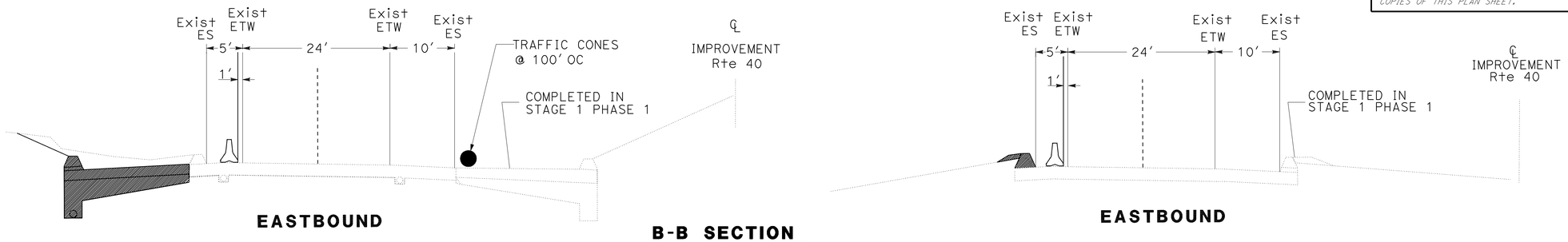

B-B SECTION
ROUTE 40
STA 2422+50 TO STA 2511+50

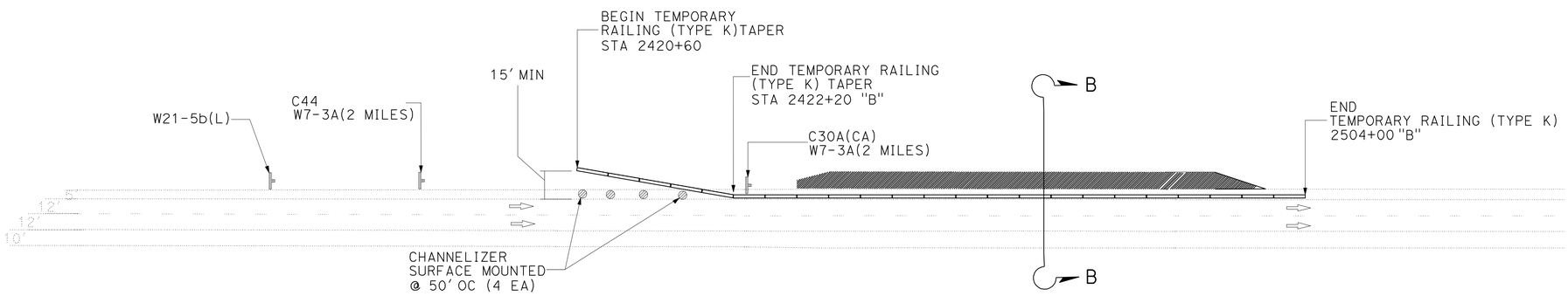

LEFT SHOULDER CLOSURE DETAIL (EASTBOUND)
STAGE 1
PHASE 2

CONSTRUCTION AREA SIGNS (STATIONARY MOUNTED)

SIGN CODE	SIGN MESSAGE	PANEL SIZE	No. OF POST AND SIZE	No. OF SIGNS
W21-5b(L)	LEFT SHOULDER CLOSED AHEAD	48" X 48"	1-6" x 6"	1
C30A(CA) W7-3A(2 MILES)	SHOULDER CLOSED/NEXT 2 MILES	48" X 48" 24" X 18"	1-6" x 6"	1
C44 W7-3A(2 MILES)	TRUCKS ENTERING-EXITING/NEXT 2 MILES	48" X 48" 24" X 18"	1-6" x 6"	1

THIS PLAN ACCURATE FOR TRAFFIC HANDLING AND STAGE CONSTRUCTION ONLY

TRAFFIC HANDLING PLAN AND STAGE CONSTRUCTION

NO SCALE **TH-2**

REVISED BY | DATE REVISED
OSCAR ALEJANDRE | DARYUSH NAMI
CALCULATED-DESIGNED BY | CHECKED BY
FUNCTIONAL SUPERVISOR | LARRY SARTORI
STATE OF CALIFORNIA - DEPARTMENT OF TRANSPORTATION
Caltrans
TRAFFIC DESIGN

LAST REVISION 04-27-10 | DATE PLOTTED => 26-AUG-2010 | TIME PLOTTED => 15:22

Dist	COUNTY	ROUTE	POST MILES TOTAL PROJECT	SHEET No.	TOTAL SHEETS
08	SBd	40	R151.7/R153.3	33	51

REGISTERED CIVIL ENGINEER 4-29-10 DATE

8-23-10
PLANS APPROVAL DATE

REGISTERED PROFESSIONAL ENGINEER
OSCAR ALEJANDRE
No. C70863
Exp. 6/30/11
CIVIL
STATE OF CALIFORNIA

THE STATE OF CALIFORNIA OR ITS OFFICERS OR AGENTS SHALL NOT BE RESPONSIBLE FOR THE ACCURACY OR COMPLETENESS OF SCANNED COPIES OF THIS PLAN SHEET.

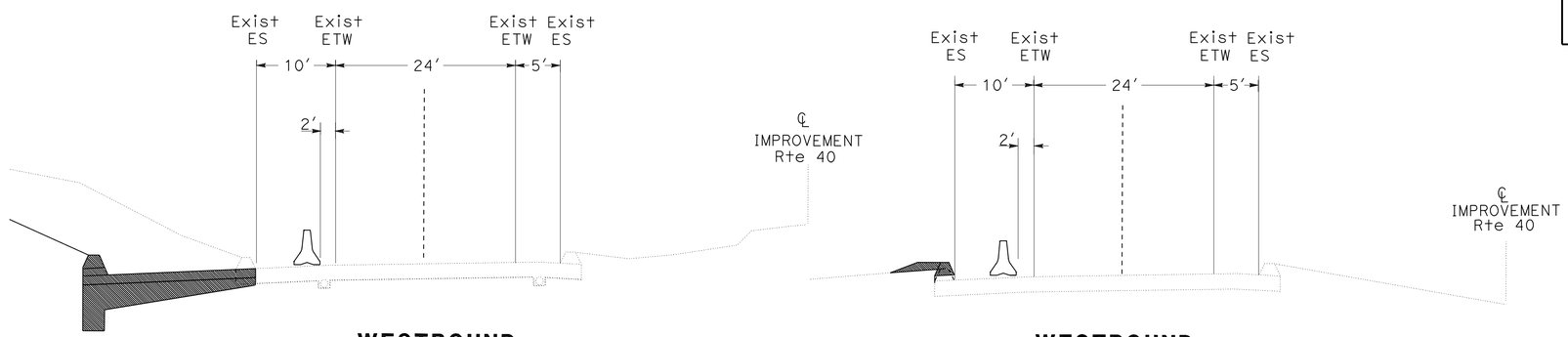

C-C SECTION
STA 2422+50 TO STA 2511+50
ROUTE 40

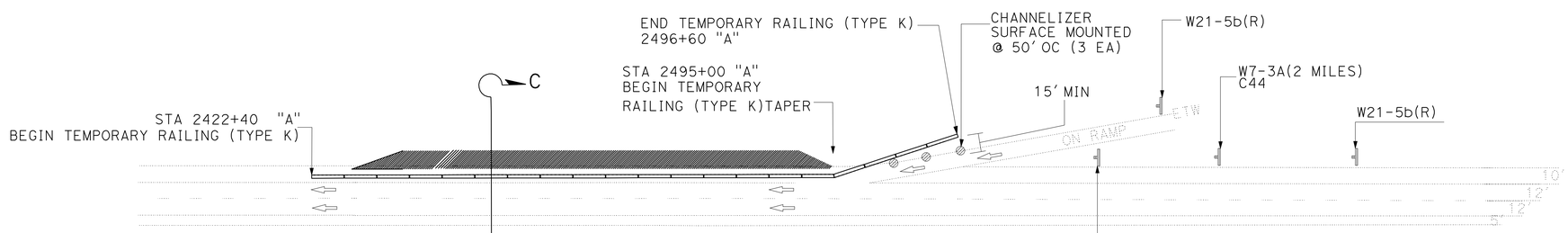

RIGHT SHOULDER CLOSURE DETAIL (WESTBOUND)
STAGE 2
PHASE 1

CONSTRUCTION AREA SIGNS (STATIONARY MOUNTED)

SIGN CODE	SIGN MESSAGE	PANEL SIZE	No. OF POST AND SIZE	No. OF SIGNS
W21-5b(R)	RIGHT SHOULDER CLOSED AHEAD	48" X 48"	1-6" x 6"	2
C30A(CA) W7-3A(2 MILES)	SHOULDER CLOSED/NEXT 2 MILES	48" X 48" 24" X 18"	1-6" x 6"	1
C44 W7-3A(2 MILES)	TRUCKS ENTERING-EXITING/NEXT 2 MILES	48" X 48" 24" X 18"	1-6" x 6"	1

THIS PLAN ACCURATE FOR TRAFFIC HANDLING AND STAGE CONSTRUCTION ONLY

TRAFFIC HANDLING PLAN AND STAGE CONSTRUCTION

NO SCALE **TH-3**

STATE OF CALIFORNIA - DEPARTMENT OF TRANSPORTATION
Caltrans® **TRAFFIC DESIGN**

FUNCTIONAL SUPERVISOR: LARRY SARTORI
CALCULATED-DESIGNED BY: OSCAR ALEJANDRE
CHECKED BY: DARYUSH NAMI
REVISED BY
DATE REVISED

LAST REVISION 04-27-10
DATE PLOTTED => 26-AUG-2010
TIME PLOTTED => 15:23

Dist	COUNTY	ROUTE	POST MILES TOTAL PROJECT	SHEET No.	TOTAL SHEETS
08	SBd	40	R151.7/R153.3	34	51

REGISTERED CIVIL ENGINEER 4-29-10 DATE

8-23-10
PLANS APPROVAL DATE

REGISTERED PROFESSIONAL ENGINEER
OSCAR ALEJANDRE
No. C70863
Exp. 6/30/11
CIVIL
STATE OF CALIFORNIA

THE STATE OF CALIFORNIA OR ITS OFFICERS OR AGENTS SHALL NOT BE RESPONSIBLE FOR THE ACCURACY OR COMPLETENESS OF SCANNED COPIES OF THIS PLAN SHEET.

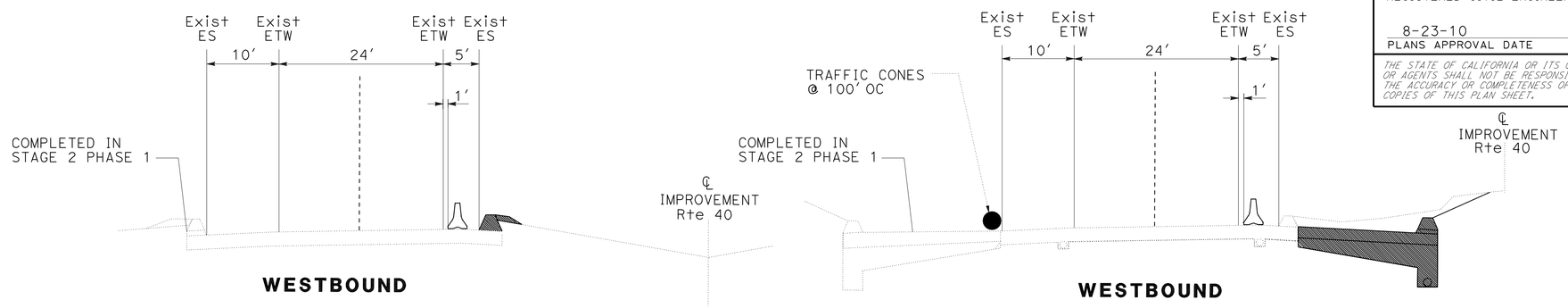

D-D SECTION
ROUTE 40
Sta 2422+50 TO Sta 2511+50

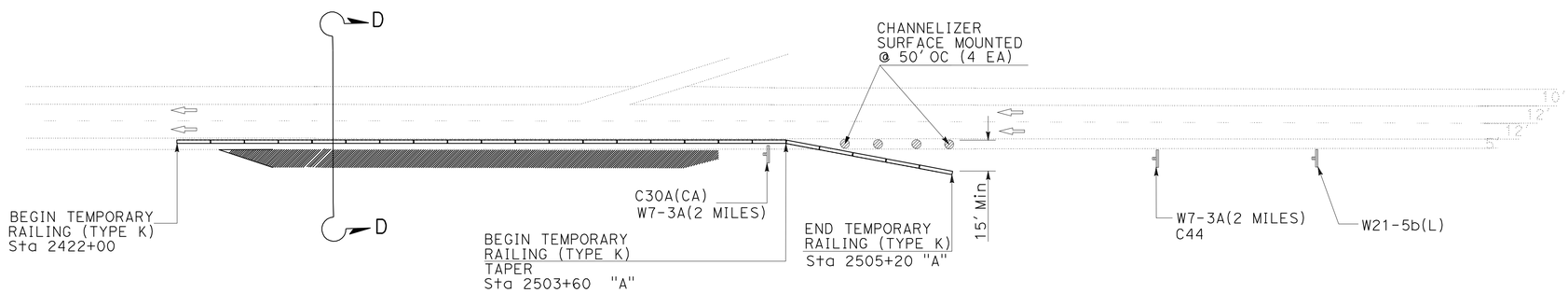

LEFT SHOULDER CLOSURE DETAIL (WESTBOUND)
STAGE 2
PHASE 2

CONSTRUCTION AREA SIGNS (STATIONARY MOUNTED)

SIGN CODE	SIGN MESSAGE	PANEL SIZE	No. OF POST AND SIZE	No. OF SIGNS
W21-5b(L)	LEFT SHOULDER CLOSED AHEAD	48" x 48"	1 - 6" x 6"	1
C30A(CA) W7-3A(2 MILES)	SHOULDER CLOSED/NEXT 2 MILES	48" x 48"	1 - 6" x 6"	1
		24" x 18"		
C44 W7-3A(2 MILES)	TRUCKS ENTERING-EXITING/NEXT 2 MILES	48" x 48"	1 - 6" x 6"	1
		24" x 18"		

THIS PLAN ACCURATE FOR TRAFFIC HANDLING AND STAGE CONSTRUCTION ONLY

TRAFFIC HANDLING PLAN AND STAGE CONSTRUCTION
NO SCALE **TH-4**

STATE OF CALIFORNIA - DEPARTMENT OF TRANSPORTATION
Caltrans
TRAFFIC DESIGN

FUNCTIONAL SUPERVISOR: LARRY SARTORI
CALCULATED-DESIGNED BY: OSCAR ALEJANDRE
CHECKED BY: DARYUSH NAMI
REVISED BY
DATE REVISED

LAST REVISION 04-27-10 | DATE PLOTTED => 26-AUG-2010 | TIME PLOTTED => 17:09

Dist	COUNTY	ROUTE	POST MILES TOTAL PROJECT	SHEET No.	TOTAL SHEETS
08	SBd	40	R151.7/R153.3	35	51

REGISTERED CIVIL ENGINEER 4-29-10 DATE

8-23-10
PLANS APPROVAL DATE

REGISTERED PROFESSIONAL ENGINEER
OSCAR ALEJANDRE
No. C70863
Exp. 6/30/11
CIVIL
STATE OF CALIFORNIA

THE STATE OF CALIFORNIA OR ITS OFFICERS OR AGENTS SHALL NOT BE RESPONSIBLE FOR THE ACCURACY OR COMPLETENESS OF SCANNED COPIES OF THIS PLAN SHEET.

TRAFFIC HANDLING QUANTITIES

SHEET No.	LOCATION	TEMPORARY CRASH CUSHION MODULES	CHANNELIZER (SURFACE MOUNTED)	TEMPORARY RAILING (TYPE K)
		EA	EA	LF
TH-1	STATION 2421+20	14		
	SEE PLAN SHEETS		5	
	STATION 2421+20 TO 2496+60			7540
TH-2	SEE PLAN SHEETS		4	
	STATION 2420+60 TO 2504+00			8340
TH-3	SEE PLAN SHEETS		3	
	STATION 2422+40 TO 2496+60			7420
TH-4	SEE PLAN SHEETS		4	
	STATION 2422+00 TO 2505+20			8320
SUBTOTAL		14	16	31620
TOTAL		14	16	31620

THIS PLAN ACCURATE FOR TRAFFIC HANDLING QUANTITIES ONLY

TRAFFIC HANDLING QUANTITIES

NO SCALE

THQ-1

STATE OF CALIFORNIA - DEPARTMENT OF TRANSPORTATION
Caltrans® TRAFFIC DESIGN

FUNCTIONAL SUPERVISOR: LARRY SARTORI
CALCULATED-DESIGNED BY: OSCAR ALEJANDRE
CHECKED BY: DARYUSH NAMI
REVISED BY
DATE REVISED

LAST REVISION 04-27-10
DATE PLOTTED => 26-AUG-2010
TIME PLOTTED => 17:09

Dist	COUNTY	ROUTE	POST MILES TOTAL PROJECT	SHEET No.	TOTAL SHEETS
08	SBd	40	R151.7/R153.3	36	51

REGISTERED CIVIL ENGINEER 4-29-10 DATE

8-23-10
PLANS APPROVAL DATE

REGISTERED PROFESSIONAL ENGINEER OSCAR ALEJANDRE No. C70863 Exp. 6/30/11 CIVIL STATE OF CALIFORNIA

THE STATE OF CALIFORNIA OR ITS OFFICERS OR AGENTS SHALL NOT BE RESPONSIBLE FOR THE ACCURACY OR COMPLETENESS OF SCANNED COPIES OF THIS PLAN SHEET.

LEGEND:

XX DETAIL No.

DIRECTION OF TRAVEL

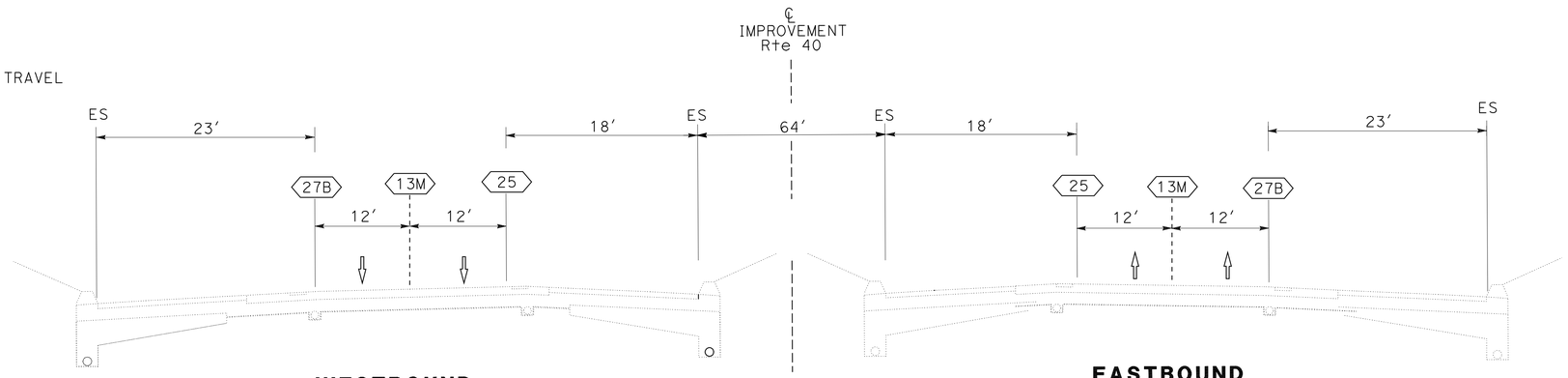

WESTBOUND **EASTBOUND**

Sta 2422+50 TO Sta 2511+50

ROUTE 40

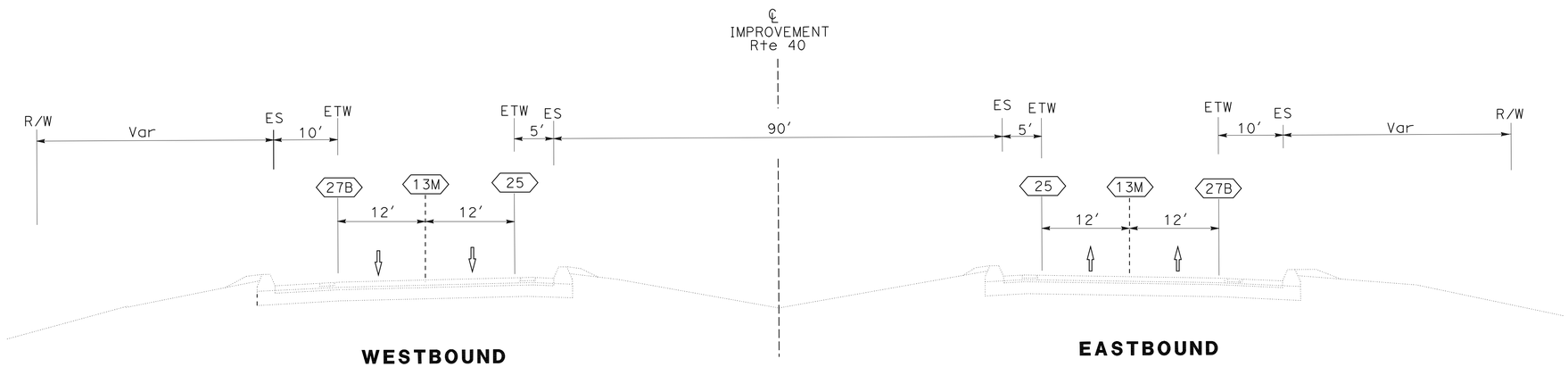

WESTBOUND **EASTBOUND**

STA 2422+50 TO Sta 2511+50

ROUTE 40

PAVEMENT DELINEATION QUANTITIES

LOCATION	DESCRIPTION	THERMOPLASTIC TRAFFIC STRIPE (SPRAYABLE)			PAVEMENT MARKERS				THERMOPLASTIC PAVEMENT MARKING
					NON-REFLECTIVE	RETROREFLECTIVE			
		4" WHITE	4" YELLOW	8" WHITE	TYPE A	TYPE C	TYPE G	TYPE H	
		(LF)			(EA)				SQFT
EB	DETAIL 13M	8900			748		175		
EB	DETAIL 14M					12			
EB	DETAIL 25		8900					187	
EB	DETAIL 27B	8900							
EB	DETAIL 36			900			40		
EB/WB	AIRCRAFT MARKING								24
WB	DETAIL 13M	8900			748		187		
WB	DETAIL 25		8900					187	
WB	DETAIL 27B	8900							
	SUBTOTAL	35,600	17,800	900	1496	12	402	374	24
	TOTAL	54,300			1496	788			24

NOTE:

1) SEE STANDARD PLAN T-10 FOR SHOULDER AND LANE CLOSURE.

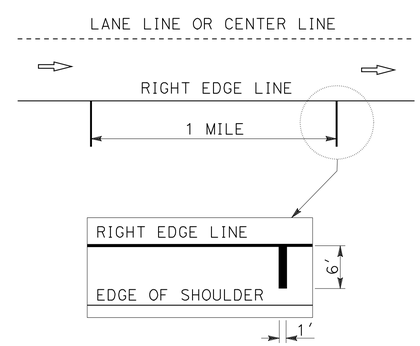

SPEED ENFORCED BY AIRCRAFT PAVEMENT MARKING DETAIL

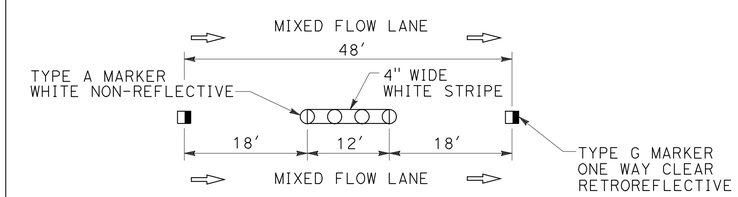

13 M STRIPING DETAIL

THIS PLAN ACCURATE FOR PAVEMENT DELINEATION AND QUANTITIES ONLY

PAVEMENT DELINEATION AND QUANTITIES

NO SCALE

PD-1

REVISED BY	DATE REVISED

CALCULATED-DESIGNED BY	CHECKED BY
OSCAR ALEJANDRE	SHABBIR AHMED

FUNCTIONAL SUPERVISOR: LARRY SARTORI

STATE OF CALIFORNIA - DEPARTMENT OF TRANSPORTATION

Caltrans® TRAFFIC DESIGN

LAST REVISION 04-27-10 | DATE PLOTTED => 26-AUG-2010 | TIME PLOTTED => 17:09

Dist	COUNTY	ROUTE	POST MILES TOTAL PROJECT	SHEET No.	TOTAL SHEETS
08	SBd	40	R151.7/R153.3	37	51

REGISTERED CIVIL ENGINEER 4-29-10 DATE

8-23-10
PLANS APPROVAL DATE

REGISTERED PROFESSIONAL ENGINEER
OSCAR ALEJANDRE
No. C70863
Exp. 6/30/11
CIVIL
STATE OF CALIFORNIA

THE STATE OF CALIFORNIA OR ITS OFFICERS OR AGENTS SHALL NOT BE RESPONSIBLE FOR THE ACCURACY OR COMPLETENESS OF SCANNED COPIES OF THIS PLAN SHEET.

NOTES:

1. EXACT POSITION OF RESET SIGNS TO BE DETERMINED BY THE ENGINEER.
2. MARKERS AND DELINEATORS TO BE RESET SHALL BE INDENTIFIED AND MARKED BY THE ENGINEER.

ROADSIDE SIGN QUANTITIES

LOCATION	SIGN CODE	SIGN MESSAGE	POST SIZE				ROADSIDE SIGN					REMARKS
			4" x 4"	4" x 6"	6" x 6"	6" x 8"	ONE POST	TWO POST	REMOVE	RESET	RELOCATE	
							EA	EA	EA	EA	EA	
EASTBOUND	G83-5	PARK MOABI-ROAD-1 MILE				×		×		1		
EASTBOUND	G86-11	HISTORIC ROUTE 66-NEXT RIGHT				×		×		1		
EASTBOUND	R2-1	SPEED LIMIT-70			×		×			1		
EASTBOUND	G85	PARK MOABI-ROAD- ARROW				×		×		1		
WESTBOUND	W4-1	MERGING SIGN			×		×			1		
WESTBOUND	G27-2, M3-4	CALIFORNIA MARKER-40-WEST			×		×			1		
GRAND TOTAL										6		

RESET MARKERS AND DELINEATORS	95 EA

THIS PLAN ACCURATE FOR SIGN QUANTITIES ONLY

SIGN QUANTITIES

NO SCALE

SQ-1

STATE OF CALIFORNIA - DEPARTMENT OF TRANSPORTATION
Caltrans
TRAFFIC DESIGN

FUNCTIONAL SUPERVISOR: LARRY SARTORI
CALCULATED-DESIGNED BY: OSCAR ALEJANDRE
CHECKED BY: SHABBIR AHMED
REVISED BY
DATE REVISED

LAST REVISION 04-27-10
DATE PLOTTED => 26-AUG-2010
TIME PLOTTED => 17:09

Dist	COUNTY	ROUTE	POST MILES TOTAL PROJECT	SHEET No.	TOTAL SHEETS
08	SBd	40	R151.7/R153.3	38	51

REGISTERED CIVIL ENGINEER 4-29-10 DATE

8-23-10
PLANS APPROVAL DATE

REGISTERED PROFESSIONAL ENGINEER DUNG HUY PHAN No. C 73061 Exp. 12/30/10 CIVIL STATE OF CALIFORNIA

THE STATE OF CALIFORNIA OR ITS OFFICERS OR AGENTS SHALL NOT BE RESPONSIBLE FOR THE ACCURACY OR COMPLETENESS OF SCANNED COPIES OF THIS PLAN SHEET.

QUANTITY OF HMA PAVEMENT FOR WIDENING

WESTBOUND

"A" LINE	WIDENING						NOTES
	FROM INSIDE SHOULDER			FROM OUTSIDE SHOULDER			
STATION	LENGTH (N)	AREA (N)	HMA-C	LENGTH (N)	AREA (N)	HMA-C	
	LF	SQFT	TON	LF	SQFT	TON	
2422+75 - 2435+50 L+				1,275	16,575	540.8	SHEET L-1
2422+75 - 2435+00 R+	1,225	15,925	519.6				
2448+25 - 2451+00 L+				275	3,575	116.6	SHEET L-2
2447+75 - 2451+50 R+	375	4,875	159.0				
2463+50 - 2468+50 L+				500	6,500	212.0	SHEET L-3, 4
2461+50 - 2474+25 R+	1,275	16,575	540.8				
2469+25 - 2475+50 L+				625	8,125	265.1	SHEET L-4
2481+00 - 2483+50 R+	250	3,250	106.0				SHEET L-5
2481+25 - 2484+00 L+				275	3,575	116.6	
2486+50 - 2489+25 R+	275	3,575	116.6				
2487+00 - 2488+50 L+				150	1,950	63.7	
2490+75 - 2503+00 R+	1,225	15,925	519.6				SHEET L-5, 6
2491+00 - 2495+00 L+				400	5,200	169.6	
TOTAL WESTBOUND *	4,625	60,125	1,961.6	3,500	45,500	1,484.4	

(N) - NOT A SEPARATE PAY ITEM, FOR INFORMATION ONLY.
* - SEE SHEET Q-4 FOR QUANTITIES.

EASTBOUND

"B" LINE	WIDENING						LOCAION
	FROM INSIDE SHOULDER			FROM OUTSIDE SHOULDER			
STATION	LENGTH (N)	AREA (N)	HMA-C	LENGTH (N)	AREA (N)	HMA-C	
	LF	SQFT	TON	LF	SQFT	TON	
2422+75 - 2434+50 L+	1,175	15,275	498.3				SHEET L-1
2422+75 - 2439+25 R+				1,650	21,450	699.8	SHEET L-1, 2
2447+50 - 2451+75 L+	425	5,525	180.2				SHEET L-2
2441+75 - 2444+75 R+				300	3,900	127.2	
2447+25 - 2450+75 R+				350	4,550	148.4	
2452+50 - 2453+50 R+				100	1,300	42.4	SHEET L-3
2455+00 - 2457+50 R+				250	3,250	106.0	
2462+25 - 2473+75 L+	1,150	14,950	487.8				SHEET L-3, 4
2463+00 - 2474+50 R+				1,150	14,950	487.7	
2475+50 - 2477+25 R+				175	2,275	74.2	SHEET L-4
2480+75 - 2484+25 R+				350	4,550	148.4	SHEET L-5
2482+50 - 2484+00 L+	150	1,950	63.7				
2486+25 - 2489+50 R+				325	4,225	137.8	
2487+25 - 2489+75 L+	250	3,250	106.0				
2491+25 - 2496+25 R+				500	6,500	212.0	SHEET L-5, 6
2491+25 - 2503+75 L+	1,250	16,250	530.1				
TOTAL EASTBOUND *	4,400	57,200	1,866.1	5,150	66,950	2,183.9	

(N) - NOT A SEPARATE PAY ITEM, FOR INFORMATION ONLY.
* - SEE SHEET Q-4 FOR QUANTITIES.

SUMMARY OF QUANTITIES

Q-1

STATE OF CALIFORNIA - DEPARTMENT OF TRANSPORTATION
Caltrans® DESIGN DIVISION

FUNCTIONAL SUPERVISOR: RENEE SASSE
CALCULATED-DESIGNED BY: DUNG HUY PHAN
CHECKED BY: ANH HUY PHAN
REVISED BY
DATE REVISED

LAST REVISION 04-27-10
DATE PLOTTED => 26-AUG-2010
TIME PLOTTED => 17:09

Dist	COUNTY	ROUTE	POST MILES TOTAL PROJECT	SHEET No.	TOTAL SHEETS
08	SBd	40	R151.7/R153.3	39	51

REGISTERED CIVIL ENGINEER 04-29-10 DATE

8-23-10
PLANS APPROVAL DATE

REGISTERED PROFESSIONAL ENGINEER DUNG HUY PHAN No. C 73061 Exp 12/30/10 CIVIL STATE OF CALIFORNIA

THE STATE OF CALIFORNIA OR ITS OFFICERS OR AGENTS SHALL NOT BE RESPONSIBLE FOR THE ACCURACY OR COMPLETENESS OF SCANNED COPIES OF THIS PLAN SHEET.

QUANTITY OF HMA DIKE

WESTBOUND

"A" LINE	HOT MIX ASPHALT DIKE						NOTES
STATION	INSIDE SHOULDER			OUTSIDE SHOULDER			
	REMOVE	TYPE A	TYPE E	REMOVE	TYPE A	TYPE E	
	LF						
2422+75 - 2435+50 L†				1,275	1,275		SHEET L-1
2422+75 - 2435+00 R†	1,225	1,225					
2442+00 - 2445+75 L†				375		375	SHEET L-2
2447+75 - 2451+50 R†	375	375					
2448+25 - 2451+00 L†				275	275		
2451+00 - 2463+50 L†				1,250		1,250	SHEET L-2, 3
2461+50 - 2474+25 R†	1,275	1,275					SHEET L-3, 4
2463+50 - 2468+50 L†				500	500		
2468+50 - 2469+25 L†				75		75	SHEET L-4
2469+25 - 2475+50 L†				625	625		
2475+50 - 2481+25 L†				575		575	SHEET L-4, 5
2481+00 - 2483+50 R†	250	250					SHEET L-5
2481+25 - 2484+00 L†				275	275		
2484+00 - 2487+00 L†				300		300	
2486+50 - 2489+25 R†	275	275					
2487+00 - 2488+50 L†				150	150		
2488+50 - 2491+00 L†				250		250	
2490+75 - 2503+00 R†	1,375	1,375					SHEET L-5, 6
2491+00 - 2495+00 L†				400	400		
2495+00 - 2504+75 L†				975		975	SHEET L-6
TOTAL WESTBOUND *	4,775	4,775	0	7,300	3,500	3,800	

* - SEE SHEET Q-4 FOR QUANTITIES.

EASTBOUND

"B" LINE	HOT MIX ASPHALT DIKE						NOTES
STATION	INSIDE SHOULDER			OUTSIDE SHOULDER			
	REMOVE	TYPE A	TYPE E	REMOVE	TYPE A	TYPE E	
	LF						
2422+75 - 2434+50 L†	1,175	1,175					SHEET L-1
2422+75 - 2439+25 R†				1,650	1,650		SHEET L-1, 2
2441+75 - 2444+75 R†				300	300		SHEET L-2
2447+25 - 2450+75 R†				350	350		
2447+25 - 2451+75 L†	450	450					
2450+75 - 2462+25 L†	1,150		1,150				SHEET L-2, 3
2450+75 - 2452+50 R†				175		175	
2452+50 - 2453+50 R†				100	100		SHEET L-3
2453+50 - 2455+00 R†				150		150	
2455+00 - 2457+50 R†				250	250		
2457+50 - 2463+00 R†				550		550	
2463+00 - 2474+50 R†				1,150	1,150		SHEET L-3, 4
2462+25 - 2473+75 L†	1,150	1,150					
2474+50 - 2475+25 R†				75		75	SHEET L-4
2475+25 - 2477+25 R†				300	300		SHEET L-4
2477+25 - 2480+75 R†				350		350	SHEET L-4, 5
2482+50 - 2484+00 L†	150	150					SHEET L-5
2480+75 - 2484+25 R†				350	350		
2484+25 - 2486+25 R†				200		200	
2486+25 - 2489+50 R†				325	325		
2487+25 - 2489+75 L†	250	250					
2489+50 - 2491+25 R†				175		175	
2491+25 - 2496+25 R†				500	500		SHEET L-5, 6
2491+25 - 2503+75 L†	1,250	1,250					
2496+25 - 2505+50 R†				925		925	SHEET L-6
2503+75 - 2505+50 L†	175		175				
TOTAL EASTBOUND *	5,750	4,425	1,325	7,875	5,275	2,600	

* - SEE SHEET Q-4 FOR QUANTITIES.

SUMMARY OF QUANTITIES

Q-2

STATE OF CALIFORNIA - DEPARTMENT OF TRANSPORTATION
Caltrans DESIGN DIVISION

FUNCTIONAL SUPERVISOR: RENEE SASSE
CALCULATED-DESIGNED BY: DUNG HUY PHAN
CHECKED BY: ANH HUY PHAN
REVISED BY
DATE REVISED

LAST REVISION 04-27-10 | DATE PLOTTED => 26-AUG-2010 | TIME PLOTTED => 17:09

Dist	COUNTY	ROUTE	POST MILES TOTAL PROJECT	SHEET No.	TOTAL SHEETS
08	SBd	40	R151.7/R153.3	40	51

REGISTERED CIVIL ENGINEER 04-29-10 DATE

8-23-10
PLANS APPROVAL DATE

REGISTERED PROFESSIONAL ENGINEER
DUNG HUY PHAN
No. C 73061
Exp. 12/30/10
CIVIL
STATE OF CALIFORNIA

THE STATE OF CALIFORNIA OR ITS OFFICERS OR AGENTS SHALL NOT BE RESPONSIBLE FOR THE ACCURACY OR COMPLETENESS OF SCANNED COPIES OF THIS PLAN SHEET.

REMOVE FACILITIES

LOCATION	INLET	PIPE	FLARE END SECTION	DRAINAGE FACILITY
	EA	LF	EA	CY
EASTBOUND "B" LINE FROM STATION 2465+69 TO STATION 2468+46	3	361	3	8
TOTAL	3	361	3	8

TEMPORARY FENCE (TORTOISE FENCE)

LOCATION	LF
SEE NOTE	1,000
TOTAL	1,000

NOTE:
EXACT LOCATIONS WITHIN THE PROJECT LIMIT TO BE DETERMINED BY THE ENGINEER.

METAL BEAM GUARD RAILING (AT WHALE MOUNTAIN WASH BRIDGE)

LOCATION	REMOVE MBGR	MINOR CONCRETE (MINOR STRUCTURE)	TRANSITION RAILING (TYPE WB)	MBGR (WOOD POST)	ALTERNATE FLARED TERMINAL SYSTEM
	LF	CY	EA	LF	EA
WESTBOUND	200	1.3	2	150	2
EASTBOUND	200	1.3	2	150	2
TOTAL	400	2.6 *	4	300	4

* SEE SHEET DQ-1 FOR ADDITIONAL QUANTITIES.

SUMMARY OF QUANTITIES

Q-3

REVISED BY | DATE REVISED
DUNG HUY PHAN | ANH HUY PHAN
CALCULATED-DESIGNED BY | CHECKED BY
FUNCTIONAL SUPERVISOR
RENEE SASSE
STATE OF CALIFORNIA - DEPARTMENT OF TRANSPORTATION
Caltrans
DESIGN DIVISION

LAST REVISION 04-27-10
DATE PLOTTED => 26-AUG-2010
TIME PLOTTED => 17:09

Dist	COUNTY	ROUTE	POST MILES TOTAL PROJECT	SHEET No.	TOTAL SHEETS
08	SBd	40	R151.7/R153.3	41	51

REGISTERED CIVIL ENGINEER 4-29-10 DATE

8-23-10
PLANS APPROVAL DATE

REGISTERED PROFESSIONAL ENGINEER
DUNG HUY PHAN
No. C 73061
Exp. 12/30/10
CIVIL
STATE OF CALIFORNIA

THE STATE OF CALIFORNIA OR ITS OFFICERS OR AGENTS SHALL NOT BE RESPONSIBLE FOR THE ACCURACY OR COMPLETENESS OF SCANNED COPIES OF THIS PLAN SHEET.

UNDER DRAIN QUANTITIES

LOCATION	3" PLASTIC PIPE (EDGE DRAIN)	3" PLASTIC PIPE (EDGE DRAIN OUTLET)	IMPERMEABLE MEMBRANE
	LF		SQYD
WESTBOUND	8,125	792	16,250
EASTBOUND	9,550	880	19,100
TOTAL	17,675	1,672	35,350

HMA DIKE & MISCELLANEOUS AREA

LOCATION	REMOVE AC DIKE	PLACE HMA DIKE		PLACE HMA (Misc AREA)	HMA-A			
		TYPE A	TYPE E		Misc AREA (N)	TYPE A (N)	TYPE E (N)	TOTAL
	LF			SQYD	TON			
WESTBOUND	12,075	8,275	3,800	22	2.9	218.7	96.7	318.3
EASTBOUND	13,625	9,700	3,925	22	2.9	256.3	99.9	359.1
TOTAL	25,700	17,975	7,725	44	5.8	475.0	196.6	677.4

(N) - NOT A SEPARATE PAY ITEM, FOR INFORMATION ONLY.

EARTHWORK QUANTITIES

LOCATION	ROADWAY EXCAVATION	PERMEABLE BACKFILL (N)	IMPORTED MATERIAL (SHOULDER BACKING)
	CY		TON
WESTBOUND	42,777	2,934	445
EASTBOUND	42,187	3,449	445
TOTAL	84,964	6,383	890

(N) - NOT A SEPARATE PAY ITEM, FOR INFORMATION ONLY.

PAVEMENT QUANTITIES

LOCATION	COLD PLANE AC PAVEMENT (0.2' Max)	AGGREGATE BASE (CLASS 2)	HMA-C				TACK COAT			SHOULDER RUMBLE STRIP (HMA) ROLLED-IN INDENTATIONS
			OVERLAY (N)	WIDENING (N)	UNDER DIKE (N)	TOTAL	OVERLAY (N)	WIDENING (N)	TOTAL	
	SQYD	CY	TON							Sta
WESTBOUND	39,900	7,237	13,018	3,446	175	16,639	55	16	71	178
EASTBOUND	39,300	8,507	12,800	4,050	198	17,048	54	19	73	178
TOTAL	79,200	15,744	25,818	7,496	373	33,687	109	35	144	356

(N) - NOT A SEPARATE PAY ITEM, FOR INFORMATION ONLY.

SUMMARY OF QUANTITIES

Q-4

REVISED BY | DATE REVISED
DANG HUY PHAN | ANH PHAN
CALCULATED-DESIGNED BY | CHECKED BY
FUNCTIONAL SUPERVISOR: RENEE SASSE
STATE OF CALIFORNIA - DEPARTMENT OF TRANSPORTATION
Caltrans® DESIGN DIVISION

LAST REVISION 04-27-10 | DATE PLOTTED => 26-AUG-2010 | TIME PLOTTED => 17:11

DIST	COUNTY	ROUTE	POST MILES TOTAL PROJECT	SHEET NO.	TOTAL SHEETS
08	SBd	40	R151.7/R153.3	42	51

Randell D. Hiatt
REGISTERED CIVIL ENGINEER

June 5, 2009
PLANS APPROVAL DATE

REGISTERED PROFESSIONAL ENGINEER
Randell D. Hiatt
No. C50200
Exp. 6-30-09
CIVIL
STATE OF CALIFORNIA

The State of California or its officers or agents shall not be responsible for the accuracy or completeness of electronic copies of this plan sheet.

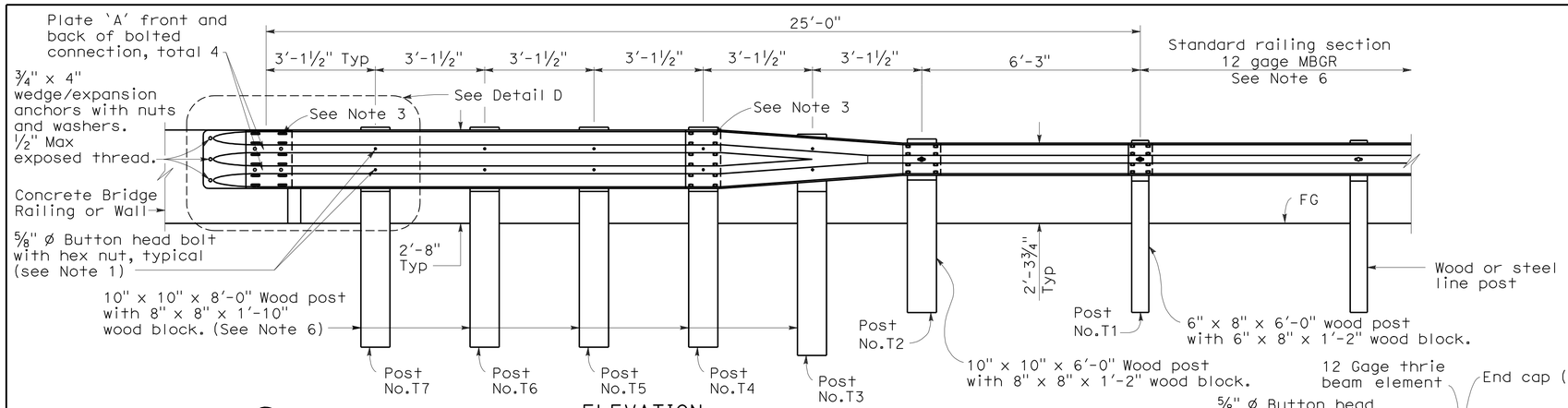

ELEVATION

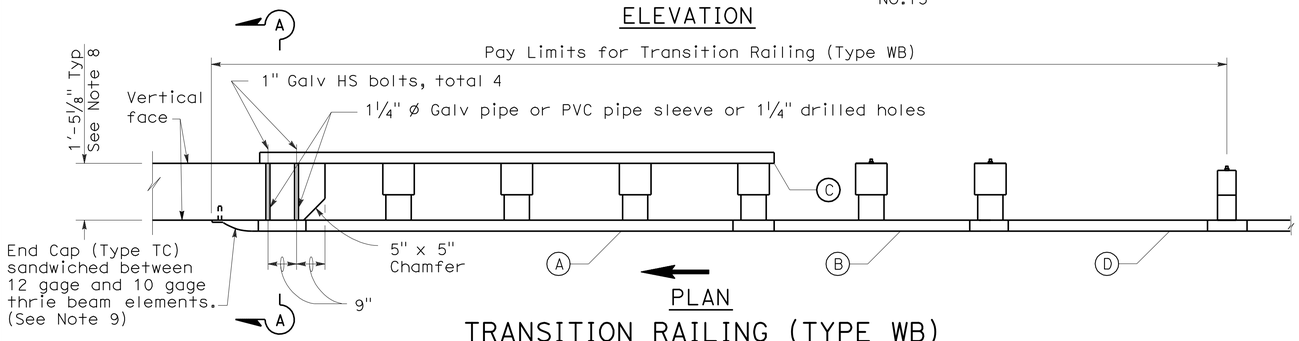

PLAN

TRANSITION RAILING (TYPE WB)

(No Blockout Attachment)

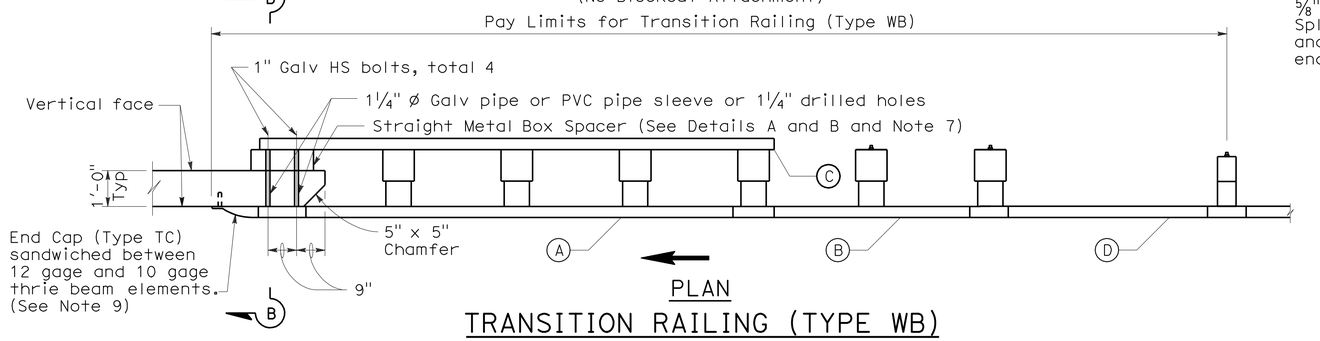

PLAN

TRANSITION RAILING (TYPE WB)

(Blockout Attachment)

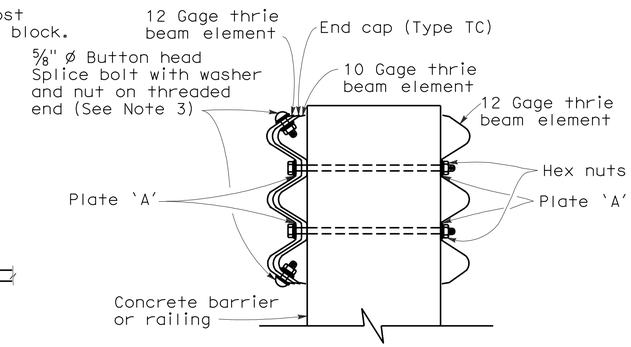

SECTION A-A

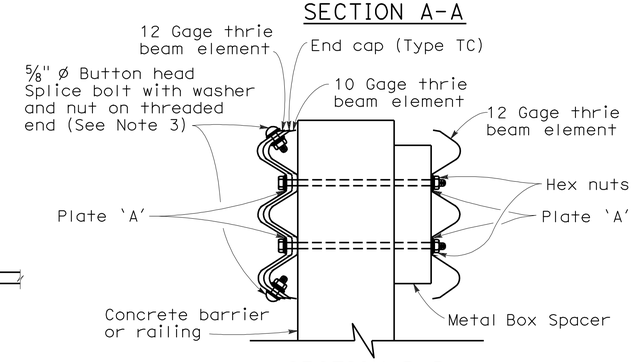

SECTION B-B

NOTES:

To accompany plans dated 8-23-10

1. Use 5/8 " ø Button head bolts and hex nuts for connections to posts. No washer on rail face for bolted connections to post.
2. The nested rail elements, end cap, and 'W' beam to thrie beam element may be spliced together prior to bolting the elements to the wood post and concrete barrier or railing.
3. Exterior splice bolt holes for rail element splices at Post No.T4 and the connection to the concrete barrier or railing shall be the standard 29/32 " x 1 1/8 " slot size. Interior splice bolt holes at these locations may be increased up to 1 1/4 " ø. Only the top 2 and the bottom 2 splice bolts with washers and nuts are required for rail splices at Post No.T4 and the connection to the concrete barrier or railing.
4. Direction of adjacent traffic indicated by →.
5. The top elevation of Post Nos.T2 through T7 shall not project more than 1" above the top elevation of the rail element.
6. Typically, the railing connected to Transition Railing (Type WB) will be either standard railing section of metal beam guard railing or an approved Caltrans end treatment attached to Post No.T1.
7. The depth of the metal box spacer varies from the 5 1/8 " to 1 1/2 " and is dependent on the width of the concrete railing or wall. The combined dimension for the depth of the metal box spacer plus the width of railing or wall is typically 17 1/8 ". Where the space between the backside of the concrete railing or wall and the rear thrie beam element is less than 1 1/2 ", metal plates similar to Plate 'A' are to be used as spacers.
8. Where the width of the concrete railing or wall is greater than 17 1/8 ", wood blocks are to be used to fill the space created between the backside of Posts No.4 through No.7 and the rear thrie beam element. These wood blocks shall be 8" in width and 1'-2" in length. The dimension between the front thrie beam element and the rear thrie beam element is to match the width of the concrete railing or wall.
9. End cap may be installed over 12 gage and 10 gage thrie beam elements where transition railing is installed on the departure end of bridge railing.

LEGEND

(A) Nested thrie beam elements (one 12 gage element nested over one 10 gage element).

(B) One 10 gage "W" beam to thrie beam element.

(C) One 12 gage thrie beam element.

(D) One 10 gage "W" beam rail element (7'-3½" length)

10 gage = 0.135" thick

12 gage = 0.108" thick

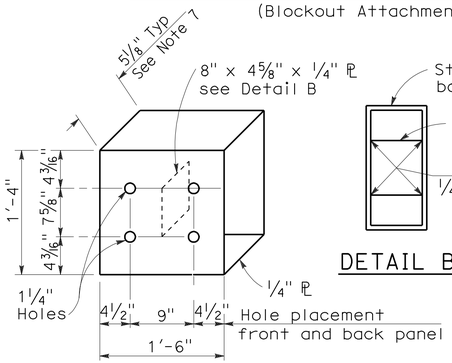

DETAIL A

STRAIGHT METAL BOX SPACER

DETAIL B

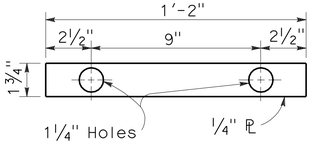

DETAIL C

PLATE 'A'

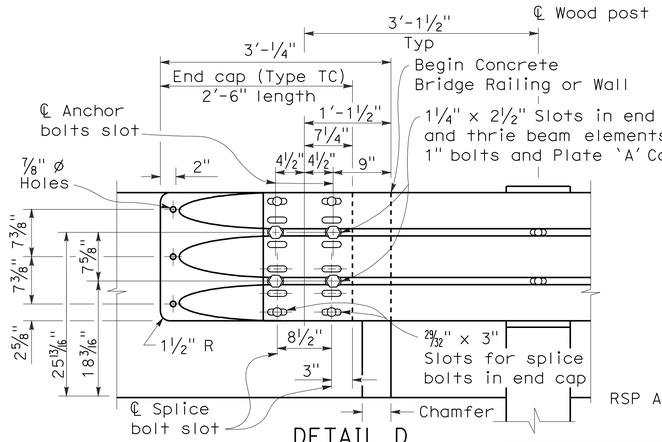

DETAIL D

STATE OF CALIFORNIA
DEPARTMENT OF TRANSPORTATION

METAL BEAM GUARD RAILING TRANSITION RAILING (TYPE WB)

NO SCALE

RSP A77J4 DATED JUNE 5, 2009 SUPERSEDES RSP A77J4 DATED JUNE 6, 2008 AND STANDARD PLAN A77J4 DATED MAY 1, 2006 - PAGE 75 OF THE STANDARD PLANS BOOK DATED MAY 2006.

REVISED STANDARD PLAN RSP A77J4

2006 REVISED STANDARD PLAN RSP A77J4

DIST	COUNTY	ROUTE	POST MILES TOTAL PROJECT	SHEET NO.	TOTAL SHEETS
08	SBd	40	R151.7/R153.3	43	51

Raymond Don Tsztoo
REGISTERED CIVIL ENGINEER

January 18, 2008
PLANS APPROVAL DATE

REGISTERED PROFESSIONAL ENGINEER
Raymond Don Tsztoo
No. C37332
Exp. 6-30-08
CIVIL
STATE OF CALIFORNIA

The State of California or its officers or agents shall not be responsible for the accuracy or completeness of electronic copies of this plan sheet.

To accompany plans dated 8-23-10

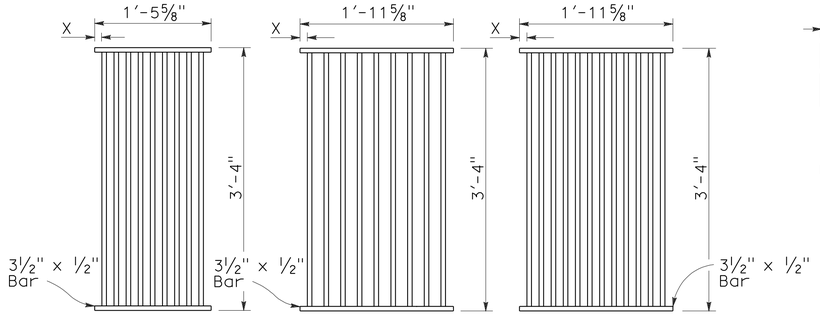

TYPE 18-9

1⅜" Clear spacing. Use within the roadbed on highways where bicycles and pedestrians are excluded.

TYPE 24-9

2" Clear spacing. Use in locations off the roadbed on all types of highways.

TYPE 24-12

1⅜" Clear spacing. Use within the roadbed on highways where bicycles and pedestrians are excluded.

RECTANGULAR GRATE DETAILS

(See table below)

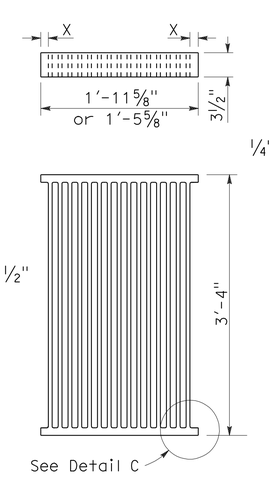

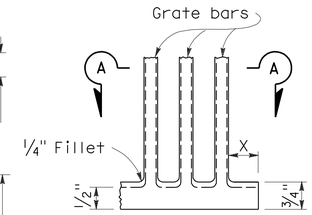

DETAIL C

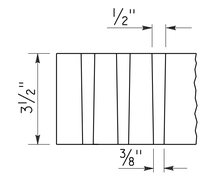

SECTION A-A

ALTERNATIVE CAST NODULAR IRON GRATE OR CAST STEEL GRATE

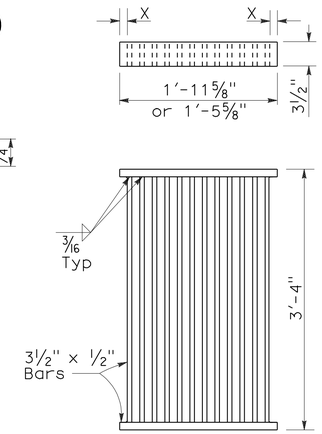

ALTERNATIVE WELDED GRATE

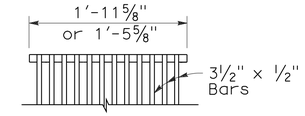

CAST END BLOCK

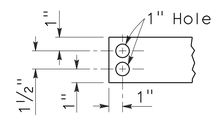

END OF BAR

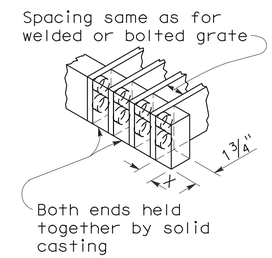

ALTERNATIVE CAST NODULAR IRON OR CAST STEEL END BLOCK GRATE

NOTES:

1. Grate type numbers refer to approximate width of grate in inches and number of bars, respectively.
2. Contractor has the option of using cast nodular iron, cast steel, welded, bolted, or cast end block grate.
3. See Special Provisions for requirements pertaining to galvanizing or asphalt dipping of grates and frames.
4. Rounded top of bars optional on all grates.
5. Pipe inlets with a grate shall be placed so that bars parallel direction of principle surface flow.
6. Full penetration butt welds may be substituted for the fillet welds on all anchors.
7. Standard square, hexagon, round or equivalent headed anchors may be substituted for the right angle hooks on the anchors shown on this plan.
8. Grate and frame weights are based on welded grates (weights of face angles, steps, protection bars, etc. are not included).

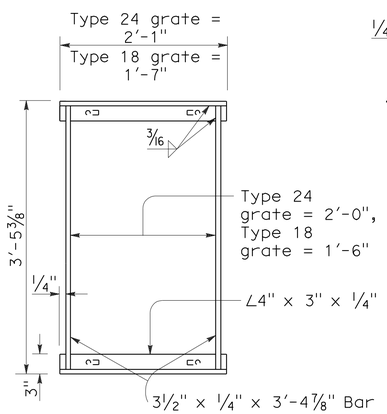

TYPICAL FRAME

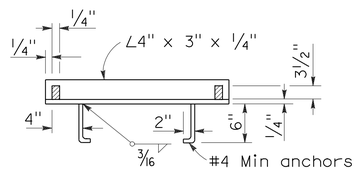

CROSS SECTION

(Thru frame)

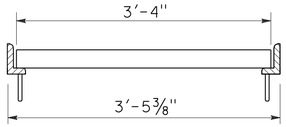

LONGITUDINAL SECTION

(Thru frame and grate)

RECTANGULAR FRAME DETAILS

(For all rectangular grates)

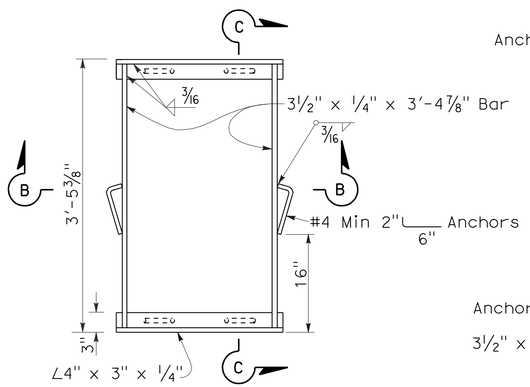

TYPICAL FRAME

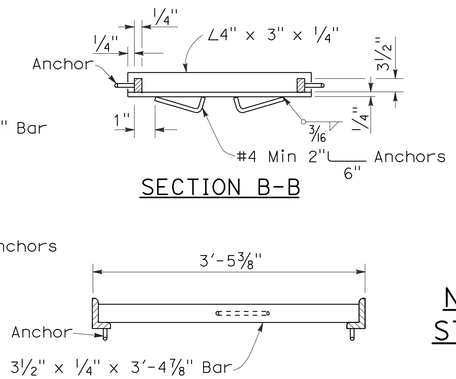

SECTION B-B

SECTION C-C

ALTERNATIVE ANCHOR FOR RECTANGULAR FRAME

(For details not shown, See Rectangular Frame Details)

INLET TYPE	GRATE TYPE	No. OF GRATES	WEIGHT LB
GDO	24-12	2	634
GOL-7	24-12	1	326
GOL-10	24-12	1	326
GO,G1,G2,G3,G4 (TYPE 24)	24-9	1	263
	24-12	1	326
G4 (TYPE 18),G5,G6	18-9	1	249
GT1	18-9	2	498
GT2	18-9	2	498
GT3	24-12	2	652
GT4	24-12	2	652
TRASH RACK			22

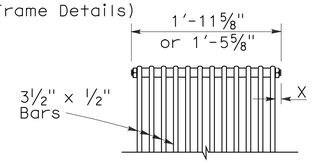

BOLTED END BLOCK

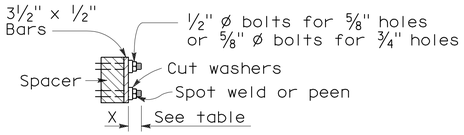

BOLTING DETAIL

ALTERNATIVE BOLTED GRATE

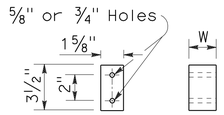

BAR SPACER

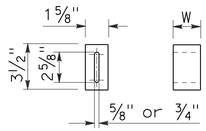

ALTERNATIVE SPACER

W = 1⅜" or 2"

GRATE BAR SPACING TABLE

TYPE	No. OF BARS	CLEAR BAR SPACING	X
18-9	9	1⅜"	1 1/16"
24-9	9	2"	1 9/16"
24-12	12	1⅜"	1¼"

INLET TYPE	COVER TYPE	WEIGHT LB
OS	PLATE	174
OL-7	PLATE	170
OL-10	PLATE	170
OL-14	PLATE	170
OL-21	PLATE	170
OCP	PLATE	112
OCPI	PLATE	112
OCPI	REDWOOD	42
OMP	PLATE	177
OMPI	PLATE	177

BASIS FOR MISC IRON & STEEL FINAL PAY WEIGHTS FOR DRAINAGE INLETS

(See General Notes, No 8)

STATE OF CALIFORNIA
DEPARTMENT OF TRANSPORTATION

GRATE DETAILS

NO SCALE

RSP D77A DATED JANUARY 18, 2008 SUPERSEDES STANDARD PLAN D77A DATED MAY 1, 2006 - PAGE 155 OF THE STANDARD PLANS BOOK DATED MAY 2006.

REVISED STANDARD PLAN RSP D77A

2006 REVISED STANDARD PLAN RSP D77A

12-14-07

DIST	COUNTY	ROUTE	POST MILES TOTAL PROJECT	SHEET NO.	TOTAL SHEETS
08	SBd	40	R151.7/R153.3	44	51

Randell D. Hiatt
REGISTERED CIVIL ENGINEER

June 6, 2008
PLANS APPROVAL DATE

REGISTERED PROFESSIONAL ENGINEER
Randell D. Hiatt
No. C50200
Exp. 6-30-09
CIVIL
STATE OF CALIFORNIA

The State of California or its officers or agents shall not be responsible for the accuracy or completeness of electronic copies of this plan sheet.

To accompany plans dated 8-23-10

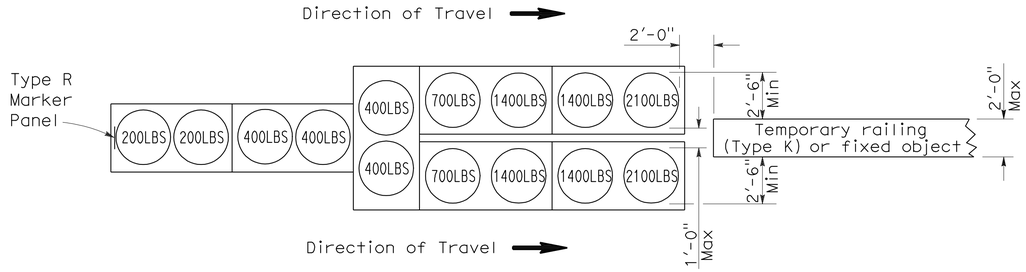

ARRAY 'TU14'

Approach speed 45 mph or more

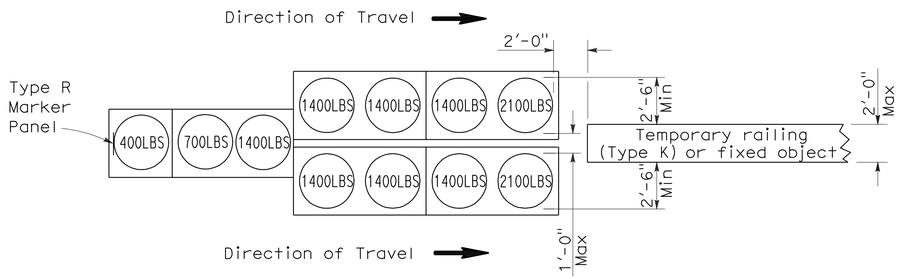

ARRAY 'TU11'

Approach speed less than 45 mph

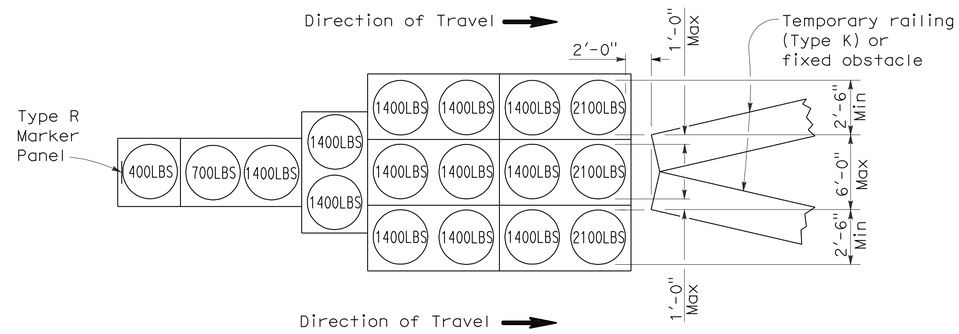

ARRAY 'TU17'

Approach speed less than 45 mph

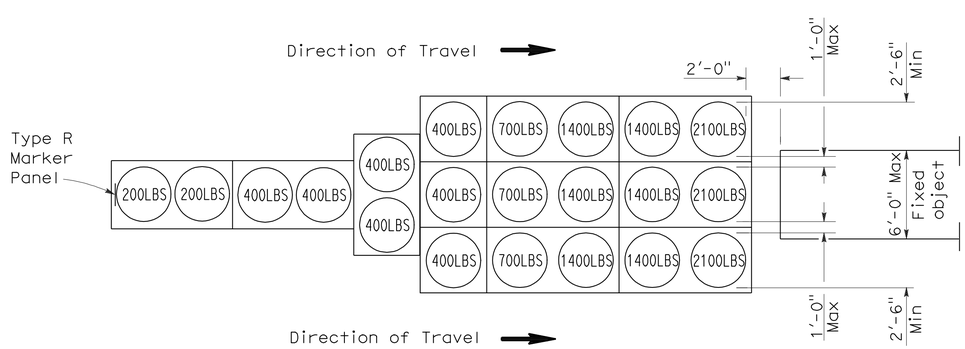

ARRAY 'TU21'

Approach speed 45 mph or more

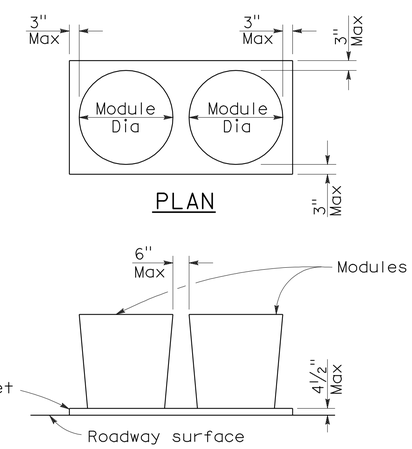

PLAN

ELEVATION

CRASH CUSHION PALLET DETAIL

See Note 7

NOTES:

1. (XXX) Indicates sand filled module location and weight of sand in pounds for each module. Module spacing is based on the greater diameter of the module.
2. All sand weights are nominal.
3. Temporary crash cushion arrays shall not encroach on the traveled way.
4. Place the top of Type R marker panel 1" below the module lid.
5. Refer to Standard Plan A73B for marker details.
6. Approach speeds indicated conform to NCHRP 350 Report criteria.
7. Use of pallets is optional.

STATE OF CALIFORNIA
DEPARTMENT OF TRANSPORTATION

TEMPORARY CRASH CUSHION, SAND FILLED (UNIDIRECTIONAL)

NO SCALE

RSP T1A DATED JUNE 6, 2008 SUPERSEDES STANDARD PLAN T1A
DATED MAY 1, 2006 - PAGE 211 OF THE STANDARD PLANS BOOK DATED MAY 2006.

REVISED STANDARD PLAN RSP T1A

2006 REVISED STANDARD PLAN RSP T1A

DIST	COUNTY	ROUTE	POST MILES TOTAL PROJECT	SHEET NO.	TOTAL SHEETS
08	SBd	40	R151.7/R153.3	45	51

Randell D. Hiatt
REGISTERED CIVIL ENGINEER

June 6, 2008
PLANS APPROVAL DATE

REGISTERED PROFESSIONAL ENGINEER
Randell D. Hiatt
No. C50200
Exp. 6-30-09
CIVIL
STATE OF CALIFORNIA

The State of California or its officers or agents shall not be responsible for the accuracy or completeness of electronic copies of this plan sheet.

To accompany plans dated 8-23-10

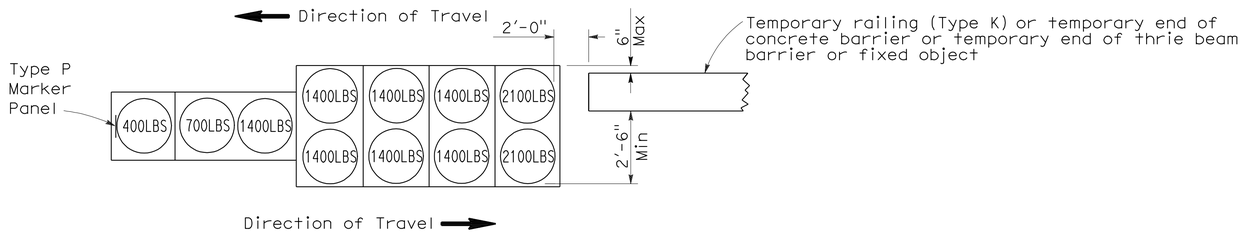

ARRAY 'TB11'

Approach speed less than 45 mph

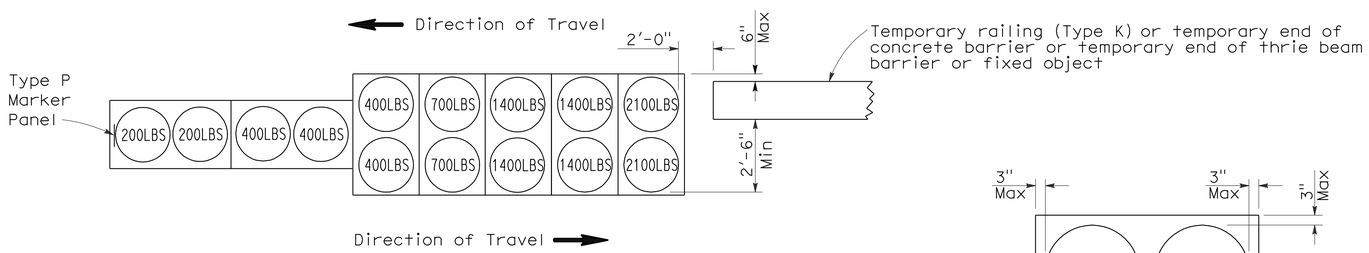

ARRAY 'TB14'

Approach speed 45 mph or more

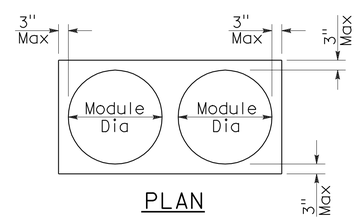

PLAN

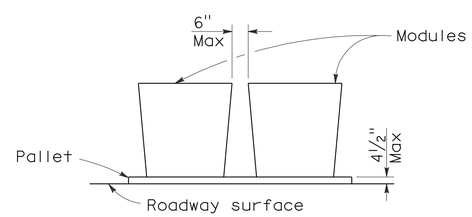

ELEVATION

CRASH CUSHION PALLET DETAIL

See Note 7

NOTES:

1. (XXX) Indicates sand filled module location and weight of sand in pounds for each module. Module spacing is based on the greater diameter of the module.
2. All sand weights are nominal.
3. Temporary crash cushion arrays shall not encroach on the traveled way.
4. Place the Type P marker panel so that the bottom of the panel rests upon the pallet.
5. Refer to Standard Plan A73B for marker details.
6. Approach speeds indicated conform to NCHRP 350 Report criteria.
7. Use of pallets is optional.

STATE OF CALIFORNIA
DEPARTMENT OF TRANSPORTATION

TEMPORARY CRASH CUSHION, SAND FILLED (BIDIRECTIONAL)

NO SCALE

RSP T1B DATED JUNE 6, 2008 SUPERSEDES STANDARD PLAN T1B
DATED MAY 1, 2006 - PAGE 212 OF THE STANDARD PLANS BOOK DATED MAY 2006.

REVISED STANDARD PLAN RSP T1B

2006 REVISED STANDARD PLAN RSP T1B

DIST	COUNTY	ROUTE	POST MILES TOTAL PROJECT	SHEET NO.	TOTAL SHEETS
08	SBd	40	R151.7/R153.3	46	51

Randell D. Hiatt
REGISTERED CIVIL ENGINEER

June 6, 2008
PLANS APPROVAL DATE

REGISTERED PROFESSIONAL ENGINEER
Randell D. Hiatt
No. C50200
Exp. 6-30-09
CIVIL
STATE OF CALIFORNIA

The State of California or its officers or agents shall not be responsible for the accuracy or completeness of electronic copies of this plan sheet.

To accompany plans dated 8-23-10

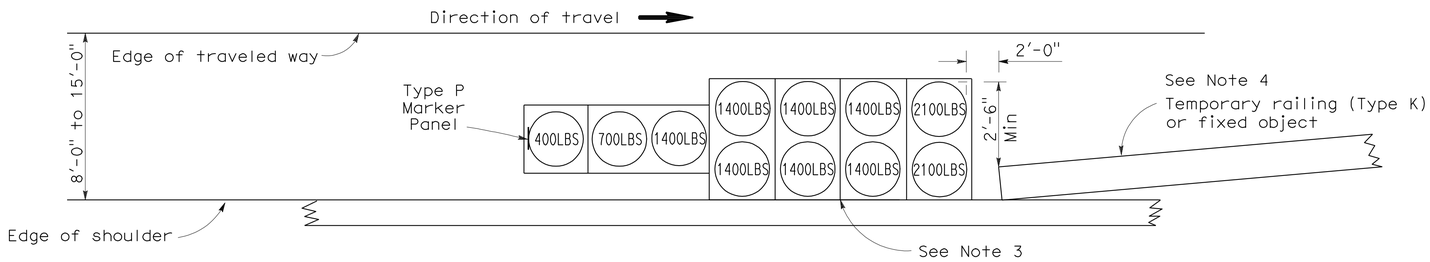

ARRAY 'TS11'

Approach speed less than 45 mph
See Note 9

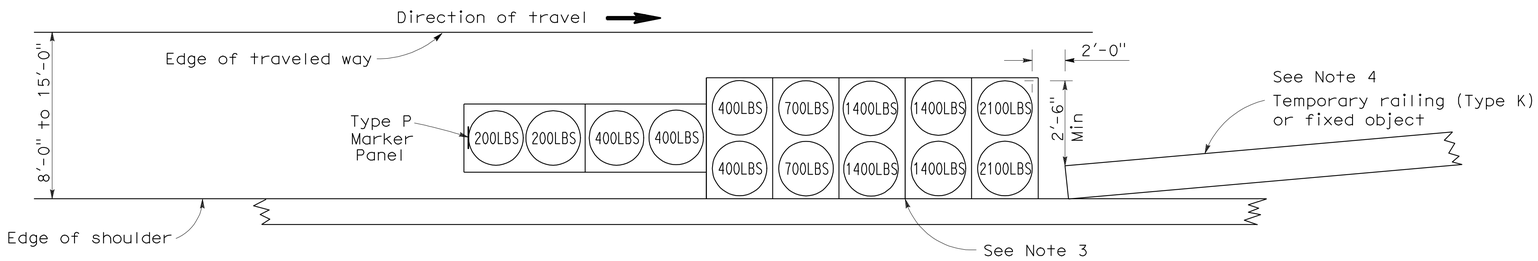

ARRAY 'TS14'

Approach speed 45 mph or more
See Note 9

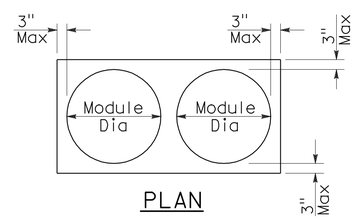

PLAN

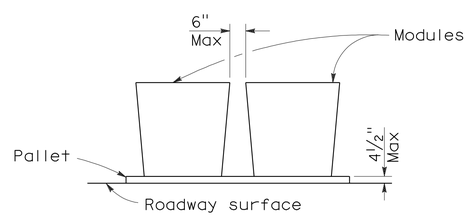

ELEVATION

CRASH CUSHION PALLET DETAIL

See Note 11

NOTES:

1. (XXX) Indicates sand filled module location and weight of sand in pounds for each module. Module spacing is based on the greater diameter of the module.
2. All sand weights are nominal.
3. The temporary crash cushion arrays shown on this plan shall be used only in locations where there will be traffic on one side of the temporary crash cushion array.
4. If the fixed object or approach end of the temporary railing is less than 15'-0" from the edge of traveled way, a temporary crash cushion is required in a construction or work zone.
5. Temporary crash cushion arrays shall not encroach on the traveled way.
6. Arrays for median shoulders shall conform to details shown on this plan for outside shoulders.
7. Place the Type P marker panel so that the bottom of the panel rests upon the pallet and faces traffic.
8. Refer to Standard Plan A73B for marker details.
9. For shoulder widths less than 8'-0", appropriate approved crash cushion protection, other than sand filled modules, shall be provided at fixed objects and at approach ends of temporary railing. The specific type of crash cushion shall be as shown on the project plans or as specified in the Special Provisions, or if not shown on the project plans or specified in the Special Provisions, shall be as approved by the Engineer.
10. Approach speeds indicated conform to NCHRP 350 Report criteria.
11. Use of pallets is optional.

STATE OF CALIFORNIA
DEPARTMENT OF TRANSPORTATION

TEMPORARY CRASH CUSHION, SAND FILLED (SHOULDER INSTALLATIONS)

NO SCALE

RSP T2 DATED JUNE 6, 2008 SUPERSEDES STANDARD PLAN T2
DATED MAY 1, 2006 - PAGE 213 OF THE STANDARD PLANS BOOK DATED MAY 2006.

REVISED STANDARD PLAN RSP T2

2006 REVISED STANDARD PLAN RSP T2

DIST	COUNTY	ROUTE	POST MILES TOTAL PROJECT	SHEET NO.	TOTAL SHEETS
08	SBd	40	R151.7/R153.3	47	51

LICENSED LANDSCAPE ARCHITECT

April 3, 2009
PLANS APPROVAL DATE

The State of California or its officers or agents shall not be responsible for the accuracy or completeness of electronic copies of this plan sheet.

LICENSED LANDSCAPE ARCHITECT — Robert B. Schott — Signature — 11-30-10 Renewal Date — 2-25-09 Date — STATE OF CALIFORNIA

To accompany plans dated 8-23-10

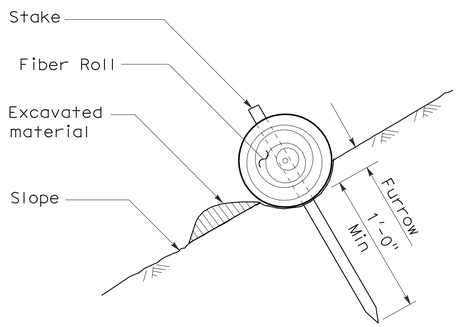

SECTION

TEMPORARY FIBER ROLL (TYPE 1)

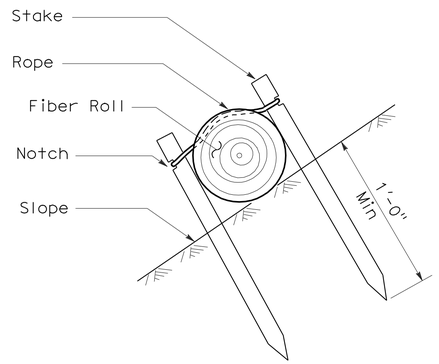

SECTION

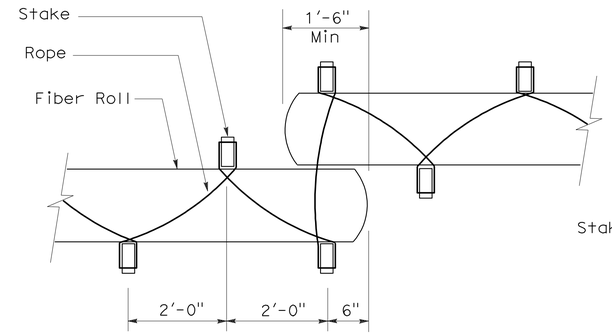

PLAN

TEMPORARY FIBER ROLL (TYPE 2)

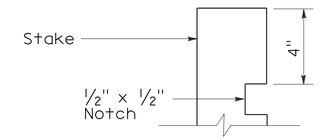

ELEVATION

STAKE NOTCH DETAIL

NOTES:

1. Temporary fiber roll spacing varies depending upon slope inclination.
2. Installations shown in the perspectives are for slope inclination of 10:1 and steeper.

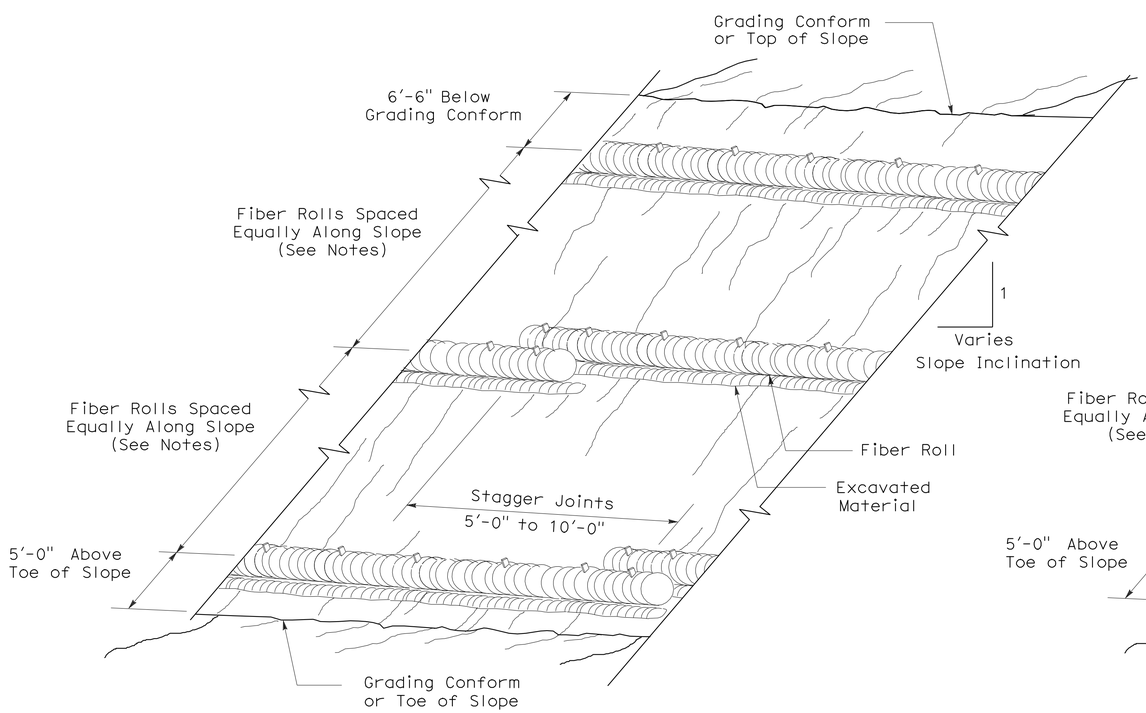

PERSPECTIVE

TEMPORARY FIBER ROLL (TYPE 1)

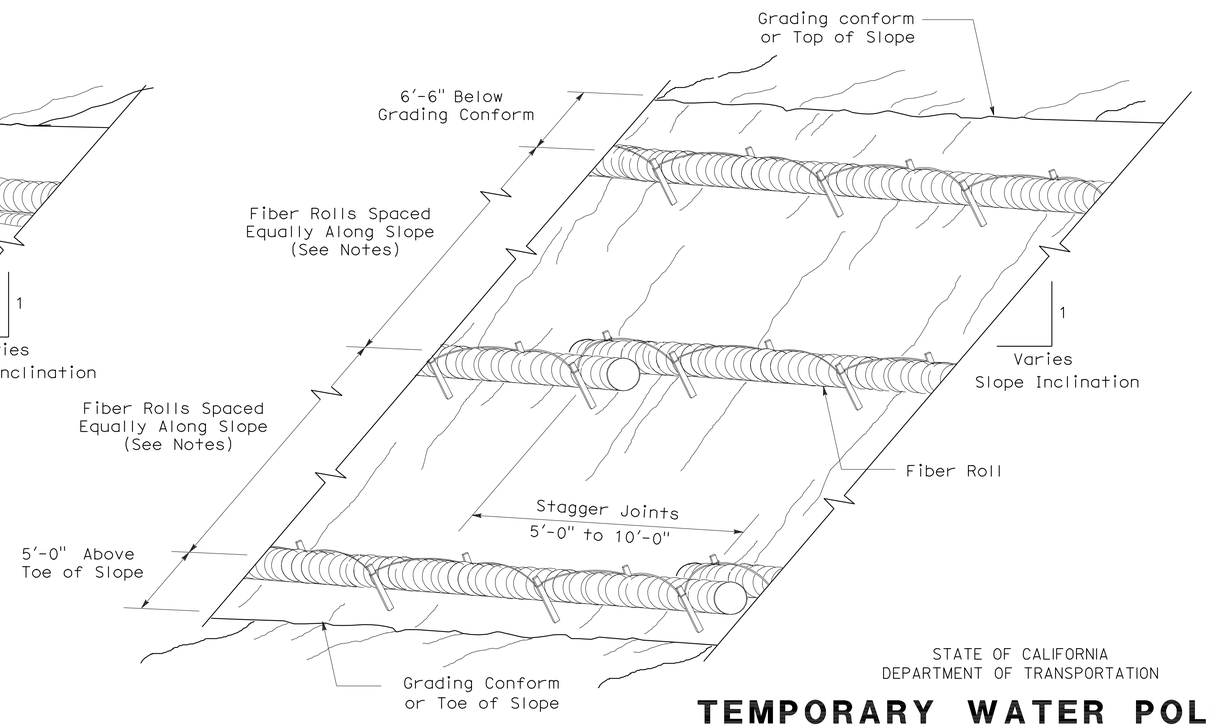

PERSPECTIVE

TEMPORARY FIBER ROLL (TYPE 2)

STATE OF CALIFORNIA
DEPARTMENT OF TRANSPORTATION

TEMPORARY WATER POLLUTION CONTROL DETAILS (TEMPORARY FIBER ROLL)

NO SCALE

RSP T56 DATED APRIL 3, 2009 SUPERSEDES STANDARD PLAN T56
DATED MAY 1, 2006 - PAGE 232 OF THE STANDARD PLANS BOOK DATED MAY 2006.

REVISED STANDARD PLAN RSP T56

2006 REVISED STANDARD PLAN RSP T56

2-23-09

DIST	COUNTY	ROUTE	POST MILES TOTAL PROJECT	SHEET NO.	TOTAL SHEETS
08	SBd	40	R151.7/R153.3	48	51

LICENSED LANDSCAPE ARCHITECT

August 15, 2008
PLANS Approval DATE

The State of California or its officers or agents shall not be responsible for the accuracy or completeness of electronic copies of this plan sheet.

LICENSED LANDSCAPE ARCHITECT — Robert B. Schott — Signature — 11-04-08 Renewal Date — 08-11-08 Date — STATE OF CALIFORNIA

To accompany plans dated 8-23-10

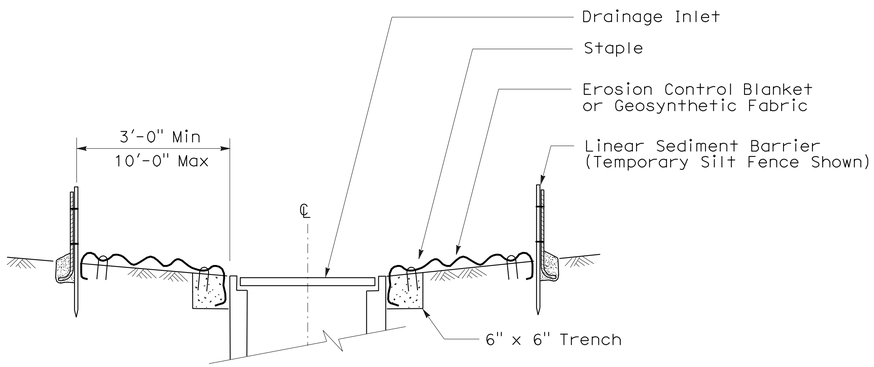

SECTION A-A

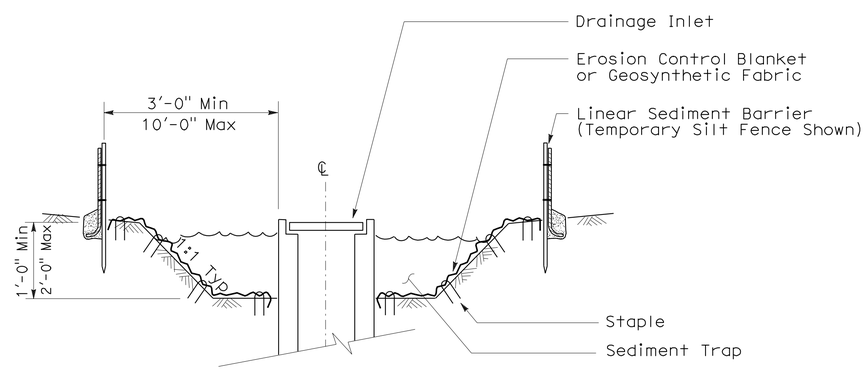

SECTION B-B

NOTES:

1. See Standard Plan T51 for Temporary Silt Fence.
2. Dimensions may vary to fit field conditions.

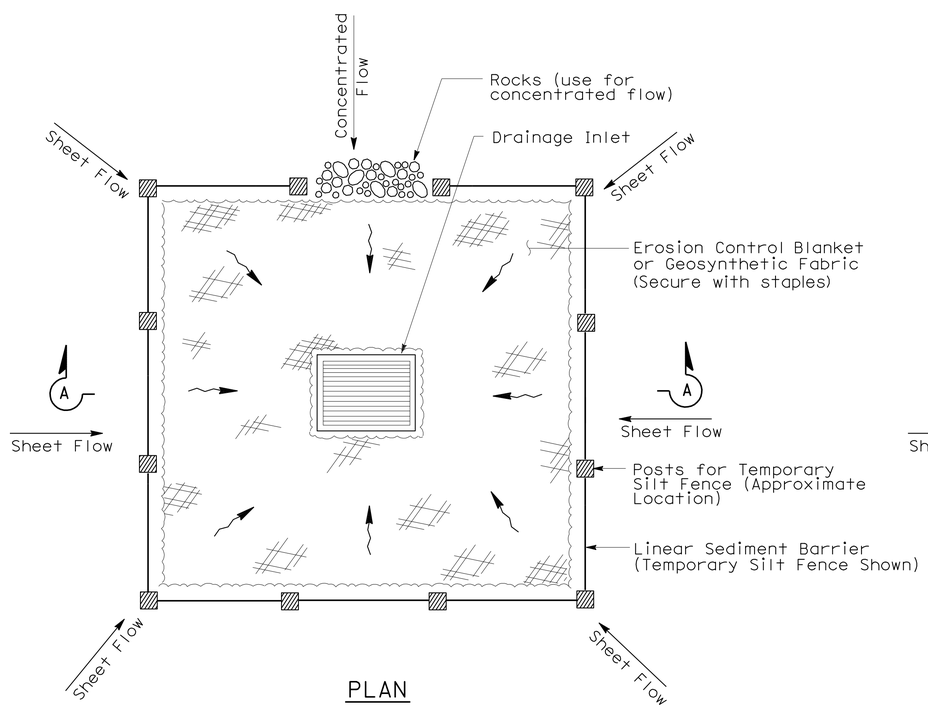

PLAN

TEMPORARY DRAINAGE INLET PROTECTION (TYPE 1)

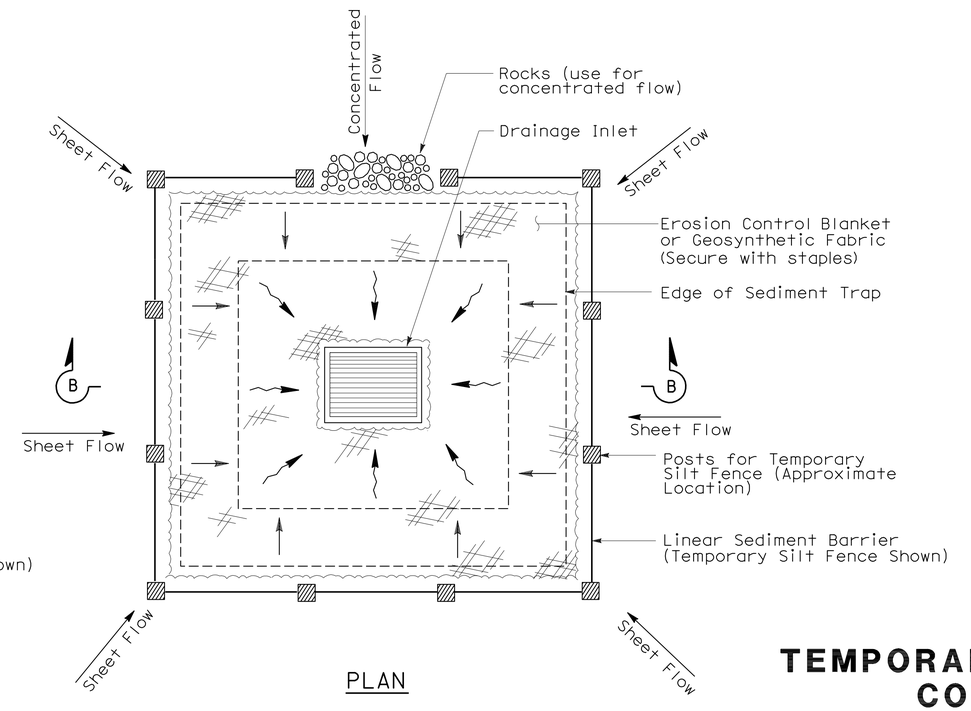

PLAN

TEMPORARY DRAINAGE INLET PROTECTION (TYPE 2) (EXCAVATED SEDIMENT TRAP)

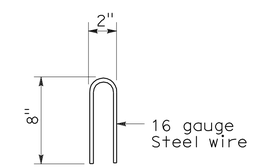

STAPLE DETAIL

STATE OF CALIFORNIA
DEPARTMENT OF TRANSPORTATION

TEMPORARY WATER POLLUTION CONTROL DETAILS (TEMPORARY DRAINAGE INLET PROTECTION)

NO SCALE

NSP T61 DATED AUGUST 15, 2008 SUPPLEMENTS THE STANDARD PLANS BOOK DATED MAY 2006.

NEW STANDARD PLAN NSP T61

2006 NEW STANDARD PLAN NSP T61

7-11-08

DIST	COUNTY	ROUTE	POST MILES TOTAL PROJECT	SHEET NO.	TOTAL SHEETS
08	SBd	40	R151.7/R153.3	49	51

LICENSED LANDSCAPE ARCHITECT

August 15, 2008
PLANS APPROVAL DATE

LICENSED LANDSCAPE ARCHITECT — Robert B. Schott — Signature — 11-04-08 Renewal Date — 08-11-08 Date — STATE OF CALIFORNIA

The State of California or its officers or agents shall not be responsible for the accuracy or completeness of electronic copies of this plan sheet.

To accompany plans dated 8-23-10

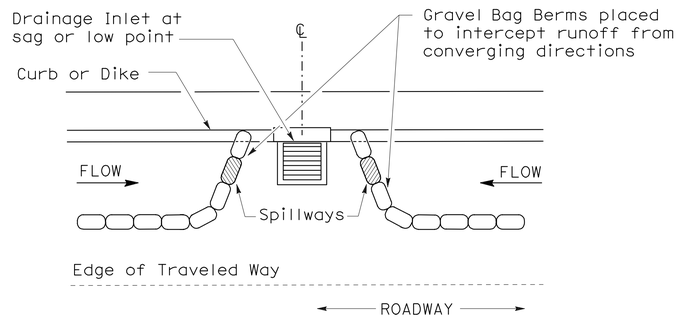

PLAN

CONFIGURATION FOR SAG POINT INLET (GRAVEL BAG BERM)

GRAVEL BAG BERM (TYPE 3A) SPACING TABLE

SLOPE OF ROADWAY (PERCENT)	1 to 3.9	4 to 5.9	6 to 7.9	8 to 10	10+
INTERVAL BETWEEN BERM	100′	75′	50′	25′	12′

For slope of less than 1%, install barriers only if erosion/sediment is prevalent

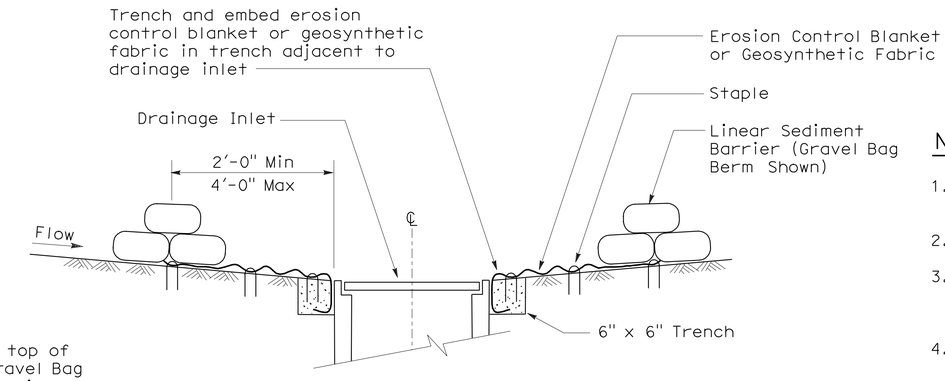

SECTION A-A

NOTES:

1. Place safety cones adjacent to drainage inlet protection.
2. Dimensions may vary to fit field conditions.
3. Install a minimum of 3 gravel bag berms upstream of each drainage inlet to be protected.
4. Position erosion control blanket or geosynthetic fabric at edge of concrete apron and secure in trench.
5. Erosion control blanket or geosynthetic fabric is not required if the area adjacent to the drainage inlet is vegetated or paved.

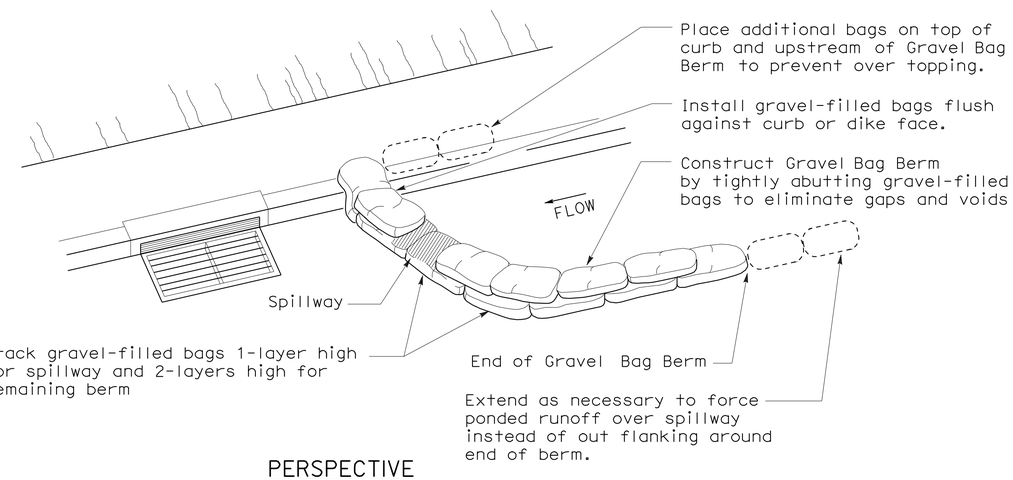

PERSPECTIVE

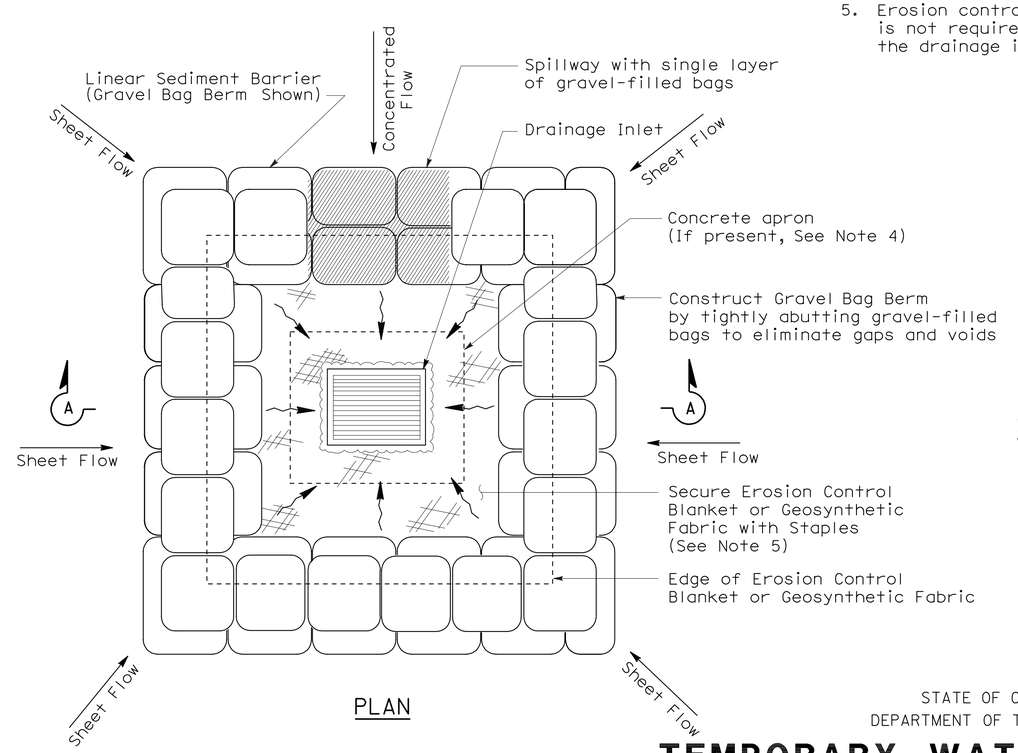

PLAN

TEMPORARY DRAINAGE INLET PROTECTION (TYPE 3B)

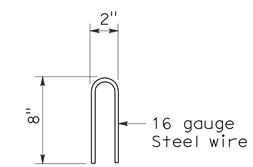

STAPLE DETAIL

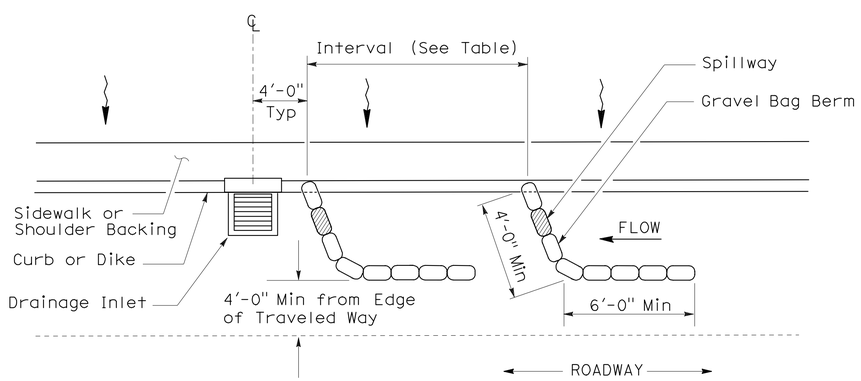

PLAN

TEMPORARY DRAINAGE INLET PROTECTION (TYPE 3A) (GRAVEL BAG BERM)

STATE OF CALIFORNIA
DEPARTMENT OF TRANSPORTATION

TEMPORARY WATER POLLUTION CONTROL DETAILS (TEMPORARY DRAINAGE INLET PROTECTION)

NO SCALE

NSP T62 DATED AUGUST 15, 2008 SUPPLEMENTS THE STANDARD PLANS BOOK DATED MAY 2006.

NEW STANDARD PLAN NSP T62

2006 NEW STANDARD PLAN NSP T62

7-11-08

DIST	COUNTY	ROUTE	POST MILES TOTAL PROJECT	SHEET NO.	TOTAL SHEETS
08	SBd	40	R151.7/R153.3	50	51

LICENSED LANDSCAPE ARCHITECT

August 15, 2008
PLANS APPROVAL DATE

The State of California or its officers or agents shall not be responsible for the accuracy or completeness of electronic copies of this plan sheet.

LICENSED LANDSCAPE ARCHITECT Robert B. Schott 3025 Signature 11-04-08 Renewal Date 08-11-08 Date STATE OF CALIFORNIA

To accompany plans dated 8-23-10

FLEXIBLE SEDIMENT BARRIER SPACING TABLE

SLOPE OF ROADWAY (PERCENT)	0 to 0.9	1 to 1.9	2 to 2.9	3 to 4	5+
INTERVAL BETWEEN BARRIERS	50′	35′	30′	25′	20′
ANGLE FROM FACE OF CURB	70°	70°	70°	45°	45°
SUGGESTED BARRIER LENGTH	6′	6′	6′	6′	6′

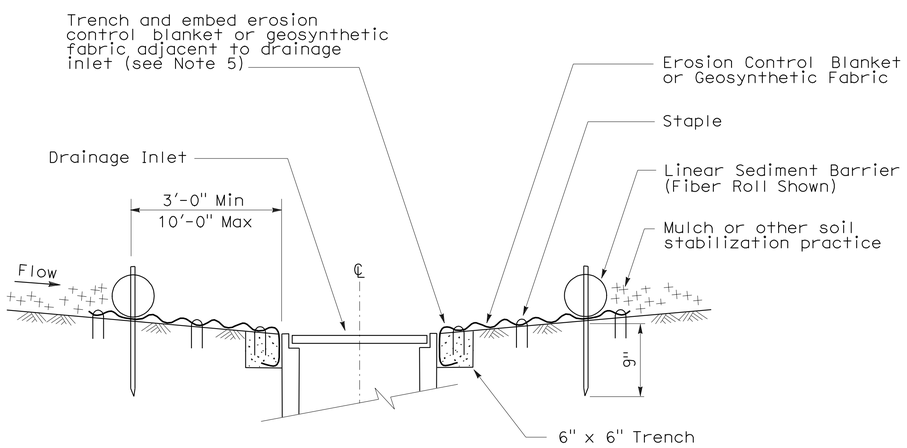

SECTION A-A

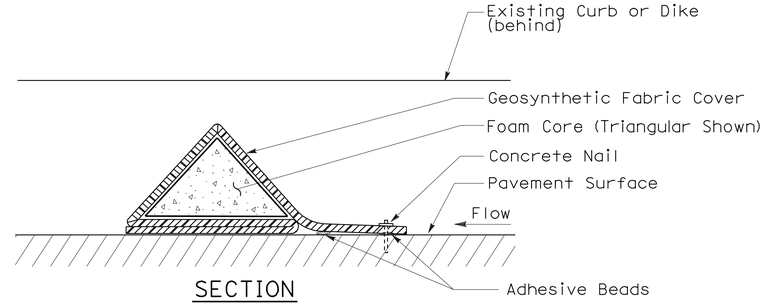

SECTION

FLEXIBLE SEDIMENT BARRIER DETAIL (FOAM BARRIER SHOWN)

NOTES:

1. See Standard Plan T51 for Temporary Silt Fence.
2. Dimensions may vary to fit field conditions.
3. Install a minimum of 3 flexible sediment barriers upstream of each drainage inlet to be protected.
4. Position erosion control blanket or geosynthetic fabric at edge of concrete apron and secure in trench.
5. Erosion control blanket or geosynthetic fabric is not required if the area adjacent to the drainage inlet is vegetated.

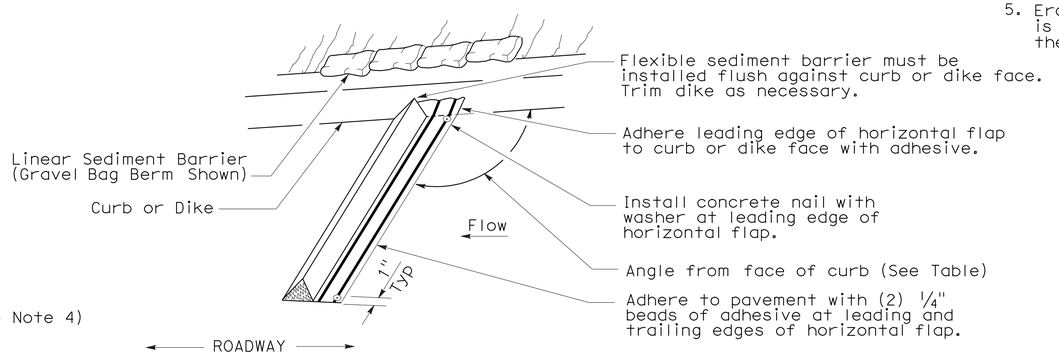

PERSPECTIVE

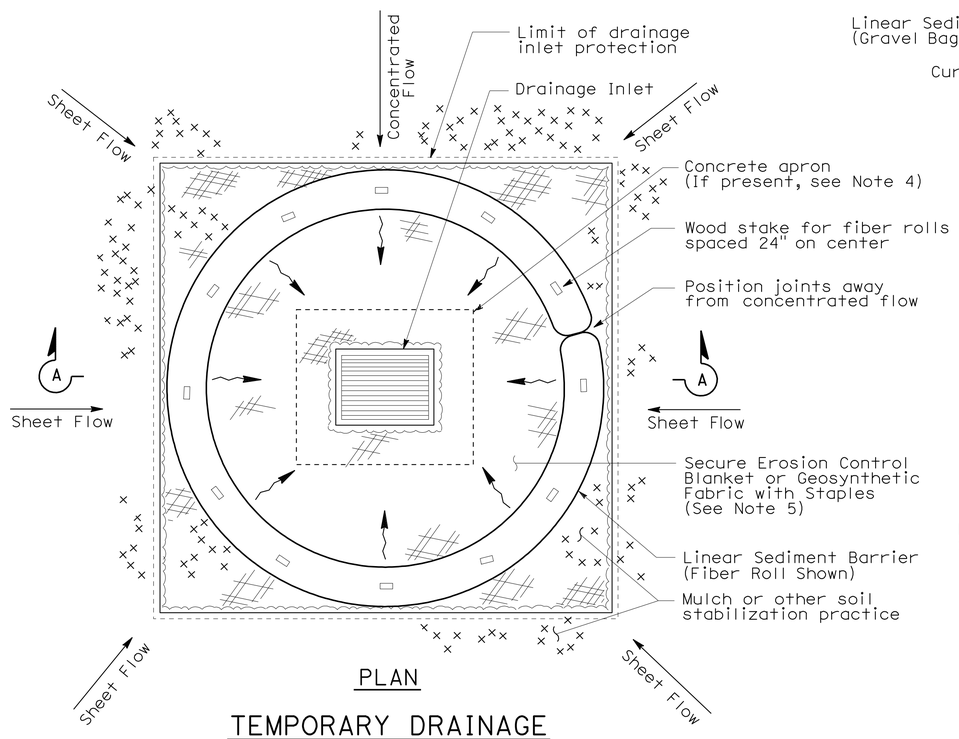

PLAN

TEMPORARY DRAINAGE INLET PROTECTION (TYPE 4A)

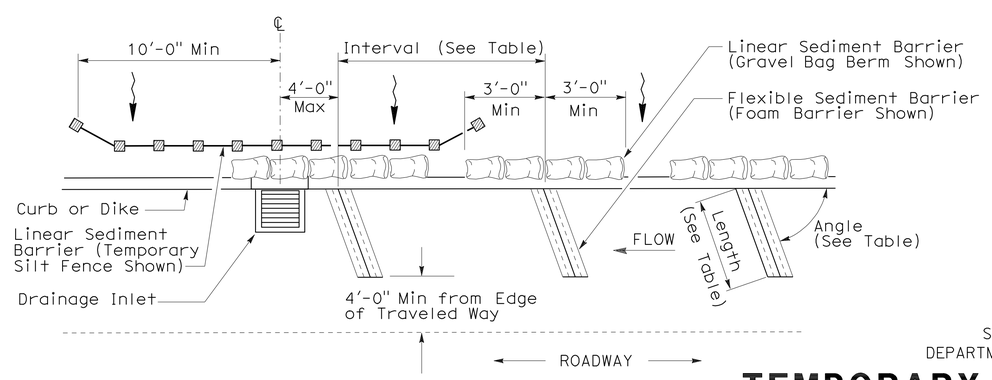

PLAN

TEMPORARY DRAINAGE INLET PROTECTION (TYPE 4B) FLEXIBLE SEDIMENT BARRIER

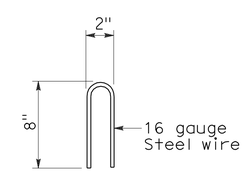

STAPLE DETAIL

STATE OF CALIFORNIA
DEPARTMENT OF TRANSPORTATION

TEMPORARY WATER POLLUTION CONTROL DETAILS (TEMPORARY DRAINAGE INLET PROTECTION)

NO SCALE

NSP T63 DATED AUGUST 15, 2008 SUPPLEMENTS THE STANDARD PLANS BOOK DATED MAY 2006.

NEW STANDARD PLAN NSP T63

2006 NEW STANDARD PLAN NSP T63

7-11-08

DIST	COUNTY	ROUTE	POST MILES TOTAL PROJECT	SHEET NO.	TOTAL SHEETS
08	SBd	40	R151.7/R153.3	51	51

LICENSED LANDSCAPE ARCHITECT

August 15, 2008
PLANS APPROVAL DATE

The State of California or its officers or agents shall not be responsible for the accuracy or completeness of electronic copies of this plan sheet.

LICENSED LANDSCAPE ARCHITECT — Robert B. Schott — Signature — 11-04-08 Renewal Date — 08-11-08 Date — STATE OF CALIFORNIA

To accompany plans dated 8-23-10

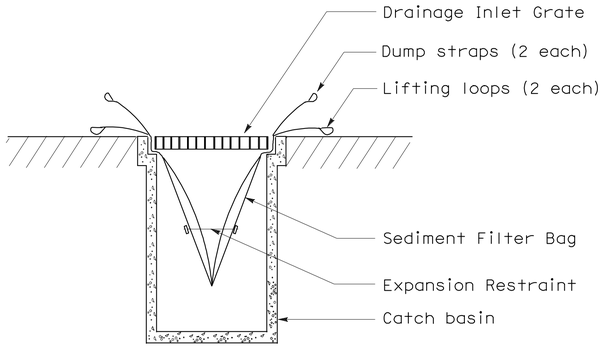

SECTION B-B

SEDIMENT FILTER BAG DETAIL

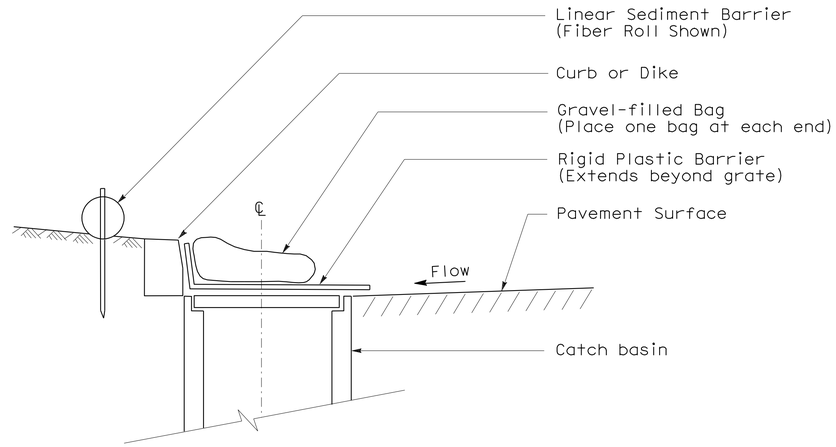

SECTION

TEMPORARY DRAINAGE INLET PROTECTION (TYPE 6A) (CATCH BASIN WITH GRATE)

NOTES:

1. See Standard Plan T51 for Temporary Silt Fence.
2. Dimensions may vary to fit field conditions.

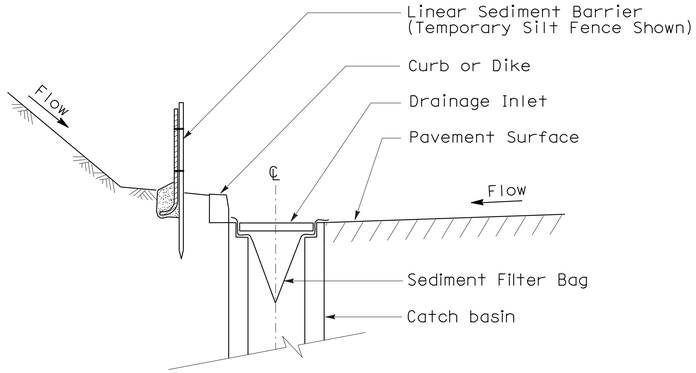

SECTION A-A

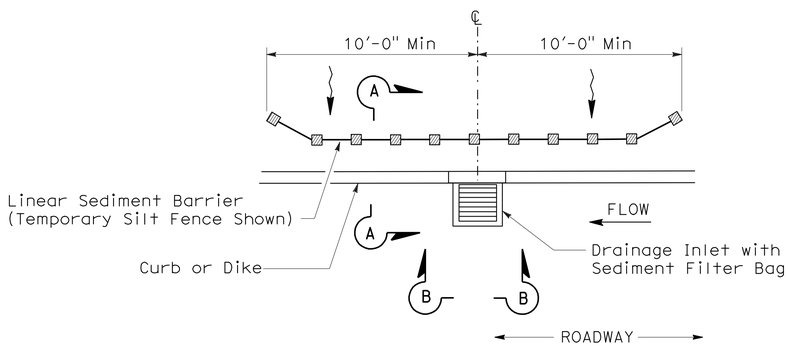

PLAN

TEMPORARY DRAINAGE INLET PROTECTION (TYPE 5) (SEDIMENT FILTER BAG)

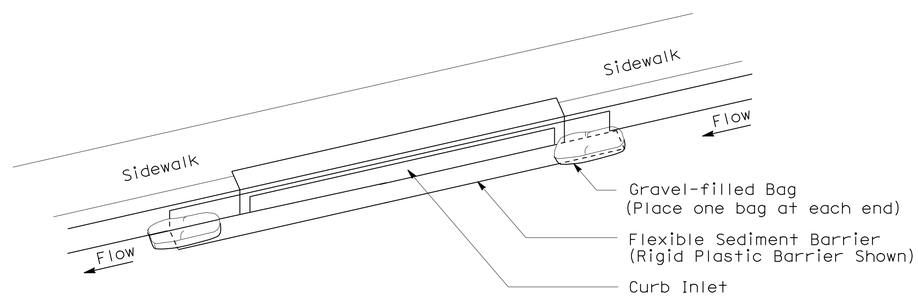

PERSPECTIVE

TEMPORARY DRAINAGE INLET PROTECTION (TYPE 6B) (CURB INLET WITHOUT GRATE)

STATE OF CALIFORNIA
DEPARTMENT OF TRANSPORTATION

TEMPORARY WATER POLLUTION CONTROL DETAILS (TEMPORARY DRAINAGE INLET PROTECTION)

NO SCALE

NSP T64 DATED AUGUST 15, 2008 SUPPLEMENTS
THE STANDARD PLANS BOOK DATED MAY 2006.

NEW STANDARD PLAN NSP T64

2006 NEW STANDARD PLAN NSP T64

7-11-08