DIST	COUNTY	ROUTE	KILOMETER POST TOTAL PROJECT	SHEET NO.	TOTAL SHEETS
08	Riv	60,215	R19.7/21.9, R61.3/62.7	401	594

Caltrans Metric

REGISTERED ELECTRICAL ENGINEER

October 5, 2007
PLANS APPROVAL DATE

REGISTERED PROFESSIONAL ENGINEER
Jeffery G. McRae
No. E14512
Exp. 6-30-08
ELECTRICAL
STATE OF CALIFORNIA

The State of California or its officers or agents shall not be responsible for the accuracy or completeness of electronic copies of this plan sheet.

To get to the Caltrans web site, go to: http://www.dot.ca.gov

To accompany plans dated 6-28-10

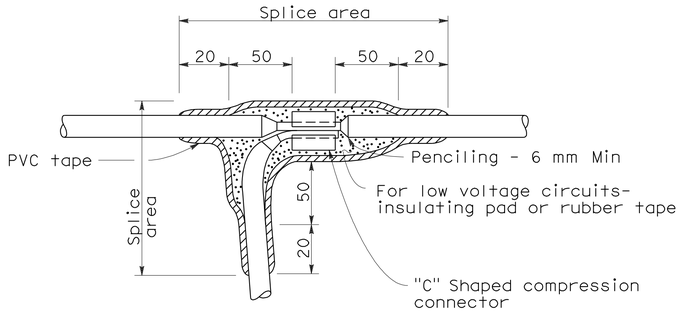

TYPE "C" SPLICE

Between 1 free-end and 1 through conductor

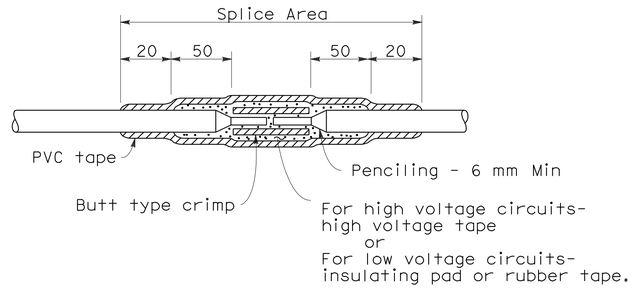

TYPE "S" SPLICE

Between 2 free-ends

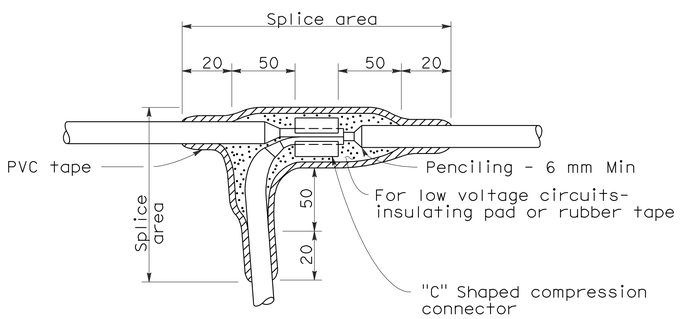

TYPE "T" SPLICE

For 3 free-ends

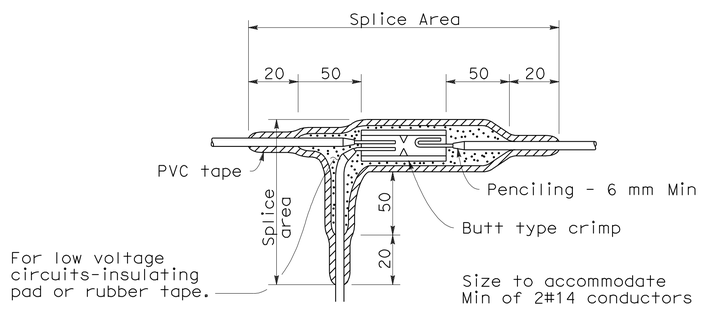

TYPE "ST" SPLICE

NOTES:

1. Dimensions are minimum.
2. Rubber tapes shall be rolled after application.

INSULATION METHODS

Low Voltage Circuits (0-600 V)

METHOD "B"

1. Completely cover the splice area with electrical insulating coating and allow to dry.
2. Apply 2 layers of electrical insulating pad with minimum thickness of 4 mm each layer or 2 layers, half lapped, synthetic oil resistant, self fusing rubber tape.
3. Apply 3 layers half lapped polyvinyl chloride tape.
4. Cover entire splice with electrical insulating coating and allow to dry.

High Voltage Circuits (Over 600 V)

1. Completely cover the splice area with electrical insulating coating and allow to dry.
2. Apply high voltage tape to a minimum thickness equal to original insulation.
3. Apply 3 layers half lapped polyvinyl chloride tape.
4. Cover entire splice with electrical insulating coating and allow to dry.

STATE OF CALIFORNIA
DEPARTMENT OF TRANSPORTATION

ELECTRICAL SYSTEMS (SPLICING DETAILS)

NO SCALE

ALL DIMENSIONS ARE IN MILLIMETERS UNLESS OTHERWISE SHOWN

RSP ES-13A DATED OCTOBER 5, 2007 SUPERSEDES STANDARD PLAN ES-13A DATED JULY 1, 2004-PAGE 478 OF THE STANDARD PLANS BOOK DATED JULY 2004.

REVISED STANDARD PLAN RSP ES-13A

2004 REVISED Std PLAN RSP ES-13A

6-27-07

DIST	COUNTY	ROUTE	KILOMETER POST TOTAL PROJECT	SHEET NO.	TOTAL SHEETS
08	Riv	60,215	R19.7/21.9, R61.3/62.7	402	594

REGISTERED ELECTRICAL ENGINEER

October 5, 2007
PLANS APPROVAL DATE

REGISTERED PROFESSIONAL ENGINEER Jeffery G. McRae No. E14512 Exp. 6-30-08 ELECTRICAL STATE OF CALIFORNIA

The State of California or its officers or agents shall not be responsible for the accuracy or completeness of electronic copies of this plan sheet.

To get to the Caltrans web site, go to: http://www.dot.ca.gov

To accompany plans dated 6-28-10

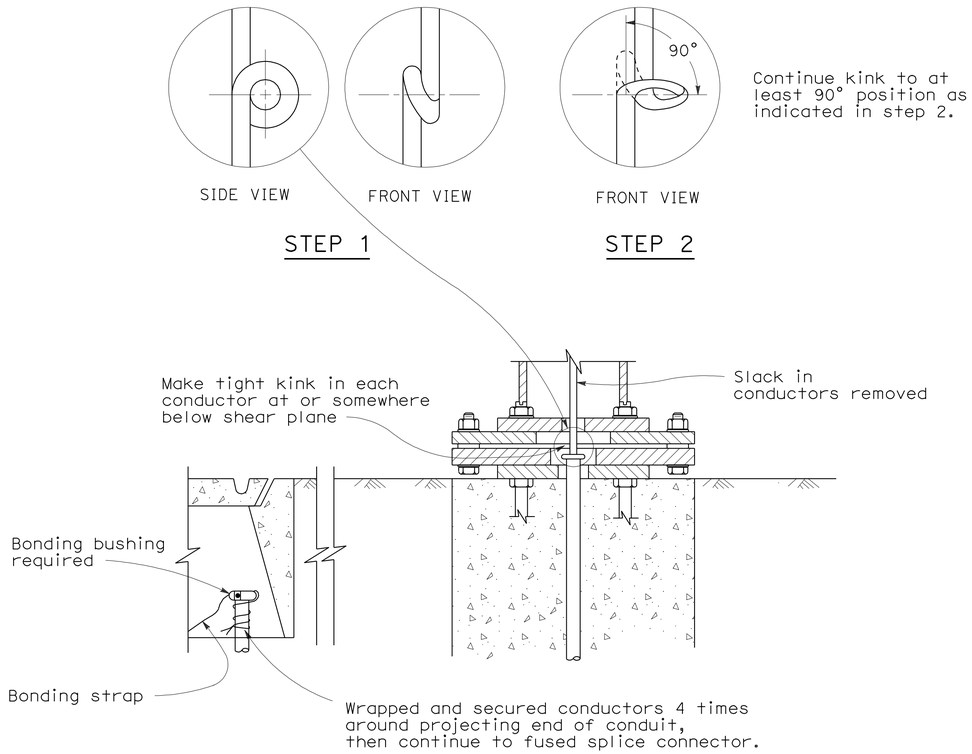

KINKING DETAIL FOR SLIP BASE STANDARDS

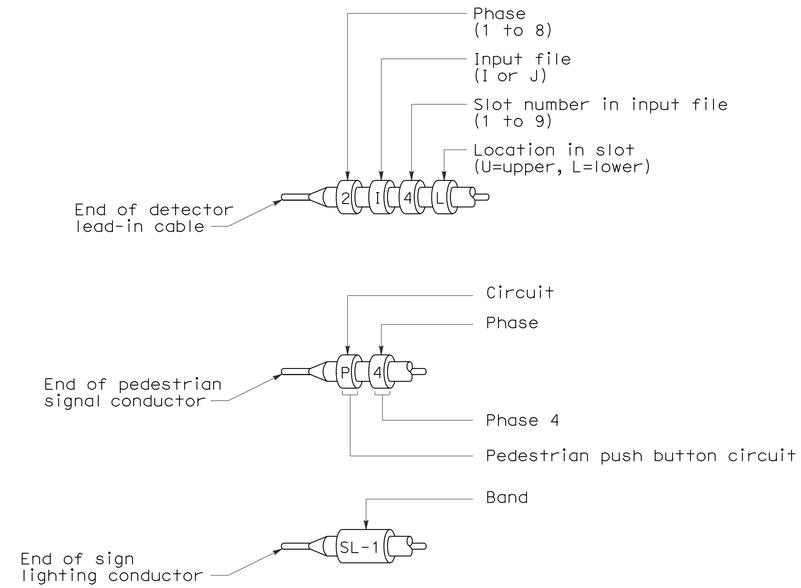

TYPICAL BANDING OF CONDUCTOR ENDS

Primary lines of multiple ballasts shall be provided with fused connectors.
Fuse ratings shall be as noted below.

CIRCUIT VOLTAGE	FUSE VOLTAGE RATING	FUSE CURRENT RATING																
		HPS LAMP BALLAST								LOW PRESSURE SODIUM BALLAST					INDUCTION SIGN LIGHTING	SINGLE PHASE (TWO WIRE) TRANSFORMERS (PRIMARY SIDE)		
		70 W	100 W	150 W	200 W	250 W	310 W	400 W	1000 W	35 W	55 W	90 W	135 W	180 W	85 W	1 kVA	2 kVA	3 kVA
120 V	250 V	5	5	5	5	5	5	5	-	5	5	5	5	5	5	10	20	30
240 V	250 V	5	5	5	5	5	5	5	5	3	3	3	5	5	5	6	10	20
480 V	500-600 V	5	5	5	5	5	5	5	5	2	2	2	3	3	1*	3	6	10

* See Revised Standard Plan RSP ES-15D, Type SC3 Control.

FUSE RATINGS FOR FUSED CONNECTORS

LUMINAIRE BALLAST FUSING

STATE OF CALIFORNIA
DEPARTMENT OF TRANSPORTATION

ELECTRICAL SYSTEMS (WIRING DETAILS AND FUSE RATINGS)

NO SCALE

ALL DIMENSIONS ARE IN MILLIMETERS UNLESS OTHERWISE SHOWN

RSP ES-13B DATED OCTOBER 5, 2007 SUPERSEDES STANDARD PLAN ES-13B DATED JULY 1, 2004-PAGE 479 OF THE STANDARD PLANS BOOK DATED JULY 2004.

REVISED STANDARD PLAN RSP ES-13B

2004 REVISED Std PLAN RSP ES-13B

10-1-07

DIST	COUNTY	ROUTE	KILOMETER POST TOTAL PROJECT	SHEET NO.	TOTAL SHEETS
08	Riv	60,215	R19.7/21.9, R61.3/62.7	403	594

Caltrans Metric

REGISTERED ELECTRICAL ENGINEER

October 5, 2007
PLANS APPROVAL DATE

REGISTERED PROFESSIONAL ENGINEER Jeffery G. McRae No. E14512 Exp. 6-30-08 ELECTRICAL STATE OF CALIFORNIA

The State of California or its officers or agents shall not be responsible for the accuracy or completeness of electronic copies of this plan sheet.

To get to the Caltrans web site, go to: http://www.dot.ca.gov

To accompany plans dated 6-28-10

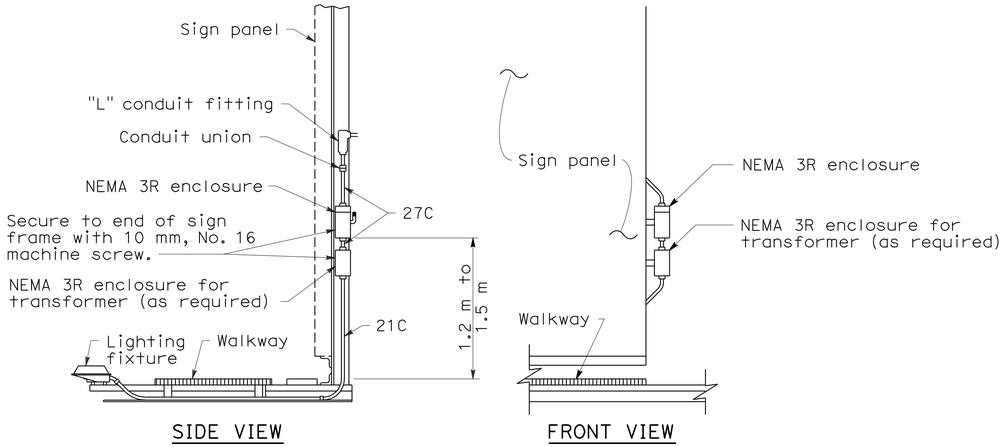

TYPICAL SIGN ILLUMINATION EQUIPMENT INSTALLATION FOR OVERHEAD SIGNS BRIDGE MOUNTED

Contactor and test switch enclosure shall be readily accessible from the sign walkway.

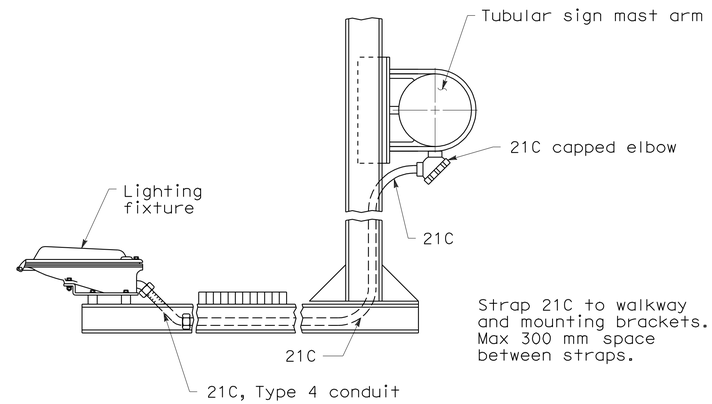

TYPICAL SIGN ILLUMINATION EQUIPMENT INSTALLATION FOR OVERHEAD SIGNS TUBULAR

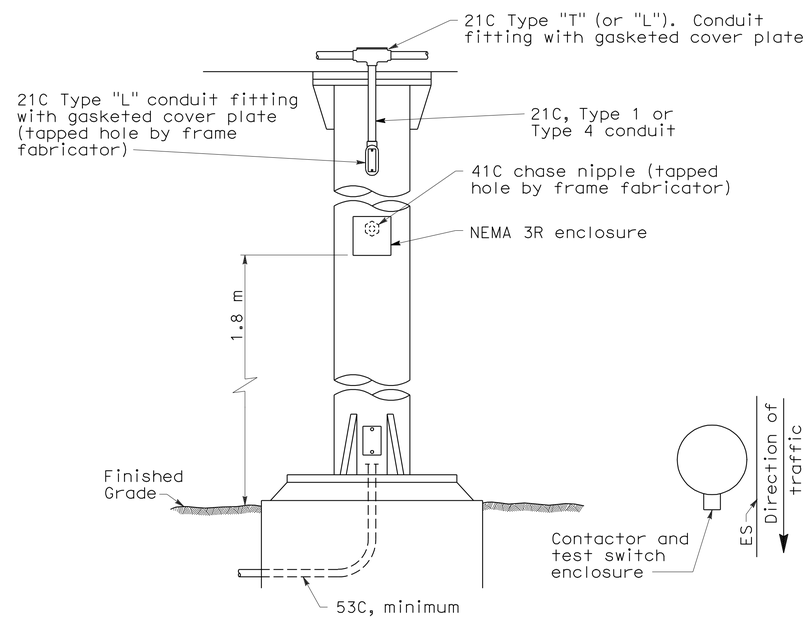

TYPICAL SIGN ILLUMINATION EQUIPMENT INSTALLATION FOR OVERHEAD SIGNS ROUND POST

NOTES:

1. Type 4 conduit shall be secured to the nearest walkway bracket using one-hole galvanized malleable iron or steel straps and brass machine screws tapped into the bracket.
2. See Overhead Signs Standard Plans for overhead signs and frame jucture details for photoelectric unit installation.
3. Enclosures and straps shall be secured by 6 mm maximum size screws.

STATE OF CALIFORNIA
DEPARTMENT OF TRANSPORTATION

ELECTRICAL SYSTEMS (SIGN ILLUMINATION EQUIPMENT)

NO SCALE

ALL DIMENSIONS ARE IN MILLIMETERS UNLESS OTHERWISE SHOWN

RSP ES-15C DATED OCTOBER 5, 2007 SUPERSEDES STANDARD PLAN ES-15C DATED JULY 1, 2004-PAGE 485 OF THE STANDARD PLANS BOOK DATED JULY 2004.

REVISED STANDARD PLAN RSP ES-15C

2004 REVISED Std PLAN RSP ES-15C

6-27-07

DIST	COUNTY	ROUTE	KILOMETER POST TOTAL PROJECT	SHEET NO.	TOTAL SHEETS
08	Riv	60,215	R19.7/21.9, R61.3/62.7	404	594

Caltrans Metric

Jeffery G. McRae
REGISTERED ELECTRICAL ENGINEER

October 5, 2007
PLANS APPROVAL DATE

REGISTERED PROFESSIONAL ENGINEER
Jeffery G. McRae
No. E14512
Exp. 6-30-08
ELECTRICAL
STATE OF CALIFORNIA

The State of California or its officers or agents shall not be responsible for the accuracy or completeness of electronic copies of this plan sheet.

To get to the Caltrans web site, go to: http://www.dot.ca.gov

To accompany plans dated 6-28-10

NOTES: (FOR LIGHTING AND SIGN ILLUMINATION CONTROL)

1. The ballast voltages of lighting fixtures and luminaires shall match line service voltages.
2. Voltage rating of photoelectric controls shall conform to the service voltage indicated on the plans.
3. Terminal strip shall be provided for wiring to fixtures.
4. Type SC1A, SC2A, SC3A controls are similar to Types SC1, SC2, SC3 controls respectively except test switch and wiring are not required.

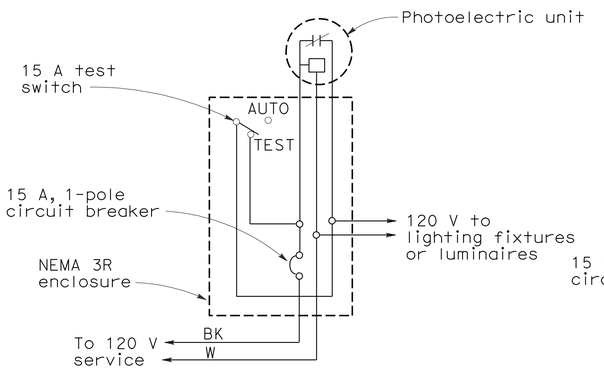

TYPE LC1 CONTROL

For 120 V unswitched circuit with no more than 800 W load.

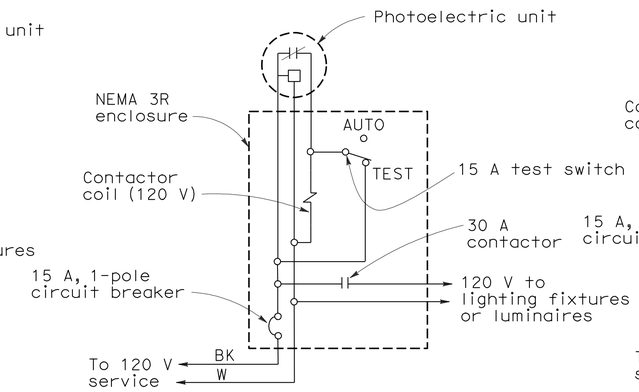

TYPE LC2 CONTROL

For 120 V unswitched circuit

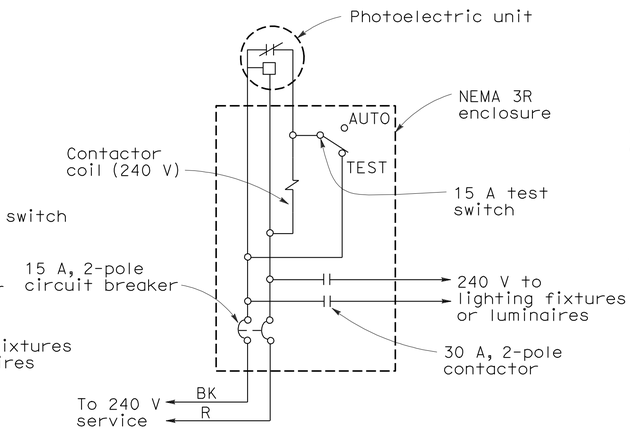

TYPE LC3 CONTROL

For 240 V and 480 V unswitched circuit

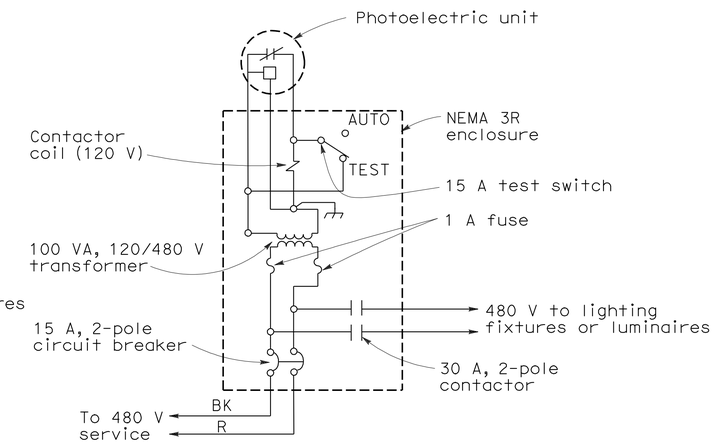

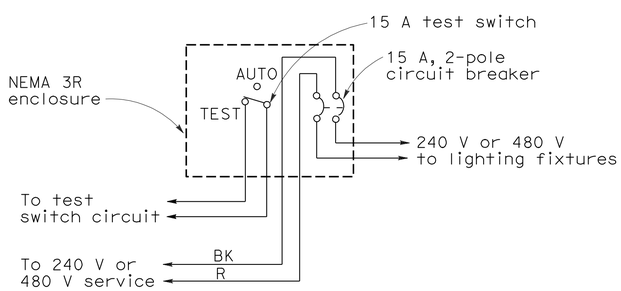

TYPE SC1 CONTROL

For 240 V or 480 V switched circuit, see Note 4 for Type SC1A

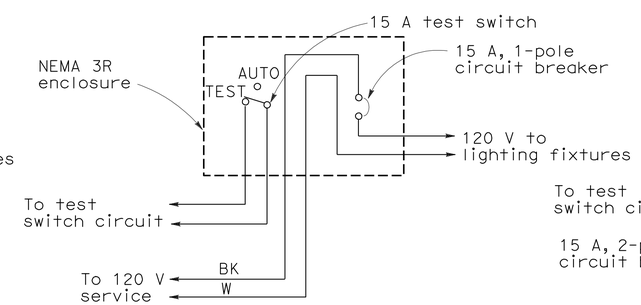

TYPE SC2 CONTROL

For 120 V switched circuit, see Note 4 for Type SC2A

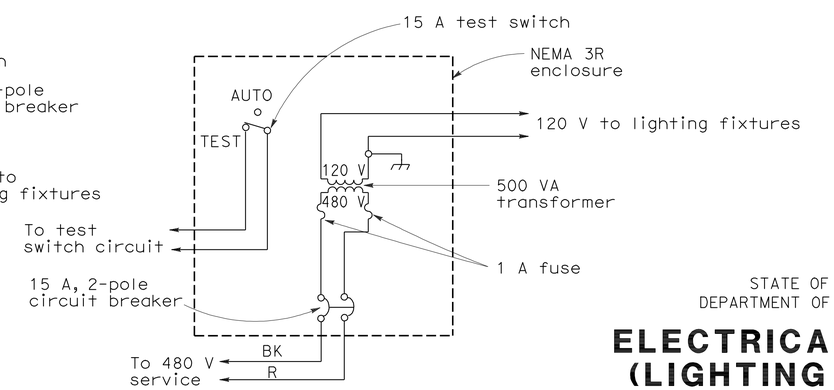

TYPE SC3 CONTROL

For 480 V switched sign circuit, see Note 4 for Type SC3A

STATE OF CALIFORNIA
DEPARTMENT OF TRANSPORTATION

ELECTRICAL SYSTEMS (LIGHTING AND SIGN ILLUMINATION CONTROL)

NO SCALE

ALL DIMENSIONS ARE IN MILLIMETERS UNLESS OTHERWISE SHOWN

RSP ES-15D DATED OCTOBER 5, 2007 SUPERSEDES RSP ES-15D DATED APRIL 28, 2005 AND STANDARD PLAN ES-15D DATED JULY 1, 2004-PAGE 486 OF THE STANDARD PLANS BOOK DATED JULY 2004.

REVISED STANDARD PLAN RSP ES-15D

2004 REVISED Std PLAN RSP ES-15D

10-1-07

Notes:

1. For "General Notes", "Index to Plans" and "Spread Footing Data Table", see "Index to Plans" sheet.

2. For Stage Construction, see "Road Plans".

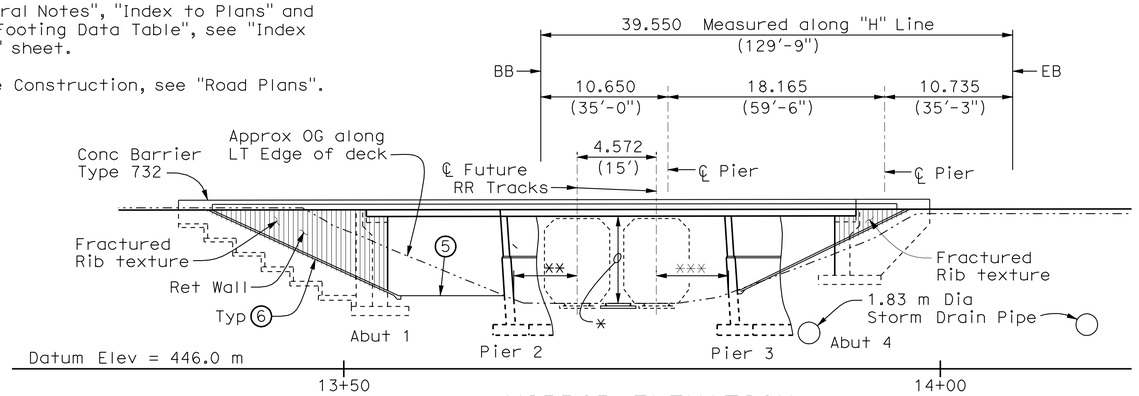

MIRROR ELEVATION

1:250

* 7.580 (24'-10") Min Vert Clr
** 4.300 (14.1') Horiz Clr (face of Pier 2)
*** 4.250 (14.0') Horiz Clr (face of Pier 3)
Note: RR Temporary Horizontal Clearance = 4.570 m
RR Temporary Vertical Clearance = 6.400 m

UTILITY LEGEND

1. Electrical Conduit for Future Utility
2. Communication Conduit for Future Utility
3. Irrigation Conduits Future Water Line

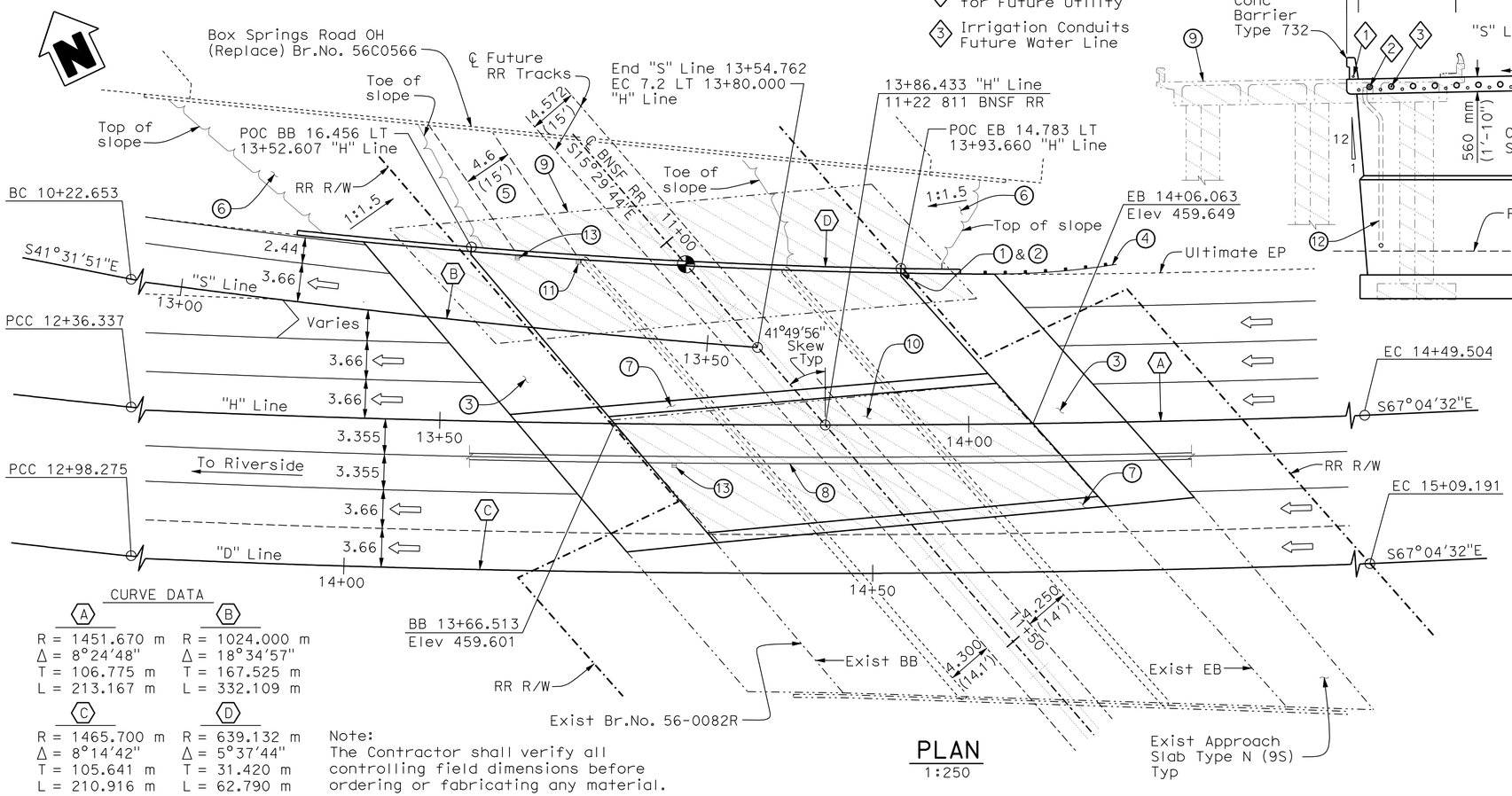

CURVE DATA

A	B
R = 1451.670 m	R = 1024.000 m
Δ = 8°24'48"	Δ = 18°34'57"
T = 106.775 m	T = 167.525 m
L = 213.167 m	L = 332.109 m

C	D
R = 1465.700 m	R = 639.132 m
Δ = 8°14'42"	Δ = 5°37'44"
T = 105.641 m	T = 31.420 m
L = 210.916 m	L = 62.790 m

Note:
The Contractor shall verify all controlling field dimensions before ordering or fabricating any material.

PLAN

1:250

NOTES:

1. Paint "Br. No. 56-0082R"
2. Paint "Box Springs OH"
3. Structure Approach Type N(9S)
4. MBGR, See "Road Plans"
5. RR Maintenance Rd
6. Slope Paving
7. 1.0 m Closure Pour
8. Conc Barrier Type 60SA, see "Road Plans"
9. Exist Br. No. 56C0056 to be removed
10. Exist Br. No. 56-0082R (Original) to be removed
11. Deck Drain, Type D-2 (Mod), see "Deck Slab Details"
12. NPS 8 Deck Drain Pipe
13. Deck Drain, Type D-2, see "Deck Slab Details"

Point of minimum vertical clearance
Indicates Direction of traffic
Indicates existing structure
Indicates existing bridge removal

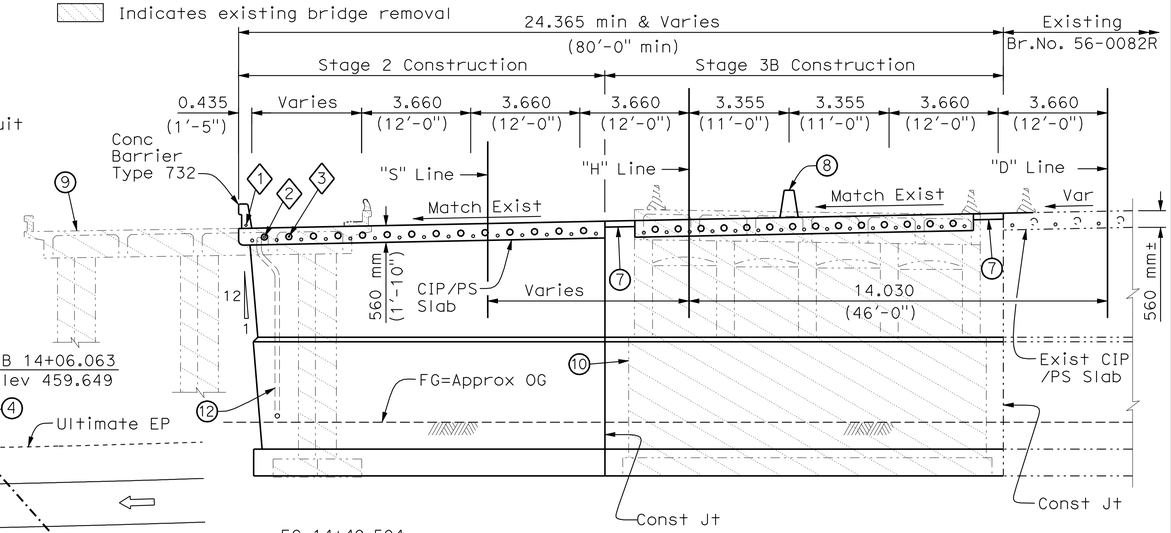

TYPICAL SECTION

1:100

BOX SPRINGS OVERHEAD (WIDEN) BR NO 56-0082R

QUANTITIES

BRIDGE REMOVAL (PORTION), LOCATION B	LUMP	SUM
BRIDGE REMOVAL (PORTION), LOCATION C	LUMP	SUM
STRUCTURE EXCAVATION (BRIDGE)	540	m^3
STRUCTURE EXCAVATION (TYPE D)	2490	m^3
STRUCTURE EXCAVATION (RETAINING WALL)	210	m^3
STRUCTURE BACKFILL (BRIDGE)	2500	m^3
STRUCTURE BACKFILL (RETAINING WALL)	150	m^3
PRESTRESSING CAST-IN-PLACE CONCRETE	LUMP	SUM
STRUCTURAL CONCRETE, BRIDGE FOOTING	570	m^3
STRUCTURAL CONCRETE, BRIDGE	1520	m^3
STRUCTURAL CONCRETE, RETAINING WALL	60	m^3
STRUCTURAL CONCRETE, APPROACH SLAB (TYPE N)	138	m^3
FRACTURED RIB TEXTURE	88	m^2
REFINISH BRIDGE DECK	53	m^2
JOINT SEAL (MR 25 MM)	67	m
BAR REINFORCING STEEL (BRIDGE)	232 600	kg
BAR REINFORCING STEEL (RETAINING WALL)	4 750	kg
SLOPE PAVING (CONCRETE)	94	m^3
BRIDGE DECK DRAINAGE SYSTEM	1 270	kg
CONCRETE BARRIER (TYPE 732)	55	m
CONCRETE BARRIER (TYPE 732A)	7	m

ALL DIMENSIONS ARE IN METERS UNLESS OTHERWISE SHOWN

Caltrans Metric

DIST	COUNTY	ROUTE	KILOMETER POST TOTAL PROJECT	SHEET No	TOTAL SHEETS
08	Riv	60,215	R19.7/21.9, R61.3/62.7	405	594

REGISTERED CIVIL ENGINEER — DATE 10/02/09

6-28-10
PLANS APPROVAL DATE

REGISTERED PROFESSIONAL ENGINEER — MOHAN S. CHAR — No. 57894 — Exp. 6/30/10 — CIVIL — STATE OF CALIFORNIA

The State of California or its officers or agents shall not be responsible for the accuracy or completeness of electronic copies of this plan sheet.

RIVERSIDE COUNTY TRANSPORTATION COMMISSION
4080 LEMON STREET - THIRD FLOOR
RIVERSIDE, CALIFORNIA 92501

LIM & NASCIMENTO ENGINEERING
1887 BUSINESS CENTER DRIVE, SUITE 6
SAN BERNARDINO, CALIFORNIA 92408

DESIGN OVERSIGHT — Robert Zezoff
10-22-09
SIGN OFF DATE

	BY	CHECKED
DESIGN	D. KIM / D. SARETSKY	T. DUDLEY/A. SIVATHASAN
DETAILS	R. ANDRASEK	M. CHAR
QUANTITIES	D. SARETSKY	K. GEE

LOAD AND RESISTANCE FACTOR DESIGN — LIVE LOADING: HL-93 W/ "LOW-BOY" AND PERMIT DESIGN VEHICLE
LAYOUT — BY R. ANDRASEK — CHECKED T. DUDLEY/M. CHAR
SPECIFICATIONS — BY — PLANS AND SPECS COMPARED

PREPARED FOR THE STATE OF CALIFORNIA DEPARTMENT OF TRANSPORTATION

MOHAN S. CHAR
PROJECT ENGINEER

BRIDGE NO. 56-0082R
KILOMETER POST R62.2

BOX SPRINGS OH (WIDEN)

GENERAL PLAN

DESIGN GENERAL PLAN SHEET (METRIC) (REV. 10/27/05)

ORIGINAL SCALE IN MILLIMETERS FOR REDUCED PLANS 0 10 20 30 40 50 60 70 80 90 100

CU 08
EA 449311

DISREGARD PRINTS BEARING EARLIER REVISION DATES

REVISION DATES (PRELIMINARY STAGE ONLY): 9/25/08 12/22/08 6/15/09 8/20/09 10/2/09

SHEET 1 OF 29

FILE => 56-0082-a-gp01.dgn

USERNAME => trilim DATE PLOTTED => 19-OCT-2010 TIME PLOTTED => 15:15

DIST	COUNTY	ROUTE	KILOMETER POST TOTAL PROJECT	SHEET No	TOTAL SHEETS
08	Riv	60,215	R19.7/21.9, R61.3/62.7	406	594

Caltrans Metric

REGISTERED CIVIL ENGINEER 10/02/09 DATE

6-28-10
PLANS APPROVAL DATE

REGISTERED PROFESSIONAL ENGINEER MOHAN S. CHAR No. 57894 Exp. 6/30/10 CIVIL STATE OF CALIFORNIA

The State of California or its officers or agents shall not be responsible for the accuracy or completeness of electronic copies of this plan sheet.

RIVERSIDE COUNTY TRANSPORTATION COMMISSION
4080 LEMON STREET - THIRD FLOOR
RIVERSIDE, CALIFORNIA 92501

LIM & NASCIMENTO ENGINEERING
1887 BUSINESS CENTER DRIVE, SUITE 6
SAN BERNARDINO, CALIFORNIA 92408

GENERAL NOTES: LOAD & RESISTANCE FACTOR DESIGN

Design:
AASHTO LRFD Bridge Design Specifications, 3rd Edition with Interims through 2006 and the Caltrans Amendments v3.06.01 except for Geotechnical design of deep foundations, earth retaining systems, bridge (including barrier & railing) details taken from Standard Plans July 2004 and earlier versions, Standard Bridge Details (XS sheets) are designed using Bridge Design Specifications (1996 AASHTO with Interims and Revisions by Caltrans).

Seismic Design: Caltrans Seismic Design Criteria (SDC), Version 1.4, June 2006

Dead Load: Includes 1.68 KPa for future wearing surface

Live Loading: HL-93 and Permit Design Load

Seismic Loading: Site Specific ARS Curve

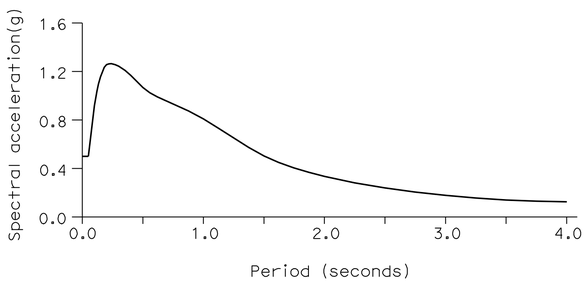

Reinforced Concrete:
fy = 420 MPa
f'c = 25 MPa, Unless otherwise noted
n = 8

Prestressed Concrete:
See "Prestressing Notes" on "Post-Tensioning Layout" sheet.

SUPPORT LOCATION (Retaining Wall)		Allowable Bearing Capacity q_{all}(kPa)	Nominal Bearing Resistance q_n(kPa)
Abut 1	7900	720	720
	6700	645	645
	5500	540	540
	4200	420	420
	3000	420	420
	1800	420	420

STANDARD PLANS DATED JULY 2004

A10A	ACRONYMS AND ABBREVIATIONS (A-L)
A10B	ACRONYMS AND ABBREVIATIONS (M-Z)
A10C	SYMBOLS (SHEET 1 OF 2)
A10D	SYMBOLS (SHEET 2 OF 2)
A62B	LIMITS OF PAYMENT FOR EXCAVATION AND BACKFILL - BRIDGE SURCHARGE AND WALL
A62C	LIMITS OF PAYMENT FOR EXCAVATION AND BACKFILL - BRIDGE
A76B	CONCRETE BARRIER TYPE 60
A76G	CONCRETE BARRIER TYPE 60S
A77J1	METAL BEAM GUARD RAILING CONNECTIONS TO BRIDGE RAILINGS WITHOUT SIDEWALKS DETAILS No. 1
A77J2	METAL BEAM GUARD RAILING CONNECTIONS TO BRIDGE RAILINGS WITHOUT SIDEWALKS DETAILS No. 2
B0-1	BRIDGE DETAILS
B0-3	BRIDGE DETAILS
B0-5	BRIDGE DETAILS
B0-13	BRIDGE DETAILS
B3-1	RETAINING WALL TYPE 1 H=1200 mm THROUGH 9100 mm
B3-8	RETAINING WALL DETAILS No. 1
RSP B6-21	JOINT SEAL (MAXIMUM MOVEMENT RATING = 50 MM)
B7-6	DECK DRAINS , TYPES D-1 AND D-2
B7-8	DECK DRAINAGE DETAILS
B8-5	CAST-IN-PLACE PRESTRESSED GIRDER DETAILS
B11-55	CONCRETE BARRIER TYPE 732

STANDARD PLAN SHEET NO.

DETAIL NO.

INDEX TO PLANS

SHEET No.	TITLE
1.	GENERAL PLAN
2.	INDEX TO PLANS
3.	DEMOLITION DETAILS No. 1
4.	DEMOLITION DETAILS No. 2
5.	STAGE CONSTRUCTION PLAN No. 1
6.	STAGE CONSTRUCTION PLAN No. 2
7.	FOUNDATION PLAN
8.	ABUTMENT 1 LAYOUT
9.	ABUTMENT 4 LAYOUT
10.	ABUTMENT DETAILS No. 1
11.	ABUTMENT DETAILS No. 2
12.	ABUTMENT DETAILS No. 3
13.	ABUTMENT DETAILS No. 4
14.	ABUTMENT DETAILS No. 5
15.	RETAINING WALL NO. 1 LAYOUT
16.	PIER LAYOUT
17.	PIER DETAILS No. 1
18.	PIER DETAILS No. 2
19.	TYPICAL SECTION
20.	DECK SLAB DETAILS
21.	POST-TENSIONING LAYOUT
22.	MISCELLANEOUS DETAILS
23.	STRUCTURE APPROACH TYPE N(9S)
24.	STRUCTURE APPROACH DRAINAGE DETAILS
25.	SLOPE PAVING - FULL SLOPE
26.	SLOPE PAVING DETAILS
27.	LOG OF TEST BORINGS No. 1 OF 3
28.	LOG OF TEST BORINGS No. 2 OF 3
29.	LOG OF TEST BORINGS No. 3 OF 3

SPREAD FOOTING DATA TABLE

SUPPORT LOCATION	Working Stress Design (WSD)		Load and Resistance Factor Design (LRFD)		
			Service	Strength	Extreme Event
	Permissible Gross Contact Stress (Settlement) (kPa)	Allowable Gross Bearing Capacity (kPa)	Permissible Net Contact Stress (Settlement) (kPa)	Factored Gross Nominal Bearing Resistance Φ_b = 0.45 (kPa)	Factored Gross Nominal Bearing Resistance Φ_b = 1.00 (kPa)
Abut 1	305	480	N/A	N/A	N/A
Pier 2	N/A	N/A	485	648	1440
Pier 3	N/A	N/A	485	648	1440
Abut 4	240	280	N/A	N/A	N/A

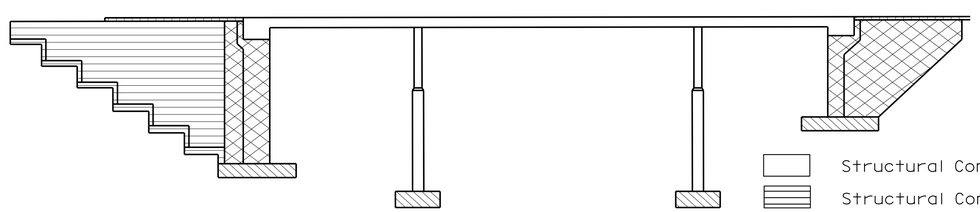

Structural Concrete, Bridge (28 MPa @ 28 days)
Structural Concrete, Retaining Wall
Structural Concrete, Bridge Footing (25 MPa @ 28 days)
Structural Concrete, Approach Slab
Structural Concrete, Bridge (25 MPa @ 28 days)

CONCRETE STRENGTH AND TYPE LIMITS

No Scale

ALL DIMENSIONS ARE IN MILLIMETERS UNLESS OTHERWISE SHOWN

DESIGN OVERSIGHT Robert Zezoff
10-22-09
SIGN OFF DATE

	BY	CHECKED
DESIGN	D. KIM/D. SARETSKY	T. DUDLEY/A. SIVATHASAN
DETAILS	R. ANDRASEK	T. DUDLEY/M. CHAR
QUANTITIES	D. SARETSKY	K. GEE

PREPARED FOR THE STATE OF CALIFORNIA DEPARTMENT OF TRANSPORTATION

MOHAN S. CHAR
PROJECT ENGINEER

BRIDGE NO. 56-0082R
KILOMETER POST R62.2

BOX SPRINGS OH (WIDEN)
INDEX TO PLANS

DESIGN DETAIL SHEET (METRIC) (REV. 10/27/05)

ORIGINAL SCALE IN MILLIMETERS FOR REDUCED PLANS 0 10 20 30 40 50 60 70 80 90 100

CU 08
EA 449311

DISREGARD PRINTS BEARING EARLIER REVISION DATES

REVISION DATES (PRELIMINARY STAGE ONLY) 9/28/08 12/22/08 6/18/09 8/28/09 10/2/09

SHEET 2 OF 29

FILE => 56-0082-b-itp.dgn

USERNAME => trlim DATE PLOTTED => 19-OCT-2010 TIME PLOTTED => 15:15

DIST	COUNTY	ROUTE	KILOMETER POST TOTAL PROJECT	SHEET No	TOTAL SHEETS
08	Riv	60,215	R19.7/21.9, R61.3/62.7	407	594

Caltrans Metric

REGISTERED CIVIL ENGINEER — DATE 10/02/09

6-28-10
PLANS APPROVAL DATE

REGISTERED PROFESSIONAL ENGINEER — MOHAN S. CHAR — No. 57894 — Exp. 6/30/10 — CIVIL — STATE OF CALIFORNIA

The State of California or its officers or agents shall not be responsible for the accuracy or completeness of electronic copies of this plan sheet.

RIVERSIDE COUNTY TRANSPORTATION COMMISSION
4080 LEMON STREET - THIRD FLOOR
RIVERSIDE, CALIFORNIA 92501

LIM & NASCIMENTO ENGINEERING
1887 BUSINESS CENTER DRIVE, SUITE 6
SAN BERNARDINO, CALIFORNIA 92408

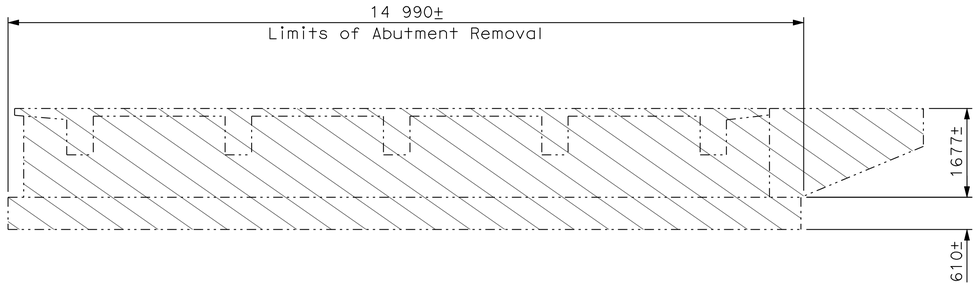

ELEVATION (Br. No. 56C0056)
1:400

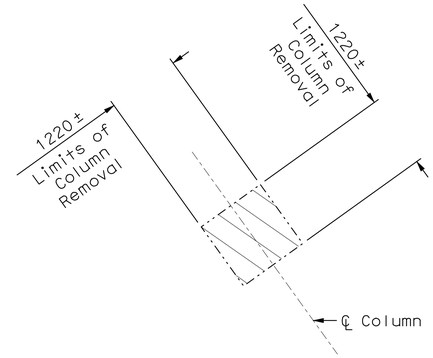

SECTION U-U
1:50

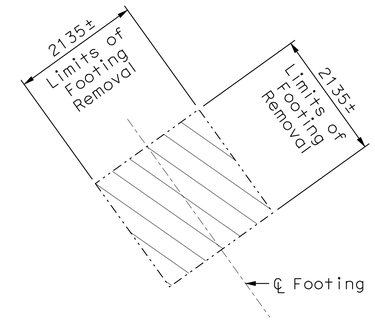

SECTION V-V
1:50

LEGEND

Limits of Bridge removal (portion)

Indicates existing bridge

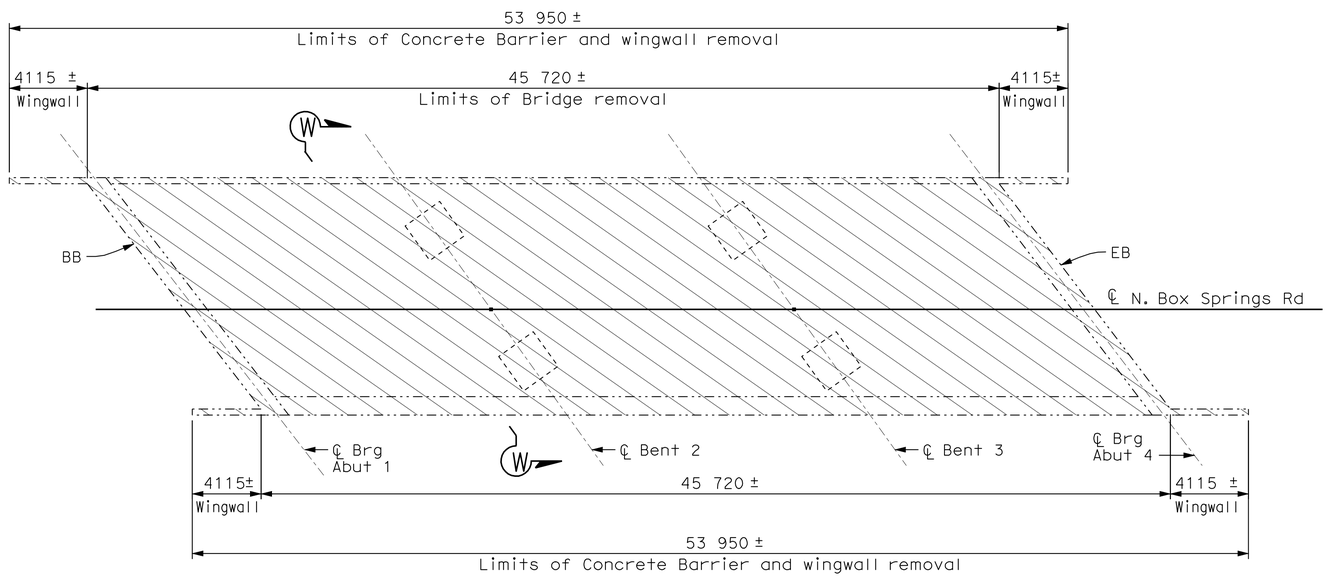

PLAN (Br. No. 56C0056)
1:150

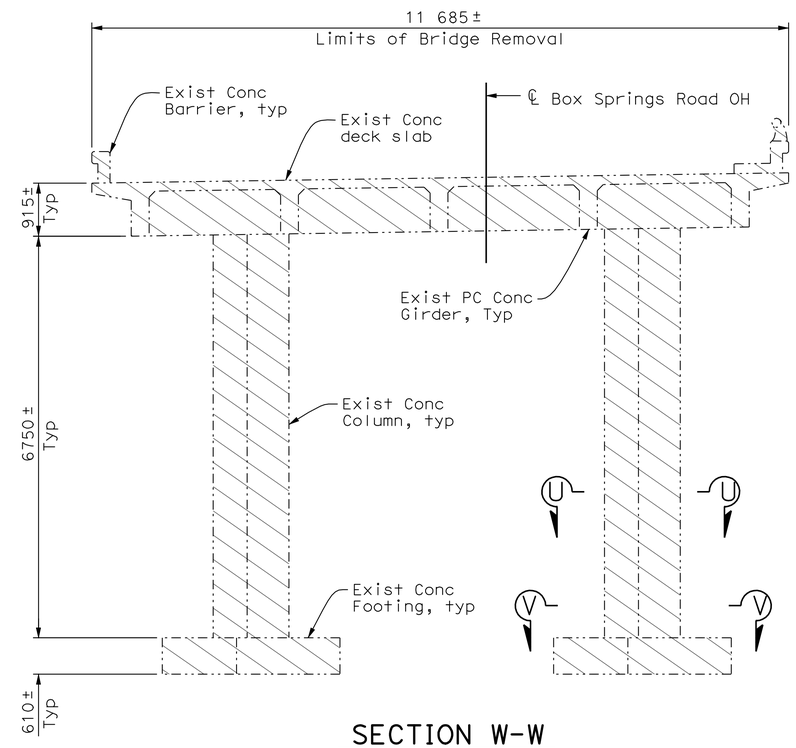

SECTION W-W
1:50

ALL DIMENSIONS ARE IN MILLIMETERS UNLESS OTHERWISE SHOWN

Robert Zezoff
DESIGN OVERSIGHT — Robert Zezoff
10-22-09
SIGN OFF DATE

	BY	CHECKED
DESIGN	D. KIM/D. SARETSKY	T. DUDLEY/A. SIVATHASAN
DETAILS	R. ANDRASEK	T. DUDLEY/M. CHAR
QUANTITIES	D. SARETSKY	K. GEE

PREPARED FOR THE STATE OF CALIFORNIA DEPARTMENT OF TRANSPORTATION

MOHAN S. CHAR
PROJECT ENGINEER

BRIDGE NO. 56-0082R
KILOMETER POST R62.2

BOX SPRINGS OH (WIDEN)
DEMOLITION DETAILS No. 1

DESIGN DETAIL SHEET (METRIC) (REV. 10/27/05)

ORIGINAL SCALE IN MILLIMETERS FOR REDUCED PLANS 0 10 20 30 40 50 60 70 80 90 100

CU 08
EA 449311

DISREGARD PRINTS BEARING EARLIER REVISION DATES

REVISION DATES (PRELIMINARY STAGE ONLY): 9/28/08 12/22/08 6/18/09 8/20/09 10/2/09

SHEET 3 OF 29

FILE => 56-0082-c-demo01.dgn

USERNAME => ttrlim DATE PLOTTED => 19-OCT-2010 TIME PLOTTED => 15:15

DIST	COUNTY	ROUTE	KILOMETER POST TOTAL PROJECT	SHEET No	TOTAL SHEETS
08	Riv	60,215	R19.7/21.9, R61.3/62.7	408	594

Caltrans Metric

REGISTERED CIVIL ENGINEER 10/02/09 DATE

6-28-10
PLANS APPROVAL DATE

REGISTERED PROFESSIONAL ENGINEER MOHAN S. CHAR No. 57894 Exp. 6/30/10 CIVIL STATE OF CALIFORNIA

The State of California or its officers or agents shall not be responsible for the accuracy or completeness of electronic copies of this plan sheet.

RIVERSIDE COUNTY TRANSPORTATION COMMISSION
4080 LEMON STREET - THIRD FLOOR
RIVERSIDE, CALIFORNIA 92501

LIM & NASCIMENTO ENGINEERING
1887 BUSINESS CENTER DRIVE, SUITE 6
SAN BERNARDINO, CALIFORNIA 92408

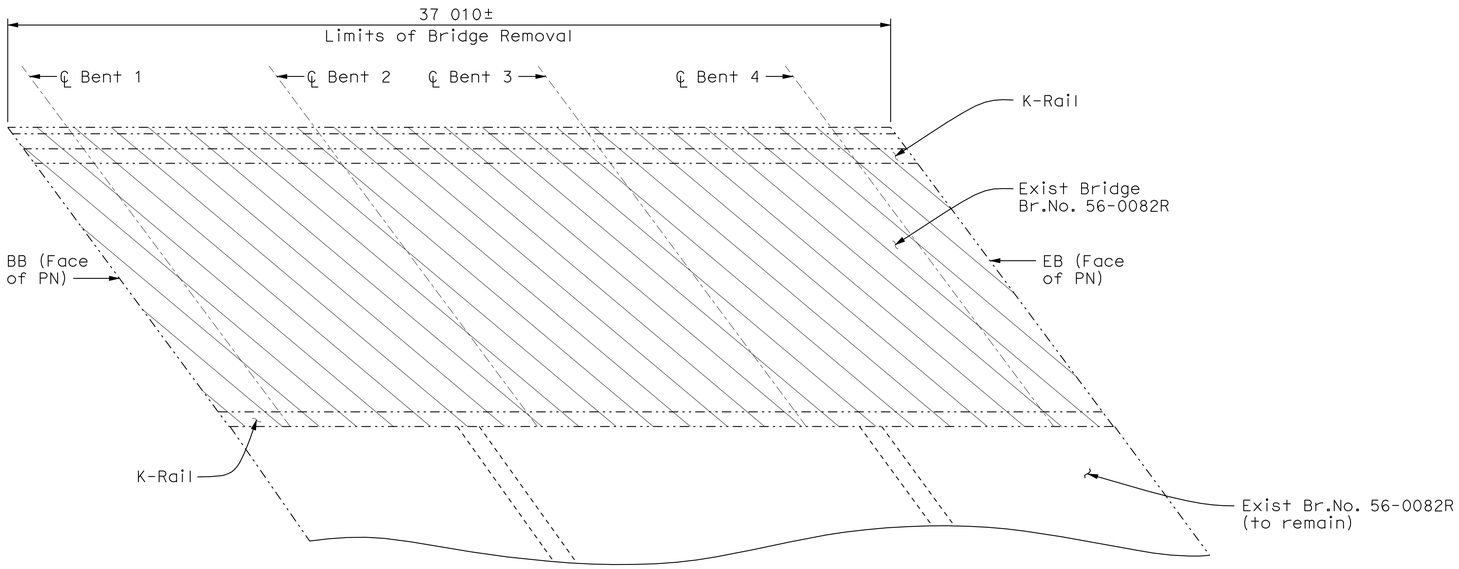

PLAN (Br. No. 56-0082R ORIGINAL)
1:125

LEGEND

Limits of Bridge removal (portion)

Indicates existing bridge

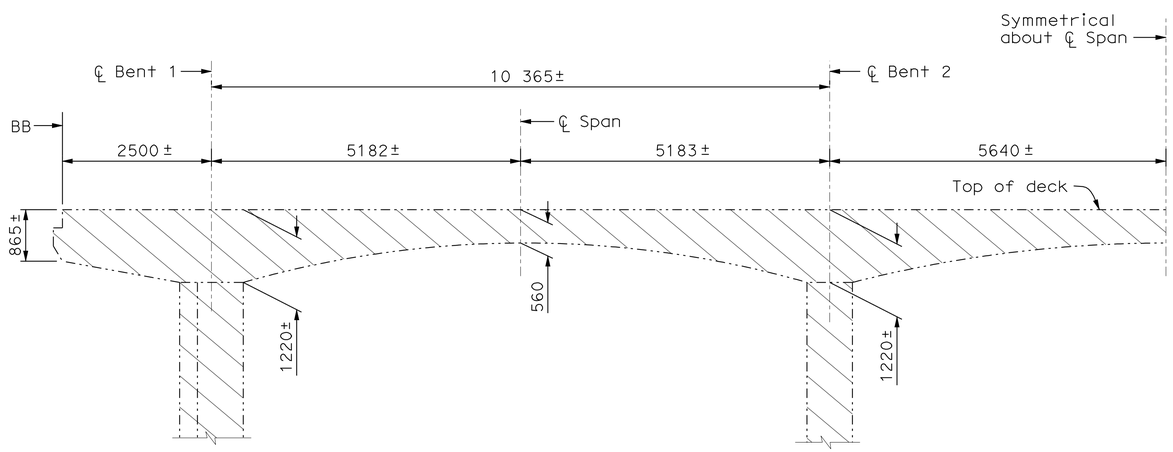

PART LONGITUDINAL SECTION
1:50

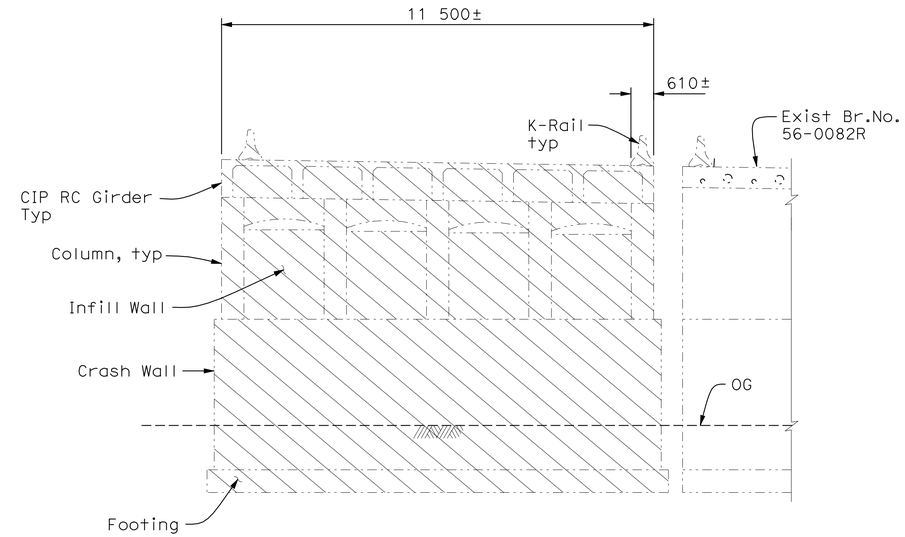

SECTION - BENTS 2 & 3
1:80

ALL DIMENSIONS ARE IN MILLIMETERS UNLESS OTHERWISE SHOWN

Robert Zezoff
DESIGN OVERSIGHT Robert Zezoff
10-22-09
SIGN OFF DATE

	BY	CHECKED
DESIGN	D. KIM/D. SARETSKY	T. DUDLEY/A. SIVATHASAN
DETAILS	R. ANDRASEK	T. DUDLEY/M. CHAR
QUANTITIES	D. SARETSKY	K. GEE

PREPARED FOR THE STATE OF CALIFORNIA DEPARTMENT OF TRANSPORTATION

MOHAN S. CHAR
PROJECT ENGINEER

BRIDGE NO. 56-0082R
KILOMETER POST R62.2

BOX SPRINGS OH (WIDEN)
DEMOLITION DETAILS No. 2

DESIGN DETAIL SHEET (METRIC) (REV. 10/27/05)

ORIGINAL SCALE IN MILLIMETERS FOR REDUCED PLANS 0 10 20 30 40 50 60 70 80 90 100

CU 08
EA 449311

DISREGARD PRINTS BEARING EARLIER REVISION DATES

REVISION DATES (PRELIMINARY STAGE ONLY) 9/28/08 12/22/08 6/18/09 8/28/09 10/2/09

SHEET 4 OF 29

FILE => 56-0082-c-demo02.dgn

USERNAME => trilm DATE PLOTTED => 19-OCT-2010 TIME PLOTTED => 15:15

DIST	COUNTY	ROUTE	KILOMETER POST TOTAL PROJECT	SHEET No	TOTAL SHEETS
08	Riv	60,215	R19.7/21.9, R61.3/62.7	409	594

REGISTERED CIVIL ENGINEER 10/02/09 DATE

6-28-10
PLANS APPROVAL DATE

REGISTERED PROFESSIONAL ENGINEER MOHAN S. CHAR No. 57894 Exp. 6/30/10 CIVIL STATE OF CALIFORNIA

The State of California or its officers or agents shall not be responsible for the accuracy or completeness of electronic copies of this plan sheet.

RIVERSIDE COUNTY TRANSPORTATION COMMISSION
4080 LEMON STREET - THIRD FLOOR
RIVERSIDE, CALIFORNIA 92501

LIM & NASCIMENTO ENGINEERING
1887 BUSINESS CENTER DRIVE, SUITE 6
SAN BERNARDINO, CALIFORNIA 92408

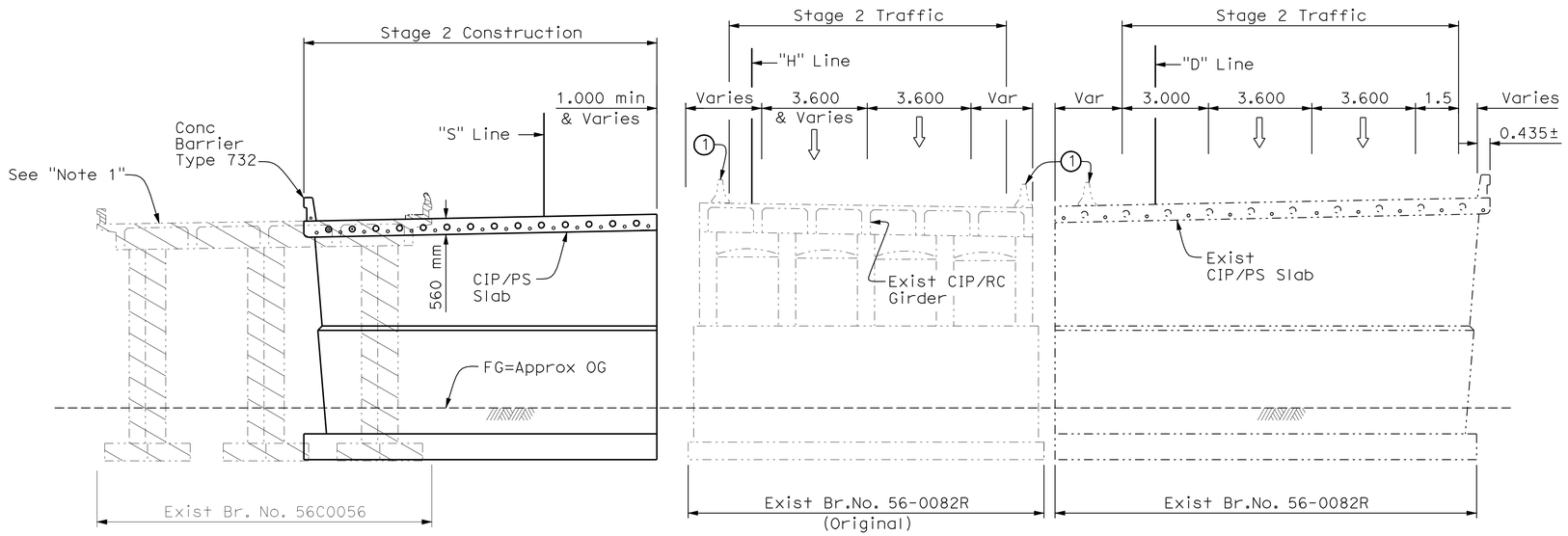

STAGE 2 TYPICAL SECTION
1:100

Stage 2:

1. Remove existing "Br. No. 56C0056".
2. Construct bridge (portion) Br. No. 56-0082R.

Notes:

1. For additional staging information not shown, see "Road Plans".

Indicates limits of Bridge removal

LEGEND

(1) Exist Conc Barrier Type K

ALL DIMENSIONS ARE IN METERS UNLESS OTHERWISE SHOWN

DESIGN OVERSIGHT Robert Zezoff
10-22-09
SIGN OFF DATE

	BY	CHECKED
DESIGN	D. KIM/D. SARETSKY	T. DUDLEY/A. SIVATHASAN
DETAILS	R. ANDRASEK	T. DUDLEY/M. CHAR
QUANTITIES	D. SARETSKY	K. GEE

PREPARED FOR THE STATE OF CALIFORNIA DEPARTMENT OF TRANSPORTATION

MOHAN S. CHAR
PROJECT ENGINEER

BRIDGE NO. 56-0082R
KILOMETER POST R62.2

BOX SPRINGS OH (WIDEN)
STAGE CONSTRUCTION No. 1

DESIGN DETAIL SHEET (METRIC) (REV. 10/27/05)

ORIGINAL SCALE IN MILLIMETERS FOR REDUCED PLANS 0 10 20 30 40 50 60 70 80 90 100

CU 08
EA 449311

DISREGARD PRINTS BEARING EARLIER REVISION DATES
REVISION DATES (PRELIMINARY STAGE ONLY) 9/28/08 12/22/08 6/18/09 8/20/09 10/2/09

SHEET 5 OF 29

FILE => 56-0082-c-stg01.dgn

USERNAME => trlim DATE PLOTTED => 19-OCT-2010 TIME PLOTTED => 15:15

DIST	COUNTY	ROUTE	KILOMETER POST TOTAL PROJECT	SHEET No	TOTAL SHEETS
08	Riv	60,215	R19.7/21.9, R61.3/62.7	410	594

Caltrans Metric

REGISTERED CIVIL ENGINEER 10/02/09 DATE

6-28-10
PLANS APPROVAL DATE

REGISTERED PROFESSIONAL ENGINEER MOHAN S. CHAR No. 57894 Exp. 6/30/10 CIVIL STATE OF CALIFORNIA

The State of California or its officers or agents shall not be responsible for the accuracy or completeness of electronic copies of this plan sheet.

RIVERSIDE COUNTY TRANSPORTATION COMMISSION
4080 LEMON STREET - THIRD FLOOR
RIVERSIDE, CALIFORNIA 92501

LIM & NASCIMENTO ENGINEERING
1887 BUSINESS CENTER DRIVE, SUITE 6
SAN BERNARDINO, CALIFORNIA 92408

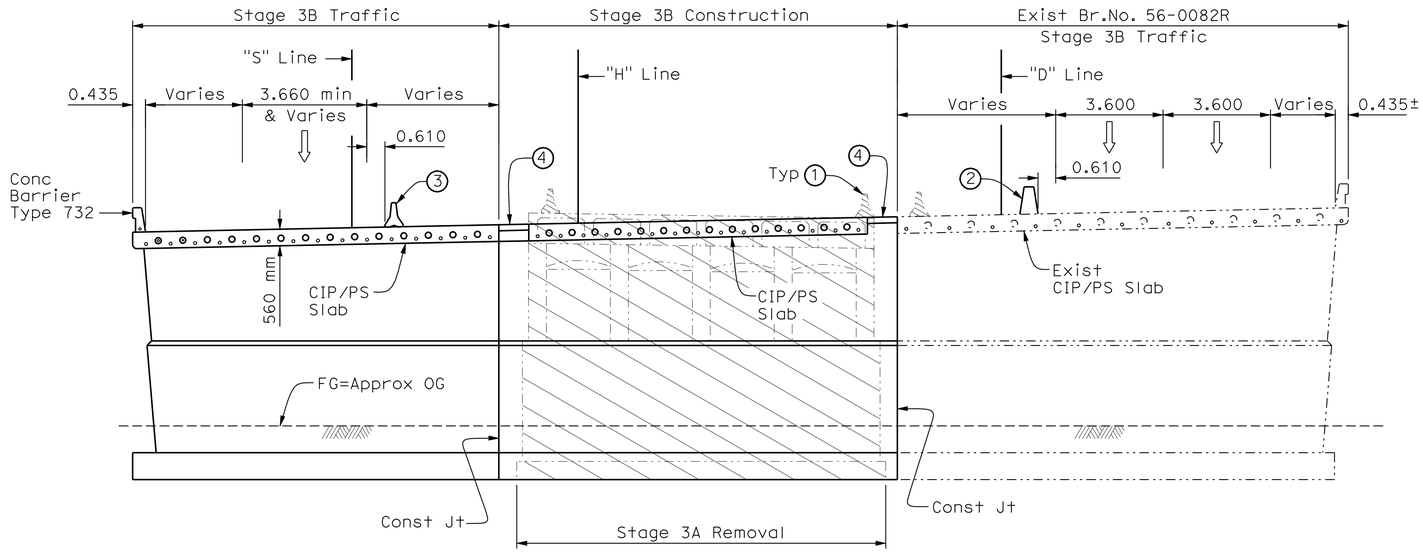

STAGE 3B TYPICAL SECTION
1:100

Stage 3A:

Remove existing "Br. No. 56-0082R".

Stage 3B:

1. Install Temp Railing Type K doweled into new bridge deck.
2. Shift traffic, 1 lane, to new bridge.
3. Install Temp Railing Type K doweled into existing bridge.
4. Realign traffic, 4 lanes, 2 EB lanes not shown see "Road Plans".
5. Construct new bridge (remaining portion).
6. Construct closure pours on either side of construction
7. Realign traffic to final alignment.

Notes:

1. For additional staging information not shown, see "Road Plans".

Indicates limits of Bridge removal

LEGEND

1. Exist Conc Barrier Type K
2. Conc Barrier Type 60SA
3. Temporary K-Railing
4. Closure Pour

ALL DIMENSIONS ARE IN METERS UNLESS OTHERWISE SHOWN

DESIGN OVERSIGHT Robert Zezoff
10-22-09
SIGN OFF DATE

	BY	CHECKED
DESIGN	D. KIM/D. SARETSKY	T. DUDLEY/A. SIVATHASAN
DETAILS	R. ANDRASEK	T. DUDLEY/M. CHAR
QUANTITIES	D. SARETSKY	K. GEE

PREPARED FOR THE STATE OF CALIFORNIA DEPARTMENT OF TRANSPORTATION

MOHAN S. CHAR
PROJECT ENGINEER

BRIDGE NO. 56-0082R
KILOMETER POST R62.2

BOX SPRINGS OH (WIDEN)
STAGE CONSTRUCTION No. 2

DESIGN DETAIL SHEET (METRIC) (REV. 10/27/05)

ORIGINAL SCALE IN MILLIMETERS FOR REDUCED PLANS 0 10 20 30 40 50 60 70 80 90 100

CU 08
EA 449311

DISREGARD PRINTS BEARING EARLIER REVISION DATES

REVISION DATES (PRELIMINARY STAGE ONLY) 9/25/08 12/22/08 6/18/09 8/28/09 10/2/09

SHEET 6 OF 29

FILE => 56-0082-c-stg02.dgn

USERNAME => trrim DATE PLOTTED => 19-OCT-2010 TIME PLOTTED => 15:15

DIST	COUNTY	ROUTE	KILOMETER POST TOTAL PROJECT	SHEET No	TOTAL SHEETS
08	Riv	60,215	R19.7/21.9, R61.3/62.7	411	594

Caltrans Metric

REGISTERED CIVIL ENGINEER DATE 10/02/09

PLANS APPROVAL DATE

REGISTERED PROFESSIONAL ENGINEER MOHAN S. CHAR No. 57894 Exp. 6/30/10 CIVIL STATE OF CALIFORNIA

The State of California or its officers or agents shall not be responsible for the accuracy or completeness of electronic copies of this plan sheet.

RIVERSIDE COUNTY TRANSPORTATION COMMISSION
4080 LEMON STREET - THIRD FLOOR
RIVERSIDE, CALIFORNIA 92501

LIM & NASCIMENTO ENGINEERING
1887 BUSINESS CENTER DRIVE, SUITE 6
SAN BERNARDINO, CALIFORNIA 92408

CURVE DATA

A	B	C
R = 1451.670 m	R = 1024.000 m	R = 1465.700 m
Δ = 8°24'48"	Δ = 18°34'57"	Δ = 8°14'42"
T = 106.775 m	T = 167.525 m	T = 105.641 m
L = 213.167 m	L = 332.109 m	L = 210.916 m

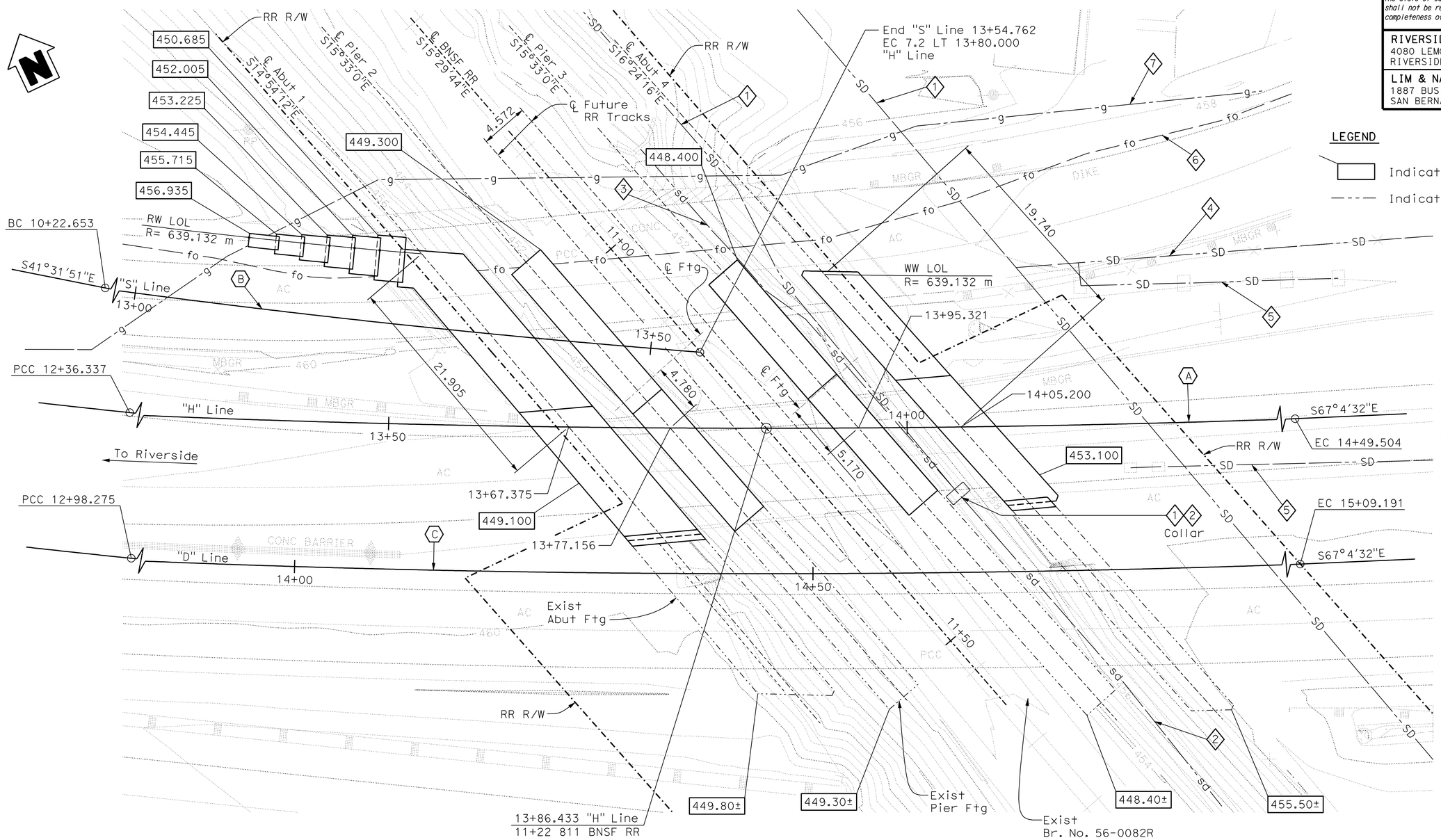

PLAN
1:200

LEGEND

Indicates bottom of footing elevation

Indicates existing footing

BENCHMARK

PT #865 ELEVATION 460.688 m

Found 25 mm iron pipe with Caltrans North side of Box Springs Road
N=698034.479
E=1903003.479

PT #3030 ELEVATION 472.840 m

Found 50 mm iron pipe with Brass Cap Stamped "Dept of Trans RIV 60-12.7 1990"
34.14 m Southwesterly of bridge.
Box Springs Road
N=697603.049
E=1903554.738

Vertical Datum: NGVD-1929
Horizontal Datum: NAD-83, Zone 6 (EPOCH 1984.0)

UTILITY LEGEND

1. 1.83 m Dia Storm Drain Pipe
2. Exist 1.83 m Dia Storm Drain Pipe Protect-in-place
3. Exist 1.83 m Dia Storm Drain Pipe To be removed
4. 1.50 m Dia Storm Drain Pipe
5. 450 mm Dia Storm Drain Pipe
6. Exist 4- 100 mm Conduit (AT&T) To be relocated
7. Exist 50 mm Dia Gas Line (TGC) Abandoned

Note:
The Contractor shall verify all controlling field dimensions before ordering or fabricating any material.

ALL DIMENSIONS ARE IN METERS UNLESS OTHERWISE SHOWN

GEOTECHNICAL PROFESSIONAL APPROVAL DATE 10/2/09

DESIGN OVERSIGHT Robert Zezoff	SCALE: AS SHOWN	VERT.DATUM NGVD-1929	HORZ.DATUM NAD-83, Zone 5 (EPOCH 1984.0)	DESIGN BY D. KIM/D. SARETSKY	CHECKED T. DUDLEY/A. SIVATHASAN
10-22-09	PHOTOGRAMMETRY AS OF:	ALIGNMENT TIES		DETAILS BY R. ANDRASEK	CHECKED T.DUDLEY/M. CHAR
SIGN OFF DATE	SURVEYED BY	DRAFTED BY		QUANTITIES BY D. SARETSKY	CHECKED K. GEE
	FIELD CHECKED BY	CHECKED BY			

PREPARED FOR THE STATE OF CALIFORNIA DEPARTMENT OF TRANSPORTATION

MOHAN S. CHAR
PROJECT ENGINEER

BRIDGE NO. 56-0082R
KILOMETER POST R62.2

BOX SPRINGS OH (WIDEN)
FOUNDATION PLAN

FOUNDATION PLAN SHEET (METRIC) (REV. 10/27/05)

ORIGINAL SCALE IN MILLIMETERS FOR REDUCED PLANS 0 10 20 30 40 50 60 70 80 90 100

CU 08
EA 449311

DISREGARD PRINTS BEARING EARLIER REVISION DATES

REVISION DATES (PRELIMINARY STAGE ONLY) 9/25/08 12/22/08 6/18/09 8/28/09 10/2/09

SHEET 7 OF 29

FILE => 56-0082-e-fdp01.dgn

USERNAME => rirlim DATE PLOTTED => 19-OCT-2010 TIME PLOTTED => 15:16

DIST	COUNTY	ROUTE	KILOMETER POST TOTAL PROJECT	SHEET No	TOTAL SHEETS
08	Riv	60,215	R19.7/21.9, R61.3/62.7	412	594

Caltrans Metric

REGISTERED CIVIL ENGINEER 10/02/09 DATE

6-28-10
PLANS APPROVAL DATE

REGISTERED PROFESSIONAL ENGINEER MOHAN S. CHAR No. 57894 Exp. 6/30/10 CIVIL STATE OF CALIFORNIA

The State of California or its officers or agents shall not be responsible for the accuracy or completeness of electronic copies of this plan sheet.

RIVERSIDE COUNTY TRANSPORTATION COMMISSION
4080 LEMON STREET - THIRD FLOOR
RIVERSIDE, CALIFORNIA 92501

LIM & NASCIMENTO ENGINEERING
1887 BUSINESS CENTER DRIVE, SUITE 6
SAN BERNARDINO, CALIFORNIA 92408

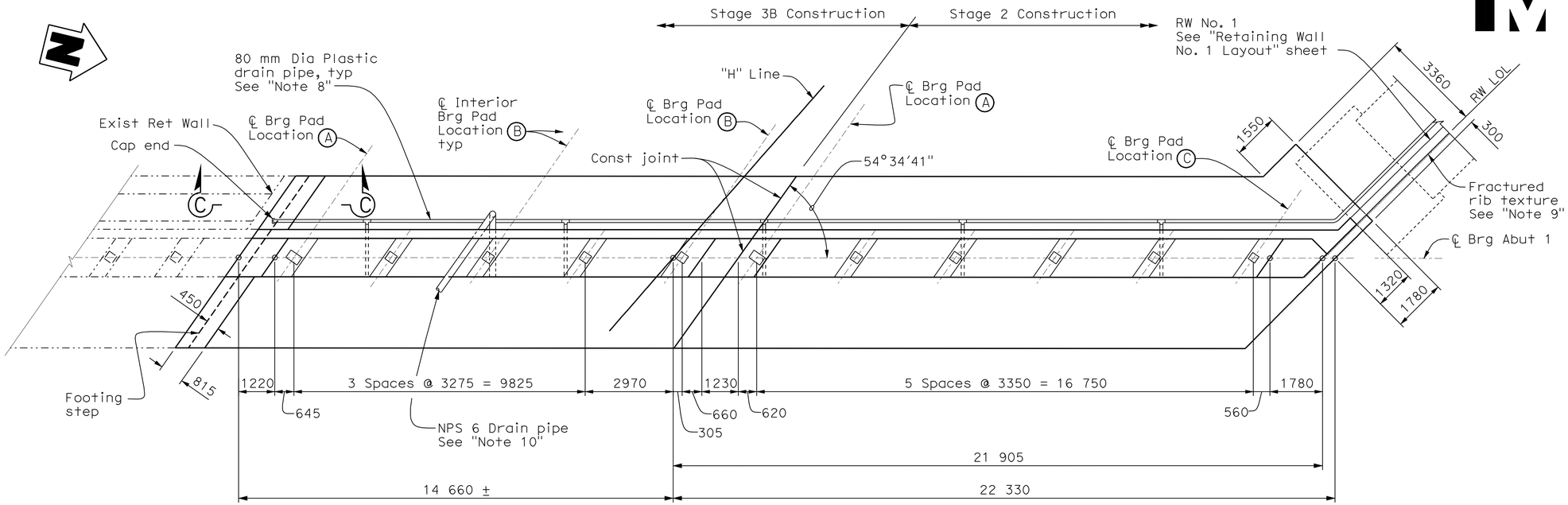

PLAN
1:80

Notes:

1. For Abutment Section "A-A" & "D-D", see "Abutment Details No. 1" sheet.
2. For external shear key details, see "Abutment Details No. 2" sheet.
3. For internal shear key details, see "Abutment Details No. 3" sheet.
4. For Abutment corner details, see "Abutment Details No. 2" sheet.
5. For "Bearing Pad Schedule", see "Abutment Details No. 5" sheet.
6. For joint details, see "Abutment Details No. 5" sheet.
7. For "Footing Corner Detail", see "Abutment Details No. 5" sheet.
8. See "Structure Approach Drainage Details" for more information.
9. For fractured rib texture detail, see "Abutment Details No. 2" sheet.
10. For "Deck Drain Type D-2" detail, see "Miscellaneous Details" sheet.
11. For limits of overexcavation at abutment 1 and limits of lean concrete base, see "Pier Details No. 2" sheet

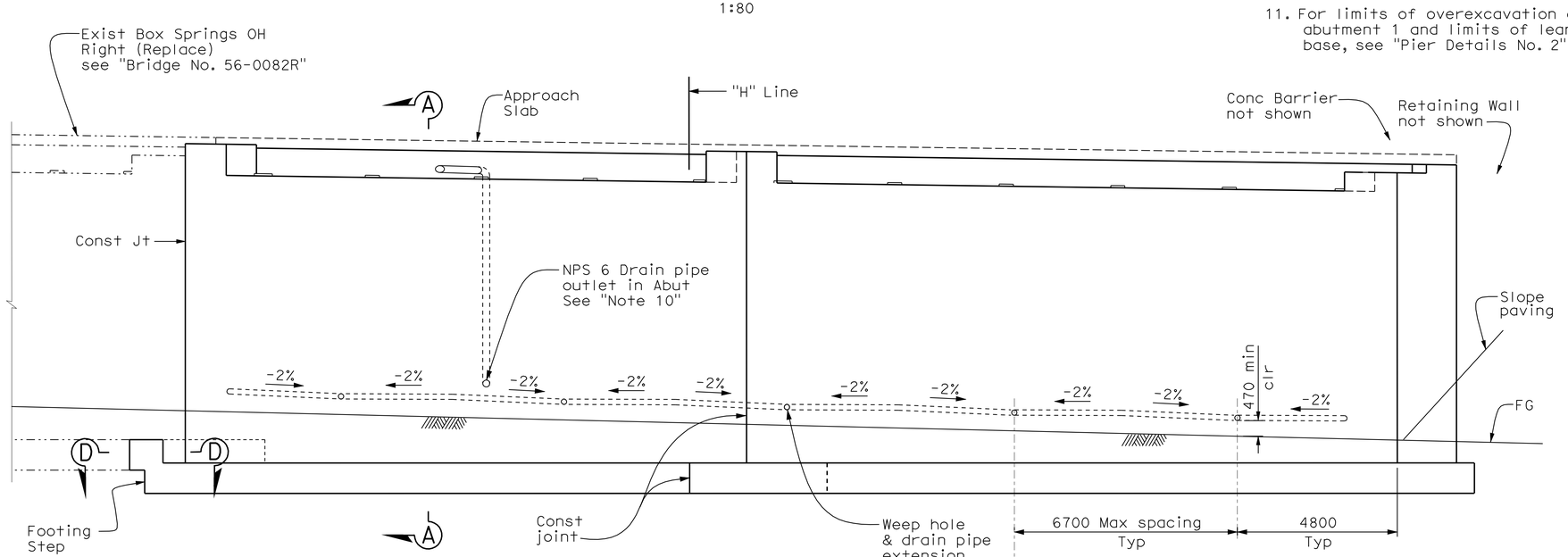

ELEVATION
1:80

Note: Footing key is not shown. Start footing key at beginning of footing step

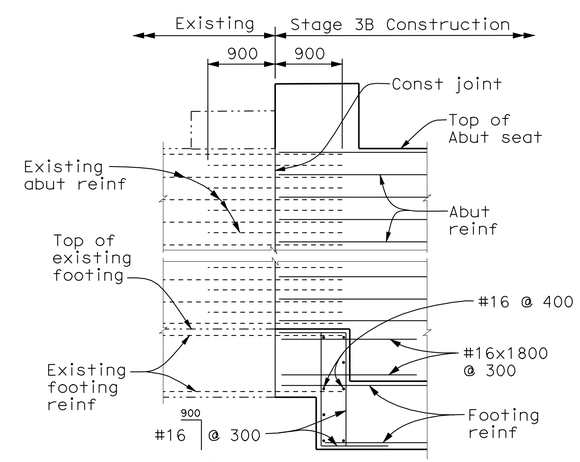

SECTION C-C
1:40
Abutment 1 shown, Abutment 4 similar

ALL DIMENSIONS ARE IN MILLIMETERS UNLESS OTHERWISE SHOWN

DESIGN OVERSIGHT Robert Zezoff
10-22-09
SIGN OFF DATE

	BY	CHECKED
DESIGN	D. KIM/D. SARETSKY	T. DUDLEY/A. SIVATHASAN
DETAILS	R. ANDRASEK	T. DUDLEY/M. CHAR
QUANTITIES	D. SARETSKY	K. GEE

PREPARED FOR THE STATE OF CALIFORNIA DEPARTMENT OF TRANSPORTATION

MOHAN S. CHAR
PROJECT ENGINEER

BRIDGE NO. 56-0082R
KILOMETER POST R62.2

BOX SPRINGS OH (WIDEN)
ABUTMENT 1 LAYOUT

DESIGN DETAIL SHEET (METRIC) (REV. 10/27/05)

ORIGINAL SCALE IN MILLIMETERS FOR REDUCED PLANS 0 10 20 30 40 50 60 70 80 90 100

CU 08
EA 449311

DISREGARD PRINTS BEARING EARLIER REVISION DATES

REVISION DATES (PRELIMINARY STAGE ONLY) 9/25/08 12/22/08 6/15/09 8/20/09 10/2/09

SHEET 8 OF 29

FILE => 56-0082-f-a01_lo1.dgn

USERNAME => trlim DATE PLOTTED => 19-OCT-2010 TIME PLOTTED => 15:16

DIST	COUNTY	ROUTE	KILOMETER POST TOTAL PROJECT	SHEET No	TOTAL SHEETS
08	Riv	60,215	R19.7/21.9, R61.3/62.7	413	594

REGISTERED CIVIL ENGINEER 10/02/09 DATE

6-28-10
PLANS APPROVAL DATE

REGISTERED PROFESSIONAL ENGINEER MOHAN S. CHAR No. 57894 Exp. 6/30/10 CIVIL STATE OF CALIFORNIA

The State of California or its officers or agents shall not be responsible for the accuracy or completeness of electronic copies of this plan sheet.

RIVERSIDE COUNTY TRANSPORTATION COMMISSION
4080 LEMON STREET - THIRD FLOOR
RIVERSIDE, CALIFORNIA 92501

LIM & NASCIMENTO ENGINEERING
1887 BUSINESS CENTER DRIVE, SUITE 6
SAN BERNARDINO, CALIFORNIA 92408

Notes:

1. For Abutment Section "B-B" and "D-D", see "Abutment Details No. 1" sheet.
2. For external shear key details, see "Abutment Details No. 2" sheet.
3. For internal shear key details, see "Abutment Details No. 3" sheet.
4. For Abutment corner details, see "Abutment Details No. 2" sheet.
5. For "Bearing Pad Schedule", see "Abutment Details No. 5" sheet.
6. For joint details, see "Abutment Details No. 5" sheet.
7. For "Section C-C", see "Abutment 1 Layout" sheet.
8. For "Footing Corner Detail", see "Abutment Details No. 5" sheet.
9. See "Structure Approach Drainage Details" for more information.
10. For fractured rib texture detail, see "Abutment Details No. 2" sheet.

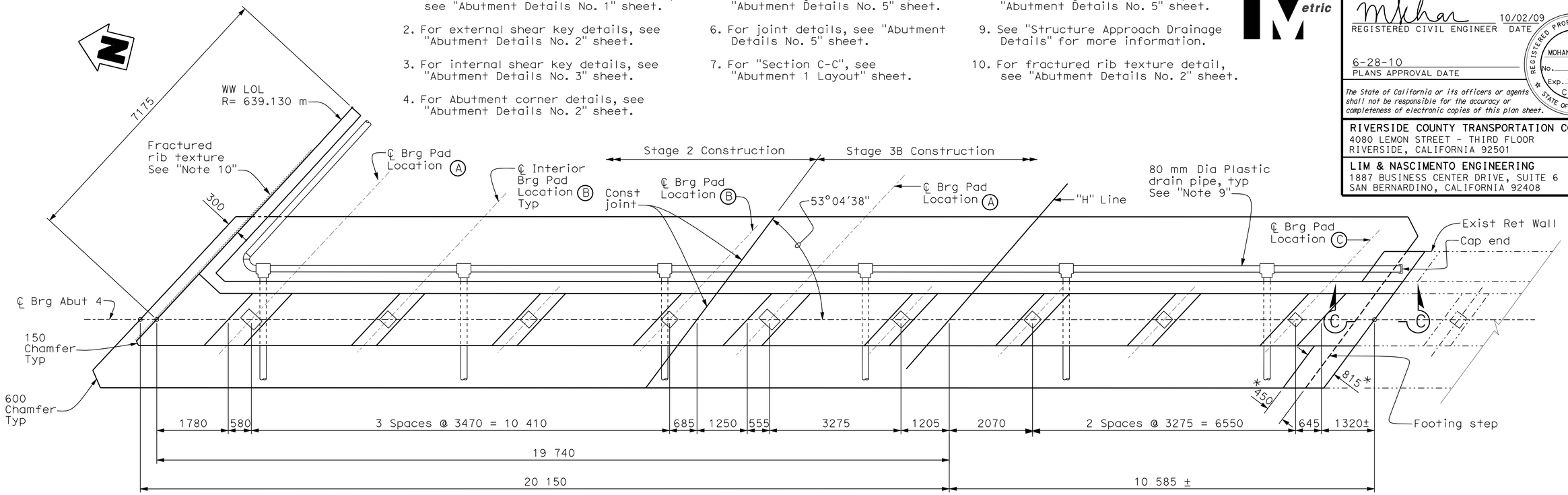

PLAN
1:50

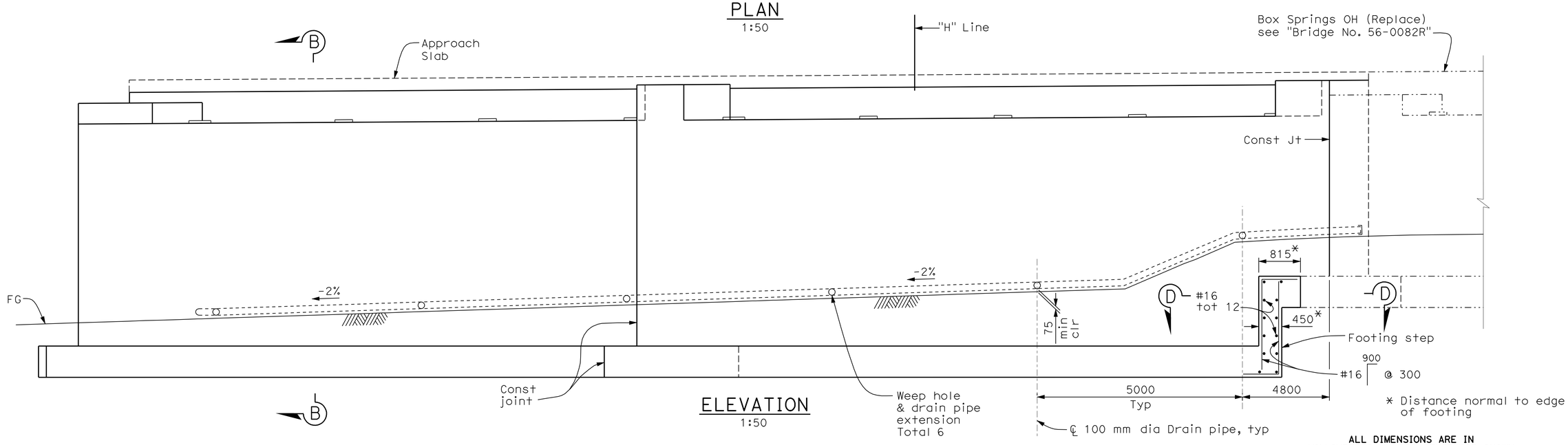

ELEVATION
1:50

ALL DIMENSIONS ARE IN MILLIMETERS UNLESS OTHERWISE SHOWN

DESIGN OVERSIGHT Robert Zezoff
10-22-09
SIGN OFF DATE

	BY	CHECKED
~~DESIGN~~	D. KIM/D. SARETSKY	T. DUDLEY/A. SIVATHASAN
DETAILS	R. ANDRASEK	T. DUDLEY/M. CHAR
QUANTITIES	D. SARETSKY	K. GEE

PREPARED FOR THE STATE OF CALIFORNIA DEPARTMENT OF TRANSPORTATION

MOHAN S. CHAR
PROJECT ENGINEER

BRIDGE NO. 56-0082R
KILOMETER POST R62.2

BOX SPRINGS OH (WIDEN)
ABUTMENT 4 LAYOUT

DESIGN DETAIL SHEET (METRIC) (REV. 10/27/05)

ORIGINAL SCALE IN MILLIMETERS FOR REDUCED PLANS 0 10 20 30 40 50 60 70 80 90 100

CU 08
EA 449311

DISREGARD PRINTS BEARING EARLIER REVISION DATES

REVISION DATES (PRELIMINARY STAGE ONLY) 9/28/08 12/22/08 6/18/09 8/28/09 10/2/09

SHEET 9 OF 29

FILE => 56-0082-f-a01_lo2.dgn

USERNAME => trlim DATE PLOTTED => 19-OCT-2010 TIME PLOTTED => 15:16

DIST	COUNTY	ROUTE	KILOMETER POST TOTAL PROJECT	SHEET No	TOTAL SHEETS
08	Riv	60,215	R19.7/21.9, R61.3/62.7	414	594

REGISTERED CIVIL ENGINEER — DATE 10/02/09

6-28-10
PLANS APPROVAL DATE

REGISTERED PROFESSIONAL ENGINEER — MOHAN S. CHAR — No. 57894 — Exp. 6/30/10 — CIVIL — STATE OF CALIFORNIA

The State of California or its officers or agents shall not be responsible for the accuracy or completeness of electronic copies of this plan sheet.

RIVERSIDE COUNTY TRANSPORTATION COMMISSION
4080 LEMON STREET - THIRD FLOOR
RIVERSIDE, CALIFORNIA 92501

LIM & NASCIMENTO ENGINEERING
1887 BUSINESS CENTER DRIVE, SUITE 6
SAN BERNARDINO, CALIFORNIA 92408

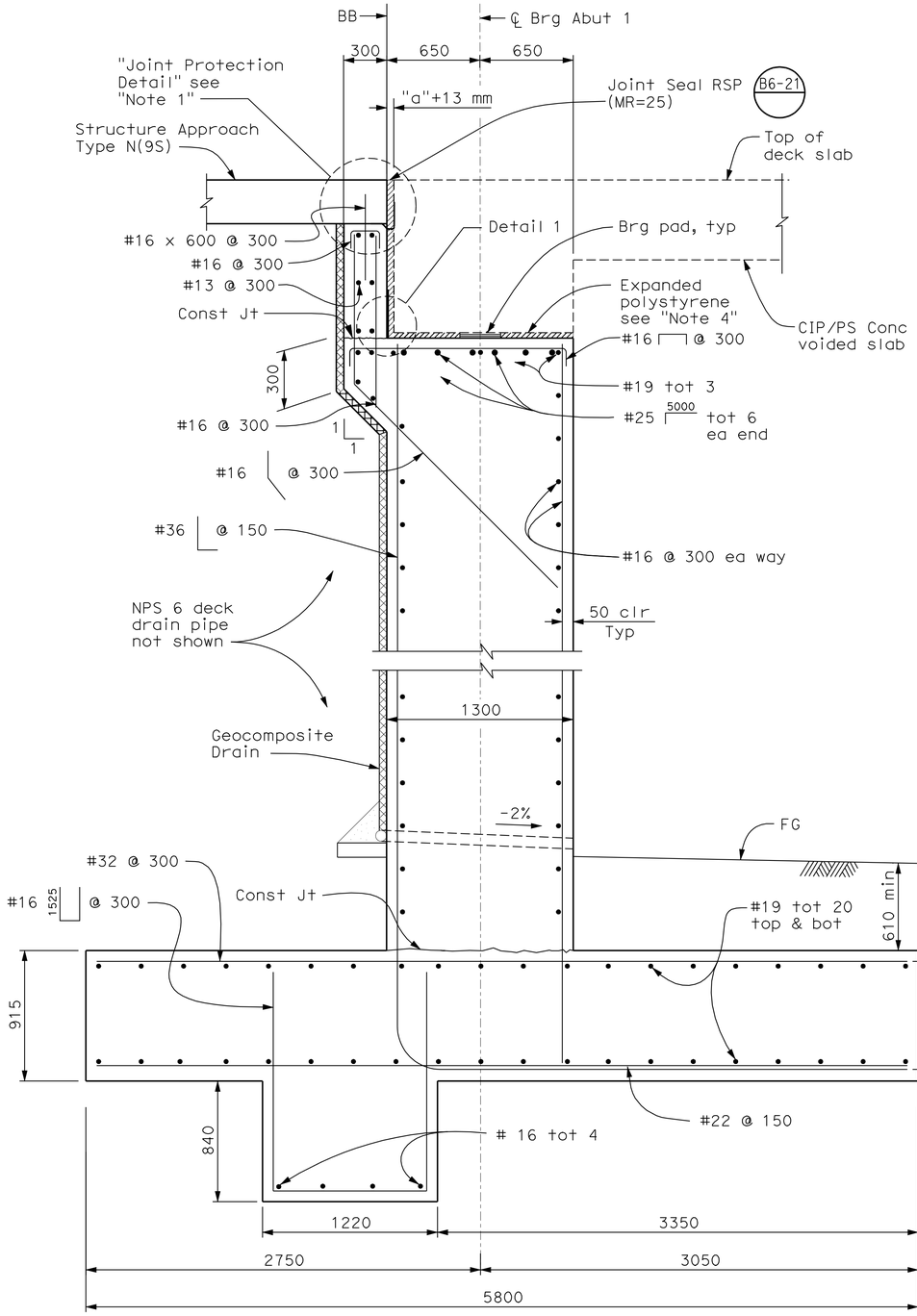

ABUTMENT 1 SECTION
1:20

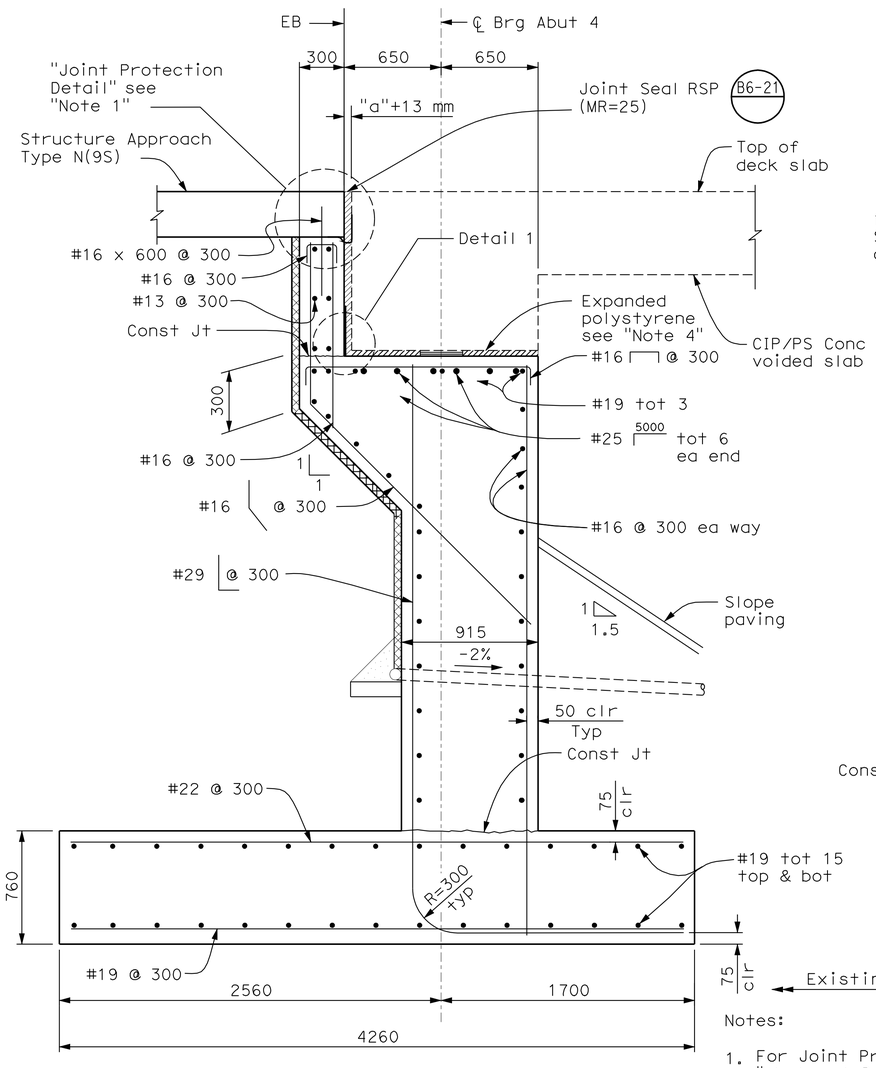

ABUTMENT 4 SECTION
1:20

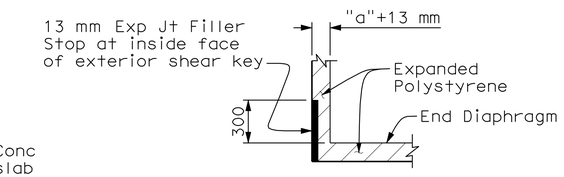

DETAIL 1
No Scale

For "a" values dimension, See (Use values corresponding to CIP/PS structures).

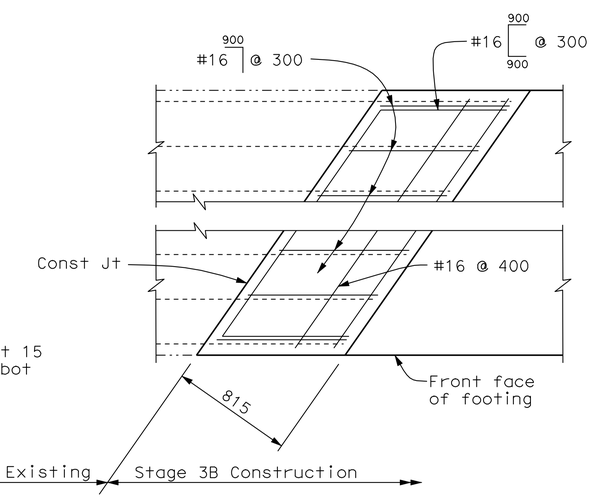

SECTION D-D
1:20

Notes:

1. For Joint Protection Detail, see "Abutment Details No. 5" sheet.
2. See "Structure Approach Slab Type N(9S)" sheet.
3. See "Structure Approach Drainage Details" sheet.
4. Remove expanded polystyrene min 150 mm from all expose surfaces.

ALL DIMENSIONS ARE IN MILLIMETERS UNLESS OTHERWISE SHOWN

DESIGN OVERSIGHT — Robert Zezoff
10-22-09
SIGN OFF DATE

	BY	CHECKED
DESIGN	D. KIM/D. SARETSKY	T. DUDLEY/A. SIVATHASAN
DETAILS	R. ANDRASEK	T. DUDLEY/M. CHAR
QUANTITIES	D. SARETSKY	K. GEE

PREPARED FOR THE STATE OF CALIFORNIA DEPARTMENT OF TRANSPORTATION

MOHAN S. CHAR
PROJECT ENGINEER

BRIDGE NO. 56-0082R
KILOMETER POST R62.2

BOX SPRINGS OH (WIDEN)
ABUTMENT DETAILS No. 1

DESIGN DETAIL SHEET (METRIC) (REV. 10/27/05)

ORIGINAL SCALE IN MILLIMETERS FOR REDUCED PLANS 0 10 20 30 40 50 60 70 80 90 100

CU 08
EA 449311

DISREGARD PRINTS BEARING EARLIER REVISION DATES

REVISION DATES (PRELIMINARY STAGE ONLY): 9/25/08 12/22/08 6/15/09 8/28/09 10/2/09

SHEET 10 OF 29

FILE => 56-0082-f-a01dt01.dgn

USERNAME => trlim DATE PLOTTED => 19-OCT-2010 TIME PLOTTED => 15:16

DIST	COUNTY	ROUTE	KILOMETER POST TOTAL PROJECT	SHEET No	TOTAL SHEETS
08	Riv	60,215	R19.7/21.9, R61.3/62.7	415	594

Caltrans Metric

REGISTERED CIVIL ENGINEER 10/02/09 DATE

6-28-10
PLANS APPROVAL DATE

REGISTERED PROFESSIONAL ENGINEER MOHAN S. CHAR No. 57894 Exp. 6/30/10 CIVIL STATE OF CALIFORNIA

The State of California or its officers or agents shall not be responsible for the accuracy or completeness of electronic copies of this plan sheet.

RIVERSIDE COUNTY TRANSPORTATION COMMISSION
4080 LEMON STREET - THIRD FLOOR
RIVERSIDE, CALIFORNIA 92501

LIM & NASCIMENTO ENGINEERING
1887 BUSINESS CENTER DRIVE, SUITE 6
SAN BERNARDINO, CALIFORNIA 92408

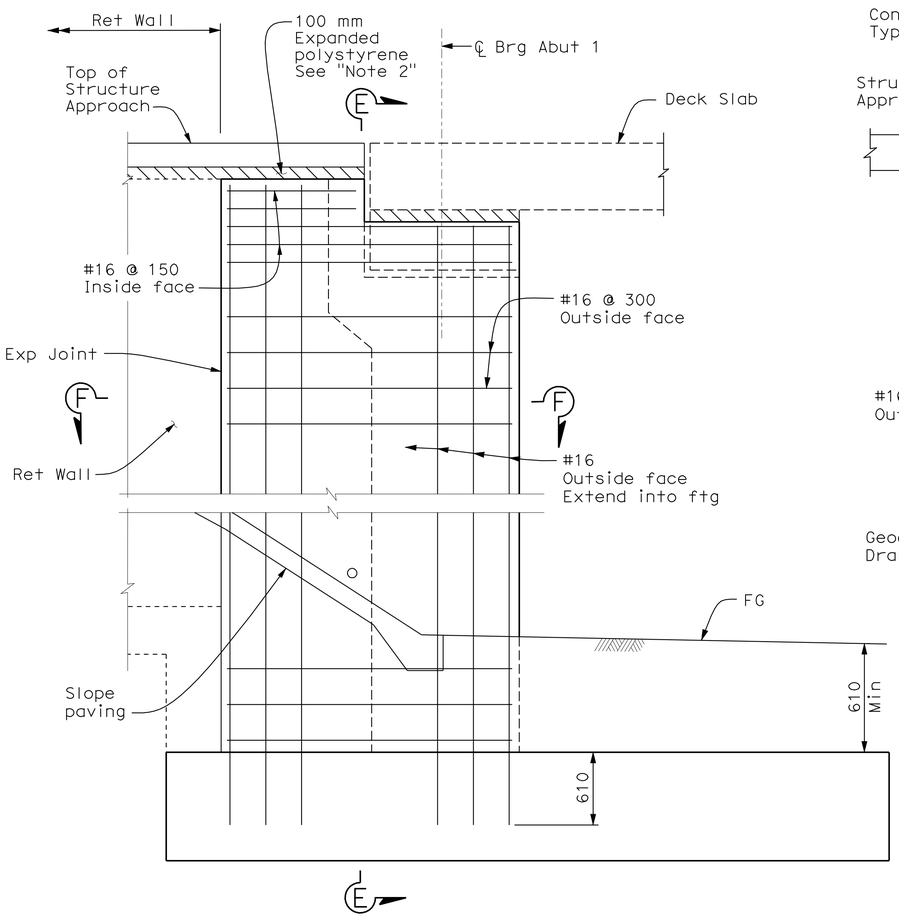

MIRRORED RETURN WALL ELEVATION
1:25

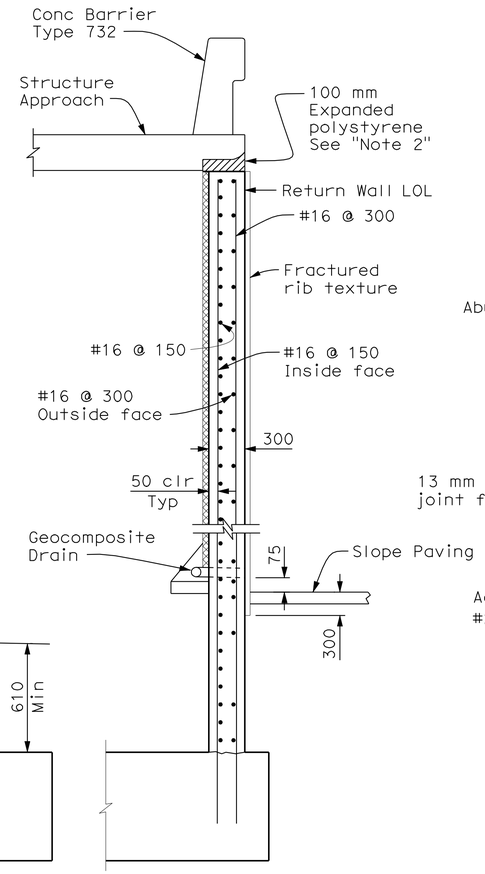

SECTION E-E
1:25

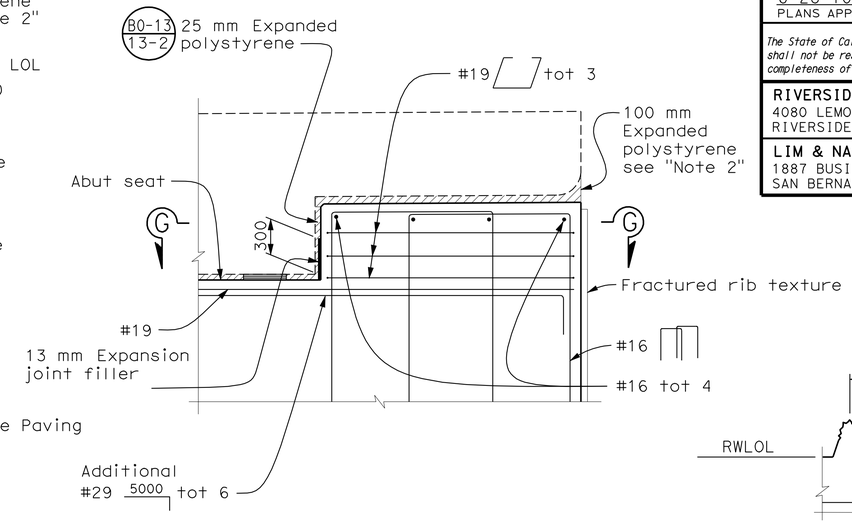

EXTERNAL SHEAR KEY
1:20

Abutment 1 Right shown
Abutment 4 Left similar

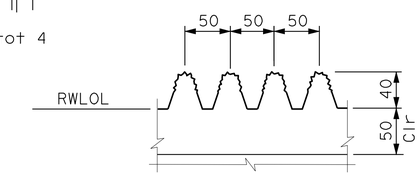

FRACTURED RIB TEXTURE
No Scale

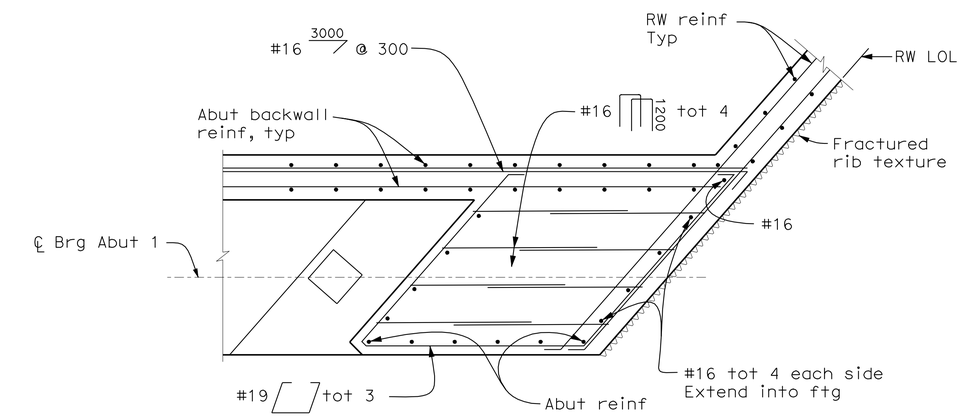

SECTION G-G
1:20

Abutment 1 Right shown
Abutment 4 Right similar

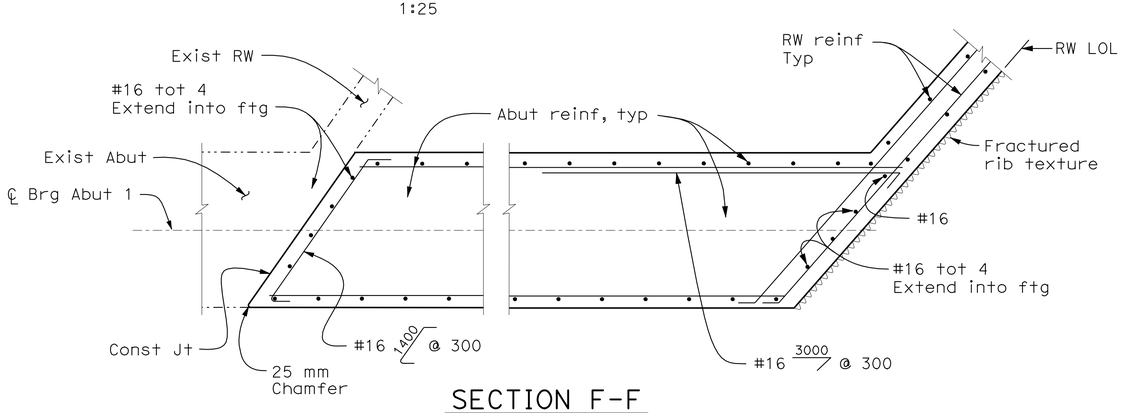

SECTION F-F
1:25

Notes:

1. For Retaining & Return Wall/ Wingwall connection, see "Abutment 1 Layout" and "Abutment 4 Layout" sheets.
2. Remove expanded polystyrene min 150 mm from all exposed surfaces.

ALL DIMENSIONS ARE IN MILLIMETERS UNLESS OTHERWISE SHOWN

Robert Zezoff
DESIGN OVERSIGHT Robert Zezoff
10-22-09
SIGN OFF DATE

	BY	CHECKED
DESIGN	D. KIM/D. SARETSKY	T. DUDLEY/A. SIVATHASAN
DETAILS	R. ANDRASEK	T. DUDLEY/M. CHAR
QUANTITIES	D. SARETSKY	K. GEE

PREPARED FOR THE STATE OF CALIFORNIA DEPARTMENT OF TRANSPORTATION

MOHAN S. CHAR
PROJECT ENGINEER

BRIDGE NO. 56-0082R
KILOMETER POST R62.2

BOX SPRINGS OH (WIDEN)
ABUTMENT DETAILS No. 2

DISREGARD PRINTS BEARING EARLIER REVISION DATES

REVISION DATES (PRELIMINARY STAGE ONLY): 9/28/08 12/22/08 6/18/09 8/20/09 10/2/09

SHEET 11 OF 29

DESIGN DETAIL SHEET (METRIC) (REV. 10/27/05)

ORIGINAL SCALE IN MILLIMETERS FOR REDUCED PLANS 0 10 20 30 40 50 60 70 80 90 100

CU 08
EA 449311

FILE => 56-0082-f-a01dt02.dgn

USERNAME => trlim DATE PLOTTED => 19-OCT-2010 TIME PLOTTED => 15:16

DIST	COUNTY	ROUTE	KILOMETER POST TOTAL PROJECT	SHEET No	TOTAL SHEETS
08	Riv	60,215	R19.7/21.9, R61.3/62.7	416	594

Caltrans Metric

REGISTERED CIVIL ENGINEER 10/02/09 DATE

6-28-10
PLANS APPROVAL DATE

REGISTERED PROFESSIONAL ENGINEER MOHAN S. CHAR No. 57894 Exp. 6/30/10 CIVIL STATE OF CALIFORNIA

The State of California or its officers or agents shall not be responsible for the accuracy or completeness of electronic copies of this plan sheet.

RIVERSIDE COUNTY TRANSPORTATION COMMISSION
4080 LEMON STREET - THIRD FLOOR
RIVERSIDE, CALIFORNIA 92501

LIM & NASCIMENTO ENGINEERING
1887 BUSINESS CENTER DRIVE, SUITE 6
SAN BERNARDINO, CALIFORNIA 92408

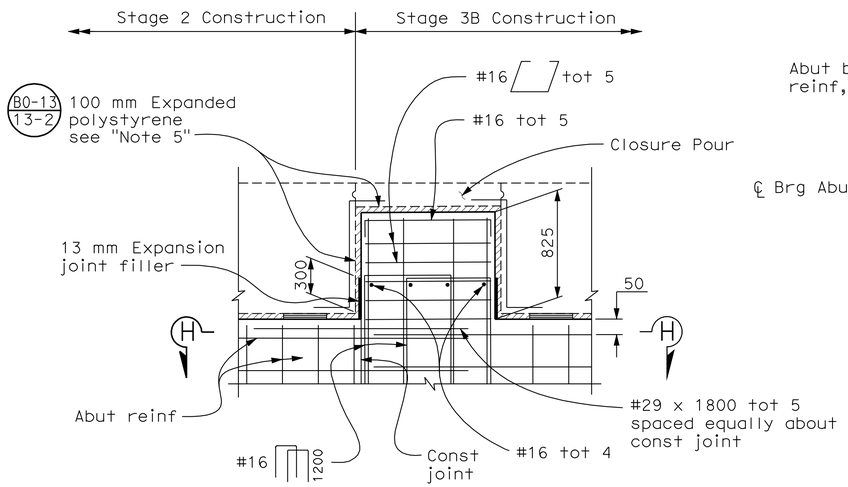

ELEVATION
INTERNAL SHEAR KEY
1:25
(Abutment 4 shown, Abutment 1 similar)

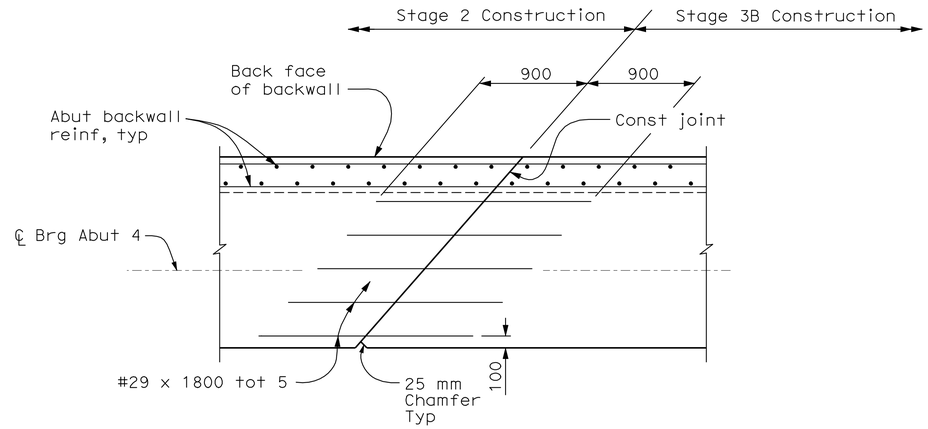

SECTION H-H
1:25

Notes:

1. Abutment 4 shown, Abutment 1 similar.
2. Extend all Abutment and Backwall reinforcement 900 mm into Stage 3B construction.
3. Extend all footing reinforcement 900 mm into Stage 3B construction.
4. For Internal Shear Key located adjacent to existing bridge, see "Section C-C" on "Abutment 1 Layout" sheet.
5. Remove expanded polystyrene min 150 mm from all exposed surfaces.

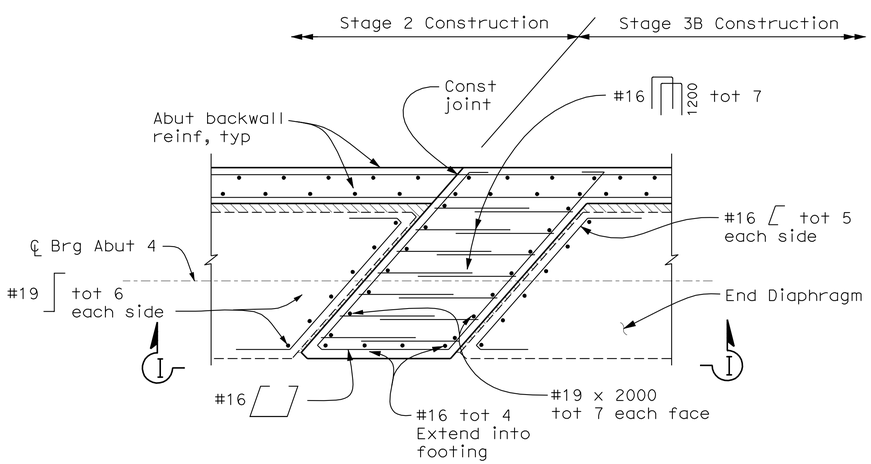

PLAN
1:25
(Abutment 4 shown, Abutment 1 similar)

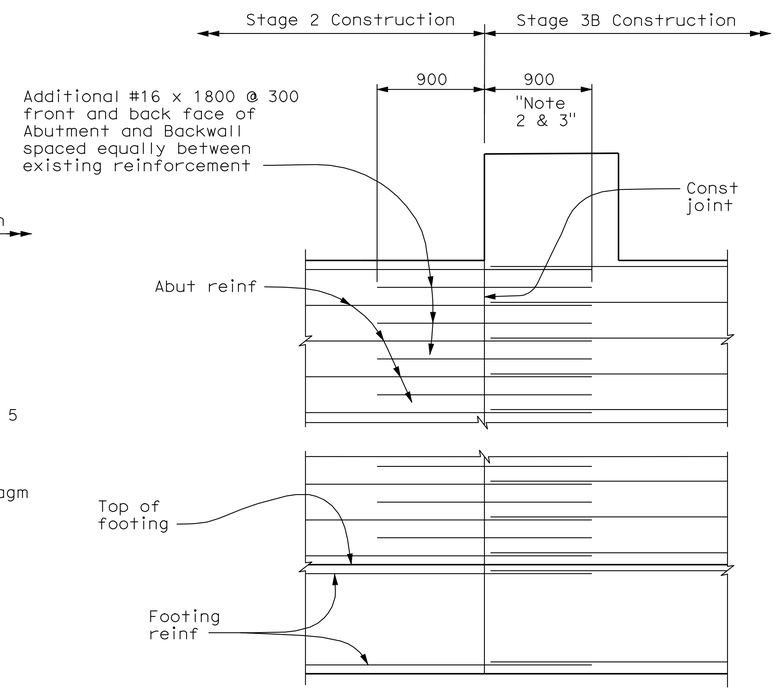

SECTION I-I
1:25

ALL DIMENSIONS ARE IN MILLIMETERS UNLESS OTHERWISE SHOWN

Robert Zezoff — DESIGN OVERSIGHT — Robert Zezoff	DESIGN	BY D. KIM/D. SARETSKY	CHECKED T. DUDLEY/A. SIVATHASAN	PREPARED FOR THE STATE OF CALIFORNIA DEPARTMENT OF TRANSPORTATION	MOHAN S. CHAR — PROJECT ENGINEER
10-22-09 — SIGN OFF DATE	DETAILS	BY R. ANDRASEK	CHECKED T. DUDLEY/M. CHAR		
	QUANTITIES	BY D. SARETSKY	CHECKED K. GEE		

BRIDGE NO. 56-0082R
KILOMETER POST R62.2

BOX SPRINGS OH (WIDEN)
ABUTMENT DETAILS No. 3

DESIGN DETAIL SHEET (METRIC) (REV. 10/27/05)

ORIGINAL SCALE IN MILLIMETERS FOR REDUCED PLANS 0 10 20 30 40 50 60 70 80 90 100

CU 08
EA 449311

DISREGARD PRINTS BEARING EARLIER REVISION DATES → REVISION DATES (PRELIMINARY STAGE ONLY) 9/25/08 12/22/08 6/15/09 8/28/09 10/2/09

SHEET 12 OF 29

FILE => 56-0082-f-a01dt03.dgn

USERNAME => trlim DATE PLOTTED => 19-OCT-2010 TIME PLOTTED => 15:16

DIST	COUNTY	ROUTE	KILOMETER POST TOTAL PROJECT	SHEET No	TOTAL SHEETS
08	Riv	60,215	R19.7/21.9, R61.3/62.7	417	594

Caltrans Metric

REGISTERED CIVIL ENGINEER — DATE 10/02/09

6-28-10
PLANS APPROVAL DATE

REGISTERED PROFESSIONAL ENGINEER — MOHAN S. CHAR — No. 57894 — Exp. 6/30/10 — CIVIL — STATE OF CALIFORNIA

The State of California or its officers or agents shall not be responsible for the accuracy or completeness of electronic copies of this plan sheet.

RIVERSIDE COUNTY TRANSPORTATION COMMISSION
4080 LEMON STREET - THIRD FLOOR
RIVERSIDE, CALIFORNIA 92501

LIM & NASCIMENTO ENGINEERING
1887 BUSINESS CENTER DRIVE, SUITE 6
SAN BERNARDINO, CALIFORNIA 92408

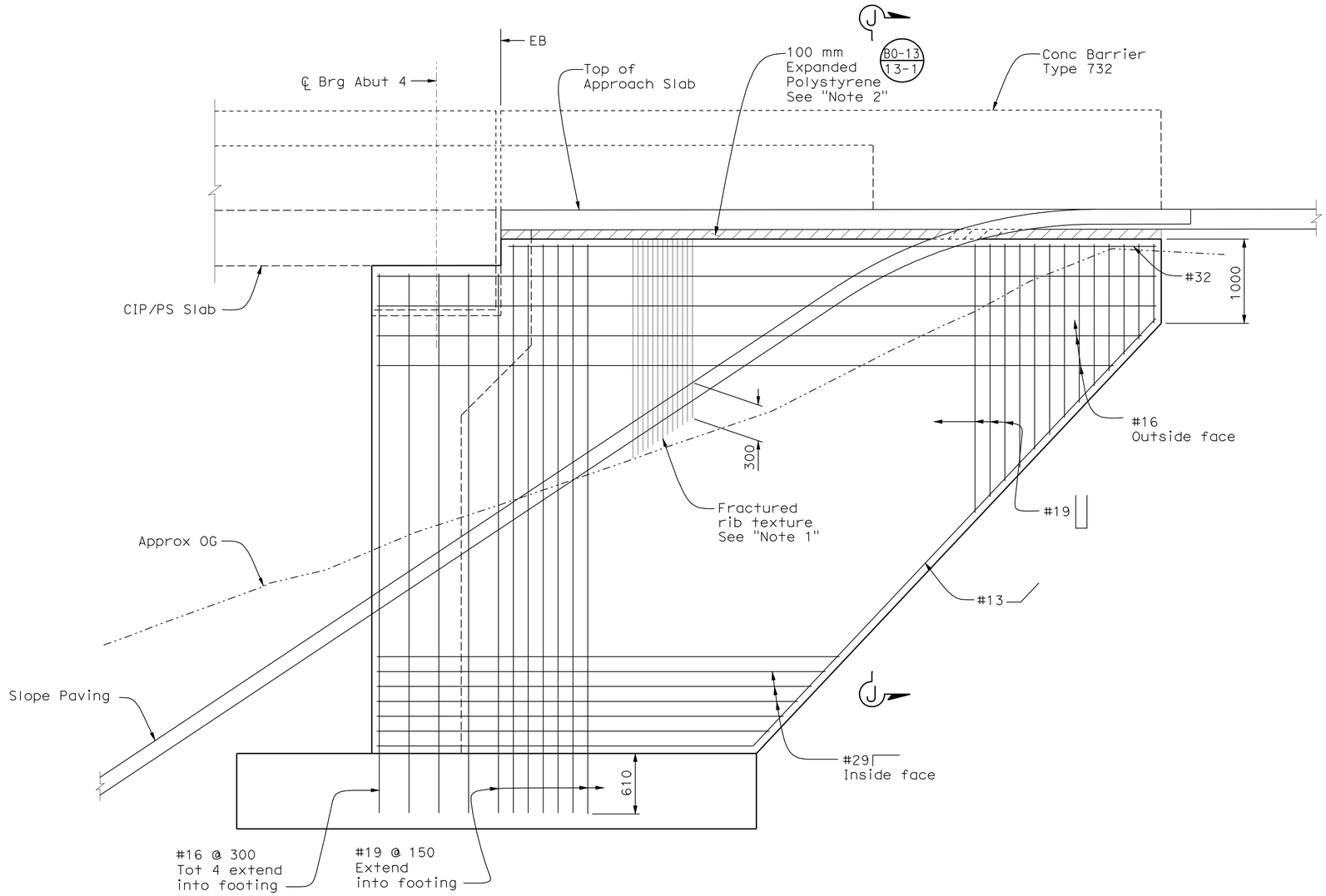

WINGWALL MIRROR ELEVATION
ABUTMENT 4 LEFT
1:25

Notes:

1. For fractured rib texture detail, see "Abutment Details No. 2" sheet.
2. Remove expanded polystyrene min 150 mm from all exposed surfaces.

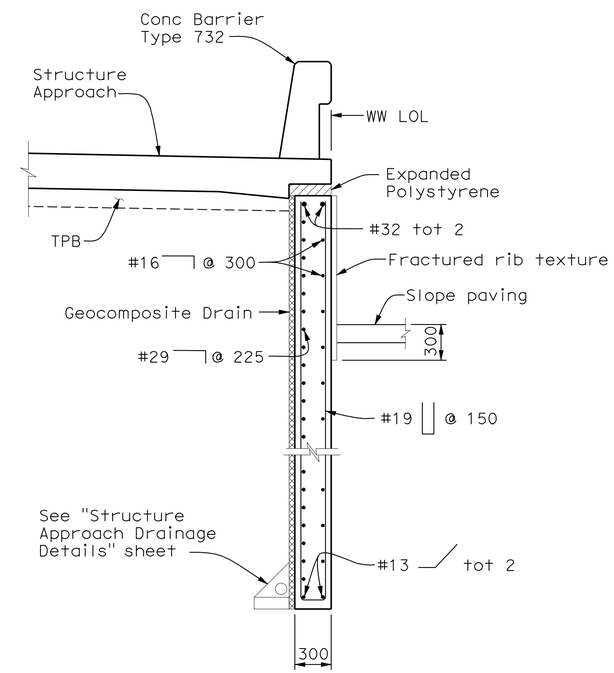

SECTION J-J
1:25

ALL DIMENSIONS ARE IN MILLIMETERS UNLESS OTHERWISE SHOWN

DESIGN OVERSIGHT — Robert Zezoff
10-22-09
SIGN OFF DATE

	BY	CHECKED
DESIGN	D. KIM/D. SARETSKY	T. DUDLEY/A. SIVATHASAN
DETAILS	R. ANDRASEK	T. DUDLEY/M. CHAR
QUANTITIES	D. SARETSKY	K. GEE

PREPARED FOR THE STATE OF CALIFORNIA DEPARTMENT OF TRANSPORTATION

MOHAN S. CHAR
PROJECT ENGINEER

BRIDGE NO. 56-0082R
KILOMETER POST R62.2

BOX SPRINGS OH (WIDEN)
ABUTMENT DETAILS No. 4

DESIGN DETAIL SHEET (METRIC) (REV. 10/27/05)

ORIGINAL SCALE IN MILLIMETERS FOR REDUCED PLANS 0 10 20 30 40 50 60 70 80 90 100

CU 08
EA 449311

DISREGARD PRINTS BEARING EARLIER REVISION DATES

REVISION DATES (PRELIMINARY STAGE ONLY): 9/25/08 12/22/08 6/18/09 8/20/09 10/2/09

SHEET 13 OF 29

FILE => 56-0082-f-a01dt04.dgn

USERNAME => trilm DATE PLOTTED => 19-OCT-2010 TIME PLOTTED => 15:17

DIST	COUNTY	ROUTE	KILOMETER POST TOTAL PROJECT	SHEET No	TOTAL SHEETS
08	Riv	60,215	R19.7/21.9, R61.3/62.7	418	594

Caltrans Metric

REGISTERED CIVIL ENGINEER — DATE 10/02/09

6-28-10
PLANS APPROVAL DATE

REGISTERED PROFESSIONAL ENGINEER — MOHAN S. CHAR — No. 57894 — Exp. 6/30/10 — CIVIL — STATE OF CALIFORNIA

The State of California or its officers or agents shall not be responsible for the accuracy or completeness of electronic copies of this plan sheet.

RIVERSIDE COUNTY TRANSPORTATION COMMISSION
4080 LEMON STREET - THIRD FLOOR
RIVERSIDE, CALIFORNIA 92501

LIM & NASCIMENTO ENGINEERING
1887 BUSINESS CENTER DRIVE, SUITE 6
SAN BERNARDINO, CALIFORNIA 92408

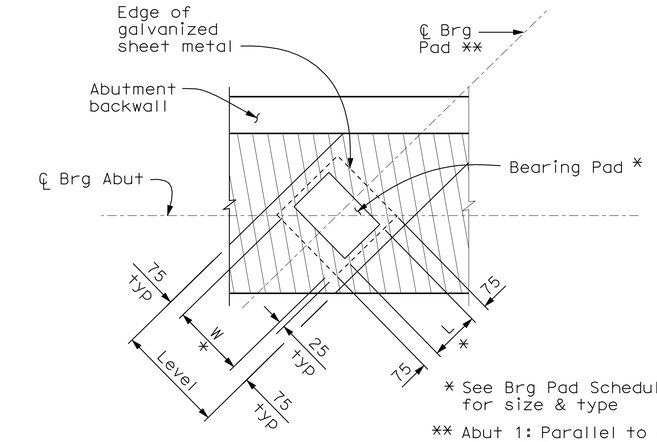

* See Brg Pad Schedule for size & type

** Abut 1: Parallel to const jt
Abut 4: Parallel to edge of deck

PLAN

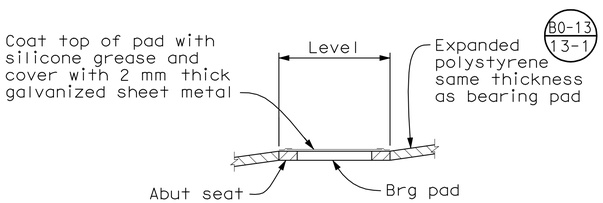

ELEVATION

BEARING PAD DETAIL

No Scale

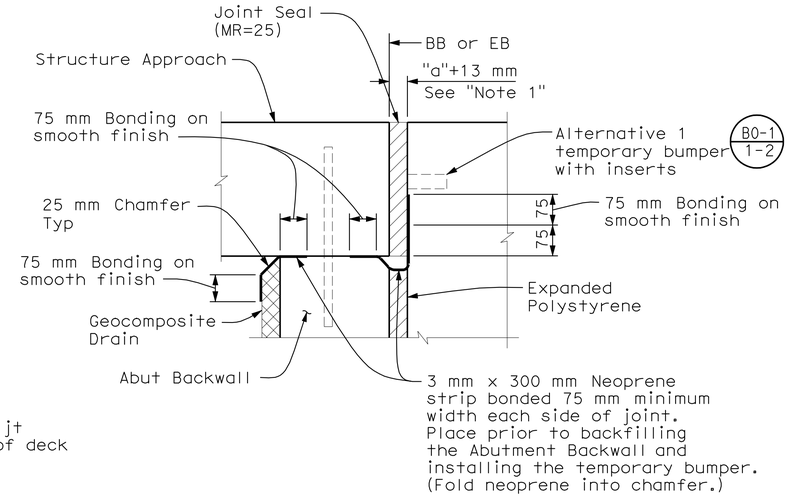

JOINT PROTECTION DETAIL

No Scale

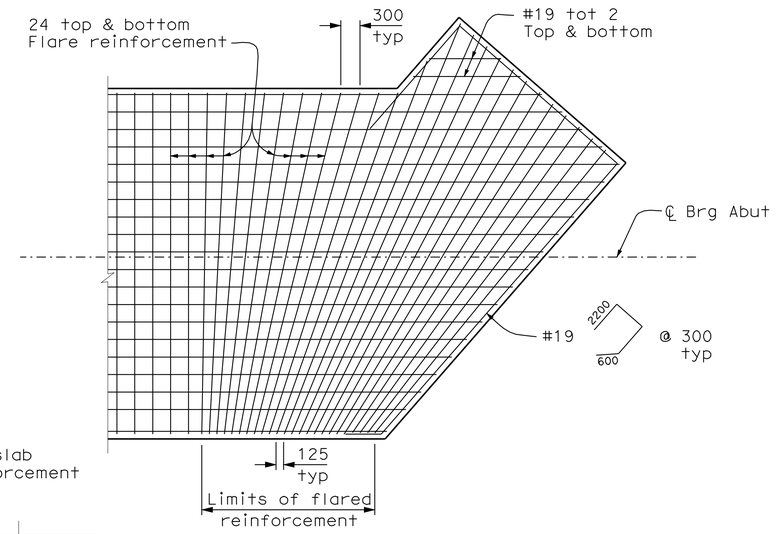

ABUTMENT 1 RIGHT FOOTING CORNER DETAIL

1:50

Abut 1 Right shown, Left similar

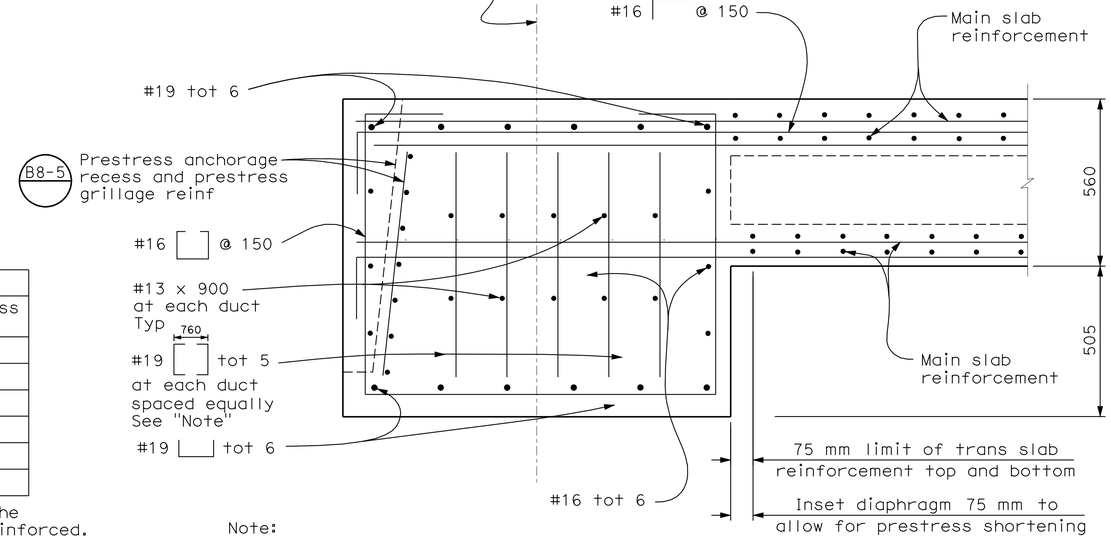

Note:

Reinforcement shown is in addition to B8-5

END DIAPHRAGM

1:10

B8-5

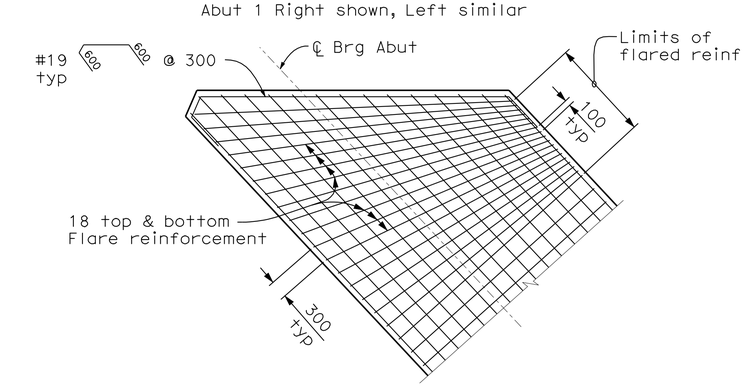

ABUTMENT 4 LEFT FOOTING CORNER DETAIL

1:50

Abut 4 Right shown, Left similar

ALL DIMENSIONS ARE IN MILLIMETERS UNLESS OTHERWISE SHOWN

BEARING PAD SCHEDULE				
Location	Reinforcement Type	Length "L"	Width "W"	Thickness "T"
A	Fabric Reinf	300	450	62.5
	Steel Reinf			75
B	Fabric Reinf	300	300	62.5
	Steel Reinf			75
C	Fabric Reinf	200	255	62.5
	Steel Reinf	255	255	75

Note: All elastomeric bearing pads shall be of the same type, either steel reinforced or fabric reinforced. Thickness "T" is for Elastomer only.

DESIGN OVERSIGHT — Robert Zezoff
10-22-09
SIGN OFF DATE

	BY	CHECKED
DESIGN	D. KIM/D. SARETSKY	T. DUDLEY/A. SIVATHASAN
DETAILS	R. ANDRASEK	T. DUDLEY/M. CHAR
QUANTITIES	D. SARETSKY	K. GEE

PREPARED FOR THE STATE OF CALIFORNIA DEPARTMENT OF TRANSPORTATION

MOHAN S. CHAR
PROJECT ENGINEER

BRIDGE NO. 56-0082R
KILOMETER POST R62.2

BOX SPRINGS OH (WIDEN)
ABUTMENT DETAILS No. 5

DESIGN DETAIL SHEET (METRIC) (REV. 10/27/05)

ORIGINAL SCALE IN MILLIMETERS FOR REDUCED PLANS 0 10 20 30 40 50 60 70 80 90 100

CU 08
EA 449311

DISREGARD PRINTS BEARING EARLIER REVISION DATES

REVISION DATES (PRELIMINARY STAGE ONLY): 9/25/08 12/22/08 6/18/09 8/28/09 10/2/09

SHEET 14 OF 29

FILE => 56-0082-f-a01dt05.dgn

USERNAME => trhim DATE PLOTTED => 19-OCT-2010 TIME PLOTTED => 15:17

DIST	COUNTY	ROUTE	KILOMETER POST TOTAL PROJECT	SHEET No	TOTAL SHEETS
08	Riv	60,215	R19.7/21.9, R61.3/62.7	419	594

REGISTERED CIVIL ENGINEER — DATE 10/02/09

6-28-10
PLANS APPROVAL DATE

REGISTERED PROFESSIONAL ENGINEER — MOHAN S. CHAR — No. 57894 — Exp. 6/30/10 — CIVIL — STATE OF CALIFORNIA

The State of California or its officers or agents shall not be responsible for the accuracy or completeness of electronic copies of this plan sheet.

RIVERSIDE COUNTY TRANSPORTATION COMMISSION
4080 LEMON STREET - THIRD FLOOR
RIVERSIDE, CALIFORNIA 92501

LIM & NASCIMENTO ENGINEERING
1887 BUSINESS CENTER DRIVE, SUITE 6
SAN BERNARDINO, CALIFORNIA 92408

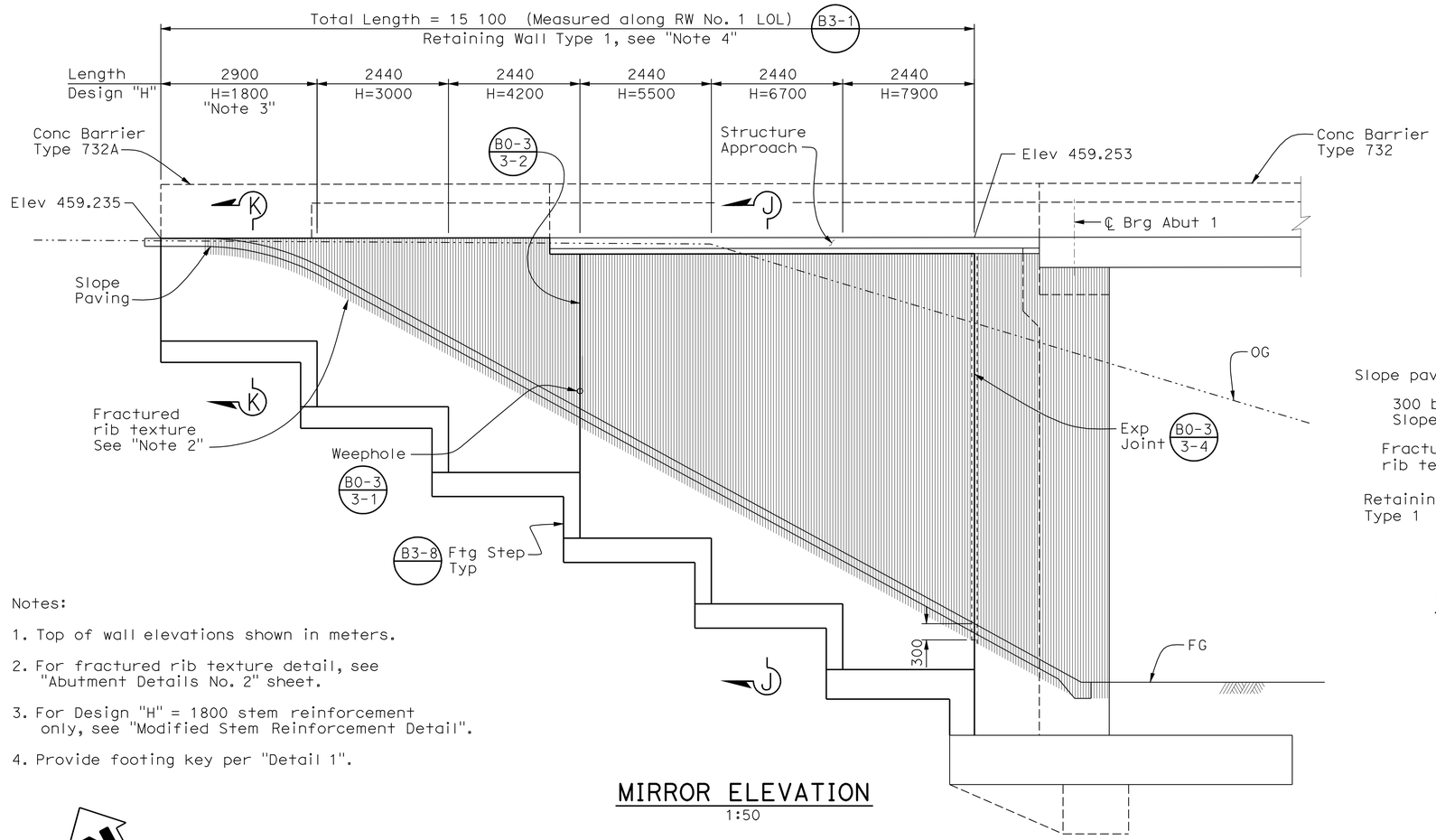

Notes:

1. Top of wall elevations shown in meters.
2. For fractured rib texture detail, see "Abutment Details No. 2" sheet.
3. For Design "H" = 1800 stem reinforcement only, see "Modified Stem Reinforcement Detail".
4. Provide footing key per "Detail 1".

MIRROR ELEVATION
1:50

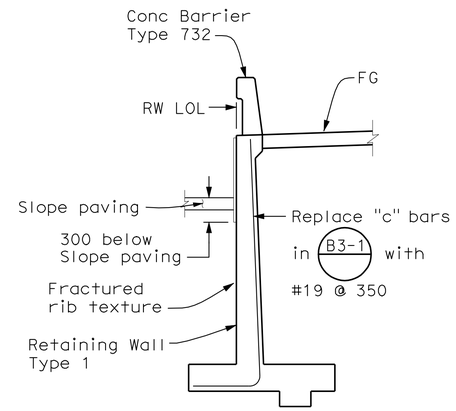

MODIFIED STEM REINFORCEMENT
No Scale

Note: For reinforcement not shown, see B3-1

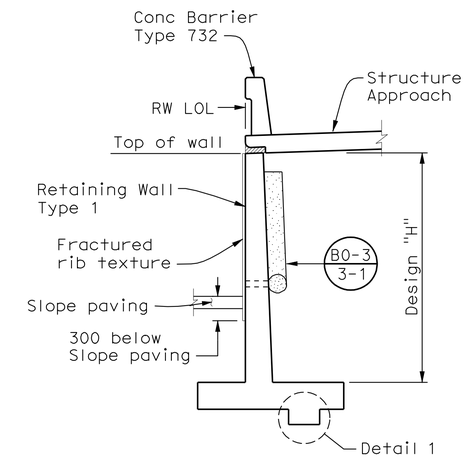

SECTION J-J
No Scale

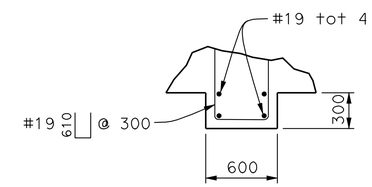

DETAIL 1
No Scale

Reinf shown is in addition to B3-1

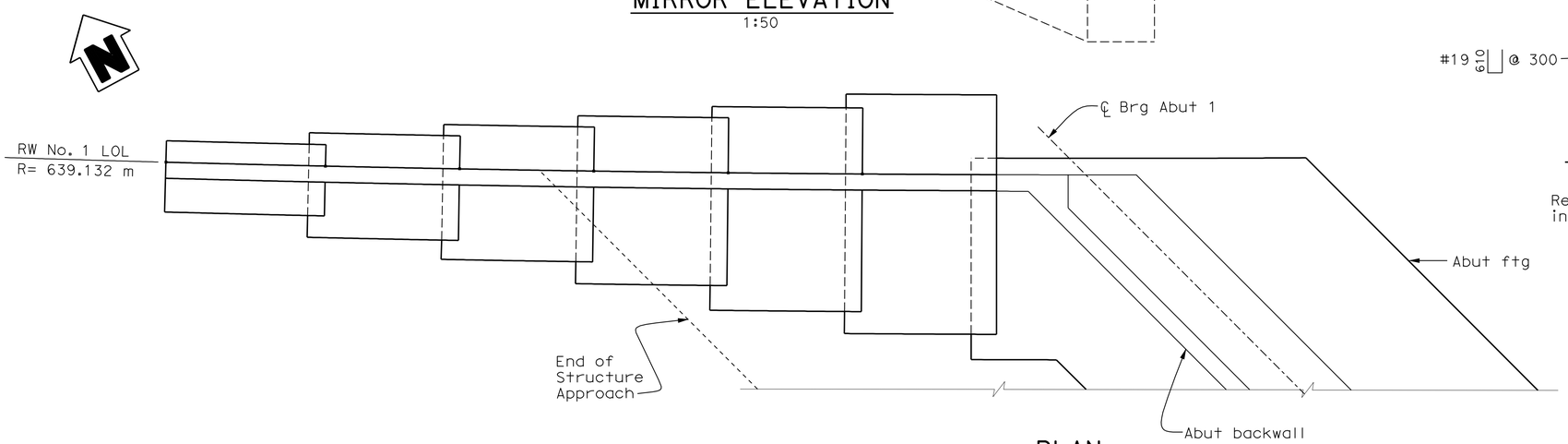

PLAN
1:50

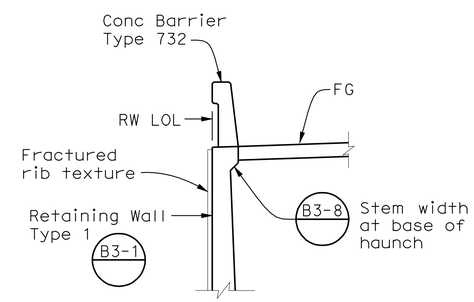

SECTION K-K
No Scale

For information not shown, see "Section J-J"

ALL DIMENSIONS ARE IN MILLIMETERS UNLESS OTHERWISE SHOWN

DESIGN OVERSIGHT — Robert Zezoff
10-22-09
SIGN OFF DATE

	BY	CHECKED
DESIGN	D. KIM/D. SARETSKY	T. DUDLEY/A. SIVATHASAN
DETAILS	R. ANDRASEK	T. DUDLEY/M. CHAR
QUANTITIES	D. SARETSKY	K. GEE

PREPARED FOR THE STATE OF CALIFORNIA DEPARTMENT OF TRANSPORTATION

MOHAN S. CHAR
PROJECT ENGINEER

BRIDGE NO. 56-0082R
KILOMETER POST R62.2

BOX SPRINGS OH (WIDEN)
RETAINING WALL No. 1 LAYOUT

DESIGN DETAIL SHEET (METRIC) (REV. 10/27/05)

ORIGINAL SCALE IN MILLIMETERS FOR REDUCED PLANS 0 10 20 30 40 50 60 70 80 90 100

CU 08
EA 449311

DISREGARD PRINTS BEARING EARLIER REVISION DATES

REVISION DATES (PRELIMINARY STAGE ONLY): 9/28/08 12/22/08 6/18/09 8/20/09 10/2/09

SHEET 15 OF 29

FILE => 56-0082-g-rw_lo1.dgn

USERNAME => rtrlim DATE PLOTTED => 19-OCT-2010 TIME PLOTTED => 15:17

DIST	COUNTY	ROUTE	KILOMETER POST TOTAL PROJECT	SHEET No	TOTAL SHEETS
08	Riv	60,215	R19.7/21.9, R61.3/62.7	420	594

Caltrans Metric

REGISTERED CIVIL ENGINEER 10/02/09 DATE

6-28-10
PLANS APPROVAL DATE

REGISTERED PROFESSIONAL ENGINEER MOHAN S. CHAR No. 57894 Exp. 6/30/10 CIVIL STATE OF CALIFORNIA

The State of California or its officers or agents shall not be responsible for the accuracy or completeness of electronic copies of this plan sheet.

RIVERSIDE COUNTY TRANSPORTATION COMMISSION
4080 LEMON STREET - THIRD FLOOR
RIVERSIDE, CALIFORNIA 92501

LIM & NASCIMENTO ENGINEERING
1887 BUSINESS CENTER DRIVE, SUITE 6
SAN BERNARDINO, CALIFORNIA 92408

Notes:

1. Pier 2 shown, Pier 3 similar. For Sections "L-L, M-M, N-N, O-O & P-P" see "Pier Details No. 1" sheet.
2. No splices permitted in vertical Pier Wall reinforcement.
3. Lap splices are not permitted in horizontal Bent Cap reinforcement.
4. For Existing Box Springs OH (Replace) see "Bridge No. 56-0082R".
5. For flared and core rebar, see left side "Elevation" view. For outside rebar, see right side "Elevation" view.
6. For flared only reinforcement detail, see Detail "A" on "Pier Details No. 2" sheet.
7. For "Deck Drain Type D-2 (Mod)" see "Pier Details No. 2" sheet.
8. For limits of overexcavation at Piers, see "Pier Details No. 2" sheet.

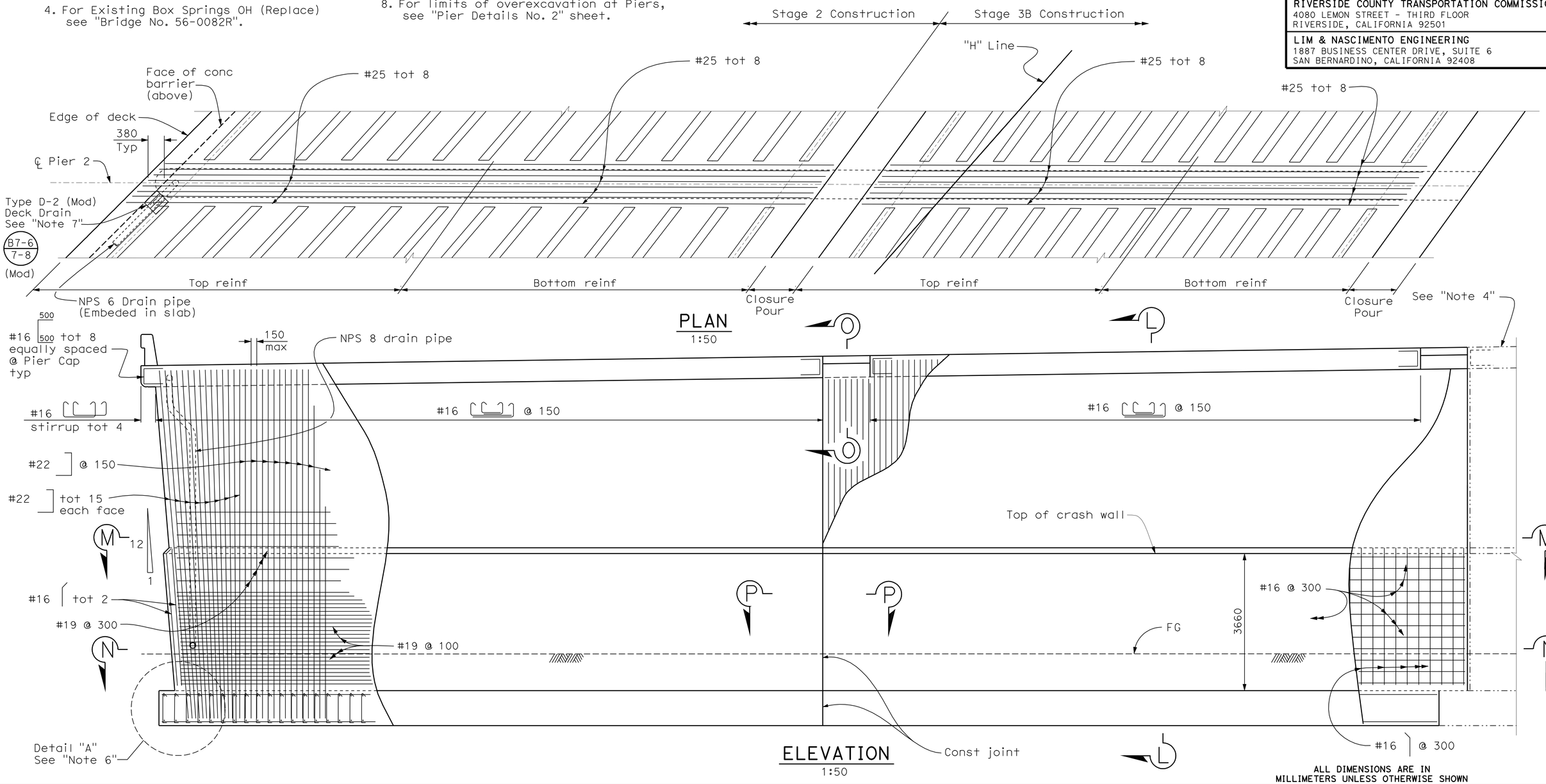

ALL DIMENSIONS ARE IN MILLIMETERS UNLESS OTHERWISE SHOWN

Robert Zezoff
DESIGN OVERSIGHT Robert Zezoff
10-22-09
SIGN OFF DATE

	BY	CHECKED
DESIGN	D. KIM/D. SARETSKY	T. DUDLEY/A. SIVATHASAN
DETAILS	R. ANDRASEK	T. DUDLEY/M. CHAR
QUANTITIES	D. SARETSKY	K. GEE

PREPARED FOR THE STATE OF CALIFORNIA DEPARTMENT OF TRANSPORTATION

MOHAN S. CHAR
PROJECT ENGINEER

BRIDGE NO. 56-0082R
KILOMETER POST R62.2

BOX SPRINGS OH (WIDEN)
PIER LAYOUT

DESIGN DETAIL SHEET (METRIC) (REV. 10/27/05)

ORIGINAL SCALE IN MILLIMETERS FOR REDUCED PLANS 0 10 20 30 40 50 60 70 80 90 100

CU 08
EA 449311

DISREGARD PRINTS BEARING EARLIER REVISION DATES

REVISION DATES (PRELIMINARY STAGE ONLY) 9/25/08 12/22/08 6/15/09 8/20/09 10/2/09

SHEET 16 OF 29

FILE => 56-0082-i-p01_lo1.dgn

USERNAME => trlim DATE PLOTTED => 19-OCT-2010 TIME PLOTTED => 15:17

DIST	COUNTY	ROUTE	KILOMETER POST TOTAL PROJECT	SHEET No	TOTAL SHEETS
08	Riv	60,215	R19.7/21.9, R61.3/62.7	421	594

Caltrans Metric

REGISTERED CIVIL ENGINEER 10/02/09 DATE

6-28-10
PLANS APPROVAL DATE

REGISTERED PROFESSIONAL ENGINEER MOHAN S. CHAR No. 57894 Exp. 6/30/10 CIVIL STATE OF CALIFORNIA

The State of California or its officers or agents shall not be responsible for the accuracy or completeness of electronic copies of this plan sheet.

RIVERSIDE COUNTY TRANSPORTATION COMMISSION
4080 LEMON STREET - THIRD FLOOR
RIVERSIDE, CALIFORNIA 92501

LIM & NASCIMENTO ENGINEERING
1887 BUSINESS CENTER DRIVE, SUITE 6
SAN BERNARDINO, CALIFORNIA 92408

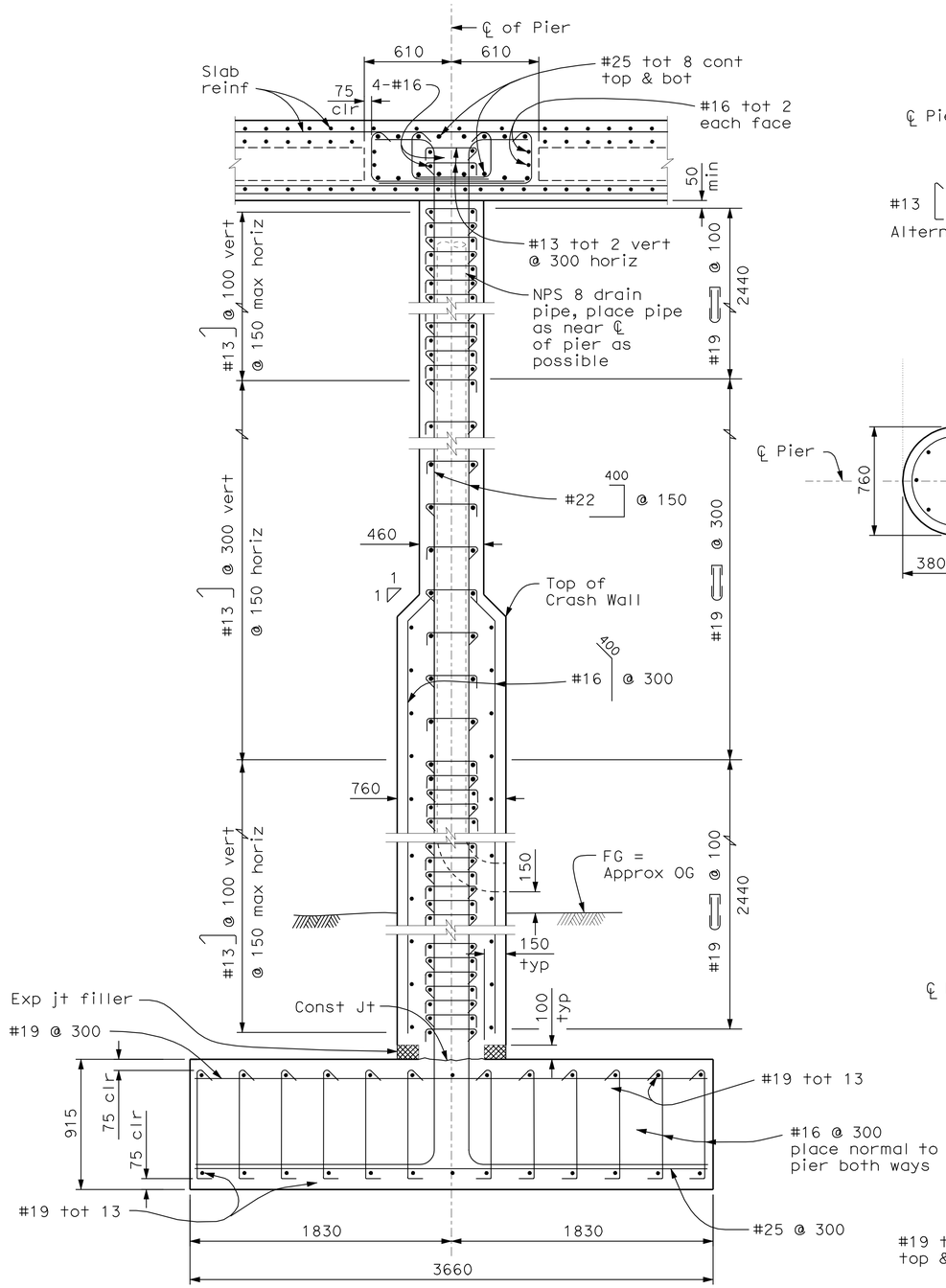

SECTION L-L
1:20

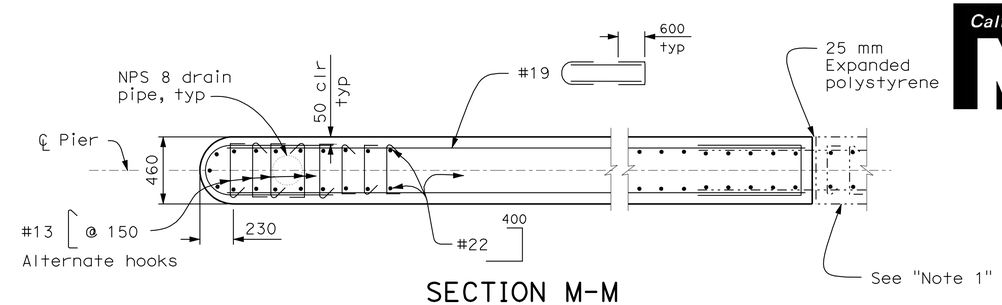

SECTION M-M
1:20

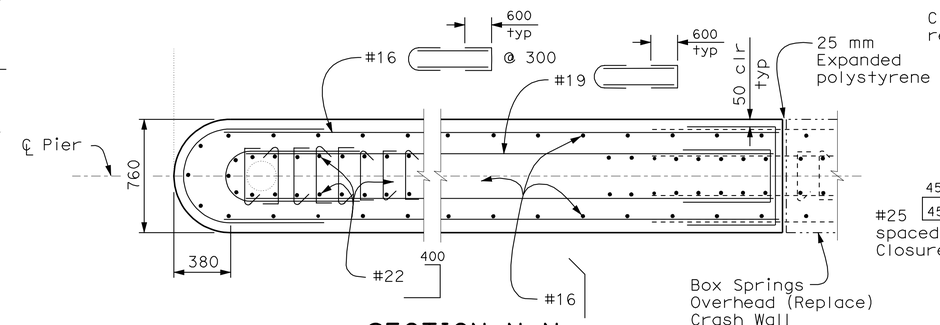

SECTION N-N
1:20

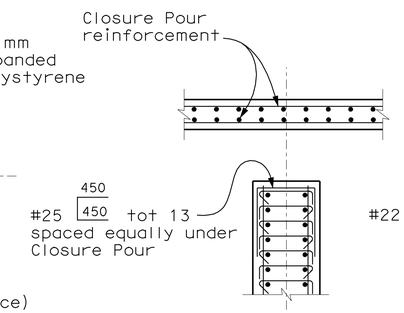

SECTION O-O
1:20

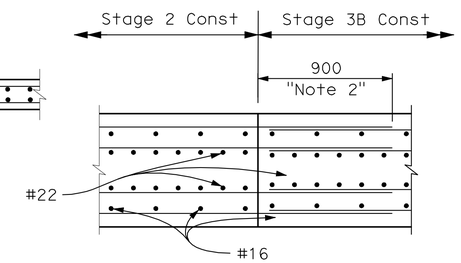

SECTION P-P
1:20

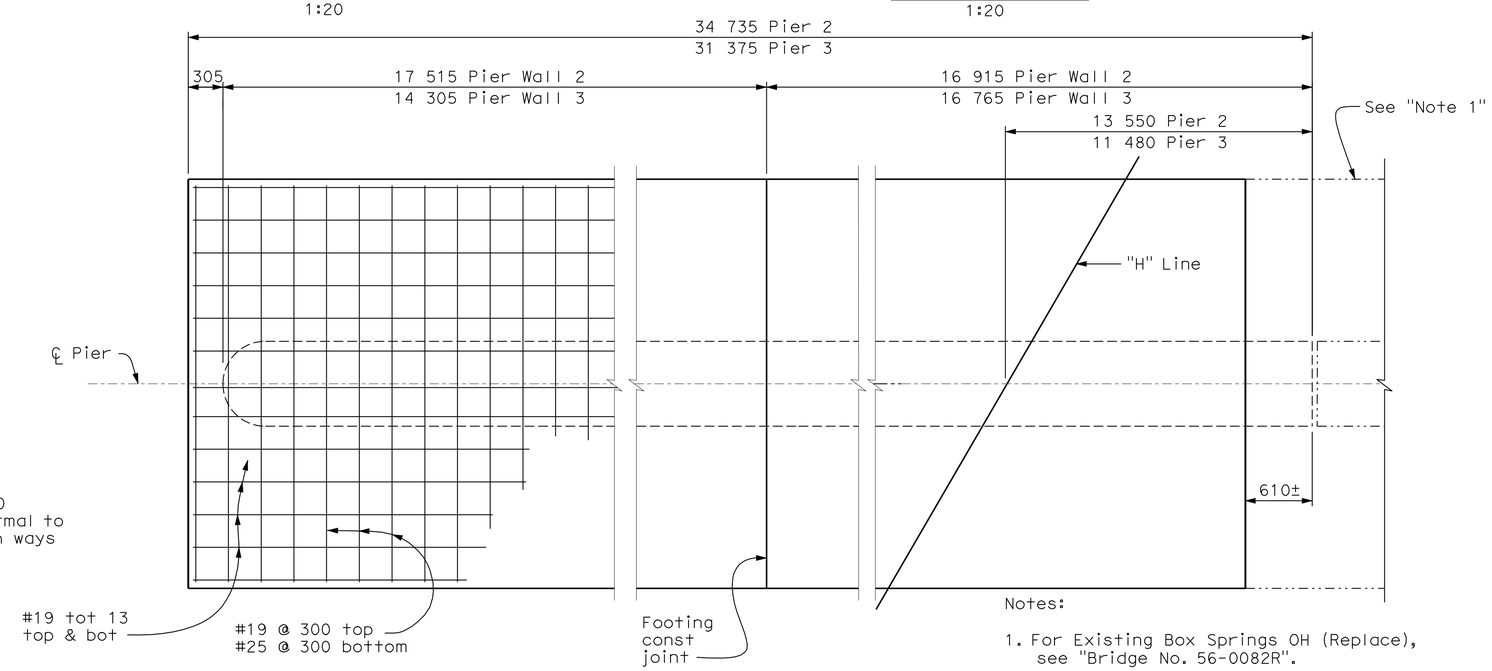

FOOTING PLAN
1:25

Notes:

1. For Existing Box Springs OH (Replace), see "Bridge No. 56-0082R".
2. Extend all pier wall & footing reinforcement 900 mm into Stage 3B construction.

ALL DIMENSIONS ARE IN MILLIMETERS UNLESS OTHERWISE SHOWN

DESIGN OVERSIGHT Robert Zezoff
10-22-09
SIGN OFF DATE

	BY	CHECKED
DESIGN	D. KIM/D. SARETSKY	T. DUDLEY/A. SIVATHASAN
DETAILS	R. ANDRASEK	T. DUDLEY/M. CHAR
QUANTITIES	D. SARETSKY	K. GEE

PREPARED FOR THE STATE OF CALIFORNIA DEPARTMENT OF TRANSPORTATION

MOHAN S. CHAR
PROJECT ENGINEER

BRIDGE NO. 56-0082R
KILOMETER POST R62.2

BOX SPRINGS OH (WIDEN)
PIER DETAILS No. 1

DESIGN DETAIL SHEET (METRIC) (REV. 10/27/05)

ORIGINAL SCALE IN MILLIMETERS FOR REDUCED PLANS 0 10 20 30 40 50 60 70 80 90 100

CU 08
EA 449311

DISREGARD PRINTS BEARING EARLIER REVISION DATES

REVISION DATES (PRELIMINARY STAGE ONLY) 9/25/08 12/22/08 6/18/09 8/20/09 10/2/09

SHEET 17 OF 29

FILE => 56-0082-i-p01dt01.dgn

USERNAME => trlim DATE PLOTTED => 19-OCT-2010 TIME PLOTTED => 15:17

DIST	COUNTY	ROUTE	KILOMETER POST TOTAL PROJECT	SHEET No	TOTAL SHEETS
08	Riv	60,215	R19.7/21.9, R61.3/62.7	422	594

Caltrans Metric

REGISTERED CIVIL ENGINEER 10/02/09 DATE

6-28-10
PLANS APPROVAL DATE

REGISTERED PROFESSIONAL ENGINEER MOHAN S. CHAR No. 57894 Exp. 6/30/10 CIVIL STATE OF CALIFORNIA

The State of California or its officers or agents shall not be responsible for the accuracy or completeness of electronic copies of this plan sheet.

RIVERSIDE COUNTY TRANSPORTATION COMMISSION
4080 LEMON STREET - THIRD FLOOR
RIVERSIDE, CALIFORNIA 92501

LIM & NASCIMENTO ENGINEERING
1887 BUSINESS CENTER DRIVE, SUITE 6
SAN BERNARDINO, CALIFORNIA 92408

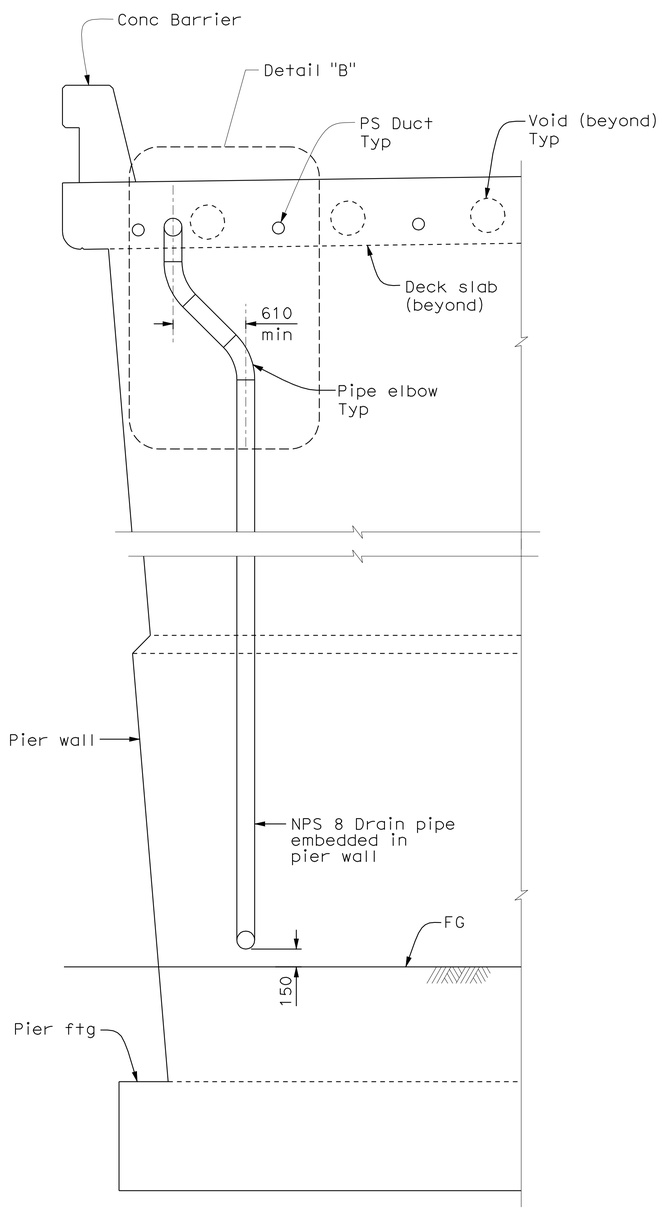

DECK DRAIN ELEVATION AT PIERWALL
1:25

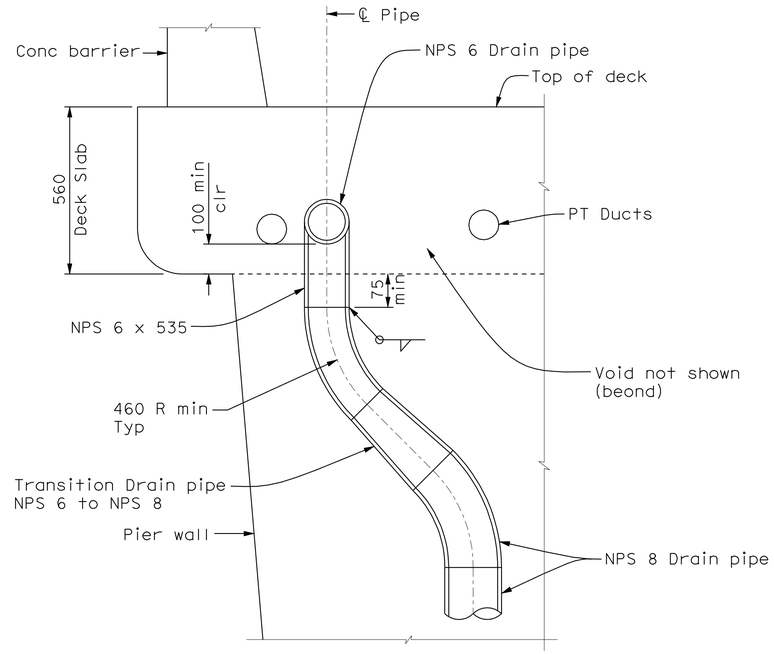

DETAIL "B"
No Scale

For dimensions not shown, see B7-6 / 7-8

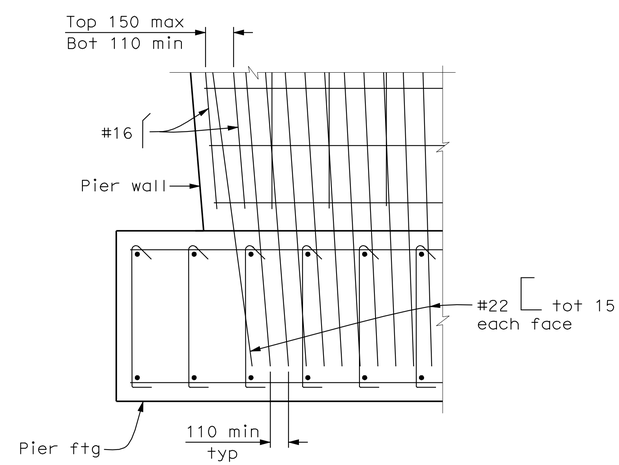

DETAIL "A"
No Scale

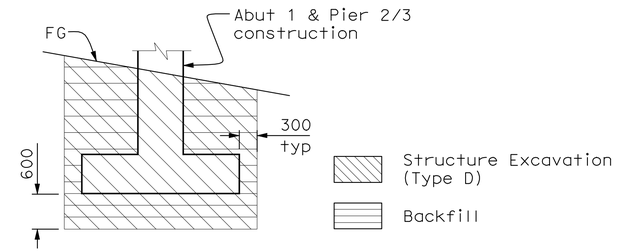

PAY LIMITS OF EXACAVATION AND BACKFILL AT ABUTMENT & PIERS
No Scale

Note:
Overexcavation depth may be reduced, as approved by the Engineer, if undisturbed bedrock is encountered.

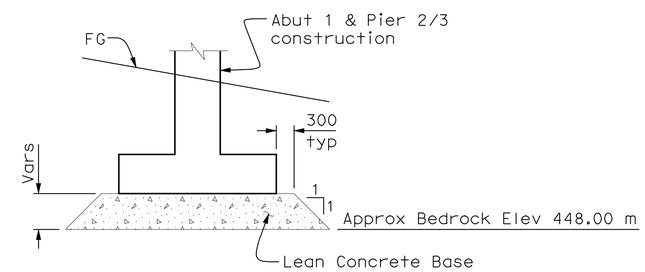

LIMITS OF LEAN CONCRETE BASE
No Scale

ALL DIMENSIONS ARE IN MILLIMETERS UNLESS OTHERWISE SHOWN

DESIGN OVERSIGHT Robert Zezoff
10-22-09
SIGN OFF DATE

	BY	CHECKED
DESIGN	D. KIM/D. SARETSKY	T. DUDLEY/A. SIVATHASAN
DETAILS	R. ANDRASEK	T. DUDLEY/M. CHAR
QUANTITIES	D. SARETSKY	K. GEE

PREPARED FOR THE STATE OF CALIFORNIA DEPARTMENT OF TRANSPORTATION

MOHAN S. CHAR
PROJECT ENGINEER

BRIDGE NO. 56-0082R
KILOMETER POST R62.2

BOX SPRINGS OH (WIDEN)
PIER DETAILS No. 2

DESIGN DETAIL SHEET (METRIC) (REV. 10/27/05)

ORIGINAL SCALE IN MILLIMETERS FOR REDUCED PLANS 0 10 20 30 40 50 60 70 80 90 100

CU 08
EA 449311

DISREGARD PRINTS BEARING EARLIER REVISION DATES

REVISION DATES (PRELIMINARY STAGE ONLY) 9/25/08 12/22/08 6/15/09 8/28/09 10/2/09

SHEET 18 OF 29

FILE => 56-0082-i-p01dt02.dgn

USERNAME => trlim DATE PLOTTED => 19-OCT-2010 TIME PLOTTED => 15:17

DIST	COUNTY	ROUTE	KILOMETER POST TOTAL PROJECT	SHEET No	TOTAL SHEETS
08	Riv	60,215	R19.7/21.9, R61.3/62.7	423	594

Caltrans Metric

REGISTERED CIVIL ENGINEER — DATE 10/02/09

6-28-10
PLANS APPROVAL DATE

REGISTERED PROFESSIONAL ENGINEER — MOHAN S. CHAR — No. 57894 — Exp. 6/30/10 — CIVIL — STATE OF CALIFORNIA

The State of California or its officers or agents shall not be responsible for the accuracy or completeness of electronic copies of this plan sheet.

RIVERSIDE COUNTY TRANSPORTATION COMMISSION
4080 LEMON STREET - THIRD FLOOR
RIVERSIDE, CALIFORNIA 92501

LIM & NASCIMENTO ENGINEERING
1887 BUSINESS CENTER DRIVE, SUITE 6
SAN BERNARDINO, CALIFORNIA 92408

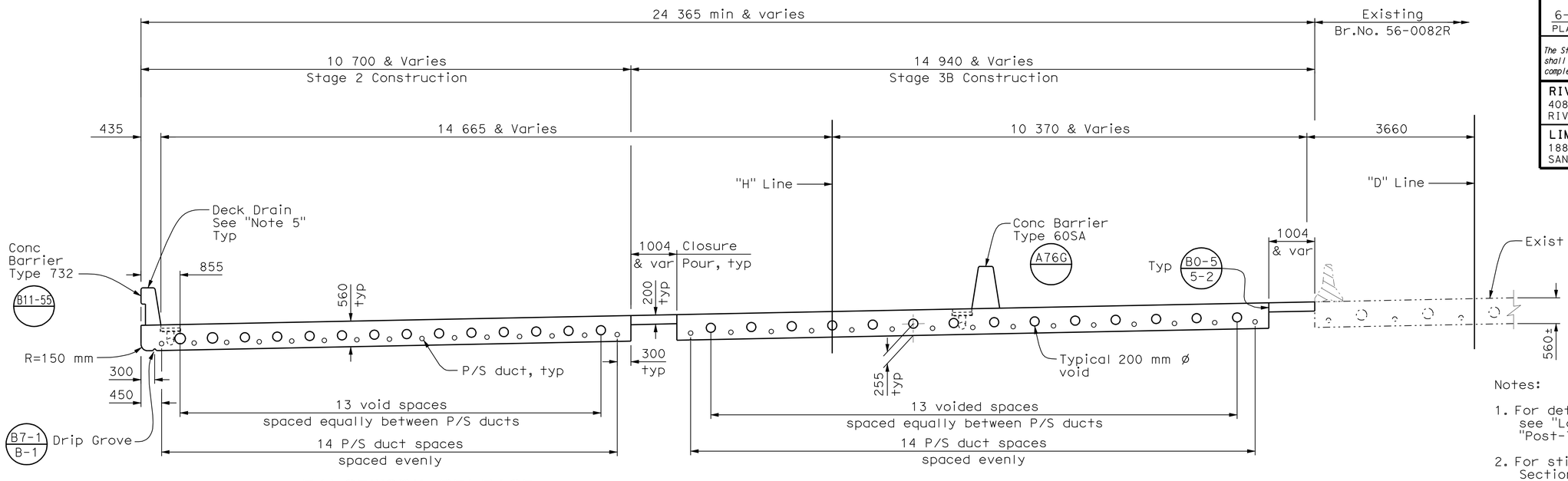

FALSEWORK RELEASE

Alternative 1:
Falsework shall be released as soon as permitted by the specifications. Closure pour shall not be placed sooner than 60 days after the falsework has been released.

Alternative 2:
Falsework shall not be released less than 28 days after the last concrete has been placed. Closure pour shall not be placed sooner than 14 days after the falsework has been released.

When Falsework Release Alternative 2 is used, camber vaules are 0.75 times those shown.

TYPICAL SECTION

1:50

Notes:

1. For details of prestressing profile, see "Longitudinal Section" on "Post-Tensioning Layout" sheet.
2. For stirrup spacing, see "Longitudinal Section" on "Post-Tensioning Layout" sheet.
3. Continuous steel shall be spliced with "Service Level" butt weld or couplers. Splices shall be staggered 915 mm minimum.
4. For details not shown, see "Deck Slab Details" sheet.
5. For deck drain locations, see "Deck Slab Details" sheet.

LEGEND:

- ◯ Indicates Prestress Ducts
- o Indicates additional slab reinforcement See "Longitudinal Section" sheet

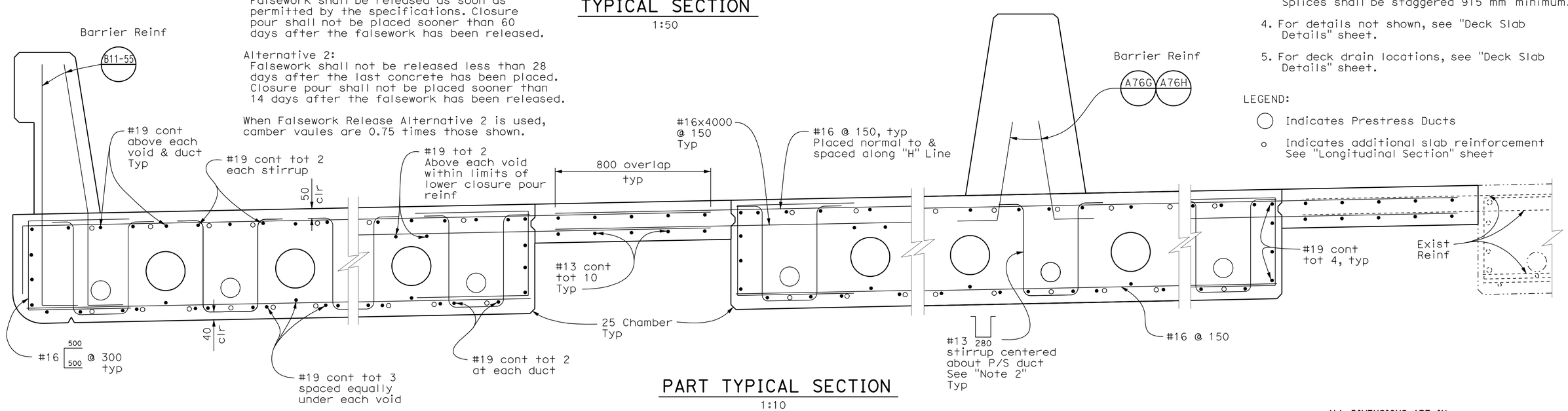

PART TYPICAL SECTION

1:10

ALL DIMENSIONS ARE IN MILLIMETERS UNLESS OTHERWISE SHOWN

Robert Zezoff
DESIGN OVERSIGHT — Robert Zezoff
10-22-09
SIGN OFF DATE

	BY	CHECKED
DESIGN	D. KIM/D. SARETSKY	T. DUDLEY/A. SIVATHASAN
DETAILS	R. ANDRASEK	T. DUDLEY/M. CHAR
QUANTITIES	D. SARETSKY	K. GEE

PREPARED FOR THE STATE OF CALIFORNIA DEPARTMENT OF TRANSPORTATION

MOHAN S. CHAR
PROJECT ENGINEER

BRIDGE NO. 56-0082R
KILOMETER POST R62.2

BOX SPRINGS OH (WIDEN)
TYPICAL SECTION

DESIGN DETAIL SHEET (METRIC) (REV. 10/27/05)

ORIGINAL SCALE IN MILLIMETERS FOR REDUCED PLANS 0 10 20 30 40 50 60 70 80 90 100

CU 08
EA 449311

DISREGARD PRINTS BEARING EARLIER REVISION DATES

REVISION DATES (PRELIMINARY STAGE ONLY): 9/28/08 12/22/08 6/18/09 8/28/09 10/2/09

SHEET 19 OF 29

FILE => 56-0082-k-ts01.dgn

USERNAME => trlim DATE PLOTTED => 19-OCT-2010 TIME PLOTTED => 15:17

DIST	COUNTY	ROUTE	KILOMETER POST TOTAL PROJECT	SHEET No	TOTAL SHEETS
08	Riv	60,215	R19.7/21.9, R61.3/62.7	424	594

REGISTERED CIVIL ENGINEER — DATE 10/02/09

6-28-10
PLANS APPROVAL DATE

REGISTERED PROFESSIONAL ENGINEER — MOHAN S. CHAR — No. 57894 — Exp. 6/30/10 — CIVIL — STATE OF CALIFORNIA

The State of California or its officers or agents shall not be responsible for the accuracy or completeness of electronic copies of this plan sheet.

RIVERSIDE COUNTY TRANSPORTATION COMMISSION
4080 LEMON STREET - THIRD FLOOR
RIVERSIDE, CALIFORNIA 92501

LIM & NASCIMENTO ENGINEERING
1887 BUSINESS CENTER DRIVE, SUITE 6
SAN BERNARDINO, CALIFORNIA 92408

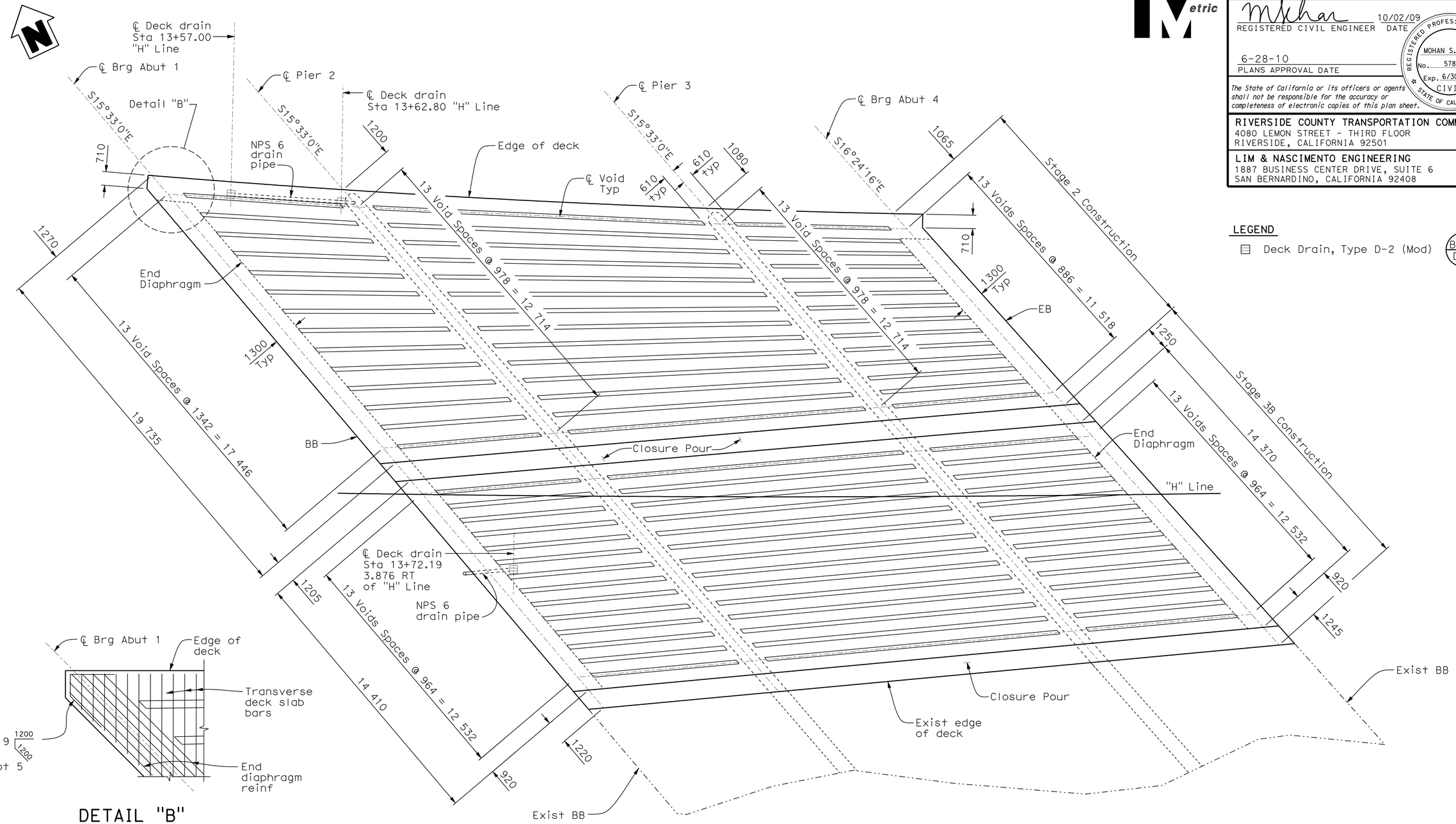

VOID LAYOUT PLAN
1:100

DETAIL "B"
1:50
(Abut 1 corner shown,
Abut 4 corner similar)

LEGEND

Deck Drain, Type D-2 (Mod) — B7-6 / D-2

ALL DIMENSIONS ARE IN MILLIMETERS UNLESS OTHERWISE SHOWN

Robert Zezoff
DESIGN OVERSIGHT — Robert Zezoff
10-22-09
SIGN OFF DATE

	BY	CHECKED
DESIGN	D. KIM/D. SARETSKY	T. DUDLEY/A. SIVATHASAN
DETAILS	R. ANDRASEK	T. DUDLEY/M. CHAR
QUANTITIES	D. SARETSKY	K. GEE

PREPARED FOR THE STATE OF CALIFORNIA DEPARTMENT OF TRANSPORTATION

MOHAN S. CHAR
PROJECT ENGINEER

BRIDGE NO. 56-0082R
KILOMETER POST R62.2

BOX SPRINGS OH (WIDEN)
DECK SLAB DETAILS

DESIGN DETAIL SHEET (METRIC) (REV. 10/27/05)

ORIGINAL SCALE IN MILLIMETERS FOR REDUCED PLANS 0 10 20 30 40 50 60 70 80 90 100

CU 08
EA 449311

DISREGARD PRINTS BEARING EARLIER REVISION DATES

REVISION DATES (PRELIMINARY STAGE ONLY): 9/25/08 12/22/08 6/18/09 8/20/09 10/2/09

SHEET 20 OF 29

FILE => 56-0082-1-gl01.dgn

USERNAME => trilim DATE PLOTTED => 19-OCT-2010 TIME PLOTTED => 15:18

DIST	COUNTY	ROUTE	KILOMETER POST TOTAL PROJECT	SHEET No	TOTAL SHEETS
08	Riv	60,215	R19.7/21.9, R61.3/62.7	425	594

REGISTERED CIVIL ENGINEER 10/02/09 DATE

6-28-10
PLANS APPROVAL DATE

REGISTERED PROFESSIONAL ENGINEER MOHAN S. CHAR No. 57894 Exp. 6/30/10 CIVIL STATE OF CALIFORNIA

The State of California or its officers or agents shall not be responsible for the accuracy or completeness of electronic copies of this plan sheet.

RIVERSIDE COUNTY TRANSPORTATION COMMISSION
4080 LEMON STREET - THIRD FLOOR
RIVERSIDE, CALIFORNIA 92501

LIM & NASCIMENTO ENGINEERING
1887 BUSINESS CENTER DRIVE, SUITE 6
SAN BERNARDINO, CALIFORNIA 92408

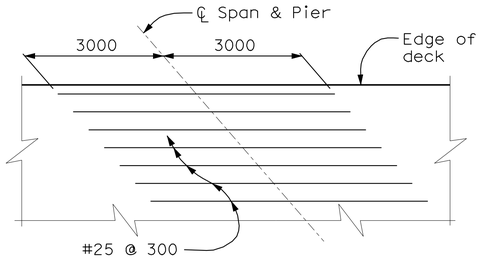

ADDITIONAL TOP REINFORCEMENT
No scale

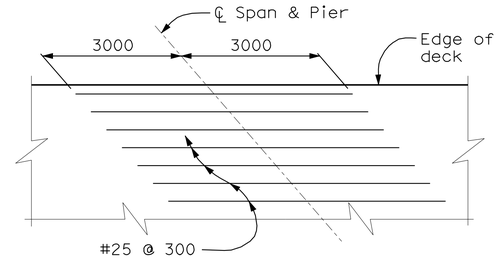

ADDITIONAL BOTTOM REINFORCEMENT
No scale

Notes:

1. No splices allowed in additional reinforcement.
2. Place bars evenly throughout the slab.

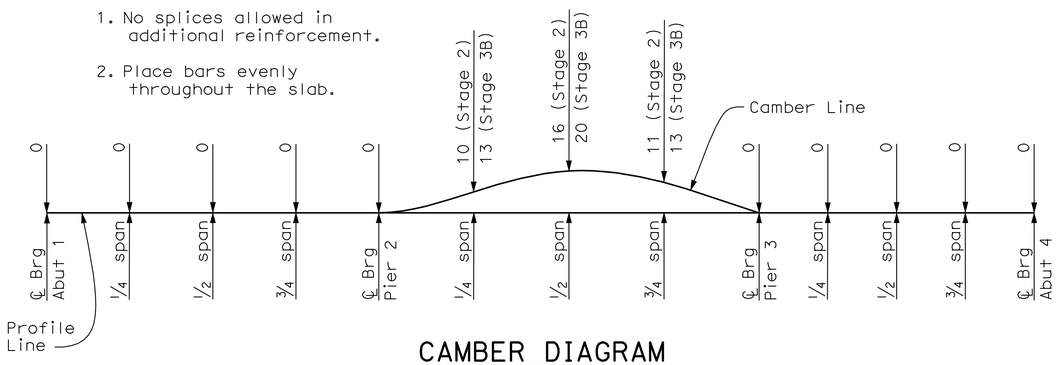

CAMBER DIAGRAM
No scale
Does not include allowance for falsework settlement

PRESTRESSING NOTES

1860 MPa low relaxation strand:

K = 0.00066/m
μ = 0.15/rad
Anchor set = 10 mm

Distribution of prestress force (Pjack) between prestressing tendons shall not exceed the ratio of 3:2. Maximum final force variation between tendons shall not exceed 2550 kN, about ℄ of the section at each stage.

Concrete: f'c = 28 MPa @ 28 days
f'ci = 25 MPa @ time of stressing

Stage 2 Construction

Pjack = 38 300 kN
Total Number of Ducts = 15
Contractor shall submit elongation calculations based on initial stress at ☒ = 0.903 times jacking stress.

Stage 3B Construction

Pjack = 36 300 kN
Total Number of Ducts = 15
Contractor shall submit elongation calculations based on initial stress at ☒ = 0.905 times jacking stress.

One end stressing shall be performed from Abutment 1 end only.

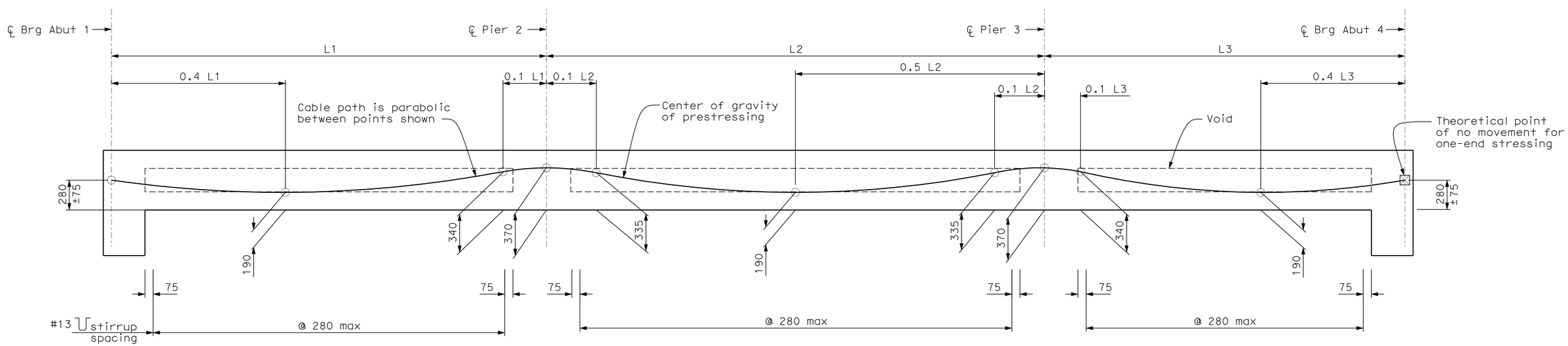

LONGITUDINAL SECTION
No Scale

B8-5

ALL DIMENSIONS ARE IN MILLIMETERS UNLESS OTHERWISE SHOWN

Robert Zezoff
DESIGN OVERSIGHT Robert Zezoff
10-22-09
SIGN OFF DATE

	BY	CHECKED
DESIGN	D. KIM/D. SARETSKY	T. DUDLEY/A. SIVATHASAN
DETAILS	R. ANDRASEK	T. DUDLEY/M. CHAR
QUANTITIES	D. SARETSKY	K. GEE

PREPARED FOR THE STATE OF CALIFORNIA DEPARTMENT OF TRANSPORTATION

MOHAN S. CHAR
PROJECT ENGINEER

BRIDGE NO. 56-0082R
KILOMETER POST R62.2

BOX SPRINGS OH (WIDEN)
POST-TENSIONING LAYOUT

DESIGN DETAIL SHEET (METRIC) (REV. 10/27/05)

ORIGINAL SCALE IN MILLIMETERS FOR REDUCED PLANS 0 10 20 30 40 50 60 70 80 90 100

CU 08
EA 449311

DISREGARD PRINTS BEARING EARLIER REVISION DATES

REVISION DATES (PRELIMINARY STAGE ONLY): 9/25/08 12/22/08 6/15/09 8/28/09 10/2/09

SHEET 21 OF 29

FILE => 56-0082-m-lsec.dgn

USERNAME => trlim DATE PLOTTED => 19-OCT-2010 TIME PLOTTED => 15:18

DIST	COUNTY	ROUTE	KILOMETER POST TOTAL PROJECT	SHEET No	TOTAL SHEETS
08	Riv	60,215	R19.7/21.9, R61.3/62.7	426	594

Caltrans Metric

REGISTERED CIVIL ENGINEER 10/02/09 DATE

6-28-10
PLANS APPROVAL DATE

REGISTERED PROFESSIONAL ENGINEER MOHAN S. CHAR No. 57894 Exp. 6/30/10 CIVIL STATE OF CALIFORNIA

The State of California or its officers or agents shall not be responsible for the accuracy or completeness of electronic copies of this plan sheet.

RIVERSIDE COUNTY TRANSPORTATION COMMISSION
4080 LEMON STREET - THIRD FLOOR
RIVERSIDE, CALIFORNIA 92501

LIM & NASCIMENTO ENGINEERING
1887 BUSINESS CENTER DRIVE, SUITE 6
SAN BERNARDINO, CALIFORNIA 92408

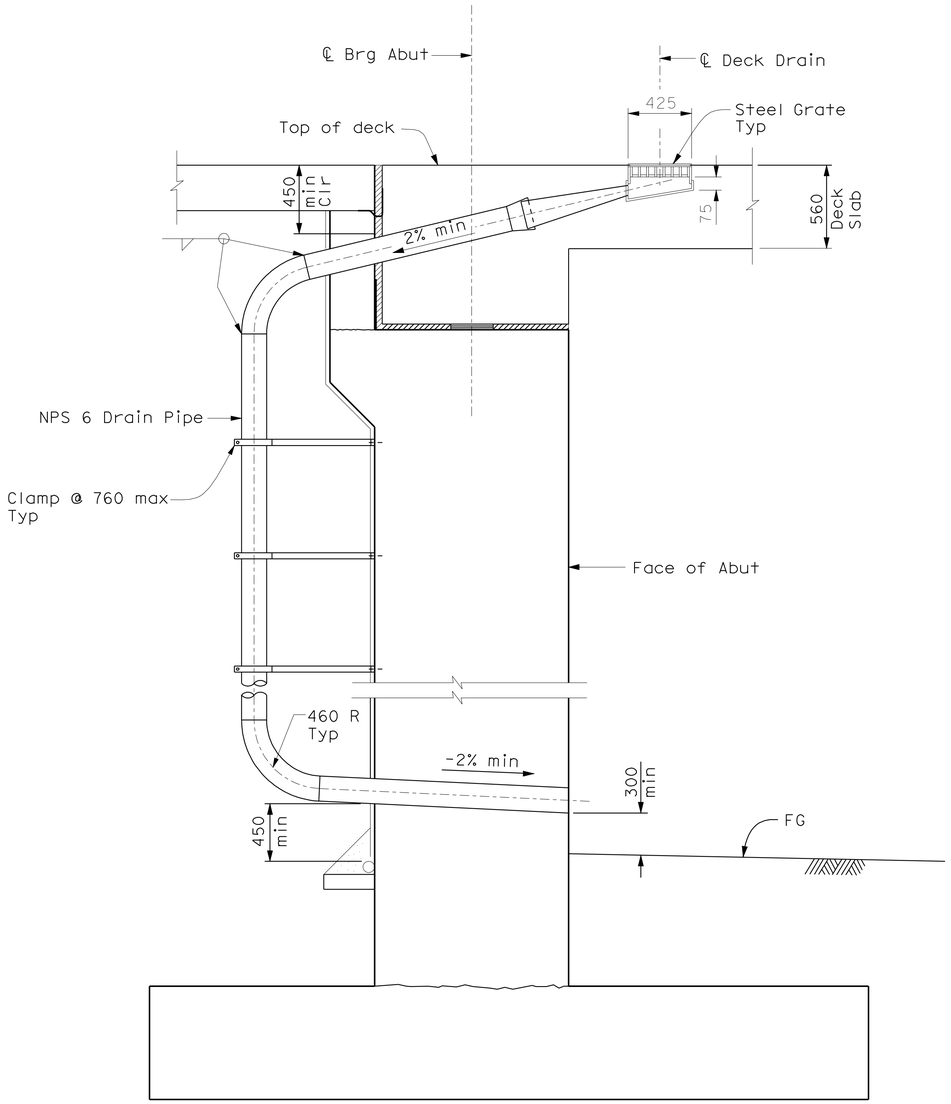

DECK DRAIN TYPE D-2 (ABUTMENT 1 LEFT)

1:20

* For Details not shown, see B7-6 / 7-8

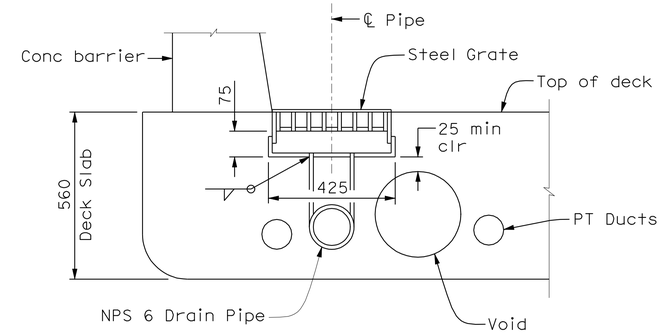

DECK DRAIN TYPE D-2 (MOD)

No Scale

Note:

1. For ℄ deck drain stations, see "Deck Slab Details" sheet.

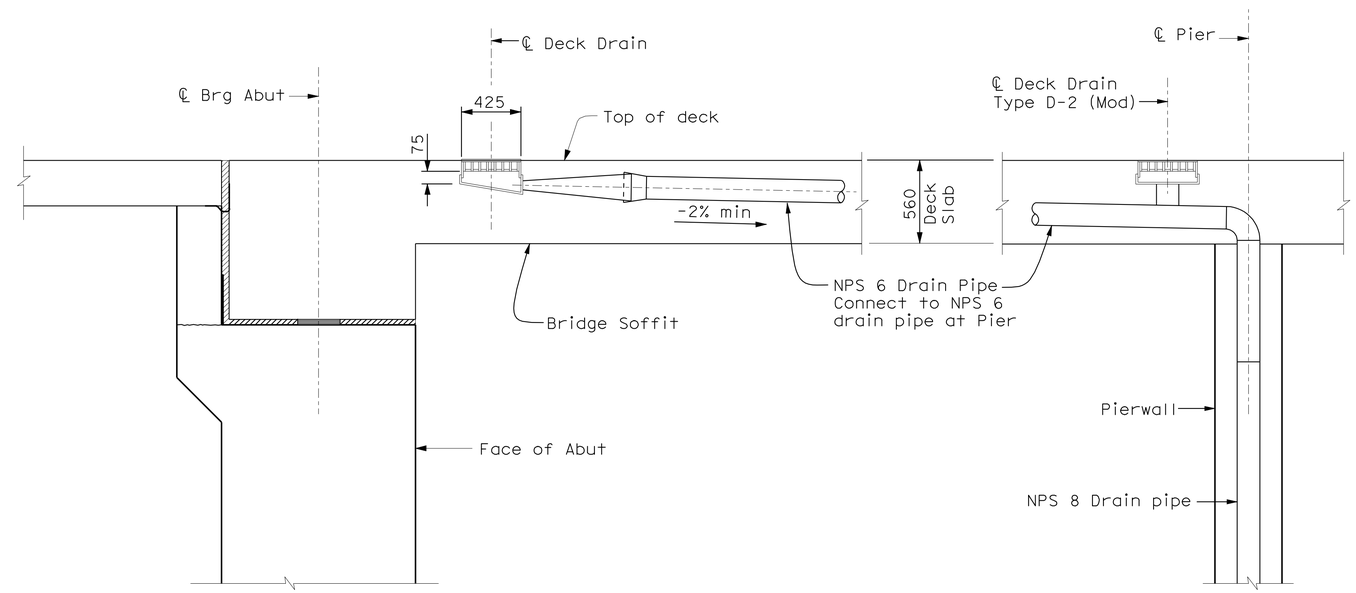

DECK DRAIN TYPE D-2 (ABUTMENT 1 RIGHT TO PIER 2)

No Scale

* For Details not shown, see B7-6 / 7-8

ALL DIMENSIONS ARE IN MILLIMETERS UNLESS OTHERWISE SHOWN

DESIGN OVERSIGHT Robert Zezoff
10-22-09
SIGN OFF DATE

	BY	CHECKED
DESIGN	D. KIM/D. SARETSKY	T. DUDLEY/A. SIVATHASAN
DETAILS	R. ANDRASEK	T. DUDLEY/M. CHAR
QUANTITIES	D. SARETSKY	K. GEE

PREPARED FOR THE STATE OF CALIFORNIA DEPARTMENT OF TRANSPORTATION

MOHAN S. CHAR
PROJECT ENGINEER

BRIDGE NO. 56-0082R
KILOMETER POST R62.2

BOX SPRINGS OH (WIDEN)
MISCELLANEOUS DETAILS

DESIGN DETAIL SHEET (METRIC) (REV. 10/27/05)

ORIGINAL SCALE IN MILLIMETERS FOR REDUCED PLANS 0 10 20 30 40 50 60 70 80 90 100

CU 08
EA 449311

DISREGARD PRINTS BEARING EARLIER REVISION DATES 8/28/09 10/2/09

REVISION DATES (PRELIMINARY STAGE ONLY)

SHEET 22 OF 29

FILE => 56-0082-n-misc.dgn

USERNAME => trlim DATE PLOTTED => 19-OCT-2010 TIME PLOTTED => 15:18

DIST.	COUNTY	ROUTE	KILOMETER POST TOTAL PROJECT	SHEET NO.	TOTAL SHEETS
08	Riv	60,215	R19.7/21.9, R61.3/62.7	427	594

Caltrans Metric

REGISTERED ENGINEER - CIVIL 10/02/09

6-28-10
PLANS APPROVAL DATE

REGISTERED PROFESSIONAL ENGINEER MOHAN S. CHAR No. 57894 Exp. 6/30/10 CIVIL STATE OF CALIFORNIA

The State of California or its officers or agents shall not be responsible for the accuracy or completeness of electronic copies of this plan sheet.

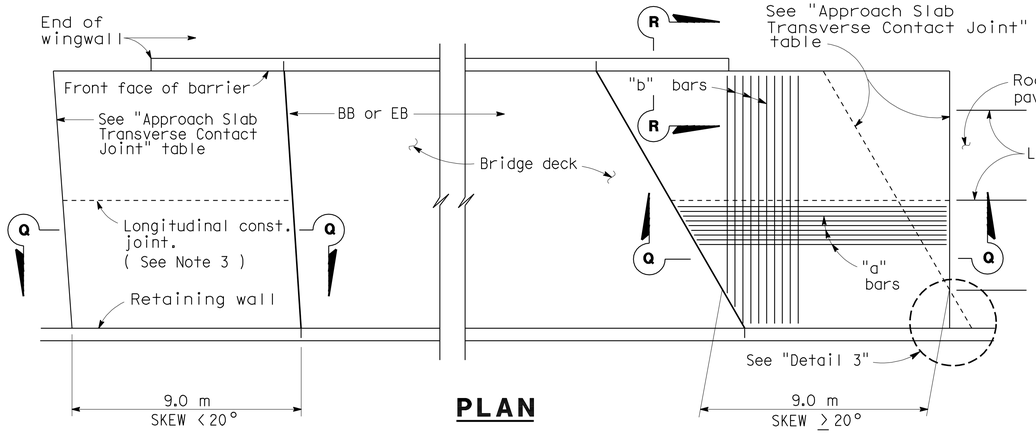

PLAN

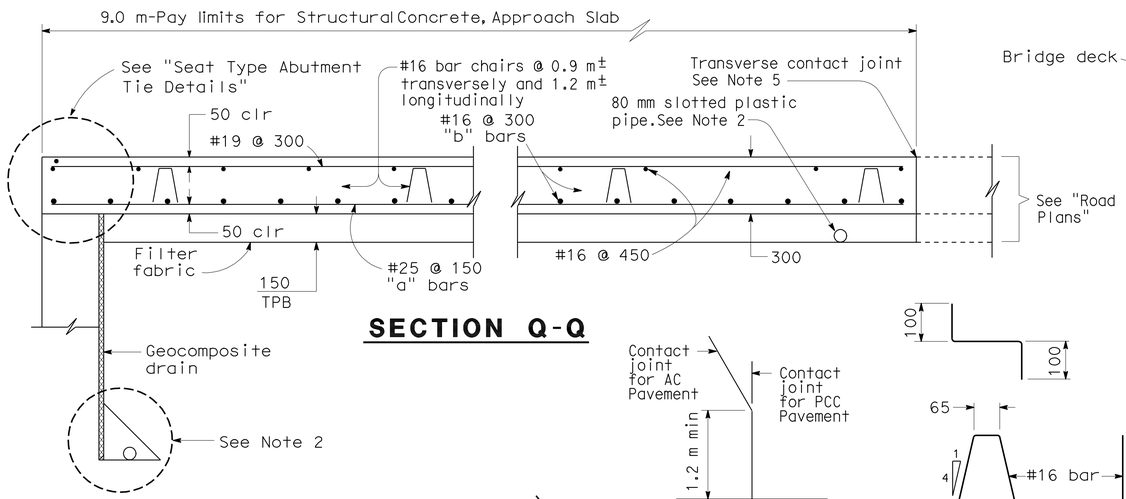

SECTION Q-Q

DETAIL 3

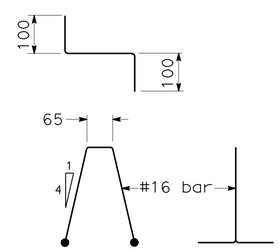

BAR CHAIR DETAIL

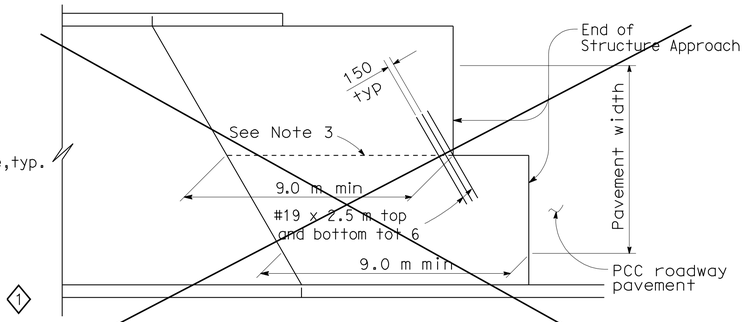

STRUCTURE APPROACH - END STAGGER DETAIL

APPROACH SLAB TRANSVERSE CONTACT JOINT		
APPROACH SKEW	WITH AC ROADWAY PAVEMENT	WITH PCC ROADWAY PAVEMENT
< 20°	Parallel to face of paving notch	Parallel to face of paving notch
20°- 45°	Parallel to face of P N use (Detail A)	Stagger lines 7.2 m to 10.8 m apart.
> 45°	Parallel to face of P N use (Detail A)	Stagger at each lane line.

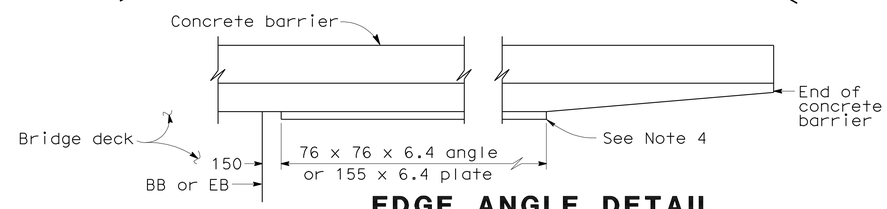

EDGE ANGLE DETAIL

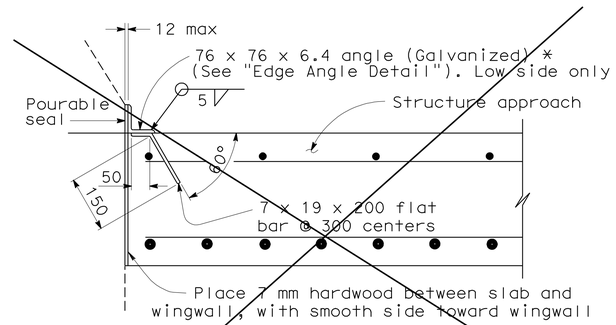

*(TO BE USED WITH TYPE 25 OR TYPE 27 CONCRETE BARRIER)

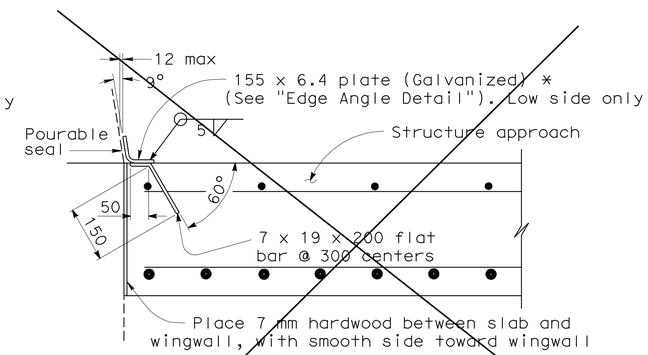

*(TO BE USED WITH TYPE 732 OR TYPE 736 CONCRETE BARRIER)

DETAIL 4

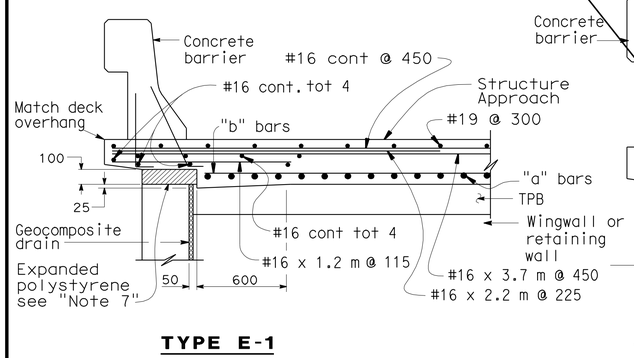

TYPE E-1

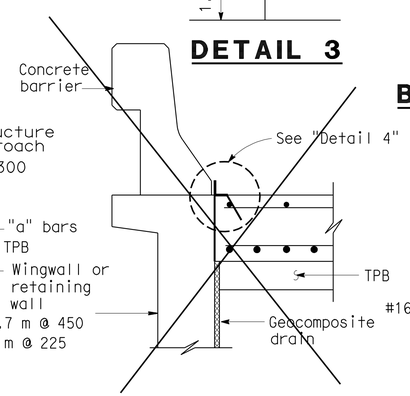

TYPE E-2

SECTION R-R

(Type E-1 to be used,unless otherwise shown on plans)

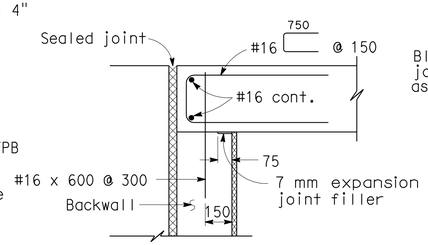

MR ≤ 50 mm

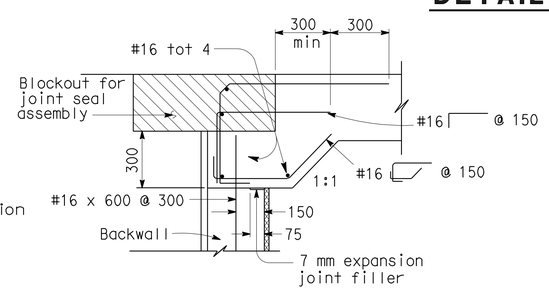

MR > 50 mm

SEAT TYPE ABUTMENT TIE DETAILS (SEE NOTE 1)

NOTES:

1. For details not shown,see Structure Plans. For MR ≤ 50 mm,adjust bar reinforcement to clear a sawcut for sealed joint,when required.
2. For drainage details,see "Structure Approach Drainage Details" sheet.
3. Longitudinal construction joints,when permitted by the Engineer, shall be located on lane lines.
4. End angle or plate at beginning of barrier transition, end of wingwall or end of structure approach as applicable.
5. For transverse contact joint with new PCC paving, refer to Standard Plan P10.
6. At the contractor's option, approach slab transverse reinforcement may be placed parallel to paving notch. Spacing of transverse reinforcement is measured along ℄ roadway.
7. Remove expanded polystyrene min 150 mm from all expose surface.

NO SCALE

ALL DIMENSIONS ARE IN MILLIMETERS UNLESS OTHERWISE SHOWN

SPECIAL DETAILS

STANDARD DRAWING					
RELEASE DATE REVISED	DESIGN	BY M. TRAFFALIS	CHECKED E. THORKILDSEN	RELEASED BY	
FILE NO. xs3-120	DETAILS	BY R. YEE	CHECKED E. THORKILDSEN		
	SUBMITTED	BY M. HA	DRAWING DATE 4/98	OFFICE CHIEF	

1 Details Deleted

STATE OF CALIFORNIA DEPARTMENT OF TRANSPORTATION

DIVISION OF ENGINEERING SERVICES

BRIDGE NO. 56-0082R

KILOMETER POST R62.2

BOX SPRINGS OH (WIDEN)

STRUCTURE APPROACH TYPE N(9S)

DS OSD 2147A (METRIC) (REV. 2/25/97)

ORIGINAL SCALE IN MILLIMETERS FOR REDUCED PLANS 0 10 20 30 40 50 60 70 80 90 100

CU 08
EA 449311

DISREGARD PRINTS BEARING EARLIER REVISION DATES

REVISION DATES (PRELIMINARY STAGE ONLY) 9/25/08 12/22/08 6/18/09 8/28/09 10/2/09

SHEET 23 OF 29

FILE => 56-0082-s-sa.dgn

DATE PLOTTED => 13-OCT-2010 TIME PLOTTED => 15:18

DIST	COUNTY	ROUTE	KILOMETER POST TOTAL PROJECT	SHEET No	TOTAL SHEETS
08	Riv	60,215	R19.7/21.9, R61.3/62.7	428	594

REGISTERED CIVIL ENGINEER 10/02/09 DATE

6-28-10
PLANS APPROVAL DATE

REGISTERED PROFESSIONAL ENGINEER MOHAN S. CHAR No. 57894 Exp. 6/30/10 CIVIL STATE OF CALIFORNIA

The State of California or its officers or agents shall not be responsible for the accuracy or completeness of electronic copies of this plan sheet.

RIVERSIDE COUNTY TRANSPORTATION COMMISSION
4080 LEMON STREET - THIRD FLOOR
RIVERSIDE, CALIFORNIA 92501

LIM & NASCIMENTO ENGINEERING
1887 BUSINESS CENTER DRIVE, SUITE 6
SAN BERNARDINO, CALIFORNIA 92408

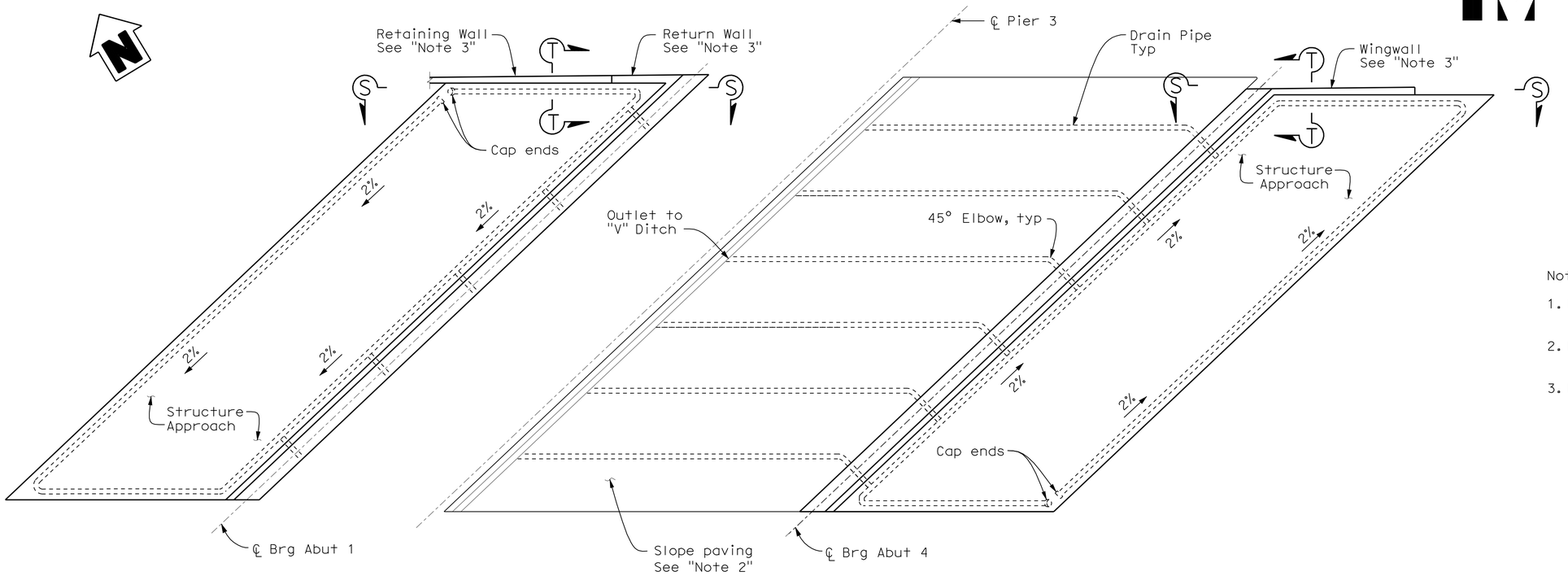

TYPICAL PLAN
No Scale

Notes:

1. Bends and junctions in 80 mm ø plastic pipe are 750 mm radius min.
2. For Slope paving details, see "Slope Paving - Full Slope" sheet.
3. For fractured rib texture detail, see "Abutment Details No. 2" sheet.

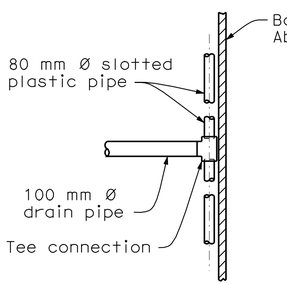

SECTION Q-Q
No Scale

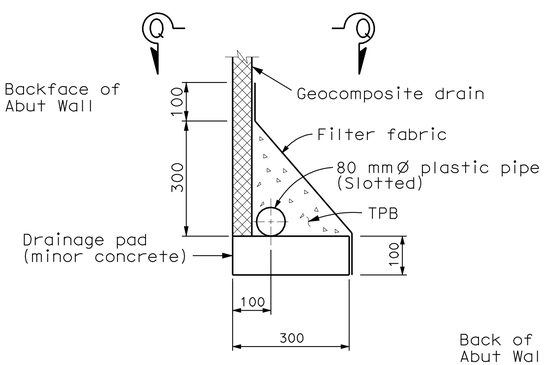

WITHOUT FOOTING

DETAIL 7

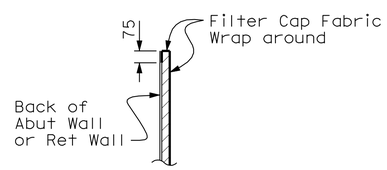

DETAIL 8

WEEP HOLE AND GEOCOMPOSITE DRAIN
No Scale

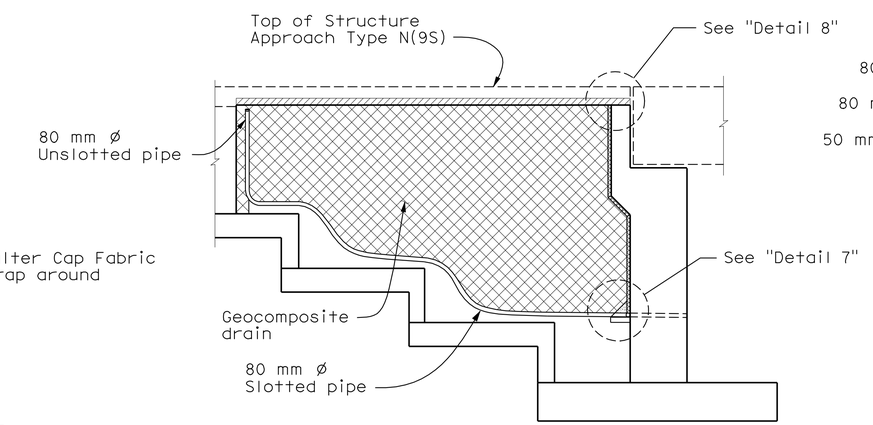

SECTION S-S
No Scale

(Abutment 1 Retaining Wall shown, Abutment 4 Wingwall similar)

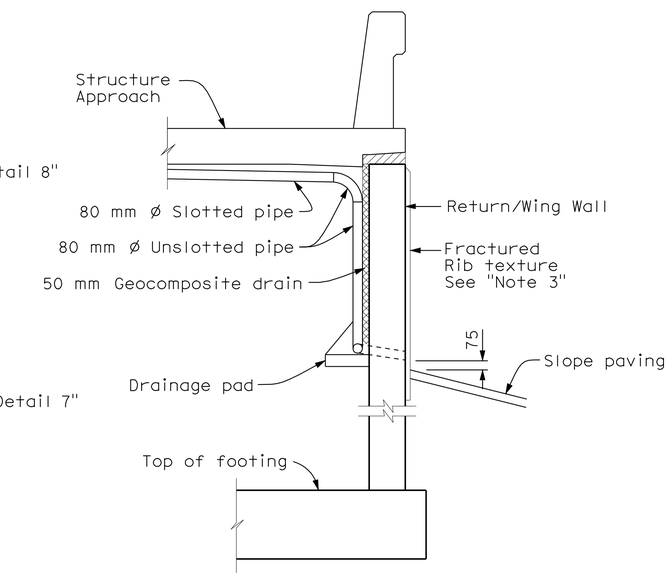

SECTION T-T
No Scale

ALL DIMENSIONS ARE IN MILLIMETERS UNLESS OTHERWISE SHOWN

DESIGN OVERSIGHT Robert Zezoff
10-22-09
SIGN OFF DATE

	BY	CHECKED
DESIGN	D. KIM/D. SARETSKY	T. DUDLEY/A. SIVATHASAN
DETAILS	R. ANDRASEK	T. DUDLEY/M. CHAR
QUANTITIES	D. SARETSKY	K. GEE

PREPARED FOR THE STATE OF CALIFORNIA DEPARTMENT OF TRANSPORTATION

MOHAN S. CHAR
PROJECT ENGINEER

BRIDGE NO. 56-0082R
KILOMETER POST R62.2

BOX SPRINGS OH (WIDEN)
STRUCTURE APPROACH DRAINAGE DETAILS

DESIGN DETAIL SHEET (METRIC) (REV. 10/27/05)

ORIGINAL SCALE IN MILLIMETERS FOR REDUCED PLANS 0 10 20 30 40 50 60 70 80 90 100

CU 08
EA 449311

DISREGARD PRINTS BEARING EARLIER REVISION DATES

REVISION DATES (PRELIMINARY STAGE ONLY) 9/25/08 12/22/08 6/15/09 8/28/09 10/2/09

SHEET 24 OF 29

FILE => 56-0082-s-sadd.dgn

USERNAME => trlim DATE PLOTTED => 19-OCT-2010 TIME PLOTTED => 15:18

DIST.	COUNTY	ROUTE	KILOMETER POST TOTAL PROJECT	SHEET NO.	TOTAL SHEETS
08	Riv	60,215	R19.7/21.9, R61.3/62.7	429	594

Caltrans Metric

10/02/09
REGISTERED ENGINEER - CIVIL

6-28-10
PLANS APPROVAL DATE

REGISTERED PROFESSIONAL ENGINEER MOHAN S. CHAR No. 57894 Exp. 6/30/10 CIVIL STATE OF CALIFORNIA

The State of California or its officers or agents shall not be responsible for the accuracy or completeness of electronic copies of this plan sheet.

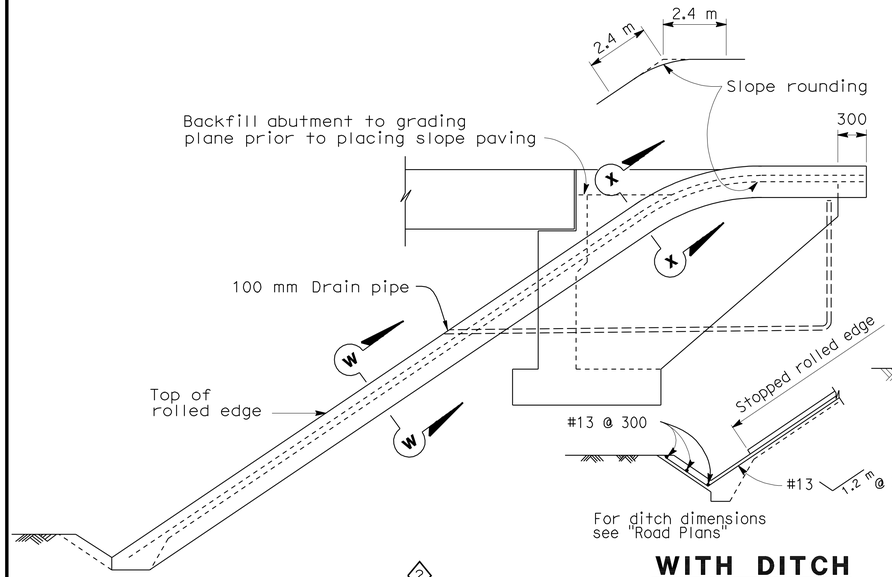

WITH DITCH

WINGWALL ELEVATION

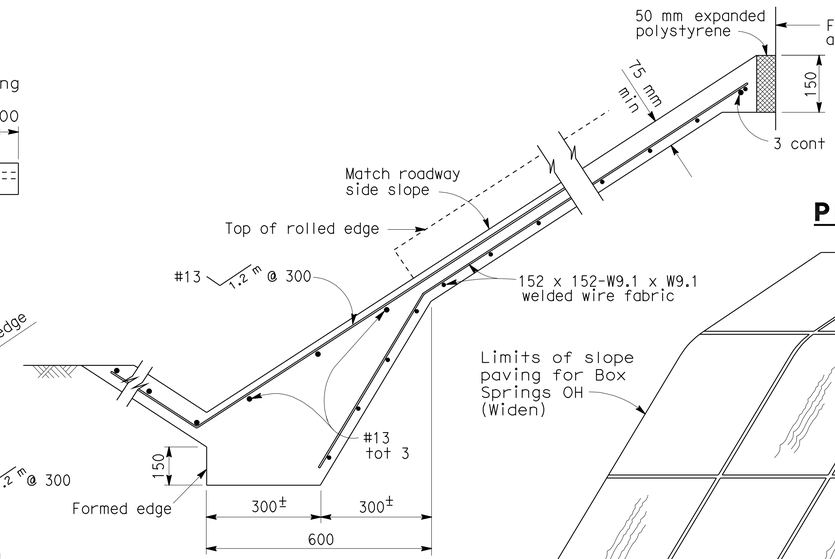

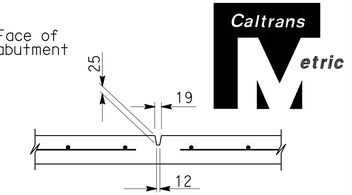

PREFORMED GROOVE

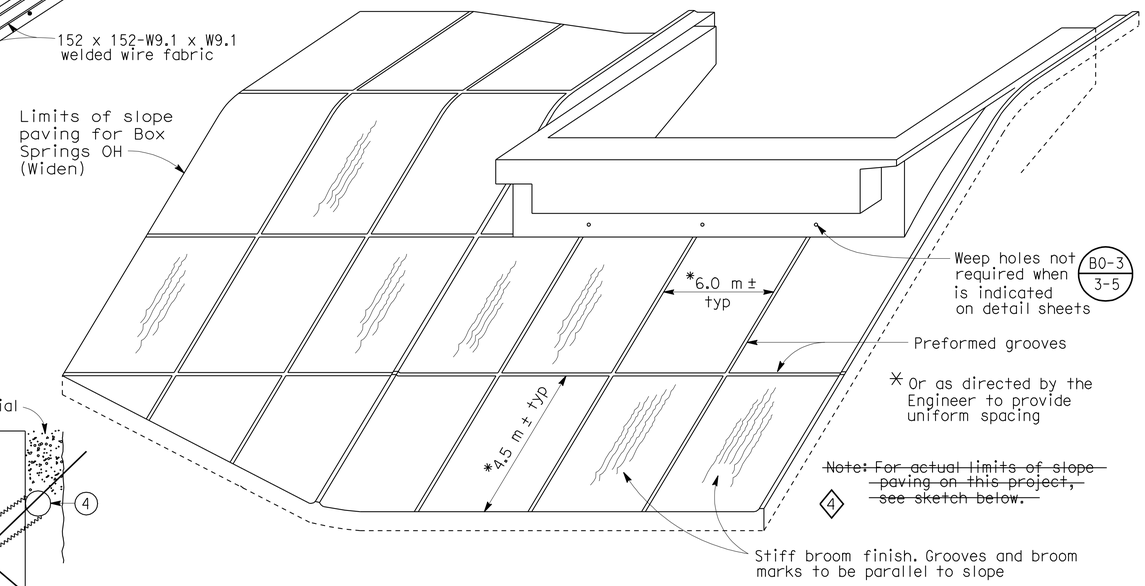

4 ~~Note: For actual limits of slope paving on this project, see sketch below.~~

2 PICTORIAL VIEW OF TYPICAL INSTALLATION

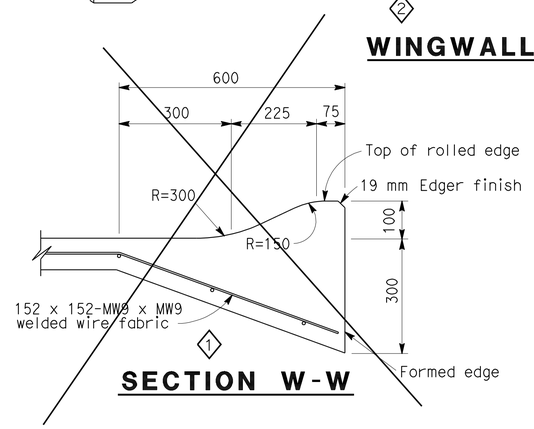

SECTION W-W

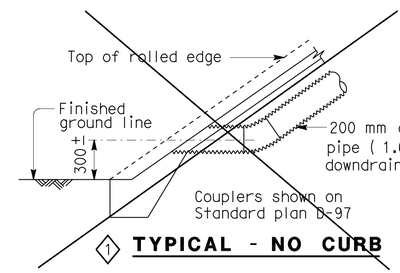

1 TYPICAL - NO CURB

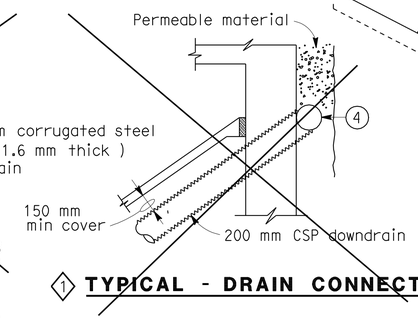

1 TYPICAL - DRAIN CONNECTION

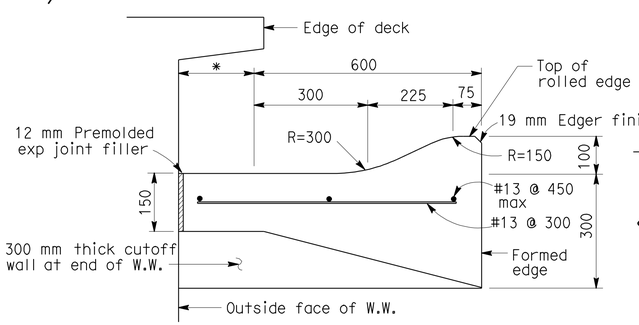

SECTION X-X

* This dimension becomes zero when edge of deck is at outside face of W.W.

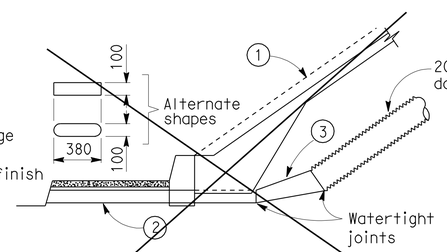

1 TYPICAL - WITH SIDEWALK

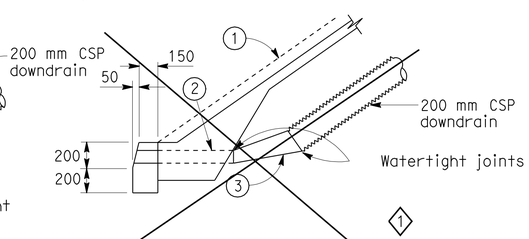

TYPICAL - WITH CURB

DRAINAGE DETAILS

Note: Drainage details are only applicable when is indicated on detail sheets. B0-3 3-5

1. Top of rolled edge
2. Conduit: 1.6 mm galv corrugated steel or 2.8 mm smooth galv steel
3. Taper: 1.6 mm / 2.8 mm smooth galv steel
4. 200 mm perforated steel pipe (1.6 mm thick) underdrain behind abutment. Connect to downdrain as shown on limits of Slope Paving & Drainage layout.

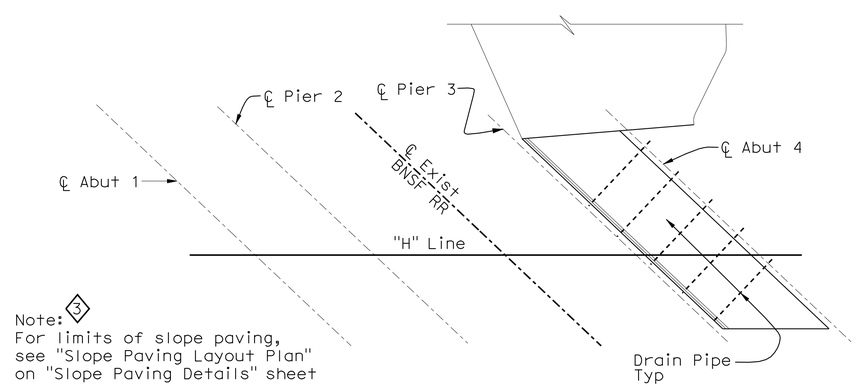

Note: 3
For limits of slope paving, see "Slope Paving Layout Plan" on "Slope Paving Details" sheet

SLOPE PAVING DRAINAGE LAYOUT

NO SCALE

ALL DIMENSIONS ARE IN MILLIMETERS UNLESS OTHERWISE SHOWN

STANDARD DRAWING					
RELEASE DATE **REVISED**	DESIGN	BY	CHECKED	RELEASED BY
	DETAILS	BY R. YEE	CHECKED	
FILE NO. **xs4-210**	SUBMITTED	BY C.W. PURKISS	DRAWING DATE 3/89	OFFICE CHIEF

1. Deleted details
2. Modified detail
3. Added Note
4. Deleted Note

STATE OF CALIFORNIA DEPARTMENT OF TRANSPORTATION

DIVISION OF ENGINEERING SERVICES

BRIDGE NO. 56-0082R

KILOMETER POST R62.2

BOX SPRINGS OH (WIDEN)

SLOPE PAVING - FULL SLOPE

DS OSD 2147A (METRIC) (REV. 2/25/97)

ORIGINAL SCALE IN MILLIMETERS FOR REDUCED PLANS 0 10 20 30 40 50 60 70 80 90 100

CU 08
EA 449311

DISREGARD PRINTS BEARING EARLIER REVISION DATES

REVISION DATES (PRELIMINARY STAGE ONLY) 9/28/08 12/22/08 5/18/09 8/20/09 10/2/09

SHEET 25 OF 29

FILE => 56-0082-s-slp01.dgn

USERNAME => trlim

DATE PLOTTED => 19-OCT-2010 TIME PLOTTED => 15:18

DIST	COUNTY	ROUTE	KILOMETER POST TOTAL PROJECT	SHEET No	TOTAL SHEETS
08	Riv	60,215	R19.7/21.9, R61.3/62.7	430	594

REGISTERED CIVIL ENGINEER 10/02/09 DATE

6-28-10
PLANS APPROVAL DATE

REGISTERED PROFESSIONAL ENGINEER MOHAN S. CHAR No. 57894 Exp. 6/30/10 CIVIL STATE OF CALIFORNIA

The State of California or its officers or agents shall not be responsible for the accuracy or completeness of electronic copies of this plan sheet.

RIVERSIDE COUNTY TRANSPORTATION COMMISSION
4080 LEMON STREET - THIRD FLOOR
RIVERSIDE, CALIFORNIA 92501

LIM & NASCIMENTO ENGINEERING
1887 BUSINESS CENTER DRIVE, SUITE 6
SAN BERNARDINO, CALIFORNIA 92408

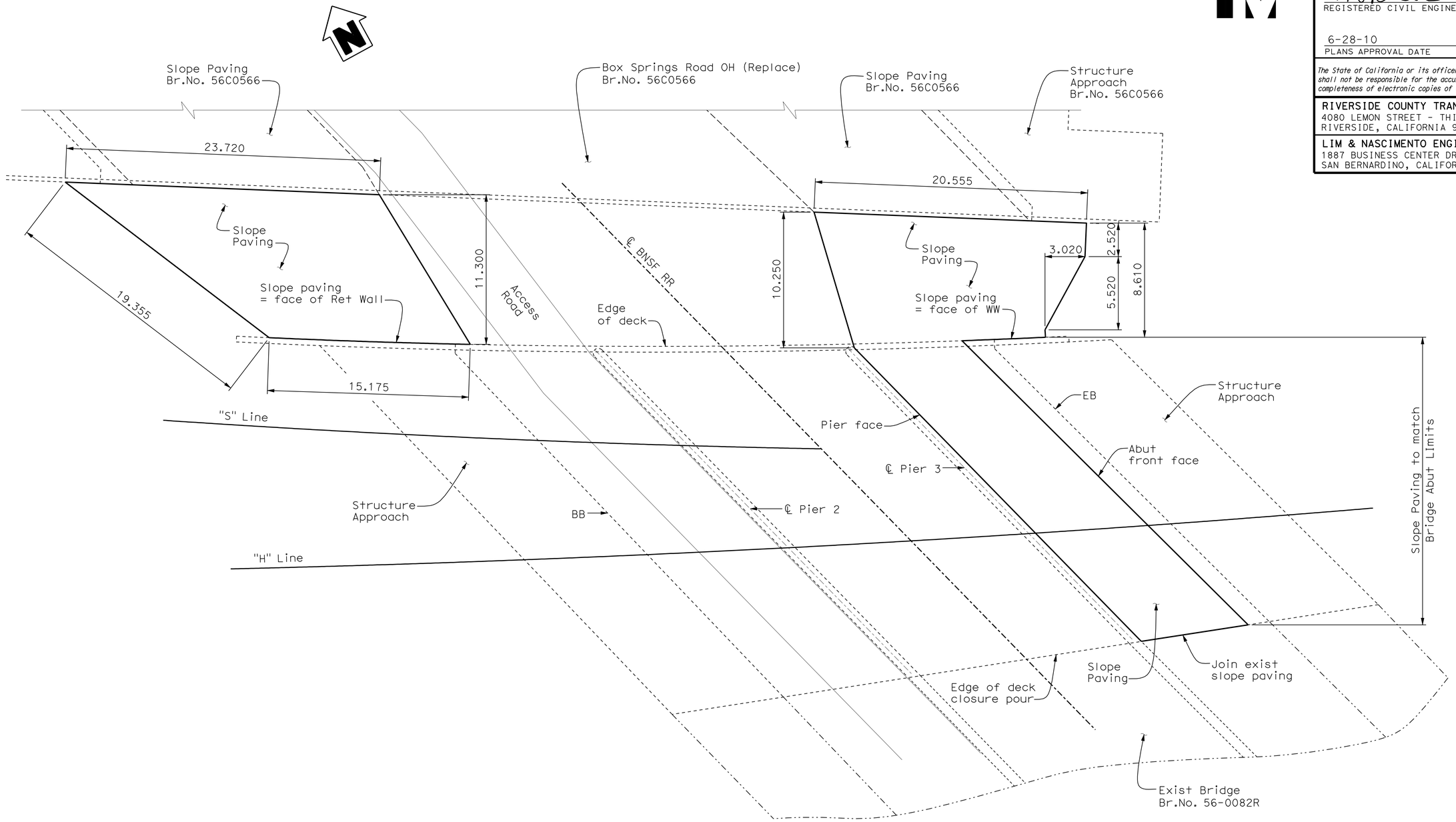

SLOPE PAVING LAYOUT PLAN
1:150

ALL DIMENSIONS ARE IN
MILLIMETERS UNLESS OTHERWISE SHOWN

Robert Zezoff
DESIGN OVERSIGHT Robert Zezoff
10-22-09
SIGN OFF DATE

	BY	CHECKED
DESIGN	D. KIM/D. SARETSKY	T. DUDLEY/A. SIVATHASAN
DETAILS	R. ANDRASEK	T. DUDLEY/M. CHAR
QUANTITIES	D. SARETSKY	K. GEE

PREPARED FOR THE STATE OF CALIFORNIA DEPARTMENT OF TRANSPORTATION

MOHAN S. CHAR
PROJECT ENGINEER

BRIDGE NO. 56-0082R
KILOMETER POST R62.2

BOX SPRINGS OH (WIDEN)
SLOPE PAVING DETAILS

DESIGN DETAIL SHEET (METRIC) (REV. 10/27/05)

ORIGINAL SCALE IN MILLIMETERS FOR REDUCED PLANS 0 10 20 30 40 50 60 70 80 90 100

CU 08
EA 449311

DISREGARD PRINTS BEARING EARLIER REVISION DATES

REVISION DATES (PRELIMINARY STAGE ONLY) 9/28/08 12/22/08 6/18/09 8/20/09 10/2/09

SHEET 26 OF 29

FILE => 56-0082-s-slp02.dgn

USERNAME => trlim DATE PLOTTED => 19-OCT-2010 TIME PLOTTED => 15:19

DIVISION OF ENGINEERING SERVICES - GEOTECHNICAL SERVICES					
As-Built Log of Test Borings sheet is considered an informational document only. As such, the State of California registration seal with signature, license number and registration certificate expiration date confirm that this is a true and accurate copy of the original document. This drawing is available and presented only for the convenience of any bidder, contractor or other interested party.					
DIST.	COUNTY	ROUTE	KILOMETER POST-TOTAL PROJECT	Sheet No.	Total Sheets
08	Riv	60,215	R19.7/21.9,R61.3/62.7	431	594
Carlos V. Amante				10/02/09	
REGISTERED CIVIL ENGINEER				DATE	
BOX SPRINGS OVERHEAD (WIDEN)					
LOG OF TEST BORINGS No. 1 OF 3					
NOTE: A COPY OF THIS LOG OF TEST BORINGS IS AVAILABLE AT OFFICE OF STRUCTURE MAINTENANCE AND INVESTIGATIONS, SACRAMENTO, CALIFORNIA			CU: 08 EA: 449311	BRIDGE No. 56-0082L	
				Sheet 27	of 29

To accompany plans dated 6-28-10

REGISTERED PROFESSIONAL ENGINEER — CARLOS AMANTE — No. GE 2724 — Exp. 6/30/10 — GEOTECHNICAL — STATE OF CALIFORNIA

Caltrans Metric

DIST	COUNTY	ROUTE	KILOMETER POST TOTAL PROJECT	SHEET No	TOTAL SHEETS

Mark A. Richards 10-1-02
REGISTERED GEOLOGIST

REGISTERED GEOLOGIST — Mark A. Richards — No. 5240 — Exp. 7-31-04 — REGISTERED GEOLOGIST — STATE OF CALIFORNIA

PLANS APPROVAL DATE

The State of California or its officers or agents shall not be responsible for the accuracy or completeness of electronic copies of this plan sheet.

Caltrans now has a web site! To get to the web site, go to: http://www.dot.ca.gov

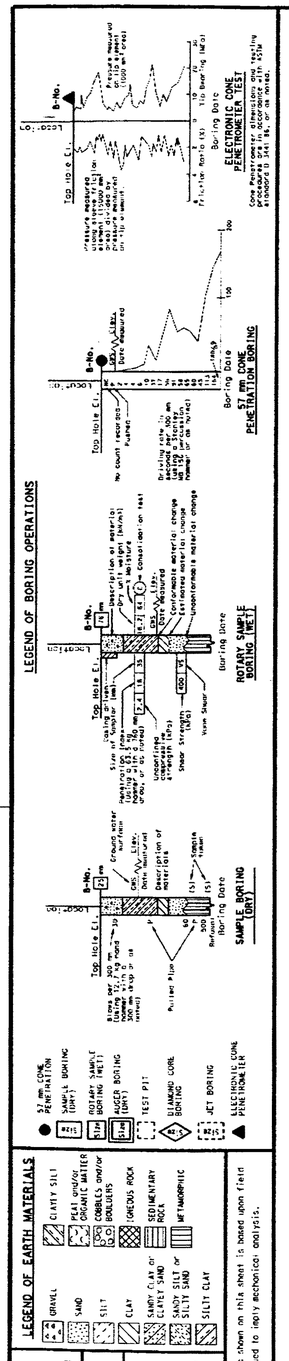

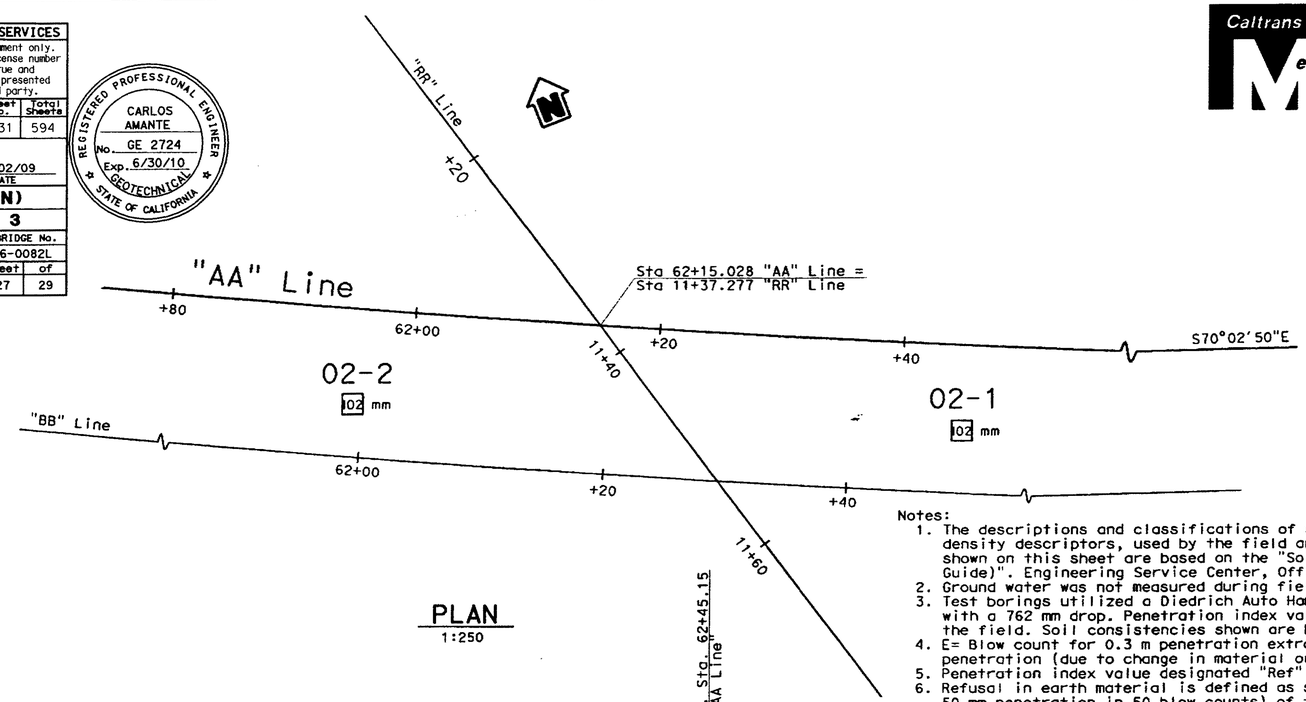

BENCH MARK
BM Elev. 459.600 m
WP 3031 2-inch brass disk NGVD 29

PLAN
1:250

Notes:
1. The descriptions and classifications of rock and/or soil, including consistency and relative density descriptors, used by the field and/or office personnel for the exploration boreholes shown on this sheet are based on the "Soil and Rock Logging Classification Manual (Field Guide)". Engineering Service Center, Office of Structural Foundations, August 1996.
2. Ground water was not measured during field investigation
3. Test borings utilized a Diedrich Auto Hammer to advance the sampler using a 63.5 kg hammer with a 762 mm drop. Penetration index values shown are the actual blow counts recorded in the field. Soil consistencies shown are based on the uncorrected N value.
4. E= Blow count for 0.3 m penetration extrapolated from blow count for less than 0.3 m penetration (due to change in material or hard driving).
5. Penetration index value designated "Ref" means sampler refusal.
6. Refusal in earth material is defined as severely limited or halted penetration (less than 50 mm penetration in 50 blow counts) of the Standard Penetration Test (SPT) sampler due to the presence of cobbles, boulders or rock formation materials.
7. REC= Percent Core Recovery. Percent Core Recovery is the "percentage ratio" between the length of the core recovered over the length of the core run on a given sample.
8. The borings were advanced with a 102 mm diameter Christiansen Sharkey bit, core barrel, and 94 mm wireline drill rod system.

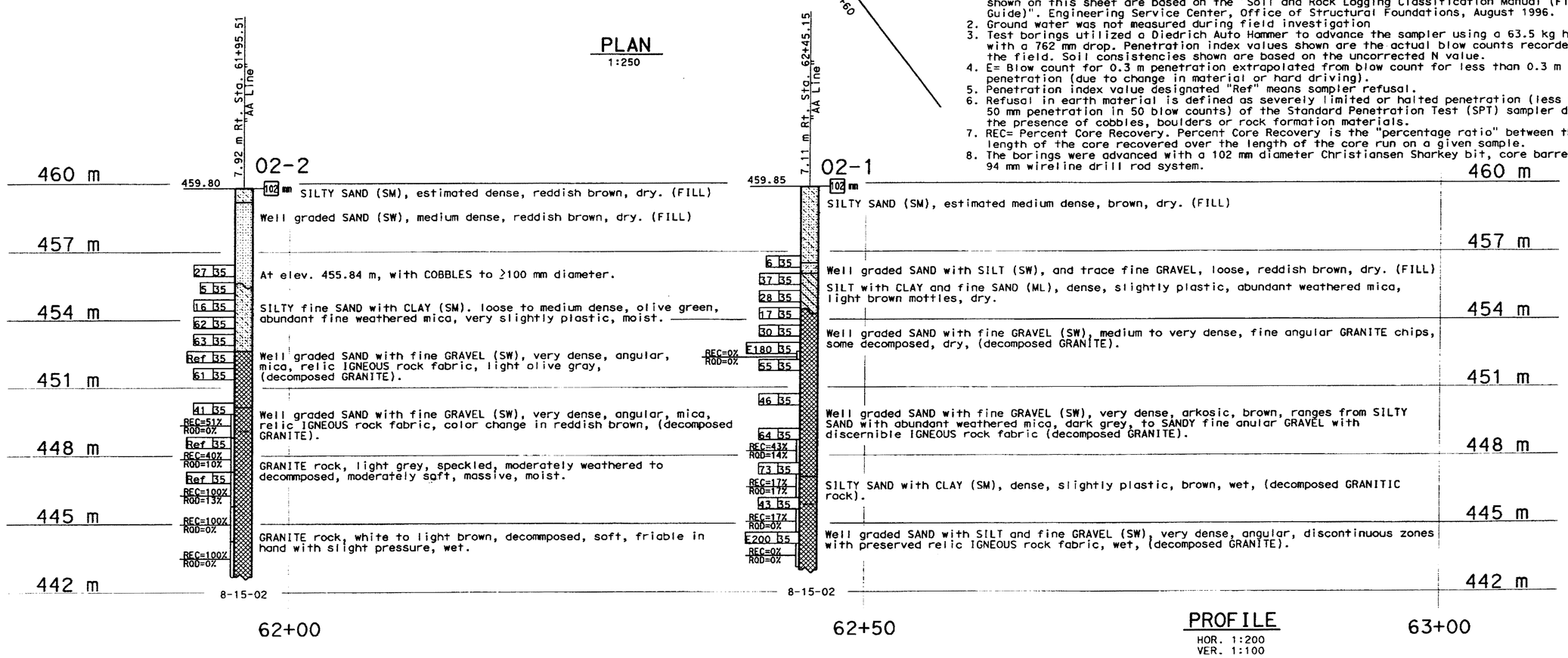

PROFILE
HOR. 1:200
VER. 1:100

ENGINEERING SERVICES	GEOTECHNICAL SERVICES	FIELD INVESTIGATION BY:	STATE OF CALIFORNIA DEPARTMENT OF TRANSPORTATION	DIVISION OF STRUCTURES STRUCTURE DESIGN	BRIDGE NO. 56-0082R	BOX SPRINGS OH RIGHT BRIDGE (REPLACEMENT)
DRAWN BY F. Nguyen 9/02		M. Richards			KILOMETER POST 60.13	LOG OF TEST BORINGS 1 OF 3
CHECKED BY M. Richards 9/02				CU 08 EA 334841		

DISREGARD PRINTS BEARING EARLIER REVISION DATES → REVISION DATES (PRELIMINARY STAGE ONLY) 9-24-02 10-1-02 12-02-02

SHEET 19 OF 21

OGS GEOLOGIST LOG OF TEST BORINGS SHEET (METRIC) (REV. 3/02)

ORIGINAL SCALE IN MILLIMETERS FOR REDUCED PLANS 0 10 20 30 40 50 60 70 80 90 100

FILENAME => 56-0082-z-ltb01.tif

DIST	COUNTY	ROUTE	KILOMETER POST TOTAL PROJECT	SHEET No	TOTAL SHEETS

Mark A. Richards 10-1-02
REGISTERED GEOLOGIST

PLANS APPROVAL DATE

REGISTERED GEOLOGIST, Mark A. Richards, No. 5240, Exp. 7-31-04, STATE OF CALIFORNIA

The State of California or its officers or agents shall not be responsible for the accuracy or completeness of electronic copies of this plan sheet.

Caltrans now has a web site! To get to the web site, go to: http://www.dot.ca.gov

Caltrans Metric

DIVISION OF ENGINEERING SERVICES - GEOTECHNICAL SERVICES

As-Built Log of Test Borings sheet is considered an informational document only. As such, the State of California registration seal with signature, license number and registration certificate expiration date confirm that this is a true and accurate copy of the original document. This drawing is available and presented only for the convenience of any bidder, contractor or other interested party.

DIST.	COUNTY	ROUTE	KILOMETER POST-TOTAL PROJECT	Sheet No.	Total Sheets
08	Riv	60,215	R19.7/21.9,R61.3/62.7	432	594

Carlos V Amante — REGISTERED CIVIL ENGINEER — 10/02/09 DATE

REGISTERED PROFESSIONAL ENGINEER, CARLOS AMANTE, No. GE 2724, Exp. 6/30/10, GEOTECHNICAL, STATE OF CALIFORNIA

BOX SPRINGS OVERHEAD (WIDEN)

LOG OF TEST BORINGS No. 2 OF 3

NOTE: A COPY OF THIS LOG OF TEST BORINGS IS AVAILABLE AT OFFICE OF STRUCTURE MAINTENANCE AND INVESTIGATIONS, SACRAMENTO, CALIFORNIA

CU: 08 EA: 449311 — BRIDGE No. 56-0082L — Sheet 28 of 29

To accompany plans dated 6-28-10

WEATHERING DESCRIPTORS

Modified from United States Bureau of Reclamation, Engineering Geology Field Manual.

Descriptors		Diagnostic features: Chemical weathering-Discoloration and/or oxidation		Mechanical weathering-Grain boundary conditions (disaggregation) primarily for granitics and some coarse-grained sediments	Texture and solutioning		General characteristics (strength, excavation, etc.)§
Alphanumeric descriptor	Descriptive term	Body of rock	Fracture surfaces†		Texture	Solutioning	
W1	Fresh	No discoloration, not oxidized.	No discoloration or oxidation.	No separation, intact (tight).	No change.	No solutioning.	Hammer rings when crystalline rocks are struck. Almost always rock excavation except for naturally weak or weakly cemented rocks such as siltstones or shales.
W2	Slightly weathered to fresh°						
W3	Slightly weathered	Discoloration or oxidation is limited to surface of, or short distance from, fractures; some feldspar crystals are dull.	Minor to complete discoloration or oxidation of most surfaces.	No visible separation, intact (tight).	Preserved.	Minor leaching of some soluble minerals may be noted.	Hammer rings when crystalline rocks are struck. Body of rock not weakened. With few exceptions, such as siltstones or shales, classified as rock excavation.
W4	Moderately to slightly weathered°						
W5	Moderately weathered	Discoloration or oxidation extends from fractures usually throughout; Fe-Mg minerals are "rusty," feldspar crystals are "cloudy."	All fracture surfaces are discolored or oxidized.	Partial separation of boundaries visible.	Generally preserved.	Soluble minerals may be mostly leached.	Hammer does not ring when rock is struck. Body of rock is slightly weakened. Depending on fracturing, usually is rock excavation except in naturally weak rocks such as siltstones or shales.
W6	Intensely to moderately weathered°						
W7	Intensely weathered	Discoloration or oxidation throughout; all feldspars and Fe-Mg minerals are altered to clay to some extent; or chemical alteration produces in-situ disaggregation, see grain boundary conditions.	All fracture surfaces are discolored or oxidized, surfaces friable.	Partial separation, rock is friable; in semiarid conditions granitics are disaggregated.	Texture altered by chemical disintegration (hydration, argillation).	Leaching of soluble minerals may be complete.	Dull sound when struck with hammer, usually can be broken with moderate to heavy manual pressure or by light hammer blow without reference to planes of weakness such as incipient or hairline fractures, or veinlets. Rock is significantly weakened. Usually common excavation.
W8	Very intensely weathered						
W9	Decomposed	Discolored or oxidized throughout, but resistant minerals such as quartz may be unaltered; all feldspars and Fe-Mg minerals are completely altered to clay.		Complete separation of grain boundaries (disaggregated).	Resembles a soil, partial or complete remnant rock structure may be preserved; leaching of soluble minerals usually complete.		Can be granulated by hand. Always common excavation. Resistant minerals such as quartz may be present as "stringers" or "dikes."

Note: This chart and its horizontal categories are more readily applied to rocks with feldspars and mafic minerals. Weathering in various sedimentary rocks, particularly limestones and poorly indurated sediments, will not always fit the categories established. This chart and weathering categories may have to be modified for particular site conditions or alteration such as hydrothermal effects; however, the basic framework and similar descriptors are to be used.

° Combination descriptors are permissible where equal distribution of both weathering characteristics are present over significant intervals or where characteristics present are "in between" the diagnostic feature. However, dual descriptors should not be used where significant, identifiable zones can be delineated. When given as a range only two adjacent terms may be combined. "Decomposed to slightly weathered," or "moderately weathered to fresh" are not acceptable.

† Does not include directional weathering along shears or faults and their associated features. For example, a shear zone that carried weathering to great depths into a fresh rock mass would not require the rock mass to be classified as weathered.

§ These are generalizations and should not be used as diagnostic features for weathering or excavation classification. These characteristics vary to a large extent based on naturally weak materials or cementation and type of excavation.

ROCK QUALITY DESIGNATION (RQD) & PERCENT RECOVERY (REC) LOGGING

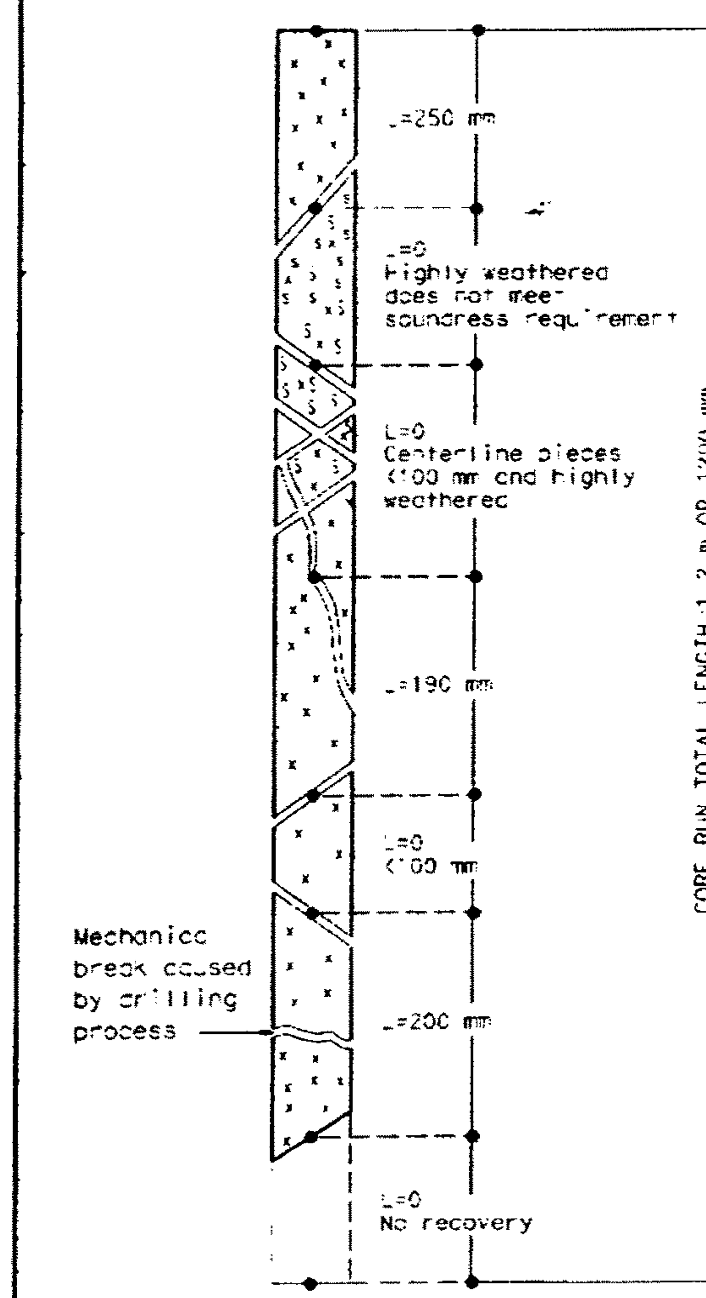

RQD (ROCK QUALITY DESIGNATION)	DESCRIPTION OF ROCK QUALITY
0 - 25%	VERY POOR
25 - 50%	POOR
50 - 75%	FAIR
75 - 90%	GOOD
90 - 100%	EXCELLENT

$$RQD = \frac{\sum \text{Length of sound core pieces} \geq 100\ mm}{\text{Total core run length}}$$

$$RQD = \frac{250+190+200}{1200} \times 100\%$$

RQD = 53% (fair)

REC = Percent Core Recovery

$$REC = \frac{\sum \text{Length of all core pieces}}{\text{Total core run length}}$$

(No Scale)
After Deere & Deere, 1989

FRACTURE DENSITY

Modified from United States Bureau of Reclamation, Engineering Geology Field Manual.

FRACTURE DENSITY- Based on the spacing of all natural fractures in an exposure or core recovery lengths in boreholes; excludes mechanical breaks, shears, and shear zones; however, shear-disturbed zones (fracturing outside the shear) are included. Descriptors for fracture density apply to all rock exposures such as tunnel walls, dozer trenches, outcrops, or foundation cut slopes and inverts, as well as boreholes. Descriptive criteria presented below are based on borehole cores where lengths are measured along the core axis, for other exposures the criteria is distance measured between fractures (size of blocks).

UNFRACTURED (FD0): No fractures.

VERY SLIGHTLY FRACTURED (FD1): Core recovered mostly in lengths greater than 1 m.

SLIGHTLY TO VERY SLIGHTLY FRACTURED (FD2)*

SLIGHTLY FRACTURED (FD3): Core recovered mostly in lengths from 300 to 1000 mm, with few scattered lengths less than 300 mm or greater than 1000 mm.

MODERATELY TO SLIGHTLY FRACTURED (FD4)*

MODERATELY FRACTURED (FD5): Core recovered mostly in 100 to 300 mm lengths with most lengths about 200 mm.

INTENSELY TO MODERATELY FRACTURED (FD6)*

INTENSELY FRACTURED (FD7): Lengths average from 30 to 100 mm with scattered fragmented intervals. Core recovered mostly in lengths less than 100 mm.

VERY INTENSELY TO INTENSELY FRACTURED (FD8)*

VERY INTENSELY FRACTURED (FD9): Core recovered mostly as chips and fragments with a few scattered short core lengths.

* Combinations of fracture densities (e.g. very intensely to intensely fractured, or moderately to slightly fractured) are used where equal distribution of both fracture density characteristics are present over a significant interval or exposure, or where characteristics are "in between" the descriptor definitions.

ROCK HARDNESS DESCRIPTORS

Alphanumeric Descriptor	Descriptor	Criteria
H1	Extremely hard	Core, fragment, or exposure cannot be scratched with knife or sharp pick; can only be chipped with repeated heavy hammer blows.
H2	Very hard	Cannot be scratched with knife or sharp pick. Core or fragment breaks with repeated heavy hammer blows.
H3	Hard	Can be scratched with knife or sharp pick with difficulty (heavy pressure). Heavy hammer blow required to break specimen.
H4	Moderately hard	Can be scratched with knife or sharp pick with light or moderate pressure. Core or fragment breaks with moderate hammer blow.
H5	Moderately soft	Can be grooved 2 mm deep by knife or sharp pick with moderate or heavy pressure. Core or fragment breaks with light hammer blow or heavy manual pressure.
H6	Soft	Can be grooved or gouged easily by knife or sharp pick with light pressure, can be scratched with fingernail. Breaks with light to moderate manual pressure.
H7	Very soft	Can be readily indented, grooved or gouged with fingernail, or carved with a knife. Breaks with light manual pressure.

Any bedrock unit softer than H7, very soft, is to be described using ASTM D-2488 consistency descriptors.

Note: Although "sharp pick" is included in these definitions, descriptions of ability to be scratched, grooved or gouged by a knife is the preferred criteria.

Modified from United States Bureau of Reclamation, Engineering Geology Field Manual.

BEDDING, FOLIATION, OR FLOW TEXTURE DESCRIPTORS

Descriptors	Thickness / Spacing
Massive	Greater than 3 m
Very thickly (bedded, foliated, or banded)	1 to 3 m
Thickly	300 mm to 1 m
Moderately	100 to 300 mm
Thinly	30 to 100 mm
Very thinly	10 to 30 mm
Laminated (intensely foliated or banded)	Less than 10 mm

Modified from United States Bureau of Reclamation, Engineering Geology Field Manual.

ENGINEERING SERVICES	GEOTECHNICAL SERVICES
DRAWN BY	F. Nguyen 9/02
CHECKED BY	M. Richards 9/02

OSF GEOLOGIST LOG OF TEST BORINGS SHEET (METRIC) (REV. 10/5/2000)

FIELD INVESTIGATION BY: M. Richards

STATE OF CALIFORNIA DEPARTMENT OF TRANSPORTATION

DIVISION OF STRUCTURES — STRUCTURE DESIGN

ORIGINAL SCALE IN MILLIMETERS FOR REDUCED PLANS 0 10 20 30 40 50 60 70 80 90 100

CU 08
EA 334841

BRIDGE NO. 56-0082R — KILOMETER POST 60.13

BOX SPRINGS OH RIGHT BRIDGE (REPLACEMENT)

LOG OF TEST BORINGS 2 OF 3

DISREGARD PRINTS BEARING EARLIER REVISION DATES — REVISION DATES (PRELIMINARY STAGE ONLY): 9-24-02, 10-1-02, 12-02-02

SHEET 20 OF 21

FILENAME => 56-0082-z-ltb02.tif

FED. AID PROJ. DIV. NO.	STATE	PROJ. No.	FISCAL YEAR	SHEET No.	TOTAL SHEETS
7	CAL.				

DIST.	COUNTY	ROUTE	SECTION	SHEET No.	TOTAL SHEETS

BRIDGE ENGINEER — CIVIL ENGINEER — LICENSE SEAL

DATE APPROVED

BENCH MARK #2-A-54
Chiseled "X" on Bridge Walk
30' Lt. Sta. 11+44 "C" Line.
ELEV. 1508.29

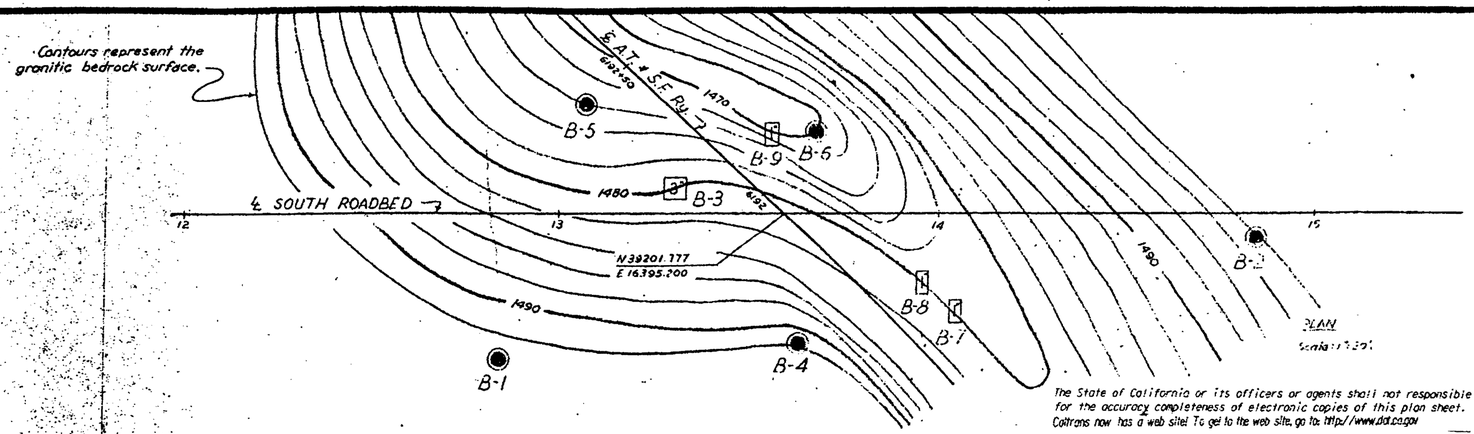

The State of California or its officers or agents shall not responsible for the accuracy completeness of electronic copies of this plan sheet. Caltrans now has a web site! To get to the web site, go to: http://www.dot.ca.gov

DIVISION OF ENGINEERING SERVICES - GEOTECHNICAL SERVICES					
As-Built Log of Test Borings sheet is considered an informational document only. As such, the State of California registration seal with signature, license number and registration certificate expiration date confirm that this is a true and accurate copy of the original document. This drawing is available and presented only for the convenience of any bidder, contractor or other interested party.					
DIST.	COUNTY	ROUTE	KILOMETER POST-TOTAL PROJECT	Sheet No.	Total Sheets
08	Riv	60,215	R19.7/21.9,R61.3/62.7	433	594
Carlos J. Amante — REGISTERED CIVIL ENGINEER			10/02/09 — DATE		
BOX SPRINGS OVERHEAD (WIDEN)					
LOG OF TEST BORINGS No. 3 OF 3					
NOTE: A COPY OF THIS LOG OF TEST BORINGS IS AVAILABLE AT OFFICE OF STRUCTURE MAINTENANCE AND INVESTIGATIONS, SACRAMENTO, CALIFORNIA			CU: 08 EA: 449311	BRIDGE No. 56-0082L	
				Sheet 29	of 29

To accompany plans dated 6-28-10

REGISTERED PROFESSIONAL ENGINEER — CARLOS AMANTE — No. GE 2724 — Exp. 6/30/10 — GEOTECHNICAL — STATE OF CALIFORNIA

Revisions made to this Log of Test Borings from the original 1962 Log of Test Borings are the addition of the following table and notes:

Boring	Station	Offset from S/L "BB" Line	
B-1	62+25.49	33.09 m	Right
B-2	62+85.83	31.73 m	Right
B-3	62+40.73	21.11 m	Right
B-4	62+48.96	35.06 m	Right
B-5	62+34.64	13.61 m	Right
B-6	62+52.30	18.28 m	Right
B-7	62+61.28	21.38 m	Right
B-8	62+58.31	30.16 m	Right
B-9	62+48.56	16.56 m	Right

Notes:

1. See the General Plan and/or Foundation Plan for Metric Stationing.
2. The Division of Structure Design produced the data presented in the table above. The data are the metric locations for the As-Built Test Borings referenced to the proposed new structure location. This table is presented on the As-Built Log of Test Boring sheet for the convenience of any bidder, contractor or other interested party.

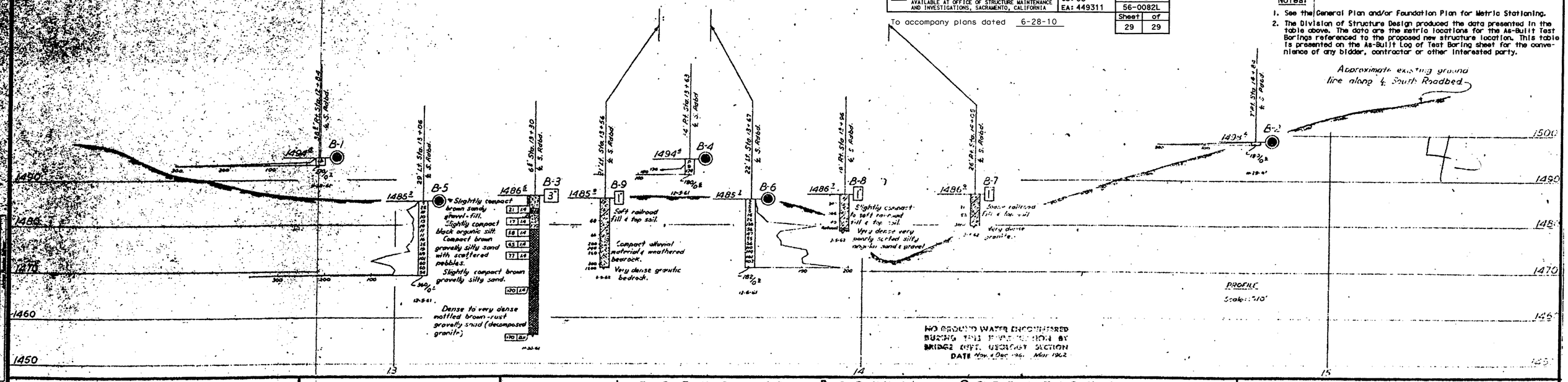

Classification of Material Based on Standard Grade Size Limits

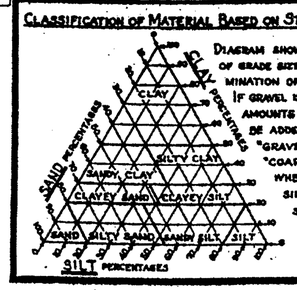

Diagram showing the basis for estimates of grade size distribution used in determination of class names.

If gravel is present in appreciable amounts the term "gravelly" may be added to the class name, viz. "gravelly sand." The terms "coarse", "medium" and "fine" when used to describe sand, silt and gravel refer to standard grade size limits.

Legend of Earth Materials

- Gravel
- Sand
- Silt
- Clay
- Sandy Clay or Clayey Sand
- Sandy Silt or Silty Sand
- Silty Clay or Clayey Silt
- Peat and/or Organic Matter
- Fill Material
- Igneous Rock
- Sedimentary Rock
- Metamorphic Rock

Legend of Boring Operations

- Penetrometer
- 2¼" Cone Penetrometer
- Sampler Boring (Dry)
- Rotary Boring (Wet)
- Auger Boring (Dry)
- Jet Boring
- Core Boring
- Test Pit

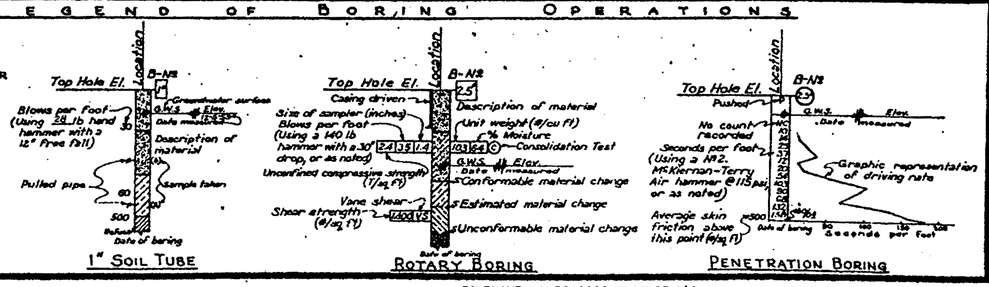

NOTE

Classification of earth material as shown on this sheet is based upon field inspection and is not to be construed to imply mechanical analysis.

STATE OF CALIFORNIA
DEPARTMENT OF PUBLIC WORKS
DIVISION OF HIGHWAYS

BOX SPRINGS OVERHEAD
W/ Contours

LOG OF TEST BORINGS

SCALE	BRIDGE	FILE	DRAWING

FILENAME => 56-0082-z-ltb03.tif

DIST	COUNTY	ROUTE	KILOMETER POST TOTAL PROJECT	SHEET No	TOTAL SHEETS
08	Riv	60,215	R19.7/21.9, R61.3/62.7	434	594

Caltrans Metric

John Bishop 10/02/09
REGISTERED CIVIL ENGINEER DATE

6-28-10
PLANS APPROVAL DATE

REGISTERED PROFESSIONAL ENGINEER J. S. BISHOP No. 50616 Exp. 9-30-11 CIVIL STATE OF CALIFORNIA

The State of California or its officers or agents shall not be responsible for the accuracy or completeness of electronic copies of this plan sheet.

RIVERSIDE COUNTY TRANSPORTATION COMMISSION
4080 LEMON STREET - THIRD FLOOR
RIVERSIDE, CALIFORNIA 92501

LIM & NASCIMENTO ENGINEERING
1887 BUSINESS CENTER DRIVE, SUITE 6
SAN BERNARDINO, CALIFORNIA 92408

Dokken Engineering
2365 Iron Point Rd, Suite 200
Folsom, CA 95630

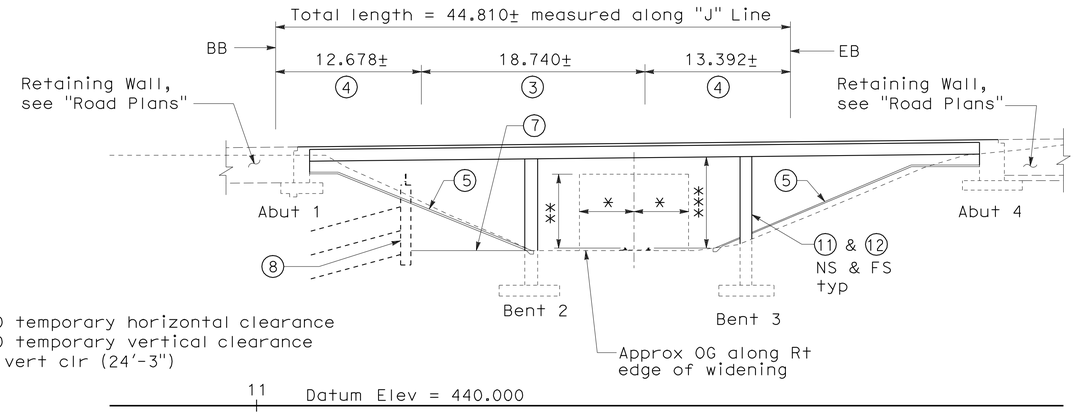

SECTION ALONG RIGHT EDGE OF WIDENING

1:250

LEGEND

1. Concrete Barrier Type 736
2. Temporary Railing Type K
3. Precast/prestressed rectangular girders (Span 2)
4. CIP Concrete T-girder (Spans 1 & 3)
5. Slope paving
6. Structure Approach Type N(9S)
7. Future RR maintenance road
8. Box Springs OH (Tieback) Br. No. 56E0036
9. 41 mm lighting conduit, see "Road Plans"
10. Permanent steel deck forms required, Span 2 only.
11. Paint bridge name
12. Paint bridge number

Point of min vert clearance
Denotes existing structure
Denotes concrete removal limits

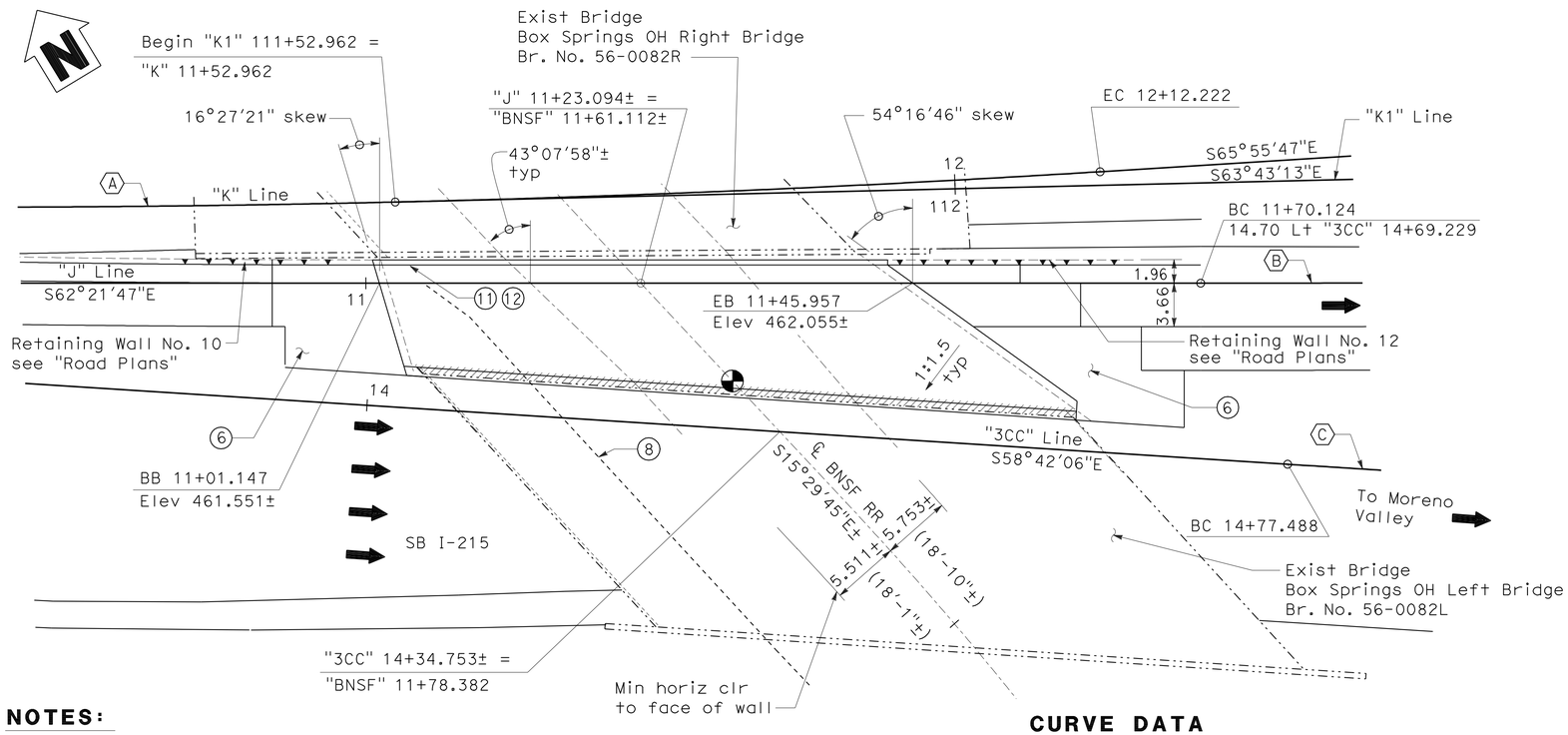

PLAN

1:250

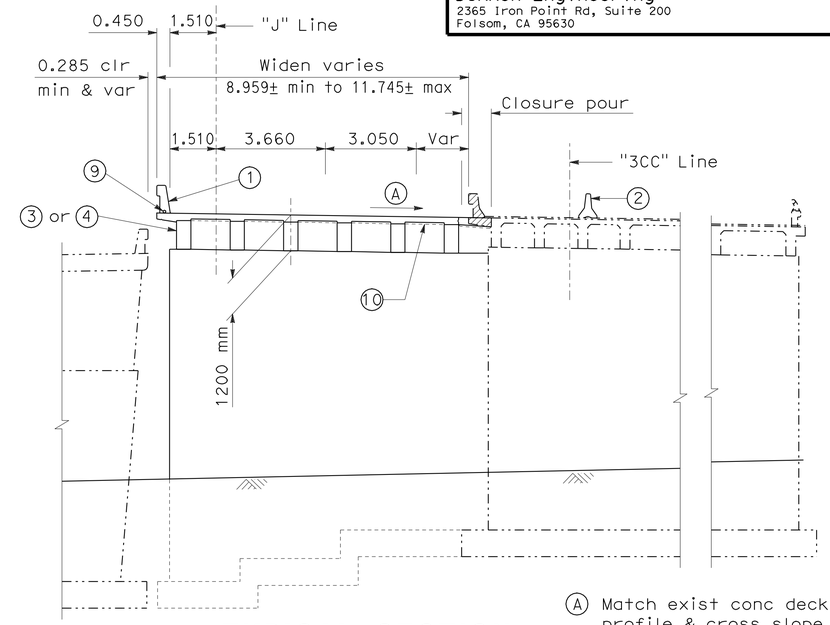

TYPICAL SECTION

1:100

CURVE DATA

No.	R	△	T	L
Ⓐ	1536.774	5°42'10"	76.544	152.962
Ⓑ	6098.972	0°43'08"	38.265	76.530
Ⓒ	5000.000	2°39'19"	115.875	231.708

BOX SPRINGS OVERHEAD (LEFT)(WIDEN) BR NO 56-0082L

QUANTITIES

BRIDGE REMOVAL (PORTION), LOCATION A	LUMP SUM	
STRUCTURE EXCAVATION (BRIDGE)	1250	m^3
STRUCTURE BACKFILL (BRIDGE)	810	m^3
STRUCTURAL CONCRETE, BRIDGE FOOTING	240	m^3
STRUCTURAL CONCRETE, BRIDGE	640	m^3
STRUCTURAL CONCRETE, APPROACH SLAB (TYPE N)	72	m^3
DRILL AND BOND DOWEL	65	m
FURNISH PRECAST PRESTRESSED RECTANGULAR GIRDER (15 M - 20 M)	6	EA
ERECT PRECAST PRESTRESSED RECTANGULAR GIRDER	6	EA
POLYESTER CONCRETE EXPANSION DAM	3	m^3
JOINT SEAL (MR 40 MM)	32	m
BAR REINFORCING STEEL (BRIDGE)	95 000	kg
SLOPE PAVING (CONCRETE)	45	m^3
CONCRETE BARRIER (TYPE 736)	45	m

ALL DIMENSIONS ARE IN METERS UNLESS OTHERWISE SHOWN

NOTES:

1. The Contractor shall verify all controlling field dimensions before ordering or fabricating any material.
2. For General Notes, Index To Plans and Standard Plans, see "Index To Plans" sheet.

Robert Zezoff DESIGN OVERSIGHT Robert Zezoff 10-22-09 SIGN OFF DATE	DESIGN	BY J. Bishop	CHECKED M. Maechler	LOAD FACTOR DESIGN	LIVE LOADING: HS20-44 AND ALTERNATIVE AND PERMIT DESIGN LOAD
	DETAILS	BY C. Houghton	CHECKED M. Maechler	LAYOUT	BY J. Bishop / CHECKED M. Maechler
	QUANTITIES	BY J. Bishop	CHECKED N. Bieniek	SPECIFICATIONS	BY J. Bishop / PLANS AND SPECS COMPARED M. Maechler

PREPARED FOR THE STATE OF CALIFORNIA DEPARTMENT OF TRANSPORTATION

John Bishop
PROJECT ENGINEER

BRIDGE NO. 56-0082L
KILOMETER POST R 62.2

BOX SPRINGS OVERHEAD (WIDEN)
GENERAL PLAN

DESIGN GENERAL PLAN SHEET (METRIC) (REV. 10/27/05)

ORIGINAL SCALE IN MILLIMETERS FOR REDUCED PLANS 0 10 20 30 40 50 60 70 80 90 100

CU 08
EA 449311

DISREGARD PRINTS BEARING EARLIER REVISION DATES

REVISION DATES (PRELIMINARY STAGE ONLY) 1-29-07 8-17-07 2-29-08 6-27-08 7-11-08 10-29-08 2-4-09 6-29-09 8-28-09 10/2/09

SHEET 1 OF 31

FILE => 56-0082l-a-gp01.dgn

USERNAME => trilim DATE PLOTTED => 19-OCT-2010 TIME PLOTTED => 15:19

DIST	COUNTY	ROUTE	KILOMETER POST TOTAL PROJECT	SHEET No	TOTAL SHEETS
08	Riv	60,215	R19.7/21.9, R61.3/62.7	435	594

Caltrans Metric

John Bishop 10/02/09
REGISTERED CIVIL ENGINEER DATE

6-28-10
PLANS APPROVAL DATE

REGISTERED PROFESSIONAL ENGINEER J. S. BISHOP No. 50616 Exp. 9-30-11 CIVIL STATE OF CALIFORNIA

The State of California or its officers or agents shall not be responsible for the accuracy or completeness of electronic copies of this plan sheet.

Dokken Engineering
2365 Iron Point Rd, Suite 200
Folsom, CA 95630

INDEX TO PLANS

Sheet No.	Title
1	General Plan
2	Index To Plans
3	Foundation Plan
4	Abutment 1 Footing Layout
5	Bent Footing Layout
6	Abutment 4 Footing Layout
7	Abutment 1 Layout
8	Abutment 4 Layout
9	Abutment Details No. 1
10	Abutment Details No. 2
11	Abutment Details No. 3
12	Abutment Details No. 4
13	Bent 2 Layout
14	Bent 3 Layout
15	Bent Details
16	Typical Section - Spans 1 & 3
17	Typical Section - Span 2
18	Girder Layout
19	Precast Girder Details No. 1
20	Precast Girder Details No. 2
21	Girder Details
22	Top Longidudinal Reinforcement
23	Top Reinforcement Details
24	Structure Approach Layout
25	Structure Approach Type N(9S)
26	Structure Approach Drainage Details
27	Slope Paving - Full Slope
28	Log of Test Borings - Soil Legend 1 of 2
29	Log of Test Borings - Soil Legend 2 of 2
30	Rock Legend
31	Log of Test Borings

STANDARD PLANS DATED JULY, 2004

Sheet No.	Title
A10A	Acronyms And Abbreviations (Sheet 1 Of 2)
A10B	Acronyms And Abbreviations (Sheet 2 Of 2)
A10C	Symbols (Sheet 1 Of 2)
A10D	Symbols (Sheet 1 Of 2)
A62C	Limits of Payment For Excavation And Backfill Bridge
B0-1	Bridge Details
B0-3	Bridge Details
B0-5	Bridge Details
B0-13	Bridge Details
B3-1	Retaining Wall Type 1 H = 1200 Through 9100 mm
B3-8	Retaining Wall Details No. 1
B6-1	T-Beam Details
RSP B6-21	Joint Seals (Maximum Movement Rating = 50 mm)
B11-56	Concrete Barrier Type 736

Standard plan sheet no.

Detail no.

GENERAL NOTES
LOAD AND RESISTANCE FACTOR DESIGN

DESIGN: AASHTO LRFD Bridge Design Specifications, 4th Edition with 2005 & 2006 Interims and Caltrans Amendments V3.06.01 except for Geotechnical design of deep foundations and retaining walls.

For geotechnical design of deep foundations and earth retaining systems: Bridge Design Specifications (1996 AASHTO with Interims and Revisions by Caltrans

SEISMIC DESIGN: CALTRANS SEISMIC DESIGN CRITERIA (SDC) Version 1.4, June 2006

DEAD LOAD: Includes 1.68 KPa for future wearing surface. Includes 10% additional dead load for permanent steel deck forms for Span 2 only.

LIVE LOAD: HL93 with "Low'Boy" and permit design load.

SEISMIC LOAD: Seismic Loading:
SDC Figure B.5, Soil Type C, Magnitude 7.25 ±0.25, Peak Rock Acceleration = 0.5g modified to account for near source effects:
- No change in spectral accelerations for T < 0.5 sec
- 20% increase in spectral accelerations for T > 1.0 sec
- Linear interpolation of spectral accelerations for T between 0.5 and 1.0 sec.

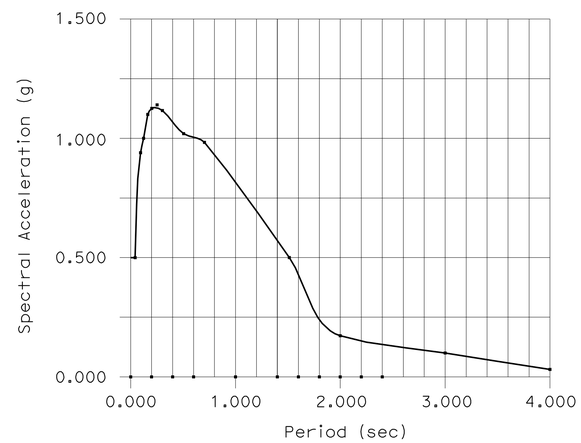

REINFORCED CONCRETE: f_y = 420 MPa
f'_c = 25 MPa, unless otherwise noted
n = 8

PRESTRESSED CONCRETE: See "Prestressing Notes" on "Precast Girder Details No. 1" sheet.

FOUNDATIONS: See "Spread Footing Data Table"

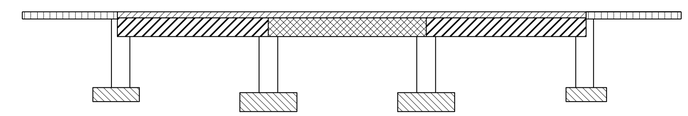

Structural Concrete, Bridge

Structural Concrete, Approach Slab

Structural Concrete, Bridge (28 MPa at 28 days)

Precast Concrete, see "Precast Girder Details No. 1" sheet

Structural Concrete, Bridge Footing

CONCRETE STRENGTH AND TYPE LIMITS

No Scale

SPREAD FOOTING DATA TABLE

SUPPORT LOCATION	WORKING STRESS DESING (WSD)		LOAD AND RESISTANCE FACTOR DESIGN (LRFD)		
	Permissible Gross Contact Stress (Settlement) (kPa)	Allowable Gross Bearing Capacity (kPa)	Service Permissible Net Contact Stress (Settlement) (kPa)	Strength Factored Gross Nominal Bearing Resistance φ_b = 0.45 (kPa)	Extreme Event Factored Gross Nominal Bearing Resistance φ_b = 1.00 (kPa)
Abut 1 (all segments)	235	290	N/A	N/A	N/A
Bent 2	N/A	N/A	335	648	1440
Bent 3	N/A	N/A	380	648	1440
Abut 4 (all segments)	200	325	N/A	N/A	N/A

ALL DIMENSIONS ARE IN MILLIMETERS UNLESS OTHERWISE SHOWN

Robert Zezoff
DESIGN OVERSIGHT Robert Zezoff
10-22-09
SIGN OFF DATE

	BY	CHECKED
DESIGN	J. Bishop	M. Maechler
DETAILS	C. Houghton	M. Maechler
QUANTITIES	J. Bishop	N. Bieniek

PREPARED FOR THE STATE OF CALIFORNIA DEPARTMENT OF TRANSPORTATION

John Bishop
PROJECT ENGINEER

BRIDGE NO. 56-0082L
KILOMETER POST R62.2

BOX SPRINGS OVERHEAD (WIDEN)
INDEX TO PLANS

DESIGN DETAIL SHEET (METRIC) (REV. 10/27/05)

ORIGINAL SCALE IN MILLIMETERS FOR REDUCED PLANS 0 10 20 30 40 50 60 70 80 90 100

CU 08
EA 449311

DISREGARD PRINTS BEARING EARLIER REVISION DATES

REVISION DATES (PRELIMINARY STAGE ONLY) 2-25-08 6-25-08 7-14-08 10-2-08 12-22-08 2-2-09 5-26-09 8/28/09 10/2/09

SHEET 2 OF 31

FILE => 56-0082l-a-itp.dgn

USERNAME => trlim DATE PLOTTED => 19-OCT-2010 TIME PLOTTED => 15:19

DIST	COUNTY	ROUTE	KILOMETER POST TOTAL PROJECT	SHEET No	TOTAL SHEETS
08	Riv	60,215	R19.7/21.9, R61.3/62.7	436	594

Caltrans Metric

John Bishop 10/02/09
REGISTERED CIVIL ENGINEER DATE

6-28-10
PLANS APPROVAL DATE

REGISTERED PROFESSIONAL ENGINEER J. S. BISHOP No. 50616 Exp. 9-30-11 CIVIL STATE OF CALIFORNIA

The State of California or its officers or agents shall not be responsible for the accuracy or completeness of electronic copies of this plan sheet.

Dokken Engineering
2365 Iron Point Rd, Suite 200
Folsom, CA 95630

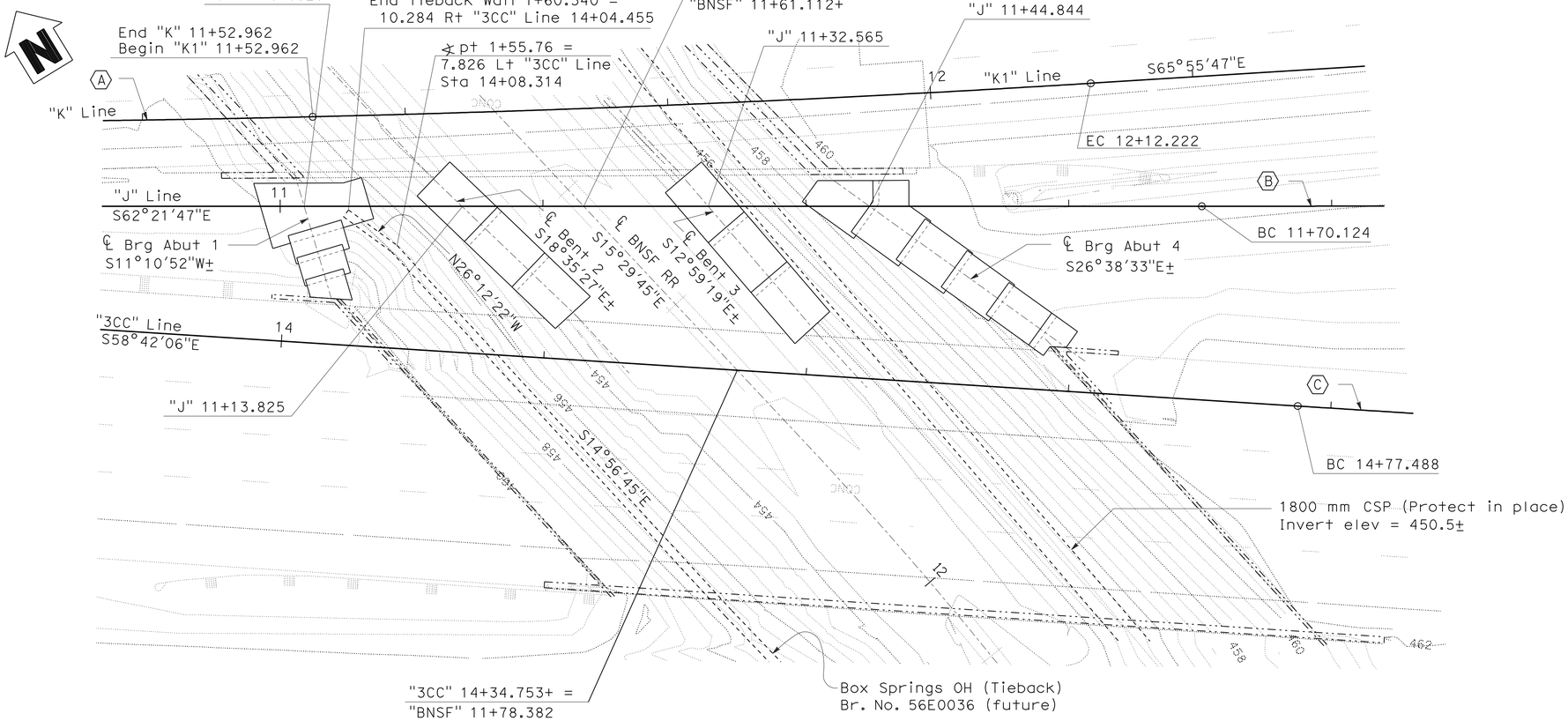

PLAN
1:200

LEGEND

—··—··— Denotes existing structure

NOTES:

1. The contractor shall verify all controlling field dimensions before ordering or fabricating any material.
2. For footing layout and elevations, see "Foundation Details" sheets.
3. For curve data, see "General Plan" sheet.

BENCH MARKS

PT #865 Elevation 460.668 m

Found 25 mm iron pipe with Caltrans RP plug
North side of Box Springs Road.
N = 698034.479
E = 1903003.479

PT #3030 Elevation 472.840 m

Found 50 mm iron pipe with Brass Cap Stamped
"Dept of Trans RIV 60-12.7 1990"
34.14 m Southwesterly of bridge.
N = 697603.049
E = 1903554.738

Vertical Datum: NGVD-1929
Horizontal Datum: NAD-83, Zone 3(EPOCH 1984.0)

ALL DIMENSIONS ARE IN METERS UNLESS OTHERWISE SHOWN

GEOTECHNICAL PROFESSIONAL APPROVAL DATE 10/02/09

Robert Zezoff
DESIGN OVERSIGHT Robert Zezoff
10-22-09
SIGN OFF DATE

SCALE: 1:200	VERT.DATUM NAD 29	HORZ.DATUM NAD 83			
PHOTOGRAMMETRY AS OF: X		ALIGNMENT TIES X			
SURVEYED	BY J. Terry	DRAFTED	BY X		
FIELD CHECKED	BY M. Wilson	CHECKED	BY X		

DESIGN	BY John Bishop	CHECKED M. Maechler
DETAILS	BY C. Houghton	CHECKED M. Maechler
QUANTITIES	BY John Bishop	CHECKED N. Bieniek

PREPARED FOR THE STATE OF CALIFORNIA DEPARTMENT OF TRANSPORTATION

John Bishop
PROJECT ENGINEER

BRIDGE NO. 56-0082L
KILOMETER POST R62.2

BOX SPRINGS OVERHEAD (WIDEN)
FOUNDATION PLAN

FOUNDATION PLAN SHEET (METRIC) (REV. 10/27/05)

ORIGINAL SCALE IN MILLIMETERS FOR REDUCED PLANS 0 10 20 30 40 50 60 70 80 90 100

CU 08
EA 449311

DISREGARD PRINTS BEARING EARLIER REVISION DATES

REVISION DATES (PRELIMINARY STAGE ONLY) 7-20-07 8-15-07 2-29-08 6-27-08 1-15-08 10-3-08 2-3-09 4-20-09 8/28/09 10/2/09

SHEET 3 OF 31

FILE => 56-0082l-e-fdp101.dgn

USERNAME => rrlim DATE PLOTTED => 19-OCT-2010 TIME PLOTTED => 15:19

DIST	COUNTY	ROUTE	KILOMETER POST TOTAL PROJECT	SHEET No	TOTAL SHEETS
08	Riv	60,215	R19.7/21.9, R61.3/62.7	437	594

Caltrans Metric

John Bishop 10/02/09
REGISTERED CIVIL ENGINEER DATE

6-28-10
PLANS APPROVAL DATE

REGISTERED PROFESSIONAL ENGINEER J. S. BISHOP No. 50616 Exp. 9-30-11 CIVIL STATE OF CALIFORNIA

The State of California or its officers or agents shall not be responsible for the accuracy or completeness of electronic copies of this plan sheet.

Dokken Engineering
2365 Iron Point Rd, Suite 200
Folsom, CA 95630

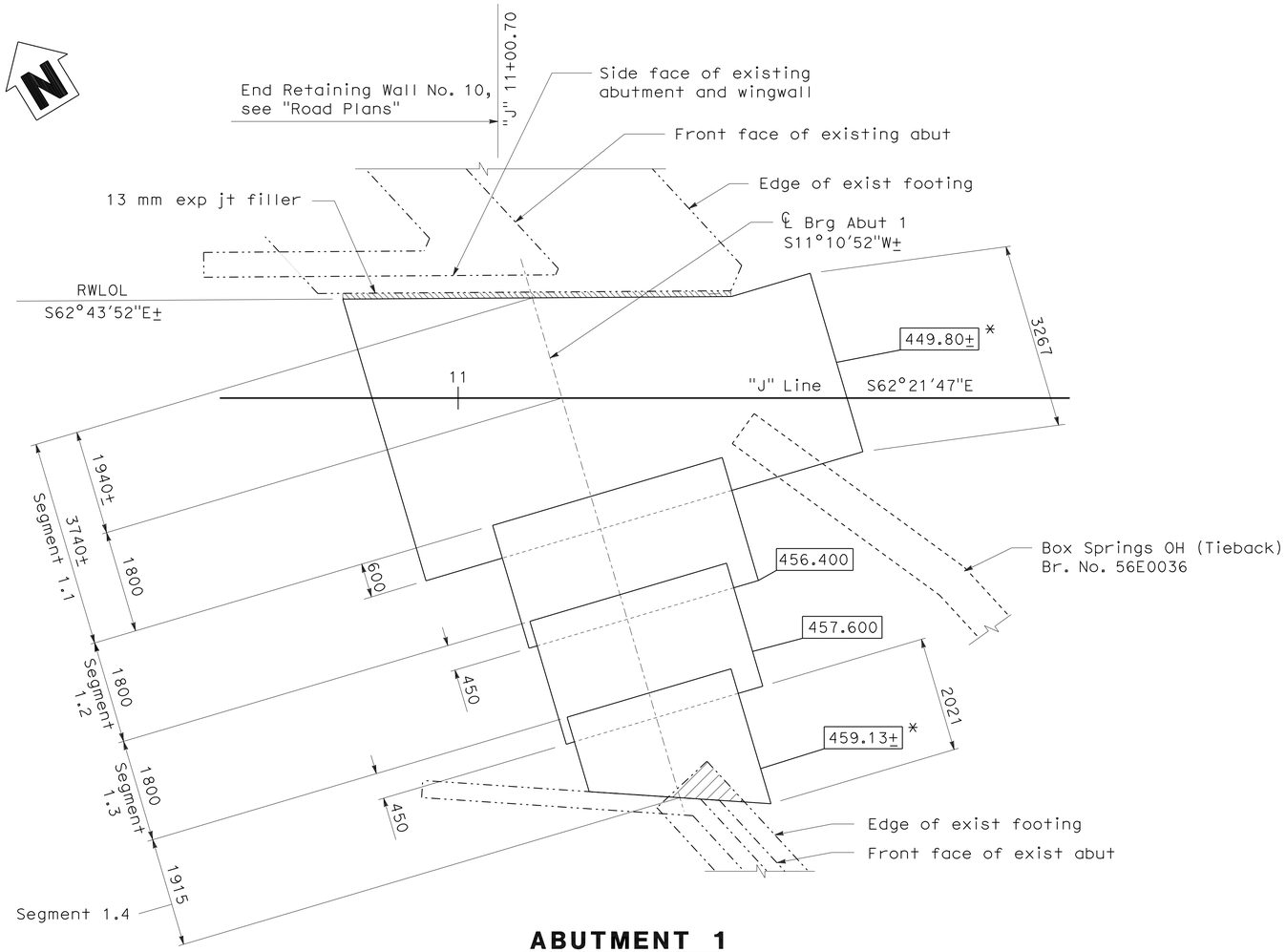

ABUTMENT 1

1:50

*Match exist bottom of footing elevation

NOTE:

1. The contractor shall verify all controlling field dimensions before ordering or fabricating any material.

LEGEND

Denotes bottom of footing elev

Denotes existing structure

Denotes portion of exist footing to be removed. Exist reinf to remain undamaged.

ALL DIMENSIONS ARE IN MILLIMETERS UNLESS OTHERWISE SHOWN

Robert Zezoff
DESIGN OVERSIGHT Robert Zezoff
10-22-09
SIGN OFF DATE

	BY	CHECKED
DESIGN	J. Bishop	M. Maechler
DETAILS	C. Houghton	M. Maechler
QUANTITIES	J. Bishop	N. Bieniek

PREPARED FOR THE STATE OF CALIFORNIA DEPARTMENT OF TRANSPORTATION

John Bishop
PROJECT ENGINEER

BRIDGE NO. 56-0082L
KILOMETER POST R62.2

BOX SPRINGS OVERHEAD (WIDEN)
ABUTMENT 1 FOOTING LAYOUT

DESIGN DETAIL SHEET (METRIC) (REV. 10/27/05)

ORIGINAL SCALE IN MILLIMETERS FOR REDUCED PLANS 0 10 20 30 40 50 60 70 80 90 100

CU 08
EA 449311

DISREGARD PRINTS BEARING EARLIER REVISION DATES

REVISION DATES (PRELIMINARY STAGE ONLY) 2-28-08 5-21-08 7-14-08 10-7-08 2-1-09 8/28/09 10/2/09

SHEET 4 OF 31

FILE => 56-0082l-e-fdp102.dgn

USERNAME => trlim DATE PLOTTED => 13-OCT-2010 TIME PLOTTED => 15:19

DIST	COUNTY	ROUTE	KILOMETER POST TOTAL PROJECT	SHEET No	TOTAL SHEETS
08	Riv	60,215	R19.7/21.9, R61.3/62.7	438	594

Caltrans Metric

John Bishop 10/02/09
REGISTERED CIVIL ENGINEER DATE

6-28-10
PLANS APPROVAL DATE

REGISTERED PROFESSIONAL ENGINEER J. S. BISHOP No. 50616 Exp. 9-30-11 CIVIL STATE OF CALIFORNIA

The State of California or its officers or agents shall not be responsible for the accuracy or completeness of electronic copies of this plan sheet.

Dokken Engineering
2365 Iron Point Rd, Suite 200
Folsom, CA 95630

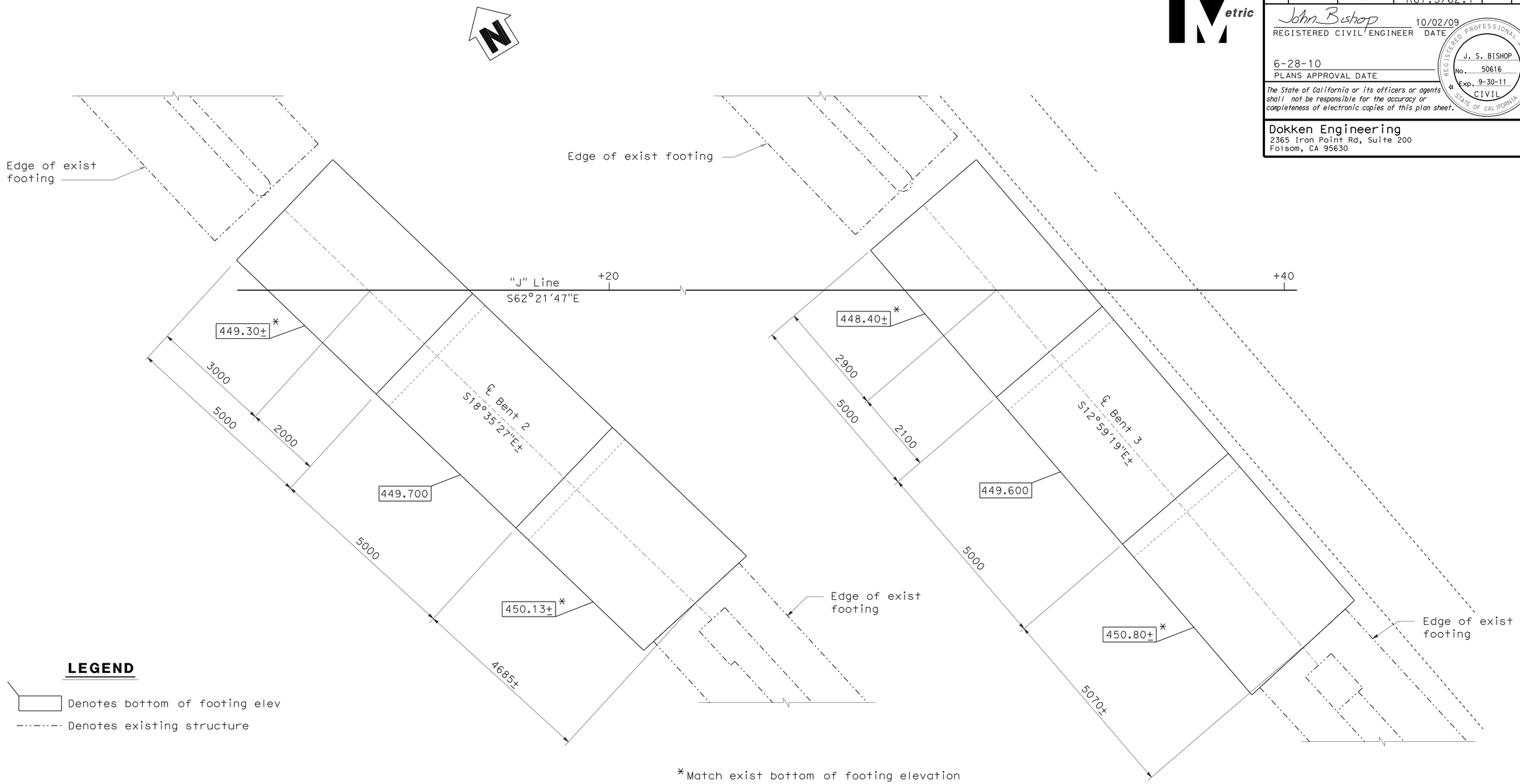

LEGEND

Denotes bottom of footing elev

Denotes existing structure

*Match exist bottom of footing elevation

BENT 2
1:50

BENT 3
1:50

NOTES:

1. The contractor shall verify all controlling field dimensions before ordering or fabricating any material.

ALL DIMENSIONS ARE IN MILLIMETERS UNLESS OTHERWISE SHOWN

Robert Zezoff
DESIGN OVERSIGHT Robert Zezoff
10-22-09
SIGN OFF DATE

	BY	CHECKED
DESIGN	J. Bishop	M. Maechler
DETAILS	C. Houghton	M. Maechler
QUANTITIES	J. Bishop	N. Bieniek

PREPARED FOR THE STATE OF CALIFORNIA DEPARTMENT OF TRANSPORTATION

John Bishop
PROJECT ENGINEER

BRIDGE NO. 56-0082L
KILOMETER POST R62.2

BOX SPRINGS OVERHEAD (WIDEN)
BENT FOOTING LAYOUT

DESIGN DETAIL SHEET (METRIC) (REV. 10/27/05)

ORIGINAL SCALE IN MILLIMETERS FOR REDUCED PLANS 0 10 20 30 40 50 60 70 80 90 100

CU 08
EA 449311

DISREGARD PRINTS BEARING EARLIER REVISION DATES

REVISION DATES (PRELIMINARY STAGE ONLY): 2-29-08 6-25-08 7-14-08 10-7-08 2-2-09 8/28/09 10/2/09

SHEET 5 OF 31

FILE => 56-0082l-e-fdp103.dgn

USERNAME => trrlm DATE PLOTTED => 19-OCT-2010 TIME PLOTTED => 15:19

DIST	COUNTY	ROUTE	KILOMETER POST TOTAL PROJECT	SHEET No	TOTAL SHEETS
08	Riv	60,215	R19.7/21.9, R61.3/62.7	439	594

Caltrans Metric

John Bishop 10/02/09
REGISTERED CIVIL ENGINEER DATE

6-28-10
PLANS APPROVAL DATE

REGISTERED PROFESSIONAL ENGINEER J. S. BISHOP No. 50616 Exp. 9-30-11 CIVIL STATE OF CALIFORNIA

The State of California or its officers or agents shall not be responsible for the accuracy or completeness of electronic copies of this plan sheet.

Dokken Engineering
2365 Iron Point Rd, Suite 200
Folsom, CA 95630

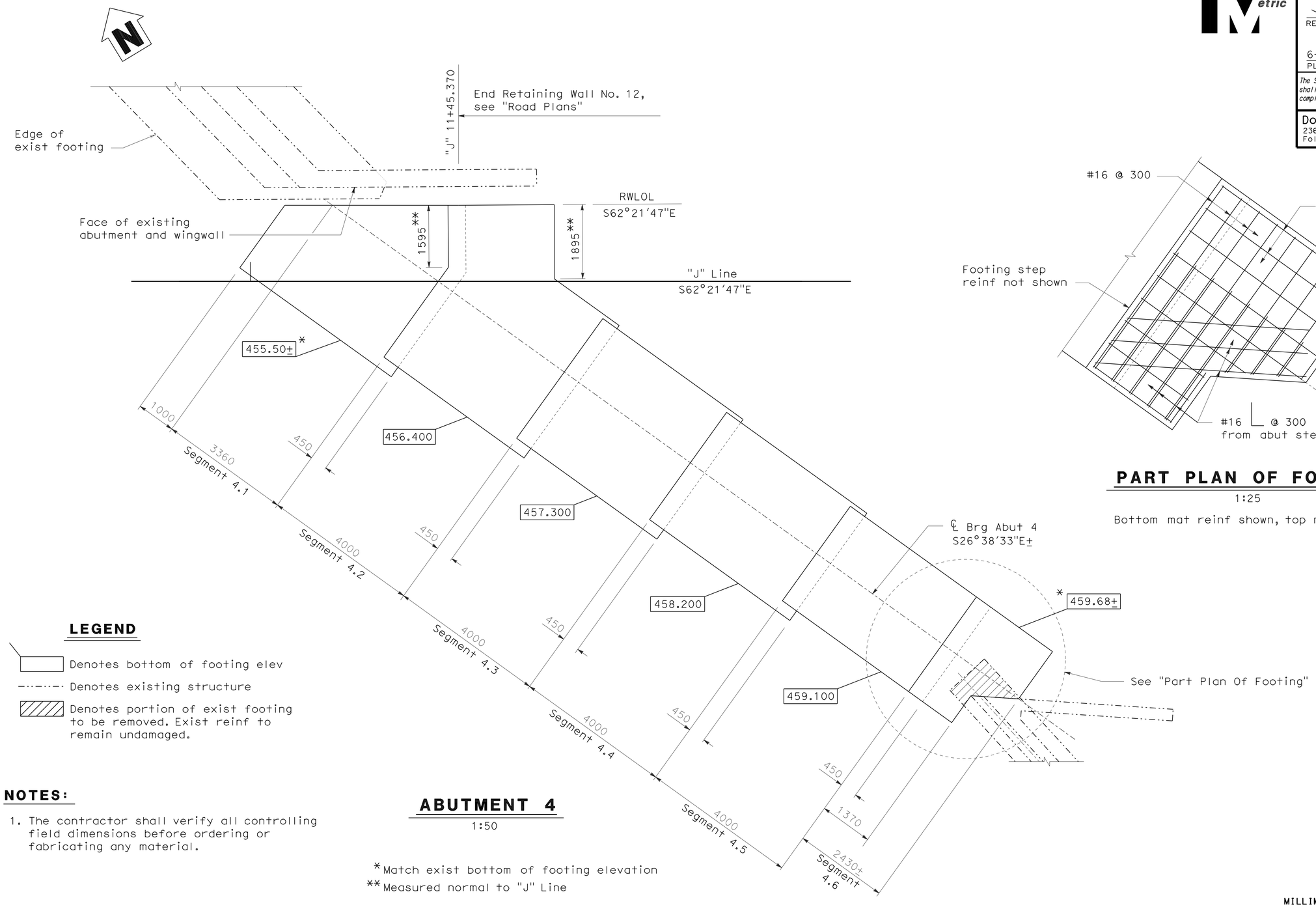

ABUTMENT 4

1:50

*Match exist bottom of footing elevation
**Measured normal to "J" Line

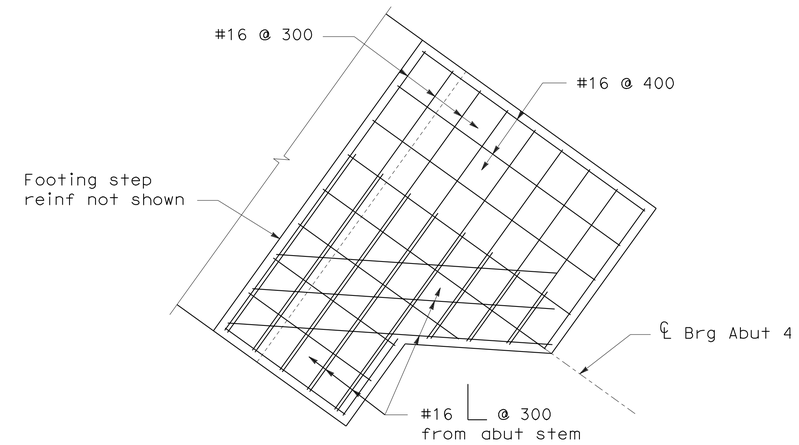

PART PLAN OF FOOTING

1:25

Bottom mat reinf shown, top mat similar

LEGEND

- Denotes bottom of footing elev
- Denotes existing structure
- Denotes portion of exist footing to be removed. Exist reinf to remain undamaged.

NOTES:

1. The contractor shall verify all controlling field dimensions before ordering or fabricating any material.

ALL DIMENSIONS ARE IN MILLIMETERS UNLESS OTHERWISE SHOWN

Robert Zezoff
DESIGN OVERSIGHT Robert Zezoff
10-22-09
SIGN OFF DATE

	BY	CHECKED
DESIGN	J. Bishop	M. Maechler
DETAILS	C. Houghton	M. Maechler
QUANTITIES	J. Bishop	N. Bieniek

PREPARED FOR THE STATE OF CALIFORNIA DEPARTMENT OF TRANSPORTATION

John Bishop
PROJECT ENGINEER

BRIDGE NO. 56-0082L
KILOMETER POST R62.2

BOX SPRINGS OVERHEAD (WIDEN)
ABUTMENT 4 FOOTING LAYOUT

DESIGN DETAIL SHEET (METRIC) (REV. 10/27/05)

ORIGINAL SCALE IN MILLIMETERS FOR REDUCED PLANS 0 10 20 30 40 50 60 70 80 90 100

CU 08
EA 449311

DISREGARD PRINTS BEARING EARLIER REVISION DATES

REVISION DATES (PRELIMINARY STAGE ONLY) 2-28-08 5-28-08 7-14-08 10-8-08 2-2-09 8/28/09 10/2/09

SHEET 6 OF 31

FILE => 56-0082l-e-fdp104.dgn

USERNAME => trilim DATE PLOTTED => 19-OCT-2010 TIME PLOTTED => 15:20

DIST	COUNTY	ROUTE	KILOMETER POST TOTAL PROJECT	SHEET No	TOTAL SHEETS
08	Riv	60,215	R19.7/21.9, R61.3/62.7	440	594

Caltrans Metric

John Bishop 10/02/09
REGISTERED CIVIL ENGINEER DATE

6-28-10
PLANS APPROVAL DATE

REGISTERED PROFESSIONAL ENGINEER J. S. BISHOP No. 50616 Exp. 9-30-11 CIVIL STATE OF CALIFORNIA

The State of California or its officers or agents shall not be responsible for the accuracy or completeness of electronic copies of this plan sheet.

Dokken Engineering
2365 Iron Point Rd, Suite 200
Folsom, CA 95630

LEGEND

Denotes existing structure

Denotes portion of exist bridge to be removed.

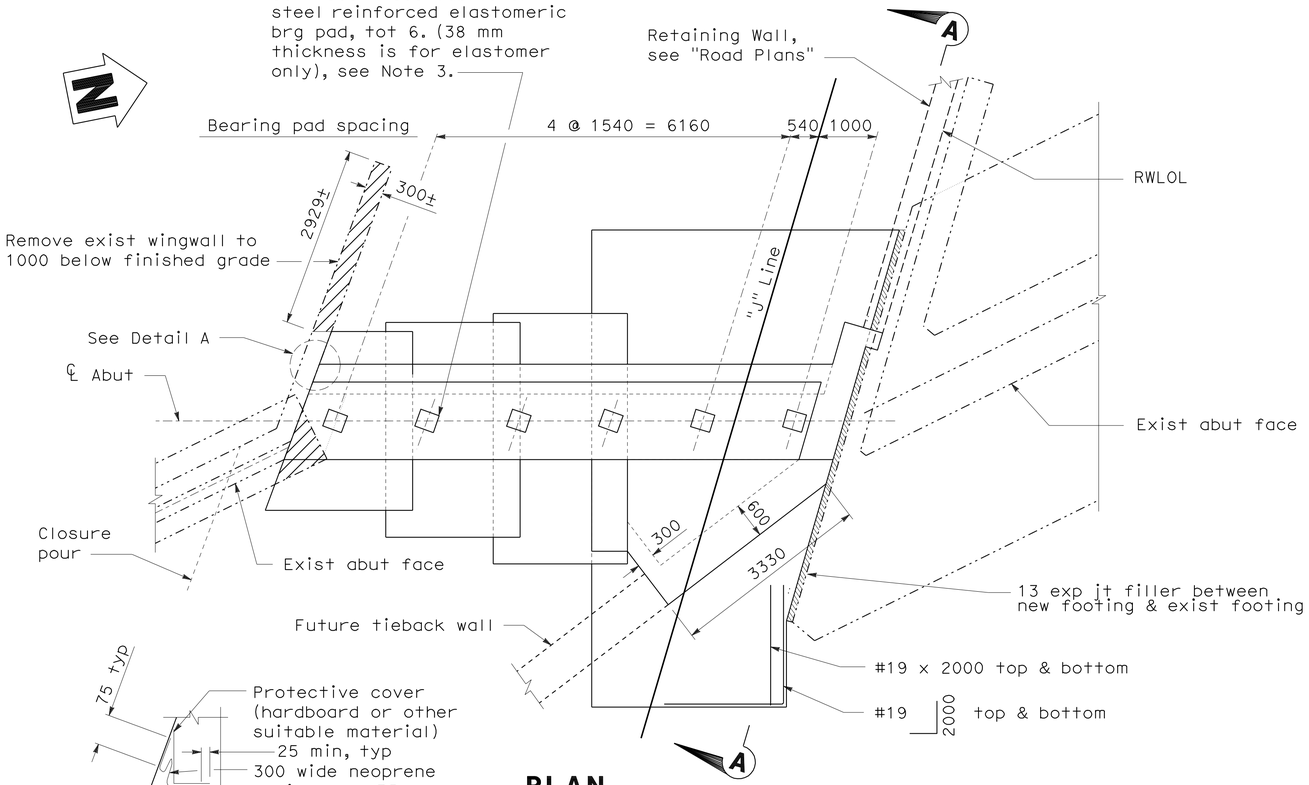

PLAN

1:50

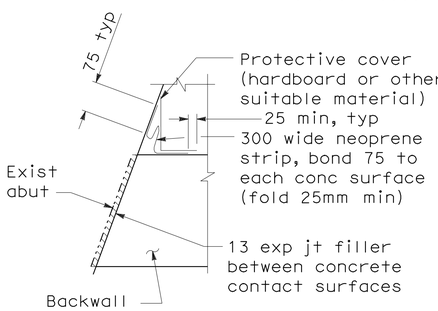

DETAIL A

No Scale

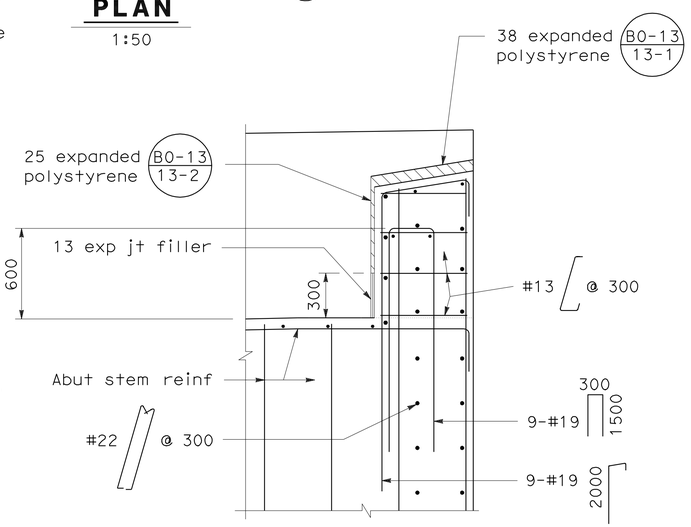

EXTERNAL SHEAR KEY

1:20

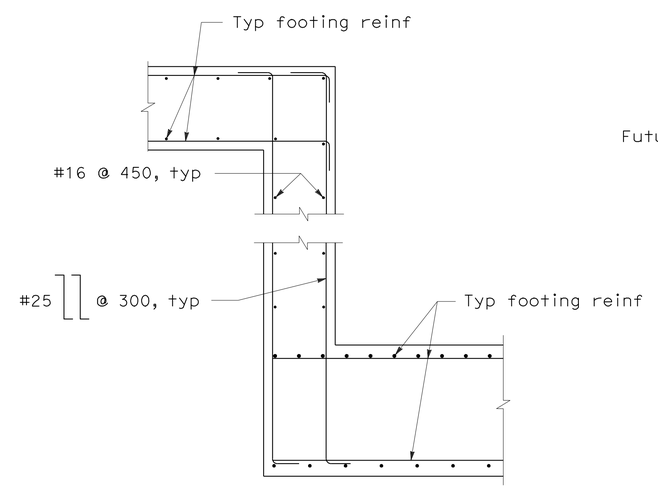

FOOTING STEP DETAIL

1:25

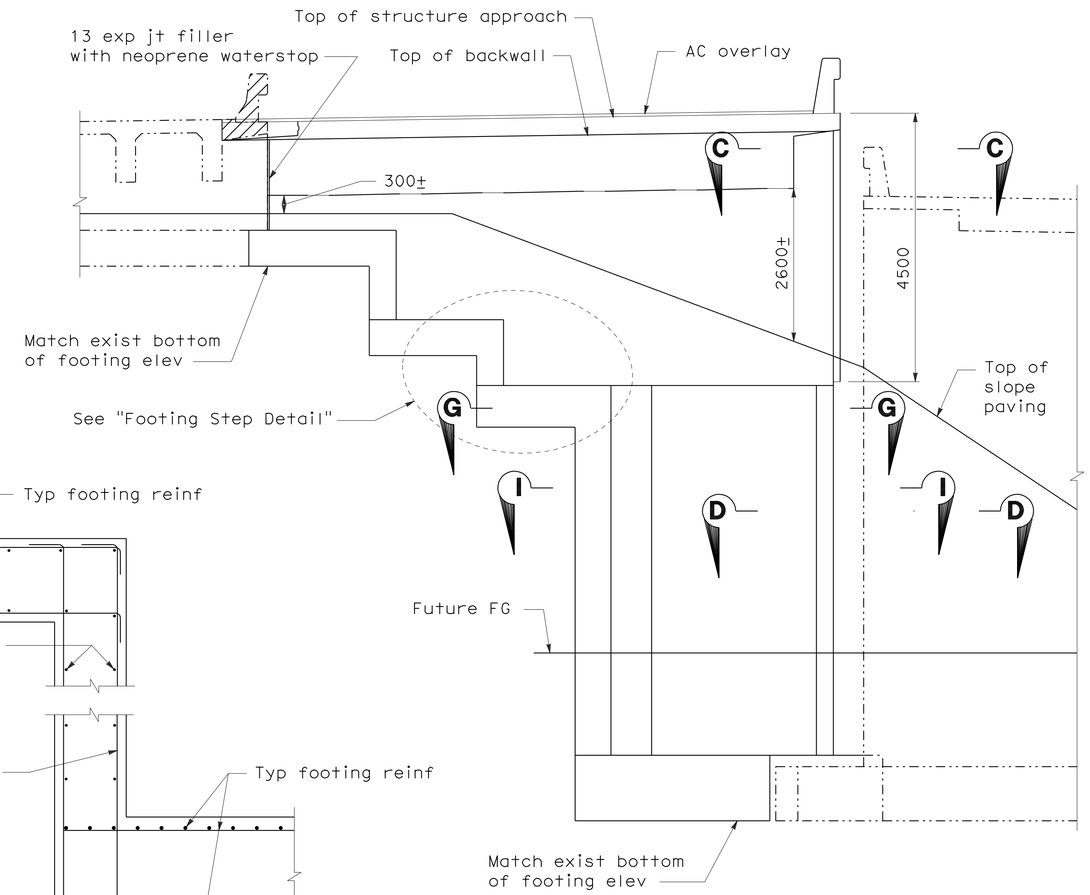

ELEVATION

1:50

NOTES:

1. The contractor shall verify all controlling field dimensions before ordering or fabricating any material.
2. For Sections A-A, C-C and D-D see "Abutment Details No. 3" sheet.
3. For bearing pad details, see "Abutment Details No. 2" sheet.
4. For Sections I-I & G-G, see "Abutment Details No. 4" sheet.
5. Remove expanded polystyrene 150 from exposed surfaces.

ALL DIMENSIONS ARE IN MILLIMETERS UNLESS OTHERWISE SHOWN

Robert Zezoff
DESIGN OVERSIGHT Robert Zezoff
10-22-09
SIGN OFF DATE

	BY	CHECKED
DESIGN	J. Bishop	M. Maechler
DETAILS	C. Houghton	M. Maechler
QUANTITIES	J. Bishop	N. Bieniek

PREPARED FOR THE STATE OF CALIFORNIA DEPARTMENT OF TRANSPORTATION

John Bishop
PROJECT ENGINEER

BRIDGE NO. 56-0082L
KILOMETER POST R62.2

BOX SPRINGS OVERHEAD (WIDEN)
ABUTMENT 1 LAYOUT

DESIGN DETAIL SHEET (METRIC) (REV. 10/27/05)

ORIGINAL SCALE IN MILLIMETERS FOR REDUCED PLANS 0 10 20 30 40 50 60 70 80 90 100

CU 08
EA 449311

DISREGARD PRINTS BEARING EARLIER REVISION DATES

REVISION DATES (PRELIMINARY STAGE ONLY) 2-28-08 6-27-08 7-14-08 10-6-08 2-2-09 4-24-09 8/28/09 10/2/09

SHEET 7 OF 31

FILE => 56-0082l-f-a01_lol1.dgn

USERNAME => trilim DATE PLOTTED => 19-OCT-2010 TIME PLOTTED => 15:20

DIST	COUNTY	ROUTE	KILOMETER POST TOTAL PROJECT	SHEET No	TOTAL SHEETS
08	Riv	60,215	R19.7/21.9, R61.3/62.7	441	594

Caltrans Metric

John Bishop 10/02/09
REGISTERED CIVIL ENGINEER DATE

6-28-10
PLANS APPROVAL DATE

REGISTERED PROFESSIONAL ENGINEER J. S. BISHOP No. 50616 Exp. 9-30-11 CIVIL STATE OF CALIFORNIA

The State of California or its officers or agents shall not be responsible for the accuracy or completeness of electronic copies of this plan sheet.

Dokken Engineering
2365 Iron Point Rd, Suite 200
Folsom, CA 95630

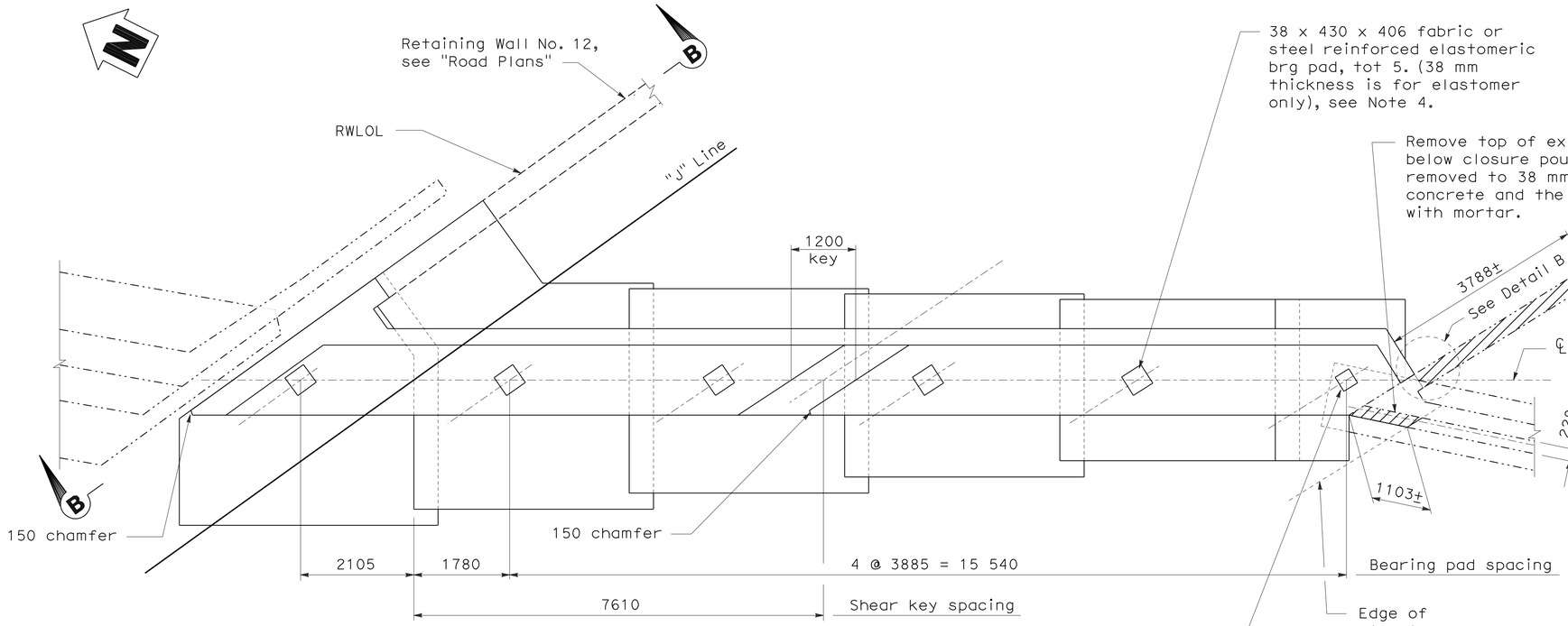

PLAN
1:50

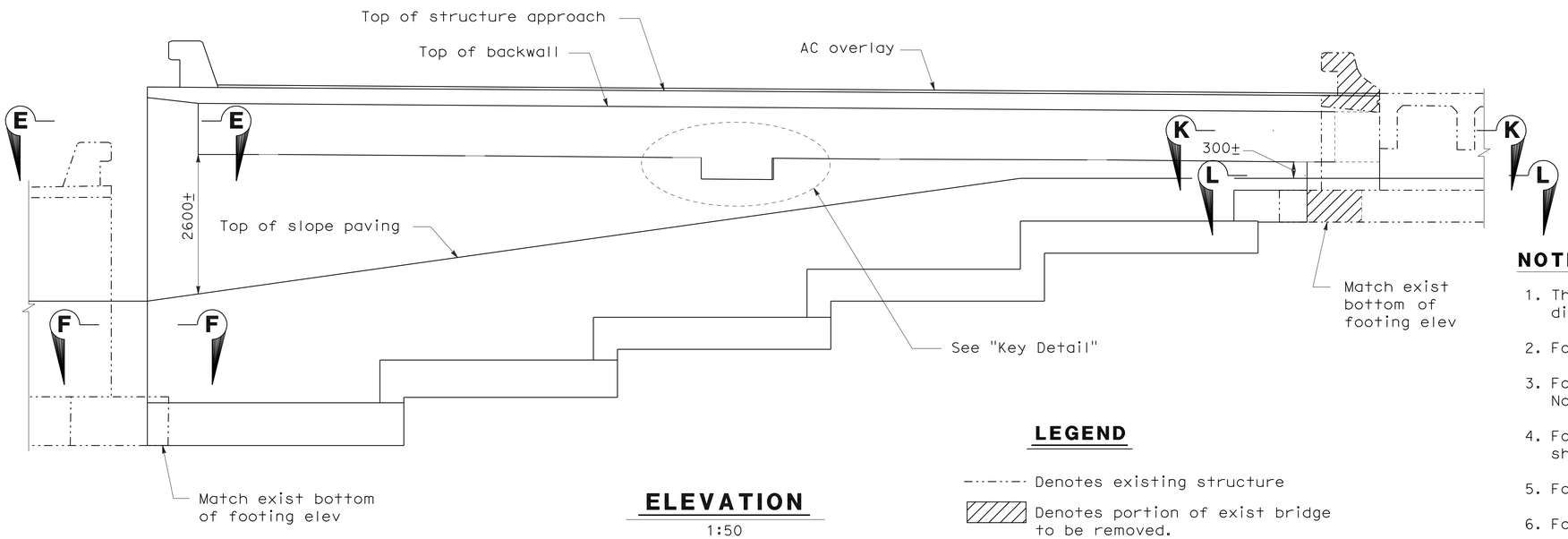

ELEVATION
1:50

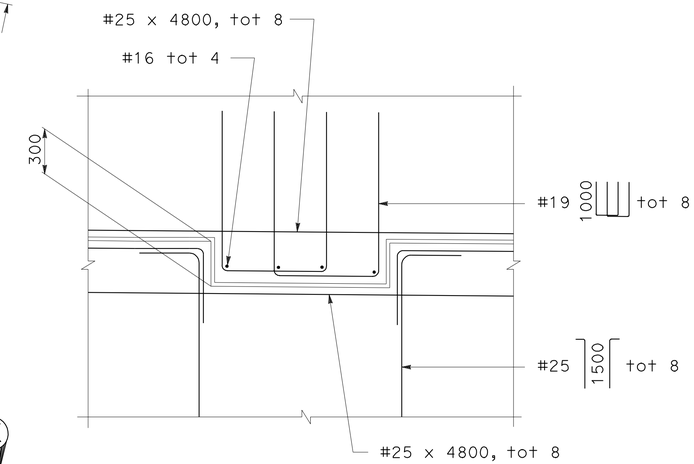

KEY DETAIL
No Scale

LEGEND

Denotes existing structure

Denotes portion of exist bridge to be removed.

NOTES:

1. The contractor shall verify all controlling field dimensions before ordering or fabricating any material.
2. For Section B-B, see "Abutment Details No. 3" sheet.
3. For Sections E-E, F-F, K-K and L-L see "Abutment Details No. 4" sheet.
4. For bearing pad details, see "Abutment Details No. 2" sheet.
5. For external shear key detail, see "Abutment 1 Layout" sheet.
6. For "Detail B", see "Abutment Details No. 3" sheet.

ALL DIMENSIONS ARE IN MILLIMETERS UNLESS OTHERWISE SHOWN

Robert Zezoff
DESIGN OVERSIGHT Robert Zezoff
10-22-09
SIGN OFF DATE

	BY	CHECKED
DESIGN	J. Bishop	M. Maechler
DETAILS	C. Houghton	M. Maechler
QUANTITIES	J. Bishop	N. Bieniek

PREPARED FOR THE STATE OF CALIFORNIA DEPARTMENT OF TRANSPORTATION

John Bishop
PROJECT ENGINEER

BRIDGE NO. 56-0082L
KILOMETER POST R62.2

BOX SPRINGS OVERHEAD (WIDEN)
ABUTMENT 4 LAYOUT

DESIGN DETAIL SHEET (METRIC) (REV. 10/27/05)

ORIGINAL SCALE IN MILLIMETERS FOR REDUCED PLANS 0 10 20 30 40 50 60 70 80 90 100

CU 08
EA 449311

DISREGARD PRINTS BEARING EARLIER REVISION DATES

REVISION DATES (PRELIMINARY STAGE ONLY): 2-25-08 6-25-08 7-14-08 10-1-08 2-1-09 4-20-09 8/20/09 10/2/09

SHEET 8 OF 31

FILE => 56-0082l-f-a01_lol2.dgn

USERNAME => trilm DATE PLOTTED => 19-OCT-2010 TIME PLOTTED => 15:20

DIST	COUNTY	ROUTE	KILOMETER POST TOTAL PROJECT	SHEET No	TOTAL SHEETS
08	Riv	60,215	R19.7/21.9, R61.3/62.7	442	594

Caltrans Metric

John Bishop 10/02/09
REGISTERED CIVIL ENGINEER DATE

6-28-10
PLANS APPROVAL DATE

REGISTERED PROFESSIONAL ENGINEER J. S. BISHOP No. 50616 Exp. 9-30-11 CIVIL STATE OF CALIFORNIA

The State of California or its officers or agents shall not be responsible for the accuracy or completeness of electronic copies of this plan sheet.

Dokken Engineering
2365 Iron Point Rd, Suite 200
Folsom, CA 95630

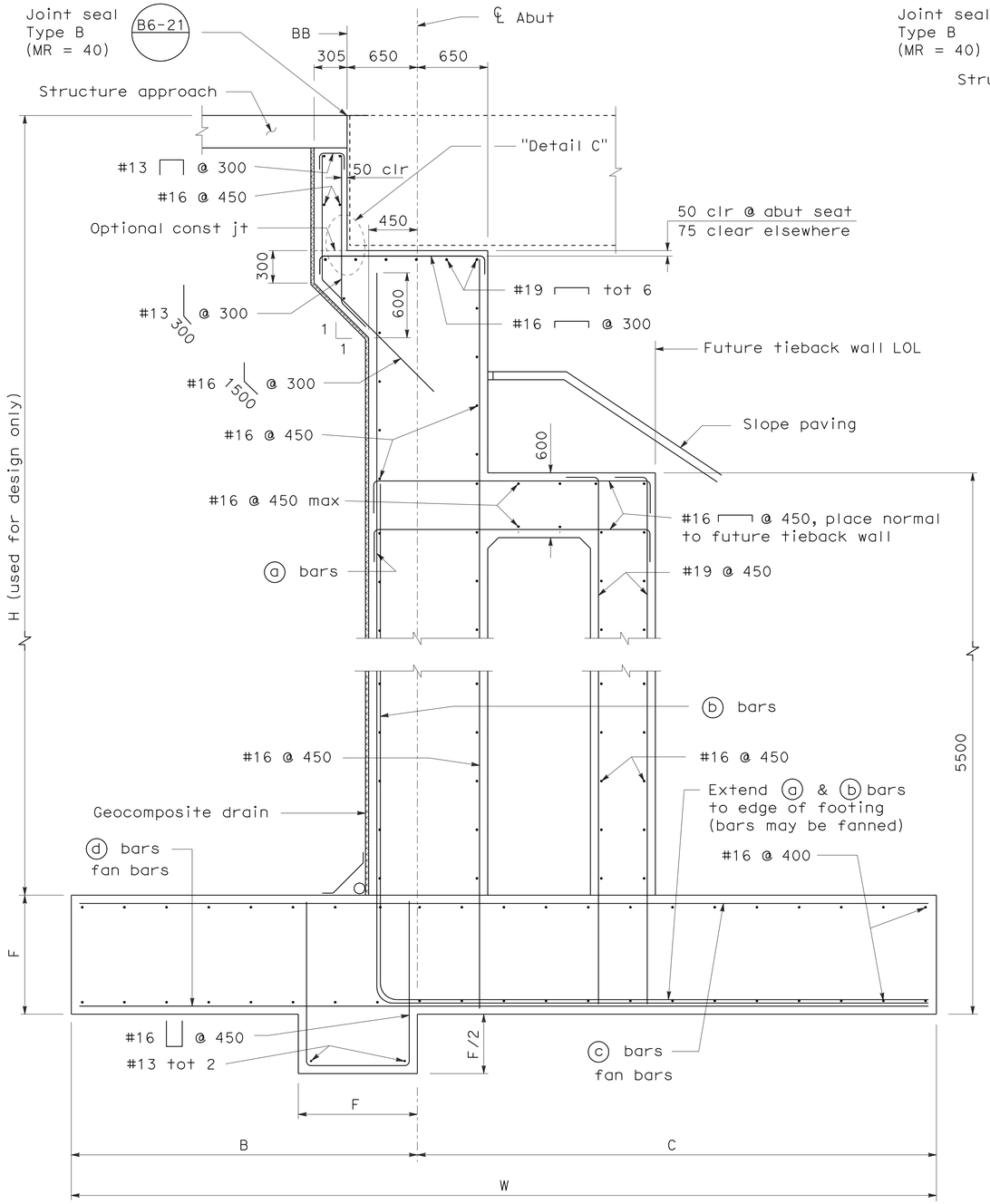

TYPICAL SECTION - SEGMENT 1.1

1:25

NOTE:

For segment location, see "Abutment 1 Footing Layout" sheet.

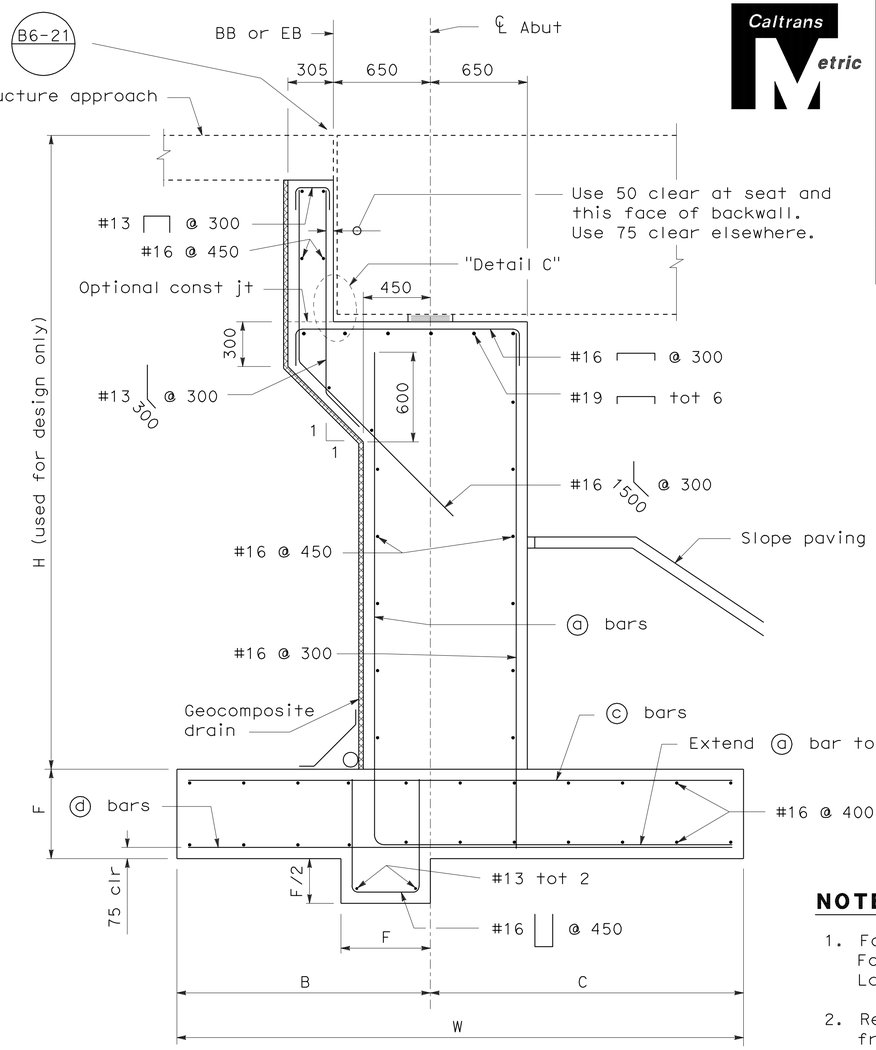

TYPICAL SECTION
SEGMENTS 1.2, 1.3, 4.1, 4.2, 4.3 & 4.4

1:20

NOTES:

1. For segment locations, see "Abutment 1 Footing Layout" and "Abutment 4 Footing Layout" sheet.
2. Remove all exposed polystyrene 300 mm from surface.

NOTES:

1. The contractor shall verify all controlling field dimensions before ordering or fabricating any material.
2. For Detail C, see "Abutment Details No. 2" sheet.
3. For table of reinforcing steel, dimensions and data, see "Abutment Details No. 2" sheet.
4. For "Section G-G", see "Abutment Details No. 4" sheet.

ALL DIMENSIONS ARE IN MILLIMETERS UNLESS OTHERWISE SHOWN

Robert Zezoff
DESIGN OVERSIGHT Robert Zezoff
10-22-09
SIGN OFF DATE

	BY	CHECKED
DESIGN	J. Bishop	M. Maechler
DETAILS	C. Houghton	M. Maechler
QUANTITIES	J. Bishop	N. Bieniek

PREPARED FOR THE STATE OF CALIFORNIA DEPARTMENT OF TRANSPORTATION

John Bishop
PROJECT ENGINEER

BRIDGE NO. 56-0082L
KILOMETER POST R62.2

BOX SPRINGS OVERHEAD (WIDEN)
ABUTMENT DETAILS NO. 1

DESIGN DETAIL SHEET (METRIC) (REV. 10/27/05)

ORIGINAL SCALE IN MILLIMETERS FOR REDUCED PLANS 0 10 20 30 40 50 60 70 80 90 100

CU 08
EA 449311

DISREGARD PRINTS BEARING EARLIER REVISION DATES

REVISION DATES (PRELIMINARY STAGE ONLY): 2-22-08 6-27-08 7-14-08 10-7-08 2-2-09 4-27-09 8/28/09 10/2/09

SHEET 9 OF 31

FILE => 56-0082l-f-a01dt01.dgn

USERNAME => trlim DATE PLOTTED => 19-OCT-2010 TIME PLOTTED => 15:20

DIST	COUNTY	ROUTE	KILOMETER POST TOTAL PROJECT	SHEET No	TOTAL SHEETS
08	Riv	60,215	R19.7/21.9, R61.3/62.7	443	594

Caltrans Metric

John Bishop 10/02/09
REGISTERED CIVIL ENGINEER DATE

6-28-10
PLANS APPROVAL DATE

REGISTERED PROFESSIONAL ENGINEER J. S. BISHOP No. 50616 Exp. 9-30-11 CIVIL STATE OF CALIFORNIA

The State of California or its officers or agents shall not be responsible for the accuracy or completeness of electronic copies of this plan sheet.

Dokken Engineering
2365 Iron Point Rd, Suite 200
Folsom, CA 95630

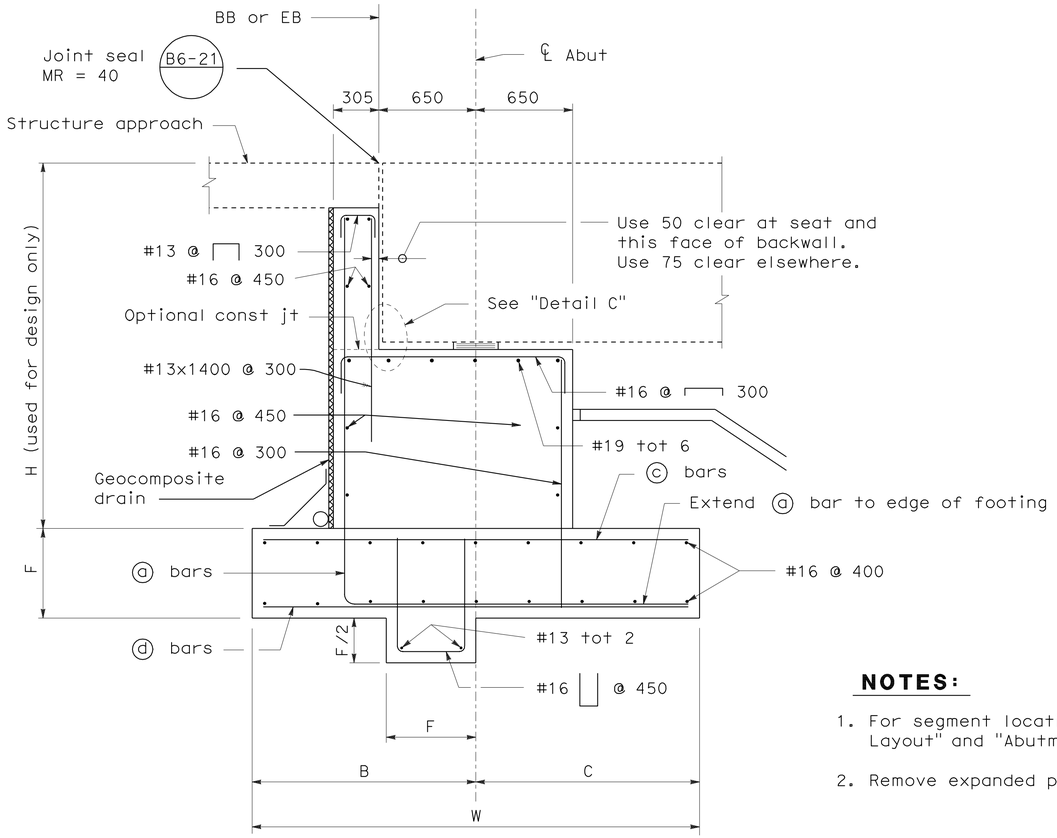

TYPICAL SECTION SEGMENTS 1.4, 4.5, & 4.6

1:20

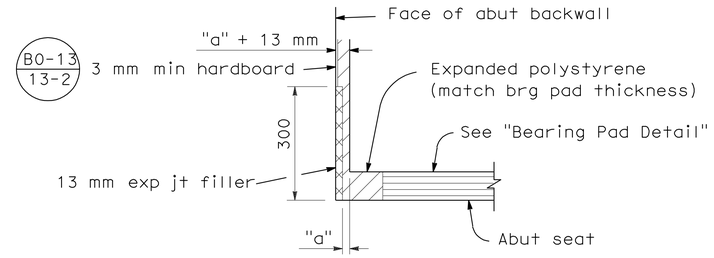

DETAIL C

No Scale

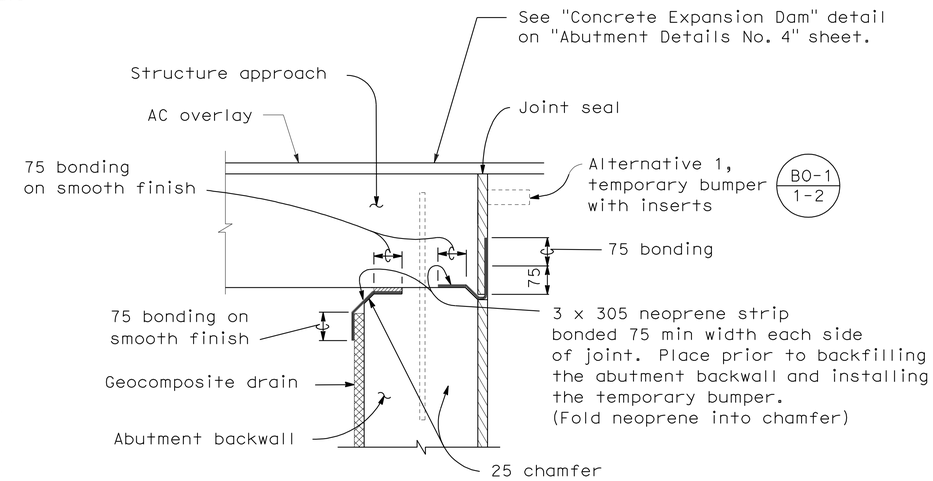

JOINT PROTECTION DETAIL

No Scale

NOTES:

1. For segment locations, see "Abutment 1 Footing Layout" and "Abutment 4 Footing Layout" sheet.
2. Remove expanded polystyrene 150 from exposed surfaces.

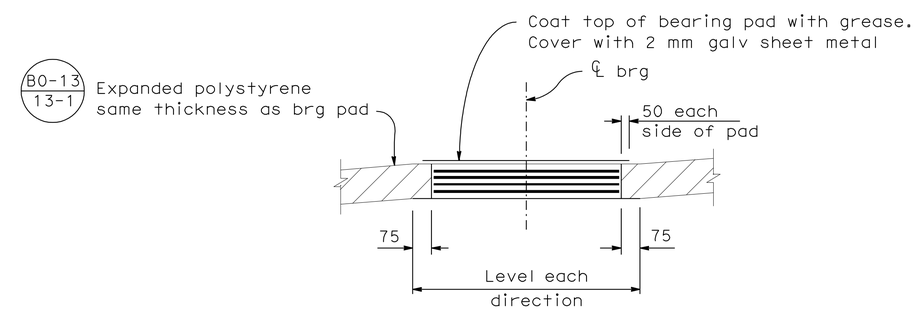

BEARING PAD DETAIL

No Scale

TABLE OF REINFORCING STEEL DIMENSIONS AND DATA

LOCATION	ABUTMENT 1				ABUTMENT 4					
Segment	1.1	1.2	1.3	1.4	4.1	4.2	4.3	4.4	4.5	4.6
Design H	10 700	4500	3400	2200	6000	5200	4300	3400	2500	1900
W	8000	4200	3600	3000	4600	4200	3800	3400	3000	3000
C	4800	2200	1800	1500	2700	2400	2100	1800	1500	1500
B	3200	2000	1800	1500	1900	1800	1700	1600	1500	1500
F	1100	700	600	600	800	700	600	600	600	600
ⓐ bars	#36@200 max	#25@300	#19@300	#16@300	#32@300	#25@300	#22@300	#19@300	#16@300	#16@300
ⓑ bars	#36@200 max	-	-	-	-	-	-	-	-	-
ⓒ bars	#25@200 max	#19@300	#16@300	#16@300	#19@300	#19@300	#19@300	#16@300	#16@300	#16@300
ⓓ bars	#22@300 max	#22@300	#19@300	#16@300	#22@300	#19@300	#19@300	#19@300	#16@300	#16@300
Max Toe Pressure (KPa)	240	200	175	175	225	160	135	125	125	125

ALL DIMENSIONS ARE IN MILLIMETERS UNLESS OTHERWISE SHOWN

Robert Zezoff
DESIGN OVERSIGHT Robert Zezoff
10-22-09
SIGN OFF DATE

	BY	CHECKED
DESIGN	J. Bishop	M. Maechler
DETAILS	C. Houghton	M. Maechler
QUANTITIES	J. Bishop	N. Bieniek

PREPARED FOR THE STATE OF CALIFORNIA DEPARTMENT OF TRANSPORTATION

John Bishop
PROJECT ENGINEER

BRIDGE NO. 56-0082L
KILOMETER POST R62.2

BOX SPRINGS OVERHEAD (WIDEN)
ABUTMENT DETAILS NO. 2

DESIGN DETAIL SHEET (METRIC) (REV. 10/27/05)

ORIGINAL SCALE IN MILLIMETERS FOR REDUCED PLANS 0 10 20 30 40 50 60 70 80 90 100

CU 08
EA 449311

DISREGARD PRINTS BEARING EARLIER REVISION DATES
REVISION DATES (PRELIMINARY STAGE ONLY) 2-20-08 6-27-08 7-14-08 10-7-08 2-2-09 4-27-09 8/14/09 10/2/09

SHEET 10 OF 31

FILE => 56-0082l-f-a01dt02.dgn

USERNAME => trlim DATE PLOTTED => 19-Oct-2010 TIME PLOTTED => 15:20

DIST	COUNTY	ROUTE	KILOMETER POST TOTAL PROJECT	SHEET No	TOTAL SHEETS
08	Riv	60,215	R19.7/21.9, R61.3/62.7	444	594

Caltrans Metric

John Bishop 10/02/09
REGISTERED CIVIL ENGINEER DATE

6-28-10
PLANS APPROVAL DATE

REGISTERED PROFESSIONAL ENGINEER J. S. BISHOP No. 50616 Exp. 9-30-11 CIVIL STATE OF CALIFORNIA

The State of California or its officers or agents shall not be responsible for the accuracy or completeness of electronic copies of this plan sheet.

Dokken Engineering
2365 Iron Point Rd, Suite 200
Folsom, CA 95630

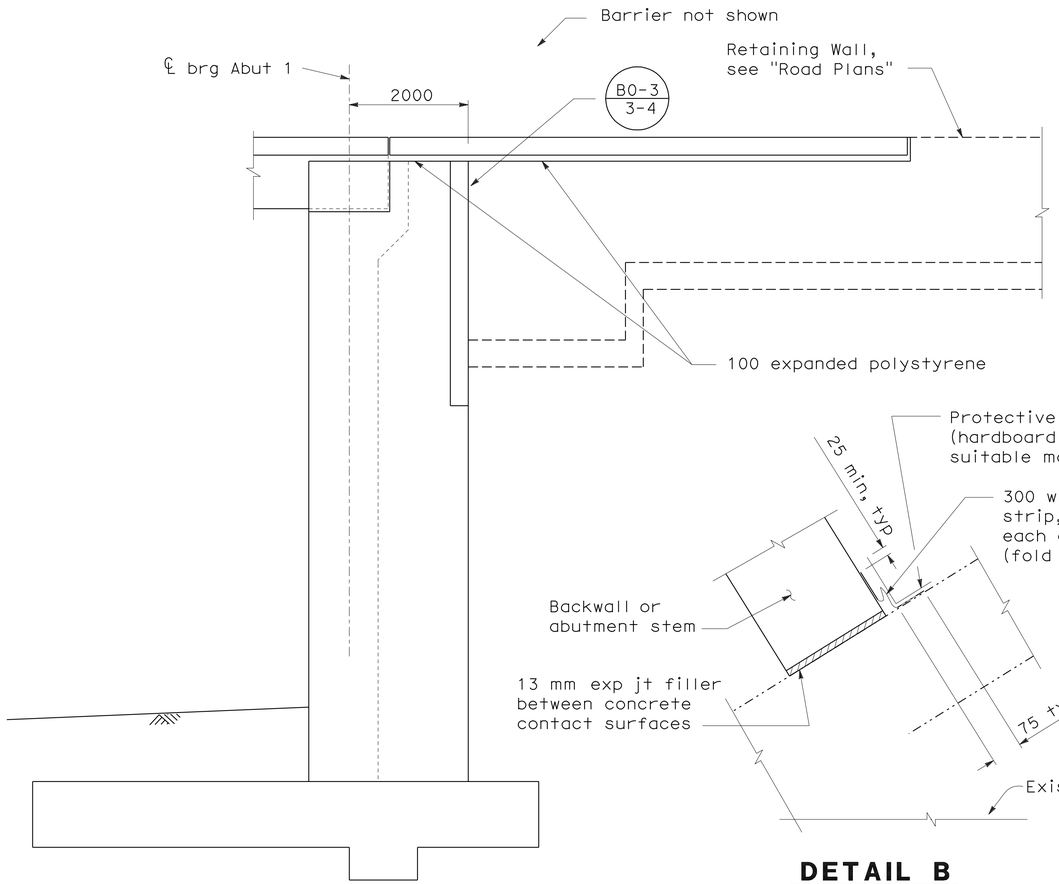

SECTION A-A

1:50

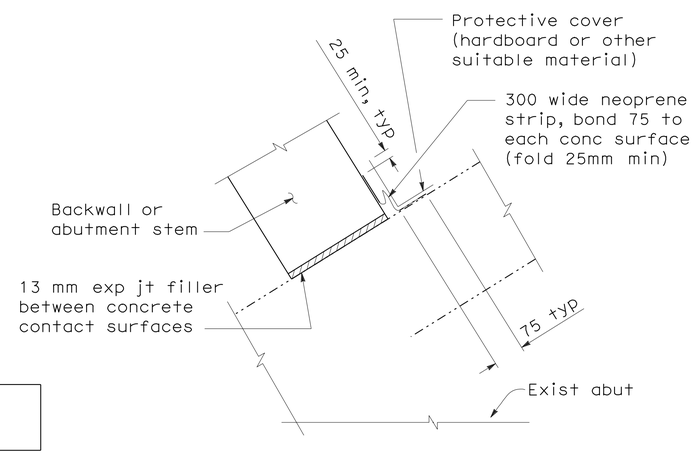

DETAIL B

No Scale

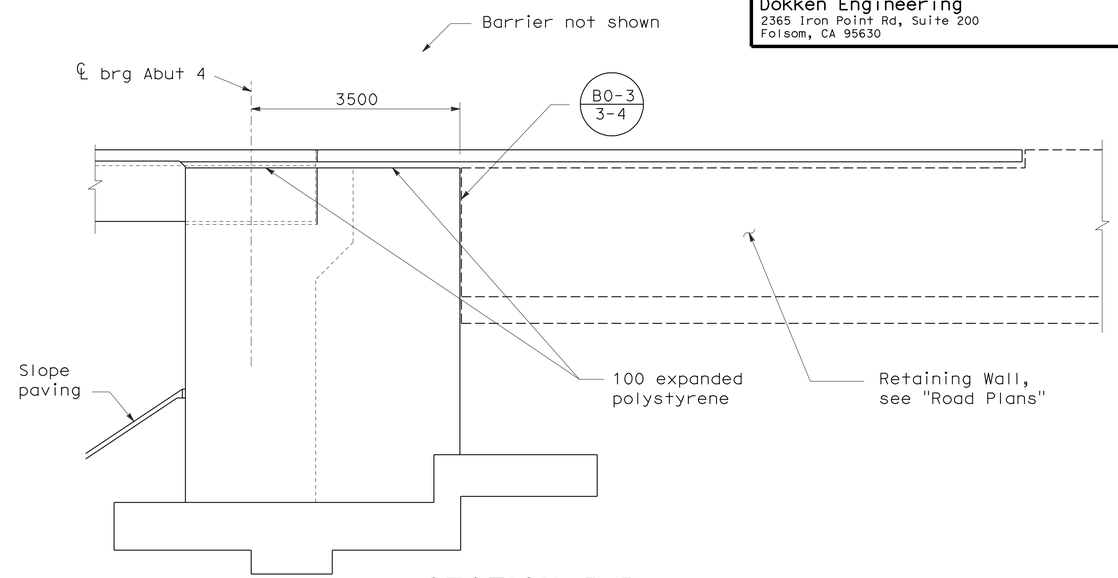

SECTION B-B

1:50

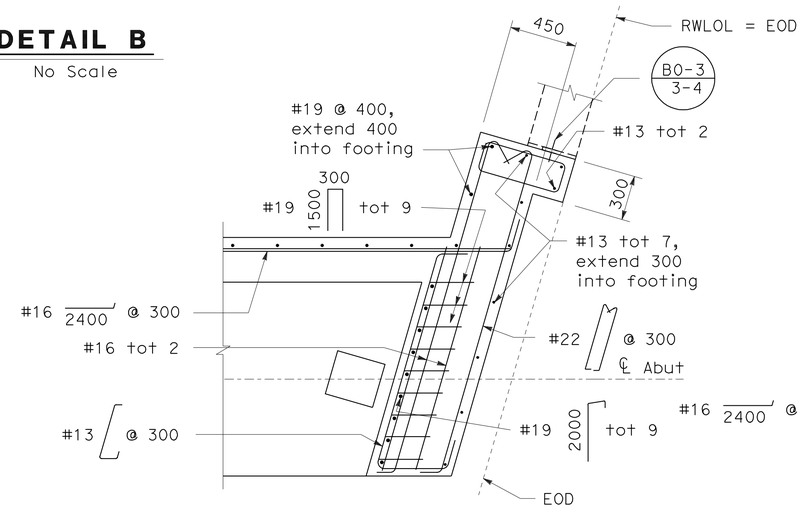

SECTION C-C

1:20

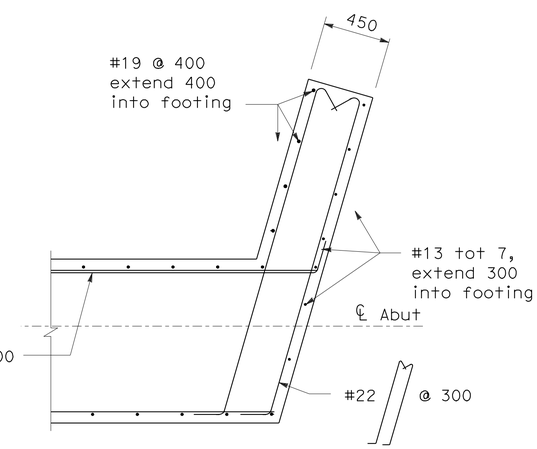

SECTION D-D

1:20

ALL DIMENSIONS ARE IN MILLIMETERS UNLESS OTHERWISE SHOWN

NOTES:

1. The contractor shall verify all controlling field dimensions before ordering or fabricating any material.
2. Remove expanded polystyrene 150 from exposed surfaces.

Robert Zezoff
DESIGN OVERSIGHT Robert Zezoff
10-22-09
SIGN OFF DATE

	BY	CHECKED
DESIGN	J. Bishop	M. Maechler
DETAILS	C. Houghton	M. Maechler
QUANTITIES	J. Bishop	N. Bieniek

PREPARED FOR THE STATE OF CALIFORNIA DEPARTMENT OF TRANSPORTATION

John Bishop
PROJECT ENGINEER

BRIDGE NO. 56-0082L
KILOMETER POST R62.2

BOX SPRINGS OVERHEAD (WIDEN)
ABUTMENT DETAILS NO. 3

DESIGN DETAIL SHEET (METRIC) (REV. 10/27/05)

ORIGINAL SCALE IN MILLIMETERS FOR REDUCED PLANS 0 10 20 30 40 50 60 70 80 90 100

CU 08
EA 449311

DISREGARD PRINTS BEARING EARLIER REVISION DATES

REVISION DATES (PRELIMINARY STAGE ONLY) 2-28-08 5-28-08 7-14-08 10-6-08 2-2-09 4-28-09 8/28/09 10/2/09

SHEET 11 OF 31

FILE => 56-0082l-f-a01dt03.dgn

USERNAME => trilim DATE PLOTTED => 19-OCT-2010 TIME PLOTTED => 15:20

DIST	COUNTY	ROUTE	KILOMETER POST TOTAL PROJECT	SHEET No	TOTAL SHEETS
08	Riv	60,215	R19.7/21.9, R61.3/62.7	445	594

Caltrans Metric

John Bishop 10/02/09
REGISTERED CIVIL ENGINEER DATE

6-28-10
PLANS APPROVAL DATE

REGISTERED PROFESSIONAL ENGINEER J. S. BISHOP No. 50616 Exp. 9-30-11 CIVIL STATE OF CALIFORNIA

The State of California or its officers or agents shall not be responsible for the accuracy or completeness of electronic copies of this plan sheet.

Dokken Engineering
2365 Iron Point Rd, Suite 200
Folsom, CA 95630

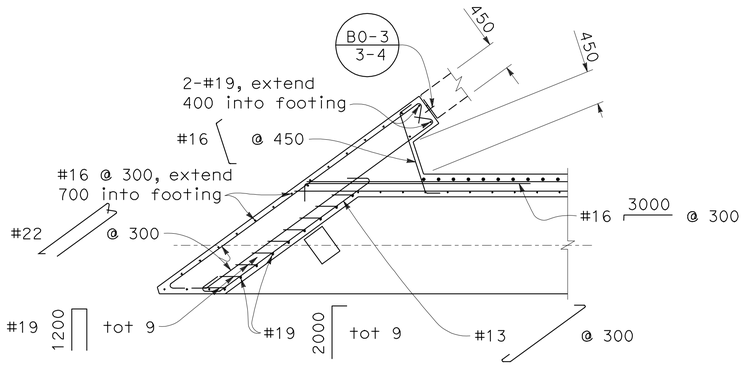

SECTION E-E

1:40

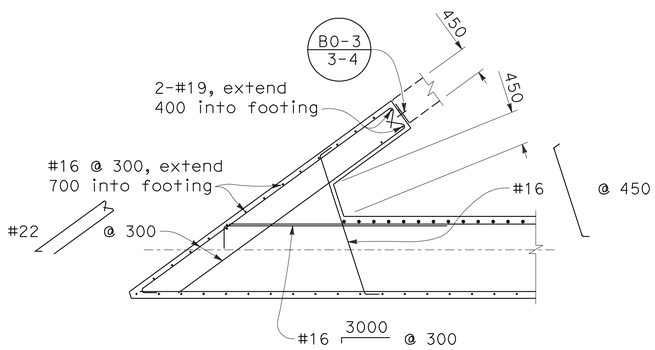

SECTION F-F

1:40

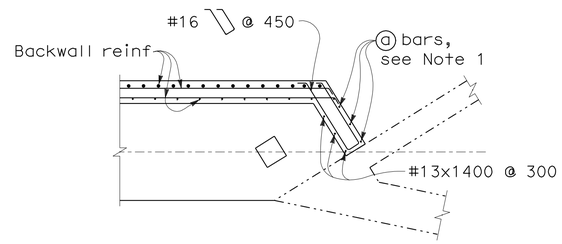

SECTION K-K

1:40

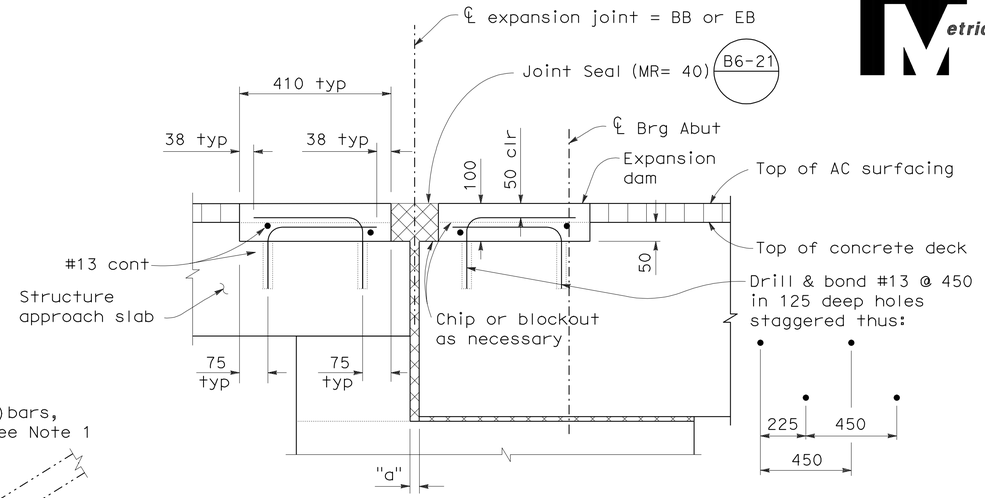

CONCRETE EXPANSION DAM

No Scale

NOTES:

Dam to be constructed after A.C. has been placed continuous across blockout.

Deck slab reinforcement to be lowered at ends of slab unit to clear expansion dam blockout.

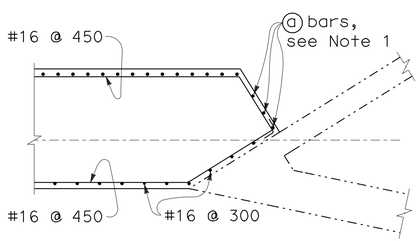

SECTION L-L

1:40

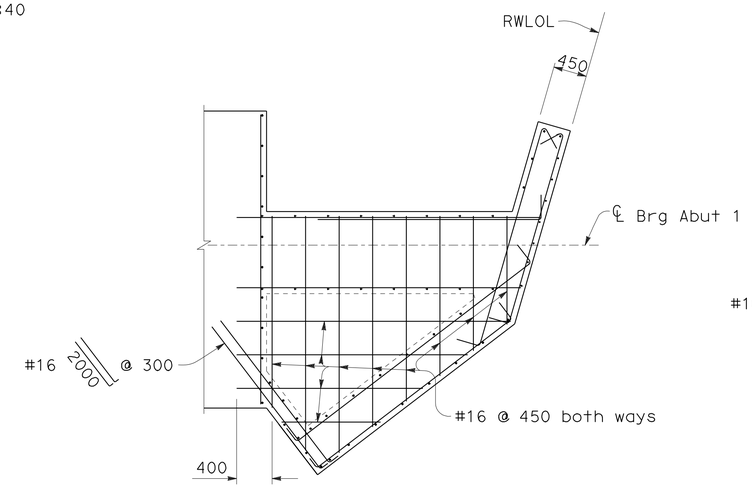

SECTION G-G

1:40

Note: For reinf not called out, see "Section I-I"

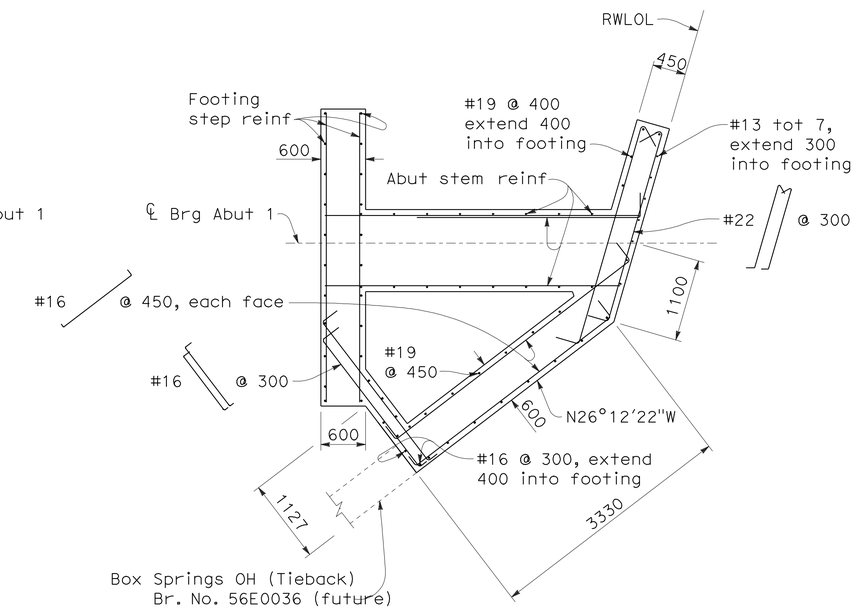

SECTION I-I

1:40

Note:

1) For ⓐ bars, see "Table Of Reinforcing Steel Dimensions And Data" on "Abutment Details No. 2" sheet.

ALL DIMENSIONS ARE IN MILLIMETERS UNLESS OTHERWISE SHOWN

Robert Zezoff
DESIGN OVERSIGHT Robert Zezoff
10-22-09
SIGN OFF DATE

	BY	CHECKED
DESIGN	J. Bishop	M. Maechler
DETAILS	C. Houghton	M. Maechler
QUANTITIES	J. Bishop	N. Bieniek

PREPARED FOR THE STATE OF CALIFORNIA DEPARTMENT OF TRANSPORTATION

John Bishop
PROJECT ENGINEER

BRIDGE NO. 56-0082L
KILOMETER POST R62.2

BOX SPRINGS OVERHEAD (WIDEN)
ABUTMENT DETAILS NO. 4

DESIGN DETAIL SHEET (METRIC) (REV. 10/27/05)

ORIGINAL SCALE IN MILLIMETERS FOR REDUCED PLANS 0 10 20 30 40 50 60 70 80 90 100

CU 08
EA 449311

DISREGARD PRINTS BEARING EARLIER REVISION DATES

REVISION DATES (PRELIMINARY STAGE ONLY) 2-29-08 6-20-08 7-14-08 10-1-08 2-2-09 4-16-09 8/28/09 10/2/09

SHEET 12 OF 31

FILE => 56-0082l-f-a01dt04.dgn

USERNAME => trlim DATE PLOTTED => 19-OCT-2010 TIME PLOTTED => 15:21

DIST	COUNTY	ROUTE	KILOMETER POST TOTAL PROJECT	SHEET No	TOTAL SHEETS
08	Riv	60,215	R19.7/21.9, R61.3/62.7	446	594

Caltrans Metric

John Bishop 10/02/09
REGISTERED CIVIL ENGINEER DATE

6-28-10
PLANS APPROVAL DATE

REGISTERED PROFESSIONAL ENGINEER J. S. BISHOP No. 50616 Exp. 9-30-11 CIVIL STATE OF CALIFORNIA

The State of California or its officers or agents shall not be responsible for the accuracy or completeness of electronic copies of this plan sheet.

Dokken Engineering
2365 Iron Point Rd, Suite 200
Folsom, CA 95630

LEGEND

Denotes existing structure

Denotes bridge removal (portion)

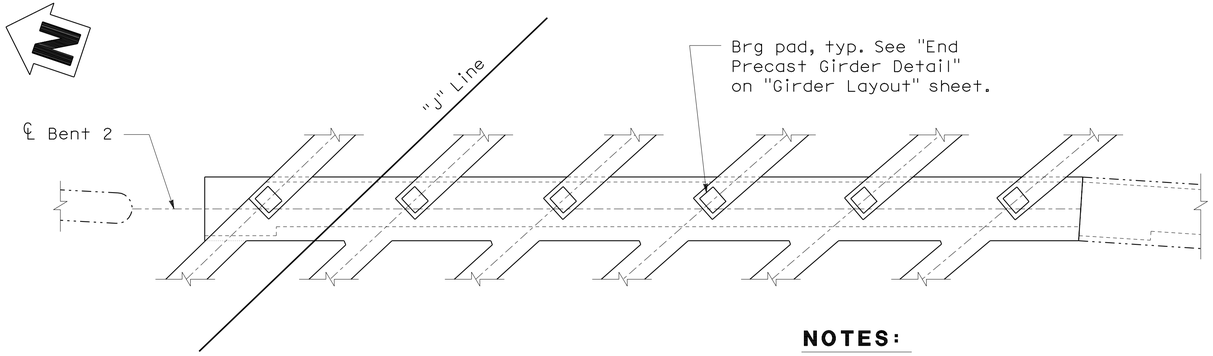

PLAN
1:50

NOTES:

1. The contractor shall verify all controlling field dimensions before ordering or fabricating any material.
2. For Sections G-G and H-H, see "Bent Details" sheet.
3. Remove expanded polystyrene 150 from exposed surfaces.

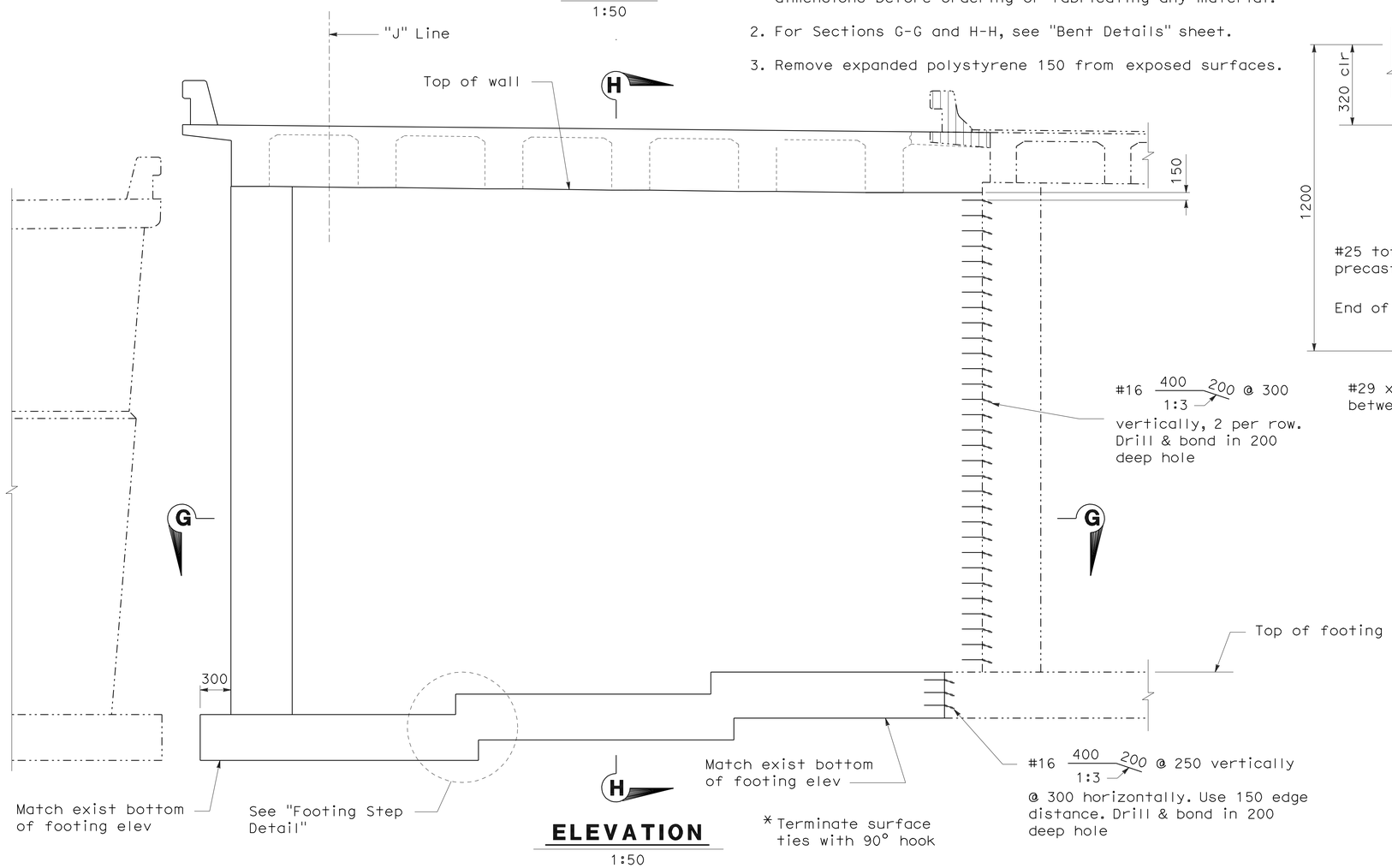

ELEVATION
1:50

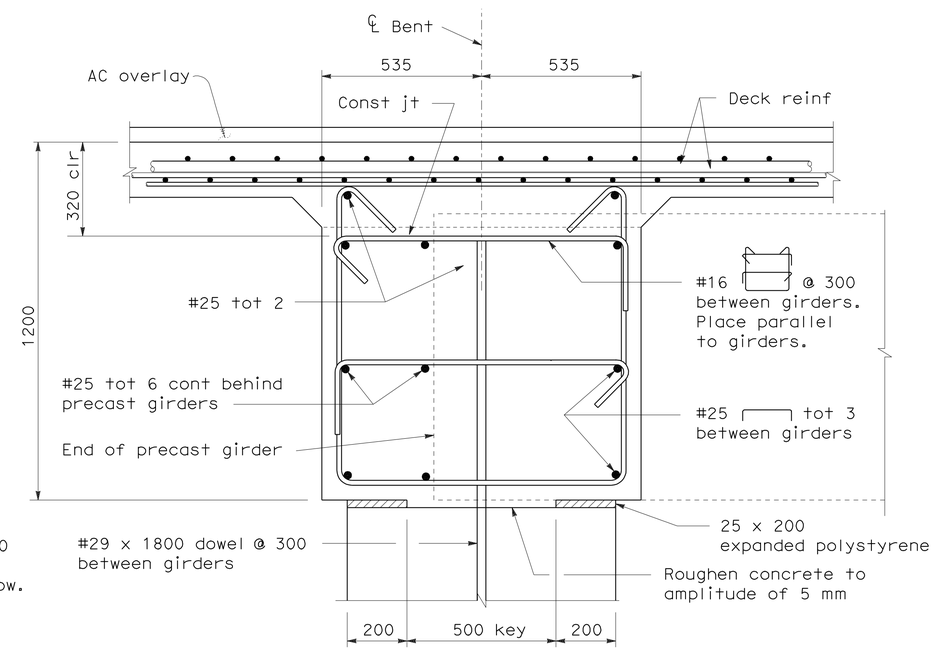

BENT CAP SECTION
1:10
(Bent 2 shown, Bent 3 similar)

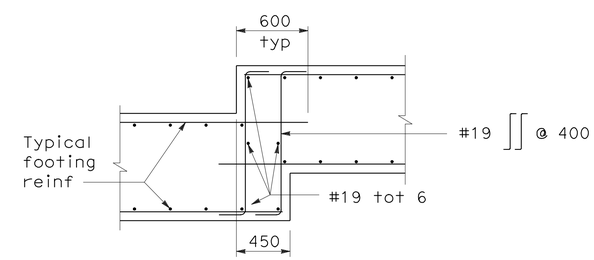

FOOTING STEP DETAIL
1:25

ALL DIMENSIONS ARE IN MILLIMETERS UNLESS OTHERWISE SHOWN

Robert Zezoff
DESIGN OVERSIGHT Robert Zezoff
10-22-09
SIGN OFF DATE

	BY	CHECKED
DESIGN	J. Bishop	M. Maechler
DETAILS	C. Houghton	M. Maechler
QUANTITIES	J. Bishop	N. Bieniek

PREPARED FOR THE STATE OF CALIFORNIA DEPARTMENT OF TRANSPORTATION

John Bishop
PROJECT ENGINEER

BRIDGE NO. 56-0082L
KILOMETER POST R62.2

BOX SPRINGS OVERHEAD (WIDEN)
BENT 2 LAYOUT

DESIGN DETAIL SHEET (METRIC) (REV. 10/27/05)

ORIGINAL SCALE IN MILLIMETERS FOR REDUCED PLANS 0 10 20 30 40 50 60 70 80 90 100

CU 08
EA 449311

DISREGARD PRINTS BEARING EARLIER REVISION DATES

REVISION DATES (PRELIMINARY STAGE ONLY) 2-29-08 6-27-08 7-14-08 10-3-08 2-2-09 4-20-09 8/28/09 10/2/09

SHEET 13 OF 31

FILE => 56-0082l-h-b01_to01.dgn

USERNAME => rrlim DATE PLOTTED => 19-OCT-2010 TIME PLOTTED => 15:21

DIST	COUNTY	ROUTE	KILOMETER POST TOTAL PROJECT	SHEET No	TOTAL SHEETS
08	Riv	60,215	R19.7/21.9, R61.3/62.7	447	594

Caltrans Metric

John Bishop 10/02/09
REGISTERED CIVIL ENGINEER DATE

6-28-10
PLANS APPROVAL DATE

REGISTERED PROFESSIONAL ENGINEER J. S. BISHOP No. 50616 Exp. 9-30-11 CIVIL STATE OF CALIFORNIA

The State of California or its officers or agents shall not be responsible for the accuracy or completeness of electronic copies of this plan sheet.

Dokken Engineering
2365 Iron Point Rd, Suite 200
Folsom, CA 95630

LEGEND

-·-·-·- Denotes existing structure

▨ Denotes bridge removal (portion)

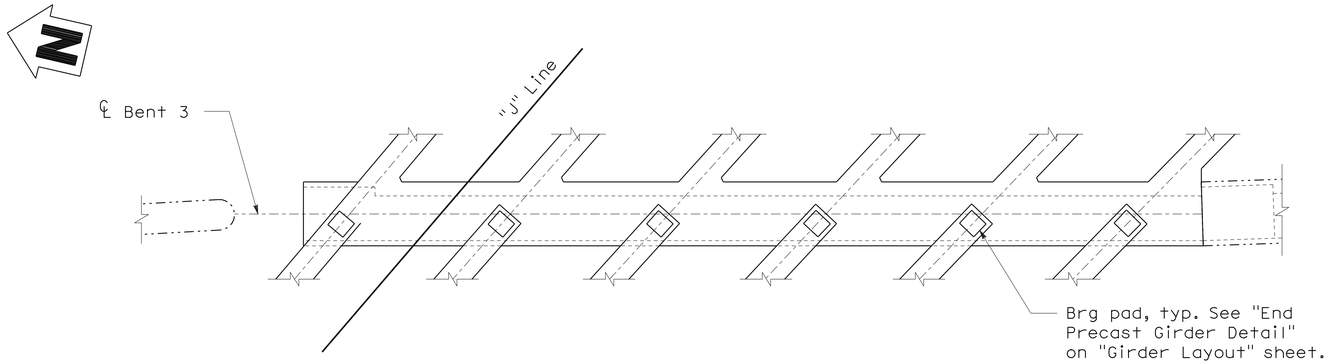

PLAN
1:50

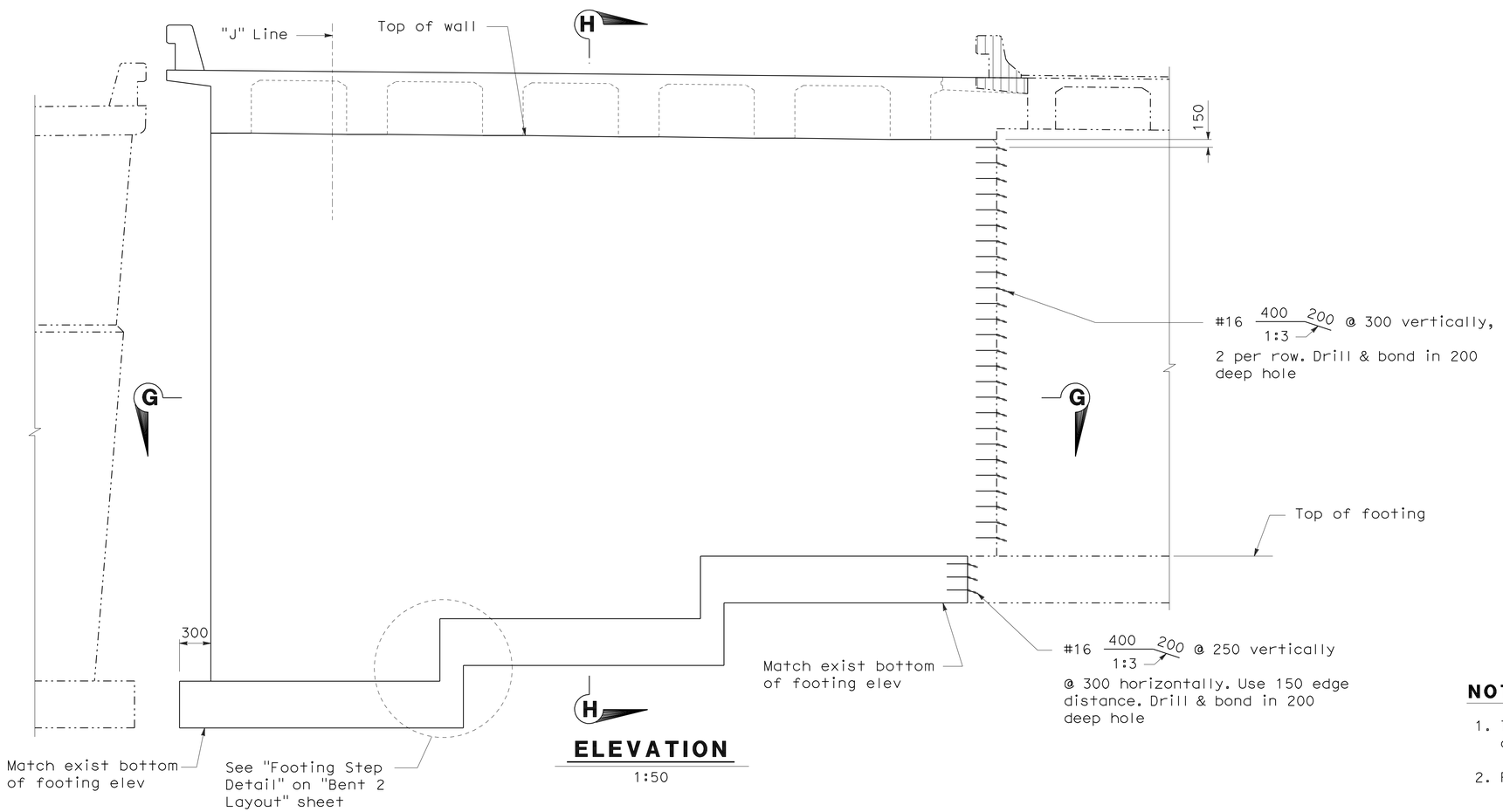

ELEVATION
1:50

NOTES:

1. The contractor shall verify all controlling field dimensions before ordering or fabricating any material.
2. For Sections G-G and H-H, see "Bent Details" sheet.

ALL DIMENSIONS ARE IN MILLIMETERS UNLESS OTHERWISE SHOWN

Robert Zezoff
DESIGN OVERSIGHT Robert Zezoff
10-22-09
SIGN OFF DATE

	BY	CHECKED
DESIGN	J. Bishop	M. Maechler
DETAILS	C. Houghton	M. Maechler
QUANTITIES	J. Bishop	N. Bieniek

PREPARED FOR THE STATE OF CALIFORNIA DEPARTMENT OF TRANSPORTATION

John Bishop
PROJECT ENGINEER

BRIDGE NO. 56-0082L
KILOMETER POST R62.2

BOX SPRINGS OVERHEAD (WIDEN)
BENT 3 LAYOUT

DESIGN DETAIL SHEET (METRIC) (REV. 10/27/05)

ORIGINAL SCALE IN MILLIMETERS FOR REDUCED PLANS 0 10 20 30 40 50 60 70 80 90 100

CU 08
EA 449311

DISREGARD PRINTS BEARING EARLIER REVISION DATES

REVISION DATES (PRELIMINARY STAGE ONLY) 2-25-08 6-25-08 7-14-08 10-7-08 2-2-09 8/28/09 10/2/09

SHEET 14 OF 31

FILE => 56-0082l-h-b01_lo02.dgn

USERNAME => rtrim DATE PLOTTED => 19-OCT-2010 TIME PLOTTED => 15:21

DIST	COUNTY	ROUTE	KILOMETER POST TOTAL PROJECT	SHEET No	TOTAL SHEETS
08	Riv	60,215	R19.7/21.9, R61.3/62.7	448	594

Caltrans Metric

John Bishop 10/02/09
REGISTERED CIVIL ENGINEER DATE

6-28-10
PLANS APPROVAL DATE

REGISTERED PROFESSIONAL ENGINEER J. S. BISHOP No. 50616 Exp. 9-30-11 CIVIL STATE OF CALIFORNIA

The State of California or its officers or agents shall not be responsible for the accuracy or completeness of electronic copies of this plan sheet.

Dokken Engineering
2365 Iron Point Rd, Suite 200
Folsom, CA 95630

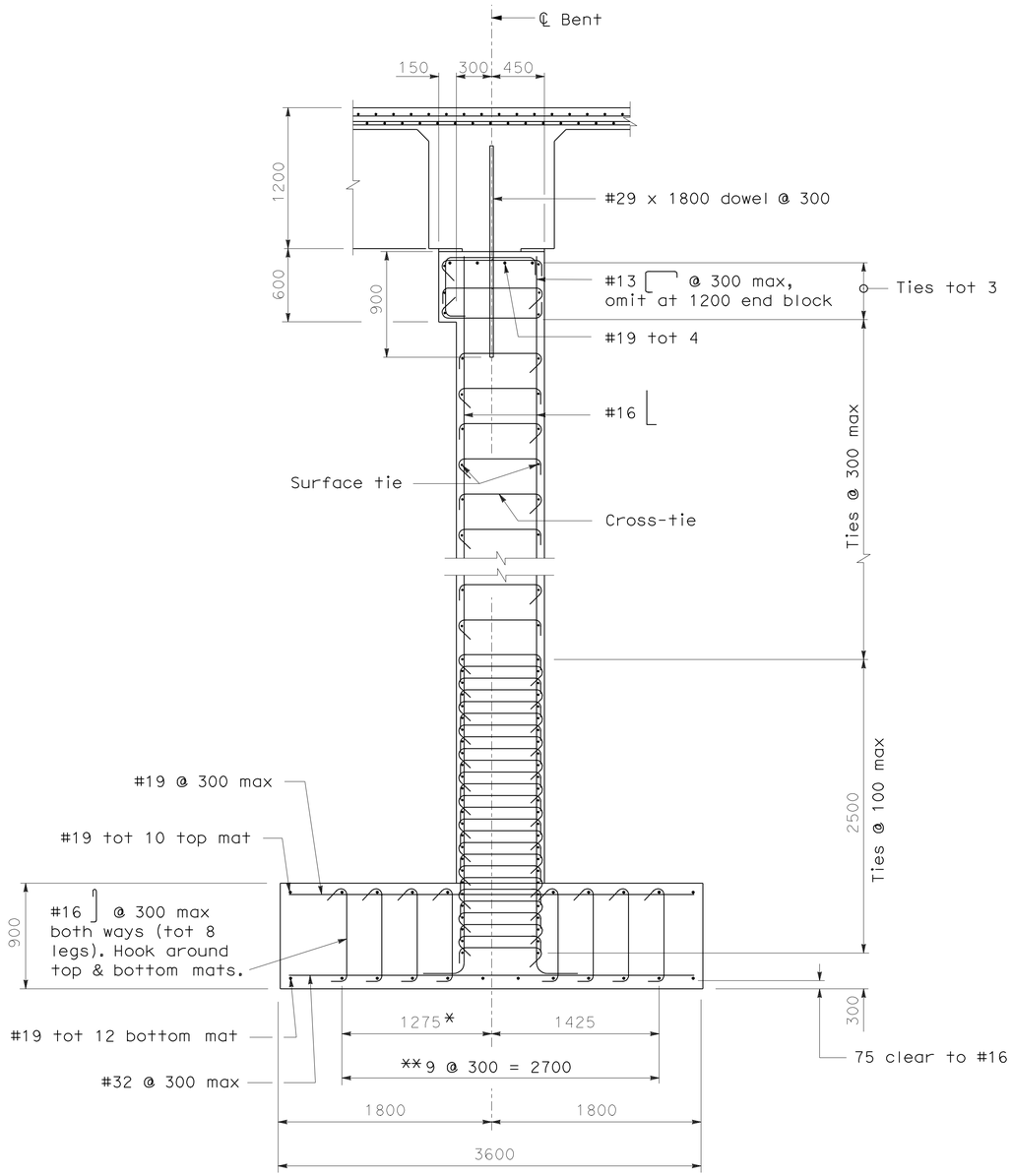

SECTION H-H
1:25

* Increase to 1400 at end block

** Adjust to 9 equal spaces at end block

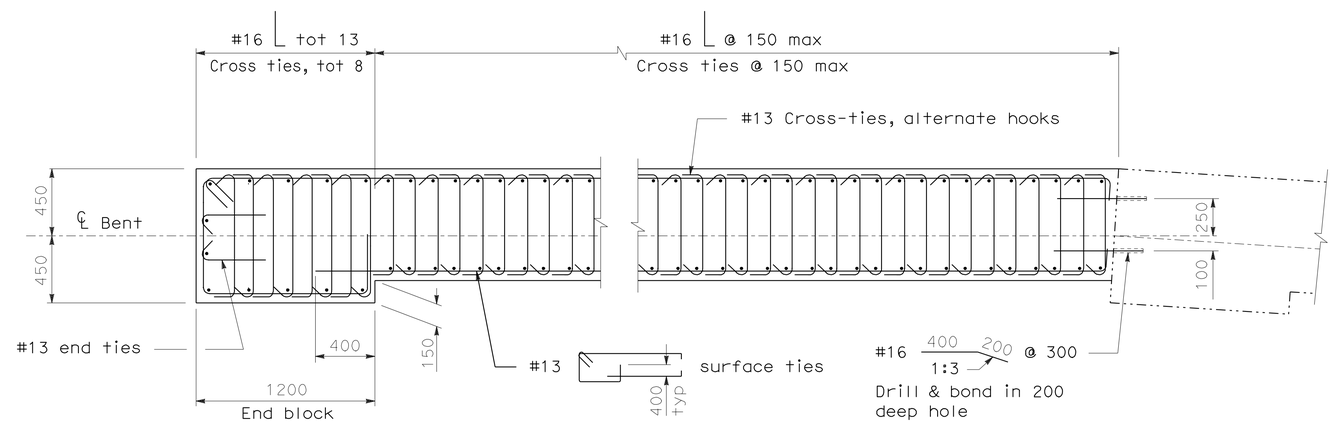

SECTION G-G
1:20

(Bent 2 shown, Bent 3 similar)

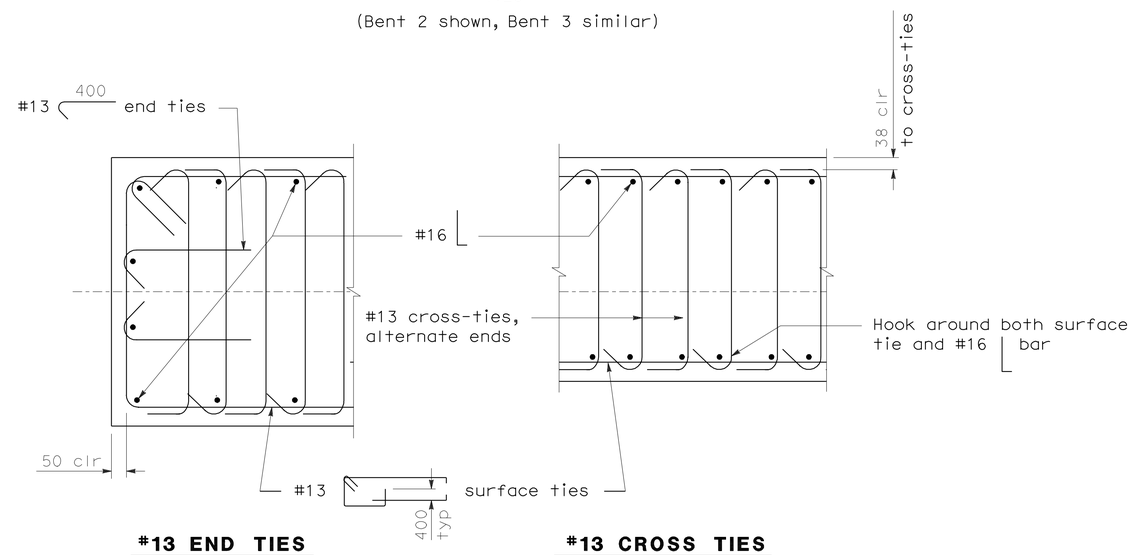

#13 END TIES
1:10

#13 CROSS TIES
1:10

ALL DIMENSIONS ARE IN MILLIMETERS UNLESS OTHERWISE SHOWN

Robert Zezoff
DESIGN OVERSIGHT Robert Zezoff
10-22-09
SIGN OFF DATE

	BY	CHECKED
DESIGN	J. Bishop	M. Maechler
DETAILS	C. Houghton	M. Maechler
QUANTITIES	J. Bishop	N. Bieniek

PREPARED FOR THE STATE OF CALIFORNIA DEPARTMENT OF TRANSPORTATION

John Bishop
PROJECT ENGINEER

BRIDGE NO. 56-0082L
KILOMETER POST R62.2

BOX SPRINGS OVERHEAD (WIDEN)
BENT DETAILS

DESIGN DETAIL SHEET (METRIC) (REV. 10/27/05)

ORIGINAL SCALE IN MILLIMETERS FOR REDUCED PLANS 0 10 20 30 40 50 60 70 80 90 100

CU 08
EA 449311

DISREGARD PRINTS BEARING EARLIER REVISION DATES

REVISION DATES (PRELIMINARY STAGE ONLY): 2-29-08 6-26-08 7-16-08 10-2-08 2-2-09 8/28/09 10/2/09

SHEET 15 OF 31

FILE => 56-0082l-h-b01dt01.dgn

USERNAME => ttrim DATE PLOTTED => 19-OCT-2010 TIME PLOTTED => 15:21

DIST	COUNTY	ROUTE	KILOMETER POST TOTAL PROJECT	SHEET No	TOTAL SHEETS
08	Riv	60,215	R19.7/21.9, R61.3/62.7	449	594

Caltrans Metric

John Bishop 10/02/09
REGISTERED CIVIL ENGINEER DATE

6-28-10
PLANS APPROVAL DATE

REGISTERED PROFESSIONAL ENGINEER J. S. BISHOP No. 50616 Exp. 9-30-11 CIVIL STATE OF CALIFORNIA

The State of California or its officers or agents shall not be responsible for the accuracy or completeness of electronic copies of this plan sheet.

Dokken Engineering
2365 Iron Point Rd, Suite 200
Folsom, CA 95630

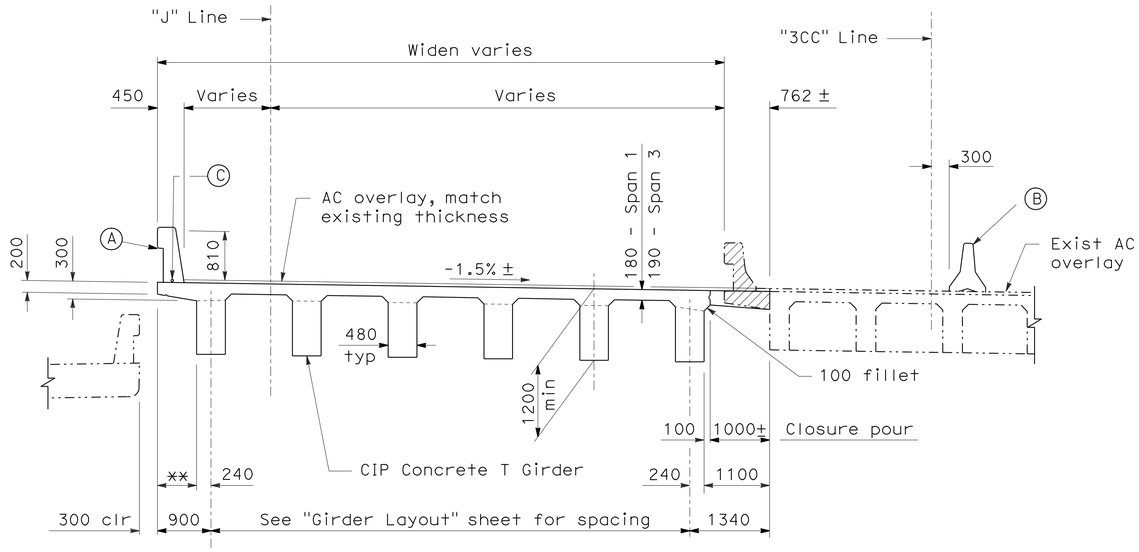

** Varies, 765 max to 487 min

TYPICAL SECTION

1:50

FALSEWORK RELEASE

Alternative 1:

Falsework shall be released as soon as permitted by the specifications. Closure pour shall not be placed sooner than 60 days after the falsework had been released.

Alternative 2:

Falsework shall not be released less than 28 days after the last concrete has been placed. Closure pour shall not be placed sooner than 14 days after the falsework has been released. When Falsework Release Alternative 2 is used, camber values are 0.75 times those shown.

LEGEND

- (A) Concrete Barrier Type 736
- (B) Temporary Railing Type K
- (C) 41 mm lighting conduit, see "Road Plans"
- Denotes existing structure
- Denotes remove exist overhang and barrier
- ◦ Denotes additional deck reinf. see "Top Longitudinal Reinforcement" sheet for size and layout.

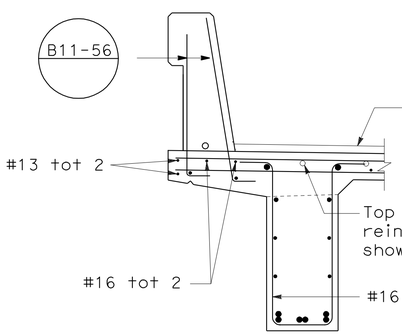

OVERHANG

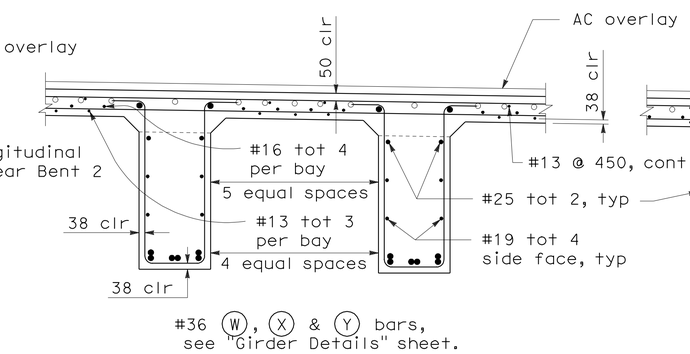

SPAN 1

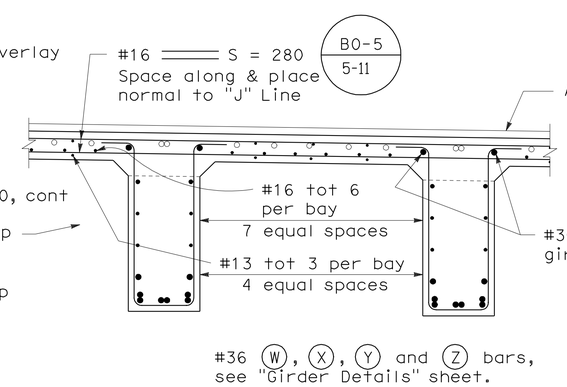

SPAN 3

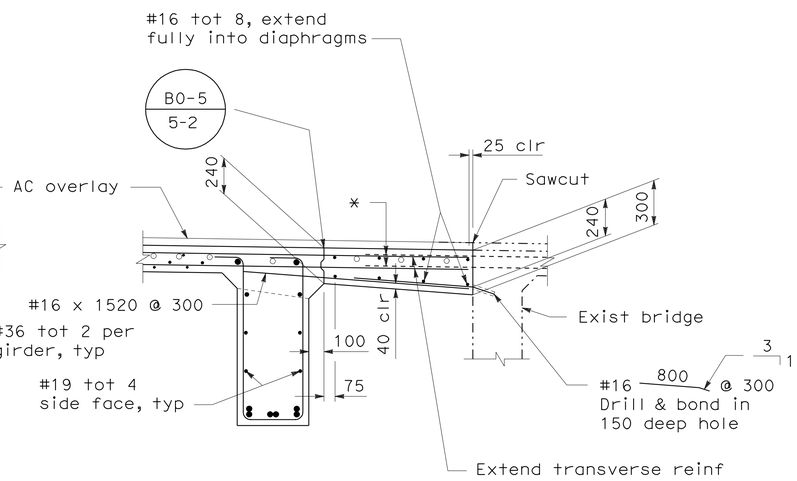

CLOSURE

* Exist top & bottom transverse deck reinf to be preserved & reused. All other exist reinf in overhang to be removed.

PART TYPICAL SECTION

1:20

B0-5 B6-1

ALL DIMENSIONS ARE IN MILLIMETERS UNLESS OTHERWISE SHOWN

Robert Zezoff
DESIGN OVERSIGHT Robert Zezoff
10-22-09
SIGN OFF DATE

	BY	CHECKED
DESIGN	J. Bishop	M. Maechler
DETAILS	C. Houghton	M. Maechler
QUANTITIES	J. Bishop	N. Bieniek

PREPARED FOR THE STATE OF CALIFORNIA DEPARTMENT OF TRANSPORTATION

John Bishop
PROJECT ENGINEER

BRIDGE NO. 56-0082L
KILOMETER POST R62.2

BOX SPRINGS OVERHEAD (WIDEN)
TYPICAL SECTION - SPANS 1 & 3

DESIGN DETAIL SHEET (METRIC) (REV. 10/27/05)

ORIGINAL SCALE IN MILLIMETERS FOR REDUCED PLANS 0 10 20 30 40 50 60 70 80 90 100

CU 08
EA 449311

DISREGARD PRINTS BEARING EARLIER REVISION DATES

REVISION DATES (PRELIMINARY STAGE ONLY) 2-29-08 6-27-08 7-14-08 10-8-08 2-2-09 8/28/09 10/2/09

SHEET 16 OF 31

FILE => 56-0082l-k-ts01.dgn

USERNAME => trilim DATE PLOTTED => 19-OCT-2010 TIME PLOTTED => 15:21

DIST	COUNTY	ROUTE	KILOMETER POST TOTAL PROJECT	SHEET No	TOTAL SHEETS
08	Riv	60,215	R19.7/21.9, R61.3/62.7	450	594

Caltrans Metric

John Bishop 10/02/09
REGISTERED CIVIL ENGINEER DATE

6-28-10
PLANS APPROVAL DATE

REGISTERED PROFESSIONAL ENGINEER J. S. BISHOP No. 50616 Exp. 9-30-11 CIVIL STATE OF CALIFORNIA

The State of California or its officers or agents shall not be responsible for the accuracy or completeness of electronic copies of this plan sheet.

Dokken Engineering
2365 Iron Point Rd, Suite 200
Folsom, CA 95630

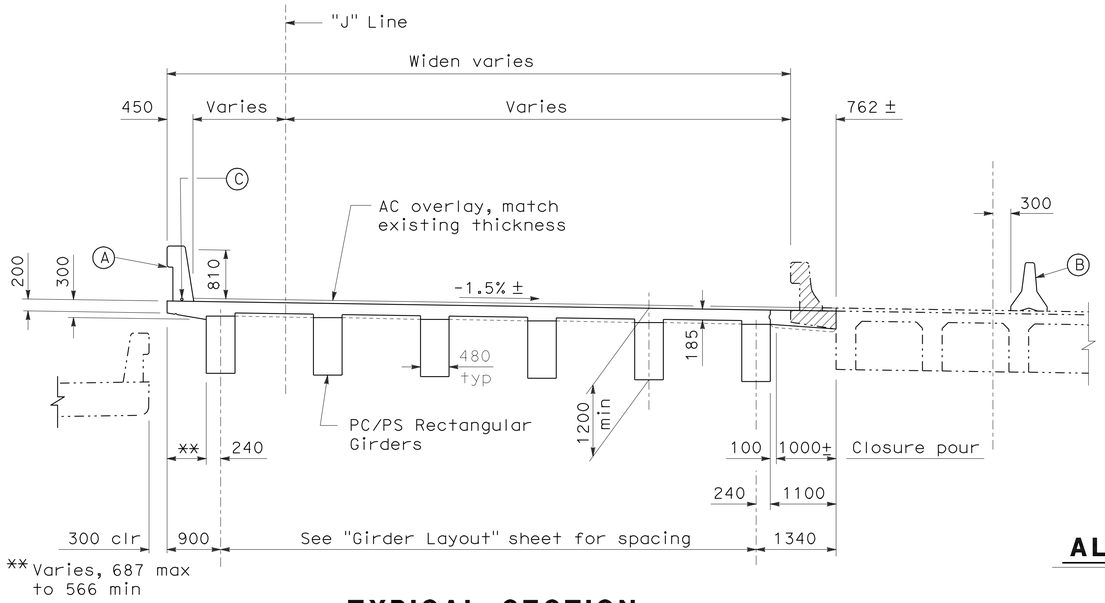

TYPICAL SECTION

1:50

LEGEND

- (A) Concrete Barrier Type 736
- (B) Temporary Railing Type K
- (C) 41 mm lighting conduit, see "Road Plans"
- Denotes existing structure
- Denotes concrete removal limits
- ○ Denotes additional deck reinf. see "Top Longitudinal Reinforcement" sheet for size and layout.

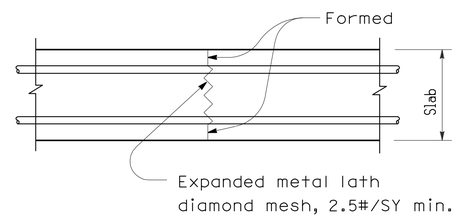

ALTERNATIVE DECK CONSTRUCTION JOINT

TOP OR BOTTOM SLAB

No Scale

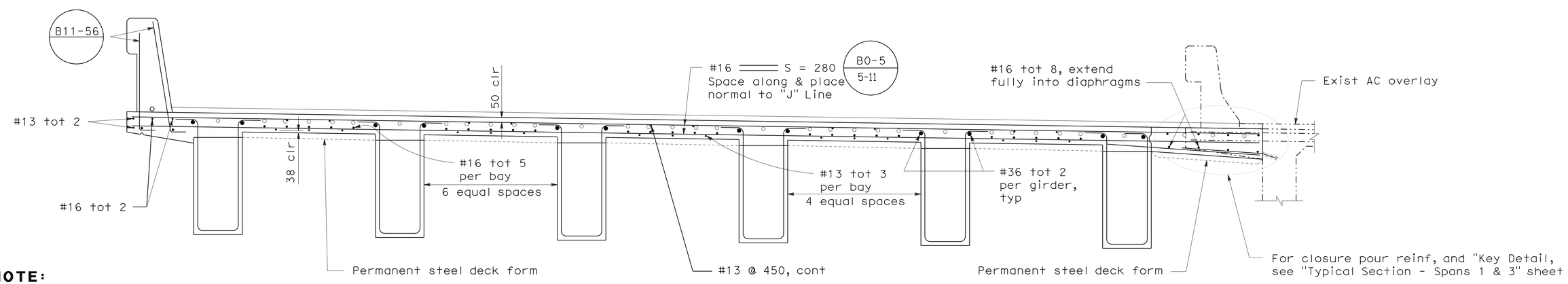

NOTE:

The contractor shall verify all controlling field dimensions before ordering or fabricating any material.

PART TYPICAL SECTION

1:20

B0-5 / 5-11 B6-1

ALL DIMENSIONS ARE IN MILLIMETERS UNLESS OTHERWISE SHOWN

Robert Zezoff
DESIGN OVERSIGHT Robert Zezoff
10-22-09
SIGN OFF DATE

	BY	CHECKED
DESIGN	J. Bishop	M. Maechler
DETAILS	C. Houghton	M. Maechler
QUANTITIES	J. Bishop	N. Bieniek

PREPARED FOR THE STATE OF CALIFORNIA DEPARTMENT OF TRANSPORTATION

John Bishop
PROJECT ENGINEER

BRIDGE NO. 56-0082L
KILOMETER POST R62.2

BOX SPRINGS OVERHEAD (WIDEN)
TYPICAL SECTION - SPAN 2

DESIGN DETAIL SHEET (METRIC) (REV. 10/27/05)

ORIGINAL SCALE IN MILLIMETERS FOR REDUCED PLANS 0 10 20 30 40 50 60 70 80 90 100

CU 08
EA 449311

DISREGARD PRINTS BEARING EARLIER REVISION DATES

REVISION DATES (PRELIMINARY STAGE ONLY) 2-29-08 6-20-08 7-14-08 10-1-08 2-2-09 8/20/09 10/2/09

SHEET 17 OF 31

FILE => 56-0082l-k-ts02.dgn

USERNAME => trlim DATE PLOTTED => 19-OCT-2010 TIME PLOTTED => 15:21

DIST	COUNTY	ROUTE	KILOMETER POST TOTAL PROJECT	SHEET No	TOTAL SHEETS
08	Riv	60,215	R19.7/21.9, R61.3/62.7	451	594

Caltrans Metric

John Bishop 10/02/09
REGISTERED CIVIL ENGINEER DATE

6-28-10
PLANS APPROVAL DATE

REGISTERED PROFESSIONAL ENGINEER J. S. BISHOP No. 50616 Exp. 9-30-11 CIVIL STATE OF CALIFORNIA

The State of California or its officers or agents shall not be responsible for the accuracy or completeness of electronic copies of this plan sheet.

Dokken Engineering
2365 Iron Point Rd, Suite 200
Folsom, CA 95630

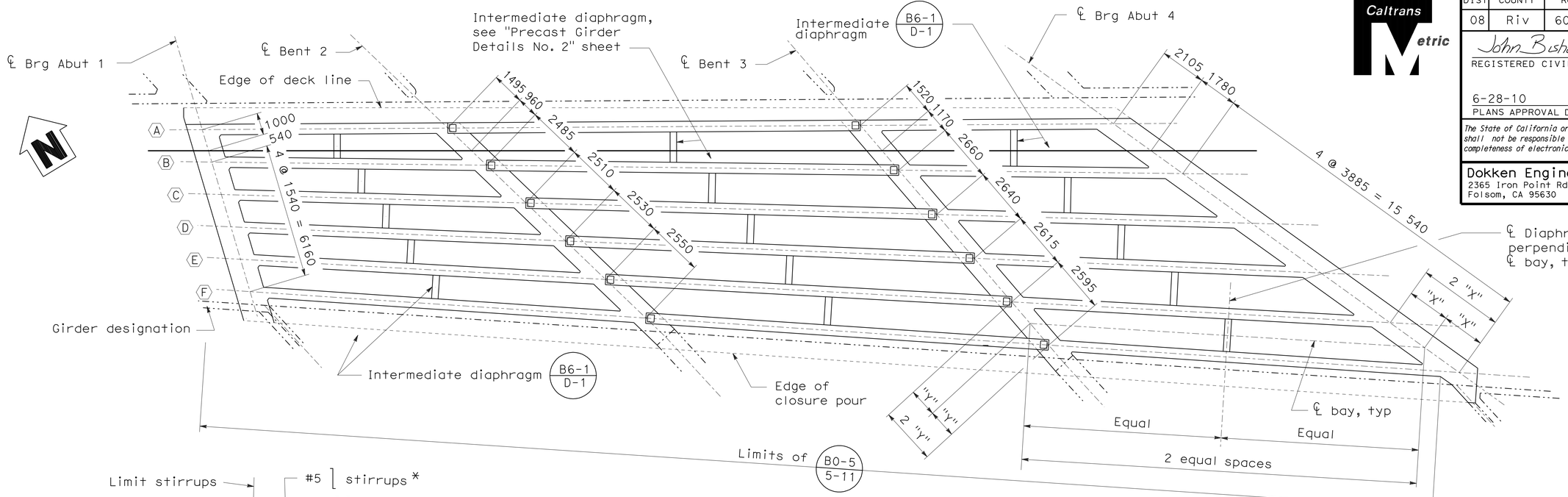

GIRDER	BEARING
A	S62°43'50"E
B	S61°41'09"E
C	S60°45'44"E
D	S59°56'25"E
E	S59°12'15"E
F	S58°32'30"E

PLAN
1:100

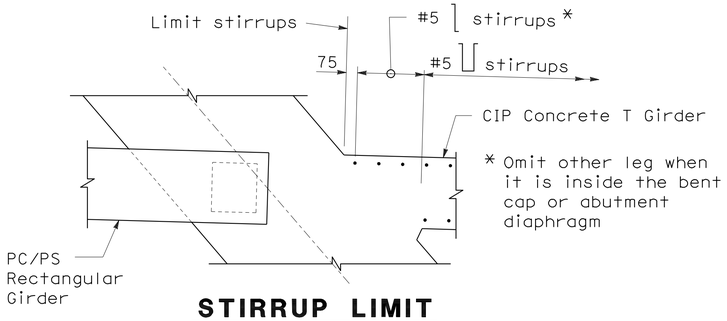

STIRRUP LIMIT
1:20

℄ Girders are a straight line

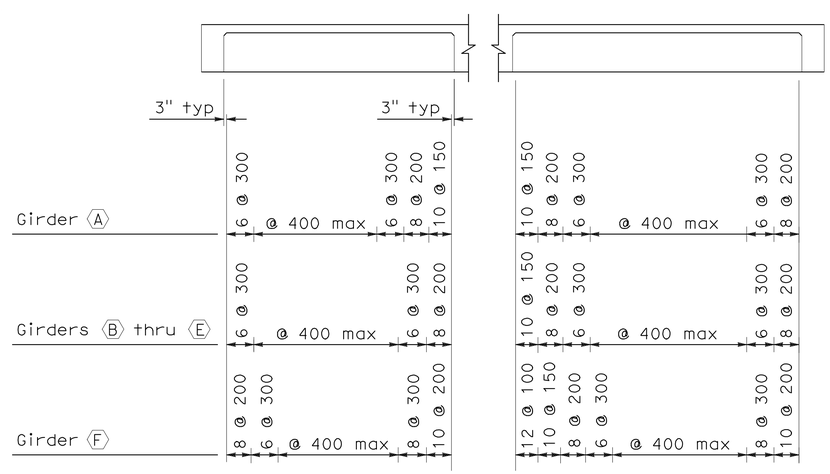

SPAN 1 **SPAN 3**

#16 ⊔ OR ⌊ STIRRUP SPACING
No Scale

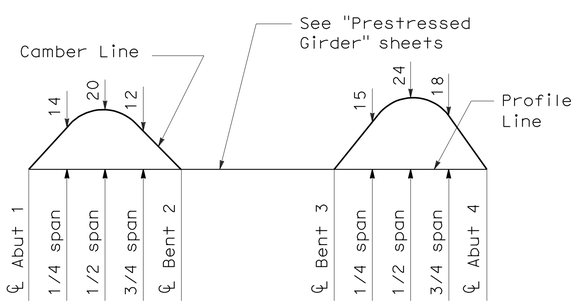

CAMBER DIAGRAM
No Scale
Does not include allowance for falsework settlement

NOTES:

1. The contractor shall verify all controlling field dimensions before ordering or fabricating any material.
2. Remove expanded polystyrene 150 from exposed surfaces.

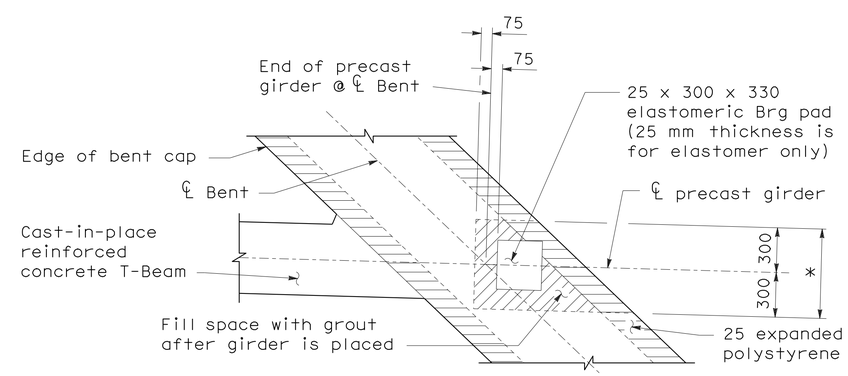

*Area to be level transversely & parallel to profile longitudinally

END PRECAST GIRDER DETAIL
1:20

ALL DIMENSIONS ARE IN MILLIMETERS UNLESS OTHERWISE SHOWN

Robert Zezoff
DESIGN OVERSIGHT Robert Zezoff
10-22-09
SIGN OFF DATE

	BY	CHECKED
DESIGN	J. Bishop	M. Maechler
DETAILS	C. Houghton	M. Maechler
QUANTITIES	J. Bishop	N. Bieniek

PREPARED FOR THE STATE OF CALIFORNIA DEPARTMENT OF TRANSPORTATION

John Bishop
PROJECT ENGINEER

BRIDGE NO. 56-0082L
KILOMETER POST R62.2

BOX SPRINGS OVERHEAD (WIDEN)
GIRDER LAYOUT

DESIGN DETAIL SHEET (METRIC) (REV. 10/27/05)

ORIGINAL SCALE IN MILLIMETERS FOR REDUCED PLANS 0 10 20 30 40 50 60 70 80 90 100

CU 08
EA 449311

DISREGARD PRINTS BEARING EARLIER REVISION DATES

REVISION DATES (PRELIMINARY STAGE ONLY) 3-20-08 6-20-08 7-18-08 10-2-08 2-2-09 4-20-09 8/28/09 10/2/09

SHEET 18 OF 31

FILE => 56-00821-1-g_lo01.dgn

USERNAME => trlim DATE PLOTTED => 19-OCT-2010 TIME PLOTTED => 15:25

DIST	COUNTY	ROUTE	KILOMETER POST TOTAL PROJECT	SHEET No	TOTAL SHEETS
08	Riv	60,215	R19.7/21.9, R61.3/62.7	452	594

Caltrans Metric

John Bishop 10/02/09
REGISTERED CIVIL ENGINEER DATE

6-28-10
PLANS APPROVAL DATE

REGISTERED PROFESSIONAL ENGINEER J. S. BISHOP No. 50616 Exp. 9-30-11 CIVIL STATE OF CALIFORNIA

The State of California or its officers or agents shall not be responsible for the accuracy or completeness of electronic copies of this plan sheet.

Dokken Engineering
2365 Iron Point Rd, Suite 200
Folsom, CA 95630

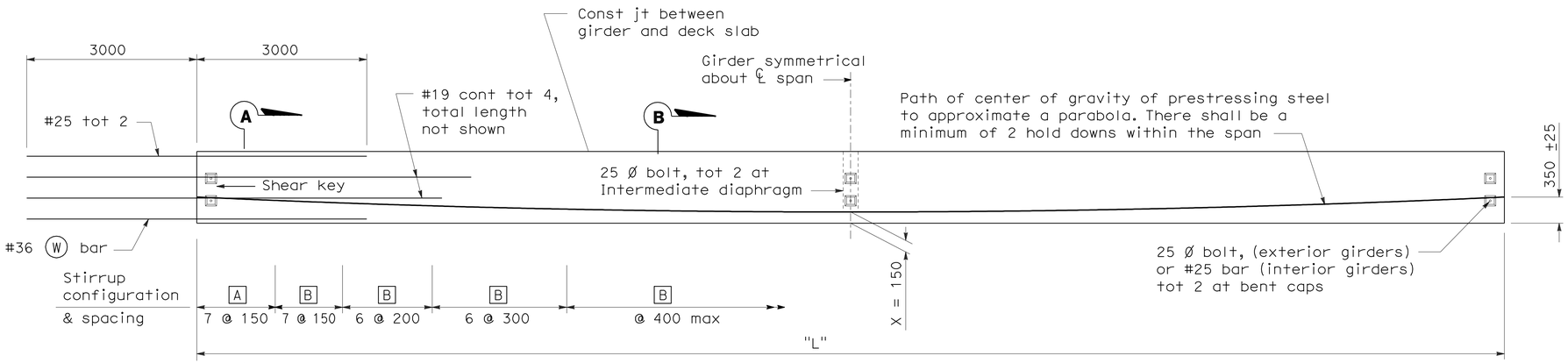

ELEVATION
No Scale

Details shown are for pretensioned girders.

STIRRUP CONFIGURATIONS

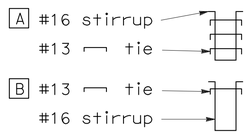

PRESTRESSING NOTES

Working force : The force required per girder at center of span after all losses.

Concrete strength : f'_{ci} is at time of initial stressing, f'_c is at 28 days, MPa.

Deflection components : Informational - to be used in setting screed line elevations.

Screed line elevations for deck concrete will be determined by the Engineer.

Contractor may interpolate "P" and "X" values between limits shown, as approved by the Engineer.

Girder	Length (m)	"X" (mm)	P = Working force (after all losses) (kN)	Concrete Strength f'_{ci} (MPa)	Concrete Strength f'_c (MPa)	Deflection Components (mm) ① Deck DL	Deflection Components (mm) ② Closure pour, barrier & overhang
A	18.830	150	2890	28	35	35	2
		180	3180				
B	18.810	150	2890	28	35	35	2
		180	3180				
C	18.735	150	2890	28	35	35	2
		180	3180				
D	18.675	150	2890	28	35	35	2
		180	3180				
E	18.560	150	2890	28	35	35	2
		180	3180				
F	18.420	150	2890	28	35	35	2
		180	3180				

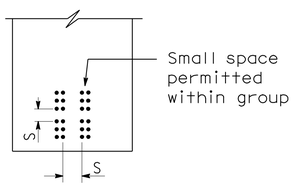

CLEARANCES FOR PRETENSIONED STRANDS

1. Strands may be bundled in groups consisting of 3 vertically 2 horizontally, and separated at the ends.
2. The min distance "S" between groups or individual strands is 40 mm for 9.5 mm strands, 45 mm for 11 and 13 mm strands and 50 mm for 15 mm strands.
3. "S" is measured between centers of adjacent strands.
4. Approval of Engineer is required for deviation.

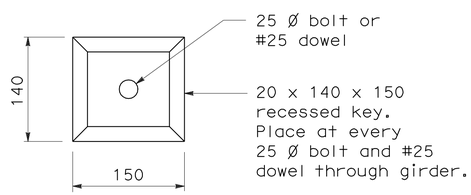

SHEAR KEY
1:4

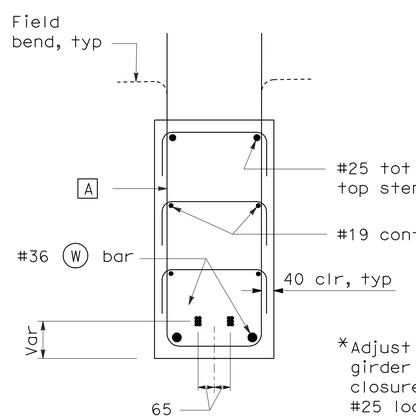

SECTION A-A
No Scale

*Adjust location of #25 in girder F, adjacent to closure pour to match #25 location in Spans 1 and 3.

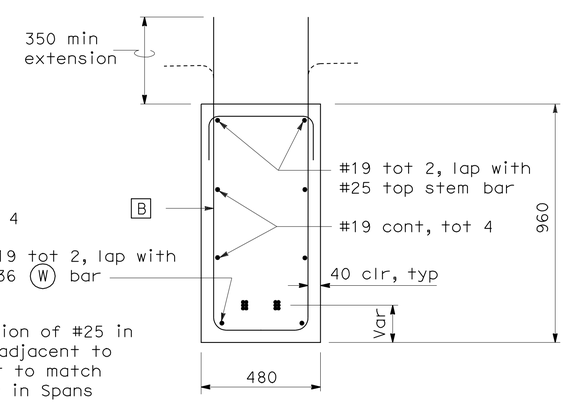

SECTION B-B
No Scale

NO SCALE

ALL DIMENSIONS ARE IN MILLIMETERS UNLESS OTHERWISE SHOWN

Robert Zezoff
DESIGN OVERSIGHT Robert Zezoff
10-22-09
SIGN OFF DATE

	BY	CHECKED
DESIGN	J. Bishop	M. Maechler
DETAILS	C. Houghton	M. Maechler
QUANTITIES	J. Bishop	N. Bieniek

PREPARED FOR THE STATE OF CALIFORNIA DEPARTMENT OF TRANSPORTATION

John Bishop
PROJECT ENGINEER

BRIDGE NO. 56-0082L
KILOMETER POST R62.2

BOX SPRINGS OVERHEAD (WIDEN)
PRECAST GIRDER DETAILS NO. 1

DESIGN DETAIL SHEET (METRIC) (REV. 10/27/05)

ORIGINAL SCALE IN MILLIMETERS FOR REDUCED PLANS 0 10 20 30 40 50 60 70 80 90 100

CU 08
EA 449311

DISREGARD PRINTS BEARING EARLIER REVISION DATES

REVISION DATES (PRELIMINARY STAGE ONLY) 2-25-08 6-25-08 7-14-08 10-7-08 2-2-09 4-20-09 8/28/09 10/2/09

SHEET 19 OF 31

FILE => 56-0082l-l-gdt01.dgn

USERNAME => trlim DATE PLOTTED => 19-OCT-2010 TIME PLOTTED => 15:25

DIST	COUNTY	ROUTE	KILOMETER POST TOTAL PROJECT	SHEET No	TOTAL SHEETS
08	Riv	60,215	R19.7/21.9, R61.3/62.7	453	594

Caltrans Metric

John Bishop 10/02/09
REGISTERED CIVIL ENGINEER DATE

6-28-10
PLANS APPROVAL DATE

REGISTERED PROFESSIONAL ENGINEER J. S. BISHOP No. 50616 Exp. 9-30-11 CIVIL STATE OF CALIFORNIA

The State of California or its officers or agents shall not be responsible for the accuracy or completeness of electronic copies of this plan sheet.

Dokken Engineering
2365 Iron Point Rd, Suite 200
Folsom, CA 95630

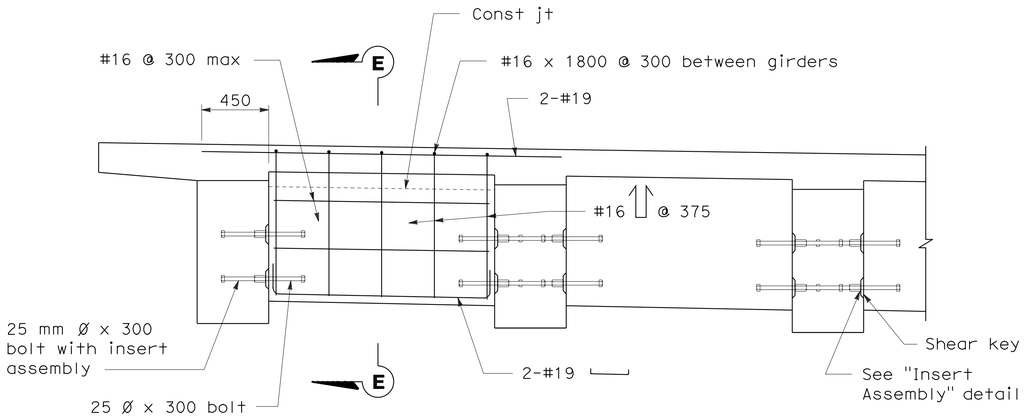

INTERMEDIATE DIAPHRAGM
1:20

Span 2 diaphragm only. For Spans 1 and 3 diaphragms, see Std Plan B6-1 / D-1

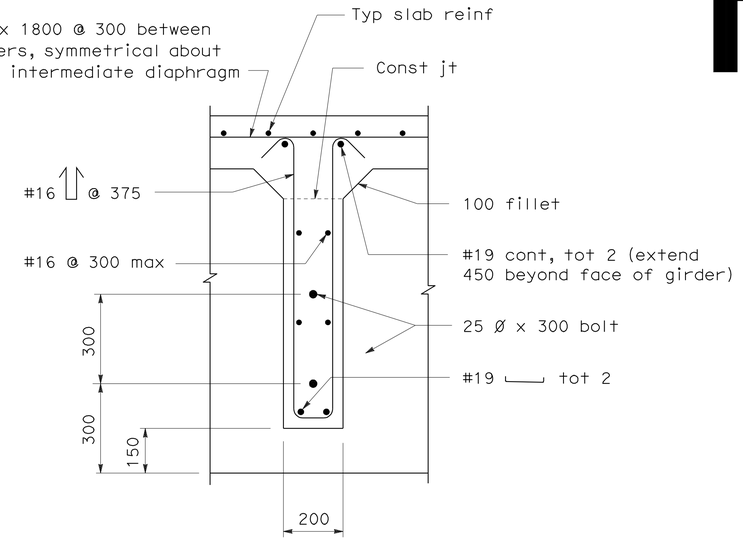

SECTION E-E
1:10

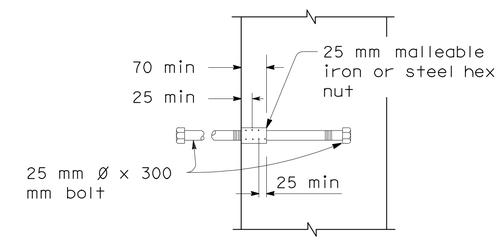

INSERT ASSEMBLY
No Scale

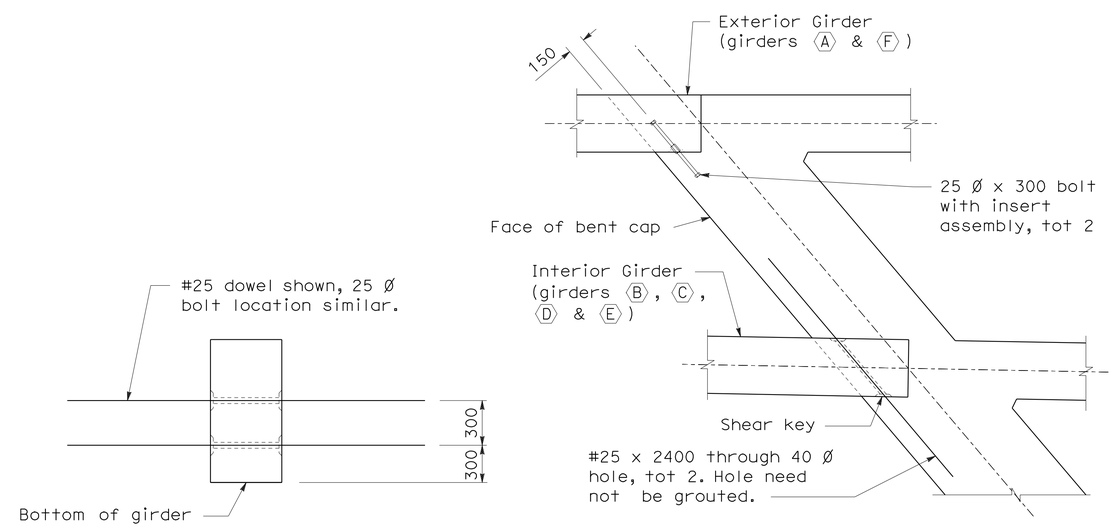

SECTION
1:20

PLAN
1:25

END GIRDER DOWELS & BOLTS

ALL DIMENSIONS ARE IN MILLIMETERS UNLESS OTHERWISE SHOWN

Robert Zezoff
DESIGN OVERSIGHT Robert Zezoff
10-22-09
SIGN OFF DATE

	BY	CHECKED
DESIGN	J. Bishop	M. Maechler
DETAILS	C. Houghton	M. Maechler
QUANTITIES	J. Bishop	N. Bieniek

PREPARED FOR THE STATE OF CALIFORNIA DEPARTMENT OF TRANSPORTATION

John Bishop
PROJECT ENGINEER

BRIDGE NO. 56-0082L
KILOMETER POST R62.2

BOX SPRINGS OVERHEAD (WIDEN)
PRECAST GIRDER DETAILS NO. 2

DESIGN DETAIL SHEET (METRIC) (REV. 10/27/05)

ORIGINAL SCALE IN MILLIMETERS FOR REDUCED PLANS 0 10 20 30 40 50 60 70 80 90 100

CU 08
EA 449311

DISREGARD PRINTS BEARING EARLIER REVISION DATES

REVISION DATES (PRELIMINARY STAGE ONLY): 2-29-08, 6-20-08, 7-16-08, 10-2-08, 2-1-09, 8/20/09, 10/2/09

SHEET 20 OF 31

FILE => 56-0082L-1-gdt02.dgn

USERNAME => trlim DATE PLOTTED => 19-OCT-2010 TIME PLOTTED => 15:25

DIST	COUNTY	ROUTE	KILOMETER POST TOTAL PROJECT	SHEET No	TOTAL SHEETS
08	Riv	60,215	R19.7/21.9, R61.3/62.7	454	594

Caltrans Metric

John Bishop 10/02/09
REGISTERED CIVIL ENGINEER DATE

6-28-10
PLANS APPROVAL DATE

REGISTERED PROFESSIONAL ENGINEER J. S. BISHOP No. 50616 Exp. 9-30-11 CIVIL STATE OF CALIFORNIA

The State of California or its officers or agents shall not be responsible for the accuracy or completeness of electronic copies of this plan sheet.

Dokken Engineering
2365 Iron Point Rd, Suite 200
Folsom, CA 95630

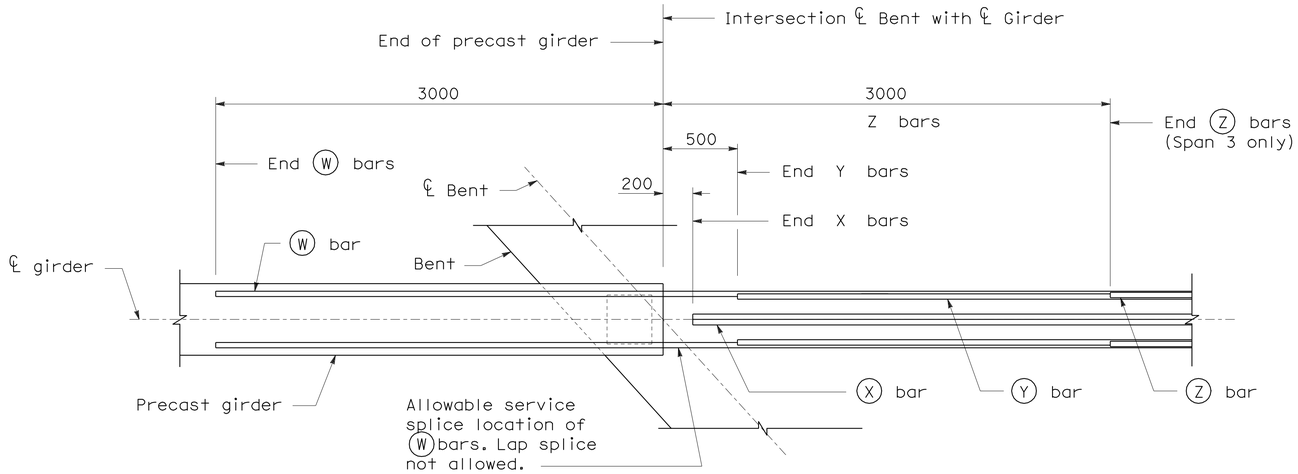

BOTTOM LONGITUDINAL REINF

1:20

Span 3 shown, Span 2 similar except as noted.

W, X, Y & Z bars to be fully extended into end diaphragm

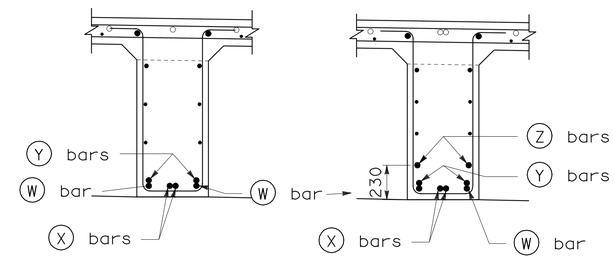

SPAN 1 **SPAN 3**

REINFORCEMENT LAYOUT

1:20

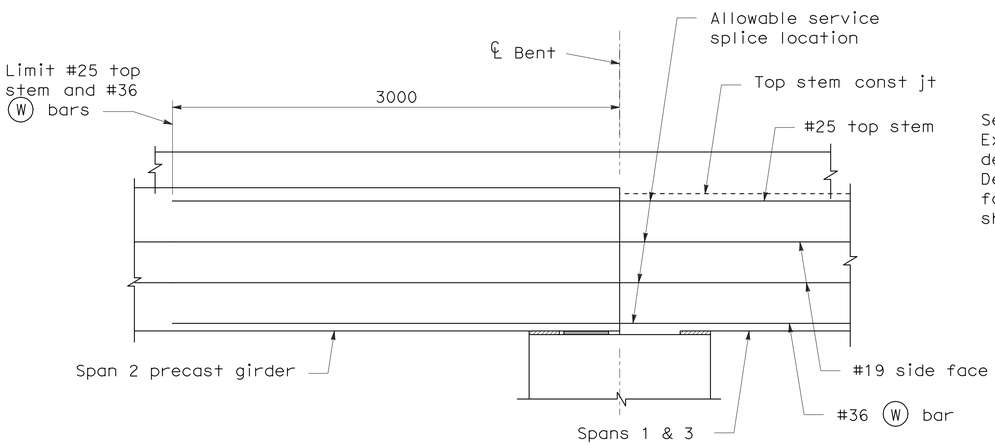

SPLICE DETAIL

1:20

Bent 3 shown, Bent 2 similar

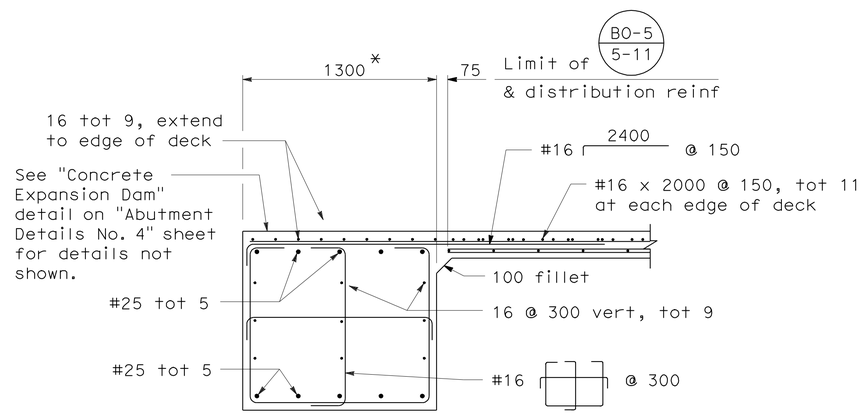

BETWEEN GIRDERS

*Measured normal to ℄ brg abut

END DIAPHRAGM

1:20

B8-5

NOTE:

#25 top stem, #19 side face, and #36 W bars shall be continuous from spans 1 and 3 into the span 2 precast girder. Any of the service splice alternatives may be used, except the lap splice alternative may not be used for the #36 W bars.

ALL DIMENSIONS ARE IN MILLIMETERS UNLESS OTHERWISE SHOWN

Robert Zezoff
DESIGN OVERSIGHT Robert Zezoff
10-22-09
SIGN OFF DATE

	BY	CHECKED
DESIGN	J. Bishop	M. Maechler
DETAILS	C. Houghton	M. Maechler
QUANTITIES	J. Bishop	N. Bieniek

PREPARED FOR THE STATE OF CALIFORNIA DEPARTMENT OF TRANSPORTATION

John Bishop
PROJECT ENGINEER

BRIDGE NO. 56-0082L
KILOMETER POST R62.2

BOX SPRINGS OVERHEAD (WIDEN)
GIRDER DETAILS

DESIGN DETAIL SHEET (METRIC) (REV. 10/27/05)

ORIGINAL SCALE IN MILLIMETERS FOR REDUCED PLANS 0 10 20 30 40 50 60 70 80 90 100

CU 08
EA 449311

DISREGARD PRINTS BEARING EARLIER REVISION DATES

REVISION DATES (PRELIMINARY STAGE ONLY) 3-20-08 6-20-08 7-18-08 10-7-08 2-3-09 8/28/09 10/2/09

SHEET 21 OF 31

FILE => 56-0082l-l-gdt03.dgn

USERNAME => ttrim DATE PLOTTED => 19-OCT-2010 TIME PLOTTED => 15:25

DIST	COUNTY	ROUTE	KILOMETER POST TOTAL PROJECT	SHEET No	TOTAL SHEETS
08	Riv	60,215	R19.7/21.9, R61.3/62.7	455	594

Caltrans Metric

John Bishop 10/02/09
REGISTERED CIVIL ENGINEER DATE

6-28-10
PLANS APPROVAL DATE

REGISTERED PROFESSIONAL ENGINEER J. S. BISHOP No. 50616 Exp. 9-30-11 CIVIL STATE OF CALIFORNIA

The State of California or its officers or agents shall not be responsible for the accuracy or completeness of electronic copies of this plan sheet.

Dokken Engineering
2365 Iron Point Rd, Suite 200
Folsom, CA 95630

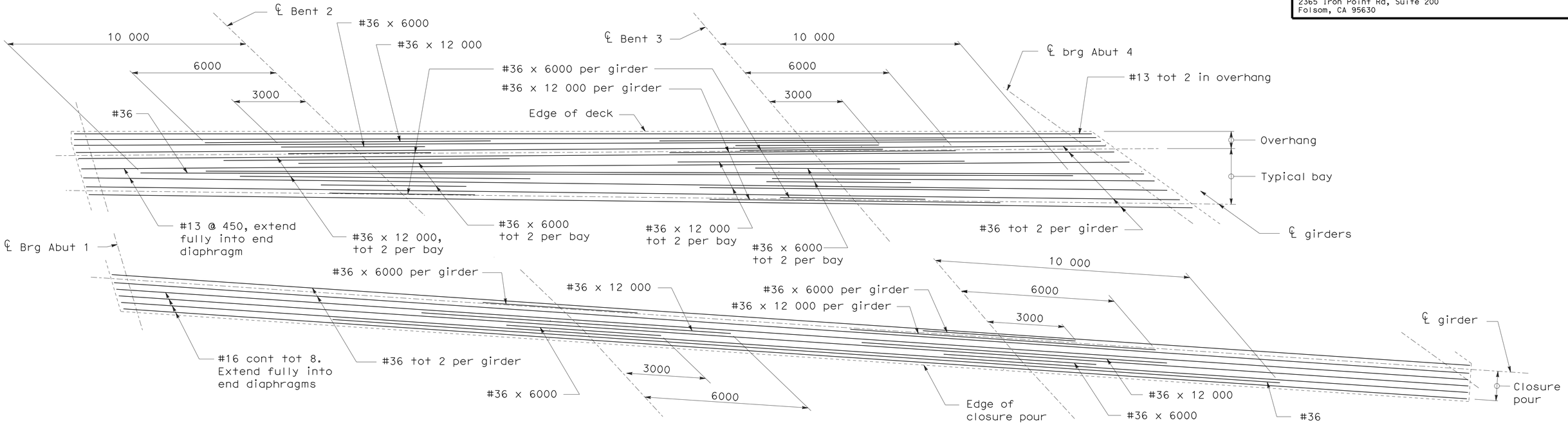

PLAN

1:80

NOTES:

1. The contractor shall verify all controlling field dimensions before ordering or fabricating any material.

ALL DIMENSIONS ARE IN MILLIMETERS UNLESS OTHERWISE SHOWN

Robert Zezoff
DESIGN OVERSIGHT Robert Zezoff
10-22-09
SIGN OFF DATE

	BY	CHECKED
DESIGN	J. Bishop	M. Maechler
DETAILS	C. Houghton	M. Maechler
QUANTITIES	J. Bishop	N. Bieniek

PREPARED FOR THE STATE OF CALIFORNIA DEPARTMENT OF TRANSPORTATION

John Bishop
PROJECT ENGINEER

BRIDGE NO. 56-0082L
KILOMETER POST R62.2

BOX SPRINGS OVERHEAD (WIDEN)
TOP LONGITUDINAL REINFORCEMENT

DESIGN DETAIL SHEET (METRIC) (REV. 10/27/05)

ORIGINAL SCALE IN MILLIMETERS FOR REDUCED PLANS 0 10 20 30 40 50 60 70 80 90 100

CU 08
EA 449311

DISREGARD PRINTS BEARING EARLIER REVISION DATES

REVISION DATES (PRELIMINARY STAGE ONLY): 2-29-08 5-29-08 7-24-08 10-6-08 2-2-09 8/28/09 10/2/09

SHEET 22 OF 31

FILE => 56-0082l-o-gir_rf01.dgn

USERNAME => trilim DATE PLOTTED => 19-OCT-2010 TIME PLOTTED => 15:26

DIST	COUNTY	ROUTE	KILOMETER POST TOTAL PROJECT	SHEET No	TOTAL SHEETS
08	Riv	60,215	R19.7/21.9, R61.3/62.7	456	594

Caltrans Metric

John Bishop 10/02/09
REGISTERED CIVIL ENGINEER DATE

6-28-10
PLANS APPROVAL DATE

REGISTERED PROFESSIONAL ENGINEER J. S. BISHOP No. 50616 Exp. 9-30-11 CIVIL STATE OF CALIFORNIA

The State of California or its officers or agents shall not be responsible for the accuracy or completeness of electronic copies of this plan sheet.

Dokken Engineering
2365 Iron Point Rd, Suite 200
Folsom, CA 95630

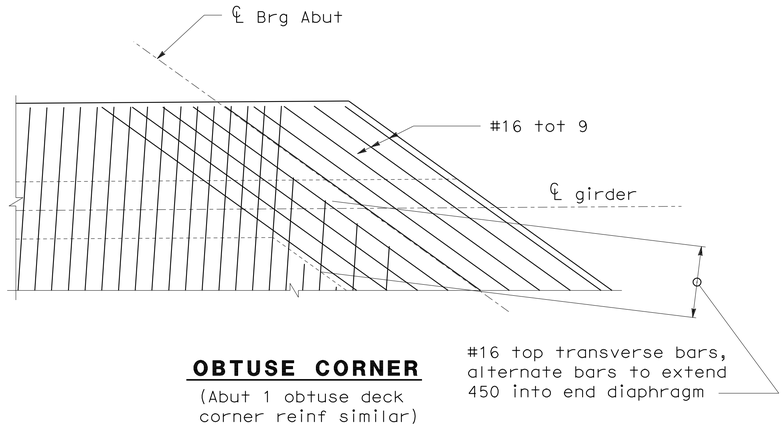

OBTUSE CORNER

(Abut 1 obtuse deck corner reinf similar)

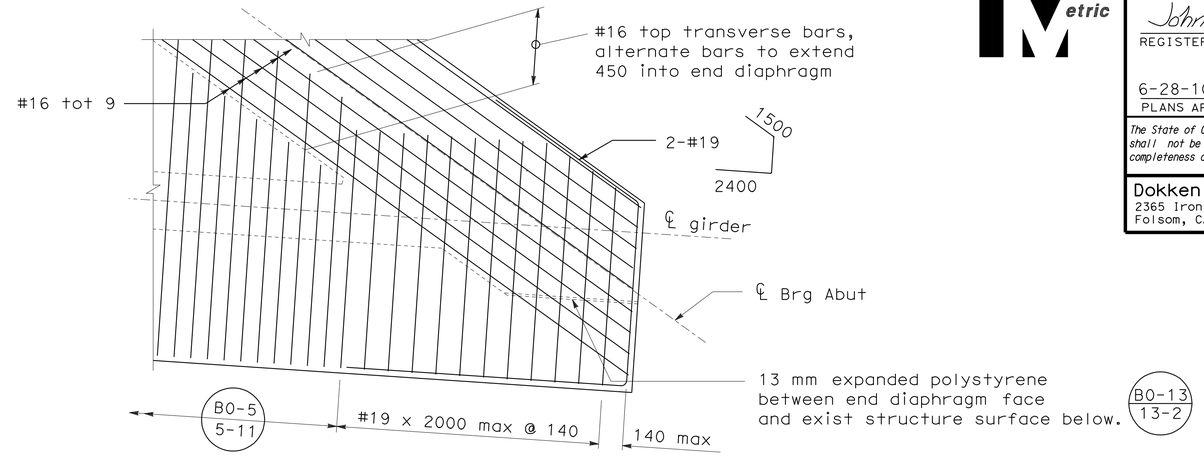

ACUTE CORNER

ABUT 4 DECK CORNER REINFORCEMENT

1:25

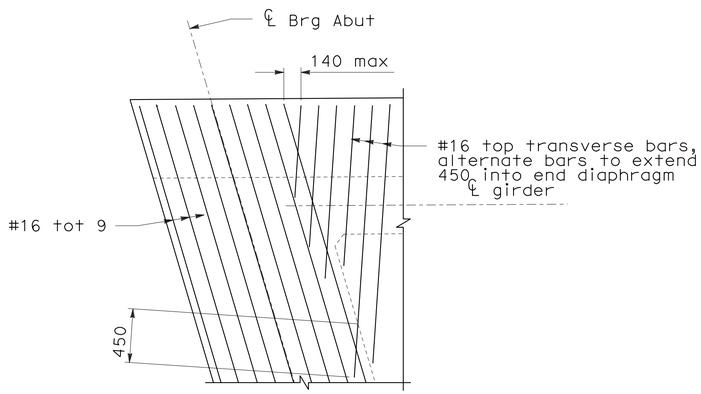

DECK CORNER REINFORCEMENT

1:25

ALL DIMENSIONS ARE IN MILLIMETERS UNLESS OTHERWISE SHOWN

Robert Zezoff
DESIGN OVERSIGHT Robert Zezoff
10-22-09
SIGN OFF DATE

DESIGN DETAIL SHEET (METRIC) (REV. 10/27/05)

	BY	CHECKED
DESIGN	J. Bishop	M. Maechler
DETAILS	C. Houghton	M. Maechler
QUANTITIES	J. Bishop	N. Bieniek

ORIGINAL SCALE IN MILLIMETERS FOR REDUCED PLANS 0 10 20 30 40 50 60 70 80 90 100

PREPARED FOR THE STATE OF CALIFORNIA DEPARTMENT OF TRANSPORTATION

John Bishop
PROJECT ENGINEER

CU 08
EA 449311

BRIDGE NO. 56-0082L
KILOMETER POST R62.2

BOX SPRINGS OVERHEAD (WIDEN)
TOP REINFORCEMENT DETAILS

DISREGARD PRINTS BEARING EARLIER REVISION DATES

REVISION DATES (PRELIMINARY STAGE ONLY): 2-25-08, 6-27-08, 7-14-08, 10-7-08, 2-1-09, 8/20/09, 10/2/09

SHEET 23 OF 31

FILE => 56-0082l-o-gir_rf02.dgn

USERNAME => trlim DATE PLOTTED => 19-OCT-2010 TIME PLOTTED => 15:26

DIST	COUNTY	ROUTE	KILOMETER POST TOTAL PROJECT	SHEET No	TOTAL SHEETS
08	Riv	60,215	R19.7/21.9, R61.3/62.7	457	594

Caltrans Metric

John Bishop 10/02/09
REGISTERED CIVIL ENGINEER DATE

6-28-10
PLANS APPROVAL DATE

REGISTERED PROFESSIONAL ENGINEER J. S. BISHOP No. 50616 Exp. 9-30-11 CIVIL STATE OF CALIFORNIA

The State of California or its officers or agents shall not be responsible for the accuracy or completeness of electronic copies of this plan sheet.

Dokken Engineering
2365 Iron Point Rd, Suite 200
Folsom, CA 95630

NOTES:

1. The contractor shall verify all controlling field dimensions before ordering or fabricating any material.

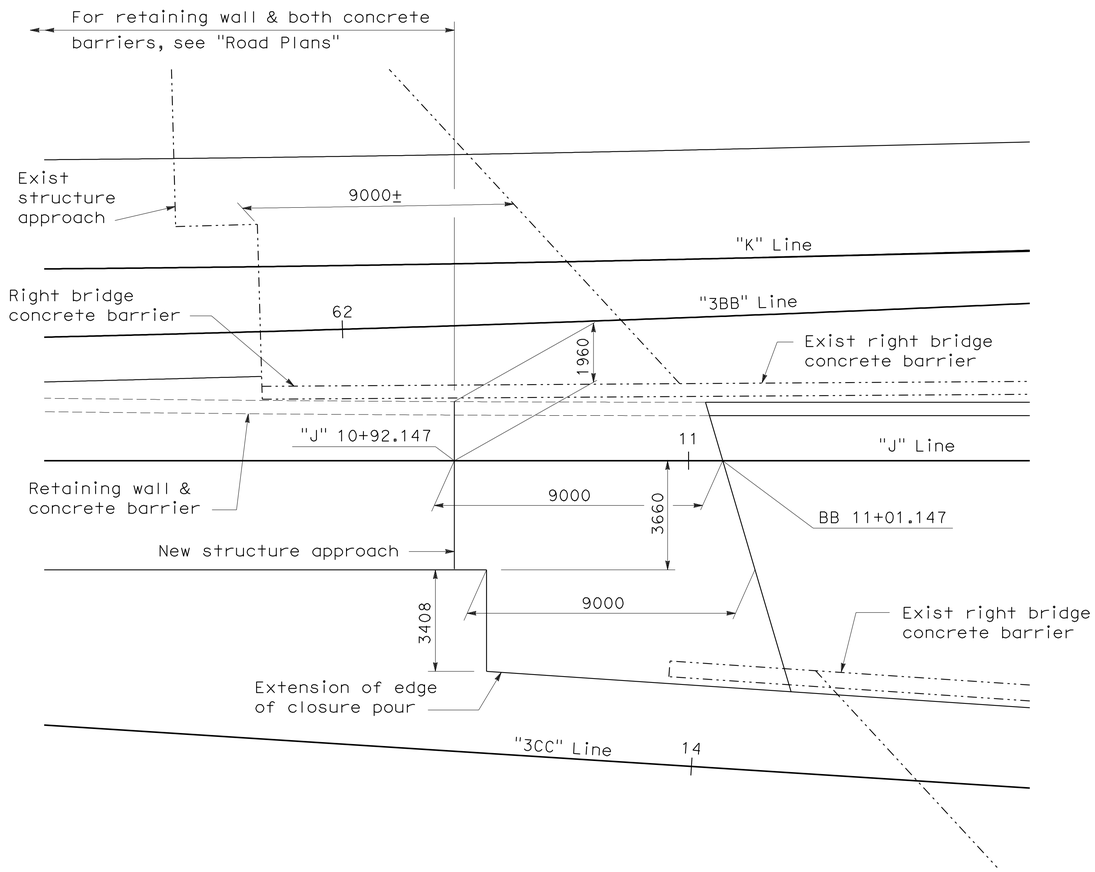

PLAN
1:100

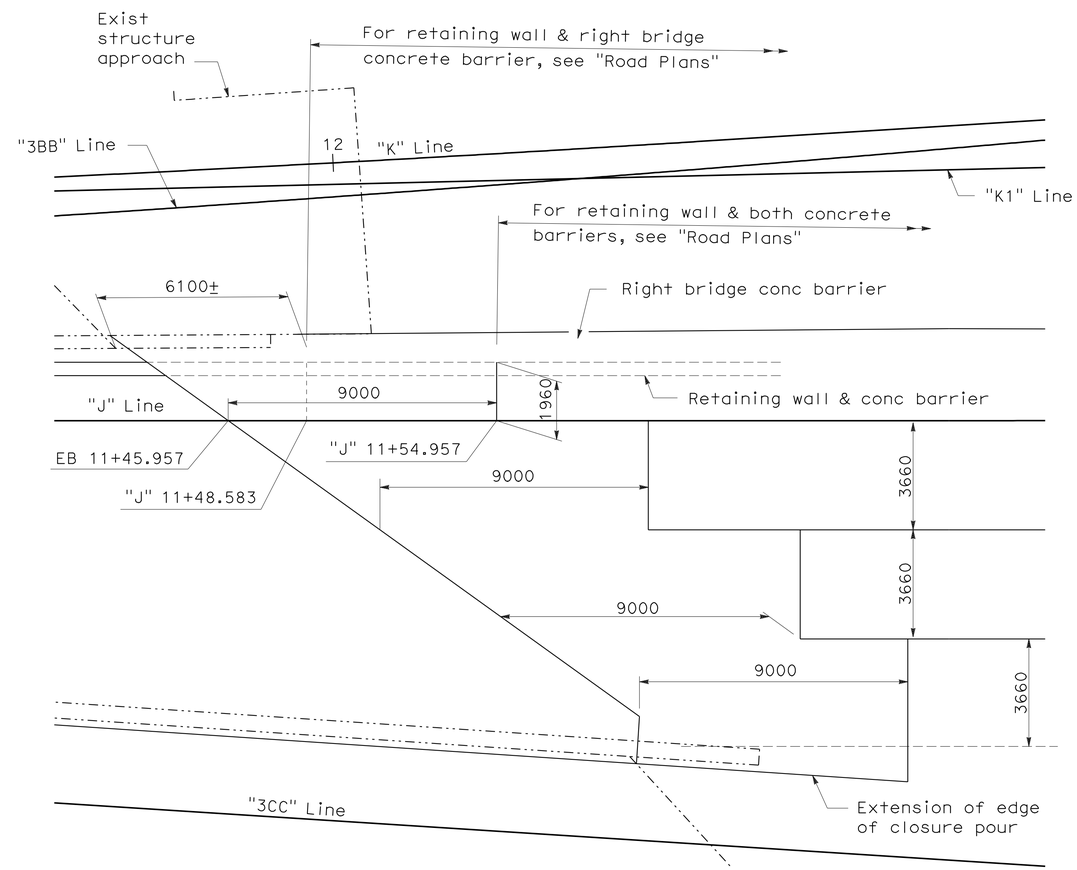

ALL DIMENSIONS ARE IN MILLIMETERS UNLESS OTHERWISE SHOWN

Robert Zezoff
DESIGN OVERSIGHT Robert Zezoff
10-22-09
SIGN OFF DATE

	BY	CHECKED
DESIGN	J. Bishop	M. Maechler
DETAILS	C. Houghton	M. Maechler
QUANTITIES	J. Bishop	N. Bieniek

PREPARED FOR THE STATE OF CALIFORNIA DEPARTMENT OF TRANSPORTATION

John Bishop
PROJECT ENGINEER

BRIDGE NO. 56-0082L
KILOMETER POST R62.2

BOX SPRINGS OVERHEAD (WIDEN)
STRUCTURE APPROACH LAYOUT

DESIGN DETAIL SHEET (METRIC) (REV. 10/27/05)

ORIGINAL SCALE IN MILLIMETERS FOR REDUCED PLANS 0 10 20 30 40 50 60 70 80 90 100

CU 08
EA 449311

DISREGARD PRINTS BEARING EARLIER REVISION DATES

REVISION DATES (PRELIMINARY STAGE ONLY) 2-29-08 6-27-08 7-14-08 10-7-08 2-2-09 8/20/09 10/2/09

SHEET 24 OF 31

FILE => 56-0082l-s-sa01.dgn

USERNAME => trilim DATE PLOTTED => 19-OCT-2010 TIME PLOTTED => 15:26

RELEASED 7-9-03

DIST.	COUNTY	ROUTE	KILOMETER POST TOTAL PROJECT	SHEET NO.	TOTAL SHEETS
08	Riv	60,215	R19.7/21.9, R61.3/62.7	458	594

Caltrans Metric

John Bishop 10/02/09
REGISTERED ENGINEER - CIVIL

6-28-10
PLANS APPROVAL DATE

The State of California or its officers or agents shall not be responsible for the accuracy or completeness of electronic copies of this plan sheet.

REGISTERED PROFESSIONAL ENGINEER J. S. BISHOP No. 50616 Exp. 9-30-11 CIVIL STATE OF CALIFORNIA

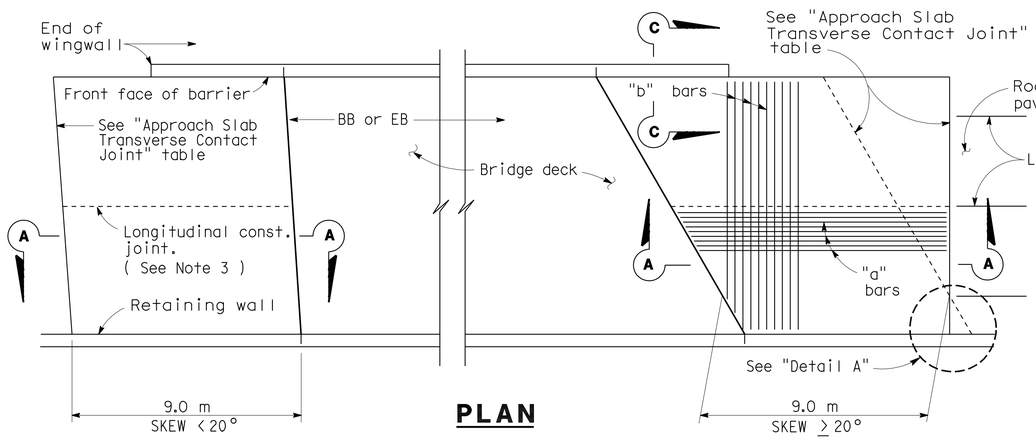

PLAN

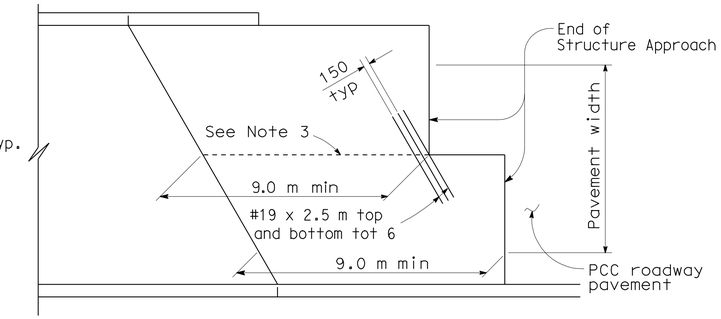

STRUCTURE APPROACH - END STAGGER DETAIL

APPROACH SLAB TRANSVERSE CONTACT JOINT		
APPROACH SKEW	WITH AC ROADWAY PAVEMENT	WITH PCC ROADWAY PAVEMENT
< 20°	Parallel to face of paving notch	Parallel to face of paving notch
20°- 45°	Parallel to face of P N use (Detail A)	Stagger lines 7.2 m to 10.8 m apart.
> 45°	Parallel to face of P N use (Detail A)	Stagger at each lane line.

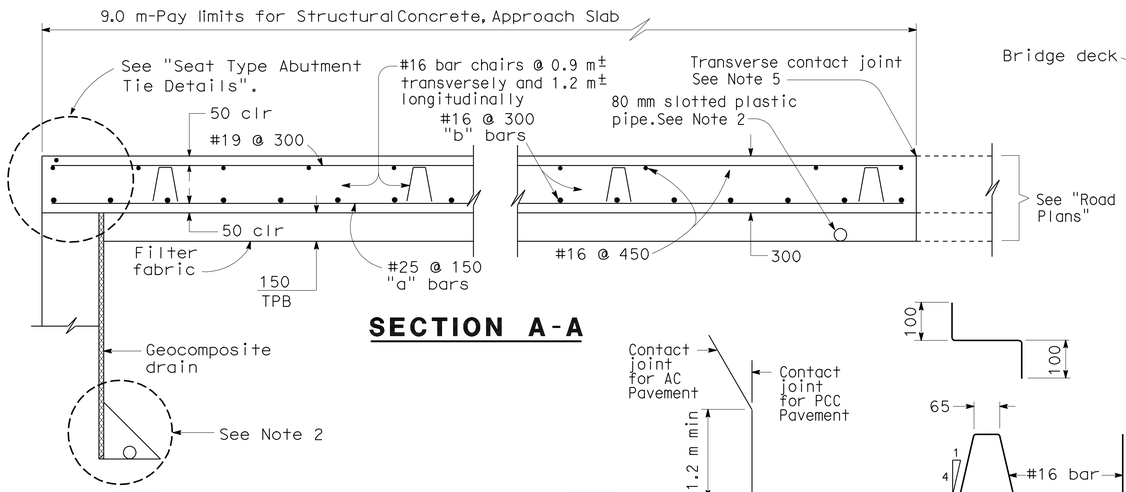

SECTION A-A

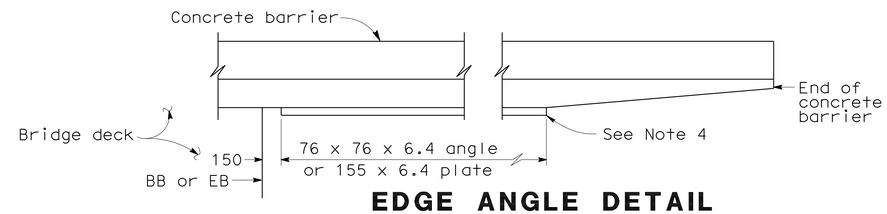

EDGE ANGLE DETAIL

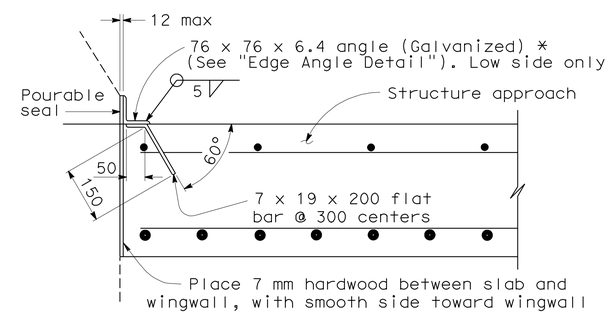

*(TO BE USED WITH TYPE 25 OR TYPE 27 CONCRETE BARRIER)

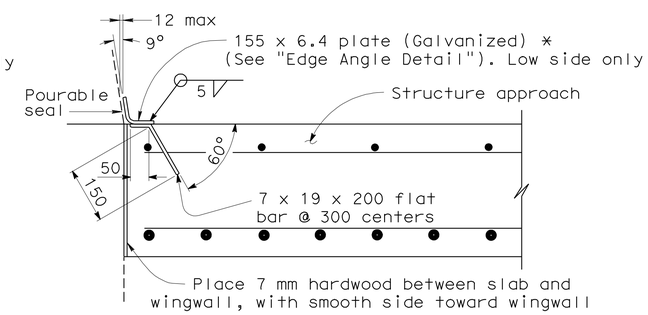

*(TO BE USED WITH TYPE 732 OR TYPE 736 CONCRETE BARRIER)

DETAIL B

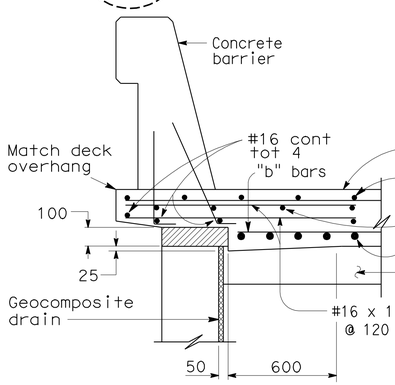

TYPE E-1

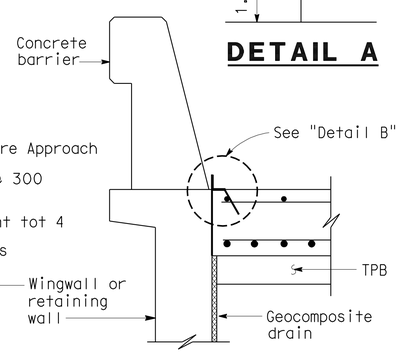

TYPE E-2

SECTION C-C

(Type E-1 to be used,unless otherwise shown on plans)

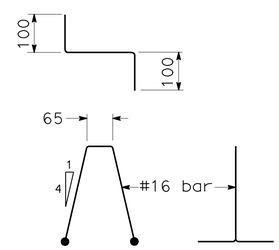

BAR CHAIR DETAIL

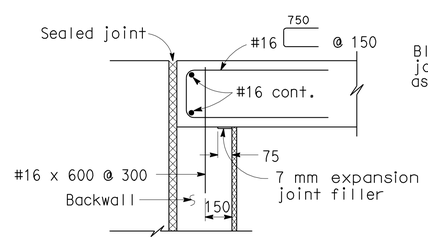

MR ≤ 50 mm

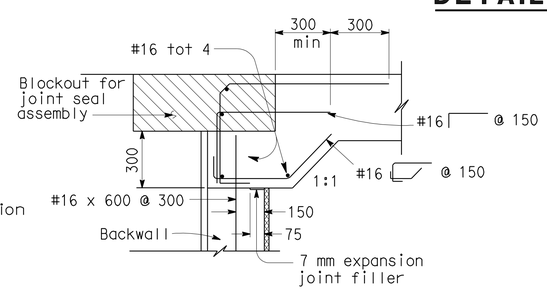

MR > 50 mm

SEAT TYPE ABUTMENT TIE DETAILS (SEE NOTE 1)

NOTES:

1. For details not shown,see Structure Plans. For MR ≤ 50 mm,adjust bar reinforcement to clear a sawcut for sealed joint,when required.
2. For drainage details,see "Structure Approach Drainage Details" sheet.
3. Longitudinal construction joints,when permitted by the Engineer, shall be located on lane lines.
4. End angle or plate at beginning of barrier transition, end of wingwall or end of structure approach as applicable.
5. For transverse contact joint with new PCC paving, refer to Standard Plan A35-A.
6. At the contractor's option, approach slab transverse reinforcement may be placed parallel to paving notch. Spacing of transverse reinforcement is measured along ℄ roadway.
7. Remove expanded polystyrene 150 from exposed surfaces.

Remove all polystyrene.

NO SCALE

ALL DIMENSIONS ARE IN MILLIMETERS UNLESS OTHERWISE SHOWN

DATE PLOTTED => 13-OCT-2010 TIME PLOTTED => 15:26

STANDARD DRAWING				
FILE NO. xs3-120	DESIGN BY M. TRAFFALIS	CHECKED E. THORKILDSEN	APPROVAL RECOMMENDED BY	
DRAWING DATE 4/98	DETAILS BY R. YEE	CHECKED E. THORKILDSEN		
	SUBMITTED BY M. HA		DESIGN SUPERVISOR	

STATE OF CALIFORNIA DEPARTMENT OF TRANSPORTATION

DIVISION OF STRUCTURES STRUCTURE DESIGN

BRIDGE NO. 56-0082L

KILOMETER POST R 62.2

BOX SPRINGS OVERHEAD (WIDEN)

STRUCTURE APPROACH TYPE N(9S)

DS OSD 2147A (METRIC) (REV. 2/25/97)

ORIGINAL SCALE IN MILLIMETERS FOR REDUCED PLANS 0 10 20 30 40 50 60 70 80 90 100

CU 08
EA 449311

DISREGARD PRINTS BEARING EARLIER REVISION DATES

REVISION DATES (PRELIMINARY STAGE ONLY) 2-25-08 6-28-08 10-8-08 2-2-09 8/20/09 10/2/09

SHEET 25 OF 31

USERNAME => trlim

56-0082l-s-sa02.dgn

DIST.	COUNTY	ROUTE	KILOMETER POST TOTAL PROJECT	SHEET NO.	TOTAL SHEETS
08	Riv	60,215	R19.7/21.9, R61.3/62.7	459	594

Caltrans Metric

John Bishop 10/02/09
REGISTERED ENGINEER - CIVIL

6-28-10
PLANS APPROVAL DATE

REGISTERED PROFESSIONAL ENGINEER J. S. BISHOP No. 50616 Exp. 9-30-11 CIVIL STATE OF CALIFORNIA

The State of California or its officers or agents shall not be responsible for the accuracy or completeness of electronic copies of this plan sheet.

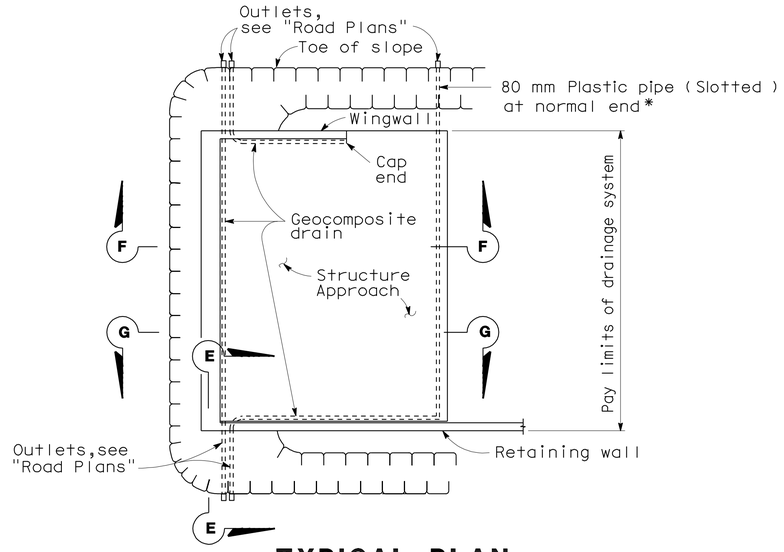

TYPICAL PLAN

*For pipe layout at staggered end, see "Detail B".

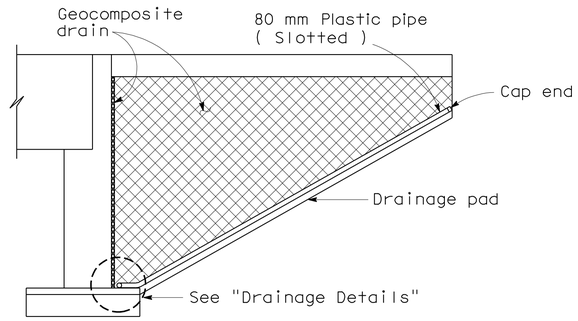

CANTILEVER WINGWALL
SECTION F-F

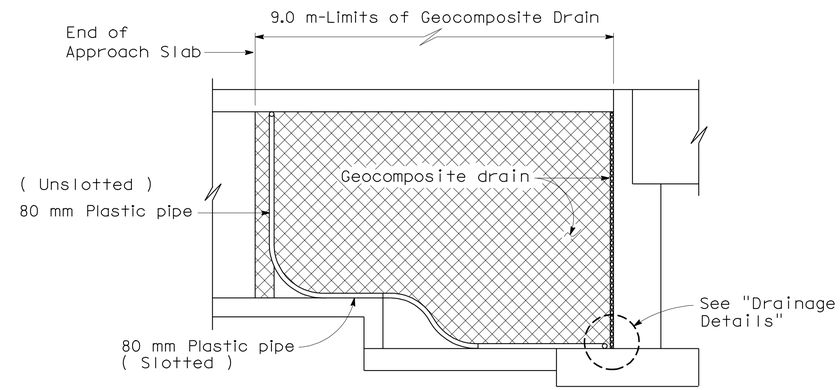

RETAINING WALL WINGWALL
SECTION G-G

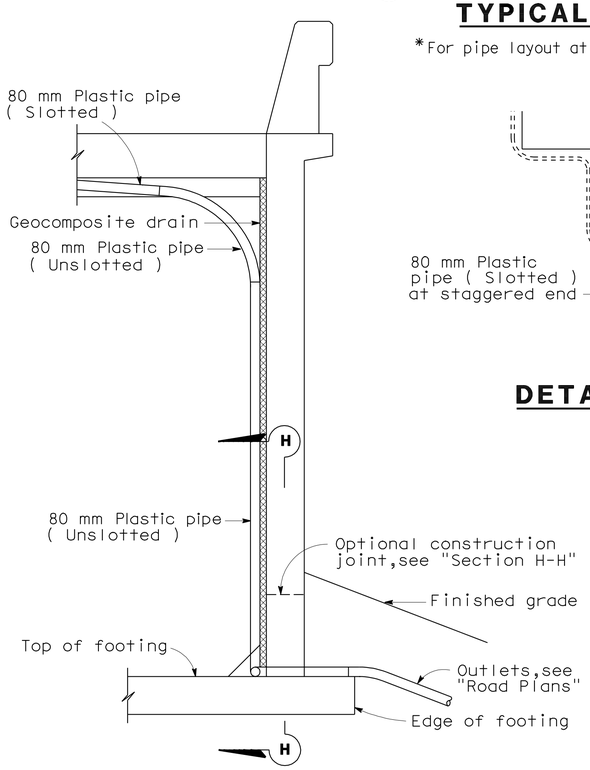

SECTION E-E

NOTE: Bends and junctions in 80 mm plastic pipe are 750 mm radius min.

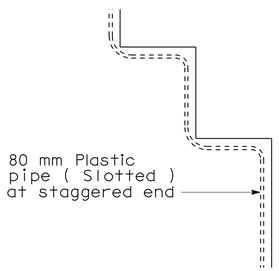

DETAIL B

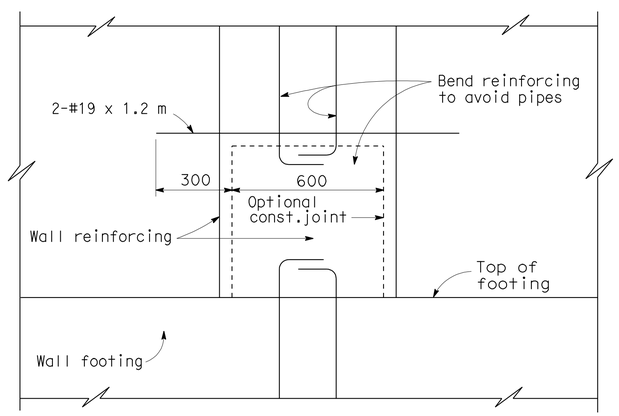

SECTION H-H

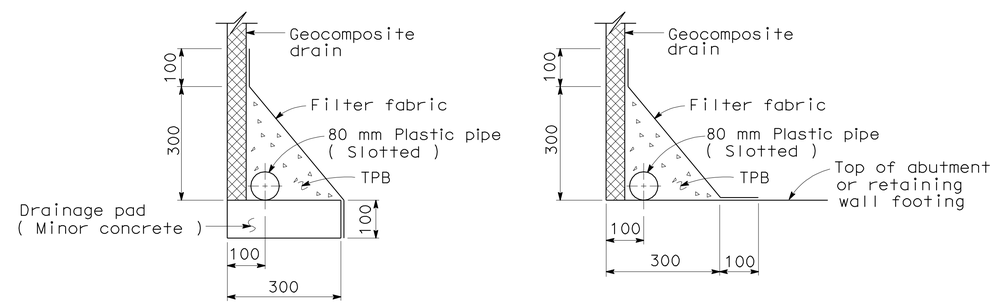

WITHOUT FOOTING **WITH FOOTING**

DRAINAGE DETAILS

NO SCALE

ALL DIMENSIONS ARE IN MILLIMETERS UNLESS OTHERWISE SHOWN

STANDARD DRAWING					
RELEASE DATE 4/23/98	DESIGN	BY M. TRAFFALIS	CHECKED E. THORKILDSEN	RELEASED BY	
FILE NO. xs3-110	DETAILS	BY R. YEE	CHECKED E. THORKILDSEN	OFFICE CHIEF	
	SUBMITTED	BY M. HA	DRAWING DATE 4/98		

DS OSD 2147A (METRIC) (REV. 2/25/97)

STATE OF CALIFORNIA DEPARTMENT OF TRANSPORTATION

DIVISION OF ENGINEERING SERVICES

CU 08
EA 449311

BRIDGE NO. 56-0082L
KILOMETER POST R 62.2

BOX SPRINGS OVERHEAD (WIDEN)

STRUCTURE APPROACH DRAINAGE DETAILS

ORIGINAL SCALE IN MILLIMETERS FOR REDUCED PLANS 0 10 20 30 40 50 60 70 80 90 100

DISREGARD PRINTS BEARING EARLIER REVISION DATES

REVISION DATES (PRELIMINARY STAGE ONLY) 2-20-08 7-18-08 10-8-08 2-1-09 8/28/09 10/2/09

SHEET 26 OF 31

USERNAME => trlim

56-00821-s-sadd.dgn

DATE PLOTTED => 19-OCT-2010 TIME PLOTTED => 15:26

RELEASED 4-20-00

DIST.	COUNTY	ROUTE	KILOMETER POST TOTAL PROJECT	SHEET NO.	TOTAL SHEETS
08	Riv	60,215	R19.7/21.9, R61.3/62.7	460	594

Caltrans Metric

John Bishop 10/02/09
REGISTERED ENGINEER - CIVIL

6-28-10
PLANS APPROVAL DATE

REGISTERED PROFESSIONAL ENGINEER J. S. BISHOP No. 50616 Exp. 9-30-11 CIVIL STATE OF CALIFORNIA

The State of California or its officers or agents shall not be responsible for the accuracy or completeness of electronic copies of this plan sheet.

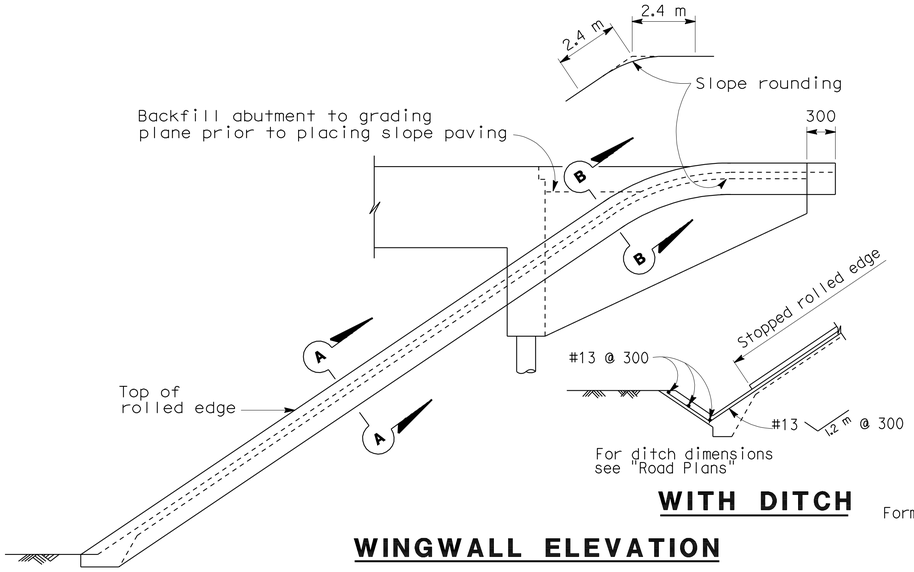

WITH DITCH

WINGWALL ELEVATION

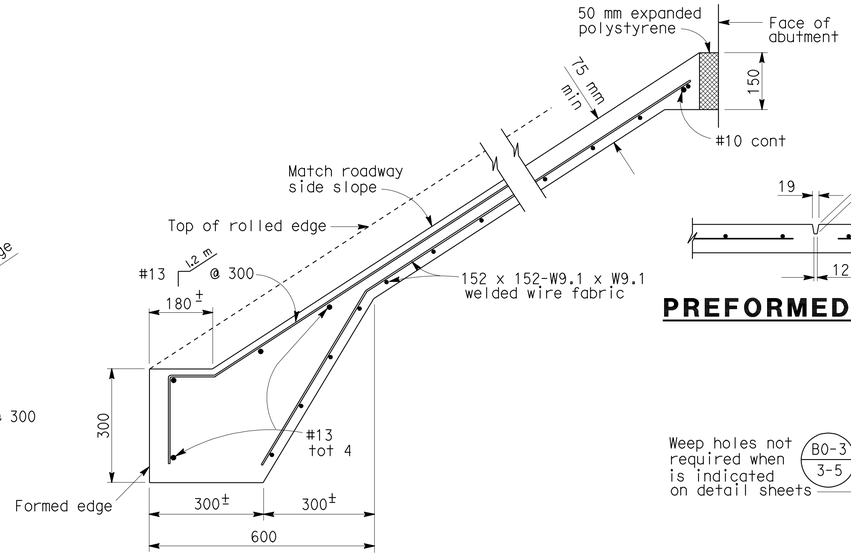

TYPICAL SECTION - CONCRETE PAVING

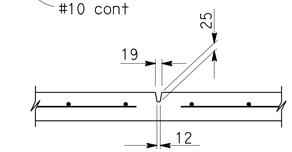

PREFORMED GROOVE

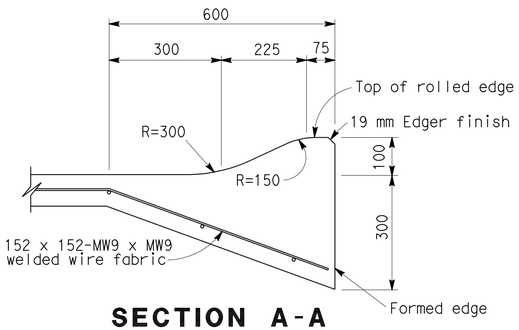

SECTION A-A

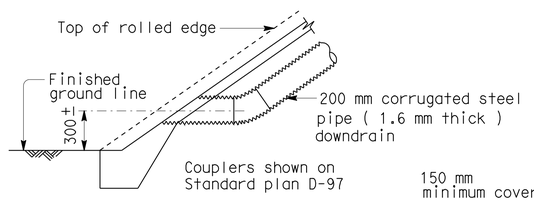

TYPICAL - NO CURB

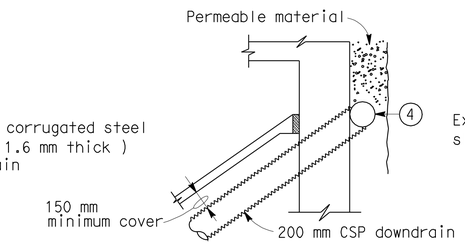

TYPICAL - DRAIN CONNECTION

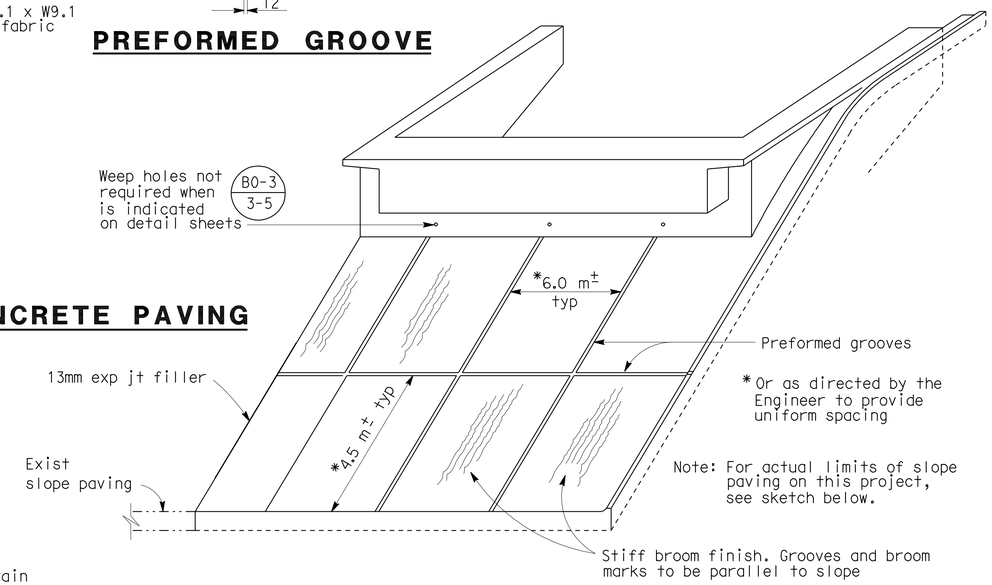

* Or as directed by the Engineer to provide uniform spacing

Note: For actual limits of slope paving on this project, see sketch below.

PICTORIAL VIEW OF TYPICAL INSTALLATION

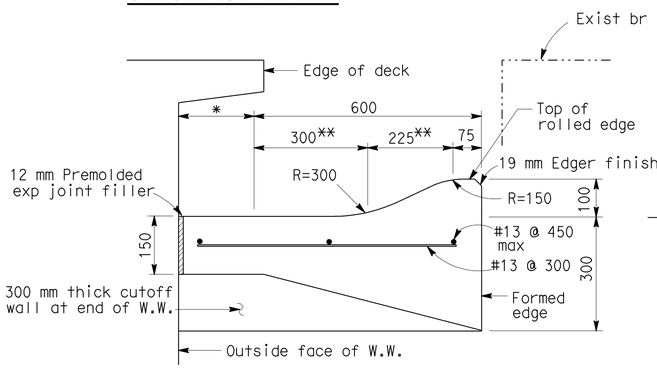

SECTION B-B

* This dimension becomes zero when edge of deck is at outside face of W.W.

** Dimension may be reduced to fit between exist bridge and widening.

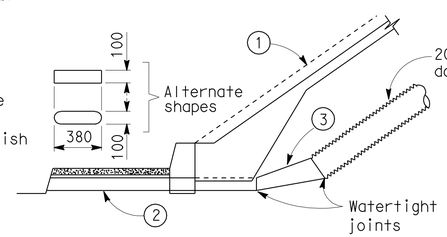

TYPICAL - WITH SIDEWALK

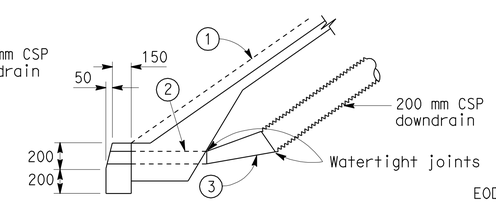

TYPICAL - WITH CURB

DRAINAGE DETAILS

Note: Drainage details are only applicable when B0-3/3-5 is indicated on detail sheets.

1. Top of rolled edge
2. Conduit: 1.6 mm galv corrugated steel or 2.8 mm smooth galv steel
3. Taper: 1.6 mm / 2.8 mm smooth galv steel
4. 200 mm perforated steel pipe (1.6 mm thick) underdrain behind abutment. Connect to downdrain as shown on limits of Slope Paving & Drainage layout.

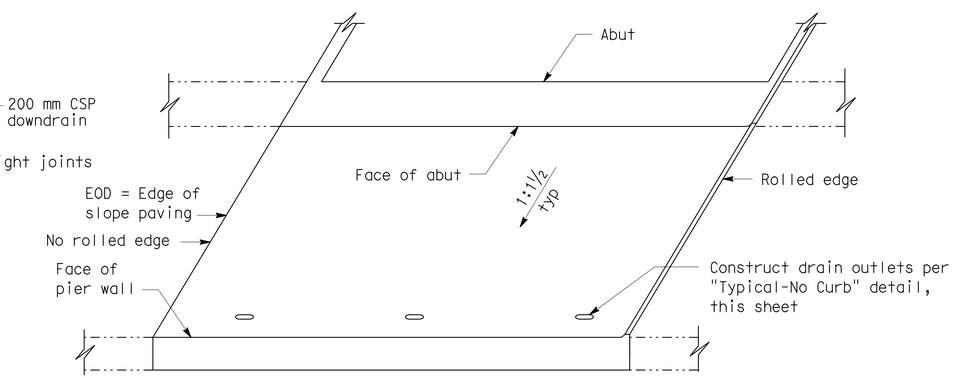

LIMITS OF SLOPE PAVING & DRAINAGE LAYOUT

NO SCALE
ALL DIMENSIONS ARE IN MILLIMETERS UNLESS OTHERWISE SHOWN

STANDARD DRAWING				
FILE NO. xs4-210	DESIGN	BY	CHECKED	APPROVAL RECOMMENDED BY
DRAWING DATE 3/89	DETAILS	BY R. YEE	CHECKED	DESIGN SUPERVISOR
	SUBMITTED BY C.W. PURKISS			

STATE OF CALIFORNIA DEPARTMENT OF TRANSPORTATION

DIVISION OF STRUCTURES STRUCTURE DESIGN

BRIDGE NO. 56-0082L

KILOMETER POST R 62.2

BOX SPRINGS OVERHEAD (WIDEN)

SLOPE PAVING - FULL SLOPE

DS OSD 2147A (METRIC) (REV. 2/25/97)

ORIGINAL SCALE IN MILLIMETERS FOR REDUCED PLANS 0 10 20 30 40 50 60 70 80 90 100

CU 08
EA 449311

DISREGARD PRINTS BEARING EARLIER REVISION DATES

REVISION DATES (PRELIMINARY STAGE ONLY) 1-16-08 2-28-08 10-8-08 2-3-09 8/28/09 10/2/09

SHEET 27 OF 31

USERNAME => trlim

56-0082l-t-slp1.dgn

DATE PLOTTED => 19-OCT-2010 TIME PLOTTED => 15:26

REFERENCE: CALTRANS SOIL & ROCK LOGGING, CLASSIFICATION, AND PRESENTATION MANUAL (JUNE 2007)

Caltrans Metric

DIST	COUNTY	ROUTE	KILOMETER POST TOTAL PROJECT	SHEET No	TOTAL SHEETS
08	Riv	60,215	R19.7/21.9, R61.3/62.7	461	594

Carlos V Amante 10/02/09
CERTIFIED GEOTECHNICAL ENGINEER

6-28-10
PLANS APPROVAL DATE

REGISTERED PROFESSIONAL ENGINEER — CARLOS AMANTE — No. GE2724 — Exp. 6-30-10 — GEOTECHNICAL — STATE OF CALIFORNIA

The State of California or its officers or agents shall not be responsible for the accuracy or completeness of electronic copies of this plan sheet.

RIVERSIDE COUNTY TRANSPORTATION COMMISSION
4080 LEMON STREET - THIRD FLOOR
RIVERSIDE, CALIFORNIA 92501

LIM & NASCIMENTO ENGINEERING
1887 BUSINESS CENTER DRIVE, SUITE 6
SAN BERNARDINO, CALIFORNIA 92408

KLEINFELDER
1220 RESEARCH DRIVE, SUITE B
REDLANDS, CALIFORNIA 92374

CEMENTATION

Description	Criteria
Weak	Crumbles or breaks with handling or little finger pressure.
Moderate	Crumbles or breaks with considerable finger pressure.
Strong	Will not crumble or break with finger pressure.

CONSISTENCY OF COHESIVE SOILS

Description	Unconfined Compressive Strength (kpa)	Pocket Penetrometer Measurement (kpa)	Torvane Measurement (kpa)	Field Approximation
Very Soft	< 23.93	< 23.93	< 11.48	Easily penetrated several inches by fist
Soft	23.93 to 47.8	23.93 to 47.8	11.48 to 23.93	Easily penetrated several inches by thumb
Medium Stiff	47.85 to 95.72	47.85 to 95.72	23.93 to 47.85	Penetrated several inches by thumb with moderate effort
Stiff	95.72 to 191.44	95.72 to 191.44	47.85 to 95.72	Readily indented by thumb but penetrated only with great effort
Very Stiff	191.44 to 382.88	191.44 to 382.88	191.44 to 382.88	Readily indented by thumbnail
Hard	>765.76	>765.76	>382.88	Indented by thumbnail with difficulty

BOREHOLE IDENTIFICATION

Symbol	Hole Type	Description
Size	A	Auger Boring
Size	R P	Rotary drilled boring Rotary percussion boring (air)
Size	R	Rotary drilled diamond core
Size	HD HA	Hand driven (25.4mm soil tube) Hand Auger
●	D	Dynamic Cone Penetration Boring
▲	CPT	Cone Penetration Test (ASTM D 5778-95)
⬚	O	Other

Note: Size in millimeters.

PLASTICITY OF FINE-GRAINED SOILS

Description	Criteria
Nonplastic	A 3.18 mm thread cannot be rolled at any water content.
Low	The thread can barely be rolled and the lump cannot be formed when drier than the plastic limit.
Medium	The thread is easy to roll and not much time is required to reach the plastic limit. The thread cannot be rerolled after reaching the plastic limit. The lump crumbles when drier than the plastic limit.
High	It takes considerable time rolling and kneading to reach the plastic limit. The thread can be rerolled several times after reaching the plastic limit. The lump can be formed without crumbling when drier than the plastic limit.

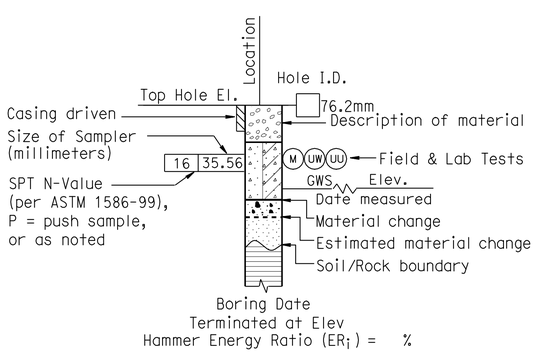

ROTARY BORING

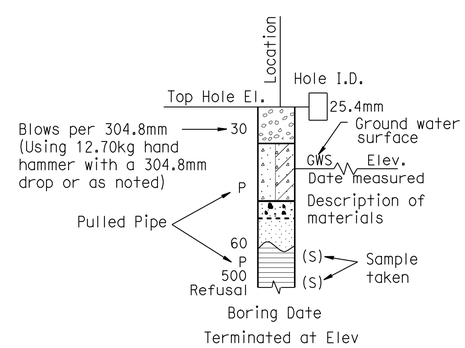

HAND BORING

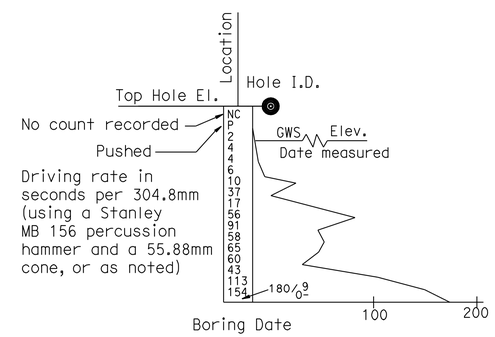

DYNAMIC CONE PENETRATION BORING

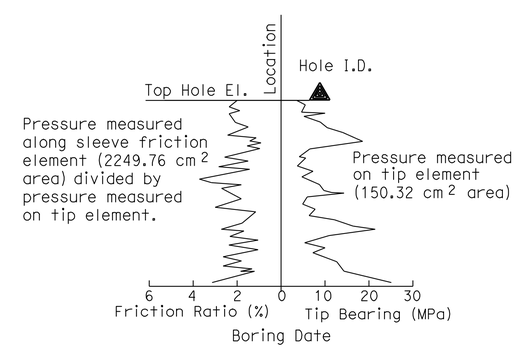

CONE PENETRATION TEST (CPT) SOUNDING

ALL DIMENSIONS ARE IN METERS UNLESS OTHERWISE SHOWN

Robert Zezoff
DESIGN OVERSIGHT Robert Zezoff
10-22-09
SIGN OFF DATE

DRAWN BY D. FAHRNEY
CHECKED BY C. AMANTE

PREPARED FOR THE STATE OF CALIFORNIA DEPARTMENT OF TRANSPORTATION

C. AMANTE
PROJECT ENGINEER

BRIDGE NO. 56-0082L
KILOMETER POST R62.2

BOX SPRINGS OVERHEAD (WIDEN)

SOIL LEGEND NO. 1

ORIGINAL SCALE IN MILLIMETERS FOR REDUCED PLANS 0 10 20 30 40 50 60 70 80 90

CU 08
EA 449311

DISREGARD PRINTS BEARING EARLIER REVISION DATES

REVISION DATES: 3/12/08 7/21/08 11/14/08 6/18/09 8/28/09 10/2/09

SHEET 28 OF 31

FILE => 56-0082l-z-l1tb01.dgn

USERNAME => tr11im DATE PLOTTED => 19-OCT-2010 TIME PLOTTED => 15:27

DIST	COUNTY	ROUTE	KILOMETER POST TOTAL PROJECT	SHEET No	TOTAL SHEETS
08	Riv	60,215	R19.7/21.9, R61.3/62.7	462	594

Caltrans Metric

Carlos V Amante 10/02/09
CERTIFIED GEOTECHNICAL ENGINEER

6-28-10
PLANS APPROVAL DATE

REGISTERED PROFESSIONAL ENGINEER — CARLOS AMANTE — No. GE2724 — Exp. 6-30-10 — GEOTECHNICAL — STATE OF CALIFORNIA

The State of California or its officers or agents shall not be responsible for the accuracy or completeness of electronic copies of this plan sheet.

RIVERSIDE COUNTY TRANSPORTATION COMMISSION
4080 LEMON STREET - THIRD FLOOR
RIVERSIDE, CALIFORNIA 92501

LIM & NASCIMENTO ENGINEERING
1887 BUSINESS CENTER DRIVE, SUITE 6
SAN BERNARDINO, CALIFORNIA 92408

KLEINFELDER
1220 RESEARCH DRIVE, SUITE B
REDLANDS, CALIFORNIA 92374

REFERENCE: CALTRANS SOIL & ROCK LOGGING, CLASSIFICATION, AND PRESENTATION MANUAL (JUNE 2007)

GROUP SYMBOLS AND NAMES

Graphic/Symbol	Group Names
GW	Well-graded GRAVEL Well-graded GRAVEL with SAND
GP	Poorly graded GRAVEL Poorly graded GRAVEL with SAND
GW-GM	Well-graded GRAVEL with SILT Well-graded GRAVEL with SILT and SAND
GW-GC	Well-graded GRAVEL with CLAY (or SILTY CLAY) Well-graded GRAVEL with CLAY and SAND (or SILTY CLAY and SAND)
GP-GM	Poorly graded GRAVEL with SILT Poorly graded GRAVEL with SILT and SAND
GP-GC	Poorly graded GRAVEL with CLAY (or SILTY CLAY) Poorly graded GRAVEL with CLAY and SAND (or SILTY CLAY and SAND)
GM	SILTY GRAVEL SILTY GRAVEL with SAND
GC	CLAYEY GRAVEL CLAYEY GRAVEL with SAND
GC-GM	SILTY, CLAYEY GRAVEL SILTY, CLAYEY GRAVEL with SAND
SW	Well-graded SAND Well-graded SAND with GRAVEL
SP	Poorly graded SAND Poorly graded SAND with GRAVEL
SW-SM	Well-graded SAND with SILT Well-graded SAND with SILT and GRAVEL
SW-SC	Well-graded SAND with CLAY (or SILTY CLAY) Well-graded SAND with CLAY and GRAVEL (or SILTY CLAY and GRAVEL)
SP-SM	Poorly graded SAND with SILT Poorly graded SAND with SILT and GRAVEL
SP-SC	Poorly graded SAND with CLAY (or SILTY CLAY) Poorly graded SAND with CLAY and GRAVEL (or SILTY CLAY and GRAVEL)
SM	SILTY SAND SILTY SAND with GRAVEL
SC	CLAYEY SAND CLAYEY SAND with GRAVEL
SC-SM	SILTY, CLAYEY SAND SILTY, CLAYEY SAND with GRAVEL
PT	PEAT
	COBBLES COBBLES and BOULDERS BOULDERS

Graphic/Symbol	Group Names
CL	Lean CLAY Lean CLAY with SAND Lean CLAY with GRAVEL SANDY lean CLAY SANDY lean CLAY with GRAVEL GRAVELLY lean CLAY GRAVELLY lean CLAY with SAND
CL-ML	SILTY CLAY SILTY CLAY with SAND SILTY CLAY with GRAVEL SANDY SILTY CLAY SANDY SILTY CLAY with GRAVEL GRAVELLY SILTY CLAY GRAVELLY SILTY CLAY with SAND
ML	SILT SILT with SAND SILT with GRAVEL SANDY SILT SANDY SILT with GRAVEL GRAVELLY SILT GRAVELLY SILT with SAND
OL	ORGANIC lean CLAY ORGANIC lean CLAY with SAND ORGANIC lean CLAY with GRAVEL SANDY ORGANIC lean CLAY SANDY ORGANIC lean CLAY with GRAVEL GRAVELLY ORGANIC lean CLAY GRAVELLY ORGANIC lean CLAY with SAND
OL	ORGANIC SILT ORGANIC SILT with SAND ORGANIC SILT with GRAVEL SANDY ORGANIC SILT SANDY ORGANIC SILT with GRAVEL GRAVELLY ORGANIC SILT GRAVELLY ORGANIC SILT with SAND
CH	Fat CLAY Fat CLAY with SAND Fat CLAY with GRAVEL SANDY fat CLAY SANDY fat CLAY with GRAVEL GRAVELLY fat CLAY GRAVELLY fat CLAY with SAND
MH	Elastic SILT Elastic SILT with SAND Elastic SILT with GRAVEL SANDY elastic SILT SANDY elastic SILT with GRAVEL GRAVELLY elastic SILT GRAVELLY elastic SILT with SAND
OH	ORGANIC fat CLAY ORGANIC fat CLAY with SAND ORGANIC fat CLAY with GRAVEL SANDY ORGANIC fat CLAY SANDY ORGANIC fat CLAY with GRAVEL GRAVELLY ORGANIC fat CLAY GRAVELLY ORGANIC fat CLAY with SAND
OH	ORGANIC elastic SILT ORGANIC elastic SILT with SAND ORGANIC elastic SILT with GRAVEL SANDY ORGANIC elastic SILT SANDY ORGANIC elastic SILT with GRAVEL GRAVELLY ORGANIC elastic SILT GRAVELLY ORGANIC elastic SILT with SAND
OL/OH	ORGANIC SOIL ORGANIC SOIL with SAND ORGANIC SOIL with GRAVEL SANDY ORGANIC SOIL SANDY ORGANIC SOIL with GRAVEL GRAVELLY ORGANIC SOIL GRAVELLY ORGANIC SOIL with SAND

FIELD AND LABORATORY TESTING

- (C) Consolidation (ASTM D 2435)
- (CL) Collapse Potential (ASTM D 5333)
- (CP) Compaction Curve (CTM 216)
- (CR) Corrosivity Testing (CTM 643, CTM 422, CTM 417)
- (CU) Consolidated Undrained Triaxial (ASTM D 4767)
- (DS) Direct Shear (ASTM D 3080)
- (EI) Expansion Index (ASTM D 4829)
- (M) Moisture Content (ASTM D 2216)
- (OC) Organic Content-% (ASTM D 2974)
- (P) Permeability (CTM 220)
- (PA) Particle Size Analysis (ASTM D 422)
- (PI) Plasticity Index (AASHTO T 90) Liquid Limit (AASHTO T 89)
- (PL) Point Load Index (ASTM D 5731)
- (PM) Pressure Meter
- (PP) Pocket Penetrometer
- (R) R-Value (CTM 301)
- (SE) Sand Equivalent (CTM 217)
- (SG) Specific Gravity (AASHTO T 100)
- (SL) Shrinkage Limit (ASTM D 427)
- (SW) Swell Potential (ASTM D 4546)
- (TV) Pocket Torvane
- (UC) Unconfined Compression-Soil (ASTM D 2166) Unconfined Compression-Rock (ASTM D 2938)
- (UU) Unconsolidated Undrained Triaxial (ASTM D 2850)
- (UW) Unit Weight (ASTM D 4767)
- (VS) Vane Shear (AASHTO T 223)

APPARENT DENSITY OF COHESIONLESS SOILS

Description	SPT N_{60} (Blows / 304.8 mm)
Very loose	0 - 4
Loose	5 - 10
Medium Dense	11 - 30
Dense	31 - 50
Very Dense	> 50

MOISTURE

Description	Criteria
Dry	Absence of moisture, dusty, dry to the touch
Moist	Damp but no visible water
Wet	Visible free water, usually soil is below water table

PERCENT OR PROPORTION OF SOILS

Description	Criteria
Trace	Particles are present but estimated to be less than 5%
Few	5 to 10%
Little	15 to 25%
Some	30 to 45%
Mostly	50 to 100%

PARTICLE SIZE

Description		Size
Boulder		> 304.8 mm
Cobble		76.2 mm to 304.8 mm
Gravel	Coarse	19.05 mm to 76.2 mm
	Fine	No. 4 to 19.05 mm
Sand	Coarse	No. 10 to No. 4
	Medium	No. 40 to No. 10
	Fine	No. 200 to No. 40

ALL DIMENSIONS ARE IN METERS UNLESS OTHERWISE SHOWN

Robert Zezoff
DESIGN OVERSIGHT Robert Zezoff
10-22-09
SIGN OFF DATE

DRAWN BY D. FAHRNEY
CHECKED BY C. AMANTE

PREPARED FOR THE STATE OF CALIFORNIA DEPARTMENT OF TRANSPORTATION

C. AMANTE
PROJECT ENGINEER

BRIDGE NO. 56-0082L
KILOMETER POST R62.2

BOX SPRINGS OVERHEAD (WIDEN)

SOIL LEGEND NO. 2

ORIGINAL SCALE IN MILLIMETERS FOR REDUCED PLANS 0 10 20 30 40 50 60 70 80 90

CU 08
EA 449311

DISREGARD PRINTS BEARING EARLIER REVISION DATES

REVISION DATES: 3/12/08 7/21/08 11/4/08 6/18/09 8/28/09 10/2/09

SHEET 29 OF 31

FILE => 56-0082I-z-lltb02.dgn

USERNAME => trrlim DATE PLOTTED => 19-OCT-2010 TIME PLOTTED => 15:27

DIST	COUNTY	ROUTE	KILOMETER POST TOTAL PROJECT	SHEET No	TOTAL SHEETS
08	Riv	60,215	R19.7/21.9, R61.3/62.7	463	594

Caltrans Metric

Carlos V Amante 10/02/09
CERTIFIED GEOTECHNICAL ENGINEER

6-28-10
PLANS APPROVAL DATE

REGISTERED PROFESSIONAL ENGINEER — CARLOS AMANTE — No. GE2724 — Exp. 6-30-10 — GEOTECHNICAL — STATE OF CALIFORNIA

The State of California or its officers or agents shall not be responsible for the accuracy or completeness of electronic copies of this plan sheet.

RIVERSIDE COUNTY TRANSPORTATION COMMISSION
4080 LEMON STREET - THIRD FLOOR
RIVERSIDE, CALIFORNIA 92501

LIM & NASCIMENTO ENGINEERING
1887 BUSINESS CENTER DRIVE, SUITE 6
SAN BERNARDINO, CALIFORNIA 92408

KLEINFELDER
1220 RESEARCH DRIVE, SUITE B
REDLANDS, CALIFORNIA 92374

REFERENCE: CALTRANS SOIL & ROCK LOGGING, CLASSIFICATION, AND PRESENTATION MANUAL (JUNE 2007)

PERCENT CORE RECOVERY (REC) & ROCK QUALITY DESIGNATION (RQD)

$$REC = \frac{\sum \text{Length of the recovered core pieces (mm)}}{\text{Total length of core run (mm)}} \times 100\%$$

$$RQD = \frac{\sum \text{Length of intact core pieces} \geq 101.6\text{ mm}}{\text{Total length of core run (mm)}} \times 100\%$$

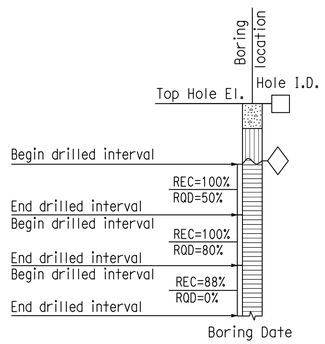

RELATIVE STRENGTH OF INTACT ROCK

Term	Uniaxial Compressive Strength (kPa)
Extremely Strong	> 206842.71
Very Strong	99973.98 - 206842.71
Strong	48263.30 - 99973.98
Medium Strong	24131.65 - 48263.30
Weak	4826.33 - 24131.65
Very Weak	1034.21 - 4826.33
Extremely Weak	< 1034.21

BEDDING SPACING

Description	Thickness / Spacing
Massive	Greater than 3.05 m
Very thickly bedded	0.91 m to 3.05 m
Thickly bedded	0.30 m to 0.91 m
Moderately bedded	92.08 mm to 304.8 mm
Thinly bedded	31.75 mm to 92.08 mm
Very thinly bedded	9.53 mm to 31.75 mm
Laminated	Less than 9.53 mm

LEGEND OF ROCK MATERIALS

- IGNEOUS ROCK
- SEDIMENTARY ROCK
- METAMORPHIC ROCK

ROCK HARDNESS

Description	Criteria
Extremely Hard	Specimen cannot be scratched with a pocket knife or sharp pick; can only be chipped with repeated heavy hammer blows.
Very Hard	Specimen cannot be scratched with a pocket knife or sharp pick. Breaks with repeated heavy hammer blows.
Hard	Specimen can be scratched with a pocket knife or sharp pick with difficulty (heavy pressure). Heavy hammer blows required to break specimen.
Moderately Hard	Specimen can be scratched with pocket knife or sharp pick with light or moderate pressure. Core breaks with moderate hammer pressure.
Moderately Soft	Specimen can be grooved 1/6" deep with a pocket knife or sharp pick with moderate or heavy pressure. Breaks with light hammer blow or heavy manual pressure.
Soft	Specimen can be grooved or gouged easily by a pocket knife or sharp pick with light pressure, can be scratched with fingernail. Breaks with light to moderate manual pressure.
Very Soft	Specimen can be readily indented, grooved or gouged with fingernail, or carved with a pocket knife. Breaks with light manual pressure.

FRACTURE DENSITY

Description	Observed Fracture Density
Unfractured	No fractures.
Very slightly fractured	Lengths greater than 0.91 m.
Slightly fractured	Lengths from 0.30 m to 0.91 m with few lengths less than 0.30 m or greater than 0.91 m.
Moderately fractured	Lengths mostly in 101.6 mm to 304.8 mm range with most lengths about 203.2 mm.
Intensely fractured	Lengths average from 25.4 mm to 101.6 mm with scattered fragmented intervals with lengths less than 101.6 mm.
Very intensely fractured	Mostly chips and fragments with a few scattered short core lengths.

Combination descriptors (such as "Very intensely to intensely fractured") are used where equal distribution of both fracture density characteristics is present over a significant interval or exposure, or where characteristics are "in between" the descriptor definitions. Only two adjacent descriptors may be combined.

WEATHERING DESCRIPTORS FOR INTACT ROCK

Description	Diagnostic features					General Characteristics
	Chemical Weathering-Discoloration and/or oxidation		Mechanical Weathering-Grain boundary conditions (disaggregation) primarily for granitics and some coarse-grained sediments	Texture and Solutioning		
	Body of Rock	Fracture Surfaces		Texture	Solutioning	
Fresh	No discoloration, not oxidized.	No discoloration or oxidation.	No separation, intact (tight).	No change.	No solutioning.	Hammer rings when crystalline rocks are struck.
Slightly Weathered	Discoloration or oxidation is limited to surface of, or short distance from, fractures; some feldspar crystals are dull.	Minor to complete discoloration or oxidation of most surfaces.	No visible separation, intact (tight).	Preserved.	Minor leaching of some soluble minerals may be noted.	Hammer rings when crystalline rocks are struck. Body of rock not weakened.
Moderately Weathered	Discoloration or oxidation extends from fractures usually throughout; Fe-Mg minerals are "rusty," feldspar crystals are "cloudy."	All fracture surfaces are discolored or oxidized.	Partial separation of boundaries visible.	Generally preserved.	Soluble minerals may be mostly leached.	Hammer does not ring when rock is struck. Body of rock is slightly weakened.
Intensely Weathered	Discoloration or oxidation throughout; all feldspars and Fe-Mg minerals are altered to clay to some extent; or chemical alteration produces in-situ disaggregation, see grain boundary conditions.	All fracture surfaces are discolored or oxidized, surfaces friable.	Partial separation, rock is friable; in semiarid conditions granitics are disaggregated.	Texture altered by chemical disintegration (hydration, argillation).	Leaching of soluble minerals may be complete.	Dull sound when struck with hammer, usually can be broken with moderate to heavy manual pressure or by light hammer blow without reference to planes of weakness such as incipient or hairline fractures, or veinlets. Rock is significantly weakened.
Decomposed	Discolored or oxidized throughout, but resistant minerals such as quartz may be unaltered; all feldspars and Fe-Mg minerals are completely altered to clay.		Complete separation of grain boundaries (disaggregated).	Resembles a soil, partial or complete remnant rock structure may be preserved; leaching of soluble minerals usually complete.		Can be granulated by hand. Resistant minerals such as quartz may be present as "stringers" or "dikes."

Combination descriptors (such as "slightly weathered to fresh") are permissible where equal distribution of both weathering characteristics is present over significant intervals or where characteristics present are "in between" the diagnostic feature. However, combination descriptors should not be used where significant, identifiable zones can be delineated. Only two adjacent descriptors may be combined. "Very intensely weathered" is the combination descriptor for "intensely weathered to decomposed."

Robert Zezoff
DESIGN OVERSIGHT Robert Zezoff
10-22-09
SIGN OFF DATE

DRAWN BY D. FAHRNEY
CHECKED BY C. AMANTE

PREPARED FOR THE STATE OF CALIFORNIA DEPARTMENT OF TRANSPORTATION

C. AMANTE
PROJECT ENGINEER

BRIDGE NO. 56-0082L
KILOMETER POST R62.2

BOX SPRINGS OVERHEAD (WIDEN)

ROCK LEGEND

ORIGINAL SCALE IN MILLIMETERS FOR REDUCED PLANS 0 10 20 30 40 50 60 70 80 90

CU 08
EA 449311

DISREGARD PRINTS BEARING EARLIER REVISION DATES

REVISION DATES: 3/12/08 7/21/08 11/4/08 6/18/09 8/28/09 10/2/09

SHEET 30 OF 31

FILE => 56-0082l-z-lrtb03.dgn

USERNAME => trlim DATE PLOTTED => 19-OCT-2010 TIME PLOTTED => 15:27

DIST	COUNTY	ROUTE	KILOMETER POST TOTAL PROJECT	SHEET No	TOTAL SHEETS
08	Riv	60,215	R19.7/21.9, R61.3/62.7	464	594

Caltrans Metric

Carlos V. Amante 10/02/09
CERTIFIED GEOTECHNICAL ENGINEER

6-28-10
PLANS APPROVAL DATE

REGISTERED PROFESSIONAL ENGINEER — CARLOS AMANTE — No. GE2724 — Exp. 6-30-10 — GEOTECHNICAL — STATE OF CALIFORNIA

The State of California or its officers or agents shall not be responsible for the accuracy or completeness of electronic copies of this plan sheet.

RIVERSIDE COUNTY TRANSPORTATION COMMISSION
4080 LEMON STREET - THIRD FLOOR
RIVERSIDE, CALIFORNIA 92501

LIM & NASCIMENTO ENGINEERING
1887 BUSINESS CENTER DRIVE, SUITE 6
SAN BERNARDINO, CALIFORNIA 92408

KLEINFELDER
1220 RESEARCH DRIVE, SUITE B
REDLANDS, CALIFORNIA 92374

PLAN
1:200

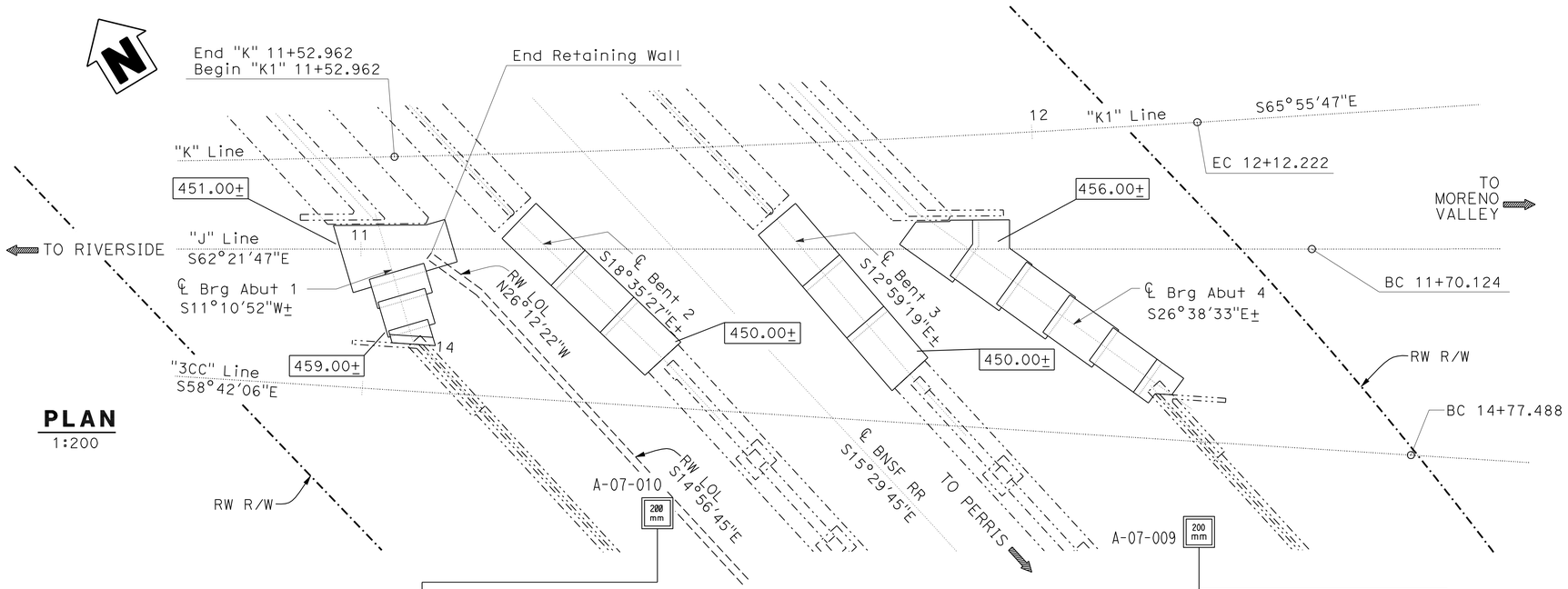

BENCH MARK

BM Elev. 459.600 m
NP 3031 2-Inch Brass disk NGVD29

NOTES:

1. 36mm DIAMETER SAMPLES WERE TAKEN USING A STANDARD PENETRATION TEST (SPT) SPLIT BARREL SAMPLER WITH AN INSIDE DIAMETER (ID) OF 36mm AND AN OUTSIDE DIAMETER (OD) OF 51mm.

2. 61mm DIAMETER RING SAMPLES WERE TAKEN USING A CALIFORNIA SPLIT BARREL SAMPLER WITH AN ID OF 61mm AND AN OD OF 84mm.

3. ALL SAMPLES WERE DRIVEN WITH 64kg HAMMER WITH A FALLING HEIGHT OF 762mm.

4. THIS LOTB SHEET WAS PREPARED IN ACCORDANCE WITH THE CALTRANS SOIL AND ROCK LOGGING, CLASSIFICATION, AND PRESENTATION MANUAL (JUNE 2007).

PROFILE
VERTICAL 1:2

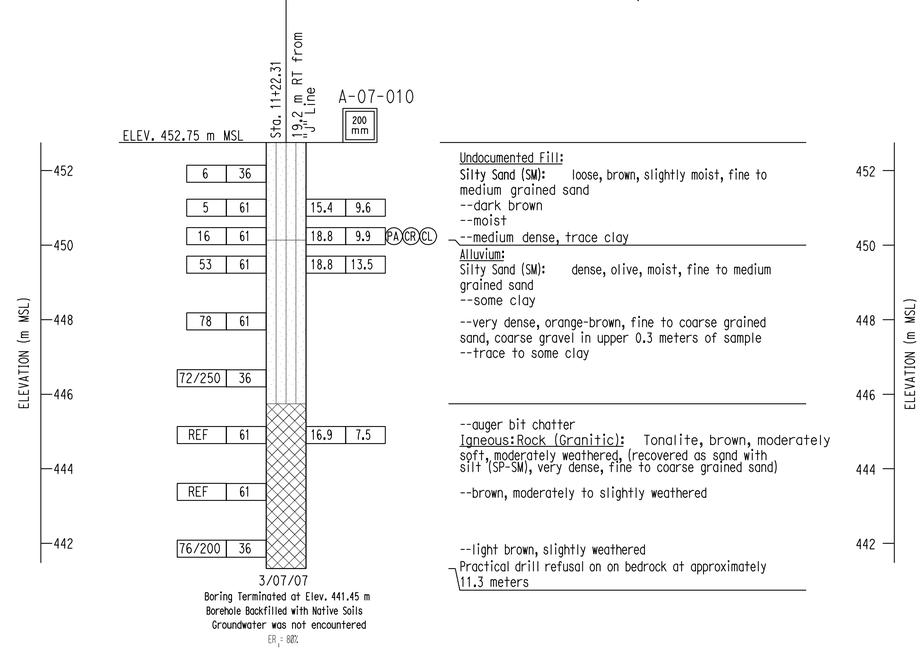

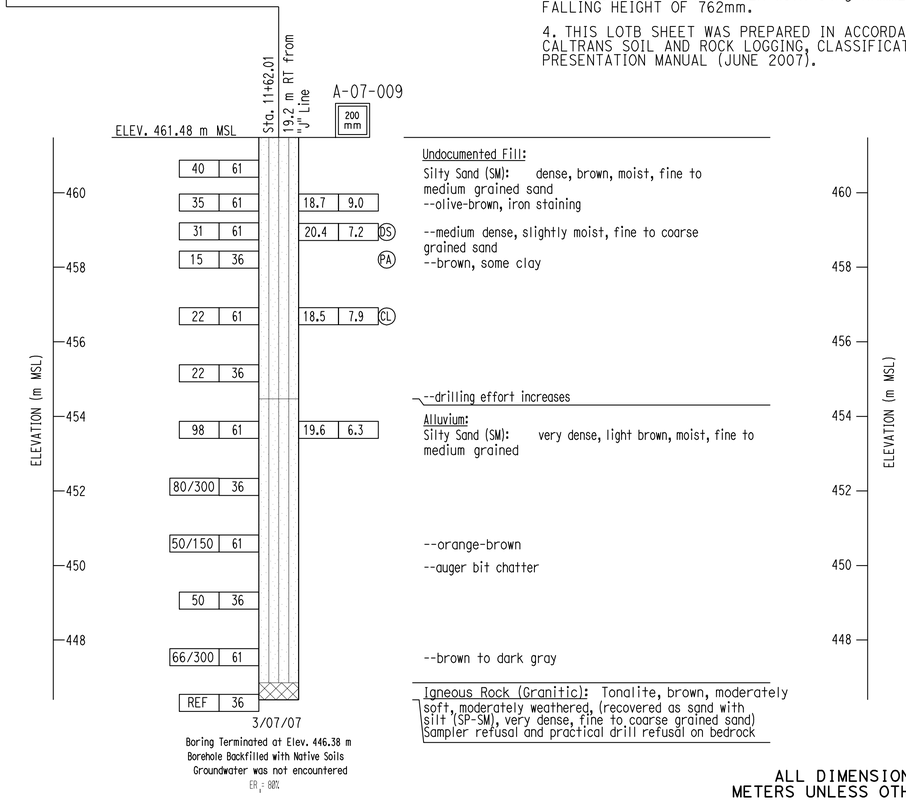

ALL DIMENSIONS ARE IN METERS UNLESS OTHERWISE SHOWN

Robert Zezoff
DESIGN OVERSIGHT Robert Zezoff

10-22-09
SIGN OFF DATE

DRAWN BY D. FAHRNEY
CHECKED BY C. AMANTE

PREPARED FOR THE STATE OF CALIFORNIA DEPARTMENT OF TRANSPORTATION

C. AMANTE
PROJECT ENGINEER

BRIDGE NO. 56-0082L
KILOMETER POST R62.2

BOX SPRINGS OVERHEAD (WIDEN)
LOG OF TEST BORINGS

ORIGINAL SCALE IN MILLIMETERS FOR REDUCED PLANS 0 10 20 30 40 50 60 70 80 90

CU 08
EA 449311

DISREGARD PRINTS BEARING EARLIER REVISION DATES

REVISION DATES: 3/12/08 7/21/08 11/4/08 5/15/09 5/27/09 10/2/09

SHEET 31 OF 31

FILE => 56-0082l-z-lrb04.dgn

USERNAME => trlim DATE PLOTTED => 19-OCT-2010 TIME PLOTTED => 15:27

DIST	COUNTY	ROUTE	KILOMETER POST TOTAL PROJECT	SHEET No	TOTAL SHEETS
08	Riv	60,215	R19.7/21.9, R61.3/62.7	465	594

Caltrans Metric

REGISTERED CIVIL ENGINEER — DATE 10/02/09

6-28-10
PLANS APPROVAL DATE

REGISTERED PROFESSIONAL ENGINEER — MOHAN S. CHAR — No. 57894 — Exp. 6/30/10 — CIVIL — STATE OF CALIFORNIA

The State of California or its officers or agents shall not be responsible for the accuracy or completeness of electronic copies of this plan sheet.

RIVERSIDE COUNTY TRANSPORTATION COMMISSION
4080 LEMON STREET - THIRD FLOOR
RIVERSIDE, CALIFORNIA 92501

LIM & NASCIMENTO ENGINEERING
1887 BUSINESS CENTER DRIVE, SUITE 6
SAN BERNARDINO, CALIFORNIA 92408

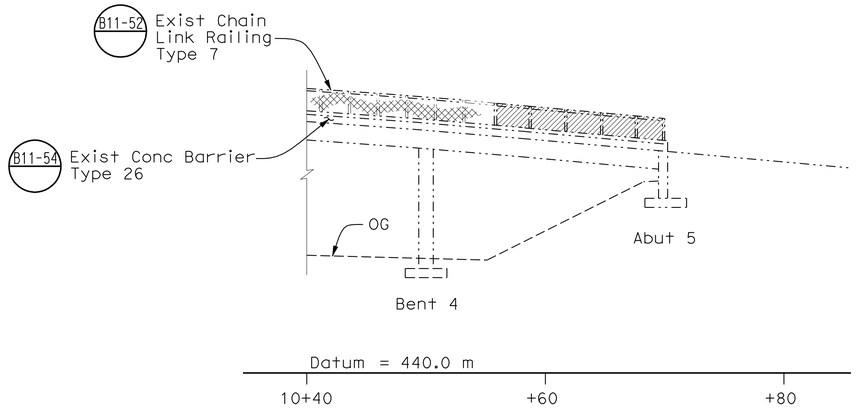

ELEVATION
(Northeast corner)
1:250

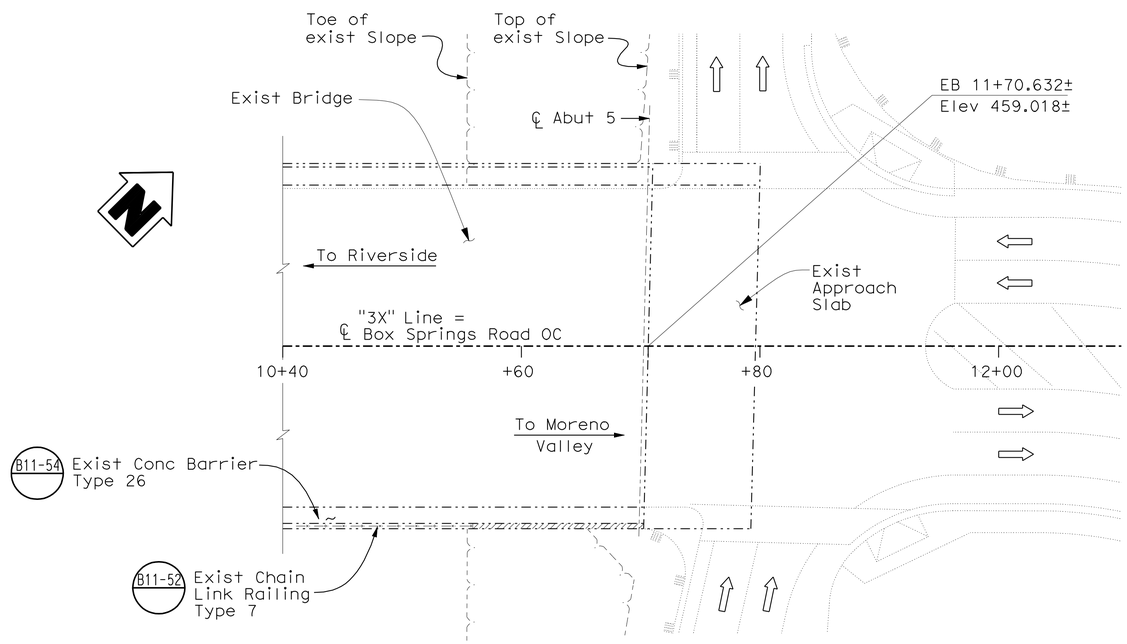

PLAN
1:250

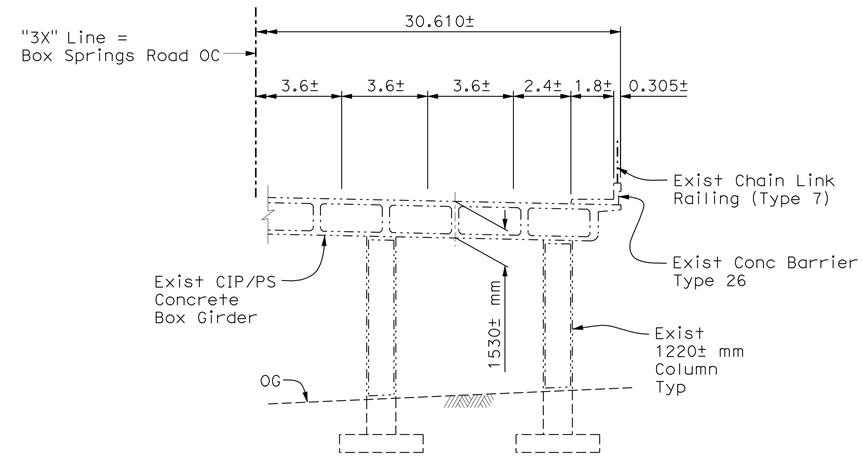

PART TYPICAL SECTION
1:125

LEGEND:

Limits of Exist Railing Removal

Note:
For railing removal details, see "Chain Link Railing Removal" sheet.

BOX SPRINGS ROAD OVERCROSSING BR NO 56-0804
QUANTITIES

* REMOVE CHAIN LINK FENCE	15	m
TUBULAR HANDRAILING	15	m

* FOR TOTAL QUANTITY SEE Q-5

INDEX TO PLANS

SHEET No.	TITLE
1.	GENERAL PLAN
2..	CHAIN LINK RAILING REMOVAL

Note:
The Contractor shall verify all controlling field dimensions before ordering or fabricating any material.

ALL DIMENSIONS ARE IN METERS UNLESS OTHERWISE SHOWN

DESIGN OVERSIGHT Robert Zezoff	DESIGN	BY D. SARETSKY	CHECKED M. CHAR	LOAD AND RESISTANCE FACTOR DESIGN — LIVE LOADING:
10-22-09 SIGN OFF DATE	DETAILS	BY M. ANDRASEK	CHECKED M. CHAR	LAYOUT BY M. ANDRASEK — CHECKED M. CHAR
	QUANTITIES	BY D. SARETSKY	CHECKED K. GEE	SPECIFICATIONS BY M. CHAR — PLANS AND SPECS COMPARED M. CHAR

PREPARED FOR THE STATE OF CALIFORNIA DEPARTMENT OF TRANSPORTATION

MOHAN S. CHAR
PROJECT ENGINEER

BRIDGE NO. 56-0804
KILOMETER POST 60.13

BOX SPRINGS ROAD OC
GENERAL PLAN

DESIGN GENERAL PLAN SHEET (METRIC) (REV. 10/27/05)

ORIGINAL SCALE IN MILLIMETERS FOR REDUCED PLANS 0 10 20 30 40 50 60 70 80 90 100

CU 08
EA 449311

DISREGARD PRINTS BEARING EARLIER REVISION DATES — REVISION DATES (PRELIMINARY STAGE ONLY) 6/18/09 8/18/09 10/2/09

SHEET 1 OF 2

FILE => 56-0804-a-gp01.dgn

USERNAME => trilm DATE PLOTTED => 19-OCT-2010 TIME PLOTTED => 15:28

DIST	COUNTY	ROUTE	KILOMETER POST TOTAL PROJECT	SHEET No	TOTAL SHEETS
08	Riv	60,215	R19.7/21.9, R61.3/62.7	466	594

REGISTERED CIVIL ENGINEER 10/02/09 DATE

6-28-10
PLANS APPROVAL DATE

REGISTERED PROFESSIONAL ENGINEER MOHAN S. CHAR No. 57894 Exp. 6/30/10 CIVIL STATE OF CALIFORNIA

The State of California or its officers or agents shall not be responsible for the accuracy or completeness of electronic copies of this plan sheet.

RIVERSIDE COUNTY TRANSPORTATION COMMISSION
4080 LEMON STREET - THIRD FLOOR
RIVERSIDE, CALIFORNIA 92501

LIM & NASCIMENTO ENGINEERING
1887 BUSINESS CENTER DRIVE, SUITE 6
SAN BERNARDINO, CALIFORNIA 92408

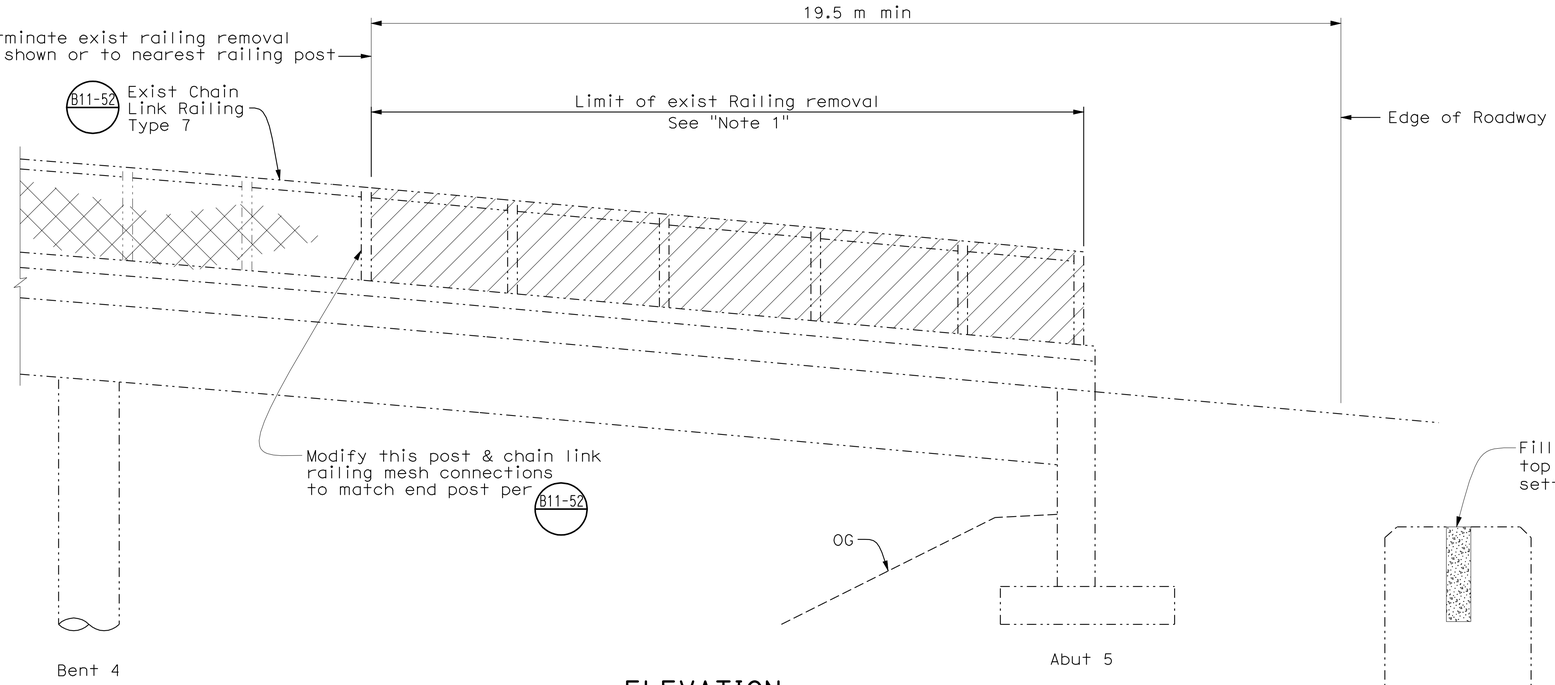

ELEVATION
(Northeast corner)
1:250

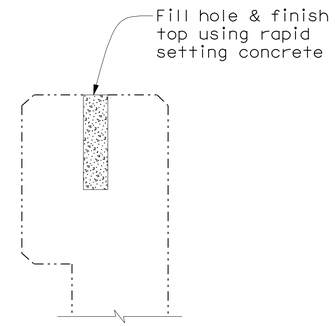

RAILING POST HOLE REPAIR DETAIL
No Scale

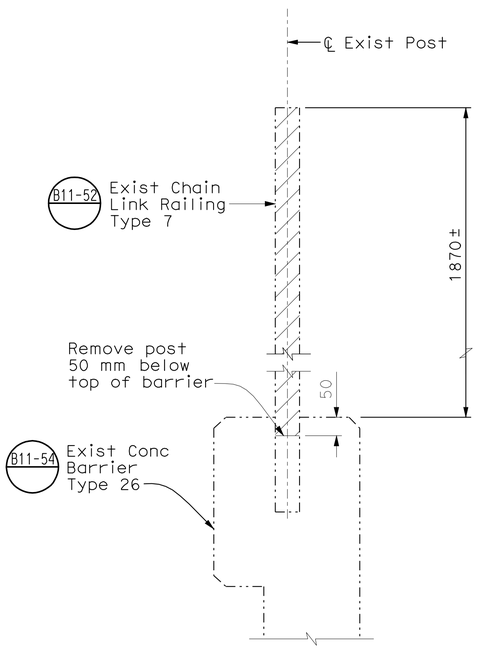

SECTION A-A
No Scale

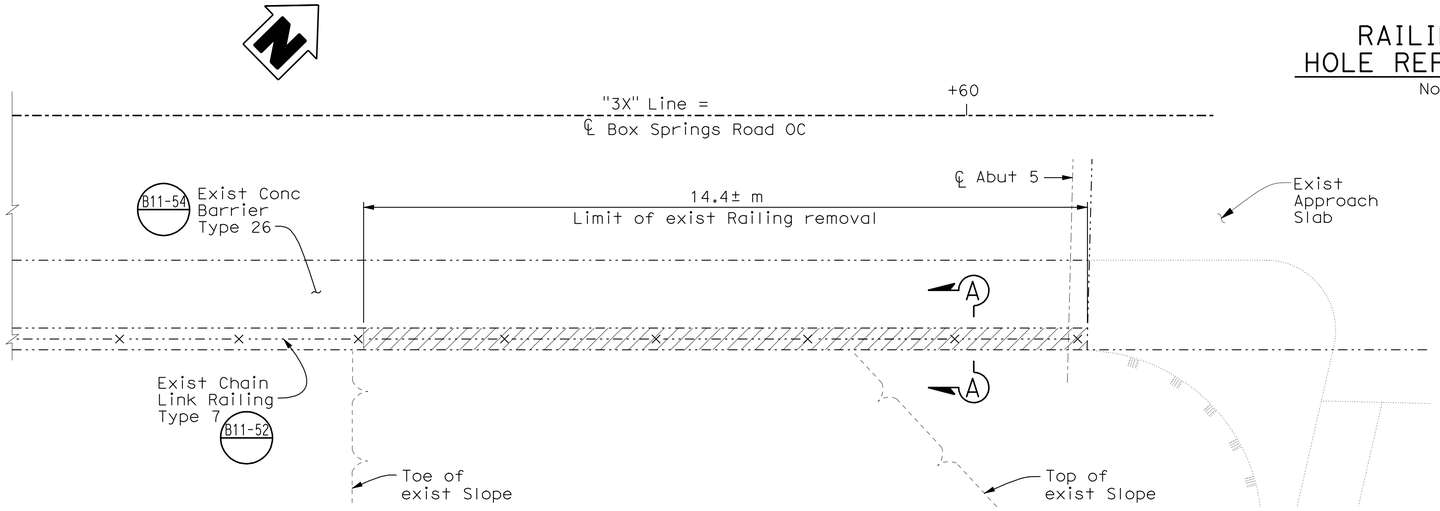

PLAN
1:60

LEGEND:

Limits of Exist Railing Removal

Note:

1. Railing removal shall include removal of railing posts, anchorages, and chain link fabric mesh.

Note:
The Contractor shall verify all controlling field dimensions before ordering or fabricating any material.

ALL DIMENSIONS ARE IN METERS UNLESS OTHERWISE SHOWN

DESIGN OVERSIGHT Robert Zezoff
10-22-09
SIGN OFF DATE

	BY		CHECKED				
DESIGN	D. SARETSKY	M. CHAR	LOAD AND RESISTANCE FACTOR DESIGN	LIVE LOADING:			
DETAILS	M. ANDRASEK	M. CHAR	LAYOUT	M. ANDRASEK	M. CHAR		
QUANTITIES	D. SARETSKY	K. GEE	SPECIFICATIONS	M. CHAR	PLANS AND SPECS COMPARED	M. CHAR	

PREPARED FOR THE STATE OF CALIFORNIA DEPARTMENT OF TRANSPORTATION

MOHAN S. CHAR
PROJECT ENGINEER

BRIDGE NO. 56-0804
KILOMETER POST 60.13

BOX SPRINGS ROAD OC
CHAIN LINK RAILING REMOVAL

DESIGN GENERAL PLAN SHEET (METRIC) (REV. 10/27/05)

ORIGINAL SCALE IN MILLIMETERS FOR REDUCED PLANS 0 10 20 30 40 50 60 70 80 90 100

CU 08
EA 449311

DISREGARD PRINTS BEARING EARLIER REVISION DATES

REVISION DATES (PRELIMINARY STAGE ONLY) 6/18/09 8/18/09 10/2/09

SHEET 2 OF 2

FILE => 56-0804-t-brdt-demo.dgn

USERNAME => ttrim DATE PLOTTED => 19-OCT-2010 TIME PLOTTED => 15:28

DIST	COUNTY	ROUTE	KILOMETER POST TOTAL PROJECT	SHEET No	TOTAL SHEETS
08	Riv	60,215	R19.7/21.9, R61.3/62.7	467	594

Caltrans Metric

REGISTERED CIVIL ENGINEER 10/02/09

6-28-10
PLANS APPROVAL DATE

REGISTERED PROFESSIONAL ENGINEER MOHAN S. CHAR No. 57894 Exp. 6/30/10 CIVIL STATE OF CALIFORNIA

The State of California or its officers or agents shall not be responsible for the accuracy or completeness of electronic copies of this plan sheet.

RIVERSIDE COUNTY TRANSPORTATION COMMISSION
4080 LEMON STREET - THIRD FLOOR
RIVERSIDE, CALIFORNIA 92501

LIM & NASCIMENTO ENGINEERING
1887 BUSINESS CENTER DRIVE, SUITE 6
SAN BERNARDINO, CALIFORNIA 92408

PROFILE GRADE
No Scale

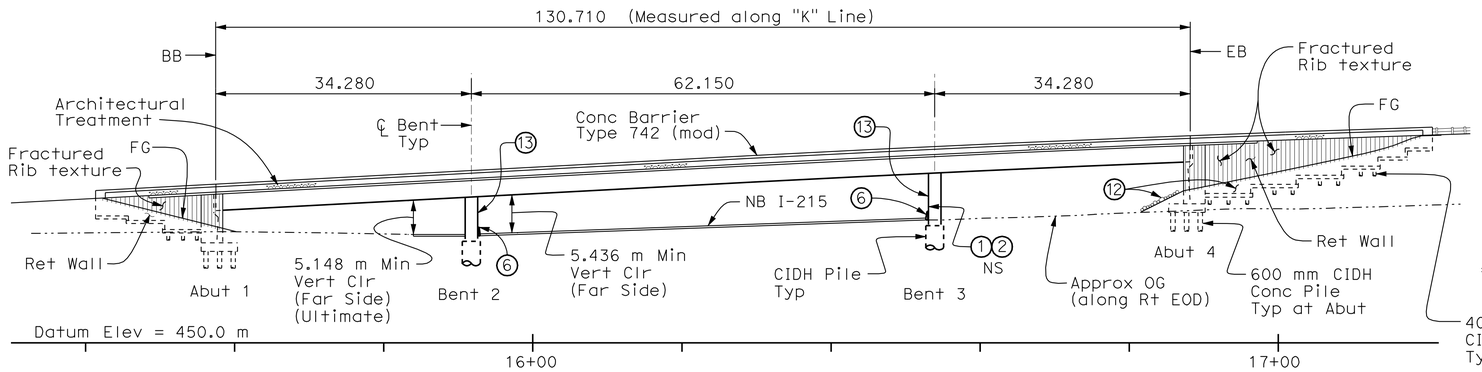

ELEVATION
1:400

NOTES:

1. Paint "Br. No. & Year Constructed"
2. Paint "WB SR60 HOV Connector"
3. Structure Approach Type N(9S)
4. MBGR, See "Road Plans"
5. Indicates Deck Drain
6. Concrete Barrier Type 60GC see "Road Plans"
7. Concrete Barrier Type 60D see "Road Plans"
8. Welded Steel Casing for Future Utility
9. Retaining Wall Type 1
10. Concrete Barrier Type 742A, see "Road Plans"
11. Concrete Barrier Type 736B, see "Road Plans"
12. Slope Paving with Rock Blanket
13. Paint "Bent No."

Point of minimum vertical clearance (Ultimate)
Point of minimum vertical clearance
Indicates direction of traffic
Indicates Proposed EB SR60 HOV Connector Br. No. 56-0842

Notes:

1. For General Notes, Index to Plans and "Standard Plans" list, see "Index to Plans" sheet.
2. For Pile Data Table, see "Foundation Plan" sheet.
3. For Stage Construction, see "Road Plans".

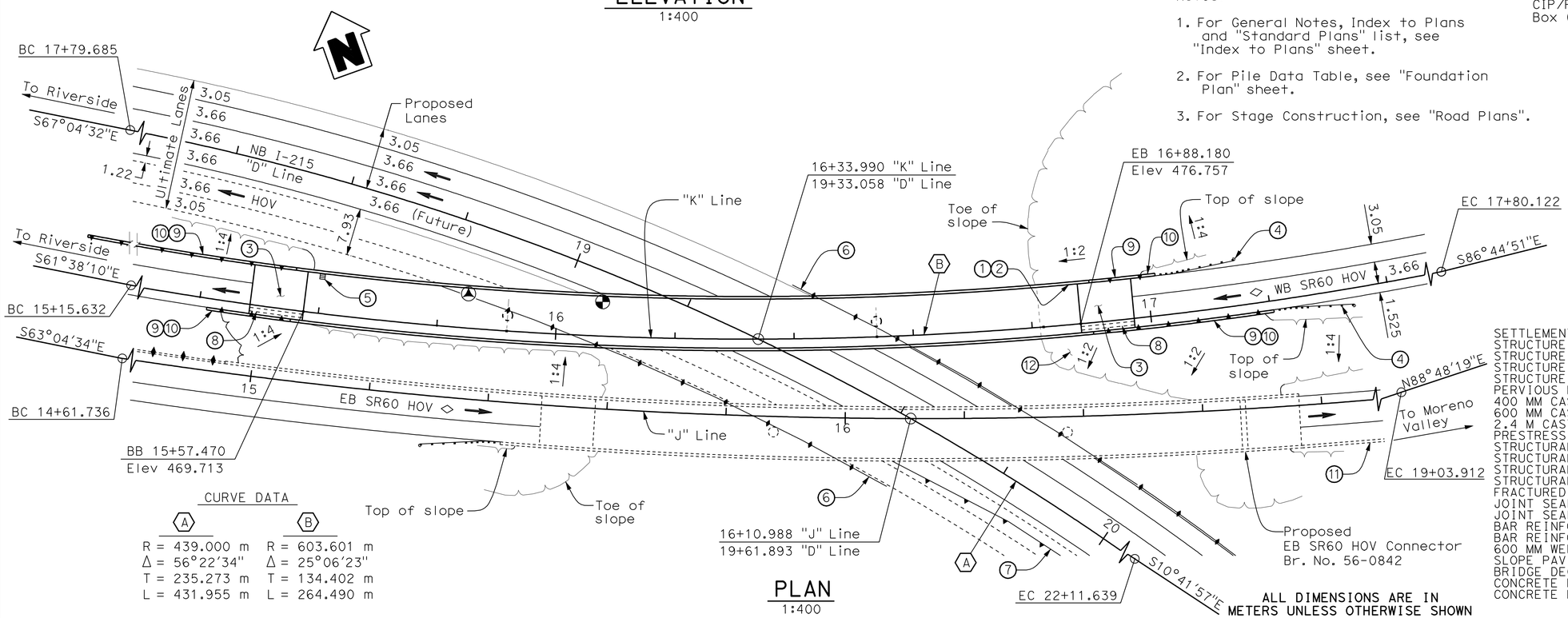

CURVE DATA

A	B
R = 439.000 m	R = 603.601 m
Δ = 56°22'34"	Δ = 25°06'23"
T = 235.273 m	T = 134.402 m
L = 431.955 m	L = 264.490 m

PLAN
1:400

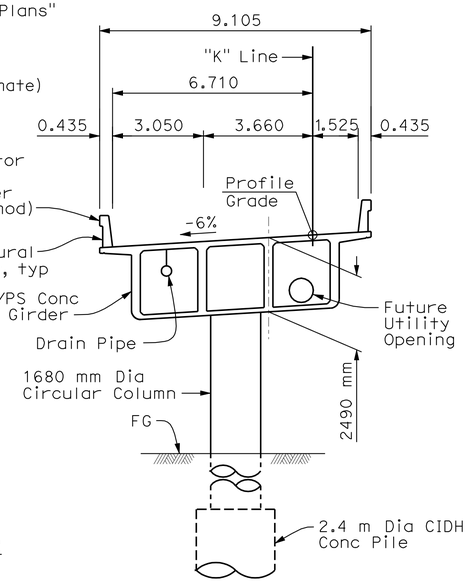

TYPICAL SECTION
1:100

WB SR60 HOV CONNECTOR BR NO 56-0841

QUANTITIES

SETTLEMENT MONITORING PROGRAM	LUMP	SUM
STRUCTURE EXCAVATION (BRIDGE)	380	m^3
STRUCTURE EXCAVATION (RETAINING WALL)	790	m^3
STRUCTURE BACKFILL (BRIDGE)	385	m^3
STRUCTURE BACKFILL (RETAINING WALL)	920	m^3
PERVIOUS BACKFILL MATERIAL (RETAINING WALL)	61	m^3
400 MM CAST-IN-DRILLED-HOLE CONCRETE PILING	557	m
600 MM CAST-IN-DRILLED-HOLE CONCRETE PILING	550	m
2.4 M CAST-IN-DRILLED-HOLE CONCRETE PILING	41	m
PRESTRESSING CAST-IN-PLACE CONCRETE	LUMP	SUM
STRUCTURAL CONCRETE, BRIDGE FOOTING	113	m^3
STRUCTURAL CONCRETE, BRIDGE	945	m^3
STRUCTURAL CONCRETE, RETAINING WALL	355	m^3
STRUCTURAL CONCRETE, APPROACH SLAB (TYPE N)	50	m^3
FRACTURED RIB TEXTURE	400	m^2
JOINT SEAL ASSEMBLY (MR 80 MM)	9	m
JOINT SEAL ASSEMBLY (MR 90 MM)	9	m
BAR REINFORCING STEEL (BRIDGE)	244 300	kg
BAR REINFORCING STEEL (RETAINING WALL)	29 700	kg
600 MM WELDED STEEL PIPE CASING (BRIDGE)	23	m
SLOPE PAVING (CONCRETE-ROCK FACING)	19	m^3
BRIDGE DECK DRAINAGE SYSTEM	800	kg
CONCRETE BARRIER (TYPE 742 MODIFIED)	297	m
CONCRETE BARRIER (TYPE 742A MODIFIED)	129	m

ALL DIMENSIONS ARE IN METERS UNLESS OTHERWISE SHOWN

Robert Zezoff
DESIGN OVERSIGHT Robert Zezoff
10-22-09
SIGN OFF DATE

	BY	CHECKED
DESIGN	D. KIM / D. SARETSKY	T. DUDLEY/A. SIVATHASAN
DETAILS	M. / R. ANDRASEK	R. PRICE / M. CHAR
QUANTITIES	D. SARETSKY	K. GEE

LOAD AND RESISTANCE FACTOR DESIGN — LIVE LOADING: HL-93 W/"LOW BOY" AND PERMIT DESIGN VEHICLE

	BY	CHECKED
LAYOUT	R. ANDRASEK	M. CHAR
SPECIFICATIONS	M. CHAR	PLANS AND SPECS COMPARED M. CHAR

PREPARED FOR THE STATE OF CALIFORNIA DEPARTMENT OF TRANSPORTATION

MOHAN S. CHAR
PROJECT ENGINEER

BRIDGE NO. 56-0841
KILOMETER POST R19.6

WB SR60 HOV CONNECTOR
GENERAL PLAN

DESIGN GENERAL PLAN SHEET (METRIC) (REV. 10/27/05)

ORIGINAL SCALE IN MILLIMETERS FOR REDUCED PLANS 0 10 20 30 40 50 60 70 80 90 100

CU 08
EA 449311

DISREGARD PRINTS BEARING EARLIER REVISION DATES

REVISION DATES (PRELIMINARY STAGE ONLY) 3/12/08 7/21/08 11/17/08 2/18/09 5/18/09 8/28/09 10/2/09

SHEET 1 OF 32

FILE => 56-0841-a-gp01.dgn

USERNAME => rtrim DATE PLOTTED => 19-OCT-2010 TIME PLOTTED => 15:28

DIST	COUNTY	ROUTE	KILOMETER POST TOTAL PROJECT	SHEET No	TOTAL SHEETS
08	Riv	60,215	R19.7/21.9, R61.3/62.7	468	594

Caltrans Metric

REGISTERED CIVIL ENGINEER 10/02/09 DATE

6-28-10
PLANS APPROVAL DATE

REGISTERED PROFESSIONAL ENGINEER MOHAN S. CHAR No. 57894 Exp. 6/30/10 CIVIL STATE OF CALIFORNIA

The State of California or its officers or agents shall not be responsible for the accuracy or completeness of electronic copies of this plan sheet.

RIVERSIDE COUNTY TRANSPORTATION COMMISSION
4080 LEMON STREET - THIRD FLOOR
RIVERSIDE, CALIFORNIA 92501

LIM & NASCIMENTO ENGINEERING
1887 BUSINESS CENTER DRIVE, SUITE 6
SAN BERNARDINO, CALIFORNIA 92408

GENERAL NOTES: LOAD & RESISTANCE FACTOR DESIGN

Design:
AASHTO LRFD Bridge Design Specifications, 3rd Edition with Interims through 2006 and the Caltrans Amendments v3.06.01 except for Geotechnical design of deep foundations, earth retaining systems, bridge (including barrier & railing) details taken from Standard Plans July 2004 and earlier versions, Standard Bridge Details (XS sheets) are designed using Bridge Design Specifications (1996 AASHTO with Interims and Revisions by Caltrans).

Seismic Design:
Caltrans Seismic Design Criteria (SDC), Version 1.4, June 2006

Dead Load: Includes 1.68 KPa for future wearing surface
Includes 2.554 kN/m for future utilities

Live Loading:
HL-93 with "Low-Boy" and Permit Design Load

Seismic Loading:
Site Specific ARS Curve

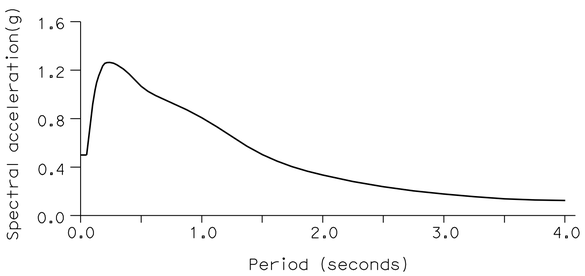

Reinforced Concrete:
fy = 420 MPa
f'c = 25 MPa, Unless otherwise noted
n = 8

Prestressed Concrete:
See "Prestressing Notes" on "Girder Layout" sheet.

Footing Pressure (KPa)	Allowable	Design
Abutments 1 & 4 (Retaining Walls only)	120	120

STANDARD PLANS DATED JULY 2004

	A10A	ACRONYMS AND ABBREVIATIONS (A-L)
	A10B	ACRONYMS AND ABBREVIATIONS (M-Z)
	A10C	SYMBOLS (SHEET 1 OF 2)
	A10D	SYMBOLS (SHEET 2 OF 2)
	A62B	LIMITS OF PAYMENT FOR EXCAVATION AND BACKFILL - BRIDGE SURCHARGE AND WALL
	A62C	LIMITS OF PAYMENT FOR EXCAVATION AND BACKFILL - BRIDGE
	A77J1	METAL BEAM GUARD RAILING CONNECTIONS TO BRIDGE RAILINGS WITHOUT SIDEWALKS DETAILS No. 1
	A77J2	METAL BEAM GUARD RAILING CONNECTIONS TO BRIDGE RAILINGS WITHOUT SIDEWALKS DETAILS No. 2
	B0-1	BRIDGE DETAILS
	B0-3	BRIDGE DETAILS
	B0-5	BRIDGE DETAILS
	B0-13	BRIDGE DETAILS
	B2-3	400 mm AND 600 mm CAST-IN-DRILLED-HOLE CONCRETE PILE
	B3-1	RETAINING WALL TYPE 1 H=1200 mm THROUGH 9100 mm
	B3-8	RETAINING WALL DETAILS No. 1
	B7-1	BOX GIRDER DETAILS
	B7-6	DECK DRAINS, TYPES D-1 & D-2
	B7-8	DECK DRAINAGE DETAILS
	B7-10	UTILITY OPENING BOX GIRDER
RSP	B8-5	CAST-IN-PLACE PRESTRESSED GIRDER DETAILS
	B11-57	CONCRETE BARRIER TYPE 742
	B14-5	WATER SUPPLY LINE (DETAILS) (PIPE SIZE LESS THAN NPS 4)
	D99B	EDGE DRAIN OUTLET AND VENT DETAILS

STANDARD PLAN SHEET NO.

DETAIL NO.

INDEX TO PLANS

SHEET No.	TITLE
1.	GENERAL PLAN
2.	INDEX TO PLANS
3.	DECK CONTOURS
4.	FOUNDATION PLAN
5.	ABUTMENT 1 LAYOUT
6.	ABUTMENT 4 LAYOUT
7.	ABUTMENT DETAILS NO. 1
8.	ABUTMENT DETAILS NO. 2
9.	ABUTMENT DETAILS NO. 3
10.	RETAINING WALL No.1 LAYOUT 1
11.	RETAINING WALL No.1 LAYOUT 2
12.	RETAINING WALL No.1 PILE LAYOUT
13.	RETAINING WALL No. 2 LAYOUT
14.	RETAINING WALL No. 3 LAYOUT
15.	RETAINING WALL No. 4 LAYOUT
16.	BENT LAYOUT
17.	TYPICAL SECTION
18.	GIRDER LAYOUT
19.	DECK REINFORCEMENT
20.	CIDH PILE DETAILS
21.	JOINT SEAL ASSEMBLY (MAXIMUM MOVEMENT RATING = 100 mm)
22.	STRUCTURE APPROACH TYPE N(9S)
23.	STRUCTURE APPROACH DRAINAGE DETAILS
24.	SLOPE PAVING - FULL SLOPE
25.	SLOPE PAVING - ARCHITECTURAL TREATMENT DETAILS
26.	ARCHITECTURAL DETAILS
27.	SOIL LEGEND NO. 1
28.	SOIL LEGEND NO. 2
29.	ROCK LEGEND
30.	LOG OF TEST BORINGS NO. 1 OF 3
31.	LOG OF TEST BORINGS NO. 2 OF 3
32.	LOG OF TEST BORINGS NO. 3 OF 3

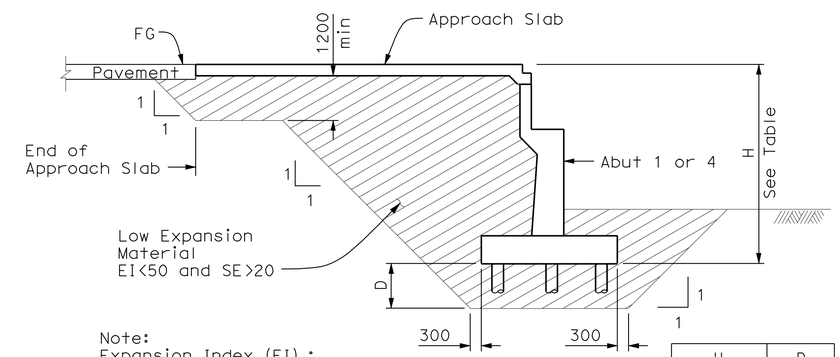

Note:
Expansion Index (EI) :
to be determined by ASTM D4829
Sand Equivalent (SE) :
to be determined by California test method 217

H	D
< 4.9 m	1.2 m
> 4.9 m	0 m

LIMITS OF LOW EXPANSION MATERIAL

No Scale
(Abut 1 shown, Abut 4 similar)

LEGEND

- Cast-in-drilled-hole Concrete Piling (31 MPa @ 28 days)
- Structural Concrete, Bridge (31 MPa @ 28 days)
- Structural Concrete, Retaining Wall
- Structural Concrete, Bridge Footing (25 Mpa @ 28 days)
- Structural Concrete, Approach Slab
- Structural Concrete, Bridge (25 Mpa @ 28 days)
- Structural Concrete, Bridge (31 MPa @ 28 days)

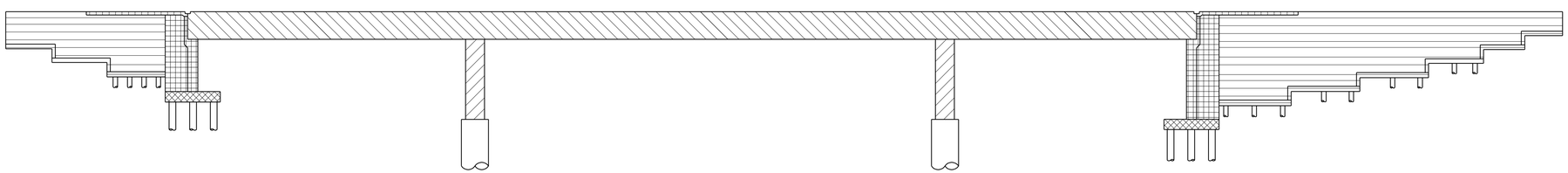

CONCRETE STRENGTH AND TYPE LIMITS

No Scale

ALL DIMENSIONS ARE IN MILLIMETERS UNLESS OTHERWISE SHOWN

DESIGN OVERSIGHT Robert Zezoff
10-22-09
SIGN OFF DATE

DESIGN DETAIL SHEET (METRIC) (REV. 10/27/05)

	BY	CHECKED
DESIGN	D. KIM / D. SARETSKY	T. DUDLEY/A. SIVATHASAN
DETAILS	M. / R. ANDRASEK	R. PRICE / M. CHAR
QUANTITIES	D. SARETSKY	K. GEE

ORIGINAL SCALE IN MILLIMETERS FOR REDUCED PLANS 0 10 20 30 40 50 60 70 80 90 100

PREPARED FOR THE STATE OF CALIFORNIA DEPARTMENT OF TRANSPORTATION

MOHAN S. CHAR
PROJECT ENGINEER

CU 08
EA 449311

BRIDGE NO. 56-0841
KILOMETER POST R19.6

WB SR60 HOV CONNECTOR
INDEX TO PLANS

DISREGARD PRINTS BEARING EARLIER REVISION DATES

REVISION DATES (PRELIMINARY STAGE ONLY) 3/12/08 7/21/08 11/4/08 2/16/09 5/18/09 8/28/09 10/2/09

SHEET 2 OF 32

FILE => 56-0841-a-itp.dgn

USERNAME => trilim DATE PLOTTED => 19-OCT-2010 TIME PLOTTED => 15:28

DIST	COUNTY	ROUTE	KILOMETER POST TOTAL PROJECT	SHEET No	TOTAL SHEETS
08	Riv	60,215	R19.7/21.9, R61.3/62.7	469	594

REGISTERED CIVIL ENGINEER — DATE 10/02/09

6-28-10
PLANS APPROVAL DATE

REGISTERED PROFESSIONAL ENGINEER — MOHAN S. CHAR — No. 57894 — Exp. 6/30/10 — CIVIL — STATE OF CALIFORNIA

The State of California or its officers or agents shall not be responsible for the accuracy or completeness of electronic copies of this plan sheet.

RIVERSIDE COUNTY TRANSPORTATION COMMISSION
4080 LEMON STREET - THIRD FLOOR
RIVERSIDE, CALIFORNIA 92501

LIM & NASCIMENTO ENGINEERING
1887 BUSINESS CENTER DRIVE, SUITE 6
SAN BERNARDINO, CALIFORNIA 92408

Caltrans Metric

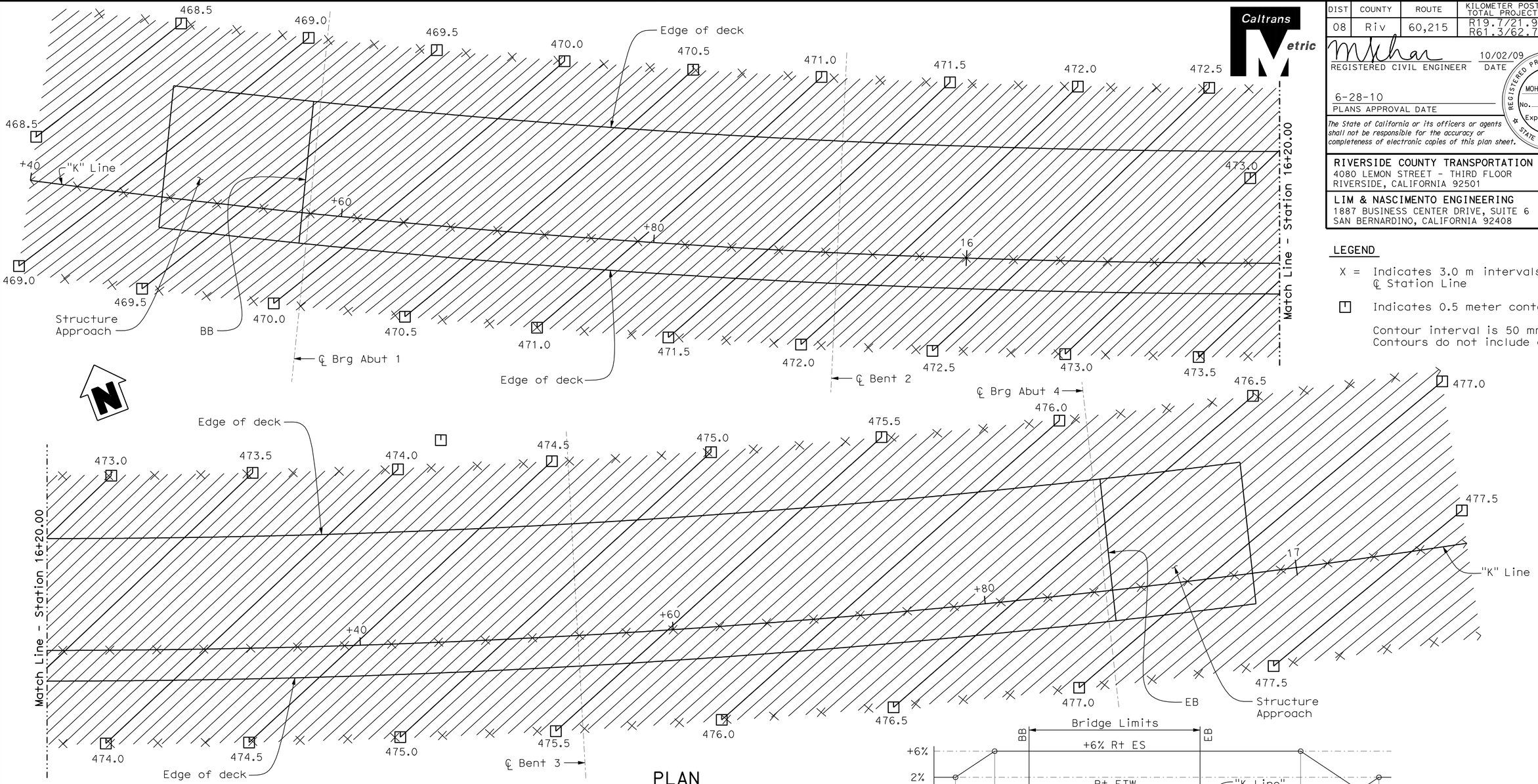

PLAN
1:125

LEGEND

X = Indicates 3.0 m intervals along ℄ Station Line

[1] Indicates 0.5 meter contours

Contour interval is 50 mm
Contours do not include camber

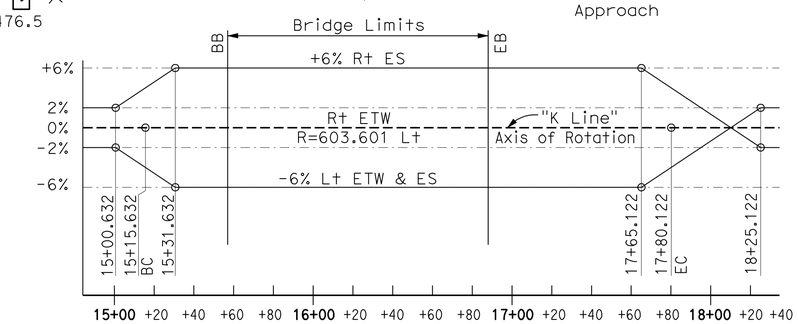

SUPERELEVATION DIAGRAM
No Scale

ALL DIMENSIONS ARE IN METERS UNLESS OTHERWISE SHOWN

DESIGN OVERSIGHT — Robert Zezoff
10-22-09
SIGN OFF DATE

	BY	CHECKED
DESIGN	D. KIM / D. SARETSKY	T. DUDLEY/A. SIVATHASAN
DETAILS	M. / R. ANDRASEK	R. PRICE / M. CHAR
QUANTITIES	D. SARETSKY	K. GEE

PREPARED FOR THE STATE OF CALIFORNIA DEPARTMENT OF TRANSPORTATION

MOHAN S. CHAR
PROJECT ENGINEER

BRIDGE NO. 56-0841
KILOMETER POST R19.6

WB SR60 HOV CONNECTOR
DECK CONTOURS

DESIGN DETAIL SHEET (METRIC) (REV. 10/27/05)

ORIGINAL SCALE IN MILLIMETERS FOR REDUCED PLANS 0 10 20 30 40 50 60 70 80 90 100

CU 08
EA 449311

DISREGARD PRINTS BEARING EARLIER REVISION DATES

REVISION DATES (PRELIMINARY STAGE ONLY): 5/12/08 7/21/08 11/4/08 2/16/09 5/15/09 8/28/09 10/2/09

SHEET 3 OF 32

FILE => 56-0841-d-dc01.dgn

USERNAME => trlim DATE PLOTTED => 19-OCT-2010 TIME PLOTTED => 15:28

DIST	COUNTY	ROUTE	KILOMETER POST TOTAL PROJECT	SHEET No	TOTAL SHEETS
08	Riv	60,215	R19.7/21.9, R61.3/62.7	470	594

Caltrans Metric

REGISTERED CIVIL ENGINEER 10/02/09

6-28-10
PLANS APPROVAL DATE

REGISTERED PROFESSIONAL ENGINEER MOHAN S. CHAR No. 57894 Exp. 6/30/10 CIVIL STATE OF CALIFORNIA

The State of California or its officers or agents shall not be responsible for the accuracy or completeness of electronic copies of this plan sheet.

RIVERSIDE COUNTY TRANSPORTATION COMMISSION
4080 LEMON STREET - THIRD FLOOR
RIVERSIDE, CALIFORNIA 92501

LIM & NASCIMENTO ENGINEERING
1887 BUSINESS CENTER DRIVE, SUITE 6
SAN BERNARDINO, CALIFORNIA 92408

PILE DATA TABLE

LOCATION	PILE TYPE	DESIGN LOADING	NOMINAL RESISTANCE		DESIGN TIP ELEVATION (m)	SPECIFIED TIP ELEVATION (m)
			COMPRESSION	TENSION		
ABUT 1	600 mm CIDH	900 kN	1800 kN	0 kN	451.330 (1) 456.210 (2)	451.330
RW No. 1	400 mm CIDH	400 kN	800 kN	0 kN	455.030 (1)	455.030
RW No. 2	400 mm CIDH	400 kN	800 kN	0 kN	455.970 (1)	455.970
BENT 2	2.4 m CIDH	—	23 800 kN	0 kN	442.140 (1) 442.750 (2)	442.140
BENT 3	2.4 m CIDH	—	23 800 kN	0 kN	444.680 (1) 445.290 (2)	444.680
ABUT 4	600 mm CIDH	900 kN	1800 kN	0 kN	456.370 (1) 461.250 (2)	456.370
RW No. 3	400 mm CIDH	400 kN	800 kN	0 kN	462.160 (1)	462.160
RW No. 4	400 mm CIDH	400 kN	800 kN	0 kN	463.340 (1)	463.340
RW No. 4	600 mm CIDH	900 kN	1800 kN	0 kN	458.320 (1)	458.320

Notes: Design tip elevation is controlled by the following demands:
1. (1) Compression; (2) Lateral Loads.
2. Proposed piles spaced at minimum of 3 pile diameters (center to center).
3. The CIDH specified tip elevation shall not be raised.

BENCHMARKS

PT #865 Elevation 460.668 m

Found 25 mm iron pipe with Caltrans RP plug
North side of Box Springs Road.
N = 698034.479
E = 1903003.479

PT #3030 Elevation 472.840 m

Found 50 mm iron pipe with Brass Cap Stamped
"Dept of Trans RIV 60-12.7 1990"
34.14 m Southwesterly of bridge.
N = 697603.049
E = 1903554.738

Vertical Datum: NGVD-1929
Horizontal Datum: NAD-83, Zone 3(EPOCH 1984.0)

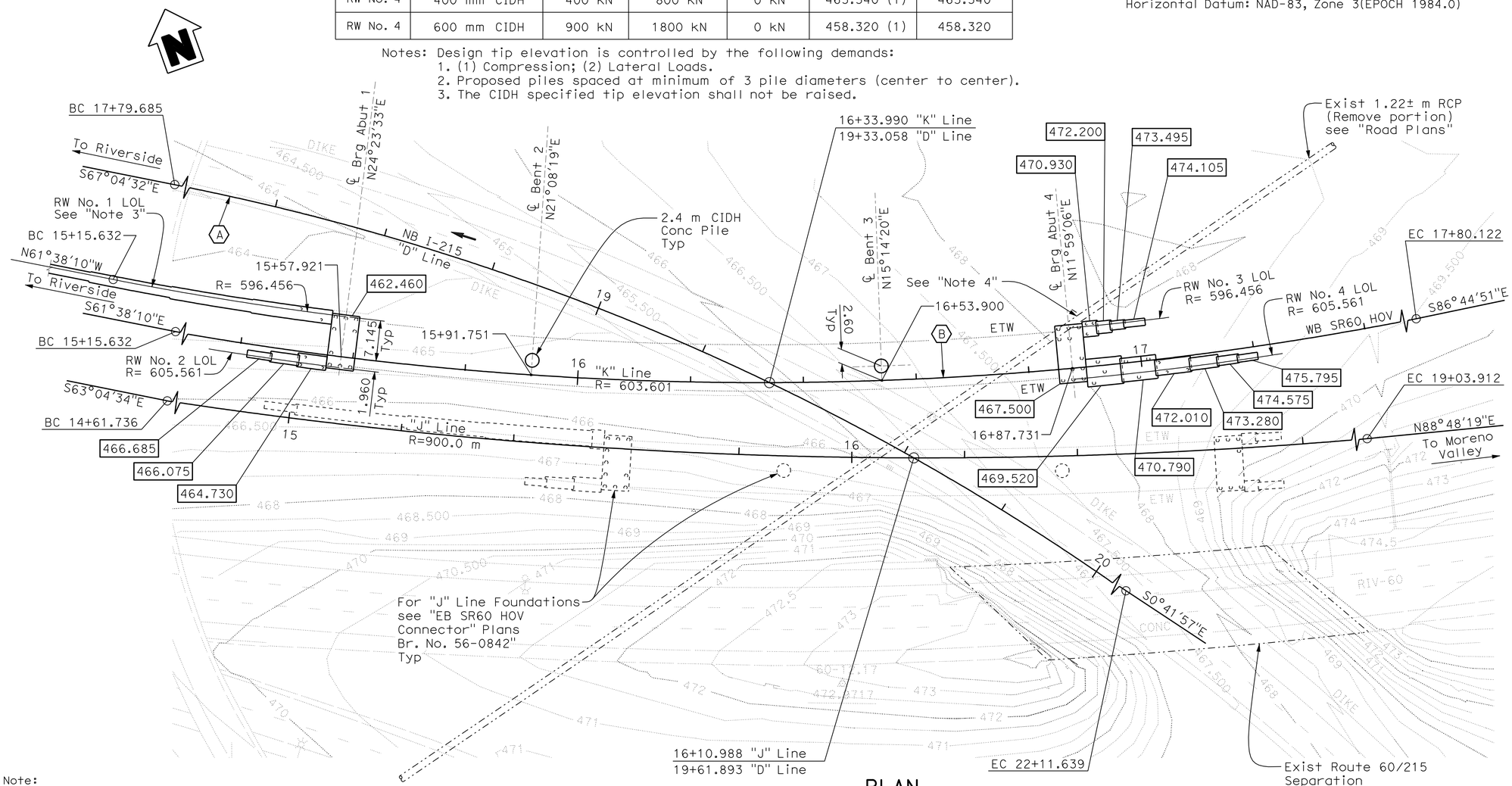

PLAN
1:400

CURVE DATA

(A)	(B)
R = 439.000 m	R = 603.601 m
Δ = 56°22'34"	Δ = 25°06'23"
T = 235.273 m	T = 134.402 m
L = 431.955 m	L = 264.490 m

LEGEND

Indicates bottom of footing elevation

400 mm or 600 mm CIDH Conc Pile

Indicates existing structure

Notes:

1. All ℄ Bents are radial to "K" Line.
2. Underground utility location as shown is approximate.
3. For Retaining Wall No. 1 layout & bottom of footing information, see Retaining Wall No.1 Layout 1 & 2 sheets.
4. Remove portion of RCP that conflicts with piles, and plug abandoned ends. For as-built RCP invert elevation, see "Abutment 4 layout" sheet.
5. For retaining wall footing pressure information, see General Notes on "Index to Plans" sheet.
6. Not all piles shown.

ALL DIMENSIONS ARE IN METERS UNLESS OTHERWISE SHOWN

Note:
The Contractor shall verify all controlling field dimensions before ordering or fabricating any material.

GEOTECHNICAL PROFESSIONAL APPROVAL DATE 10/2/09

Robert Zezoff
DESIGN OVERSIGHT Robert Zezoff
10-22-09
SIGN OFF DATE

SCALE: AS SHOWN | VERT.DATUM NGVD-1929 | HORZ.DATUM NAD-83, Zone 5 (EPOCH 1984.0)
PHOTOGRAMMETRY AS OF: | ALIGNMENT TIES
SURVEYED BY J. TERRY | DRAFTED BY
FIELD CHECKED BY M. WILSON | CHECKED BY

	BY	CHECKED
DESIGN	D. KIM / D. SARETSKY	T. DUDLEY/A. SIVATHASAN
DETAILS	M. / R. ANDRASEK	R. PRICE / M. CHAR
QUANTITIES	D. SARETSKY	K. GEE

PREPARED FOR THE STATE OF CALIFORNIA DEPARTMENT OF TRANSPORTATION

MOHAN S. CHAR
PROJECT ENGINEER

BRIDGE NO. 56-0841
KILOMETER POST R19.6

WB SR60 HOV CONNECTOR
FOUNDATION PLAN

FOUNDATION PLAN SHEET (METRIC) (REV. 10/27/05)

ORIGINAL SCALE IN MILLIMETERS FOR REDUCED PLANS 0 10 20 30 40 50 60 70 80 90 100

CU 08
EA 449311

DISREGARD PRINTS BEARING EARLIER REVISION DATES

REVISION DATES (PRELIMINARY STAGE ONLY): 3/12/08 7/21/08 11/14/08 2/16/09 5/18/09 8/28/09 10/2/09

SHEET 4 OF 32

FILE => 56-0841-e-fdp01.dgn

USERNAME => trim DATE PLOTTED => 19-OCT-2010 TIME PLOTTED => 15:28

DIST	COUNTY	ROUTE	KILOMETER POST TOTAL PROJECT	SHEET No	TOTAL SHEETS
08	Riv	60,215	R19.7/21.9, R61.3/62.7	471	594

Caltrans Metric

REGISTERED CIVIL ENGINEER — DATE 10/02/09

6-28-10
PLANS APPROVAL DATE

REGISTERED PROFESSIONAL ENGINEER — MOHAN S. CHAR — No. 57894 — Exp. 6/30/10 — CIVIL — STATE OF CALIFORNIA

The State of California or its officers or agents shall not be responsible for the accuracy or completeness of electronic copies of this plan sheet.

RIVERSIDE COUNTY TRANSPORTATION COMMISSION
4080 LEMON STREET - THIRD FLOOR
RIVERSIDE, CALIFORNIA 92501

LIM & NASCIMENTO ENGINEERING
1887 BUSINESS CENTER DRIVE, SUITE 6
SAN BERNARDINO, CALIFORNIA 92408

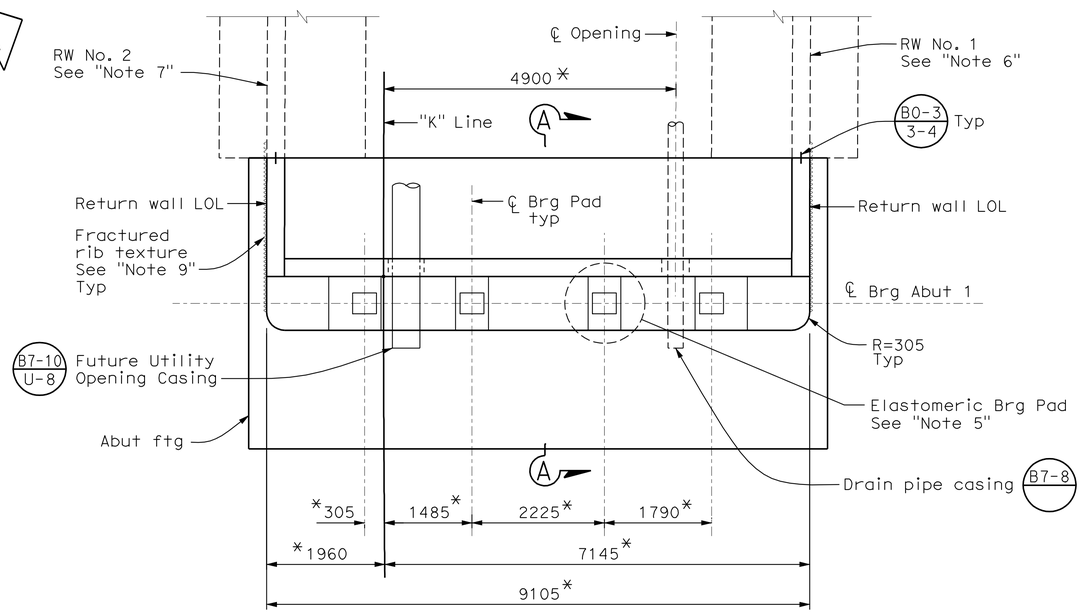

PLAN
1:50

* Measured along ℄ of Brg Abut 1

Notes:

1. For return wall details, see "Abutment Details No. 3" sheet.
2. For foundation layout, see "Foundation Plan" sheet.
3. For Section "A-A", see "Abutment Details No. 1" sheet.
4. See "Structure Approach Drainage Details" sheet.
5. For Elastomeric bearing pad details, see "Abutment Details No. 2 "sheet.
6. For RW No. 1, see "Retaining Wall No. 1 Layout" sheet.
7. For RW No. 2" see "Retaining Wall No. 2 Layout" sheet.
8. For deck drain pipe casing layout see "Girder Layout" sheet.
9. For fractured rib texture, see "Architectural Details" sheet.

LEGEND

Indicates CIDH Concrete Pile

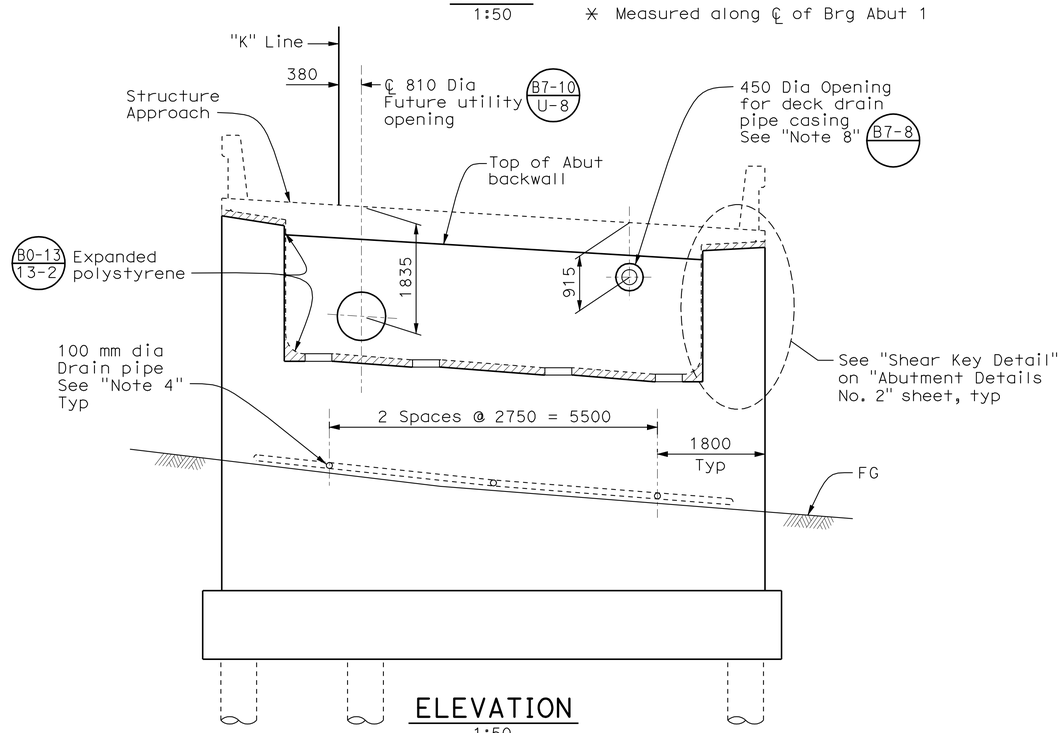

ELEVATION
1:50

Note: Not all piles shown.

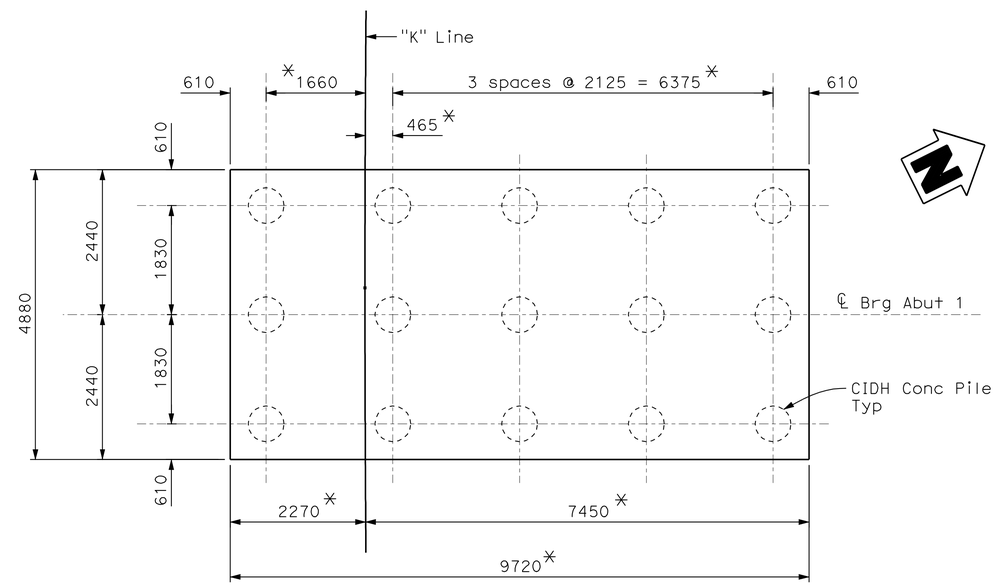

PILE LAYOUT
1:50

* Measured along ℄ of Brg Abut 1

ALL DIMENSIONS ARE IN MILLIMETERS UNLESS OTHERWISE SHOWN

DESIGN OVERSIGHT — Robert Zezoff
10-22-09
SIGN OFF DATE

	BY	CHECKED
DESIGN	D. KIM / D. SARETSKY	T. DUDLEY/A. SIVATHASAN
DETAILS	M. / R. ANDRASEK	R. PRICE / M. CHAR
QUANTITIES	D. SARETSKY	K. GEE

PREPARED FOR THE STATE OF CALIFORNIA DEPARTMENT OF TRANSPORTATION

MOHAN S. CHAR
PROJECT ENGINEER

BRIDGE NO. 56-0841
KILOMETER POST R19.6

WB SR60 HOV CONNECTOR
ABUTMENT 1 LAYOUT

DESIGN DETAIL SHEET (METRIC) (REV. 10/27/05)

ORIGINAL SCALE IN MILLIMETERS FOR REDUCED PLANS 0 10 20 30 40 50 60 70 80 90 100

CU 08
EA 449311

DISREGARD PRINTS BEARING EARLIER REVISION DATES

REVISION DATES (PRELIMINARY STAGE ONLY): 3/12/08 7/21/08 11/4/08 2/16/09 5/15/09 8/28/09 10/2/09

SHEET 5 OF 32

FILE => 56-0841-f-a01_lo1.dgn

USERNAME => trlim DATE PLOTTED => 19-OCT-2010 TIME PLOTTED => 15:29

DIST	COUNTY	ROUTE	KILOMETER POST TOTAL PROJECT	SHEET No	TOTAL SHEETS
08	Riv	60,215	R19.7/21.9, R61.3/62.7	472	594

Caltrans Metric

REGISTERED CIVIL ENGINEER — DATE 10/02/09

6-28-10
PLANS APPROVAL DATE

REGISTERED PROFESSIONAL ENGINEER — MOHAN S. CHAR — No. 57894 — Exp. 6/30/10 — CIVIL — STATE OF CALIFORNIA

The State of California or its officers or agents shall not be responsible for the accuracy or completeness of electronic copies of this plan sheet.

RIVERSIDE COUNTY TRANSPORTATION COMMISSION
4080 LEMON STREET - THIRD FLOOR
RIVERSIDE, CALIFORNIA 92501

LIM & NASCIMENTO ENGINEERING
1887 BUSINESS CENTER DRIVE, SUITE 6
SAN BERNARDINO, CALIFORNIA 92408

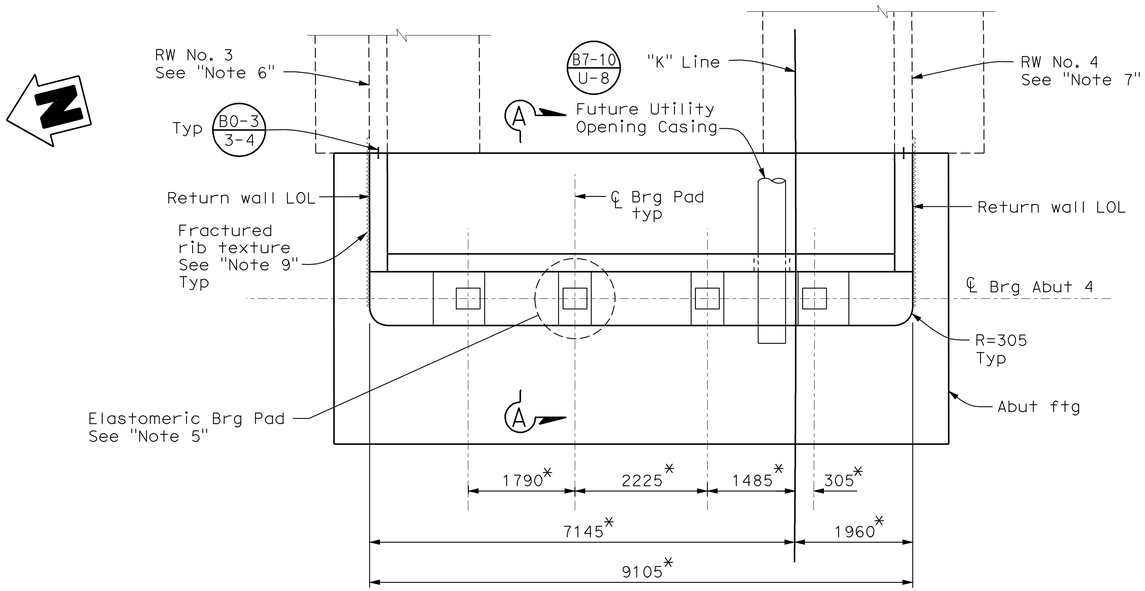

PLAN
1:50

* Measured along ℄ of Brg Abut 4

Notes:

1. For return wall details, see "Abutment Details No. 3" sheet.
2. For foundation layout, see "Foundation Plan" sheet.
3. For Section "A-A", see "Abutment Details No. 1" sheet.
4. See "Structure Approach Drainage Details" sheet.
5. For Elastomeric bearing pad details, see "Abutment Details No. 2 "sheet.
6. For RW No. 3, see "Retaining Wall No. 3 Layout" sheet.
7. For RW No. 4" see "Retaining Wall No. 4 Layout" sheet.
8. Remove portion of RCP that conflicts with piles and plug abandonded ends, see "Road Plans".
9. For fractured rib texture, see "Architectural Details" sheet.
10. For slope paving, see "Slope Paving - Full Slope" and "Slope Paving - Architectural Treatment Details" sheets.

LEGEND

Indicates CIDH Concrete Pile

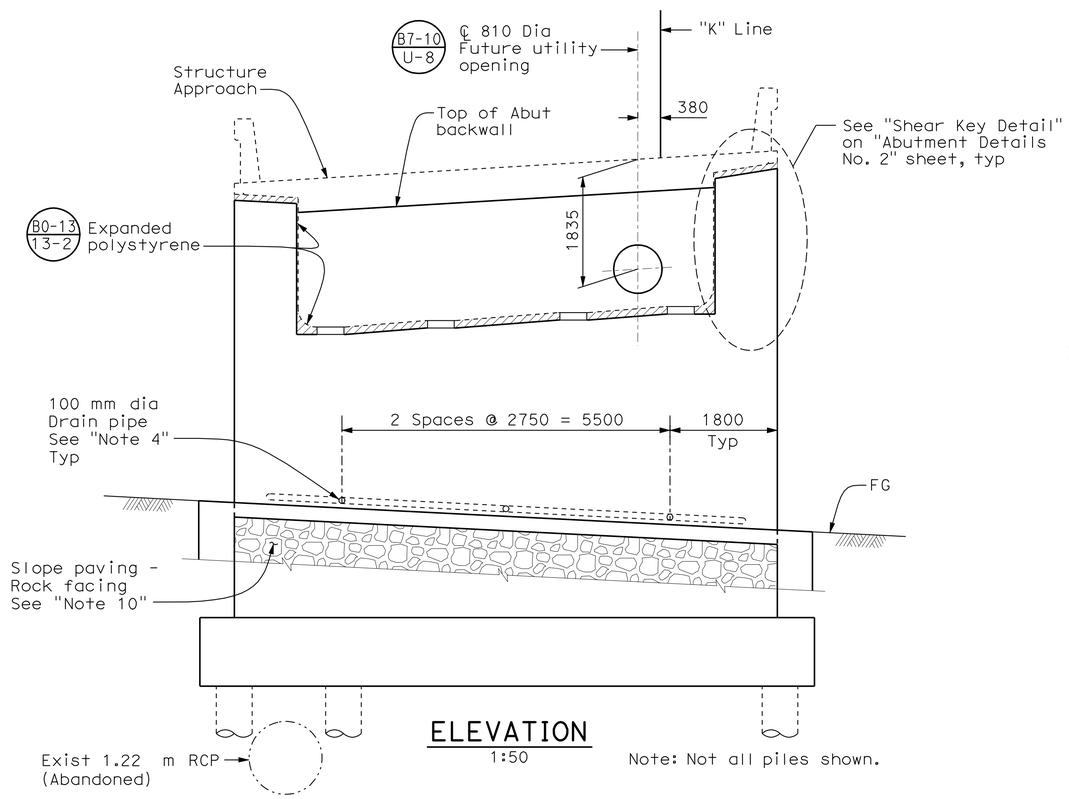

ELEVATION
1:50

Note: Not all piles shown.

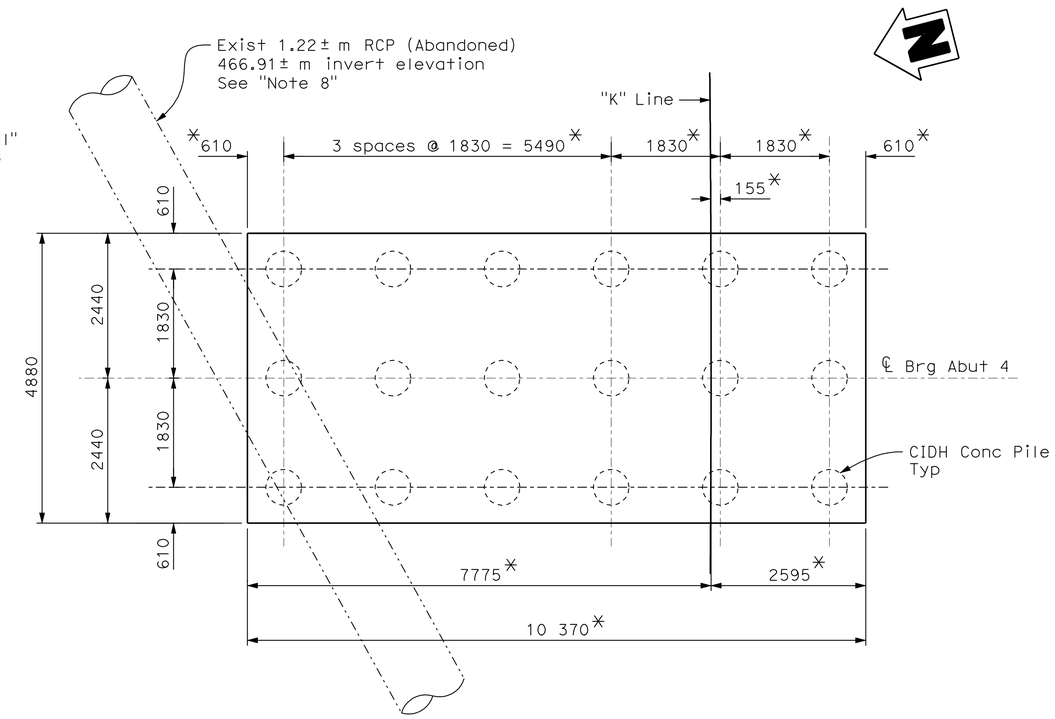

PILE LAYOUT
1:50

* Measured along ℄ of Brg Abut 4

ALL DIMENSIONS ARE IN MILLIMETERS UNLESS OTHERWISE SHOWN

DESIGN OVERSIGHT — Robert Zezoff
10-22-09
SIGN OFF DATE

	BY	CHECKED
DESIGN	D. KIM / D. SARETSKY	T. DUDLEY/A. SIVATHASAN
DETAILS	M. / R. ANDRASEK	R. PRICE / M. CHAR
QUANTITIES	D. SARETSKY	K. GEE

PREPARED FOR THE STATE OF CALIFORNIA DEPARTMENT OF TRANSPORTATION

MOHAN S. CHAR
PROJECT ENGINEER

BRIDGE NO. 56-0841
KILOMETER POST R19.6

WB SR60 HOV CONNECTOR
ABUTMENT 4 LAYOUT

DESIGN DETAIL SHEET (METRIC) (REV. 10/27/05)

ORIGINAL SCALE IN MILLIMETERS FOR REDUCED PLANS 0 10 20 30 40 50 60 70 80 90 100

CU 08
EA 449311

DISREGARD PRINTS BEARING EARLIER REVISION DATES

REVISION DATES (PRELIMINARY STAGE ONLY): 3/12/08 7/21/08 11/4/08 2/16/09 5/18/09 8/28/09 10/2/09

SHEET 6 OF 32

FILE => 56-0841-f-a01_lo2.dgn

USERNAME => trlim DATE PLOTTED => 19-OCT-2010 TIME PLOTTED => 15:29

DIST	COUNTY	ROUTE	KILOMETER POST TOTAL PROJECT	SHEET No	TOTAL SHEETS
08	Riv	60,215	R19.7/21.9, R61.3/62.7	473	594

Caltrans Metric

REGISTERED CIVIL ENGINEER — DATE 10/02/09

6-28-10
PLANS APPROVAL DATE

REGISTERED PROFESSIONAL ENGINEER — MOHAN S. CHAR No. 57894 Exp. 6/30/10 CIVIL — STATE OF CALIFORNIA

The State of California or its officers or agents shall not be responsible for the accuracy or completeness of electronic copies of this plan sheet.

RIVERSIDE COUNTY TRANSPORTATION COMMISSION
4080 LEMON STREET - THIRD FLOOR
RIVERSIDE, CALIFORNIA 92501

LIM & NASCIMENTO ENGINEERING
1887 BUSINESS CENTER DRIVE, SUITE 6
SAN BERNARDINO, CALIFORNIA 92408

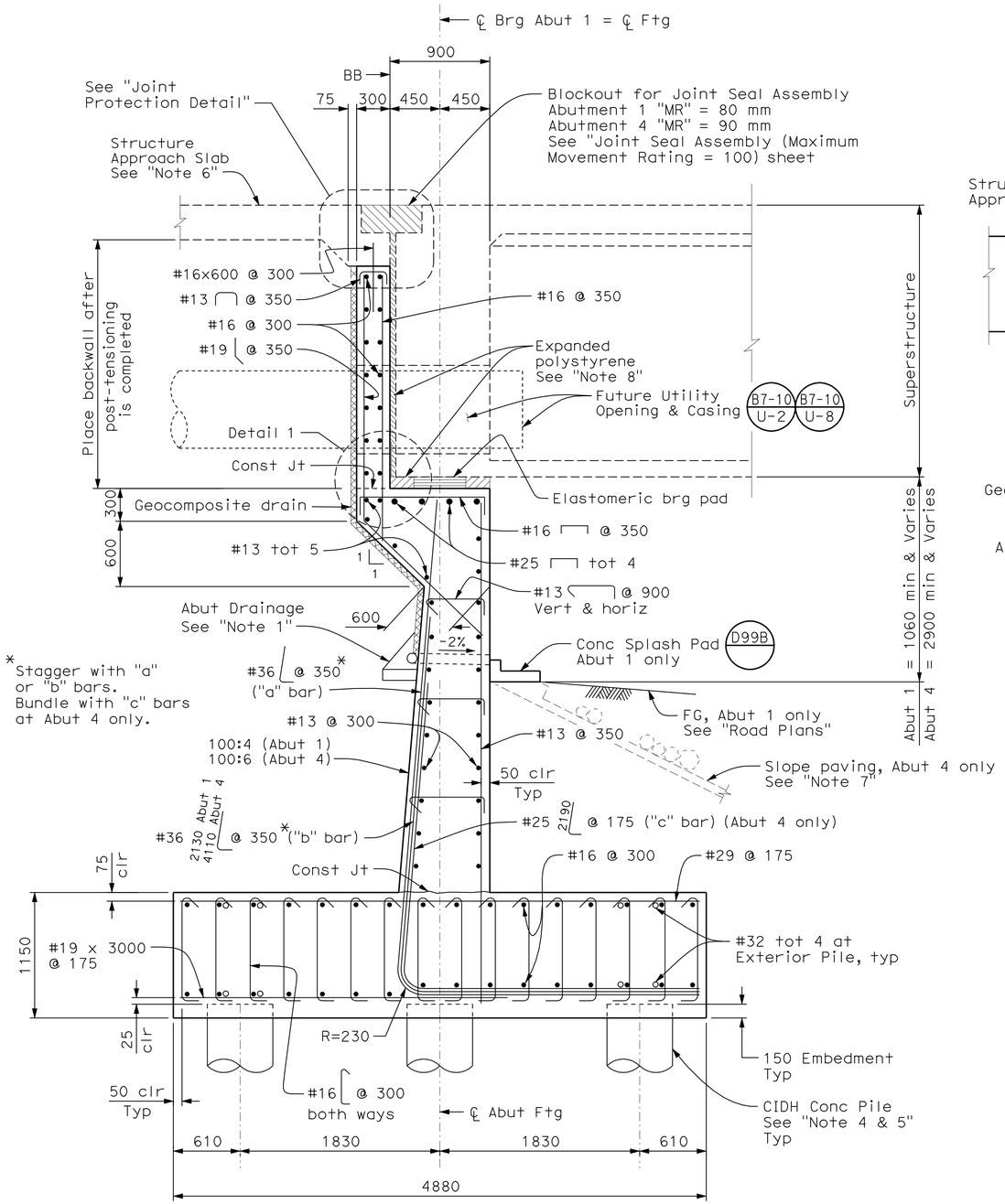

SECTION A-A
1:25
(Abutment 1 shown, Abutment 4 similar)

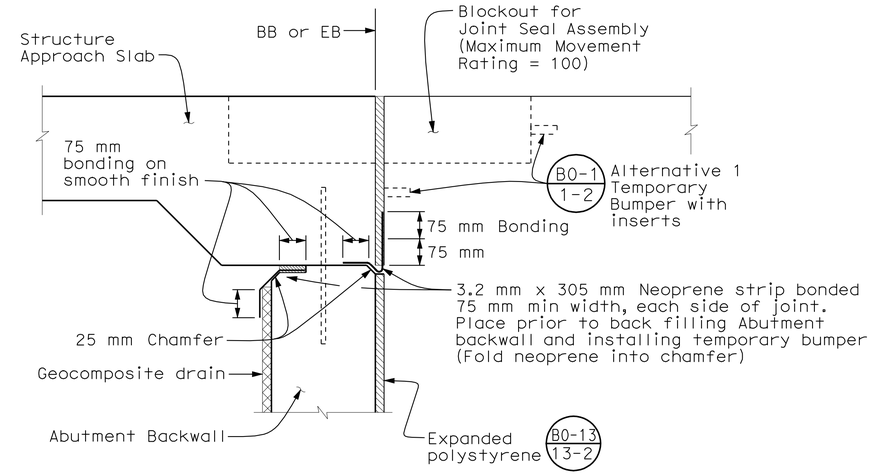

JOINT PROTECTION DETAIL
No Scale

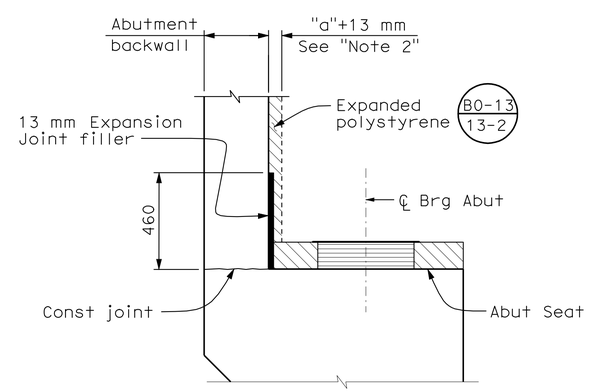

DETAIL 1
No Scale

Notes:

1. For drainage details, see "Structure Approach Drainage Details" sheet.
2. For "a" dimension, see "Joint Seal Assembly (Maximum Movement Rating = 100)" sheet.
3. For location of "Section A-A", see "Abutment 1 & 4 Layout" sheets.
4. For Pile locations, see "Pile Layout" details on "Abutment Layout" sheets.
5. For CIDH Pile Details, see "CIDH Pile Detail" sheet.
6. For structure approach details, see "Structure Approach Type N9(S)" sheet.
7. For slope paving, see "Slope Paving - Full Slope" and "Slope Paving - Architectural Treatment Details" sheets.
8. Remove expanded polystyrene min 150 mm from all exposed surfaces.

ALL DIMENSIONS ARE IN MILLIMETERS UNLESS OTHERWISE SHOWN

Robert Zezoff
DESIGN OVERSIGHT — Robert Zezoff
10-22-09
SIGN OFF DATE

	BY	CHECKED
DESIGN	D. KIM / D. SARETSKY	T. DUDLEY/A. SIVATHASAN
DETAILS	M. / R. ANDRASEK	R. PRICE / M. CHAR
QUANTITIES	D. SARETSKY	K. GEE

PREPARED FOR THE STATE OF CALIFORNIA DEPARTMENT OF TRANSPORTATION

MOHAN S. CHAR
PROJECT ENGINEER

BRIDGE NO. 56-0841
KILOMETER POST R19.6

WB SR60 HOV CONNECTOR
ABUTMENT DETAILS No. 1

DESIGN DETAIL SHEET (METRIC) (REV. 10/27/05)

ORIGINAL SCALE IN MILLIMETERS FOR REDUCED PLANS 0 10 20 30 40 50 60 70 80 90 100

CU 08
EA 449311

DISREGARD PRINTS BEARING EARLIER REVISION DATES
REVISION DATES (PRELIMINARY STAGE ONLY): 3/12/08 7/21/08 11/17/08 2/18/09 5/15/09 8/28/09 10/2/09

SHEET 7 OF 32

FILE => 56-0841-f-a01dt01.dgn

USERNAME => trlim DATE PLOTTED => 19-OCT-2010 TIME PLOTTED => 15:29

DIST	COUNTY	ROUTE	KILOMETER POST TOTAL PROJECT	SHEET No	TOTAL SHEETS
08	Riv	60,215	R19.7/21.9, R61.3/62.7	474	594

REGISTERED CIVIL ENGINEER — DATE 10/02/09

6-28-10
PLANS APPROVAL DATE

REGISTERED PROFESSIONAL ENGINEER — MOHAN S. CHAR — No. 57894 — Exp. 6/30/10 — CIVIL — STATE OF CALIFORNIA

The State of California or its officers or agents shall not be responsible for the accuracy or completeness of electronic copies of this plan sheet.

RIVERSIDE COUNTY TRANSPORTATION COMMISSION
4080 LEMON STREET - THIRD FLOOR
RIVERSIDE, CALIFORNIA 92501

LIM & NASCIMENTO ENGINEERING
1887 BUSINESS CENTER DRIVE, SUITE 6
SAN BERNARDINO, CALIFORNIA 92408

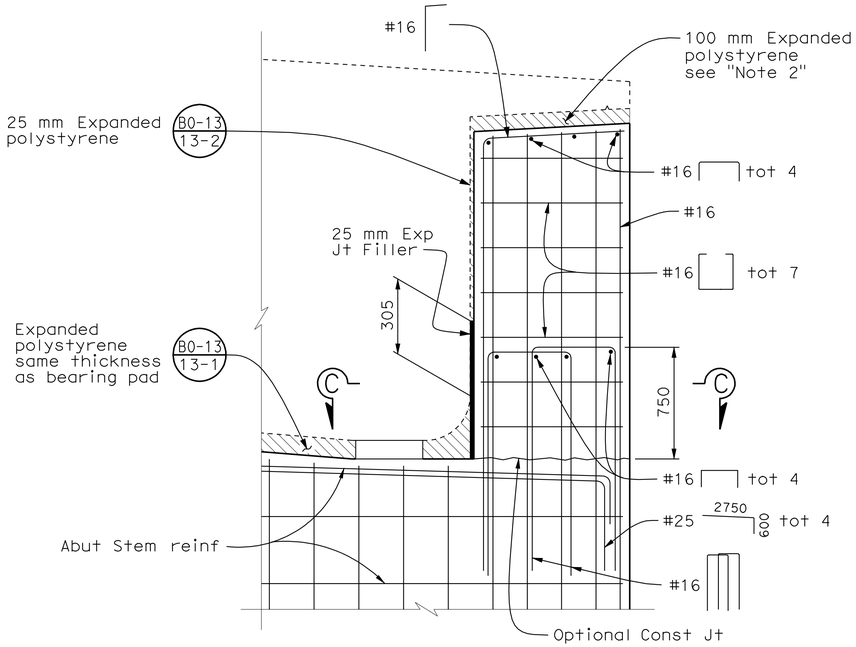

SHEAR KEY DETAIL
1:20
(Abutment 1 Left shown, others similar)

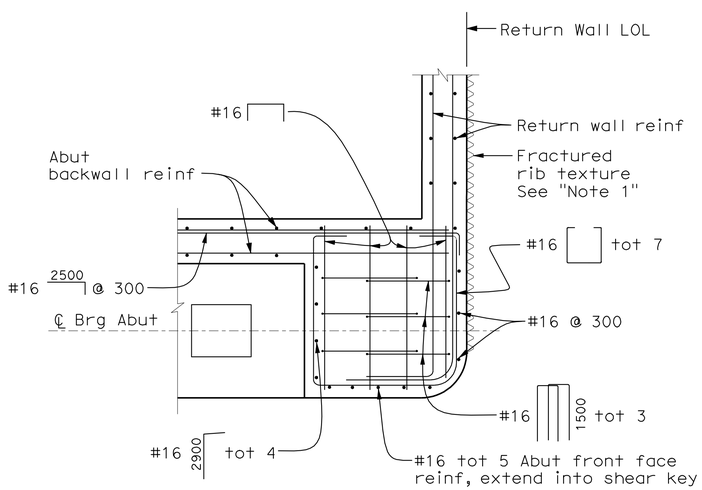

SECTION C-C
1:20
(Abutment 1 Left shown, others similar)

Note:

1. For fractured rib texture, see "Architectural Details" sheet.
2. Remove all expanded polystyrene min 150 mm from all exposed surfaces.

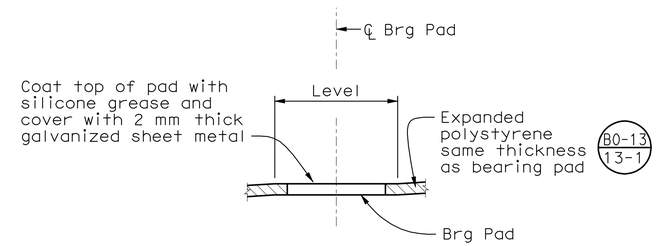

ELEVATION

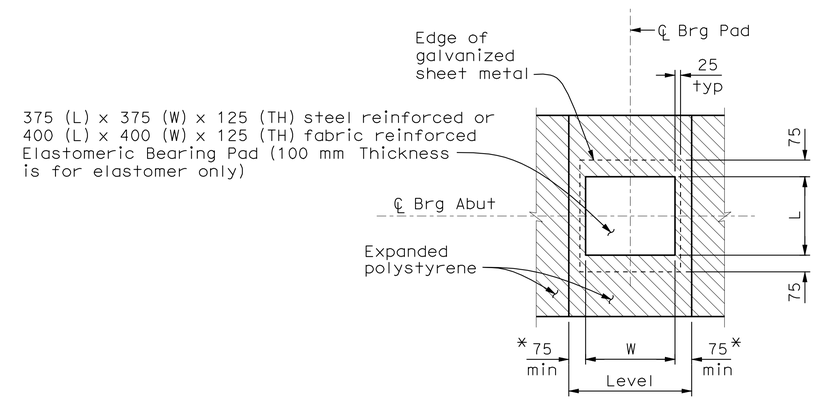

PLAN

* Extend Level portion to face of shear key at exterior girders.

BEARING PAD DETAIL
No Scale

ALL DIMENSIONS ARE IN MILLIMETERS UNLESS OTHERWISE SHOWN

Robert Zezoff
DESIGN OVERSIGHT — Robert Zezoff
10-22-09
SIGN OFF DATE

	BY	CHECKED
DESIGN	D. KIM / D. SARETSKY	T. DUDLEY/A. SIVATHASAN
DETAILS	M. / R. ANDRASEK	R. PRICE / M. CHAR
QUANTITIES	D. SARETSKY	K. GEE

PREPARED FOR THE STATE OF CALIFORNIA DEPARTMENT OF TRANSPORTATION

MOHAN S. CHAR
PROJECT ENGINEER

BRIDGE NO. 56-0841
KILOMETER POST R19.6

WB SR60 HOV CONNECTOR
ABUTMENT DETAILS No. 2

DESIGN DETAIL SHEET (METRIC) (REV. 10/27/05)

ORIGINAL SCALE IN MILLIMETERS FOR REDUCED PLANS 0 10 20 30 40 50 60 70 80 90 100

CU 08
EA 449311

DISREGARD PRINTS BEARING EARLIER REVISION DATES — REVISION DATES (PRELIMINARY STAGE ONLY) 3/12/08 7/21/08 11/14/08 2/16/09 5/15/09 8/28/09 10/2/09

SHEET 8 OF 32

FILE => 56-0841-f-a01dt02.dgn

USERNAME => trlim DATE PLOTTED => 19-OCT-2010 TIME PLOTTED => 15:29

DIST	COUNTY	ROUTE	KILOMETER POST TOTAL PROJECT	SHEET No	TOTAL SHEETS
08	Riv	60,215	R19.7/21.9, R61.3/62.7	475	594

Caltrans Metric

REGISTERED CIVIL ENGINEER — DATE 10/02/09

6-28-10
PLANS APPROVAL DATE

REGISTERED PROFESSIONAL ENGINEER — MOHAN S. CHAR — No. 57894 — Exp. 6/30/10 — CIVIL — STATE OF CALIFORNIA

The State of California or its officers or agents shall not be responsible for the accuracy or completeness of electronic copies of this plan sheet.

RIVERSIDE COUNTY TRANSPORTATION COMMISSION
4080 LEMON STREET - THIRD FLOOR
RIVERSIDE, CALIFORNIA 92501

LIM & NASCIMENTO ENGINEERING
1887 BUSINESS CENTER DRIVE, SUITE 6
SAN BERNARDINO, CALIFORNIA 92408

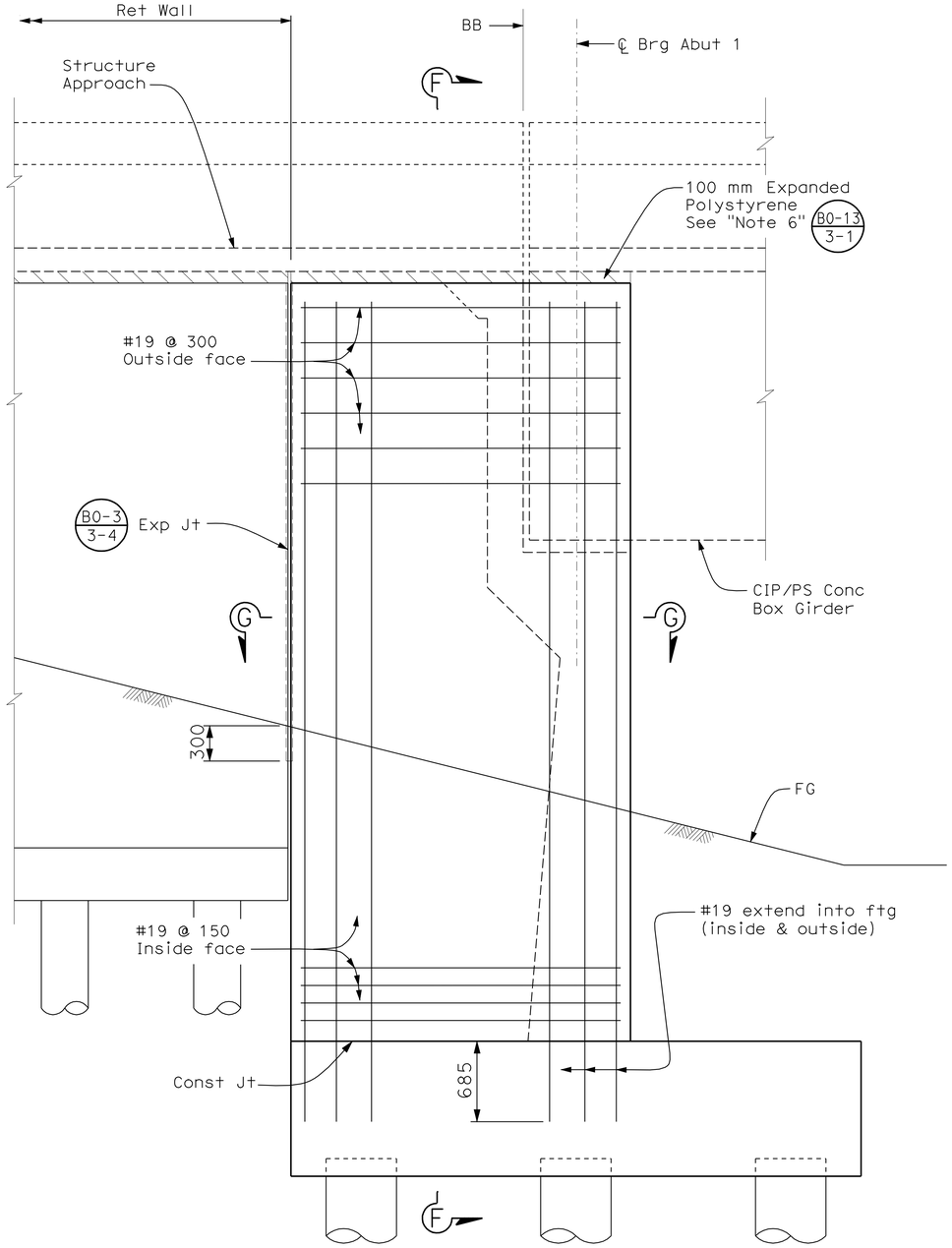

RETURN WALL ELEVATION
1:25
(Abutment 1 Right shown, others similar)

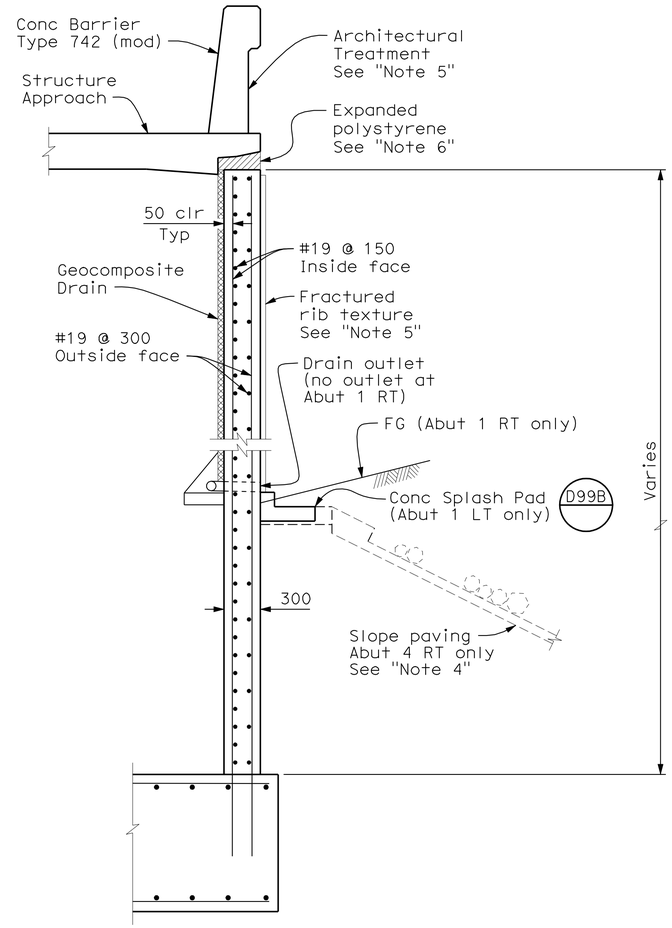

SECTION F-F
1:25
(Abutment 1 Right shown, others similar)
(Piles not shown)

Notes:

1. For Structure Approach Details, see "Structure Approach Type N(9S)" sheet.
2. For Drainage Details, see "Structure Approach Drainage Details" sheet.
3. For Shear Key reinforcement details, see "Abutment Details No. 2" sheet.
4. For slope paving, see "Slope Paving - Full Slope" and "Slope Paving - Architectural Treatment Details" sheets.
5. For fractured rib texture, see "Architectural Details" sheet.
6. Remove expanded polystrene min 150 mm from all exposed surface.

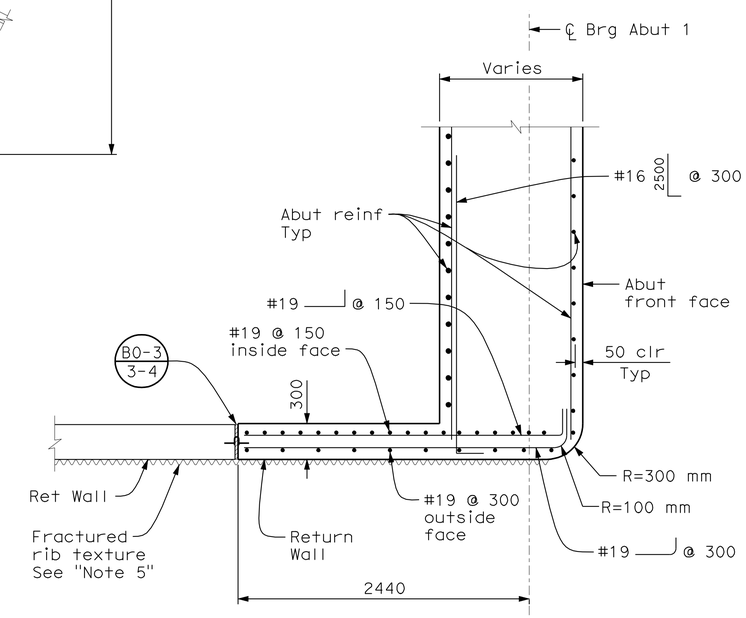

SECTION G-G
1:25
(Abutment 1 Right shown, others similar)

ALL DIMENSIONS ARE IN MILLIMETERS UNLESS OTHERWISE SHOWN

Robert Zezoff
DESIGN OVERSIGHT — Robert Zezoff
10-22-09
SIGN OFF DATE

	BY	CHECKED
DESIGN	D. KIM / D. SARETSKY	T. DUDLEY/A. SIVATHASAN
DETAILS	M. / R. ANDRASEK	R. PRICE / M. CHAR
QUANTITIES	D. SARETSKY	K. GEE

PREPARED FOR THE STATE OF CALIFORNIA DEPARTMENT OF TRANSPORTATION

MOHAN S. CHAR
PROJECT ENGINEER

BRIDGE NO. 56-0841
KILOMETER POST R19.6

WB SR60 HOV CONNECTOR
ABUTMENT DETAILS No. 3

DESIGN DETAIL SHEET (METRIC) (REV. 10/27/05)

ORIGINAL SCALE IN MILLIMETERS FOR REDUCED PLANS 0 10 20 30 40 50 60 70 80 90 100

CU 08
EA 449311

DISREGARD PRINTS BEARING EARLIER REVISION DATES

REVISION DATES (PRELIMINARY STAGE ONLY): 3/12/08 7/21/08 11/4/08 2/16/09 5/18/09 8/28/09 10/2/09

SHEET 9 OF 32

FILE => 56-0841-f-a01dt03.dgn

USERNAME => trlim DATE PLOTTED => 19-OCT-2010 TIME PLOTTED => 15:29

DIST	COUNTY	ROUTE	KILOMETER POST TOTAL PROJECT	SHEET No	TOTAL SHEETS
08	Riv	60,215	R19.7/21.9, R61.3/62.7	476	594

Caltrans Metric

REGISTERED CIVIL ENGINEER — DATE 10/02/09

6-28-10
PLANS APPROVAL DATE

REGISTERED PROFESSIONAL ENGINEER — MOHAN S. CHAR — No. 57894 — Exp. 6/30/10 — CIVIL — STATE OF CALIFORNIA

The State of California or its officers or agents shall not be responsible for the accuracy or completeness of electronic copies of this plan sheet.

RIVERSIDE COUNTY TRANSPORTATION COMMISSION
4080 LEMON STREET - THIRD FLOOR
RIVERSIDE, CALIFORNIA 92501

LIM & NASCIMENTO ENGINEERING
1887 BUSINESS CENTER DRIVE, SUITE 6
SAN BERNARDINO, CALIFORNIA 92408

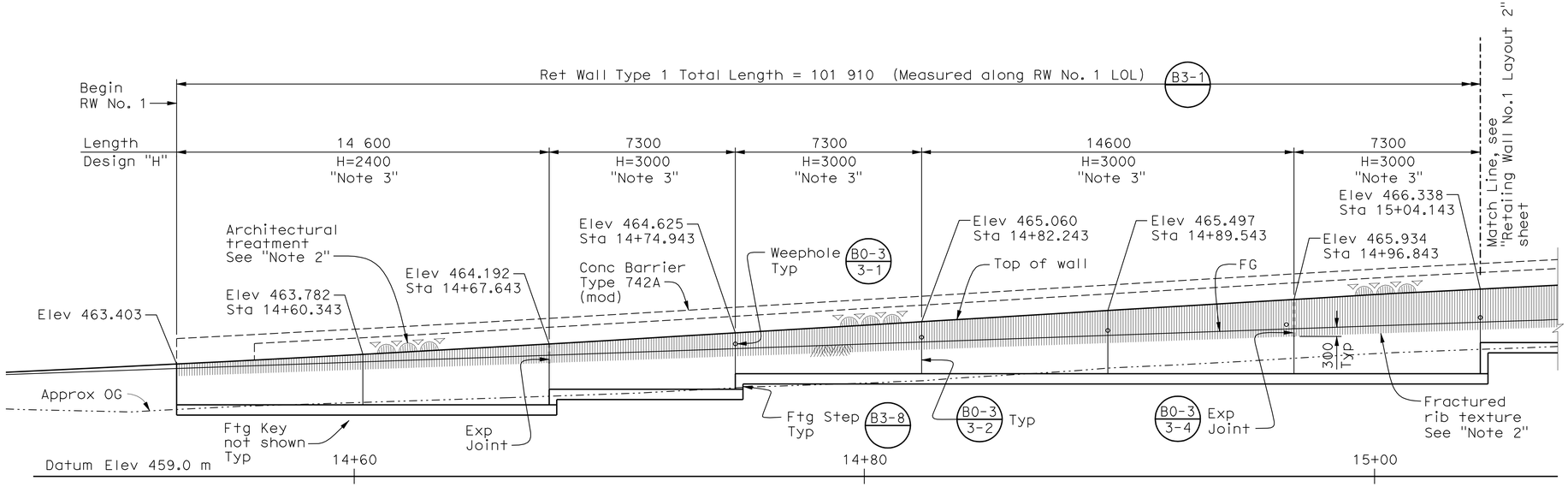

PART MIRROR ELEVATION
1:100

Notes:

1. Top of wall elevations shown in meters.
2. For fractured rib texture & architectural treatment, see "Architectural Details" sheet.
3. For stem reinforcement only, see Modified Stem Reinforcement Detail on "Retaining Wall No. 2 Layout" sheet

LEGEND

Bottom of footing elevation (m)

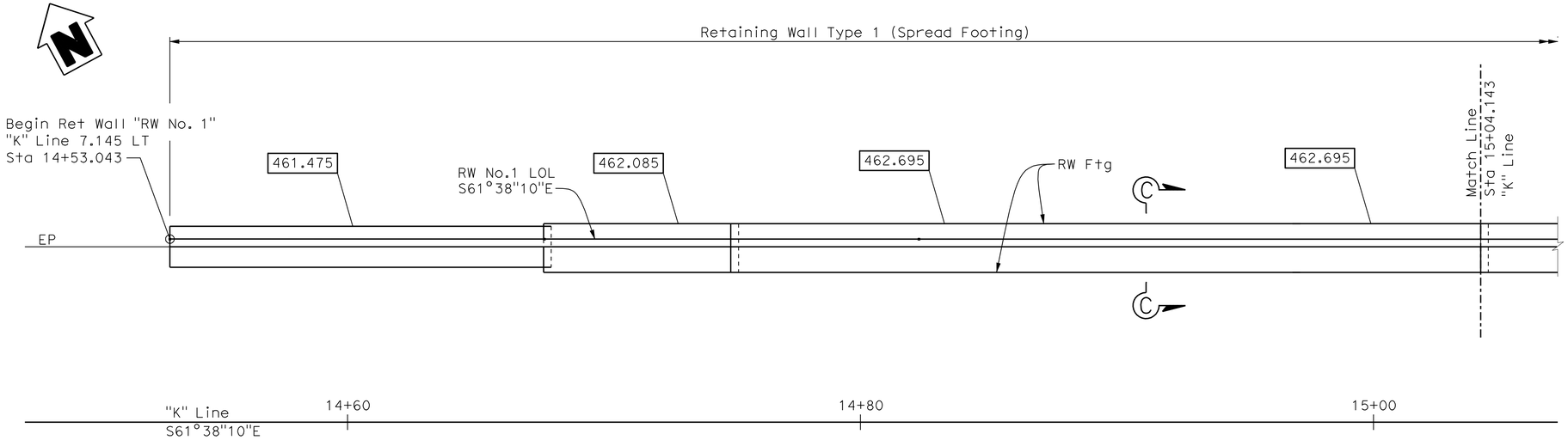

PART PLAN
1:100

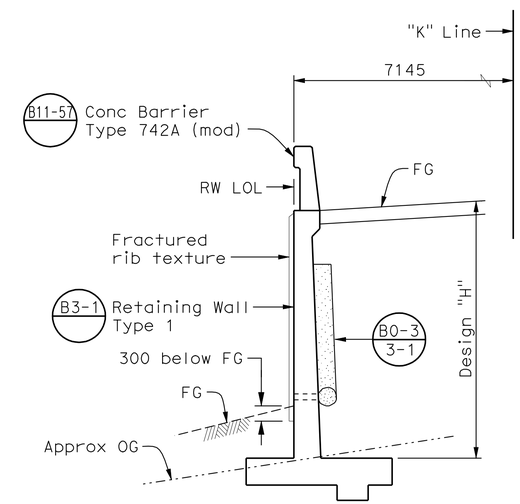

SECTION C-C
No Scale

ALL DIMENSIONS ARE IN MILLIMETERS UNLESS OTHERWISE SHOWN

Robert Zezoff
DESIGN OVERSIGHT — Robert Zezoff
10-22-09
SIGN OFF DATE

	BY	CHECKED
DESIGN	D. SARETSKY/M. CHAR	D. KIM
DETAILS	M. / R. ANDRASEK	R. PRICE / M. CHAR
QUANTITIES	D. SARETSKY	K. GEE

PREPARED FOR THE STATE OF CALIFORNIA DEPARTMENT OF TRANSPORTATION

MOHAN S. CHAR
PROJECT ENGINEER

BRIDGE NO. 56-0841
KILOMETER POST R19.6

WB SR60 HOV CONNECTOR
RETAINING WALL NO. 1 LAYOUT 1

DESIGN DETAIL SHEET (METRIC) (REV. 10/27/05)

ORIGINAL SCALE IN MILLIMETERS FOR REDUCED PLANS 0 10 20 30 40 50 60 70 80 90 100

CU 08
EA 449311

DISREGARD PRINTS BEARING EARLIER REVISION DATES

REVISION DATES (PRELIMINARY STAGE ONLY) 3/12/08 7/21/08 2/18/09 6/18/09 8/28/09 10/2/09

SHEET 10 OF 32

FILE => 56-0841-g-rw_lo1.dgn

USERNAME => trlim DATE PLOTTED => 19-OCT-2010 TIME PLOTTED => 15:29

DIST	COUNTY	ROUTE	KILOMETER POST TOTAL PROJECT	SHEET No	TOTAL SHEETS
08	Riv	60,215	R19.7/21.9, R61.3/62.7	477	594

Caltrans Metric

REGISTERED CIVIL ENGINEER — DATE 10/02/09

6-28-10
PLANS APPROVAL DATE

REGISTERED PROFESSIONAL ENGINEER — MOHAN S. CHAR — No. 57894 — Exp. 6/30/10 — CIVIL — STATE OF CALIFORNIA

The State of California or its officers or agents shall not be responsible for the accuracy or completeness of electronic copies of this plan sheet.

RIVERSIDE COUNTY TRANSPORTATION COMMISSION
4080 LEMON STREET - THIRD FLOOR
RIVERSIDE, CALIFORNIA 92501

LIM & NASCIMENTO ENGINEERING
1887 BUSINESS CENTER DRIVE, SUITE 6
SAN BERNARDINO, CALIFORNIA 92408

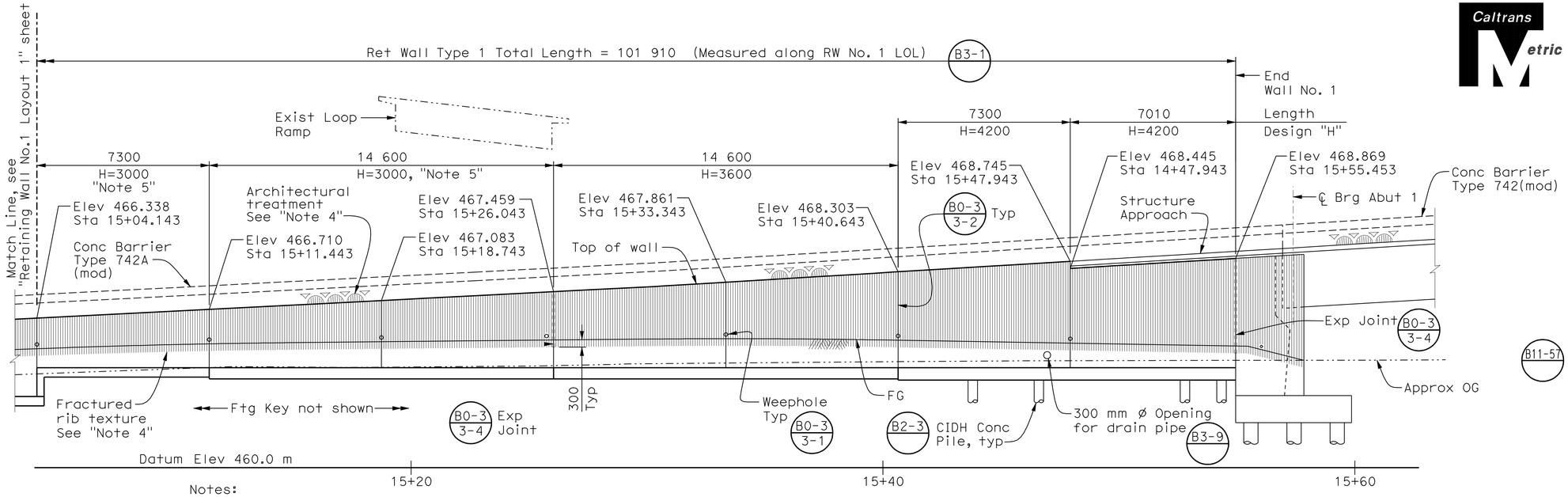

Notes:

1. For pile layout, see "Retaining Wall No. 1 Pile Layout 1" sheet.
2. Top of wall elevations shown in meters.
3. For "Section C-C", see "Retaining Wall No. 1 Layout 1" sheet.
4. For fractured rib texture & architectural treatment, see "Architectural Details" sheet.
5. For stem reinforcement only, see Modified Stem Reinforcement Detail on "Retaining Wall No. 2 Layout" sheet

PART MIRROR ELEVATION
1:100

Note: Not all piles shown.

LEGEND

Bottom of footing elevation (m)

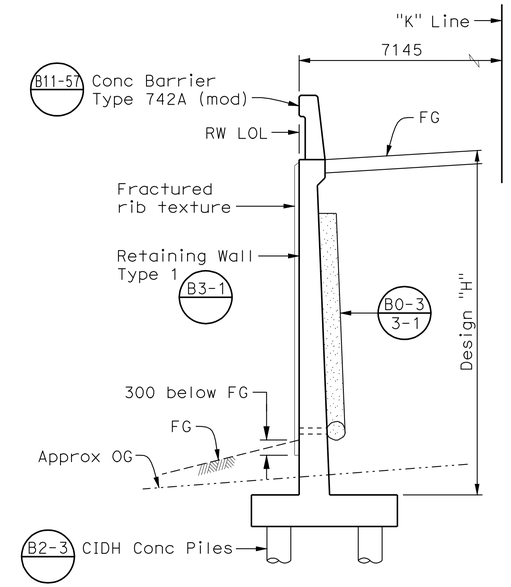

SECTION A-A
No Scale

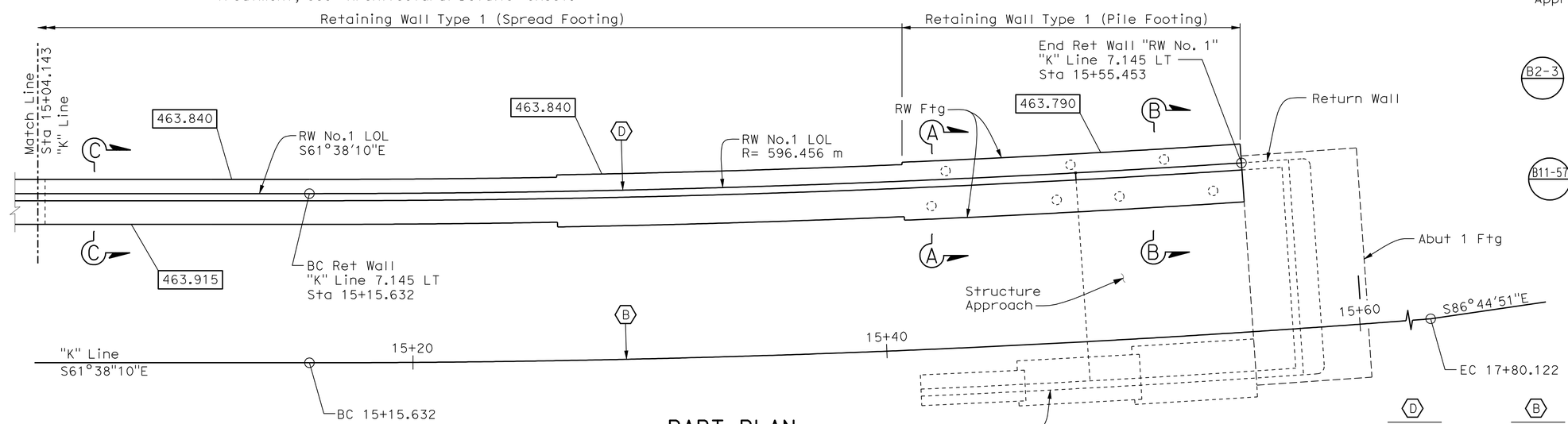

PART PLAN
1:100

Note: Not all piles shown.

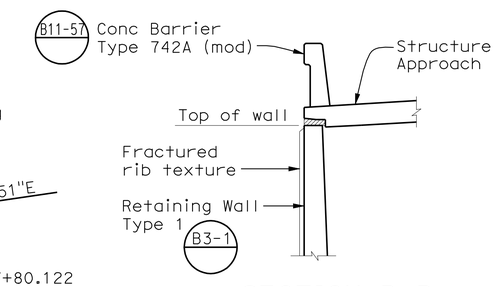

SECTION B-B
No Scale

For information not shown, see "Section A-A"

D	B
R = 596.456 m	R = 603.601 m
Δ = 3°46'57"	Δ = 23°06'23"
T = 19.695 m	T = 134.402 m
L = 29.376 m	L = 264.490 m

ALL DIMENSIONS ARE IN MILLIMETERS UNLESS OTHERWISE SHOWN

DESIGN OVERSIGHT — Robert Zezoff
10-22-09
SIGN OFF DATE

	BY	CHECKED
DESIGN	D. SARETSKY/M. CHAR	D. KIM
DETAILS	M. / R. ANDRASEK	R. PRICE / M. CHAR
QUANTITIES	D. SARETSKY	K. GEE

PREPARED FOR THE STATE OF CALIFORNIA DEPARTMENT OF TRANSPORTATION

MOHAN S. CHAR
PROJECT ENGINEER

BRIDGE NO. 56-0841
KILOMETER POST R19.6

WB SR60 HOV CONNECTOR
RETAINING WALL NO. 1 LAYOUT 2

DESIGN DETAIL SHEET (METRIC) (REV. 10/27/05)

ORIGINAL SCALE IN MILLIMETERS FOR REDUCED PLANS 0 10 20 30 40 50 60 70 80 90 100

CU 08
EA 449311

DISREGARD PRINTS BEARING EARLIER REVISION DATES

REVISION DATES (PRELIMINARY STAGE ONLY) 5/12/08 7/21/08 12/18/09 6/18/09 8/28/09 10/2/09

SHEET 11 OF 32

FILE => 56-0841-g-rw_lo2.dgn

USERNAME => trlim DATE PLOTTED => 19-OCT-2010 TIME PLOTTED => 15:29

DIST	COUNTY	ROUTE	KILOMETER POST TOTAL PROJECT	SHEET No	TOTAL SHEETS
08	Riv	60,215	R19.7/21.9, R61.3/62.7	478	594

Caltrans Metric

REGISTERED CIVIL ENGINEER — DATE 10/02/09

6-28-10
PLANS APPROVAL DATE

REGISTERED PROFESSIONAL ENGINEER — MOHAN S. CHAR — No. 57894 — Exp. 6/30/10 — CIVIL — STATE OF CALIFORNIA

The State of California or its officers or agents shall not be responsible for the accuracy or completeness of electronic copies of this plan sheet.

RIVERSIDE COUNTY TRANSPORTATION COMMISSION
4080 LEMON STREET - THIRD FLOOR
RIVERSIDE, CALIFORNIA 92501

LIM & NASCIMENTO ENGINEERING
1887 BUSINESS CENTER DRIVE, SUITE 6
SAN BERNARDINO, CALIFORNIA 92408

Notes:

1. All longitudinal pile dimensions are measured along RW LOL.
2. For "Pile Data Table", see "Foundation Plan" sheet.
3. For CIDH Pile Details, see "CIDH Pile Details" sheet.

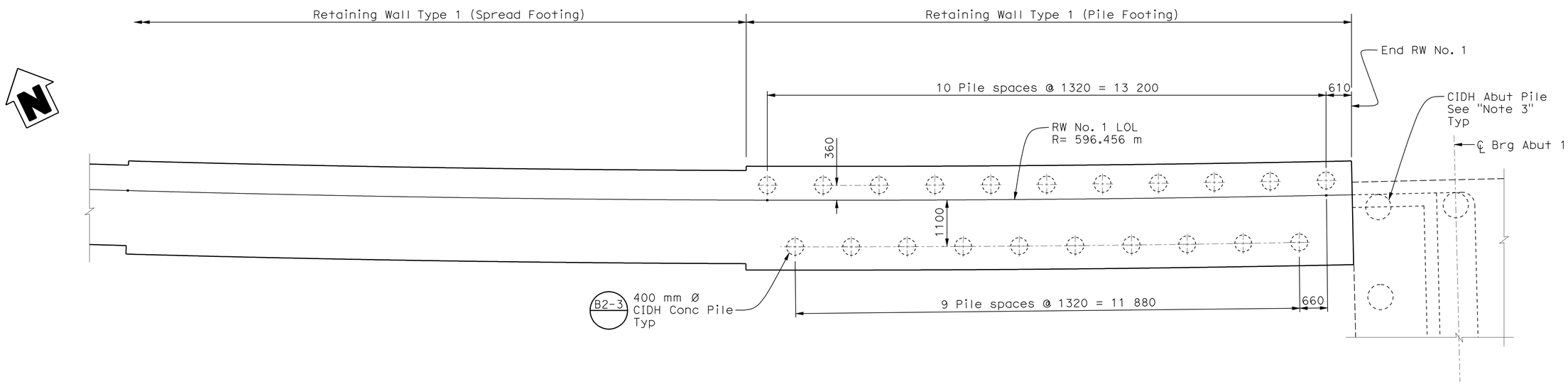

PART PLAN
1:50

ALL DIMENSIONS ARE IN MILLIMETERS UNLESS OTHERWISE SHOWN

DESIGN OVERSIGHT — Robert Zezoff
10-22-09
SIGN OFF DATE

	BY	CHECKED
DESIGN	D. SARETSKY/M. CHAR	D. KIM
DETAILS	M. / R. ANDRASEK	R. PRICE / M. CHAR
QUANTITIES	D. SARETSKY	K. GEE

PREPARED FOR THE STATE OF CALIFORNIA DEPARTMENT OF TRANSPORTATION

MOHAN S. CHAR
PROJECT ENGINEER

BRIDGE NO. 56-0841
KILOMETER POST R19.6

WB SR60 HOV CONNECTOR
RETAINING WALL NO. 1 PILE LAYOUT

DESIGN DETAIL SHEET (METRIC) (REV. 10/27/05)

ORIGINAL SCALE IN MILLIMETERS FOR REDUCED PLANS 0 10 20 30 40 50 60 70 80 90 100

CU 08
EA 449311

DISREGARD PRINTS BEARING EARLIER REVISION DATES

REVISION DATES (PRELIMINARY STAGE ONLY) 3/12/08 7/21/08 2/18/09 6/18/09 8/28/09 10/2/09

SHEET 12 OF 32

FILE => 56-0841-g-rw_lo3.dgn

USERNAME => trlim DATE PLOTTED => 19-OCT-2010 TIME PLOTTED => 15:30

DIST	COUNTY	ROUTE	KILOMETER POST TOTAL PROJECT	SHEET No	TOTAL SHEETS
08	Riv	60,215	R19.7/21.9, R61.3/62.7	479	594

Caltrans Metric

REGISTERED CIVIL ENGINEER — DATE 10/02/09

6-28-10
PLANS APPROVAL DATE

REGISTERED PROFESSIONAL ENGINEER — MOHAN S. CHAR — No. 57894 — Exp. 6/30/10 — CIVIL — STATE OF CALIFORNIA

The State of California or its officers or agents shall not be responsible for the accuracy or completeness of electronic copies of this plan sheet.

RIVERSIDE COUNTY TRANSPORTATION COMMISSION
4080 LEMON STREET - THIRD FLOOR
RIVERSIDE, CALIFORNIA 92501

LIM & NASCIMENTO ENGINEERING
1887 BUSINESS CENTER DRIVE, SUITE 6
SAN BERNARDINO, CALIFORNIA 92408

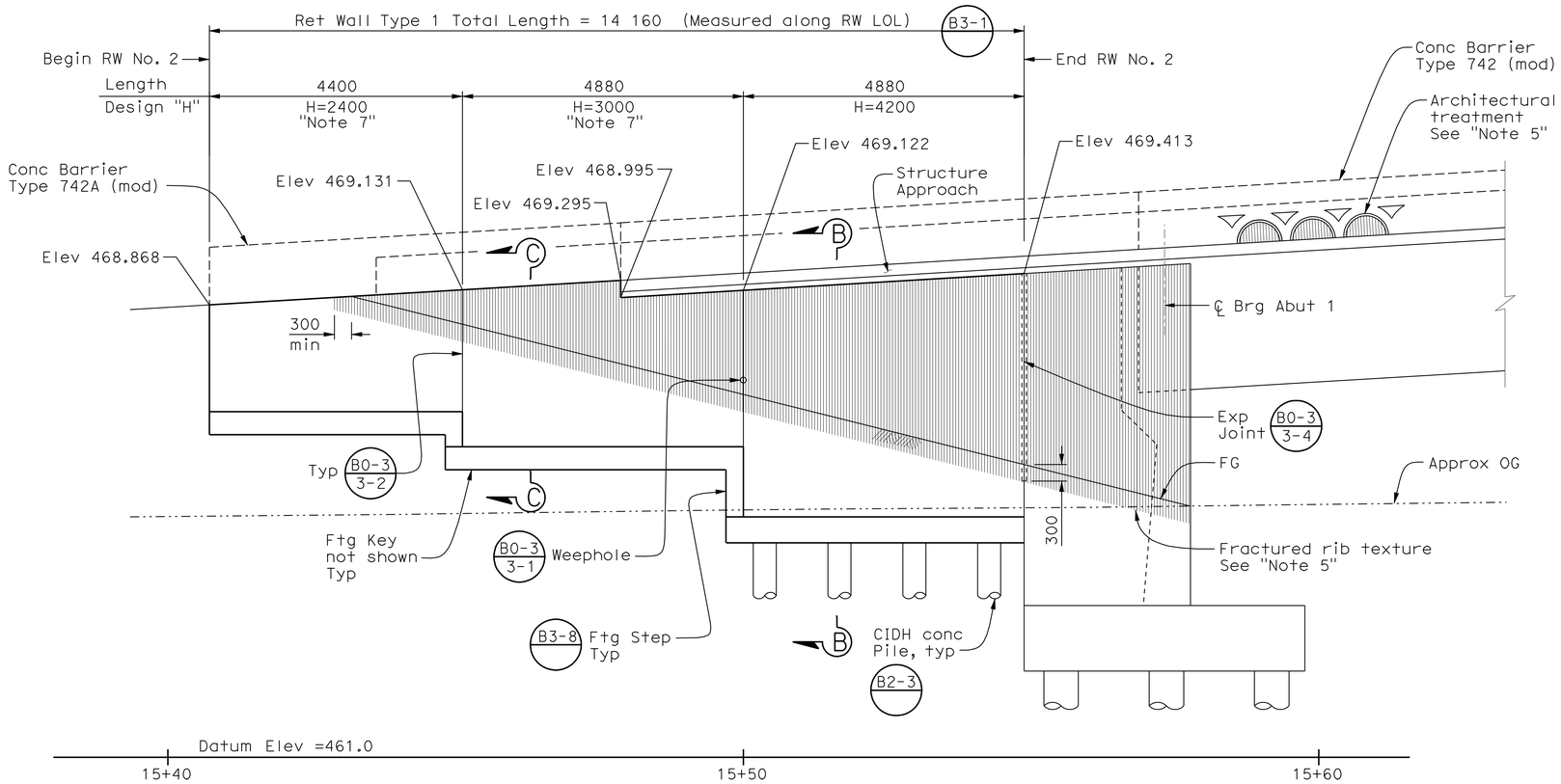

ELEVATION
1:50

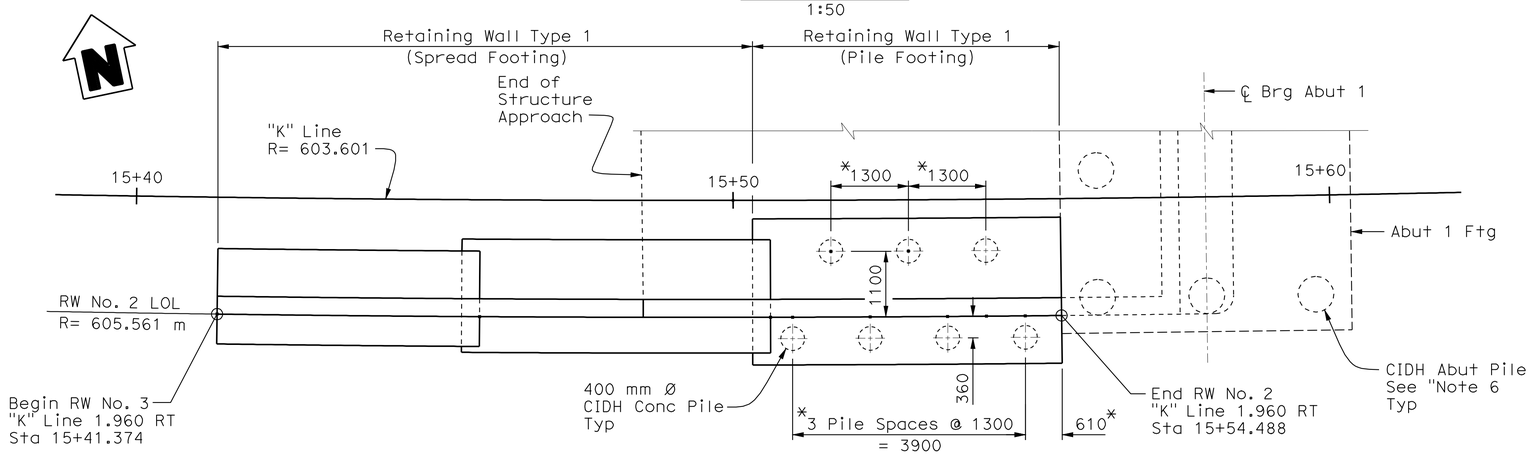

PLAN
1:50

* Measured along RW LOL

Notes:

1. For "Section B-B" see "Retaining Wall No. 1 Layout 2" sheet.
2. For "Section C-C" see "Retaining Wall No. 1 Layout 1" sheet.
3. Top of wall elevations shown in meters.
4. For Pile Data Table, see "Foundation Plan" sheet.
5. For fractured rib texture & architectural treatment, see "Architectural Details" sheet.
6. For CIDH Pile Detail, see "CIDH Pile Detail" sheet
7. For stem reinforcement only, see "Modified stem Reinforcment" Detail.
8. For bottom of footing elevations, see "Foundation Plan" sheet.

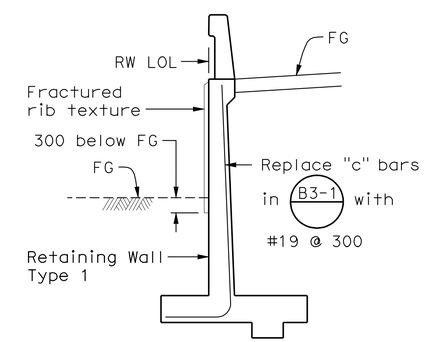

MODIFIED STEM REINFORCEMENT
No Scale

Note: For reinforcement not shown, see B3-1

ALL DIMENSIONS ARE IN MILLIMETERS UNLESS OTHERWISE SHOWN

DESIGN OVERSIGHT — Robert Zezoff
10-22-09
SIGN OFF DATE

	BY	CHECKED
DESIGN	D. SARETSKY/M. CHAR	D. KIM
DETAILS	M. / R. ANDRASEK	R. PRICE / M. CHAR
QUANTITIES	D. SARETSKY	K. GEE

PREPARED FOR THE STATE OF CALIFORNIA DEPARTMENT OF TRANSPORTATION

MOHAN S. CHAR
PROJECT ENGINEER

BRIDGE NO. 56-0841
KILOMETER POST R19.6

WB SR60 HOV CONNECTOR
RETAINING WALL NO. 2 LAYOUT

DESIGN DETAIL SHEET (METRIC) (REV. 10/27/05)

ORIGINAL SCALE IN MILLIMETERS FOR REDUCED PLANS 0 10 20 30 40 50 60 70 80 90 100

CU 08
EA 449311

DISREGARD PRINTS BEARING EARLIER REVISION DATES

REVISION DATES (PRELIMINARY STAGE ONLY) 3/12/08 7/27/08 2/18/09 6/18/09 8/28/09 10/2/09

SHEET 13 OF 32

FILE => 56-0841-g-rw_lo4.dgn

USERNAME => trrim DATE PLOTTED => 19-OCT-2010 TIME PLOTTED => 15:30

DIST	COUNTY	ROUTE	KILOMETER POST TOTAL PROJECT	SHEET No	TOTAL SHEETS
08	Riv	60,215	R19.7/21.9, R61.3/62.7	480	594

Caltrans Metric

REGISTERED CIVIL ENGINEER — DATE 10/02/09

6-28-10
PLANS APPROVAL DATE

The State of California or its officers or agents shall not be responsible for the accuracy or completeness of electronic copies of this plan sheet.

REGISTERED PROFESSIONAL ENGINEER — MOHAN S. CHAR — No. 57894 — Exp. 6/30/10 — CIVIL — STATE OF CALIFORNIA

RIVERSIDE COUNTY TRANSPORTATION COMMISSION
4080 LEMON STREET - THIRD FLOOR
RIVERSIDE, CALIFORNIA 92501

LIM & NASCIMENTO ENGINEERING
1887 BUSINESS CENTER DRIVE, SUITE 6
SAN BERNARDINO, CALIFORNIA 92408

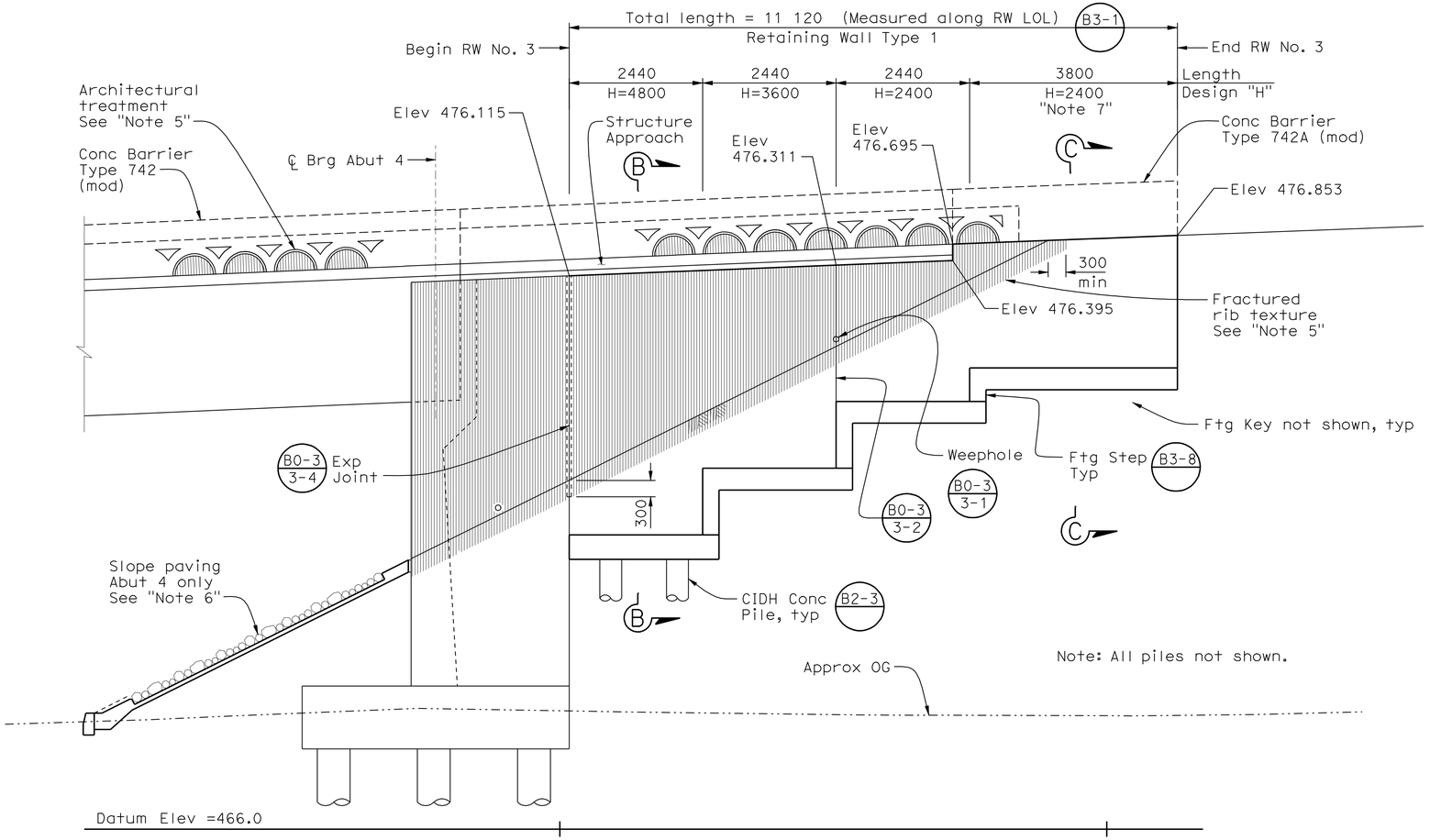

MIRROR ELEVATION
1:50

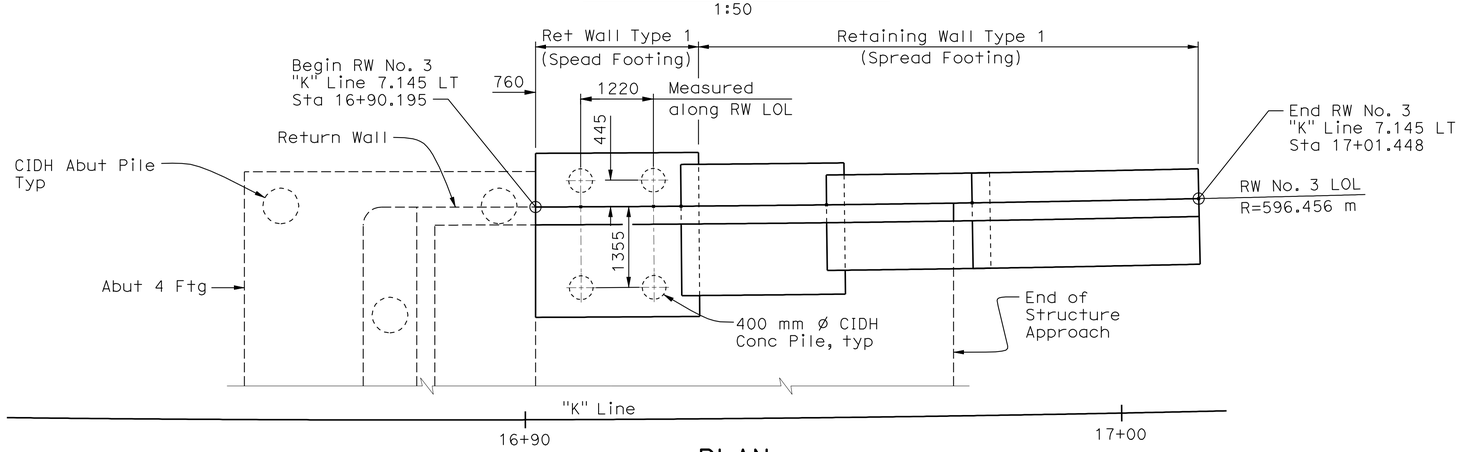

PLAN
1:50

Notes:

1. For "Section B-B" see "Retaining Wall No. 1 Layout 2" sheet.
2. For "Section C-C" see "Retaining Wall No. 1 Layout 1" sheet.
3. Top of wall elevations shown in meters.
4. For pile cut-off elevation, see "Foundation Plan" sheet.
5. For fractured rib texture & architectural treatment, see "Architectural Details" sheet.
6. For slope paving, see "Slope Paving - Full Slope" and "Slope Paving - Architectural Treatment Details" sheets.
7. For stem reinforcement only, see "Modified Stem Reinforcement" Detail on "Retaining Wall No. 2 Layout" sheet.
8. For bottom of footing elevations, see "Foundation Plan" sheet.

ALL DIMENSIONS ARE IN MILLIMETERS UNLESS OTHERWISE SHOWN

Robert Zezoff
DESIGN OVERSIGHT — Robert Zezoff
10-22-09
SIGN OFF DATE

	BY	CHECKED
DESIGN	D. SARETSKY/M. CHAR	D. KIM
DETAILS	M. / R. ANDRASEK	R. PRICE / M. CHAR
QUANTITIES	D. SARETSKY	K. GEE

PREPARED FOR THE STATE OF CALIFORNIA DEPARTMENT OF TRANSPORTATION

MOHAN S. CHAR
PROJECT ENGINEER

BRIDGE NO. 56-0841
KILOMETER POST R19.6

WB SR60 HOV CONNECTOR
RETAINING WALL NO. 3 LAYOUT

DESIGN DETAIL SHEET (METRIC) (REV. 10/27/05)

ORIGINAL SCALE IN MILLIMETERS FOR REDUCED PLANS 0 10 20 30 40 50 60 70 80 90 100

CU 08
EA 449311

DISREGARD PRINTS BEARING EARLIER REVISION DATES

REVISION DATES (PRELIMINARY STAGE ONLY): 5/12/08 7/21/08 2/16/09 6/18/09 8/20/09 10/2/09

SHEET 14 OF 32

FILE => 56-0841-g-rw_lo5.dgn

USERNAME => trlim — DATE PLOTTED => 19-OCT-2010 — TIME PLOTTED => 15:30

DIST	COUNTY	ROUTE	KILOMETER POST TOTAL PROJECT	SHEET No	TOTAL SHEETS
08	Riv	60,215	R19.7/21.9, R61.3/62.7	481	594

Caltrans Metric

REGISTERED CIVIL ENGINEER — DATE 10/02/09

6-28-10
PLANS APPROVAL DATE

REGISTERED PROFESSIONAL ENGINEER — MOHAN S. CHAR — No. 57894 — Exp. 6/30/10 — CIVIL — STATE OF CALIFORNIA

The State of California or its officers or agents shall not be responsible for the accuracy or completeness of electronic copies of this plan sheet.

RIVERSIDE COUNTY TRANSPORTATION COMMISSION
4080 LEMON STREET - THIRD FLOOR
RIVERSIDE, CALIFORNIA 92501

LIM & NASCIMENTO ENGINEERING
1887 BUSINESS CENTER DRIVE, SUITE 6
SAN BERNARDINO, CALIFORNIA 92408

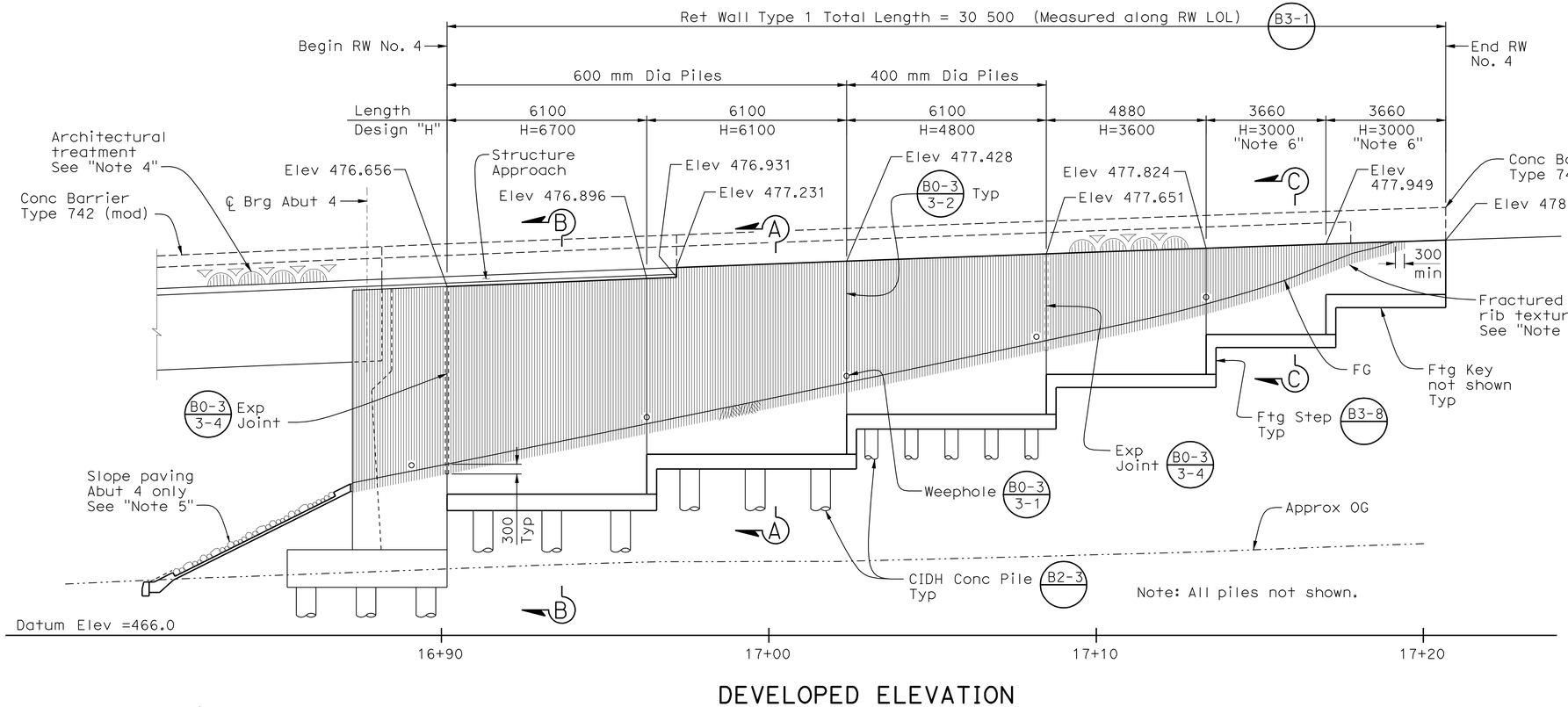

DEVELOPED ELEVATION
1:80

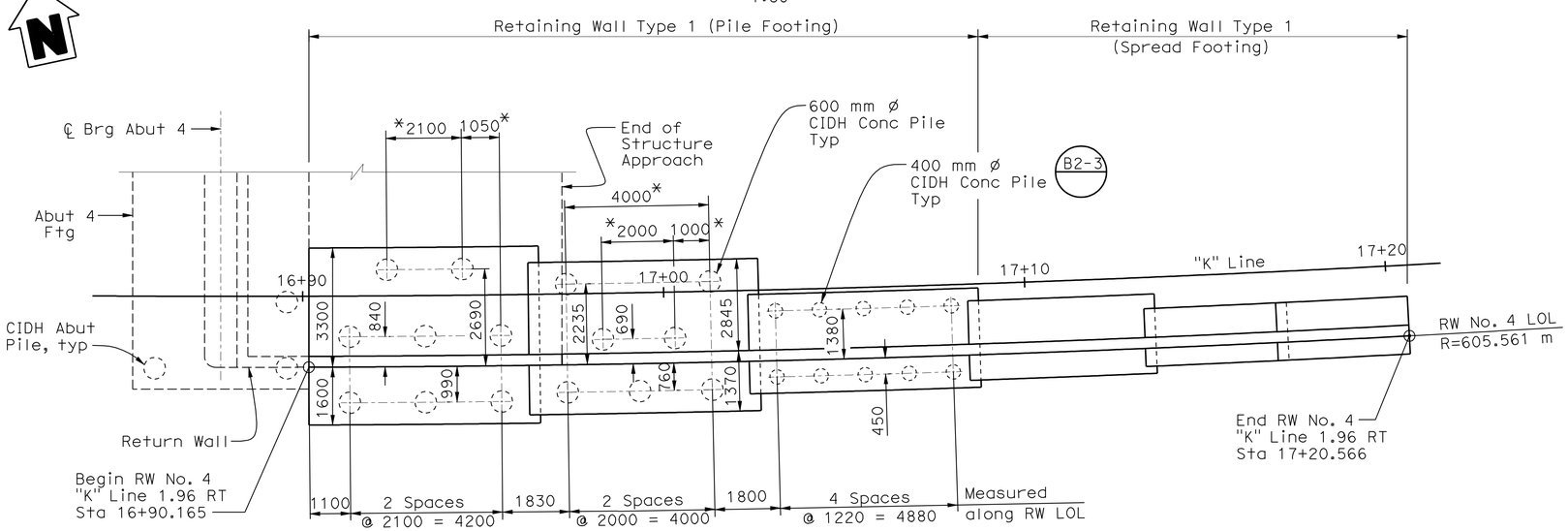

PLAN
1:80

*Measured along RW LOL

Notes:

1. For "Section A-A" & "Section B-B" see "Retaining Wall No. 1 Layout 2" sheet.
2. For "Section C-C" see "Retaining Wall No. 1 Layout 1" sheet.
3. Top of wall elevations shown in meters.
4. For fractured rib texture & architectural treatment, see "Architectural Details" sheet.
5. For slope paving, see "Slope Paving - Full Slope" and "Slope Paving - Architectural Treatment Details" sheets.
6. For stem reinforcement only, see "Modified Stem Reinforcement" Detail on "Retaining Wall No. 2 Layout" sheet.
7. For bottom of footing elevations, see "Foundation Plan" sheet.

ALL DIMENSIONS ARE IN MILLIMETERS UNLESS OTHERWISE SHOWN

DESIGN OVERSIGHT — Robert Zezoff
10-22-09
SIGN OFF DATE

	BY	CHECKED
DESIGN	D. SARETSKY/M. CHAR	D. KIM
DETAILS	M. / R. ANDRASEK	R. PRICE / M. CHAR
QUANTITIES	D. SARETSKY	K. GEE

PREPARED FOR THE STATE OF CALIFORNIA DEPARTMENT OF TRANSPORTATION

MOHAN S. CHAR
PROJECT ENGINEER

BRIDGE NO. 56-0841
KILOMETER POST R19.6

WB SR60 HOV CONNECTOR
RETAINING WALL NO. 4 LAYOUT

DESIGN DETAIL SHEET (METRIC) (REV. 10/27/05)

ORIGINAL SCALE IN MILLIMETERS FOR REDUCED PLANS 0 10 20 30 40 50 60 70 80 90 100

CU 08
EA 449311

DISREGARD PRINTS BEARING EARLIER REVISION DATES

REVISION DATES (PRELIMINARY STAGE ONLY): 3/12/08 7/21/08 2/18/09 6/18/09 8/28/09 10/2/09

SHEET 15 OF 32

FILE => 56-0841-g-rw_lo6.dgn

USERNAME => trlim DATE PLOTTED => 19-OCT-2010 TIME PLOTTED => 15:30

DIST	COUNTY	ROUTE	KILOMETER POST TOTAL PROJECT	SHEET No	TOTAL SHEETS
08	Riv	60,215	R19.7/21.9, R61.3/62.7	482	594

Caltrans Metric

REGISTERED CIVIL ENGINEER 10/02/09 DATE

6-28-10
PLANS APPROVAL DATE

REGISTERED PROFESSIONAL ENGINEER MOHAN S. CHAR No. 57894 Exp. 6/30/10 CIVIL STATE OF CALIFORNIA

The State of California or its officers or agents shall not be responsible for the accuracy or completeness of electronic copies of this plan sheet.

RIVERSIDE COUNTY TRANSPORTATION COMMISSION
4080 LEMON STREET - THIRD FLOOR
RIVERSIDE, CALIFORNIA 92501

LIM & NASCIMENTO ENGINEERING
1887 BUSINESS CENTER DRIVE, SUITE 6
SAN BERNARDINO, CALIFORNIA 92408

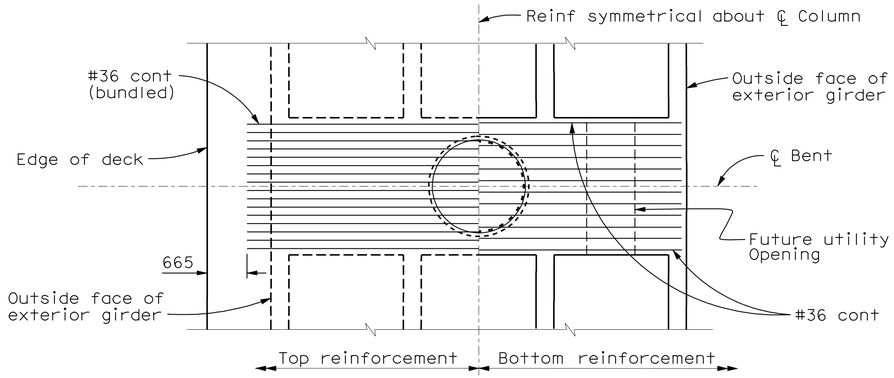

PLAN
1:50

Note: Bent 2 shown. Bent 3 similar.

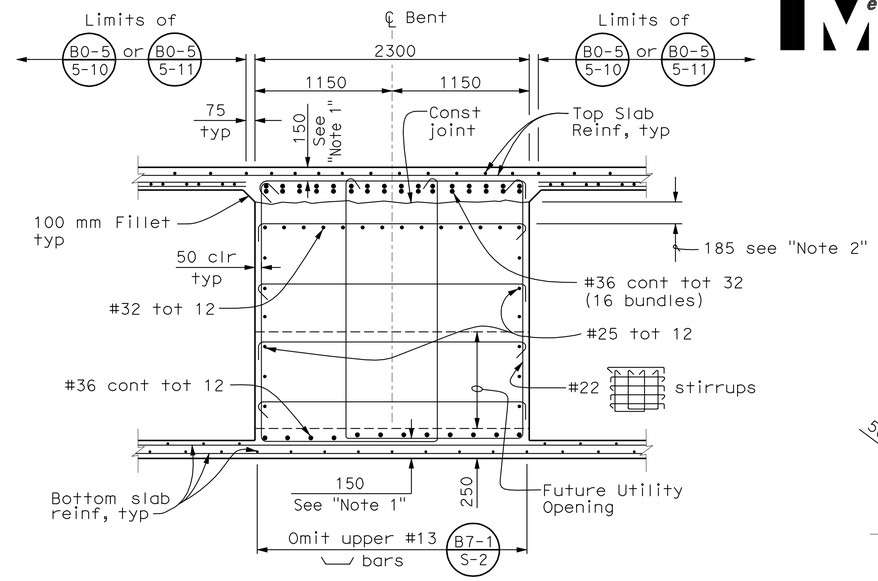

SECTION H-H
1:25

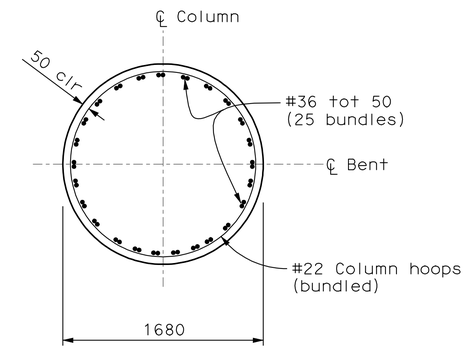

SECTION K-K
1:25

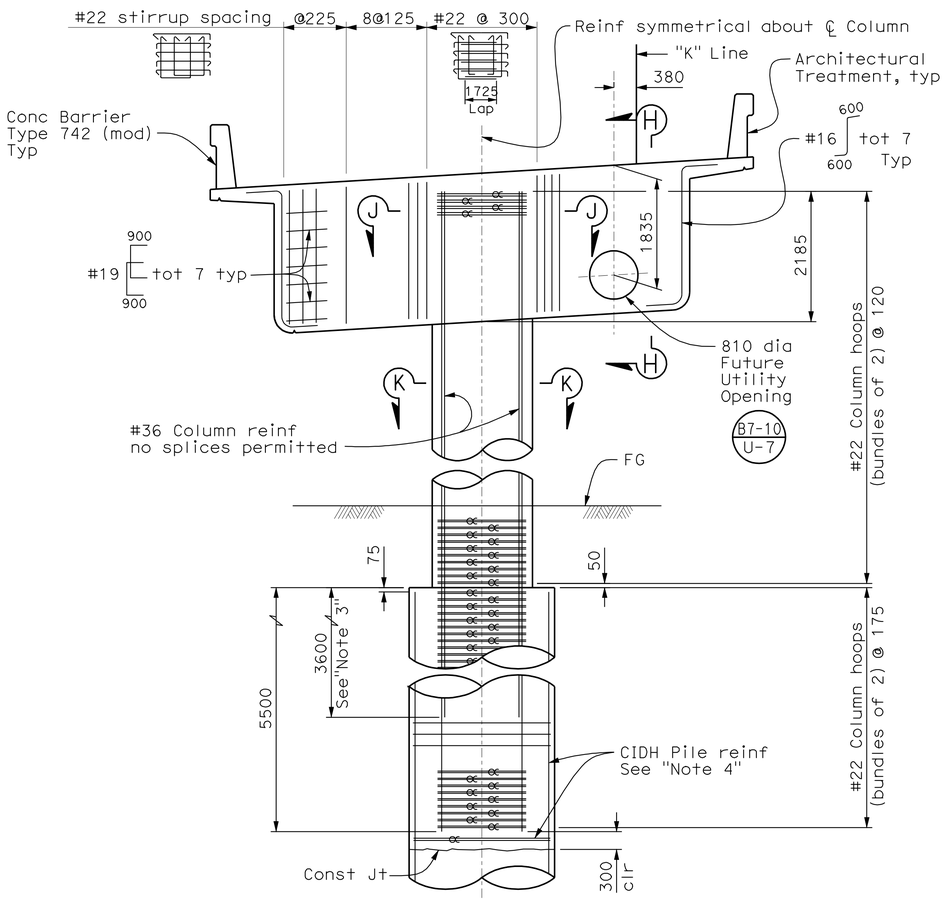

ELEVATION
1:50
(Bent 2 shown, Bent 3 similar)

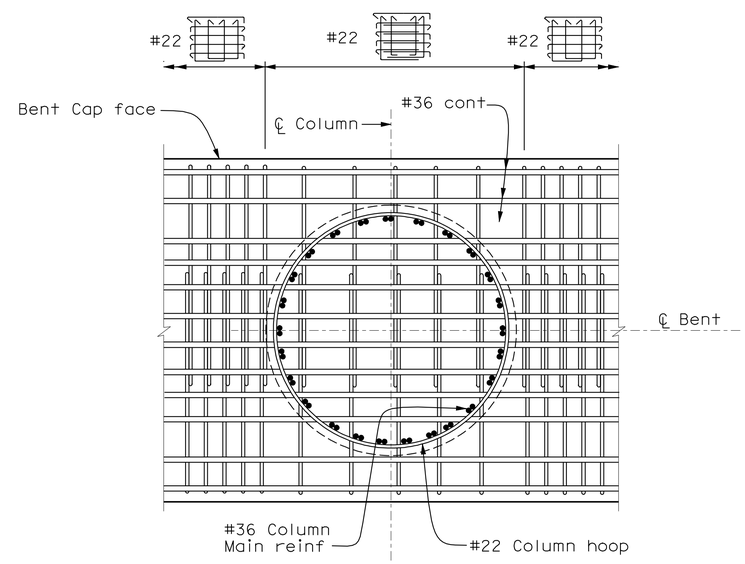

SECTION J-J
1:20

Notes:

1. Indicates clearance to main cap reinforcement.
2. Indicates clearance to #32 tot 12. Reinforcement may be adjusted as necessary to accommodate prestressing ducts as directed by the Engineer.
3. Terminate every other main column bar, 25 maximum.
4. For CIDH Pile details & cut off elevation, see "CIDH Pile Details" sheet.
5. All hoops shall be "Ultimate" butt spliced.

ALL DIMENSIONS ARE IN MILLIMETERS UNLESS OTHERWISE SHOWN

Robert Zezoff
DESIGN OVERSIGHT Robert Zezoff
10-22-09
SIGN OFF DATE

	BY	CHECKED
DESIGN	D. KIM / D. SARETSKY	T. DUDLEY/A. SIVATHASAN
DETAILS	M. / R. ANDRASEK	R. PRICE / M. CHAR
QUANTITIES	D. SARETSKY	K. GEE

PREPARED FOR THE STATE OF CALIFORNIA DEPARTMENT OF TRANSPORTATION

MOHAN S. CHAR
PROJECT ENGINEER

BRIDGE NO. 56-0841
KILOMETER POST R19.6

WB SR60 HOV CONNECTOR
BENT LAYOUT

DESIGN DETAIL SHEET (METRIC) (REV. 10/27/05)

ORIGINAL SCALE IN MILLIMETERS FOR REDUCED PLANS 0 10 20 30 40 50 60 70 80 90 100

CU 08
EA 449311

DISREGARD PRINTS BEARING EARLIER REVISION DATES

REVISION DATES (PRELIMINARY STAGE ONLY) 3/12/08 7/21/08 11/4/08 2/16/09 5/18/09 8/28/09 10/2/09

SHEET 16 OF 32

FILE => 56-0841-h-b01_lo01.dgn

USERNAME => trlim DATE PLOTTED => 19-OCT-2010 TIME PLOTTED => 15:30

DIST	COUNTY	ROUTE	KILOMETER POST TOTAL PROJECT	SHEET No	TOTAL SHEETS
08	Riv	60,215	R19.7/21.9, R61.3/62.7	483	594

Caltrans Metric

REGISTERED CIVIL ENGINEER — DATE 10/02/09

6-28-10
PLANS APPROVAL DATE

REGISTERED PROFESSIONAL ENGINEER — MOHAN S. CHAR No. 57894 Exp. 6/30/10 CIVIL — STATE OF CALIFORNIA

The State of California or its officers or agents shall not be responsible for the accuracy or completeness of electronic copies of this plan sheet.

RIVERSIDE COUNTY TRANSPORTATION COMMISSION
4080 LEMON STREET - THIRD FLOOR
RIVERSIDE, CALIFORNIA 92501

LIM & NASCIMENTO ENGINEERING
1887 BUSINESS CENTER DRIVE, SUITE 6
SAN BERNARDINO, CALIFORNIA 92408

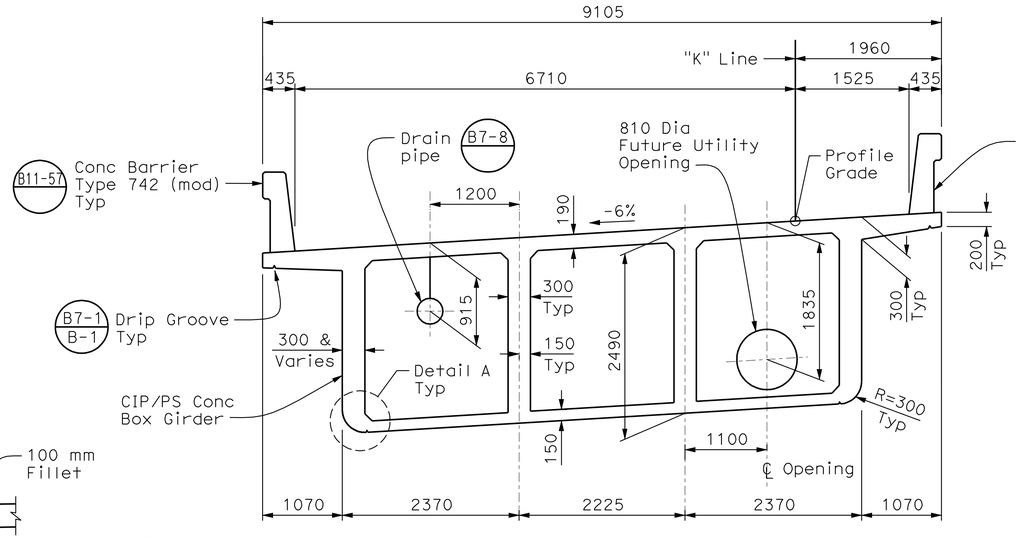

TYPICAL SECTION
1:40

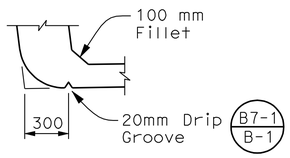

DETAIL A
1:20

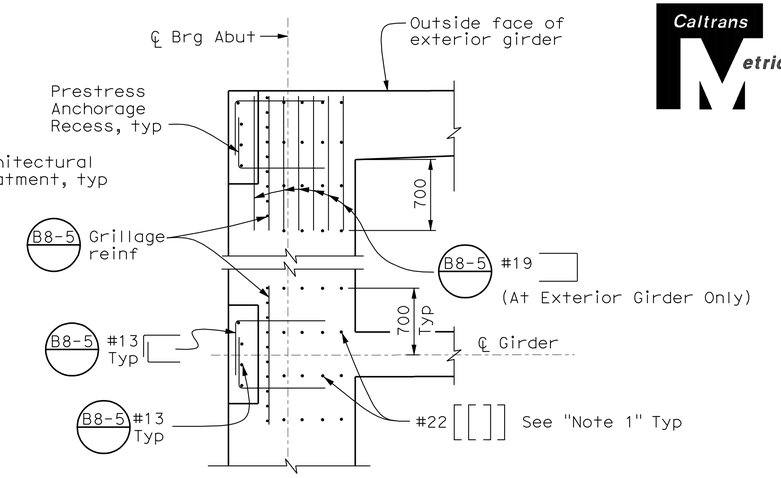

END DIAPHRAGM PART PLAN
1:20

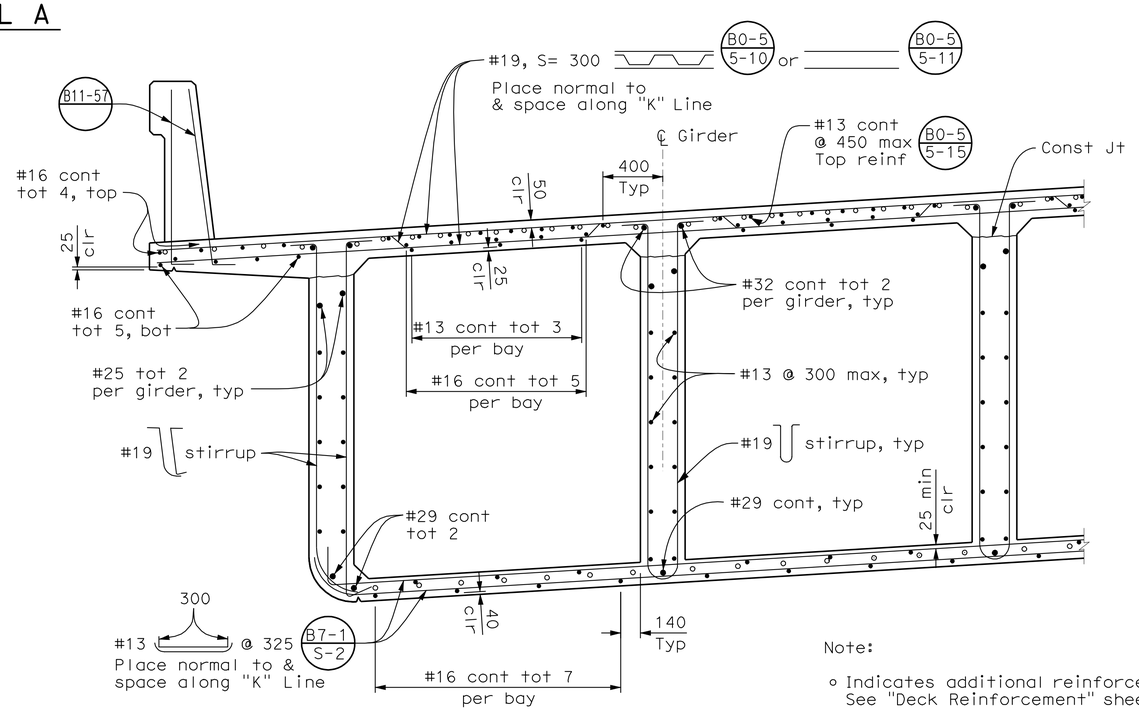

Note:
- Indicates additional reinforcement. See "Deck Reinforcement" sheet.

PART TYPICAL SECTION
1:20 B0-5 B7-1 B8-5

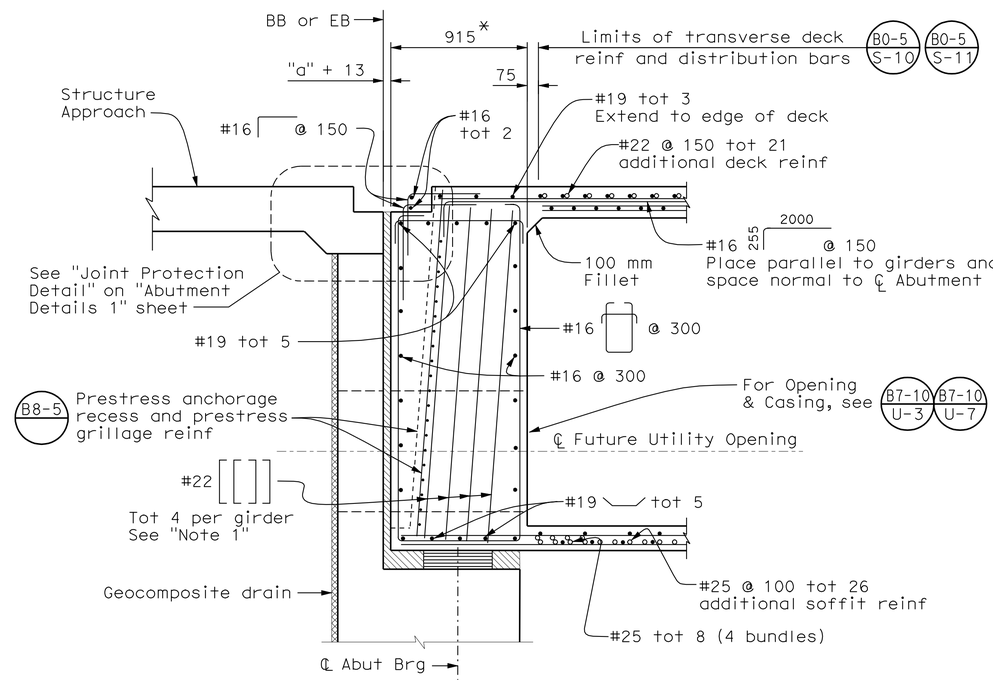

END DIAPHRAGM DETAIL
1:20

* Normal to ℄ Abutment

Note:
1. Reinforcement shown is in addition to B8-5

ALL DIMENSIONS ARE IN MILLIMETERS UNLESS OTHERWISE SHOWN

DESIGN OVERSIGHT — Robert Zezoff
10-22-09
SIGN OFF DATE

	BY	CHECKED
DESIGN	D. KIM / D. SARETSKY	T. DUDLEY/A. SIVATHASAN
DETAILS	M. / R. ANDRASEK	R. PRICE / M. CHAR
QUANTITIES	D. SARETSKY	K. GEE

PREPARED FOR THE STATE OF CALIFORNIA DEPARTMENT OF TRANSPORTATION

MOHAN S. CHAR
PROJECT ENGINEER

BRIDGE NO. 56-0841
KILOMETER POST R19.6

WB SR60 HOV CONNECTOR
TYPICAL SECTION

DESIGN DETAIL SHEET (METRIC) (REV. 10/27/05)

ORIGINAL SCALE IN MILLIMETERS FOR REDUCED PLANS 0 10 20 30 40 50 60 70 80 90 100

CU 08
EA 449311

DISREGARD PRINTS BEARING EARLIER REVISION DATES

REVISION DATES (PRELIMINARY STAGE ONLY): 3/12/08 7/21/08 11/14/08 2/16/09 5/18/09 8/28/09 10/2/09

SHEET 17 OF 32

FILE => 56-0841-k-ts01.dgn

USERNAME => trilim DATE PLOTTED => 19-OCT-2010 TIME PLOTTED => 15:30

DIST	COUNTY	ROUTE	KILOMETER POST TOTAL PROJECT	SHEET No	TOTAL SHEETS
08	Riv	60,215	R19.7/21.9, R61.3/62.7	484	594

Caltrans Metric

REGISTERED CIVIL ENGINEER — DATE 10/02/09

6-28-10
PLANS APPROVAL DATE

REGISTERED PROFESSIONAL ENGINEER — MOHAN S. CHAR No. 57894 Exp. 6/30/10 CIVIL — STATE OF CALIFORNIA

The State of California or its officers or agents shall not be responsible for the accuracy or completeness of electronic copies of this plan sheet.

RIVERSIDE COUNTY TRANSPORTATION COMMISSION
4080 LEMON STREET - THIRD FLOOR
RIVERSIDE, CALIFORNIA 92501

LIM & NASCIMENTO ENGINEERING
1887 BUSINESS CENTER DRIVE, SUITE 6
SAN BERNARDINO, CALIFORNIA 92408

PRESTRESSING NOTES:

1860 MPa Low Relaxation Strand:

P_{jack} = 36 700 kN

Total Number of Girders = 4

Anchor Set = 10 mm

Friction Wobble Coeff k = 0.00066/meter

Friction Curvature Coeff μ = 0.15

Distribution of prestress force (Pjack) between girders shall not exceed the ratio of 3:2. Maximum final force variation between girders shall not exceed 3058 kN.

Concrete: f'c = 31 MPa @ 28 days
f'ci = 25 MPa @ time of stressing

The Contractor shall submit elongation calculations based on the initial stress at ⊠ = 0.864 times jacking stress

Stressing shall be performed from both Abutments.

LEGEND

▭ Indicates girder stem width in millimeters

⊠ Theoretical point of no movement for two end stressing

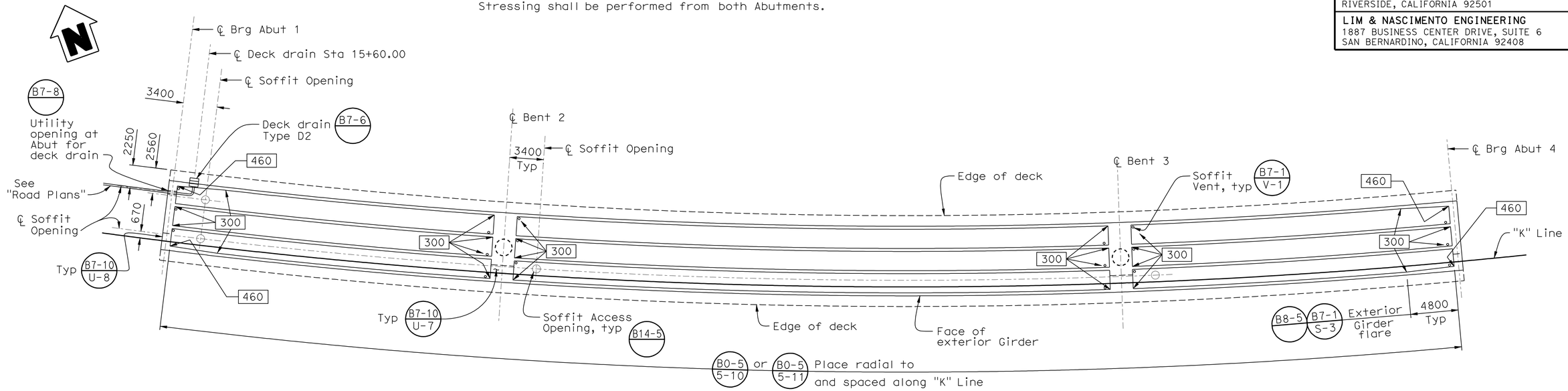

PLAN
1:200

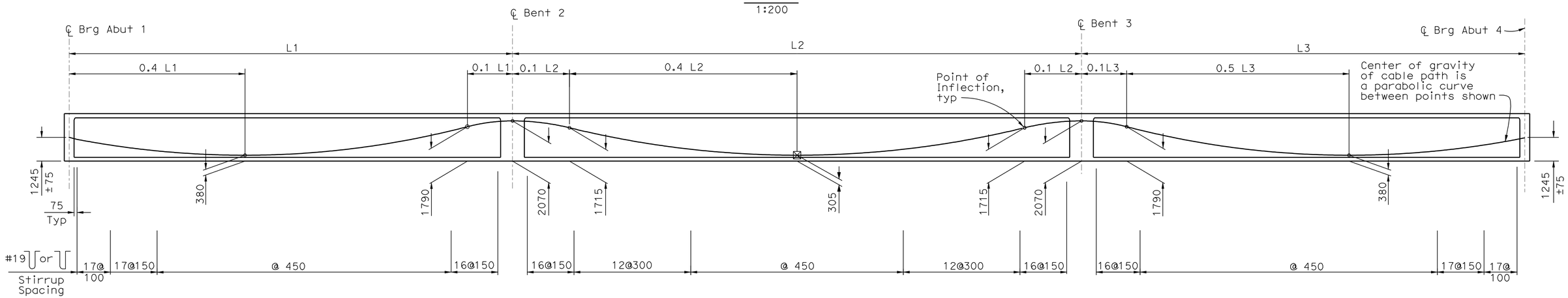

LONGITUDINAL SECTION B8-5
No Scale

ALL DIMENSIONS ARE IN MILLIMETERS UNLESS OTHERWISE SHOWN

Robert Zezoff
DESIGN OVERSIGHT — Robert Zezoff
10-22-09
SIGN OFF DATE

	BY	CHECKED
DESIGN	D. KIM / D. SARETSKY	T. DUDLEY/A. SIVATHASAN
DETAILS	M. / R. ANDRASEK	R. PRICE / M. CHAR
QUANTITIES	D. SARETSKY	K. GEE

PREPARED FOR THE STATE OF CALIFORNIA DEPARTMENT OF TRANSPORTATION

MOHAN S. CHAR
PROJECT ENGINEER

BRIDGE NO. 56-0841
KILOMETER POST R19.6

WB SR60 HOV CONNECTOR
GIRDER LAYOUT

DESIGN DETAIL SHEET (METRIC) (REV. 10/27/05)

ORIGINAL SCALE IN MILLIMETERS FOR REDUCED PLANS 0 10 20 30 40 50 60 70 80 90 100

CU 08
EA 449311

DISREGARD PRINTS BEARING EARLIER REVISION DATES

REVISION DATES (PRELIMINARY STAGE ONLY): 5/12/08 7/21/08 11/4/08 2/16/09 5/15/09 8/28/09 10/2/09

SHEET 18 OF 32

FILE => 56-0841-1-g_lo1.dgn

USERNAME => trlim DATE PLOTTED => 19-OCT-2010 TIME PLOTTED => 15:30

DIST	COUNTY	ROUTE	KILOMETER POST TOTAL PROJECT	SHEET No	TOTAL SHEETS
08	Riv	60,215	R19.7/21.9, R61.3/62.7	485	594

Caltrans Metric

REGISTERED CIVIL ENGINEER — DATE 10/02/09

6-28-10
PLANS APPROVAL DATE

REGISTERED PROFESSIONAL ENGINEER — MOHAN S. CHAR — No. 57894 — Exp. 6/30/10 — CIVIL — STATE OF CALIFORNIA

The State of California or its officers or agents shall not be responsible for the accuracy or completeness of electronic copies of this plan sheet.

RIVERSIDE COUNTY TRANSPORTATION COMMISSION
4080 LEMON STREET - THIRD FLOOR
RIVERSIDE, CALIFORNIA 92501

LIM & NASCIMENTO ENGINEERING
1887 BUSINESS CENTER DRIVE, SUITE 6
SAN BERNARDINO, CALIFORNIA 92408

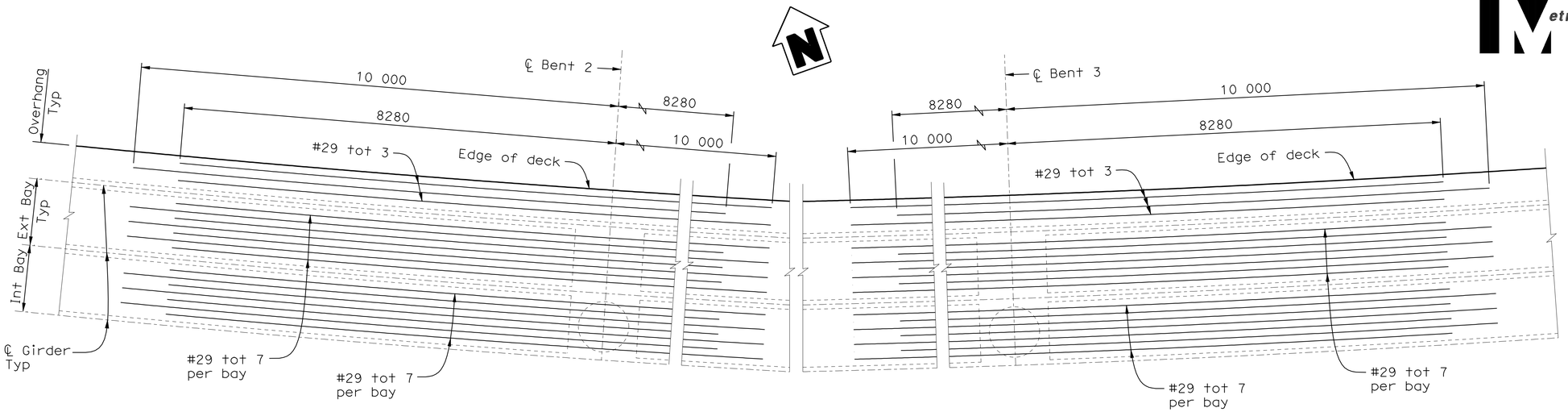

ADDITIONAL DECK REINFORCEMENT

No Scale

Note:
Splices in additional deck reinforcement shall meet the "Service Splice" requirement.

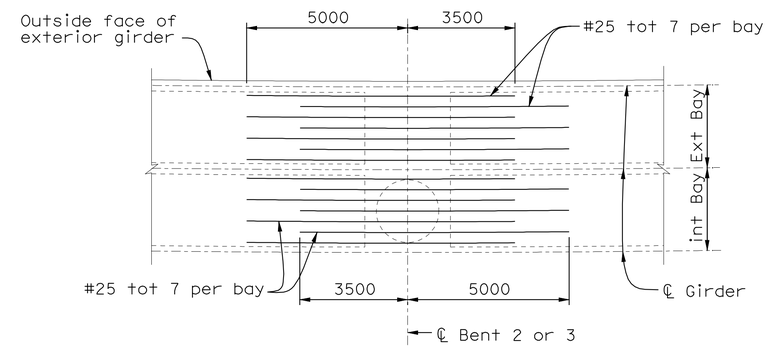

ADDITIONAL SOFFIT REINFORCEMENT

No Scale

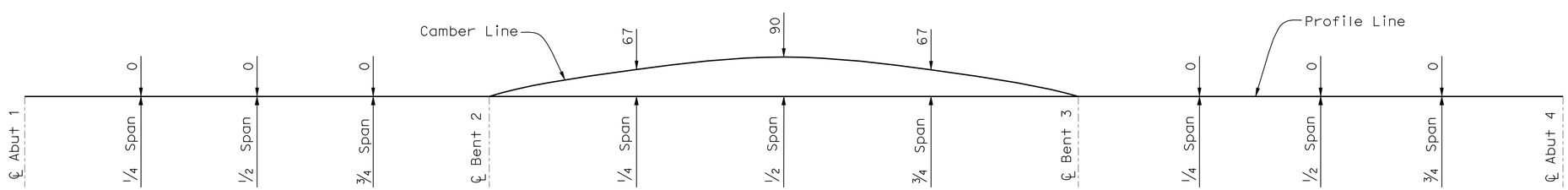

CAMBER DIAGRAM

No scale

Camber values shown do not include allowance for falsework settlement.

ALL DIMENSIONS ARE IN MILLIMETERS UNLESS OTHERWISE SHOWN

Robert Zezoff
DESIGN OVERSIGHT — Robert Zezoff

10-22-09
SIGN OFF DATE

	BY	CHECKED
DESIGN	D. KIM / D. SARETSKY	T. DUDLEY/A. SIVATHASAN
DETAILS	M. / R. ANDRASEK	R. PRICE / M. CHAR
QUANTITIES	D. SARETSKY	K. GEE

PREPARED FOR THE STATE OF CALIFORNIA DEPARTMENT OF TRANSPORTATION

MOHAN S. CHAR
PROJECT ENGINEER

BRIDGE NO. 56-0841
KILOMETER POST R19.6

WB SR60 HOV CONNECTOR
DECK REINFORCEMENT

DESIGN DETAIL SHEET (METRIC) (REV. 10/27/05)

ORIGINAL SCALE IN MILLIMETERS FOR REDUCED PLANS 0 10 20 30 40 50 60 70 80 90 100

CU 08
EA 449311

DISREGARD PRINTS BEARING EARLIER REVISION DATES

REVISION DATES (PRELIMINARY STAGE ONLY): 3/12/08 7/21/08 11/14/08 2/16/09 5/18/09 8/28/09 10/2/09

SHEET 19 OF 32

FILE => 56-0841-o-g_rf01.dgn

USERNAME => trlim DATE PLOTTED => 19-OCT-2010 TIME PLOTTED => 15:31

DIST	COUNTY	ROUTE	KILOMETER POST TOTAL PROJECT	SHEET No	TOTAL SHEETS
08	Riv	60,215	R19.7/21.9, R61.3/62.7	486	594

Caltrans Metric

REGISTERED CIVIL ENGINEER — DATE 10/02/09

6-28-10
PLANS APPROVAL DATE

REGISTERED PROFESSIONAL ENGINEER — MOHAN S. CHAR No. 57894 Exp. 6/30/10 CIVIL — STATE OF CALIFORNIA

The State of California or its officers or agents shall not be responsible for the accuracy or completeness of electronic copies of this plan sheet.

RIVERSIDE COUNTY TRANSPORTATION COMMISSION
4080 LEMON STREET - THIRD FLOOR
RIVERSIDE, CALIFORNIA 92501

LIM & NASCIMENTO ENGINEERING
1887 BUSINESS CENTER DRIVE, SUITE 6
SAN BERNARDINO, CALIFORNIA 92408

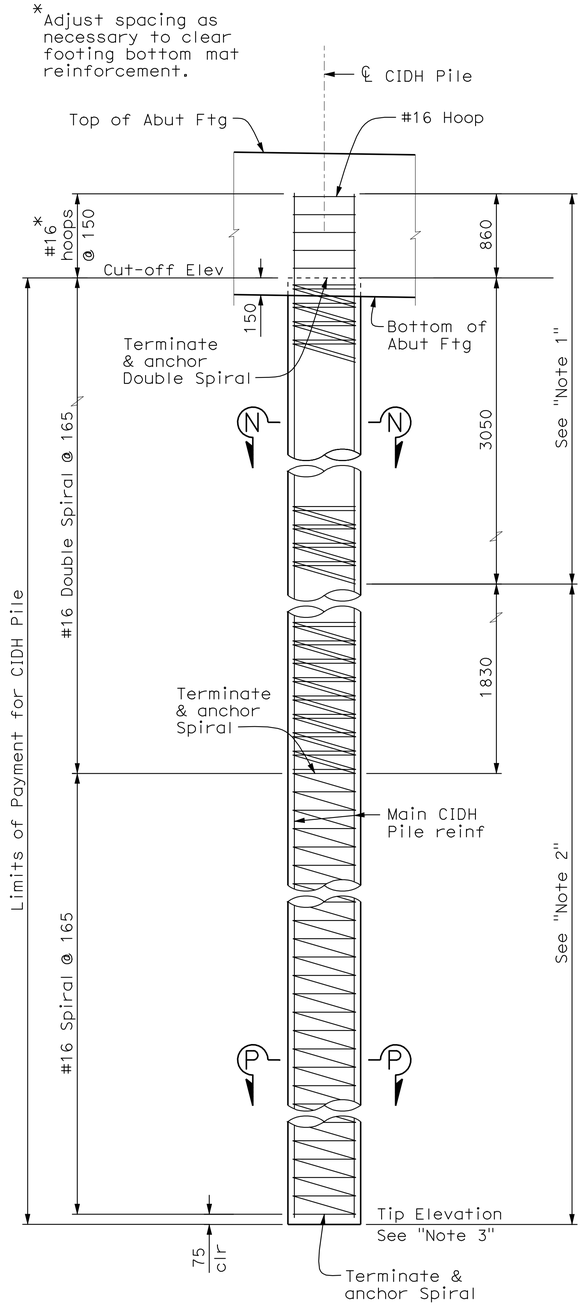

600 mm Ø CIDH PILE ELEVATION
1:25

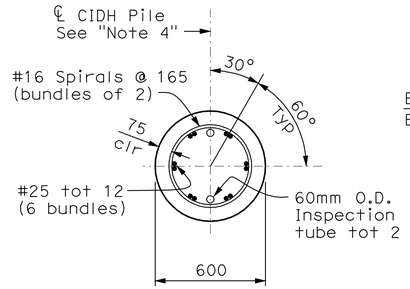

SECTION N-N
1:15

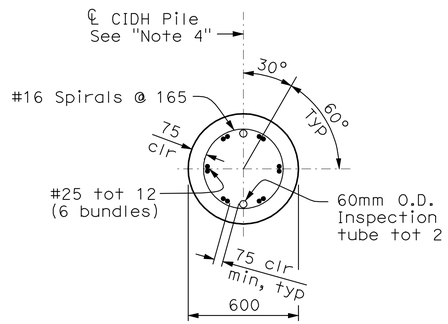

SECTION P-P
1:15

CIDH Pile Notes:

1. No splices allowed in Main reinforcement and spirals within this zone.
2. Only staggered "Ultimate" butt splices are allowed in Main CIDH pile reinforcement in this zone. Splice in spiral shall conform to "Ultimate Splice" in this zone.
3. For specified tip elevation, see "Pile Data Table" on "Foundation Plan" sheet.
4. Orient ℄ of CIDH piles parallel to ℄ Abutment bearing as shown in Sections "N-N" & "P-P".
5. Anchorages and splices in spiral reinforcement shall be made by weld or sleeve mechanical coupler.
6. For Column details, see "Bent Layout" sheet.
7. All hoops are "Ultimate" butt spliced continuous.

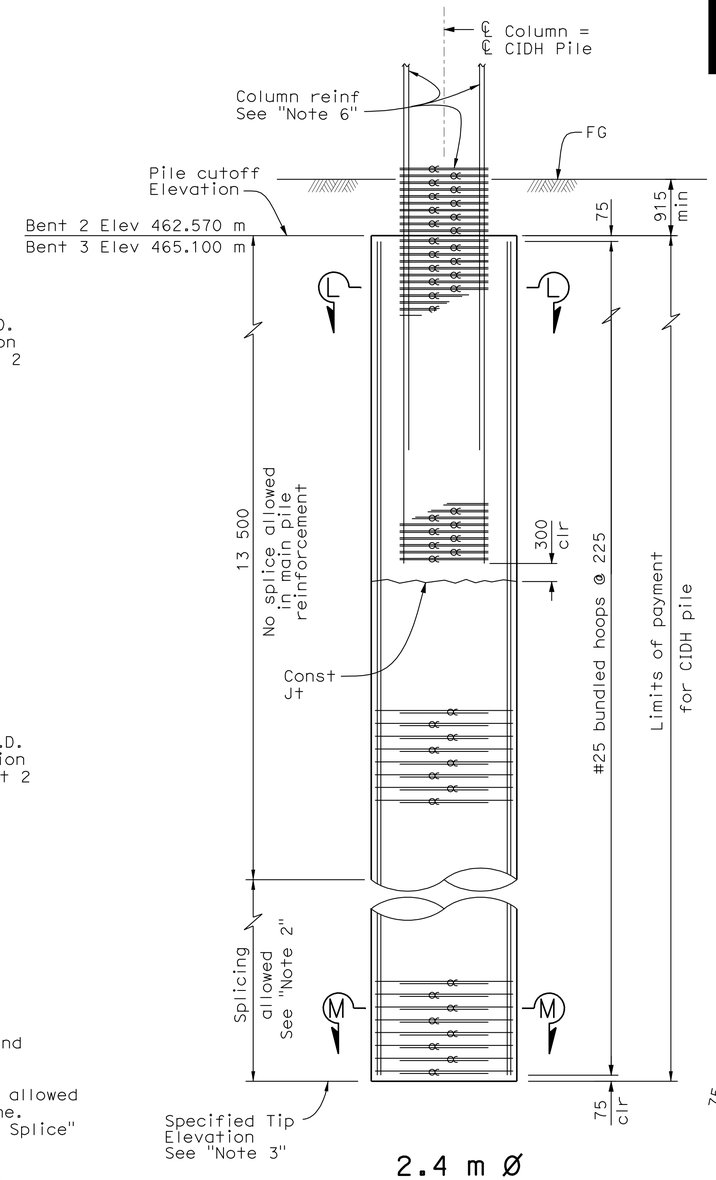

2.4 m Ø CIDH PILE ELEVATION
1:50

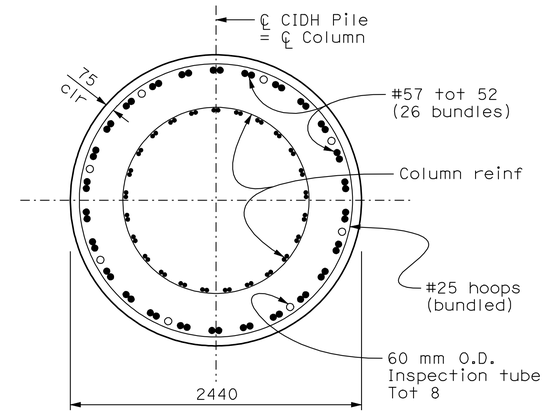

SECTION L-L
1:25

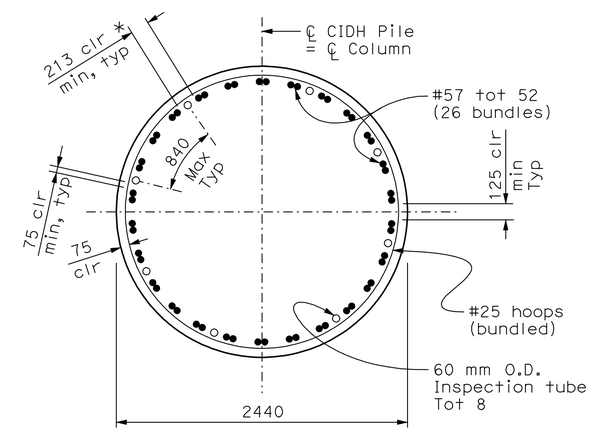

* 213 min clr at inspection tube locations only

SECTION M-M
1:25

ALL DIMENSIONS ARE IN MILLIMETERS UNLESS OTHERWISE SHOWN

DESIGN OVERSIGHT — Robert Zezoff
10-22-09
SIGN OFF DATE

	BY	CHECKED
DESIGN	D. KIM / D. SARETSKY	T. DUDLEY/A. SIVATHASAN
DETAILS	M. / R. ANDRASEK	R. PRICE / M. CHAR
QUANTITIES	D. SARETSKY	K. GEE

PREPARED FOR THE STATE OF CALIFORNIA DEPARTMENT OF TRANSPORTATION

MOHAN S. CHAR
PROJECT ENGINEER

BRIDGE NO. 56-0841
KILOMETER POST R19.6

WB SR60 HOV CONNECTOR
CIDH PILE DETAILS

DESIGN DETAIL SHEET (METRIC) (REV. 10/27/05)

ORIGINAL SCALE IN MILLIMETERS FOR REDUCED PLANS: 0 10 20 30 40 50 60 70 80 90 100

CU 08
EA 449311

DISREGARD PRINTS BEARING EARLIER REVISION DATES
REVISION DATES (PRELIMINARY STAGE ONLY): 3/12/08 7/21/08 11/4/08 2/16/09 5/15/09 8/28/09 10/2/09

SHEET 20 OF 32

FILE => 56-0841-p-pdt01.dgn

USERNAME => trrlim DATE PLOTTED => 19-OCT-2010 TIME PLOTTED => 15:31

DIST	COUNTY	ROUTE	KILOMETER POST TOTAL PROJECT	SHEET No	TOTAL SHEETS
08	Riv	60,215	R19.7/21.9, R61.3/62.7	487	594

Caltrans Metric

REGISTERED CIVIL ENGINEER — DATE 10/02/09

6-28-10
PLANS APPROVAL DATE

REGISTERED PROFESSIONAL ENGINEER — MOHAN S. CHAR — No. 57894 — Exp. 6/30/10 — CIVIL — STATE OF CALIFORNIA

The State of California or its officers or agents shall not be responsible for the accuracy or completeness of electronic copies of this plan sheet.

RIVERSIDE COUNTY TRANSPORTATION COMMISSION
4080 LEMON STREET - THIRD FLOOR
RIVERSIDE, CALIFORNIA 92501

LIM & NASCIMENTO ENGINEERING
1887 BUSINESS CENTER DRIVE, SUITE 6
SAN BERNARDINO, CALIFORNIA 92408

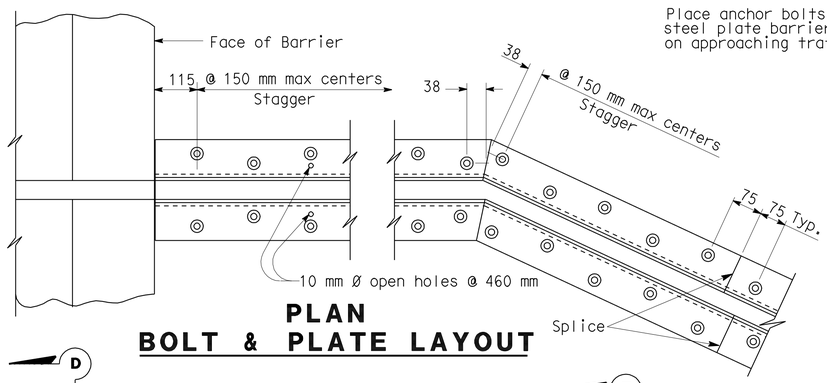

PLAN
BOLT & PLATE LAYOUT

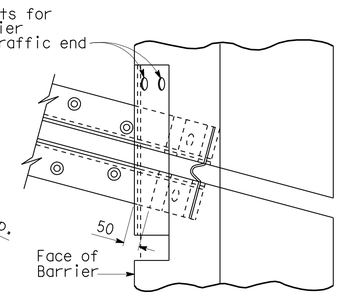

SKEW ≤ 20

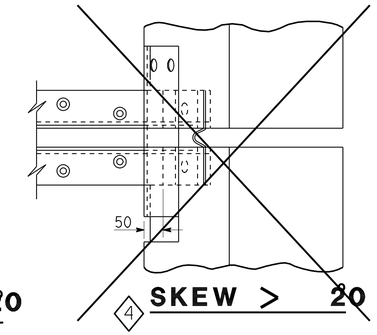

SKEW > 20 ◇4

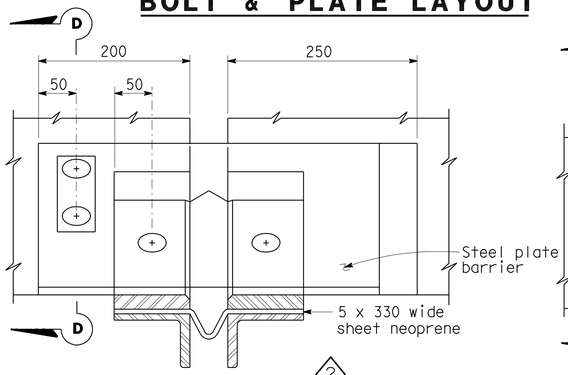

VIEW B-B ◇2

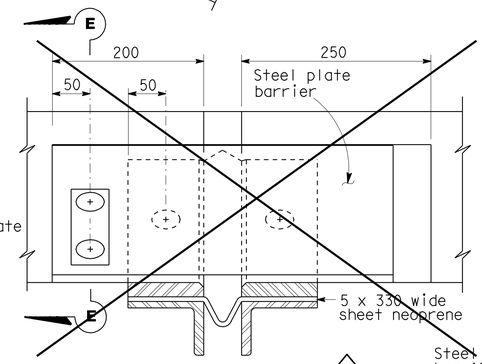

VIEW C-C ◇4

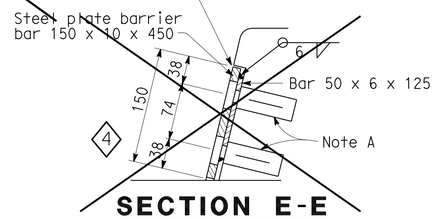

SECTION E-E ◇4

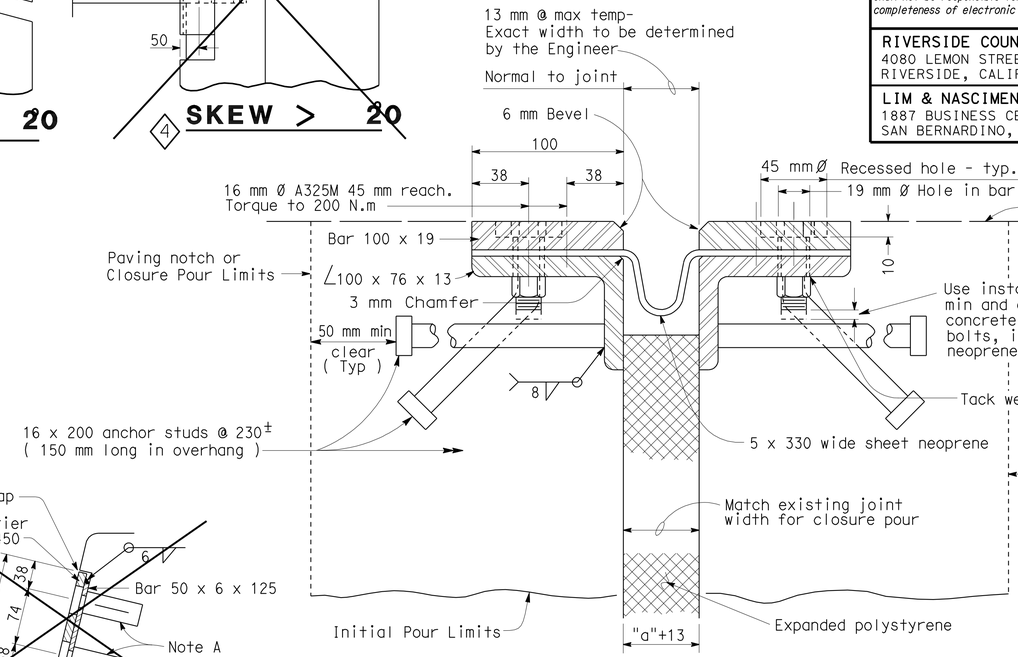

SECTION A-A

Note :
Stagger anchor studs @ 115 mm ± on centers thus :

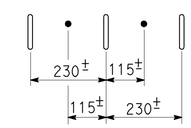

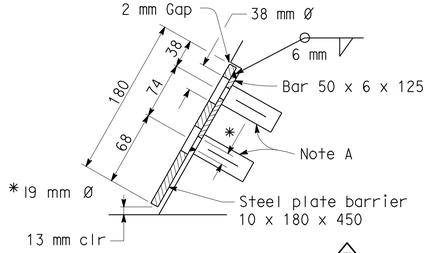

SECTION D-D ◇3

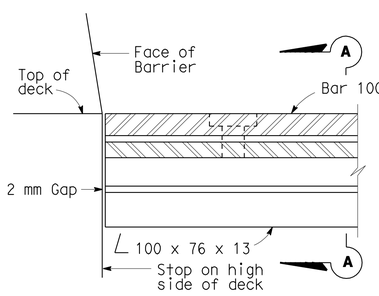

HIGH SIDE BARRIER DETAIL

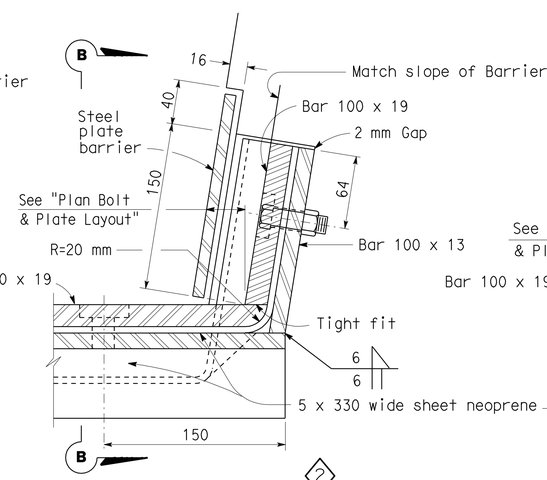

LOW SIDE BARRIER DETAIL ◇2
(See Note B)

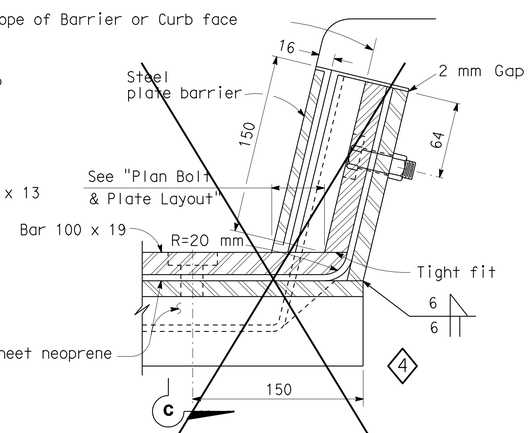

SIDEWALK DETAIL ◇4
(See Note B)

Joint Information			"a" Dimensions		
Location	Movement Rating (MR)	Skew	Winter	Spring & Fall	Summer
Abutment 1	80 mm	0°	30	25	15
Abutment 4	90 mm	0°	35	25	20

◇1

NOTES: Full penetration butt welds may be substituted for fillet welds on all anchor studs.

Alternate types of anchor studs may be permitted subject to the approval by the Engineer.

Joint seal assembly to be used in conjunction with closure pour. (See other sheets for limits). Closure pour shall not be placed until final deck surface is within the tolerance specified.

Use joint at crown of roadway, at any change in transverse slope in deck and at changes in horizontal direction. Place other joints at or near lanes. All metal parts to be painted or galvanized after fabrication.

Sheet neoprene shall be fabricated in one continuous piece or joints shall be vulcanized. Neoprene shall be fabricated to bend around corners. 25 mm holes in neoprene sheets shall be drilled or punched so that the neoprene is not distorted at the time of installation.

NOTE A

Insert assembly or expansion anchorage for 16 x 45 A325M bolt.

NOTE B

◇4 ~~Use the Sidewalk Detail at all sidewalk joints.~~ Use the Low Side Barrier Detail at both sides if the roadway is crowned or if the difference in elevation between the ends of the seal is 150 mm or less.

NO SCALE **SPECIAL DETAILS** ALL DIMENSIONS ARE IN MILLIMETERS UNLESS OTHERWISE SHOWN

STANDARD DRAWING

RELEASE DATE	Revised	DESIGN	BY H. HERR	CHECKED R. LACALLE	RELEASED BY
		DETAILS	BY R. YEE	CHECKED R. LACALLE	
FILE NO.	xs8-010	SUBMITTED	BY C.W. PURKISS	DRAWING DATE 9/93	OFFICE CHIEF

◇1 Add joint information and "a" dimension
◇2 Modified shape of barrier
◇3 Modified detail
◇4 Deleted details

STATE OF CALIFORNIA
DEPARTMENT OF TRANSPORTATION

DIVISION OF ENGINEERING SERVICES

BRIDGE NO. 56-0841
KILOMETER POST R19.6

WB SR60 HOV CONNECTOR
JOINT SEAL ASSEMBLY (MAXIMUM MOVEMENT RATING = 100 mm)

DS OSD 2147A (METRIC) (REV. 2/25/97)

ORIGINAL SCALE IN MILLIMETERS FOR REDUCED PLANS 0 10 20 30 40 50 60 70 80 90 100

CU 08
EA 449311

DISREGARD PRINTS BEARING EARLIER REVISION DATES

REVISION DATES (PRELIMINARY STAGE ONLY) 5/12/08 7/21/08 11/4/08 2/16/09 5/15/09 8/28/09 10/2/09

SHEET 21 OF 31

FILE => 56-0841-q-jntdt.dgn

USERNAME => trflm DATE PLOTTED => 19-OCT-2010 TIME PLOTTED => 15:31

DIST	COUNTY	ROUTE	KILOMETER POST TOTAL PROJECT	SHEET No	TOTAL SHEETS
08	Riv	60,215	R19.7/21.9, R61.3/62.7	488	594

Caltrans Metric

REGISTERED CIVIL ENGINEER — DATE 10/02/09

6-28-10
PLANS APPROVAL DATE

REGISTERED PROFESSIONAL ENGINEER — MOHAN S. CHAR — No. 57894 — Exp. 6/30/10 — CIVIL — STATE OF CALIFORNIA

The State of California or its officers or agents shall not be responsible for the accuracy or completeness of electronic copies of this plan sheet.

RIVERSIDE COUNTY TRANSPORTATION COMMISSION
4080 LEMON STREET - THIRD FLOOR
RIVERSIDE, CALIFORNIA 92501

LIM & NASCIMENTO ENGINEERING
1887 BUSINESS CENTER DRIVE, SUITE 6
SAN BERNARDINO, CALIFORNIA 92408

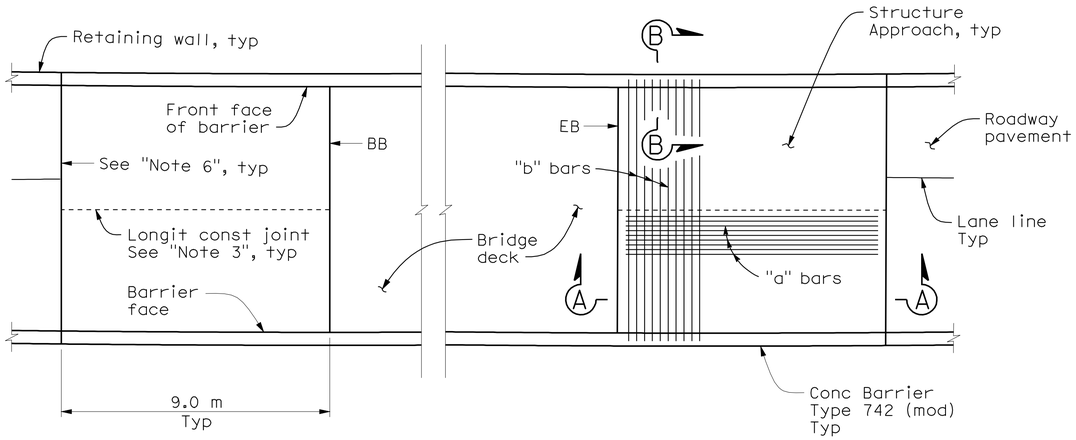

PLAN
No Scale

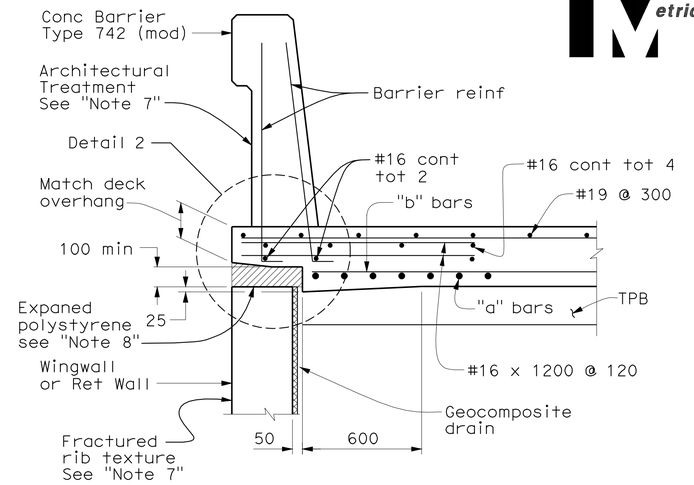

SECTION B-B
No Scale

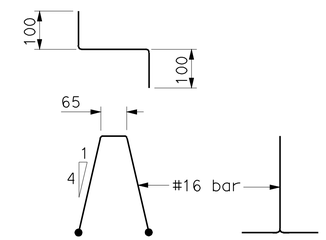

BAR CHAIR DETAIL
No Scale

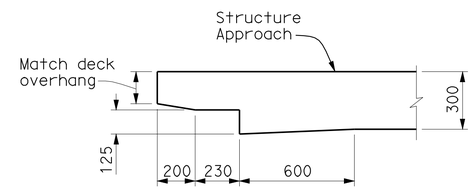

DETAIL 2
No Scale

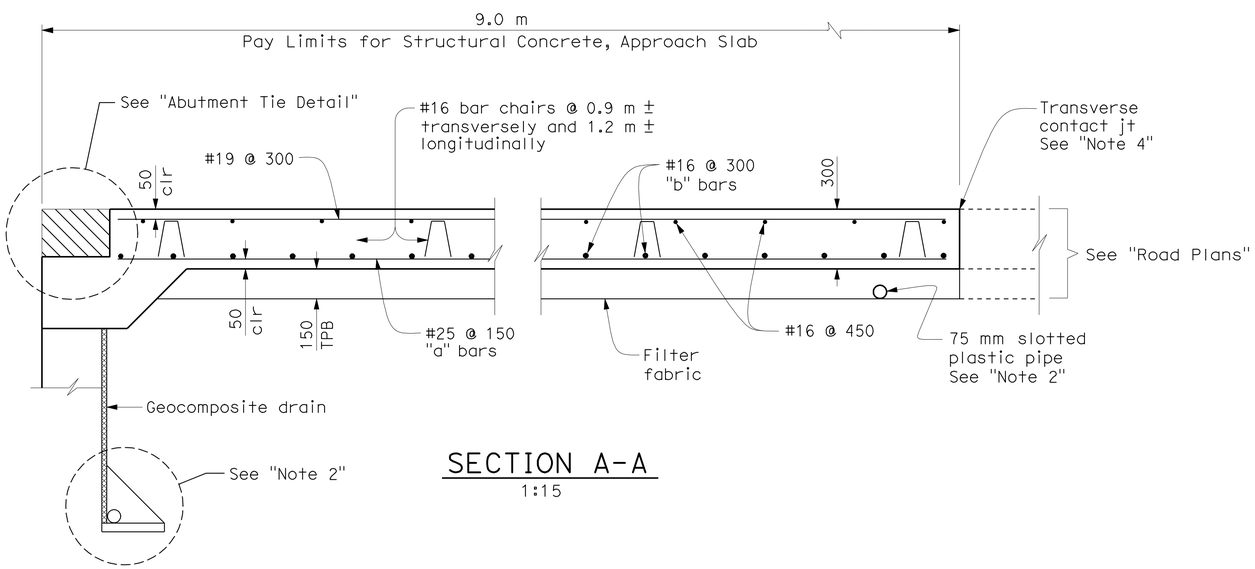

SECTION A-A
1:15

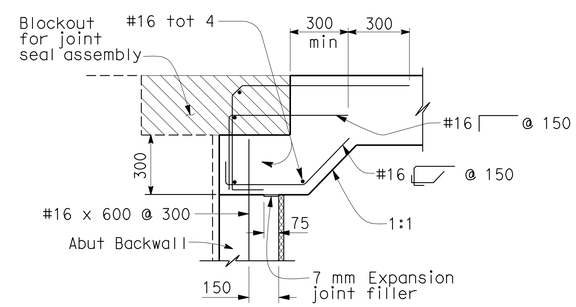

MR ≥ 50 mm

ABUTMENT TIE DETAIL
1:15
See "Note 1"

Notes:

1. For details not shown, see "Structure Plans". For MR ≥ 50 mm, adjust bar reinforcement to clear a sawcut for sealed joint, when required.
2. For drainage details, see "Structure Approach Drainage Details" sheet.
3. Additional longitudinal construction joints, when permitted by the Engineer, shall be located on lane lines.
4. For transverse contact joint with new PCC paving, refer to Revised Standard Plan P-1.
5. At the Contractor's option, approach slab transverse reinforcement may be placed parallel to paving notch. Spacing of transverse reinforcement is measured along ℄ roadway.
6. Approach Slab Transverse Contact Joint shall be parallel to face of paving notch.
7. For fractured rib texture & architectural treatment, see "Architectural Details" sheet.
8. Remove expanded polystyrene min 150 mm from all exposed surfaces.

ALL DIMENSIONS ARE IN MILLIMETERS UNLESS OTHERWISE SHOWN

DESIGN OVERSIGHT — Robert Zezoff
10-22-09
SIGN OFF DATE

	BY	CHECKED
DESIGN	D. KIM / D. SARETSKY	T. DUDLEY/A. SIVATHASAN
DETAILS	M. / R. ANDRASEK	R. PRICE / M. CHAR
QUANTITIES	D. SARETSKY	K. GEE

PREPARED FOR THE STATE OF CALIFORNIA DEPARTMENT OF TRANSPORTATION

MOHAN S. CHAR
PROJECT ENGINEER

BRIDGE NO. 56-0841
KILOMETER POST R19.6

WB SR60 HOV CONNECTOR
STRUCTURE APPROACH TYPE N(9S)

DESIGN DETAIL SHEET (METRIC) (REV. 10/27/05)

ORIGINAL SCALE IN MILLIMETERS FOR REDUCED PLANS 0 10 20 30 40 50 60 70 80 90 100

CU 08
EA 449311

DISREGARD PRINTS BEARING EARLIER REVISION DATES — REVISION DATES (PRELIMINARY STAGE ONLY) 3/12/08 7/21/08 11/4/08 2/18/09 5/18/09 8/20/09

SHEET 22 OF 32

FILE => 56-0841-s-sa.dgn

USERNAME => trlim DATE PLOTTED => 19-OCT-2010 TIME PLOTTED => 15:31

DIST	COUNTY	ROUTE	KILOMETER POST TOTAL PROJECT	SHEET No	TOTAL SHEETS
08	Riv	60,215	R19.7/21.9, R61.3/62.7	489	594

Caltrans Metric

REGISTERED CIVIL ENGINEER — DATE 10/02/09

6-28-10
PLANS APPROVAL DATE

REGISTERED PROFESSIONAL ENGINEER — MOHAN S. CHAR — No. 57894 — Exp. 6/30/10 — CIVIL — STATE OF CALIFORNIA

The State of California or its officers or agents shall not be responsible for the accuracy or completeness of electronic copies of this plan sheet.

RIVERSIDE COUNTY TRANSPORTATION COMMISSION
4080 LEMON STREET - THIRD FLOOR
RIVERSIDE, CALIFORNIA 92501

LIM & NASCIMENTO ENGINEERING
1887 BUSINESS CENTER DRIVE, SUITE 6
SAN BERNARDINO, CALIFORNIA 92408

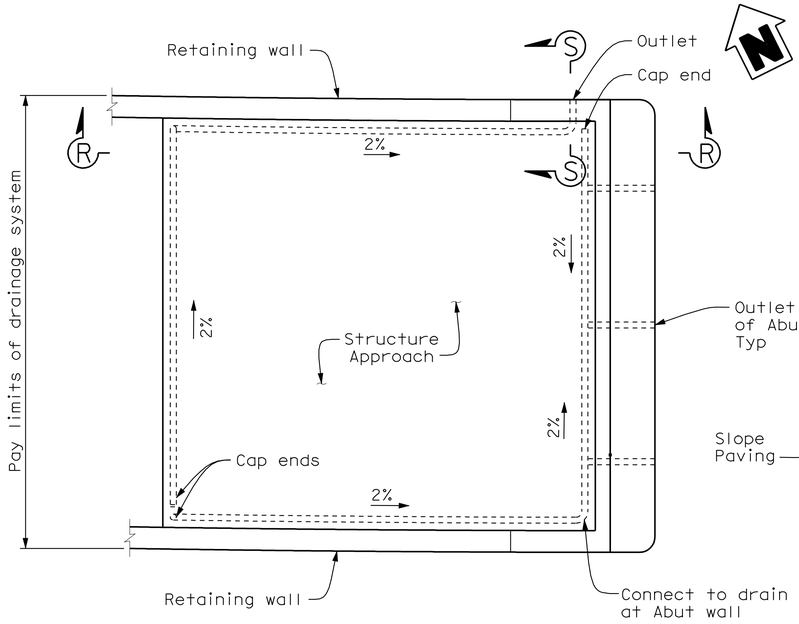

APPROACH DRAINAGE PLAN - ABUT 1
No Scale

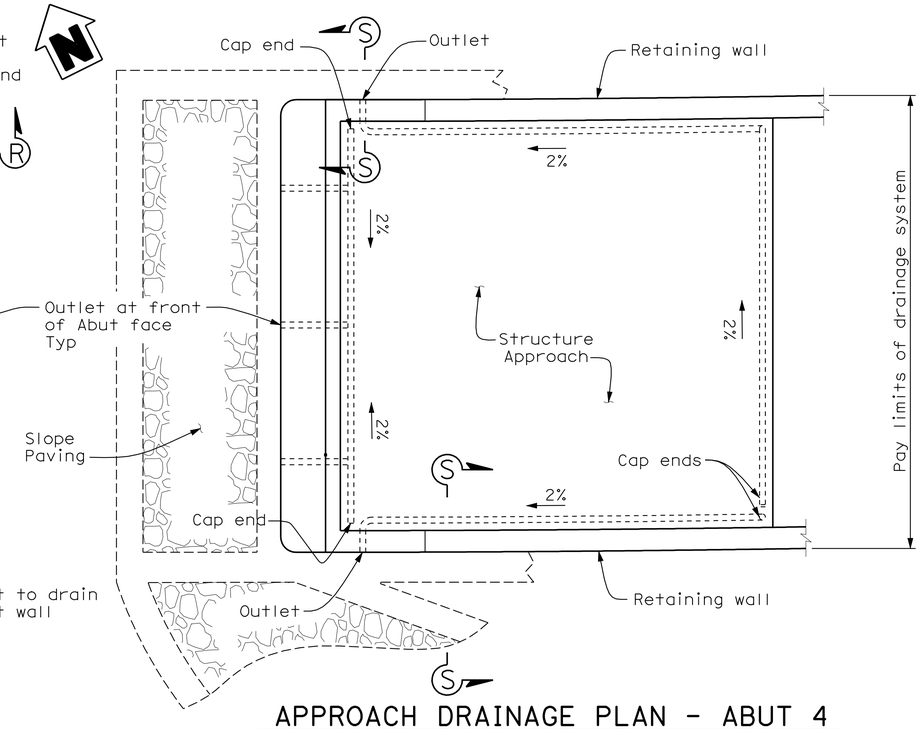

APPROACH DRAINAGE PLAN - ABUT 4
No Scale

Notes:

1. Bends and junctions in 75 mm ø plastic pipe are 750 mm radius min.
2. For slope paving, see "Slope Paving - Full Slope" and "Slope Paving - Architectural Treatment Details" sheets.
3. For architectural treatment & fractured rib texture, see "Architectural Details" sheet.

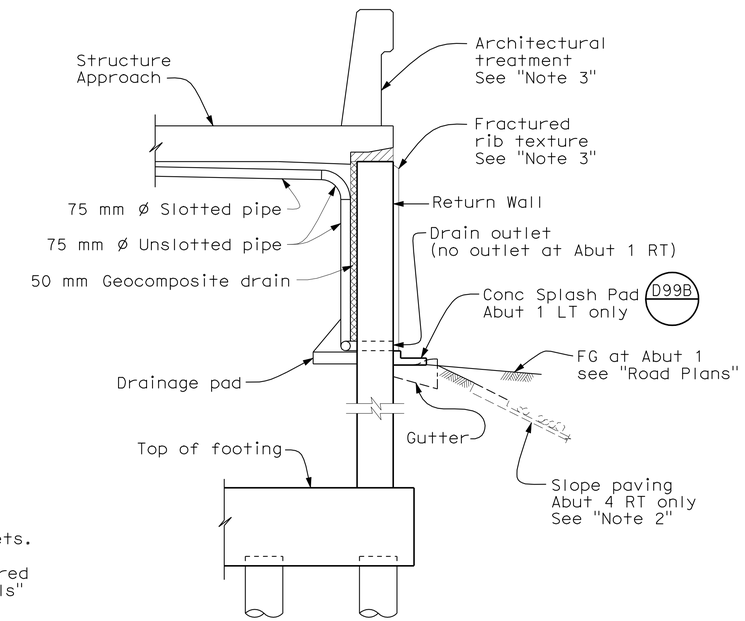

SECTION S-S
No Scale

Note:
Bends and junctions in 75 mm ø plastic pipe are 750 mm radius min.

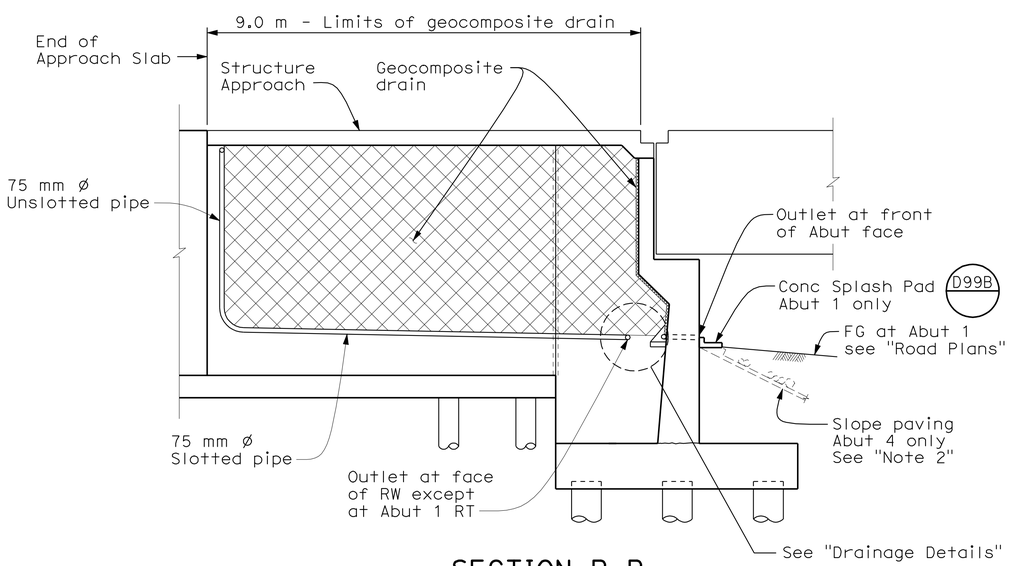

SECTION R-R
No Scale

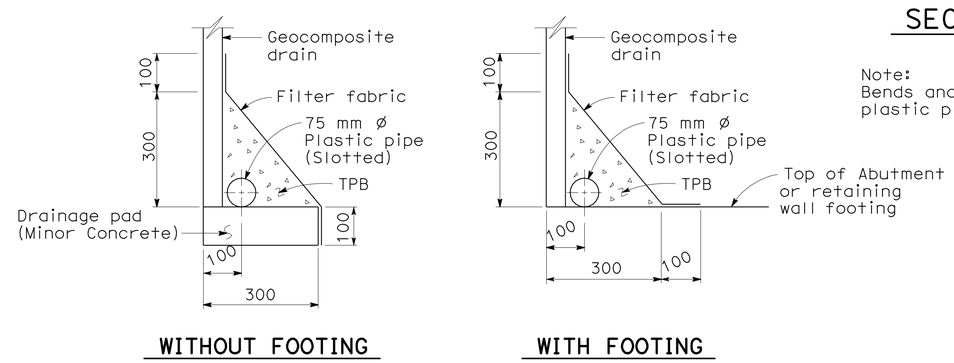

WITHOUT FOOTING — WITH FOOTING

DRAIANGE DETAILS
No Scale

ALL DIMENSIONS ARE IN MILLIMETERS UNLESS OTHERWISE SHOWN

DESIGN OVERSIGHT: Robert Zezoff	DESIGN	BY D. KIM / D. SARETSKY	CHECKED T. DUDLEY/A. SIVATHASAN	PREPARED FOR THE STATE OF CALIFORNIA DEPARTMENT OF TRANSPORTATION	MOHAN S. CHAR, PROJECT ENGINEER
10-22-09 SIGN OFF DATE	DETAILS	BY M. / R. ANDRASEK	CHECKED R. PRICE / M. CHAR		
	QUANTITIES	BY D. SARETSKY	CHECKED K. GEE		

BRIDGE NO. 56-0841 — KILOMETER POST R19.6

WB SR60 HOV CONNECTOR
STRUCTURE APPROACH DRAINAGE DETAILS

DESIGN DETAIL SHEET (METRIC) (REV. 10/27/05)

ORIGINAL SCALE IN MILLIMETERS FOR REDUCED PLANS: 0 10 20 30 40 50 60 70 80 90 100

CU 08
EA 449311

DISREGARD PRINTS BEARING EARLIER REVISION DATES — REVISION DATES (PRELIMINARY STAGE ONLY): 5/12/08 7/21/08 11/4/08 2/16/09 5/15/09 8/28/09 10/2/09

SHEET 23 OF 32

FILE => 56-0841-s-sadd.dgn

USERNAME => trlim — DATE PLOTTED => 19-OCT-2010 — TIME PLOTTED => 15:31

DIST	COUNTY	ROUTE	KILOMETER POST TOTAL PROJECT	SHEET No	TOTAL SHEETS
08	Riv	60,215	R19.7/21.9, R61.3/62.7	490	594

Caltrans Metric

REGISTERED CIVIL ENGINEER — DATE 10/02/09

6-28-10
PLANS APPROVAL DATE

REGISTERED PROFESSIONAL ENGINEER — MOHAN S. CHAR No. 57894 Exp. 6/30/10 CIVIL — STATE OF CALIFORNIA

The State of California or its officers or agents shall not be responsible for the accuracy or completeness of electronic copies of this plan sheet.

RIVERSIDE COUNTY TRANSPORTATION COMMISSION
4080 LEMON STREET - THIRD FLOOR
RIVERSIDE, CALIFORNIA 92501

LIM & NASCIMENTO ENGINEERING
1887 BUSINESS CENTER DRIVE, SUITE 6
SAN BERNARDINO, CALIFORNIA 92408

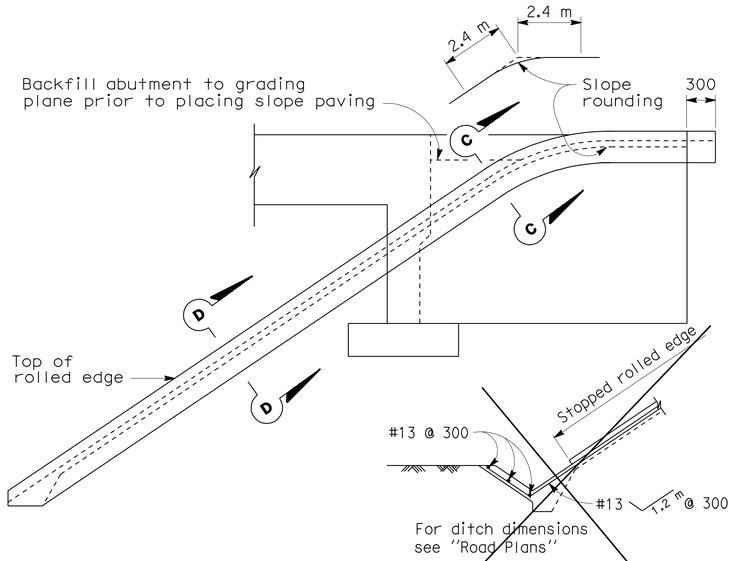

1 **WITH DITCH**

2 **RETAINING WALL ELEVATION**
(Abutment 4 only)

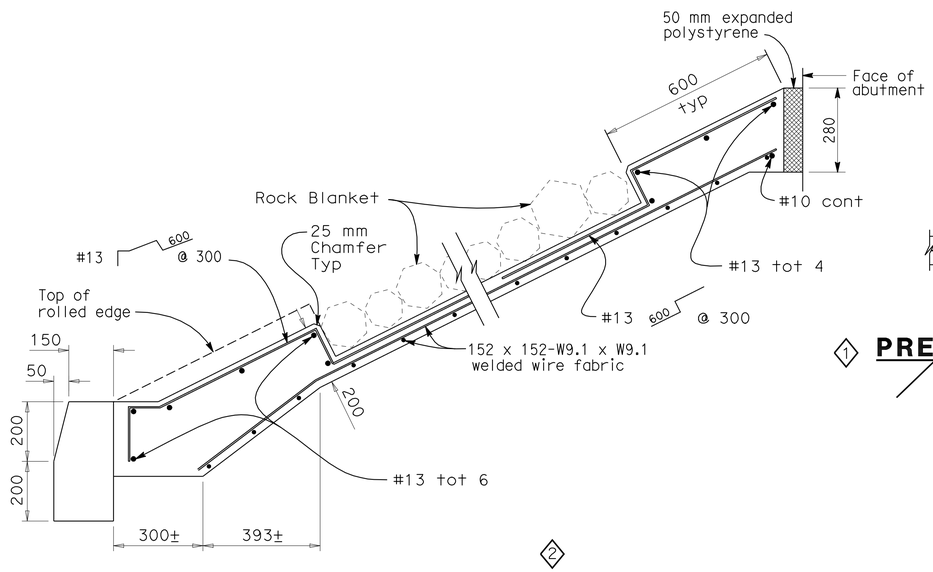

2 **TYPICAL SECTION - CONCRETE PAVING**

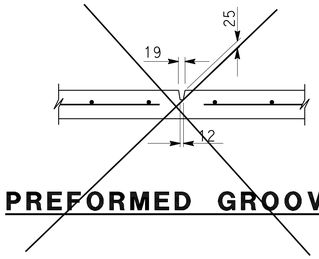

1 **PREFORMED GROOVE**

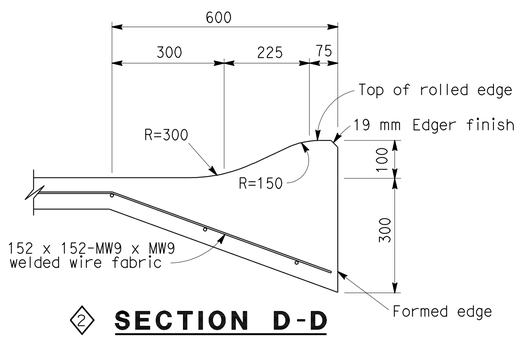

2 **SECTION D-D**
(Abutment 4 Left side only)

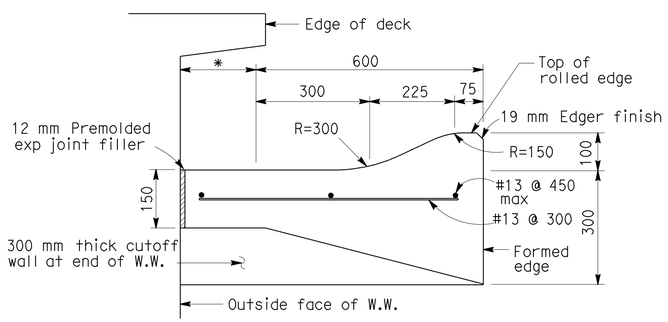

2 **SECTION C-C**

* This dimension becomes zero when edge of deck is at outside face of W.W.

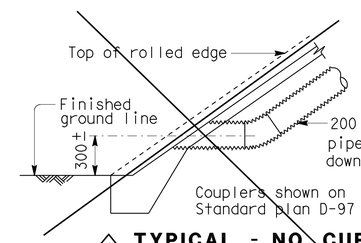

1 **TYPICAL - NO CURB**

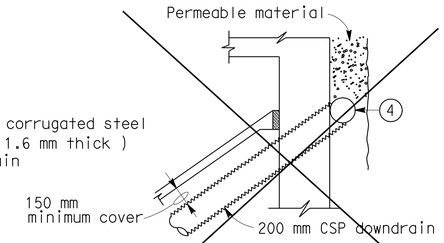

1 **TYPICAL - DRAIN CONNECTION**

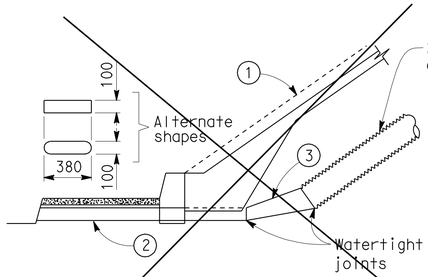

1 **TYPICAL - WITH SIDEWALK**

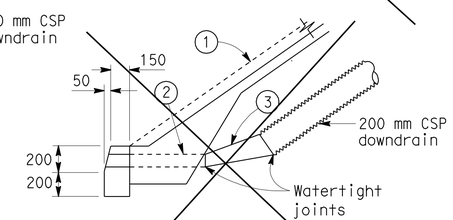

1 **TYPICAL - WITH CURB**

DRAINAGE DETAILS

Note: Drainage details are only applicable when is indicated on detail sheets. (B0-3 / 3-5)

1. Top of rolled edge
2. Conduit: 1.6 mm galv corrugated steel or 2.8 mm smooth galv steel
3. Taper: 1.6 mm / 2.8 mm smooth galv steel
4. 200 mm perforated steel pipe (1.6 mm thick) underdrain behind abutment. Connect to downdrain as shown on limits of Slope Paving & Drainage layout.

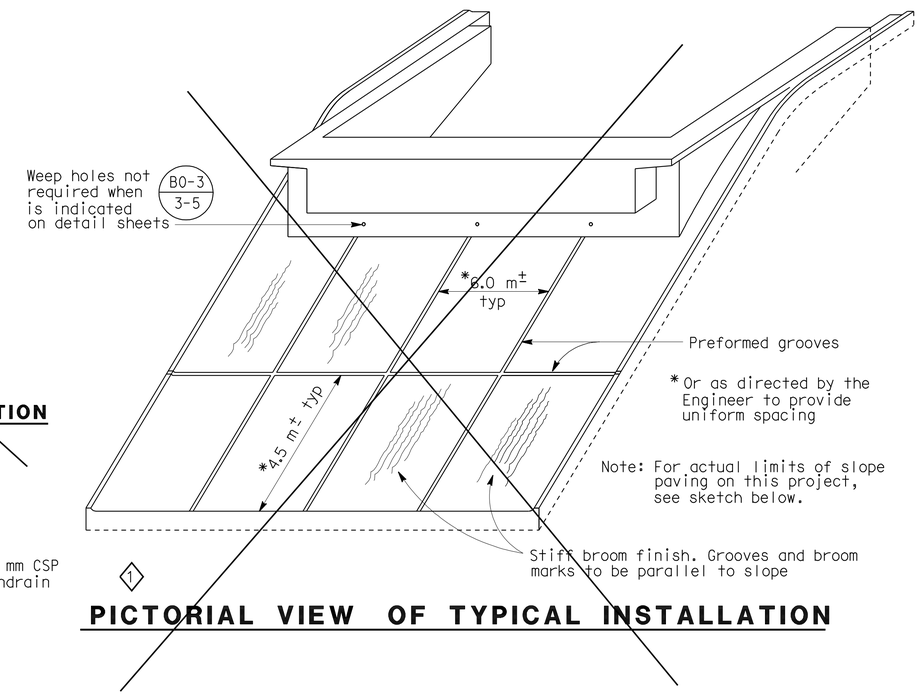

1 **PICTORIAL VIEW OF TYPICAL INSTALLATION**

* Or as directed by the Engineer to provide uniform spacing

Note: For actual limits of slope paving on this project, see sketch below.

Note:

For rock blanket layout and limits of slope paving, see "Slope Paving - Architectural Treatment Details" sheet.

NO SCALE
ALL DIMENSIONS ARE IN MILLIMETERS UNLESS OTHERWISE SHOWN

STANDARD DRAWING				
RELEASE DATE REVISED	DESIGN	BY	CHECKED	RELEASED BY
FILE NO. xs4-210	DETAILS	BY R. YEE	CHECKED	Roberto Varelli OFFICE CHIEF
	SUBMITTED	BY C.W. PURKISS	DRAWING DATE 3/89	

1 Deleted details
2 Modified detail

STATE OF CALIFORNIA
DEPARTMENT OF TRANSPORTATION

DIVISION OF ENGINEERING SERVICES

BRIDGE NO. 56-0841
KILOMETER POST R19.6

WB SR60 HOV CONNECTOR
SLOPE PAVING - FULL SLOPE

DS OSD 2147A (METRIC) (REV. 2/25/97)

ORIGINAL SCALE IN MILLIMETERS FOR REDUCED PLANS 0 10 20 30 40 50 60 70 80 90 100

CU 08
EA 449311

DISREGARD PRINTS BEARING EARLIER REVISION DATES

REVISION DATES (PRELIMINARY STAGE ONLY) 5/18/09 8/28/09 10/2/09

SHEET 24 OF 32

FILE => 56-0841-s-slp01.dgn

USERNAME => trlim DATE PLOTTED => 19-OCT-2010 TIME PLOTTED => 15:31

DIST	COUNTY	ROUTE	KILOMETER POST TOTAL PROJECT	SHEET No	TOTAL SHEETS
08	Riv	60,215	R19.7/21.9, R61.3/62.7	491	594

Caltrans Metric

REGISTERED CIVIL ENGINEER — DATE 10/02/09

6-28-10
PLANS APPROVAL DATE

REGISTERED PROFESSIONAL ENGINEER — MOHAN S. CHAR — No. 57894 — Exp. 6/30/10 — CIVIL — STATE OF CALIFORNIA

The State of California or its officers or agents shall not be responsible for the accuracy or completeness of electronic copies of this plan sheet.

RIVERSIDE COUNTY TRANSPORTATION COMMISSION
4080 LEMON STREET - THIRD FLOOR
RIVERSIDE, CALIFORNIA 92501

LIM & NASCIMENTO ENGINEERING
1887 BUSINESS CENTER DRIVE, SUITE 6
SAN BERNARDINO, CALIFORNIA 92408

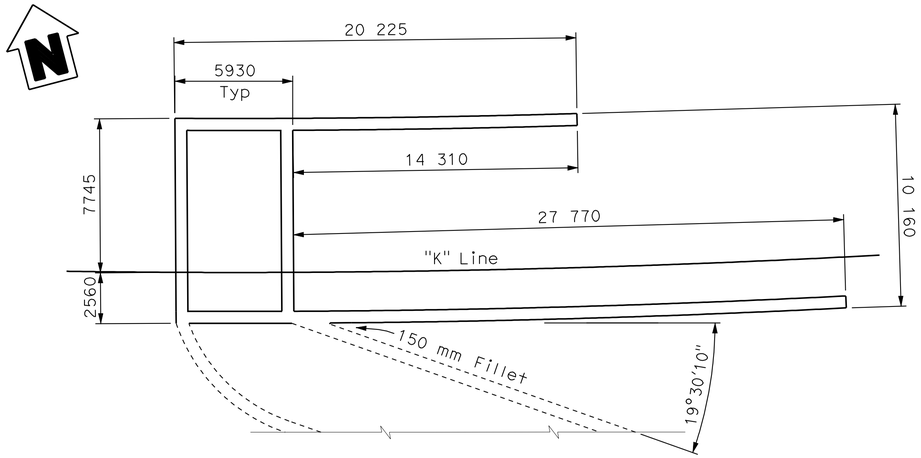

For continuation and limits, see Eastbound Br.No. 56-0842 "Slope Paving - Full Slope" sheet

ABUTMENT 4 LIMITS OF SLOPE PAVING
1:150

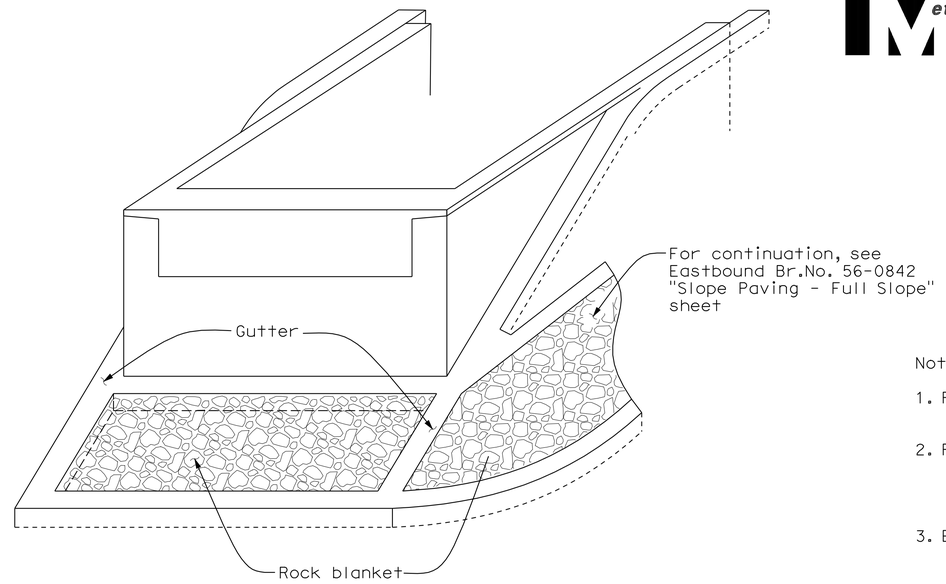

PICTORIAL VIEW OF ABUTMENT 4 ROCK BLANKET INSTALLATION
No Scale

Notes:

1. Rock size: 125 min diameter
   175 max diameter
2. Rocks shall be fully seated in the mortar bed. The mortar surface shall be trimmed to mid depth of rocks.
3. Excess mortar shall be removed and the rock surfaces shall be cleaned after installation.
4. Rocks are to be grey in color.
5. Bottom of slope paving to match toe of fill. Dimensions to be field verified.
6. For Section C-C, see "Slope Paving - Full Slope" sheet.

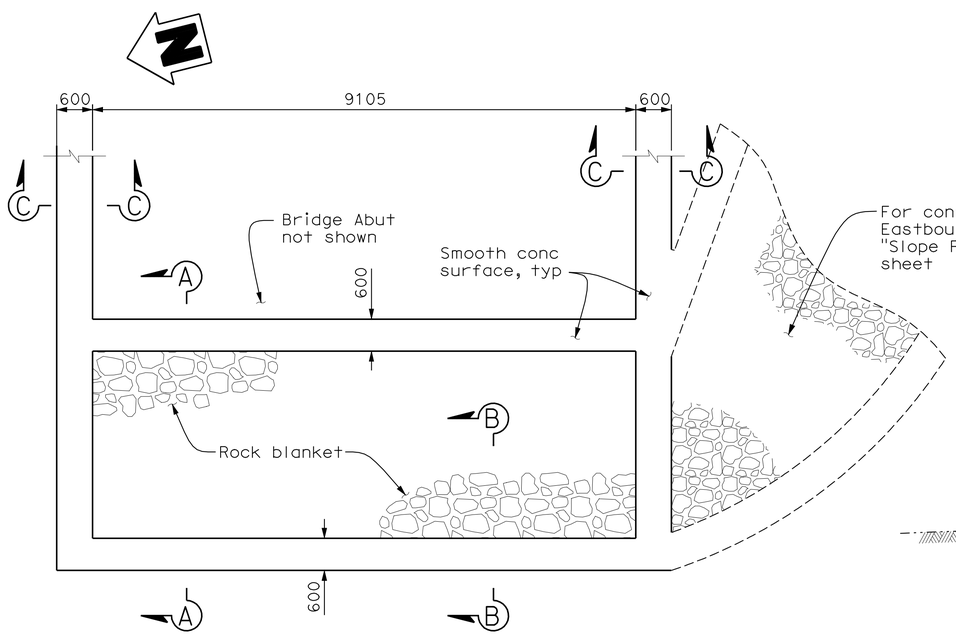

ABUTMENT 4 PLAN
1:50

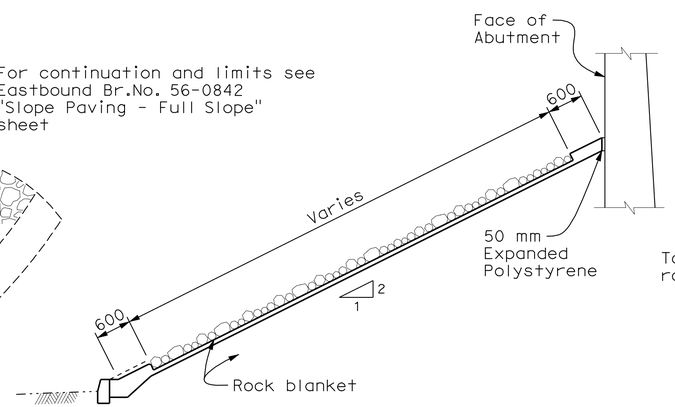

SECTION A-A
1:50

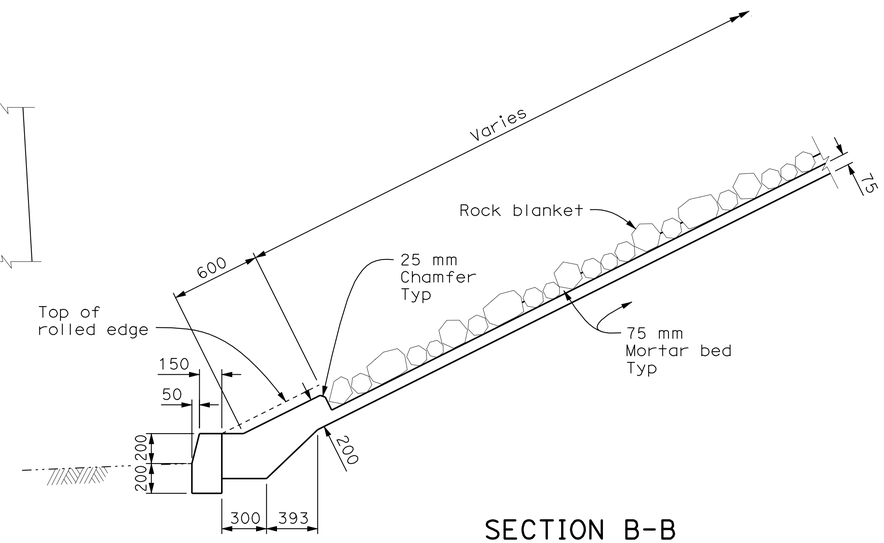

SECTION B-B
1:20

ALL DIMENSIONS ARE IN MILLIMETERS UNLESS OTHERWISE SHOWN

DESIGN OVERSIGHT — Robert Zezoff	DESIGN	BY D. KIM / D. SARETSKY	CHECKED T. DUDLEY/A. SIVATHASAN
10-22-09 SIGN OFF DATE	DETAILS	BY M. / R. ANDRASEK	CHECKED R. PRICE / M. CHAR
	QUANTITIES	BY D. SARETSKY	CHECKED K. GEE

PREPARED FOR THE STATE OF CALIFORNIA DEPARTMENT OF TRANSPORTATION

MOHAN S. CHAR
PROJECT ENGINEER

BRIDGE NO. 56-0841
KILOMETER POST R19.6

WB SR60 HOV CONNECTOR
SLOPE PAVING-ARCHITECTURAL TREATMENT DETAILS

DESIGN DETAIL SHEET (METRIC) (REV. 10/27/05)

ORIGINAL SCALE IN MILLIMETERS FOR REDUCED PLANS 0 10 20 30 40 50 60 70 80 90 100

CU 08
EA 449311

DISREGARD PRINTS BEARING EARLIER REVISION DATES

REVISION DATES (PRELIMINARY STAGE ONLY): 3/12/08 7/21/08 11/14/08 2/16/09 5/15/09 8/28/09 10/2/09

SHEET 25 OF 32

FILE => 56-0841-s-slp02.dgn

USERNAME => trlim DATE PLOTTED => 19-OCT-2010 TIME PLOTTED => 15:32

DIST	COUNTY	ROUTE	KILOMETER POST TOTAL PROJECT	SHEET No	TOTAL SHEETS
08	Riv	60,215	R19.7/21.9, R61.3/62.7	492	594

Caltrans Metric

REGISTERED CIVIL ENGINEER — DATE 10/02/09

6-28-10
PLANS APPROVAL DATE

REGISTERED PROFESSIONAL ENGINEER — MOHAN S. CHAR — No. 57894 — Exp. 6/30/10 — CIVIL — STATE OF CALIFORNIA

The State of California or its officers or agents shall not be responsible for the accuracy or completeness of electronic copies of this plan sheet.

RIVERSIDE COUNTY TRANSPORTATION COMMISSION
4080 LEMON STREET - THIRD FLOOR
RIVERSIDE, CALIFORNIA 92501

LIM & NASCIMENTO ENGINEERING
1887 BUSINESS CENTER DRIVE, SUITE 6
SAN BERNARDINO, CALIFORNIA 92408

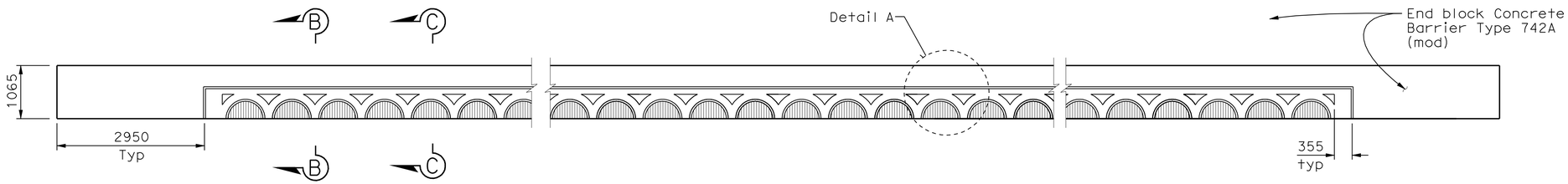

ARCH PATTERN TEXTURE ELEVATION
CONCRETE BARRIER TYPE 742 (MOD) / 742A (MOD)
1:50

Notes:

End blocks to have same dimensions

Indicates Fracture Rib Texture

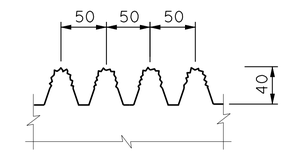

FRACTURE RIB TEXTURE
NO SCALE

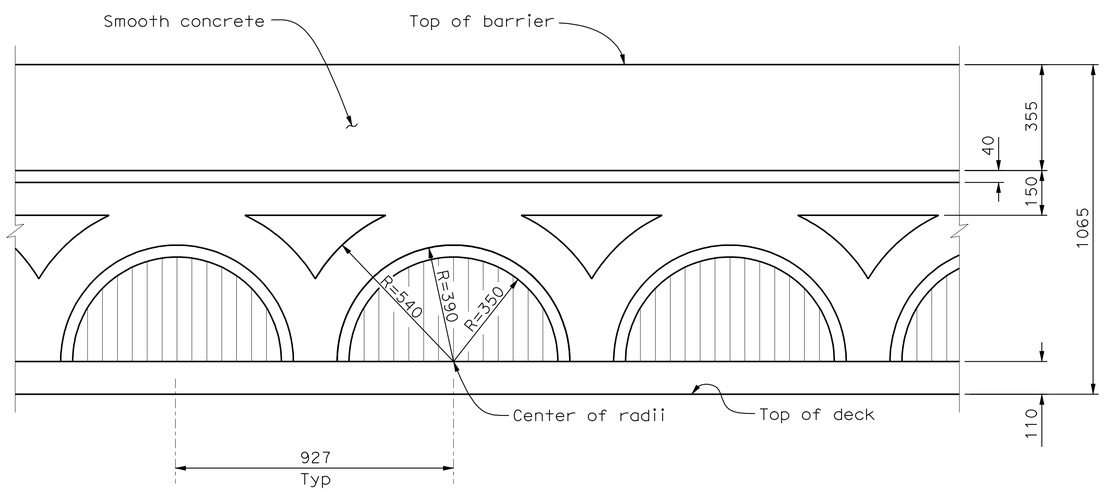

DETAIL A
1:10

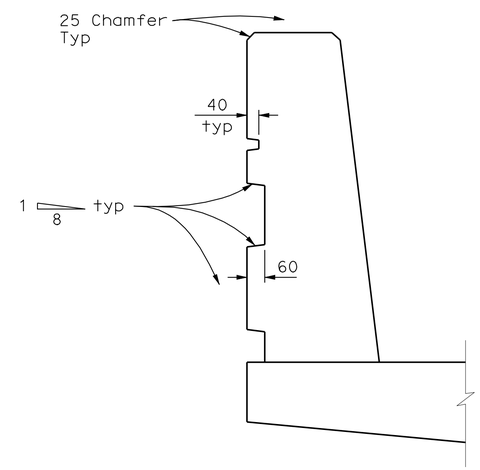

SECTION B-B
1:10
Type 742 (mod) shown,
Type 742A (mod) similar

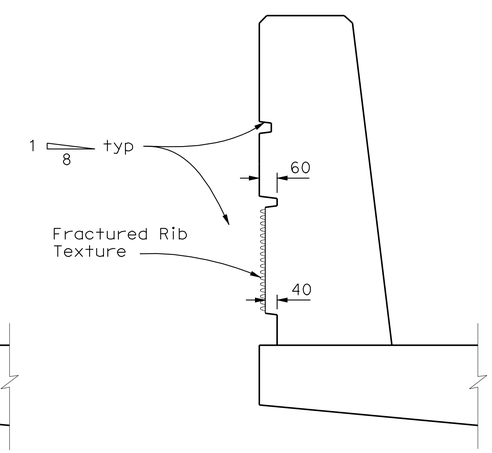

SECTION C-C
1:10
Type 742 (mod) shown,
Type 742A (mod) similar

Note: For reinforcing & dimensions not shown, see B11-57

ALL DIMENSIONS ARE IN MILLIMETERS UNLESS OTHERWISE SHOWN

DESIGN OVERSIGHT — Robert Zezoff
10-22-09
SIGN OFF DATE

	BY	CHECKED
DESIGN	D. KIM / D. SARETSKY	T. DUDLEY/A. SIVATHASAN
DETAILS	M. / R. ANDRASEK	R. PRICE / M. CHAR
QUANTITIES	D. SARETSKY	K. GEE

PREPARED FOR THE STATE OF CALIFORNIA DEPARTMENT OF TRANSPORTATION

MOHAN S. CHAR
PROJECT ENGINEER

BRIDGE NO. 56-0841
KILOMETER POST R19.6

WB SR60 HOV CONNECTOR
ARCHITECTURAL DETAILS

DESIGN DETAIL SHEET (METRIC) (REV. 10/27/05)

ORIGINAL SCALE IN MILLIMETERS FOR REDUCED PLANS 0 10 20 30 40 50 60 70 80 90 100

CU 08
EA 449311

DISREGARD PRINTS BEARING EARLIER REVISION DATES

REVISION DATES (PRELIMINARY STAGE ONLY): 5/12/08 7/21/08 11/4/08 2/16/09 5/15/09 8/28/09 10/2/09

SHEET 26 OF 32

FILE => 56-0841-t-brdt.dgn

USERNAME => trlim DATE PLOTTED => 19-OCT-2010 TIME PLOTTED => 15:32

DIST	COUNTY	ROUTE	KILOMETER POST TOTAL PROJECT	SHEET No	TOTAL SHEETS
08	Riv	60,215	R19.7/21.9, R61.3/62.7	493	594

Caltrans Metric

Carlos Amante 10/02/09
CERTIFIED ENGINEERING GEOLOGIST

6-28-10
PLANS APPROVAL DATE

REGISTERED GEOLOGIST — CARLOS AMANTE — No. GE2724 — Exp. 6-30-10 — CERTIFIED ENGINEERING GEOLOGIST — STATE OF CALIFORNIA

The State of California or its officers or agents shall not be responsible for the accuracy or completeness of electronic copies of this plan sheet.

RIVERSIDE COUNTY TRANSPORTATION COMMISSION
4080 LEMON STREET - THIRD FLOOR
RIVERSIDE, CALIFORNIA 92501

LIM & NASCIMENTO ENGINEERING
1887 BUSINESS CENTER DRIVE, SUITE 6
SAN BERNARDINO, CALIFORNIA 92408

KLEINFELDER WEST, INC.
1220 RESEARCH DRIVE, SUITE B
REDLANDS, CALIFORNIA 92374

CEMENTATION

Description	Criteria
Weak	Crumbles or breaks with handling or little finger pressure.
Moderate	Crumbles or breaks with considerable finger pressure.
Strong	Will not crumble or break with finger pressure.

CONSISTENCY OF COHESIVE SOILS

Description	Unconfined Compressive Strength (kpa)	Pocket Penetrometer Measurement (kpa)	Torvane Measurement (kpa)	Field Approximation
Very Soft	< 23.93	< 23.93	< 11.48	Easily penetrated several inches by fist
Soft	23.93 to 47.8	23.93 to 47.8	11.48 to 23.93	Easily penetrated several inches by thumb
Medium Stiff	47.85 to 95.72	47.85 to 95.72	23.93 to 47.85	Penetrated several inches by thumb with moderate effort
Stiff	95.72 to 191.44	95.72 to 191.44	47.85 to 95.72	Readily indented by thumb but penetrated only with great effort
Very Stiff	191.44 to 382.88	191.44 to 382.88	191.44 to 382.88	Readily indented by thumbnail
Hard	>765.76	>765.76	>382.88	Indented by thumbnail with difficulty

BOREHOLE IDENTIFICATION

Symbol	Hole Type	Description
Size	A	Auger Boring
Size	R P	Rotary drilled boring Rotary percussion boring (air)
Size	R	Rotary drilled diamond core
Size	HD HA	Hand driven (25.4 mm soil tube) Hand Auger
●	D	Dynamic Cone Penetration Boring
▲	CPT	Cone Penetration Test (ASTM D 5778-95)
⬚	O	Other

Note: Size in millimeters.

PLASTICITY OF FINE-GRAINED SOILS

Description	Criteria
Nonplastic	A 3.18 mm thread cannot be rolled at any water content.
Low	The thread can barely be rolled and the lump cannot be formed when drier than the plastic limit.
Medium	The thread is easy to roll and not much time is required to reach the plastic limit. The thread cannot be rerolled after reaching the plastic limit. The lump crumbles when drier than the plastic limit.
High	It takes considerable time rolling and kneading to reach the plastic limit. The thread can be rerolled several times after reaching the plastic limit. The lump can be formed without crumbling when drier than the plastic limit.

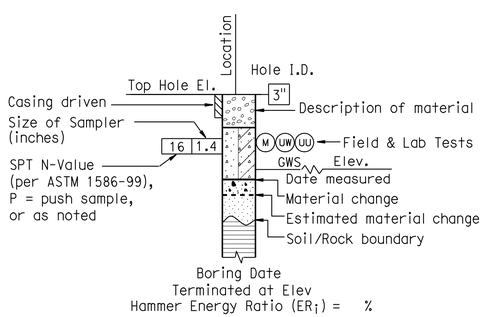

ROTARY BORING

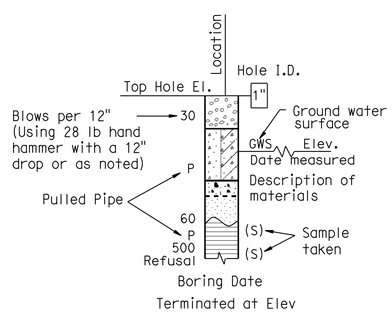

HAND BORING

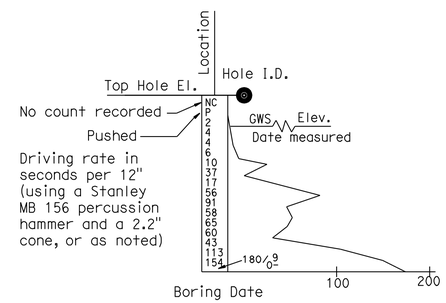

DYNAMIC CONE PENETRATION BORING

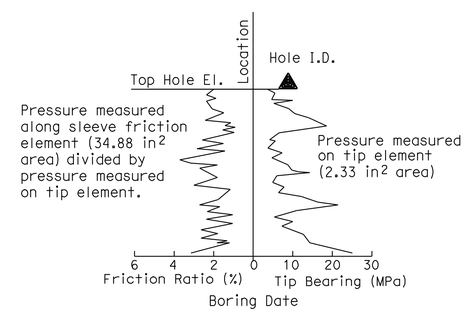

CONE PENETRATION TEST (CPT) SOUNDING

ALL DIMENSIONS ARE IN METERS UNLESS OTHERWISE SHOWN

Robert Zezoff
DESIGN OVERSIGHT Robert Zezoff
10-22-09
SIGN OFF DATE

DRAWN BY	D. FAHRNEY
CHECKED BY	C. AMANTE

PREPARED FOR THE STATE OF CALIFORNIA DEPARTMENT OF TRANSPORTATION

C. AMANTE
PROJECT ENGINEER

BRIDGE NO. 56-0841
KILOMETER POST R19.6

WB SR60 HOV CONNECTOR
SOIL LEGEND NO. 1

ORIGINAL SCALE IN MILLIMETERS FOR REDUCED PLANS 0 10 20 30 40 50 60 70 80 90

CU 08
EA 449311

DISREGARD PRINTS BEARING EARLIER REVISION DATES

REVISION DATES: 3/12/08 7/21/08 11/14/08 2/16/09 6/18/09 8/28/09 10/2/09

SHEET 27 OF 32

FILE => 56-0841-z-ltb01.dgn

USERNAME => rtrim DATE PLOTTED => 19-OCT-2010 TIME PLOTTED => 15:32

DIST	COUNTY	ROUTE	KILOMETER POST TOTAL PROJECT	SHEET No	TOTAL SHEETS
08	Riv	60,215	R19.7/21.9, R61.3/62.7	494	594

Caltrans Metric

Carlos V Amante 10/02/09
CERTIFIED ENGINEERING GEOLOGIST

6-28-10
PLANS APPROVAL DATE

REGISTERED GEOLOGIST CARLOS AMANTE No. GE2724 Exp. 6-30-10 CERTIFIED ENGINEERING GEOLOGIST STATE OF CALIFORNIA

The State of California or its officers or agents shall not be responsible for the accuracy or completeness of electronic copies of this plan sheet.

RIVERSIDE COUNTY TRANSPORTATION COMMISSION
4080 LEMON STREET - THIRD FLOOR
RIVERSIDE, CALIFORNIA 92501

LIM & NASCIMENTO ENGINEERING
1887 BUSINESS CENTER DRIVE, SUITE 6
SAN BERNARDINO, CALIFORNIA 92408

KLEINFELDER WEST, INC.
1220 RESEARCH DRIVE, SUITE B
REDLANDS, CALIFORNIA 92374

REFERENCE: CALTRANS SOIL & ROCK LOGGING, CLASSIFICATION, AND PRESENTATION MANUAL (JUNE 2007)

GROUP SYMBOLS AND NAMES

Graphic/Symbol	Group Names
GW	Well-graded GRAVEL Well-graded GRAVEL with SAND
GP	Poorly graded GRAVEL Poorly graded GRAVEL with SAND
GW-GM	Well-graded GRAVEL with SILT Well-graded GRAVEL with SILT and SAND
GW-GC	Well-graded GRAVEL with CLAY (or SILTY CLAY) Well-graded GRAVEL with CLAY and SAND (or SILTY CLAY and SAND)
GP-GM	Poorly graded GRAVEL with SILT Poorly graded GRAVEL with SILT and SAND
GP-GC	Poorly graded GRAVEL with CLAY (or SILTY CLAY) Poorly graded GRAVEL with CLAY and SAND (or SILTY CLAY and SAND)
GM	SILTY GRAVEL SILTY GRAVEL with SAND
GC	CLAYEY GRAVEL CLAYEY GRAVEL with SAND
GC-GM	SILTY, CLAYEY GRAVEL SILTY, CLAYEY GRAVEL with SAND
SW	Well-graded SAND Well-graded SAND with GRAVEL
SP	Poorly graded SAND Poorly graded SAND with GRAVEL
SW-SM	Well-graded SAND with SILT Well-graded SAND with SILT and GRAVEL
SW-SC	Well-graded SAND with CLAY (or SILTY CLAY) Well-graded SAND with CLAY and GRAVEL (or SILTY CLAY and GRAVEL)
SP-SM	Poorly graded SAND with SILT Poorly graded SAND with SILT and GRAVEL
SP-SC	Poorly graded SAND with CLAY (or SILTY CLAY) Poorly graded SAND with CLAY and GRAVEL (or SILTY CLAY and GRAVEL)
SM	SILTY SAND SILTY SAND with GRAVEL
SC	CLAYEY SAND CLAYEY SAND with GRAVEL
SC-SM	SILTY, CLAYEY SAND SILTY, CLAYEY SAND with GRAVEL
PT	PEAT
	COBBLES COBBLES and BOULDERS BOULDERS

Graphic/Symbol	Group Names
CL	Lean CLAY Lean CLAY with SAND Lean CLAY with GRAVEL SANDY lean CLAY SANDY lean CLAY with GRAVEL GRAVELLY lean CLAY GRAVELLY lean CLAY with SAND
CL-ML	SILTY CLAY SILTY CLAY with SAND SILTY CLAY with GRAVEL SANDY SILTY CLAY SANDY SILTY CLAY with GRAVEL GRAVELLY SILTY CLAY GRAVELLY SILTY CLAY with SAND
ML	SILT SILT with SAND SILT with GRAVEL SANDY SILT SANDY SILT with GRAVEL GRAVELLY SILT GRAVELLY SILT with SAND
OL	ORGANIC lean CLAY ORGANIC lean CLAY with SAND ORGANIC lean CLAY with GRAVEL SANDY ORGANIC lean CLAY SANDY ORGANIC lean CLAY with GRAVEL GRAVELLY ORGANIC lean CLAY GRAVELLY ORGANIC lean CLAY with SAND
OL	ORGANIC SILT ORGANIC SILT with SAND ORGANIC SILT with GRAVEL SANDY ORGANIC SILT SANDY ORGANIC SILT with GRAVEL GRAVELLY ORGANIC SILT GRAVELLY ORGANIC SILT with SAND
CH	Fat CLAY Fat CLAY with SAND Fat CLAY with GRAVEL SANDY fat CLAY SANDY fat CLAY with GRAVEL GRAVELLY fat CLAY GRAVELLY fat CLAY with SAND
MH	Elastic SILT Elastic SILT with SAND Elastic SILT with GRAVEL SANDY elastic SILT SANDY elastic SILT with GRAVEL GRAVELLY elastic SILT GRAVELLY elastic SILT with SAND
OH	ORGANIC fat CLAY ORGANIC fat CLAY with SAND ORGANIC fat CLAY with GRAVEL SANDY ORGANIC fat CLAY SANDY ORGANIC fat CLAY with GRAVEL GRAVELLY ORGANIC fat CLAY GRAVELLY ORGANIC fat CLAY with SAND
OH	ORGANIC elastic SILT ORGANIC elastic SILT with SAND ORGANIC elastic SILT with GRAVEL SANDY ORGANIC elastic SILT SANDY ORGANIC elastic SILT with GRAVEL GRAVELLY ORGANIC elastic SILT GRAVELLY ORGANIC elastic SILT with SAND
OL/OH	ORGANIC SOIL ORGANIC SOIL with SAND ORGANIC SOIL with GRAVEL SANDY ORGANIC SOIL SANDY ORGANIC SOIL with GRAVEL GRAVELLY ORGANIC SOIL GRAVELLY ORGANIC SOIL with SAND

FIELD AND LABORATORY TESTING

- (C) Consolidation (ASTM D 2435)
- (CL) Collapse Potential (ASTM D 5333)
- (CP) Compaction Curve (CTM 216)
- (CR) Corrosivity Testing (CTM 643, CTM 422, CTM 417)
- (CU) Consolidated Undrained Triaxial (ASTM D 4767)
- (DS) Direct Shear (ASTM D 3080)
- (EI) Expansion Index (ASTM D 4829)
- (M) Moisture Content (ASTM D 2216)
- (OC) Organic Content-% (ASTM D 2974)
- (P) Permeability (CTM 220)
- (PA) Particle Size Analysis (ASTM D 422)
- (PI) Plasticity Index (AASHTO T 90) Liquid Limit (AASHTO T 89)
- (PL) Point Load Index (ASTM D 5731)
- (PM) Pressure Meter
- (PP) Pocket Penetrometer
- (R) R-Value (CTM 301)
- (SE) Sand Equivalent (CTM 217)
- (SG) Specific Gravity (AASHTO T 100)
- (SL) Shrinkage Limit (ASTM D 427)
- (SW) Swell Potential (ASTM D 4546)
- (TV) Pocket Torvane
- (UC) Unconfined Compression-Soil (ASTM D 2166) Unconfined Compression-Rock (ASTM D 2938)
- (UU) Unconsolidated Undrained Triaxial (ASTM D 2850)
- (UW) Unit Weight (ASTM D 4767)
- (VS) Vane Shear (AASHTO T 223)

APPARENT DENSITY OF COHESIONLESS SOILS

Description	SPT N_{60} (Blows / 304.8 mm)
Very loose	0 - 4
Loose	5 - 10
Medium Dense	11 - 30
Dense	31 - 50
Very Dense	> 50

MOISTURE

Description	Criteria
Dry	Absence of moisture, dusty, dry to the touch
Moist	Damp but no visible water
Wet	Visible free water, usually soil is below water table

PERCENT OR PROPORTION OF SOILS

Description	Criteria
Trace	Particles are present but estimated to be less than 5%
Few	5 to 10%
Little	15 to 25%
Some	30 to 45%
Mostly	50 to 100%

PARTICLE SIZE

Description		Size
Boulder		> 304.8 mm
Cobble		76.2 mm to 304.8 mm
Gravel	Coarse	19.05 mm to 76.2 mm
	Fine	No. 4 to 19.05 mm
Sand	Coarse	No. 10 to No. 4
	Medium	No. 40 to No. 10
	Fine	No. 200 to No. 40

ALL DIMENSIONS ARE IN METERS UNLESS OTHERWISE SHOWN

Robert Zezoff
DESIGN OVERSIGHT Robert Zezoff
10-22-09
SIGN OFF DATE

DRAWN BY D. FAHRNEY
CHECKED BY C. AMANTE

PREPARED FOR THE STATE OF CALIFORNIA DEPARTMENT OF TRANSPORTATION

C. AMANTE
PROJECT ENGINEER

BRIDGE NO. 56-0841
KILOMETER POST R19.6

WB SR60 HOV CONNECTOR
SOIL LEGEND NO. 2

ORIGINAL SCALE IN MILLIMETERS FOR REDUCED PLANS 0 10 20 30 40 50 60 70 80 90

CU 08
EA 449311

DISREGARD PRINTS BEARING EARLIER REVISION DATES
REVISION DATES 3/12/08 7/21/08 11/4/08 2/16/09 6/18/09 8/28/09 10/2/09

SHEET 28 OF 32

FILE => 56-0841-z-ltb02.dgn

USERNAME => rtrim DATE PLOTTED => 19-OCT-2010 TIME PLOTTED => 15:32

DIST	COUNTY	ROUTE	KILOMETER POST TOTAL PROJECT	SHEET No	TOTAL SHEETS
08	Riv	60,215	R19.7/21.9, R61.3/62.7	495	594

Caltrans Metric

Carlos D'Amante 10/02/09
CERTIFIED ENGINEERING GEOLOGIST

REGISTERED GEOLOGIST CARLOS AMANTE No. GE2724 Exp. 6-30-10 CERTIFIED ENGINEERING GEOLOGIST STATE OF CALIFORNIA

6-28-10
PLANS APPROVAL DATE

The State of California or its officers or agents shall not be responsible for the accuracy or completeness of electronic copies of this plan sheet.

RIVERSIDE COUNTY TRANSPORTATION COMMISSION
4080 LEMON STREET - THIRD FLOOR
RIVERSIDE, CALIFORNIA 92501

LIM & NASCIMENTO ENGINEERING
1887 BUSINESS CENTER DRIVE, SUITE 6
SAN BERNARDINO, CALIFORNIA 92408

KLEINFELDER WEST, INC.
1220 RESEARCH DRIVE, SUITE B
REDLANDS, CALIFORNIA 92374

REFERENCE: CALTRANS SOIL & ROCK LOGGING, CLASSIFICATION, AND PRESENTATION MANUAL (JUNE 2007)

PERCENT CORE RECOVERY (REC) & ROCK QUALITY DESIGNATION (RQD)

$$REC = \frac{\sum \text{Length of the recovered core pieces (mm)}}{\text{Total length of core run (mm)}} \times 100\%$$

$$RQD = \frac{\sum \text{Length of intact core pieces} \geq 101.6\text{ mm}}{\text{Total length of core run (mm)}} \times 100\%$$

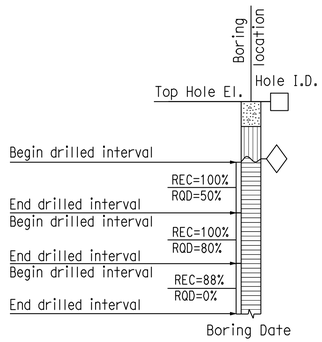

RELATIVE STRENGTH OF INTACT ROCK

Term	Uniaxial Compressive Strength (kPa)
Extremely Strong	> 206842.71
Very Strong	99973.98 - 206842.71
Strong	48263.30 - 99973.98
Medium Strong	24131.65 - 48263.30
Weak	4826.33 - 24131.65
Very Weak	1034.21 - 4826.33
Extremely Weak	< 1034.21

BEDDING SPACING

Description	Thickness / Spacing
Massive	Greater than 3.05 m
Very thickly bedded	0.91 m to 3.05 m
Thickly bedded	0.30 m to 0.91 m
Moderately bedded	92.08 mm to 304.8 mm
Thinly bedded	31.75 mm to 92.08 mm
Very thinly bedded	9.53 mm to 31.75 mm
Laminated	Less than 9.53 mm

LEGEND OF ROCK MATERIALS

- IGNEOUS ROCK
- SEDIMENTARY ROCK
- METAMORPHIC ROCK

ROCK HARDNESS

Description	Criteria
Extremely Hard	Specimen cannot be scratched with a pocket knife or sharp pick; can only be chipped with repeated heavy hammer blows.
Very Hard	Specimen cannot be scratched with a pocket knife or sharp pick. Breaks with repeated heavy hammer blows.
Hard	Specimen can be scratched with a pocket knife or sharp pick with difficulty (heavy pressure). Heavy hammer blows required to break specimen.
Moderately Hard	Specimen can be scratched with pocket knife or sharp pick with light or moderate pressure. Core breaks with moderate hammer pressure.
Moderately Soft	Specimen can be grooved 1/6" deep with a pocket knife or sharp pick with moderate or heavy pressure. Breaks with light hammer blow or heavy manual pressure.
Soft	Specimen can be grooved or gouged easily by a pocket knife or sharp pick with light pressure, can be scratched with fingernail. Breaks with light to moderate manual pressure.
Very Soft	Specimen can be readily indented, grooved or gouged with fingernail, or carved with a pocket knife. Breaks with light manual pressure.

FRACTURE DENSITY

Description	Observed Fracture Density
Unfractured	No fractures.
Very slightly fractured	Lengths greater than 0.91 m.
Slightly fractured	Lengths from 0.30 m to 0.91 m with few lengths less than 0.30 m or greater than 0.91 m.
Moderately fractured	Lengths mostly in 101.6 mm to 304.8 mm range with most lengths about 203.2 mm.
Intensely fractured	Lengths average from 25.4 mm to 101.6 mm with scattered fragmented intervals with lengths less than 101.6 mm.
Very intensely fractured	Mostly chips and fragments with a few scattered short core lengths.

Combination descriptors (such as "Very intensely to intensely fractured") are used where equal distribution of both fracture density characteristics is present over a significant interval or exposure, or where characteristics are "in between" the descriptor definitions. Only two adjacent descriptors may be combined.

WEATHERING DESCRIPTORS FOR INTACT ROCK

Description	Diagnostic features					General Characteristics
	Chemical Weathering-Discoloration and/or oxidation		Mechanical Weathering-Grain boundary conditions (disaggregation) primarily for granitics and some coarse-grained sediments	Texture and Solutioning		
	Body of Rock	Fracture Surfaces		Texture	Solutioning	
Fresh	No discoloration, not oxidized.	No discoloration or oxidation.	No separation, intact (tight).	No change.	No solutioning.	Hammer rings when crystalline rocks are struck.
Slightly Weathered	Discoloration or oxidation is limited to surface of, or short distance from, fractures; some feldspar crystals are dull.	Minor to complete discoloration or oxidation of most surfaces.	No visible separation, intact (tight).	Preserved.	Minor leaching of some soluble minerals may be noted.	Hammer rings when crystalline rocks are struck. Body of rock not weakened.
Moderately Weathered	Discoloration or oxidation extends from fractures usually throughout; Fe-Mg minerals are "rusty," feldspar crystals are "cloudy."	All fracture surfaces are discolored or oxidized.	Partial separation of boundaries visible.	Generally preserved.	Soluble minerals may be mostly leached.	Hammer does not ring when rock is struck. Body of rock is slightly weakened.
Intensely Weathered	Discoloration or oxidation throughout; all feldspars and Fe-Mg minerals are altered to clay to some extent; or chemical alteration produces in-situ disaggregation, see grain boundary conditions.	All fracture surfaces are discolored or oxidized, surfaces friable.	Partial separation, rock is friable; in semiarid conditions granitics are disaggregated.	Texture altered by chemical disintegration (hydration, argillation).	Leaching of soluble minerals may be complete.	Dull sound when struck with hammer, usually can be broken with moderate to heavy manual pressure or by light hammer blow without reference to planes of weakness such as incipient or hairline fractures, or veinlets. Rock is significantly weakened.
Decomposed	Discolored or oxidized throughout, but resistant minerals such as quartz may be unaltered; all feldspars and Fe-Mg minerals are completely altered to clay.		Complete separation of grain boundaries (disaggregated).	Resembles a soil, partial or complete remnant rock structure may be preserved; leaching of soluble minerals usually complete.		Can be granulated by hand. Resistant minerals such as quartz may be present as "stringers" or "dikes."

Combination descriptors (such as "slightly weathered to fresh") are permissible where equal distribution of both weathering characteristics is present over significant intervals or where characteristics present are "in between" the diagnostic feature. However, combination descriptors should not be used where significant, identifiable zones can be delineated. Only two adjacent descriptors may be combined. "Very intensely weathered" is the combination descriptor for "intensely weathered to decomposed."

Robert Zezoff
DESIGN OVERSIGHT Robert Zezoff
10-22-09
SIGN OFF DATE

DRAWN BY D. FAHRNEY
CHECKED BY C. AMANTE

PREPARED FOR THE STATE OF CALIFORNIA DEPARTMENT OF TRANSPORTATION

C. AMANTE
PROJECT ENGINEER

BRIDGE NO. 56-0841
KILOMETER POST R19.6

WB SR60 HOV CONNECTOR
ROCK LEGEND

ORIGINAL SCALE IN MILLIMETERS FOR REDUCED PLANS 0 10 20 30 40 50 60 70 80 90

CU 08
EA 449311

DISREGARD PRINTS BEARING EARLIER REVISION DATES

REVISION DATES: 3/12/08 7/21/08 11/4/08 2/13/09 6/18/09 8/28/09 10/2/09

SHEET 29 OF 32

FILE => 56-0841-z-ltb03.dgn

USERNAME => trilim DATE PLOTTED => 19-Oct-2010 TIME PLOTTED => 16:32

DIST	COUNTY	ROUTE	KILOMETER POST TOTAL PROJECT	SHEET No	TOTAL SHEETS
08	Riv	60,215	R19.7/21.9, R61.3/62.7	496	594

Caltrans Metric

Carlos V Amante 10/02/09
CERTIFIED ENGINEERING GEOLOGIST

6-28-10
PLANS APPROVAL DATE

REGISTERED GEOLOGIST — CARLOS AMANTE — No. GE2724 — Exp. 6-30-10 — CERTIFIED ENGINEERING GEOLOGIST — STATE OF CALIFORNIA

The State of California or its officers or agents shall not be responsible for the accuracy or completeness of electronic copies of this plan sheet.

RIVERSIDE COUNTY TRANSPORTATION COMMISSION
4080 LEMON STREET - THIRD FLOOR
RIVERSIDE, CALIFORNIA 92501

LIM & NASCIMENTO ENGINEERING
1887 BUSINESS CENTER DRIVE, SUITE 6
SAN BERNARDINO, CALIFORNIA 92408

KLEINFELDER WEST, INC.
1220 RESEARCH DRIVE, SUITE B
REDLANDS, CALIFORNIA 92374

PLAN
1:500

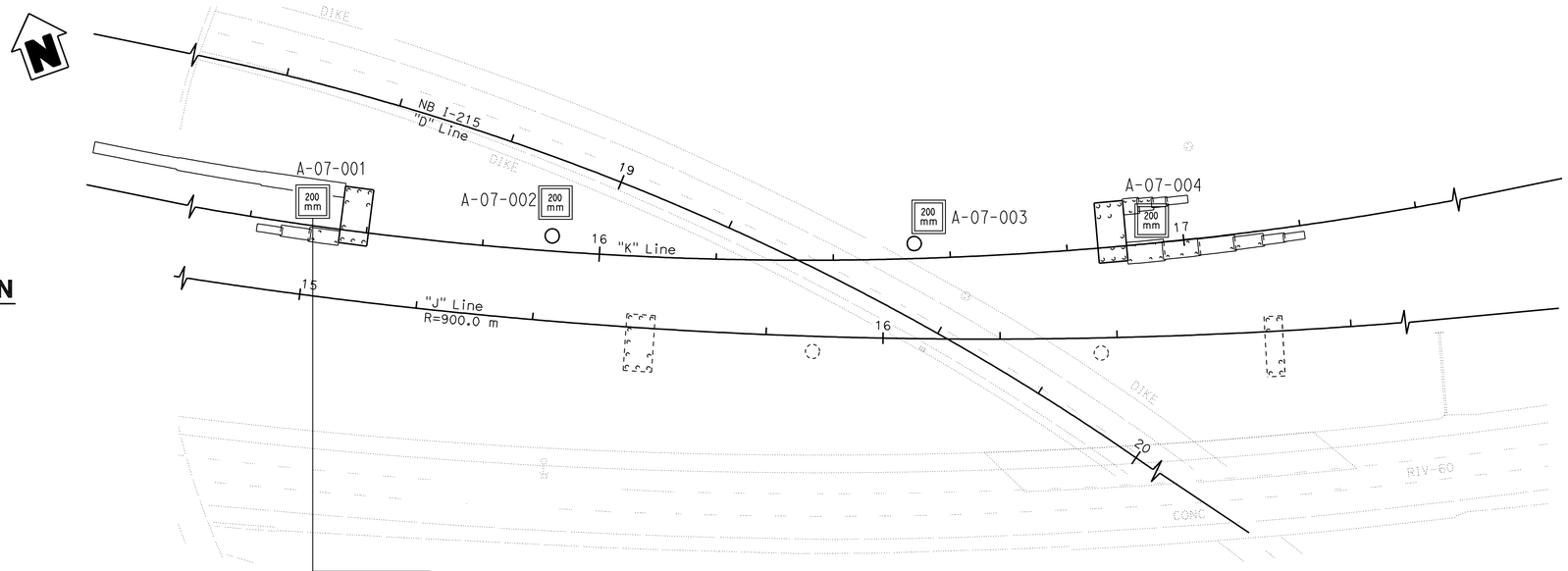

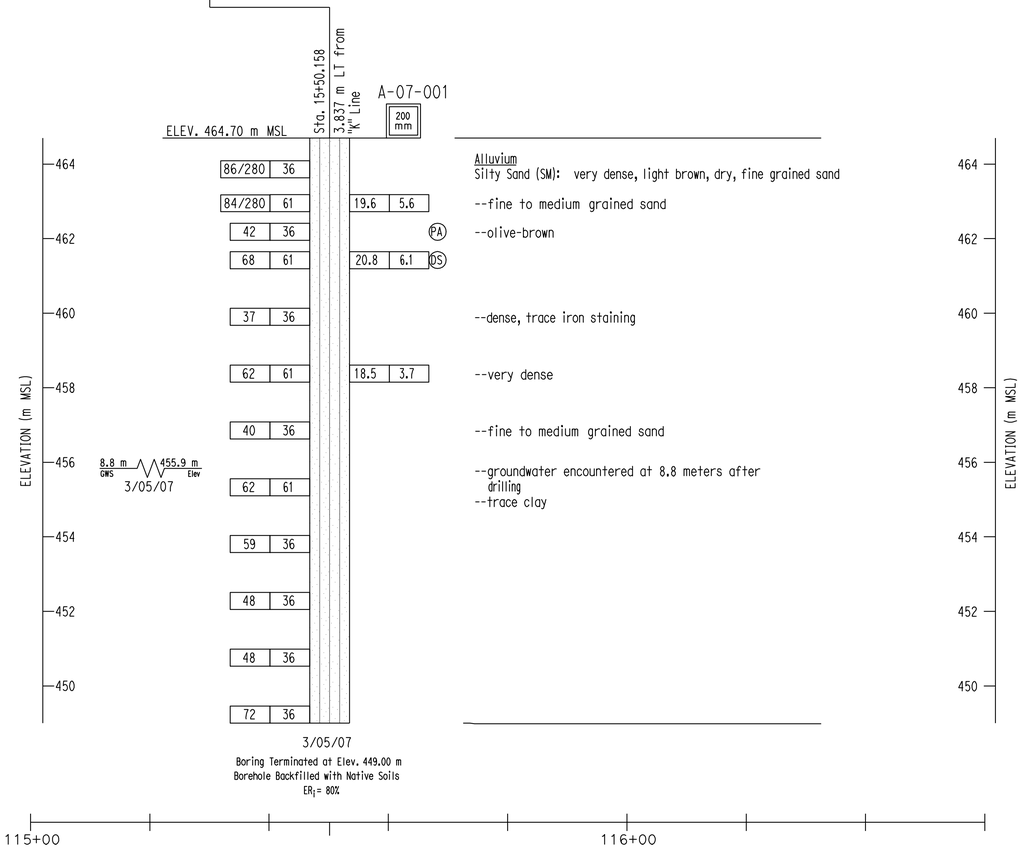

PROFILE
VERTICAL SCALE 1:2

BENCH MARK:

Pt # 3030 Elevation 472.840, Found 2 iron pipe with Brass Cap Stamped Dept of Trans RIV 60-12.7 1990 112 southwesterly of bridge.
N = 697603.049
E = 1903554.738

NOTES:

1. 36mm DIAMETER SAMPLES WERE TAKEN USING A STANDARD PENETRATION TEST (SPT) SPLIT BARREL SAMPLER WITH AN INSIDE DIAMETER (ID) OF 36mm AND AN OUTSIDE DIAMETER (OD) OF 51mm.
2. 61mm DIAMETER RING SAMPLES WERE TAKEN USING A CALIFORNIA SPLIT BARREL SAMPLER WITH AN ID OF 61mm AND AN OD OF 84mm.
3. ALL SAMPLES WERE DRIVEN WITH 64kg HAMMER WITH A FALLING HEIGHT OF 762mm.
4. THIS LOTB SHEET WAS PREPARED IN ACCORDANCE WITH THE CALTRANS SOIL AND ROCK LOGGING, CLASSIFICATION, AND PRESENTATION MANUAL (JUNE 2007).

ALL DIMENSIONS ARE IN METERS UNLESS OTHERWISE SHOWN

Robert Zezoff
DESIGN OVERSIGHT Robert Zezoff
10-22-09
SIGN OFF DATE

DRAWN BY D. FAHRNEY
CHECKED BY C. AMANTE

PREPARED FOR THE STATE OF CALIFORNIA DEPARTMENT OF TRANSPORTATION

C. AMANTE
PROJECT ENGINEER

BRIDGE NO. 56-0841
KILOMETER POST R19.6

WB SR60 HOV CONNECTOR
LOG OF TEST BORINGS NO. 1 OF 3

ORIGINAL SCALE IN MILLIMETERS FOR REDUCED PLANS 0 10 20 30 40 50 60 70 80 90

CU 08
EA 449311

DISREGARD PRINTS BEARING EARLIER REVISION DATES
REVISION DATES: 3/12/08 7/21/08 11/14/08 2/13/09 6/18/09 8/28/09 10/2/09

SHEET 30 OF 32

FILE => 56-0841-z-ltb04.dgn

USERNAME => trlim DATE PLOTTED => 19-OCT-2010 TIME PLOTTED => 16:33

DIST	COUNTY	ROUTE	KILOMETER POST TOTAL PROJECT	SHEET No	TOTAL SHEETS
08	Riv	60,215	R19.7/21.9, R61.3/62.7	497	594

Caltrans Metric

Carlos V Amante 10/02/09
CERTIFIED ENGINEERING GEOLOGIST

6-28-10
PLANS APPROVAL DATE

REGISTERED GEOLOGIST CARLOS AMANTE No. GE2724 Exp. 6-30-10 CERTIFIED ENGINEERING GEOLOGIST STATE OF CALIFORNIA

The State of California or its officers or agents shall not be responsible for the accuracy or completeness of electronic copies of this plan sheet.

RIVERSIDE COUNTY TRANSPORTATION COMMISSION
4080 LEMON STREET - THIRD FLOOR
RIVERSIDE, CALIFORNIA 92501

LIM & NASCIMENTO ENGINEERING
1887 BUSINESS CENTER DRIVE, SUITE 6
SAN BERNARDINO, CALIFORNIA 92408

KLEINFELDER WEST, INC.
1220 RESEARCH DRIVE, SUITE B
REDLANDS, CALIFORNIA 92374

PLAN
1:500

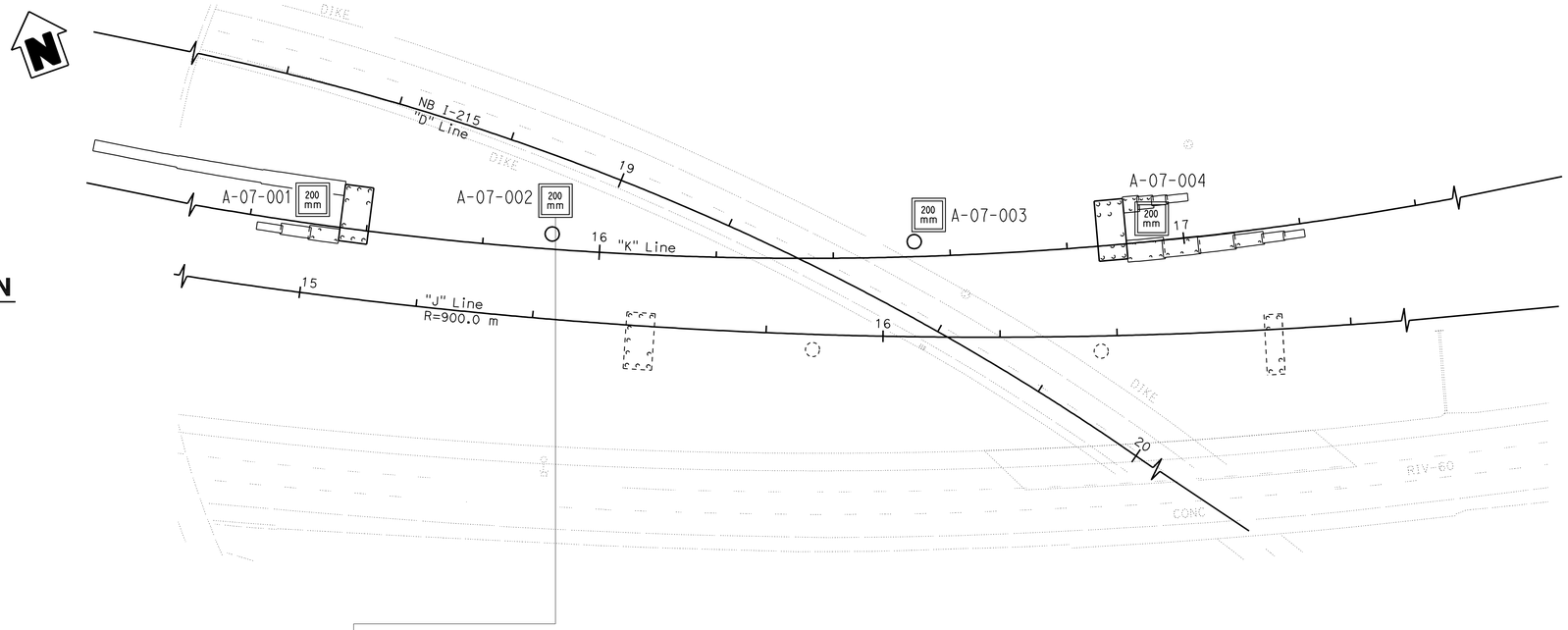

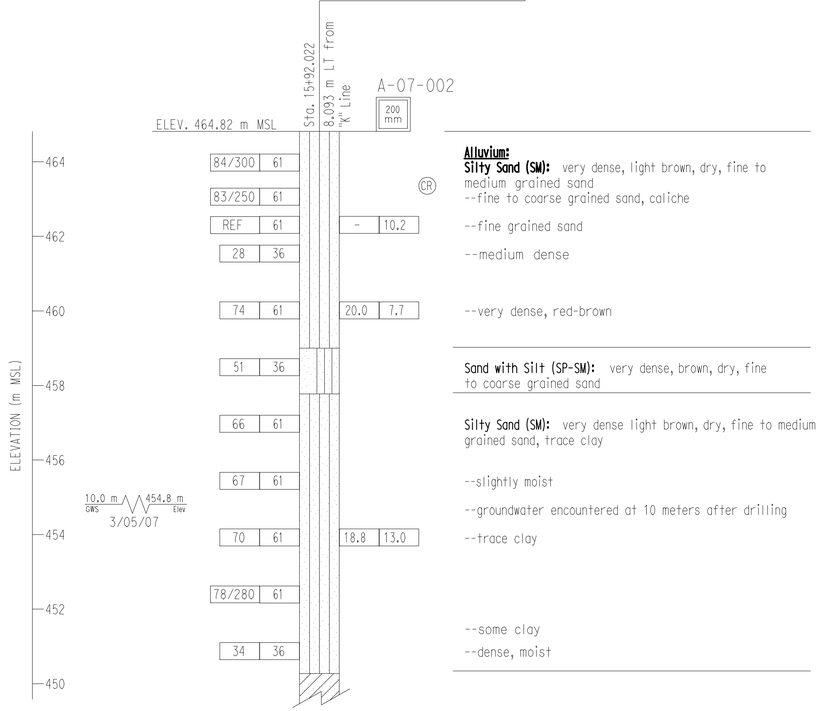

Alluvium:
Silty Sand (SM): very dense, light brown, dry, fine to medium grained sand
--fine to coarse grained sand, caliche
--fine grained sand
--medium dense
--very dense, red-brown

Sand with Silt (SP-SM): very dense, brown, dry, fine to coarse grained sand

Silty Sand (SM): very dense light brown, dry, fine to medium grained sand, trace clay
--slightly moist
--groundwater encountered at 10 meters after drilling
--trace clay
--some clay
--dense, moist

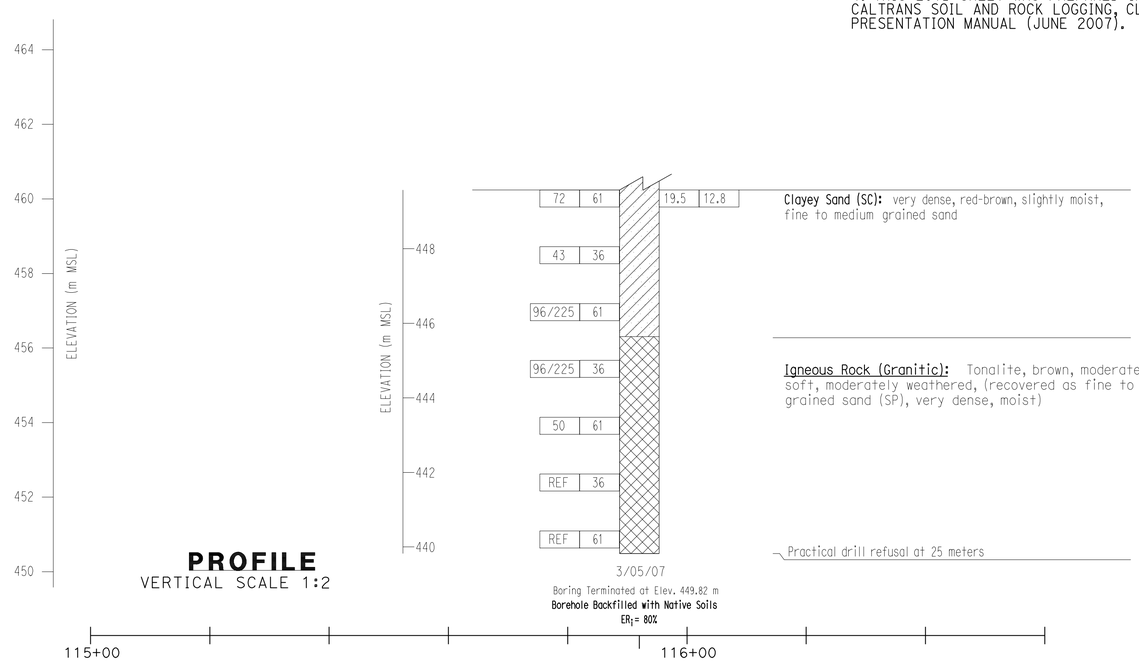

Clayey Sand (SC): very dense, red-brown, slightly moist, fine to medium grained sand

Igneous Rock (Granitic): Tonalite, brown, moderately soft, moderately weathered, (recovered as fine to coarse grained sand (SP), very dense, moist)

Practical drill refusal at 25 meters

PROFILE
VERTICAL SCALE 1:2

BENCH MARK:

Pt # 3030 Elevation 472.840, Found 2 iron pipe with Brass Cap Stamped Dept of Trans RIV 60-12.7 1990 112 southwesterly of bridge.
N = 697603.049
E = 1903554.738

NOTES:

1. 36mm DIAMETER SAMPLES WERE TAKEN USING A STANDARD PENETRATION TEST (SPT) SPLIT BARREL SAMPLER WITH AN INSIDE DIAMETER (ID) OF 36mm AND AN OUTSIDE DIAMETER (OD) OF 51mm.
2. 61mm DIAMETER RING SAMPLES WERE TAKEN USING A CALIFORNIA SPLIT BARREL SAMPLER WITH AN ID OF 61mm AND AN OD OF 84mm.
3. ALL SAMPLES WERE DRIVEN WITH 64kg HAMMER WITH A FALLING HEIGHT OF 762mm.
4. THIS LOTB SHEET WAS PREPARED IN ACCORDANCE WITH THE CALTRANS SOIL AND ROCK LOGGING, CLASSIFICATION, AND PRESENTATION MANUAL (JUNE 2007).

ALL DIMENSIONS ARE IN METERS UNLESS OTHERWISE SHOWN

Robert Zezoff
DESIGN OVERSIGHT Robert Zezoff
10-22-09
SIGN OFF DATE

DRAWN BY D. FAHRNEY
CHECKED BY C. AMANTE

PREPARED FOR THE STATE OF CALIFORNIA DEPARTMENT OF TRANSPORTATION

C. AMANTE
PROJECT ENGINEER

BRIDGE NO. 56-0841
KILOMETER POST R19.6

WB SR60 HOV CONNECTOR
LOG OF TEST BORINGS NO. 2 OF 3

ORIGINAL SCALE IN MILLIMETERS FOR REDUCED PLANS 0 10 20 30 40 50 60 70 80 90

CU 08
EA 449311

DISREGARD PRINTS BEARING EARLIER REVISION DATES
REVISION DATES 3/12/08 7/21/08 11/14/08 2/13/09 6/18/09 8/28/09 10/2/09

SHEET 31 OF 32

FILE => 56-0841-z-ttb05.dgn

USERNAME => rtrim DATE PLOTTED => 19-OCT-2010 TIME PLOTTED => 15:33

DIST	COUNTY	ROUTE	KILOMETER POST TOTAL PROJECT	SHEET No	TOTAL SHEETS
08	Riv	60,215	R19.7/21.9, R61.3/62.7	498	594

Caltrans Metric

Carlos V. Amante 10/02/09
CERTIFIED ENGINEERING GEOLOGIST

6-28-10
PLANS APPROVAL DATE

REGISTERED GEOLOGIST — CARLOS AMANTE — No. GE2724 — Exp. 6-30-10 — CERTIFIED ENGINEERING GEOLOGIST — STATE OF CALIFORNIA

The State of California or its officers or agents shall not be responsible for the accuracy or completeness of electronic copies of this plan sheet.

RIVERSIDE COUNTY TRANSPORTATION COMMISSION
4080 LEMON STREET - THIRD FLOOR
RIVERSIDE, CALIFORNIA 92501

LIM & NASCIMENTO ENGINEERING
1887 BUSINESS CENTER DRIVE, SUITE 6
SAN BERNARDINO, CALIFORNIA 92408

KLEINFELDER WEST, INC.
1220 RESEARCH DRIVE, SUITE B
REDLANDS, CALIFORNIA 92374

PLAN
1:500

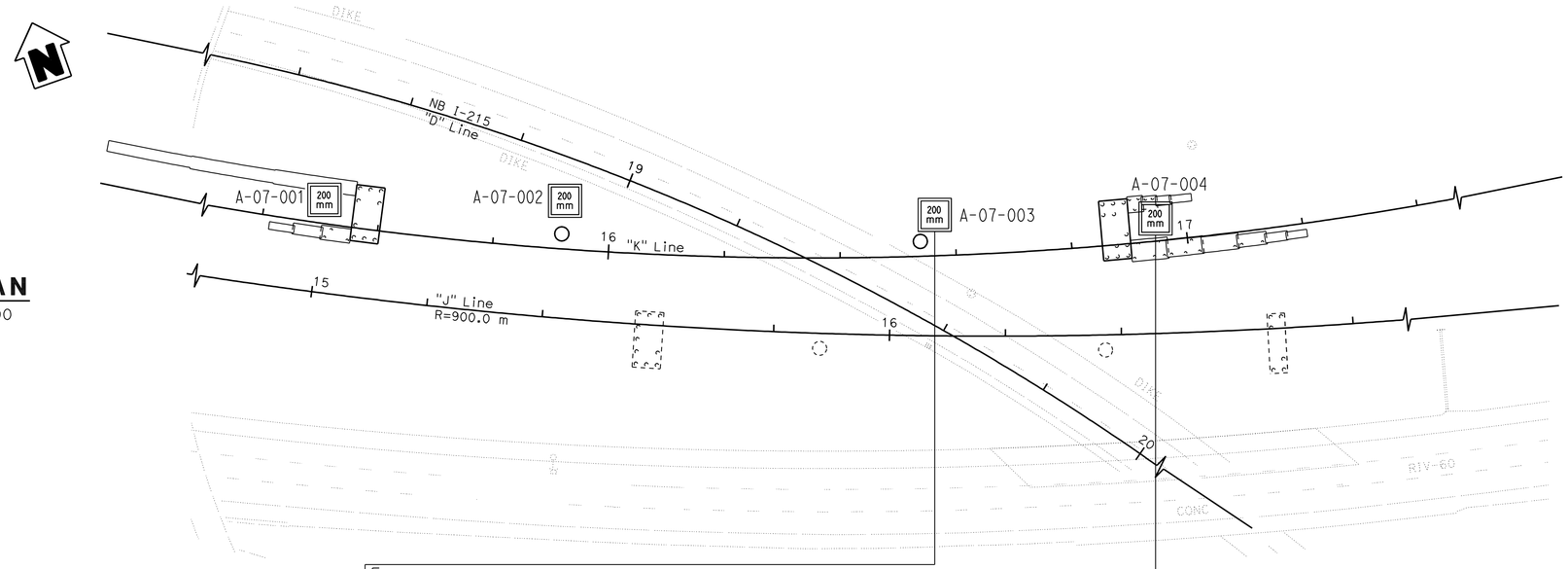

BENCH MARK:

Pt # 3030 Elevation 472.840, Found 2 iron pipe with Brass Cap Stamped Dept of Trans RIV 60-12.7 1990 112 southwesterly of bridge.
N = 697603.049
E = 1903554.738

NOTES:

1. 36mm DIAMETER SAMPLES WERE TAKEN USING A STANDARD PENETRATION TEST (SPT) SPLIT BARREL SAMPLER WITH AN INSIDE DIAMETER (ID) OF 36mm AND AN OUTSIDE DIAMETER (OD) OF 51mm.
2. 61mm DIAMETER RING SAMPLES WERE TAKEN USING A CALIFORNIA SPLIT BARREL SAMPLER WITH AN ID OF 61mm AND AN OD OF 84mm.
3. ALL SAMPLES WERE DRIVEN WITH 64kg HAMMER WITH A FALLING HEIGHT OF 762mm.
4. THIS LOTB SHEET WAS PREPARED IN ACCORDANCE WITH THE CALTRANS SOIL AND ROCK LOGGING, CLASSIFICATION, AND PRESENTATION MANUAL (JUNE 2007).

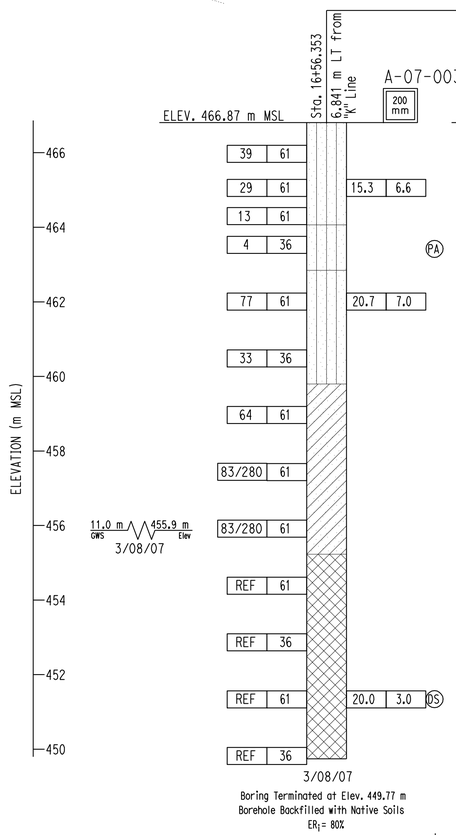

Fill:
Silty Sand (SM): dense, dark brown, fine to coarse grained sand, with fine gravel and asphalt grindings
--medium dense, asphalt grindings
--fine grained sand, trace medium sand, iron staining, gravel content decreasing

Alluvium:
Silty Sand (SM): loose, brown, slightly moist

Silty Sand (SM): very dense, red-brown, slightly moist, fine to medium grained sand, trace clay
--dense, fine grained sand

Clayey Sand (SC): very dense, brown, moist, fine grained sand
--groundwater encountered at 11 meters

Igneous Rock (Granitic): Tonalite, gray-bown, moderately soft, moderately weathered, (recovered as fine to coarse grained sand (SP), very dense, wet)
--drilling effort increases
--gray
--very difficult drilling
--slightly weathered, moist, gray-brown, fine to medium grained
--wet
Practical drill refusal at 17.1 meters

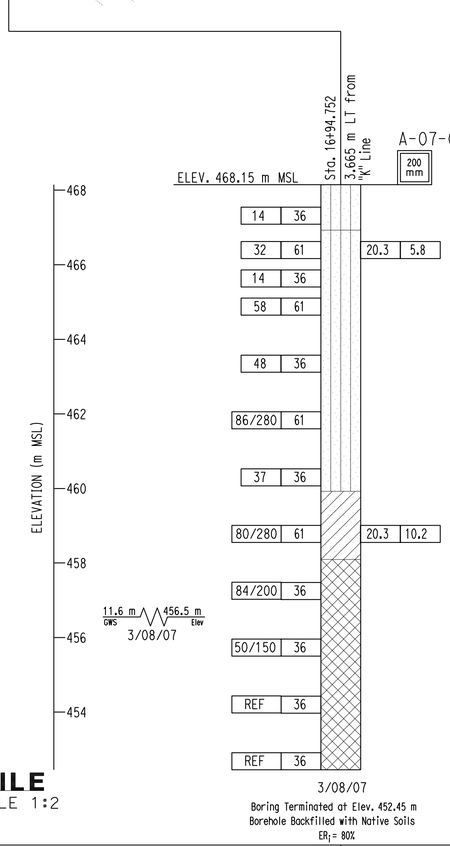

Fill:
Silty Sand (SM): medium dense, red-brown, dry, fine to medium grained sand, trace coarse sand

Alluvium:
Silty Sand (SM): medium dense, brown, slightly moist, fine to coarse grained sand
--roots
--very dense, brown, slightly moist, fine grained sand
--orange-brown, dry
--dense

Clayey Sand (SC): very dense, red-brown, moist, fine to coarse grained sand

Igneous Rock (Granitic): Tonalite, tan-brown, moderately soft, slightly weathered, (recovered as fine to medium grained sand (SP), very dense, moist)
--groundwater encountered at approximately 11.6 meters

PROFILE
VERTICAL SCALE 1:2

116+40 — 117+00

ALL DIMENSIONS ARE IN METERS UNLESS OTHERWISE SHOWN

Robert Zezoff
DESIGN OVERSIGHT Robert Zezoff
10-22-09
SIGN OFF DATE

DRAWN BY D. FAHRNEY
CHECKED BY C. AMANTE

PREPARED FOR THE STATE OF CALIFORNIA DEPARTMENT OF TRANSPORTATION

C. AMANTE
PROJECT ENGINEER

BRIDGE NO. 56-0841
KILOMETER POST R19.6

WB SR60 HOV CONNECTOR
LOG OF TEST BORINGS NO. 3 OF 3

ORIGINAL SCALE IN MILLIMETERS FOR REDUCED PLANS 0 10 20 30 40 50 60 70 80 90

CU 08
EA 449311

DISREGARD PRINTS BEARING EARLIER REVISION DATES
REVISION DATES: 5/12/08 7/21/08 11/4/08 2/13/09 6/18/09 8/28/09 10/2/09

SHEET 32 OF 32

FILE => 56-0841-z-ltb06.dgn

USERNAME => tr11m DATE PLOTTED => 19-OCT-2010 TIME PLOTTED => 15:33

DIST	COUNTY	ROUTE	KILOMETER POST TOTAL PROJECT	SHEET No	TOTAL SHEETS
08	Riv	60,215	R19.7/21.9, R61.3/62.7	499	594

REGISTERED CIVIL ENGINEER 10/02/09

6-28-10
PLANS APPROVAL DATE

REGISTERED PROFESSIONAL ENGINEER MOHAN S. CHAR No. 57894 Exp. 6/30/10 CIVIL STATE OF CALIFORNIA

The State of California or its officers or agents shall not be responsible for the accuracy or completeness of electronic copies of this plan sheet.

RIVERSIDE COUNTY TRANSPORTATION COMMISSION
4080 LEMON STREET - THIRD FLOOR
RIVERSIDE, CALIFORNIA 92501

LIM & NASCIMENTO ENGINEERING
1887 BUSINESS CENTER DRIVE, SUITE 6
SAN BERNARDINO, CALIFORNIA 92408

NOTES:

1. Paint "Br. No. & Year Constructed"
2. Paint "EB SR60 HOV Connector"
3. Structure Approach Type N(9S)
4. MBGR, See "Road Plans"
5. Indicates Deck Drain, see "Girder layout" sheet
6. Concrete Barrier Type 60GC, see "Road Plans"
7. Concrete Barrier Type 60D, see "Road Plans"
8. Welded Steel Casing for Future Utility
9. Retaining Wall Type 1
10. Concrete Barrier Type 742A, see "Road Plans"
11. Concrete Barrier Type 736B, see "Road Plans"
12. Slope Paving with Rock Blanket
13. Paint "Bent No."

Point of minimum vertical clearance Including "Ultimate"

Indicates Direction of traffic

Indicates WB SR60 HOV Connector Br. No. 56-0841

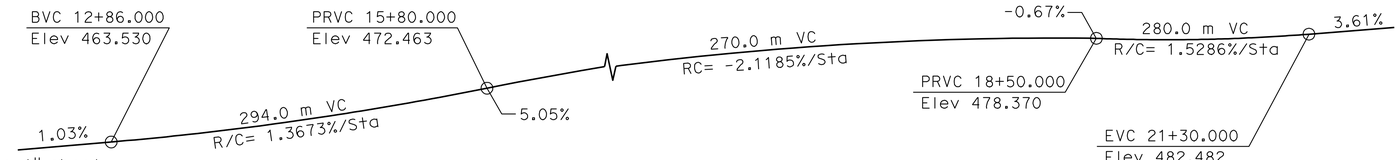

PROFILE GRADE
No Scale

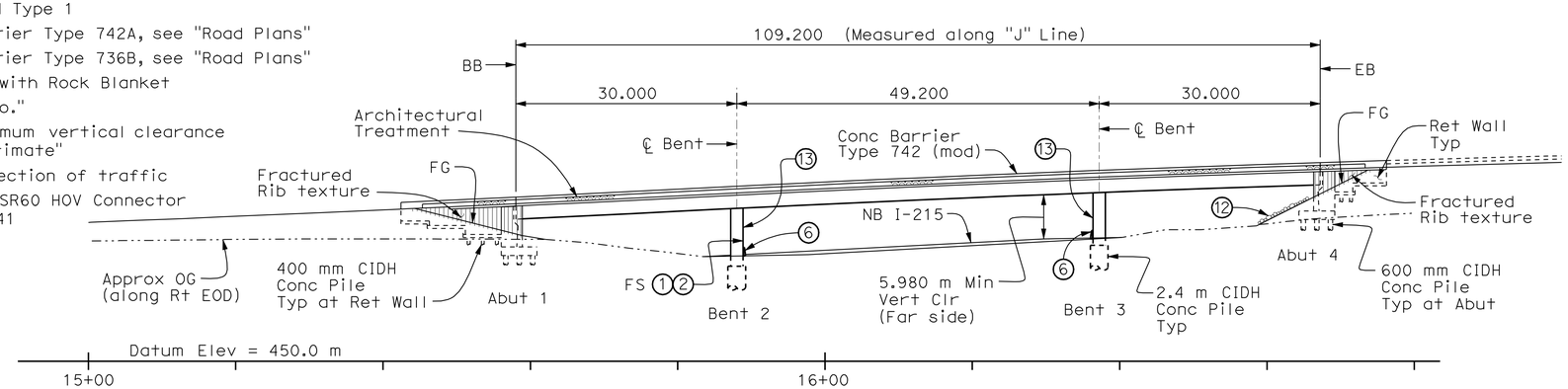

ELEVATION
1:400

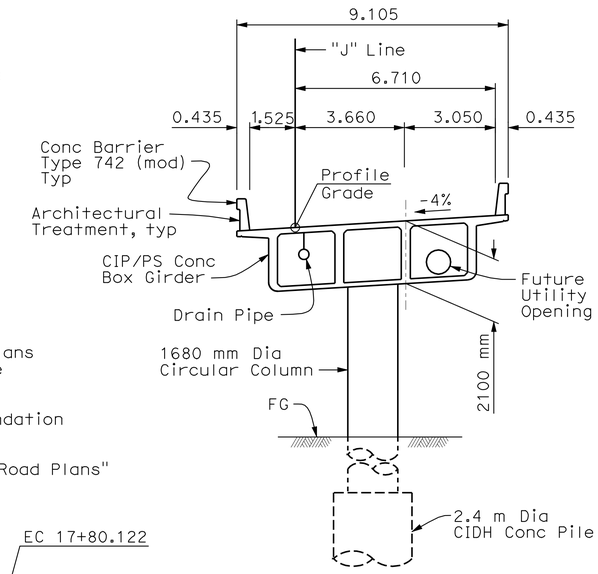

TYPICAL SECTION
1:100

Notes:

1. For General Notes, Index to Plans and "Standard Plans" list, see "Index to Plans" sheet.
2. For Pile Data Table, see "Foundation Plan" sheet.
3. For Stage Construction, see "Road Plans"

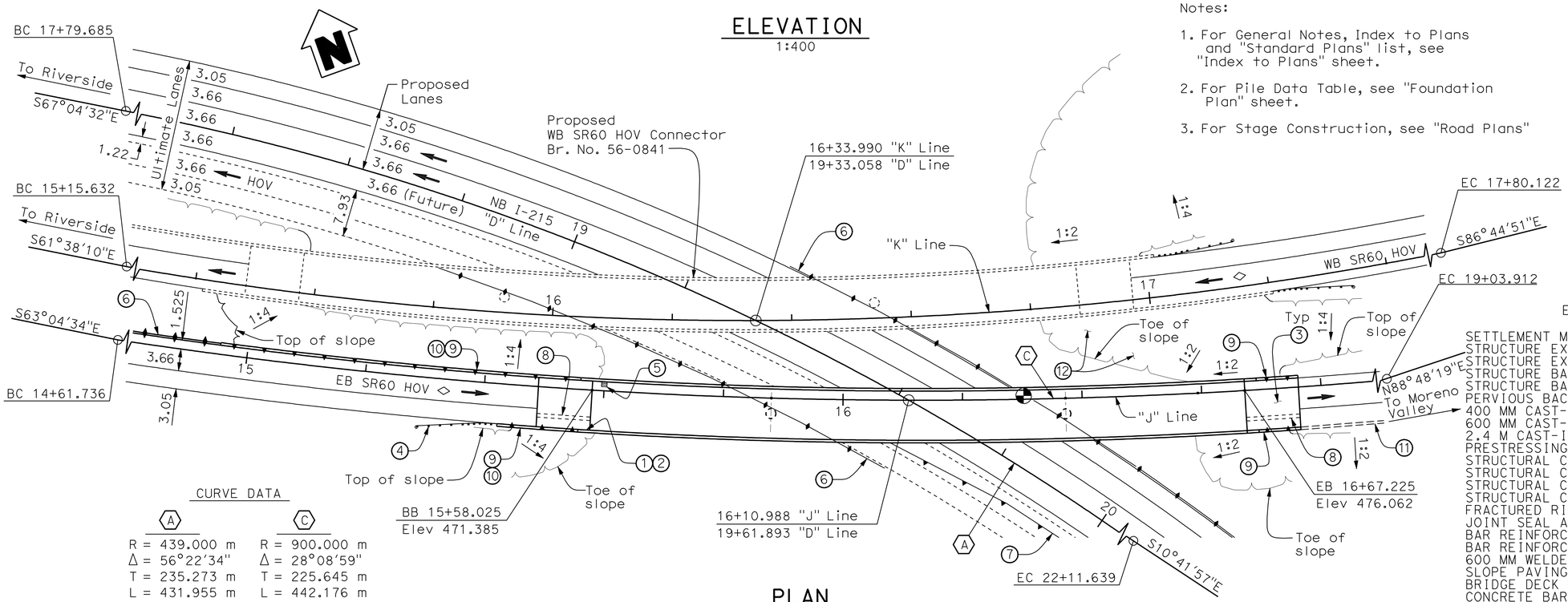

CURVE DATA

A	C
R = 439.000 m	R = 900.000 m
Δ = 56°22'34"	Δ = 28°08'59"
T = 235.273 m	T = 225.645 m
L = 431.955 m	L = 442.176 m

PLAN
1:400

ALL DIMENSIONS ARE IN METERS UNLESS OTHERWISE SHOWN

EB SR60 HOV CONNECTOR BR NO 56-0842
QUANTITIES

	LUMP	SUM
SETTLEMENT MONITORING PROGRAM		
STRUCTURE EXCAVATION (BRIDGE)	335	m^3
STRUCTURE EXCAVATION (RETAINING WALL)	560	m^3
STRUCTURE BACKFILL (BRIDGE)	380	m^3
STRUCTURE BACKFILL (RETAINING WALL)	580	m^3
PERVIOUS BACKFILL MATERIAL (RETAINING WALL)	39	m^3
400 MM CAST-IN-DRILLED-HOLE CONCRETE PILING	371	m
600 MM CAST-IN-DRILLED-HOLE CONCRETE PILING	293	m
2.4 M CAST-IN-DRILLED-HOLE CONCRETE PILING	40	m
PRESTRESSING CAST-IN-PLACE CONCRETE	LUMP	SUM
STRUCTURAL CONCRETE, BRIDGE FOOTING	110	m^3
STRUCTURAL CONCRETE, BRIDGE	732	m^3
STRUCTURAL CONCRETE, RETAINING WALL	221	m^3
STRUCTURAL CONCRETE, APPROACH SLAB (TYPE N)	50	m^3
FRACTURED RIB TEXTURE	235	m^2
JOINT SEAL ASSEMBLY (MR 60 MM)	18	m
BAR REINFORCING STEEL (BRIDGE)	207 200	kg
BAR REINFORCING STEEL (RETAINING WALL)	15 000	kg
600 MM WELDED STEEL PIPE CASING (BRIDGE)	23	m
SLOPE PAVING (CONCRETE-ROCK FACING)	58	m^3
BRIDGE DECK DRAINAGE SYSTEM	1235	kg
CONCRETE BARRIER (TYPE 742 MODIFIED)	254	m
CONCRETE BARRIER (TYPE 742A MODIFIED)	60	m

Robert Zezoff
DESIGN OVERSIGHT Robert Zezoff
10-22-09
SIGN OFF DATE

	BY	CHECKED
DESIGN	D. KIM / K. GEE	T. DUDLEY/A. SIVATHASAN
DETAILS	R. ANDRASEK	R. PRICE / M. CHAR
QUANTITIES	K. GEE	D. SARETSKY

LOAD AND RESISTANCE FACTOR DESIGN — LIVE LOADING: HL-93 W/"LOW BOY" AND PERMIT DESIGN VEHICLE

	BY	CHECKED
LAYOUT	R. ANDRASEK	M. CHAR
SPECIFICATIONS	M. CHAR	PLANS AND SPECS COMPARED M. CHAR

PREPARED FOR THE STATE OF CALIFORNIA DEPARTMENT OF TRANSPORTATION

MOHAN S. CHAR
PROJECT ENGINEER

BRIDGE NO. 56-0842
KILOMETER POST R19.6

EB SR60 HOV CONNECTOR
GENERAL PLAN

DESIGN GENERAL PLAN SHEET (METRIC) (REV. 10/27/05)

ORIGINAL SCALE IN MILLIMETERS FOR REDUCED PLANS 0 10 20 30 40 50 60 70 80 90 100

CU 08
EA 449311

DISREGARD PRINTS BEARING EARLIER REVISION DATES

REVISION DATES (PRELIMINARY STAGE ONLY) 3/12/08 7/21/08 11/14/08 2/18/09 5/18/09 6/18/09 8/20/09 10/2/09

SHEET 1 OF 31

FILE => 56-0842-a-gp01.dgn

USERNAME => rtrim DATE PLOTTED => 19-OCT-2010 TIME PLOTTED => 15:33

DIST	COUNTY	ROUTE	KILOMETER POST TOTAL PROJECT	SHEET No	TOTAL SHEETS
08	Riv	60,215	R19.7/21.9, R61.3/62.7	500	594

Caltrans Metric

REGISTERED CIVIL ENGINEER — DATE 10/02/09

6-28-10
PLANS APPROVAL DATE

REGISTERED PROFESSIONAL ENGINEER — MOHAN S. CHAR No. 57894 Exp. 6/30/10 CIVIL — STATE OF CALIFORNIA

The State of California or its officers or agents shall not be responsible for the accuracy or completeness of electronic copies of this plan sheet.

RIVERSIDE COUNTY TRANSPORTATION COMMISSION
4080 LEMON STREET - THIRD FLOOR
RIVERSIDE, CALIFORNIA 92501

LIM & NASCIMENTO ENGINEERING
1887 BUSINESS CENTER DRIVE, SUITE 6
SAN BERNARDINO, CALIFORNIA 92408

GENERAL NOTES: LOAD & RESISTANCE FACTOR DESIGN

Design:
AASHTO LRFD Bridge Design Specifications, 3rd Edition with Interims through 2006 and the Caltrans Amendments v3.06.01 except that Geotechnical design of deep foundations, earth retaining systems, bridge (including barrier & railing) details taken from Standard Plans July 2004 and earlier versions, Standard Bridge Details (XS sheets) are designed using Bridge Design Specifications (1996 AASHTO with Revisions by Caltrans)

Seismic Design: Caltrans Seismic Design Criteria (SDC), Version 1.4 dated June 2006

Dead Load: Includes 1.68 KPa for future wearing surface

Live Loading: HL-93 and Permit Design Load

Seismic Loading: Site Specific ARS Curve

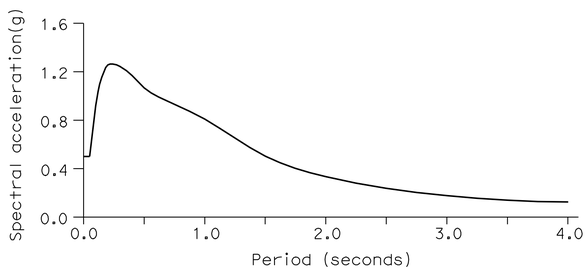

Reinforced Concrete:
fy = 420 MPa
f'c = 25 MPa, Unless otherwise noted
n = 8

Prestressed Concrete:
See "Prestressing Notes" on "Girder Layout" sheet.

Footing Pressure (KPa)	Allowable	Design
Abutments 1 & 4 (Retaining Walls only)	120	120

STANDARD PLANS DATED JULY 2004

	A10A	ACRONYMS AND ABBREVIATIONS (A-L)
	A10B	ACRONYMS AND ABBREVIATIONS (M-Z)
	A10C	SYMBOLS (SHEET 1 OF 2)
	A10D	SYMBOLS (SHEET 2 OF 2)
	A62B	LIMITS OF PAYMENT FOR EXCAVATION AND BACKFILL - BRIDGE SURCHARGE AND WALL
	A62C	LIMITS OF PAYMENT FOR EXCAVATION AND BACKFILL - BRIDGE
	A77J1	METAL BEAM GUARD RAILING CONNECTIONS TO BRIDGE RAILINGS WITHOUT SIDEWALKS DETAILS No. 1
	A77J2	METAL BEAM GUARD RAILING CONNECTIONS TO BRIDGE RAILINGS WITHOUT SIDEWALKS DETAILS No. 2
	B0-1	BRIDGE DETAILS
	B0-3	BRIDGE DETAILS
	B0-5	BRIDGE DETAILS
	B0-13	BRIDGE DETAILS
	B2-3	400 mm AND 600 mm CAST-IN-DRILLED-HOLE CONCRETE PILE
	B3-1	RETAINING WALL TYPE 1 H=1200 mm THRU 9100 mm
	B3-8	RETAINING WALL DETAILS No. 1
	B7-1	BOX GIRDER DETAILS
	B7-6	DECK DRAINS, TYPES D-1 & D-2
	B7-8	DECK DRAINAGE DETAILS
	B7-10	UTILITY OPENING BOX GIRDER
RSP	B8-5	CAST-IN-PLACE PRESTRESSED GIRDER DETAILS
	B11-57	CONCRETE BARRIER TYPE 742
	B14-5	WATER SUPPLY LINE (DETAILS) (PIPE SIZES LESS THAN NPS 4)
	D99B	EDGE DRAIN OUTLET AND VENT DETAILS

STANDARD PLAN SHEET NO.

DETAIL NO.

INDEX TO PLANS

SHEET No.	TITLE
1.	GENERAL PLAN
2.	INDEX TO PLANS
3.	DECK CONTOURS
4.	FOUNDATION PLAN
5.	ABUTMENT 1 LAYOUT
6.	ABUTMENT 4 LAYOUT
7.	ABUTMENT DETAILS NO. 1
8.	ABUTMENT DETAILS NO. 2
9.	ABUTMENT DETAILS NO. 3
10.	RETAINING WALL NO. 1 LAYOUT
11.	RETAINING WALL NO. 1 PILE LAYOUT
12.	RETAINING WALL NO. 2 LAYOUT
13.	RETAINING WALL NO. 3 & NO. 4 LAYOUT
14.	BENT LAYOUT
15.	TYPICAL SECTION
16.	GIRDER LAYOUT
17.	DECK REINFORCEMENT
18.	CIDH PILE DETAILS
19.	JOINT SEAL ASSEMBLY (MAXIMUM MOVEMENT RATING = 100 mm)
20.	STRUCTURE APPROACH TYPE N(9S)
21.	STRUCTURE APPROACH DRAINAGE DETAILS
22.	SLOPE PAVING - FULL SLOPE
23.	SLOPE PAVING - ARCHITECTURAL TREATMENT DETAILS
24.	ARCHITECTURAL DETAILS
25.	SOIL LEGEND NO. 1
26.	SOIL LEGEND NO. 2
27.	ROCK LEGEND
28.	LOG OF TEST BORINGS NO. 1 OF 4
29.	LOG OF TEST BORINGS NO. 2 OF 4
30.	LOG OF TEST BORINGS NO. 3 OF 4
31.	LOG OF TEST BORINGS NO. 4 OF 4

LEGEND

- Cast-in-drilled-hole Concrete Piling (31 MPa @ 28 days)
- Structural Concrete, Bridge (28 MPa @ 28 days)
- Structural Concrete, Retaining Wall
- Structural Concrete, Bridge Footing (25 Mpa @ 28 days)
- Structural Concrete, Approach Slab
- Structural Concrete, Bridge (25 Mpa @ 28 days)
- Structural Concrete, Bridge (31 MPa @ 28 days)

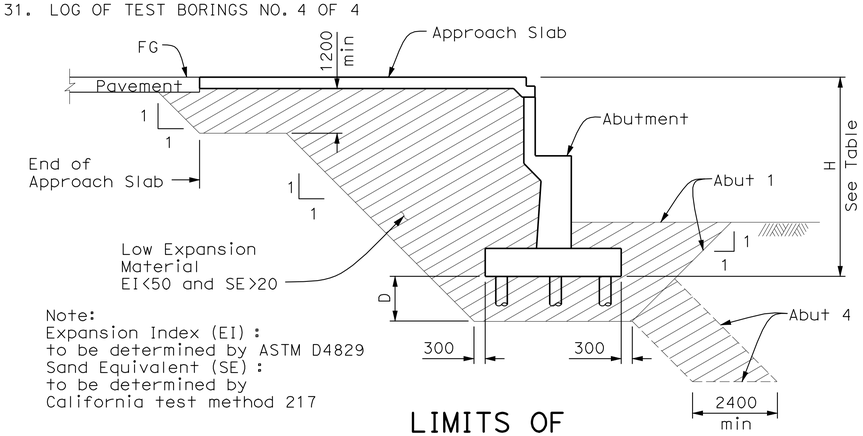

Note:
Expansion Index (EI) :
to be determined by ASTM D4829
Sand Equivalent (SE) :
to be determined by
California test method 217

LIMITS OF LOW EXPANSION MATERIAL

No Scale
(Abut 1 shown, Abut 4 similar)

H	D
< 4.9 m	1.2 m
> 4.9 m	0 m

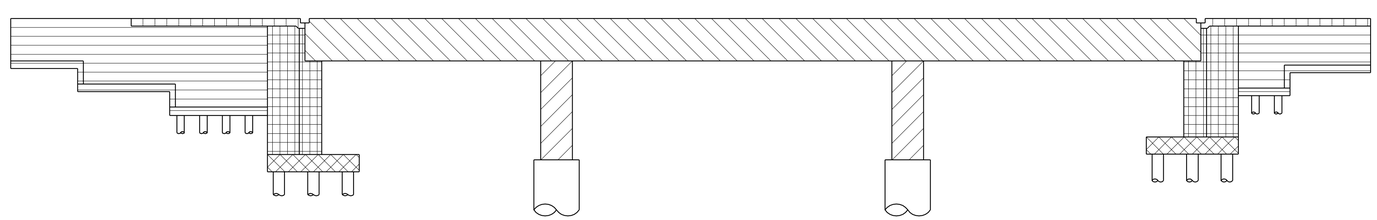

CONCRETE STRENGTH AND TYPE LIMITS

No Scale

ALL DIMENSIONS ARE IN MILLIMETERS UNLESS OTHERWISE SHOWN

DESIGN OVERSIGHT — Robert Zezoff
10-22-09
SIGN OFF DATE

	BY	CHECKED
DESIGN	D. KIM / K. GEE	T. DUDLEY/A. SIVATHASAN
DETAILS	M. / R. ANDRASEK	R. PRICE / M. CHAR
QUANTITIES	K. GEE	D. SARETSKY

PREPARED FOR THE STATE OF CALIFORNIA DEPARTMENT OF TRANSPORTATION

MOHAN S. CHAR
PROJECT ENGINEER

BRIDGE NO. 56-0842
KILOMETER POST R19.6

EB SR60 HOV CONNECTOR
INDEX TO PLANS

DESIGN DETAIL SHEET (METRIC) (REV. 10/27/05)

ORIGINAL SCALE IN MILLIMETERS FOR REDUCED PLANS 0 10 20 30 40 50 60 70 80 90 100

CU 08
EA 449311

DISREGARD PRINTS BEARING EARLIER REVISION DATES

REVISION DATES (PRELIMINARY STAGE ONLY) 3/12/08 7/21/08 11/4/08 2/16/09 5/15/09 6/15/09 8/28/09 10/2/09

SHEET 2 OF 31

FILE => 56-0842-a-itp.dgn

USERNAME => trlim DATE PLOTTED => 19-OCT-2010 TIME PLOTTED => 15:33