DIST	COUNTY	ROUTE	POST MILES TOTAL PROJECT	SHEET No	TOTAL SHEETS
08	Riv	91	15.6/21.6	1501	2028

REGISTERED CIVIL ENGINEER 11/12/10 DATE

4-25-11
PLANS APPROVAL DATE

REGISTERED PROFESSIONAL ENGINEER HUAN VU No. 60696 Exp. 12-31-10 CIVIL STATE OF CALIFORNIA

The State of California or its officers or agents shall not be responsible for the accuracy or completeness of electronic copies of this plan sheet.

DESIGN DATA

DESIGN: "Manual for Railroad Engineering" A.R.E.M.A. 2010 Edition

LIVE LOAD: Cooper E-80

REINFORCED CONCRETE: Load Factor Design
f'_c = 3,600 psi
fy = 60,000 psi

Soil: Equivalent Fluid pressure = 34 pcf

TABLE OF REINFORCING STEEL, DIMENSIONS AND DATA

Design H	29′	27′	25′	21′	17′	14′	12′
W	21′-0"	20′-0"	19′-0"	17′-6"	14′-0"	12′-0"	10′-6"
C	5′-0"	4′-0"	4′-0"	3′-6"	3′-0"	2′-0"	1′-6"
B	x′-x"	x′-x"	x′-x"	x′-x"	11′-0"	10′-0"	9′-0"
F	2′-9"	2′-6"	2′-6"	2′-6"	1′-6"	1′-6"	1′-6"
Batter	1-1/4:12	1-1/4:12	1-1/4:12	1-1/4:12	3/4:12	1/2:12	1/2:12
ⓐ bars	#5 @ 18	#5 @ 18	#5 @ 12	–	–	–	–
ⓑ bars	#8 @ 9	#7 @ 9	#8 @ 12	#5 @ 14	#5 @ 14	#5 @ 18	#5 @ 16
ⓒ bars	#10 @ 9 ∞	#9 @ 9 ∞	#10 @ 6	#9 @ 7	#8 @ 7	#8 @ 9	#6 @ 8
ⓓ bars	#9 @ 9 ∞	#9 @ 8 ∞	#10 @ 7	#9 @ 7	#8 @ 7	#8 @ 12	#6 @ 8

∞ Denotes a bundle of 2 bars.

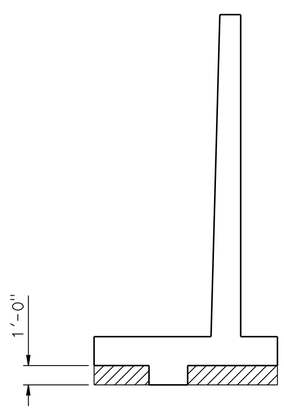

LIMITS OF OVER EXCAVATION

No Scale

Indicates limits of over excavation 1′-0" below bottom of footing and recompaction of 95 % relative compaction

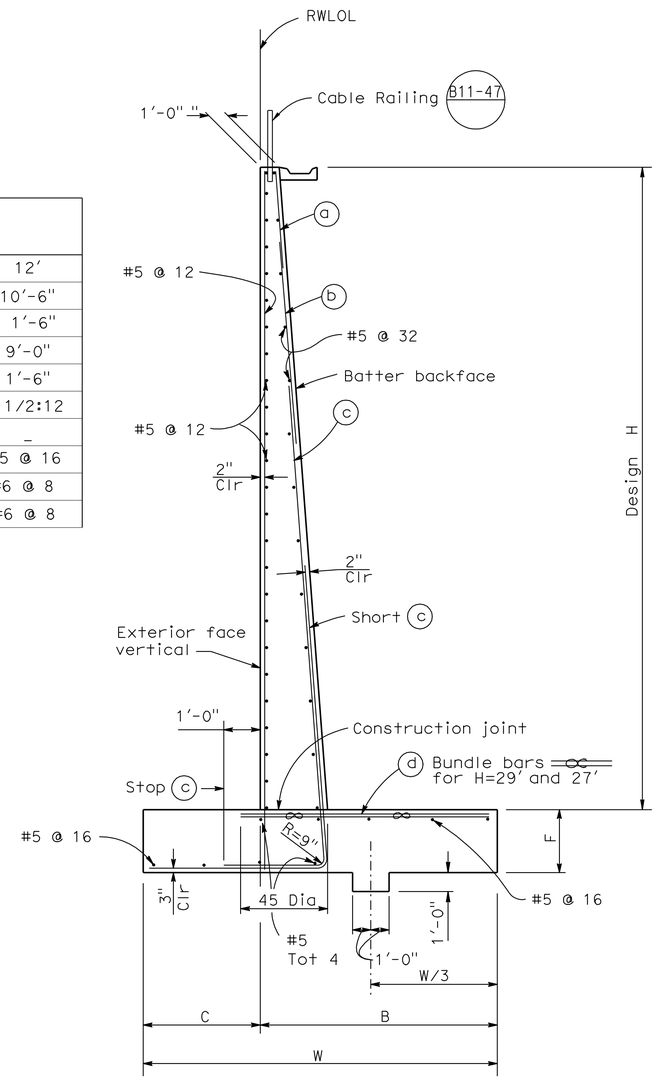

SECTION

Not to Scale

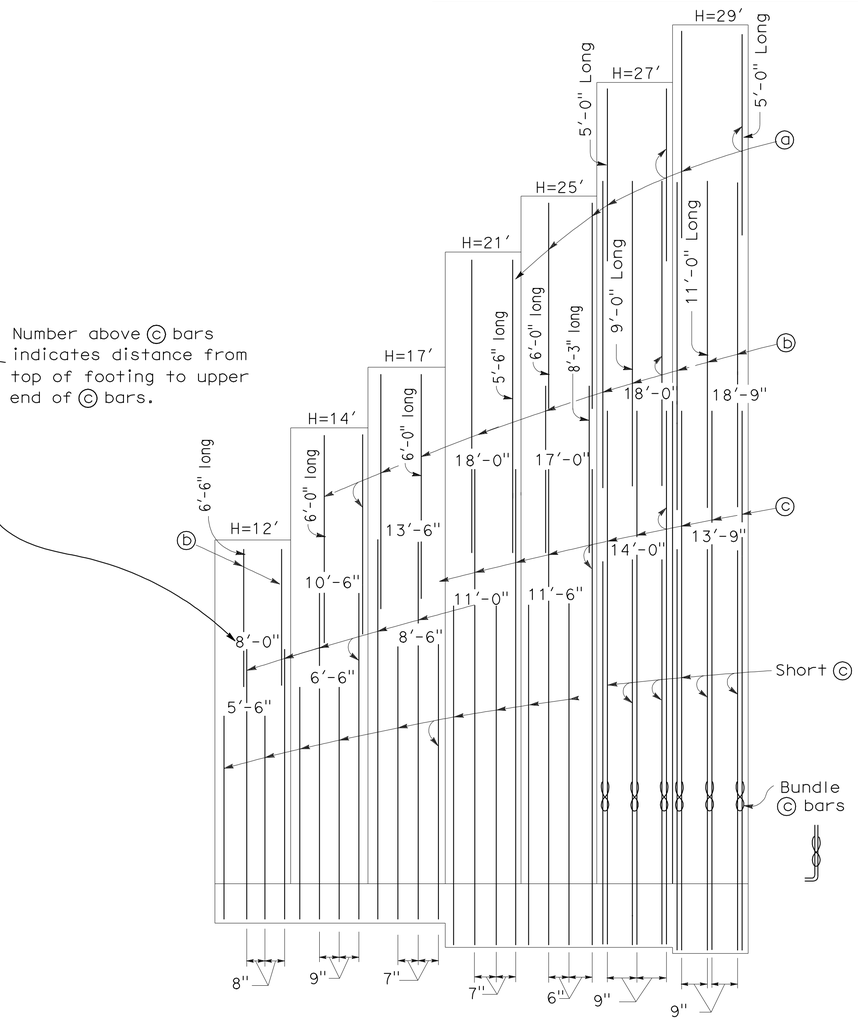

ELEVATION

Not to Scale

NOTES:

1. For details not shown and drainage notes see B3-8
2. For wall stem joint details, see B0-3 / 3-3 and B0-3 / 3-4

DESIGN	BY H. Vu	CHECKED R. Stiltz	
DETAILS	BY D. Wooten	CHECKED R. Stiltz	
QUANTITIES	BY H. Vu	CHECKED J. Szabo	

STATE OF CALIFORNIA
DEPARTMENT OF TRANSPORTATION

DIVISION OF ENGINEERING SERVICES
STRUCTURE DESIGN
DESIGN BRANCH 10

BRIDGE NO. 56E0069
POST MILE 19.40

RETAINING WALL NO. 342
RETAINING WALL DETAILS

STRUCTURES DESIGN DETAIL SHEET (ENGLISH) (REV. 10/25/05)

ORIGINAL SCALE IN INCHES FOR REDUCED PLANS 0 1 2 3

CU 08
EA 448401

DISREGARD PRINTS BEARING EARLIER REVISION DATES

REVISION DATES: 2-18-10 5-05-10 8-17-10 11-04-10

SHEET 5 OF 8

FILE => 56e0069grwdt05.dgn

USERNAME => trphilis DATE PLOTTED => 30-APR-2011 TIME PLOTTED => 11:28

DIST	COUNTY	ROUTE	POST MILES TOTAL PROJECT	SHEET No	TOTAL SHEETS
08	Riv	91	15.6/21.6	1502	2028

GEOTECHNICAL PROFESSIONAL — DATE 11/03/2010

4-25-11
PLANS APPROVAL DATE

REGISTERED PROFESSIONAL ENGINEER — FARID MOTAMED No. 2738 Exp. 6-30-11 GEOTECHNICAL STATE OF CALIFORNIA

The State of California or its officers or agents shall not be responsible for the accuracy or completeness of electronic copies of this plan sheet.

California Department of Transportation
5900 Folsom Boulevard
Sacramento, CA 95819

URS Corporation
2020 East First Street, Suite 400
Santa Ana, CA 92705

GROUP SYMBOLS AND NAMES

Graphic / Symbol	Group Names	Graphic / Symbol	Group Names
GW	Well-graded GRAVEL Well-graded GRAVEL with SAND	CL	Lean CLAY Lean CLAY with SAND Lean CLAY with GRAVEL SANDY lean CLAY SANDY lean CLAY with GRAVEL GRAVELLY lean CLAY GRAVELLY lean CLAY with SAND
GP	Poorly graded GRAVEL Poorly graded GRAVEL with SAND		
GW-GM	Well-graded GRAVEL with SILT Well-graded GRAVEL with SILT and SAND	CL-ML	SILTY CLAY SILTY CLAY with SAND SILTY CLAY with GRAVEL SANDY SILTY CLAY SANDY SILTY CLAY with GRAVEL GRAVELLY SILTY CLAY GRAVELLY SILTY CLAY with SAND
GW-GC	Well-graded GRAVEL with CLAY (or SILTY CLAY) Well-graded GRAVEL with CLAY and SAND (or SILTY CLAY and SAND)		
GP-GM	Poorly graded GRAVEL with SILT Poorly graded GRAVEL with SILT and SAND	ML	SILT SILT with SAND SILT with GRAVEL SANDY SILT SANDY SILT with GRAVEL GRAVELLY SILT GRAVELLY SILT with SAND
GP-GC	Poorly graded GRAVEL with CLAY (or SILTY CLAY) Poorly graded GRAVEL with CLAY and SAND (or SILTY CLAY and SAND)		
GM	SILTY GRAVEL SILTY GRAVEL with SAND	OL	ORGANIC lean CLAY ORGANIC lean CLAY with SAND ORGANIC lean CLAY with GRAVEL SANDY ORGANIC lean CLAY SANDY ORGANIC lean CLAY with GRAVEL GRAVELLY ORGANIC lean CLAY GRAVELLY ORGANIC lean CLAY with SAND
GC	CLAYEY GRAVEL CLAYEY GRAVEL with SAND		
GC-GM	SILTY, CLAYEY GRAVEL SILTY, CLAYEY GRAVEL with SAND	OL	ORGANIC SILT ORGANIC SILT with SAND ORGANIC SILT with GRAVEL SANDY ORGANIC SILT SANDY ORGANIC SILT with GRAVEL GRAVELLY ORGANIC SILT GRAVELLY ORGANIC SILT with SAND
SW	Well-graded SAND Well-graded SAND with GRAVEL		
SP	Poorly graded SAND Poorly graded SAND with GRAVEL	CH	Fat CLAY Fat CLAY with SAND Fat CLAY with GRAVEL SANDY fat CLAY SANDY fat CLAY with GRAVEL GRAVELLY fat CLAY GRAVELLY fat CLAY with SAND
SW-SM	Well-graded SAND with SILT Well-graded SAND with SILT and GRAVEL		
SW-SC	Well-graded SAND with CLAY (or SILTY CLAY) Well-graded SAND with CLAY and GRAVEL (or SILTY CLAY and GRAVEL)	MH	Elastic SILT Elastic SILT with SAND Elastic SILT with GRAVEL SANDY elastic SILT SANDY elastic SILT with GRAVEL GRAVELLY elastic SILT GRAVELLY elastic SILT with SAND
SP-SM	Poorly graded SAND with SILT Poorly graded SAND with SILT and GRAVEL		
SP-SC	Poorly graded SAND with CLAY (or SILTY CLAY) Poorly graded SAND with CLAY and GRAVEL (or SILTY CLAY and GRAVEL)	OH	ORGANIC fat CLAY ORGANIC fat CLAY with SAND ORGANIC fat CLAY with GRAVEL SANDY ORGANIC fat CLAY SANDY ORGANIC fat CLAY with GRAVEL GRAVELLY ORGANIC fat CLAY GRAVELLY ORGANIC fat CLAY with SAND
SM	SILTY SAND SILTY SAND with GRAVEL		
SC	CLAYEY SAND CLAYEY SAND with GRAVEL	OH	ORGANIC elastic SILT ORGANIC elastic SILT with SAND ORGANIC elastic SILT with GRAVEL SANDY elastic ELASTIC SILT SANDY ORGANIC elastic SILT with GRAVEL GRAVELLY ORGANIC elastic SILT GRAVELLY ORGANIC elastic SILT with SAND
SC-SM	SILTY, CLAYEY SAND SILTY, CLAYEY SAND with GRAVEL		
PT	PEAT	OL/OH	ORGANIC SOIL ORGANIC SOIL with SAND ORGANIC SOIL with GRAVEL SANDY ORGANIC SOIL SANDY ORGANIC SOIL with GRAVEL GRAVELLY ORGANIC SOIL GRAVELLY ORGANIC SOIL with SAND
	COBBLES COBBLES and BOULDERS BOULDERS		

FIELD AND LABORATORY TESTS

C	Consolidation (ASTM D 2435-04)
CL	Collapse Potential (ASTM D 5333-03)
CP	Compaction Curve (CTM 216 - 06)
CR	Corrosion, Sulfates, Chlorides (CTM 643 - 99; CTM 417 - 06; CTM 422 - 06)
CU	Consolidated Undrained Triaxial (ASTM D 4767-02)
DS	Direct Shear (ASTM D 3080-04)
EI	Expansion Index (ASTM D 4829-03)
M	Moisture Content (ASTM D 2216-05)
OC	Organic Content (ASTM D 2974-07)
P	Permeability (CTM 220 - 05)
PA	Particle Size Analysis (ASTM D 422-63 [2002])
PI	Liquid Limit, Plastic Limit, Plasticity Index (AASHTO T 89-02, AASHTO T 90-00)
PL	Point Load Index (ASTM D 5731-05)
PM	Pressure Meter
PP	Pocket Penetrometer
R	R-Value (CTM 301 - 00)
SE	Sand Equivalent (CTM 217 - 99)
SG	Specific Gravity (AASHTO T 100-06)
SL	Shrinkage Limit (ASTM D 427-04)
SW	Swell Potential (ASTM D 4546-03)
TV	Pocket Torvane
UC	Unconfined Compression - Soil (ASTM D 2166-06) Unconfined Compression - Rock (ASTM D 2938-95)
UU	Unconsolidated Undrained Triaxial (ASTM D 2850-03)
UW	Unit Weight (ASTM D 4767-04)
VS	Vane Shear (AASHTO T 223-96 [2004])

CONSISTENCY OF COHESIVE SOILS

Descriptor	Unconfined Compressive Strength (tsf)	Pocket Penetrometer (tsf)	Torvane (tsf)	Field Approximation
Very Soft	< 0.25	< 0.25	< 0.12	Easily penetrated several inches by fist
Soft	0.25 - 0.50	0.25 - 0.50	0.12 - 0.25	Easily penetrated several inches by thumb
Medium Stiff	0.50 - 1.0	0.50 - 1.0	0.25 - 0.50	Can be penetrated several inches by thumb with moderate effort
Stiff	1.0 - 2.0	1.0 - 2.0	0.50 - 1.0	Readily indented by thumb but penetrated only with great effort
Very Stiff	2.0 - 4.0	2.0 - 4.0	1.0 - 2.0	Readily indented by thumbnail
Hard	> 4.0	> 4.0	> 2.0	Indented by thumbnail with difficulty

APPARENT DENSITY OF COHESIONLESS SOILS

Descriptor	SPT N60 - Value (blows / foot)
Very Loose	0 - 4
Loose	5 - 10
Medium Dense	11 - 30
Dense	31 - 50
Very Dense	> 50

MOISTURE

Descriptor	Criteria
Dry	Absence of moisture, dusty, dry to the touch
Moist	Damp but no visible water
Wet	Visible free water, usually soil is below water table

PERCENT OR PROPORTION OF SOILS

Descriptor	Criteria
Trace	Particles are present but estimated to be less than 5%
Few	5 to 10%
Little	15 to 25%
Some	30 to 45%
Mostly	50 to 100%

SOIL PARTICLE SIZE

Descriptor		Size
Boulder		> 12 inches
Cobble		3 to 12 inches
Gravel	Coarse	3/4 inch to 3 inches
	Fine	No. 4 Sieve to 3/4 inch
Sand	Coarse	No. 10 Sieve to No. 4 Sieve
	Medium	No. 40 Sieve to No. 10 Sieve
	Fine	No. 200 Sieve to No. 40 Sieve
Silt and Clay		Passing No. 200 Sieve

PLASTICITY OF FINE-GRAINED SOILS

Descriptor	Criteria
Nonplastic	A 1/8-inch thread cannot be rolled at any water content.
Low	The thread can barely be rolled, and the lump cannot be formed when drier than the plastic limit.
Medium	The thread is easy to roll, and not much time is required to reach the plastic limit; it cannot be rerolled after reaching the plastic limit. The lump crumbles when drier than the plastic limit.
High	It takes considerable time rolling and kneading to reach the plastic limit. The thread can be rerolled several times after reaching the plastic limit. The lump can be formed without crumbling when drier than the plastic limit.

CEMENTATION

Descriptor	Criteria
Weak	Crumbles or breaks with handling or little finger pressure.
Moderate	Crumbles or breaks with considerable finger pressure.
Strong	Will not crumble or break with finger pressure.

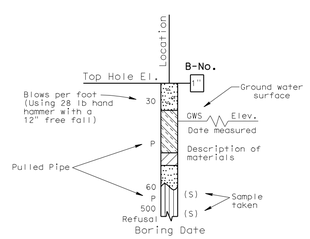

SAMPLE BORING (DRY)

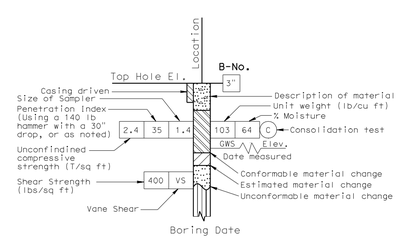

ROTARY SAMPLE BORING (WET)

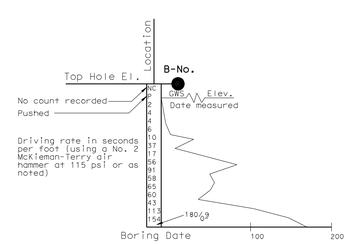

2 1/4" CONE PENETRATION BORING

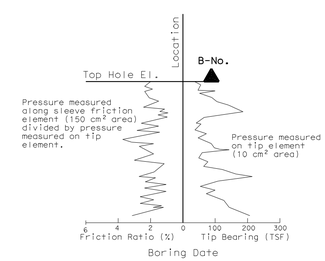

ELECTRONIC CONE PENETROMETER TEST

Cone Penetrometer dimensions and testing procedures are in accordance with ASTM standard D 3441-79, or as noted.

GINA PURSELL DESIGN OVERSIGHT	SHAWN WEI FUNCTIONAL SUPERVISOR	DRAWN BY	P. QUACH	P.CHAU/D.WADER/C.CARBINO FIELD INVESTIGATION BY:	PREPARED FOR THE STATE OF CALIFORNIA DEPARTMENT OF TRANSPORTATION	A. LEE PROJECT ENGINEER	BRIDGE NO. 56 E0069 POST MILE 19.40
11/12/10 SIGN OFF DATE		CHECKED BY	S. PIRATHIVIRAJ	DATE: Nov 6 2007 to March 7 2008			

RETAINING WALL NO. 342

LOG OF TEST BORINGS 1 OF 3

OSF GEOTECHNICAL LOG OF TEST BORINGS SHEET (ENGLISH) (REV. 2/25/05)

ORIGINAL SCALE IN INCHES FOR REDUCED PLANS 0 1 2 3

CU 08
EA 448401

DISREGARD PRINTS BEARING EARLIER REVISION DATES 8/25/10

REVISION DATES (PRELIMINARY STAGE ONLY)

SHEET 6 OF 8

FILE => 56e0069zltb06.dgn

USERNAME => trphtis DATE PLOTTED => 30-APR-2011 TIME PLOTTED =>

DIST	COUNTY	ROUTE	POST MILES TOTAL PROJECT	SHEET No	TOTAL SHEETS
08	Riv	91	15.6/21.6	1503	2028

GEOTECHNICAL PROFESSIONAL — DATE 11/03/2010

4-25-11
PLANS APPROVAL DATE

REGISTERED PROFESSIONAL ENGINEER — FARID MOTAMED — No. 2738 — Exp. 6-30-11 — GEOTECHNICAL — STATE OF CALIFORNIA

The State of California or its officers or agents shall not be responsible for the accuracy or completeness of electronic copies of this plan sheet.

California Department of Transportation
5900 Folsom Boulevard
Sacramento, CA 95819

URS Corporation
2020 East First Street, Suite 400
Santa Ana, CA 92705

FOR PLAN VIEW, SEE
"LOG OF TEST BORINGS 3 OF 3"

NOTE: 1. This LOTB sheet was prepared in accordance with the Caltrans Soil & Rock Logging, Classification, and Presentation Manual (June 2007).

2. For legend, see "Log of Test Borings 1 OF 3"

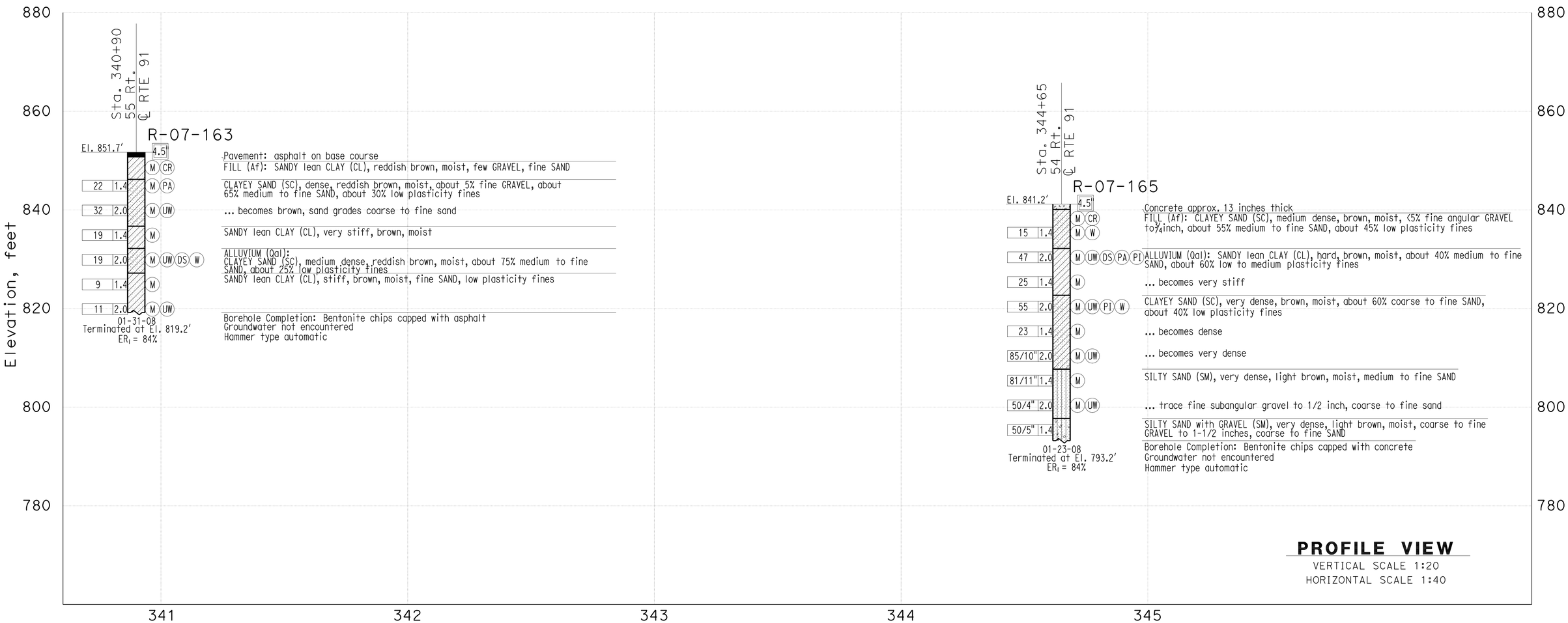

PROFILE VIEW
VERTICAL SCALE 1:20
HORIZONTAL SCALE 1:40

THIS PLAN ACCURATE FOR SOUND WALL AND RETAINING WALL WORK ONLY

GINA PURSELL DESIGN OVERSIGHT	SHAWN WEI FUNCTIONAL SUPERVISOR	DRAWN BY	P. QUACH	P.CHAU/D.WADER/C.CARBINO FIELD INVESTIGATION BY:	PREPARED FOR THE STATE OF CALIFORNIA DEPARTMENT OF TRANSPORTATION	A. LEE PROJECT ENGINEER	BRIDGE NO. 56 E0069 POST MILE 19.40	RETAINING WALL 342
11/12/10 SIGN OFF DATE		CHECKED BY	S. PIRATHIVIRAJ	DATE: Nov 6 2007 to March 7 2008				LOG OF TEST BORINGS 2 OF 3

OSF GEOTECHNICAL LOG OF TEST BORINGS SHEET (ENGLISH) (REV. 2/25/05)

ORIGINAL SCALE IN INCHES FOR REDUCED PLANS 0 1 2 3

CU 08
EA 448401

DISREGARD PRINTS BEARING EARLIER REVISION DATES — 8/25/10

REVISION DATES (PRELIMINARY STAGE ONLY)

SHEET 7 OF 8

FILE => 56e0069z1tb07.dgn

USERNAME => trphilts DATE PLOTTED => 30-APR-2011 TIME PLOTTED =>

DIST	COUNTY	ROUTE	POST MILES TOTAL PROJECT	SHEET No	TOTAL SHEETS
08	Riv	91	15.6/21.6	1504	2028

GEOTECHNICAL PROFESSIONAL — DATE 11/03/2010

4-25-11
PLANS APPROVAL DATE

REGISTERED PROFESSIONAL ENGINEER — FARID MOTAMED No. 2738 Exp. 6-30-11 GEOTECHNICAL — STATE OF CALIFORNIA

The State of California or its officers or agents shall not be responsible for the accuracy or completeness of electronic copies of this plan sheet.

California Department of Transportation
5900 Folsom Boulevard
Sacramento, CA 95819

URS Corporation
2020 East First Street, Suite 400
Santa Ana, CA 92705

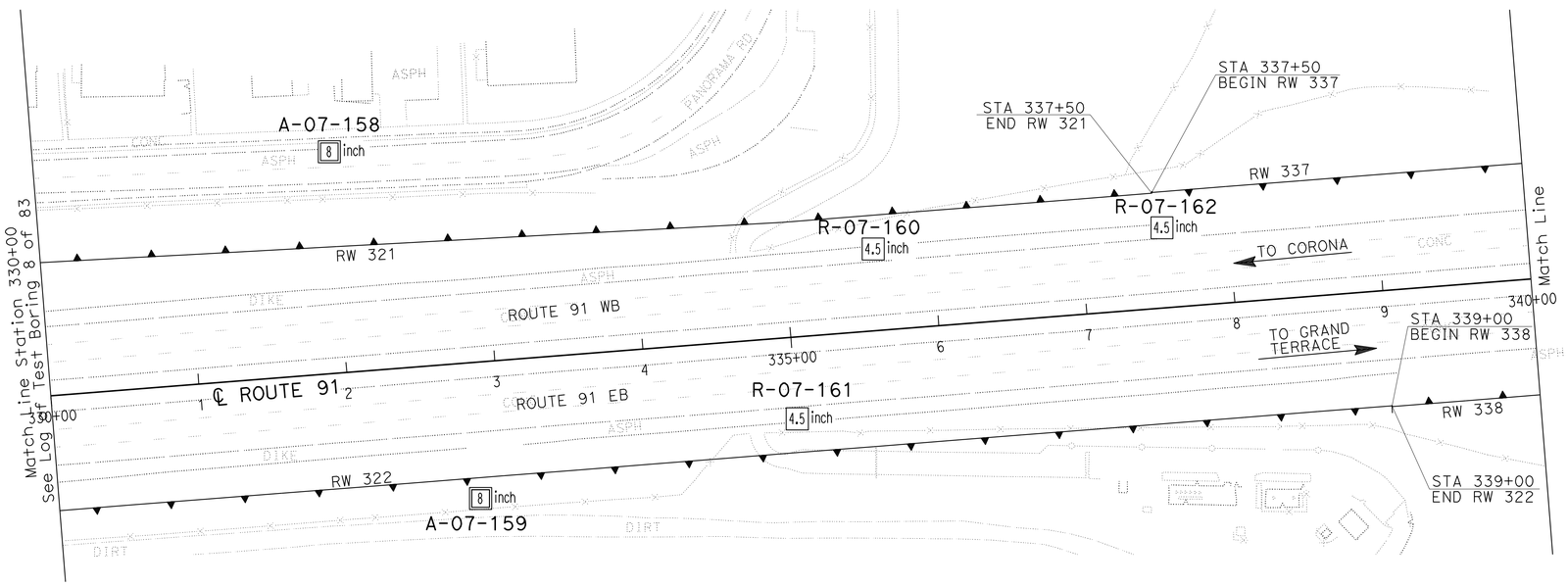

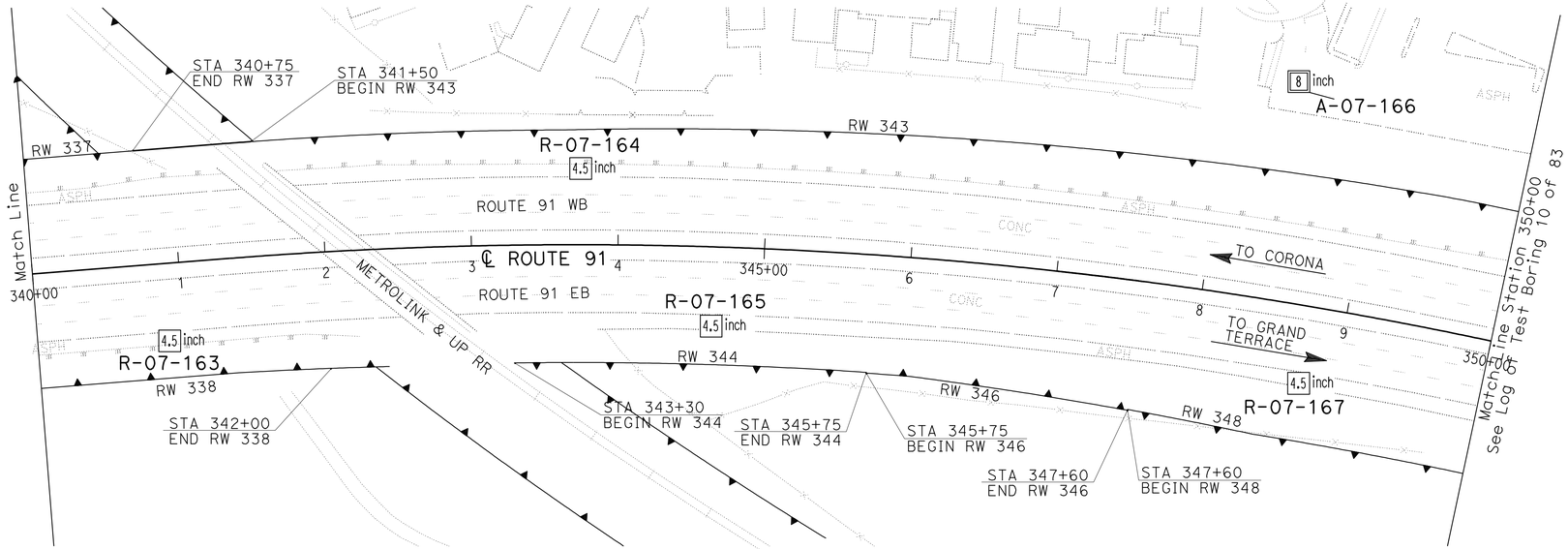

PLAN
SCALE 1"=50'

Borehole Number	Drill Rig	Hammer Type	Avg. Hammer Efficiency, ETR (%)
A-07-158	Diedrich D-120	Automatic	75*
A-07-159	Diedrich D-120	Automatic	75*
R-07-160	CME 85	Automatic	87
R-07-161	CS-2000	Automatic	84
R-07-162	CS-2000	Automatic	84
R-07-163	CME 85	Automatic	87
R-07-164	CS-2000	Automatic	84
R-07-165	CS-2000	Automatic	84
A-07-166	Diedrich D-120	Automatic	75*
R-07-167	Acker Rig	Automatic	74

Sampler Type	Inside Diameter (Inches)	Borehole Numbers
SPT	1.375	A-07-158, A-07-159, R-07-60 R-07-161, R-07-162, R-07-163 R-07-164, R-07-165, A-07-166 R-07-177
Modified California 1	1.94	R-07-160, R-07-162, R-07-163 R-07-164, R-07-165, R-07-167
Modified California 2	2.40	A-07-158, A-07-159, A-07-166

*Estimated Hammer Efficiency Rating.

WALL LAYOUT & EXPLORATORY LOCATION MAP

GINA PURSELL DESIGN OVERSIGHT	SHAWN WEI FUNCTIONAL SUPERVISOR	DRAWN BY	P. QUACH	P.CHAU/D.WADER/C.CARBINO FIELD INVESTIGATION BY:	PREPARED FOR THE STATE OF CALIFORNIA DEPARTMENT OF TRANSPORTATION	A. LEE PROJECT ENGINEER	BRIDGE NO. 56 E0069	RETAINING WALL NO. 342	
11/12/10 SIGN OFF DATE		CHECKED BY	S. PIRATHIVIRAJ	DATE: Nov 6 2007 to March 7 2008			POST MILE 19.40	LOG OF TEST BORINGS 3 OF 3	

OSF GEOTECHNICAL LOG OF TEST BORINGS SHEET (ENGLISH) (REV. 2/25/05)

ORIGINAL SCALE IN INCHES FOR REDUCED PLANS 0 1 2 3

CU 08
EA 448401

DISREGARD PRINTS BEARING EARLIER REVISION DATES

REVISION DATES (PRELIMINARY STAGE ONLY) 8/25/10

SHEET 8 OF 8

FILE => 56e0069zltb08.dgn

USERNAME => trphilis DATE PLOTTED => 30-APR-2011 TIME PLOTTED =>

DIST	COUNTY	ROUTE	POST MILES TOTAL PROJECT	SHEET No	TOTAL SHEETS
08	Riv	91	15.6/21.6	1505	2028

REGISTERED CIVIL ENGINEER 11/12/10 DATE

4-25-11
PLANS APPROVAL DATE

REGISTERED PROFESSIONAL ENGINEER MINH THUONG VO No. C59297 Exp. 06-30-11 CIVIL STATE OF CALIFORNIA

The State of California or its officers or agents shall not be responsible for the accuracy or completeness of electronic copies of this plan sheet.

Notes:

1 For Top of Wall and Leveling Pad Elevations see "STRUCTURE PLAN NO. 1 and 2" sheets.

2 For General Notes see "MECHANICALLY STABILIZED EMBANKMENT DETAILS NO. 2" sheet.

3 For Details see "MECHANICALLY STABILIZED EMBANKMENT DETAILS NO. 1 and 2" sheets.

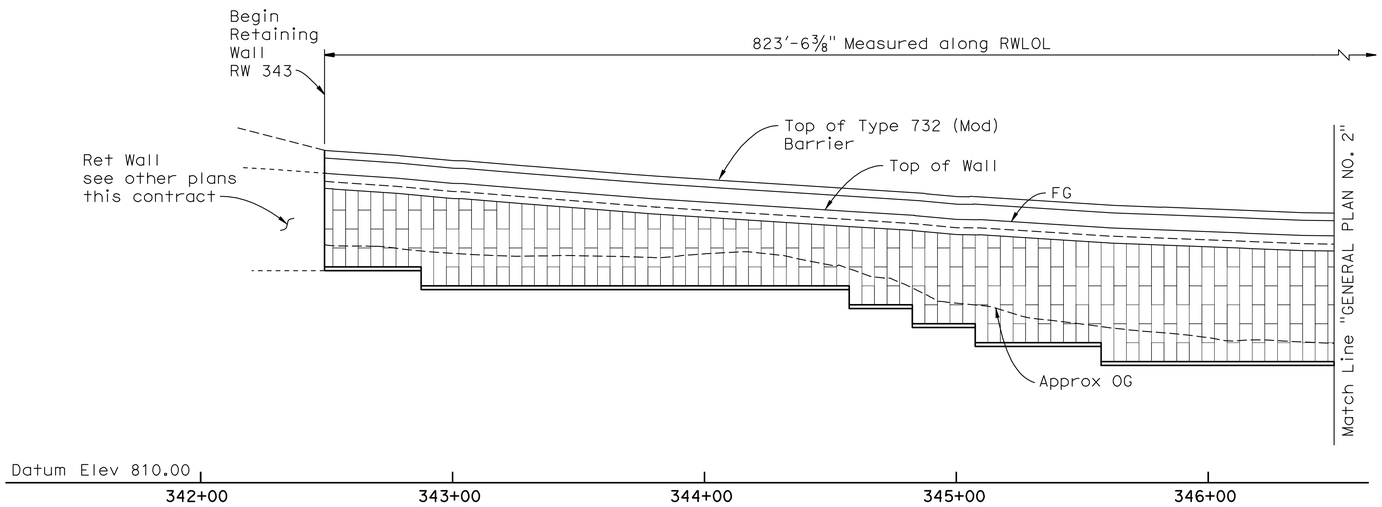

DEVELOPED MIRROR ELEVATION

Horiz. 1" = 30'
Vert. 1" = 10'

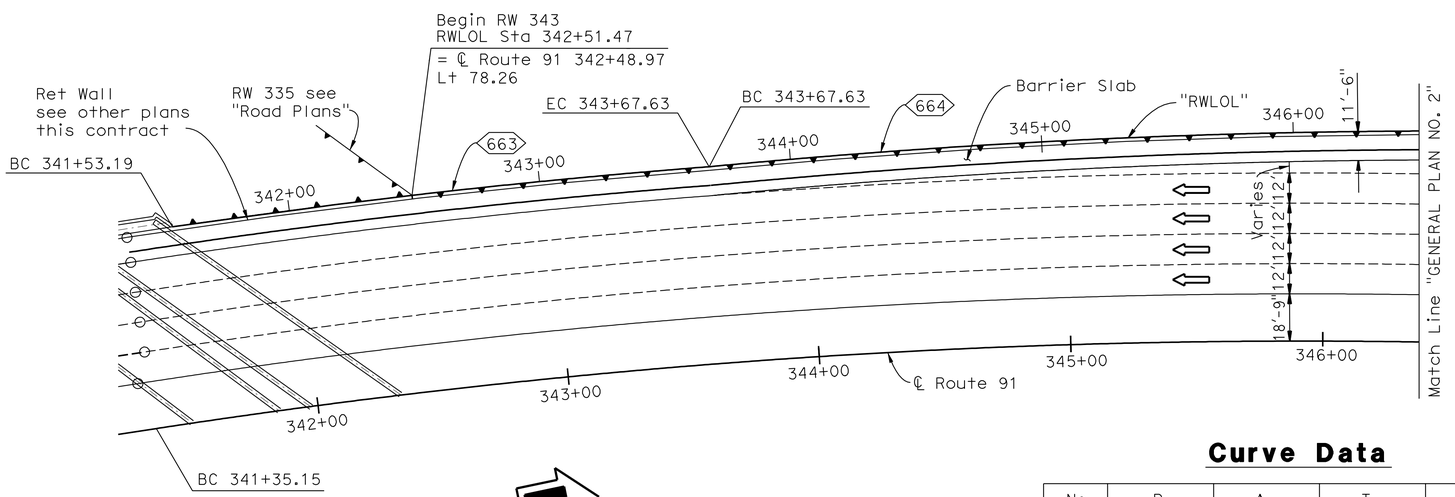

PLAN

1" = 30'

Curve Data

No	R	Δ	T	L
663	3077.99'	2°9'44"	58.09'	116.16'
664	3084.50'	11°27'37"	309.51'	616.96'
665	3090.07'	1°40'36"	45.21'	90.42'

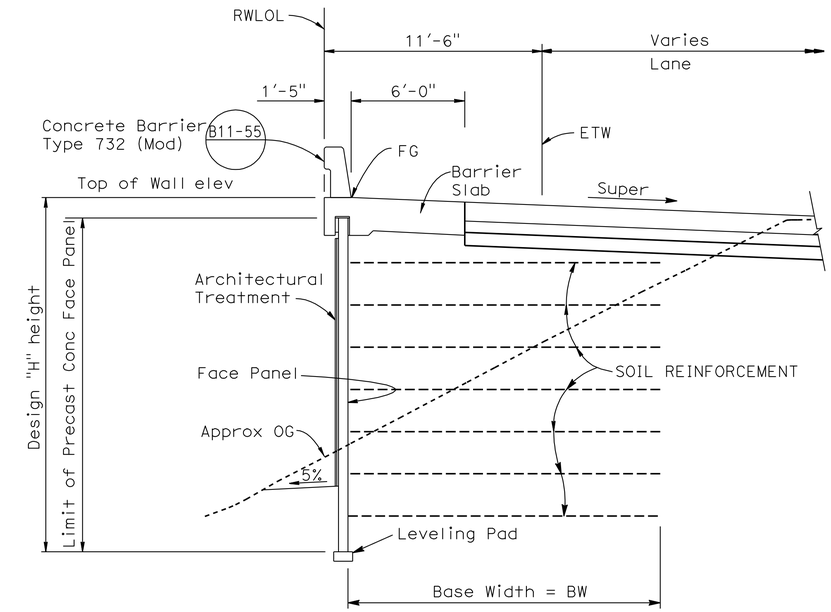

TYPICAL SECTION

¼" = 1'-0"

INDEX TO PLANS

Sheet No.	Title
1	GENERAL PLAN NO. 1
2	GENERAL PLAN NO. 2
3	STRUCTURE PLAN NO. 1
4	STRUCTURE PLAN NO. 2
5	PILE CAP DETAILS NO. 1
6	MECHANICALLY STABILIZED EMBANKMENT DETAILS NO. 1
7	MECHANICALLY STABILIZED EMBANKMENT DETAILS NO. 2
8	MECHANICALLY STABILIZED EMBANKMENT DETAILS NO. 3
9	MECHANICALLY STABILIZED EMBANKMENT DETAILS NO. 4
10	MECHANICALLY STABILIZED EMBANKMENT DETAILS NO. 5
11	ARCHITECTURAL SURFACE NO. 1
12	ARCHITECTURAL SURFACE NO. 2
13	ARCHITECTURAL DETAILS
14	LOG OF TEST BORINGS 1 OF 4
15	LOG OF TEST BORINGS 2 OF 4
16	LOG OF TEST BORINGS 3 OF 4
17	LOG OF TEST BORINGS 4 OF 4

NOTE:
THE CONTRACTOR SHALL VERIFY ALL CONTROLLING FIELD DIMENSIONS BEFORE ORDERING OR FABRICATING ANY MATERIAL.

X Daniel T Adams
DESIGN ENGINEER

	BY	CHECKED
DESIGN	M. Vo	A. McPhee
DETAILS	Y. Tang	A. McPhee
QUANTITIES	A. McPhee	M. Vo

LOAD & RESISTANCE FACTOR DESIGN — LIVE LOADING: HL93 W/"LOW-BOY"; PERMIT DESIGN VEHICLE

LAYOUT: M. Vo — CHECKED: A. McPhee
SPECIFICATIONS: Dave Klein — PLANS AND SPECS COMPARED: Dave Klein

ORIGINAL SCALE IN INCHES FOR REDUCED PLANS 0 1 2 3

STATE OF CALIFORNIA
DEPARTMENT OF TRANSPORTATION

DIVISION OF ENGINEERING SERVICES
STRUCTURE DESIGN
DESIGN BRANCH 10

CU 08
EA 448401

BRIDGE NO. 56E0070
POST MILE 19.39

RETAINING WALL NO. 343
GENERAL PLAN NO. 1

DISREGARD PRINTS BEARING EARLIER REVISION DATES → REVISION DATES 11-26-09 1-14-10 2-24-10 4-28-10 5-05-10 7-14-10

SHEET 1 OF 17

STRUCTURES DESIGN GENERAL PLAN SHEET (ENGLISH) (REV.07-24-06)

FILE => 56e0070agp01.dgn

USERNAME => trphilis DATE PLOTTED => 30-APR-2011 TIME PLOTTED => 11:29

DIST	COUNTY	ROUTE	POST MILES TOTAL PROJECT	SHEET No	TOTAL SHEETS
08	Riv	91	15.6/21.6	1506	2028

REGISTERED CIVIL ENGINEER 11/12/10 DATE

4-25-11
PLANS APPROVAL DATE

REGISTERED PROFESSIONAL ENGINEER MINH THUONG VO No. C59297 Exp. 06-30-11 CIVIL STATE OF CALIFORNIA

The State of California or its officers or agents shall not be responsible for the accuracy or completeness of electronic copies of this plan sheet.

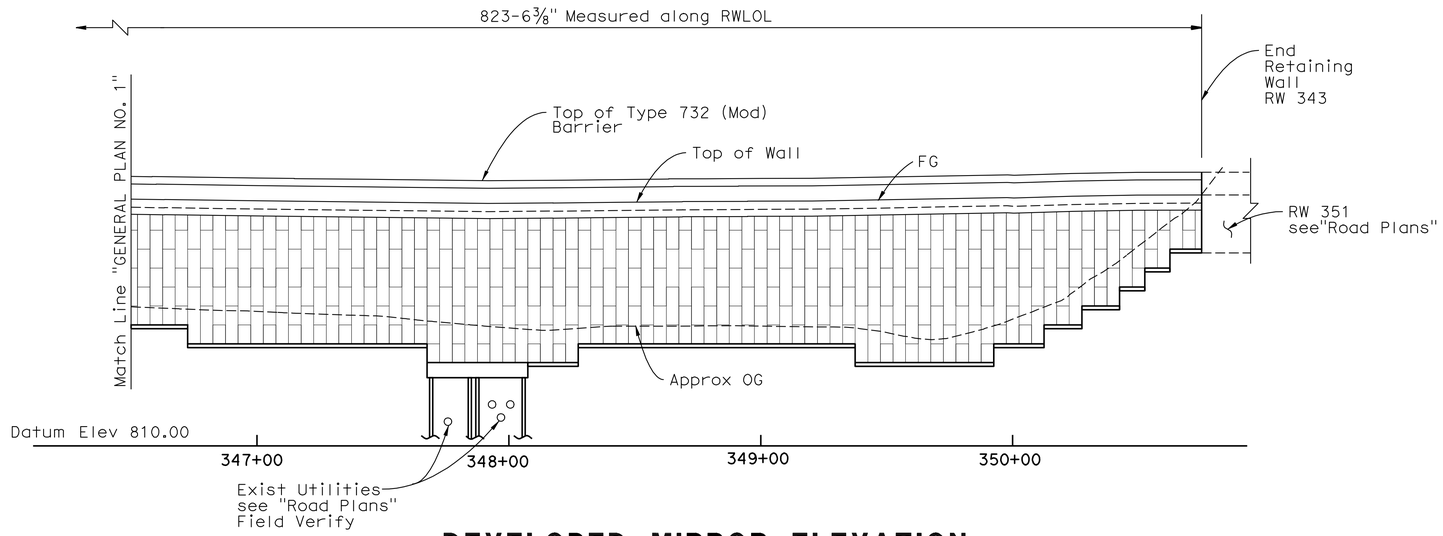

DEVELOPED MIRROR ELEVATION

Horiz. 1" = 30'
Vert. 1" = 10'

QUANTITIES

EARTH RETAINING STRUCTURE	13,349	SQFT
FURNISH PILING (CLASS 90) (ALTERNATIVE X)	240	LF
DRIVE PILE (CLASS 90) (ALTERNATIVE X)	8	EA
STRUCTURAL CONCRETE, BARRIER SLAB	397	CY
STRUCTURAL CONCRETE, PILE CAP	18	CY
BAR REINFORCING STEEL (BARRIER SLAB)	39,189	LB
CONCRETE BARRIER (TYPE 732 MODIFIED)	826	LF

STANDARD PLANS DATED MAY 2006

A10A	ACRONYMS AND ABBREVIATIONS (SHEET 1 OF 2)
A10B	ACRONYMS AND ABBREVIATIONS (SHEET 2 OF 2)
A10C	SYMBOLS (SHEET 1 OF 2)
A10D	SYMBOLS (SHEET 2 OF 2)
B2-5	PILE DETAILS CLASS 90 AND CLASS 140
D-102	UNDERDRAINS
B11-55	CONCRETE BARRIER TYPE 732

STANDARD PLAN SHEET NO.
DETAIL NO.

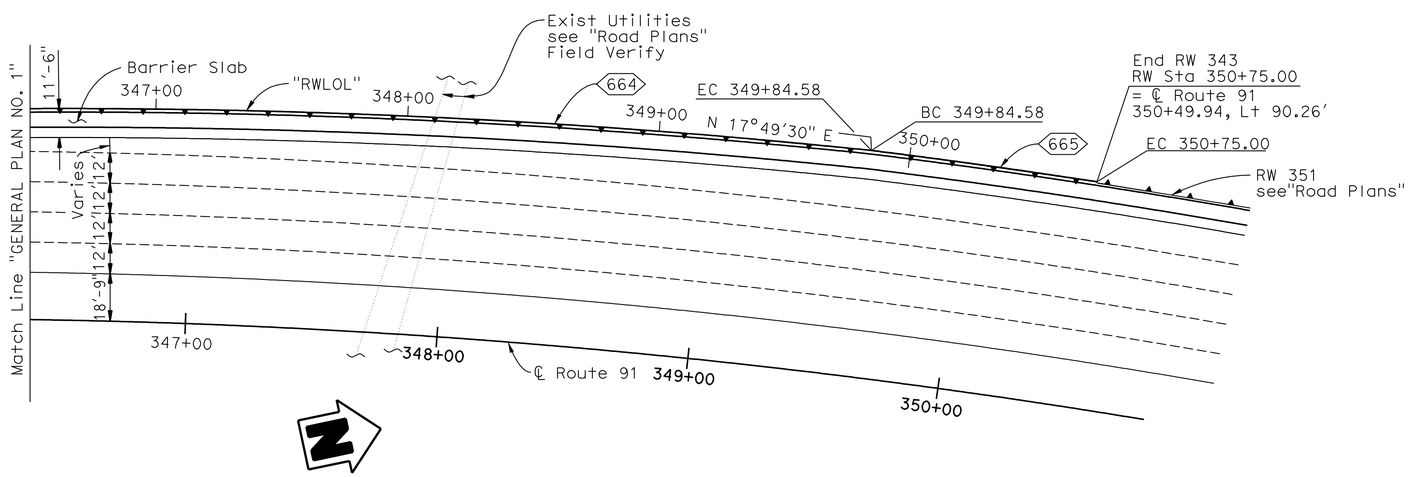

PLAN

1" = 30'

Curve Data

No	R	Δ	T	L
663	3077.99'	2°9'44"	58.09'	116.16'
664	3084.50'	11°27'37"	309.51'	616.96'
665	3090.07'	1°40'36"	45.21'	90.42'

NOTE:
THE CONTRACTOR SHALL VERIFY ALL CONTROLLING FIELD DIMENSIONA BEFORE ORDERING OR FABRICATING ANY MATERIAL.

X Daniel T Adams
DESIGN ENGINEER

	BY	CHECKED
DESIGN	M. Vo	A. McPhee
DETAILS	Y. Tang	A. McPhee
QUANTITIES	A. McPhee	M. Vo

LOAD & RESISTANCE FACTOR DESIGN — LIVE LOADING: HL93 W/"LOW-BOY"; PERMIT DESIGN VEHICLE

	BY	CHECKED
LAYOUT	M. Vo	A. McPhee
SPECIFICATIONS	Dave Klein	PLANS AND SPECS COMPARED Dave Klein

ORIGINAL SCALE IN INCHES FOR REDUCED PLANS 0 1 2 3

STATE OF CALIFORNIA
DEPARTMENT OF TRANSPORTATION

DIVISION OF ENGINEERING SERVICES
STRUCTURE DESIGN
DESIGN BRANCH 10

CU 08
EA 448401

BRIDGE NO. 56E0070
POST MILE 19.39

RETAINING WALL NO. 343
GENERAL PLAN NO. 2

DISREGARD PRINTS BEARING EARLIER REVISION DATES

REVISION DATES: 11-2-09, 1-22-10, 2-24-10, 4-28-10, 5-05-10, 7-14-10

SHEET 2 OF 17

STRUCTURES DESIGN GENERAL PLAN SHEET (ENGLISH) (REV.07-24-06)

FILE => 56e0070agp02.dgn

USERNAME => trphillis DATE PLOTTED => 30-APR-2011 TIME PLOTTED => 11:29

DIST	COUNTY	ROUTE	POST MILES TOTAL PROJECT	SHEET No	TOTAL SHEETS
08	Riv	91	15.6/21.6	1507	2028

REGISTERED CIVIL ENGINEER 11/12/10 DATE

4-25-11
PLANS APPROVAL DATE

REGISTERED PROFESSIONAL ENGINEER MINH THUONG VO No. C59297 Exp. 06-30-11 CIVIL STATE OF CALIFORNIA

The State of California or its officers or agents shall not be responsible for the accuracy or completeness of electronic copies of this plan sheet.

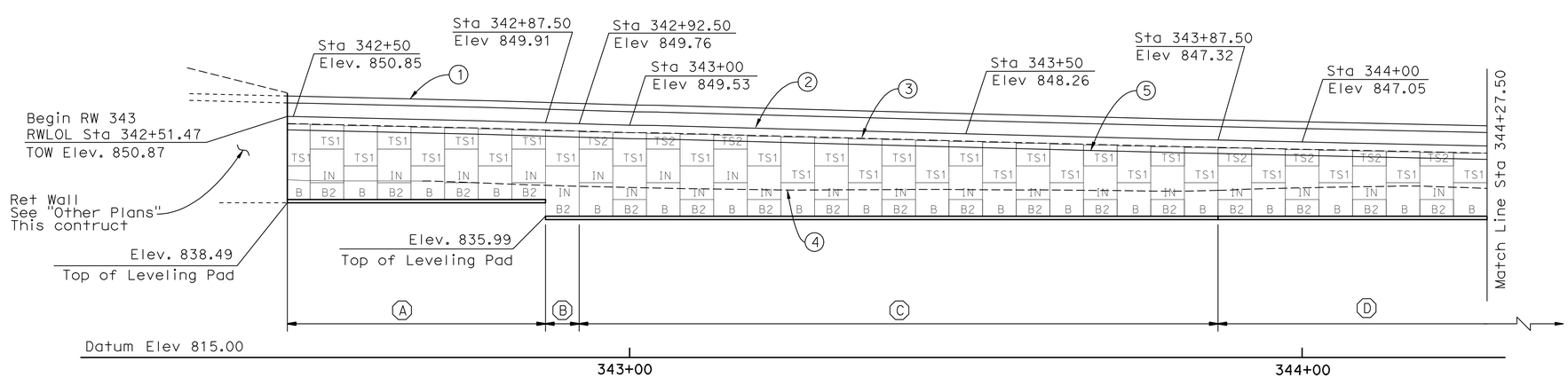

DEVELOPED MIRROR ELEVATION

1" = 10'

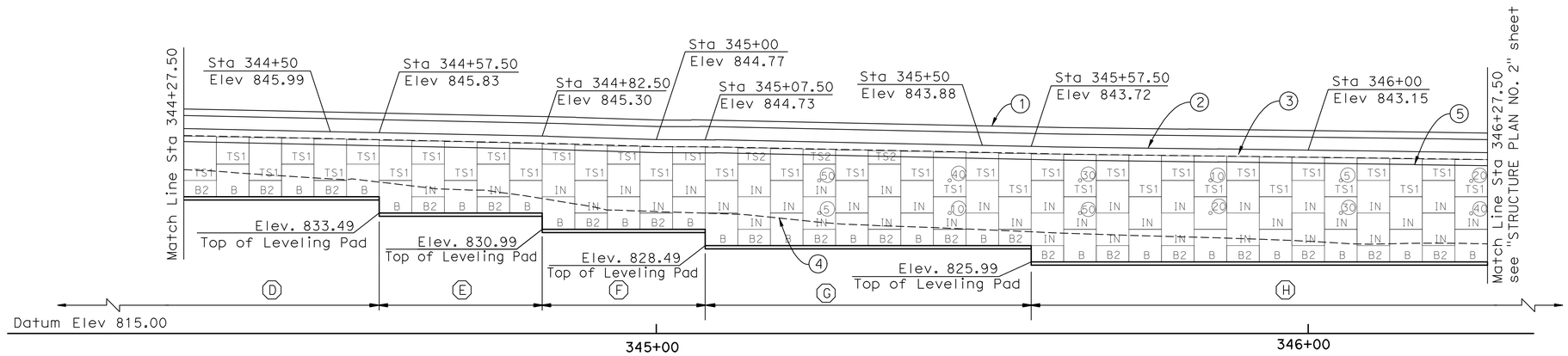

DEVELOPED MIRROR ELEVATION

1" = 10'

LEGEND:

1. Top of Concrete Barrier Type 732(Mod)
2. Top of Wall
3. Top of Precast Concrete Panel
4. Approximate FG
5. Bottom of Barrier Slab

50 — Indicates interval in years from time of construction to time of removal of inspection wire

IN — Indicates location of inspection wire replacement, see "MECHANICALLY STABILIZED EMBANKMENT DETAILS NO. 3" sheet

Panel type designation, see "MECHANICALLY STABILIZED EMBANKMENT DETAILS NO. 1" sheet

NOTES:

1. Contractor to field verify all utility locations prior to retaining wall construction.
2. For Typical Sections, see "General Plan No. 1" sheet.
3. For Architectural Treatment, see "Architectural Treatment Details" sheet.
4. For utility information, see "Utility Plans".

SOIL REINFORCEMENT TABLE

	Ⓐ	Ⓑ	Ⓒ	Ⓓ	Ⓔ	Ⓕ	Ⓖ	Ⓗ
Design "H"	H=12.91 Max	H=13.92 Max	H=13.76 Max	H=11.33 Max	H=12.34 Max	H=14.31 Max	H=16.24 Max	H=17.73 Max
Base Width (BW)	BW = 9' Min	BW = 11' Min	BW = 9' Min	BW = 8' Min	BW = 9' Min	BW = 11' Min	BW = 11' Min	BW = 12' Min
Top level of Mesh: Levels Below:	2 @ W11 x W11 + 6" x 9" 2 @ W11 x W11 + 6" x 12" 1 @ W11 x W11 + 6" x 18"	2 @ W11 x W11 + 6" x 9" 2 @ W11 x W11 + 6" x 12" 1 @ W11 x W11 + 6" x 18" 1 @ W11 x W11 + 6" x 24"	2 @ W11 x W11 + 6" x 9" 2 @ W11 x W11 + 6" x 12" 1 @ W11 x W11 + 6" x 18"	2 @ W11 x W11 + 6" x 9" 2 @ W11 x W11 + 6" x 12"	2 @ W11 x W11 + 6" x 9" 2 @ W11 x W11 + 6" x 12" 1 @ W11 x W11 + 6" x 18"	2 @ W11 x W11 + 6" x 9" 2 @ W11 x W11 + 6" x 12" 1 @ W11 x W11 + 6" x 18" 1 @ W11 x W11 + 6" x 24"	2 @ W11 x W11 + 6" x 9" 2 @ W11 x W11 + 6" x 12" 1 @ W11 x W11 + 6" x 18" 1 @ W11 x W11 + 6" x 24"	2 @ W11 x W11 + 6" x 9" 2 @ W11 x W11 + 6" x 12" 1 @ W11 x W11 + 6" x 18" 2 @ W11 x W11 + 6" x 24"

MSE NOTES:

1. Mesh is indicated sequentially from top level of mesh to bottom level of mesh.
2. For limits of excavation & backfill, see "Mechanically Stabilized Embankment Details No. 6" sheet.
3. For Barrier Slab details, see "Mechanically Stabilized Embankment Details No. 4" sheet.
4. For panel details, see "Mechanically Stabilized Embankment Details No. 1" sheet.
5. For General Notes and wire mat details, see "Mechanically Stabilized Embankment Details No. 2" sheet.
6. For inspection wire details, see "Mechanically Stabilized Embankment Details No. 3" sheet.

LEGEND:

2 @ W11 x W11 + 6" x 9"

- 6" x 9" — Longitudinal wire spacing x Transverse wire spacing
- W11 x W11 — Longitudinal wire size x Transverse wire size
- 2 — Number of welded wire mats.

NOTE:
THE CONTRACTOR SHALL VERIFY ALL CONTROLLING FIELD DIMENSIONS BEFORE ORDERING OR FABRICATING ANY MATERIAL.

	BY	CHECKED
DESIGN	M. Vo	A. McPhee
DETAILS	Y. Tang	A. McPhee
QUANTITIES	A. McPhee	M. Vo

STATE OF CALIFORNIA
DEPARTMENT OF TRANSPORTATION

DIVISION OF ENGINEERING SERVICES
STRUCTURE DESIGN
DESIGN BRANCH 10

BRIDGE NO. 56E0070
POST MILE 19.39

RETAINING WALL NO. 343
STRUCTURE PLAN NO. 1

STRUCTURES DESIGN DETAIL SHEET (ENGLISH) (REV. 10/25/05)

ORIGINAL SCALE IN INCHES FOR REDUCED PLANS 0 1 2 3

CU 08
EA 448401

DISREGARD PRINTS BEARING EARLIER REVISION DATES

REVISION DATES: 11-16-09, 1-26-10, 2-24-10, 4-29-10, 7-14-10

SHEET 3 OF 17

FILE => 56e0070csp03.dgn

USERNAME => trphlis DATE PLOTTED => 30-APR-2011 TIME PLOTTED => 11:29

DIST	COUNTY	ROUTE	POST MILES TOTAL PROJECT	SHEET No	TOTAL SHEETS
08	Riv	91	15.6/21.6	1508	2028

REGISTERED CIVIL ENGINEER 11/12/10 DATE

4-25-11
PLANS APPROVAL DATE

REGISTERED PROFESSIONAL ENGINEER MINH THUONG VO No. C59297 Exp. 06-30-11 CIVIL STATE OF CALIFORNIA

The State of California or its officers or agents shall not be responsible for the accuracy or completeness of electronic copies of this plan sheet.

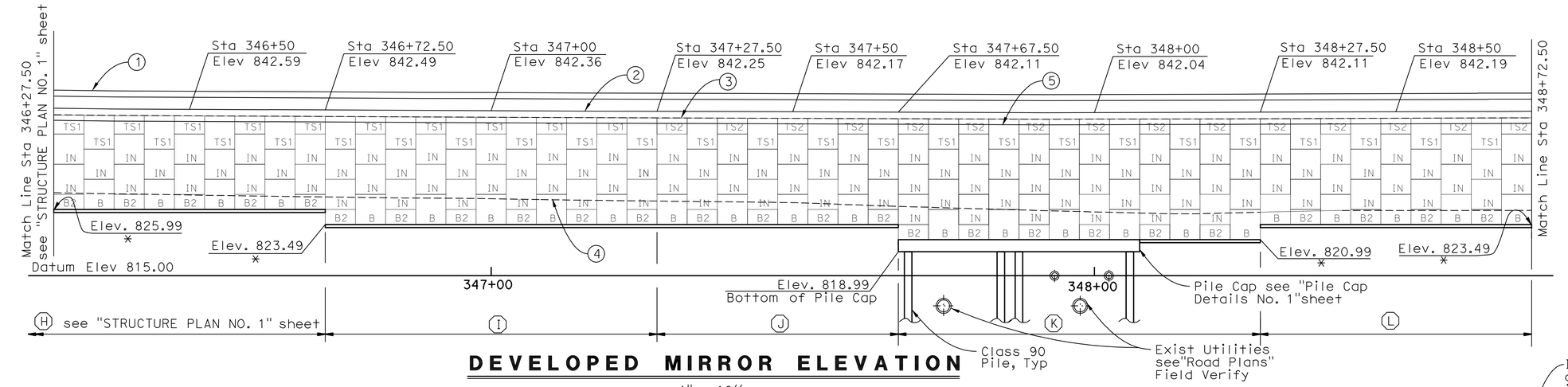

DEVELOPED MIRROR ELEVATION

1" = 10''

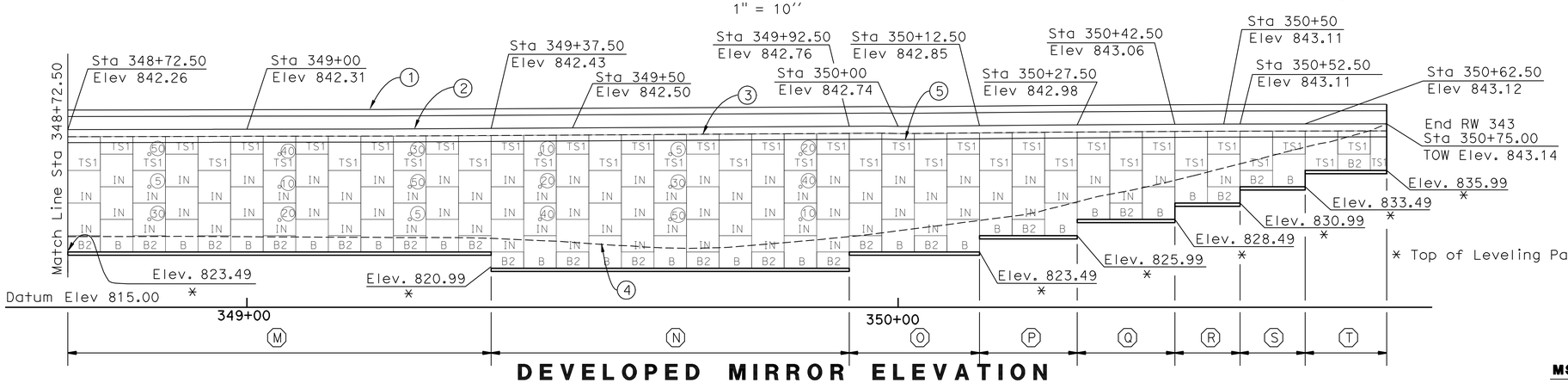

DEVELOPED MIRROR ELEVATION

1" = 10''

SOIL REINFORCEMENT TABLE

	I	J	K	L	M	N
Design "H"	H=19.00 Max	H=18.86 Max	H=21.11 Max	H=18.76 Max	H=18.94 Max	H=21.77 Max
Base Width (BW)	BW = 14' Min	BW = 12' Min	BW = 14' Min	BW = 12' Min	BW = 14' Min	BW = 16' Min
Top level of Mesh: Levels Below:	2 @ W11 x W11 + 6" x 9" 3 @ W11 x W11 + 6" x 12" 3 @ W11 x W11 + 6" x 24"	2 @ W11 x W11 + 6" x 9" 2 @ W11 x W11 + 6" x 12" 1 @ W11 x W11 + 6" x 18" 2 @ W11 x W11 + 6" x 24"	2 @ W11 x W11 + 6" x 9" 3 @ W11 x W11 + 6" x 18" 3 @ W11 x W11 + 6" x 24"	2 @ W11 x W11 + 6" x 9" 2 @ W11 x W11 + 6" x 12" 1 @ W11 x W11 + 6" x 18" 2 @ W11 x W11 + 6" x 24"	2 @ W11 x W11 + 6" x 9" 3 @ W11 x W11 + 6" x 18" 3 @ W11 x W11 + 6" x 24"	5 @ W11 x W11 + 6" x 18" 4 @ W11 x W11 + 6" x 24"

	O	P	Q	R	S	T
Design "H"	H=19.36 Max	H=16.99 Max	H=14.57 Max	H=12.12 Max	H=9.63 Max	H=7.15 Max
Base Width (BW)	BW = 14' Min	BW = 12' Min	BW = 11' Min	BW = 9' Min	BW = 7' Min	BW = 5' Min
Top level of Mesh: Levels Below:	2 @ W11 x W11 + 6" x 9" 3 @ W11 x W11 + 6" x 18" 3 @ W11 x W11 + 6" x 24"	2 @ W11 x W11 + 6" x 9" 2 @ W11 x W11 + 6" x 12" 1 @ W11 x W11 + 6" x 18" 2 @ W11 x W11 + 6" x 24"	2 @ W11 x W11 + 6" x 9" 2 @ W11 x W11 + 6" x 12" 1 @ W11 x W11 + 6" x 18" 1 @ W11 x W11 + 6" x 24"	2 @ W11 x W11 + 6" x 9" 2 @ W11 x W11 + 6" x 12" 1 @ W11 x W11 + 6" x 18"	4 @ W11 x W11 + 6" x 9"	3 @ W11 x W11 + 6" x 9"

NOTE:
THE CONTRACTOR SHALL VERIFY ALL CONTROLLING FIELD DIMENSIONS BEFORE ORDERING OR FABRICATING ANY MATERIAL.

LEGEND:

1. Top of Concrete Barrier Type 732(Mod)
2. Top of Wall
3. Top of Precast Concrete Panel
4. Approximate FG
5. Bottom of Barrier Slab

50 — Indicates interval in years from time of construction to time of removal of inspection wire

IN — Indicates location of inspection wire replacement, see"MECHANICALLY STABILIZED EMBANKMENT DETAILS NO. 3" sheet

Panel type designation, see "MECHANICALLY STABILIZED EMBANKMENT DETAILS NO. 1" sheet

NOTES:

1. Contractor to field verify all utility locations prior to retaining wall construction.
2. For Typical Sections, see "General Plan No. 1" sheet.
3. For Architectural Treatment, see "Architectural Treatment Details" sheet.
4. For utility information, see "Utility Plans".

MSE NOTES:

1. Mesh is indicated sequentially from top level of mesh to bottom level of mesh.
2. For limits of excavation & backfill, see "Mechanically Stabilized Embankment Details No. 6" sheet.
3. For Barrier Slab details, see "Mechanically Stabilized Embankment Details No. 4" sheet.
4. For panel details, see "Mechanically Stabilized Embankment Details No. 1" sheet.
5. For General Notes and wire mat details, see "Mechanically Stabilized Embankment Details No. 2" sheet.
6. For inspection wire details, see "Mechanically Stabilized Embankment Details No. 3" sheet.

LEGEND:

2 @ W11 x W11 + 6" x 9"

- 6" x 9" — Longitudinal wire spacing x Transverse wire spacing
- W11 x W11 — Longitudinal wire size x Transverse wire size
- 2 — Number of welded wire mats.

	BY	CHECKED
DESIGN	M. Vo	A. McPhee
DETAILS	Y. Tang	A. McPhee
QUANTITIES	A. McPhee	M. Vo

STATE OF CALIFORNIA
DEPARTMENT OF TRANSPORTATION

DIVISION OF ENGINEERING SERVICES
STRUCTURE DESIGN
DESIGN BRANCH 10

BRIDGE NO. 56E0070
POST MILE 19.39

RETAINING WALL NO. 343
STRUCTURE PLAN NO. 2

STRUCTURES DESIGN DETAIL SHEET (ENGLISH) (REV. 10/25/05)

ORIGINAL SCALE IN INCHES FOR REDUCED PLANS 0 1 2 3

CU 08
EA 448401

DISREGARD PRINTS BEARING EARLIER REVISION DATES

REVISION DATES: 11-16-09 1-26-10 2-24-10 4-29-10 7-15-10

SHEET 4 OF 17

FILE => 56e0070csp04.dgn

USERNAME => trphtis DATE PLOTTED => 30-APR-2011 TIME PLOTTED => 11:29

DIST	COUNTY	ROUTE	POST MILES TOTAL PROJECT	SHEET No	TOTAL SHEETS
08	Riv	91	15.6/21.6	1509	2028

REGISTERED CIVIL ENGINEER 11/12/10 DATE

4-25-11
PLANS APPROVAL DATE

REGISTERED PROFESSIONAL ENGINEER MINH THUONG VO No. C59297 Exp. 06-30-11 CIVIL STATE OF CALIFORNIA

The State of California or its officers or agents shall not be responsible for the accuracy or completeness of electronic copies of this plan sheet.

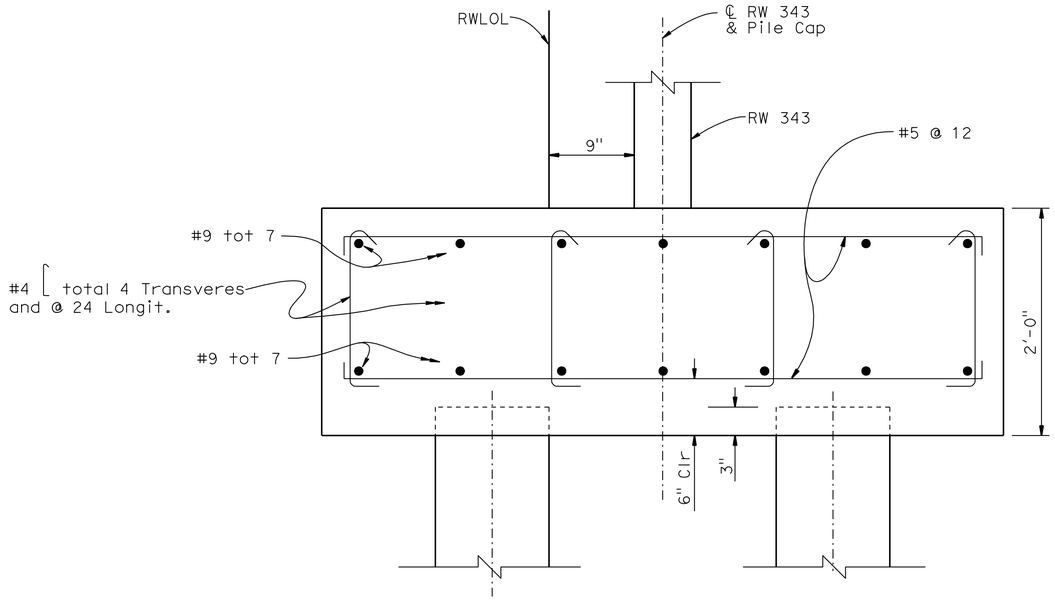

SECTION A-A

1½" = 1'-0"

PILE DATA TABLE

B2-5

Pile Type	Nominal Resistance (kN)		Design Tip Elevations (Ft)	Specified Tip Elevations (Ft)	Nominal Driving Resistance Req'd
	Compression	Tension			
Class 90 Alternative "X"	180 kips	0	789 (1)	789	180 kips

Note: Design tip elevation controlled by (1) compression.

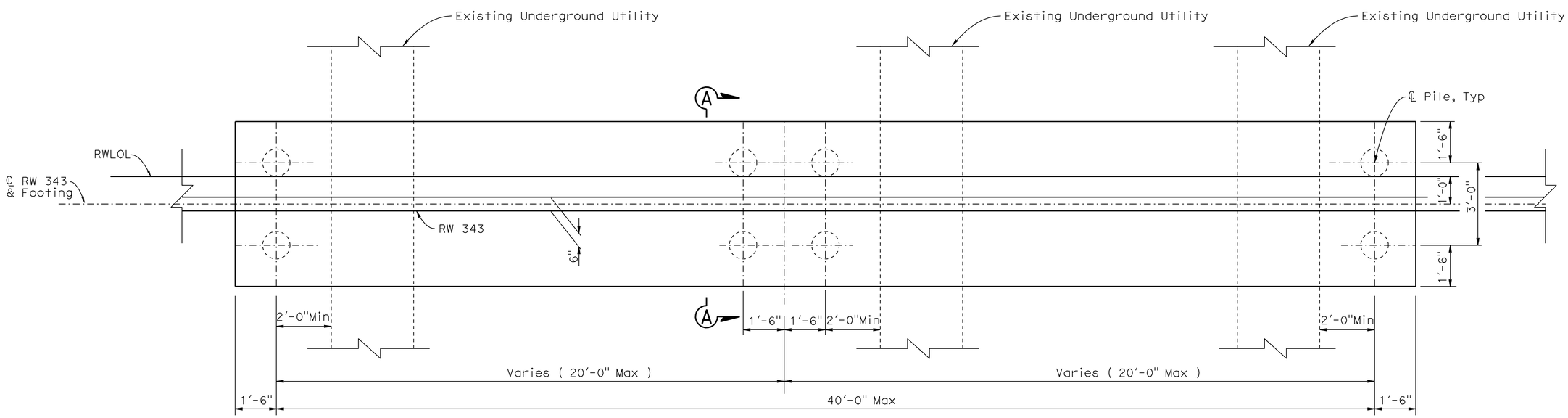

PILE CAP PLAN

½"= 1'-0"

NOTE:
THE CONTRACTOR SHALL VERIFY ALL CONTROLLING FIELD DIMENSIONS BEFORE ORDERING OR FABRICATING ANY MATERIAL.

	BY	CHECKED
DESIGN	M. Vo	A. McPhee
DETAILS	Y. Tang	A. McPhee
QUANTITIES	A. McPhee	M. Vo

STATE OF CALIFORNIA
DEPARTMENT OF TRANSPORTATION

DIVISION OF ENGINEERING SERVICES
STRUCTURE DESIGN
DESIGN BRANCH 10

BRIDGE NO. 56E0070
POST MILE 19.39

RETAINING WALL NO. 343
PILE CAP DETAILS NO. 1

STRUCTURES DESIGN DETAIL SHEET (ENGLISH) (REV. 10/25/05)

ORIGINAL SCALE IN INCHES FOR REDUCED PLANS 0 1 2 3

CU 08
EA 448401

DISREGARD PRINTS BEARING EARLIER REVISION DATES

REVISION DATES: 11-9-09, 1-26-10, 2-24-10, 4-29-10, 7-15-10

SHEET 5 OF 17

FILE => 56e0070ppdt05.dgn

USERNAME => trphils DATE PLOTTED => 30-APR-2011 TIME PLOTTED => 11:30

DIST	COUNTY	ROUTE	POST MILES TOTAL PROJECT	SHEET No	TOTAL SHEETS
08	Riv	91	15.6/21.6	1510	2028

REGISTERED CIVIL ENGINEER — DATE 11/12/10

4-25-11
PLANS APPROVAL DATE

REGISTERED PROFESSIONAL ENGINEER — MINH THUONG VO — No. C59297 — Exp. 06-30-11 — CIVIL — STATE OF CALIFORNIA

The State of California or its officers or agents shall not be responsible for the accuracy or completeness of electronic copies of this plan sheet.

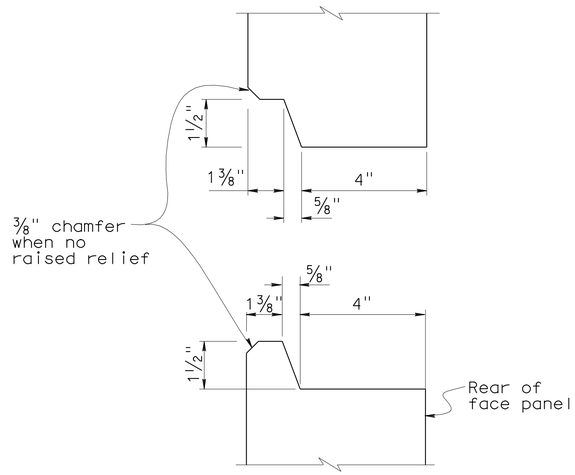

HORIZONTAL JOINT DETAIL
No Scale

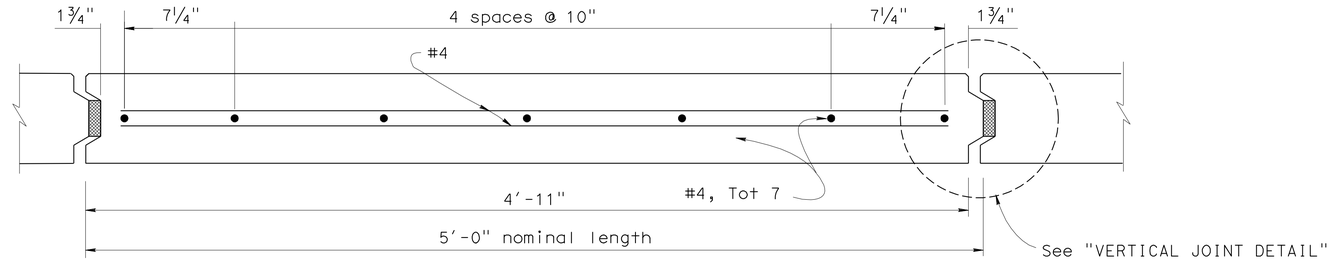

PLAN - FACE PANEL
No Scale

NOTES:

1. Architectural treatment not shown. Architectural surface extends beyond face of panel. See "Architectural Treatment Details" sheet.
2. Place reinforced elastomeric bearing pads in all of the panel joints between the panels. Place one in each vertical joint where the horizontal joint intersects it. Place two per panel in each horizontal joint.
   3/4" x 2 3/8" x 6" for vertical joints
   3/4" x 4" x 6" for horizontal joints.
3. Bond a strip of filter fabric, 1' - 0" wide, over the full length of all panel joints.

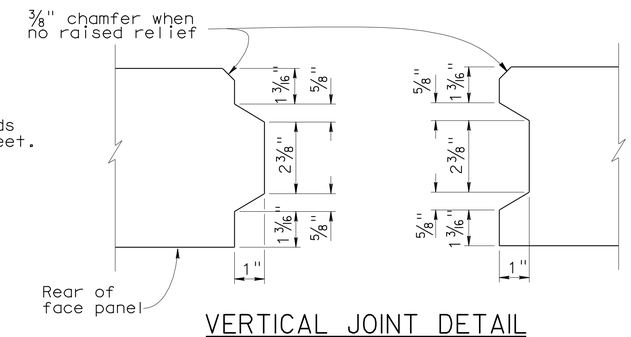

VERTICAL JOINT DETAIL
No Scale

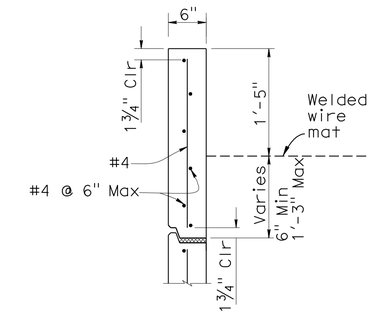

TOP PANEL (TYPE "TS2")
1" =1'-0"

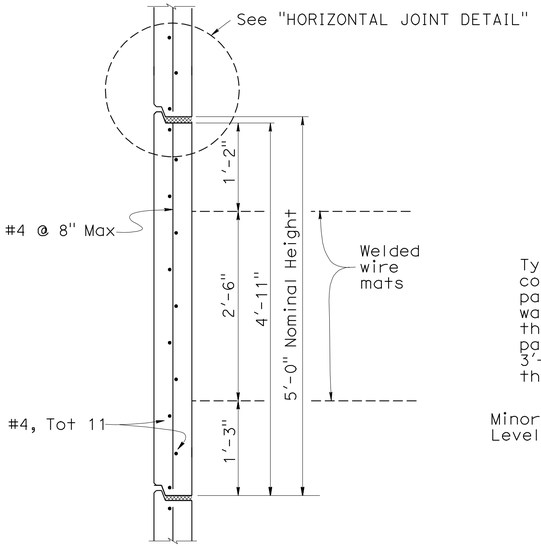

INTERMEDIATE PANEL (TYPE "IN")
1" = 1'-0"

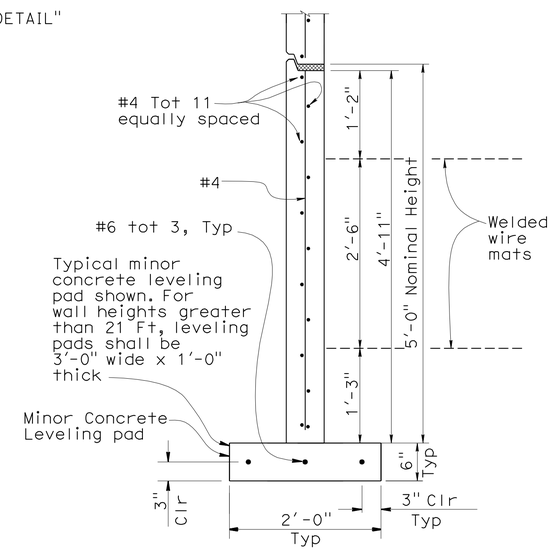

BOTTOM PANEL (TYPE "B")
1" = 1'-0"

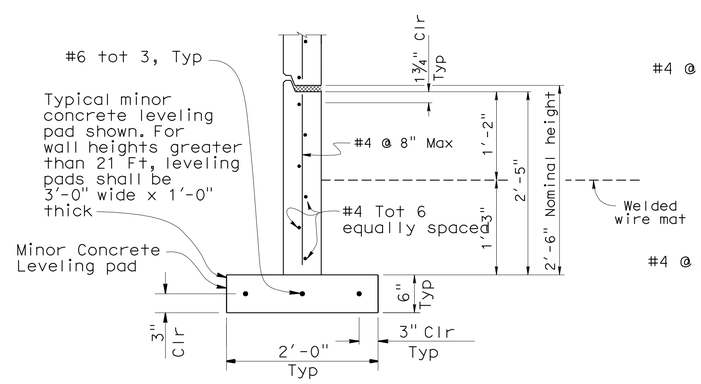

BOTTOM HALF PANEL (TYPE "B2")
1" = 1'-0"

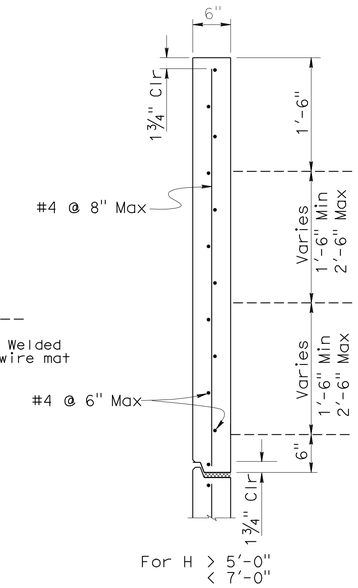

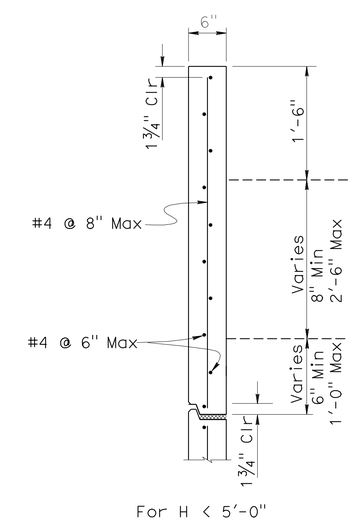

TOP PANEL (TYPE "TSI")
1" = 1'-0"

DESIGN	BY M. Vo	CHECKED A. McPhee	
DETAILS	BY Y. Tang	CHECKED A. McPhee	
QUANTITIES	BY A. McPhee	CHECKED M. Vo	

STATE OF CALIFORNIA
DEPARTMENT OF TRANSPORTATION

DIVISION OF ENGINEERING SERVICES
STRUCTURE DESIGN
DESIGN BRANCH 10

BRIDGE NO. 56E0070
POST MILE 19.39

RETAINING WALL NO. 343
MECHANICALLY STABILIZED EMBANKMENT
DETAILS NO. 1

STRUCTURES DESIGN DETAIL SHEET (ENGLISH) (REV. 10/25/05)

ORIGINAL SCALE IN INCHES FOR REDUCED PLANS 0 1 2 3

CU 08
EA 448401

DISREGARD PRINTS BEARING EARLIER REVISION DATES — 11-16-09 T-16-10

REVISION DATES

SHEET 6 OF 17

FILE => 56e0070s_msedt06.dgn

USERNAME => trphillis DATE PLOTTED => 30-APR-2011 TIME PLOTTED => 11:30

DIST.	COUNTY	ROUTE	POST MILES TOTAL PROJECT	SHEET NO.	TOTAL SHEETS
08	Riv	91	15.6/21.6	1511	2028

REGISTERED ENGINEER - CIVIL

4-25-11

PLANS APPROVAL DATE

REGISTERED PROFESSIONAL ENGINEER MINH THUONG VO No. C59297 Exp. 06-30-11 CIVIL STATE OF CALIFORNIA

The State of California or its officers or agents shall not be responsible for the accuracy or completeness of electronic copies of this plan sheet.

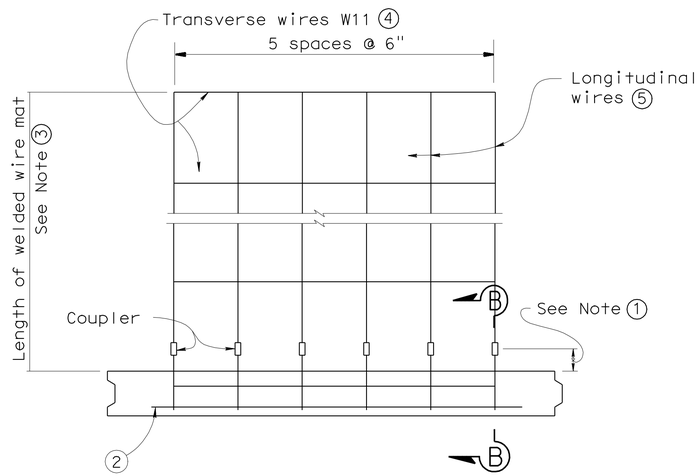

PLAN OF PANEL WITH WELDED WIRE MAT

No scale

GENERAL NOTES (MSE WALLS)

Live loading: Surcharge = 240 lb/ft^2

Soil parameters:

Internal design ϕ = 34°, γ = 120 lb/ft^3

External design ϕ(Backfill) = 34°, γ = 120 lb/ft^3

ϕ(Foundation) = 30°

Precast concrete panels:

f′c = 4,000 psi (Concrete compressive strength at 28 days)

fy = 60,000 psi (Yield strength of reinforcement)

Soil reinforcement:

Welded wire mats: fy = 65,000 psi (Yield strength)

Coupler: fy = 36,000 psi (Yield strength)

Corrosion rate = 1.1 mils/year

Reinforced concrete:

f′c = 3,600 psi, except as noted

(Concrete compressive strength at 28 days)

fy = 60,000 psi (Yield strength of reinforcement)

MSE = Mechanically stabilized embankment

Notes:

① Distance as required to permit coupler to be swaged.

② Place #4 bar, 3′ - 2" long, centered on connector mat, but not welded to it.

③ Length equals "Base width" of wall, except it shall not be less than 16′ for the top 2 levels of mats at the top of the wall.

④ All Transverse Wires size W11 at various spacings as shown elsewhere in plans.

⑤ All Longitudinal Wires at 6" spacing, of various sizes, as shown elsewhere in plans.

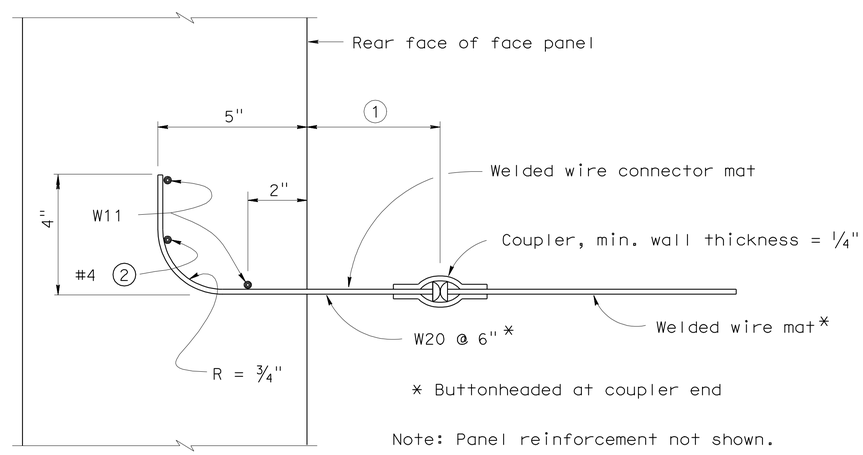

SECTION B-B

No scale

STANDARD DRAWING

FILE NO. xs13-020-2e

APPROVED BY K. GRISWELL — RESPONSIBLE TECHNICAL SPECIALIST

APPROVAL DATE 5-6-08

RELEASED BY ROBERTO LACALLE — RESPONSIBLE OFFICE CHIEF

RELEASE DATE 5-6-08

STATE OF CALIFORNIA DEPARTMENT OF TRANSPORTATION

DIVISION OF ENGINEERING SERVICES

BRIDGE NO. 56E0070

POST MILE 19.39

RETAINING WALL NO. 343

MECHANICALLY STABILIZED EMBANKMENT DETAILS NO. 2

DS OSD 2147A (ENGLISH STANDARD DRAWING "XS" BORDER REV. 01/11/08)

ORIGINAL SCALE IN INCHES FOR REDUCED PLANS 0 1 2 3

CU 08
EA 448401

DISREGARD PRINTS BEARING EARLIER REVISION DATES 4-29-10

REVISION DATES (PRELIMINARY STAGE ONLY)

SHEET 7 OF 17

USERNAME => trphils

56e0070s_msedt07.dgn

DATE PLOTTED => 30-APR-2011 TIME PLOTTED => 11:30

DIST.	COUNTY	ROUTE	POST MILES TOTAL PROJECT	SHEET NO.	TOTAL SHEETS
08	Riv	91	15.6/21.6	1512	2028

REGISTERED ENGINEER - CIVIL

4-25-11

PLANS APPROVAL DATE

REGISTERED PROFESSIONAL ENGINEER MINH THUONG VO No. C59297 Exp. 06-30-11 CIVIL STATE OF CALIFORNIA

The State of California or its officers or agents shall not be responsible for the accuracy or completeness of electronic copies of this plan sheet.

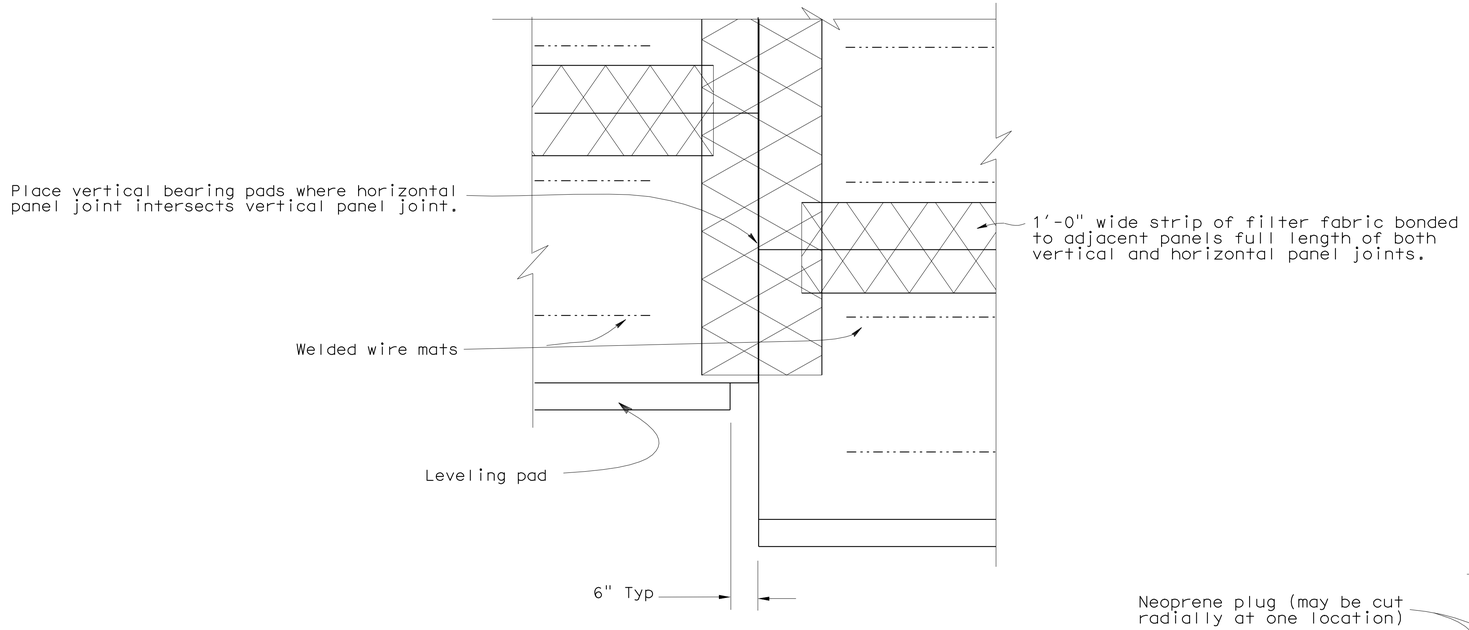

REAR ELEVATION

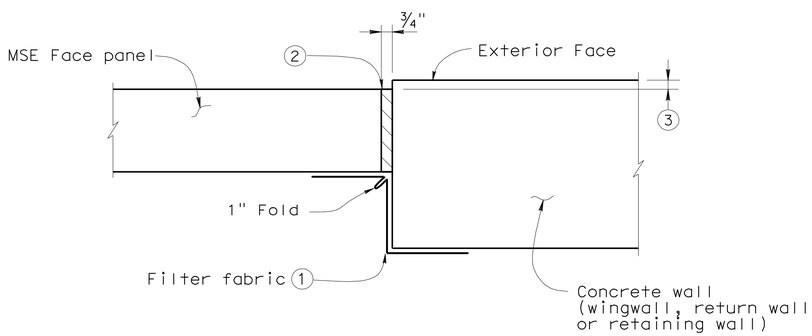

MSE FACE PANEL-TO-CONCRETE WALL JOINT DETAIL

LEGEND:

1. Bond a strip of filter fabric, 1'-6" wide, to back of MSE panels and the adjacent concrete wall for entire length of vertical joint.
2. Bond expansion joint material to the concrete wall.
3. Offset between face of MSE face panel and face of the concrete wall as dictated by location of layout lines shown elsewhere in Project Plans.

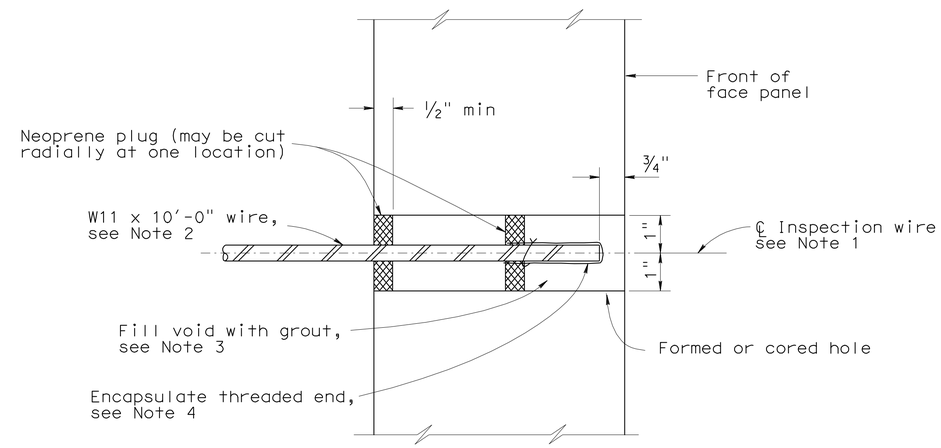

SECTION THRU INSPECTION WIRE

NOTES:

1. Center inspection wire in face panel.
2. Fabricate inspection wires from W11 wire representative of the welded wire mats, with 3/8" dia - 16 UNC threads for at least 1 1/2" of one end.
3. Place inspection wire horizontal and perpendicular to the wall panel prior to backfilling. After backfill placement to a level at least 2'-0" above the inspection wire, dry pack opening with 1000 to 1500 psi mortar. Trowel mortar smooth and flush with face of panel.
4. Encapsulate threaded end with corrosion inhibiting mastic, and secure round vinyl cover with nylon tie.

   UNC = Unified coarse threads

STANDARD DRAWING

FILE NO. xs13-020-3e

APPROVED BY K. GRISWELL — RESPONSIBLE TECHNICAL SPECIALIST

APPROVAL DATE 5-6-08

RELEASED BY ROBERTO LACALLE — RESPONSIBLE OFFICE CHIEF

RELEASE DATE 5-6-08

STATE OF CALIFORNIA DEPARTMENT OF TRANSPORTATION

DIVISION OF ENGINEERING SERVICES

BRIDGE NO. 56E0070

POST MILE 19.39

RETAINING WALL NO. 343

MECHANICALLY STABILIZED EMBANKMENT

DETAILS NO. 3

DS OSD 2147A (ENGLISH STANDARD DRAWING "XS" BORDER REV. 01/11/08)

ORIGINAL SCALE IN INCHES FOR REDUCED PLANS 0 1 2 3

CU 08
EA 448401

DISREGARD PRINTS BEARING EARLIER REVISION DATES 11-16-09

REVISION DATES (PRELIMINARY STAGE ONLY)

SHEET 8 OF 17

USERNAME => trphils

56e0070s_msedt08.dgn

DATE PLOTTED => 30-APR-2011 TIME PLOTTED => 11:30

DIST.	COUNTY	ROUTE	POST MILES TOTAL PROJECT	SHEET NO.	TOTAL SHEETS
08	Riv	91	15.6/21.6	1513	2028

REGISTERED ENGINEER - CIVIL

4-25-11

PLANS APPROVAL DATE

REGISTERED PROFESSIONAL ENGINEER MINH THUONG VO No. C59297 Exp. 06-30-11 CIVIL STATE OF CALIFORNIA

The State of California or its officers or agents shall not be responsible for the accuracy or completeness of electronic copies of this plan sheet.

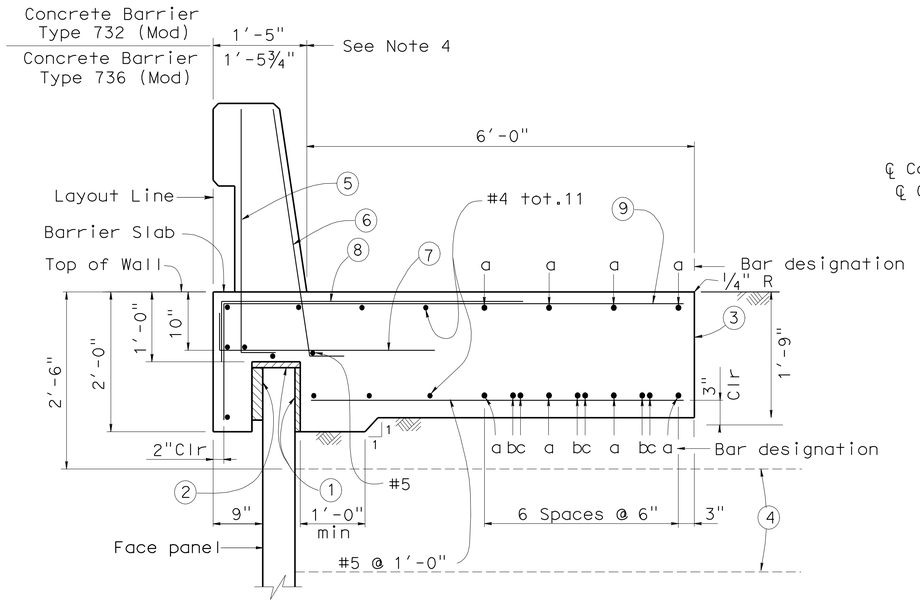

SECTION AT TOP OF WALL WITH BARRIER SLAB AND CONCRETE BARRIER

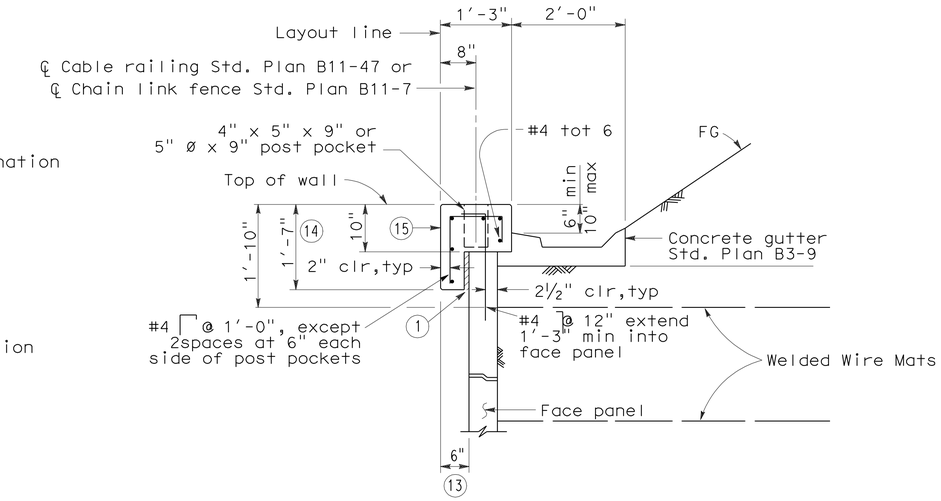

SECTION AT TOP OF WALL WITH COPING AND GUTTER

NOTES:

1. Clearance to reinforcing steel in concrete barrier to be 1".
2. Not all barrier reinforcement shown.
3. No expansion joints in concrete barrier or barrier slab within MSE wall limits.
4. Specific concrete barrier to be utilized as shown on typical section elsewhere in Project Plans.
5. Install cable railing or chain link fence when indicated in Project Plans.

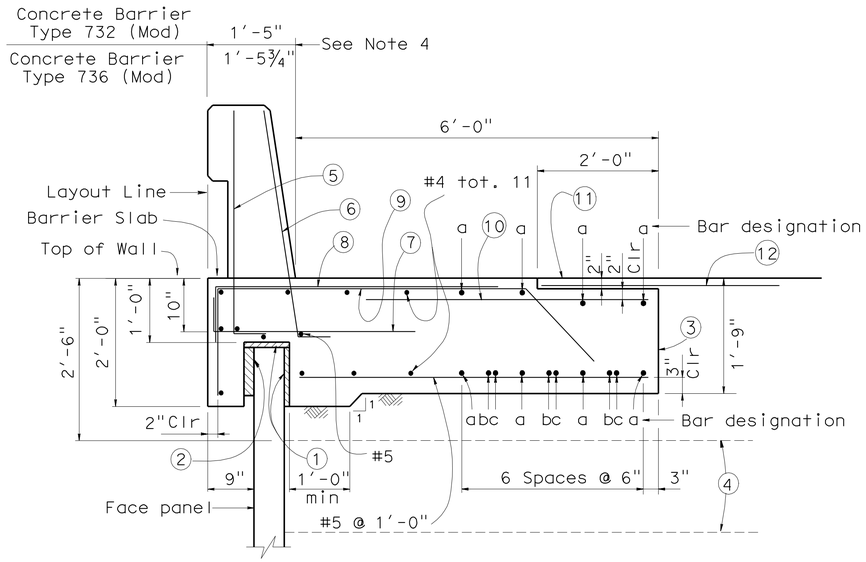

SECTION AT TOP OF WALL WITH BARRIER SLAB WITH PAVING NOTCH AND CONCRETE BARRIER

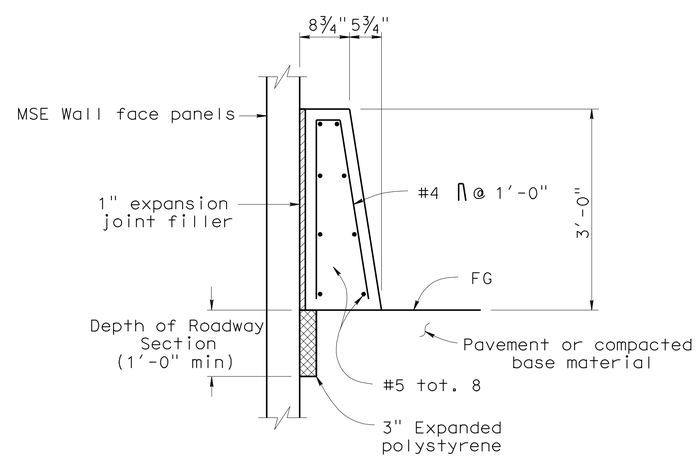

CONCRETE BARRIER TYPE 60D (MOD) AT FACE OF MSE WALL

LEGEND:

1. 1" Expanded polystyrene.
2. 2" Expanded polystyrene. Recess expanded polystyrene 2" into barrier slab.
3. Contact joint.
4. Welded Wire Mat Soil reinforcement.
5. #5 6¼" @ 1'-4" (To be in place prior to barrier slab concrete).
6. #5 6¼" @ 8" (To be in place prior to barrier slab concrete).
7. #5 6¼" 3'-4" @ 1'-0"
8. #5 4'-7" @ 1'-0" bundled with 9 bars.
9. #5 5'-0" 1'-3¾" @ 1'-0"
10. #5 X 1400 @ 1'-0"

    "a" bar = #6 continuous.
    "b" bar = #6 X 59'-0"
    "c" bar = #6 X 49'-2"
    Place "b" and "c" bars at beginning and ending ends of barrier slab.
11. AC Overlay on barrier slab (see Road Plan).
12. 4'-0" wide pavement reinforcing fabric.
13. Except 9" when coping and barrier slab occur along the top of the same wall.
14. Except 2'-0" when coping and barrier slab occur along the top of the same wall.
15. ½" expansion joints in coping at every fourth panel joint.

RETAINING WALL NO. 343

MECHANICALLY STABILIZED EMBANKMENT

DETAILS NO. 4

STANDARD DRAWING

FILE NO. xs13-020-4e

APPROVED BY K. GRISWELL — RESPONSIBLE TECHNICAL SPECIALIST

APPROVAL DATE 5-6-08

RELEASED BY ROBERTO LACALLE — RESPONSIBLE OFFICE CHIEF

RELEASE DATE 5-6-08

STATE OF CALIFORNIA DEPARTMENT OF TRANSPORTATION

DIVISION OF ENGINEERING SERVICES

BRIDGE NO. 56E0070

POST MILE 19.39

CU 08
EA 448401

DS OSD 2147A (ENGLISH STANDARD DRAWING "XS" BORDER REV. 01/11/08)

ORIGINAL SCALE IN INCHES FOR REDUCED PLANS 0 1 2 3

DISREGARD PRINTS BEARING EARLIER REVISION DATES

REVISION DATES (PRELIMINARY STAGE ONLY) 11-16-09 7-16-10

SHEET 9 OF 17

USERNAME => trphils

56e0070s_msedt09.dgn

DATE PLOTTED => 30-APR-2011 TIME PLOTTED => 11:30

DIST.	COUNTY	ROUTE	POST MILES TOTAL PROJECT	SHEET NO.	TOTAL SHEETS
08	Riv	91	15.6/21.6	1514	2028

REGISTERED ENGINEER - CIVIL

4-25-11

PLANS APPROVAL DATE

REGISTERED PROFESSIONAL ENGINEER MINH THUONG VO No. C59297 Exp. 06-30-11 CIVIL STATE OF CALIFORNIA

The State of California or its officers or agents shall not be responsible for the accuracy or completeness of electronic copies of this plan sheet.

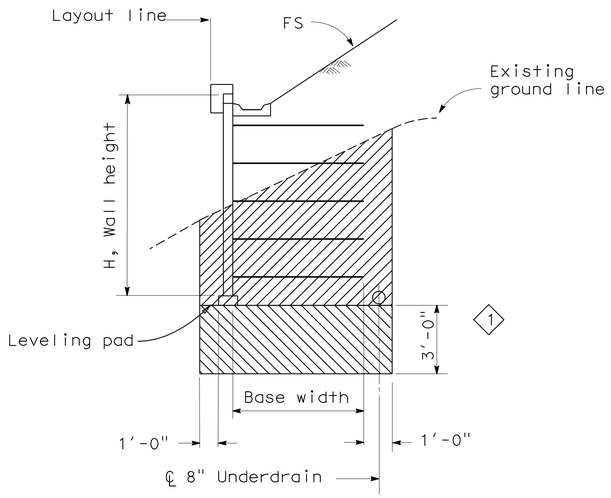

LIMITS OF EXCAVATION

No Scale

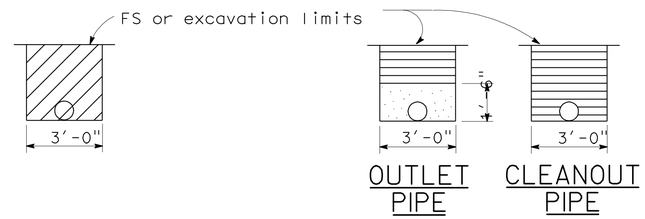

OUTLET OR CLEANOUT PIPE FOR UNDERDRAIN

No Scale

ABBREVIATIONS

OG	Original ground
FS	Planned finished surface
GP	Planned grading plane

LEGEND

	Limits of structure excavation
	Limits of structure backfill
	Limits of permeable material
1	Limits of structure overexcavation

NOTES:

1. Limits to FS except to GP when in roadway section.
2. Locate 8" perforated underdrain below bottom level of welded wire mats.
3. Maximum spacing of outlet pipes is 200 ft.
4. At sags in profile of underdrain, install outlet pipe for each direction of flow.

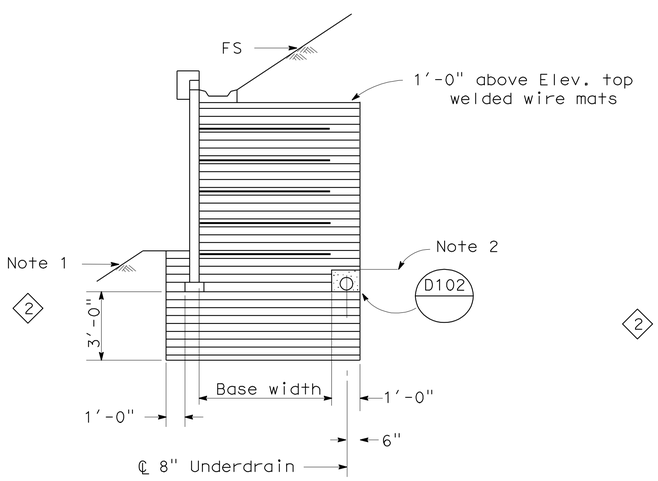

SLOPING FINISHED SURFACE

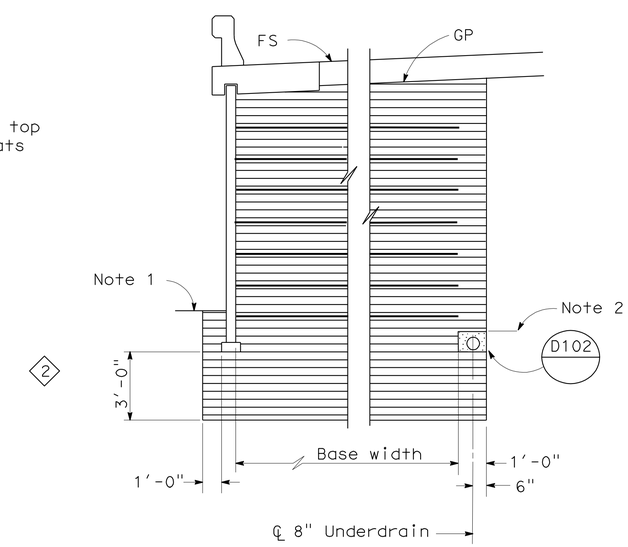

ROADWAY SECTION WITH BASE WIDTH 16' OR GREATER

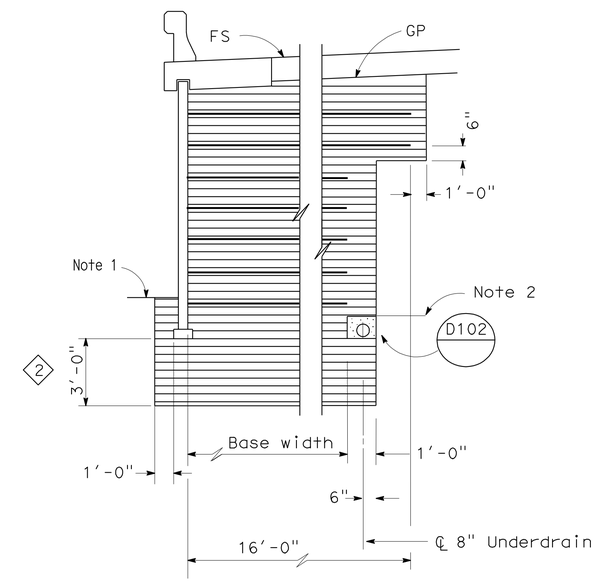

ROADWAY SECTION WITH BASE WIDTH LESS THAN 16'

LIMITS OF BACKFILL

No Scale

STANDARD DRAWING

FILE NO. xs13-020-6e

APPROVED BY K. GRISWELL — RESPONSIBLE TECHNICAL SPECIALIST

APPROVAL DATE 5-6-08

RELEASED BY ROBERTO LACALLE — RESPONSIBLE OFFICE CHIEF

RELEASE DATE 5-6-08

1 Add limits of overexcavation

2 Add limits of Backfill

STATE OF CALIFORNIA DEPARTMENT OF TRANSPORTATION

DIVISION OF ENGINEERING SERVICES

BRIDGE NO. 56E0070

POST MILE 19.39

RETAINING WALL NO. 343

MECHANICALLY STABILIZED EMBANKMENT

DETAIL NO. 5

DS OSD 2147A (ENGLISH STANDARD DRAWING "XS" BORDER REV. 01/11/08)

ORIGINAL SCALE IN INCHES FOR REDUCED PLANS 0 1 2 3

CU 08
EA 448401

DISREGARD PRINTS BEARING EARLIER REVISION DATES

REVISION DATES (PRELIMINARY STAGE ONLY) 11-16-09 7-15-10 9-09-10

SHEET 10 OF 17

USERNAME => trphils

56e0070s_msedt10.dgn

DATE PLOTTED => 30-APR-2011 TIME PLOTTED => 11:30

Dist	COUNTY	ROUTE	POST MILES TOTAL PROJECT	SHEET No.	TOTAL SHEETS
08	Riv	91	15.6/21.6	1515	2028

LICENSED LANDSCAPE ARCHITECT

4-25-11
PLANS APPROVAL DATE

LICENSED LANDSCAPE ARCHITECT
Matthew Perry Hall No. 4393
Signature
10/31/2011
Renewal Date
11/12/2010
Date
STATE OF CALIFORNIA

THE STATE OF CALIFORNIA OR ITS OFFICERS OR AGENTS SHALL NOT BE RESPONSIBLE FOR THE ACCURACY OR COMPLETENESS OF SCANNED COPIES OF THIS PLAN SHEET.

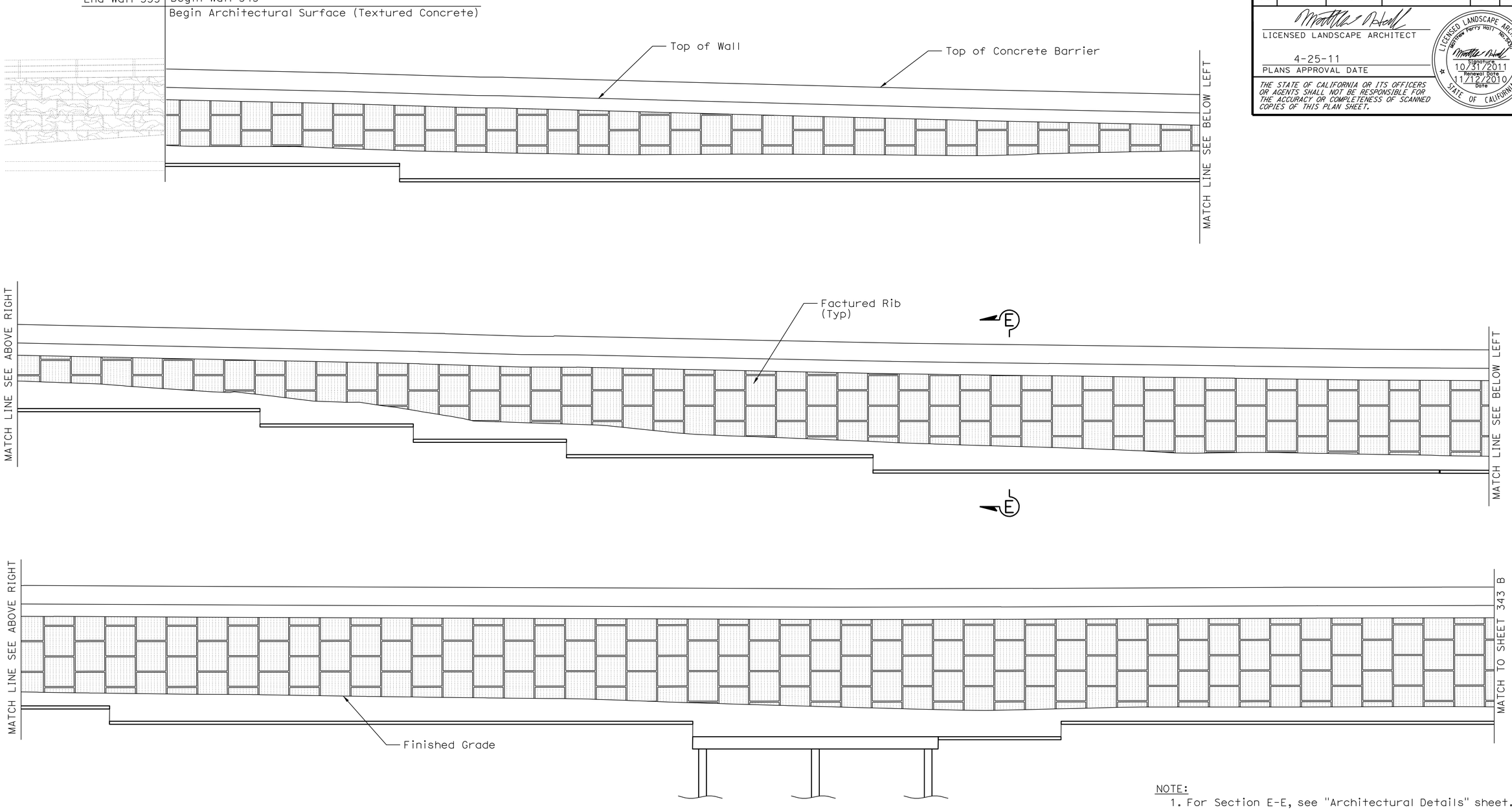

NOTE:
1. For Section E-E, see "Architectural Details" sheet.

MIRRORED ELEVATION FOR FRACTURED RIB TEXTURE MSE RETAINING WALL No. 343 A

1/8"=1'-0"

DESIGN	BY MATTHEW HALL	CHECKED MIRIAM BISHOP	
DETAILS	BY Y. Tang	CHECKED MIRIAM BISHOP	
QUANTITIES	BY A. McPhee	M. Vo	

STATE OF CALIFORNIA
DEPARTMENT OF TRANSPORTATION

DIVISION OF ENGINEERING SERVICES
STRUCTURE DESIGN
DESIGN BRANCH 10

BRIDGE NO. 56E0070
POST MILE 19.39

RETAINING WALL NO. 343
ARCHITECTURAL SURFACE NO. 1

STRUCTURES DESIGN DETAIL SHEET (ENGLISH) (REV. 10/25/05)

ORIGINAL SCALE IN INCHES FOR REDUCED PLANS 0 1 2 3

CU 08
EA 448401

DISREGARD PRINTS BEARING EARLIER REVISION DATES

REVISION DATES: 8-17-10

SHEET 11 OF 17

FILE => 56e0070sars11.dgn

USERNAME => ttphtis DATE PLOTTED => 30-APR-2011 TIME PLOTTED => 11:31

Dist	COUNTY	ROUTE	POST MILES TOTAL PROJECT	SHEET No.	TOTAL SHEETS
08	Riv	91	15.6/21.6	1516	2028

LICENSED LANDSCAPE ARCHITECT

4-25-11
PLANS APPROVAL DATE

LICENSED LANDSCAPE ARCHITECT
Matthew Perry Hall No. 4293
Signature
10/31/2011
Renewal Date
11/12/2010
Date
STATE OF CALIFORNIA

THE STATE OF CALIFORNIA OR ITS OFFICERS OR AGENTS SHALL NOT BE RESPONSIBLE FOR THE ACCURACY OR COMPLETENESS OF SCANNED COPIES OF THIS PLAN SHEET.

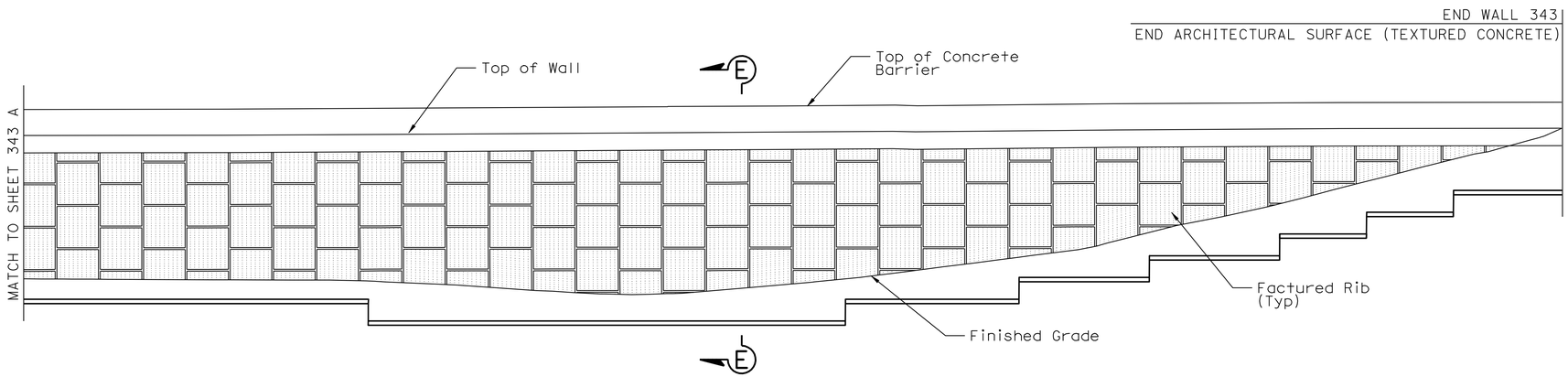

NOTE:
1. For Section E-E, see "Architectural Details" sheet.

MIRRORED ELEVATION FOR FRACTURED RIB TEXTURE MSE RETAINING WALL No. 343 B

1/8"=1'-0"

DESIGN	BY MATTHEW HALL	CHECKED MIRIAM BISHOP	
DETAILS	BY Y. Tang	CHECKED MIRIAM BISHOP	
QUANTITIES	BY A. McPhee	CHECKED M. Vo	

STATE OF CALIFORNIA
DEPARTMENT OF TRANSPORTATION

DIVISION OF ENGINEERING SERVICES
STRUCTURE DESIGN
DESIGN BRANCH 10

BRIDGE NO. 56E0070
POST MILE 19.39

RETAINING WALL NO. 343
ARCHITECTURAL SURFACE NO. 2

STRUCTURES DESIGN DETAIL SHEET (ENGLISH) (REV. 10/25/05)

ORIGINAL SCALE IN INCHES FOR REDUCED PLANS 0 1 2 3

CU 08
EA 448401

DISREGARD PRINTS BEARING EARLIER REVISION DATES

REVISION DATES: 8-17-10

SHEET 12 OF 17

FILE => 56e0070sars12.dgn

USERNAME => trphills DATE PLOTTED => 30-APR-2011 TIME PLOTTED => 11:31

Dist	COUNTY	ROUTE	POST MILES TOTAL PROJECT	SHEET No.	TOTAL SHEETS
08	Riv	91	15.6/21.6	1517	2028

LICENSED LANDSCAPE ARCHITECT

4-25-11
PLANS APPROVAL DATE

LICENSED LANDSCAPE ARCHITECT
Matthew Perry Hall No. 4262
Signature
10/31/2011
Renewal Date
11/12/2010
Date
STATE OF CALIFORNIA

THE STATE OF CALIFORNIA OR ITS OFFICERS OR AGENTS SHALL NOT BE RESPONSIBLE FOR THE ACCURACY OR COMPLETENESS OF SCANNED COPIES OF THIS PLAN SHEET.

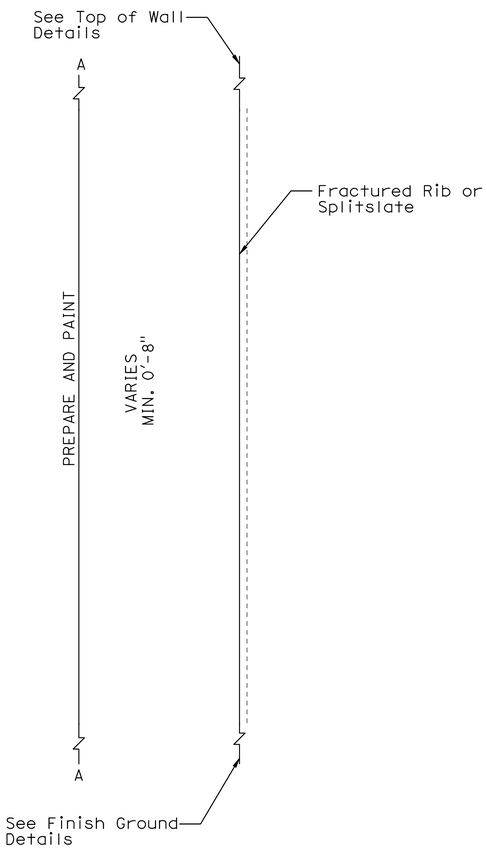

SECTION E-E

NO SCALE

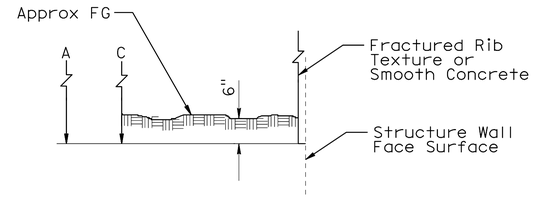

FINISH GROUND DETAIL
TYPICAL DETAIL AT FINISH GRADE

NO SCALE

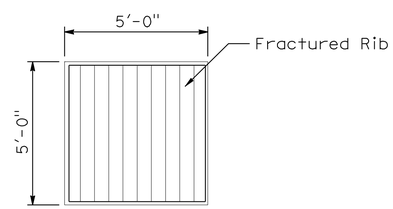

PANEL 1

ARCHITECTURAL SURFACE FOR TYPICAL MECHANICALLY STABILIZED EMBANKMENT (MSE) PANELS

NO SCALE

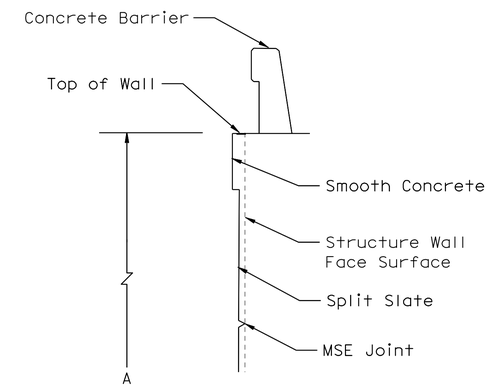

TOP OF WALL DETAIL
TYPICAL WITH CONCRETE BARRIER

NO SCALE

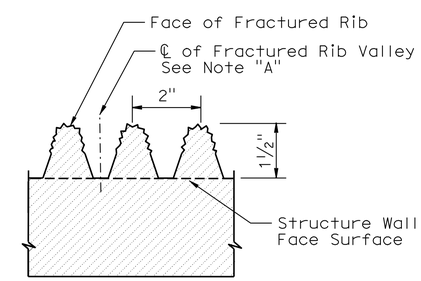

TYPICAL FRACTURED RIB TEXTURE

NO SCALE

DESIGN	BY MATTHEW HALL	CHECKED MIRIAM BISHOP	
DETAILS	BY Y. Tang	CHECKED MIRIAM BISHOP	
QUANTITIES	BY A. McPhee	CHECKED M. Vo	

STATE OF CALIFORNIA
DEPARTMENT OF TRANSPORTATION

DIVISION OF ENGINEERING SERVICES
STRUCTURE DESIGN
DESIGN BRANCH 10

BRIDGE NO. 56E0070
POST MILE 19.39

RETAINING WALL NO. 343
ARCHITECTURAL DETAILS

STRUCTURES DESIGN DETAIL SHEET (ENGLISH) (REV. 10/25/05)

ORIGINAL SCALE IN INCHES FOR REDUCED PLANS 0 1 2 3

CU 08
EA 448401

DISREGARD PRINTS BEARING EARLIER REVISION DATES

REVISION DATES: 8-17-10

SHEET 13 OF 17

FILE => 56e0070sarsedt13.dgn

USERNAME => trphills DATE PLOTTED => 30-APR-2011 TIME PLOTTED => 11:31

DIST	COUNTY	ROUTE	POST MILES TOTAL PROJECT	SHEET No	TOTAL SHEETS
08	Riv	91	15.6/21.6	1518	2028

GEOTECHNICAL PROFESSIONAL — DATE 11/03/10

4-25-11
PLANS APPROVAL DATE

REGISTERED PROFESSIONAL ENGINEER — Farid Motamed — No. 2738 — Exp. 6-30-11 — GEOTECHNICAL — STATE OF CALIFORNIA

The State of California or its officers or agents shall not be responsible for the accuracy or completeness of electronic copies of this plan sheet.

California Department of Transportation
5900 Folsom Boulevard
Sacramento, CA 95819

URS Corporation
2020 East First Street, Suite 400
Santa Ana, CA 92705

GROUP SYMBOLS AND NAMES

Graphic / Symbol	Group Names	Graphic / Symbol	Group Names
GW	Well-graded GRAVEL Well-graded GRAVEL with SAND	CL	Lean CLAY Lean CLAY with SAND Lean CLAY with GRAVEL SANDY lean CLAY SANDY lean CLAY with GRAVEL GRAVELLY lean CLAY GRAVELLY lean CLAY with SAND
GP	Poorly graded GRAVEL Poorly graded GRAVEL with SAND		
GW-GM	Well-graded GRAVEL with SILT Well-graded GRAVEL with SILT and SAND	CL-ML	SILTY CLAY SILTY CLAY with SAND SILTY CLAY with GRAVEL SANDY SILTY CLAY SANDY SILTY CLAY with GRAVEL GRAVELLY SILTY CLAY GRAVELLY SILTY CLAY with SAND
GW-GC	Well-graded GRAVEL with CLAY (or SILTY CLAY) Well-graded GRAVEL with CLAY and SAND (or SILTY CLAY and SAND)		
GP-GM	Poorly graded GRAVEL with SILT Poorly graded GRAVEL with SILT and SAND	ML	SILT SILT with SAND SILT with GRAVEL SANDY SILT SANDY SILT with GRAVEL GRAVELLY SILT GRAVELLY SILT with SAND
GP-GC	Poorly graded GRAVEL with CLAY (or SILTY CLAY) Poorly graded GRAVEL with CLAY and SAND (or SILTY CLAY and SAND)		
GM	SILTY GRAVEL SILTY GRAVEL with SAND	OL	ORGANIC lean CLAY ORGANIC lean CLAY with SAND ORGANIC lean CLAY with GRAVEL SANDY ORGANIC lean CLAY SANDY ORGANIC lean CLAY with GRAVEL GRAVELLY ORGANIC lean CLAY GRAVELLY ORGANIC lean CLAY with SAND
GC	CLAYEY GRAVEL CLAYEY GRAVEL with SAND		
GC-GM	SILTY, CLAYEY GRAVEL SILTY, CLAYEY GRAVEL with SAND	OL	ORGANIC SILT ORGANIC SILT with SAND ORGANIC SILT with GRAVEL SANDY ORGANIC SILT SANDY ORGANIC SILT with GRAVEL GRAVELLY ORGANIC SILT GRAVELLY ORGANIC SILT with SAND
SW	Well-graded SAND Well-graded SAND with GRAVEL		
SP	Poorly graded SAND Poorly graded SAND with GRAVEL	CH	Fat CLAY Fat CLAY with SAND Fat CLAY with GRAVEL SANDY fat CLAY SANDY fat CLAY with GRAVEL GRAVELLY fat CLAY GRAVELLY fat CLAY with SAND
SW-SM	Well-graded SAND with SILT Well-graded SAND with SILT and GRAVEL		
SW-SC	Well-graded SAND with CLAY (or SILTY CLAY) Well-graded SAND with CLAY and GRAVEL (or SILTY CLAY and GRAVEL)	MH	Elastic SILT Elastic SILT with SAND Elastic SILT with GRAVEL SANDY elastic SILT SANDY elastic SILT with GRAVEL GRAVELLY elastic SILT GRAVELLY elastic SILT with SAND
SP-SM	Poorly graded SAND with SILT Poorly graded SAND with SILT and GRAVEL		
SP-SC	Poorly graded SAND with CLAY (or SILTY CLAY) Poorly graded SAND with CLAY and GRAVEL (or SILTY CLAY and GRAVEL)	OH	ORGANIC fat CLAY ORGANIC fat CLAY with SAND ORGANIC fat CLAY with GRAVEL SANDY ORGANIC fat CLAY SANDY ORGANIC fat CLAY with GRAVEL GRAVELLY ORGANIC fat CLAY GRAVELLY ORGANIC fat CLAY with SAND
SM	SILTY SAND SILTY SAND with GRAVEL		
SC	CLAYEY SAND CLAYEY SAND with GRAVEL	OH	ORGANIC elastic SILT ORGANIC elastic SILT with SAND ORGANIC elastic SILT with GRAVEL SANDY elastic ELASTIC SILT SANDY ORGANIC elastic SILT with GRAVEL GRAVELLY ORGANIC elastic SILT GRAVELLY ORGANIC elastic SILT with SAND
SC-SM	SILTY, CLAYEY SAND SILTY, CLAYEY SAND with GRAVEL		
PT	PEAT	OL/OH	ORGANIC SOIL ORGANIC SOIL with SAND ORGANIC SOIL with GRAVEL SANDY ORGANIC SOIL SANDY ORGANIC SOIL with GRAVEL GRAVELLY ORGANIC SOIL GRAVELLY ORGANIC SOIL with SAND
	COBBLES COBBLES and BOULDERS BOULDERS		

FIELD AND LABORATORY TESTS

C	Consolidation (ASTM D 2435-04)
CL	Collapse Potential (ASTM D 5333-03)
CP	Compaction Curve (CTM 216 - 06)
CR	Corrosion, Sulfates, Chlorides (CTM 643 - 99; CTM 417 - 06; CTM 422 - 06)
CU	Consolidated Undrained Triaxial (ASTM D 4767-02)
DS	Direct Shear (ASTM D 3080-04)
EI	Expansion Index (ASTM D 4829-03)
M	Moisture Content (ASTM D 2216-05)
OC	Organic Content (ASTM D 2974-07)
P	Permeability (CTM 220 - 05)
PA	Particle Size Analysis (ASTM D 422-63 [2002])
PI	Liquid Limit, Plastic Limit, Plasticity Index (AASHTO T 89-02, AASHTO T 90-00)
PL	Point Load Index (ASTM D 5731-05)
PM	Pressure Meter
PP	Pocket Penetrometer
R	R-Value (CTM 301 - 00)
SE	Sand Equivalent (CTM 217 - 99)
SG	Specific Gravity (AASHTO T 100-06)
SL	Shrinkage Limit (ASTM D 427-04)
SW	Swell Potential (ASTM D 4546-03)
TV	Pocket Torvane
UC	Unconfined Compression - Soil (ASTM D 2166-06) Unconfined Compression - Rock (ASTM D 2938-95)
UU	Unconsolidated Undrained Triaxial (ASTM D 2850-03)
UW	Unit Weight (ASTM D 4767-04)
VS	Vane Shear (AASHTO T 223-96 [2004])

CONSISTENCY OF COHESIVE SOILS

Descriptor	Unconfined Compressive Strength (tsf)	Pocket Penetrometer (tsf)	Torvane (tsf)	Field Approximation
Very Soft	< 0.25	< 0.25	< 0.12	Easily penetrated several inches by fist
Soft	0.25 - 0.50	0.25 - 0.50	0.12 - 0.25	Easily penetrated several inches by thumb
Medium Stiff	0.50 - 1.0	0.50 - 1.0	0.25 - 0.50	Can be penetrated several inches by thumb with moderate effort
Stiff	1.0 - 2.0	1.0 - 2.0	0.50 - 1.0	Readily indented by thumb but penetrated only with great effort
Very Stiff	2.0 - 4.0	2.0 - 4.0	1.0 - 2.0	Readily indented by thumbnail
Hard	> 4.0	> 4.0	> 2.0	Indented by thumbnail with difficulty

APPARENT DENSITY OF COHESIONLESS SOILS

Descriptor	SPT N60 - Value (blows / foot)
Very Loose	0 - 4
Loose	5 - 10
Medium Dense	11 - 30
Dense	31 - 50
Very Dense	> 50

MOISTURE

Descriptor	Criteria
Dry	Absence of moisture, dusty, dry to the touch
Moist	Damp but no visible water
Wet	Visible free water, usually soil is below water table

PERCENT OR PROPORTION OF SOILS

Descriptor	Criteria
Trace	Particles are present but estimated to be less than 5%
Few	5 to 10%
Little	15 to 25%
Some	30 to 45%
Mostly	50 to 100%

SOIL PARTICLE SIZE

Descriptor		Size
Boulder		> 12 inches
Cobble		3 to 12 inches
Gravel	Coarse	3/4 inch to 3 inches
	Fine	No. 4 Sieve to 3/4 inch
Sand	Coarse	No. 10 Sieve to No. 4 Sieve
	Medium	No. 40 Sieve to No. 10 Sieve
	Fine	No. 200 Sieve to No. 40 Sieve
Silt and Clay		Passing No. 200 Sieve

PLASTICITY OF FINE-GRAINED SOILS

Descriptor	Criteria
Nonplastic	A 1/8-inch thread cannot be rolled at any water content.
Low	The thread can barely be rolled, and the lump cannot be formed when drier than the plastic limit.
Medium	The thread is easy to roll, and not much time is required to reach the plastic limit; it cannot be rerolled after reaching the plastic limit. The lump crumbles when drier than the plastic limit.
High	It takes considerable time rolling and kneading to reach the plastic limit. The thread can be rerolled several times after reaching the plastic limit. The lump can be formed without crumbling when drier than the plastic limit.

CEMENTATION

Descriptor	Criteria
Weak	Crumbles or breaks with handling or little finger pressure.
Moderate	Crumbles or breaks with considerable finger pressure.
Strong	Will not crumble or break with finger pressure.

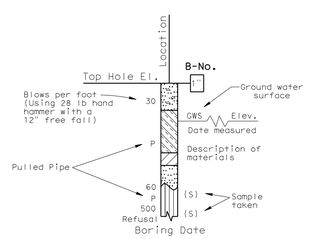

SAMPLE BORING (DRY)

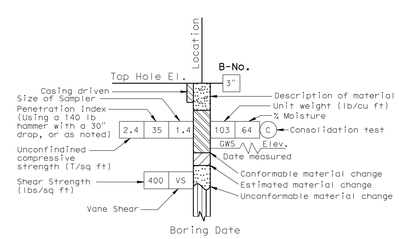

ROTARY SAMPLE BORING (WET)

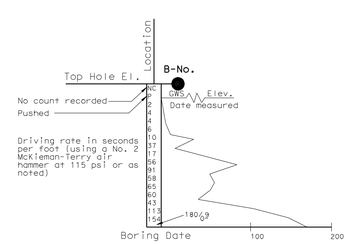

2 1/4" CONE PENETRATION BORING

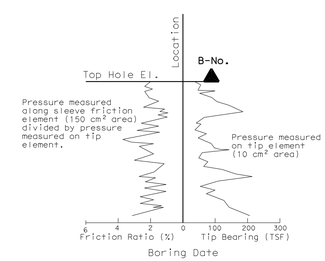

ELECTRONIC CONE PENETROMETER TEST

Cone Penetrometer dimensions and testing procedures are in accordance with ASTM standard D 3441-79, or as noted.

GINA PURSELL DESIGN OVERSIGHT	SHAWN WEI FUNCTIONAL SUPERVISOR	DRAWN BY	P. QUACH	P.CHAU/D.WADER/C.CARBINO FIELD INVESTIGATION BY:	PREPARED FOR THE STATE OF CALIFORNIA DEPARTMENT OF TRANSPORTATION	A. LEE PROJECT ENGINEER	BRIDGE NO. 56E0070 POST MILE 19.39
11/12/10 SIGN OFF DATE		CHECKED BY	S. PIRATHIVIRAJ	DATE: Nov 6 2007 to March 7 2008			

RETAINING WALL NO. 343

LOG OF TEST BORINGS 1 OF 4

OSF GEOTECHNICAL LOG OF TEST BORINGS SHEET (ENGLISH) (REV. 2/25/05)

ORIGINAL SCALE IN INCHES FOR REDUCED PLANS 0 1 2 3

CU 59A0590
EA 08-448400

DISREGARD PRINTS BEARING EARLIER REVISION DATES

REVISION DATES (PRELIMINARY STAGE ONLY): 8-17-10

SHEET 14 OF 17

FILE => 56e0070zltb14.dgn

USERNAME => trphtis DATE PLOTTED => 30-APR-2011 TIME PLOTTED =>

DIST	COUNTY	ROUTE	POST MILES TOTAL PROJECT	SHEET No	TOTAL SHEETS
08	Riv	91	15.6/21.6	1519	2028

GEOTECHNICAL PROFESSIONAL — DATE 11/03/10

4-25-11
PLANS APPROVAL DATE

REGISTERED PROFESSIONAL ENGINEER — Farid Motamed — No. 2738 — Exp. 6-30-11 — GEOTECHNICAL — STATE OF CALIFORNIA

The State of California or its officers or agents shall not be responsible for the accuracy or completeness of electronic copies of this plan sheet.

California Department of Transportation
5900 Folsom Boulevard
Sacramento, CA 95819

URS Corporation
2020 East First Street, Suite 400
Santa Ana, CA 92705

NOTE: 1. This LOTB sheet was prepared in accordance with the Caltrans Soil & Rock Logging, Classification, and Presentation Manual (June 2007).

2. For legend, see "Log of Test Borings" 1 of 4

FOR PLAN VIEW, SEE
"LOG OF TEST BORINGS" 4 OF 4

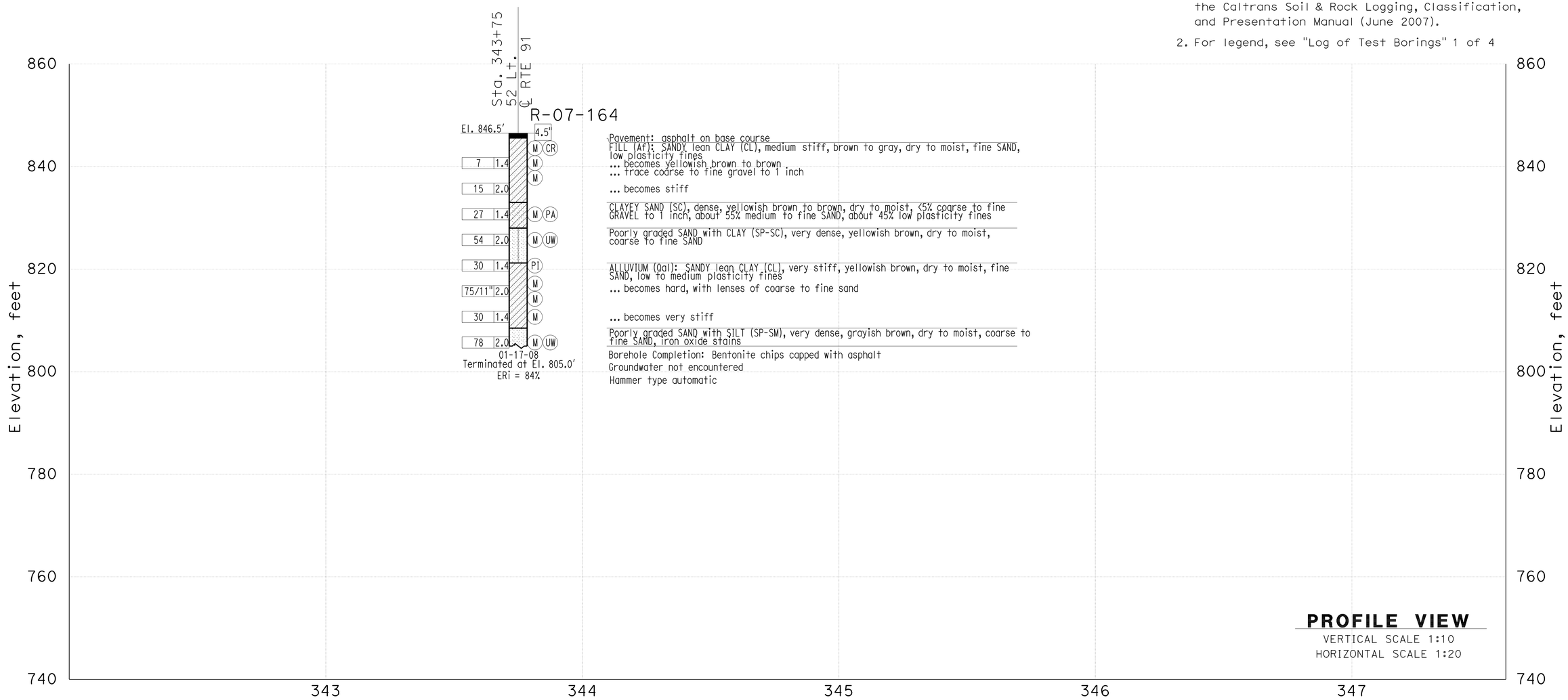

THIS PLAN ACCURATE FOR SOUND WALL AND RETAINING WALL WORK ONLY

GINA PURSELL DESIGN OVERSIGHT 11/12/10 SIGN OFF DATE	SHAWN WEI FUNCTIONAL SUPERVISOR	DRAWN BY	P. QUACH	P.CHAU/D.WADER/C.CARBINO FIELD INVESTIGATION BY: DATE: Nov 6 2007 to March 7 2008	PREPARED FOR THE STATE OF CALIFORNIA DEPARTMENT OF TRANSPORTATION	A. LEE PROJECT ENGINEER	BRIDGE NO. 56E0070 POST MILE 19.39
		CHECKED BY	S. PIRATHIVIRAJ				

Retaining Wall 343

LOG OF TEST BORINGS SHEET 2 OF 4

OSF GEOTECHNICAL LOG OF TEST BORINGS SHEET (ENGLISH) (REV. 2/25/05)

ORIGINAL SCALE IN INCHES FOR REDUCED PLANS 0 1 2 3

CU 59A0590
EA 08-448400

DISREGARD PRINTS BEARING EARLIER REVISION DATES

REVISION DATES (PRELIMINARY STAGE ONLY) 8-17-10

SHEET 15 OF 17

FILE => 56e0070zltb15.dgn

USERNAME => trphtls DATE PLOTTED => 30-APR-2011 TIME PLOTTED =>

DIST	COUNTY	ROUTE	POST MILES TOTAL PROJECT	SHEET No	TOTAL SHEETS
08	Riv	91	15.6/21.6	1520	2028

GEOTECHNICAL PROFESSIONAL — DATE 11/03/10

4-25-11
PLANS APPROVAL DATE

REGISTERED PROFESSIONAL ENGINEER — Farid Motamed — No. 2738 — Exp. 6-30-11 — GEOTECHNICAL — STATE OF CALIFORNIA

The State of California or its officers or agents shall not be responsible for the accuracy or completeness of electronic copies of this plan sheet.

California Department of Transportation
5900 Folsom Boulevard
Sacramento, CA 95819

URS Corporation
2020 East First Street, Suite 400
Santa Ana, CA 92705

FOR PLAN VIEW, SEE
"LOG OF TEST BORINGS" 4 OF 4

NOTE: 1. This LOTB sheet was prepared in accordance with the Caltrans Soil & Rock Logging, Classification, and Presentation Manual (June 2007).

2. For legend, see "Log of Test Borings" 1 of 4

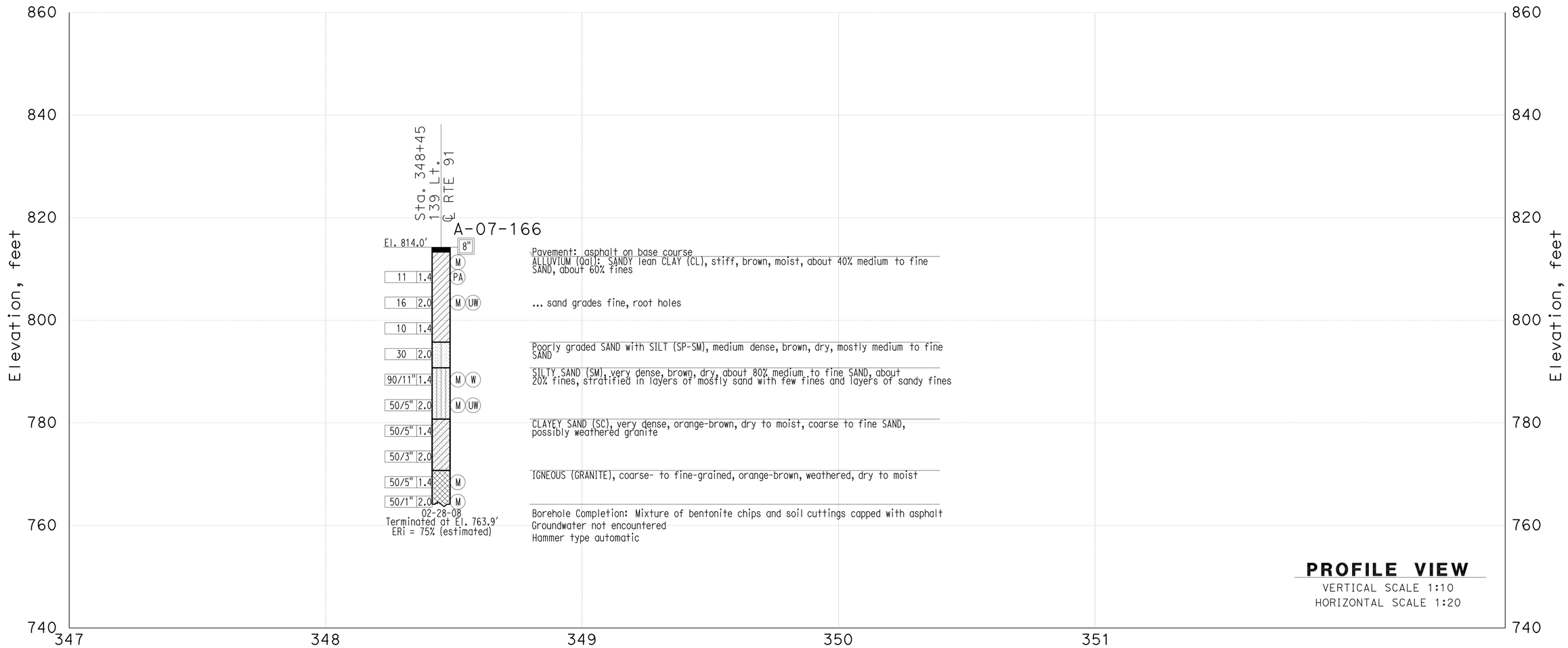

THIS PLAN ACCURATE FOR SOUND WALL AND RETAINING WALL WORK ONLY

GINA PURSELL DESIGN OVERSIGHT 11/12/10 SIGN OFF DATE	SHAWN WEI FUNCTIONAL SUPERVISOR	DRAWN BY CHECKED BY	P. QUACH S. PIRATHIVIRAJ	P.CHAU/D.WADER/C.CARBINO FIELD INVESTIGATION BY: DATE: Nov 6 2007 to March 7 2008	PREPARED FOR THE STATE OF CALIFORNIA DEPARTMENT OF TRANSPORTATION	A. LEE PROJECT ENGINEER	BRIDGE NO. 56E0070 POST MILE 19.39

Retaining Wall 343

LOG OF TEST BORINGS SHEET 3 OF 4

OSF GEOTECHNICAL LOG OF TEST BORINGS SHEET (ENGLISH) (REV. 2/25/05)

ORIGINAL SCALE IN INCHES FOR REDUCED PLANS 0 1 2 3

CU 59A0590
EA 08-448400

DISREGARD PRINTS BEARING EARLIER REVISION DATES

REVISION DATES (PRELIMINARY STAGE ONLY) 8-17-10

SHEET 16 OF 17

FILE => 56e0070zltb16.dgn

USERNAME => trphtis DATE PLOTTED => 30-APR-2011 TIME PLOTTED =>

DIST	COUNTY	ROUTE	POST MILES TOTAL PROJECT	SHEET No	TOTAL SHEETS
08	Riv	91	15.6/21.6	1521	2028

GEOTECHNICAL PROFESSIONAL — DATE 11/03/10

4-25-11
PLANS APPROVAL DATE

REGISTERED PROFESSIONAL ENGINEER — Farid Motamed — No. 2738 — Exp. 6-30-11 — GEOTECHNICAL — STATE OF CALIFORNIA

The State of California or its officers or agents shall not be responsible for the accuracy or completeness of electronic copies of this plan sheet.

California Department of Transportation
5900 Folsom Boulevard
Sacramento, CA 95819

URS Corporation
2020 East First Street, Suite 400
Santa Ana, CA 92705

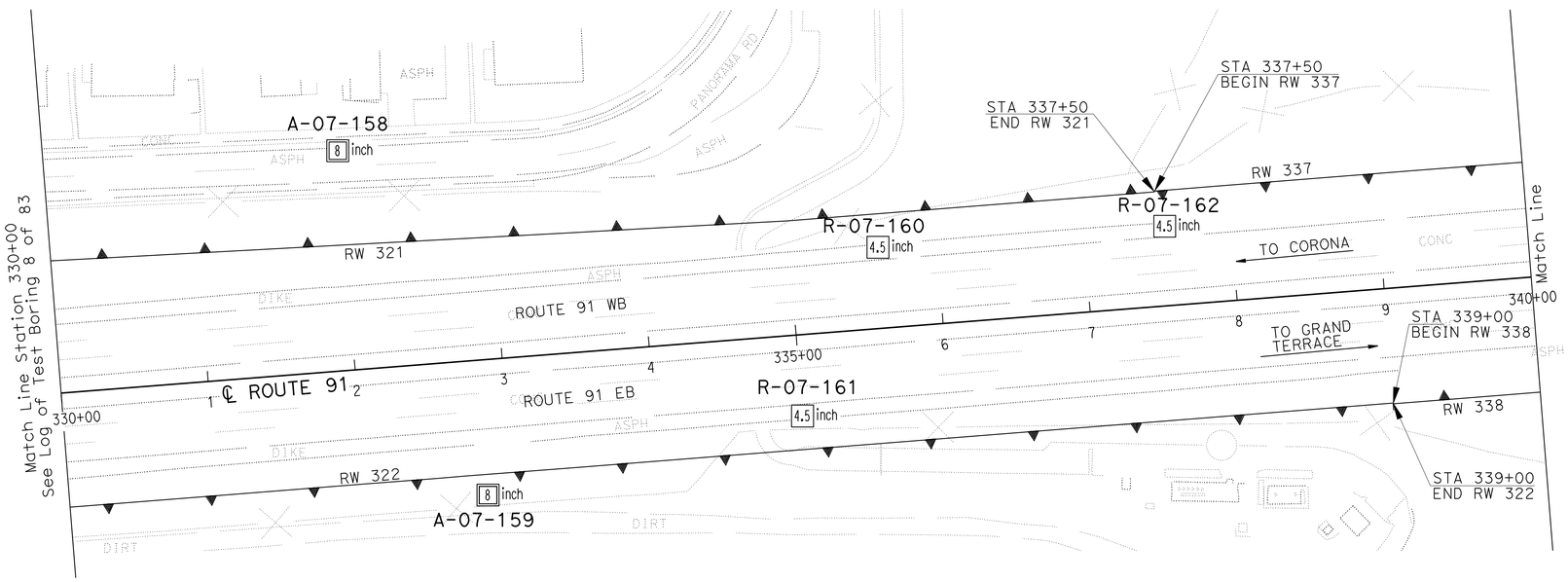

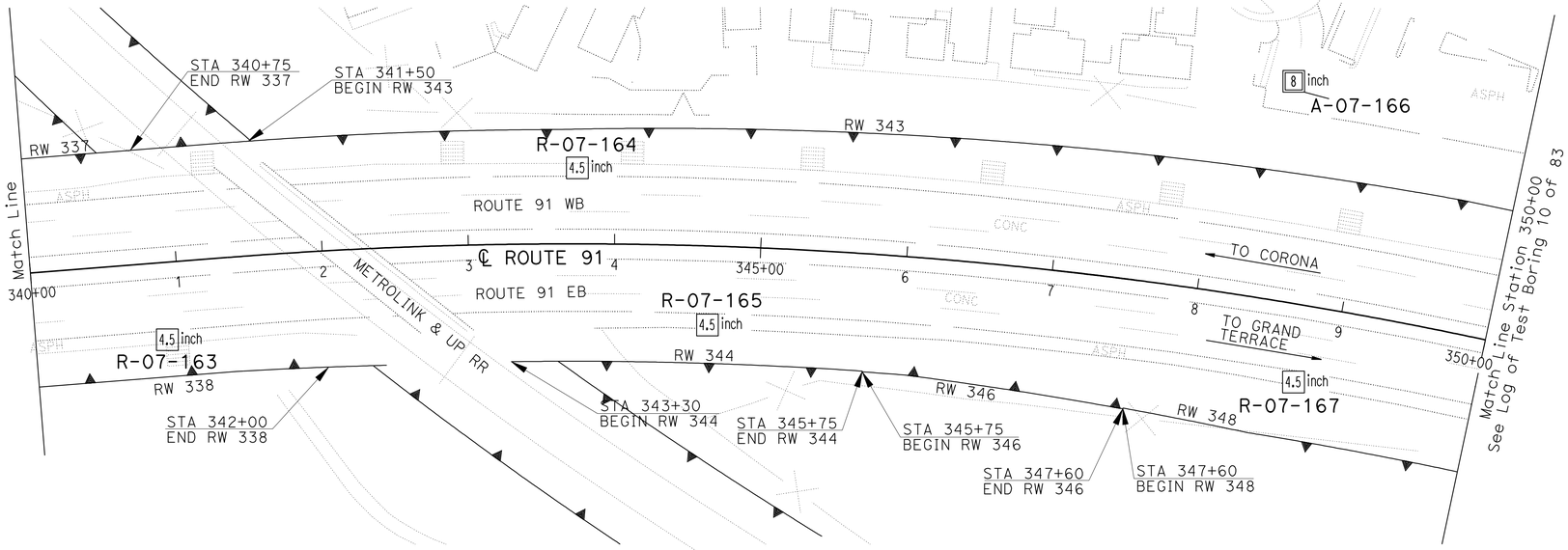

PLAN
SCALE 1"=50'

Borehole Number	Drill Rig	Hammer Type	Avg. Hammer Efficiency, ETR (%)
A-07-158	Diedrich D-120	Automatic	75*
A-07-159	Diedrich D-120	Automatic	75*
R-07-160	CME 85	Automatic	87
R-07-161	CS-2000	Automatic	84
R-07-162	CS-2000	Automatic	84
R-07-163	CME 85	Automatic	87
R-07-164	CS-2000	Automatic	84
R-07-165	CS-2000	Automatic	84
A-07-166	Diedrich D-120	Automatic	75*
R-07-167	Acker Rig	Automatic	74

Sampler Type	Inside Diameter (Inches)	Borehole Numbers
SPT	1.375	A-07-158, A-07-159, R-07-60 R-07-161, R-07-162, R-07-163 R-07-164, R-07-165, A-07-166 R-07-177
Modified California 1	1.94	R-07-160, R-07-162, R-07-163 R-07-164, R-07-165, R-07-167
Modified California 2	2.40	A-07-158, A-07-159, A-07-166

*Estimated Hammer Efficiency Rating.

GINA PURSELL — DESIGN OVERSIGHT
SHAWN WEI — FUNCTIONAL SUPERVISOR
11/12/10 — SIGN OFF DATE

DRAWN BY: P. QUACH
CHECKED BY: S. PIRATHIVIRAJ

P.CHAU/D.WADER/C.CARBINO — FIELD INVESTIGATION BY:
DATE: Nov 6 2007 to March 7 2008

PREPARED FOR THE STATE OF CALIFORNIA DEPARTMENT OF TRANSPORTATION

A. LEE — PROJECT ENGINEER

BRIDGE NO. 56E0070
POST MILE 19.39

RETAINING WALL NO. 343
LOG OF TEST BORINGS 4 OF 4

OSF GEOTECHNICAL LOG OF TEST BORINGS SHEET (ENGLISH) (REV. 2/25/05)

ORIGINAL SCALE IN INCHES FOR REDUCED PLANS 0 1 2 3

CU 59A0590
EA 08-448400

DISREGARD PRINTS BEARING EARLIER REVISION DATES
REVISION DATES (PRELIMINARY STAGE ONLY) 8-17-10

SHEET 17 OF 17

FILE => 56e0070zltb17.dgn

USERNAME => trphilis DATE PLOTTED => 30-APR-2011 TIME PLOTTED =>

DIST	COUNTY	ROUTE	POST MILES TOTAL PROJECT	SHEET No	TOTAL SHEETS
08	Riv	91	15.6/21.6	1522	2028

REGISTERED CIVIL ENGINEER 11/12/10 DATE

4-25-11
PLANS APPROVAL DATE

REGISTERED PROFESSIONAL ENGINEER Minh Thuong Vo No. C59297 Exp. 6/30/2011 CIVIL STATE OF CALIFORNIA

The State of California or its officers or agents shall not be responsible for the accuracy or completeness of electronic copies of this plan sheet.

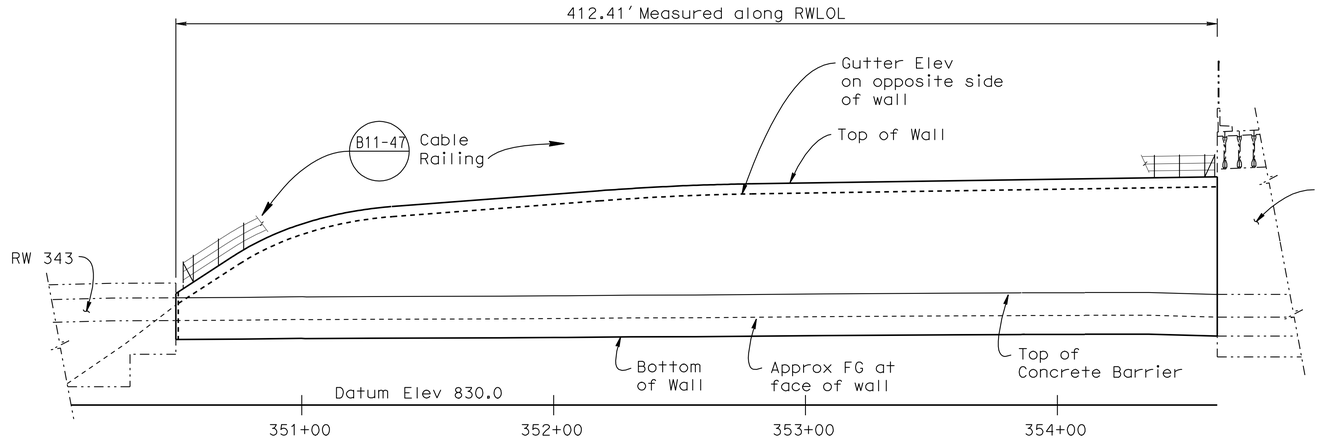

DEVELOPED ELEVATION

Horiz. 1" = 30′
Vert. 1" = 10′

Notes:

1. For top of wall and bottom of wall elevations see "STRUCTURE PLAN NO. 1 and "STRUCTURE PLAN NO. 2" sheets.
2. For Quantities see "INDEX TO PLANS" sheet.

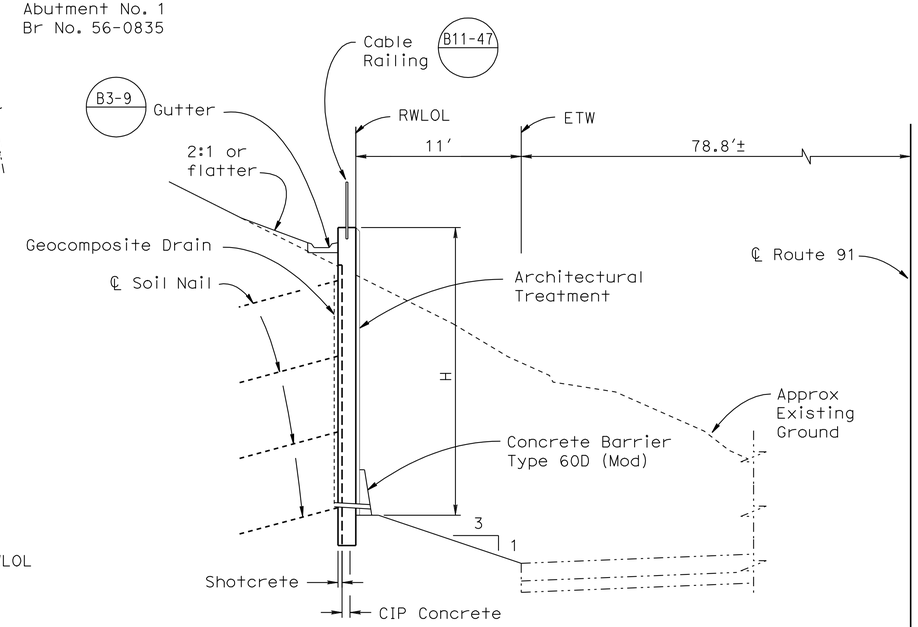

TYPICAL SECTION

1" = 5′

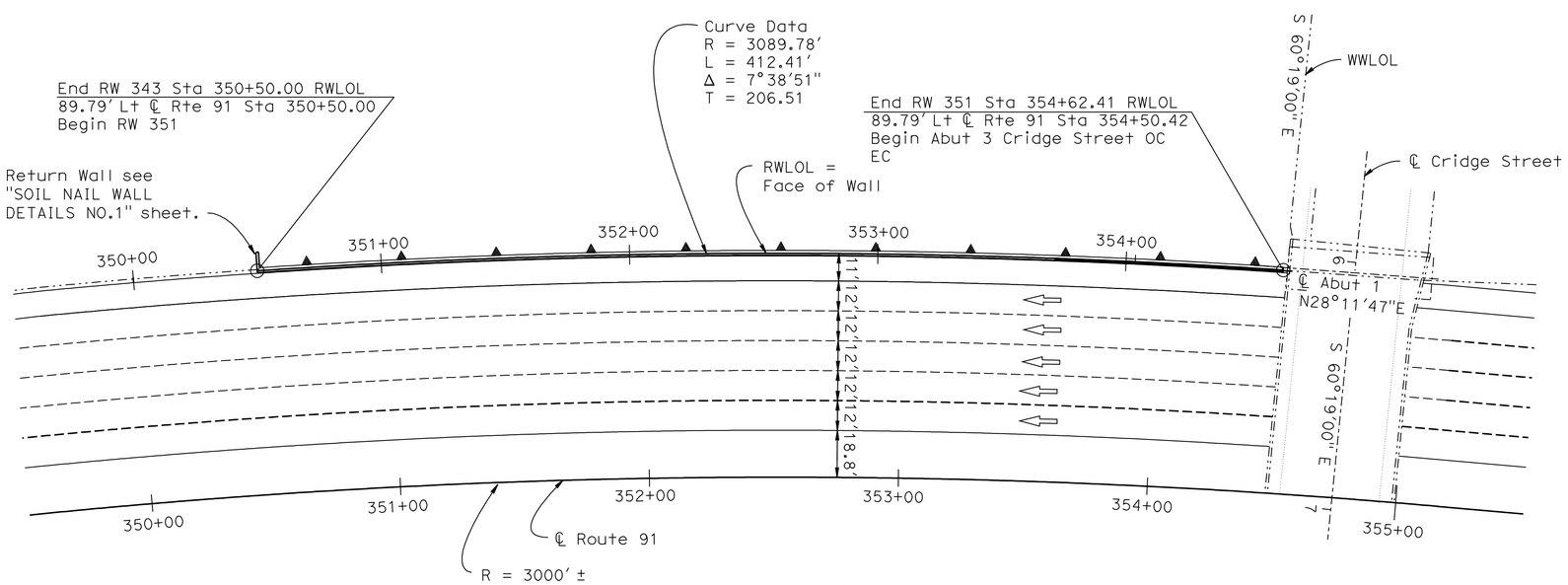

PLAN

1" = 30′

NOTE:
THE CONTRACTOR SHALL VERIFY ALL CONTROLLING FIELD DIMENSIONS BEFORE ORDERING OR FABRICATING ANY MATERIAL.

Daniel T. Adams
DESIGN ENGINEER

	BY	CHECKED
DESIGN	M. Vo	J. Szabo
DETAILS	R. Kirkland	J. Szabo
QUANTITIES	J. Szabo	M. Vo

LOAD & RESISTANCE FACTOR DESIGN — LIVE LOADING: HL93 W/"LOW-BOY"; PERMIT DESIGN VEHICLE

	BY	CHECKED
LAYOUT	M. Vo	J. Szabo
SPECIFICATIONS	Dave Klein	PLANS AND SPECS COMPARED Dave Klein

ORIGINAL SCALE IN INCHES FOR REDUCED PLANS 0 1 2 3

STATE OF CALIFORNIA
DEPARTMENT OF TRANSPORTATION

DIVISION OF ENGINEERING SERVICES
STRUCTURE DESIGN
DESIGN BRANCH 10

CU 08
EA 448401

BRIDGE NO. 56 E0071
POST MILE 19.55

RETAINING WALL NO. 351
GENERAL PLAN

DISREGARD PRINTS BEARING EARLIER REVISION DATES → 7/15/10 7/15/10

REVISION DATES

SHEET 1 OF 13

STRUCTURES DESIGN GENERAL PLAN SHEET (ENGLISH) (REV.07-24-06)

FILE => 56e0071agp01.dgn

USERNAME => trphilis DATE PLOTTED => 30-APR-2011 TIME PLOTTED => 11:32

DIST	COUNTY	ROUTE	POST MILES TOTAL PROJECT	SHEET No	TOTAL SHEETS
08	Riv	91	15.6/21.6	1523	2028

REGISTERED CIVIL ENGINEER — DATE 11/12/10

4-25-11
PLANS APPROVAL DATE

REGISTERED PROFESSIONAL ENGINEER — Minh Thuong Vo — No. C59297 — Exp. 6/30/2011 — CIVIL — STATE OF CALIFORNIA

The State of California or its officers or agents shall not be responsible for the accuracy or completeness of electronic copies of this plan sheet.

DESIGN DATA

DESIGN: Service Load Design Method per FHWA Geotechnical Engineering Circular No. 7 (FHWA O-IF-03-017) & Manual for Design and Construction Monitoring of Soil Nail Wall (FHWA-SA-96-069R)

REINFORCED CONCRETE: f_c = 3.6 KSI, f_y = 60 KSI

SHOTCRETE: f_c = 3.6 KSI, f_y = 60 KSI

STRUCTURAL STEEL: ASTM Designation: A 709, Grade 36, f_y = 36 KSI

SOIL NAILS: ASTM Designation: A615, Grade 60, f_y = 60 KSI

SOIL PARAMETERS: ϕ = 33°
c = 470 lb/ft^2
γ = 125 lb/ft^3
Q_d = 2.18 k/ft (Design Pullout Resistance)

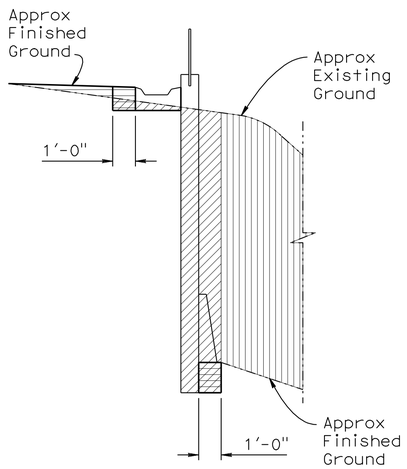

Structure Excavation (Soil Nail Wall)

Structure Backfill (Soil Nail Wall)

Roadway Excavation (see Roadway Plan)

SOIL NAIL WALL EXCAVATION & BACKFILL

NO SCALE

INDEX TO PLANS

Sheet No.	Title
1	GENERAL PLAN
2	INDEX TO PLANS
3	STRUCTURE PLAN NO. 1
4	STRUCTURE PLAN NO. 2
5	SOIL NAIL WALL DETAILS NO. 1
6	SOIL NAIL WALL DETAILS NO. 2
7	SOIL NAIL WALL DETAILS NO. 3
8	ARCHITECTURAL SURFACE
9	ARCHITECTURAL SURFACE DETAIL SHEET NO. 1
10	ARCHITECTURAL SURFACE DETAIL SHEET NO. 2
11	LOG OF TEST BORINGS 1 OF 3
12	LOG OF TEST BORINGS 2 OF 3
13	LOG OF TEST BORINGS 3 OF 3

STANDARD PLANS DATED MAY 2006

A10A	ACRONYMS AND ABBREVIATIONS (SHEET 1 OF 2)
A10B	ACRONYMS AND ABBREVIATIONS (SHEET 2 OF 2)
A10C	SYMBOLS (SHEET 1 OF 2)
A10D	SYMBOLS (SHEET 2 OF 2)
B0-1	BRIDGE DETAILS
B0-3	BRIDGE DETAILS
B3-1	RETAINING WALL TYPE 1 H=4' THROUGH 30'
B3-2	RETAINING WALL TYPE 1 H=32' THROUGH 36'
B3-8	RETAINING WALL DETAILS NO. 1
B3-9	RETAINING WALL DETAILS NO. 2
B11-47	CABLE RAILING

STANDARD PLAN SHEET NO.

DETAIL NO.

QUANTITIES

RETAINING WALL 351 — BRIDGE NO 56E0071

STRUCTURE EXCAVATION (SOIL NAIL WALL)	482	CY
STRUCTURE BACKFILL (SOIL NAIL WALL)	43	CY
SOIL NAIL ASSEMBLY	3,516	LF
STRUCTURAL CONCRETE, RETAINING WALL	192	CY
ARCHITECTURAL SURFACE (TEXTURED CONCRETE) FRACTURED RIB SPLIT SLATE TEXTURE	4,525	SQFT
BAR REINFORCING STEEL (RETAINING WALL)	29,811	LB
SHOTCRETE	92	CY
MINOR CONCRETE (GUTTER)	414	LF
CABLE RAILING	414	LF
CONCRETE BARRIER (TYPE 60D MODIFIED)	414	LF

	BY	CHECKED
DESIGN	M. Vo	J. Szabo
DETAILS	R. Kirkland	J. Szabo
QUANTITIES	J. Szabo	M. Vo

STATE OF CALIFORNIA
DEPARTMENT OF TRANSPORTATION

DIVISION OF ENGINEERING SERVICES
STRUCTURE DESIGN
DESIGN BRANCH 10

BRIDGE NO. 56 E0071
POST MILE 19.55

RETAINING WALL NO. 351
INDEX TO PLANS

STRUCTURES DESIGN DETAIL SHEET (ENGLISH) (REV. 10/25/05)

ORIGINAL SCALE IN INCHES FOR REDUCED PLANS 0 1 2 3

CU 08
EA 448401

DISREGARD PRINTS BEARING EARLIER REVISION DATES — REVISION DATES 7/15/10 7/15/10

SHEET 2 OF 13

FILE => 56e0071aitp02.dgn

USERNAME => ttphilis DATE PLOTTED => 30-APR-2011 TIME PLOTTED => 11:32

DIST	COUNTY	ROUTE	POST MILES TOTAL PROJECT	SHEET No	TOTAL SHEETS
08	Riv	91	15.6/21.6	1524	2028

REGISTERED CIVIL ENGINEER 11/12/10 DATE

4-25-11
PLANS APPROVAL DATE

REGISTERED PROFESSIONAL ENGINEER Minh Thuong Vo No. C59297 Exp. 6/30/2011 CIVIL STATE OF CALIFORNIA

The State of California or its officers or agents shall not be responsible for the accuracy or completeness of electronic copies of this plan sheet.

SOIL NAIL SCHEDULE

Location	Soil Nail Embedment Length Le
Schedule 1	All Soil Nails: Le = 15'-0"

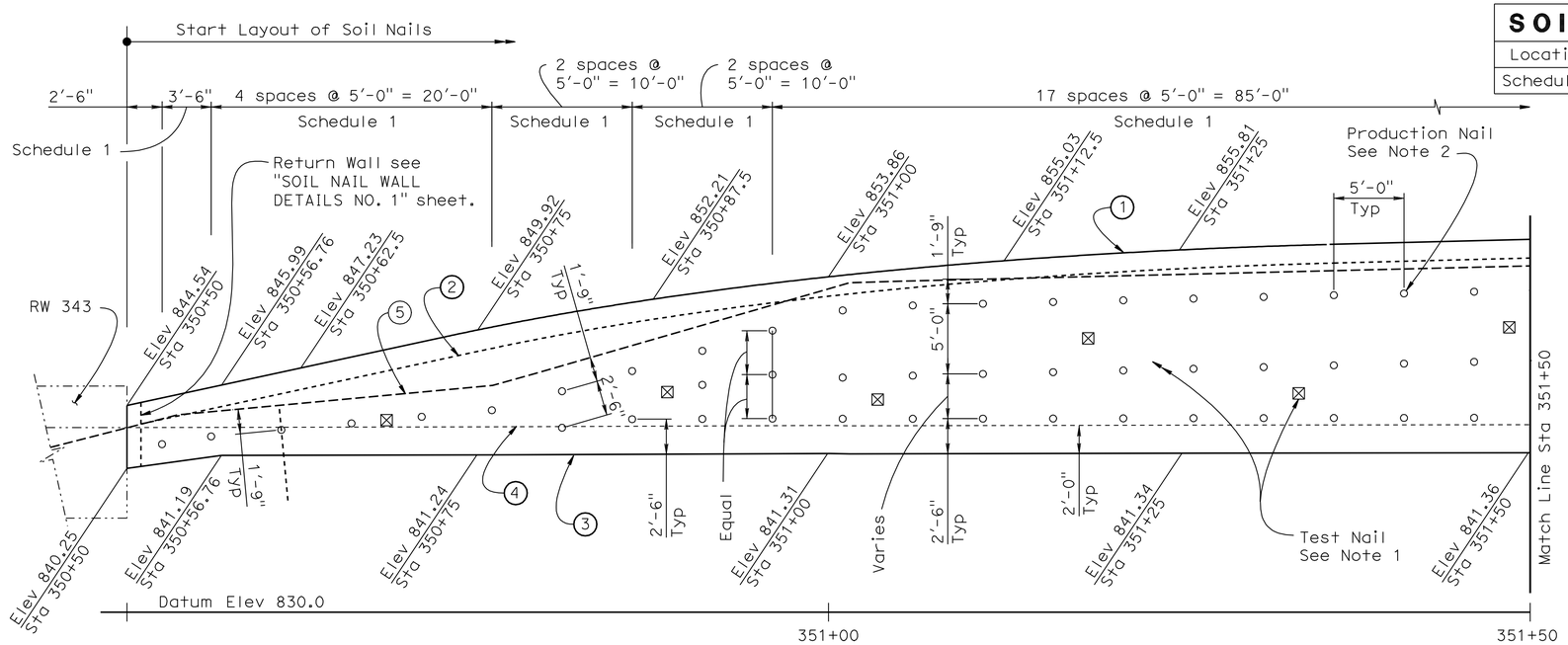

SOIL NAIL LAYOUT

3/16" = 1'-0"

Note:
Cable Railing and Concrete Barrier Type 60D not shown for clarity

NOTES:

1. Test nail locations are at midway between production nails. The exact location of the proof test nails to be determined in the field by the Engineer.
2. The maximum vertical and horizontal spacing of production nails shall be 5'-0".
3. Contractor shall adjust the concrete gutter to meet the gutter flow line.

(1) Top of Soil Nail Wall
(2) Gutter Elevation at back of wall
(3) Bottom of Soil Nail Wall
(4) Approximate Finished Grade at face of wall
(5) Approximate Original Ground, see "STRUCTURAL PLAN NO. 2" sheet.

LEGEND:

○ Indicates location of Production Nail assembly.
⊠ Indicates location of Test Nail assembly. Located in the middle of Production nails.

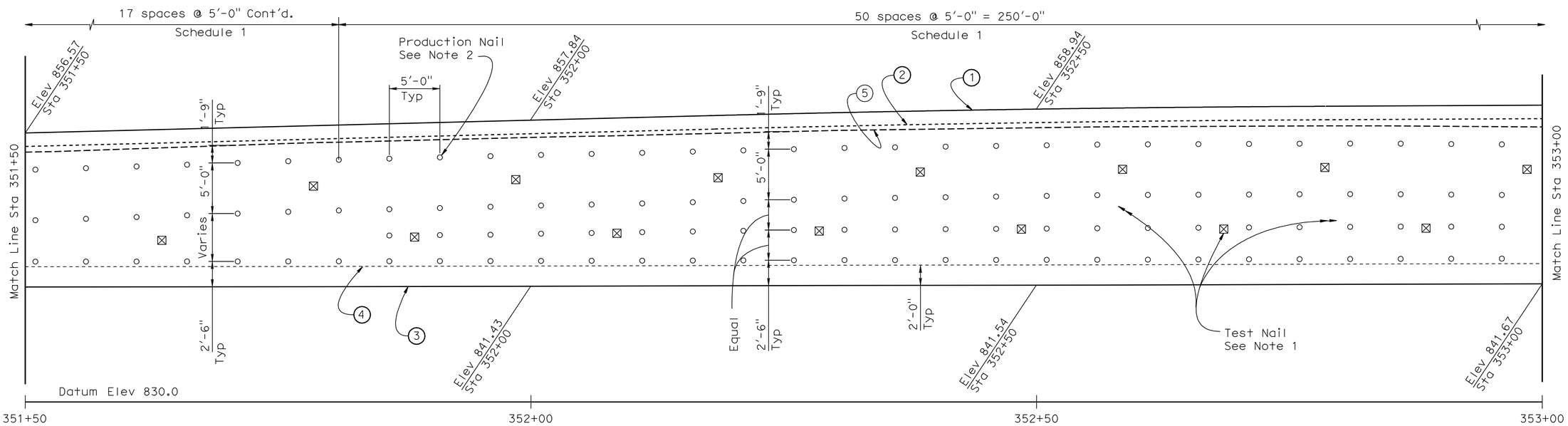

SOIL NAIL LAYOUT

3/16" = 1'-0"

NOTE:
THE CONTRACTOR SHALL VERIFY ALL CONTROLLING FIELD DIMENSIONS BEFORE ORDERING OR FABRICATING ANY MATERIAL.

	BY	CHECKED
DESIGN	M. Vo	J. Szabo
DETAILS	R. Kirkland	J. Szabo
QUANTITIES	J. Szabo	M. Vo

STATE OF CALIFORNIA
DEPARTMENT OF TRANSPORTATION

DIVISION OF ENGINEERING SERVICES
STRUCTURE DESIGN
DESIGN BRANCH 10

BRIDGE NO. 56 E0071
POST MILE 19.55

RETAINING WALL NO. 351
STRUCTURAL PLAN NO. 1

STRUCTURES DESIGN DETAIL SHEET (ENGLISH) (REV. 10/25/05)

ORIGINAL SCALE IN INCHES FOR REDUCED PLANS 0 1 2 3

CU 08
EA 448401

DISREGARD PRINTS BEARING EARLIER REVISION DATES 3/15/10 7/15/10

REVISION DATES

SHEET 3 OF 13

FILE => 56e0071csp03.dgn

USERNAME => trphlts DATE PLOTTED => 30-APR-2011 TIME PLOTTED => 11:32

Note:
Cable Railing and Concrete Barrier Type 60D not shown for clarity

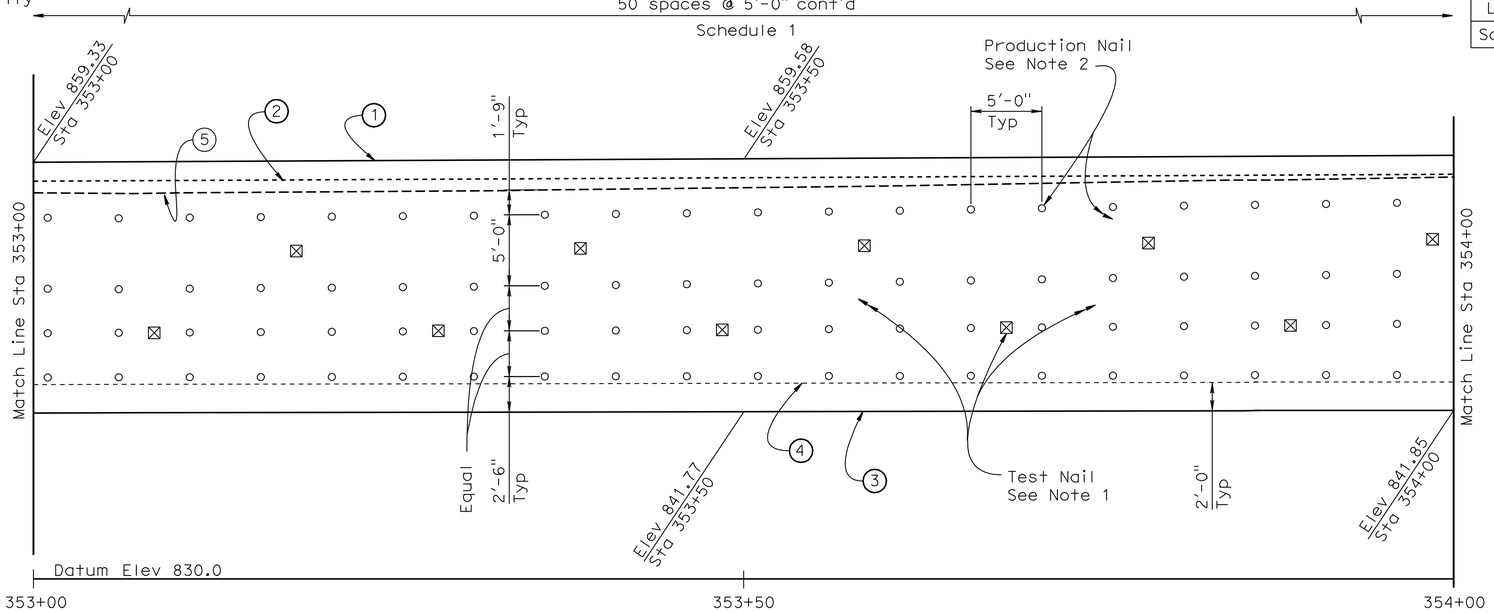

SOIL NAIL LAYOUT

3/16" = 1'-0"

SOIL NAIL SCHEDULE	
Location	Soil Nail Embedment Length Le
Schedule 1	All Soil Nails: Le = 15'-0"

DIST	COUNTY	ROUTE	POST MILES TOTAL PROJECT	SHEET No	TOTAL SHEETS
08	Riv	91	15.6/21.6	1525	2028

REGISTERED CIVIL ENGINEER 11/12/10 DATE

4-25-11
PLANS APPROVAL DATE

REGISTERED PROFESSIONAL ENGINEER Minh Thuong Vo No. C59297 Exp. 6/30/2011 CIVIL STATE OF CALIFORNIA

The State of California or its officers or agents shall not be responsible for the accuracy or completeness of electronic copies of this plan sheet.

NOTES:

1. Test nail locations are at midway between production nails. The exact location of the proof test nails to be determined in the field by the Engineer.
2. The maximum vertical and horizontal spacing of production nails shall be 5'-0".
3. Contractor shall adjust the concrete gutter to meet the gutter flow line.

(1) Top of Soil Nail Wall
(2) Gutter Elevation at back of wall
(3) Bottom of Soil Nail Wall
(4) Approximate Finished Grade at face of wall.
(5) Approximate Original Ground, see this sheet.

LEGEND:

○ Indicates location of Production Nail assembly.

⊠ Indicates location of Test Nail assembly. Located in the middle of Production nails.

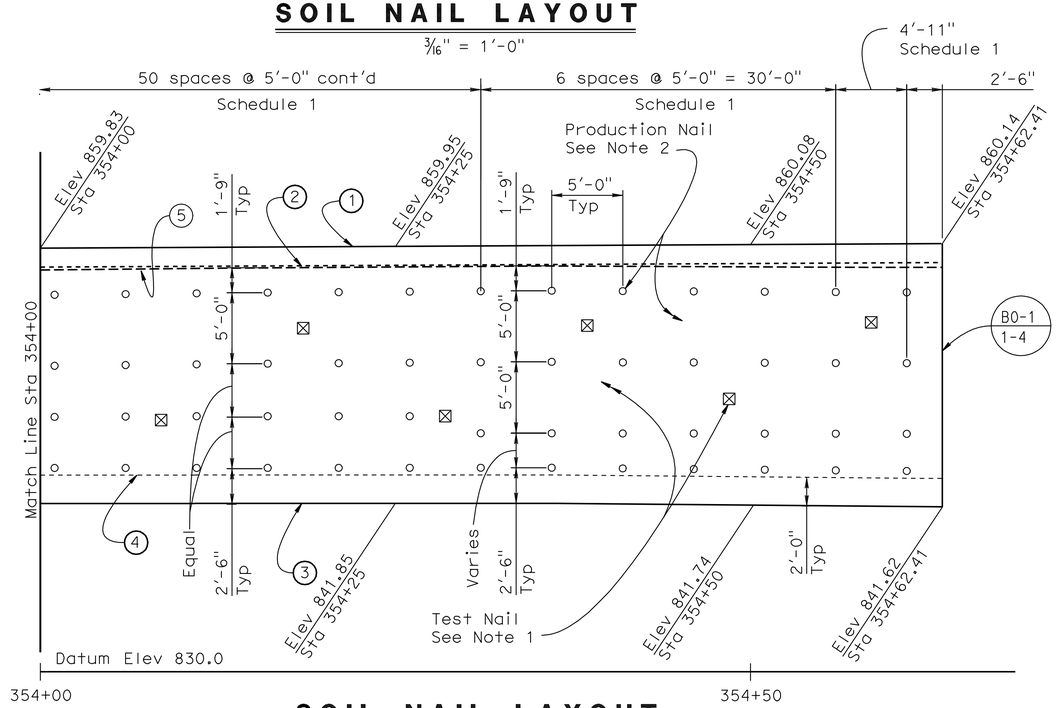

SOIL NAIL LAYOUT

3/16" = 1'-0"

STATION	OG ELEV	STATION	OG ELEV	STATION	OG ELEV
350+50	843.21	351+05	853.65	353+00	857.25
350+55	844.24	351+10	853.77	353+25	857.34
350+60	844.71	351+15	853.89	353+50	857.60
350+65	845.17	351+20	854.02	353+75	857.97
350+70	845.64	351+25	854.14	354+00	858.49
350+75	846.11	351+50	854.75	354+25	858.57
350+80	847.34	351+75	855.57	354+50	858.59
350+85	848.78	352+00	856.20	354+62.41	858.55
350+90	850.22	352+25	856.77		
350+95	851.66	352+50	857.16		
351+00	853.10	352+75	857.33		

APPROXIMATE ORIGINAL GROUND

NOTE:
THE CONTRACTOR SHALL VERIFY ALL CONTROLLING FIELD DIMENSIONS BEFORE ORDERING OR FABRICATING ANY MATERIAL.

	BY	CHECKED
DESIGN	M. Vo	J. Szabo
DETAILS	R. Kirkland	J. Szabo
QUANTITIES	J. Szabo	M. Vo

STATE OF CALIFORNIA
DEPARTMENT OF TRANSPORTATION

DIVISION OF ENGINEERING SERVICES
STRUCTURE DESIGN
DESIGN BRANCH 10

BRIDGE NO. 56 E0071
POST MILE 19.55

RETAINING WALL NO. 351
STRUCTURAL PLAN NO. 2

STRUCTURES DESIGN DETAIL SHEET (ENGLISH) (REV. 10/25/05)

ORIGINAL SCALE IN INCHES FOR REDUCED PLANS 0 1 2 3

CU 08
EA 448401

DISREGARD PRINTS BEARING EARLIER REVISION DATES 7/15/10 7/15/10

REVISION DATES

SHEET 4 OF 13

FILE => 56e0071csp04.dgn

USERNAME => trphilis DATE PLOTTED => 30-APR-2011 TIME PLOTTED => 11:32

DIST	COUNTY	ROUTE	POST MILES TOTAL PROJECT	SHEET No	TOTAL SHEETS
08	Riv	91	15.6/21.6	1526	2028

REGISTERED CIVIL ENGINEER 11/12/10 DATE

4-25-11
PLANS APPROVAL DATE

REGISTERED PROFESSIONAL ENGINEER Minh Thuong Vo No. C59297 Exp. 6/30/2011 CIVIL STATE OF CALIFORNIA

The State of California or its officers or agents shall not be responsible for the accuracy or completeness of electronic copies of this plan sheet.

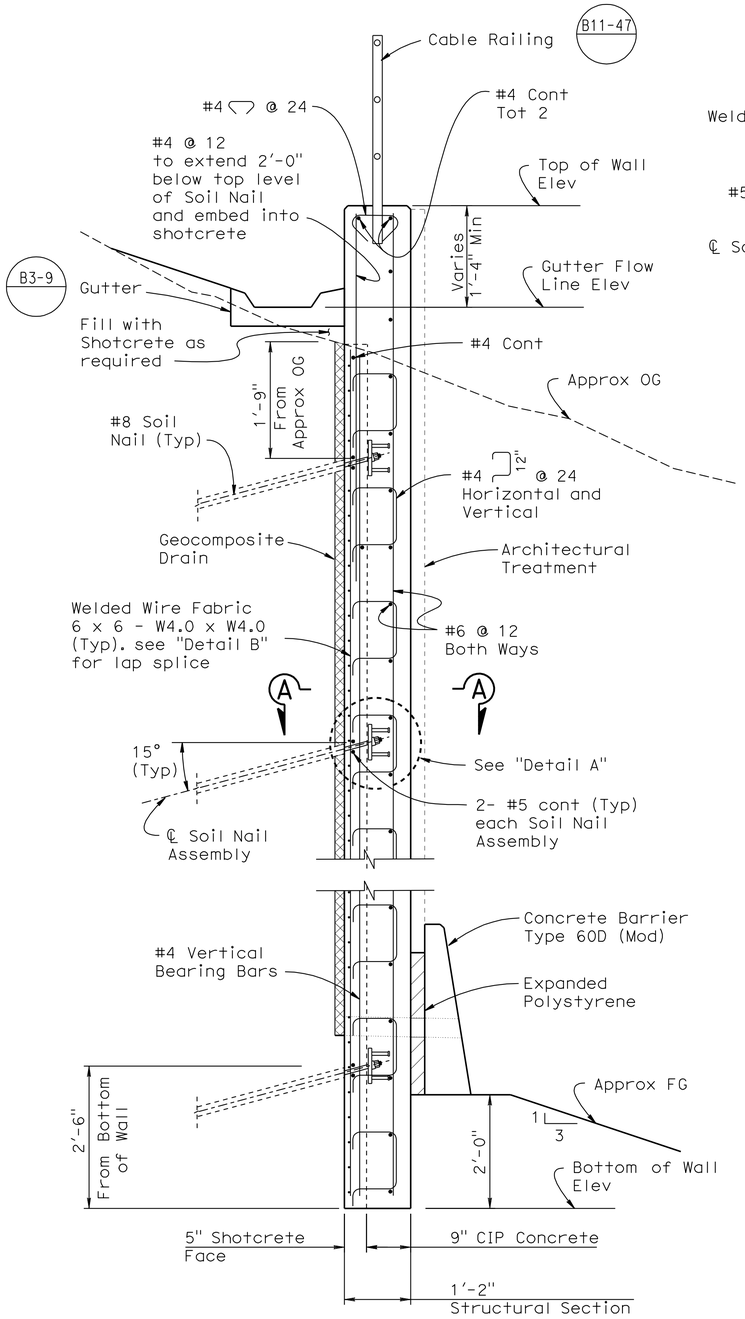

TYPICAL SECTION

3/4" = 1'-0"

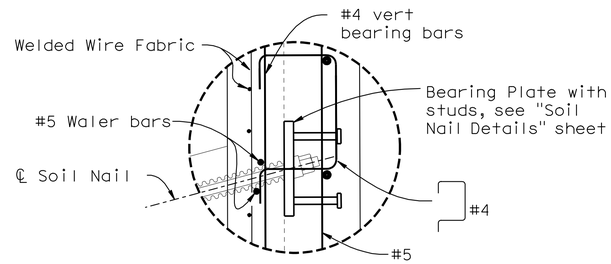

DETAIL A

1 1/2" = 1'-0"

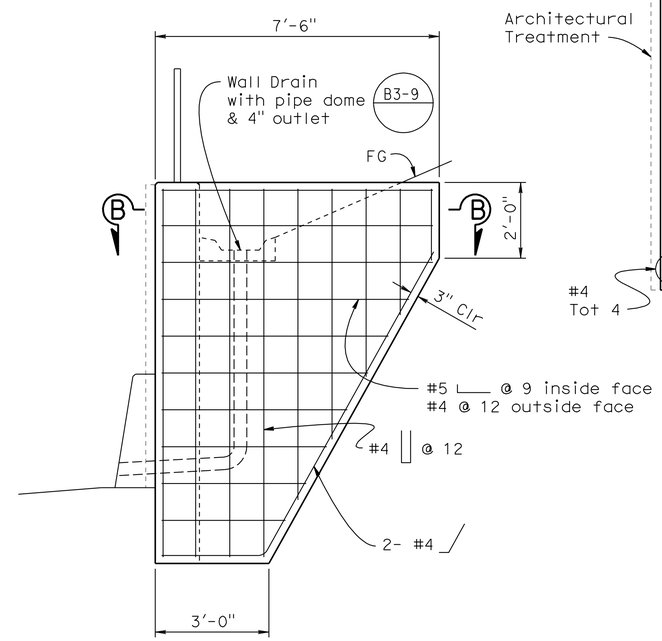

RETURN WALL ELEVATION

1/2" = 1'-0"

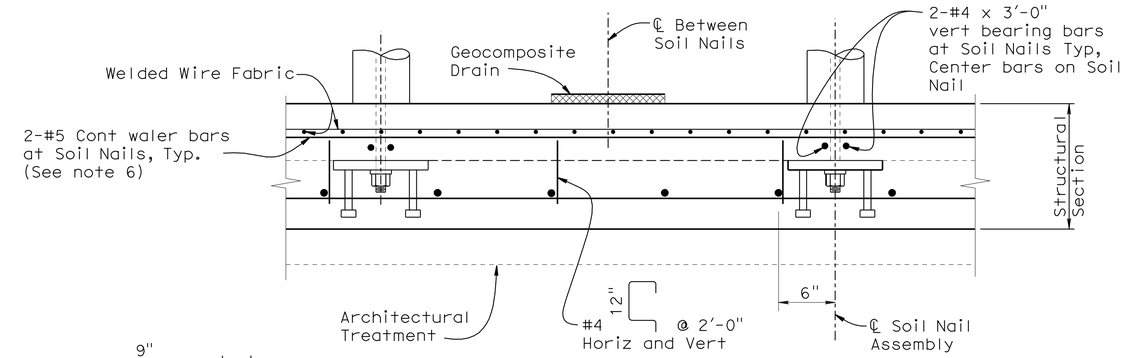

SECTION A-A

1 1/2" = 1'-0"

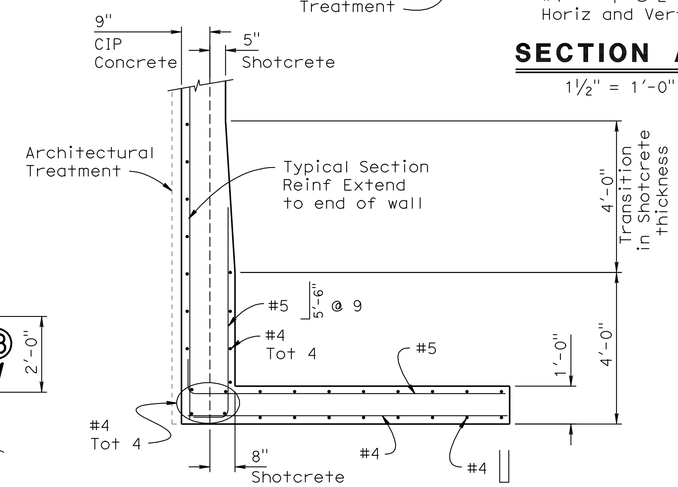

SECTION B-B

1/2" = 1'-0"

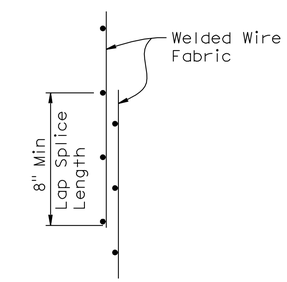

LAP SPLICE

DETAIL B

NO SCALE

Notes:

1. Bottom of wall to be placed against undisturbed material.
2. For Horizontal and Vertical Soil Nail spacing see "Structure Plan No. 1" and "Structure Plan No. 2" sheets.
3. For Soil Nail Details & Assemblies, see "Soil Nail Details No. 1 and Soil Nail Details No. 2" sheets.
4. For Geocomposite Drain Details see "Soil Nail Details No. 3" sheet.
5. For Architectural Treatment (Textured Shotcrete and textured Concrete), see "Architectural Treatment Details" sheet.
6. For soil nail rows that are discontinuous, extend waler bars a minimum of 5' beyond last soil nail.

	BY	CHECKED
DESIGN	M. Vo	J. Szabo
DETAILS	R. Kirkland	J. Szabo
QUANTITIES	J. Szabo	M. Vo

STATE OF CALIFORNIA
DEPARTMENT OF TRANSPORTATION

DIVISION OF ENGINEERING SERVICES
STRUCTURE DESIGN
DESIGN BRANCH 10

BRIDGE NO. 56 E0071
POST MILE 19.55

RETAINING WALL NO. 351
SOIL NAIL WALL DETAILS NO. 1

STRUCTURES DESIGN DETAIL SHEET (ENGLISH) (REV. 10/25/05)

ORIGINAL SCALE IN INCHES FOR REDUCED PLANS 0 1 2 3

CU 08
EA 448401

DISREGARD PRINTS BEARING EARLIER REVISION DATES 3/15/10 7/15/10

REVISION DATES

SHEET 5 OF 13

FILE => 56e0071grwdt05.dgn

USERNAME => trphtis DATE PLOTTED => 30-APR-2011 TIME PLOTTED => 11:32

DIST	COUNTY	ROUTE	POST MILES TOTAL PROJECT	SHEET No	TOTAL SHEETS
08	Riv	91	15.6/21.6	1527	2028

REGISTERED CIVIL ENGINEER 11/12/10 DATE

4-25-11
PLANS APPROVAL DATE

REGISTERED PROFESSIONAL ENGINEER Minh Thuong Vo No. C59297 Exp. 6/30/2011 CIVIL STATE OF CALIFORNIA

The State of California or its officers or agents shall not be responsible for the accuracy or completeness of electronic copies of this plan sheet.

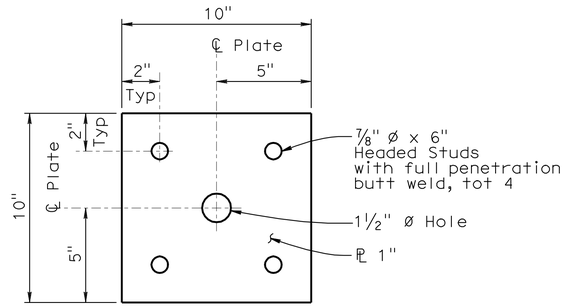

BEARING PLATE

DETAIL G

3" = 1'-0"

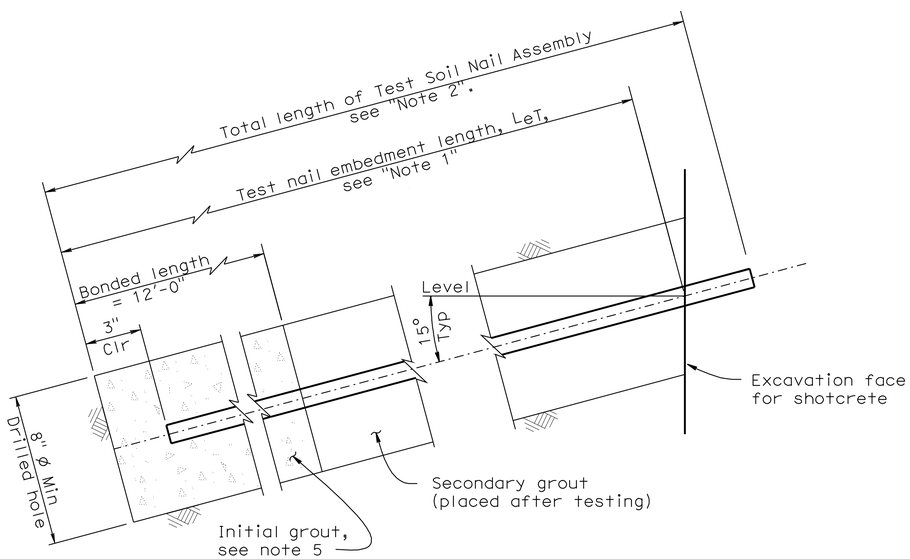

TEST SOIL NAIL ASSEMBLY

DETAIL H

3" = 1'-0"

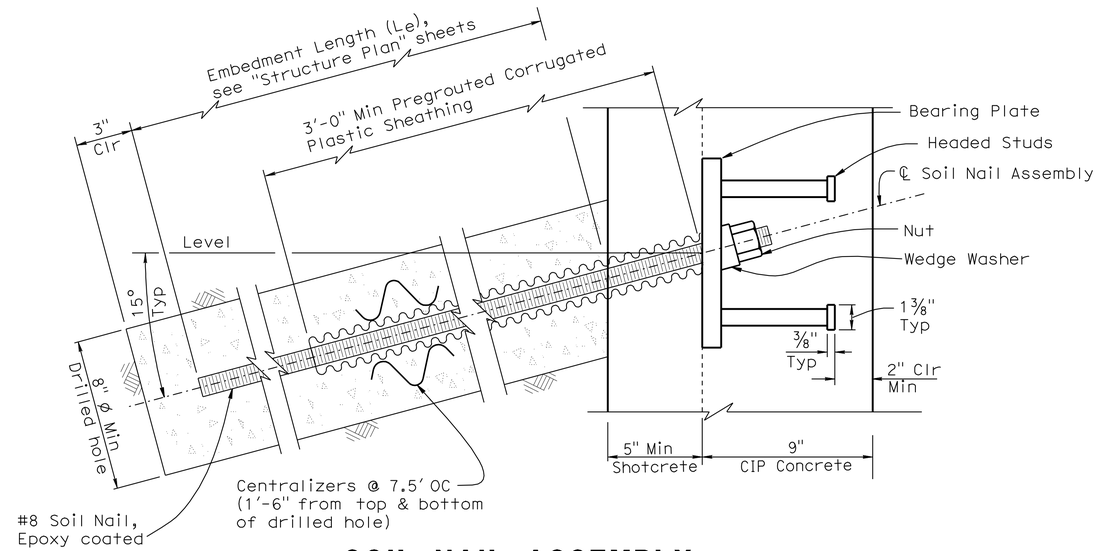

SOIL NAIL ASSEMBLY

DETAIL J

3" = 1'-0"

Notes:

1. Embedment length L_{eT} of test nails equals two thirds of the embedment length L_e of adjacent soil nail assemblies, but not less than 12'-0".
2. Total length of test soil nail equals embedment length plus the length required for jacking equipment.
3. For embedment length of production nails see 'Schedule' on "Structure Plan" sheets.
4. Finished grout surface to be perpendicular to bar.
5. For location of test nail, see "Structure Plan" sheets. Additional test nails will be installed and tested per special provisions.

	BY	CHECKED
DESIGN	M. Vo	J. Szabo
DETAILS	R. Kirkland	J. Szabo
QUANTITIES	J. Szabo	M. Vo

STATE OF CALIFORNIA
DEPARTMENT OF TRANSPORTATION

DIVISION OF ENGINEERING SERVICES
STRUCTURE DESIGN
DESIGN BRANCH 10

BRIDGE NO. 56 E0071
POST MILE 19.55

RETAINING WALL NO. 351
SOIL NAIL WALL DETAILS NO. 2

STRUCTURES DESIGN DETAIL SHEET (ENGLISH) (REV. 10/25/05)

ORIGINAL SCALE IN INCHES FOR REDUCED PLANS 0 1 2 3

CU 08
EA 448401

DISREGARD PRINTS BEARING EARLIER REVISION DATES 3/15/10 7/15/10

REVISION DATES

SHEET 6 OF 13

FILE => 56e0071grwdt06.dgn

USERNAME => trpbt16 DATE PLOTTED => 30-APR-2011 TIME PLOTTED => 11:32

DIST	COUNTY	ROUTE	POST MILES TOTAL PROJECT	SHEET No	TOTAL SHEETS
08	Riv	91	15.6/21.6	1528	2028

REGISTERED CIVIL ENGINEER 11/12/10 DATE

4-25-11
PLANS APPROVAL DATE

REGISTERED PROFESSIONAL ENGINEER Minh Thuong Vo No. C59297 Exp. 6/30/2011 CIVIL STATE OF CALIFORNIA

The State of California or its officers or agents shall not be responsible for the accuracy or completeness of electronic copies of this plan sheet.

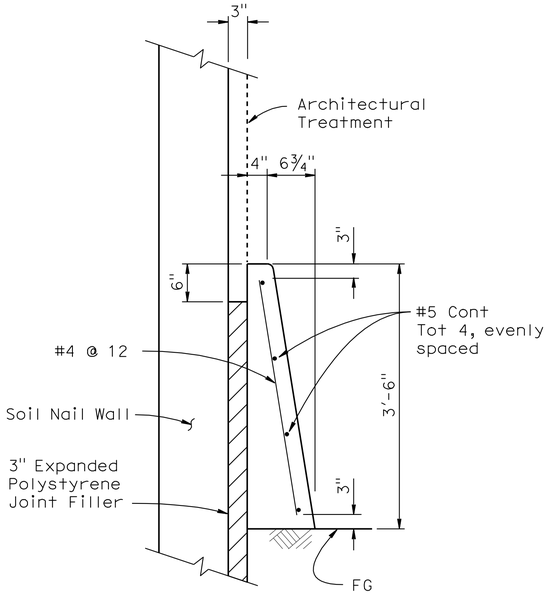

CONCRETE BARRIER (TYPE 60D MOD)

No scale

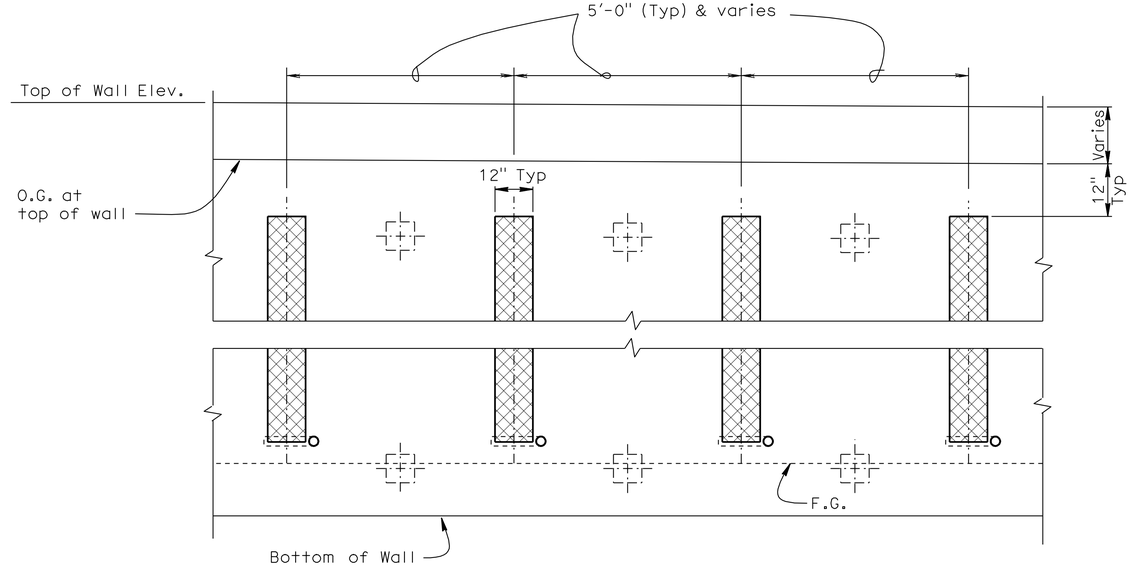

PART ELEVATION - GEOCOMPOSITE DRAIN

No scale

NOTES:

1. Center Geocomposite drain between Soil Nail assemblies.
2. - Indicates Soil Nail Assembly.
3. 2" dia drain pipe to be placed 3" above finished grade at face of barrier (Typ).
4. Adjust Geocomposite Drain to clear Test Soil Nails.

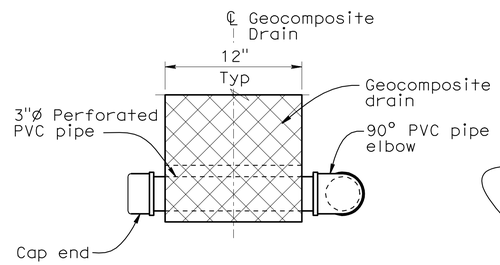

VIEW A-A

No scale

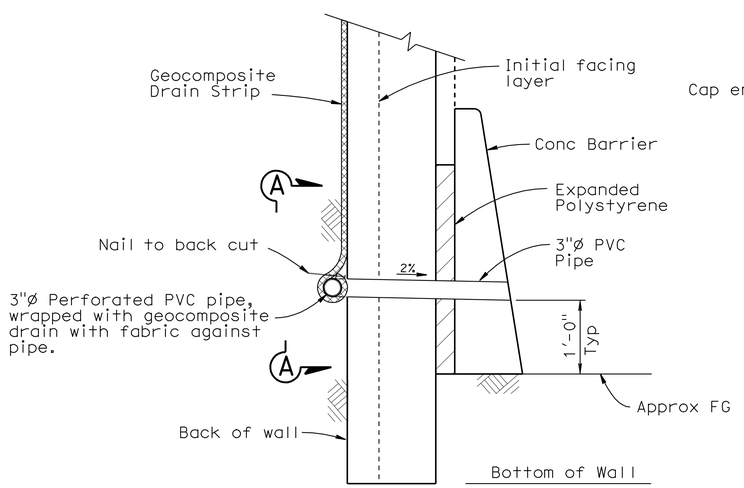

WALL DRAIN DETAIL AT WEEPHOLE OPTION A

No scale

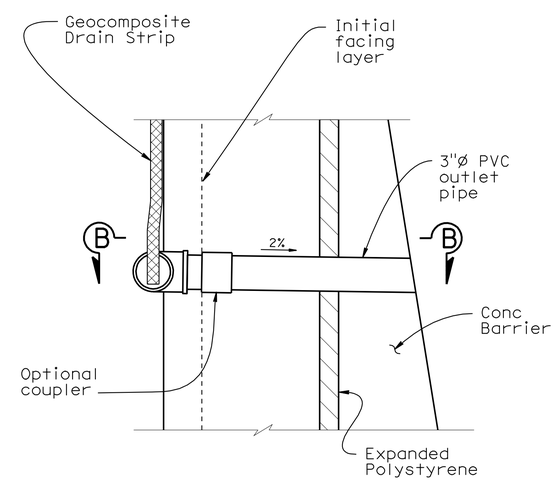

WALL DRAIN DETAIL AT WEEPHOLE OPTION B

No scale

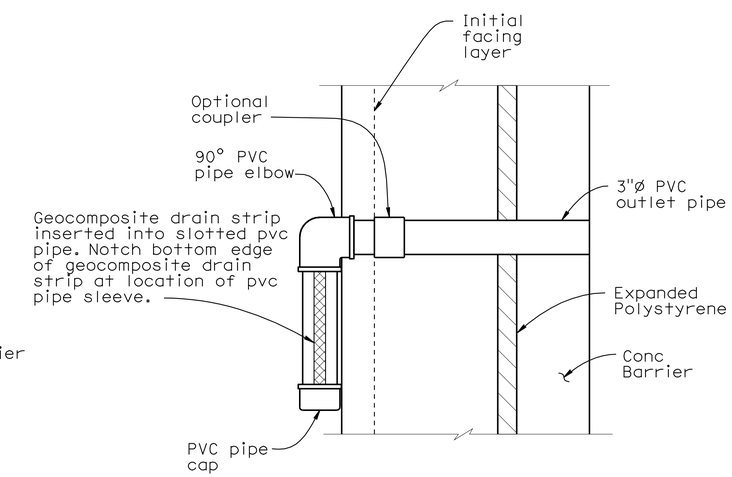

VIEW B-B

No Scale

DESIGN	BY M. Vo	CHECKED J. Szabo	
DETAILS	BY R. Kirkland	CHECKED J. Szabo	
QUANTITIES	BY J. Szabo	CHECKED M. Vo	

STATE OF CALIFORNIA
DEPARTMENT OF TRANSPORTATION

DIVISION OF ENGINEERING SERVICES
STRUCTURE DESIGN
DESIGN BRANCH 10

BRIDGE NO. 56 E0071
POST MILE 19.55

RETAINING WALL NO. 351
SOIL NAIL WALL DETAILS NO. 3

STRUCTURES DESIGN DETAIL SHEET (ENGLISH) (REV. 10/25/05)

ORIGINAL SCALE IN INCHES FOR REDUCED PLANS 0 1 2 3

CU 08
EA 448401

DISREGARD PRINTS BEARING EARLIER REVISION DATES 3/15/10 7/15/10

REVISION DATES

SHEET 7 OF 13

FILE => 56e0071grwdt07.dgn

USERNAME => ttrphtis DATE PLOTTED => 30-APR-2011 TIME PLOTTED => 11:33

Dist	COUNTY	ROUTE	POST MILES TOTAL PROJECT	SHEET No.	TOTAL SHEETS
08	Riv	91	15.6/21.6	1529	2028

LICENSED LANDSCAPE ARCHITECT

4-25-11
PLANS APPROVAL DATE

LICENSED LANDSCAPE ARCHITECT
Matthew Harry Hall
No. 5000
Signature
10/31/2011
Renewal Date
11/12/10
Date
STATE OF CALIFORNIA

THE STATE OF CALIFORNIA OR ITS OFFICERS OR AGENTS SHALL NOT BE RESPONSIBLE FOR THE ACCURACY OR COMPLETENESS OF SCANNED COPIES OF THIS PLAN SHEET.

NOTES:

1. For Section D-D and Section E-E see "Architectural Surface Detail Sheet No. 2".

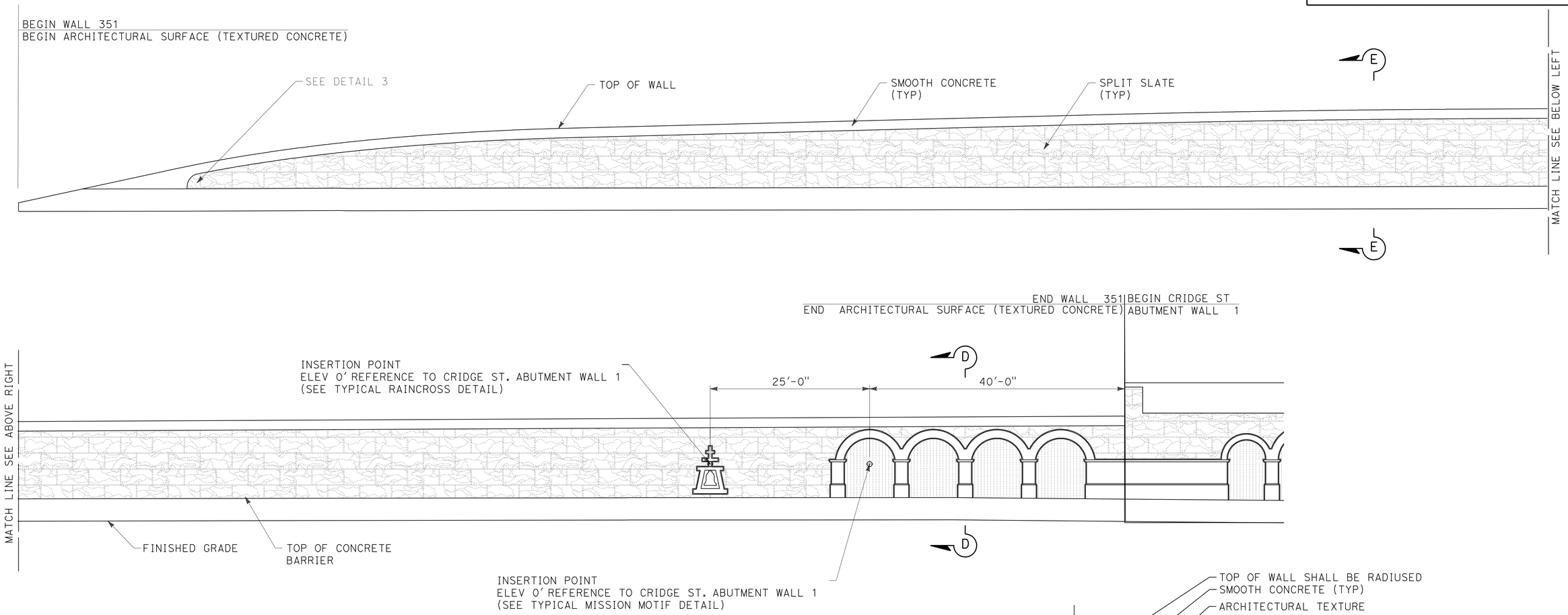

MIRRORED ELEVATION FOR FRACTURED RIB SPLIT SLATE TEXTURE RETAINING WALL No. 351

1/8"=1'-0"

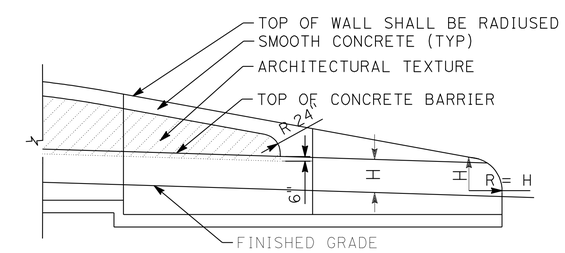

DETAIL NO. 3 - TYPICAL END OF WALL WITH TYPE 60D (MOD) CONCRETE BARRIER

No Scale

THIS PLAN IS ACCURATE FOR ARCHITECTUAL TREATMENT WORK ONLY.

	BY	CHECKED
DESIGN	M. Hall	M. Bishop
DETAILS	R. Kirkland	M. Bishop
QUANTITIES	J. Szabo	M. Vo

STATE OF CALIFORNIA
DEPARTMENT OF TRANSPORTATION

DIVISION OF ENGINEERING SERVICES
STRUCTURE DESIGN
DESIGN BRANCH 10

BRIDGE NO. 56 E0071
POST MILE 19.55

RETAINING WALL NO. 351
ARCHITECTURAL SURFACE

STRUCTURES DESIGN DETAIL SHEET (ENGLISH) (REV. 10/25/05)

ORIGINAL SCALE IN INCHES FOR REDUCED PLANS 0 1 2 3

CU 08
EA 448401

DISREGARD PRINTS BEARING EARLIER REVISION DATES

REVISION DATES: 8/10/10

SHEET 8 OF 13

FILE => 56e0071umiscdt08.dgn

USERNAME => rrphillis DATE PLOTTED => 30-APR-2011 TIME PLOTTED => 11:33

NOTES:
1. For Section D-D see "Architectural Surface Detail Sheet No. 2"

Dist	COUNTY	ROUTE	POST MILES TOTAL PROJECT	SHEET No.	TOTAL SHEETS
08	Riv	91	15.6/21.6	1530	2028

LICENSED LANDSCAPE ARCHITECT

4-25-11
PLANS APPROVAL DATE

LICENSED LANDSCAPE ARCHITECT
Matthew Nobell
Signature
10/31/2011
Renewal Date
11/12/10
Date
STATE OF CALIFORNIA

THE STATE OF CALIFORNIA OR ITS OFFICERS OR AGENTS SHALL NOT BE RESPONSIBLE FOR THE ACCURACY OR COMPLETENESS OF SCANNED COPIES OF THIS PLAN SHEET.

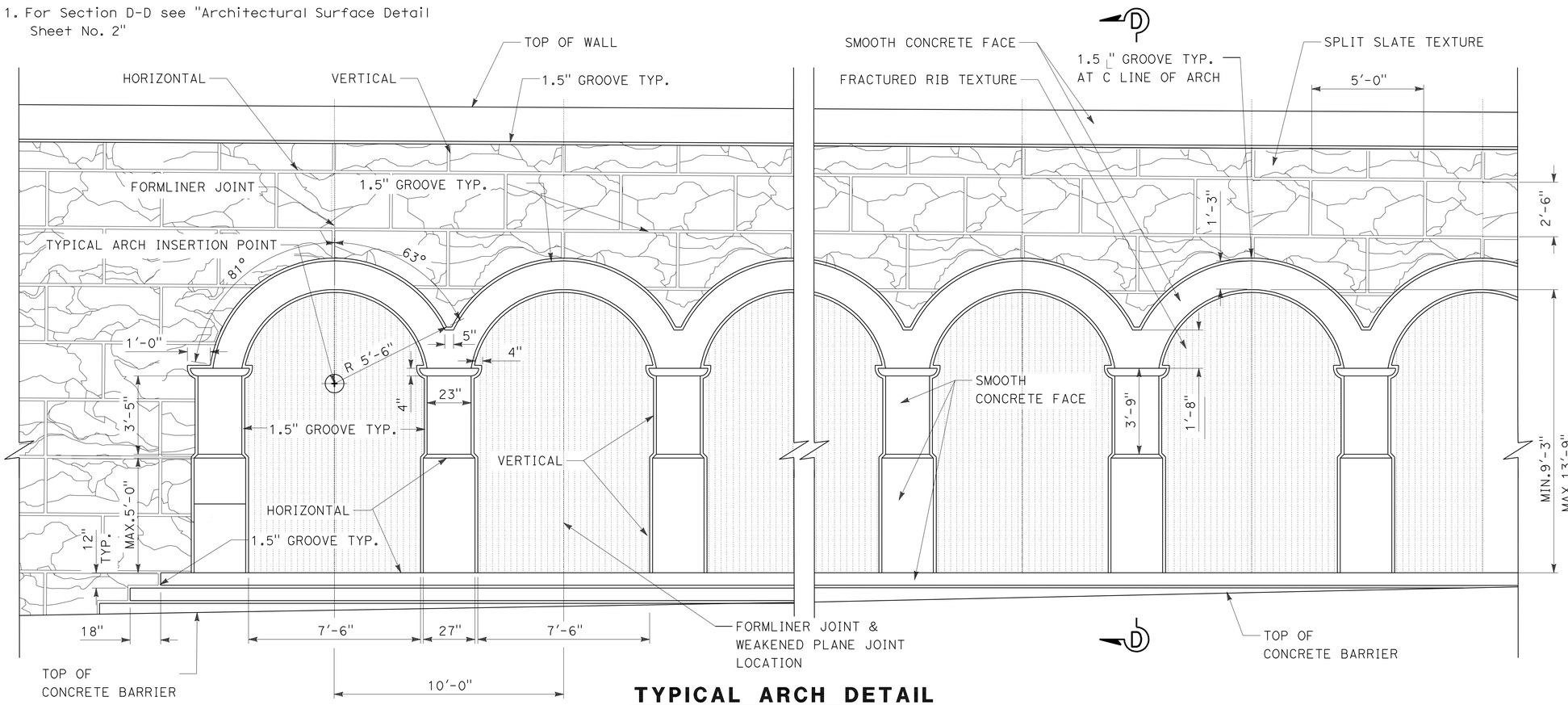

TYPICAL ARCH DETAIL

3/8" = 1'-0"

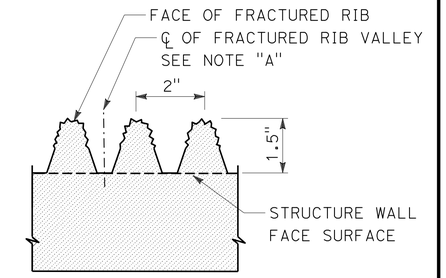

TYPICAL FRACTURED RIB TEXTURE

No Scale

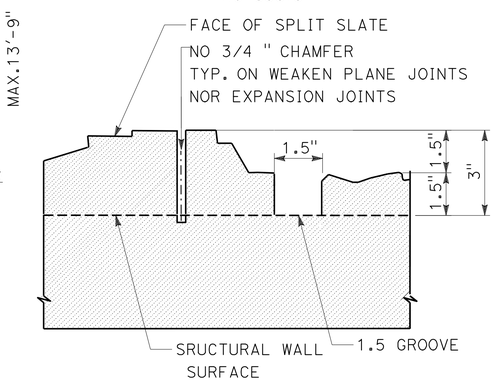

TYPICAL SPLIT SLATE TEXTURE

No Scale

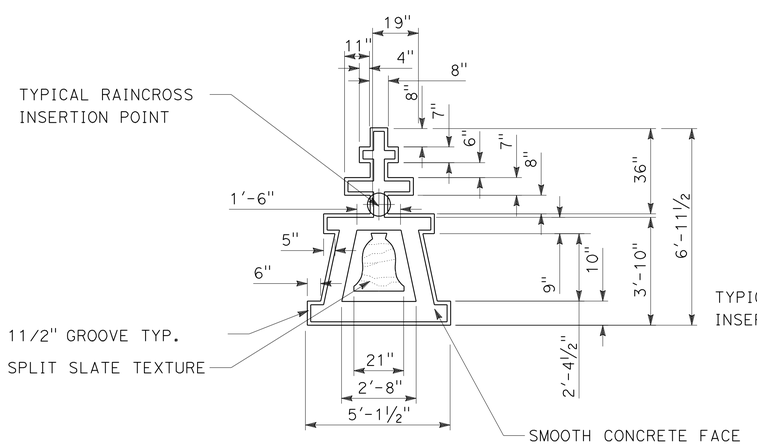

TYPICAL RAINCROSS DETAIL

3/8" = 1'-0"

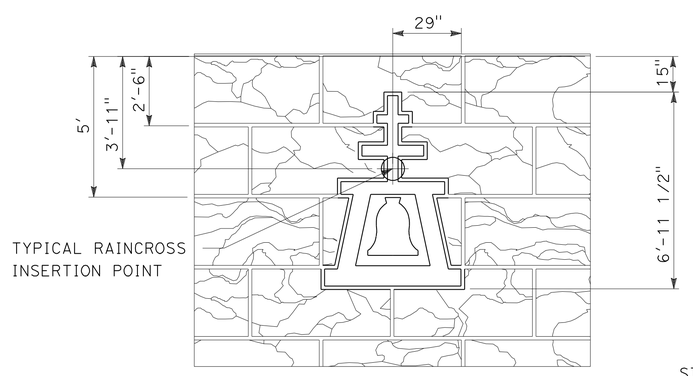

TYPICAL RAINCROSS DETAIL/ SPLIT SLATE TEXTURE

3/8" = 1'-0"

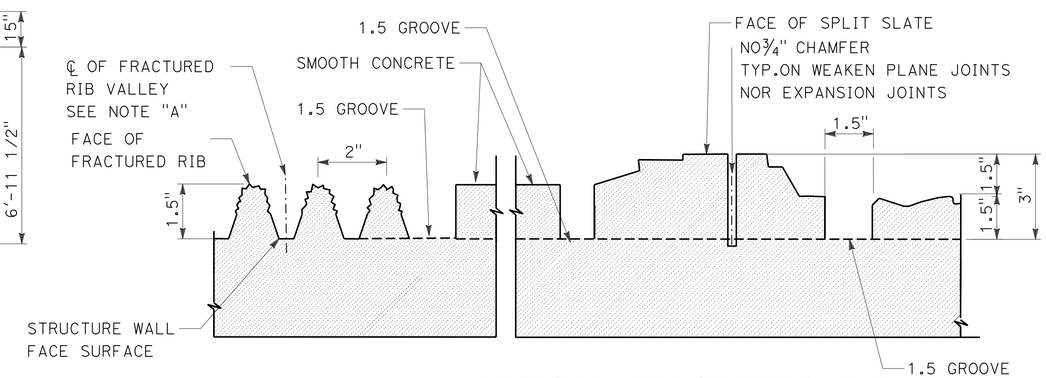

NOTE "A"
PERMITTED LOCATION OF WEAKEN PLANE AND EXPANSION JOINTS

TYPICAL FRACTURED RIB WITH SPLIT SLATE TEXTURE

No Scale

THIS PLAN IS ACCURATE FOR ARCHITECTUAL TREATMENT WORK ONLY.

	BY	CHECKED
DESIGN	M. Hall	M. Bishop
DETAILS	R. Kirkland	M. Bishop
QUANTITIES	J. Szabo	M. Vo

STATE OF CALIFORNIA
DEPARTMENT OF TRANSPORTATION

DIVISION OF ENGINEERING SERVICES
STRUCTURE DESIGN
DESIGN BRANCH 10

BRIDGE NO. 56 E0071
POST MILE 19.55

RETAINING WALL NO. 351
ARCHITECTURAL SURFACE DETAIL SHEET NO. 1

STRUCTURES DESIGN DETAIL SHEET (ENGLISH) (REV. 10/25/05)

ORIGINAL SCALE IN INCHES FOR REDUCED PLANS 0 1 2 3

CU 08
EA 448401

DISREGARD PRINTS BEARING EARLIER REVISION DATES 8/10/10

REVISION DATES

SHEET 9 OF 13

FILE => 56e0071umiscdt09.dgn

USERNAME => tricar01 DATE PLOTTED => 30-APR-2011 TIME PLOTTED => 11:34

Dist	COUNTY	ROUTE	POST MILES TOTAL PROJECT	SHEET No.	TOTAL SHEETS
08	Riv	91	15.6/21.6	1531	2028

LICENSED LANDSCAPE ARCHITECT

4-25-11
PLANS APPROVAL DATE

LICENSED LANDSCAPE ARCHITECT
Matthew Harry Hall
No. 5000
Signature
10/31/2011
Renewal Date
11/12/10
Date
STATE OF CALIFORNIA

THE STATE OF CALIFORNIA OR ITS OFFICERS OR AGENTS SHALL NOT BE RESPONSIBLE FOR THE ACCURACY OR COMPLETENESS OF SCANNED COPIES OF THIS PLAN SHEET.

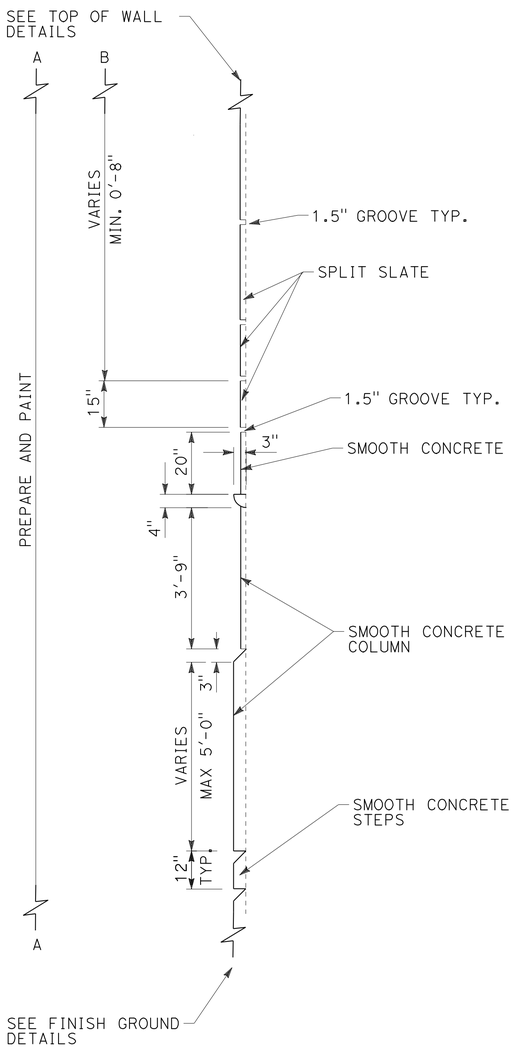

SECTION D-D

No Scale

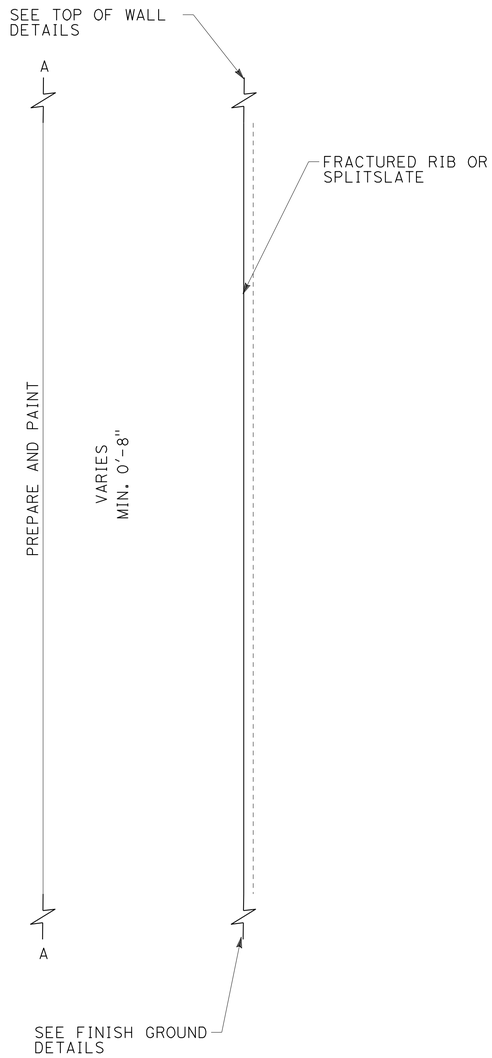

SECTION E-E

No Scale

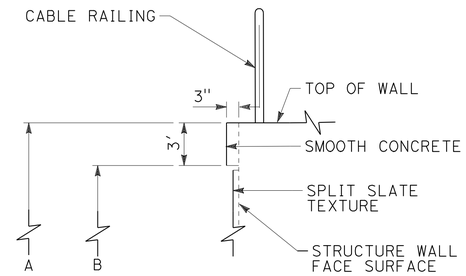

TOP OF WALL DETAIL TYPICAL WITH CABLE RAIL

No Scale

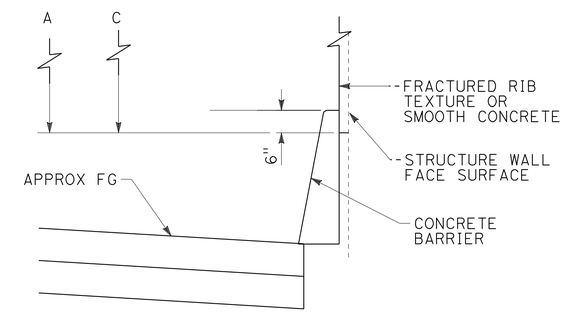

FINISH GROUND DETAIL TYPICAL WITH CONCRETE BARRIER

No Scale

DESIGN	BY M. Hall	CHECKED M. Bishop	
DETAILS	BY R. Kirkland	CHECKED M. Bishop	
QUANTITIES	BY J. Szabo	CHECKED M. Vo	

STATE OF CALIFORNIA
DEPARTMENT OF TRANSPORTATION

DIVISION OF ENGINEERING SERVICES
STRUCTURE DESIGN
DESIGN BRANCH 10

BRIDGE NO. 56 E0071
POST MILE 19.55

RETAINING WALL NO. 351
ARCHITECTURAL SURFACE DETAIL SHEET NO. 2

STRUCTURES DESIGN DETAIL SHEET (ENGLISH) (REV. 10/25/05)

ORIGINAL SCALE IN INCHES FOR REDUCED PLANS 0 1 2 3

CU 08
EA 448401

DISREGARD PRINTS BEARING EARLIER REVISION DATES 8/10/10

REVISION DATES

SHEET 10 OF 13

FILE => 56e0071umiscdt10.dgn

USERNAME => trcarol DATE PLOTTED => 30-APR-2011 TIME PLOTTED => 11:34

DIST	COUNTY	ROUTE	POST MILES TOTAL PROJECT	SHEET No	TOTAL SHEETS
08	Riv	91	15.6/21.6	1532	2028

GEOTECHNICAL PROFESSIONAL — DATE 11/03/2010

4-25-11
PLANS APPROVAL DATE

REGISTERED PROFESSIONAL ENGINEER — FARID MOTAMED No. 2738 Exp. 6-30-11 GEOTECHNICAL STATE OF CALIFORNIA

The State of California or its officers or agents shall not be responsible for the accuracy or completeness of electronic copies of this plan sheet.

California Department of Transportation
5900 Folsom Boulevard
Sacramento, CA 95819

URS Corporation
2020 East First Street, Suite 400
Santa Ana, CA 92705

GROUP SYMBOLS AND NAMES

Graphic / Symbol	Group Names	Graphic / Symbol	Group Names
GW	Well-graded GRAVEL Well-graded GRAVEL with SAND	CL	Lean CLAY Lean CLAY with SAND Lean CLAY with GRAVEL SANDY lean CLAY SANDY lean CLAY with GRAVEL GRAVELLY lean CLAY GRAVELLY lean CLAY with SAND
GP	Poorly graded GRAVEL Poorly graded GRAVEL with SAND		
GW-GM	Well-graded GRAVEL with SILT Well-graded GRAVEL with SILT and SAND	CL-ML	SILTY CLAY SILTY CLAY with SAND SILTY CLAY with GRAVEL SANDY SILTY CLAY SANDY SILTY CLAY with GRAVEL GRAVELLY SILTY CLAY GRAVELLY SILTY CLAY with SAND
GW-GC	Well-graded GRAVEL with CLAY (or SILTY CLAY) Well-graded GRAVEL with CLAY and SAND (or SILTY CLAY and SAND)		
GP-GM	Poorly graded GRAVEL with SILT Poorly graded GRAVEL with SILT and SAND	ML	SILT SILT with SAND SILT with GRAVEL SANDY SILT SANDY SILT with GRAVEL GRAVELLY SILT GRAVELLY SILT with SAND
GP-GC	Poorly graded GRAVEL with CLAY (or SILTY CLAY) Poorly graded GRAVEL with CLAY and SAND (or SILTY CLAY and SAND)		
GM	SILTY GRAVEL SILTY GRAVEL with SAND	OL	ORGANIC lean CLAY ORGANIC lean CLAY with SAND ORGANIC lean CLAY with GRAVEL SANDY ORGANIC lean CLAY SANDY ORGANIC lean CLAY with GRAVEL GRAVELLY ORGANIC lean CLAY GRAVELLY ORGANIC lean CLAY with SAND
GC	CLAYEY GRAVEL CLAYEY GRAVEL with SAND		
GC-GM	SILTY, CLAYEY GRAVEL SILTY, CLAYEY GRAVEL with SAND	OL	ORGANIC SILT ORGANIC SILT with SAND ORGANIC SILT with GRAVEL SANDY ORGANIC SILT SANDY ORGANIC SILT with GRAVEL GRAVELLY ORGANIC SILT GRAVELLY ORGANIC SILT with SAND
SW	Well-graded SAND Well-graded SAND with GRAVEL		
SP	Poorly graded SAND Poorly graded SAND with GRAVEL	CH	Fat CLAY Fat CLAY with SAND Fat CLAY with GRAVEL SANDY fat CLAY SANDY fat CLAY with GRAVEL GRAVELLY fat CLAY GRAVELLY fat CLAY with SAND
SW-SM	Well-graded SAND with SILT Well-graded SAND with SILT and GRAVEL		
SW-SC	Well-graded SAND with CLAY (or SILTY CLAY) Well-graded SAND with CLAY and GRAVEL (or SILTY CLAY and GRAVEL)	MH	Elastic SILT Elastic SILT with SAND Elastic SILT with GRAVEL SANDY elastic SILT SANDY elastic SILT with GRAVEL GRAVELLY elastic SILT GRAVELLY elastic SILT with SAND
SP-SM	Poorly graded SAND with SILT Poorly graded SAND with SILT and GRAVEL		
SP-SC	Poorly graded SAND with CLAY (or SILTY CLAY) Poorly graded SAND with CLAY and GRAVEL (or SILTY CLAY and GRAVEL)	OH	ORGANIC fat CLAY ORGANIC fat CLAY with SAND ORGANIC fat CLAY with GRAVEL SANDY ORGANIC fat CLAY SANDY ORGANIC fat CLAY with GRAVEL GRAVELLY ORGANIC fat CLAY GRAVELLY ORGANIC fat CLAY with SAND
SM	SILTY SAND SILTY SAND with GRAVEL		
SC	CLAYEY SAND CLAYEY SAND with GRAVEL	OH	ORGANIC elastic SILT ORGANIC elastic SILT with SAND ORGANIC elastic SILT with GRAVEL SANDY elastic ELASTIC SILT SANDY ORGANIC elastic SILT with GRAVEL GRAVELLY ORGANIC elastic SILT GRAVELLY ORGANIC elastic SILT with SAND
SC-SM	SILTY, CLAYEY SAND SILTY, CLAYEY SAND with GRAVEL		
PT	PEAT	OL/OH	ORGANIC SOIL ORGANIC SOIL with SAND ORGANIC SOIL with GRAVEL SANDY ORGANIC SOIL SANDY ORGANIC SOIL with GRAVEL GRAVELLY ORGANIC SOIL GRAVELLY ORGANIC SOIL with SAND
	COBBLES COBBLES and BOULDERS BOULDERS		

FIELD AND LABORATORY TESTS

C	Consolidation (ASTM D 2435-04)
CL	Collapse Potential (ASTM D 5333-03)
CP	Compaction Curve (CTM 216 - 06)
CR	Corrosion, Sulfates, Chlorides (CTM 643 - 99; CTM 417 - 06; CTM 422 - 06)
CU	Consolidated Undrained Triaxial (ASTM D 4767-02)
DS	Direct Shear (ASTM D 3080-04)
EI	Expansion Index (ASTM D 4829-03)
M	Moisture Content (ASTM D 2216-05)
OC	Organic Content (ASTM D 2974-07)
P	Permeability (CTM 220 - 05)
PA	Particle Size Analysis (ASTM D 422-63 [2002])
PI	Liquid Limit, Plastic Limit, Plasticity Index (AASHTO T 89-02, AASHTO T 90-00)
PL	Point Load Index (ASTM D 5731-05)
PM	Pressure Meter
PP	Pocket Penetrometer
R	R-Value (CTM 301 - 00)
SE	Sand Equivalent (CTM 217 - 99)
SG	Specific Gravity (AASHTO T 100-06)
SL	Shrinkage Limit (ASTM D 427-04)
SW	Swell Potential (ASTM D 4546-03)
TV	Pocket Torvane
UC	Unconfined Compression - Soil (ASTM D 2166-06) Unconfined Compression - Rock (ASTM D 2938-95)
UU	Unconsolidated Undrained Triaxial (ASTM D 2850-03)
UW	Unit Weight (ASTM D 4767-04)
VS	Vane Shear (AASHTO T 223-96 [2004])

CONSISTENCY OF COHESIVE SOILS

Descriptor	Unconfined Compressive Strength (tsf)	Pocket Penetrometer (tsf)	Torvane (tsf)	Field Approximation
Very Soft	< 0.25	< 0.25	< 0.12	Easily penetrated several inches by fist
Soft	0.25 - 0.50	0.25 - 0.50	0.12 - 0.25	Easily penetrated several inches by thumb
Medium Stiff	0.50 - 1.0	0.50 - 1.0	0.25 - 0.50	Can be penetrated several inches by thumb with moderate effort
Stiff	1.0 - 2.0	1.0 - 2.0	0.50 - 1.0	Readily indented by thumb but penetrated only with great effort
Very Stiff	2.0 - 4.0	2.0 - 4.0	1.0 - 2.0	Readily indented by thumbnail
Hard	> 4.0	> 4.0	> 2.0	Indented by thumbnail with difficulty

APPARENT DENSITY OF COHESIONLESS SOILS

Descriptor	SPT N60 - Value (blows / foot)
Very Loose	0 - 4
Loose	5 - 10
Medium Dense	11 - 30
Dense	31 - 50
Very Dense	> 50

MOISTURE

Descriptor	Criteria
Dry	Absence of moisture, dusty, dry to the touch
Moist	Damp but no visible water
Wet	Visible free water, usually soil is below water table

PERCENT OR PROPORTION OF SOILS

Descriptor	Criteria
Trace	Particles are present but estimated to be less than 5%
Few	5 to 10%
Little	15 to 25%
Some	30 to 45%
Mostly	50 to 100%

SOIL PARTICLE SIZE

Descriptor		Size
Boulder		> 12 inches
Cobble		3 to 12 inches
Gravel	Coarse	3/4 inch to 3 inches
	Fine	No. 4 Sieve to 3/4 inch
Sand	Coarse	No. 10 Sieve to No. 4 Sieve
	Medium	No. 40 Sieve to No. 10 Sieve
	Fine	No. 200 Sieve to No. 40 Sieve
Silt and Clay		Passing No. 200 Sieve

PLASTICITY OF FINE-GRAINED SOILS

Descriptor	Criteria
Nonplastic	A 1/8-inch thread cannot be rolled at any water content.
Low	The thread can barely be rolled, and the lump cannot be formed when drier than the plastic limit.
Medium	The thread is easy to roll, and not much time is required to reach the plastic limit; it cannot be rerolled after reaching the plastic limit. The lump crumbles when drier than the plastic limit.
High	It takes considerable time rolling and kneading to reach the plastic limit. The thread can be rerolled several times after reaching the plastic limit. The lump can be formed without crumbling when drier than the plastic limit.

CEMENTATION

Descriptor	Criteria
Weak	Crumbles or breaks with handling or little finger pressure.
Moderate	Crumbles or breaks with considerable finger pressure.
Strong	Will not crumble or break with finger pressure.

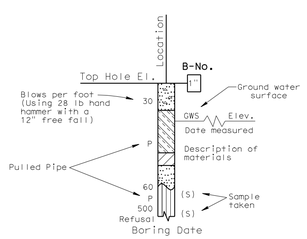

SAMPLE BORING (DRY)

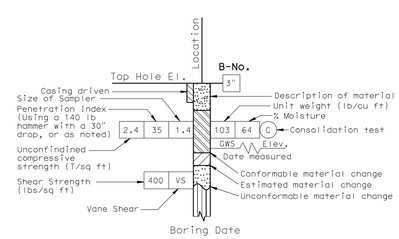

ROTARY SAMPLE BORING (WET)

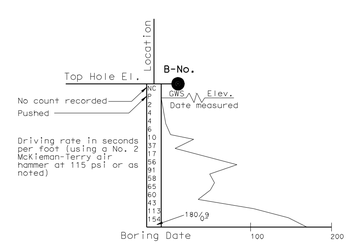

2 1/4" CONE PENETRATION BORING

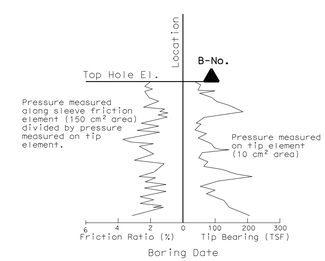

ELECTRONIC CONE PENETROMETER TEST

Cone Penetrometer dimensions and testing procedures are in accordance with ASTM standard D 3441-79, or as noted.

GINA PURSELL DESIGN OVERSIGHT	SHAWN WEI FUNCTIONAL SUPERVISOR	DRAWN BY	P. QUACH	P.CHAU/D.WADER/C.CARBINO FIELD INVESTIGATION BY:	PREPARED FOR THE STATE OF CALIFORNIA DEPARTMENT OF TRANSPORTATION	A. LEE PROJECT ENGINEER	BRIDGE NO. 56 E0071 POST MILE 19.55
11/12/10 SIGN OFF DATE		CHECKED BY	S. PIRATHIVIRAJ	DATE: Nov 6 2007 to March 7 2008			

SOIL LEGEND

LOG OF TEST BORINGS 1 OF 3

OSF GEOTECHNICAL LOG OF TEST BORINGS SHEET (ENGLISH) (REV. 2/25/05)

ORIGINAL SCALE IN INCHES FOR REDUCED PLANS 0 1 2 3

CU 08
EA 448401

DISREGARD PRINTS BEARING EARLIER REVISION DATES 8/18/10

REVISION DATES (PRELIMINARY STAGE ONLY)

SHEET 11 OF 13

FILE => 56e0071zlotb11.dgn

USERNAME => trcarol DATE PLOTTED => 30-APR-2011 TIME PLOTTED =>

DIST	COUNTY	ROUTE	POST MILES TOTAL PROJECT	SHEET No	TOTAL SHEETS
08	Riv	91	15.6/21.6	1533	2028

GEOTECHNICAL PROFESSIONAL — DATE 11/03/2010

4-25-11
PLANS APPROVAL DATE

REGISTERED PROFESSIONAL ENGINEER — FARID MOTAMED No. 2738 Exp. 6-30-11 GEOTECHNICAL STATE OF CALIFORNIA

The State of California or its officers or agents shall not be responsible for the accuracy or completeness of electronic copies of this plan sheet.

California Department of Transportation
5900 Folsom Boulevard
Sacramento, CA 95819

URS Corporation
2020 East First Street, Suite 400
Santa Ana, CA 92705

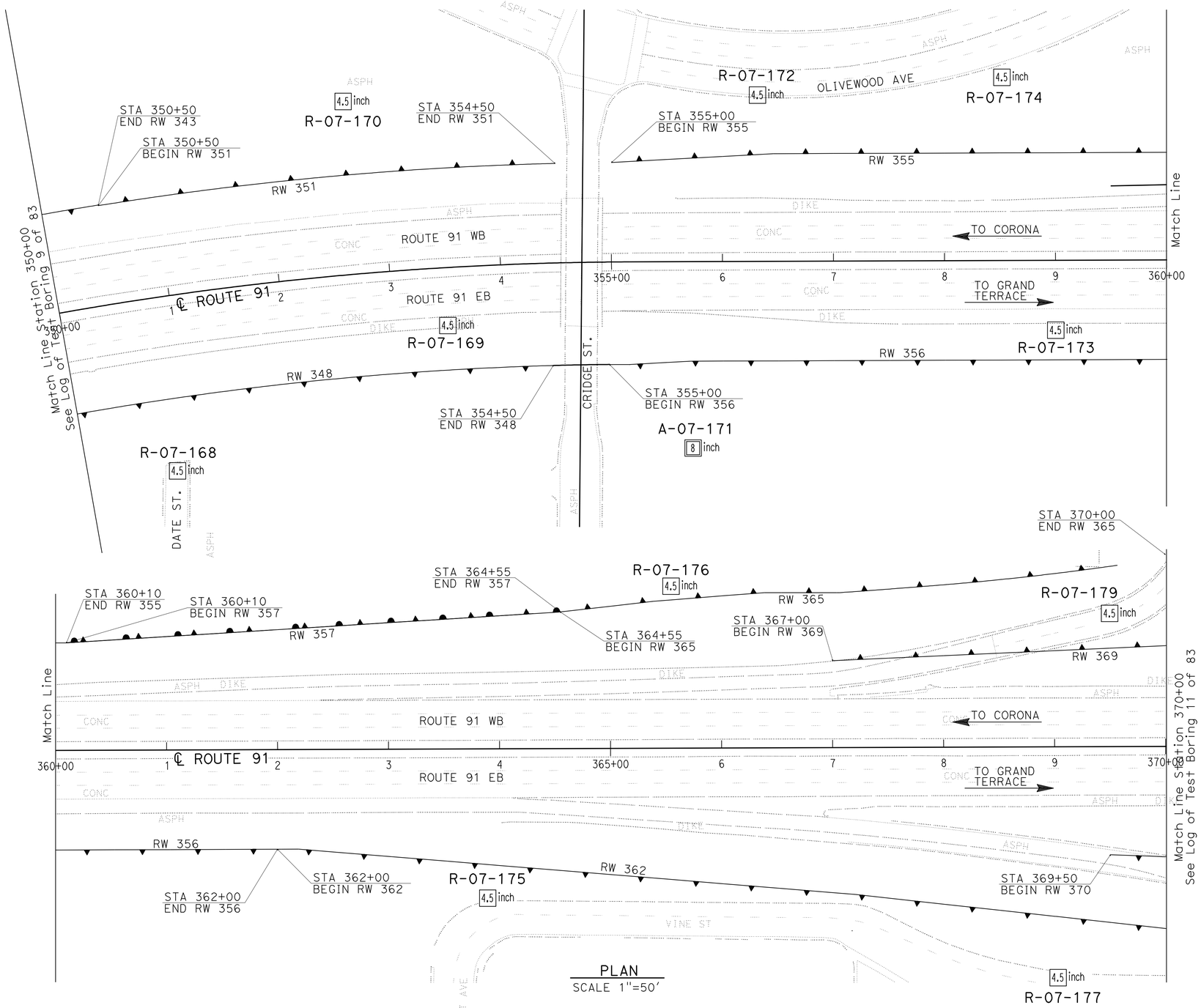

PLAN
SCALE 1"=50'

Borehole Number	Drill Rig	Hammer Type	Avg. Hammer Efficiency, ETR (%)
R-07-168	CS-2000	Automatic	84
R-07-169	CME 85	Automatic	87
R-07-170	Acker Rig	Automatic	74
A-07-171	Diedrich D-120	Automatic	75*
R-07-172	CS-2000	Automatic	84
R-07-173	CME 85	Automatic	87
R-07-174	CS-2000	Automatic	84
R-07-175	CS-2000	Automatic	84
R-07-176	CS-2000	Automatic	84
R-07-177	CS-2000	Automatic	84
R-07-179	Acker Rig	Automatic	74

Sampler Type	Inside Diameter (Inches)	Borehole Numbers
SPT	1.375	R-07-168, R-07-169, R-07-170 A-07-171, R-07-172, R-07-173 R-07-174, R-07-175, R-07-176 R-07-177, R-07-179
Modified California 1	1.94	R-07-168, R-07-169, R-07-170 R-07-172, R-07-173, R-07-174 R-07-175, R-07-177, R-07-179
Modified California 2	2.40	A-07-171

*Estimated Hammer Efficiency Rating.

GINA PURSELL DESIGN OVERSIGHT	SHAWN WEI FUNCTIONAL SUPERVISOR	DRAWN BY	P. QUACH	P.CHAU/D.WADER/C.CARBINO FIELD INVESTIGATION BY:	PREPARED FOR THE STATE OF CALIFORNIA DEPARTMENT OF TRANSPORTATION	A. LEE PROJECT ENGINEER	BRIDGE NO. 56 E0071	WALL LAYOUT & EXPLORATORY LOCATION MAP
11/12/10 SIGN OFF DATE		CHECKED BY	S. PIRATHIVIRAJ	DATE: Nov 6 2007 to March 7 2008			POST MILE 19.55	LOG OF TEST BORINGS 2 OF 3

OSF GEOTECHNICAL LOG OF TEST BORINGS SHEET (ENGLISH) (REV. 2/25/05)

ORIGINAL SCALE IN INCHES FOR REDUCED PLANS 0 1 2 3

CU 08
EA 448401

DISREGARD PRINTS BEARING EARLIER REVISION DATES — REVISION DATES (PRELIMINARY STAGE ONLY) 8/18/10

SHEET 12 OF 13

FILE => 56e0071zlotb12.dgn

USERNAME => trcarol DATE PLOTTED => 30-APR-2011 TIME PLOTTED =>

DIST	COUNTY	ROUTE	POST MILES TOTAL PROJECT	SHEET No	TOTAL SHEETS
08	Riv	91	15.6/21.6	1534	2028

GEOTECHNICAL PROFESSIONAL — DATE 11/03/2010

4-25-11
PLANS APPROVAL DATE

REGISTERED PROFESSIONAL ENGINEER — FARID MOTAMED — No. 2738 — Exp. 6-30-11 — GEOTECHNICAL — STATE OF CALIFORNIA

The State of California or its officers or agents shall not be responsible for the accuracy or completeness of electronic copies of this plan sheet.

California Department of Transportation
5900 Folsom Boulevard
Sacramento, CA 95819

URS Corporation
2020 East First Street, Suite 400
Santa Ana, CA 92705

FOR PLAN VIEW, SEE
"LOG OF TEST BORINGS 2 OF 3"

NOTE: 1. This LOTB sheet was prepared in accordance with the Caltrans Soil & Rock Logging, Classification, and Presentation Manual (June 2007).

2. For legend, see "Log of Test Borings 1 of 3"

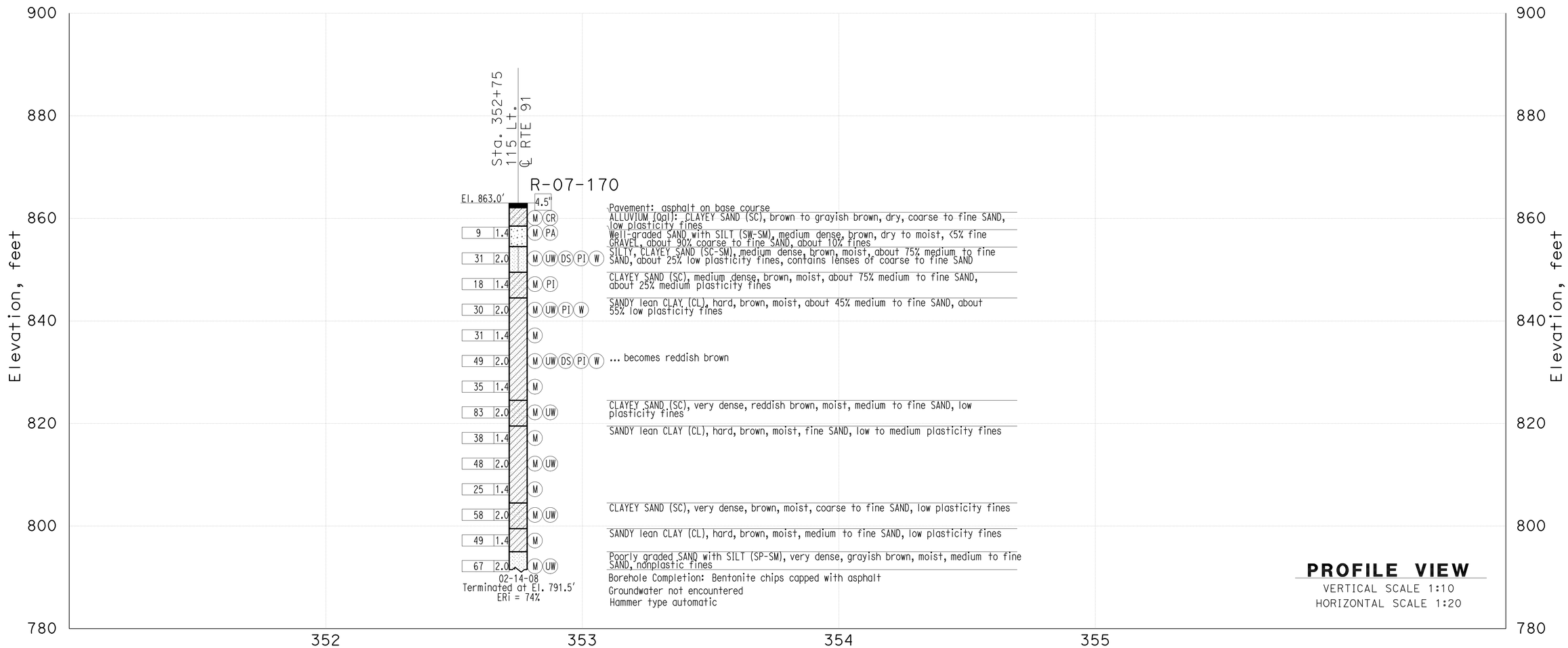

THIS PLAN ACCURATE FOR SOUND WALL AND RETAINING WALL WORK ONLY

GINA PURSELL DESIGN OVERSIGHT	SHAWN WEI FUNCTIONAL SUPERVISOR	DRAWN BY	P. QUACH	P.CHAU/D.WADER/C.CARBINO FIELD INVESTIGATION BY:	PREPARED FOR THE STATE OF CALIFORNIA DEPARTMENT OF TRANSPORTATION	A. LEE PROJECT ENGINEER	BRIDGE NO. 56 E0071 POST MILE 19.55
11/12/10 SIGN OFF DATE		CHECKED BY	S. PIRATHIVIRAJ	DATE: Nov 6 2007 to March 7 2008			

RETAINING WALL 351

LOG OF TEST BORINGS 3 OF 3

OSF GEOTECHNICAL LOG OF TEST BORINGS SHEET (ENGLISH) (REV. 2/25/05)

ORIGINAL SCALE IN INCHES FOR REDUCED PLANS 0 1 2 3

CU 08
EA 448401

DISREGARD PRINTS BEARING EARLIER REVISION DATES

REVISION DATES (PRELIMINARY STAGE ONLY) 8/17/10

SHEET 13 OF 13

FILE => 56e0071zlotb13.dgn

USERNAME => trcarol DATE PLOTTED => 30-APR-2011 TIME PLOTTED =>

DIST	COUNTY	ROUTE	POST MILES TOTAL PROJECT	SHEET No	TOTAL SHEETS
08	Riv	91	15.6/21.6	1535	2028

REGISTERED CIVIL ENGINEER 11/12/10 DATE

4-25-11
PLANS APPROVAL DATE

REGISTERED PROFESSIONAL ENGINEER Minh Thuong Vo No. C59297 Exp. 6/30/2011 CIVIL STATE OF CALIFORNIA

The State of California or its officers or agents shall not be responsible for the accuracy or completeness of electronic copies of this plan sheet.

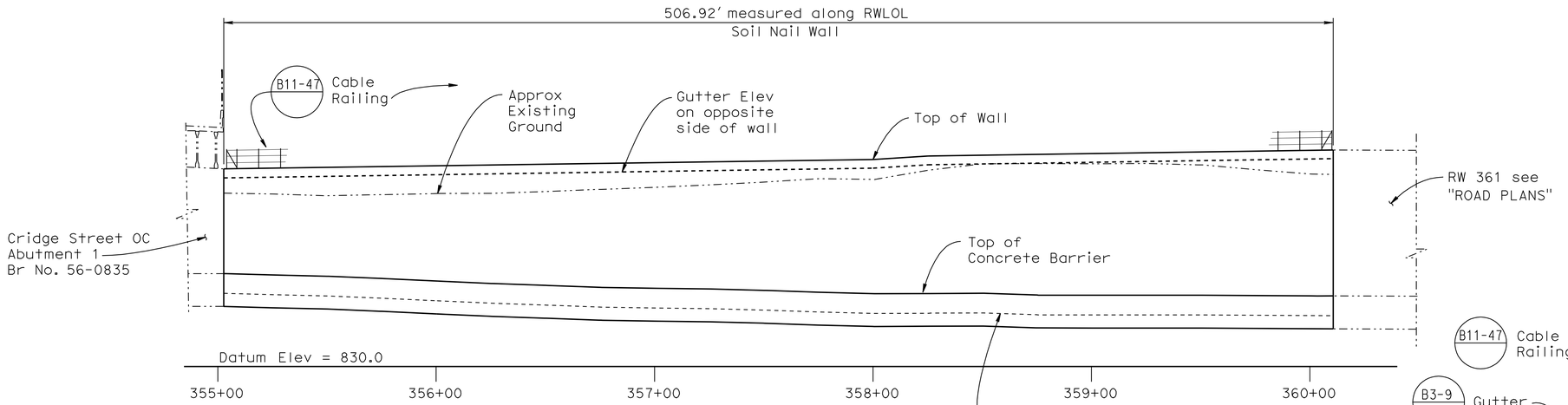

DEVELOPED ELEVATION

Horiz. 1" = 30'
Vert. 1" = 10'

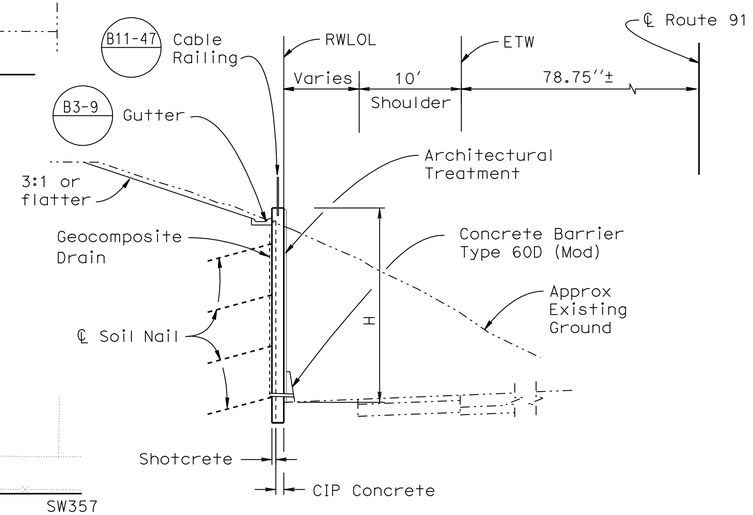

TYPICAL SECTION

1/8" = 1'-0"

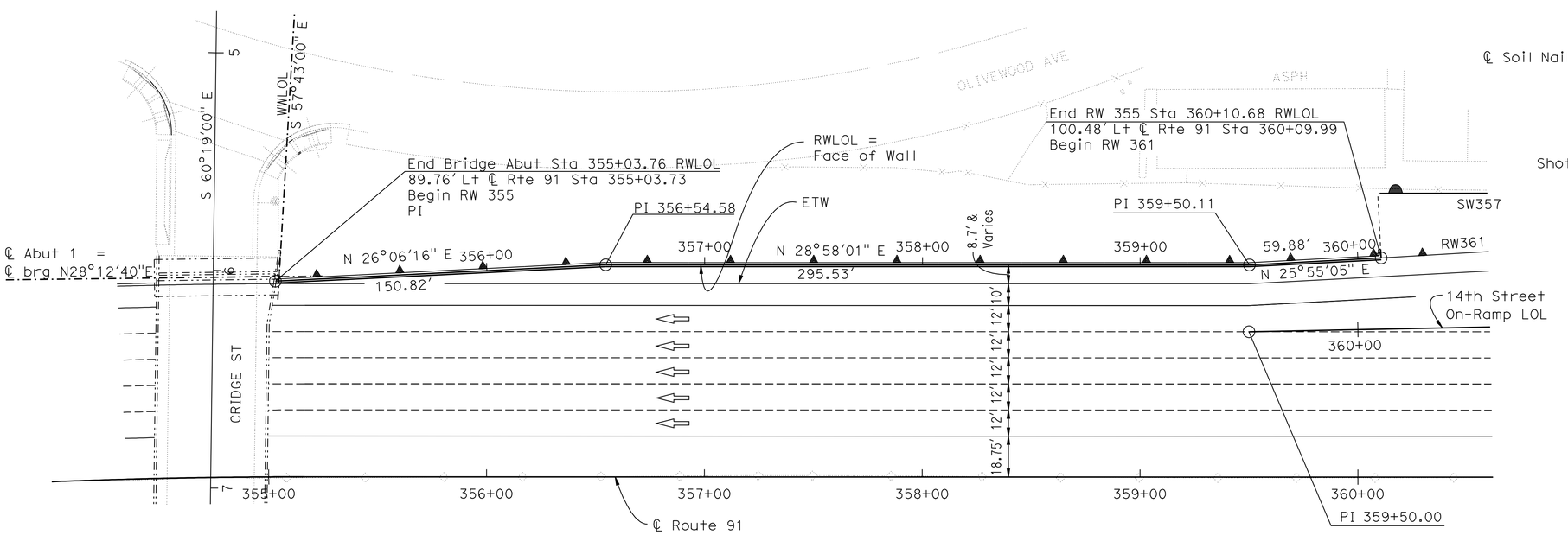

PLAN

1" = 30'

NOTES:

1. For Quantities see "INDEX TO PLANS" sheet.

NOTE:
THE CONTRACTOR SHALL VERIFY ALL CONTROLLING FIELD DIMENSIONS BEFORE ORDERING OR FABRICATING ANY MATERIAL.

Daniel T. Adams
DESIGN ENGINEER

	BY	CHECKED
DESIGN	M. Vo	J. Szabo
DETAILS	R. Kirkland	J. Szabo
QUANTITIES	J. Szabo	M. Vo

LOAD & RESISTANCE FACTOR DESIGN — LIVE LOADING: HL93 W/"LOW-BOY"; PERMIT DESIGN VEHICLE

	BY	CHECKED
LAYOUT	M. Vo	J. Szabo
SPECIFICATIONS	Dave Klein	PLANS AND SPECS COMPARED Dave Klein

ORIGINAL SCALE IN INCHES FOR REDUCED PLANS 0 1 2 3

STATE OF CALIFORNIA
DEPARTMENT OF TRANSPORTATION

DIVISION OF ENGINEERING SERVICES
STRUCTURE DESIGN
DESIGN BRANCH 10

CU 08
EA 448401

BRIDGE NO. 56 E0072
POST MILE 19.64

RETAINING WALL NO. 355
GENERAL PLAN

DISREGARD PRINTS BEARING EARLIER REVISION DATES → 3/15/10 7/15/10

REVISION DATES

SHEET 1 OF 13

STRUCTURES DESIGN GENERAL PLAN SHEET (ENGLISH) (REV.07-24-06)

FILE => 56e0072agp01.dgn

USERNAME => trcarol DATE PLOTTED =>

DIST	COUNTY	ROUTE	POST MILES TOTAL PROJECT	SHEET No	TOTAL SHEETS
08	Riv	91	15.6/21.6	1536	2028

REGISTERED CIVIL ENGINEER 11/12/10 DATE

4-25-11
PLANS APPROVAL DATE

REGISTERED PROFESSIONAL ENGINEER Minh Thuong Vo No. C59297 Exp. 6/30/2011 CIVIL STATE OF CALIFORNIA

The State of California or its officers or agents shall not be responsible for the accuracy or completeness of electronic copies of this plan sheet.

DESIGN DATA

DESIGN: Service Load Design Method per FHWA Geotechnical Engineering Circular No. 7 (FHWA O-IF-03-017) & Manual for Design and Construction Monitoring of Soil Nail Wall (FHWA-SA-96-069R)

REINFORCED CONCRETE: f_c = 3.6 KSI
f_y = 60 KSI

SHOTCRETE: f_c = 3.6 KSI
f_y = 60 KSI

STRUCTURAL STEEL: ASTM Designation: A 709, Grade 36
f_y = 36 KSI

SOIL NAILS: ASTM Designation: A615, Grade 60
f_y = 60 KSI

SOIL PARAMETERS: ϕ = 36°
c = 210 lb/ft^2
γ = 125 lb/ft^3
Q_d = 2.18 k/ft (Design Pullout Resistance)

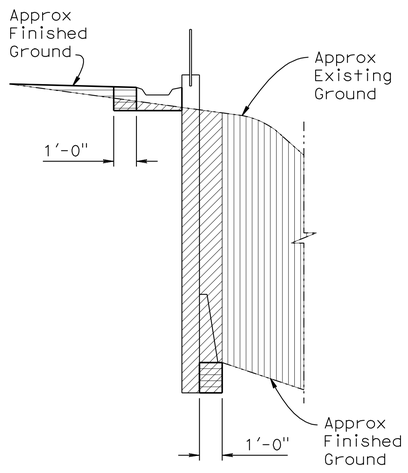

Structure Excavation (Soil Nail Wall)

Structure Backfill (Soil Nail Wall)

Roadway Excavation (see Roadway Plan)

SOIL NAIL WALL EXCAVATION & BACKFILL

NO SCALE

QUANTITIES

RETAINING WALL 355 BRIDGE NO 56E0072

STRUCTURE EXCAVATION (SOIL NAIL WALL)	816	CY
STRUCTURE BACKFILL (SOIL NAIL WALL)	53	CY
SOIL NAIL ASSEMBLY	9,072	LF
STRUCTURAL CONCRETE, RETAINING WALL	340	CY
ARCHITECTURAL SURFACE (TEXTURED CONCRETE) FRACTURED RIB SPLIT SLATE TEXTURE	8,980	SQFT
BAR REINFORCING STEEL (RETAINING WALL)	51,178	LB
SHOTCRETE	157	CY
MINOR CONCRETE (GUTTER)	508	LF
CABLE RAILING	508	LF
CONCRETE BARRIER (TYPE 60D MODIFIED)	508	LF

INDEX TO PLANS

Sheet No.	Title
1	GENERAL PLAN
2	INDEX TO PLANS
3	STRUCTURE PLAN NO. 1
4	STRUCTURE PLAN NO. 2
5	SOIL NAIL WALL DETAILS NO. 1
6	SOIL NAIL WALL DETAILS NO. 2
7	SOIL NAIL WALL DETAILS NO. 3
8	ARCHITECTURAL SURFACE
9	ARCHITECTURAL SURFACE DETAIL NO. 1
10	ARCHITECTURAL SURFACE DETAIL NO. 2
11	LOG OF TEST BORINGS 1 OF 3
12	LOG OF TEST BORINGS 2 OF 3
13	LOG OF TEST BORINGS 3 OF 3

STANDARD PLANS DATED MAY 2006

A10A	ACRONYMS AND ABBREVIATIONS (SHEET 1 OF 2)
A10B	ACRONYMS AND ABBREVIATIONS (SHEET 2 OF 2)
A10C	SYMBOLS (SHEET 1 OF 2)
A10D	SYMBOLS (SHEET 2 OF 2)
B0-1	BRIDGE DETAILS
B0-3	BRIDGE DETAILS
B3-8	RETAINING WALL DETAILS NO. 1
B3-9	RETAINING WALL DETAILS NO. 2
B11-47	CABLE RAILING

STANDARD PLAN SHEET NO.

DETAIL NO.

	BY	CHECKED
DESIGN	M. Vo	J. Szabo
DETAILS	R. Kirkland	J. Szabo
QUANTITIES	J. Szabo	M. Vo

STATE OF CALIFORNIA DEPARTMENT OF TRANSPORTATION

DIVISION OF ENGINEERING SERVICES STRUCTURE DESIGN DESIGN BRANCH 10

BRIDGE NO. 56 E0072
POST MILE 19.64

RETAINING WALL NO. 355
INDEX TO PLANS

STRUCTURES DESIGN DETAIL SHEET (ENGLISH) (REV. 10/25/05)

ORIGINAL SCALE IN INCHES FOR REDUCED PLANS 0 1 2 3

CU 08
EA 448401

DISREGARD PRINTS BEARING EARLIER REVISION DATES

REVISION DATES 3/15/10 7/15/10

SHEET 2 OF 13

FILE => 56e0072aitp02.dgn

USERNAME => trcarol DATE PLOTTED => 30-APR-2011 TIME PLOTTED => 11:35

Note:
Cable Railing and Concrete Barrier Type 60D not shown for clarity

SOIL NAIL SCHEDULE	
Location	Soil Nail Embedment Length Le
Schedule 1	All Soil Nails: Le = 18'-0"

DIST	COUNTY	ROUTE	POST MILES TOTAL PROJECT	SHEET No	TOTAL SHEETS
08	Riv	91	15.6/21.6	1537	2028

REGISTERED CIVIL ENGINEER 11/12/10 DATE

4-25-11
PLANS APPROVAL DATE

REGISTERED PROFESSIONAL ENGINEER Minh Thuong Vo No. C59297 Exp. 6/30/2011 CIVIL STATE OF CALIFORNIA

The State of California or its officers or agents shall not be responsible for the accuracy or completeness of electronic copies of this plan sheet.

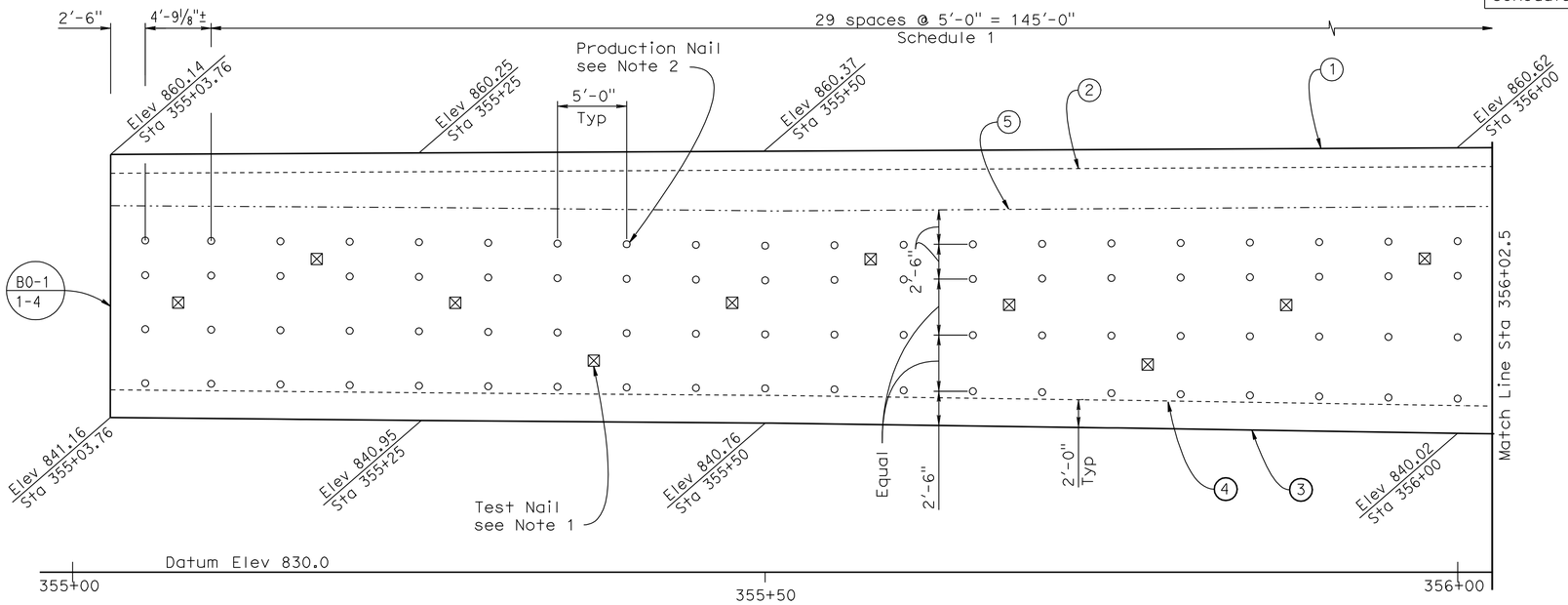

SOIL NAIL LAYOUT

3/16" = 1'-0"

NOTES:

1. Test nail locations are at midway between production nails. The exact location of the proof test nails to be determined in the field by the Engineer.
2. The maximum vertical and horizontal spacing of production nails shall be 5'-0".
3. Contractor shall adjust the concrete gutter to meet the gutter flow line.

(1) Top of Soil Nail Wall
(2) Gutter Elevation at back of wall
(3) Bottom of Soil Nail Wall
(4) Approximate Finished Grade on Freeway
(5) Approximate Original Ground, see "SOIL NAIL WALL DETAILS NO. 1" sheet.

LEGEND:

○ Indicates location of Production Nail assembly.
⊠ Indicates location of Test Nail assembly. Located in the middle of Production nails.

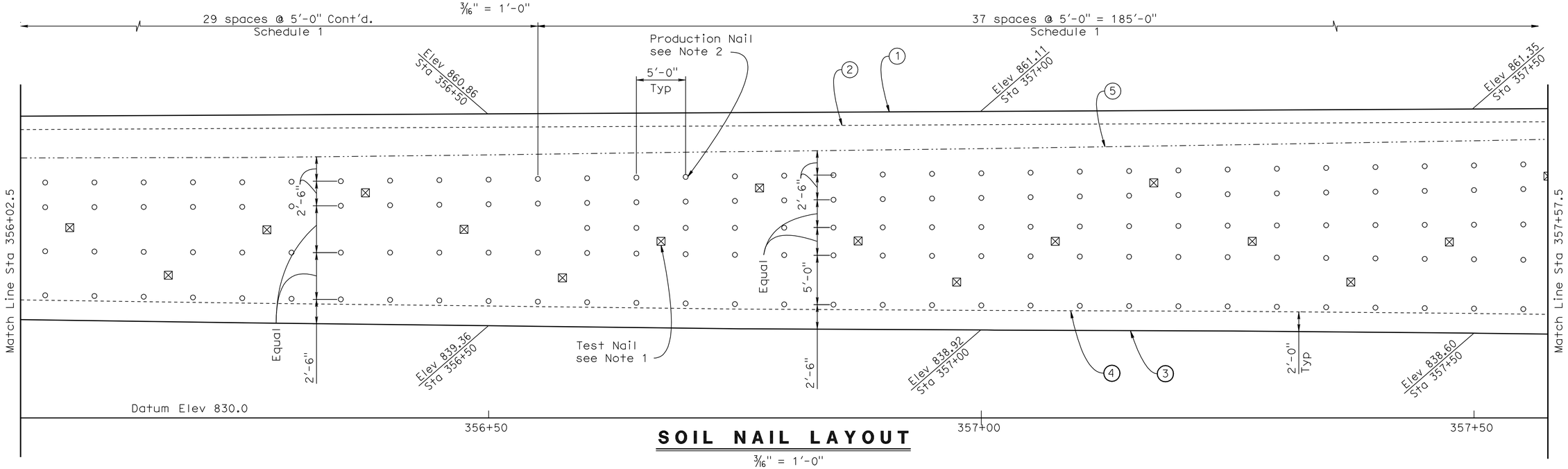

SOIL NAIL LAYOUT

3/16" = 1'-0"

DESIGN	BY M. Vo	CHECKED J. Szabo	
DETAILS	BY R. Kirkland	CHECKED J. Szabo	
QUANTITIES	BY J. Szabo	CHECKED M. Vo	

STATE OF CALIFORNIA
DEPARTMENT OF TRANSPORTATION

DIVISION OF ENGINEERING SERVICES
STRUCTURE DESIGN
DESIGN BRANCH 10

BRIDGE NO. 56 E0072
POST MILE 19.64

RETAINING WALL NO. 355
STRUCTURE PLAN NO. 1

STRUCTURES DESIGN DETAIL SHEET (ENGLISH) (REV. 10/25/05)

ORIGINAL SCALE IN INCHES FOR REDUCED PLANS 0 1 2 3

CU 08
EA 448401

DISREGARD PRINTS BEARING EARLIER REVISION DATES

REVISION DATES: 3/15/10 7/15/10

SHEET 3 OF 13

FILE => 56e0072csp03.dgn

USERNAME => trcarol DATE PLOTTED => 30-APR-2011 TIME PLOTTED => 11:35

Note:
Cable Railing and Concrete Barrier Type 60D not shown for clarity

DIST	COUNTY	ROUTE	POST MILES TOTAL PROJECT	SHEET No	TOTAL SHEETS
08	Riv	91	15.6/21.6	1538	2028

REGISTERED CIVIL ENGINEER 11/12/10 DATE

4-25-11
PLANS APPROVAL DATE

REGISTERED PROFESSIONAL ENGINEER Minh Thuong Vo No. C59297 Exp. 6/30/2011 CIVIL STATE OF CALIFORNIA

The State of California or its officers or agents shall not be responsible for the accuracy or completeness of electronic copies of this plan sheet.

SOIL NAIL SCHEDULE

Location	Soil Nail Embedment Length Le
Schedule 1	All Soil Nails: Le = 18'-0"

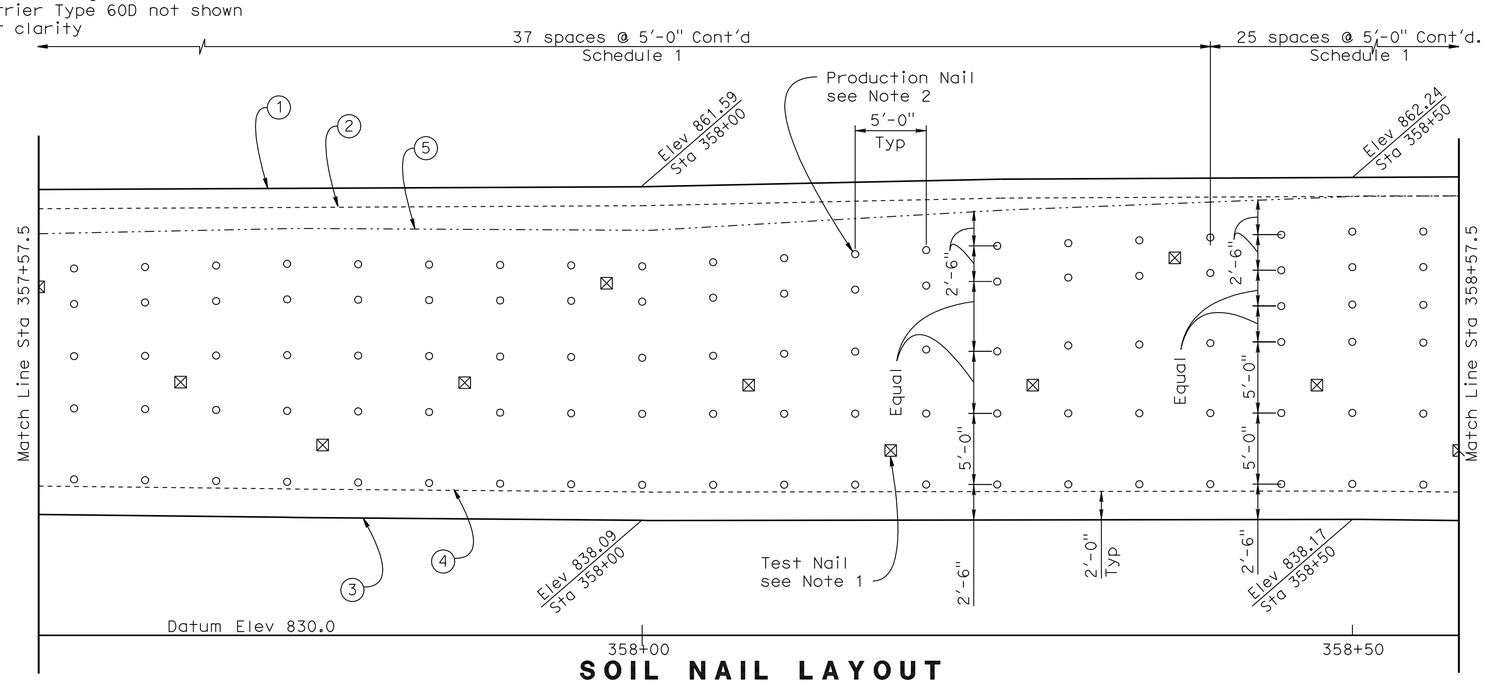

SOIL NAIL LAYOUT

3/16" = 1'-0"

NOTES:

1. Test nail locations are at midway between production nails. The exact location of the proof test nails to be determined in the field by the Engineer.
2. The maximum vertical and horizontal spacing of production nails shall be 5'-0".
3. Contractor shall adjust the concrete gutter to meet the gutter flow line.

(1) Top of Soil Nail Wall

(2) Gutter Elevation at back of wall

(3) Bottom of Soil Nail Wall

(4) Approximate Finished Grade on Freeway

(5) Approximate Original Ground, see "RETAINING WALL DETAILS NO. 1" sheet.

LEGEND:

○ Indicates location of Production Nail assembly.

⊠ Indicates location of Test Nail assembly. Located in the middle of Production nails.

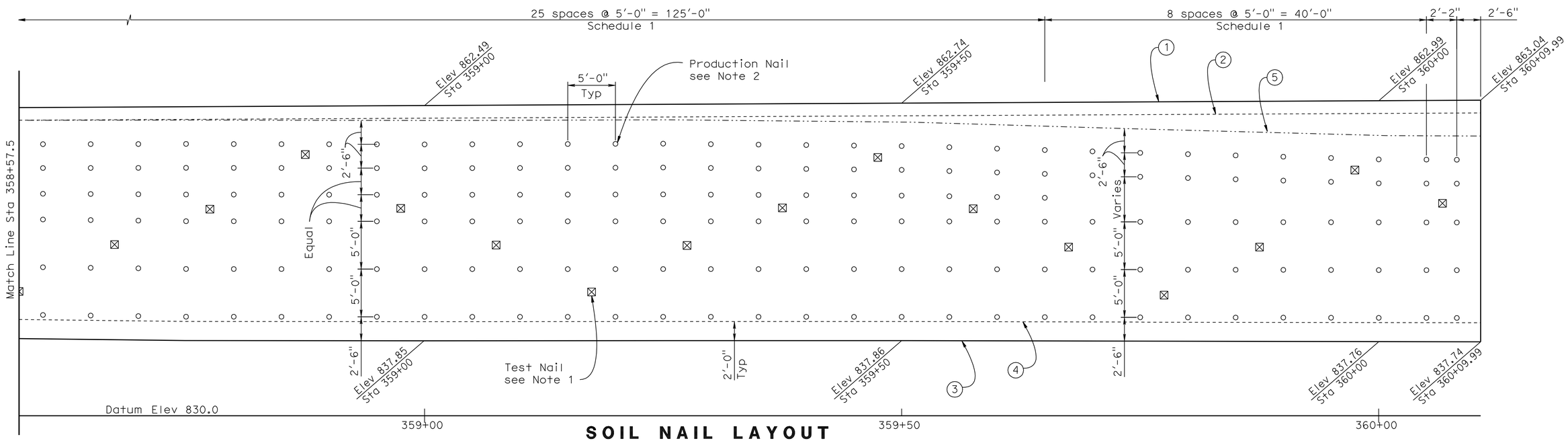

SOIL NAIL LAYOUT

3/16" = 1'-0"

	BY	CHECKED
DESIGN	M. Vo	J. Szabo
DETAILS	R. Kirkland	J. Szabo
QUANTITIES	J. Szabo	M. Vo

STATE OF CALIFORNIA
DEPARTMENT OF TRANSPORTATION

DIVISION OF ENGINEERING SERVICES
STRUCTURE DESIGN
DESIGN BRANCH 10

BRIDGE NO. 56 E0072
POST MILE 19.64

RETAINING WALL NO. 355
STRUCTURE PLAN NO. 2

STRUCTURES DESIGN DETAIL SHEET (ENGLISH) (REV. 10/25/05)

ORIGINAL SCALE IN INCHES FOR REDUCED PLANS 0 1 2 3

CU 08
EA 448401

DISREGARD PRINTS BEARING EARLIER REVISION DATES

REVISION DATES: 3/15/10 7/15/10

SHEET 4 OF 13

FILE => 56e0072csp04.dgn

USERNAME => trcarol DATE PLOTTED => 30-APR-2011 TIME PLOTTED => 11:35

DIST	COUNTY	ROUTE	POST MILES TOTAL PROJECT	SHEET No	TOTAL SHEETS
08	Riv	91	15.6/21.6	1539	2028

REGISTERED CIVIL ENGINEER 11/12/10 DATE

4-25-11
PLANS APPROVAL DATE

The State of California or its officers or agents shall not be responsible for the accuracy or completeness of electronic copies of this plan sheet.

REGISTERED PROFESSIONAL ENGINEER Minh Thuong Vo No. C59297 Exp. 6/30/2011 CIVIL STATE OF CALIFORNIA

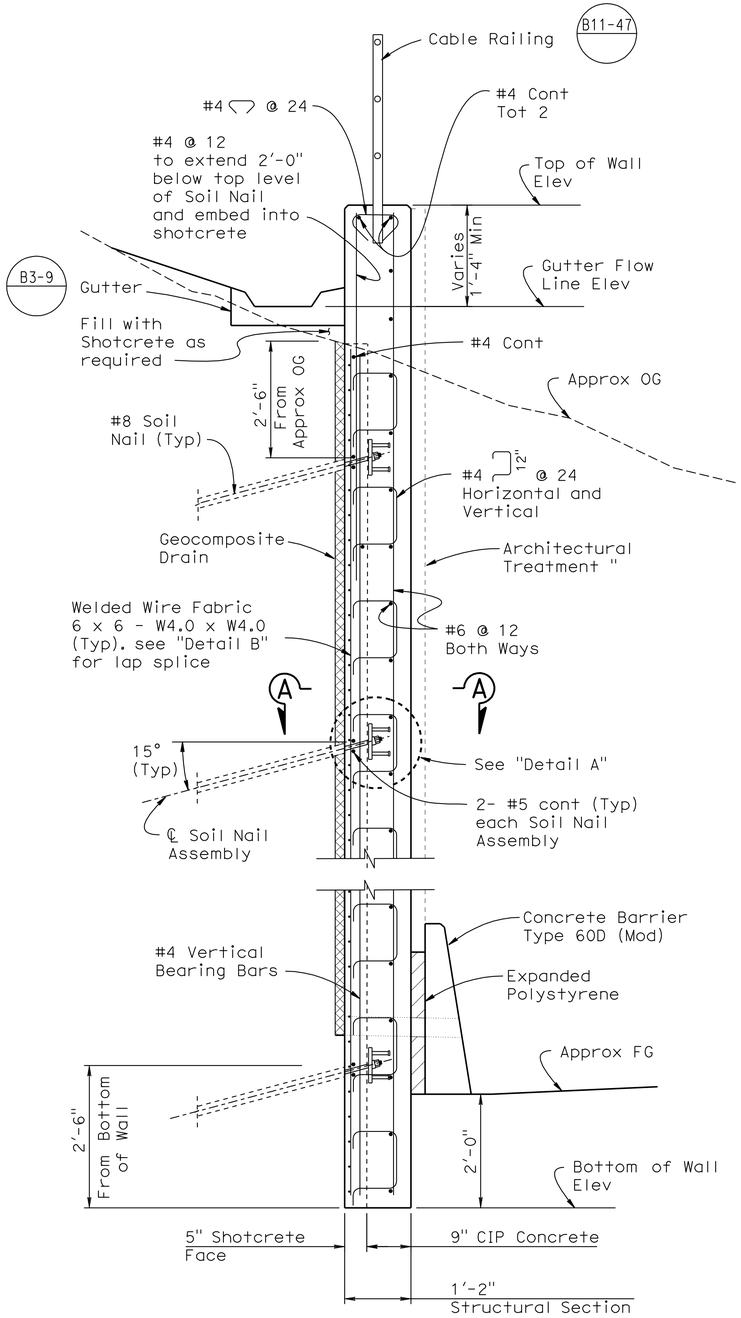

TYPICAL SECTION

3/4" = 1'-0"

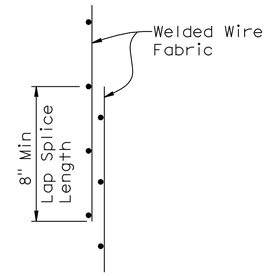

LAP SPLICE

DETAIL B

NO SCALE

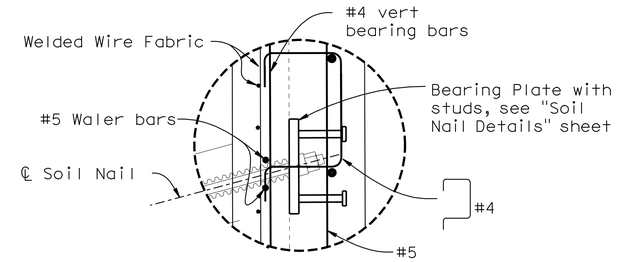

DETAIL A

1½" = 1'-0"

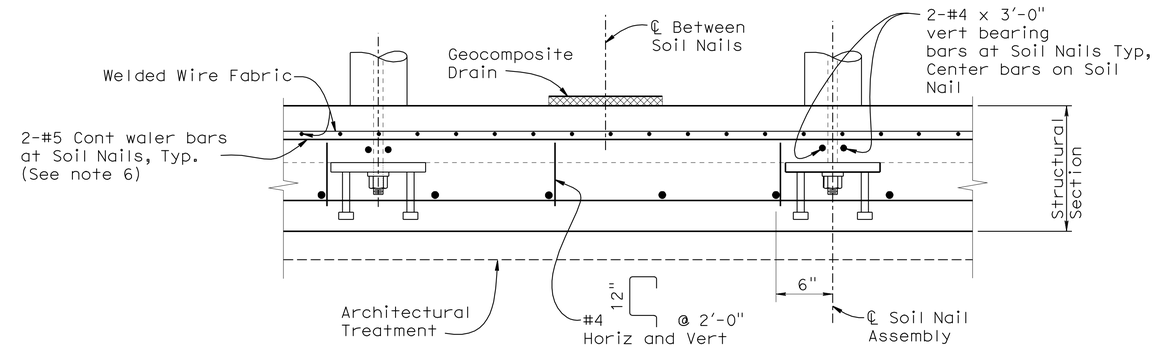

SECTION A-A

1½" = 1'-0"

STATION	OG ELEV	STATION	OG ELEV
355+03.76	856.45	357+75	858.66
355+25	856.31	358+00	858.49
355+50	856.05	358+25	859.91
355+75	856.22	358+50	860.91
356+00	856.38	358+75	860.97
356+25	856.43	359+00	860.92
356+50	856.69	359+25	861.00
356+75	857.02	359+50	860.78
357+00	857.33	359+75	860.03
357+25	857.71	360+00	859.34
357+50	858.13	369.99	859.30

APPROXIMATE ORIGINAL GROUND

Notes:

1. Bottom of wall to be placed against undisturbed material.
2. For Horizontal and Vertical Soil Nail spacing see "Structure Plan No. 1" and "Structure Plan No. 2" sheets.
3. For Soil Nail Details & Assemblies, see "Soil Nail Details No. 1 and Soil Nail Details No. 2" sheets.
4. For Geocomposite Drain Details see "Soil Nail Details No. 3" sheet.
5. For Architectural Treatment (Textured Shotcrete and textured Concrete), see "Architectural Treatment Details" sheet.
6. For soil nail rows that are discontinuous, extend waler bars a minimum of 5' beyond last soil nail.

	BY	CHECKED
DESIGN	M. Vo	J. Szabo
DETAILS	R. Kirkland	J. Szabo
QUANTITIES	J. Szabo	M. Vo

STATE OF CALIFORNIA
DEPARTMENT OF TRANSPORTATION

DIVISION OF ENGINEERING SERVICES
STRUCTURE DESIGN
DESIGN BRANCH 10

BRIDGE NO. 56 E0072
POST MILE 19.64

RETAINING WALL NO. 355
SOIL NAIL WALL DETAILS NO. 1

STRUCTURES DESIGN DETAIL SHEET (ENGLISH) (REV. 10/25/05)

ORIGINAL SCALE IN INCHES FOR REDUCED PLANS 0 1 2 3

CU 08
EA 448401

DISREGARD PRINTS BEARING EARLIER REVISION DATES 3/15/10 7/15/10

REVISION DATES

SHEET 5 OF 13

FILE => 56e0072grwdt05.dgn

USERNAME => trcarol DATE PLOTTED => 30-APR-2011 TIME PLOTTED => 11:35

DIST	COUNTY	ROUTE	POST MILES TOTAL PROJECT	SHEET No	TOTAL SHEETS
08	Riv	91	15.6/21.6	1540	2028

REGISTERED CIVIL ENGINEER — DATE 11/12/10

4-25-11
PLANS APPROVAL DATE

REGISTERED PROFESSIONAL ENGINEER — Minh Thuong Vo — No. C59297 — Exp. 6/30/2011 — CIVIL — STATE OF CALIFORNIA

The State of California or its officers or agents shall not be responsible for the accuracy or completeness of electronic copies of this plan sheet.

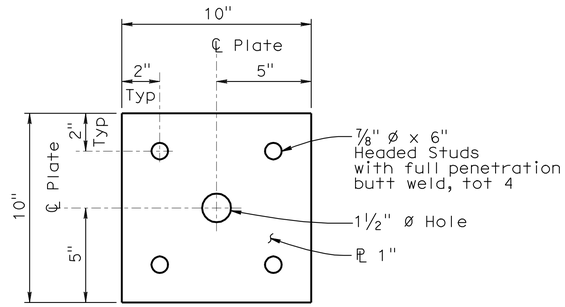

BEARING PLATE

DETAIL G

3" = 1'-0"

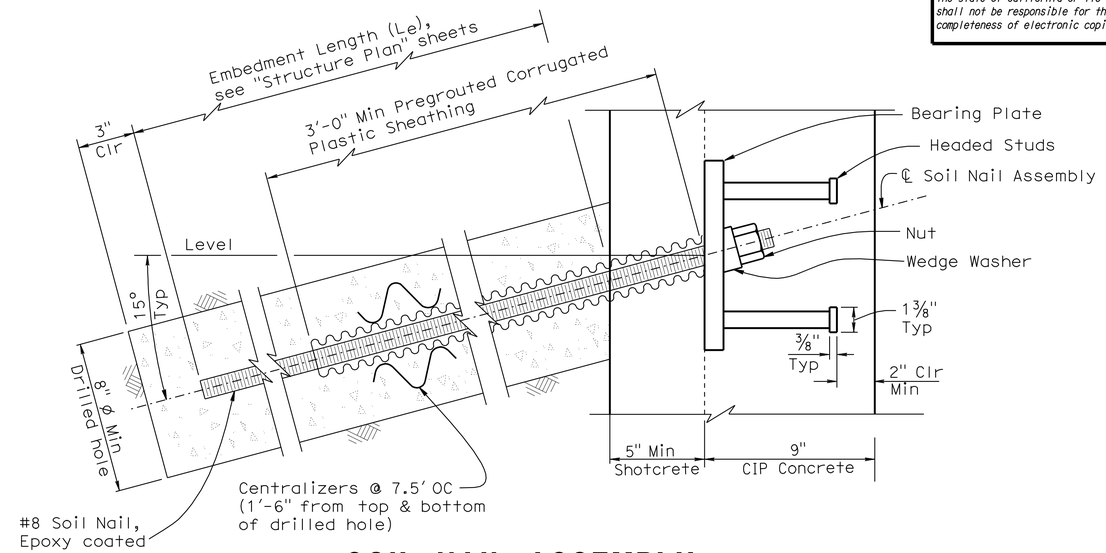

SOIL NAIL ASSEMBLY

DETAIL J

3" = 1'-0"

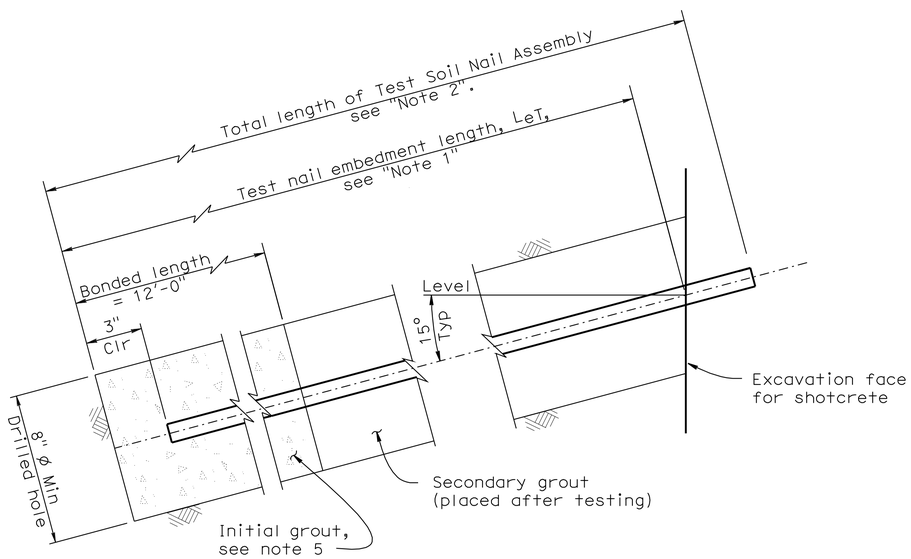

TEST SOIL NAIL ASSEMBLY

DETAIL H

3" = 1'-0"

Notes:

1. Embedment length L_{eT} of test nails equals two thirds of the embedment length L_e of adjacent soil nail assemblies, but not less than 12'-0".
2. Total length of test soil nail equals embedment length plus the length required for jacking equipment.
3. For embedment length of production nails see 'Schedule' on "Structure Plan" sheets.
4. Contractor to determine drilled hole diameter.
5. Finished grout surface to be perpendicular to bar.
6. For location of test nail, see "Structure Plan" sheets. Additional test nails will be installed and tested per special provisions.

	BY	CHECKED
DESIGN	M. Vo	J. Szabo
DETAILS	R. Kirkland	J. Szabo
QUANTITIES	J. Szabo	M. Vo

STATE OF CALIFORNIA
DEPARTMENT OF TRANSPORTATION

DIVISION OF ENGINEERING SERVICES
STRUCTURE DESIGN
DESIGN BRANCH 10

BRIDGE NO. 56 E0072
POST MILE 19.64

RETAINING WALL NO. 355
SOIL NAIL WALL DETAILS NO. 2

STRUCTURES DESIGN DETAIL SHEET (ENGLISH) (REV. 10/25/05)

ORIGINAL SCALE IN INCHES FOR REDUCED PLANS 0 1 2 3

CU 08
EA 448401

DISREGARD PRINTS BEARING EARLIER REVISION DATES → 3/15/10 7/15/10

REVISION DATES

SHEET 6 OF 13

FILE => 56e0072grwdt06.dgn

USERNAME => trcarol DATE PLOTTED => 30-APR-2011 TIME PLOTTED => 11:35

DIST	COUNTY	ROUTE	POST MILES TOTAL PROJECT	SHEET No	TOTAL SHEETS
08	Riv	91	15.6/21.6	1541	2028

REGISTERED CIVIL ENGINEER 11/12/10 DATE

4-25-11
PLANS APPROVAL DATE

REGISTERED PROFESSIONAL ENGINEER Minh Thuong Vo No. C59297 Exp. 6/30/2011 CIVIL STATE OF CALIFORNIA

The State of California or its officers or agents shall not be responsible for the accuracy or completeness of electronic copies of this plan sheet.

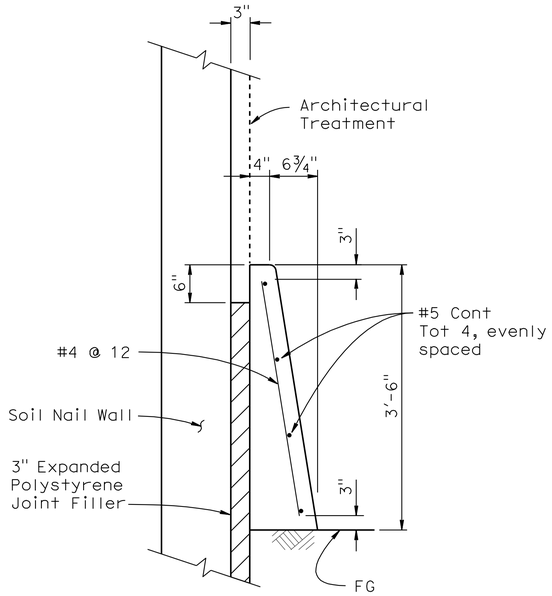

CONCRETE BARRIER (TYPE 60D MOD)

No scale

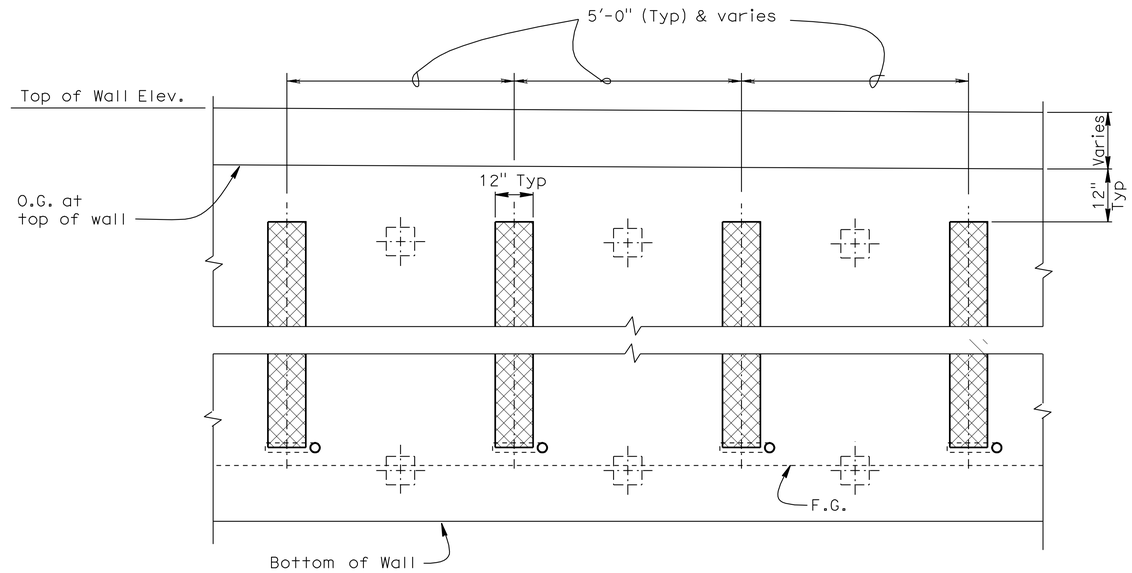

PART ELEVATION - GEOCOMPOSITE DRAIN

No scale

NOTES:

1. Center Geocomposite drain between Soil Nail assemblies.
2. - Indicates Soil Nail Assembly.
3. 2" dia drain pipe to be placed 3" above finished grade at face of barrier (Typ).
4. Adjust Geocomposite Drain to clear Test Soil Nails.

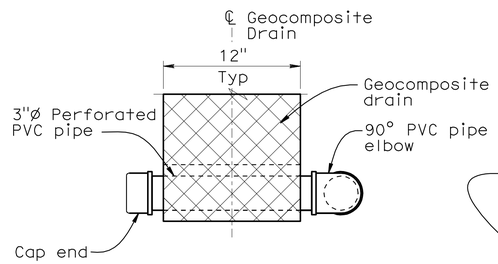

VIEW A-A

No scale

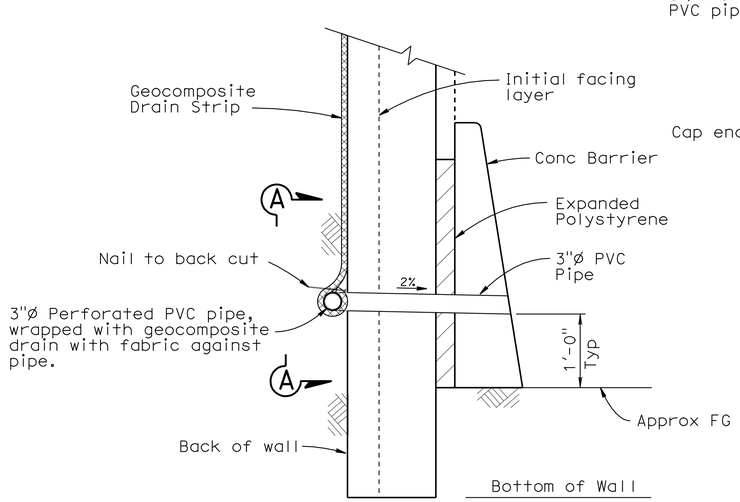

WALL DRAIN DETAIL AT WEEPHOLE

OPTION A

No scale

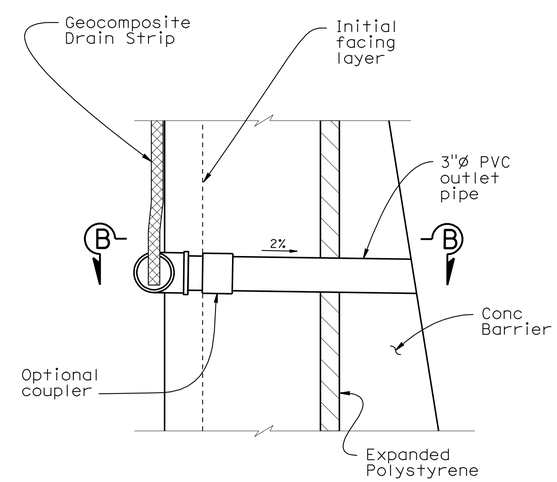

WALL DRAIN DETAIL AT WEEPHOLE

OPTION B

No scale

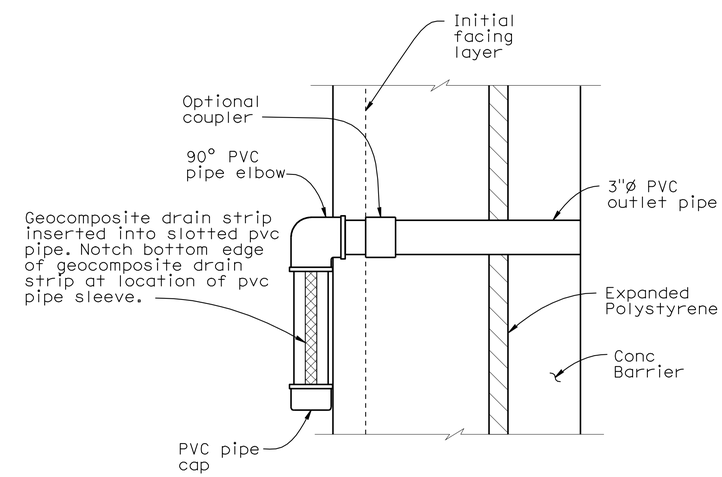

VIEW B-B

No Scale

DESIGN	BY M. Vo	CHECKED J. Szabo	
DETAILS	BY R. Kirkland	CHECKED J. Szabo	
QUANTITIES	BY J. Szabo	CHECKED M. Vo	

STATE OF CALIFORNIA
DEPARTMENT OF TRANSPORTATION

DIVISION OF ENGINEERING SERVICES
STRUCTURE DESIGN
DESIGN BRANCH 10

BRIDGE NO. 56 E0072
POST MILE 19.64

RETAINING WALL NO. 355
SOIL NAIL WALL DETAILS NO. 3

STRUCTURES DESIGN DETAIL SHEET (ENGLISH) (REV. 10/25/05)

ORIGINAL SCALE IN INCHES FOR REDUCED PLANS 0 1 2 3

CU 08
EA 448401

DISREGARD PRINTS BEARING EARLIER REVISION DATES 3/15/10 7/15/10

REVISION DATES

SHEET 7 OF 13

FILE => 56e0072grwdt07.dgn

USERNAME => trcarol DATE PLOTTED => 30-APR-2011 TIME PLOTTED => 11:36

Dist	COUNTY	ROUTE	POST MILES TOTAL PROJECT	SHEET No.	TOTAL SHEETS
08	Riv	91	15.6/21.6	1542	2028

LICENSED LANDSCAPE ARCHITECT

4-25-11
PLANS APPROVAL DATE

LICENSED LANDSCAPE ARCHITECT
Matthew Harry Hall No. 2604
Signature
10/31/2011
Renewal Date
11/12/10
Date
STATE OF CALIFORNIA

THE STATE OF CALIFORNIA OR ITS OFFICERS OR AGENTS SHALL NOT BE RESPONSIBLE FOR THE ACCURACY OR COMPLETENESS OF SCANNED COPIES OF THIS PLAN SHEET.

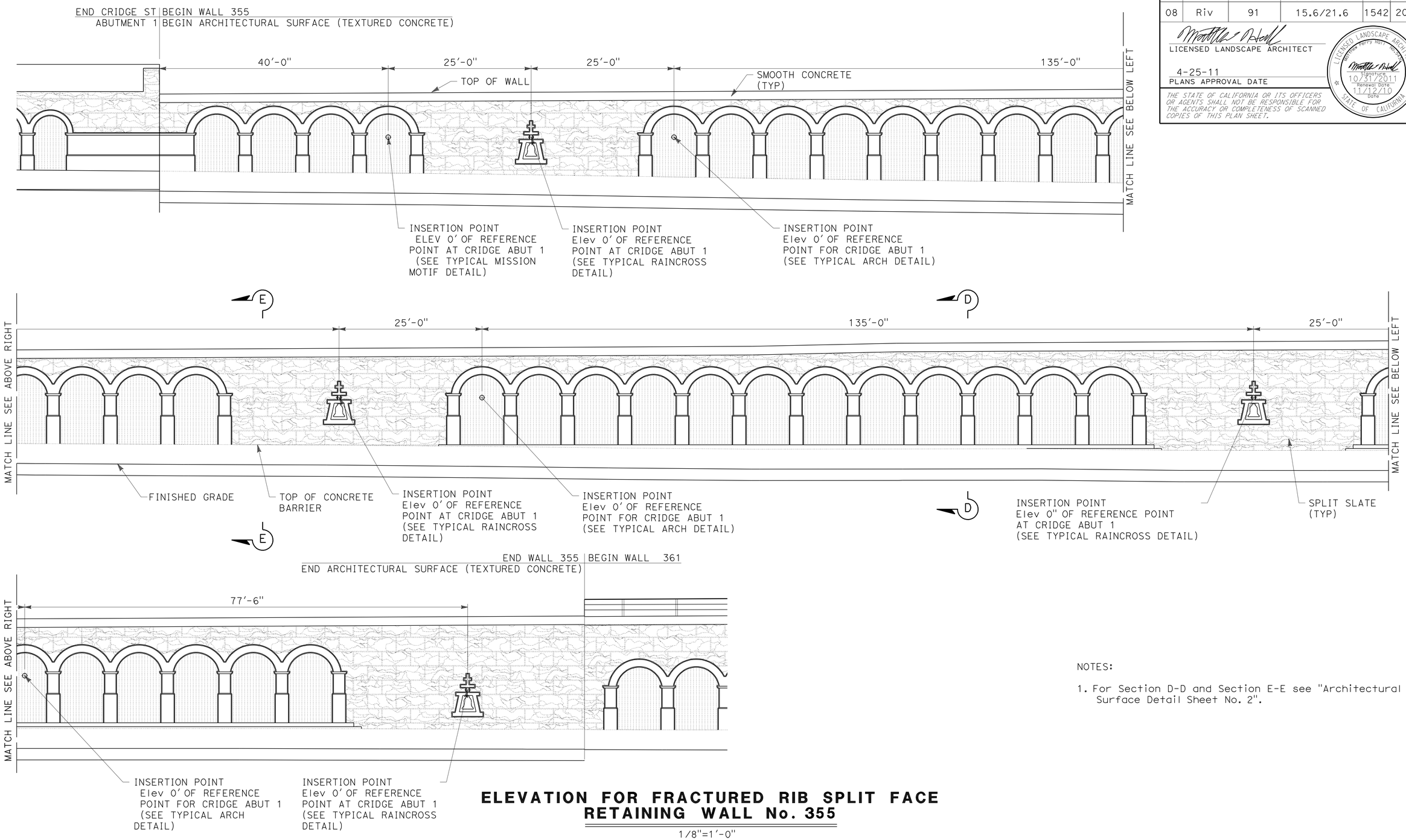

ELEVATION FOR FRACTURED RIB SPLIT FACE RETAINING WALL No. 355

1/8"=1'-0"

NOTES:

1. For Section D-D and Section E-E see "Architectural Surface Detail Sheet No. 2".

THIS PLAN IS ACCURATE FOR ARCHITECTUAL TREATMENT WORK ONLY.

	BY	CHECKED
DESIGN	M. Hall	M. Bishop
DETAILS	R. Kirkland	M. Bishop
QUANTITIES	J. Szabo	M. Vo

STATE OF CALIFORNIA
DEPARTMENT OF TRANSPORTATION

DIVISION OF ENGINEERING SERVICES
STRUCTURE DESIGN
DESIGN BRANCH 10

BRIDGE NO. 56 E0072
POST MILE 19.64

RETAINING WALL NO. 355
ARCHITECTURAL SURFACE

STRUCTURES DESIGN DETAIL SHEET (ENGLISH) (REV. 10/25/05)

ORIGINAL SCALE IN INCHES FOR REDUCED PLANS 0 1 2 3

CU 08
EA 448401

DISREGARD PRINTS BEARING EARLIER REVISION DATES

REVISION DATES: 8/10/10

SHEET 8 OF 13

FILE => 56e0072umiscdt08.dgn

USERNAME => tfcarol DATE PLOTTED => 30-APR-2011 TIME PLOTTED => 11:36

NOTES:
1. For Section D-D see "Architectural Surface Detail Sheet No. 2"

Dist	COUNTY	ROUTE	POST MILES TOTAL PROJECT	SHEET No.	TOTAL SHEETS
08	Riv	91	15.6/21.6	1543	2028

LICENSED LANDSCAPE ARCHITECT

4-25-11
PLANS APPROVAL DATE

LICENSED LANDSCAPE ARCHITECT — Matthew Perry Holt — No. 2499 — Signature — 10/31/2011 — Renewal Date — 11/12/10 — Date — STATE OF CALIFORNIA

THE STATE OF CALIFORNIA OR ITS OFFICERS OR AGENTS SHALL NOT BE RESPONSIBLE FOR THE ACCURACY OR COMPLETENESS OF SCANNED COPIES OF THIS PLAN SHEET.

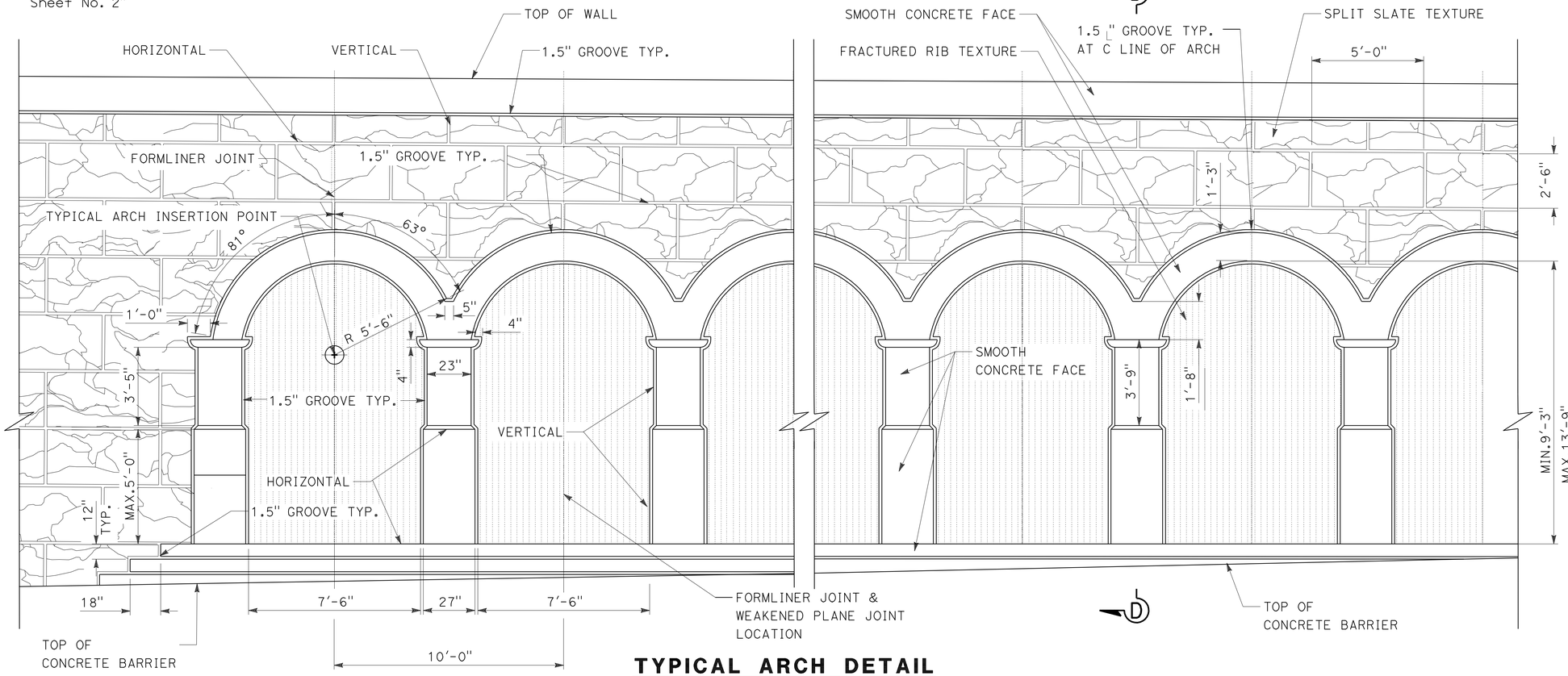

TYPICAL ARCH DETAIL

3/8" = 1'-0"

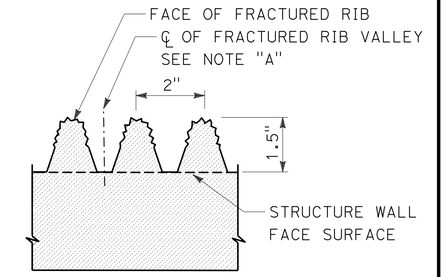

TYPICAL FRACTURED RIB TEXTURE

No Scale

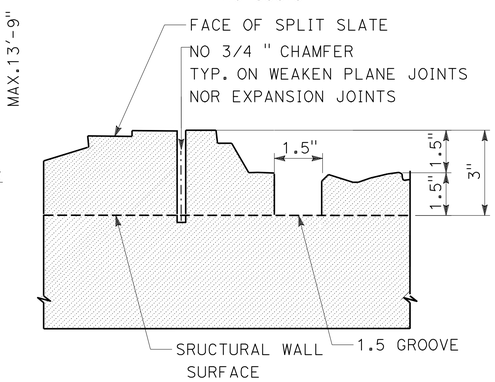

TYPICAL SPLIT SLATE TEXTURE

No Scale

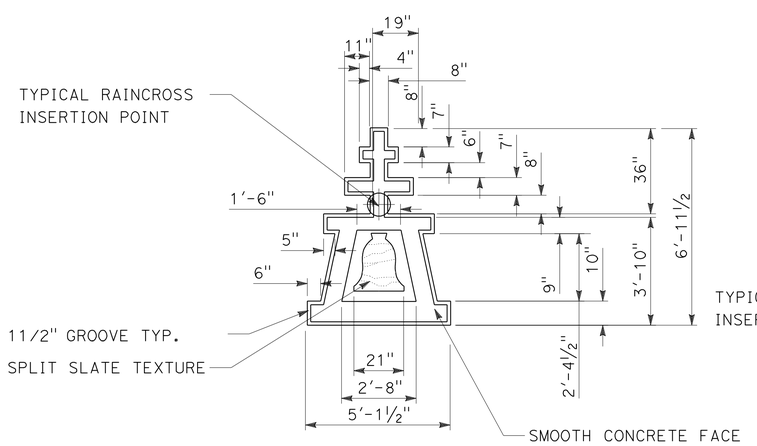

TYPICAL RAINCROSS DETAIL

3/8" = 1'-0"

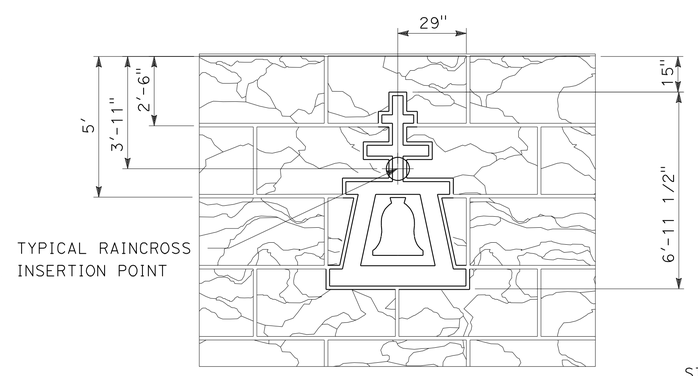

TYPICAL RAINCROSS DETAIL/ SPLIT SLATE TEXTURE

3/8" = 1'-0"

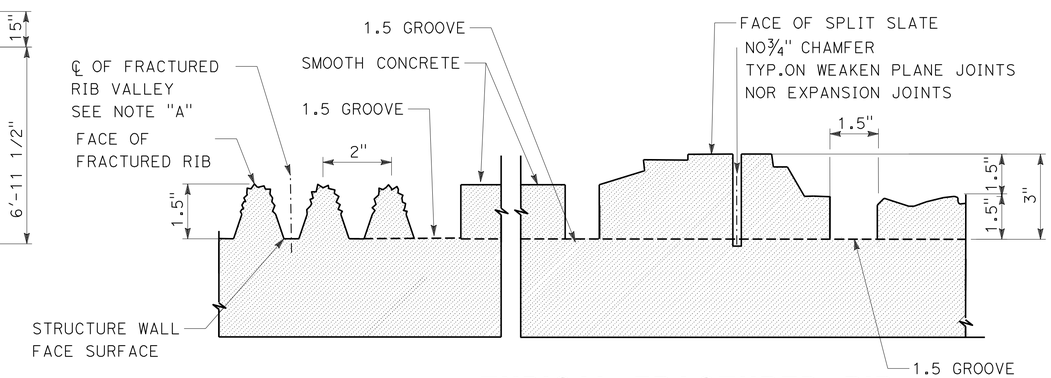

NOTE "A"
PERMITTED LOCATION OF WEAKEN PLANE AND EXPANSION JOINTS

TYPICAL FRACTURED RIB WITH SPLIT SLATE TEXTURE

No Scale

THIS PLAN IS ACCURATE FOR ARCHITECTUAL TREATMENT WORK ONLY.

	BY	CHECKED
DESIGN	M. Hall	M. Bishop
DETAILS	R. Kirkland	M. Bishop
QUANTITIES	J. Szabo	M. Vo

STATE OF CALIFORNIA
DEPARTMENT OF TRANSPORTATION

DIVISION OF ENGINEERING SERVICES
STRUCTURE DESIGN
DESIGN BRANCH 10

BRIDGE NO. 56 E0072
POST MILE 19.64

RETAINING WALL NO. 355
ARCHITECTURAL SURFACE DETAIL SHEET NO. 1

STRUCTURES DESIGN DETAIL SHEET (ENGLISH) (REV. 10/25/05)

ORIGINAL SCALE IN INCHES FOR REDUCED PLANS 0 1 2 3

CU 08
EA 448401

DISREGARD PRINTS BEARING EARLIER REVISION DATES 8/10/10

REVISION DATES

SHEET 9 OF 13

FILE => 56e0072umiscdt09.dgn

USERNAME => tricar01 DATE PLOTTED => 30-APR-2011 TIME PLOTTED => 11:36

Dist	COUNTY	ROUTE	POST MILES TOTAL PROJECT	SHEET No.	TOTAL SHEETS
08	Riv	91	15.6/21.6	1544	2028

LICENSED LANDSCAPE ARCHITECT

4-25-11
PLANS APPROVAL DATE

LICENSED LANDSCAPE ARCHITECT — Matthew Harry Hall — No. 3343 — Signature — 10/31/2011 Renewal Date — 11/12/10 Date — STATE OF CALIFORNIA

THE STATE OF CALIFORNIA OR ITS OFFICERS OR AGENTS SHALL NOT BE RESPONSIBLE FOR THE ACCURACY OR COMPLETENESS OF SCANNED COPIES OF THIS PLAN SHEET.

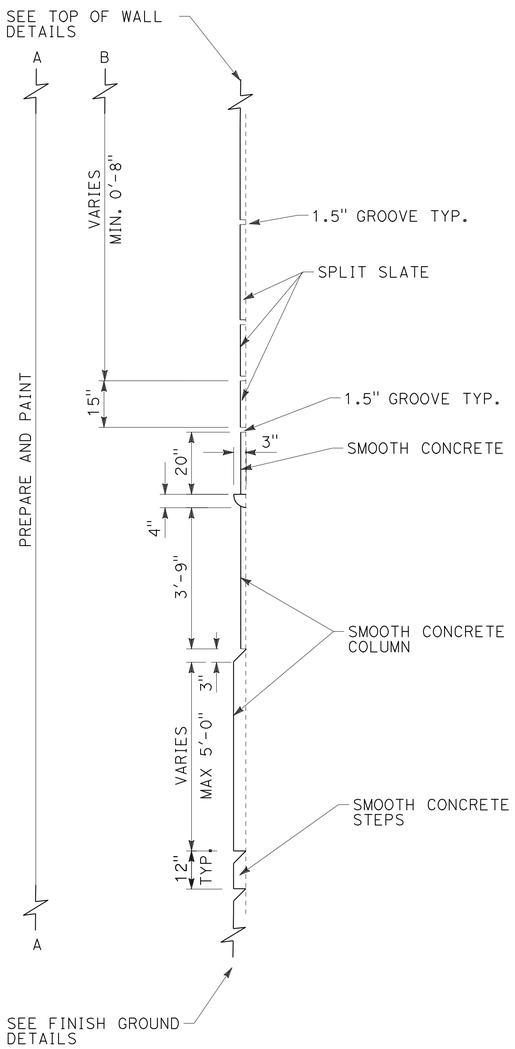

SECTION D-D

No Scale

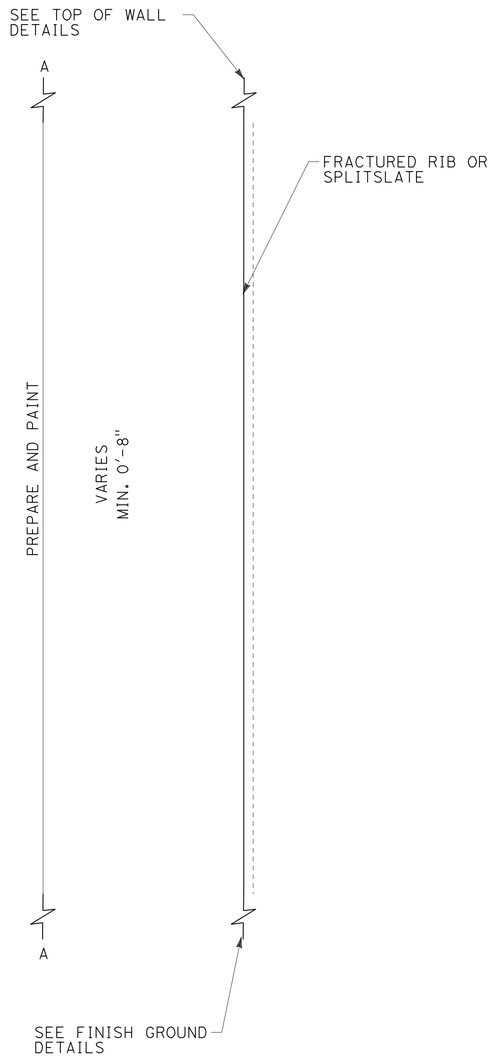

SECTION E-E

No Scale

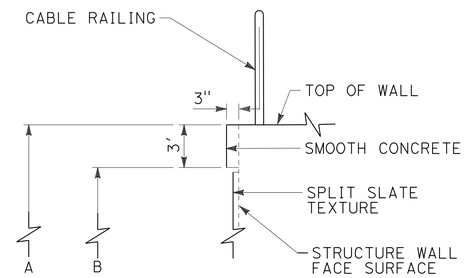

TOP OF WALL DETAIL TYPICAL WITH CABLE RAIL

No Scale

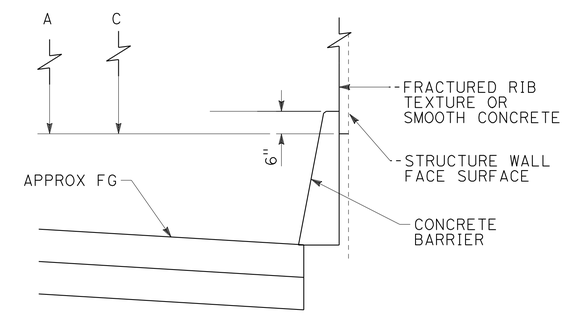

FINISH GROUND DETAIL TYPICAL WITH CONCRETE BARRIER

No Scale

DESIGN	BY M. Hall	CHECKED M. Bishop	STATE OF CALIFORNIA DEPARTMENT OF TRANSPORTATION
DETAILS	BY R. Kirkland	CHECKED M. Bishop	
QUANTITIES	BY J. Szabo	CHECKED M. Vo	

DIVISION OF ENGINEERING SERVICES STRUCTURE DESIGN
DESIGN BRANCH 10

BRIDGE NO. 56 E0072
POST MILE 19.64

RETAINING WALL NO. 355
ARCHITECTURAL SURFACE DETAIL SHEET NO. 2

STRUCTURES DESIGN DETAIL SHEET (ENGLISH) (REV. 10/25/05)

ORIGINAL SCALE IN INCHES FOR REDUCED PLANS 0 1 2 3

CU 08
EA 448401

DISREGARD PRINTS BEARING EARLIER REVISION DATES → 8/10/10

REVISION DATES

SHEET 10 OF 13

FILE => 56e0072umiscdt10.dgn

USERNAME => trcarol DATE PLOTTED => 30-APR-2011 TIME PLOTTED => 11:36

DIST	COUNTY	ROUTE	POST MILES TOTAL PROJECT	SHEET No	TOTAL SHEETS
08	Riv	91	15.6/21.6	1545	2028

GEOTECHNICAL PROFESSIONAL — DATE 11/03/2010

4-25-11
PLANS APPROVAL DATE

REGISTERED PROFESSIONAL ENGINEER — FARID MOTAMED — No. 2738 — Exp. 6-30-11 — GEOTECHNICAL — STATE OF CALIFORNIA

The State of California or its officers or agents shall not be responsible for the accuracy or completeness of electronic copies of this plan sheet.

California Department of Transportation
5900 Folsom Boulervard
Sacramento, CA 95819

URS Corporation
2020 East First Street, Suite 400
Santa Ana, CA 92705

GROUP SYMBOLS AND NAMES

Graphic / Symbol	Group Names
GW	Well-graded GRAVEL Well-graded GRAVEL with SAND
GP	Poorly graded GRAVEL Poorly graded GRAVEL with SAND
GW-GM	Well-graded GRAVEL with SILT Well-graded GRAVEL with SILT and SAND
GW-GC	Well-graded GRAVEL with CLAY (or SILTY CLAY) Well-graded GRAVEL with CLAY and SAND (or SILTY CLAY and SAND)
GP-GM	Poorly graded GRAVEL with SILT Poorly graded GRAVEL with SILT and SAND
GP-GC	Poorly graded GRAVEL with CLAY (or SILTY CLAY) Poorly graded GRAVEL with CLAY and SAND (or SILTY CLAY and SAND)
GM	SILTY GRAVEL SILTY GRAVEL with SAND
GC	CLAYEY GRAVEL CLAYEY GRAVEL with SAND
GC-GM	SILTY, CLAYEY GRAVEL SILTY, CLAYEY GRAVEL with SAND
SW	Well-graded SAND Well-graded SAND with GRAVEL
SP	Poorly graded SAND Poorly graded SAND with GRAVEL
SW-SM	Well-graded SAND with SILT Well-graded SAND with SILT and GRAVEL
SW-SC	Well-graded SAND with CLAY (or SILTY CLAY) Well-graded SAND with CLAY and GRAVEL (or SILTY CLAY and GRAVEL)
SP-SM	Poorly graded SAND with SILT Poorly graded SAND with SILT and GRAVEL
SP-SC	Poorly graded SAND with CLAY (or SILTY CLAY) Poorly graded SAND with CLAY and GRAVEL (or SILTY CLAY and GRAVEL)
SM	SILTY SAND SILTY SAND with GRAVEL
SC	CLAYEY SAND CLAYEY SAND with GRAVEL
SC-SM	SILTY, CLAYEY SAND SILTY, CLAYEY SAND with GRAVEL
PT	PEAT
	COBBLES COBBLES and BOULDERS BOULDERS

Graphic / Symbol	Group Names
CL	Lean CLAY Lean CLAY with SAND Lean CLAY with GRAVEL SANDY lean CLAY SANDY lean CLAY with GRAVEL GRAVELLY lean CLAY GRAVELLY lean CLAY with SAND
CL-ML	SILTY CLAY SILTY CLAY with SAND SILTY CLAY with GRAVEL SANDY SILTY CLAY SANDY SILTY CLAY with GRAVEL GRAVELLY SILTY CLAY GRAVELLY SILTY CLAY with SAND
ML	SILT SILT with SAND SILT with GRAVEL SANDY SILT SANDY SILT with GRAVEL GRAVELLY SILT GRAVELLY SILT with SAND
OL	ORGANIC lean CLAY ORGANIC lean CLAY with SAND ORGANIC lean CLAY with GRAVEL SANDY ORGANIC lean CLAY SANDY ORGANIC lean CLAY with GRAVEL GRAVELLY ORGANIC lean CLAY GRAVELLY ORGANIC lean CLAY with SAND
OL	ORGANIC SILT ORGANIC SILT with SAND ORGANIC SILT with GRAVEL SANDY ORGANIC SILT SANDY ORGANIC SILT with GRAVEL GRAVELLY ORGANIC SILT GRAVELLY ORGANIC SILT with SAND
CH	Fat CLAY Fat CLAY with SAND Fat CLAY with GRAVEL SANDY fat CLAY SANDY fat CLAY with GRAVEL GRAVELLY fat CLAY GRAVELLY fat CLAY with SAND
MH	Elastic SILT Elastic SILT with SAND Elastic SILT with GRAVEL SANDY elastic SILT SANDY elastic SILT with GRAVEL GRAVELLY elastic SILT GRAVELLY elastic SILT with SAND
OH	ORGANIC fat CLAY ORGANIC fat CLAY with SAND ORGANIC fat CLAY with GRAVEL SANDY ORGANIC fat CLAY SANDY ORGANIC fat CLAY with GRAVEL GRAVELLY ORGANIC fat CLAY GRAVELLY ORGANIC fat CLAY with SAND
OH	ORGANIC elastic SILT ORGANIC elastic SILT with SAND ORGANIC elastic SILT with GRAVEL SANDY elastic ELASTIC SILT SANDY ORGANIC elastic SILT with GRAVEL GRAVELLY ORGANIC elastic SILT GRAVELLY ORGANIC elastic SILT with SAND
OL/OH	ORGANIC SOIL ORGANIC SOIL with SAND ORGANIC SOIL with GRAVEL SANDY ORGANIC SOIL SANDY ORGANIC SOIL with GRAVEL GRAVELLY ORGANIC SOIL GRAVELLY ORGANIC SOIL with SAND

FIELD AND LABORATORY TESTS

C	Consolidation (ASTM D 2435-04)
CL	Collapse Potential (ASTM D 5333-03)
CP	Compaction Curve (CTM 216 - 06)
CR	Corrosion, Sulfates, Chlorides (CTM 643 - 99; CTM 417 - 06; CTM 422 - 06)
CU	Consolidated Undrained Triaxial (ASTM D 4767-02)
DS	Direct Shear (ASTM D 3080-04)
EI	Expansion Index (ASTM D 4829-03)
M	Moisture Content (ASTM D 2216-05)
OC	Organic Content (ASTM D 2974-07)
P	Permeability (CTM 220 - 05)
PA	Particle Size Analysis (ASTM D 422-63 [2002])
PI	Liquid Limit, Plastic Limit, Plasticity Index (AASHTO T 89-02, AASHTO T 90-00)
PL	Point Load Index (ASTM D 5731-05)
PM	Pressure Meter
PP	Pocket Penetrometer
R	R-Value (CTM 301 - 00)
SE	Sand Equivalent (CTM 217 - 99)
SG	Specific Gravity (AASHTO T 100-06)
SL	Shrinkage Limit (ASTM D 427-04)
SW	Swell Potential (ASTM D 4546-03)
TV	Pocket Torvane
UC	Unconfined Compression - Soil (ASTM D 2166-06) Unconfined Compression - Rock (ASTM D 2938-95)
UU	Unconsolidated Undrained Triaxial (ASTM D 2850-03)
UW	Unit Weight (ASTM D 4767-04)
VS	Vane Shear (AASHTO T 223-96 [2004])

CONSISTENCY OF COHESIVE SOILS

Descriptor	Unconfined Compressive Strength (tsf)	Pocket Penetrometer (tsf)	Torvane (tsf)	Field Approximation
Very Soft	< 0.25	< 0.25	< 0.12	Easily penetrated several inches by fist
Soft	0.25 - 0.50	0.25 - 0.50	0.12 - 0.25	Easily penetrated several inches by thumb
Medium Stiff	0.50 - 1.0	0.50 - 1.0	0.25 - 0.50	Can be penetrated several inches by thumb with moderate effort
Stiff	1.0 - 2.0	1.0 - 2.0	0.50 - 1.0	Readily indented by thumb but penetrated only with great effort
Very Stiff	2.0 - 4.0	2.0 - 4.0	1.0 - 2.0	Readily indented by thumbnail
Hard	> 4.0	> 4.0	> 2.0	Indented by thumbnail with difficulty

APPARENT DENSITY OF COHESIONLESS SOILS

Descriptor	SPT N60 - Value (blows / foot)
Very Loose	0 - 4
Loose	5 - 10
Medium Dense	11 - 30
Dense	31 - 50
Very Dense	> 50

MOISTURE

Descriptor	Criteria
Dry	Absence of moisture, dusty, dry to the touch
Moist	Damp but no visible water
Wet	Visible free water, usually soil is below water table

PERCENT OR PROPORTION OF SOILS

Descriptor	Criteria
Trace	Particles are present but estimated to be less than 5%
Few	5 to 10%
Little	15 to 25%
Some	30 to 45%
Mostly	50 to 100%

SOIL PARTICLE SIZE

Descriptor		Size
Boulder		> 12 inches
Cobble		3 to 12 inches
Gravel	Coarse	3/4 inch to 3 inches
	Fine	No. 4 Sieve to 3/4 inch
Sand	Coarse	No. 10 Sieve to No. 4 Sieve
	Medium	No. 40 Sieve to No. 10 Sieve
	Fine	No. 200 Sieve to No. 40 Sieve
Silt and Clay		Passing No. 200 Sieve

PLASTICITY OF FINE-GRAINED SOILS

Descriptor	Criteria
Nonplastic	A 1/8-inch thread cannot be rolled at any water content.
Low	The thread can barely be rolled, and the lump cannot be formed when drier than the plastic limit.
Medium	The thread is easy to roll, and not much time is required to reach the plastic limit; it cannot be rerolled after reaching the plastic limit. The lump crumbles when drier than the plastic limit.
High	It takes considerable time rolling and kneading to reach the plastic limit. The thread can be rerolled several times after reaching the plastic limit. The lump can be formed without crumbling when drier than the plastic limit.

CEMENTATION

Descriptor	Criteria
Weak	Crumbles or breaks with handling or little finger pressure.
Moderate	Crumbles or breaks with considerable finger pressure.
Strong	Will not crumble or break with finger pressure.

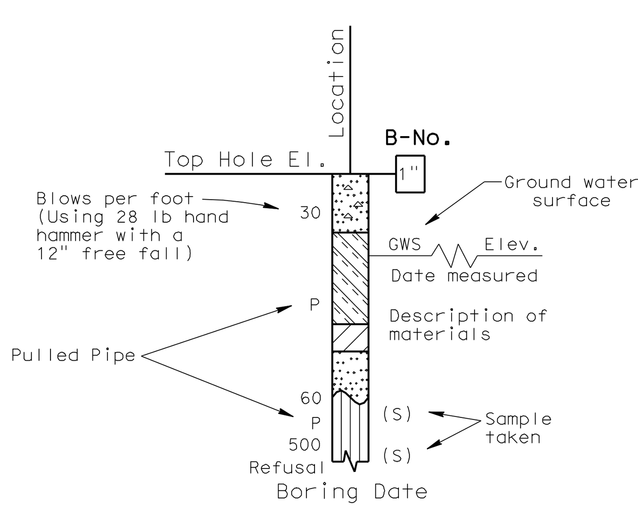

SAMPLE BORING (DRY)

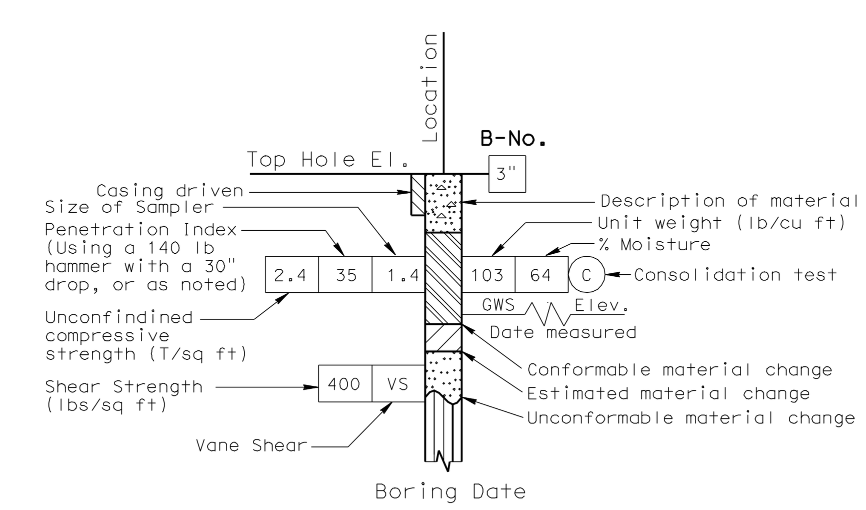

ROTARY SAMPLE BORING (WET)

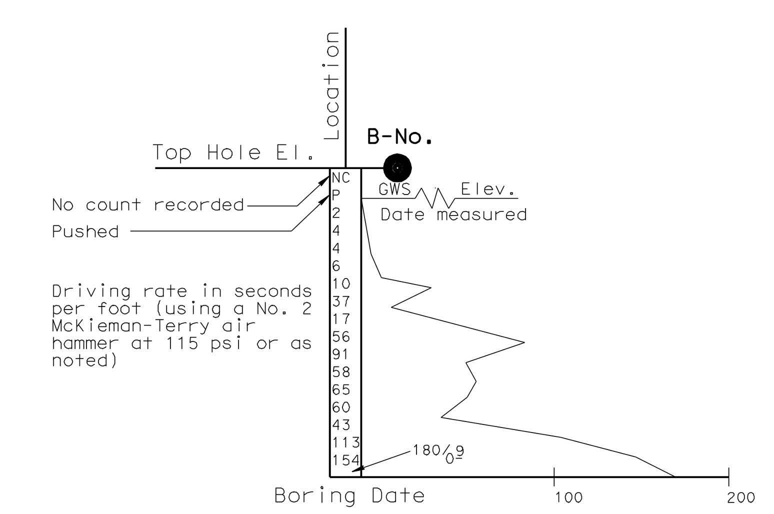

2 1/4" CONE PENETRATION BORING

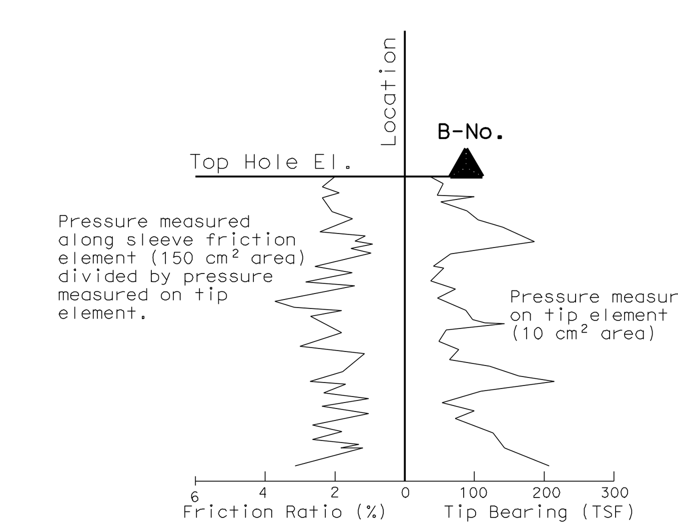

ELECTRONIC CONE PENETROMETER TEST

Cone Penetrometer dimensions and testing procedures are in accordance with ASTM standard D 3441-79, or as noted.

GINA PURSELL DESIGN OVERSIGHT 11/12/10 SIGN OFF DATE	SHAWN WEI FUNCTIONAL SUPERVISOR	DRAWN BY: P. QUACH CHECKED BY: S. PIRATHIVIRAJ	P.CHAU/D.WADER/C.CARBINO FIELD INVESTIGATION BY: DATE: Nov 6 2007 to March 7 2008

PREPARED FOR THE STATE OF CALIFORNIA DEPARTMENT OF TRANSPORTATION

A. LEE
PROJECT ENGINEER

BRIDGE NO. 56 E0072
POST MILE 19.64

SOIL LEGEND
LOG OF TEST BORINGS 1 OF 3

OSF GEOTECHNICAL LOG OF TEST BORINGS SHEET (ENGLISH) (REV. 2/25/05)

ORIGINAL SCALE IN INCHES FOR REDUCED PLANS 0 1 2 3

CU 08
EA 448401

DISREGARD PRINTS BEARING EARLIER REVISION DATES — 8/18/10

REVISION DATES (PRELIMINARY STAGE ONLY)

SHEET 11 OF 13

FILE => 56e0072zlotb11.dgn

USERNAME => trlenard DATE PLOTTED => 30-APR-2011 TIME PLOTTED =>

DIST	COUNTY	ROUTE	POST MILES TOTAL PROJECT	SHEET No	TOTAL SHEETS
08	Riv	91	15.6/21.6	1546	2028

GEOTECHNICAL PROFESSIONAL — DATE 11/03/2010

4-25-11
PLANS APPROVAL DATE

REGISTERED PROFESSIONAL ENGINEER — FARID MOTAMED No. 2738 Exp. 6-30-11 GEOTECHNICAL — STATE OF CALIFORNIA

The State of California or its officers or agents shall not be responsible for the accuracy or completeness of electronic copies of this plan sheet.

California Department of Transportation
5900 Folsom Boulevard
Sacramento, CA 95819

URS Corporation
2020 East First Street, Suite 400
Santa Ana, CA 92705

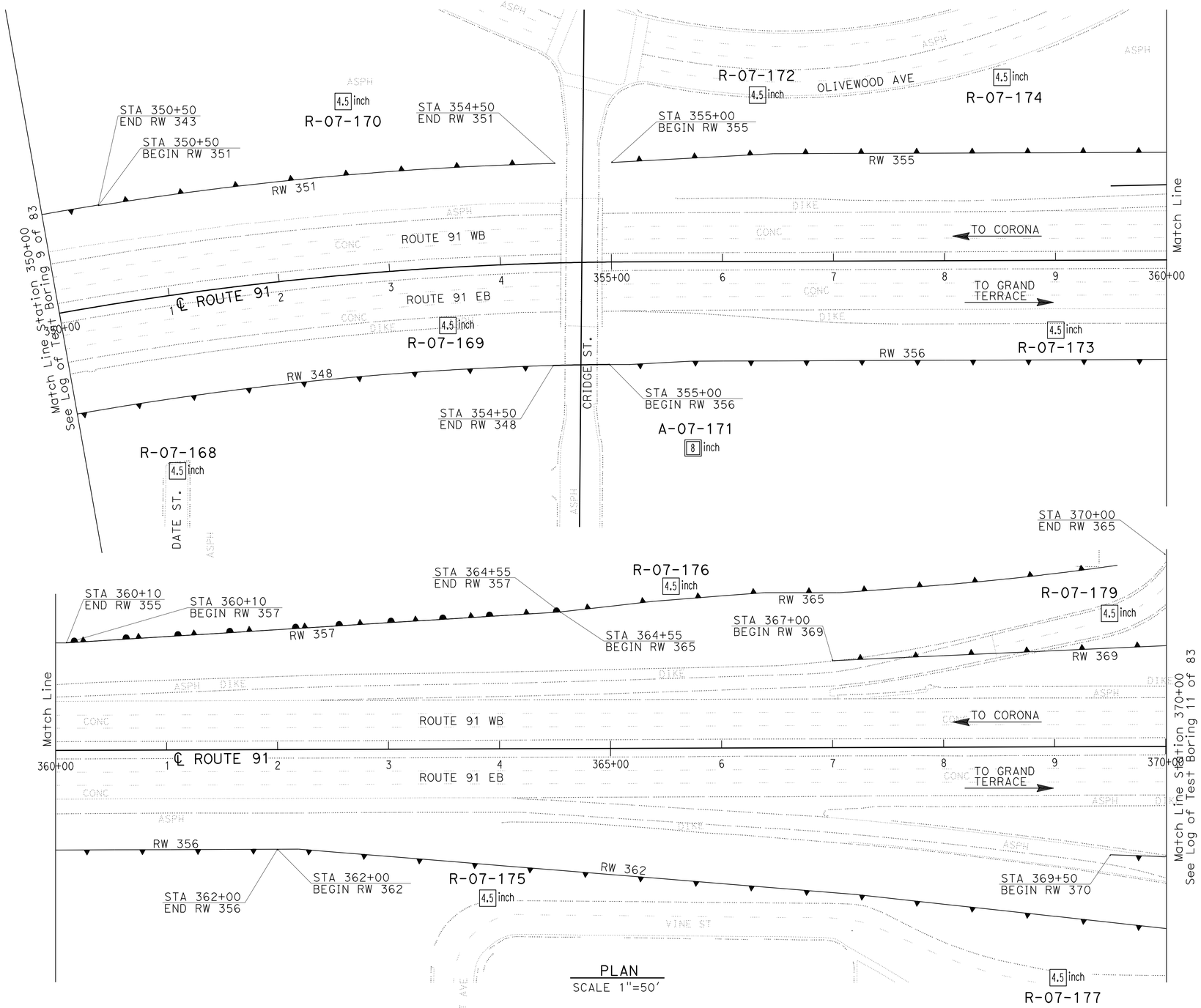

PLAN
SCALE 1"=50'

Borehole Number	Drill Rig	Hammer Type	Avg. Hammer Efficiency, ETR (%)
R-07-168	CS-2000	Automatic	84
R-07-169	CME 85	Automatic	87
R-07-170	Acker Rig	Automatic	74
A-07-171	Diedrich D-120	Automatic	75*
R-07-172	CS-2000	Automatic	84
R-07-173	CME 85	Automatic	87
R-07-174	CS-2000	Automatic	84
R-07-175	CS-2000	Automatic	84
R-07-176	CS-2000	Automatic	84
R-07-177	CS-2000	Automatic	84
R-07-179	Acker Rig	Automatic	74

Sampler Type	Inside Diameter (Inches)	Borehole Numbers
SPT	1.375	R-07-168, R-07-169, R-07-170 A-07-171, R-07-172, R-07-173 R-07-174, R-07-175, R-07-176 R-07-177, R-07-179
Modified California 1	1.94	R-07-168, R-07-169, R-07-170 R-07-172, R-07-173, R-07-174 R-07-175, R-07-177, R-07-179
Modified California 2	2.40	A-07-171

*Estimated Hammer Efficiency Rating.

GINA PURSELL — DESIGN OVERSIGHT
SHAWN WEI — FUNCTIONAL SUPERVISOR
11/12/10 — SIGN OFF DATE

DRAWN BY: P. QUACH
CHECKED BY: S. PIRATHIVIRAJ

P.CHAU/D.WADER/C.CARBINO
FIELD INVESTIGATION BY:
DATE: Nov 6 2007 to March 7 2008

PREPARED FOR THE STATE OF CALIFORNIA DEPARTMENT OF TRANSPORTATION

A. LEE — PROJECT ENGINEER

BRIDGE NO. 56 E0072
POST MILE 19.64

WALL LAYOUT & EXPLORATORY LOCATION MAP
LOG OF TEST BORINGS 2 OF 3

OSF GEOTECHNICAL LOG OF TEST BORINGS SHEET (ENGLISH) (REV. 2/25/05)

ORIGINAL SCALE IN INCHES FOR REDUCED PLANS 0 1 2 3

CU 08
EA 448401

DISREGARD PRINTS BEARING EARLIER REVISION DATES
REVISION DATES (PRELIMINARY STAGE ONLY) 8/19/10
SHEET 12 OF 13

FILE => 56e0072z1otb12.dgn

USERNAME => trrichard DATE PLOTTED => 30-APR-2011 TIME PLOTTED =>

DIST	COUNTY	ROUTE	POST MILES TOTAL PROJECT	SHEET No	TOTAL SHEETS
08	Riv	91	15.6/21.6	1547	2028

GEOTECHNICAL PROFESSIONAL — DATE 11/03/2010

4-25-11
PLANS APPROVAL DATE

REGISTERED PROFESSIONAL ENGINEER — FARID MOTAMED No. 2738 Exp. 6-30-11 GEOTECHNICAL — STATE OF CALIFORNIA

The State of California or its officers or agents shall not be responsible for the accuracy or completeness of electronic copies of this plan sheet.

California Department of Transportation
5900 Folsom Boulevard
Sacramento, CA 95819

URS Corporation
2020 East First Street, Suite 400
Santa Ana, CA 92705

FOR PLAN VIEW, SEE
"LOG OF TEST BORINGS 2 OF 3"

NOTE: 1. This LOTB sheet was prepared in accordance with the Caltrans Soil & Rock Logging, Classification, and Presentation Manual (June 2007).

2. For legend, see "Log of Test Borings 1 of 3"

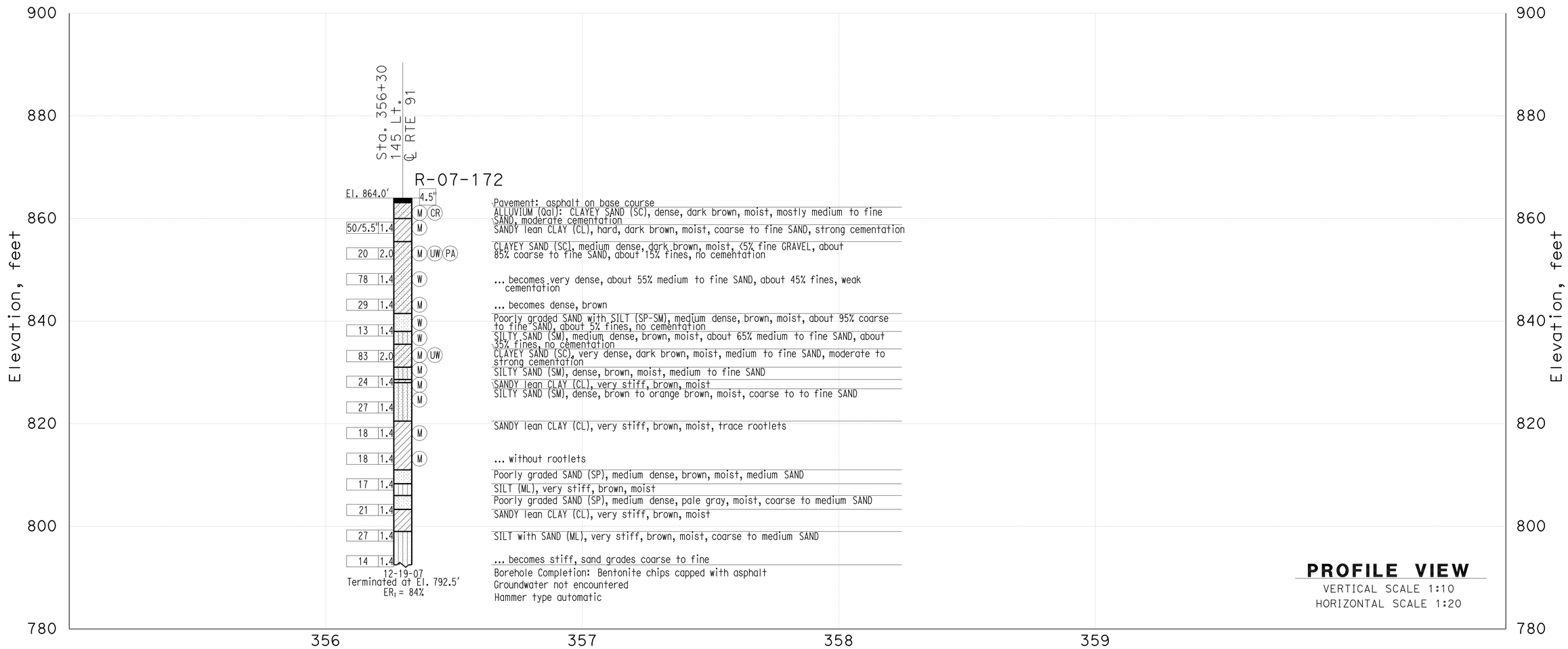

THIS PLAN ACCURATE FOR SOUND WALL AND RETAINING WALL WORK ONLY

GINA PURSELL DESIGN OVERSIGHT	SHAWN WEI FUNCTIONAL SUPERVISOR	DRAWN BY	P. QUACH	P.CHAU/D.WADER/C.CARBINO FIELD INVESTIGATION BY:	PREPARED FOR THE STATE OF CALIFORNIA DEPARTMENT OF TRANSPORTATION	A. LEE PROJECT ENGINEER	BRIDGE NO. 56 E0072 POST MILE 19.64
11/12/10 SIGN OFF DATE		CHECKED BY	S. PIRATHIVIRAJ	DATE: Nov 6 2007 to March 7 2008			

RETAINING WALL 355

LOG OF TEST BORINGS 3 OF 3

OSF GEOTECHNICAL LOG OF TEST BORINGS SHEET (ENGLISH) (REV. 2/25/05)

ORIGINAL SCALE IN INCHES FOR REDUCED PLANS 0 1 2 3

CU 08
EA 448401

DISREGARD PRINTS BEARING EARLIER REVISION DATES 8/17/10

REVISION DATES (PRELIMINARY STAGE ONLY)

SHEET 13 OF 13

FILE => 56e0072z1otb13.dgn

USERNAME => trrenard DATE PLOTTED => 30-APR-2011 TIME PLOTTED =>

DIST	COUNTY	ROUTE	POST MILES TOTAL PROJECT	SHEET No	TOTAL SHEETS
08	Riv	91	15.6/21.6	1548	2028

REGISTERED CIVIL ENGINEER 11/12/10 DATE

4-25-11
PLANS APPROVAL DATE

REGISTERED PROFESSIONAL ENGINEER Minh Thuong Vo No. C59297 Exp. 6/30/2011 CIVIL STATE OF CALIFORNIA

The State of California or its officers or agents shall not be responsible for the accuracy or completeness of electronic copies of this plan sheet.

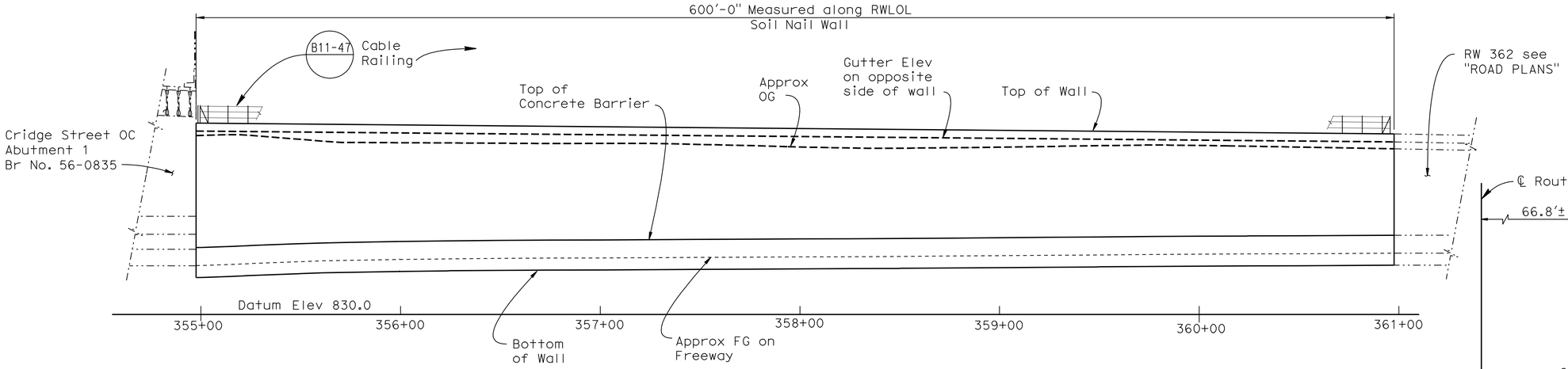

DEVELOPED MIRROR ELEVATION

Horiz. 1" = 30'
Vert. 1" = 10'

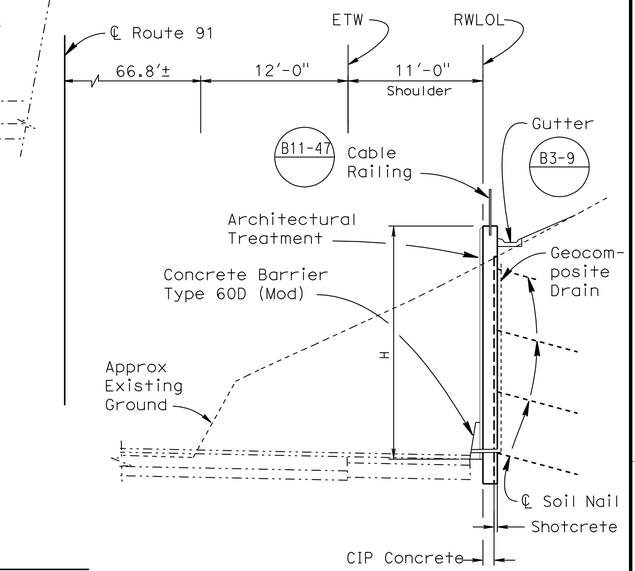

TYPICAL SECTION

No Scale

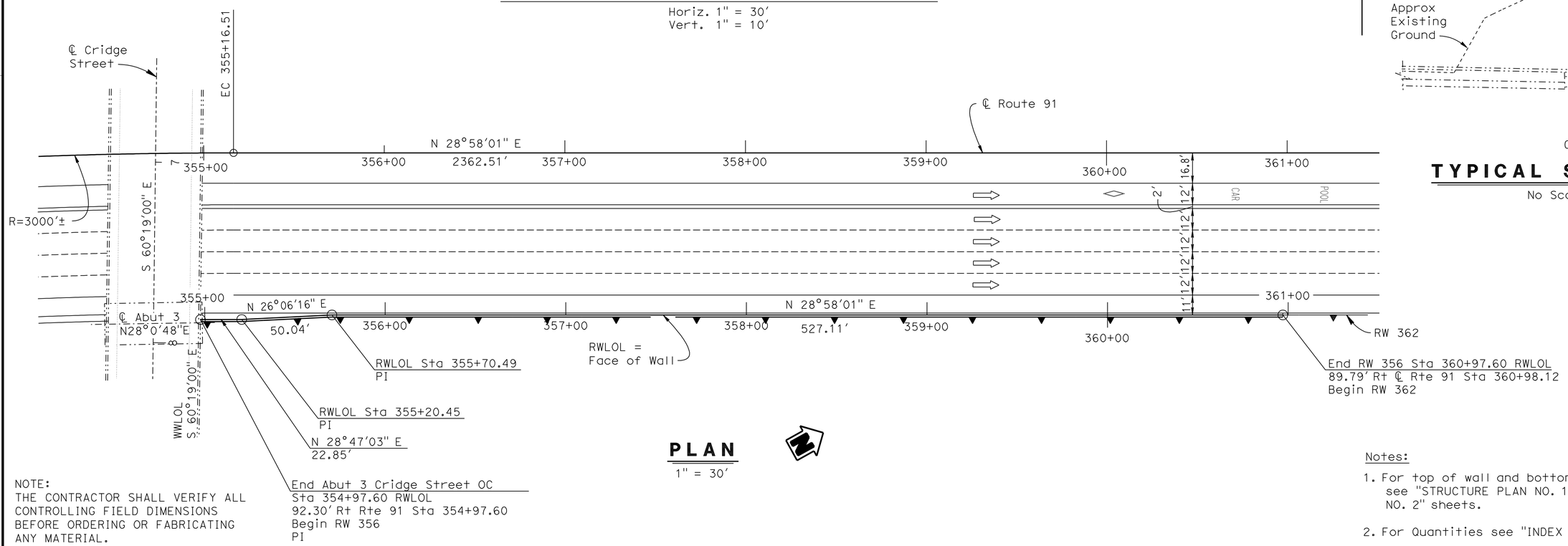

PLAN

1" = 30'

NOTE:
THE CONTRACTOR SHALL VERIFY ALL CONTROLLING FIELD DIMENSIONS BEFORE ORDERING OR FABRICATING ANY MATERIAL.

Notes:

1. For top of wall and bottom of wall elevations see "STRUCTURE PLAN NO. 1 and "STRUCTURE PLAN NO. 2" sheets.
2. For Quantities see "INDEX TO PLANS" sheet.

Daniel T. Adams
DESIGN ENGINEER

	BY	CHECKED
DESIGN	M. Vo	J. Szabo
DETAILS	R. Kirkland	J. Szabo
QUANTITIES	J. Szabo	M. Vo

LOAD & RESISTANCE FACTOR DESIGN — LIVE LOADING: HL93 W/"LOW-BOY"; PERMIT DESIGN VEHICLE

	BY	CHECKED
LAYOUT	M. Vo	J. Szabo
SPECIFICATIONS	Dave Klein	PLANS AND SPECS COMPARED Dave Klein

ORIGINAL SCALE IN INCHES FOR REDUCED PLANS 0 1 2 3

STATE OF CALIFORNIA
DEPARTMENT OF TRANSPORTATION

DIVISION OF ENGINEERING SERVICES
STRUCTURE DESIGN
DESIGN BRANCH 10

CU 08
EA 448401

BRIDGE NO. 56 E0073
POST MILE 19.63

RETAINING WALL NO. 356
GENERAL PLAN

DISREGARD PRINTS BEARING EARLIER REVISION DATES → 3/15/10 7/15/10

REVISION DATES

SHEET 1 OF 14

STRUCTURES DESIGN GENERAL PLAN SHEET (ENGLISH) (REV.07-24-06)

FILE => 56e0073agp01.dgn

USERNAME => trcarol DATE PLOTTED => 30-APR-2011 TIME PLOTTED => 11:37

DIST	COUNTY	ROUTE	POST MILES TOTAL PROJECT	SHEET No	TOTAL SHEETS
08	Riv	91	15.6/21.6	1549	2028

REGISTERED CIVIL ENGINEER 11/12/10 DATE

4-25-11
PLANS APPROVAL DATE

REGISTERED PROFESSIONAL ENGINEER Minh Thuong Vo No. C59297 Exp. 6/30/2011 CIVIL STATE OF CALIFORNIA

The State of California or its officers or agents shall not be responsible for the accuracy or completeness of electronic copies of this plan sheet.

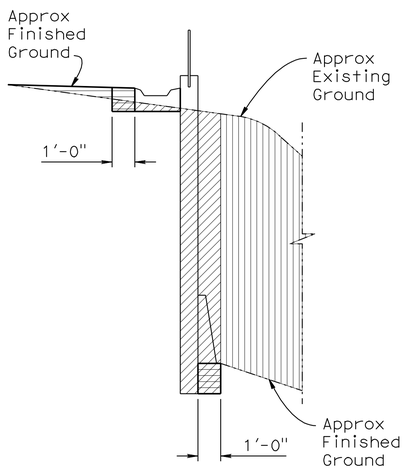

Structure Excavation (Soil Nail Wall)

Structure Backfill (Soil Nail Wall)

Roadway Excavation (see Roadway Plan)

SOIL NAIL WALL EXCAVATION & BACKFILL

NO SCALE

DESIGN DATA

DESIGN: Service Load Design Method per FHWA Geotechnical Engineering Circular No. 7 (FHWA O-IF-03-017) & Manual for Design and Construction Monitoring of Soil Nail Wall (FHWA-SA-96-069R)

REINFORCED CONCRETE: f_c = 3.6 KSI, f_y = 60 KSI

SHOTCRETE: f_c = 3.6 KSI, f_y = 60 KSI

STRUCTURAL STEEL: ASTM Designation: A 709, Grade 36, f_y = 36 KSI

SOIL NAILS: ASTM Designation: A615, Grade 60, f_y = 60 KSI

SOIL PARAMETERS: $\phi = 36°$, $c = 310\ lb/ft^2$, $\gamma = 125\ lb/ft^3$, Q_d = 2.18 k/ft (Design Pullout Resistance)

QUANTITIES

RETAINING WALL 356 — BRIDGE NO 56E0073

STRUCTURE EXCAVATION (SOIL NAIL WALL)	1,020	CY
STRUCTURE BACKFILL (SOIL NAIL WALL)	63	CY
SOIL NAIL ASSEMBLY	11,720	LF
STRUCTURAL CONCRETE, RETAINING WALL	413	CY
ARCHITECTURAL SURFACE (TEXTURED CONCRETE) FRACTURED RIB SPLIT SLATE TEXTURE	11,107	SQFT
BAR REINFORCING STEEL (RETAINING WALL)	61,497	LB
SHOTCRETE	196	CY
MINOR CONCRETE (GUTTER)	600	LF
CABLE RAILING	600	LF
CONCRETE BARRIER (TYPE 60D MODIFIED)	600	LF

INDEX TO PLANS

Sheet No.	Title
1	GENERAL PLAN
2	INDEX TO PLANS
3	STRUCTURE PLAN NO. 1
4	STRUCTURE PLAN NO. 2
5	STRUCTURE PLAN NO. 3
6	SOIL NAIL WALL DETAILS NO. 1
7	SOIL NAIL WALL DETAILS NO. 2
8	SOIL NAIL WALL DETAILS NO. 3
9	ARCHITECTURAL SURFACE
10	ARCHITECTURAL SURFACE DETAIL NO. 1
11	ARCHITECTURAL SURFACE DETAIL NO. 2
12	LOG OF TEST BORINGS 1 OF 3
13	LOG OF TEST BORINGS 2 OF 3
14	LOG OF TEST BORINGS 3 OF 3

STANDARD PLANS DATED MAY 2006

A10A	ACRONYMS AND ABBREVIATIONS (SHEET 1 OF 2)
A10B	ACRONYMS AND ABBREVIATIONS (SHEET 2 OF 2)
A10C	SYMBOLS (SHEET 1 OF 2)
A10D	SYMBOLS (SHEET 2 OF 2)
B0-1	BRIDGE DETAILS
B0-3	BRIDGE DETAILS
B3-8	RETAINING WALL DETAILS NO. 1
B3-9	RETAINING WALL DETAILS NO. 2
B11-47	CABLE RAILING

STANDARD PLAN SHEET NO.

DETAIL NO.

	BY	CHECKED
DESIGN	M. Vo	J Szabo
DETAILS	R. Kirkland	J. Szabo
QUANTITIES	J. Szabo	M. Vo

STATE OF CALIFORNIA DEPARTMENT OF TRANSPORTATION

DIVISION OF ENGINEERING SERVICES STRUCTURE DESIGN DESIGN BRANCH 10

BRIDGE NO. 56 E0073 POST MILE 19.63

RETAINING WALL NO. 356
INDEX TO PLANS

STRUCTURES DESIGN DETAIL SHEET (ENGLISH) (REV. 10/25/05)

ORIGINAL SCALE IN INCHES FOR REDUCED PLANS 0 1 2 3

CU 08
EA 448401

DISREGARD PRINTS BEARING EARLIER REVISION DATES 7/15/10 7/15/10

REVISION DATES

SHEET 2 OF 14

FILE => 56e0073aitp02.dgn

USERNAME => trcarol DATE PLOTTED => 30-APR-2011 TIME PLOTTED => 11:37

Note:
Cable Railing and Concrete Barrier Type 60D not shown for clarity

SOIL NAIL SCHEDULE	
Location	Soil Nail Embedment Length Le
Schedule 1	All Soil Nails: Le = 20'-0"

DIST	COUNTY	ROUTE	POST MILES TOTAL PROJECT	SHEET No	TOTAL SHEETS
08	Riv	91	15.6/21.6	1550	2028

REGISTERED CIVIL ENGINEER 11/12/10 DATE

4-25-11
PLANS APPROVAL DATE

REGISTERED PROFESSIONAL ENGINEER Minh Thuong Vo No. C56297 Exp. 6/30/2011 CIVIL STATE OF CALIFORNIA

The State of California or its officers or agents shall not be responsible for the accuracy or completeness of electronic copies of this plan sheet.

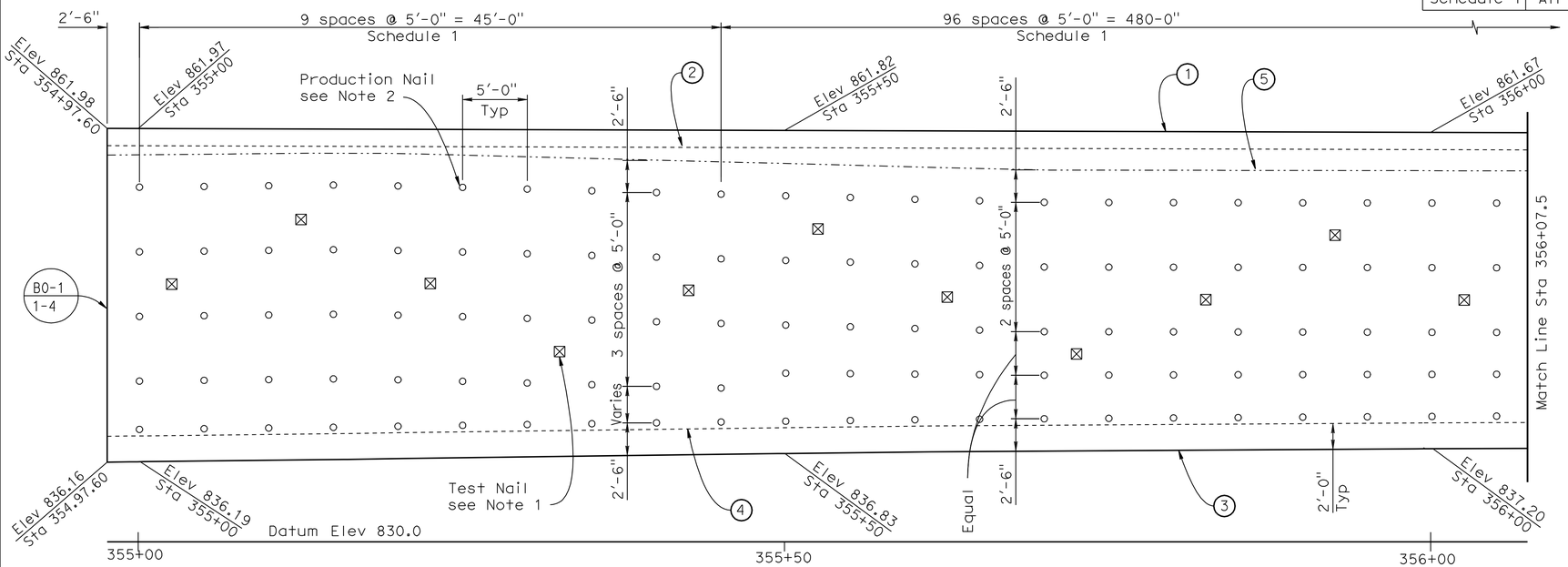

SOIL NAIL LAYOUT

3/16" = 1'-0"

NOTES:

1. Test nail locations are at midway between production nails. The exact location of the proof test nails to be determined in the field by the Engineer.
2. The maximum vertical and horizontal spacing of production nails shall be 5'-0".
3. Contractor shall adjust the concrete gutter to meet the gutter flow line.

(1) Top of Soil Nail Wall
(2) Gutter Elevation at back of wall
(3) Bottom of Soil Nail Wall
(4) Approximate Finished Grade on Freeway
(5) Approximate Original Ground, see "STRUCTURE PLAN NO. 3" sheet.

LEGEND:

○ Indicates location of Production Nail assembly.
⊠ Indicates location of Test Nail assembly. Located in the middle of Production nails.

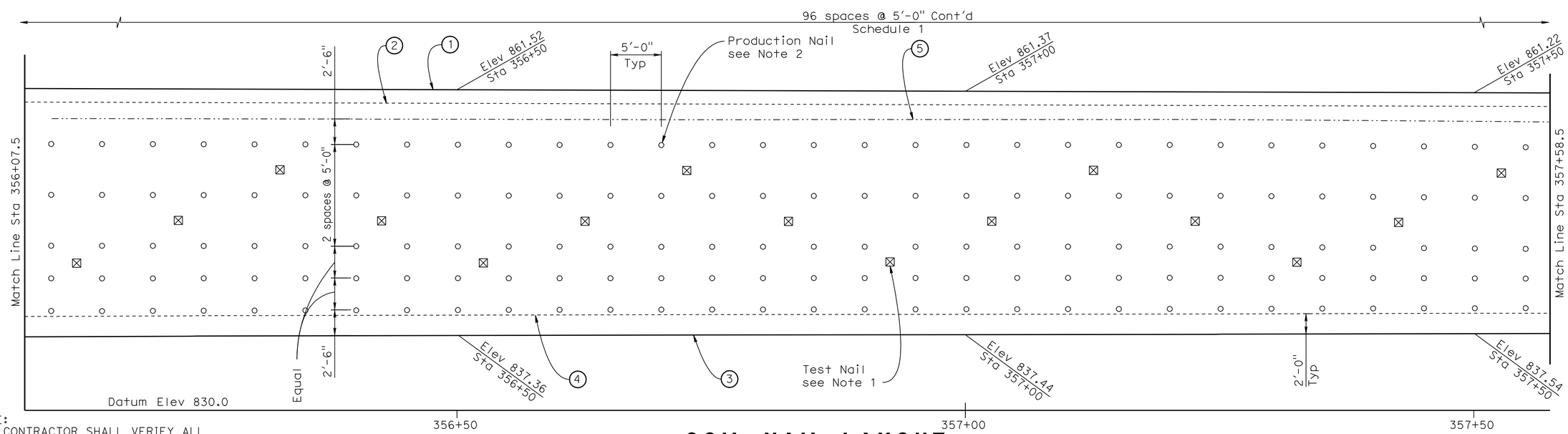

SOIL NAIL LAYOUT

3/16" = 1'-0"

NOTE:
THE CONTRACTOR SHALL VERIFY ALL CONTROLLING FIELD DIMENSIONS BEFORE ORDERING OR FABRICATING ANY MATERIAL.

	BY	CHECKED
DESIGN	M. Vo	J. Szabo
DETAILS	R. Kirkland	J. Szabo
QUANTITIES	J. Szabo	M. Vo

STATE OF CALIFORNIA
DEPARTMENT OF TRANSPORTATION

DIVISION OF ENGINEERING SERVICES
STRUCTURE DESIGN
DESIGN BRANCH 10

BRIDGE NO. 56 E0073
POST MILE 19.63

RETAINING WALL NO. 356
STRUCTURE PLAN NO. 1

STRUCTURES DESIGN DETAIL SHEET (ENGLISH) (REV. 10/25/05)

ORIGINAL SCALE IN INCHES FOR REDUCED PLANS 0 1 2 3

CU 08
EA 448401

DISREGARD PRINTS BEARING EARLIER REVISION DATES

REVISION DATES: 3/15/10 7/15/10

SHEET 3 OF 14

FILE => 56e0073csp03.dgn

USERNAME => trcarol DATE PLOTTED => 30-APR-2011 TIME PLOTTED => 11:37

Note:
Cable Railing and Concrete Barrier Type 60D not shown for clarity

SOIL NAIL SCHEDULE	
Location	Soil Nail Embedment Length Le
Schedule 1	All Soil Nails: Le = 20'-0"

DIST	COUNTY	ROUTE	POST MILES TOTAL PROJECT	SHEET No	TOTAL SHEETS
08	Riv	91	15.6/21.6	1551	2028

REGISTERED CIVIL ENGINEER 11/12/10 DATE

4-25-11
PLANS APPROVAL DATE

REGISTERED PROFESSIONAL ENGINEER Minh Thuong Vo No. C59297 Exp. 6/30/2011 CIVIL STATE OF CALIFORNIA

The State of California or its officers or agents shall not be responsible for the accuracy or completeness of electronic copies of this plan sheet.

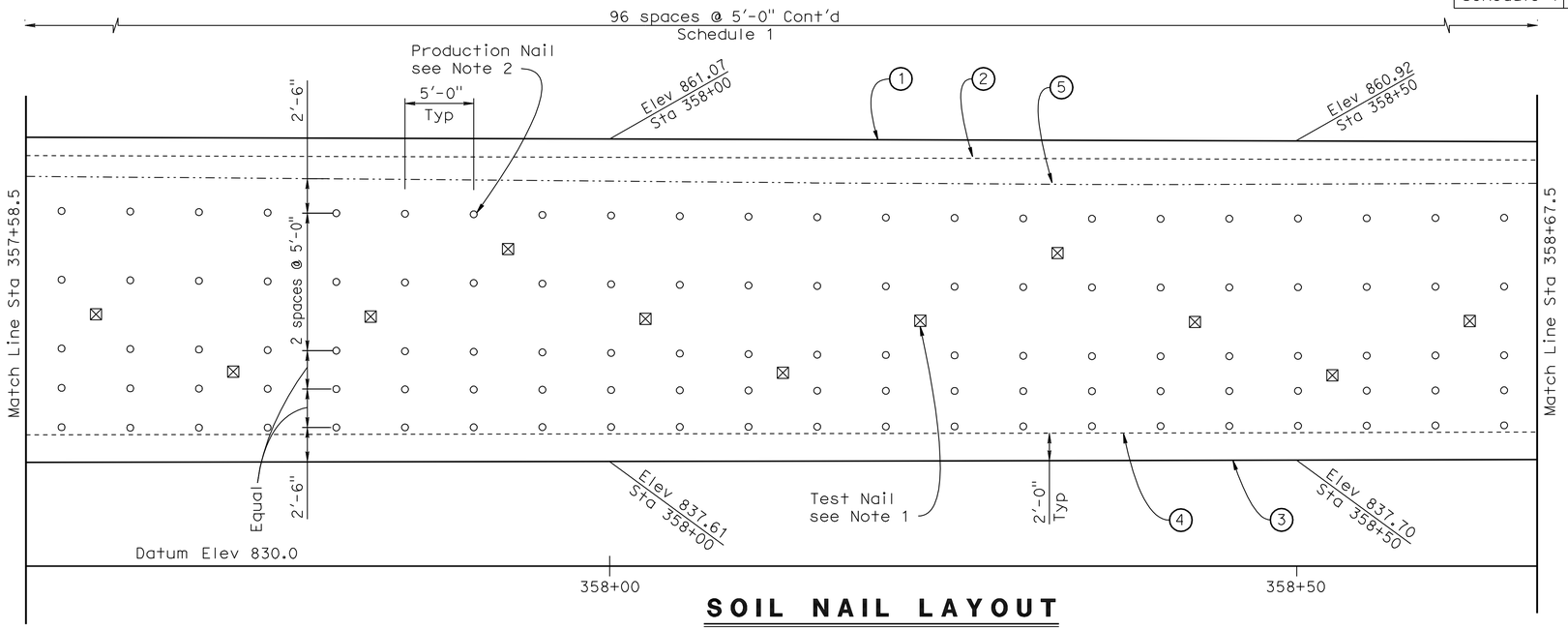

SOIL NAIL LAYOUT

3/16" = 1'-0"

NOTES:

1. Test nail locations are at midway between production nails. The exact location of the proof test nails to be determined in the field by the Engineer.
2. The maximum vertical and horizontal spacing of production nails shall be 5'-0".
3. Contractor shall adjust the concrete gutter to meet the gutter flow line.

(1) Top of Soil Nail Wall
(2) Gutter Elevation at back of wall
(3) Bottom of Soil Nail Wall
(4) Approximate Finished Grade on Freeway
(5) Approximate Original Ground, see "STRUCTURAL PLAN NO. 3" sheet.

LEGEND:

○ Indicates location of Production Nail assembly.

⊠ Indicates location of Test Nail assembly. Located in the middle of Production nails.

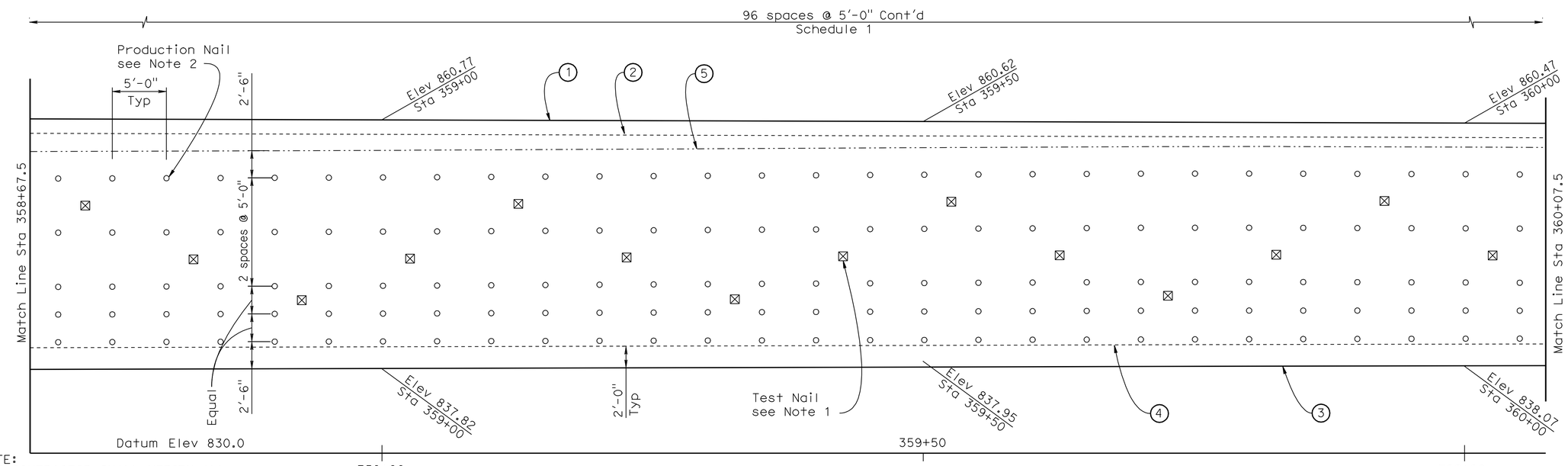

NOTE:
THE CONTRACTOR SHALL VERIFY ALL CONTROLLING FIELD DIMENSIONS BEFORE ORDERING OR FABRICATING ANY MATERIAL.

SOIL NAIL LAYOUT

3/16" = 1'-0"

	BY	CHECKED
DESIGN	M. Vo	J. Szabo
DETAILS	R. Kirkland	J. Szabo
QUANTITIES	J. Szabo	M. Vo

STATE OF CALIFORNIA
DEPARTMENT OF TRANSPORTATION

DIVISION OF ENGINEERING SERVICES
STRUCTURE DESIGN
DESIGN BRANCH 10

BRIDGE NO. 59 E0073
POST MILE 19.63

RETAINING WALL NO. 356
STRUCTURE PLAN NO. 2

STRUCTURES DESIGN DETAIL SHEET (ENGLISH) (REV. 10/25/05)

ORIGINAL SCALE IN INCHES FOR REDUCED PLANS 0 1 2 3

CU 08
EA 448401

DISREGARD PRINTS BEARING EARLIER REVISION DATES 3/15/10 7/15/10

REVISION DATES

SHEET 4 OF 14

FILE => 56e0073csp04.dgn

USERNAME => trleonard DATE PLOTTED => 30-APR-2011 TIME PLOTTED => 11:08

Note:
Cable Railing and Concrete Barrier Type 60D not shown for clarity

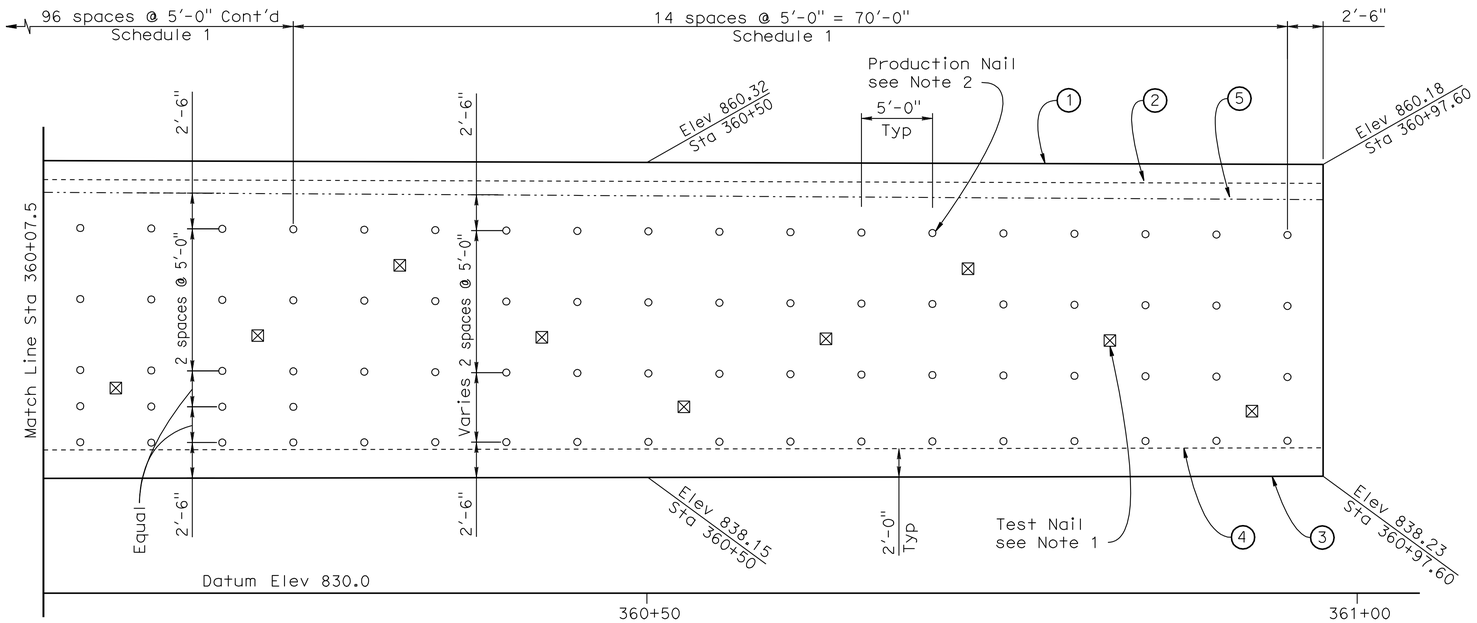

SOIL NAIL LAYOUT

3/16" = 1'-0"

SOIL NAIL SCHEDULE	
Location	Soil Nail Embedment Length Le
Schedule 1	All Soil Nails: Le = 20'-0"

DIST	COUNTY	ROUTE	POST MILES TOTAL PROJECT	SHEET No	TOTAL SHEETS
08	Riv	91	15.6/21.6	1552	2028

REGISTERED CIVIL ENGINEER 11/12/10 DATE

4-25-11
PLANS APPROVAL DATE

REGISTERED PROFESSIONAL ENGINEER Minh Thuong Vo No. C59297 Exp. 6/30/2011 CIVIL STATE OF CALIFORNIA

The State of California or its officers or agents shall not be responsible for the accuracy or completeness of electronic copies of this plan sheet.

NOTES:

1. Test nail locations are at midway between production nails. The exact location of the proof test nails to be determined in the field by the Engineer.
2. The maximum vertical and horizontal spacing of production nails shall be 5'-0".
3. Contractor shall adjust the concrete gutter to meet the gutter flow line.

(1) Top of Soil Nail Wall
(2) Gutter Elevation at back of wall
(3) Bottom of Soil Nail Wall
(4) Approximate Finished Grade on Freeway
(5) Approximate Original Ground, see this sheet.

LEGEND:

○ Indicates location of Production Nail assembly.
⊠ Indicates location of Test Nail assembly. Located in the middle of Production nails.

STATION	OG ELEV	STATION	OG ELEV	STATION	OG ELEV
354+97.60	859.91	357+50	858.41	360+25	858.12
355+00	859.93	357+75	858.21	360+50	857.97
355+25	859.92	358+00	858.01	360+75	857.83
355+50	859.27	358+25	857.83	360+97.60	857.69
355+75	858.75	358+50	857.79		
356+00	858.71	358+75	857.87		
356+25	858.67	359+00	857.95		
356+50	858.62	359+25	858.08		
356+75	858.58	359+50	858.21		
357+00	858.59	359+75	858.31		
357+25	858.59	360+00	858.27		

APPROXIMATE ORIGINAL GROUND

NOTE:
THE CONTRACTOR SHALL VERIFY ALL CONTROLLING FIELD DIMENSIONS BEFORE ORDERING OR FABRICATING ANY MATERIAL.

	BY	CHECKED
DESIGN	M. Vo	J. Szabo
DETAILS	R. Kirkland	J. Szabo
QUANTITIES	J. Szabo	M. Vo

STATE OF CALIFORNIA
DEPARTMENT OF TRANSPORTATION

DIVISION OF ENGINEERING SERVICES
STRUCTURE DESIGN
DESIGN BRANCH 10

BRIDGE NO. 56 E0073
POST MILE 19.63

RETAINING WALL NO. 356
STRUCTURE PLAN NO. 3

STRUCTURES DESIGN DETAIL SHEET (ENGLISH) (REV. 10/25/05)

ORIGINAL SCALE IN INCHES FOR REDUCED PLANS 0 1 2 3

CU 08
EA 448401

DISREGARD PRINTS BEARING EARLIER REVISION DATES

REVISION DATES 3/15/10

SHEET 5 OF 14

FILE => 56e0073csp05.dgn

USERNAME => trlenard DATE PLOTTED => 30-APR-2011 TIME PLOTTED => 11:08

DIST	COUNTY	ROUTE	POST MILES TOTAL PROJECT	SHEET No	TOTAL SHEETS
08	Riv	91	15.6/21.6	1553	2028

REGISTERED CIVIL ENGINEER 11/12/10 DATE

4-25-11
PLANS APPROVAL DATE

REGISTERED PROFESSIONAL ENGINEER Minh Thuong Vo No. C59297 Exp. 6/30/2011 CIVIL STATE OF CALIFORNIA

The State of California or its officers or agents shall not be responsible for the accuracy or completeness of electronic copies of this plan sheet.

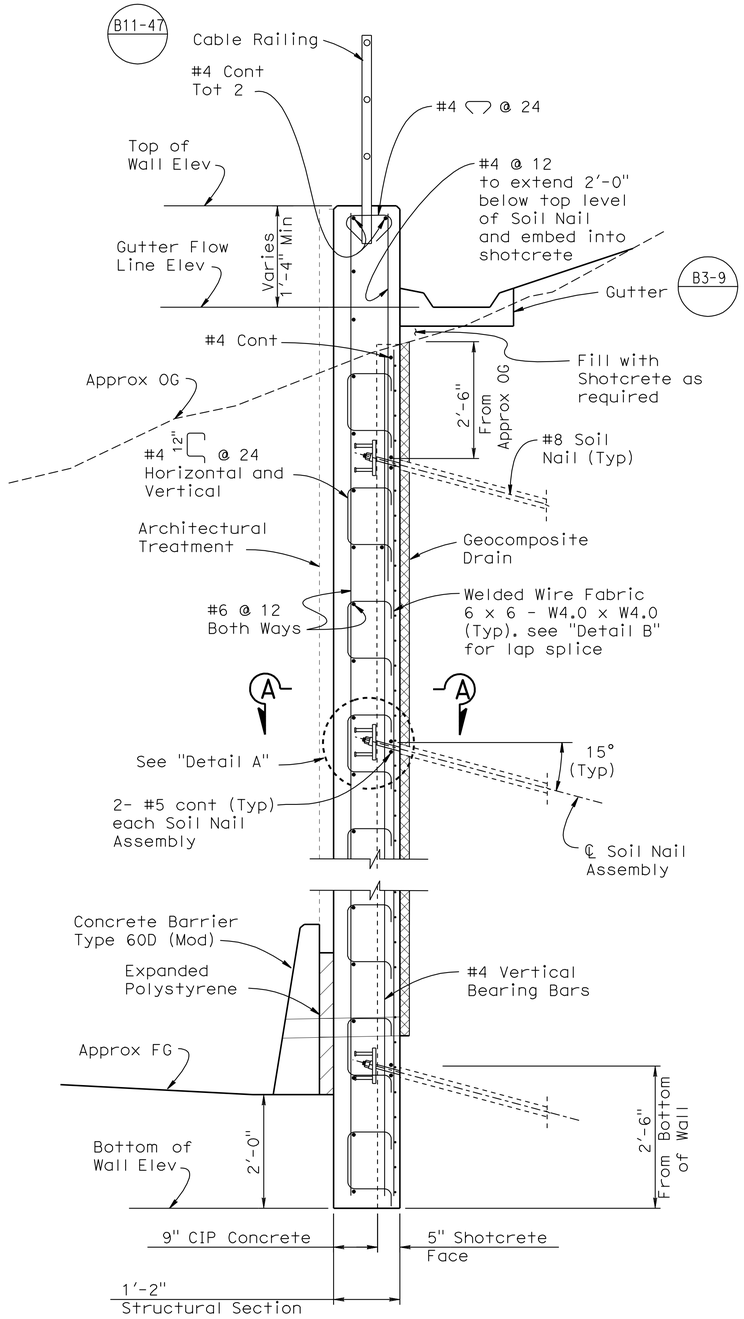

TYPICAL SECTION

3/4" = 1'-0"

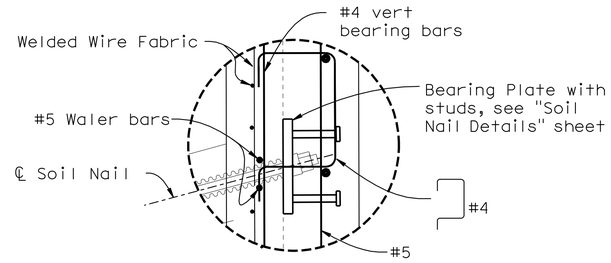

DETAIL A

1 1/2" = 1'-0"

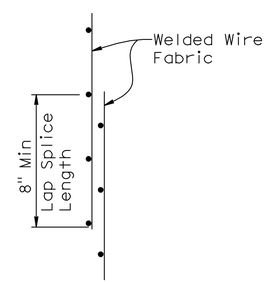

LAP SPLICE

DETAIL B

NO SCALE

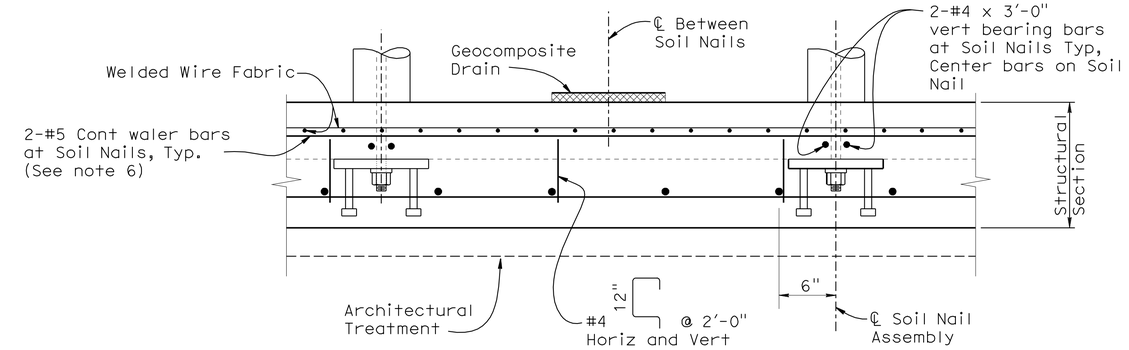

SECTION A-A

1 1/2" = 1'-0"

Notes:

1. Bottom of wall to be placed against undisturbed material.
2. For Horizontal and Vertical Soil Nail spacing see "Structure Plan No. 1" and "Structure Plan No. 2" sheets.
3. For Soil Nail Details & Assemblies, see "Soil Nail Details No. 1 and Soil Nail Details No. 2" sheets.
4. For Geocomposite Drain Details see "Soil Nail Details No. 3" sheet.
5. For Architectural Treatment (Textured Shotcrete and textured Concrete), see "Architectural Treatment Details" sheet.
6. For soil nail rows that are discontinuous, extend waler bars a minimum of 5' beyond last soil nail.

	BY	CHECKED
DESIGN	M. Vo	J. Szabo
DETAILS	R. Kirkland	J. Szabo
QUANTITIES	J. Szabo	M. Vo

STATE OF CALIFORNIA
DEPARTMENT OF TRANSPORTATION

DIVISION OF ENGINEERING SERVICES
STRUCTURE DESIGN
DESIGN BRANCH 10

BRIDGE NO. 56 E0073
POST MILE 19.63

RETAINING WALL NO. 356
SOIL NAIL WALL DETAILS NO. 1

STRUCTURES DESIGN DETAIL SHEET (ENGLISH) (REV. 10/25/05)

ORIGINAL SCALE IN INCHES FOR REDUCED PLANS 0 1 2 3

CU 08
EA 448401

DISREGARD PRINTS BEARING EARLIER REVISION DATES → 3/15/10 7/15/10

REVISION DATES

SHEET 6 OF 14

FILE => 56e0073grwdt06.dgn

USERNAME => trlenard DATE PLOTTED => 30-APR-2011 TIME PLOTTED => 11:08

DIST	COUNTY	ROUTE	POST MILES TOTAL PROJECT	SHEET No	TOTAL SHEETS
08	Riv	91	15.6/21.6	1554	2028

REGISTERED CIVIL ENGINEER 11/12/10 DATE

4-25-11
PLANS APPROVAL DATE

REGISTERED PROFESSIONAL ENGINEER Minh Thuong Vo No. C59297 Exp. 6/30/2011 CIVIL STATE OF CALIFORNIA

The State of California or its officers or agents shall not be responsible for the accuracy or completeness of electronic copies of this plan sheet.

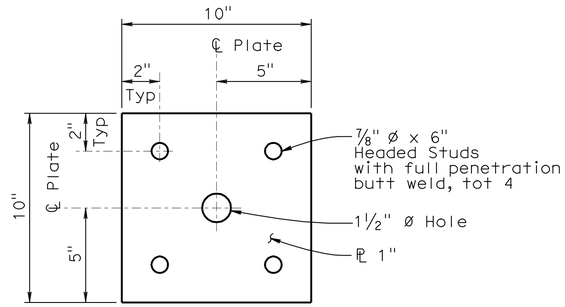

BEARING PLATE

DETAIL G

3" = 1'-0"

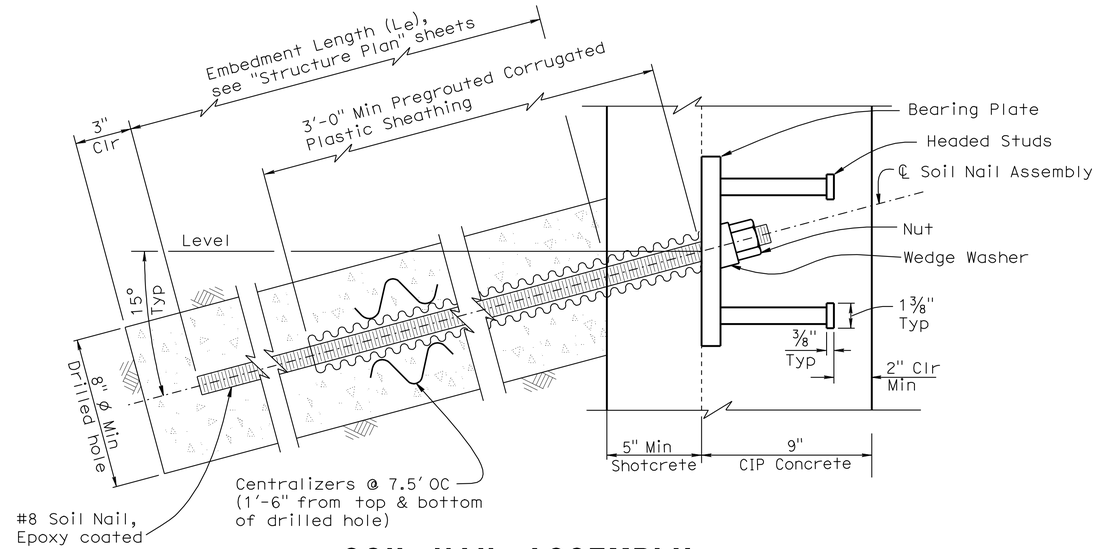

SOIL NAIL ASSEMBLY

DETAIL J

3" = 1'-0"

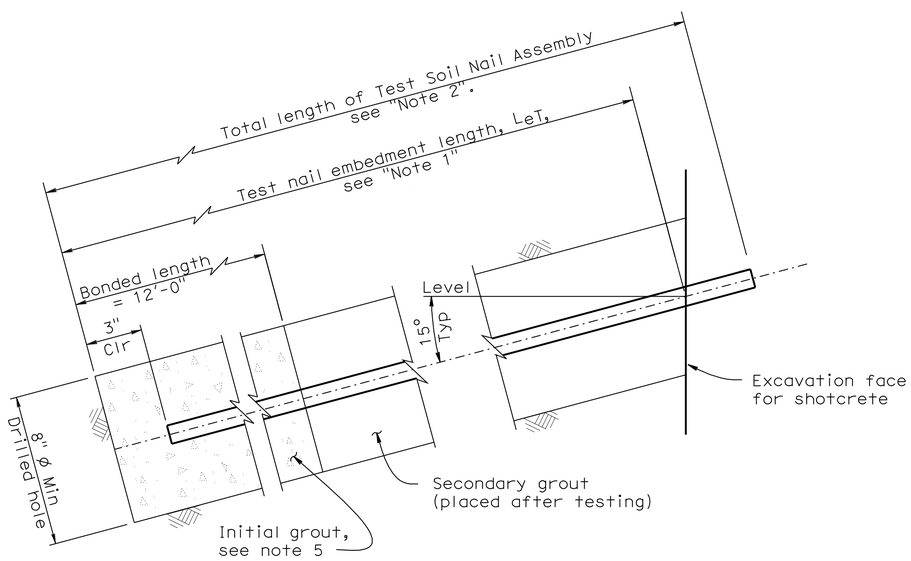

TEST SOIL NAIL ASSEMBLY

DETAIL H

3" = 1'-0"

Notes:

1. Embedment length L_{eT} of test nails equals two thirds of the embedment length L_e of adjacent soil nail assemblies, but not less than 12'-0".
2. Total length of test soil nail equals embedment length plus the length required for jacking equipment.
3. For embedment length of production nails see 'Schedule' on "Structure Plan" sheets.
4. Finished grout surface to be perpendicular to bar.
5. For location of test nail, see "Structure Plan" sheets. Additional test nails will be installed and tested per special provisions.

DESIGN	BY M. Vo	CHECKED J. Szabo
DETAILS	BY R. Kirkland	CHECKED J. Szabo
QUANTITIES	BY J. Szabo	CHECKED M. Vo

STATE OF CALIFORNIA
DEPARTMENT OF TRANSPORTATION

DIVISION OF ENGINEERING SERVICES
STRUCTURE DESIGN
DESIGN BRANCH 10

BRIDGE NO. 56 E0073
POST MILE 19.63

RETAINING WALL NO. 356
SOIL NAIL WALL DETAILS NO. 2

STRUCTURES DESIGN DETAIL SHEET (ENGLISH) (REV. 10/25/05)

ORIGINAL SCALE IN INCHES FOR REDUCED PLANS 0 1 2 3

CU 08
EA 448401

DISREGARD PRINTS BEARING EARLIER REVISION DATES → 3/15/10 7/15/10

REVISION DATES

SHEET 7 OF 14

FILE => 56e0073grwdt07.dgn

USERNAME => trlenard DATE PLOTTED => 30-APR-2011 TIME PLOTTED => 11:08

DIST	COUNTY	ROUTE	POST MILES TOTAL PROJECT	SHEET No	TOTAL SHEETS
08	Riv	91	15.6/21.6	1555	2028

REGISTERED CIVIL ENGINEER 11/12/10 DATE

4-25-11
PLANS APPROVAL DATE

REGISTERED PROFESSIONAL ENGINEER Minh Thuong Vo No. C59297 Exp. 6/30/2011 CIVIL STATE OF CALIFORNIA

The State of California or its officers or agents shall not be responsible for the accuracy or completeness of electronic copies of this plan sheet.

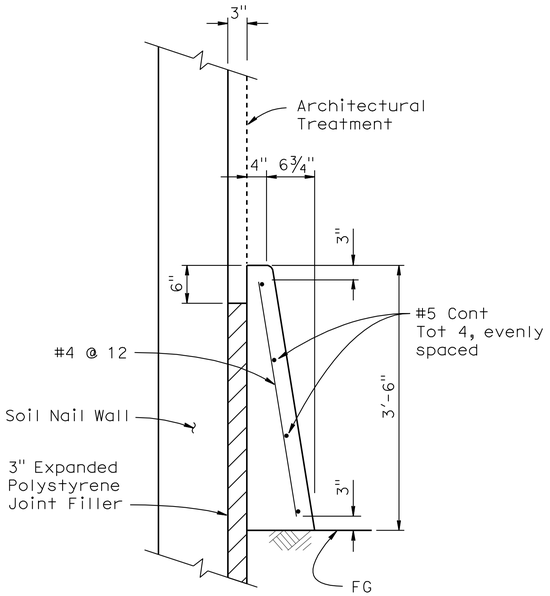

CONCRETE BARRIER (TYPE 60D MOD)

No scale

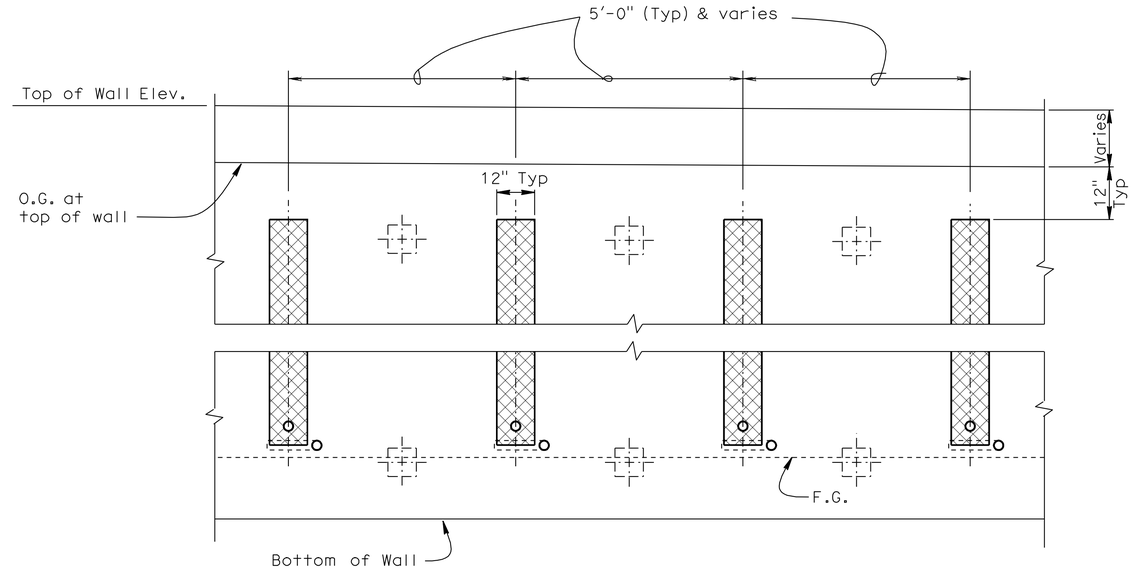

PART ELEVATION - GEOCOMPOSITE DRAIN

No scale

NOTES:

1. Center Geocomposite drain between Soil Nail assemblies.
2. - Indicates Soil Nail Assembly.
3. 2" dia drain pipe to be placed 3" above finished grade at face of barrier (Typ).
4. Adjust Geocomposite Drain to clear Test Soil Nails.

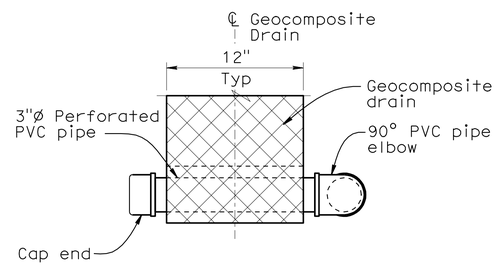

VIEW A-A

No scale

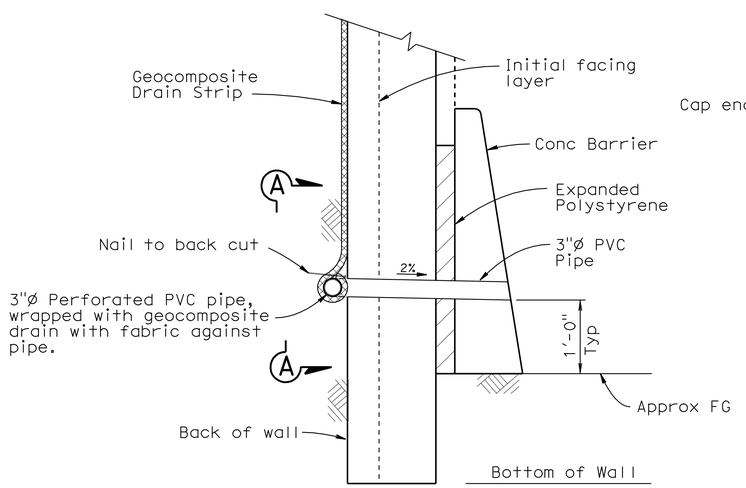

WALL DRAIN DETAIL AT WEEPHOLE OPTION A

No scale

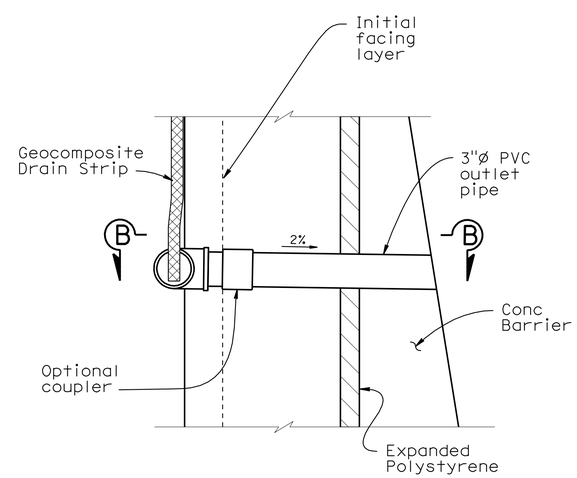

WALL DRAIN DETAIL AT WEEPHOLE OPTION B

No scale

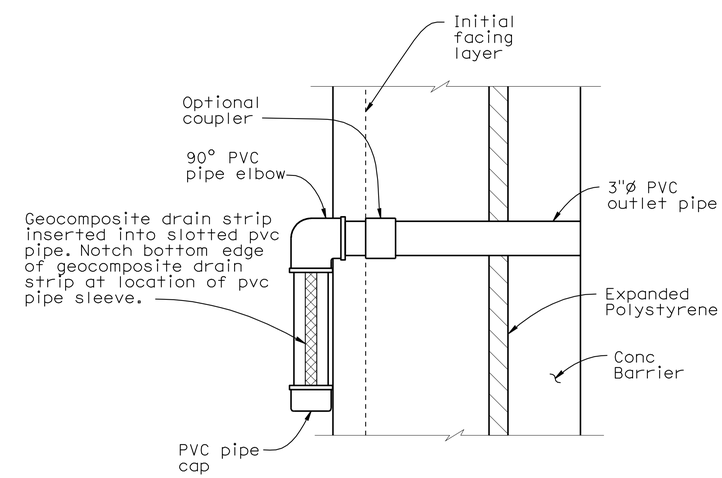

VIEW B-B

No Scale

	BY	CHECKED
DESIGN	M. Vo	J. Szabo
DETAILS	R. Kirkland	J. Szabo
QUANTITIES	J. Szabo	M. Vo

STATE OF CALIFORNIA DEPARTMENT OF TRANSPORTATION

DIVISION OF ENGINEERING SERVICES STRUCTURE DESIGN DESIGN BRANCH 10

BRIDGE NO. 56 E0073
POST MILE 19.63

RETAINING WALL NO. 356
SOIL NAIL WALL DETAILS NO. 3

STRUCTURES DESIGN DETAIL SHEET (ENGLISH) (REV. 10/25/05)

ORIGINAL SCALE IN INCHES FOR REDUCED PLANS 0 1 2 3

CU 08
EA 448401

DISREGARD PRINTS BEARING EARLIER REVISION DATES

REVISION DATES 3/15/10 7/15/10

SHEET 8 OF 14

FILE => 56e0073grwdt08.dgn

USERNAME => trienard DATE PLOTTED => 30-APR-2011 TIME PLOTTED => 11:08

Dist	COUNTY	ROUTE	POST MILES TOTAL PROJECT	SHEET No.	TOTAL SHEETS
08	Riv	91	15.6/21.6	1556	2028

LICENSED LANDSCAPE ARCHITECT

4-25-11
PLANS APPROVAL DATE

LICENSED LANDSCAPE ARCHITECT
Matthew Perry Hall
No. 5145
Signature
10/31/2011
Renewal Date
11/12/10
Date
STATE OF CALIFORNIA

THE STATE OF CALIFORNIA OR ITS OFFICERS OR AGENTS SHALL NOT BE RESPONSIBLE FOR THE ACCURACY OR COMPLETENESS OF SCANNED COPIES OF THIS PLAN SHEET.

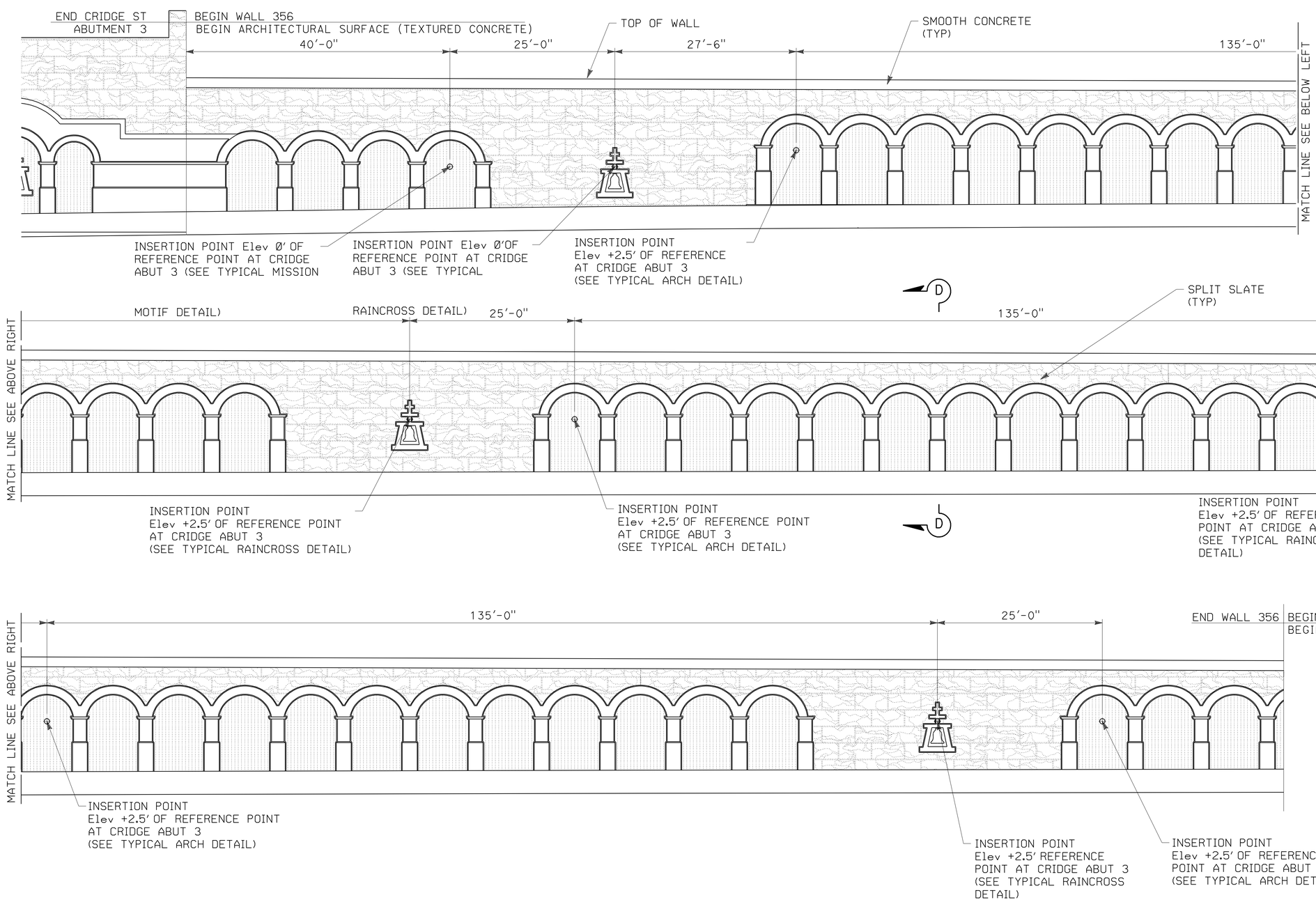

MIRRORED ELEVATION FOR FRACTURED RIB SPLIT FACE TEXTURE RETAINING WALL No. 356

1/8"=1'-0"

THIS PLAN IS ACCURATE FOR ARCHITECTUAL TREATMENT WORK ONLY.

NOTES:

1. For Section D-D and Section E-E see "Architectural Surface Detail Sheet No. 2".

	BY	CHECKED
DESIGN	M. Hall	M. Bishop
DETAILS	R. Kirkland	M. Bishop
QUANTITIES	J. Szabo	M. Vo

STATE OF CALIFORNIA
DEPARTMENT OF TRANSPORTATION

DIVISION OF ENGINEERING SERVICES
STRUCTURE DESIGN
DESIGN BRANCH 10

BRIDGE NO. 56 E0073
POST MILE 19.63

RETAINING WALL NO. 356
ARCHITECTURAL SURFACE

STRUCTURES DESIGN DETAIL SHEET (ENGLISH) (REV. 10/25/05)

ORIGINAL SCALE IN INCHES FOR REDUCED PLANS 0 1 2 3

CU 08
EA 448401

DISREGARD PRINTS BEARING EARLIER REVISION DATES → 8/17/10

REVISION DATES

SHEET 9 OF 14

FILE => 56e0073umiscdt09.dgn

USERNAME => friehard DATE PLOTTED => 30-APR-2011 TIME PLOTTED => 11:08

NOTES:
1. For Section D-D see "Architectural Surface Detail Sheet No. 4"

Dist	COUNTY	ROUTE	POST MILES TOTAL PROJECT	SHEET No.	TOTAL SHEETS
08	Riv	91	15.6/21.6	1557	2028

LICENSED LANDSCAPE ARCHITECT
4-25-11
PLANS APPROVAL DATE

LICENSED LANDSCAPE ARCHITECT — Matthew Harry Hall — Signature — 10/31/2011 — Renewal Date — 11/12/10 — Date — STATE OF CALIFORNIA

THE STATE OF CALIFORNIA OR ITS OFFICERS OR AGENTS SHALL NOT BE RESPONSIBLE FOR THE ACCURACY OR COMPLETENESS OF SCANNED COPIES OF THIS PLAN SHEET.

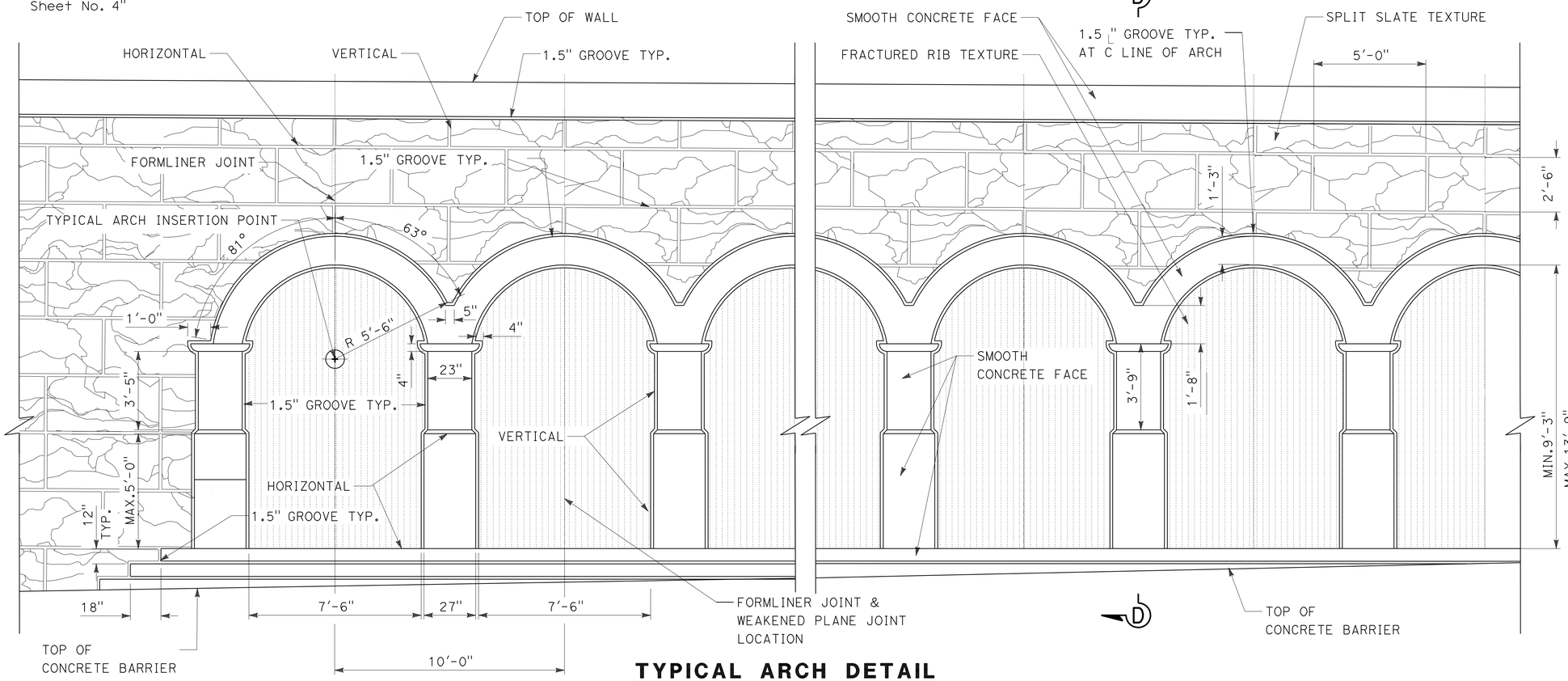

TYPICAL ARCH DETAIL

3/8" = 1'-0"

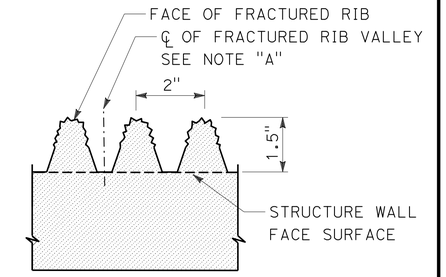

TYPICAL FRACTURED RIB TEXTURE

No Scale

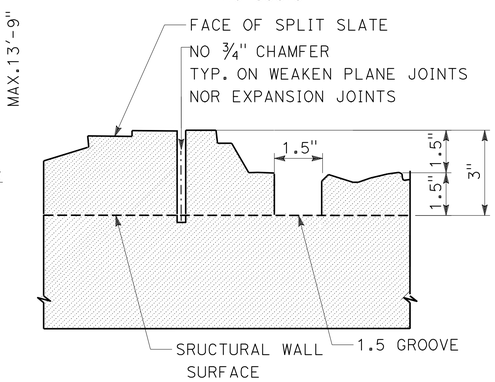

TYPICAL SPLIT SLATE TEXTURE

No Scale

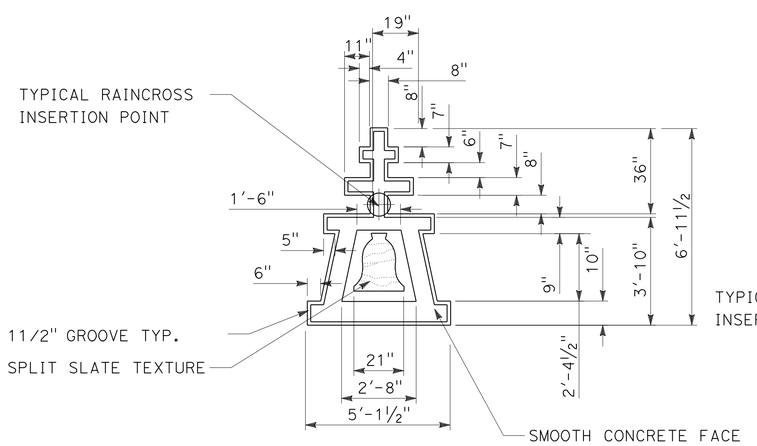

TYPICAL RAINCROSS DETAIL

3/8" = 1'-0"

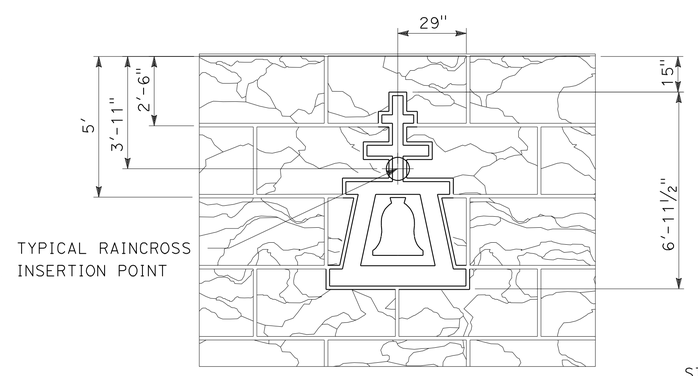

TYPICAL RAINCROSS DETAIL/ SPLIT SLATE TEXTURE

3/8" = 1'-0"

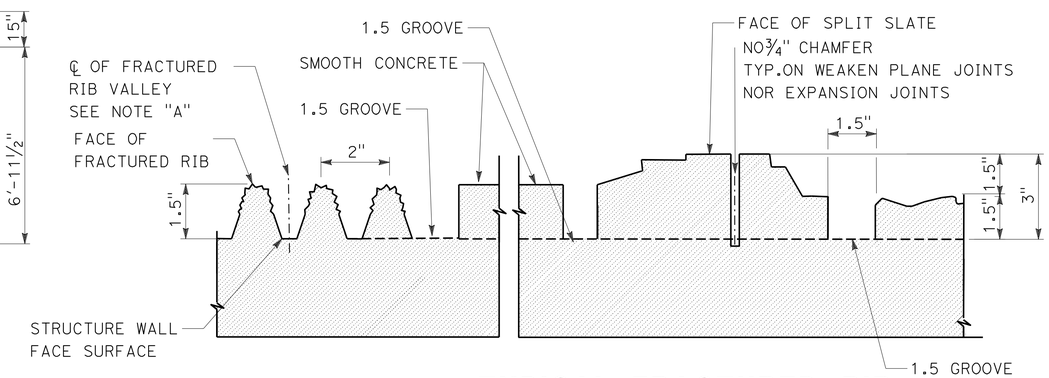

NOTE "A"
PERMITTED LOCATION OF WEAKEN PLANE AND EXPANSION JOINTS

TYPICAL FRACTURED RIB WITH SPLIT SLATE TEXTURE

No Scale

THIS PLAN IS ACCURATE FOR ARCHITECTUAL TREATMENT WORK ONLY.

	BY	CHECKED
DESIGN	M. Hall	M. Bishop
DETAILS	R. Kirkland	M. Bishop
QUANTITIES	J. Szabo	M. Vo

STATE OF CALIFORNIA
DEPARTMENT OF TRANSPORTATION

DIVISION OF ENGINEERING SERVICES
STRUCTURE DESIGN
DESIGN BRANCH 10

BRIDGE NO. 56 E0073
POST MILE 19.63

RETAINING WALL NO. 356
ARCHITECTURAL SURFACE DETAIL SHEET NO. 1

STRUCTURES DESIGN DETAIL SHEET (ENGLISH) (REV. 10/25/05)

ORIGINAL SCALE IN INCHES FOR REDUCED PLANS 0 1 2 3

CU 08
EA 448401

DISREGARD PRINTS BEARING EARLIER REVISION DATES 8/10/10

REVISION DATES

SHEET 10 OF 14

FILE => 56e0073umiscdt10.dgn

USERNAME => trlenard DATE PLOTTED => 30-APR-2011 TIME PLOTTED => 11:08

Dist	COUNTY	ROUTE	POST MILES TOTAL PROJECT	SHEET No.	TOTAL SHEETS
08	Riv	91	15.6/21.6	1558	2028

LICENSED LANDSCAPE ARCHITECT

4-25-11
PLANS APPROVAL DATE

LICENSED LANDSCAPE ARCHITECT
Matthew Harry Hall
No. 4401
Signature
10/31/2011
Renewal Date
11/12/10
Date
STATE OF CALIFORNIA

THE STATE OF CALIFORNIA OR ITS OFFICERS OR AGENTS SHALL NOT BE RESPONSIBLE FOR THE ACCURACY OR COMPLETENESS OF SCANNED COPIES OF THIS PLAN SHEET.

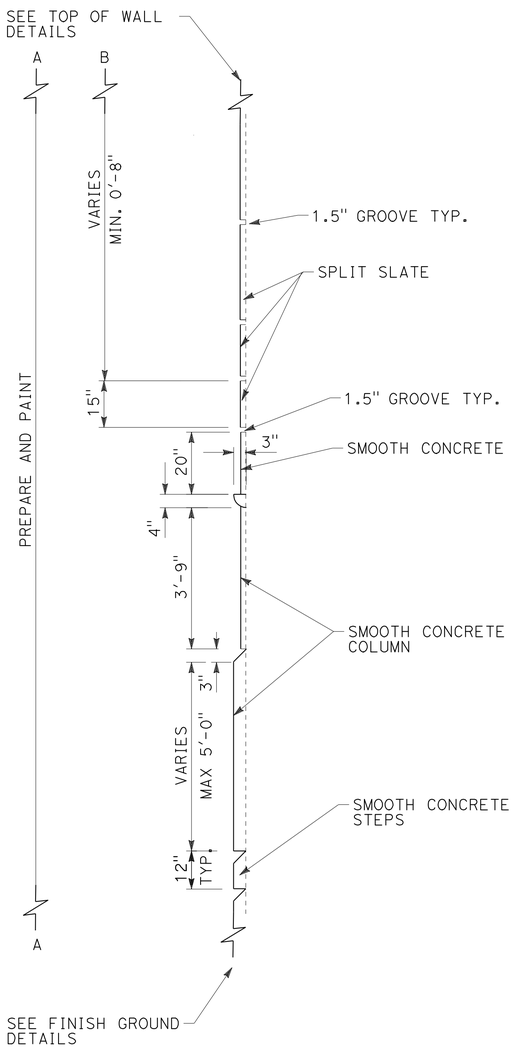

SECTION D-D

No Scale

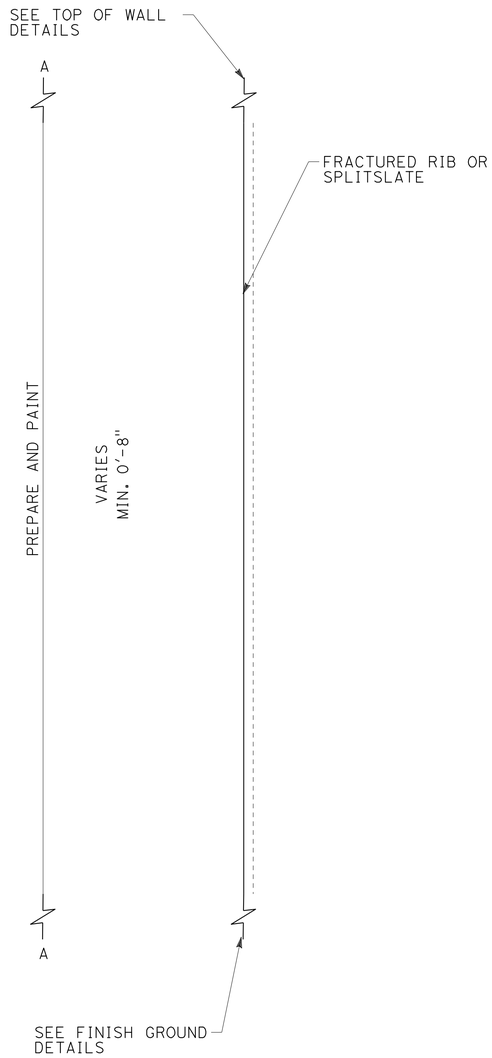

SECTION E-E

No Scale

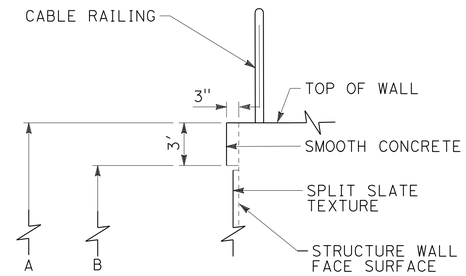

TOP OF WALL DETAIL TYPICAL WITH CABLE RAIL

No Scale

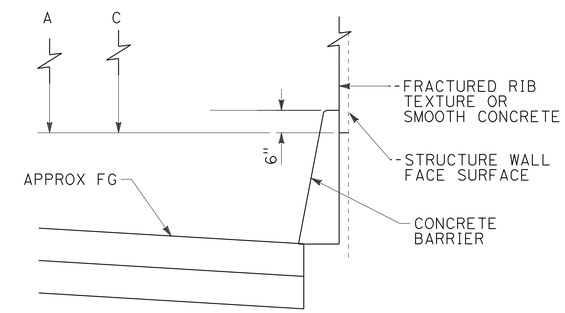

FINISH GROUND DETAIL TYPICAL WITH CONCRETE BARRIER

No Scale

DESIGN	BY M. Hall	CHECKED M. Bishop	
DETAILS	BY R. Kirkland	CHECKED M. Bishop	
QUANTITIES	BY J. Szabo	CHECKED M. Vo	

STATE OF CALIFORNIA
DEPARTMENT OF TRANSPORTATION

DIVISION OF ENGINEERING SERVICES
STRUCTURE DESIGN
DESIGN BRANCH 10

BRIDGE NO. 56 E0073
POST MILE 19.63

RETAINING WALL NO. 356
ARCHITECTURAL SURFACE DETAIL SHEET NO. 2

STRUCTURES DESIGN DETAIL SHEET (ENGLISH) (REV. 10/25/05)

ORIGINAL SCALE IN INCHES FOR REDUCED PLANS 0 1 2 3

CU 08
EA 448401

DISREGARD PRINTS BEARING EARLIER REVISION DATES → 8/10/10

REVISION DATES

SHEET 11 OF 14

FILE => 56e0073umiscdt11.dgn

USERNAME => friehard DATE PLOTTED => 30-APR-2011 TIME PLOTTED => 11:03

DIST	COUNTY	ROUTE	POST MILES TOTAL PROJECT	SHEET No	TOTAL SHEETS
08	Riv	91	15.6/21.6	1559	2028

GEOTECHNICAL PROFESSIONAL 11/03/2010 DATE

4-25-11
PLANS APPROVAL DATE

REGISTERED PROFESSIONAL ENGINEER FARID MOTAMED No. 2738 Exp. 6-30-11 GEOTECHNICAL STATE OF CALIFORNIA

The State of California or its officers or agents shall not be responsible for the accuracy or completeness of electronic copies of this plan sheet.

California Department of Transportation
5900 Folsom Boulervard
Sacramento, CA 95819

URS Corporation
2020 East First Street, Suite 400
Santa Ana, CA 92705

GROUP SYMBOLS AND NAMES

Graphic / Symbol	Group Names
GW	Well-graded GRAVEL Well-graded GRAVEL with SAND
GP	Poorly graded GRAVEL Poorly graded GRAVEL with SAND
GW-GM	Well-graded GRAVEL with SILT Well-graded GRAVEL with SILT and SAND
GW-GC	Well-graded GRAVEL with CLAY (or SILTY CLAY) Well-graded GRAVEL with CLAY and SAND (or SILTY CLAY and SAND)
GP-GM	Poorly graded GRAVEL with SILT Poorly graded GRAVEL with SILT and SAND
GP-GC	Poorly graded GRAVEL with CLAY (or SILTY CLAY) Poorly graded GRAVEL with CLAY and SAND (or SILTY CLAY and SAND)
GM	SILTY GRAVEL SILTY GRAVEL with SAND
GC	CLAYEY GRAVEL CLAYEY GRAVEL with SAND
GC-GM	SILTY, CLAYEY GRAVEL SILTY, CLAYEY GRAVEL with SAND
SW	Well-graded SAND Well-graded SAND with GRAVEL
SP	Poorly graded SAND Poorly graded SAND with GRAVEL
SW-SM	Well-graded SAND with SILT Well-graded SAND with SILT and GRAVEL
SW-SC	Well-graded SAND with CLAY (or SILTY CLAY) Well-graded SAND with CLAY and GRAVEL (or SILTY CLAY and GRAVEL)
SP-SM	Poorly graded SAND with SILT Poorly graded SAND with SILT and GRAVEL
SP-SC	Poorly graded SAND with CLAY (or SILTY CLAY) Poorly graded SAND with CLAY and GRAVEL (or SILTY CLAY and GRAVEL)
SM	SILTY SAND SILTY SAND with GRAVEL
SC	CLAYEY SAND CLAYEY SAND with GRAVEL
SC-SM	SILTY, CLAYEY SAND SILTY, CLAYEY SAND with GRAVEL
PT	PEAT
	COBBLES COBBLES and BOULDERS BOULDERS

Graphic / Symbol	Group Names
CL	Lean CLAY Lean CLAY with SAND Lean CLAY with GRAVEL SANDY lean CLAY SANDY lean CLAY with GRAVEL GRAVELLY lean CLAY GRAVELLY lean CLAY with SAND
CL-ML	SILTY CLAY SILTY CLAY with SAND SILTY CLAY with GRAVEL SANDY SILTY CLAY SANDY SILTY CLAY with GRAVEL GRAVELLY SILTY CLAY GRAVELLY SILTY CLAY with SAND
ML	SILT SILT with SAND SILT with GRAVEL SANDY SILT SANDY SILT with GRAVEL GRAVELLY SILT GRAVELLY SILT with SAND
OL	ORGANIC lean CLAY ORGANIC lean CLAY with SAND ORGANIC lean CLAY with GRAVEL SANDY ORGANIC lean CLAY SANDY ORGANIC lean CLAY with GRAVEL GRAVELLY ORGANIC lean CLAY GRAVELLY ORGANIC lean CLAY with SAND
OL	ORGANIC SILT ORGANIC SILT with SAND ORGANIC SILT with GRAVEL SANDY ORGANIC SILT SANDY ORGANIC SILT with GRAVEL GRAVELLY ORGANIC SILT GRAVELLY ORGANIC SILT with SAND
CH	Fat CLAY Fat CLAY with SAND Fat CLAY with GRAVEL SANDY fat CLAY SANDY fat CLAY with GRAVEL GRAVELLY fat CLAY GRAVELLY fat CLAY with SAND
MH	Elastic SILT Elastic SILT with SAND Elastic SILT with GRAVEL SANDY elastic SILT SANDY elastic SILT with GRAVEL GRAVELLY elastic SILT GRAVELLY elastic SILT with SAND
OH	ORGANIC fat CLAY ORGANIC fat CLAY with SAND ORGANIC fat CLAY with GRAVEL SANDY ORGANIC fat CLAY SANDY ORGANIC fat CLAY with GRAVEL GRAVELLY ORGANIC fat CLAY GRAVELLY ORGANIC fat CLAY with SAND
OH	ORGANIC elastic SILT ORGANIC elastic SILT with SAND ORGANIC elastic SILT with GRAVEL SANDY elastic ELASTIC SILT SANDY ORGANIC elastic SILT with GRAVEL GRAVELLY ORGANIC elastic SILT GRAVELLY ORGANIC elastic SILT with SAND
OL/OH	ORGANIC SOIL ORGANIC SOIL with SAND ORGANIC SOIL with GRAVEL SANDY ORGANIC SOIL SANDY ORGANIC SOIL with GRAVEL GRAVELLY ORGANIC SOIL GRAVELLY ORGANIC SOIL with SAND

FIELD AND LABORATORY TESTS

C	Consolidation (ASTM D 2435-04)
CL	Collapse Potential (ASTM D 5333-03)
CP	Compaction Curve (CTM 216 - 06)
CR	Corrosion, Sulfates, Chlorides (CTM 643 - 99; CTM 417 - 06; CTM 422 - 06)
CU	Consolidated Undrained Triaxial (ASTM D 4767-02)
DS	Direct Shear (ASTM D 3080-04)
EI	Expansion Index (ASTM D 4829-03)
M	Moisture Content (ASTM D 2216-05)
OC	Organic Content (ASTM D 2974-07)
P	Permeability (CTM 220 - 05)
PA	Particle Size Analysis (ASTM D 422-63 [2002])
PI	Liquid Limit, Plastic Limit, Plasticity Index (AASHTO T 89-02, AASHTO T 90-00)
PL	Point Load Index (ASTM D 5731-05)
PM	Pressure Meter
PP	Pocket Penetrometer
R	R-Value (CTM 301 - 00)
SE	Sand Equivalent (CTM 217 - 99)
SG	Specific Gravity (AASHTO T 100-06)
SL	Shrinkage Limit (ASTM D 427-04)
SW	Swell Potential (ASTM D 4546-03)
TV	Pocket Torvane
UC	Unconfined Compression - Soil (ASTM D 2166-06) Unconfined Compression - Rock (ASTM D 2938-95)
UU	Unconsolidated Undrained Triaxial (ASTM D 2850-03)
UW	Unit Weight (ASTM D 4767-04)
VS	Vane Shear (AASHTO T 223-96 [2004])

CONSISTENCY OF COHESIVE SOILS

Descriptor	Unconfined Compressive Strength (tsf)	Pocket Penetrometer (tsf)	Torvane (tsf)	Field Approximation
Very Soft	< 0.25	< 0.25	< 0.12	Easily penetrated several inches by fist
Soft	0.25 - 0.50	0.25 - 0.50	0.12 - 0.25	Easily penetrated several inches by thumb
Medium Stiff	0.50 - 1.0	0.50 - 1.0	0.25 - 0.50	Can be penetrated several inches by thumb with moderate effort
Stiff	1.0 - 2.0	1.0 - 2.0	0.50 - 1.0	Readily indented by thumb but penetrated only with great effort
Very Stiff	2.0 - 4.0	2.0 - 4.0	1.0 - 2.0	Readily indented by thumbnail
Hard	> 4.0	> 4.0	> 2.0	Indented by thumbnail with difficulty

APPARENT DENSITY OF COHESIONLESS SOILS

Descriptor	SPT N60 - Value (blows / foot)
Very Loose	0 - 4
Loose	5 - 10
Medium Dense	11 - 30
Dense	31 - 50
Very Dense	> 50

MOISTURE

Descriptor	Criteria
Dry	Absence of moisture, dusty, dry to the touch
Moist	Damp but no visible water
Wet	Visible free water, usually soil is below water table

PERCENT OR PROPORTION OF SOILS

Descriptor	Criteria
Trace	Particles are present but estimated to be less than 5%
Few	5 to 10%
Little	15 to 25%
Some	30 to 45%
Mostly	50 to 100%

SOIL PARTICLE SIZE

Descriptor		Size
Boulder		> 12 inches
Cobble		3 to 12 inches
Gravel	Coarse	3/4 inch to 3 inches
	Fine	No. 4 Sieve to 3/4 inch
Sand	Coarse	No. 10 Sieve to No. 4 Sieve
	Medium	No. 40 Sieve to No. 10 Sieve
	Fine	No. 200 Sieve to No. 40 Sieve
Silt and Clay		Passing No. 200 Sieve

PLASTICITY OF FINE-GRAINED SOILS

Descriptor	Criteria
Nonplastic	A 1/8-inch thread cannot be rolled at any water content.
Low	The thread can barely be rolled, and the lump cannot be formed when drier than the plastic limit.
Medium	The thread is easy to roll, and not much time is required to reach the plastic limit; it cannot be rerolled after reaching the plastic limit. The lump crumbles when drier than the plastic limit.
High	It takes considerable time rolling and kneading to reach the plastic limit. The thread can be rerolled several times after reaching the plastic limit. The lump can be formed without crumbling when drier than the plastic limit.

CEMENTATION

Descriptor	Criteria
Weak	Crumbles or breaks with handling or little finger pressure.
Moderate	Crumbles or breaks with considerable finger pressure.
Strong	Will not crumble or break with finger pressure.

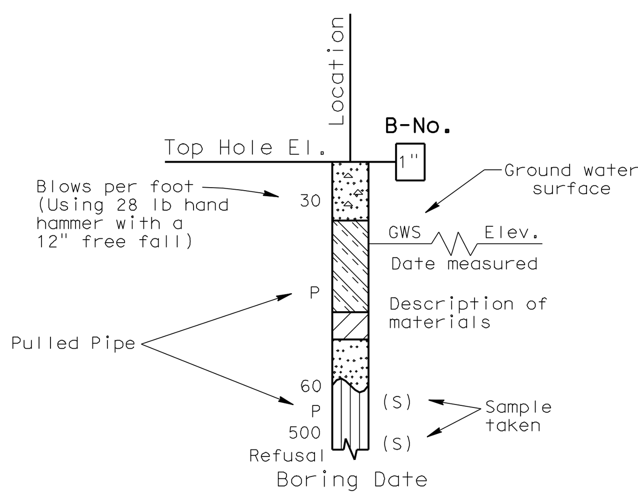

SAMPLE BORING (DRY)

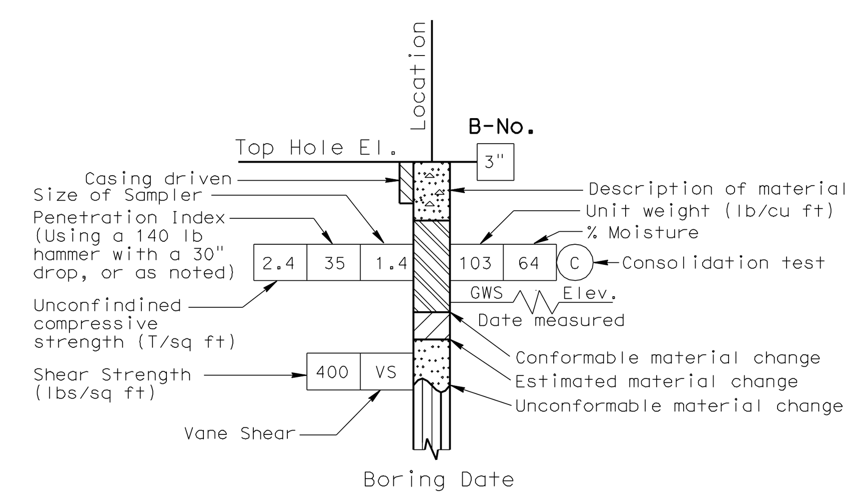

ROTARY SAMPLE BORING (WET)

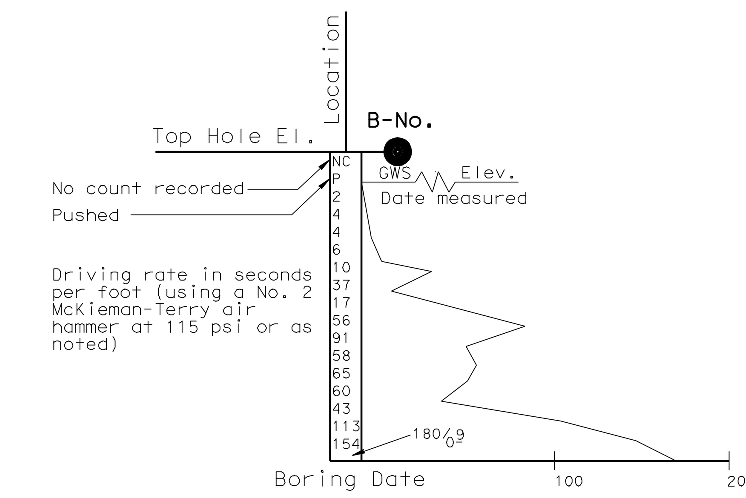

2 1/4" CONE PENETRATION BORING

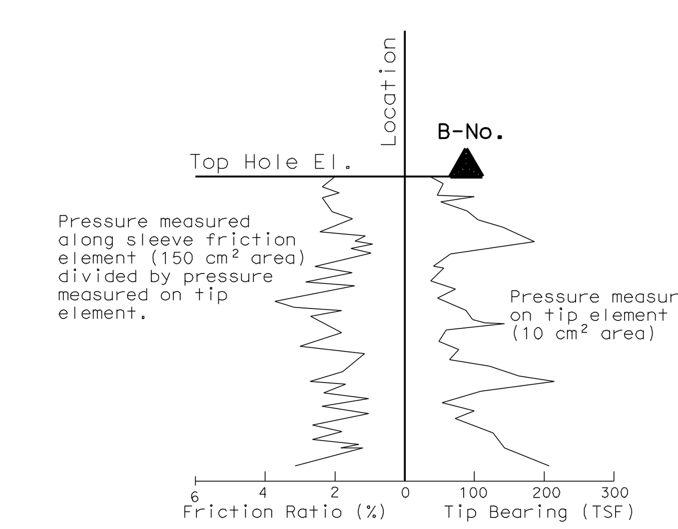

ELECTRONIC CONE PENETROMETER TEST

Cone Penetrometer dimensions and testing procedures are in accordance with ASTM standard D 3441-79, or as noted.

GINA PURSELL DESIGN OVERSIGHT 11/12/10 SIGN OFF DATE	SHAWN WEI FUNCTIONAL SUPERVISOR	DRAWN BY: P. QUACH CHECKED BY: S. PIRATHIVIRAJ	P.CHAU/D.WADER/C.CARBINO FIELD INVESTIGATION BY: DATE: Nov 6 2007 to March 7 2008

PREPARED FOR THE STATE OF CALIFORNIA DEPARTMENT OF TRANSPORTATION

A. LEE
PROJECT ENGINEER

BRIDGE NO. 56 E0073
POST MILE 19.63

SOIL LEGEND
LOG OF TEST BORINGS 1 OF 3

OSF GEOTECHNICAL LOG OF TEST BORINGS SHEET (ENGLISH) (REV. 2/25/05)

ORIGINAL SCALE IN INCHES FOR REDUCED PLANS 0 1 2 3

CU 08
EA 448401

DISREGARD PRINTS BEARING EARLIER REVISION DATES → 8/18/10

REVISION DATES (PRELIMINARY STAGE ONLY)

FILE => 56e0073zlotb12.dgn

USERNAME => trlenard DATE PLOTTED => 30-APR-2011 TIME PLOTTED =>

DIST	COUNTY	ROUTE	POST MILES TOTAL PROJECT	SHEET No	TOTAL SHEETS
08	Riv	91	15.6/21.6	1560	2028

GEOTECHNICAL PROFESSIONAL — DATE 11/03/2010

4-25-11
PLANS APPROVAL DATE

REGISTERED PROFESSIONAL ENGINEER — FARID MOTAMED No. 2738 Exp. 6-30-11 GEOTECHNICAL STATE OF CALIFORNIA

The State of California or its officers or agents shall not be responsible for the accuracy or completeness of electronic copies of this plan sheet.

California Department of Transportation
5900 Folsom Boulevard
Sacramento, CA 95819

URS Corporation
2020 East First Street, Suite 400
Santa Ana, CA 92705

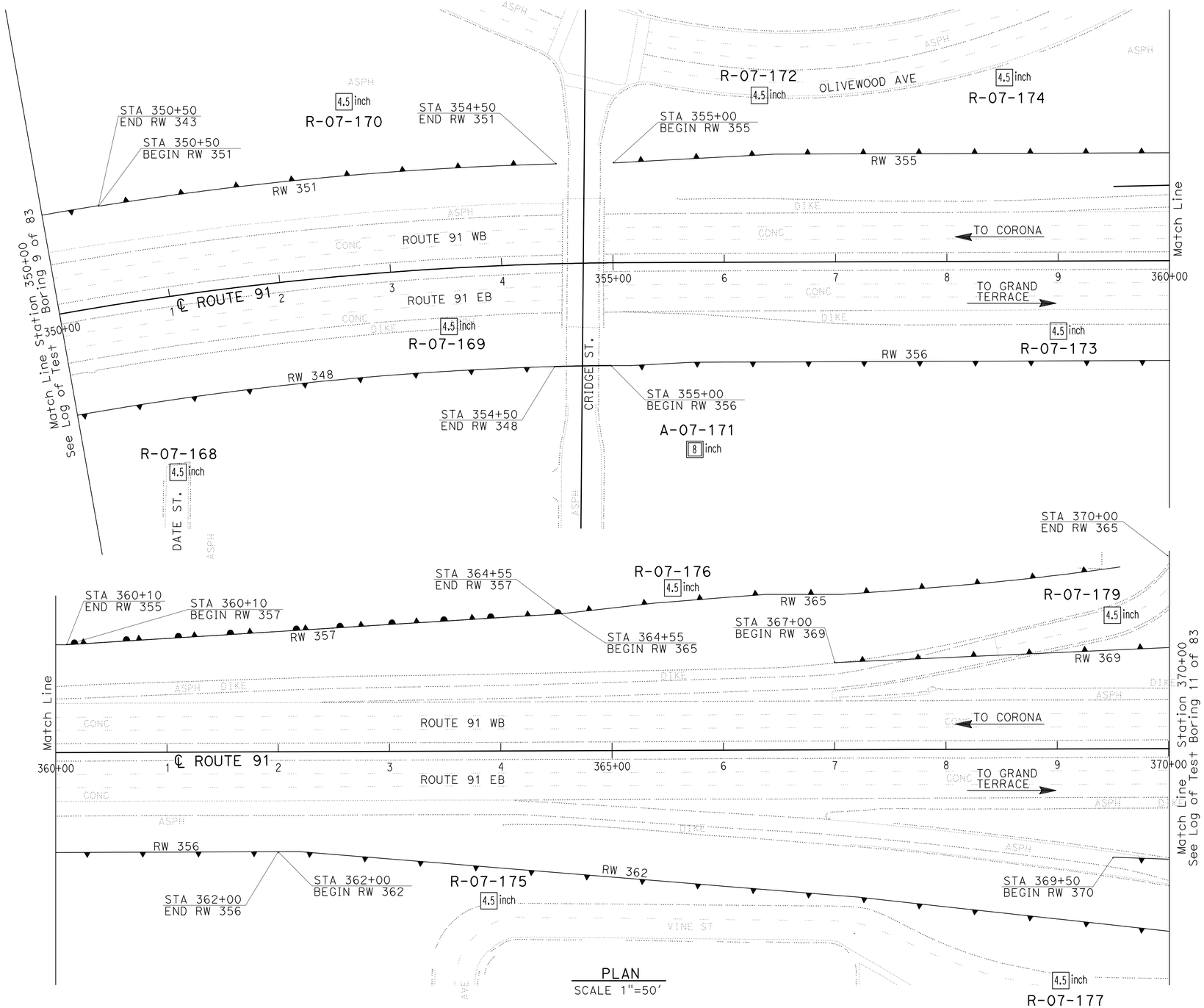

PLAN
SCALE 1"=50'

Borehole Number	Drill Rig	Hammer Type	Avg. Hammer Efficiency, ETR (%)
R-07-168	CS-2000	Automatic	84
R-07-169	CME 85	Automatic	87
R-07-170	Acker Rig	Automatic	74
A-07-171	Diedrich D-120	Automatic	75*
R-07-172	CS-2000	Automatic	84
R-07-173	CME 85	Automatic	87
R-07-174	CS-2000	Automatic	84
R-07-175	CS-2000	Automatic	84
R-07-176	CS-2000	Automatic	84
R-07-177	CS-2000	Automatic	84
R-07-179	Acker Rig	Automatic	74

Sampler Type	Inside Diameter (Inches)	Borehole Numbers
SPT	1.375	R-07-168, R-07-169, R-07-170 A-07-171, R-07-172, R-07-173 R-07-174, R-07-175, R-07-176 R-07-177, R-07-179
Modified California 1	1.94	R-07-168, R-07-169, R-07-170 R-07-172, R-07-173, R-07-174 R-07-175, R-07-177, R-07-179
Modified California 2	2.40	A-07-171

*Estimated Hammer Efficiency Rating.

GINA PURSELL — DESIGN OVERSIGHT
SHAWN WEI — FUNCTIONAL SUPERVISOR
11/12/10 — SIGN OFF DATE

DRAWN BY: P. QUACH
CHECKED BY: S. PIRATHIVIRAJ

P.CHAU/D.WADER/C.CARBINO
FIELD INVESTIGATION BY:
DATE: Nov 6 2007 to March 7 2008

PREPARED FOR THE STATE OF CALIFORNIA DEPARTMENT OF TRANSPORTATION

A. LEE — PROJECT ENGINEER

BRIDGE NO. 56 E0073
POST MILE 19.63

WALL LAYOUT & EXPLORATORY LOCATION MAP
LOG OF TEST BORINGS 2 OF 3

OSF GEOTECHNICAL LOG OF TEST BORINGS SHEET (ENGLISH) (REV. 2/25/05)

ORIGINAL SCALE IN INCHES FOR REDUCED PLANS 0 1 2 3

CU 08
EA 448401

DISREGARD PRINTS BEARING EARLIER REVISION DATES 8/19/10

REVISION DATES (PRELIMINARY STAGE ONLY)

SHEET 13 OF 14

FILE => 56e0073zlotb13.dgn

USERNAME => trcarol DATE PLOTTED => 30-APR-2011 TIME PLOTTED =>

DIST	COUNTY	ROUTE	POST MILES TOTAL PROJECT	SHEET No	TOTAL SHEETS
08	Riv	91	15.6/21.6	1561	2028

GEOTECHNICAL PROFESSIONAL — DATE 11/03/2010

4-25-11
PLANS APPROVAL DATE

REGISTERED PROFESSIONAL ENGINEER — FARID MOTAMED — No. 2738 — Exp. 6-30-11 — GEOTECHNICAL — STATE OF CALIFORNIA

The State of California or its officers or agents shall not be responsible for the accuracy or completeness of electronic copies of this plan sheet.

California Department of Transportation
5900 Folsom Boulevard
Sacramento, CA 95819

URS Corporation
2020 East First Street, Suite 400
Santa Ana, CA 92705

FOR PLAN VIEW, SEE
"LOG OF TEST BORINGS 2 OF 3"

NOTE: 1. This LOTB sheet was prepared in accordance with the Caltrans Soil & Rock Logging, Classification, and Presentation Manual (June 2007).

2. For legend, see "Log of Test Borings" 1 of 3

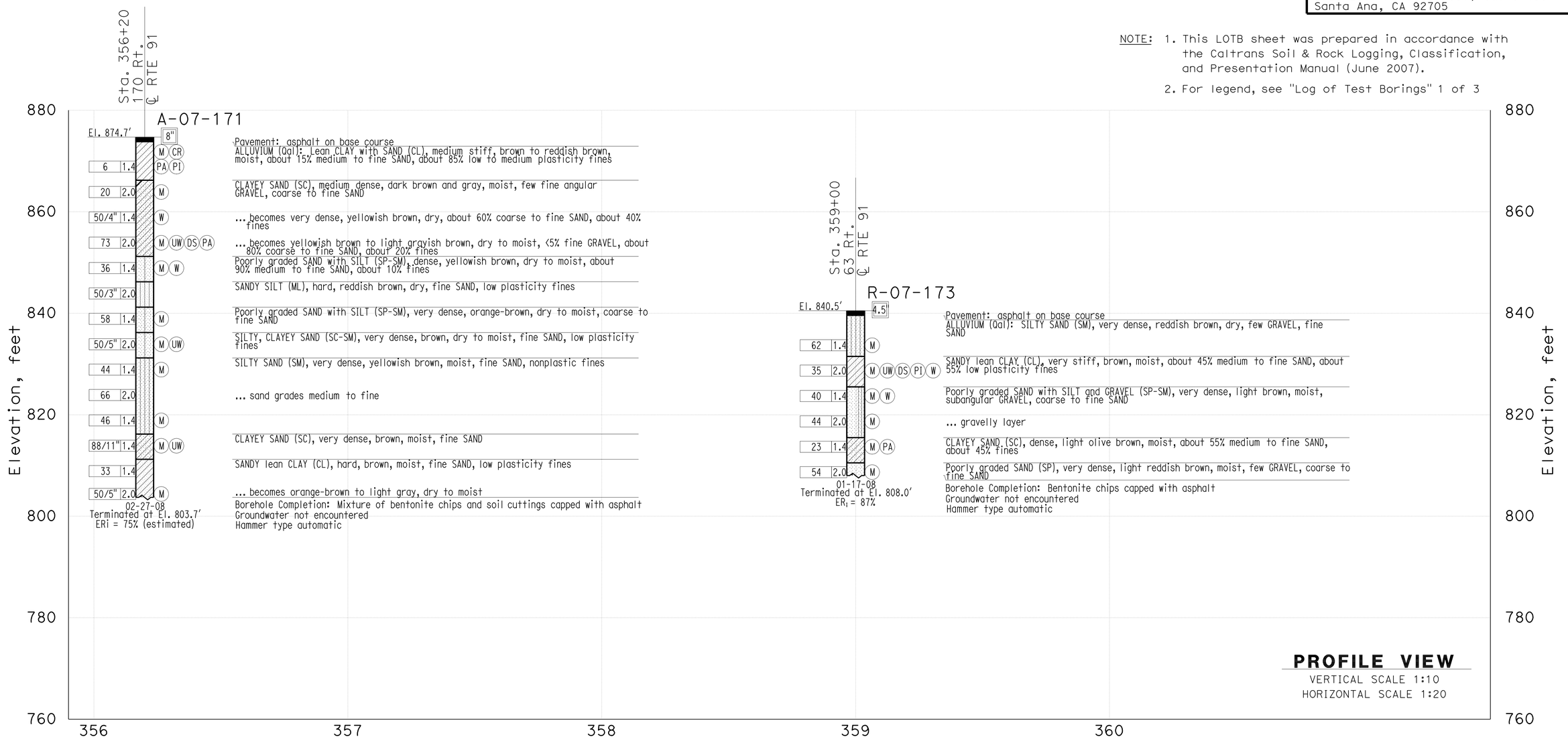

THIS PLAN ACCURATE FOR SOUND WALL AND RETAINING WALL WORK ONLY

GINA PURSELL DESIGN OVERSIGHT	SHAWN WEI FUNCTIONAL SUPERVISOR	DRAWN BY	P. QUACH	P.CHAU/D.WADER/C.CARBINO FIELD INVESTIGATION BY:	PREPARED FOR THE STATE OF CALIFORNIA DEPARTMENT OF TRANSPORTATION	A. LEE PROJECT ENGINEER	BRIDGE NO. 56 E0073 POST MILE 19.63	RETAINING WALL 356
11/12/10 SIGN OFF DATE		CHECKED BY	S. PIRATHIVIRAJ	DATE: Nov 6 2007 to March 7 2008				LOG OF TEST BORINGS 3 OF 3

OSF GEOTECHNICAL LOG OF TEST BORINGS SHEET (ENGLISH) (REV. 2/25/05)

ORIGINAL SCALE IN INCHES FOR REDUCED PLANS 0 1 2 3

CU 08
EA 448401

DISREGARD PRINTS BEARING EARLIER REVISION DATES — REVISION DATES (PRELIMINARY STAGE ONLY) 8/17/10

SHEET 14 OF 14

FILE => 56e0073z1otb14.dgn

DATE PLOTTED => 30-APR-2011 TIME PLOTTED =>
USERNAME => trlenard

DIST	COUNTY	ROUTE	POST MILES TOTAL PROJECT	SHEET No	TOTAL SHEETS
08	Riv	91	15.6/21.6	1562	2028

REGISTERED CIVIL ENGINEER — DATE 11/12/10

4-25-11
PLANS APPROVAL DATE

REGISTERED PROFESSIONAL ENGINEER — Minh Thuong Vo — No. C59297 — Exp. 6/30/2011 — CIVIL — STATE OF CALIFORNIA

The State of California or its officers or agents shall not be responsible for the accuracy or completeness of electronic copies of this plan sheet.

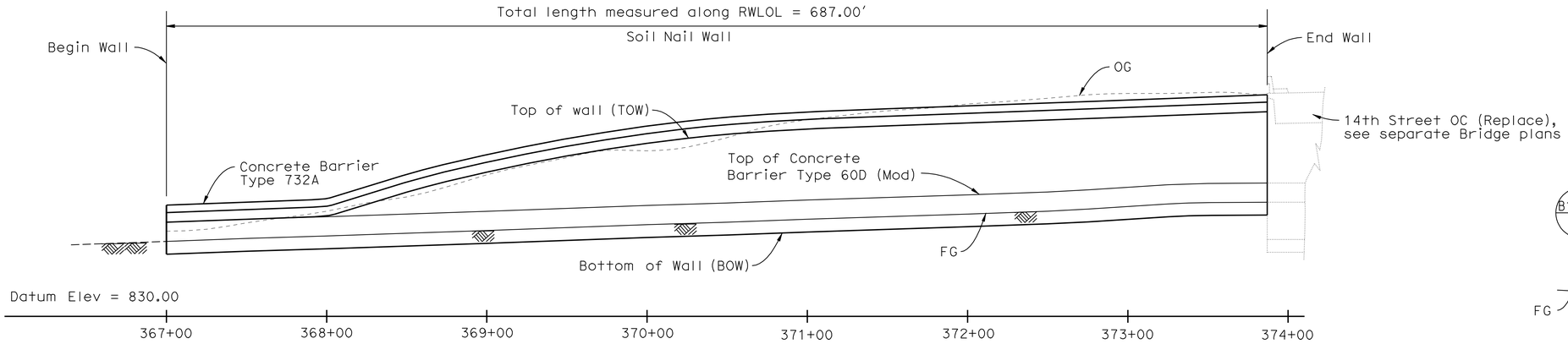

DEVELOPED ELEVATION

HORZ. SCALE 1" = 40'
VERT. SCALE 1" = 10'

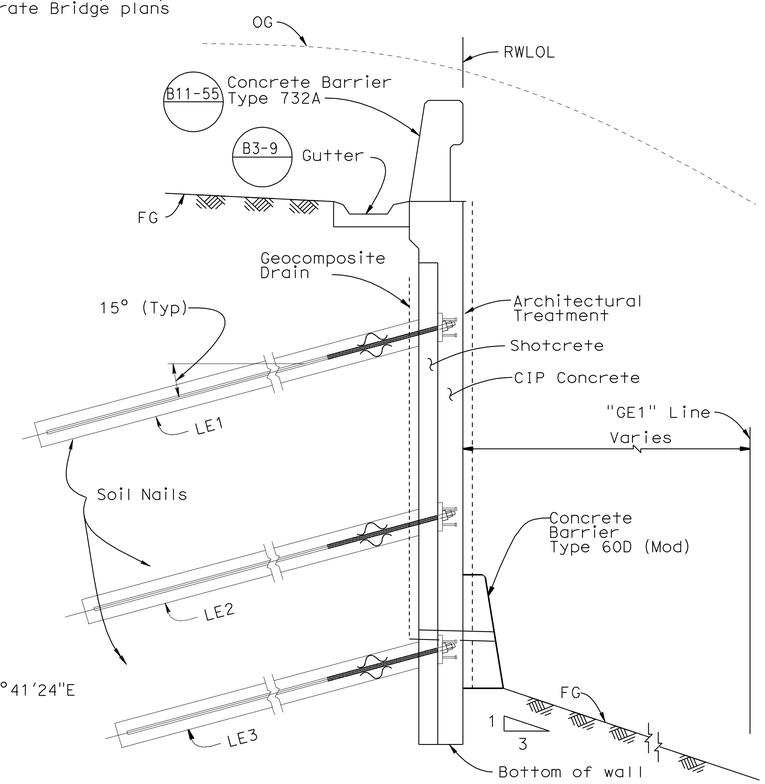

TYPICAL SECTION

½" = 1'-0"

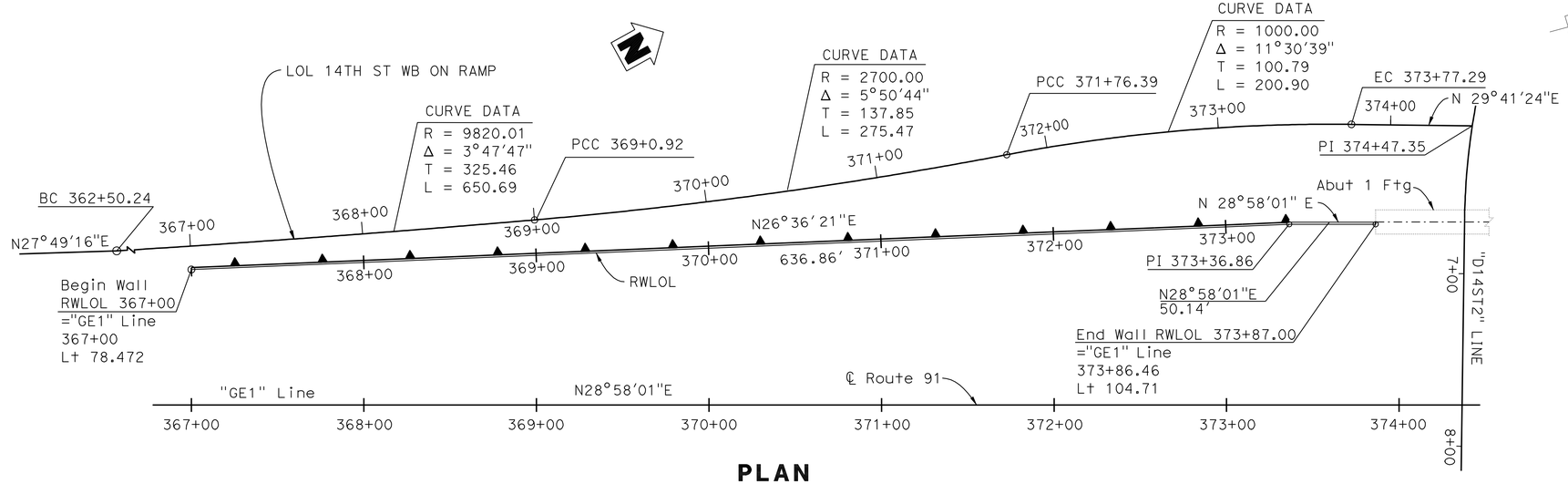

PLAN

1" = 40'

NOTE:

1. For General Notes and Quantities, see "INDEX TO PLANS" sheet.
2. For Quantities see "INDEX TO PLANS" sheet.

DANIEL T. ADAMS
DESIGN ENGINEER

	BY	CHECKED
DESIGN	L. Wu	J. Szabo
DETAILS	Y. Tang/G. Hallstrom	J. Szabo
QUANTITIES	J. Szabo	M. Vo

LOAD & RESISTANCE FACTOR DESIGN — LIVE LOADING: HL93 W/"LOW-BOY"; PERMIT DESIGN VEHICLE
LAYOUT — BY L. Wu — CHECKED J. Szabo
SPECIFICATIONS — BY Dave Klein — PLANS AND SPECS COMPARED Dave Klein

ORIGINAL SCALE IN INCHES FOR REDUCED PLANS 0 1 2 3

STATE OF CALIFORNIA
DEPARTMENT OF TRANSPORTATION

DIVISION OF ENGINEERING SERVICES
STRUCTURE DESIGN
DESIGN BRANCH 10

CU 08
EA 448401

BRIDGE NO. 56 E0074
POST MILE 19.86

RETAINING WALL 369
GENERAL PLAN

DISREGARD PRINTS BEARING EARLIER REVISION DATES → 7-08-09 7-09-10 7/15/10

REVISION DATES

SHEET 1 OF 13

STRUCTURES DESIGN GENERAL PLAN SHEET (ENGLISH) (REV.07-24-06)

FILE => 56E0074agp01.dgn

USERNAME => trlenard DATE PLOTTED => 30-APR-2011 TIME PLOTTED => 11:09

DIST	COUNTY	ROUTE	POST MILES TOTAL PROJECT	SHEET No	TOTAL SHEETS
08	Riv	91	15.6/21.6	1563	2028

REGISTERED CIVIL ENGINEER 11/12/10 DATE

4-25-11
PLANS APPROVAL DATE

REGISTERED PROFESSIONAL ENGINEER Minh Thuong Vo No. C59297 Exp. 6/30/2011 CIVIL STATE OF CALIFORNIA

The State of California or its officers or agents shall not be responsible for the accuracy or completeness of electronic copies of this plan sheet.

INDEX TO PLANS

SHEET NO.	TITLE
1	GENERAL PLAN
2	INDEX TO PLANS
3	STRUCTURE PLAN NO. 1
4	STRUCTURE PLAN NO. 2
5	STRUCTURE PLAN NO. 3
6	SOIL NAIL WALL DETAILS NO. 1
7	SOIL NAIL WALL DETAILS NO. 2
8	SOIL NAIL WALL DETAILS NO. 3
9	ARCHITECTURAL SURFACE
10	ARCHITECTURAL SURFACE DETAILS NO. 1
11	LOG OF TEST BORINGS 1 OF 3
12	LOG OF TEST BORINGS 2 OF 3
13	LOG OF TEST BORINGS 3 OF 3

DESIGN DATA

DESIGN: Service Load Design Method per FHWA Geotechnical Engineering Circular No. 7 (FHWA O-IF-03-017) & Manual for Design and Construction Monitoring of Soil Nail Wall (FHWA-SA-96-069R)

REINFORCED CONCRETE: f_c = 3.6 KSI, f_y = 60 KSI

SHOTCRETE: f_c = 3.6 KSI, f_y = 60 KSI

STRUCTURAL STEEL: ASTM Designation: A 709, Grade 36, f_y = 36 KSI

SOIL NAILS: ASTM Designation: A615, Grade 60, f_y = 60 KSI

SOIL PARAMETERS: $\phi = 35°$, $c = 550\ lb/ft^2$, $\gamma = 125\ lb/ft^3$, Q_d = 2.18 k/ft (Design Pullout Resistance)

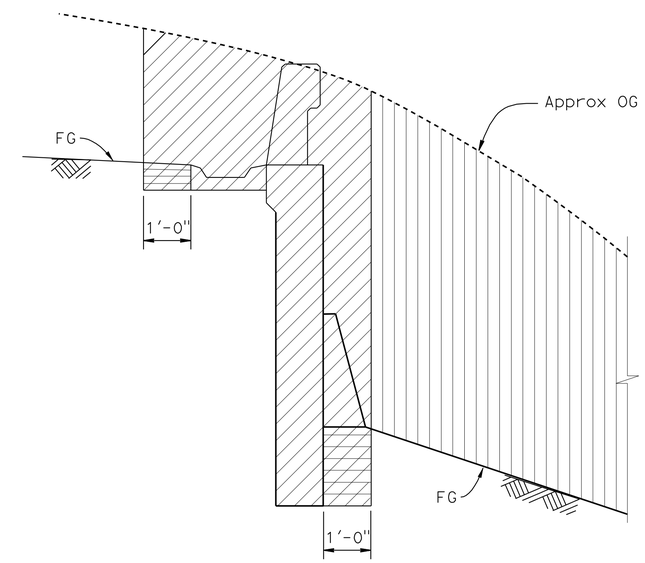

Structure Excavation (Soil Nail Wall)

Structure Backfill (Soil Nail Wall)

Roadway Excavation (see Roadway Plan)

QUANTITIES

RETAINING WALL 369 — BRIDGE NO 56E0074

STRUCTURE EXCAVATION (SOIL NAIL WALL)	891	CY
STRUCTURE BACKFILL (SOIL NAIL WALL)	72	CY
SOIL NAIL ASSEMBLY	4,580	LF
STRUCTURAL CONCRETE, RETAINING WALL	261	CY
ARCHITECTURAL SURFACE (TEXTURED CONCRETE) SPLIT SLATE TEXTURE	5,352	SQFT
BAR REINFORCING STEEL (RETAINING WALL)	39,467	LB
SHOTCRETE	120	CY
MINOR CONCRETE (GUTTER)	687	LF
CONCRETE BARRIER (TYPE 732)	687	LF
CONCRETE BARRIER (TYPE 60D MODIFIED)	687	LF

STANDARD PLANS DATED JULY 2006

A10A	ACRONYMS AND ABBREVIATIONS (SHEET 1 OF 2)
A10B	ACRONYMS AND ABBREVIATIONS (SHEET 2 OF 2)
A10C	SYMBOLS (SHEET 1 OF 2)
A10D	SYMBOLS (SHEET 2 OF 2)
B3-9	RETAINING WALL DETAILS NO. 2
B11-55	CONCRETE BARRIER TYPE 732

STANDARD PLAN SHEET NO.

DETAIL NO.

SOIL NAIL WALL EXCAVATION AND BACKFILL

NO SCALE

	BY	CHECKED
DESIGN	L. Wu	J. Szabo
DETAILS	Y. Tang/ G. Hallstrom	J. Szabo
QUANTITIES	J. Szabo	M. Vo

STATE OF CALIFORNIA DEPARTMENT OF TRANSPORTATION

DIVISION OF ENGINEERING SERVICES STRUCTURE DESIGN DESIGN BRANCH 10

BRIDGE NO. 56 E0074 POST MILE 19.86

RETAINING WALL 369
INDEX TO PLANS

STRUCTURES DESIGN DETAIL SHEET (ENGLISH) (REV. 10/25/05)

ORIGINAL SCALE IN INCHES FOR REDUCED PLANS 0 1 2 3

CU 08 EA 448401

DISREGARD PRINTS BEARING EARLIER REVISION DATES — REVISION DATES 7-09-09 3-08-10 3-16-10 8-19-10

SHEET 2 OF 13

FILE => 56E0074aitp02.dgn

USERNAME => trlenard DATE PLOTTED => 30-APR-2011 TIME PLOTTED => 11:09

DIST	COUNTY	ROUTE	POST MILES TOTAL PROJECT	SHEET No	TOTAL SHEETS
08	Riv	91	15.6/21.6	1564	2028

REGISTERED CIVIL ENGINEER 11/12/10 DATE

4-25-11
PLANS APPROVAL DATE

REGISTERED PROFESSIONAL ENGINEER
Minh Thuong Vo
No. C59297
Exp. 6/30/2011
CIVIL
STATE OF CALIFORNIA

The State of California or its officers or agents shall not be responsible for the accuracy or completeness of electronic copies of this plan sheet.

Station	OG Elev (ft)	TOW Elev (ft)	BOW Elev (ft)
367+00	843.300	844.710	839.710
+20	843.540	844.894	839.894
+40	844.194	845.078	840.078
+60	844.946	845.246	840.246
+80	845.672	845.400	840.400
368+00	846.440	845.560	840.560
+20	847.480	847.096	840.728

Station	OG Elev (ft)	TOW Elev (ft)	BOW Elev (ft)
368+40	848.292	848.662	840.902
+60	849.284	850.126	841.078
+80	850.598	851.420	841.250
369+00	852.110	852.540	841.410
+20	853.270	853.604	841.586
+40	854.310	854.590	841.768
+60	855.254	855.494	841.956

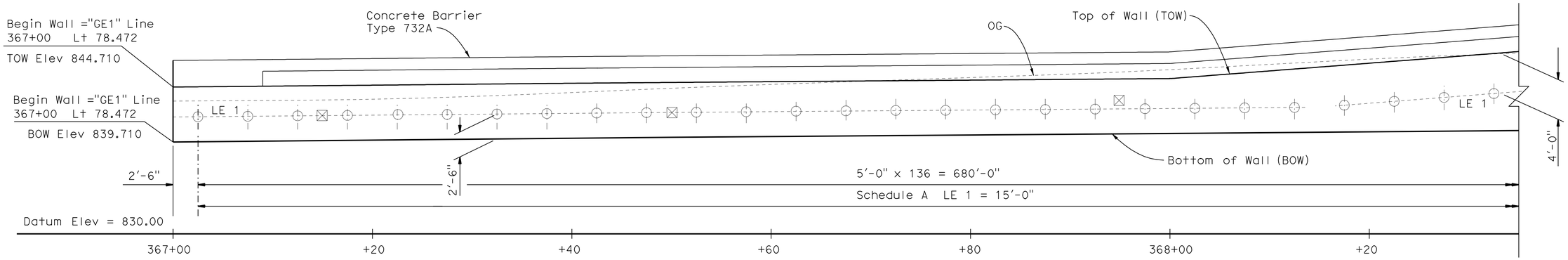

ELEVATION

3/16" = 1'-0"

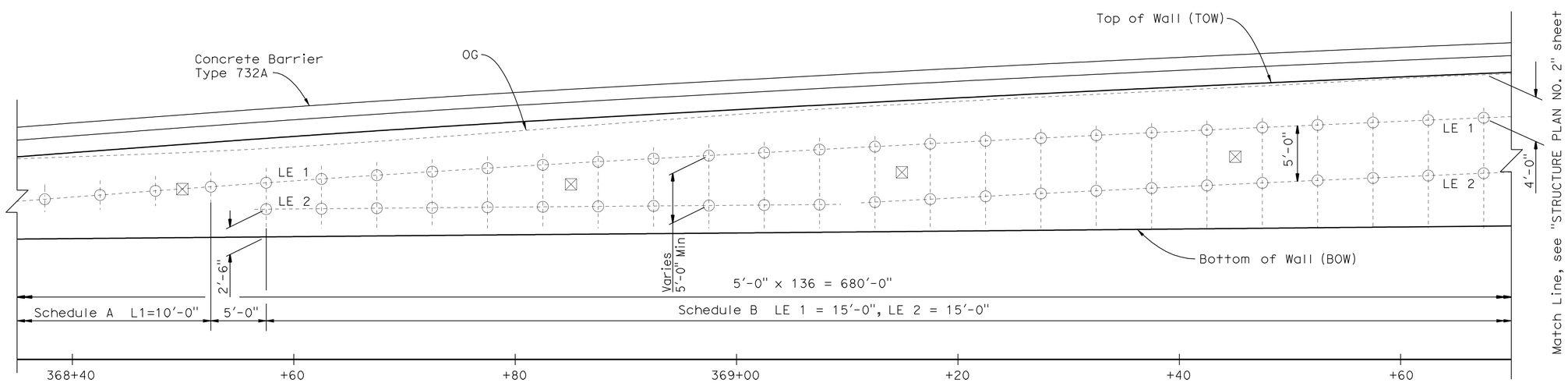

ELEVATION

3/16" = 1'-0"

LEGEND

○ Indicates soil nail bearing plate location.

⊠ Indicates proof test soil nail location. Locations may be adjusted by the Engineer.

—·—·— LE # Indicates soil nail profile line.

DESIGN	BY L. Wu	CHECKED J. Szabo	
DETAILS	BY Y. Tang/ G. Hallstrom	CHECKED J. Szabo	
QUANTITIES	BY J. Szabo	CHECKED M. Vo	

STATE OF CALIFORNIA
DEPARTMENT OF TRANSPORTATION

DIVISION OF ENGINEERING SERVICES
STRUCTURE DESIGN
DESIGN BRANCH 10

BRIDGE NO. 56 E0074
POST MILE 19.86

RETAINING WALL 369
STRUCTURE PLAN NO. 1

STRUCTURES DESIGN DETAIL SHEET (ENGLISH) (REV. 10/25/05)

ORIGINAL SCALE IN INCHES FOR REDUCED PLANS 0 1 2 3

CU 08
EA 448401

DISREGARD PRINTS BEARING EARLIER REVISION DATES

REVISION DATES: 7-15-09 3-08-10 7/15/10

SHEET 3 OF 13

FILE => 56E0074csp03.dgn

USERNAME => trlehard DATE PLOTTED => 30-APR-2011 TIME PLOTTED => 11:09

DIST	COUNTY	ROUTE	POST MILES TOTAL PROJECT	SHEET No	TOTAL SHEETS
08	Riv	91	15.6/21.6	1565	2028

REGISTERED CIVIL ENGINEER 11/12/10 DATE

4-25-11
PLANS APPROVAL DATE

REGISTERED PROFESSIONAL ENGINEER Minh Thuong Vo No. C59297 Exp. 6/30/2011 CIVIL STATE OF CALIFORNIA

The State of California or its officers or agents shall not be responsible for the accuracy or completeness of electronic copies of this plan sheet.

Station	OG Elev (ft)	TOW Elev (ft)	BOW Elev (ft)
369+80	855.908	856.314	842.144
370+00	855.860	857.050	842.320
+20	856.324	857.682	842.480
+40	857.340	858.224	842.634
+60	858.624	858.684	842.806
+80	859.862	859.066	842.994
371+00	860.710	859.370	843.170

Station	OG Elev (ft)	TOW Elev (ft)	BOW Elev (ft)
371+20	861.310	859.546	843.322
+40	861.844	859.638	843.486
+60	862.260	859.770	843.654
+80	862.630	859.968	843.822
372+00	863.150	860.160	843.990
+20	863.502	860.352	844.166
+40	863.878	860.544	844.348

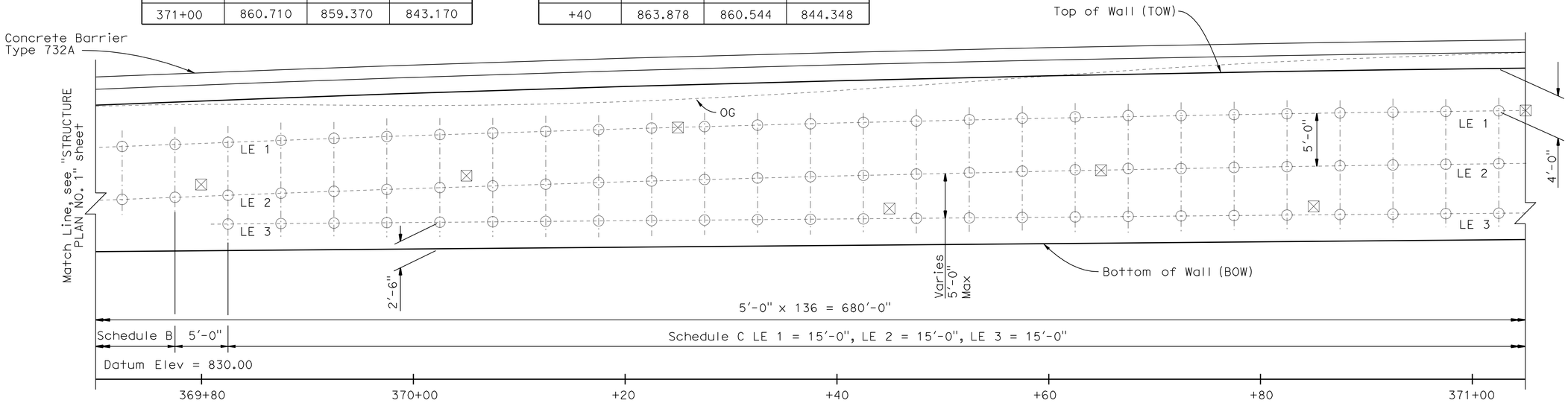

ELEVATION

3/16" = 1'-0"

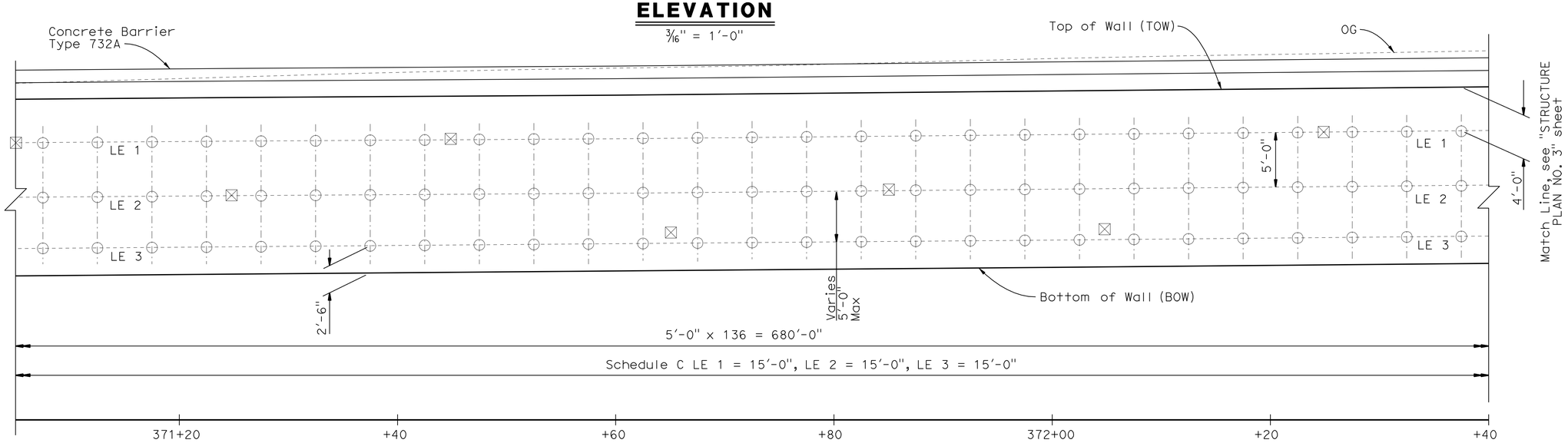

ELEVATION

3/16" = 1'-0"

LEGEND

○ Indicates soil nail bearing plate location.

⊠ Indicates proof test soil nail location. Locations may be adjusted by the Engineer.

—·—·— LE # Indicates soil nail profile line.

	BY	CHECKED
DESIGN	L. Wu	J. Szabo
DETAILS	Y. Tang/ G. Hallstrom	J. Szabo
QUANTITIES	J. Szabo	M. Vo

STATE OF CALIFORNIA DEPARTMENT OF TRANSPORTATION

DIVISION OF ENGINEERING SERVICES STRUCTURE DESIGN DESIGN BRANCH 10

BRIDGE NO. 56 E0074

POST MILE 19.86

RETAINING WALL 369

STRUCTURE PLAN NO. 2

STRUCTURES DESIGN DETAIL SHEET (ENGLISH) (REV. 10/25/05)

ORIGINAL SCALE IN INCHES FOR REDUCED PLANS 0 1 2 3

CU 08
EA 448401

DISREGARD PRINTS BEARING EARLIER REVISION DATES 8-26-09 7-08-10 7/15/10

REVISION DATES

SHEET 4 OF 13

FILE => 56E0074csp04.dgn

USERNAME => trlenard DATE PLOTTED => 30-APR-2011 TIME PLOTTED => 11:09

DIST	COUNTY	ROUTE	POST MILES TOTAL PROJECT	SHEET No	TOTAL SHEETS
08	Riv	91	15.6/21.6	1566	2028

REGISTERED CIVIL ENGINEER 11/12/10 DATE

4-25-11
PLANS APPROVAL DATE

REGISTERED PROFESSIONAL ENGINEER
Minh Thuong Vo
No. C59297
Exp. 6/30/2011
CIVIL
STATE OF CALIFORNIA

The State of California or its officers or agents shall not be responsible for the accuracy or completeness of electronic copies of this plan sheet.

STATION	OG Elev (ft)	TOW Elev (ft)	BOW Elev (ft)
372+60	864.286	860.736	844.564
+80	864.648	860.928	844.834
373+00	864.800	861.120	845.170
+20	864.808	861.312	845.482
+40	864.918	860.510	845.680
+60	865.022	861.706	845.780
+80	864.760	861.905	845.820
373+87	864.500	861.960	845.830

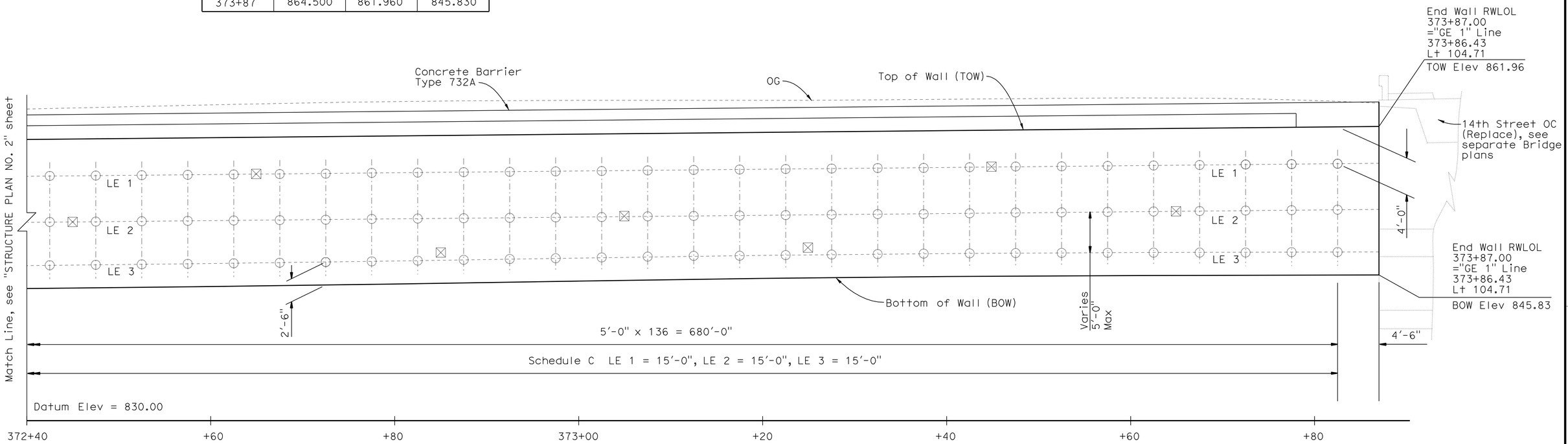

ELEVATION

3/16" = 1'-0"

LEGEND

○ Indicates soil nail bearing plate location.

⊠ Indicates proof test soil nail location. Locations may be adjusted by the Engineer.

—·—·— LE # Indicates soil nail profile line.

	BY	CHECKED
DESIGN	L. Wu	J. Szabo
DETAILS	Y. Tang/ G. Hallstrom	J. Szabo
QUANTITIES	J. Szabo	M. Vo

STATE OF CALIFORNIA
DEPARTMENT OF TRANSPORTATION

DIVISION OF ENGINEERING SERVICES
STRUCTURE DESIGN
DESIGN BRANCH 10

BRIDGE NO. 56 E0074
POST MILE 19.86

RETAINING WALL 369
STRUCTURE PLAN NO. 3

STRUCTURES DESIGN DETAIL SHEET (ENGLISH) (REV. 10/25/05)

ORIGINAL SCALE IN INCHES FOR REDUCED PLANS 0 1 2 3

CU 08
EA 448401

DISREGARD PRINTS BEARING EARLIER REVISION DATES

REVISION DATES: 8-24-09 3-08-10 7-15-10

SHEET 5 OF 13

FILE => 56E0074csp05.dgn

USERNAME => rtrenard DATE PLOTTED => 30-APR-2011 TIME PLOTTED => 11:09

DIST	COUNTY	ROUTE	POST MILES TOTAL PROJECT	SHEET No	TOTAL SHEETS
08	Riv	91	15.6/21.6	1567	2028

REGISTERED CIVIL ENGINEER 11/12/10 DATE

4-25-11
PLANS APPROVAL DATE

REGISTERED PROFESSIONAL ENGINEER Minh Thuong Vo No. C59297 Exp. 6/30/2011 CIVIL STATE OF CALIFORNIA

The State of California or its officers or agents shall not be responsible for the accuracy or completeness of electronic copies of this plan sheet.

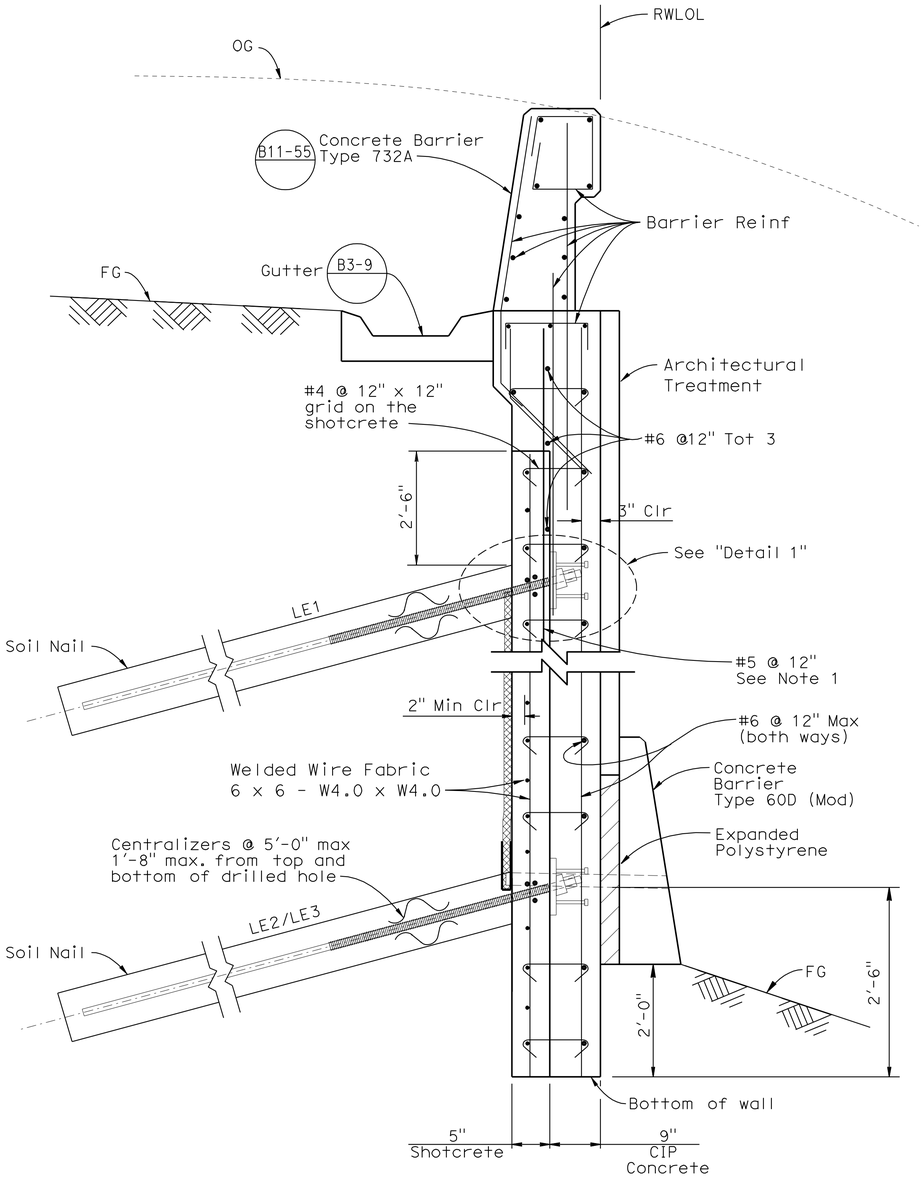

TYPICAL SECTION

1" = 1'-0"

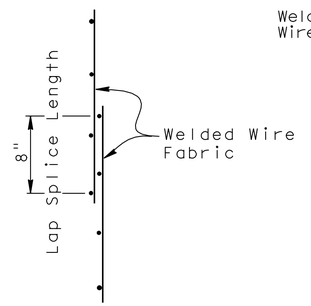

LAP SPLICE

No scale

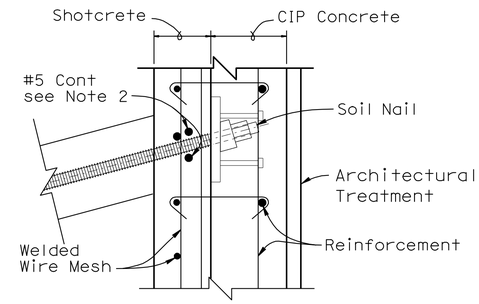

DETAIL 1

1½" = 1'-0"

NOTES:

1. #5 reinforcement bar to extend 2'-6" below soil nail profile line LE1.
2. At locations where soil nail profile lines do not continue, extend #5 bars horizontal 2'-6" Min beyond last soil nail anchor or to end of wall.
3. The 1'-0" geocomposite drains shall be placed vertically at mid bays between soil nails. Must be continuous with minimum 1'-0" lapping at splices.
4. For the CIP concrete the rebar cover shall be minimum of 3".
5. Bottom of wall to be placed against undisturbed material.
6. Adjust geocomposite drain to clear test soil nails.

	BY	CHECKED
DESIGN	L. Wu	J. Szabo
DETAILS	Y. Tang/ G. Hallstrom	J. Szabo
QUANTITIES	J. Szabo	M. Vo

STATE OF CALIFORNIA
DEPARTMENT OF TRANSPORTATION

DIVISION OF ENGINEERING SERVICES
STRUCTURE DESIGN
DESIGN BRANCH 10

BRIDGE NO. 56 E0074
POST MILE 19.86

RETAINING WALL 369
SOIL NAIL WALL DETAILS NO. 1

STRUCTURES DESIGN DETAIL SHEET (ENGLISH) (REV. 10/25/05)

ORIGINAL SCALE IN INCHES FOR REDUCED PLANS 0 1 2 3

CU 08
EA 448401

DISREGARD PRINTS BEARING EARLIER REVISION DATES

REVISION DATES: 9-08-09 3-08-10 7-15-10

SHEET 6 OF 13

FILE => 56E0074gdt06.dgn

USERNAME => trienard DATE PLOTTED => 30-APR-2011 TIME PLOTTED => 11:09

DIST	COUNTY	ROUTE	POST MILES TOTAL PROJECT	SHEET No	TOTAL SHEETS
08	Riv	91	15.6/21.6	1568	2028

REGISTERED CIVIL ENGINEER — DATE 11/12/10

4-25-11
PLANS APPROVAL DATE

REGISTERED PROFESSIONAL ENGINEER — Minh Thuong Vo — No. C59297 — Exp. 6/30/2011 — CIVIL — STATE OF CALIFORNIA

The State of California or its officers or agents shall not be responsible for the accuracy or completeness of electronic copies of this plan sheet.

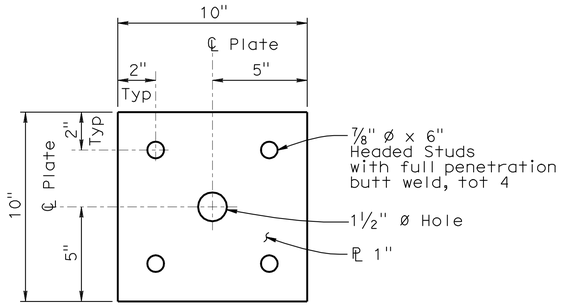

BEARING PLATE

3" = 1'-0"

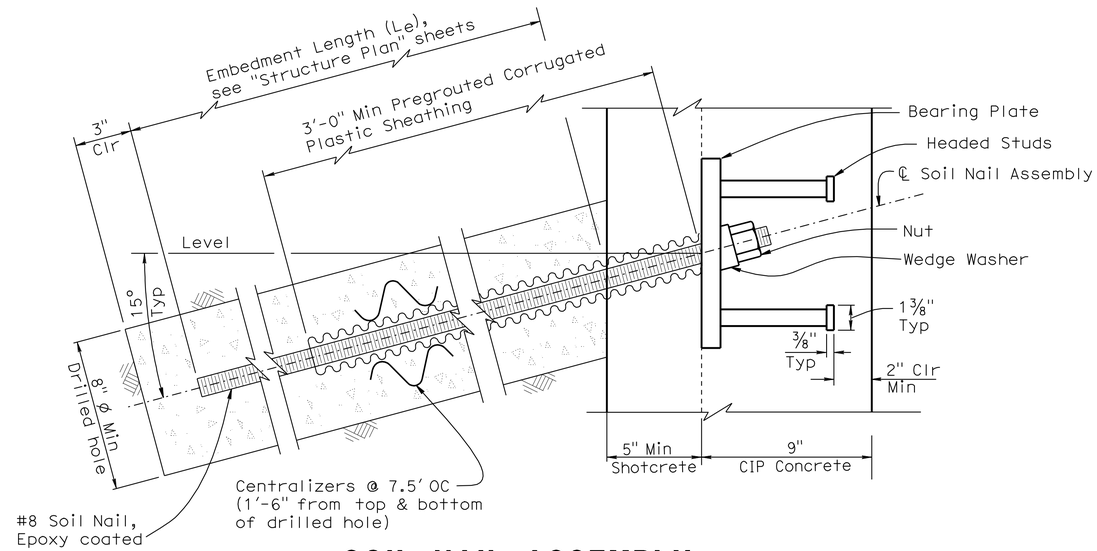

SOIL NAIL ASSEMBLY

DETAIL J

3" = 1'-0"

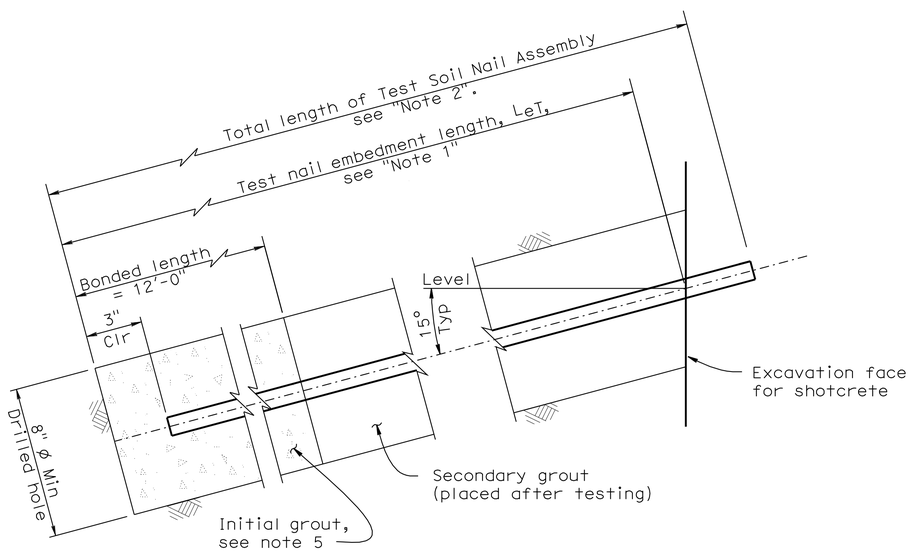

TEST SOIL NAIL ASSEMBLY

DETAIL H

3" = 1'-0"

Notes:

1. Embedment length L_{eT} of test nails equals two thirds of the embedment length L_e of adjacent soil nail assemblies, but not less than 12'-0".
2. Total length of test soil nail equals embedment length plus the length required for jacking equipment.
3. For embedment length of production nails see 'Schedule' on "Structure Plan" sheets.
4. Finished grout surface to be perpendicular to bar.
5. For location of test nail, see "Structure Plan" sheets. Additional test nails will be installed and tested per special provisions.

	BY	CHECKED
DESIGN	L. Wu	J. Szabo
DETAILS	Y. Tang/ G. Hallstrom	J. Szabo
QUANTITIES	J. Szabo	M. Vo

STATE OF CALIFORNIA
DEPARTMENT OF TRANSPORTATION

DIVISION OF ENGINEERING SERVICES
STRUCTURE DESIGN
DESIGN BRANCH 10

BRIDGE NO. 56 E0074
POST MILE 19.86

RETAINING WALL 369
SOIL NAIL WALL DETAILS NO. 2

STRUCTURES DESIGN DETAIL SHEET (ENGLISH) (REV. 10/25/05)

ORIGINAL SCALE IN INCHES FOR REDUCED PLANS 0 1 2 3

CU 08
EA 448401

DISREGARD PRINTS BEARING EARLIER REVISION DATES → 9-9-09 | 3-08-10 | 7-15-10

REVISION DATES

SHEET 7 OF 13

FILE => 56E0074gdt07.dgn

USERNAME => friehard DATE PLOTTED => 30-APR-2011 TIME PLOTTED => 11:10

DIST	COUNTY	ROUTE	POST MILES TOTAL PROJECT	SHEET No	TOTAL SHEETS
08	Riv	91	15.6/21.6	1569	2028

REGISTERED CIVIL ENGINEER 11/12/10 DATE

4-25-11
PLANS APPROVAL DATE

REGISTERED PROFESSIONAL ENGINEER Minh Thuong Vo No. C59297 Exp. 6/30/2011 CIVIL STATE OF CALIFORNIA

The State of California or its officers or agents shall not be responsible for the accuracy or completeness of electronic copies of this plan sheet.

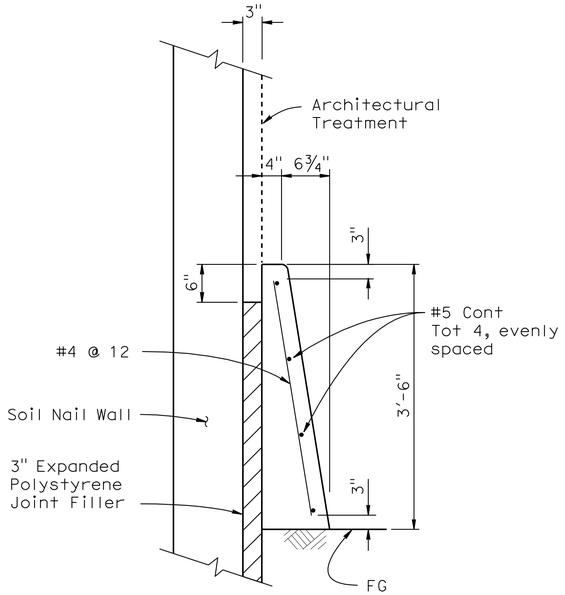

CONCRETE BARRIER (TYPE 60D MOD)

No scale

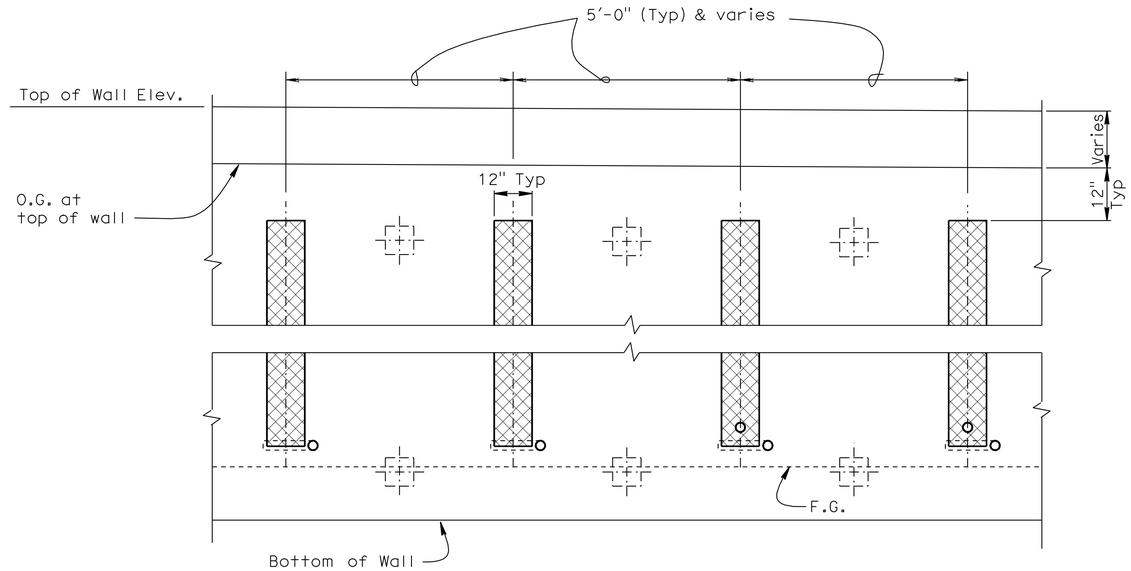

PART ELEVATION - GEOCOMPOSITE DRAIN

No scale

NOTES:

1. Center Geocomposite drain between Soil Nail assemblies.
2. - Indicates Soil Nail Assembly.
3. 2" dia drain pipe to be placed 3" above finished grade at face of barrier (Typ).
4. Adjust Geocomposite Drain to clear Test Soil Nails.

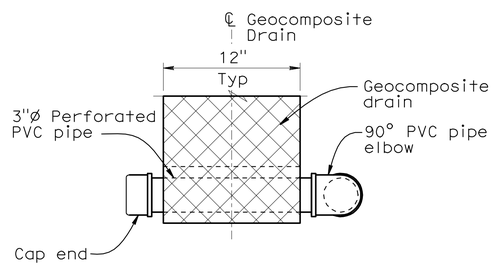

VIEW A-A

No scale

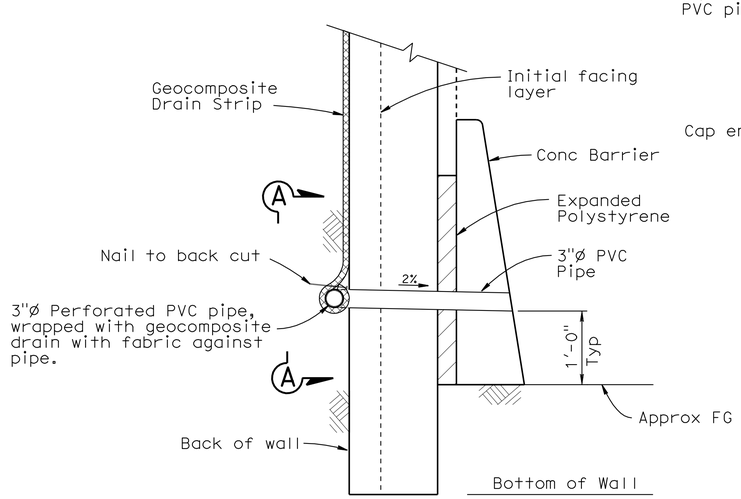

WALL DRAIN DETAIL AT WEEPHOLE OPTION A

No scale

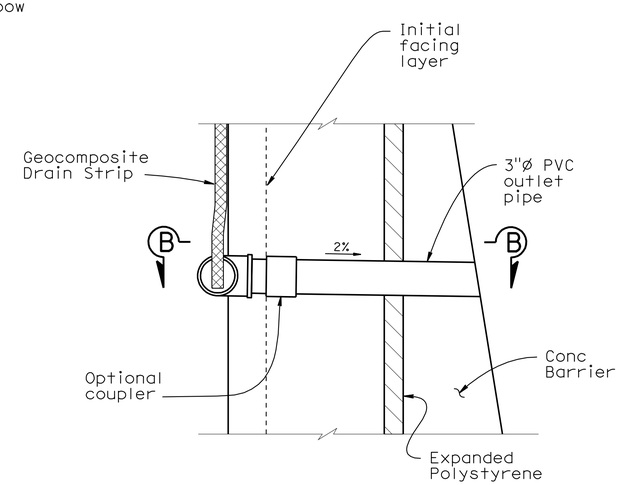

WALL DRAIN DETAIL AT WEEPHOLE OPTION B

No scale

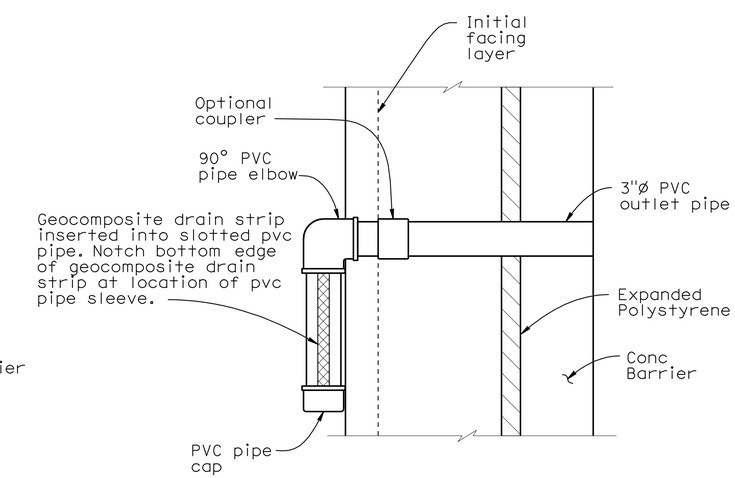

VIEW B-B

No Scale

	BY	CHECKED
DESIGN	L. Wu	J. Szabo
DETAILS	Y. Tang/ G. Hallstrom	J. Szabo
QUANTITIES	J. Szabo	M. Vo

STATE OF CALIFORNIA
DEPARTMENT OF TRANSPORTATION

DIVISION OF ENGINEERING SERVICES
STRUCTURE DESIGN
DESIGN BRANCH 10

BRIDGE NO. 56 E0074
POST MILE 19.86

RETAINING WALL 369
SOIL NAIL WALL DETAILS NO. 3

STRUCTURES DESIGN DETAIL SHEET (ENGLISH) (REV. 10/25/05)

ORIGINAL SCALE IN INCHES FOR REDUCED PLANS 0 1 2 3

CU 08
EA 448401

DISREGARD PRINTS BEARING EARLIER REVISION DATES

REVISION DATES: 9-9-09, 4-28-10, 7-15-10

SHEET 8 OF 13

FILE => 56E0074gdt08.dgn

USERNAME => Trenard DATE PLOTTED => 30-APR-2011 TIME PLOTTED => 11:10

Dist	COUNTY	ROUTE	POST MILES TOTAL PROJECT	SHEET No.	TOTAL SHEETS
08	Riv	91	15.6/21.6	1570	2028

LICENSED LANDSCAPE ARCHITECT

4-25-11
PLANS APPROVAL DATE

LICENSED LANDSCAPE ARCHITECT
Matthew Perry Hall
No. 2434
Signature
10/31/2011
Renewal Date
11/12/10
Date
STATE OF CALIFORNIA

THE STATE OF CALIFORNIA OR ITS OFFICERS OR AGENTS SHALL NOT BE RESPONSIBLE FOR THE ACCURACY OR COMPLETENESS OF SCANNED COPIES OF THIS PLAN SHEET.

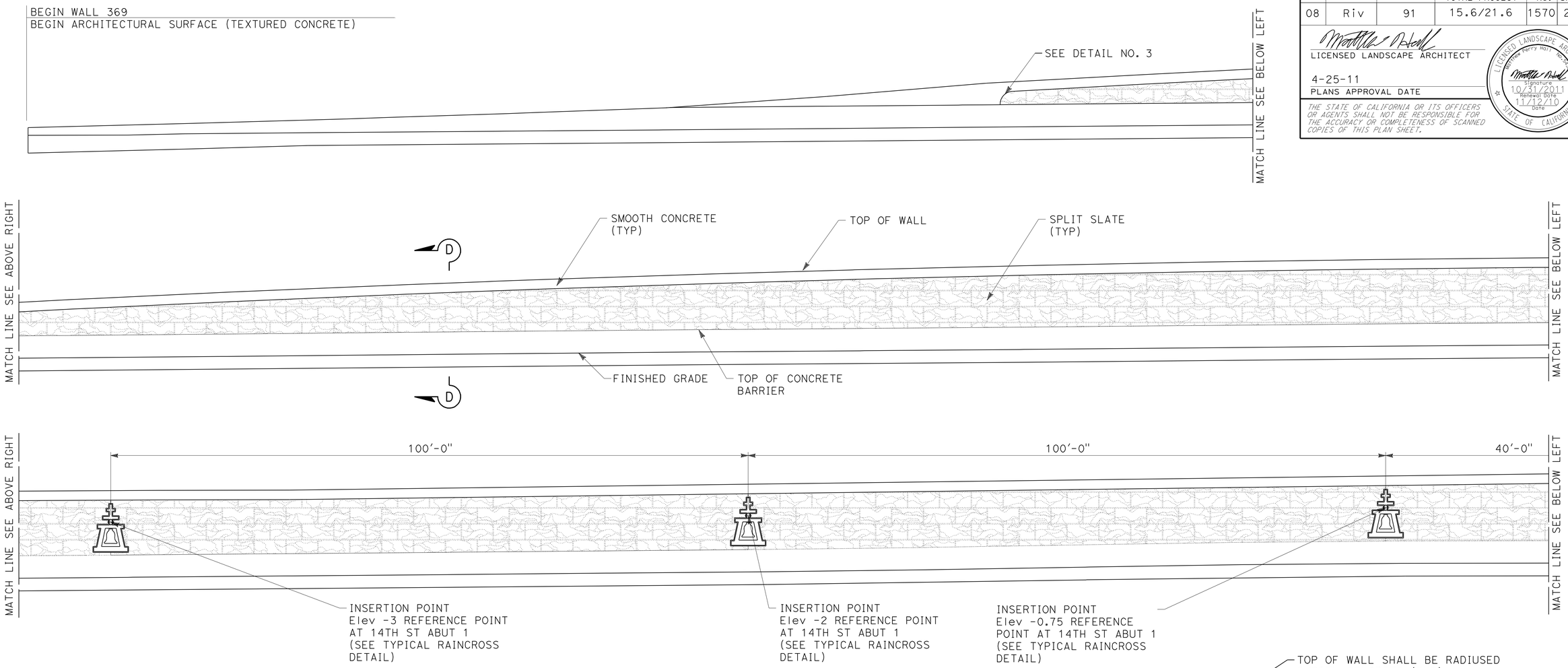

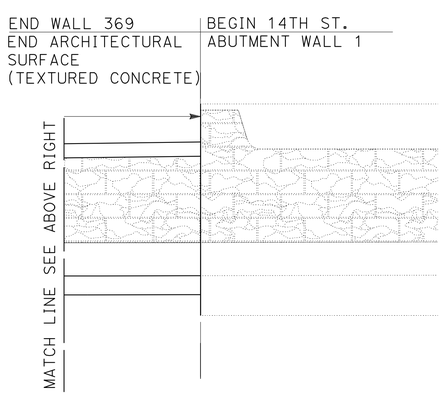

ELEVATION FOR FRACTURED RIB SPLIT FACE TEXTURE RETAINING WALL No. 369

1/8" = 1'-0"

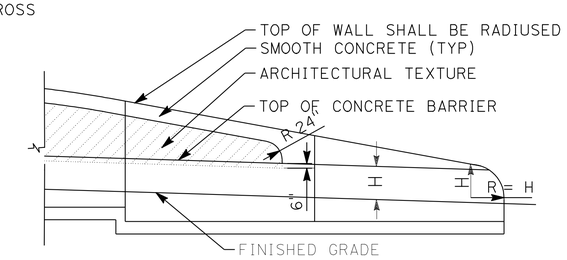

DETAIL NO. 3 - TYPICAL END OF WALL WITH TYPE 60d (MOD) CONCRETE BARRIER

No Scale

NOTES:

1. For Section D-D see "Architectural Surface Detail Sheet No. 1".

THIS PLAN IS ACCURATE FOR ARCHITECTUAL TREATMENT WORK ONLY.

	BY	CHECKED
DESIGN	M. Hall	M. Bishop
DETAILS	R. Kirkland	M. Bishop
QUANTITIES	J. Szabo	M. Vo

STATE OF CALIFORNIA
DEPARTMENT OF TRANSPORTATION

DIVISION OF ENGINEERING SERVICES
STRUCTURE DESIGN
DESIGN BRANCH 10

BRIDGE NO. 56 E0074
POST MILE 19.86

RETAINING WALL NO. 369
ARCHITECTURAL SURFACE

STRUCTURES DESIGN DETAIL SHEET (ENGLISH) (REV. 10/25/05)

ORIGINAL SCALE IN INCHES FOR REDUCED PLANS 0 1 2 3

CU 08
EA 448401

DISREGARD PRINTS BEARING EARLIER REVISION DATES → 8/17/10

REVISION DATES

SHEET 9 OF 13

FILE => 56E0074umiscdt09.dgn

USERNAME => trlenard DATE PLOTTED => 30-APR-2011 TIME PLOTTED => 11:10

Dist	COUNTY	ROUTE	POST MILES TOTAL PROJECT	SHEET No.	TOTAL SHEETS
08	Riv	91	15.6/21.6	1571	2028

LICENSED LANDSCAPE ARCHITECT

4-25-11
PLANS APPROVAL DATE

LICENSED LANDSCAPE ARCHITECT — Matthew Harry Hall — Signature — 10/31/2011 Renewal Date — 11/12/10 Date — STATE OF CALIFORNIA

THE STATE OF CALIFORNIA OR ITS OFFICERS OR AGENTS SHALL NOT BE RESPONSIBLE FOR THE ACCURACY OR COMPLETENESS OF SCANNED COPIES OF THIS PLAN SHEET.

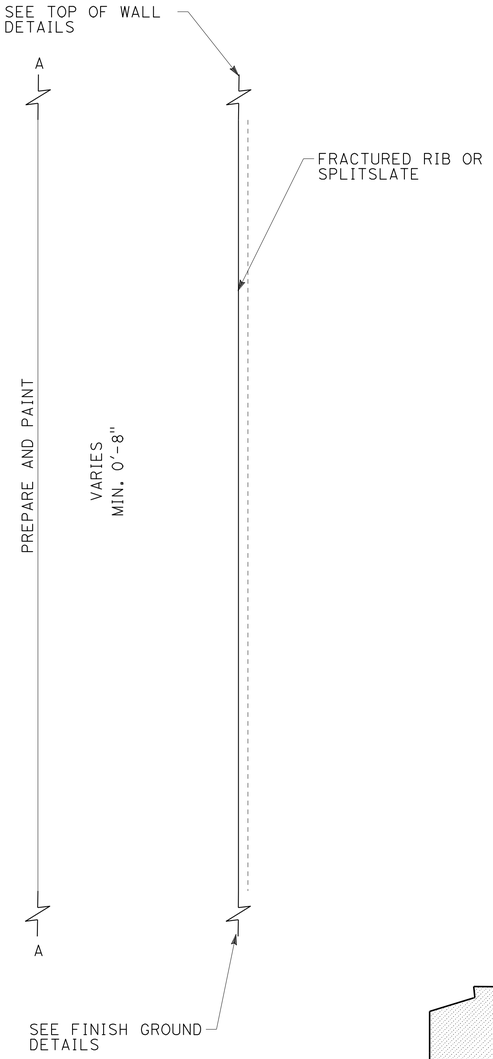

SECTION D-D

No Scale

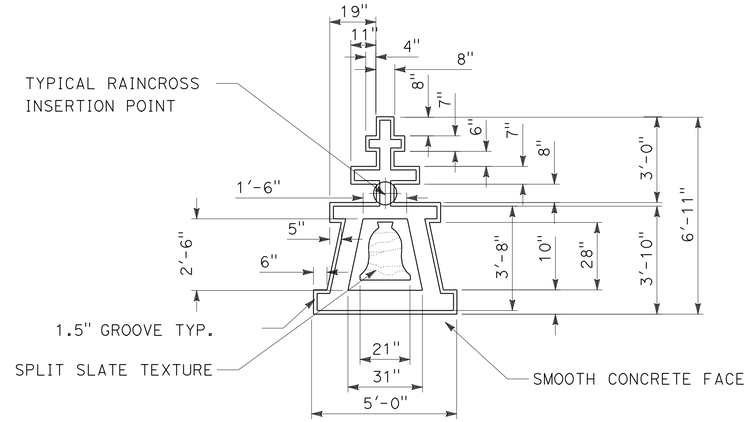

TYPICAL RAINCROSS DETAIL

3/8" = 1'-0"

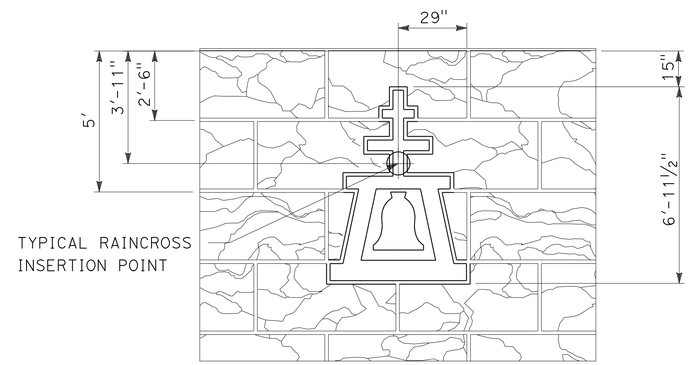

TYPICAL RAINCROSS DETAIL/ SPLIT SLATE TEXTURE

3/8" = 1'-0"

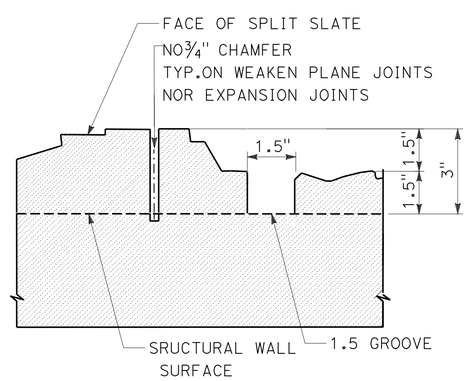

TYPICAL SPLIT SLATE TEXTURE

No Scale

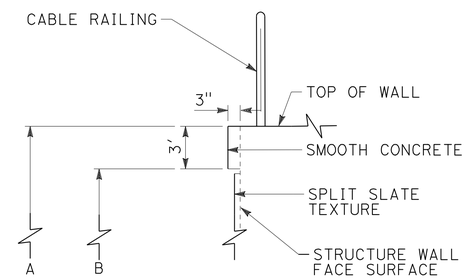

TOP OF WALL DETAIL TYPICAL WITH CABLE RAIL

No Scale

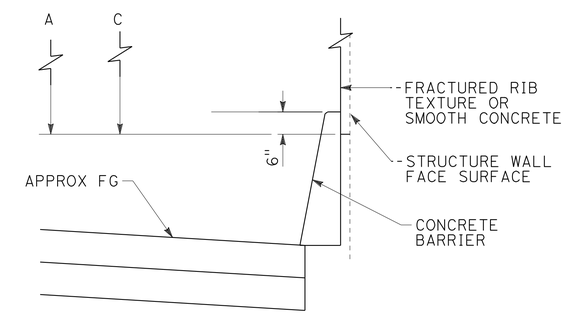

FINISH GROUND DETAIL TYPICAL WITH CONCRETE BARRIER

No Scale

DESIGN	BY M. Hall	CHECKED M. Bishop	
DETAILS	BY R. Kirkland	CHECKED M. Bishop	
QUANTITIES	BY J. Szabo	CHECKED M. Vo	

STATE OF CALIFORNIA
DEPARTMENT OF TRANSPORTATION

DIVISION OF ENGINEERING SERVICES
STRUCTURE DESIGN
DESIGN BRANCH 10

BRIDGE NO. 56 E0074
POST MILE 19.+86

RETAINING WALL NO. 369
ARCHITECTURAL SURFACE DETAIL SHEET NO. 1

STRUCTURES DESIGN DETAIL SHEET (ENGLISH) (REV. 10/25/05)

ORIGINAL SCALE IN INCHES FOR REDUCED PLANS 0 1 2 3

CU 08
EA 448401

DISREGARD PRINTS BEARING EARLIER REVISION DATES → 8/10/10

REVISION DATES

SHEET 10 OF 13

FILE => 56E0074umiscdt10.dgn

USERNAME => trlenard DATE PLOTTED => 30-APR-2011 TIME PLOTTED => 12:07

DIST	COUNTY	ROUTE	POST MILES TOTAL PROJECT	SHEET No	TOTAL SHEETS
08	Riv	91	15.6/21.6	1572	2028

GEOTECHNICAL PROFESSIONAL — DATE 11/03/2010

4-25-11
PLANS APPROVAL DATE

REGISTERED PROFESSIONAL ENGINEER — FARID MOTAMED No. 2738 Exp. 6-30-11 GEOTECHNICAL STATE OF CALIFORNIA

The State of California or its officers or agents shall not be responsible for the accuracy or completeness of electronic copies of this plan sheet.

California Department of Transportation
5900 Folsom Boulevard
Sacramento, CA 95819

URS Corporation
2020 East First Street, Suite 400
Santa Ana, CA 92705

GROUP SYMBOLS AND NAMES

Graphic / Symbol	Group Names	Graphic / Symbol	Group Names
GW	Well-graded GRAVEL Well-graded GRAVEL with SAND	CL	Lean CLAY Lean CLAY with SAND Lean CLAY with GRAVEL SANDY lean CLAY SANDY lean CLAY with GRAVEL GRAVELLY lean CLAY GRAVELLY lean CLAY with SAND
GP	Poorly graded GRAVEL Poorly graded GRAVEL with SAND		
GW-GM	Well-graded GRAVEL with SILT Well-graded GRAVEL with SILT and SAND	CL-ML	SILTY CLAY SILTY CLAY with SAND SILTY CLAY with GRAVEL SANDY SILTY CLAY SANDY SILTY CLAY with GRAVEL GRAVELLY SILTY CLAY GRAVELLY SILTY CLAY with SAND
GW-GC	Well-graded GRAVEL with CLAY (or SILTY CLAY) Well-graded GRAVEL with CLAY and SAND (or SILTY CLAY and SAND)		
GP-GM	Poorly graded GRAVEL with SILT Poorly graded GRAVEL with SILT and SAND	ML	SILT SILT with SAND SILT with GRAVEL SANDY SILT SANDY SILT with GRAVEL GRAVELLY SILT GRAVELLY SILT with SAND
GP-GC	Poorly graded GRAVEL with CLAY (or SILTY CLAY) Poorly graded GRAVEL with CLAY and SAND (or SILTY CLAY and SAND)		
GM	SILTY GRAVEL SILTY GRAVEL with SAND	OL	ORGANIC lean CLAY ORGANIC lean CLAY with SAND ORGANIC lean CLAY with GRAVEL SANDY ORGANIC lean CLAY SANDY ORGANIC lean CLAY with GRAVEL GRAVELLY ORGANIC lean CLAY GRAVELLY ORGANIC lean CLAY with SAND
GC	CLAYEY GRAVEL CLAYEY GRAVEL with SAND		
GC-GM	SILTY, CLAYEY GRAVEL SILTY, CLAYEY GRAVEL with SAND	OL	ORGANIC SILT ORGANIC SILT with SAND ORGANIC SILT with GRAVEL SANDY ORGANIC SILT SANDY ORGANIC SILT with GRAVEL GRAVELLY ORGANIC SILT GRAVELLY ORGANIC SILT with SAND
SW	Well-graded SAND Well-graded SAND with GRAVEL		
SP	Poorly graded SAND Poorly graded SAND with GRAVEL	CH	Fat CLAY Fat CLAY with SAND Fat CLAY with GRAVEL SANDY fat CLAY SANDY fat CLAY with GRAVEL GRAVELLY fat CLAY GRAVELLY fat CLAY with SAND
SW-SM	Well-graded SAND with SILT Well-graded SAND with SILT and GRAVEL		
SW-SC	Well-graded SAND with CLAY (or SILTY CLAY) Well-graded SAND with CLAY and GRAVEL (or SILTY CLAY and GRAVEL)	MH	Elastic SILT Elastic SILT with SAND Elastic SILT with GRAVEL SANDY elastic SILT SANDY elastic SILT with GRAVEL GRAVELLY elastic SILT GRAVELLY elastic SILT with SAND
SP-SM	Poorly graded SAND with SILT Poorly graded SAND with SILT and GRAVEL		
SP-SC	Poorly graded SAND with CLAY (or SILTY CLAY) Poorly graded SAND with CLAY and GRAVEL (or SILTY CLAY and GRAVEL)	OH	ORGANIC fat CLAY ORGANIC fat CLAY with SAND ORGANIC fat CLAY with GRAVEL SANDY ORGANIC fat CLAY SANDY ORGANIC fat CLAY with GRAVEL GRAVELLY ORGANIC fat CLAY GRAVELLY ORGANIC fat CLAY with SAND
SM	SILTY SAND SILTY SAND with GRAVEL		
SC	CLAYEY SAND CLAYEY SAND with GRAVEL	OH	ORGANIC elastic SILT ORGANIC elastic SILT with SAND ORGANIC elastic SILT with GRAVEL SANDY elastic ELASTIC SILT SANDY ORGANIC elastic SILT with GRAVEL GRAVELLY ORGANIC elastic SILT GRAVELLY ORGANIC elastic SILT with SAND
SC-SM	SILTY, CLAYEY SAND SILTY, CLAYEY SAND with GRAVEL		
PT	PEAT	OL/OH	ORGANIC SOIL ORGANIC SOIL with SAND ORGANIC SOIL with GRAVEL SANDY ORGANIC SOIL SANDY ORGANIC SOIL with GRAVEL GRAVELLY ORGANIC SOIL GRAVELLY ORGANIC SOIL with SAND
	COBBLES COBBLES and BOULDERS BOULDERS		

FIELD AND LABORATORY TESTS

C	Consolidation (ASTM D 2435-04)
CL	Collapse Potential (ASTM D 5333-03)
CP	Compaction Curve (CTM 216 - 06)
CR	Corrosion, Sulfates, Chlorides (CTM 643 - 99; CTM 417 - 06; CTM 422 - 06)
CU	Consolidated Undrained Triaxial (ASTM D 4767-02)
DS	Direct Shear (ASTM D 3080-04)
EI	Expansion Index (ASTM D 4829-03)
M	Moisture Content (ASTM D 2216-05)
OC	Organic Content (ASTM D 2974-07)
P	Permeability (CTM 220 - 05)
PA	Particle Size Analysis (ASTM D 422-63 [2002])
PI	Liquid Limit, Plastic Limit, Plasticity Index (AASHTO T 89-02, AASHTO T 90-00)
PL	Point Load Index (ASTM D 5731-05)
PM	Pressure Meter
PP	Pocket Penetrometer
R	R-Value (CTM 301 - 00)
SE	Sand Equivalent (CTM 217 - 99)
SG	Specific Gravity (AASHTO T 100-06)
SL	Shrinkage Limit (ASTM D 427-04)
SW	Swell Potential (ASTM D 4546-03)
TV	Pocket Torvane
UC	Unconfined Compression - Soil (ASTM D 2166-06) Unconfined Compression - Rock (ASTM D 2938-95)
UU	Unconsolidated Undrained Triaxial (ASTM D 2850-03)
UW	Unit Weight (ASTM D 4767-04)
VS	Vane Shear (AASHTO T 223-96 [2004])

CONSISTENCY OF COHESIVE SOILS

Descriptor	Unconfined Compressive Strength (tsf)	Pocket Penetrometer (tsf)	Torvane (tsf)	Field Approximation
Very Soft	< 0.25	< 0.25	< 0.12	Easily penetrated several inches by fist
Soft	0.25 - 0.50	0.25 - 0.50	0.12 - 0.25	Easily penetrated several inches by thumb
Medium Stiff	0.50 - 1.0	0.50 - 1.0	0.25 - 0.50	Can be penetrated several inches by thumb with moderate effort
Stiff	1.0 - 2.0	1.0 - 2.0	0.50 - 1.0	Readily indented by thumb but penetrated only with great effort
Very Stiff	2.0 - 4.0	2.0 - 4.0	1.0 - 2.0	Readily indented by thumbnail
Hard	> 4.0	> 4.0	> 2.0	Indented by thumbnail with difficulty

APPARENT DENSITY OF COHESIONLESS SOILS

Descriptor	SPT N60 - Value (blows / foot)
Very Loose	0 - 4
Loose	5 - 10
Medium Dense	11 - 30
Dense	31 - 50
Very Dense	> 50

MOISTURE

Descriptor	Criteria
Dry	Absence of moisture, dusty, dry to the touch
Moist	Damp but no visible water
Wet	Visible free water, usually soil is below water table

PERCENT OR PROPORTION OF SOILS

Descriptor	Criteria
Trace	Particles are present but estimated to be less than 5%
Few	5 to 10%
Little	15 to 25%
Some	30 to 45%
Mostly	50 to 100%

SOIL PARTICLE SIZE

Descriptor		Size
Boulder		> 12 inches
Cobble		3 to 12 inches
Gravel	Coarse	3/4 inch to 3 inches
	Fine	No. 4 Sieve to 3/4 inch
Sand	Coarse	No. 10 Sieve to No. 4 Sieve
	Medium	No. 40 Sieve to No. 10 Sieve
	Fine	No. 200 Sieve to No. 40 Sieve
Silt and Clay		Passing No. 200 Sieve

PLASTICITY OF FINE-GRAINED SOILS

Descriptor	Criteria
Nonplastic	A 1/8-inch thread cannot be rolled at any water content.
Low	The thread can barely be rolled, and the lump cannot be formed when drier than the plastic limit.
Medium	The thread is easy to roll, and not much time is required to reach the plastic limit; it cannot be rerolled after reaching the plastic limit. The lump crumbles when drier than the plastic limit.
High	It takes considerable time rolling and kneading to reach the plastic limit. The thread can be rerolled several times after reaching the plastic limit. The lump can be formed without crumbling when drier than the plastic limit.

CEMENTATION

Descriptor	Criteria
Weak	Crumbles or breaks with handling or little finger pressure.
Moderate	Crumbles or breaks with considerable finger pressure.
Strong	Will not crumble or break with finger pressure.

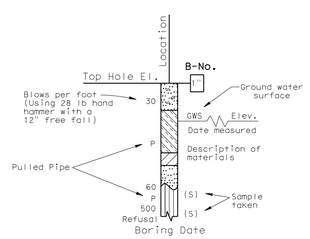

SAMPLE BORING (DRY)

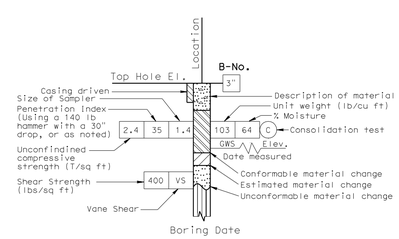

ROTARY SAMPLE BORING (WET)

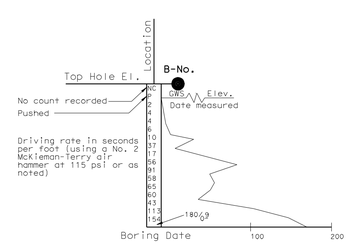

2 1/4" CONE PENETRATION BORING

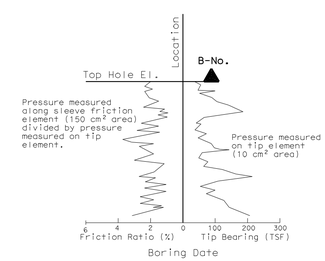

ELECTRONIC CONE PENETROMETER TEST

Cone Penetrometer dimensions and testing procedures are in accordance with ASTM standard D 3441-79, or as noted.

GINA PURSELL DESIGN OVERSIGHT	SHAWN WEI FUNCTIONAL SUPERVISOR	DRAWN BY	P. QUACH	P.CHAU/D.WADER/C.CARBINO FIELD INVESTIGATION BY:	PREPARED FOR THE STATE OF CALIFORNIA DEPARTMENT OF TRANSPORTATION	A. LEE PROJECT ENGINEER	BRIDGE NO. 56 E0074 POST MILE 19.86
11/12/10 SIGN OFF DATE		CHECKED BY	S. PIRATHIVIRAJ	DATE: Nov 6 2007 to March 7 2008			

SOIL LEGEND

LOG OF TEST BORINGS 1 OF 3

OSF GEOTECHNICAL LOG OF TEST BORINGS SHEET (ENGLISH) (REV. 2/25/05)

ORIGINAL SCALE IN INCHES FOR REDUCED PLANS 0 1 2 3

CU 08
EA 448401

DISREGARD PRINTS BEARING EARLIER REVISION DATES 8/18/10

REVISION DATES (PRELIMINARY STAGE ONLY)

SHEET 11 OF 13

FILE => 56E0074zlotb11.dgn

USERNAME => trienard DATE PLOTTED => 30-APR-2011 TIME PLOTTED =>

DIST	COUNTY	ROUTE	POST MILES TOTAL PROJECT	SHEET No	TOTAL SHEETS
08	Riv	91	15.6/21.6	1573	2028

GEOTECHNICAL PROFESSIONAL — DATE 11/03/2010

4-25-11
PLANS APPROVAL DATE

REGISTERED PROFESSIONAL ENGINEER — FARID MOTAMED — No. 2738 — Exp. 6-30-11 — GEOTECHNICAL — STATE OF CALIFORNIA

The State of California or its officers or agents shall not be responsible for the accuracy or completeness of electronic copies of this plan sheet.

California Department of Transportation
5900 Folsom Boulevard
Sacramento, CA 95819

URS Corporation
2020 East First Street, Suite 400
Santa Ana, CA 92705

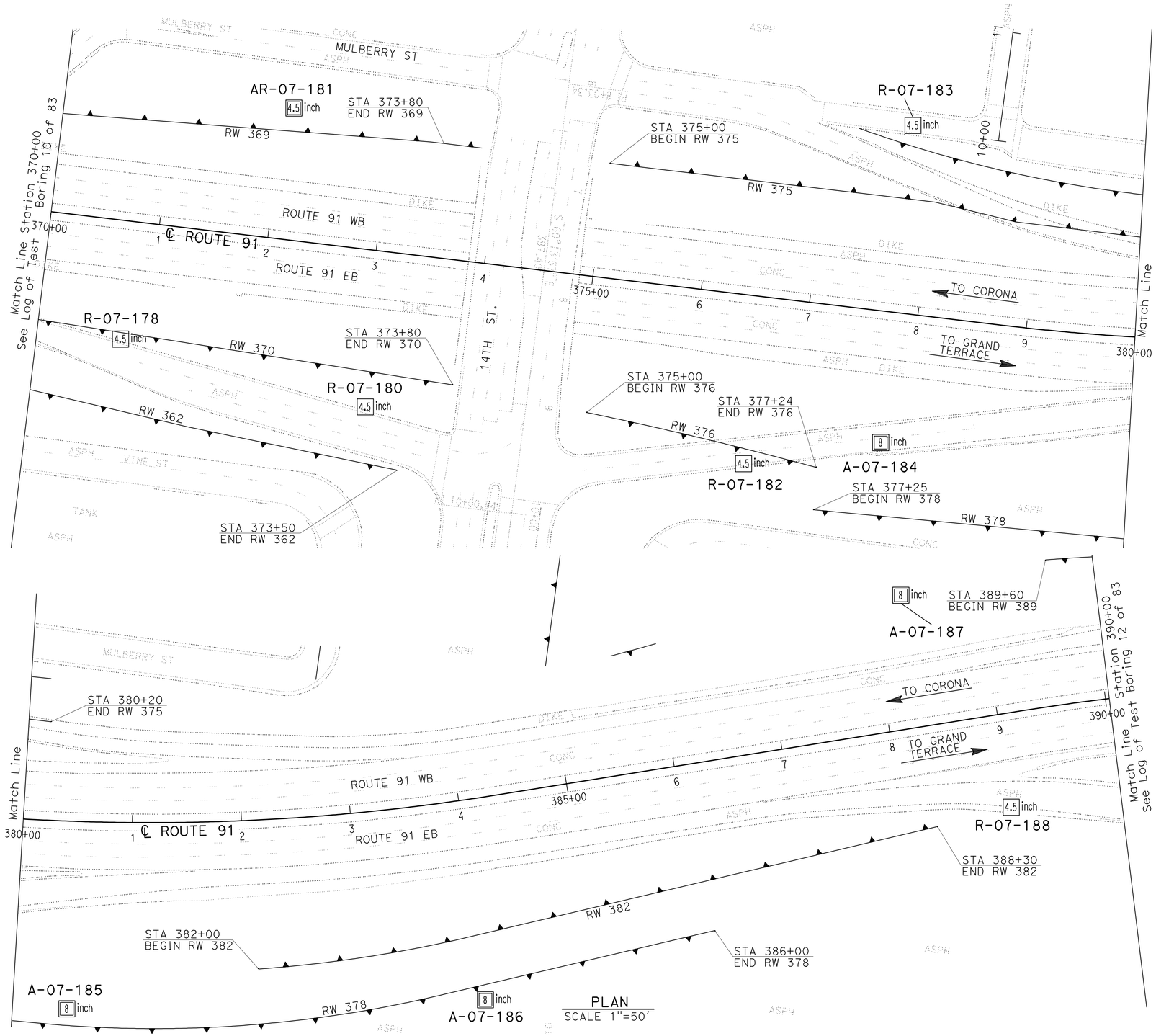

PLAN
SCALE 1"=50'

Borehole Number	Drill Rig	Hammer Type	Avg. Hammer Efficiency, ETR (%)
R-07-178	CS-2000	Automatic	84
R-07-180	CME 85	Automatic	87
AR-07-181	CS-2000	Automatic	84
R-07-182	CS-2000	Automatic	84
R-07-183	CS-2000	Automatic	84
A-07-184	Diedrich D-120	Automatic	75*
A-07-185	Diedrich D-120	Automatic	75*
A-07-186	Diedrich D-120	Automatic	75*
A-07-187	Diedrich D-120	Automatic	75*
R-07-188	CS-2000	Automatic	84

Sampler Type	Inside Diameter (Inches)	Borehole Numbers
SPT	1.375	R-07-178, R-07-180, R-07-181 R-07-182, R-07-183, A-07-184 A-07-185, A-07-186, A-07-187 R-07-188
Modified California 1	1.94	R-07-180, R-07-183
Modified California 2	2.40	A-07-184, A-07-185, A-07-186 A-07-187

*Estimated Hammer Efficiency Rating.

GINA PURSELL — DESIGN OVERSIGHT
SHAWN WEI — FUNCTIONAL SUPERVISOR
11/12/10 — SIGN OFF DATE

DRAWN BY: P. QUACH
CHECKED BY: S. PIRATHIVIRAJ

P.CHAU/D.WADER/C.CARBINO
FIELD INVESTIGATION BY:
DATE: Nov 6 2007 to March 7 2008

PREPARED FOR THE STATE OF CALIFORNIA DEPARTMENT OF TRANSPORTATION

A. LEE — PROJECT ENGINEER

BRIDGE NO. 56 E0074
POST MILE 19.86

WALL LAYOUT & EXPLORATORY LOCATION MAP
LOG OF TEST BORINGS 2 OF 3

OSF GEOTECHNICAL LOG OF TEST BORINGS SHEET (ENGLISH) (REV. 2/25/05)

ORIGINAL SCALE IN INCHES FOR REDUCED PLANS 0 1 2 3

CU 08
EA 448401

DISREGARD PRINTS BEARING EARLIER REVISION DATES 8/19/10

REVISION DATES (PRELIMINARY STAGE ONLY)

SHEET 12 OF 13

FILE => 56E0074zlotb12.dgn

USERNAME => trlenard DATE PLOTTED => 30-APR-2011 TIME PLOTTED =>

DIST	COUNTY	ROUTE	POST MILES TOTAL PROJECT	SHEET No	TOTAL SHEETS
08	Riv	91	15.6/21.6	1574	2028

GEOTECHNICAL PROFESSIONAL — DATE 11/03/2010

4-25-11
PLANS APPROVAL DATE

REGISTERED PROFESSIONAL ENGINEER — FARID MOTAMED — No. 2738 — Exp. 6-30-11 — GEOTECHNICAL — STATE OF CALIFORNIA

The State of California or its officers or agents shall not be responsible for the accuracy or completeness of electronic copies of this plan sheet.

California Department of Transportation
5900 Folsom Boulevard
Sacramento, CA 95819

URS Corporation
2020 East First Street, Suite 400
Santa Ana, CA 92705

FOR PLAN VIEW, SEE
"LOG OF TEST BORINGS 2 OF 3"

NOTE: 1. This LOTB sheet was prepared in accordance with the Caltrans Soil & Rock Logging, Classification, and Presentation Manual (June 2007).

2. For legend, see "Log of Test Borings" 1 of 83

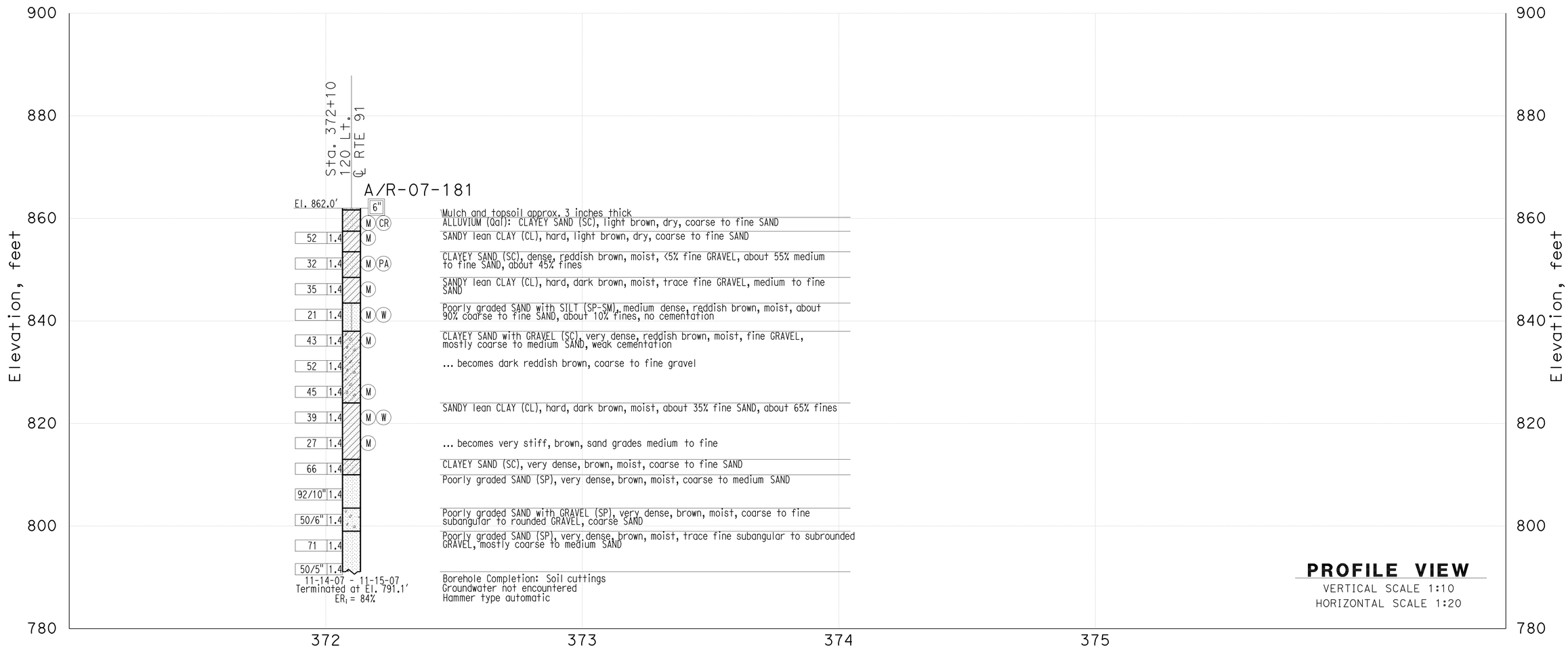

THIS PLAN ACCURATE FOR SOUND WALL AND RETAINING WALL WORK ONLY

GINA PURSELL DESIGN OVERSIGHT	SHAWN WEI FUNCTIONAL SUPERVISOR	DRAWN BY	P. QUACH	P.CHAU/D.WADER/C.CARBINO FIELD INVESTIGATION BY:	PREPARED FOR THE STATE OF CALIFORNIA DEPARTMENT OF TRANSPORTATION	A. LEE PROJECT ENGINEER	BRIDGE NO. 56 E0074 POST MILE 19.86
11/12/10 SIGN OFF DATE		CHECKED BY	S. PIRATHIVIRAJ	DATE: Nov 6 2007 to March 7 2008			

RETAINING WALL 369

LOG OF TEST BORINGS 3 OF 3

OSF GEOTECHNICAL LOG OF TEST BORINGS SHEET (ENGLISH) (REV. 2/25/05)

ORIGINAL SCALE IN INCHES FOR REDUCED PLANS 0 1 2 3

CU 08
EA 448400

DISREGARD PRINTS BEARING EARLIER REVISION DATES

REVISION DATES (PRELIMINARY STAGE ONLY) X

SHEET 13 OF 13

FILE => 56E0074zlotb13.dgn

USERNAME => rtrenard DATE PLOTTED => 30-APR-2011 TIME PLOTTED =>

DIST	COUNTY	ROUTE	POST MILES TOTAL PROJECT	SHEET No	TOTAL SHEETS
08	Riv	91	15.6/21.6	1575	2028

REGISTERED CIVIL ENGINEER 11/12/10 DATE

4-25-11
PLANS APPROVAL DATE

REGISTERED PROFESSIONAL ENGINEER Minh Thuong Vo No. C59297 Exp. 6/30/2011 CIVIL STATE OF CALIFORNIA

The State of California or its officers or agents shall not be responsible for the accuracy or completeness of electronic copies of this plan sheet.

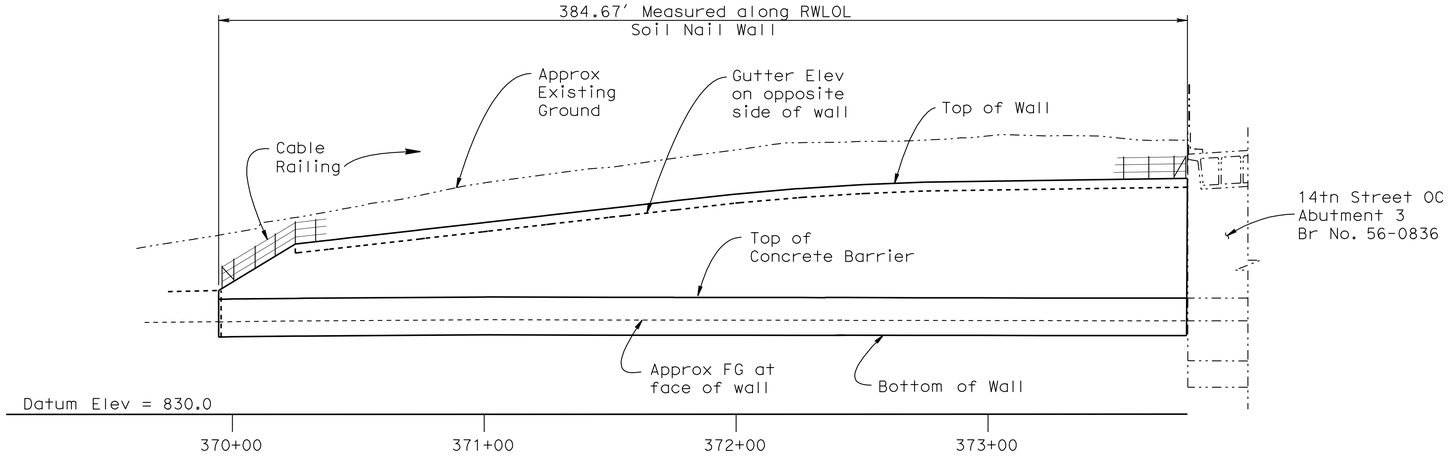

DEVELOPED MIRROR ELEVATION

Horiz. 1" = 30'
Vert. 1" = 10'

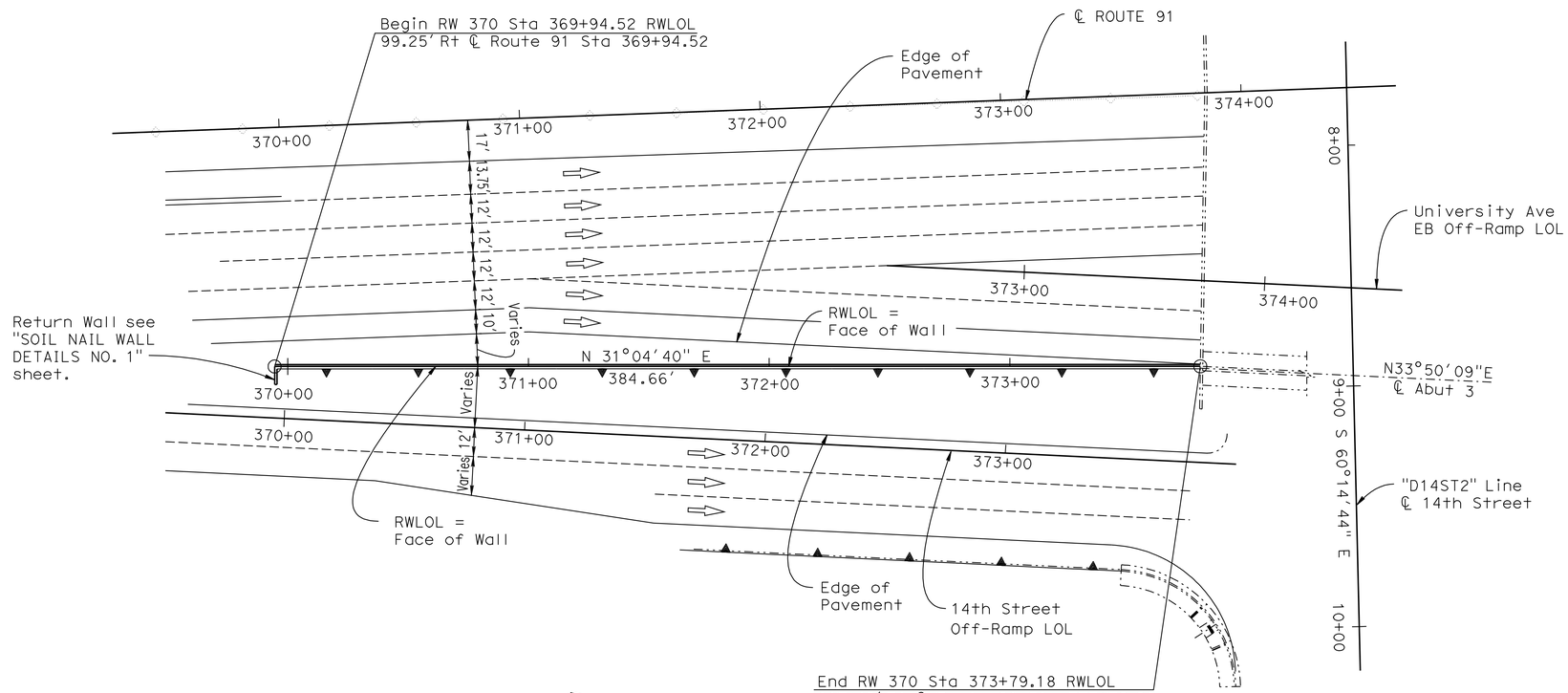

PLAN

1" = 30'

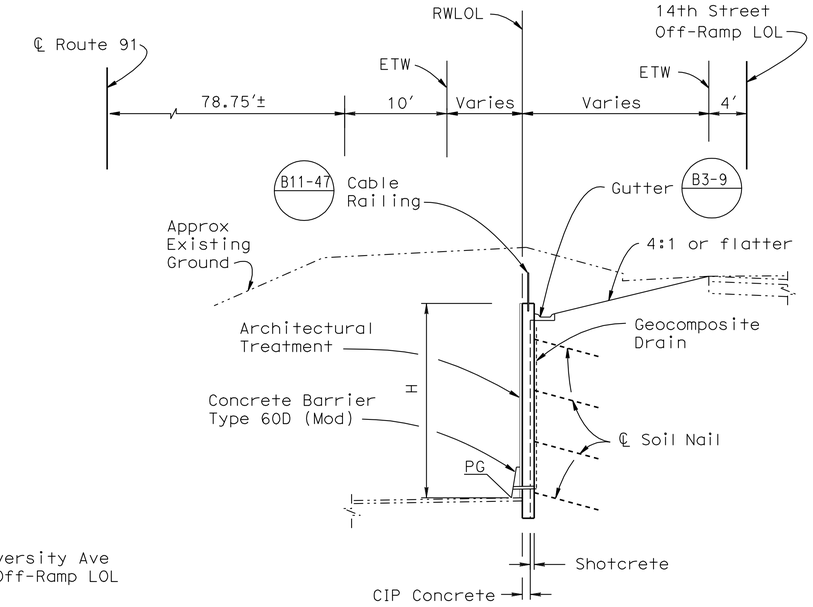

TYPICAL SECTION

1/8" = 1'-0"

NOTE:
THE CONTRACTOR SHALL VERIFY ALL CONTROLLING FIELD DIMENSIONS BEFORE ORDERING OR FABRICATING ANY MATERIAL.

NOTES:

1. For Quantities see "INDEX TO PLANS" sheet.

Daniel T. Adams
DESIGN ENGINEER

	BY	CHECKED
DESIGN	M. Vo	J. Szabo
DETAILS	R. Kirkland	J. Szabo
QUANTITIES	J. Szabo	M. Vo

LOAD & RESISTANCE FACTOR DESIGN — LIVE LOADING: HL93 W/"LOW-BOY"; PERMIT DESIGN VEHICLE

	BY	CHECKED
LAYOUT	M. Vo	J. Szabo
SPECIFICATIONS	Dave Klein	PLANS AND SPECS COMPARED Dave Klein

STATE OF CALIFORNIA
DEPARTMENT OF TRANSPORTATION

DIVISION OF ENGINEERING SERVICES
STRUCTURE DESIGN
DESIGN BRANCH 10

BRIDGE NO. 56 E0075
POST MILE 19.92

RETAINING WALL NO. 370
GENERAL PLAN

ORIGINAL SCALE IN INCHES FOR REDUCED PLANS 0 1 2 3

CU 08
EA 448401

DISREGARD PRINTS BEARING EARLIER REVISION DATES 7/15/10 7/15/10

REVISION DATES

SHEET 1 OF 13

STRUCTURES DESIGN GENERAL PLAN SHEET (ENGLISH) (REV.07-24-06)

FILE => 56e0075agp01.dgn

USERNAME => trlenard DATE PLOTTED =>

DIST	COUNTY	ROUTE	POST MILES TOTAL PROJECT	SHEET No	TOTAL SHEETS
08	Riv	91	15.6/21.6	1576	2028

REGISTERED CIVIL ENGINEER 11/12/10 DATE

4-25-11
PLANS APPROVAL DATE

REGISTERED PROFESSIONAL ENGINEER Minh Thuong Vo No. C59297 Exp. 6/30/2011 CIVIL STATE OF CALIFORNIA

The State of California or its officers or agents shall not be responsible for the accuracy or completeness of electronic copies of this plan sheet.

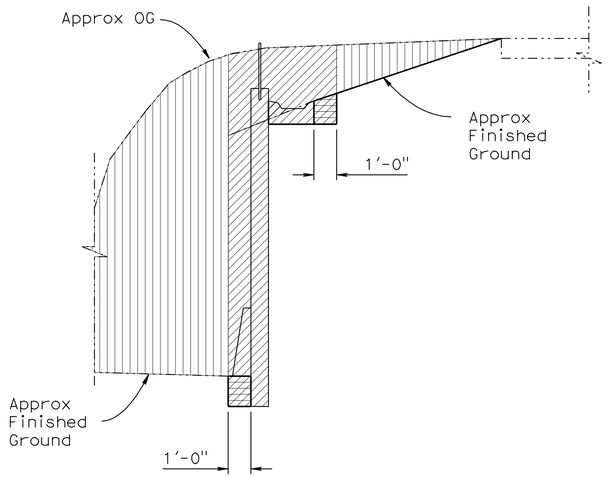

Structure Excavation (Soil Nail Wall)

Structure Backfill (Soil Nail Wall)

Roadway Excavation (see Roadway Plan)

SOIL NAIL WALL EXCAVATION & BACKFILL

NO SCALE

DESIGN DATA

DESIGN: Service Load Design Method per FHWA Geotechnical Engineering Circular No. 7 (FHWA O-IF-03-017) & Manual for Design and Construction Monitoring of Soil Nail Wall (FHWA-SA-96-069R)

REINFORCED CONCRETE: f_c = 3.6 KSI, f_y = 60 KSI

SHOTCRETE: f_c = 3.6 KSI, f_y = 60 KSI

STRUCTURAL STEEL: ASTM Designation: A 709, Grade 36, f_y = 36 KSI

SOIL NAILS: ASTM Designation: A615, Grade 60, f_y = 60 KSI

SOIL PARAMETERS: ϕ = 35°, c = 220 lb/ft^2, γ = 125 lb/ft^3, Q_d = 2.18 k/ft (Design Pullout Resistance)

QUANTITIES

RETAINING WALL 370 — BRIDGE NO 56E0075

STRUCTURE EXCAVATION (SOIL NAIL WALL)	487	CY
STRUCTURE BACKFILL (SOIL NAIL WALL)	40	CY
SOIL NAIL ASSEMBLY	4,160	LF
STRUCTURAL CONCRETE, RETAINING WALL	192	CY
ARCHITECTURAL SURFACE (TEXTURED CONCRETE) FRACTURED RIB SPLIT SLATE TEXTURE	4,689	SQFT
BAR REINFORCING STEEL (RETAINING WALL)	28,845	LB
SHOTCRETE	94	CY
MINOR CONCRETE (GUTTER)	385	LF
CABLE RAILING	385	LF
CONCRETE BARRIER (TYPE 60D MODIFIED)	385	LF

INDEX TO PLANS

Sheet No.	Title
1	GENERAL PLAN
2	INDEX TO PLANS
3	STRUCTURE PLAN NO. 1
4	STRUCTURE PLAN NO. 2
5	SOIL NAIL WALL DETAILS NO. 1
6	SOIL NAIL WALL DETAILS NO. 2
7	SOIL NAIL WALL DETAILS NO. 3
8	ARCHITECTURAL SURFACE
9	ARCHITECTURAL SURFACE DETAILS SHEET NO. 1
10	ARCHITECTURAL SURFACE DETAILS SHEET NO. 2
11	LOG OF TEST BORINGS 1 OF 3
12	LOG OF TEST BORINGS 2 OF 3
13	LOG OF TEST BORINGS 3 OF 3

STANDARD PLANS DATED MAY 2006

A10A	ACRONYMS AND ABBREVIATIONS (SHEET 1 OF 2)
A10B	ACRONYMS AND ABBREVIATIONS (SHEET 2 OF 2)
A10C	SYMBOLS (SHEET 1 OF 2)
A10D	SYMBOLS (SHEET 2 OF 2)
B0-3	BRIDGE DETAILS
B3-1	RETAINING WALL TYPE 1 H=4' THROUGH 30'
B3-2	RETAINING WALL TYPE 1 H=32' THROUGH 36'
B3-8	RETAINING WALL DETAILS NO. 1
B3-9	RETAINING WALL DETAILS NO. 2
B11-47	CABLE RAILING

STANDARD PLAN SHEET NO.

DETAIL NO.

	BY	CHECKED
DESIGN	M. Vo	J. Szabo
DETAILS	R. Kirkland	J. Szabo
QUANTITIES	J. Szabo	M. Vo

STATE OF CALIFORNIA DEPARTMENT OF TRANSPORTATION

DIVISION OF ENGINEERING SERVICES STRUCTURE DESIGN DESIGN BRANCH 10

BRIDGE NO. 56 E0075 POST MILE 19.92

RETAINING WALL NO. 370
INDEX TO PLANS

STRUCTURES DESIGN DETAIL SHEET (ENGLISH) (REV. 10/25/05)

ORIGINAL SCALE IN INCHES FOR REDUCED PLANS 0 1 2 3

CU 08
EA 448401

DISREGARD PRINTS BEARING EARLIER REVISION DATES 3/15/10 7/15/10

REVISION DATES

SHEET 2 OF 13

FILE => 56e0075aitp02.dgn

USERNAME => friehard DATE PLOTTED => 30-APR-2011 TIME PLOTTED => 12:08

Note:
Cable Railing and Concrete Barrier Type 60D not shown for clarity

SOIL NAIL SCHEDULE	
Location	Soil Nail Embedment Length Le
Schedule 1	All Soil Nails: Le = 18'-0"
Schedule 2	All Soil Nails: Le = 15'-0"

DIST	COUNTY	ROUTE	POST MILES TOTAL PROJECT	SHEET No	TOTAL SHEETS
08	Riv	91	15.6/21.6	1577	2028

REGISTERED CIVIL ENGINEER 11/12/10 DATE

4-25-11
PLANS APPROVAL DATE

REGISTERED PROFESSIONAL ENGINEER Minh Thuong Vo No. C59297 Exp. 6/30/2011 CIVIL STATE OF CALIFORNIA

The State of California or its officers or agents shall not be responsible for the accuracy or completeness of electronic copies of this plan sheet.

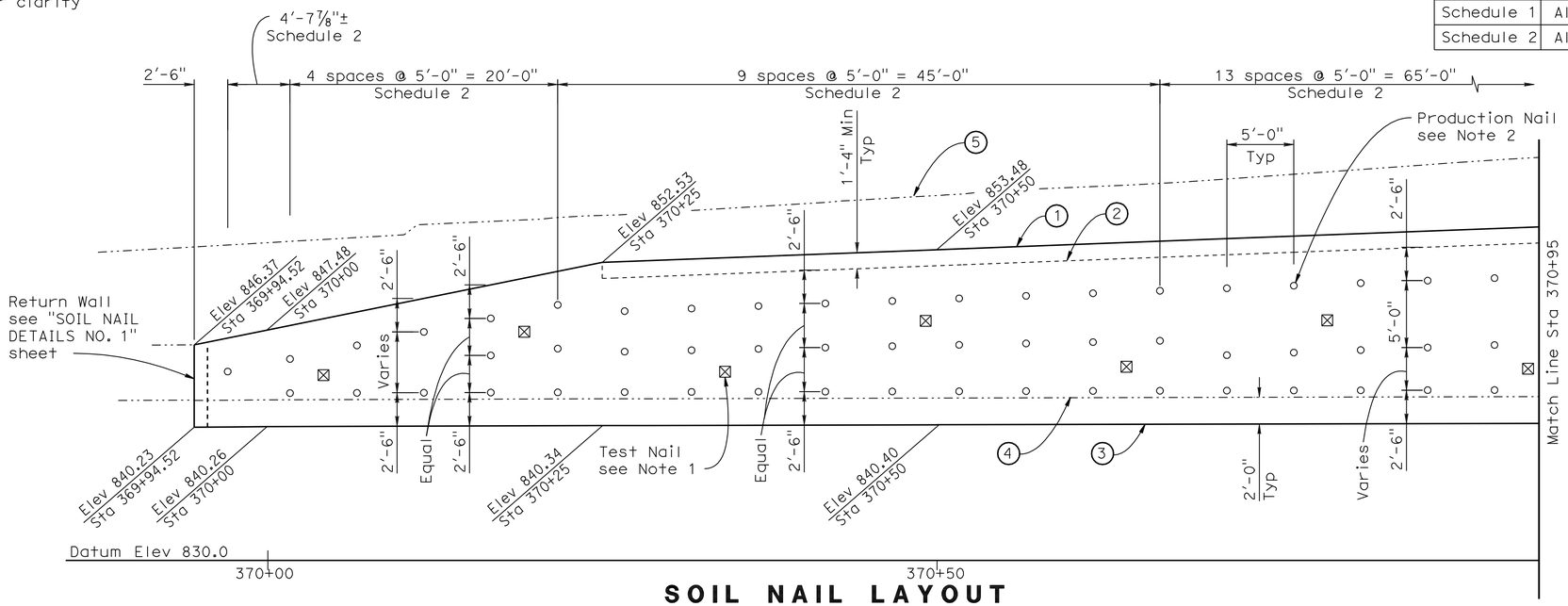

SOIL NAIL LAYOUT

3/16" = 1'-0"

NOTES:

1. Test nail locations are at midway between production nails. The exact location of the proof test nails to be determined in the field by the Engineer.
2. The maximum vertical and horizontal spacing of production nails shall be 5'-0".
3. Contractor shall adjust the concrete gutter to meet the gutter flow line.

(1) Top of Soil Nail Wall
(2) Gutter Elevation at back of wall
(3) Bottom of Soil Nail Wall
(4) Approximate Finished Grade on Freeway
(5) Approximate Original Ground

LEGEND:

○ Indicates location of Production Nail assembly.
⊠ Indicates location of Test Nail assembly. Located in the middle of Production nails.

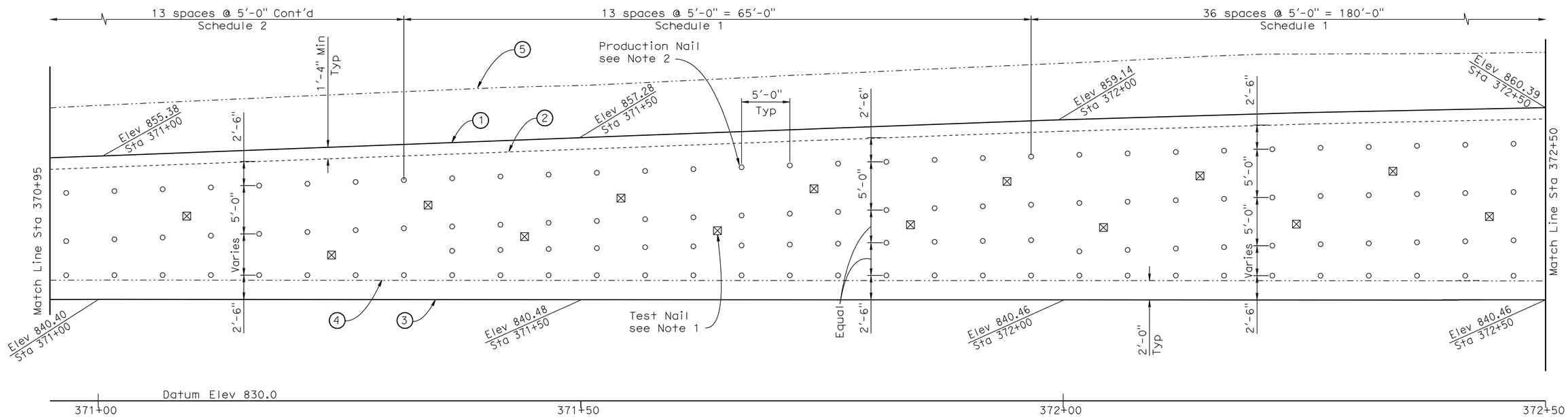

SOIL NAIL LAYOUT

3/16" = 1'-0"

DESIGN	BY M. Vo	CHECKED J. Szabo	
DETAILS	BY R. Kirkland	CHECKED J. Szabo	
QUANTITIES	BY J. Szabo	CHECKED M. Vo	

STATE OF CALIFORNIA DEPARTMENT OF TRANSPORTATION

DIVISION OF ENGINEERING SERVICES STRUCTURE DESIGN DESIGN BRANCH 10

BRIDGE NO. 56 E0075
POST MILE 19.92

RETAINING WALL NO. 370
STRUCTURE PLAN NO. 1

STRUCTURES DESIGN DETAIL SHEET (ENGLISH) (REV. 10/25/05)

ORIGINAL SCALE IN INCHES FOR REDUCED PLANS 0 1 2 3

CU 08
EA 448401

DISREGARD PRINTS BEARING EARLIER REVISION DATES 3/15/10 7/15/10

REVISION DATES

SHEET 3 OF 13

FILE => 56e0075csp03.dgn

USERNAME => trlenard DATE PLOTTED => 30-APR-2011 TIME PLOTTED => 12:08

DIST	COUNTY	ROUTE	POST MILES TOTAL PROJECT	SHEET No	TOTAL SHEETS
08	Riv	91	15.6/21.6	1578	2028

REGISTERED CIVIL ENGINEER 11/12/10 DATE

4-25-11
PLANS APPROVAL DATE

REGISTERED PROFESSIONAL ENGINEER
Minh Thuong Vo
No. C59297
Exp. 6/30/2011
CIVIL
STATE OF CALIFORNIA

The State of California or its officers or agents shall not be responsible for the accuracy or completeness of electronic copies of this plan sheet.

NOTES:

1. Test nail locations are at midway between production nails. The exact location of the proof test nails to be determined in the field by the Engineer.
2. The maximum vertical and horizontal spacing of production nails shall be 5'-0".
3. Contractor shall adjust the concrete gutter to meet the gutter flow line.

(1) Top of Soil Nail Wall

(2) Gutter Elevation at back of wall

(3) Bottom of Soil Nail Wall

(4) Approximate Finished Grade on Freeway

(5) Approximate Original Ground

LEGEND:

○ Indicates location of Production Nail assembly.

⊠ Indicates location of Test Nail assembly. Located in the middle of Production nails.

SOIL NAIL SCHEDULE	
Location	Soil Nail Embedment Length Le
Schedule 1	All Soil Nails: Le = 18'-0"

Note:
Cable Railing and Concrete Barrier Type 60D not shown for clarity

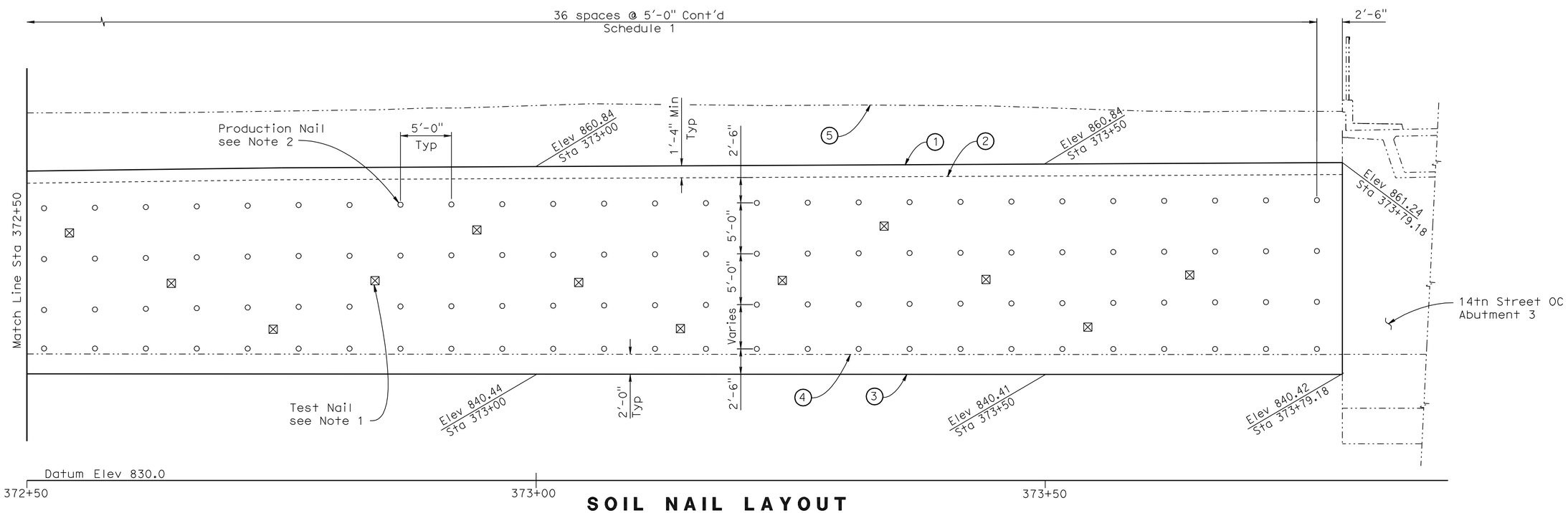

SOIL NAIL LAYOUT

3/16" = 1'-0"

DESIGN	BY M. Vo	CHECKED J. Szabo	
DETAILS	BY R. Kirkland	CHECKED J. Szabo	
QUANTITIES	BY J. Szabo	CHECKED M. Vo	

STATE OF CALIFORNIA
DEPARTMENT OF TRANSPORTATION

DIVISION OF ENGINEERING SERVICES
STRUCTURE DESIGN
DESIGN BRANCH 10

BRIDGE NO. 56 E0075
POST MILE 19.92

RETAINING WALL NO. 370
STRUCTURE PLAN NO. 2

STRUCTURES DESIGN DETAIL SHEET (ENGLISH) (REV. 10/25/05)

ORIGINAL SCALE IN INCHES FOR REDUCED PLANS 0 1 2 3

CU 08
EA 448401

DISREGARD PRINTS BEARING EARLIER REVISION DATES

REVISION DATES: 3/15/10 7/15/10

SHEET 4 OF 13

FILE => 56e0075csp04.dgn

USERNAME => rtrenard DATE PLOTTED => 30-APR-2011 TIME PLOTTED => 12:08

DIST	COUNTY	ROUTE	POST MILES TOTAL PROJECT	SHEET No	TOTAL SHEETS
08	Riv	91	15.6/21.6	1579	2028

REGISTERED CIVIL ENGINEER 11/12/10 DATE

4-25-11
PLANS APPROVAL DATE

REGISTERED PROFESSIONAL ENGINEER Minh Thuong Vo No. C59297 Exp. 6/30/2011 CIVIL STATE OF CALIFORNIA

The State of California or its officers or agents shall not be responsible for the accuracy or completeness of electronic copies of this plan sheet.

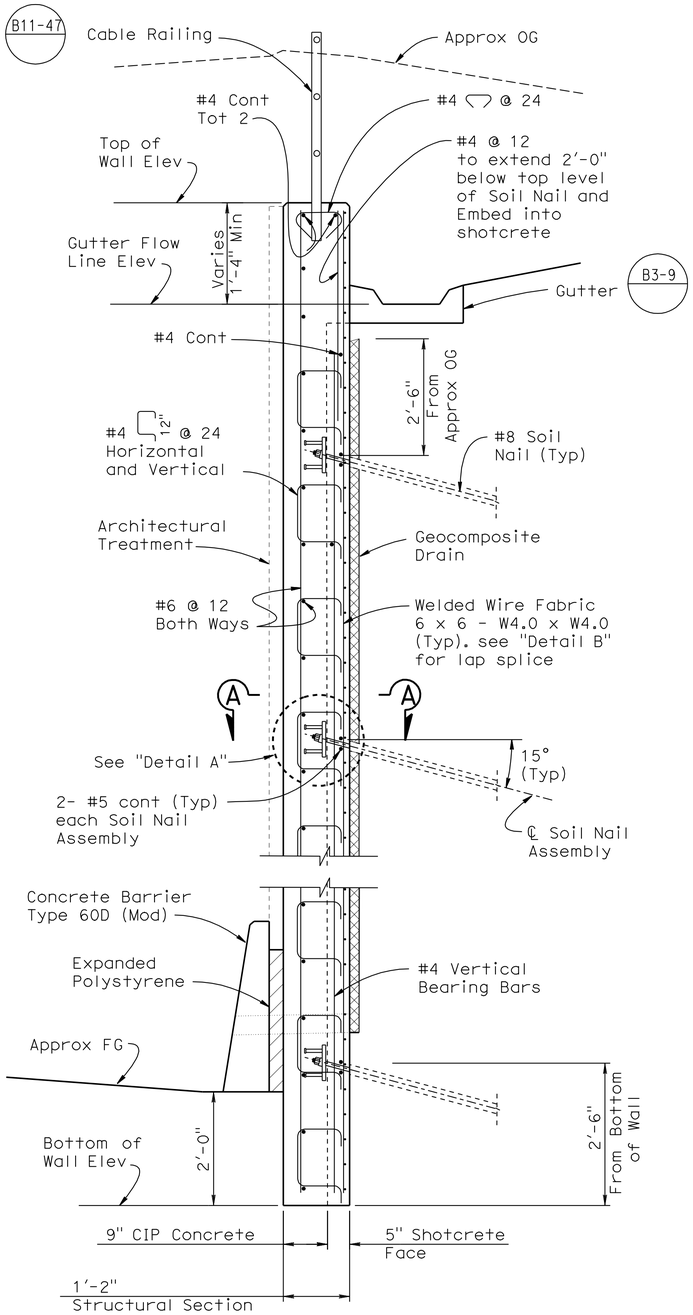

TYPICAL SECTION

3/4" = 1'-0"

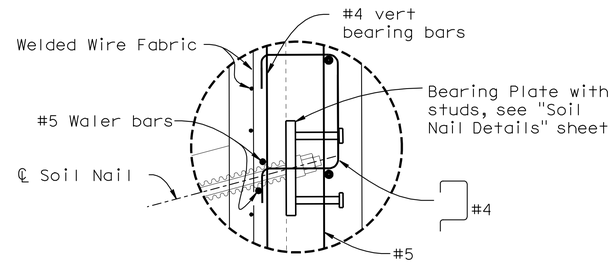

DETAIL A

1 1/2" = 1'-0"

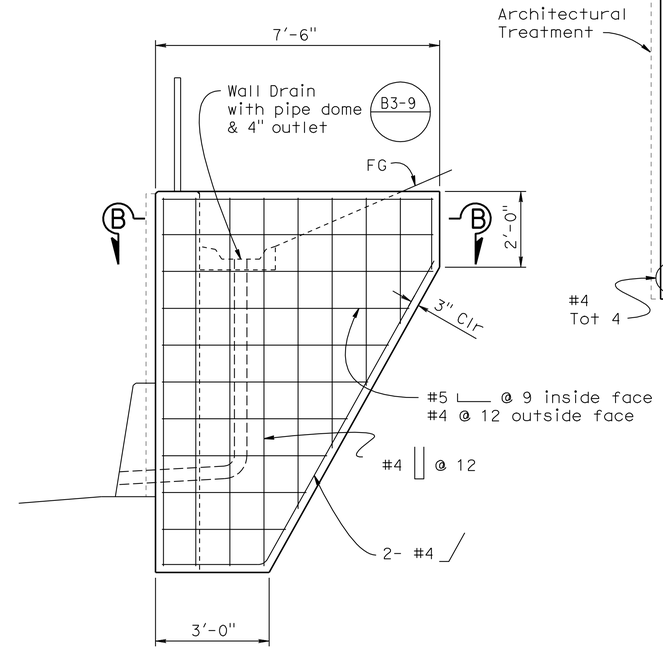

RETURN WALL ELEVATION

1/2" = 1'-0"

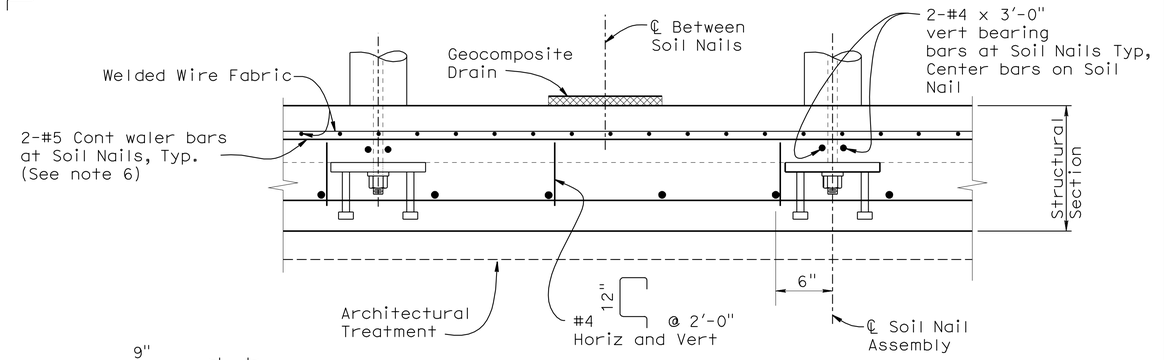

SECTION A-A

1 1/2" = 1'-0"

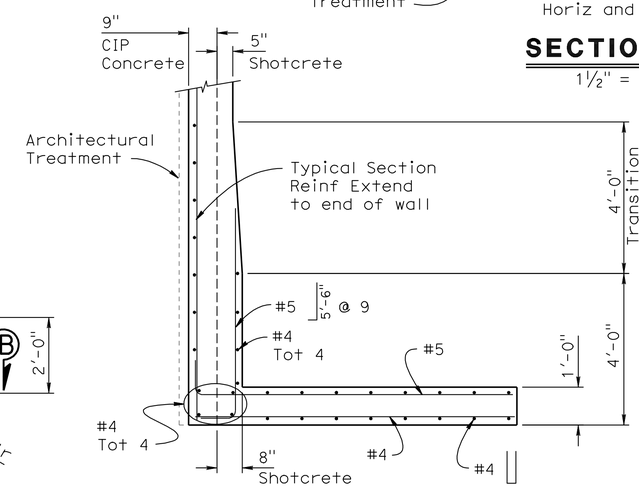

SECTION B-B

1/2" = 1'-0"

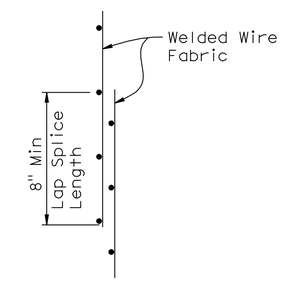

LAP SPLICE

DETAIL B

NO SCALE

Notes:

1. Bottom of wall to be placed against undisturbed material.
2. For Horizontal and Vertical Soil Nail spacing see "Structure Plan No. 1" and "Structure Plan No. 2" sheets.
3. For Soil Nail Details & Assemblies, see "Soil Nail Details No. 1 and Soil Nail Details No. 2" sheets.
4. For Geocomposite Drain Details see "Soil Nail Details No. 3" sheet.
5. For Architectural Treatment (Textured Shotcrete and textured Concrete), see "Architectural Treatment Details" sheet.
6. For soil nail rows that are discontinuous, extend waler bars a minimum of 5' beyond last soil nail.

	BY	CHECKED
DESIGN	M. Vo	J. Szabo
DETAILS	R. Kirkland	J. Szabo
QUANTITIES	J. Szabo	M. Vo

STATE OF CALIFORNIA
DEPARTMENT OF TRANSPORTATION

DIVISION OF ENGINEERING SERVICES
STRUCTURE DESIGN
DESIGN BRANCH 10

BRIDGE NO. 56 E0075
POST MILE 19.92

RETAINING WALL NO. 370
SOIL NAIL WALL DETAILS NO. 1

STRUCTURES DESIGN DETAIL SHEET (ENGLISH) (REV. 10/25/05)

ORIGINAL SCALE IN INCHES FOR REDUCED PLANS 0 1 2 3

CU 08
EA 448401

DISREGARD PRINTS BEARING EARLIER REVISION DATES

REVISION DATES 3/15/10 7/15/10

SHEET 5 OF 13

FILE => 56e0075grwdt05.dgn

USERNAME => rtrenard DATE PLOTTED => 30-APR-2011 TIME PLOTTED => 12:08

DIST	COUNTY	ROUTE	POST MILES TOTAL PROJECT	SHEET No	TOTAL SHEETS
08	Riv	91	15.6/21.6	1580	2028

REGISTERED CIVIL ENGINEER 11/12/10 DATE

4-25-11
PLANS APPROVAL DATE

REGISTERED PROFESSIONAL ENGINEER Minh Thuong Vo No. C59297 Exp. 6/30/2011 CIVIL STATE OF CALIFORNIA

The State of California or its officers or agents shall not be responsible for the accuracy or completeness of electronic copies of this plan sheet.

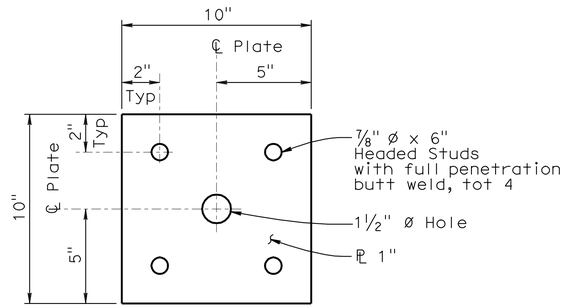

BEARING PLATE

DETAIL G

3" = 1'-0"

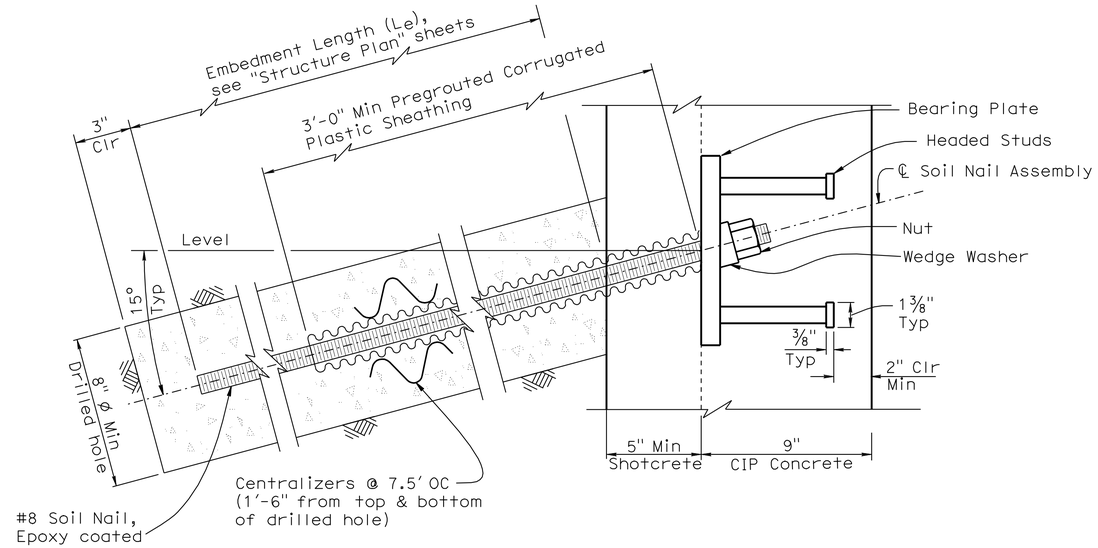

SOIL NAIL ASSEMBLY

3" = 1'-0"

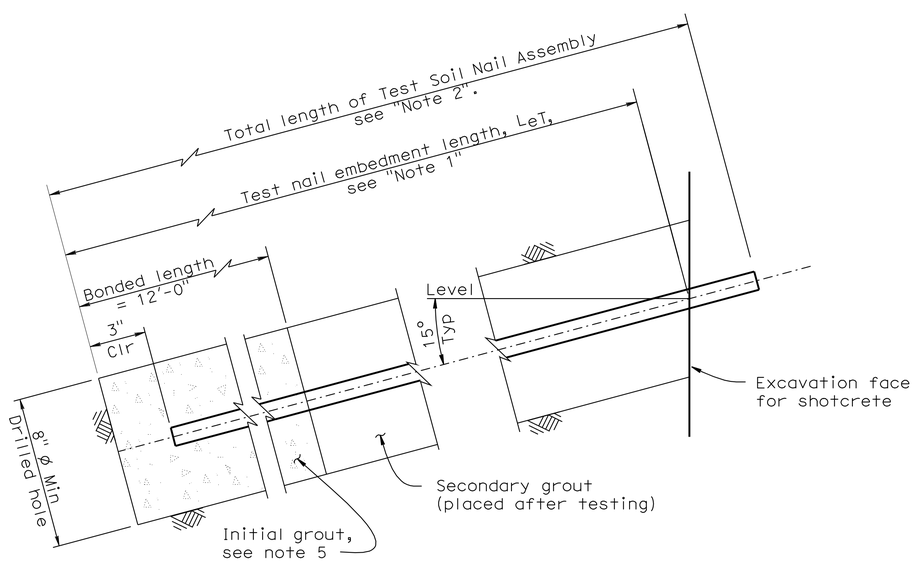

TEST SOIL NAIL ASSEMBLY

3" = 1'-0"

Notes:

1. Embedment length L_{eT} of test nails equals two thirds of the embedment length L_e of adjacent soil nail assemblies, but not less than 12'-0".
2. Total length of test soil nail equals embedment length plus the length required for jacking equipment.
3. For embedment length of production nails see 'Schedule' on "Structure Plan" sheets.
4. Finished grout surface to be perpendicular to bar.
5. For location of test nail, see "Structure Plan" sheets. Additional test nails will be installed and tested per special provisions.

	BY	CHECKED
DESIGN	M. Vo	J. Szabo
DETAILS	R. Kirkland	J. Szabo
QUANTITIES	J. Szabo	M. Vo

STATE OF CALIFORNIA
DEPARTMENT OF TRANSPORTATION

DIVISION OF ENGINEERING SERVICES
STRUCTURE DESIGN
DESIGN BRANCH 10

BRIDGE NO. 56 E0075
POST MILE 19.92

RETAINING WALL NO. 370
SOIL NAIL WALL DETAILS NO. 2

STRUCTURES DESIGN DETAIL SHEET (ENGLISH) (REV. 10/25/05)

ORIGINAL SCALE IN INCHES FOR REDUCED PLANS 0 1 2 3

CU 08
EA 448401

DISREGARD PRINTS BEARING EARLIER REVISION DATES 3/15/10 7/15/10

REVISION DATES

SHEET 6 OF 13

FILE => 56e0075grwdt06.dgn

USERNAME => trlenard DATE PLOTTED => 30-APR-2011 TIME PLOTTED => 12:08

DIST	COUNTY	ROUTE	POST MILES TOTAL PROJECT	SHEET No	TOTAL SHEETS
08	Riv	91	15.6/21.6	1581	2028

REGISTERED CIVIL ENGINEER 11/12/10 DATE

4-25-11
PLANS APPROVAL DATE

REGISTERED PROFESSIONAL ENGINEER Minh Thuong Vo No. C59297 Exp. 6/30/2011 CIVIL STATE OF CALIFORNIA

The State of California or its officers or agents shall not be responsible for the accuracy or completeness of electronic copies of this plan sheet.

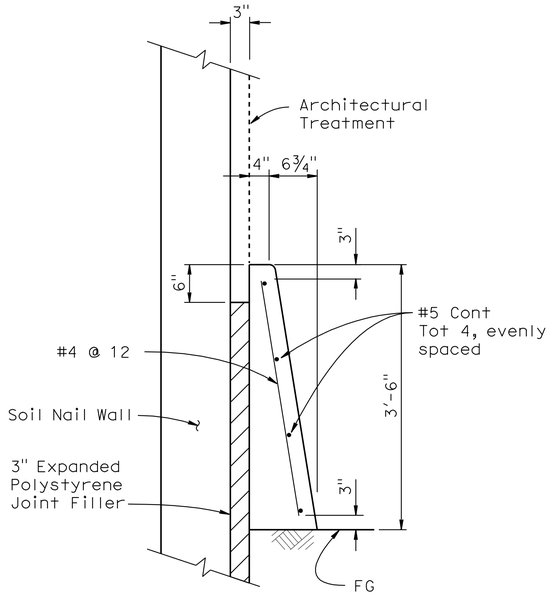

CONCRETE BARRIER (TYPE 60D MOD)

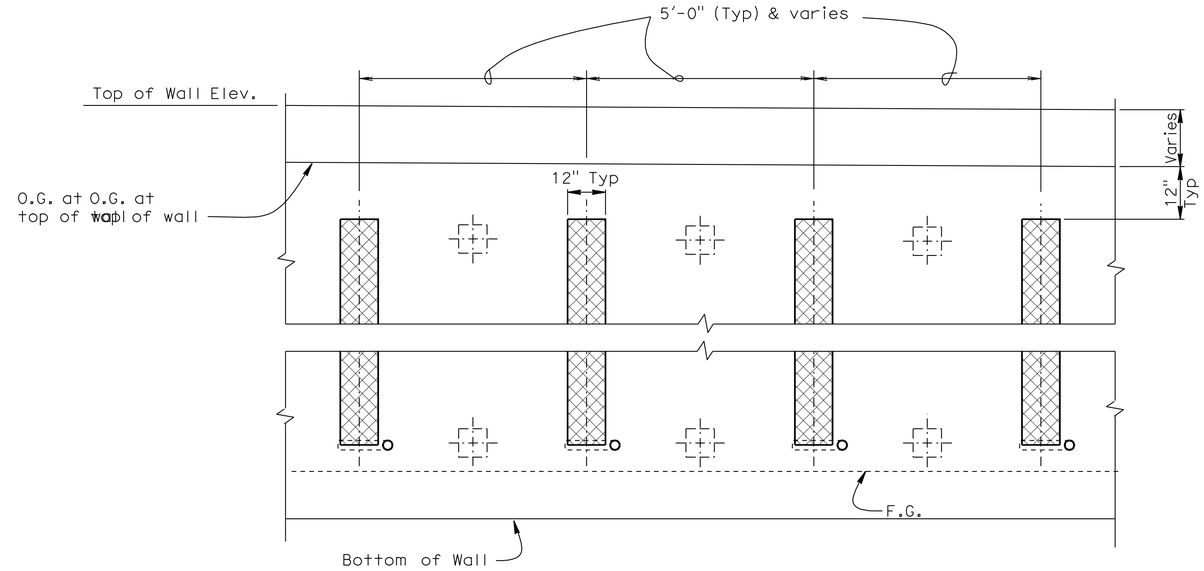

PART ELEVATION - GEOCOMPOSITE DRAIN

No scale

NOTES:

1. Center Geocomposite drain between Soil Nail assemblies.
2. - Indicates Soil Nail Assembly.
3. 2" dia drain pipe to be placed 3" above finished grade at face of barrier (Typ).
4. Adjust Geocomposite Drain to clear Test Soil Nails.

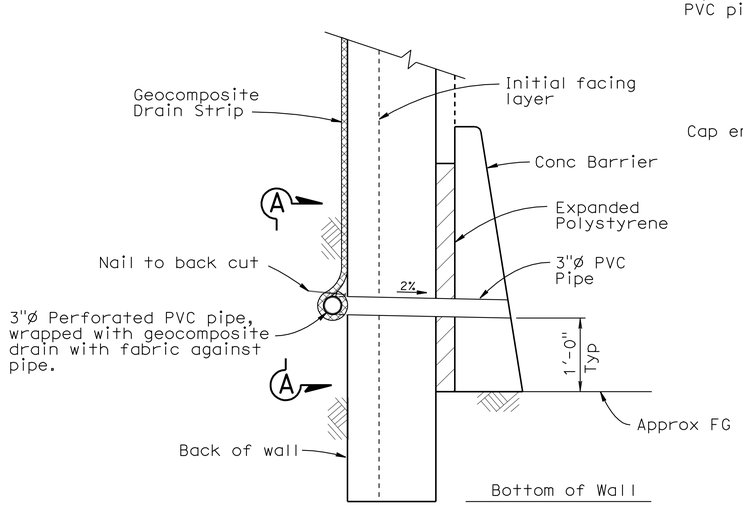

WALL DRAIN DETAIL AT WEEPHOLE OPTION A

No scale

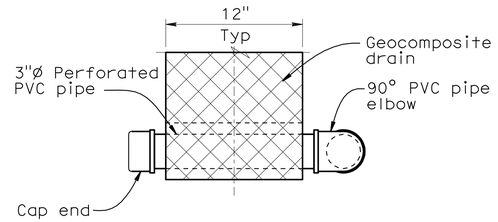

VIEW A-A

No scale

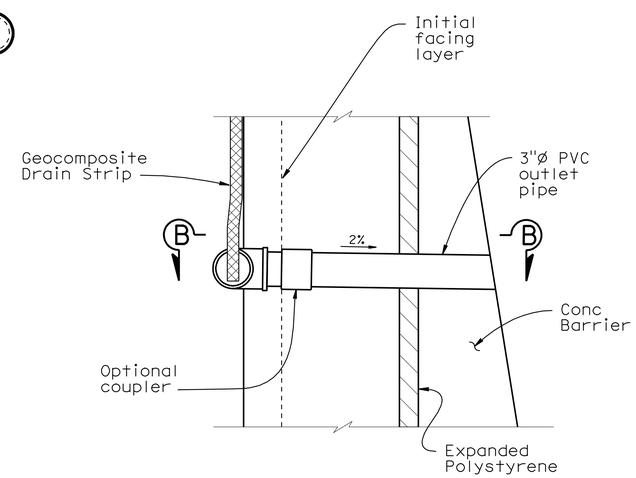

WALL DRAIN DETAIL AT WEEPHOLE OPTION B

No scale

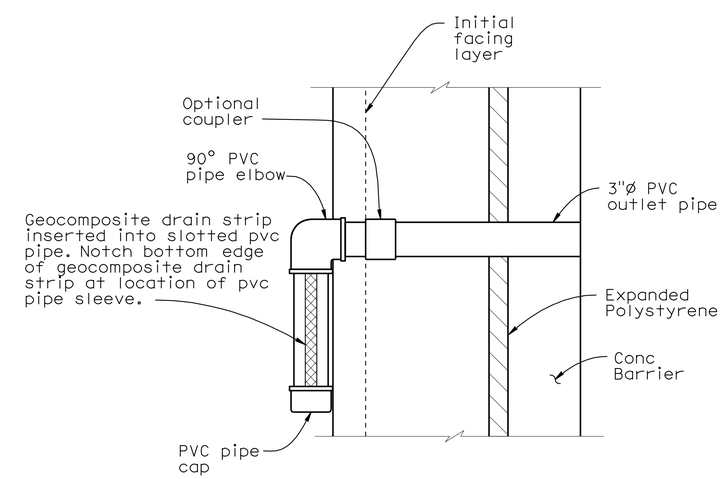

VIEW B-B

No Scale

DESIGN	BY M. Vo	CHECKED J. Szabo	
DETAILS	BY R. Kirkland	CHECKED J. Szabo	
QUANTITIES	BY J. Szabo	CHECKED M. Vo	

STATE OF CALIFORNIA DEPARTMENT OF TRANSPORTATION

DIVISION OF ENGINEERING SERVICES STRUCTURE DESIGN DESIGN BRANCH 10

BRIDGE NO. 56 E0075
POST MILE 19.92

RETAINING WALL NO. 370
SOIL NAIL WALL DETAILS NO. 3

STRUCTURES DESIGN DETAIL SHEET (ENGLISH) (REV. 10/25/05)

ORIGINAL SCALE IN INCHES FOR REDUCED PLANS 0 1 2 3

CU 08
EA 448401

DISREGARD PRINTS BEARING EARLIER REVISION DATES 3/15/10 7/15/10

REVISION DATES

SHEET 7 OF 13

FILE => 56e0075grwdt07.dgn

USERNAME => trlenard DATE PLOTTED => 30-APR-2011 TIME PLOTTED => 12:08

Dist	COUNTY	ROUTE	POST MILES TOTAL PROJECT	SHEET No.	TOTAL SHEETS
08	Riv	91	15.6/21.6	1582	2028

LICENSED LANDSCAPE ARCHITECT

4-25-11
PLANS APPROVAL DATE

LICENSED LANDSCAPE ARCHITECT
Matthew Perry Hall No. 2528
Signature
10/31/2011
Renewal Date
11/12/10
Date
STATE OF CALIFORNIA

THE STATE OF CALIFORNIA OR ITS OFFICERS OR AGENTS SHALL NOT BE RESPONSIBLE FOR THE ACCURACY OR COMPLETENESS OF SCANNED COPIES OF THIS PLAN SHEET.

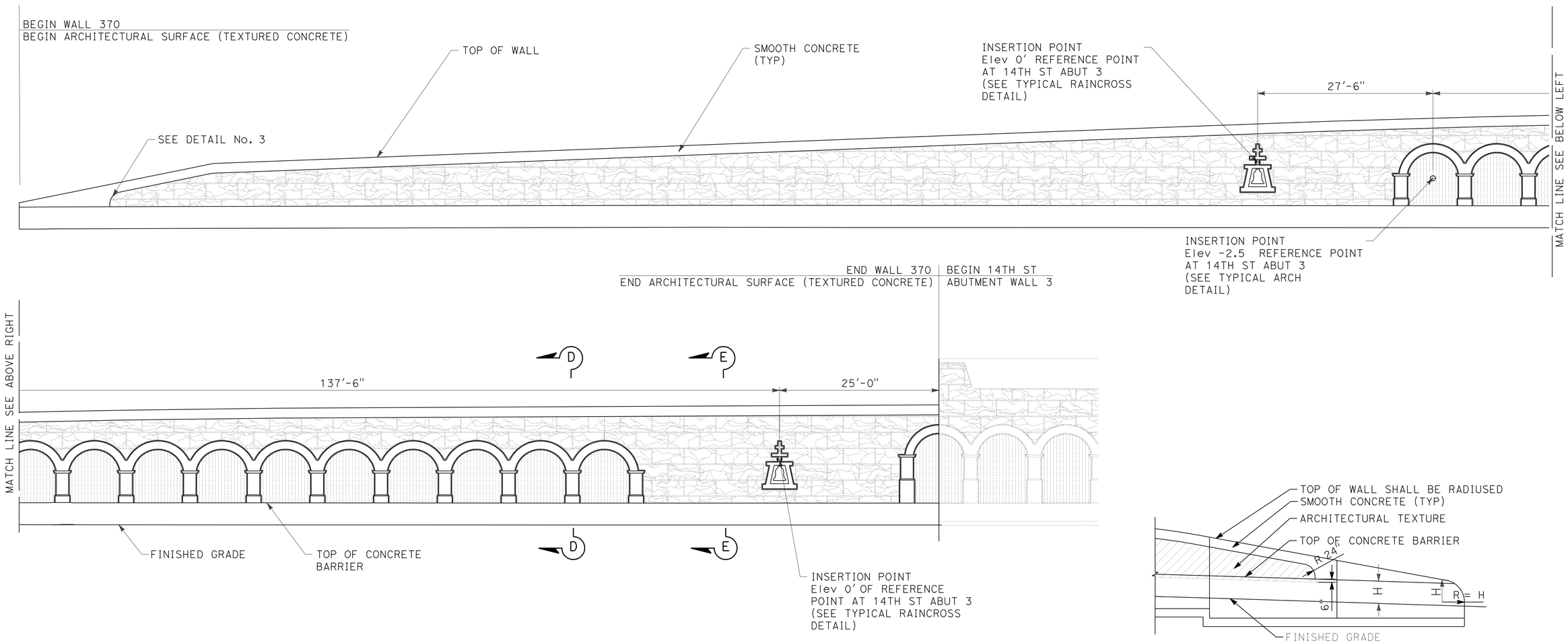

MIRRORED ELEVATION FOR FRACTURED RIB SPLIT FACE TEXTURE RETAINING WALL NO. 370

1/8" = 1'-0"

DETAIL NO. 3 - TYPICAL END OF WALL WITH TYPE 60D (MOD) CONCRETE BARRIER

No Scale

NOTES:

1. For Section D-D and Section E-E see "Architectural Surface Detail Sheet No. 2".

THIS PLAN IS ACCURATE FOR ARCHITECTUAL TREATMENT WORK ONLY.

DESIGN	BY M. Hall	CHECKED M. Bishop	
DETAILS	BY R. Kirkland	CHECKED M. Bishop	
QUANTITIES	BY J. Szabo	CHECKED M. Vo	

STATE OF CALIFORNIA
DEPARTMENT OF TRANSPORTATION

DIVISION OF ENGINEERING SERVICES
STRUCTURE DESIGN
DESIGN BRANCH 10

BRIDGE NO. 56 E0075
POST MILE 19.92

RETAINING WALL NO. 370
ARCHITECTURAL SURFACE

STRUCTURES DESIGN DETAIL SHEET (ENGLISH) (REV. 10/25/05)

ORIGINAL SCALE IN INCHES FOR REDUCED PLANS 0 1 2 3

CU 08
EA 448401

DISREGARD PRINTS BEARING EARLIER REVISION DATES → 8/17/10

REVISION DATES

SHEET 8 OF 13

FILE => 56e0075umiscdt08.dgn

USERNAME => friehard DATE PLOTTED => 30-APR-2011 TIME PLOTTED => 12:08

NOTES:
1. For Section D-D see "Architectural Surface Detail Sheet No. 2"

Dist	COUNTY	ROUTE	POST MILES TOTAL PROJECT	SHEET No.	TOTAL SHEETS
08	Riv	91	15.6/21.6	1583	2028

LICENSED LANDSCAPE ARCHITECT

4-25-11
PLANS APPROVAL DATE

LICENSED LANDSCAPE ARCHITECT Matthew Barry Hall No. 2011 Signature 10/31/2011 Renewal Date 11/12/10 Date STATE OF CALIFORNIA

THE STATE OF CALIFORNIA OR ITS OFFICERS OR AGENTS SHALL NOT BE RESPONSIBLE FOR THE ACCURACY OR COMPLETENESS OF SCANNED COPIES OF THIS PLAN SHEET.

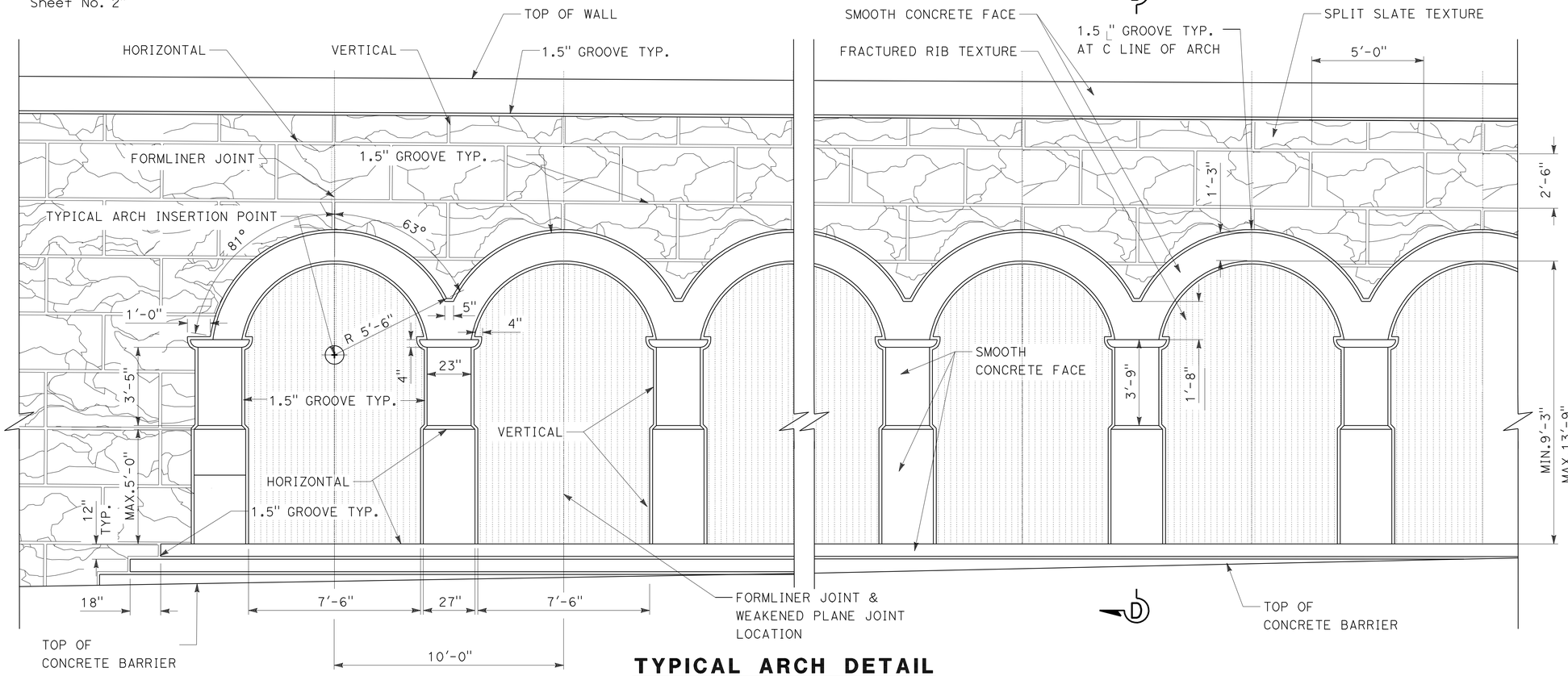

TYPICAL ARCH DETAIL

3/8" = 1'-0"

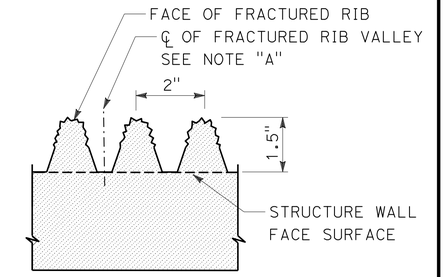

TYPICAL FRACTURED RIB TEXTURE

No Scale

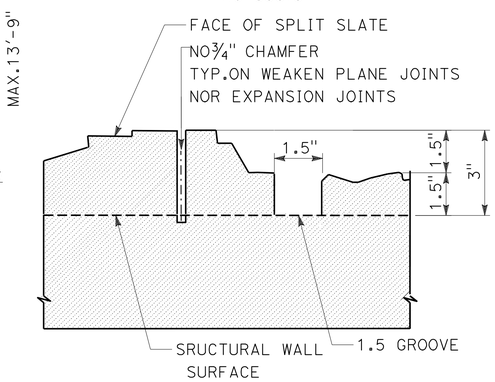

TYPICAL SPLIT SLATE TEXTURE

No Scale

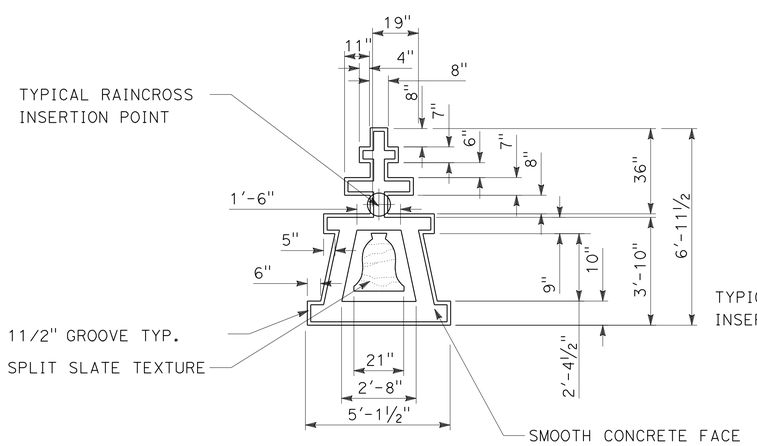

TYPICAL RAINCROSS DETAIL

3/8" = 1'-0"

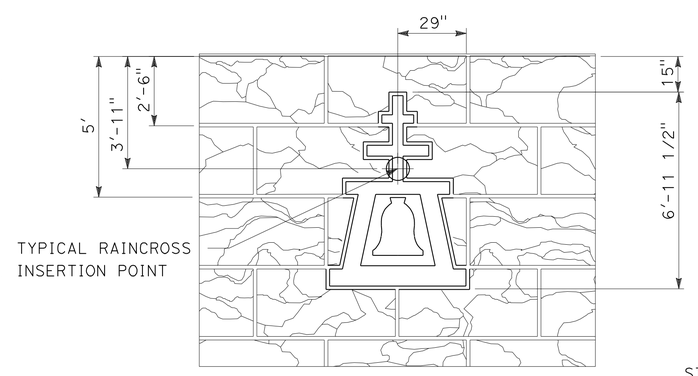

TYPICAL RAINCROSS DETAIL/ SPLIT SLATE TEXTURE

3/8" = 1'-0"

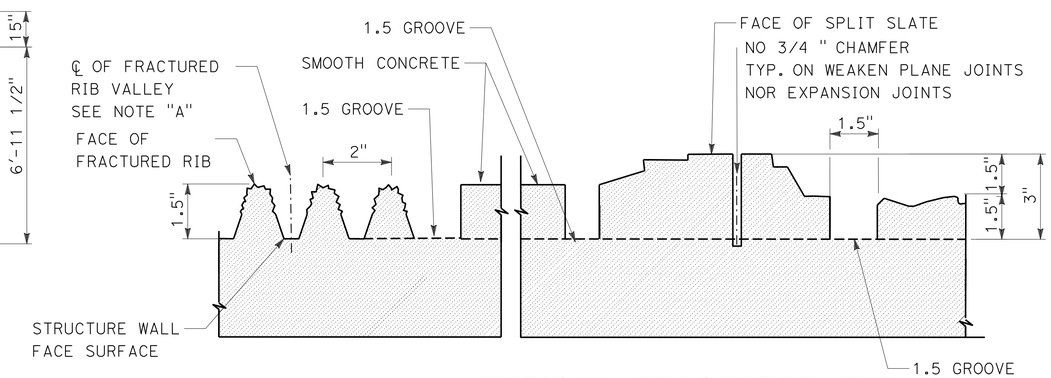

NOTE "A"
PERMITTED LOCATION OF WEAKEN PLANE AND EXPANSION JOINTS

TYPICAL FRACTURED RIB WITH SPLIT SLATE TEXTURE

No Scale

THIS PLAN IS ACCURATE FOR ARCHITECTUAL TREATMENT WORK ONLY.

	BY	CHECKED
DESIGN	M. Hall	M. Bishop
DETAILS	R. Kirkland	M. Bishop
QUANTITIES	J. Szabo	M. Vo

STATE OF CALIFORNIA
DEPARTMENT OF TRANSPORTATION

DIVISION OF ENGINEERING SERVICES
STRUCTURE DESIGN
DESIGN BRANCH 10

BRIDGE NO. 56 E0075
POST MILE 19.92

RETAINING WALL NO. 370
ARCHITECTURAL SURFACE DETAIL SHEET NO. 1

STRUCTURES DESIGN DETAIL SHEET (ENGLISH) (REV. 10/25/05)

ORIGINAL SCALE IN INCHES FOR REDUCED PLANS 0 1 2 3

CU 08
EA 448401

DISREGARD PRINTS BEARING EARLIER REVISION DATES 8/10/10

REVISION DATES

SHEET 9 OF 13

FILE => 56e0075umiscdt09.dgn

USERNAME => trlenard DATE PLOTTED => 30-APR-2011 TIME PLOTTED => 12:09

Dist	COUNTY	ROUTE	POST MILES TOTAL PROJECT	SHEET No.	TOTAL SHEETS
08	Riv	91	15.6/21.6	1584	2028

LICENSED LANDSCAPE ARCHITECT

4-25-11
PLANS APPROVAL DATE

LICENSED LANDSCAPE ARCHITECT
Matthew Harry Hall
No. 4401
Signature
10/31/2011
Renewal Date
11/12/10
Date
STATE OF CALIFORNIA

THE STATE OF CALIFORNIA OR ITS OFFICERS OR AGENTS SHALL NOT BE RESPONSIBLE FOR THE ACCURACY OR COMPLETENESS OF SCANNED COPIES OF THIS PLAN SHEET.

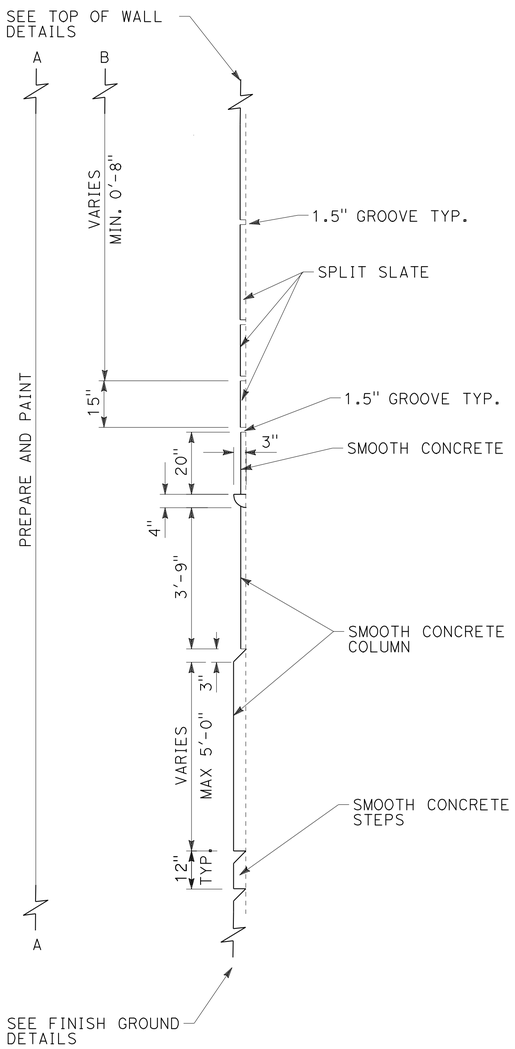

SECTION D-D

No Scale

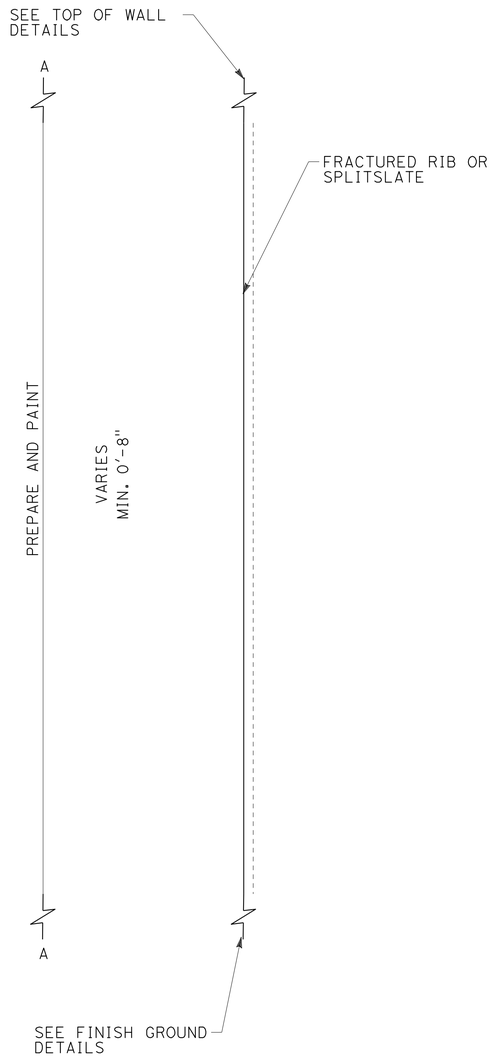

SECTION E-E

No Scale

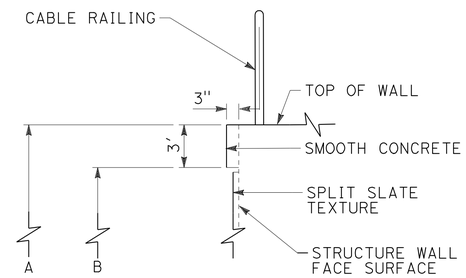

TOP OF WALL DETAIL TYPICAL WITH CABLE RAIL

No Scale

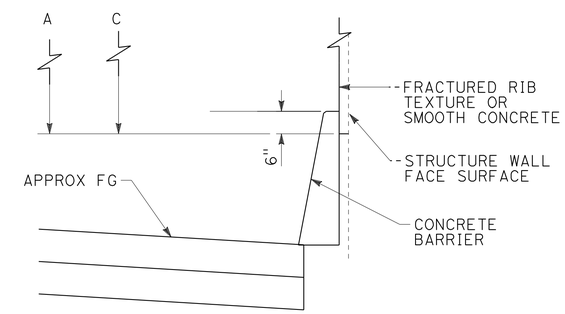

FINISH GROUND DETAIL TYPICAL WITH CONCRETE BARRIER

No Scale

DESIGN	BY M. Hall	CHECKED M. Bishop	
DETAILS	BY R. Kirkland	CHECKED M. Bishop	
QUANTITIES	BY J. Szabo	CHECKED M. Vo	

STATE OF CALIFORNIA
DEPARTMENT OF TRANSPORTATION

DIVISION OF ENGINEERING SERVICES
STRUCTURE DESIGN
DESIGN BRANCH 10

BRIDGE NO. 56 E0075
POST MILE 19.92

RETAINING WALL NO. 370
ARCHITECTURAL SURFACE DETAIL SHEET NO. 2

STRUCTURES DESIGN DETAIL SHEET (ENGLISH) (REV. 10/25/05)

ORIGINAL SCALE IN INCHES FOR REDUCED PLANS 0 1 2 3

CU 08
EA 448401

DISREGARD PRINTS BEARING EARLIER REVISION DATES 8/10/10

REVISION DATES

SHEET 10 OF 13

FILE => 56e0075umiscdt10.dgn

USERNAME => friehard DATE PLOTTED => 30-APR-2011 TIME PLOTTED => 12:03

DIST	COUNTY	ROUTE	POST MILES TOTAL PROJECT	SHEET No	TOTAL SHEETS
08	Riv	91	15.6/21.6	1585	2028

GEOTECHNICAL PROFESSIONAL — DATE 11/03/2010

4-25-11
PLANS APPROVAL DATE

REGISTERED PROFESSIONAL ENGINEER — FARID MOTAMED No. 2738 Exp. 6-30-11 GEOTECHNICAL STATE OF CALIFORNIA

The State of California or its officers or agents shall not be responsible for the accuracy or completeness of electronic copies of this plan sheet.

California Department of Transportation
5900 Folsom Boulevard
Sacramento, CA 95819

URS Corporation
2020 East First Street, Suite 400
Santa Ana, CA 92705

GROUP SYMBOLS AND NAMES

Graphic / Symbol	Group Names	Graphic / Symbol	Group Names
GW	Well-graded GRAVEL Well-graded GRAVEL with SAND	CL	Lean CLAY Lean CLAY with SAND Lean CLAY with GRAVEL SANDY lean CLAY SANDY lean CLAY with GRAVEL GRAVELLY lean CLAY GRAVELLY lean CLAY with SAND
GP	Poorly graded GRAVEL Poorly graded GRAVEL with SAND		
GW-GM	Well-graded GRAVEL with SILT Well-graded GRAVEL with SILT and SAND	CL-ML	SILTY CLAY SILTY CLAY with SAND SILTY CLAY with GRAVEL SANDY SILTY CLAY SANDY SILTY CLAY with GRAVEL GRAVELLY SILTY CLAY GRAVELLY SILTY CLAY with SAND
GW-GC	Well-graded GRAVEL with CLAY (or SILTY CLAY) Well-graded GRAVEL with CLAY and SAND (or SILTY CLAY and SAND)		
GP-GM	Poorly graded GRAVEL with SILT Poorly graded GRAVEL with SILT and SAND	ML	SILT SILT with SAND SILT with GRAVEL SANDY SILT SANDY SILT with GRAVEL GRAVELLY SILT GRAVELLY SILT with SAND
GP-GC	Poorly graded GRAVEL with CLAY (or SILTY CLAY) Poorly graded GRAVEL with CLAY and SAND (or SILTY CLAY and SAND)		
GM	SILTY GRAVEL SILTY GRAVEL with SAND	OL	ORGANIC lean CLAY ORGANIC lean CLAY with SAND ORGANIC lean CLAY with GRAVEL SANDY ORGANIC lean CLAY SANDY ORGANIC lean CLAY with GRAVEL GRAVELLY ORGANIC lean CLAY GRAVELLY ORGANIC lean CLAY with SAND
GC	CLAYEY GRAVEL CLAYEY GRAVEL with SAND		
GC-GM	SILTY, CLAYEY GRAVEL SILTY, CLAYEY GRAVEL with SAND	OL	ORGANIC SILT ORGANIC SILT with SAND ORGANIC SILT with GRAVEL SANDY ORGANIC SILT SANDY ORGANIC SILT with GRAVEL GRAVELLY ORGANIC SILT GRAVELLY ORGANIC SILT with SAND
SW	Well-graded SAND Well-graded SAND with GRAVEL		
SP	Poorly graded SAND Poorly graded SAND with GRAVEL	CH	Fat CLAY Fat CLAY with SAND Fat CLAY with GRAVEL SANDY fat CLAY SANDY fat CLAY with GRAVEL GRAVELLY fat CLAY GRAVELLY fat CLAY with SAND
SW-SM	Well-graded SAND with SILT Well-graded SAND with SILT and GRAVEL		
SW-SC	Well-graded SAND with CLAY (or SILTY CLAY) Well-graded SAND with CLAY and GRAVEL (or SILTY CLAY and GRAVEL)	MH	Elastic SILT Elastic SILT with SAND Elastic SILT with GRAVEL SANDY elastic SILT SANDY elastic SILT with GRAVEL GRAVELLY elastic SILT GRAVELLY elastic SILT with SAND
SP-SM	Poorly graded SAND with SILT Poorly graded SAND with SILT and GRAVEL		
SP-SC	Poorly graded SAND with CLAY (or SILTY CLAY) Poorly graded SAND with CLAY and GRAVEL (or SILTY CLAY and GRAVEL)	OH	ORGANIC fat CLAY ORGANIC fat CLAY with SAND ORGANIC fat CLAY with GRAVEL SANDY ORGANIC fat CLAY SANDY ORGANIC fat CLAY with GRAVEL GRAVELLY ORGANIC fat CLAY GRAVELLY ORGANIC fat CLAY with SAND
SM	SILTY SAND SILTY SAND with GRAVEL		
SC	CLAYEY SAND CLAYEY SAND with GRAVEL	OH	ORGANIC elastic SILT ORGANIC elastic SILT with SAND ORGANIC elastic SILT with GRAVEL SANDY elastic ELASTIC SILT SANDY ORGANIC elastic SILT with GRAVEL GRAVELLY ORGANIC elastic SILT GRAVELLY ORGANIC elastic SILT with SAND
SC-SM	SILTY, CLAYEY SAND SILTY, CLAYEY SAND with GRAVEL		
PT	PEAT	OL/OH	ORGANIC SOIL ORGANIC SOIL with SAND ORGANIC SOIL with GRAVEL SANDY ORGANIC SOIL SANDY ORGANIC SOIL with GRAVEL GRAVELLY ORGANIC SOIL GRAVELLY ORGANIC SOIL with SAND
	COBBLES COBBLES and BOULDERS BOULDERS		

FIELD AND LABORATORY TESTS

C	Consolidation (ASTM D 2435-04)
CL	Collapse Potential (ASTM D 5333-03)
CP	Compaction Curve (CTM 216 - 06)
CR	Corrosion, Sulfates, Chlorides (CTM 643 - 99; CTM 417 - 06; CTM 422 - 06)
CU	Consolidated Undrained Triaxial (ASTM D 4767-02)
DS	Direct Shear (ASTM D 3080-04)
EI	Expansion Index (ASTM D 4829-03)
M	Moisture Content (ASTM D 2216-05)
OC	Organic Content (ASTM D 2974-07)
P	Permeability (CTM 220 - 05)
PA	Particle Size Analysis (ASTM D 422-63 [2002])
PI	Liquid Limit, Plastic Limit, Plasticity Index (AASHTO T 89-02, AASHTO T 90-00)
PL	Point Load Index (ASTM D 5731-05)
PM	Pressure Meter
PP	Pocket Penetrometer
R	R-Value (CTM 301 - 00)
SE	Sand Equivalent (CTM 217 - 99)
SG	Specific Gravity (AASHTO T 100-06)
SL	Shrinkage Limit (ASTM D 427-04)
SW	Swell Potential (ASTM D 4546-03)
TV	Pocket Torvane
UC	Unconfined Compression - Soil (ASTM D 2166-06) Unconfined Compression - Rock (ASTM D 2938-95)
UU	Unconsolidated Undrained Triaxial (ASTM D 2850-03)
UW	Unit Weight (ASTM D 4767-04)
VS	Vane Shear (AASHTO T 223-96 [2004])

CONSISTENCY OF COHESIVE SOILS

Descriptor	Unconfined Compressive Strength (tsf)	Pocket Penetrometer (tsf)	Torvane (tsf)	Field Approximation
Very Soft	< 0.25	< 0.25	< 0.12	Easily penetrated several inches by fist
Soft	0.25 - 0.50	0.25 - 0.50	0.12 - 0.25	Easily penetrated several inches by thumb
Medium Stiff	0.50 - 1.0	0.50 - 1.0	0.25 - 0.50	Can be penetrated several inches by thumb with moderate effort
Stiff	1.0 - 2.0	1.0 - 2.0	0.50 - 1.0	Readily indented by thumb but penetrated only with great effort
Very Stiff	2.0 - 4.0	2.0 - 4.0	1.0 - 2.0	Readily indented by thumbnail
Hard	> 4.0	> 4.0	> 2.0	Indented by thumbnail with difficulty

APPARENT DENSITY OF COHESIONLESS SOILS

Descriptor	SPT N60 - Value (blows / foot)
Very Loose	0 - 4
Loose	5 - 10
Medium Dense	11 - 30
Dense	31 - 50
Very Dense	> 50

MOISTURE

Descriptor	Criteria
Dry	Absence of moisture, dusty, dry to the touch
Moist	Damp but no visible water
Wet	Visible free water, usually soil is below water table

PERCENT OR PROPORTION OF SOILS

Descriptor	Criteria
Trace	Particles are present but estimated to be less than 5%
Few	5 to 10%
Little	15 to 25%
Some	30 to 45%
Mostly	50 to 100%

SOIL PARTICLE SIZE

Descriptor		Size
Boulder		> 12 inches
Cobble		3 to 12 inches
Gravel	Coarse	3/4 inch to 3 inches
	Fine	No. 4 Sieve to 3/4 inch
Sand	Coarse	No. 10 Sieve to No. 4 Sieve
	Medium	No. 40 Sieve to No. 10 Sieve
	Fine	No. 200 Sieve to No. 40 Sieve
Silt and Clay		Passing No. 200 Sieve

PLASTICITY OF FINE-GRAINED SOILS

Descriptor	Criteria
Nonplastic	A 1/8-inch thread cannot be rolled at any water content.
Low	The thread can barely be rolled, and the lump cannot be formed when drier than the plastic limit.
Medium	The thread is easy to roll, and not much time is required to reach the plastic limit; it cannot be rerolled after reaching the plastic limit. The lump crumbles when drier than the plastic limit.
High	It takes considerable time rolling and kneading to reach the plastic limit. The thread can be rerolled several times after reaching the plastic limit. The lump can be formed without crumbling when drier than the plastic limit.

CEMENTATION

Descriptor	Criteria
Weak	Crumbles or breaks with handling or little finger pressure.
Moderate	Crumbles or breaks with considerable finger pressure.
Strong	Will not crumble or break with finger pressure.

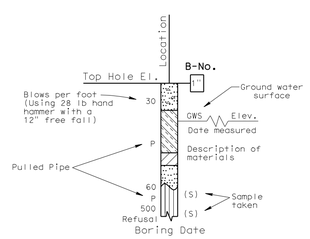

SAMPLE BORING (DRY)

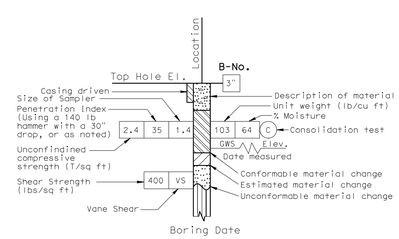

ROTARY SAMPLE BORING (WET)

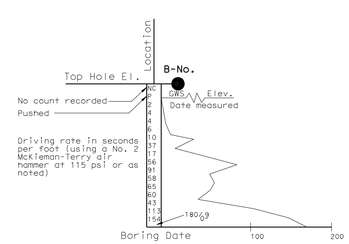

2 1/4" CONE PENETRATION BORING

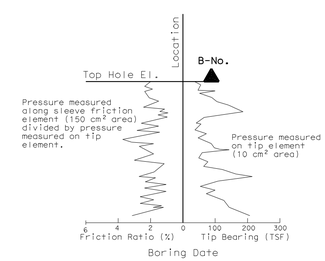

ELECTRONIC CONE PENETROMETER TEST

Cone Penetrometer dimensions and testing procedures are in accordance with ASTM standard D 3441-79, or as noted.

GINA PURSELL DESIGN OVERSIGHT	SHAWN WEI FUNCTIONAL SUPERVISOR	DRAWN BY	P. QUACH	P.CHAU/D.WADER/C.CARBINO FIELD INVESTIGATION BY:	PREPARED FOR THE STATE OF CALIFORNIA DEPARTMENT OF TRANSPORTATION	A. LEE PROJECT ENGINEER	BRIDGE NO. 56 E0075 POST MILE 19.92
11/12/10 SIGN OFF DATE		CHECKED BY	S. PIRATHIVIRAJ	DATE: Nov 6 2007 to March 7 2008			

SOIL LEGEND

LOG OF TEST BORINGS 1 OF 3

OSF GEOTECHNICAL LOG OF TEST BORINGS SHEET (ENGLISH) (REV. 2/25/05)

ORIGINAL SCALE IN INCHES FOR REDUCED PLANS 0 1 2 3

CU 08
EA 448401

DISREGARD PRINTS BEARING EARLIER REVISION DATES 8/18/10

REVISION DATES (PRELIMINARY STAGE ONLY)

SHEET 11 OF 13

FILE => 56e0075zlotb11.dgn

USERNAME => trrichard DATE PLOTTED => 30-APR-2011 TIME PLOTTED =>

DIST	COUNTY	ROUTE	POST MILES TOTAL PROJECT	SHEET No	TOTAL SHEETS
08	Riv	91	15.6/21.6	1586	2028

GEOTECHNICAL PROFESSIONAL — DATE 11/03/2010

4-25-11
PLANS APPROVAL DATE

REGISTERED PROFESSIONAL ENGINEER — FARID MOTAMED No. 2738 Exp. 6-30-11 GEOTECHNICAL — STATE OF CALIFORNIA

The State of California or its officers or agents shall not be responsible for the accuracy or completeness of electronic copies of this plan sheet.

California Department of Transportation
5900 Folsom Boulevard
Sacramento, CA 95819

URS Corporation
2020 East First Street, Suite 400
Santa Ana, CA 92705

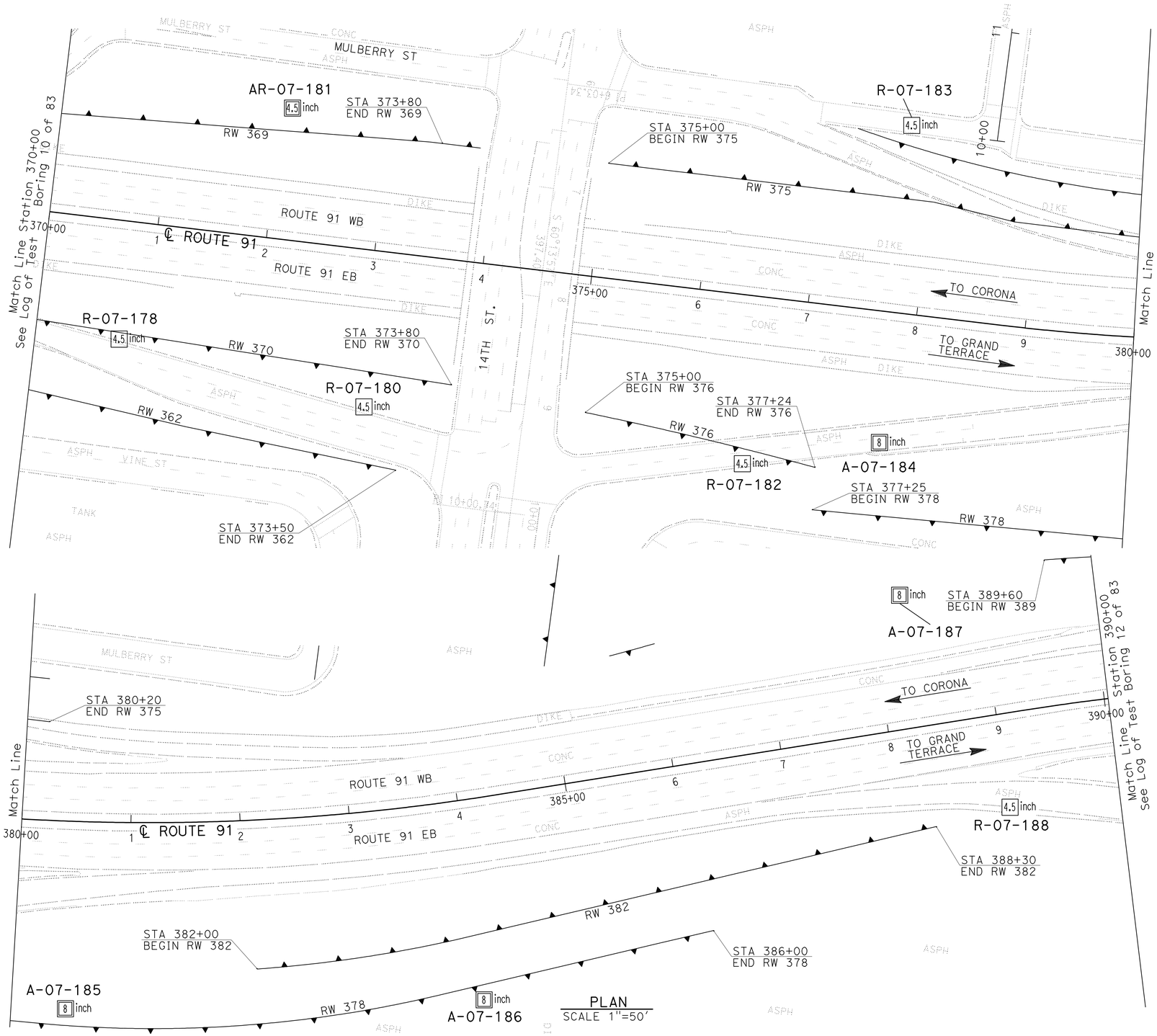

Borehole Number	Drill Rig	Hammer Type	Avg. Hammer Efficiency, ETR (%)
R-07-178	CS-2000	Automatic	84
R-07-180	CME 85	Automatic	87
AR-07-181	CS-2000	Automatic	84
R-07-182	CS-2000	Automatic	84
R-07-183	CS-2000	Automatic	84
A-07-184	Diedrich D-120	Automatic	75*
A-07-185	Diedrich D-120	Automatic	75*
A-07-186	Diedrich D-120	Automatic	75*
A-07-187	Diedrich D-120	Automatic	75*
R-07-188	CS-2000	Automatic	84

Sampler Type	Inside Diameter (Inches)	Borehole Numbers
SPT	1.375	R-07-178, R-07-180, R-07-181 R-07-182, R-07-183, A-07-184 A-07-185, A-07-186, A-07-187 R-07-188
Modified California 1	1.94	R-07-180, R-07-183
Modified California 2	2.40	A-07-184, A-07-185, A-07-186 A-07-187

*Estimated Hammer Efficiency Rating.

GINA PURSELL — DESIGN OVERSIGHT
SHAWN WEI — FUNCTIONAL SUPERVISOR
11/12/10 — SIGN OFF DATE

DRAWN BY: P. QUACH
CHECKED BY: S. PIRATHIVIRAJ

P.CHAU/D.WADER/C.CARBINO
FIELD INVESTIGATION BY:
DATE: Nov 6 2007 to March 7 2008

PREPARED FOR THE STATE OF CALIFORNIA DEPARTMENT OF TRANSPORTATION

A. LEE — PROJECT ENGINEER

BRIDGE NO. 56 E0075
POST MILE 19.92

WALL LAYOUT & EXPLORATORY LOCATION MAP
LOG OF TEST BORINGS 2 of 3

OSF GEOTECHNICAL LOG OF TEST BORINGS SHEET (ENGLISH) (REV. 2/25/05)

ORIGINAL SCALE IN INCHES FOR REDUCED PLANS 0 1 2 3

CU 08
EA 448401

DISREGARD PRINTS BEARING EARLIER REVISION DATES
REVISION DATES (PRELIMINARY STAGE ONLY) 8/19/10

SHEET 12 OF 13

FILE => 56e0075zlotb12.dgn

USERNAME => trfenard DATE PLOTTED => 30-APR-2011 TIME PLOTTED =>

DIST	COUNTY	ROUTE	POST MILES TOTAL PROJECT	SHEET No	TOTAL SHEETS
08	Riv	91	15.6/21.6	1587	2028

GEOTECHNICAL PROFESSIONAL — DATE 11/03/2010

4-25-11
PLANS APPROVAL DATE

REGISTERED PROFESSIONAL ENGINEER — FARID MOTAMED No. 2738 Exp. 6-30-11 GEOTECHNICAL — STATE OF CALIFORNIA

The State of California or its officers or agents shall not be responsible for the accuracy or completeness of electronic copies of this plan sheet.

California Department of Transportation
5900 Folsom Boulevard
Sacramento, CA 95819

URS Corporation
2020 East First Street, Suite 400
Santa Ana, CA 92705

FOR PLAN VIEW, SEE
"LOG OF TEST BORINGS 2 OF 3"

NOTE: 1. This LOTB sheet was prepared in accordance with the Caltrans Soil & Rock Logging, Classification, and Presentation Manual (June 2007).

2. For legend, see "Log of Test Borings 1 OF 3"

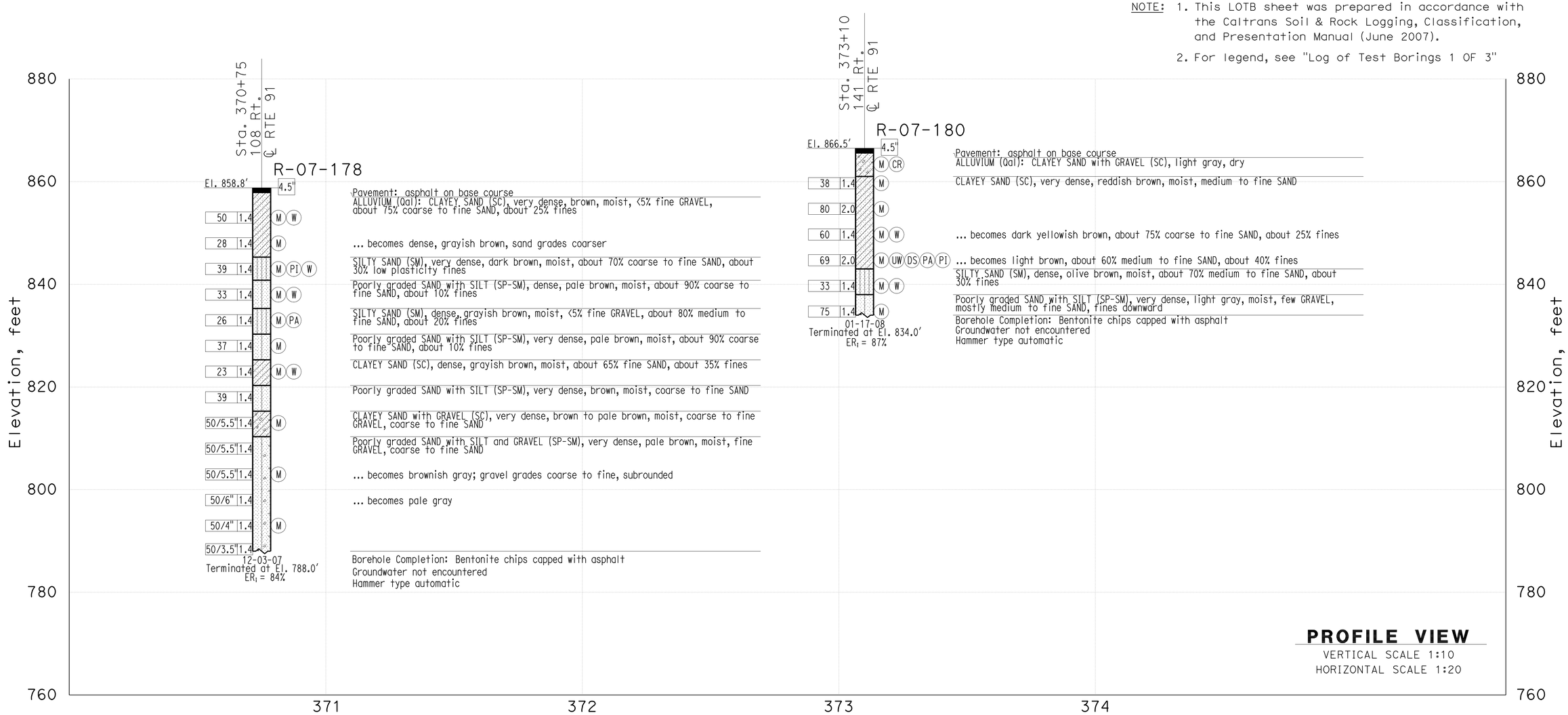

THIS PLAN ACCURATE FOR SOUND WALL AND RETAINING WALL WORK ONLY

GINA PURSELL DESIGN OVERSIGHT	SHAWN WEI FUNCTIONAL SUPERVISOR	DRAWN BY	P. QUACH	P.CHAU/D.WADER/C.CARBINO FIELD INVESTIGATION BY:	PREPARED FOR THE STATE OF CALIFORNIA DEPARTMENT OF TRANSPORTATION	A. LEE PROJECT ENGINEER	BRIDGE NO. 56 E0075 POST MILE 19.92
11/12/10 SIGN OFF DATE		CHECKED BY	S. PIRATHIVIRAJ	DATE: Nov 6 2007 to March 7 2008			

RETAINING WALL 370

LOG OF TEST BORINGS 3 OF 3

OSF GEOTECHNICAL LOG OF TEST BORINGS SHEET (ENGLISH) (REV. 2/25/05)

ORIGINAL SCALE IN INCHES FOR REDUCED PLANS 0 1 2 3

CU 08
EA 448401

DISREGARD PRINTS BEARING EARLIER REVISION DATES

REVISION DATES (PRELIMINARY STAGE ONLY) 8/18/10

SHEET 13 OF 13

FILE => 56e0075zlotb13.dgn

USERNAME => friehard DATE PLOTTED => 30-APR-2011 TIME PLOTTED =>

DIST	COUNTY	ROUTE	POST MILES TOTAL PROJECT	SHEET No	TOTAL SHEETS
08	Riv	91	15.6/21.6	1588	2028

REGISTERED CIVIL ENGINEER 11/12/10 DATE

4-25-11
PLANS APPROVAL DATE

REGISTERED PROFESSIONAL ENGINEER Minh Thuong Vo No. C59297 Exp. 6/30/2011 CIVIL STATE OF CALIFORNIA

The State of California or its officers or agents shall not be responsible for the accuracy or completeness of electronic copies of this plan sheet.

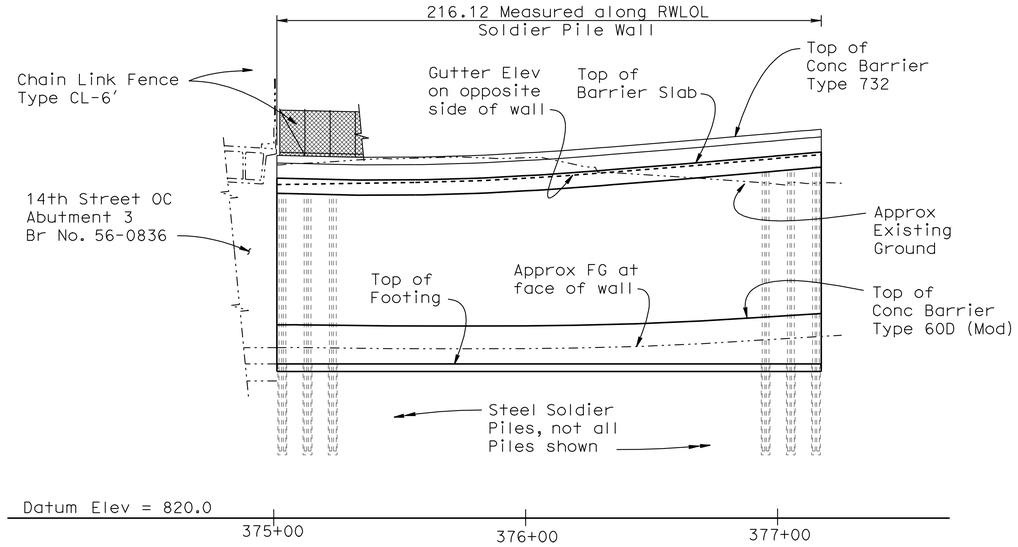

DEVELOPED MIRROR ELEVATION

Horiz. 1" = 30′
Vert. 1" = 10′

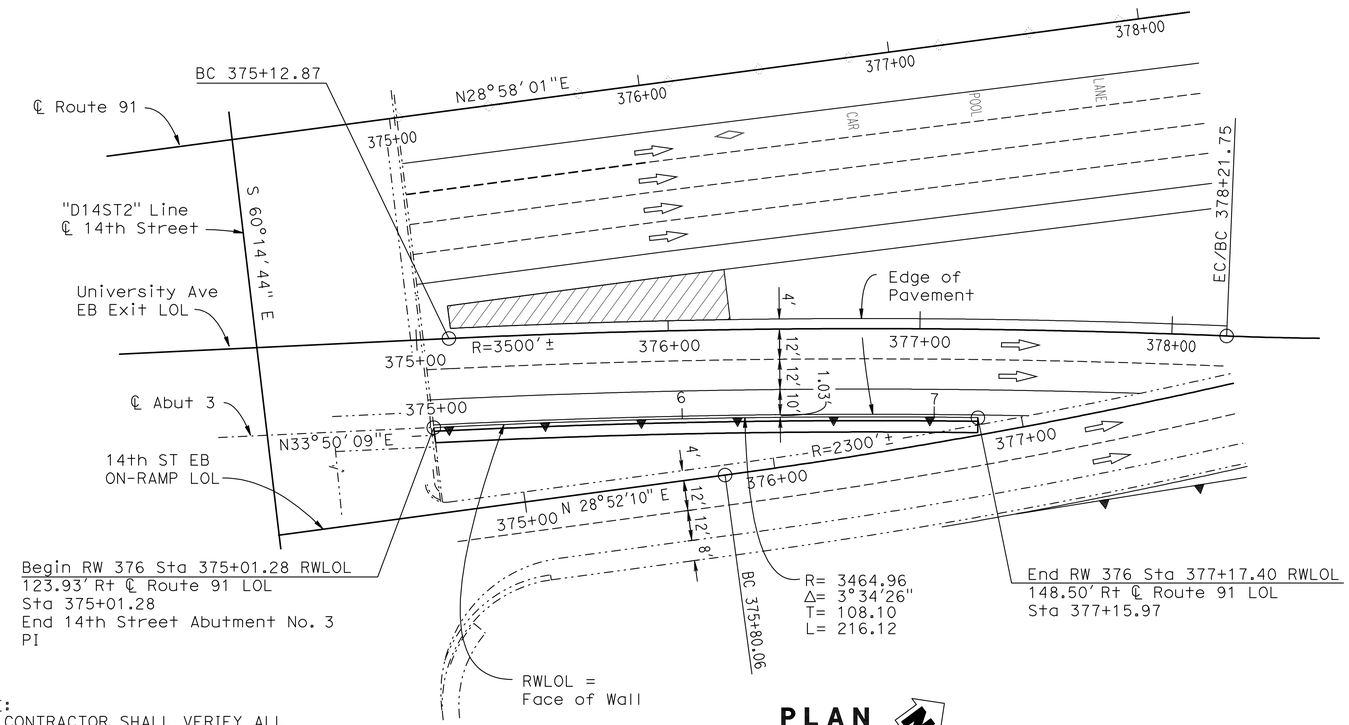

PLAN

1" = 30′

NOTE:
THE CONTRACTOR SHALL VERIFY ALL CONTROLLING FIELD DIMENSIONS BEFORE ORDERING OR FABRICATING ANY MATERIAL.

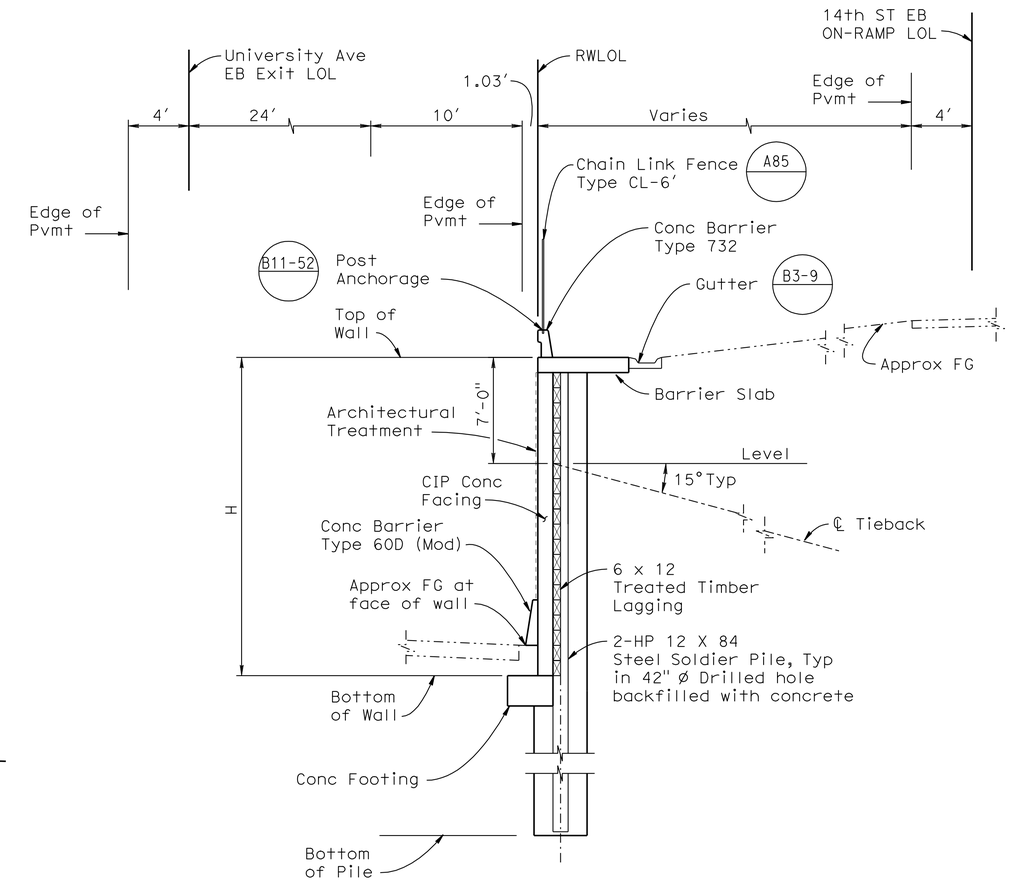

TYPICAL SECTION

1" = 5′

NOTES:

1. For Quantities see "INDEX TO PLANS" sheet.

Daniel T. Adams DESIGN ENGINEER	DESIGN	BY M. Vo	CHECKED J. Szabo	LOAD & RESISTANCE FACTOR DESIGN	LIVE LOADING: HL93 W/"LOW-BOY"; PERMIT DESIGN VEHICLE
	DETAILS	BY R. Kirkland	CHECKED J. Szabo	LAYOUT BY M. Vo	CHECKED J. Szabo
	QUANTITIES	BY J. Szabo	CHECKED M. Vo	SPECIFICATIONS BY Dave Klein	PLANS AND SPECS COMPARED Dave Klein

STATE OF CALIFORNIA
DEPARTMENT OF TRANSPORTATION

DIVISION OF ENGINEERING SERVICES
STRUCTURE DESIGN
DESIGN BRANCH 10

BRIDGE NO. 56 E0076
POST MILE 20.02

RETAINING WALL NO. 376
GENERAL PLAN

ORIGINAL SCALE IN INCHES FOR REDUCED PLANS 0 1 2 3

CU 08
EA 448401

DISREGARD PRINTS BEARING EARLIER REVISION DATES

REVISION DATES 3/15/10 7/15/10

SHEET 1 OF 13

STRUCTURES DESIGN GENERAL PLAN SHEET (ENGLISH) (REV.07-24-06)

FILE => 56e0076agp01.dgn

USERNAME => trrichard DATE PLOTTED =>

DIST	COUNTY	ROUTE	POST MILES TOTAL PROJECT	SHEET No	TOTAL SHEETS
08	Riv	91	15.6/21.6	1589	2028

REGISTERED CIVIL ENGINEER 11/12/10 DATE

4-25-11
PLANS APPROVAL DATE

REGISTERED PROFESSIONAL ENGINEER Minh Thuong Vo No. C59297 Exp. 6/30/2011 CIVIL STATE OF CALIFORNIA

The State of California or its officers or agents shall not be responsible for the accuracy or completeness of electronic copies of this plan sheet.

GENERAL NOTES
LOAD FACTOR DESIGN

DESIGN: CALTRANS BRIDGE DESIGN SPECIFICATIONS
LFD Version April 2000 (1996 AASHTO with Interims and Revision by Caltrans)

SEISMIC DESIGN: CALTRANS SEISMIC DESIGN CRITERIA (SDC)
Version 1.4, June 2006

SOIL PARAMETERS:

(For determination of design lateral earth pressures)

Land Slide Material (to bottom of lagging)	ϕ =30°	γ_m=120 #/ft^3	c = 50 #/ft^2
Bedrock	ϕ =25°	γ_m=165 #/ft^3	c = 3600 #/ft^2

REINFORCED CONCRETE:

f'c =3,200 psi (Concrete compressive strength at 28 days)
fy = 60,000 psi (Yield strength of reinforcement)

STRUCTURAL STEEL:

Steel piles - ASTM Designation: A709/A709M, Grade 50 or A572/A572M, Grade 50
Plates - ASTM Designation: A709/A709M, Grade 36 or A36/A36M
Welded pipe - ASTM Designation: A53

TIMBER:

Treated Douglas Fir, Grade No.1 or better
Lagging members shall be full sawn

TIEBACKS:

Strand tendon- ASTM Designation: A416
T = Design force per tieback, see "DETAILS NO. 4" Sheet
fpu = Minimum tensile strength of prestressing steel, ksi
As(min) = Minimum cross sectional area of prestressing steel in tieback tendon, square inches

$$As(min) = \frac{1.5\ T}{0.75\ fpu}$$

LIVE LOAD:

Surcharge - 2 feet level earth
ϕ =30° γ_m=120 #/ft^3

NOTES

1. Earthwork shall conform to the slope or grade limits shown prior to start of construction for the tiebacks.
2. Tiebacks at a soldier pile shall be constructed starting with level A.
3. For Limits & Layout of Permeable Material and Filter Fabric, see "Road Plans".
4. Contractor may submit alternative plans & details for approval by the Engineer.
5. Attach Geocomposite Drain with Hot Dip Galvanized Nails min 8d and as approved by the Engineer. Filter Fabric on Geocomposite Drain to face away from lagging. For limits of Geocomposite Drain, see "Road Plans"

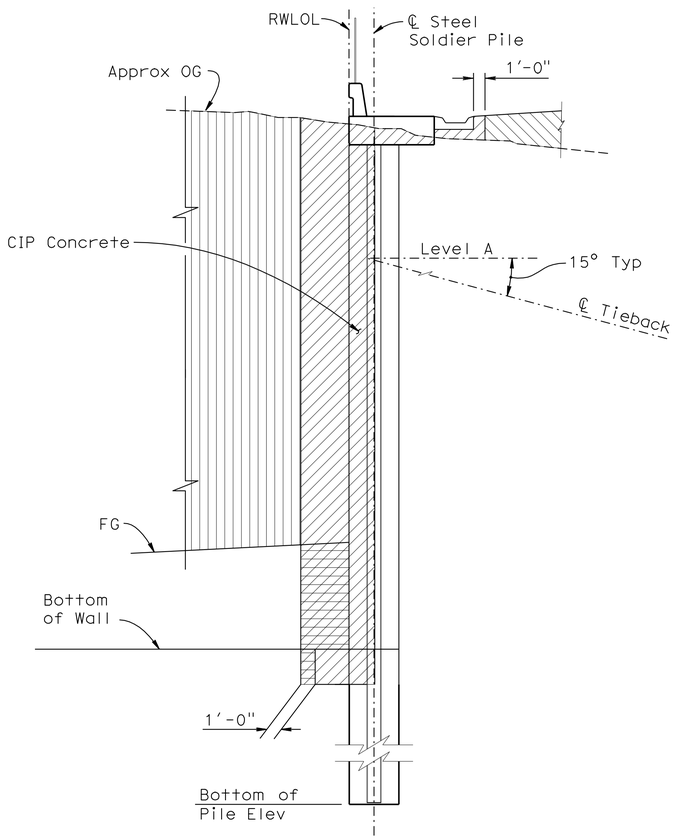

LIMITS OF PAYMENT FOR EXCAVATION AND BACKFILL

No Scale

LEGEND

- Structure Backfill
- Structure Excavation
- Roadway Excavation (see Roadway Plan)
- Roadway Backfill (see Roadway Plan)

INDEX TO PLANS

Sheet No.	Title
1	GENERAL PLAN
2	INDEX TO PLANS
3	STRUCTURE PLAN
4	TYPICAL SECTION
5	DETAILS NO. 1
6	DETAILS NO. 2
7	DETAILS NO. 3
8	ARCHITECTURAL SURFACE
9	ARCHITECTURAL SURFACE DETAIL SHEET NO.1
10	ARCHITECTURAL SURFACE DETAIL SHEET NO. 2
11	LOG OF TEST BORINGS 1 OF 3
12	LOG OF TEST BORINGS 2 OF 3
13	LOG OF TEST BORINGS 3 OF 3

STANDARD PLANS DATED MAY 2006

A10A	ACRONYMS AND ABBREVIATIONS (SHEET 1 OF 2)
A10B	ACRONYMS AND ABBREVIATIONS (SHEET 2 OF 2)
A10C	SYMBOLS (SHEET 1 OF 2)
A10D	SYMBOLS (SHEET 2 OF 2)
A85	CHAIN LINK FENCE
B0-1	BRIDGE DETAILS
B0-3	BRIDGE DETAILS
B3-9	RETAINING WALL DETAILS No. 2
B11-52	CHAIN LINK RAILING TYPE 7
B11-55	CONCRETE BARRIER TYPE 732

STANDARD PLAN SHEET NO.
DETAIL NO.

QUANTITIES

RETAINING WALL 376 BRIDGE NO 56E0076

STRUCTURE EXCAVATION (SOLDIER PILE WALL)	979	CY
STRUCTURE BACKFILL (SOLDIER PILE WALL)	71	CY
CONCRETE BACKFILL (SOLDIER PILE WALL)	92	CY
LEAN CONCRETE BACKFILL	135	CY
STEEL SOLDIER PILE (HP 12 X 84)	1,676	LF
42" DRILLED HOLE	868	LF
TIEBACK ANCHOR	22	EA
STRUCTURAL CONCRETE, RETAINING WALL	236	CY
STRUCTURAL CONCRETE, BARRIER SLAB	96	CY
ARCHITECTURAL SURFACE (TEXTURED CONCRETE) FRACTURED RIB SPLIT SLATE TEXTURE	4,375	SQFT
BAR REINFORCING STEEL (RETAINING WALL)	35,014	LB
BAR REINFORCING STEEL (BARRIER SLAB)	9,967	LB
TIMBER LAGGING	30	MFBM
MINOR CONCRETE (GUTTER)	216	LF
CHAIN LINK FENCE (TYPE CL-6)	216	LF
CONCRETE BARRIER (TYPE 732)	216	LF
CONCRETE BARRIER (TYPE 60D MODIFIED)	216	LF

	BY	CHECKED
DESIGN	M. Vo	J. Szabo
DETAILS	R. Kirkland	J. Szabo
QUANTITIES	J. Szabo	M. Vo

STATE OF CALIFORNIA
DEPARTMENT OF TRANSPORTATION

DIVISION OF ENGINEERING SERVICES
STRUCTURE DESIGN
DESIGN BRANCH 10

BRIDGE NO. 56 E0076
POST MILE 20.02

RETAINING WALL NO. 376
INDEX TO PLANS

STRUCTURES DESIGN DETAIL SHEET (ENGLISH) (REV. 10/25/05)

ORIGINAL SCALE IN INCHES FOR REDUCED PLANS 0 1 2 3

CU 08
EA 448401

DISREGARD PRINTS BEARING EARLIER REVISION DATES 3/15/10 7/15/10

REVISION DATES

SHEET 2 OF 13

FILE => 56e0076aitp02.dgn

USERNAME => friehard DATE PLOTTED => 30-APR-2011 TIME PLOTTED => 12:03

DIST	COUNTY	ROUTE	POST MILES TOTAL PROJECT	SHEET No	TOTAL SHEETS
08	Riv	91	15.6/21.6	1590	2028

REGISTERED CIVIL ENGINEER 11/12/10 DATE

4-25-11
PLANS APPROVAL DATE

REGISTERED PROFESSIONAL ENGINEER Minh Thuong Vo No. C59297 Exp. 6/30/2011 CIVIL STATE OF CALIFORNIA

The State of California or its officers or agents shall not be responsible for the accuracy or completeness of electronic copies of this plan sheet.

Note:
Chain Link Fence and Concrete Barrier Type 60D (Mod) not shown for clarity

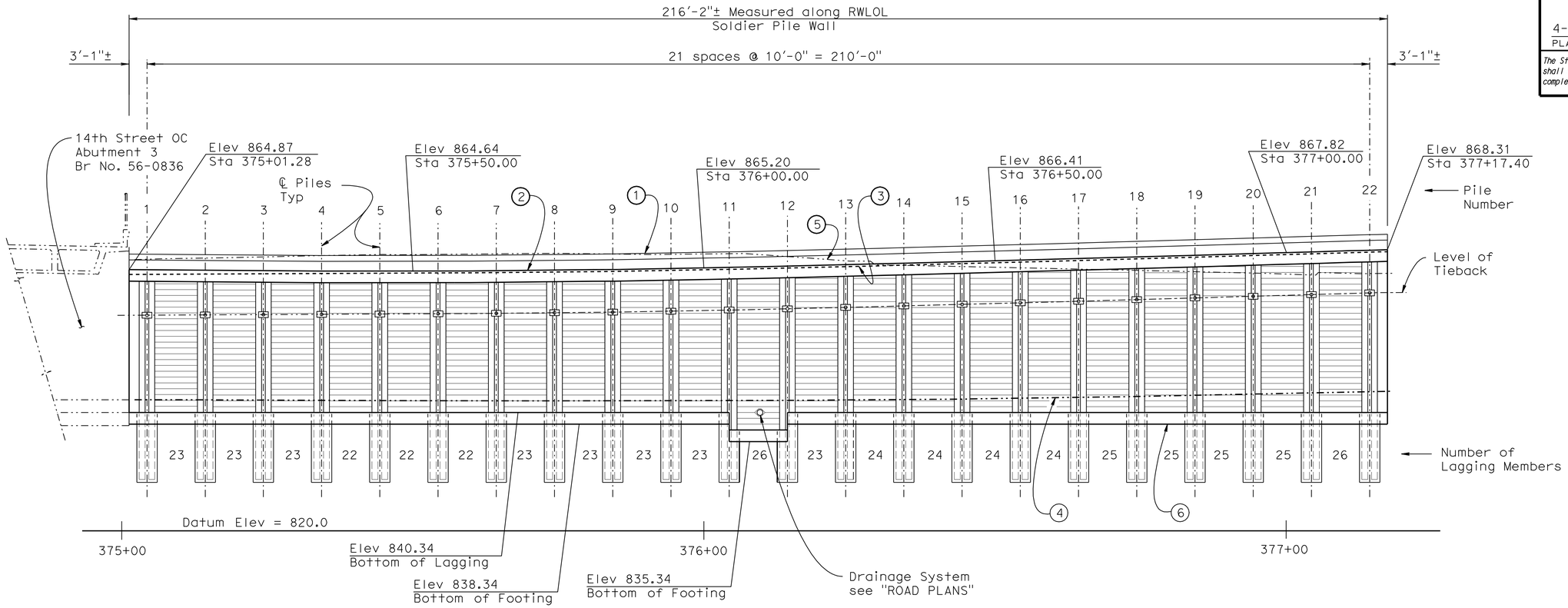

DEVELOPED MIRROR ELEVATION

1" = 10'

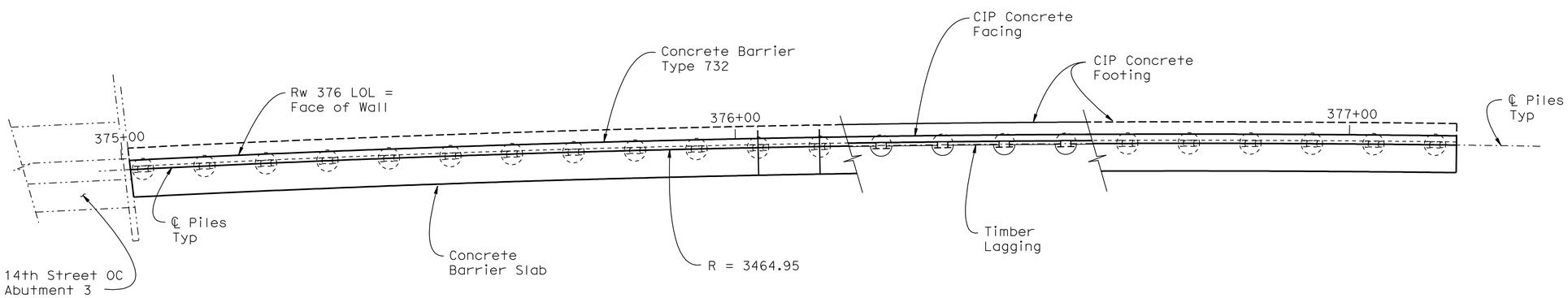

PLAN

1" = 10'

NOTES:

1. Top of Concrete Barrier Type 732
2. Top of Wall
3. Gutter Elevation At Back of Wall
4. Approximate FG at Face of Wall
5. Approximate OG at Face of Wall
6. Bottom of Wall

	BY	CHECKED
DESIGN	M. Vo	J.Szabo
DETAILS	R. Kirkland	J. Szabo
QUANTITIES	J. Szabo	M. Vo

STATE OF CALIFORNIA
DEPARTMENT OF TRANSPORTATION

DIVISION OF ENGINEERING SERVICES
STRUCTURE DESIGN
DESIGN BRANCH 10

BRIDGE NO. 56 E0076
POST MILE 20.02

RETAINING WALL NO. 376
STRUCTURE PLAN

STRUCTURES DESIGN DETAIL SHEET (ENGLISH) (REV. 10/25/05)

ORIGINAL SCALE IN INCHES FOR REDUCED PLANS 0 1 2 3

CU 08
EA 448401

DISREGARD PRINTS BEARING EARLIER REVISION DATES 3/15/10 7/15/10

REVISION DATES

SHEET 3 OF 13

FILE => 56e0076csp03.dgn

USERNAME => trlenard DATE PLOTTED => 30-APR-2011 TIME PLOTTED => 12:09

DIST	COUNTY	ROUTE	POST MILES TOTAL PROJECT	SHEET No	TOTAL SHEETS
08	Riv	91	15.6/21.6	1591	2028

REGISTERED CIVIL ENGINEER 11/12/10 DATE

4-25-11
PLANS APPROVAL DATE

The State of California or its officers or agents shall not be responsible for the accuracy or completeness of electronic copies of this plan sheet.

REGISTERED PROFESSIONAL ENGINEER Minh Thuong Vo No. C59297 Exp. 6/30/2011 CIVIL STATE OF CALIFORNIA

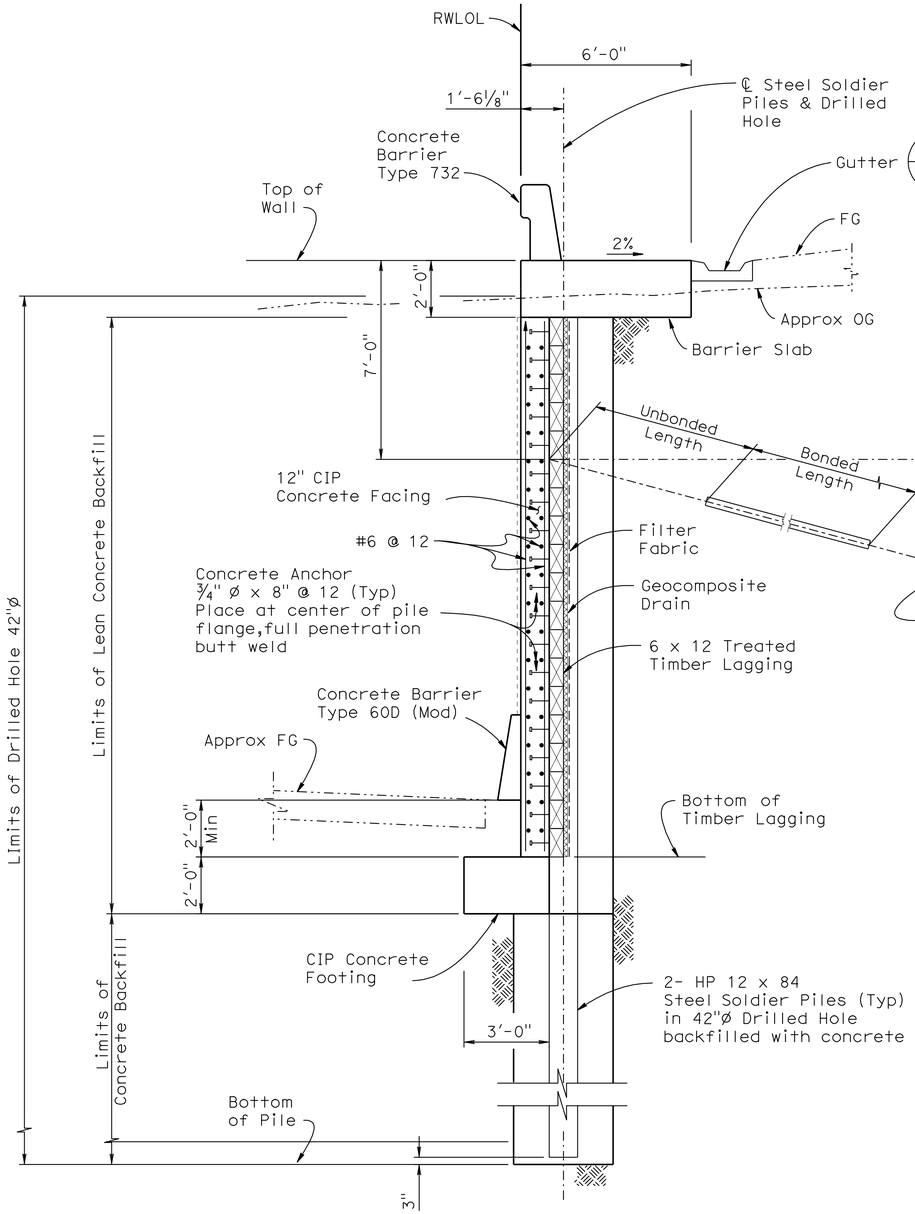

TYPICAL SECTION

⅜" = 1'-0"

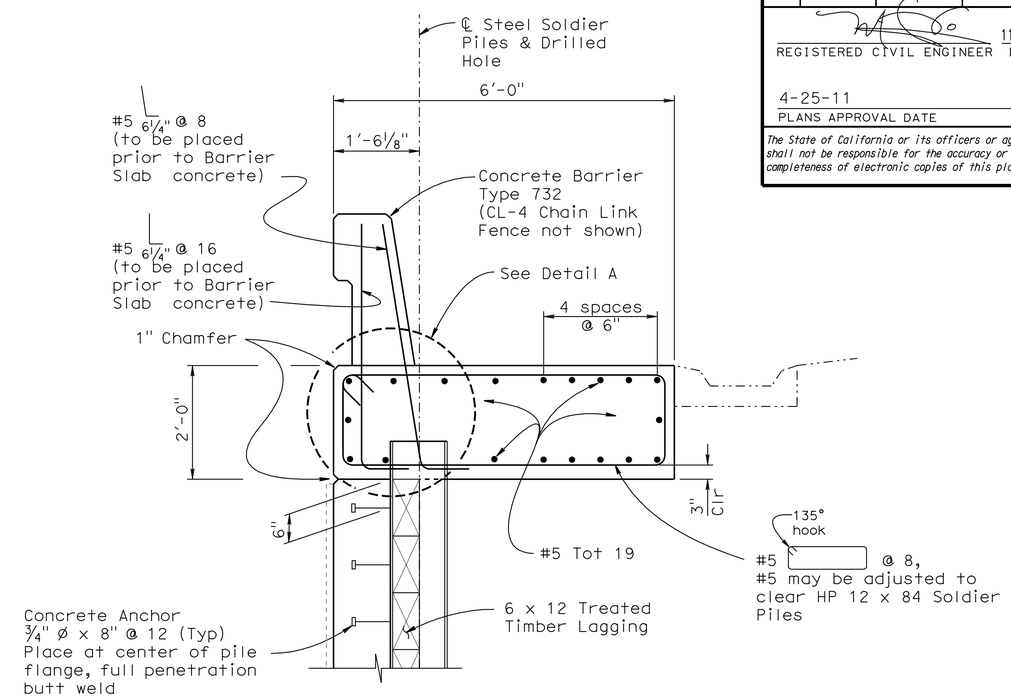

CONCRETE DETAIL AT PILE

¾" = 1'-0"

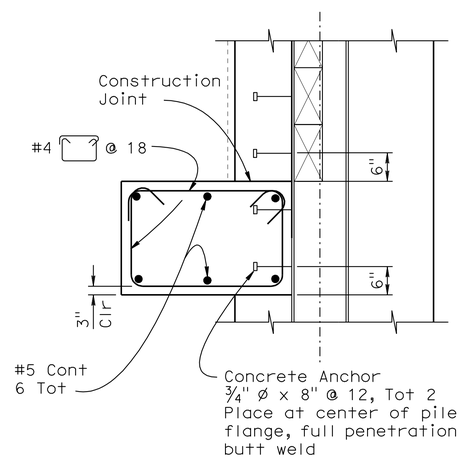

CONCRETE FOOTING DETAIL

¾" = 1'-0"

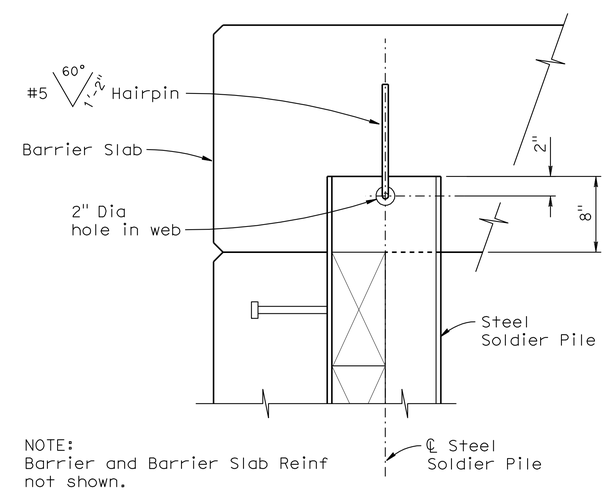

NOTE:
Barrier and Barrier Slab Reinf not shown.

DETAIL A
STEEL PILE ANCHOR

1½" = 1'-0"

NOTES:

1. For Concrete Barrier Details not shown see Standard Plan B11-55.
2. No Expansion Joints in Concrete Barrier or Barrier Slab within length of wall.

	BY	CHECKED
DESIGN	M. Vo	J. Szabo
DETAILS	R. Kirkland	J. Szabo
QUANTITIES	J.Szabo	M. Vo

STATE OF CALIFORNIA
DEPARTMENT OF TRANSPORTATION

DIVISION OF ENGINEERING SERVICES
STRUCTURE DESIGN
DESIGN BRANCH 10

BRIDGE NO. 56 E0076
POST MILE 20.02

RETAINING WALL NO. 376
TYPICAL SECTION

STRUCTURES DESIGN DETAIL SHEET (ENGLISH) (REV. 10/25/05)

ORIGINAL SCALE IN INCHES FOR REDUCED PLANS 0 1 2 3

CU 08
EA 448401

DISREGARD PRINTS BEARING EARLIER REVISION DATES

REVISION DATES: 3/15/10 7/15/10

SHEET 4 OF 13

FILE => 56e0076kts04.dgn

USERNAME => trlenard DATE PLOTTED => 30-APR-2011 TIME PLOTTED => 12:10

DIST	COUNTY	ROUTE	POST MILES TOTAL PROJECT	SHEET No	TOTAL SHEETS
08	Riv	91	15.6/21.6	1592	2028

REGISTERED CIVIL ENGINEER 11/12/10 DATE

4-25-11
PLANS APPROVAL DATE

REGISTERED PROFESSIONAL ENGINEER Minh Thuong Vo No. C59297 Exp. 6/30/2011 CIVIL STATE OF CALIFORNIA

The State of California or its officers or agents shall not be responsible for the accuracy or completeness of electronic copies of this plan sheet.

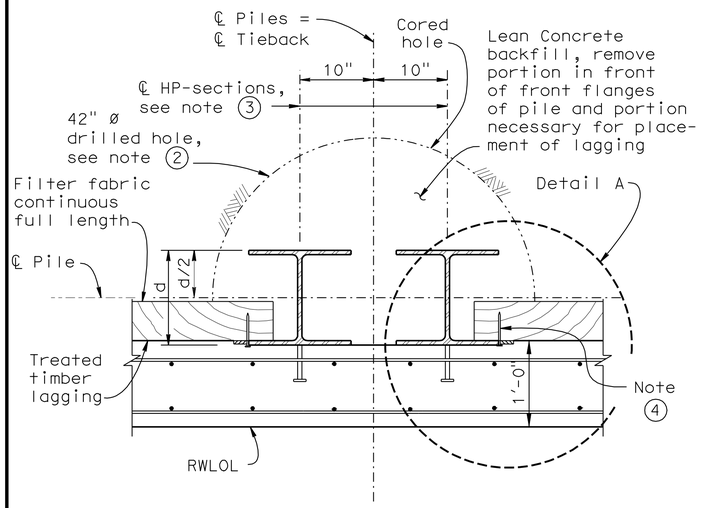

TYPICAL PILE SECTION

No Scale

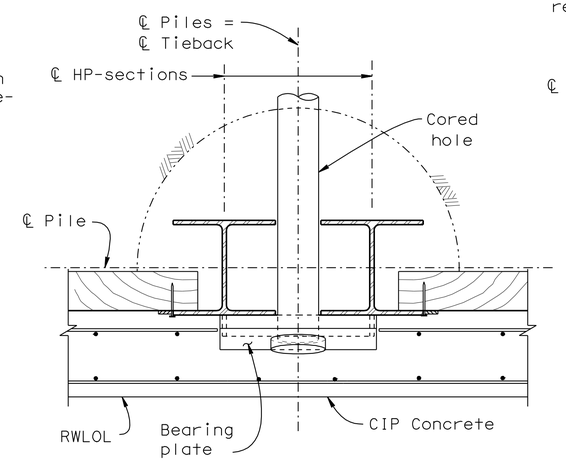

PILE SECTION AT TIEBACK

No Scale

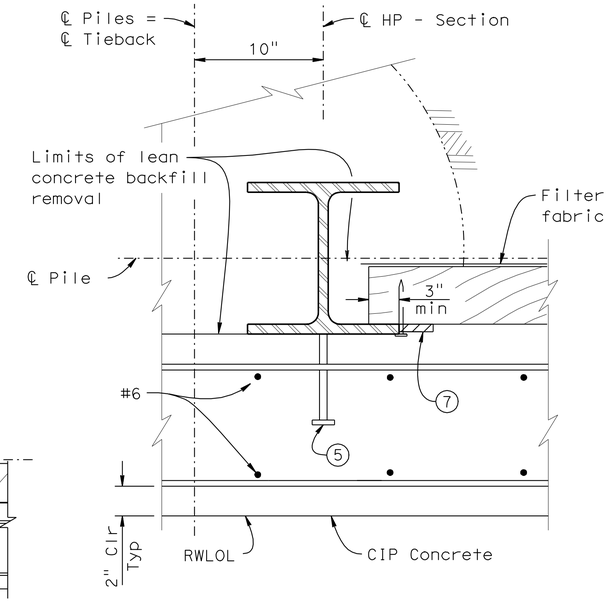

DETAIL A

No Scale

NOTES:

1. Detail symmetrical about ℄ Piles = ℄ Tieback.
2. When OG is below the pile cutoff elevation, the drilled hole shall be formed to extend to the top of the pile.
3. Provide sufficient number of stay plates between HP-Sections to maintain relative alignment during construction.
4. ¼" Dia 5" galvanized spikes, Typ.
5. Anchor stud, ¾"ø x 8" @ 12" vertical spacing. All studs are to be welded to HP-section with full penetration weld.
6. Mortar Tight Joint
7. ½" x 6" x full length premolded expansion joint filler, Typ.

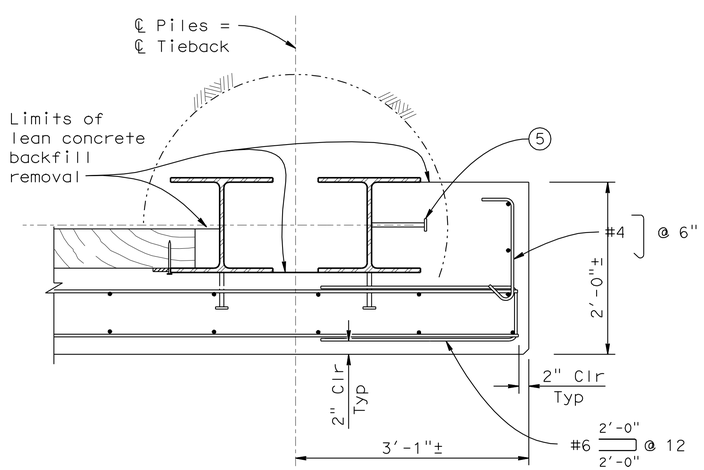

PILE SECTION AT BEGIN OR END WALL

No Scale

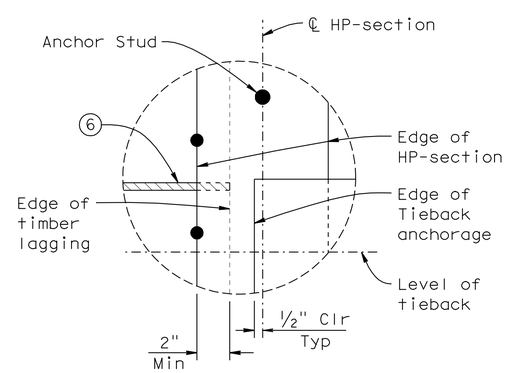

DETAIL "B"

No Scale

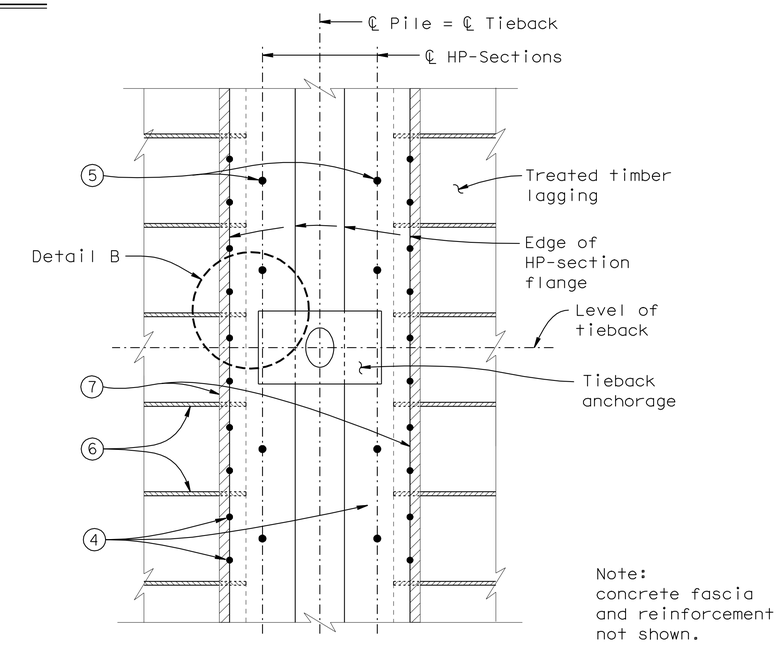

PART ELEVATION OF SOLDIER PILE

No Scale

DESIGN	BY M. Vo	CHECKED J. Szabo	
DETAILS	BY R. Kirkland	CHECKED J. Szabo	
QUANTITIES	BY J. Szabo	CHECKED M. Vo	

STATE OF CALIFORNIA
DEPARTMENT OF TRANSPORTATION

DIVISION OF ENGINEERING SERVICES
STRUCTURE DESIGN
DESIGN BRANCH 10

BRIDGE NO. 56 E0076
POST MILE 20.02

RETAINING WALL NO. 376
DETAILS NO. 1

STRUCTURES DESIGN DETAIL SHEET (ENGLISH) (REV. 10/25/05)

ORIGINAL SCALE IN INCHES FOR REDUCED PLANS 0 1 2 3

CU 08
EA 448401

DISREGARD PRINTS BEARING EARLIER REVISION DATES

REVISION DATES 3/15/10 7/15/10

SHEET 5 OF 13

FILE => 56e0076umiscdt05.dgn

USERNAME => frlenard DATE PLOTTED => 30-APR-2011 TIME PLOTTED => 12:10

DIST	COUNTY	ROUTE	POST MILES TOTAL PROJECT	SHEET No	TOTAL SHEETS
08	Riv	91	15.6/21.6	1593	2028

REGISTERED CIVIL ENGINEER 11/12/10 DATE

4-25-11
PLANS APPROVAL DATE

REGISTERED PROFESSIONAL ENGINEER Minh Thuong Vo No. C59297 Exp. 6/30/2011 CIVIL STATE OF CALIFORNIA

The State of California or its officers or agents shall not be responsible for the accuracy or completeness of electronic copies of this plan sheet.

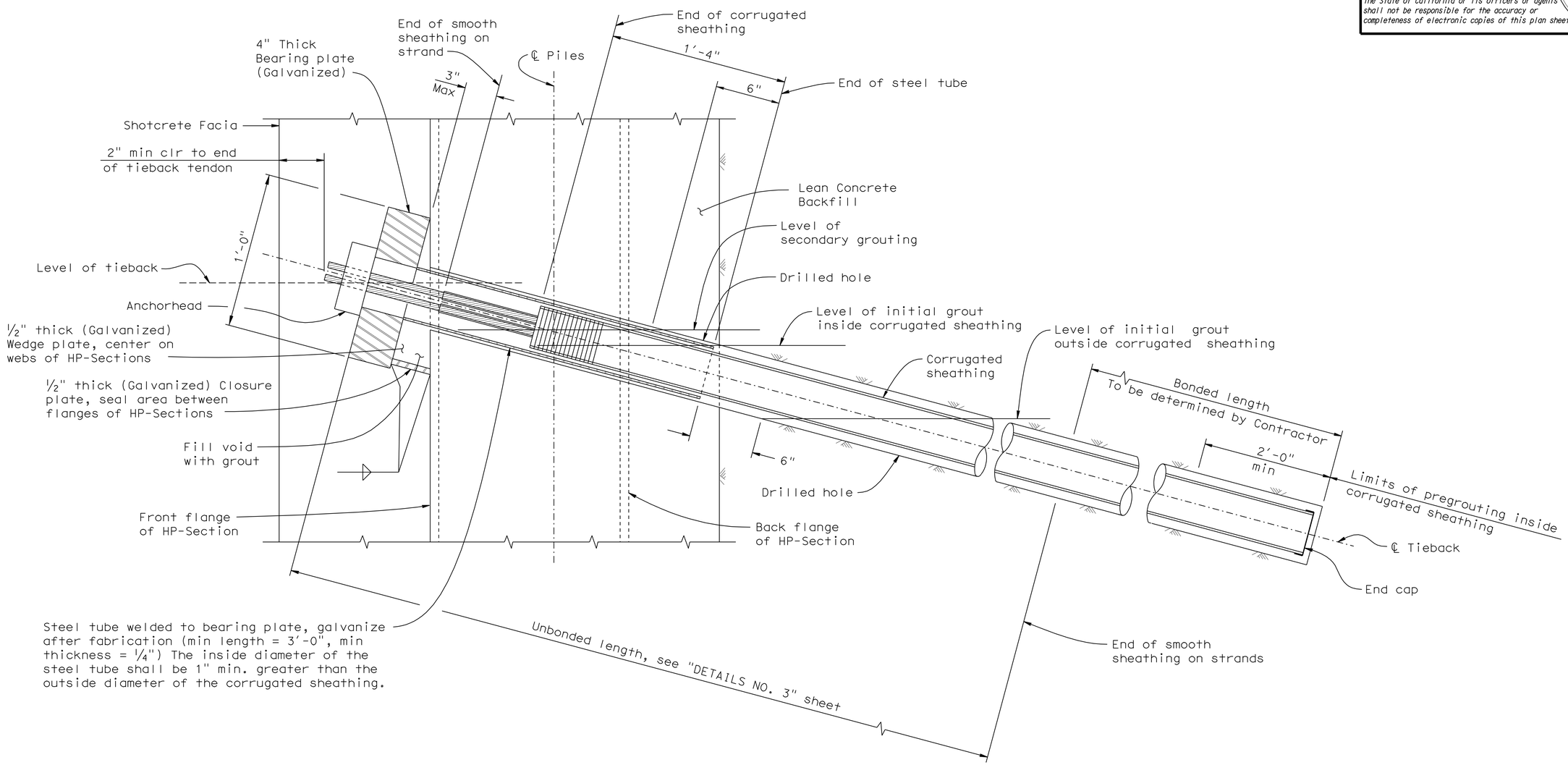

TIEBACK TENDON DETAIL

No Scale

DESIGN	BY M. Vo	CHECKED J. Szabo	
DETAILS	BY R. Kirkland	CHECKED J. Szabo	
QUANTITIES	BY J. Szabo	CHECKED M. Vo	

STATE OF CALIFORNIA
DEPARTMENT OF TRANSPORTATION

DIVISION OF ENGINEERING SERVICES
STRUCTURE DESIGN
DESIGN BRANCH 10

BRIDGE NO. 56 E0076
POST MILE 20.02

RETAINING WALL NO. 376
DETAILS NO. 2

STRUCTURES DESIGN DETAIL SHEET (ENGLISH) (REV. 10/25/05)

ORIGINAL SCALE IN INCHES FOR REDUCED PLANS 0 1 2 3

CU 08
EA 448401

DISREGARD PRINTS BEARING EARLIER REVISION DATES

REVISION DATES: ~~3/16/10~~ 7/15/10

SHEET 6 OF 13

FILE => 56e0076umiscdt06.dgn

USERNAME => tlenard DATE PLOTTED => 30-APR-2011 TIME PLOTTED => 12:10

DIST	COUNTY	ROUTE	POST MILES TOTAL PROJECT	SHEET No	TOTAL SHEETS
08	Riv	91	15.6/21.6	1594	2028

REGISTERED CIVIL ENGINEER 11/12/10 DATE

4-25-11
PLANS APPROVAL DATE

REGISTERED PROFESSIONAL ENGINEER Minh Thuong Vo No. C59297 Exp. 6/30/2011 CIVIL STATE OF CALIFORNIA

The State of California or its officers or agents shall not be responsible for the accuracy or completeness of electronic copies of this plan sheet.

PILE & TIEBACK DATA TABLE

Station Along RWLOL	Pile No.	Top of Lagging Elev	Top of Wall Elev	Bottom of Pile Elev	Pile * Section	Finished Grade Elev **	T1=A	
							T	Unbonded Length
feet		feet	feet	feet		feet	kips	feet
375+04.34	1	862.85	864.85	826.34	2-HP 12X84	842.51	200	30.0
375+14.34	2	862.77	864.77	826.34	2-HP 12X84	842.50	200	30.0
375+24.34	3	862.70	864.70	826.34	2-HP 12X84	842.46	200	30.0
375+34.34	4	862.63	864.63	826.34	2-HP 12X84	842.41	200	30.0
375+44.34	5	862.64	864.64	826.34	2-HP 12X84	842.38	200	30.0
375+54.34	6	862.65	864.65	826.34	2-HP 12X84	842.36	200	30.0
375+64.34	7	862.71	864.71	826.34	2-HP 12X84	842.35	200	30.0
375+74.34	8	862.81	864.80	826.34	2-HP 12X84	842.34	200	30.0
375+84.34	9	862.91	864.91	826.34	2-HP 12X84	842.35	200	30.0
375+94.34	10	863.09	865.09	826.34	2-HP 12X84	842.36	200	30.0
376+04.34	11	863.28	865.28	826.34	2-HP 12X84	842.39	200	30.0
376+14.34	12	863.50	865.50	826.34	2-HP 12X84	842.43	200	30.0
376+24.34	13	863.75	865.75	826.34	2-HP 12X84	842.48	200	30.0
376+34.34	14	864.00	866.00	826.59	2-HP 12X84	842.56	200	30.0
376+44.34	15	864.26	866.26	826.34	2-HP 12X84	842.64	200	30.0
376+54.34	16	864.53	866.53	826.34	2-HP 12X84	842.78	200	30.0
376+64.34	17	864.80	866.80	826.34	2-HP 12X84	842.92	200	30.0
376+74.34	18	865.08	867.08	826.34	2-HP 12X84	843.09	200	30.0
376+84.34	19	865.37	867.34	826.34	2-HP 12X84	843.29	200	30.0
376+94.34	20	865.66	867.66	826.34	2-HP 12X84	843.49	200	30.0
377+04.34	21	865.95	867.95	826.34	2-HP 12X84	843.70	200	30.0
377+14.34	22	866.23	868.23	826.34	2-HP 12X84	843.90	200	30.0

NOTES:

** FG may be adjusted by Contractor upon approval of the Engineer to Balance Excavation/Backfill Materials.

* Pile may be Substituted with Larger Pile Sections with minimum property requirement pile: S 106 in^3 and $T_f \geq 11/16''$ upon approval of the Engineer.

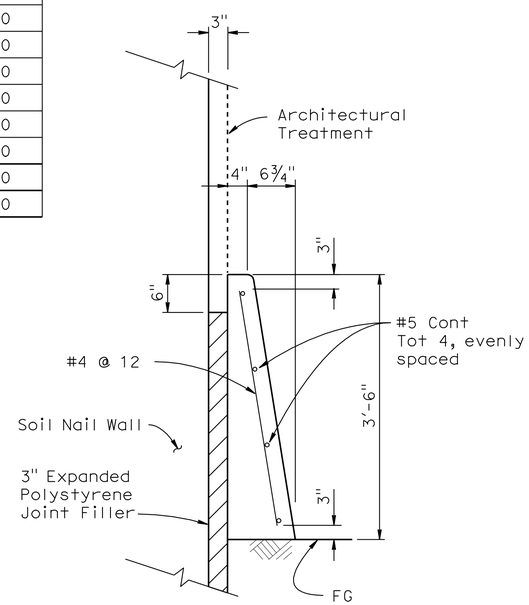

CONCRETE BARRIER (TYPE 60D MOD)

No scale

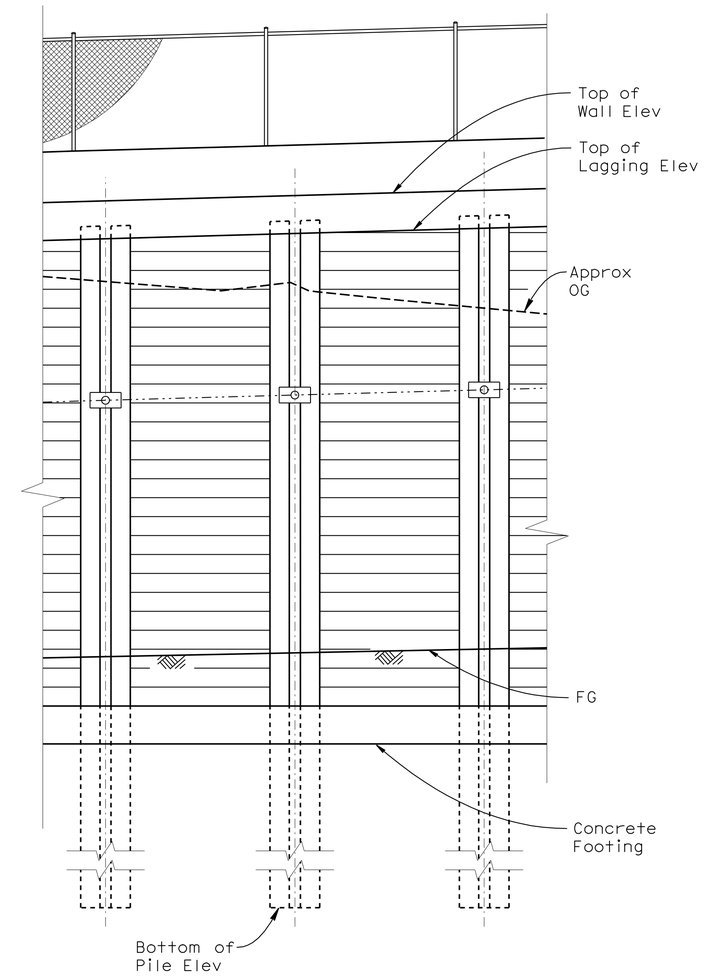

PART ELEVATION

No Scale

DESIGN	BY M. Vo	CHECKED J. Szabo	
DETAILS	BY R. Kirkland	CHECKED J. Szabo	
QUANTITIES	BY J. Szabo	CHECKED M. Vo	

STATE OF CALIFORNIA DEPARTMENT OF TRANSPORTATION

DIVISION OF ENGINEERING SERVICES STRUCTURE DESIGN DESIGN BRANCH 10

BRIDGE NO. 56 E0076
POST MILE 20.02

RETAINING WALL NO. 376
DETAILS NO. 3

STRUCTURES DESIGN DETAIL SHEET (ENGLISH) (REV. 10/25/05)

ORIGINAL SCALE IN INCHES FOR REDUCED PLANS 0 1 2 3

CU 08
EA 448401

DISREGARD PRINTS BEARING EARLIER REVISION DATES 3/15/10 7/15/10

REVISION DATES

SHEET 7 OF 13

FILE => 56e0076umiscdt07.dgn

USERNAME => trlenard DATE PLOTTED => 30-APR-2011 TIME PLOTTED => 12:10

Dist	COUNTY	ROUTE	POST MILES TOTAL PROJECT	SHEET No.	TOTAL SHEETS
08	Riv	91	15.6/21.6	1595	2028

LICENSED LANDSCAPE ARCHITECT

4-25-11
PLANS APPROVAL DATE

LICENSED LANDSCAPE ARCHITECT
Matthew Perry Hall No. 2555
Signature
10/31/2011
Renewal Date
11/12/10
Date
STATE OF CALIFORNIA

THE STATE OF CALIFORNIA OR ITS OFFICERS OR AGENTS SHALL NOT BE RESPONSIBLE FOR THE ACCURACY OR COMPLETENESS OF SCANNED COPIES OF THIS PLAN SHEET.

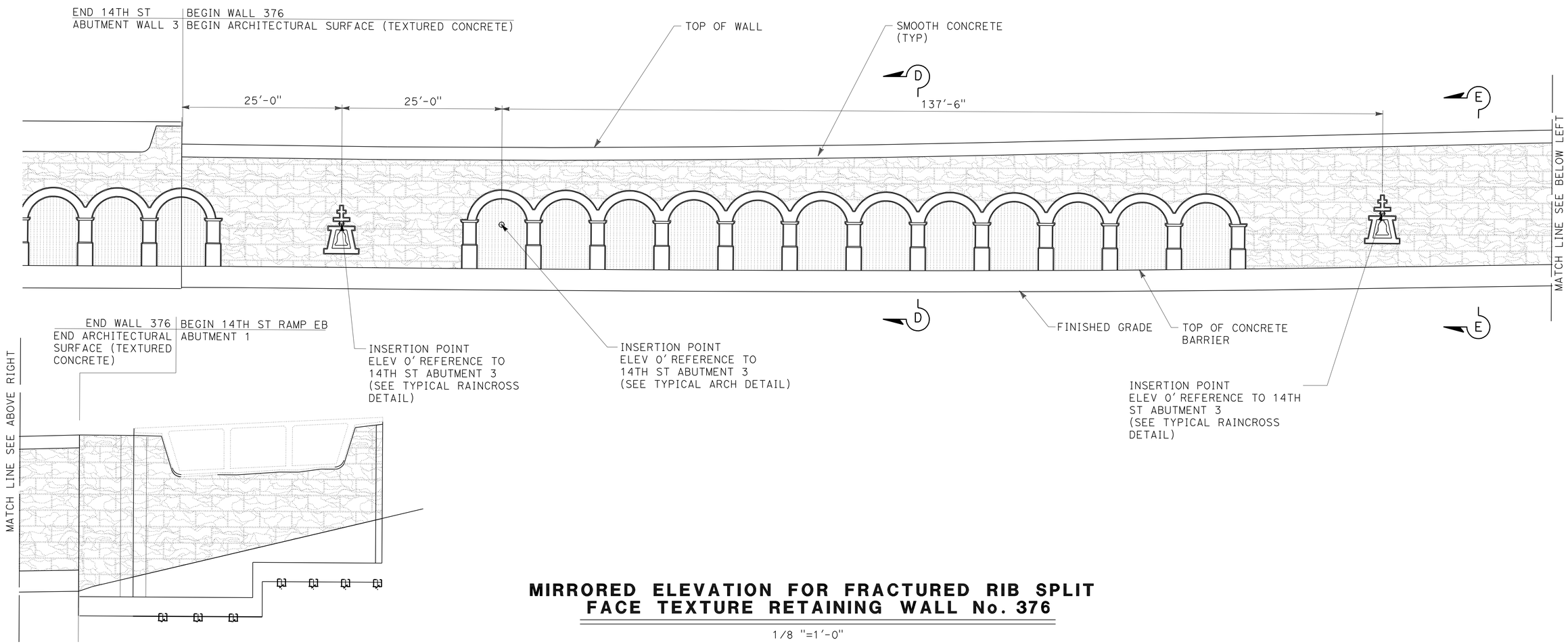

MIRRORED ELEVATION FOR FRACTURED RIB SPLIT FACE TEXTURE RETAINING WALL No. 376

1/8 "=1'-0"

NOTES:

1. For Section D-D and E-E see "Architectural Surface Detail Sheet No. 2.

THIS PLAN IS ACCURATE FOR ARCHITECTUAL TREATMENT WORK ONLY.

	BY	CHECKED
DESIGN	M. Hall	M. Bishop
DETAILS	R. Kirkland	M. Bishop
QUANTITIES	J. Szabo	M. Vo

STATE OF CALIFORNIA
DEPARTMENT OF TRANSPORTATION

DIVISION OF ENGINEERING SERVICES
STRUCTURE DESIGN
DESIGN BRANCH 10

BRIDGE NO. 56 E0076
POST MILE 20.02

RETAINING WALL NO. 376
ARCHITECTURAL SURFACE

STRUCTURES DESIGN DETAIL SHEET (ENGLISH) (REV. 10/25/05)

ORIGINAL SCALE IN INCHES FOR REDUCED PLANS 0 1 2 3

CU 08
EA 448401

DISREGARD PRINTS BEARING EARLIER REVISION DATES

REVISION DATES: 8/17/10

SHEET 8 OF 13

FILE => 56e0076umiscdt08.dgn

USERNAME => trrenard DATE PLOTTED => 30-APR-2011 TIME PLOTTED => 12:10

NOTES:
1. For Section D-D see "Architectural Surface Detail Sheet No. 4"

Dist	COUNTY	ROUTE	POST MILES TOTAL PROJECT	SHEET No.	TOTAL SHEETS
08	Riv	91	15.6/21.6	1596	2028

LICENSED LANDSCAPE ARCHITECT

4-25-11
PLANS APPROVAL DATE

LICENSED LANDSCAPE ARCHITECT Matthew Harry Hall No. 2011 Signature 10/31/2011 Renewal Date 11/12/10 Date STATE OF CALIFORNIA

THE STATE OF CALIFORNIA OR ITS OFFICERS OR AGENTS SHALL NOT BE RESPONSIBLE FOR THE ACCURACY OR COMPLETENESS OF SCANNED COPIES OF THIS PLAN SHEET.

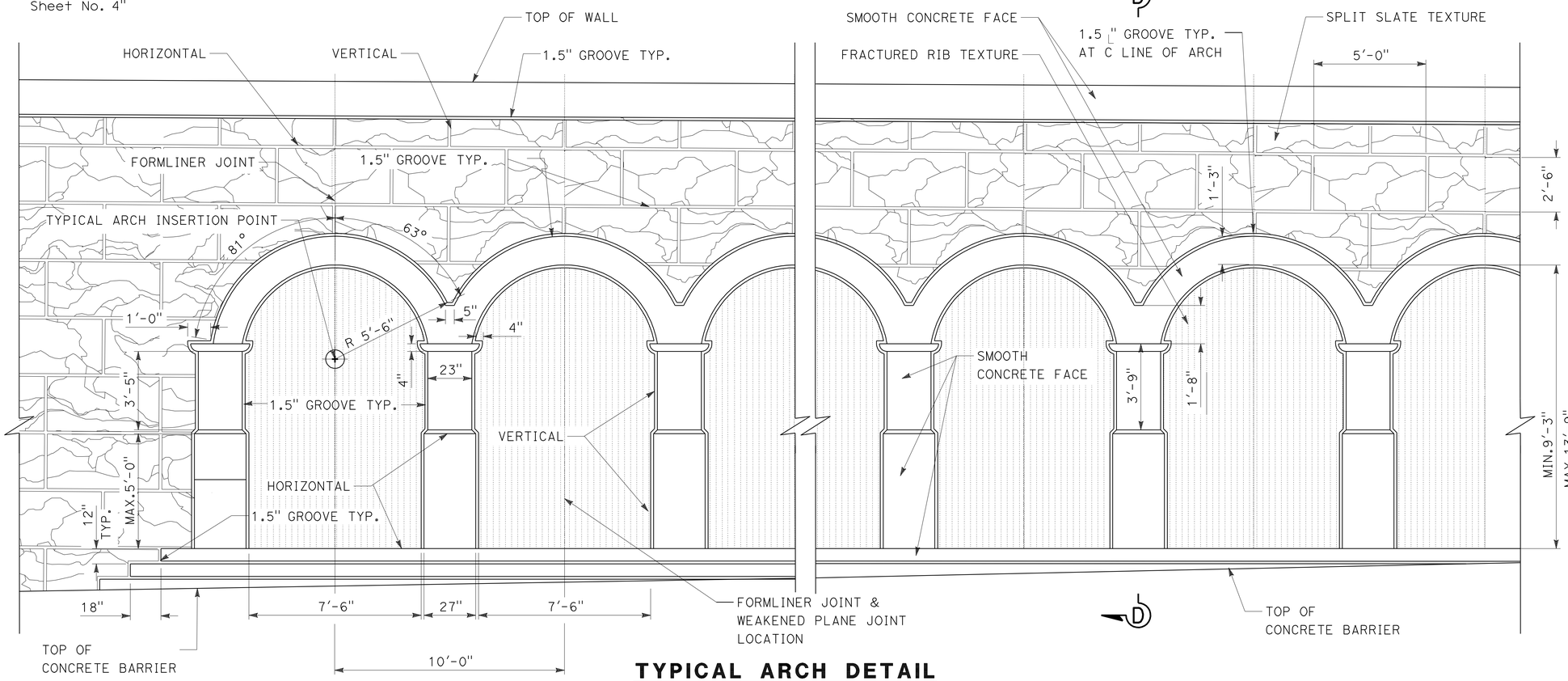

TYPICAL ARCH DETAIL

3/8" = 1'-0"

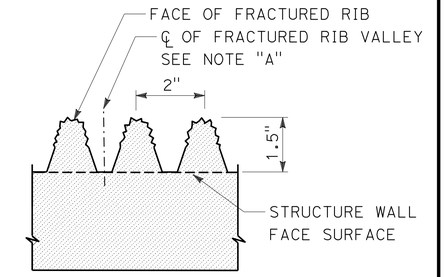

TYPICAL FRACTURED RIB TEXTURE

No Scale

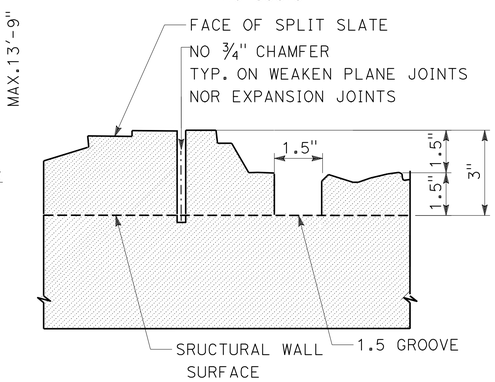

TYPICAL SPLIT SLATE TEXTURE

No Scale

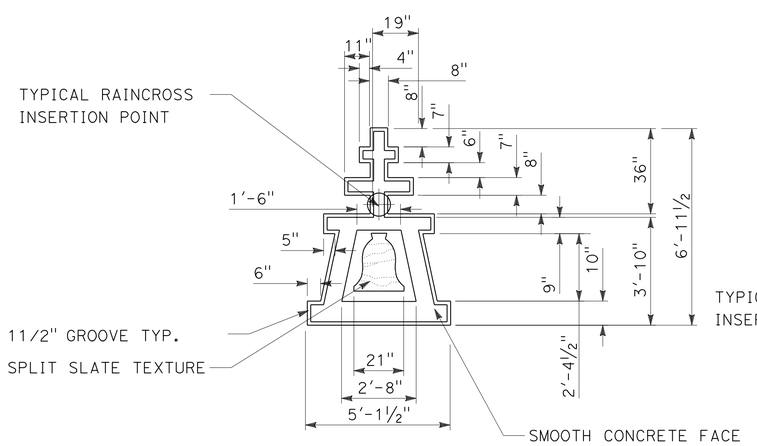

TYPICAL RAINCROSS DETAIL

3/8" = 1'-0"

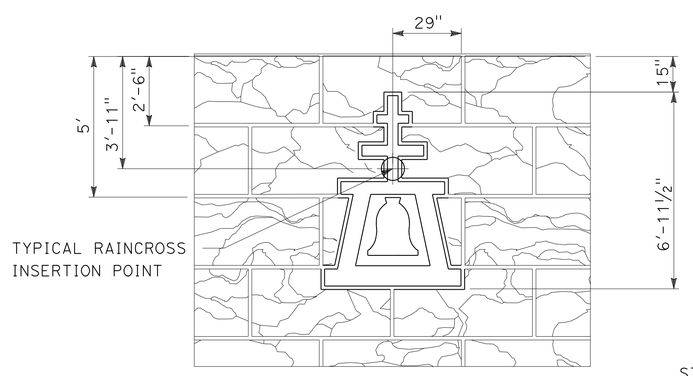

TYPICAL RAINCROSS DETAIL/ SPLIT SLATE TEXTURE

3/8" = 1'-0"

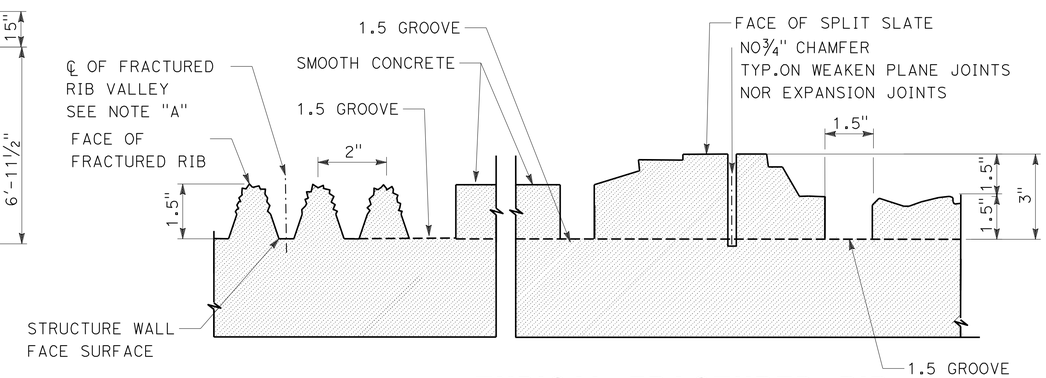

NOTE "A"
PERMITTED LOCATION OF WEAKEN PLANE AND EXPANSION JOINTS

TYPICAL FRACTURED RIB WITH SPLIT SLATE TEXTURE

No Scale

THIS PLAN IS ACCURATE FOR ARCHITECTUAL TREATMENT WORK ONLY.

	BY	CHECKED
DESIGN	M. Hall	M. Bishop
DETAILS	R. Kirkland	M. Bishop
QUANTITIES	J. Szabo	M. Vo

STATE OF CALIFORNIA
DEPARTMENT OF TRANSPORTATION

DIVISION OF ENGINEERING SERVICES
STRUCTURE DESIGN
DESIGN BRANCH 10

BRIDGE NO. 56 E0076
POST MILE 20.02

RETAINING WALL NO. 376
ARCHITECTURAL SURFACE DETAIL SHEET NO. 1

STRUCTURES DESIGN DETAIL SHEET (ENGLISH) (REV. 10/25/05)

ORIGINAL SCALE IN INCHES FOR REDUCED PLANS 0 1 2 3

CU 08
EA 448401

DISREGARD PRINTS BEARING EARLIER REVISION DATES 8/10/10

REVISION DATES

SHEET 9 OF 13

FILE => 56e0076umiscdt09.dgn

USERNAME => trlenord DATE PLOTTED => 30-APR-2011 TIME PLOTTED => 12:10

Dist	COUNTY	ROUTE	POST MILES TOTAL PROJECT	SHEET No.	TOTAL SHEETS
08	Riv	91	15.6/21.6	1597	2028

LICENSED LANDSCAPE ARCHITECT

4-25-11
PLANS APPROVAL DATE

LICENSED LANDSCAPE ARCHITECT
Matthew Harry Hall
No. 4401
Signature
10/31/2011
Renewal Date
11/12/10
Date
STATE OF CALIFORNIA

THE STATE OF CALIFORNIA OR ITS OFFICERS OR AGENTS SHALL NOT BE RESPONSIBLE FOR THE ACCURACY OR COMPLETENESS OF SCANNED COPIES OF THIS PLAN SHEET.

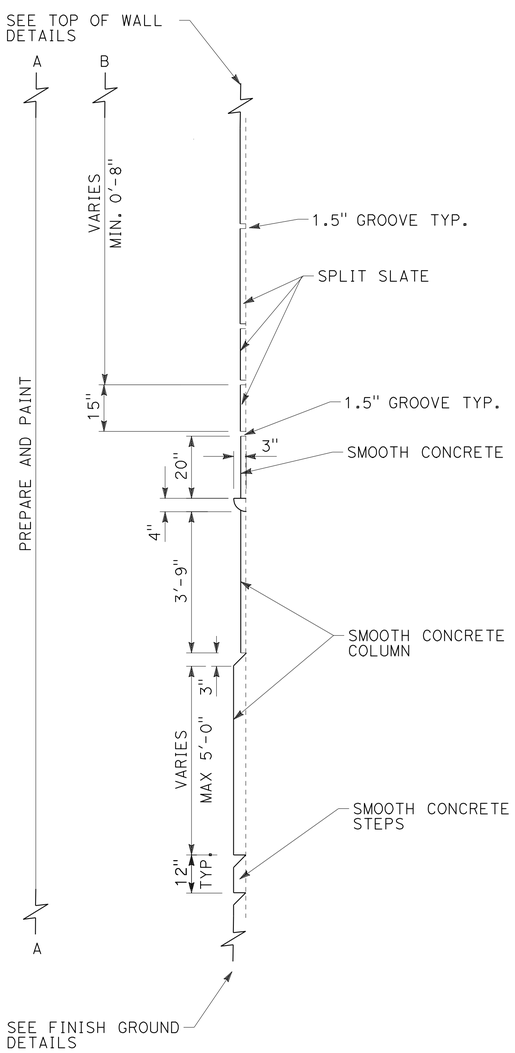

SECTION D-D

No Scale

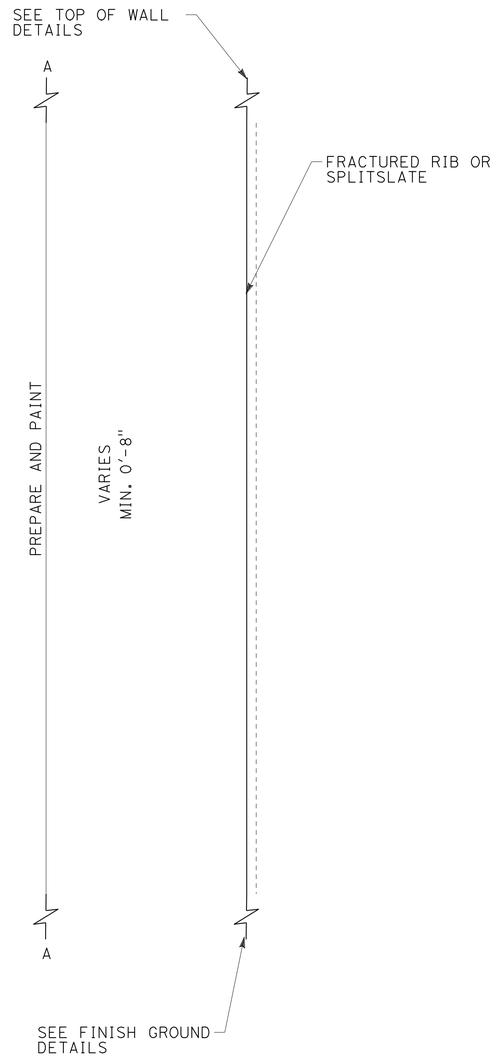

SECTION E-E

No Scale

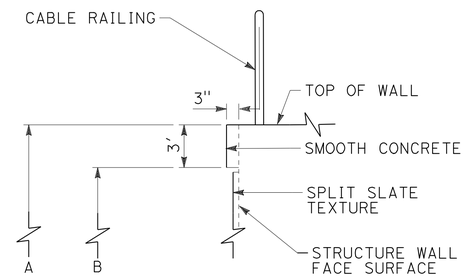

TOP OF WALL DETAIL TYPICAL WITH CABLE RAIL

No Scale

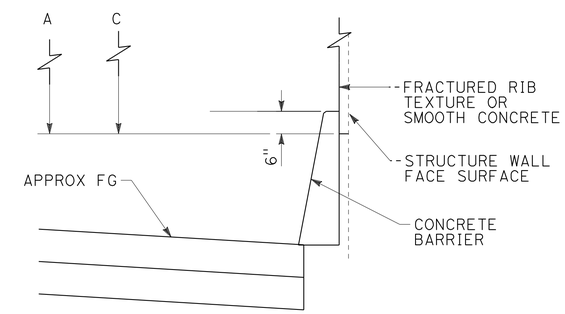

FINISH GROUND DETAIL TYPICAL WITH CONCRETE BARRIER

No Scale

DESIGN	BY M. Hall	CHECKED M. Bishop	
DETAILS	BY R. Kirkland	CHECKED M. Bishop	
QUANTITIES	BY J. Szabo	CHECKED M. Vo	

STATE OF CALIFORNIA
DEPARTMENT OF TRANSPORTATION

DIVISION OF ENGINEERING SERVICES
STRUCTURE DESIGN
DESIGN BRANCH 10

BRIDGE NO. 56 E0076
POST MILE 20.02

RETAINING WALL NO. 376
ARCHITECTURAL SURFACE DETAIL SHEET NO. 2

STRUCTURES DESIGN DETAIL SHEET (ENGLISH) (REV. 10/25/05)

ORIGINAL SCALE IN INCHES FOR REDUCED PLANS 0 1 2 3

CU 08
EA 448401

DISREGARD PRINTS BEARING EARLIER REVISION DATES 8/10/10

REVISION DATES

SHEET 10 OF 13

FILE => 56e0076umiscdt10.dgn

USERNAME => friehard DATE PLOTTED => 30-APR-2011 TIME PLOTTED => 12:10

DIST	COUNTY	ROUTE	POST MILES TOTAL PROJECT	SHEET No	TOTAL SHEETS
08	Riv	91	15.6/21.6	1598	2028

GEOTECHNICAL PROFESSIONAL — DATE 11/03/2010

4-25-11
PLANS APPROVAL DATE

REGISTERED PROFESSIONAL ENGINEER — FARID MOTAMED No. 2738 Exp. 6-30-11 GEOTECHNICAL STATE OF CALIFORNIA

The State of California or its officers or agents shall not be responsible for the accuracy or completeness of electronic copies of this plan sheet.

California Department of Transportation
5900 Folsom Boulevard
Sacramento, CA 95819

URS Corporation
2020 East First Street, Suite 400
Santa Ana, CA 92705

GROUP SYMBOLS AND NAMES

Graphic / Symbol	Group Names	Graphic / Symbol	Group Names
GW	Well-graded GRAVEL Well-graded GRAVEL with SAND	CL	Lean CLAY Lean CLAY with SAND Lean CLAY with GRAVEL SANDY lean CLAY SANDY lean CLAY with GRAVEL GRAVELLY lean CLAY GRAVELLY lean CLAY with SAND
GP	Poorly graded GRAVEL Poorly graded GRAVEL with SAND		
GW-GM	Well-graded GRAVEL with SILT Well-graded GRAVEL with SILT and SAND	CL-ML	SILTY CLAY SILTY CLAY with SAND SILTY CLAY with GRAVEL SANDY SILTY CLAY SANDY SILTY CLAY with GRAVEL GRAVELLY SILTY CLAY GRAVELLY SILTY CLAY with SAND
GW-GC	Well-graded GRAVEL with CLAY (or SILTY CLAY) Well-graded GRAVEL with CLAY and SAND (or SILTY CLAY and SAND)		
GP-GM	Poorly graded GRAVEL with SILT Poorly graded GRAVEL with SILT and SAND	ML	SILT SILT with SAND SILT with GRAVEL SANDY SILT SANDY SILT with GRAVEL GRAVELLY SILT GRAVELLY SILT with SAND
GP-GC	Poorly graded GRAVEL with CLAY (or SILTY CLAY) Poorly graded GRAVEL with CLAY and SAND (or SILTY CLAY and SAND)		
GM	SILTY GRAVEL SILTY GRAVEL with SAND	OL	ORGANIC lean CLAY ORGANIC lean CLAY with SAND ORGANIC lean CLAY with GRAVEL SANDY ORGANIC lean CLAY SANDY ORGANIC lean CLAY with GRAVEL GRAVELLY ORGANIC lean CLAY GRAVELLY ORGANIC lean CLAY with SAND
GC	CLAYEY GRAVEL CLAYEY GRAVEL with SAND		
GC-GM	SILTY, CLAYEY GRAVEL SILTY, CLAYEY GRAVEL with SAND	OL	ORGANIC SILT ORGANIC SILT with SAND ORGANIC SILT with GRAVEL SANDY ORGANIC SILT SANDY ORGANIC SILT with GRAVEL GRAVELLY ORGANIC SILT GRAVELLY ORGANIC SILT with SAND
SW	Well-graded SAND Well-graded SAND with GRAVEL		
SP	Poorly graded SAND Poorly graded SAND with GRAVEL	CH	Fat CLAY Fat CLAY with SAND Fat CLAY with GRAVEL SANDY fat CLAY SANDY fat CLAY with GRAVEL GRAVELLY fat CLAY GRAVELLY fat CLAY with SAND
SW-SM	Well-graded SAND with SILT Well-graded SAND with SILT and GRAVEL		
SW-SC	Well-graded SAND with CLAY (or SILTY CLAY) Well-graded SAND with CLAY and GRAVEL (or SILTY CLAY and GRAVEL)	MH	Elastic SILT Elastic SILT with SAND Elastic SILT with GRAVEL SANDY elastic SILT SANDY elastic SILT with GRAVEL GRAVELLY elastic SILT GRAVELLY elastic SILT with SAND
SP-SM	Poorly graded SAND with SILT Poorly graded SAND with SILT and GRAVEL		
SP-SC	Poorly graded SAND with CLAY (or SILTY CLAY) Poorly graded SAND with CLAY and GRAVEL (or SILTY CLAY and GRAVEL)	OH	ORGANIC fat CLAY ORGANIC fat CLAY with SAND ORGANIC fat CLAY with GRAVEL SANDY ORGANIC fat CLAY SANDY ORGANIC fat CLAY with GRAVEL GRAVELLY ORGANIC fat CLAY GRAVELLY ORGANIC fat CLAY with SAND
SM	SILTY SAND SILTY SAND with GRAVEL		
SC	CLAYEY SAND CLAYEY SAND with GRAVEL	OH	ORGANIC elastic SILT ORGANIC elastic SILT with SAND ORGANIC elastic SILT with GRAVEL SANDY elastic ELASTIC SILT SANDY ORGANIC elastic SILT with GRAVEL GRAVELLY ORGANIC elastic SILT GRAVELLY ORGANIC elastic SILT with SAND
SC-SM	SILTY, CLAYEY SAND SILTY, CLAYEY SAND with GRAVEL		
PT	PEAT	OL/OH	ORGANIC SOIL ORGANIC SOIL with SAND ORGANIC SOIL with GRAVEL SANDY ORGANIC SOIL SANDY ORGANIC SOIL with GRAVEL GRAVELLY ORGANIC SOIL GRAVELLY ORGANIC SOIL with SAND
	COBBLES COBBLES and BOULDERS BOULDERS		

FIELD AND LABORATORY TESTS

C	Consolidation (ASTM D 2435-04)
CL	Collapse Potential (ASTM D 5333-03)
CP	Compaction Curve (CTM 216 - 06)
CR	Corrosion, Sulfates, Chlorides (CTM 643 - 99; CTM 417 - 06; CTM 422 - 06)
CU	Consolidated Undrained Triaxial (ASTM D 4767-02)
DS	Direct Shear (ASTM D 3080-04)
EI	Expansion Index (ASTM D 4829-03)
M	Moisture Content (ASTM D 2216-05)
OC	Organic Content (ASTM D 2974-07)
P	Permeability (CTM 220 - 05)
PA	Particle Size Analysis (ASTM D 422-63 [2002])
PI	Liquid Limit, Plastic Limit, Plasticity Index (AASHTO T 89-02, AASHTO T 90-00)
PL	Point Load Index (ASTM D 5731-05)
PM	Pressure Meter
PP	Pocket Penetrometer
R	R-Value (CTM 301 - 00)
SE	Sand Equivalent (CTM 217 - 99)
SG	Specific Gravity (AASHTO T 100-06)
SL	Shrinkage Limit (ASTM D 427-04)
SW	Swell Potential (ASTM D 4546-03)
TV	Pocket Torvane
UC	Unconfined Compression - Soil (ASTM D 2166-06) Unconfined Compression - Rock (ASTM D 2938-95)
UU	Unconsolidated Undrained Triaxial (ASTM D 2850-03)
UW	Unit Weight (ASTM D 4767-04)
VS	Vane Shear (AASHTO T 223-96 [2004])

CONSISTENCY OF COHESIVE SOILS

Descriptor	Unconfined Compressive Strength (tsf)	Pocket Penetrometer (tsf)	Torvane (tsf)	Field Approximation
Very Soft	< 0.25	< 0.25	< 0.12	Easily penetrated several inches by fist
Soft	0.25 - 0.50	0.25 - 0.50	0.12 - 0.25	Easily penetrated several inches by thumb
Medium Stiff	0.50 - 1.0	0.50 - 1.0	0.25 - 0.50	Can be penetrated several inches by thumb with moderate effort
Stiff	1.0 - 2.0	1.0 - 2.0	0.50 - 1.0	Readily indented by thumb but penetrated only with great effort
Very Stiff	2.0 - 4.0	2.0 - 4.0	1.0 - 2.0	Readily indented by thumbnail
Hard	> 4.0	> 4.0	> 2.0	Indented by thumbnail with difficulty

APPARENT DENSITY OF COHESIONLESS SOILS

Descriptor	SPT N60 - Value (blows / foot)
Very Loose	0 - 4
Loose	5 - 10
Medium Dense	11 - 30
Dense	31 - 50
Very Dense	> 50

MOISTURE

Descriptor	Criteria
Dry	Absence of moisture, dusty, dry to the touch
Moist	Damp but no visible water
Wet	Visible free water, usually soil is below water table

PERCENT OR PROPORTION OF SOILS

Descriptor	Criteria
Trace	Particles are present but estimated to be less than 5%
Few	5 to 10%
Little	15 to 25%
Some	30 to 45%
Mostly	50 to 100%

SOIL PARTICLE SIZE

Descriptor		Size
Boulder		> 12 inches
Cobble		3 to 12 inches
Gravel	Coarse	3/4 inch to 3 inches
	Fine	No. 4 Sieve to 3/4 inch
Sand	Coarse	No. 10 Sieve to No. 4 Sieve
	Medium	No. 40 Sieve to No. 10 Sieve
	Fine	No. 200 Sieve to No. 40 Sieve
Silt and Clay		Passing No. 200 Sieve

PLASTICITY OF FINE-GRAINED SOILS

Descriptor	Criteria
Nonplastic	A 1/8-inch thread cannot be rolled at any water content.
Low	The thread can barely be rolled, and the lump cannot be formed when drier than the plastic limit.
Medium	The thread is easy to roll, and not much time is required to reach the plastic limit; it cannot be rerolled after reaching the plastic limit. The lump crumbles when drier than the plastic limit.
High	It takes considerable time rolling and kneading to reach the plastic limit. The thread can be rerolled several times after reaching the plastic limit. The lump can be formed without crumbling when drier than the plastic limit.

CEMENTATION

Descriptor	Criteria
Weak	Crumbles or breaks with handling or little finger pressure.
Moderate	Crumbles or breaks with considerable finger pressure.
Strong	Will not crumble or break with finger pressure.

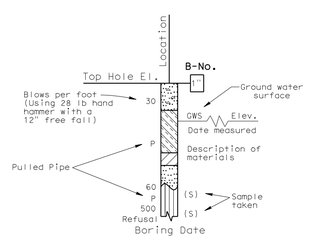

SAMPLE BORING (DRY)

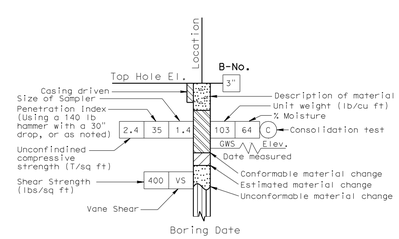

ROTARY SAMPLE BORING (WET)

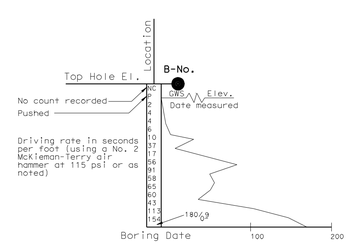

2 1/4" CONE PENETRATION BORING

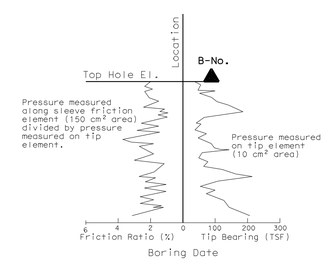

ELECTRONIC CONE PENETROMETER TEST

Cone Penetrometer dimensions and testing procedures are in accordance with ASTM standard D 3441-79, or as noted.

GINA PURSELL DESIGN OVERSIGHT	SHAWN WEI FUNCTIONAL SUPERVISOR	DRAWN BY	P. QUACH	P.CHAU/D.WADER/C.CARBINO FIELD INVESTIGATION BY:	PREPARED FOR THE STATE OF CALIFORNIA DEPARTMENT OF TRANSPORTATION	A. LEE PROJECT ENGINEER	BRIDGE NO. 56 E0076 POST MILE 20.02
11/12/10 SIGN OFF DATE		CHECKED BY	S. PIRATHIVIRAJ	DATE: Nov 6 2007 to March 7 2008			

SOIL LEGEND

LOG OF TEST BORINGS 1 OF 3

OSF GEOTECHNICAL LOG OF TEST BORINGS SHEET (ENGLISH) (REV. 2/25/05)

ORIGINAL SCALE IN INCHES FOR REDUCED PLANS 0 1 2 3

CU 08
EA 448401

DISREGARD PRINTS BEARING EARLIER REVISION DATES 8/18/10

REVISION DATES (PRELIMINARY STAGE ONLY)

SHEET 11 OF 13

FILE => 56e0076z1otb11.dgn

USERNAME => trienard DATE PLOTTED => 30-APR-2011 TIME PLOTTED =>

DIST	COUNTY	ROUTE	POST MILES TOTAL PROJECT	SHEET No	TOTAL SHEETS
08	Riv	91	15.6/21.6	1599	2028

GEOTECHNICAL PROFESSIONAL — DATE 11/03/2010

4-25-11
PLANS APPROVAL DATE

REGISTERED PROFESSIONAL ENGINEER — FARID MOTAMED — No. 2738 — Exp. 6-30-11 — GEOTECHNICAL — STATE OF CALIFORNIA

The State of California or its officers or agents shall not be responsible for the accuracy or completeness of electronic copies of this plan sheet.

California Department of Transportation
5900 Folsom Boulevard
Sacramento, CA 95819

URS Corporation
2020 East First Street, Suite 400
Santa Ana, CA 92705

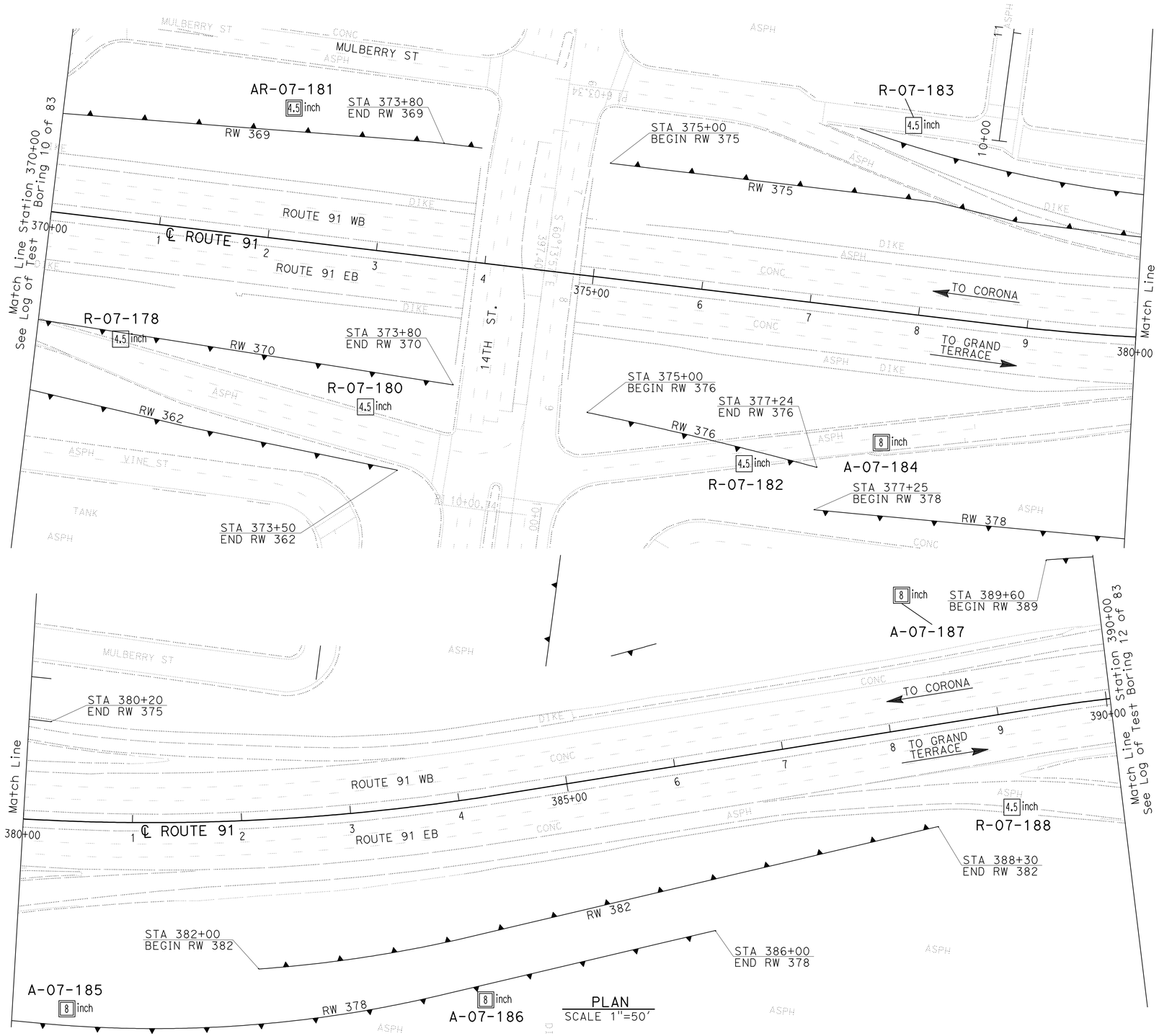

Borehole Number	Drill Rig	Hammer Type	Avg. Hammer Efficiency, ETR (%)
R-07-178	CS-2000	Automatic	84
R-07-180	CME 85	Automatic	87
AR-07-181	CS-2000	Automatic	84
R-07-182	CS-2000	Automatic	84
R-07-183	CS-2000	Automatic	84
A-07-184	Diedrich D-120	Automatic	75*
A-07-185	Diedrich D-120	Automatic	75*
A-07-186	Diedrich D-120	Automatic	75*
A-07-187	Diedrich D-120	Automatic	75*
R-07-188	CS-2000	Automatic	84

Sampler Type	Inside Diameter (Inches)	Borehole Numbers
SPT	1.375	R-07-178, R-07-180, R-07-181 R-07-182, R-07-183, A-07-184 A-07-185, A-07-186, A-07-187 R-07-188
Modified California 1	1.94	R-07-180, R-07-183
Modified California 2	2.40	A-07-184, A-07-185, A-07-186 A-07-187

*Estimated Hammer Efficiency Rating.

GINA PURSELL — DESIGN OVERSIGHT
SHAWN WEI — FUNCTIONAL SUPERVISOR
11/12/10 — SIGN OFF DATE

DRAWN BY: P. QUACH
CHECKED BY: S. PIRATHIVIRAJ

P.CHAU/D.WADER/C.CARBINO
FIELD INVESTIGATION BY:
DATE: Nov 6 2007 to March 7 2008

PREPARED FOR THE STATE OF CALIFORNIA DEPARTMENT OF TRANSPORTATION

A. LEE — PROJECT ENGINEER

BRIDGE NO. 56 E0076
POST MILE 20.02

WALL LAYOUT & EXPLORATORY LOCATION MAP
LOG OF TEST BORINGS 2 of 3

OSF GEOTECHNICAL LOG OF TEST BORINGS SHEET (ENGLISH) (REV. 2/25/05)

ORIGINAL SCALE IN INCHES FOR REDUCED PLANS 0 1 2 3

CU 08
EA 448401

DISREGARD PRINTS BEARING EARLIER REVISION DATES
REVISION DATES (PRELIMINARY STAGE ONLY) 8/19/10

SHEET 12 OF 13

FILE => 56e0076zlotb12.dgn

USERNAME => frtenard DATE PLOTTED => 30-APR-2011 TIME PLOTTED =>

DIST	COUNTY	ROUTE	POST MILES TOTAL PROJECT	SHEET No	TOTAL SHEETS
08	Riv	91	15.6/21.6	1600	2028

GEOTECHNICAL PROFESSIONAL — DATE 11/03/2010

4-25-11
PLANS APPROVAL DATE

REGISTERED PROFESSIONAL ENGINEER — FARID MOTAMED No. 2738 Exp. 6-30-11 GEOTECHNICAL — STATE OF CALIFORNIA

The State of California or its officers or agents shall not be responsible for the accuracy or completeness of electronic copies of this plan sheet.

California Department of Transportation
5900 Folsom Boulevard
Sacramento, CA 95819

URS Corporation
2020 East First Street, Suite 400
Santa Ana, CA 92705

FOR PLAN VIEW, SEE
"LOG OF TEST BORINGS 2 OF 3"

NOTE: 1. This LOTB sheet was prepared in accordance with the Caltrans Soil & Rock Logging, Classification, and Presentation Manual (June 2007).

2. For legend, see "Log of Test Borings 1 of 3"

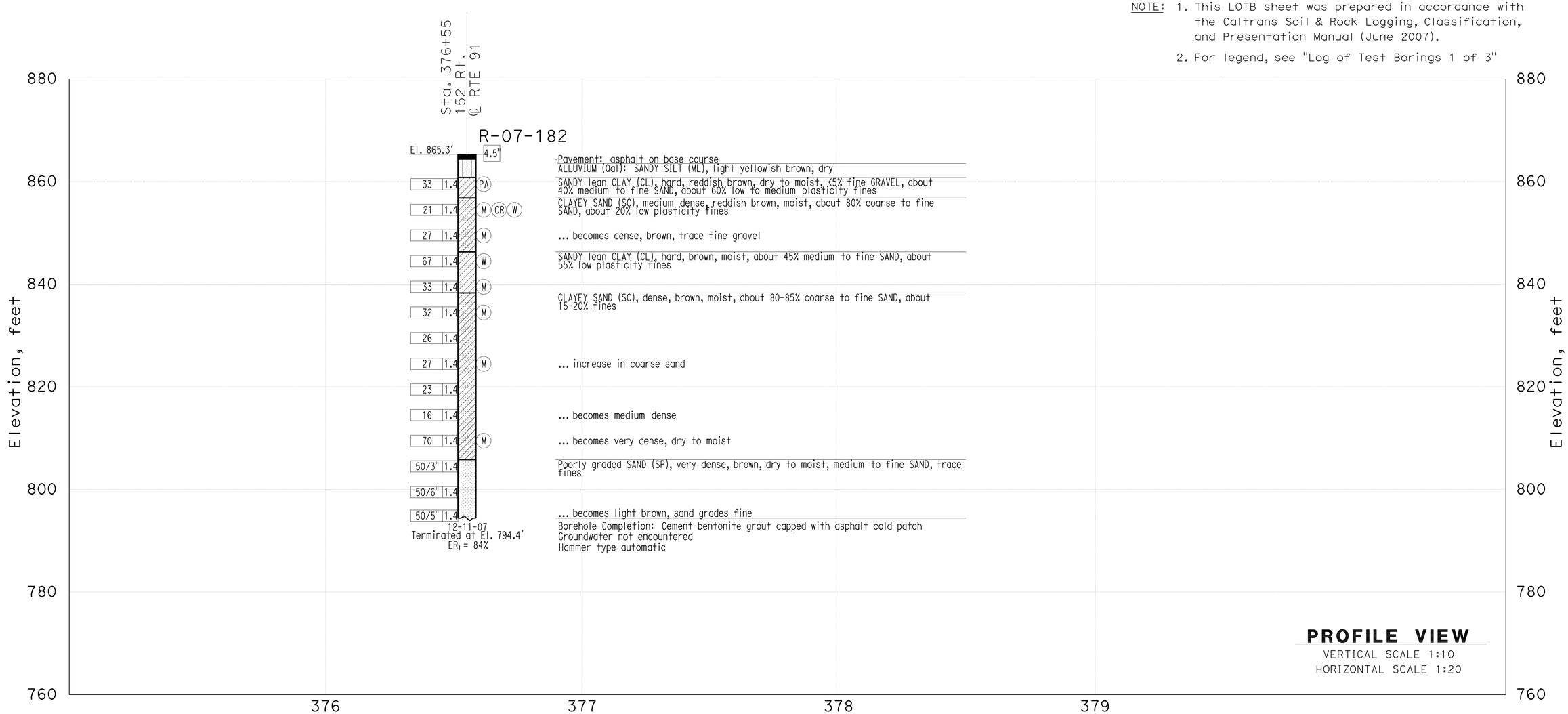

THIS PLAN ACCURATE FOR SOUND WALL AND RETAINING WALL WORK ONLY

GINA PURSELL DESIGN OVERSIGHT	SHAWN WEI FUNCTIONAL SUPERVISOR	DRAWN BY	P. QUACH	P.CHAU/D.WADER/C.CARBINO FIELD INVESTIGATION BY:	PREPARED FOR THE STATE OF CALIFORNIA DEPARTMENT OF TRANSPORTATION	A. LEE PROJECT ENGINEER	BRIDGE NO. 56 E0076	RETAINING WALL 376
11/12/10 SIGN OFF DATE		CHECKED BY	S. PIRATHIVIRAJ	DATE: Nov 6 2007 to March 7 2008			POST MILE 20.02	LOG OF TEST BORINGS 3 OF 3

OSF GEOTECHNICAL LOG OF TEST BORINGS SHEET (ENGLISH) (REV. 2/25/05)

ORIGINAL SCALE IN INCHES FOR REDUCED PLANS 0 1 2 3

CU 08
EA 448401

DISREGARD PRINTS BEARING EARLIER REVISION DATES

REVISION DATES (PRELIMINARY STAGE ONLY) 8/18/10

SHEET 13 OF 13

FILE => 56e0076z1otb13.dgn

USERNAME => trlenard DATE PLOTTED => 30-APR-2011 TIME PLOTTED =>