Dist	COUNTY	ROUTE	POST MILES TOTAL PROJECT	SHEET No.	TOTAL SHEETS
08	Riv	91	15.6/21.6	1001	2028

REGISTERED CIVIL ENGINEER 12-1-10 DATE

4-25-11
PLANS APPROVAL DATE

REGISTERED PROFESSIONAL ENGINEER CUONG LE TRAN No. C60436 Exp. 6-30-12 CIVIL STATE OF CALIFORNIA

THE STATE OF CALIFORNIA OR ITS OFFICERS OR AGENTS SHALL NOT BE RESPONSIBLE FOR THE ACCURACY OR COMPLETENESS OF SCANNED COPIES OF THIS PLAN SHEET.

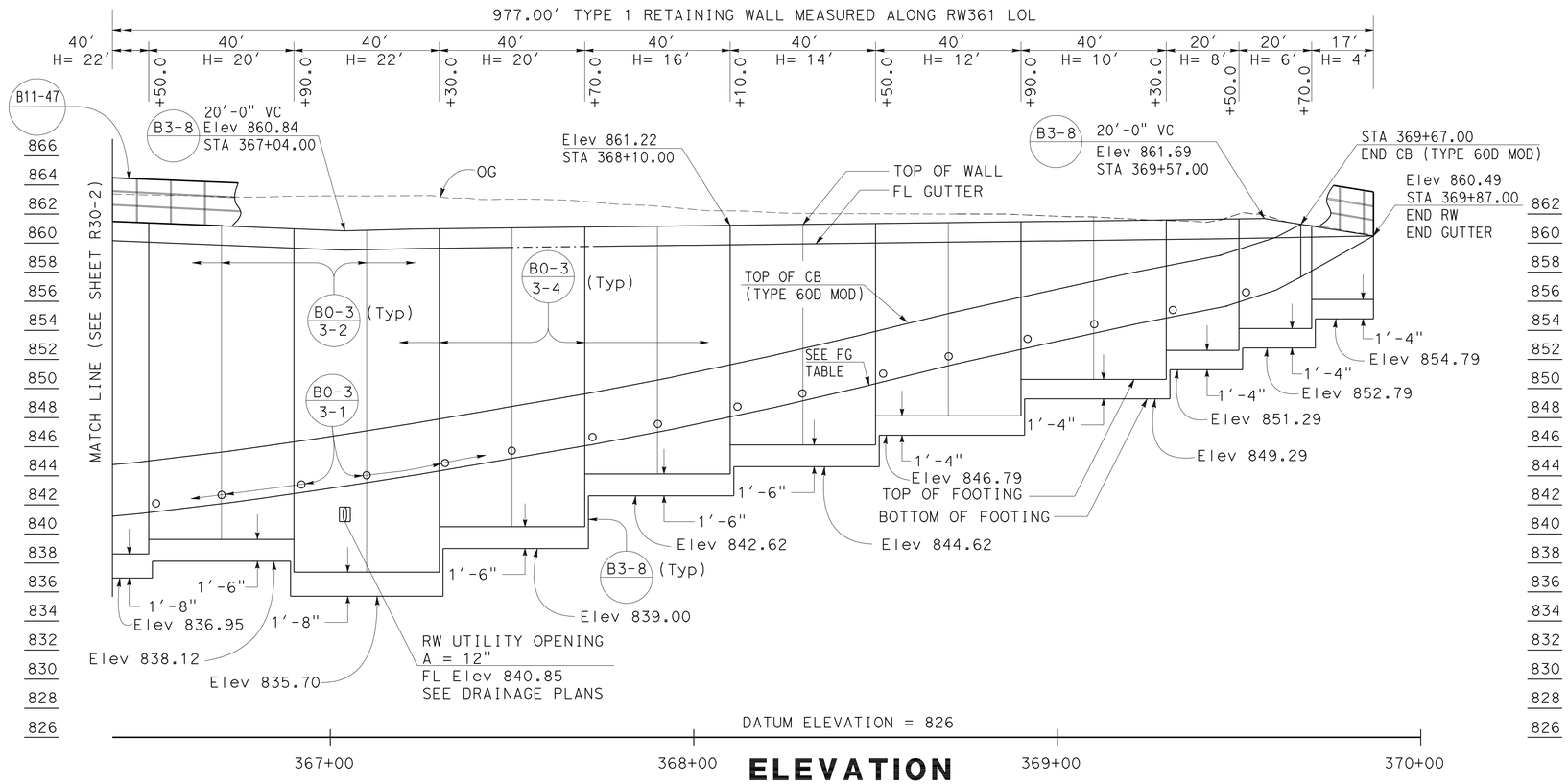

ELEVATION

SCALE Horiz 1"=20'
Vert 1"=5'

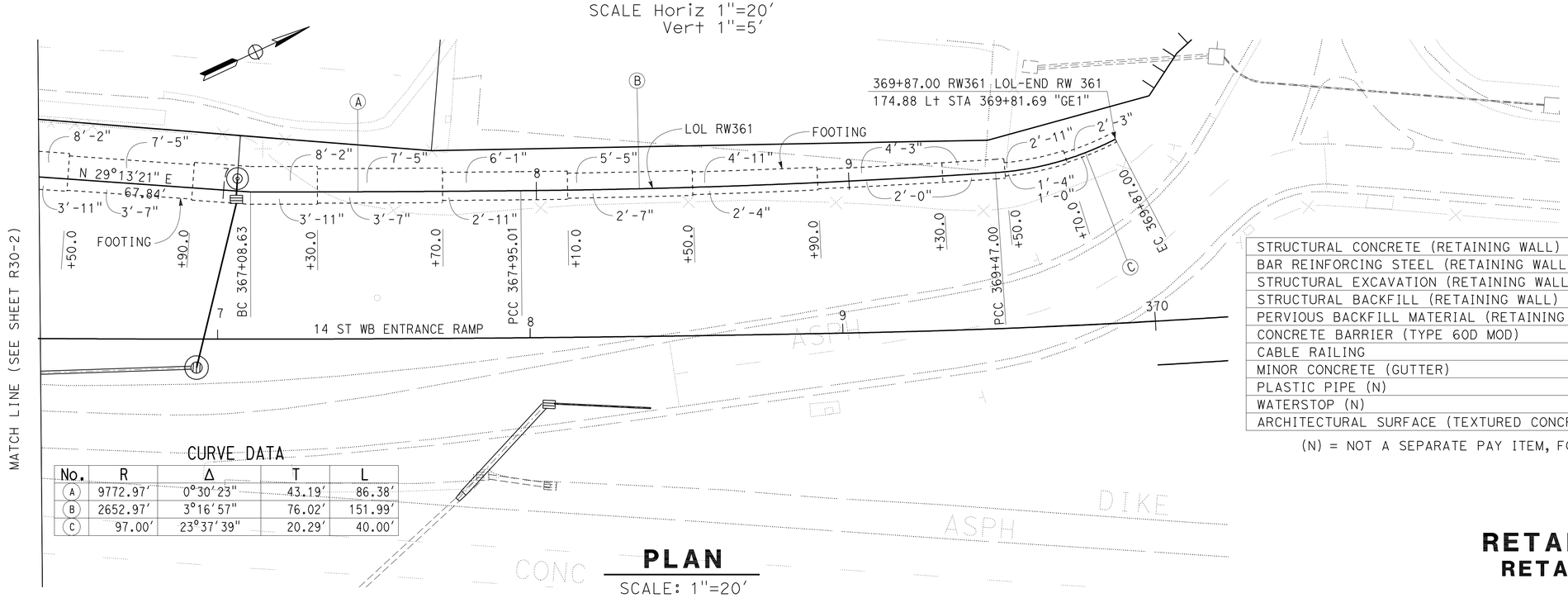

PLAN

SCALE: 1"=20'

CURVE DATA

No.	R	Δ	T	L
A	9772.97'	0°30'23"	43.19'	86.38'
B	2652.97'	3°16'57"	76.02'	151.99'
C	97.00'	23°37'39"	20.29'	40.00'

QUANTITIES

STRUCTURAL CONCRETE (RETAINING WALL)	2444.70	CY
BAR REINFORCING STEEL (RETAINING WALL)	347311	LB
STRUCTURAL EXCAVATION (RETAINING WALL)	18626.08	CY
STRUCTURAL BACKFILL (RETAINING WALL)	9312.24	CY
PERVIOUS BACKFILL MATERIAL (RETAINING WALL)	694.21	CY
CONCRETE BARRIER (TYPE 60D MOD)	957.00	LF
CABLE RAILING	977.00	LF
MINOR CONCRETE (GUTTER)	977.00	LF
PLASTIC PIPE (N)	105.54	LF
WATERSTOP (N)	439.40	LF
ARCHITECTURAL SURFACE (TEXTURED CONCRETE)	16121.17	SF

(N) = NOT A SEPARATE PAY ITEM, FOR INFORMATION ONLY

THIS PLAN ACCURATE FOR RETAINING WALL WORK ONLY.

RETAINING WALL PLAN
RETAINING WALL No. 361
SCALE AS SHOWN

R30-3

REVISED BY | DATE REVISED
ANNABELL WANG | CUONG LE TRAN
CALCULATED-DESIGNED BY | CHECKED BY
FUNCTIONAL SUPERVISOR: MARK PERTILE

STATE OF CALIFORNIA - DEPARTMENT OF TRANSPORTATION
Caltrans DESIGN

LAST REVISION 12-01-10 | DATE PLOTTED => 30-APR-2011 | TIME PLOTTED => 07:31

Dist	COUNTY	ROUTE	POST MILES TOTAL PROJECT	SHEET No.	TOTAL SHEETS
08	Riv	91	15.6/21.6	1002	2028

REGISTERED CIVIL ENGINEER 12-1-10 DATE

4-25-11
PLANS APPROVAL DATE

REGISTERED PROFESSIONAL ENGINEER CUONG LE TRAN No. C60436 Exp. 6-30-12 CIVIL STATE OF CALIFORNIA

THE STATE OF CALIFORNIA OR ITS OFFICERS OR AGENTS SHALL NOT BE RESPONSIBLE FOR THE ACCURACY OR COMPLETENESS OF SCANNED COPIES OF THIS PLAN SHEET.

NOTES

1. See Retaining Wall Details for Concrete Barrier Type 60D(mod).
2. Contractor options for fill between concrete barrier walls:
   A. Place 4" PCC at base between concrete barrier walls.
   B. Place 12" of granular material at base between walls.
   C. Place granular material from base to bottom of 4" cap.
   D. Monolithic concrete with foam blockouts is not permitted.
3. Reinforcing steel shall extend continuous through construction joints.
4. Adjust height of concrete barrier wall on low side of offset or superelevated roadways to provide level grade across top of concrete barrier cap.
5. Pull Boxes to be placed as shown or as directed by the Engineer.

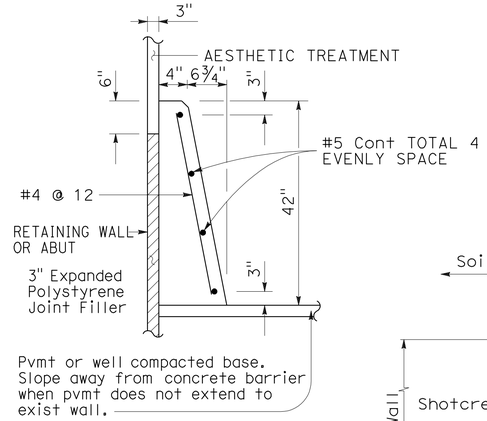

CONCRETE BARRIER
(TYPE 60D MOD)

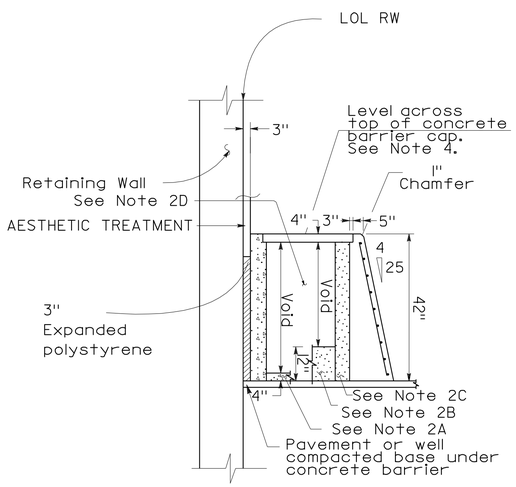

SECTION A-A

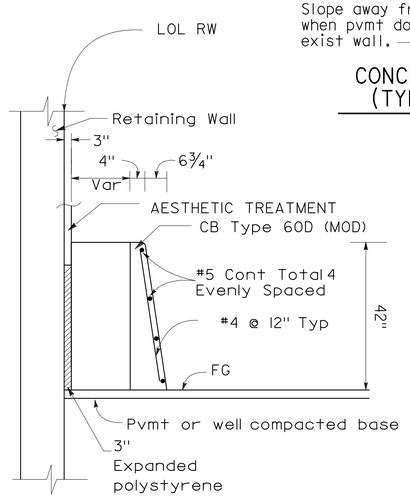

SECTION B-B

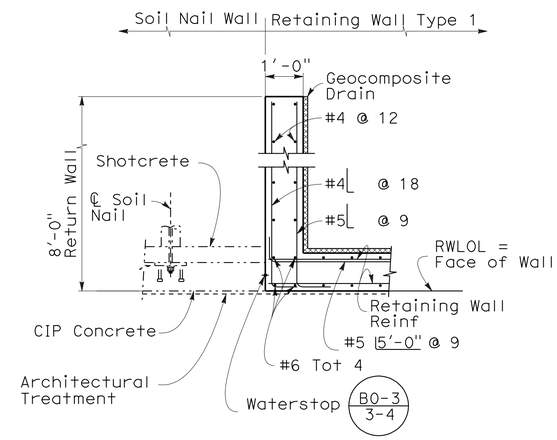

PLAN
NO SCALE

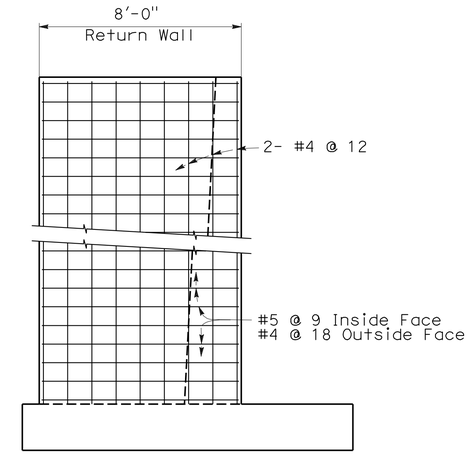

ELEVATION
NO SCALE

RETURN WALL DETAILS FOR RETAINING WALL NO. 361

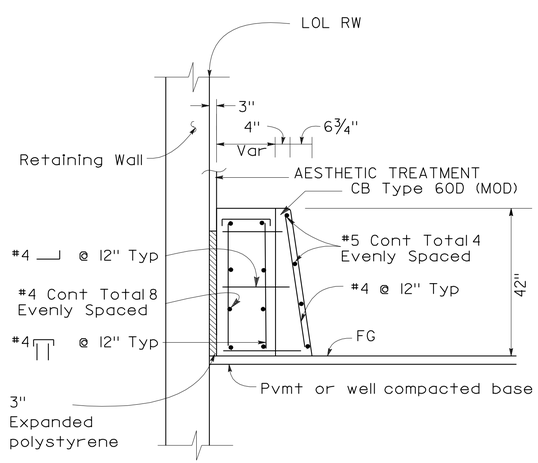

DETAIL A

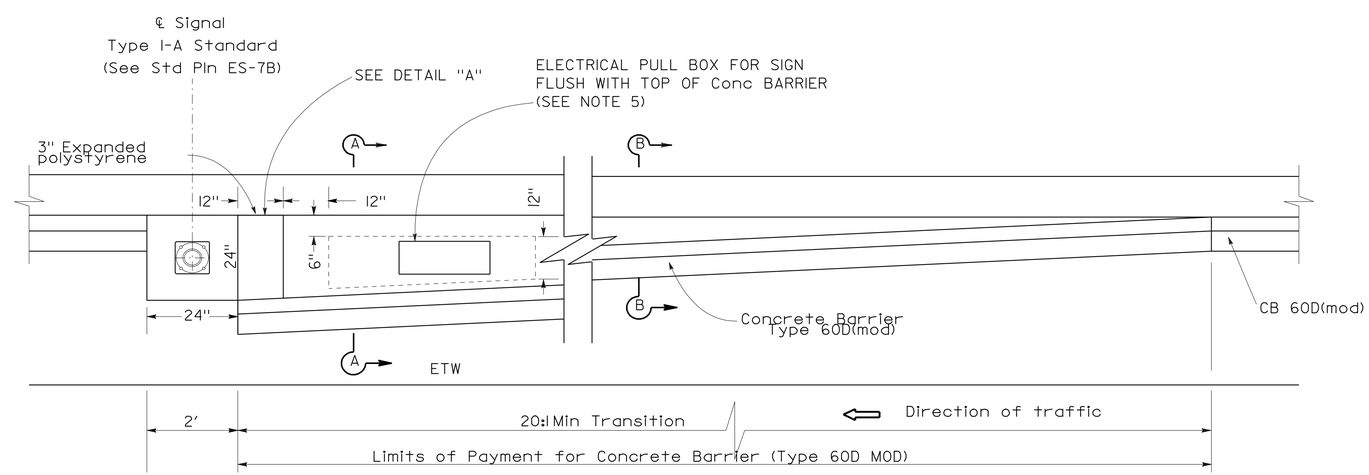

CB 60D(MOD) FOR ELECTRICAL SYSTEM TYPE 1-A Std

RETAINING WALL DETAILS
RETAINING WALL No. 361
NO SCALE

R30-4

THIS PLAN ACCURATE FOR RETAINING WALL WORK ONLY.

STATE OF CALIFORNIA - DEPARTMENT OF TRANSPORTATION
DESIGN
FUNCTIONAL SUPERVISOR: MARK PERTILE
CALCULATED-DESIGNED BY: ANNABELL WANG
CHECKED BY: CUONG LE TRAN
REVISED BY
DATE REVISED

LAST REVISION 12-01-10
DATE PLOTTED => 30-APR-2011
TIME PLOTTED => 07:31

Dist	COUNTY	ROUTE	POST MILES TOTAL PROJECT	SHEET No.	TOTAL SHEETS
08	Riv	91	15.6/21.6	1003	2028

LICENSED LANDSCAPE ARCHITECT

4-25-11
PLANS APPROVAL DATE

LICENSED LANDSCAPE ARCHITECT
Matthew Harry Hall
No. 2011
Signature
10/31/2011
Renewal Date
12-1-10
Date
STATE OF CALIFORNIA

THE STATE OF CALIFORNIA OR ITS OFFICERS OR AGENTS SHALL NOT BE RESPONSIBLE FOR THE ACCURACY OR COMPLETENESS OF SCANNED COPIES OF THIS PLAN SHEET.

NOTE:

SEE SHEET ASD-1, ASD-2, ASD-3 AND ASD-5.

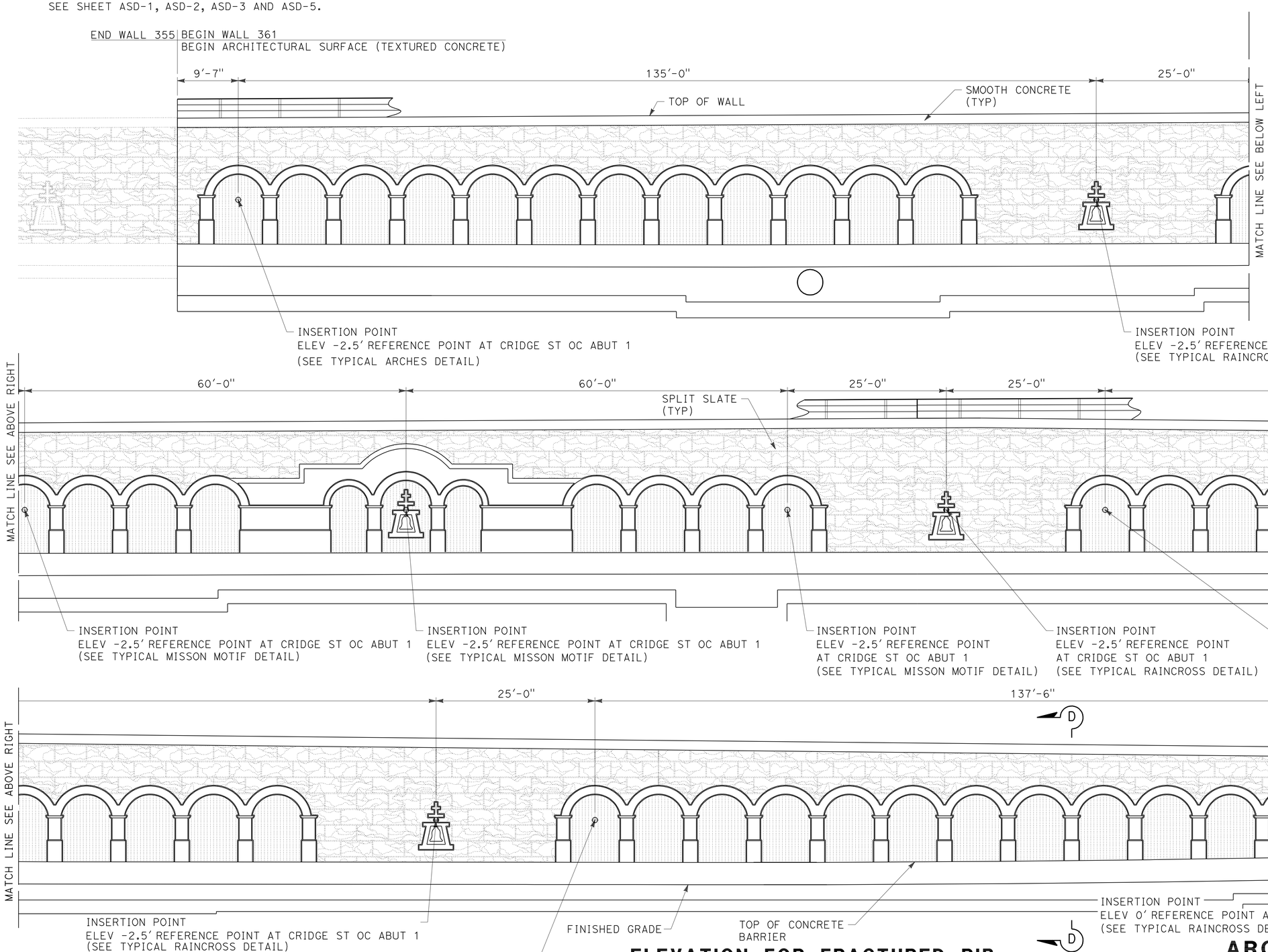

ELEVATION FOR FRACTURED RIB SPLIT FACE TEXTURE RETAINING WALL No. 361

THIS PLAN IS ACCURATE FOR ARCHITECTUAL TREATMENT WORK ONLY.

ARCHITECTURAL SURFACE RETAINING WALL No. 361

SCALE: 1/8"=1'-0"

R30-5

REVISED BY	DATE REVISED
MATTHEW HALL	MIRIAM BISHOP

CALCULATED-DESIGNED BY
CHECKED BY

SENIOR LANDSCAPE ARCHITECT
BYRON STROUT

STATE OF CALIFORNIA - DEPARTMENT OF TRANSPORTATION
Caltrans® LANDSCAPE ARCHITECTURE

LAST REVISION 12-01-10
DATE PLOTTED => 30-APR-2011
TIME PLOTTED => 07:32

Dist	COUNTY	ROUTE	POST MILES TOTAL PROJECT	SHEET No.	TOTAL SHEETS
08	Riv	91	15.6/21.6	1004	2028

LICENSED LANDSCAPE ARCHITECT

4-25-11
PLANS APPROVAL DATE

LICENSED LANDSCAPE ARCHITECT
Matthew Harry Hall
No. 2011
Signature
10/31/2011
Renewal Date
12-1-10
Date
STATE OF CALIFORNIA

THE STATE OF CALIFORNIA OR ITS OFFICERS OR AGENTS SHALL NOT BE RESPONSIBLE FOR THE ACCURACY OR COMPLETENESS OF SCANNED COPIES OF THIS PLAN SHEET.

NOTE:

SEE SHEET ASD-2, ASD-3 AND ASD-5.

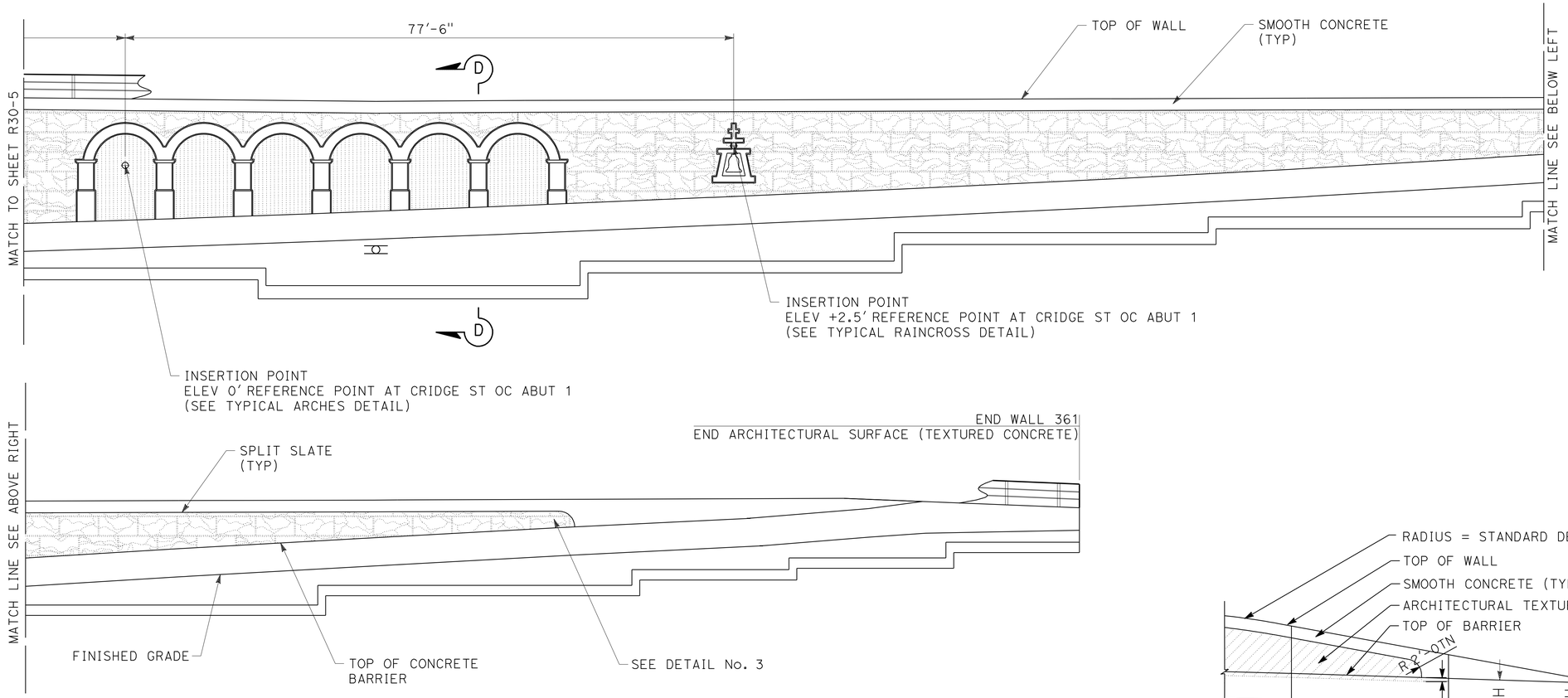

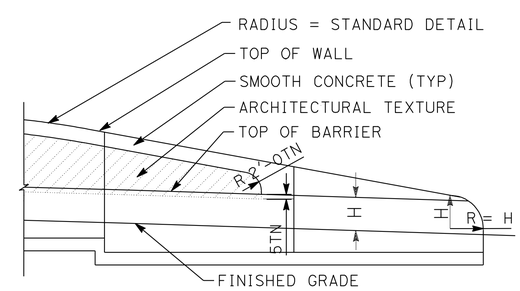

DETAIL No. 3

TYPICAL END OF WALL WITH
TYPE 60D MOD. CONCRETE BARRIER

ELEVATION FOR FRACTURED RIB SPLIT FACE TEXTURE RETAINING WALL No. 361

THIS PLAN IS ACCURATE FOR ARCHITECTUAL TREATMENT WORK ONLY.

ARCHITECTURAL SURFACE RETAINING WALL No. 361

SCALE: 1/8"=1'-0"

R30-6

REVISED BY	DATE REVISED

MATTHEW HALL — MIRIAM BISHOP
CALCULATED-DESIGNED BY — CHECKED BY
SENIOR LANDSCAPE ARCHITECT — BYRON STROUT

STATE OF CALIFORNIA - DEPARTMENT OF TRANSPORTATION
Caltrans® LANDSCAPE ARCHITECTURE

LAST REVISION 12-01-10 | DATE PLOTTED => 30-APR-2011 | TIME PLOTTED => 07:32

DIST	COUNTY	ROUTE	POST MILES TOTAL PROJECT	SHEET No	TOTAL SHEETS
08	Riv	91	15.6/21.6	1005	2028

GEOTECHNICAL PROFESSIONAL — DATE 10/2008

4-25-11
PLANS APPROVAL DATE

REGISTERED PROFESSIONAL ENGINEER — ANDREW C. LEE — No. 2616 — Exp. 6-30-12 — GEOTECHNICAL — STATE OF CALIFORNIA

The State of California or its officers or agents shall not be responsible for the accuracy or completeness of electronic copies of this plan sheet.

California Department of Transportation
5900 Folsom Boulevard
Sacramento, CA 95819

URS Corporation
2020 East First Street, Suite 400
Santa Ana, CA 92705

FOR PLAN VIEW, SEE SHEET R30-9

NOTE: 1. This LOTB sheet was prepared in accordance with the Caltrans Soil & Rock Logging, Classification, and Presentation Manual (June 2007).

2. For legend, see "Log of Test Borings" 1 of 83

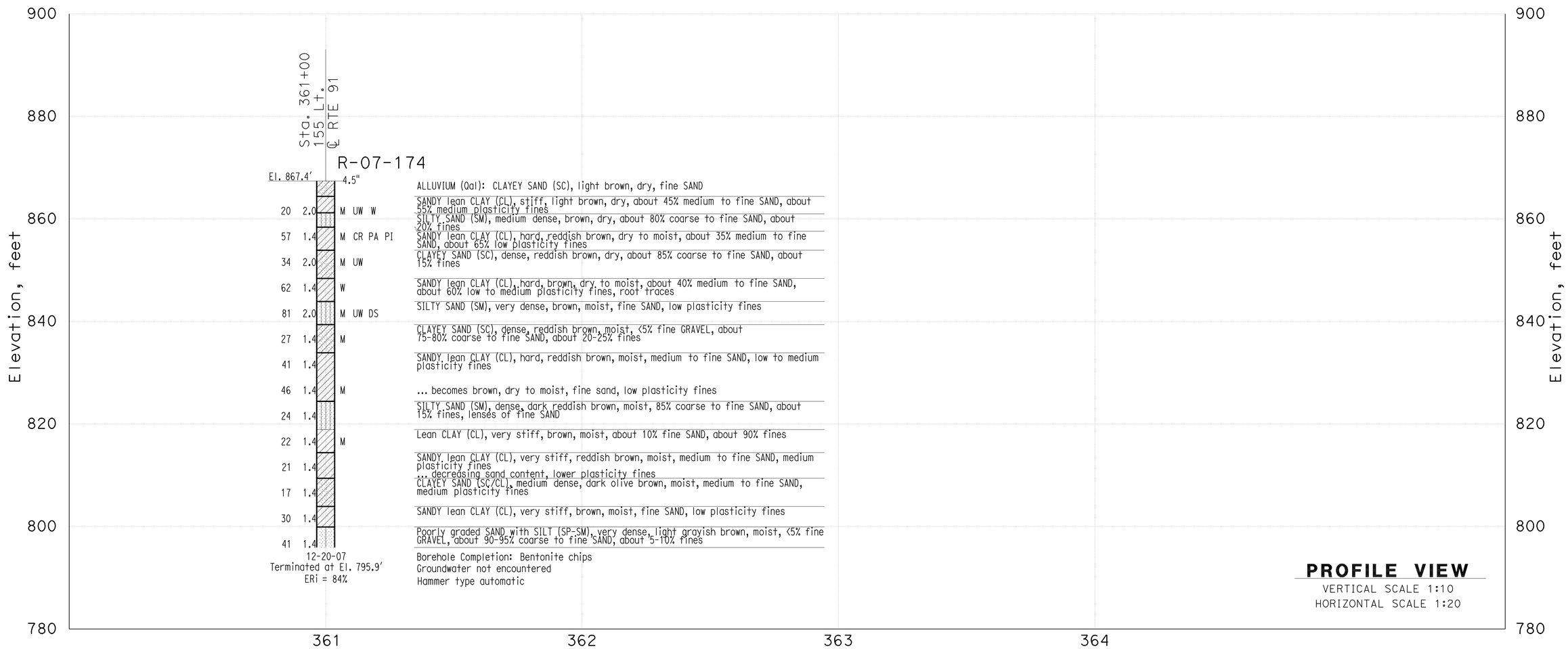

THIS PLAN ACCURATE FOR SOUND WALL AND RETAINING WALL WORK ONLY

DESIGN OVERSIGHT X SIGN OFF DATE	GINA PURSELL FUNCTIONAL SUPERVISOR	DRAWN BY CHECKED BY	P. QUACH S. PIRATHIVIRAJ	P.CHAU/D.WADER/C.CARBINO FIELD INVESTIGATION BY: DATE: Nov 6 2007 to March 7 2008	PREPARED FOR THE STATE OF CALIFORNIA DEPARTMENT OF TRANSPORTATION	A. LEE PROJECT ENGINEER	BRIDGE NO. X POST MILE X

Retaining Wall 361 R30-7

LOG OF TEST BORINGS SHEET 1 OF 3

OSF GEOTECHNICAL LOG OF TEST BORINGS SHEET (ENGLISH) (REV. 2/25/05)

ORIGINAL SCALE IN INCHES FOR REDUCED PLANS 0 1 2 3

CU 59A0590
EA 08-448400

DISREGARD PRINTS BEARING EARLIER REVISION DATES

REVISION DATES (PRELIMINARY STAGE ONLY) X

SHEET 1 OF 3

FILE => 844840qzd007.dgn

USERNAME => trpierce DATE PLOTTED => 30-APR-2011 TIME PLOTTED =>

DIST	COUNTY	ROUTE	POST MILES TOTAL PROJECT	SHEET No	TOTAL SHEETS
08	Riv	91	15.6/21.6	1006	2028

GEOTECHNICAL PROFESSIONAL DATE 10/2008

4-25-11
PLANS APPROVAL DATE

REGISTERED PROFESSIONAL ENGINEER ANDREW C. LEE No. 2616 Exp. 6-30-12 GEOTECHNICAL STATE OF CALIFORNIA

The State of California or its officers or agents shall not be responsible for the accuracy or completeness of electronic copies of this plan sheet.

California Department of Transportation
5900 Folsom Boulevard
Sacramento, CA 95819

URS Corporation
2020 East First Street, Suite 400
Santa Ana, CA 92705

FOR PLAN VIEW, SEE SHEET R30-9

NOTE: 1. This LOTB sheet was prepared in accordance with the Caltrans Soil & Rock Logging, Classification, and Presentation Manual (June 2007).

2. For legend, see "Log of Test Borings" 1 of 83

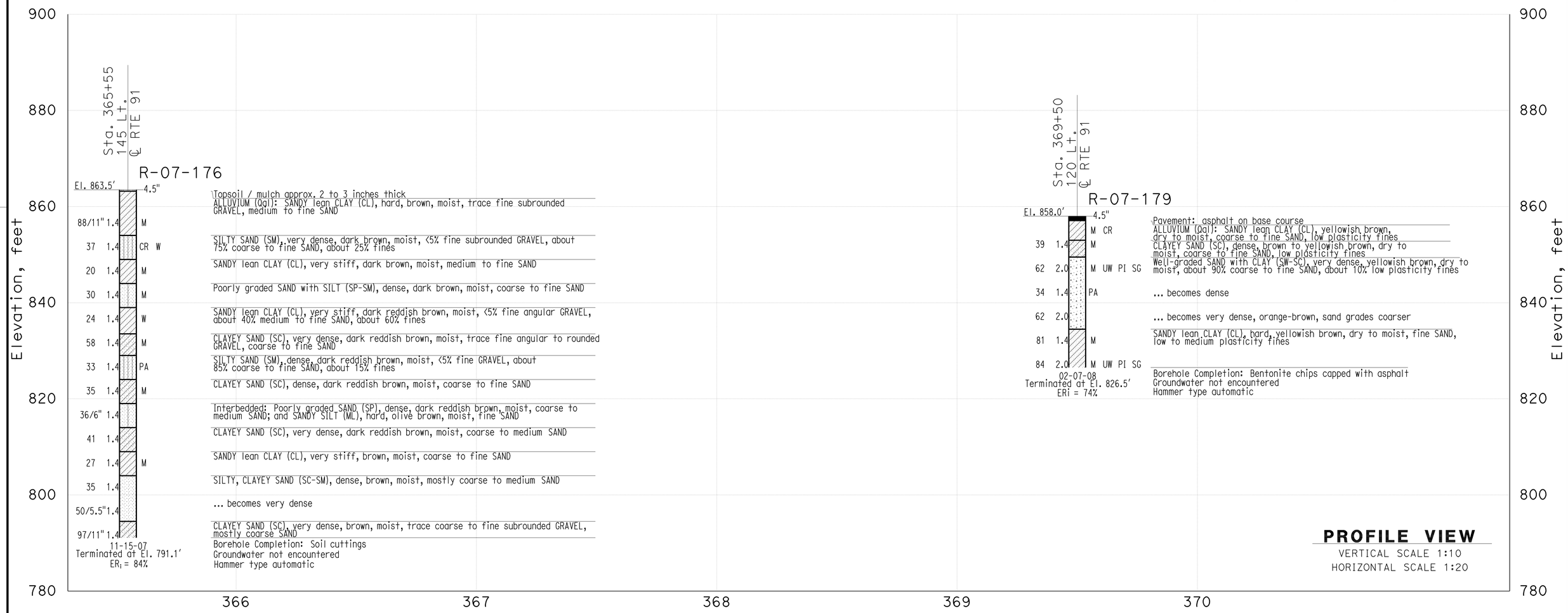

PROFILE VIEW
VERTICAL SCALE 1:10
HORIZONTAL SCALE 1:20

THIS PLAN ACCURATE FOR SOUND WALL AND RETAINING WALL WORK ONLY

DESIGN OVERSIGHT X SIGN OFF DATE	GINA PURSELL FUNCTIONAL SUPERVISOR	DRAWN BY CHECKED BY	P. QUACH S. PIRATHIVIRAJ	P.CHAU/D.WADER/C.CARBINO FIELD INVESTIGATION BY: DATE: Nov 6 2007 to March 7 2008	PREPARED FOR THE STATE OF CALIFORNIA DEPARTMENT OF TRANSPORTATION	A. LEE PROJECT ENGINEER	BRIDGE NO. X POST MILE X	Retaining Wall 361 R30-8 LOG OF TEST BORINGS SHEET 2 OF 3

OSF GEOTECHNICAL LOG OF TEST BORINGS SHEET (ENGLISH) (REV. 2/25/05)

ORIGINAL SCALE IN INCHES FOR REDUCED PLANS 0 1 2 3

CU 59A0590
EA 08-448400

DISREGARD PRINTS BEARING EARLIER REVISION DATES

REVISION DATES (PRELIMINARY STAGE ONLY) X

SHEET 2 OF 3

FILE => 844840qzd008.dgn

USERNAME => trpierce DATE PLOTTED => 30-APR-2011 TIME PLOTTED =>

DIST	COUNTY	ROUTE	POST MILES TOTAL PROJECT	SHEET No	TOTAL SHEETS
08	Riv	91	15.6/21.6	1007	2028

GEOTECHNICAL PROFESSIONAL — DATE 10/2008

4-25-11
PLANS APPROVAL DATE

REGISTERED PROFESSIONAL ENGINEER — ANDREW C. LEE — No. 2616 — Exp. 6-30-12 — GEOTECHNICAL — STATE OF CALIFORNIA

The State of California or its officers or agents shall not be responsible for the accuracy or completeness of electronic copies of this plan sheet.

California Department of Transportation
5900 Folsom Boulevard
Sacramento, CA 95819

URS Corporation
2020 East First Street, Suite 400
Santa Ana, CA 92705

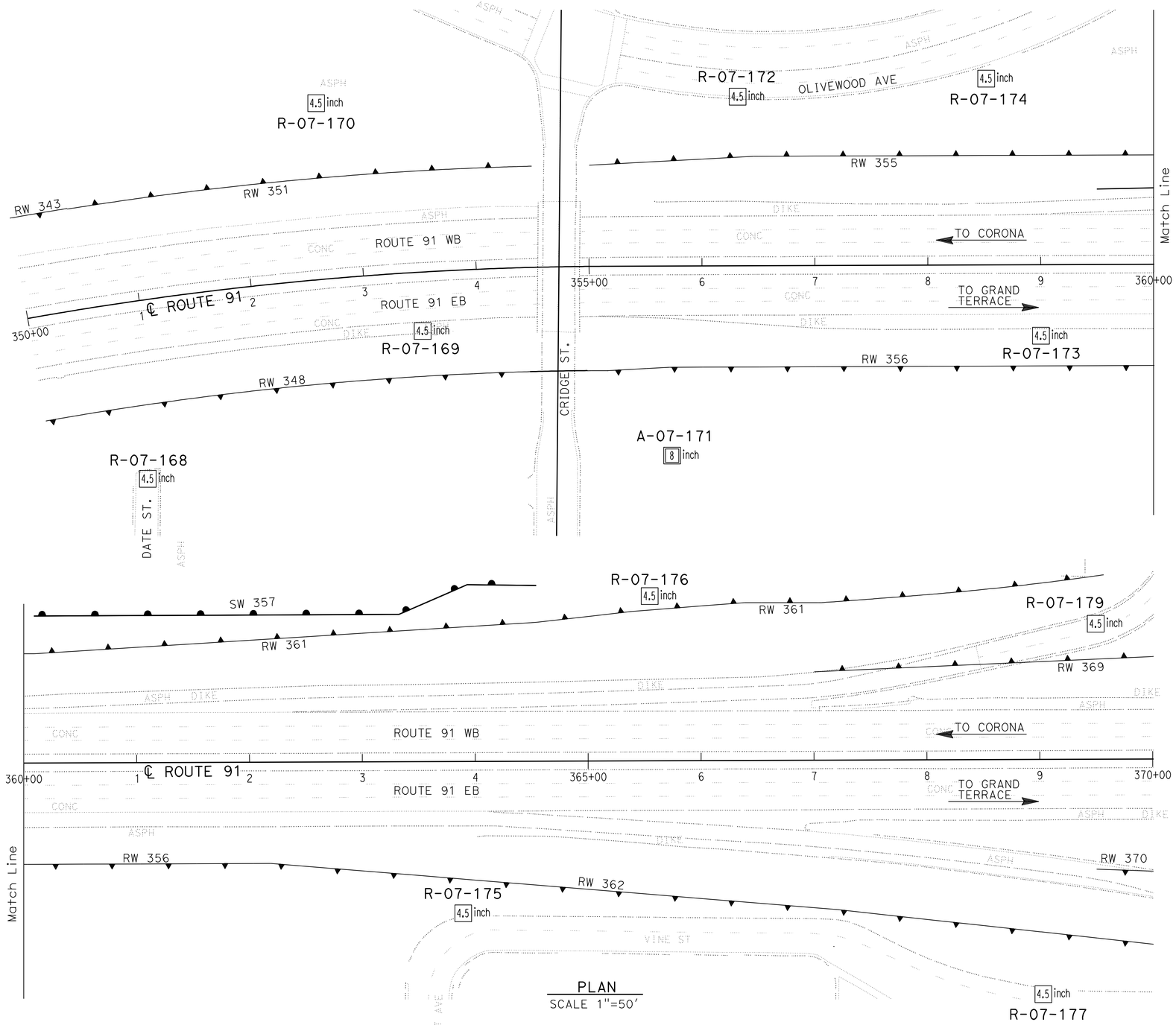

PLAN
SCALE 1"=50'

Borehole Number	Drill Rig	Hammer Type	Avg. Hammer Efficiency, ETR (%)
R-07-168	CS-2000	Automatic	84
R-07-169	CME 85	Automatic	87
R-07-170	Acker Rig	Automatic	74
A-07-171	Diedrich D-120	Automatic	75*
R-07-172	CS-2000	Automatic	84
R-07-173	CME 85	Automatic	87
R-07-174	CS-2000	Automatic	84
R-07-175	CS-2000	Automatic	84
R-07-176	CS-2000	Automatic	84
R-07-177	CS-2000	Automatic	84
R-07-179	Acker Rig	Automatic	74

Sampler Type	Inside Diameter (Inches)	Borehole Numbers
SPT	1.375	R-07-168, R-07-169, R-07-170 A-07-171, R-07-172, R-07-173 R-07-174, R-07-175, R-07-176 R-07-177, R-07-179
Modified California 1	1.94	R-07-168, R-07-169, R-07-170 R-07-172, R-07-173, R-07-174 R-07-175, R-07-177, R-07-179
Modified California 2	2.40	A-07-171

*Estimated Hammer Efficiency Rating.

DESIGN OVERSIGHT X SIGN OFF DATE	GINA PURSELL FUNCTIONAL SUPERVISOR	DRAWN BY P. QUACH	P.CHAU/D.WADER/C.CARBINO FIELD INVESTIGATION BY: DATE: Nov 6 2007 to March 7 2008	PREPARED FOR THE STATE OF CALIFORNIA DEPARTMENT OF TRANSPORTATION	A. LEE PROJECT ENGINEER	BRIDGE NO. X POST MILE X	RETAINING WALL 361 R30-9 LOG OF TEST BORINGS SHEET 3 OF 3
		CHECKED BY S. PIRATHIVIRAJ					

OSF GEOTECHNICAL LOG OF TEST BORINGS SHEET (ENGLISH) (REV. 2/25/05)

ORIGINAL SCALE IN INCHES FOR REDUCED PLANS 0 1 2 3

CU 59A0590
EA 08-448400

DISREGARD PRINTS BEARING EARLIER REVISION DATES

REVISION DATES (PRELIMINARY STAGE ONLY) X

SHEET 3 OF 3

FILE => 844840qzd009.dgn

USERNAME => trpierce DATE PLOTTED => 30-APR-2011 TIME PLOTTED =>

Dist	COUNTY	ROUTE	POST MILES TOTAL PROJECT	SHEET No.	TOTAL SHEETS
08	Riv	91	15.6/21.6	1008	2028

REGISTERED CIVIL ENGINEER 12-1-10 DATE

4-25-11
PLANS APPROVAL DATE

REGISTERED PROFESSIONAL ENGINEER CUONG LE TRAN No. C60436 Exp. 6-30-12 CIVIL STATE OF CALIFORNIA

THE STATE OF CALIFORNIA OR ITS OFFICERS OR AGENTS SHALL NOT BE RESPONSIBLE FOR THE ACCURACY OR COMPLETENESS OF SCANNED COPIES OF THIS PLAN SHEET.

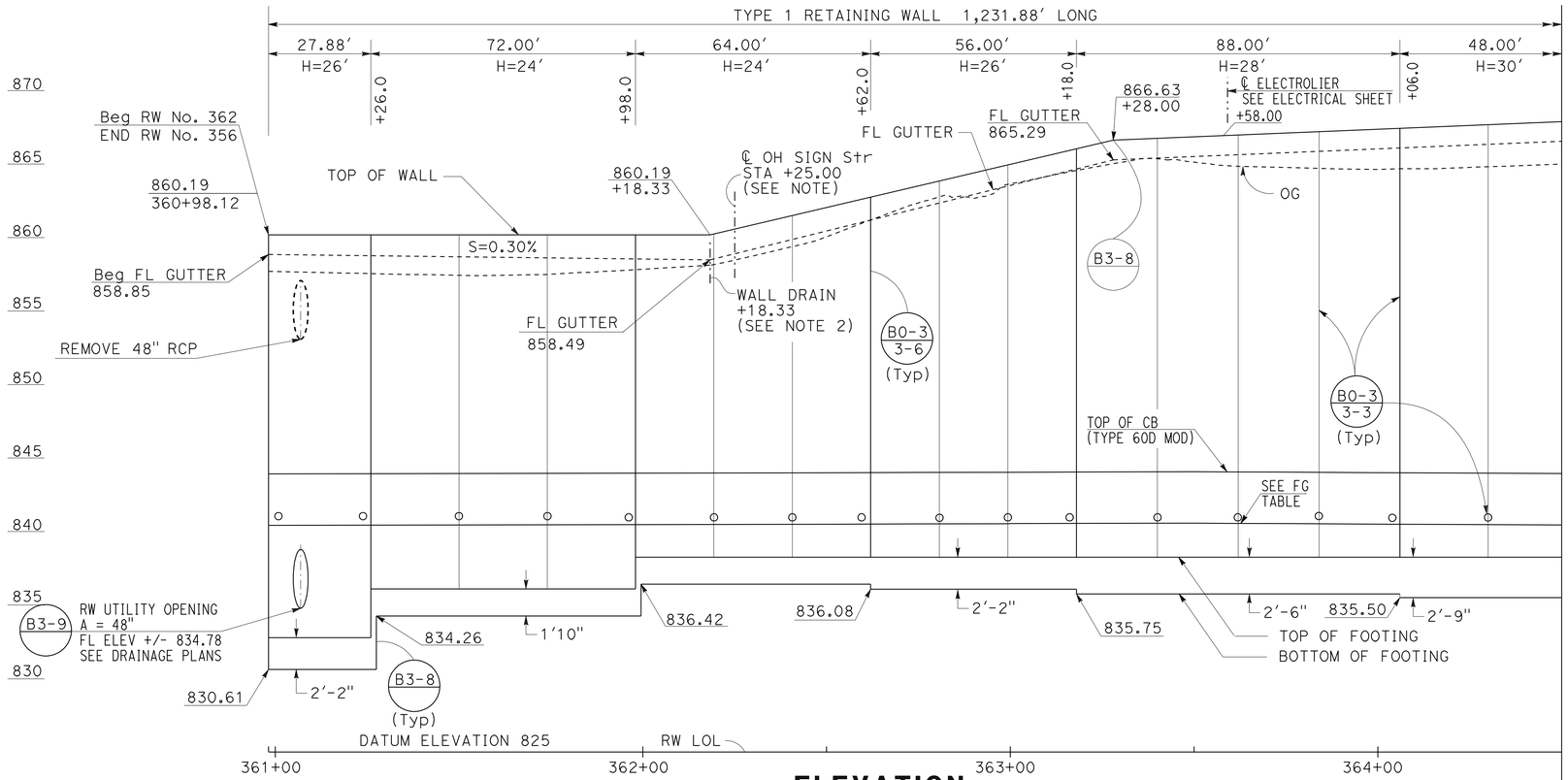

ELEVATION

SCALE Horiz 1"=20'
Vert 1"=5'

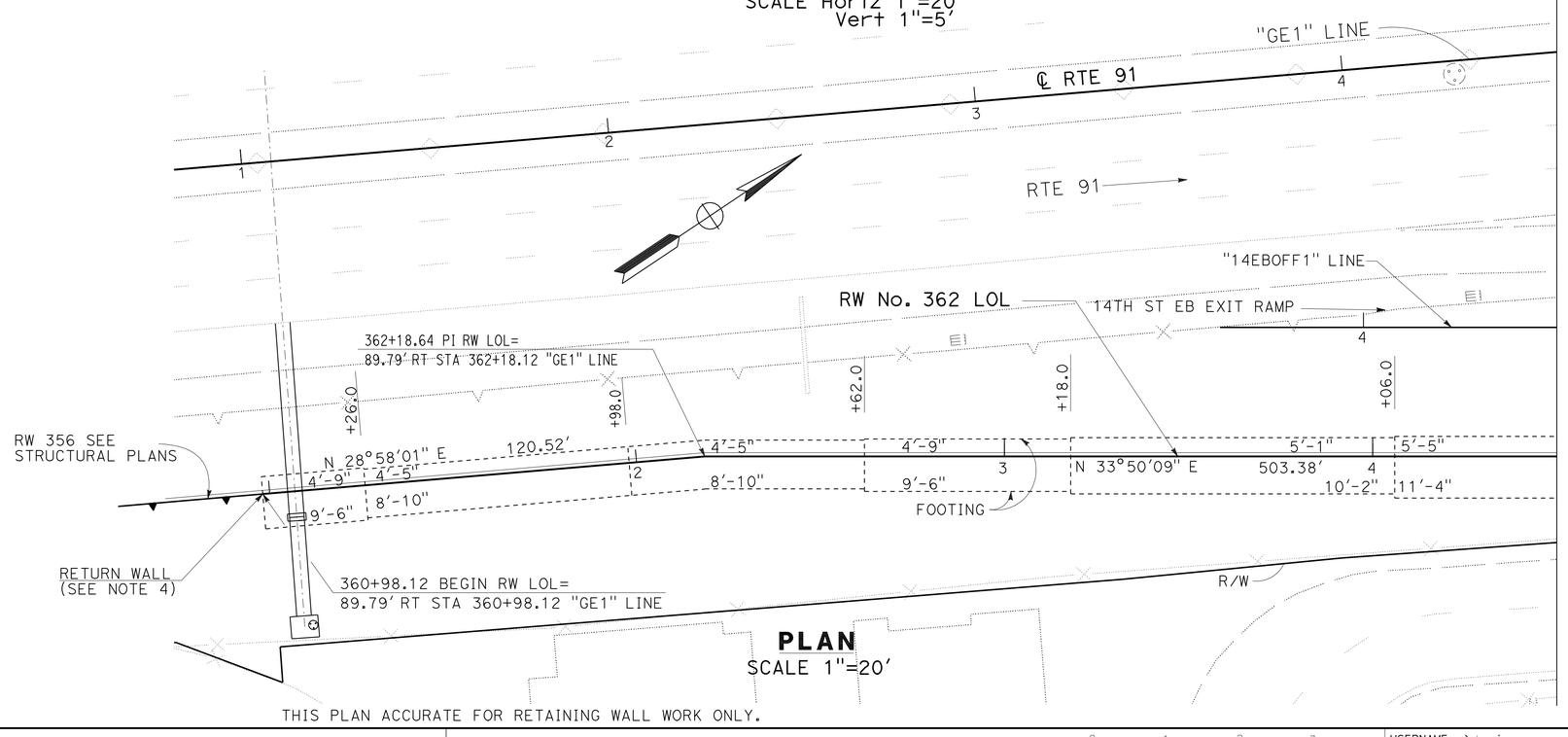

PLAN

SCALE 1"=20'

THIS PLAN ACCURATE FOR RETAINING WALL WORK ONLY.

NOTE:

1. FOR ELECTROLIER DETAILS, SEE ELECTRICAL DETAIL SHEETS.
2. FOR WALL DRAIN, SEE STD PLAN B3-9.
3. FOR OVERHEAD SIGN STRUCTURE DETAILS, SEE OVERHEAD SIGN STRUCTURE DETAIL SHEETS.
4. FOR RETURN WALL DETAILS, SEE SHEET R31-4.

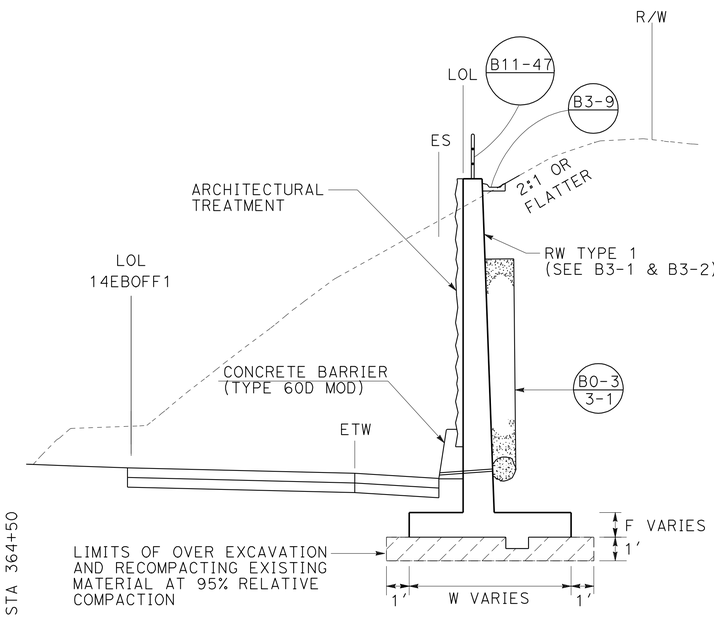

TYPICAL SECTION

NO SCALE

FROM STA 360+98.12 TO STA 373+30.00

RETAINING WALL PLAN
RETAINING WALL No. 362

SCALE AS SHOWN

R31-1

REVISED BY	DATE REVISED

CALCULATED-DESIGNED BY	CHECKED BY
ANNABELL WANG	CUONG LE TRAN

FUNCTIONAL SUPERVISOR: MARK PERTILE

STATE OF CALIFORNIA - DEPARTMENT OF TRANSPORTATION

Caltrans DESIGN

LAST REVISION 12-01-10 | DATE PLOTTED => 30-APR-2011 | TIME PLOTTED => 07:32

Dist	COUNTY	ROUTE	POST MILES TOTAL PROJECT	SHEET No.	TOTAL SHEETS
08	Riv	91	15.6/21.6	1009	2028

REGISTERED CIVIL ENGINEER 12-1-10 DATE

4-25-11
PLANS APPROVAL DATE

REGISTERED PROFESSIONAL ENGINEER CUONG LE TRAN No. C60436 Exp. 6-30-12 CIVIL STATE OF CALIFORNIA

THE STATE OF CALIFORNIA OR ITS OFFICERS OR AGENTS SHALL NOT BE RESPONSIBLE FOR THE ACCURACY OR COMPLETENESS OF SCANNED COPIES OF THIS PLAN SHEET.

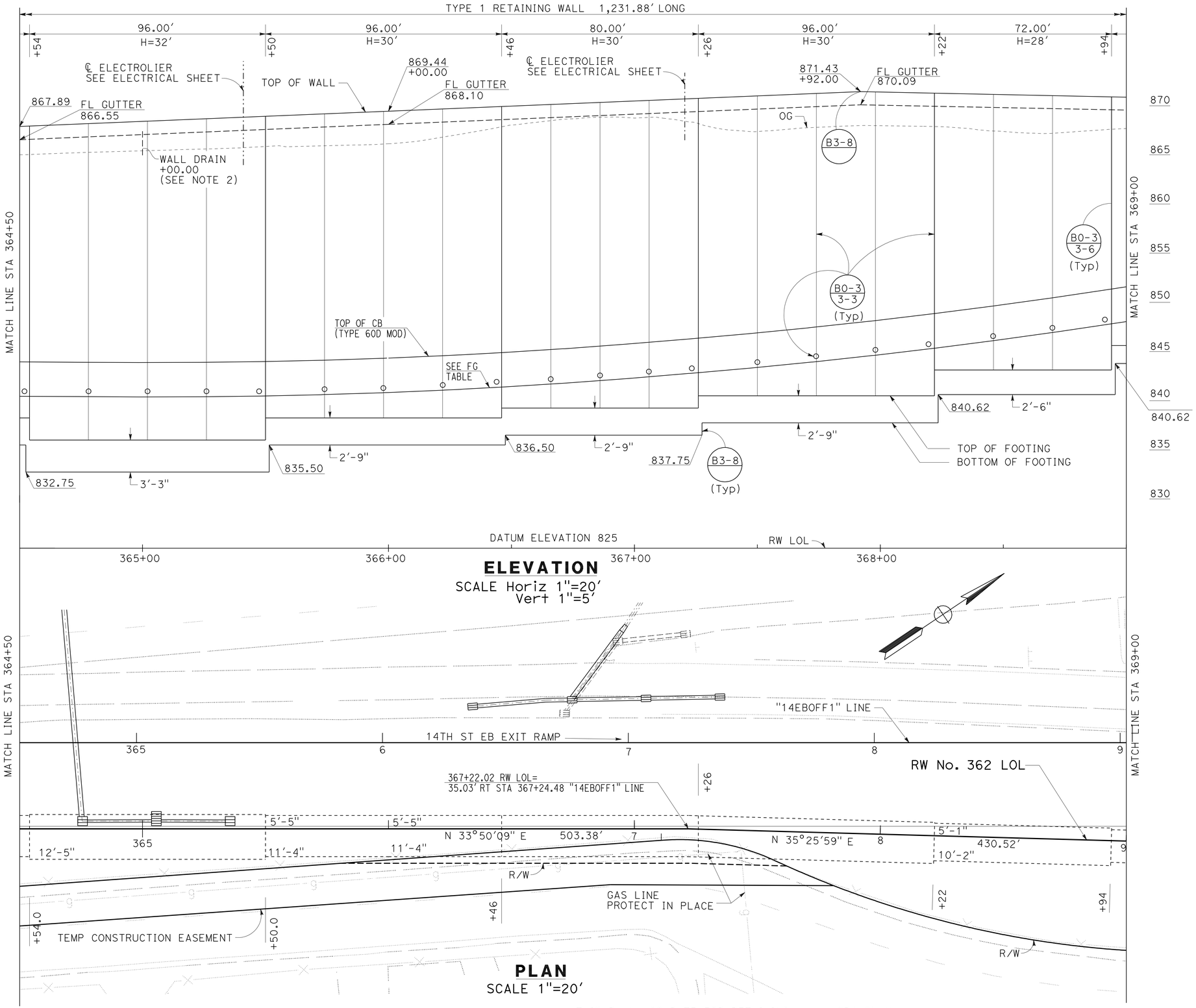

THIS PLAN ACCURATE FOR RETAINING WALL WORK ONLY.

NOTE:
FOR ELECTROLIER DETAILS, SEE ELECTRICAL DETAILS SHEETS.

FINISHED GRADE (FG) TABLE			
STATION	ELEVATION	STATION	ELEVATION
361+00.00	840.24	368+00.00	844.69
361+25.00	840.28	368+25.00	845.43
361+50.00	840.34	368+50.00	846.24
361+75.00	840.39	368+75.00	847.11
362+00.00	840.44	369+00.00	848.05
362+25.00	840.48	369+25.00	849.05
362+50.00	840.50	369+50.00	850.11
362+75.00	840.52	369+75.00	851.24
363+00.00	840.54	370+00.00	852.43
363+25.00	840.55	370+25.00	853.64
363+50.00	840.57	370+50.00	854.90
363+75.00	840.54	370+75.00	856.19
364+00.00	840.51	371+00.00	857.49
364+25.00	840.48	371+25.00	858.78
364+50.00	840.44	371+50.00	860.07
364+75.00	840.41	371+75.00	861.33
365+00.00	840.39	372+00.00	862.53
365+25.00	840.40	372+25.00	863.56
365+50.00	840.48	372+50.00	864.37
365+75.00	840.63	372+75.00	864.97
366+00.00	840.84	373+00.00	865.24
366+25.00	841.11	373+25.00	865.22
366+50.00	841.45	373+30.00	865.18
366+75.00	841.84		
367+00.00	842.31		
367+25.00	842.83		
367+50.00	843.39		
367+75.00	844.00		

RETAINING WALL PLAN
RETAINING WALL No. 362
SCALE AS SHOWN

R31-2

STATE OF CALIFORNIA - DEPARTMENT OF TRANSPORTATION
Caltrans
DESIGN

FUNCTIONAL SUPERVISOR: MARK PERTILE
CALCULATED-DESIGNED BY: ANNABELL WANG
CHECKED BY: CUONG LE TRAN
REVISED BY / DATE REVISED

LAST REVISION 12-01-10
DATE PLOTTED => 30-APR-2011
TIME PLOTTED => 07:33

Dist	COUNTY	ROUTE	POST MILES TOTAL PROJECT	SHEET No.	TOTAL SHEETS
08	Riv	91	15.6/21.6	1010	2028

REGISTERED CIVIL ENGINEER 12-1-10 DATE

4-25-11
PLANS APPROVAL DATE

REGISTERED PROFESSIONAL ENGINEER CUONG LE TRAN No. C60436 Exp. 6-30-12 CIVIL STATE OF CALIFORNIA

THE STATE OF CALIFORNIA OR ITS OFFICERS OR AGENTS SHALL NOT BE RESPONSIBLE FOR THE ACCURACY OR COMPLETENESS OF SCANNED COPIES OF THIS PLAN SHEET.

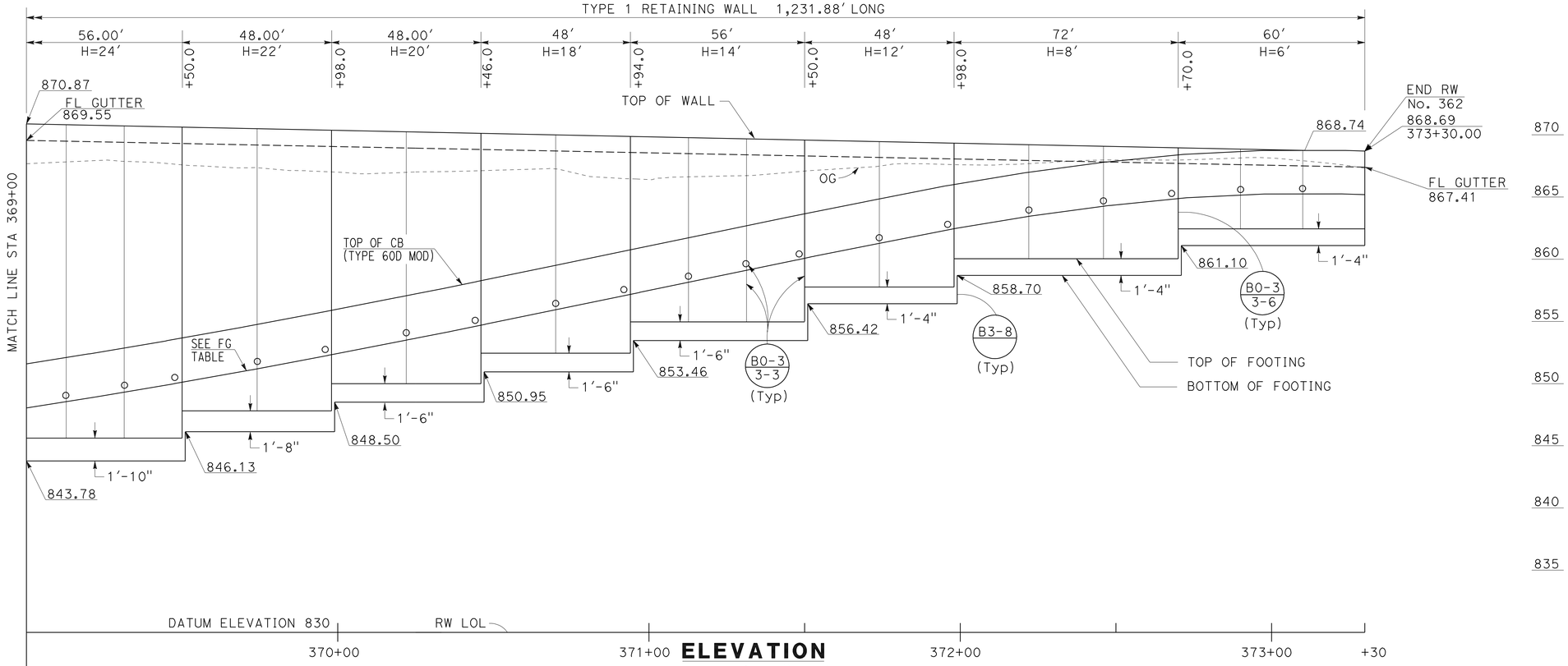

ELEVATION
SCALE Horiz 1"=20'
Vert 1"=5'

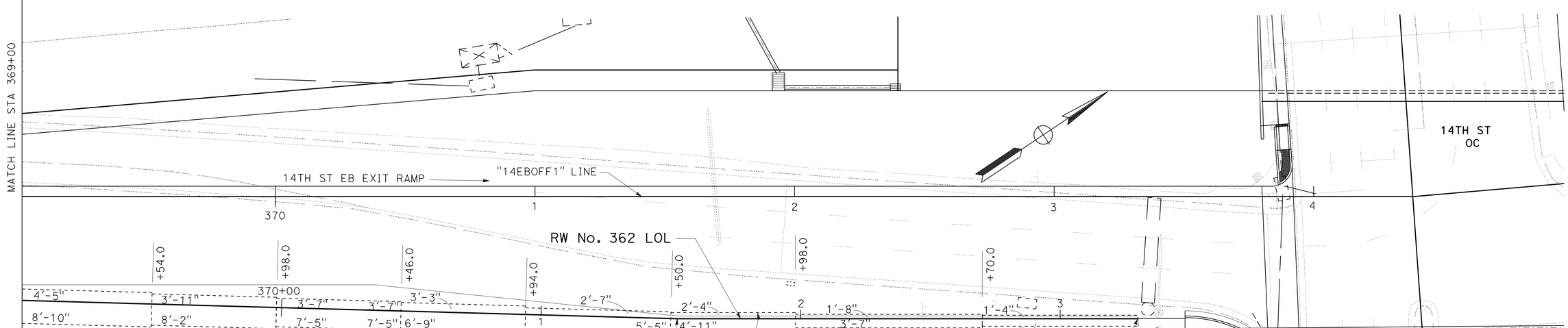

PLAN
SCALE 1"=20'

THIS PLAN ACCURATE FOR RETAINING WALL WORK ONLY.

RETAINING WALL PLAN
RETAINING WALL No. 362
SCALE AS SHOWN **R31-3**

STATE OF CALIFORNIA - DEPARTMENT OF TRANSPORTATION
Caltrans® DESIGN

FUNCTIONAL SUPERVISOR: MARK PERTILE
CALCULATED-DESIGNED BY: ANNABELL WANG
CHECKED BY: CUONG LE TRAN
REVISED BY
DATE REVISED

LAST REVISION 12-01-10
DATE PLOTTED => 30-APR-2011
TIME PLOTTED => 07:33

Dist	COUNTY	ROUTE	POST MILES TOTAL PROJECT	SHEET No.	TOTAL SHEETS
08	Riv	91	15.6/21.6	1011	2028

REGISTERED CIVIL ENGINEER 12-1-10 DATE

4-25-11
PLANS APPROVAL DATE

REGISTERED PROFESSIONAL ENGINEER CUONG LE TRAN No. C60436 Exp. 6-30-12 CIVIL STATE OF CALIFORNIA

THE STATE OF CALIFORNIA OR ITS OFFICERS OR AGENTS SHALL NOT BE RESPONSIBLE FOR THE ACCURACY OR COMPLETENESS OF SCANNED COPIES OF THIS PLAN SHEET.

QUANTITIES

STRUCTURAL CONCRETE (RETAINING WALL)	2896.80	CY
BAR REINFORCING STEEL (RETAINING WALL)	503027	LB
STRUCTURAL EXCAVATION (RETAINING WALL)	26958.86	CY
STRUCTURAL BACKFILL (RETAINING WALL)	21490.07	CY
PERVIOUS BACKFILL MATERIAL (RETAINING WALL)	1534.48	CY
CONCRETE BARRIER (TYPE 60D MOD)	1231.88	LF
CABLE RAILING	1231.88	LF
MINOR CONCRETE (GUTTER)	1231.88	LF
PLASTIC PIPE (N)	129.70	LF
WATERSTOP (N)	412.00	LF
ARCHITECTURAL SURFACE (TEXTURED CONCRETE)	21847.52	SF

(N) = NOT A SEPARATE PAY ITEM, FOR INFORMATION ONLY

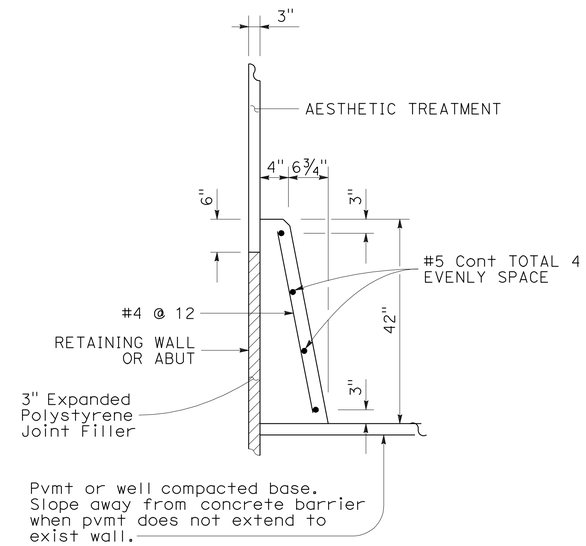

CONCRETE BARRIER
(TYPE 60D MOD)

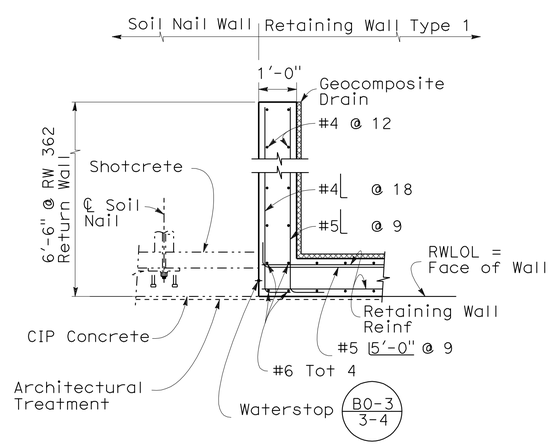

PLAN
1" = 2'

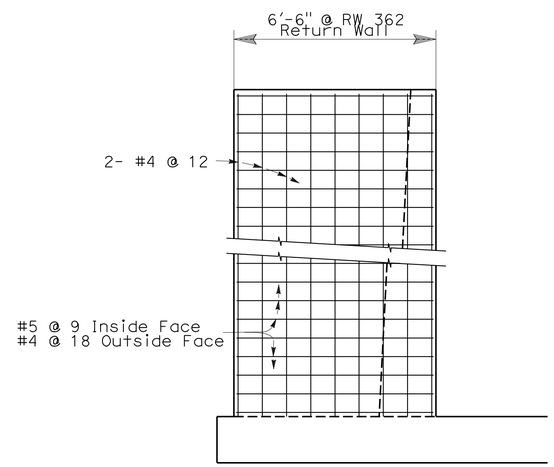

ELEVATION
1" = 2'

RETURN WALL DETAILS FOR RETAINING WALL

THIS PLAN ACCURATE FOR RETAINING WALL WORK ONLY.

RETAINING WALL PLAN
RETAINING WALL No. 362
SCALE AS SHOWN

R31-4

REVISED BY	DATE REVISED

CALCULATED-DESIGNED BY	CHECKED BY
ANNABELL WANG	CUONG LE TRAN

FUNCTIONAL SUPERVISOR: MARK PERTILE

STATE OF CALIFORNIA - DEPARTMENT OF TRANSPORTATION
Caltrans
DESIGN

LAST REVISION 12-01-10 | DATE PLOTTED => 30-APR-2011 | TIME PLOTTED => 07:33

Dist	COUNTY	ROUTE	POST MILES TOTAL PROJECT	SHEET No.	TOTAL SHEETS
08	Riv	91	15.6/21.6	1012	2028

LICENSED LANDSCAPE ARCHITECT

4-25-11
PLANS APPROVAL DATE

LICENSED LANDSCAPE ARCHITECT
Matthew Harry Hall
Signature
10/31/2011
Renewal Date
12-1-10
Date
STATE OF CALIFORNIA

THE STATE OF CALIFORNIA OR ITS OFFICERS OR AGENTS SHALL NOT BE RESPONSIBLE FOR THE ACCURACY OR COMPLETENESS OF SCANNED COPIES OF THIS PLAN SHEET.

NOTE:

SEE SHEET ASD-1, ASD-2, ASD-3 AND ASD-5.

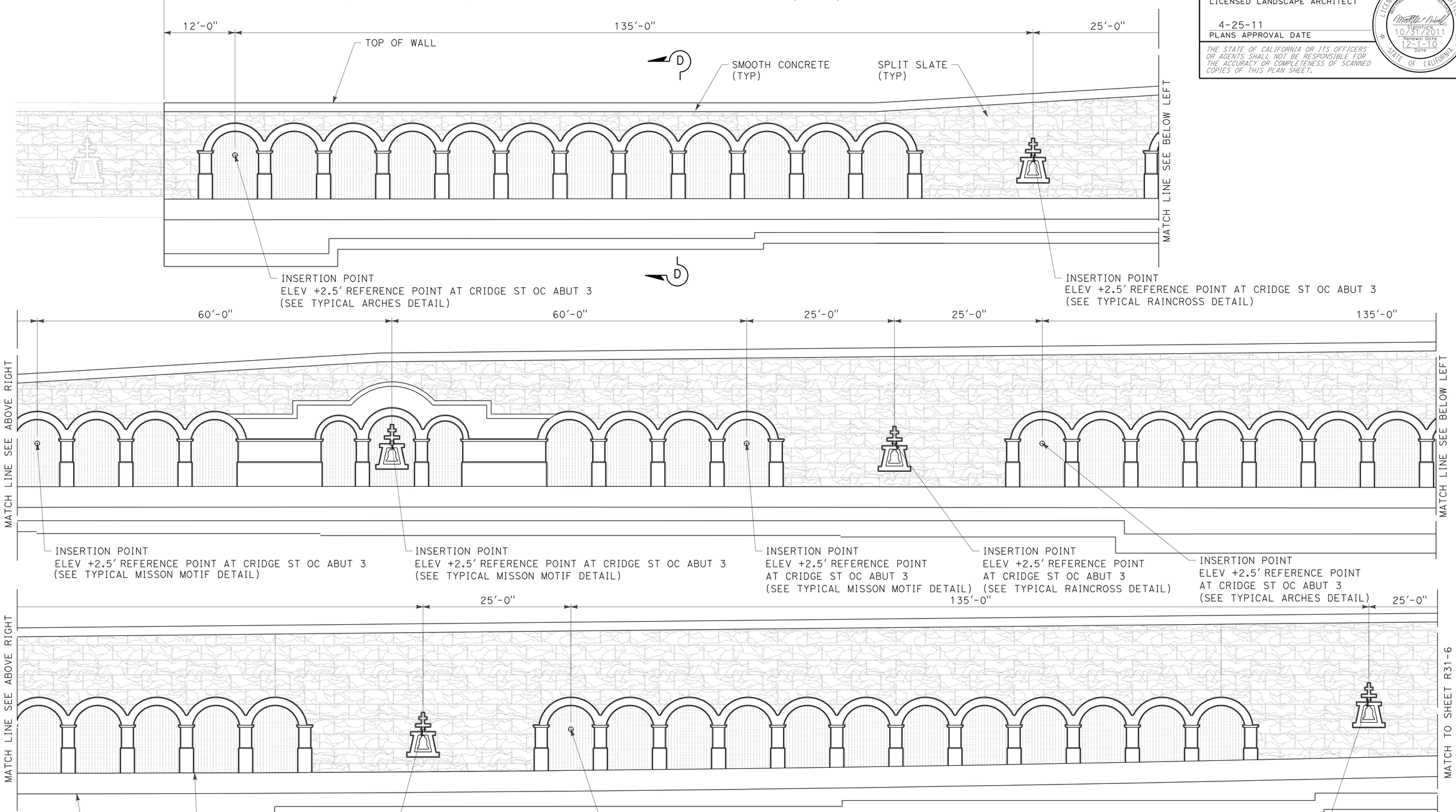

MIRRORED ELEVATION FOR FRACTURED RIB SPLIT FACE TEXTURE RETAINING WALL No. 362

THIS PLAN IS ACCURATE FOR ARCHITECTUAL TREATMENT WORK ONLY.

ARCHITECTURAL SURFACE RETAINING WALL No. 362

SCALE: 1/8"=1'-0"

R31-5

STATE OF CALIFORNIA - DEPARTMENT OF TRANSPORTATION
Caltrans® LANDSCAPE ARCHITECTURE

SENIOR LANDSCAPE ARCHITECT: BYRON STROUT
CALCULATED-DESIGNED BY: MATTHEW HALL
CHECKED BY: MIRIAM BISHOP
REVISED BY
DATE REVISED

LAST REVISION DATE PLOTTED => 30-APR-2011
TIME PLOTTED => 07:33
12-01-10

Dist	COUNTY	ROUTE	POST MILES TOTAL PROJECT	SHEET No.	TOTAL SHEETS
08	Riv	91	15.6/21.6	1013	2028

LICENSED LANDSCAPE ARCHITECT

4-25-11
PLANS APPROVAL DATE

LICENSED LANDSCAPE ARCHITECT
Matthew Harry Hall
Signature
10/31/2011
Renewal Date
12-1-10
Date
STATE OF CALIFORNIA

THE STATE OF CALIFORNIA OR ITS OFFICERS OR AGENTS SHALL NOT BE RESPONSIBLE FOR THE ACCURACY OR COMPLETENESS OF SCANNED COPIES OF THIS PLAN SHEET.

NOTE:

SEE SHEET ASD-2, ASD-3 AND ASD-5.

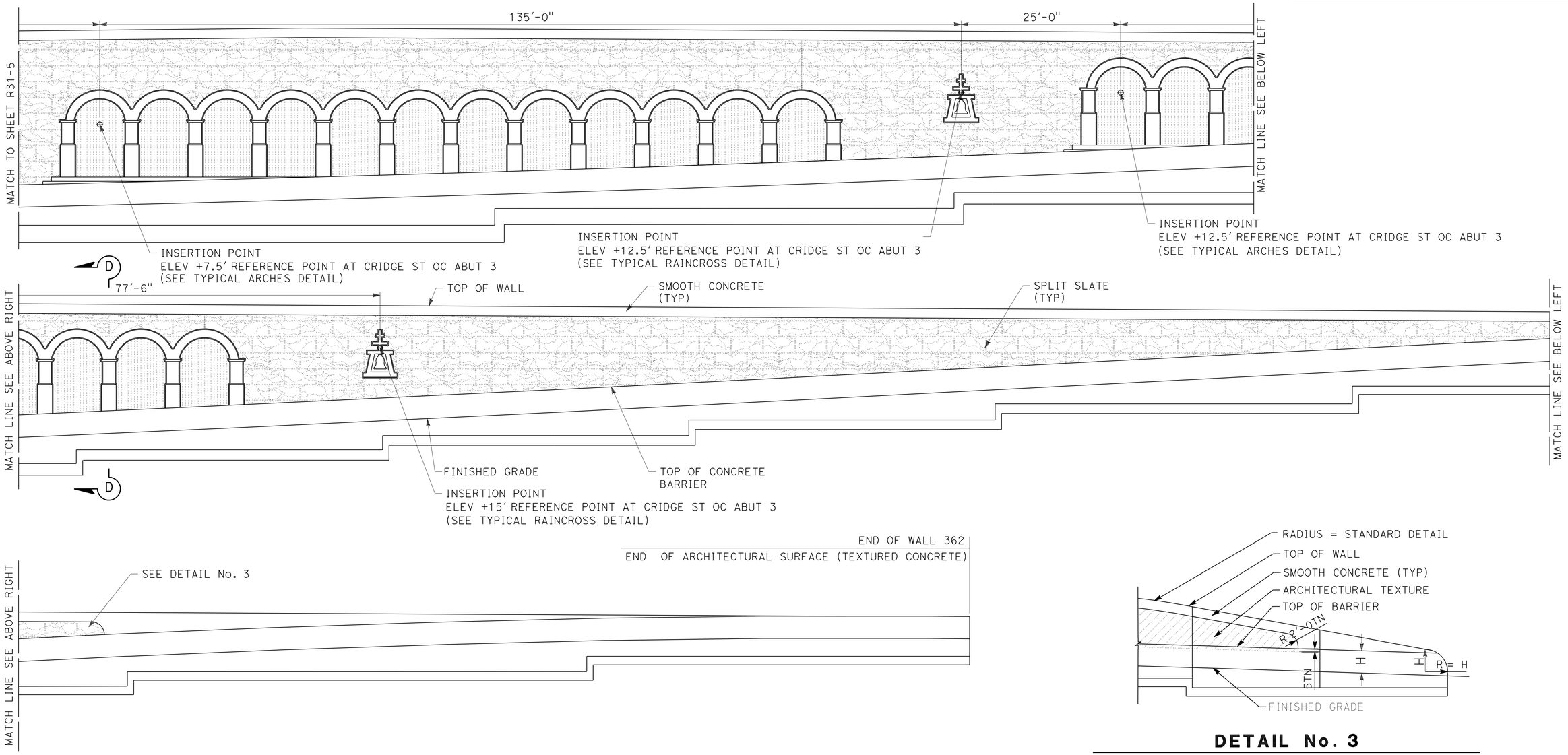

DETAIL No. 3

TYPICAL END OF WALL WITH TYPE 60D MOD. CONCRETE BARRIER

MIRRORED ELEVATION FOR FRACTURED RIB SPLIT FACE TEXTURE RETAINING WALL No. 362

THIS PLAN IS ACCURATE FOR ARCHITECTUAL TREATMENT WORK ONLY.

ARCHITECTURAL SURFACE
RETAINING WALL No. 362

SCALE: 1/8"=1'-0"

R31-6

STATE OF CALIFORNIA - DEPARTMENT OF TRANSPORTATION
Caltrans® LANDSCAPE ARCHITECTURE

SENIOR LANDSCAPE ARCHITECT: BYRON STROUT
CALCULATED-DESIGNED BY: MATTHEW HALL
CHECKED BY: MIRIAM BISHOP
REVISED BY
DATE REVISED

LAST REVISION 12-01-10
DATE PLOTTED => 30-APR-2011
TIME PLOTTED => 07:33

DIST	COUNTY	ROUTE	POST MILES TOTAL PROJECT	SHEET No	TOTAL SHEETS
08	Riv	91	15.6/21.6	1014	2028

GEOTECHNICAL PROFESSIONAL DATE 10/2008

4-25-11
PLANS APPROVAL DATE

REGISTERED PROFESSIONAL ENGINEER ANDREW C. LEE No. 2616 Exp. 6-30-12 GEOTECHNICAL STATE OF CALIFORNIA

The State of California or its officers or agents shall not be responsible for the accuracy or completeness of electronic copies of this plan sheet.

California Department of Transportation
5900 Folsom Boulevard
Sacramento, CA 95819

URS Corporation
2020 East First Street, Suite 400
Santa Ana, CA 92705

FOR PLAN VIEW, SEE SHEET R31-9

NOTE: 1. This LOTB sheet was prepared in accordance with the Caltrans Soil & Rock Logging, Classification, and Presentation Manual (June 2007).

2. For legend, see "Soil Legend Log of Test Borings" sheet

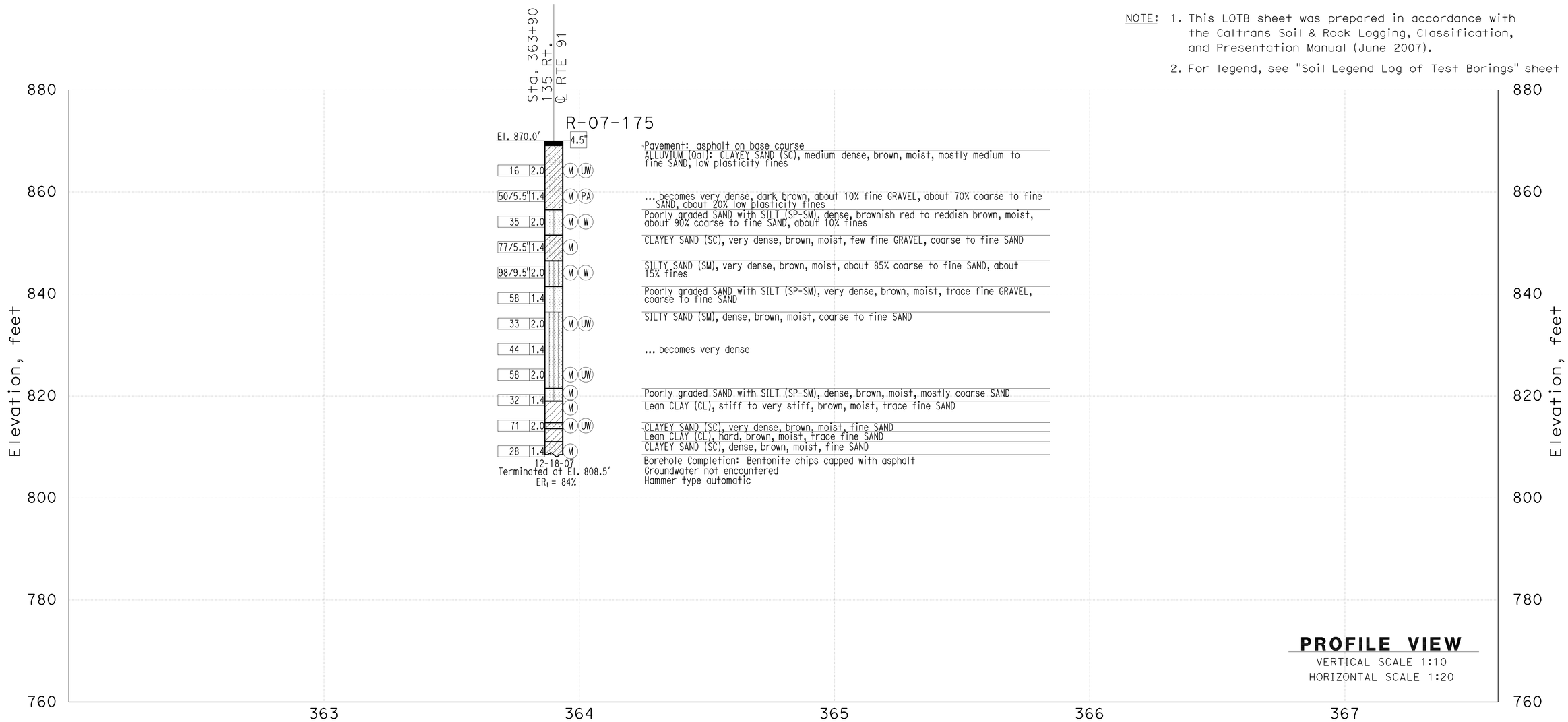

THIS PLAN ACCURATE FOR SOUND WALL AND RETAINING WALL WORK ONLY

DESIGN OVERSIGHT X SIGN OFF DATE	GINA PURSELL FUNCTIONAL SUPERVISOR	DRAWN BY CHECKED BY	P. QUACH S. PIRATHIVIRAJ	P.CHAU/D.WADER/C.CARBINO FIELD INVESTIGATION BY: DATE: Nov 6 2007 to March 7 2008	PREPARED FOR THE STATE OF CALIFORNIA DEPARTMENT OF TRANSPORTATION	A. LEE PROJECT ENGINEER	BRIDGE NO. X POST MILE X	Retaining Wall 362 R31-7 LOG OF TEST BORINGS SHEET 1 OF 2

OSF GEOTECHNICAL LOG OF TEST BORINGS SHEET (ENGLISH) (REV. 2/25/05)

ORIGINAL SCALE IN INCHES FOR REDUCED PLANS 0 1 2 3

CU 59A0590
EA 08-448400

DISREGARD PRINTS BEARING EARLIER REVISION DATES

REVISION DATES (PRELIMINARY STAGE ONLY) X

SHEET 1 OF 4

FILE => 844840qze007.dgn

USERNAME => trpierce DATE PLOTTED => 30-APR-2011 TIME PLOTTED =>

DIST	COUNTY	ROUTE	POST MILES TOTAL PROJECT	SHEET No	TOTAL SHEETS
08	Riv	91	15.6/21.6	1015	2028

GEOTECHNICAL PROFESSIONAL — DATE 10/2008

4-25-11
PLANS APPROVAL DATE

REGISTERED PROFESSIONAL ENGINEER — ANDREW C. LEE — No. 2616 — Exp. 6-30-12 — GEOTECHNICAL — STATE OF CALIFORNIA

The State of California or its officers or agents shall not be responsible for the accuracy or completeness of electronic copies of this plan sheet.

California Department of Transportation
5900 Folsom Boulevard
Sacramento, CA 95819

URS Corporation
2020 East First Street, Suite 400
Santa Ana, CA 92705

FOR PLAN VIEW, SEE SHEET R31-9

NOTE: 1. This LOTB sheet was prepared in accordance with the Caltrans Soil & Rock Logging, Classification, and Presentation Manual (June 2007).

2. For legend, see "Soil Legend Log of Test Borings" sheet

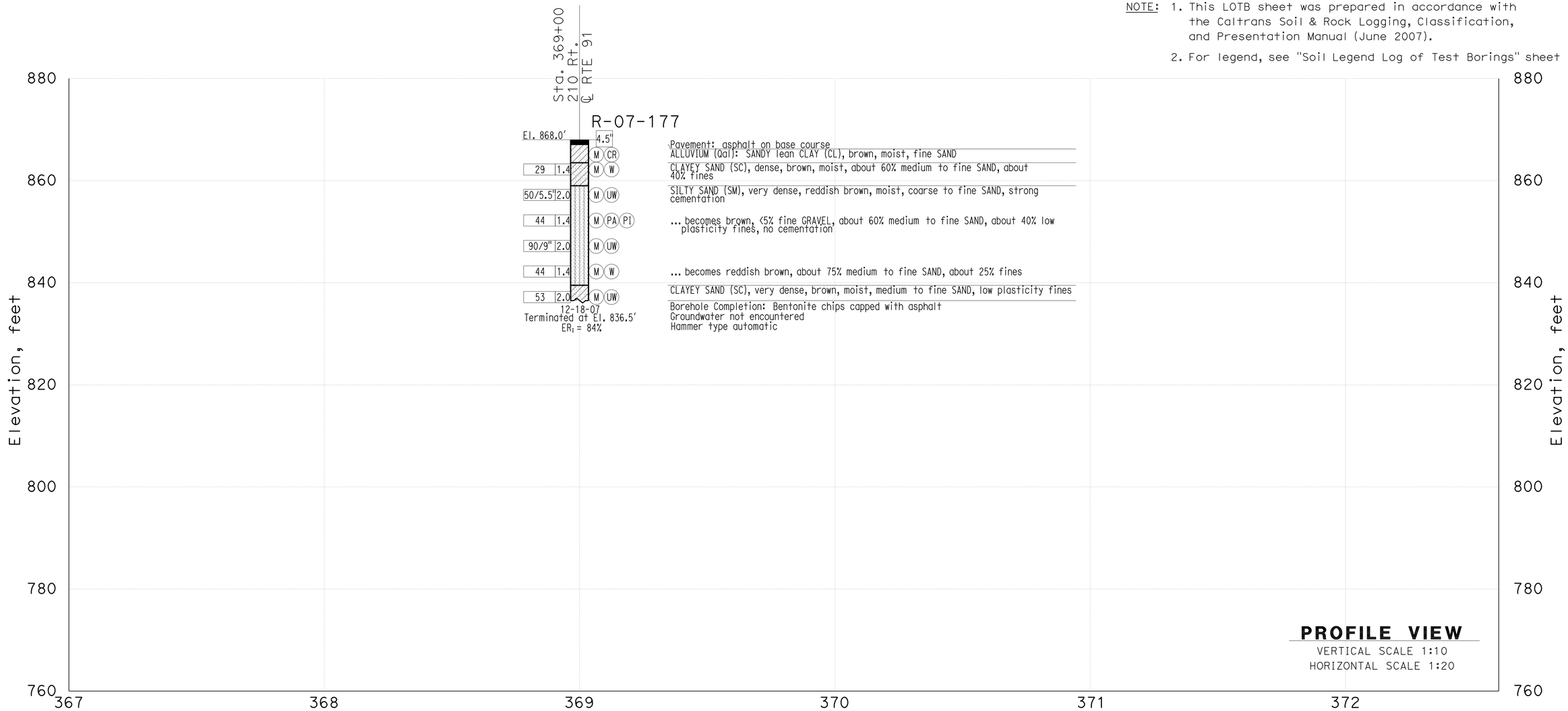

THIS PLAN ACCURATE FOR SOUND WALL AND RETAINING WALL WORK ONLY

DESIGN OVERSIGHT	GINA PURSELL FUNCTIONAL SUPERVISOR	DRAWN BY	P. QUACH	P.CHAU/D.WADER/C.CARBINO FIELD INVESTIGATION BY:	PREPARED FOR THE STATE OF CALIFORNIA DEPARTMENT OF TRANSPORTATION	A. LEE PROJECT ENGINEER	BRIDGE NO. X	Retaining Wall 362 R31-8
X SIGN OFF DATE		CHECKED BY	S. PIRATHIVIRAJ	DATE: Nov 6 2007 to March 7 2008			POST MILE X	LOG OF TEST BORINGS SHEET 2 OF 2

OSF GEOTECHNICAL LOG OF TEST BORINGS SHEET (ENGLISH) (REV. 2/25/05)

ORIGINAL SCALE IN INCHES FOR REDUCED PLANS 0 1 2 3

CU 59A0590
EA 08-448400

DISREGARD PRINTS BEARING EARLIER REVISION DATES

REVISION DATES (PRELIMINARY STAGE ONLY) X

SHEET 2 OF 4

FILE => 844840qze008.dgn

USERNAME => ttpierce DATE PLOTTED => 30-APR-2011 TIME PLOTTED =>

DIST	COUNTY	ROUTE	POST MILES TOTAL PROJECT	SHEET No	TOTAL SHEETS
08	Riv	91	15.6/21.6	1016	2028

GEOTECHNICAL PROFESSIONAL — DATE 10/2008

4-25-11
PLANS APPROVAL DATE

REGISTERED PROFESSIONAL ENGINEER — ANDREW C. LEE — No. 2616 — Exp. 6-30-12 — GEOTECHNICAL — STATE OF CALIFORNIA

The State of California or its officers or agents shall not be responsible for the accuracy or completeness of electronic copies of this plan sheet.

California Department of Transportation
5900 Folsom Boulevard
Sacramento, CA 95819

URS Corporation
2020 East First Street, Suite 400
Santa Ana, CA 92705

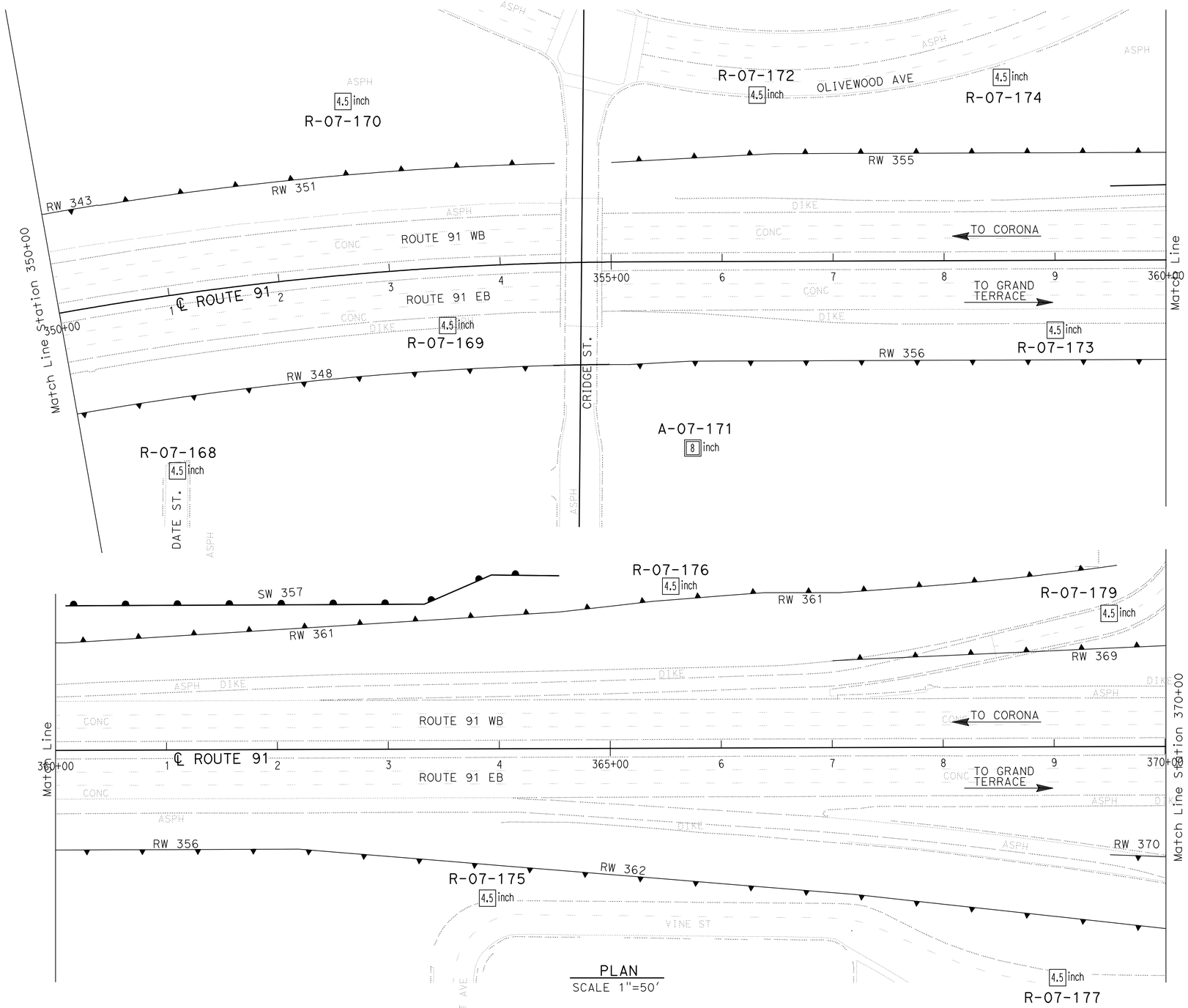

PLAN
SCALE 1"=50'

Borehole Number	Drill Rig	Hammer Type	Avg. Hammer Efficiency, ETR (%)
R-07-168	CS-2000	Automatic	84
R-07-169	CME 85	Automatic	87
R-07-170	Acker Rig	Automatic	74
A-07-171	Diedrich D-120	Automatic	75*
R-07-172	CS-2000	Automatic	84
R-07-173	CME 85	Automatic	87
R-07-174	CS-2000	Automatic	84
R-07-175	CS-2000	Automatic	84
R-07-176	CS-2000	Automatic	84
R-07-177	CS-2000	Automatic	84
R-07-179	Acker Rig	Automatic	74

Sampler Type	Inside Diameter (Inches)	Borehole Numbers
SPT	1.375	R-07-168, R-07-169, R-07-170 A-07-171, R-07-172, R-07-173 R-07-174, R-07-175, R-07-176 R-07-177, R-07-179
Modified California 1	1.94	R-07-168, R-07-169, R-07-170 R-07-172, R-07-173, R-07-174 R-07-175, R-07-177, R-07-179
Modified California 2	2.40	A-07-171

*Estimated Hammer Efficiency Rating.

DESIGN OVERSIGHT X SIGN OFF DATE	GINA PURSELL FUNCTIONAL SUPERVISOR	DRAWN BY P. QUACH	P.CHAU/D.WADER/C.CARBINO FIELD INVESTIGATION BY: DATE: Nov 6 2007 to March 7 2008	PREPARED FOR THE STATE OF CALIFORNIA DEPARTMENT OF TRANSPORTATION	A. LEE PROJECT ENGINEER
		CHECKED BY S. PIRATHIVIRAJ			

BRIDGE NO. X — POST MILE X

RETAINING WALL 362 — R31-9

LOG OF TEST BORINGS 3 OF 4

OSF GEOTECHNICAL LOG OF TEST BORINGS SHEET (ENGLISH) (REV. 2/25/05)

ORIGINAL SCALE IN INCHES FOR REDUCED PLANS 0 1 2 3

CU 59A0590
EA 08-448400

DISREGARD PRINTS BEARING EARLIER REVISION DATES

REVISION DATES (PRELIMINARY STAGE ONLY) X

SHEET 3 OF 4

FILE => 844840qze009.dgn

USERNAME => trrichard — DATE PLOTTED => 30-APR-2011 — TIME PLOTTED =>

DIST	COUNTY	ROUTE	POST MILES TOTAL PROJECT	SHEET No	TOTAL SHEETS
08	Riv	91	15.6/21.6	1017	2028

GEOTECHNICAL PROFESSIONAL — DATE 10/2008

4-25-11
PLANS APPROVAL DATE

REGISTERED PROFESSIONAL ENGINEER — ANDREW C. LEE — No. 2616 — Exp. 6-30-12 — GEOTECHNICAL — STATE OF CALIFORNIA

The State of California or its officers or agents shall not be responsible for the accuracy or completeness of electronic copies of this plan sheet.

California Department of Transportation
5900 Folsom Boulevard
Sacramento, CA 95819

URS Corporation
2020 East First Street, Suite 400
Santa Ana, CA 92705

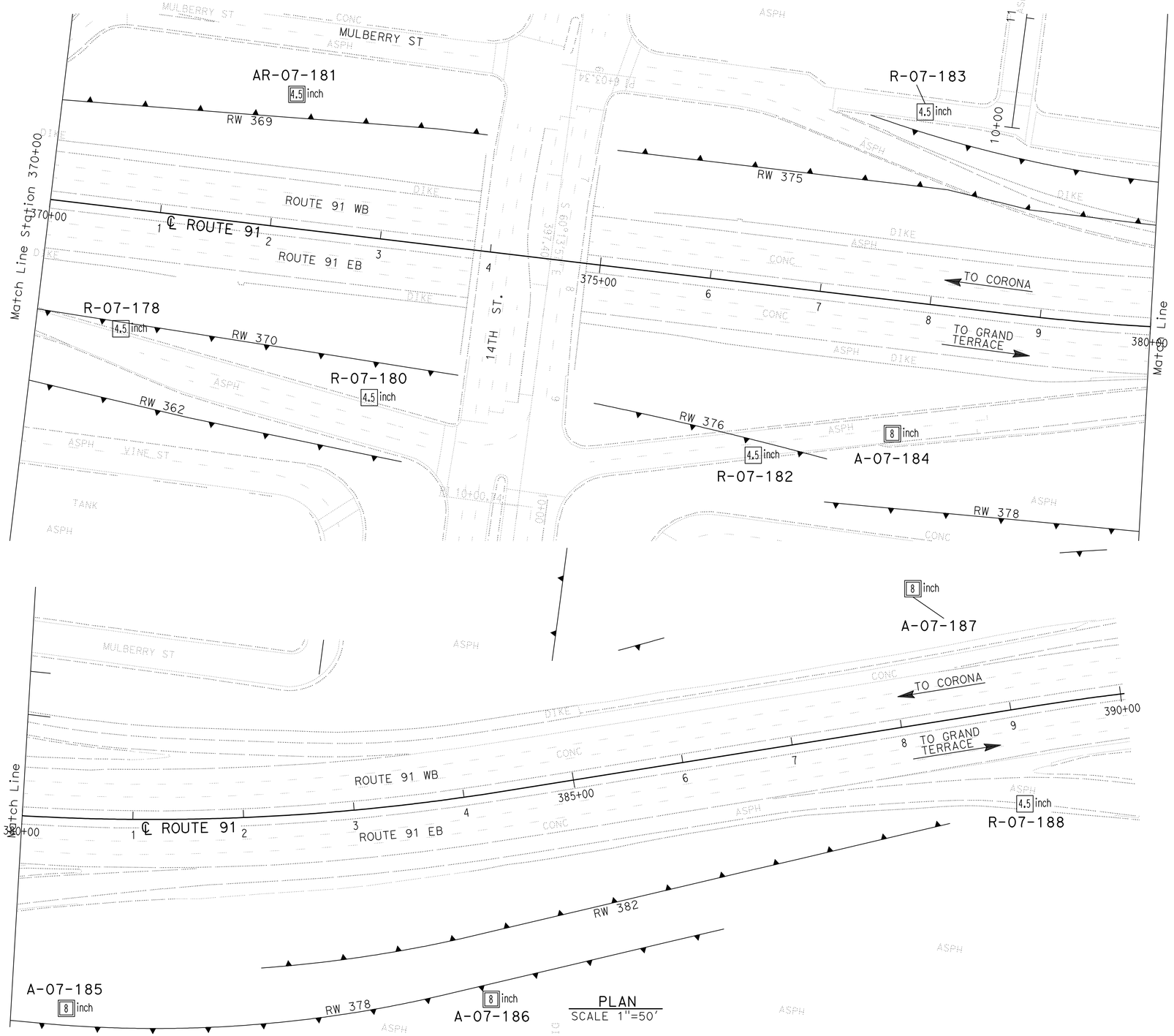

Borehole Number	Drill Rig	Hammer Type	Avg. Hammer Efficiency, ETR (%)
R-07-178	CS-2000	Automatic	84
R-07-180	CME 85	Automatic	87
AR-07-181	CS-2000	Automatic	84
R-07-182	CS-2000	Automatic	84
R-07-183	CS-2000	Automatic	84
A-07-184	Diedrich D-120	Automatic	75*
A-07-185	Diedrich D-120	Automatic	75*
A-07-186	Diedrich D-120	Automatic	75*
A-07-187	Diedrich D-120	Automatic	75*
R-07-188	CS-2000	Automatic	84

Sampler Type	Inside Diameter (Inches)	Borehole Numbers
SPT	1.375	R-07-178, R-07-180, R-07-181 R-07-182, R-07-183, A-07-184 A-07-185, A-07-186, A-07-187 R-07-188
Modified California 1	1.94	R-07-180, R-07-183
Modified California 2	2.40	A-07-184, A-07-185, A-07-186 A-07-187

*Estimated Hammer Efficiency Rating.

DESIGN OVERSIGHT — GINA PURSELL, FUNCTIONAL SUPERVISOR
X
SIGN OFF DATE

DRAWN BY: P. QUACH
CHECKED BY: S. PIRATHIVIRAJ

P.CHAU/D.WADER/C.CARBINO
FIELD INVESTIGATION BY:
DATE: Nov 6 2007 to March 7 2008

PREPARED FOR THE STATE OF CALIFORNIA DEPARTMENT OF TRANSPORTATION

A. LEE
PROJECT ENGINEER

BRIDGE NO. X
POST MILE X

RETAINING WALL 362 R31-10

LOG OF TEST BORINGS 4 OF 4

OSF GEOTECHNICAL LOG OF TEST BORINGS SHEET (ENGLISH) (REV. 2/25/05)

ORIGINAL SCALE IN INCHES FOR REDUCED PLANS 0 1 2 3

CU 59A0590
EA 08-448400

DISREGARD PRINTS BEARING EARLIER REVISION DATES

REVISION DATES (PRELIMINARY STAGE ONLY) X

SHEET 4 OF 4

FILE => 844840qze010.dgn

USERNAME => rtriebord DATE PLOTTED => 30-APR-2011 TIME PLOTTED =>

Dist	COUNTY	ROUTE	POST MILES TOTAL PROJECT	SHEET No.	TOTAL SHEETS
08	Riv	91	15.6/21.6	1018	2028

REGISTERED CIVIL ENGINEER 12-1-10 DATE

4-25-11
PLANS APPROVAL DATE

REGISTERED PROFESSIONAL ENGINEER CUONG LE TRAN No. C60436 Exp. 6-30-12 CIVIL STATE OF CALIFORNIA

THE STATE OF CALIFORNIA OR ITS OFFICERS OR AGENTS SHALL NOT BE RESPONSIBLE FOR THE ACCURACY OR COMPLETENESS OF SCANNED COPIES OF THIS PLAN SHEET.

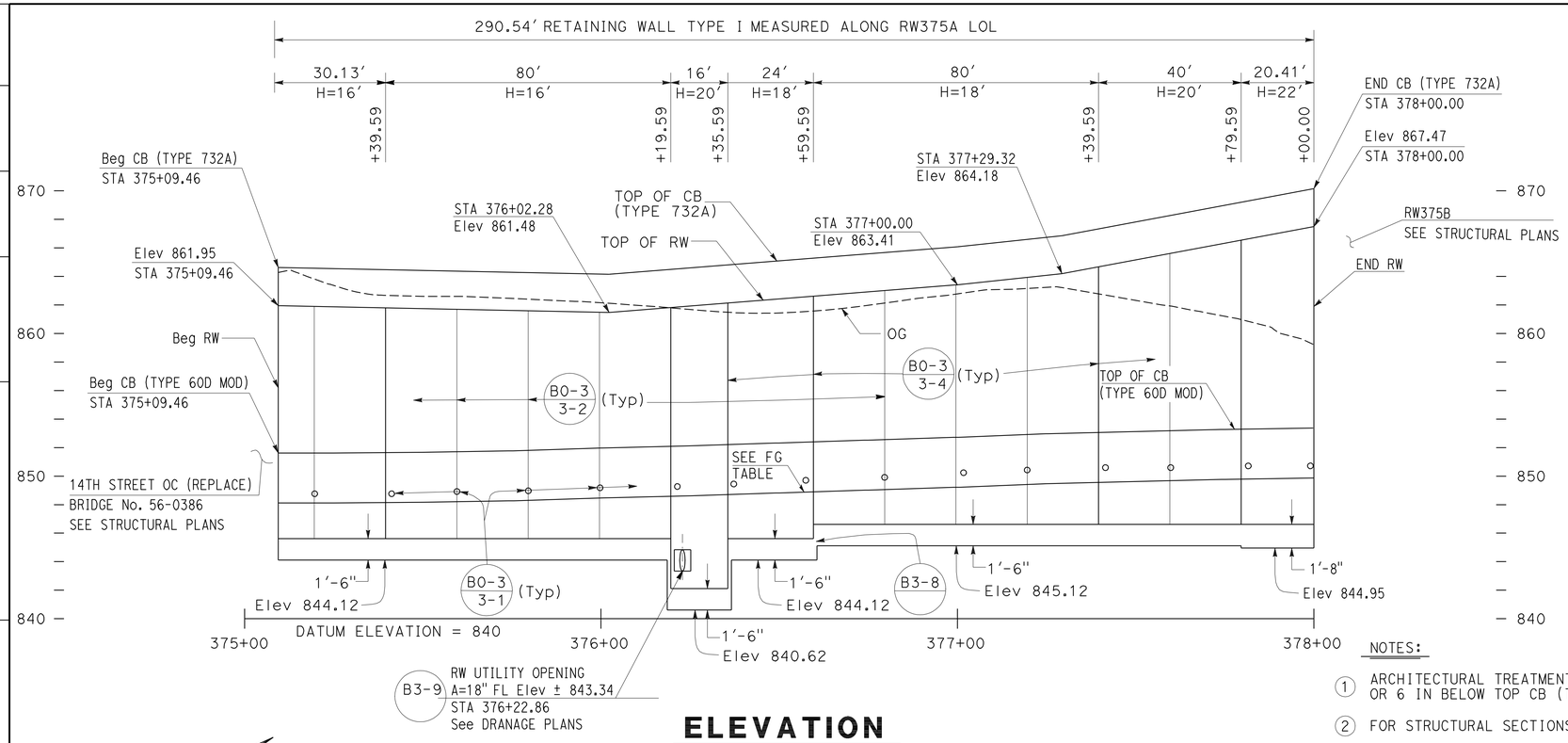

ELEVATION

SCALE Horiz 1"=20'
Vert 1"=5'

FINISHED GRADE (FG) TABLE	
STATION	ELEVATION
375+09.46	848.12
375+50.00	848.17
375+75.00	848.27
376+00.00	848.47
376+25.00	848.62
376+50.00	848.82
376+75.00	849.03
377+00.00	849.23
377+25.00	849.47
377+50.00	849.62
377+75.00	849.78
378+00.00	849.87

NOTES:

1. ARCHITECTURAL TREATMENT SHOULD EXTEND 6 IN BELOW FG OR 6 IN BELOW TOP CB (TYPE 60D MOD)
2. FOR STRUCTURAL SECTIONS, SEE ROADWAY PLANS
3. FOR POST ANCHORAGE DETAILS, SEE B11-52
4. FOR ROUNDING DETAILS, SEE ARCHITECTURAL TREATMENT PLANS

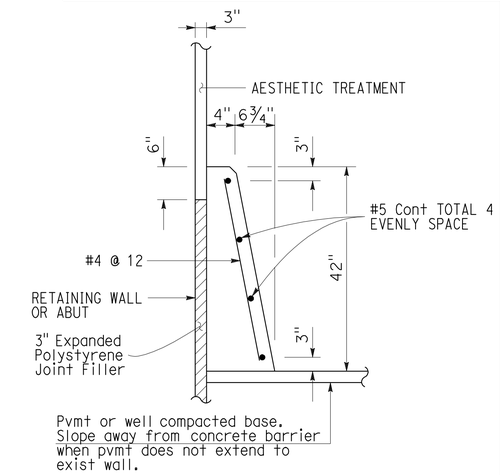

CONCRETE BARRIER
(TYPE 60D MOD)

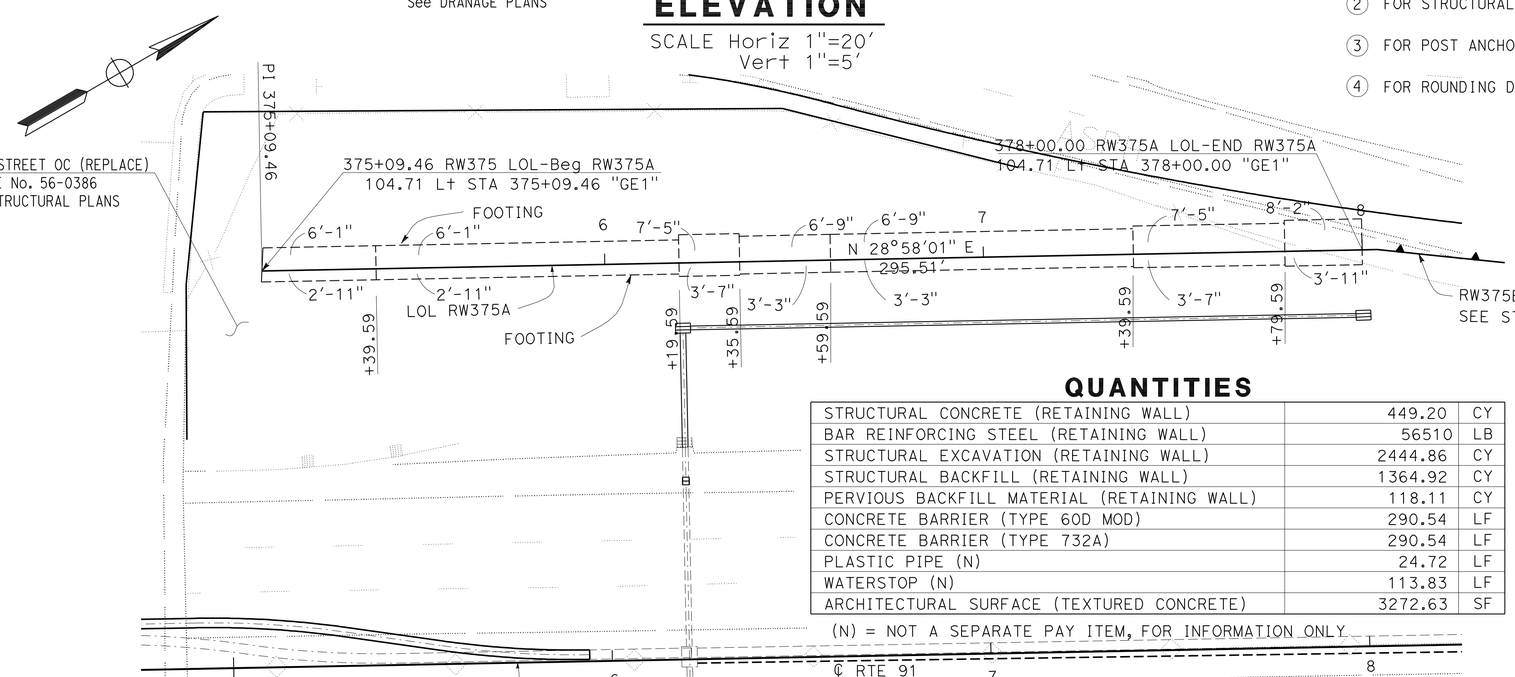

PLAN

SCALE: 1"=20'

QUANTITIES

STRUCTURAL CONCRETE (RETAINING WALL)	449.20	CY
BAR REINFORCING STEEL (RETAINING WALL)	56510	LB
STRUCTURAL EXCAVATION (RETAINING WALL)	2444.86	CY
STRUCTURAL BACKFILL (RETAINING WALL)	1364.92	CY
PERVIOUS BACKFILL MATERIAL (RETAINING WALL)	118.11	CY
CONCRETE BARRIER (TYPE 60D MOD)	290.54	LF
CONCRETE BARRIER (TYPE 732A)	290.54	LF
PLASTIC PIPE (N)	24.72	LF
WATERSTOP (N)	113.83	LF
ARCHITECTURAL SURFACE (TEXTURED CONCRETE)	3272.63	SF

(N) = NOT A SEPARATE PAY ITEM, FOR INFORMATION ONLY

THIS PLAN ACCURATE FOR RETAINING WALL WORK ONLY.

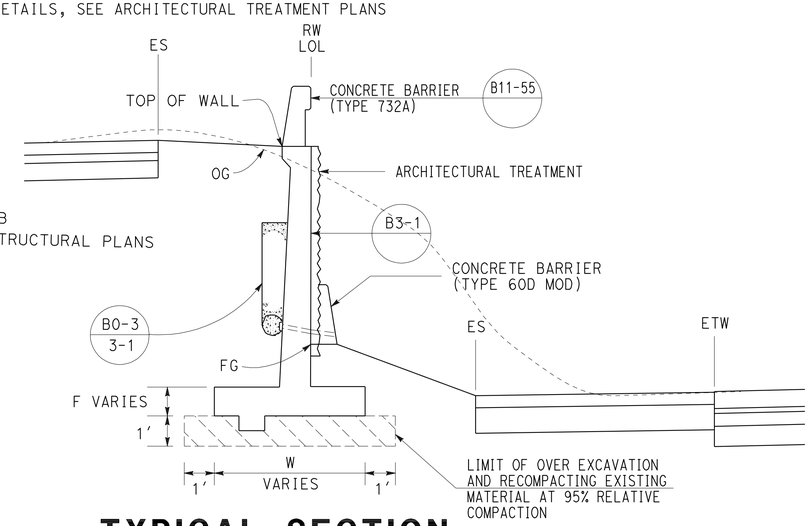

TYPICAL SECTION

NO SCALE
FROM STA 375+09.46 TO STA 378+00.00

RETAINING WALL PLAN

RETAINING WALL No. 375A

SCALE AS SHOWN

R32-1

STATE OF CALIFORNIA - DEPARTMENT OF TRANSPORTATION
Caltrans® DESIGN

FUNCTIONAL SUPERVISOR: MARK PERTILE
CALCULATED-DESIGNED BY: CUONG LE TRAN
CHECKED BY: ANNABELL WANG
REVISED BY / DATE REVISED

LAST REVISION 12-01-10
DATE PLOTTED => 30-APR-2011
TIME PLOTTED => 07:27

Dist	COUNTY	ROUTE	POST MILES TOTAL PROJECT	SHEET No.	TOTAL SHEETS
08	Riv	91	15.6/21.6	1019	2028

LICENSED LANDSCAPE ARCHITECT

4-25-11
PLANS APPROVAL DATE

LICENSED LANDSCAPE ARCHITECT
Matthew Harry Hall
No. 2504
Signature
10/31/2011
Renewal Date
12-1-10
Date
STATE OF CALIFORNIA

THE STATE OF CALIFORNIA OR ITS OFFICERS OR AGENTS SHALL NOT BE RESPONSIBLE FOR THE ACCURACY OR COMPLETENESS OF SCANNED COPIES OF THIS PLAN SHEET.

NOTE:

SEE SHEET ASD-2, ASD-4 AND ASD-5.

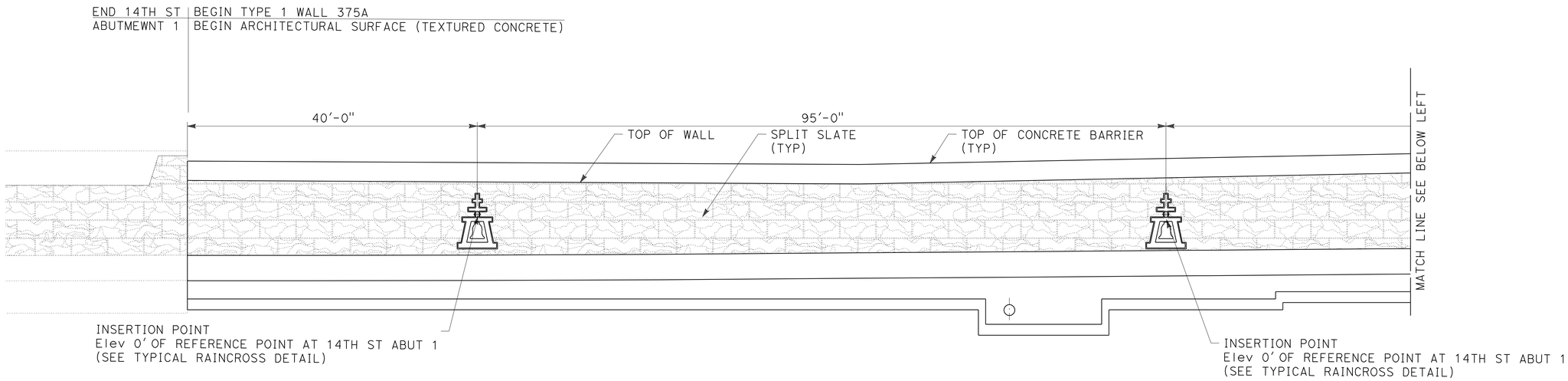

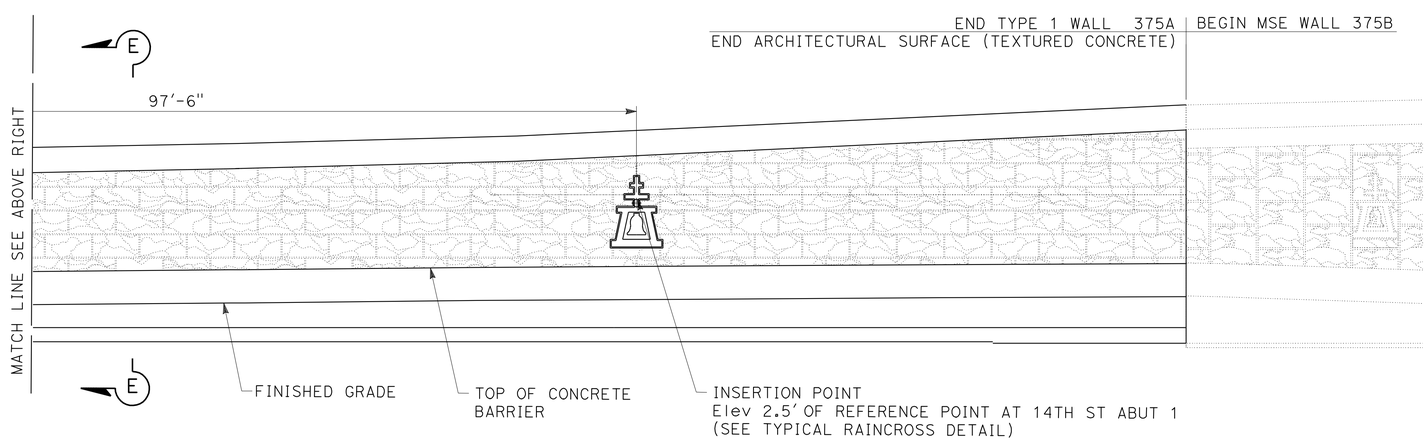

ELEVATION FOR FRACTURED RIB SPLIT FACE TEXTURE RETAINING WALL 375A

THIS PLAN IS ACCURATE FOR ARCHITECTUAL TREATMENT WORK ONLY.

ARCHITECTURAL SURFACE
RETAINING WALL No. 375A

SCALE: 1/8"=1'-0"

R32-2

STATE OF CALIFORNIA - DEPARTMENT OF TRANSPORTATION
Caltrans® LANDSCAPE ARCHITECTURE

SENIOR LANDSCAPE ARCHITECT: BYRON STROUT
CALCULATED-DESIGNED BY: MATTHEW HALL
CHECKED BY: MIRIAM BISHOP
REVISED BY
DATE REVISED

LAST REVISION 12-01-10
DATE PLOTTED => 30-APR-2011
TIME PLOTTED => 07:27

DIST	COUNTY	ROUTE	POST MILES TOTAL PROJECT	SHEET No	TOTAL SHEETS
08	Riv	91	15.6/21.6	1020	2028

GEOTECHNICAL PROFESSIONAL — DATE 10/2008

4-25-11
PLANS APPROVAL DATE

REGISTERED PROFESSIONAL ENGINEER — ANDREW C. LEE — No. 2616 — Exp. 6-30-12 — GEOTECHNICAL — STATE OF CALIFORNIA

The State of California or its officers or agents shall not be responsible for the accuracy or completeness of electronic copies of this plan sheet.

California Department of Transportation
5900 Folsom Boulevard
Sacramento, CA 95819

URS Corporation
2020 East First Street, Suite 400
Santa Ana, CA 92705

FOR PLAN VIEW, SEE SHEET R32-4

NOTE: 1. This LOTB sheet was prepared in accordance with the Caltrans Soil & Rock Logging, Classification, and Presentation Manual (June 2007).

2. For legend, see "Log of Test Borings" 1 of 83

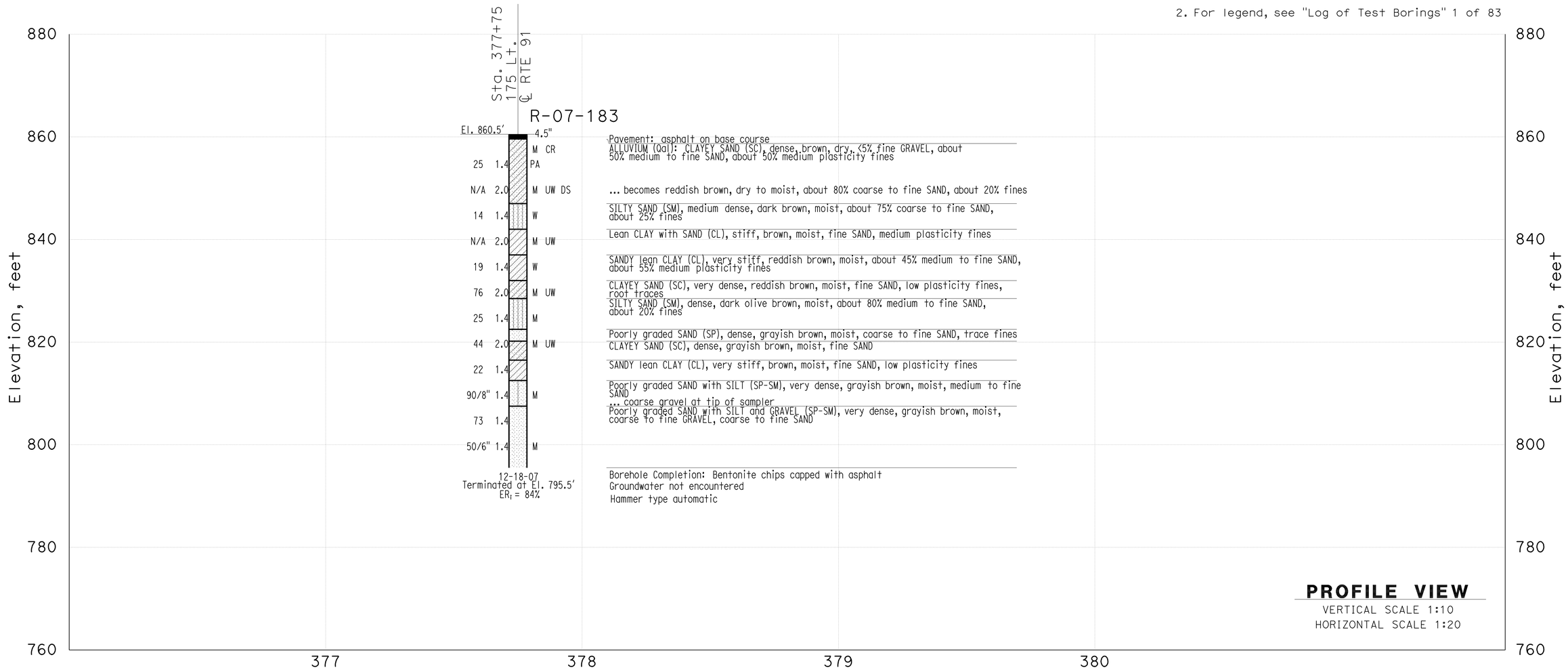

THIS PLAN ACCURATE FOR SOUND WALL AND RETAINING WALL WORK ONLY

DESIGN OVERSIGHT	GINA PURSELL FUNCTIONAL SUPERVISOR	DRAWN BY	P. QUACH	P.CHAU/D.WADER/C.CARBINO FIELD INVESTIGATION BY: DATE: Nov 6 2007 to March 7 2008	PREPARED FOR THE STATE OF CALIFORNIA DEPARTMENT OF TRANSPORTATION	A. LEE PROJECT ENGINEER	BRIDGE NO. X POST MILE X	Retaining Wall 375A R32-3
X SIGN OFF DATE		CHECKED BY	S. PIRATHIVIRAJ					LOG OF TEST BORINGS SHEET 1 OF 2

OSF GEOTECHNICAL LOG OF TEST BORINGS SHEET (ENGLISH) (REV. 2/25/05)

ORIGINAL SCALE IN INCHES FOR REDUCED PLANS 0 1 2 3

CU 59A0590
EA 08-448400

DISREGARD PRINTS BEARING EARLIER REVISION DATES

REVISION DATES (PRELIMINARY STAGE ONLY) X

SHEET 1 OF 2

FILE => 844840qzf003.dgn

USERNAME => trlenard DATE PLOTTED => 30-APR-2011 TIME PLOTTED =>

DIST	COUNTY	ROUTE	POST MILES TOTAL PROJECT	SHEET No	TOTAL SHEETS
08	Riv	91	15.6/21.6	1021	2028

GEOTECHNICAL PROFESSIONAL — DATE 10/2008

4-25-11
PLANS APPROVAL DATE

REGISTERED PROFESSIONAL ENGINEER — ANDREW C. LEE — No. 2616 — Exp. 6-30-12 — GEOTECHNICAL — STATE OF CALIFORNIA

The State of California or its officers or agents shall not be responsible for the accuracy or completeness of electronic copies of this plan sheet.

California Department of Transportation
5900 Folsom Boulevard
Sacramento, CA 95819

URS Corporation
2020 East First Street, Suite 400
Santa Ana, CA 92705

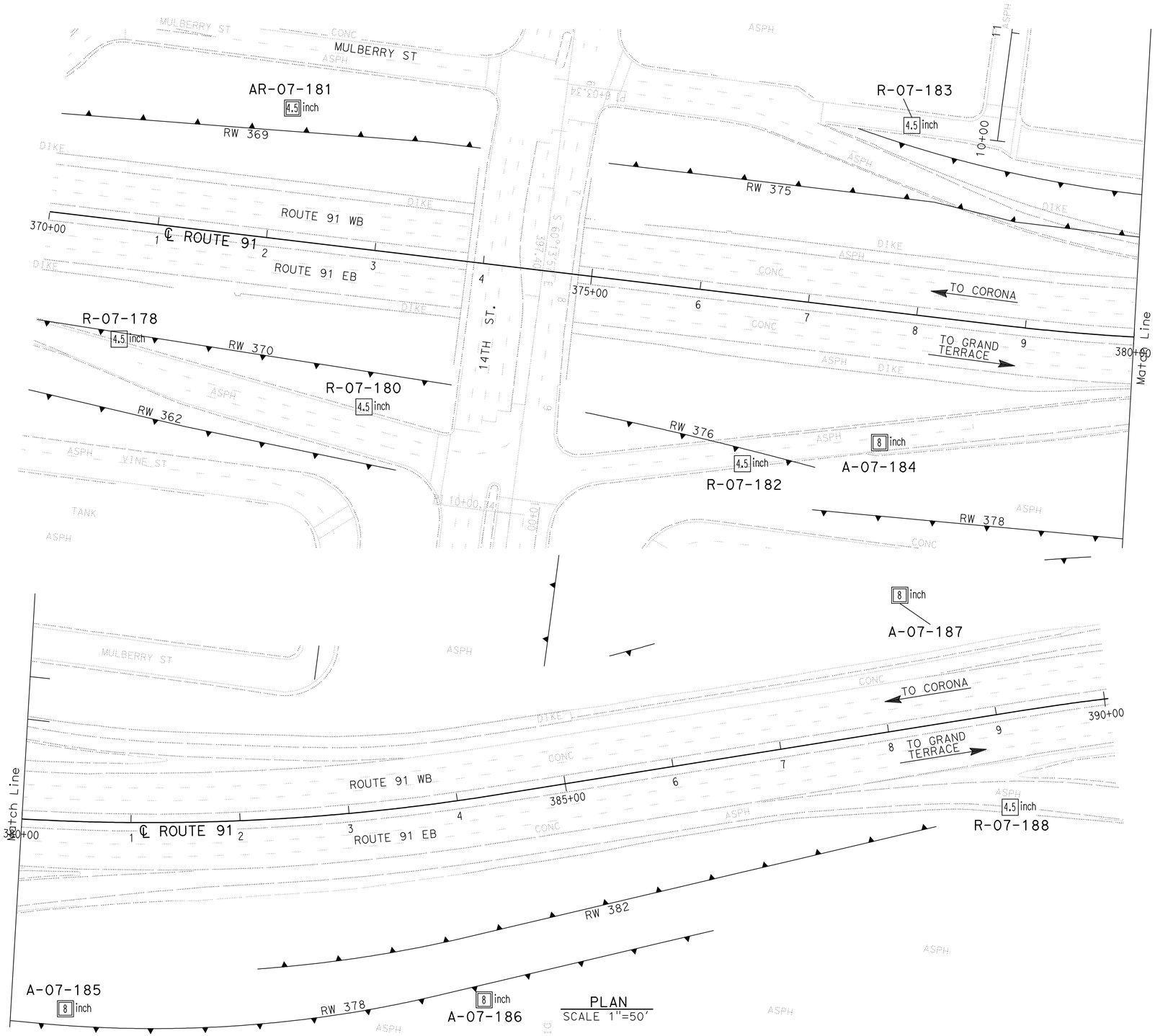

Borehole Number	Drill Rig	Hammer Type	Avg. Hammer Efficiency, ETR (%)
R-07-178	CS-2000	Automatic	84
R-07-180	CME 85	Automatic	87
AR-07-181	CS-2000	Automatic	84
R-07-182	CS-2000	Automatic	84
R-07-183	CS-2000	Automatic	84
A-07-184	Diedrich D-120	Automatic	75*
A-07-185	Diedrich D-120	Automatic	75*
A-07-186	Diedrich D-120	Automatic	75*
A-07-187	Diedrich D-120	Automatic	75*
R-07-188	CS-2000	Automatic	84

Sampler Type	Inside Diameter (Inches)	Borehole Numbers
SPT	1.375	R-07-178, R-07-180, R-07-181 R-07-182, R-07-183, A-07-184 A-07-185, A-07-186, A-07-187 R-07-188
Modified California 1	1.94	R-07-180, R-07-183
Modified California 2	2.40	A-07-184, A-07-185, A-07-186 A-07-187

*Estimated Hammer Efficiency Rating.

DESIGN OVERSIGHT — GINA PURSELL, FUNCTIONAL SUPERVISOR
X
SIGN OFF DATE

DRAWN BY: P. QUACH
CHECKED BY: S. PIRATHIVIRAJ

P.CHAU/D.WADER/C.CARBINO
FIELD INVESTIGATION BY:
DATE: Nov 6 2007 to March 7 2008

PREPARED FOR THE STATE OF CALIFORNIA DEPARTMENT OF TRANSPORTATION

A. LEE
PROJECT ENGINEER

BRIDGE NO. X
POST MILE X

RETAINING WALL 375A — R32-4

LOG OF TEST BORINGS 2 OF 2

OSF GEOTECHNICAL LOG OF TEST BORINGS SHEET (ENGLISH) (REV. 2/25/05)

ORIGINAL SCALE IN INCHES FOR REDUCED PLANS 0 1 2 3

CU 59A0590
EA 08-448400

DISREGARD PRINTS BEARING EARLIER REVISION DATES

REVISION DATES (PRELIMINARY STAGE ONLY) X

SHEET 2 OF 2

FILE => 844840qzf004.dgn

USERNAME => trlenard DATE PLOTTED => 30-APR-2011 TIME PLOTTED =>

Dist	COUNTY	ROUTE	POST MILES TOTAL PROJECT	SHEET No.	TOTAL SHEETS
08	Riv	91	15.6/21.6	1022	2028

REGISTERED CIVIL ENGINEER 12-1-10 DATE

4-25-11
PLANS APPROVAL DATE

REGISTERED PROFESSIONAL ENGINEER CUONG LE TRAN No. C60436 Exp. 6-30-12 CIVIL STATE OF CALIFORNIA

THE STATE OF CALIFORNIA OR ITS OFFICERS OR AGENTS SHALL NOT BE RESPONSIBLE FOR THE ACCURACY OR COMPLETENESS OF SCANNED COPIES OF THIS PLAN SHEET.

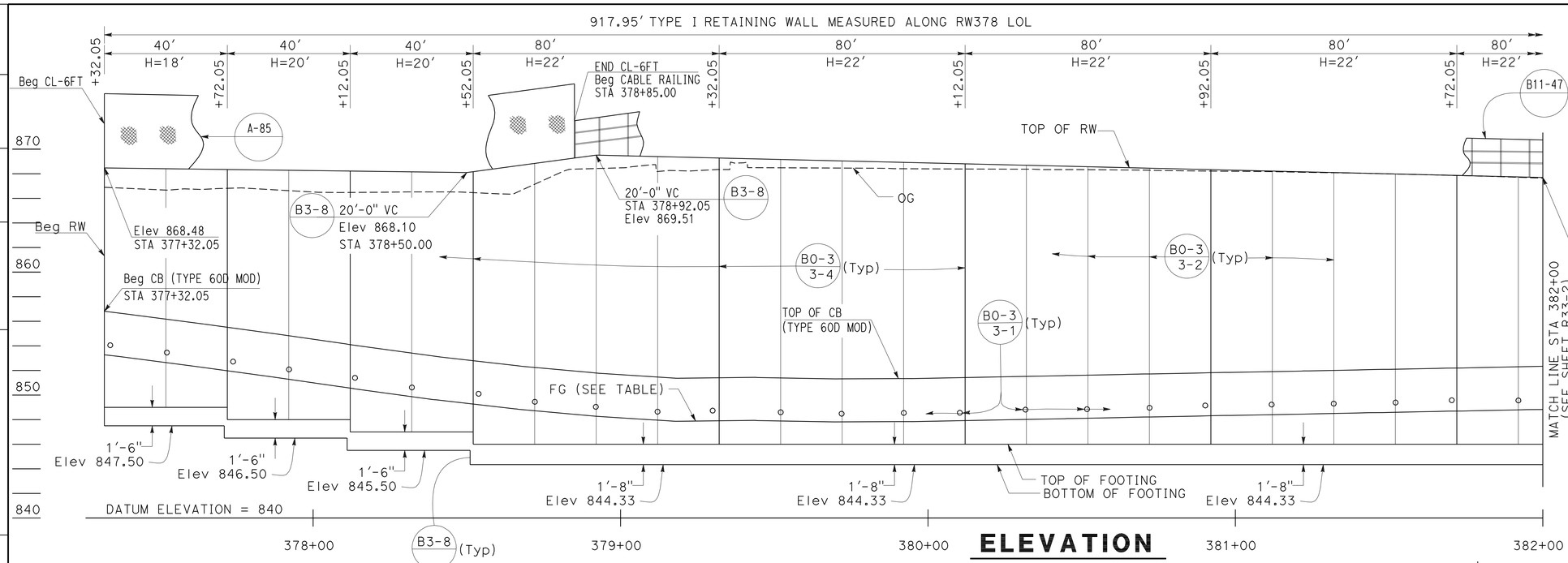

ELEVATION

SCALE Horiz 1"=20'
Vert 1"=5'

NOTES:

1. ARCHITECTURAL TREATMENT SHOULD EXTEND 6 IN BELOW FG OR 6 IN BELOW TOP CB (TYPE 60D MOD)
2. FOR STRUCTURAL SECTIONS, SEE ROADWAY PLANS
3. FOR POST ANCHORAGE DETAILS, SEE B11-52
4. FOR ROUNDING DETAILS, SEE ARCHITECTURAL TREATMENT PLANS

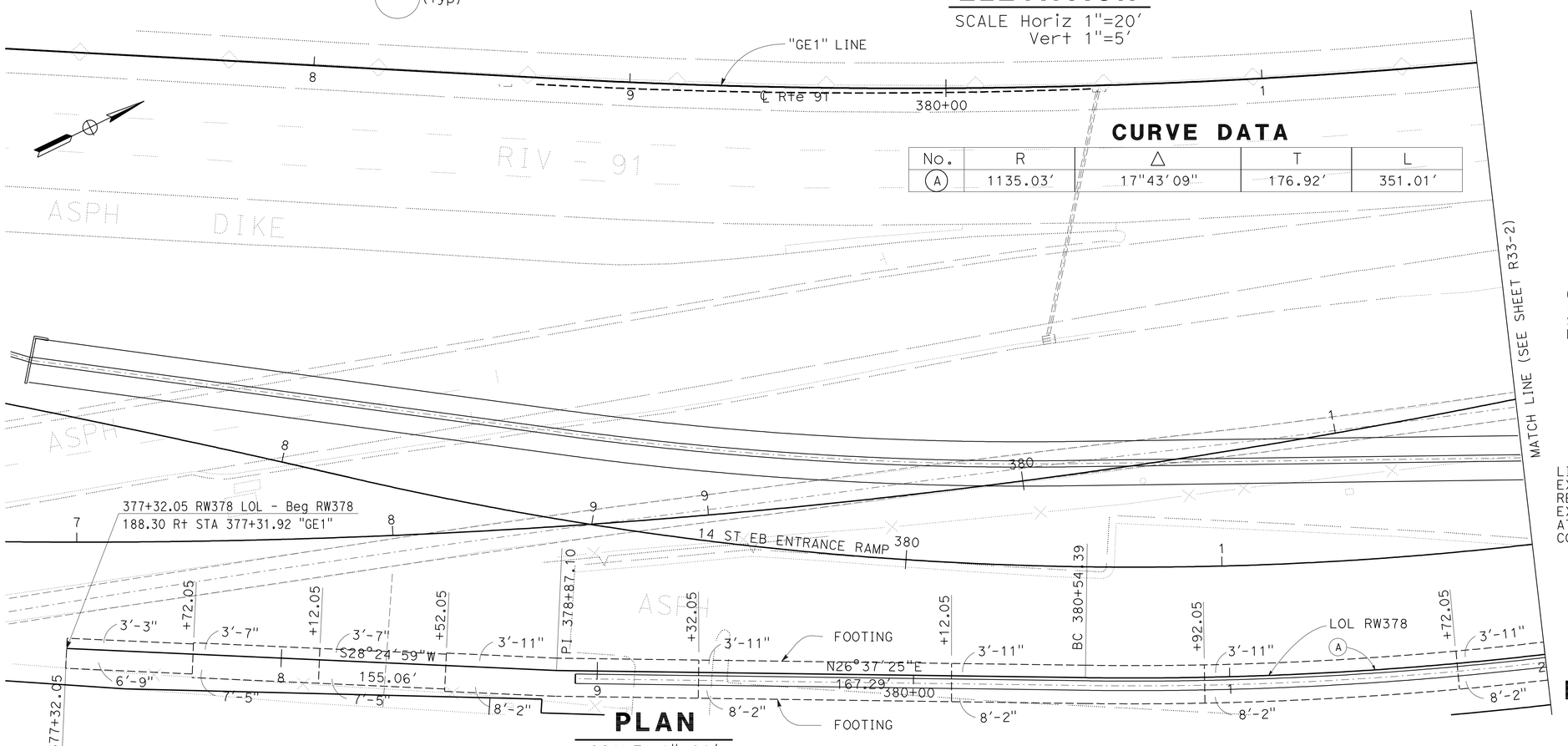

THIS PLAN ACCURATE FOR RETAINING WALL WORK ONLY.

PLAN

SCALE: 1"=20'

CURVE DATA

No.	R	Δ	T	L
A	1135.03'	17°43'09"	176.92'	351.01'

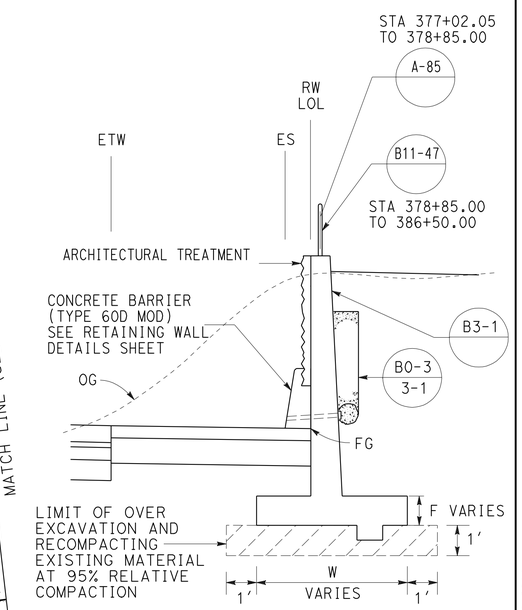

TYPICAL SECTION

NO SCALE
FROM STA 377+32.05 TO STA 386+50.00

RETAINING WALL PLAN
RETAINING WALL No. 378
SCALE AS SHOWN

R33-1

STATE OF CALIFORNIA - DEPARTMENT OF TRANSPORTATION
Caltrans® DESIGN
FUNCTIONAL SUPERVISOR: MARK PERTILE
CALCULATED-DESIGNED BY: ANNABELL WANG
CHECKED BY: CUONG LE TRAN
REVISED BY / DATE REVISED

LAST REVISION | DATE PLOTTED => 30-APR-2011
12-01-10 | TIME PLOTTED => 07:27

Dist	COUNTY	ROUTE	POST MILES TOTAL PROJECT	SHEET No.	TOTAL SHEETS
08	Riv	91	15.6/21.6	1023	2028

REGISTERED CIVIL ENGINEER 12-1-10 DATE

4-25-11
PLANS APPROVAL DATE

REGISTERED PROFESSIONAL ENGINEER CUONG LE TRAN No. C60436 Exp. 6-30-12 CIVIL STATE OF CALIFORNIA

THE STATE OF CALIFORNIA OR ITS OFFICERS OR AGENTS SHALL NOT BE RESPONSIBLE FOR THE ACCURACY OR COMPLETENESS OF SCANNED COPIES OF THIS PLAN SHEET.

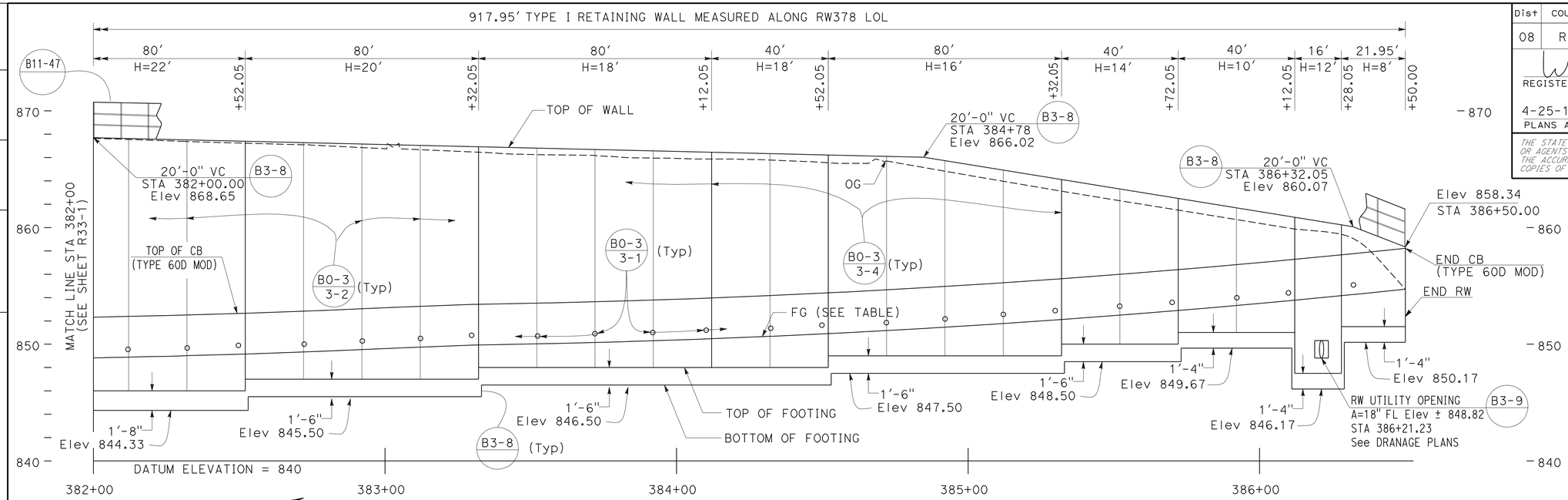

ELEVATION

SCALE Horiz 1"=20'
Vert 1"=5'

FINISHED GRADE (FG) TABLE	
STATION	ELEVATION
377+32.05	853.28
377+50.00	852.70
377+75.00	851.87
378+00.00	850.99
378+25.00	850.11
378+50.00	849.32
378+75.00	848.66
379+00.00	848.15
379+25.00	847.88
379+50.00	847.90
379+75.00	847.82
380+00.00	847.86
380+25.00	847.98
380+50.00	848.10
380+75.00	848.23
381+00.00	848.35
381+25.00	848.47
381+50.00	848.59
381+75.00	848.71
382+00.00	848.83
382+25.00	848.97
382+50.00	849.14
382+75.00	849.37
383+00.00	849.63
383+25.00	849.88
383+50.00	850.02
383+75.00	850.18
384+00.00	850.37
384+25.00	850.61
384+50.00	850.89
384+75.00	851.22
385+00.00	851.59
385+25.00	852.00
385+50.00	852.46
385+75.00	852.96
386+00.00	853.50
386+25.00	854.09
386+50.00	854.72

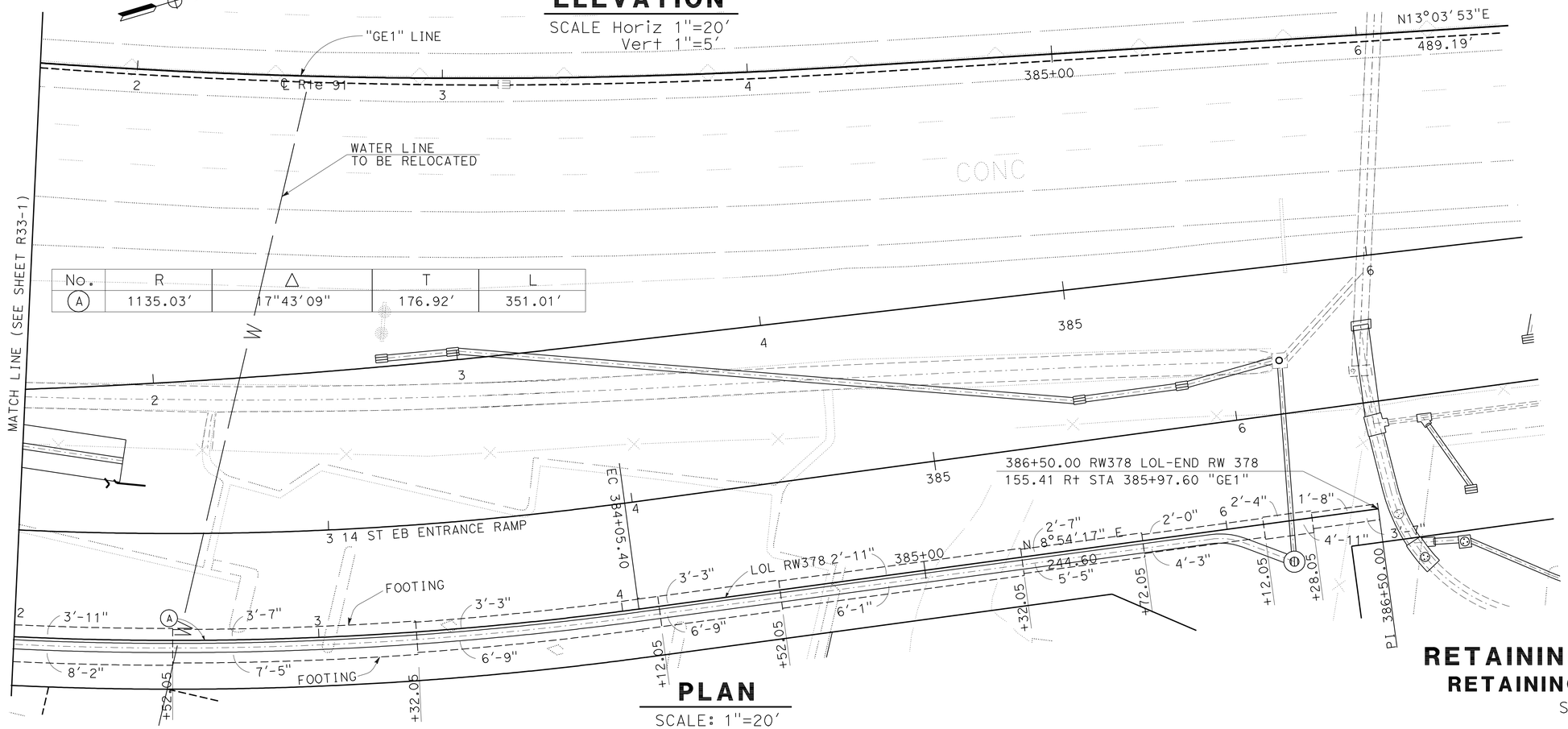

No.	R	Δ	T	L
A	1135.03'	17°43'09"	176.92'	351.01'

PLAN

SCALE: 1"=20'

THIS PLAN ACCURATE FOR RETAINING WALL WORK ONLY.

RETAINING WALL PLAN
RETAINING WALL No. 378

SCALE AS SHOWN

R33-2

STATE OF CALIFORNIA - DEPARTMENT OF TRANSPORTATION
Caltrans® DESIGN

FUNCTIONAL SUPERVISOR: MARK PERTILE
CALCULATED-DESIGNED BY: ANNABELL WANG
CHECKED BY: CUONG LE TRAN
REVISED BY / DATE REVISED

LAST REVISION 12-01-10
DATE PLOTTED => 30-APR-2011
TIME PLOTTED => 07:27

Dist	COUNTY	ROUTE	POST MILES TOTAL PROJECT	SHEET No.	TOTAL SHEETS
08	Riv	91	15.6/21.6	1024	2028

REGISTERED CIVIL ENGINEER 12-1-10 DATE

4-25-11
PLANS APPROVAL DATE

REGISTERED PROFESSIONAL ENGINEER CUONG LE TRAN No. C60436 Exp. 6-30-12 CIVIL STATE OF CALIFORNIA

THE STATE OF CALIFORNIA OR ITS OFFICERS OR AGENTS SHALL NOT BE RESPONSIBLE FOR THE ACCURACY OR COMPLETENESS OF SCANNED COPIES OF THIS PLAN SHEET.

QUANTITIES

STRUCTURAL CONCRETE (RETAINING WALL)	1604.80	CY
BAR REINFORCING STEEL (RETAINING WALL)	213012	LB
STRUCTURAL EXCAVATION (RETAINING WALL)	9243.50	CY
STRUCTURAL BACKFILL (RETAINING WALL)	4843.60	CY
PERVIOUS BACKFILL MATERIAL (RETAINING WALL)	425.60	CY
CONCRETE BARRIER (TYPE 60D MOD)	917.95	LF
CABLE RAILING	765.00	LF
PLASTIC PIPE (N)	77.72	LF
WATERSTOP (N)	285.72	LF
CHAIN LINK FENCE (TYPE CL-6)	152.95	LF
ARCHITECTURAL SURFACE (TEXTURED CONCRETE)	12799.77	SF

(N) = NOT A SEPARATE PAY ITEM, FOR INFORMATION ONLY

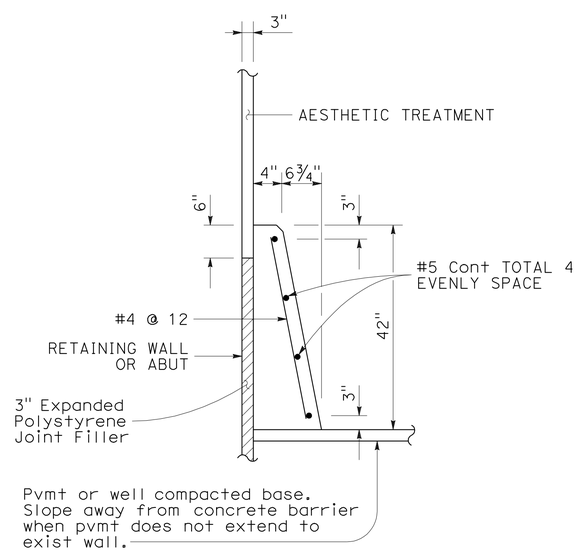

CONCRETE BARRIER
(TYPE 60D MOD)

RETAINING WALL DETAILS
RETAINING WALL No. 378
NO SCALE

R33-3

THIS PLAN ACCURATE FOR RETAINING WALL WORK ONLY.

STATE OF CALIFORNIA - DEPARTMENT OF TRANSPORTATION
Caltrans® DESIGN

FUNCTIONAL SUPERVISOR: MARK PERTILE
CALCULATED-DESIGNED BY: ANNABELL WANG
CHECKED BY: CUONG LE TRAN
REVISED BY
DATE REVISED

LAST REVISION 12-01-10
DATE PLOTTED => 30-APR-2011
TIME PLOTTED => 07:27

Dist	COUNTY	ROUTE	POST MILES TOTAL PROJECT	SHEET No.	TOTAL SHEETS
08	Riv	91	15.6/21.6	1025	2028

LICENSED LANDSCAPE ARCHITECT

4-25-11
PLANS APPROVAL DATE

LICENSED LANDSCAPE ARCHITECT
Matthew Harry Hall
Signature
10/31/2011
Renewal Date
12-1-10
Date
STATE OF CALIFORNIA

THE STATE OF CALIFORNIA OR ITS OFFICERS OR AGENTS SHALL NOT BE RESPONSIBLE FOR THE ACCURACY OR COMPLETENESS OF SCANNED COPIES OF THIS PLAN SHEET.

NOTE:

SEE SHEET ASD-1, ASD-2, ASD-3 AND ASD-5.

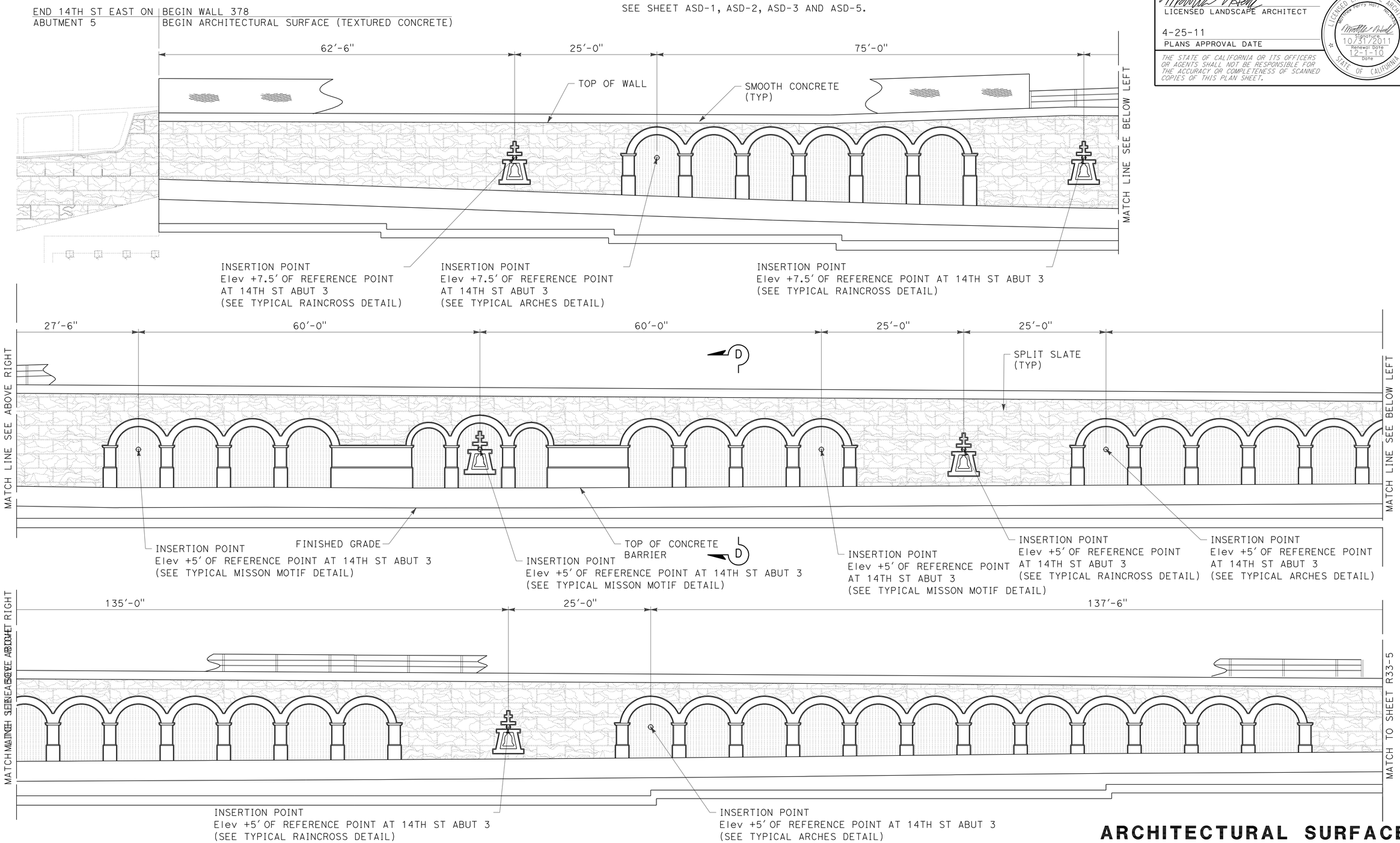

MIRRORED ELEVATION FOR FRACTURED RIB SPLIT SLATE TEXTURE RETAINING WALL No. 378

THIS PLAN IS ACCURATE FOR ARCHITECTUAL TREATMENT WORK ONLY.

ARCHITECTURAL SURFACE RETAINING WALL No. 378

SCALE: 1/8"=1'-0"

R33-4

STATE OF CALIFORNIA - DEPARTMENT OF TRANSPORTATION
Caltrans® LANDSCAPE ARCHITECTURE

SENIOR LANDSCAPE ARCHITECT: BYRON STROUT
CALCULATED-DESIGNED BY: MATTHEW HALL
CHECKED BY: MIRIAM BISHOP
REVISED BY
DATE REVISED

LAST REVISION 12-01-10
DATE PLOTTED => 30-APR-2011
TIME PLOTTED => 07:28

Dist	COUNTY	ROUTE	POST MILES TOTAL PROJECT	SHEET No.	TOTAL SHEETS
08	Riv	91	15.6/21.6	1026	2028

LICENSED LANDSCAPE ARCHITECT

4-25-11
PLANS APPROVAL DATE

LICENSED LANDSCAPE ARCHITECT
Matthew Harry Hall
Signature
10/31/2011
Renewal Date
12-1-10
Date
STATE OF CALIFORNIA

THE STATE OF CALIFORNIA OR ITS OFFICERS OR AGENTS SHALL NOT BE RESPONSIBLE FOR THE ACCURACY OR COMPLETENESS OF SCANNED COPIES OF THIS PLAN SHEET.

NOTE:

SEE SHEET ASD-2, ASD-4 AND ASD-5.

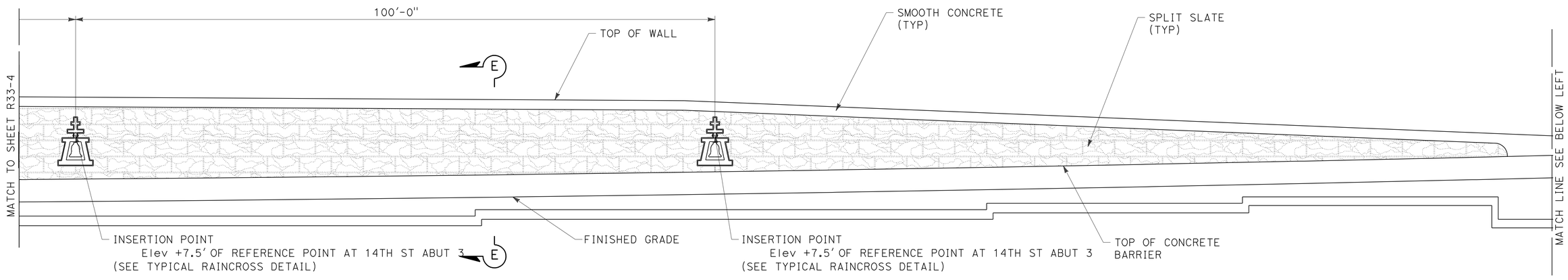

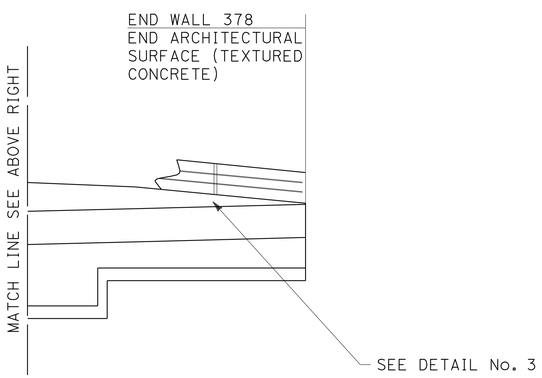

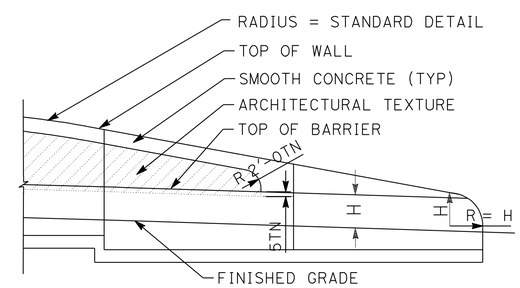

DETAIL No. 3

TYPICAL END OF WALL WITH TYPE 60D MOD. CONCRETE BARRIER

MIRRORED ELEVATION FOR SPLIT SLATE TEXTURE RETAINING WALL No. 378

THIS PLAN IS ACCURATE FOR ARCHITECTUAL TREATMENT WORK ONLY.

ARCHITECTURAL SURFACE RETAINING WALL No. 378

SCALE: 1/8"=1'-0"

R33-5

STATE OF CALIFORNIA - DEPARTMENT OF TRANSPORTATION
Caltrans LANDSCAPE ARCHITECTURE

SENIOR LANDSCAPE ARCHITECT: BYRON STROUT
CALCULATED-DESIGNED BY: MATTHEW HALL
CHECKED BY: MIRIAM BISHOP
REVISED BY
DATE REVISED

LAST REVISION 12-01-10
DATE PLOTTED => 30-APR-2011
TIME PLOTTED => 07:28

DIST	COUNTY	ROUTE	POST MILES TOTAL PROJECT	SHEET No	TOTAL SHEETS
08	Riv	91	15.6/21.6	1027	2028

GEOTECHNICAL PROFESSIONAL — DATE 10/2008

4-25-11
PLANS APPROVAL DATE

REGISTERED PROFESSIONAL ENGINEER — ANDREW C. LEE — No. 2616 — Exp. 6-30-12 — GEOTECHNICAL — STATE OF CALIFORNIA

The State of California or its officers or agents shall not be responsible for the accuracy or completeness of electronic copies of this plan sheet.

California Department of Transportation
5900 Folsom Boulevard
Sacramento, CA 95819

URS Corporation
2020 East First Street, Suite 400
Santa Ana, CA 92705

FOR PLAN VIEW, SEE SHEET R33-8

NOTE: 1. This LOTB sheet was prepared in accordance with the Caltrans Soil & Rock Logging, Classification, and Presentation Manual (June 2007).

2. For legend, see "Log of Test Borings" 1 of 83

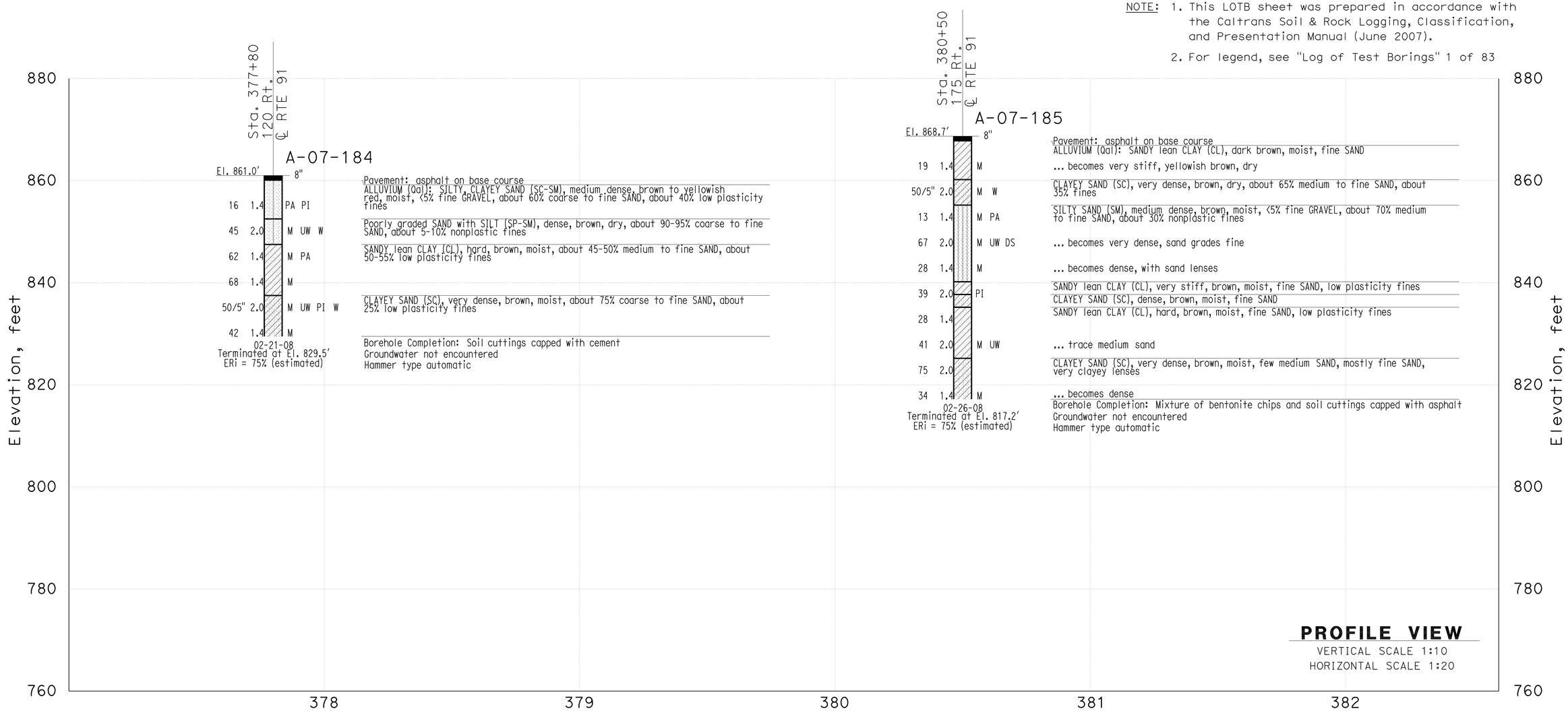

THIS PLAN ACCURATE FOR SOUND WALL AND RETAINING WALL WORK ONLY

DESIGN OVERSIGHT	GINA PURSELL FUNCTIONAL SUPERVISOR	DRAWN BY	P. QUACH	P.CHAU/D.WADER/C.CARBINO FIELD INVESTIGATION BY:	PREPARED FOR THE STATE OF CALIFORNIA DEPARTMENT OF TRANSPORTATION	A. LEE PROJECT ENGINEER	BRIDGE NO. X	Retaining Wall 378 R33-6
X SIGN OFF DATE		CHECKED BY	S. PIRATHIVIRAJ	DATE: Nov 6 2007 to March 7 2008			POST MILE X	LOG OF TEST BORINGS SHEET 1 OF 3

OSF GEOTECHNICAL LOG OF TEST BORINGS SHEET (ENGLISH) (REV. 2/25/05)

ORIGINAL SCALE IN INCHES FOR REDUCED PLANS 0 1 2 3

CU 59A0590
EA 08-448400

DISREGARD PRINTS BEARING EARLIER REVISION DATES

REVISION DATES (PRELIMINARY STAGE ONLY) X

SHEET 1 OF 3

FILE => 844840qzg006.dgn

USERNAME => trienard DATE PLOTTED => 30-APR-2011 TIME PLOTTED =>

DIST	COUNTY	ROUTE	POST MILES TOTAL PROJECT	SHEET No	TOTAL SHEETS
08	Riv	91	15.6/21.6	1028	2028

GEOTECHNICAL PROFESSIONAL — DATE 10/2008

4-25-11
PLANS APPROVAL DATE

REGISTERED PROFESSIONAL ENGINEER — ANDREW C. LEE — No. 2616 — Exp. 6-30-12 — GEOTECHNICAL — STATE OF CALIFORNIA

The State of California or its officers or agents shall not be responsible for the accuracy or completeness of electronic copies of this plan sheet.

California Department of Transportation
5900 Folsom Boulevard
Sacramento, CA 95819

URS Corporation
2020 East First Street, Suite 400
Santa Ana, CA 92705

FOR PLAN VIEW, SEE SHEET R33-8

NOTE: 1. This LOTB sheet was prepared in accordance with the Caltrans Soil & Rock Logging, Classification, and Presentation Manual (June 2007).

2. For legend, see "Log of Test Borings" 1 of 83

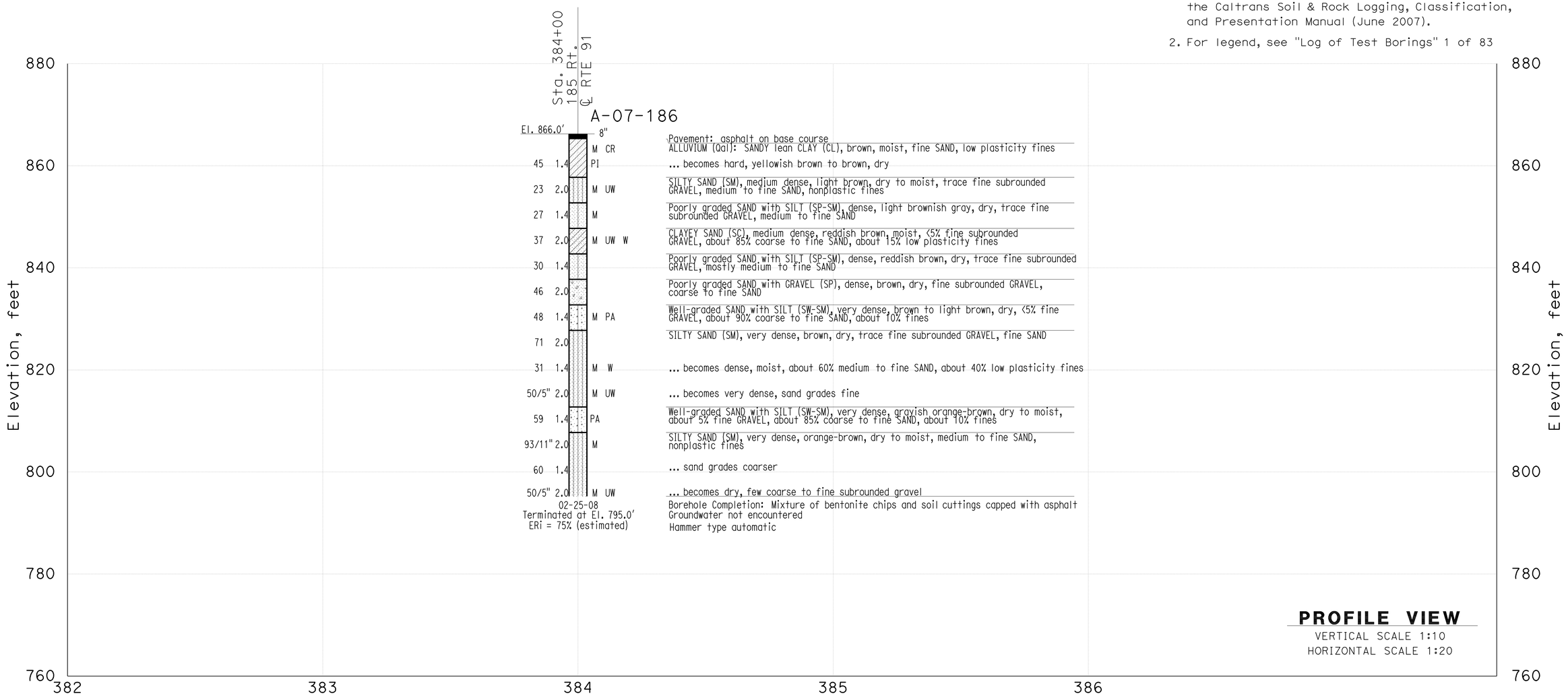

THIS PLAN ACCURATE FOR SOUND WALL AND RETAINING WALL WORK ONLY

DESIGN OVERSIGHT	GINA PURSELL	DRAWN BY	P. QUACH	P.CHAU/D.WADER/C.CARBINO	PREPARED FOR THE STATE OF CALIFORNIA DEPARTMENT OF TRANSPORTATION	A. LEE	BRIDGE NO. X	Retaining Wall 378 R33-7
X	FUNCTIONAL SUPERVISOR	CHECKED BY	S. PIRATHIVIRAJ	FIELD INVESTIGATION BY: DATE: Nov 6 2007 to March 7 2008		PROJECT ENGINEER	POST MILE X	LOG OF TEST BORINGS SHEET 2 OF 3
SIGN OFF DATE								

OSF GEOTECHNICAL LOG OF TEST BORINGS SHEET (ENGLISH) (REV. 2/25/05)

ORIGINAL SCALE IN INCHES FOR REDUCED PLANS 0 1 2 3

CU 59A0590
EA 08-448400

DISREGARD PRINTS BEARING EARLIER REVISION DATES

REVISION DATES (PRELIMINARY STAGE ONLY) X

SHEET 2 OF 3

FILE => 844840qzg007.dgn

USERNAME => trrenford DATE PLOTTED => 30-APR-2011 TIME PLOTTED =>

DIST	COUNTY	ROUTE	POST MILES TOTAL PROJECT	SHEET No	TOTAL SHEETS
08	Riv	91	15.6/21.6	1029	2028

GEOTECHNICAL PROFESSIONAL — DATE 10/2008

4-25-11
PLANS APPROVAL DATE

REGISTERED PROFESSIONAL ENGINEER — ANDREW C. LEE — No. 2616 — Exp. 6-30-12 — GEOTECHNICAL — STATE OF CALIFORNIA

The State of California or its officers or agents shall not be responsible for the accuracy or completeness of electronic copies of this plan sheet.

California Department of Transportation
5900 Folsom Boulevard
Sacramento, CA 95819

URS Corporation
2020 East First Street, Suite 400
Santa Ana, CA 92705

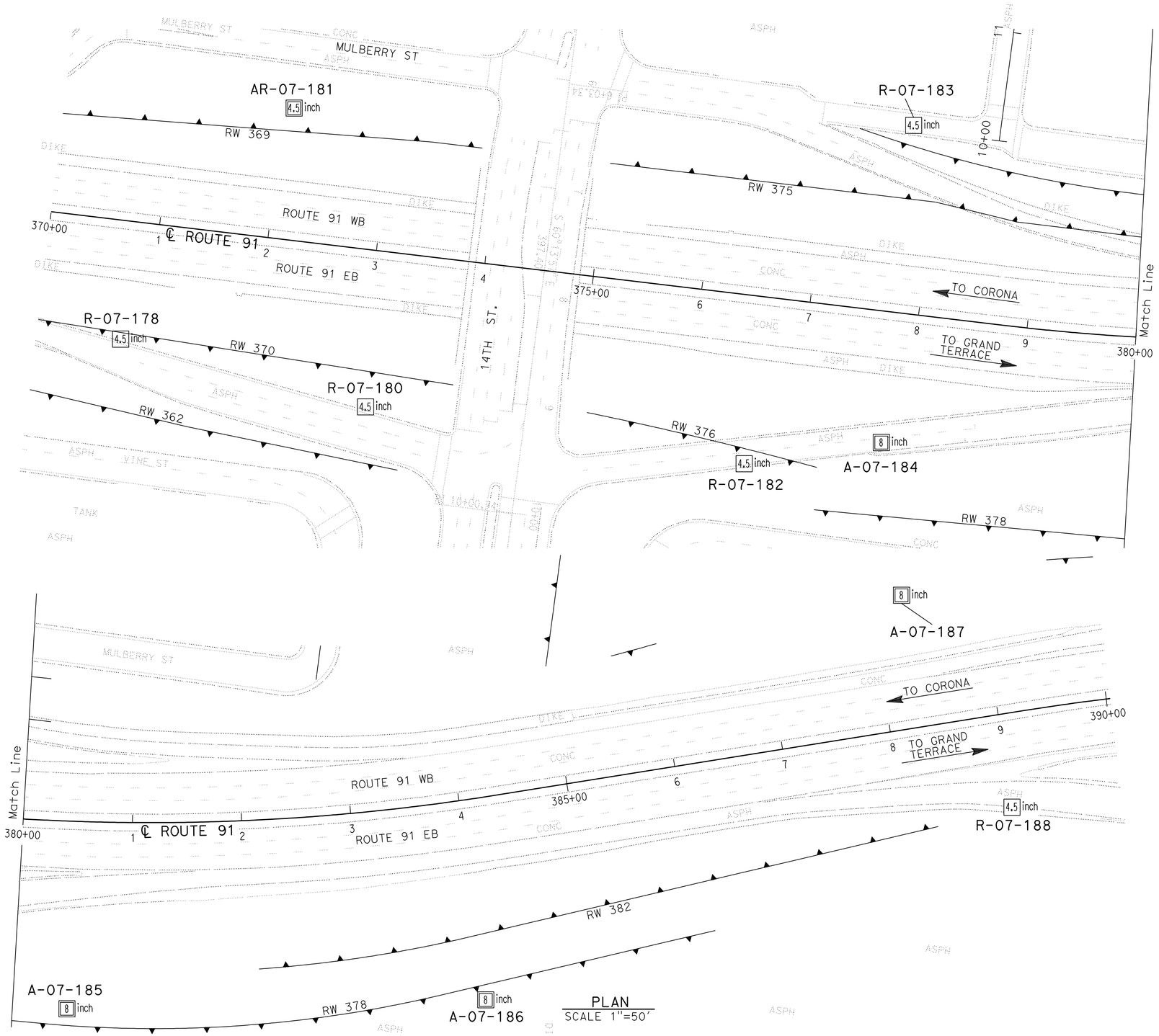

Borehole Number	Drill Rig	Hammer Type	Avg. Hammer Efficiency, ETR (%)
R-07-178	CS-2000	Automatic	84
R-07-180	CME 85	Automatic	87
AR-07-181	CS-2000	Automatic	84
R-07-182	CS-2000	Automatic	84
R-07-183	CS-2000	Automatic	84
A-07-184	Diedrich D-120	Automatic	75*
A-07-185	Diedrich D-120	Automatic	75*
A-07-186	Diedrich D-120	Automatic	75*
A-07-187	Diedrich D-120	Automatic	75*
R-07-188	CS-2000	Automatic	84

Sampler Type	Inside Diameter (Inches)	Borehole Numbers
SPT	1.375	R-07-178, R-07-180, R-07-181 R-07-182, R-07-183, A-07-184 A-07-185, A-07-186, A-07-187 R-07-188
Modified California 1	1.94	R-07-180, R-07-183
Modified California 2	2.40	A-07-184, A-07-185, A-07-186 A-07-187

*Estimated Hammer Efficiency Rating.

DESIGN OVERSIGHT — GINA PURSELL, FUNCTIONAL SUPERVISOR
X
SIGN OFF DATE

DRAWN BY: P. QUACH
CHECKED BY: S. PIRATHIVIRAJ

P.CHAU/D.WADER/C.CARBINO
FIELD INVESTIGATION BY:
DATE: Nov 6 2007 to March 7 2008

PREPARED FOR THE STATE OF CALIFORNIA DEPARTMENT OF TRANSPORTATION

A. LEE
PROJECT ENGINEER

BRIDGE NO. X
POST MILE X

RETAINING WALL 378 — R33-8

LOG OF TEST BORINGS 3 OF 3

OSF GEOTECHNICAL LOG OF TEST BORINGS SHEET (ENGLISH) (REV. 2/25/05)

ORIGINAL SCALE IN INCHES FOR REDUCED PLANS 0 1 2 3

CU 59A0590
EA 08-448400

DISREGARD PRINTS BEARING EARLIER REVISION DATES

REVISION DATES (PRELIMINARY STAGE ONLY) X

SHEET 3 OF 3

FILE => 844840qzg008.dgn

USERNAME => trlenard DATE PLOTTED => 30-APR-2011 TIME PLOTTED =>

Dist	COUNTY	ROUTE	POST MILES TOTAL PROJECT	SHEET No.	TOTAL SHEETS
08	Riv	91	15.6/21.6	1030	2028

REGISTERED CIVIL ENGINEER 12-1-10 DATE

4-25-11
PLANS APPROVAL DATE

REGISTERED PROFESSIONAL ENGINEER CUONG LE TRAN No. C60436 Exp. 6-30-12 CIVIL STATE OF CALIFORNIA

THE STATE OF CALIFORNIA OR ITS OFFICERS OR AGENTS SHALL NOT BE RESPONSIBLE FOR THE ACCURACY OR COMPLETENESS OF SCANNED COPIES OF THIS PLAN SHEET.

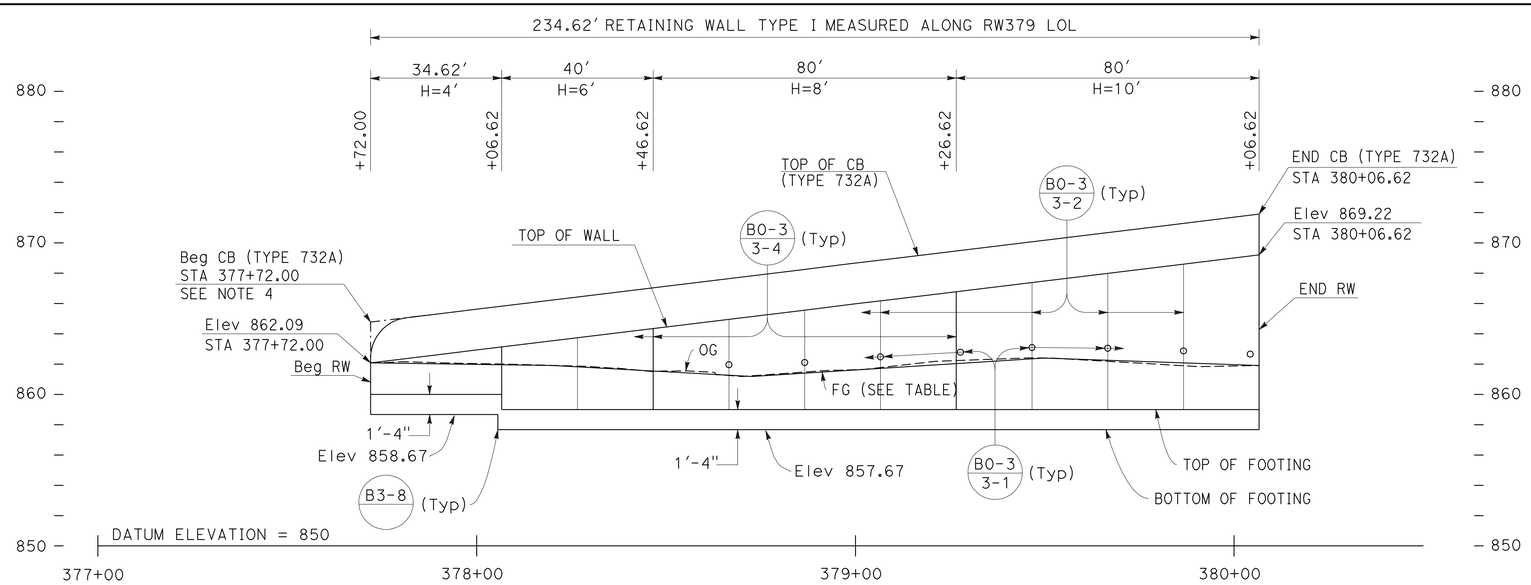

ELEVATION

SCALE Horiz 1"=20'
Vert 1"=5'

FINISHED GRADE (FG) TABLE	
STATION	ELEVATION
377+72.00	862.09
378+20.20	861.91
378+72.69	861.18
379+49.88	862.40
380+06.62	861.91

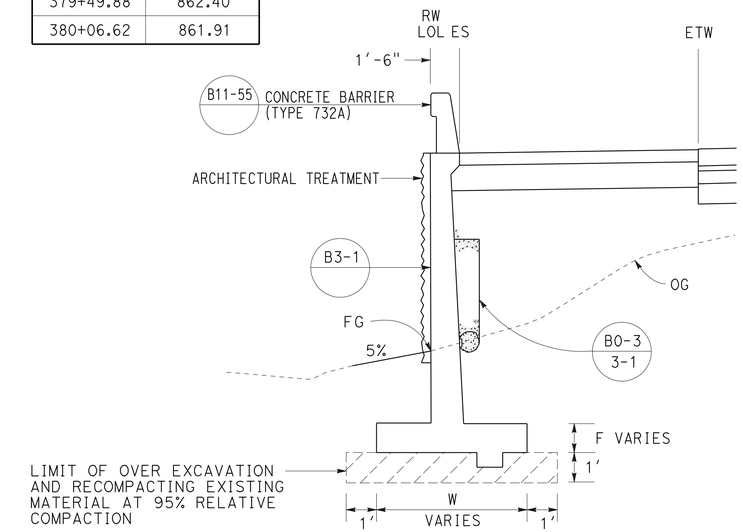

TYPICAL SECTION

NO SCALE
FROM STA 377+72.00 TO STA 380+06.62

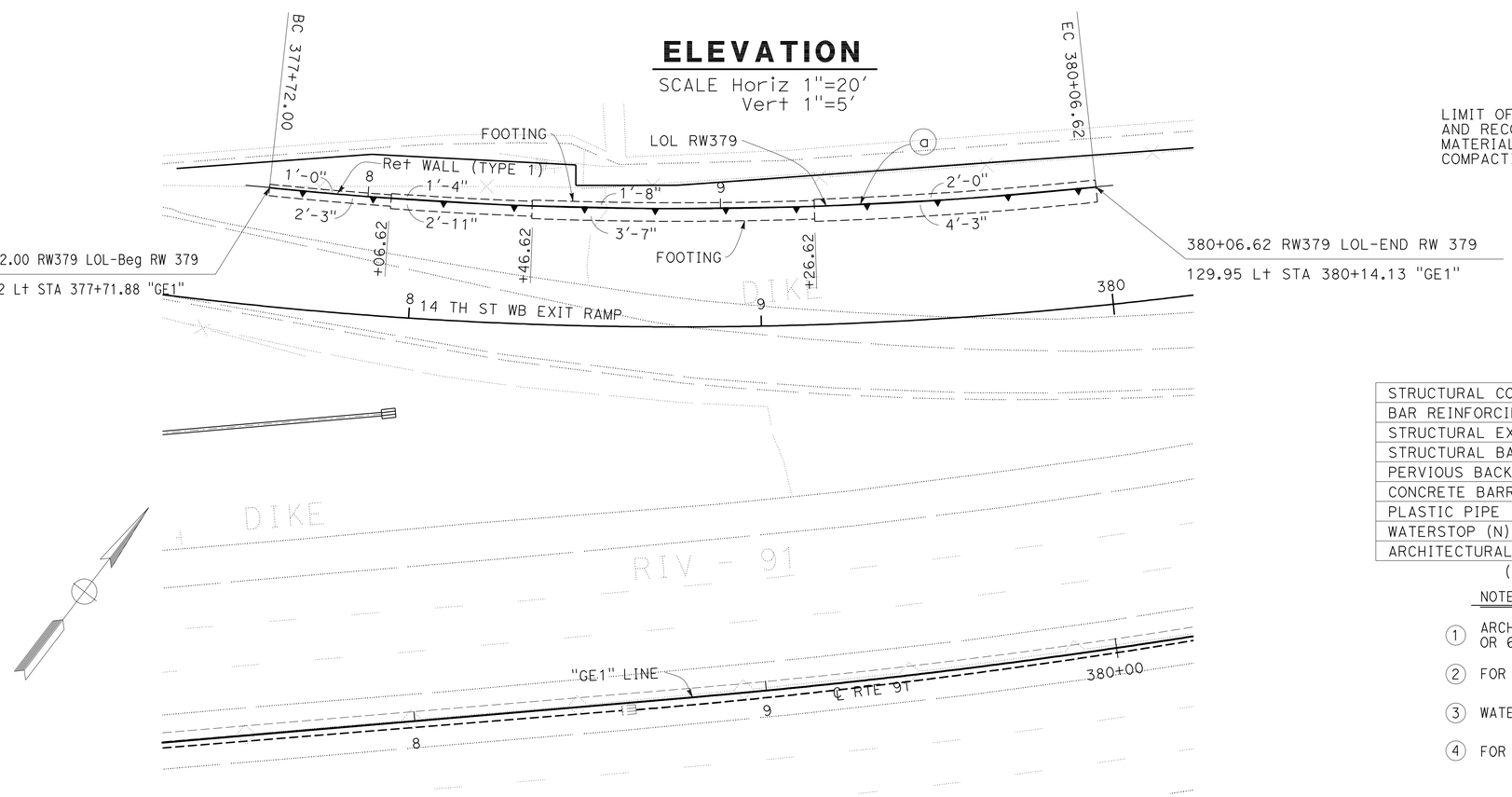

PLAN

SCALE: 1"=20'

CURVE DATA

No.	R	Δ	T	L
a	1146.47'	11°43'32"	117.72	234.62

THIS PLAN ACCURATE FOR RETAINING WALL WORK ONLY.

QUANTITIES

STRUCTURAL CONCRETE (RETAINING WALL)	139.10	CY
BAR REINFORCING STEEL (RETAINING WALL)	11659	LB
STRUCTURAL EXCAVATION (RETAINING WALL)	309.84	CY
STRUCTURAL BACKFILL (RETAINING WALL)	295.61	CY
PERVIOUS BACKFILL MATERIAL (RETAINING WALL)	9.92	CY
CONCRETE BARRIER (TYPE 732A)	234.62	LF
PLASTIC PIPE (N)	10.18	LF
WATERSTOP (N)	18.77	LF
ARCHITECTURAL SURFACE (TEXTURED CONCRETE)	1004.55	SF

(N) = NOT A SEPARATE PAY ITEM, FOR INFORMATION ONLY

NOTES:

1. ARCHITECTURAL TREATMENT SHOULD EXTEND 6 IN BELOW FG OR 6 IN BELOW TOP CB (TYPE 60D MOD)
2. FOR STRUCTURAL SECTIONS, SEE ROADWAY PLANS
3. WATERSTOP IN EXPANSION JOINT SHALL BE EXTEND 6 IN INTO THE BARRIER
4. FOR ROUNDING DETAILS, SEE ARCHITECTURAL TREATMENT PLANS

RETAINING WALL PLAN
RETAINING WALL No. 379

SCALE AS SHOWN **R34-1**

STATE OF CALIFORNIA - DEPARTMENT OF TRANSPORTATION
Caltrans® DESIGN

FUNCTIONAL SUPERVISOR: MARK PERTILE
CALCULATED-DESIGNED BY: ANNABELL WANG
CHECKED BY: CUONG LE TRAN
REVISED BY / DATE REVISED

LAST REVISION 12-01-10
DATE PLOTTED => 30-APR-2011
TIME PLOTTED => 07:28

Dist	COUNTY	ROUTE	POST MILES TOTAL PROJECT	SHEET No.	TOTAL SHEETS
08	Riv	91	15.6/21.6	1031	2028

LICENSED LANDSCAPE ARCHITECT

4-25-11
PLANS APPROVAL DATE

LICENSED LANDSCAPE ARCHITECT
Matthew Harry Hall
No. 2011
Signature
10/31/2011
Renewal Date
12-1-10
Date
STATE OF CALIFORNIA

THE STATE OF CALIFORNIA OR ITS OFFICERS OR AGENTS SHALL NOT BE RESPONSIBLE FOR THE ACCURACY OR COMPLETENESS OF SCANNED COPIES OF THIS PLAN SHEET.

NOTE:

SEE SHEET ASD-4 AND ASD-5.

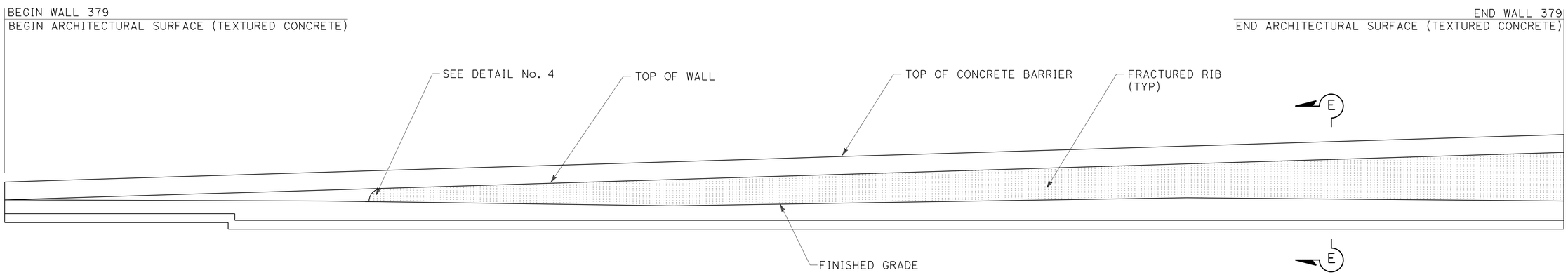

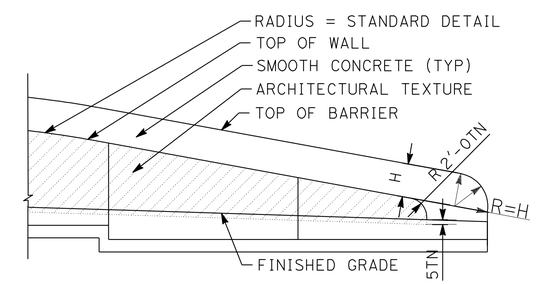

DETAIL No. 4

TYPICAL END OF WALL WITH
CONCRETE BARRIER ON TOP OF WALL
AND TYPE 60D MOD. CONCRETE BARRIER

MIRRORED ELEVATION FOR FRACTURED RIB TEXTURE RETAINING WALL No. 379

THIS PLAN IS ACCURATE FOR ARCHITECTUAL TREATMENT WORK ONLY.

ARCHITECTURAL SURFACE
RETAINING WALL No. 379

SCALE: 1/8"=1'-0"

R34-2

REVISED BY	DATE REVISED

CALCULATED-DESIGNED BY	CHECKED BY
MATTHEW HALL	MIRIAM BISHOP

SENIOR LANDSCAPE ARCHITECT: BYRON STROUT

STATE OF CALIFORNIA - DEPARTMENT OF TRANSPORTATION
Caltrans® LANDSCAPE ARCHITECTURE

LAST REVISION 12-01-10 | DATE PLOTTED => 30-APR-2011 | TIME PLOTTED => 08:11

DIST	COUNTY	ROUTE	POST MILES TOTAL PROJECT	SHEET No	TOTAL SHEETS
08	Riv	91	15.6/21.6	1032	2028

GEOTECHNICAL PROFESSIONAL — DATE 04/2009

4-25-11
PLANS APPROVAL DATE

REGISTERED PROFESSIONAL ENGINEER — ANDREW C. LEE — No. 2616 — Exp. 6-30-12 — GEOTECHNICAL — STATE OF CALIFORNIA

The State of California or its officers or agents shall not be responsible for the accuracy or completeness of electronic copies of this plan sheet.

California Department of Transportation
5900 Folsom Boulevard
Sacramento, CA 95819

URS Corporation
2020 East First Street, Suite 400
Santa Ana, CA 92705

FOR PLAN VIEW, SEE SHEET R34-4

NOTE: 1. This LOTB sheet was prepared in accordance with the Caltrans Soil & Rock Logging, Classification, and Presentation Manual (June 2007).

2. For legend, see "Log of Test Borings" 1 of 16

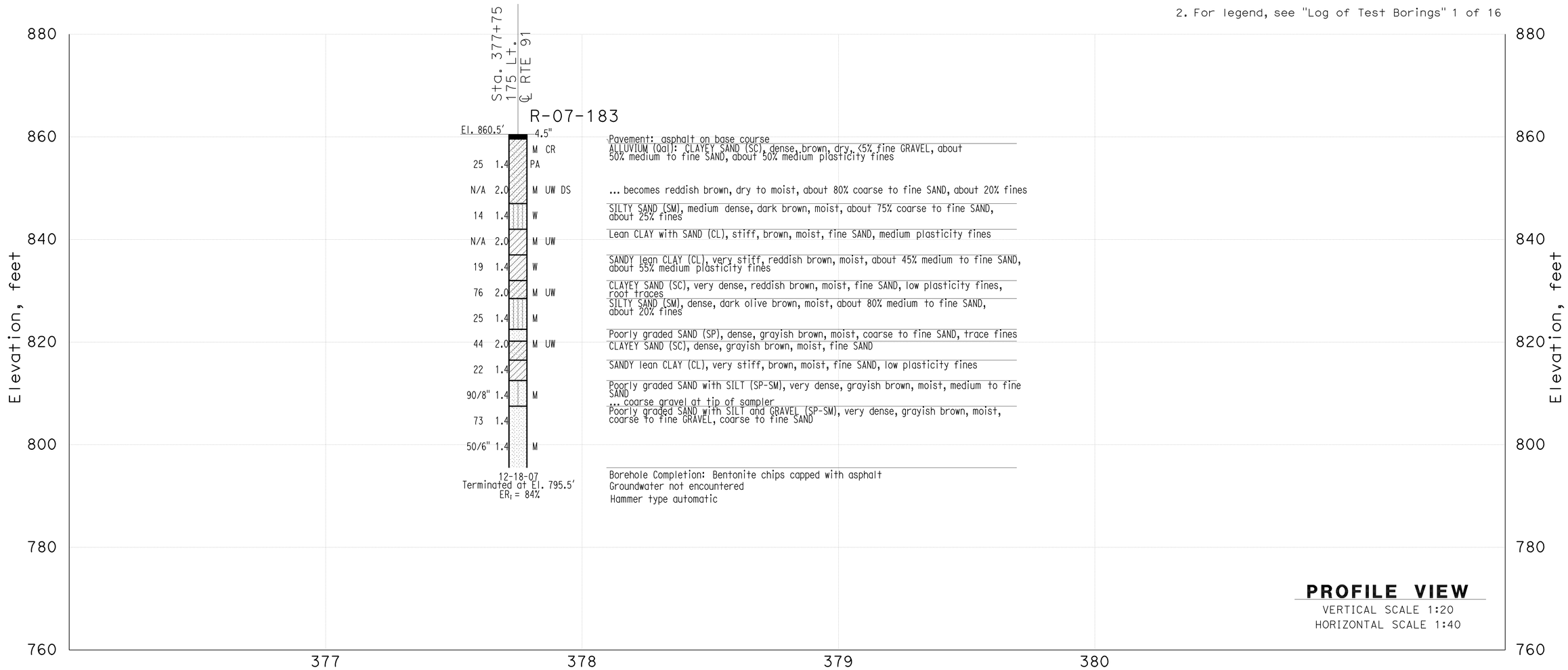

THIS PLAN ACCURATE FOR SOUND WALL AND RETAINING WALL WORK ONLY

GINA PURSELL DESIGN OVERSIGHT	SHAWN WEI FUNCTIONAL SUPERVISOR	DRAWN BY	P. QUACH	P.CHAU/D.WADER/C.CARBINO FIELD INVESTIGATION BY:	PREPARED FOR THE STATE OF CALIFORNIA DEPARTMENT OF TRANSPORTATION	A. LEE PROJECT ENGINEER	BRIDGE NO. X	Retaining Wall 379 R34-3
X SIGN OFF DATE		CHECKED BY	S. PIRATHIVIRAJ	DATE: Nov 6 2007 to March 7 2008			POST MILE X	LOG OF TEST BORINGS SHEET 1 OF 2

OSF GEOTECHNICAL LOG OF TEST BORINGS SHEET (ENGLISH) (REV. 2/25/05)

ORIGINAL SCALE IN INCHES FOR REDUCED PLANS 0 1 2 3

CU 59A0590
EA 08-448400

DISREGARD PRINTS BEARING EARLIER REVISION DATES

REVISION DATES (PRELIMINARY STAGE ONLY) X

SHEET 1 OF 2

FILE => 844840qzh003.dgn

USERNAME => trcarol DATE PLOTTED => 30-APR-2011 TIME PLOTTED =>

DIST	COUNTY	ROUTE	POST MILES TOTAL PROJECT	SHEET No	TOTAL SHEETS
08	Riv	91	15.6/21.6	1033	2028

GEOTECHNICAL PROFESSIONAL — DATE 04/2009

PLANS APPROVAL DATE 4-25-11

REGISTERED PROFESSIONAL ENGINEER — ANDREW C. LEE — No. 2616 — Exp. 6-30-12 — GEOTECHNICAL — STATE OF CALIFORNIA

The State of California or its officers or agents shall not be responsible for the accuracy or completeness of electronic copies of this plan sheet.

California Department of Transportation
5900 Folsom Boulevard
Sacramento, CA 95819

URS Corporation
2020 East First Street, Suite 400
Santa Ana, CA 92705

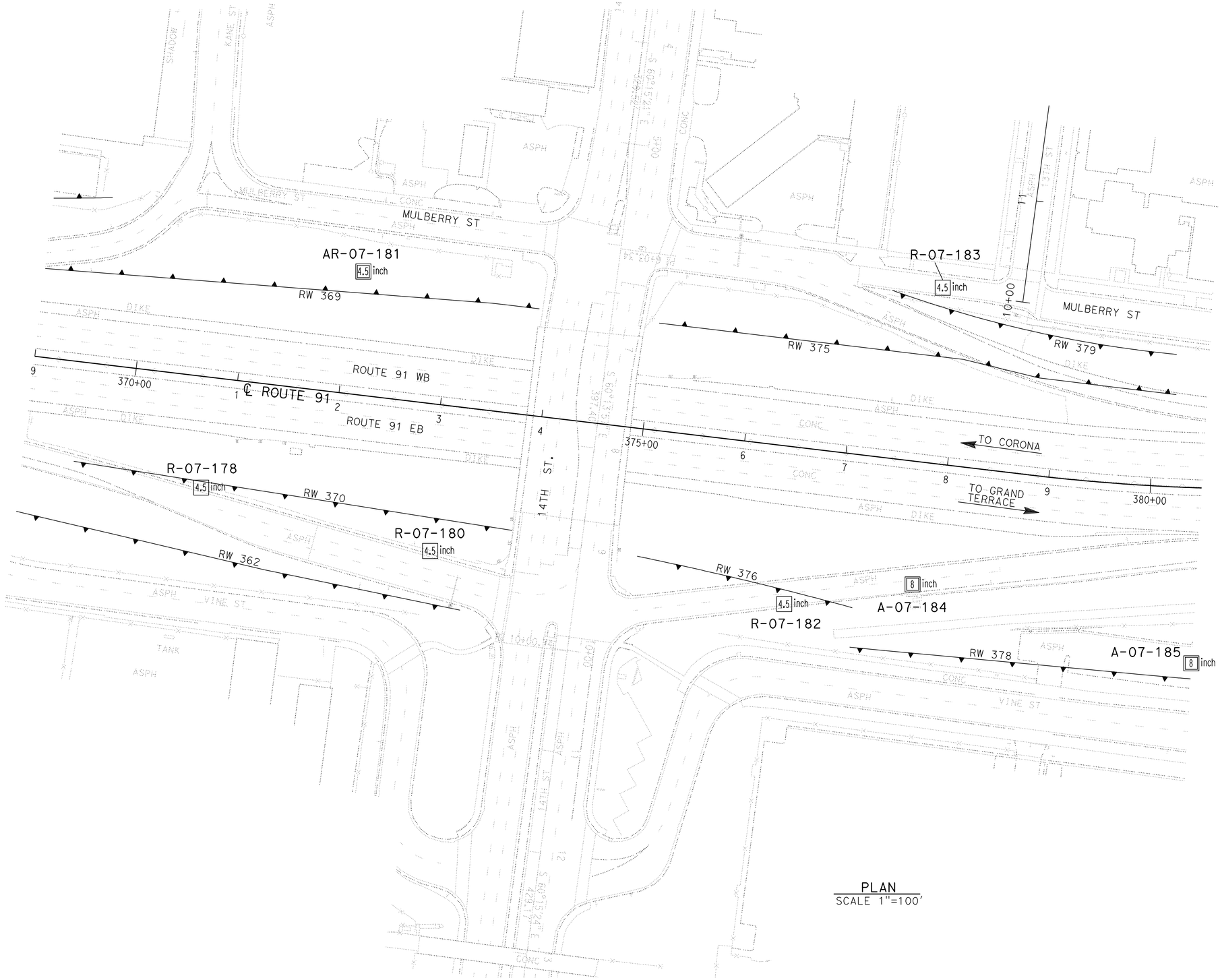

PLAN
SCALE 1"=100'

Borehole Number	Drill Rig	Hammer Type	Avg. Hammer Efficiency, ETR (%)
R-07-178	CS-2000	Automatic	84
R-07-180	CME 85	Automatic	87
AR-07-181	CS-2000	Automatic	84
R-07-182	CS-2000	Automatic	84
R-07-183	CS-2000	Automatic	84
A-07-184	Diedrich D-120	Automatic	75*
A-07-185	Diedrich D-120	Automatic	75*

Sampler Type	Inside Diameter (Inches)	Borehole Numbers
SPT	1.375	R-07-178, R-07-180, R-07-181 R-07-182, R-07-183, A-07-184 A-07-185
Modified California 1	1.94	R-07-180, R-07-183
Modified California 2	2.40	A-07-184, A-07-185

*Estimated Hammer Efficiency Rating.

GINA PURSELL — DESIGN OVERSIGHT	SHAWN WEI — FUNCTIONAL SUPERVISOR	DRAWN BY	P. QUACH	P.CHAU/D.WADER/C.CARBINO — FIELD INVESTIGATION BY:	PREPARED FOR THE STATE OF CALIFORNIA DEPARTMENT OF TRANSPORTATION
X — SIGN OFF DATE		CHECKED BY	S. PIRATHIVIRAJ	DATE: Nov 6 2007 to March 7 2008	

A. LEE — PROJECT ENGINEER

BRIDGE NO. X — POST MILE X

RETAINING WALL 379 — R34-4

LOG OF TEST BORINGS SHEET 2 OF 2

OSF GEOTECHNICAL LOG OF TEST BORINGS SHEET (ENGLISH) (REV. 2/25/05)

ORIGINAL SCALE IN INCHES FOR REDUCED PLANS 0 1 2 3

CU 59A0590
EA 08-448400

DISREGARD PRINTS BEARING EARLIER REVISION DATES

REVISION DATES (PRELIMINARY STAGE ONLY) X

SHEET 2 OF 2

FILE => 844840qzh004.dgn

USERNAME => trcarol DATE PLOTTED => 30-APR-2011 TIME PLOTTED =>

Dist	COUNTY	ROUTE	POST MILES TOTAL PROJECT	SHEET No.	TOTAL SHEETS
08	Riv	91	15.6/21.6	1034	2028

REGISTERED CIVIL ENGINEER 12-1-10 DATE

4-25-11
PLANS APPROVAL DATE

REGISTERED PROFESSIONAL ENGINEER CUONG LE TRAN No. C60436 Exp. 6-30-12 CIVIL STATE OF CALIFORNIA

THE STATE OF CALIFORNIA OR ITS OFFICERS OR AGENTS SHALL NOT BE RESPONSIBLE FOR THE ACCURACY OR COMPLETENESS OF SCANNED COPIES OF THIS PLAN SHEET.

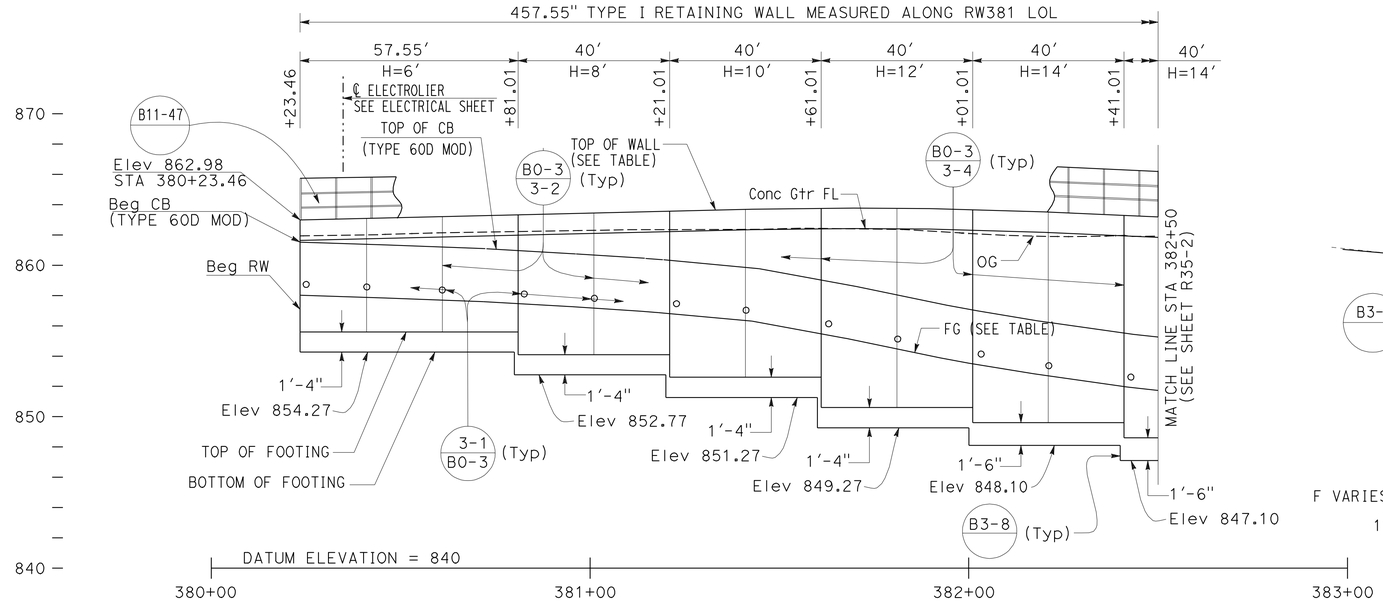

ELEVATION

SCALE Horiz 1"=20′
Vert 1"=5′

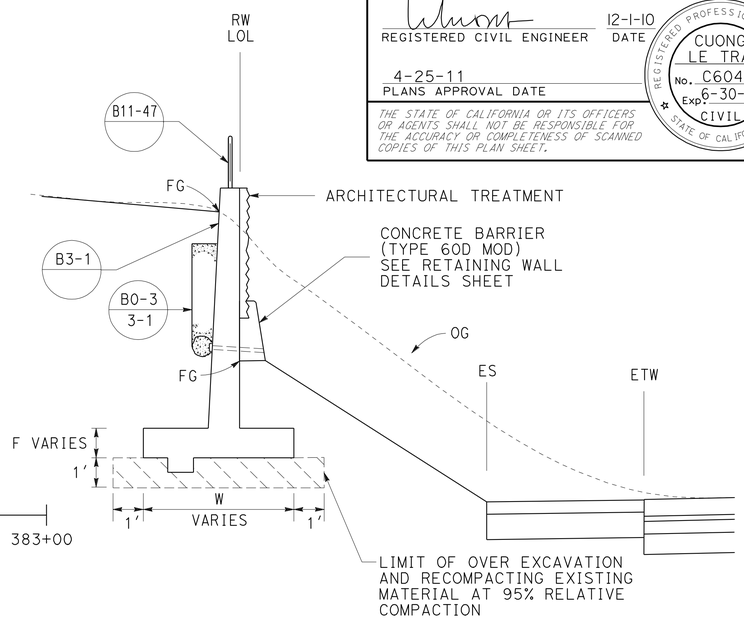

TYPICAL SECTION

NO SCALE
FROM STA 380+23.46 TO STA 384+81.01

NOTES:

1. ARCHITECTURAL TREATMENT SHOULD EXTEND 6 IN BELOW FG OR 6 IN BELOW TOP CB (TYPE 60D MOD)
2. FOR STRUCTURAL SECTIONS, SEE ROADWAY PLANS
3. FOR POST ANCHORAGE DETAILS, SEE B11-52
4. FOR ROUNDING DETAILS, SEE ARCHITECTURAL TREATMENT PLANS

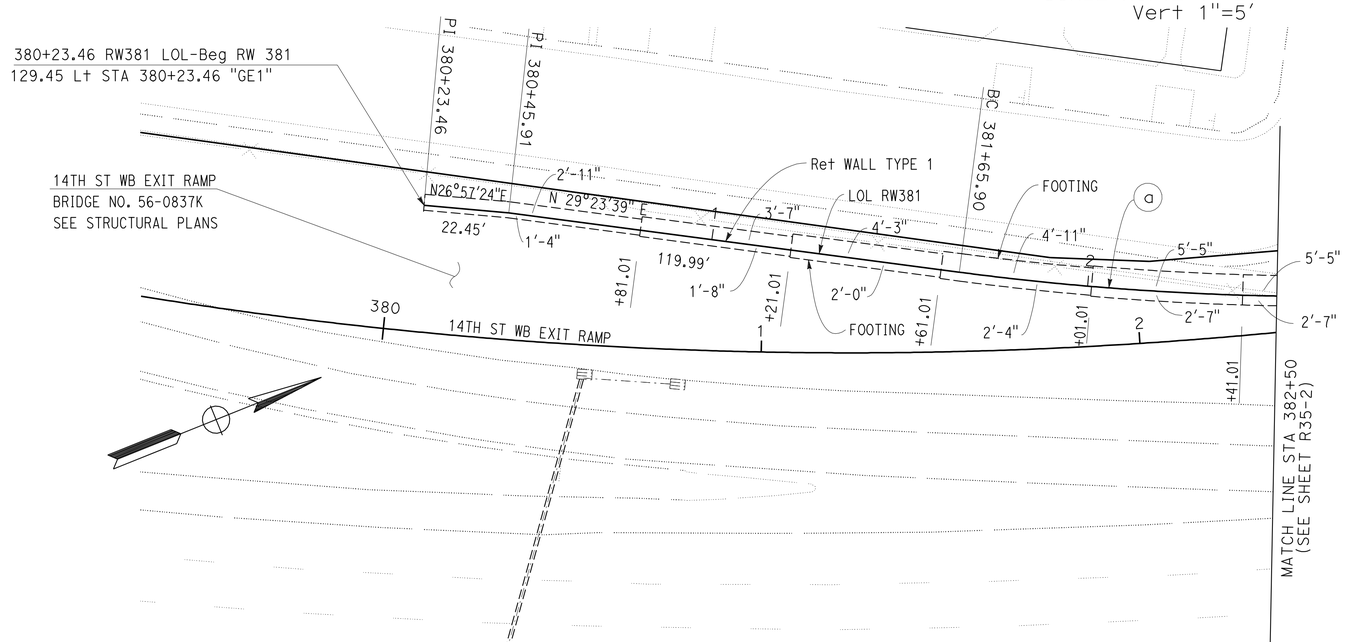

PLAN

SCALE: 1"=20′

CURVE DATA

No.	R	Δ	T	L
a	750.00′	18°35′18"	122.74′	243.32′

THIS PLAN ACCURATE FOR RETAINING WALL WORK ONLY.

QUANTITIES

STRUCTURAL CONCRETE (RETAINING WALL)	452.40	CY
BAR REINFORCING STEEL (RETAINING WALL)	34901	LB
STRUCTURAL EXCAVATION (RETAINING WALL)	2023.50	CY
STRUCTURAL BACKFILL (RETAINING WALL)	1092.70	CY
PERVIOUS BACKFILL MATERIAL (RETAINING WALL)	67.20	CY
CONCRETE BARRIER (TYPE 60D MOD)	457.55	LF
CABLE RAILING	457.55	LF
MINOR CONCRETE (GUTTER)	457.55	LF
PLASTIC PIPE (N)	31.32	LF
WATERSTOP (N)	92.40	LF
ARCHITECTURAL SURFACE (TEXTURED CONCRETE)	2596.24	SF

(N) = NOT A SEPARATE PAY ITEM, FOR INFORMATION ONLY

RETAINING WALL PLAN
RETAINING WALL No. 381

SCALE AS SHOWN

R35-1

STATE OF CALIFORNIA - DEPARTMENT OF TRANSPORTATION
Caltrans® DESIGN

FUNCTIONAL SUPERVISOR: MARK PERTILE
CALCULATED-DESIGNED BY: ANNABELL WANG
CHECKED BY: CUONG LE TRAN
REVISED BY
DATE REVISED

LAST REVISION 12-01-10 | DATE PLOTTED => 30-APR-2011 | TIME PLOTTED => 08:11

Dist	COUNTY	ROUTE	POST MILES TOTAL PROJECT	SHEET No.	TOTAL SHEETS
08	Riv	91	15.6/21.6	1035	2028

REGISTERED CIVIL ENGINEER 12-1-10 DATE

4-25-11
PLANS APPROVAL DATE

REGISTERED PROFESSIONAL ENGINEER CUONG LE TRAN No. C60436 Exp. 6-30-12 CIVIL STATE OF CALIFORNIA

THE STATE OF CALIFORNIA OR ITS OFFICERS OR AGENTS SHALL NOT BE RESPONSIBLE FOR THE ACCURACY OR COMPLETENESS OF SCANNED COPIES OF THIS PLAN SHEET.

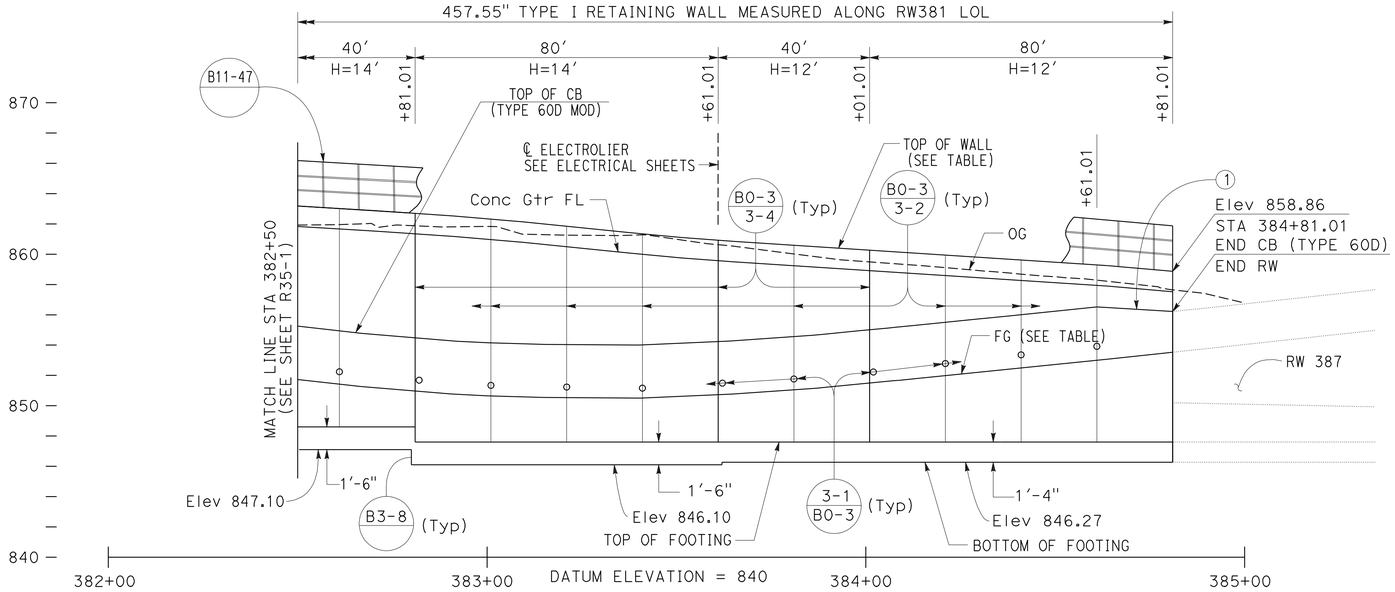

ELEVATION TABLE		
STATION	TOP OF WALL	FG
380+25.00	850.19	850.19
380+50.00	849.91	849.91
380+75.00	849.19	849.19
381+00.00	850.23	850.23
381+25.00	851.23	851.23
381+50.00	854.46	854.46
381+75.00	855.15	855.15
382+00.00	855.15	855.15
382+25.00	852.46	852.46
382+50.00	852.24	852.24
382+75.00	852.31	852.31
383+00.00	852.93	852.93
383+25.00	852.96	852.96
383+50.00	852.66	852.66
383+75.00	849.18	849.18
384+00.00	849.41	849.41
384+25.00	850.40	850.40
384+50.00	850.12	850.12
384+75.00	850.75	850.75

NOTE:

(1) CONCRETE BARRIER TRANSITION FROM TYPE 60D MOD TO TYPE 732A SEE Ret WALL DETAILS SHEET

ELEVATION

SCALE Horiz 1"=20'
Vert 1"=5'

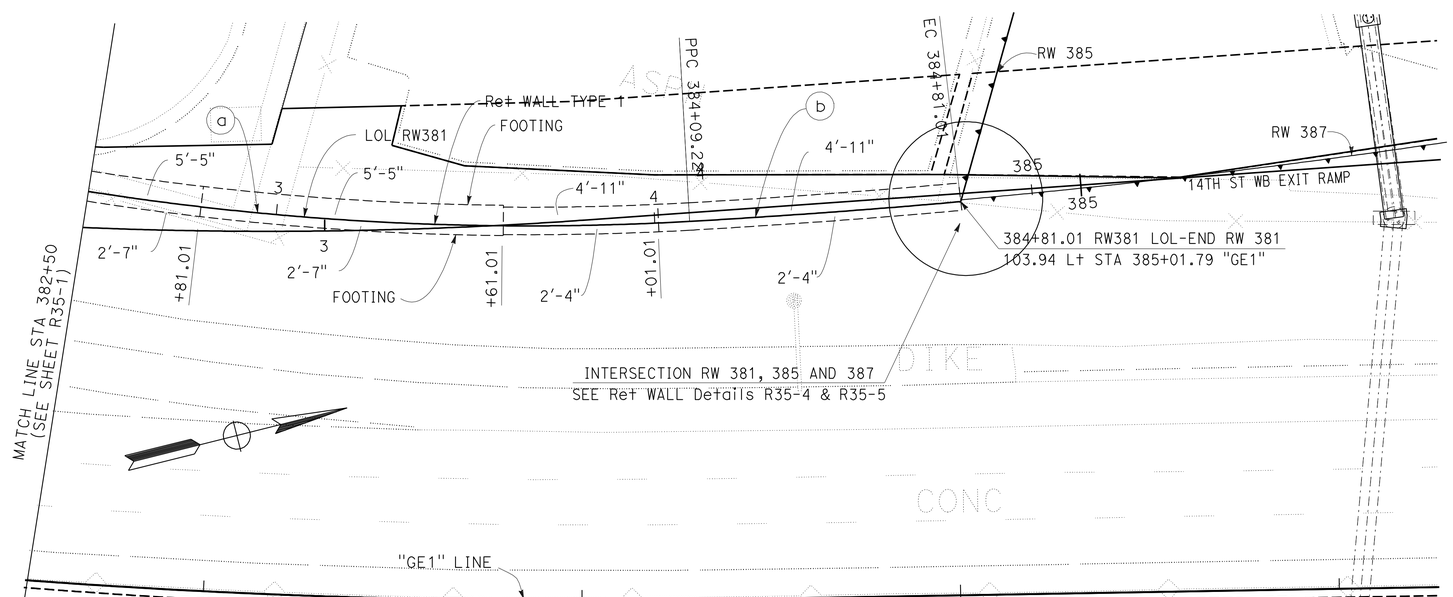

CURVE DATA

No.	R	Δ	T	L
(b)	2212'	1°51'34"	35.90'	71.79'

THIS PLAN ACCURATE FOR RETAINING WALL WORK ONLY.

RETAINING WALL PLAN
RETAINING WALL No. 381
SCALE AS SHOWN

R35-2

STATE OF CALIFORNIA - DEPARTMENT OF TRANSPORTATION
Caltrans DESIGN

FUNCTIONAL SUPERVISOR: MARK PERTILE
CALCULATED-DESIGNED BY: ANNABELL WANG
CHECKED BY: CUONG LE TRAN
REVISED BY
DATE REVISED

LAST REVISION 12-01-10
DATE PLOTTED => 30-APR-2011
TIME PLOTTED => 08:11

Dist	COUNTY	ROUTE	POST MILES TOTAL PROJECT	SHEET No.	TOTAL SHEETS
08	Riv	91	15.6/21.6	1036	2028

REGISTERED CIVIL ENGINEER 12-1-10 DATE

4-25-11
PLANS APPROVAL DATE

REGISTERED PROFESSIONAL ENGINEER CUONG LE TRAN No. C60436 Exp. 6-30-12 CIVIL STATE OF CALIFORNIA

THE STATE OF CALIFORNIA OR ITS OFFICERS OR AGENTS SHALL NOT BE RESPONSIBLE FOR THE ACCURACY OR COMPLETENESS OF SCANNED COPIES OF THIS PLAN SHEET.

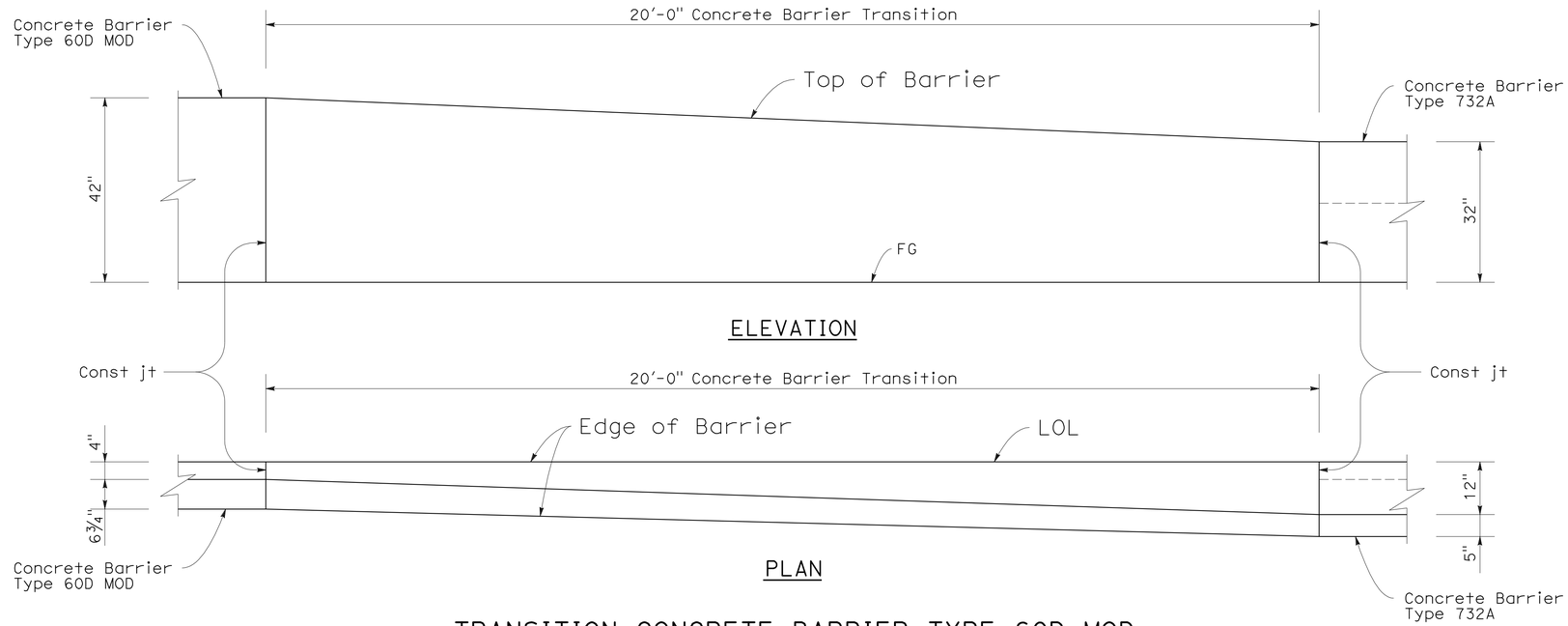

TRANSITION CONCRETE BARRIER TYPE 60D MOD TO CONCRETE BARRIER TYPE 732

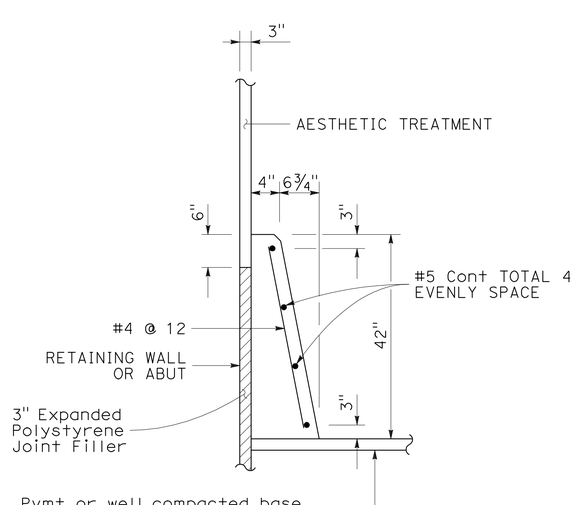

CONCRETE BARRIER (TYPE 60D MOD)

THIS PLAN ACCURATE FOR RETAINING WALL WORK ONLY.

RETAINING WALL DETAILS

RETAINING WALL No. 381

NO SCALE

R35-3

STATE OF CALIFORNIA - DEPARTMENT OF TRANSPORTATION
Caltrans
DESIGN

FUNCTIONAL SUPERVISOR: MARK PERTILE
CALCULATED-DESIGNED BY: ANNABELL WANG
CHECKED BY: CUONG LE TRAN
REVISED BY
DATE REVISED

LAST REVISION 12-01-10 | DATE PLOTTED => 30-APR-2011 | TIME PLOTTED => 08:11

Dist	COUNTY	ROUTE	POST MILES TOTAL PROJECT	SHEET No.	TOTAL SHEETS
08	Riv	91	15.6/21.6	1037	2028

REGISTERED CIVIL ENGINEER 12-1-10 DATE

4-25-11
PLANS APPROVAL DATE

REGISTERED PROFESSIONAL ENGINEER
MINH THUONG VO
No. C59297
Exp. 06/30/11
CIVIL
STATE OF CALIFORNIA

THE STATE OF CALIFORNIA OR ITS OFFICERS OR AGENTS SHALL NOT BE RESPONSIBLE FOR THE ACCURACY OR COMPLETENESS OF SCANNED COPIES OF THIS PLAN SHEET.

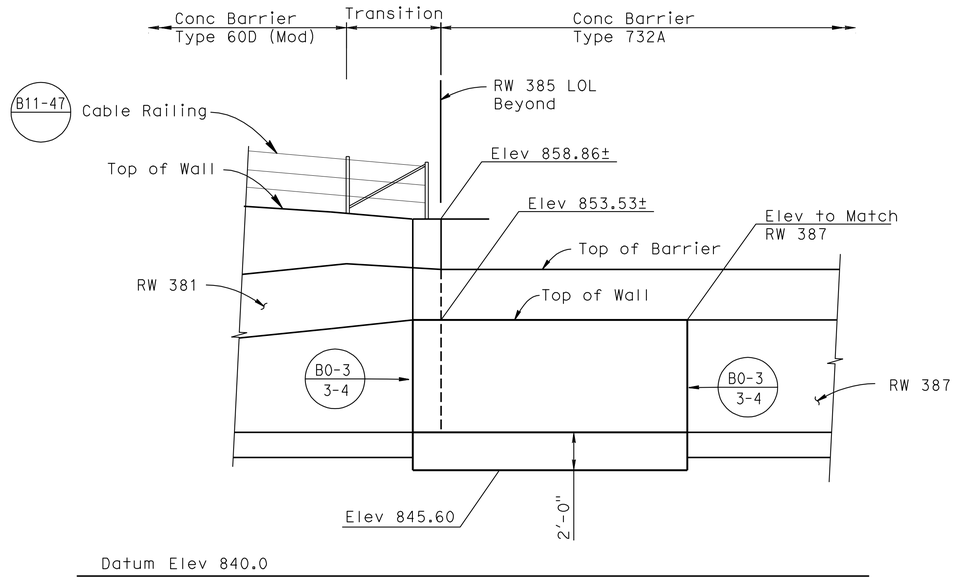

DEVELOPED ELEVATION

1/4"=1'-0"

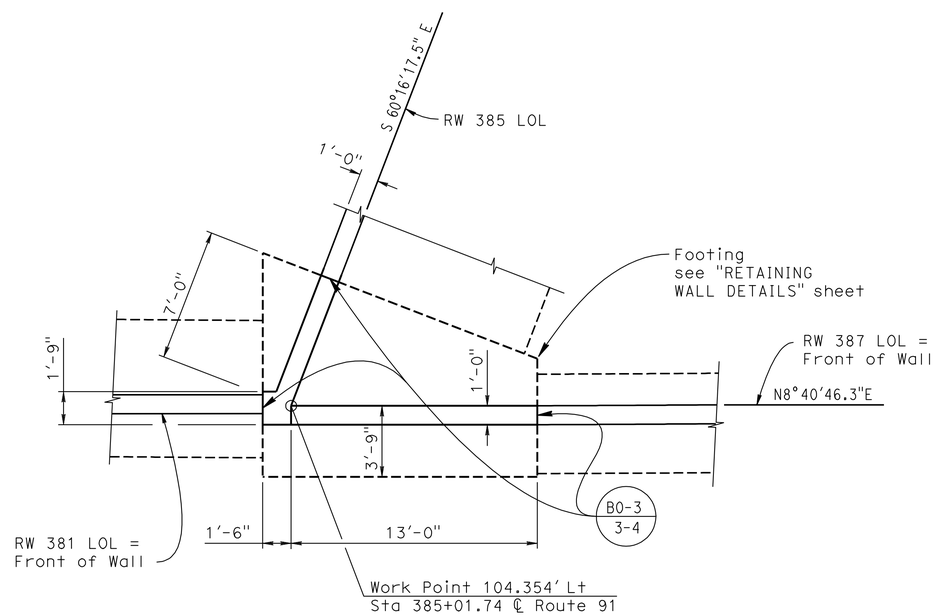

PLAN

1/4"=1'-0"

NOTE:
THE CONTRACTOR SHALL VERIFY ALL CONTROLLING FIELD DIMENSIONS BEFORE ORDERING OR FABRICATING ANY MATERIAL.

THIS PLAN ACCURATE FOR RETAINING WALL WORK ONLY.

RETAINING WALL DETAILS

INTERSECTION RW 381, 385 AND 387

SCALE AS SHOWN

R35-4

STATE OF CALIFORNIA - DEPARTMENT OF TRANSPORTATION
Caltrans
DESIGN

FUNCTIONAL SUPERVISOR: DANIEL T. ADAMS
CALCULATED-DESIGNED BY: MINH VO
CHECKED BY: RYAN STILTZ
REVISED BY
DATE REVISED

LAST REVISION 12-01-10 | DATE PLOTTED => 30-APR-2011 | TIME PLOTTED => 08:11

Dist	COUNTY	ROUTE	POST MILES TOTAL PROJECT	SHEET No.	TOTAL SHEETS
08	Riv	91	15.6/21.6	1038	2028

REGISTERED CIVIL ENGINEER 12-1-10 DATE

4-25-11
PLANS APPROVAL DATE

REGISTERED PROFESSIONAL ENGINEER MINH THUONG VO No. C59297 Exp. 06/30/11 CIVIL STATE OF CALIFORNIA

THE STATE OF CALIFORNIA OR ITS OFFICERS OR AGENTS SHALL NOT BE RESPONSIBLE FOR THE ACCURACY OR COMPLETENESS OF SCANNED COPIES OF THIS PLAN SHEET.

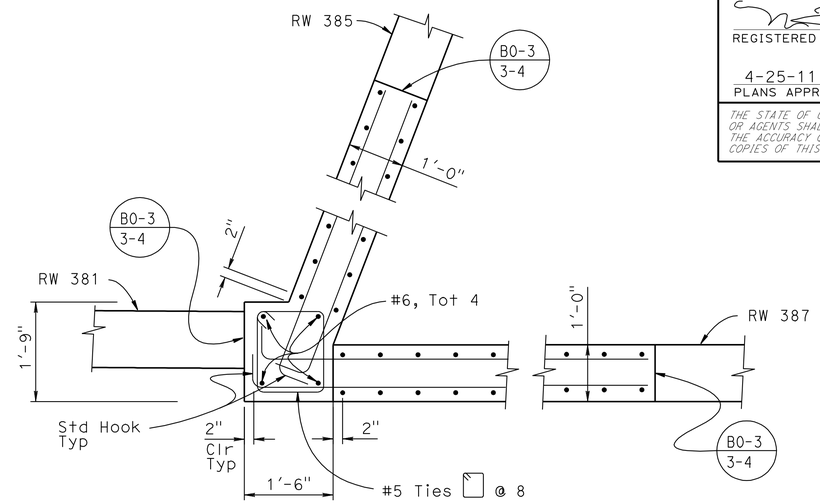

SECTION C-C

3/4"=1'-0"

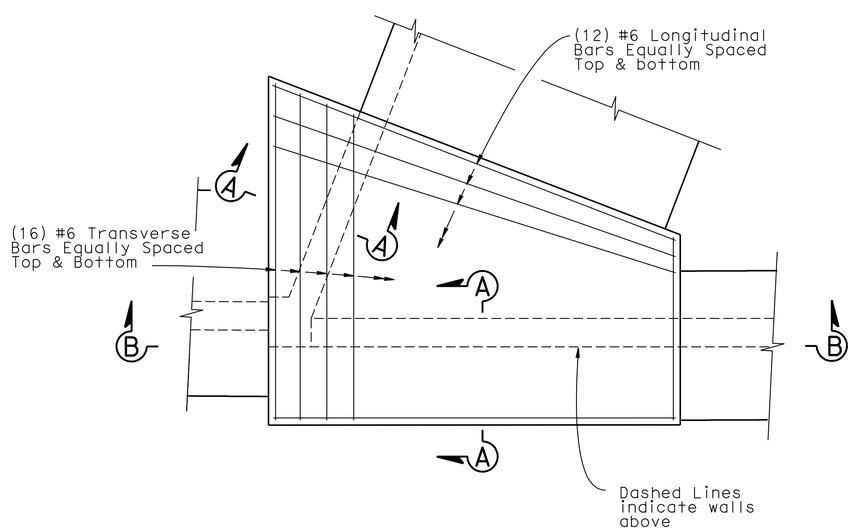

RETAINING WALL INTERSECTION FOOTING REINFORCEMENT PLAN

3/8"=1'-0"

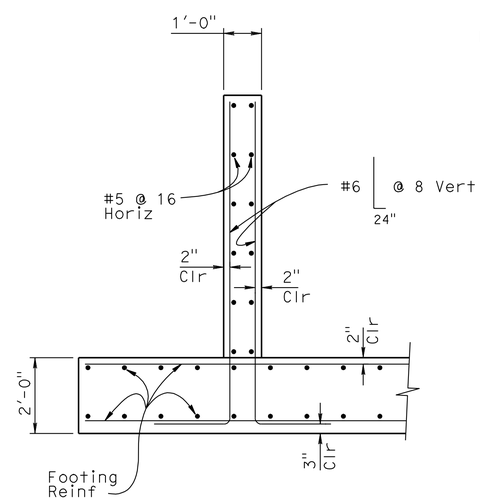

SECTION A-A

1/2"=1'-0"

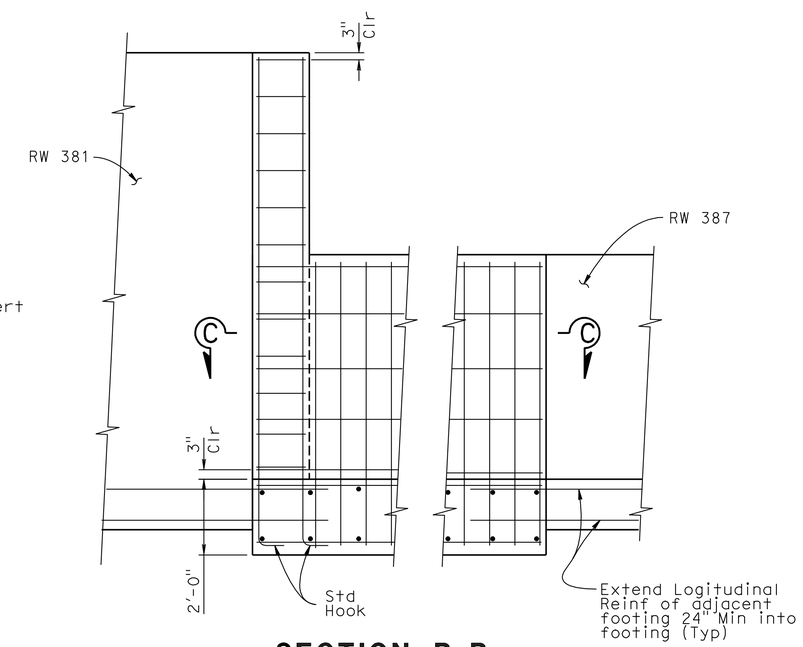

SECTION B-B

1/2"=1'-0"

RETAINING WALL DETAILS

INTERSECTION RW 381, 385 AND 387

SCALE AS SHOWN

R35-5

THIS PLAN ACCURATE FOR RETAINING WALL WORK ONLY.

STATE OF CALIFORNIA - DEPARTMENT OF TRANSPORTATION
Caltrans
DESIGN

FUNCTIONAL SUPERVISOR: DANIEL T. ADAMS

CALCULATED-DESIGNED BY: MINH VO
CHECKED BY: RYAN STILTZ

REVISED BY | DATE REVISED

LAST REVISION 12-01-10 | DATE PLOTTED => 30-APR-2011 | TIME PLOTTED => 08:12

Dist	COUNTY	ROUTE	POST MILES TOTAL PROJECT	SHEET No.	TOTAL SHEETS
08	Riv	91	15.6/21.6	1039	2028

LICENSED LANDSCAPE ARCHITECT

4-25-11
PLANS APPROVAL DATE

LICENSED LANDSCAPE ARCHITECT
Matthew Harry Hall
Signature
10/31/2011
Renewal Date
12-1-10
Date
STATE OF CALIFORNIA

THE STATE OF CALIFORNIA OR ITS OFFICERS OR AGENTS SHALL NOT BE RESPONSIBLE FOR THE ACCURACY OR COMPLETENESS OF SCANNED COPIES OF THIS PLAN SHEET.

NOTE:

SEE SHEET ASD-4 AND ASD-5.

END 14TH ST WEST OFF ABUTMENT 1 | BEGIN WALL 381 BEGIN ARCHITECTURAL SURFACE (TEXTURED CONCRETE)

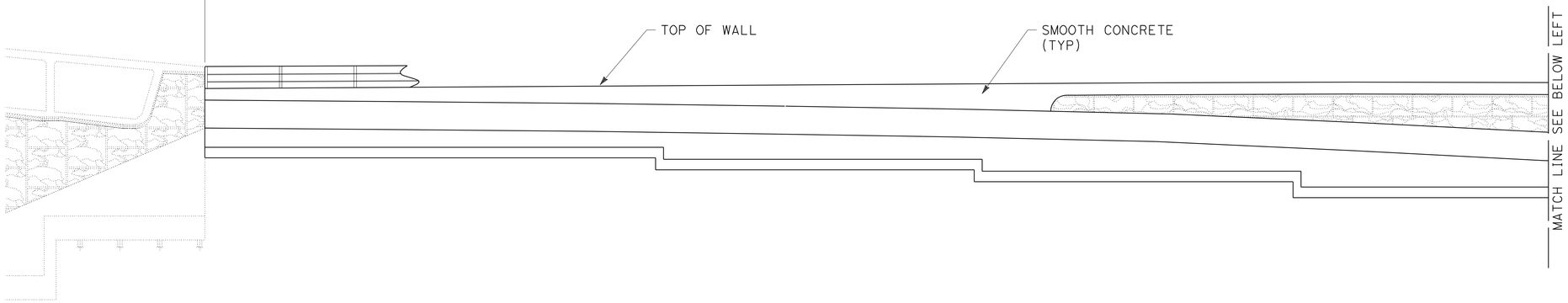

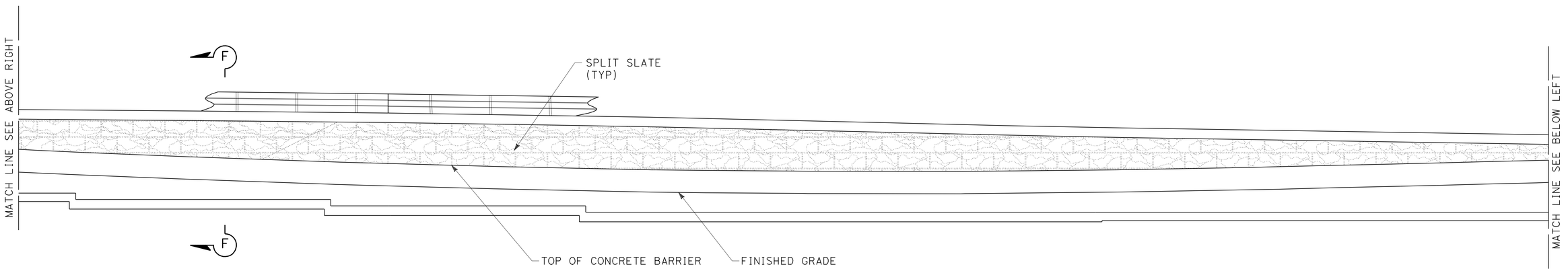

END WALL 381 | END WALL 387
END ARCHITECTURAL SURFACE (TEXTURED CONCRETE)

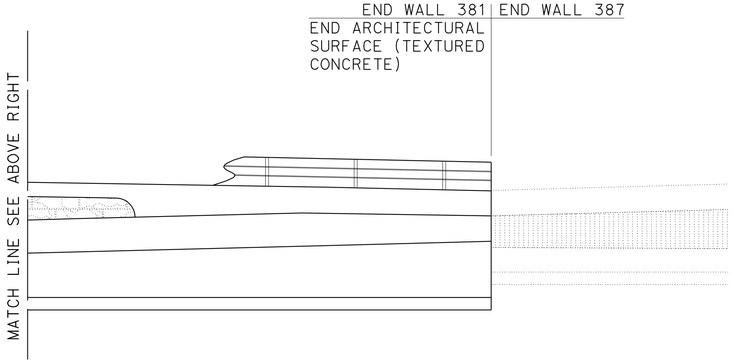

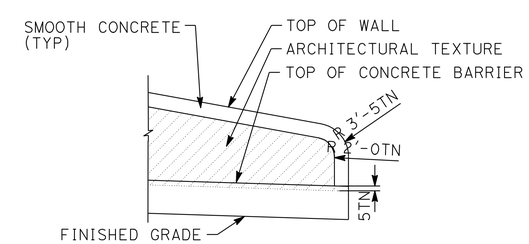

DETAIL No. 2

TYPICAL END OF WALL DETAIL

ELEVATION FOR FRACTURED RIB SPLIT FACE TEXTURE RETAINING WALL No. 381

THIS PLAN IS ACCURATE FOR ARCHITECTUAL TREATMENT WORK ONLY.

ARCHITECTURAL SURFACE RETAINING WALL No. 381

SCALE: 1/8"=1'-0"

R35-6

REVISED BY	DATE REVISED
MATTHEW HALL	MIRIAM BISHOP

CALCULATED-DESIGNED BY / CHECKED BY

SENIOR LANDSCAPE ARCHITECT: BYRON STROUT

STATE OF CALIFORNIA - DEPARTMENT OF TRANSPORTATION
Caltrans® LANDSCAPE ARCHITECTURE

LAST REVISION 12-01-10 | DATE PLOTTED => 30-APR-2011 | TIME PLOTTED => 08:12

DIST	COUNTY	ROUTE	POST MILES TOTAL PROJECT	SHEET No	TOTAL SHEETS
08	Riv	91	15.6/21.6	1040	2028

GEOTECHNICAL PROFESSIONAL 04/2009 DATE

4-25-11
PLANS APPROVAL DATE

REGISTERED PROFESSIONAL ENGINEER
ANDREW C. LEE
No. 2616
Exp. 6-30-12
GEOTECHNICAL
STATE OF CALIFORNIA

The State of California or its officers or agents shall not be responsible for the accuracy or completeness of electronic copies of this plan sheet.

California Department of Transportation
5900 Folsom Boulevard
Sacramento, CA 95819

URS Corporation
2020 East First Street, Suite 400
Santa Ana, CA 92705

FOR PLAN VIEW, SEE SHEET 35-9

NOTE: 1. This LOTB sheet was prepared in accordance with the Caltrans Soil & Rock Logging, Classification, and Presentation Manual (June 2007).

2. For legend, see "Log of Test Borings" 1 of 16

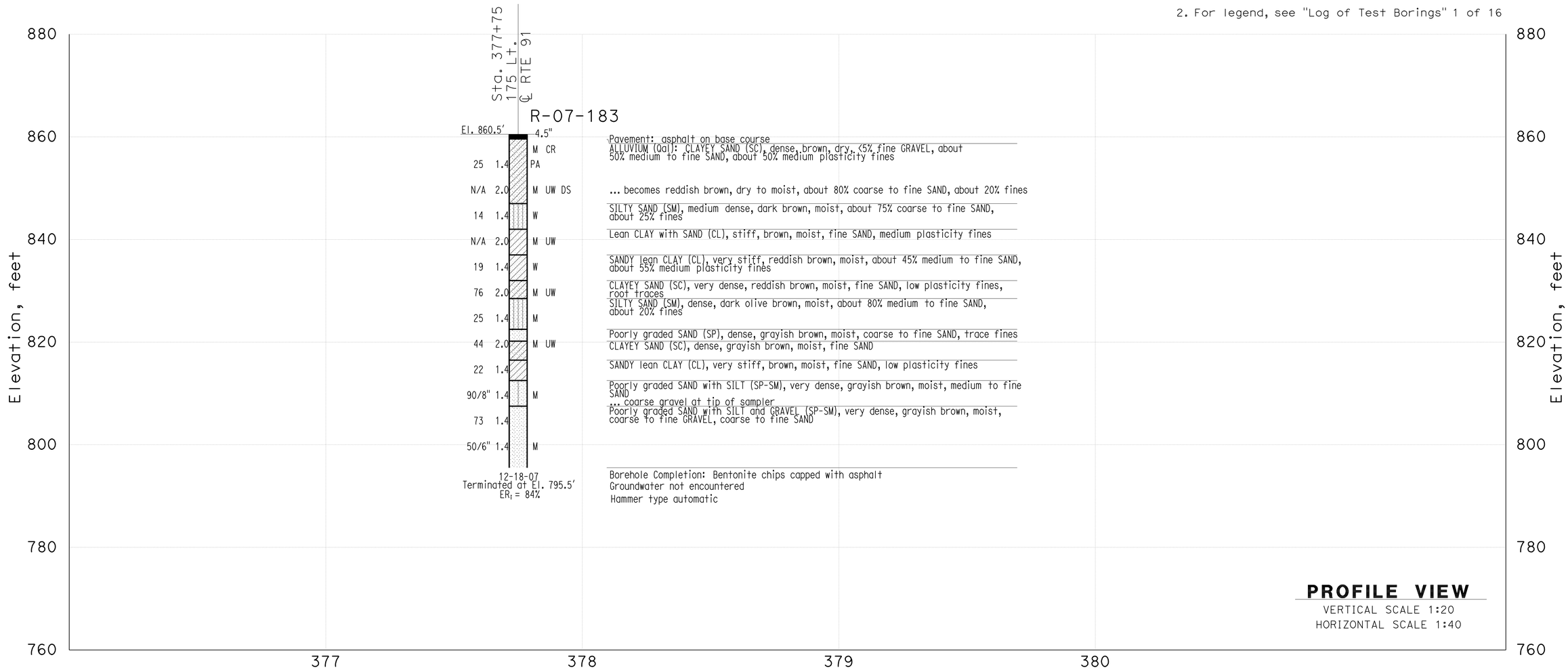

THIS PLAN ACCURATE FOR SOUND WALL AND RETAINING WALL WORK ONLY

GINA PURSELL DESIGN OVERSIGHT	SHAWN WEI FUNCTIONAL SUPERVISOR	DRAWN BY	P. QUACH	P.CHAU/D.WADER/C.CARBINO FIELD INVESTIGATION BY:	PREPARED FOR THE STATE OF CALIFORNIA DEPARTMENT OF TRANSPORTATION	A. LEE PROJECT ENGINEER	BRIDGE NO. X	Retaining Wall 381 R35-7
X SIGN OFF DATE		CHECKED BY	S. PIRATHIVIRAJ	DATE: Nov 6 2007 to March 7 2008			POST MILE X	LOG OF TEST BORINGS SHEET 1 OF 4

OSF GEOTECHNICAL LOG OF TEST BORINGS SHEET (ENGLISH) (REV. 2/25/05)

ORIGINAL SCALE IN INCHES FOR REDUCED PLANS 0 1 2 3

CU 59A0590
EA 08-448400

DISREGARD PRINTS BEARING EARLIER REVISION DATES

REVISION DATES (PRELIMINARY STAGE ONLY) X

SHEET 1 OF 4

FILE => 844840qzi007.dgn

USERNAME => trcarol DATE PLOTTED => 30-APR-2011 TIME PLOTTED =>

DIST	COUNTY	ROUTE	POST MILES TOTAL PROJECT	SHEET No	TOTAL SHEETS
08	Riv	91	15.6/21.6	1041	2028

GEOTECHNICAL PROFESSIONAL 04/2009 DATE

4-25-11
PLANS APPROVAL DATE

REGISTERED PROFESSIONAL ENGINEER
ANDREW C. LEE
No. 2616
Exp. 6-30-12
GEOTECHNICAL
STATE OF CALIFORNIA

The State of California or its officers or agents shall not be responsible for the accuracy or completeness of electronic copies of this plan sheet.

California Department of Transportation
5900 Folsom Boulevard
Sacramento, CA 95819

URS Corporation
2020 East First Street, Suite 400
Santa Ana, CA 92705

FOR PLAN VIEW, SEE SHEET R37-10

NOTE: 1. This LOTB sheet was prepared in accordance with the Caltrans Soil & Rock Logging, Classification, and Presentation Manual (June 2007).

2. For legend, see "Log of Test Borings" 1 of 16

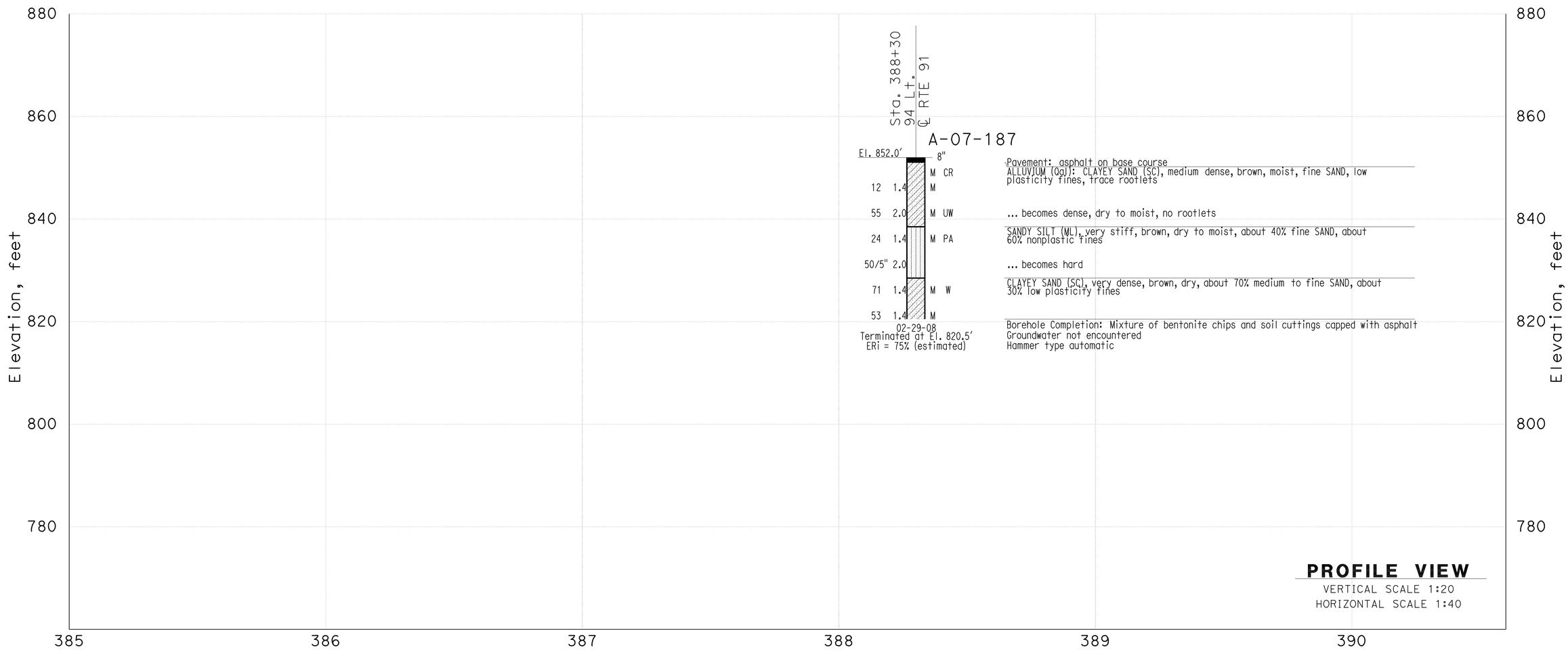

THIS PLAN ACCURATE FOR SOUND WALL AND RETAINING WALL WORK ONLY

GINA PURSELL DESIGN OVERSIGHT X SIGN OFF DATE	SHAWN WEI FUNCTIONAL SUPERVISOR	DRAWN BY	P. QUACH	P.CHAU/D.WADER/C.CARBINO FIELD INVESTIGATION BY: DATE: Nov 6 2007 to March 7 2008		PREPARED FOR THE STATE OF CALIFORNIA DEPARTMENT OF TRANSPORTATION	A. LEE PROJECT ENGINEER	BRIDGE NO. X POST MILE X
		CHECKED BY	S. PIRATHIVIRAJ					

Retaining Wall 381 R35-8

LOG OF TEST BORINGS SHEET 2 OF 4

OSF GEOTECHNICAL LOG OF TEST BORINGS SHEET (ENGLISH) (REV. 2/25/05)

ORIGINAL SCALE IN INCHES FOR REDUCED PLANS 0 1 2 3

CU 59A0590
EA 08-448400

DISREGARD PRINTS BEARING EARLIER REVISION DATES

REVISION DATES (PRELIMINARY STAGE ONLY) X

SHEET 2 OF 4

FILE => 844840qzi008.dgn

USERNAME => trcarol DATE PLOTTED => 30-APR-2011 TIME PLOTTED =>

DIST	COUNTY	ROUTE	POST MILES TOTAL PROJECT	SHEET No	TOTAL SHEETS
08	Riv	91	15.6/21.6	1042	2028

GEOTECHNICAL PROFESSIONAL DATE 04/2009

4-25-11
PLANS APPROVAL DATE

REGISTERED PROFESSIONAL ENGINEER
ANDREW C. LEE
No. 2616
Exp. 6-30-12
GEOTECHNICAL
STATE OF CALIFORNIA

The State of California or its officers or agents shall not be responsible for the accuracy or completeness of electronic copies of this plan sheet.

California Department of Transportation
5900 Folsom Boulevard
Sacramento, CA 95819

URS Corporation
2020 East First Street, Suite 400
Santa Ana, CA 92705

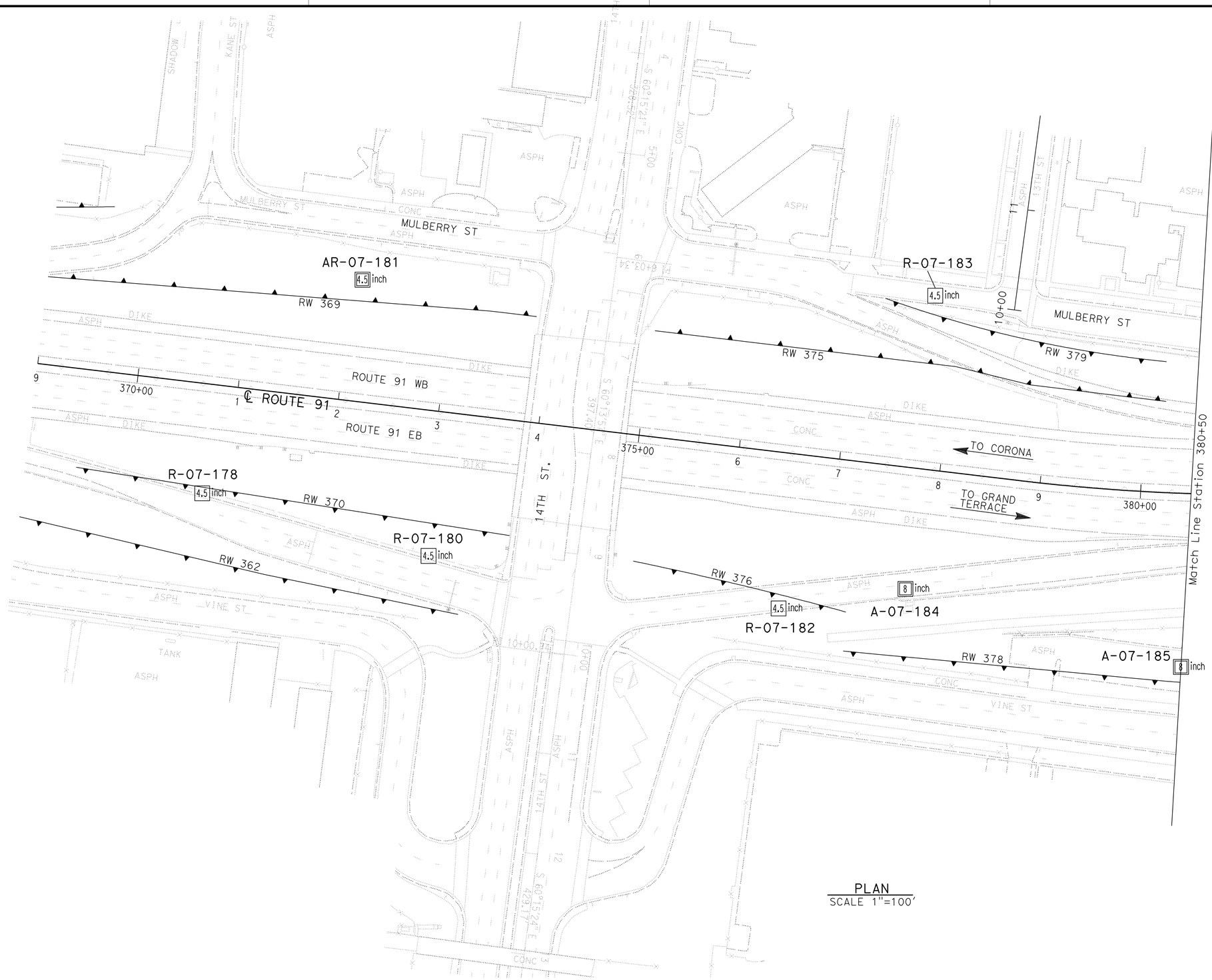

PLAN
SCALE 1"=100'

Borehole Number	Drill Rig	Hammer Type	Avg. Hammer Efficiency, ETR (%)
R-07-178	CS-2000	Automatic	84
R-07-180	CME 85	Automatic	87
AR-07-181	CS-2000	Automatic	84
R-07-182	CS-2000	Automatic	84
R-07-183	CS-2000	Automatic	84
A-07-184	Diedrich D-120	Automatic	75*
A-07-185	Diedrich D-120	Automatic	75*

Sampler Type	Inside Diameter (Inches)	Borehole Numbers
SPT	1.375	R-07-178, R-07-180, R-07-181 R-07-182, R-07-183, A-07-184 A-07-185
Modified California 1	1.94	R-07-180, R-07-183
Modified California 2	2.40	A-07-184, A-07-185

*Estimated Hammer Efficiency Rating.

GINA PURSELL DESIGN OVERSIGHT	SHAWN WEI FUNCTIONAL SUPERVISOR	DRAWN BY	P. QUACH	P.CHAU/D.WADER/C.CARBINO FIELD INVESTIGATION BY:	
X SIGN OFF DATE		CHECKED BY	S. PIRATHIVIRAJ	DATE: Nov 6 2007 to March 7 2008	

PREPARED FOR THE
STATE OF CALIFORNIA
DEPARTMENT OF TRANSPORTATION

A. LEE
PROJECT ENGINEER

BRIDGE NO. X
POST MILE X

RETAINING WALL 381 R35-9

LOG OF TEST BORINGS SHEET 3 OF 4

OSF GEOTECHNICAL LOG OF TEST BORINGS SHEET (ENGLISH) (REV. 2/25/05)

ORIGINAL SCALE IN INCHES FOR REDUCED PLANS 0 1 2 3

CU 59A0590
EA 08-448400

DISREGARD PRINTS BEARING EARLIER REVISION DATES

REVISION DATES (PRELIMINARY STAGE ONLY) X

SHEET 3 OF 4

FILE => 844840qzi009.dgn

DATE PLOTTED => 30-APR-2011 TIME PLOTTED =>
USERNAME => trcarol

DIST	COUNTY	ROUTE	POST MILES TOTAL PROJECT	SHEET No	TOTAL SHEETS
08	Riv	91	15.6/21.6	1043	2028

GEOTECHNICAL PROFESSIONAL — DATE 04/2009

4-25-11
PLANS APPROVAL DATE

REGISTERED PROFESSIONAL ENGINEER — ANDREW C. LEE — No. 2616 — Exp. 6-30-12 — GEOTECHNICAL — STATE OF CALIFORNIA

The State of California or its officers or agents shall not be responsible for the accuracy or completeness of electronic copies of this plan sheet.

California Department of Transportation
5900 Folsom Boulevard
Sacramento, CA 95819

URS Corporation
2020 East First Street, Suite 400
Santa Ana, CA 92705

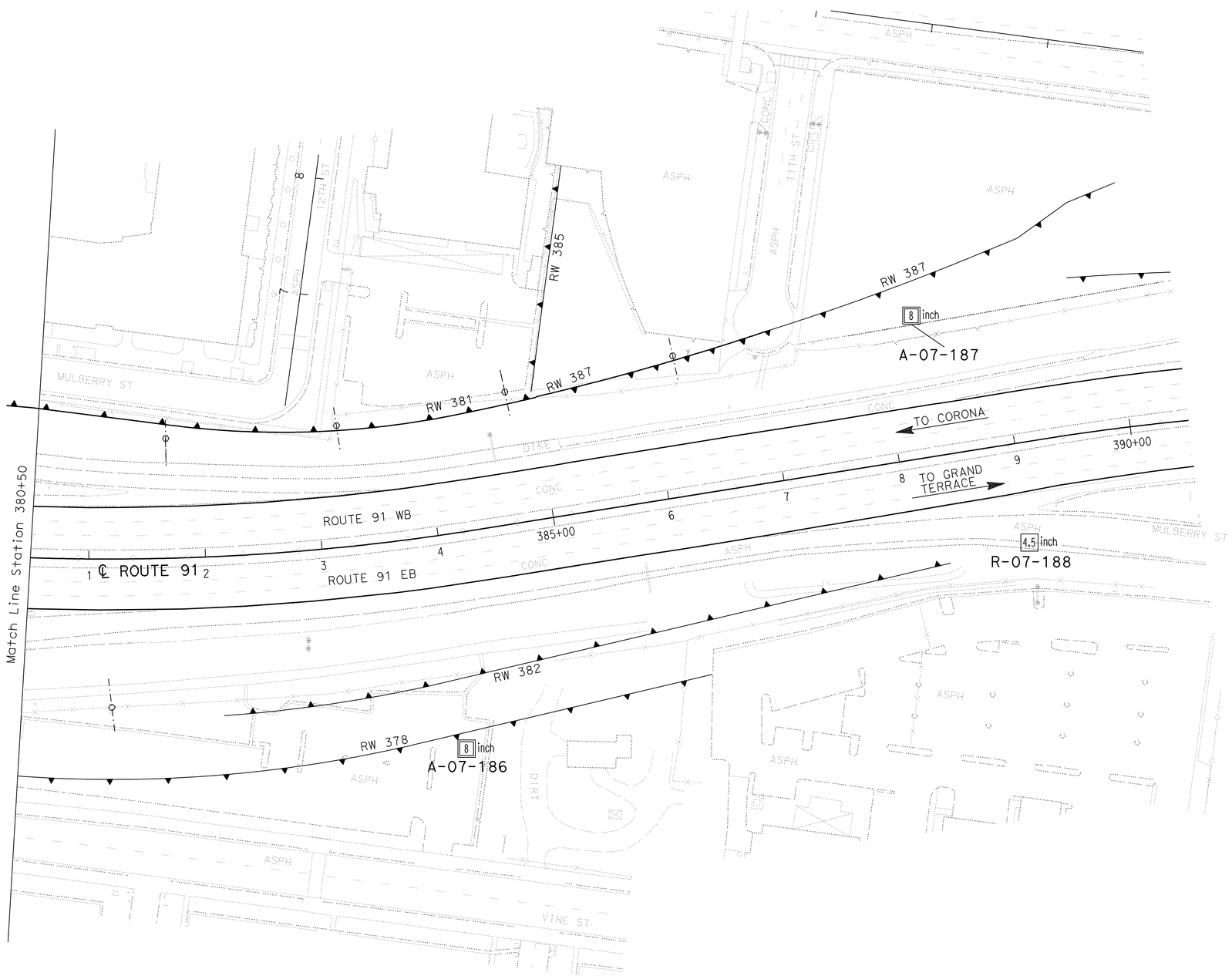

PLAN
SCALE 1"=100'

Borehole Number	Drill Rig	Hammer Type	Avg. Hammer Efficiency, ETR (%)
A-07-186	Diedrich D-120	Automatic	75*
A-07-187	Diedrich D-120	Automatic	75*
R-07-188	CS-2000	Automatic	84

Sampler Type	Inside Diameter (Inches)	Borehole Numbers
SPT	1.375	A-07-186, A-07-187 R-07-188
Modified California 1	1.94	
Modified California 2	2.40	A-07-186, A-07-187

*Estimated Hammer Efficiency Rating.

GINA PURSELL — DESIGN OVERSIGHT	SHAWN WEI — FUNCTIONAL SUPERVISOR	DRAWN BY	P. QUACH	P.CHAU/D.WADER/C.CARBINO — FIELD INVESTIGATION BY:	PREPARED FOR THE STATE OF CALIFORNIA DEPARTMENT OF TRANSPORTATION
X — SIGN OFF DATE		CHECKED BY	S. PIRATHIVIRAJ	DATE: Nov 6 2007 to March 7 2008	

A. LEE — PROJECT ENGINEER

BRIDGE NO. X — POST MILE X

RETAINING WALL 381 — R35-10

LOG OF TEST BORINGS SHEET 4 OF 4

OSF GEOTECHNICAL LOG OF TEST BORINGS SHEET (ENGLISH) (REV. 2/25/05)

ORIGINAL SCALE IN INCHES FOR REDUCED PLANS 0 1 2 3

CU 59A0590
EA 08-448400

DISREGARD PRINTS BEARING EARLIER REVISION DATES

REVISION DATES (PRELIMINARY STAGE ONLY) X

SHEET 4 OF 4

FILE => 844840qzi010.dgn

USERNAME => trcarol — DATE PLOTTED => 30-APR-2011 — TIME PLOTTED =>

Dist	COUNTY	ROUTE	POST MILES TOTAL PROJECT	SHEET No.	TOTAL SHEETS
08	Riv	91	15.6/21.6	1044	2028

REGISTERED CIVIL ENGINEER 12-1-10 DATE

4-25-11
PLANS APPROVAL DATE

REGISTERED PROFESSIONAL ENGINEER CUONG LE TRAN No. C60436 Exp. 6-30-12 CIVIL STATE OF CALIFORNIA

THE STATE OF CALIFORNIA OR ITS OFFICERS OR AGENTS SHALL NOT BE RESPONSIBLE FOR THE ACCURACY OR COMPLETENESS OF SCANNED COPIES OF THIS PLAN SHEET.

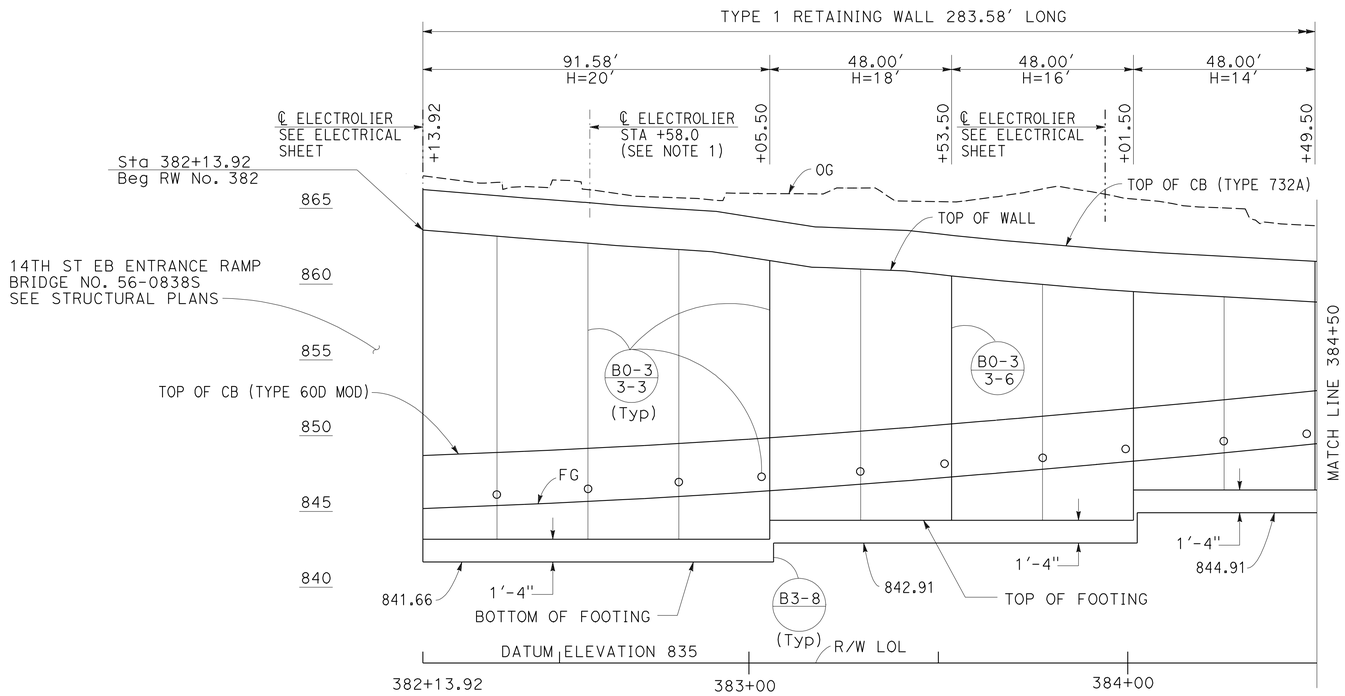

ELEVATION

SCALE Horiz 1"=20'
Vert 1"=5'

NOTE:

1. FOR ELECTROLIER DETAILS, SEE ELECTRICAL DETAIL SHEETS.
2. ARCHITECTURAL TREATMENT SHOULD EXTEND 6 IN BELOW FG
3. FOR STRUCTURAL SECTIONS, SEE ROADWAY PLANS
4. WATERSTOP IN EXPANSION JOINT SHALL BE EXTEND 6 IN INTO THE BARRIER

QUANTITIES

STRUCTURAL CONCRETE (RETAINING WALL)	514.50	CY
BAR REINFORCING STEEL (RETAINING WALL)	62317	LB
STRUCTURAL EXCAVATION (RETAINING WALL)	3619.72	CY
STRUCTURAL BACKFILL (RETAINING WALL)	1609.45	CY
PERVIOUS BACKFILL MATERIAL (RETAINING WALL)	112.82	CY
CONCRETE BARRIER (TYPE 732A)	432.00	LF
PLASTIC PIPE (N)	28.21	LF
WATERSTOP (N)	56.37	LF
ARCHITECTURAL SURFACES (TEXTURED CONCRETE)	4700.80	SF
CONCRETE BARRIER (TYPE 60D MOD)	432.00	LF

(N) = NOT A SEPARATE PAY ITEM, FOR INFORMATION ONLY

CURVE DATA

No.	R	Δ	T	L
1	1238.09'	8°13'50"	89.08'	177.85'

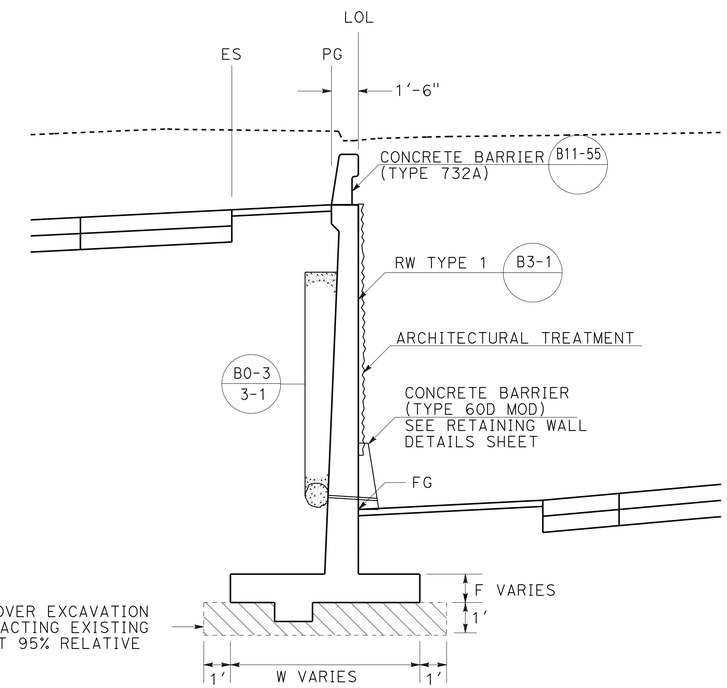

TYPICAL SECTION

FROM STA 382+09.50 TO STA 384+97.50
NO SCALE

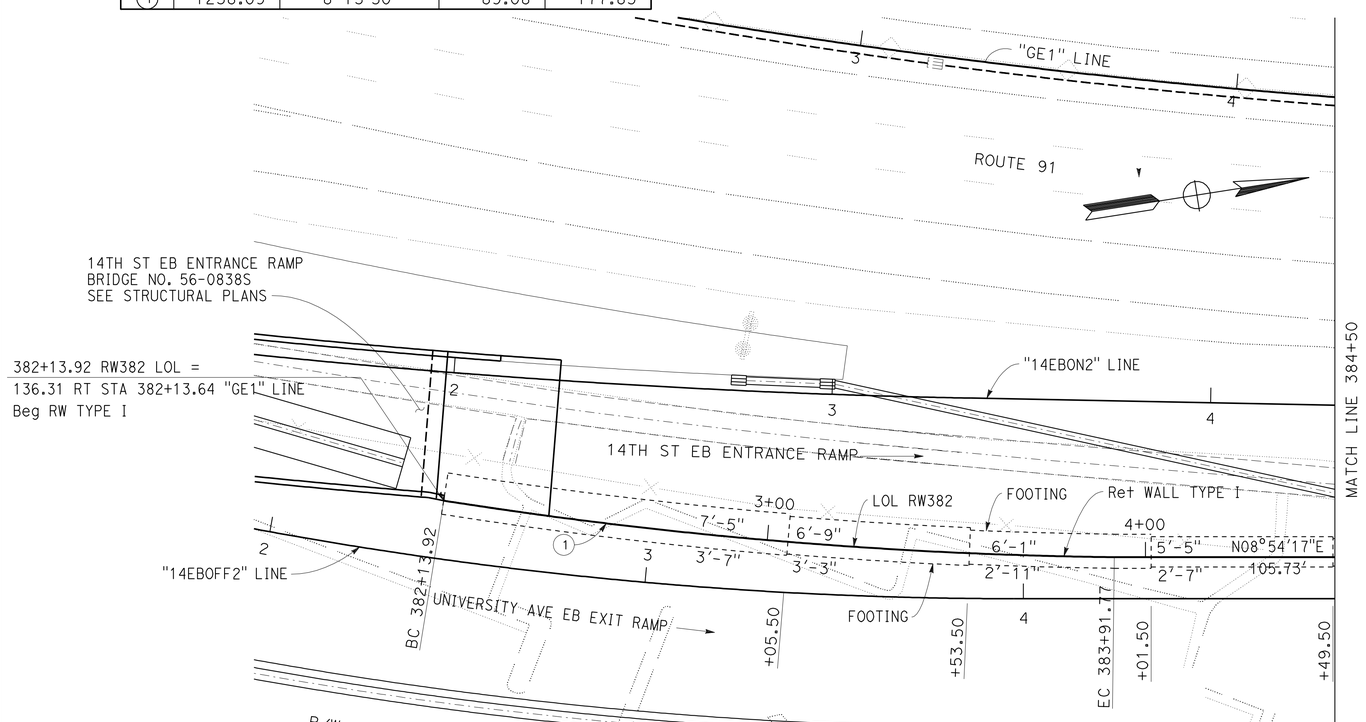

PLAN

SCALE 1"=20'

THIS PLAN ACCURATE FOR RETAINING WALL WORK ONLY.

RETAINING WALL PLAN
RETAINING WALL No. 382

SCALE AS SHOWN

R36-1

STATE OF CALIFORNIA - DEPARTMENT OF TRANSPORTATION
Caltrans® DESIGN

FUNCTIONAL SUPERVISOR: MARK PERTILE
CALCULATED-DESIGNED BY: ANNABELL WANG
CHECKED BY: CUONG LE TRAN
REVISED BY / DATE REVISED

LAST REVISION 12-01-10
DATE PLOTTED => 30-APR-2011
TIME PLOTTED => 08:12

Dist	COUNTY	ROUTE	POST MILES TOTAL PROJECT	SHEET No.	TOTAL SHEETS
08	Riv	91	15.6/21.6	1045	2028

REGISTERED CIVIL ENGINEER 12-1-10 DATE

4-25-11
PLANS APPROVAL DATE

REGISTERED PROFESSIONAL ENGINEER CUONG LE TRAN No. C60436 Exp. 6-30-12 CIVIL STATE OF CALIFORNIA

THE STATE OF CALIFORNIA OR ITS OFFICERS OR AGENTS SHALL NOT BE RESPONSIBLE FOR THE ACCURACY OR COMPLETENESS OF SCANNED COPIES OF THIS PLAN SHEET.

NOTES:

1. CONCRETE FOR CONCRETE BARRIER TYPE 60D MOD AND TYPE 732A CAN BE POURED MONOLITHIC
2. EXACT LOCATION WILL BE DETERMINED BY THE ENGINEER IN THE FIELD.

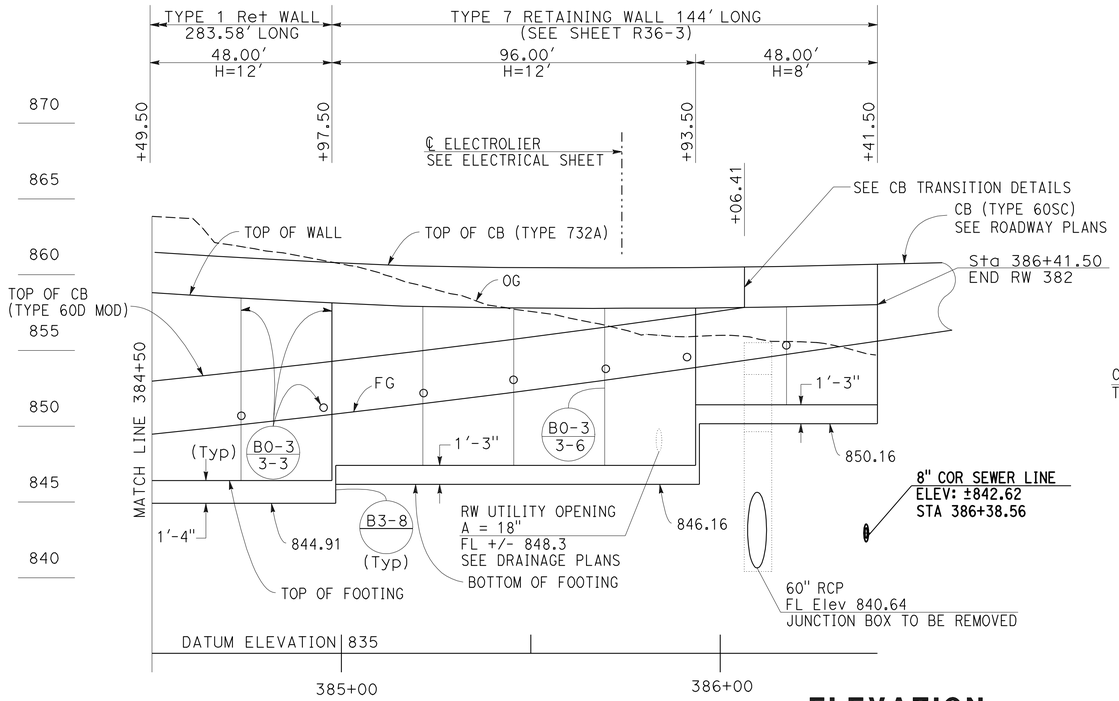

ELEVATION

SCALE Horiz 1"=20'
Vert 1"=5'

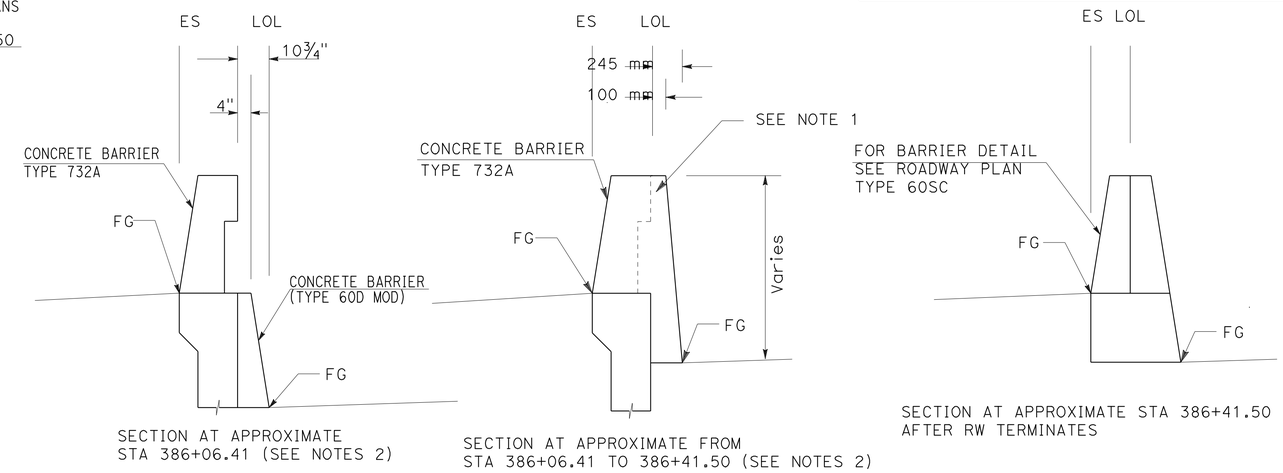

CONCRETE BARRIER TRANSITION 60 MOD AND TYPE 732A DETAILS

NO SCALE

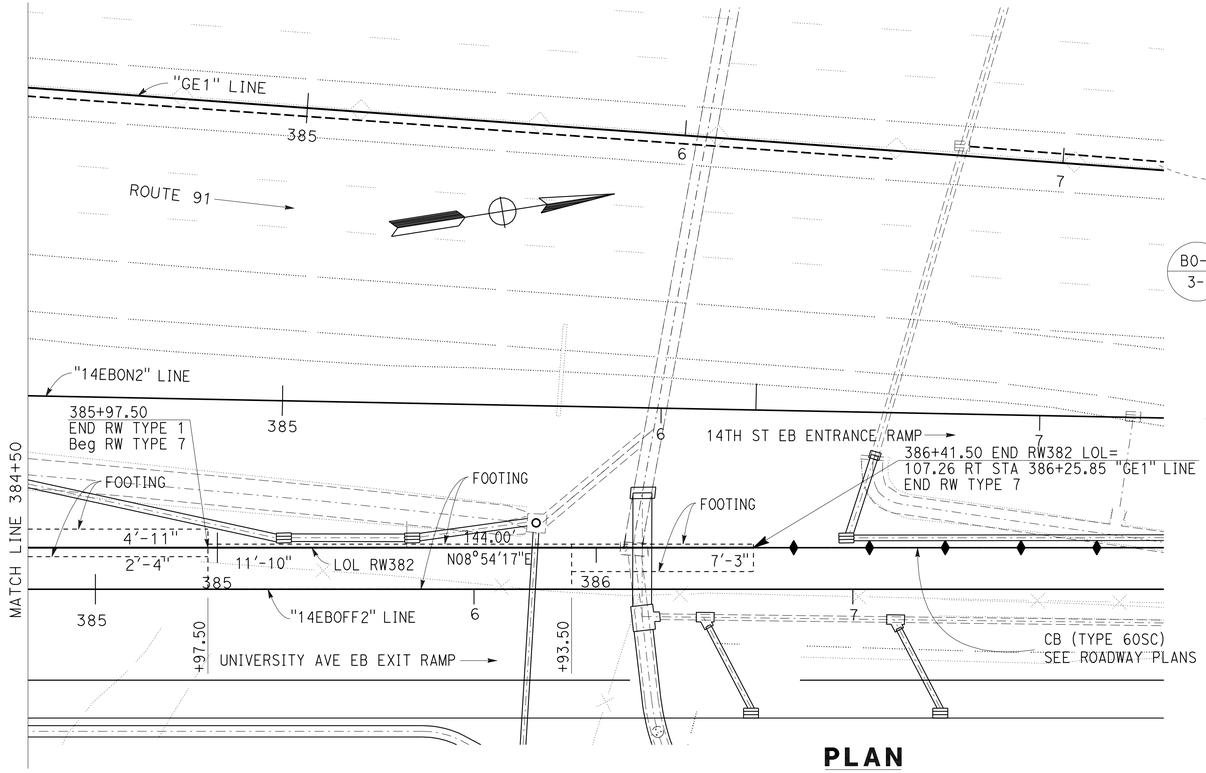

PLAN

SCALE 1"=20'

THIS PLAN ACCURATE FOR RETAINING WALL WORK ONLY.

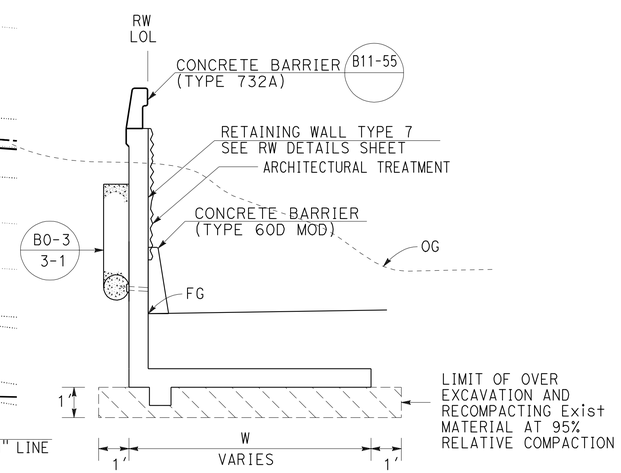

TYPICAL SECTION

NO SCALE
FROM STA 384+97.50 TO STA 386+41.50

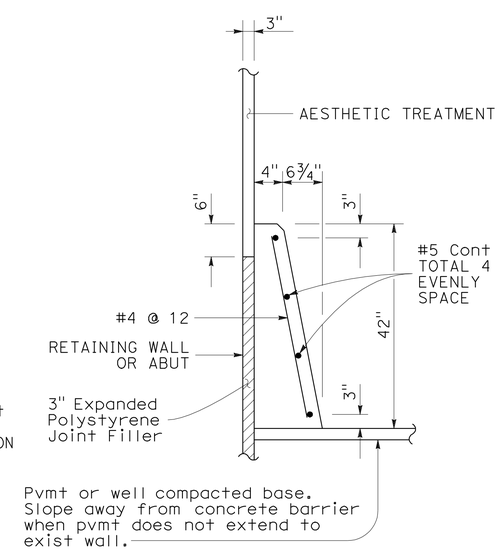

CONCRETE BARRIER
(TYPE 60D MOD)

RETAINING WALL PLAN
RETAINING WALL No. 382

SCALE AS SHOWN

R36-2

STATE OF CALIFORNIA - DEPARTMENT OF TRANSPORTATION
Caltrans® DESIGN

FUNCTIONAL SUPERVISOR: MARK PERTILE
CALCULATED-DESIGNED BY: ANNABELL WANG
CHECKED BY: CUONG LE TRAN
REVISED BY
DATE REVISED

LAST REVISION 12-01-10 | DATE PLOTTED => 30-APR-2011 | TIME PLOTTED => 08:12

Dist	COUNTY	ROUTE	POST MILES TOTAL PROJECT	SHEET No.	TOTAL SHEETS
08	Riv	91	15.6/21.6	1046	2028

REGISTERED CIVIL ENGINEER 12-1-10 DATE

4-25-11
PLANS APPROVAL DATE

REGISTERED PROFESSIONAL ENGINEER CUONG LE TRAN No. C60436 Exp. 6-30-12 CIVIL STATE OF CALIFORNIA

THE STATE OF CALIFORNIA OR ITS OFFICERS OR AGENTS SHALL NOT BE RESPONSIBLE FOR THE ACCURACY OR COMPLETENESS OF SCANNED COPIES OF THIS PLAN SHEET.

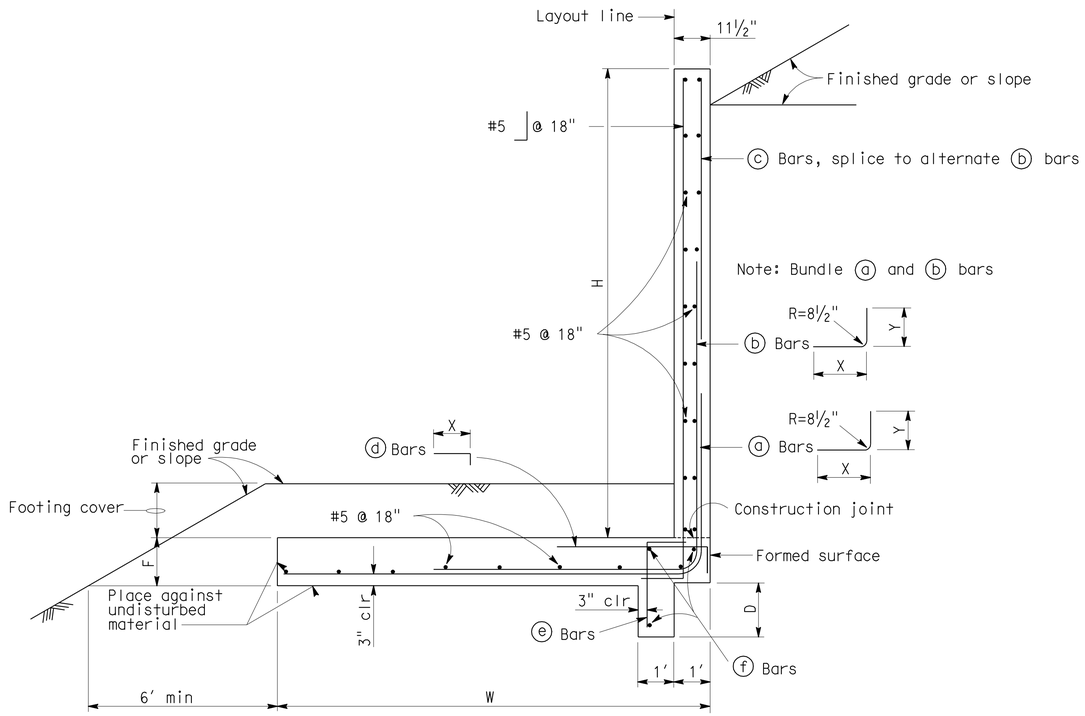

TYPICAL SECTION

Note: For details not shown, see B3-8

TABLE OF DIMENSIONS AND REINFORCING STEEL

DESIGN H	4'	6'	8'	10'	12'
W	4'-0"	5'-10"	7'-3"	9'-7"	11'-10"
F	1'-0"	1'-0"	1'-3"	1'-3"	1'-3"
D	0'-9"	0'-9"	0'9"	1'-6"	1'-6"
FOOTING COVER	1' min	1' min	1'-6" min	1'-6" min	1'-6" min
ⓐ Bars X Y	#5 @ 18" Cont Cont	#5 @ 12" Cont Cont	#6 @ 12" Cont Cont	#6 @ 12" Cont 5'-11"	#6 @ 9" Cont 5'-11"
ⓑ Bars X Y	——— ——— ———	——— ——— ———	——— ——— ———	#6 @ 12" 5'-3" Cont	#6 @ 9" 7'-3" 8'-2"
ⓒ Bars	———	———	———	———	#5 @ 18"
ⓓ Bars X	——— ———	——— ———	——— ———	#5 @ 12" 5'-11"	#5 @ 12" 5'-11"
ⓔ Bars	———	———	———	#5 @ 12"	#5 @ 12"
ⓕ Bars	———	———	———	3-#5	3-#5

Cont = Continuous

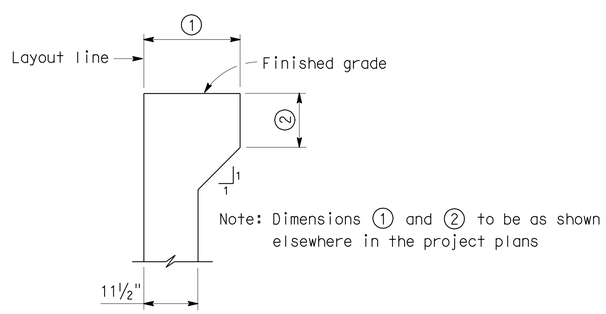

HAUNCH FOR CONCRETE BARRIER

GENERAL NOTES

Design: Service load design
Loading case:
1. Level slope with 240 psf surcharge
2. 2:1 unlimited slope

Concrete: n=9, f'_c =3250 psi, f_c= 1300 psi
Reinforcing steel: fy=60,000 psi f_s=24,000 psi
Soil:
Backfill: Ø=34°, γ =120 pcf
Foundation: Ø=34°, c=200 psf, γ =120 pcf
Minimum allowable bearing pressure=2.0 ksf

Lateral earth pressure: Coulomb's theory with δ=0°
Seismic:
1. Level slope, k_h=0.3g
2. 2:1 unlimited slope, k_h=0.1g

RETAINING WALL TYPE 7

THIS PLAN ACCURATE FOR RETAINING WALL WORK ONLY.

RETAINING WALL PLAN
RETAINING WALL No. 382
SCALE AS SHOWN **R36-3**

STATE OF CALIFORNIA - DEPARTMENT OF TRANSPORTATION
Caltrans® DESIGN

FUNCTIONAL SUPERVISOR: MARK PERTILE
CALCULATED-DESIGNED BY: ANNABELL WANG
CHECKED BY: CUONG LE TRAN
REVISED BY / DATE REVISED

LAST REVISION 12-01-10 | DATE PLOTTED => 30-APR-2011 | TIME PLOTTED => 08:13

Dist	COUNTY	ROUTE	POST MILES TOTAL PROJECT	SHEET No.	TOTAL SHEETS
08	Riv	91	15.6/21.6	1047	2028

LICENSED LANDSCAPE ARCHITECT

4-25-11
PLANS APPROVAL DATE

LICENSED LANDSCAPE ARCHITECT
Matthew Harry Hall
Signature
10/31/2011
Renewal Date
12-1-10
Date
STATE OF CALIFORNIA

THE STATE OF CALIFORNIA OR ITS OFFICERS OR AGENTS SHALL NOT BE RESPONSIBLE FOR THE ACCURACY OR COMPLETENESS OF SCANNED COPIES OF THIS PLAN SHEET.

END 14TH ST WEST OFF ABUTMENT 6 | BEGIN WALL 382 BEGIN ARCHITECTURAL SURFACE (TEXTURED CONCRETE)

NOTE:

SEE SHEET ASD-2, ASD-3 AND ASD-5.

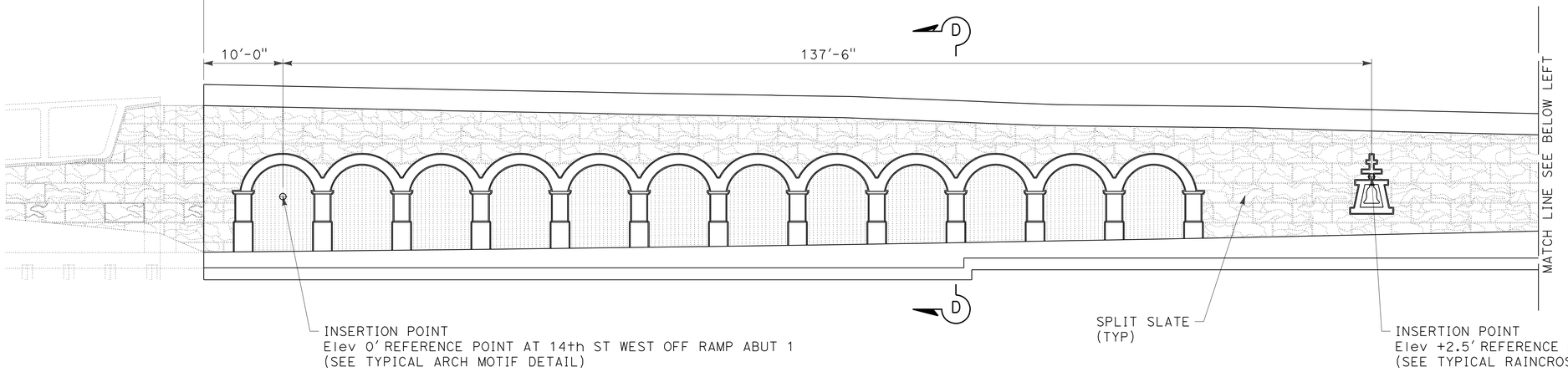

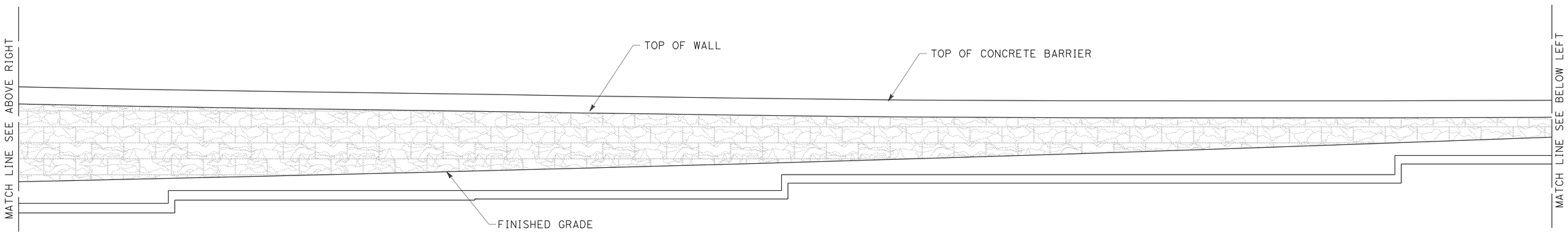

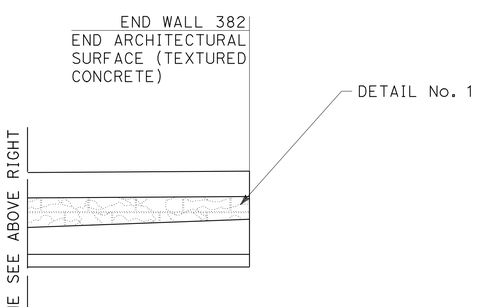

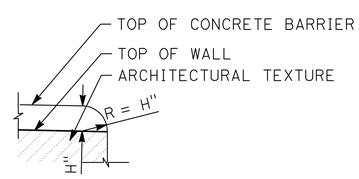

DETAIL No. 1

TYPICAL END OF WALL WITH CONCRETE BARRIER ON TOP OF WALL DETAIL

ELEVATION FOR FRACTURED RIB SPLIT SLATE TEXTURE RETAINING WALL No. 382

THIS PLAN IS ACCURATE FOR ARCHITECTUAL TREATMENT WORK ONLY.

ARCHITECTURAL SURFACE
RETAINING WALL No. 382

SCALE: 1/8"=1'-0"

R36-4

STATE OF CALIFORNIA - DEPARTMENT OF TRANSPORTATION
Caltrans LANDSCAPE ARCHITECTURE

SENIOR LANDSCAPE ARCHITECT: BYRON STROUT
CALCULATED-DESIGNED BY: MATTHEW HALL
CHECKED BY: MIRIAM BISHOP
REVISED BY
DATE REVISED

LAST REVISION 12-01-10 | DATE PLOTTED => 30-APR-2011 | TIME PLOTTED => 08:13

DIST	COUNTY	ROUTE	POST MILES TOTAL PROJECT	SHEET No	TOTAL SHEETS
08	Riv	91	15.6/21.6	1048	2028

GEOTECHNICAL PROFESSIONAL 10/2008 DATE

4-25-11
PLANS APPROVAL DATE

REGISTERED PROFESSIONAL ENGINEER
ANDREW C. LEE
No. 2616
Exp. 6-30-12
GEOTECHNICAL
STATE OF CALIFORNIA

The State of California or its officers or agents shall not be responsible for the accuracy or completeness of electronic copies of this plan sheet.

California Department of Transportation
5900 Folsom Boulevard
Sacramento, CA 95819

URS Corporation
2020 East First Street, Suite 400
Santa Ana, CA 92705

FOR PLAN VIEW, SEE SHEET R36-6

NOTE: 1. This LOTB sheet was prepared in accordance with the Caltrans Soil & Rock Logging, Classification, and Presentation Manual (June 2007).

2. For legend, see "Soil Legend Log of Test Borings" sheet

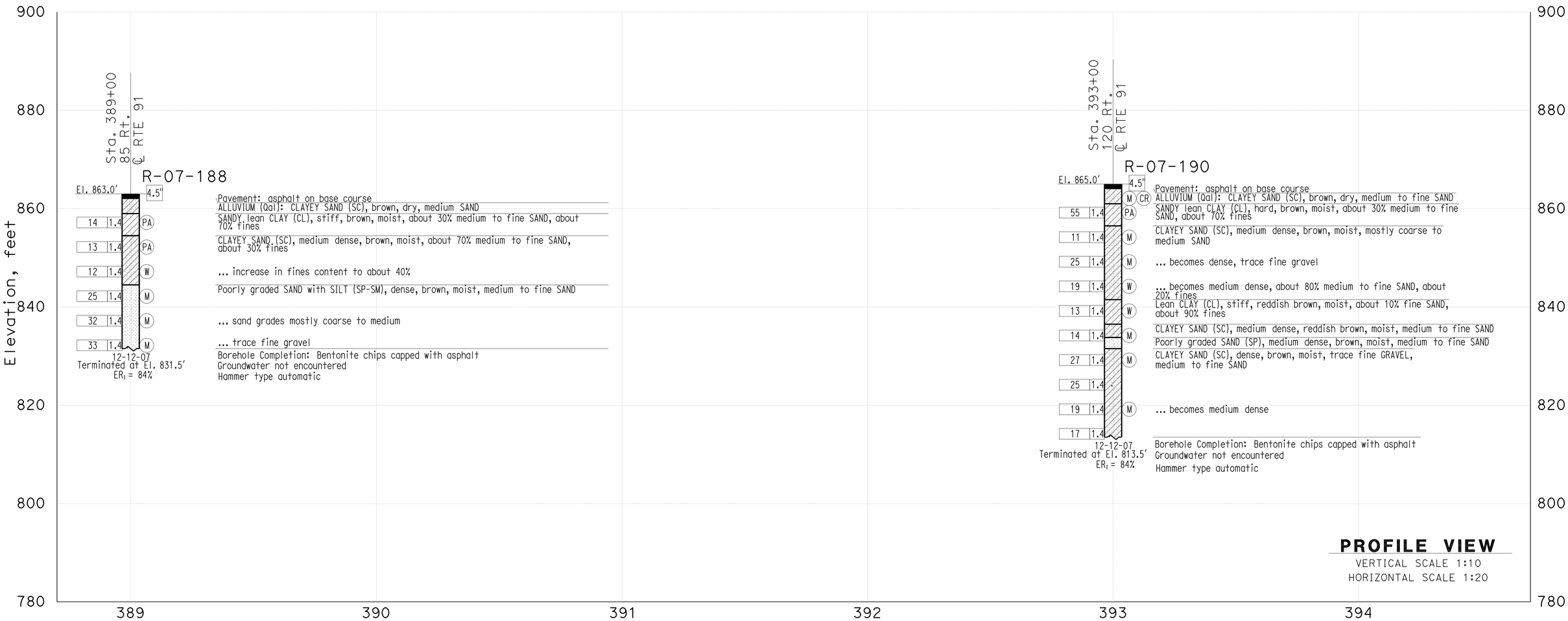

THIS PLAN ACCURATE FOR SOUND WALL AND RETAINING WALL WORK ONLY

DESIGN OVERSIGHT X SIGN OFF DATE	GINA PURSELL FUNCTIONAL SUPERVISOR	DRAWN BY CHECKED BY	P. QUACH S. PIRATHIVIRAJ	P.CHAU/D.WADER/C.CARBINO FIELD INVESTIGATION BY: DATE: Nov 6 2007 to March 7 2008	PREPARED FOR THE STATE OF CALIFORNIA DEPARTMENT OF TRANSPORTATION	A. LEE PROJECT ENGINEER	BRIDGE NO. X POST MILE X	Retaining Wall 382 R36-5 **LOG OF TEST BORINGS**

OSF GEOTECHNICAL LOG OF TEST BORINGS SHEET (ENGLISH) (REV. 2/25/05)

ORIGINAL SCALE IN INCHES FOR REDUCED PLANS 0 1 2 3

CU 59A0590
EA 08-448400

DISREGARD PRINTS BEARING EARLIER REVISION DATES

REVISION DATES (PRELIMINARY STAGE ONLY) X

SHEET 1 OF 2

FILE => 844840qzj005.dgn

USERNAME => trcarol DATE PLOTTED => 30-APR-2011 TIME PLOTTED =>

DIST	COUNTY	ROUTE	POST MILES TOTAL PROJECT	SHEET No	TOTAL SHEETS
08	Riv	91	15.6/21.6	1049	2028

GEOTECHNICAL PROFESSIONAL — DATE 10/2008

PLANS APPROVAL DATE 4-25-11

REGISTERED PROFESSIONAL ENGINEER — ANDREW C. LEE — No. 2616 — Exp. 6-30-12 — GEOTECHNICAL — STATE OF CALIFORNIA

The State of California or its officers or agents shall not be responsible for the accuracy or completeness of electronic copies of this plan sheet.

California Department of Transportation
5900 Folsom Boulevard
Sacramento, CA 95819

URS Corporation
2020 East First Street, Suite 400
Santa Ana, CA 92705

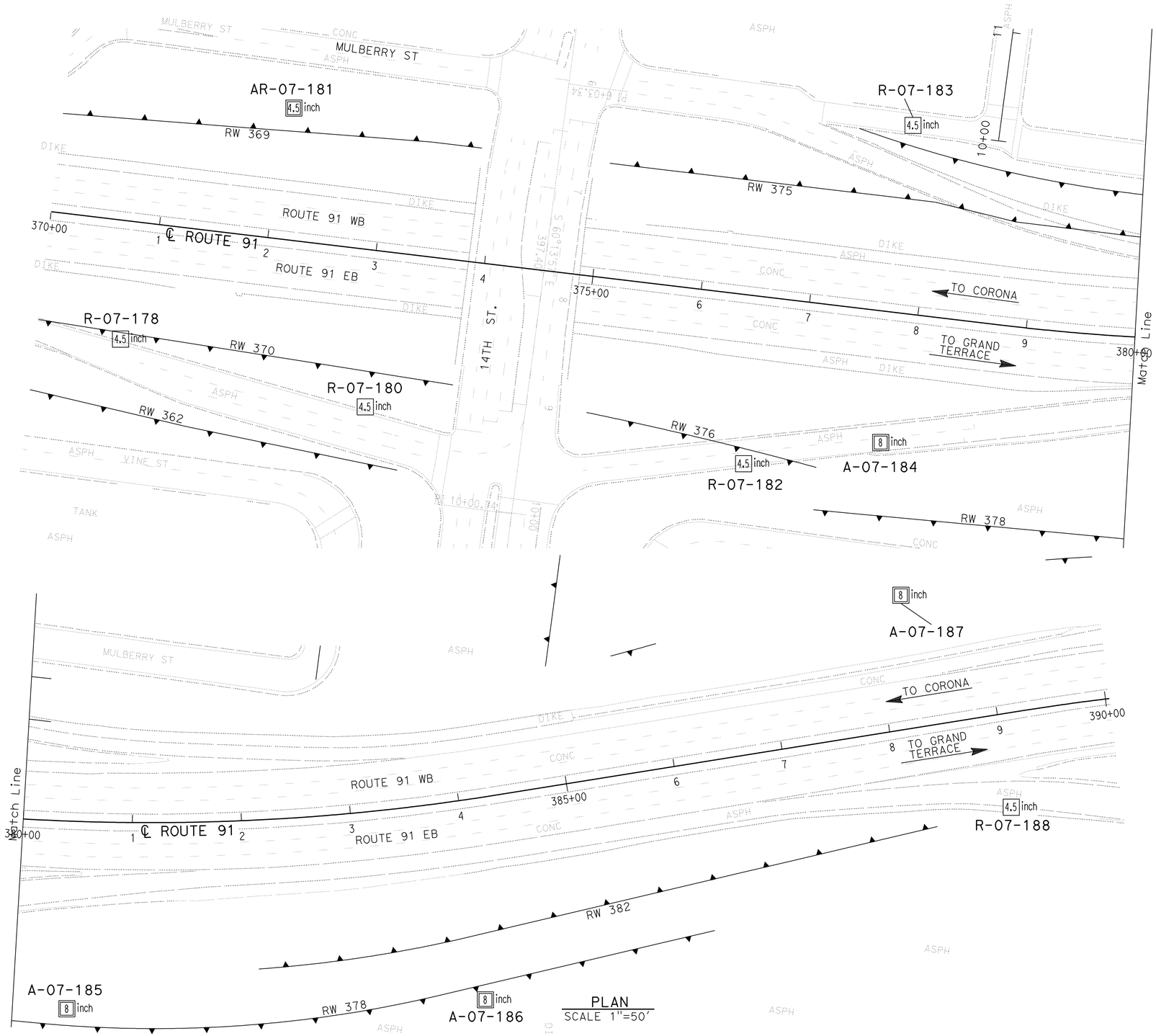

Borehole Number	Drill Rig	Hammer Type	Avg. Hammer Efficiency, ETR (%)
R-07-178	CS-2000	Automatic	84
R-07-180	CME 85	Automatic	87
AR-07-181	CS-2000	Automatic	84
R-07-182	CS-2000	Automatic	84
R-07-183	CS-2000	Automatic	84
A-07-184	Diedrich D-120	Automatic	75*
A-07-185	Diedrich D-120	Automatic	75*
A-07-186	Diedrich D-120	Automatic	75*
A-07-187	Diedrich D-120	Automatic	75*
R-07-188	CS-2000	Automatic	84

Sampler Type	Inside Diameter (Inches)	Borehole Numbers
SPT	1.375	R-07-178, R-07-180, R-07-181 R-07-182, R-07-183, A-07-184 A-07-185, A-07-186, A-07-187 R-07-188
Modified California 1	1.94	R-07-180, R-07-183
Modified California 2	2.40	A-07-184, A-07-185, A-07-186 A-07-187

*Estimated Hammer Efficiency Rating.

DESIGN OVERSIGHT — GINA PURSELL, FUNCTIONAL SUPERVISOR — X — SIGN OFF DATE

DRAWN BY: P. QUACH — CHECKED BY: S. PIRATHIVIRAJ

P.CHAU/D.WADER/C.CARBINO — FIELD INVESTIGATION BY: — DATE: Nov 6 2007 to March 7 2008

PREPARED FOR THE STATE OF CALIFORNIA DEPARTMENT OF TRANSPORTATION

A. LEE — PROJECT ENGINEER

BRIDGE NO. X — POST MILE X

RETAINING WALL 382 R36-6

LOG OF TEST BORINGS 2 OF 2

OSF GEOTECHNICAL LOG OF TEST BORINGS SHEET (ENGLISH) (REV. 2/25/05)

ORIGINAL SCALE IN INCHES FOR REDUCED PLANS 0 1 2 3

CU 59A0590
EA 08-448400

DISREGARD PRINTS BEARING EARLIER REVISION DATES

REVISION DATES (PRELIMINARY STAGE ONLY) X

SHEET 2 OF 2

FILE => 844840qzj006.dgn

USERNAME => trcarb01 DATE PLOTTED => 30-APR-2011 TIME PLOTTED =>

Dist	COUNTY	ROUTE	POST MILES TOTAL PROJECT	SHEET No.	TOTAL SHEETS
08	Riv	91	15.6/21.6	1050	2028

REGISTERED CIVIL ENGINEER 12-1-10 DATE

4-25-11
PLANS APPROVAL DATE

REGISTERED PROFESSIONAL ENGINEER CUONG LE TRAN No. C60436 Exp. 6-30-12 CIVIL STATE OF CALIFORNIA

THE STATE OF CALIFORNIA OR ITS OFFICERS OR AGENTS SHALL NOT BE RESPONSIBLE FOR THE ACCURACY OR COMPLETENESS OF SCANNED COPIES OF THIS PLAN SHEET.

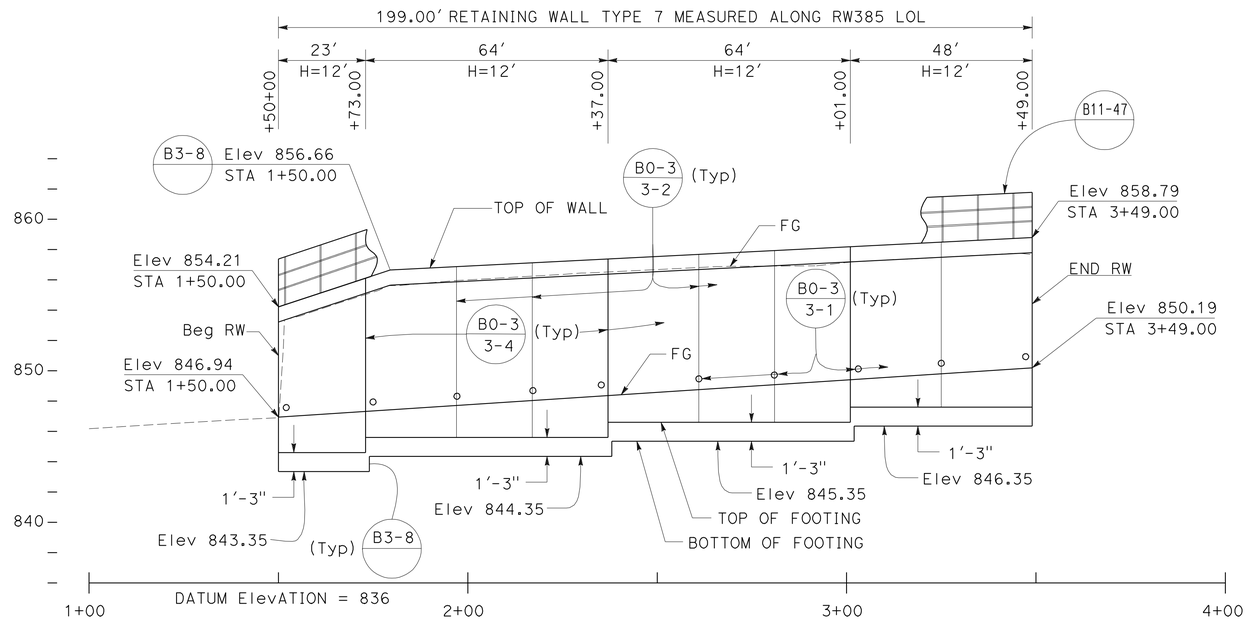

ElevATION

SCALE Horiz 1"=20'
Vert 1"=5'

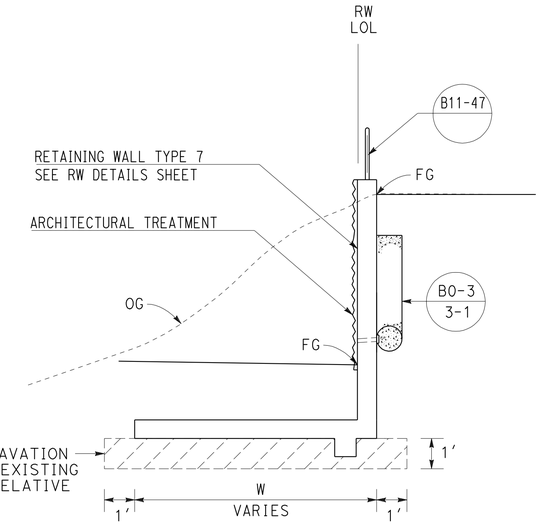

TYPICAL SECTION

NO SCALE
FROM STA 1+50.00 TO STA 3+49.00

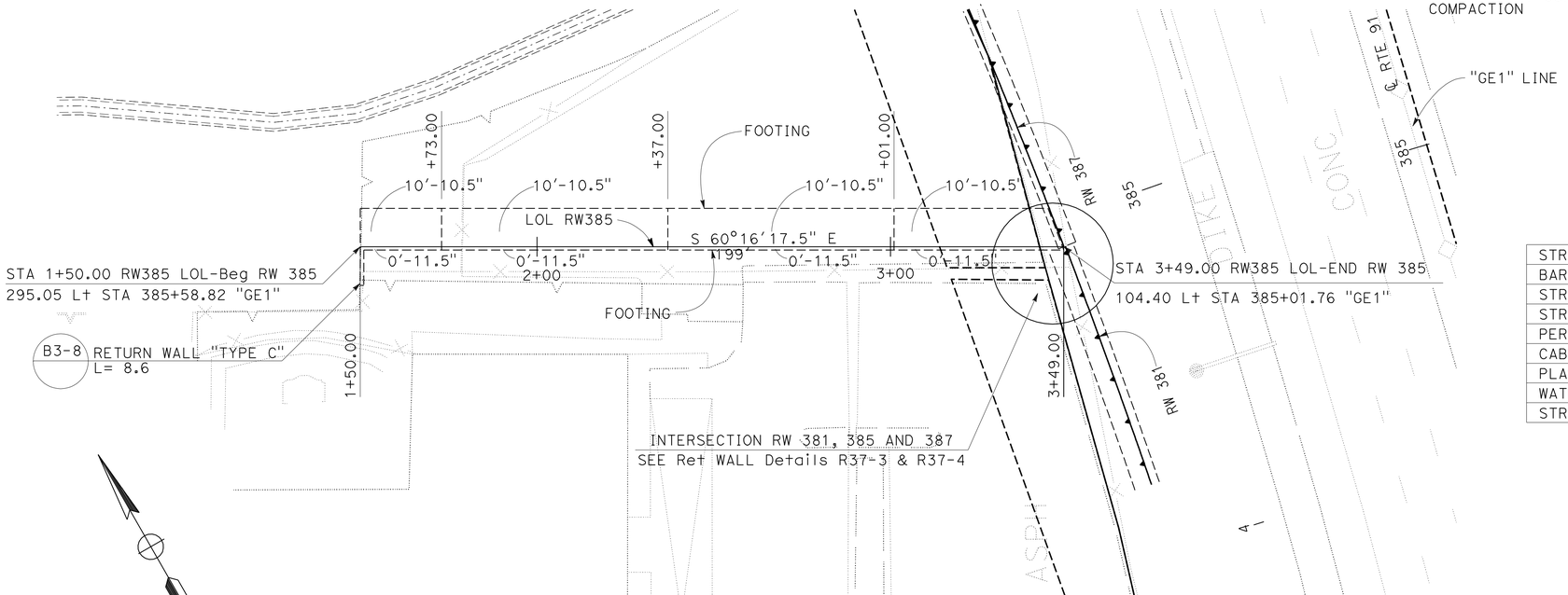

PLAN

SCALE: 1"=20'

THIS PLAN ACCURATE FOR RETAINING WALL WORK ONLY.

QUANTITIES

STRUCTURAL CONCRETE (RETAINING WALL)	1063.10	CY
BAR REINFORCING STEEL (RETAINING WALL)	19756	LB
STRUCTURAL EXCAVATION (RETAINING WALL)	363.70	CY
STRUCTURAL BACKFILL (RETAINING WALL)	410.70	CY
PERVIOUS BACKFILL MATERIAL (RETAINING WALL)	33.70	CY
CABLE RAILING	199.00	LF
PLASTIC PIPE (N)	13.87	LF
WATERSTOP (N)	34.87	LF
STRUCTURAL CONCRETE (WALL TEXTURE)	1854.58	SF

(N) = NOT A SEPARATE PAY ITEM, FOR INFORMATION ONLY

NOTES:

1. ARCHITECTURAL TREATMENT SHOULD EXTEND 6 IN BELOW FG OR 6 IN BELOW TOP CB (TYPE 60D MOD)
2. FOR STRUCTURAL SECTIONS, SEE ROADWAY PLANS
3. FOR POST ANCHORAGE DETAILS, SEE B11-52
4. FOR ROUNDING DETAILS, SEE ARCHITECTURAL TREATMENT PLANS

RETAINING WALL PLAN
RETAINING WALL No. 385

SCALE AS SHOWN

R37-1

STATE OF CALIFORNIA - DEPARTMENT OF TRANSPORTATION
Caltrans® DESIGN

FUNCTIONAL SUPERVISOR: MARK PERTILE
CALCULATED-DESIGNED BY: ANNABELL WANG
CHECKED BY: CUONG LE TRAN
REVISED BY / DATE REVISED

LAST REVISION 12-01-10
DATE PLOTTED => 30-APR-2011
TIME PLOTTED => 08:13

DIST.	COUNTY	ROUTE	POST MILES TOTAL PROJECT	SHEET NO.	TOTAL SHEETS
08	Riv	91	15.6/21.6	1051	2028

REGISTERED ENGINEER - CIVIL 12-1-10

4-25-11
PLANS APPROVAL DATE

REGISTERED PROFESSIONAL ENGINEER CUONG LE TRAN No. C60436 Exp. 06/30/12 CIVIL STATE OF CALIFORNIA

The State of California or its officers or agents shall not be responsible for the accuracy or completeness of electronic copies of this plan sheet.

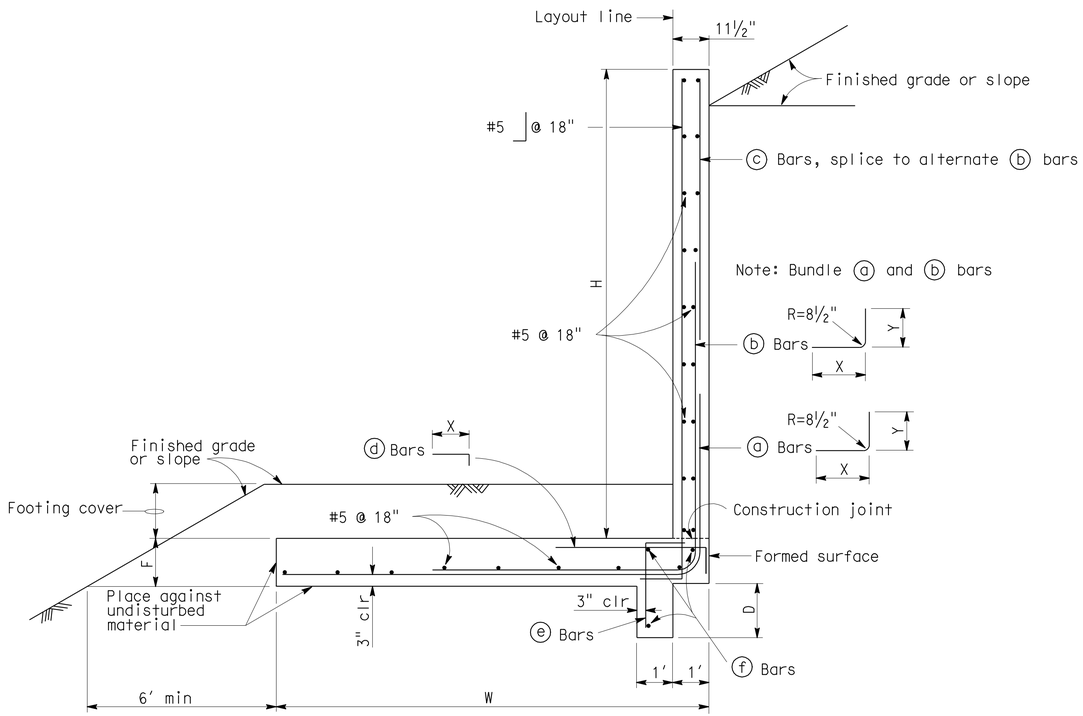

TYPICAL SECTION

Note: For details not shown, see B3-8

TABLE OF DIMENSIONS AND REINFORCING STEEL

DESIGN H	4'	6'	8'	10'	12'
W	4'-0"	5'-10"	7'-3"	9'-7"	11'-10"
F	1'-0"	1'-0"	1'-3"	1'-3"	1'-3"
D	0'-9"	0'-9"	0'9"	1'-6"	1'-6"
FOOTING COVER	1' min	1' min	1'-6" min	1'-6" min	1'-6" min
ⓐ Bars	#5 @ 18"	#5 @ 12"	#6 @ 12"	#6 @ 12"	#6 @ 9"
X	Cont	Cont	Cont	Cont	Cont
Y	Cont	Cont	Cont	5'-11"	5'-11"
ⓑ Bars	———	———	———	#6 @ 12"	#6 @ 9"
X	———	———	———	5'-3"	7'-3"
Y	———	———	———	Cont	8'-2"
ⓒ Bars	———	———	———	———	#5 @ 18"
ⓓ Bars	———	———	———	#5 @ 12"	#5 @ 12"
X	———	———	———	5'-11"	5'-11"
ⓔ Bars	———	———	———	#5 @ 12"	#5 @ 12"
ⓕ Bars	———	———	———	3-#5	3-#5

Cont = Continuous

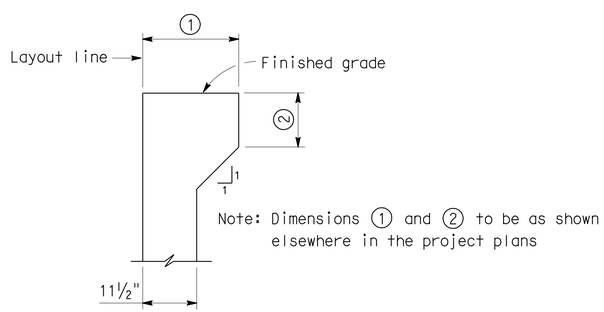

HAUNCH FOR CONCRETE BARRIER

GENERAL NOTES

Design: Service load design
Loading case:
1. Level slope with 240 psf surcharge
2. 2:1 unlimited slope

Concrete: n=9, f'_c=3250 psi, f_c= 1300 psi
Reinforcing steel: fy=60,000 psi f_s=24,000 psi
Soil:
Backfill: Ø=34°, γ=120 pcf
Foundation: Ø=34°, c=200 psf, γ=120 pcf
Minimum allowable bearing pressure=2.0 ksf

Lateral earth pressure: Coulomb's theory with δ=0°
Seismic:
1. Level slope, k_h=0.3g
2. 2:1 unlimited slope, k_h=0.1g

NO SCALE

R37-2

STANDARD DRAWING					
RELEASE DATE 9/22/93	DESIGN	BY J.C. MOESE	CHECKED O. HOR	RELEASED BY	
FILE NO. xs14-010	DETAILS	BY R. YEE	CHECKED O. HOR		
	SUBMITTED	BY J.C. MOESE	DRAWING DATE 10/92	OFFICE CHIEF	

DS OSD 2147A (METRIC) (REV. 2/25/97)

STATE OF CALIFORNIA DEPARTMENT OF TRANSPORTATION

DIVISION OF ENGINEERING SERVICES

CU
EA

BRIDGE NO.

POST MILES

RETAINING WALL TYPE 7, H = 4'-12'

DISREGARD PRINTS BEARING EARLIER REVISION DATES

REVISION DATES (PRELIMINARY STAGE ONLY) SHEET OF

USERNAME => trmnguye

844840qzk002.dgn

DATE PLOTTED => 30-APR-2011 TIME PLOTTED => 08:47

Dist	COUNTY	ROUTE	POST MILES TOTAL PROJECT	SHEET No.	TOTAL SHEETS
08	Riv	91	15.6/21.6	1052	2028

REGISTERED CIVIL ENGINEER 12-1-10 DATE

4-25-11
PLANS APPROVAL DATE

REGISTERED PROFESSIONAL ENGINEER MINH THUONG VO No. C59297 Exp. 06/30/11 CIVIL STATE OF CALIFORNIA

THE STATE OF CALIFORNIA OR ITS OFFICERS OR AGENTS SHALL NOT BE RESPONSIBLE FOR THE ACCURACY OR COMPLETENESS OF SCANNED COPIES OF THIS PLAN SHEET.

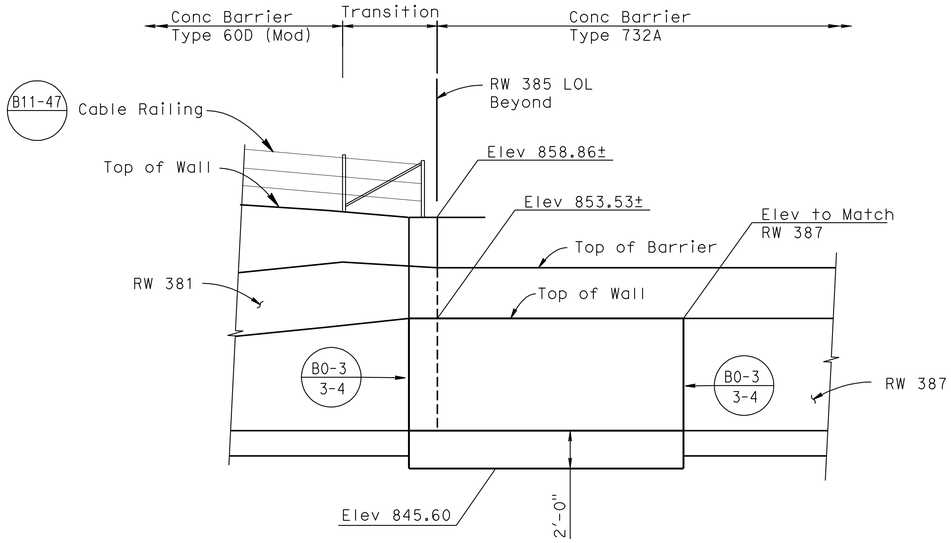

Datum Elev 840.0

DEVELOPED ELEVATION

1/4"=1'-0"

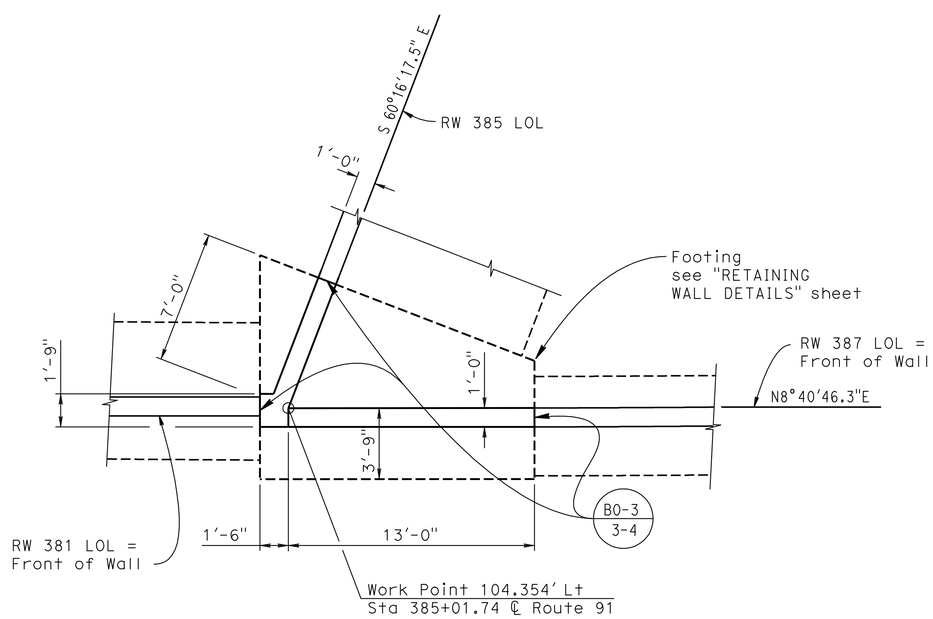

PLAN

1/4"=1'-0"

NOTE:
THE CONTRACTOR SHALL VERIFY ALL CONTROLLING FIELD DIMENSIONS BEFORE ORDERING OR FABRICATING ANY MATERIAL.

THIS PLAN ACCURATE FOR RETAINING WALL WORK ONLY.

RETAINING WALL DETAILS

INTERSECTION RW 381, 385 AND 387

SCALE AS SHOWN **R37-3**

REVISED BY	DATE REVISED
MINH VO	RYAN STILTZ
CALCULATED-DESIGNED BY	CHECKED BY
FUNCTIONAL SUPERVISOR	DANIEL T. ADAMS

STATE OF CALIFORNIA - DEPARTMENT OF TRANSPORTATION
Caltrans®
DESIGN

LAST REVISION 12-01-10 | DATE PLOTTED => 30-APR-2011 TIME PLOTTED => 08:47

Dist	COUNTY	ROUTE	POST MILES TOTAL PROJECT	SHEET No.	TOTAL SHEETS
08	Riv	91	15.6/21.6	1053	2028

REGISTERED CIVIL ENGINEER 12-1-10 DATE

4-25-11
PLANS APPROVAL DATE

REGISTERED PROFESSIONAL ENGINEER MINH THUONG VO No. C59297 Exp. 06/30/11 CIVIL STATE OF CALIFORNIA

THE STATE OF CALIFORNIA OR ITS OFFICERS OR AGENTS SHALL NOT BE RESPONSIBLE FOR THE ACCURACY OR COMPLETENESS OF SCANNED COPIES OF THIS PLAN SHEET.

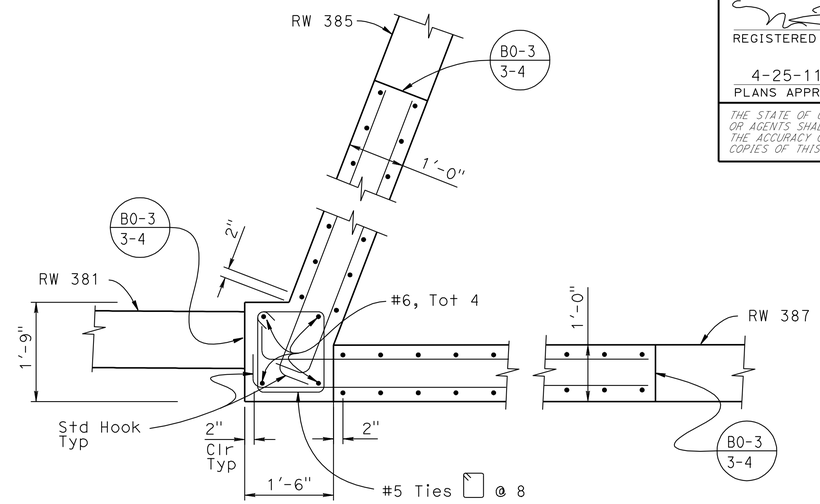

SECTION C-C
3/4"=1'-0"

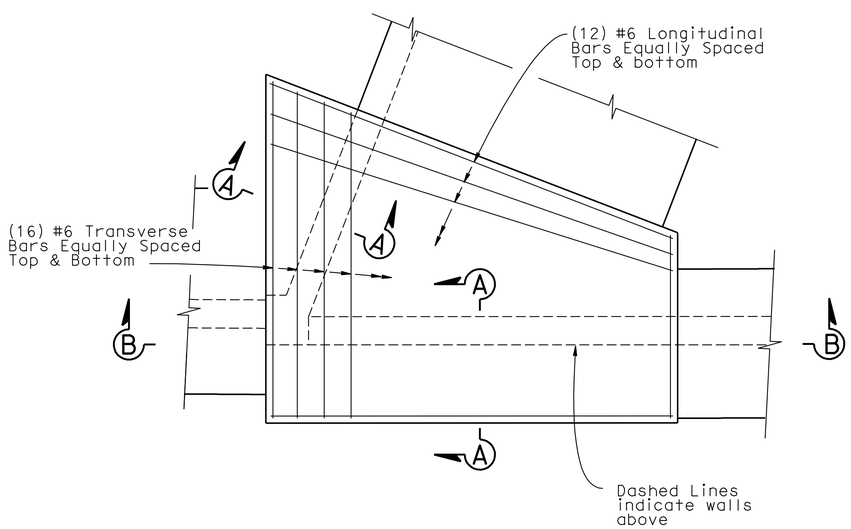

RETAINING WALL INTERSECTION FOOTING REINFORCEMENT PLAN
3/8"=1'-0"

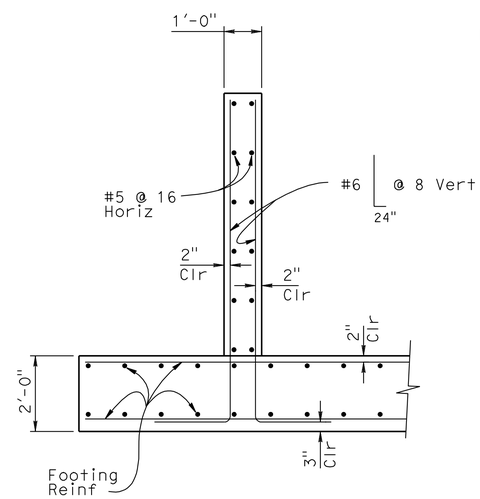

SECTION A-A
1/2"=1'-0"

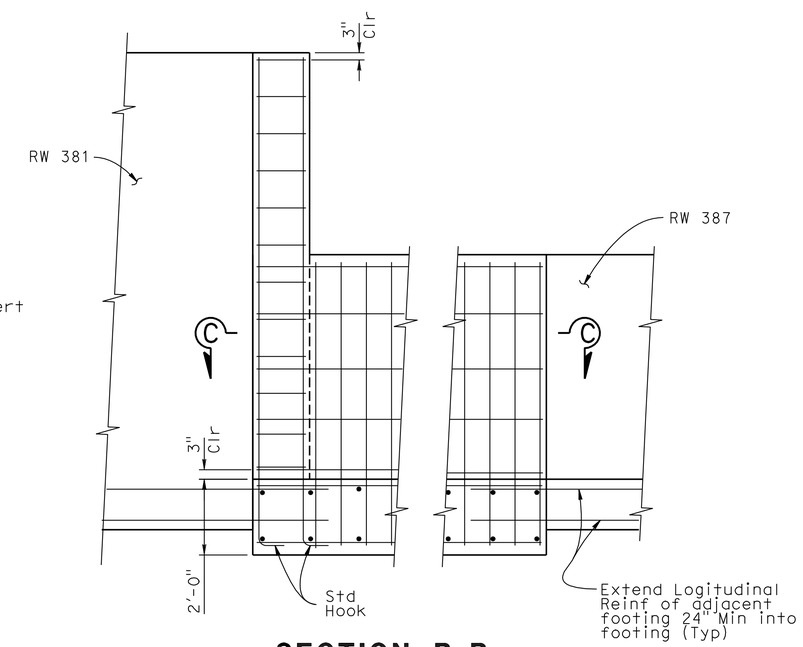

SECTION B-B
1/2"=1'-0"

RETAINING WALL DETAILS
INTERSECTION RW 381, 385 AND 387

SCALE AS SHOWN **R37-4**

THIS PLAN ACCURATE FOR RETAINING WALL WORK ONLY.

STATE OF CALIFORNIA - DEPARTMENT OF TRANSPORTATION
Caltrans
DESIGN

FUNCTIONAL SUPERVISOR: DANIEL T. ADAMS
CALCULATED-DESIGNED BY: MINH VO
CHECKED BY: RYAN STILTZ
REVISED BY
DATE REVISED

LAST REVISION 12-01-10 | DATE PLOTTED => 30-APR-2011 | TIME PLOTTED => 08:47

Dist	COUNTY	ROUTE	POST MILES TOTAL PROJECT	SHEET No.	TOTAL SHEETS
08	Riv	91	15.6/21.6	1054	2028

LICENSED LANDSCAPE ARCHITECT

4-25-11
PLANS APPROVAL DATE

LICENSED LANDSCAPE ARCHITECT
Matthew Harry Hall
No. 2011
Signature
10/31/2011
Renewal Date
12-1-10
Date
STATE OF CALIFORNIA

THE STATE OF CALIFORNIA OR ITS OFFICERS OR AGENTS SHALL NOT BE RESPONSIBLE FOR THE ACCURACY OR COMPLETENESS OF SCANNED COPIES OF THIS PLAN SHEET.

NOTE:

SEE SHEET ASD-4 AND ASD-5.

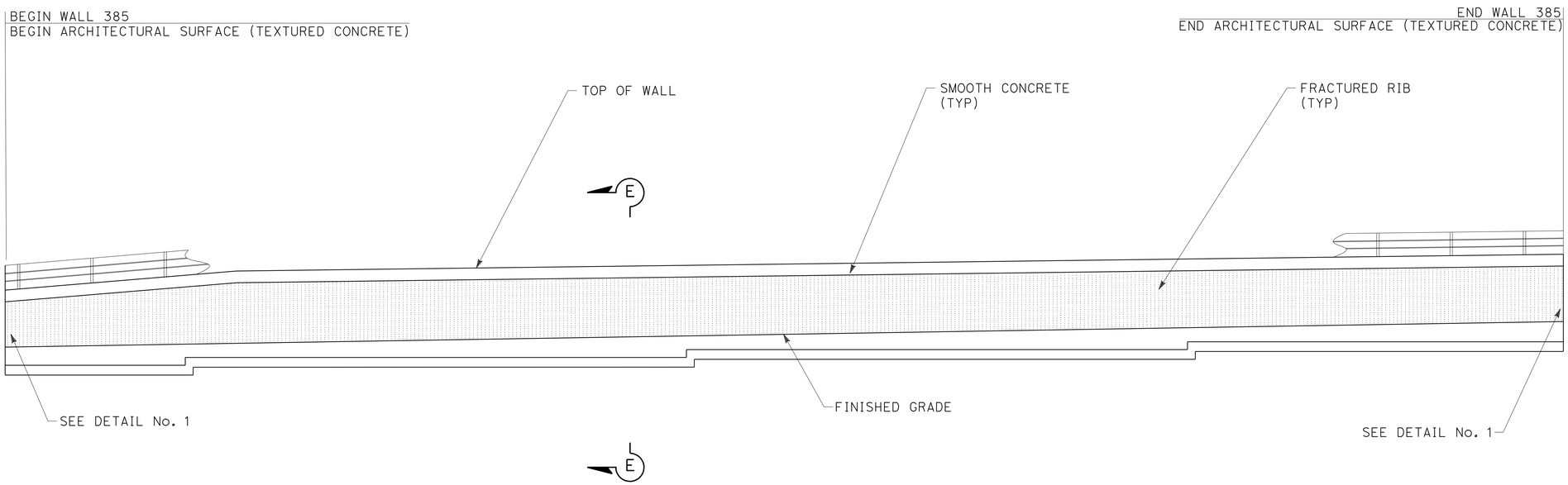

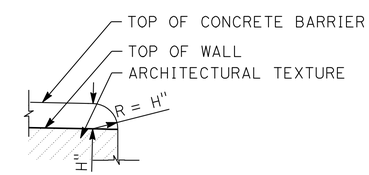

DETAIL No. 1

TYPICAL END OF WALL
WITH CONCRETE BARRIER
ON TOP OF WALL DETAIL

MIRRORED ELEVATION FOR FRACTURED RIB TEXTURE RETAINING WALL No. 385

THIS PLAN IS ACCURATE FOR ARCHITECTUAL TREATMENT WORK ONLY.

ARCHITECTURAL SURFACE
RETAINING WALL No. 385

SCALE: 1/8"=1'-0"

R37-5

REVISED BY	DATE REVISED

CALCULATED-DESIGNED BY	CHECKED BY
MATTHEW HALL	MIRIAM BISHOP

SENIOR LANDSCAPE ARCHITECT: BYRON STROUT

STATE OF CALIFORNIA - DEPARTMENT OF TRANSPORTATION
Caltrans® LANDSCAPE ARCHITECTURE

LAST REVISION: 12-01-10
DATE PLOTTED => 30-APR-2011
TIME PLOTTED => 08:47

DIST	COUNTY	ROUTE	POST MILES TOTAL PROJECT	SHEET No	TOTAL SHEETS
08	Riv	91	15.6/21.6	1055	2028

GEOTECHNICAL PROFESSIONAL — DATE 04/2009

4-25-11
PLANS APPROVAL DATE

REGISTERED PROFESSIONAL ENGINEER — ANDREW C. LEE — No. 2616 — Exp. 6-30-12 — GEOTECHNICAL — STATE OF CALIFORNIA

The State of California or its officers or agents shall not be responsible for the accuracy or completeness of electronic copies of this plan sheet.

California Department of Transportation
5900 Folsom Boulevard
Sacramento, CA 95819

URS Corporation
2020 East First Street, Suite 400
Santa Ana, CA 92705

FOR PLAN VIEW, SEE SHEET R37-8

NOTE: 1. This LOTB sheet was prepared in accordance with the Caltrans Soil & Rock Logging, Classification, and Presentation Manual (June 2007).

2. For legend, see "Log of Test Borings" 1 of 16

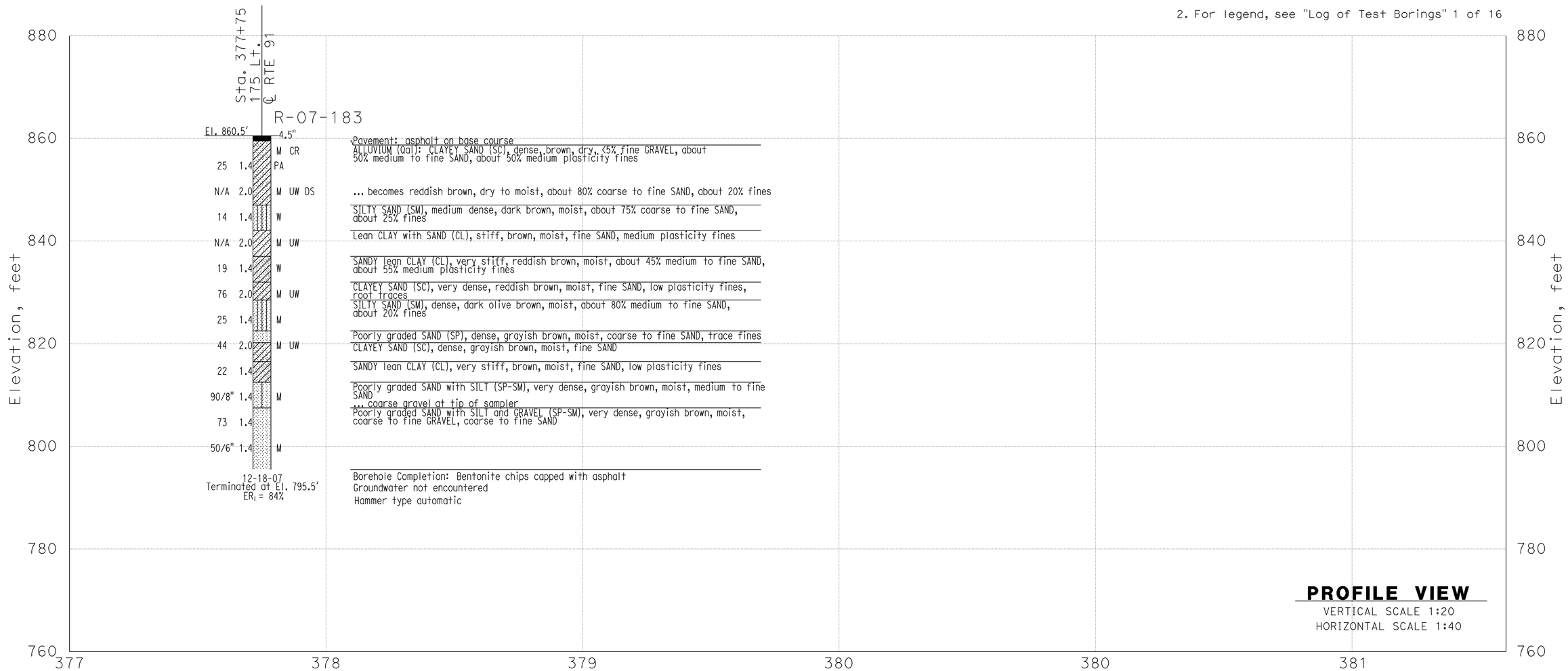

THIS PLAN ACCURATE FOR SOUND WALL AND RETAINING WALL WORK ONLY

GINA PURSELL DESIGN OVERSIGHT	SHAWN WEI FUNCTIONAL SUPERVISOR	DRAWN BY	P. QUACH	P.CHAU/D.WADER/C.CARBINO FIELD INVESTIGATION BY:	PREPARED FOR THE STATE OF CALIFORNIA DEPARTMENT OF TRANSPORTATION	A. LEE PROJECT ENGINEER	BRIDGE NO. X	Retaining Wall 385 R37-6
X SIGN OFF DATE		CHECKED BY	S. PIRATHIVIRAJ	DATE: Nov 6 2007 to March 7 2008			POST MILE X	LOG OF TEST BORINGS SHEET 1 OF 4

OSF GEOTECHNICAL LOG OF TEST BORINGS SHEET (ENGLISH) (REV. 2/25/05)

ORIGINAL SCALE IN INCHES FOR REDUCED PLANS 0 1 2 3

CU 59A0590
EA 08-448400

DISREGARD PRINTS BEARING EARLIER REVISION DATES → REVISION DATES (PRELIMINARY STAGE ONLY) X — SHEET 1 OF 4

FILE => 844840qzk006.dgn

USERNAME => trmnguye DATE PLOTTED => 30-APR-2011 TIME PLOTTED =>

DIST	COUNTY	ROUTE	POST MILES TOTAL PROJECT	SHEET No	TOTAL SHEETS
08	Riv	91	15.6/21.6	1056	2028

GEOTECHNICAL PROFESSIONAL 04/2009 DATE

4-25-11
PLANS APPROVAL DATE

REGISTERED PROFESSIONAL ENGINEER
ANDREW C. LEE
No. 2616
Exp. 6-30-12
GEOTECHNICAL
STATE OF CALIFORNIA

The State of California or its officers or agents shall not be responsible for the accuracy or completeness of electronic copies of this plan sheet.

California Department of Transportation
5900 Folsom Boulevard
Sacramento, CA 95819

URS Corporation
2020 East First Street, Suite 400
Santa Ana, CA 92705

FOR PLAN VIEW, SEE SHEET R37-9

NOTE: 1. This LOTB sheet was prepared in accordance with the Caltrans Soil & Rock Logging, Classification, and Presentation Manual (June 2007).

2. For legend, see "Log of Test Borings" 1 of 16

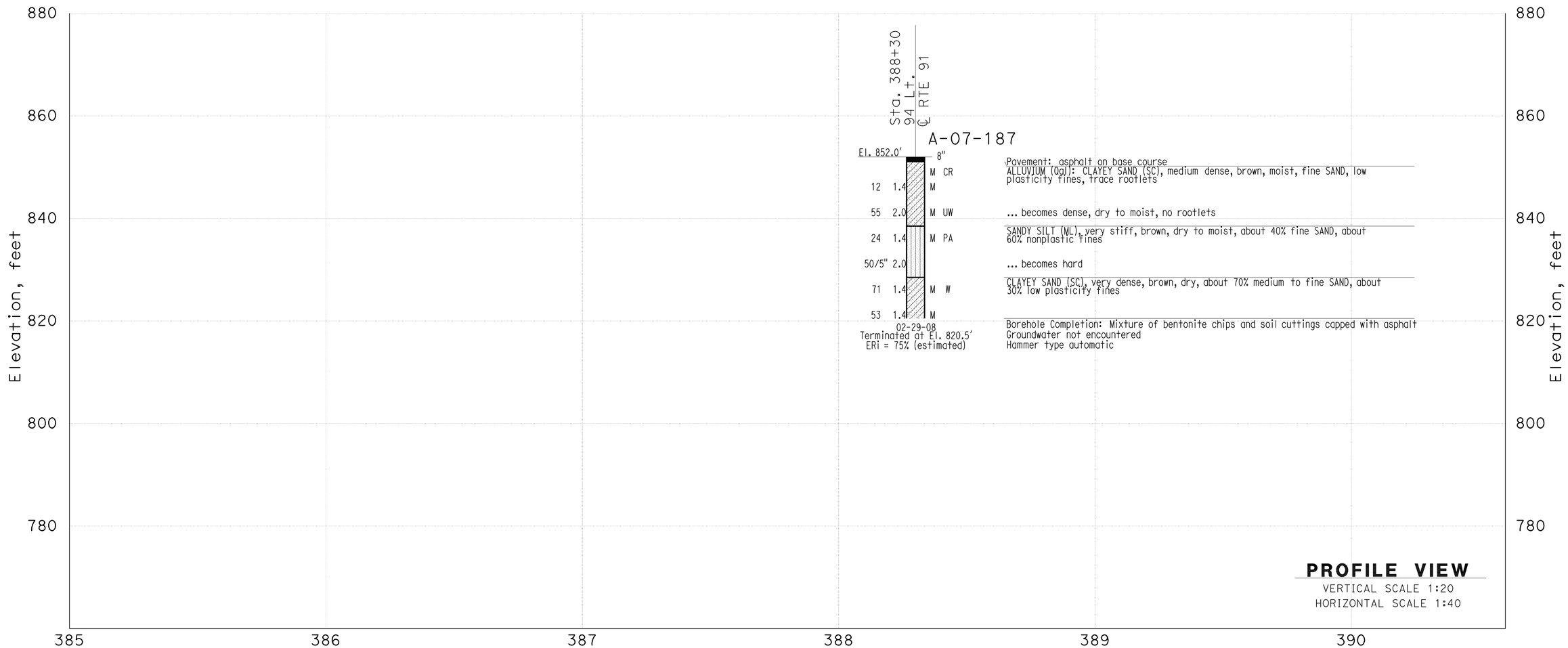

THIS PLAN ACCURATE FOR SOUND WALL AND RETAINING WALL WORK ONLY

GINA PURSELL DESIGN OVERSIGHT	SHAWN WEI FUNCTIONAL SUPERVISOR	DRAWN BY	P. QUACH	P.CHAU/D.WADER/C.CARBINO FIELD INVESTIGATION BY:	PREPARED FOR THE STATE OF CALIFORNIA DEPARTMENT OF TRANSPORTATION	A. LEE PROJECT ENGINEER	BRIDGE NO. X POST MILE X	Retaining Wall 385 R37-7
X SIGN OFF DATE		CHECKED BY	S. PIRATHIVIRAJ	DATE: Nov 6 2007 to March 7 2008				LOG OF TEST BORINGS SHEET 2 OF 4

OSF GEOTECHNICAL LOG OF TEST BORINGS SHEET (ENGLISH) (REV. 2/25/05)

ORIGINAL SCALE IN INCHES FOR REDUCED PLANS 0 1 2 3

CU 59A0590
EA 08-448400

DISREGARD PRINTS BEARING EARLIER REVISION DATES

REVISION DATES (PRELIMINARY STAGE ONLY) X

SHEET 2 OF 4

FILE => 844840qzk007.dgn

USERNAME => trmnguye DATE PLOTTED => 30-APR-2011 TIME PLOTTED =>

DIST	COUNTY	ROUTE	POST MILES TOTAL PROJECT	SHEET No	TOTAL SHEETS
08	Riv	91	15.6/21.6	1057	2028

GEOTECHNICAL PROFESSIONAL 04/2009 DATE

4-25-11
PLANS APPROVAL DATE

REGISTERED PROFESSIONAL ENGINEER
ANDREW C. LEE
No. 2616
Exp. 6-30-12
GEOTECHNICAL
STATE OF CALIFORNIA

The State of California or its officers or agents shall not be responsible for the accuracy or completeness of electronic copies of this plan sheet.

California Department of Transportation
5900 Folsom Boulevard
Sacramento, CA 95819

URS Corporation
2020 East First Street, Suite 400
Santa Ana, CA 92705

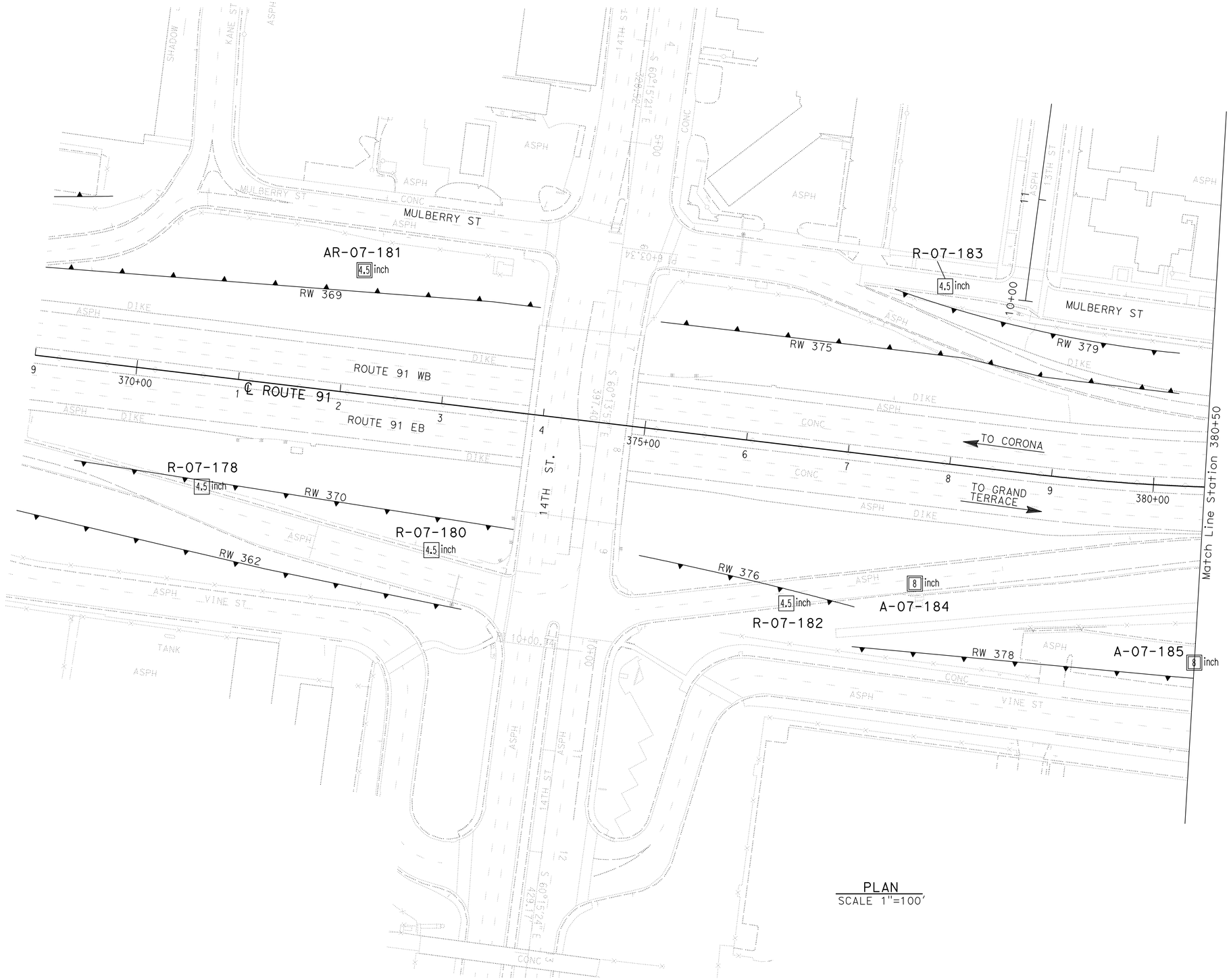

PLAN
SCALE 1"=100'

Borehole Number	Drill Rig	Hammer Type	Avg. Hammer Efficiency, ETR (%)
R-07-178	CS-2000	Automatic	84
R-07-180	CME 85	Automatic	87
AR-07-181	CS-2000	Automatic	84
R-07-182	CS-2000	Automatic	84
R-07-183	CS-2000	Automatic	84
A-07-184	Diedrich D-120	Automatic	75*
A-07-185	Diedrich D-120	Automatic	75*

Sampler Type	Inside Diameter (Inches)	Borehole Numbers
SPT	1.375	R-07-178, R-07-180, R-07-181 R-07-182, R-07-183, A-07-184 A-07-185
Modified California 1	1.94	R-07-180, R-07-183
Modified California 2	2.40	A-07-184, A-07-185

*Estimated Hammer Efficiency Rating.

GINA PURSELL DESIGN OVERSIGHT	SHAWN WEI FUNCTIONAL SUPERVISOR	DRAWN BY	P. QUACH	P.CHAU/D.WADER/C.CARBINO FIELD INVESTIGATION BY:	PREPARED FOR THE STATE OF CALIFORNIA DEPARTMENT OF TRANSPORTATION
X SIGN OFF DATE		CHECKED BY	S. PIRATHIVIRAJ	DATE: Nov 6 2007 to March 7 2008	

A. LEE
PROJECT ENGINEER

BRIDGE NO. X
POST MILE X

RETAINING WALL 385 R37-8

LOG OF TEST BORINGS SHEET 3 OF 4

OSF GEOTECHNICAL LOG OF TEST BORINGS SHEET (ENGLISH) (REV. 2/25/05)

ORIGINAL SCALE IN INCHES FOR REDUCED PLANS 0 1 2 3

CU 59A0590
EA 08-448400

DISREGARD PRINTS BEARING EARLIER REVISION DATES

REVISION DATES (PRELIMINARY STAGE ONLY) X

SHEET 3 OF 4

FILE => 844840qzk008.dgn

USERNAME => trmnguye DATE PLOTTED => 30-APR-2011 TIME PLOTTED =>

DIST	COUNTY	ROUTE	POST MILES TOTAL PROJECT	SHEET No	TOTAL SHEETS
08	Riv	91	15.6/21.6	1058	2028

GEOTECHNICAL PROFESSIONAL 04/2009 DATE

4-25-11
PLANS APPROVAL DATE

REGISTERED PROFESSIONAL ENGINEER
ANDREW C. LEE
No. 2616
Exp. 6-30-12
GEOTECHNICAL
STATE OF CALIFORNIA

The State of California or its officers or agents shall not be responsible for the accuracy or completeness of electronic copies of this plan sheet.

California Department of Transportation
5900 Folsom Boulevard
Sacramento, CA 95819

URS Corporation
2020 East First Street, Suite 400
Santa Ana, CA 92705

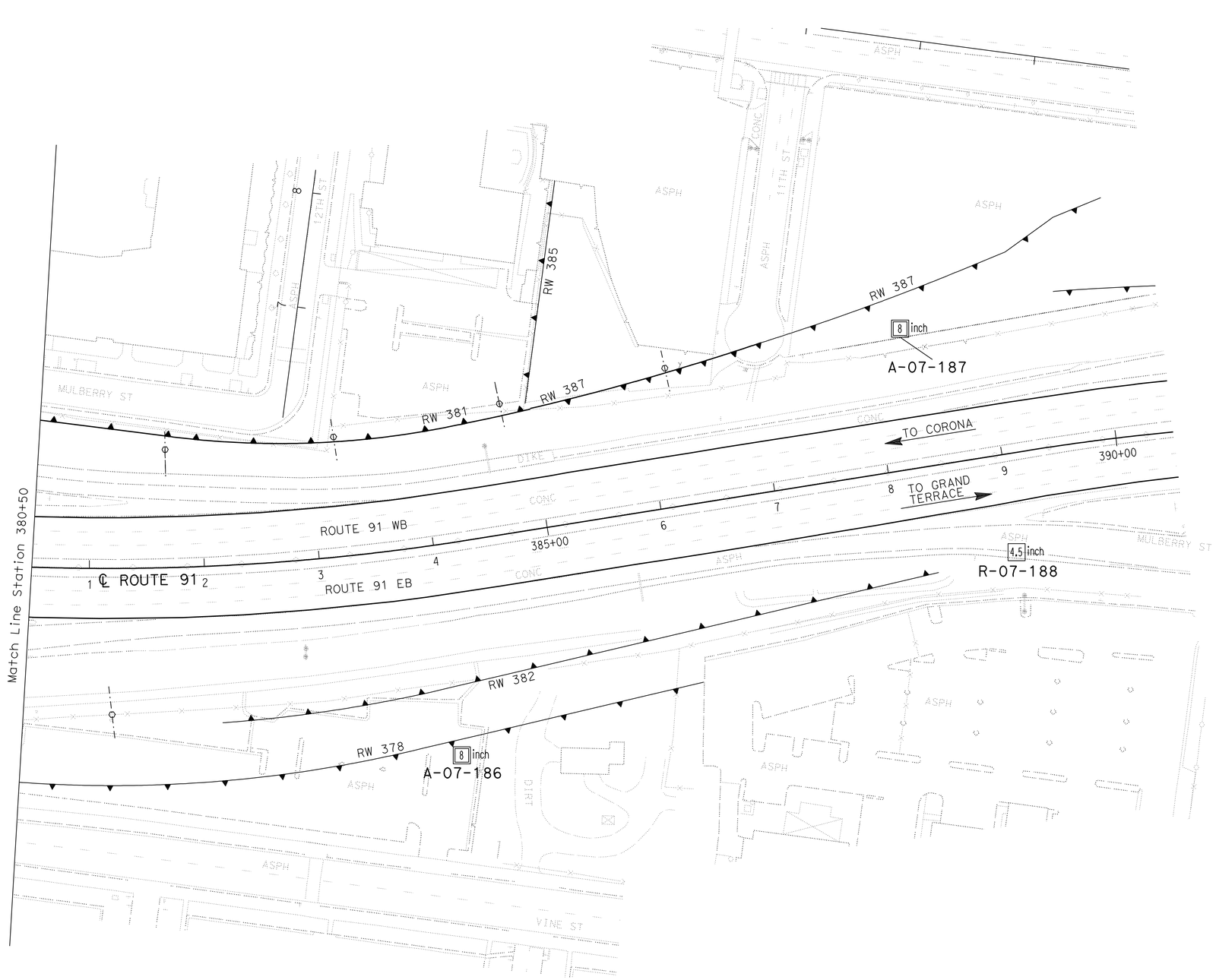

PLAN
SCALE 1"=100'

Borehole Number	Drill Rig	Hammer Type	Avg. Hammer Efficiency, ETR (%)
A-07-186	Diedrich D-120	Automatic	75*
A-07-187	Diedrich D-120	Automatic	75*
R-07-188	CS-2000	Automatic	84

Sampler Type	Inside Diameter (Inches)	Borehole Numbers
SPT	1.375	A-07-186, A-07-187 R-07-188
Modified California 1	1.94	
Modified California 2	2.40	A-07-186, A-07-187

*Estimated Hammer Efficiency Rating.

GINA PURSELL DESIGN OVERSIGHT	SHAWN WEI FUNCTIONAL SUPERVISOR	DRAWN BY	P. QUACH	P.CHAU/D.WADER/C.CARBINO FIELD INVESTIGATION BY:	PREPARED FOR THE STATE OF CALIFORNIA DEPARTMENT OF TRANSPORTATION
X SIGN OFF DATE		CHECKED BY	S. PIRATHIVIRAJ	DATE: Nov 6 2007 to March 7 2008	

A. LEE
PROJECT ENGINEER

BRIDGE NO. X
POST MILE X

RETAINING WALL 385 R37-9

LOG OF TEST BORINGS SHEET 4 OF 4

OSF GEOTECHNICAL LOG OF TEST BORINGS SHEET (ENGLISH) (REV. 2/25/05)

ORIGINAL SCALE IN INCHES FOR REDUCED PLANS 0 1 2 3

CU 59A0590
EA 08-448400

DISREGARD PRINTS BEARING EARLIER REVISION DATES

REVISION DATES (PRELIMINARY STAGE ONLY) X

SHEET 4 OF 4

FILE => 844840qzk009.dgn

USERNAME => trmnguye DATE PLOTTED => 30-APR-2011 TIME PLOTTED =>

Dist	COUNTY	ROUTE	POST MILES TOTAL PROJECT	SHEET No.	TOTAL SHEETS
08	Riv	91	15.6/21.6	1059	2028

REGISTERED CIVIL ENGINEER 12-1-10 DATE

4-25-11
PLANS APPROVAL DATE

REGISTERED PROFESSIONAL ENGINEER CUONG LE TRAN No. C60436 Exp. 6-30-12 CIVIL STATE OF CALIFORNIA

THE STATE OF CALIFORNIA OR ITS OFFICERS OR AGENTS SHALL NOT BE RESPONSIBLE FOR THE ACCURACY OR COMPLETENESS OF SCANNED COPIES OF THIS PLAN SHEET.

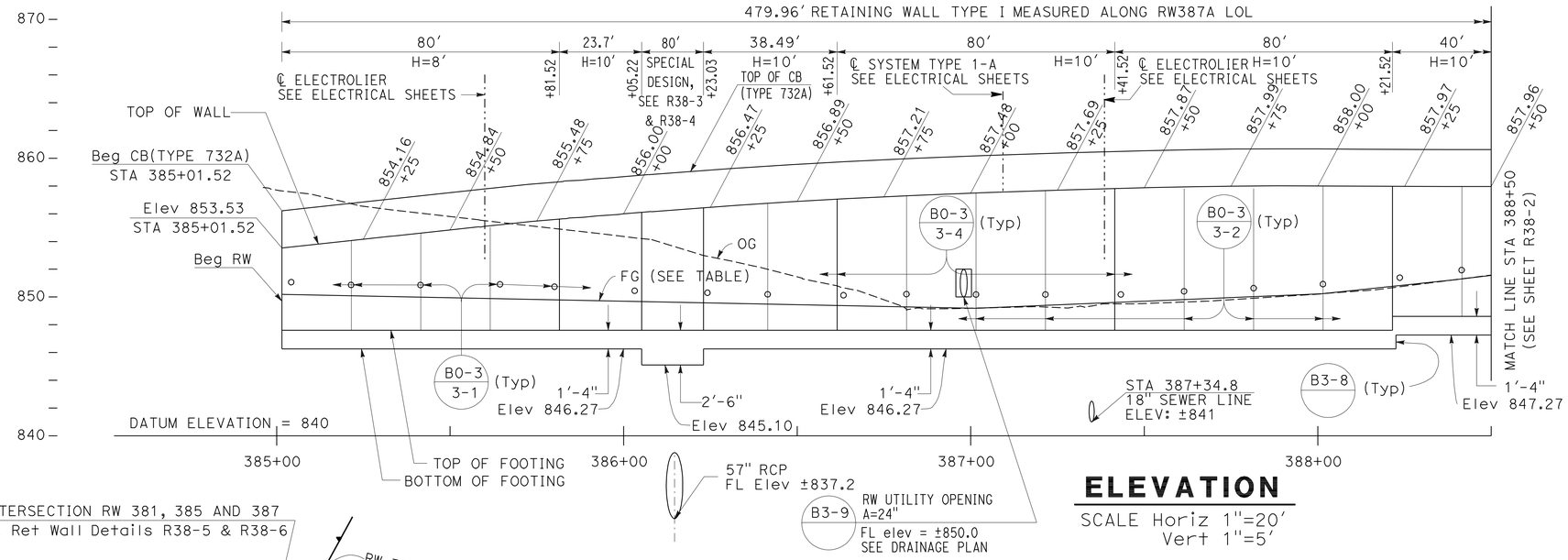

ELEVATION

SCALE Horiz 1"=20'
Vert 1"=5'

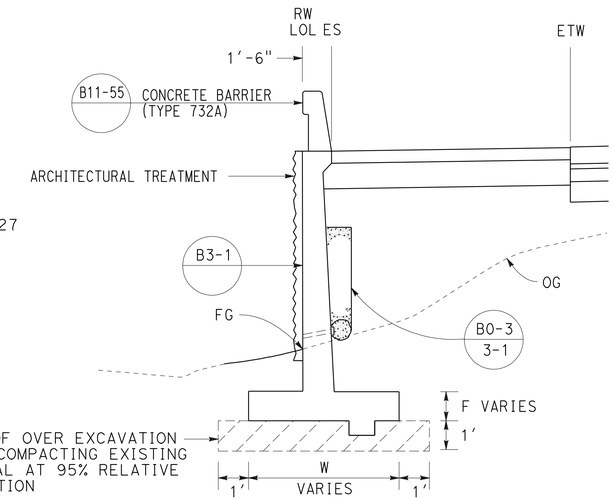

TYPICAL SECTION

NO SCALE
FROM STA 385+01.52 TO STA 389+81.48

FINISHED GRADE (FG) TABLE	
STATION	ELEVATION
385+01.52	850.19
385+58.40	849.91
387+01.38	849.19
388+01.00	850.23
388+39.00	851.23
389+41.37	854.46
389+81.52	855.15

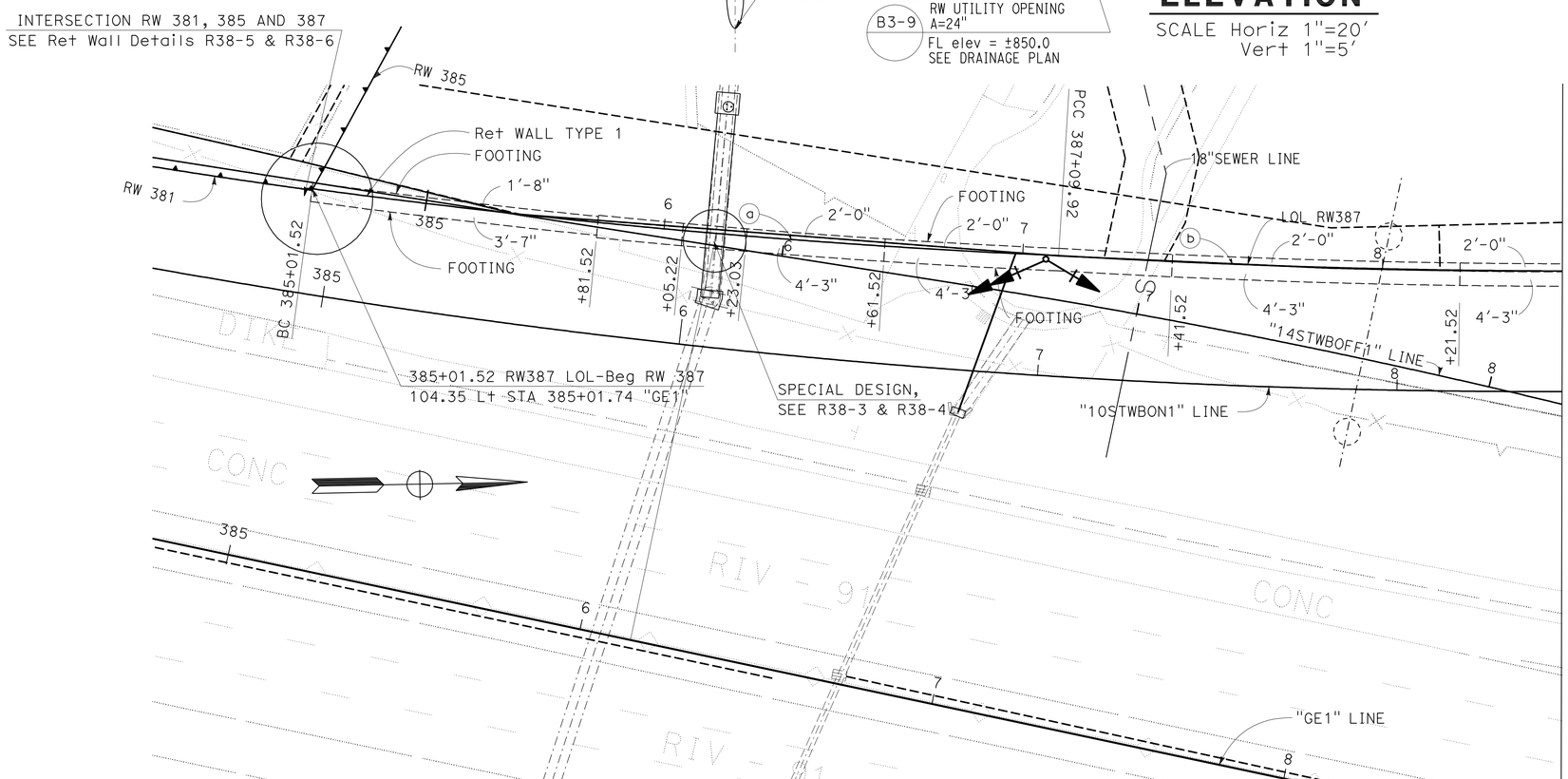

PLAN

SCALE: 1"=20'

CURVE DATA

No.	R	Δ	T	L
a	2282.84'	5°13'50"	104.27'	208.40'
b	2463.85'	4°19'48"	93.14'	186.20'

THIS PLAN ACCURATE FOR RETAINING WALL WORK ONLY.

RETAINING WALL PLAN
RETAINING WALL No. 387
SCALE AS SHOWN

R38-1

STATE OF CALIFORNIA - DEPARTMENT OF TRANSPORTATION
Caltrans® DESIGN

FUNCTIONAL SUPERVISOR: MARK PERTILE
CALCULATED-DESIGNED BY: ANNABELL WANG
CHECKED BY: CUONG LE TRAN
REVISED BY / DATE REVISED

LAST REVISION 12-01-10 | DATE PLOTTED => 30-APR-2011 | TIME PLOTTED => 08:48

Dist	COUNTY	ROUTE	POST MILES TOTAL PROJECT	SHEET No.	TOTAL SHEETS
08	Riv	91	15.6/21.6	1060	2028

REGISTERED CIVIL ENGINEER 12-1-10 DATE

4-25-11
PLANS APPROVAL DATE

REGISTERED PROFESSIONAL ENGINEER CUONG LE TRAN No. C60436 Exp. 6-30-12 CIVIL STATE OF CALIFORNIA

THE STATE OF CALIFORNIA OR ITS OFFICERS OR AGENTS SHALL NOT BE RESPONSIBLE FOR THE ACCURACY OR COMPLETENESS OF SCANNED COPIES OF THIS PLAN SHEET.

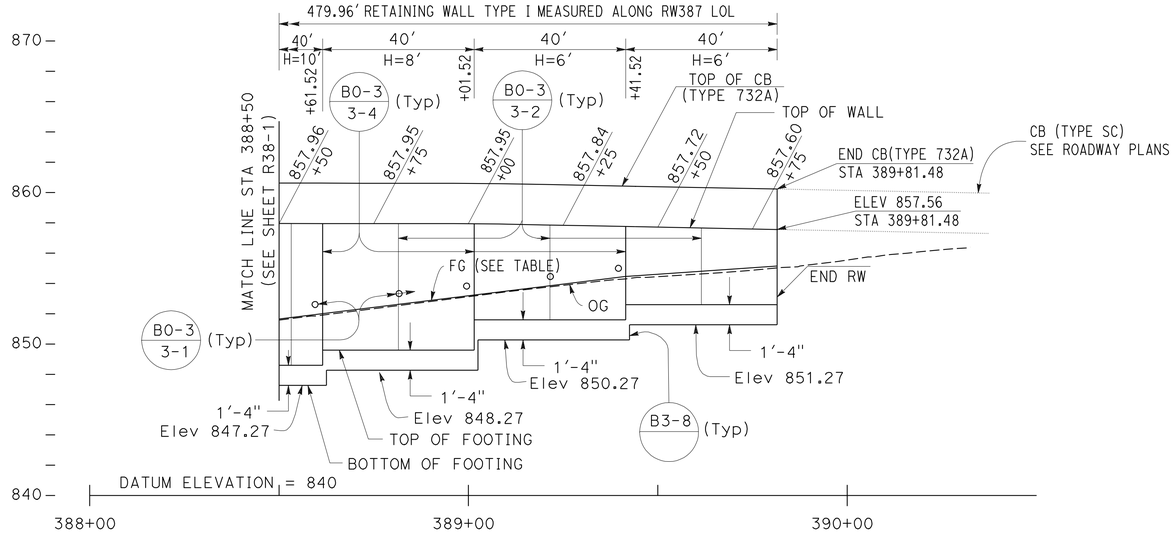

ELEVATION

SCALE Horiz 1"=20'
Vert 1"=5'

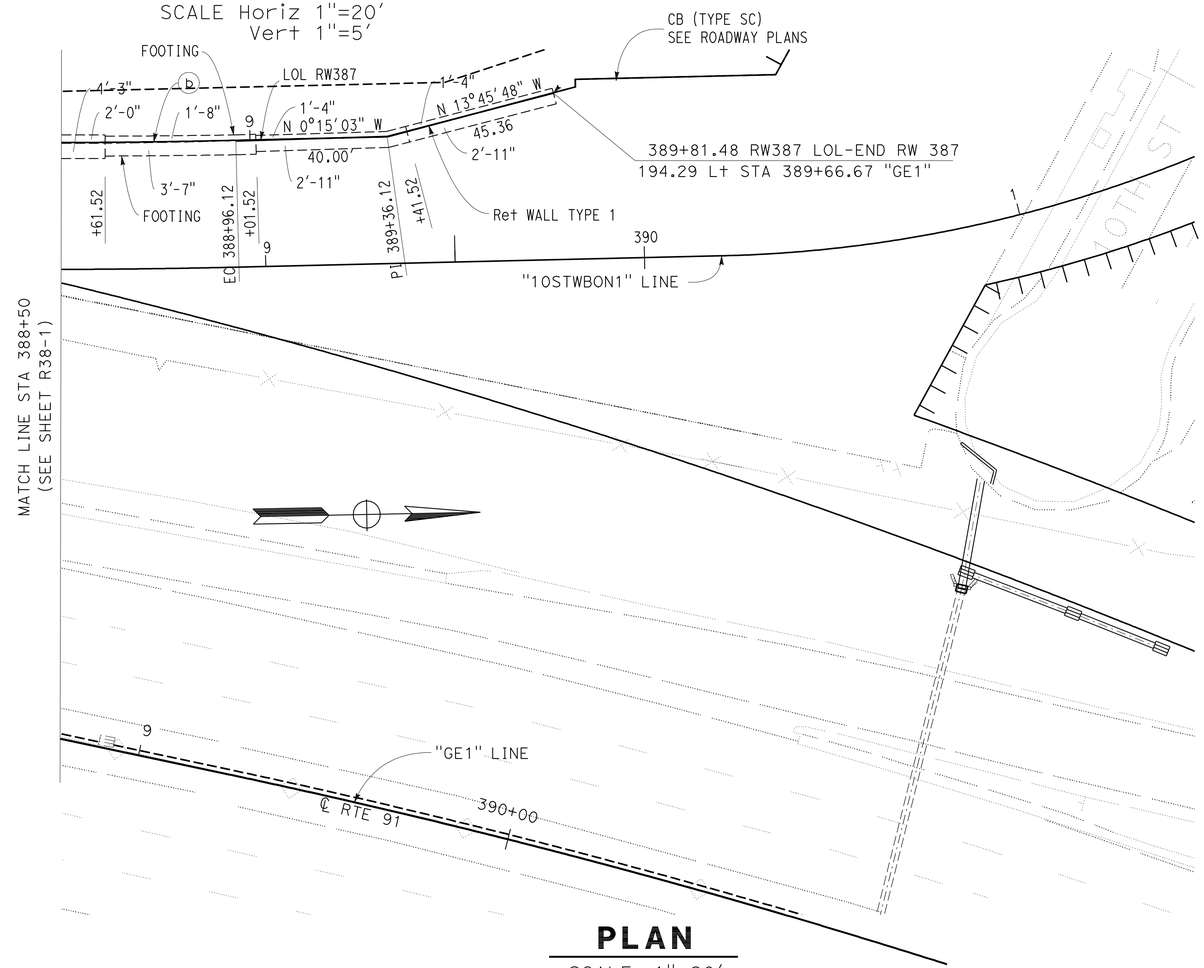

PLAN

SCALE: 1"=20'

THIS PLAN ACCURATE FOR RETAINING WALL WORK ONLY.

QUANTITIES

STRUCTURAL CONCRETE (RETAINING WALL)	348.10	CY
BAR REINFORCING STEEL (RETAINING WALL)	28585	LB
STRUCTURAL EXCAVATION (RETAINING WALL)	847.66	CY
STRUCTURAL BACKFILL (RETAINING WALL)	716.55	CY
PERVIOUS BACKFILL MATERIAL (RETAINING WALL)	52.45	CY
CONCRETE BARRIER (TYPE 732A)	479.96	LF
PLASTIC PIPE (N)	29.07	LF
WATERSTOP (N)	65.40	LF
ARCHITECTURAL SURFACE (TEXTURED CONCRETE)	3198.55	SF
FURNISH PILING (CLASS 90) (ALTERNATIVE X)	113.76	LF
DRIVE PILE (CLASS 90) (ALTERNATIVE X)	8.00	EA

(N) = NOT A SEPARATE PAY ITEM, FOR INFORMATION ONLY

CURVE DATA

No.	R	Δ	T	L
b	2463.85'	4°19'48"	93.14'	186.20'

RETAINING WALL PLAN
RETAINING WALL No. 387

SCALE AS SHOWN

R38-2

STATE OF CALIFORNIA - DEPARTMENT OF TRANSPORTATION
Caltrans DESIGN

FUNCTIONAL SUPERVISOR: MARK PERTILE
CALCULATED-DESIGNED BY: ANNABELL WANG
CHECKED BY: CUONG LE TRAN
REVISED BY / DATE REVISED

LAST REVISION 12-01-10
DATE PLOTTED => 30-APR-2011
TIME PLOTTED => 08:48

BORDER LAST REVISED 4/11/2008
RELATIVE BORDER SCALE IS IN INCHES 0 1 2 3
USERNAME => trmnguye
DGN FILE => 844840qz1002.dgn
CU 08227
EA 448401

Dist	COUNTY	ROUTE	POST MILES TOTAL PROJECT	SHEET No.	TOTAL SHEETS
08	Riv	91	15.6/21.6	1061	2028

REGISTERED CIVIL ENGINEER 12-1-10 DATE

4-25-11
PLANS APPROVAL DATE

REGISTERED PROFESSIONAL ENGINEER MINH THUONG VO No. C59297 Exp. 06/30/11 CIVIL STATE OF CALIFORNIA

THE STATE OF CALIFORNIA OR ITS OFFICERS OR AGENTS SHALL NOT BE RESPONSIBLE FOR THE ACCURACY OR COMPLETENESS OF SCANNED COPIES OF THIS PLAN SHEET.

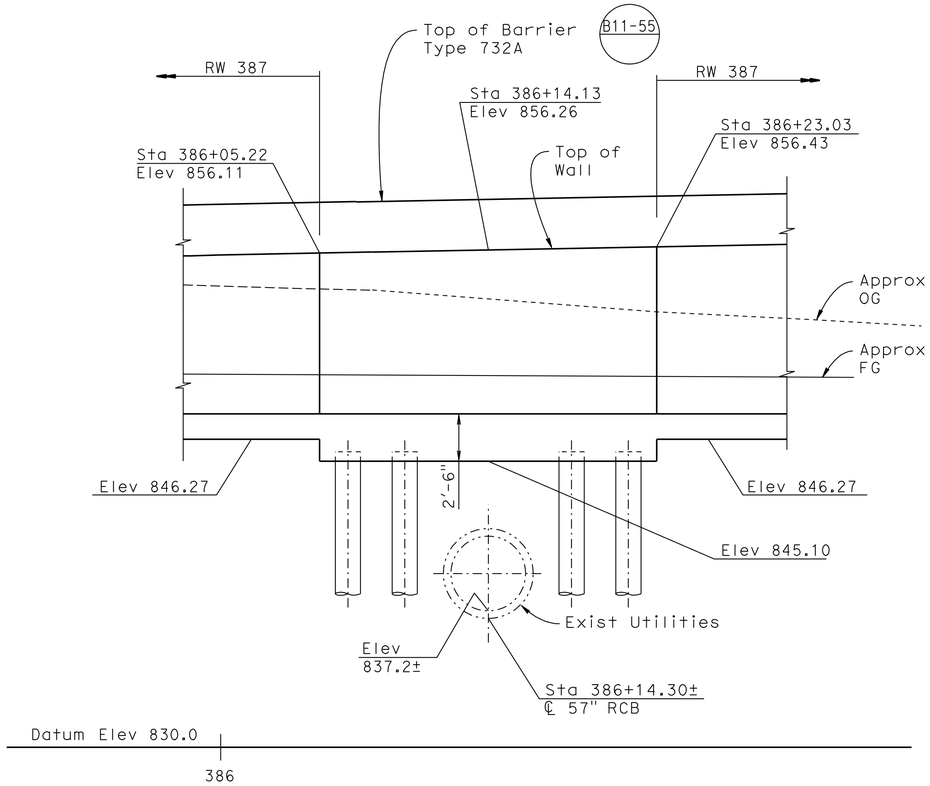

DEVELOPED MIRROR ELEVATION

1/4"=1'-0"

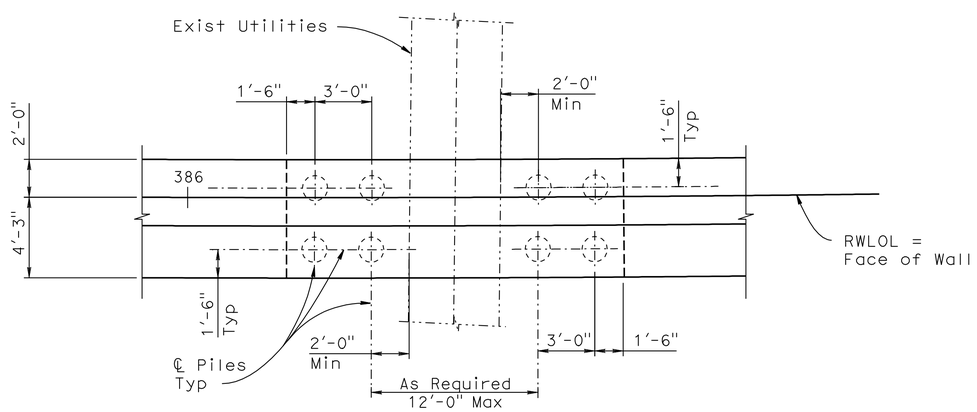

PLAN

1/4"=1'-0"

Sta 386+05.22 to 386+23.03

DESIGN DATA

DESIGN: Bridge Design Specification
(1996 AASHTO with Revisions by Caltrans)

LOADING CASE:
1. Level slope with 240 psf Max. surcharge

CONCRETE: n = 9, f'c = 3600 psi, fc = 1440 psi

REINFORCING STEEL: fy = 60,000 psi, fs = 24,000 psi

SOIL PARAMETERS: (for determination of design lateral earth pressure)
$\phi = 33°$ $\gamma = 120$ pcf

NOTE:
THE CONTRACTOR SHALL VERIFY ALL CONTROLLING FIELD DIMENSIONS BEFORE ORDERING OR FABRICATING ANY MATERIAL.

THIS PLAN ACCURATE FOR RETAINING WALL WORK ONLY.

RETAINING WALL DETAILS

RETAINING WALL No.387

SCALE AS SHOWN **R38-3**

STATE OF CALIFORNIA - DEPARTMENT OF TRANSPORTATION
Caltrans
DESIGN

FUNCTIONAL SUPERVISOR: DANIEL T. ADAMS
CALCULATED-DESIGNED BY: MINH VO
CHECKED BY: RYAN STILTZ
REVISED BY
DATE REVISED

LAST REVISION 12-01-10 | DATE PLOTTED => 30-APR-2011 | TIME PLOTTED => 08:48

Dist	COUNTY	ROUTE	POST MILES TOTAL PROJECT	SHEET No.	TOTAL SHEETS
08	Riv	91	15.6/21.6	1062	2028

REGISTERED CIVIL ENGINEER 12-1-10 DATE

4-25-11
PLANS APPROVAL DATE

REGISTERED PROFESSIONAL ENGINEER MINH THUONG VO No. C59297 Exp. 06/30/11 CIVIL STATE OF CALIFORNIA

THE STATE OF CALIFORNIA OR ITS OFFICERS OR AGENTS SHALL NOT BE RESPONSIBLE FOR THE ACCURACY OR COMPLETENESS OF SCANNED COPIES OF THIS PLAN SHEET.

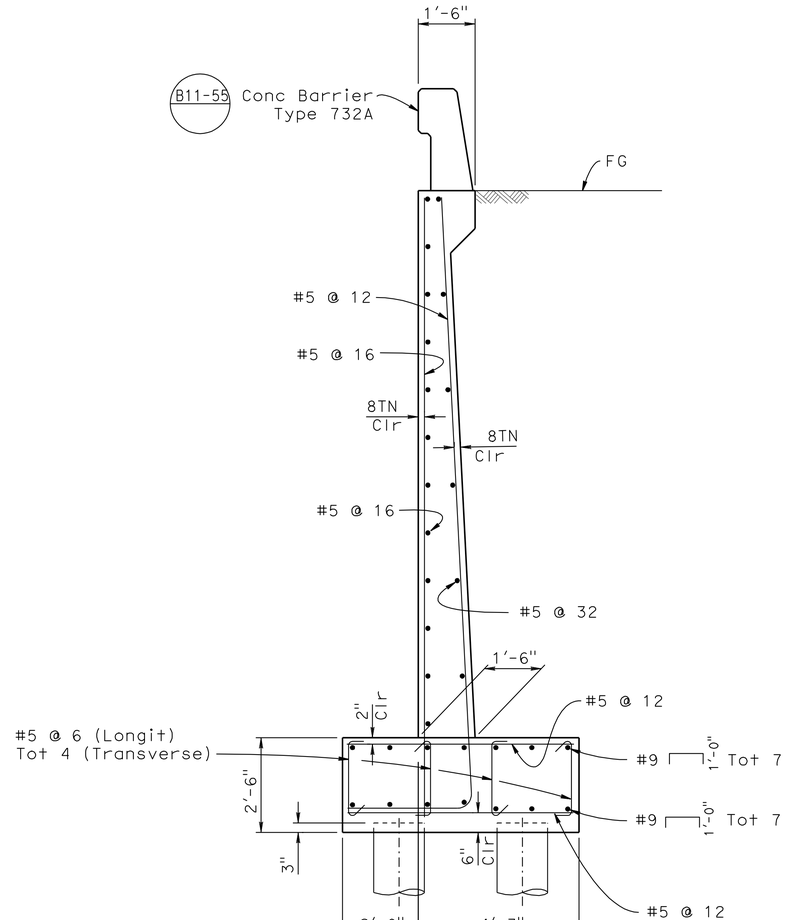

SECTION A-A

PILE DATA TABLE

B2-5

Pile Type	Nominal Resistance		Design Tip Elevation (ft)	Specified Tip Elevation (ft)	Nominal Driving Resistance Req'd
	Compression	Tension			
Class 90 Alternate X	180 kips	0	817	817	180 kips

THIS PLAN ACCURATE FOR RETAINING WALL WORK ONLY.

RETAINING WALL DETAILS
RETAINING WALL No. 387
SCALE AS SHOWN

R38-4

STATE OF CALIFORNIA - DEPARTMENT OF TRANSPORTATION
Caltrans® DESIGN

FUNCTIONAL SUPERVISOR: DANIEL T. ADAMS

CALCULATED-DESIGNED BY: MINH VO
CHECKED BY: RYAN STILTZ

REVISED BY
DATE REVISED

LAST REVISION 12-01-10
DATE PLOTTED => 30-APR-2011
TIME PLOTTED => 08:48

Dist	COUNTY	ROUTE	POST MILES TOTAL PROJECT	SHEET No.	TOTAL SHEETS
08	Riv	91	15.6/21.6	1063	2028

REGISTERED CIVIL ENGINEER 12-1-10 DATE

4-25-11
PLANS APPROVAL DATE

REGISTERED PROFESSIONAL ENGINEER
MINH THUONG VO
No. C59297
Exp. 06/30/11
CIVIL
STATE OF CALIFORNIA

THE STATE OF CALIFORNIA OR ITS OFFICERS OR AGENTS SHALL NOT BE RESPONSIBLE FOR THE ACCURACY OR COMPLETENESS OF SCANNED COPIES OF THIS PLAN SHEET.

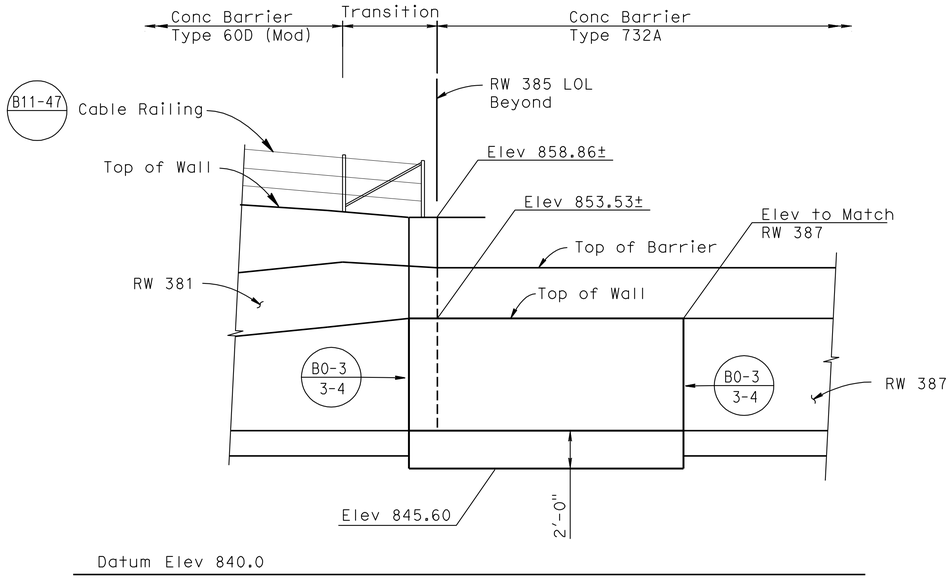

DEVELOPED ELEVATION

1/4"=1'-0"

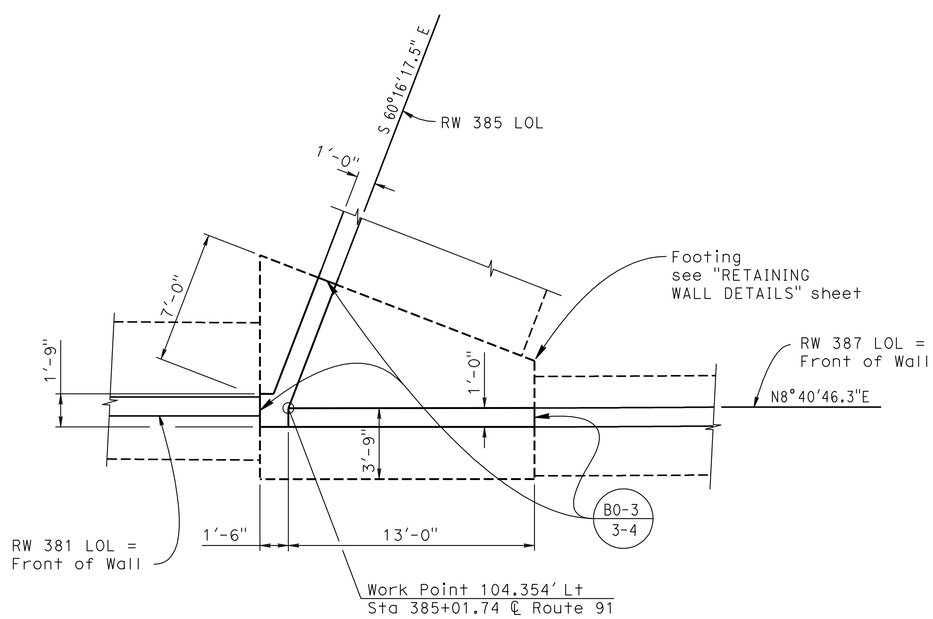

PLAN

1/4"=1'-0"

NOTE:
THE CONTRACTOR SHALL VERIFY ALL CONTROLLING FIELD DIMENSIONS BEFORE ORDERING OR FABRICATING ANY MATERIAL.

THIS PLAN ACCURATE FOR RETAINING WALL WORK ONLY.

RETAINING WALL DETAILS

INTERSECTION RW 381, 385 AND 387

SCALE AS SHOWN

R38-5

REVISED BY	DATE REVISED

CALCULATED-DESIGNED BY	CHECKED BY
MINH VO	RYAN STILTZ

FUNCTIONAL SUPERVISOR: DANIEL T. ADAMS

STATE OF CALIFORNIA - DEPARTMENT OF TRANSPORTATION

Caltrans® DESIGN

LAST REVISION 12-01-10 | DATE PLOTTED => 30-APR-2011 | TIME PLOTTED => 08:48

Dist	COUNTY	ROUTE	POST MILES TOTAL PROJECT	SHEET No.	TOTAL SHEETS
08	Riv	91	15.6/21.6	1064	2028

REGISTERED CIVIL ENGINEER 12-1-10 DATE

4-25-11
PLANS APPROVAL DATE

REGISTERED PROFESSIONAL ENGINEER MINH THUONG VO No. C59297 Exp. 06/30/11 CIVIL STATE OF CALIFORNIA

THE STATE OF CALIFORNIA OR ITS OFFICERS OR AGENTS SHALL NOT BE RESPONSIBLE FOR THE ACCURACY OR COMPLETENESS OF SCANNED COPIES OF THIS PLAN SHEET.

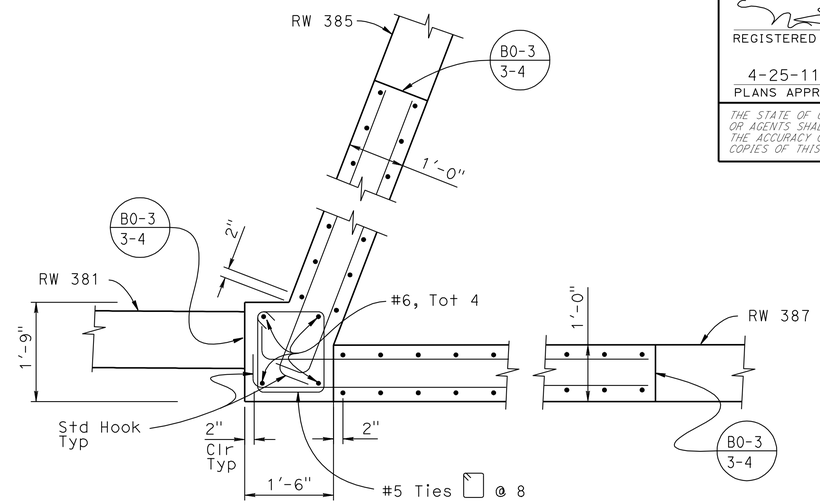

SECTION C-C
3/4"=1'-0"

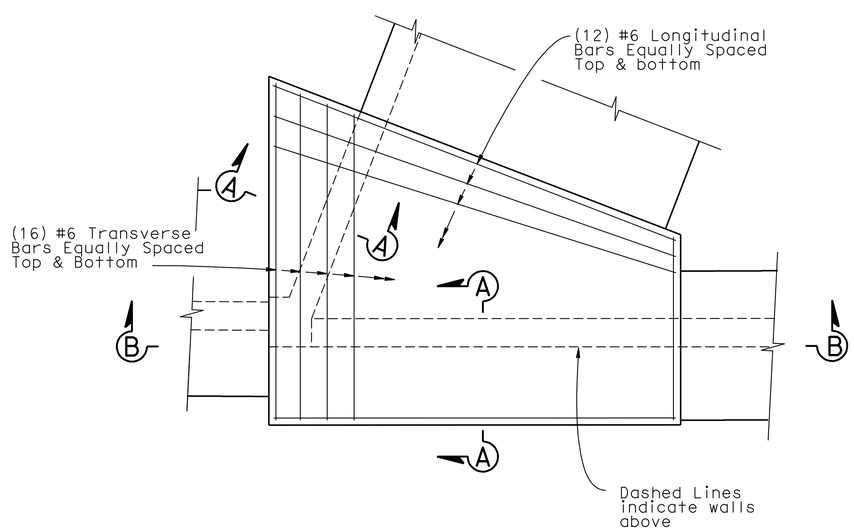

RETAINING WALL INTERSECTION FOOTING REINFORCEMENT PLAN
3/8"=1'-0"

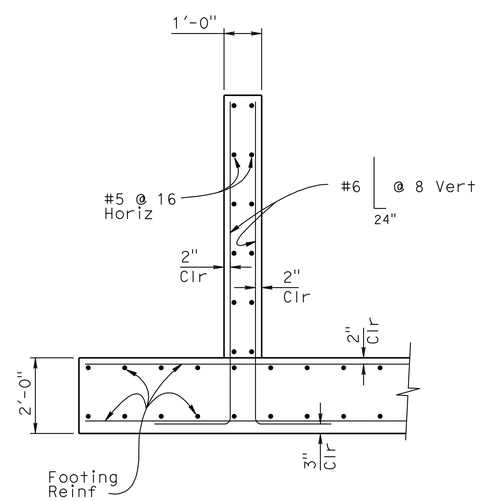

SECTION A-A
1/2"=1'-0"

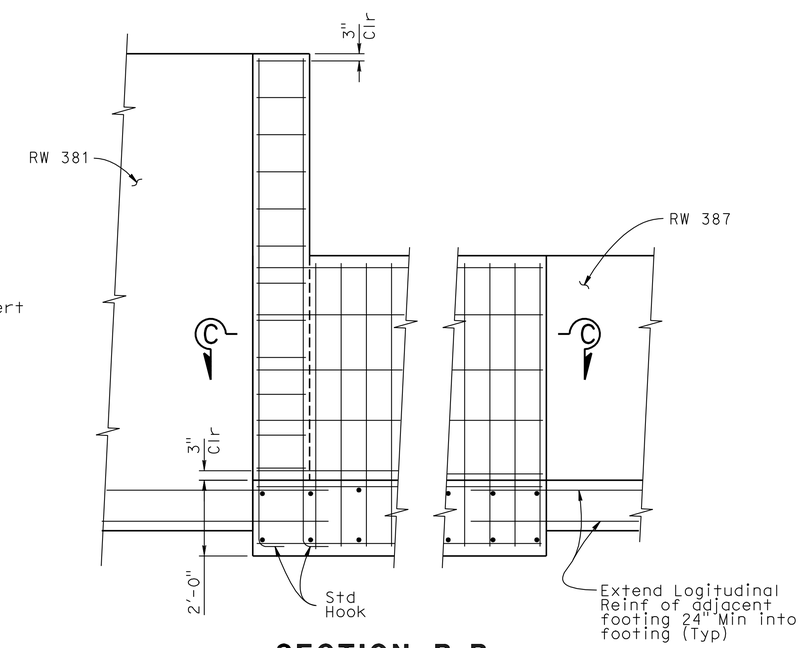

SECTION B-B
1/2"=1'-0"

RETAINING WALL DETAILS
INTERSECTION RW 381, 385 AND 387
SCALE AS SHOWN

R38-6

THIS PLAN ACCURATE FOR RETAINING WALL WORK ONLY.

STATE OF CALIFORNIA - DEPARTMENT OF TRANSPORTATION
Caltrans
DESIGN

FUNCTIONAL SUPERVISOR: DANIEL T. ADAMS

CALCULATED-DESIGNED BY: MINH VO
CHECKED BY: RYAN STILTZ

REVISED BY
DATE REVISED

LAST REVISION 12-01-10 | DATE PLOTTED => 30-APR-2011 | TIME PLOTTED => 08:49

Dist	COUNTY	ROUTE	POST MILES TOTAL PROJECT	SHEET No.	TOTAL SHEETS
08	Riv	91	15.6/21.6	1065	2028

LICENSED LANDSCAPE ARCHITECT

4-25-11
PLANS APPROVAL DATE

LICENSED LANDSCAPE ARCHITECT
Matthew Harry Hall No. 4504
Signature
10/31/2011
Renewal Date
12-1-10
Date
STATE OF CALIFORNIA

THE STATE OF CALIFORNIA OR ITS OFFICERS OR AGENTS SHALL NOT BE RESPONSIBLE FOR THE ACCURACY OR COMPLETENESS OF SCANNED COPIES OF THIS PLAN SHEET.

NOTE:

SEE SHEET ASD-4 AND ASD-5.

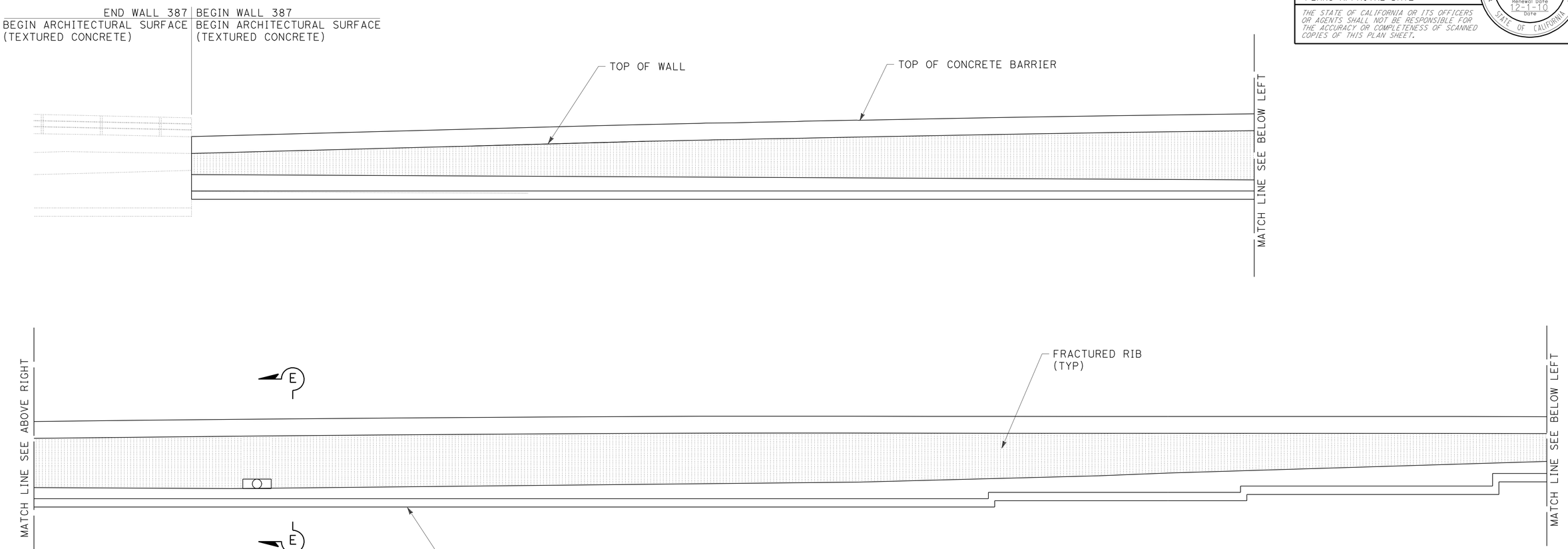

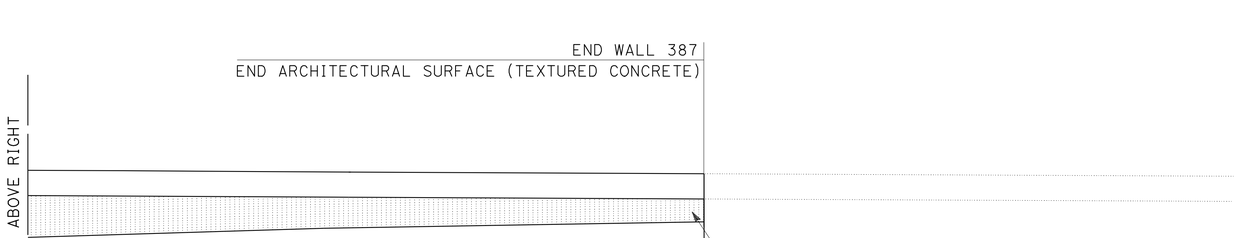

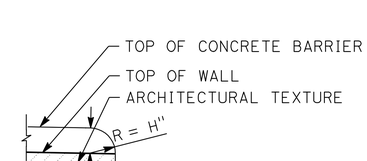

DETAIL No. 1

TYPICAL END OF WALL WITH CONCRETE BARRIER ON TOP OF WALL DETAIL

MIRRORED ELEVATION FOR FRACTURED RIB TEXTURE RETAINING WALL No. 387

THIS PLAN IS ACCURATE FOR ARCHITECTUAL TREATMENT WORK ONLY.

ARCHITECTURAL SURFACE RETAINING WALL No. 387

SCALE: 1/8"=1'-0"

R38-7

STATE OF CALIFORNIA - DEPARTMENT OF TRANSPORTATION
Caltrans LANDSCAPE ARCHITECTURE

SENIOR LANDSCAPE ARCHITECT: BYRON STROUT
CALCULATED-DESIGNED BY: MATTHEW HALL
CHECKED BY: MIRIAM BISHOP
REVISED BY
DATE REVISED

LAST REVISION 12-01-10
DATE PLOTTED => 30-APR-2011
TIME PLOTTED => 08:49

DIST	COUNTY	ROUTE	POST MILES TOTAL PROJECT	SHEET No	TOTAL SHEETS
08	Riv	91	15.6/21.6	1066	2028

GEOTECHNICAL PROFESSIONAL 04/2009 DATE

4-25-11
PLANS APPROVAL DATE

REGISTERED PROFESSIONAL ENGINEER
ANDREW C. LEE
No. 2616
Exp. 6-30-12
GEOTECHNICAL
STATE OF CALIFORNIA

The State of California or its officers or agents shall not be responsible for the accuracy or completeness of electronic copies of this plan sheet.

California Department of Transportation
5900 Folsom Boulevard
Sacramento, CA 95819

URS Corporation
2020 East First Street, Suite 400
Santa Ana, CA 92705

FOR PLAN VIEW, SEE SHEET R38-10

NOTE: 1. This LOTB sheet was prepared in accordance with the Caltrans Soil & Rock Logging, Classification, and Presentation Manual (June 2007).

2. For legend, see "Log of Test Borings" 1 of 16

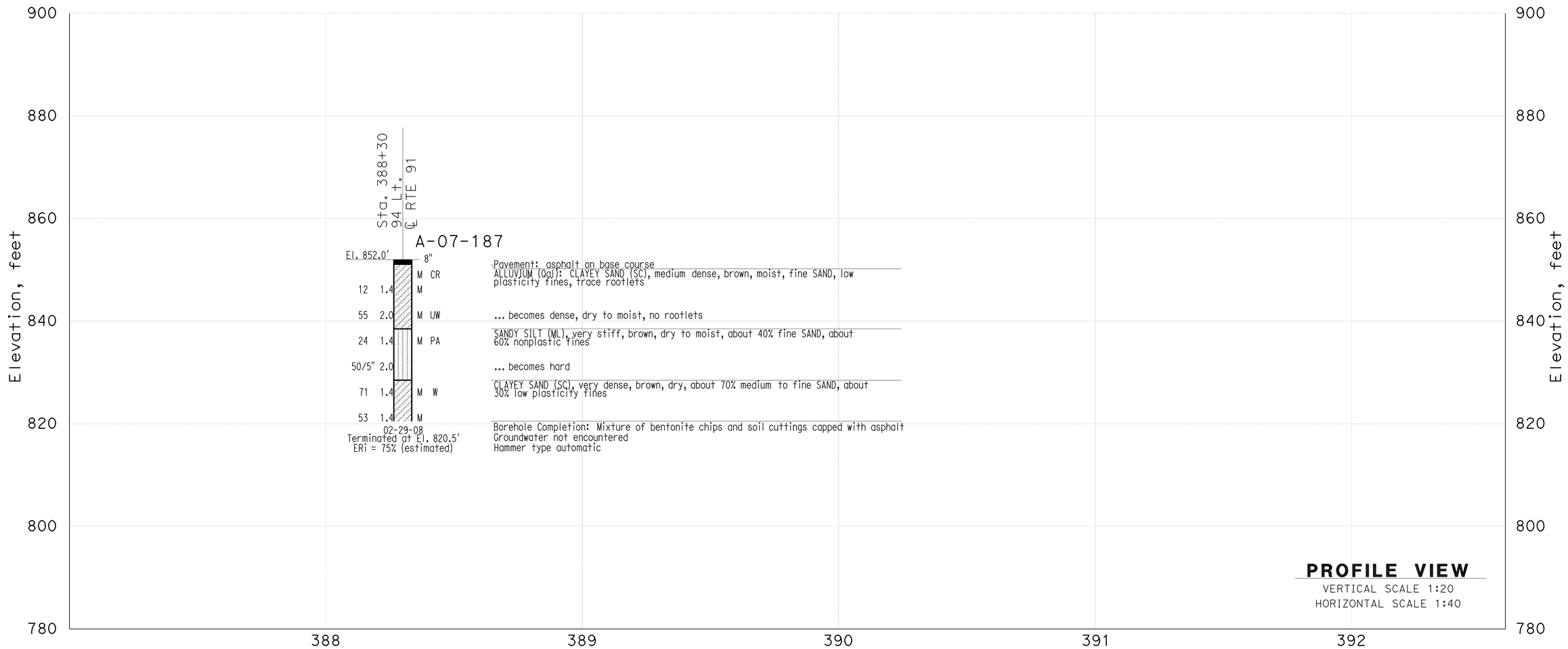

THIS PLAN ACCURATE FOR SOUND WALL AND RETAINING WALL WORK ONLY

GINA PURSELL DESIGN OVERSIGHT X SIGN OFF DATE	SHAWN WEI FUNCTIONAL SUPERVISOR	DRAWN BY CHECKED BY	P. QUACH S. PIRATHIVIRAJ	P.CHAU/D.WADER/C.CARBINO FIELD INVESTIGATION BY: DATE: Nov 6 2007 to March 7 2008	PREPARED FOR THE STATE OF CALIFORNIA DEPARTMENT OF TRANSPORTATION	A. LEE PROJECT ENGINEER	BRIDGE NO. X POST MILE X	Retaining Wall 387 R38-8 LOG OF TEST BORINGS SHEET 1 OF 4

OSF GEOTECHNICAL LOG OF TEST BORINGS SHEET (ENGLISH) (REV. 2/25/05)

ORIGINAL SCALE IN INCHES FOR REDUCED PLANS 0 1 2 3

CU 59A0590
EA 08-448400

DISREGARD PRINTS BEARING EARLIER REVISION DATES

REVISION DATES (PRELIMINARY STAGE ONLY) X

SHEET 1 OF 4

FILE => 844840qz1008.dgn

USERNAME => trmnguye DATE PLOTTED => 30-APR-2011 TIME PLOTTED =>

DIST	COUNTY	ROUTE	POST MILES TOTAL PROJECT	SHEET No	TOTAL SHEETS
08	Riv	91	15.6/21.6	1067	2028

GEOTECHNICAL PROFESSIONAL — DATE 04/2009

4-25-11
PLANS APPROVAL DATE

REGISTERED PROFESSIONAL ENGINEER — ANDREW C. LEE — No. 2616 — Exp. 6-30-12 — GEOTECHNICAL — STATE OF CALIFORNIA

The State of California or its officers or agents shall not be responsible for the accuracy or completeness of electronic copies of this plan sheet.

California Department of Transportation
5900 Folsom Boulevard
Sacramento, CA 95819

URS Corporation
2020 East First Street, Suite 400
Santa Ana, CA 92705

FOR PLAN VIEW, SEE SHEET R38-11

NOTE: 1. This LOTB sheet was prepared in accordance with the Caltrans Soil & Rock Logging, Classification, and Presentation Manual (June 2007).

2. For legend, see "Log of Test Borings" 1 of 16

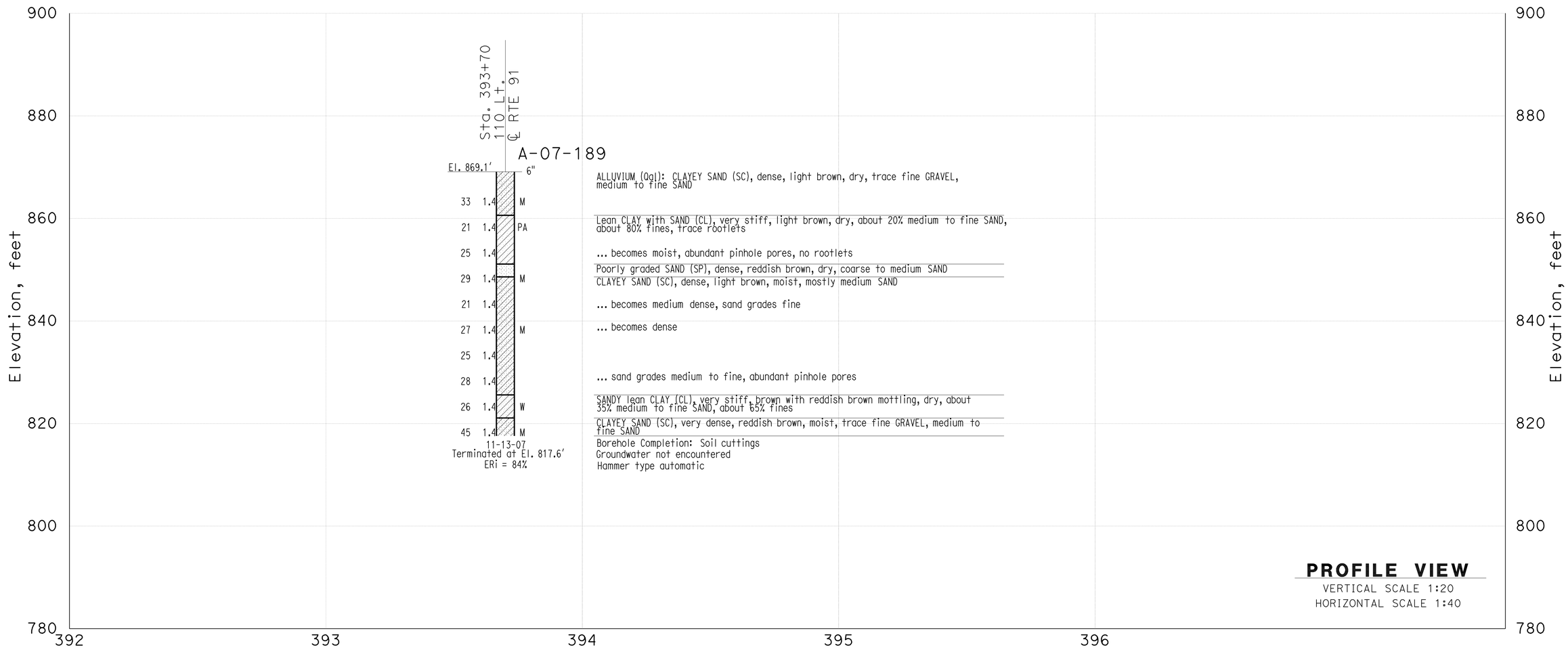

THIS PLAN ACCURATE FOR SOUND WALL AND RETAINING WALL WORK ONLY

GINA PURSELL DESIGN OVERSIGHT	SHAWN WEI FUNCTIONAL SUPERVISOR	DRAWN BY	P. QUACH	P.CHAU/D.WADER/C.CARBINO FIELD INVESTIGATION BY:	PREPARED FOR THE STATE OF CALIFORNIA DEPARTMENT OF TRANSPORTATION	A. LEE PROJECT ENGINEER	BRIDGE NO. X	Retaining Wall 387 R38-9
X SIGN OFF DATE		CHECKED BY	S. PIRATHIVIRAJ	DATE: Nov 6 2007 to March 7 2008			POST MILE X	LOG OF TEST BORINGS SHEET 2 OF 4

OSF GEOTECHNICAL LOG OF TEST BORINGS SHEET (ENGLISH) (REV. 2/25/05)

ORIGINAL SCALE IN INCHES FOR REDUCED PLANS 0 1 2 3

CU 59A0590
EA 08-448400

DISREGARD PRINTS BEARING EARLIER REVISION DATES

REVISION DATES (PRELIMINARY STAGE ONLY) X

SHEET 2 OF 4

FILE => 844840qzl009.dgn

USERNAME => trmnguye DATE PLOTTED => 30-APR-2011 TIME PLOTTED =>

DIST	COUNTY	ROUTE	POST MILES TOTAL PROJECT	SHEET No	TOTAL SHEETS
08	Riv	91	15.6/21.6	1068	2028

GEOTECHNICAL PROFESSIONAL DATE 04/2009

4-25-11
PLANS APPROVAL DATE

REGISTERED PROFESSIONAL ENGINEER
ANDREW C. LEE
No. 2616
Exp. 6-30-12
GEOTECHNICAL
STATE OF CALIFORNIA

The State of California or its officers or agents shall not be responsible for the accuracy or completeness of electronic copies of this plan sheet.

California Department of Transportation
5900 Folsom Boulevard
Sacramento, CA 95819

URS Corporation
2020 East First Street, Suite 400
Santa Ana, CA 92705

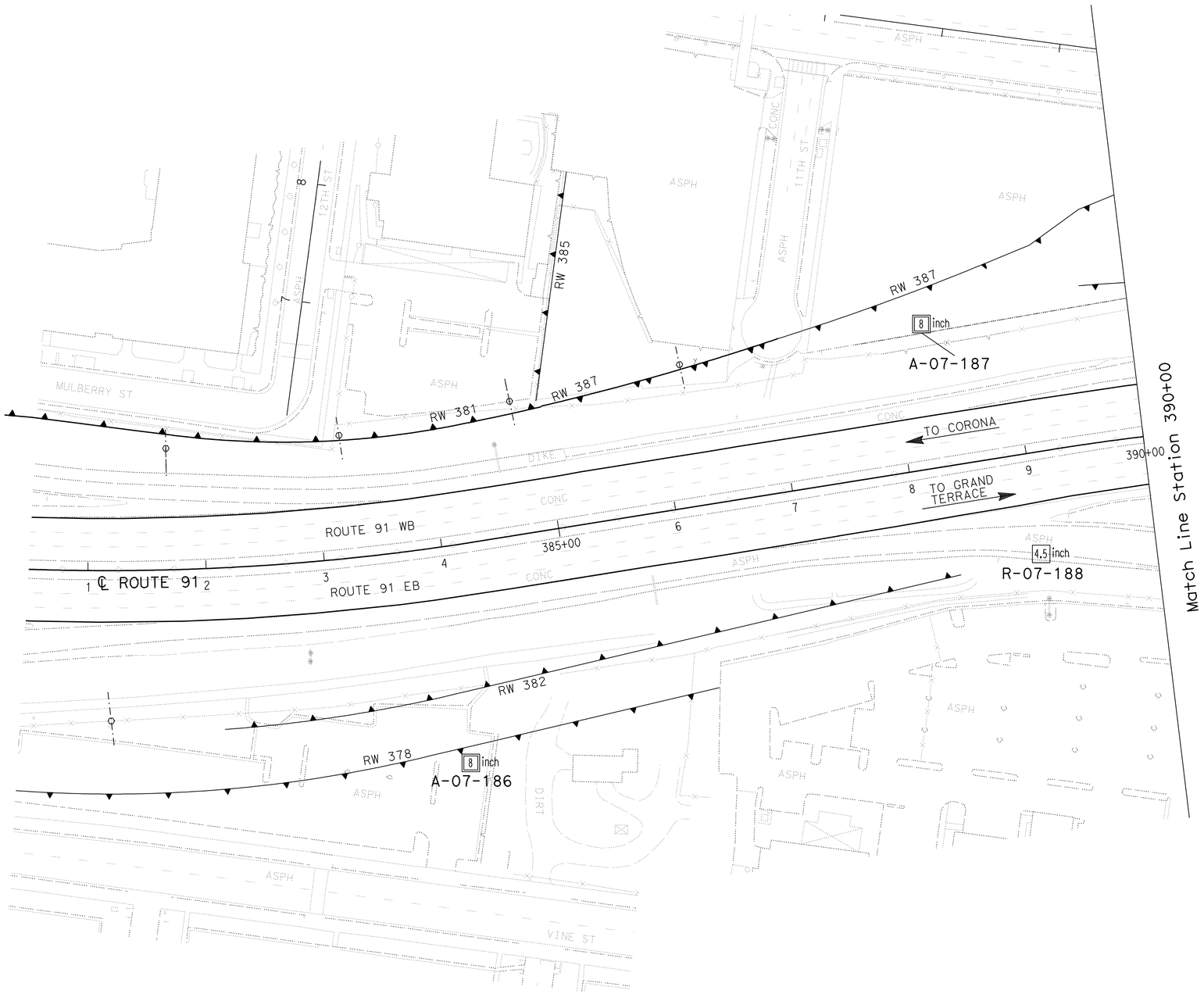

PLAN
SCALE 1"=100'

Borehole Number	Drill Rig	Hammer Type	Avg. Hammer Efficiency, ETR (%)
A-07-186	Diedrich D-120	Automatic	75*
A-07-187	Diedrich D-120	Automatic	75*
R-07-188	CS-2000	Automatic	84

Sampler Type	Inside Diameter (Inches)	Borehole Numbers
SPT	1.375	A-07-186, A-07-187 R-07-188
Modified California 1	1.94	
Modified California 2	2.40	A-07-186, A-07-187

*Estimated Hammer Efficiency Rating.

GINA PURSELL DESIGN OVERSIGHT	SHAWN WEI FUNCTIONAL SUPERVISOR	DRAWN BY	P. QUACH	P.CHAU/D.WADER/C.CARBINO FIELD INVESTIGATION BY:	
X SIGN OFF DATE		CHECKED BY	S. PIRATHIVIRAJ	DATE: Nov 6 2007 to March 7 2008	

PREPARED FOR THE STATE OF CALIFORNIA DEPARTMENT OF TRANSPORTATION

A. LEE
PROJECT ENGINEER

BRIDGE NO. X
POST MILE X

RETAINING WALL 387 R38-10

LOG OF TEST BORINGS SHEET 3 OF 4

OSF GEOTECHNICAL LOG OF TEST BORINGS SHEET (ENGLISH) (REV. 2/25/05)

ORIGINAL SCALE IN INCHES FOR REDUCED PLANS 0 1 2 3

CU 59A0590
EA 08-448400

DISREGARD PRINTS BEARING EARLIER REVISION DATES

REVISION DATES (PRELIMINARY STAGE ONLY) X

SHEET 3 OF 4

FILE => 844840qz1010.dgn

USERNAME => trmmguye DATE PLOTTED => 30-APR-2011 TIME PLOTTED =>

DIST	COUNTY	ROUTE	POST MILES TOTAL PROJECT	SHEET No	TOTAL SHEETS
08	Riv	91	15.6/21.6	1069	2028

GEOTECHNICAL PROFESSIONAL — DATE 10/2008

4-25-11
PLANS APPROVAL DATE

REGISTERED PROFESSIONAL ENGINEER — ANDREW C. LEE — No. 2616 — Exp. 6-30-12 — GEOTECHNICAL — STATE OF CALIFORNIA

The State of California or its officers or agents shall not be responsible for the accuracy or completeness of electronic copies of this plan sheet.

California Department of Transportation
5900 Folsom Boulevard
Sacramento, CA 95819

URS Corporation
2020 East First Street, Suite 400
Santa Ana, CA 92705

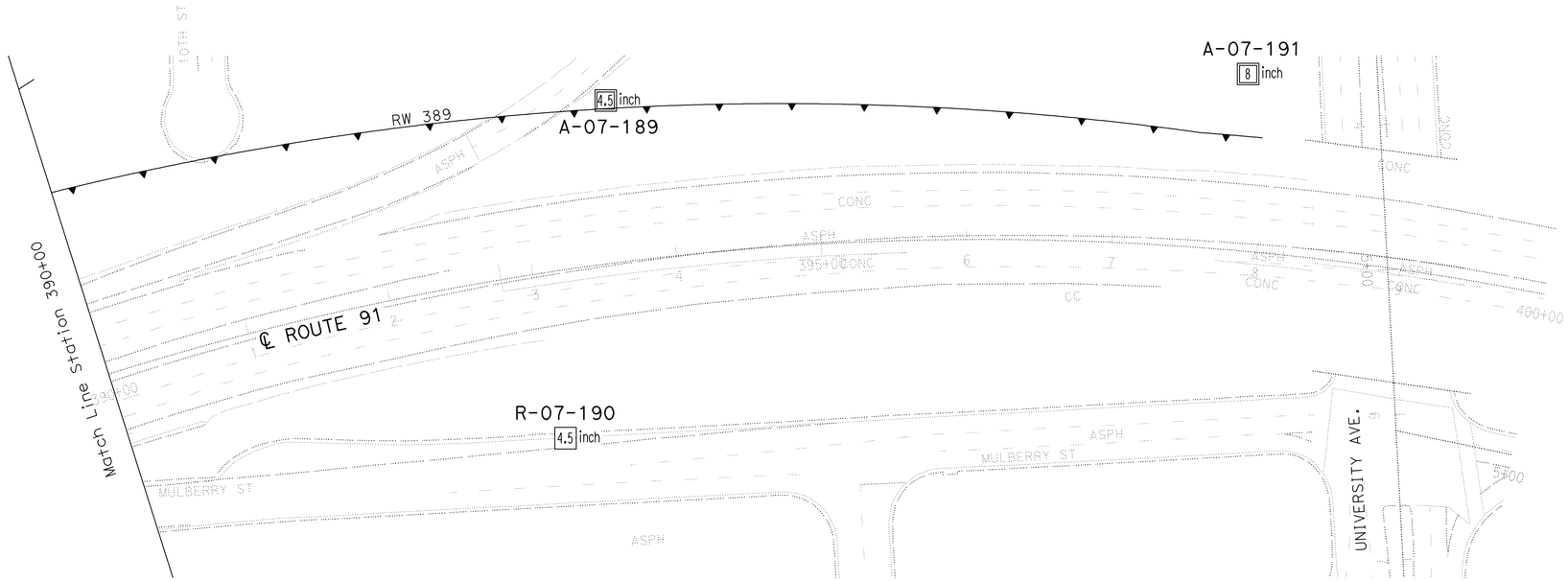

PLAN
SCALE 1"=50'

Borehole Number	Drill Rig	Hammer Type	Avg. Hammer Efficiency, ETR (%)
A-07-189	CS-2000	Automatic	84
R-07-190	CS-2000	Automatic	84
A-07-191	Diedrich D-120	Automatic	75*

Sampler Type	Inside Diameter (Inches)	Borehole Numbers
SPT	1.375	A-07-189, R-07-190 A-07-191
Modified California 1	1.94	-
Modified California 2	2.40	A-07-191

*Estimated Hammer Efficiency Rating.

DESIGN OVERSIGHT	GINA PURSELL FUNCTIONAL SUPERVISOR	DRAWN BY	P. QUACH	P.CHAU/D.WADER/C.CARBINO FIELD INVESTIGATION BY:	PREPARED FOR THE STATE OF CALIFORNIA DEPARTMENT OF TRANSPORTATION
X SIGN OFF DATE		CHECKED BY	S. PIRATHIVIRAJ	DATE: Nov 6 2007 to March 7 2008	

A. LEE
PROJECT ENGINEER

BRIDGE NO. X
POST MILE X

Retainging Wall 387 — R38-11

LOG OF TEST BORINGS SHEET 4 OF 4

OSF GEOTECHNICAL LOG OF TEST BORINGS SHEET (ENGLISH) (REV. 2/25/05)

ORIGINAL SCALE IN INCHES FOR REDUCED PLANS 0 1 2 3

CU 59A0590
EA 08-448400

DISREGARD PRINTS BEARING EARLIER REVISION DATES

REVISION DATES (PRELIMINARY STAGE ONLY) X

SHEET 4 OF 4

FILE => 844840qzi011.dgn

USERNAME => trmnguye DATE PLOTTED => 30-APR-2011 TIME PLOTTED =>

Dist	COUNTY	ROUTE	POST MILES TOTAL PROJECT	SHEET No.	TOTAL SHEETS
08	Riv	91	15.6/21.6	1070	2028

REGISTERED CIVIL ENGINEER 12-1-10 DATE

4-25-11
PLANS APPROVAL DATE

REGISTERED PROFESSIONAL ENGINEER THOMAS HIEN NGO No. 68383 Exp. 9/30/11 CIVIL STATE OF CALIFORNIA

THE STATE OF CALIFORNIA OR ITS OFFICERS OR AGENTS SHALL NOT BE RESPONSIBLE FOR THE ACCURACY OR COMPLETENESS OF SCANNED COPIES OF THIS PLAN SHEET.

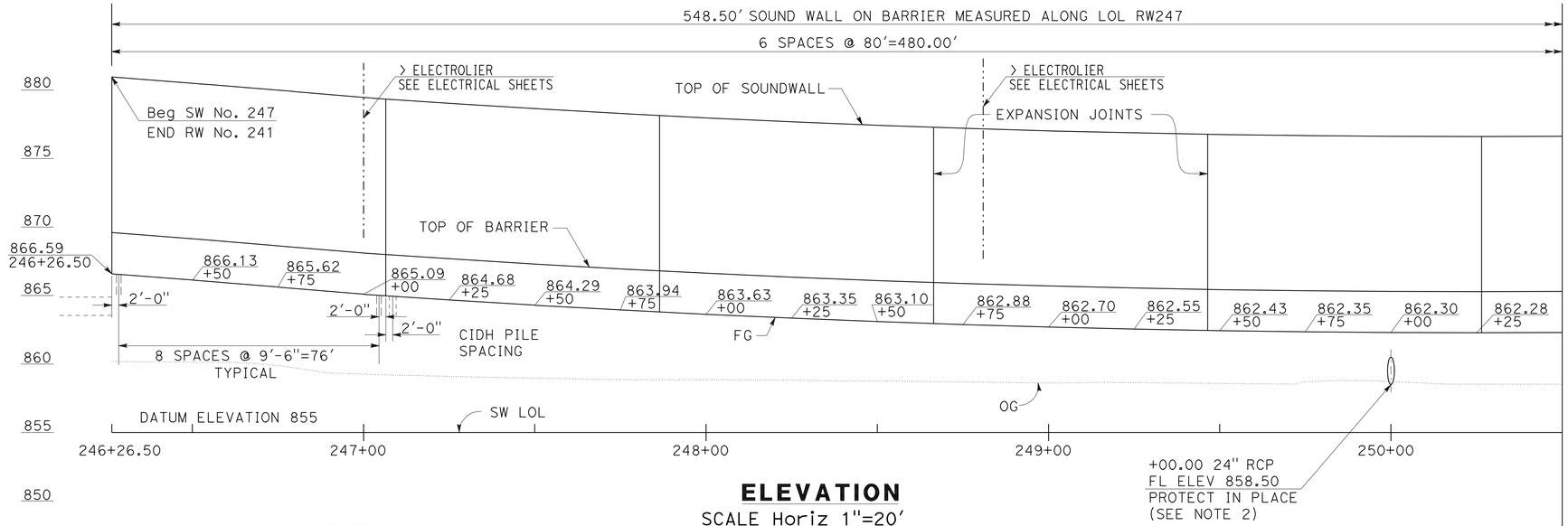

ELEVATION

SCALE Horiz 1"=20'
Vert 1"=5'

NOTES:

1. FOR SOUND WALL ON BARRIER CASE 2, SEE STD PLANS B15-6,B15-7, & B15-8.
2. LOCATION OF DRAINAGE PIPE TO BE FIELD VERIFIED PRIOR TO CONSTRUCTING PILES.
3. ARCHITECTURAL TREATMENT SHOULD EXTEND 6 IN BELOW FG
4. FOR STRUCTURAL SECTIONS, SEE ROADWAY PLANS
5. WATERSTOP IN EXPANSION JOINT SHALL BE EXTEND 6 IN INTO THE BARRIER

SOUND WALL ON BARRIER (CASE 2) He 1' MIN				
BEG STA	END STA	H	S	L
246+26.50	251+75.00	14'-4"	9'-6"	15'-6"

QUANTITIES

16" CIDH CONCRETE PILING (SOUND WALL)	976.5	LF
SOUND WALL (BARRIER) (MASONRY BLOCK)	8826.60	SF
CONCRETE BARRIER (TYPE 736SV)	548.50	LF
STRUCTURAL CONCRETE (RETAINING WALL)	282.20	CY
BAR REINFORCING STEEL (RETAINING WALL)	28923	LB
STRUCTURAL EXCAVATION (RETAINING WALL)	487.49	CY
STRUCTURAL BACKFILL (RETAINING WALL)	495.68	CY
PERVIOUS BACKFILL MATERIAL (RETAINING WALL)	13.41	CY
CONCRETE BARRIER (TYPE 736 MOD)	230.55	LF
PLASTIC PIPE (N)	17.92	LF
WATERSTOP (N)	33.00	LF
ARCHITECTURAL SURFACE (TEXTURED CONCRETE)	1279.43	SF

(N) = NOT A SEPARATE PAY ITEM, FOR INFORMATION ONLY

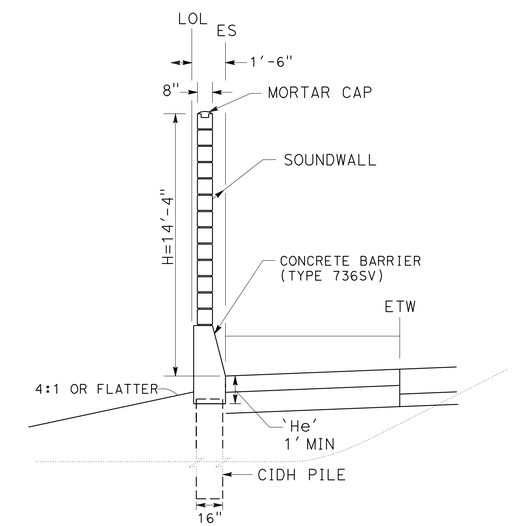

SOUND WALL ON BARRIER (CASE 2)

TYPICAL SECTION

NO SCALE

FROM STA 246+26.5 TO STA 251+75.00

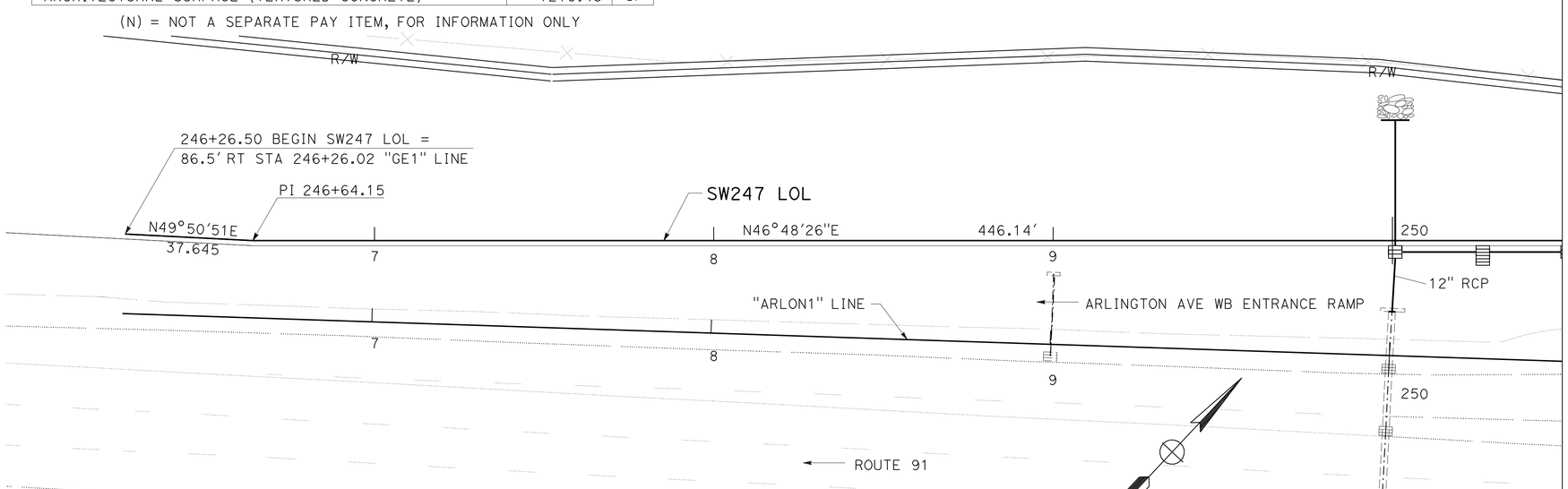

PLAN

SCALE 1"=20'

THIS PLAN ACCURATE FOR SOUND WALL WORK ONLY

SOUND WALL PLAN
SOUND WALL No. 247

SCALE AS SHOWN **SW1-1**

STATE OF CALIFORNIA - DEPARTMENT OF TRANSPORTATION
Caltrans® DESIGN

FUNCTIONAL SUPERVISOR: MARK PERTILE
CALCULATED-DESIGNED BY: THAI VAN HGUYEN
CHECKED BY: THOMAS HIEN NGO
REVISED BY
DATE REVISED

LAST REVISION 12-01-10
DATE PLOTTED => 30-APR-2011
TIME PLOTTED => 08:49

Dist	COUNTY	ROUTE	POST MILES TOTAL PROJECT	SHEET No.	TOTAL SHEETS
08	Riv	91	15.6/21.6	1071	2028

REGISTERED CIVIL ENGINEER 12-1-10 DATE

4-25-11
PLANS APPROVAL DATE

REGISTERED PROFESSIONAL ENGINEER THOMAS HIEN NGO No. 68383 Exp. 9/30/11 CIVIL STATE OF CALIFORNIA

THE STATE OF CALIFORNIA OR ITS OFFICERS OR AGENTS SHALL NOT BE RESPONSIBLE FOR THE ACCURACY OR COMPLETENESS OF SCANNED COPIES OF THIS PLAN SHEET.

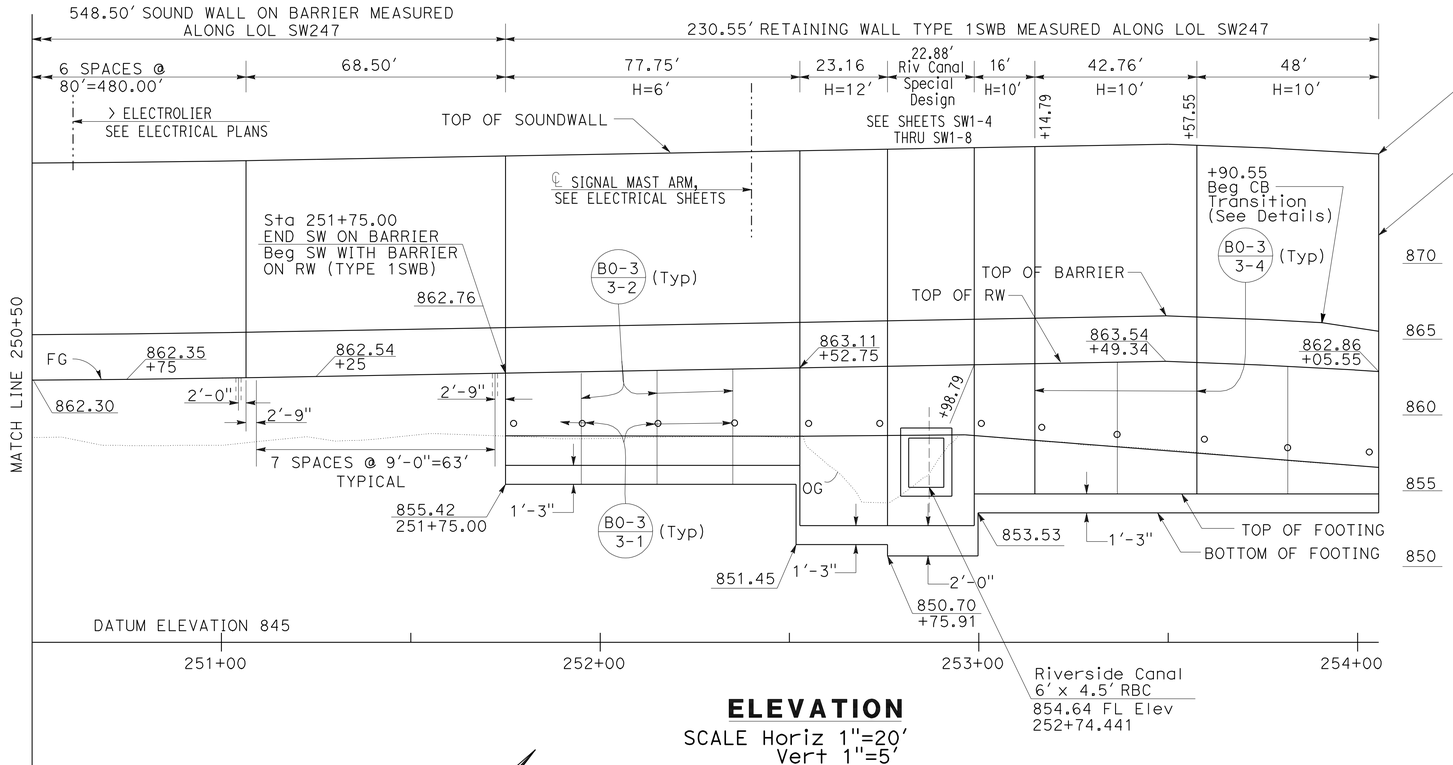

ELEVATION

SCALE Horiz 1"=20'
Vert 1"=5'

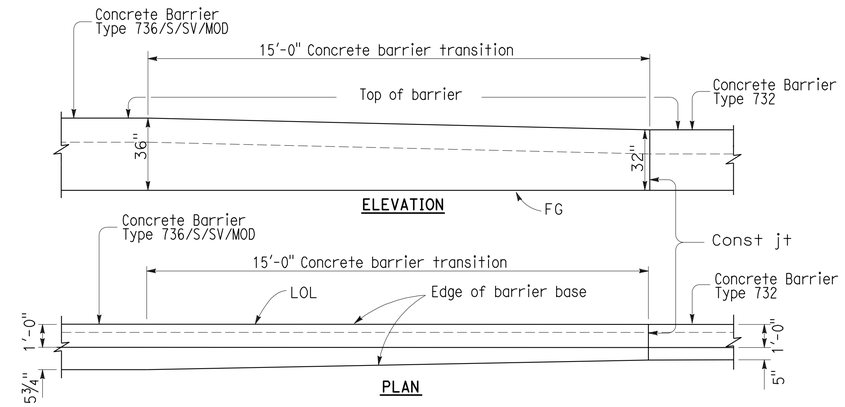

TRANSITION CONCRETE BARRIER TYPE 736/S/V/MOD TO CONCRETE BARRIER TYPE 732

CB TRANSITION DETAIL

NO SCALE

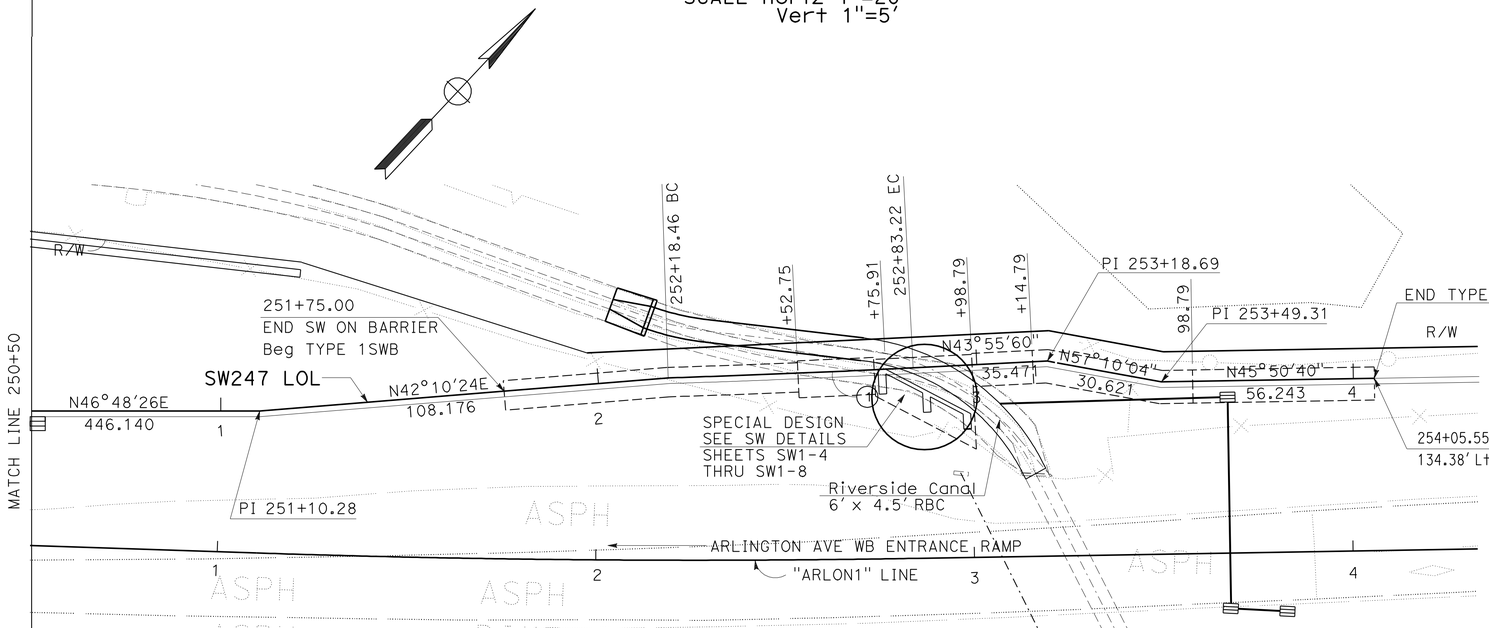

PLAN

SCALE 1"=20'

CURVE DATA

No.	R	Δ	T	L
1	3452.12'	1°4'13"	32.24'	64.49'

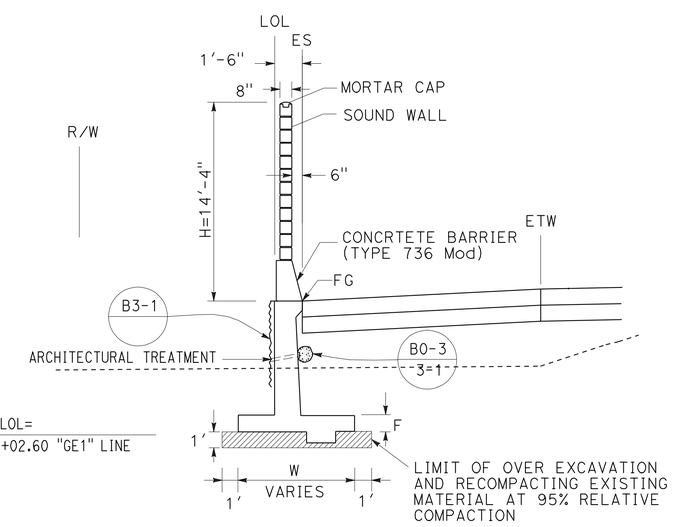

RETAINING WALL TYPE 1SWB

TYPICAL SECTION

NO SCALE

FROM STA 251+75.00 TO STA 254+05.55

THIS PLAN ACCURATE FOR SOUND WALL WORK ONLY

SOUND WALL PLAN
SOUND WALL No. 247

SCALE AS SHOWN

SW1-2

STATE OF CALIFORNIA - DEPARTMENT OF TRANSPORTATION
Caltrans® DESIGN

FUNCTIONAL SUPERVISOR: MARK PERTILE
CALCULATED-DESIGNED BY: THOMAS HIEN NGO
CHECKED BY: THAI VAN HGUYEN
REVISED BY
DATE REVISED

LAST REVISION 12-01-10
DATE PLOTTED => 30-APR-2011
TIME PLOTTED => 08:49

Dist	COUNTY	ROUTE	POST MILES TOTAL PROJECT	SHEET No.	TOTAL SHEETS
08	Riv	91	15.6/21.6	1072	2028

REGISTERED CIVIL ENGINEER 12-1-10 DATE

4-25-11
PLANS APPROVAL DATE

REGISTERED PROFESSIONAL ENGINEER THOMAS HIEN NGO No. 68383 Exp. 9/30/11 CIVIL STATE OF CALIFORNIA

THE STATE OF CALIFORNIA OR ITS OFFICERS OR AGENTS SHALL NOT BE RESPONSIBLE FOR THE ACCURACY OR COMPLETENESS OF SCANNED COPIES OF THIS PLAN SHEET.

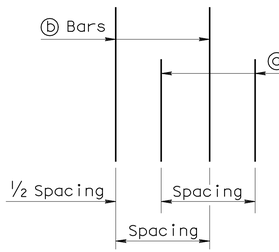

DETAIL B

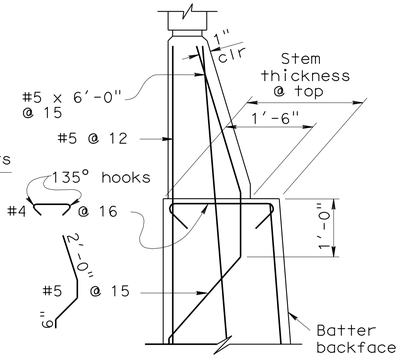

DETAIL A WITHOUT HAUNCH

GENERAL NOTES

1. For soundwall and retaining wall architectural finish or texture, see details elsewhere in project plans.
2. For details not shown and drainage notes, see B3-8
3. Footing cover, 1'-6" minimum.
4. Limit of no splicing rebars = 3 times the bottom thickness of the stem.
5. Placement of reinforcements :
   - ⓑ & ⓒ bars are spliced together.
   - * ⓐ & ⓑ bars are bundled together.
   - ** Alternate ⓐ & ⓑ bars are shown in "Detail B".
   - Cont = Continuous.
6. For Soundwall & Barrier reinforcement, see "Soundwall Masonry Block on Barriers" sheets in Standard Plans.

TABLE 1: TABLE OF REINFORCING STEEL DIMENSIONS AND DATA

	Stem With Haunch													
Design H	6'	8'	10'	12'	14'	16'	18'	20'	22'	24'	26'	28'	30'	32'
W	7'-9"	8'-0"	8'-9"	9'-9"	10'-9"	12'-0"	13'-0"	14'-3"	15'-3"	16'-6"	18'-6"	19'-9"	21'-3"	22'-6"
C	2'-9"	2'-9"	3'-0"	3'-3"	3'-6"	4'-0"	4'-3"	4'-9"	5'-0"	5'-6"	6'-3"	6'-9"	7'-3"	7'-9"
B	5'-0"	5'-3"	5'-9"	6'-6"	7'-3"	8'-0"	8'-9"	9'-6"	10'-3"	11'-0"	12'-3"	13'-0"	14'-0"	14'-9"
F Spread footing	1'-3"	1'-3"	1'-3"	1'-3"	1'-3"	1'-6"	1'-6"	1'-9"	2'-0"	2'-3"	2'-9"	3'-0"	3'-3"	3'-9"
Batter	0	½:12	½:12	½:12	½:12	½:12	½:12	½:12	½:12	⅝:12	¾:12	⅞:12	1:12	1:12
Stem thickn. @ Haunch	1'-0"	1'-0"	1'-0"	1'-0"	1'-0"	1'-0"	1'-0"	1'-0"	1'-0"	1'-0"	1'-0"	1'-0"	1'-0"	1'-0"
ⓐ Bars				#6 @18**	#7 @18**	#8 @18**	#9 @18**	#10 @18**	#8 @9*	#8 @9*	#7 @6*	#10 @12**	#9 @9*	#11@12**
X				Cont	Cont	Cont	Cont	Cont	Cont	Cont	Cont	Cont	Cont	Cont
Y				8'-0"	6'-6"	7'-6"	8'-6"	9'-6"	9'-6"	11'-0"	11'-6"	13'-0"	14'-0"	15'-6"
ⓑ Bars	#5 @12	#5 @12	#5 @9	#6 @18**	#7 @18**	#8 @18**	#9 @18**	#10 @18**	#8 @9*	#8 @9*	#7 @6*	#10 @12**	#9 @9*	#11@12**
X	Cont	Cont	Cont	Cont	Cont	Cont	Cont	Cont	Cont	5'-6"	6'-6"	7'-0"	8'-0"	8'-6"
Y	Cont	Cont	Cont	Cont	10'-6"	13'-0"	15'-0"	17'-6"	19'-6"	21'-0"	18'-6"	19'-0"	25'-6"	23'-6"
ⓒ Bars					#6 @18	#6 @18	#6 @18	#6 @18	#6 @18	#6 @18	#6 @12	#7 @12	#7 @18	#7 @12
ⓓ Bars	#5 @12	#5 @12	#5 @12	#5 @9	#6 @9	#6 @9	#6 @6	#8 @9	#8 @9	#8 @9	#7 @6	#7 @6	#9 @9	#9 @9
Ultimate Bearing Capacity Req'd k/sf	4.6	5.5	6.1	6.6	7.3	8.1	9.0	9.9	11.3	12.2	12.5	13.4	14.1	15.4

TABLE 2: TABLE OF REINFORCING STEEL DIMENSIONS AND DATA

	Stem With Haunch						Stem Without Haunch						
Design H	8'	10'	12'	14'	16'	18'	20'	22'	24'	26'	28'	30'	32'
W	8'-0"	8'-6"	9'-3"	10'-3"	11'-3"	13'-0"	13'-9"	16'-0"	16'-6"	18'-6"	20'-0"	20'-6"	21'-9"
C	2'-9"	2'-9"	3'-0"	3'-6"	3'-9"	4'-3"	4'-6"	5'-3"	5'-6"	6'-3"	6'-9"	6'-9"	7'-6"
B	5'-3"	5'-9"	6'-3"	6'-9"	7'-6"	8'-9"	9'-3"	10'-9"	11'-0"	12'-3"	13'-3"	13'-9"	14'-3"
F Spread footing	1'-3"	1'-3"	1'-3"	1'-3"	1'-6"	1'-6"	1'-9"	2'-0"	2'-3"	2'-9"	3'-0"	3'-3"	3'-6"
Batter	0	0	0	0	0	0	0	0	0	¼:12	½:12	½:12	½:12
Stem thickn. @ Haunch	1'-0"	1'-0"	1'-0"	1'-0"	1'-3"	1'-3"							
Stem thickn. @ top							1'-6"	2'-0"	2'-0"	2'-0"	2'-0"	2'-0"	2'-0"
ⓐ Bars			#6 @12**	#5 @6*	#9 @18**	#9 @12**	#9 @12**	#9 @12**	#7 @ 6*	#7 @6*	#7 @6*	#9 @9*	#11@12**
X			Cont	Cont	Cont	Cont	Cont	Cont	Cont	Cont	Cont	Cont	Cont
Y			5'-6"	5'-6"	8'-6"	8'-6"	8'-6"	8'-6"	9'-6"	11'-0"	12'-6"	13'-6"	14'-6"
ⓑ Bars	#5 @9	#6 @9	#6 @12**	#5 @6*	#9 @18**	#9 @12**	#9 @12**	#9 @12**	#7 @ 6*	#7 @6*	#7 @6*	#9 @9*	#11@12**
X	Cont	Cont	Cont	Cont	Cont	Cont	Cont	Cont	5'-6"	6'-0"	7'-6"	7'-6"	8'-0"
Y	Cont	Cont	Cont	Cont	11'-6"	11'-6"	12'-0"	12'-0"	17'-6"	20'-0"	21'-6"	24'-0"	24'-0"
ⓒ Bars					#7 @18	#7 @12	#7 @12	#7 @12	#6 @ 12	#6 @ 12	#6 @12	#7 @18	#7 @12
ⓓ Bars	#5 @12	#5 @9	#5 @9	#6 @9	#6 @9	#9 @12	#9 @12	#7 @#7	6 @ 6	#7 @ 6	#7 @ 6	#9 @ 9	#9 @ 9
Ultimate Bearing Capacity Req'd k/sf	5.5	6.5	7.3	7.6	9.0	9.0	10.6	10.5	12.2	12.6	13.3	15.4	16.0

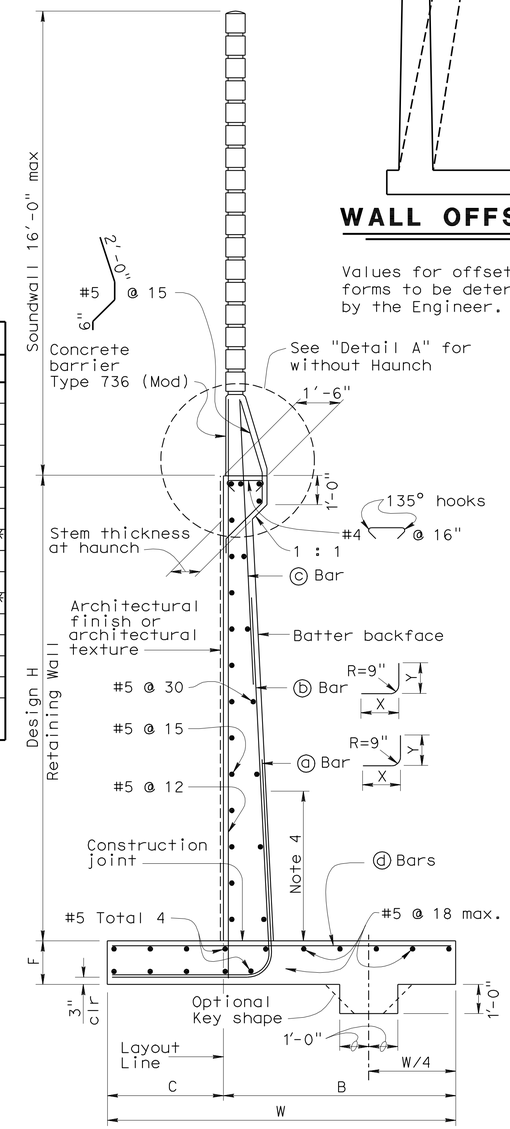

SPREAD FOOTING SECTION

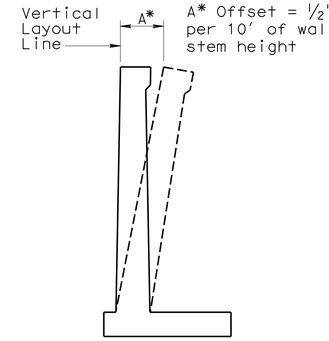

WALL OFFSET

Values for offsetting forms to be determined by the Engineer.

DESIGN DATA

DESIGN: Load Factor Design (LFD)

CONCRETE: Reinforced Concrete, f'c = 3600 psi
fy = 60,000 psi

LOADING CASE:
Level ground with 240 psf surcharge and 16' Soundwall

Seismic Load = 0.3 Dead Load
Wind Load = 30 psf
Dead Load of Soundwall = 1414 lb/ft
Dead Load of Barrier = 372 lb/ft

SEISMIC LOAD: SOIL
Kh = 0.3g
Kv = 0.0
Kae : Mononobe-Okabe Method

SOIL: Ø = 34° γ = 120 pcf
Equivalent fluid pressure:
= 36 pcf for determination of toe pressure
= 27 pcf for determination of heel pressure

EXTERNAL STABILITY:
Group 1 : D + E + SC
Group 2 : D + E + SC + W
Group 3 : D + PYM

INTERNAL STABILITY (LFD):
Group A : βD + 1.7E + 1.7SC
Group B : βD + 1.7E + 1.3W
Group C (stem) : 1.0D + 1.0E + 1.0EQD + 1.0EQE
Group C (footing) : D + PYM

Where : β = 1.0 or 1.3 whichever controls design
D = Dead Load
E = Lateral Earth Pressure
SC = Surcharge
W = Wind load
EQD = Seismic Dead Load
EQE = Seismic Lateral Earth Pressure
PYM = Probable Yield Moment (1.3 x Nominal Yield Moment of Stem)

THIS PLAN ACCURATE FOR SOUND WALL WORK ONLY

RETAINING WALL TYPE 1SWB

No Scale

SW1-3

REVISED BY | DATE REVISED
THAI VAN HGUYEN | THOMAS HIEN NGO
CALCULATED-DESIGNED BY | CHECKED BY
FUNCTIONAL SUPERVISOR | MARK PERTILE
STATE OF CALIFORNIA - DEPARTMENT OF TRANSPORTATION
Caltrans
DESIGN

LAST REVISION 12-01-10 | DATE PLOTTED => 30-APR-2011 | TIME PLOTTED => 08:50

Dist	COUNTY	ROUTE	POST MILES TOTAL PROJECT	SHEET No.	TOTAL SHEETS
08	Riv	91	15.6/21.6	1073	2028

REGISTERED CIVIL ENGINEER 12-1-10 DATE

4-25-11
PLANS APPROVAL DATE

REGISTERED PROFESSIONAL ENGINEER MINH THUONG VO No. C59297 Exp. 06/30/11 CIVIL STATE OF CALIFORNIA

THE STATE OF CALIFORNIA OR ITS OFFICERS OR AGENTS SHALL NOT BE RESPONSIBLE FOR THE ACCURACY OR COMPLETENESS OF SCANNED COPIES OF THIS PLAN SHEET.

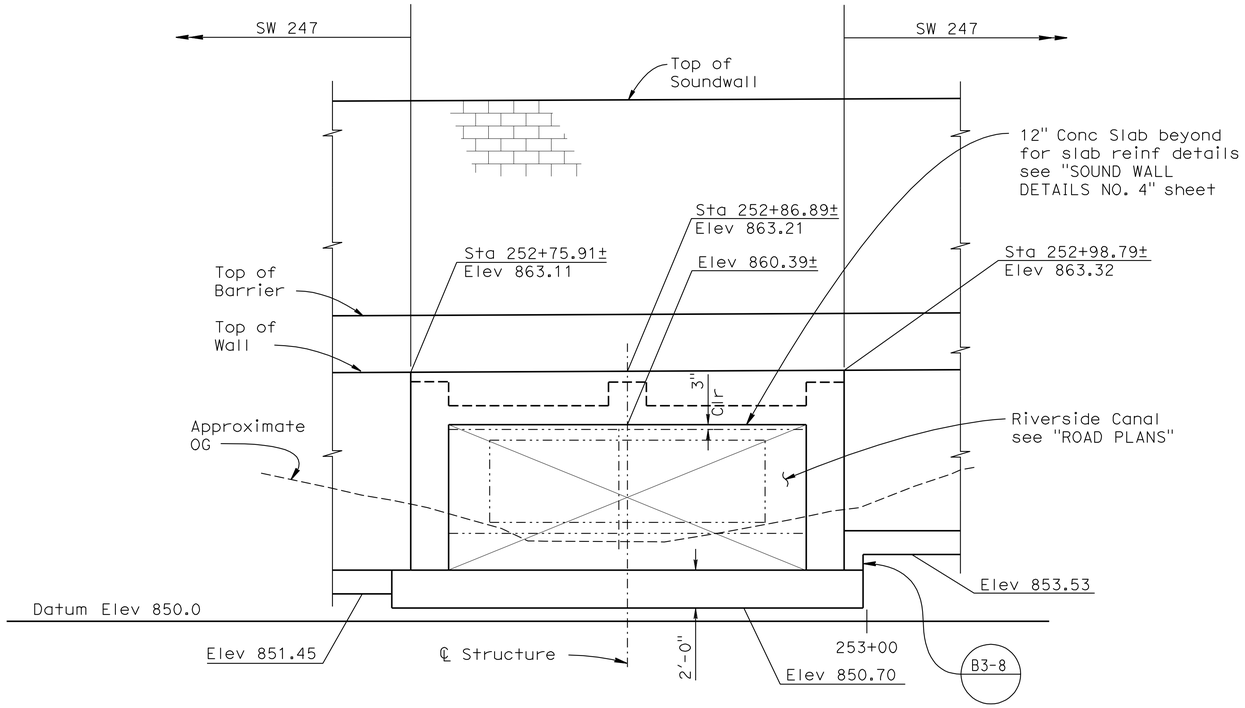

DEVELOPED MIRROR ELEVATION

1/4" = 1'-0"

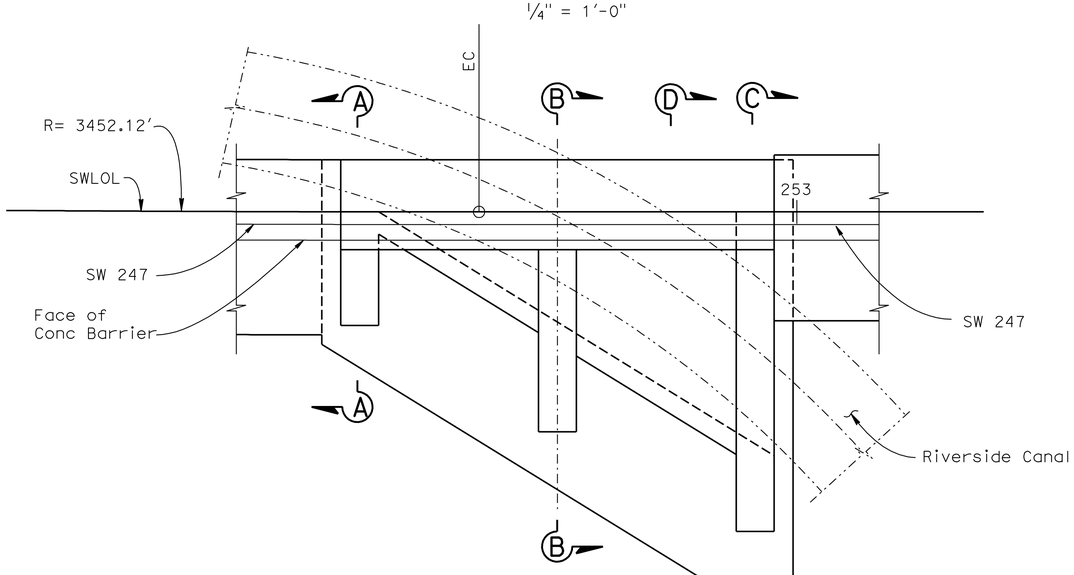

PLAN

1/4" = 1'-0"

NOTE:
THE CONTRACTOR SHALL VERIFY ALL CONTROLLING FIELD DIMENSIONS BEFORE ORDERING OR FABRICATING ANY MATERIAL.

DESIGN DATA

DESIGN: Load Factor Design (LFD)

CONCRETE: Reinforced Concrete, f'c = 3600 psi
fy = 60,000 psi

LOADING CASE:
Level ground with 240 psf surcharge and 16' Soundwall

Seismic Load = 0.3 Dead Load
Wind Load = 30 psf
Dead Load of Soundwall = 1414 lb/ft

SEISMIC LOAD: SOIL
Kh = 0.3g
Kv = 0.0
Kae : Mononobe-Okabe Method

SOIL: ϕ = 34° γ = 120 pcf
Equivalent fluid pressure:
= 36 pcf for determination of toe pressure
= 27 pcf for determination of heel pressure

EXTERNAL STABILITY:
Group 1 : D + E + SC
Group 2 : D + E + SC + W
Group 3 : 1.0D + 1.0E + 1.0EQD + 1.0EQE

INTERNAL STABILITY (LFD):
Group A : βD + 1.7E + 1.7SC
Group B : βD + 1.7E + 1.3W
Group C : 1.0D + 1.0E + 1.0EQD + 1.0EQE

Where : = 1.0 or 1.3 whichever controls design
β = Dead Load
E = Lateral Earth Pressure
SC = Surcharge
W = Wind load
EQD = Seismic Dead Load
EQE = Seismic Lateral Earth Pressure

Notes:

1. For Setions A-A see "SOUND WALL DETAILS NO. 2" sheet.
2. For Setions B-B, see "SOUND WALL DETAILS NO. 3" sheet.
3. For Secttion C-C see" SOUND WALL DETAILS NO. 4" Sheet.
4. For Section D-D see "SOUND WALL DETAILS NO. 5" sheet.

SOUND WALL DETAILS No. 1

SOUND WALL No. 247

SCALE AS SHOWN **SW1-4**

THIS PLAN ACCURATE FOR SOUND WALL WORK ONLY.

STATE OF CALIFORNIA - DEPARTMENT OF TRANSPORTATION
Caltrans® DESIGN
FUNCTIONAL SUPERVISOR DANIEL T. ADAMS
CALCULATED-DESIGNED BY MINH VO
CHECKED BY RYAN STILTZ
REVISED BY
DATE REVISED

LAST REVISION 12-01-10
DATE PLOTTED => 30-APR-2011
TIME PLOTTED => 08:50

Dist	COUNTY	ROUTE	POST MILES TOTAL PROJECT	SHEET No.	TOTAL SHEETS
08	Riv	91	15.6/21.6	1074	2028

REGISTERED CIVIL ENGINEER 12-1-10 DATE

4-25-11
PLANS APPROVAL DATE

REGISTERED PROFESSIONAL ENGINEER MINH THUONG VO No. C59297 Exp. 06/30/11 CIVIL STATE OF CALIFORNIA

THE STATE OF CALIFORNIA OR ITS OFFICERS OR AGENTS SHALL NOT BE RESPONSIBLE FOR THE ACCURACY OR COMPLETENESS OF SCANNED COPIES OF THIS PLAN SHEET.

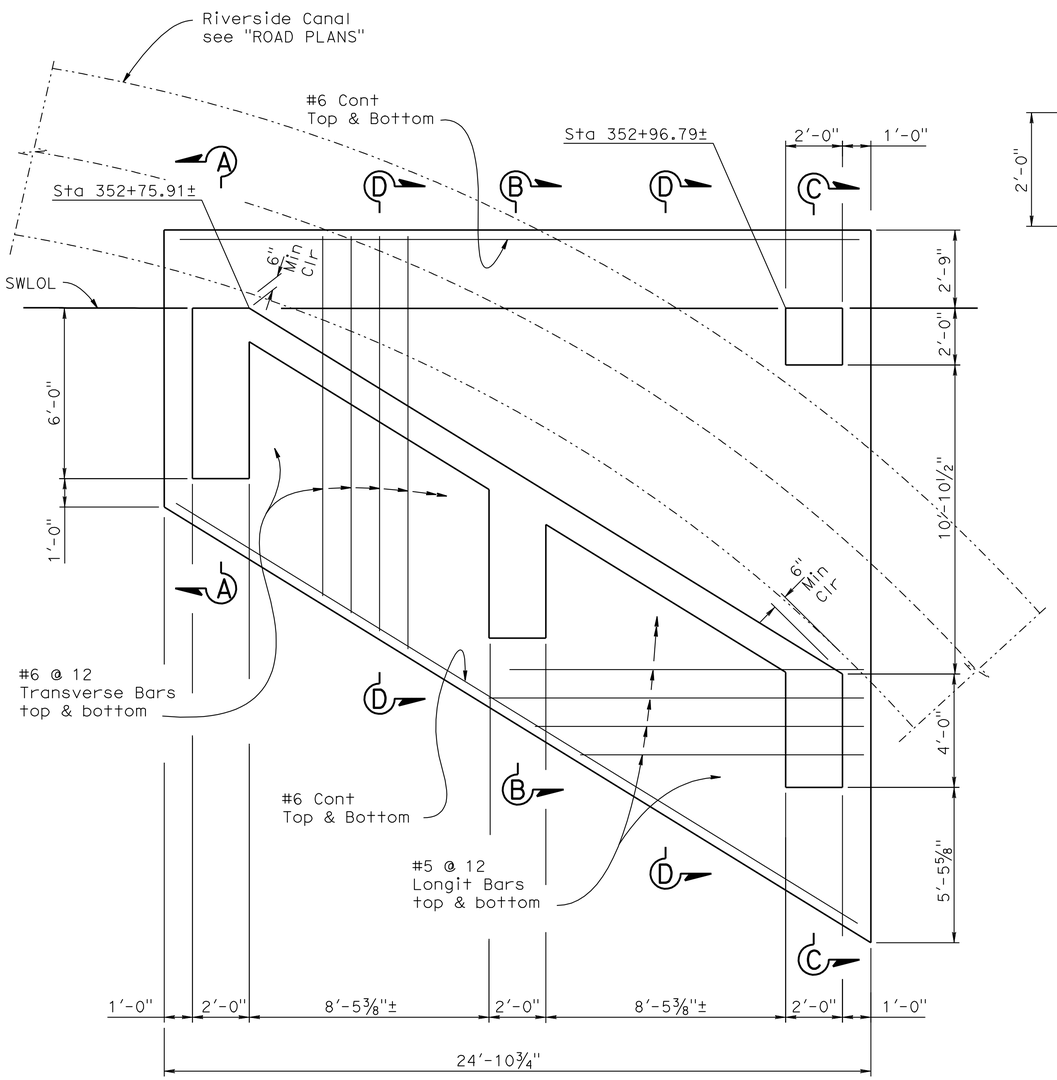

FOOTING PLAN

⅜" = 1'-0"

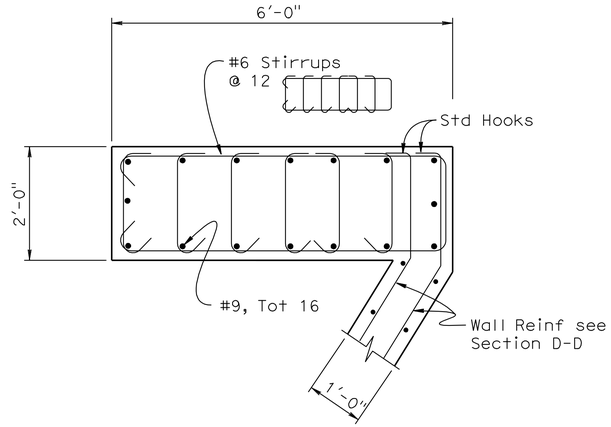

SECTION E-E

3/4 " = 1'-0"

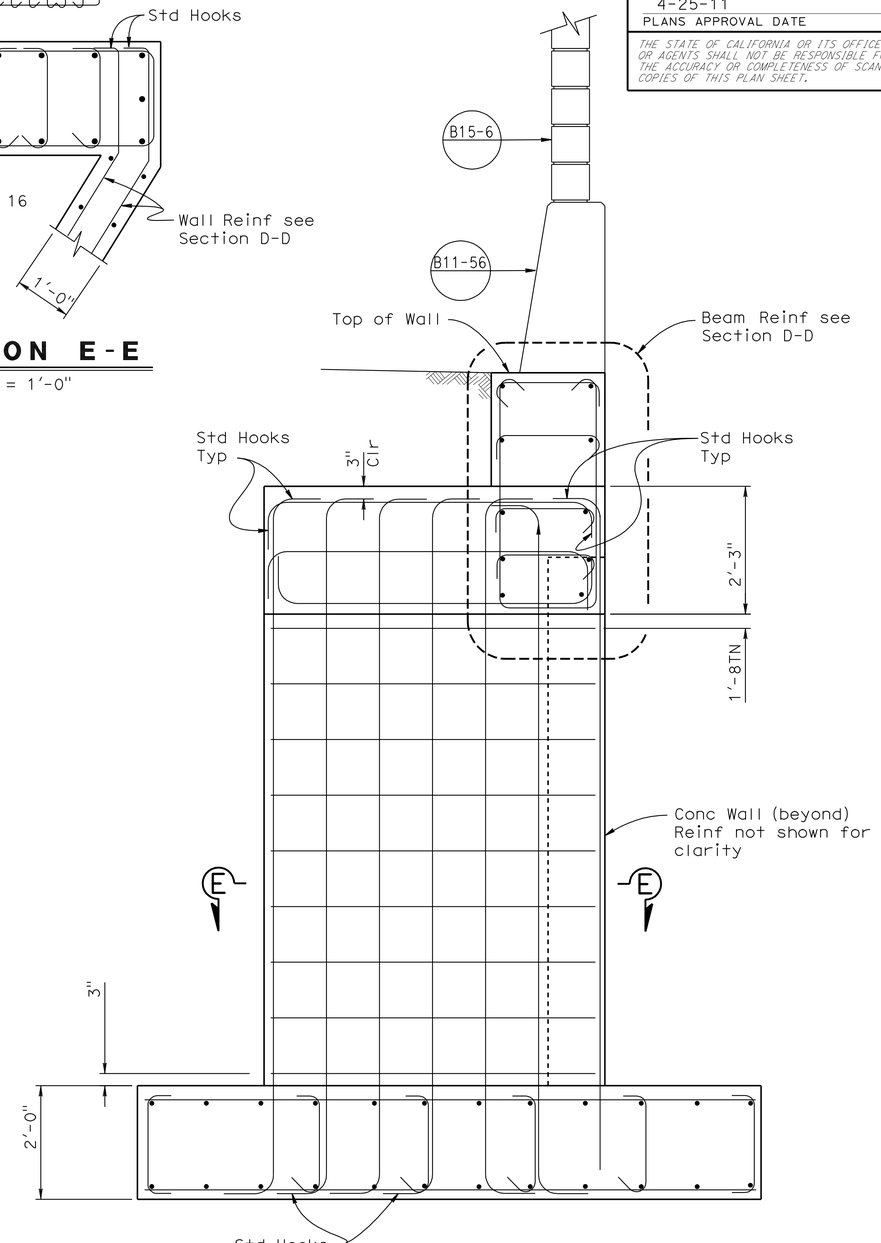

SECTION A-A

3/4 " = 1'-0"

Notes:

1. For Section B-B see "SOUND WALL DETAILS NO. 3" sheet.
2. For Section C-C see "SOUND WALL DETAILS NO. 4" sheet.
3. For Section D-D see "SOUND WALL DETAILS NO. 5" sheet.

NOTE:
THE CONTRACTOR SHALL VERIFY ALL CONTROLLING FIELD DIMENSIONS BEFORE ORDERING OR FABRICATING ANY MATERIAL.

THIS PLAN ACCURATE FOR SOUND WALL WORK ONLY.

SOUND WALL DETAILS No. 2

SOUND WALL No. 247

SCALE AS SHOWN

SW1-5

REVISED BY | DATE REVISED
MINH VO | RYAN STILTZ
CALCULATED-DESIGNED BY | CHECKED BY
FUNCTIONAL SUPERVISOR
DANIEL T. ADAMS

STATE OF CALIFORNIA - DEPARTMENT OF TRANSPORTATION
Caltrans
DESIGN

LAST REVISION 12-01-10
DATE PLOTTED => 30-APR-2011
TIME PLOTTED => 08:50

Dist	COUNTY	ROUTE	POST MILES TOTAL PROJECT	SHEET No.	TOTAL SHEETS
08	Riv	91	15.6/21.6	1075	2028

REGISTERED CIVIL ENGINEER 12-1-10 DATE

4-25-11
PLANS APPROVAL DATE

REGISTERED PROFESSIONAL ENGINEER MINH THUONG VO No. C59297 Exp. 06/30/11 CIVIL STATE OF CALIFORNIA

THE STATE OF CALIFORNIA OR ITS OFFICERS OR AGENTS SHALL NOT BE RESPONSIBLE FOR THE ACCURACY OR COMPLETENESS OF SCANNED COPIES OF THIS PLAN SHEET.

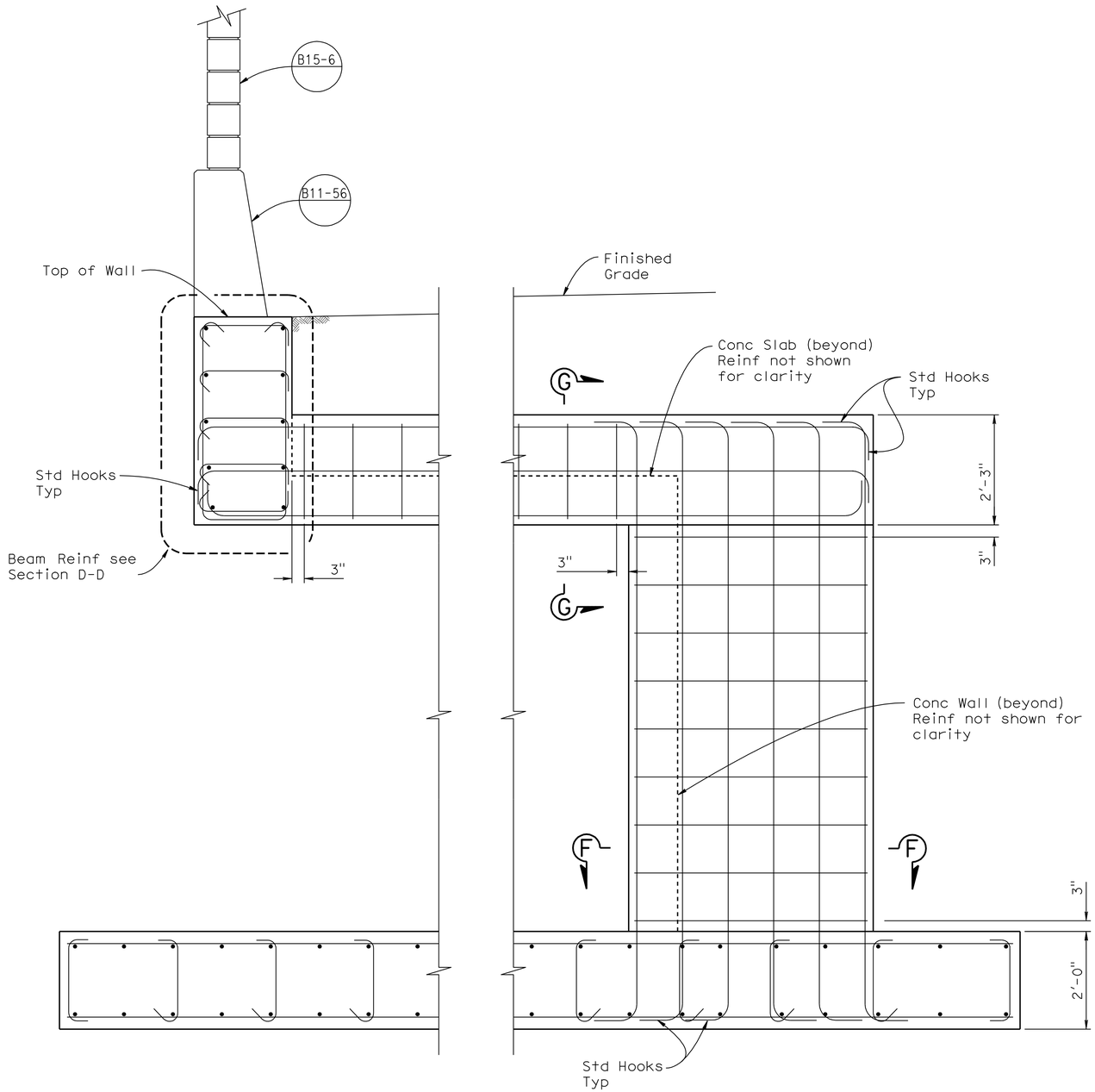

SECTION B-B

3/4" = 1'-0"

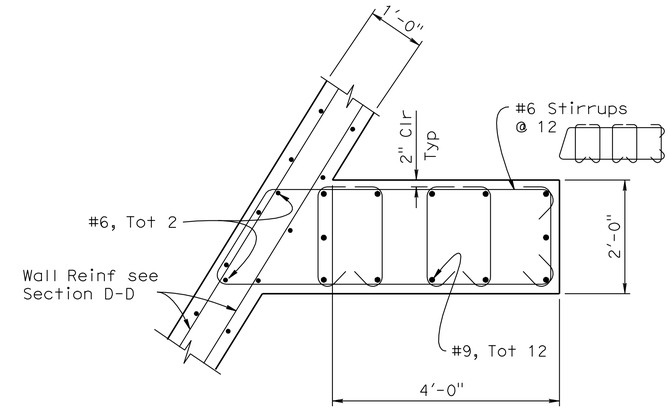

SECTION F-F

3/4" = 1'-0"

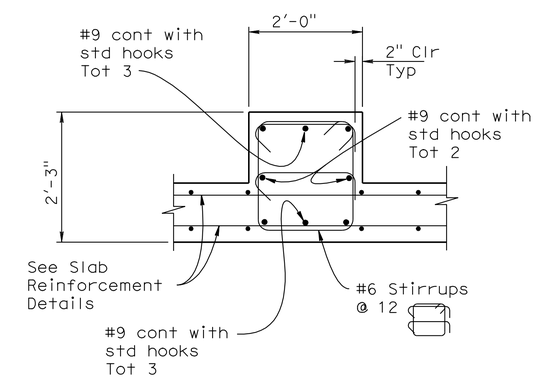

SECTION G-G

3/4" = 1'-0"

NOTE:
THE CONTRACTOR SHALL VERIFY ALL CONTROLLING FIELD DIMENSIONS BEFORE ORDERING OR FABRICATING ANY MATERIAL.

SOUND WALL DETAILS No. 3

SOUND WALL No. 247

SCALE AS SHOWN

SW1-6

THIS PLAN ACCURATE FOR SOUND WALL WORK ONLY.

STATE OF CALIFORNIA - DEPARTMENT OF TRANSPORTATION
Caltrans®
DESIGN
FUNCTIONAL SUPERVISOR: DANIEL T. ADAMS
CALCULATED-DESIGNED BY: MINH VO
CHECKED BY: RYAN STILTZ
REVISED BY
DATE REVISED

LAST REVISION 12-01-10
DATE PLOTTED => 30-APR-2011
TIME PLOTTED => 08:50

Dist	COUNTY	ROUTE	POST MILES TOTAL PROJECT	SHEET No.	TOTAL SHEETS
08	Riv	91	15.6/21.6	1076	2028

REGISTERED CIVIL ENGINEER 12-1-10 DATE

4-25-11
PLANS APPROVAL DATE

REGISTERED PROFESSIONAL ENGINEER MINH THUONG VO No. C59297 Exp. 06/30/11 CIVIL STATE OF CALIFORNIA

THE STATE OF CALIFORNIA OR ITS OFFICERS OR AGENTS SHALL NOT BE RESPONSIBLE FOR THE ACCURACY OR COMPLETENESS OF SCANNED COPIES OF THIS PLAN SHEET.

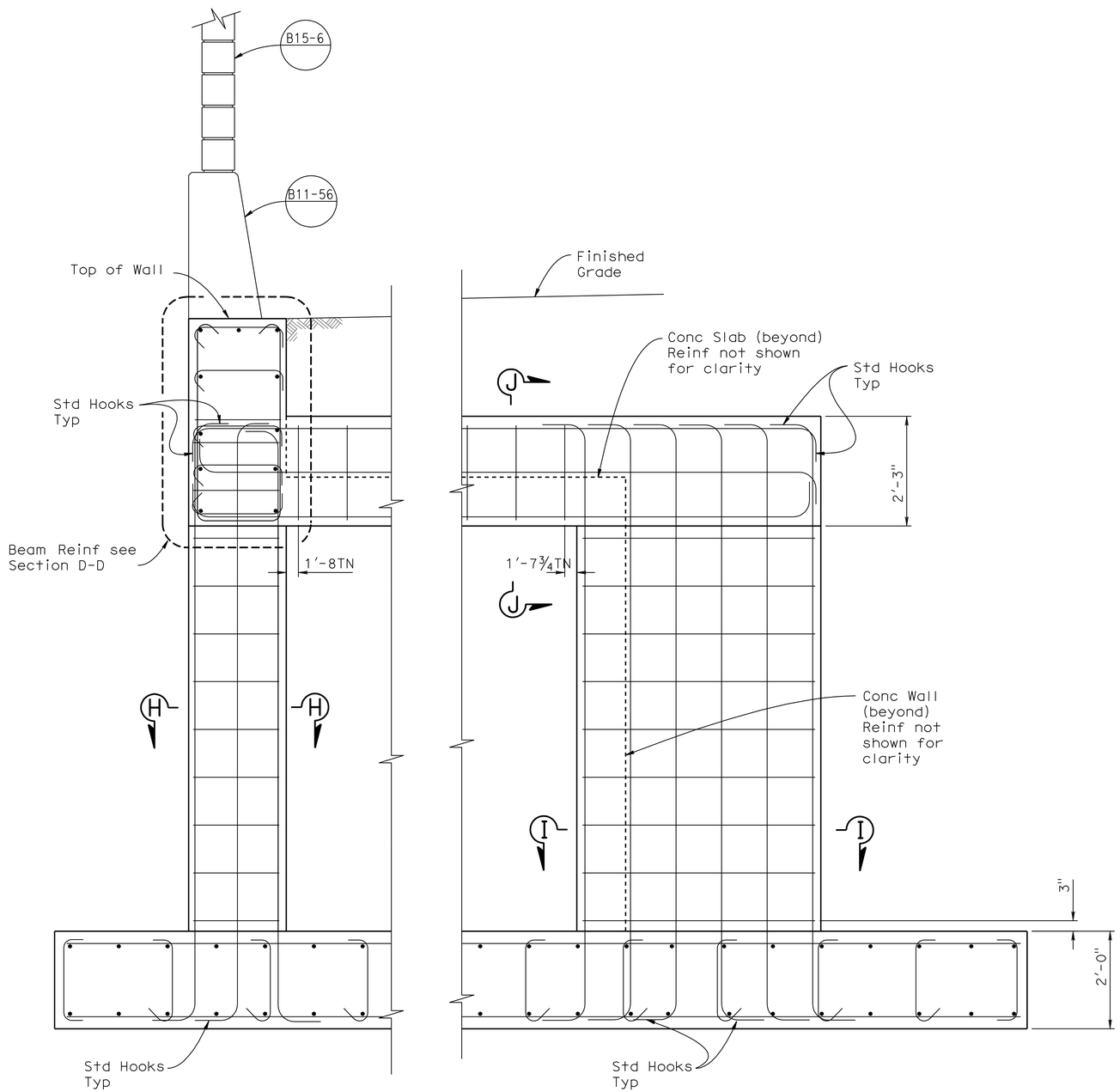

SECTION C-C

¾" = 1'-0"

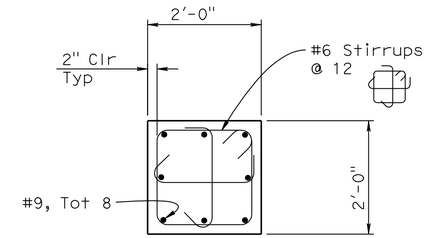

SECTION H-H

¾" = 1'-0"

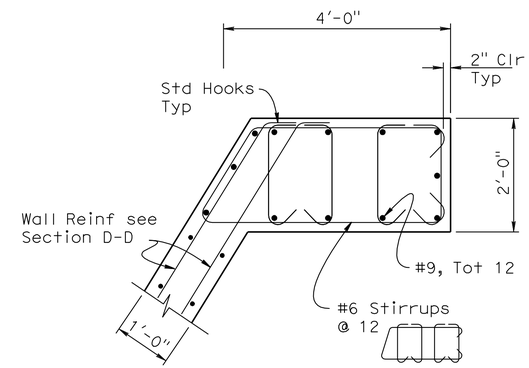

SECTION I-I

¾" = 1'-0"

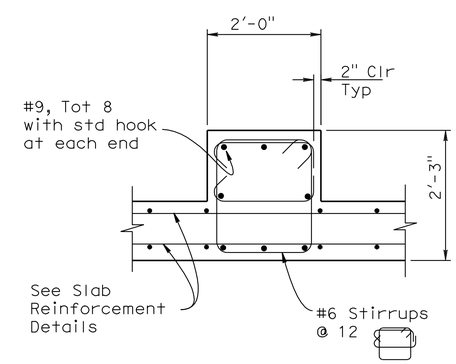

SECTION J-J

¾" = 1'-0"

NOTE:
THE CONTRACTOR SHALL VERIFY ALL CONTROLLING FIELD DIMENSIONS BEFORE ORDERING OR FABRICATING ANY MATERIAL.

THIS PLAN ACCURATE FOR SOUND WALL WORK ONLY.

SOUND WALL DETAILS No. 4

SOUND WALL No. 247

SCALE AS SHOWN

SW1-7

STATE OF CALIFORNIA - DEPARTMENT OF TRANSPORTATION
Caltrans®
DESIGN
FUNCTIONAL SUPERVISOR: DANIEL T. ADAMS
CALCULATED-DESIGNED BY: MINH VO
CHECKED BY: RYAN STILTZ
REVISED BY
DATE REVISED

LAST REVISION 12-01-10
DATE PLOTTED => 30-APR-2011
TIME PLOTTED => 08:50

Dist	COUNTY	ROUTE	POST MILES TOTAL PROJECT	SHEET No.	TOTAL SHEETS
08	Riv	91	15.6/21.6	1077	2028

REGISTERED CIVIL ENGINEER 12-1-10 DATE

4-25-11
PLANS APPROVAL DATE

REGISTERED PROFESSIONAL ENGINEER MINH THUONG VO No. C59297 Exp. 06/30/11 CIVIL STATE OF CALIFORNIA

THE STATE OF CALIFORNIA OR ITS OFFICERS OR AGENTS SHALL NOT BE RESPONSIBLE FOR THE ACCURACY OR COMPLETENESS OF SCANNED COPIES OF THIS PLAN SHEET.

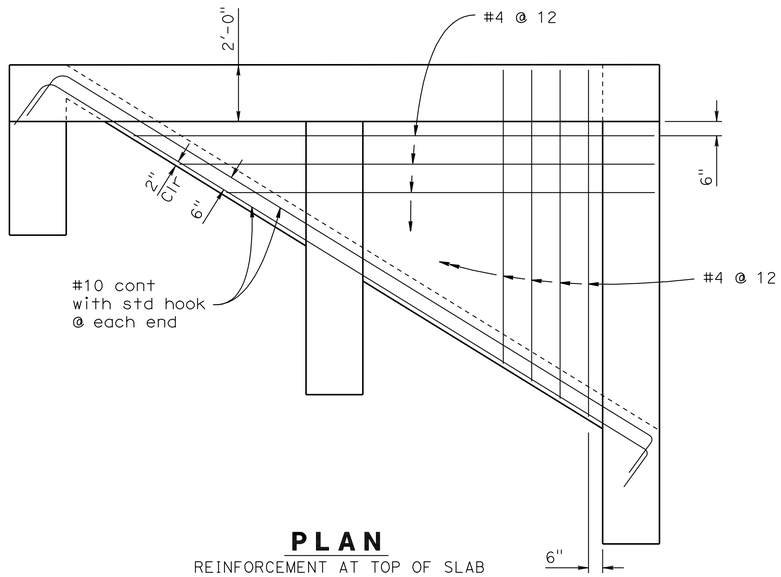

PLAN
REINFORCEMENT AT TOP OF SLAB

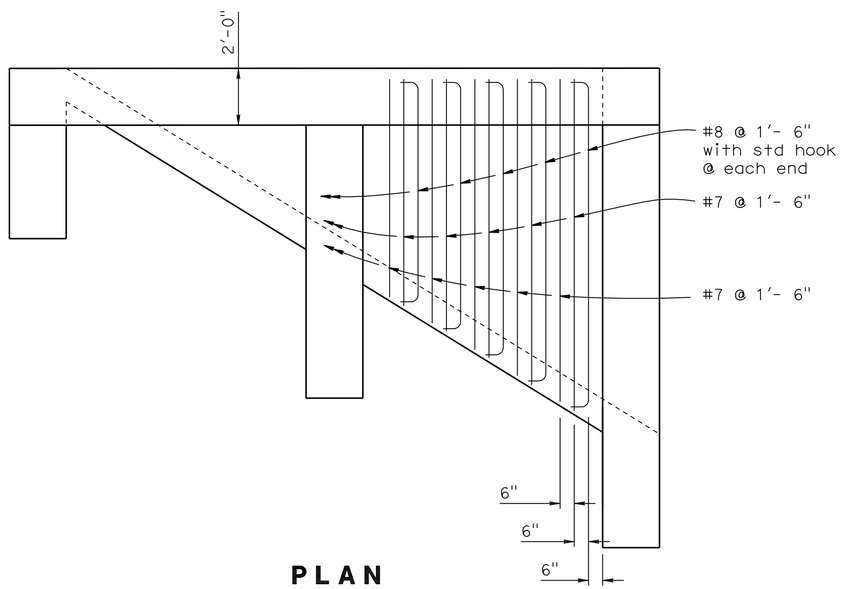

PLAN
REINFORCEMENT AT BOTTOM OF SLAB

SLAB REINFORCEMENT DETAILS

3/8" = 1'-0"

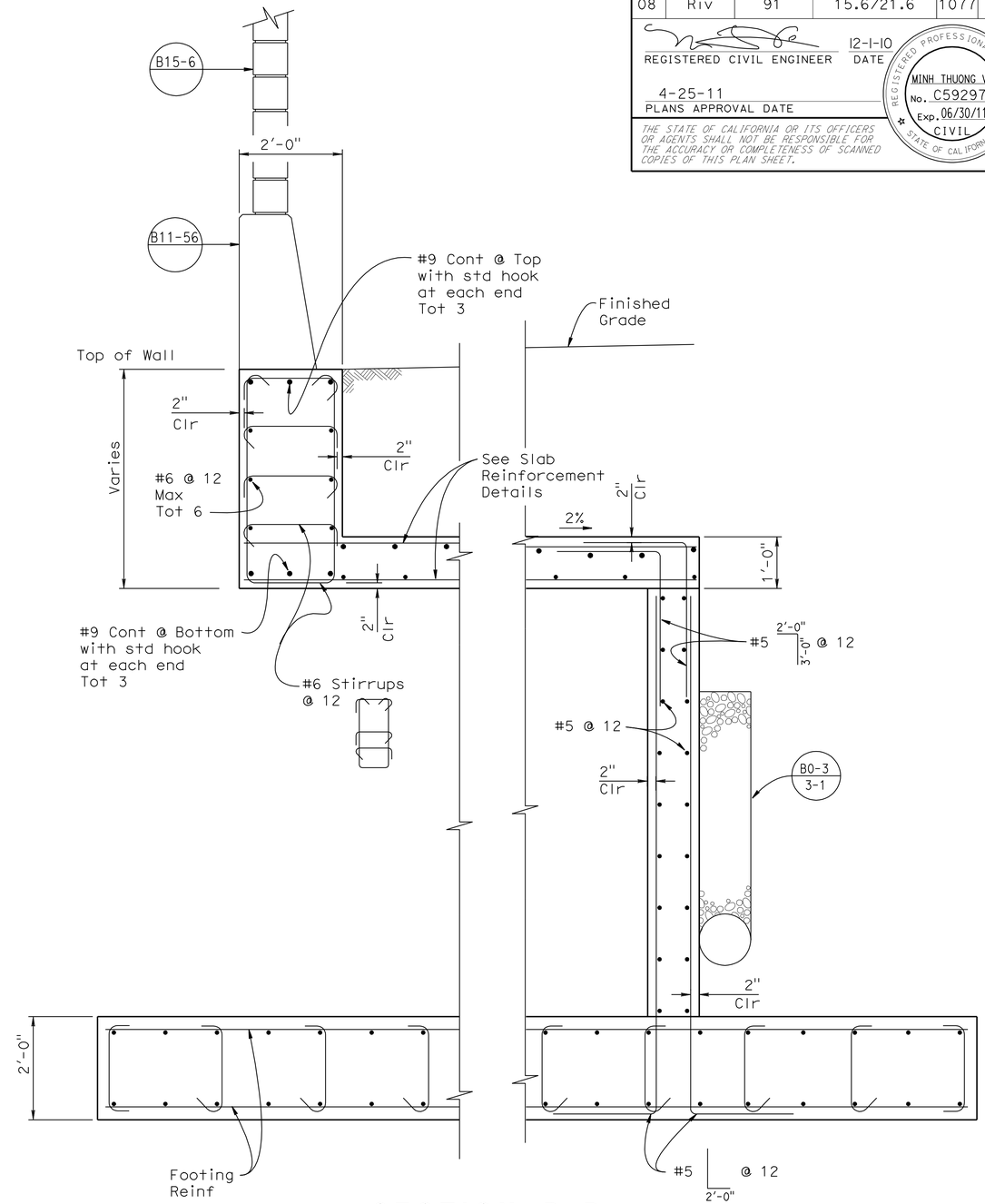

SECTION D-D

3/4" = 1'-0"

NOTE:
THE CONTRACTOR SHALL VERIFY ALL CONTROLLING FIELD DIMENSIONS BEFORE ORDERING OR FABRICATING ANY MATERIAL.

SOUND WALL DETAILS No. 5

SOUND WALL No. 247

SCALE AS SHOWN

SW1-8

THIS PLAN ACCURATE FOR RETAINING WALL WORK ONLY.

STATE OF CALIFORNIA - DEPARTMENT OF TRANSPORTATION
Caltrans
DESIGN
FUNCTIONAL SUPERVISOR: DANIEL T. ADAMS
CALCULATED-DESIGNED BY: MINH VO
CHECKED BY: RYAN STILTZ
REVISED BY
DATE REVISED

LAST REVISION 12-01-10
DATE PLOTTED => 30-APR-2011
TIME PLOTTED => 08:50

Dist	COUNTY	ROUTE	POST MILES TOTAL PROJECT	SHEET No.	TOTAL SHEETS
08	Riv	91	15.6/21.6	1078	2028

LICENSED LANDSCAPE ARCHITECT

4-25-11
PLANS APPROVAL DATE

LICENSED LANDSCAPE ARCHITECT
Matthew Harry Hall
No. 2011
Signature
10/31/2011
Renewal Date
12-1-10
Date
STATE OF CALIFORNIA

THE STATE OF CALIFORNIA OR ITS OFFICERS OR AGENTS SHALL NOT BE RESPONSIBLE FOR THE ACCURACY OR COMPLETENESS OF SCANNED COPIES OF THIS PLAN SHEET.

NOTE:

SEE SHEET ASD-4 AND ASD-5.

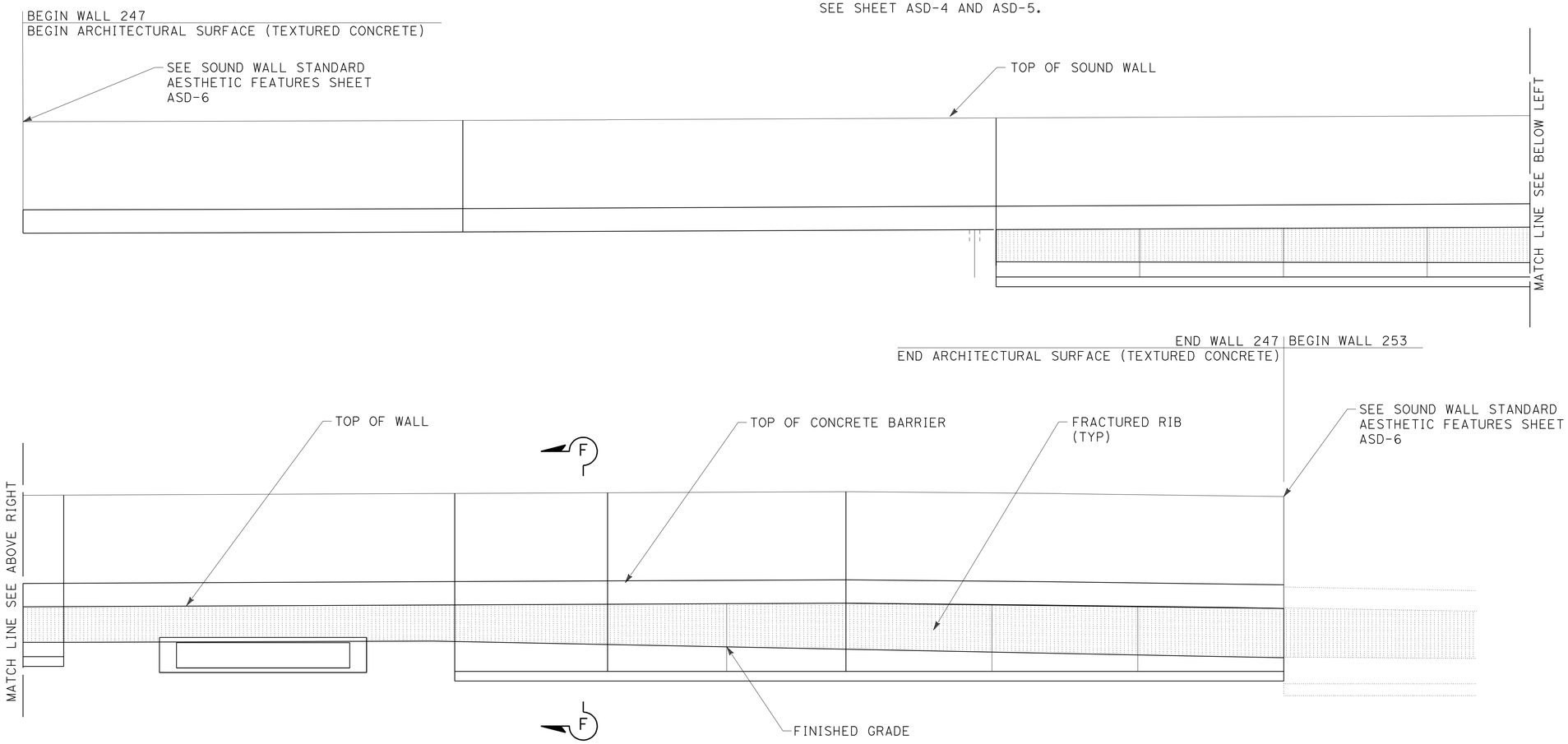

MIRRORED ELEVATION FOR FRACTURED RIB TEXTURE RETAINING WALL No. 247 WITH SOUNDWALL 247

THIS PLAN IS ACCURATE FOR ARCHITECTUAL TREATMENT WORK ONLY.

ARCHITECTURAL SURFACE
SOUND WALL No. 247

SCALE: 1/8"=1'-0"

SW1-9

STATE OF CALIFORNIA - DEPARTMENT OF TRANSPORTATION
Caltrans® LANDSCAPE ARCHITECTURE

SENIOR LANDSCAPE ARCHITECT: BYRON STROUT
CALCULATED-DESIGNED BY: MATTHEW HALL
CHECKED BY: MIRIAM BISHOP
REVISED BY
DATE REVISED

LAST REVISION 12-01-10
DATE PLOTTED => 30-APR-2011
TIME PLOTTED => 08:50

DIST	COUNTY	ROUTE	POST MILES TOTAL PROJECT	SHEET No	TOTAL SHEETS
08	Riv	91	15.6/21.6	1079	2028

GEOTECHNICAL PROFESSIONAL — DATE 10/2008

4-25-11
PLANS APPROVAL DATE

REGISTERED PROFESSIONAL ENGINEER — ANDREW C. LEE — No. 2616 — Exp. 6-30-12 — GEOTECHNICAL — STATE OF CALIFORNIA

The State of California or its officers or agents shall not be responsible for the accuracy or completeness of electronic copies of this plan sheet.

California Department of Transportation
5900 Folsom Boulevard
Sacramento, CA 95819

URS Corporation
2020 East First Street, Suite 400
Santa Ana, CA 92705

FOR PLAN VIEW, SEE SHEET SW1-12

NOTE: 1. This LOTB sheet was prepared in accordance with the Caltrans Soil & Rock Logging, Classification, and Presentation Manual (June 2007).

2. For legend, see "Soil Legend Log of Test Borings" sheet

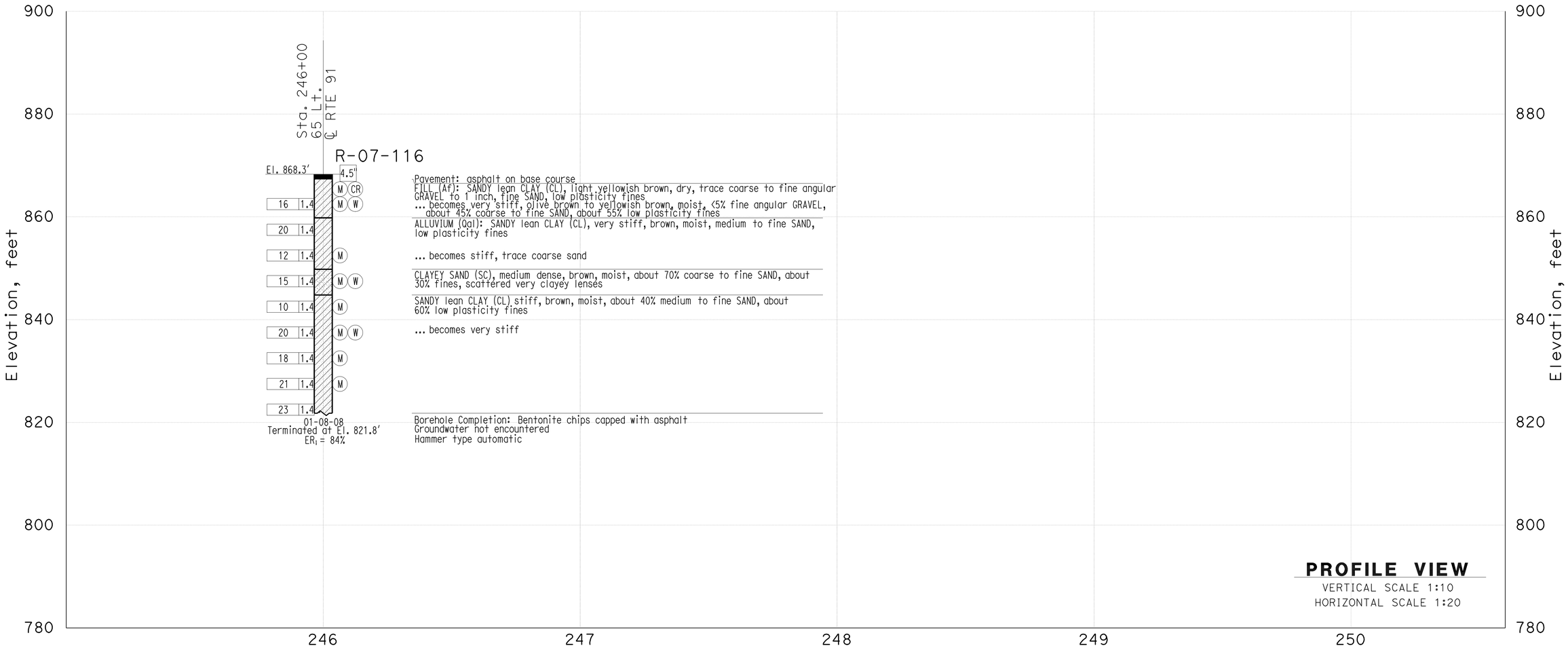

THIS PLAN ACCURATE FOR SOUND WALL AND RETAINING WALL WORK ONLY

DESIGN OVERSIGHT	GINA PURSELL FUNCTIONAL SUPERVISOR	DRAWN BY	P. QUACH	P.CHAU/D.WADER/C.CARBINO FIELD INVESTIGATION BY:	PREPARED FOR THE STATE OF CALIFORNIA DEPARTMENT OF TRANSPORTATION	A. LEE PROJECT ENGINEER	BRIDGE NO. X	Sound Wall 247 SW1-10
X SIGN OFF DATE		CHECKED BY	S. PIRATHIVIRAJ	DATE: Nov 6 2007 to March 7 2008			POST MILE X	LOG OF TEST BORINGS SHEET 1 OF 2

OSF GEOTECHNICAL LOG OF TEST BORINGS SHEET (ENGLISH) (REV. 2/25/05)

ORIGINAL SCALE IN INCHES FOR REDUCED PLANS 0 1 2 3

CU 59A0590
EA 08-448400

DISREGARD PRINTS BEARING EARLIER REVISION DATES

REVISION DATES (PRELIMINARY STAGE ONLY) X

SHEET 1 OF 3

FILE => 844840ra010.dgn

USERNAME => trmoguye DATE PLOTTED => 30-APR-2011 TIME PLOTTED =>

DIST	COUNTY	ROUTE	POST MILES TOTAL PROJECT	SHEET No	TOTAL SHEETS
08	Riv	91	15.6/21.6	1080	2028

GEOTECHNICAL PROFESSIONAL 10/2008 DATE

4-25-11
PLANS APPROVAL DATE

REGISTERED PROFESSIONAL ENGINEER
ANDREW C. LEE
No. 2616
Exp. 6-30-12
GEOTECHNICAL
STATE OF CALIFORNIA

The State of California or its officers or agents shall not be responsible for the accuracy or completeness of electronic copies of this plan sheet.

California Department of Transportation
5900 Folsom Boulevard
Sacramento, CA 95819

URS Corporation
2020 East First Street, Suite 400
Santa Ana, CA 92705

FOR PLAN VIEW, SEE SHEET SW1-12

NOTE: 1. This LOTB sheet was prepared in accordance with the Caltrans Soil & Rock Logging, Classification, and Presentation Manual (June 2007).

2. For legend, see "Soil Legend Log of Test Borings" sheet

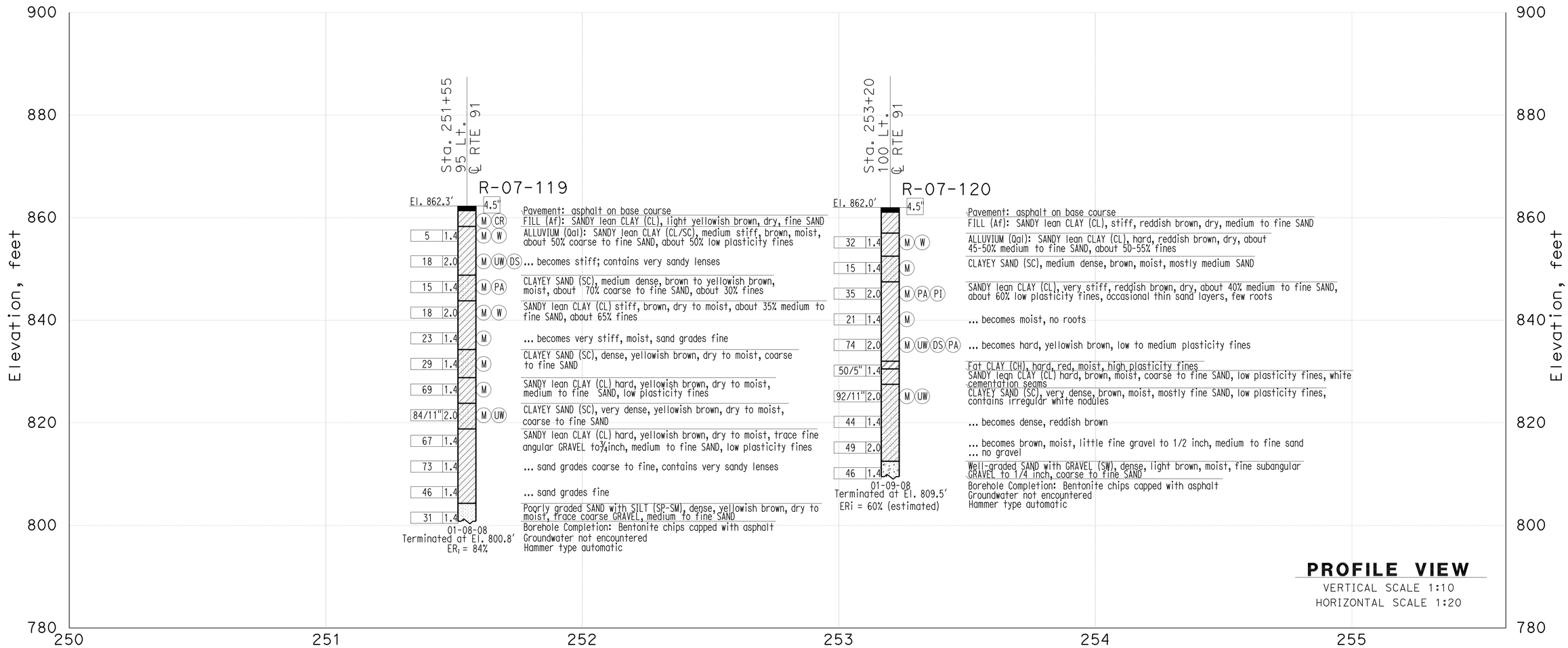

THIS PLAN ACCURATE FOR SOUND WALL AND RETAINING WALL WORK ONLY

DESIGN OVERSIGHT X SIGN OFF DATE	GINA PURSELL FUNCTIONAL SUPERVISOR	DRAWN BY CHECKED BY	P. QUACH S. PIRATHIVIRAJ	P.CHAU/D.WADER/C.CARBINO FIELD INVESTIGATION BY: DATE: Nov 6 2007 to March 7 2008	PREPARED FOR THE STATE OF CALIFORNIA DEPARTMENT OF TRANSPORTATION	A. LEE PROJECT ENGINEER	BRIDGE NO. X POST MILE X	Sound Wall 247 SW1-11 LOG OF TEST BORINGS SHEET 2 OF 2

OSF GEOTECHNICAL LOG OF TEST BORINGS SHEET (ENGLISH) (REV. 2/25/05)

ORIGINAL SCALE IN INCHES FOR REDUCED PLANS 0 1 2 3

CU 59A0590
EA 08-448400

DISREGARD PRINTS BEARING EARLIER REVISION DATES

REVISION DATES (PRELIMINARY STAGE ONLY) X

SHEET 2 OF 3

FILE => 844840ra011.dgn

USERNAME => trastrk DATE PLOTTED => 30-APR-2011 TIME PLOTTED =>

DIST	COUNTY	ROUTE	POST MILES TOTAL PROJECT	SHEET No	TOTAL SHEETS
08	Riv	91	15.6/21.6	1081	2028

GEOTECHNICAL PROFESSIONAL — DATE 10/2008

4-25-11
PLANS APPROVAL DATE

REGISTERED PROFESSIONAL ENGINEER — ANDREW C. LEE — No. 2616 — Exp. 6-30-12 — GEOTECHNICAL — STATE OF CALIFORNIA

The State of California or its officers or agents shall not be responsible for the accuracy or completeness of electronic copies of this plan sheet.

California Department of Transportation
5900 Folsom Boulevard
Sacramento, CA 95819

URS Corporation
2020 East First Street, Suite 400
Santa Ana, CA 92705

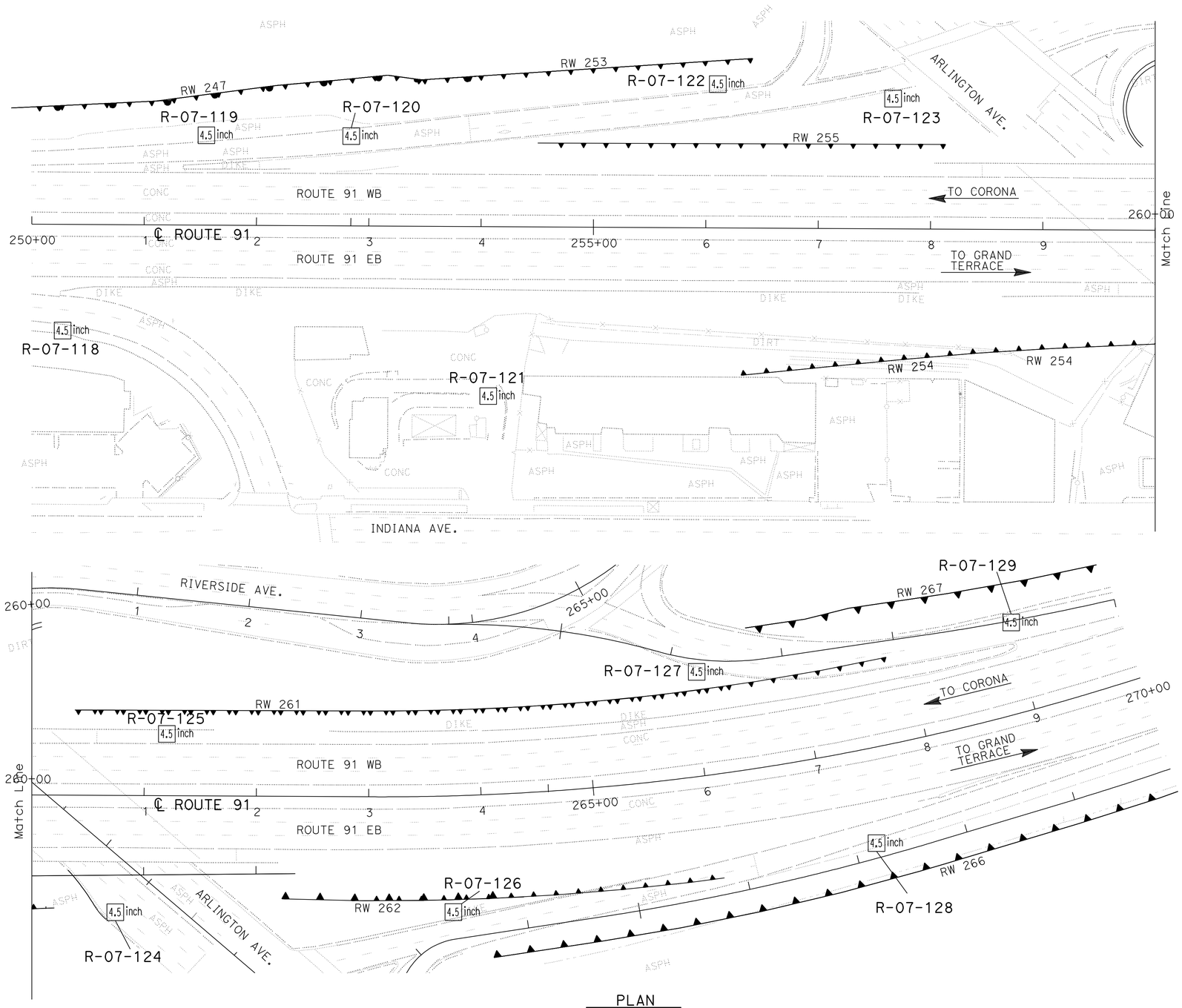

PLAN
SCALE 1"=50'

Borehole Number	Drill Rig	Hammer Type	Avg. Hammer Efficiency, ETR (%)
R-07-118	CS-2000	Automatic	84
R-07-119	CS-2000	Automatic	84
R-07-120	Mobile B-47	Manual trip	60*
R-07-121	CS-2000	Automatic	84
R-07-122	CS-2000	Automatic	84
R-07-123	CS-2000	Automatic	84
R-07-124	CS-2000	Automatic	84
R-07-125	CME 85	Automatic	87
R-07-126	CS-2000	Automatic	84
R-07-127	CME 85	Automatic	87
R-07-128	CS-2000	Automatic	84
R-07-129	CME 85	Automatic	87

Sampler Type	Inside Diameter (Inches)	Borehole Numbers
SPT	1.375	R-07-118, R-07-119, R-07-120 R-07-121, R-07-122, R-07-123 R-07-124, R-07-125, R-07-126 R-07-127, R-07-128, R-07-129
Modified California 1	1.94	R-07-119, R-07-120, R-07-121 R-07-124, R-07-125, R-07-127 R-07-129
Modified California 2	2.40	-

*Estimated Hammer Efficiency Rating.

DESIGN OVERSIGHT — GINA PURSELL, FUNCTIONAL SUPERVISOR — X — SIGN OFF DATE

DRAWN BY: P. QUACH
CHECKED BY: S. PIRATHIVIRAJ

P.CHAU/D.WADER/C.CARBINO — FIELD INVESTIGATION BY: DATE: Nov 6 2007 to March 7 2008

PREPARED FOR THE STATE OF CALIFORNIA DEPARTMENT OF TRANSPORTATION

A. LEE — PROJECT ENGINEER

BRIDGE NO. X
POST MILE X

SOUND WALL 247 — SW1-12

LOG OF TEST BORINGS 3 of 3

OSF GEOTECHNICAL LOG OF TEST BORINGS SHEET (ENGLISH) (REV. 2/25/05)

ORIGINAL SCALE IN INCHES FOR REDUCED PLANS: 0 1 2 3

CU 59A0590
EA 08-448400

DISREGARD PRINTS BEARING EARLIER REVISION DATES

REVISION DATES (PRELIMINARY STAGE ONLY): X

SHEET 3 OF 3

FILE => 844840ra012.dgn

USERNAME => trstrk — DATE PLOTTED => 30-APR-2011 — TIME PLOTTED =>

Dist	COUNTY	ROUTE	POST MILES TOTAL PROJECT	SHEET No.	TOTAL SHEETS
08	Riv	91	15.6/21.6	1082	2028

REGISTERED CIVIL ENGINEER 12-1-10 DATE

4-25-11
PLANS APPROVAL DATE

REGISTERED PROFESSIONAL ENGINEER THOMAS HIEN NGO No. 68383 Exp. 9/30/11 CIVIL STATE OF CALIFORNIA

THE STATE OF CALIFORNIA OR ITS OFFICERS OR AGENTS SHALL NOT BE RESPONSIBLE FOR THE ACCURACY OR COMPLETENESS OF SCANNED COPIES OF THIS PLAN SHEET.

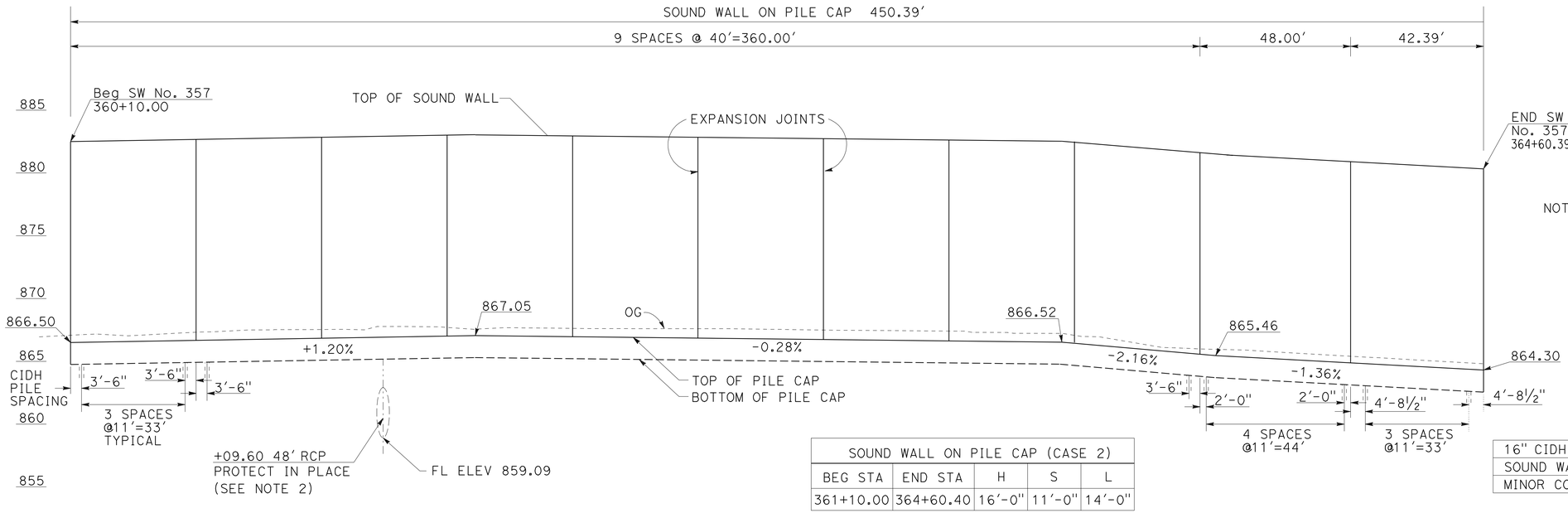

SOUND WALL ON PILE CAP (CASE 2)				
BEG STA	END STA	H	S	L
361+10.00	364+60.40	16'-0"	11'-0"	14'-0"

NOTE:

1. FOR SOUND WALL ON PILE CAP CASE 2, SEE STD PLANS B15-3, B15-4, AND B15-5.
2. LOCATION OF EXISTING DRAINAGE PIPE TO BE FIELD VERIFIED PRIOR TO CONSTRUCTING PILES.

QUANTITIES

16" CIDH CONCRETE PILING (SOUND WALL)	671.0	LF
SOUND WALL (MASONRY BLOCK)	5,760.0	SQFT
MINOR CONRETE (SOUND WALL)	23.3	CY

ELEVATION

SCALE Horiz 1"=20'
Vert 1"=10'

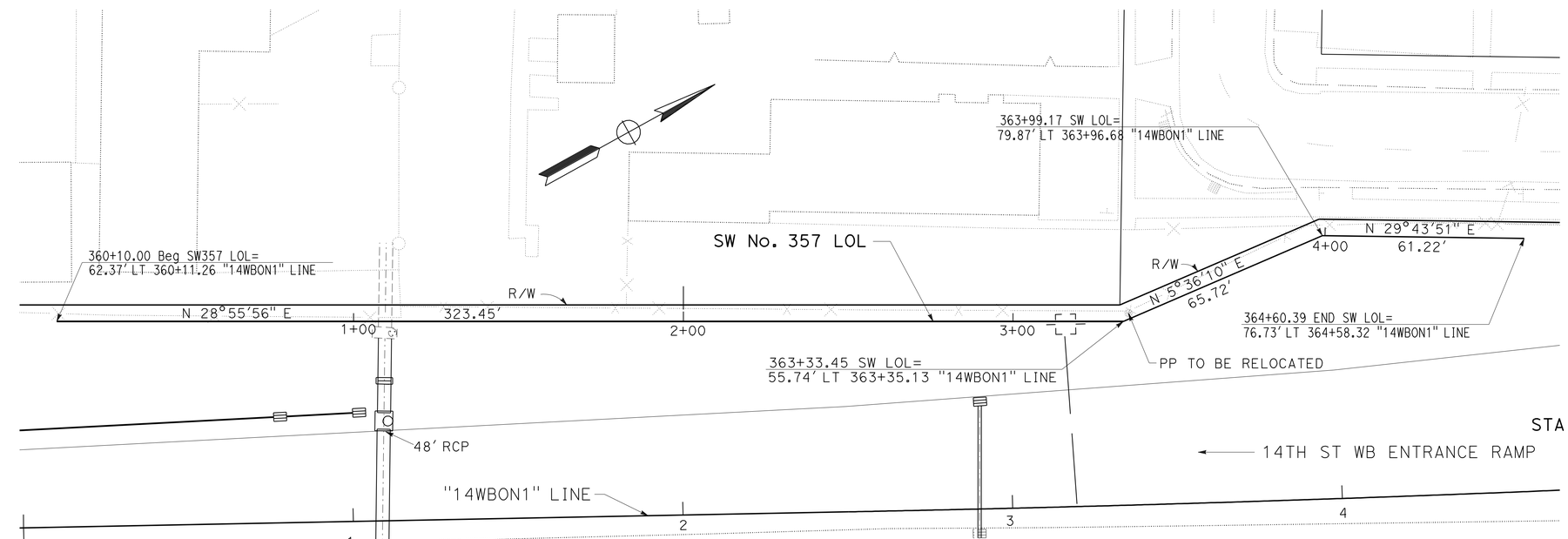

PLAN

SCALE 1"=20'

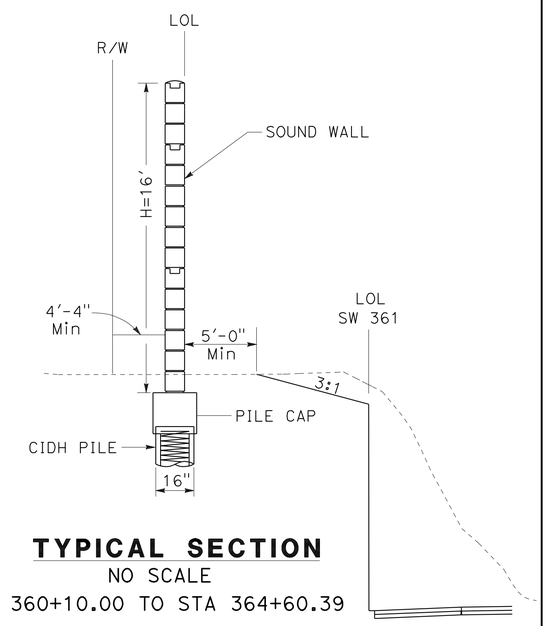

TYPICAL SECTION

NO SCALE

STA 360+10.00 TO STA 364+60.39

SOUND WALL ON PILE CAP
(CASE 2)

THIS PLAN ACCURATE FOR SOUND WALL WORK ONLY

SOUND WALL PLAN

SOUND WALL No. 357

SCALE AS SHOWN

SW2-1

STATE OF CALIFORNIA - DEPARTMENT OF TRANSPORTATION
Caltrans
DESIGN

FUNCTIONAL SUPERVISOR: MARK PERTILE
CALCULATED-DESIGNED BY: THAI VAN HGUYEN
CHECKED BY: THOMAS HIEN NGO
REVISED BY
DATE REVISED

LAST REVISION 12-01-10 | DATE PLOTTED => 30-APR-2011 | TIME PLOTTED => 08:48

Dist	COUNTY	ROUTE	POST MILES TOTAL PROJECT	SHEET No.	TOTAL SHEETS
08	Riv	91	15.6/21.6	1083	2028

LICENSED LANDSCAPE ARCHITECT

4-25-11
PLANS APPROVAL DATE

LICENSED LANDSCAPE ARCHITECT
Matthew Harry Hall
No. 2011
Signature
10/31/2011
Renewal Date
12-1-10
Date
STATE OF CALIFORNIA

THE STATE OF CALIFORNIA OR ITS OFFICERS OR AGENTS SHALL NOT BE RESPONSIBLE FOR THE ACCURACY OR COMPLETENESS OF SCANNED COPIES OF THIS PLAN SHEET.

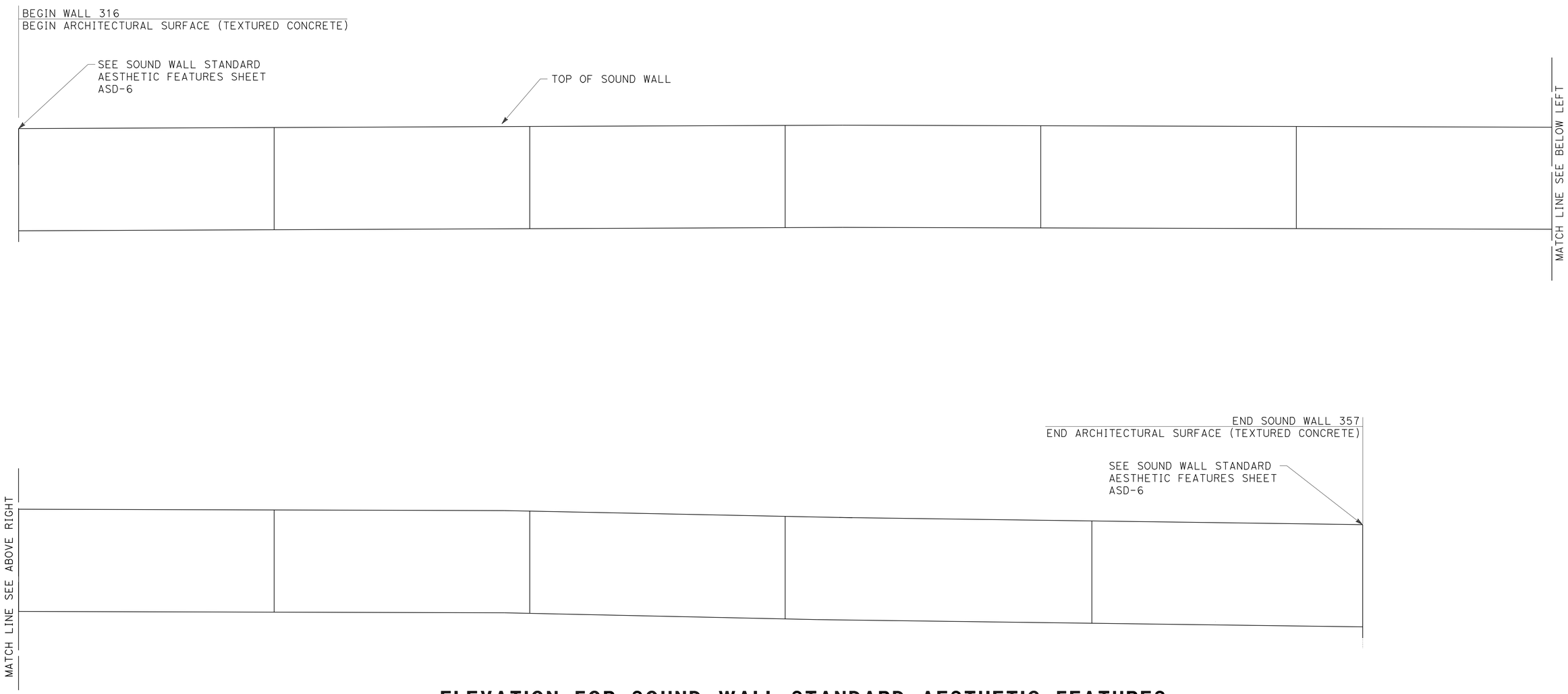

ELEVATION FOR SOUND WALL STANDARD AESTHETIC FEATURES
SOUND WALL No. 357

THIS PLAN IS ACCURATE FOR ARCHITECTUAL TREATMENT WORK ONLY.

ARCHITECTURAL SURFACE
SOUND WALL No. 357

SCALE: 1/8"=1'-0"

SW2-2

STATE OF CALIFORNIA - DEPARTMENT OF TRANSPORTATION
Caltrans® LANDSCAPE ARCHITECTURE

SENIOR LANDSCAPE ARCHITECT: BYRON STROUT
CALCULATED-DESIGNED BY: MATTHEW HALL
CHECKED BY: MIRIAM BISHOP
REVISED BY
DATE REVISED

LAST REVISION 12-01-10
DATE PLOTTED => 30-APR-2011
TIME PLOTTED => 08:48

DIST	COUNTY	ROUTE	POST MILES TOTAL PROJECT	SHEET No	TOTAL SHEETS
08	Riv	91	15.6/21.6	1084	2028

GEOTECHNICAL PROFESSIONAL — DATE 10/2008

4-25-11
PLANS APPROVAL DATE

REGISTERED PROFESSIONAL ENGINEER — ANDREW C. LEE — No. 2616 — Exp. 6-30-12 — GEOTECHNICAL — STATE OF CALIFORNIA

The State of California or its officers or agents shall not be responsible for the accuracy or completeness of electronic copies of this plan sheet.

California Department of Transportation
5900 Folsom Boulevard
Sacramento, CA 95819

URS Corporation
2020 East First Street, Suite 400
Santa Ana, CA 92705

FOR PLAN VIEW, SEE SHEET SW2-4

NOTE: 1. This LOTB sheet was prepared in accordance with the Caltrans Soil & Rock Logging, Classification, and Presentation Manual (June 2007).

2. For legend, see "Soil Legend Log of Test Borings" sheet

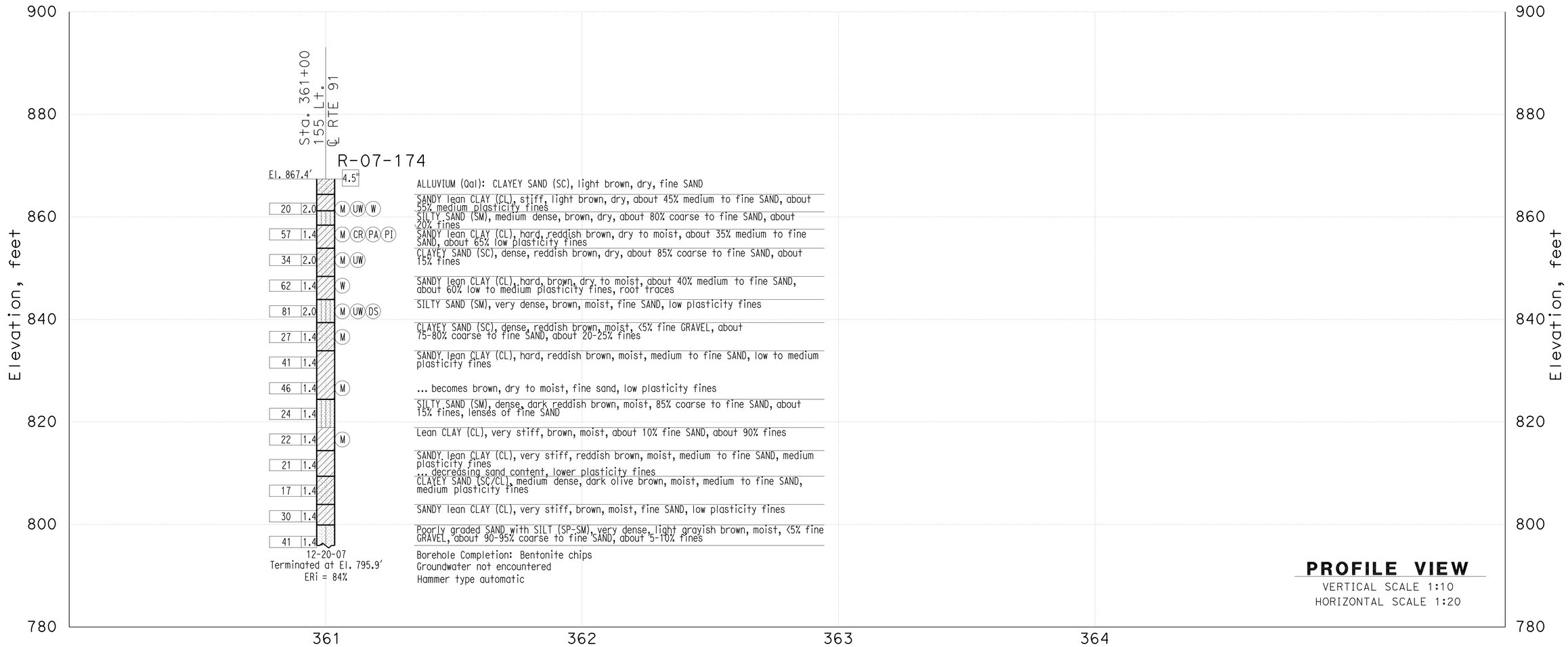

THIS PLAN ACCURATE FOR SOUND WALL AND RETAINING WALL WORK ONLY

DESIGN OVERSIGHT X SIGN OFF DATE	GINA PURSELL FUNCTIONAL SUPERVISOR	DRAWN BY CHECKED BY	P. QUACH S. PIRATHIVIRAJ	P.CHAU/D.WADER/C.CARBINO FIELD INVESTIGATION BY: DATE: Nov 6 2007 to March 7 2008	PREPARED FOR THE STATE OF CALIFORNIA DEPARTMENT OF TRANSPORTATION	A. LEE PROJECT ENGINEER	BRIDGE NO. X POST MILE X

Sound Wall 357 SW2-3

LOG OF TEST BORINGS

OSF GEOTECHNICAL LOG OF TEST BORINGS SHEET (ENGLISH) (REV. 2/25/05)

ORIGINAL SCALE IN INCHES FOR REDUCED PLANS 0 1 2 3

CU 59A0590
EA 08-448400

DISREGARD PRINTS BEARING EARLIER REVISION DATES

REVISION DATES (PRELIMINARY STAGE ONLY) X

SHEET 1 OF 2

FILE => 844840rb003.dgn

USERNAME => trastrk DATE PLOTTED => 30-APR-2011 TIME PLOTTED =>

DIST	COUNTY	ROUTE	POST MILES TOTAL PROJECT	SHEET No	TOTAL SHEETS
08	Riv	91	15.6/21.6	1085	2028

GEOTECHNICAL PROFESSIONAL — DATE 10/2008

4-25-11
PLANS APPROVAL DATE

REGISTERED PROFESSIONAL ENGINEER — ANDREW C. LEE — No. 2616 — Exp. 6-30-12 — GEOTECHNICAL — STATE OF CALIFORNIA

The State of California or its officers or agents shall not be responsible for the accuracy or completeness of electronic copies of this plan sheet.

California Department of Transportation
5900 Folsom Boulevard
Sacramento, CA 95819

URS Corporation
2020 East First Street, Suite 400
Santa Ana, CA 92705

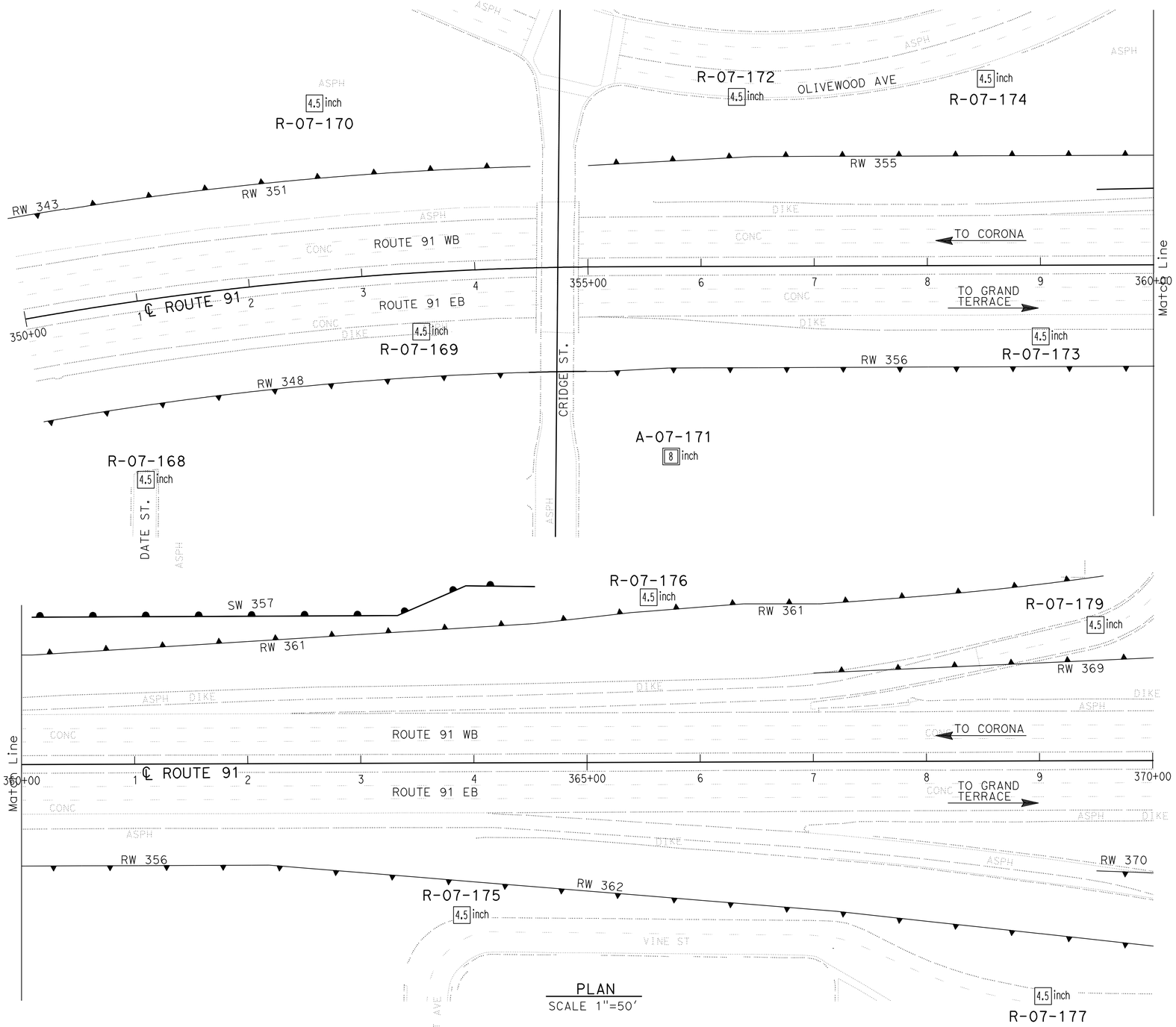

PLAN
SCALE 1"=50'

Borehole Number	Drill Rig	Hammer Type	Avg. Hammer Efficiency, ETR (%)
R-07-168	CS-2000	Automatic	84
R-07-169	CME 85	Automatic	87
R-07-170	Acker Rig	Automatic	74
A-07-171	Diedrich D-120	Automatic	75*
R-07-172	CS-2000	Automatic	84
R-07-173	CME 85	Automatic	87
R-07-174	CS-2000	Automatic	84
R-07-175	CS-2000	Automatic	84
R-07-176	CS-2000	Automatic	84
R-07-177	CS-2000	Automatic	84
R-07-179	Acker Rig	Automatic	74

Sampler Type	Inside Diameter (Inches)	Borehole Numbers
SPT	1.375	R-07-168, R-07-169, R-07-170 A-07-171, R-07-172, R-07-173 R-07-174, R-07-175, R-07-176 R-07-177, R-07-179
Modified California 1	1.94	R-07-168, R-07-169, R-07-170 R-07-172, R-07-173, R-07-174 R-07-175, R-07-177, R-07-179
Modified California 2	2.40	A-07-171

*Estimated Hammer Efficiency Rating.

DESIGN OVERSIGHT X SIGN OFF DATE	GINA PURSELL FUNCTIONAL SUPERVISOR	DRAWN BY P. QUACH	P.CHAU/D.WADER/C.CARBINO FIELD INVESTIGATION BY: DATE: Nov 6 2007 to March 7 2008	PREPARED FOR THE STATE OF CALIFORNIA DEPARTMENT OF TRANSPORTATION	A. LEE PROJECT ENGINEER	BRIDGE NO. X POST MILE X	SOUNDWALL 357 SW2-4 LOG OF TEST BORINGS 2 OF 2
		CHECKED BY S. PIRATHIVIRAJ					

OSF GEOTECHNICAL LOG OF TEST BORINGS SHEET (ENGLISH) (REV. 2/25/05)

ORIGINAL SCALE IN INCHES FOR REDUCED PLANS 0 1 2 3

CU 59A0590
EA 08-448400

DISREGARD PRINTS BEARING EARLIER REVISION DATES

REVISION DATES (PRELIMINARY STAGE ONLY) X

SHEET 2 OF 2

FILE => 844840rb004.dgn

USERNAME => trstrk DATE PLOTTED => 30-APR-2011 TIME PLOTTED =>

Dist	COUNTY	ROUTE	POST MILES TOTAL PROJECT	SHEET No.	TOTAL SHEETS
08	Riv	91	15.6/21.6	1086	2028

LICENSED LANDSCAPE ARCHITECT

4-25-11
PLANS APPROVAL DATE

LICENSED LANDSCAPE ARCHITECT
Matthew Harry Hall
Signature
10/31/2011
Renewal Date
12-01-10
Date
STATE OF CALIFORNIA

THE STATE OF CALIFORNIA OR ITS OFFICERS OR AGENTS SHALL NOT BE RESPONSIBLE FOR THE ACCURACY OR COMPLETENESS OF SCANNED COPIES OF THIS PLAN SHEET.

NOTE: 1. VERIFY TOP OF WALL ELEVATION WITH ENGINEERS PLANS
ALL INSERTION POINTS ELEVATIONS REFERENCE WITH THE TOP OF WALL ELEVATION

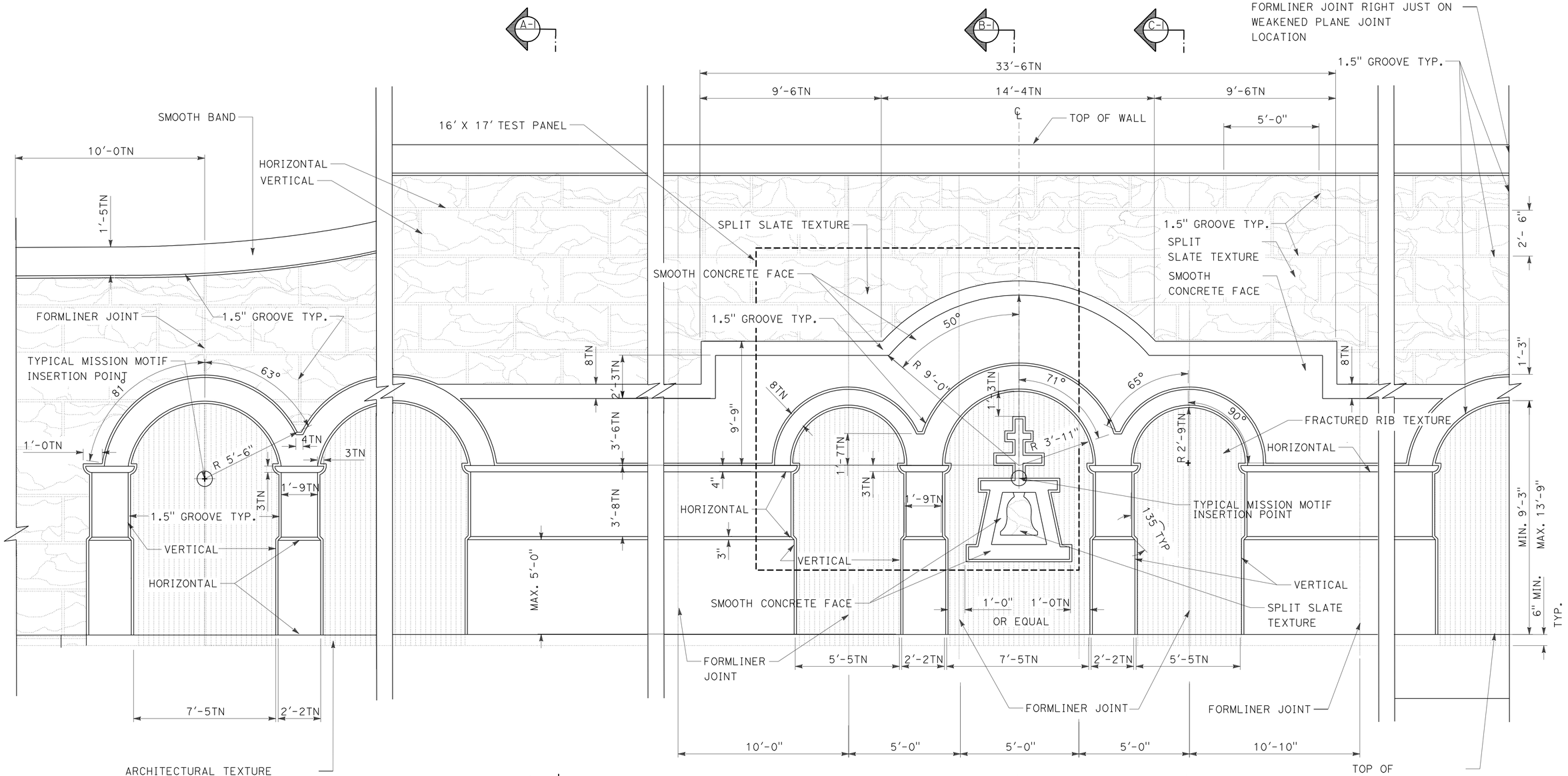

TYPICAL MISSION MOTIF ELEVATION

THIS PLAN IS ACCURATE FOR ARCHITECTUAL TREATMENT WORK ONLY.

ARCHITECTURAL SURFACE
SPLIT SLATE FRACTURED RIB DETAILS No. 1

SCALE: 3/8"=1'-0"

ASD-1

STATE OF CALIFORNIA - DEPARTMENT OF TRANSPORTATION
Caltrans® LANDSCAPE ARCHITECTURE

SENIOR LANDSCAPE ARCHITECT: BYRON STROUT
CALCULATED-DESIGNED BY: MATTHEW HALL
CHECKED BY: MIRIAM BISHOP
REVISED BY
DATE REVISED

LAST REVISION 12-01-10
DATE PLOTTED => 30-APR-2011
TIME PLOTTED => 08:49

Dist	COUNTY	ROUTE	POST MILES TOTAL PROJECT	SHEET No.	TOTAL SHEETS
08	Riv	91	15.6/21.6	1087	2028

LICENSED LANDSCAPE ARCHITECT

4-25-11
PLANS APPROVAL DATE

LICENSED LANDSCAPE ARCHITECT — Matthew Harry Hall — Signature — 10/31/2011 — Renewal Date — 12-1-10 — Date — STATE OF CALIFORNIA

THE STATE OF CALIFORNIA OR ITS OFFICERS OR AGENTS SHALL NOT BE RESPONSIBLE FOR THE ACCURACY OR COMPLETENESS OF SCANNED COPIES OF THIS PLAN SHEET.

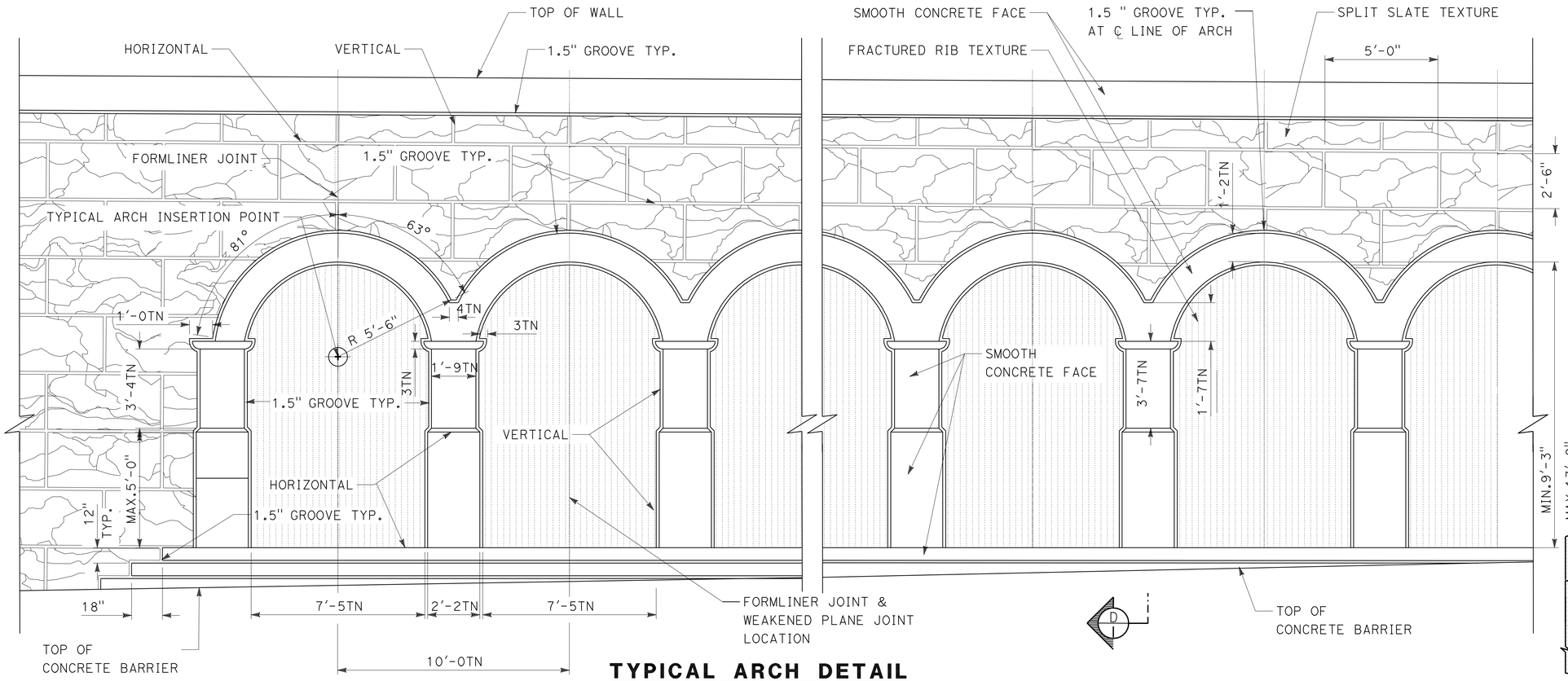

TYPICAL ARCH DETAIL

SCALE: 3/8"=1'-0"

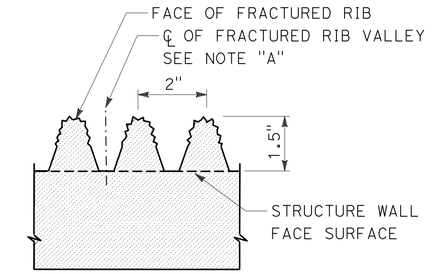

TYPICAL FRACTURED RIB TEXTURE

NO SCALE

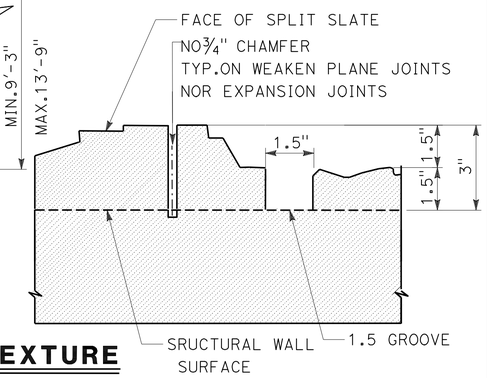

TYPICAL SPLIT SLATE TEXTURE

NO SCALE

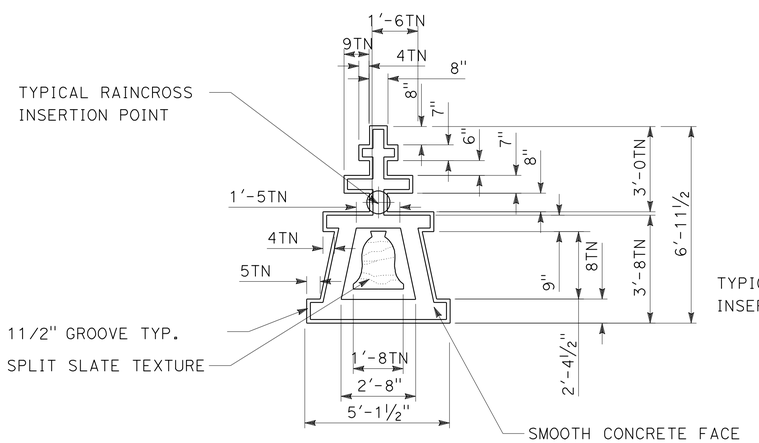

TYPICAL RAINCROSS DETAIL

SCALE: 3/8"=1'-0"

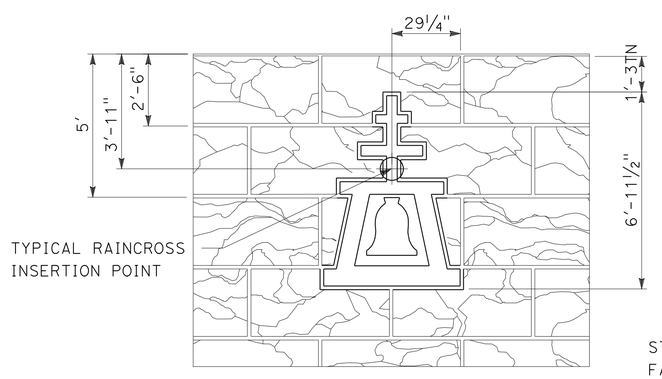

TYPICAL RAINCROSS DETAIL/ SPLIT SLATE TEXTURE

SCALE: 3/8"=1'-0"

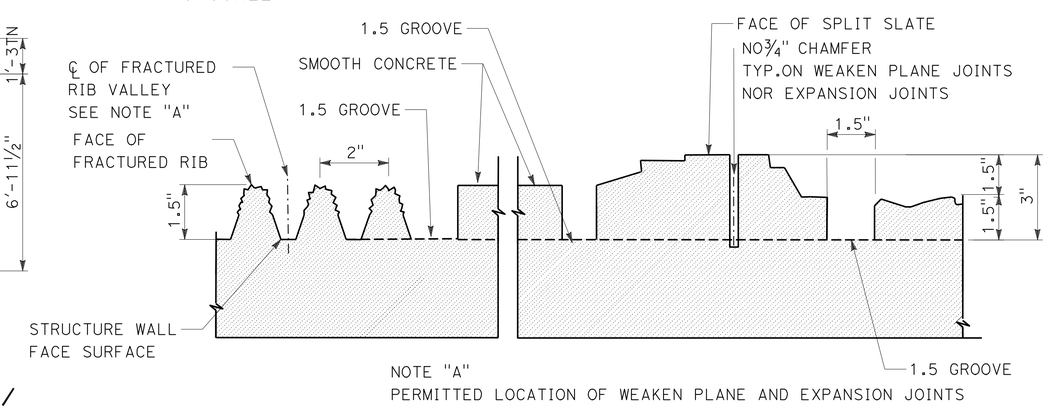

TYPICAL FRACTURED RIB WITH SPLIT SLATE TEXTURE

NO SCALE

THIS PLAN IS ACCURATE FOR ARCHITECTUAL TREATMENT WORK ONLY.

ARCHITECTURAL SURFACE
SPLIT SLATE FRACTURED RIB DETAILS No. 2

SCALE AS SHOWN

ASD-2

REVISED BY	DATE REVISED
MATTHEW HALL	MIRIAM BISHOP
CALCULATED-DESIGNED BY	CHECKED BY
SENIOR LANDSCAPE ARCHITECT	BYRON STROUT

STATE OF CALIFORNIA - DEPARTMENT OF TRANSPORTATION
Caltrans® LANDSCAPE ARCHITECTURE

LAST REVISION 12-01-10 | DATE PLOTTED => 30-APR-2011 | TIME PLOTTED => 08:49

Dist	COUNTY	ROUTE	POST MILES TOTAL PROJECT	SHEET No.	TOTAL SHEETS
08	Riv	91	15.6/21.6	1088	2028

LICENSED LANDSCAPE ARCHITECT

4-25-11
PLANS APPROVAL DATE

LICENSED LANDSCAPE ARCHITECT
Matthew Harry Hall
No. 4844
Signature
10/31/2011
Renewal Date
12-01-10
Date
STATE OF CALIFORNIA

THE STATE OF CALIFORNIA OR ITS OFFICERS OR AGENTS SHALL NOT BE RESPONSIBLE FOR THE ACCURACY OR COMPLETENESS OF SCANNED COPIES OF THIS PLAN SHEET.

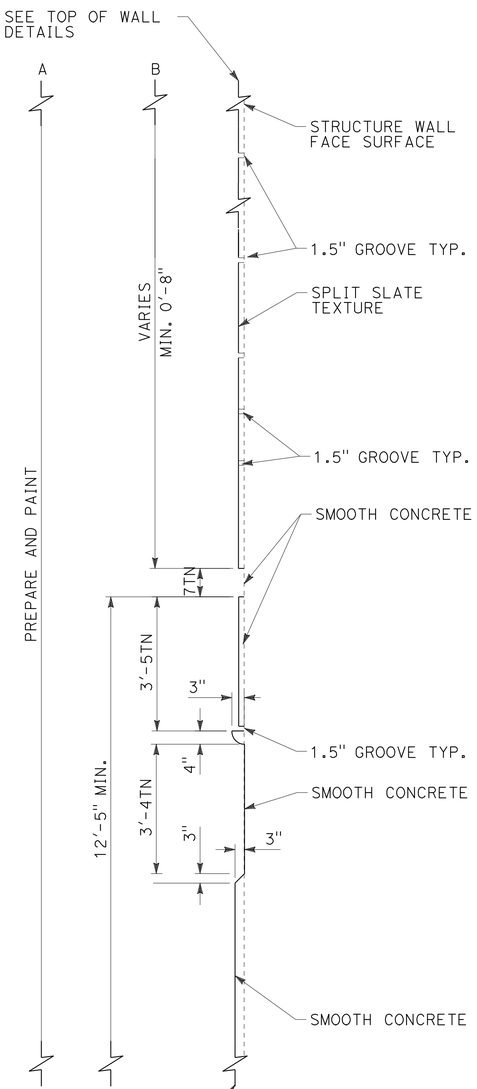

SECTION A-A

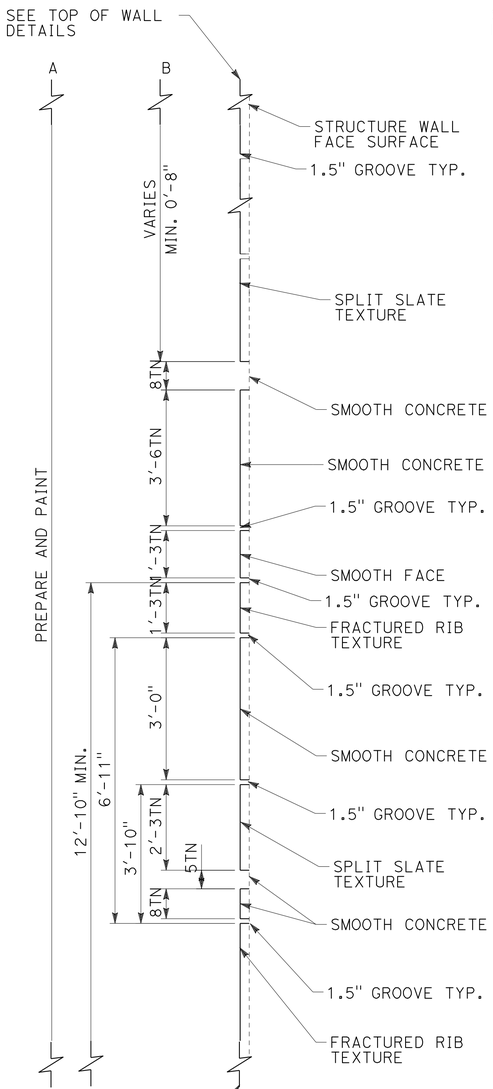

SECTION B-B

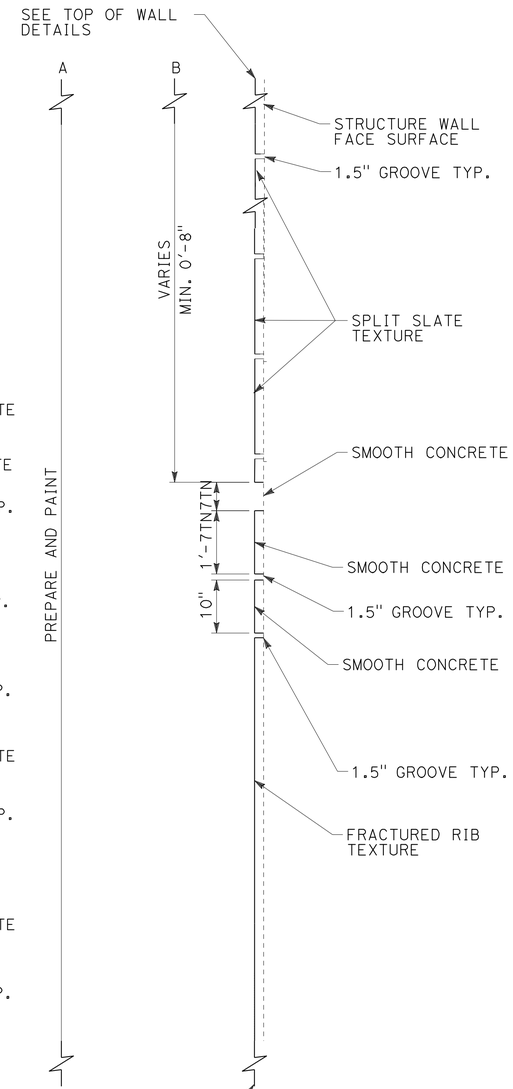

SECTION C-C

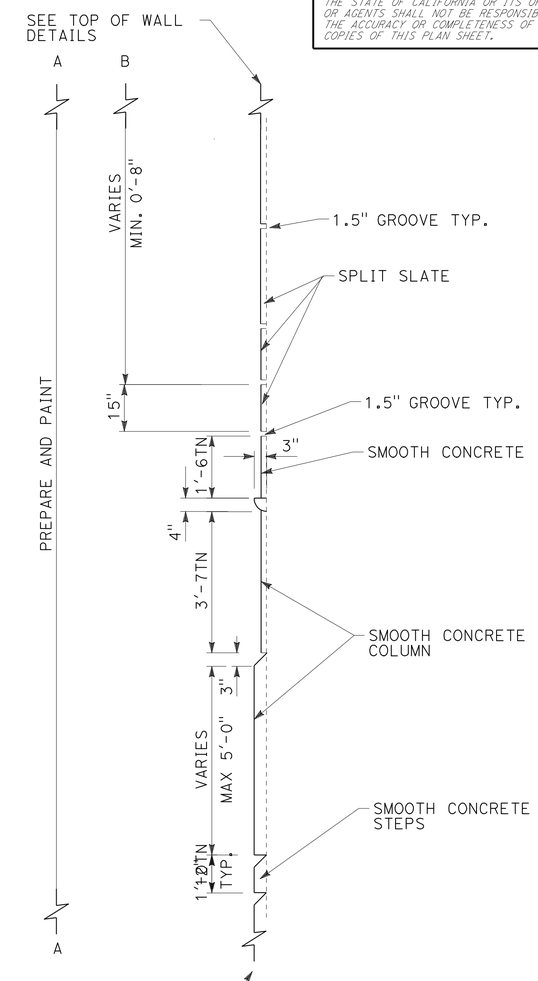

SECTION D-D

ARCHITECTURAL SURFACE
SPLIT SLATE FRACTURED RIB DETAILS No. 3

SCALE: ½"=1'-0"

THIS PLAN IS ACCURATE FOR ARCHITECTUAL TREATMENT WORK ONLY.

ASD-3

STATE OF CALIFORNIA - DEPARTMENT OF TRANSPORTATION
Caltrans® LANDSCAPE ARCHITECTURE

SENIOR LANDSCAPE ARCHITECT: BYRON STROUT
CALCULATED-DESIGNED BY: MATTHEW HALL
CHECKED BY: MIRIAM BISHOP
REVISED BY
DATE REVISED

LAST REVISION 12-01-10
DATE PLOTTED => 30-APR-2011
TIME PLOTTED => 08:49

Dist	COUNTY	ROUTE	POST MILES TOTAL PROJECT	SHEET No.	TOTAL SHEETS
08	Riv	91	15.6/21.6	1089	2028

LICENSED LANDSCAPE ARCHITECT

4-25-11
PLANS APPROVAL DATE

LICENSED LANDSCAPE ARCHITECT
Matthew Harry Hall
No. 4244
Signature
10/31/2011
Renewal Date
12-01-10
Date
STATE OF CALIFORNIA

THE STATE OF CALIFORNIA OR ITS OFFICERS OR AGENTS SHALL NOT BE RESPONSIBLE FOR THE ACCURACY OR COMPLETENESS OF SCANNED COPIES OF THIS PLAN SHEET.

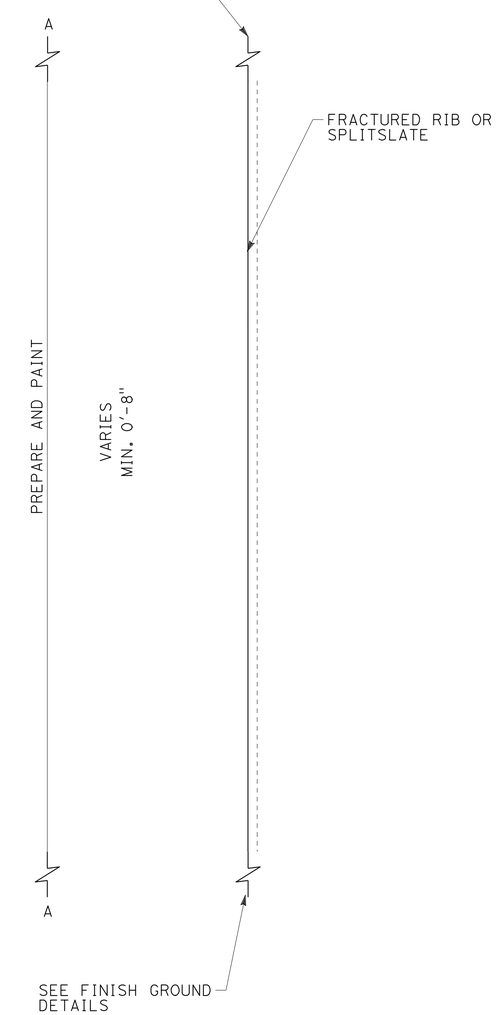

SECTION E-E

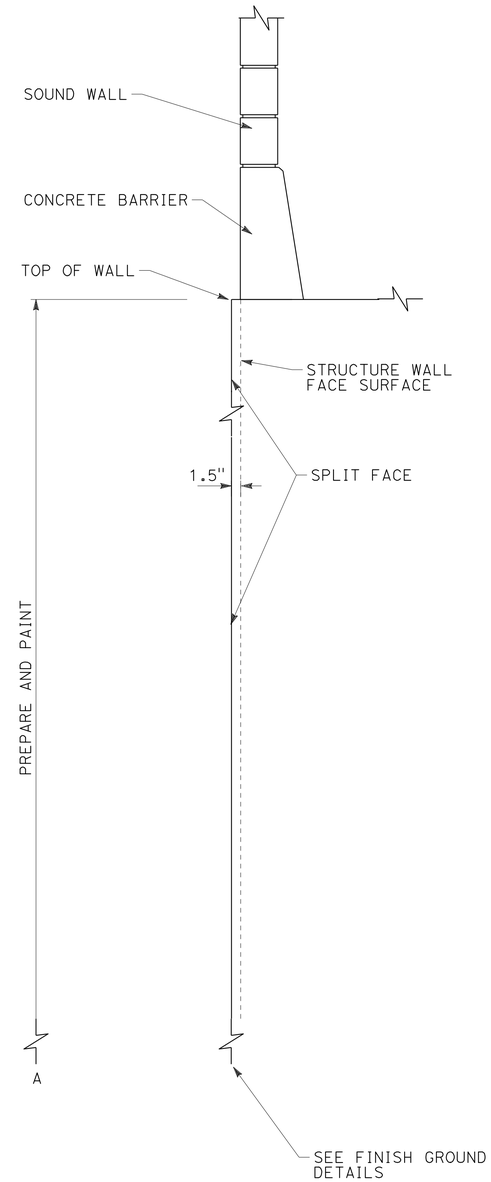

SECTION F-F

THIS PLAN IS ACCURATE FOR ARCHITECTUAL TREATMENT WORK ONLY.

ARCHITECTURAL SURFACE DETAILS No. 1

SCALE: 1/2"=1'-0"

ASD-4

STATE OF CALIFORNIA - DEPARTMENT OF TRANSPORTATION
Caltrans® LANDSCAPE ARCHITECTURE

SENIOR LANDSCAPE ARCHITECT: BYRON STROUT
CALCULATED-DESIGNED BY: MATTHEW HALL
CHECKED BY: MIRIAM BISHOP
REVISED BY
DATE REVISED

LAST REVISION 12-01-10
DATE PLOTTED => 30-APR-2011
TIME PLOTTED => 08:49

Dist	COUNTY	ROUTE	POST MILES TOTAL PROJECT	SHEET No.	TOTAL SHEETS
08	Riv	91	15.6/21.6	1090	2028

LICENSED LANDSCAPE ARCHITECT

4-25-11
PLANS APPROVAL DATE

LICENSED LANDSCAPE ARCHITECT — Matthew Harry Hall — Signature — 10/31/2011 — Renewal Date — 12-1-10 — Date — STATE OF CALIFORNIA

THE STATE OF CALIFORNIA OR ITS OFFICERS OR AGENTS SHALL NOT BE RESPONSIBLE FOR THE ACCURACY OR COMPLETENESS OF SCANNED COPIES OF THIS PLAN SHEET.

ALL DIMENSIONS ARE IN FEET AND INCHES UNLESS OTHERWISE SHOWN

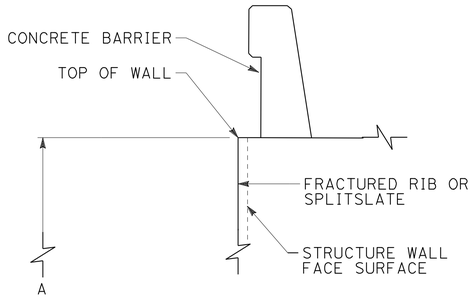

TOP OF WALL DETAIL TYPICAL WITH CONCRETE BARRIER

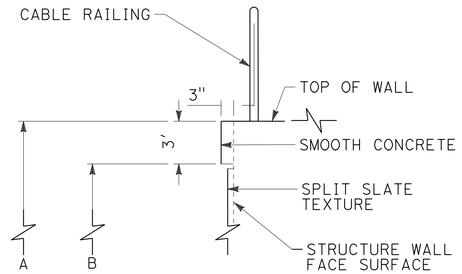

TOP OF WALL DETAIL TYPICAL WITH CABLE RAIL

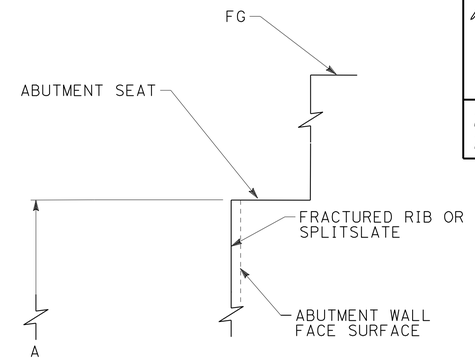

TOP OF BRIDGE ABUTMENT WALL DETAIL TYPICAL BRIDGE SOFFIT

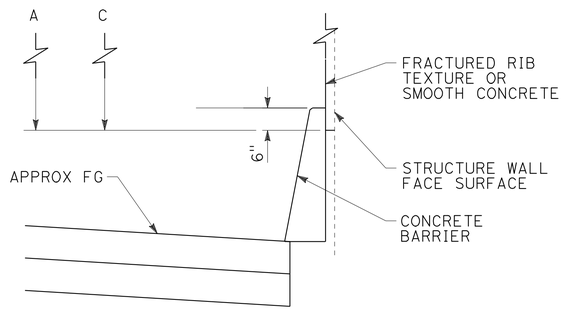

FINISH GROUND DETAIL TYPICAL WITH CONCRETE BARRIER

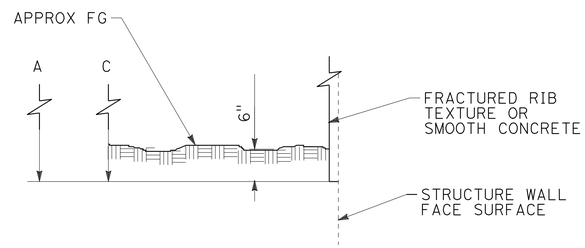

FINISH GROUND DETAIL TYPICAL DETAIL AT FINISH GRADE

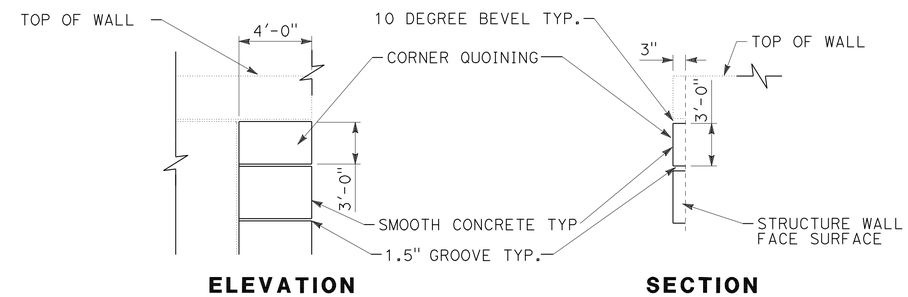

CORNER QUOINING DETAIL

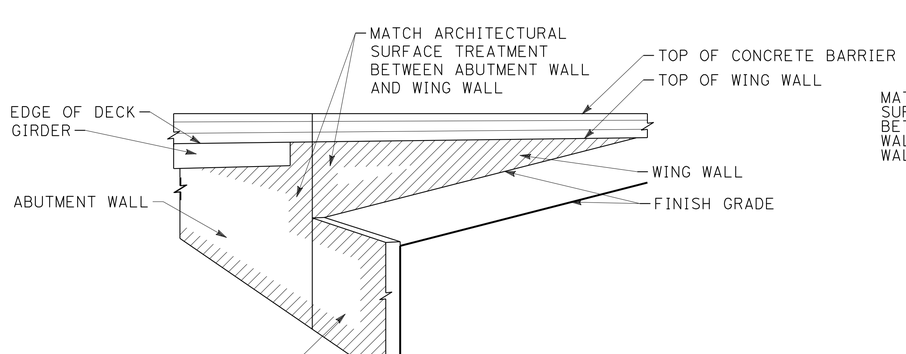

TYPICAL CONTINUATION OF ARCHITECTURAL SURFACE TREATMENT ONTO ABUTMENT WING WALL

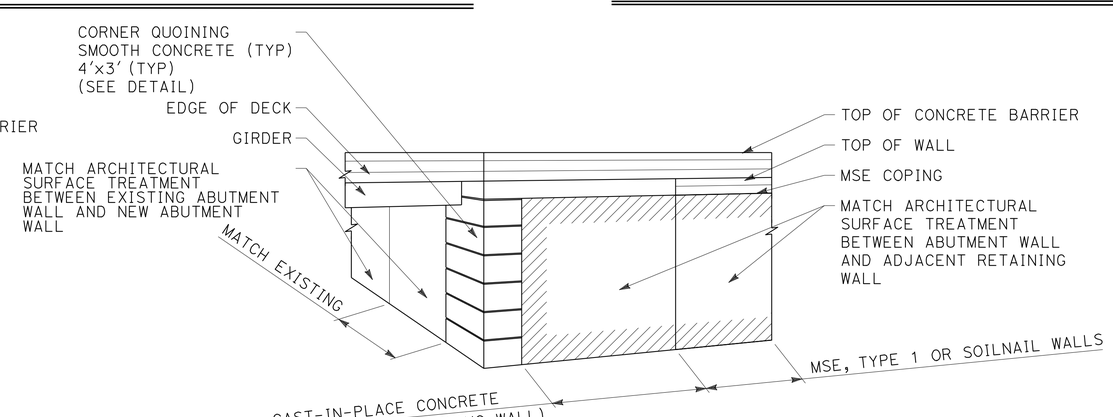

TYPICAL ARCHITECTURAL SURFACE TREATMENT FOR WIDENED UC WITH MATCHING ADJACENT RETAINING WALL

THIS PLAN IS ACCURATE FOR ARCHITECTUAL TREATMENT WORK ONLY.

ARCHITECTURAL SURFACE DETAILS No. 2

SCALE: 1/2"=1'-0"

ASD-5

STATE OF CALIFORNIA - DEPARTMENT OF TRANSPORTATION
Caltrans® LANDSCAPE ARCHITECTURE

SENIOR LANDSCAPE ARCHITECT: BYRON STROUT
CALCULATED-DESIGNED BY: MATTHEW HALL
CHECKED BY: MIRIAM BISHOP
REVISED BY / DATE REVISED

LAST REVISION 12-01-10
DATE PLOTTED => 30-APR-2011
TIME PLOTTED => 08:49

Dist	COUNTY	ROUTE	POST MILES TOTAL PROJECT	SHEET No.	TOTAL SHEETS
08	Riv	91	15.6/21.6	1091	2028

LICENSED LANDSCAPE ARCHITECT

4-25-11
PLANS APPROVAL DATE

LICENSED LANDSCAPE ARCHITECT
Matthew Harry Hall
No. 2011
Signature
10/31/2011
Renewal Date
12-1-10
Date
STATE OF CALIFORNIA

THE STATE OF CALIFORNIA OR ITS OFFICERS OR AGENTS SHALL NOT BE RESPONSIBLE FOR THE ACCURACY OR COMPLETENESS OF SCANNED COPIES OF THIS PLAN SHEET.

MASONRY BLOCK FACES

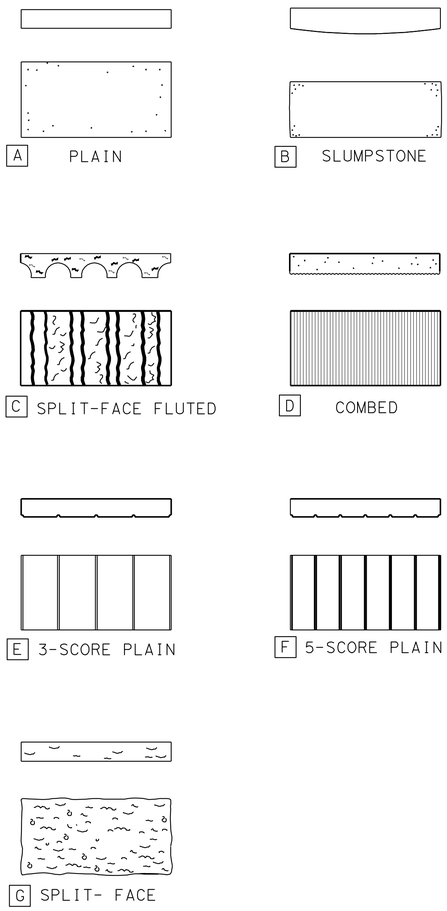

BOND TYPES

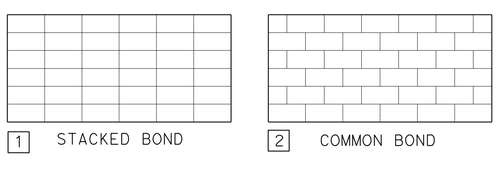

NOTE: TOOLED JOINTS ONLY

TYPICAL WALL SEGMENT

* 8 x 8 x 16 BLOCK SPLIT-FACE

NOTE: COLOR SHALL BE RED BROWN, FEDERAL STANDARD COLOR CHIP #30227

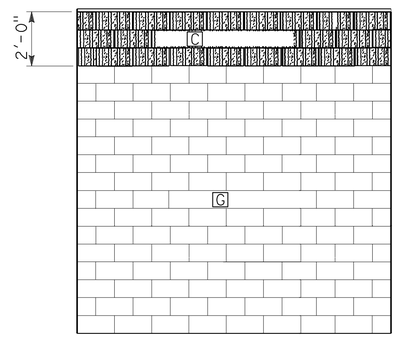

TRAFFIC SIDE AND OTHER SIDE SIMILAR

END TYPE

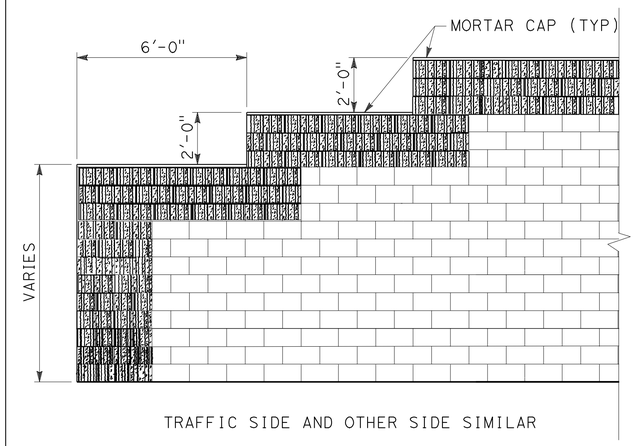

TRAFFIC SIDE AND OTHER SIDE SIMILAR

ELEVATION TRANSITION TYPE

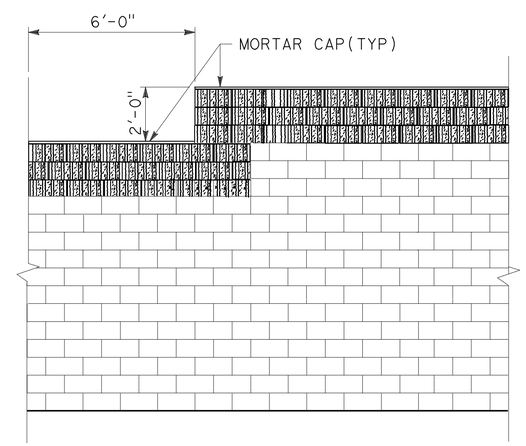

TRAFFIC SIDE AND OTHER SIDE SIMILAR

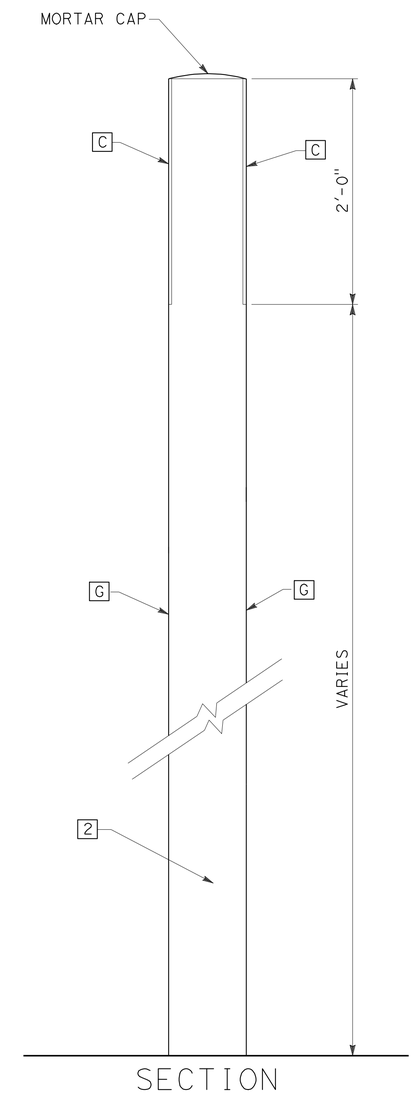

SECTION

SOUND WALL STANDARD AESTHETIC FEATURES
MASONRY BLOCK-DETAILS No. 1

NO SCALE

ASD-6

STATE OF CALIFORNIA - DEPARTMENT OF TRANSPORTATION
Caltrans® LANDSCAPE ARCHITECTURE

SENIOR LANDSCAPE ARCHITECT: BYRON STROUT
CALCULATED-DESIGNED BY: MATTHEW HALL
CHECKED BY: MIRIAM BISHOP
REVISED BY
DATE REVISED

LAST REVISION 12-01-10 | DATE PLOTTED => 30-APR-2011 | TIME PLOTTED => 08:50

Dist	COUNTY	ROUTE	POST MILES TOTAL PROJECT	SHEET No.	TOTAL SHEETS
08	Riv	91	15.6/21.6	1092	2028

LICENSED LANDSCAPE ARCHITECT

4-25-11
PLANS APPROVAL DATE

LICENSED LANDSCAPE ARCHITECT
Matthew Harry Hall
Signature
10/31/2011
Renewal Date
12-1-10
Date
STATE OF CALIFORNIA

THE STATE OF CALIFORNIA OR ITS OFFICERS OR AGENTS SHALL NOT BE RESPONSIBLE FOR THE ACCURACY OR COMPLETENESS OF SCANNED COPIES OF THIS PLAN SHEET.

NOTES:

1. NEW END POST OF THE WOOD FENCE SHALL BE SECURED WITH 3/8" STUDS AND EXPANSION ANCHORS. 1" DIA. CUT WASHERS, LOCK, AND HEX. NUTS (TYPICAL)
2. THE FIRST INTERIOR FENCE POST SHALL BE REPLACED.
3. RECONSTRUCTED WOOD FENCE SHALL MATCH THE EXISTING MATERIAL AND DESIGN.
4. THE EXACT LOCATIONS OF LANSCAPE OPENINGS SHALL BE FIELD DETERMINED BY THE ENGINEER.

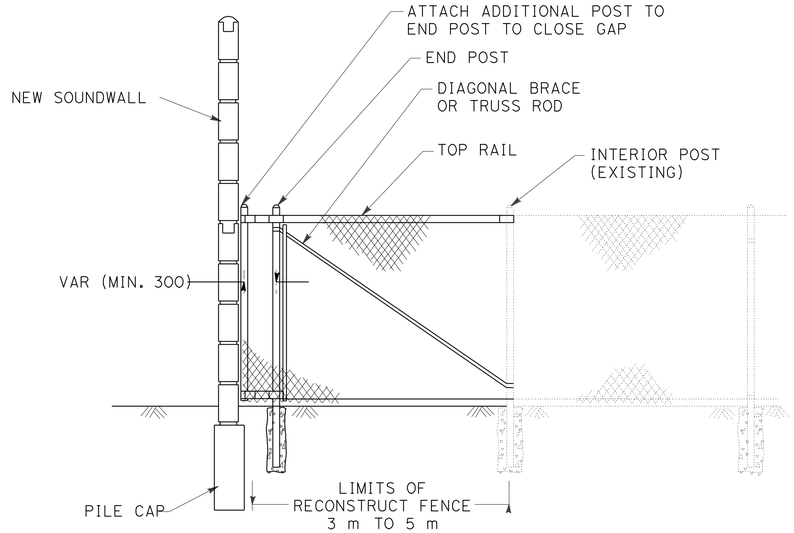

RECONSTRUCT FENCE
CHAIN LINK
(SEE NOTE 2)

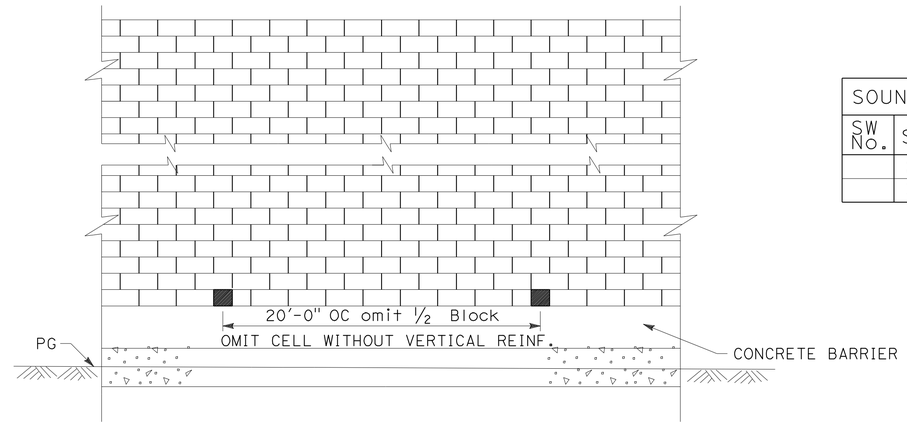

LANDSCAPE OPENING DETAIL
(SEE NOTE 4)

SOUND WALL OPENING FOR LANDSCAPE		
SW NO.	STATIONING LOL SOUND WALL	DIRECTION
	246+00 TO 252+00	SOUTHBOUND
	360+00 TO 364+50	SOUTHBOUND

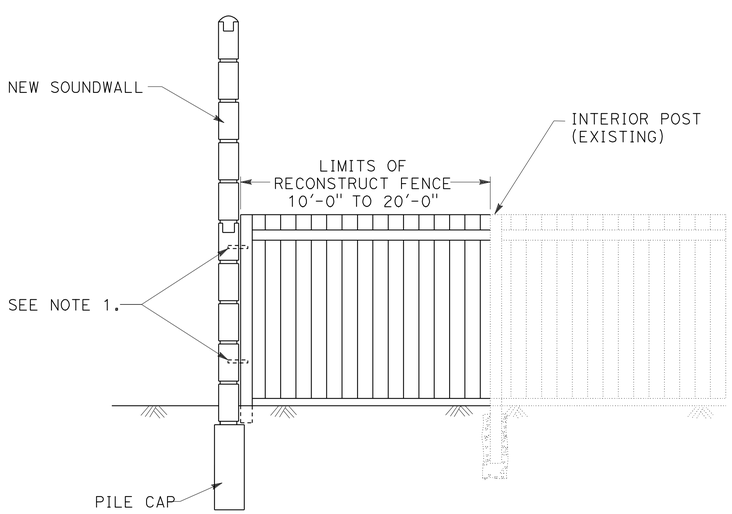

RECONSTRUCT FENCE
WOOD
(SEE NOTE 2 AND 3)

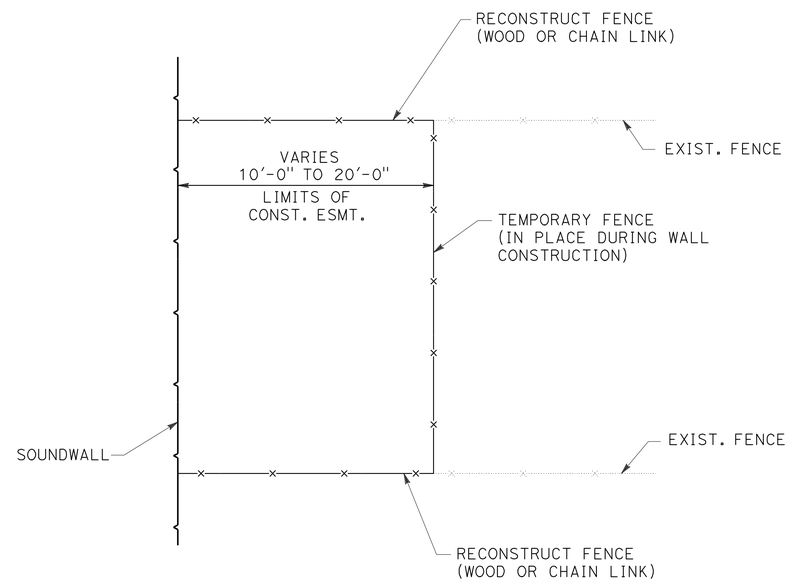

RECONSTRUCT FENCE
PLAN VIEW

THIS PLAN IS ACCURATE FOR ARCHITECTUAL TREATMENT WORK ONLY.

SOUND WALL STANDARD AESTHETIC FEATURES
MASONRY BLOCK-DETAILS No. 2

NO SCALE

ASD-7

REVISED BY | DATE REVISED
MATTHEW HALL | MIRIAM BISHOP
CALCULATED-DESIGNED BY | CHECKED BY
SENIOR LANDSCAPE ARCHITECT
BYRON STROUT

STATE OF CALIFORNIA - DEPARTMENT OF TRANSPORTATION
Caltrans® LANDSCAPE ARCHITECTURE

LAST REVISION 12-01-10 | DATE PLOTTED => 30-APR-2011 | TIME PLOTTED => 08:50

Dist	COUNTY	ROUTE	POST MILES TOTAL PROJECT	SHEET No.	TOTAL SHEETS
08	Riv	91	15.6/21.6	1093	2028

LICENSED LANDSCAPE ARCHITECT

4-25-11
PLANS APPROVAL DATE

LICENSED LANDSCAPE ARCHITECT Byron Strout No. 2433 Signature 07-30-11 Renewal Date 12-1-10 Date STATE OF CALIFORNIA

THE STATE OF CALIFORNIA OR ITS OFFICERS OR AGENTS SHALL NOT BE RESPONSIBLE FOR THE ACCURACY OR COMPLETENESS OF SCANNED COPIES OF THIS PLAN SHEET.

ABBREVIATIONS

AMEND — amendment
B & B — balled and burlapped
Dia — diameter
EA — each
LB — pound
Oz — ounce
Ft — foot/feet
SQFT — square feet
SQYD — square yard
CF — cubic feet
IN — INCHES
Max — maximum
Min — minimum
NCN — no common name
No. — number
Pkt — packet
PLT ESTB — plant establishment
Pvmt — pavement
R/W — right of way
SF — state furnished
TRVD — traveled

PLANT LIST AND PLANTING SPECIFICATIONS

PLANT GROUP	PLANT No.	SYMBOL	BOTANICAL NAME	COMMON NAME	SIZE	QUANTITY EACH	HOLE SIZE (INCH) Dia	HOLE SIZE (INCH) DEPTH	BASIN TYPE	IRON SULFATE ①	SOIL AMEND ①	COMMERCIAL FERTILIZER ① PLANTING	COMMERCIAL FERTILIZER ① PLT ESTB	BASIN MULCH	STAKING	PLANTING LIMITS MINIMUM DISTANCE (Ft) FROM TRVD WAY	PVMT	FENCE	WALL	PAVED DITCH	EARTH DITCH	ON CENTER (Ft)	REMARKS
A	1		PARTHENOCISSUS TRICUSPIDATA	BOSTON IVY	No. 1	194	②	②	III	—	1 CF	0.25 LB	0.5 LB	0.02 CY	—	—	—	—	—	④	④	10	VINE
B	2		BOUGAINVILLEA "ROSENKA"	BOUGAINVILLEA ROSENKA	No. 5	1738	②	②	I	—	1 CF	0.25 LB	0.5 LB	0.02 CY	—	—	10	④	④	④	④	8	SHRUB
	3		BOUGAINVILLEA "OO-LA-LA"	BOUGAINVILLEA OO-LA-LA	No. 5	2968	②	②	I	—	1 CF	0.25 LB	0.5 LB	0.02 CY	—	—	15	④	④	④	④	6	SHRUB
U	4		JACARANDA MIMOSIFOLIA	JACARANDA	No. 15	225	②	②	I	—	2 CF	0.5 LB	0.5 LB	0.02 CY	X	30	—	④	④	④	④	—	TREE
	5		EUCALYPTUS CITRIODORA	LEMON GUM	No. 15	248	②	②	I	—	2 CF	0.5 LB	0.5 LB	0.02 CY	X	30	—	④	④	④	④	—	TREE
	6		LAGERSTROEMIA INDICA "SIREN RED"	CRAPE MYRTLE "SIREN RED"	No. 15	371	②	②	I	—	2 CF	0.5 LB	0.5 LB	0.02 CY	X	30	—	④	④	④	④	—	MULTI - TRUNK SHRUB
Z	7		WASHINGTONIA ROBUSTA	MEXICAN FAN PALM	B & B	396	⑥	⑥	⑥	—	2 CF	0.5 LB	0.5 LB	0.02 CY	—	30	—	④	④	④	④	④	⑨ 20'-0"
H	8		CARPOBROTUS EDULIS	HOTTENTOT FIG	CUTTING	234776	—	—	—	—	—	16.5 LB/ 1080 SQFT	16.5 LB/ 1080 SQFT	—	—	—	6	—	—	—	—	1.5	⑩ GROUNDCOVER SEE DETAIL
F	9		OSTEOSPERMUM FRUTICOSUM	TRAILING AFRICAN DAISY	FLATS	234776	—	—	—	—	—	16.5 LB/ 1080 SQFT	16.5 LB/ 1080 SQFT	—	—	—	6	—	—	—	—	1.5	⑩ GROUNDCOVER SEE DETAIL

APPLICABLE WHEN CIRCLED:

① - Quantities shown are "per plant" unless shown as SQFT or SQYD application rates.
② - 2 X diameter rootball, same depth as rootball.
3 - Does not apply to mulch areas.
④ - As shown on plans.
5 - Unless otherwise shown on plans.
⑥ - See detail.
7 - See Special Provisions.
8 - See Standard Plans and Specifications.
⑨ - Height of Palm Trees shall be from the top of the rootball to the bottom of the first palm frond.
⑩ - Compost (Incorporate) Areas.

LEGEND

EXISTING PHOENIX CANARIENSIS TO BE TRANSPLANTED

RELOCATED PHOENIX CANARIENSIS

EXISTING VINE TO BE MAINTAINED

GRAVEL(MISCELLANEOUS AREAS) SIZE IS ¾"

GRAVEL(MISCELLANEOUS AREAS) SIZE IS 2½"

ROCK BLANKET

NOTE:

Underlined portions of botanical name indicate abbreviations used on Planting Plans.

PLANT LIST

PL-1

REVISED BY | DATE REVISED
ALFREDO CORNEJO | MIRIAM BISHOP
CALCULATED-DESIGNED BY | CHECKED BY
SENIOR LANDSCAPE ARCHITECT | BYRON STROUT
STATE OF CALIFORNIA - DEPARTMENT OF TRANSPORTATION
Caltrans LANDSCAPE ARCHITECT

LAST REVISION 12-01-10 | DATE PLOTTED => 30-APR-2011 | TIME PLOTTED => 08:50

Dist	COUNTY	ROUTE	POST MILES TOTAL PROJECT	SHEET No.	TOTAL SHEETS
08	Riv	91	15.6/21.6	1094	2028

LICENSED LANDSCAPE ARCHITECT

4-25-11
PLANS APPROVAL DATE

LICENSED LANDSCAPE ARCHITECT Byron Strout No. 2513 Signature 07-30-11 Renewal Date 12-1-10 Date STATE OF CALIFORNIA

THE STATE OF CALIFORNIA OR ITS OFFICERS OR AGENTS SHALL NOT BE RESPONSIBLE FOR THE ACCURACY OR COMPLETENESS OF SCANNED COPIES OF THIS PLAN SHEET.

NOTES:

1. FOR COMPLETE RIGHT OF WAY AND ACCURATE ACCESS DATA, SEE RIGHT OF WAY RECORD MAPS AT DISTRICT OFFICE.
2. GRAVEL OR GROUNDCOVER SHALL BE PLACED BELOW ALL TREES.

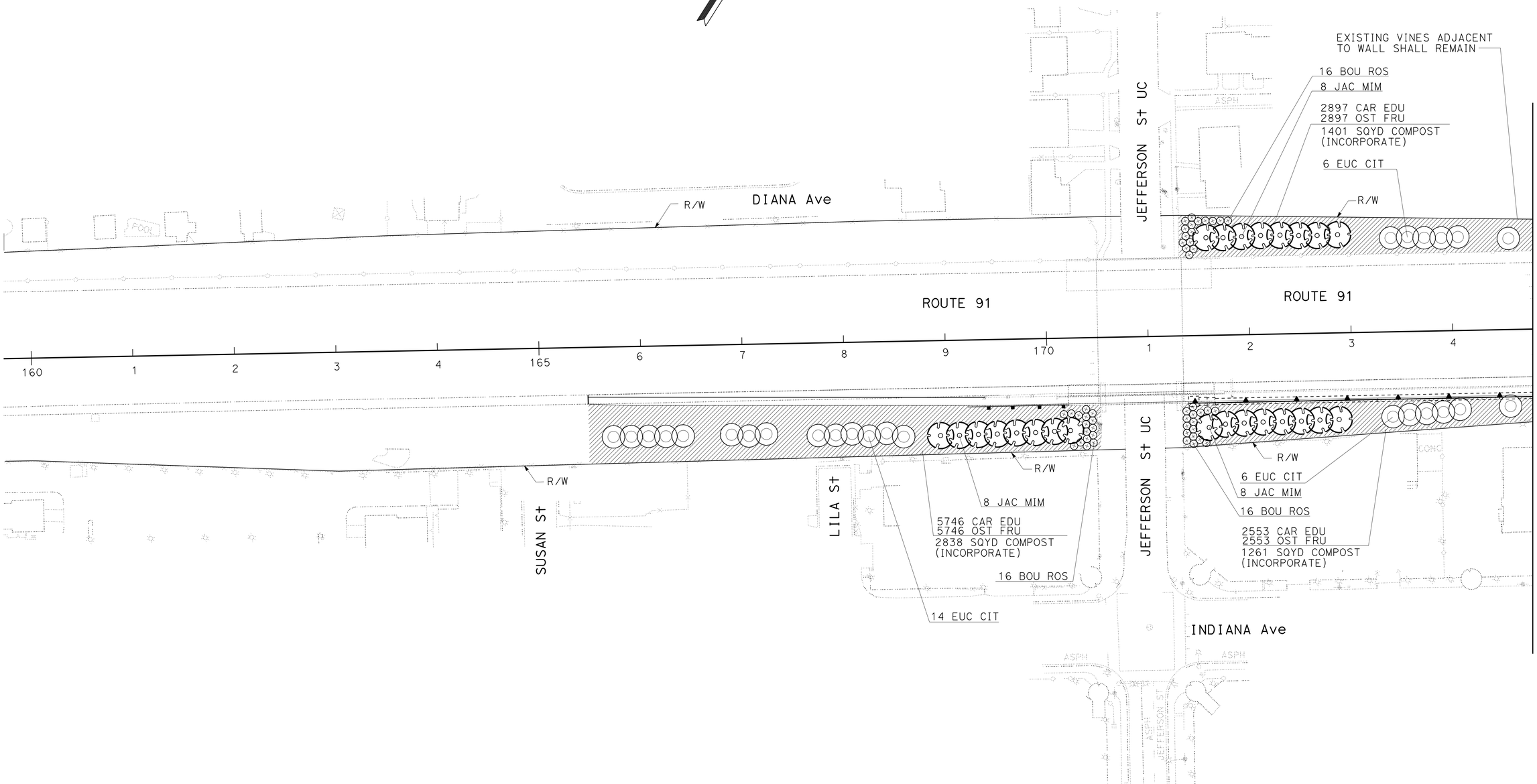

PLANTING PLAN

SCALE: 1"=50'

PP-1

THIS PLAN ACCURATE FOR PLANTING WORK ONLY.

STATE OF CALIFORNIA - DEPARTMENT OF TRANSPORTATION
Caltrans® LANDSCAPE ARCHITECT

SENIOR LANDSCAPE ARCHITECT: BYRON STROUT
CALCULATED-DESIGNED BY: ALFREDO CORNEJO
CHECKED BY: MIRIAM BISHOP
REVISED BY
DATE REVISED

LAST REVISION 12-01-10
DATE PLOTTED => 30-APR-2011
TIME PLOTTED => 08:50

Dist	COUNTY	ROUTE	POST MILES TOTAL PROJECT	SHEET No.	TOTAL SHEETS
08	Riv	91	15.6/21.6	1095	2028

LICENSED LANDSCAPE ARCHITECT

4-25-11
PLANS APPROVAL DATE

LICENSED LANDSCAPE ARCHITECT
Byron Strout No. 2439
Signature
07-30-11
Renewal Date
12-1-10
Date
STATE OF CALIFORNIA

THE STATE OF CALIFORNIA OR ITS OFFICERS OR AGENTS SHALL NOT BE RESPONSIBLE FOR THE ACCURACY OR COMPLETENESS OF SCANNED COPIES OF THIS PLAN SHEET.

NOTE:

FOR COMPLETE RIGHT OF WAY AND ACCURATE ACCESS DATA, SEE RIGHT OF WAY RECORD MAPS AT DISTRICT OFFICE.

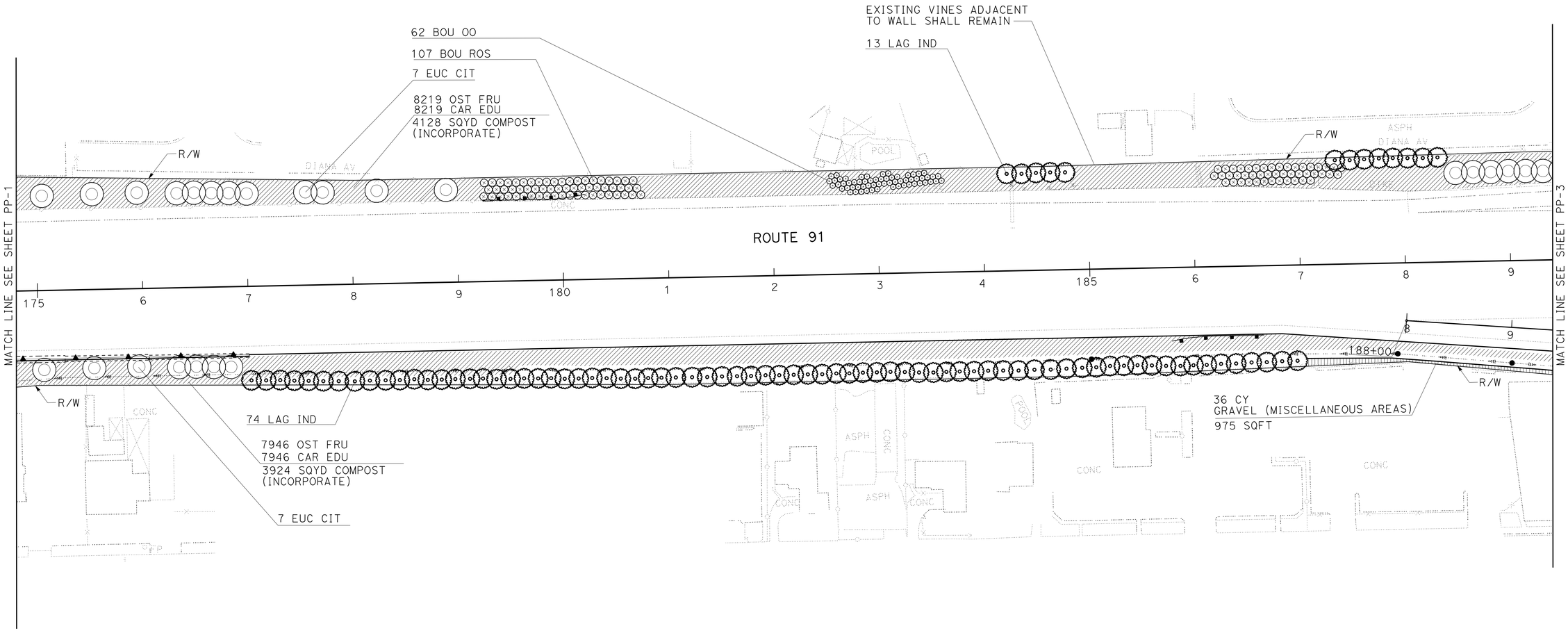

PLANTING PLAN

SCALE: 1"=50'

PP-2

THIS PLAN ACCURATE FOR PLANTING WORK ONLY.

STATE OF CALIFORNIA - DEPARTMENT OF TRANSPORTATION
Caltrans® LANDSCAPE ARCHITECT

SENIOR LANDSCAPE ARCHITECT: BYRON STROUT
CALCULATED-DESIGNED BY: ALFREDO CORNEJO
CHECKED BY: MIRIAM BISHOP
REVISED BY
DATE REVISED

LAST REVISION 12-01-10
DATE PLOTTED => 30-APR-2011
TIME PLOTTED => 09:02

Dist	COUNTY	ROUTE	POST MILES TOTAL PROJECT	SHEET No.	TOTAL SHEETS
08	Riv	91	15.6/21.6	1096	2028

LICENSED LANDSCAPE ARCHITECT

4-25-11
PLANS APPROVAL DATE

LICENSED LANDSCAPE ARCHITECT
Byron Strout No. 2633
Signature
07-30-11
Renewal Date
12-1-10
Date
STATE OF CALIFORNIA

THE STATE OF CALIFORNIA OR ITS OFFICERS OR AGENTS SHALL NOT BE RESPONSIBLE FOR THE ACCURACY OR COMPLETENESS OF SCANNED COPIES OF THIS PLAN SHEET.

NOTE:

FOR COMPLETE RIGHT OF WAY AND ACCURATE ACCESS DATA, SEE RIGHT OF WAY RECORD MAPS AT DISTRICT OFFICE.

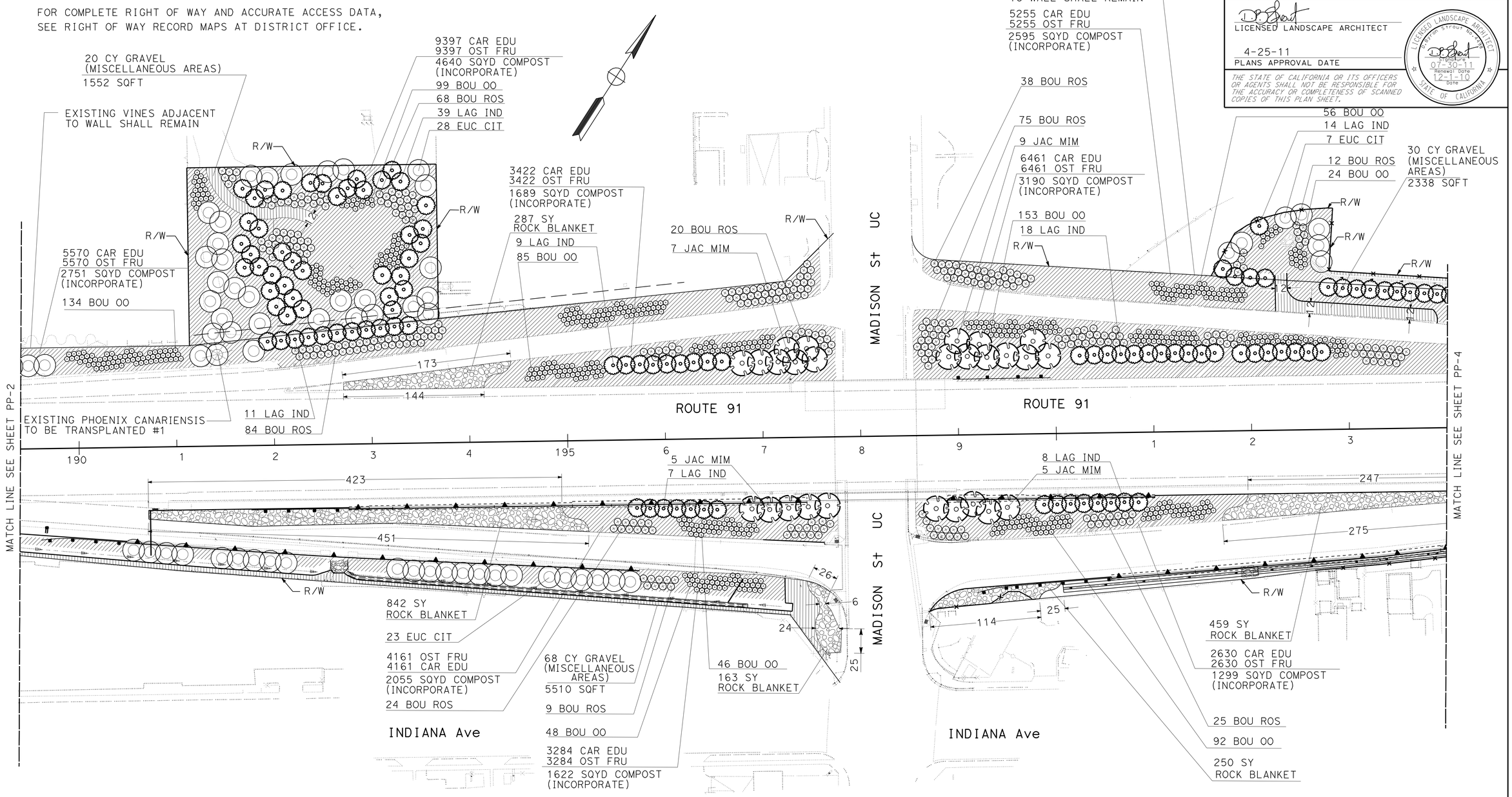

PLANTING PLAN

SCALE: 1"=50'

PP-3

THIS PLAN ACCURATE FOR PLANTING WORK ONLY.

STATE OF CALIFORNIA - DEPARTMENT OF TRANSPORTATION
Caltrans® LANDSCAPE ARCHITECT

SENIOR LANDSCAPE ARCHITECT: BYRON STROUT

CALCULATED-DESIGNED BY: ALFREDO CORNEJO
CHECKED BY: MIRIAM BISHOP

REVISED BY
DATE REVISED

LAST REVISION 12-01-10
DATE PLOTTED => 30-APR-2011
TIME PLOTTED => 08:51

BORDER LAST REVISED 4/11/2008

RELATIVE BORDER SCALE IS IN INCHES 0 1 2 3

USERNAME => trstrk
DGN FILE => 844840ti003.dgn

CU 08340

EA 448401

Dist	COUNTY	ROUTE	POST MILES TOTAL PROJECT	SHEET No.	TOTAL SHEETS
08	Riv	91	15.6/21.6	1097	2028

LICENSED LANDSCAPE ARCHITECT

4-25-11
PLANS APPROVAL DATE

LICENSED LANDSCAPE ARCHITECT
Byron Strout No. 2439
Signature
07-30-11
Renewal Date
12-1-10
Date
STATE OF CALIFORNIA

THE STATE OF CALIFORNIA OR ITS OFFICERS OR AGENTS SHALL NOT BE RESPONSIBLE FOR THE ACCURACY OR COMPLETENESS OF SCANNED COPIES OF THIS PLAN SHEET.

NOTE:

FOR COMPLETE RIGHT OF WAY AND ACCURATE ACCESS DATA, SEE RIGHT OF WAY RECORD MAPS AT DISTRICT OFFICE.

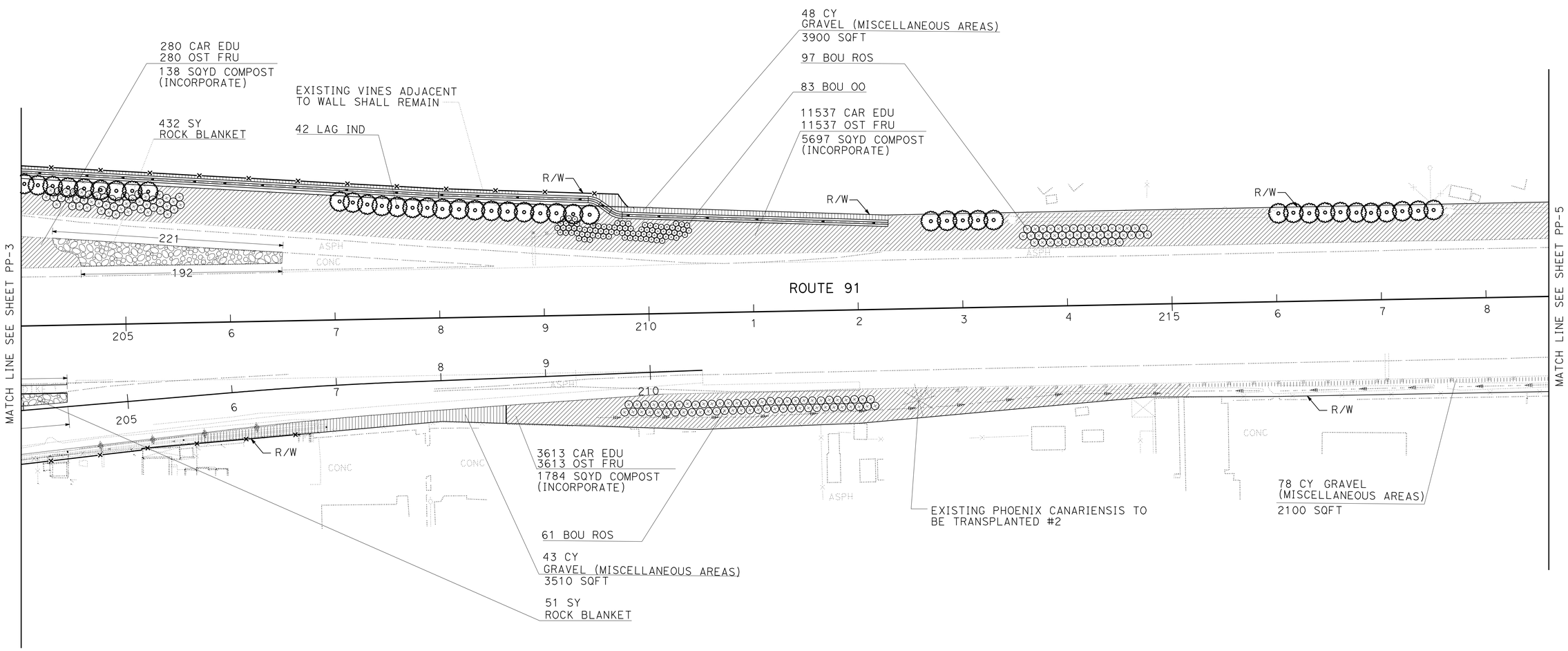

PLANTING PLAN

SCALE: 1"=50'

PP-4

THIS PLAN ACCURATE FOR PLANTING WORK ONLY.

STATE OF CALIFORNIA - DEPARTMENT OF TRANSPORTATION
Caltrans® LANDSCAPE ARCHITECT

SENIOR LANDSCAPE ARCHITECT: BYRON STROUT
CALCULATED-DESIGNED BY: ALFREDO CORNEJO
CHECKED BY: MIRIAM BISHOP
REVISED BY
DATE REVISED

LAST REVISION 12-01-10
DATE PLOTTED => 30-APR-2011
TIME PLOTTED => 08:51

Dist	COUNTY	ROUTE	POST MILES TOTAL PROJECT	SHEET No.	TOTAL SHEETS
08	Riv	91	15.6/21.6	1098	2028

LICENSED LANDSCAPE ARCHITECT

4-25-11
PLANS APPROVAL DATE

LICENSED LANDSCAPE ARCHITECT Byron Strout No. 2433 Signature 07-30-11 Renewal Date 12-1-10 Date STATE OF CALIFORNIA

THE STATE OF CALIFORNIA OR ITS OFFICERS OR AGENTS SHALL NOT BE RESPONSIBLE FOR THE ACCURACY OR COMPLETENESS OF SCANNED COPIES OF THIS PLAN SHEET.

NOTE:

FOR COMPLETE RIGHT OF WAY AND ACCURATE ACCESS DATA, SEE RIGHT OF WAY RECORD MAPS AT DISTRICT OFFICE.

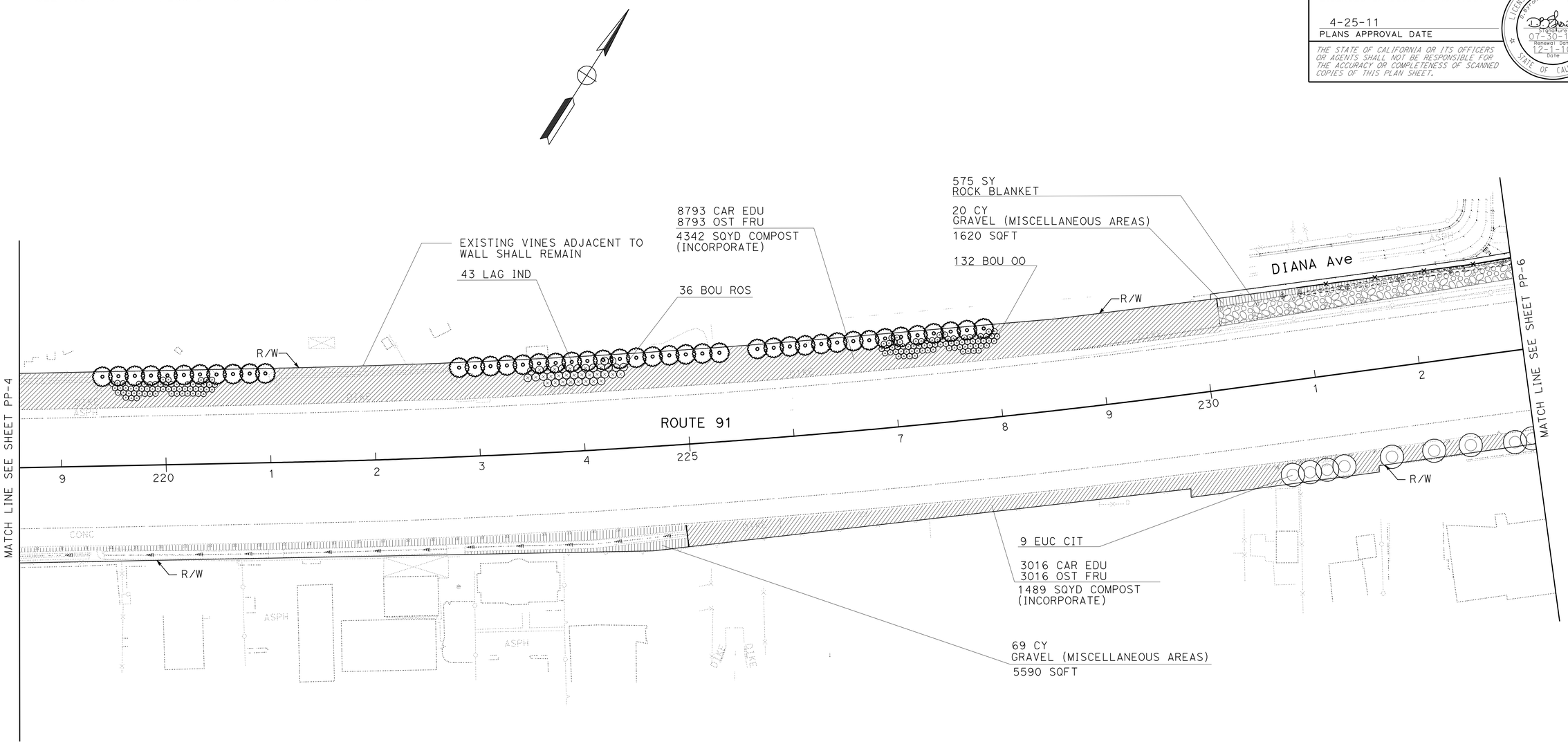

THIS PLAN ACCURATE FOR PLANTING WORK ONLY.

PLANTING PLAN

SCALE: 1"=50'

PP-5

STATE OF CALIFORNIA - DEPARTMENT OF TRANSPORTATION
Caltrans® LANDSCAPE ARCHITECT

SENIOR LANDSCAPE ARCHITECT: BYRON STROUT
CALCULATED-DESIGNED BY: ALFREDO CORNEJO
CHECKED BY: MIRIAM BISHOP
REVISED BY
DATE REVISED

LAST REVISION 12-01-10
DATE PLOTTED => 30-APR-2011
TIME PLOTTED => 08:51

Dist	COUNTY	ROUTE	POST MILES TOTAL PROJECT	SHEET No.	TOTAL SHEETS
08	Riv	91	15.6/21.6	1099	2028

LICENSED LANDSCAPE ARCHITECT

4-25-11
PLANS APPROVAL DATE

LICENSED LANDSCAPE ARCHITECT
Byron Strout No. 2488
Signature
07-30-11
Renewal Date
12-1-10
Date
STATE OF CALIFORNIA

THE STATE OF CALIFORNIA OR ITS OFFICERS OR AGENTS SHALL NOT BE RESPONSIBLE FOR THE ACCURACY OR COMPLETENESS OF SCANNED COPIES OF THIS PLAN SHEET.

NOTE:

FOR COMPLETE RIGHT OF WAY AND ACCURATE ACCESS DATA, SEE RIGHT OF WAY RECORD MAPS AT DISTRICT OFFICE.

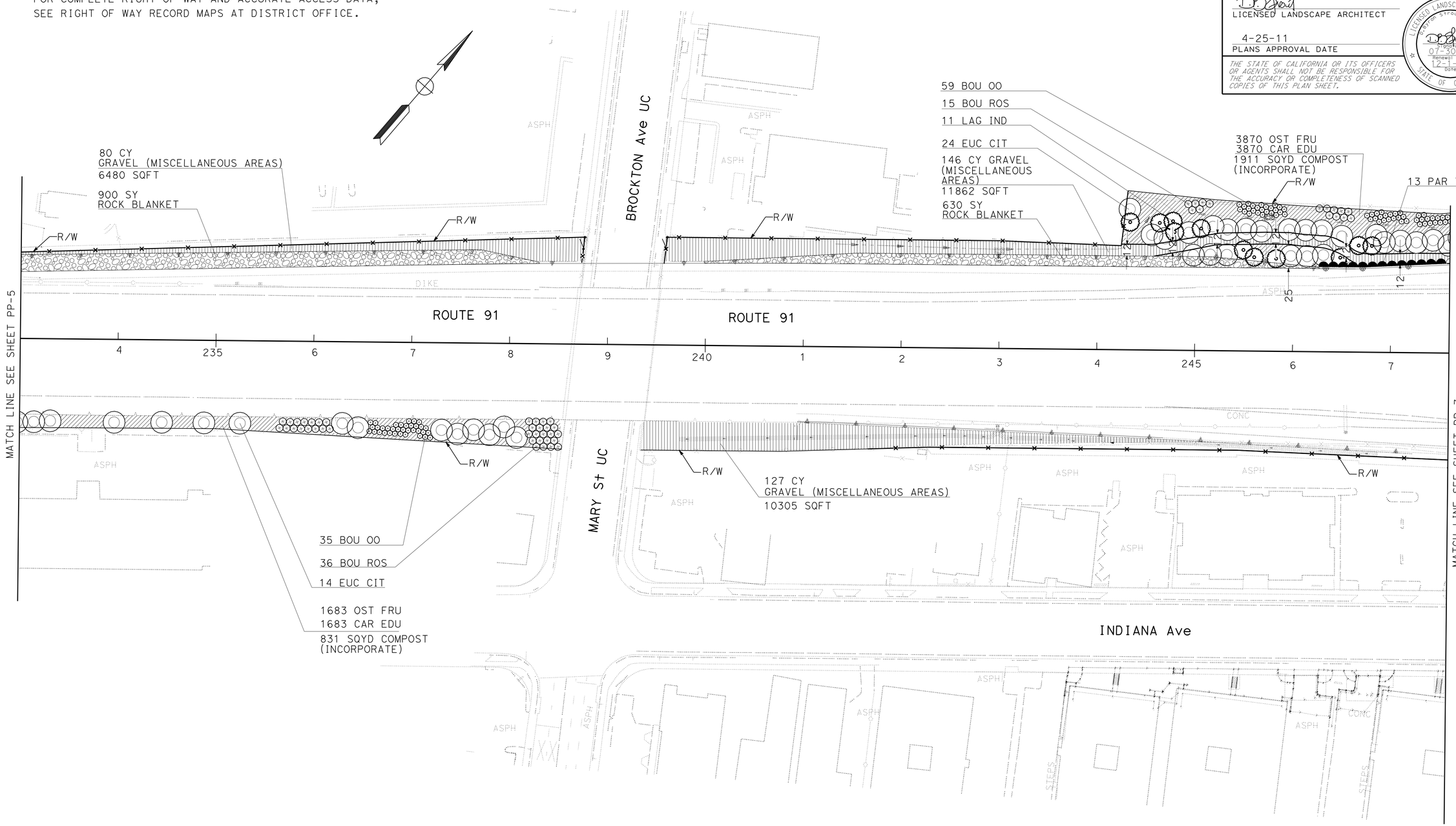

PLANTING PLAN

SCALE: 1"=50'

PP-6

THIS PLAN ACCURATE FOR PLANTING WORK ONLY.

STATE OF CALIFORNIA - DEPARTMENT OF TRANSPORTATION
Caltrans® LANDSCAPE ARCHITECT

SENIOR LANDSCAPE ARCHITECT: BYRON STROUT
CALCULATED-DESIGNED BY: ALFREDO CORNEJO
CHECKED BY: MIRIAM BISHOP
REVISED BY
DATE REVISED

LAST REVISION 12-01-10
DATE PLOTTED => 30-APR-2011
TIME PLOTTED => 08:52

Dist	COUNTY	ROUTE	POST MILES TOTAL PROJECT	SHEET No.	TOTAL SHEETS
08	Riv	91	15.6/21.6	1100	2028

LICENSED LANDSCAPE ARCHITECT

4-25-11
PLANS APPROVAL DATE

LICENSED LANDSCAPE ARCHITECT Byron Strout No. 2543 Signature 07-30-11 Renewal Date 12-1-10 Date STATE OF CALIFORNIA

THE STATE OF CALIFORNIA OR ITS OFFICERS OR AGENTS SHALL NOT BE RESPONSIBLE FOR THE ACCURACY OR COMPLETENESS OF SCANNED COPIES OF THIS PLAN SHEET.

NOTE:

FOR COMPLETE RIGHT OF WAY AND ACCURATE ACCESS DATA, SEE RIGHT OF WAY RECORD MAPS AT DISTRICT OFFICE.

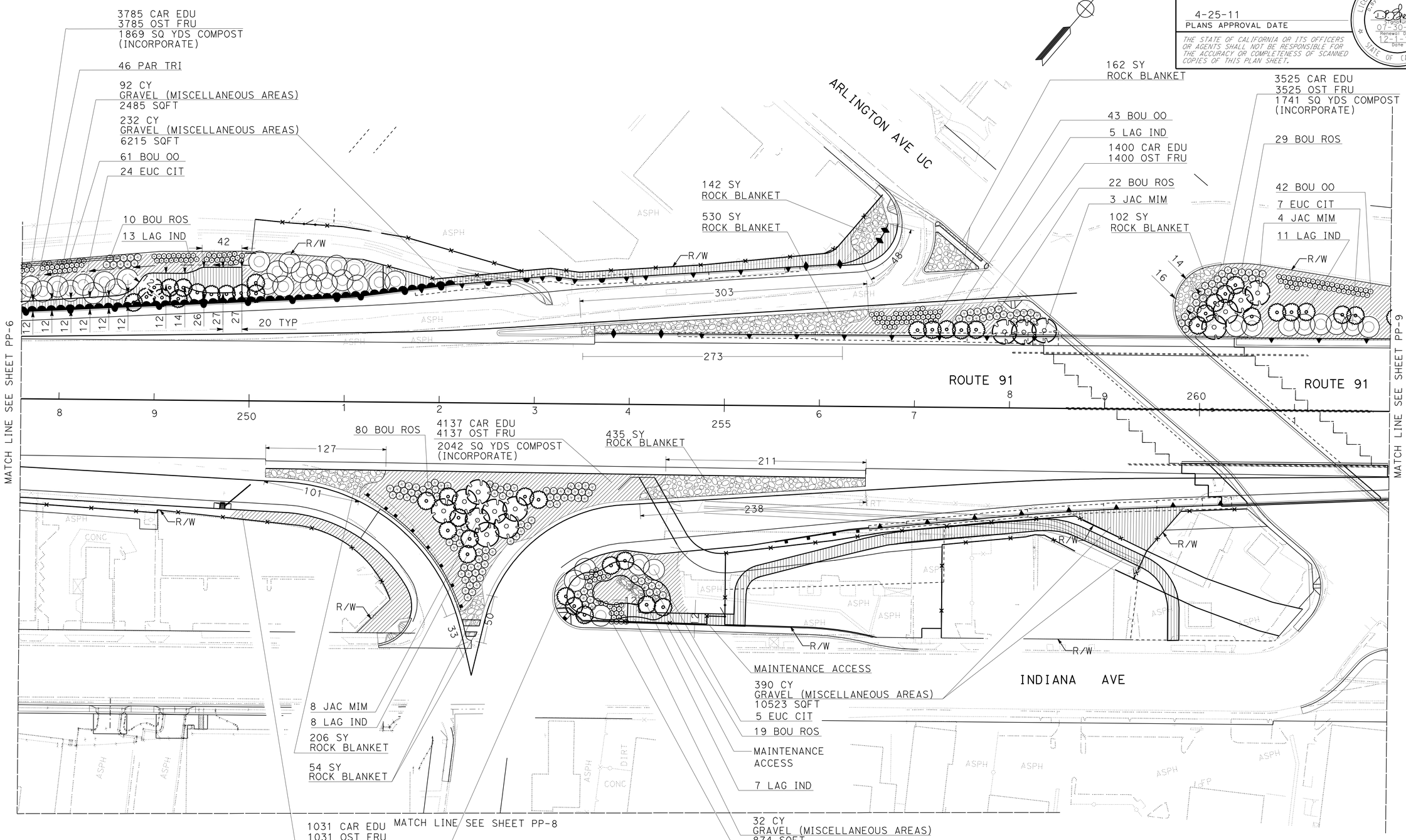

THIS PLAN ACCURATE FOR PLANTING WORK ONLY.

PLANTING PLAN

SCALE: 1"=50'

PP-7

STATE OF CALIFORNIA - DEPARTMENT OF TRANSPORTATION
Caltrans® LANDSCAPE ARCHITECT

SENIOR LANDSCAPE ARCHITECT: BYRON STROUT

CALCULATED-DESIGNED BY: ALFREDO CORNEJO
CHECKED BY: MIRIAM BISHOP
REVISED BY
DATE REVISED

LAST REVISION 12-01-10
DATE PLOTTED => 30-APR-2011
TIME PLOTTED => 08:52