DIST	COUNTY	ROUTE	POST MILES TOTAL PROJECT	SHEET No	TOTAL SHEETS
08	Riv	91	15.6/21.6	901	2028

GEOTECHNICAL PROFESSIONAL DATE 10/2008

4-25-11
PLANS APPROVAL DATE

REGISTERED PROFESSIONAL ENGINEER
ANDREW C. LEE
No. 2616
Exp. 6-30-12
GEOTECHNICAL
STATE OF CALIFORNIA

The State of California or its officers or agents shall not be responsible for the accuracy or completeness of electronic copies of this plan sheet.

California Department of Transportation
5900 Folsom Boulevard
Sacramento, CA 95819

URS Corporation
2020 East First Street, Suite 400
Santa Ana, CA 92705

FOR PLAN VIEW, SEE SHEET R17-5

NOTE: 1. This LOTB sheet was prepared in accordance with the Caltrans Soil & Rock Logging, Classification, and Presentation Manual (June 2007).

2. For legend, see "Log of Test Borings" 1 of 83

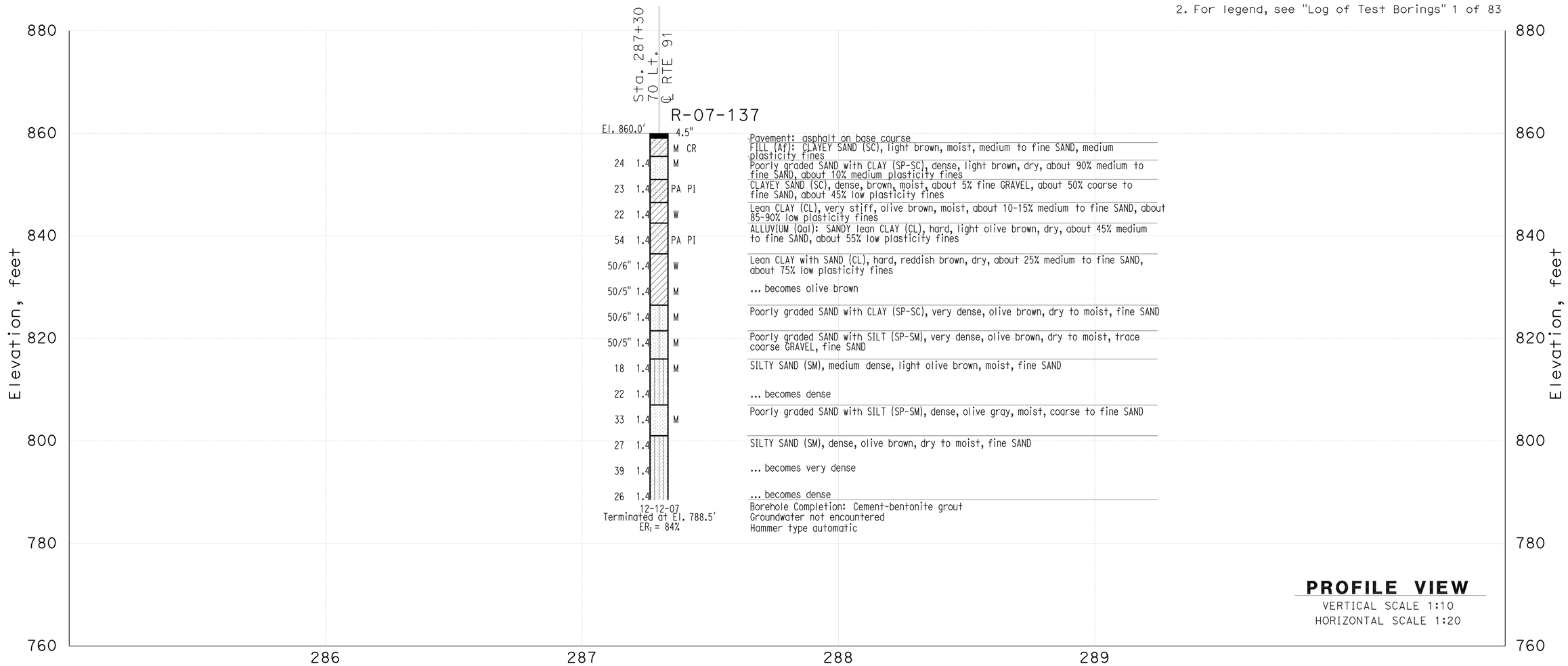

THIS PLAN ACCURATE FOR SOUND WALL AND RETAINING WALL WORK ONLY

DESIGN OVERSIGHT	GINA PURSELL FUNCTIONAL SUPERVISOR	DRAWN BY	P. QUACH	P.CHAU/D.WADER/C.CARBINO FIELD INVESTIGATION BY:	PREPARED FOR THE STATE OF CALIFORNIA DEPARTMENT OF TRANSPORTATION	A. LEE PROJECT ENGINEER	BRIDGE NO. X POST MILE X
X SIGN OFF DATE		CHECKED BY	S. PIRATHIVIRAJ	DATE: Nov 6 2007 to March 7 2008			

Retaining Wall 287 R17-4

LOG OF TEST BORINGS SHEET 1 OF 2

OSF GEOTECHNICAL LOG OF TEST BORINGS SHEET (ENGLISH) (REV. 2/25/05)

ORIGINAL SCALE IN INCHES FOR REDUCED PLANS 0 1 2 3

CU 59A0590
EA 08-448400

DISREGARD PRINTS BEARING EARLIER REVISION DATES

REVISION DATES (PRELIMINARY STAGE ONLY) X

SHEET 1 OF 2

FILE => 844840qq004.dgn

USERNAME => trpierce DATE PLOTTED => 30-APR-2011 TIME PLOTTED =>

DIST	COUNTY	ROUTE	POST MILES TOTAL PROJECT	SHEET No	TOTAL SHEETS
08	Riv	91	15.6/21.6	902	2028

GEOTECHNICAL PROFESSIONAL — DATE 10/2008

4-25-11
PLANS APPROVAL DATE

REGISTERED PROFESSIONAL ENGINEER — ANDREW C. LEE — No. 2616 — Exp. 6-30-12 — GEOTECHNICAL — STATE OF CALIFORNIA

The State of California or its officers or agents shall not be responsible for the accuracy or completeness of electronic copies of this plan sheet.

California Department of Transportation
5900 Folsom Boulevard
Sacramento, CA 95819

URS Corporation
2020 East First Street, Suite 400
Santa Ana, CA 92705

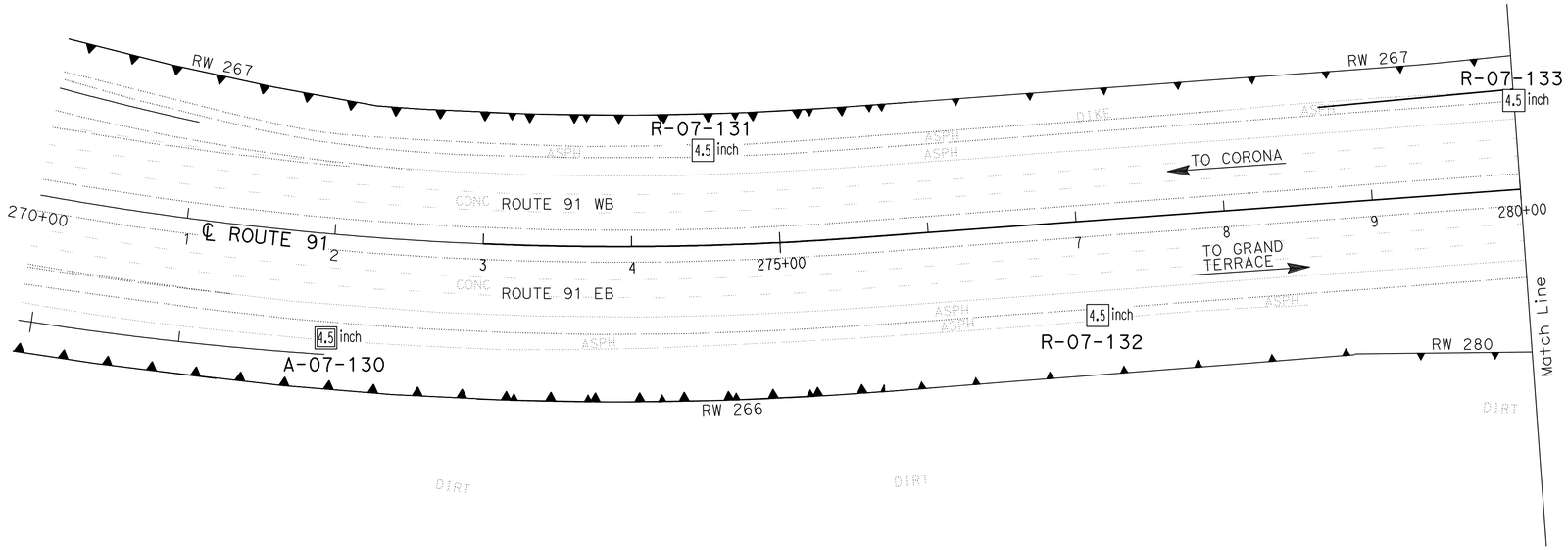

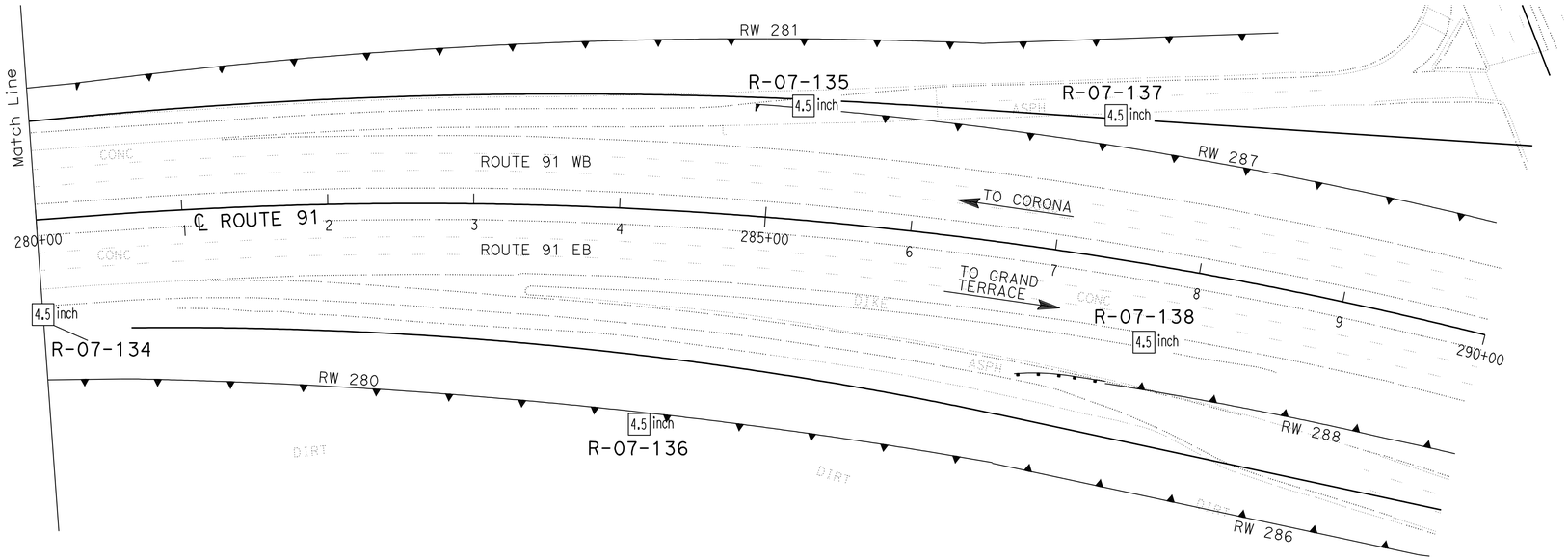

PLAN
SCALE 1"=50'

Borehole Number	Drill Rig	Hammer Type	Avg. Hammer Efficiency, ETR (%)
A-07-130	CS-2000	Automatic	84
R-07-131	CS-2000	Automatic	84
R-07-132	CS-2000	Automatic	84
R-07-133	CME 85	Automatic	87
R-07-134	CS-2000	Automatic	84
R-07-135	CS-2000	Automatic	84
R-07-136	CS-2000	Automatic	84
R-07-137	CS-2000	Automatic	84
R-07-138	CS-2000	Automatic	84

Sampler Type	Inside Diameter (Inches)	Borehole Numbers
SPT	1.375	A-07-130, R-07-131, R-07-132 R-07-133, R-07-134, R-07-135 R-07-136, R-07-137
Modified California 1	1.94	R-07-131, R-07-133 R-07-135, R-07-136
Modified California 2	2.40	-

DESIGN OVERSIGHT — GINA PURSELL, FUNCTIONAL SUPERVISOR
X
SIGN OFF DATE

DRAWN BY: P. QUACH
CHECKED BY: S. PIRATHIVIRAJ

P.CHAU/D.WADER/C.CARBINO
FIELD INVESTIGATION BY:
DATE: Nov 6 2007 to March 7 2008

PREPARED FOR THE STATE OF CALIFORNIA DEPARTMENT OF TRANSPORTATION

A. LEE
PROJECT ENGINEER

BRIDGE NO. X
POST MILE X

RETAINING WALL 287 — R17-5

LOG OF TEST BORINGS 2 OF 2

OSF GEOTECHNICAL LOG OF TEST BORINGS SHEET (ENGLISH) (REV. 2/25/05)

ORIGINAL SCALE IN INCHES FOR REDUCED PLANS 0 1 2 3

CU 59A0590
EA 08-448400

DISREGARD PRINTS BEARING EARLIER REVISION DATES

REVISION DATES (PRELIMINARY STAGE ONLY) X

SHEET 2 OF 2

FILE => 844840qq005.dgn

USERNAME => trpierce DATE PLOTTED => 30-APR-2011 TIME PLOTTED =>

Dist	COUNTY	ROUTE	POST MILES TOTAL PROJECT	SHEET No.	TOTAL SHEETS
08	Riv	91	15.6/21.6	903	2028

REGISTERED CIVIL ENGINEER 12-1-10 DATE

4-25-11
PLANS APPROVAL DATE

REGISTERED PROFESSIONAL ENGINEER CUONG LE TRAN No. C60436 Exp. 6-30-12 CIVIL STATE OF CALIFORNIA

THE STATE OF CALIFORNIA OR ITS OFFICERS OR AGENTS SHALL NOT BE RESPONSIBLE FOR THE ACCURACY OR COMPLETENESS OF SCANNED COPIES OF THIS PLAN SHEET.

NOTES:
1. ARCHITECTURAL TREATMENT SHOULD EXTEND 6" BELOW FG.
2. FOR STRUCTURAL SECTIONS, SEE ROADWAY PLANS.
3. WATERSTOP IN EXPANSION JOINT SHALL BE EXTEND 6" INTO THE BARRIER.
4. LOWER TOP OF WALL 12" WITHIN STRUCTURE APPROACH LIMITS (SEE STRUCTURAL PLANS)

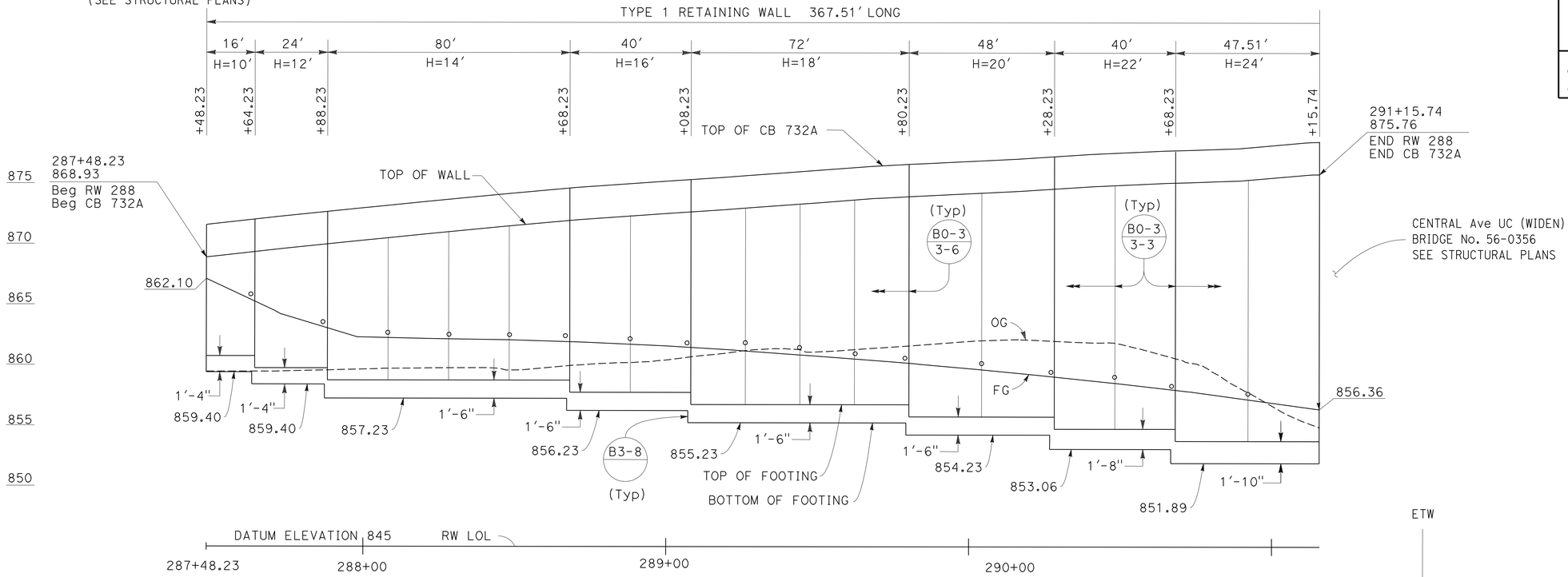

ELEVATION

SCALE Horiz 1"=20'
Vert 1"=5'

ELEVATION TABLE		
STATION	FINISH GRADE	TOP OF WALL
287+75.00	864.03	869.63
288+00.00	862.29	870.27
288+25.00	862.15	870.90
288+50.00	862.05	871.58
288+75.00	861.86	872.06
289+00.00	861.57	872.50
289+25.00	861.18	872.93
289+50.00	860.73	873.40
289+75.00	860.26	873.84
290+00.00	859.72	874.16
290+25.00	859.12	874.50
290+50.00	858.46	874.86
290+75.00	857.75	875.11
291+00.00	856.89	875.47

CURVE DATA

No.	R	Δ	T	L
1	3840.00'	5°29'01"	183.90'	367.51'

QUANTITIES

STRUCTURAL CONCRETE (RETAINING WALL)	548.50	CY
BAR REINFORCING STEEL (RETAINING WALL)	73996	LB
STRUCTURAL EXCAVATION (RETAINING WALL)	1075.98	CY
STRUCTURAL BACKFILL (RETAINING WALL)	1744.86	CY
PERVIOUS BACKFILL MATERIAL (RETAINING WALL)	132.50	CY
CONCRETE BARRIER (TYPE 732A)	367.51	LF
PLASTIC PIPE (N)	24.94	LF
WATERSTOP (N)	63.21	LF
ARCHITECTURAL SURFACE (TEXTURED CONCRETE)	4611.00	SF

(N) = NOT A SEPARATE PAY ITEM, FOR INFORMATION ONLY

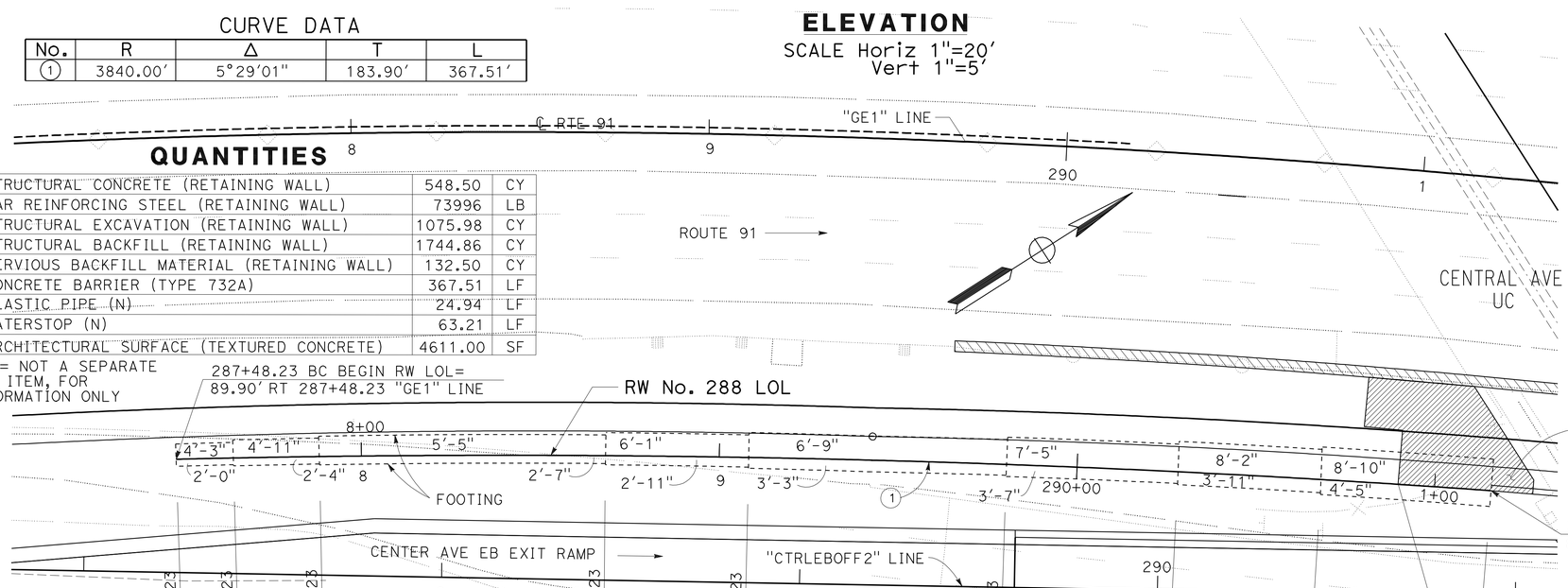

PLAN

SCALE 1"=20'

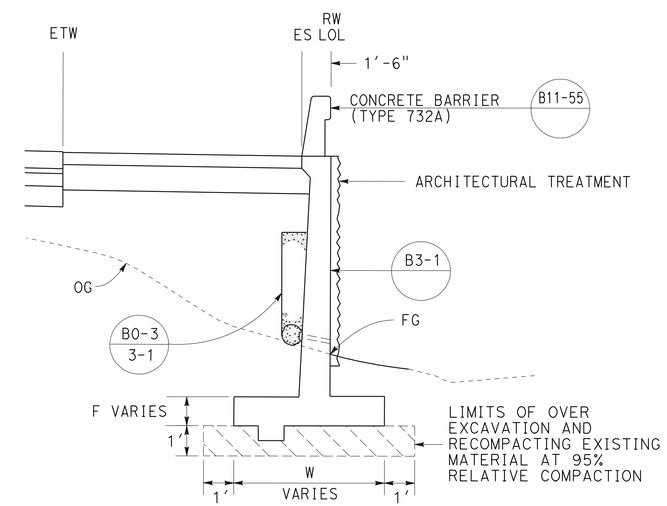

TYPICAL SECTION

NO SCALE
FROM STA 287+48.23 TO STA 291+15.74

THIS PLAN ACCURATE FOR RETAINING WALL WORK ONLY.

RETAINING WALL PLAN
RETAINING WALL No. 288

SCALE AS SHOWN

R18-1

REVISED BY | DATE REVISED
ANNABELL WANG | CUONG LE TRAN
CALCULATED-DESIGNED BY | CHECKED BY
FUNCTIONAL SUPERVISOR: MARK PERTILE
STATE OF CALIFORNIA - DEPARTMENT OF TRANSPORTATION
DESIGN
Caltrans

LAST REVISION 12-01-10 | DATE PLOTTED => 30-APR-2011 | TIME PLOTTED => 06:26

Dist	COUNTY	ROUTE	POST MILES TOTAL PROJECT	SHEET No.	TOTAL SHEETS
08	Riv	91	15.6/21.6	904	2028

LICENSED LANDSCAPE ARCHITECT

4-25-11
PLANS APPROVAL DATE

LICENSED LANDSCAPE ARCHITECT
Matthew Harry Hall
No. 2504
Signature
10/31/2011
Renewal Date
12-1-10
Date
STATE OF CALIFORNIA

THE STATE OF CALIFORNIA OR ITS OFFICERS OR AGENTS SHALL NOT BE RESPONSIBLE FOR THE ACCURACY OR COMPLETENESS OF SCANNED COPIES OF THIS PLAN SHEET.

NOTE:

SEE SHEET ASD-2, ASD-4 AND ASD-5.

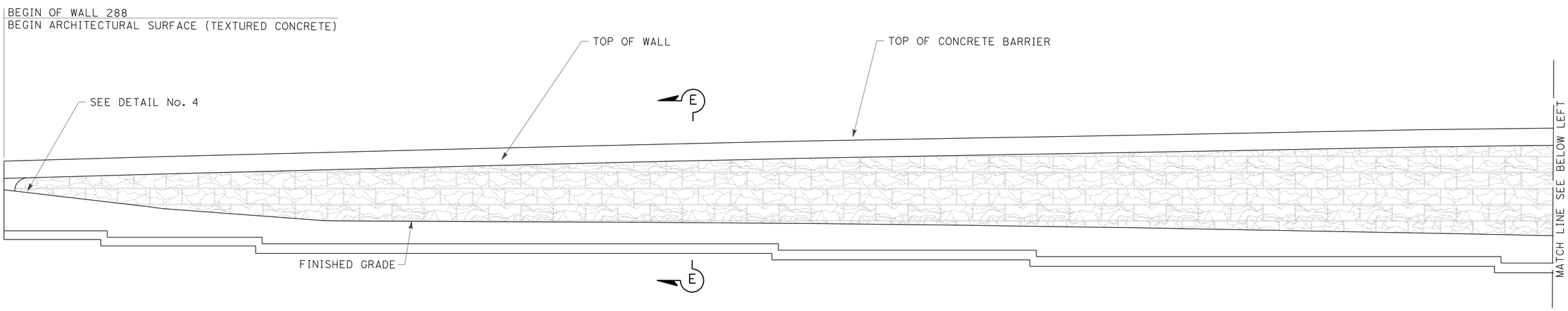

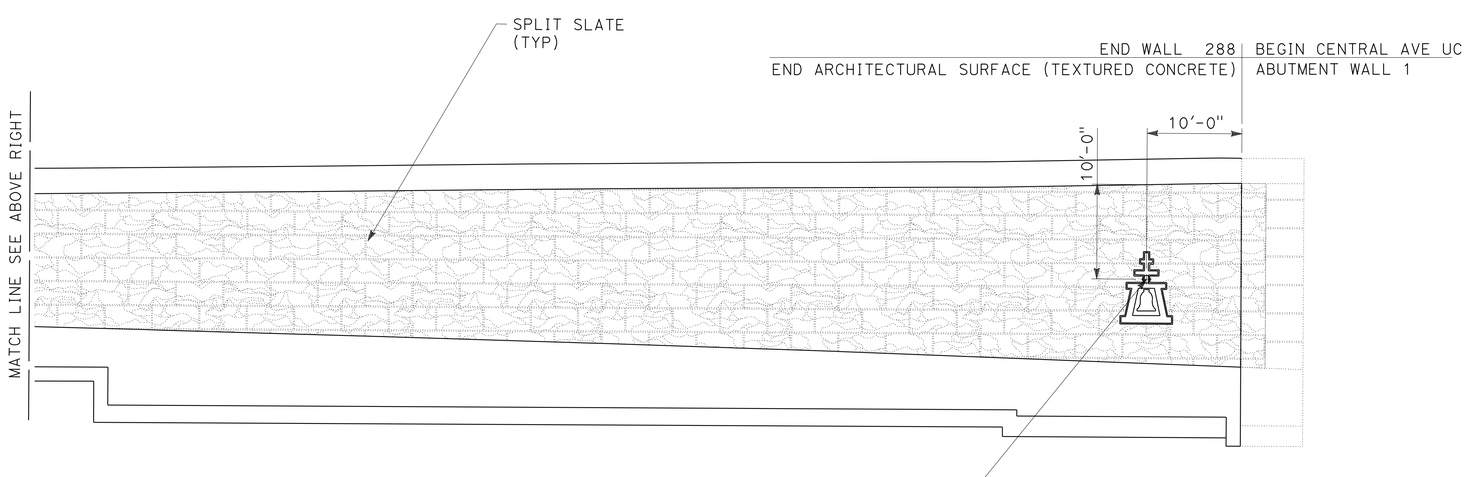

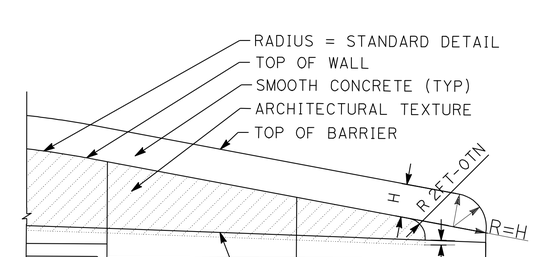

DETAIL No. 4

TYPICAL END OF WALL WITH CONCRETE BARRIER ON TOP OF WALL AND TYPE 60D MOD. CONCRETE BARRIER

ELEVATION FOR SPLIT SLATE TEXTURE RETAINING WALL No. 288

THIS PLAN IS ACCURATE FOR ARCHITECTUAL TREATMENT WORK ONLY.

ARCHITECTURAL SURFACE RETAINING WALL No. 288

SCALE: 1/8"=1'-0"

R18-2

REVISED BY	DATE REVISED

CALCULATED-DESIGNED BY: MATTHEW HALL
CHECKED BY: MIRIAM BISHOP
SENIOR LANDSCAPE ARCHITECT: BYRON STROUT

STATE OF CALIFORNIA - DEPARTMENT OF TRANSPORTATION
Caltrans® LANDSCAPE ARCHITECTURE

LAST REVISION 12-01-10 | DATE PLOTTED => 30-APR-2011 | TIME PLOTTED => 07:44

DIST	COUNTY	ROUTE	POST MILES TOTAL PROJECT	SHEET No	TOTAL SHEETS
08	Riv	91	15.6/21.6	905	2028

GEOTECHNICAL PROFESSIONAL — DATE 10/2008

4-25-11
PLANS APPROVAL DATE

REGISTERED PROFESSIONAL ENGINEER — ANDREW C. LEE — No. 2616 — Exp. 6-30-12 — GEOTECHNICAL — STATE OF CALIFORNIA

The State of California or its officers or agents shall not be responsible for the accuracy or completeness of electronic copies of this plan sheet.

California Department of Transportation
5900 Folsom Boulevard
Sacramento, CA 95819

URS Corporation
2020 East First Street, Suite 400
Santa Ana, CA 92705

NOTE: 1. This LOTB sheet was prepared in accordance with the Caltrans Soil & Rock Logging, Classification, and Presentation Manual (June 2007).

2. For legend, see "Soil Legend Log of Test Borings" sheet

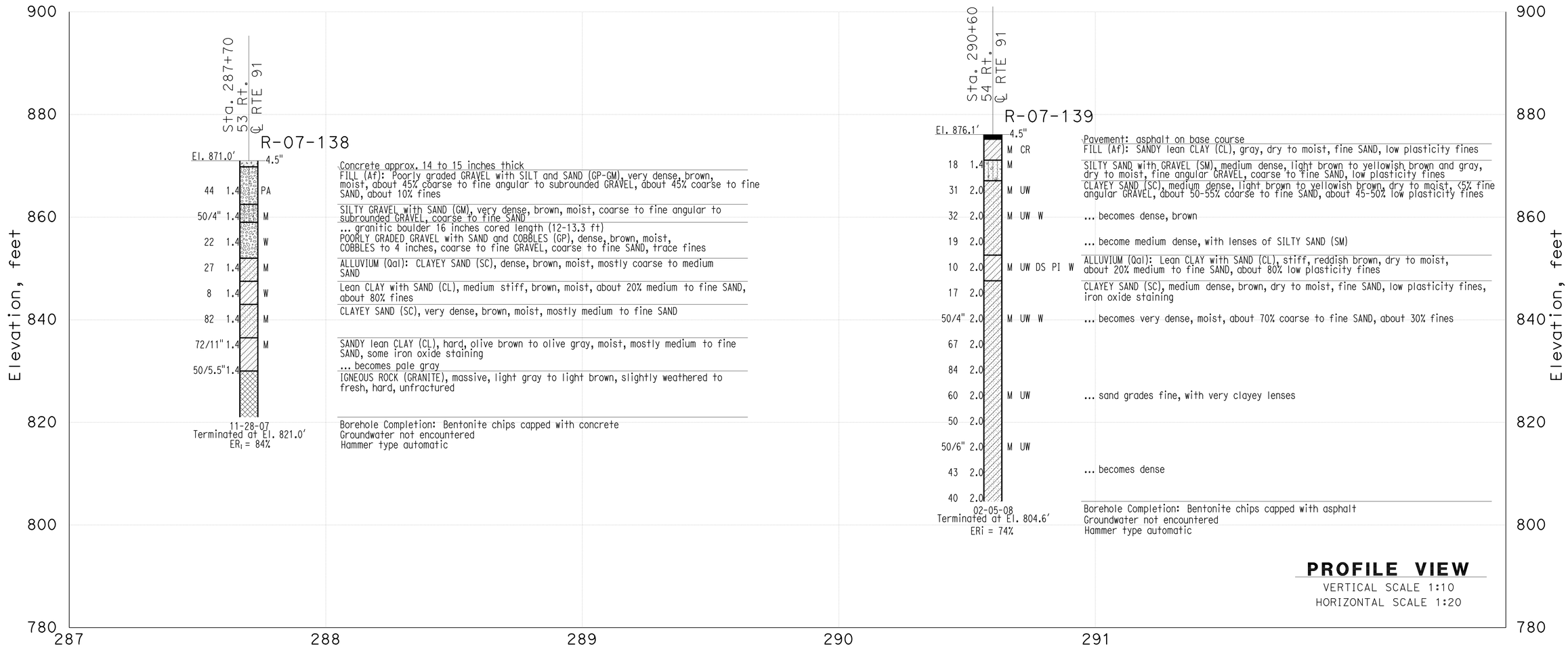

THIS PLAN ACCURATE FOR SOUND WALL AND RETAINING WALL WORK ONLY

DESIGN OVERSIGHT X SIGN OFF DATE	GINA PURSELL FUNCTIONAL SUPERVISOR	DRAWN BY CHECKED BY	P. QUACH S. PIRATHIVIRAJ	P.CHAU/D.WADER/C.CARBINO FIELD INVESTIGATION BY: DATE: Nov 6 2007 to March 7 2008	PREPARED FOR THE STATE OF CALIFORNIA DEPARTMENT OF TRANSPORTATION	A. LEE PROJECT ENGINEER	BRIDGE NO. X POST MILE X

Retaining Wall 288 R18-3

LOG OF TEST BORINGS

OSF GEOTECHNICAL LOG OF TEST BORINGS SHEET (ENGLISH) (REV. 2/25/05)

ORIGINAL SCALE IN INCHES FOR REDUCED PLANS 0 1 2 3

CU 59A0590
EA 08-448400

DISREGARD PRINTS BEARING EARLIER REVISION DATES

REVISION DATES (PRELIMINARY STAGE ONLY) X

SHEET 1 OF 3

FILE => 844840gr003.dgn

USERNAME => trpierce DATE PLOTTED => 30-APR-2011 TIME PLOTTED =>

DIST	COUNTY	ROUTE	POST MILES TOTAL PROJECT	SHEET No	TOTAL SHEETS
08	Riv	91	15.6/21.6	906	2028

GEOTECHNICAL PROFESSIONAL — DATE 10/2008

4-25-11
PLANS APPROVAL DATE

REGISTERED PROFESSIONAL ENGINEER — ANDREW C. LEE — No. 2616 — Exp. 6-30-12 — GEOTECHNICAL — STATE OF CALIFORNIA

The State of California or its officers or agents shall not be responsible for the accuracy or completeness of electronic copies of this plan sheet.

California Department of Transportation
5900 Folsom Boulevard
Sacramento, CA 95819

URS Corporation
2020 East First Street, Suite 400
Santa Ana, CA 92705

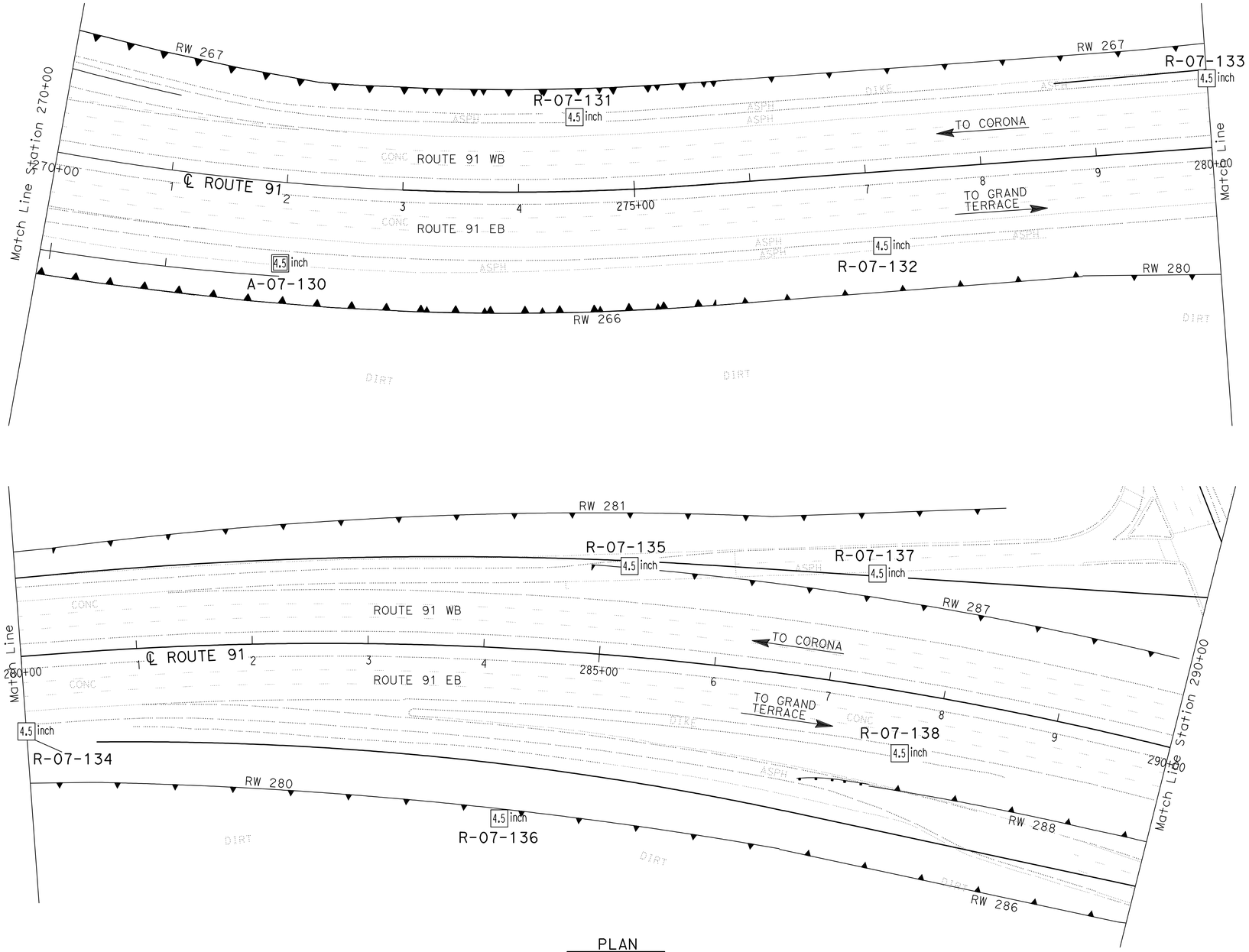

PLAN
SCALE 1"=50'

Borehole Number	Drill Rig	Hammer Type	Avg. Hammer Efficiency, ETR (%)
A-07-130	CS-2000	Automatic	84
R-07-131	CS-2000	Automatic	84
R-07-132	CS-2000	Automatic	84
R-07-133	CME 85	Automatic	87
R-07-134	CS-2000	Automatic	84
R-07-135	CS-2000	Automatic	84
R-07-136	CS-2000	Automatic	84
R-07-137	CS-2000	Automatic	84
R-07-138	CS-2000	Automatic	84

Sampler Type	Inside Diameter (Inches)	Borehole Numbers
SPT	1.375	A-07-130, R-07-131, R-07-132 R-07-133, R-07-134, R-07-135 R-07-136, R-07-137
Modified California 1	1.94	R-07-131, R-07-133 R-07-135, R-07-136
Modified California 2	2.40	-

DESIGN OVERSIGHT — GINA PURSELL, FUNCTIONAL SUPERVISOR
X
SIGN OFF DATE

DRAWN BY: P. QUACH
CHECKED BY: S. PIRATHIVIRAJ

P.CHAU/D.WADER/C.CARBINO
FIELD INVESTIGATION BY:
DATE: Nov 6 2007 to March 7 2008

PREPARED FOR THE STATE OF CALIFORNIA DEPARTMENT OF TRANSPORTATION

A. LEE
PROJECT ENGINEER

BRIDGE NO. X
POST MILE X

RETAINING WALL 288 R18-4

LOG OF TEST BORINGS 2 OF 3

OSF GEOTECHNICAL LOG OF TEST BORINGS SHEET (ENGLISH) (REV. 2/25/05)

ORIGINAL SCALE IN INCHES FOR REDUCED PLANS 0 1 2 3

CU 59A0590
EA 08-448400

DISREGARD PRINTS BEARING EARLIER REVISION DATES

REVISION DATES (PRELIMINARY STAGE ONLY) X

SHEET 2 OF 3

FILE => 844840qr004.dgn

USERNAME => trpierce DATE PLOTTED => 30-APR-2011 TIME PLOTTED =>

DIST	COUNTY	ROUTE	POST MILES TOTAL PROJECT	SHEET No	TOTAL SHEETS
08	Riv	91	15.6/21.6	907	2028

GEOTECHNICAL PROFESSIONAL 10/2008 DATE

4-25-11
PLANS APPROVAL DATE

REGISTERED PROFESSIONAL ENGINEER ANDREW C. LEE No. 2616 Exp. 6-30-12 GEOTECHNICAL STATE OF CALIFORNIA

The State of California or its officers or agents shall not be responsible for the accuracy or completeness of electronic copies of this plan sheet.

California Department of Transportation
5900 Folsom Boulevard
Sacramento, CA 95819

URS Corporation
2020 East First Street, Suite 400
Santa Ana, CA 92705

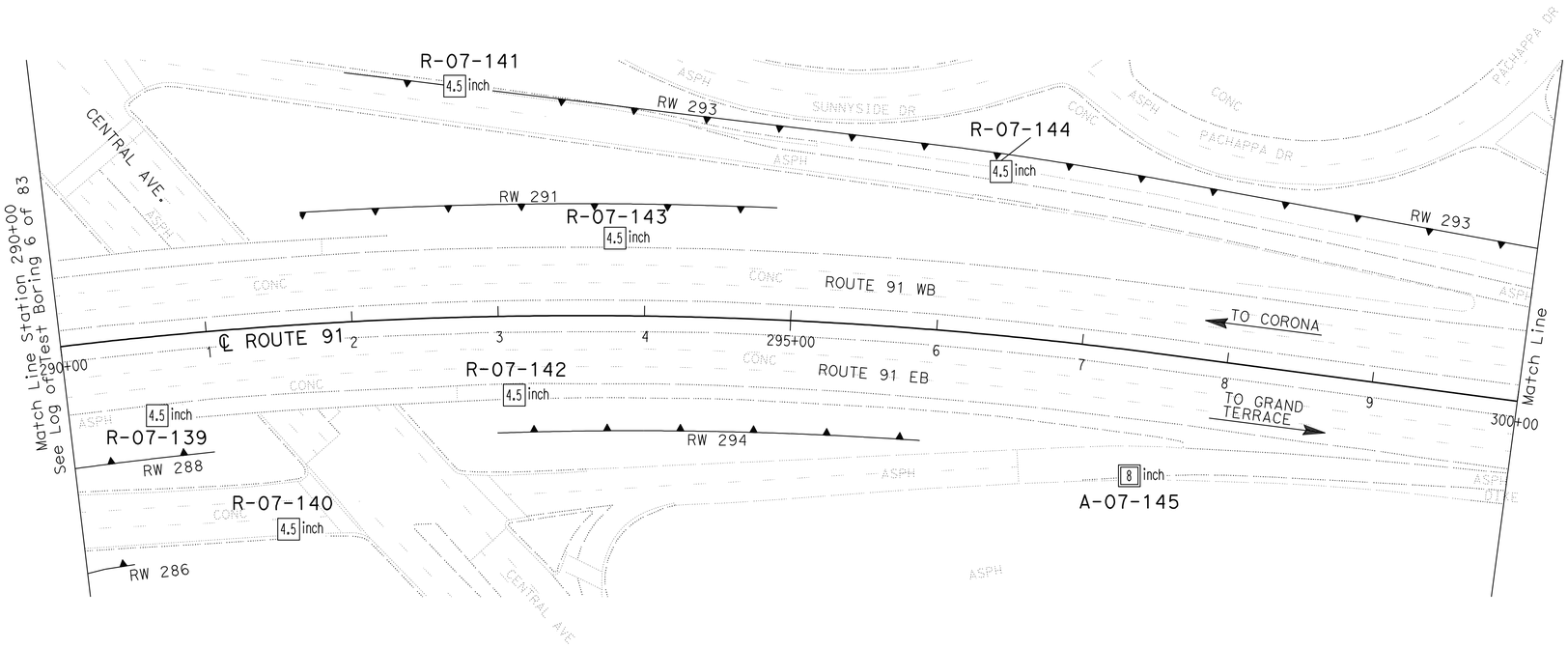

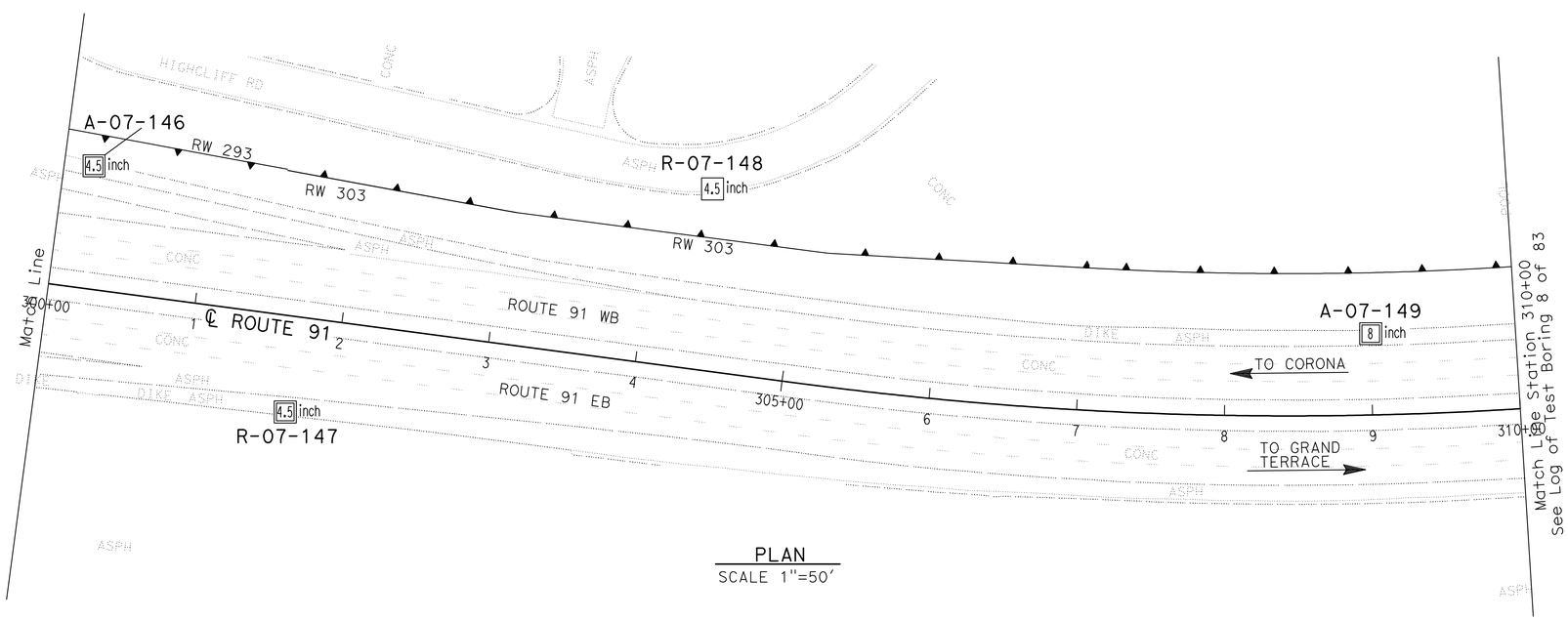

PLAN
SCALE 1"=50'

Borehole Number	Drill Rig	Hammer Type	Avg. Hammer Efficiency, ETR (%)
R-07-139	Acker Rig	Automatic	74
R-07-140	CS-2000	Automatic	84
R-07-141	CS-2000	Automatic	84
R-07-142	Acker Rig	Automatic	74
R-07-143	Acker Rig	Automatic	74
R-07-144	CS-2000	Automatic	84
A-07-145	Diedrich D-120	Automatic	75*
A-07-146	CS-2000	Automatic	84
R-07-147	CS-2000	Automatic	84
R-07-148	CS-2000	Automatic	84
A-07-149	Diedrich D-120	Automatic	75*

Sampler Type	Inside Diameter (Inches)	Borehole Numbers
SPT	1.375	R-07-139, R-07-140, R-07-141 R-07-142, R-07-143, R-07-144 A-07-145, A-07-146, AR-07-147 R-07-148, A-07-149
Modified California 1	1.94	R-07-139, R-07-141, R-07-142 R-07-143, R-07-148
Modified California 2	2.40	A-07-145, A-07-149

*Estimated Hammer Efficiency Rating.

DESIGN OVERSIGHT X SIGN OFF DATE	GINA PURSELL FUNCTIONAL SUPERVISOR	DRAWN BY	P. QUACH	P.CHAU/D.WADER/C.CARBINO FIELD INVESTIGATION BY: DATE: Nov 6 2007 to March 7 2008	PREPARED FOR THE STATE OF CALIFORNIA DEPARTMENT OF TRANSPORTATION	A. LEE PROJECT ENGINEER	BRIDGE NO. X POST MILE X	RETAINING WALL 288 R18-5 LOG OF TEST BORINGS 3 of 3
		CHECKED BY	S. PIRATHIVIRAJ					

OSF GEOTECHNICAL LOG OF TEST BORINGS SHEET (ENGLISH) (REV. 2/25/05)

ORIGINAL SCALE IN INCHES FOR REDUCED PLANS 0 1 2 3

CU 59A0590
EA 08-448400

DISREGARD PRINTS BEARING EARLIER REVISION DATES

REVISION DATES (PRELIMINARY STAGE ONLY) X

SHEET 3 OF 3

FILE => 844840gr005.dgn

USERNAME => trpierce DATE PLOTTED => 30-APR-2011 TIME PLOTTED =>

Dist	COUNTY	ROUTE	POST MILES TOTAL PROJECT	SHEET No.	TOTAL SHEETS
08	Riv	91	15.6/21.6	908	2028

REGISTERED CIVIL ENGINEER 12-1-10 DATE

4-25-11
PLANS APPROVAL DATE

REGISTERED PROFESSIONAL ENGINEER CUONG LE TRAN No. C60436 Exp. 06/30/12 CIVIL STATE OF CALIFORNIA

THE STATE OF CALIFORNIA OR ITS OFFICERS OR AGENTS SHALL NOT BE RESPONSIBLE FOR THE ACCURACY OR COMPLETENESS OF SCANNED COPIES OF THIS PLAN SHEET.

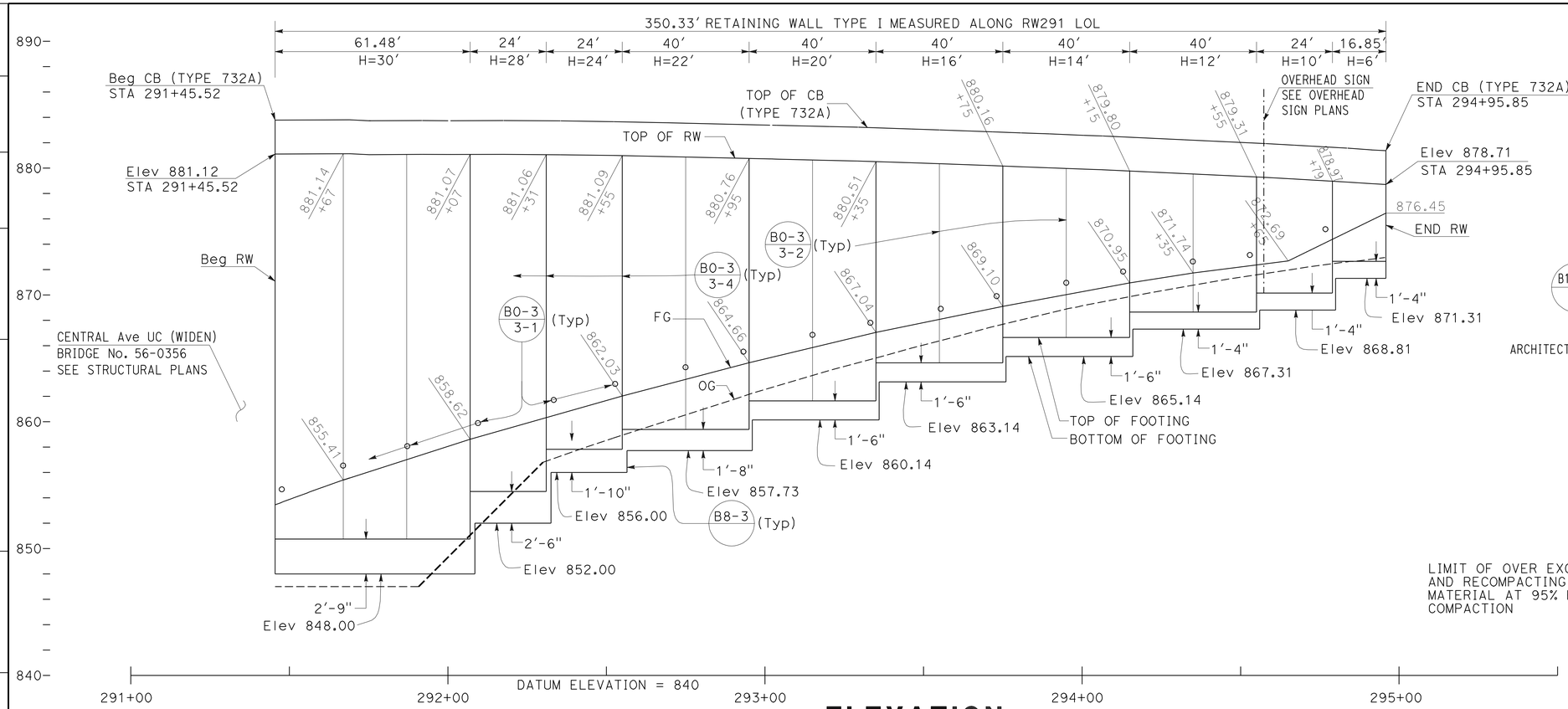

ELEVATION

SCALE Horiz 1"=20'
Vert 1"=5'

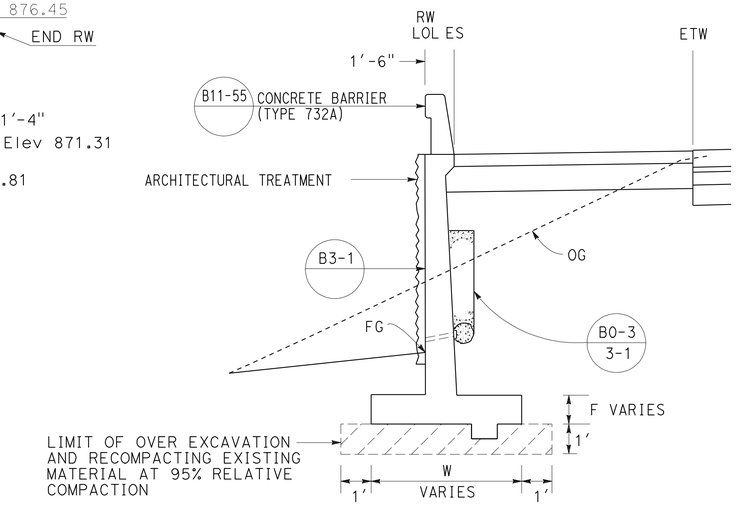

TYPICAL SECTION

NO SCALE
FROM STA 291+45.52 TO STA 294+95.85

NOTES:

1. ARCHITECTURAL TREATMENT SHOULD EXTEND 6 IN BELOW FG OR 6 IN BELOW TOP CB (TYPE 60D MOD)
2. FOR STRUCTURAL SECTIONS, SEE ROADWAY PLANS
3. WATERSTOP IN EXPANSION JOINT SHALL BE EXTEND 6 IN INTO THE BARRIER
4. LOWER TOP OF WALL 12" WITHIN STRUCTURE APPROACH LIMITS (SEE STRUCTURAL PLANS)

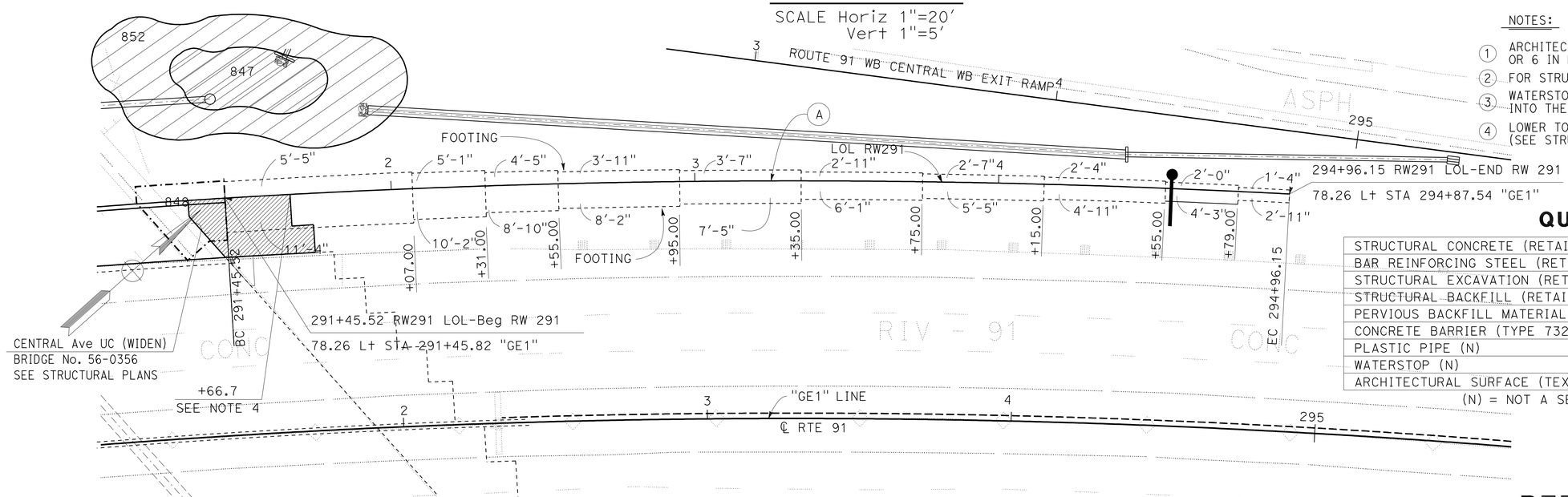

QUANTITIES

STRUCTURAL CONCRETE (RETAINING WALL)	711.00	CY
BAR REINFORCING STEEL (RETAINING WALL)	98633	LB
STRUCTURAL EXCAVATION (RETAINING WALL)	2163.73	CY
STRUCTURAL BACKFILL (RETAINING WALL)	2400.36	CY
PERVIOUS BACKFILL MATERIAL (RETAINING WALL)	151.47	CY
CONCRETE BARRIER (TYPE 732A)	350.33	LF
PLASTIC PIPE (N)	33.07	LF
WATERSTOP (N)	172.92	LF
ARCHITECTURAL SURFACE (TEXTURED CONCRETE)	5403.49	SF

(N) = NOT A SEPARATE PAY ITEM, FOR INFORMATION ONLY

CURVE DATA

No.	R	Δ	T	L
(A)	3078.26'	6°31'35"	175.50'	350.63'

PLAN

SCALE: 1"=20'

ALL DIMENSIONS ARE IN FEET UNLESS OTHERWISE SHOWN

RETAINING WALL PLAN

RETAINING WALL No. 291

SCALE AS SHOWN **R19-1**

STATE OF CALIFORNIA - DEPARTMENT OF TRANSPORTATION
Caltrans®
DESIGN
FUNCTIONAL SUPERVISOR MARK PERTILE
CALCULATED-DESIGNED BY CUONG LE TRAN
CHECKED BY
REVISED BY
DATE REVISED

LAST REVISION 12-01-10
DATE PLOTTED => 30-APR-2011
TIME PLOTTED => 06:27

Dist	COUNTY	ROUTE	POST MILES TOTAL PROJECT	SHEET No.	TOTAL SHEETS
08	Riv	91	15.6/21.6	909	2028

LICENSED LANDSCAPE ARCHITECT

4-25-11
PLANS APPROVAL DATE

LICENSED LANDSCAPE ARCHITECT
Matthew Harry Hall
No. 5000
Signature
10/31/2011
Renewal Date
12-1-10
Date
STATE OF CALIFORNIA

THE STATE OF CALIFORNIA OR ITS OFFICERS OR AGENTS SHALL NOT BE RESPONSIBLE FOR THE ACCURACY OR COMPLETENESS OF SCANNED COPIES OF THIS PLAN SHEET.

NOTE:

SEE SHEET ASD-4 AND ASD-5.

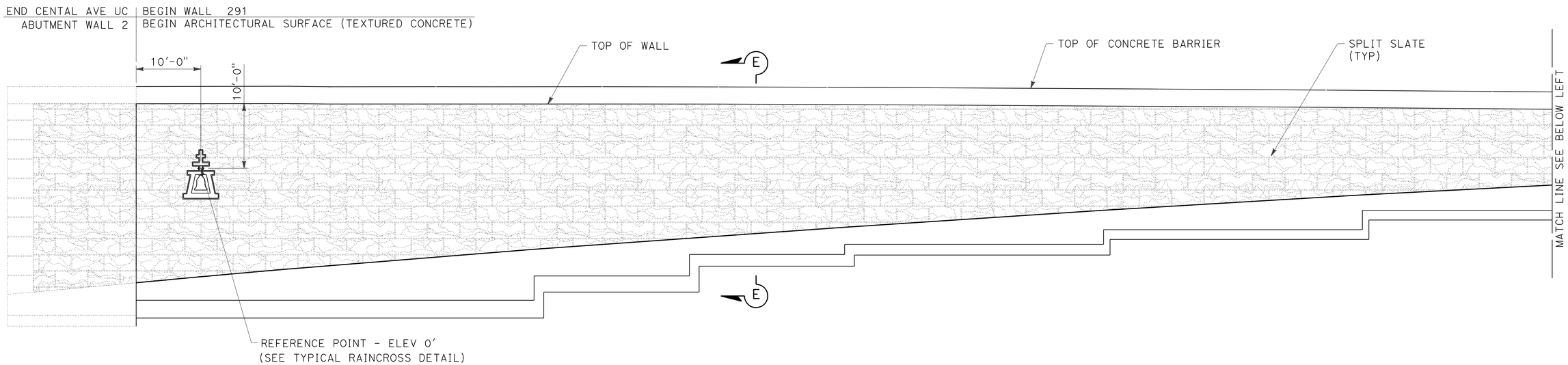

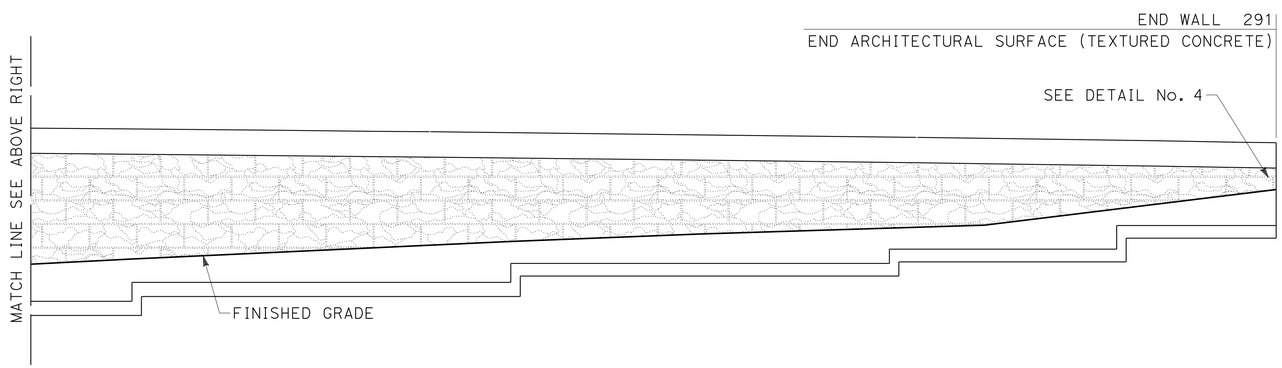

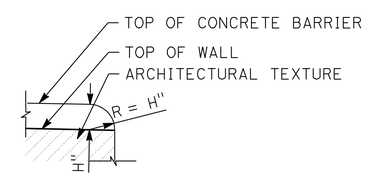

DETAIL No. 1

TYPICAL END OF WALL
WITH CONCRETE BARRIER
ON TOP OF WALL DETAIL

MIRRORED ELEVATION FOR SPLIT SLATE TEXTURE RETAINING WALL No. 291

THIS PLAN IS ACCURATE FOR ARCHITECTUAL TREATMENT WORK ONLY.

ARCHITECTURAL SURFACE RETAINING WALL No. 291

SCALE: 1/8" = 1'-0"

R19-2

STATE OF CALIFORNIA - DEPARTMENT OF TRANSPORTATION
Caltrans® LANDSCAPE ARCHITECTURE

SENIOR LANDSCAPE ARCHITECT: BYRON STROUT
CALCULATED-DESIGNED BY: MATTHEW HALL
CHECKED BY: MIRIAM BISHOP
REVISED BY
DATE REVISED

LAST REVISION 12-01-10
DATE PLOTTED => 30-APR-2011
TIME PLOTTED => 07:23

DIST	COUNTY	ROUTE	POST MILES TOTAL PROJECT	SHEET No	TOTAL SHEETS
08	Riv	91	15.6/21.6	910	2028

GEOTECHNICAL PROFESSIONAL — DATE 10/2008

PLANS APPROVAL DATE 4-25-11

REGISTERED PROFESSIONAL ENGINEER — ANDREW C. LEE — No. 2616 — Exp. 6-30-12 — GEOTECHNICAL — STATE OF CALIFORNIA

The State of California or its officers or agents shall not be responsible for the accuracy or completeness of electronic copies of this plan sheet.

California Department of Transportation
5900 Folsom Boulevard
Sacramento, CA 95819

URS Corporation
2020 East First Street, Suite 400
Santa Ana, CA 92705

FOR PLAN VIEW, SEE SHEET R19-4

NOTE: 1. This LOTB sheet was prepared in accordance with the Caltrans Soil & Rock Logging, Classification, and Presentation Manual (June 2007).

2. For legend, see "Log of Test Borings" 1 of 83

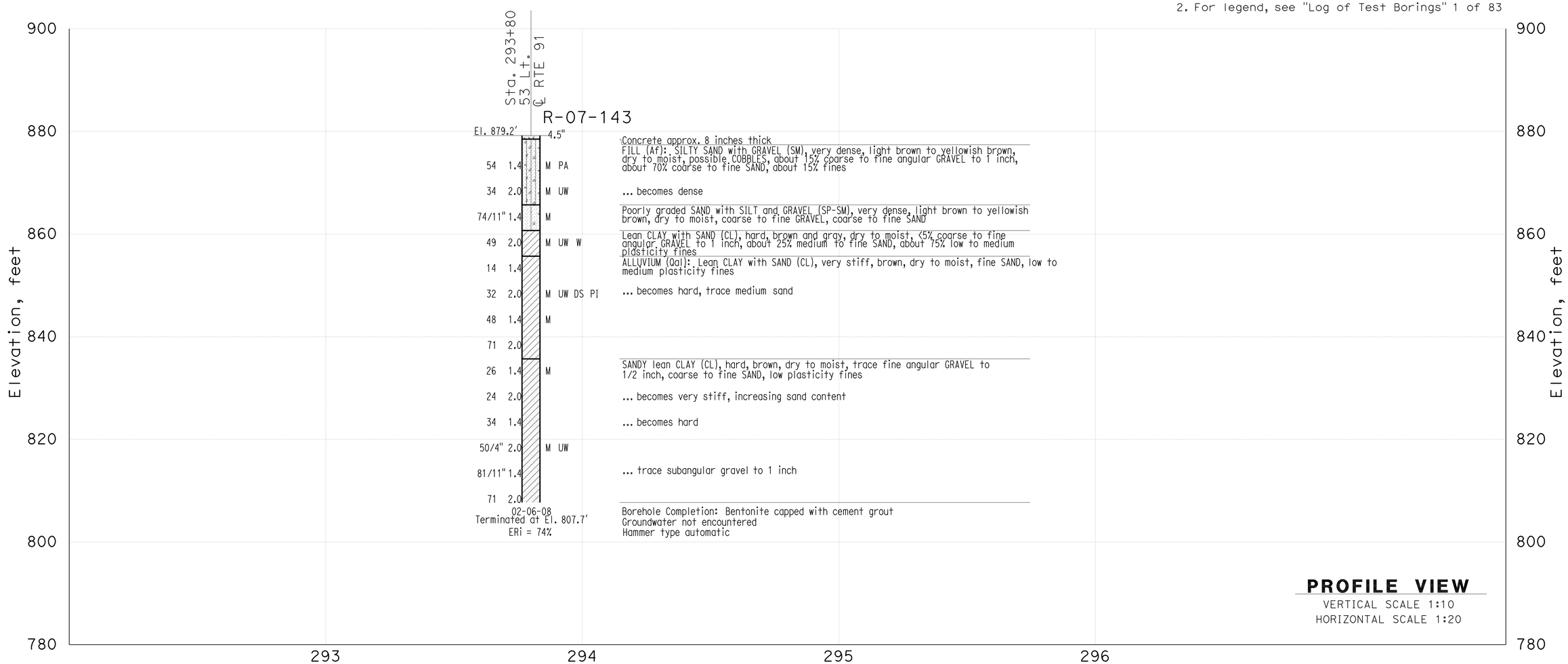

THIS PLAN ACCURATE FOR SOUND WALL AND RETAINING WALL WORK ONLY

DESIGN OVERSIGHT X SIGN OFF DATE	GINA PURSELL FUNCTIONAL SUPERVISOR	DRAWN BY CHECKED BY	P. QUACH S. PIRATHIVIRAJ	P.CHAU/D.WADER/C.CARBINO FIELD INVESTIGATION BY: DATE: Nov 6 2007 to March 7 2008	PREPARED FOR THE STATE OF CALIFORNIA DEPARTMENT OF TRANSPORTATION	A. LEE PROJECT ENGINEER	BRIDGE NO. X POST MILE X	Retaining Wall 291 R19-3 LOG OF TEST BORINGS SHEET 1 OF 2

OSF GEOTECHNICAL LOG OF TEST BORINGS SHEET (ENGLISH) (REV. 2/25/05)

ORIGINAL SCALE IN INCHES FOR REDUCED PLANS 0 1 2 3

CU 59A0590
EA 08-448400

DISREGARD PRINTS BEARING EARLIER REVISION DATES

REVISION DATES (PRELIMINARY STAGE ONLY) X

SHEET 1 OF 2

FILE => 844840qs003.dgn

USERNAME => trcarol DATE PLOTTED => 30-APR-2011 TIME PLOTTED =>

DIST	COUNTY	ROUTE	POST MILES TOTAL PROJECT	SHEET No	TOTAL SHEETS
08	Riv	91	15.6/21.6	911	2028

GEOTECHNICAL PROFESSIONAL — DATE 10/2008

4-25-11
PLANS APPROVAL DATE

REGISTERED PROFESSIONAL ENGINEER — ANDREW C. LEE — No. 2616 — Exp. 6-30-12 — GEOTECHNICAL — STATE OF CALIFORNIA

The State of California or its officers or agents shall not be responsible for the accuracy or completeness of electronic copies of this plan sheet.

California Department of Transportation
5900 Folsom Boulevard
Sacramento, CA 95819

URS Corporation
2020 East First Street, Suite 400
Santa Ana, CA 92705

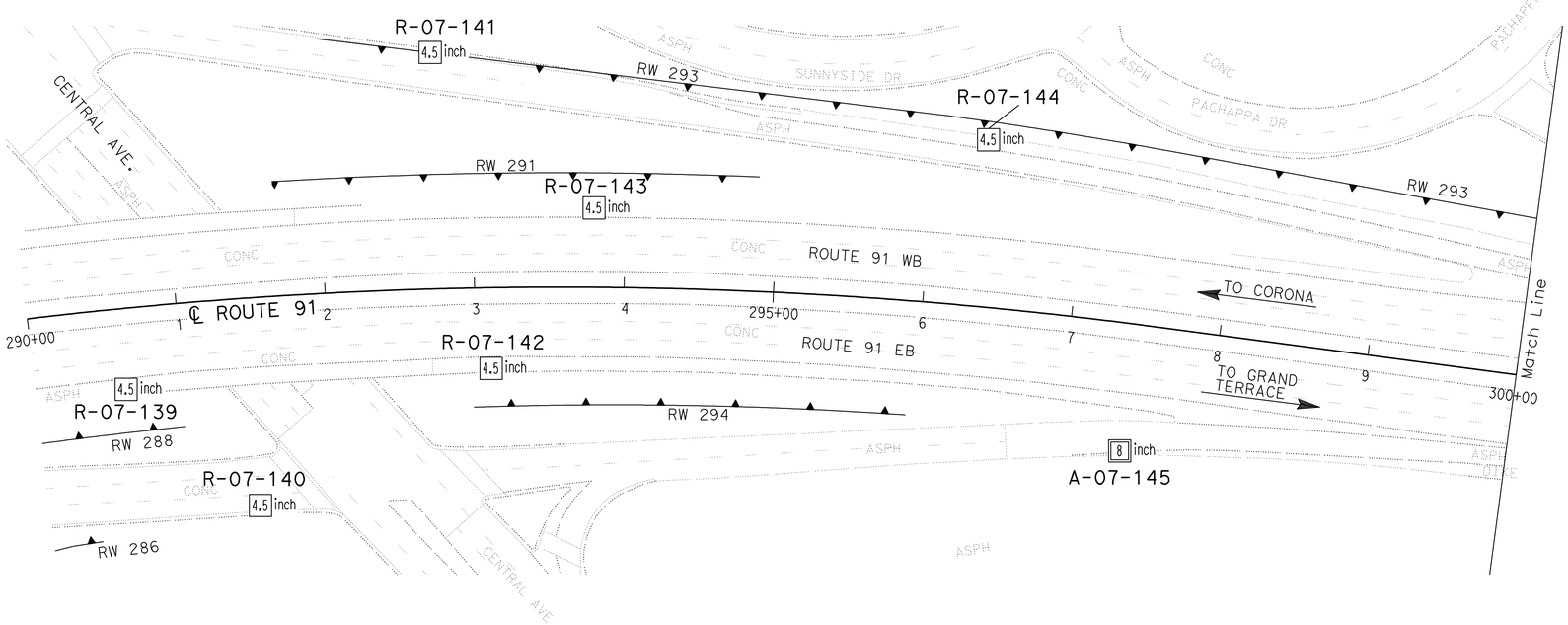

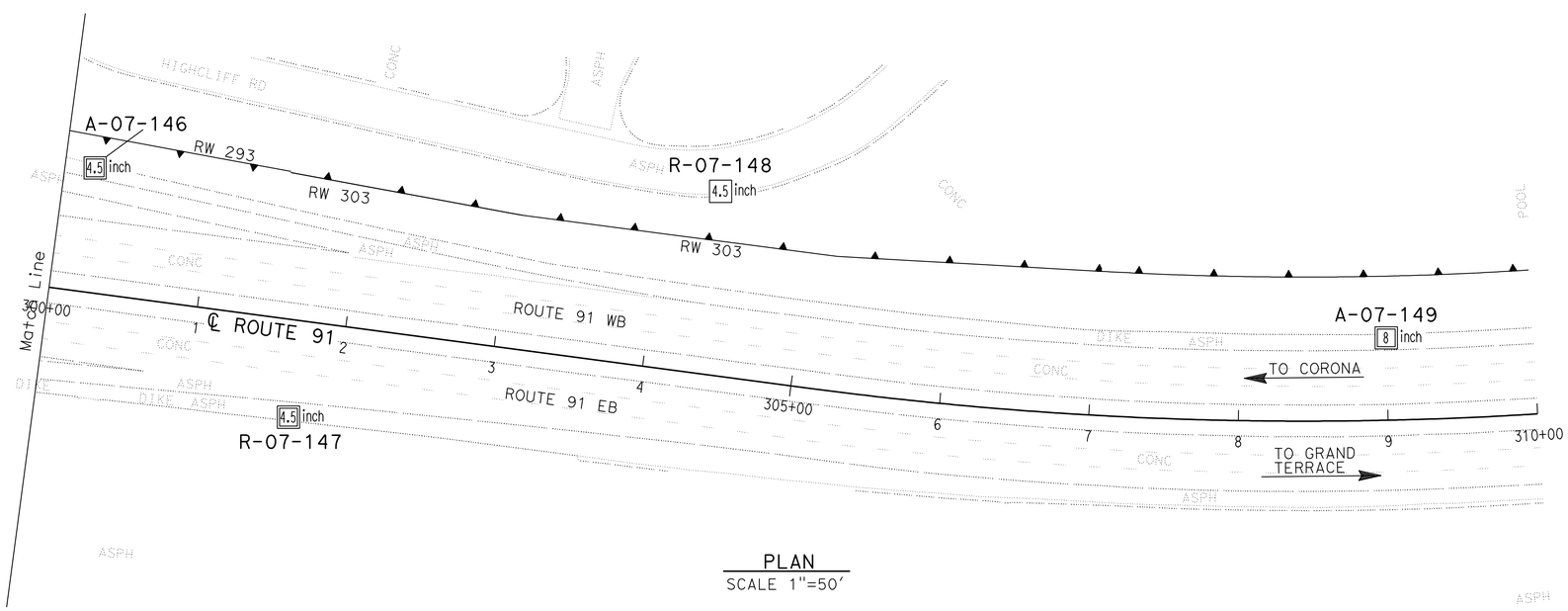

PLAN
SCALE 1"=50'

Borehole Number	Drill Rig	Hammer Type	Avg. Hammer Efficiency, ETR (%)
R-07-139	Acker Rig	Automatic	74
R-07-140	CS-2000	Automatic	84
R-07-141	CS-2000	Automatic	84
R-07-142	Acker Rig	Automatic	74
R-07-143	Acker Rig	Automatic	74
R-07-144	CS-2000	Automatic	84
A-07-145	Diedrich D-120	Automatic	75*
A-07-146	CS-2000	Automatic	84
R-07-147	CS-2000	Automatic	84
R-07-148	CS-2000	Automatic	84
A-07-149	Diedrich D-120	Automatic	75*

Sampler Type	Inside Diameter (Inches)	Borehole Numbers
SPT	1.375	R-07-139, R-07-140, R-07-141 R-07-142, R-07-143, R-07-144 A-07-145, A-07-146, AR-07-147 R-07-148, A-07-149
Modified California 1	1.94	R-07-139, R-07-141, R-07-142 R-07-143, R-07-148
Modified California 2	2.40	A-07-145, A-07-149

*Estimated Hammer Efficiency Rating.

DESIGN OVERSIGHT X SIGN OFF DATE	GINA PURSELL FUNCTIONAL SUPERVISOR	DRAWN BY	P. QUACH	P.CHAU/D.WADER/C.CARBINO FIELD INVESTIGATION BY: DATE: Nov 6 2007 to March 7 2008	PREPARED FOR THE STATE OF CALIFORNIA DEPARTMENT OF TRANSPORTATION	A. LEE PROJECT ENGINEER	BRIDGE NO. X POST MILE X	RETAINING WALL 291 R19-4 LOG OF TEST BORINGS 2 of 2
		CHECKED BY	S. PIRATHIVIRAJ					

OSF GEOTECHNICAL LOG OF TEST BORINGS SHEET (ENGLISH) (REV. 2/25/05)

ORIGINAL SCALE IN INCHES FOR REDUCED PLANS 0 1 2 3

CU 59A0590
EA 08-448400

DISREGARD PRINTS BEARING EARLIER REVISION DATES

REVISION DATES (PRELIMINARY STAGE ONLY) X

SHEET 2 OF 2

FILE => 844840qs004.dgn

USERNAME => trcarro1 DATE PLOTTED => 30-APR-2011 TIME PLOTTED =>

Dist	COUNTY	ROUTE	POST MILES TOTAL PROJECT	SHEET No.	TOTAL SHEETS
08	Riv	91	15.6/21.6	912	2028

REGISTERED CIVIL ENGINEER 12-1-10 DATE

4-25-11
PLANS APPROVAL DATE

REGISTERED PROFESSIONAL ENGINEER CUONG LE TRAN No. C60436 Exp. 6-30-12 CIVIL STATE OF CALIFORNIA

THE STATE OF CALIFORNIA OR ITS OFFICERS OR AGENTS SHALL NOT BE RESPONSIBLE FOR THE ACCURACY OR COMPLETENESS OF SCANNED COPIES OF THIS PLAN SHEET.

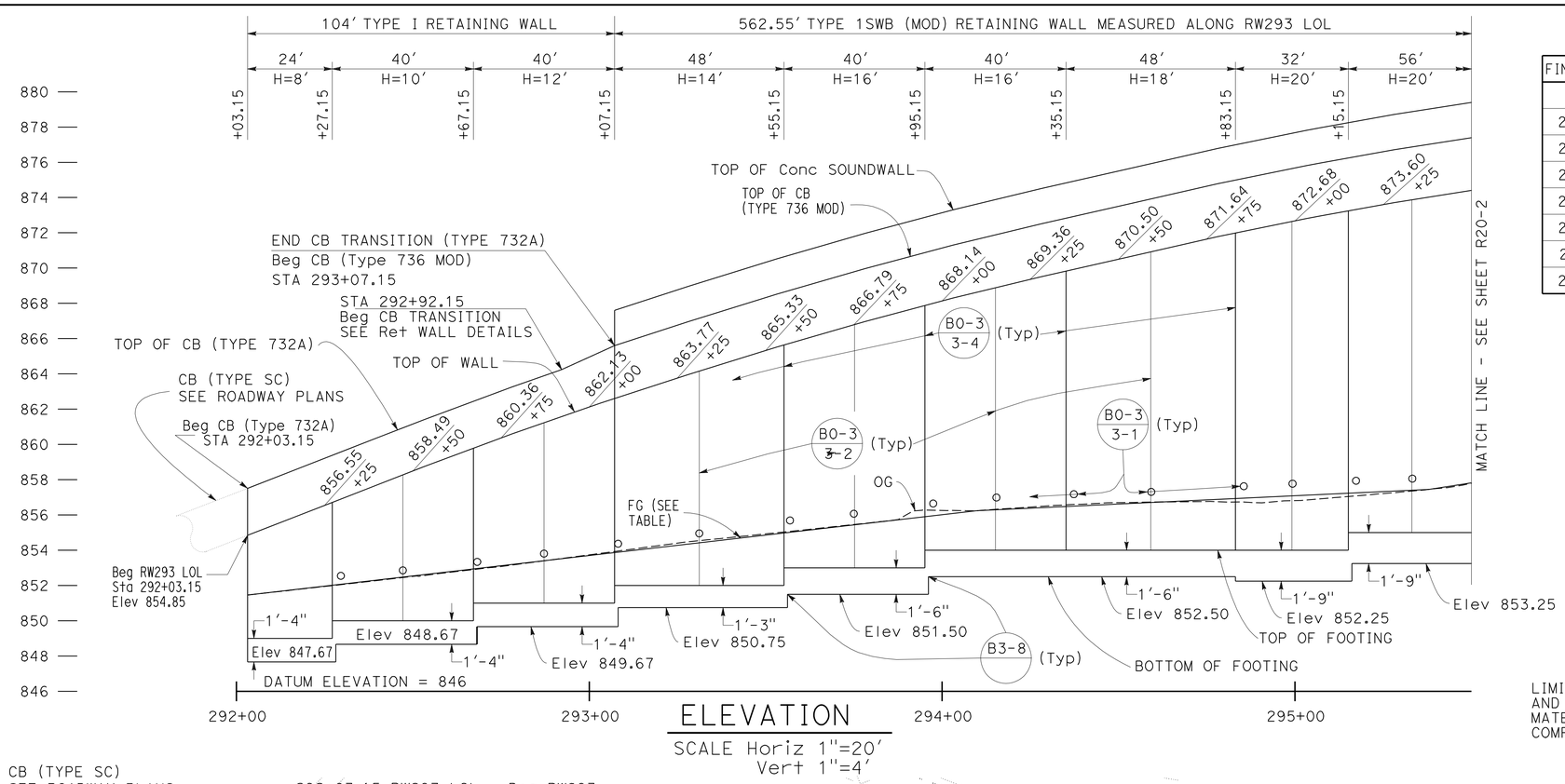

ELEVATION

SCALE Horiz 1"=20'
Vert 1"=4'

FINISHED GRADE (FG) TABLE	
STATION	ELEVATION
292+03.15	851.45
294+09.84	856.24
295+37.94	857.45
296+02.39	859.46
298+37.82	864.38
298+95.21	866.49
299+48.40	866.50

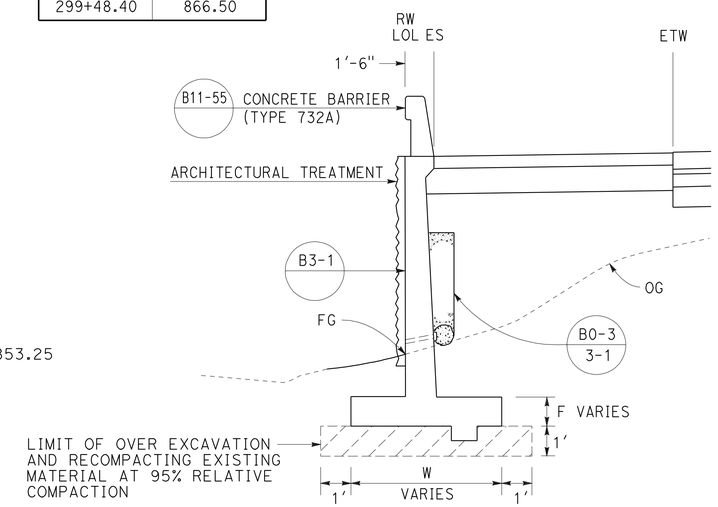

TYPICAL SECTION

FROM STA 292+03.15 TO STA 293+07.15
NO SCALE

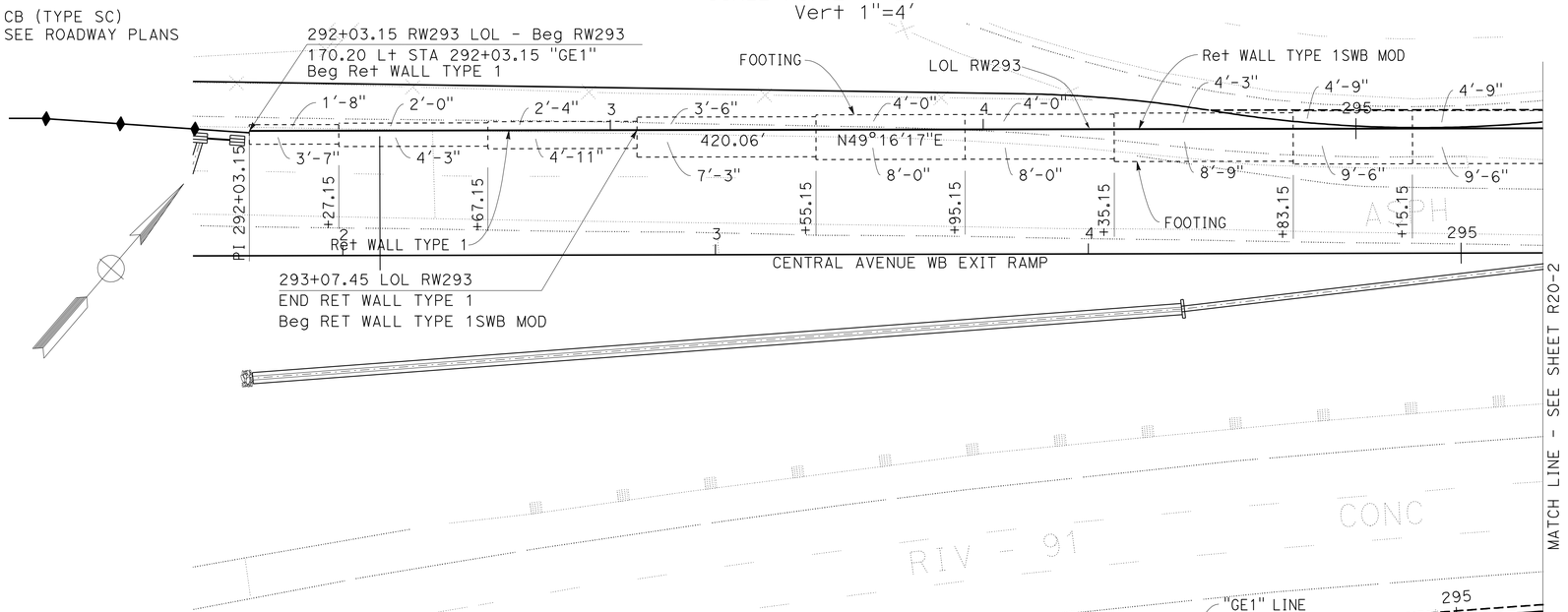

PLAN

SCALE: 1"=20'

THIS PLAN ACCURATE FOR RETAINING WALL WORK ONLY.

QUANTITIES

STRUCTURAL CONCRETE (RETAINING WALL)	1054.20	CY
BAR REINFORCING STEEL (RETAINING WALL)	123321	LB
STRUCTURAL EXCAVATION (RETAINING WALL)	1927.05	CY
STRUCTURAL BACKFILL (RETAINING WALL)	3154.33	CY
PERVIOUS BACKFILL MATERIAL (RETAINING WALL)	223.77	CY
CONCRETE BARRIER (TYPE 732A)	104.00	LF
CONCRETE BARRIER (TYPE 736 MOD)	641.25	LF
SOUND WALL (BARRIER CONCRETE)	1283	SF
PLASTIC PIPE (N)	59.51	LF
WATERSTOP (N)	248.75	LF
STRUCTURAL CONCRETE (WALL TEXTURE)	8846.57	SF

(N) = NOT A SEPARATE PAY ITEM, FOR INFORMATION ONLY

NOTES:

1. ARCHITECTURAL TREATMENT SHOULD EXTEND 6 IN BELOW FG OR 6 IN BELOW TOP CB (TYPE 60D MOD)
2. FOR STRUCTURAL SECTIONS, SEE ROADWAY PLANS
3. WATERSTOP IN EXPANSION JOINT SHALL BE EXTEND 6 IN INTO THE BARRIER

RETAINING WALL PLAN
RETAINING WALL No. 293
SCALE AS SHOWN

R20-1

LAST REVISION 12-01-10 | DATE PLOTTED => 30-APR-2011 | TIME PLOTTED => 07:24

STATE OF CALIFORNIA - DEPARTMENT OF TRANSPORTATION
Caltrans® DESIGN

FUNCTIONAL SUPERVISOR: MARK PERTILE
CALCULATED-DESIGNED BY: ANNABELL WANG
CHECKED BY: CUONG LE TRAN
REVISED BY | DATE REVISED

Dist	COUNTY	ROUTE	POST MILES TOTAL PROJECT	SHEET No.	TOTAL SHEETS
08	Riv	91	15.6/21.6	913	2028

REGISTERED CIVIL ENGINEER 12-1-10 DATE

4-25-11
PLANS APPROVAL DATE

REGISTERED PROFESSIONAL ENGINEER CUONG LE TRAN No. C60436 Exp. 6-30-12 CIVIL STATE OF CALIFORNIA

THE STATE OF CALIFORNIA OR ITS OFFICERS OR AGENTS SHALL NOT BE RESPONSIBLE FOR THE ACCURACY OR COMPLETENESS OF SCANNED COPIES OF THIS PLAN SHEET.

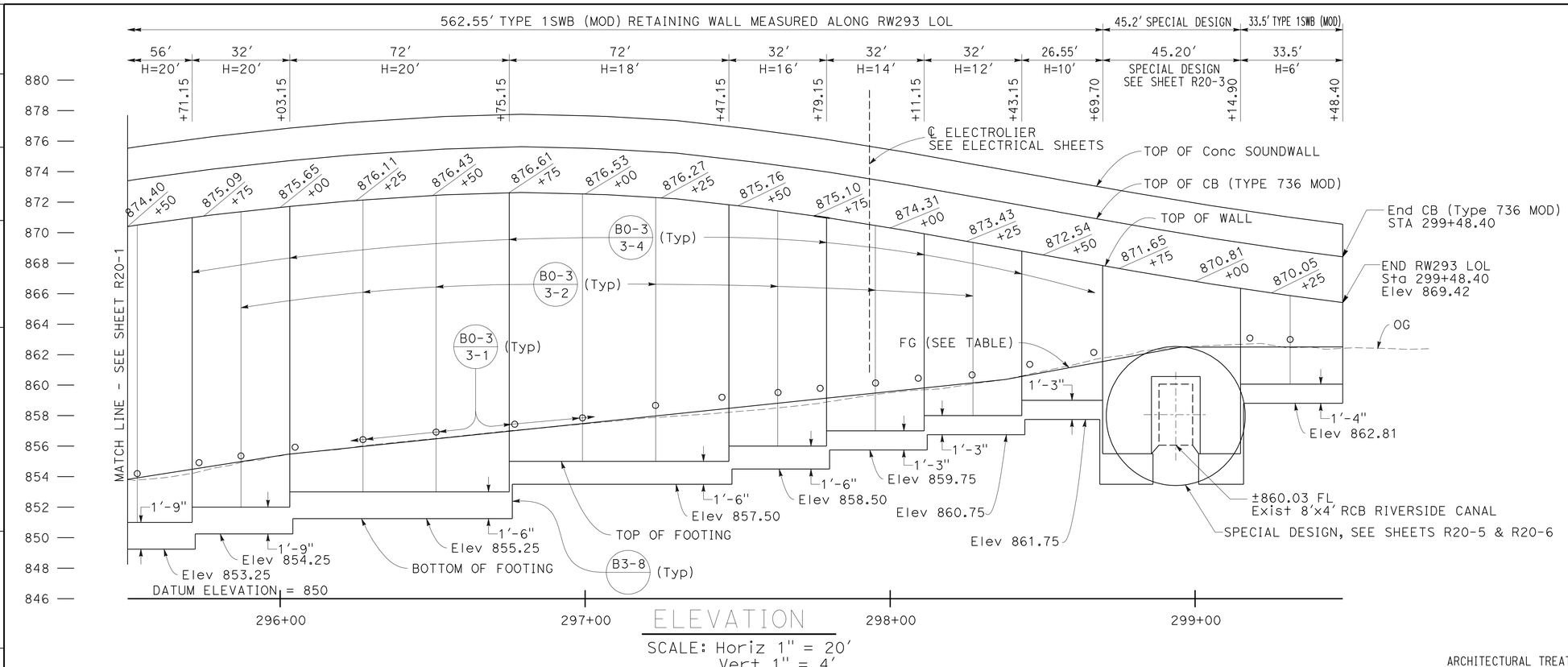

ELEVATION

SCALE: Horiz 1" = 20'
Vert 1" = 4'

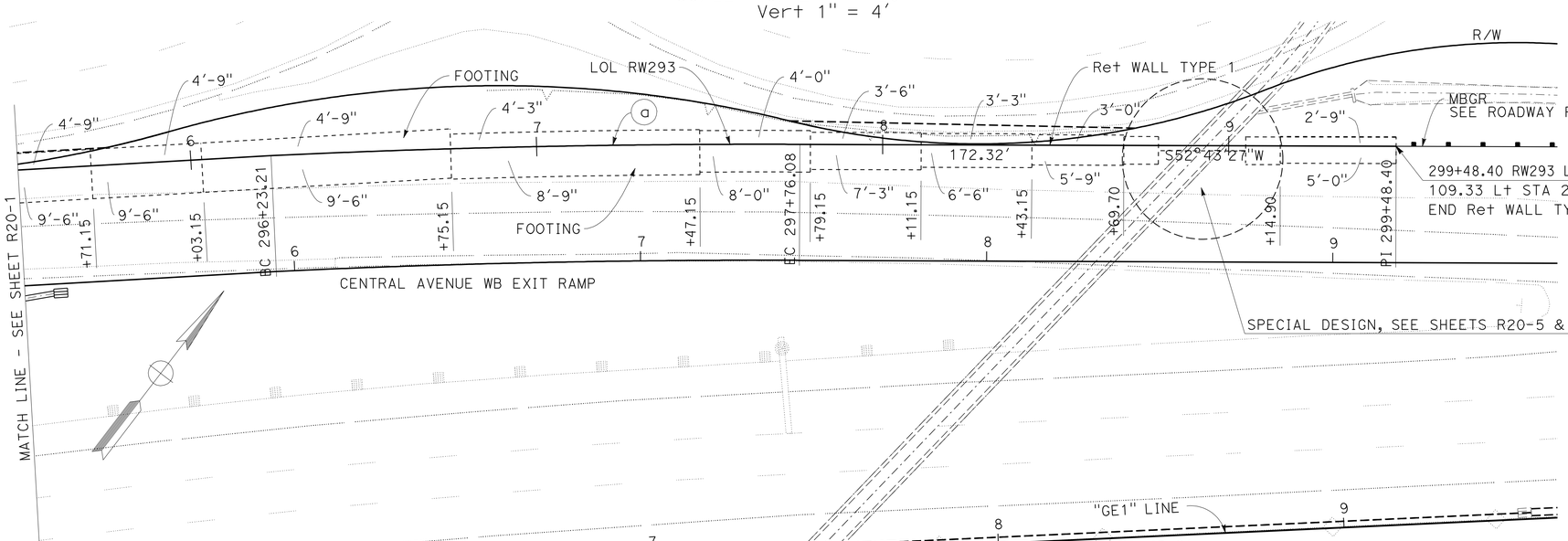

PLAN

SCALE: 1" = 20'

CURVE DATA

No.	R	Δ	T	L
a	3033.58'	2°53'14"	76.45'	152.87'

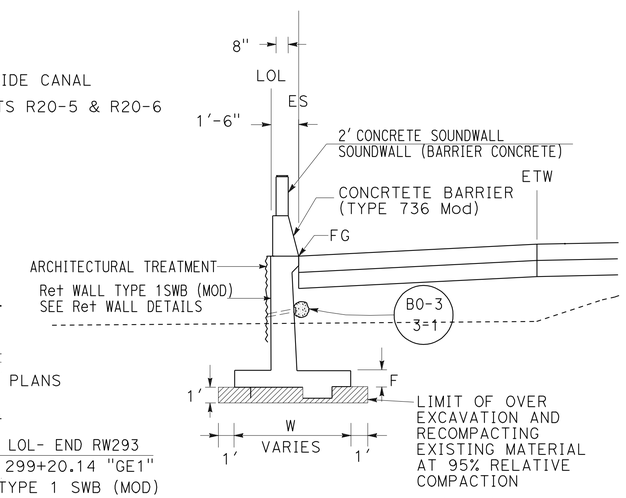

RETAINING WALL TYPE 1SWB (MOD)

TYPICAL SECTION

NO SCALE

FROM STA 293+07.15 TO STA 298+69.70
FROM STA 299+14.90 TO STA 299+48.40

THIS PLAN ACCURATE FOR RETAINING WALL WORK ONLY.

RETAINING WALL PLAN
RETAINING WALL No. 293

SCALE AS SHOWN

R20-2

LAST REVISION 12-01-10 | DATE PLOTTED => 30-APR-2011 | TIME PLOTTED => 07:24

STATE OF CALIFORNIA - DEPARTMENT OF TRANSPORTATION
Caltrans® DESIGN

FUNCTIONAL SUPERVISOR: MARK PERTILE
CALCULATED-DESIGNED BY: ANNABELL WANG
CHECKED BY: CUONG LE TRAN
REVISED BY
DATE REVISED

Dist	COUNTY	ROUTE	POST MILES TOTAL PROJECT	SHEET No.	TOTAL SHEETS
08	Riv	91	15.6/21.6	914	2028

REGISTERED CIVIL ENGINEER 12-1-10 DATE

4-25-11
PLANS APPROVAL DATE

REGISTERED PROFESSIONAL ENGINEER CUONG LE TRAN No. C60436 Exp. 6-30-12 CIVIL STATE OF CALIFORNIA

THE STATE OF CALIFORNIA OR ITS OFFICERS OR AGENTS SHALL NOT BE RESPONSIBLE FOR THE ACCURACY OR COMPLETENESS OF SCANNED COPIES OF THIS PLAN SHEET.

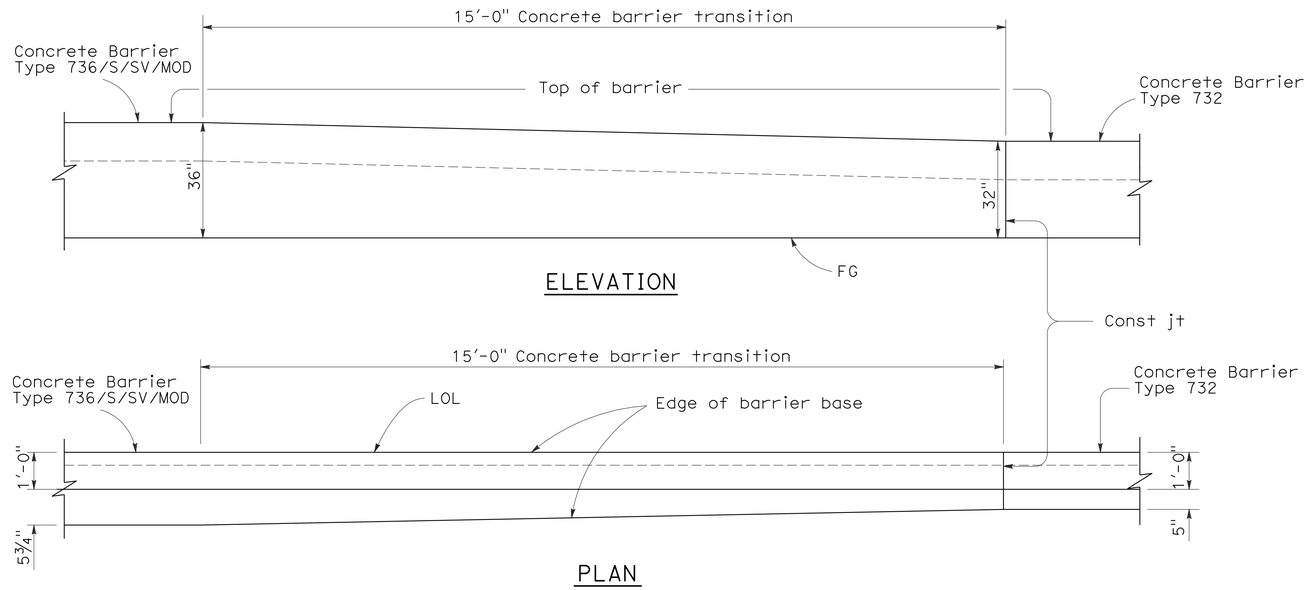

TRANSITION CONCRETE BARRIER TYPE 736/S/V/MOD TO CONCRETE BARRIER TYPE 732

THIS PLAN ACCURATE FOR RETAINING WALL WORK ONLY.

RETAINING WALL DETAILS

RETAINING WALL No. 293

NO SCALE

R20-3

STATE OF CALIFORNIA - DEPARTMENT OF TRANSPORTATION
Caltrans® DESIGN

FUNCTIONAL SUPERVISOR: MARK PERTILE
CALCULATED-DESIGNED BY: ANNABELL WANG
CHECKED BY: CUONG LE TRAN
REVISED BY
DATE REVISED

LAST REVISION 12-01-10
DATE PLOTTED => 30-APR-2011
TIME PLOTTED => 07:24

DIST.	COUNTY	ROUTE	POST MILES TOTAL PROJECT	SHEET NO.	TOTAL SHEETS
08	Riv	91	15.6/21.6	915	2028

REGISTERED ENGINEER - CIVIL 12-1-10

4-25-11
PLANS APPROVAL DATE

REGISTERED PROFESSIONAL ENGINEER MINH THUONG VO No. C59297 Exp. 6/30/2011 CIVIL STATE OF CALIFORNIA

The State of California or its officers or agents shall not be responsible for the accuracy or completeness of electronic copies of this plan sheet.

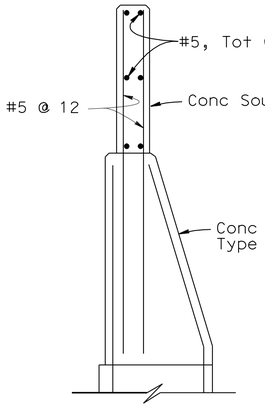

DETAIL C
No Scale

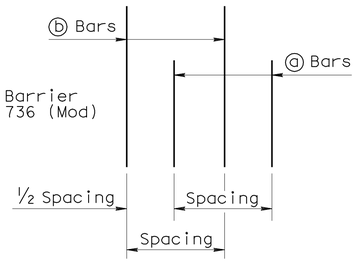

DETAIL B
No Scale

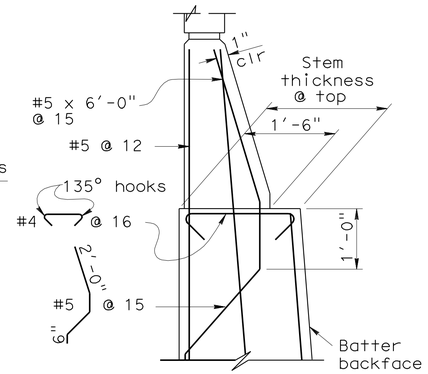

DETAIL A WITHOUT HAUNCH
No Scale

GENERAL NOTES

1. For soundwall and retaining wall architectural finish or texture, see details elsewhere in project plans.
2. For details not shown and drainage notes, see B3-8
3. Footing cover, 1'-6" minimum.
4. Limit of no splicing rebars = 3 times the bottom thickness of the stem.
5. Placement of reinforcements :
   - ⓑ & ⓒ bars are spliced together.
   - ✳ ⓐ & ⓑ bars are bundled together.
   - ✳✳ Alternate ⓐ & ⓑ bars are shown in "Detail B".
   - Cont = Continuous.
6. For Barrier Reinfocement not shown, see B11-56

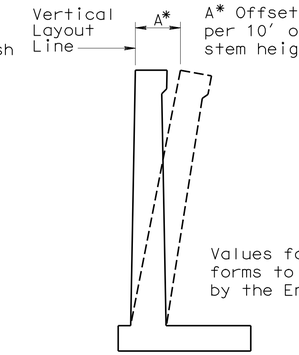

WALL OFFSET
No Scale

TABLE 1: TABLE OF REINFORCING STEEL DIMENSIONS AND DATA

	Stem With Haunch													
Design H	6'	8'	10'	12'	14'	16'	18'	20'	22'	24'	26'	28'	30'	32'
W	7'-9"	8'-0"	8'-9"	9'-9"	10'-9"	12'-0"	13'-0"	14'-3"	15'-3"	16'-6"	18'-6"	19'-9"	21'-3"	22'-6"
C	2'-9"	2'-9"	3'-0"	3'-3"	3'-6"	4'-0"	4'-3"	4'-9"	5'-0"	5'-6"	6'-3"	6'-9"	7'-3"	7'-9"
B	5'-0"	5'-3"	5'-9"	6'-6"	7'-3"	8'-0"	8'-9"	9'-6"	10'-3"	11'-0"	12'-3"	13'-0"	14'-0"	14'-9"
F Spread footing	1'-3"	1'-3"	1'-3"	1'-3"	1'-3"	1'-6"	1'-6"	1'-9"	2'-0"	2'-3"	2'-9"	3'-0"	3'-3"	3'-9"
Batter	0	½:12	½:12	½:12	½:12	½:12	½:12	½:12	½:12	⅝:12	¾:12	⅞:12	1:12	1:12
Stem thickn. @ Haunch	1'-0"	1'-0"	1'-0"	1'-0"	1'-0"	1'-0"	1'-0"	1'-0"	1'-0"	1'-0"	1'-0"	1'-0"	1'-0"	1'-0"
ⓐ Bars				#6 @18✳✳	#7 @18✳✳	#8 @18✳✳	#9 @18✳✳	#10 @18✳✳	#8 @ 9✳	#8 @ 9✳	#7 @ 6✳	#10@12✳✳	#9 @ 9✳	#11@12✳✳
X				Cont	Cont	Cont	Cont	Cont	Cont	Cont	Cont	Cont	Cont	Cont
Y				8'-0"	6'-6"	7'-6"	8'-6"	9'-6"	9'-6"	11'-0"	11'-6"	13'-0"	14'-0"	15'-6"
ⓑ Bars	#5 @12	#5 @12	#5 @ 9	#6 @18✳✳	#7 @18✳✳	#8 @18✳✳	#9 @18✳✳	#10 @18✳✳	#8 @ 9✳	#8 @ 9✳	#7 @ 6✳	#10@12✳✳	#9 @ 9✳	#11@12✳✳
X	Cont	Cont	Cont	Cont	Cont	Cont	Cont	Cont	Cont	5'-6"	6'-6"	7'-0"	8'-0"	8'-6"
Y	Cont	Cont	Cont	Cont	10'-6"	13'-0"	15'-0"	17'-6"	19'-6"	21'-0"	18'-6"	19'-0"	25'-6"	23'-6"
ⓒ Bars					#6 @18	#6 @18	#6 @18	#6 @18	#6 @18	#6 @18	#6 @12	#7 @12	#7 @18	#7 @12
ⓓ Bars	#5 @12	#5 @12	#5 @12	#5 @ 9	#6 @ 9	#6 @ 9	#6 @ 6	#8 @ 9	#8 @ 9	#8 @ 9	#7 @ 6	#7 @ 6	#9 @ 9	#9 @ 9
Ultimate Bearing Capacity Req'd k/sf	4.6	5.5	6.1	6.6	7.3	8.1	9.0	9.9	11.3	12.2	12.5	13.4	14.1	15.4

TABLE 2: TABLE OF REINFORCING STEEL DIMENSIONS AND DATA

	Stem With Haunch						Stem Without Haunch						
Design H	8'	10'	12'	14'	16'	18'	20'	22'	24'	26'	28'	30'	32'
W	8'-0"	8'-6"	9'-3"	10'-3"	11'-3"	13'-0"	13'-9"	16'-0"	16'-6"	18'-6"	20'-0"	20'-6"	21'-9"
C	2'-9"	2'-9"	3'-0"	3'-6"	3'-9"	4'-3"	4'-6"	5'-3"	5'-6"	6'-3"	6'-9"	6'-9"	7'-6"
B	5'-3"	5'-9"	6'-3"	6'-9"	7'-6"	8'-9"	9'-3"	10'-9"	11'-0"	12'-3"	13'-3"	13'-9"	14'-3"
F Spread footing	1'-3"	1'-3"	1'-3"	1'-3"	1'-6"	1'-6"	1'-9"	2'-0"	2'-3"	2'-9"	3'-0"	3'-3"	3'-6"
Batter	0	0	0	0	0	0	0	0	0	¼:12	½:12	½:12	½:12
Stem thickn. @ Haunch	1'-0"	1'-0"	1'-0"	1'-0"	1'-3"	1'-3"							
Stem thickn. @ top							1'-6"	2'-0"	2'-0"	2'-0"	2'-0"	2'-0"	2'-0"
ⓐ Bars			#6 @12✳✳	#5 @ 6✳	#9 @18✳✳	#9 @12✳✳	#9 @12✳✳	#9 @12✳✳	#7 @ 6✳	#7 @ 6✳	#7 @ 6✳	#9 @ 9✳	#11@12✳✳
X			Cont	Cont	Cont	Cont	Cont	Cont	Cont	Cont	Cont	Cont	Cont
Y			5'-6"	5'-6"	8'-6"	8'-6"	8'-6"	8'-6"	9'-6"	11'-0"	12'-6"	13'-6"	14'-6"
ⓑ Bars	#5 @ 9	#6 @ 9	#6 @12✳✳	#5 @ 6✳	#9 @18✳✳	#9 @12✳✳	#9 @12✳✳	#9 @12✳✳	#7 @ 6✳	#7 @ 6✳	#7 @ 6✳	#9 @ 9✳	#11@12✳✳
X	Cont	Cont	Cont	Cont	Cont	Cont	Cont	Cont	5'-6"	6'-0"	7'-6"	7'-6"	8'-0"
Y	Cont	Cont	Cont	Cont	11'-6"	11'-6"	12'-0"	12'-0"	17'-6"	20'-0"	21'-6"	24'-0"	24'-0"
ⓒ Bars					#7 @18	#7 @12	#7 @12	#7 @12	#6 @ 12	#6 @ 12	#6 @12	#7 @18	#7 @12
ⓓ Bars	#5 @12	#5 @ 9	#5 @9	#6 @9	#6 @ 9	#9 @12	#9 @12	#7 @#7	6 @ 6	#7 @ 6	#7 @ 6	#9 @ 9	#9 @ 9
Ultimate Bearing Capacity Req'd k/sf	5.5	6.5	7.3	7.6	9.0	9.0	10.6	10.5	12.2	12.6	13.3	15.4	16.0

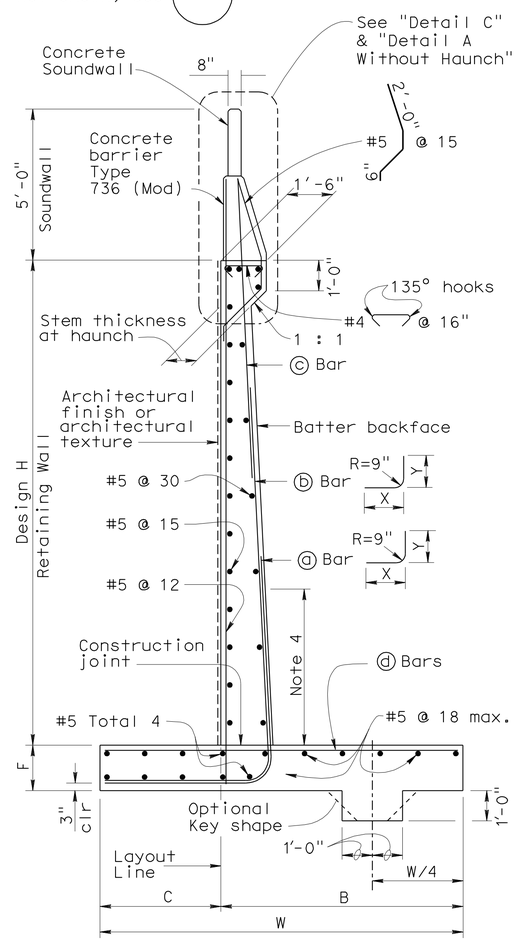

SPREAD FOOTING SECTION
No Scale

DESIGN DATA

DESIGN: Load Factor Design (LFD)

CONCRETE: Reinforced Concrete, f'c = 3600 psi
fy = 60,000 psi

LOADING CASE:
Level ground with 240 psf surcharge and 16' Soundwall

Seismic Load = 0.3 Dead Load
Wind Load = 30 psf
Dead Load of Soundwall = 200 lb/ft
Dead Load of Barrier = 372 lb/ft

SEISMIC LOAD: SOIL
Kh = 0.3g
Kv = 0.0
Kae : Mononobe-Okabe Method

SOIL: Ø = 34° γ = 120 pcf
Equivalent fluid pressure:
= 36 pcf for determination of toe pressure
= 27 pcf for determination of heel pressure

EXTERNAL STABILITY:
Group 1 : D + E + SC
Group 2 : D + E + SC + W
Group 3 : D + PYM

INTERNAL STABILITY (LFD):
Group A : βD + 1.7E + 1.7SC
Group B : βD + 1.7E + 1.3W
Group C (stem) : 1.0D + 1.0E + 1.0EQD + 1.0EQE
Group C (footing) : D + PYM

Where : β = 1.0 or 1.3 whichever controls design
D = Dead Load
E = Lateral Earth Pressure
SC = Surcharge
W = Wind load
EQD = Seismic Dead Load
EQE = Seismic Lateral Earth Pressure
PYM = Probable Yield Moment (1.3 x Nominal Yield Moment of Stem)

STANDARD DRAWING

FILE NO. xs14-220e

APPROVED BY G. WANG (RESPONSIBLE TECHNICAL SPECIALIST)
APPROVAL DATE 5-19-08

RELEASED BY ROBERTO LACALLE (RESPONSIBLE OFFICE CHIEF)
RELEASE DATE 5-19-08

1 Changed/Added Detail
2 Changed Note
3 Changed Soundwall Loading

STATE OF CALIFORNIA
DEPARTMENT OF TRANSPORTATION

DIVISION OF ENGINEERING SERVICES

BRIDGE NO.
POST MILE

RETAINING WALL NO 293 R20-4

RETAINING WALL TYPE 1SWB (Mod)

DS OSD 2147A (ENGLISH STANDARD DRAWING "XS" BORDER REV. 01/11/08)

ORIGINAL SCALE IN INCHES FOR REDUCED PLANS 0 1 2 3

CU
EA

DISREGARD PRINTS BEARING EARLIER REVISION DATES

REVISION DATES (PRELIMINARY STAGE ONLY) SHEET OF

USERNAME => trcarol

844840gt004.dgn

DATE PLOTTED => 30-APR-2011 TIME PLOTTED => 07:24

Dist	COUNTY	ROUTE	POST MILES TOTAL PROJECT	SHEET No.	TOTAL SHEETS
08	Riv	91	15.6/21.6	916	2028

REGISTERED CIVIL ENGINEER 12-1-10 DATE

4-25-11
PLANS APPROVAL DATE

REGISTERED PROFESSIONAL ENGINEER MINH THUONG VO No. C59297 Exp. 06/30/11 CIVIL STATE OF CALIFORNIA

THE STATE OF CALIFORNIA OR ITS OFFICERS OR AGENTS SHALL NOT BE RESPONSIBLE FOR THE ACCURACY OR COMPLETENESS OF SCANNED COPIES OF THIS PLAN SHEET.

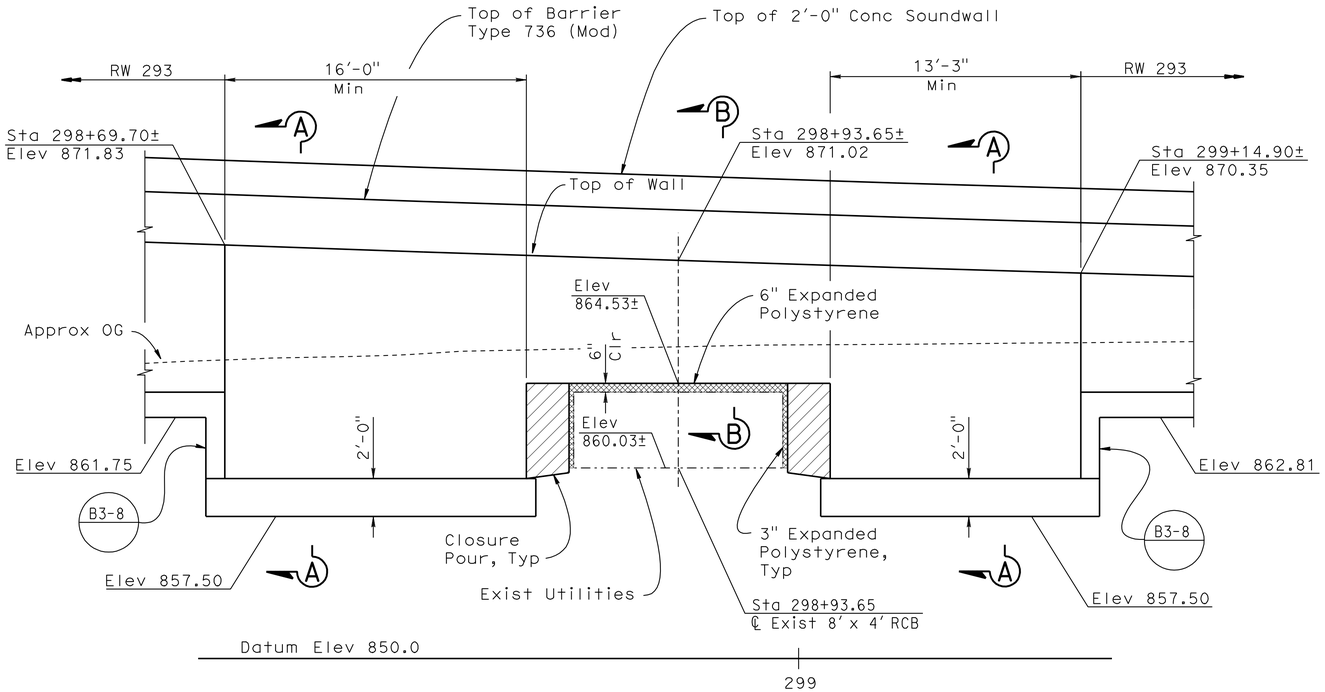

DEVELOPED MIRROR ELEVATION

1/4"=1'-0"

DESIGN DATA

DESIGN: Bridge Design Specification
(1996 AASHTO with Revisions by Caltrans)

LOADING CASE:
1. Level slope with 240 psf Max. surcharge

CONCRETE: n = 9, f'c = 3600 psi, fc = 1440 psi

REINFORCING STEEL: fy = 60,000 psi, fs = 24,000 psi

SOIL PARAMETERS: (for determination of design lateral earth pressure)
ø = 34° γ = 120 pcf

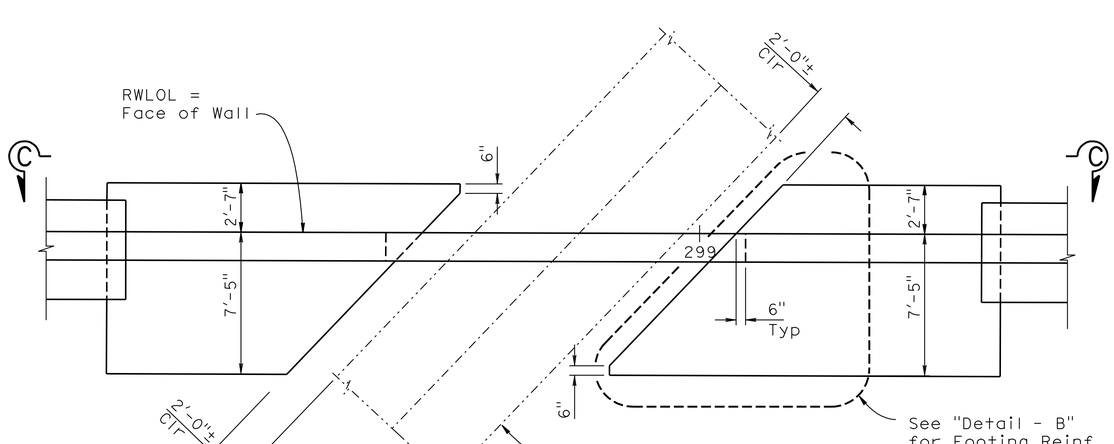

PLAN

1/4"=1'-0"

Sta 298+69.70± to Sta 299+14.90±

NOTE:
THE CONTRACTOR SHALL VERIFY ALL CONTROLLING FIELD DIMENSIONS BEFORE ORDERING OR FABRICATING ANY MATERIAL.

THIS PLAN ACCURATE FOR RETAINING WALL WORK ONLY.

RETAINING WALL DETAILS

RETAINING WALL No. 293

SCALE AS SHOWN

R20-5

STATE OF CALIFORNIA - DEPARTMENT OF TRANSPORTATION
Caltrans
DESIGN
FUNCTIONAL SUPERVISOR: DANIEL T. ADAMS
CALCULATED-DESIGNED BY: MINH VO
CHECKED BY: RYAN STILTZ
REVISED BY
DATE REVISED

LAST REVISION 12-01-10 | DATE PLOTTED => 30-APR-2011 | TIME PLOTTED => 07:24

Dist	COUNTY	ROUTE	POST MILES TOTAL PROJECT	SHEET No.	TOTAL SHEETS
08	Riv	91	15.6/21.6	917	2028

REGISTERED CIVIL ENGINEER 12-1-10 DATE

4-25-11
PLANS APPROVAL DATE

REGISTERED PROFESSIONAL ENGINEER MINH THUONG VO No. C59297 Exp. 06/30/11 CIVIL STATE OF CALIFORNIA

THE STATE OF CALIFORNIA OR ITS OFFICERS OR AGENTS SHALL NOT BE RESPONSIBLE FOR THE ACCURACY OR COMPLETENESS OF SCANNED COPIES OF THIS PLAN SHEET.

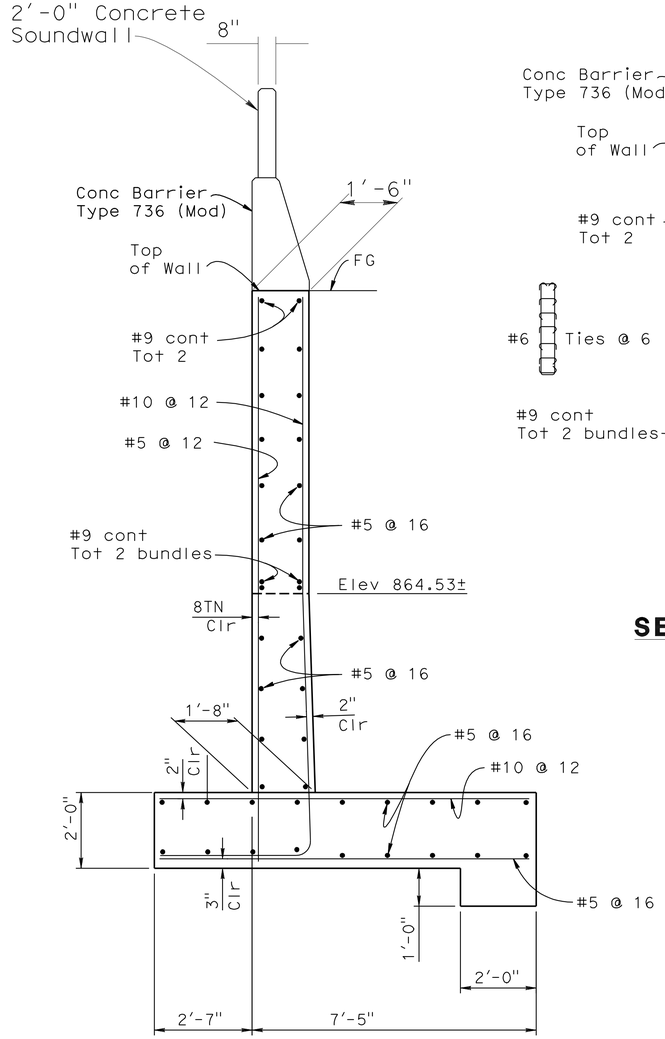

SECTION A-A
1/2 "=1'-0"

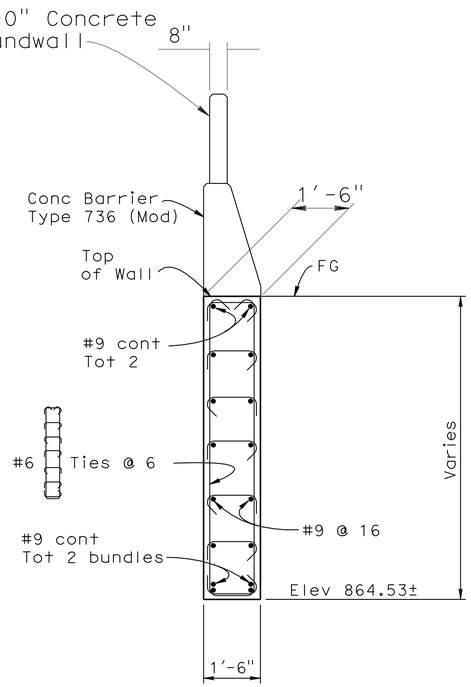

SECTION B-B
1/2 "=1'-0"

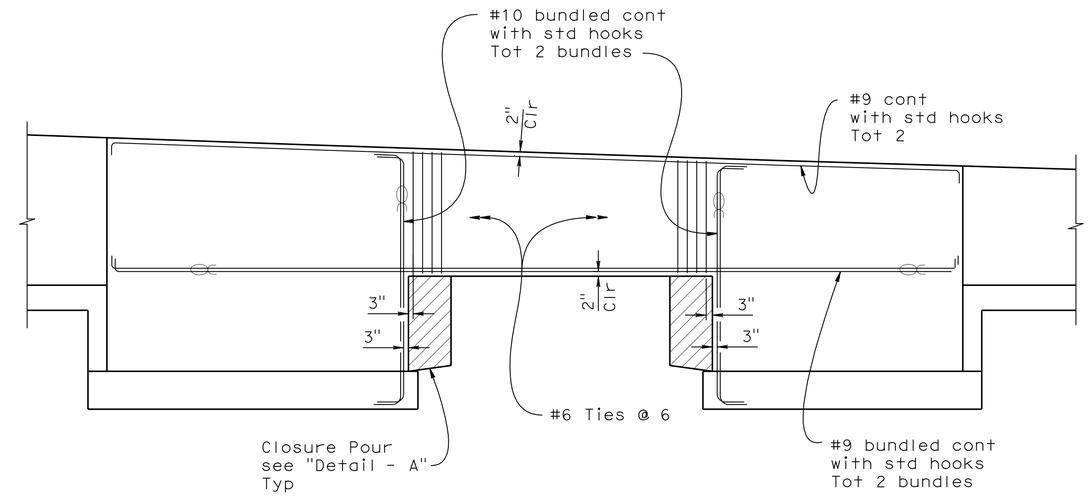

SECTION C-C
1/4"=1'-0"

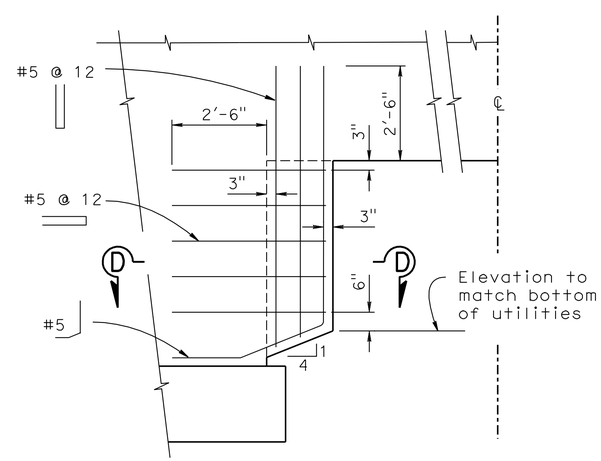

DETAIL - A
1/2" = 1'-0"

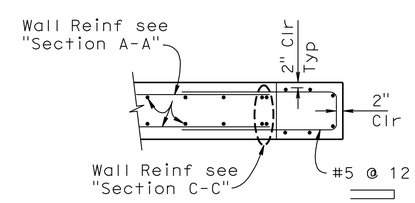

SECTION D-D
1/2" = 1'-0"

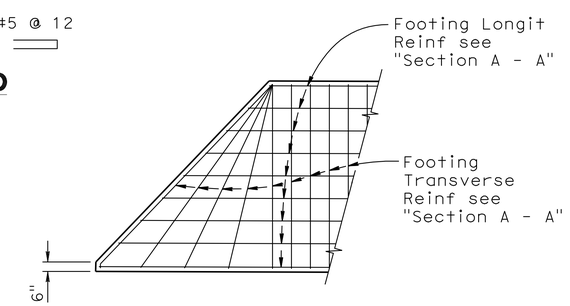

DETAIL - B
1/4" = 1'-0"

THIS PLAN ACCURATE FOR RETAINING WALL WORK ONLY.

RETAINING WALL DETAILS
RETAINING WALL No. 293

SCALE AS SHOWN **R20-6**

STATE OF CALIFORNIA - DEPARTMENT OF TRANSPORTATION
Caltrans®
DESIGN

FUNCTIONAL SUPERVISOR: DANIEL T. ADAMS
CALCULATED-DESIGNED BY: MINH VO
CHECKED BY: RYAN STILTZ
REVISED BY
DATE REVISED

LAST REVISION 12-01-10
DATE PLOTTED => 30-APR-2011
TIME PLOTTED => 07:25

Dist	COUNTY	ROUTE	POST MILES TOTAL PROJECT	SHEET No.	TOTAL SHEETS
08	Riv	91	15.6/21.6	918	2028

LICENSED LANDSCAPE ARCHITECT

4-25-11
PLANS APPROVAL DATE

LICENSED LANDSCAPE ARCHITECT
Matthew Harry Hall
Signature
10/31/2011
Renewal Date
12-1-10
Date
STATE OF CALIFORNIA

THE STATE OF CALIFORNIA OR ITS OFFICERS OR AGENTS SHALL NOT BE RESPONSIBLE FOR THE ACCURACY OR COMPLETENESS OF SCANNED COPIES OF THIS PLAN SHEET.

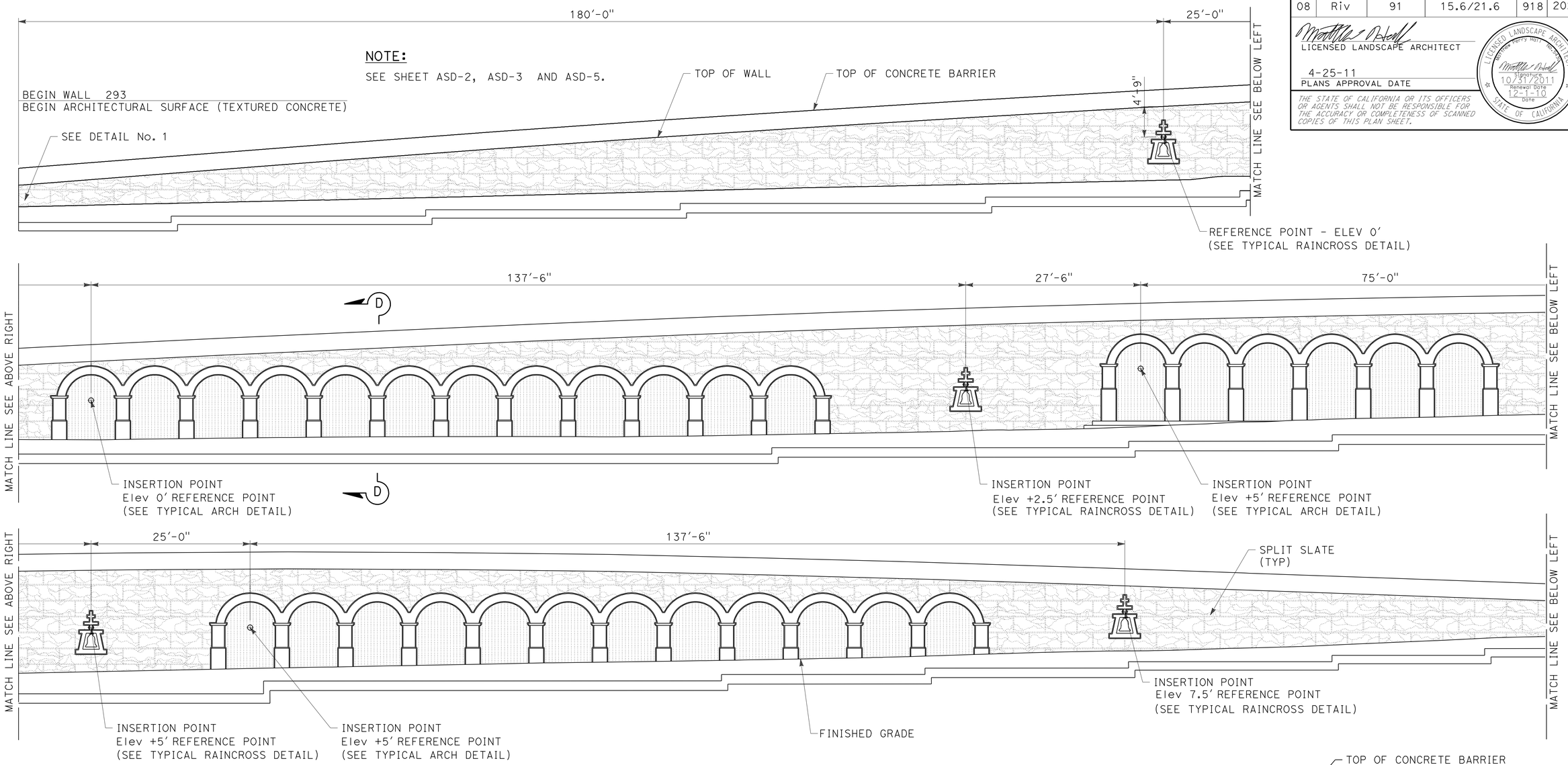

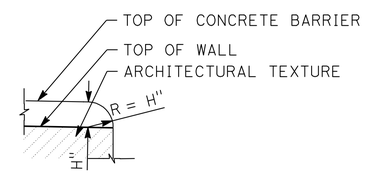

DETAIL No. 1

TYPICAL END OF WALL
WITH CONCRETE BARRIER
ON TOP OF WALL DETAIL

ELEVATION FOR SPLIT SLATE TEXTURE RETAINING WALL No. 293

THIS PLAN IS ACCURATE FOR ARCHITECTUAL TREATMENT WORK ONLY.

ARCHITECTURAL SURFACE RETAINING WALL No. 293

SCALE: 1/8"=1'-0"

R20-7

STATE OF CALIFORNIA - DEPARTMENT OF TRANSPORTATION
Caltrans® LANDSCAPE ARCHITECTURE

SENIOR LANDSCAPE ARCHITECT: BYRON STROUT
CALCULATED-DESIGNED BY: MATTHEW HALL
CHECKED BY: MIRIAM BISHOP
REVISED BY
DATE REVISED

LAST REVISION 12-01-10
DATE PLOTTED => 30-APR-2011
TIME PLOTTED => 07:25

DIST	COUNTY	ROUTE	POST MILES TOTAL PROJECT	SHEET No	TOTAL SHEETS
08	Riv	91	15.6/21.6	919	2028

GEOTECHNICAL PROFESSIONAL — DATE 10/2008

4-25-11
PLANS APPROVAL DATE

REGISTERED PROFESSIONAL ENGINEER — ANDREW C. LEE — No. 2616 — Exp. 6-30-12 — GEOTECHNICAL — STATE OF CALIFORNIA

The State of California or its officers or agents shall not be responsible for the accuracy or completeness of electronic copies of this plan sheet.

California Department of Transportation
5900 Folsom Boulevard
Sacramento, CA 95819

URS Corporation
2020 East First Street, Suite 400
Santa Ana, CA 92705

FOR PLAN VIEW, SEE SHEET R20-10

NOTE: 1. This LOTB sheet was prepared in accordance with the Caltrans Soil & Rock Logging, Classification, and Presentation Manual (June 2007).

2. For legend, see "Log of Test Borings" 1 of 83

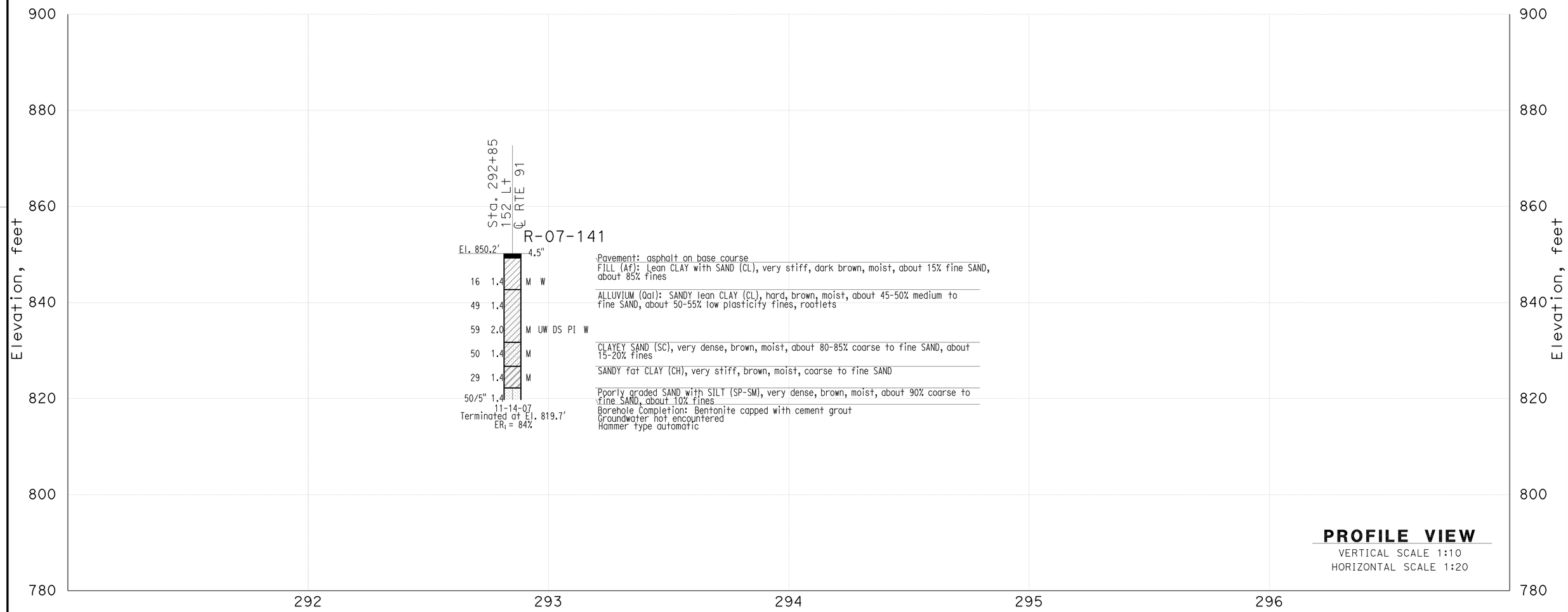

THIS PLAN ACCURATE FOR SOUND WALL AND RETAINING WALL WORK ONLY

DESIGN OVERSIGHT	GINA PURSELL	DRAWN BY	P. QUACH	P.CHAU/D.WADER/C.CARBINO	PREPARED FOR THE STATE OF CALIFORNIA DEPARTMENT OF TRANSPORTATION	A. LEE	BRIDGE NO. X
X	FUNCTIONAL SUPERVISOR	CHECKED BY	S. PIRATHIVIRAJ	FIELD INVESTIGATION BY: DATE: Nov 6 2007 to March 7 2008		PROJECT ENGINEER	POST MILE X
SIGN OFF DATE							

Retaining Wall 293 — R20-8

LOG OF TEST BORINGS SHEET 1 OF 3

OSF GEOTECHNICAL LOG OF TEST BORINGS SHEET (ENGLISH) (REV. 2/25/05)

ORIGINAL SCALE IN INCHES FOR REDUCED PLANS 0 1 2 3

CU 59A0590
EA 08-448400

DISREGARD PRINTS BEARING EARLIER REVISION DATES

REVISION DATES (PRELIMINARY STAGE ONLY) X

SHEET 1 OF 3

FILE => 844840qt008.dgn

USERNAME => trcarol DATE PLOTTED => 30-APR-2011 TIME PLOTTED =>

DIST	COUNTY	ROUTE	POST MILES TOTAL PROJECT	SHEET No	TOTAL SHEETS
08	Riv	91	15.6/21.6	920	2028

GEOTECHNICAL PROFESSIONAL DATE 10/2008

4-25-11
PLANS APPROVAL DATE

REGISTERED PROFESSIONAL ENGINEER ANDREW C. LEE No. 2616 Exp. 6-30-12 GEOTECHNICAL STATE OF CALIFORNIA

The State of California or its officers or agents shall not be responsible for the accuracy or completeness of electronic copies of this plan sheet.

California Department of Transportation
5900 Folsom Boulevard
Sacramento, CA 95819

URS Corporation
2020 East First Street, Suite 400
Santa Ana, CA 92705

FOR PLAN VIEW, SEE SHEET R20-10

NOTE: 1. This LOTB sheet was prepared in accordance with the Caltrans Soil & Rock Logging, Classification, and Presentation Manual (June 2007).

2. For legend, see "Log of Test Borings" 1 of 83

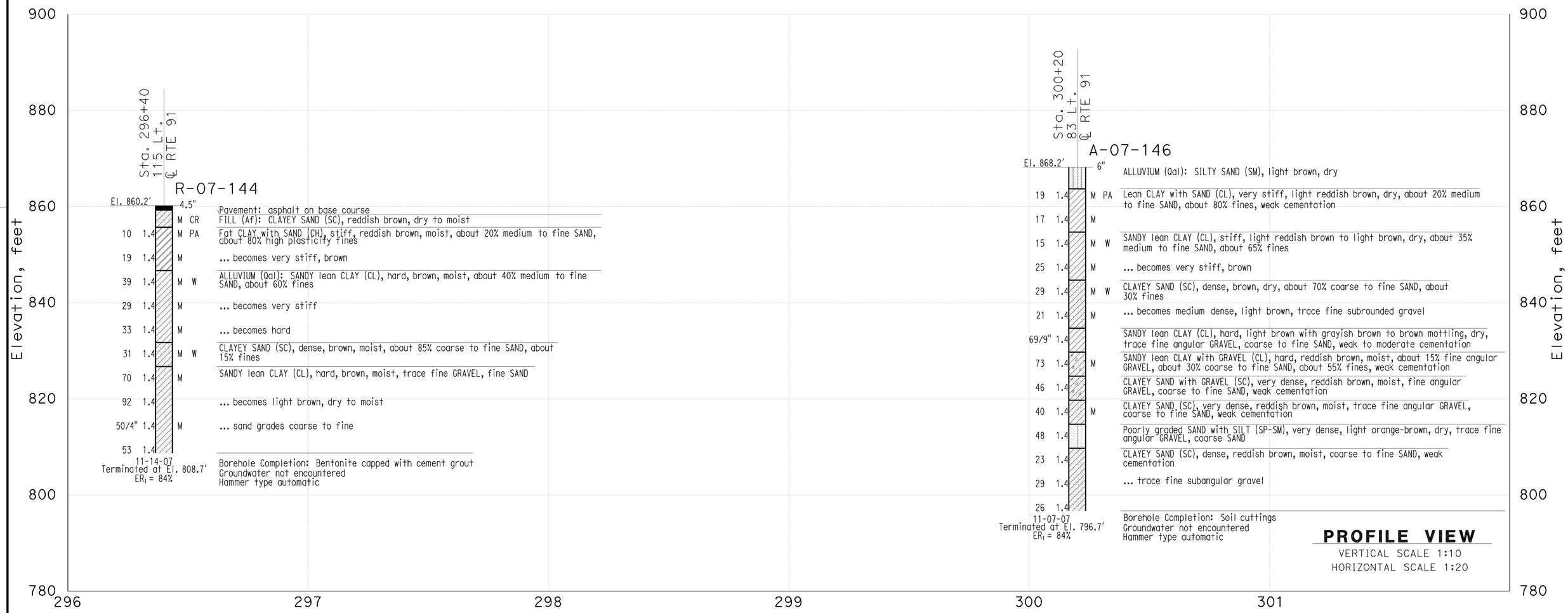

THIS PLAN ACCURATE FOR SOUND WALL AND RETAINING WALL WORK ONLY

DESIGN OVERSIGHT X SIGN OFF DATE	GINA PURSELL FUNCTIONAL SUPERVISOR	DRAWN BY	P. QUACH	P.CHAU/D.WADER/C.CARBINO FIELD INVESTIGATION BY: DATE: Nov 6 2007 to March 7 2008	PREPARED FOR THE STATE OF CALIFORNIA DEPARTMENT OF TRANSPORTATION	A. LEE PROJECT ENGINEER	BRIDGE NO. X POST MILE X	Retaining Wall 293 R20-9 LOG OF TEST BORINGS SHEET 2 OF 3
		CHECKED BY	S. PIRATHIVIRAJ					

OSF GEOTECHNICAL LOG OF TEST BORINGS SHEET (ENGLISH) (REV. 2/25/05)

ORIGINAL SCALE IN INCHES FOR REDUCED PLANS 0 1 2 3

CU 59A0590
EA 08-448400

DISREGARD PRINTS BEARING EARLIER REVISION DATES

REVISION DATES (PRELIMINARY STAGE ONLY) X

SHEET 2 OF 3

FILE => 844840qt009.dgn

USERNAME => trcarol DATE PLOTTED => 30-APR-2011 TIME PLOTTED =>

DIST	COUNTY	ROUTE	POST MILES TOTAL PROJECT	SHEET No	TOTAL SHEETS
08	Riv	91	15.6/21.6	921	2028

GEOTECHNICAL PROFESSIONAL — DATE 10/2008

4-25-11
PLANS APPROVAL DATE

REGISTERED PROFESSIONAL ENGINEER — ANDREW C. LEE — No. 2616 — Exp. 6-30-12 — GEOTECHNICAL — STATE OF CALIFORNIA

The State of California or its officers or agents shall not be responsible for the accuracy or completeness of electronic copies of this plan sheet.

California Department of Transportation
5900 Folsom Boulevard
Sacramento, CA 95819

URS Corporation
2020 East First Street, Suite 400
Santa Ana, CA 92705

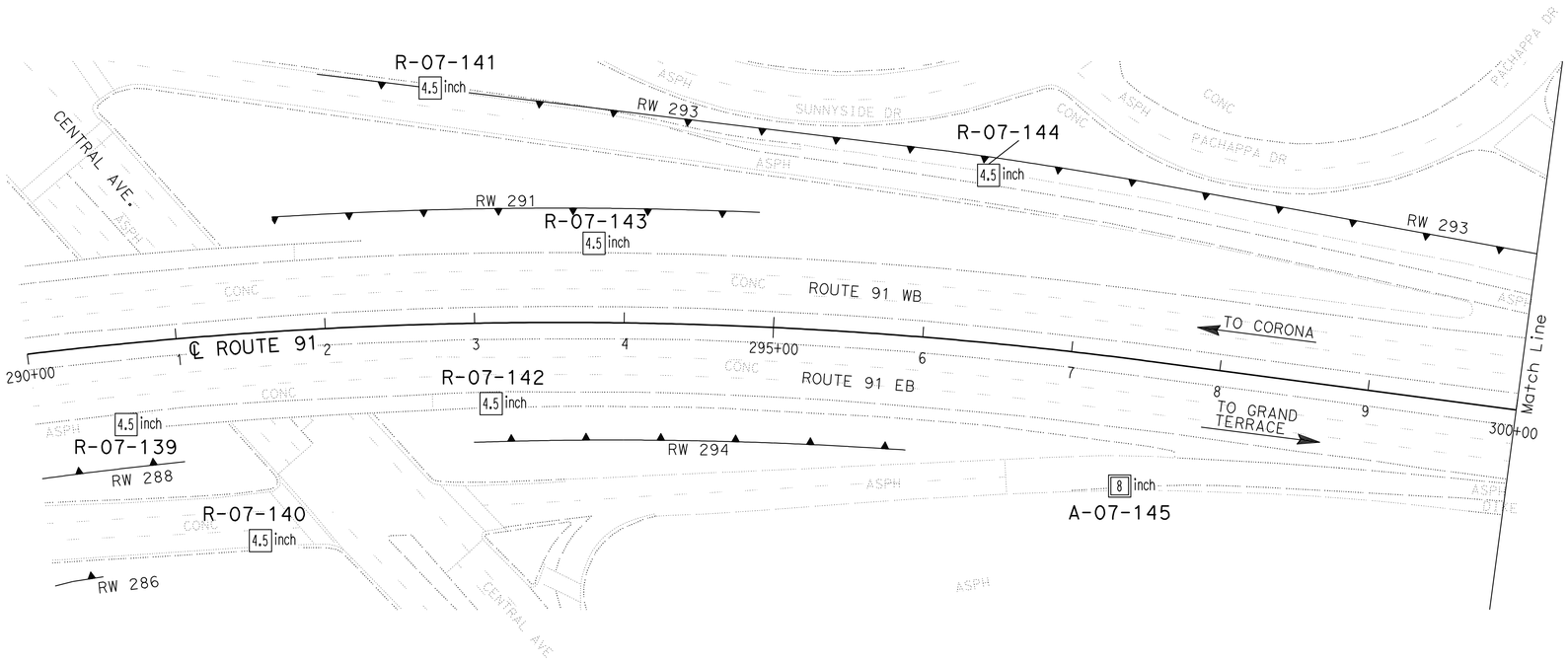

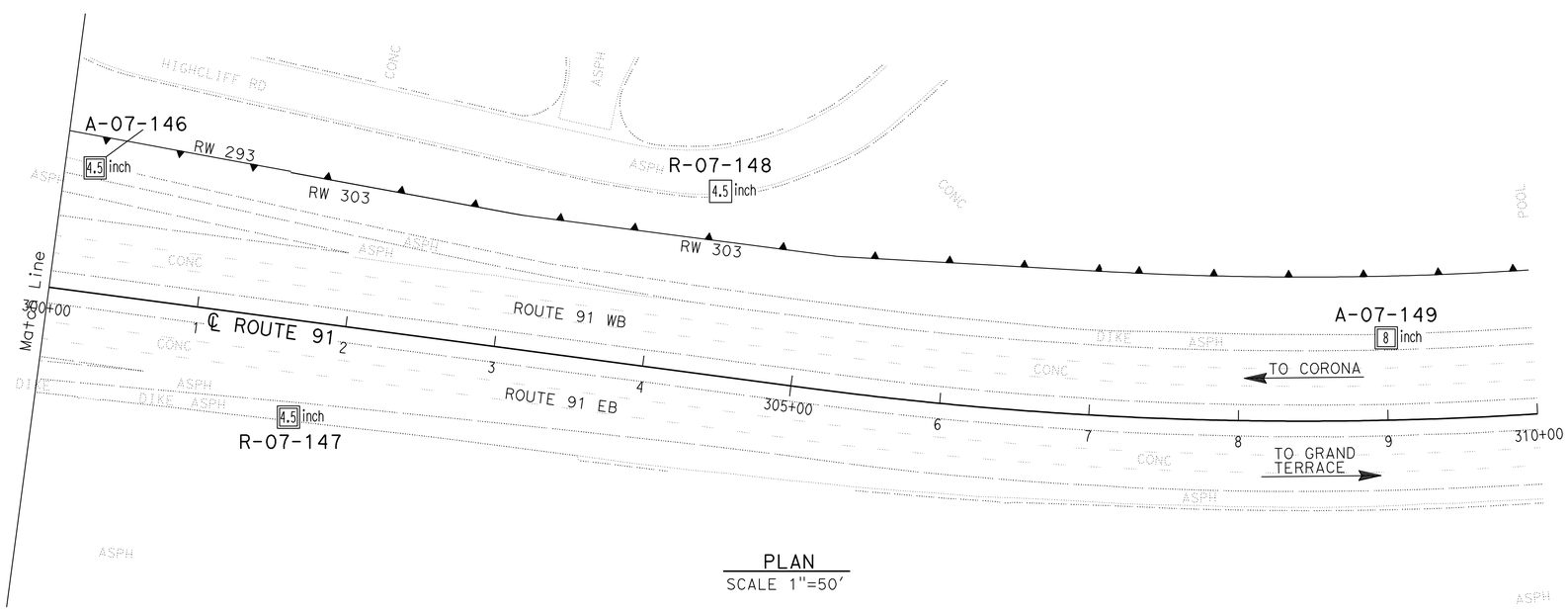

PLAN
SCALE 1"=50'

Borehole Number	Drill Rig	Hammer Type	Avg. Hammer Efficiency, ETR (%)
R-07-139	Acker Rig	Automatic	74
R-07-140	CS-2000	Automatic	84
R-07-141	CS-2000	Automatic	84
R-07-142	Acker Rig	Automatic	74
R-07-143	Acker Rig	Automatic	74
R-07-144	CS-2000	Automatic	84
A-07-145	Diedrich D-120	Automatic	75*
A-07-146	CS-2000	Automatic	84
R-07-147	CS-2000	Automatic	84
R-07-148	CS-2000	Automatic	84
A-07-149	Diedrich D-120	Automatic	75*

Sampler Type	Inside Diameter (Inches)	Borehole Numbers
SPT	1.375	R-07-139, R-07-140, R-07-141 R-07-142, R-07-143, R-07-144 A-07-145, A-07-146, AR-07-147 R-07-148, A-07-149
Modified California 1	1.94	R-07-139, R-07-141, R-07-142 R-07-143, R-07-148
Modified California 2	2.40	A-07-145, A-07-149

*Estimated Hammer Efficiency Rating.

DESIGN OVERSIGHT — GINA PURSELL, FUNCTIONAL SUPERVISOR
X
SIGN OFF DATE

DRAWN BY — P. QUACH
CHECKED BY — S. PIRATHIVIRAJ

P.CHAU/D.WADER/C.CARBINO
FIELD INVESTIGATION BY:
DATE: Nov 6 2007 to March 7 2008

PREPARED FOR THE STATE OF CALIFORNIA DEPARTMENT OF TRANSPORTATION

A. LEE
PROJECT ENGINEER

BRIDGE NO. X
POST MILE X

RETAINING WALL 293 — R20-10

LOG OF TEST BORINGS 3 of 3

OSF GEOTECHNICAL LOG OF TEST BORINGS SHEET (ENGLISH) (REV. 2/25/05)

ORIGINAL SCALE IN INCHES FOR REDUCED PLANS 0 1 2 3

CU 59A0590
EA 08-448400

DISREGARD PRINTS BEARING EARLIER REVISION DATES

REVISION DATES (PRELIMINARY STAGE ONLY) X

SHEET 3 OF 3

FILE => 844840gt010.dgn

USERNAME => trcarol DATE PLOTTED => 30-APR-2011 TIME PLOTTED =>

Dist	COUNTY	ROUTE	POST MILES TOTAL PROJECT	SHEET No.	TOTAL SHEETS
08	Riv	91	15.6/21.6	922	2028

REGISTERED CIVIL ENGINEER 12-1-10 DATE

4-25-11
PLANS APPROVAL DATE

REGISTERED PROFESSIONAL ENGINEER CUONG LE TRAN No. C60436 Exp. 6-30-12 CIVIL STATE OF CALIFORNIA

THE STATE OF CALIFORNIA OR ITS OFFICERS OR AGENTS SHALL NOT BE RESPONSIBLE FOR THE ACCURACY OR COMPLETENESS OF SCANNED COPIES OF THIS PLAN SHEET.

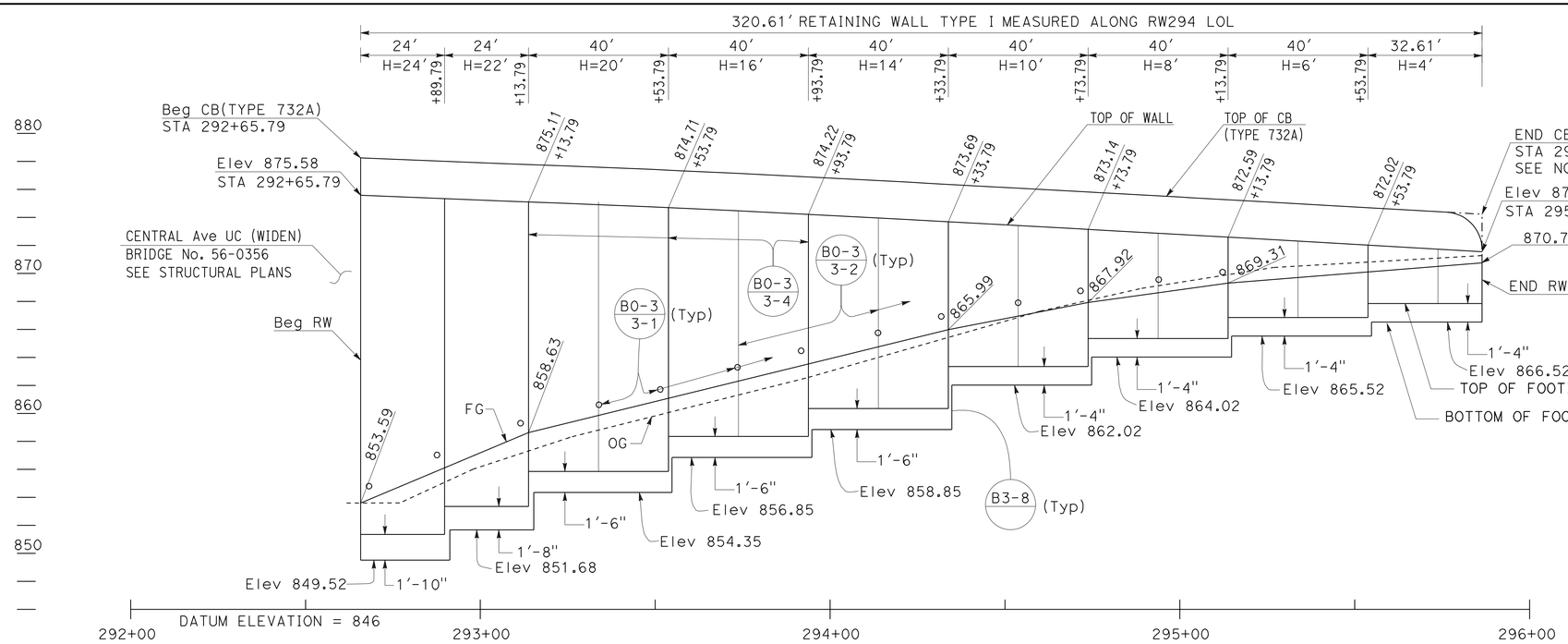

ELEVATION

SCALE Horiz 1"=20'
Vert 1"=5'

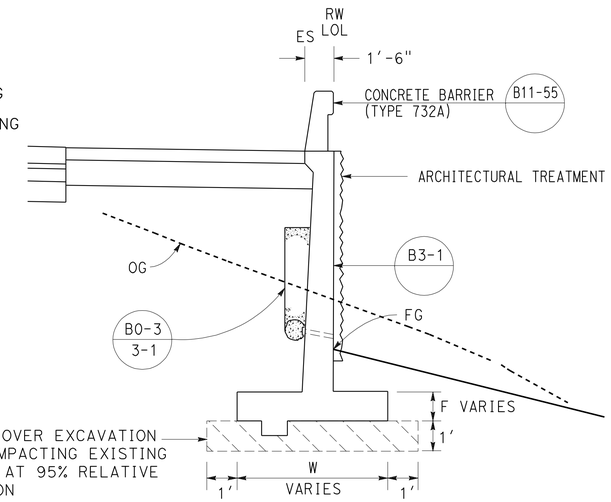

TYPICAL SECTION

NO SCALE
FROM STA 292+65.79 TO STA 295+86.40

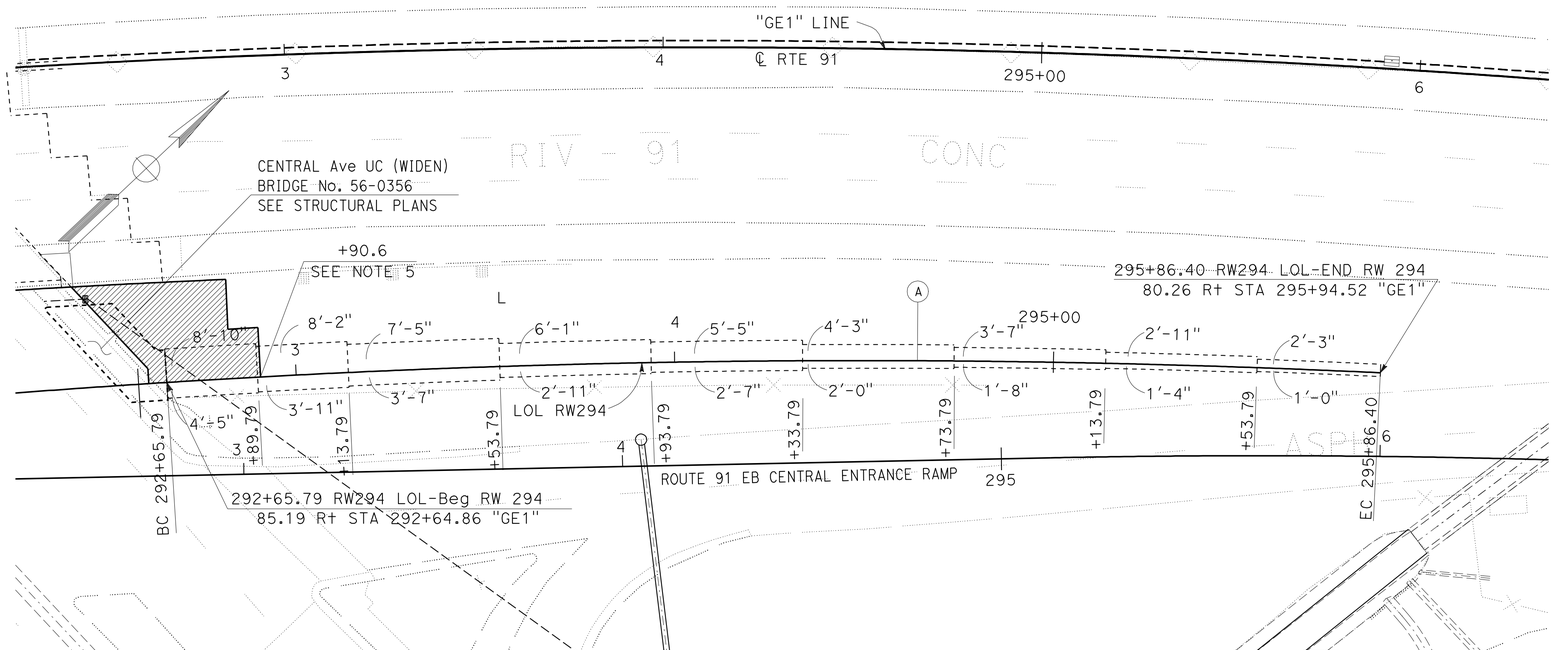

PLAN

SCALE: 1"=20'

THIS PLAN ACCURATE FOR RETAINING WALL WORK ONLY.

CURVE DATA

No.	R	Δ	T	L
A	2916.08'	6°17'58"	160.47'	320.61'

QUANTITIES

STRUCTURAL CONCRETE (RETAINING WALL)	373.70	CY
BAR REINFORCING STEEL (RETAINING WALL)	45293	LB
STRUCTURAL EXCAVATION (RETAINING WALL)	1016.32	CY
STRUCTURAL BACKFILL (RETAINING WALL)	1127.42	CY
PERVIOUS BACKFILL MATERIAL (RETAINING WALL)	76.17	CY
CONCRETE BARRIER (TYPE 732A)	320.61	LF
PLASTIC PIPE (N)	20.91	LF
WATERSTOP (N)	120.00	LF
ARCHITECTURAL SURFACE (TEXTURED CONCRETE)	3117.33	SF

(N) = NOT A SEPARATE PAY ITEM, FOR INFORMATION ONLY

NOTES:

1. ARCHITECTURAL TREATMENT SHOULD EXTEND 6 IN BELOW FG OR 6 IN BELOW TOP CB (TYPE 60D MOD)
2. FOR STRUCTURAL SECTIONS, SEE ROADWAY PLANS
3. WATERSTOP IN EXPANSION JOINT SHALL BE EXTEND 6 IN INTO THE BARRIER
4. FOR ROUNDING DETAILS, SEE ARCHITECTURAL TREATMENT PLANS
5. LOWER TOP OF WALL 12" WITHIN STRUCTURE APPROACH LIMITS (SEE STRUCTURAL PLANS)

RETAINING WALL PLAN
RETAINING WALL No. 294

SCALE AS SHOWN

R21-1

REVISED BY | DATE REVISED
ANNABELL WANG | CUONG LE TRAN
CALCULATED-DESIGNED BY | CHECKED BY
FUNCTIONAL SUPERVISOR: MARK PERTILE

STATE OF CALIFORNIA - DEPARTMENT OF TRANSPORTATION
Caltrans
DESIGN

LAST REVISION 12-01-10 | DATE PLOTTED => 30-APR-2011 | TIME PLOTTED => 07:25

Dist	COUNTY	ROUTE	POST MILES TOTAL PROJECT	SHEET No.	TOTAL SHEETS
08	Riv	91	15.6/21.6	923	2028

LICENSED LANDSCAPE ARCHITECT

4-25-11
PLANS APPROVAL DATE

LICENSED LANDSCAPE ARCHITECT
Matthew Harry Hall
No. 4844
Signature
10/31/2011
Renewal Date
12-1-10
Date
STATE OF CALIFORNIA

THE STATE OF CALIFORNIA OR ITS OFFICERS OR AGENTS SHALL NOT BE RESPONSIBLE FOR THE ACCURACY OR COMPLETENESS OF SCANNED COPIES OF THIS PLAN SHEET.

NOTE:

SEE SHEET ASD-4 AND ASD-5.

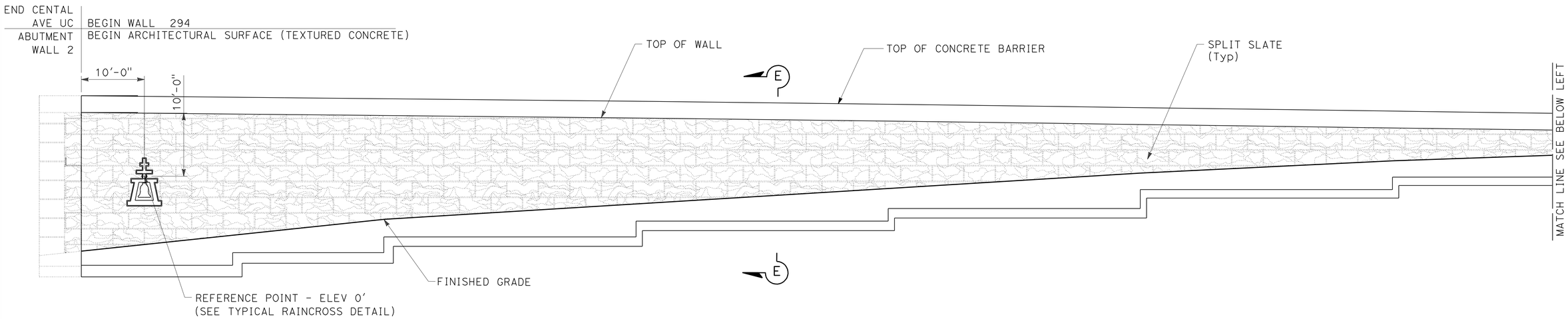

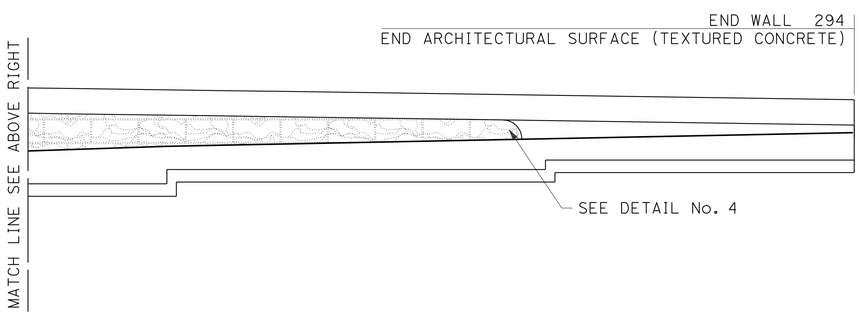

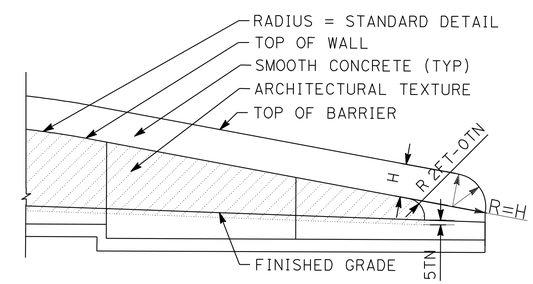

DETAIL No. 4

TYPICAL END OF WALL WITH CONCRETE BARRIER ON TOP OF WALL AND TYPE 60D MOD. CONCRETE BARRIER

ELEVATION FOR SPLIT SLATE TEXTURE RETAINING WALL No. 294

THIS PLAN IS ACCURATE FOR ARCHITECTUAL TREATMENT WORK ONLY.

ARCHITECTURAL SURFACE RETAINING WALL No. 294

SCALE: 1/8" = 1'-0"

R21-2

STATE OF CALIFORNIA - DEPARTMENT OF TRANSPORTATION
Caltrans® LANDSCAPE ARCHITECTURE

SENIOR LANDSCAPE ARCHITECT: BYRON STROUT
CALCULATED-DESIGNED BY: MATTHEW HALL
CHECKED BY: MIRIAM BISHOP
REVISED BY
DATE REVISED

LAST REVISION 12-01-10
DATE PLOTTED => 30-APR-2011
TIME PLOTTED => 07:47

DIST	COUNTY	ROUTE	POST MILES TOTAL PROJECT	SHEET No	TOTAL SHEETS
08	Riv	91	15.6/21.6	924	2028

GEOTECHNICAL PROFESSIONAL — DATE 10/2008

4-25-11
PLANS APPROVAL DATE

REGISTERED PROFESSIONAL ENGINEER — ANDREW C. LEE — No. 2616 — Exp. 6-30-12 — GEOTECHNICAL — STATE OF CALIFORNIA

The State of California or its officers or agents shall not be responsible for the accuracy or completeness of electronic copies of this plan sheet.

California Department of Transportation
5900 Folsom Boulevard
Sacramento, CA 95819

URS Corporation
2020 East First Street, Suite 400
Santa Ana, CA 92705

FOR PLAN VIEW, SEE SHEET R21-4

NOTE: 1. This LOTB sheet was prepared in accordance with the Caltrans Soil & Rock Logging, Classification, and Presentation Manual (June 2007).

2. For legend, see "Log of Test Borings" 1 of 83

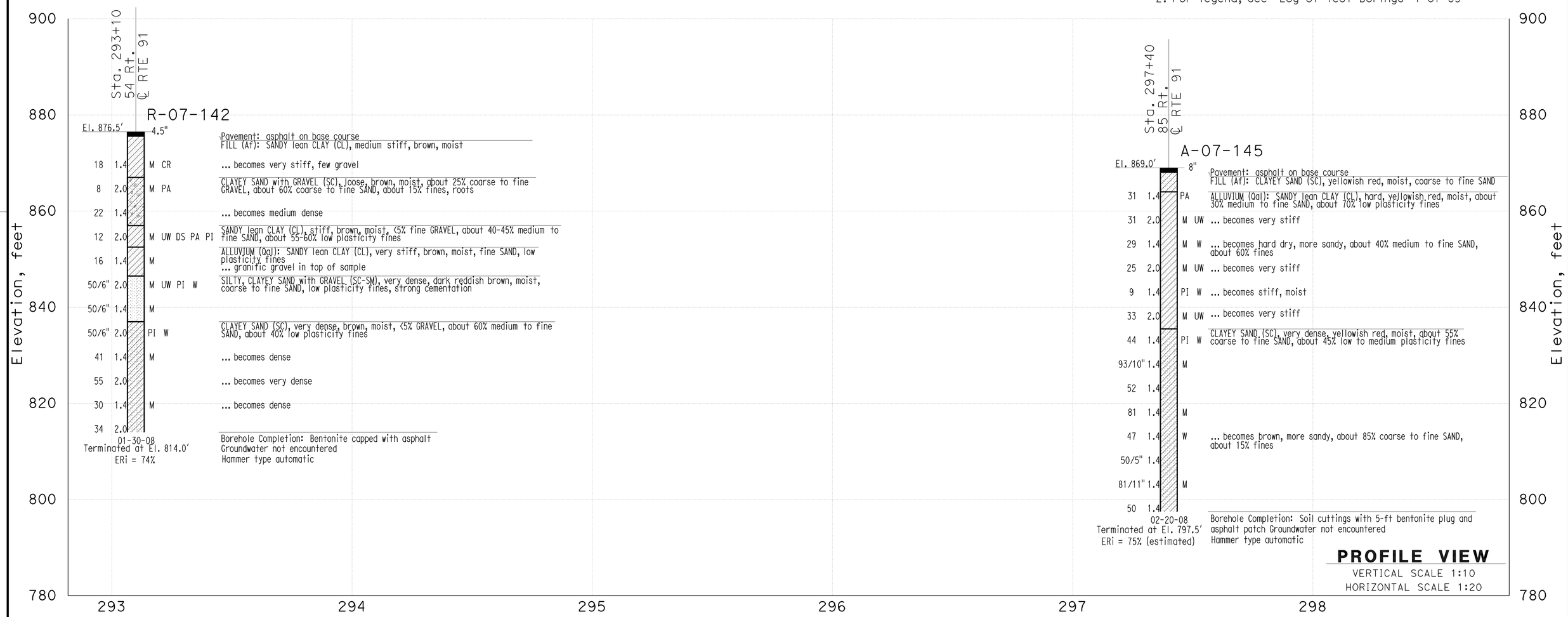

THIS PLAN ACCURATE FOR SOUND WALL AND RETAINING WALL WORK ONLY

DESIGN OVERSIGHT X SIGN OFF DATE	GINA PURSELL FUNCTIONAL SUPERVISOR	DRAWN BY CHECKED BY	P. QUACH S. PIRATHIVIRAJ	P.CHAU/D.WADER/C.CARBINO FIELD INVESTIGATION BY: DATE: Nov 6 2007 to March 7 2008	PREPARED FOR THE STATE OF CALIFORNIA DEPARTMENT OF TRANSPORTATION	A. LEE PROJECT ENGINEER	BRIDGE NO. X POST MILE X

Retaining Wall 294 R21-3

LOG OF TEST BORINGS SHEET 1 OF 2

OSF GEOTECHNICAL LOG OF TEST BORINGS SHEET (ENGLISH) (REV. 2/25/05)

ORIGINAL SCALE IN INCHES FOR REDUCED PLANS 0 1 2 3

CU 59A0590
EA 08-448400

DISREGARD PRINTS BEARING EARLIER REVISION DATES

REVISION DATES (PRELIMINARY STAGE ONLY) X

SHEET 1 OF 2

FILE => 844840qu003.dgn

USERNAME => trmartin DATE PLOTTED => 30-APR-2011 TIME PLOTTED =>

DIST	COUNTY	ROUTE	POST MILES TOTAL PROJECT	SHEET No	TOTAL SHEETS
08	Riv	91	15.6/21.6	925	2028

GEOTECHNICAL PROFESSIONAL — DATE 10/2008

PLANS APPROVAL DATE 4-25-11

REGISTERED PROFESSIONAL ENGINEER — ANDREW C. LEE — No. 2616 — Exp. 6-30-12 — GEOTECHNICAL — STATE OF CALIFORNIA

The State of California or its officers or agents shall not be responsible for the accuracy or completeness of electronic copies of this plan sheet.

California Department of Transportation
5900 Folsom Boulevard
Sacramento, CA 95819

URS Corporation
2020 East First Street, Suite 400
Santa Ana, CA 92705

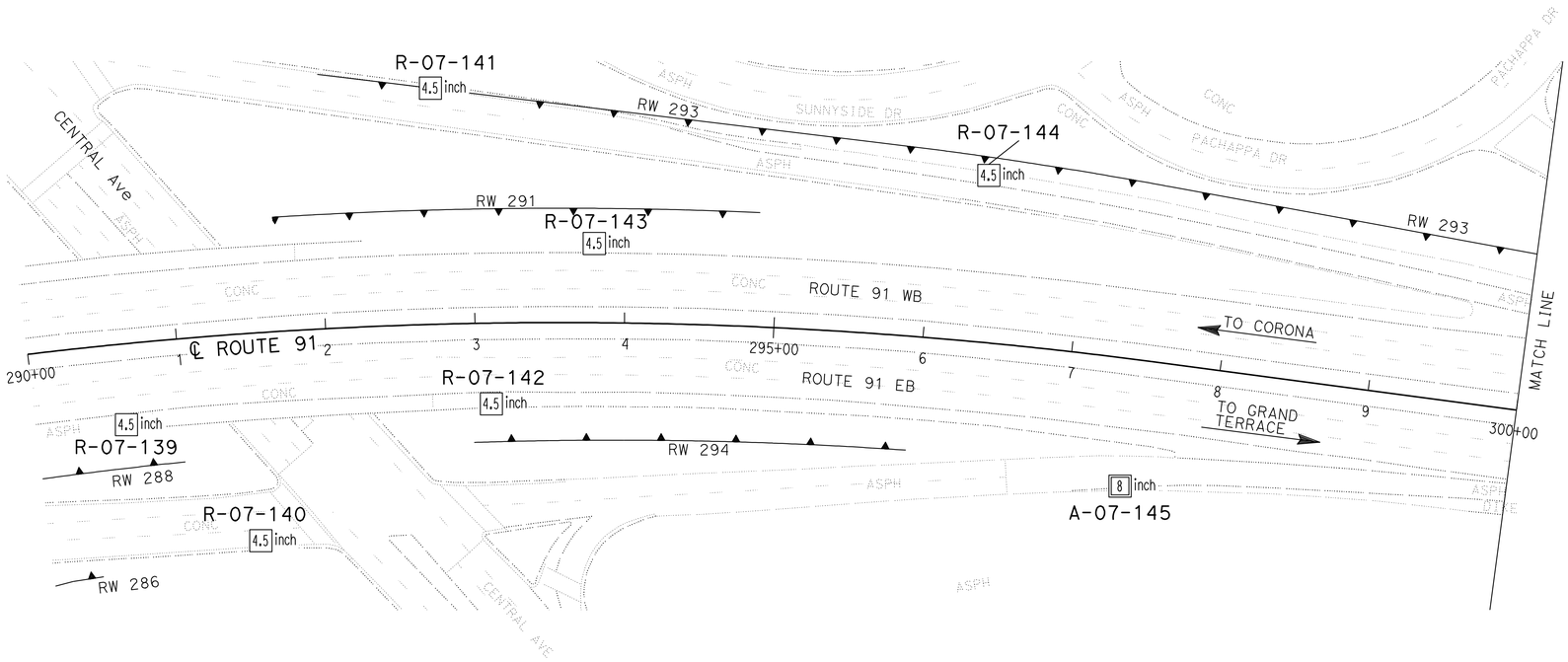

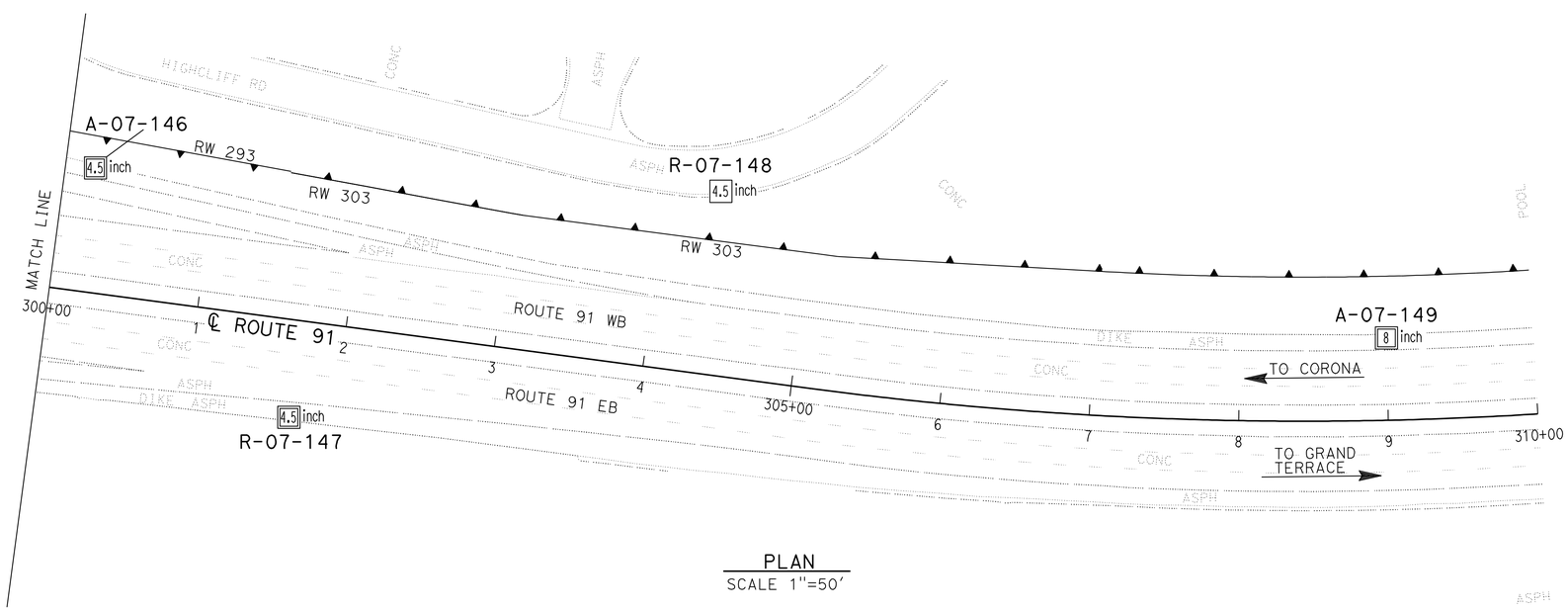

PLAN
SCALE 1"=50'

Borehole Number	Drill Rig	Hammer Type	Avg. Hammer Efficiency, ETR (%)
R-07-139	Acker Rig	Automatic	74
R-07-140	CS-2000	Automatic	84
R-07-141	CS-2000	Automatic	84
R-07-142	Acker Rig	Automatic	74
R-07-143	Acker Rig	Automatic	74
R-07-144	CS-2000	Automatic	84
A-07-145	Diedrich D-120	Automatic	75*
A-07-146	CS-2000	Automatic	84
R-07-147	CS-2000	Automatic	84
R-07-148	CS-2000	Automatic	84
A-07-149	Diedrich D-120	Automatic	75*

Sampler Type	Inside Diameter (Inches)	Borehole Numbers
SPT	1.375	R-07-139, R-07-140, R-07-141 R-07-142, R-07-143, R-07-144 A-07-145, A-07-146, AR-07-147 R-07-148, A-07-149
Modified California 1	1.94	R-07-139, R-07-141, R-07-142 R-07-143, R-07-148
Modified California 2	2.40	A-07-145, A-07-149

*Estimated Hammer Efficiency Rating.

DESIGN OVERSIGHT — GINA PURSELL, FUNCTIONAL SUPERVISOR
X
SIGN OFF DATE

DRAWN BY — P. QUACH
CHECKED BY — S. PIRATHIVIRAJ

P.CHAU/D.WADER/C.CARBINO
FIELD INVESTIGATION BY:
DATE: Nov 6 2007 to March 7 2008

PREPARED FOR THE STATE OF CALIFORNIA DEPARTMENT OF TRANSPORTATION

A. LEE
PROJECT ENGINEER

BRIDGE NO. X
POST MILE X

RETAINING WALL 294 — R21-4

LOG OF TEST BORINGS 2 of 2

OSF GEOTECHNICAL LOG OF TEST BORINGS SHEET (ENGLISH) (REV. 2/25/05)

ORIGINAL SCALE IN INCHES FOR REDUCED PLANS 0 1 2 3

CU 59A0590
EA 08-448400

DISREGARD PRINTS BEARING EARLIER REVISION DATES

REVISION DATES (PRELIMINARY STAGE ONLY) X

SHEET 2 OF 2

FILE => 844840qu004.dgn

USERNAME => trmartin DATE PLOTTED => 30-APR-2011 TIME PLOTTED =>

Dist	COUNTY	ROUTE	POST MILES TOTAL PROJECT	SHEET No.	TOTAL SHEETS
08	Riv	91	15.6/21.6	926	2028

REGISTERED CIVIL ENGINEER 12-1-10 DATE

4-25-11
PLANS APPROVAL DATE

REGISTERED PROFESSIONAL ENGINEER CUONG LE TRAN No. C60436 Exp. 6-30-12 CIVIL STATE OF CALIFORNIA

THE STATE OF CALIFORNIA OR ITS OFFICERS OR AGENTS SHALL NOT BE RESPONSIBLE FOR THE ACCURACY OR COMPLETENESS OF SCANNED COPIES OF THIS PLAN SHEET.

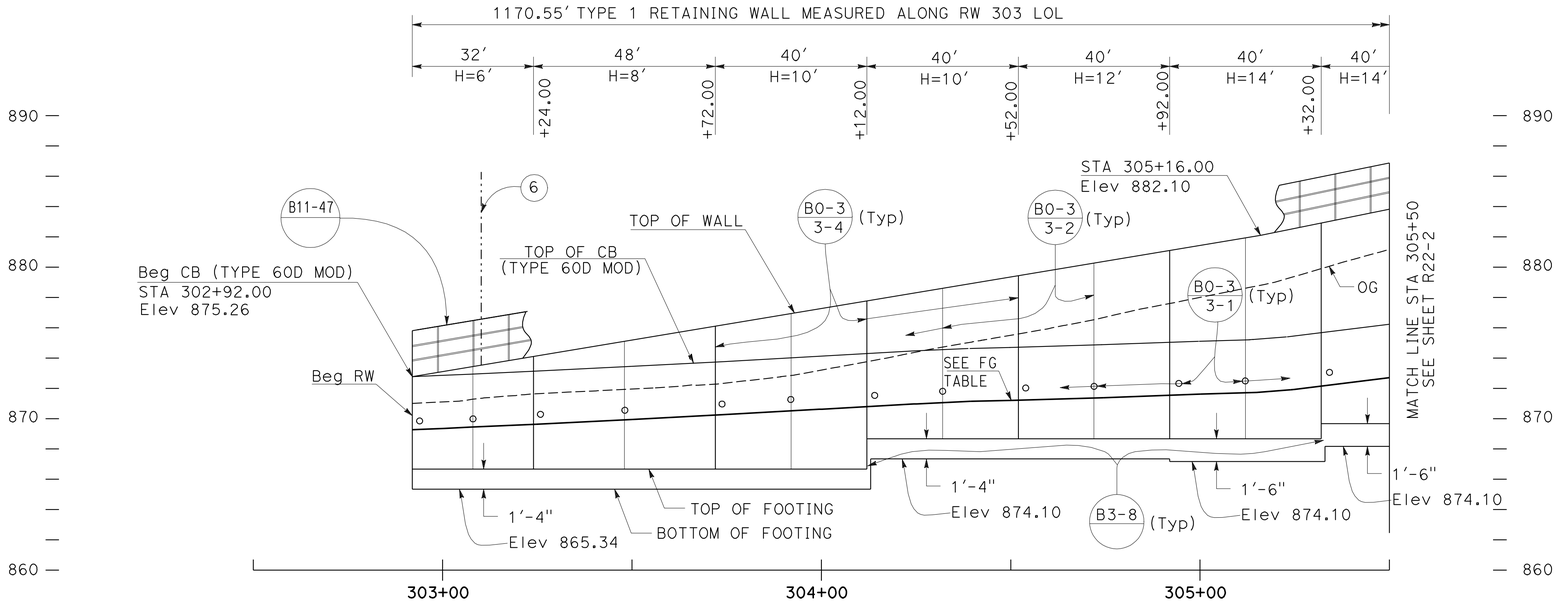

ELEVATION

SCALE Horiz 1"=20'
Vert 1"=5'

QUANTITIES

STRUCTURAL CONCRETE (RETAINING WALL)	1672.30	CY
BAR REINFORCING STEEL (RETAINING WALL)	274974	LB
STRUCTURAL EXCAVATION (RETAINING WALL)	13300.78	CY
STRUCTURAL BACKFILL (RETAINING WALL)	9334.61	CY
PERVIOUS BACKFILL MATERIAL (RETAINING WALL)	713.12	CY
CONCRETE BARRIER (TYPE 60D MOD)	1170.55	LF
CABLE RAILING	1170.55	LF
MINOR CONCRETE (GUTTER)	250.55	LF
PLASTIC PIPE (N)	101.74	LF
WATERSTOP (N)	389.07	LF
ARCHITECTURAL SURFACE (TEXTURED CONCRETE)	13400.52	SF

(N) = NOT A SEPARATE PAY ITEM, FOR INFORMATION ONLY

NOTES:

1. ARCHITECTURAL TREATMENT SHOULD EXTEND 6 IN BELOW FG OR 6 IN BELOW TOP CB (TYPE 60D MOD)
2. FOR STRUCTURAL SECTIONS, SEE ROADWAY PLANS
3. FOR POST ANCHORAGE DETAILS, SEE B11-52
4. FOR ROUNDING DETAILS, SEE ARCHITECTURAL TREATMENT PLANS
5. CONCRETE DITCH, SEE DRAINAGE PLANS
6. OVERHEAD SIGN, SEE OVERHEAD SIGN PLANS

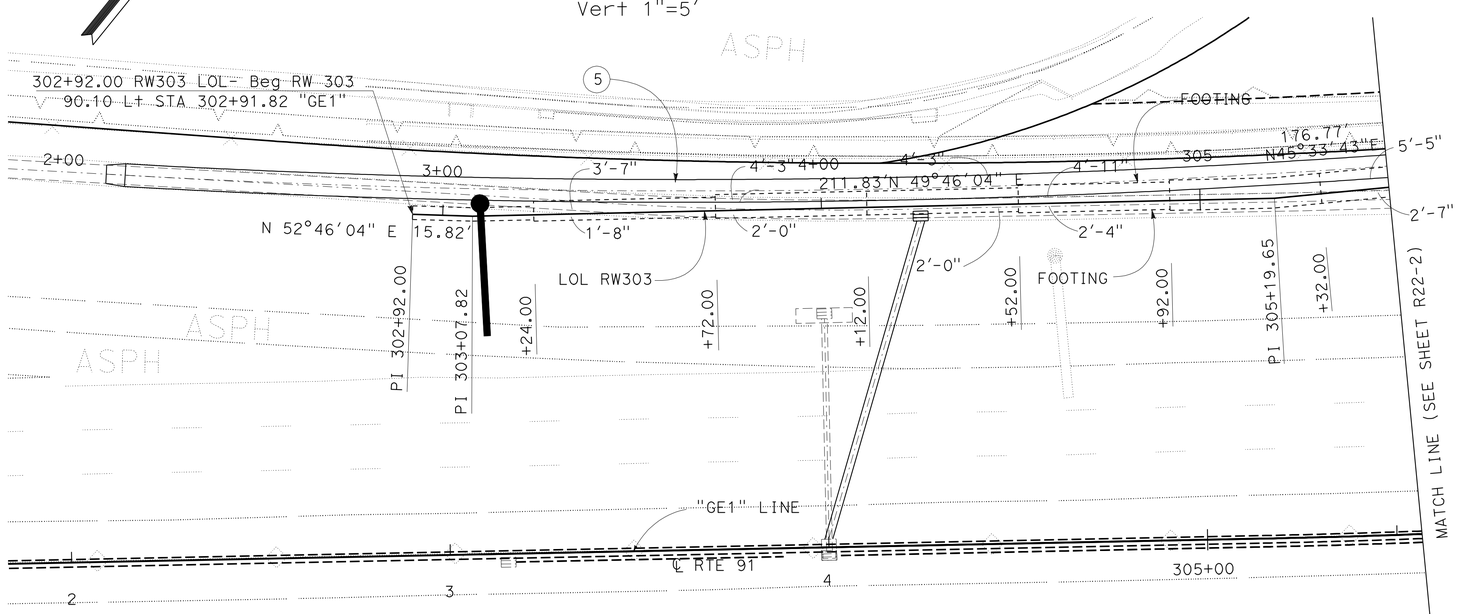

PLAN

SCALE: 1" = 20'

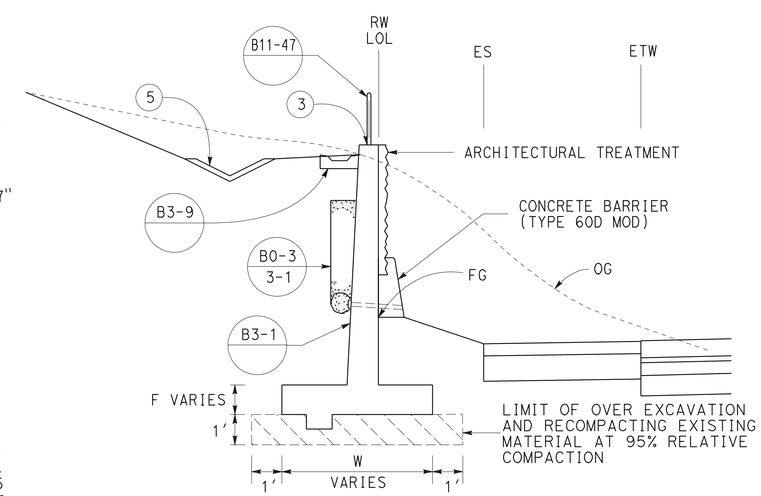

TYPICAL SECTION

NO SCALE
FROM STA 302+92.00 TO STA 314+62.55

THIS PLAN ACCURATE FOR RETAINING WALL WORK ONLY.

RETAINING WALL PLAN
RETAINING WALL No. 303

SCALE AS SHOWN

R22-1

STATE OF CALIFORNIA - DEPARTMENT OF TRANSPORTATION
Caltrans® DESIGN
FUNCTIONAL SUPERVISOR: MARK PERTILE
CALCULATED-DESIGNED BY: ANNABELL WANG
CHECKED BY: CUONG LE TRAN
REVISED BY / DATE REVISED

LAST REVISION 12-01-10 | DATE PLOTTED => 30-APR-2011 | TIME PLOTTED => 07:47

Dist	COUNTY	ROUTE	POST MILES TOTAL PROJECT	SHEET No.	TOTAL SHEETS
08	Riv	91	15.6/21.6	927	2028

REGISTERED CIVIL ENGINEER 12-1-10 DATE

4-25-11
PLANS APPROVAL DATE

REGISTERED PROFESSIONAL ENGINEER CUONG LE TRAN No. C60436 Exp. 6-30-12 CIVIL STATE OF CALIFORNIA

THE STATE OF CALIFORNIA OR ITS OFFICERS OR AGENTS SHALL NOT BE RESPONSIBLE FOR THE ACCURACY OR COMPLETENESS OF SCANNED COPIES OF THIS PLAN SHEET.

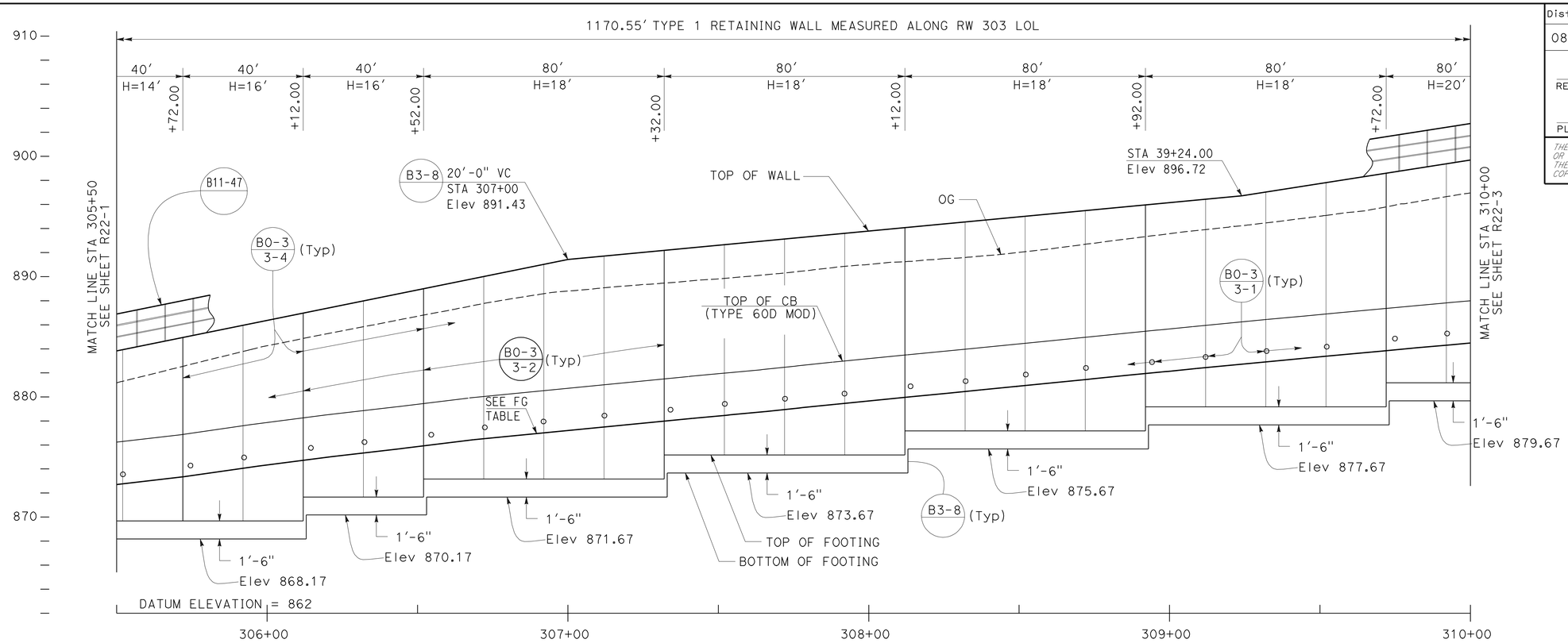

ELEVATION

SCALE Horiz 1"=20'
Vert 1"=5'

FINISH GRADE (FG) TABLE	
STATION	ELEVATION
302+92.00	869.27
303+24.65	869.63
303+50.16	869.95
304+39.48	871.14
304+74.43	871.38
305+00.16	871.62
305+14.95	871.73
305+24.71	871.92
306+68.58	874.43
307+42.03	876.22
307+89.48	877.40
308+62.22	879.19
309+09.04	880.36
309+39.43	881.08
310+05.81	884.61
310+77.93	885.23
311+26.00	887.66
311+74.07	888.82
312+45.56	890.55
312+93.63	891.79
313+65.74	893.43
313+90.41	893.96
313+62.55	895.69

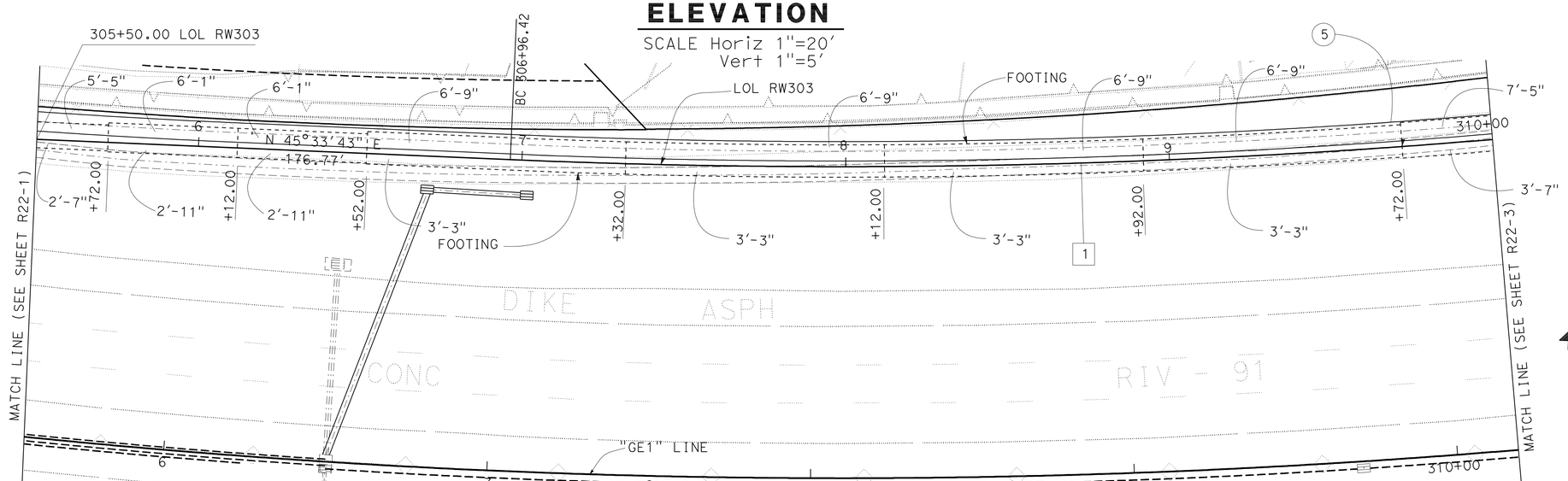

PLAN

SCALE: 1"=20'

CURVE DATA

No.	R	Δ	T	L
1	2403.71'	18°15'43"	386.34'	766.13'

THIS PLAN ACCURATE FOR RETAINING WALL WORK ONLY.

RETAINING WALL PLAN
RETAINING WALL No. 303
SCALE AS SHOWN

R22-2

STATE OF CALIFORNIA - DEPARTMENT OF TRANSPORTATION
Caltrans DESIGN

FUNCTIONAL SUPERVISOR: MARK PERTILE
CALCULATED-DESIGNED BY: ANNABELL WANG
CHECKED BY: CUONG LE TRAN
REVISED BY
DATE REVISED

LAST REVISION 12-01-10
DATE PLOTTED => 30-APR-2011
TIME PLOTTED => 07:47

Dist	COUNTY	ROUTE	POST MILES TOTAL PROJECT	SHEET No.	TOTAL SHEETS
08	Riv	91	15.6/21.6	928	2028

REGISTERED CIVIL ENGINEER 12-1-10 DATE

4-25-11
PLANS APPROVAL DATE

REGISTERED PROFESSIONAL ENGINEER CUONG LE TRAN No. C60436 Exp. 6-30-12 CIVIL STATE OF CALIFORNIA

THE STATE OF CALIFORNIA OR ITS OFFICERS OR AGENTS SHALL NOT BE RESPONSIBLE FOR THE ACCURACY OR COMPLETENESS OF SCANNED COPIES OF THIS PLAN SHEET.

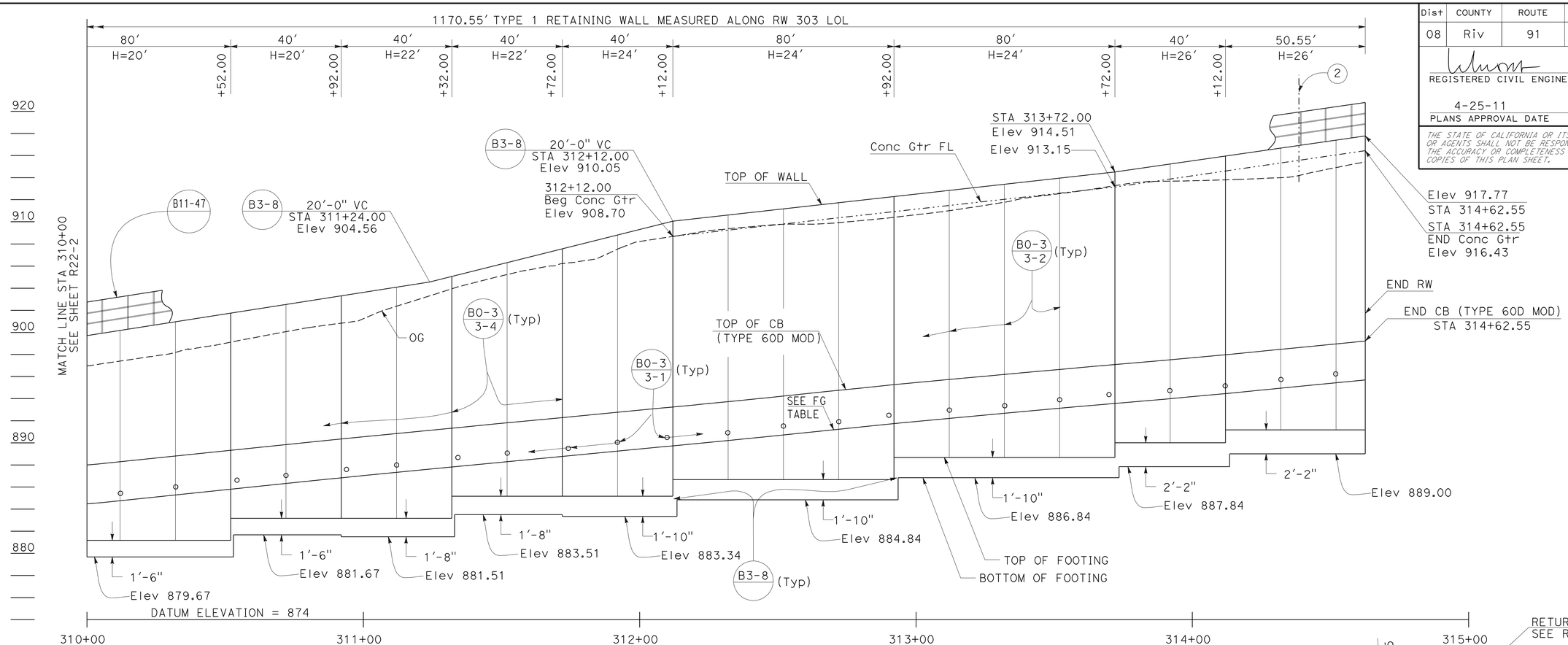

ELEVATION

SCALE Horiz 1"=20'
Vert 1"=5'

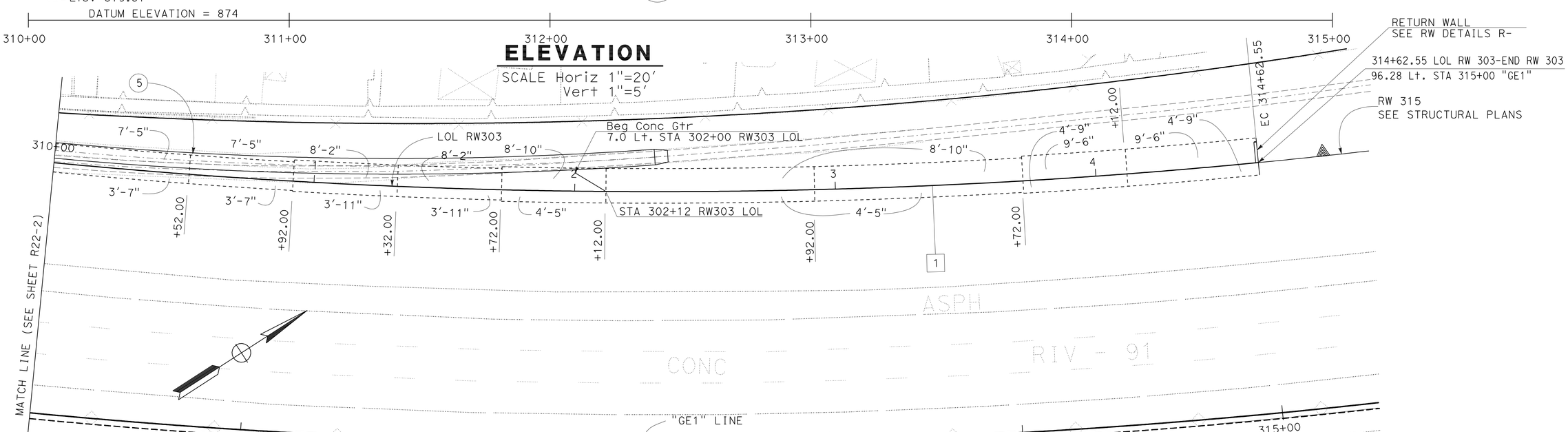

PLAN

SCALE: 1" = 20'

CURVE DATA

No.	R	Δ	T	L
1	2403.71'	18°15'43"	386.34'	766.13'

THIS PLAN ACCURATE FOR RETAINING WALL WORK ONLY.

RETAINING WALL PLAN
RETAINING WALL No. 303
SCALE AS SHOWN

R22-3

STATE OF CALIFORNIA - DEPARTMENT OF TRANSPORTATION
DESIGN
Caltrans

FUNCTIONAL SUPERVISOR: MARK PERTILE
CALCULATED-DESIGNED BY: ANNABELL WANG
CHECKED BY: CUONG LE TRAN
REVISED BY
DATE REVISED

LAST REVISION 12-01-10
DATE PLOTTED => 30-APR-2011
TIME PLOTTED => 07:47

Dist	COUNTY	ROUTE	POST MILES TOTAL PROJECT	SHEET No.	TOTAL SHEETS
08	Riv	91	15.6/21.6	929	2028

REGISTERED CIVIL ENGINEER 12-1-10 DATE

4-25-11
PLANS APPROVAL DATE

REGISTERED PROFESSIONAL ENGINEER
CUONG LE TRAN
No. C60436
Exp. 6-30-12
CIVIL
STATE OF CALIFORNIA

THE STATE OF CALIFORNIA OR ITS OFFICERS OR AGENTS SHALL NOT BE RESPONSIBLE FOR THE ACCURACY OR COMPLETENESS OF SCANNED COPIES OF THIS PLAN SHEET.

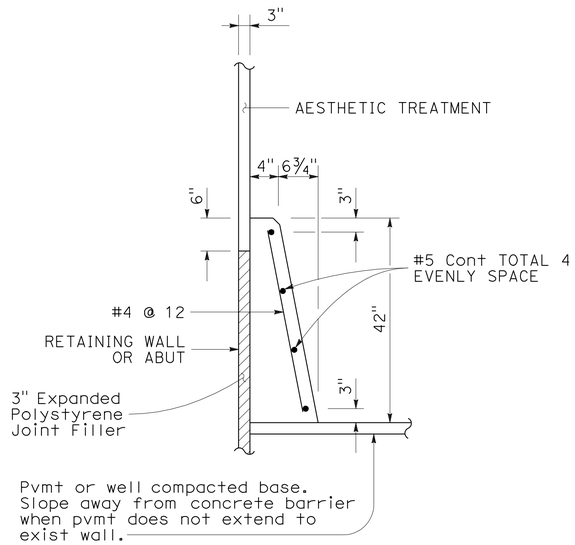

CONCRETE BARRIER
(TYPE 60D MOD)

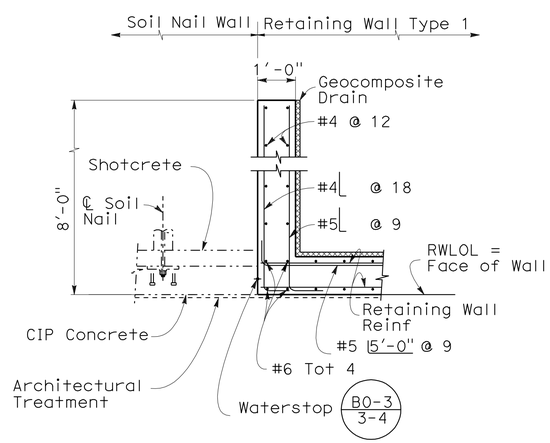

PLAN
NO SCALE

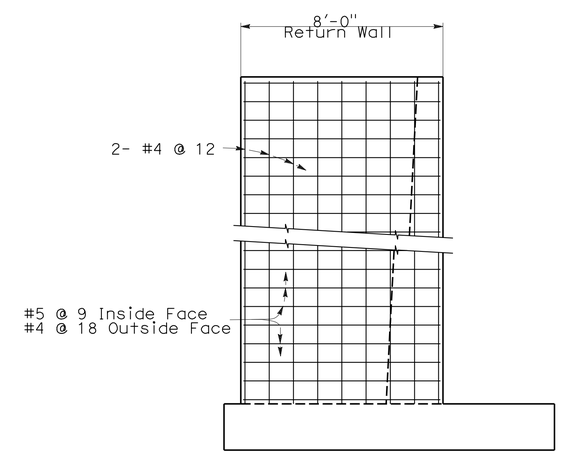

ELEVATION
NO SCALE

RETURN WALL DETAILS FOR RETAINING WALL No. 303

THIS PLAN ACCURATE FOR RETAINING WALL WORK ONLY.

RETAINING WALL DETAILS
RETAINING WALL No. 303
NO SCALE

R22-4

STATE OF CALIFORNIA - DEPARTMENT OF TRANSPORTATION
Caltrans
DESIGN

FUNCTIONAL SUPERVISOR: MARK PERTILE
CALCULATED-DESIGNED BY: ANNABELL WANG
CHECKED BY: CUONG LE TRAN
REVISED BY
DATE REVISED

LAST REVISION 12-01-10
DATE PLOTTED => 30-APR-2011
TIME PLOTTED => 07:47

Dist	COUNTY	ROUTE	POST MILES TOTAL PROJECT	SHEET No.	TOTAL SHEETS
08	Riv	91	15.6/21.6	930	2028

LICENSED LANDSCAPE ARCHITECT

4-25-11
PLANS APPROVAL DATE

LICENSED LANDSCAPE ARCHITECT
Matthew Harry Hall
No. 2011
Signature
10/31/2011
Renewal Date
12-1-10
Date
STATE OF CALIFORNIA

THE STATE OF CALIFORNIA OR ITS OFFICERS OR AGENTS SHALL NOT BE RESPONSIBLE FOR THE ACCURACY OR COMPLETENESS OF SCANNED COPIES OF THIS PLAN SHEET.

NOTE:

SEE SHEET ASD-4 AND ASD-5.

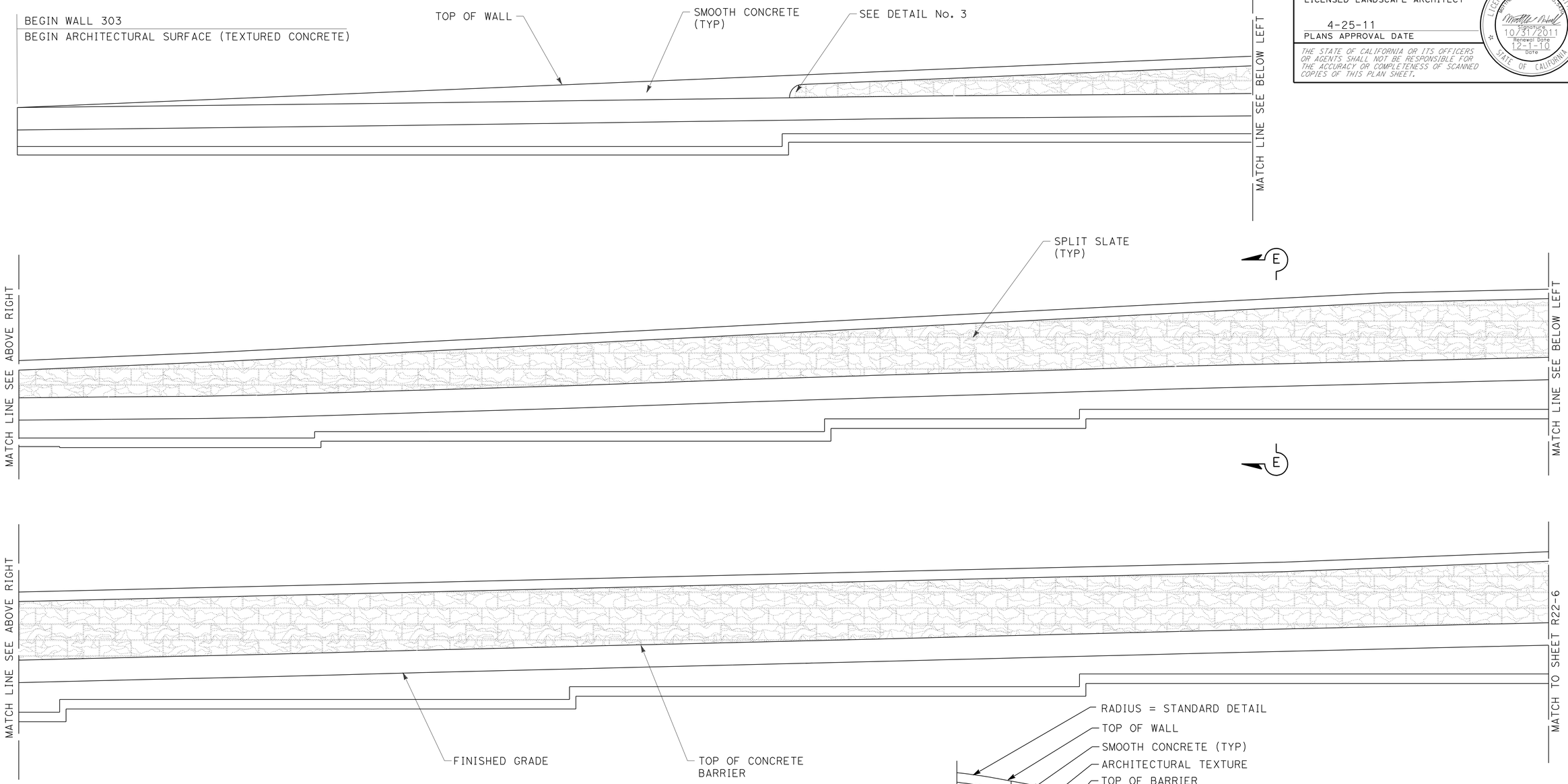

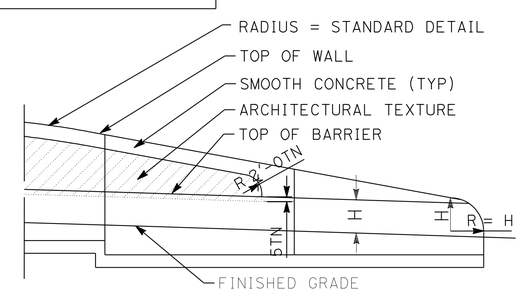

DETAIL No. 3

TYPICAL END OF WALL WITH TYPE 60D MOD. CONCRETE BARRIER

ELEVATION FOR SPLIT SLATE TEXTURE RETAINING WALL No. 303

THIS PLAN IS ACCURATE FOR ARCHITECTUAL TREATMENT WORK ONLY.

ARCHITECTURAL SURFACE RETAINING WALL No. 303

SCALE: 1/8" = 1'-0"

R22-5

STATE OF CALIFORNIA - DEPARTMENT OF TRANSPORTATION
Caltrans® LANDSCAPE ARCHITECTURE

SENIOR LANDSCAPE ARCHITECT: BYRON STROUT
CALCULATED-DESIGNED BY: MATTHEW HALL
CHECKED BY: MIRIAM BISHOP
REVISED BY
DATE REVISED

LAST REVISION 12-01-10 | DATE PLOTTED => 30-APR-2011 | TIME PLOTTED => 07:48

Dist	COUNTY	ROUTE	POST MILES TOTAL PROJECT	SHEET No.	TOTAL SHEETS
08	Riv	91	15.6/21.6	931	2028

LICENSED LANDSCAPE ARCHITECT

4-25-11
PLANS APPROVAL DATE

LICENSED LANDSCAPE ARCHITECT
Matthew Harry Hall
No. 2011
Signature
10/31/2011
Renewal Date
12-1-10
Date
STATE OF CALIFORNIA

THE STATE OF CALIFORNIA OR ITS OFFICERS OR AGENTS SHALL NOT BE RESPONSIBLE FOR THE ACCURACY OR COMPLETENESS OF SCANNED COPIES OF THIS PLAN SHEET.

NOTE:

SEE SHEET ASD-2, ASD-3 AND ASD-5.

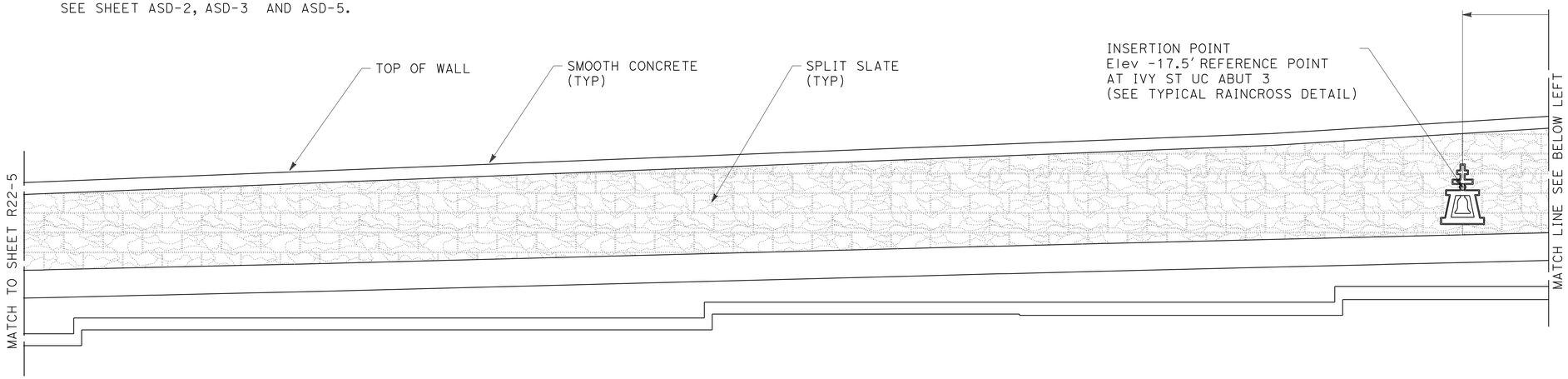

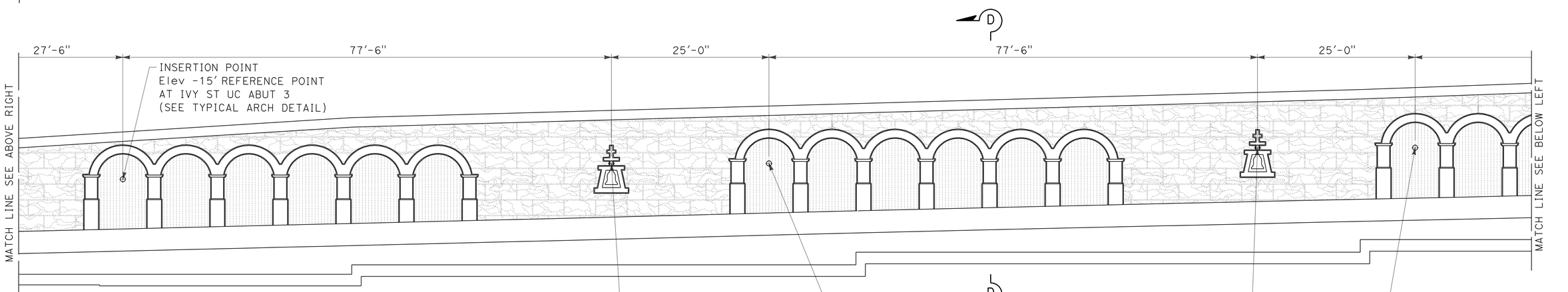

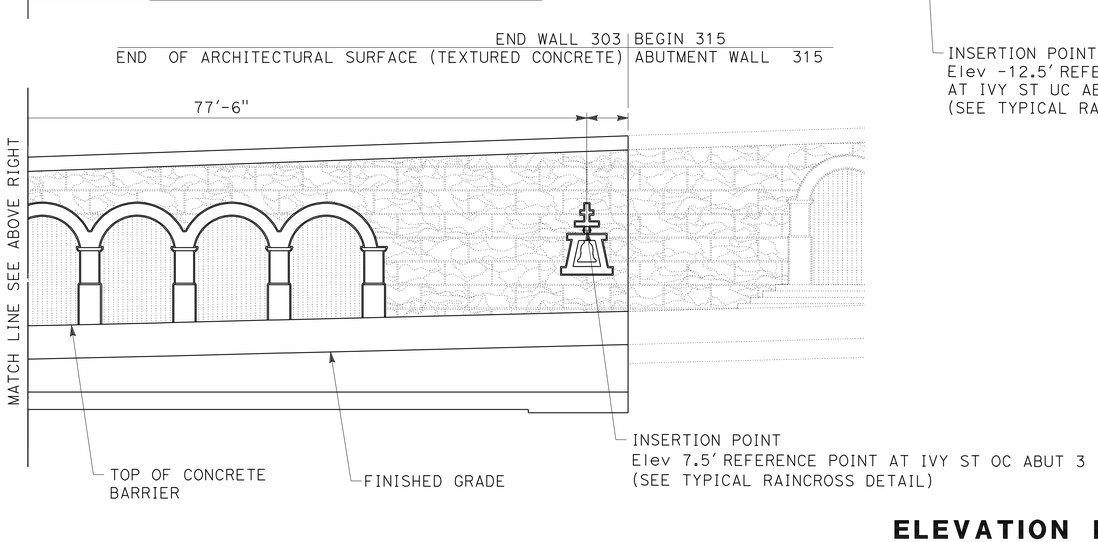

ELEVATION FOR FRACTURED RIB SPLIT SLATE TEXTURE RETAINING WALL No. 303

THIS PLAN IS ACCURATE FOR ARCHITECTUAL TREATMENT WORK ONLY.

ARCHITECTURAL SURFACE RETAINING WALL No. 303

SCALE: 1/8" = 1'-0"

R22-6

STATE OF CALIFORNIA - DEPARTMENT OF TRANSPORTATION
Caltrans® LANDSCAPE ARCHITECTURE

SENIOR LANDSCAPE ARCHITECT: BYRON STROUT
CALCULATED-DESIGNED BY: MATTHEW HALL
CHECKED BY: MIRIAM BISHOP
REVISED BY
DATE REVISED

LAST REVISION 12-01-10
DATE PLOTTED => 30-APR-2011
TIME PLOTTED => 07:48

DIST	COUNTY	ROUTE	POST MILES TOTAL PROJECT	SHEET No	TOTAL SHEETS
08	Riv	91	15.6/21.6	932	2028

GEOTECHNICAL PROFESSIONAL — DATE 10/2008

PLANS APPROVAL DATE 4-25-11

REGISTERED PROFESSIONAL ENGINEER — ANDREW C. LEE — No. 2616 — Exp. 6-30-12 — GEOTECHNICAL — STATE OF CALIFORNIA

The State of California or its officers or agents shall not be responsible for the accuracy or completeness of electronic copies of this plan sheet.

California Department of Transportation
5900 Folsom Boulevard
Sacramento, CA 95819

URS Corporation
2020 East First Street, Suite 400
Santa Ana, CA 92705

FOR PLAN VIEW, SEE SHEET R22-10

NOTES:
1. This LOTB sheet was prepared in accordance with the Caltrans Soil & Rock Logging, Classification, and Presentation Manual (June 2007).
2. For legend, see "Log of Test Borings" 1 of 83

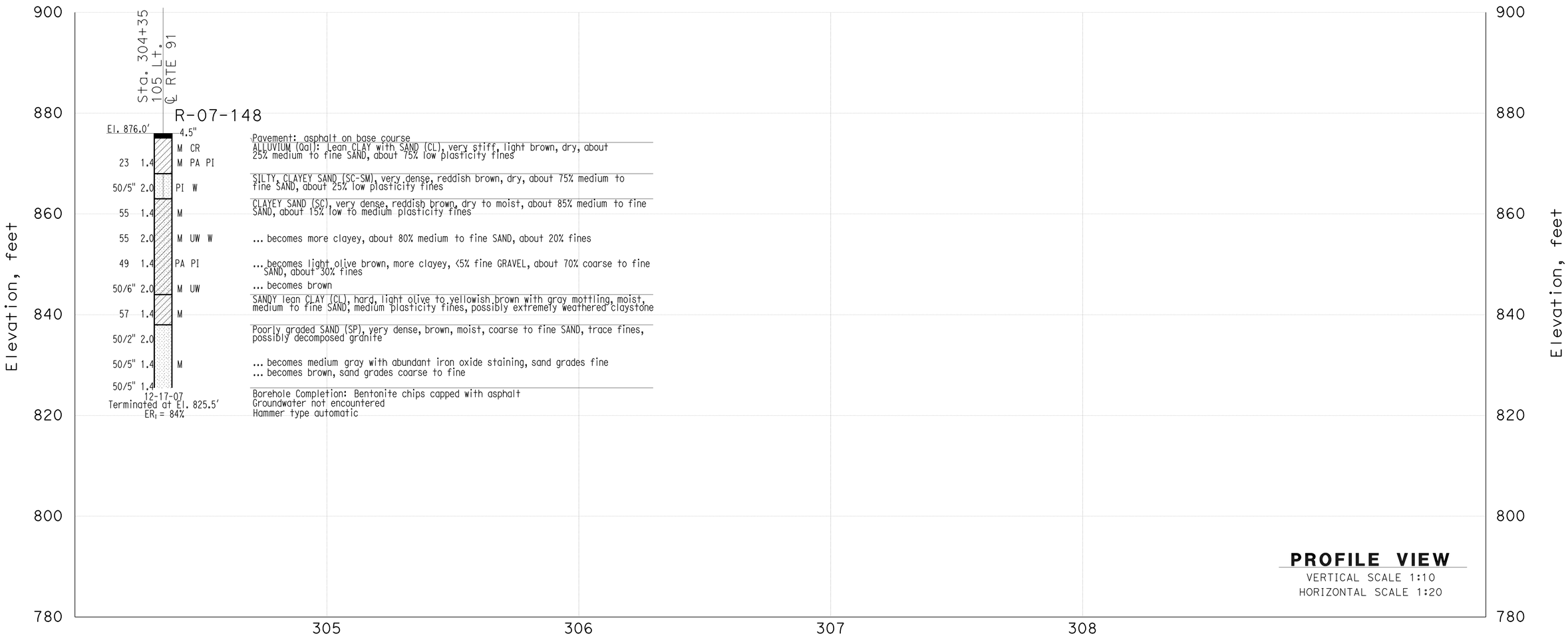

THIS PLAN ACCURATE FOR SOUND WALL AND RETAINING WALL WORK ONLY

DESIGN OVERSIGHT	GINA PURSELL FUNCTIONAL SUPERVISOR	DRAWN BY	P. QUACH	P.CHAU/D.WADER/C.CARBINO FIELD INVESTIGATION BY:	PREPARED FOR THE STATE OF CALIFORNIA DEPARTMENT OF TRANSPORTATION	A. LEE PROJECT ENGINEER	BRIDGE NO. X
X SIGN OFF DATE		CHECKED BY	S. PIRATHIVIRAJ	DATE: Nov 6 2007 to March 7 2008			POST MILE X

Retaining Wall 303 R22-7

LOG OF TEST BORINGS SHEET 1 OF 5

OSF GEOTECHNICAL LOG OF TEST BORINGS SHEET (ENGLISH) (REV. 2/25/05)

ORIGINAL SCALE IN INCHES FOR REDUCED PLANS 0 1 2 3

CU 59A0590
EA 08-448400

DISREGARD PRINTS BEARING EARLIER REVISION DATES

REVISION DATES (PRELIMINARY STAGE ONLY) X

SHEET 1 OF 5

FILE => 844840qv007.dgn

USERNAME => trmartin DATE PLOTTED => 30-APR-2011 TIME PLOTTED =>

DIST	COUNTY	ROUTE	POST MILES TOTAL PROJECT	SHEET No	TOTAL SHEETS
08	Riv	91	15.6/21.6	933	2028

GEOTECHNICAL PROFESSIONAL — DATE 10/2008

4-25-11
PLANS APPROVAL DATE

REGISTERED PROFESSIONAL ENGINEER — ANDREW C. LEE — No. 2616 — Exp. 6-30-12 — GEOTECHNICAL — STATE OF CALIFORNIA

The State of California or its officers or agents shall not be responsible for the accuracy or completeness of electronic copies of this plan sheet.

California Department of Transportation
5900 Folsom Boulevard
Sacramento, CA 95819

URS Corporation
2020 East First Street, Suite 400
Santa Ana, CA 92705

FOR PLAN VIEW, SEE SHEET R22-10

NOTES:
1. This LOTB sheet was prepared in accordance with the Caltrans Soil & Rock Logging, Classification, and Presentation Manual (June 2007).
2. For legend, see "Log of Test Borings" 1 of 83

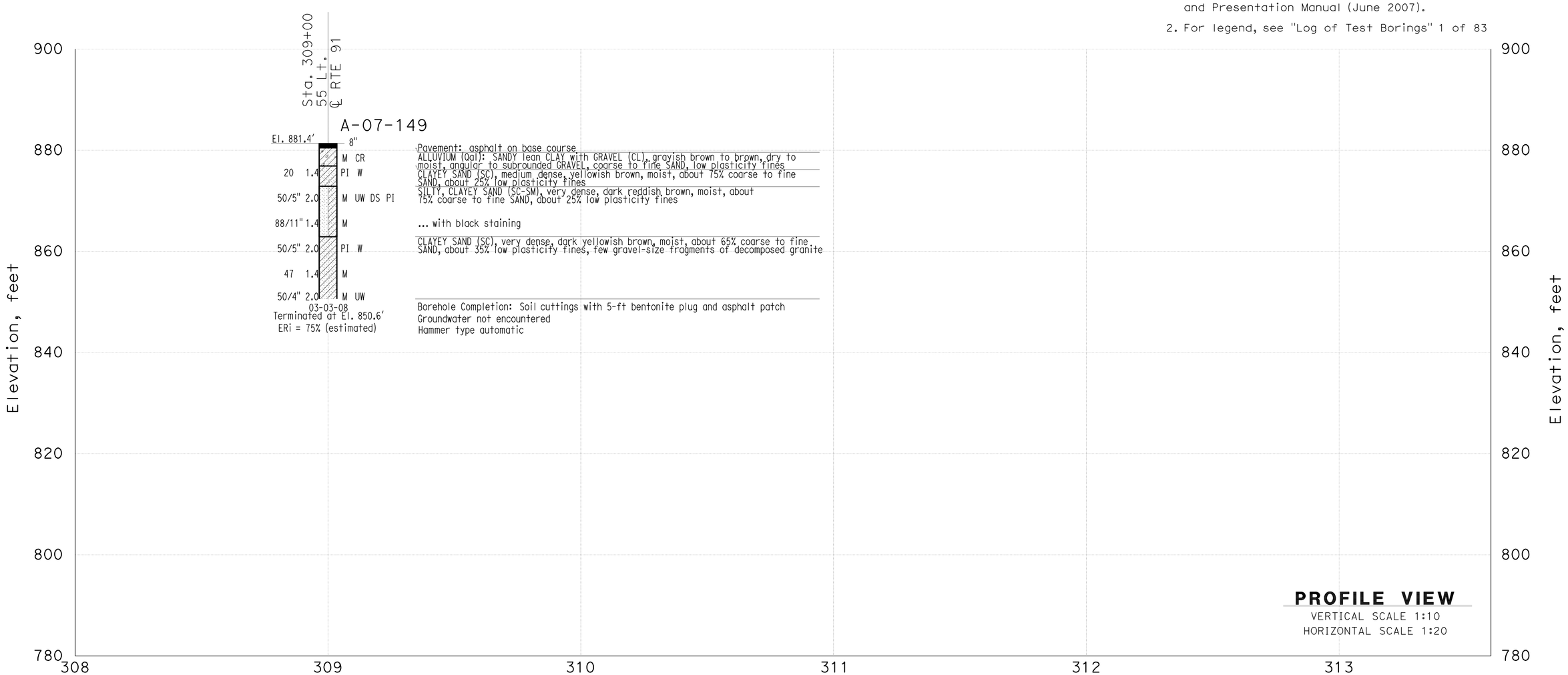

THIS PLAN ACCURATE FOR SOUND WALL AND RETAINING WALL WORK ONLY

DESIGN OVERSIGHT	GINA PURSELL FUNCTIONAL SUPERVISOR	DRAWN BY	P. QUACH	P.CHAU/D.WADER/C.CARBINO FIELD INVESTIGATION BY: DATE: Nov 6 2007 to March 7 2008	PREPARED FOR THE STATE OF CALIFORNIA DEPARTMENT OF TRANSPORTATION	A. LEE PROJECT ENGINEER	BRIDGE NO. X POST MILE X	Retaining Wall 303 R22-8 LOG OF TEST BORINGS SHEET 2 OF 5
X SIGN OFF DATE		CHECKED BY	S. PIRATHIVIRAJ					

OSF GEOTECHNICAL LOG OF TEST BORINGS SHEET (ENGLISH) (REV. 2/25/05)

ORIGINAL SCALE IN INCHES FOR REDUCED PLANS 0 1 2 3

CU 59A0590
EA 08-448400

DISREGARD PRINTS BEARING EARLIER REVISION DATES

REVISION DATES (PRELIMINARY STAGE ONLY) X

SHEET 2 OF 5

FILE => 844840qv008.dgn

USERNAME => trmartin DATE PLOTTED => 30-APR-2011 TIME PLOTTED =>

DIST	COUNTY	ROUTE	POST MILES TOTAL PROJECT	SHEET No	TOTAL SHEETS
08	Riv	91	15.6/21.6	934	2028

GEOTECHNICAL PROFESSIONAL — DATE 10/2008

4-25-11
PLANS APPROVAL DATE

REGISTERED PROFESSIONAL ENGINEER — ANDREW C. LEE — No. 2616 — Exp. 6-30-12 — GEOTECHNICAL — STATE OF CALIFORNIA

The State of California or its officers or agents shall not be responsible for the accuracy or completeness of electronic copies of this plan sheet.

California Department of Transportation
5900 Folsom Boulevard
Sacramento, CA 95819

URS Corporation
2020 East First Street, Suite 400
Santa Ana, CA 92705

FOR PLAN VIEW, SEE SHEET R22-11

NOTES: 1. This LOTB sheet was prepared in accordance with the Caltrans Soil & Rock Logging, Classification, and Presentation Manual (June 2007).

2. For legend, see "Log of Test Borings" 1 of 83

THIS PLAN ACCURATE FOR SOUND WALL AND RETAINING WALL WORK ONLY

DESIGN OVERSIGHT X SIGN OFF DATE	GINA PURSELL FUNCTIONAL SUPERVISOR	DRAWN BY	P. QUACH	P.CHAU/D.WADER/C.CARBINO FIELD INVESTIGATION BY: DATE: Nov 6 2007 to March 7 2008	PREPARED FOR THE STATE OF CALIFORNIA DEPARTMENT OF TRANSPORTATION	A. LEE PROJECT ENGINEER	BRIDGE NO. X / POST MILE X	Retaining Wall 303 R22-9
		CHECKED BY	S. PIRATHIVIRAJ					LOG OF TEST BORINGS SHEET 3 OF 5

OSF GEOTECHNICAL LOG OF TEST BORINGS SHEET (ENGLISH) (REV. 2/25/05)

ORIGINAL SCALE IN INCHES FOR REDUCED PLANS 0 1 2 3

CU 59A0590
EA 08-448400

DISREGARD PRINTS BEARING EARLIER REVISION DATES

REVISION DATES (PRELIMINARY STAGE ONLY) X

SHEET 3 OF 5

FILE => 844840qv009.dgn

USERNAME => frmartin DATE PLOTTED => 30-APR-2011 TIME PLOTTED =>

DIST	COUNTY	ROUTE	POST MILES TOTAL PROJECT	SHEET No	TOTAL SHEETS
08	Riv	91	15.6/21.6	935	2028

GEOTECHNICAL PROFESSIONAL — DATE 10/2008

PLANS APPROVAL DATE 4-25-11

REGISTERED PROFESSIONAL ENGINEER — ANDREW C. LEE — No. 2616 — Exp. 6-30-12 — GEOTECHNICAL — STATE OF CALIFORNIA

The State of California or its officers or agents shall not be responsible for the accuracy or completeness of electronic copies of this plan sheet.

California Department of Transportation
5900 Folsom Boulevard
Sacramento, CA 95819

URS Corporation
2020 East First Street, Suite 400
Santa Ana, CA 92705

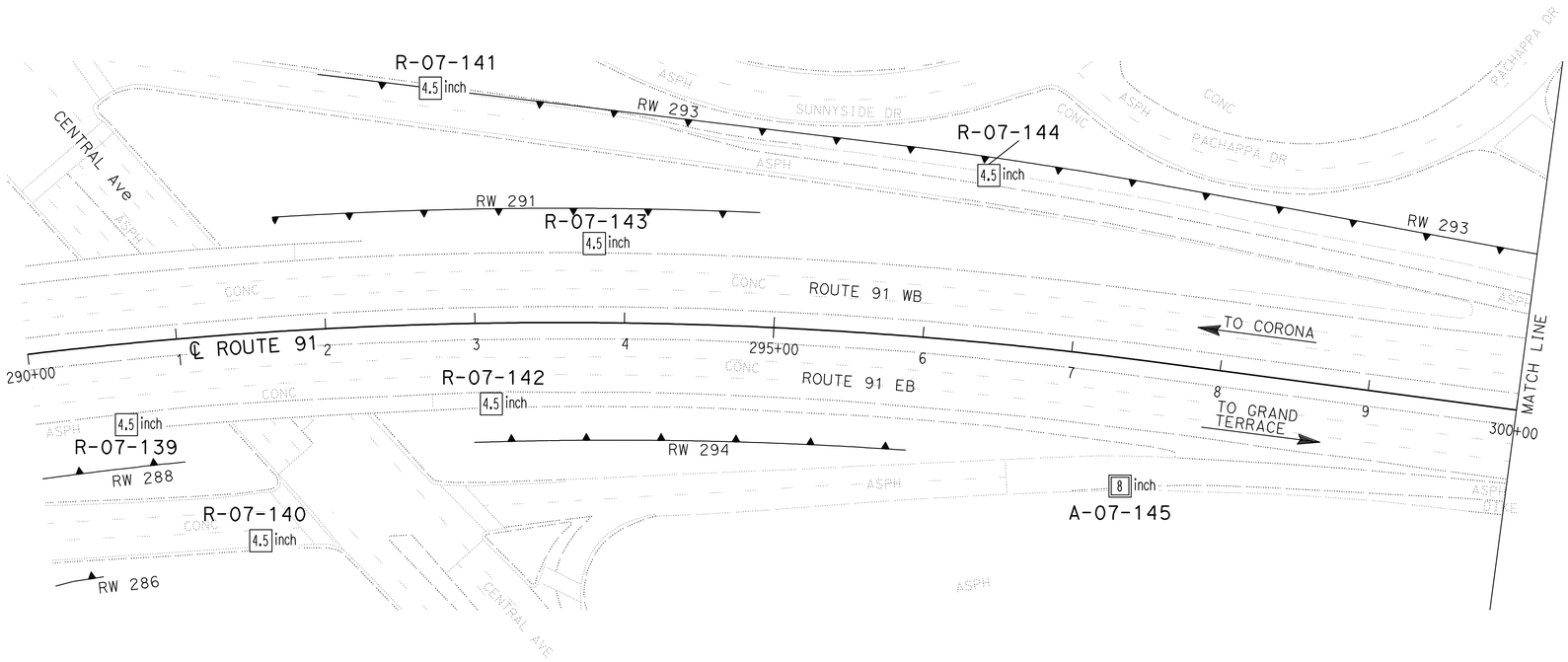

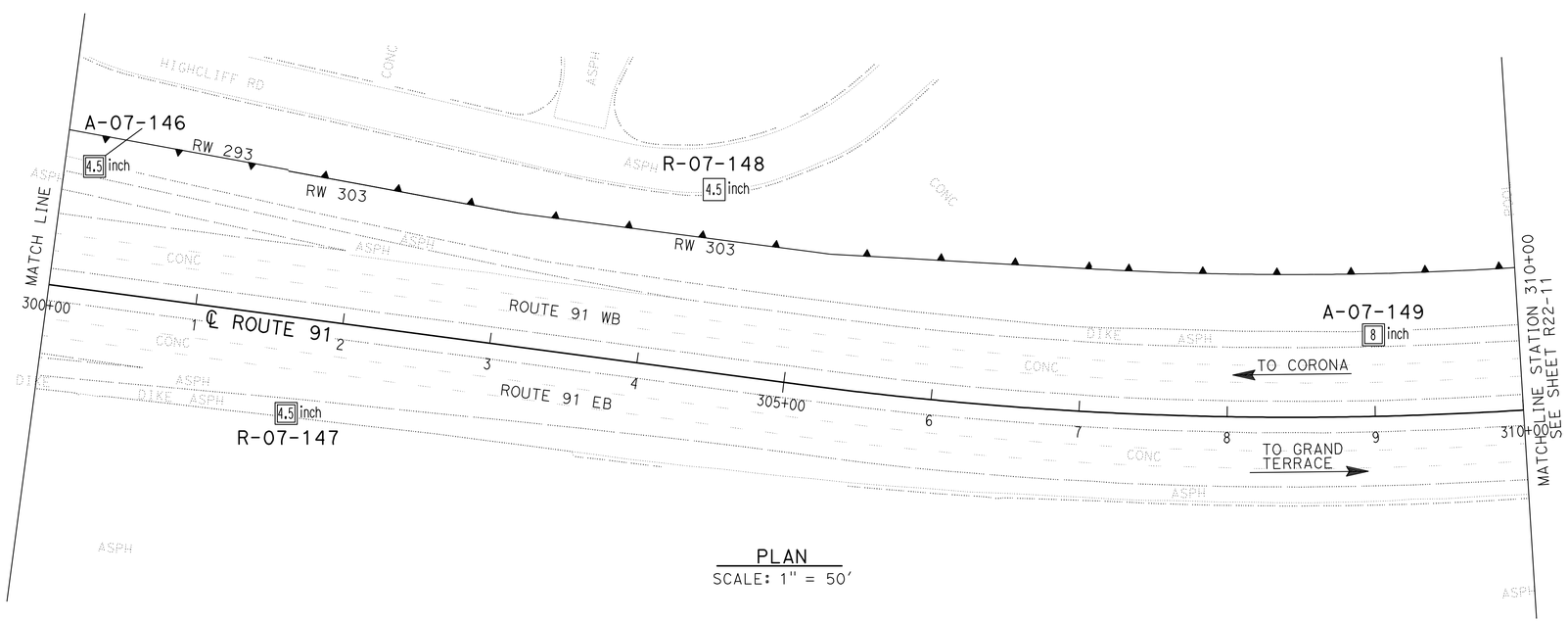

PLAN
SCALE: 1" = 50'

Borehole Number	Drill Rig	Hammer Type	Avg. Hammer Efficiency, ETR (%)
R-07-139	Acker Rig	Automatic	74
R-07-140	CS-2000	Automatic	84
R-07-141	CS-2000	Automatic	84
R-07-142	Acker Rig	Automatic	74
R-07-143	Acker Rig	Automatic	74
R-07-144	CS-2000	Automatic	84
A-07-145	Diedrich D-120	Automatic	75*
A-07-146	CS-2000	Automatic	84
R-07-147	CS-2000	Automatic	84
R-07-148	CS-2000	Automatic	84
A-07-149	Diedrich D-120	Automatic	75*

Sampler Type	Inside Diameter (Inches)	Borehole Numbers
SPT	1.375	R-07-139, R-07-140, R-07-141 R-07-142, R-07-143, R-07-144 A-07-145, A-07-146, AR-07-147 R-07-148, A-07-149
Modified California 1	1.94	R-07-139, R-07-141, R-07-142 R-07-143, R-07-148
Modified California 2	2.40	A-07-145, A-07-149

*Estimated Hammer Efficiency Rating.

DESIGN OVERSIGHT — GINA PURSELL, FUNCTIONAL SUPERVISOR — X — SIGN OFF DATE

DRAWN BY: P. QUACH — CHECKED BY: S. PIRATHIVIRAJ

P.CHAU/D.WADER/C.CARBINO — FIELD INVESTIGATION BY: — DATE: Nov 6 2007 to March 7 2008

PREPARED FOR THE STATE OF CALIFORNIA DEPARTMENT OF TRANSPORTATION

A. LEE — PROJECT ENGINEER

BRIDGE NO. X — POST MILE X

RETAINING WALL 303 R22-10

LOG OF TEST BORINGS 4 of 5

OSF GEOTECHNICAL LOG OF TEST BORINGS SHEET (ENGLISH) (REV. 2/25/05)

ORIGINAL SCALE IN INCHES FOR REDUCED PLANS 0 1 2 3

CU 59A0590
EA 08-448400

DISREGARD PRINTS BEARING EARLIER REVISION DATES

REVISION DATES (PRELIMINARY STAGE ONLY) X

SHEET 4 OF 5

FILE => 844840qv010.dgn

USERNAME => trmartin — DATE PLOTTED => 30-APR-2011 — TIME PLOTTED =>

DIST	COUNTY	ROUTE	POST MILES TOTAL PROJECT	SHEET No	TOTAL SHEETS
08	Riv	91	15.6/21.6	936	2028

GEOTECHNICAL PROFESSIONAL — DATE 10/2008

4-25-11
PLANS APPROVAL DATE

REGISTERED PROFESSIONAL ENGINEER — ANDREW C. LEE — No. 2616 — Exp. 6-30-12 — GEOTECHNICAL — STATE OF CALIFORNIA

The State of California or its officers or agents shall not be responsible for the accuracy or completeness of electronic copies of this plan sheet.

California Department of Transportation
5900 Folsom Boulevard
Sacramento, CA 95819

URS Corporation
2020 East First Street, Suite 400
Santa Ana, CA 92705

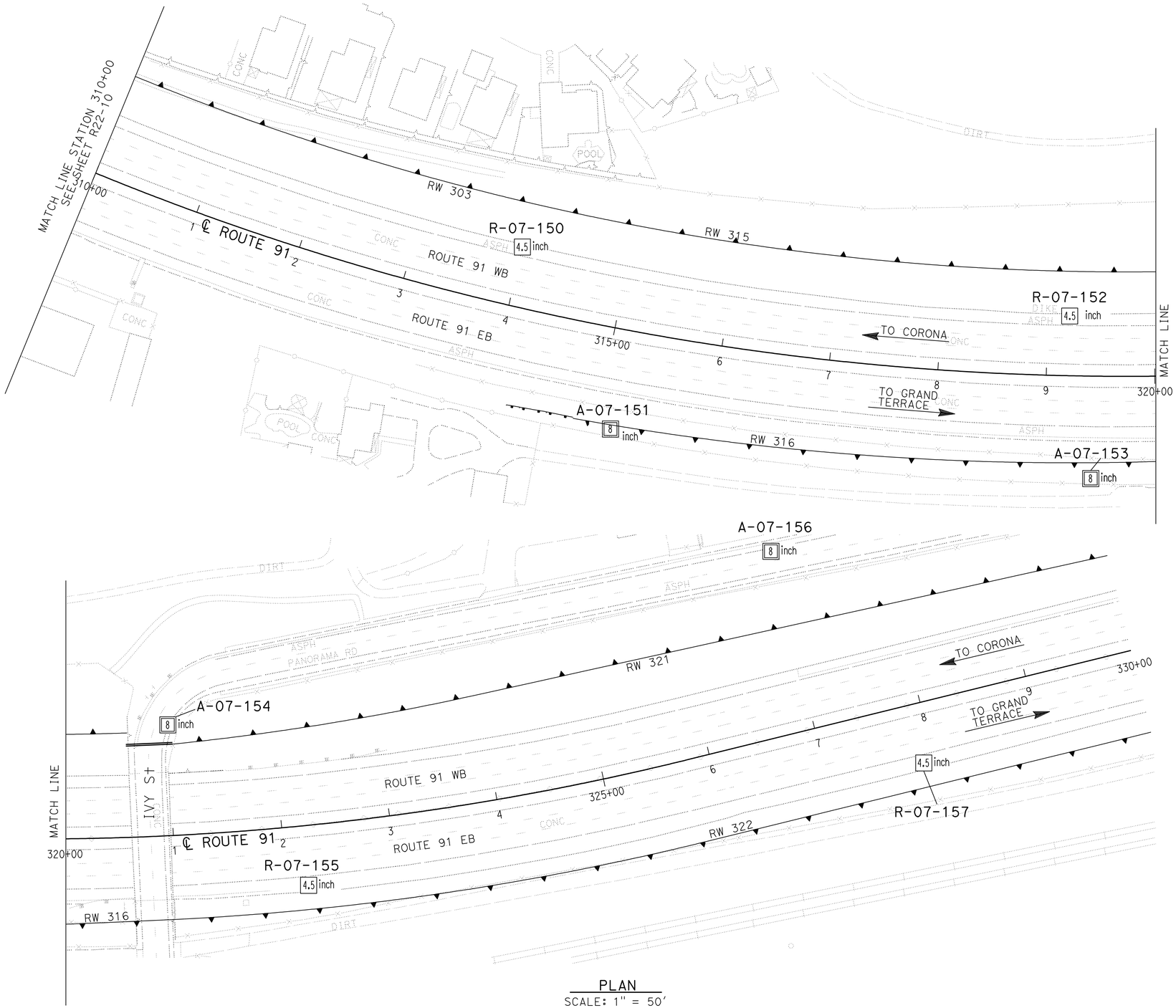

PLAN
SCALE: 1" = 50'

Borehole Number	Drill Rig	Hammer Type	Avg. Hammer Efficiency, ETR (%)
R-07-150	CME 85	Automatic	87
A-07-151	Diedrich D-120	Automatic	75*
R-07-152	CS-2000	Automatic	84
A-07-153	Diedrich D-120	Automatic	75*
A-07-154	Diedrich D-120	Automatic	75*
R-07-155	Acker Rig	Automatic	74
A-07-156	Diedrich D-120	Automatic	75*
R-07-157	CME 85	Automatic	87

Sampler Type	Inside Diameter (Inches)	Borehole Numbers
SPT	1.375	R-07-150, A-07-151 A-07-153, A-07-154 R-07-155, A-07-156 R-07-157
Modified California 1	1.94	R-07-155, R-07-157
Modified California 2	2.40	A-07-151, A-07-153 A-07-154, A-07-156

*Estimated Hammer Efficiency Rating.

DESIGN OVERSIGHT X SIGN OFF DATE	GINA PURSELL FUNCTIONAL SUPERVISOR	DRAWN BY	P. QUACH	P.CHAU/D.WADER/C.CARBINO FIELD INVESTIGATION BY: DATE: Nov 6 2007 to March 7 2008	
		CHECKED BY	S. PIRATHIVIRAJ		

PREPARED FOR THE STATE OF CALIFORNIA DEPARTMENT OF TRANSPORTATION

A. LEE
PROJECT ENGINEER

BRIDGE NO. X
POST MILE X

RETAINING WALL 303 — R22-11

LOG OF TEST BORINGS 5 OF 5

OSF GEOTECHNICAL LOG OF TEST BORINGS SHEET (ENGLISH) (REV. 2/25/05)

ORIGINAL SCALE IN INCHES FOR REDUCED PLANS 0 1 2 3

CU 59A0590
EA 08-448400

DISREGARD PRINTS BEARING EARLIER REVISION DATES

REVISION DATES (PRELIMINARY STAGE ONLY) X

SHEET 5 OF 5

FILE => 844840qv011.dgn

USERNAME => trmikesl DATE PLOTTED => 02-MAY-2011 TIME PLOTTED =>

Dist	COUNTY	ROUTE	POST MILES TOTAL PROJECT	SHEET No.	TOTAL SHEETS
08	Riv	91	15.6/21.6	937	2028

REGISTERED CIVIL ENGINEER 12-1-10 DATE

4-25-11
PLANS APPROVAL DATE

REGISTERED PROFESSIONAL ENGINEER CUONG LE TRAN No. C60436 Exp. 6-30-12 CIVIL STATE OF CALIFORNIA

THE STATE OF CALIFORNIA OR ITS OFFICERS OR AGENTS SHALL NOT BE RESPONSIBLE FOR THE ACCURACY OR COMPLETENESS OF SCANNED COPIES OF THIS PLAN SHEET.

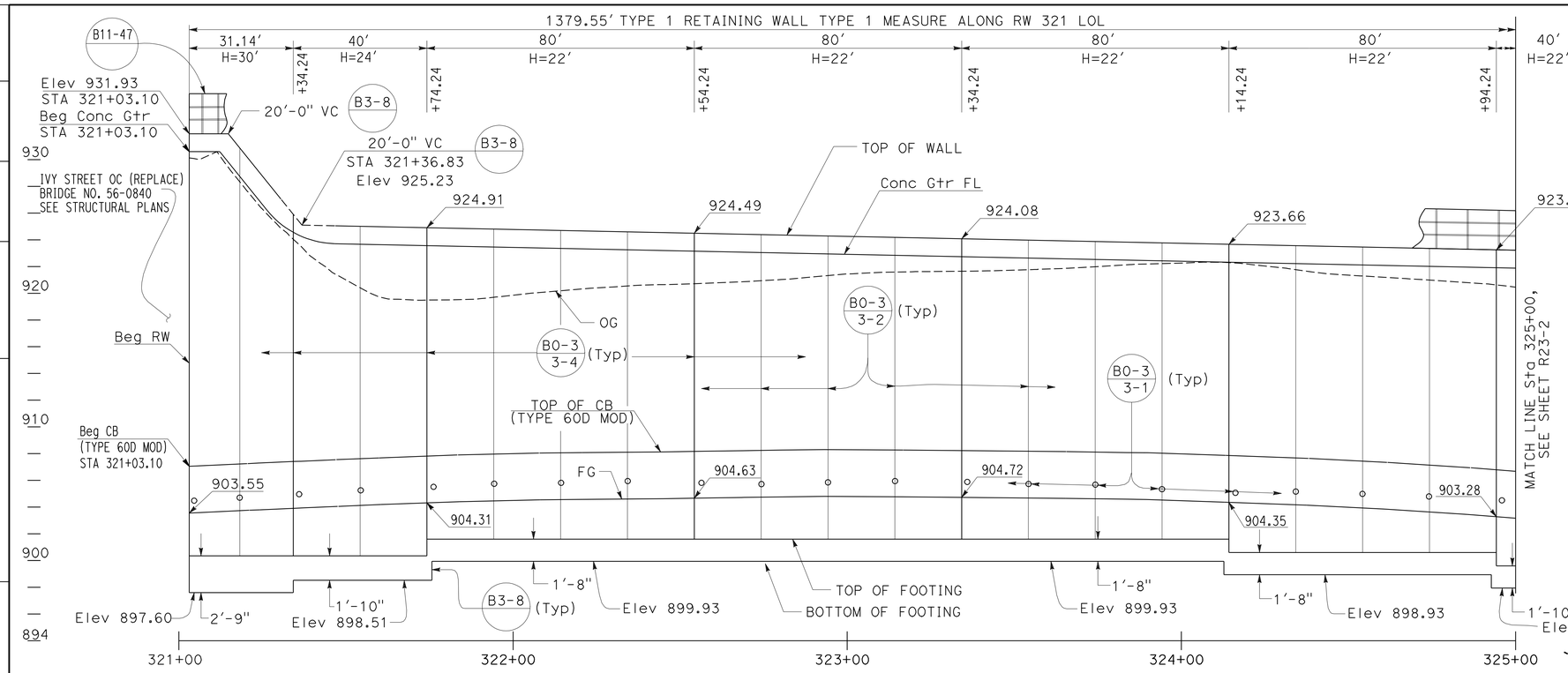

ELEVATION

SCALE Horiz 1"=20'
Vert 1"=5'

NOTES:

1. ARCHITECTURAL TREATMENT SHOULD EXTEND 6 IN BELOW FG OR 6 IN BELOW TOP CB (TYPE 60D MOD)
2. FOR STRUCTURAL SECTIONS, SEE ROADWAY PLANS
3. FOR POST ANCHORAGE DETAILS, SEE B11-52
4. FOR ROUNDING DETAILS, SEE ARCHITECTURAL TREATMENT PLANS
5. CONCRETE BARRIER (TYPE 60 D MOD) TRANSITION TO CONCRETE BARRIER 732 SEE RETAINING WALL DETAILS

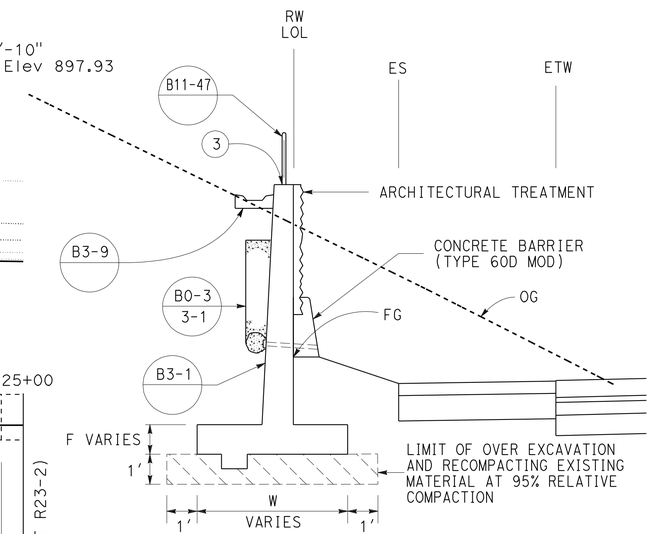

TYPICAL SECTION

NO SCALE
FROM STA 321+03.10 TO STA 334+82.65

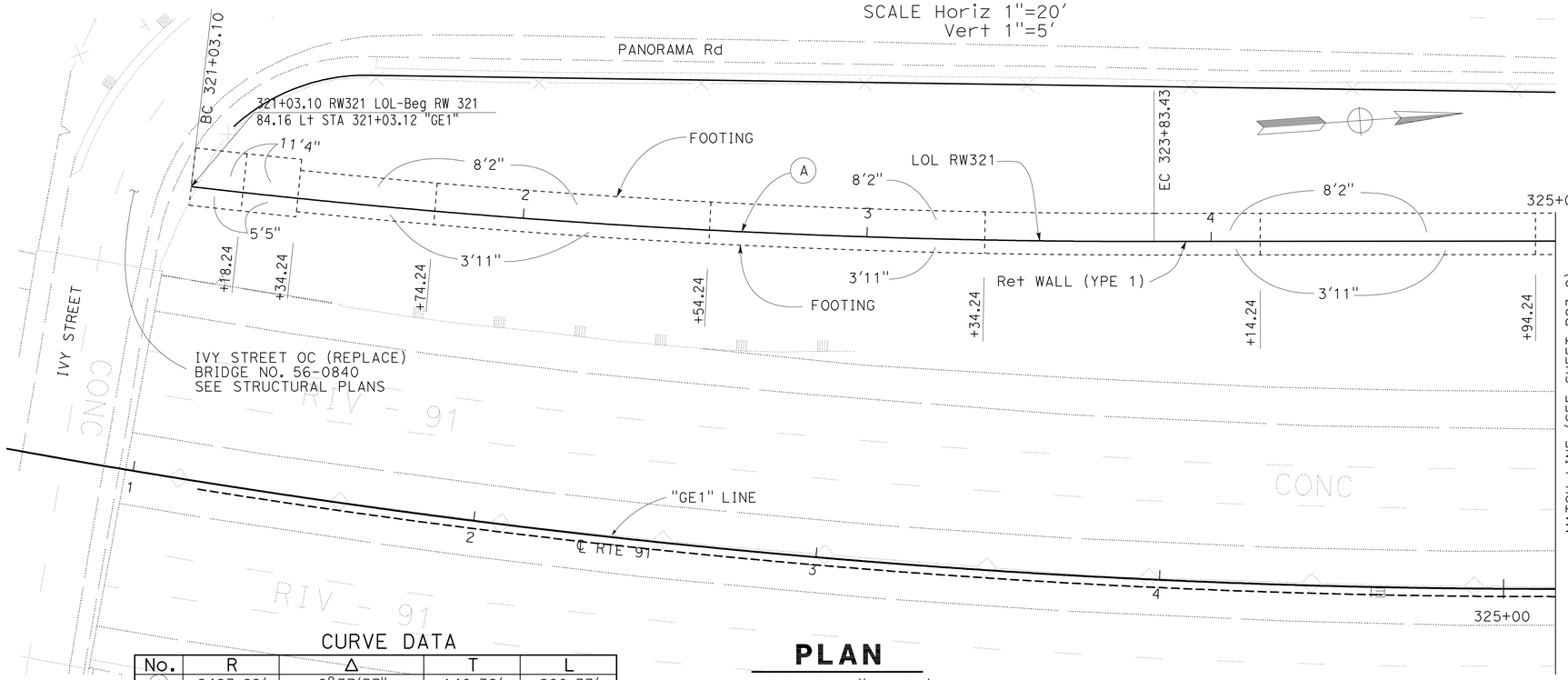

CURVE DATA

No.	R	Δ	T	L
A	2423.69'	6°37'37"	140.32'	280.33'

PLAN

SCALE: 1" = 20'

THIS PLAN ACCURATE FOR RETAINING WALL WORK ONLY.

RETAINING WALL PLAN
RETAINING WALL No. 321

SCALE AS SHOWN

R23-1

REVISED BY | DATE REVISED
ANNABELL WANG | CUONG LE TRAN
CALCULATED-DESIGNED BY | CHECKED BY
FUNCTIONAL SUPERVISOR: MARK PERTILE

STATE OF CALIFORNIA - DEPARTMENT OF TRANSPORTATION
Caltrans
DESIGN

LAST REVISION 12-01-10
DATE PLOTTED => 30-APR-2011
TIME PLOTTED => 07:48

Dist	COUNTY	ROUTE	POST MILES TOTAL PROJECT	SHEET No.	TOTAL SHEETS
08	Riv	91	15.6/21.6	938	2028

REGISTERED CIVIL ENGINEER 12-1-10 DATE

4-25-11
PLANS APPROVAL DATE

REGISTERED PROFESSIONAL ENGINEER CUONG LE TRAN No. C60436 Exp. 6-30-12 CIVIL STATE OF CALIFORNIA

THE STATE OF CALIFORNIA OR ITS OFFICERS OR AGENTS SHALL NOT BE RESPONSIBLE FOR THE ACCURACY OR COMPLETENESS OF SCANNED COPIES OF THIS PLAN SHEET.

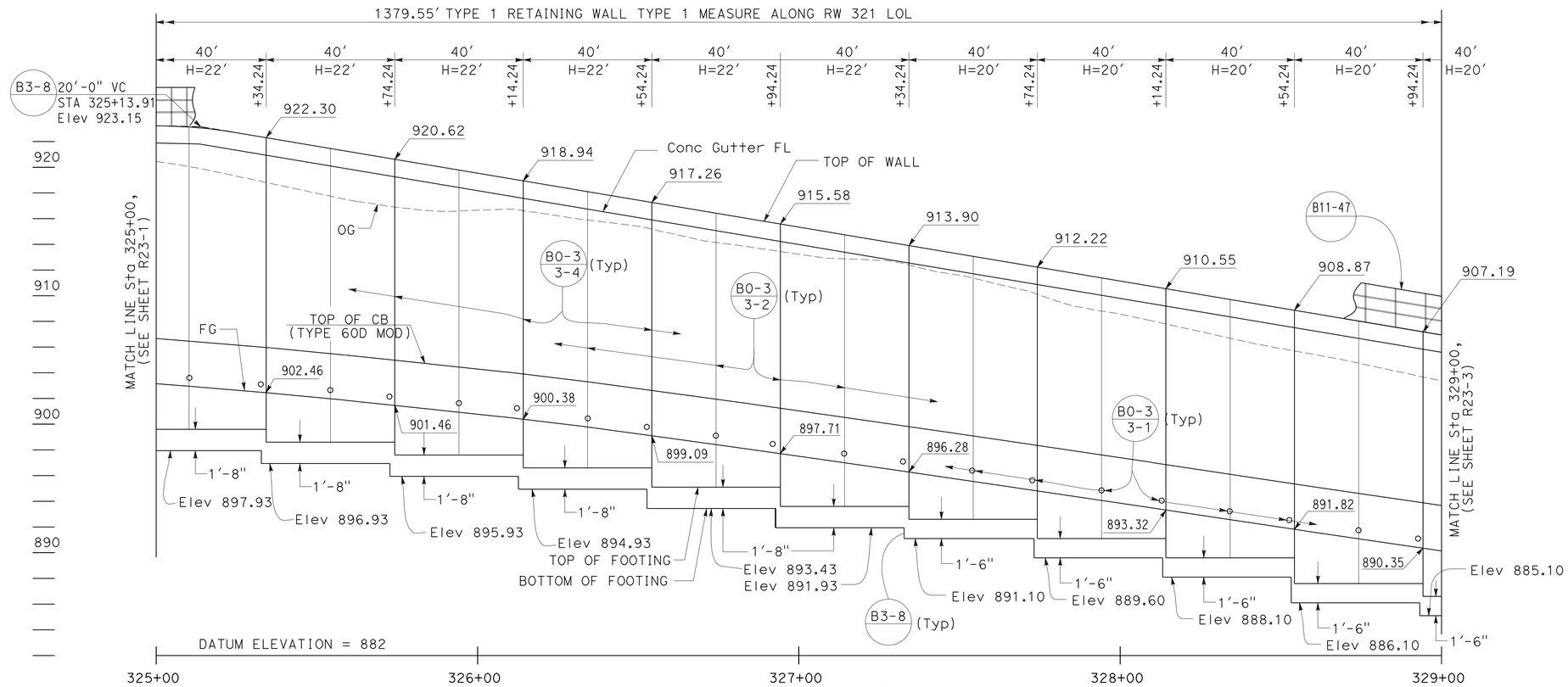

ELEVATION

SCALE Horiz 1"=20'
Vert 1"=5'

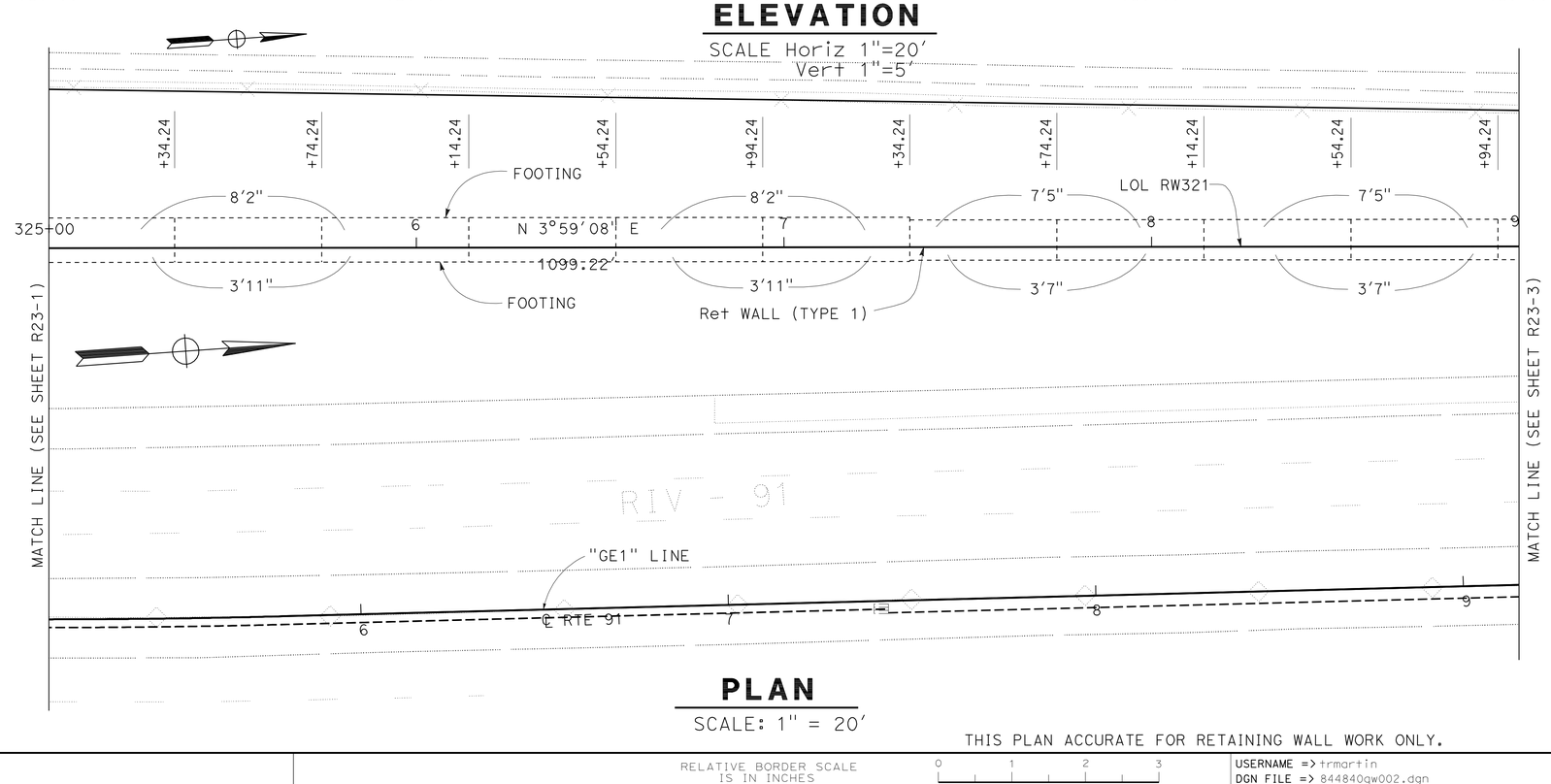

PLAN

SCALE: 1" = 20'

THIS PLAN ACCURATE FOR RETAINING WALL WORK ONLY.

RETAINING WALL PLAN
RETAINING WALL No. 321
SCALE AS SHOWN

R23-2

REVISED BY | DATE REVISED
ANNABELL WANG | CUONG LE TRAN
CALCULATED-DESIGNED BY | CHECKED BY
FUNCTIONAL SUPERVISOR: MARK PERTILE

STATE OF CALIFORNIA - DEPARTMENT OF TRANSPORTATION
Caltrans® DESIGN

LAST REVISION 12-01-10 | DATE PLOTTED => 30-APR-2011 TIME PLOTTED => 07:49

Dist	COUNTY	ROUTE	POST MILES TOTAL PROJECT	SHEET No.	TOTAL SHEETS
08	Riv	91	15.6/21.6	939	2028

REGISTERED CIVIL ENGINEER 12-1-10 DATE

4-25-11
PLANS APPROVAL DATE

REGISTERED PROFESSIONAL ENGINEER CUONG LE TRAN No. C60436 Exp. 6-30-12 CIVIL STATE OF CALIFORNIA

THE STATE OF CALIFORNIA OR ITS OFFICERS OR AGENTS SHALL NOT BE RESPONSIBLE FOR THE ACCURACY OR COMPLETENESS OF SCANNED COPIES OF THIS PLAN SHEET.

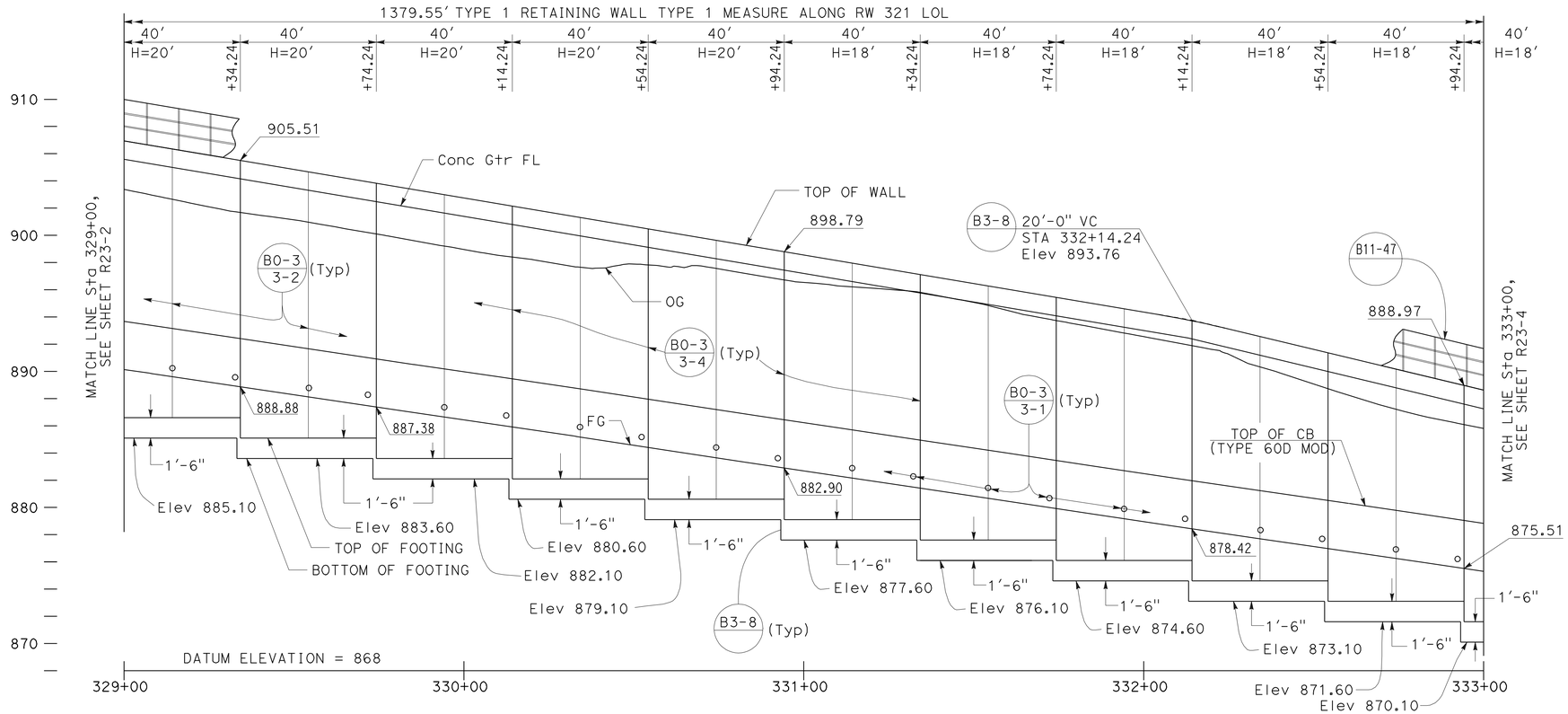

ELEVATION

SCALE Horiz 1" = 20'
Vert 1" = 5'

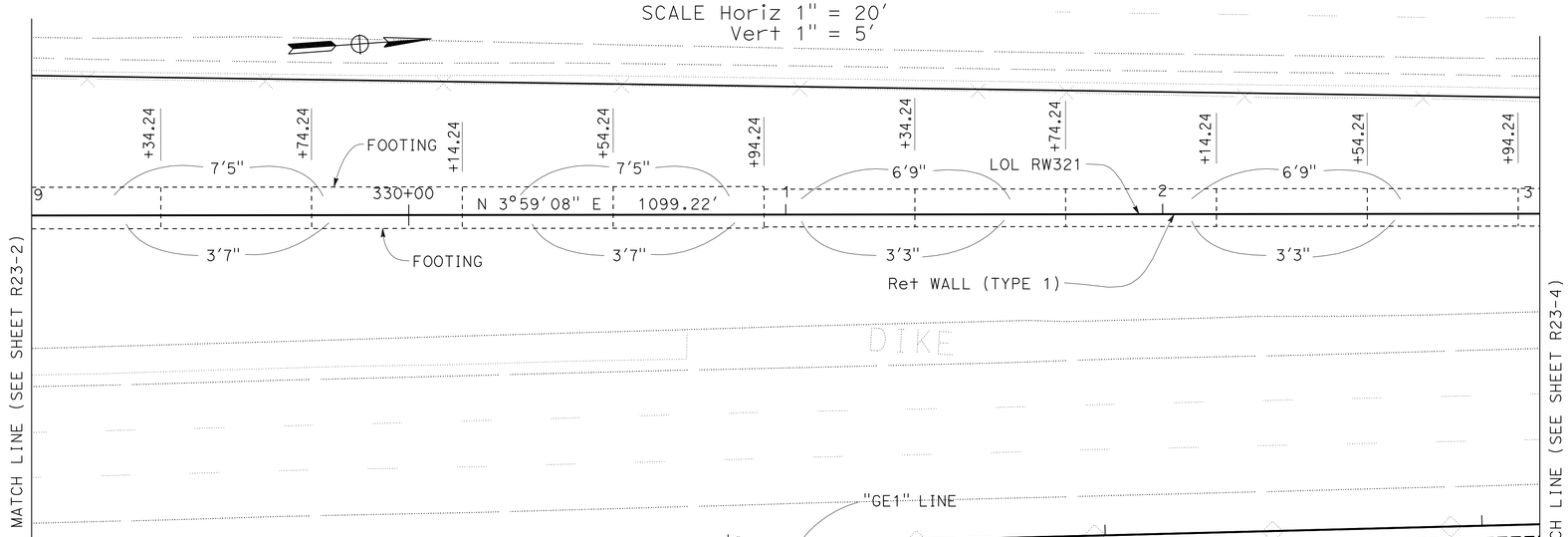

PLAN

SCALE: 1" = 20'

THIS PLAN ACCURATE FOR RETAINING WALL WORK ONLY.

RETAINING WALL PLAN
RETAINING WALL No. 321

SCALE AS SHOWN

R23-3

STATE OF CALIFORNIA - DEPARTMENT OF TRANSPORTATION
Caltrans®
DESIGN

FUNCTIONAL SUPERVISOR: MARK PERTILE
CALCULATED-DESIGNED BY: ANNABELL WANG
CHECKED BY: CUONG LE TRAN
REVISED BY
DATE REVISED

LAST REVISION 12-01-10 | DATE PLOTTED => 30-APR-2011 | TIME PLOTTED => 07:49

BORDER LAST REVISED 4/11/2008
RELATIVE BORDER SCALE IS IN INCHES 0 1 2 3
USERNAME => trmartin
DGN FILE => 844840qw003.dgn
CU 08227
EA 448401

Dist	COUNTY	ROUTE	POST MILES TOTAL PROJECT	SHEET No.	TOTAL SHEETS
08	Riv	91	15.6/21.6	940	2028

REGISTERED CIVIL ENGINEER 12-1-10 DATE

4-25-11
PLANS APPROVAL DATE

REGISTERED PROFESSIONAL ENGINEER CUONG LE TRAN No. C60436 Exp. 6-30-12 CIVIL STATE OF CALIFORNIA

THE STATE OF CALIFORNIA OR ITS OFFICERS OR AGENTS SHALL NOT BE RESPONSIBLE FOR THE ACCURACY OR COMPLETENESS OF SCANNED COPIES OF THIS PLAN SHEET.

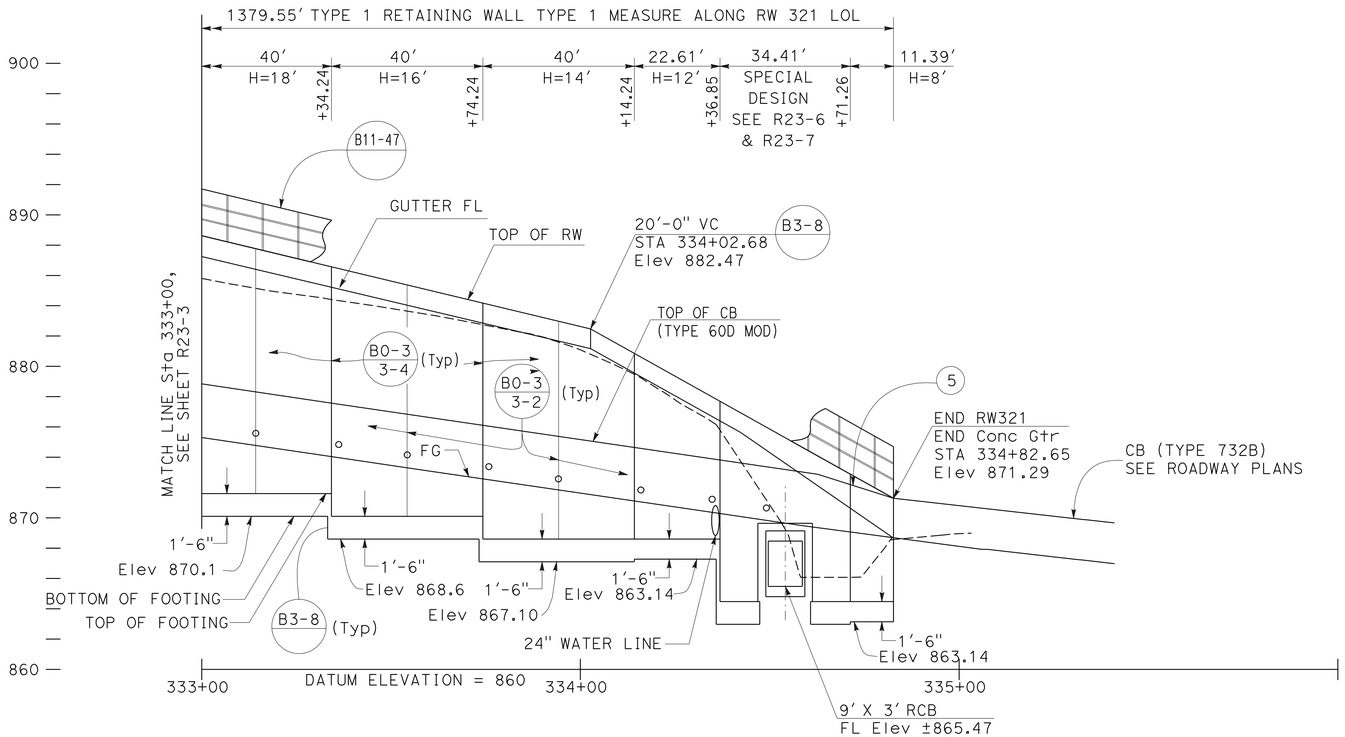

ELEVATION

SCALE Horiz 1" = 20'
Vert 1" = 5'

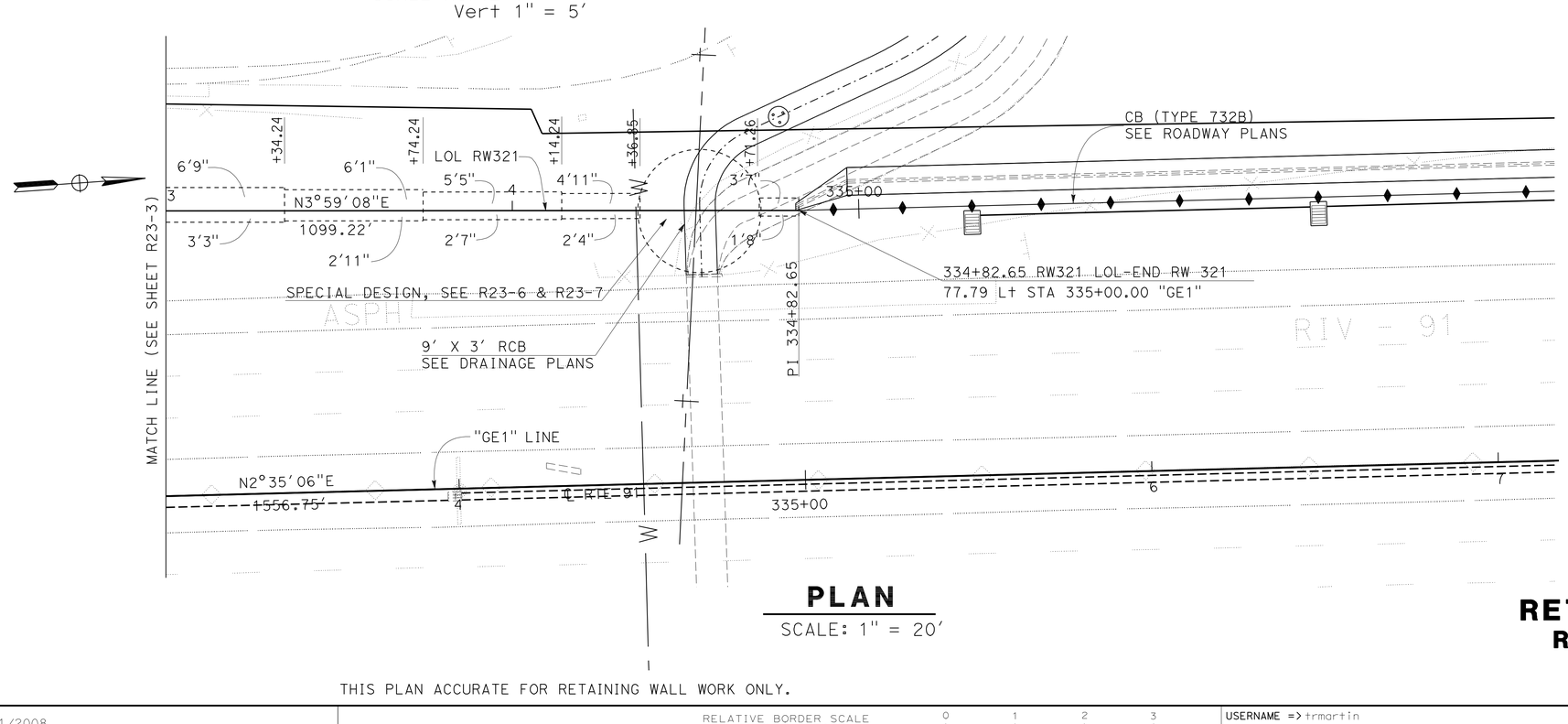

PLAN

SCALE: 1" = 20'

THIS PLAN ACCURATE FOR RETAINING WALL WORK ONLY.

QUANTITIES

STRUCTURAL CONCRETE (RETAINING WALL)	2656.20	CY
BAR REINFORCING STEEL (RETAINING WALL)	356924	LB
STRUCTURAL EXCAVATION (RETAINING WALL)	13132.05	CY
STRUCTURAL BACKFILL (RETAINING WALL)	7959.71	CY
PERVIOUS BACKFILL MATERIAL (RETAINING WALL)	633.97	CY
CONCRETE BARRIER (TYPE 60D MOD)	1379.55	LF
CABLE RAILING	1379.55	LF
MINOR CONCRETE (GUTTER)	1379.55	LF
PLASTIC PIPE (N)	125.38	LF
WATERSTOP (N)	586.67	LF
ARCHITECTURAL SURFACE (TEXTURED CONCRETE)	19216.68	SF

(N) = NOT A SEPARATE PAY ITEM, FOR INFORMATION ONLY

RETAINING WALL PLAN
RETAINING WALL No. 321
SCALE AS SHOWN

R23-4

STATE OF CALIFORNIA - DEPARTMENT OF TRANSPORTATION
Caltrans® DESIGN

FUNCTIONAL SUPERVISOR: MARK PERTILE
CALCULATED-DESIGNED BY: ANNABELL WANG
CHECKED BY: CUONG LE TRAN
REVISED BY / DATE REVISED

LAST REVISION 12-01-10
DATE PLOTTED => 30-APR-2011
TIME PLOTTED => 07:49

Dist	COUNTY	ROUTE	POST MILES TOTAL PROJECT	SHEET No.	TOTAL SHEETS
08	Riv	91	15.6/21.6	941	2028

REGISTERED CIVIL ENGINEER 12-1-10 DATE

4-25-11
PLANS APPROVAL DATE

REGISTERED PROFESSIONAL ENGINEER CUONG LE TRAN No. C60436 Exp. 6-30-12 CIVIL STATE OF CALIFORNIA

THE STATE OF CALIFORNIA OR ITS OFFICERS OR AGENTS SHALL NOT BE RESPONSIBLE FOR THE ACCURACY OR COMPLETENESS OF SCANNED COPIES OF THIS PLAN SHEET.

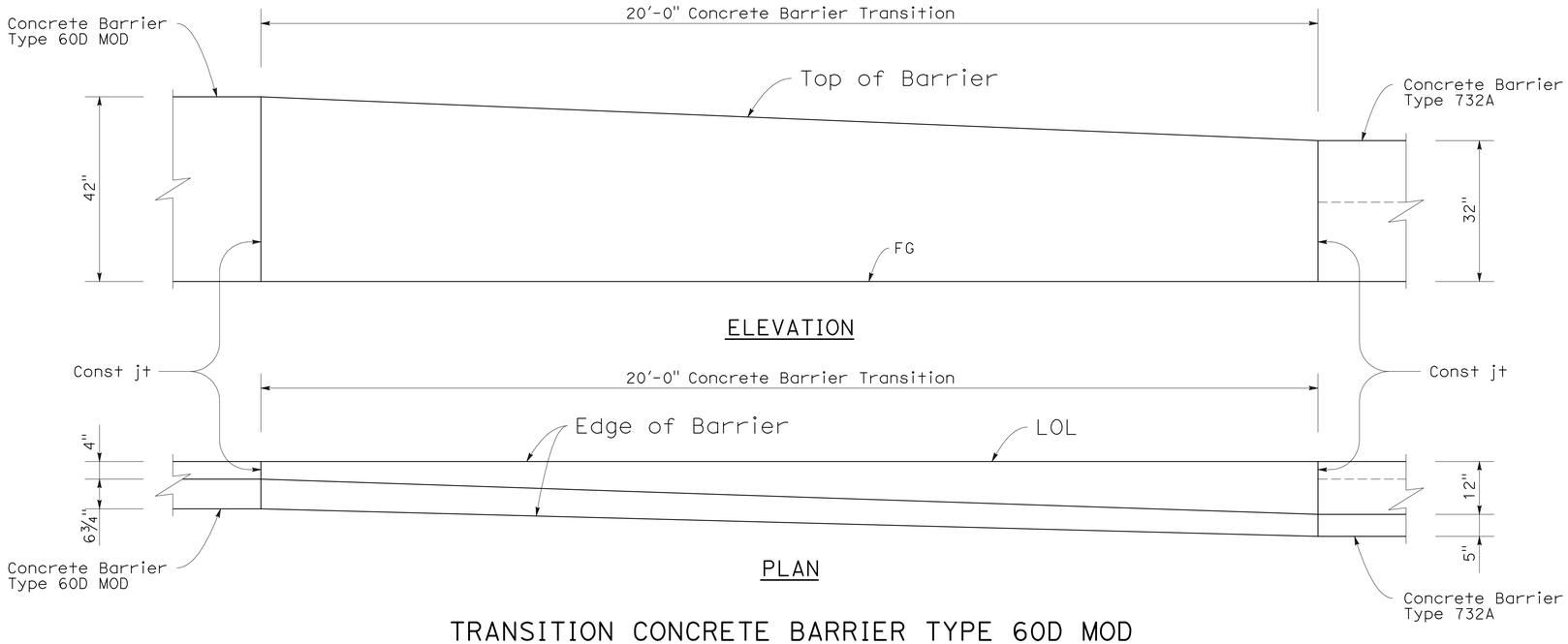

TRANSITION CONCRETE BARRIER TYPE 60D MOD TO CONCRETE BARRIER TYPE 732

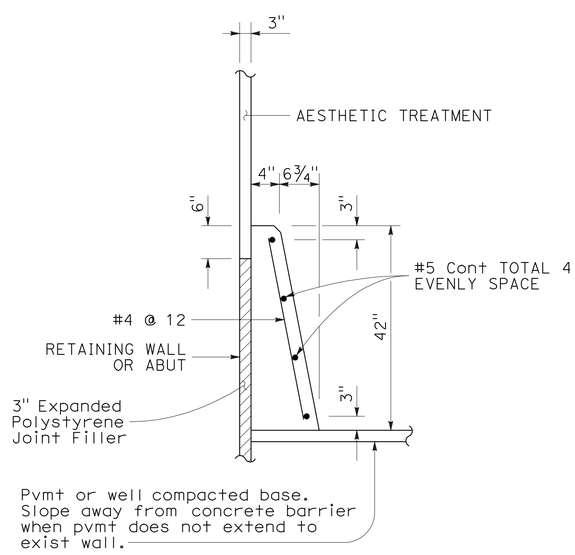

CONCRETE BARRIER (TYPE 60D MOD)

THIS PLAN ACCURATE FOR RETAINING WALL WORK ONLY.

RETAINING WALL DETAILS
RETAINING WALL No. 321
NO SCALE

R23-5

REVISED BY	DATE REVISED

CALCULATED-DESIGNED BY	CHECKED BY
ANNABELL WANG	CUONG LE TRAN

FUNCTIONAL SUPERVISOR: MARK PERTILE

STATE OF CALIFORNIA - DEPARTMENT OF TRANSPORTATION
Caltrans® DESIGN

LAST REVISION 12-01-10 | DATE PLOTTED => 30-APR-2011 TIME PLOTTED => 07:49

Dist	COUNTY	ROUTE	POST MILES TOTAL PROJECT	SHEET No.	TOTAL SHEETS
08	Riv	91	15.6/21.6	942	2028

REGISTERED CIVIL ENGINEER 12-1-10 DATE

4-25-11
PLANS APPROVAL DATE

REGISTERED PROFESSIONAL ENGINEER MINH THUONG VO No. C59297 Exp. 06/30/11 CIVIL STATE OF CALIFORNIA

THE STATE OF CALIFORNIA OR ITS OFFICERS OR AGENTS SHALL NOT BE RESPONSIBLE FOR THE ACCURACY OR COMPLETENESS OF SCANNED COPIES OF THIS PLAN SHEET.

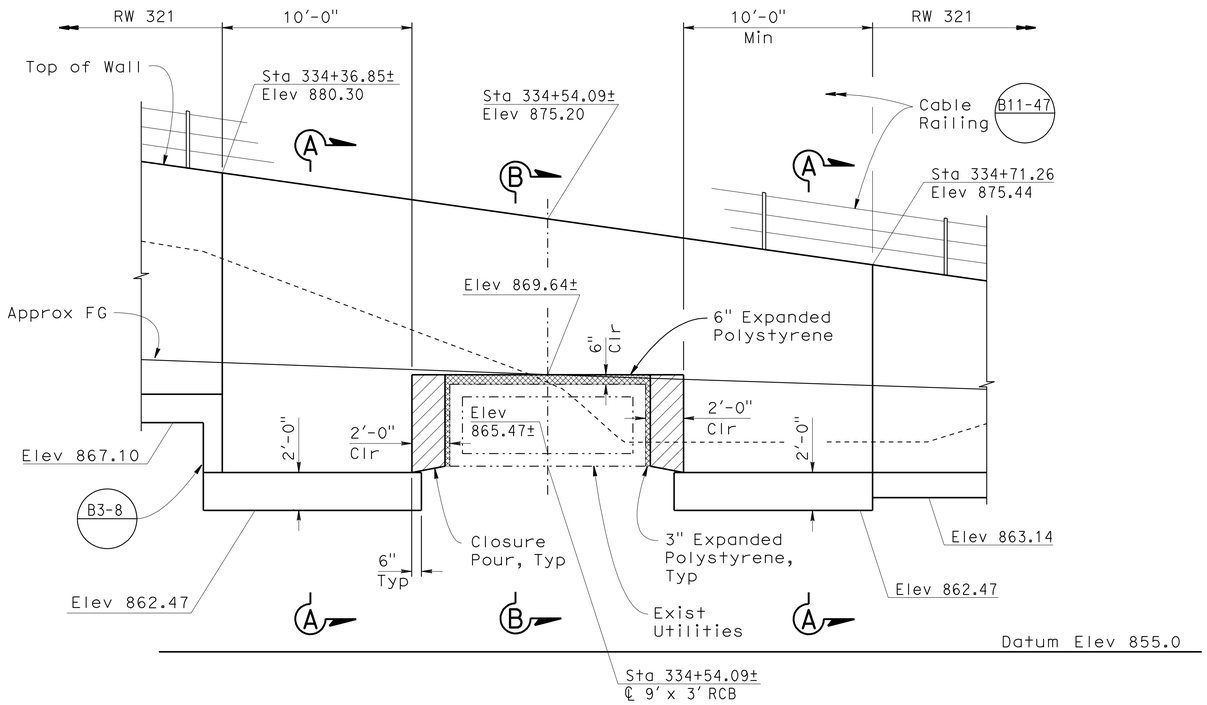

DEVELOPED ELEVATION

1/4"=1'-0"

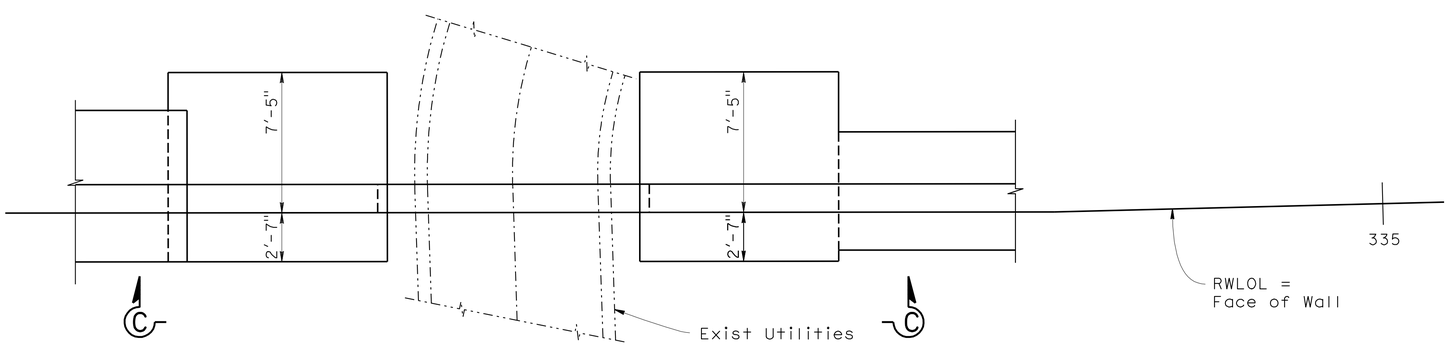

PLAN

1/4"=1'-0"

Sta 334+36.85± to Sta 334+71.26±

DESIGN DATA

DESIGN: Bridge Design Specification
(1996 AASHTO with Revisions by Caltrans)

LOADING CASE:
1. Level slope with 240 psf Max. surcharge

CONCRETE: n = 9, f'c = 3600 psi, fc = 1440 psi

REINFORCING STEEL: fy = 60,000 psi, fs = 24,000 psi

SOIL PARAMETERS: (for determination of design lateral earth pressure)
$\phi = 34°$ $\gamma = 120$ pcf

NOTE:
THE CONTRACTOR SHALL VERIFY ALL CONTROLLING FIELD DIMENSIONS BEFORE ORDERING OR FABRICATING ANY MATERIAL.

THIS PLAN ACCURATE FOR RETAINING WALL WORK ONLY.

RETAINING WALL DETAILS
RETAINING WALL No. 321

SCALE AS SHOWN

R23-6

STATE OF CALIFORNIA - DEPARTMENT OF TRANSPORTATION
Caltrans®
DESIGN

FUNCTIONAL SUPERVISOR: DANIEL T. ADAMS
CALCULATED-DESIGNED BY: MINH VO
CHECKED BY: RYAN STILTZ
REVISED BY
DATE REVISED

LAST REVISION 12-01-10
DATE PLOTTED => 30-APR-2011
TIME PLOTTED => 07:49

Dist	COUNTY	ROUTE	POST MILES TOTAL PROJECT	SHEET No.	TOTAL SHEETS
08	Riv	91	15.6/21.6	943	2028

REGISTERED CIVIL ENGINEER 12-1-10 DATE

4-25-11
PLANS APPROVAL DATE

REGISTERED PROFESSIONAL ENGINEER MINH THUONG VO No. C59297 Exp. 06/30/11 CIVIL STATE OF CALIFORNIA

THE STATE OF CALIFORNIA OR ITS OFFICERS OR AGENTS SHALL NOT BE RESPONSIBLE FOR THE ACCURACY OR COMPLETENESS OF SCANNED COPIES OF THIS PLAN SHEET.

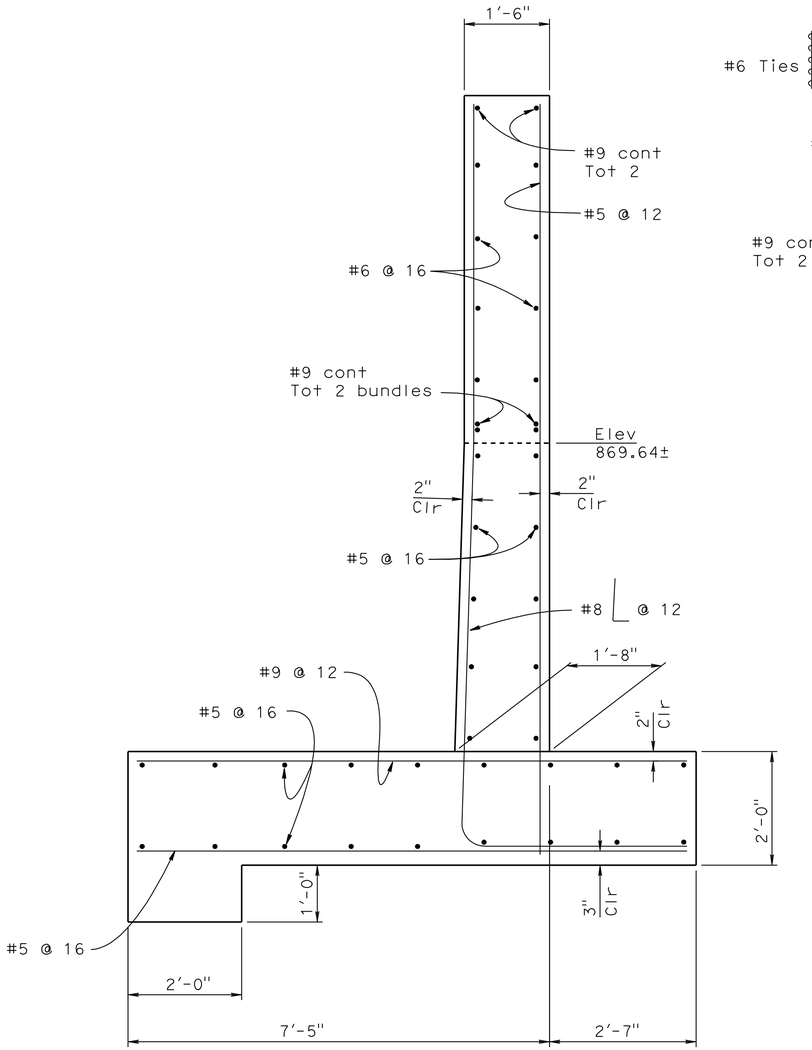

SECTION A-A
3/4" = 1'-0"

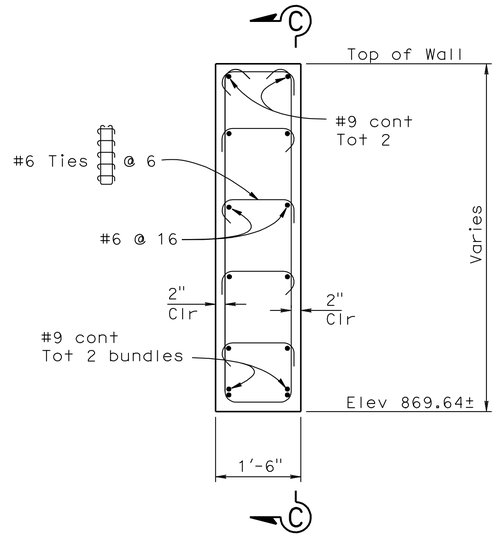

SECTION B-B
3/4" = 1'-0"

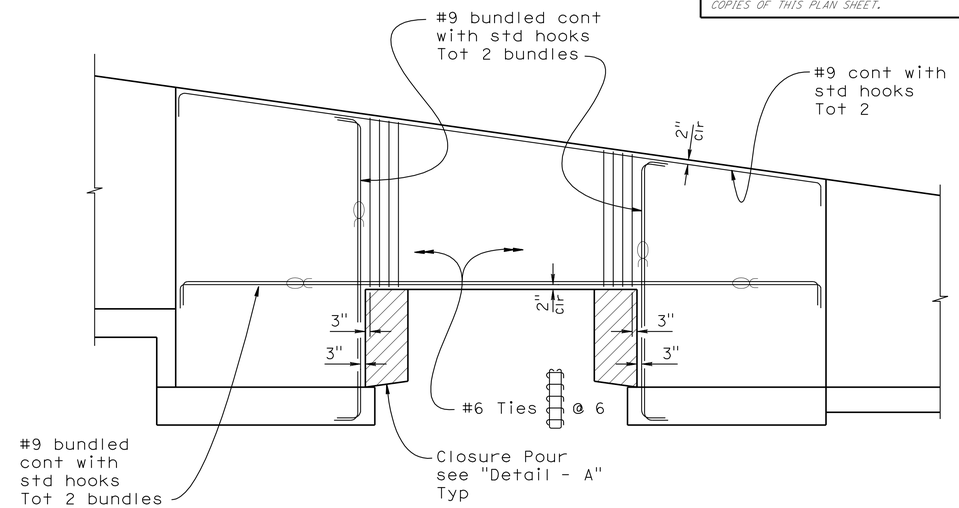

SECTION C-C
1/4" = 1'-0"

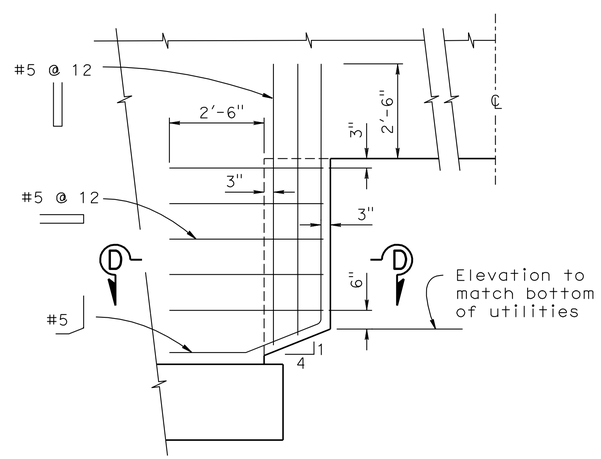

DETAIL - A
1/2" = 1'-0"

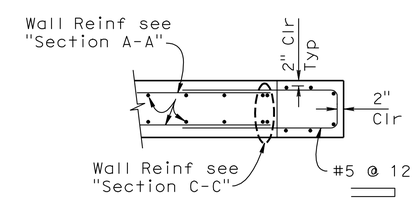

SECTION D-D
1/2" = 1'-0"

RETAINING WALL DETAILS
RETAINING WALL No.321
SCALE AS SHOWN

R23-7

THIS PLAN ACCURATE FOR RETAINING WALL WORK ONLY.

STATE OF CALIFORNIA - DEPARTMENT OF TRANSPORTATION
Caltrans
DESIGN
FUNCTIONAL SUPERVISOR: DANIEL T. ADAMS
CALCULATED-DESIGNED BY: MINH VO
CHECKED BY: RYAN STILTZ
REVISED BY
DATE REVISED

LAST REVISION 12-01-10
DATE PLOTTED => 30-APR-2011
TIME PLOTTED => 07:23

Dist	COUNTY	ROUTE	POST MILES TOTAL PROJECT	SHEET No.	TOTAL SHEETS
08	Riv	91	15.6/21.6	944	2028

LICENSED LANDSCAPE ARCHITECT

4-25-11
PLANS APPROVAL DATE

LICENSED LANDSCAPE ARCHITECT
Matthew Harry Hall
No. 2011
Signature
10/31/2011
Renewal Date
12-1-10
Date
STATE OF CALIFORNIA

THE STATE OF CALIFORNIA OR ITS OFFICERS OR AGENTS SHALL NOT BE RESPONSIBLE FOR THE ACCURACY OR COMPLETENESS OF SCANNED COPIES OF THIS PLAN SHEET.

NOTE:

SEE SHEET ASD-1, ASD-2, ASD-3 AND ASD-5.

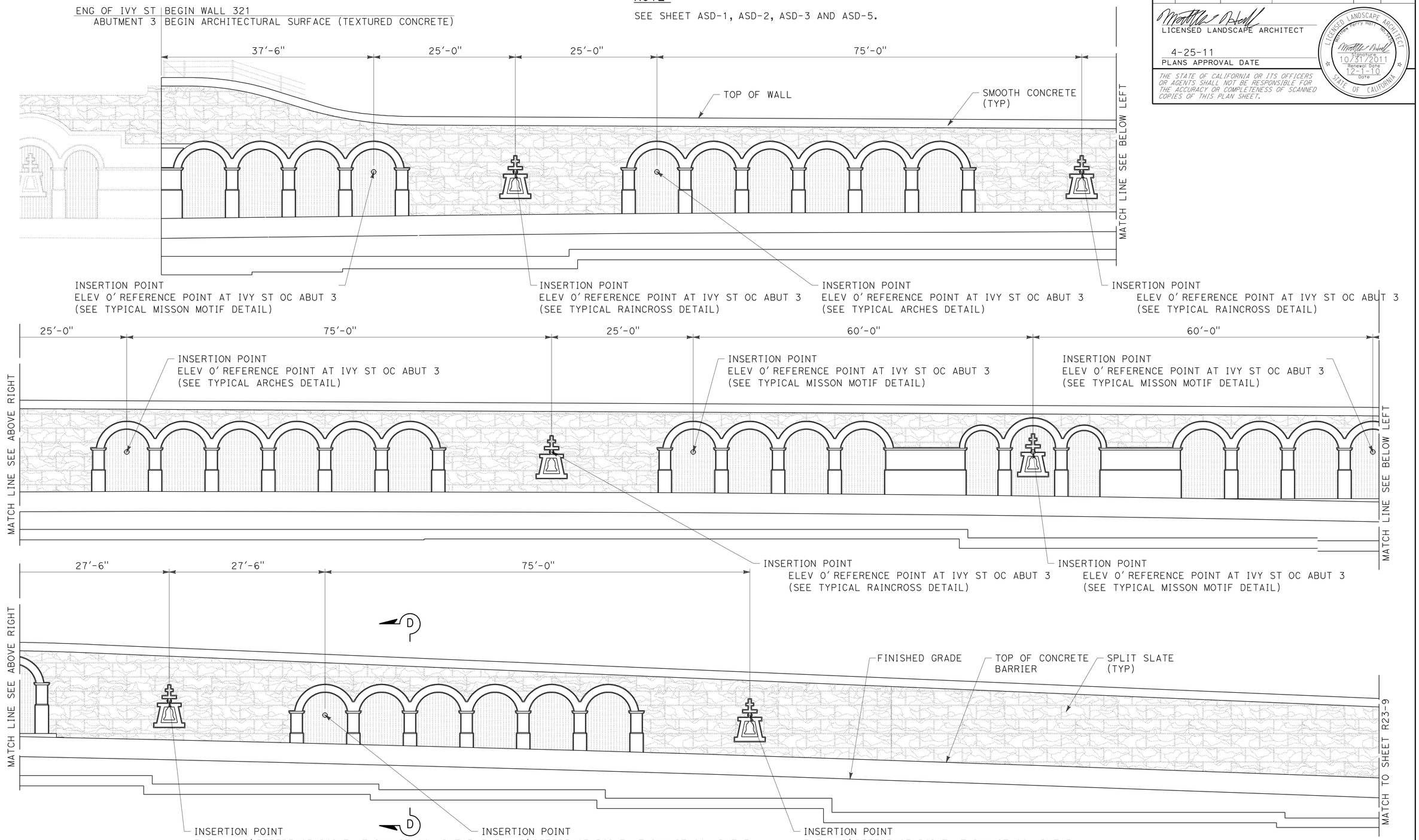

ELEVATION FOR FRACTURED RIB
SPLIT SLATE TEXTURE RETAINING WALL No. 321

THIS PLAN IS ACCURATE FOR ARCHITECTUAL TREATMENT WORK ONLY.

ARCHITECTURAL SURFACE
RETAINING WALL No. 321

SCALE: 1/8"=1'-0"

R23-8

REVISED BY	DATE REVISED
MATTHEW HALL	MIRIAM BISHOP
CALCULATED-DESIGNED BY	CHECKED BY
SENIOR LANDSCAPE ARCHITECT	BYRON STROUT

STATE OF CALIFORNIA - DEPARTMENT OF TRANSPORTATION
Caltrans® LANDSCAPE ARCHITECTURE

LAST REVISION 12-01-10 | DATE PLOTTED => 30-APR-2011 | TIME PLOTTED => 07:23

Dist	COUNTY	ROUTE	POST MILES TOTAL PROJECT	SHEET No.	TOTAL SHEETS
08	Riv	91	15.6/21.6	945	2028

LICENSED LANDSCAPE ARCHITECT

4-25-11
PLANS APPROVAL DATE

LICENSED LANDSCAPE ARCHITECT
Matthew Harry Hall
No. 2011
Signature
10/31/2011
Renewal Date
12-1-10
Date
STATE OF CALIFORNIA

THE STATE OF CALIFORNIA OR ITS OFFICERS OR AGENTS SHALL NOT BE RESPONSIBLE FOR THE ACCURACY OR COMPLETENESS OF SCANNED COPIES OF THIS PLAN SHEET.

NOTE:

SEE SHEET ASD-4 AND ASD-5.

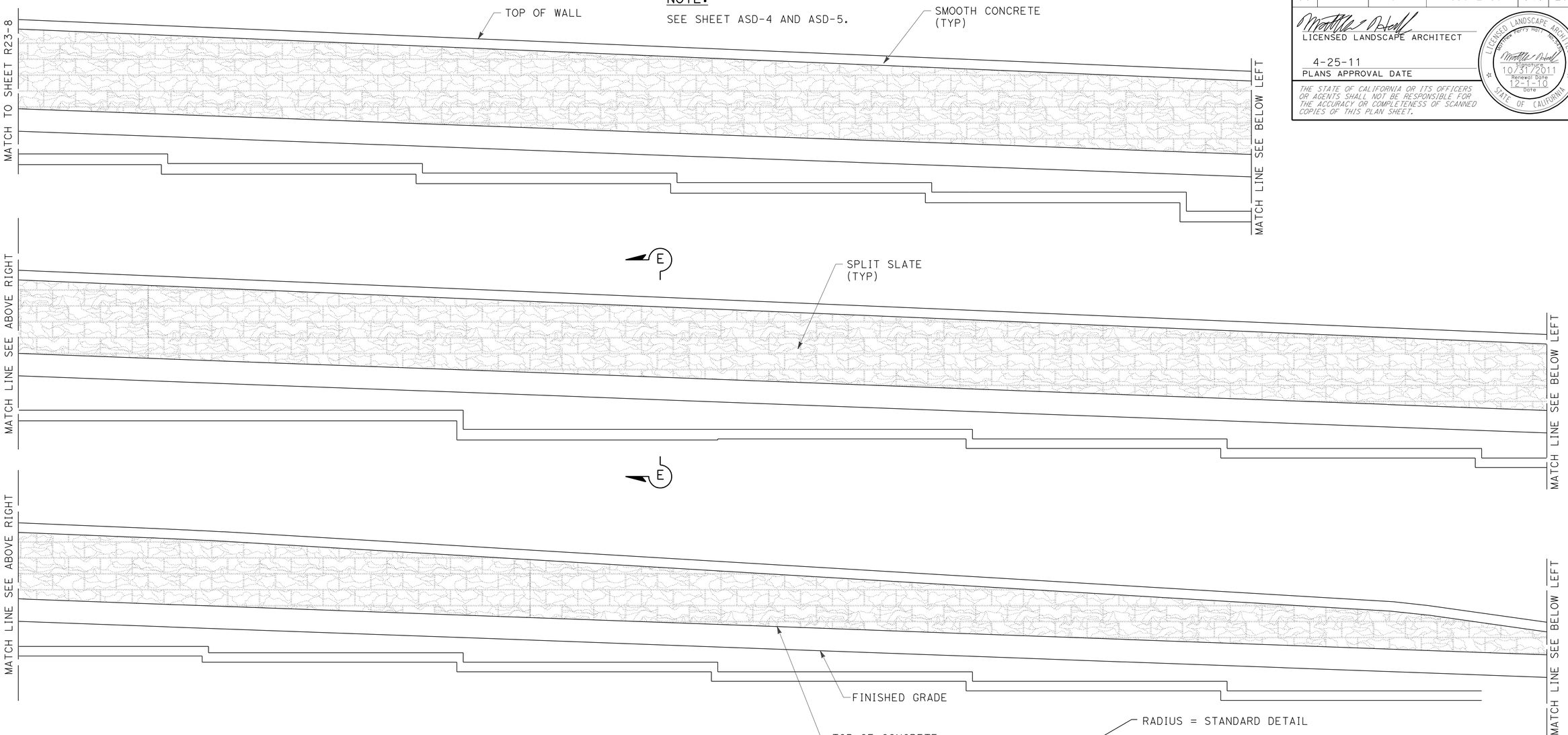

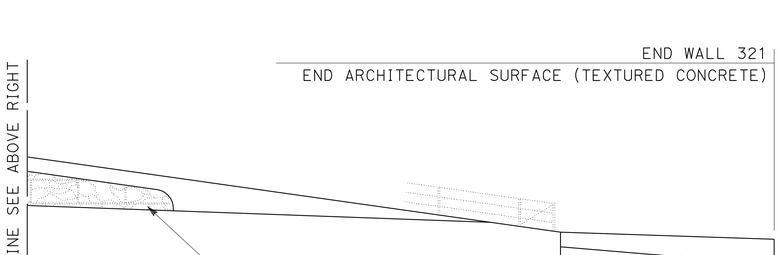

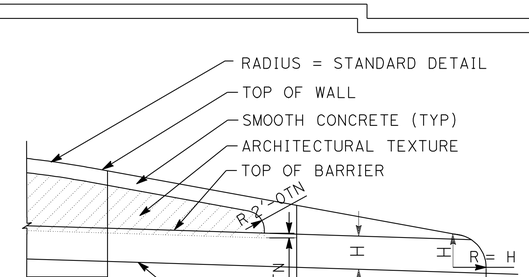

DETAIL No. 3

TYPICAL END OF WALL WITH TYPE 60D MOD. CONCRETE BARRIER

ELEVATION FOR SPLIT SLATE TEXTURE RETAINING WALL No. 321

THIS PLAN IS ACCURATE FOR ARCHITECTUAL TREATMENT WORK ONLY.

ARCHITECTURAL SURFACE RETAINING WALL No. 321

SCALE: 1/8"=1'-0"

R23-9

STATE OF CALIFORNIA - DEPARTMENT OF TRANSPORTATION
Caltrans LANDSCAPE ARCHITECTURE

SENIOR LANDSCAPE ARCHITECT: BYRON STROUT
CALCULATED-DESIGNED BY: MATTHEW HALL
CHECKED BY: MIRIAM BISHOP
REVISED BY
DATE REVISED

LAST REVISION 12-01-10
DATE PLOTTED => 30-APR-2011
TIME PLOTTED => 07:23

DIST	COUNTY	ROUTE	POST MILES TOTAL PROJECT	SHEET No	TOTAL SHEETS
08	Riv	91	15.6/21.6	946	2028

GEOTECHNICAL PROFESSIONAL — DATE 10/2008

4-25-11
PLANS APPROVAL DATE

REGISTERED PROFESSIONAL ENGINEER — ANDREW C. LEE — No. 2616 — Exp. 6-30-12 — GEOTECHNICAL — STATE OF CALIFORNIA

The State of California or its officers or agents shall not be responsible for the accuracy or completeness of electronic copies of this plan sheet.

California Department of Transportation
5900 Folsom Boulevard
Sacramento, CA 95819

URS Corporation
2020 East First Street, Suite 400
Santa Ana, CA 92705

FOR PLAN VIEW, SEE SHEET R23-13

NOTE: 1. This LOTB sheet was prepared in accordance with the Caltrans Soil & Rock Logging, Classification, and Presentation Manual (June 2007).

2. For legend, see "Log of Test Borings" 1 of 83

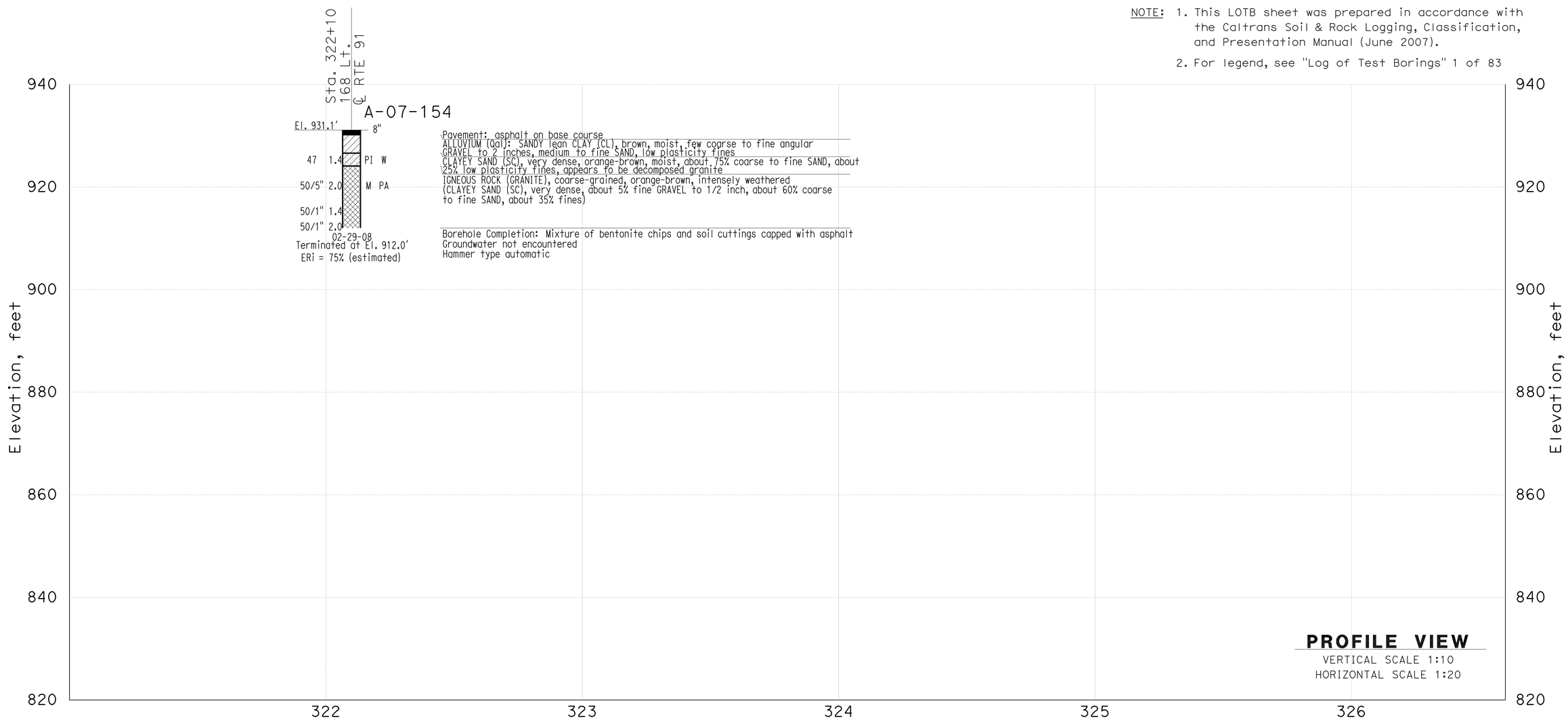

THIS PLAN ACCURATE FOR SOUND WALL AND RETAINING WALL WORK ONLY

DESIGN OVERSIGHT X SIGN OFF DATE	GINA PURSELL FUNCTIONAL SUPERVISOR	DRAWN BY	P. QUACH	P.CHAU/D.WADER/C.CARBINO FIELD INVESTIGATION BY: DATE: Nov 6 2007 to March 7 2008	PREPARED FOR THE STATE OF CALIFORNIA DEPARTMENT OF TRANSPORTATION	A. LEE PROJECT ENGINEER	BRIDGE NO. X / POST MILE X	Retaining Wall 321 R23-10
		CHECKED BY	S. PIRATHIVIRAJ					LOG OF TEST BORINGS SHEET 1 OF 5

OSF GEOTECHNICAL LOG OF TEST BORINGS SHEET (ENGLISH) (REV. 2/25/05)

ORIGINAL SCALE IN INCHES FOR REDUCED PLANS 0 1 2 3

CU 59A0590
EA 08-448400

DISREGARD PRINTS BEARING EARLIER REVISION DATES

REVISION DATES (PRELIMINARY STAGE ONLY) X

SHEET 1 OF 5

FILE => 844840qw010.dgn

USERNAME => trmnguye DATE PLOTTED => 30-APR-2011 TIME PLOTTED =>

DIST	COUNTY	ROUTE	POST MILES TOTAL PROJECT	SHEET No	TOTAL SHEETS
08	Riv	91	15.6/21.6	947	2028

GEOTECHNICAL PROFESSIONAL — DATE 10/2008

4-25-11
PLANS APPROVAL DATE

REGISTERED PROFESSIONAL ENGINEER — ANDREW C. LEE — No. 2616 — Exp. 6-30-12 — GEOTECHNICAL — STATE OF CALIFORNIA

The State of California or its officers or agents shall not be responsible for the accuracy or completeness of electronic copies of this plan sheet.

California Department of Transportation
5900 Folsom Boulevard
Sacramento, CA 95819

URS Corporation
2020 East First Street, Suite 400
Santa Ana, CA 92705

NOTE: 1. This LOTB sheet was prepared in accordance with the Caltrans Soil & Rock Logging, Classification, and Presentation Manual (June 2007).

2. For legend, see "Log of Test Borings" 1 of 83

FOR PLAN VIEW, SEE SHEET R23-13

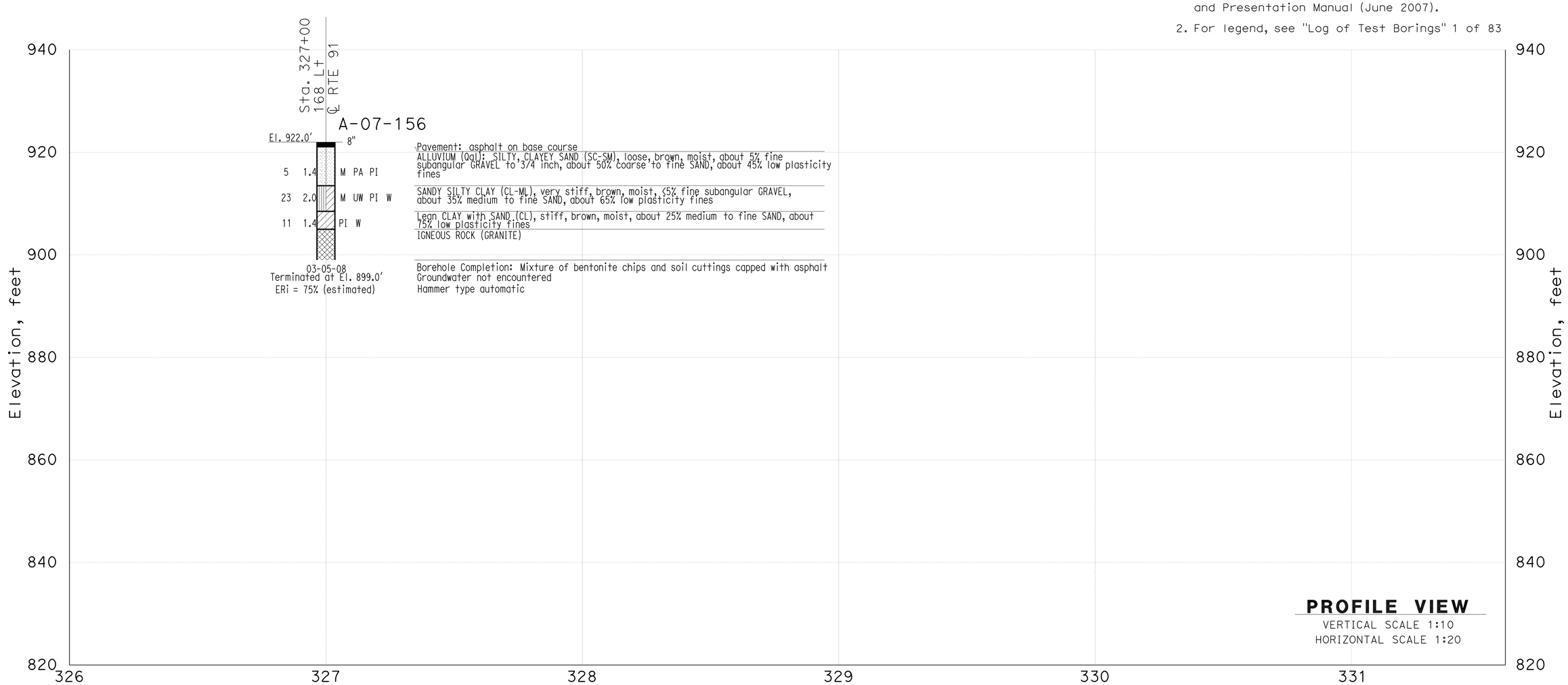

THIS PLAN ACCURATE FOR SOUND WALL AND RETAINING WALL WORK ONLY

DESIGN OVERSIGHT X SIGN OFF DATE	GINA PURSELL FUNCTIONAL SUPERVISOR	DRAWN BY	P. QUACH	P.CHAU/D.WADER/C.CARBINO FIELD INVESTIGATION BY: DATE: Nov 6 2007 to March 7 2008		PREPARED FOR THE STATE OF CALIFORNIA DEPARTMENT OF TRANSPORTATION	A. LEE PROJECT ENGINEER	BRIDGE NO. X / POST MILE X	Retaining Wall 321 R23-11 LOG OF TEST BORINGS SHEET 2 OF 5
		CHECKED BY	S. PIRATHIVIRAJ						

OSF GEOTECHNICAL LOG OF TEST BORINGS SHEET (ENGLISH) (REV. 2/25/05)

ORIGINAL SCALE IN INCHES FOR REDUCED PLANS 0 1 2 3

CU 59A0590
EA 08-448400

DISREGARD PRINTS BEARING EARLIER REVISION DATES

REVISION DATES (PRELIMINARY STAGE ONLY) X

SHEET 2 OF 5

FILE => 844840qw011.dgn

USERNAME => trmmgaye DATE PLOTTED => 30-APR-2011 TIME PLOTTED =>

DIST	COUNTY	ROUTE	POST MILES TOTAL PROJECT	SHEET No	TOTAL SHEETS
08	Riv	91	15.6/21.6	948	2028

GEOTECHNICAL PROFESSIONAL — DATE 10/2008

4-25-11
PLANS APPROVAL DATE

REGISTERED PROFESSIONAL ENGINEER — ANDREW C. LEE — No. 2616 — Exp. 6-30-12 — GEOTECHNICAL — STATE OF CALIFORNIA

The State of California or its officers or agents shall not be responsible for the accuracy or completeness of electronic copies of this plan sheet.

California Department of Transportation
5900 Folsom Boulevard
Sacramento, CA 95819

URS Corporation
2020 East First Street, Suite 400
Santa Ana, CA 92705

FOR PLAN VIEW, SEE SHEET R23-14

NOTE: 1. This LOTB sheet was prepared in accordance with the Caltrans Soil & Rock Logging, Classification, and Presentation Manual (June 2007).

2. For legend, see "Log of Test Borings" 1 of 83

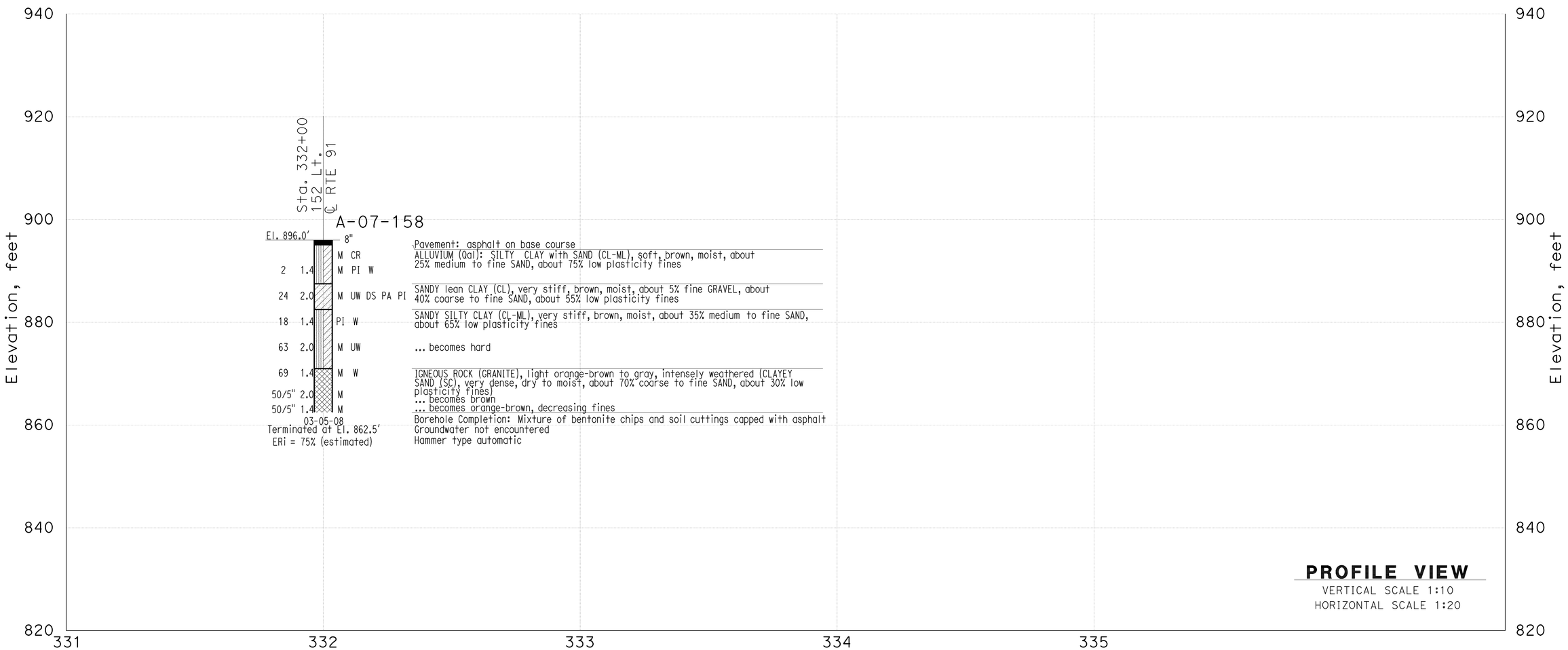

THIS PLAN ACCURATE FOR SOUND WALL AND RETAINING WALL WORK ONLY

DESIGN OVERSIGHT X SIGN OFF DATE	GINA PURSELL FUNCTIONAL SUPERVISOR	DRAWN BY	P. QUACH	P.CHAU/D.WADER/C.CARBINO FIELD INVESTIGATION BY: DATE: Nov 6 2007 to March 7 2008	PREPARED FOR THE STATE OF CALIFORNIA DEPARTMENT OF TRANSPORTATION	A. LEE PROJECT ENGINEER	BRIDGE NO. X / POST MILE X
		CHECKED BY	S. PIRATHIVIRAJ				

Retaining Wall 321 — R23-12

LOG OF TEST BORINGS SHEET 3 OF 5

OSF GEOTECHNICAL LOG OF TEST BORINGS SHEET (ENGLISH) (REV. 2/25/05)

ORIGINAL SCALE IN INCHES FOR REDUCED PLANS 0 1 2 3

CU 59A0590
EA 08-448400

DISREGARD PRINTS BEARING EARLIER REVISION DATES

REVISION DATES (PRELIMINARY STAGE ONLY) X

SHEET 3 OF 5

FILE => 844840qw012.dgn

DATE PLOTTED => 30-APR-2011 TIME PLOTTED =>
USERNAME => trmnguye

DIST	COUNTY	ROUTE	POST MILES TOTAL PROJECT	SHEET No	TOTAL SHEETS
08	Riv	91	15.6/21.6	949	2028

GEOTECHNICAL PROFESSIONAL — DATE 10/2008

4-25-11
PLANS APPROVAL DATE

REGISTERED PROFESSIONAL ENGINEER — ANDREW C. LEE — No. 2616 — Exp. 6-30-12 — GEOTECHNICAL — STATE OF CALIFORNIA

The State of California or its officers or agents shall not be responsible for the accuracy or completeness of electronic copies of this plan sheet.

California Department of Transportation
5900 Folsom Boulevard
Sacramento, CA 95819

URS Corporation
2020 East First Street, Suite 400
Santa Ana, CA 92705

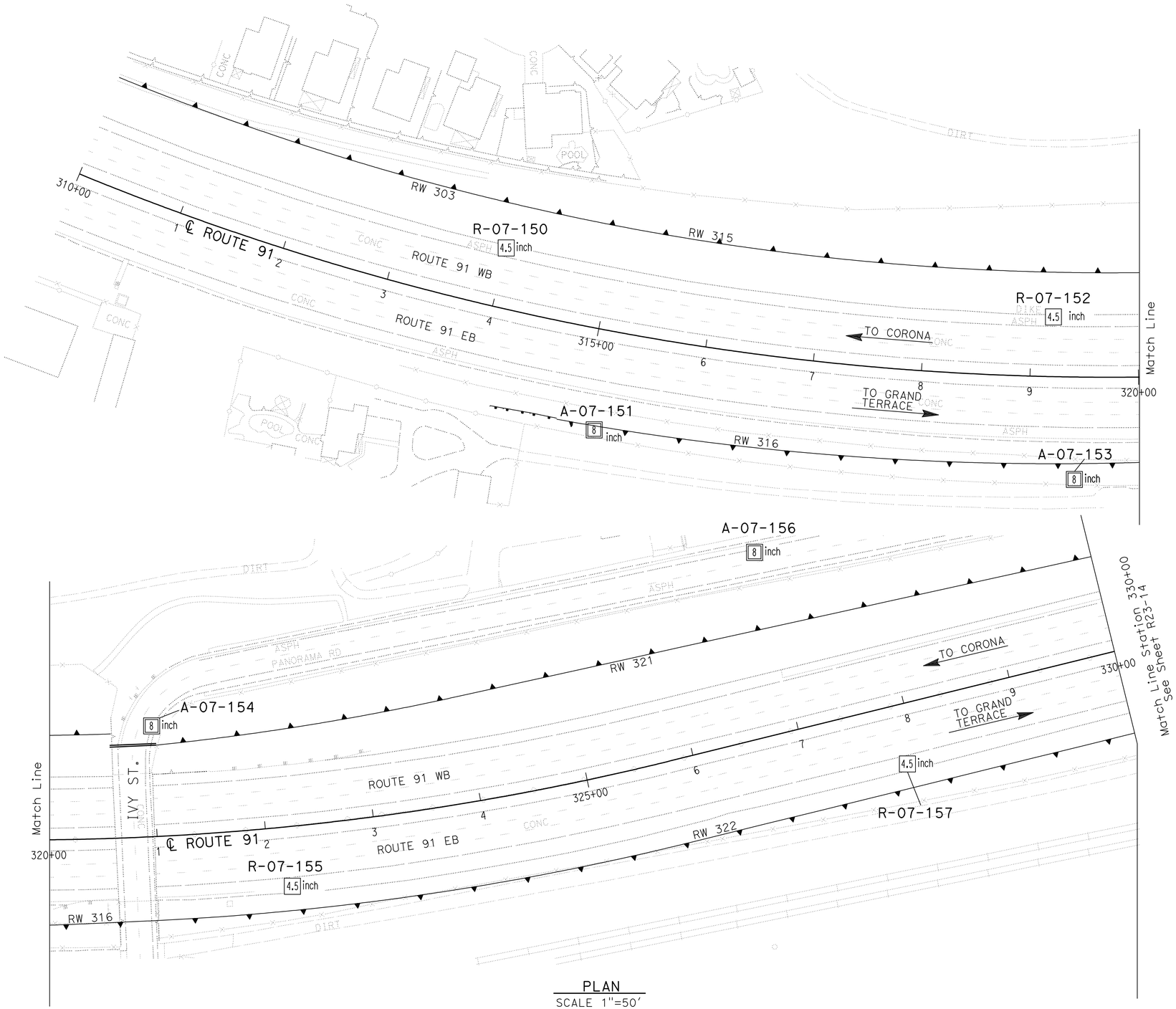

PLAN
SCALE 1"=50'

Borehole Number	Drill Rig	Hammer Type	Avg. Hammer Efficiency, ETR (%)
R-07-150	CME 85	Automatic	87
A-07-151	Diedrich D-120	Automatic	75*
R-07-152	CS-2000	Automatic	84
A-07-153	Diedrich D-120	Automatic	75*
A-07-154	Diedrich D-120	Automatic	75*
R-07-155	Acker Rig	Automatic	74
A-07-156	Diedrich D-120	Automatic	75*
R-07-157	CME 85	Automatic	87

Sampler Type	Inside Diameter (Inches)	Borehole Numbers
SPT	1.375	R-07-150, A-07-151 A-07-153, A-07-154 R-07-155, A-07-156 R-07-157
Modified California 1	1.94	R-07-155, R-07-157
Modified California 2	2.40	A-07-151, A-07-153 A-07-154, A-07-156

*Estimated Hammer Efficiency Rating.

DESIGN OVERSIGHT X SIGN OFF DATE	GINA PURSELL FUNCTIONAL SUPERVISOR	DRAWN BY CHECKED BY	P. QUACH S. PIRATHIVIRAJ	P.CHAU/D.WADER/C.CARBINO FIELD INVESTIGATION BY: DATE: Nov 6 2007 to March 7 2008	

PREPARED FOR THE STATE OF CALIFORNIA DEPARTMENT OF TRANSPORTATION

A. LEE
PROJECT ENGINEER

BRIDGE NO. X
POST MILE X

RETAINING WALL 321 — R23-13

LOG OF TEST BORINGS 4 OF 5

OSF GEOTECHNICAL LOG OF TEST BORINGS SHEET (ENGLISH) (REV. 2/25/05)

ORIGINAL SCALE IN INCHES FOR REDUCED PLANS 0 1 2 3

CU 59A0590
EA 08-448400

DISREGARD PRINTS BEARING EARLIER REVISION DATES

REVISION DATES (PRELIMINARY STAGE ONLY) X

SHEET 4 OF 5

FILE => 844840qw013.dgn

USERNAME => trmnguye DATE PLOTTED => 30-APR-2011 TIME PLOTTED =>

DIST	COUNTY	ROUTE	POST MILES TOTAL PROJECT	SHEET No	TOTAL SHEETS
08	Riv	91	15.6/21.6	950	2028

GEOTECHNICAL PROFESSIONAL — DATE 10/2008

4-25-11
PLANS APPROVAL DATE

REGISTERED PROFESSIONAL ENGINEER — ANDREW C. LEE — No. 2616 — Exp. 6-30-12 — GEOTECHNICAL — STATE OF CALIFORNIA

The State of California or its officers or agents shall not be responsible for the accuracy or completeness of electronic copies of this plan sheet.

California Department of Transportation
5900 Folsom Boulevard
Sacramento, CA 95819

URS Corporation
2020 East First Street, Suite 400
Santa Ana, CA 92705

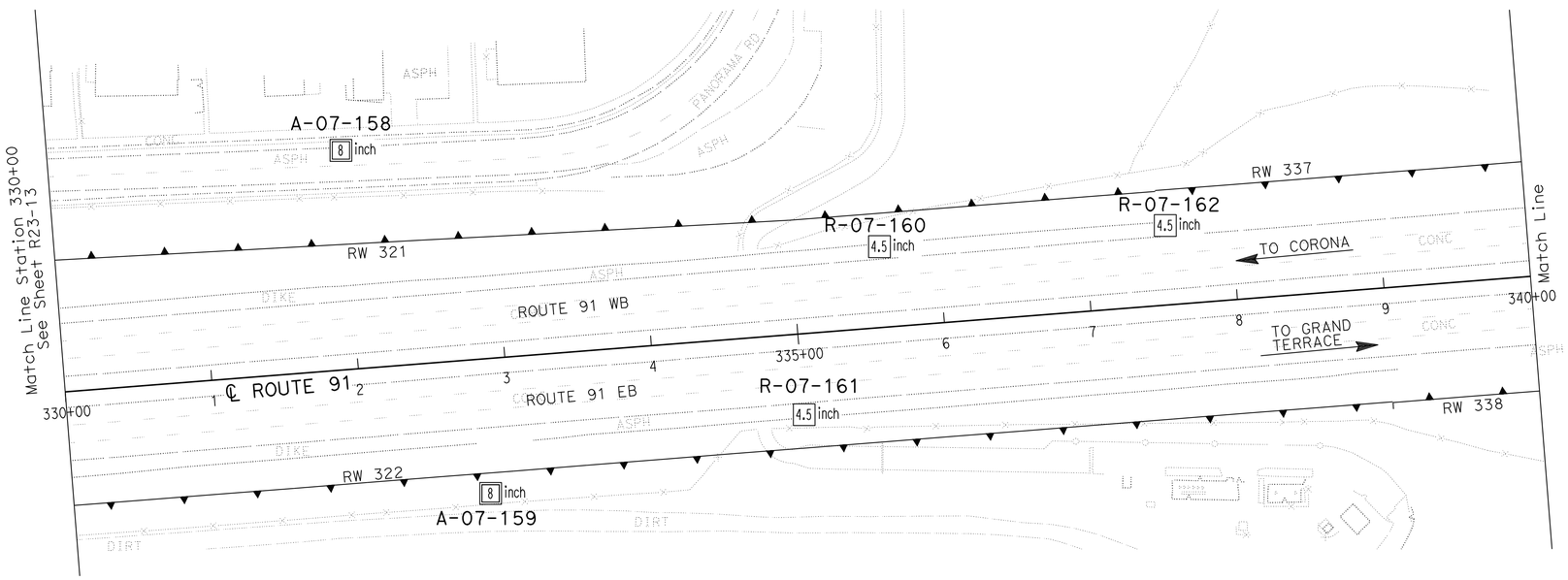

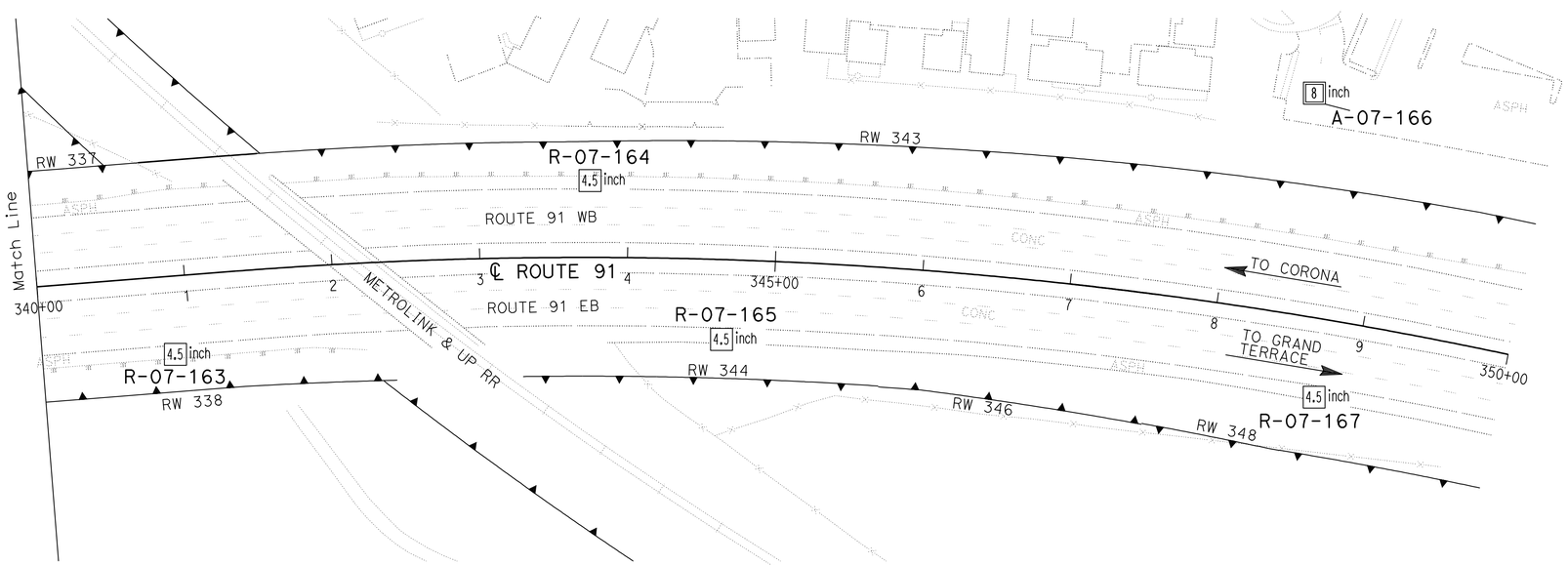

PLAN
SCALE 1"=50'

Borehole Number	Drill Rig	Hammer Type	Avg. Hammer Efficiency, ETR (%)
A-07-158	Diedrich D-120	Automatic	75*
A-07-159	Diedrich D-120	Automatic	75*
R-07-160	CME 85	Automatic	87
R-07-161	CS-2000	Automatic	84
R-07-162	CS-2000	Automatic	84
R-07-163	CME 85	Automatic	87
R-07-164	CS-2000	Automatic	84
R-07-165	CS-2000	Automatic	84
A-07-166	Diedrich D-120	Automatic	75*
R-07-167	Acker Rig	Automatic	74

Sampler Type	Inside Diameter (Inches)	Borehole Numbers
SPT	1.375	A-07-158, A-07-159, R-07-60 R-07-161, R-07-162, R-07-163 R-07-164, R-07-165, A-07-166 R-07-177
Modified California 1	1.94	R-07-160, R-07-162, R-07-163 R-07-164, R-07-165, R-07-167
Modified California 2	2.40	A-07-158, A-07-159, A-07-166

*Estimated Hammer Efficiency Rating.

DESIGN OVERSIGHT X SIGN OFF DATE	GINA PURSELL FUNCTIONAL SUPERVISOR	DRAWN BY	P. QUACH	P.CHAU/D.WADER/C.CARBINO FIELD INVESTIGATION BY: DATE: Nov 6 2007 to March 7 2008	PREPARED FOR THE STATE OF CALIFORNIA DEPARTMENT OF TRANSPORTATION	A. LEE PROJECT ENGINEER	BRIDGE NO. X POST MILE X
		CHECKED BY	S. PIRATHIVIRAJ				

RETAINING WALL 321 — R23-14

LOG OF TEST BORINGS 5 OF 5

OSF GEOTECHNICAL LOG OF TEST BORINGS SHEET (ENGLISH) (REV. 2/25/05)

ORIGINAL SCALE IN INCHES FOR REDUCED PLANS 0 1 2 3

CU 59A0590
EA 08-448400

DISREGARD PRINTS BEARING EARLIER REVISION DATES

REVISION DATES (PRELIMINARY STAGE ONLY) X

SHEET 5 OF 5

FILE => 844840qw014.dgn

USERNAME => trmoguye DATE PLOTTED => 30-APR-2011 TIME PLOTTED =>

Dist	COUNTY	ROUTE	POST MILES TOTAL PROJECT	SHEET No.	TOTAL SHEETS
08	Riv	91	15.6/21.6	951	2028

REGISTERED CIVIL ENGINEER 12-1-10 DATE

4-25-11
PLANS APPROVAL DATE

REGISTERED PROFESSIONAL ENGINEER CUONG LE TRAN No. C60436 Exp. 6-30-12 CIVIL STATE OF CALIFORNIA

THE STATE OF CALIFORNIA OR ITS OFFICERS OR AGENTS SHALL NOT BE RESPONSIBLE FOR THE ACCURACY OR COMPLETENESS OF SCANNED COPIES OF THIS PLAN SHEET.

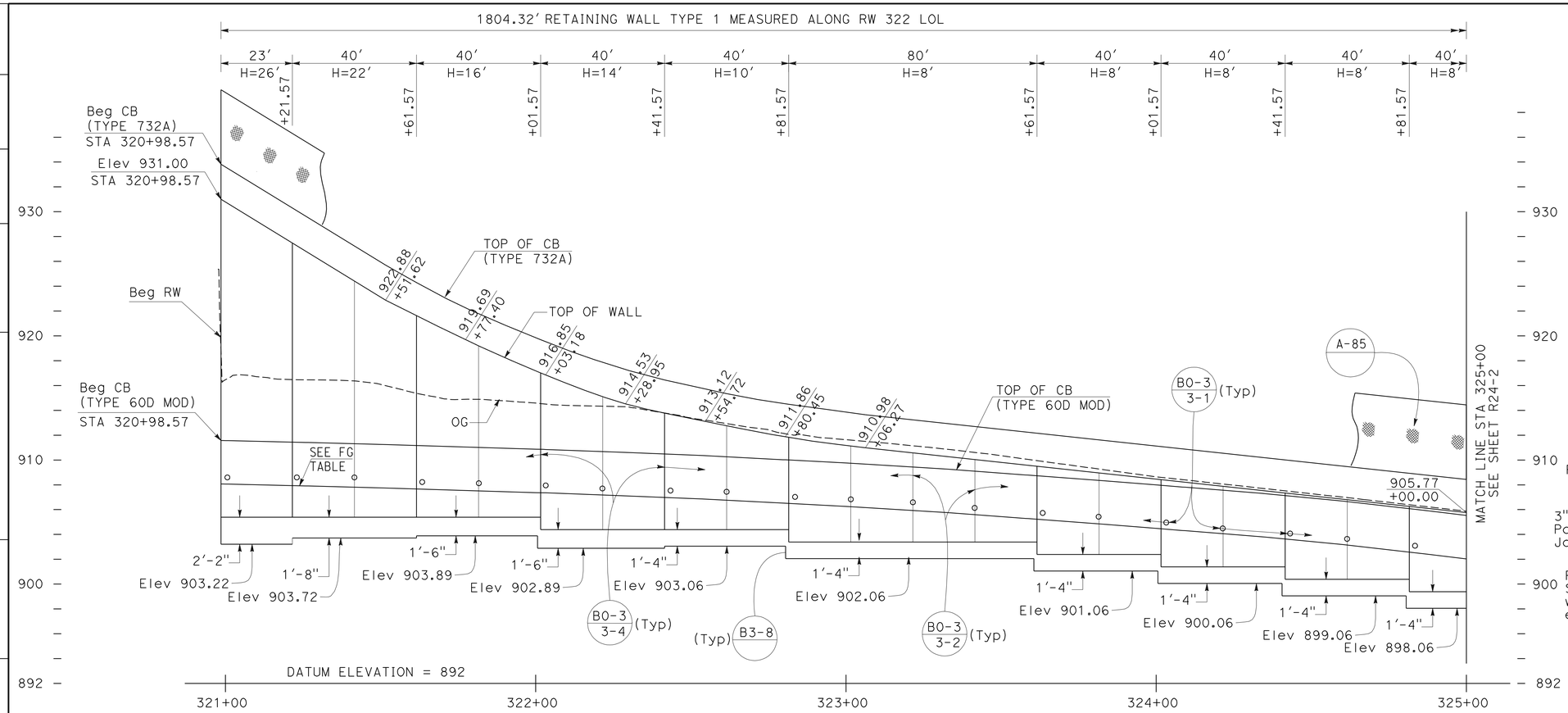

ELEVATION

SCALE Horiz 1"=20'
Vert 1"=5'

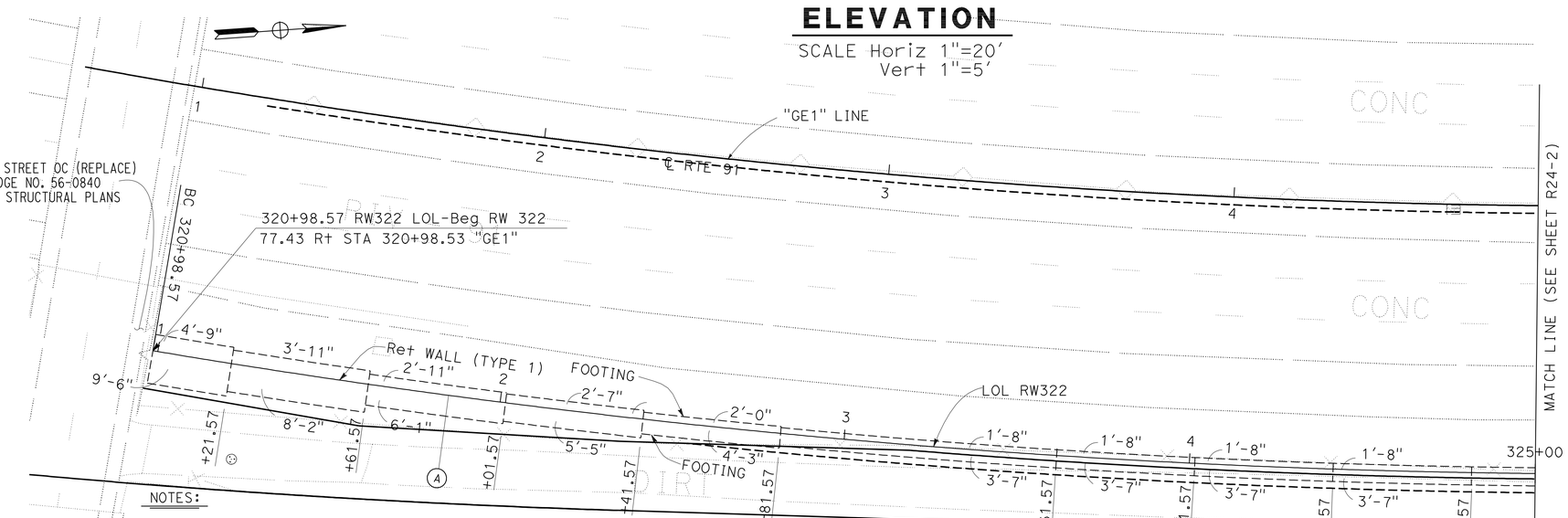

NOTES:

1. ARCHITECTURAL TREATMENT SHOULD EXTEND 6 IN BELOW FG OR 6 IN BELOW TOP CB (TYPE 60D MOD)
2. FOR STRUCTURAL SECTIONS, SEE ROADWAY PLANS
3. FOR POST ANCHORAGE DETAILS, SEE B11-52
4. FOR ROUNDING DETAILS, SEE ARCHITECTURAL TREATMENT PLANS

PLAN

SCALE: 1"=20'

CURVE DATA

No.	R	Δ	T	L
A	2577.43'	10°58'02"	247.43'	493.35'

THIS PLAN ACCURATE FOR RETAINING WALL WORK ONLY.

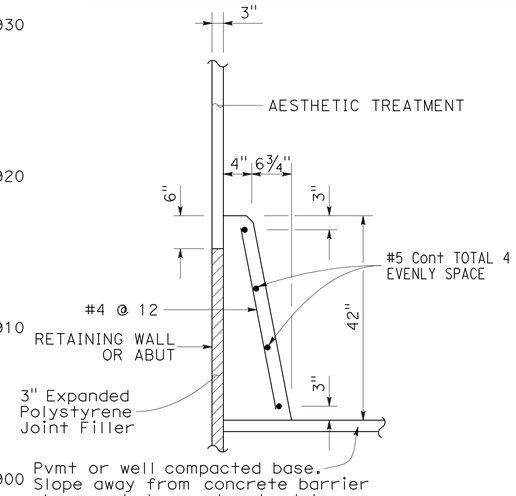

CONCRETE BARRIER (TYPE 60D MOD)

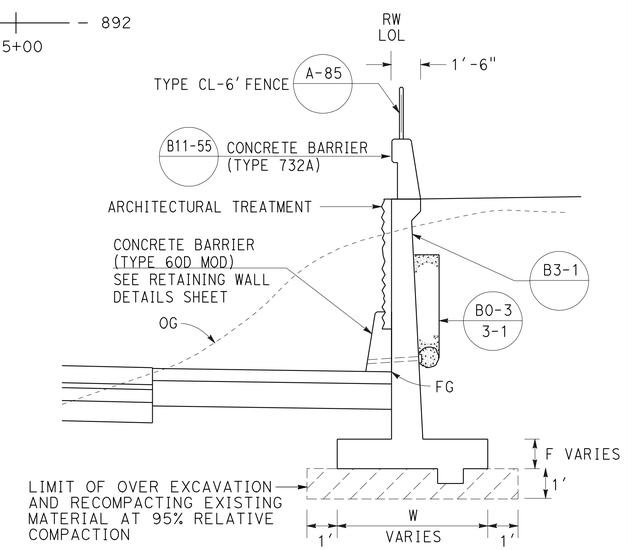

TYPICAL SECTION

NO SCALE
FROM STA 320+98.57 TO STA 328+50.00

RETAINING WALL PLAN
RETAINING WALL No. 322

SCALE AS SHOWN

R24-1

REVISED BY | DATE REVISED
ANNABELL WANG | CUONG LE TRAN
CALCULATED-DESIGNED BY | CHECKED BY
FUNCTIONAL SUPERVISOR: MARK PERTILE

STATE OF CALIFORNIA - DEPARTMENT OF TRANSPORTATION
DESIGN
Caltrans

LAST REVISION | DATE PLOTTED => 30-APR-2011
12-01-10 | TIME PLOTTED => 07:24

Dist	COUNTY	ROUTE	POST MILES TOTAL PROJECT	SHEET No.	TOTAL SHEETS
08	Riv	91	15.6/21.6	952	2028

REGISTERED CIVIL ENGINEER 12-1-10 DATE

4-25-11
PLANS APPROVAL DATE

REGISTERED PROFESSIONAL ENGINEER CUONG LE TRAN No. C60436 Exp. 6-30-12 CIVIL STATE OF CALIFORNIA

THE STATE OF CALIFORNIA OR ITS OFFICERS OR AGENTS SHALL NOT BE RESPONSIBLE FOR THE ACCURACY OR COMPLETENESS OF SCANNED COPIES OF THIS PLAN SHEET.

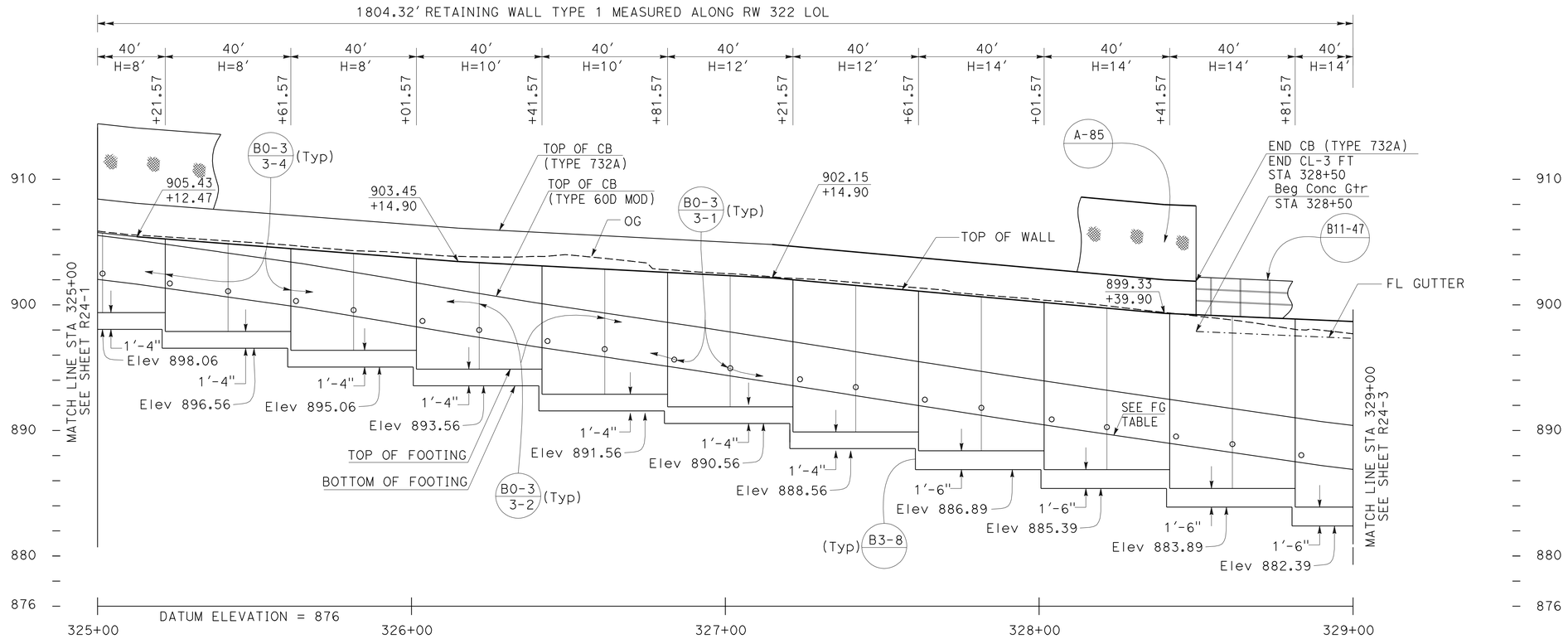

ELEVATION

SCALE Horiz 1"=20'
Vert 1"=5'

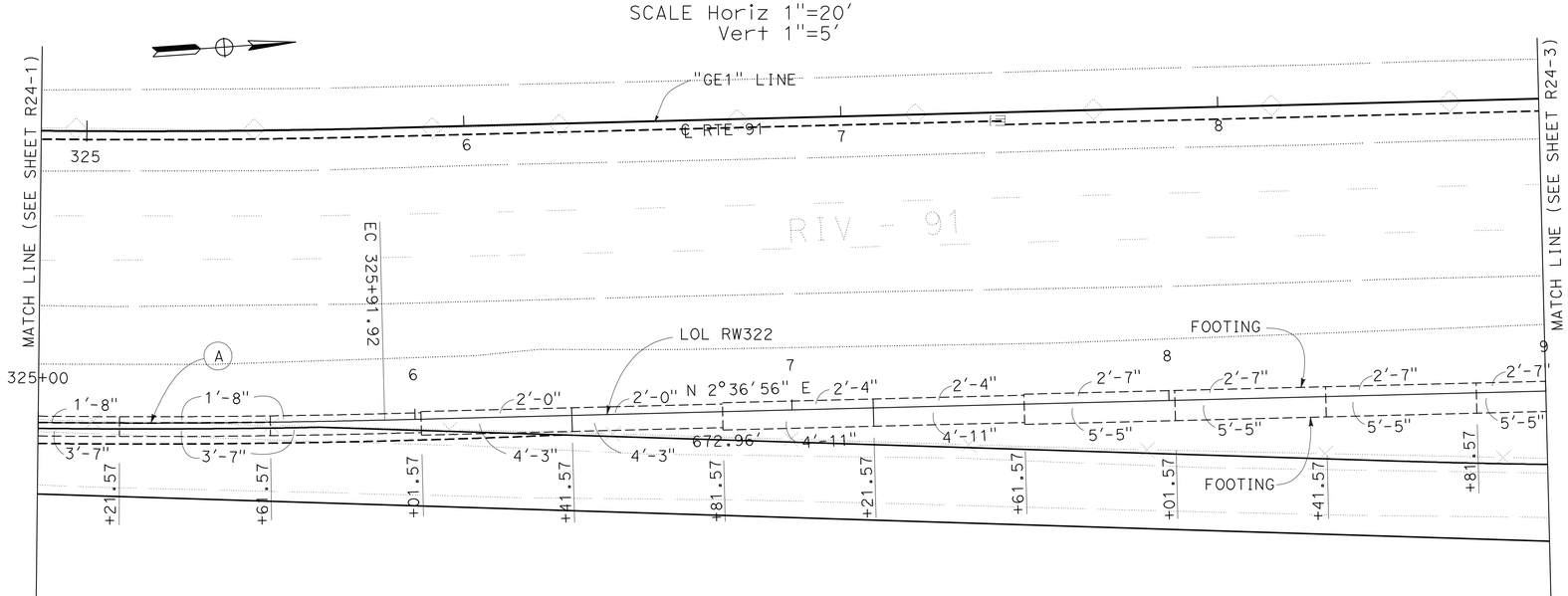

PLAN

SCALE: 1"=20'

CURVE DATA

No.	R	Δ	T	L
(A)	2577.43'	10°58'02"	247.43'	494.35'

THIS PLAN ACCURATE FOR RETAINING WALL WORK ONLY.

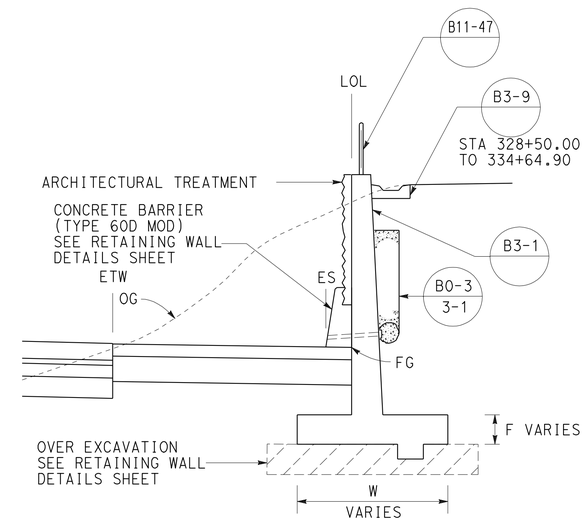

TYPICAL SECTION

NO SCALE
FROM STA 328+50.00 TO STA 339+02.89

RETAINING WALL PLAN
RETAINING WALL No. 322
SCALE AS SHOWN

R24-2

STATE OF CALIFORNIA - DEPARTMENT OF TRANSPORTATION
Caltrans DESIGN

FUNCTIONAL SUPERVISOR: MARK PERTILE
CALCULATED-DESIGNED BY: ANNABELL WANG
CHECKED BY: CUONG LE TRAN
REVISED BY / DATE REVISED

LAST REVISION 12-01-10 | DATE PLOTTED => 30-APR-2011 | TIME PLOTTED => 07:24

Dist	COUNTY	ROUTE	POST MILES TOTAL PROJECT	SHEET No.	TOTAL SHEETS
08	Riv	91	15.6/21.6	953	2028

REGISTERED CIVIL ENGINEER 12-1-10 DATE

4-25-11
PLANS APPROVAL DATE

REGISTERED PROFESSIONAL ENGINEER CUONG LE TRAN No. C60436 Exp. 6-30-12 CIVIL STATE OF CALIFORNIA

THE STATE OF CALIFORNIA OR ITS OFFICERS OR AGENTS SHALL NOT BE RESPONSIBLE FOR THE ACCURACY OR COMPLETENESS OF SCANNED COPIES OF THIS PLAN SHEET.

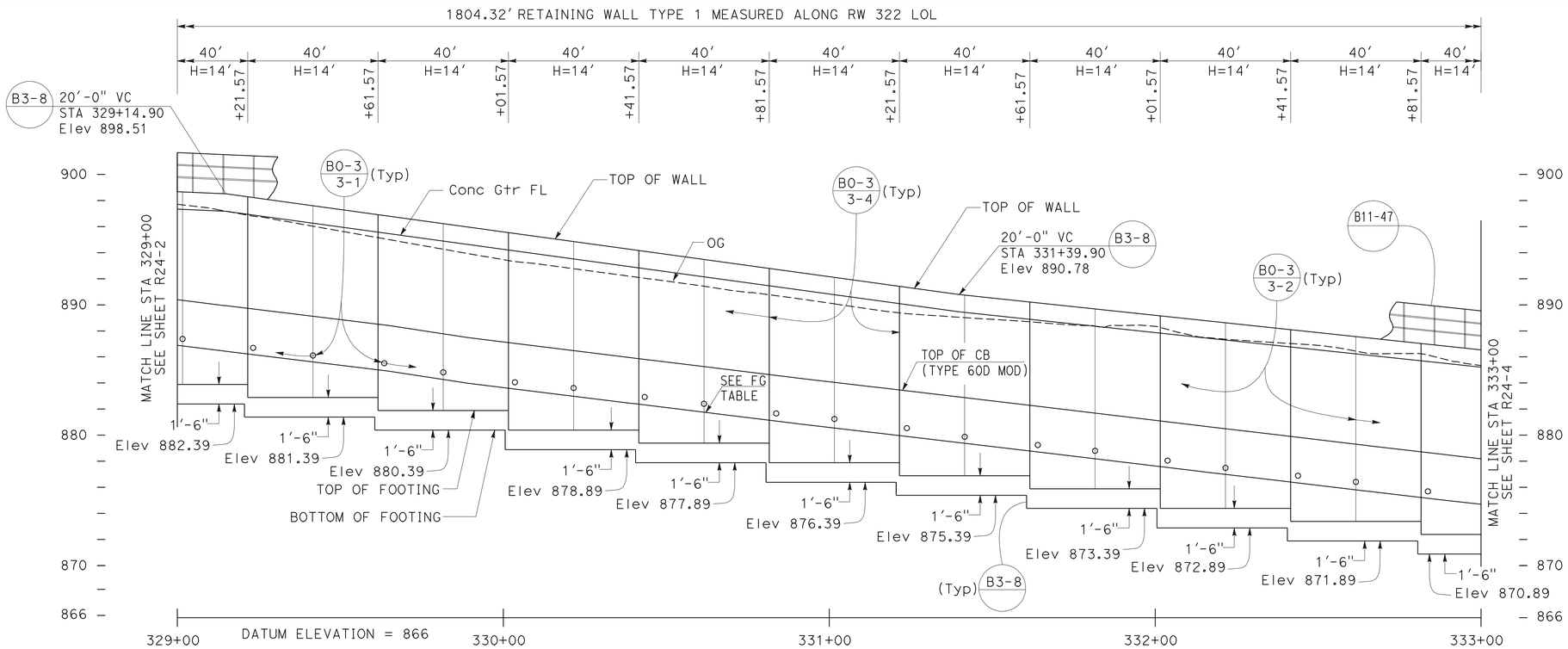

ELEVATION

SCALE Horiz 1"=20'
Vert 1"=5'

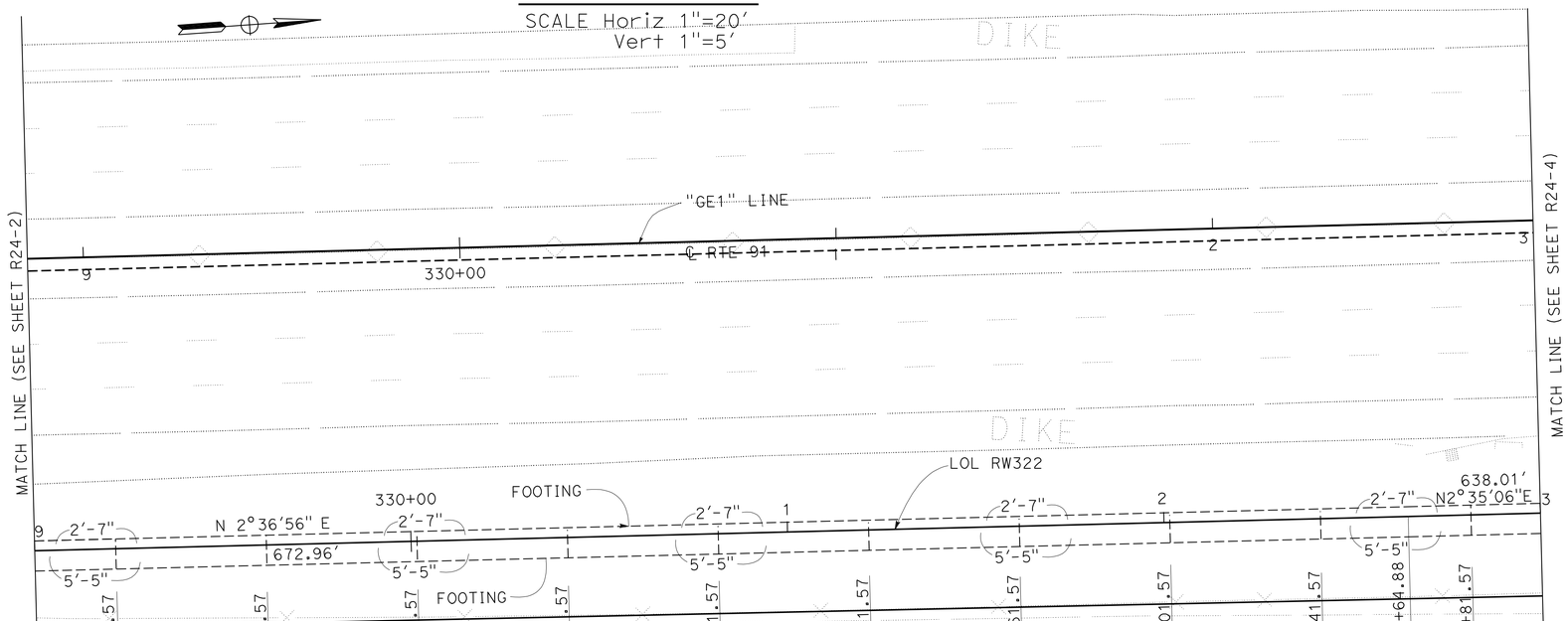

PLAN

SCALE: 1"=20'

THIS PLAN ACCURATE FOR RETAINING WALL WORK ONLY.

FINISHED GRADE (FG) TABLE			
STATION	ELEVATION	STATION	ELEVATION
321+00.00	908.06	330+25.00	882.88
321+25.00	907.92	330+50.00	882.11
321+50.00	907.75	330+75.00	881.35
321+75.00	907.56	331+00.00	880.60
322+00.00	907.37	331+25.00	879.86
322+25.00	907.15	331+50.00	879.13
322+50.00	906.89	331+75.00	878.39
322+75.00	906.58	332+00.00	887.64
323+00.00	906.26	332+25.00	876.89
323+25.00	905.88	332+50.00	876.15
323+50.00	905.44	332+75.00	875.41
323+75.00	904.98	333+00.00	874.70
324+00.00	904.49	333+25.00	873.99
324+25.00	903.99	333+50.00	873.28
324+50.00	903.43	333+75.00	872.58
324+75.00	902.77	334+00.00	871.86
325+00.00	902.03	334+25.00	871.12
325+25.00	901.22	334+50.00	870.38
325+50.00	900.33	334+75.00	869.65
325+75.00	899.38	335+00.00	868.93
326+00.00	898.33	335+25.00	868.22
326+25.00	897.28	335+50.00	867.50
326+50.00	896.29	335+75.00	866.79
326+75.00	895.35	336+00.00	866.07
327+00.00	894.40	336+25.00	865.36
327+25.00	893.43	336+50.00	864.64
327+50.00	892.45	336+75.00	863.92
327+75.00	891.47	337+00.00	863.20
328+00.00	890.50	337+25.00	862.48
328+25.00	889.58	337+50.00	861.76
328+50.00	888.66	337+75.00	861.05
328+75.00	887.75	338+00.00	860.36
329+00.00	886.89	338+25.00	859.67
329+25.00	886.12	338+50.00	858.96
329+50.00	885.36	338+75.00	858.20
329+75.00	884.52	339+00.00	857.41
330+00.00	883.65		

RETAINING WALL PLAN
RETAINING WALL No. 322
SCALE AS SHOWN

R24-3

STATE OF CALIFORNIA - DEPARTMENT OF TRANSPORTATION
Caltrans® DESIGN

FUNCTIONAL SUPERVISOR: MARK PERTILE
CALCULATED-DESIGNED BY: ANNABELL WANG
CHECKED BY: CUONG LE TRAN
REVISED BY
DATE REVISED

LAST REVISION 12-01-10
DATE PLOTTED => 30-APR-2011
TIME PLOTTED => 07:24

Dist	COUNTY	ROUTE	POST MILES TOTAL PROJECT	SHEET No.	TOTAL SHEETS
08	Riv	91	15.6/21.6	954	2028

REGISTERED CIVIL ENGINEER 12-1-10 DATE

4-25-11
PLANS APPROVAL DATE

REGISTERED PROFESSIONAL ENGINEER CUONG LE TRAN No. C60436 Exp. 6-30-12 CIVIL STATE OF CALIFORNIA

THE STATE OF CALIFORNIA OR ITS OFFICERS OR AGENTS SHALL NOT BE RESPONSIBLE FOR THE ACCURACY OR COMPLETENESS OF SCANNED COPIES OF THIS PLAN SHEET.

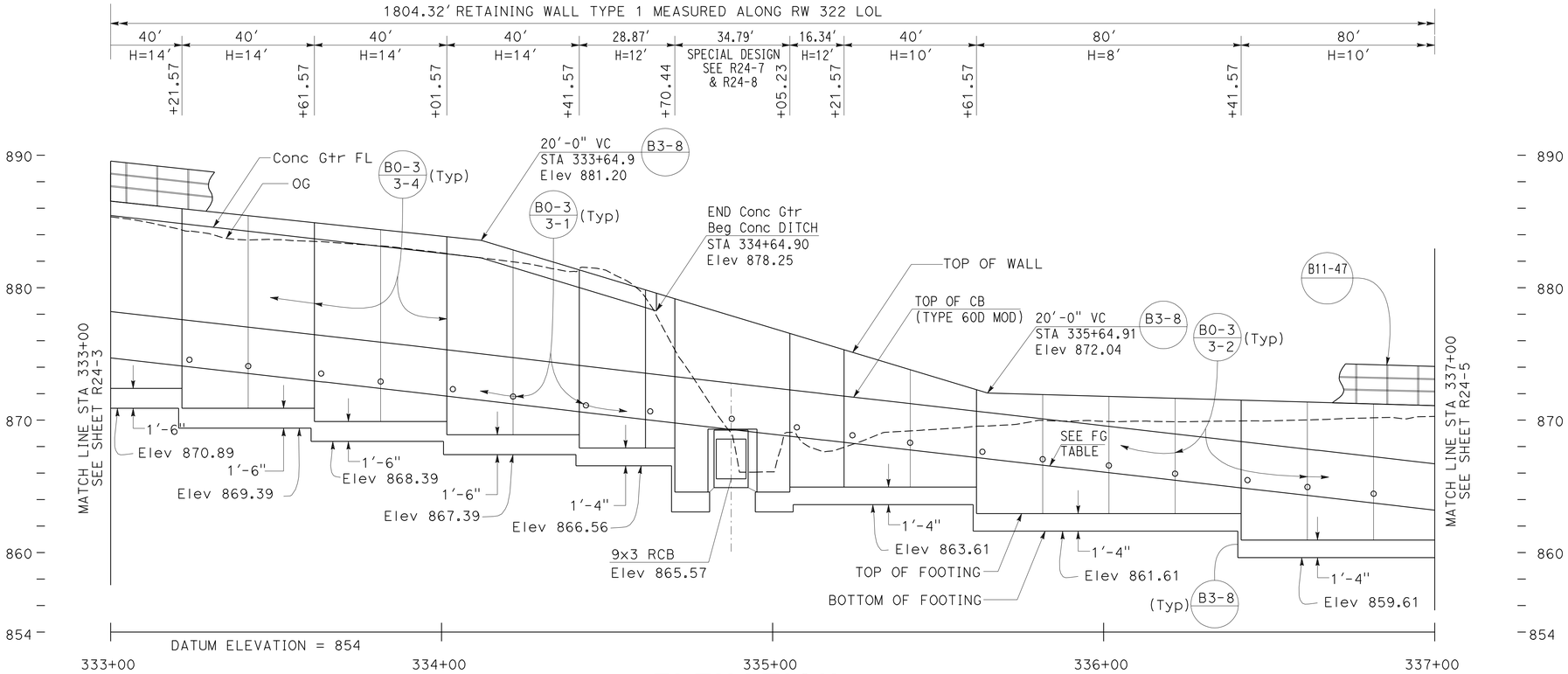

ELEVATION

SCALE Horiz 1"=20'
Vert 1"=5'

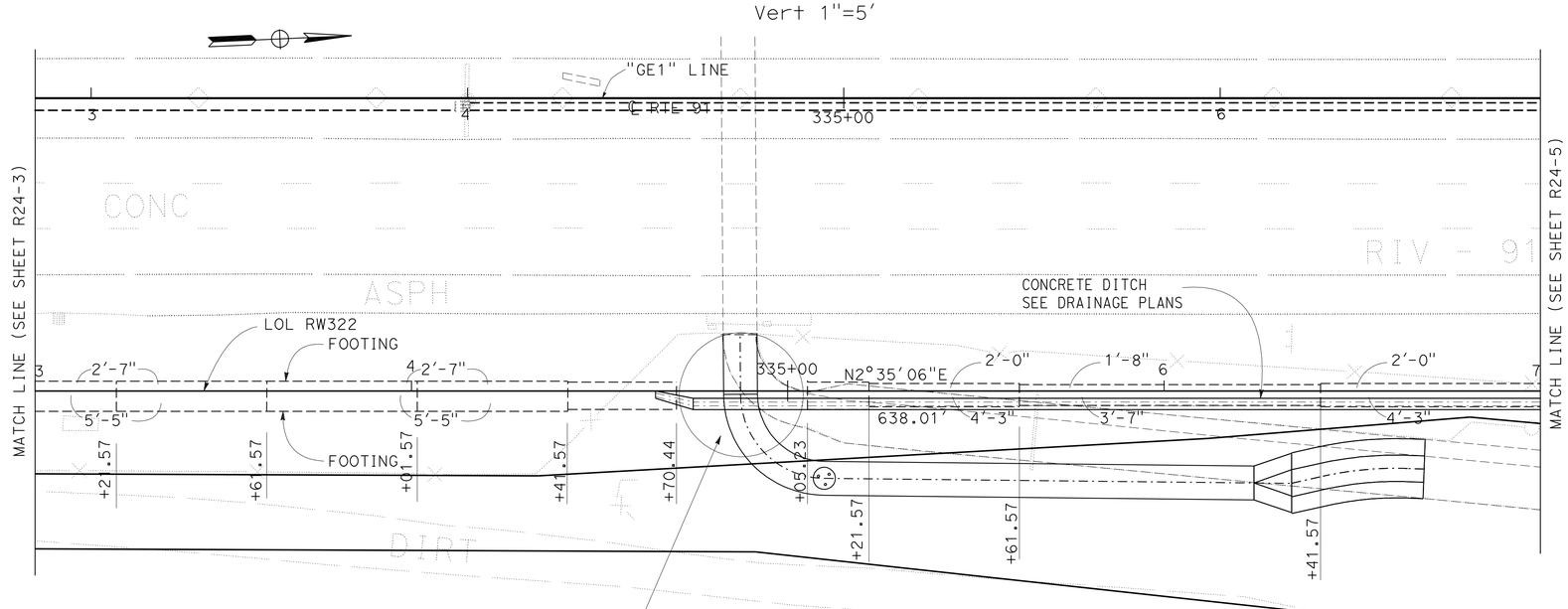

PLAN

SCALE: 1"=20'

THIS PLAN ACCURATE FOR RETAINING WALL WORK ONLY.

RETAINING WALL PLAN
RETAINING WALL No. 322
SCALE AS SHOWN

R24-4

REVISED BY | DATE REVISED
ANNABELL WANG | CUONG LE TRAN
CALCULATED-DESIGNED BY | CHECKED BY
FUNCTIONAL SUPERVISOR: MARK PERTILE

STATE OF CALIFORNIA - DEPARTMENT OF TRANSPORTATION
Caltrans
DESIGN

LAST REVISION 12-01-10 | DATE PLOTTED => 30-APR-2011 | TIME PLOTTED => 07:25

Dist	COUNTY	ROUTE	POST MILES TOTAL PROJECT	SHEET No.	TOTAL SHEETS
08	Riv	91	15.6/21.6	955	2028

REGISTERED CIVIL ENGINEER 12-1-10 DATE

4-25-11
PLANS APPROVAL DATE

REGISTERED PROFESSIONAL ENGINEER CUONG LE TRAN No. C60436 Exp. 6-30-12 CIVIL STATE OF CALIFORNIA

THE STATE OF CALIFORNIA OR ITS OFFICERS OR AGENTS SHALL NOT BE RESPONSIBLE FOR THE ACCURACY OR COMPLETENESS OF SCANNED COPIES OF THIS PLAN SHEET.

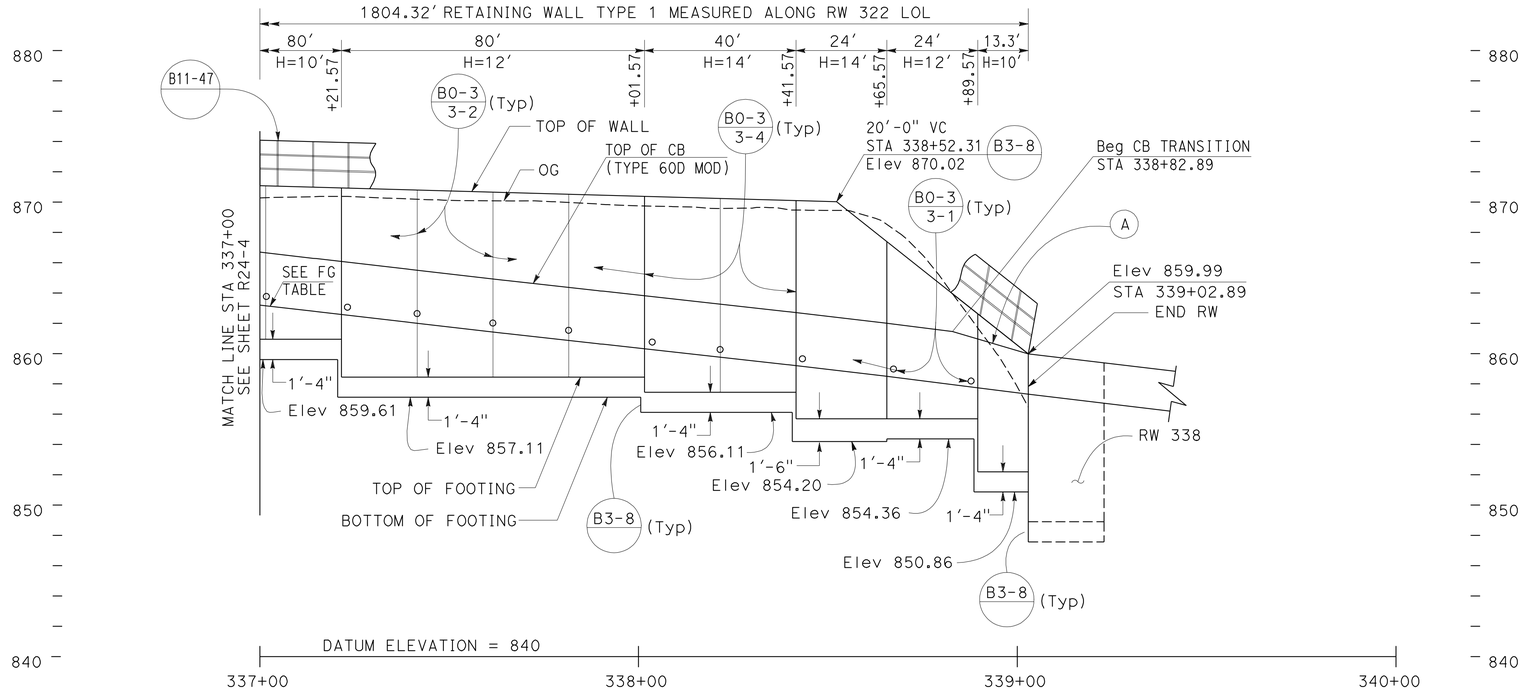

ELEVATION

SCALE Horiz 1"=20'
Vert 1"=5'

(A) CONCRETE BARRIER (TYPE 60 D MOD) TRANSITION TO CONCRETE BARRIER 732 SEE RETAINING WALL DETAILS

QUANTITIES

STRUCTURAL CONCRETE (RETAINING WALL)	1824.20	CY
BAR REINFORCING STEEL (RETAINING WALL)	171004	LB
STRUCTURAL EXCAVATION (RETAINING WALL)	8266.20	CY
STRUCTURAL BACKFILL (RETAINING WALL)	4312.70	CY
PERVIOUS BACKFILL MATERIAL (RETAINING WALL)	336.92	CY
CONCRETE BARRIER (TYPE 60D MOD)	1804.32	LF
CONCRETE BARRIER (TYPE 732A)	751.43	LF
CABLE RAILING	1052.89	LF
MINOR CONCRETE (GUTTER)	614.90	LF
PLASTIC PIPE (N)	124.54	LF
WATERSTOP (N)	515.88	LF
CHAIN LINK FENCE (TYPE CL-6)	751.43	LF
ARCHITECTURAL SURFACE (TEXTURED CONCRETE)	10750.63	SF

(N) = NOT A SEPARATE PAY ITEM, FOR INFORMATION ONLY

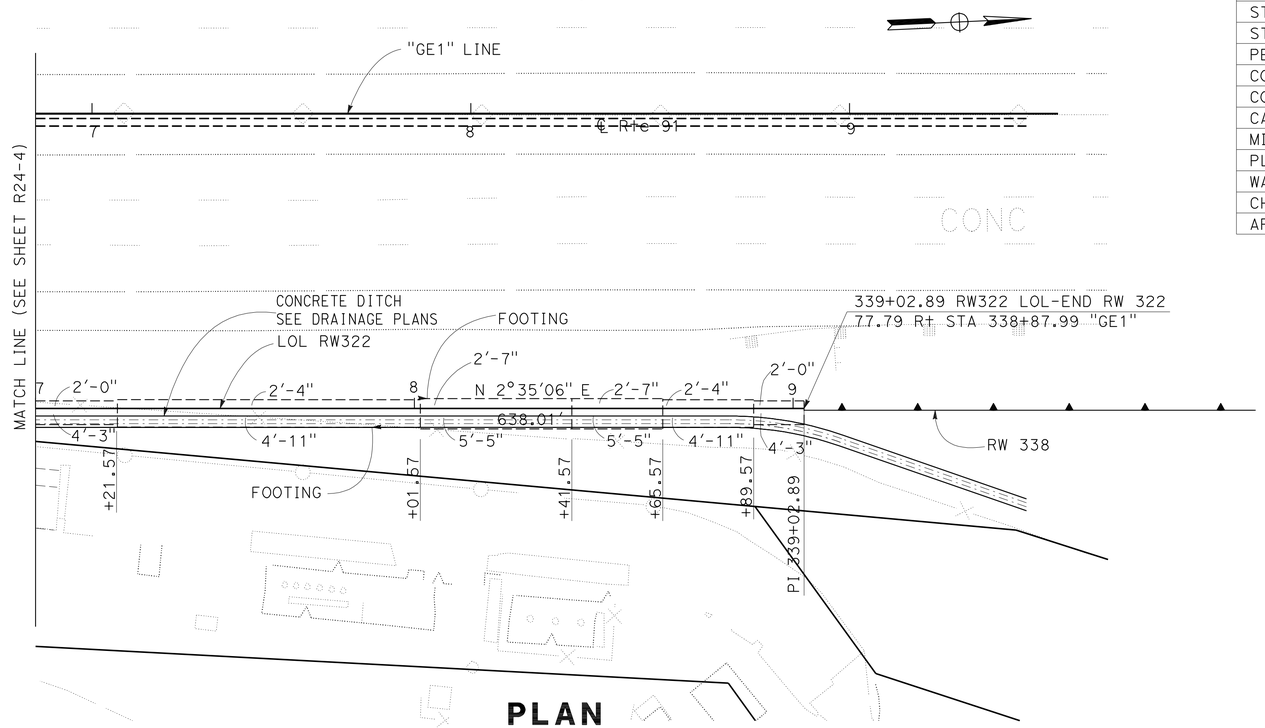

PLAN

SCALE: 1"=20'

THIS PLAN ACCURATE FOR RETAINING WALL WORK ONLY.

RETAINING WALL PLAN
RETAINING WALL No. 322

SCALE AS SHOWN **R24-5**

STATE OF CALIFORNIA - DEPARTMENT OF TRANSPORTATION
Caltrans DESIGN
FUNCTIONAL SUPERVISOR: MARK PERTILE
CALCULATED-DESIGNED BY: ANNABELL WANG
CHECKED BY: CUONG LE TRAN
REVISED BY / DATE REVISED

LAST REVISION 12-01-10
DATE PLOTTED => 30-APR-2011
TIME PLOTTED => 07:01

Dist	COUNTY	ROUTE	POST MILES TOTAL PROJECT	SHEET No.	TOTAL SHEETS
08	Riv	91	15.6/21.6	956	2028

REGISTERED CIVIL ENGINEER 12-1-10 DATE

4-25-11
PLANS APPROVAL DATE

REGISTERED PROFESSIONAL ENGINEER CUONG LE TRAN No. C60436 Exp. 6-30-12 CIVIL STATE OF CALIFORNIA

THE STATE OF CALIFORNIA OR ITS OFFICERS OR AGENTS SHALL NOT BE RESPONSIBLE FOR THE ACCURACY OR COMPLETENESS OF SCANNED COPIES OF THIS PLAN SHEET.

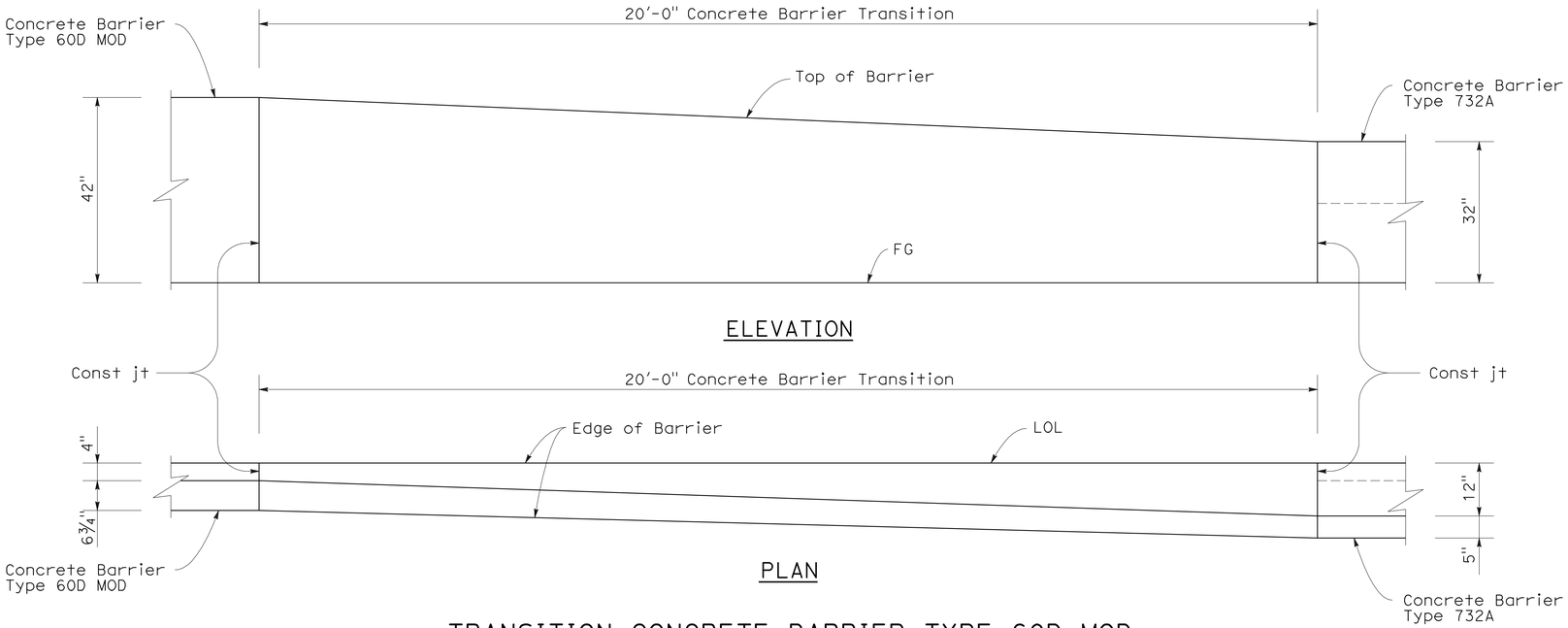

TRANSITION CONCRETE BARRIER TYPE 60D MOD TO CONCRETE BARRIER TYPE 732

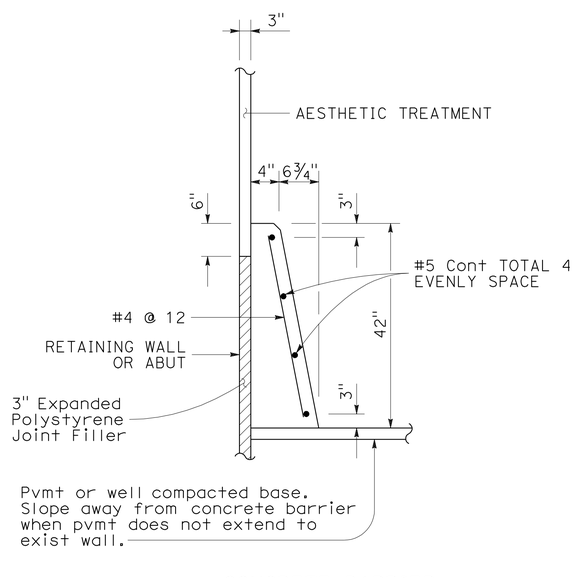

CONCRETE BARRIER (TYPE 60D MOD)

THIS PLAN ACCURATE FOR RETAINING WALL WORK ONLY.

RETAINING WALL DETAILS
RETAINING WALL No. 322
NO SCALE

R24-6

REVISED BY	DATE REVISED

CALCULATED-DESIGNED BY	CHECKED BY
ANNABELL WANG	CUONG LE TRAN

FUNCTIONAL SUPERVISOR: MARK PERTILE

STATE OF CALIFORNIA - DEPARTMENT OF TRANSPORTATION
Caltrans®
DESIGN

LAST REVISION 12-01-10 | DATE PLOTTED => 30-APR-2011 | TIME PLOTTED => 07:01

Dist	COUNTY	ROUTE	POST MILES TOTAL PROJECT	SHEET No.	TOTAL SHEETS
08	Riv	91	15.6/21.6	957	2028

REGISTERED CIVIL ENGINEER 12-1-10 DATE

4-25-11
PLANS APPROVAL DATE

REGISTERED PROFESSIONAL ENGINEER MINH THUONG VO No. C59297 Exp. 06/30/11 CIVIL STATE OF CALIFORNIA

THE STATE OF CALIFORNIA OR ITS OFFICERS OR AGENTS SHALL NOT BE RESPONSIBLE FOR THE ACCURACY OR COMPLETENESS OF SCANNED COPIES OF THIS PLAN SHEET.

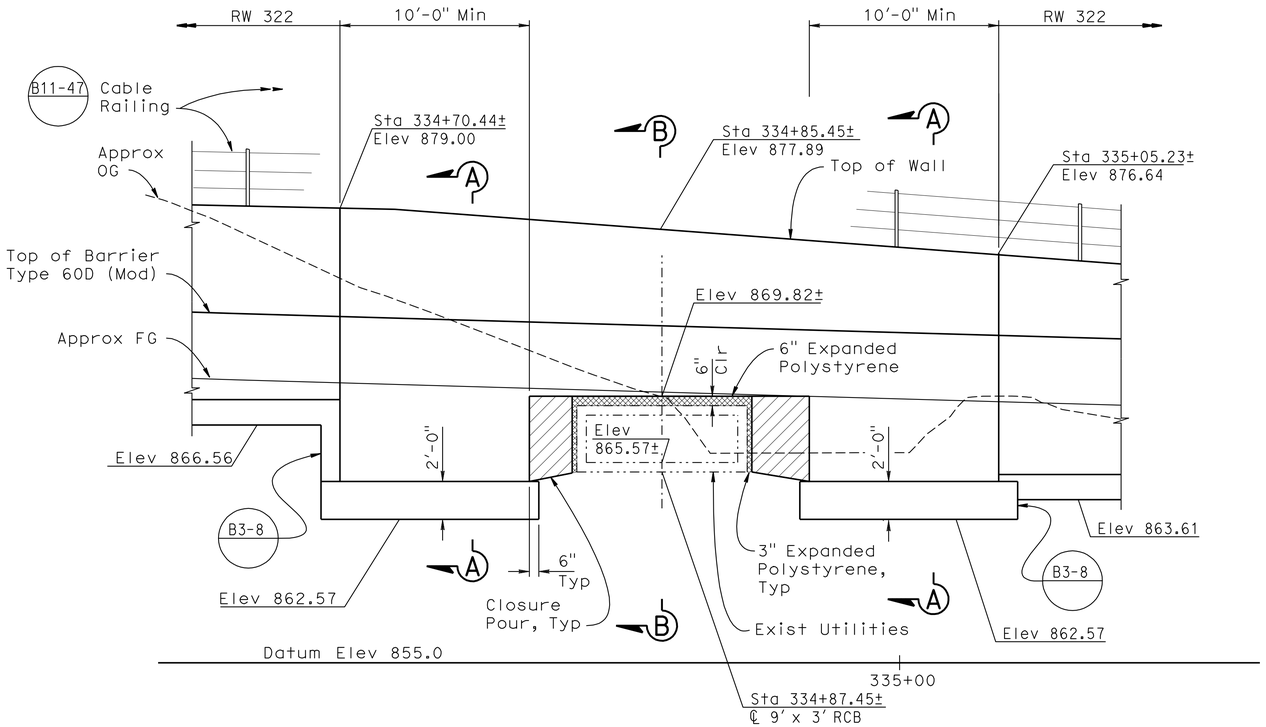

DEVELOPED MIRROR ELEVATION

1/4"=1'-0"

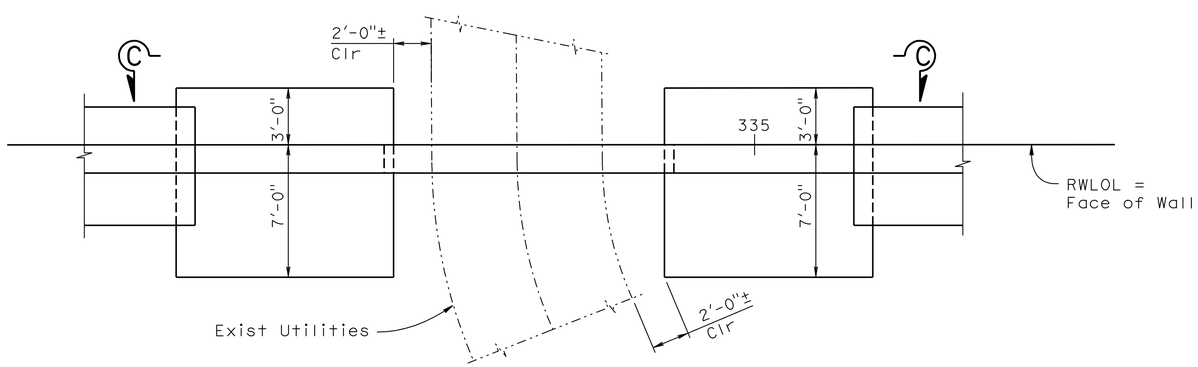

PLAN

1/4"=1'-0"

Sta 334+70.44 to Sta 335+05.23

DESIGN DATA

DESIGN: Bridge Design Specification
(1996 AASHTO with Revisions by Caltrans)

LOADING CASE:
1. Level slope with 240 psf Max. surcharge

CONCRETE: n = 9, f'c = 3600 psi, fc = 1440 psi

REINFORCING STEEL: fy = 60,000 psi, fs = 24,000 psi

SOIL PARAMETERS: (for determination of design lateral earth pressure)
ø = 36° γ = 120 pcf

NOTE:
THE CONTRACTOR SHALL VERIFY ALL CONTROLLING FIELD DIMENSIONS BEFORE ORDERING OR FABRICATING ANY MATERIAL.

THIS PLAN ACCURATE FOR RETAINING WALL WORK ONLY.

RETAINING WALL DETAILS

RETAINING WALL No. 322

SCALE AS SHOWN **R24-7**

STATE OF CALIFORNIA - DEPARTMENT OF TRANSPORTATION
Caltrans
DESIGN

FUNCTIONAL SUPERVISOR: DANIEL T. ADAMS
CALCULATED-DESIGNED BY: MINH VO
CHECKED BY: RYAN STILTZ
REVISED BY
DATE REVISED

LAST REVISION 12-01-10
DATE PLOTTED => 30-APR-2011
TIME PLOTTED => 07:02

Dist	COUNTY	ROUTE	POST MILES TOTAL PROJECT	SHEET No.	TOTAL SHEETS
08	Riv	91	15.6/21.6	958	2028

REGISTERED CIVIL ENGINEER 12-1-10 DATE

4-25-11
PLANS APPROVAL DATE

REGISTERED PROFESSIONAL ENGINEER MINH THUONG VO No. C59297 Exp. 06/30/11 CIVIL STATE OF CALIFORNIA

THE STATE OF CALIFORNIA OR ITS OFFICERS OR AGENTS SHALL NOT BE RESPONSIBLE FOR THE ACCURACY OR COMPLETENESS OF SCANNED COPIES OF THIS PLAN SHEET.

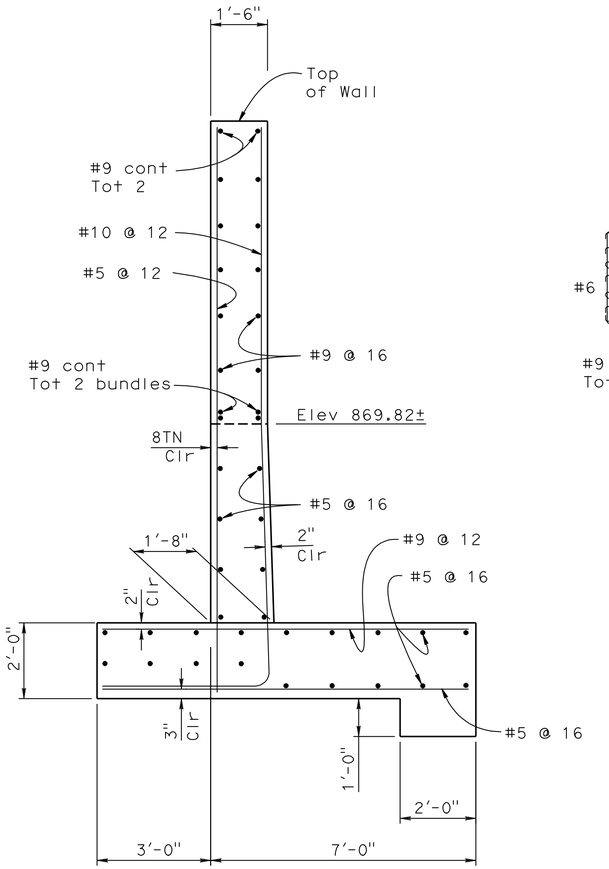

SECTION A-A
1/2 "=1'-0"

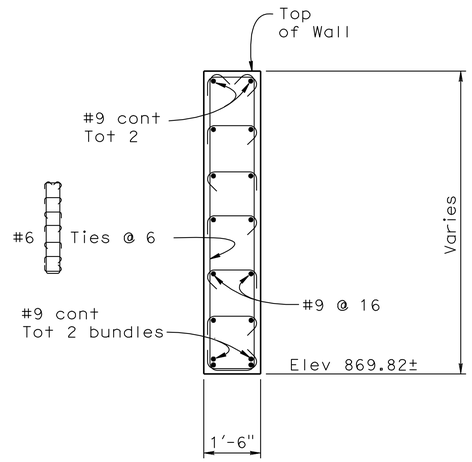

SECTION B-B
1/2 "=1'-0"

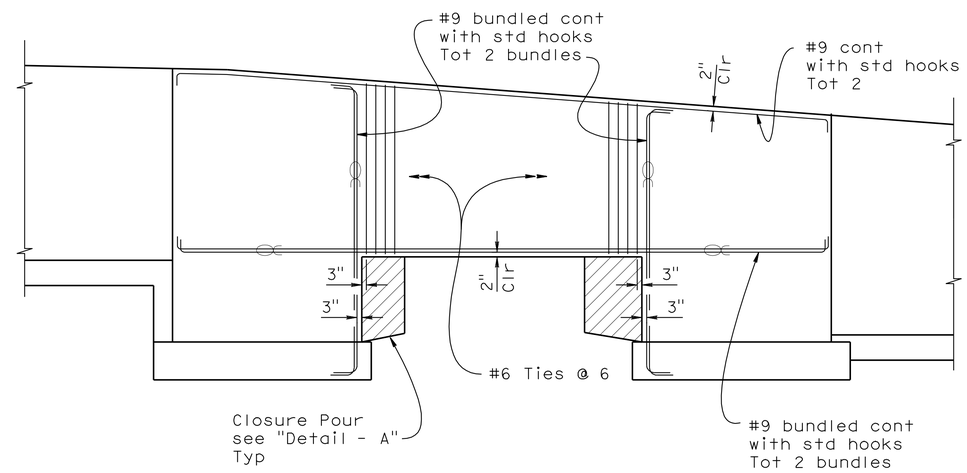

SECTION C-C
1/4"=1'-0"

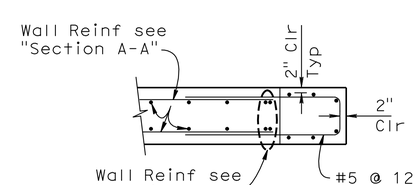

SECTION D-D
1/2" = 1'-0"

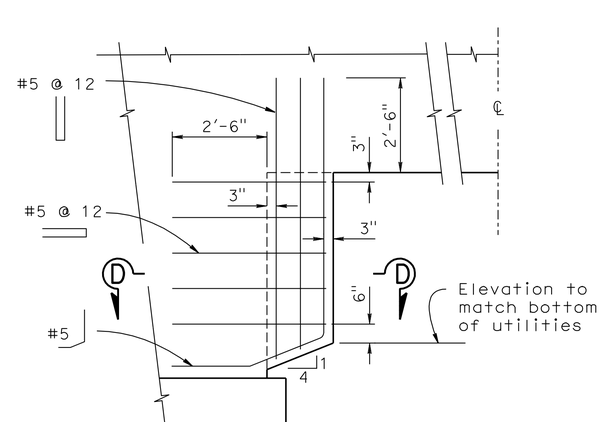

DETAIL - A
1/2" = 1'-0"

RETAINING WALL DETAILS
RETAINING WALL No. 322
SCALE AS SHOWN

R24-8

THIS PLAN ACCURATE FOR RETAINING WALL WORK ONLY.

STATE OF CALIFORNIA - DEPARTMENT OF TRANSPORTATION
Caltrans® DESIGN

FUNCTIONAL SUPERVISOR: DANIEL T. ADAMS
CALCULATED-DESIGNED BY: MINH VO
CHECKED BY: RYAN STILTZ
REVISED BY
DATE REVISED

LAST REVISION 12-01-10 | DATE PLOTTED => 30-APR-2011 | TIME PLOTTED => 07:02

BORDER LAST REVISED 4/11/2008 | RELATIVE BORDER SCALE IS IN INCHES 0 1 2 3 | USERNAME => trstrk | DGN FILE => 844840qx008.dgn | CU 08227 | EA 448401

Dist	COUNTY	ROUTE	POST MILES TOTAL PROJECT	SHEET No.	TOTAL SHEETS
08	Riv	91	15.6/21.6	959	2028

LICENSED LANDSCAPE ARCHITECT

4-25-11
PLANS APPROVAL DATE

LICENSED LANDSCAPE ARCHITECT
Matthew Harry Hall
Signature
10/31/2011
Renewal Date
12-1-10
Date
STATE OF CALIFORNIA

THE STATE OF CALIFORNIA OR ITS OFFICERS OR AGENTS SHALL NOT BE RESPONSIBLE FOR THE ACCURACY OR COMPLETENESS OF SCANNED COPIES OF THIS PLAN SHEET.

END IVY ST.
ABUTMENT WALL 1

BEGIN WALL 322
BEGIN ARCHITECTURAL SURFACE (TEXTURED CONCRETE)

NOTE:

SEE SHEET ASD-1, ASD-2, ASD-3 AND ASD-5.

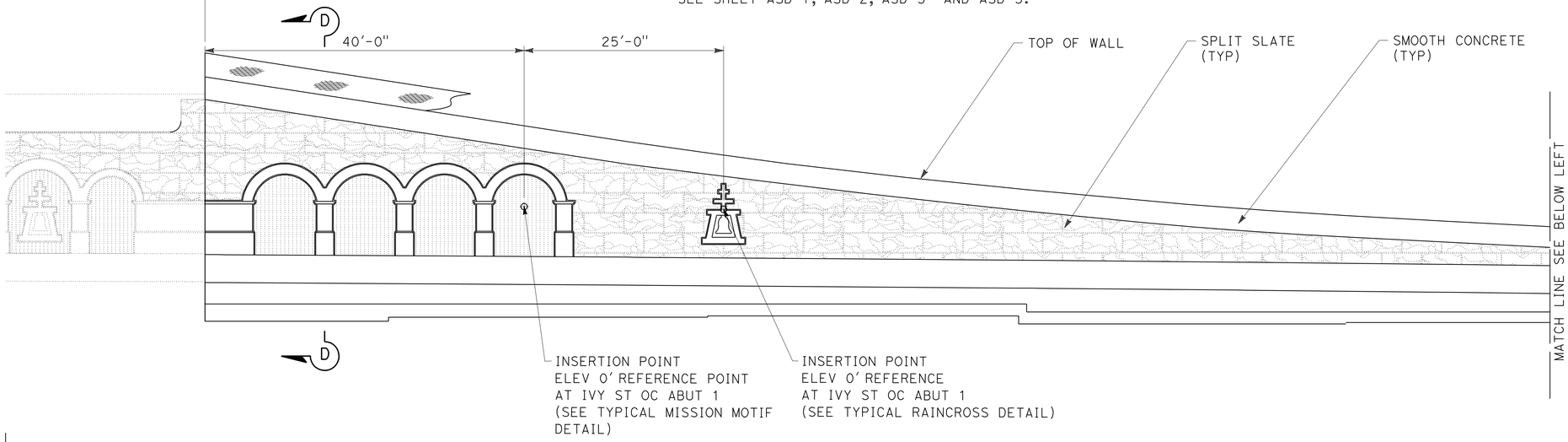

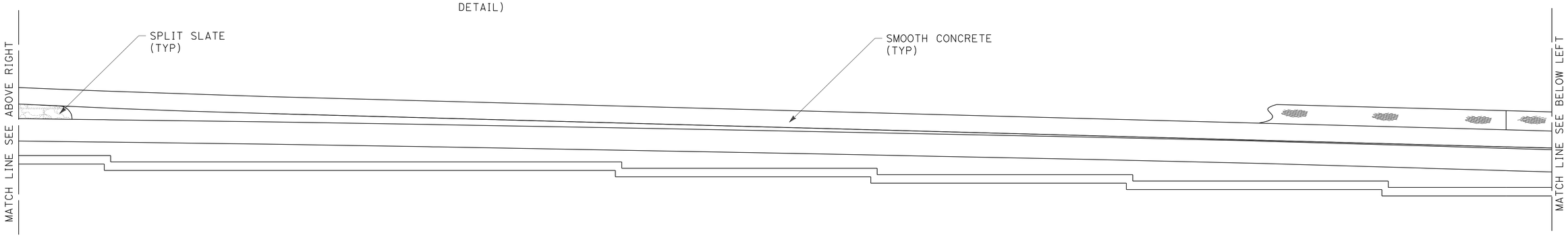

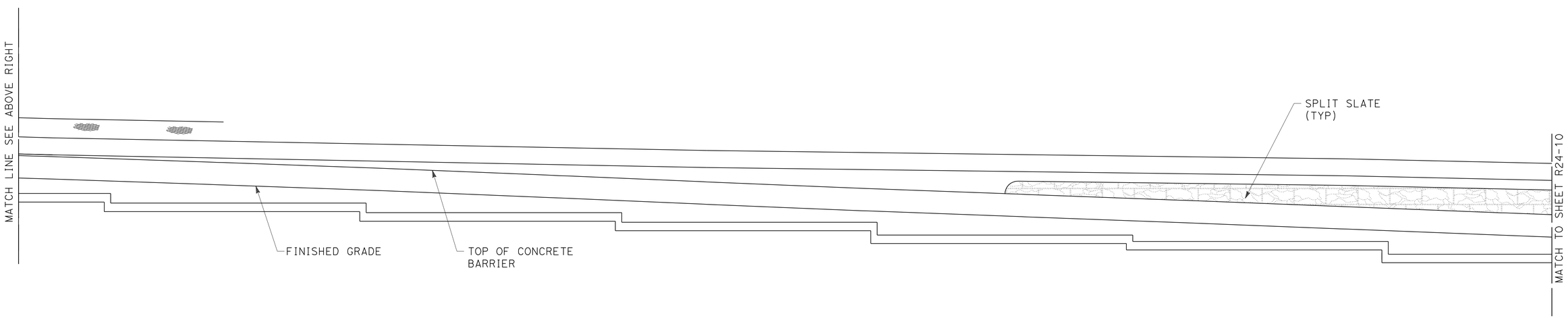

MIRRORED ELEVATION FOR SPLIT SLATE TEXTURE RETAINING WALL No. 322

THIS PLAN IS ACCURATE FOR ARCHITECTUAL TREATMENT WORK ONLY.

ARCHITECTURAL SURFACE
RETAINING WALL No. 322

SCALE: 1/8"=1'-0"

R24-9

REVISED BY	DATE REVISED
MATTHEW HALL	MIRIAM BISHOP
CALCULATED-DESIGNED BY	CHECKED BY
SENIOR LANDSCAPE ARCHITECT	BYRON STROUT

STATE OF CALIFORNIA - DEPARTMENT OF TRANSPORTATION
Caltrans® LANDSCAPE ARCHITECTURE

LAST REVISION 12-01-10 | DATE PLOTTED => 30-APR-2011 | TIME PLOTTED => 07:02

Dist	COUNTY	ROUTE	POST MILES TOTAL PROJECT	SHEET No.	TOTAL SHEETS
08	Riv	91	15.6/21.6	960	2028

LICENSED LANDSCAPE ARCHITECT

4-25-11
PLANS APPROVAL DATE

LICENSED LANDSCAPE ARCHITECT
Matthew Harry Hall
No. 2011
Signature
10/31/2011
Renewal Date
12-1-10
Date
STATE OF CALIFORNIA

THE STATE OF CALIFORNIA OR ITS OFFICERS OR AGENTS SHALL NOT BE RESPONSIBLE FOR THE ACCURACY OR COMPLETENESS OF SCANNED COPIES OF THIS PLAN SHEET.

NOTE:

SEE SHEET ASD-4 AND ASD-5.

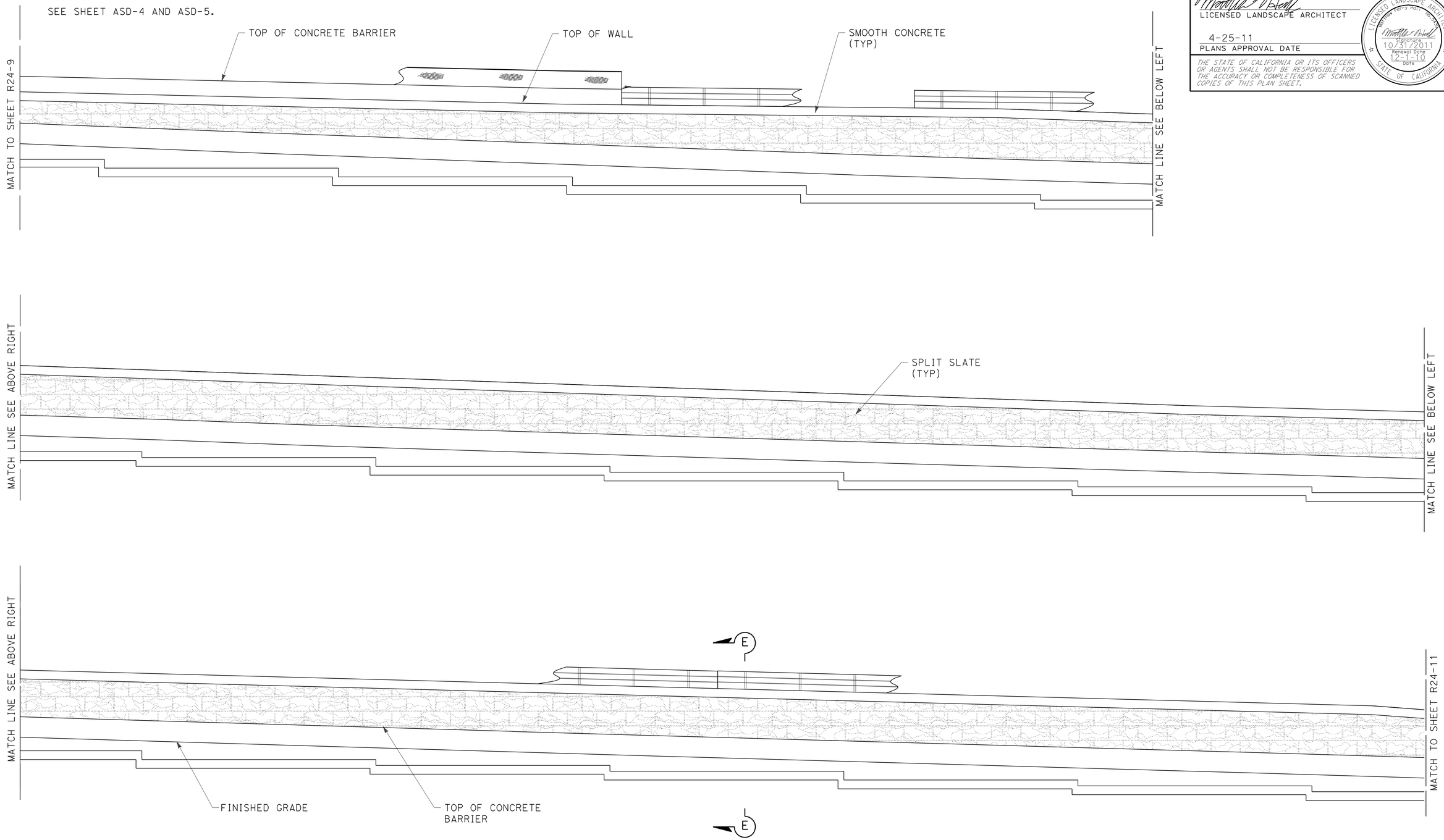

MIRRORED ELEVATION FOR SPLIT SLATE TEXTURE RETAINING WALL No. 322

THIS PLAN IS ACCURATE FOR ARCHITECTUAL TREATMENT WORK ONLY.

ARCHITECTURAL SURFACE
RETAINING WALL No. 322

SCALE: 1/8"=1'-0"

R24-10

STATE OF CALIFORNIA - DEPARTMENT OF TRANSPORTATION
Caltrans LANDSCAPE ARCHITECTURE

SENIOR LANDSCAPE ARCHITECT: BYRON STROUT
CALCULATED-DESIGNED BY: MATTHEW HALL
CHECKED BY: MIRIAM BISHOP
REVISED BY
DATE REVISED

LAST REVISION 12-01-10
DATE PLOTTED => 30-APR-2011
TIME PLOTTED => 07:02

Dist	COUNTY	ROUTE	POST MILES TOTAL PROJECT	SHEET No.	TOTAL SHEETS
08	Riv	91	15.6/21.6	961	2028

LICENSED LANDSCAPE ARCHITECT

4-25-11
PLANS APPROVAL DATE

LICENSED LANDSCAPE ARCHITECT
Matthew Harry Hall
No. 2011
Signature
10/31/2011
Renewal Date
12-1-10
Date
STATE OF CALIFORNIA

THE STATE OF CALIFORNIA OR ITS OFFICERS OR AGENTS SHALL NOT BE RESPONSIBLE FOR THE ACCURACY OR COMPLETENESS OF SCANNED COPIES OF THIS PLAN SHEET.

NOTE:

SEE SHEET ASD-4 AND ASD-5.

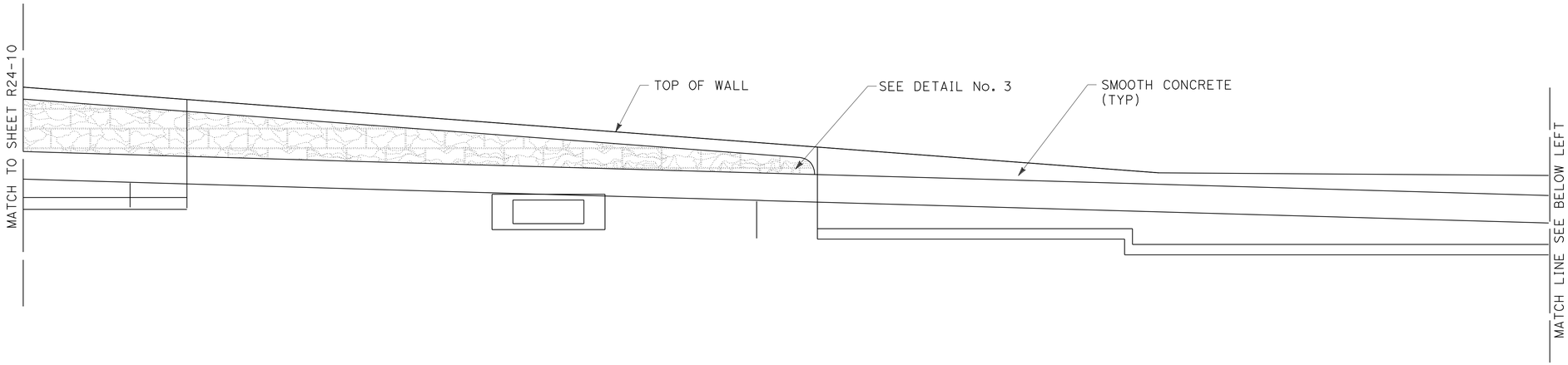

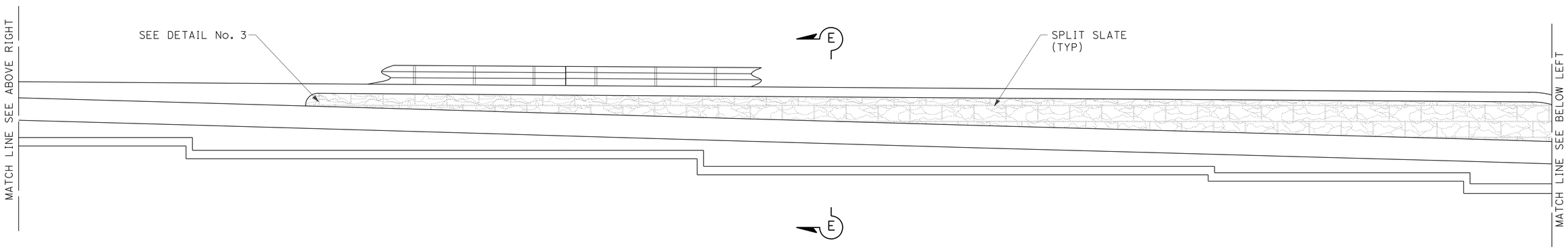

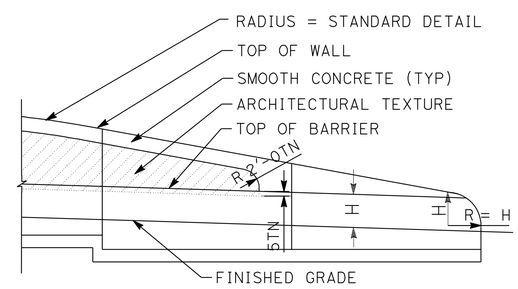

DETAIL No. 3

TYPICAL END OF WALL WITH TYPE 60D MOD. CONCRETE BARRIER

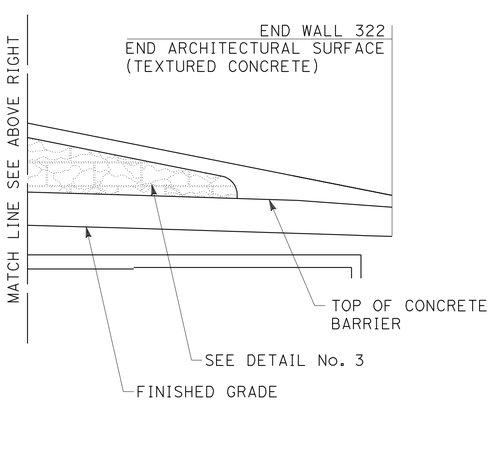

MIRRORED ELEVATION FOR SPLIT SLATE TEXTURE RETAINING WALL No. 322

THIS PLAN IS ACCURATE FOR ARCHITECTUAL TREATMENT WORK ONLY.

ARCHITECTURAL SURFACE
RETAINING WALL No. 322

SCALE: 1/8"=1'-0"

R24-11

REVISED BY | DATE REVISED
MATTHEW HALL | MIRIAM BISHOP
CALCULATED-DESIGNED BY | CHECKED BY
SENIOR LANDSCAPE ARCHITECT | BYRON STROUT

STATE OF CALIFORNIA - DEPARTMENT OF TRANSPORTATION
Caltrans® LANDSCAPE ARCHITECTURE

LAST REVISION 12-01-10 | DATE PLOTTED => 30-APR-2011 | TIME PLOTTED => 07:02

DIST	COUNTY	ROUTE	POST MILES TOTAL PROJECT	SHEET No	TOTAL SHEETS
08	Riv	91	15.6/21.6	962	2028

GEOTECHNICAL PROFESSIONAL — DATE 10/2008

4-25-11
PLANS APPROVAL DATE

REGISTERED PROFESSIONAL ENGINEER — ANDREW C. LEE — No. 2616 — Exp. 6-30-12 — GEOTECHNICAL — STATE OF CALIFORNIA

The State of California or its officers or agents shall not be responsible for the accuracy or completeness of electronic copies of this plan sheet.

California Department of Transportation
5900 Folsom Boulevard
Sacramento, CA 95819

URS Corporation
2020 East First Street, Suite 400
Santa Ana, CA 92705

FOR PLAN VIEW, SEE SHEET R24-15

NOTE: 1. This LOTB sheet was prepared in accordance with the Caltrans Soil & Rock Logging, Classification, and Presentation Manual (June 2007).

2. For legend, see "Log of Test Borings" 1 of 83

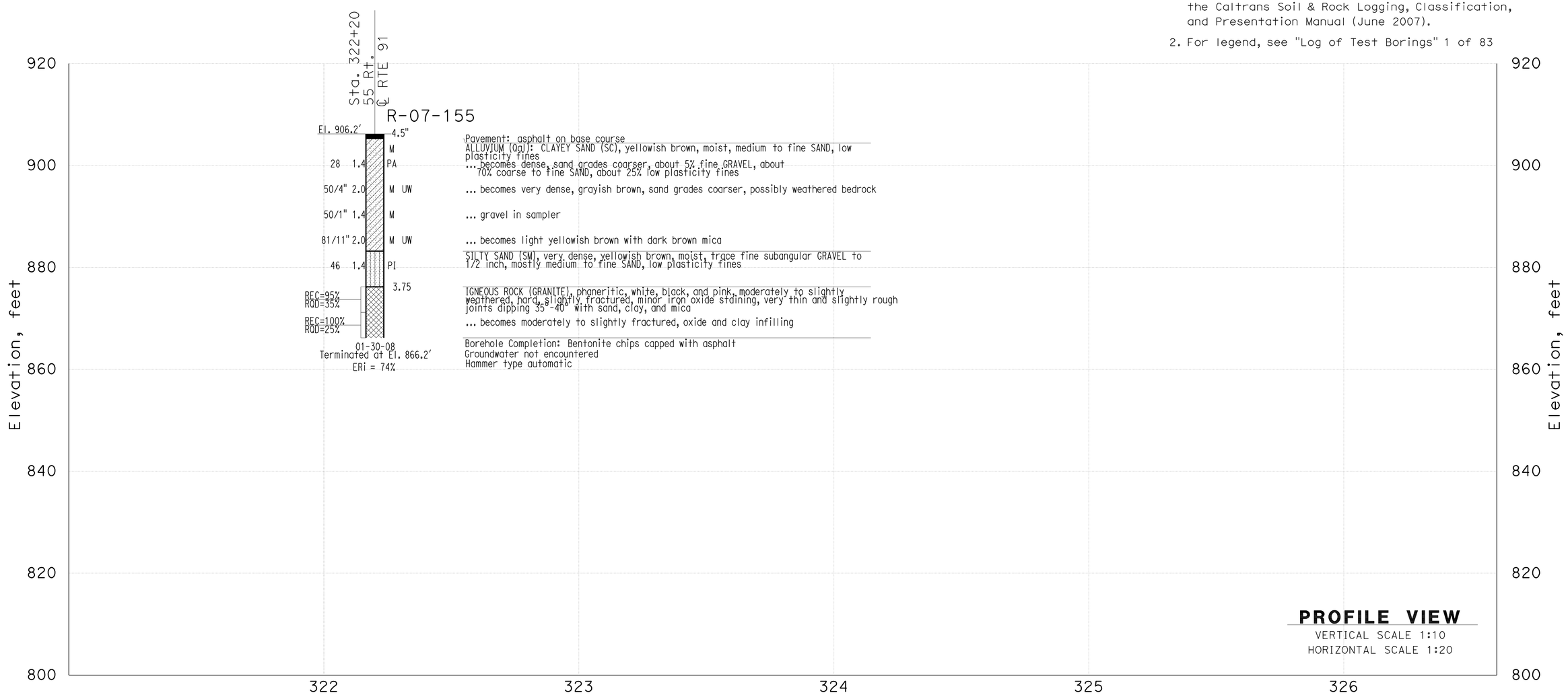

THIS PLAN ACCURATE FOR SOUND WALL AND RETAINING WALL WORK ONLY

DESIGN OVERSIGHT X SIGN OFF DATE	GINA PURSELL FUNCTIONAL SUPERVISOR	DRAWN BY P. QUACH	P.CHAU/D.WADER/C.CARBINO FIELD INVESTIGATION BY: DATE: Nov 6 2007 to March 7 2008	PREPARED FOR THE STATE OF CALIFORNIA DEPARTMENT OF TRANSPORTATION	A. LEE PROJECT ENGINEER	BRIDGE NO. X POST MILE X	Retaining Wall 322	R24-12
		CHECKED BY S. PIRATHIVIRAJ					LOG OF TEST BORINGS SHEET 1 OF 5	

OSF GEOTECHNICAL LOG OF TEST BORINGS SHEET (ENGLISH) (REV. 2/25/05)

ORIGINAL SCALE IN INCHES FOR REDUCED PLANS 0 1 2 3

CU 59A0590
EA 08-448400

DISREGARD PRINTS BEARING EARLIER REVISION DATES

REVISION DATES (PRELIMINARY STAGE ONLY) X

SHEET 1 OF 5

FILE => 844840qx012.dgn

USERNAME => trstrk DATE PLOTTED => 30-APR-2011 TIME PLOTTED =>

DIST	COUNTY	ROUTE	POST MILES TOTAL PROJECT	SHEET No	TOTAL SHEETS
08	Riv	91	15.6/21.6	963	2028

GEOTECHNICAL PROFESSIONAL — DATE 10/2008

4-25-11
PLANS APPROVAL DATE

REGISTERED PROFESSIONAL ENGINEER — ANDREW C. LEE — No. 2616 — Exp. 6-30-12 — GEOTECHNICAL — STATE OF CALIFORNIA

The State of California or its officers or agents shall not be responsible for the accuracy or completeness of electronic copies of this plan sheet.

California Department of Transportation
5900 Folsom Boulevard
Sacramento, CA 95819

URS Corporation
2020 East First Street, Suite 400
Santa Ana, CA 92705

FOR PLAN VIEW, SEE SHEET R24-15

NOTE: 1. This LOTB sheet was prepared in accordance with the Caltrans Soil & Rock Logging, Classification, and Presentation Manual (June 2007).

2. For legend, see "Log of Test Borings" 1 of 83

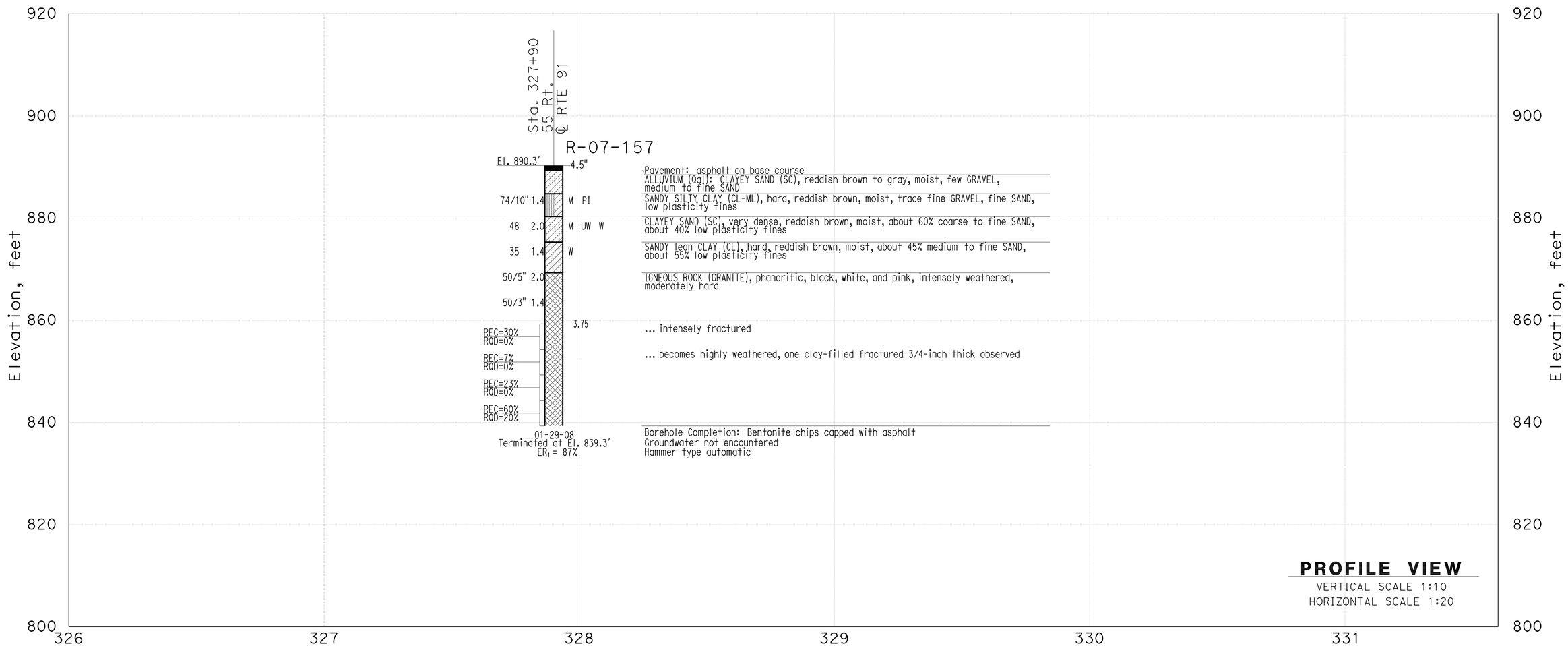

THIS PLAN ACCURATE FOR SOUND WALL AND RETAINING WALL WORK ONLY

DESIGN OVERSIGHT	GINA PURSELL FUNCTIONAL SUPERVISOR	DRAWN BY	P. QUACH	P.CHAU/D.WADER/C.CARBINO FIELD INVESTIGATION BY:	PREPARED FOR THE STATE OF CALIFORNIA DEPARTMENT OF TRANSPORTATION	A. LEE PROJECT ENGINEER	BRIDGE NO. X POST MILE X
X SIGN OFF DATE		CHECKED BY	S. PIRATHIVIRAJ	DATE: Nov 6 2007 to March 7 2008			

Retaining Wall 322 R24-13

LOG OF TEST BORINGS SHEET 2 OF 5

OSF GEOTECHNICAL LOG OF TEST BORINGS SHEET (ENGLISH) (REV. 2/25/05)

ORIGINAL SCALE IN INCHES FOR REDUCED PLANS 0 1 2 3

CU 59A0590
EA 08-448400

DISREGARD PRINTS BEARING EARLIER REVISION DATES

REVISION DATES (PRELIMINARY STAGE ONLY) X

SHEET 2 OF 5

FILE => 844840qx013.dgn

USERNAME => trstrk DATE PLOTTED => 30-APR-2011 TIME PLOTTED =>

DIST	COUNTY	ROUTE	POST MILES TOTAL PROJECT	SHEET No	TOTAL SHEETS
08	Riv	91	15.6/21.6	964	2028

GEOTECHNICAL PROFESSIONAL DATE 10/2008

4-25-11
PLANS APPROVAL DATE

REGISTERED PROFESSIONAL ENGINEER
ANDREW C. LEE
No. 2616
Exp. 6-30-12
GEOTECHNICAL
STATE OF CALIFORNIA

The State of California or its officers or agents shall not be responsible for the accuracy or completeness of electronic copies of this plan sheet.

California Department of Transportation
5900 Folsom Boulevard
Sacramento, CA 95819

URS Corporation
2020 East First Street, Suite 400
Santa Ana, CA 92705

FOR PLAN VIEW, SEE SHEET R24-16

NOTE: 1. This LOTB sheet was prepared in accordance with the Caltrans Soil & Rock Logging, Classification, and Presentation Manual (June 2007).

2. For legend, see "Log of Test Borings" 1 of 83

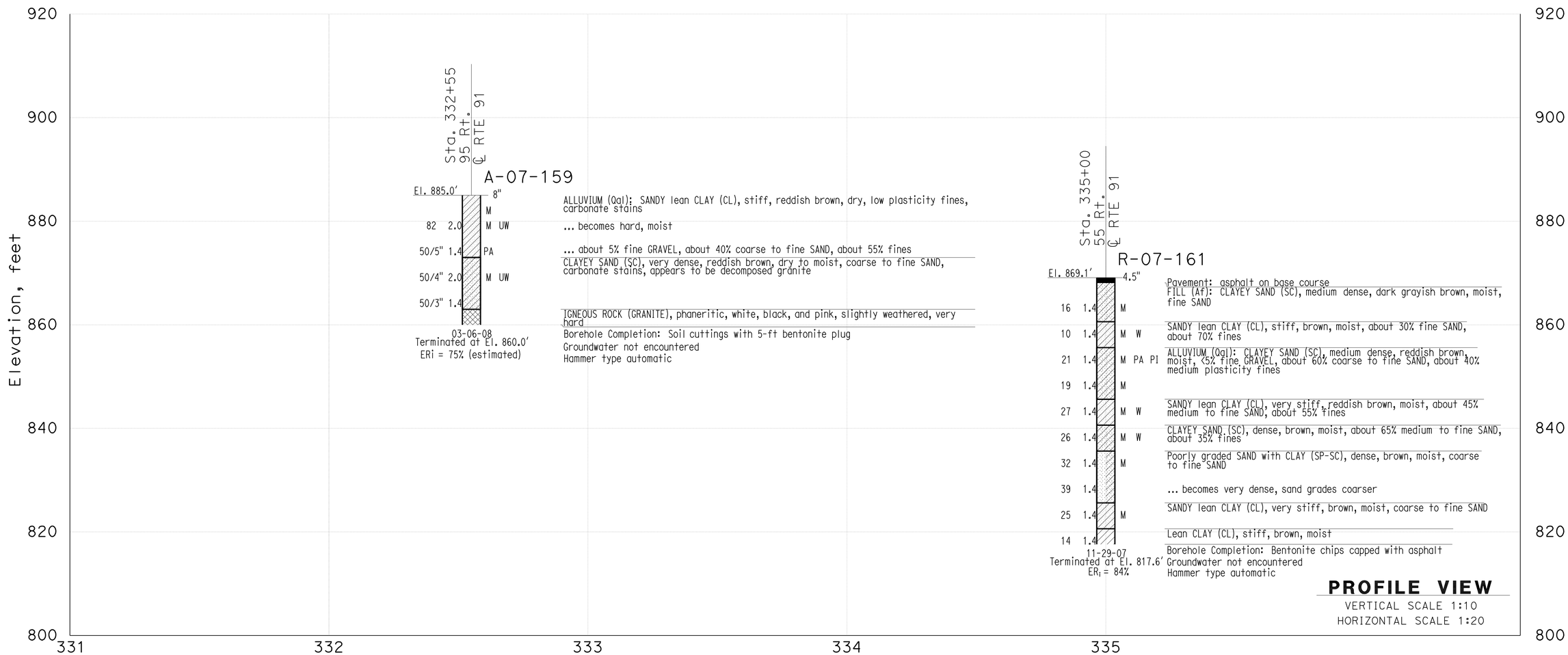

PROFILE VIEW
VERTICAL SCALE 1:10
HORIZONTAL SCALE 1:20

THIS PLAN ACCURATE FOR SOUND WALL AND RETAINING WALL WORK ONLY

DESIGN OVERSIGHT	GINA PURSELL FUNCTIONAL SUPERVISOR	DRAWN BY	P. QUACH	P.CHAU/D.WADER/C.CARBINO FIELD INVESTIGATION BY:	PREPARED FOR THE STATE OF CALIFORNIA DEPARTMENT OF TRANSPORTATION	A. LEE PROJECT ENGINEER	BRIDGE NO. X	Retaining Wall 322 R24-14
X SIGN OFF DATE		CHECKED BY	S. PIRATHIVIRAJ	DATE: Nov 6 2007 to March 7 2008			POST MILE X	LOG OF TEST BORINGS SHEET 3 OF 5

OSF GEOTECHNICAL LOG OF TEST BORINGS SHEET (ENGLISH) (REV. 2/25/05)

ORIGINAL SCALE IN INCHES FOR REDUCED PLANS 0 1 2 3

CU 59A0590
EA 08-448400

DISREGARD PRINTS BEARING EARLIER REVISION DATES

REVISION DATES (PRELIMINARY STAGE ONLY) X

SHEET 3 OF 5

FILE => 844840qx014.dgn

USERNAME => trstrk DATE PLOTTED => 30-APR-2011 TIME PLOTTED =>

DIST	COUNTY	ROUTE	POST MILES TOTAL PROJECT	SHEET No	TOTAL SHEETS
08	Riv	91	15.6/21.6	965	2028

GEOTECHNICAL PROFESSIONAL — DATE 10/2008

4-25-11
PLANS APPROVAL DATE

REGISTERED PROFESSIONAL ENGINEER — ANDREW C. LEE — No. 2616 — Exp. 6-30-12 — GEOTECHNICAL — STATE OF CALIFORNIA

The State of California or its officers or agents shall not be responsible for the accuracy or completeness of electronic copies of this plan sheet.

California Department of Transportation
5900 Folsom Boulevard
Sacramento, CA 95819

URS Corporation
2020 East First Street, Suite 400
Santa Ana, CA 92705

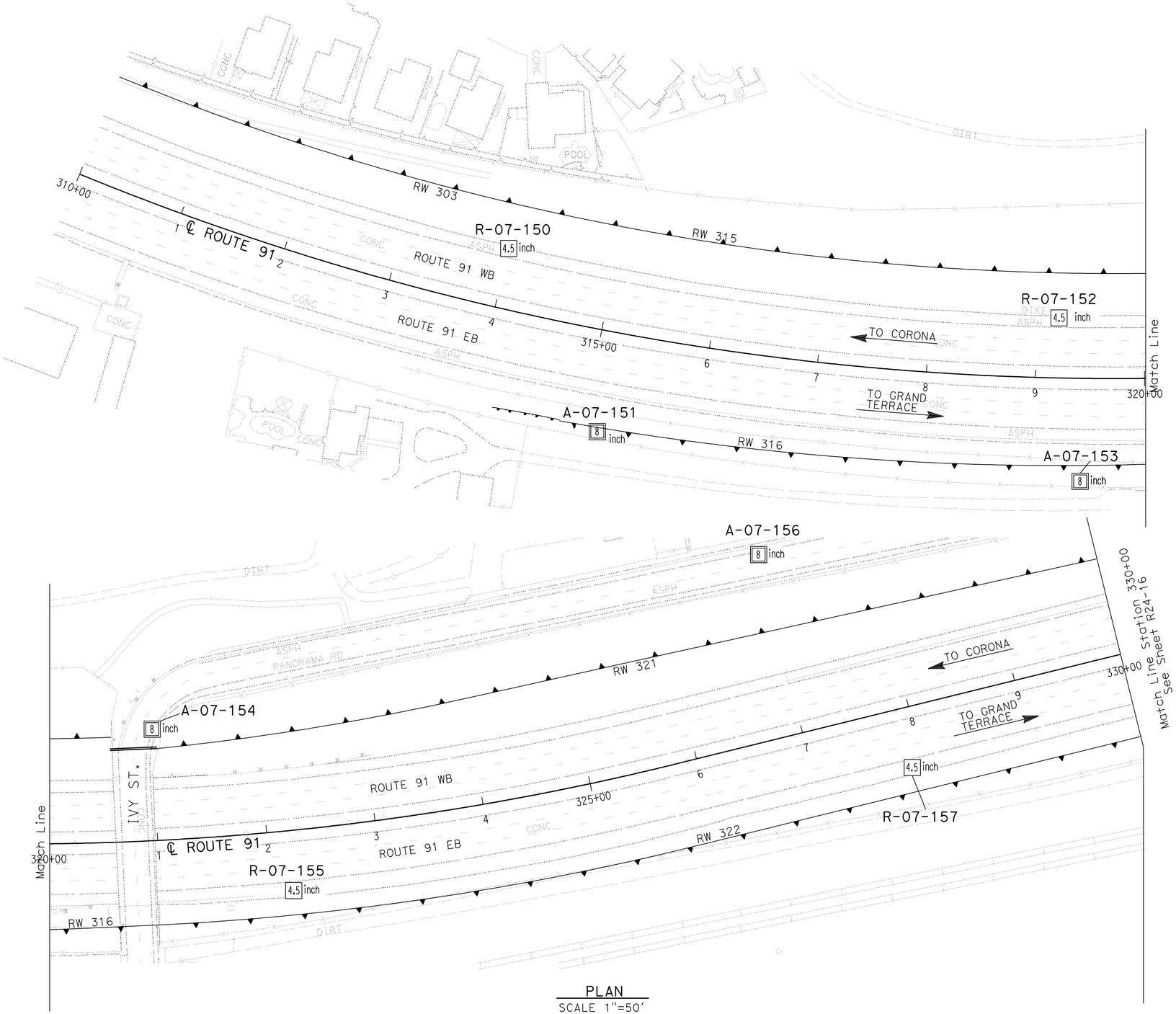

PLAN
SCALE 1"=50'

Borehole Number	Drill Rig	Hammer Type	Avg. Hammer Efficiency, ETR (%)
R-07-150	CME 85	Automatic	87
A-07-151	Diedrich D-120	Automatic	75*
R-07-152	CS-2000	Automatic	84
A-07-153	Diedrich D-120	Automatic	75*
A-07-154	Diedrich D-120	Automatic	75*
R-07-155	Acker Rig	Automatic	74
A-07-156	Diedrich D-120	Automatic	75*
R-07-157	CME 85	Automatic	87

Sampler Type	Inside Diameter (Inches)	Borehole Numbers
SPT	1.375	R-07-150, A-07-151 A-07-153, A-07-154 R-07-155, A-07-156 R-07-157
Modified California 1	1.94	R-07-155, R-07-157
Modified California 2	2.40	A-07-151, A-07-153 A-07-154, A-07-156

*Estimated Hammer Efficiency Rating.

DESIGN OVERSIGHT — GINA PURSELL, FUNCTIONAL SUPERVISOR
X
SIGN OFF DATE

DRAWN BY: P. QUACH
CHECKED BY: S. PIRATHIVIRAJ

P.CHAU/D.WADER/C.CARBINO
FIELD INVESTIGATION BY:
DATE: Nov 6 2007 to March 7 2008

PREPARED FOR THE STATE OF CALIFORNIA DEPARTMENT OF TRANSPORTATION

A. LEE
PROJECT ENGINEER

BRIDGE NO. X
POST MILE X

RETAINING WALL 322 — R24-15

LOG OF TEST BORINGS 4 OF 5

OSF GEOTECHNICAL LOG OF TEST BORINGS SHEET (ENGLISH) (REV. 2/25/05)

ORIGINAL SCALE IN INCHES FOR REDUCED PLANS 0 1 2 3

CU 59A0590
EA 08-448400

DISREGARD PRINTS BEARING EARLIER REVISION DATES

REVISION DATES (PRELIMINARY STAGE ONLY) X

SHEET 4 OF 5

FILE => 844840qx015.dgn

USERNAME => trstrk — DATE PLOTTED => 30-APR-2011 — TIME PLOTTED =>

DIST	COUNTY	ROUTE	POST MILES TOTAL PROJECT	SHEET No	TOTAL SHEETS
08	Riv	91	15.6/21.6	966	2028

GEOTECHNICAL PROFESSIONAL DATE 10/2008

4-25-11
PLANS APPROVAL DATE

REGISTERED PROFESSIONAL ENGINEER
ANDREW C. LEE
No. 2616
Exp. 6-30-12
GEOTECHNICAL
STATE OF CALIFORNIA

The State of California or its officers or agents shall not be responsible for the accuracy or completeness of electronic copies of this plan sheet.

California Department of Transportation
5900 Folsom Boulevard
Sacramento, CA 95819

URS Corporation
2020 East First Street, Suite 400
Santa Ana, CA 92705

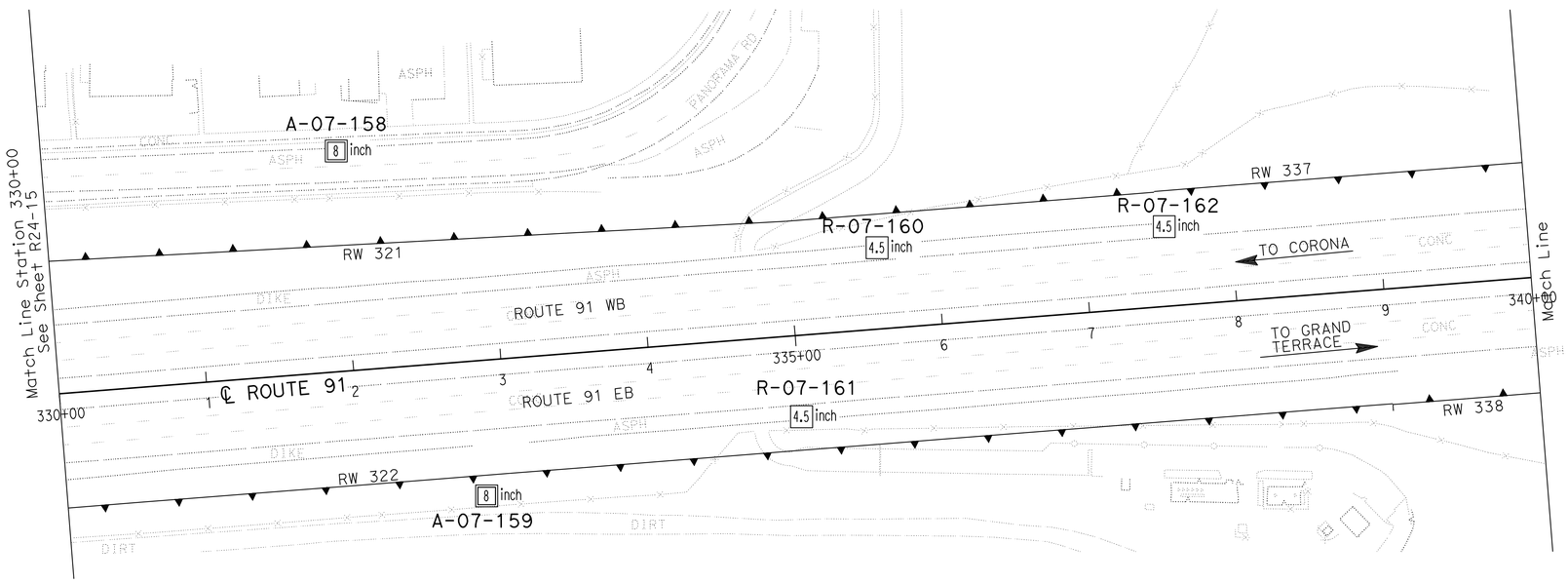

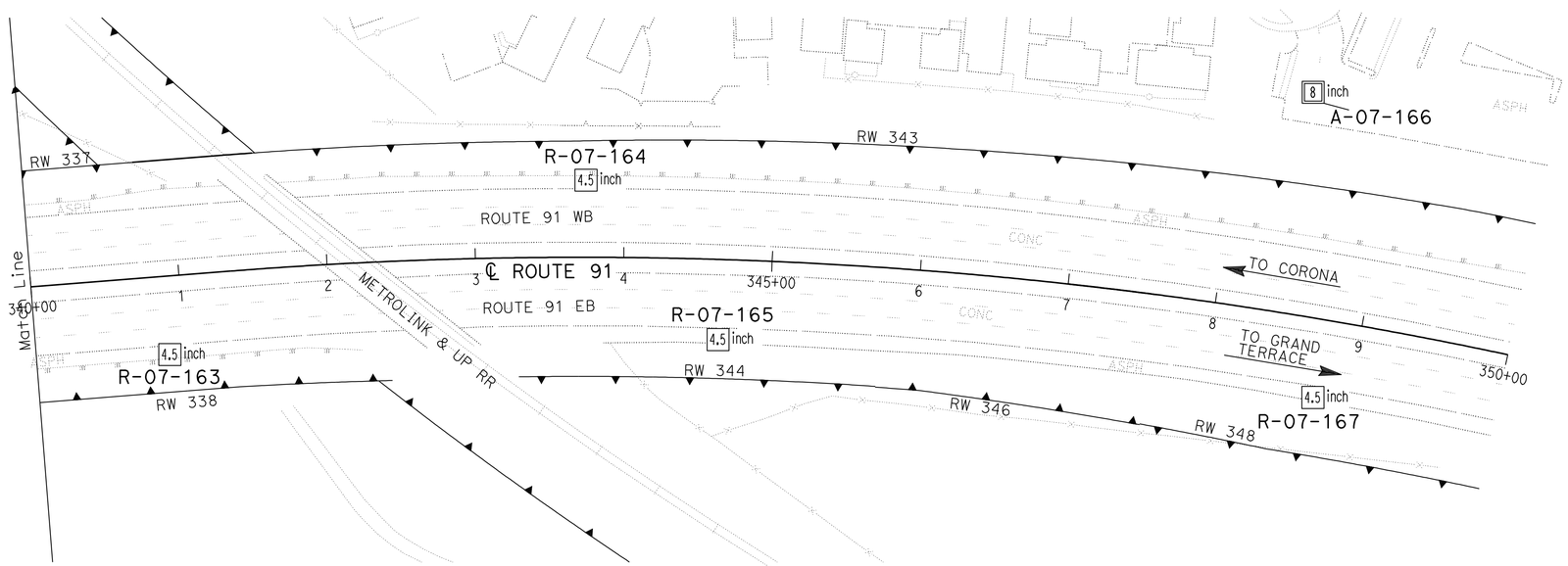

PLAN
SCALE 1"=50'

Borehole Number	Drill Rig	Hammer Type	Avg. Hammer Efficiency, ETR (%)
A-07-158	Diedrich D-120	Automatic	75*
A-07-159	Diedrich D-120	Automatic	75*
R-07-160	CME 85	Automatic	87
R-07-161	CS-2000	Automatic	84
R-07-162	CS-2000	Automatic	84
R-07-163	CME 85	Automatic	87
R-07-164	CS-2000	Automatic	84
R-07-165	CS-2000	Automatic	84
A-07-166	Diedrich D-120	Automatic	75*
R-07-167	Acker Rig	Automatic	74

Sampler Type	Inside Diameter (Inches)	Borehole Numbers
SPT	1.375	A-07-158, A-07-159, R-07-60 R-07-161, R-07-162, R-07-163 R-07-164, R-07-165, A-07-166 R-07-177
Modified California 1	1.94	R-07-160, R-07-162, R-07-163 R-07-164, R-07-165, R-07-167
Modified California 2	2.40	A-07-158, A-07-159, A-07-166

*Estimated Hammer Efficiency Rating.

DESIGN OVERSIGHT X SIGN OFF DATE	GINA PURSELL FUNCTIONAL SUPERVISOR	DRAWN BY	P. QUACH	P.CHAU/D.WADER/C.CARBINO FIELD INVESTIGATION BY: DATE: Nov 6 2007 to March 7 2008	PREPARED FOR THE STATE OF CALIFORNIA DEPARTMENT OF TRANSPORTATION	A. LEE PROJECT ENGINEER	BRIDGE NO. X POST MILE X
		CHECKED BY	S. PIRATHIVIRAJ				

RETAINING WALL 322 R24-16

LOG OF TEST BORINGS 5 OF 5

OSF GEOTECHNICAL LOG OF TEST BORINGS SHEET (ENGLISH) (REV. 2/25/05)

ORIGINAL SCALE IN INCHES FOR REDUCED PLANS 0 1 2 3

CU 59A0590
EA 08-448400

DISREGARD PRINTS BEARING EARLIER REVISION DATES

REVISION DATES (PRELIMINARY STAGE ONLY) X

SHEET 5 OF 5

FILE => 844840qx016.dgn

USERNAME => trstrk DATE PLOTTED => 30-APR-2011 TIME PLOTTED =>

Dist	COUNTY	ROUTE	POST MILES TOTAL PROJECT	SHEET No.	TOTAL SHEETS
08	Riv	91	15.6/21.6	967	2028

REGISTERED CIVIL ENGINEER 12-1-10 DATE

4-25-11
PLANS APPROVAL DATE

REGISTERED PROFESSIONAL ENGINEER CUONG LE TRAN No. C60436 Exp. 6-30-12 CIVIL STATE OF CALIFORNIA

THE STATE OF CALIFORNIA OR ITS OFFICERS OR AGENTS SHALL NOT BE RESPONSIBLE FOR THE ACCURACY OR COMPLETENESS OF SCANNED COPIES OF THIS PLAN SHEET.

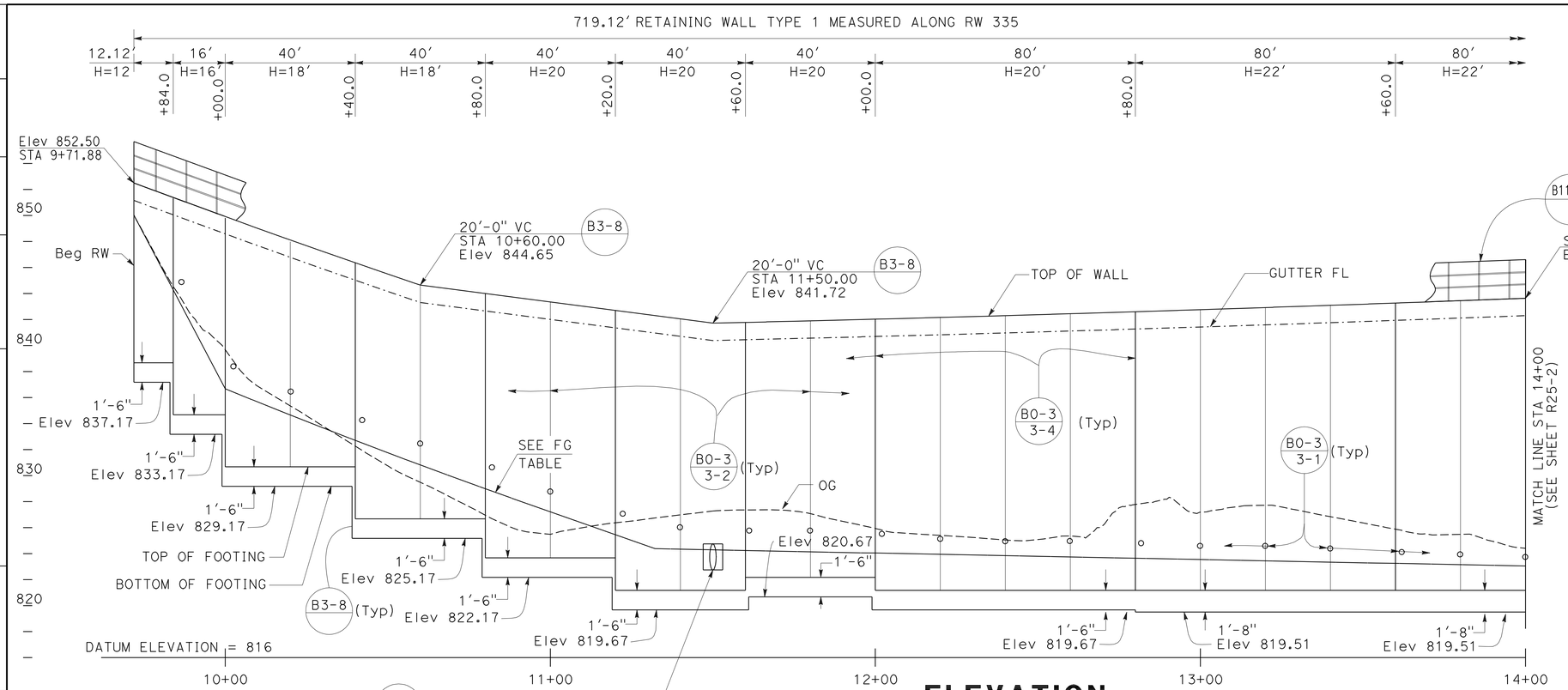

ELEVATION

SCALE Horiz 1"=20'
Vert 1"=10'

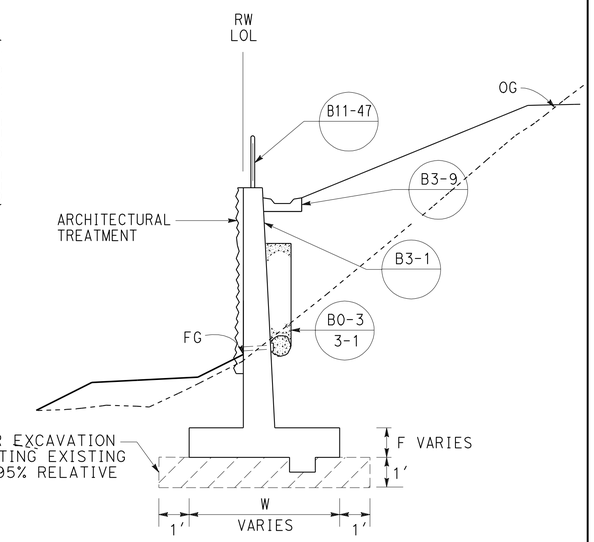

TYPICAL SECTION

NO SCALE
FROM STA 9+71.88 TO STA 16+91.00

NOTES:

1. ARCHITECTURAL TREATMENT SHOULD EXTEND 6 IN BELOW FG OR 6 IN BELOW TOP CB (TYPE 60D MOD)
2. FOR STRUCTURAL SECTIONS, SEE ROADWAY PLANS
3. WATERSTOP IN EXPANSION JOINT SHALL BE EXTEND 6 IN INTO THE BARRIER

FINISH GRADE (FG) TABLE	
STATION	ELEVATION
9+71.88	849.89
10+00.00	836.68
11+32.20	824.38
14+00.00	823.05
14+40.00	822.98
14+80.00	824.01
15+87.83	831.23
16+91.00	838.02

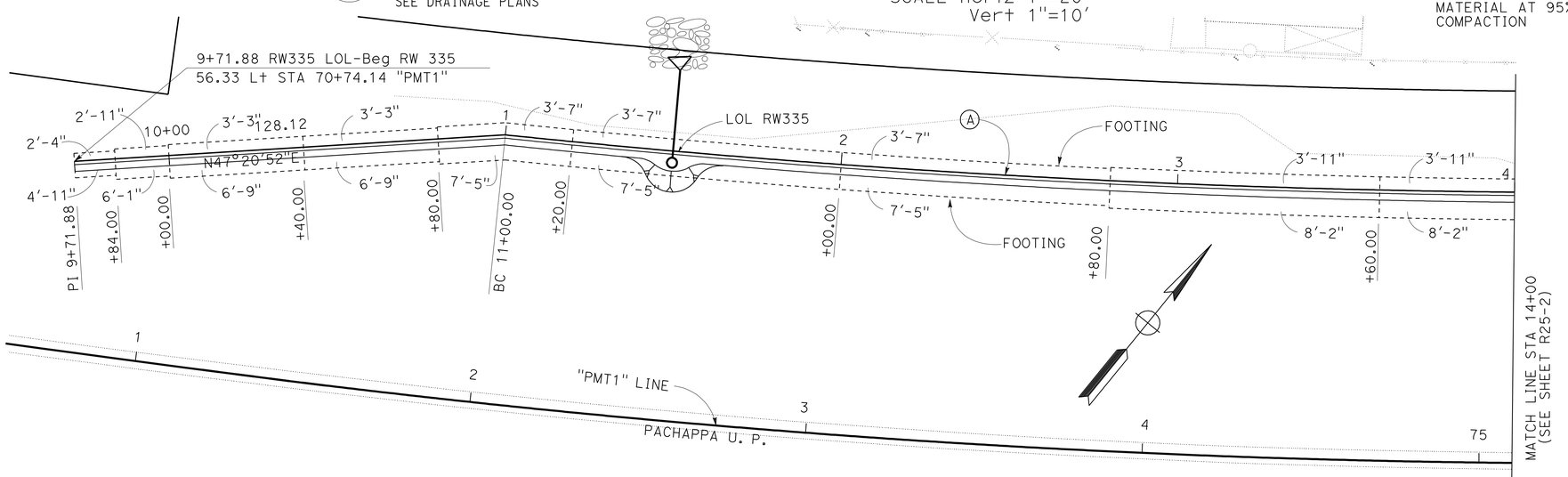

CURVE DATA

No.	R	Δ	T	L
A	3194.14'	10°33'31"	295.15'	588.63'

PLAN

SCALE: 1"=20'

THIS PLAN ACCURATE FOR RETAINING WALL WORK ONLY.

RETAINING WALL PLAN
RETAINING WALL No. 335
SCALE AS SHOWN

R25-1

STATE OF CALIFORNIA - DEPARTMENT OF TRANSPORTATION
Caltrans
DESIGN

FUNCTIONAL SUPERVISOR: MARK PERTILE
CALCULATED-DESIGNED BY: ANNABELL WANG
CHECKED BY: CUONG LE TRAN
REVISED BY
DATE REVISED

LAST REVISION 12-01-10
DATE PLOTTED => 30-APR-2011
TIME PLOTTED => 07:03

Dist	COUNTY	ROUTE	POST MILES TOTAL PROJECT	SHEET No.	TOTAL SHEETS
08	Riv	91	15.6/21.6	968	2028

REGISTERED CIVIL ENGINEER 12-1-10 DATE

4-25-11
PLANS APPROVAL DATE

REGISTERED PROFESSIONAL ENGINEER CUONG LE TRAN No. C60436 Exp. 6-30-12 CIVIL STATE OF CALIFORNIA

THE STATE OF CALIFORNIA OR ITS OFFICERS OR AGENTS SHALL NOT BE RESPONSIBLE FOR THE ACCURACY OR COMPLETENESS OF SCANNED COPIES OF THIS PLAN SHEET.

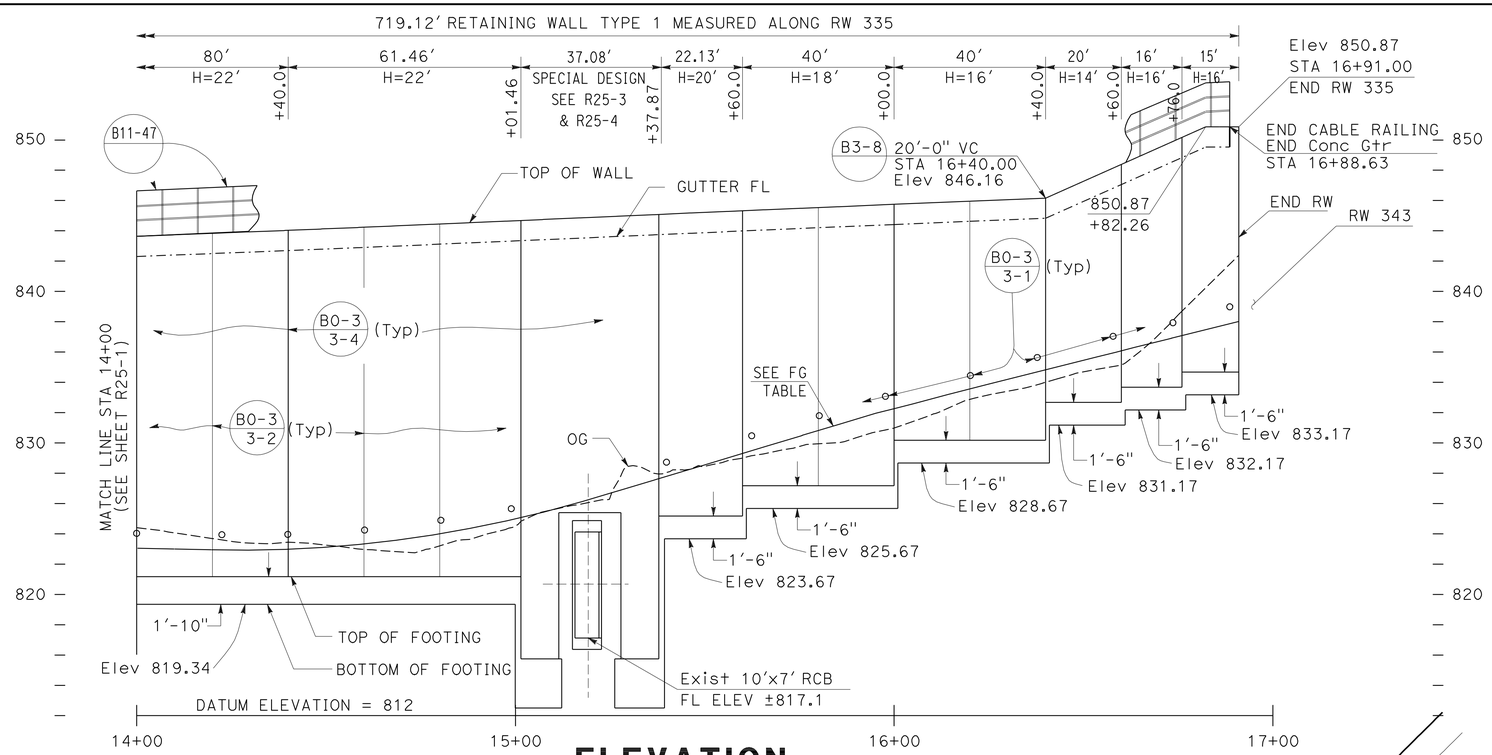

ELEVATION

SCALE Horiz 1"=20'
Vert 1"=10'

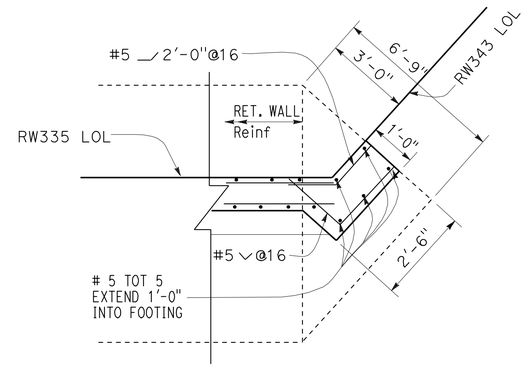

RW 335 END WALL DETAIL

NO SCALE

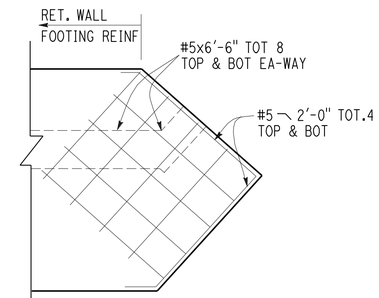

RW 355 END WALL FOOTING REINF.

NO SCALE

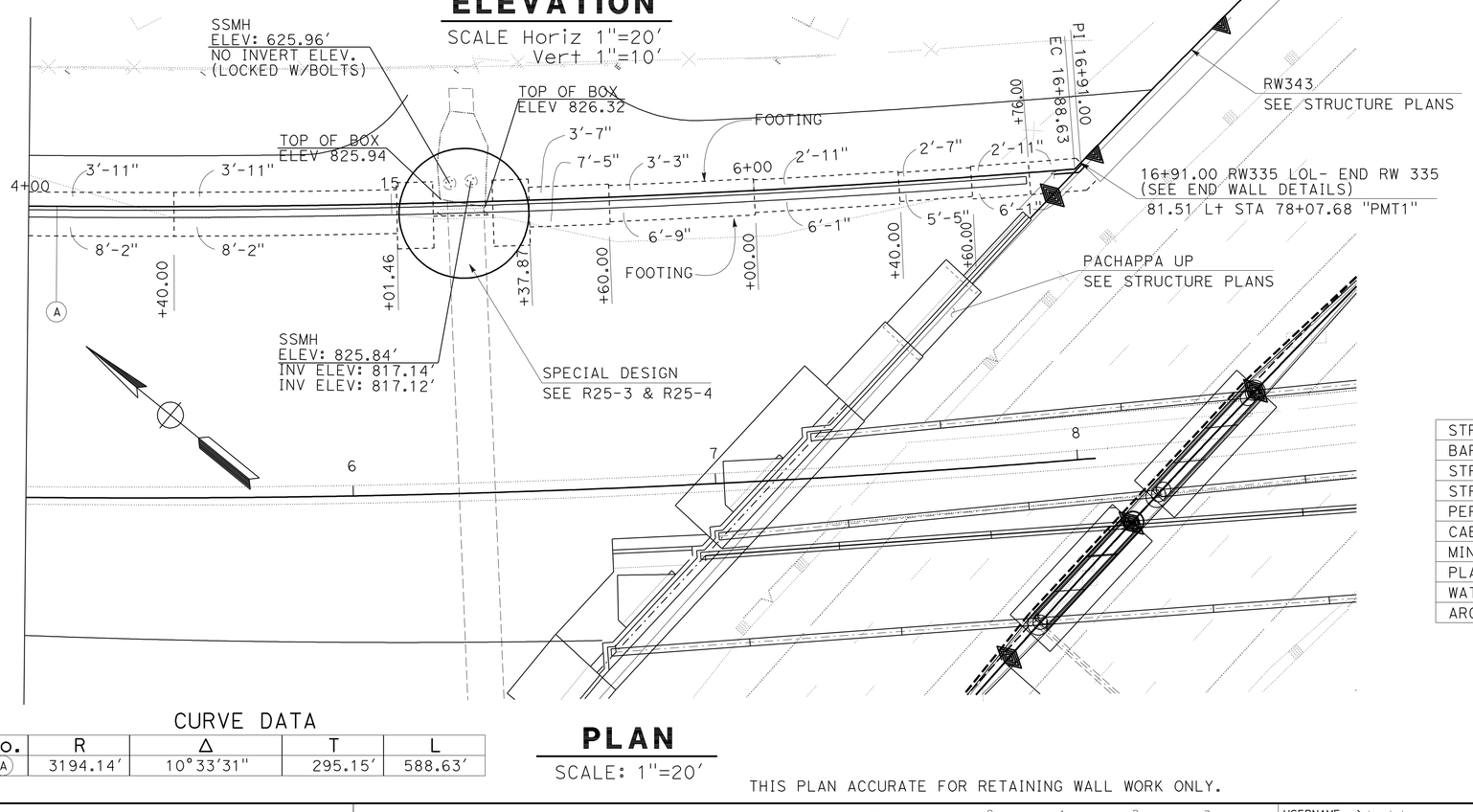

PLAN

SCALE: 1"=20'

CURVE DATA

No.	R	Δ	T	L
A	3194.14'	10°33'31"	295.15'	588.63'

THIS PLAN ACCURATE FOR RETAINING WALL WORK ONLY.

QUANTITIES

STRUCTURAL CONCRETE (RETAINING WALL)	1343.40	CY
BAR REINFORCING STEEL (RETAINING WALL)	270453	LB
STRUCTURAL EXCAVATION (RETAINING WALL)	2532.76	CY
STRUCTURAL BACKFILL (RETAINING WALL)	4222.92	CY
PERVIOUS BACKFILL MATERIAL (RETAINING WALL)	321.17	CY
CABLE RAILING	716.75	LF
MINOR CONCRETE (GUTTER)	716.75	LF
PLASTIC PIPE (N)	62.82	LF
WATERSTOP (N)	313.38	LF
ARCHITECTURAL SURFACE (TEXTURED CONCRETE)	12179.92	SF

(N) = NOT A SEPARATE PAY ITEM, FOR INFORMATION ONLY

RETAINING WALL PLAN
RETAINING WALL No. 335

SCALE AS SHOWN

R25-2

STATE OF CALIFORNIA - DEPARTMENT OF TRANSPORTATION
Caltrans® DESIGN

FUNCTIONAL SUPERVISOR: MARK PERTILE
CALCULATED-DESIGNED BY: ANNABELL WANG
CHECKED BY: CUONG LE TRAN
REVISED BY / DATE REVISED

LAST REVISION DATE PLOTTED => 30-APR-2011
TIME PLOTTED => 07:03
12-01-10

Dist	COUNTY	ROUTE	POST MILES TOTAL PROJECT	SHEET No.	TOTAL SHEETS
08	Riv	91	15.6/21.6	969	2028

REGISTERED CIVIL ENGINEER 12-1-10 DATE

4-25-11
PLANS APPROVAL DATE

REGISTERED PROFESSIONAL ENGINEER MINH THUONG VO No. C59297 Exp. 06/30/11 CIVIL STATE OF CALIFORNIA

THE STATE OF CALIFORNIA OR ITS OFFICERS OR AGENTS SHALL NOT BE RESPONSIBLE FOR THE ACCURACY OR COMPLETENESS OF SCANNED COPIES OF THIS PLAN SHEET.

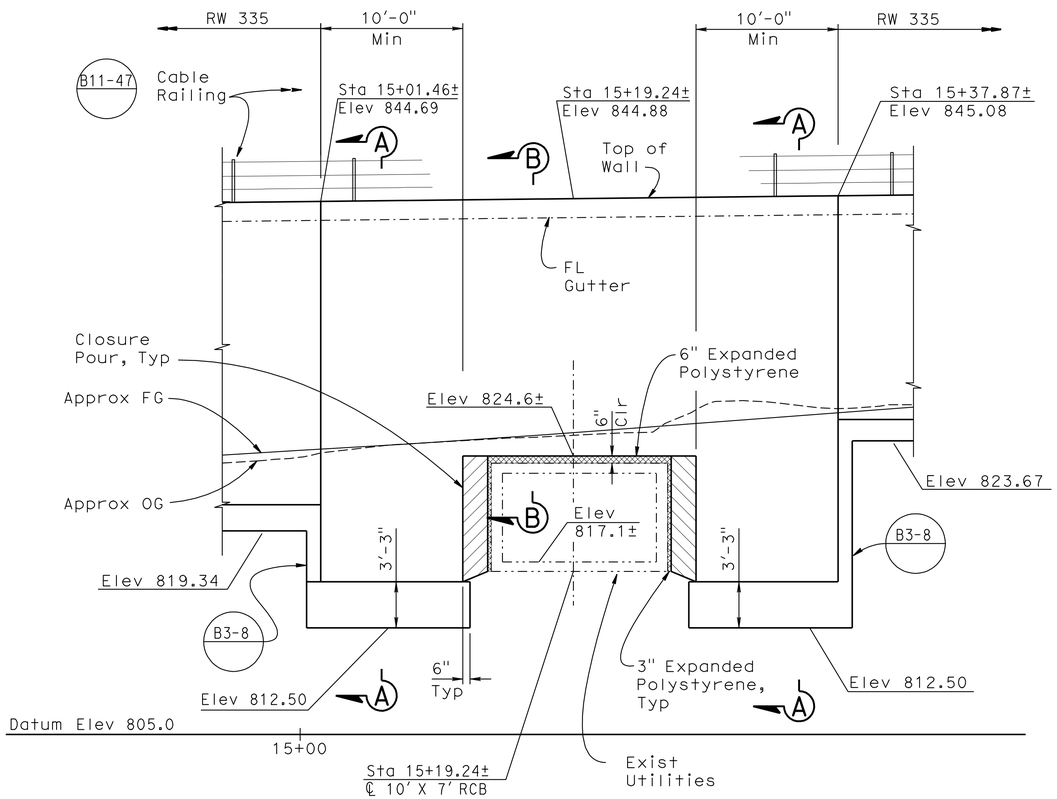

DEVELOPED MIRROR ELEVATION

3/16"=1'-0"

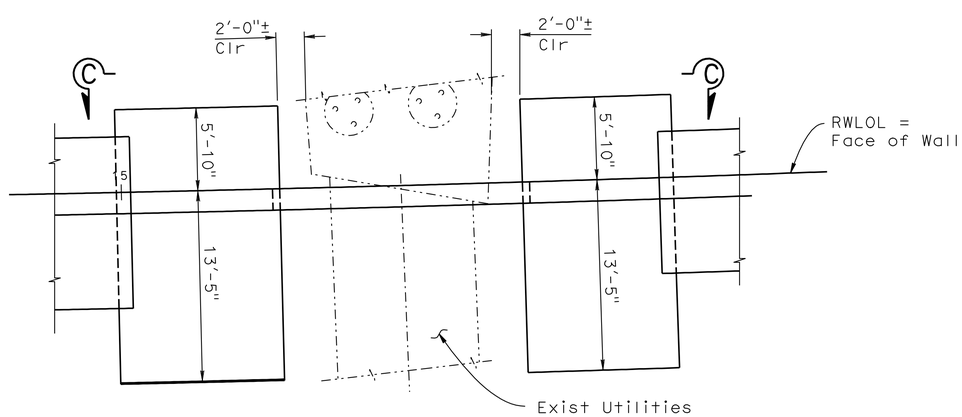

PLAN

3/16"=1'-0"

Sta 15+01.46 TO Sta 15+37.87

DESIGN DATA

DESIGN: Bridge Design Specification
(1996 AASHTO with Revisions by Caltrans)

LOADING CASE:
1. Level slope with 240 psf Max. surcharge

CONCRETE: n = 9, f'c = 3600 psi, fc = 1440 psi

REINFORCING STEEL: fy = 60,000 psi, fs = 24,000 psi

SOIL PARAMETERS: (for determination of design lateral earth pressure)
ø = 35° γ = 120 pcf

NOTE:
THE CONTRACTOR SHALL VERIFY ALL CONTROLLING FIELD DIMENSIONS BEFORE ORDERING OR FABRICATING ANY MATERIAL.

THIS PLAN ACCURATE FOR RETAINING WALL WORK ONLY.

RETAINING WALL DETAILS
RETAINING WALL No. 335

SCALE AS SHOWN

R25-3

STATE OF CALIFORNIA - DEPARTMENT OF TRANSPORTATION
Caltrans
DESIGN

FUNCTIONAL SUPERVISOR: DANIEL T. ADAMS
CALCULATED-DESIGNED BY: MINH VO
CHECKED BY: RYAN STILTZ
REVISED BY
DATE REVISED

LAST REVISION 12-01-10
DATE PLOTTED => 30-APR-2011
TIME PLOTTED => 07:03

Dist	COUNTY	ROUTE	POST MILES TOTAL PROJECT	SHEET No.	TOTAL SHEETS
08	Riv	91	15.6/21.6	970	2028

REGISTERED CIVIL ENGINEER 12-1-10 DATE

4-25-11
PLANS APPROVAL DATE

REGISTERED PROFESSIONAL ENGINEER MINH THUONG VO No. C59297 Exp. 06/30/11 CIVIL STATE OF CALIFORNIA

THE STATE OF CALIFORNIA OR ITS OFFICERS OR AGENTS SHALL NOT BE RESPONSIBLE FOR THE ACCURACY OR COMPLETENESS OF SCANNED COPIES OF THIS PLAN SHEET.

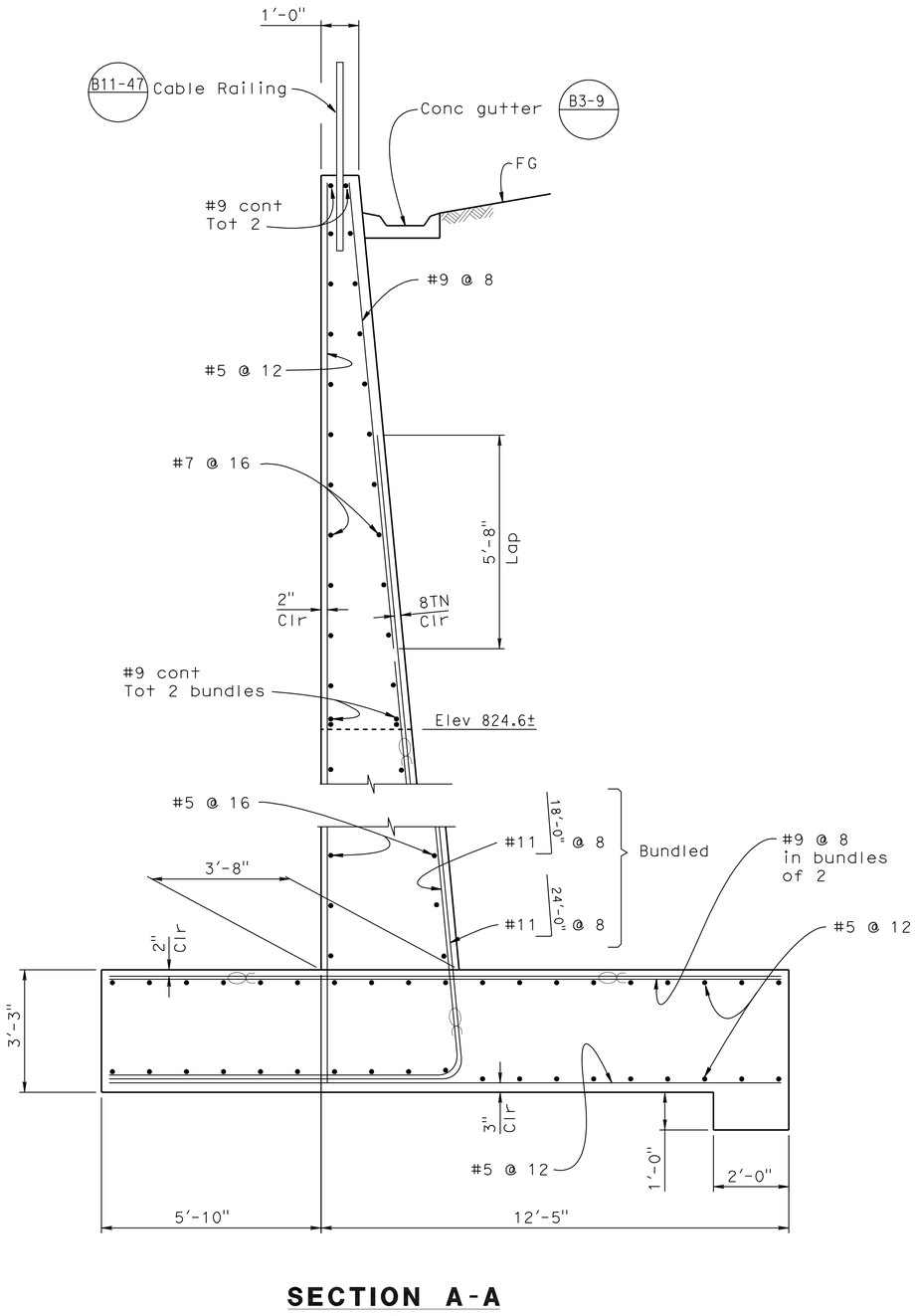

SECTION A-A
No Scale

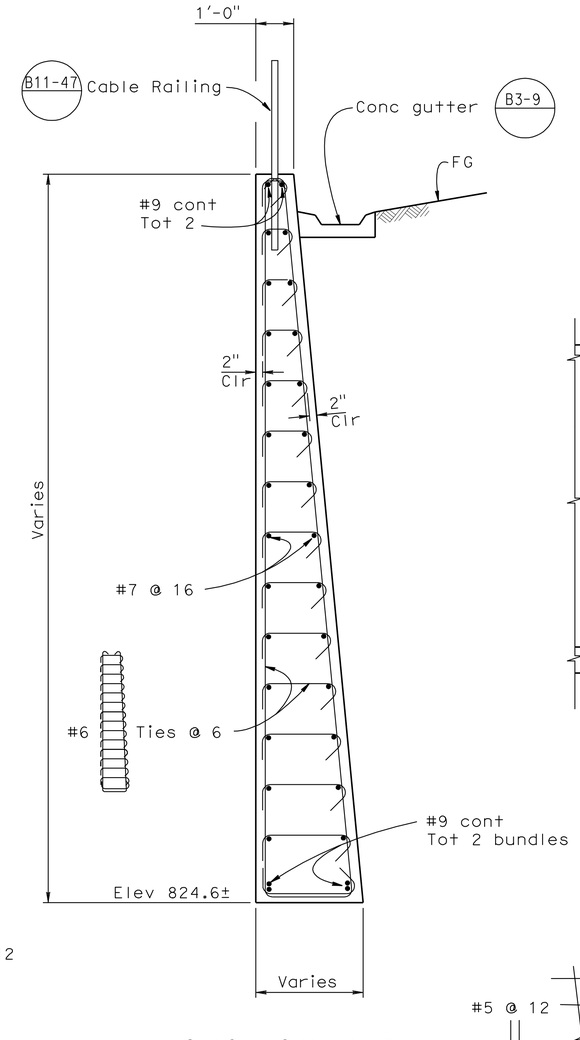

SECTION B-B
½" = 1'-0"

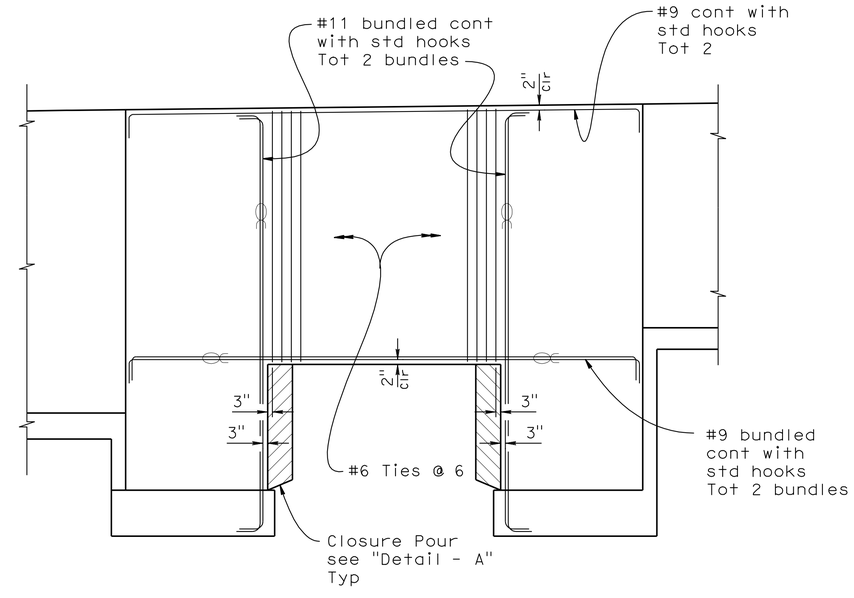

SECTION C-C
No Scale

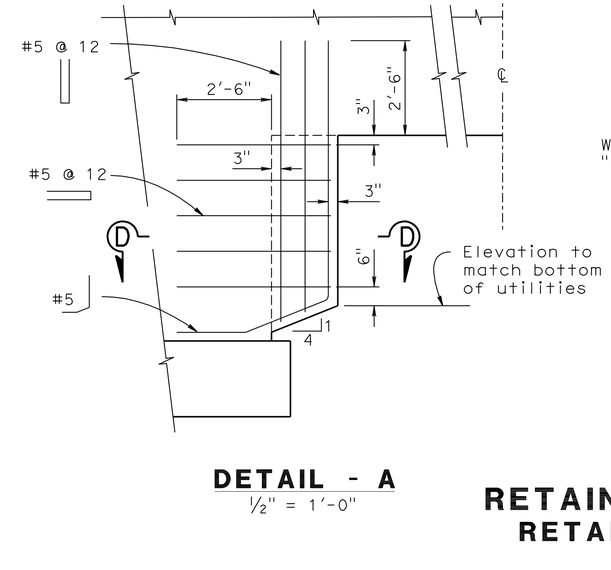

DETAIL - A
½" = 1'-0"

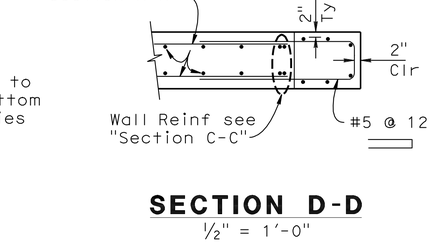

SECTION D-D
½" = 1'-0"

NOTE:
THE CONTRACTOR SHALL VERIFY ALL CONTROLLING FIELD DIMENSIONS BEFORE ORDERING OR FABRICATING ANY MATERIAL.

THIS PLAN ACCURATE FOR RETAINING WALL WORK ONLY.

RETAINING WALL DETAILS
RETAINING WALL No. 335
SCALE AS SHOWN

R25-4

REVISED BY	DATE REVISED

CALCULATED-DESIGNED BY	CHECKED BY
MINH VO	RYAN STILTZ

FUNCTIONAL SUPERVISOR: DANIEL T. ADAMS

STATE OF CALIFORNIA - DEPARTMENT OF TRANSPORTATION
Caltrans®
DESIGN

LAST REVISION 12-01-10 | DATE PLOTTED => 30-APR-2011 | TIME PLOTTED => 07:03

Dist	COUNTY	ROUTE	POST MILES TOTAL PROJECT	SHEET No.	TOTAL SHEETS
08	Riv	91	15.6/21.6	971	2028

LICENSED LANDSCAPE ARCHITECT

4-25-11
PLANS APPROVAL DATE

LICENSED LANDSCAPE ARCHITECT
Matthew Harry Hall
Signature
10/31/2011
Renewal Date
12-1-10
Date
STATE OF CALIFORNIA

THE STATE OF CALIFORNIA OR ITS OFFICERS OR AGENTS SHALL NOT BE RESPONSIBLE FOR THE ACCURACY OR COMPLETENESS OF SCANNED COPIES OF THIS PLAN SHEET.

NOTE:

SEE SHEET ASD-4 AND ASD-5.

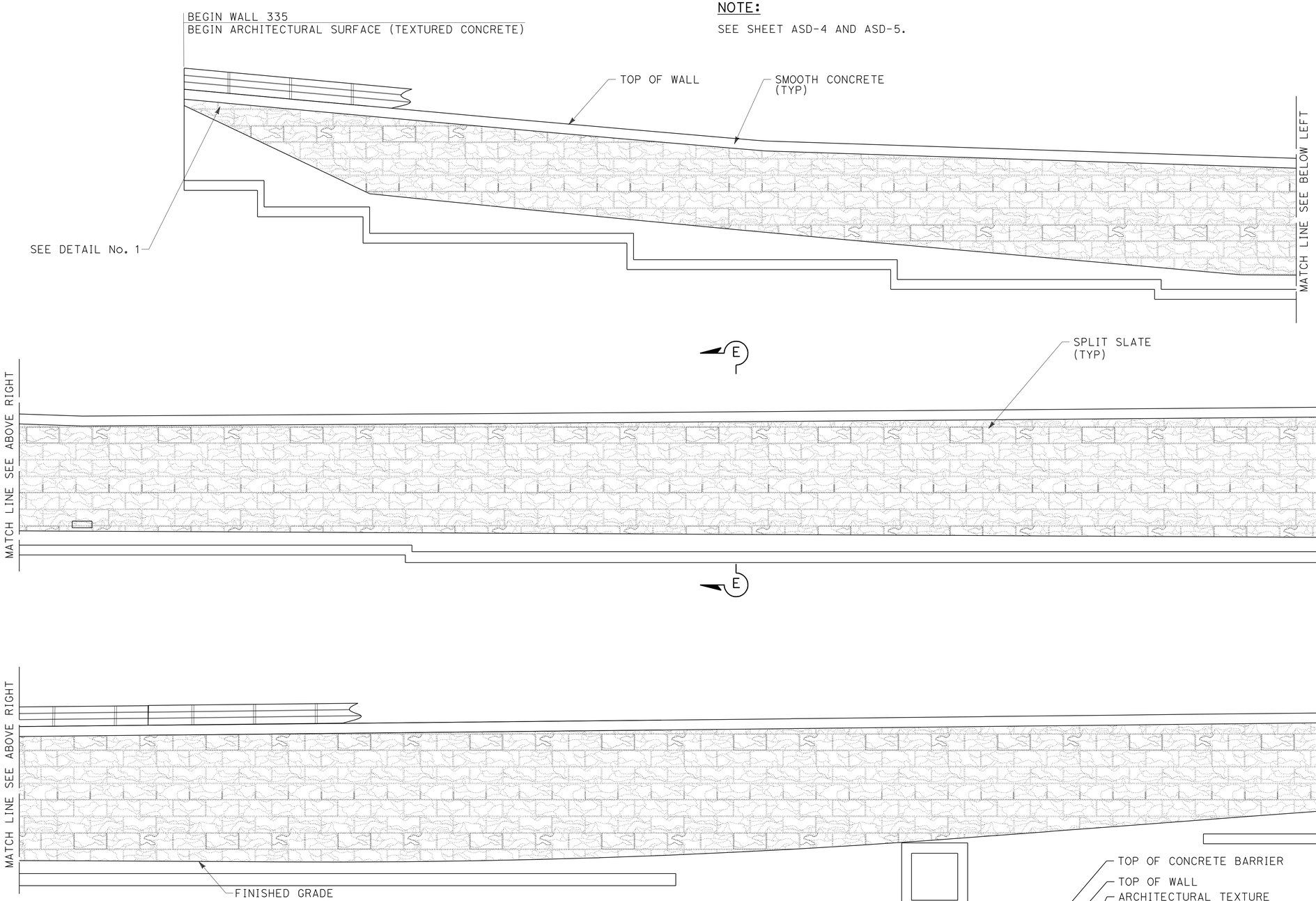

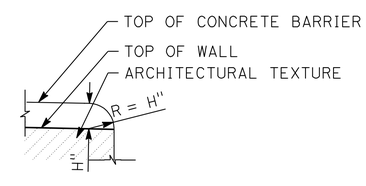

MIRRORED ELEVATION FOR SPLIT SLATE TEXTURE RETAINING WALL No. 335

THIS PLAN IS ACCURATE FOR ARCHITECTUAL TREATMENT WORK ONLY.

DETAIL No. 1

TYPICAL END OF WALL WITH CONCRETE BARRIER ON TOP OF WALL DETAIL

ARCHITECTURAL SURFACE
RETAINING WALL No. 335

SCALE: 1/8"=1'-0"

R25-5

STATE OF CALIFORNIA - DEPARTMENT OF TRANSPORTATION
Caltrans® LANDSCAPE ARCHITECTURE

SENIOR LANDSCAPE ARCHITECT: BYRON STROUT
CALCULATED-DESIGNED BY: MATTHEW HALL
CHECKED BY: MIRIAM BISHOP
REVISED BY
DATE REVISED

LAST REVISION 12-01-10
DATE PLOTTED => 30-APR-2011
TIME PLOTTED => 07:03

Dist	COUNTY	ROUTE	POST MILES TOTAL PROJECT	SHEET No.	TOTAL SHEETS
08	Riv	91	15.6/21.6	972	2028

LICENSED LANDSCAPE ARCHITECT

4-25-11
PLANS APPROVAL DATE

LICENSED LANDSCAPE ARCHITECT
Matthew Harry Hall
No. 2011
Signature
10/31/2011
Renewal Date
12-1-10
Date
STATE OF CALIFORNIA

THE STATE OF CALIFORNIA OR ITS OFFICERS OR AGENTS SHALL NOT BE RESPONSIBLE FOR THE ACCURACY OR COMPLETENESS OF SCANNED COPIES OF THIS PLAN SHEET.

NOTE:

SEE SHEET ASD-4 AND ASD-5.

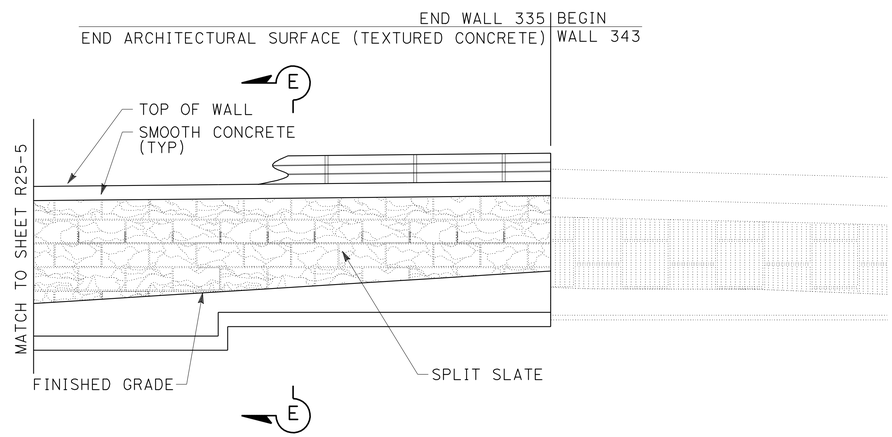

ELEVATION FOR SPLIT SLATE TEXTURE RETAINING WALL No. 335

THIS PLAN IS ACCURATE FOR ARCHITECTUAL TREATMENT WORK ONLY.

ARCHITECTURAL SURFACE RETAINING WALL No. 335

SCALE: 1/8"=1'-0"

R25-6

STATE OF CALIFORNIA - DEPARTMENT OF TRANSPORTATION
Caltrans® LANDSCAPE ARCHITECTURE

SENIOR LANDSCAPE ARCHITECT: BYRON STROUT
CALCULATED-DESIGNED BY: MATTHEW HALL
CHECKED BY: MIRIAM BISHOP
REVISED BY
DATE REVISED

LAST REVISION 12-01-10
DATE PLOTTED => 30-APR-2011
TIME PLOTTED => 07:04

DIST	COUNTY	ROUTE	POST MILES TOTAL PROJECT	SHEET No	TOTAL SHEETS
08	Riv	91	15.6/21.6	973	2028

GEOTECHNICAL PROFESSIONAL — DATE 04/2009

4-25-11
PLANS APPROVAL DATE

REGISTERED PROFESSIONAL ENGINEER — ANDREW C. LEE — No. 2616 — Exp. 6-30-12 — GEOTECHNICAL — STATE OF CALIFORNIA

The State of California or its officers or agents shall not be responsible for the accuracy or completeness of electronic copies of this plan sheet.

California Department of Transportation
5900 Folsom Boulevard
Sacramento, CA 95819

URS Corporation
2020 East First Street, Suite 400
Santa Ana, CA 92705

FOR PLAN VIEW, SEE SHEET R25-9

NOTE: 1. This LOTB sheet was prepared in accordance with the Caltrans Soil & Rock Logging, Classification, and Presentation Manual (June 2007).

2. For legend, see "Log of Test Borings" 1 of 16

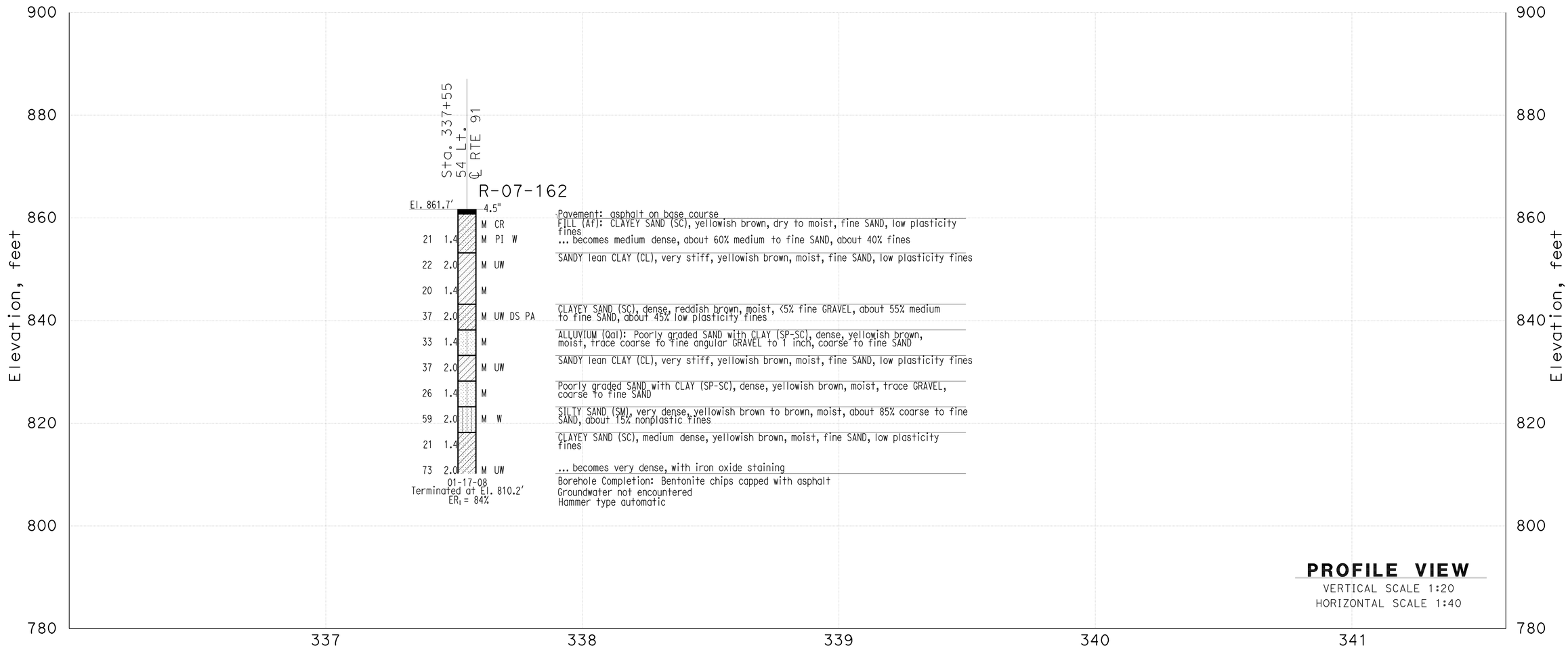

THIS PLAN ACCURATE FOR SOUND WALL AND RETAINING WALL WORK ONLY

GINA PURSELL DESIGN OVERSIGHT	SHAWN WEI FUNCTIONAL SUPERVISOR	DRAWN BY	P. QUACH	P.CHAU/D.WADER/C.CARBINO FIELD INVESTIGATION BY:	PREPARED FOR THE STATE OF CALIFORNIA DEPARTMENT OF TRANSPORTATION	A. LEE PROJECT ENGINEER	BRIDGE NO. X	Retaining Wall 335 R25-7
X SIGN OFF DATE		CHECKED BY	S. PIRATHIVIRAJ	DATE: Nov 6 2007 to March 7 2008			POST MILE X	LOG OF TEST BORINGS SHEET 1 OF 4

OSF GEOTECHNICAL LOG OF TEST BORINGS SHEET (ENGLISH) (REV. 2/25/05)

ORIGINAL SCALE IN INCHES FOR REDUCED PLANS 0 1 2 3

CU 59A0590
EA 08-448400

DISREGARD PRINTS BEARING EARLIER REVISION DATES

REVISION DATES (PRELIMINARY STAGE ONLY) X

SHEET 1 OF 4

FILE => 844840qy007.dgn

USERNAME => trstrk DATE PLOTTED => 30-APR-2011 TIME PLOTTED =>

DIST	COUNTY	ROUTE	POST MILES TOTAL PROJECT	SHEET No	TOTAL SHEETS
08	Riv	91	15.6/21.6	974	2028

GEOTECHNICAL PROFESSIONAL — DATE 04/2009

4-25-11
PLANS APPROVAL DATE

REGISTERED PROFESSIONAL ENGINEER — ANDREW C. LEE — No. 2616 — Exp. 6-30-12 — GEOTECHNICAL — STATE OF CALIFORNIA

The State of California or its officers or agents shall not be responsible for the accuracy or completeness of electronic copies of this plan sheet.

California Department of Transportation
5900 Folsom Boulevard
Sacramento, CA 95819

URS Corporation
2020 East First Street, Suite 400
Santa Ana, CA 92705

FOR PLAN VIEW, SEE SHEET R25-9

NOTE: 1. This LOTB sheet was prepared in accordance with the Caltrans Soil & Rock Logging, Classification, and Presentation Manual (June 2007).

2. For legend, see "Log of Test Borings" 1 of 16

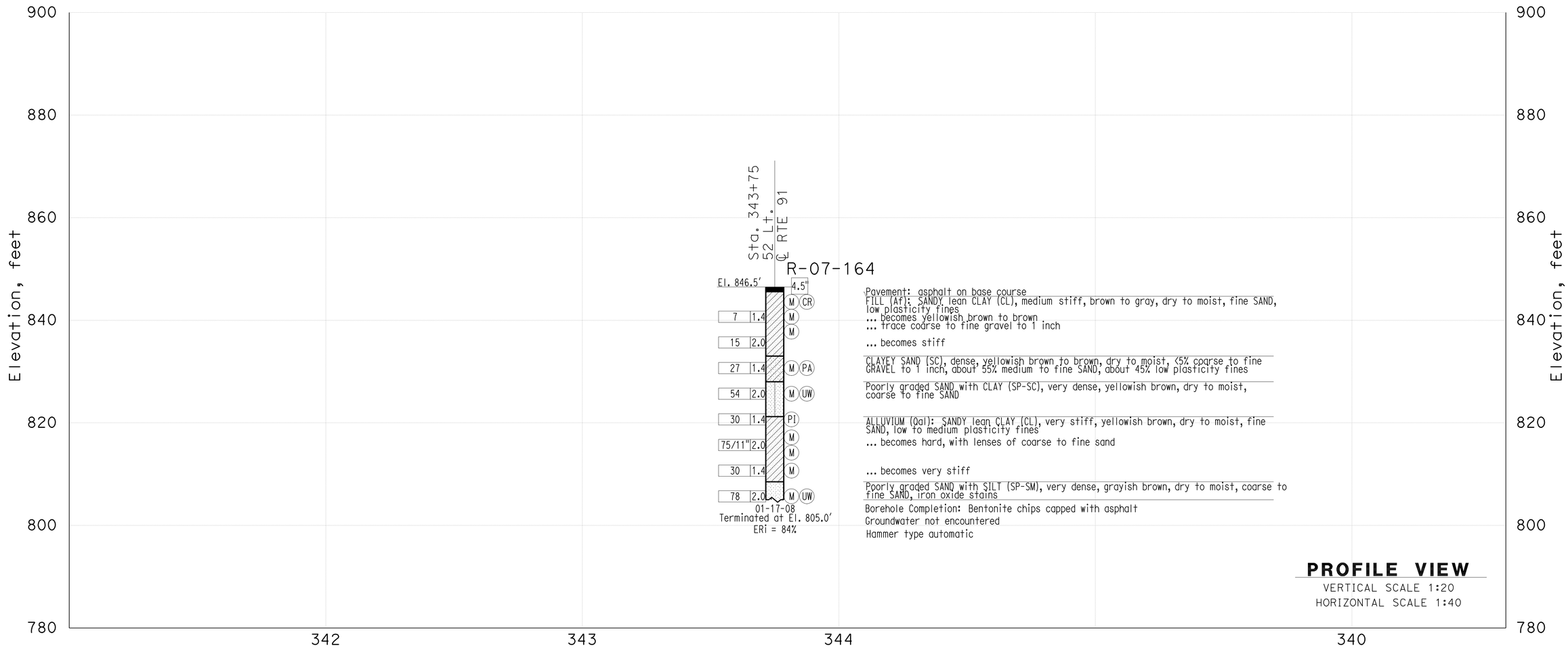

THIS PLAN ACCURATE FOR SOUND WALL AND RETAINING WALL WORK ONLY

GINA PURSELL DESIGN OVERSIGHT	SHAWN WEI FUNCTIONAL SUPERVISOR	DRAWN BY	P. QUACH	P.CHAU/D.WADER/C.CARBINO FIELD INVESTIGATION BY:	PREPARED FOR THE STATE OF CALIFORNIA DEPARTMENT OF TRANSPORTATION	A. LEE PROJECT ENGINEER	BRIDGE NO. X POST MILE X	Retaining Wall 335 R25-8
X SIGN OFF DATE		CHECKED BY	S. PIRATHIVIRAJ	DATE: Nov 6 2007 to March 7 2008				LOG OF TEST BORINGS SHEET 2 OF 4

OSF GEOTECHNICAL LOG OF TEST BORINGS SHEET (ENGLISH) (REV. 2/25/05)

ORIGINAL SCALE IN INCHES FOR REDUCED PLANS 0 1 2 3

CU 59A0590
EA 08-448400

DISREGARD PRINTS BEARING EARLIER REVISION DATES

REVISION DATES (PRELIMINARY STAGE ONLY) X

SHEET 2 OF 4

FILE => 844840qy008.dgn

USERNAME => frstrk DATE PLOTTED => 30-APR-2011 TIME PLOTTED =>

Borehole Number	Drill Rig	Hammer Type	Avg. Hammer Efficiency, ETR (%)
A-07-158	Diedrich D-120	Automatic	75*
A-07-159	Diedrich D-120	Automatic	75*
R-07-160	CME 85	Automatic	87
R-07-161	CS-2000	Automatic	84
R-07-162	CS-2000	Automatic	84
R-07-163	CME 85	Automatic	87

Sampler Type	Inside Diameter (Inches)	Borehole Numbers
SPT	1.375	A-07-158, A-07-159, R-07-60 R-07-161, R-07-162, R-07-163
Modified California 1	1.94	R-07-160, R-07-162, R-07-163
Modified California 2	2.40	A-07-158, A-07-159

*Estimated Hammer Efficiency Rating.

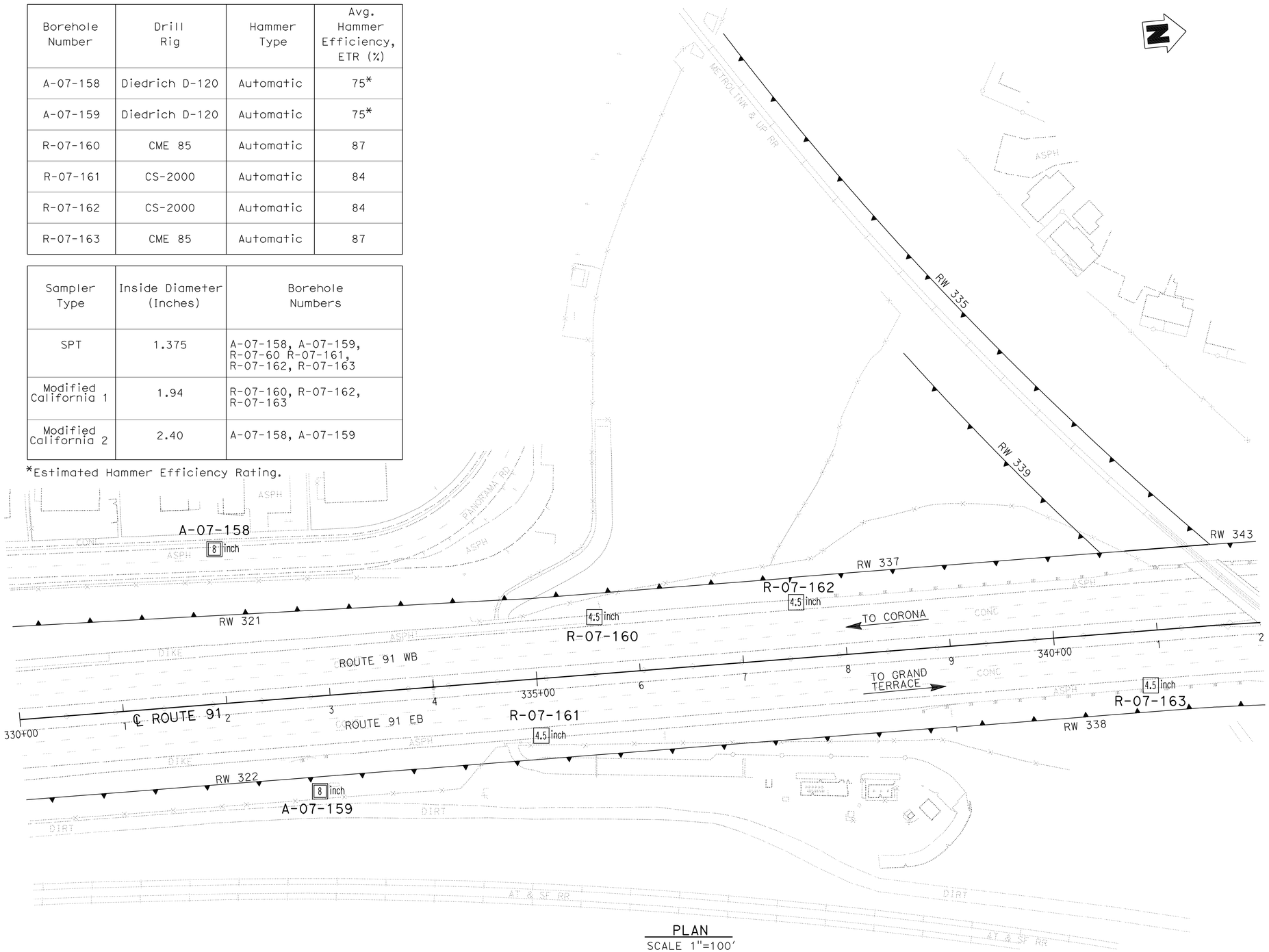

PLAN
SCALE 1"=100'

DIST	COUNTY	ROUTE	POST MILES TOTAL PROJECT	SHEET No	TOTAL SHEETS
08	Riv	91	15.6/21.6	975	2028

GEOTECHNICAL PROFESSIONAL — DATE 04/2009

PLANS APPROVAL DATE 4-25-11

REGISTERED PROFESSIONAL ENGINEER — ANDREW C. LEE — No. 2616 — Exp. 6-30-12 — GEOTECHNICAL — STATE OF CALIFORNIA

The State of California or its officers or agents shall not be responsible for the accuracy or completeness of electronic copies of this plan sheet.

California Department of Transportation
5900 Folsom Boulevard
Sacramento, CA 95819

URS Corporation
2020 East First Street, Suite 400
Santa Ana, CA 92705

GINA PURSELL — DESIGN OVERSIGHT
X — SIGN OFF DATE
SHAWN WEI — FUNCTIONAL SUPERVISOR

DRAWN BY: P. QUACH
CHECKED BY: S. PIRATHIVIRAJ

P.CHAU/D.WADER/C.CARBINO — FIELD INVESTIGATION BY:
DATE: Nov 6 2007 to March 7 2008

PREPARED FOR THE STATE OF CALIFORNIA DEPARTMENT OF TRANSPORTATION

A. LEE — PROJECT ENGINEER

BRIDGE NO. X
POST MILE X

RETAINING WALL 335 — R25-9

LOG OF TEST BORINGS 3 OF 4

OSF GEOTECHNICAL LOG OF TEST BORINGS SHEET (ENGLISH) (REV. 2/25/05)

ORIGINAL SCALE IN INCHES FOR REDUCED PLANS 0 1 2 3

CU 59A0590
EA 08-448400

DISREGARD PRINTS BEARING EARLIER REVISION DATES

REVISION DATES (PRELIMINARY STAGE ONLY) X

SHEET 3 OF 4

FILE => 844840qy009.dgn

USERNAME => trstrk — DATE PLOTTED => 30-APR-2011 — TIME PLOTTED =>

DIST	COUNTY	ROUTE	POST MILES TOTAL PROJECT	SHEET No	TOTAL SHEETS
08	Riv	91	15.6/21.6	976	2028

GEOTECHNICAL PROFESSIONAL DATE 10/2008

4-25-11
PLANS APPROVAL DATE

REGISTERED PROFESSIONAL ENGINEER
ANDREW C. LEE
No. 2616
Exp. 6-30-12
GEOTECHNICAL
STATE OF CALIFORNIA

The State of California or its officers or agents shall not be responsible for the accuracy or completeness of electronic copies of this plan sheet.

California Department of Transportation
5900 Folsom Boulevard
Sacramento, CA 95819

URS Corporation
2020 East First Street, Suite 400
Santa Ana, CA 92705

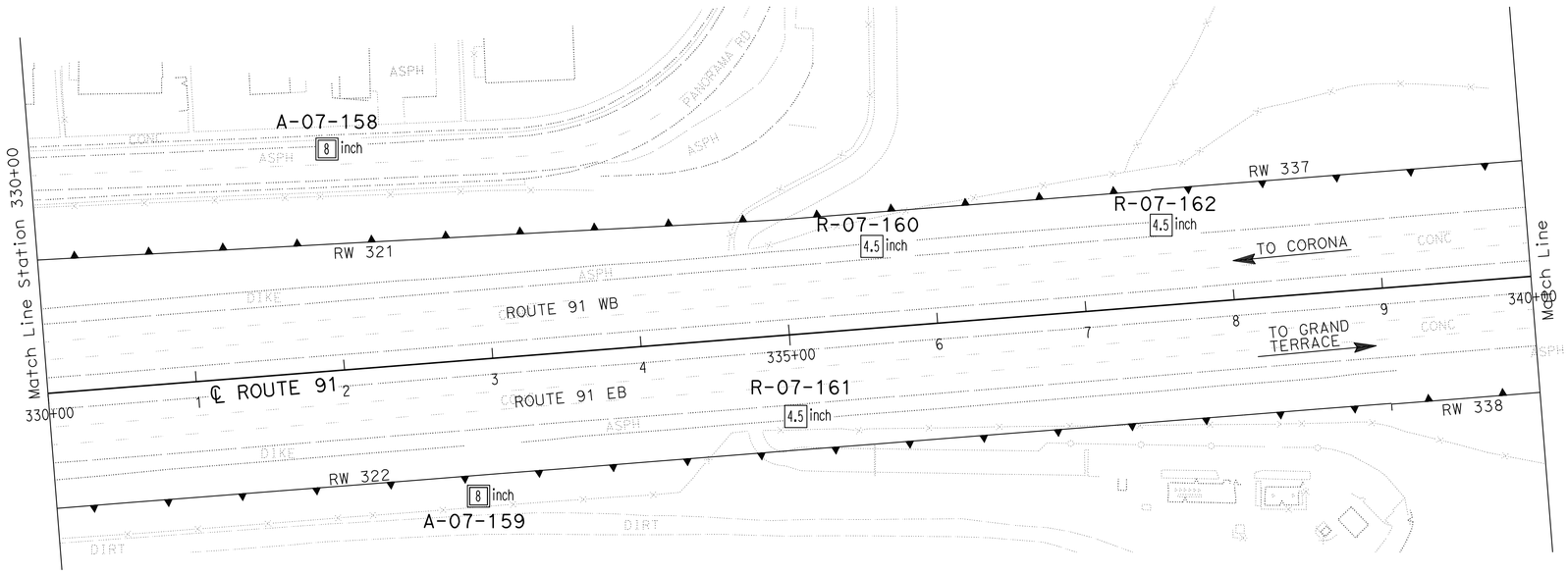

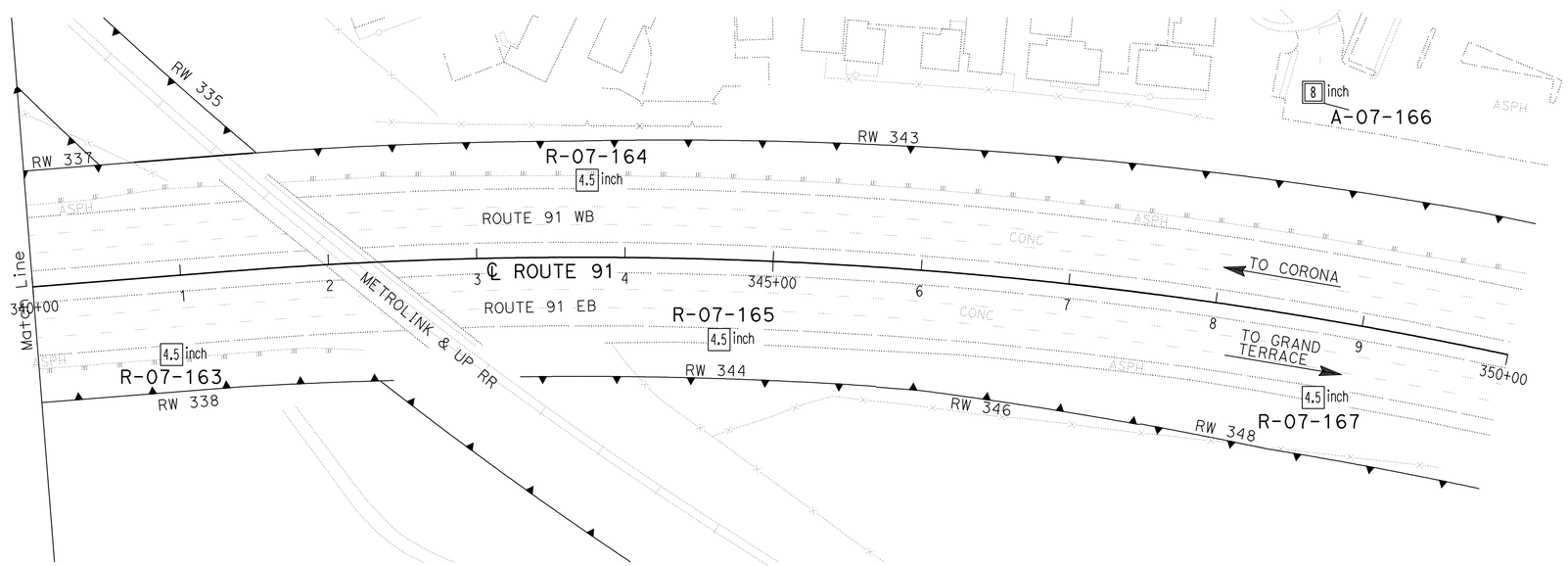

PLAN
SCALE 1"=50'

Borehole Number	Drill Rig	Hammer Type	Avg. Hammer Efficiency, ETR (%)
A-07-158	Diedrich D-120	Automatic	75*
A-07-159	Diedrich D-120	Automatic	75*
R-07-160	CME 85	Automatic	87
R-07-161	CS-2000	Automatic	84
R-07-162	CS-2000	Automatic	84
R-07-163	CME 85	Automatic	87
R-07-164	CS-2000	Automatic	84
R-07-165	CS-2000	Automatic	84
A-07-166	Diedrich D-120	Automatic	75*
R-07-167	Acker Rig	Automatic	74

Sampler Type	Inside Diameter (Inches)	Borehole Numbers
SPT	1.375	A-07-158, A-07-159, R-07-60 R-07-161, R-07-162, R-07-163 R-07-164, R-07-165, A-07-166 R-07-177
Modified California 1	1.94	R-07-160, R-07-162, R-07-163 R-07-164, R-07-165, R-07-167
Modified California 2	2.40	A-07-158, A-07-159, A-07-166

*Estimated Hammer Efficiency Rating.

DESIGN OVERSIGHT X SIGN OFF DATE	GINA PURSELL FUNCTIONAL SUPERVISOR	DRAWN BY P. QUACH	P.CHAU/D.WADER/C.CARBINO FIELD INVESTIGATION BY: DATE: Nov 6 2007 to March 7 2008	PREPARED FOR THE STATE OF CALIFORNIA DEPARTMENT OF TRANSPORTATION	A. LEE PROJECT ENGINEER
		CHECKED BY S. PIRATHIVIRAJ			

BRIDGE NO. X
POST MILE X

RETAINING WALL 335 R25-10

LOG OF TEST BORINGS 4 OF 4

OSF GEOTECHNICAL LOG OF TEST BORINGS SHEET (ENGLISH) (REV. 2/25/05)

ORIGINAL SCALE IN INCHES FOR REDUCED PLANS 0 1 2 3

CU 59A0590
EA 08-448400

DISREGARD PRINTS BEARING EARLIER REVISION DATES

REVISION DATES (PRELIMINARY STAGE ONLY) X

SHEET 4 OF 4

FILE => 844840qy010.dgn

USERNAME => trstrk DATE PLOTTED => 30-APR-2011 TIME PLOTTED =>

Dist	COUNTY	ROUTE	POST MILES TOTAL PROJECT	SHEET No.	TOTAL SHEETS
08	Riv	91	15.6/21.6	977	2028

REGISTERED CIVIL ENGINEER 12-1-10 DATE

4-25-11
PLANS APPROVAL DATE

REGISTERED PROFESSIONAL ENGINEER CUONG LE TRAN No. C60436 Exp. 6-30-12 CIVIL STATE OF CALIFORNIA

THE STATE OF CALIFORNIA OR ITS OFFICERS OR AGENTS SHALL NOT BE RESPONSIBLE FOR THE ACCURACY OR COMPLETENESS OF SCANNED COPIES OF THIS PLAN SHEET.

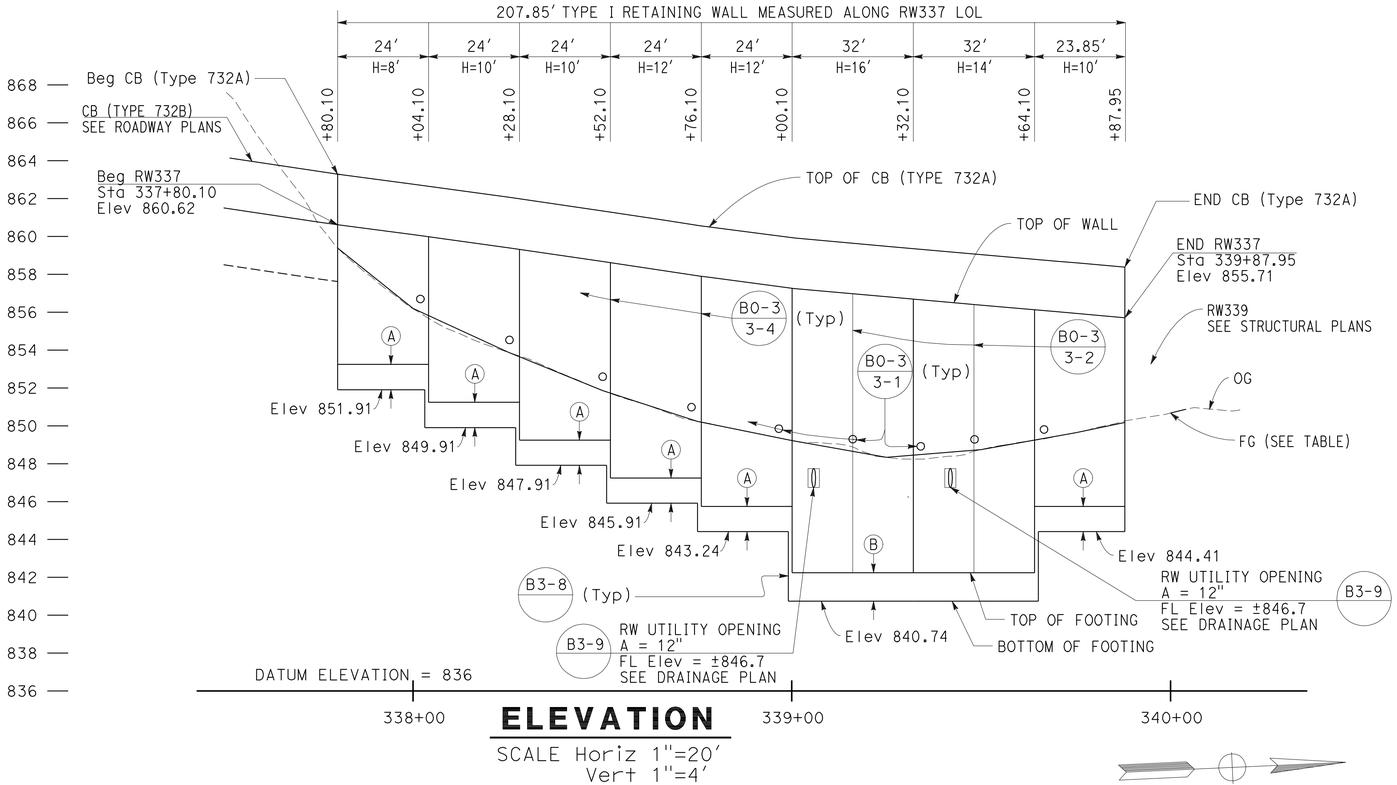

ELEVATION

SCALE Horiz 1"=20'
Vert 1"=4'

NOTES:

(A) FOOTING THICKNESS F = 1'-4"

(B) FOOTING THICKNESS F = 1'-6"

ELEVATION TABLE		
STATION	TOP OF WALL	FG
337+80.10	860.62	859.39
338+00.00	860.10	856.20
338+25.00	859.41	853.89
338+50.00	858.68	851.87
338+75.00	857.93	850.24
339+00.00	857.27	849.23
339+25.00	856.82	848.33
339+50.00	856.37	848.75
339+75.00	855.94	849.64
339+87.95	855.71	850.17

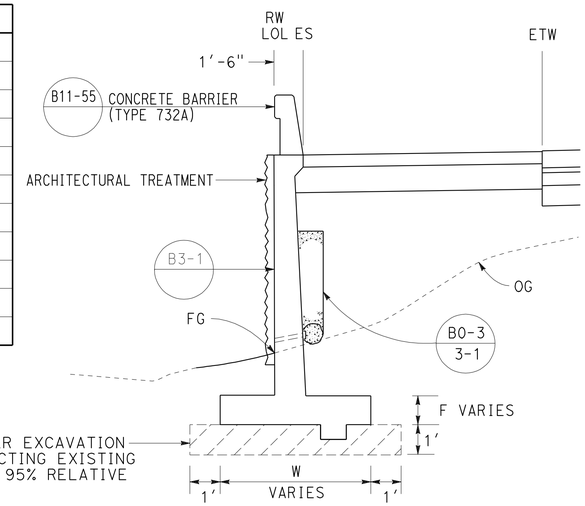

TYPICAL SECTION

NO SCALE
FROM STA 337+80.10 TO STA 339+87.95

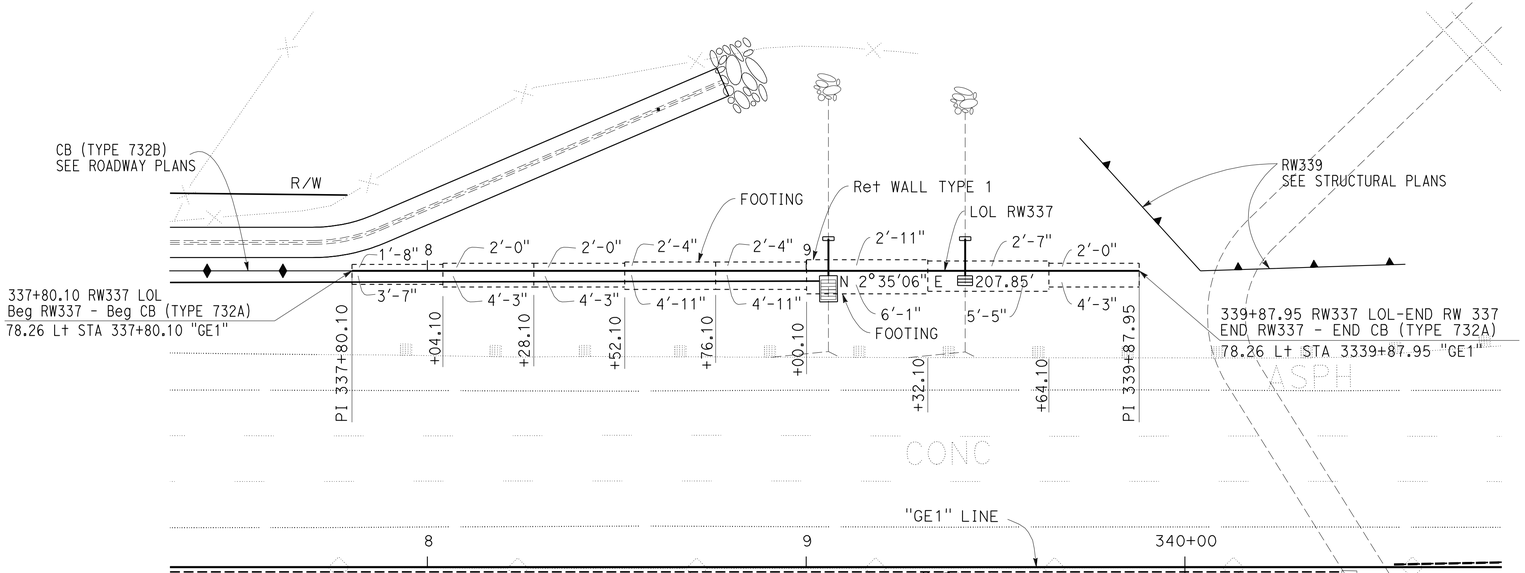

PLAN

SCALE: 1"=20'

THIS PLAN ACCURATE FOR RETAINING WALL WORK ONLY.

QUANTITIES

STRUCTURAL CONCRETE (RETAINING WALL)	201.20	CY
BAR REINFORCING STEEL (RETAINING WALL)	18196	LB
STRUCTURAL EXCAVATION (RETAINING WALL)	559.96	CY
STRUCTURAL BACKFILL (RETAINING WALL)	594.01	CY
PERVIOUS BACKFILL MATERIAL (RETAINING WALL)	27.01	CY
CONCRETE BARRIER (TYPE 732A)	207.85	LF
PLASTIC PIPE (N)	12.40	LF
WATERSTOP (N)	89.20	LF
STRUCTURAL CONCRETE (WALL TEXTURE)	1553.60	SF

(N) = NOT A SEPARATE PAY ITEM, FOR INFORMATION ONLY

NOTES:

1. ARCHITECTURAL TREATMENT SHOULD EXTEND 6 IN BELOW FG OR 6 IN BELOW TOP CB (TYPE 60D MOD)
2. FOR STRUCTURAL SECTIONS, SEE ROADWAY PLANS
3. WATERSTOP IN EXPANSION JOINT SHALL BE EXTEND 6 IN INTO THE BARRIER

SHEET 1 OF 1

RETAINING WALL PLAN
RETAINING WALL No. 337

SCALE AS SHOWN

R26-1

REVISED BY | DATE REVISED
ANNABELL WANG | CUONG LE TRAN
CALCULATED-DESIGNED BY | CHECKED BY
FUNCTIONAL SUPERVISOR: MARK PERTILE

STATE OF CALIFORNIA - DEPARTMENT OF TRANSPORTATION
Caltrans DESIGN

LAST REVISION 12-01-10 | DATE PLOTTED => 30-APR-2011 | TIME PLOTTED => 07:41

Dist	COUNTY	ROUTE	POST MILES TOTAL PROJECT	SHEET No.	TOTAL SHEETS
08	Riv	91	15.6/21.6	978	2028

LICENSED LANDSCAPE ARCHITECT

4-25-11
PLANS APPROVAL DATE

LICENSED LANDSCAPE ARCHITECT
Matthew Harry Hall
Signature
10/31/2011
Renewal Date
12-1-10
Date
STATE OF CALIFORNIA

THE STATE OF CALIFORNIA OR ITS OFFICERS OR AGENTS SHALL NOT BE RESPONSIBLE FOR THE ACCURACY OR COMPLETENESS OF SCANNED COPIES OF THIS PLAN SHEET.

NOTE:

SEE SHEET ASD-4 AND ASD-5.

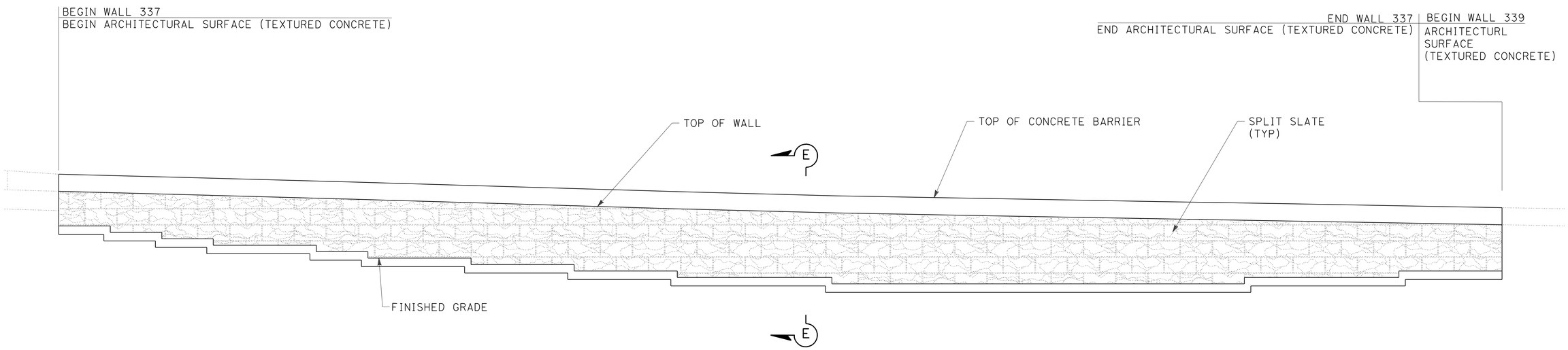

MIRRORED ELEVATION FOR SPLIT SLATE TEXTURE RETAINING WALL No. 337

THIS PLAN IS ACCURATE FOR ARCHITECTUAL TREATMENT WORK ONLY.

ARCHITECTURAL SURFACE RETAINING WALL No. 337

SCALE: 1/8"=1'-0"

R26-2

STATE OF CALIFORNIA - DEPARTMENT OF TRANSPORTATION
Caltrans LANDSCAPE ARCHITECTURE

SENIOR LANDSCAPE ARCHITECT: BYRON STROUT
CALCULATED-DESIGNED BY: MATTHEW HALL
CHECKED BY: MIRIAM BISHOP
REVISED BY
DATE REVISED

LAST REVISION 12-01-10
DATE PLOTTED => 30-APR-2011
TIME PLOTTED => 07:41

DIST	COUNTY	ROUTE	POST MILES TOTAL PROJECT	SHEET No	TOTAL SHEETS
08	Riv	91	15.6/21.6	979	2028

GEOTECHNICAL PROFESSIONAL DATE 10/2008

4-25-11
PLANS APPROVAL DATE

REGISTERED PROFESSIONAL ENGINEER
ANDREW C. LEE
No. 2616
Exp. 6-30-12
GEOTECHNICAL
STATE OF CALIFORNIA

The State of California or its officers or agents shall not be responsible for the accuracy or completeness of electronic copies of this plan sheet.

California Department of Transportation
5900 Folsom Boulevard
Sacramento, CA 95819

URS Corporation
2020 East First Street, Suite 400
Santa Ana, CA 92705

FOR PLAN VIEW, SEE SHEET 26-4

NOTE: 1. This LOTB sheet was prepared in accordance with the Caltrans Soil & Rock Logging, Classification, and Presentation Manual (June 2007).

2. For legend, see "Log of Test Borings" 1 of 83

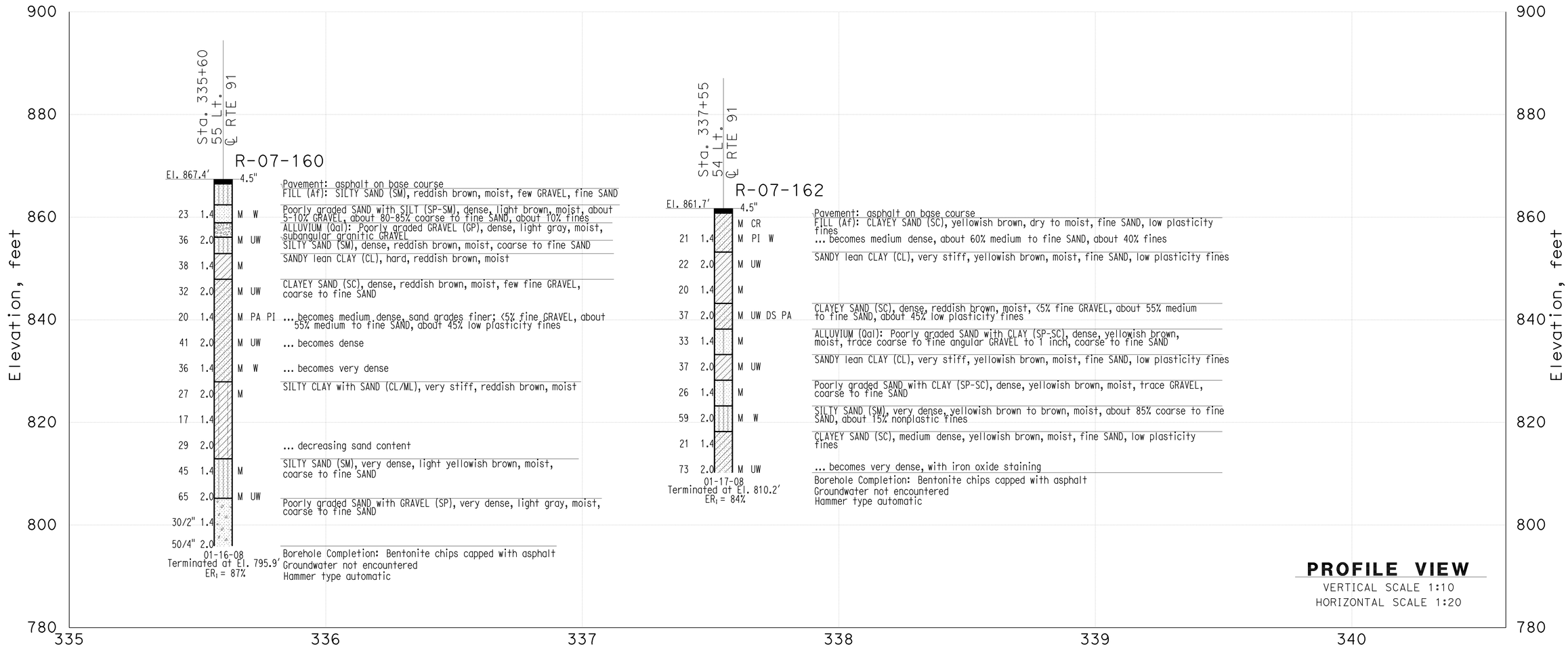

THIS PLAN ACCURATE FOR SOUND WALL AND RETAINING WALL WORK ONLY

DESIGN OVERSIGHT X SIGN OFF DATE	GINA PURSELL FUNCTIONAL SUPERVISOR	DRAWN BY CHECKED BY	P. QUACH S. PIRATHIVIRAJ	P.CHAU/D.WADER/C.CARBINO FIELD INVESTIGATION BY: DATE: Nov 6 2007 to March 7 2008	PREPARED FOR THE STATE OF CALIFORNIA DEPARTMENT OF TRANSPORTATION	A. LEE PROJECT ENGINEER	BRIDGE NO. X POST MILE X

Retaining Wall 337 R26-3

LOG OF TEST BORINGS SHEET 1 OF 2

OSF GEOTECHNICAL LOG OF TEST BORINGS SHEET (ENGLISH) (REV. 2/25/05)

ORIGINAL SCALE IN INCHES FOR REDUCED PLANS 0 1 2 3

CU 59A0590
EA 08-448400

DISREGARD PRINTS BEARING EARLIER REVISION DATES

REVISION DATES (PRELIMINARY STAGE ONLY) X

SHEET 1 OF 2

FILE => 844840qz003.dgn

USERNAME => trstrk DATE PLOTTED => 30-APR-2011 TIME PLOTTED =>

Borehole Number	Drill Rig	Hammer Type	Avg. Hammer Efficiency, ETR (%)
A-07-158	Diedrich D-120	Automatic	75*
A-07-159	Diedrich D-120	Automatic	75*
R-07-160	CME 85	Automatic	87
R-07-161	CS-2000	Automatic	84
R-07-162	CS-2000	Automatic	84
R-07-163	CME 85	Automatic	87

Sampler Type	Inside Diameter (Inches)	Borehole Numbers
SPT	1.375	A-07-158, A-07-159, R-07-60 R-07-161, R-07-162, R-07-163
Modified California 1	1.94	R-07-160, R-07-162, R-07-163
Modified California 2	2.40	A-07-158, A-07-159

*Estimated Hammer Efficiency Rating.

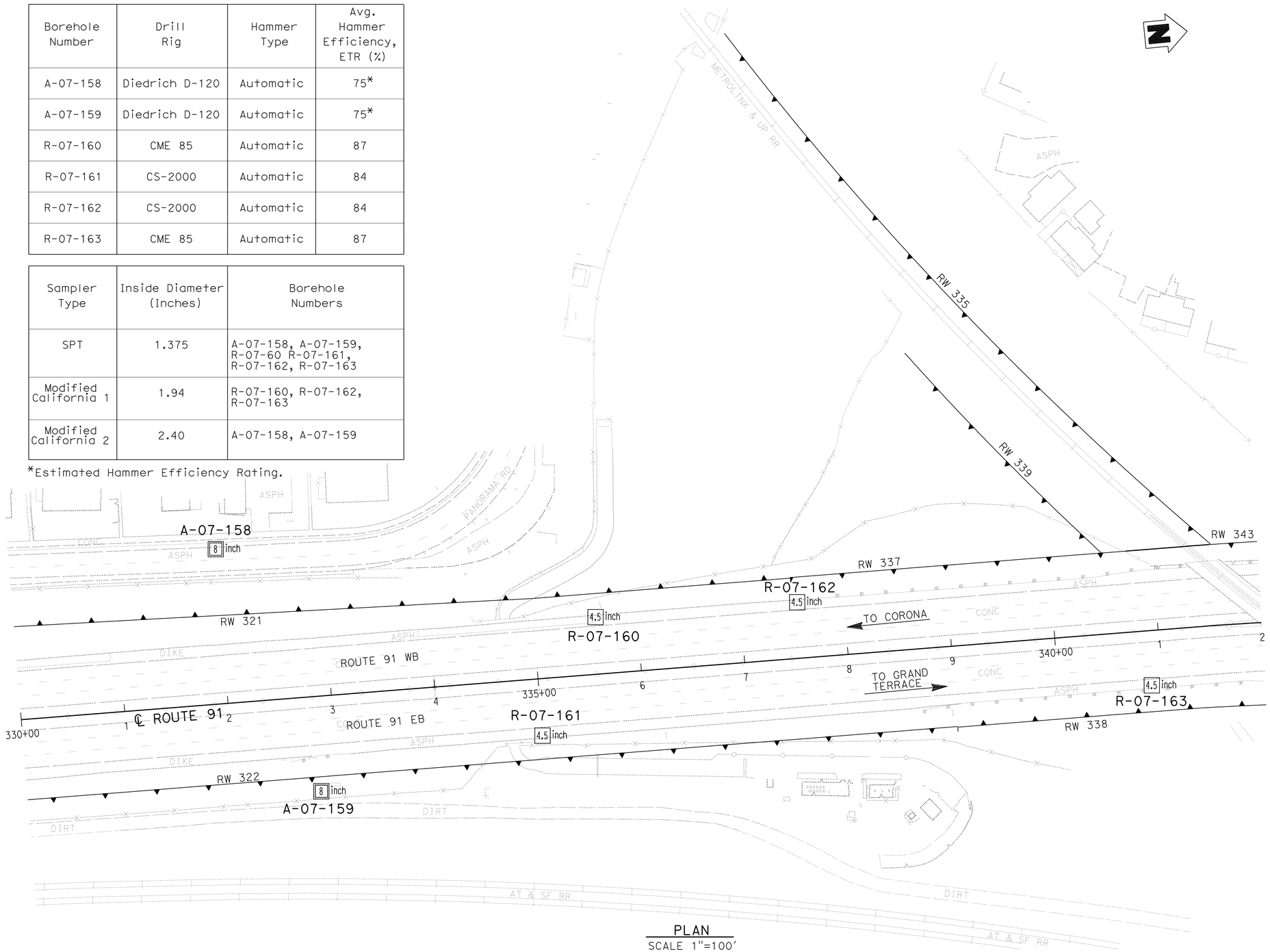

PLAN
SCALE 1"=100'

DIST	COUNTY	ROUTE	POST MILES TOTAL PROJECT	SHEET No	TOTAL SHEETS
08	Riv	91	15.6/21.6	980	2028

GEOTECHNICAL PROFESSIONAL — DATE 04/2009

PLANS APPROVAL DATE 4-25-11

REGISTERED PROFESSIONAL ENGINEER — ANDREW C. LEE — No. 2616 — Exp. 6-30-12 — GEOTECHNICAL — STATE OF CALIFORNIA

The State of California or its officers or agents shall not be responsible for the accuracy or completeness of electronic copies of this plan sheet.

California Department of Transportation
5900 Folsom Boulevard
Sacramento, CA 95819

URS Corporation
2020 East First Street, Suite 400
Santa Ana, CA 92705

GINA PURSELL — DESIGN OVERSIGHT	SHAWN WEI — FUNCTIONAL SUPERVISOR	DRAWN BY	P. QUACH	P.CHAU/D.WADER/C.CARBINO — FIELD INVESTIGATION BY:	PREPARED FOR THE STATE OF CALIFORNIA DEPARTMENT OF TRANSPORTATION
X — SIGN OFF DATE		CHECKED BY	S. PIRATHIVIRAJ	DATE: Nov 6 2007 to March 7 2008	

A. LEE — PROJECT ENGINEER

BRIDGE NO. X — POST MILE X

RETAINING WALL 337 — R26-4

LOG OF TEST BORINGS SHEET 2 OF 2

OSF GEOTECHNICAL LOG OF TEST BORINGS SHEET (ENGLISH) (REV. 2/25/05)

ORIGINAL SCALE IN INCHES FOR REDUCED PLANS 0 1 2 3

CU 59A0590
EA 08-448400

DISREGARD PRINTS BEARING EARLIER REVISION DATES

REVISION DATES (PRELIMINARY STAGE ONLY) X

SHEET 2 OF 2

FILE => 844840qz004.dgn

USERNAME => trstrk — DATE PLOTTED => 30-APR-2011 — TIME PLOTTED =>

Dist	COUNTY	ROUTE	POST MILES TOTAL PROJECT	SHEET No.	TOTAL SHEETS
08	Riv	91	15.6/21.6	981	2028

REGISTERED CIVIL ENGINEER 12-1-10 DATE

4-25-11
PLANS APPROVAL DATE

REGISTERED PROFESSIONAL ENGINEER CUONG LE TRAN No. C60436 Exp. 6-30-12 CIVIL STATE OF CALIFORNIA

THE STATE OF CALIFORNIA OR ITS OFFICERS OR AGENTS SHALL NOT BE RESPONSIBLE FOR THE ACCURACY OR COMPLETENESS OF SCANNED COPIES OF THIS PLAN SHEET.

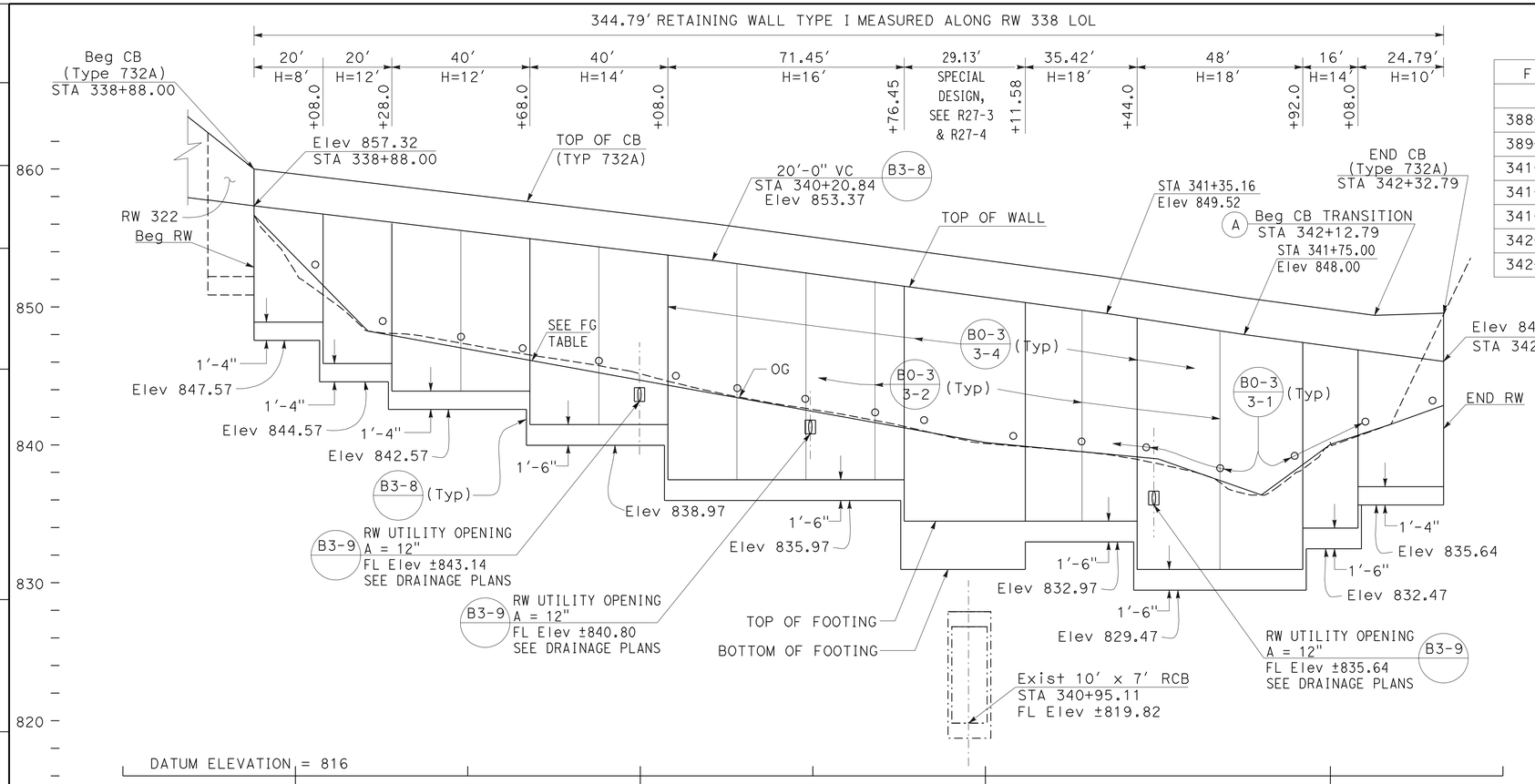

ELEVATION

SCALE Horiz 1"=20'
Vert 1"=5'

FINISH GRADE (FG) TABLE	
STATION	ELEVATION
388+88.00	856.65
389+21.00	848.25
341+00.00	840.17
341+50.00	838.98
341+80.00	836.37
342+00.00	840.03
342+32.79	842.86

QUANTITIES

STRUCTURAL CONCRETE (RETAINING WALL)	445.30	CY
BAR REINFORCING STEEL (RETAINING WALL)	48146	LB
STRUCTURAL EXCAVATION (RETAINING WALL)	1163.90	CY
STRUCTURAL BACKFILL (RETAINING WALL)	1289.97	CY
PERVIOUS BACKFILL MATERIAL (RETAINING WALL)	71.74	CY
CONCRETE BARRIER (TYPE 732A)	344.79	LF
PLASTIC PIPE (N)	25.50	LF
WATERSTOP (N)	121.06	LF
ARCHITECTURAL SURFACE (TEXTURED CONCRETE)	3192.60	SF
FURNIS PILING (CLASS 90) (ALTERNATIVE X)	327.00	LF
DRIVE PILE (CLASS 90) (ALTERNATIVE X)	12.00	EA

(N) = NOT A SEPARATE PAY ITEM, FOR INFORMATION ONLY

NOTES:

1. ARCHITECTURAL TREATMENT SHOULD EXTEND 6 IN BELOW FG OR 6 IN BELOW TOP CB (TYPE 60D MOD)
2. FOR STRUCTURAL SECTIONS, SEE ROADWAY PLANS
3. WATERSTOP IN EXPANSION JOINT SHALL BE EXTEND 6 IN INTO THE BARRIER

(A) CONCRETE BARRIER 732 TRANSITION TO CONCRETE BARRIER (TYPE 60 D MOD) SEE RETAINING WALL DETAILS

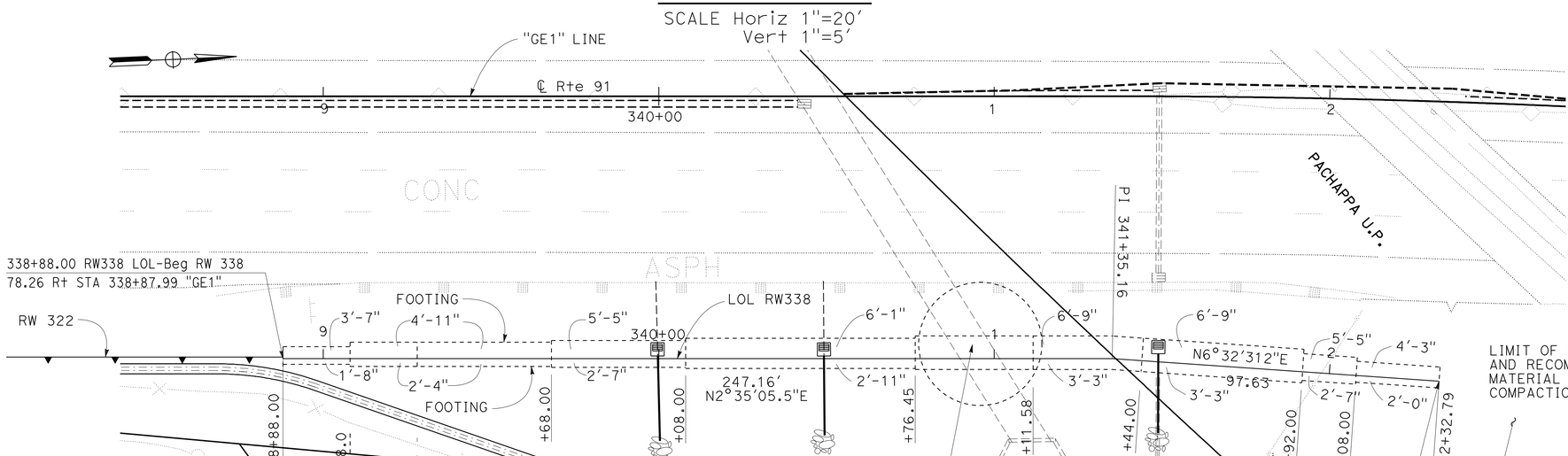

PLAN

SCALE: 1"=20'

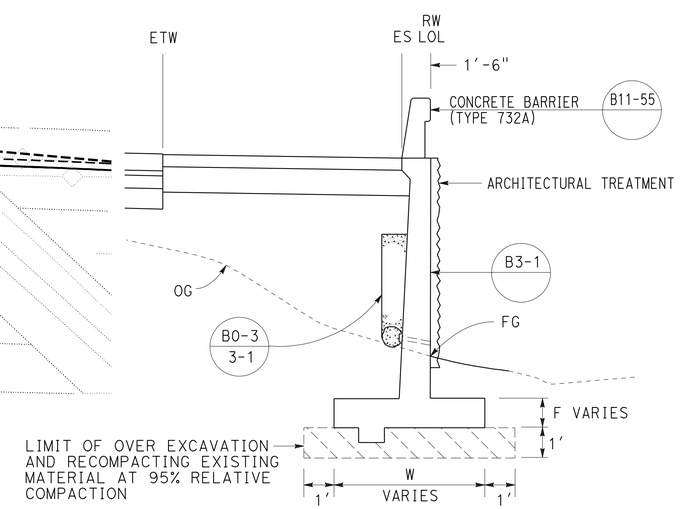

TYPICAL SECTION

NO SCALE
FROM STA 338+88.00 TO STA 342+32.79

THIS PLAN ACCURATE FOR RETAINING WALL WORK ONLY.

RETAINING WALL PLAN
RETAINING WALL No. 338
SCALE AS SHOWN

R27-1

STATE OF CALIFORNIA - DEPARTMENT OF TRANSPORTATION
DESIGN
FUNCTIONAL SUPERVISOR: MARK PERTILE
CALCULATED-DESIGNED BY: ANNABELL WANG
CHECKED BY: CUONG LE TRAN
REVISED BY / DATE REVISED

LAST REVISION 12-01-10
DATE PLOTTED => 30-APR-2011
TIME PLOTTED => 07:41

Dist	COUNTY	ROUTE	POST MILES TOTAL PROJECT	SHEET No.	TOTAL SHEETS
08	Riv	91	15.6/21.6	982	2028

REGISTERED CIVIL ENGINEER 12-1-10 DATE

4-25-11
PLANS APPROVAL DATE

REGISTERED PROFESSIONAL ENGINEER CUONG LE TRAN No. C60436 Exp. 6-30-12 CIVIL STATE OF CALIFORNIA

THE STATE OF CALIFORNIA OR ITS OFFICERS OR AGENTS SHALL NOT BE RESPONSIBLE FOR THE ACCURACY OR COMPLETENESS OF SCANNED COPIES OF THIS PLAN SHEET.

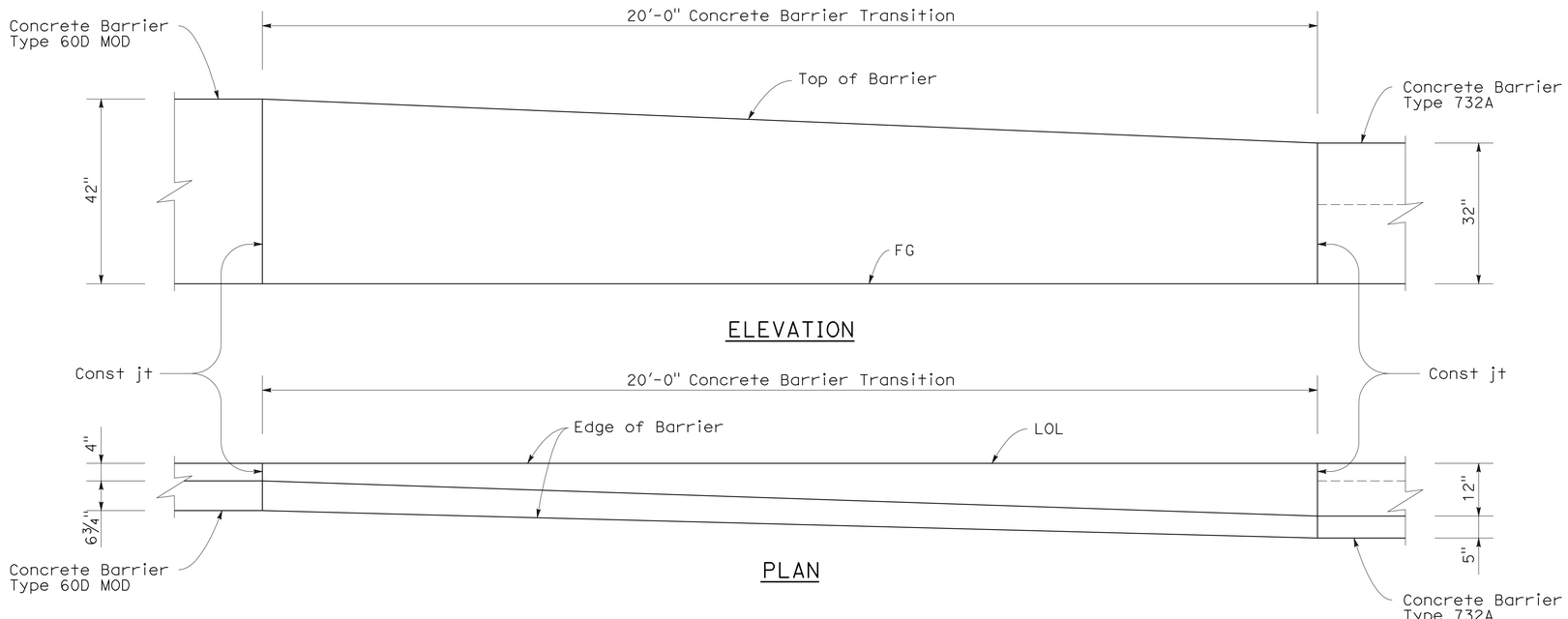

TRANSITION CONCRETE BARRIER TYPE 60D MOD
TO CONCRETE BARRIER TYPE 732

THIS PLAN ACCURATE FOR RETAINING WALL WORK ONLY.

RETAINING WALL DETAILS
RETAINING WALL No. 338
NO SCALE

R27-2

STATE OF CALIFORNIA - DEPARTMENT OF TRANSPORTATION
Caltrans DESIGN

FUNCTIONAL SUPERVISOR: MARK PERTILE
CALCULATED-DESIGNED BY: ANNABELL WANG
CHECKED BY: CUONG LE TRAN
REVISED BY
DATE REVISED

LAST REVISION 12-01-10 | DATE PLOTTED => 30-APR-2011 | TIME PLOTTED => 07:51

Dist	COUNTY	ROUTE	POST MILES TOTAL PROJECT	SHEET No.	TOTAL SHEETS
08	Riv	91	15.6/21.6	983	2028

REGISTERED CIVIL ENGINEER 12-1-10 DATE

4-25-11
PLANS APPROVAL DATE

REGISTERED PROFESSIONAL ENGINEER MINH THUONG VO No. C59297 Exp. 06/30/11 CIVIL STATE OF CALIFORNIA

THE STATE OF CALIFORNIA OR ITS OFFICERS OR AGENTS SHALL NOT BE RESPONSIBLE FOR THE ACCURACY OR COMPLETENESS OF SCANNED COPIES OF THIS PLAN SHEET.

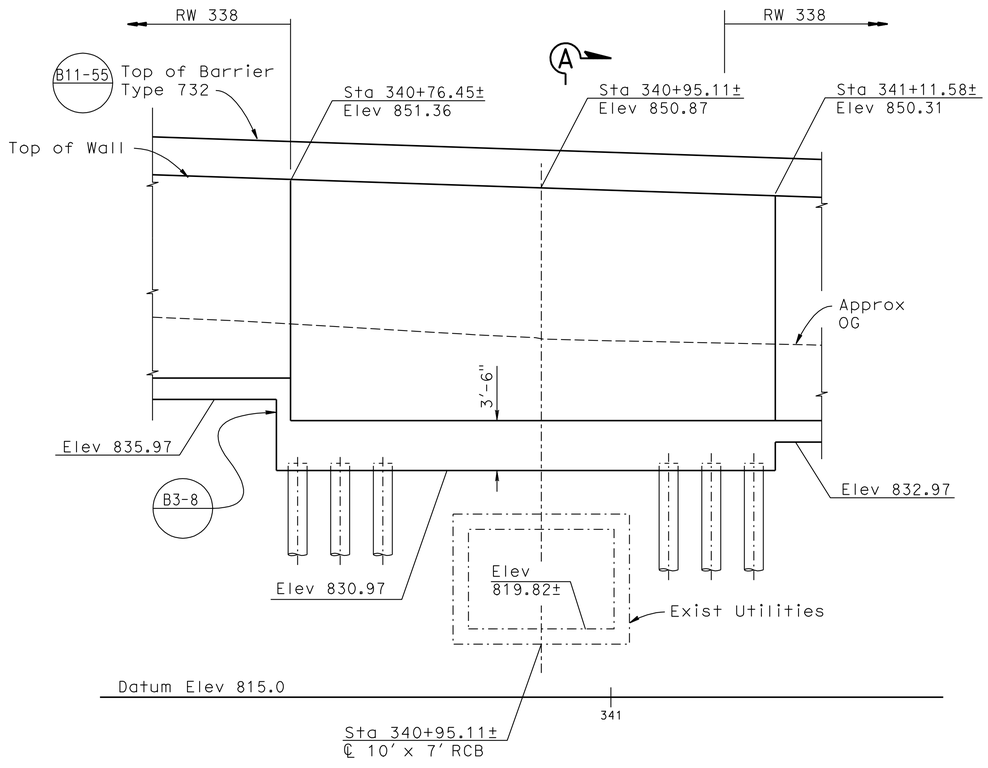

DEVELOPED ELEVATION

3/16"=1'-0"

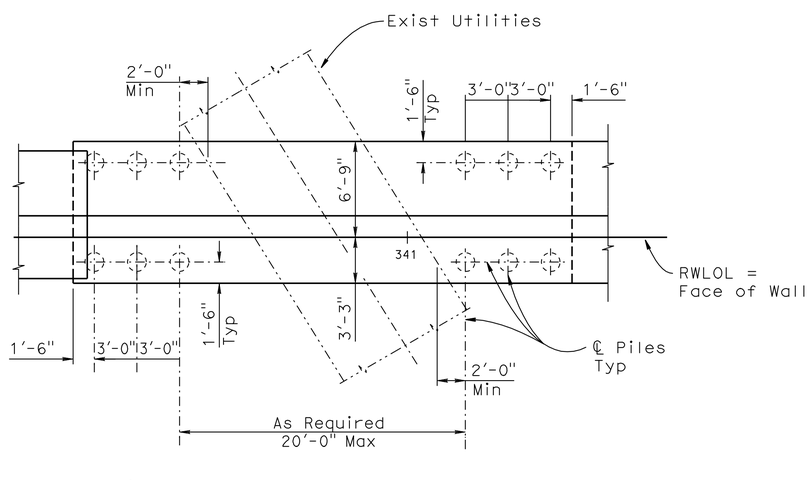

PLAN

3/16"=1'-0"

Sta 340+76.45± to Sta 341+11.58±

DESIGN DATA

DESIGN: Bridge Design Specification
(1996 AASHTO with Revisions by Caltrans)

LOADING CASE:
1. Level slope with 240 psf Max. surcharge

CONCRETE: n = 9, f'c = 3600 psi, fc = 1440 psi

REINFORCING STEEL: fy = 60,000 psi, fs = 24,000 psi

SOIL PARAMETERS: (for determination of design lateral earth pressure)
ø = 34° γ = 120 pcf

NOTE:
THE CONTRACTOR SHALL VERIFY ALL CONTROLLING FIELD DIMENSIONS BEFORE ORDERING OR FABRICATING ANY MATERIAL.

THIS PLAN ACCURATE FOR RETAINING WALL WORK ONLY.

RETAINING WALL DETAILS
RETAINING WALL No. 338
SCALE AS SHOWN

R27-3

STATE OF CALIFORNIA - DEPARTMENT OF TRANSPORTATION
Caltrans
DESIGN

FUNCTIONAL SUPERVISOR: DANIEL T. ADAMS
CALCULATED-DESIGNED BY: MINH VO
CHECKED BY: RYAN STILTZ
REVISED BY
DATE REVISED

LAST REVISION 12-01-10
DATE PLOTTED => 30-APR-2011
TIME PLOTTED => 07:41

Dist	COUNTY	ROUTE	POST MILES TOTAL PROJECT	SHEET No.	TOTAL SHEETS
08	Riv	91	15.6/21.6	984	2028

REGISTERED CIVIL ENGINEER 12-1-10 DATE

4-25-11
PLANS APPROVAL DATE

REGISTERED PROFESSIONAL ENGINEER
MINH THUONG VO
No. C59297
Exp. 06/30/11
CIVIL
STATE OF CALIFORNIA

THE STATE OF CALIFORNIA OR ITS OFFICERS OR AGENTS SHALL NOT BE RESPONSIBLE FOR THE ACCURACY OR COMPLETENESS OF SCANNED COPIES OF THIS PLAN SHEET.

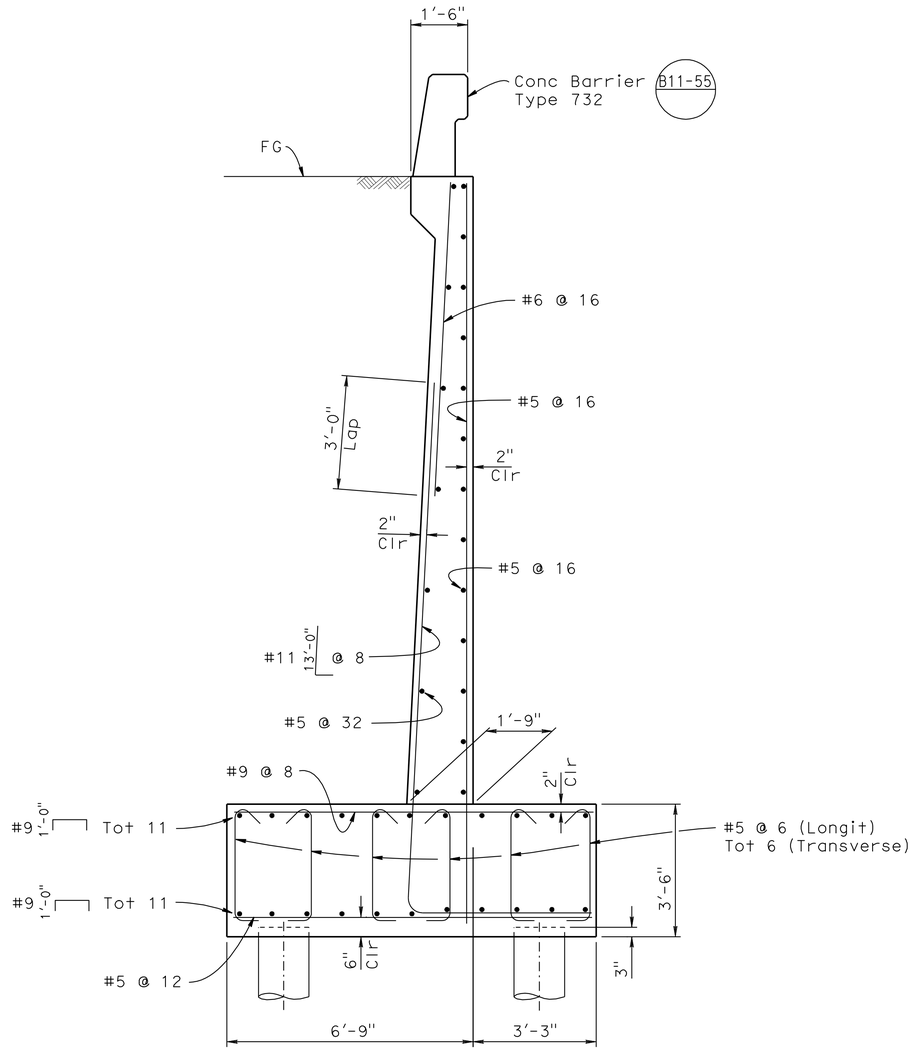

SECTION A - A

½" = 1'-0"

PILE DATA TABLE

B2-5

Pile Type	Nominal Resistance		Design Tip Elevation (ft)	Specified Tip Elevation (ft)	Nominal Driving Resistance Req'd
	Compression	Tension			
Class 90 Alternate X	180 kips	0	804	804	180 kips

RETAINING WALL DETAILS
RETAINING WALL No. 338
SCALE AS SHOWN

R27-4

THIS PLAN ACCURATE FOR RETAINING WALL WORK ONLY.

STATE OF CALIFORNIA - DEPARTMENT OF TRANSPORTATION
Caltrans®
DESIGN

FUNCTIONAL SUPERVISOR: DANIEL T. ADAMS
CALCULATED-DESIGNED BY: MINH VO
CHECKED BY: RYAN STILTZ
REVISED BY
DATE REVISED

LAST REVISION 12-01-10 | DATE PLOTTED => 30-APR-2011 | TIME PLOTTED => 07:41

Dist	COUNTY	ROUTE	POST MILES TOTAL PROJECT	SHEET No.	TOTAL SHEETS
08	Riv	91	15.6/21.6	985	2028

LICENSED LANDSCAPE ARCHITECT

4-25-11
PLANS APPROVAL DATE

LICENSED LANDSCAPE ARCHITECT
Matthew Harry Hall
No. 5000
Signature
10/31/2011
Renewal Date
12-1-10
Date
STATE OF CALIFORNIA

THE STATE OF CALIFORNIA OR ITS OFFICERS OR AGENTS SHALL NOT BE RESPONSIBLE FOR THE ACCURACY OR COMPLETENESS OF SCANNED COPIES OF THIS PLAN SHEET.

NOTE:

SEE SHEET ASD-4 AND ASD-5.

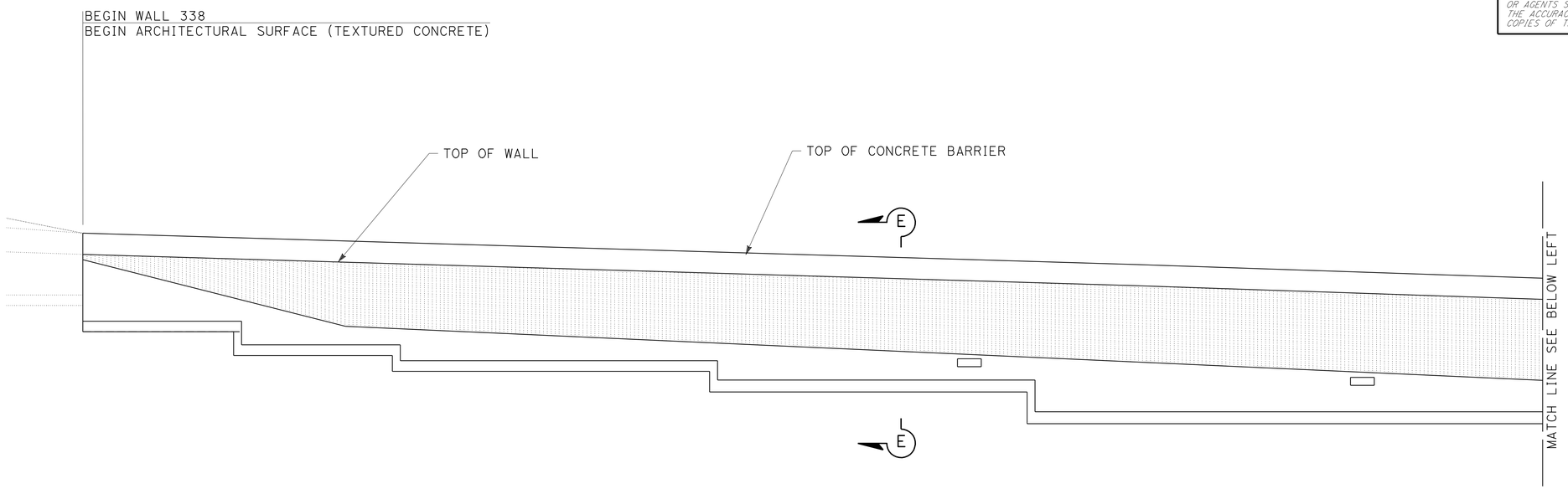

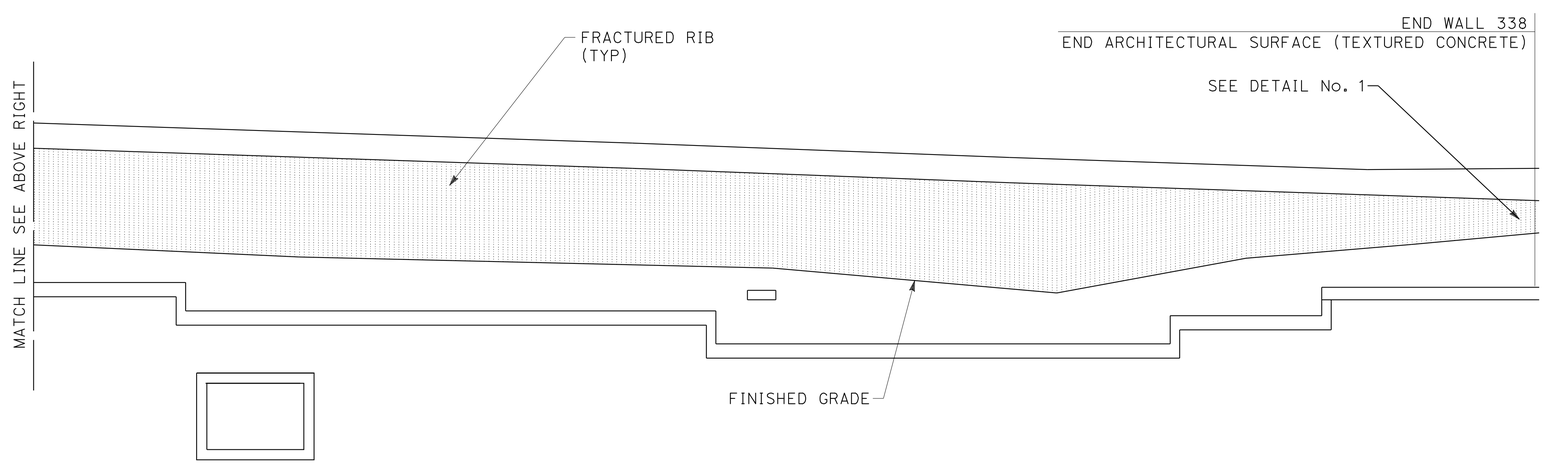

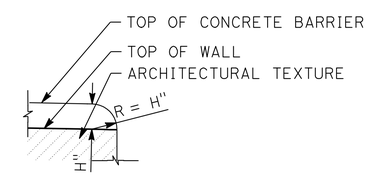

DETAIL No. 1

TYPICAL END OF WALL
WITH CONCRETE BARRIER
ON TOP OF WALL DETAIL

ELEVATION FOR FRACTURED RIB TEXTURE RETAINING WALL No. 338

THIS PLAN IS ACCURATE FOR ARCHITECTUAL TREATMENT WORK ONLY.

ARCHITECTURAL SURFACE RETAINING WALL No. 338

SCALE: 1/8"=1'-0"

R27-5

STATE OF CALIFORNIA - DEPARTMENT OF TRANSPORTATION
Caltrans® LANDSCAPE ARCHITECTURE

SENIOR LANDSCAPE ARCHITECT: BYRON STROUT
CALCULATED-DESIGNED BY: MATTHEW HALL
CHECKED BY: MIRIAM BISHOP
REVISED BY
DATE REVISED

LAST REVISION 12-01-10
DATE PLOTTED => 30-APR-2011
TIME PLOTTED => 07:42

DIST	COUNTY	ROUTE	POST MILES TOTAL PROJECT	SHEET No	TOTAL SHEETS
08	Riv	91	15.6/21.6	986	2028

GEOTECHNICAL PROFESSIONAL — DATE 10/2008

4-25-11
PLANS APPROVAL DATE

REGISTERED PROFESSIONAL ENGINEER — ANDREW C. LEE — No. 2616 — Exp. 6-30-12 — GEOTECHNICAL — STATE OF CALIFORNIA

The State of California or its officers or agents shall not be responsible for the accuracy or completeness of electronic copies of this plan sheet.

California Department of Transportation
5900 Folsom Boulevard
Sacramento, CA 95819

URS Corporation
2020 East First Street, Suite 400
Santa Ana, CA 92705

FOR PLAN VIEW, SEE SHEET R27-7

NOTE: 1. This LOTB sheet was prepared in accordance with the Caltrans Soil & Rock Logging, Classification, and Presentation Manual (June 2007).

2. For legend, see "Log of Test Borings" 1 of 83

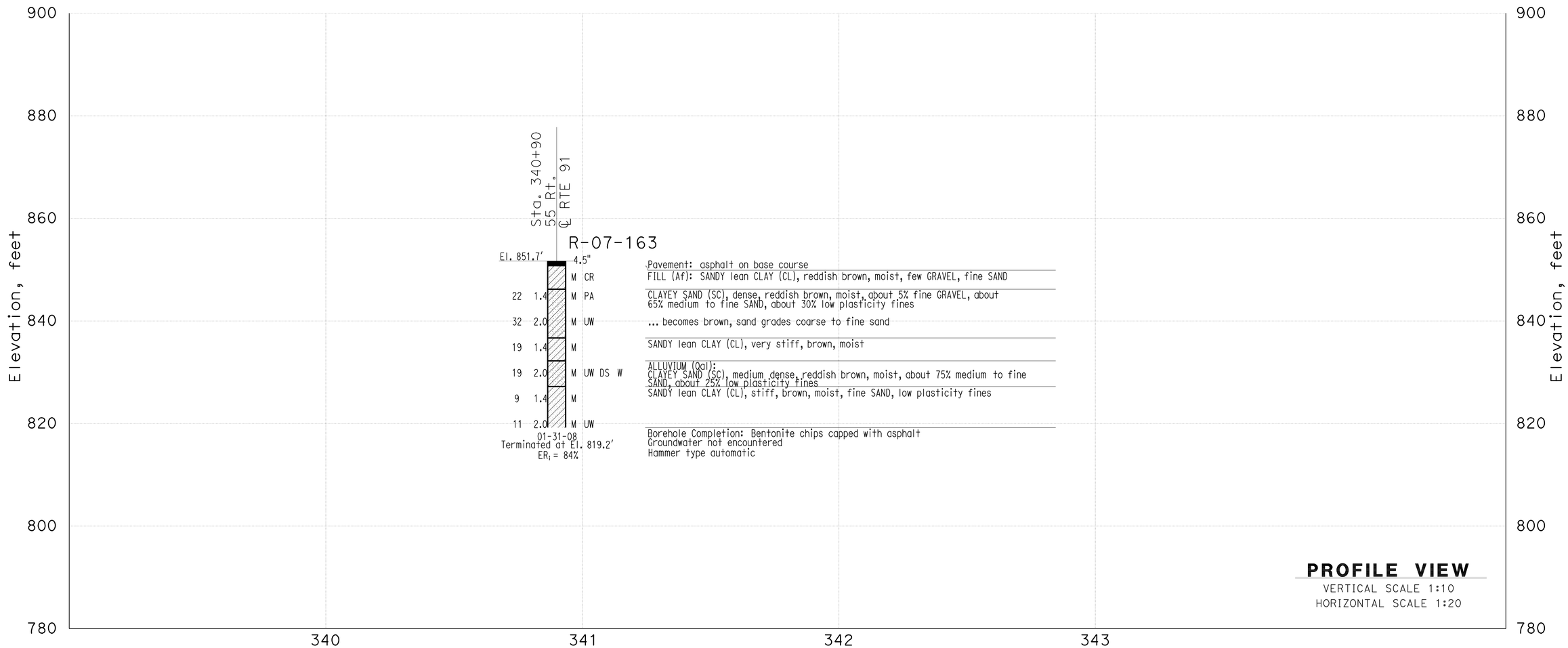

PROFILE VIEW
VERTICAL SCALE 1:10
HORIZONTAL SCALE 1:20

THIS PLAN ACCURATE FOR SOUND WALL AND RETAINING WALL WORK ONLY

DESIGN OVERSIGHT: X — SIGN OFF DATE	GINA PURSELL — FUNCTIONAL SUPERVISOR	DRAWN BY: P. QUACH	P.CHAU/D.WADER/C.CARBINO — FIELD INVESTIGATION BY:	PREPARED FOR THE STATE OF CALIFORNIA DEPARTMENT OF TRANSPORTATION	A. LEE — PROJECT ENGINEER	BRIDGE NO. X	Retaining Wall 338 — R27-6
		CHECKED BY: S. PIRATHIVIRAJ	DATE: Nov 6 2007 to March 7 2008			POST MILE X	LOG OF TEST BORINGS SHEET 1 OF 2

OSF GEOTECHNICAL LOG OF TEST BORINGS SHEET (ENGLISH) (REV. 2/25/05)

ORIGINAL SCALE IN INCHES FOR REDUCED PLANS 0 1 2 3

CU 59A0590
EA 08-448400

DISREGARD PRINTS BEARING EARLIER REVISION DATES

REVISION DATES (PRELIMINARY STAGE ONLY) X

SHEET 1 OF 2

FILE => 844840qza006.dgn

USERNAME => trstPK DATE PLOTTED => 30-APR-2011 TIME PLOTTED =>

DIST	COUNTY	ROUTE	POST MILES TOTAL PROJECT	SHEET No	TOTAL SHEETS
08	Riv	91	15.6/21.6	987	2028

GEOTECHNICAL PROFESSIONAL — DATE 10/2008

4-25-11
PLANS APPROVAL DATE

REGISTERED PROFESSIONAL ENGINEER — ANDREW C. LEE — No. 2616 — Exp. 6-30-12 — GEOTECHNICAL — STATE OF CALIFORNIA

The State of California or its officers or agents shall not be responsible for the accuracy or completeness of electronic copies of this plan sheet.

California Department of Transportation
5900 Folsom Boulevard
Sacramento, CA 95819

URS Corporation
2020 East First Street, Suite 400
Santa Ana, CA 92705

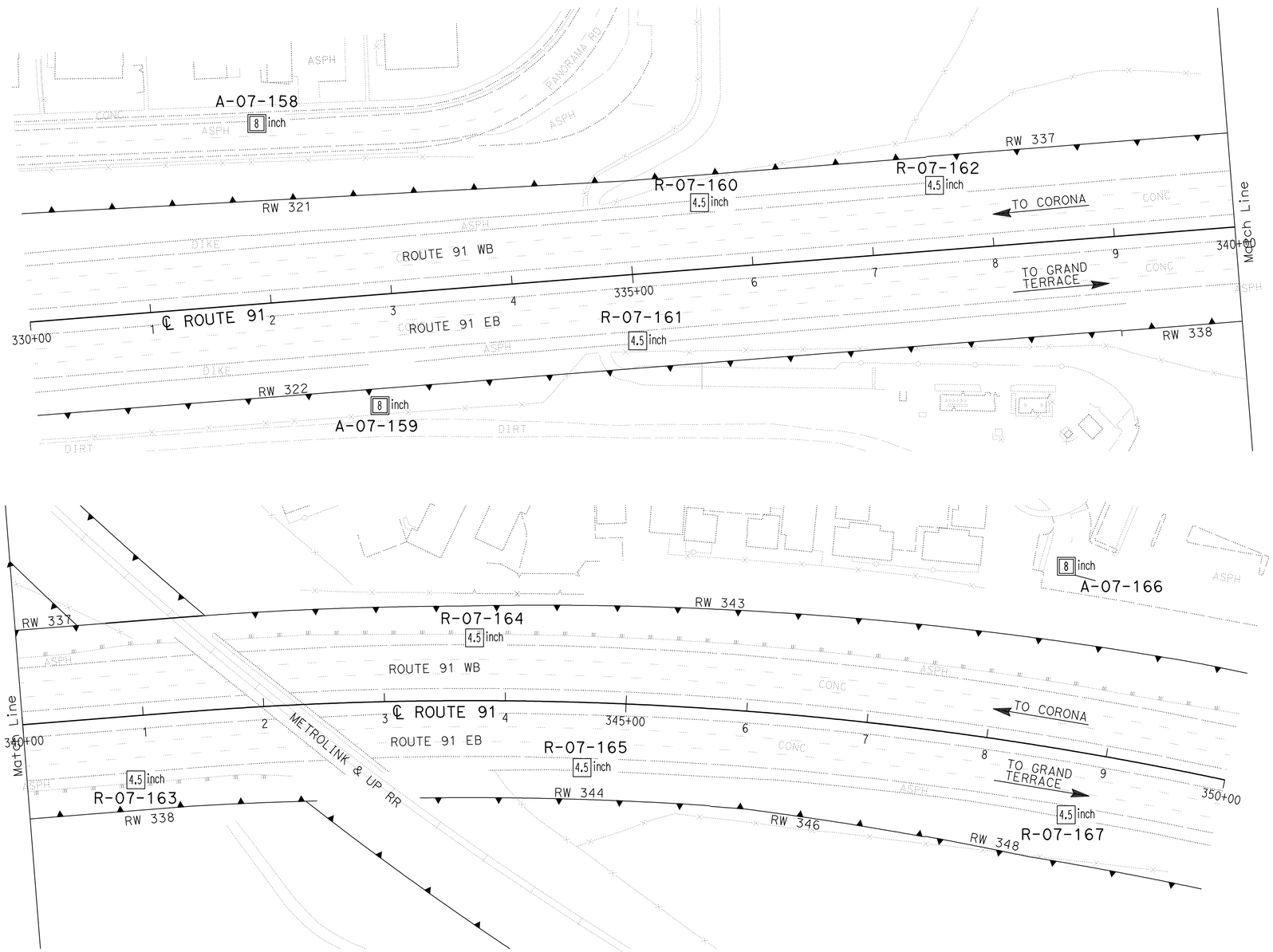

PLAN
SCALE 1"=50'

Borehole Number	Drill Rig	Hammer Type	Avg. Hammer Efficiency, ETR (%)
A-07-158	Diedrich D-120	Automatic	75*
A-07-159	Diedrich D-120	Automatic	75*
R-07-160	CME 85	Automatic	87
R-07-161	CS-2000	Automatic	84
R-07-162	CS-2000	Automatic	84
R-07-163	CME 85	Automatic	87
R-07-164	CS-2000	Automatic	84
R-07-165	CS-2000	Automatic	84
A-07-166	Diedrich D-120	Automatic	75*
R-07-167	Acker Rig	Automatic	74

Sampler Type	Inside Diameter (Inches)	Borehole Numbers
SPT	1.375	A-07-158, A-07-159, R-07-60 R-07-161, R-07-162, R-07-163 R-07-164, R-07-165, A-07-166 R-07-177
Modified California 1	1.94	R-07-160, R-07-162, R-07-163 R-07-164, R-07-165, R-07-167
Modified California 2	2.40	A-07-158, A-07-159, A-07-166

*Estimated Hammer Efficiency Rating.

DESIGN OVERSIGHT X SIGN OFF DATE	GINA PURSELL FUNCTIONAL SUPERVISOR	DRAWN BY	P. QUACH	P.CHAU/D.WADER/C.CARBINO FIELD INVESTIGATION BY: DATE: Nov 6 2007 to March 7 2008	PREPARED FOR THE STATE OF CALIFORNIA DEPARTMENT OF TRANSPORTATION
		CHECKED BY	S. PIRATHIVIRAJ		

A. LEE
PROJECT ENGINEER

BRIDGE NO. X
POST MILE X

RETAINING WALL 338 R27-7

LOG OF TEST BORINGS 2 OF 2

OSF GEOTECHNICAL LOG OF TEST BORINGS SHEET (ENGLISH) (REV. 2/25/05)

ORIGINAL SCALE IN INCHES FOR REDUCED PLANS 0 1 2 3

CU 59A0590
EA 08-448400

DISREGARD PRINTS BEARING EARLIER REVISION DATES

REVISION DATES (PRELIMINARY STAGE ONLY) X

SHEET 2 OF 2

FILE => 844840qza007.dgn

USERNAME => trstrk DATE PLOTTED => 30-APR-2011 TIME PLOTTED =>

Dist	COUNTY	ROUTE	POST MILES TOTAL PROJECT	SHEET No.	TOTAL SHEETS
08	Riv	91	15.6/21.6	988	2028

REGISTERED CIVIL ENGINEER 12-1-10 DATE

4-25-11
PLANS APPROVAL DATE

REGISTERED PROFESSIONAL ENGINEER CUONG LE TRAN No. C60436 Exp. 6-30-12 CIVIL STATE OF CALIFORNIA

THE STATE OF CALIFORNIA OR ITS OFFICERS OR AGENTS SHALL NOT BE RESPONSIBLE FOR THE ACCURACY OR COMPLETENESS OF SCANNED COPIES OF THIS PLAN SHEET.

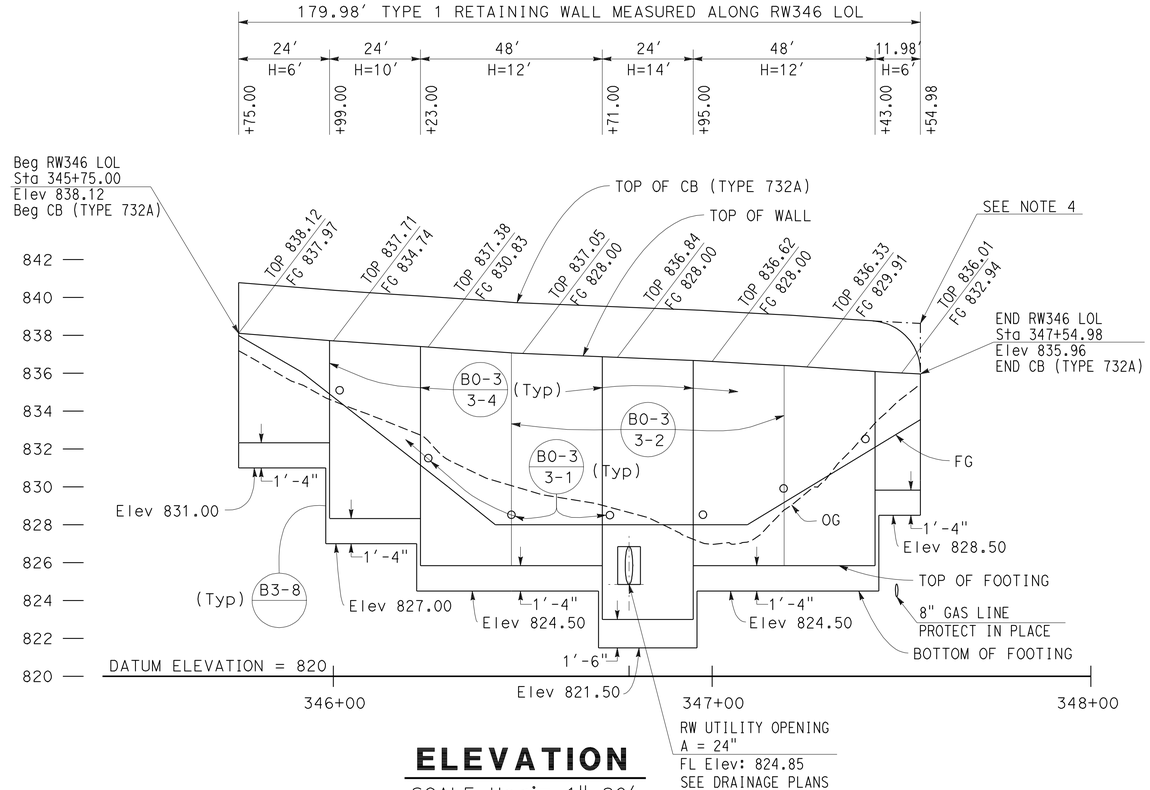

ELEVATION

SCALE Horiz 1"=20'
Vert 1"= 4'

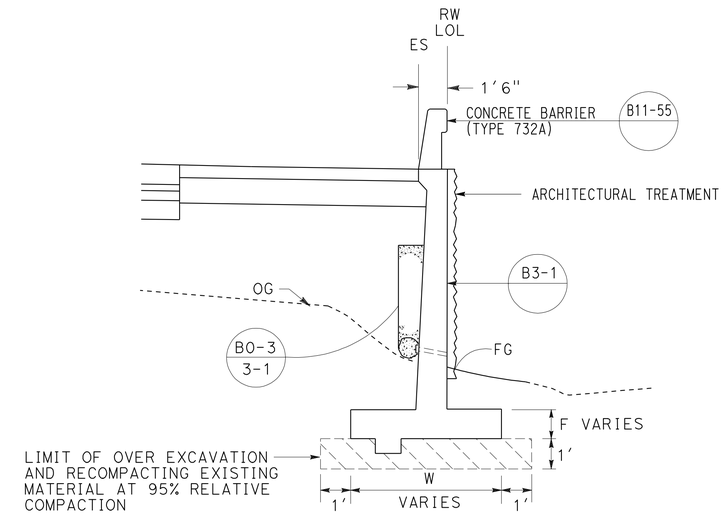

TYPICAL SECTION

NO SCALE
FROM STA 345+75.00 TO STA 347+54.98

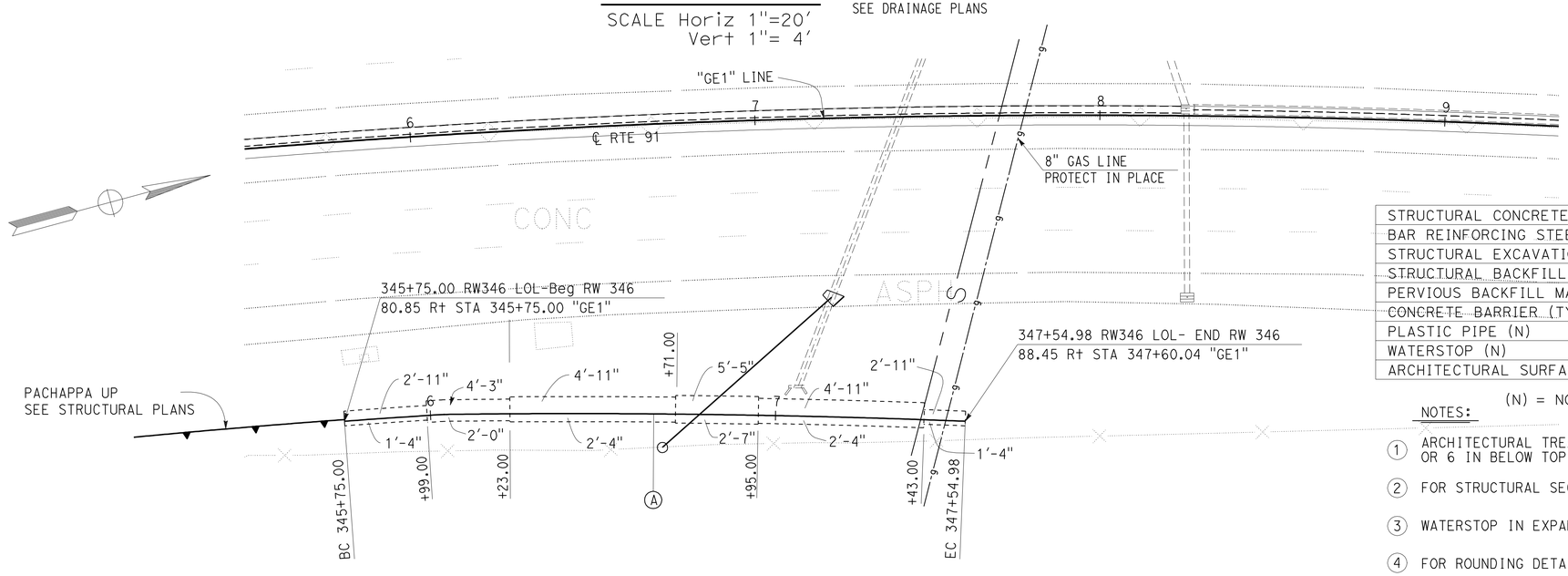

CURVE DATA

No.	R	Δ	T	L
A	2915'	3°32'15"	90.02'	179.98'

PLAN

SCALE: 1"=20'

QUANTITIES

STRUCTURAL CONCRETE (RETAINING WALL)	157.30	CY
BAR REINFORCING STEEL (RETAINING WALL)	14092	LB
STRUCTURAL EXCAVATION (RETAINING WALL)	367.19	CY
STRUCTURAL BACKFILL (RETAINING WALL)	401.59	CY
PERVIOUS BACKFILL MATERIAL (RETAINING WALL)	19.92	CY
CONCRETE BARRIER (TYPE 732A)	179.98	LF
PLASTIC PIPE (N)	9.71	LF
WATERSTOP (N)	59.27	LF
ARCHITECTURAL SURFACE (TEXTURED CONCRETE)	1221.79	SF

(N) = NOT A SEPARATE PAY ITEM, FOR INFORMATION ONLY

NOTES:

1. ARCHITECTURAL TREATMENT SHOULD EXTEND 6 IN BELOW FG OR 6 IN BELOW TOP CB (TYPE 60D MOD)
2. FOR STRUCTURAL SECTIONS, SEE ROADWAY PLANS
3. WATERSTOP IN EXPANSION JOINT SHALL BE EXTEND 6 IN INTO THE BARRIER
4. FOR ROUNDING DETAILS, SEE ARCHITECTURAL TREATMENT PLANS

THIS PLAN ACCURATE FOR RETAINING WALL WORK ONLY.

RETAINING WALL PLAN
RETAINING WALL No. 346

SCALE AS SHOWN

R28-1

STATE OF CALIFORNIA - DEPARTMENT OF TRANSPORTATION
Caltrans®
DESIGN
FUNCTIONAL SUPERVISOR: MARK PERTILE
CALCULATED-DESIGNED BY: ANNABELL WANG
CHECKED BY: CUONG LE TRAN
REVISED BY
DATE REVISED

LAST REVISION DATE PLOTTED => 30-APR-2011
TIME PLOTTED => 07:42
12-01-10

Dist	COUNTY	ROUTE	POST MILES TOTAL PROJECT	SHEET No.	TOTAL SHEETS
08	Riv	91	15.6/21.6	989	2028

LICENSED LANDSCAPE ARCHITECT

4-25-11
PLANS APPROVAL DATE

LICENSED LANDSCAPE ARCHITECT
Matthew Harry Hall
No. 2011
Signature
10/31/2011
Renewal Date
12-1-10
Date
STATE OF CALIFORNIA

THE STATE OF CALIFORNIA OR ITS OFFICERS OR AGENTS SHALL NOT BE RESPONSIBLE FOR THE ACCURACY OR COMPLETENESS OF SCANNED COPIES OF THIS PLAN SHEET.

NOTE:

SEE SHEET ASD-4 AND ASD-5.

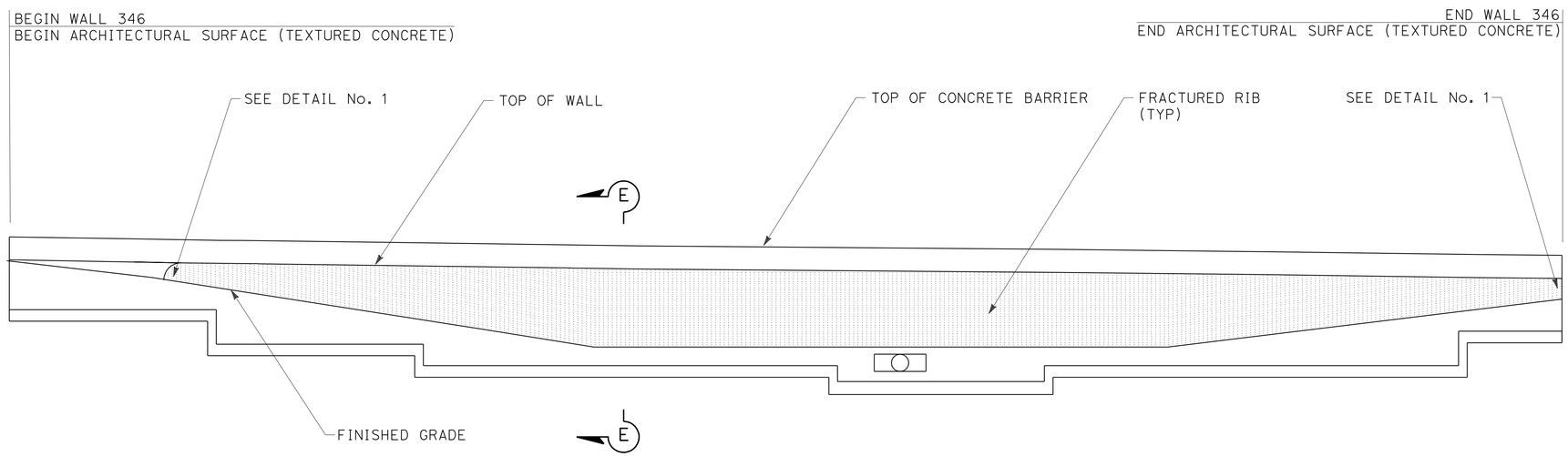

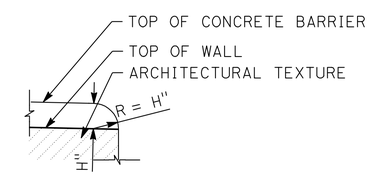

DETAIL No. 1

TYPICAL END OF WALL
WITH CONCRETE BARRIER
ON TOP OF WALL DETAIL

ELEVATION FOR FRACTURED RIB RETAINING WALL No. 346

THIS PLAN IS ACCURATE FOR ARCHITECTUAL TREATMENT WORK ONLY.

ARCHITECTURAL SURFACE RETAINING WALL No. 346

SCALE: 1/8"=1'-0"

R28-2

STATE OF CALIFORNIA - DEPARTMENT OF TRANSPORTATION
Caltrans® LANDSCAPE ARCHITECTURE

SENIOR LANDSCAPE ARCHITECT: BYRON STROUT
CALCULATED-DESIGNED BY: MATTHEW HALL
CHECKED BY: MIRIAM BISHOP
REVISED BY
DATE REVISED

LAST REVISION 12-01-10
DATE PLOTTED => 30-APR-2011
TIME PLOTTED => 07:42

DIST	COUNTY	ROUTE	POST MILES TOTAL PROJECT	SHEET No	TOTAL SHEETS
08	Riv	91	15.6/21.6	990	2028

GEOTECHNICAL PROFESSIONAL — DATE 10/2008

4-25-11
PLANS APPROVAL DATE

REGISTERED PROFESSIONAL ENGINEER — ANDREW C. LEE — No. 2616 — Exp. 6-30-12 — GEOTECHNICAL — STATE OF CALIFORNIA

The State of California or its officers or agents shall not be responsible for the accuracy or completeness of electronic copies of this plan sheet.

California Department of Transportation
5900 Folsom Boulevard
Sacramento, CA 95819

URS Corporation
2020 East First Street, Suite 400
Santa Ana, CA 92705

FOR PLAN VIEW, SEE SHEET R28-4

NOTE: 1. This LOTB sheet was prepared in accordance with the Caltrans Soil & Rock Logging, Classification, and Presentation Manual (June 2007).

2. For legend, see "Log of Test Borings" 1 of 83

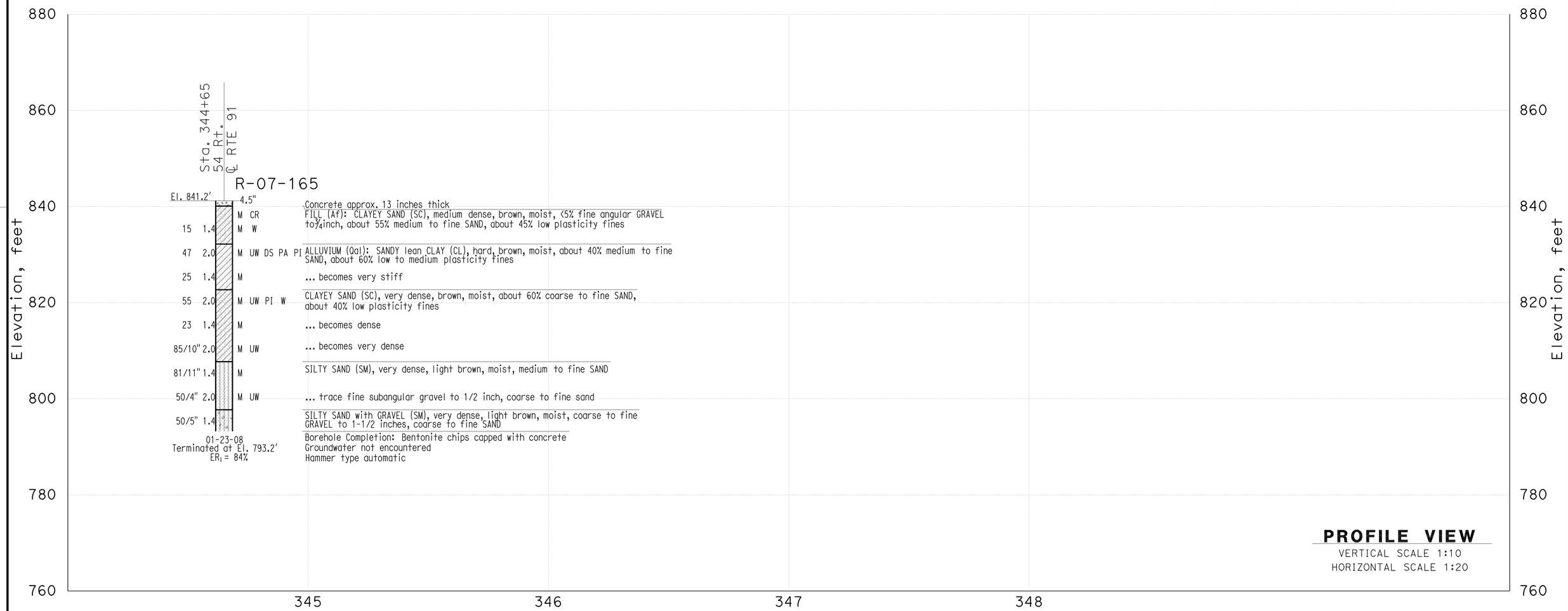

THIS PLAN ACCURATE FOR SOUND WALL AND RETAINING WALL WORK ONLY

DESIGN OVERSIGHT	GINA PURSELL FUNCTIONAL SUPERVISOR	DRAWN BY	P. QUACH	P.CHAU/D.WADER/C.CARBINO FIELD INVESTIGATION BY:	PREPARED FOR THE STATE OF CALIFORNIA DEPARTMENT OF TRANSPORTATION	A. LEE PROJECT ENGINEER	BRIDGE NO. X POST MILE X
X SIGN OFF DATE		CHECKED BY	S. PIRATHIVIRAJ	DATE: Nov 6 2007 to March 7 2008			

Retaining Wall 346 — R28-3

LOG OF TEST BORINGS

OSF GEOTECHNICAL LOG OF TEST BORINGS SHEET (ENGLISH) (REV. 2/25/05)

ORIGINAL SCALE IN INCHES FOR REDUCED PLANS 0 1 2 3

CU 59A0590
EA 08-448400

DISREGARD PRINTS BEARING EARLIER REVISION DATES

REVISION DATES (PRELIMINARY STAGE ONLY) X

SHEET 1 OF 2

FILE => 844840qzb003.dgn

USERNAME => trstrk DATE PLOTTED => 30-APR-2011 TIME PLOTTED =>

DIST	COUNTY	ROUTE	POST MILES TOTAL PROJECT	SHEET No	TOTAL SHEETS
08	Riv	91	15.6/21.6	991	2028

GEOTECHNICAL PROFESSIONAL — DATE 10/2008

4-25-11
PLANS APPROVAL DATE

REGISTERED PROFESSIONAL ENGINEER — ANDREW C. LEE — No. 2616 — Exp. 6-30-12 — GEOTECHNICAL — STATE OF CALIFORNIA

The State of California or its officers or agents shall not be responsible for the accuracy or completeness of electronic copies of this plan sheet.

California Department of Transportation
5900 Folsom Boulevard
Sacramento, CA 95819

URS Corporation
2020 East First Street, Suite 400
Santa Ana, CA 92705

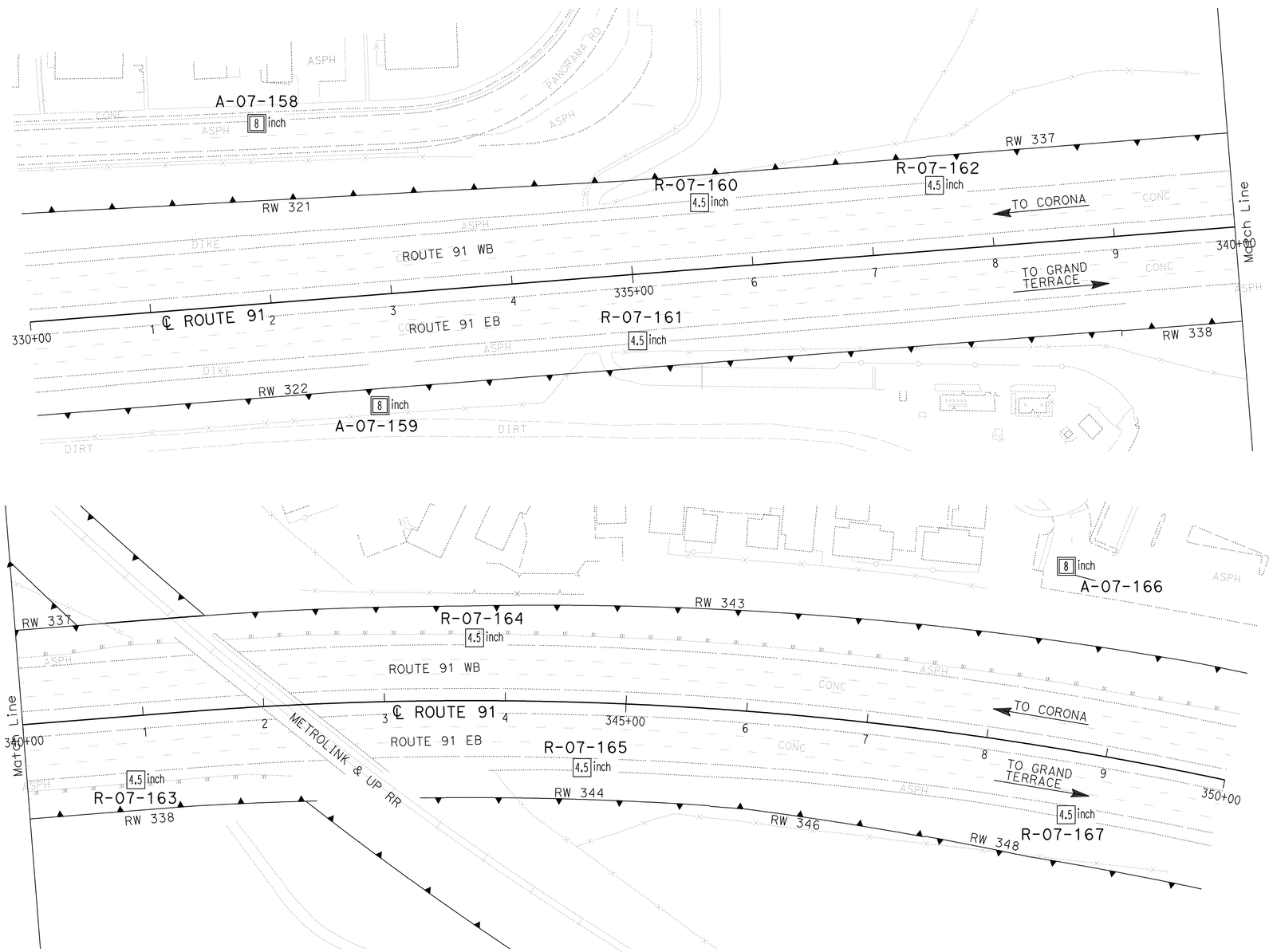

PLAN
SCALE 1"=50'

Borehole Number	Drill Rig	Hammer Type	Avg. Hammer Efficiency, ETR (%)
A-07-158	Diedrich D-120	Automatic	75*
A-07-159	Diedrich D-120	Automatic	75*
R-07-160	CME 85	Automatic	87
R-07-161	CS-2000	Automatic	84
R-07-162	CS-2000	Automatic	84
R-07-163	CME 85	Automatic	87
R-07-164	CS-2000	Automatic	84
R-07-165	CS-2000	Automatic	84
A-07-166	Diedrich D-120	Automatic	75*
R-07-167	Acker Rig	Automatic	74

Sampler Type	Inside Diameter (Inches)	Borehole Numbers
SPT	1.375	A-07-158, A-07-159, R-07-60 R-07-161, R-07-162, R-07-163 R-07-164, R-07-165, A-07-166 R-07-177
Modified California 1	1.94	R-07-160, R-07-162, R-07-163 R-07-164, R-07-165, R-07-167
Modified California 2	2.40	A-07-158, A-07-159, A-07-166

*Estimated Hammer Efficiency Rating.

DESIGN OVERSIGHT — GINA PURSELL, FUNCTIONAL SUPERVISOR
X
SIGN OFF DATE

DRAWN BY: P. QUACH
CHECKED BY: S. PIRATHIVIRAJ

P.CHAU/D.WADER/C.CARBINO
FIELD INVESTIGATION BY:
DATE: Nov 6 2007 to March 7 2008

PREPARED FOR THE STATE OF CALIFORNIA DEPARTMENT OF TRANSPORTATION

A. LEE
PROJECT ENGINEER

BRIDGE NO. X
POST MILE X

RETAINING WALL 346 — R28-4

LOG OF TEST BORINGS 2 OF 2

OSF GEOTECHNICAL LOG OF TEST BORINGS SHEET (ENGLISH) (REV. 2/25/05)

ORIGINAL SCALE IN INCHES FOR REDUCED PLANS 0 1 2 3

CU 59A0590
EA 08-448400

DISREGARD PRINTS BEARING EARLIER REVISION DATES

REVISION DATES (PRELIMINARY STAGE ONLY) X

SHEET 2 OF 2

FILE => 844840qzb004.dgn

USERNAME => trstrk — DATE PLOTTED => 30-APR-2011 — TIME PLOTTED =>

Dist	COUNTY	ROUTE	POST MILES TOTAL PROJECT	SHEET No.	TOTAL SHEETS
08	Riv	91	15.6/21.6	992	2028

REGISTERED CIVIL ENGINEER 12-1-10 DATE

4-25-11
PLANS APPROVAL DATE

REGISTERED PROFESSIONAL ENGINEER CUONG LE TRAN No. C60436 Exp. 6-30-12 CIVIL STATE OF CALIFORNIA

THE STATE OF CALIFORNIA OR ITS OFFICERS OR AGENTS SHALL NOT BE RESPONSIBLE FOR THE ACCURACY OR COMPLETENESS OF SCANNED COPIES OF THIS PLAN SHEET.

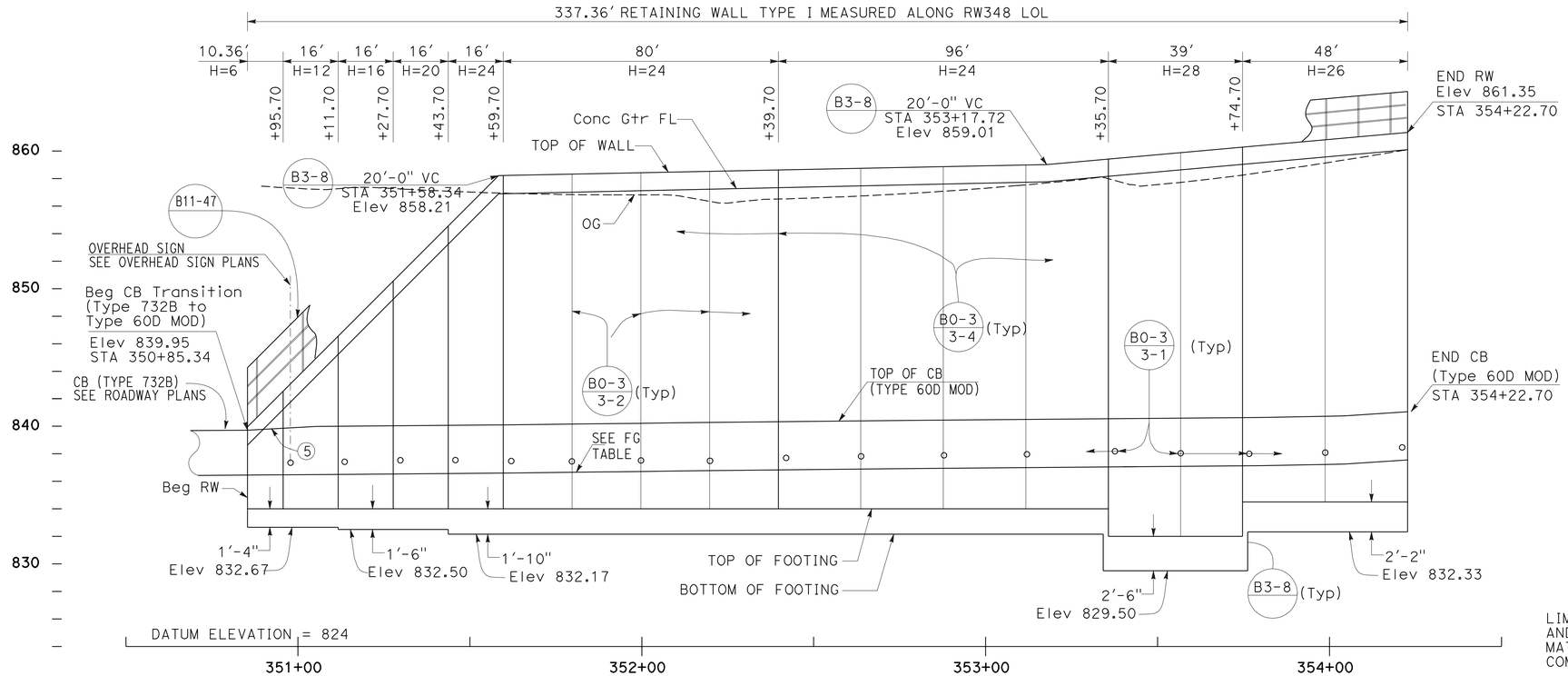

ELEVATION

SCALE Horiz 1"=20'
Vert 1"=5'

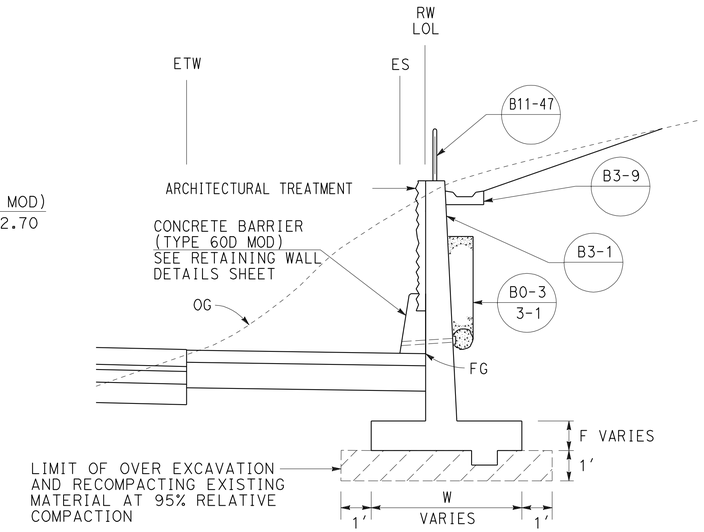

TYPICAL SECTION

NO SCALE
FROM STA 350+85.34 TO STA 354+22.70

CURVE DATA

No.	R	Δ	T	L
(A)	1300'	1°13'08"	13.83'	27.65'
(B)	2908'	6°6'10"	155.00'	309.71'

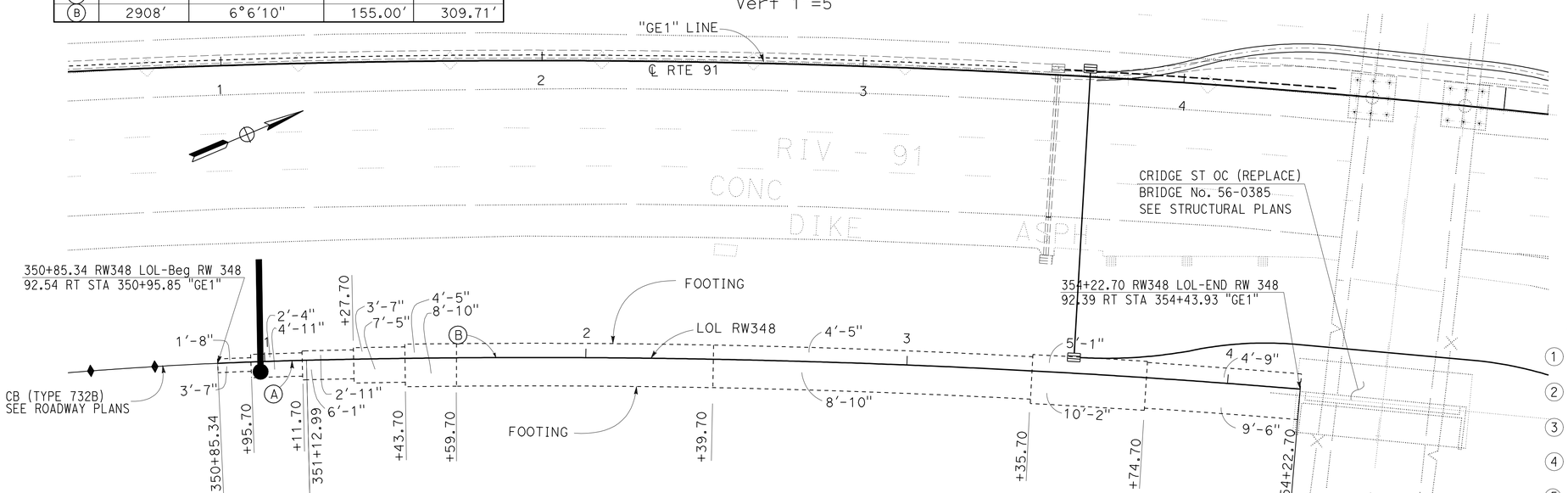

NOTE:

PLAN

SCALE: 1"=20'
THIS PLAN ACCURATE FOR RETAINING WALL WORK ONLY.

FINISHED GRADE (FG) TABLE

STATION	ELEVATION	STATION	ELEVATION
350+89.36	836.46	352+75.00	836.92
351+00.00	836.48	353+00.00	836.98
351+25.00	836.53	353+25.00	837.03
351+50.00	836.58	353+50.00	837.08
351+75.00	836.64	353+75.00	837.13
352+00.00	836.72	354+00.00	837.23
352+25.00	836.79	354+23.70	837.57
352+50.00	836.86		

NOTES:

1. ARCHITECTURAL TREATMENT SHOULD EXTEND 6 IN BELOW FG OR 6 IN BELOW TOP CB (TYPE 60D MOD)
2. FOR STRUCTURAL SECTIONS, SEE ROADWAY PLANS
3. FOR POST ANCHORAGE DETAILS, SEE B11-52
4. FOR ROUNDING DETAILS, SEE ARCHITECTURAL TREATMENT PLANS
5. CONCRETE BARRIER TRANSITION FROM TYPE 60D MOD TO TYPE 732A SEE Rt WALL DETAILS SHEET

RETAINING WALL PLAN
RETAINING WALL No. 348

SCALE AS SHOWN

R29-1

STATE OF CALIFORNIA - DEPARTMENT OF TRANSPORTATION
Caltrans®
DESIGN
FUNCTIONAL SUPERVISOR: MARK PERTILE
CALCULATED-DESIGNED BY: ANNABELL WANG
CHECKED BY: CUONG LE TRAN
REVISED BY
DATE REVISED

LAST REVISION 12-01-10
DATE PLOTTED => 30-APR-2011
TIME PLOTTED => 07:42

Dist	COUNTY	ROUTE	POST MILES TOTAL PROJECT	SHEET No.	TOTAL SHEETS
08	Riv	91	15.6/21.6	993	2028

REGISTERED CIVIL ENGINEER 12-1-10 DATE

4-25-11
PLANS APPROVAL DATE

REGISTERED PROFESSIONAL ENGINEER CUONG LE TRAN No. C60436 Exp. 6-30-12 CIVIL STATE OF CALIFORNIA

THE STATE OF CALIFORNIA OR ITS OFFICERS OR AGENTS SHALL NOT BE RESPONSIBLE FOR THE ACCURACY OR COMPLETENESS OF SCANNED COPIES OF THIS PLAN SHEET.

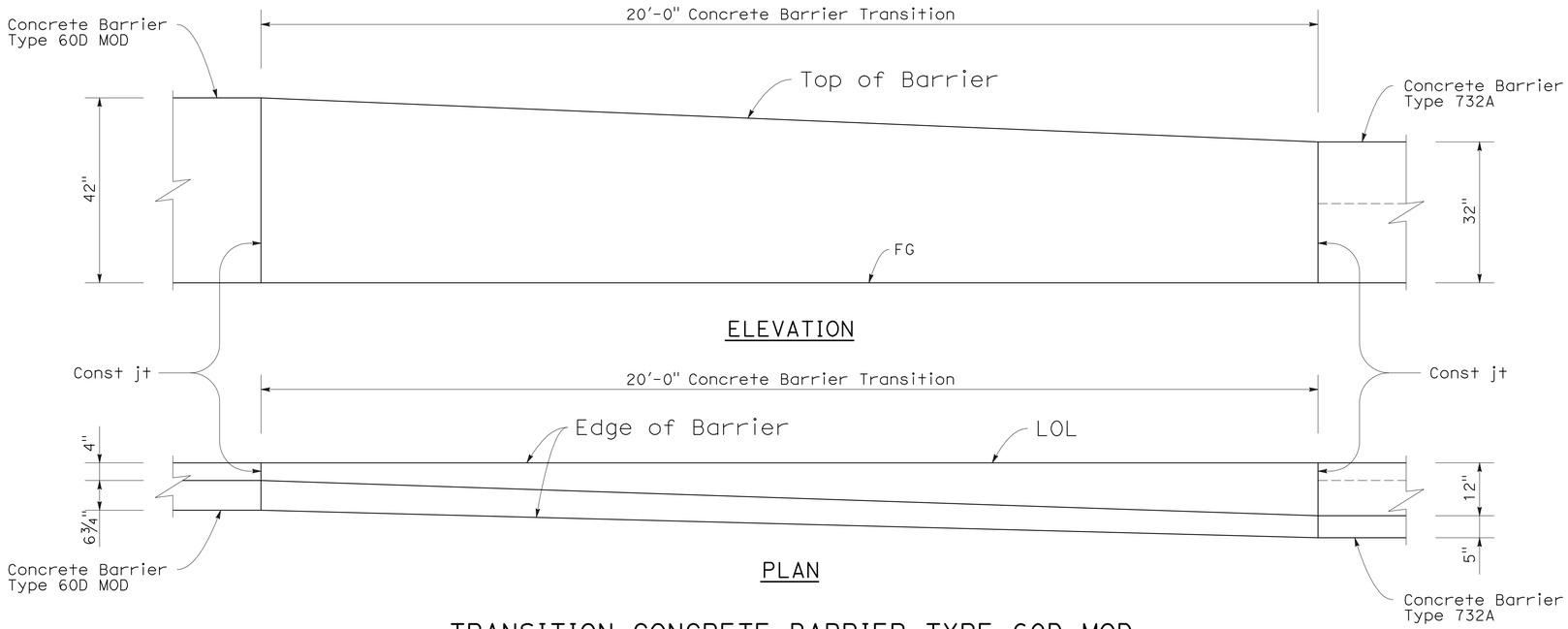

TRANSITION CONCRETE BARRIER TYPE 60D MOD TO CONCRETE BARRIER TYPE 732

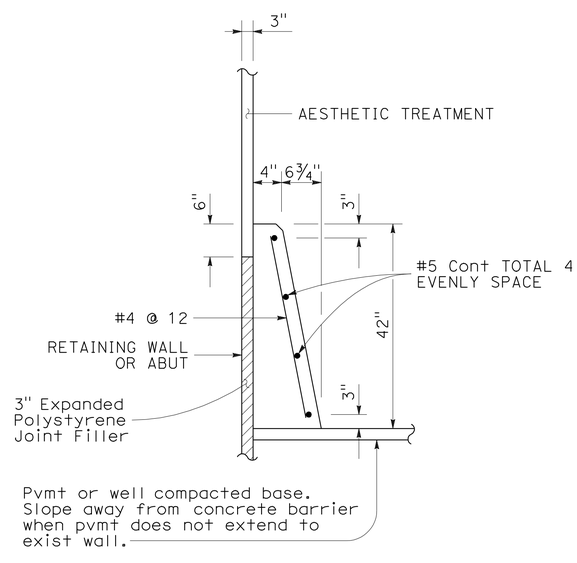

CONCRETE BARRIER (TYPE 60D MOD)

QUANTITIES

STRUCTURAL CONCRETE (RETAINING WALL)	827.60	CY
BAR REINFORCING STEEL (RETAINING WALL)	122092	LB
STRUCTURAL EXCAVATION (RETAINING WALL)	4822.89	CY
STRUCTURAL BACKFILL (RETAINING WALL)	2605.55	CY
PERVIOUS BACKFILL MATERIAL (RETAINING WALL)	194.95	CY
CONCRETE BARRIER (TYPE 60D MOD)	337.36	LF
CABLE RAILING	337.36	LF
MINOR CONCRETE (GUTTER)	337.36	LF
PLASTIC PIPE (N)	38.96	LF
WATERSTOP (N)	161.97	LF
ARCHITECTURAL SURFACE (TEXTURED CONCRETE)	5794.42	SF

(N) = NOT A SEPARATE PAY ITEM, FOR INFORMATION ONLY

THIS PLAN ACCURATE FOR RETAINING WALL WORK ONLY.

RETAINING WALL DETAILS
RETAINING WALL No. 348
NO SCALE

R29-2

STATE OF CALIFORNIA - DEPARTMENT OF TRANSPORTATION
Caltrans DESIGN

FUNCTIONAL SUPERVISOR: MARK PERTILE
CALCULATED-DESIGNED BY: ANNABELL WANG
CHECKED BY: CUONG LE TRAN
REVISED BY / DATE REVISED

LAST REVISION 12-01-10
DATE PLOTTED => 30-APR-2011
TIME PLOTTED => 07:42

Dist	COUNTY	ROUTE	POST MILES TOTAL PROJECT	SHEET No.	TOTAL SHEETS
08	Riv	91	15.6/21.6	994	2028

LICENSED LANDSCAPE ARCHITECT

4-25-11
PLANS APPROVAL DATE

LICENSED LANDSCAPE ARCHITECT
Matthew Harry Hall
Signature
10/31/2011
Renewal Date
12-1-10
Date
STATE OF CALIFORNIA

THE STATE OF CALIFORNIA OR ITS OFFICERS OR AGENTS SHALL NOT BE RESPONSIBLE FOR THE ACCURACY OR COMPLETENESS OF SCANNED COPIES OF THIS PLAN SHEET.

NOTE:

SEE SHEET ASD-1, ASD-2, ASD-3 AND ASD-5.

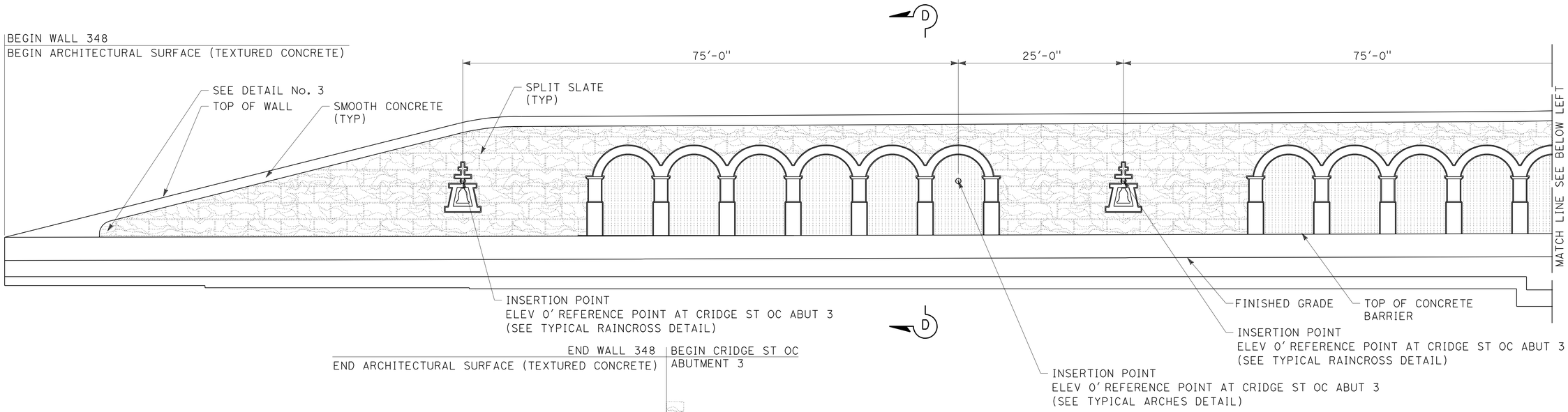

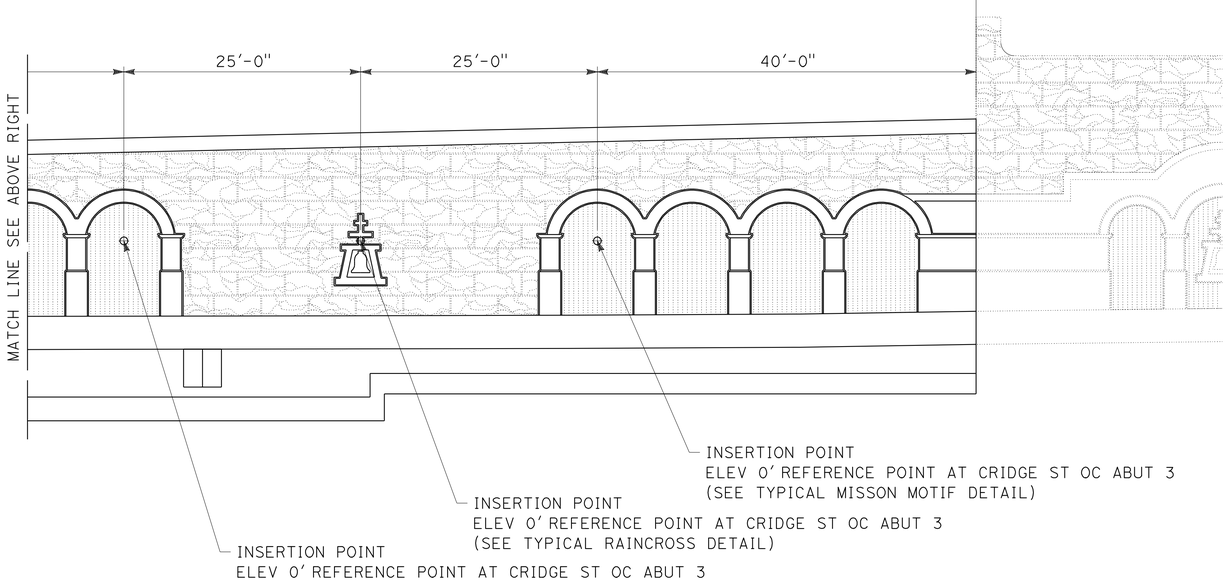

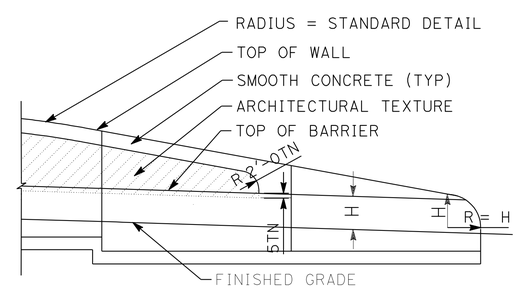

DETAIL No. 3

TYPICAL END OF WALL WITH TYPE 60D MOD. CONCRETE BARRIER

MIRRORED ELEVATION FOR FRACTURED RIB SPLIT FACE TEXTURE RETAINING WALL No. 348

THIS PLAN IS ACCURATE FOR ARCHITECTUAL TREATMENT WORK ONLY.

ARCHITECTURAL SURFACE RETAINING WALL No. 348

SCALE: 1/8"=1'-0"

R29-3

REVISED BY	DATE REVISED

MATTHEW HALL — MIRIAM BISHOP
CALCULATED-DESIGNED BY — CHECKED BY
SENIOR LANDSCAPE ARCHITECT — BYRON STROUT

STATE OF CALIFORNIA - DEPARTMENT OF TRANSPORTATION
Caltrans LANDSCAPE ARCHITECTURE

LAST REVISION 12-01-10 | DATE PLOTTED => 30-APR-2011 | TIME PLOTTED => 07:43

DIST	COUNTY	ROUTE	POST MILES TOTAL PROJECT	SHEET No	TOTAL SHEETS
08	Riv	91	15.6/21.6	995	2028

GEOTECHNICAL PROFESSIONAL — DATE 10/2008

4-25-11
PLANS APPROVAL DATE

REGISTERED PROFESSIONAL ENGINEER — ANDREW C. LEE — No. 2616 — Exp. 6-30-12 — GEOTECHNICAL — STATE OF CALIFORNIA

The State of California or its officers or agents shall not be responsible for the accuracy or completeness of electronic copies of this plan sheet.

California Department of Transportation
5900 Folsom Boulevard
Sacramento, CA 95819

URS Corporation
2020 East First Street, Suite 400
Santa Ana, CA 92705

FOR PLAN VIEW, SEE SHEET R29-6

NOTE: 1. This LOTB sheet was prepared in accordance with the Caltrans Soil & Rock Logging, Classification, and Presentation Manual (June 2007).

2. For legend, see "Log of Test Borings" 1 of 83

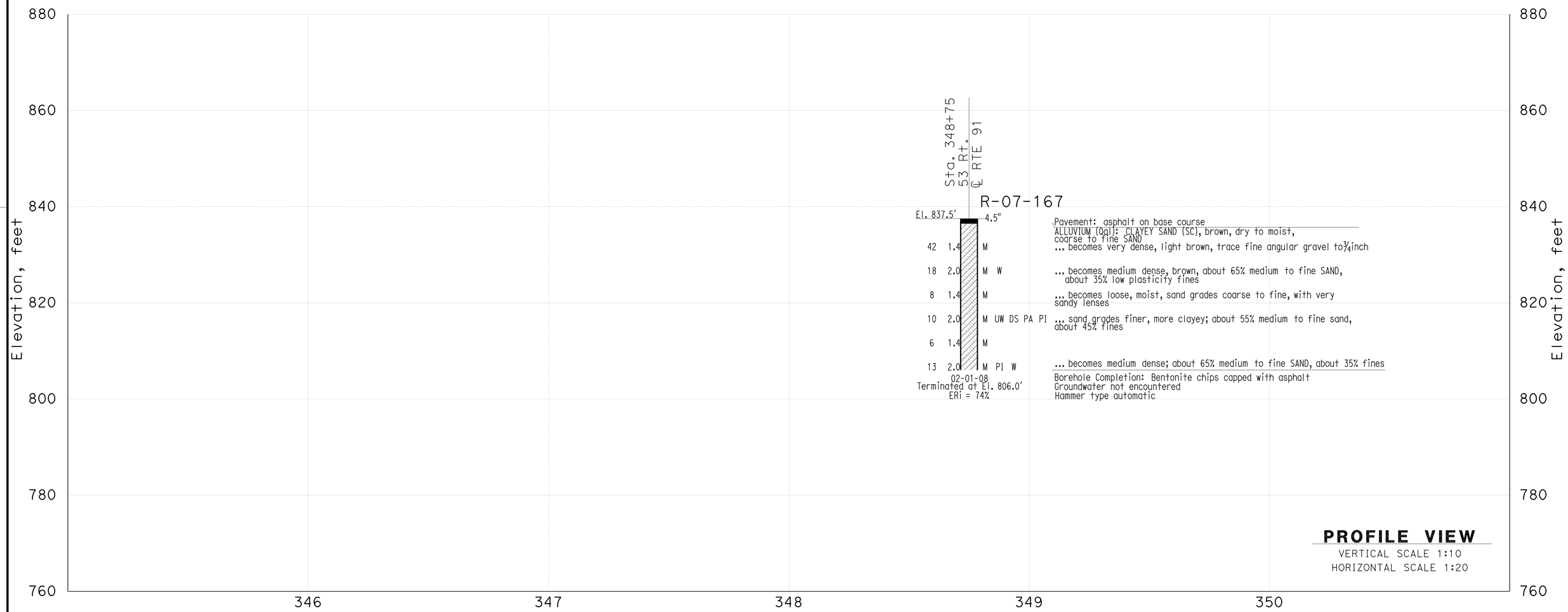

THIS PLAN ACCURATE FOR SOUND WALL AND RETAINING WALL WORK ONLY

DESIGN OVERSIGHT	GINA PURSELL FUNCTIONAL SUPERVISOR	DRAWN BY	P. QUACH	P.CHAU/D.WADER/C.CARBINO FIELD INVESTIGATION BY: DATE: Nov 6 2007 to March 7 2008	PREPARED FOR THE STATE OF CALIFORNIA DEPARTMENT OF TRANSPORTATION	A. LEE PROJECT ENGINEER	BRIDGE NO. X POST MILE X	Retaining Wall 348 R29-4 LOG OF TEST BORINGS SHEET 1 OF 4
X SIGN OFF DATE		CHECKED BY	S. PIRATHIVIRAJ					

OSF GEOTECHNICAL LOG OF TEST BORINGS SHEET (ENGLISH) (REV. 2/25/05)

ORIGINAL SCALE IN INCHES FOR REDUCED PLANS 0 1 2 3

CU 59A0590
EA 08-448400

DISREGARD PRINTS BEARING EARLIER REVISION DATES

REVISION DATES (PRELIMINARY STAGE ONLY) X

SHEET 1 OF 4

FILE => 844840qzc004.dgn

USERNAME => trstrk DATE PLOTTED => 30-APR-2011 TIME PLOTTED =>

DIST	COUNTY	ROUTE	POST MILES TOTAL PROJECT	SHEET No	TOTAL SHEETS
08	Riv	91	15.6/21.6	996	2028

GEOTECHNICAL PROFESSIONAL — DATE 10/2008

4-25-11
PLANS APPROVAL DATE

REGISTERED PROFESSIONAL ENGINEER — ANDREW C. LEE — No. 2616 — Exp. 6-30-12 — GEOTECHNICAL — STATE OF CALIFORNIA

The State of California or its officers or agents shall not be responsible for the accuracy or completeness of electronic copies of this plan sheet.

California Department of Transportation
5900 Folsom Boulevard
Sacramento, CA 95819

URS Corporation
2020 East First Street, Suite 400
Santa Ana, CA 92705

FOR PLAN VIEW, SEE SHEET R29-7

NOTE: 1. This LOTB sheet was prepared in accordance with the Caltrans Soil & Rock Logging, Classification, and Presentation Manual (June 2007).

2. For legend, see "Log of Test Borings" 1 of 83

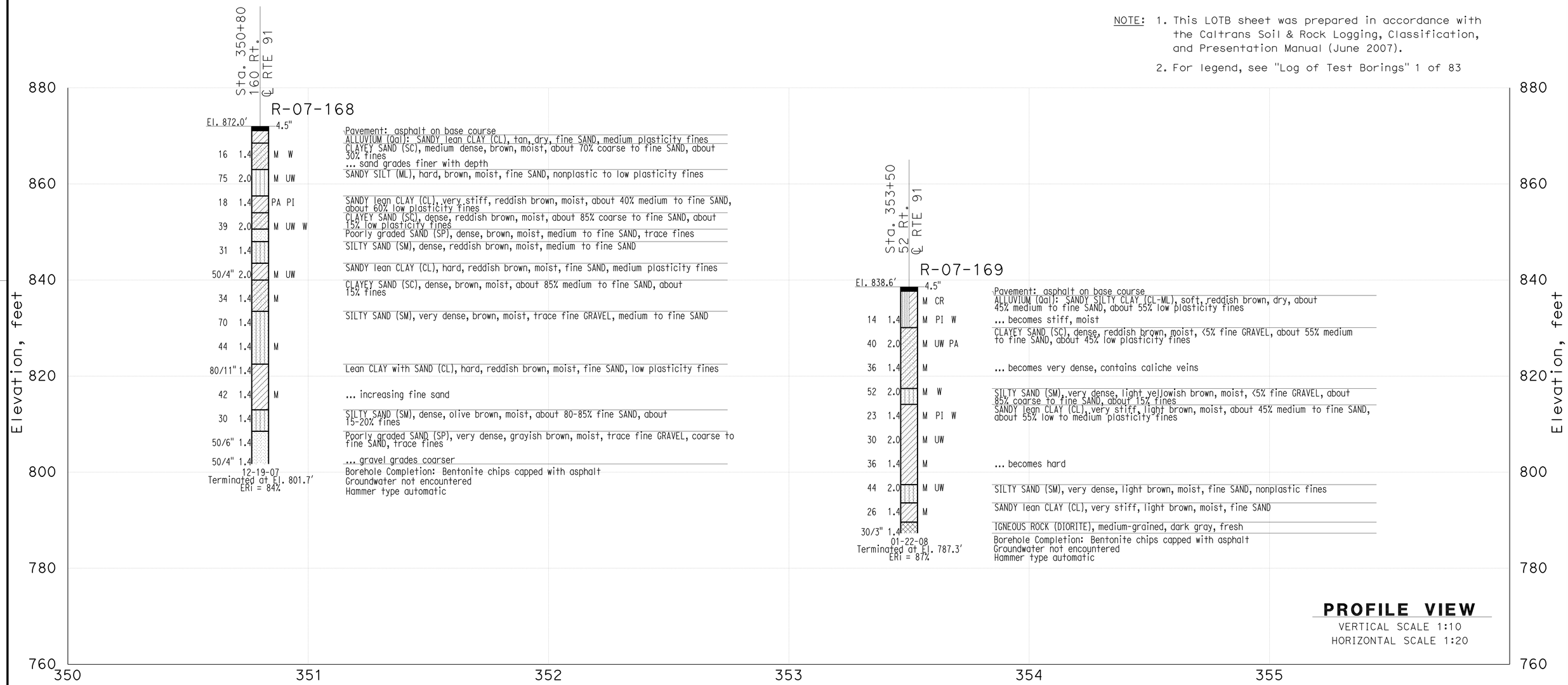

PROFILE VIEW
VERTICAL SCALE 1:10
HORIZONTAL SCALE 1:20

THIS PLAN ACCURATE FOR SOUND WALL AND RETAINING WALL WORK ONLY

DESIGN OVERSIGHT X SIGN OFF DATE	GINA PURSELL FUNCTIONAL SUPERVISOR	DRAWN BY CHECKED BY	P. QUACH S. PIRATHIVIRAJ	P.CHAU/D.WADER/C.CARBINO FIELD INVESTIGATION BY: DATE: Nov 6 2007 to March 7 2008	PREPARED FOR THE STATE OF CALIFORNIA DEPARTMENT OF TRANSPORTATION	A. LEE PROJECT ENGINEER	BRIDGE NO. X POST MILE X	Retaining Wall 348 R29-5 LOG OF TEST BORINGS SHEET 2 OF 4

OSF GEOTECHNICAL LOG OF TEST BORINGS SHEET (ENGLISH) (REV. 2/25/05)

ORIGINAL SCALE IN INCHES FOR REDUCED PLANS 0 1 2 3

CU 59A0590
EA 08-448400

DISREGARD PRINTS BEARING EARLIER REVISION DATES

REVISION DATES (PRELIMINARY STAGE ONLY) X

SHEET 2 OF 4

FILE => 844840qzc005.dgn

USERNAME => rtstrk DATE PLOTTED => 30-APR-2011 TIME PLOTTED =>

DIST	COUNTY	ROUTE	POST MILES TOTAL PROJECT	SHEET No	TOTAL SHEETS
08	Riv	91	15.6/21.6	997	2028

GEOTECHNICAL PROFESSIONAL — DATE 10/2008

4-25-11
PLANS APPROVAL DATE

REGISTERED PROFESSIONAL ENGINEER — ANDREW C. LEE — No. 2616 — Exp. 6-30-12 — GEOTECHNICAL — STATE OF CALIFORNIA

The State of California or its officers or agents shall not be responsible for the accuracy or completeness of electronic copies of this plan sheet.

California Department of Transportation
5900 Folsom Boulevard
Sacramento, CA 95819

URS Corporation
2020 East First Street, Suite 400
Santa Ana, CA 92705

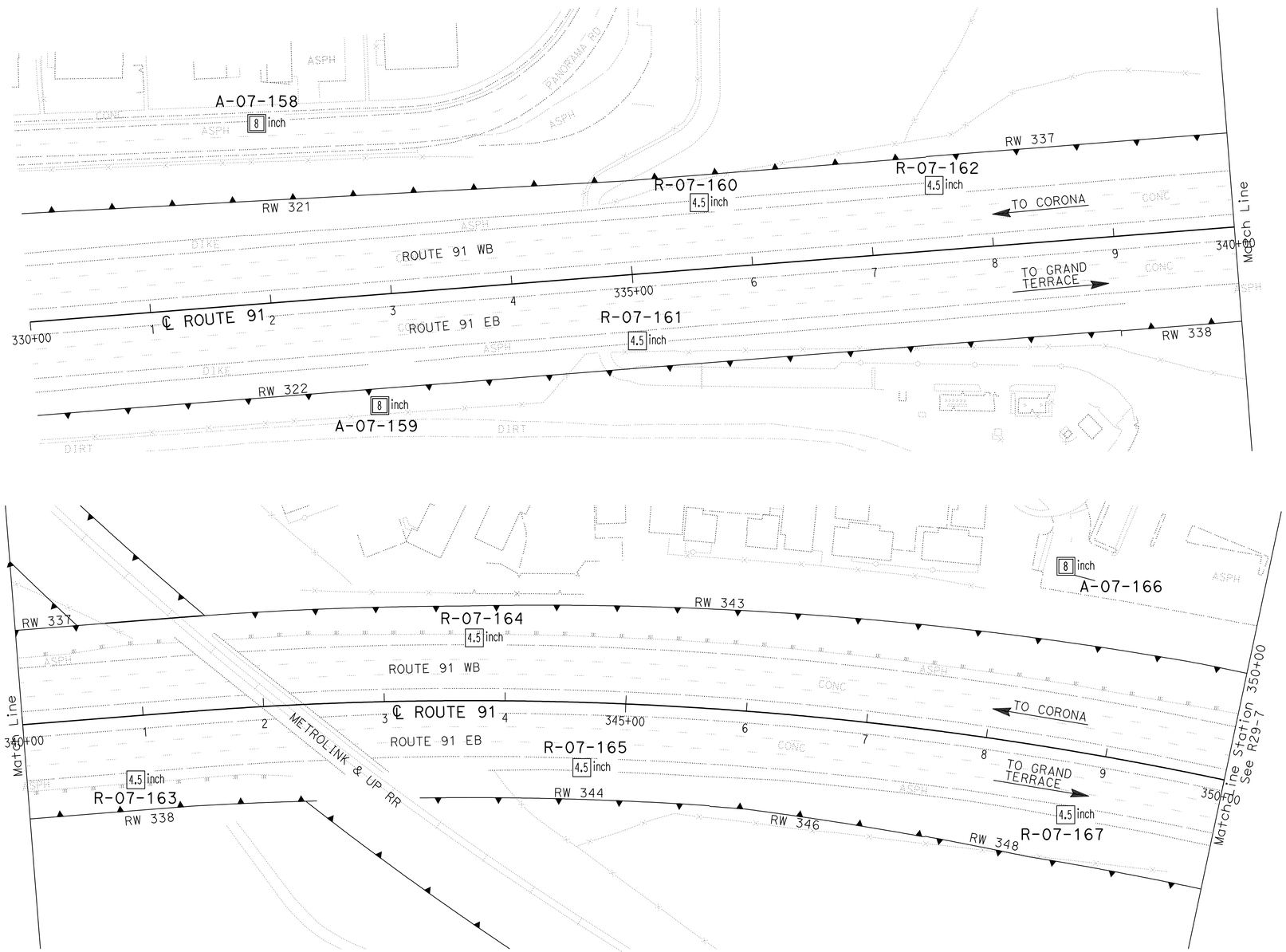

PLAN
SCALE 1"=50'

Borehole Number	Drill Rig	Hammer Type	Avg. Hammer Efficiency, ETR (%)
A-07-158	Diedrich D-120	Automatic	75*
A-07-159	Diedrich D-120	Automatic	75*
R-07-160	CME 85	Automatic	87
R-07-161	CS-2000	Automatic	84
R-07-162	CS-2000	Automatic	84
R-07-163	CME 85	Automatic	87
R-07-164	CS-2000	Automatic	84
R-07-165	CS-2000	Automatic	84
A-07-166	Diedrich D-120	Automatic	75*
R-07-167	Acker Rig	Automatic	74

Sampler Type	Inside Diameter (Inches)	Borehole Numbers
SPT	1.375	A-07-158, A-07-159, R-07-60 R-07-161, R-07-162, R-07-163 R-07-164, R-07-165, A-07-166 R-07-177
Modified California 1	1.94	R-07-160, R-07-162, R-07-163 R-07-164, R-07-165, R-07-167
Modified California 2	2.40	A-07-158, A-07-159, A-07-166

*Estimated Hammer Efficiency Rating.

DESIGN OVERSIGHT X SIGN OFF DATE	GINA PURSELL FUNCTIONAL SUPERVISOR	DRAWN BY	P. QUACH	P.CHAU/D.WADER/C.CARBINO FIELD INVESTIGATION BY: DATE: Nov 6 2007 to March 7 2008	PREPARED FOR THE STATE OF CALIFORNIA DEPARTMENT OF TRANSPORTATION
		CHECKED BY	S. PIRATHIVIRAJ		

A. LEE
PROJECT ENGINEER

BRIDGE NO. X
POST MILE X

RETAINING WALL 348 R29-6

LOG OF TEST BORINGS SHEET 3 OF 4

OSF GEOTECHNICAL LOG OF TEST BORINGS SHEET (ENGLISH) (REV. 2/25/05)

ORIGINAL SCALE IN INCHES FOR REDUCED PLANS 0 1 2 3

CU 59A0590
EA 08-448400

DISREGARD PRINTS BEARING EARLIER REVISION DATES

REVISION DATES (PRELIMINARY STAGE ONLY) X

SHEET 3 OF 4

FILE => 844840qzc006.dgn

USERNAME => trstrk DATE PLOTTED => 30-APR-2011 TIME PLOTTED =>

DIST	COUNTY	ROUTE	POST MILES TOTAL PROJECT	SHEET No	TOTAL SHEETS
08	Riv	91	15.6/21.6	998	2028

GEOTECHNICAL PROFESSIONAL — DATE 10/2008

4-25-11
PLANS APPROVAL DATE

REGISTERED PROFESSIONAL ENGINEER — ANDREW C. LEE — No. 2616 — Exp. 6-30-12 — GEOTECHNICAL — STATE OF CALIFORNIA

The State of California or its officers or agents shall not be responsible for the accuracy or completeness of electronic copies of this plan sheet.

California Department of Transportation
5900 Folsom Boulevard
Sacramento, CA 95819

URS Corporation
2020 East First Street, Suite 400
Santa Ana, CA 92705

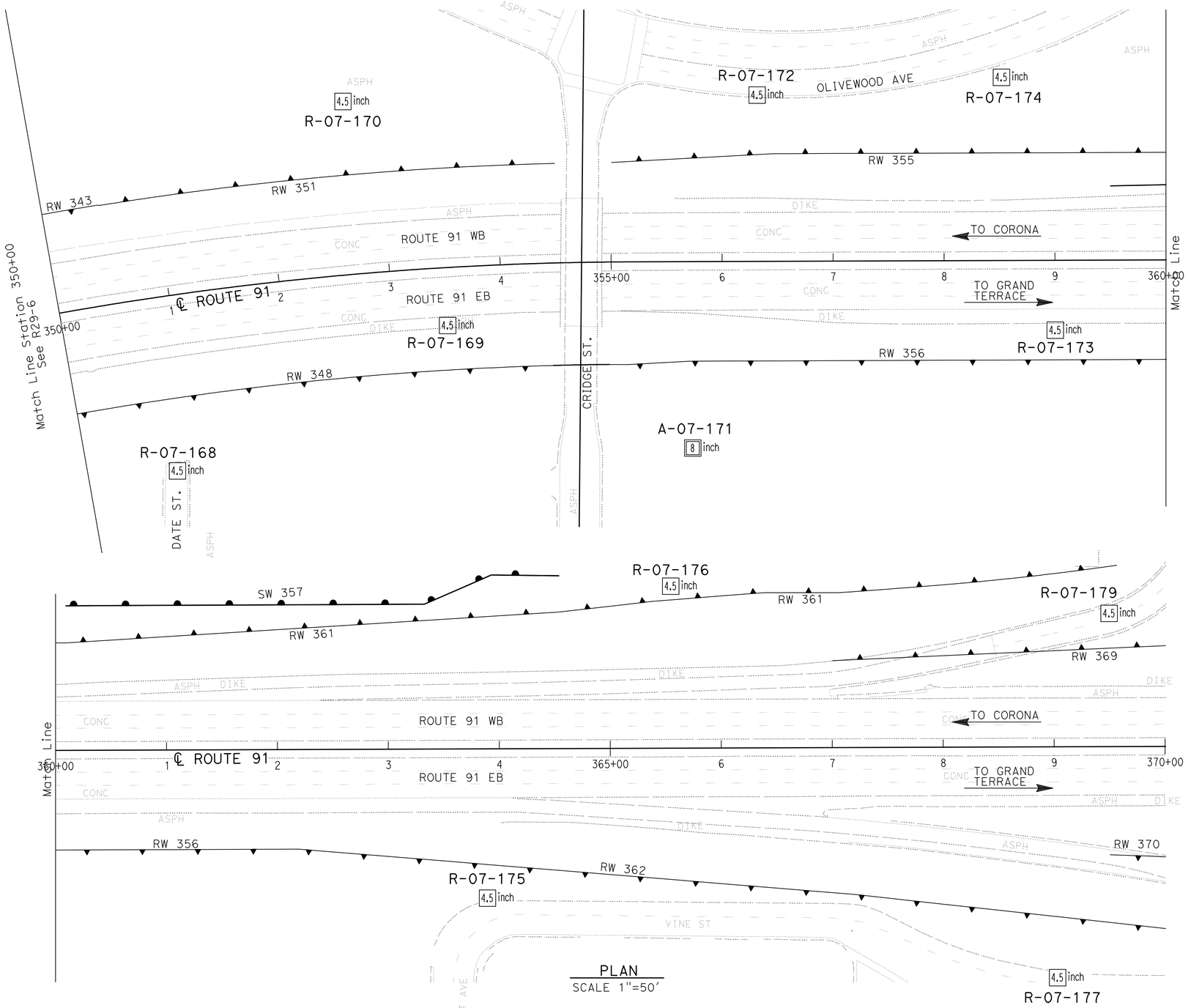

PLAN
SCALE 1"=50'

Borehole Number	Drill Rig	Hammer Type	Avg. Hammer Efficiency, ETR (%)
R-07-168	CS-2000	Automatic	84
R-07-169	CME 85	Automatic	87
R-07-170	Acker Rig	Automatic	74
A-07-171	Diedrich D-120	Automatic	75*
R-07-172	CS-2000	Automatic	84
R-07-173	CME 85	Automatic	87
R-07-174	CS-2000	Automatic	84
R-07-175	CS-2000	Automatic	84
R-07-176	CS-2000	Automatic	84
R-07-177	CS-2000	Automatic	84
R-07-179	Acker Rig	Automatic	74

Sampler Type	Inside Diameter (Inches)	Borehole Numbers
SPT	1.375	R-07-168, R-07-169, R-07-170 A-07-171, R-07-172, R-07-173 R-07-174, R-07-175, R-07-176 R-07-177, R-07-179
Modified California 1	1.94	R-07-168, R-07-169, R-07-170 R-07-172, R-07-173, R-07-174 R-07-175, R-07-177, R-07-179
Modified California 2	2.40	A-07-171

*Estimated Hammer Efficiency Rating.

DESIGN OVERSIGHT X SIGN OFF DATE	GINA PURSELL FUNCTIONAL SUPERVISOR	DRAWN BY P. QUACH	P.CHAU/D.WADER/C.CARBINO FIELD INVESTIGATION BY: DATE: Nov 6 2007 to March 7 2008	PREPARED FOR THE STATE OF CALIFORNIA DEPARTMENT OF TRANSPORTATION	A. LEE PROJECT ENGINEER	BRIDGE NO. X POST MILE X	RETAINING WALL 348 R29-7 LOG OF TEST BORINGS SHEET 4 OF 4
		CHECKED BY S. PIRATHIVIRAJ					

OSF GEOTECHNICAL LOG OF TEST BORINGS SHEET (ENGLISH) (REV. 2/25/05)

ORIGINAL SCALE IN INCHES FOR REDUCED PLANS 0 1 2 3

CU 59A0590
EA 08-448400

DISREGARD PRINTS BEARING EARLIER REVISION DATES

REVISION DATES (PRELIMINARY STAGE ONLY) X

SHEET 4 OF 4

FILE => 844840qzc007.dgn

USERNAME => trstrk DATE PLOTTED => 30-APR-2011 TIME PLOTTED =>

Dist	COUNTY	ROUTE	POST MILES TOTAL PROJECT	SHEET No.	TOTAL SHEETS
08	Riv	91	15.6/21.6	999	2028

REGISTERED CIVIL ENGINEER 12-1-10 DATE

4-25-11
PLANS APPROVAL DATE

REGISTERED PROFESSIONAL ENGINEER CUONG LE TRAN No. C60436 Exp. 6-30-12 CIVIL STATE OF CALIFORNIA

THE STATE OF CALIFORNIA OR ITS OFFICERS OR AGENTS SHALL NOT BE RESPONSIBLE FOR THE ACCURACY OR COMPLETENESS OF SCANNED COPIES OF THIS PLAN SHEET.

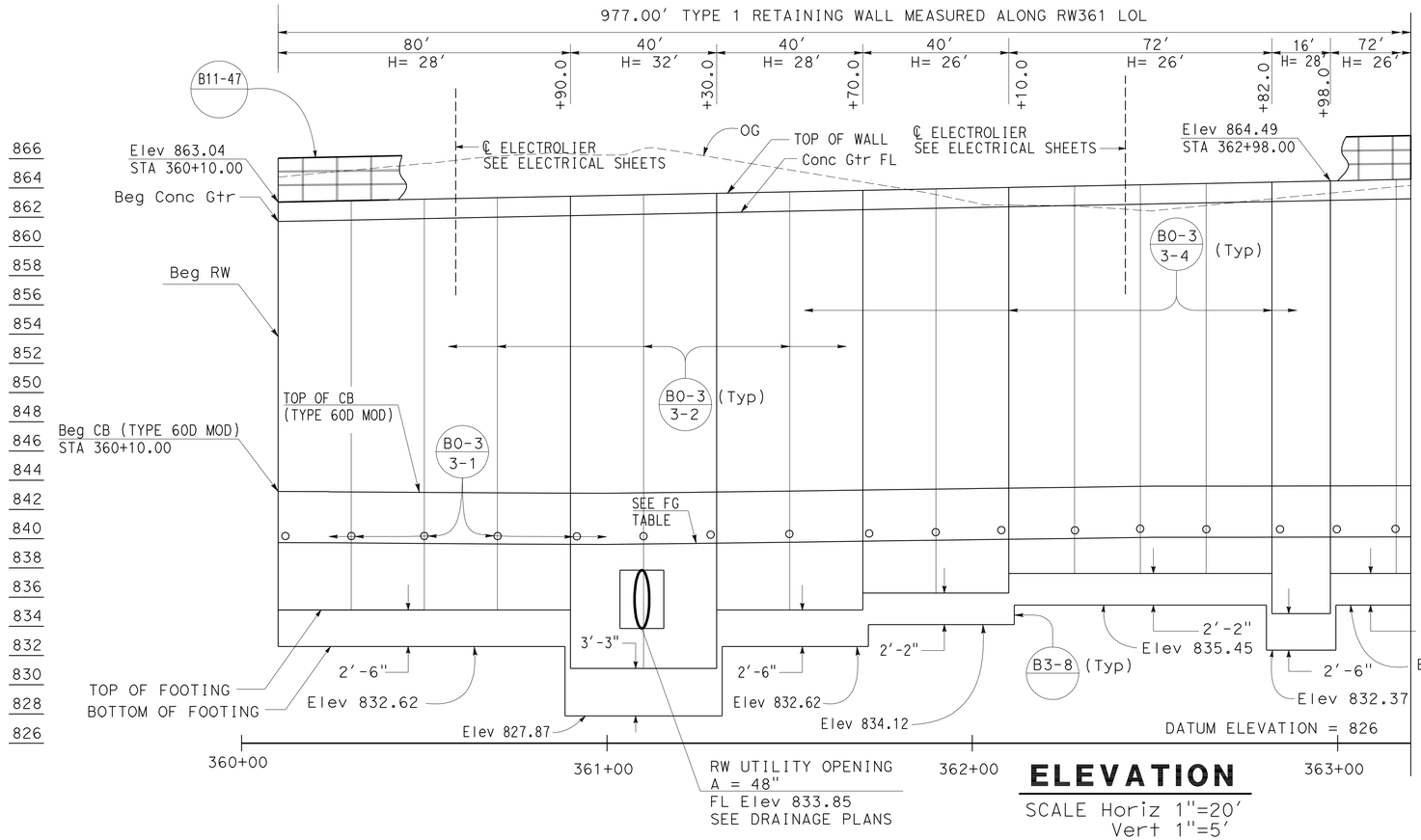

ELEVATION

SCALE Horiz 1"=20'
Vert 1"=5'

NOTES:

1. ARCHITECTURAL TREATMENT SHOULD EXTEND 6 IN BELOW FG OR 6 IN BELOW TOP CB (TYPE 60D MOD)
2. FOR STRUCTURAL SECTIONS, SEE ROADWAY PLANS
3. FOR POST ANCHORAGE DETAILS, SEE B11-52
4. FOR ROUNDING DETAILS, SEE ARCHITECTURAL TREATMENT PLANS

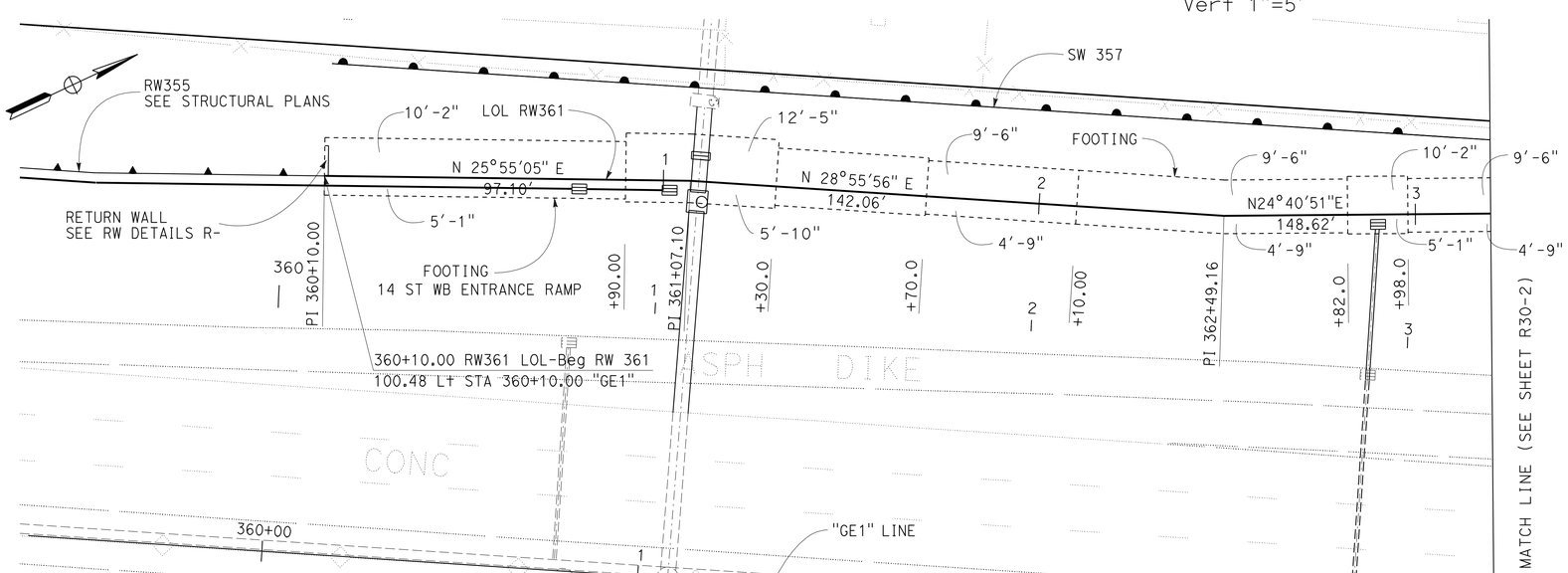

PLAN

SCALE: 1"=20'

THIS PLAN ACCURATE FOR RETAINING WALL WORK ONLY.

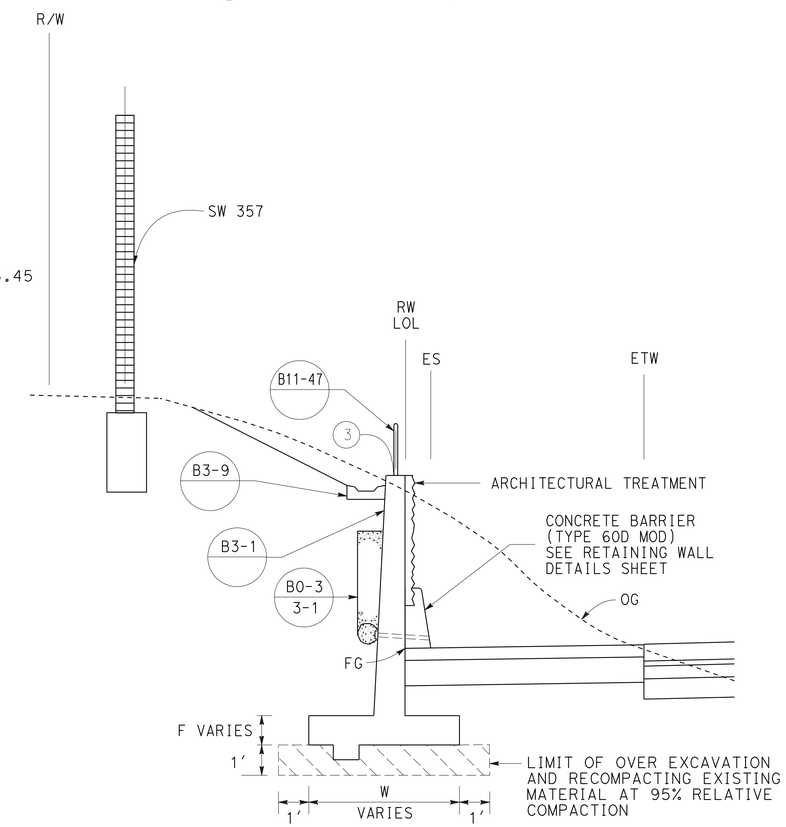

TYPICAL SECTION

NO SCALE
FROM STA 360+10.00 TO STA 369+87.00

RETAINING WALL PLAN
RETAINING WALL No. 361

SCALE AS SHOWN

R30-1

STATE OF CALIFORNIA - DEPARTMENT OF TRANSPORTATION
Caltrans
DESIGN

FUNCTIONAL SUPERVISOR: MARK PERTILE
CALCULATED-DESIGNED BY: ANNABELL WANG
CHECKED BY: CUONG LE TRAN
REVISED BY
DATE REVISED

LAST REVISION 12-01-10
DATE PLOTTED => 30-APR-2011
TIME PLOTTED => 07:43

Dist	COUNTY	ROUTE	POST MILES TOTAL PROJECT	SHEET No.	TOTAL SHEETS
08	Riv	91	15.6/21.6	1000	2028

REGISTERED CIVIL ENGINEER 12-1-10 DATE

4-25-11
PLANS APPROVAL DATE

REGISTERED PROFESSIONAL ENGINEER CUONG LE TRAN No. C60436 Exp. 6-30-12 CIVIL STATE OF CALIFORNIA

THE STATE OF CALIFORNIA OR ITS OFFICERS OR AGENTS SHALL NOT BE RESPONSIBLE FOR THE ACCURACY OR COMPLETENESS OF SCANNED COPIES OF THIS PLAN SHEET.

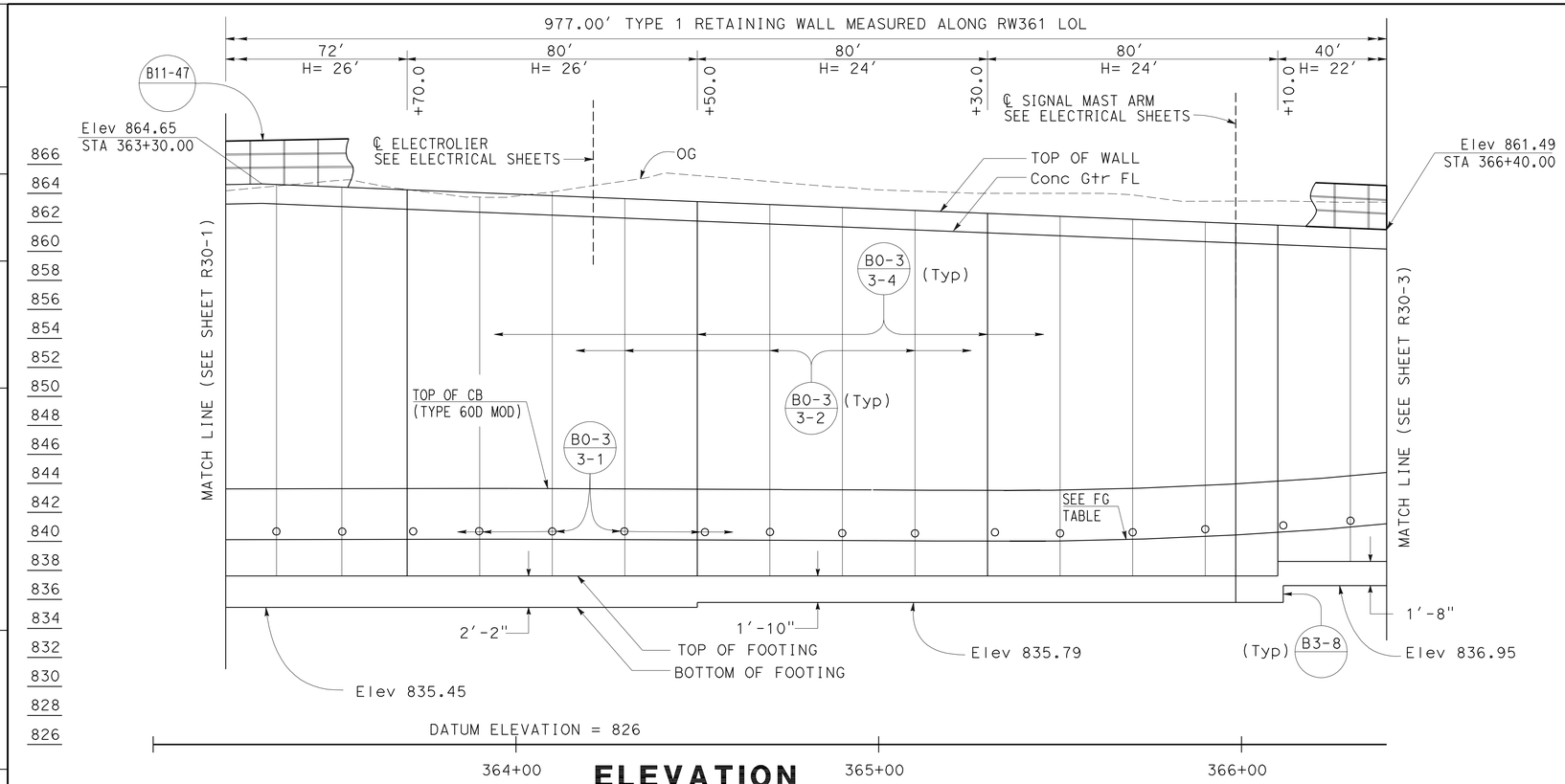

ELEVATION

SCALE Horiz 1"=20'
Vert 1"=5'

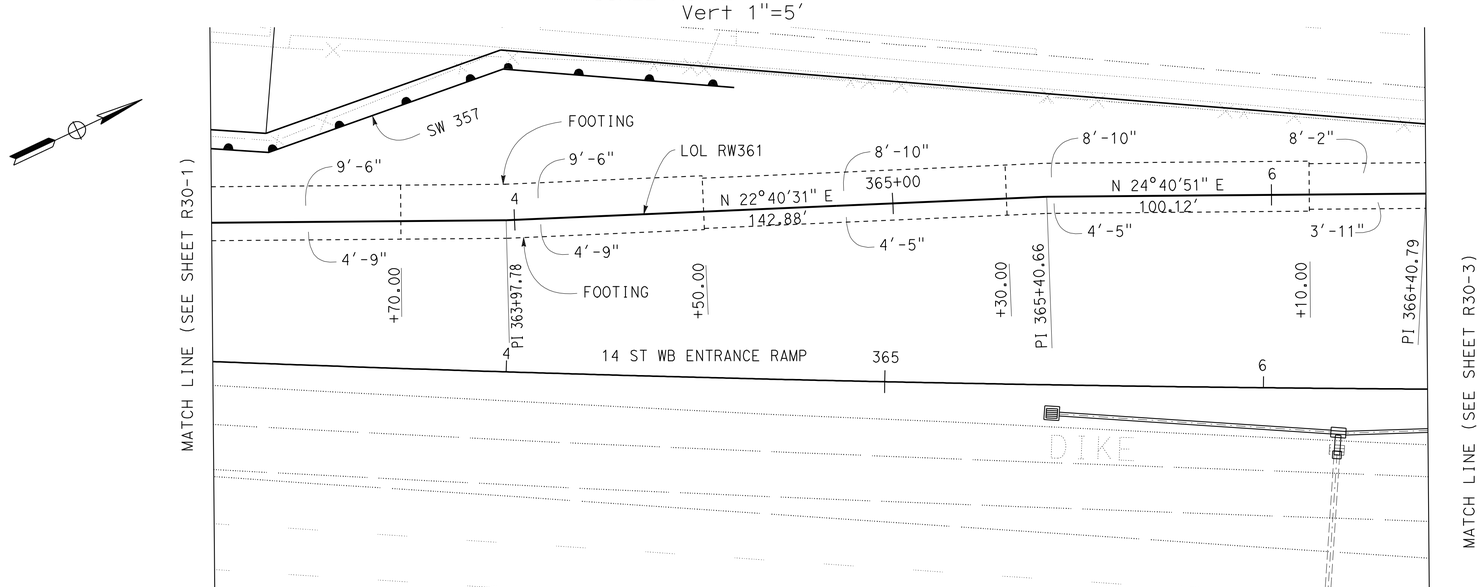

PLAN

SCALE: 1"=20'

THIS PLAN ACCURATE FOR RETAINING WALL WORK ONLY.

FINISH GRADE (FG) TABLE	
STATION	ELEVATION
360+10.0	839.71
360+25.0	839.71
360+50.0	839.67
360+75.0	839.63
361+00.0	839.61
361+25.0	839.68
361+50.0	839.76
361+75.0	839.84
362+00.0	839.93
362+25.0	840.01
362+50.0	840.09
362+75.0	840.10
363+00.0	840.11
363+25.0	880.12
363+50.0	880.13
363+75.0	880.14
364+00.0	840.15
364+25.0	840.13
364+50.0	840.10
364+75.0	840.07
365+00.0	840.05
365+25.0	840.02
365+50.0	840.04
365+75.0	840.18
366+00.0	840.47
366+25.0	840.54
366+50.0	841.46
366+75.0	842.24
367+00.0	843.14
367+25.0	844.12
367+50.0	845.19
367+75.0	846.28
368+00.0	847.51
368+25.0	848.86
368+50.0	850.33
368+75.0	851.85
369+00.0	853.24
369+25.0	854.60
369+50.0	856.04
369+70.0	858.08
369+87.0	860.99

RETAINING WALL PLAN
RETAINING WALL No. 361

SCALE AS SHOWN

R30-2

STATE OF CALIFORNIA - DEPARTMENT OF TRANSPORTATION
Caltrans DESIGN

FUNCTIONAL SUPERVISOR: MARK PERTILE
CALCULATED-DESIGNED BY: ANNABELL WANG
CHECKED BY: CUONG LE TRAN
REVISED BY
DATE REVISED

LAST REVISION 12-01-10 | DATE PLOTTED => 30-APR-2011 | TIME PLOTTED => 07:43