Dist	COUNTY	ROUTE	POST MILES TOTAL PROJECT	SHEET No.	TOTAL SHEETS
08	Riv	91	15.6/21.6	801	2028

REGISTERED CIVIL ENGINEER — DATE 12-1-10

4-25-11
PLANS APPROVAL DATE

REGISTERED PROFESSIONAL ENGINEER — THOMAS HIEN NGO No. 68383 Exp. 9/30/11 CIVIL — STATE OF CALIFORNIA

THE STATE OF CALIFORNIA OR ITS OFFICERS OR AGENTS SHALL NOT BE RESPONSIBLE FOR THE ACCURACY OR COMPLETENESS OF SCANNED COPIES OF THIS PLAN SHEET.

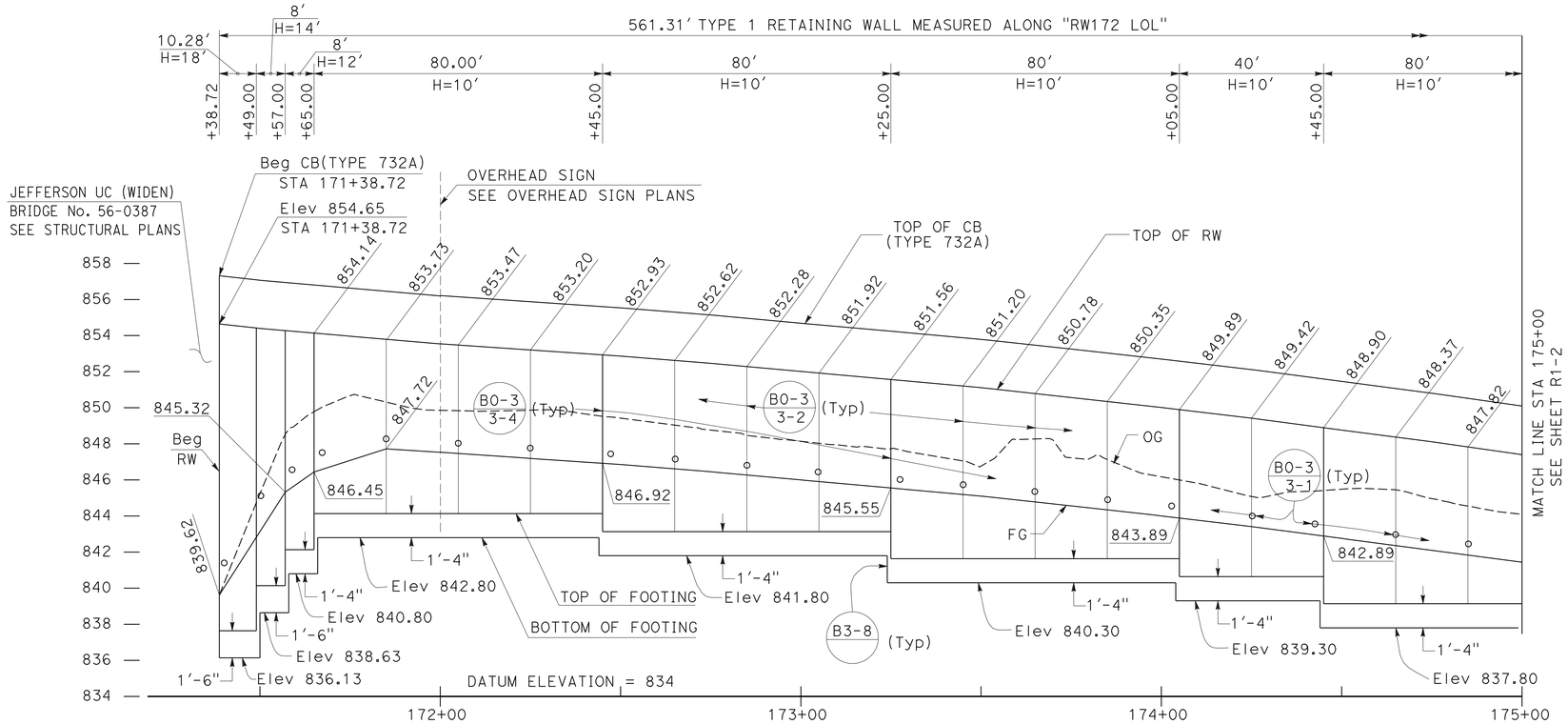

ELEVATION

SCALE Horiz 1"=20'
Vert 1"=4'

NOTES:

1. ARCHITECTURAL TREATMENT SHOULD EXTEND 6 IN BELOW FG OR 6 IN BELOW TOP CB (TYPE 60D MOD)
2. FOR STRUCTURAL SECTIONS, SEE ROADWAY PLANS
3. WATERSTOP IN EXPANSION JOINT SHALL BE EXTEND 6 IN INTO THE BARRIER
4. FOR ROUNDING DETAILS, SEE ARCHITECTURAL TREATMENT PLANS
5. LOWER TOP OF WALL 12" WITHIN STRUCTURE APPROACH LIMITS (SEE STRUCTURE PLANS)

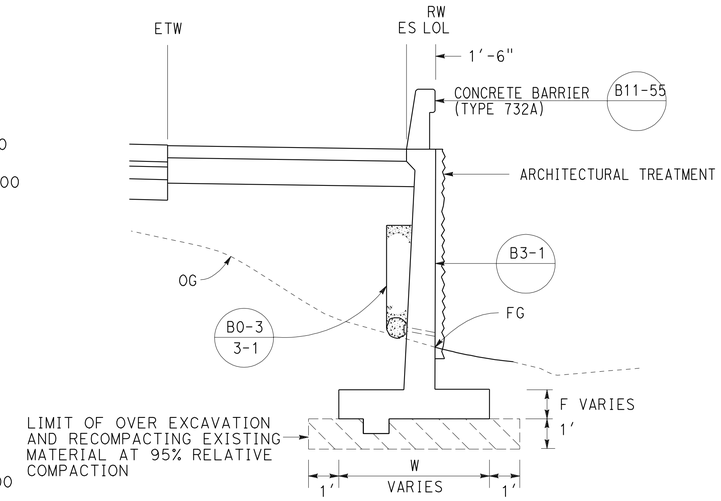

TYPICAL SECTION

NO SCALE
FROM STA 171+38.72 TO STA 177+00.03

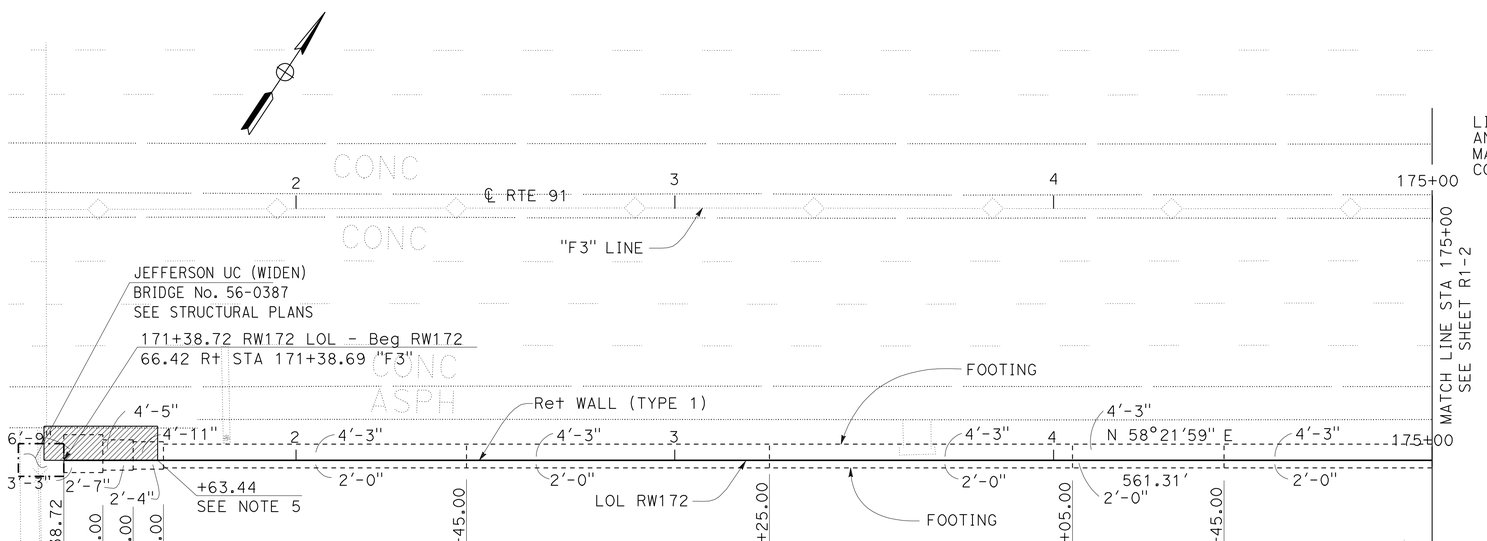

PLAN

SCALE: 1"=20'

RETAINING WALL PLAN
RETAINING WALL No. 172

SCALE AS SHOWN

R1-1

STATE OF CALIFORNIA - DEPARTMENT OF TRANSPORTATION
Caltrans® DESIGN
FUNCTIONAL SUPERVISOR: MARK PERTILE
CALCULATED-DESIGNED BY: THAI VAN HGUYEN
CHECKED BY: THOMAS HIEN NGO
REVISED BY / DATE REVISED

LAST REVISION 12-01-10 | DATE PLOTTED => 29-APR-2011 | TIME PLOTTED => 20:24

Dist	COUNTY	ROUTE	POST MILES TOTAL PROJECT	SHEET No.	TOTAL SHEETS
08	Riv	91	15.6/21.6	802	2028

REGISTERED CIVIL ENGINEER 12-1-10 DATE

4-25-11
PLANS APPROVAL DATE

REGISTERED PROFESSIONAL ENGINEER THOMAS HIEN NGO No. 68383 Exp. 9/30/11 CIVIL STATE OF CALIFORNIA

THE STATE OF CALIFORNIA OR ITS OFFICERS OR AGENTS SHALL NOT BE RESPONSIBLE FOR THE ACCURACY OR COMPLETENESS OF SCANNED COPIES OF THIS PLAN SHEET.

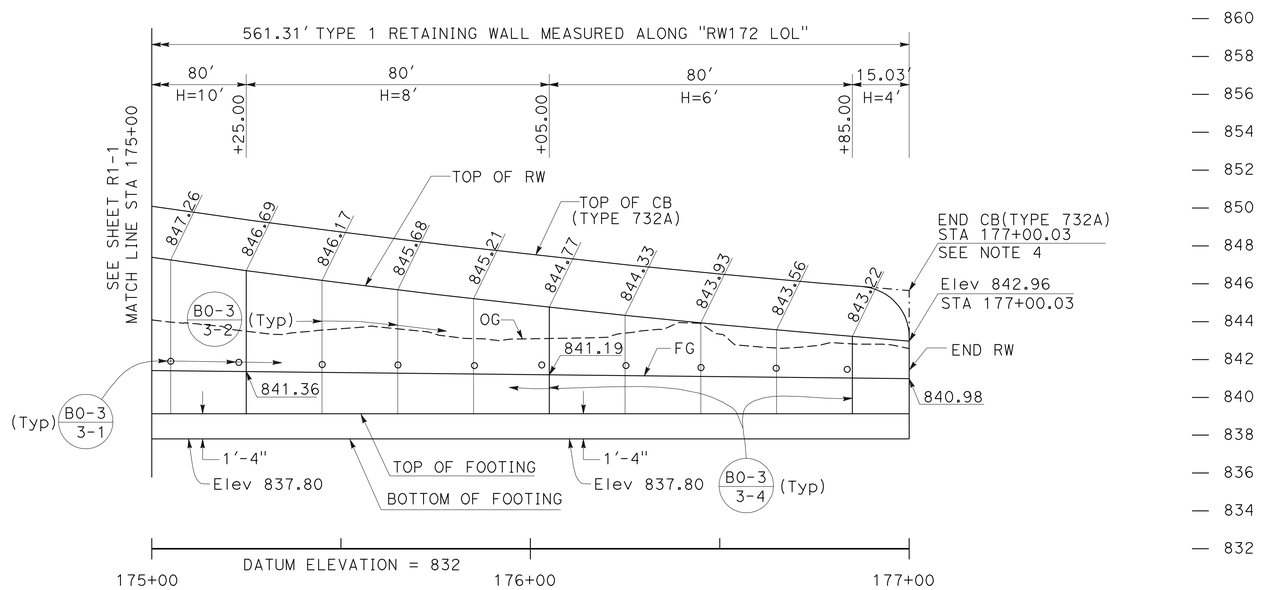

ELEVATION

SCALE Horiz 1"=20'
Vert 1"=4'

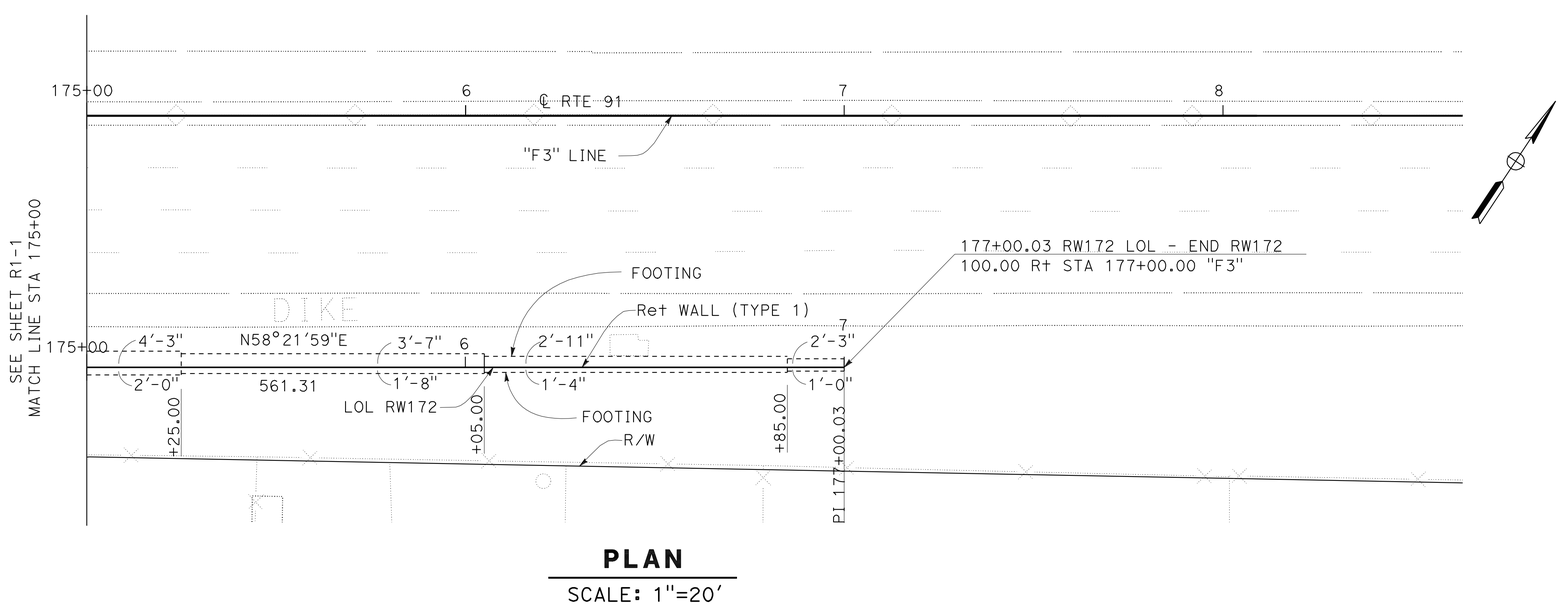

PLAN

SCALE: 1"=20'

QUANTITIES

STRUCTURAL CONCRETE (RETAINING WALL)	403.80	CY
BAR REINFORCING STEEL (RETAINING WALL)	33792	LB
STRUCTURAL EXCAVATION (RETAINING WALL)	1276.11	CY
STRUCTURAL BACKFILL (RETAINING WALL)	913.55	CY
PERVIOUS BACKFILL MATERIAL (RETAINING WALL)	47.20	CY
CONCRETE BARRIER (TYPE 732A)	561.31	LF
PLASTIC PIPE (N)	38.70	LF
WATERSTOP (N)	107.44	LF
ARCHITECTURAL SURFACE (TEXTURED CONCRETE)	3344.10	SF

(N) = NOT A SEPARATE PAY ITEM, FOR INFORMATION ONLY

THIS PLAN ACCURATE FOR RETAINING WALL WORK ONLY.

RETAINING WALL PLAN
RETAINING WALL No. 172
SCALE AS SHOWN

R1-2

STATE OF CALIFORNIA - DEPARTMENT OF TRANSPORTATION
Caltrans
DESIGN
FUNCTIONAL SUPERVISOR: MARK PERTILE
CALCULATED-DESIGNED BY: THAI VAN HGUYEN
CHECKED BY: THOMAS HIEN NGO
REVISED BY
DATE REVISED

LAST REVISION 12-01-10
DATE PLOTTED => 29-APR-2011
TIME PLOTTED => 20:24

Dist	COUNTY	ROUTE	POST MILES TOTAL PROJECT	SHEET No.	TOTAL SHEETS
08	Riv	91	15.6/21.6	803	2028

LICENSED LANDSCAPE ARCHITECT

4-25-11
PLANS APPROVAL DATE

LICENSED LANDSCAPE ARCHITECT
Matthew Harry Hall
No. 2504
Signature
10/31/2011
Renewal Date
12-1-10
Date
STATE OF CALIFORNIA

THE STATE OF CALIFORNIA OR ITS OFFICERS OR AGENTS SHALL NOT BE RESPONSIBLE FOR THE ACCURACY OR COMPLETENESS OF SCANNED COPIES OF THIS PLAN SHEET.

NOTE:

SEE SHEET ASD-4 AND ASD-5.

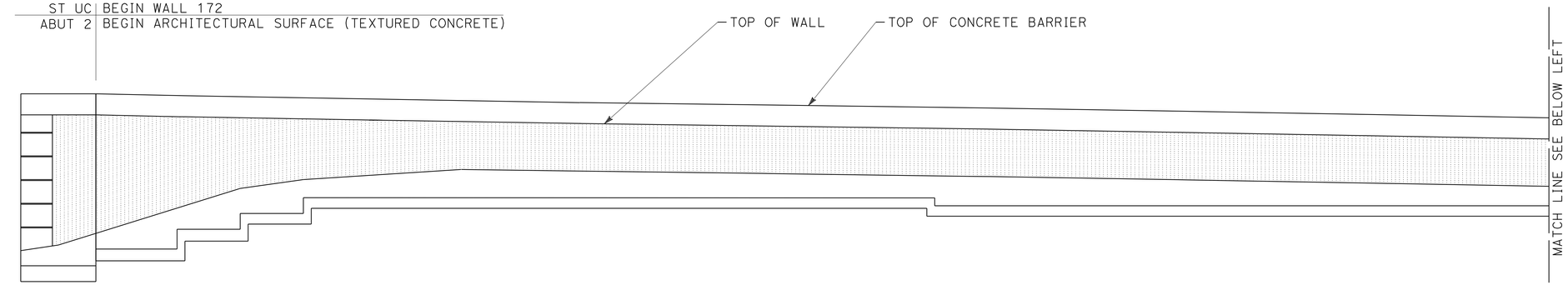

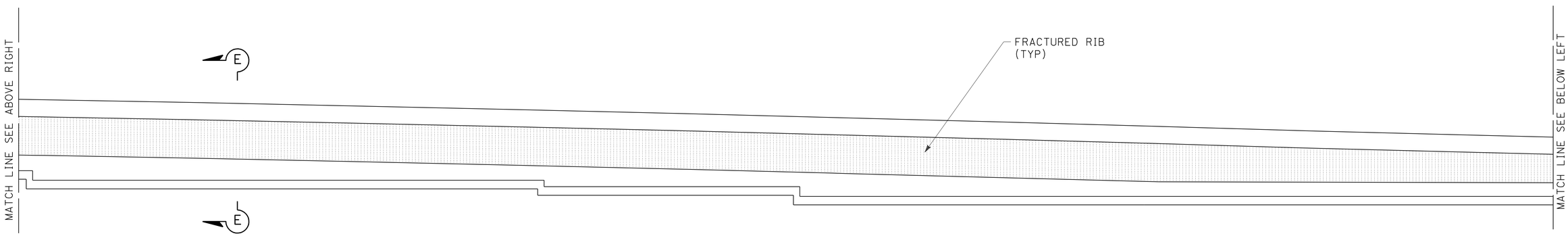

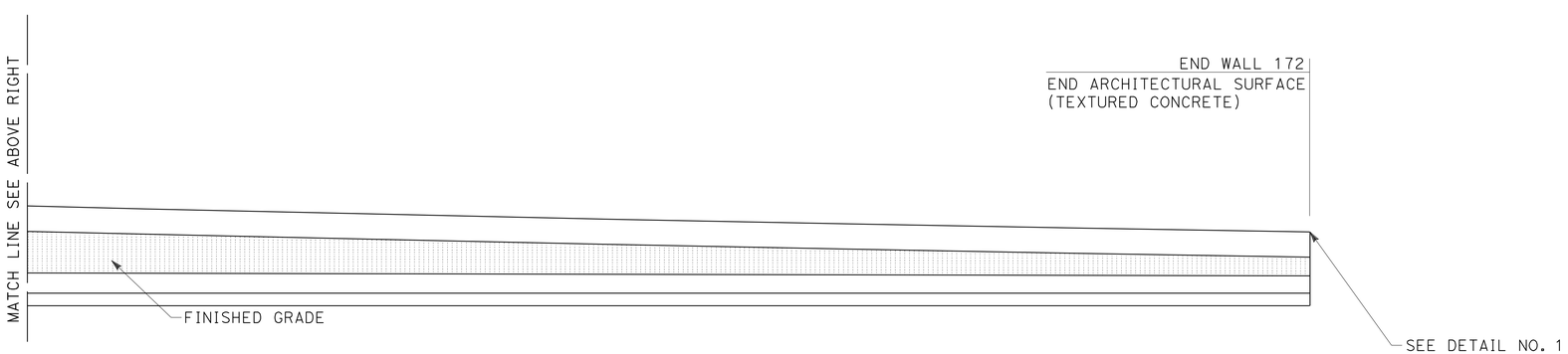

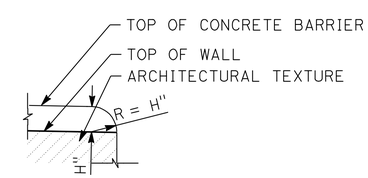

DETAIL No. 1

TYPICAL END OF WALL
WITH CONCRETE BARRIER
ON TOP OF WALL DETAIL

ELEVATION FOR FRACTURED RIB RETAINING WALL No. 172

THIS PLAN IS ACCURATE FOR ARCHITECTUAL TREATMENT WORK ONLY.

ARCHITECTURAL SURFACE RETAINING WALL No. 172

SCALE: 1/8"=1'-0"

R1-3

STATE OF CALIFORNIA - DEPARTMENT OF TRANSPORTATION
Caltrans® LANDSCAPE ARCHITECTURE

SENIOR LANDSCAPE ARCHITECT: BYRON STROUT
CALCULATED-DESIGNED BY: MATTHEW HALL
CHECKED BY: MIRIAM BISHOP
REVISED BY
DATE REVISED

LAST REVISION 12-01-10
DATE PLOTTED => 29-APR-2011
TIME PLOTTED => 20:24

DIST	COUNTY	ROUTE	POST MILES TOTAL PROJECT	SHEET No	TOTAL SHEETS
08	Riv	91	15.6/21.6	804	2028

GEOTECHNICAL PROFESSIONAL — DATE 10/2008

4-25-11
PLANS APPROVAL DATE

REGISTERED PROFESSIONAL ENGINEER — ANDREW C. LEE — No. 2616 — Exp. 6-30-12 — GEOTECHNICAL — STATE OF CALIFORNIA

The State of California or its officers or agents shall not be responsible for the accuracy or completeness of electronic copies of this plan sheet.

California Department of Transportation
5900 Folsom Boulevard
Sacramento, CA 95819

URS Corporation
2020 East First Street, Suite 400
Santa Ana, CA 92705

GROUP SYMBOLS AND NAMES

Graphic / Symbol	Group Names	Graphic / Symbol	Group Names
GW	Well-graded GRAVEL Well-graded GRAVEL with SAND	CL	Lean CLAY Lean CLAY with SAND Lean CLAY with GRAVEL SANDY lean CLAY SANDY lean CLAY with GRAVEL GRAVELLY lean CLAY GRAVELLY lean CLAY with SAND
GP	Poorly graded GRAVEL Poorly graded GRAVEL with SAND		
GW-GM	Well-graded GRAVEL with SILT Well-graded GRAVEL with SILT and SAND	CL-ML	SILTY CLAY SILTY CLAY with SAND SILTY CLAY with GRAVEL SANDY SILTY CLAY SANDY SILTY CLAY with GRAVEL GRAVELLY SILTY CLAY GRAVELLY SILTY CLAY with SAND
GW-GC	Well-graded GRAVEL with CLAY (or SILTY CLAY) Well-graded GRAVEL with CLAY and SAND (or SILTY CLAY and SAND)		
GP-GM	Poorly graded GRAVEL with SILT Poorly graded GRAVEL with SILT and SAND	ML	SILT SILT with SAND SILT with GRAVEL SANDY SILT SANDY SILT with GRAVEL GRAVELLY SILT GRAVELLY SILT with SAND
GP-GC	Poorly graded GRAVEL with CLAY (or SILTY CLAY) Poorly graded GRAVEL with CLAY and SAND (or SILTY CLAY and SAND)		
GM	SILTY GRAVEL SILTY GRAVEL with SAND	OL	ORGANIC lean CLAY ORGANIC lean CLAY with SAND ORGANIC lean CLAY with GRAVEL SANDY ORGANIC lean CLAY SANDY ORGANIC lean CLAY with GRAVEL GRAVELLY ORGANIC lean CLAY GRAVELLY ORGANIC lean CLAY with SAND
GC	CLAYEY GRAVEL CLAYEY GRAVEL with SAND		
GC-GM	SILTY, CLAYEY GRAVEL SILTY, CLAYEY GRAVEL with SAND	OL	ORGANIC SILT ORGANIC SILT with SAND ORGANIC SILT with GRAVEL SANDY ORGANIC SILT SANDY ORGANIC SILT with GRAVEL GRAVELLY ORGANIC SILT GRAVELLY ORGANIC SILT with SAND
SW	Well-graded SAND Well-graded SAND with GRAVEL		
SP	Poorly graded SAND Poorly graded SAND with GRAVEL	CH	Fat CLAY Fat CLAY with SAND Fat CLAY with GRAVEL SANDY fat CLAY SANDY fat CLAY with GRAVEL GRAVELLY fat CLAY GRAVELLY fat CLAY with SAND
SW-SM	Well-graded SAND with SILT Well-graded SAND with SILT and GRAVEL		
SW-SC	Well-graded SAND with CLAY (or SILTY CLAY) Well-graded SAND with CLAY and GRAVEL (or SILTY CLAY and GRAVEL)	MH	Elastic SILT Elastic SILT with SAND Elastic SILT with GRAVEL SANDY elastic SILT SANDY elastic SILT with GRAVEL GRAVELLY elastic SILT GRAVELLY elastic SILT with SAND
SP-SM	Poorly graded SAND with SILT Poorly graded SAND with SILT and GRAVEL		
SP-SC	Poorly graded SAND with CLAY (or SILTY CLAY) Poorly graded SAND with CLAY and GRAVEL (or SILTY CLAY and GRAVEL)	OH	ORGANIC fat CLAY ORGANIC fat CLAY with SAND ORGANIC fat CLAY with GRAVEL SANDY ORGANIC fat CLAY SANDY ORGANIC fat CLAY with GRAVEL GRAVELLY ORGANIC fat CLAY GRAVELLY ORGANIC fat CLAY with SAND
SM	SILTY SAND SILTY SAND with GRAVEL		
SC	CLAYEY SAND CLAYEY SAND with GRAVEL	OH	ORGANIC elastic SILT ORGANIC elastic SILT with SAND ORGANIC elastic SILT with GRAVEL SANDY elastic ELASTIC SILT SANDY ORGANIC elastic SILT with GRAVEL GRAVELLY ORGANIC elastic SILT GRAVELLY ORGANIC elastic SILT with SAND
SC-SM	SILTY, CLAYEY SAND SILTY, CLAYEY SAND with GRAVEL		
PT	PEAT	OL/OH	ORGANIC SOIL ORGANIC SOIL with SAND ORGANIC SOIL with GRAVEL SANDY ORGANIC SOIL SANDY ORGANIC SOIL with GRAVEL GRAVELLY ORGANIC SOIL GRAVELLY ORGANIC SOIL with SAND
	COBBLES COBBLES and BOULDERS BOULDERS		

FIELD AND LABORATORY TESTS

C	Consolidation (ASTM D 2435-04)
CL	Collapse Potential (ASTM D 5333-03)
CP	Compaction Curve (CTM 216 - 06)
CR	Corrosion, Sulfates, Chlorides (CTM 643 - 99; CTM 417 - 06; CTM 422 - 06)
CU	Consolidated Undrained Triaxial (ASTM D 4767-02)
DS	Direct Shear (ASTM D 3080-04)
EI	Expansion Index (ASTM D 4829-03)
M	Moisture Content (ASTM D 2216-05)
OC	Organic Content (ASTM D 2974-07)
P	Permeability (CTM 220 - 05)
PA	Particle Size Analysis (ASTM D 422-63 [2002])
PI	Liquid Limit, Plastic Limit, Plasticity Index (AASHTO T 89-02, AASHTO T 90-00)
PL	Point Load Index (ASTM D 5731-05)
PM	Pressure Meter
PP	Pocket Penetrometer
R	R-Value (CTM 301 - 00)
SE	Sand Equivalent (CTM 217 - 99)
SG	Specific Gravity (AASHTO T 100-06)
SL	Shrinkage Limit (ASTM D 427-04)
SW	Swell Potential (ASTM D 4546-03)
TV	Pocket Torvane
UC	Unconfined Compression - Soil (ASTM D 2166-06) Unconfined Compression - Rock (ASTM D 2938-95)
UU	Unconsolidated Undrained Triaxial (ASTM D 2850-03)
UW	Unit Weight (ASTM D 4767-04)
VS	Vane Shear (AASHTO T 223-96 [2004])

CONSISTENCY OF COHESIVE SOILS

Descriptor	Unconfined Compressive Strength (tsf)	Pocket Penetrometer (tsf)	Torvane (tsf)	Field Approximation
Very Soft	< 0.25	< 0.25	< 0.12	Easily penetrated several inches by fist
Soft	0.25 - 0.50	0.25 - 0.50	0.12 - 0.25	Easily penetrated several inches by thumb
Medium Stiff	0.50 - 1.0	0.50 - 1.0	0.25 - 0.50	Can be penetrated several inches by thumb with moderate effort
Stiff	1.0 - 2.0	1.0 - 2.0	0.50 - 1.0	Readily indented by thumb but penetrated only with great effort
Very Stiff	2.0 - 4.0	2.0 - 4.0	1.0 - 2.0	Readily indented by thumbnail
Hard	> 4.0	> 4.0	> 2.0	Indented by thumbnail with difficulty

APPARENT DENSITY OF COHESIONLESS SOILS

Descriptor	SPT N60 - Value (blows / foot)
Very Loose	0 - 4
Loose	5 - 10
Medium Dense	11 - 30
Dense	31 - 50
Very Dense	> 50

MOISTURE

Descriptor	Criteria
Dry	Absence of moisture, dusty, dry to the touch
Moist	Damp but no visible water
Wet	Visible free water, usually soil is below water table

PERCENT OR PROPORTION OF SOILS

Descriptor	Criteria
Trace	Particles are present but estimated to be less than 5%
Few	5 to 10%
Little	15 to 25%
Some	30 to 45%
Mostly	50 to 100%

SOIL PARTICLE SIZE

Descriptor		Size
Boulder		> 12 inches
Cobble		3 to 12 inches
Gravel	Coarse	3/4 inch to 3 inches
	Fine	No. 4 Sieve to 3/4 inch
Sand	Coarse	No. 10 Sieve to No. 4 Sieve
	Medium	No. 40 Sieve to No. 10 Sieve
	Fine	No. 200 Sieve to No. 40 Sieve
Silt and Clay		Passing No. 200 Sieve

PLASTICITY OF FINE-GRAINED SOILS

Descriptor	Criteria
Nonplastic	A 1/8-inch thread cannot be rolled at any water content.
Low	The thread can barely be rolled, and the lump cannot be formed when drier than the plastic limit.
Medium	The thread is easy to roll, and not much time is required to reach the plastic limit; it cannot be rerolled after reaching the plastic limit. The lump crumbles when drier than the plastic limit.
High	It takes considerable time rolling and kneading to reach the plastic limit. The thread can be rerolled several times after reaching the plastic limit. The lump can be formed without crumbling when drier than the plastic limit.

CEMENTATION

Descriptor	Criteria
Weak	Crumbles or breaks with handling or little finger pressure.
Moderate	Crumbles or breaks with considerable finger pressure.
Strong	Will not crumble or break with finger pressure.

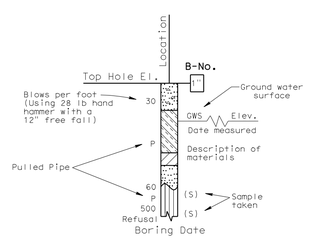

SAMPLE BORING (DRY)

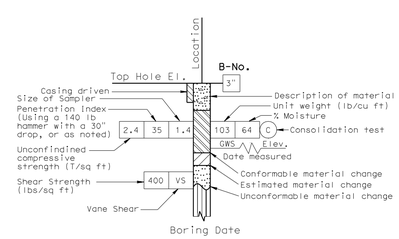

ROTARY SAMPLE BORING (WET)

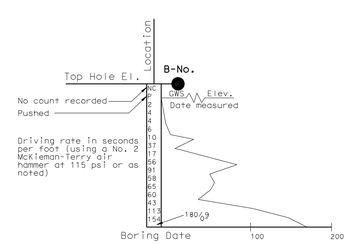

2 1/4" CONE PENETRATION BORING

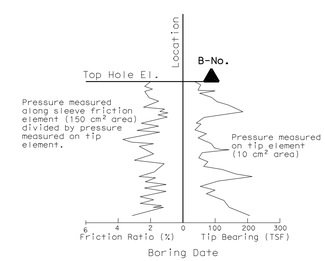

ELECTRONIC CONE PENETROMETER TEST

Cone Penetrometer dimensions and testing procedures are in accordance with ASTM standard D 3441-79, or as noted.

DESIGN OVERSIGHT	GINA PURSELL FUNCTIONAL SUPERVISOR	DRAWN BY	P. QUACH	P.CHAU/D.WADER/C.CARBINO FIELD INVESTIGATION BY:	PREPARED FOR THE STATE OF CALIFORNIA DEPARTMENT OF TRANSPORTATION	A. LEE PROJECT ENGINEER	BRIDGE NO. X POST MILE X
X SIGN OFF DATE		CHECKED BY	S. PIRATHIVIRAJ	DATE: Nov 6 2007 to March 7 2008			

SOIL LEGEND LOTB-1

LOG OF TEST BORINGS

OSF GEOTECHNICAL LOG OF TEST BORINGS SHEET (ENGLISH) (REV. 2/25/05)

ORIGINAL SCALE IN INCHES FOR REDUCED PLANS 0 1 2 3

CU 59A0590
EA 08-448400

DISREGARD PRINTS BEARING EARLIER REVISION DATES

REVISION DATES (PRELIMINARY STAGE ONLY) X — SHEET — OF

FILE => 844840ph001.dgn

USERNAME => trienard — DATE PLOTTED => 29-APR-2011 — TIME PLOTTED =>

DIST	COUNTY	ROUTE	POST MILES TOTAL PROJECT	SHEET No	TOTAL SHEETS
08	Riv	91	15.6/21.6	805	2028

GEOTECHNICAL PROFESSIONAL DATE 10/2008

4-25-11
PLANS APPROVAL DATE

REGISTERED PROFESSIONAL ENGINEER
ANDREW C. LEE
No. 2616
Exp. 6-30-12
GEOTECHNICAL
STATE OF CALIFORNIA

The State of California or its officers or agents shall not be responsible for the accuracy or completeness of electronic copies of this plan sheet.

California Department of Transportation
5900 Folsom Boulevard
Sacramento, CA 95819

URS Corporation
2020 East First Street, Suite 400
Santa Ana, CA 92705

FOR PLAN VIEW, SEE SHEET R1-5

NOTE: 1. This LOTB sheet was prepared in accordance with the Caltrans Soil & Rock Logging, Classification, and Presentation Manual (June 2007).

2. For legend, see "SOIL LEGEND LOG OF TEST BORINGS" SHEET

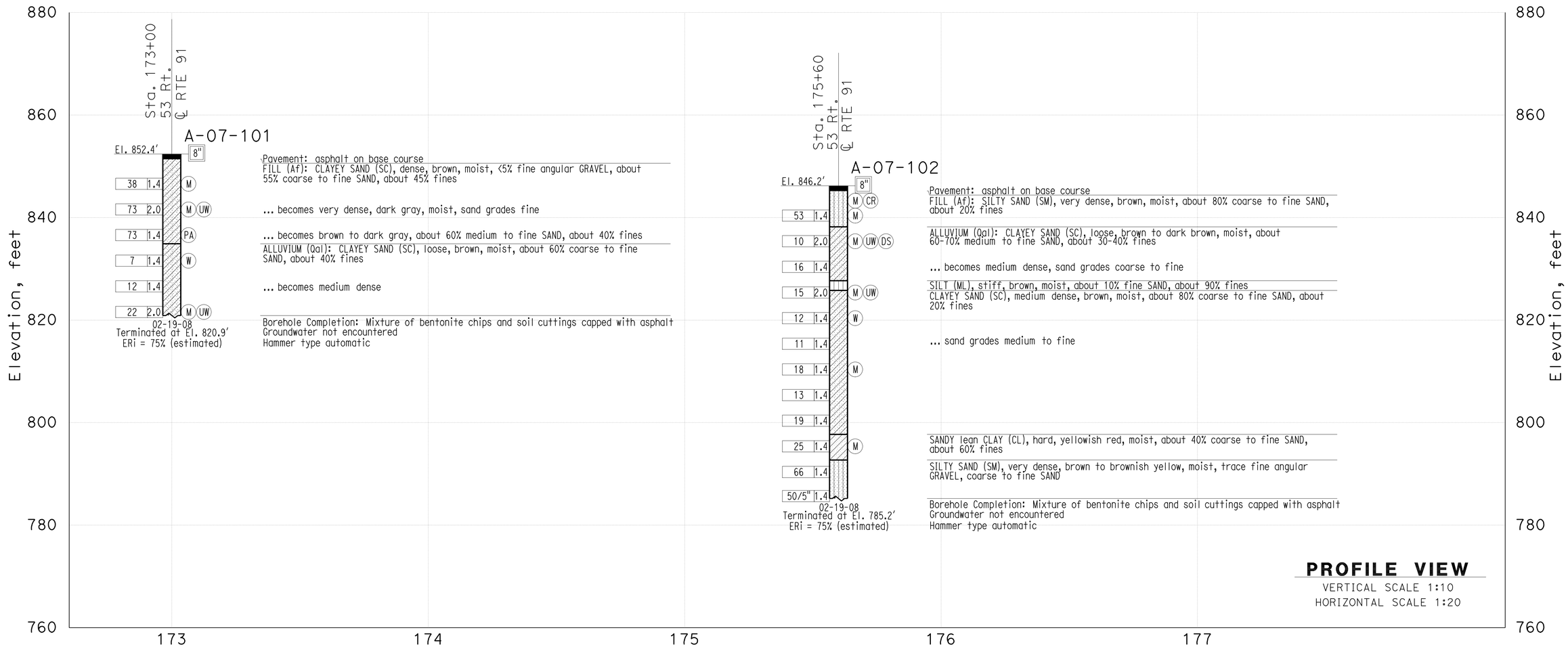

THIS PLAN ACCURATE FOR SOUND WALL AND RETAINING WALL WORK ONLY

DESIGN OVERSIGHT X SIGN OFF DATE	GINA PURSELL FUNCTIONAL SUPERVISOR	DRAWN BY CHECKED BY	P. QUACH S. PIRATHIVIRAJ	P.CHAU/D.WADER/C.CARBINO FIELD INVESTIGATION BY: DATE: Nov 6 2007 to March 7 2008	PREPARED FOR THE STATE OF CALIFORNIA DEPARTMENT OF TRANSPORTATION

A. LEE
PROJECT ENGINEER

BRIDGE NO. X
POST MILE X

Retaining Wall 172 R1-4

LOG OF TEST BORINGS 1 OF 2

OSF GEOTECHNICAL LOG OF TEST BORINGS SHEET (ENGLISH) (REV. 2/25/05)

ORIGINAL SCALE IN INCHES FOR REDUCED PLANS 0 1 2 3

CU 59A0590
EA 08-448400

DISREGARD PRINTS BEARING EARLIER REVISION DATES

REVISION DATES (PRELIMINARY STAGE ONLY) X

SHEET 1 OF 2

FILE => 844840qa004.dgn

USERNAME => trlenard DATE PLOTTED => 29-APR-2011 TIME PLOTTED =>

DIST	COUNTY	ROUTE	POST MILES TOTAL PROJECT	SHEET No	TOTAL SHEETS
08	Riv	91	15.6/21.6	806	2028

GEOTECHNICAL PROFESSIONAL — DATE 10/2008

4-25-11
PLANS APPROVAL DATE

REGISTERED PROFESSIONAL ENGINEER — ANDREW C. LEE — No. 2616 — Exp. 6-30-12 — GEOTECHNICAL — STATE OF CALIFORNIA

The State of California or its officers or agents shall not be responsible for the accuracy or completeness of electronic copies of this plan sheet.

California Department of Transportation
5900 Folsom Boulevard
Sacramento, CA 95819

URS Corporation
2020 East First Street, Suite 400
Santa Ana, CA 92705

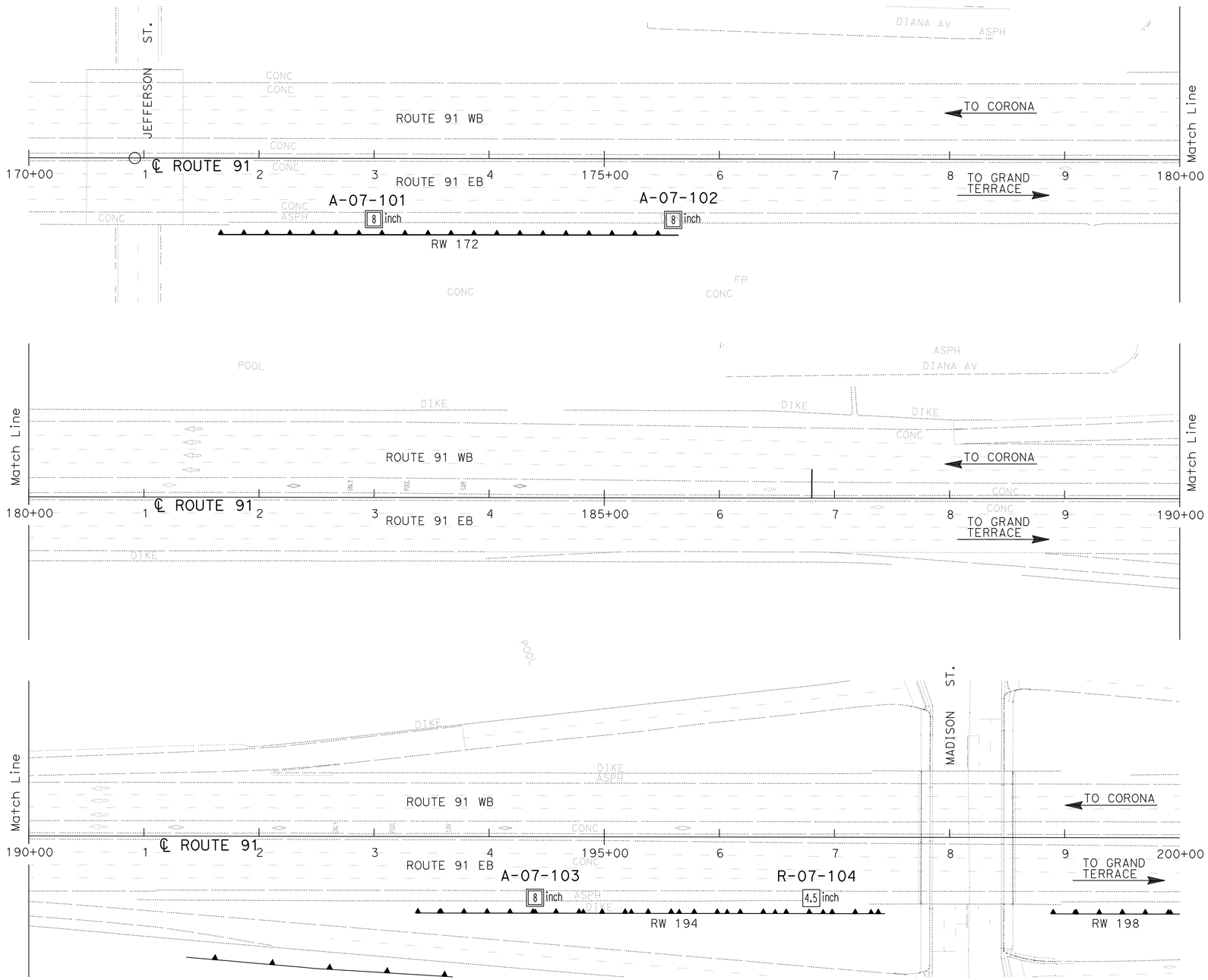

PLAN
SCALE 1"=50'

Borehole Number	Drill Rig	Hammer Type	Avg. Hammer Efficiency, ETR (%)
A-07-101	Diedrich D-120	Automatic	75*
A-07-102	Diedrich D-120	Automatic	75*
A-07-103	Diedrich D-120	Automatic	75*
R-07-104	CS-2000	Automatic	84

Sampler Type	Inside Diameter (Inches)	Borehole Numbers
SPT	1.375	A-07-101, A-07-102 A-07-103, R-07-104
Modified California 1	1.94	R-07-104
Modified California 2	2.40	A-07-101, A-07-102 A-07-103

*Estimated Hammer Efficiency Rating.

DESIGN OVERSIGHT X SIGN OFF DATE	GINA PURSELL FUNCTIONAL SUPERVISOR	DRAWN BY	P. QUACH	P.CHAU/D.WADER/C.CARBINO FIELD INVESTIGATION BY: DATE: Nov 6 2007 to March 7 2008	PREPARED FOR THE STATE OF CALIFORNIA DEPARTMENT OF TRANSPORTATION
		CHECKED BY	S. PIRATHIVIRAJ		

A. LEE
PROJECT ENGINEER

BRIDGE NO. X
POST MILE X

RETAINING WALL 172 R1-5

LOG OF TEST BORINGS 2 OF 2

OSF GEOTECHNICAL LOG OF TEST BORINGS SHEET (ENGLISH) (REV. 2/25/05)

ORIGINAL SCALE IN INCHES FOR REDUCED PLANS 0 1 2 3

CU 59A0590
EA 08-448400

DISREGARD PRINTS BEARING EARLIER REVISION DATES

REVISION DATES (PRELIMINARY STAGE ONLY) X

SHEET 2 OF 2

FILE => 844840qa005.dgn

USERNAME => trlenard DATE PLOTTED => 23-APR-2011 TIME PLOTTED =>

Dist	COUNTY	ROUTE	POST MILES TOTAL PROJECT	SHEET No.	TOTAL SHEETS
08	Riv	91	15.6/21.6	807	2028

REGISTERED CIVIL ENGINEER 12-1-10 DATE

4-25-11
PLANS APPROVAL DATE

REGISTERED PROFESSIONAL ENGINEER THOMAS HIEN NGO No. 68383 Exp. 9/30/11 CIVIL STATE OF CALIFORNIA

THE STATE OF CALIFORNIA OR ITS OFFICERS OR AGENTS SHALL NOT BE RESPONSIBLE FOR THE ACCURACY OR COMPLETENESS OF SCANNED COPIES OF THIS PLAN SHEET.

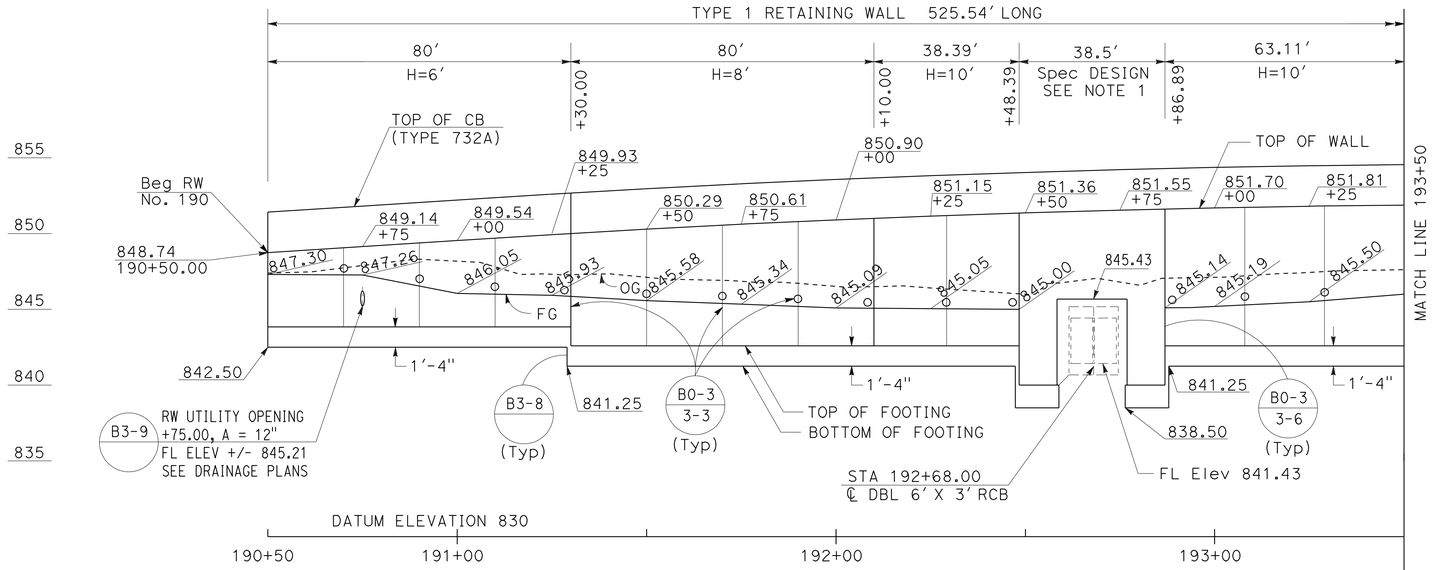

ELEVATION

SCALE Horiz 1"=20'
Vert 1"=5'

CURVE DATA

No.	R	Δ	T	L
1	6025.38'	01°25' 52"	75.26'	150.52'

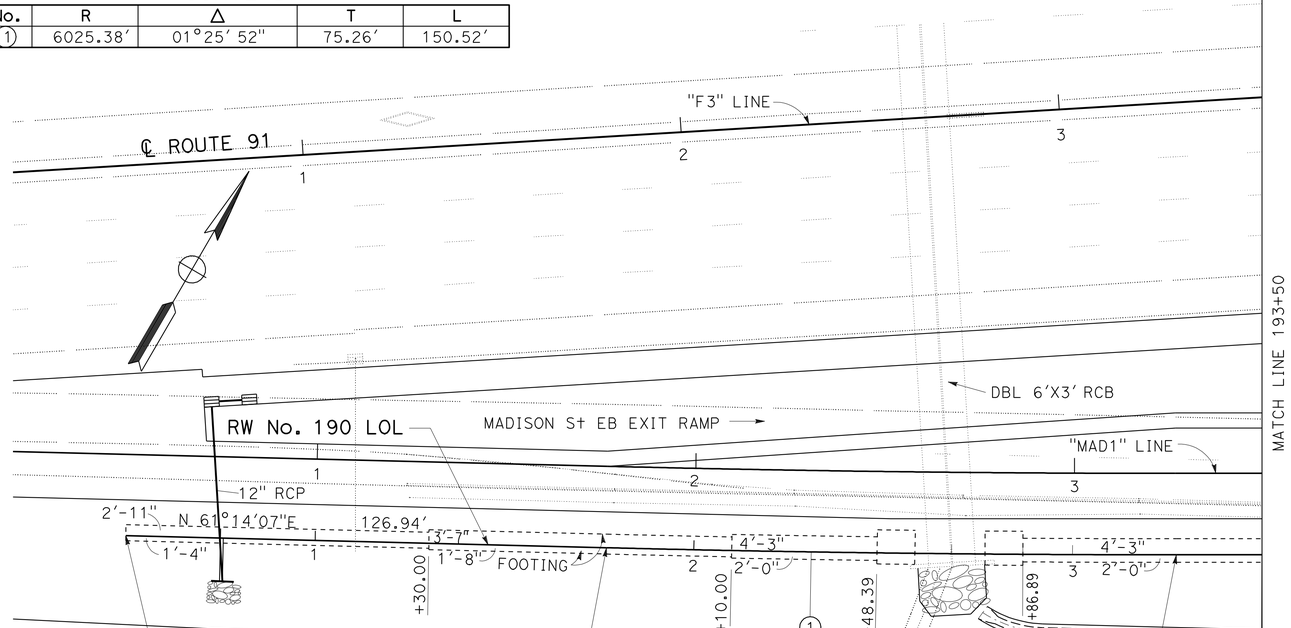

PLAN

SCALE 1"=20'

NOTES:

1. FOR SPECIAL DESIGN, SEE RETAINING WALL DETAILs SHEETS R2-3 AND R2-4.
2. ARCHITECTURAL TREATMENT SHOULD EXTEND 6" BELOW FG.
3. FOR STRUCTURAL SECTIONS, SEE ROADWAY PLANS.
4. WATERSTOP IN EXPANSION JOINT SHALL BE EXTEND 6" INTO THE BARRIER.
5. FOR ROUNDING DETAILS, SEE ARCHITECTURAL SURFACE PLAN.

QUANTITIES

STRUCTURAL CONCRETE (RETAINING WALL)	337.60	CY
BAR REINFORCING STEEL (RETAINING WALL)	32737	LB
STRUCTURAL EXCAVATION (RETAINING WALL)	900.24	CY
STRUCTURAL BACKFILL (RETAINING WALL)	664.40	CY
PERVIOUS BACKFILL MATERIAL (RETAINING WALL)	32.40	CY
CONCRETE BARRIER (TYPE 732A)	525.54	LF
PLASTIC PIPE (N)	28.00	LF
WATERSTOP (N)	62.10	LF
ARCHITECTURAL SURFACE (TEXTURED CONCRETE)	2100.0	SF

(N) = NOT A SEPARATE PAY ITEM, FOR INFORMATION ONLY

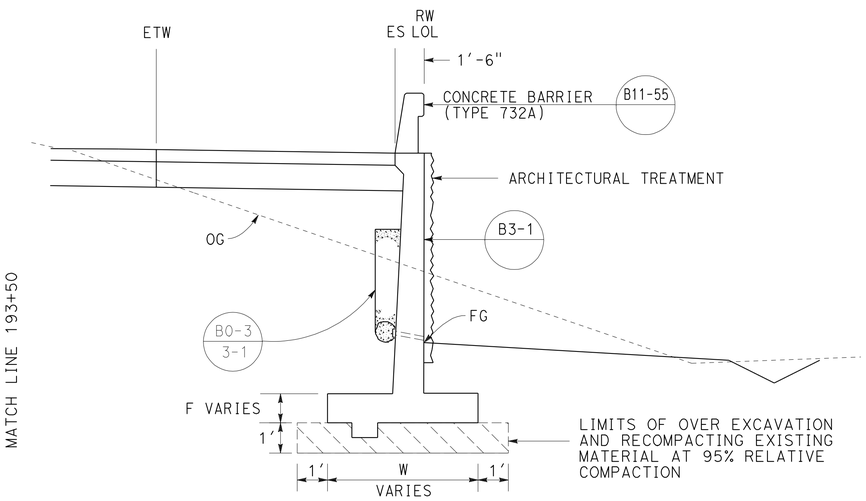

TYPICAL SECTION

NO SCALE
STA 190+50.00 TO STA 195+75.54

THIS PLAN ACCURATE FOR RETAINING WALL WORK ONLY.

RETAINING WALL PLAN
RETAINING WALL No. 190
SCALE AS SHOWN

R2-1

STATE OF CALIFORNIA - DEPARTMENT OF TRANSPORTATION
Caltrans® DESIGN
FUNCTIONAL SUPERVISOR: MARK PERTILE
CALCULATED-DESIGNED BY: THAI VAN HGUYEN
CHECKED BY: THOMAS HIEN NGO
REVISED BY / DATE REVISED

LAST REVISION 12-01-10 | DATE PLOTTED => 29-APR-2011 | TIME PLOTTED => 20:25

Dist	COUNTY	ROUTE	POST MILES TOTAL PROJECT	SHEET No.	TOTAL SHEETS
08	Riv	91	15.6/21.6	808	2028

REGISTERED CIVIL ENGINEER — DATE 12-1-10

4-25-11
PLANS APPROVAL DATE

REGISTERED PROFESSIONAL ENGINEER — THOMAS HIEN NGO No. 68383 Exp. 9/30/11 CIVIL — STATE OF CALIFORNIA

THE STATE OF CALIFORNIA OR ITS OFFICERS OR AGENTS SHALL NOT BE RESPONSIBLE FOR THE ACCURACY OR COMPLETENESS OF SCANNED COPIES OF THIS PLAN SHEET.

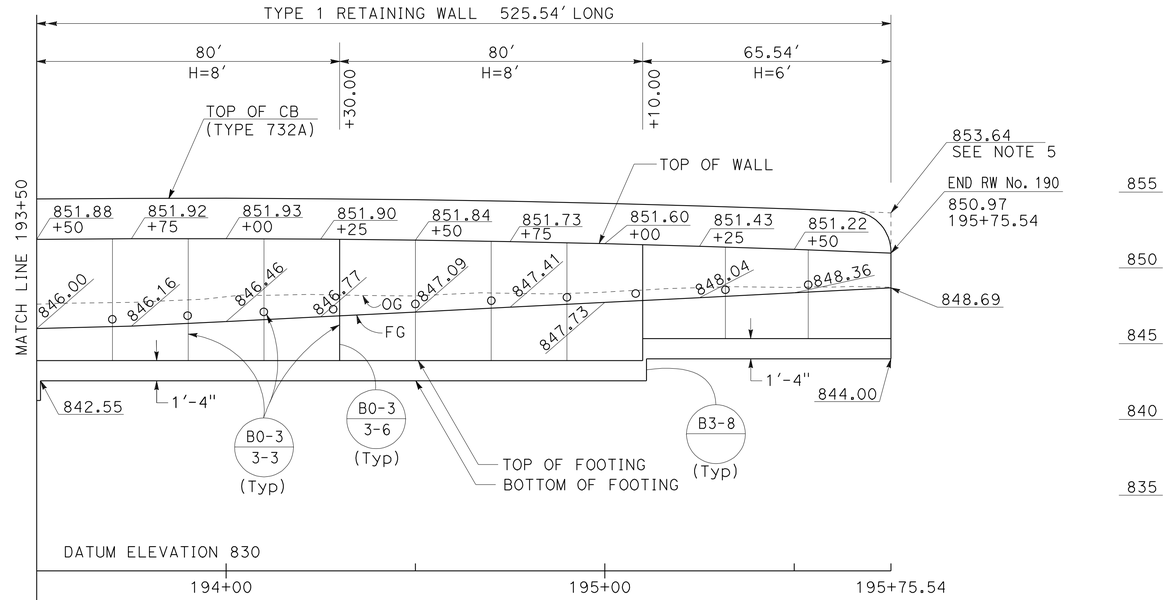

ELEVATION

SCALE Horiz 1"=20'
Vert 1"=5'

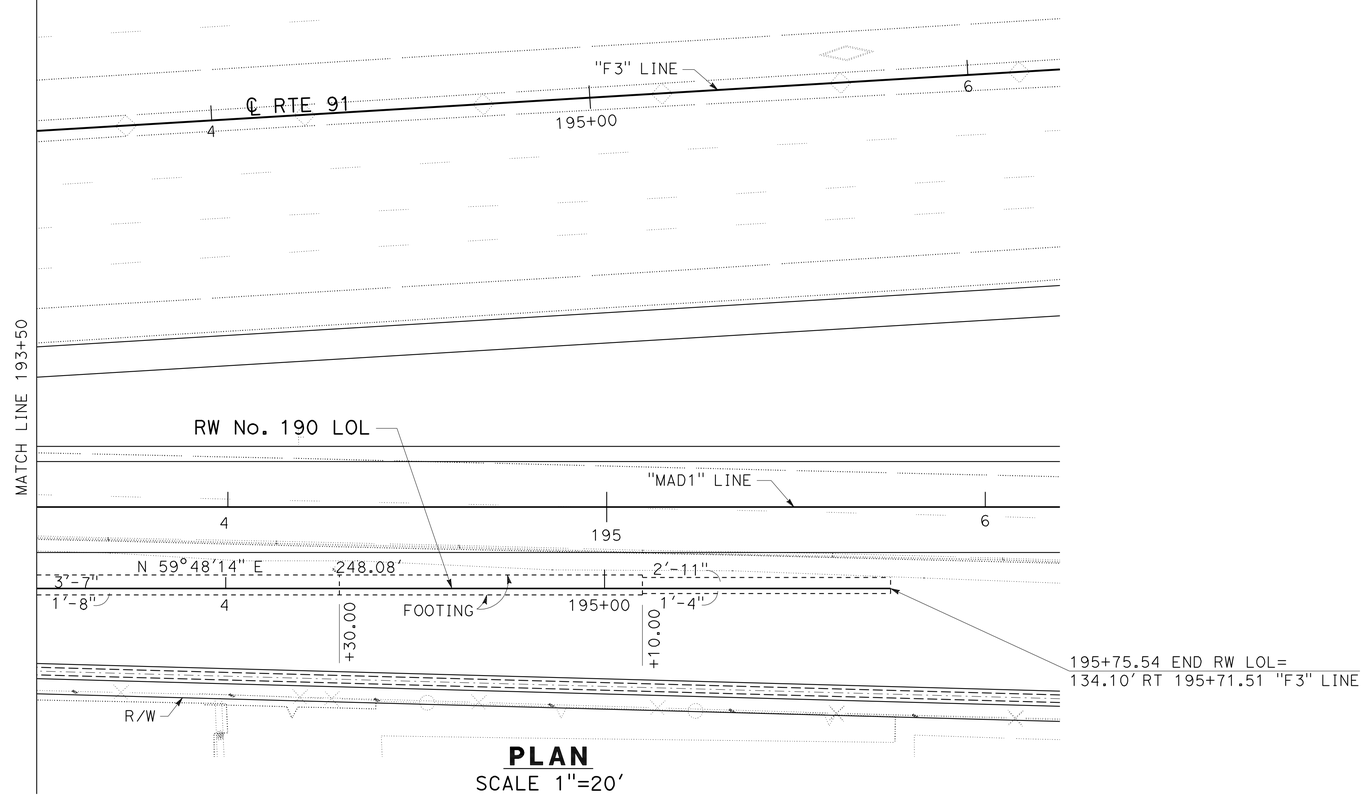

PLAN

SCALE 1"=20'

THIS PLAN ACCURATE FOR RETAINING WALL WORK ONLY.

RETAINING WALL PLAN
RETAINING WALL No. 190
SCALE AS SHOWN

R2-2

STATE OF CALIFORNIA - DEPARTMENT OF TRANSPORTATION
Caltrans®
DESIGN

FUNCTIONAL SUPERVISOR: MARK PERTILE
CALCULATED-DESIGNED BY: THAI VAN HGUYEN
CHECKED BY: THOMAS HIEN NGO
REVISED BY
DATE REVISED

LAST REVISION 12-01-10
DATE PLOTTED => 29-APR-2011
TIME PLOTTED => 20:25

Dist	COUNTY	ROUTE	POST MILES TOTAL PROJECT	SHEET No.	TOTAL SHEETS
08	Riv	91	15.6/21.6	809	2028

REGISTERED CIVIL ENGINEER 12-1-10 DATE

4-25-11
PLANS APPROVAL DATE

REGISTERED PROFESSIONAL ENGINEER MINH THUONG VO No. C59297 Exp. 06/30/11 CIVIL STATE OF CALIFORNIA

THE STATE OF CALIFORNIA OR ITS OFFICERS OR AGENTS SHALL NOT BE RESPONSIBLE FOR THE ACCURACY OR COMPLETENESS OF SCANNED COPIES OF THIS PLAN SHEET.

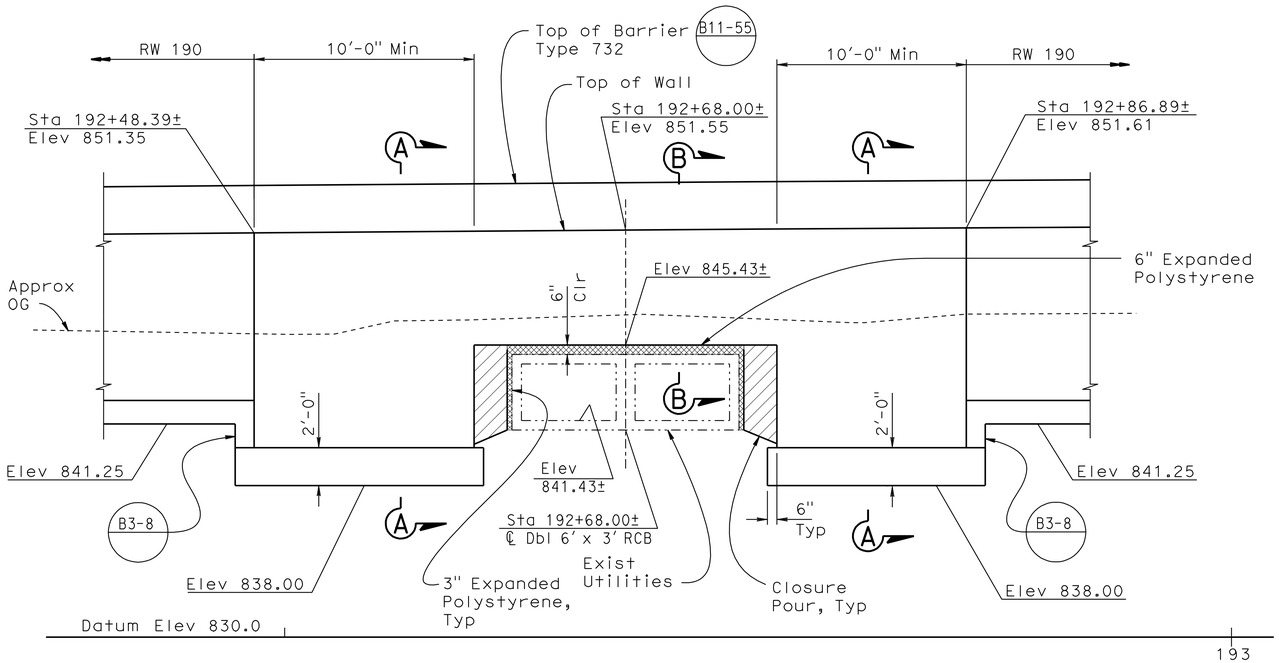

DEVELOPED ELEVATION

1/4"=1'-0"

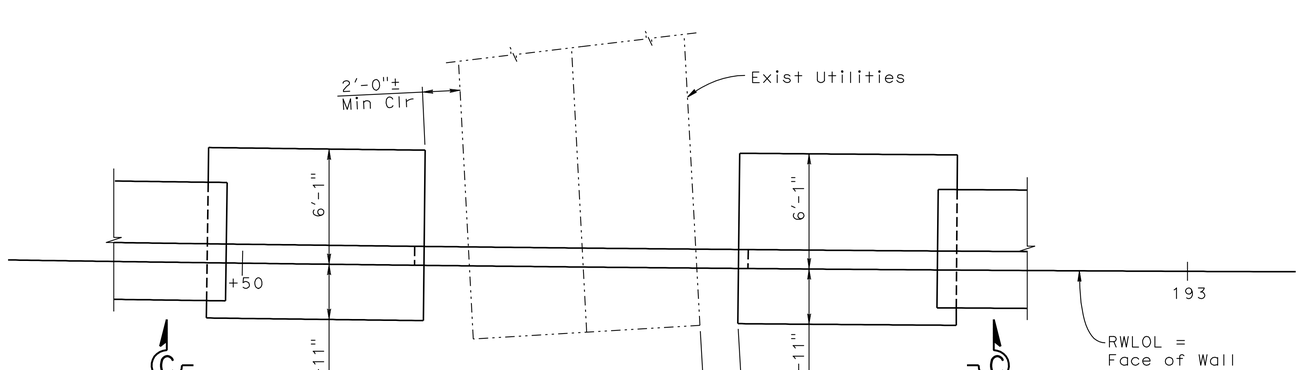

PLAN

1/4"=1'-0"

Sta 192+48.39 to Sta 192+86.89

DESIGN DATA

DESIGN: Bridge Design Specification
(1996 AASHTO with Revisions by Caltrans)

LOADING CASE:
1. Level slope with 240 psf Max. surcharge

CONCRETE: n = 9, f'c = 3600 psi, fc = 1440 psi

REINFORCING STEEL: fy = 60,000 psi, fs = 24,000 psi

SOIL PARAMETERS: (for determination of design lateral earth pressure)
ø = 30° γ = 120 pcf

NOTE:
THE CONTRACTOR SHALL VERIFY ALL CONTROLLING FIELD DIMENSIONS BEFORE ORDERING OR FABRICATING ANY MATERIAL.

THIS PLAN ACCURATE FOR RETAINING WALL WORK ONLY.

RETAINING WALL DETAILS

RETAINING WALL No. 190

SCALE AS SHOWN **R2-3**

STATE OF CALIFORNIA - DEPARTMENT OF TRANSPORTATION
Caltrans
DESIGN
FUNCTIONAL SUPERVISOR: DANIEL T. ADAMS
CALCULATED-DESIGNED BY: MINH VO
CHECKED BY: RYAN STILTZ
REVISED BY
DATE REVISED

LAST REVISION 12-01-10
DATE PLOTTED => 29-APR-2011
TIME PLOTTED => 20:25

Dist	COUNTY	ROUTE	POST MILES TOTAL PROJECT	SHEET No.	TOTAL SHEETS
08	Riv	91	15.6/21.6	810	2028

REGISTERED CIVIL ENGINEER 12-1-10 DATE

4-25-11
PLANS APPROVAL DATE

REGISTERED PROFESSIONAL ENGINEER MINH THUONG VO No. C59297 Exp. 06/30/11 CIVIL STATE OF CALIFORNIA

THE STATE OF CALIFORNIA OR ITS OFFICERS OR AGENTS SHALL NOT BE RESPONSIBLE FOR THE ACCURACY OR COMPLETENESS OF SCANNED COPIES OF THIS PLAN SHEET.

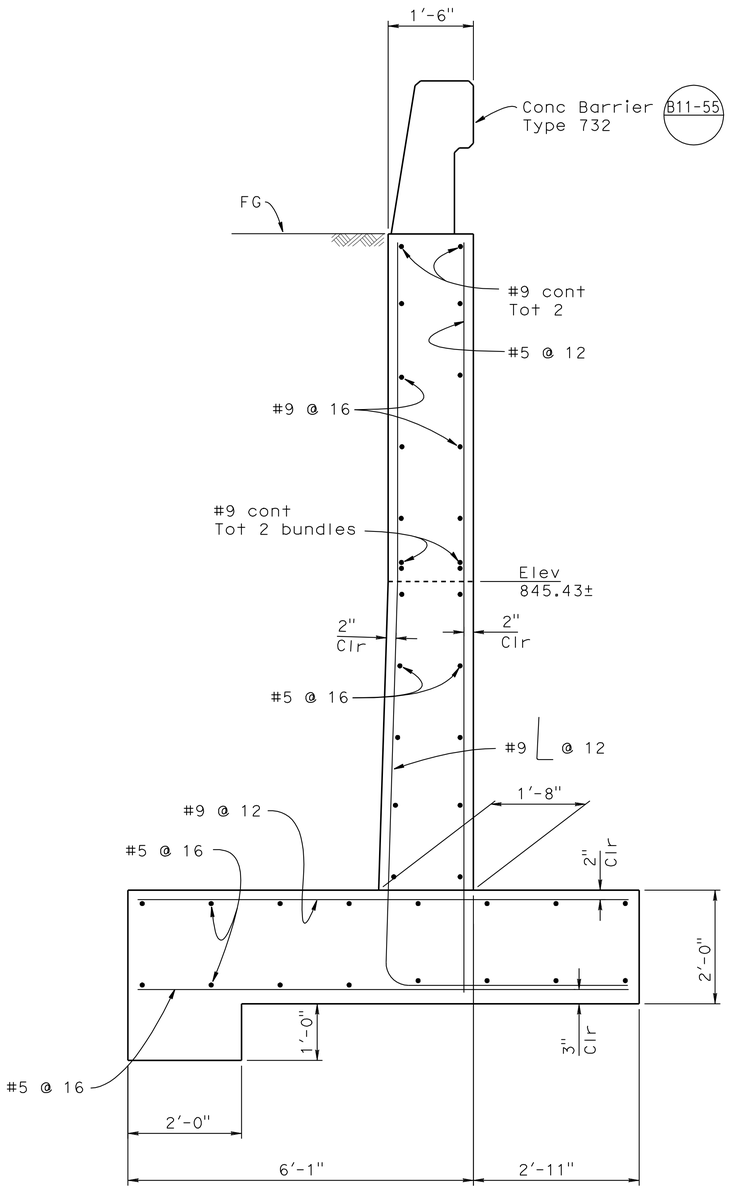

SECTION A-A
¾" = 1'-0"

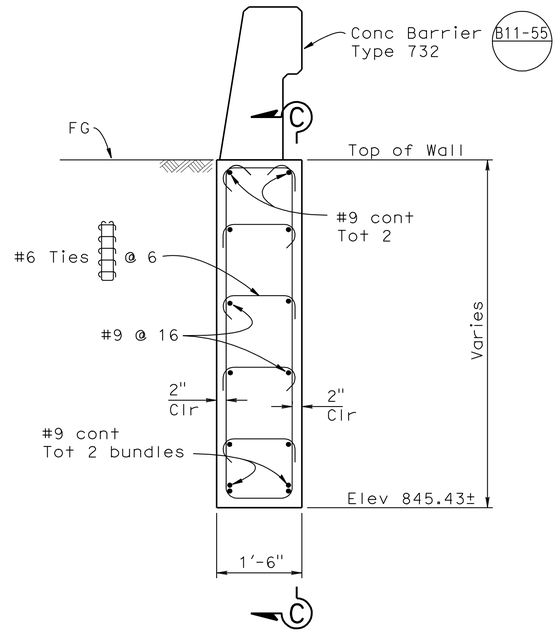

SECTION B-B
¾" = 1'-0"

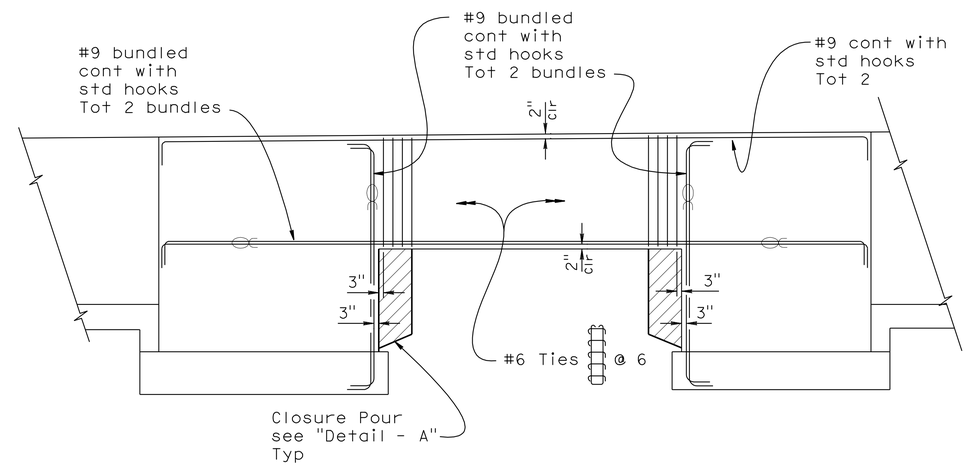

SECTION C-C
¼" = 1'-0"

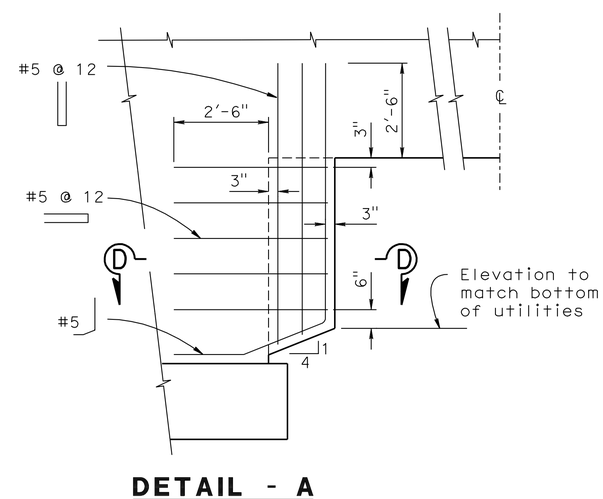

DETAIL - A
½" = 1'-0"

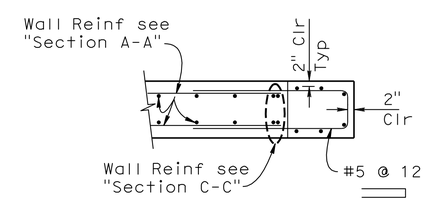

SECTION D-D
½" = 1'-0"

THIS PLAN ACCURATE FOR RETAINING WALL WORK ONLY.

RETAINING WALL DETAILS
RETAINING WALL No. 190

SCALE AS SHOWN **R2-4**

REVISED BY	DATE REVISED
MINH VO	RYAN STILTZ
CALCULATED-DESIGNED BY	CHECKED BY
FUNCTIONAL SUPERVISOR	DANIEL T. ADAMS

STATE OF CALIFORNIA - DEPARTMENT OF TRANSPORTATION
Caltrans
DESIGN

LAST REVISION 12-01-10 DATE PLOTTED => 02-MAY-2011 TIME PLOTTED => 07:57

Dist	COUNTY	ROUTE	POST MILES TOTAL PROJECT	SHEET No.	TOTAL SHEETS
08	Riv	91	15.6/21.6	811	2028

LICENSED LANDSCAPE ARCHITECT

4-25-11
PLANS APPROVAL DATE

LICENSED LANDSCAPE ARCHITECT
Matthew Harry Hall
No. 4825
Signature
10/31/2011
Renewal Date
12-1-10
Date
STATE OF CALIFORNIA

THE STATE OF CALIFORNIA OR ITS OFFICERS OR AGENTS SHALL NOT BE RESPONSIBLE FOR THE ACCURACY OR COMPLETENESS OF SCANNED COPIES OF THIS PLAN SHEET.

NOTE:

SEE SHEET ASD-4 AND ASD-5.

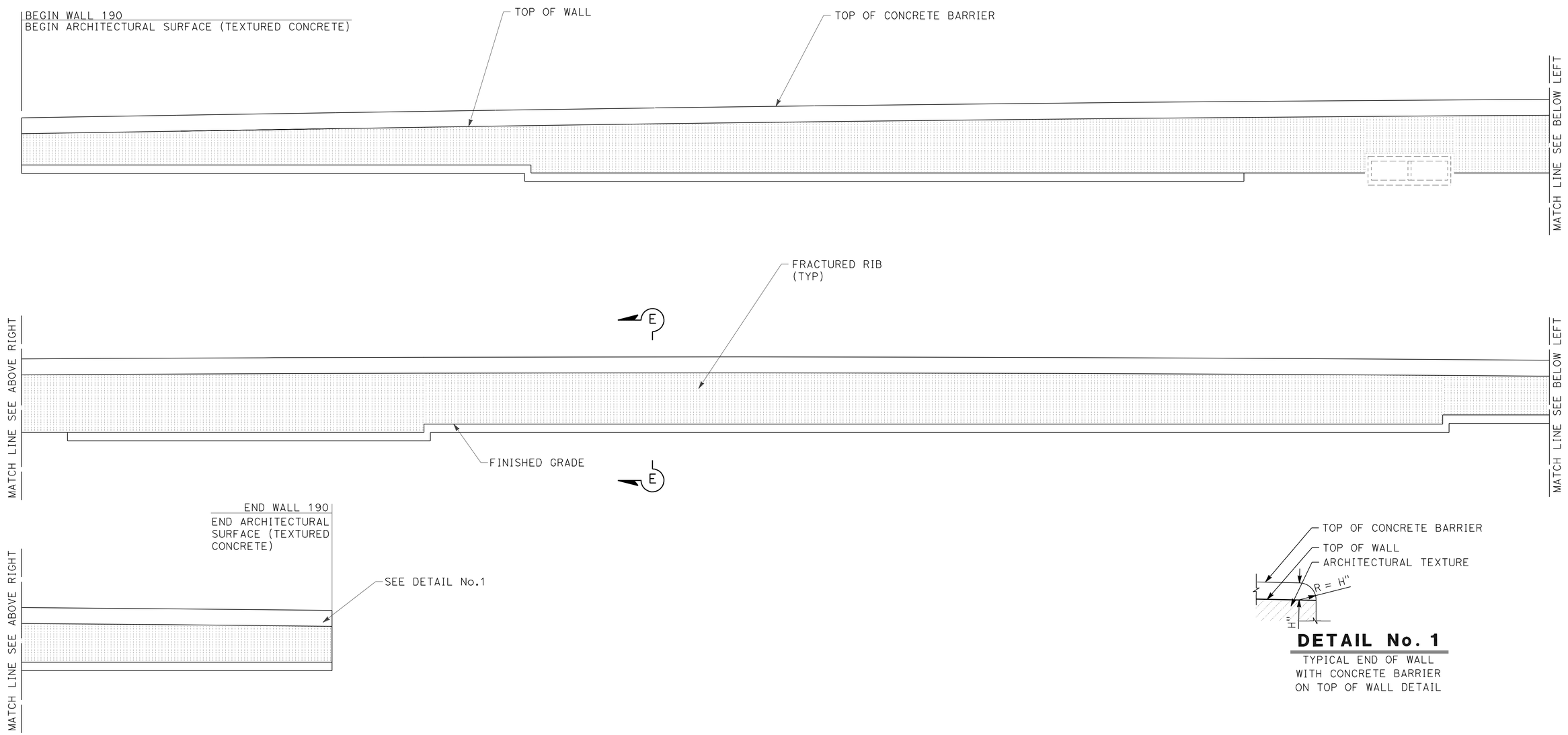

DETAIL No. 1

TYPICAL END OF WALL WITH CONCRETE BARRIER ON TOP OF WALL DETAIL

ELEVATION FOR FRACTURED RIB TEXTURE RETAINING WALL No. 190

THIS PLAN IS ACCURATE FOR ARCHITECTUAL TREATMENT WORK ONLY.

ARCHITECTURAL SURFACE RETAINING WALL No. 190

SCALE: 1/8"=1'-0"

R2-5

REVISED BY	DATE REVISED

MATTHEW HALL
MIRIAM BISHOP

CALCULATED-DESIGNED BY
CHECKED BY

SENIOR LANDSCAPE ARCHITECT
BYRON STROUT

STATE OF CALIFORNIA - DEPARTMENT OF TRANSPORTATION
Caltrans® LANDSCAPE ARCHITECTURE

LAST REVISION 12-01-10
DATE PLOTTED => 29-APR-2011
TIME PLOTTED => 20:35

DIST	COUNTY	ROUTE	POST MILES TOTAL PROJECT	SHEET No	TOTAL SHEETS
08	Riv	91	15.6/21.6	812	2028

GEOTECHNICAL PROFESSIONAL DATE 04/2009

4-25-11
PLANS APPROVAL DATE

REGISTERED PROFESSIONAL ENGINEER
ANDREW C. LEE
No. 2616
Exp. 6-30-12
GEOTECHNICAL
STATE OF CALIFORNIA

The State of California or its officers or agents shall not be responsible for the accuracy or completeness of electronic copies of this plan sheet.

California Department of Transportation
5900 Folsom Boulevard
Sacramento, CA 95819

URS Corporation
2020 East First Street, Suite 400
Santa Ana, CA 92705

NOTE: 1. This LOTB sheet was prepared in accordance with the Caltrans Soil & Rock Logging, Classification, and Presentation Manual (June 2007).

2. For legend, see "Soil Legend Log of Test Borings" Sheet

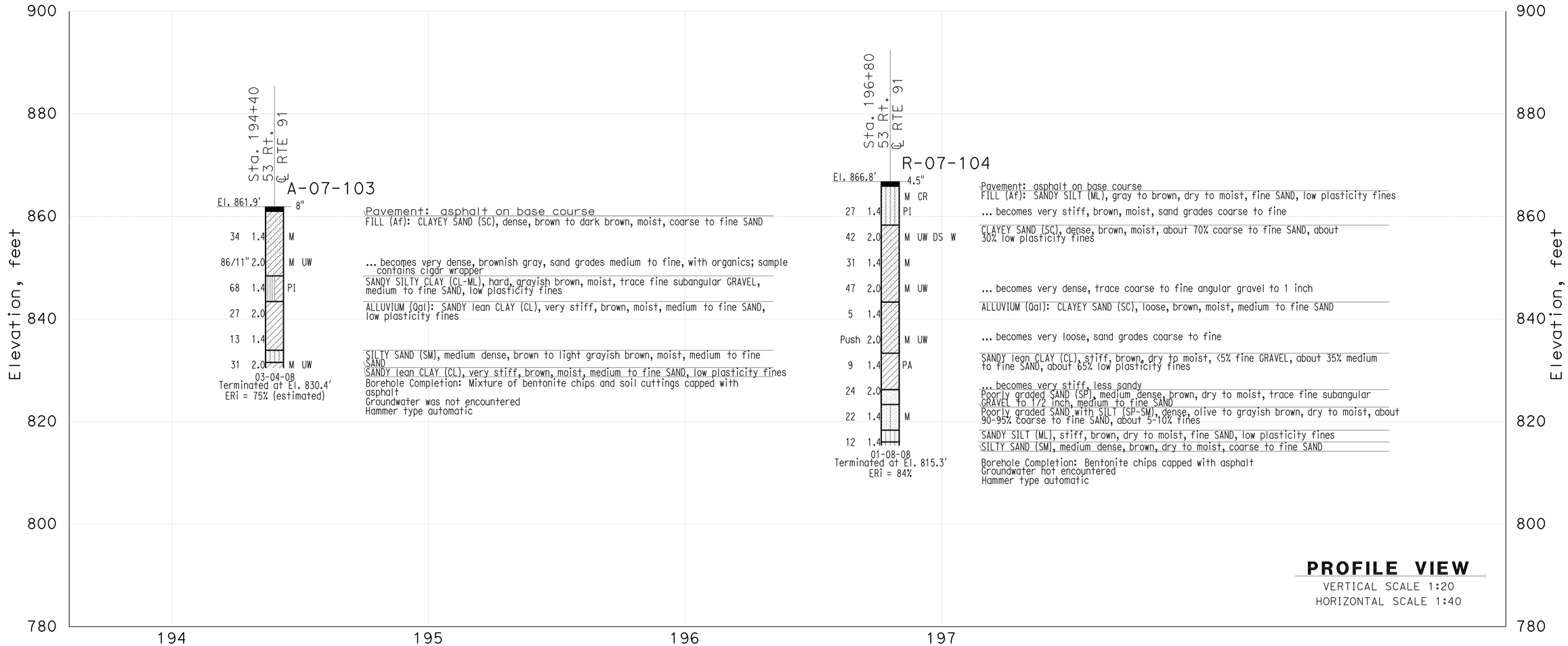

THIS PLAN ACCURATE FOR SOUND WALL AND RETAINING WALL WORK ONLY

GINA PURSELL DESIGN OVERSIGHT	SHAWN WEI FUNCTIONAL SUPERVISOR	DRAWN BY	P. QUACH	P.CHAU/D.WADER/C.CARBINO FIELD INVESTIGATION BY:	PREPARED FOR THE STATE OF CALIFORNIA DEPARTMENT OF TRANSPORTATION	A. LEE PROJECT ENGINEER	BRIDGE NO. X POST MILE X
X SIGN OFF DATE		CHECKED BY	S. PIRATHIVIRAJ	DATE: Nov 6 2007 to March 7 2008			

Retaining Wall 190 R2-6

LOG OF TEST BORINGS

OSF GEOTECHNICAL LOG OF TEST BORINGS SHEET (ENGLISH) (REV. 2/25/05)

ORIGINAL SCALE IN INCHES FOR REDUCED PLANS 0 1 2 3

CU 59A0590
EA 08-448400

DISREGARD PRINTS BEARING EARLIER REVISION DATES

REVISION DATES (PRELIMINARY STAGE ONLY) X

SHEET 1 OF 2

FILE => 844840qb006.dgn

USERNAME => trlenard DATE PLOTTED => 30-APR-2011 TIME PLOTTED =>

DIST	COUNTY	ROUTE	POST MILES TOTAL PROJECT	SHEET No	TOTAL SHEETS
08	Riv	91	15.6/21.6	813	2028

GEOTECHNICAL PROFESSIONAL — DATE 04/2009

4-25-11
PLANS APPROVAL DATE

REGISTERED PROFESSIONAL ENGINEER — ANDREW C. LEE — No. 2616 — Exp. 6-30-12 — GEOTECHNICAL — STATE OF CALIFORNIA

The State of California or its officers or agents shall not be responsible for the accuracy or completeness of electronic copies of this plan sheet.

California Department of Transportation
5900 Folsom Boulevard
Sacramento, CA 95819

URS Corporation
2020 East First Street, Suite 400
Santa Ana, CA 92705

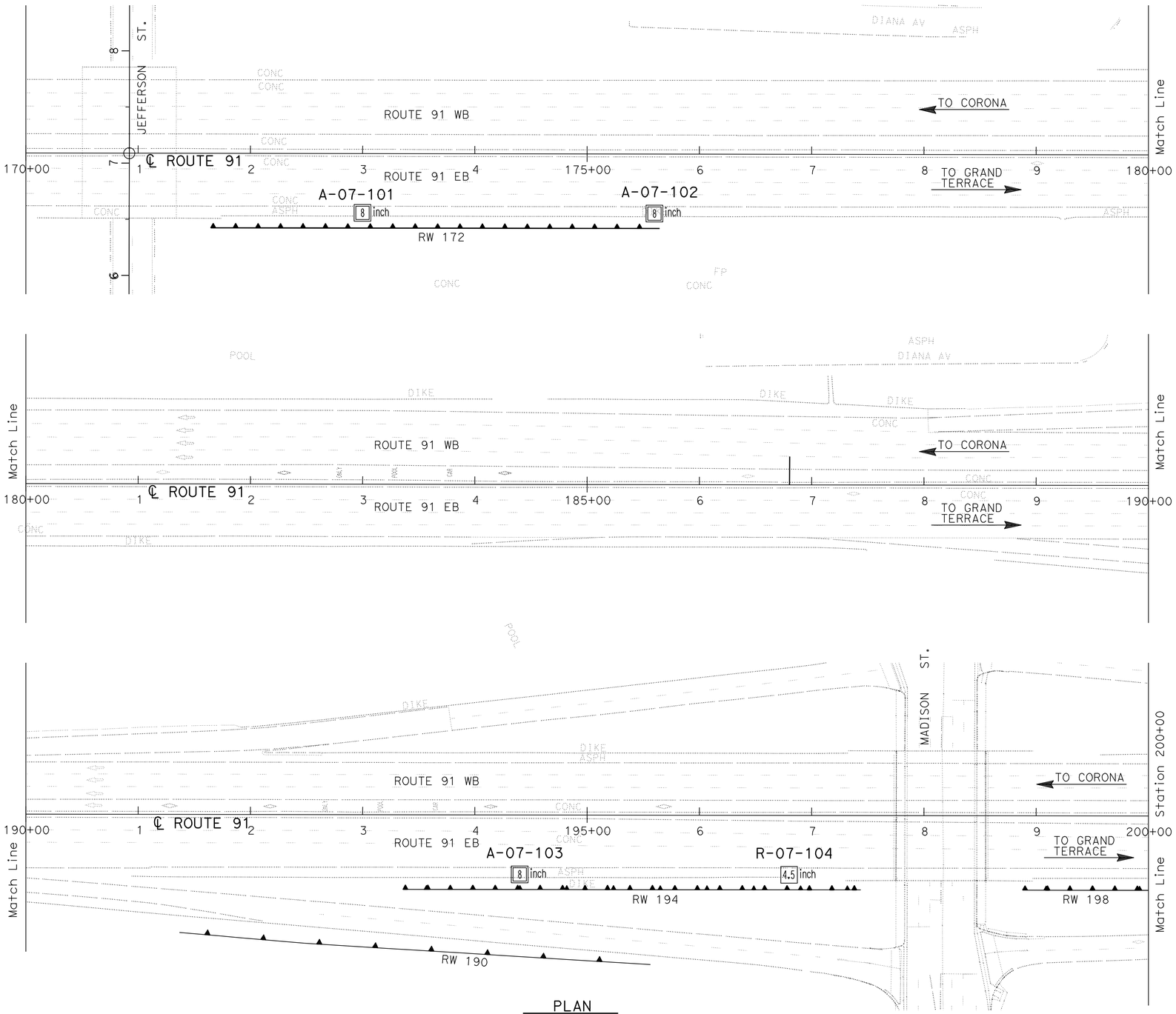

PLAN
SCALE 1"=100'

Borehole Number	Drill Rig	Hammer Type	Avg. Hammer Efficiency, ETR (%)
A-07-101	Diedrich D-120	Automatic	75*
A-07-102	Diedrich D-120	Automatic	75*
A-07-103	Diedrich D-120	Automatic	75*
R-07-104	CS-2000	Automatic	84

Sampler Type	Inside Diameter (Inches)	Borehole Numbers
SPT	1.375	A-07-101, A-07-102 A-07-103, R-07-104
Modified California 1	1.94	R-07-104
Modified California 2	2.40	A-07-101, A-07-102 A-07-103

*Estimated Hammer Efficiency Rating.

GINA PURSELL — DESIGN OVERSIGHT	SHAWN WEI — FUNCTIONAL SUPERVISOR	DRAWN BY	P. QUACH	P.CHAU/D.WADER/C.CARBINO — FIELD INVESTIGATION BY:	PREPARED FOR THE STATE OF CALIFORNIA DEPARTMENT OF TRANSPORTATION
X — SIGN OFF DATE		CHECKED BY	S. PIRATHIVIRAJ	DATE: Nov 6 2007 to March 7 2008	

A. LEE — PROJECT ENGINEER

BRIDGE NO. X
POST MILE X

RETAINING WALL 190 R2-7

LOG OF TEST BORINGS 2 OF 2

OSF GEOTECHNICAL LOG OF TEST BORINGS SHEET (ENGLISH) (REV. 2/25/05)

ORIGINAL SCALE IN INCHES FOR REDUCED PLANS 0 1 2 3

CU 59A0590
EA 08-448400

DISREGARD PRINTS BEARING EARLIER REVISION DATES

REVISION DATES (PRELIMINARY STAGE ONLY) X

SHEET 2 OF 2

FILE => 844840qb007.dgn

USERNAME => trlehard DATE PLOTTED => 30-APR-2011 TIME PLOTTED =>

Dist	COUNTY	ROUTE	POST MILES TOTAL PROJECT	SHEET No.	TOTAL SHEETS
08	Riv	91	15.6/21.6	814	2028

REGISTERED CIVIL ENGINEER — DATE 12-1-10

4-25-11
PLANS APPROVAL DATE

REGISTERED PROFESSIONAL ENGINEER — THOMAS HIEN NGO No. 68383 Exp. 9/30/11 CIVIL — STATE OF CALIFORNIA

THE STATE OF CALIFORNIA OR ITS OFFICERS OR AGENTS SHALL NOT BE RESPONSIBLE FOR THE ACCURACY OR COMPLETENESS OF SCANNED COPIES OF THIS PLAN SHEET.

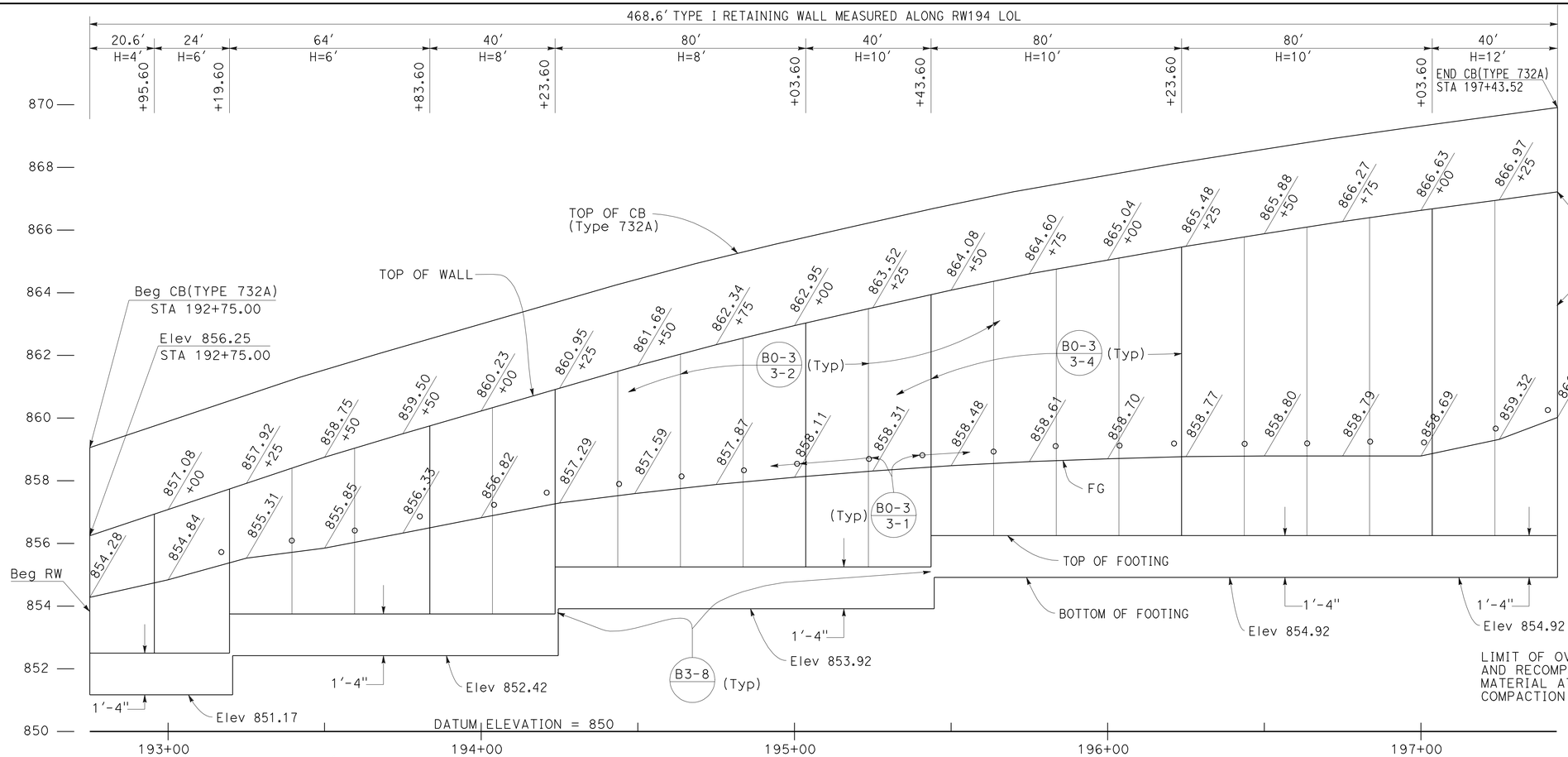

ELEVATION

SCALE Horiz 1"=20'
Vert 1"=2'

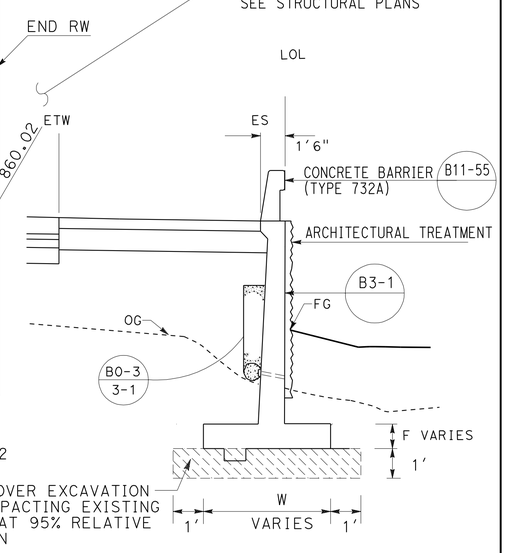

TYPICAL SECTION

NO SCALE
FROM STA 192+75.00 TO STA 197+43.60

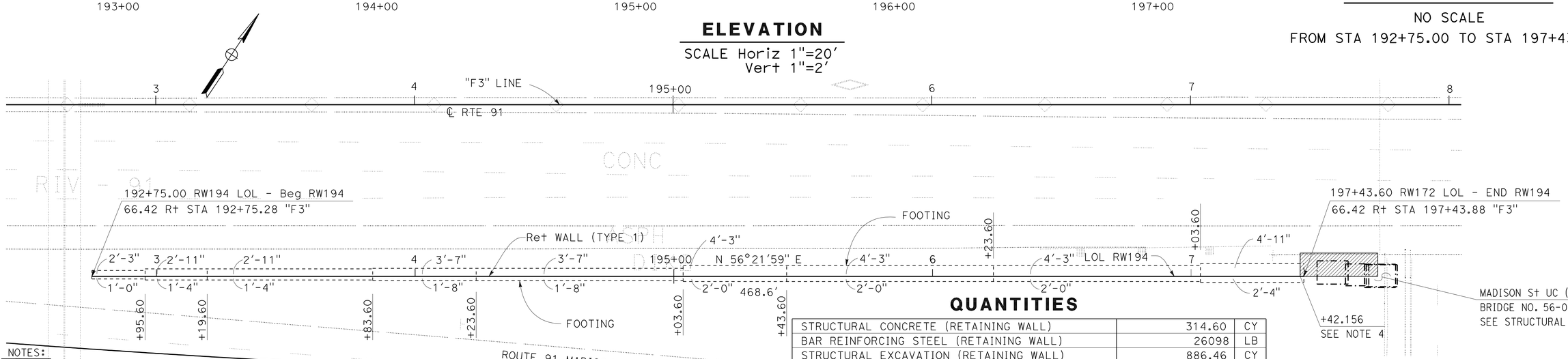

PLAN

SCALE: 1"=20'

NOTES:

1. ARCHITECTURAL TREATMENT SHOULD EXTEND 6 IN BELOW FG OR 6 IN BELOW TOP CB (TYPE 60D MOD)
2. FOR STRUCTURAL SECTIONS, SEE ROADWAY PLANS
3. WATERSTOP IN EXPANSION JOINT SHALL BE EXTEND 6 IN INTO THE BARRIER
4. LOWER TOP OF WALL 12" WITHIN STRUCTURE APPROACH LIMITS (SEE STRUCTURAL PLANS)

THIS PLAN ACCURATE FOR RETAINING WALL WORK ONLY.

QUANTITIES

STRUCTURAL CONCRETE (RETAINING WALL)	314.60	CY
BAR REINFORCING STEEL (RETAINING WALL)	26098	LB
STRUCTURAL EXCAVATION (RETAINING WALL)	886.46	CY
STRUCTURAL BACKFILL (RETAINING WALL)	622.69	CY
PERVIOUS BACKFILL MATERIAL (RETAINING WALL)	30.09	CY
CONCRETE BARRIER (TYPE 732A)	468.60	LF
PLASTIC PIPE (N)	27.68	LF
WATERSTOP (N)	58.75	LF
ARCHITECTURAL SURFACE (TEXTURED CONCRETE)	2578.30	SF

(N) = NOT A SEPARATE PAY ITEM, FOR INFORMATION ONLY

RETAINING WALL PLAN
RETAINING WALL No. 194

SCALE AS SHOWN

R3-1

REVISED BY | DATE REVISED
THAI VAN HGUYEN | THOMAS HIEN NGO
CALCULATED-DESIGNED BY | CHECKED BY
FUNCTIONAL SUPERVISOR | MARK PERTILE

STATE OF CALIFORNIA - DEPARTMENT OF TRANSPORTATION
Caltrans® DESIGN

LAST REVISION 12-01-10 | DATE PLOTTED => 29-APR-2011 | TIME PLOTTED => 20:36

Dist	COUNTY	ROUTE	POST MILES TOTAL PROJECT	SHEET No.	TOTAL SHEETS
08	Riv	91	15.6/21.6	815	2028

LICENSED LANDSCAPE ARCHITECT

4-25-11
PLANS APPROVAL DATE

LICENSED LANDSCAPE ARCHITECT
Matthew Harry Hall
No. 2011
Signature
10/31/2011
Renewal Date
12-1-10
Date
STATE OF CALIFORNIA

THE STATE OF CALIFORNIA OR ITS OFFICERS OR AGENTS SHALL NOT BE RESPONSIBLE FOR THE ACCURACY OR COMPLETENESS OF SCANNED COPIES OF THIS PLAN SHEET.

NOTE:

SEE SHEET ASD-4 AND ASD-5.

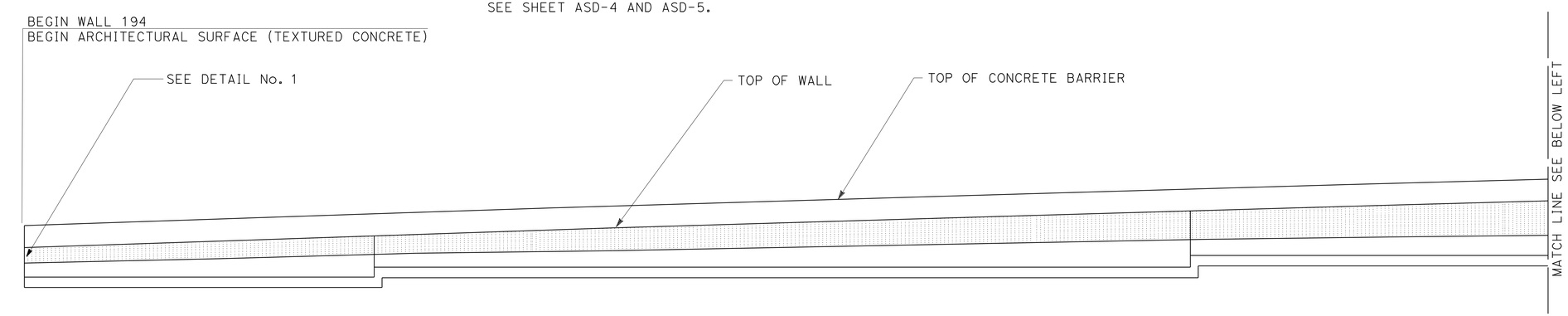

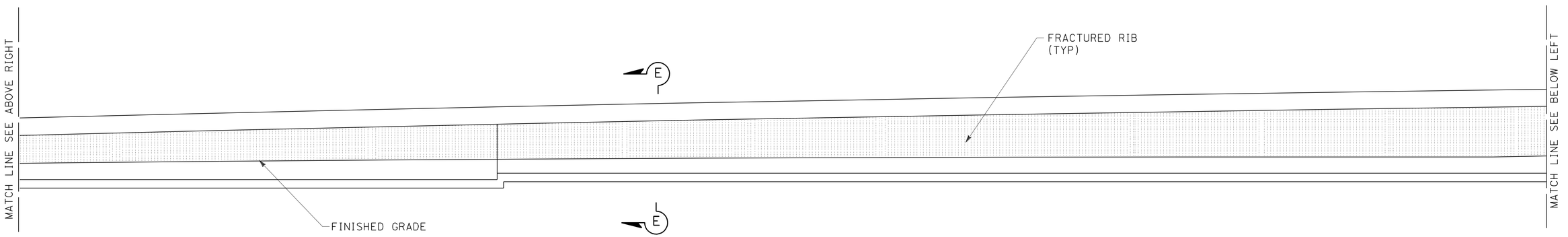

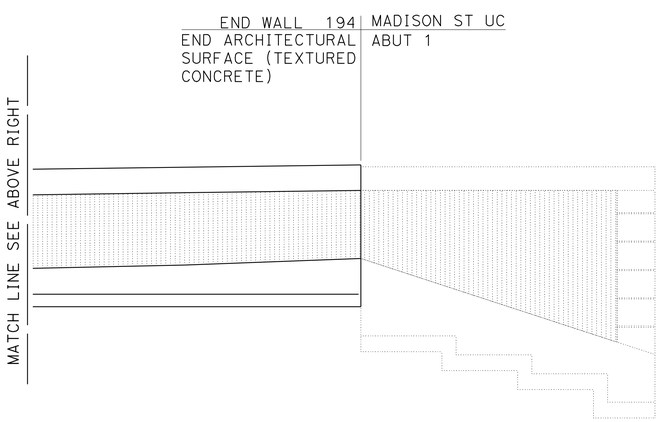

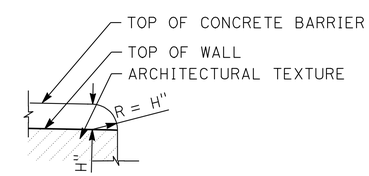

DETAIL No. 1

TYPICAL END OF WALL
WITH CONCRETE BARRIER
ON TOP OF WALL DETAIL

ELEVATION FOR FRACTURED RIB TEXTURE RETAINING WALL No. 194

THIS PLAN IS ACCURATE FOR ARCHITECTUAL TREATMENT WORK ONLY.

ARCHITECTURAL SURFACE
RETAINING WALL No. 194

SCALE: 1/8"=1'-0"

R3-2

STATE OF CALIFORNIA - DEPARTMENT OF TRANSPORTATION
Caltrans® LANDSCAPE ARCHITECTURE

SENIOR LANDSCAPE ARCHITECT: BYRON STROUT
CALCULATED-DESIGNED BY: MATTHEW HALL
CHECKED BY: MIRIAM BISHOP
REVISED BY
DATE REVISED

LAST REVISION 12-01-10
DATE PLOTTED => 29-APR-2011
TIME PLOTTED => 20:36

DIST	COUNTY	ROUTE	POST MILES TOTAL PROJECT	SHEET No	TOTAL SHEETS
08	Riv	91	15.6/21.6	816	2028

GEOTECHNICAL PROFESSIONAL DATE 10/2008

4-25-11
PLANS APPROVAL DATE

REGISTERED PROFESSIONAL ENGINEER
ANDREW C. LEE
No. 2616
Exp. 6-30-12
GEOTECHNICAL
STATE OF CALIFORNIA

The State of California or its officers or agents shall not be responsible for the accuracy or completeness of electronic copies of this plan sheet.

California Department of Transportation
5900 Folsom Boulevard
Sacramento, CA 95819

URS Corporation
2020 East First Street, Suite 400
Santa Ana, CA 92705

FOR PLAN VIEW, SEE SHEET R3-4

NOTE: 1. This LOTB sheet was prepared in accordance with the Caltrans Soil & Rock Logging, Classification, and Presentation Manual (June 2007).

2. For legend, see "Log of Test Borings" 1 of 83

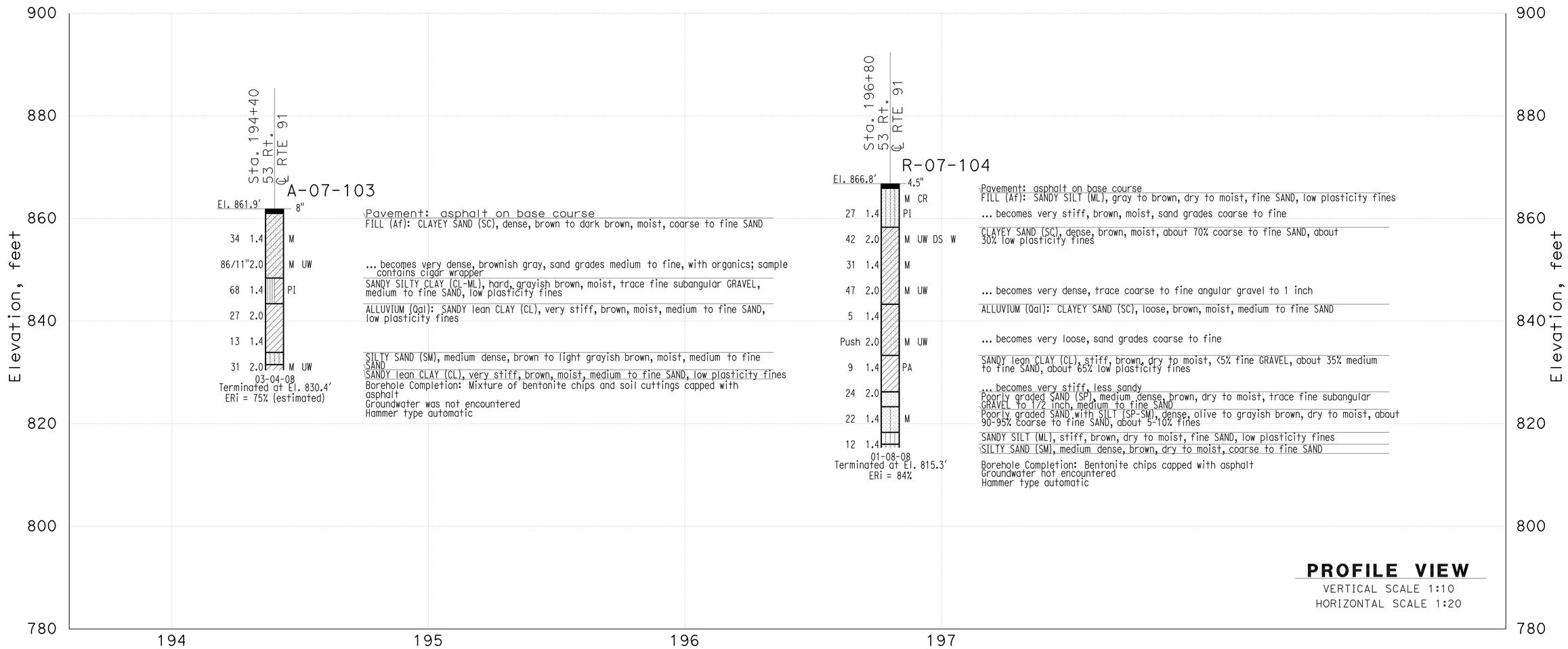

THIS PLAN ACCURATE FOR SOUND WALL AND RETAINING WALL WORK ONLY

DESIGN OVERSIGHT X SIGN OFF DATE	GINA PURSELL FUNCTIONAL SUPERVISOR	DRAWN BY	P. QUACH	P.CHAU/D.WADER/C.CARBINO FIELD INVESTIGATION BY: DATE: Nov 6 2007 to March 7 2008	PREPARED FOR THE STATE OF CALIFORNIA DEPARTMENT OF TRANSPORTATION	A. LEE PROJECT ENGINEER	BRIDGE NO. X POST MILE X	Retaining Wall 194 R3-3
		CHECKED BY	S. PIRATHIVIRAJ					LOG OF TEST BORINGS 1 OF 2

OSF GEOTECHNICAL LOG OF TEST BORINGS SHEET (ENGLISH) (REV. 2/25/05)

ORIGINAL SCALE IN INCHES FOR REDUCED PLANS 0 1 2 3

CU 59A0590
EA 08-448400

DISREGARD PRINTS BEARING EARLIER REVISION DATES

REVISION DATES (PRELIMINARY STAGE ONLY) X

SHEET 1 OF 2

FILE => 844840qc003.dgn

USERNAME => trlenard DATE PLOTTED => 30-APR-2011 TIME PLOTTED =>

DIST	COUNTY	ROUTE	POST MILES TOTAL PROJECT	SHEET No	TOTAL SHEETS
08	Riv	91	15.6/21.6	817	2028

GEOTECHNICAL PROFESSIONAL DATE 10/2008

4-25-11
PLANS APPROVAL DATE

REGISTERED PROFESSIONAL ENGINEER
ANDREW C. LEE
No. 2616
Exp. 6-30-12
GEOTECHNICAL
STATE OF CALIFORNIA

The State of California or its officers or agents shall not be responsible for the accuracy or completeness of electronic copies of this plan sheet.

California Department of Transportation
5900 Folsom Boulevard
Sacramento, CA 95819

URS Corporation
2020 East First Street, Suite 400
Santa Ana, CA 92705

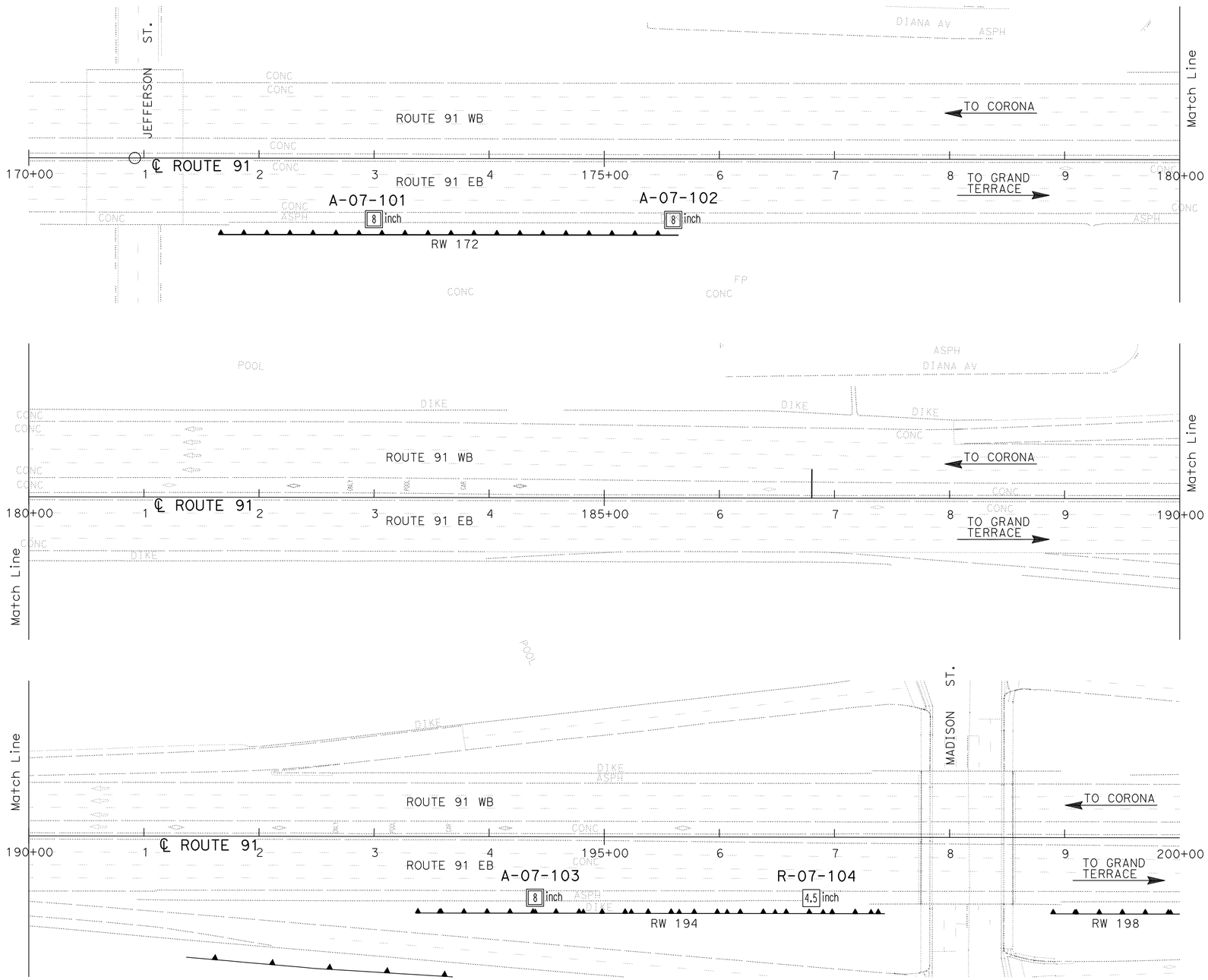

PLAN
SCALE 1"=50'

Borehole Number	Drill Rig	Hammer Type	Avg. Hammer Efficiency, ETR (%)
A-07-101	Diedrich D-120	Automatic	75*
A-07-102	Diedrich D-120	Automatic	75*
A-07-103	Diedrich D-120	Automatic	75*
R-07-104	CS-2000	Automatic	84

Sampler Type	Inside Diameter (Inches)	Borehole Numbers
SPT	1.375	A-07-101, A-07-102 A-07-103, R-07-104
Modified California 1	1.94	R-07-104
Modified California 2	2.40	A-07-101, A-07-102 A-07-103

*Estimated Hammer Efficiency Rating.

DESIGN OVERSIGHT X SIGN OFF DATE	GINA PURSELL FUNCTIONAL SUPERVISOR	DRAWN BY	P. QUACH	P.CHAU/D.WADER/C.CARBINO FIELD INVESTIGATION BY: DATE: Nov 6 2007 to March 7 2008	PREPARED FOR THE STATE OF CALIFORNIA DEPARTMENT OF TRANSPORTATION
		CHECKED BY	S. PIRATHIVIRAJ		

A. LEE
PROJECT ENGINEER

BRIDGE NO. X
POST MILE X

RETAINING WALL 194 R3-4

LOG OF TEST BORINGS 2 OF 2

OSF GEOTECHNICAL LOG OF TEST BORINGS SHEET (ENGLISH) (REV. 2/25/05)

ORIGINAL SCALE IN INCHES FOR REDUCED PLANS 0 1 2 3

CU 59A0590
EA 08-448400

DISREGARD PRINTS BEARING EARLIER REVISION DATES

REVISION DATES (PRELIMINARY STAGE ONLY) X

SHEET 2 OF 2

FILE => 844840qc004.dgn

USERNAME => trlenard DATE PLOTTED => 30-APR-2011 TIME PLOTTED =>

Dist	COUNTY	ROUTE	POST MILES TOTAL PROJECT	SHEET No.	TOTAL SHEETS
08	Riv	91	15.6/21.6	818	2028

REGISTERED CIVIL ENGINEER 12-1-10 DATE

4-25-11
PLANS APPROVAL DATE

REGISTERED PROFESSIONAL ENGINEER THOMAS HIEN NGO No. 68383 Exp. 9/30/11 CIVIL STATE OF CALIFORNIA

THE STATE OF CALIFORNIA OR ITS OFFICERS OR AGENTS SHALL NOT BE RESPONSIBLE FOR THE ACCURACY OR COMPLETENESS OF SCANNED COPIES OF THIS PLAN SHEET.

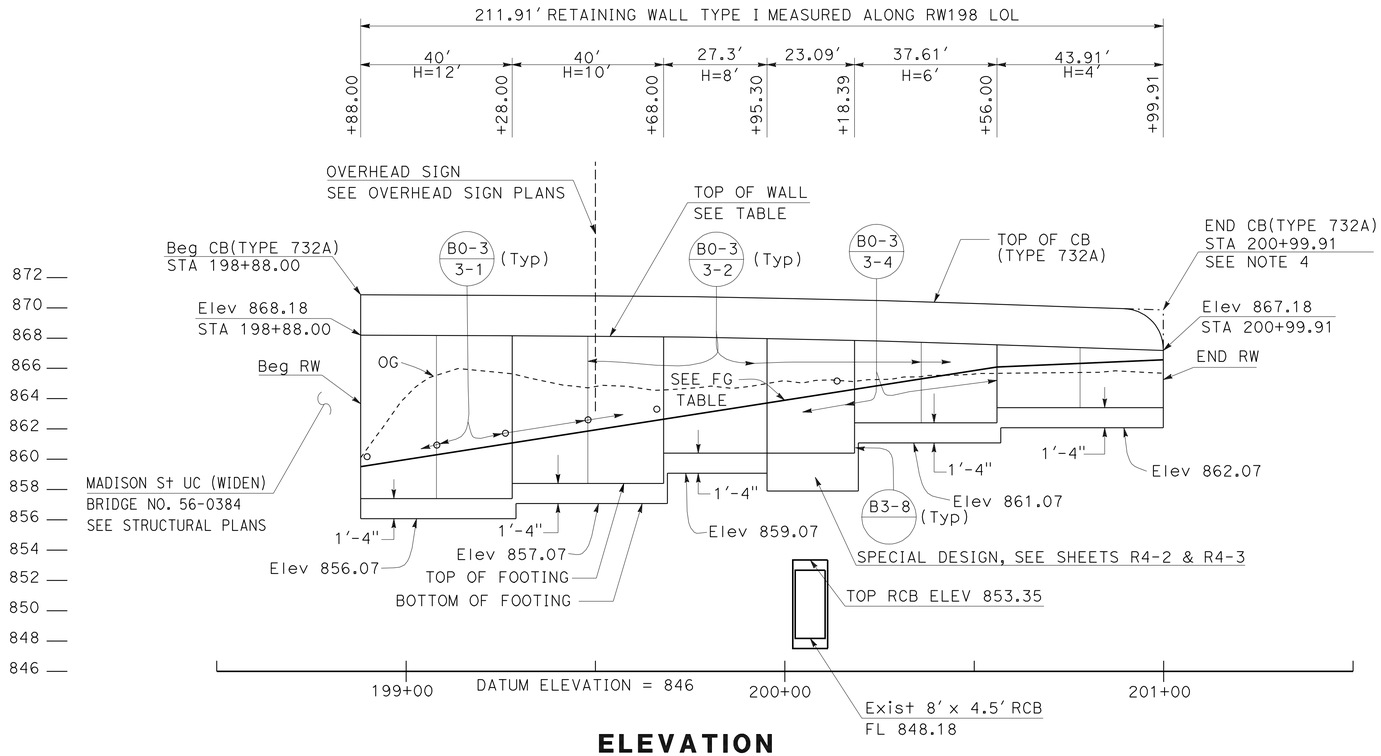

ELEVATION

SCALE Horiz 1"=20'
Vert 1"=5'

TOP OF WALL TABLE	
STATION	ELEVATION
199+28.00	868.15
199+68.00	868.08
200+16.00	867.85
200+56.00	867.56

FINISHED GRADE (FG) TABLE	
STATION	ELEVATION
198+88.00	859.52
199+68.00	862.65
200+56.00	866.09
200+99.91	866.57

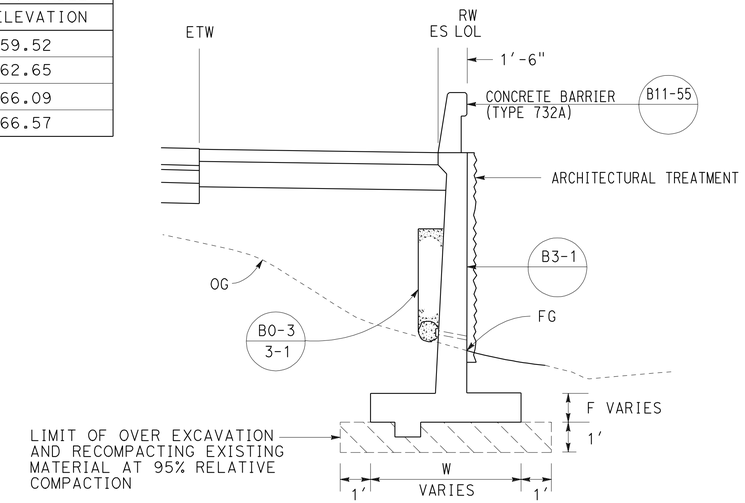

TYPICAL SECTION

NO SCALE
FROM STA 198+88.00 TO STA 200+99.91

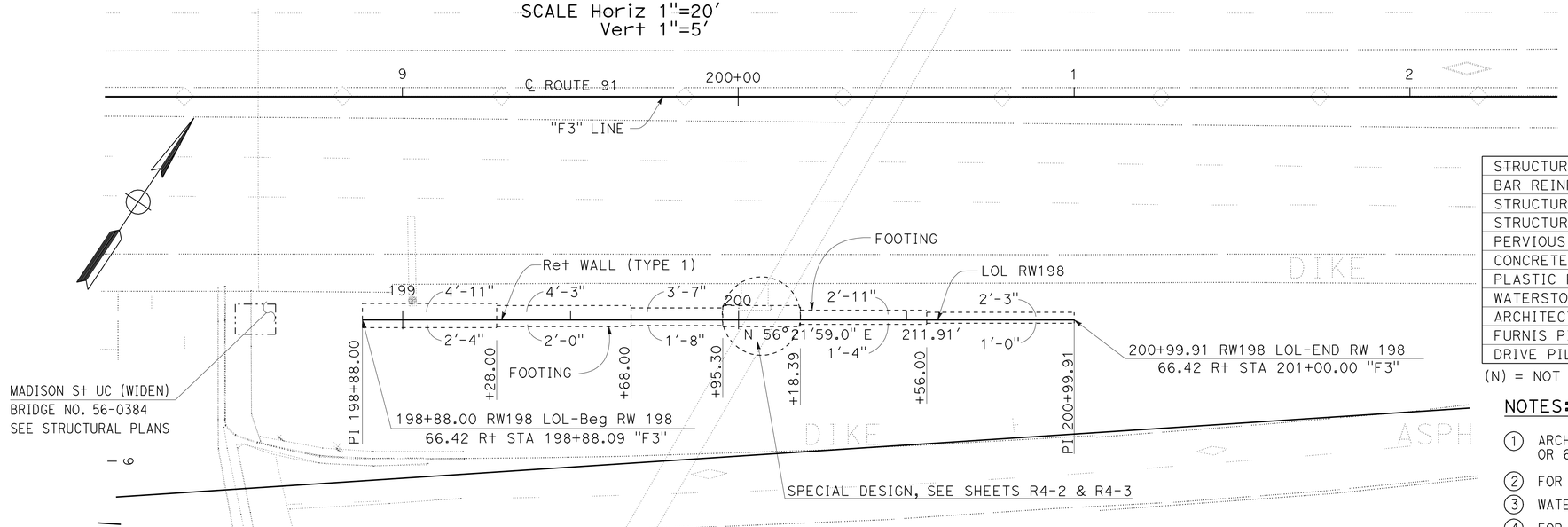

PLAN

SCALE: 1"=20'

THIS PLAN ACCURATE FOR RETAINING WALL WORK ONLY.

QUANTITIES

STRUCTURAL CONCRETE (RETAINING WALL)	147.20	CY
BAR REINFORCING STEEL (RETAINING WALL)	15062	LB
STRUCTURAL EXCAVATION (RETAINING WALL)	446.98	CY
STRUCTURAL BACKFILL (RETAINING WALL)	305.00	CY
PERVIOUS BACKFILL MATERIAL (RETAINING WALL)	13.36	LF
CONCRETE BARRIER (TYPE 732A)	211.91	LF
PLASTIC PIPE (N)	9.21	LF
WATERSTOP (N)	41.52	LF
ARCHITECTURAL SURFACE (TEXTURED CONCRETE)	1590.00	SF
FURNIS PILING (CLASS 90) (ALTERNATIVE X)	225.20	LF
DRIVE PILE (CLASS 90) (ALTERNATIVE X)	8.00	EA

(N) = NOT A SEPARATE PAY ITEM, FOR INFORMATION ONLY

NOTES:

1. ARCHITECTURAL TREATMENT SHOULD EXTEND 6 IN BELOW FG OR 6 IN BELOW TOP CB (TYPE 60D MOD)
2. FOR STRUCTURAL SECTIONS, SEE ROADWAY PLANS
3. WATERSTOP IN EXPANSION JOINT SHALL BE EXTEND 6 IN INTO THE BARRIER
4. FOR ROUNDING DETAILS, SEE ARCHITECTURAL TREATMENT PLANS

RETAINING WALL PLAN
RETAINING WALL No. 198

SCALE AS SHOWN

R4-1

STATE OF CALIFORNIA - DEPARTMENT OF TRANSPORTATION
Caltrans
DESIGN
FUNCTIONAL SUPERVISOR: MARK PERTILE
CALCULATED-DESIGNED BY: THAI VAN HGUYEN
CHECKED BY: THOMAS HIEN NGO
REVISED BY
DATE REVISED

LAST REVISION 12-01-10
DATE PLOTTED => 29-APR-2011
TIME PLOTTED => 20:36

Dist	COUNTY	ROUTE	POST MILES TOTAL PROJECT	SHEET No.	TOTAL SHEETS
08	Riv	91	15.6/21.6	819	2028

REGISTERED CIVIL ENGINEER 12-1-10 DATE

4-25-11
PLANS APPROVAL DATE

REGISTERED PROFESSIONAL ENGINEER MINH THUONG VO No. C59297 Exp. 06/30/11 CIVIL STATE OF CALIFORNIA

THE STATE OF CALIFORNIA OR ITS OFFICERS OR AGENTS SHALL NOT BE RESPONSIBLE FOR THE ACCURACY OR COMPLETENESS OF SCANNED COPIES OF THIS PLAN SHEET.

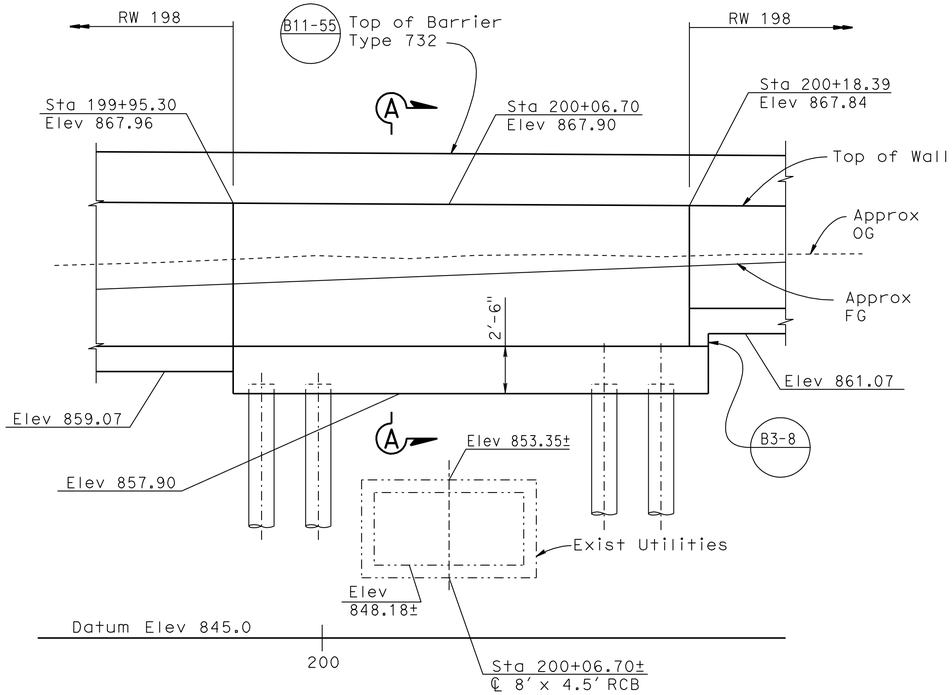

DEVELOPED ELEVATION

1/4"=1'-0"

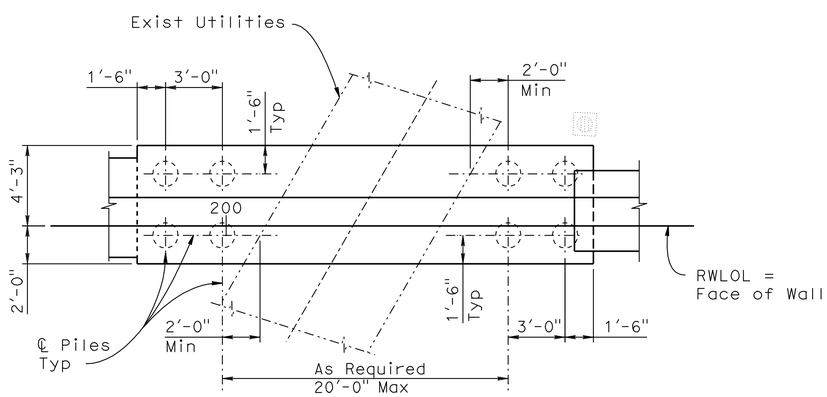

PLAN

1/4"=1'-0"

Sta 199+95.30 to Sta 200+18.39

NOTE:
THE CONTRACTOR SHALL VERIFY ALL CONTROLLING FIELD DIMENSIONS BEFORE ORDERING OR FABRICATING ANY MATERIAL.

DESIGN DATA

DESIGN: Bridge Design Specification
(1996 AASHTO with Revisions by Caltrans)

LOADING CASE:
1. Level slope with 240 psf Max. surcharge

CONCRETE: n = 9, f'c = 3600 psi, fc = 1440 psi

REINFORCING STEEL: fy = 60,000 psi, fs = 24,000 psi

SOIL PARAMETERS: (for determination of design lateral earth pressure)
$\phi = 34°$ $\gamma = 120$ pcf

THIS PLAN ACCURATE FOR RETAINING WALL WORK ONLY.

RETAINING WALL DETAILS

RETAINING WALL No. 198

SCALE AS SHOWN **R4-2**

STATE OF CALIFORNIA - DEPARTMENT OF TRANSPORTATION
Caltrans
DESIGN

FUNCTIONAL SUPERVISOR: DANIEL T. ADAMS
CALCULATED-DESIGNED BY: MINH VO
CHECKED BY: RYAN STILTZ
REVISED BY
DATE REVISED

LAST REVISION 12-01-10
DATE PLOTTED => 29-APR-2011
TIME PLOTTED => 20:36

Dist	COUNTY	ROUTE	POST MILES TOTAL PROJECT	SHEET No.	TOTAL SHEETS
08	Riv	91	15.6/21.6	820	2028

REGISTERED CIVIL ENGINEER 12-1-10 DATE

4-25-11
PLANS APPROVAL DATE

REGISTERED PROFESSIONAL ENGINEER MINH THUONG VO No. C59297 Exp. 06/30/11 CIVIL STATE OF CALIFORNIA

THE STATE OF CALIFORNIA OR ITS OFFICERS OR AGENTS SHALL NOT BE RESPONSIBLE FOR THE ACCURACY OR COMPLETENESS OF SCANNED COPIES OF THIS PLAN SHEET.

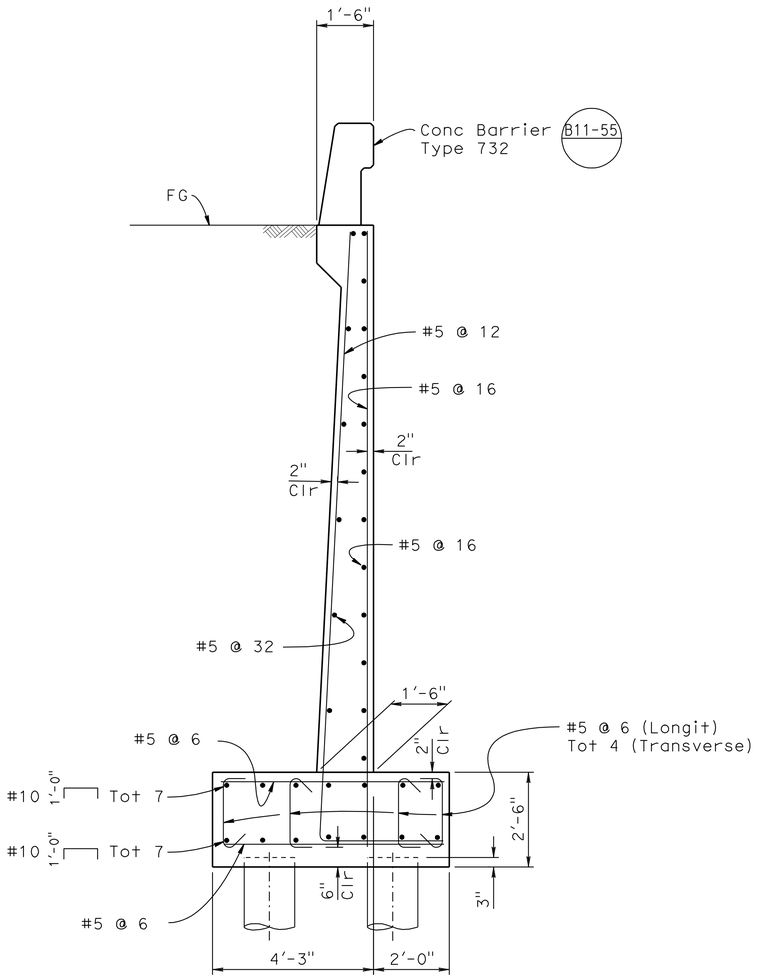

SECTION A-A

1/2 "=1'-0"

PILE DATA TABLE

B2-5

Pile Type	Nominal Resistance		Design Tip Elevation (ft)	Specified Tip Elevation (ft)	Nominal Driving Resistance Req'd
	Compression	Tension			
Class 90 Alternate X	180 kips	0	830	830	180 kips

THIS PLAN ACCURATE FOR RETAINING WALL WORK ONLY.

RETAINING WALL DETAILS

RETAINING WALL No. 198

SCALE AS SHOWN **R4-3**

STATE OF CALIFORNIA - DEPARTMENT OF TRANSPORTATION
DESIGN
FUNCTIONAL SUPERVISOR: DANIEL T. ADAMS
CALCULATED-DESIGNED BY: MINH VO
CHECKED BY: RYAN STILTZ
REVISED BY
DATE REVISED

LAST REVISION 12-01-10 | DATE PLOTTED => 29-APR-2011 | TIME PLOTTED => 20:36

Dist	COUNTY	ROUTE	POST MILES TOTAL PROJECT	SHEET No.	TOTAL SHEETS
08	Riv	91	15.6/21.6	821	2028

LICENSED LANDSCAPE ARCHITECT

4-25-11
PLANS APPROVAL DATE

LICENSED LANDSCAPE ARCHITECT
Matthew Harry Hall
Signature
10/31/2011
Renewal Date
12-1-10
Date
STATE OF CALIFORNIA

THE STATE OF CALIFORNIA OR ITS OFFICERS OR AGENTS SHALL NOT BE RESPONSIBLE FOR THE ACCURACY OR COMPLETENESS OF SCANNED COPIES OF THIS PLAN SHEET.

NOTE:

SEE SHEET ASD-4 AND ASD-5.

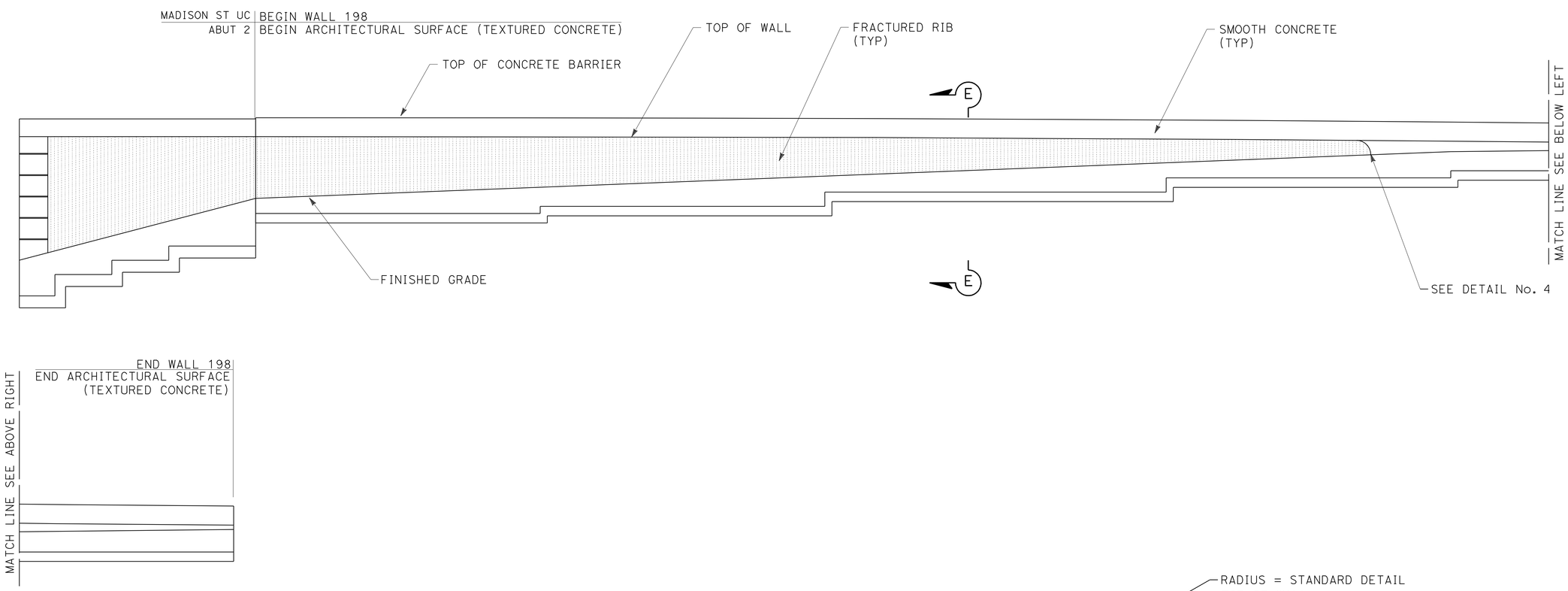

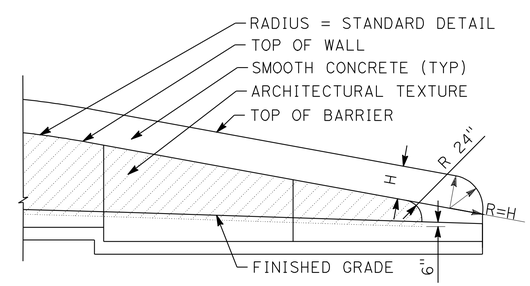

DETAIL No. 4

TYPICAL END OF WALL WITH CONCRETE BARRIER ON TOP OF WALL AND TYPE 60D MOD. CONCRETE BARRIER

ELEVATION FOR FRACTURED RIB TEXTURE RETAINING WALL No. 198

THIS PLAN IS ACCURATE FOR ARCHITECTUAL TREATMENT WORK ONLY.

ARCHITECTURAL SURFACE RETAINING WALL No. 198

SCALE: 1/8"=1'-0"

R4-4

REVISED BY | DATE REVISED
MATTHEW HALL | MIRIAM BISHOP
CALCULATED-DESIGNED BY | CHECKED BY
SENIOR LANDSCAPE ARCHITECT
BYRON STROUT

STATE OF CALIFORNIA - DEPARTMENT OF TRANSPORTATION
Caltrans LANDSCAPE ARCHITECTURE

LAST REVISION 12-01-10 | DATE PLOTTED => 29-APR-2011 | TIME PLOTTED => 20:37

DIST	COUNTY	ROUTE	POST MILES TOTAL PROJECT	SHEET No	TOTAL SHEETS
08	Riv	91	15.6/21.6	822	2028

GEOTECHNICAL PROFESSIONAL — DATE 10/2008

4-25-11
PLANS APPROVAL DATE

REGISTERED PROFESSIONAL ENGINEER — ANDREW C. LEE — No. 2616 — Exp. 6-30-12 — GEOTECHNICAL — STATE OF CALIFORNIA

The State of California or its officers or agents shall not be responsible for the accuracy or completeness of electronic copies of this plan sheet.

California Department of Transportation
5900 Folsom Boulevard
Sacramento, CA 95819

URS Corporation
2020 East First Street, Suite 400
Santa Ana, CA 92705

FOR PLAN VIEW, SEE SHEET R4-6 AND R4-7

NOTE: 1. This LOTB sheet was prepared in accordance with the Caltrans Soil & Rock Logging, Classification, and Presentation Manual (June 2007).

2. For legend, see "SOIL LEGEND LOG OF TEST BORINGS" SHEET

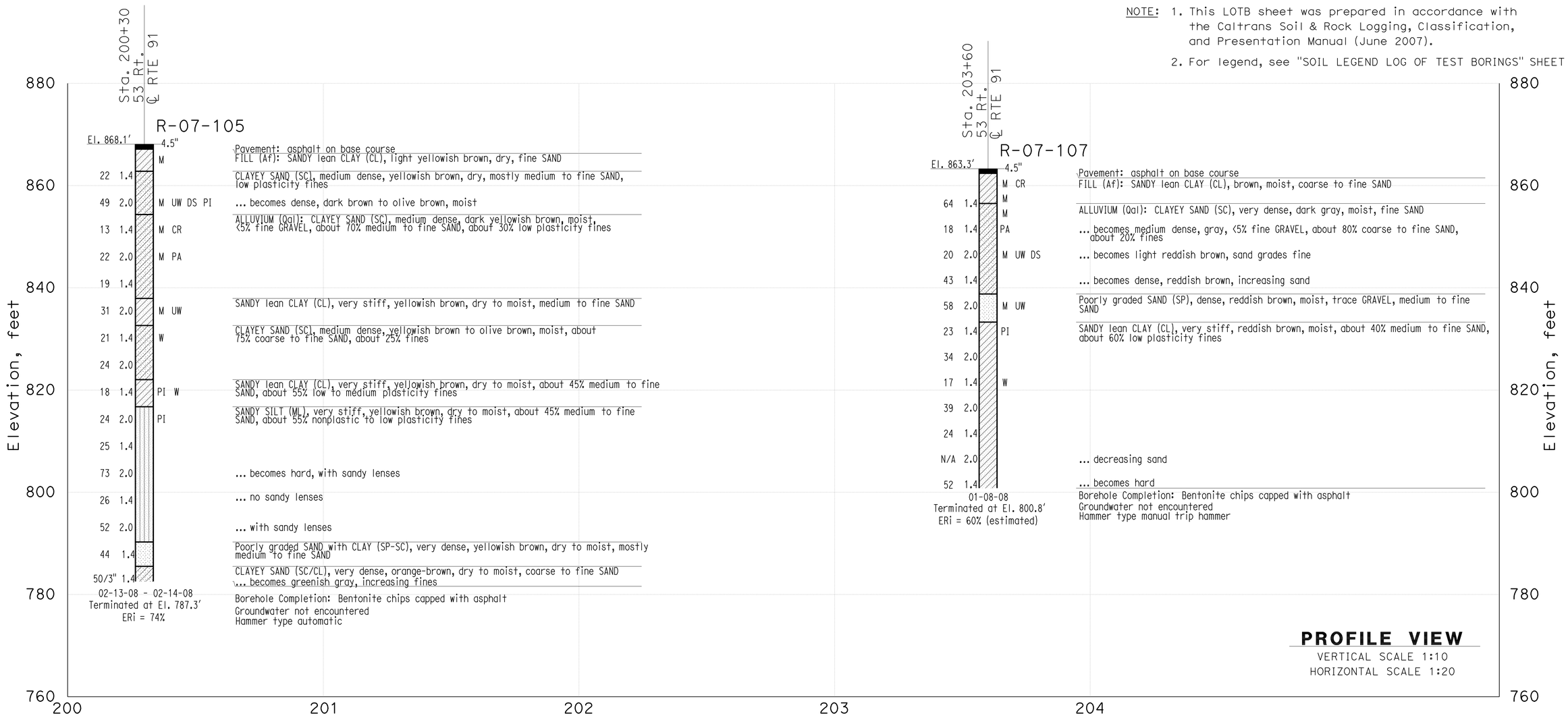

THIS PLAN ACCURATE FOR SOUND WALL AND RETAINING WALL WORK ONLY

DESIGN OVERSIGHT X SIGN OFF DATE	GINA PURSELL FUNCTIONAL SUPERVISOR	DRAWN BY	P. QUACH	P.CHAU/D.WADER/C.CARBINO FIELD INVESTIGATION BY: DATE: Nov 6 2007 to March 7 2008	PREPARED FOR THE STATE OF CALIFORNIA DEPARTMENT OF TRANSPORTATION	A. LEE PROJECT ENGINEER	BRIDGE NO. X POST MILE X	Retaining Wall 198 R4-5
		CHECKED BY	S. PIRATHIVIRAJ					LOG OF TEST BORINGS SHEET 1 OF 3

OSF GEOTECHNICAL LOG OF TEST BORINGS SHEET (ENGLISH) (REV. 2/25/05)

ORIGINAL SCALE IN INCHES FOR REDUCED PLANS 0 1 2 3

CU 59A0590
EA 08-448400

DISREGARD PRINTS BEARING EARLIER REVISION DATES

REVISION DATES (PRELIMINARY STAGE ONLY) X

SHEET 1 OF 3

FILE => 844840qd005.dgn

USERNAME => trlenard DATE PLOTTED => 30-APR-2011 TIME PLOTTED =>

DIST	COUNTY	ROUTE	POST MILES TOTAL PROJECT	SHEET No	TOTAL SHEETS
08	Riv	91	15.6/21.6	823	2028

GEOTECHNICAL PROFESSIONAL DATE 10/2008

4-25-11
PLANS APPROVAL DATE

REGISTERED PROFESSIONAL ENGINEER
ANDREW C. LEE
No. 2616
Exp. 6-30-12
GEOTECHNICAL
STATE OF CALIFORNIA

The State of California or its officers or agents shall not be responsible for the accuracy or completeness of electronic copies of this plan sheet.

California Department of Transportation
5900 Folsom Boulevard
Sacramento, CA 95819

URS Corporation
2020 East First Street, Suite 400
Santa Ana, CA 92705

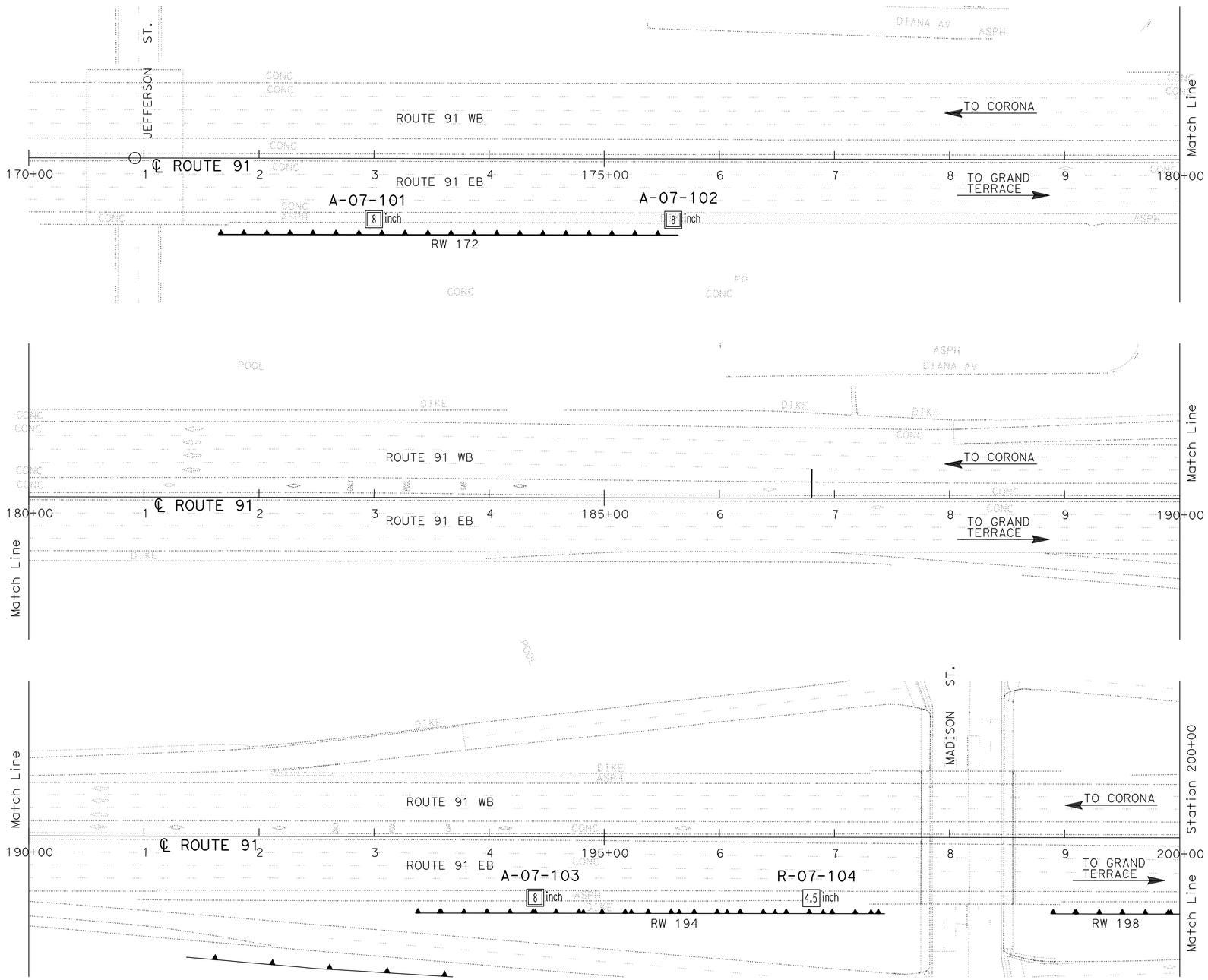

PLAN
SCALE 1"=50'

Borehole Number	Drill Rig	Hammer Type	Avg. Hammer Efficiency, ETR (%)
A-07-101	Diedrich D-120	Automatic	75*
A-07-102	Diedrich D-120	Automatic	75*
A-07-103	Diedrich D-120	Automatic	75*
R-07-104	CS-2000	Automatic	84

Sampler Type	Inside Diameter (Inches)	Borehole Numbers
SPT	1.375	A-07-101, A-07-102 A-07-103, R-07-104
Modified California 1	1.94	R-07-104
Modified California 2	2.40	A-07-101, A-07-102 A-07-103

*Estimated Hammer Efficiency Rating.

DESIGN OVERSIGHT X SIGN OFF DATE	GINA PURSELL FUNCTIONAL SUPERVISOR	DRAWN BY	P. QUACH	P.CHAU/D.WADER/C.CARBINO FIELD INVESTIGATION BY: DATE: Nov 6 2007 to March 7 2008	PREPARED FOR THE STATE OF CALIFORNIA DEPARTMENT OF TRANSPORTATION
		CHECKED BY	S. PIRATHIVIRAJ		

A. LEE
PROJECT ENGINEER

BRIDGE NO. X
POST MILE X

RETAINING WALL 198 R4-6

LOG OF TEST BORINGS 2 OF 3

OSF GEOTECHNICAL LOG OF TEST BORINGS SHEET (ENGLISH) (REV. 2/25/05)

ORIGINAL SCALE IN INCHES FOR REDUCED PLANS 0 1 2 3

CU 59A0590
EA 08-448400

DISREGARD PRINTS BEARING EARLIER REVISION DATES

REVISION DATES (PRELIMINARY STAGE ONLY) X

SHEET 2 OF 3

FILE => 844840qd006.dgn

USERNAME => trrenard DATE PLOTTED => 30-APR-2011 TIME PLOTTED =>

DIST	COUNTY	ROUTE	POST MILES TOTAL PROJECT	SHEET No	TOTAL SHEETS
08	Riv	91	15.6/21.6	824	2028

GEOTECHNICAL PROFESSIONAL 10/2008 DATE

4-25-11
PLANS APPROVAL DATE

REGISTERED PROFESSIONAL ENGINEER ANDREW C. LEE No. 2616 Exp. 6-30-12 GEOTECHNICAL STATE OF CALIFORNIA

The State of California or its officers or agents shall not be responsible for the accuracy or completeness of electronic copies of this plan sheet.

California Department of Transportation
5900 Folsom Boulevard
Sacramento, CA 95819

URS Corporation
2020 East First Street, Suite 400
Santa Ana, CA 92705

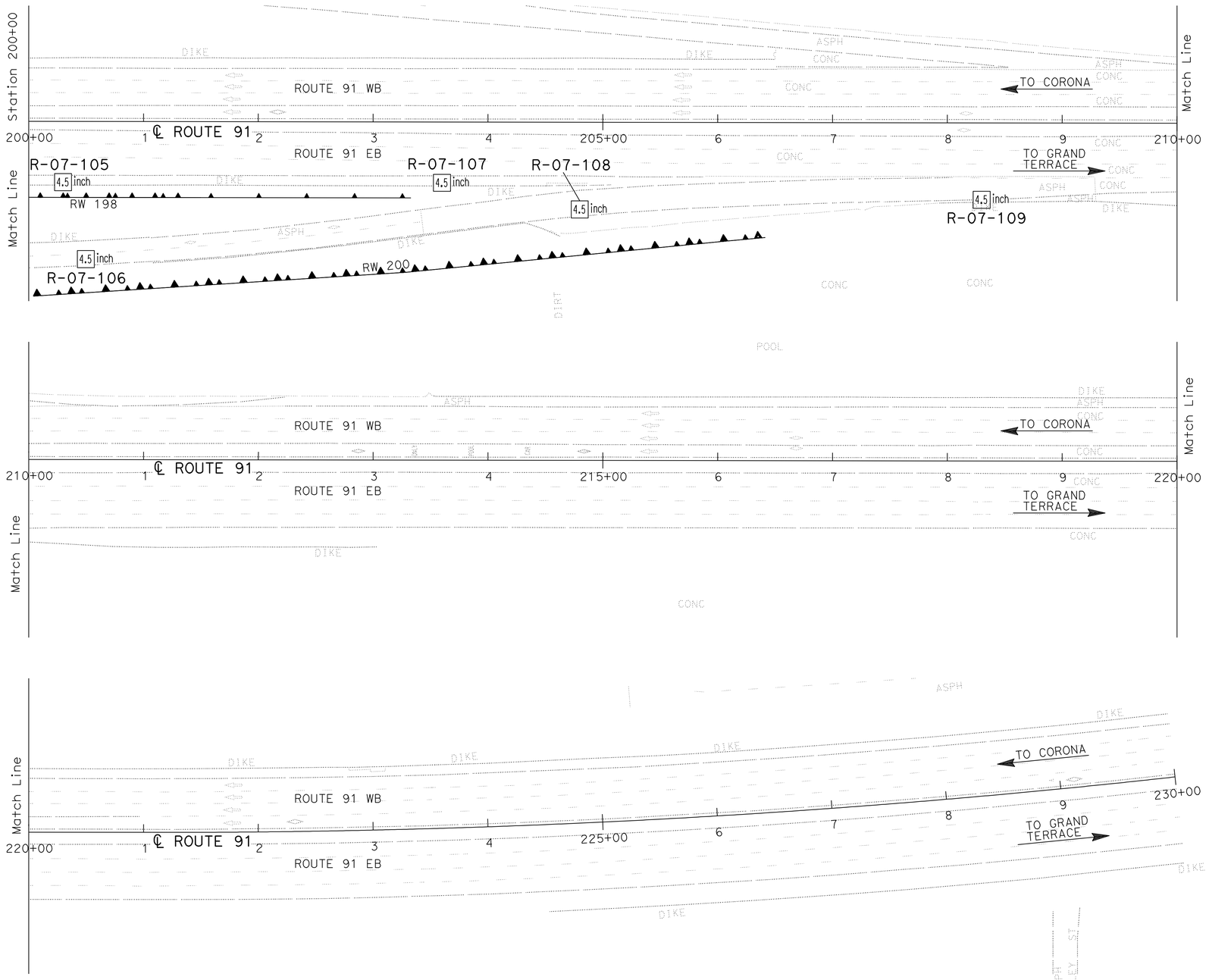

PLAN
SCALE 1"=50'

Borehole Number	Drill Rig	Hammer Type	Avg. Hammer Efficiency, ETR (%)
R-07-105	Acker Rig	Automatic	74
R-07-106	CS-2000	Automatic	84
R-07-107	Mobile B-47	Manual trip	60*
R-07-108	CS-2000	Automatic	84
R-07-109	Acker Rig	Automatic	74

Sampler Type	Inside Diameter (Inches)	Borehole Numbers
SPT	1.375	R-07-105, R-07-106 R-07-107, R-07-108 R-07-109
Modified California 1	1.94	R-07-105, R-07-107 R-07-109
Modified California 2	2.40	-

*Estimated Hammer Efficiency Rating.

DESIGN OVERSIGHT	GINA PURSELL FUNCTIONAL SUPERVISOR	DRAWN BY	P. QUACH	P.CHAU/D.WADER/C.CARBINO FIELD INVESTIGATION BY: DATE: Nov 6 2007 to March 7 2008	PREPARED FOR THE STATE OF CALIFORNIA DEPARTMENT OF TRANSPORTATION
X SIGN OFF DATE		CHECKED BY	S. PIRATHIVIRAJ		

A. LEE
PROJECT ENGINEER

BRIDGE NO. X
POST MILE X

RETAINING WALL 198 R4-7

LOG OF TEST BORINGS 3 OF 3

OSF GEOTECHNICAL LOG OF TEST BORINGS SHEET (ENGLISH) (REV. 2/25/05)

ORIGINAL SCALE IN INCHES FOR REDUCED PLANS 0 1 2 3

CU 59A0590
EA 08-448400

DISREGARD PRINTS BEARING EARLIER REVISION DATES

REVISION DATES (PRELIMINARY STAGE ONLY) X

SHEET 3 OF 3

FILE => 844840qd007.dgn

USERNAME => trrenard DATE PLOTTED => 30-APR-2011 TIME PLOTTED =>

Dist	COUNTY	ROUTE	POST MILES TOTAL PROJECT	SHEET No.	TOTAL SHEETS
08	Riv	91	15.6/21.6	825	2028

REGISTERED CIVIL ENGINEER 12-1-10 DATE

4-25-11
PLANS APPROVAL DATE

REGISTERED PROFESSIONAL ENGINEER THOMAS HIEN NGO No. 68383 Exp. 9/30/11 CIVIL STATE OF CALIFORNIA

THE STATE OF CALIFORNIA OR ITS OFFICERS OR AGENTS SHALL NOT BE RESPONSIBLE FOR THE ACCURACY OR COMPLETENESS OF SCANNED COPIES OF THIS PLAN SHEET.

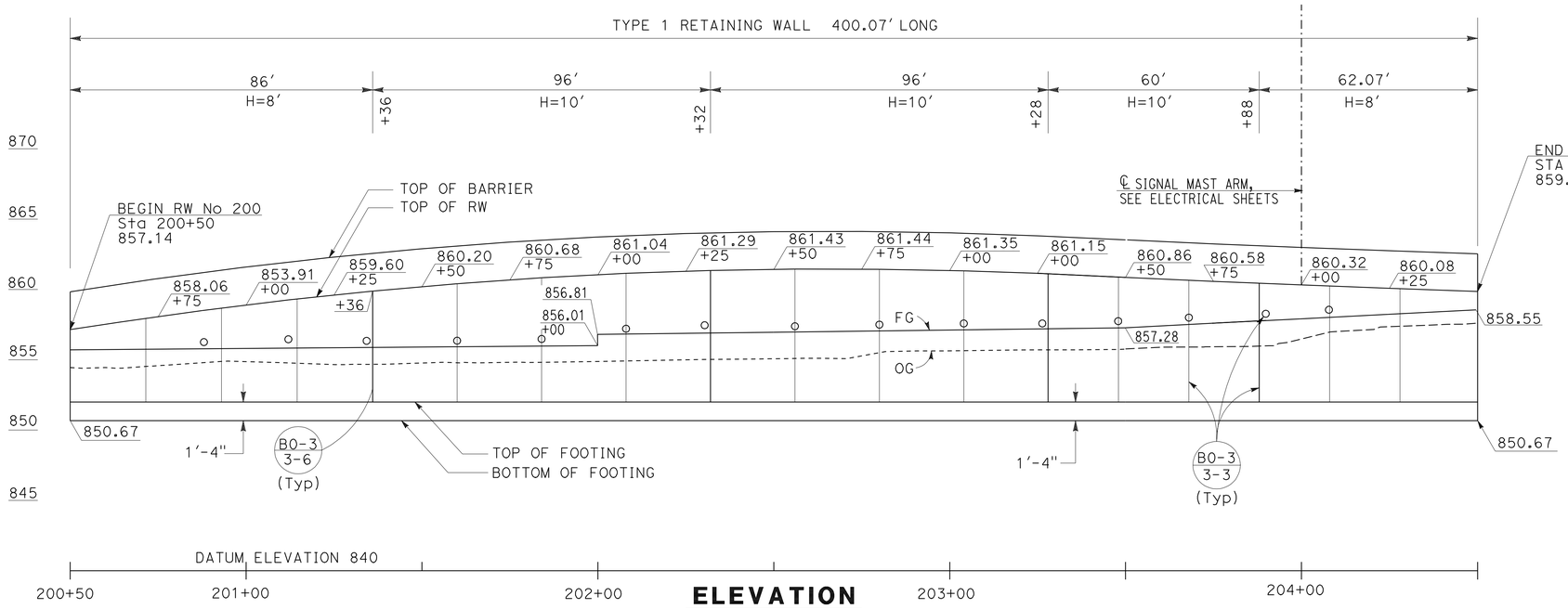

ELEVATION

SCALE Horiz 1"=20'
Vert 1"=5'

NOTES:

1. ARCHITECTURAL TREATMENT SHOULD EXTEND 6 IN BELOW FG
2. FOR STRUCTURAL SECTIONS, SEE ROADWAY PLANS
3. WATERSTOP IN EXPANSION JOINT SHALL BE EXTEND 6 IN INTO THE BARRIER

QUANTITIES

STRUCTURAL CONCRETE (RETAINING WALL)	274.23	CY
BAR REINFORCING STEEL (RETAINING WALL)	22797	LB
STRUCTURAL EXCAVATION (RETAINING WALL)	696.19	CY
STRUCTURAL BACKFILL (RETAINING WALL)	911.89	CY
PERVIOUS BACKFILL MATERIAL (RETAINING WALL)	25.76	CY
CONCRETE BARRIER (TYPE 732A)	400.07	LF
PLASTIC PIPE (N)	19.31	LF
WATERSTOP (N)	36.80	LF
ARCHITECTURAL SURFACES (TEXTURED CONCRETE)	1612.28	SF

(N) = NOT A SEPARATE PAY ITEM, FOR INFORMATION ONLY

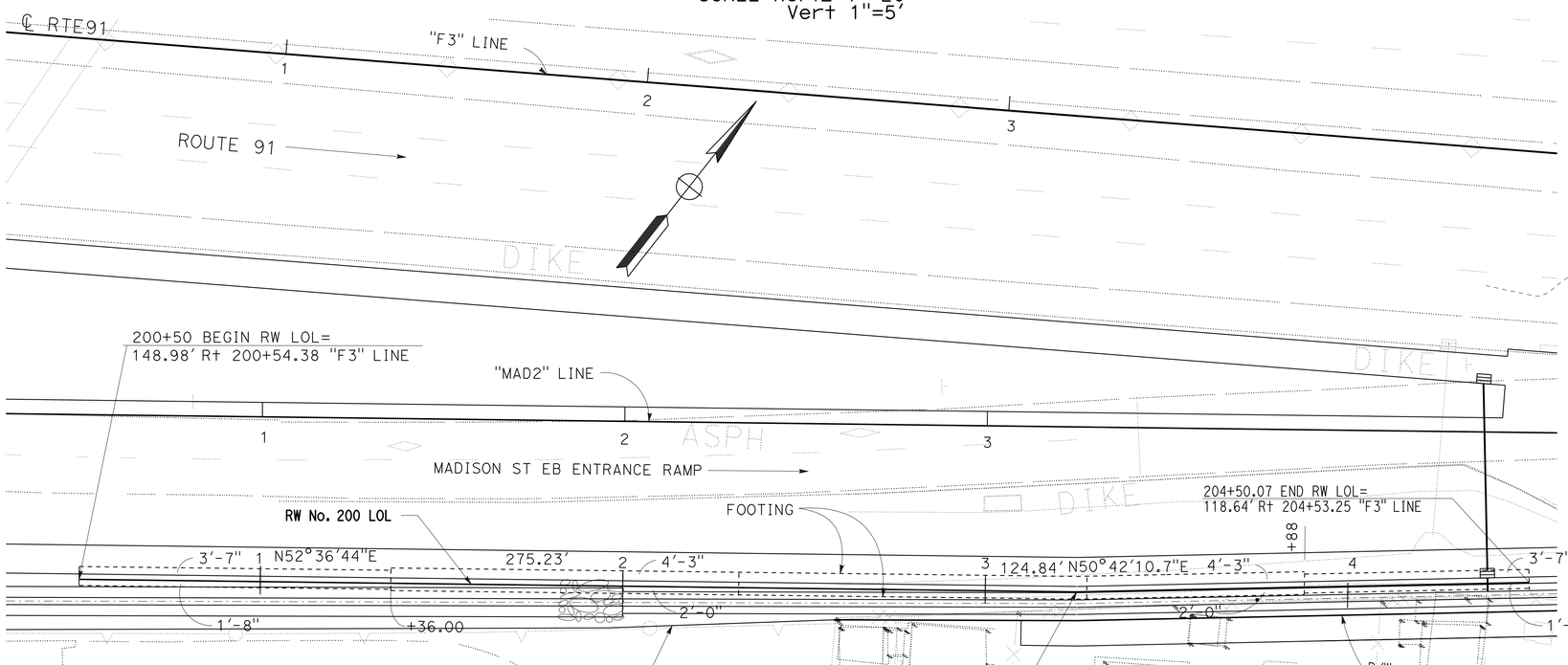

PLAN

SCALE 1"=20'

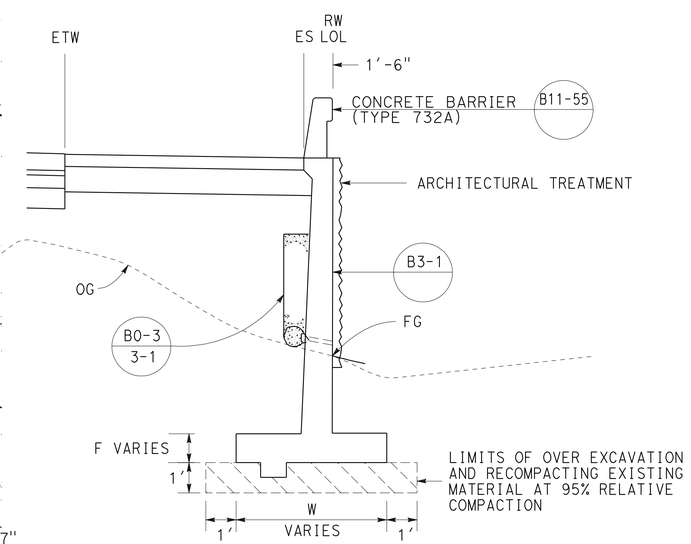

TYPICAL SECTION

NO SCALE

THIS PLAN ACCURATE FOR RETAINING WALL WORK ONLY.

RETAINING WALL PLAN
RETAINING WALL No. 200

SCALE AS SHOWN

R5-1

STATE OF CALIFORNIA - DEPARTMENT OF TRANSPORTATION
Caltrans
DESIGN
FUNCTIONAL SUPERVISOR: MARK PERTILE
CALCULATED-DESIGNED BY: THOMAS HIEN NGO
CHECKED BY: THAI VAN HGUYEN
REVISED BY
DATE REVISED

LAST REVISION 12-01-10
DATE PLOTTED => 30-APR-2011
TIME PLOTTED => 06:52

Dist	COUNTY	ROUTE	POST MILES TOTAL PROJECT	SHEET No.	TOTAL SHEETS
08	Riv	91	15.6/21.6	826	2028

LICENSED LANDSCAPE ARCHITECT

4-25-11
PLANS APPROVAL DATE

LICENSED LANDSCAPE ARCHITECT
Matthew Harry Hall
Signature
10/31/2011
Renewal Date
12-1-10
Date
STATE OF CALIFORNIA

THE STATE OF CALIFORNIA OR ITS OFFICERS OR AGENTS SHALL NOT BE RESPONSIBLE FOR THE ACCURACY OR COMPLETENESS OF SCANNED COPIES OF THIS PLAN SHEET.

NOTE:

SEE SHEET ASD-4 AND ASD-5.

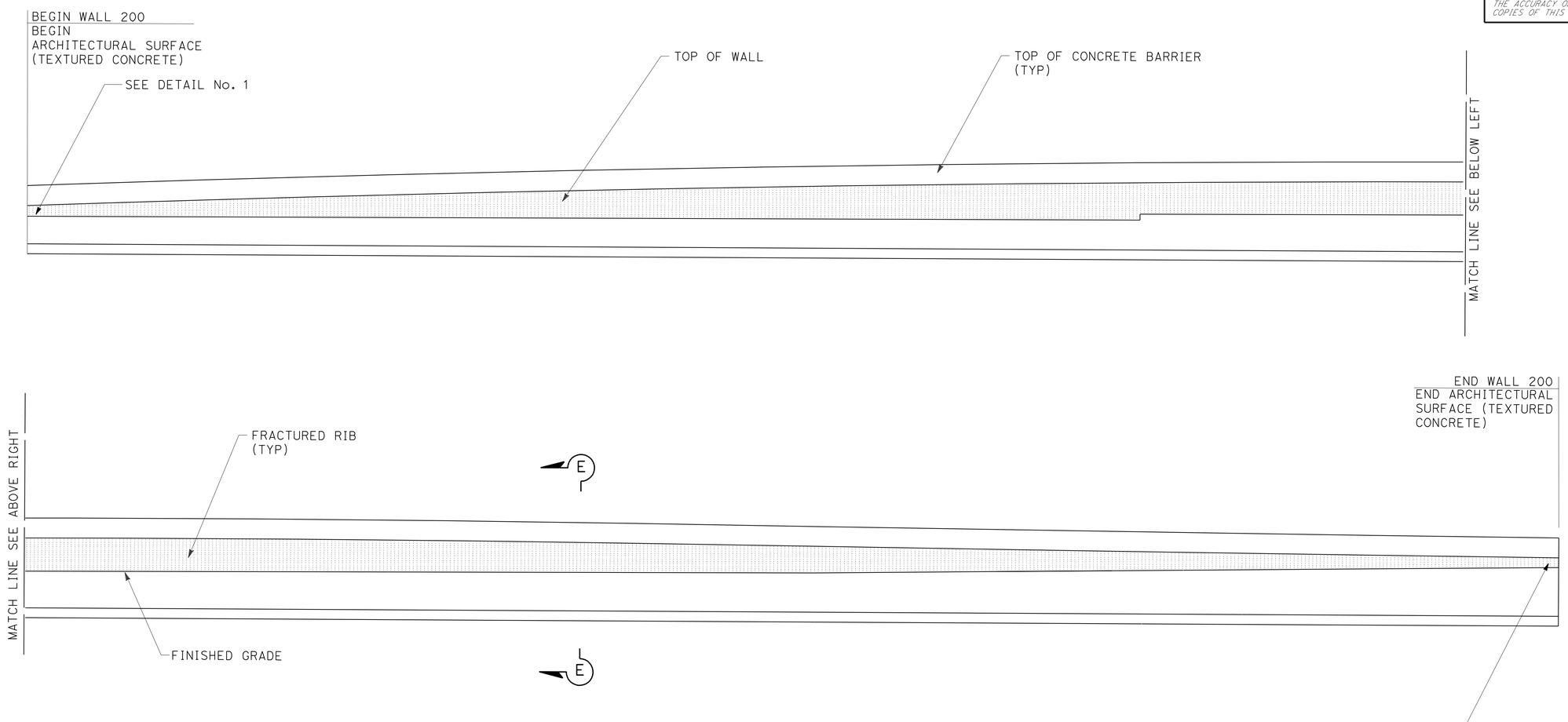

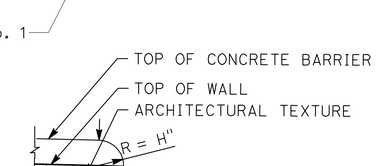

DETAIL No. 1

TYPICAL END OF WALL
WITH CONCRETE BARRIER
ON TOP OF WALL DETAIL

MIRRORED ELEVATION FOR FRACTURED RIB TEXTURE RETAINING WALL No. 200

THIS PLAN IS ACCURATE FOR ARCHITECTUAL TREATMENT WORK ONLY.

ARCHITECTURAL SURFACE RETAINING WALL No. 200

SCALE: 1/8"=1'-0"

R5-2

REVISED BY	DATE REVISED
MATTHEW HALL	MIRIAM BISHOP
CALCULATED-DESIGNED BY	CHECKED BY
SENIOR LANDSCAPE ARCHITECT	BYRON STROUT

STATE OF CALIFORNIA - DEPARTMENT OF TRANSPORTATION
Caltrans® LANDSCAPE ARCHITECTURE

LAST REVISION 12-01-10 | DATE PLOTTED => 30-APR-2011 | TIME PLOTTED => 06:52

DIST	COUNTY	ROUTE	POST MILES TOTAL PROJECT	SHEET No	TOTAL SHEETS
08	Riv	91	15.6/21.6	827	2028

GEOTECHNICAL PROFESSIONAL — DATE 10/2008

4-25-11
PLANS APPROVAL DATE

REGISTERED PROFESSIONAL ENGINEER — ANDREW C. LEE — No. 2616 — Exp. 6-30-12 — GEOTECHNICAL — STATE OF CALIFORNIA

The State of California or its officers or agents shall not be responsible for the accuracy or completeness of electronic copies of this plan sheet.

California Department of Transportation
5900 Folsom Boulevard
Sacramento, CA 95819

URS Corporation
2020 East First Street, Suite 400
Santa Ana, CA 92705

NOTE: 1. This LOTB sheet was prepared in accordance with the Caltrans Soil & Rock Logging, Classification, and Presentation Manual (June 2007).

2. For legend, see "Soil Legend Log of Test Borings" sheet

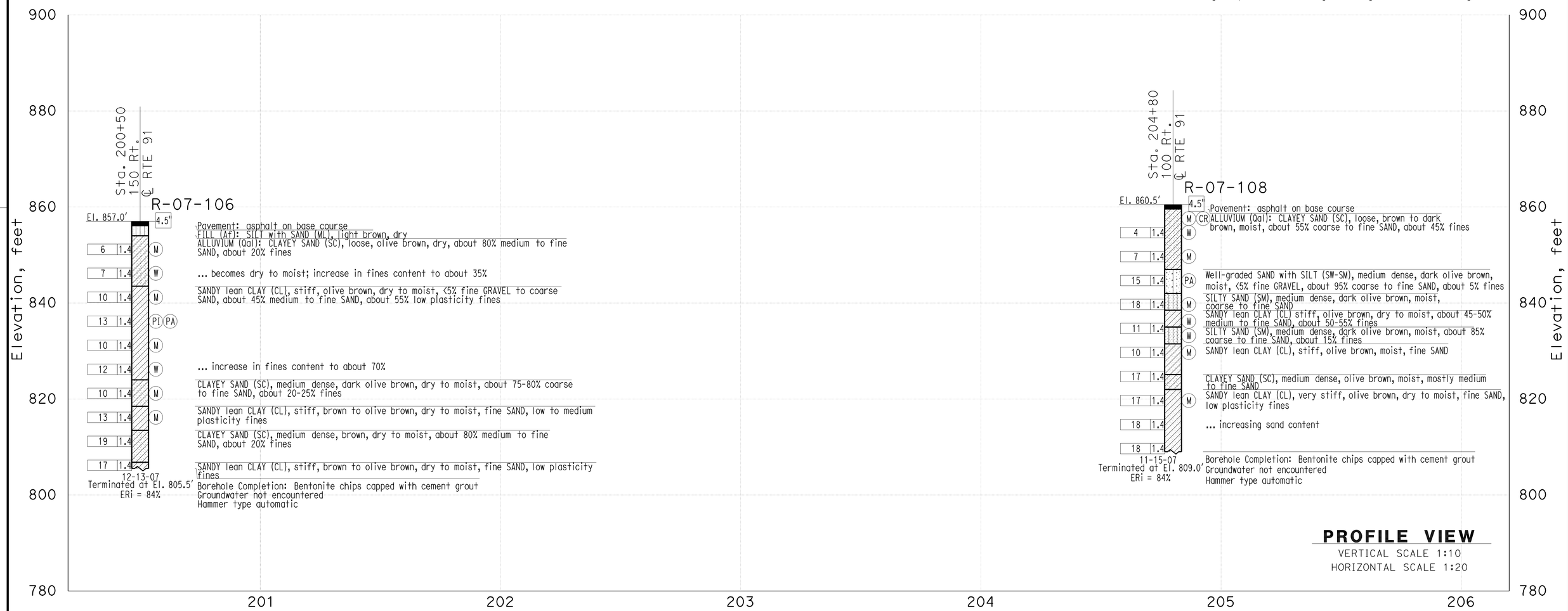

PROFILE VIEW
VERTICAL SCALE 1:10
HORIZONTAL SCALE 1:20

THIS PLAN ACCURATE FOR SOUND WALL AND RETAINING WALL WORK ONLY

DESIGN OVERSIGHT X SIGN OFF DATE	GINA PURSELL FUNCTIONAL SUPERVISOR	DRAWN BY CHECKED BY	P. QUACH S. PIRATHIVIRAJ	P.CHAU/D.WADER/C.CARBINO FIELD INVESTIGATION BY: DATE: Nov 6 2007 to March 7 2008	PREPARED FOR THE STATE OF CALIFORNIA DEPARTMENT OF TRANSPORTATION	A. LEE PROJECT ENGINEER	BRIDGE NO. X POST MILE X	Retaining Wall 200 R5-3 **LOG OF TEST BORINGS SHEET 1 OF 3**

OSF GEOTECHNICAL LOG OF TEST BORINGS SHEET (ENGLISH) (REV. 2/25/05)

ORIGINAL SCALE IN INCHES FOR REDUCED PLANS 0 1 2 3

CU 59A0590
EA 08-448400

DISREGARD PRINTS BEARING EARLIER REVISION DATES

REVISION DATES (PRELIMINARY STAGE ONLY) X

SHEET 1 OF 3

FILE => 844840qe003.dgn

USERNAME => trmnguye DATE PLOTTED => 30-APR-2011 TIME PLOTTED =>

DIST	COUNTY	ROUTE	POST MILES TOTAL PROJECT	SHEET No	TOTAL SHEETS
08	Riv	91	15.6/21.6	828	2028

GEOTECHNICAL PROFESSIONAL 10/2008 DATE

4-25-11
PLANS APPROVAL DATE

REGISTERED PROFESSIONAL ENGINEER
ANDREW C. LEE
No. 2616
Exp. 6-30-12
GEOTECHNICAL
STATE OF CALIFORNIA

The State of California or its officers or agents shall not be responsible for the accuracy or completeness of electronic copies of this plan sheet.

California Department of Transportation
5900 Folsom Boulevard
Sacramento, CA 95819

URS Corporation
2020 East First Street, Suite 400
Santa Ana, CA 92705

NOTE: 1. This LOTB sheet was prepared in accordance with the Caltrans Soil & Rock Logging, Classification, and Presentation Manual (June 2007).

2. For legend, see "Soil Legend Log of Test Borings" sheet

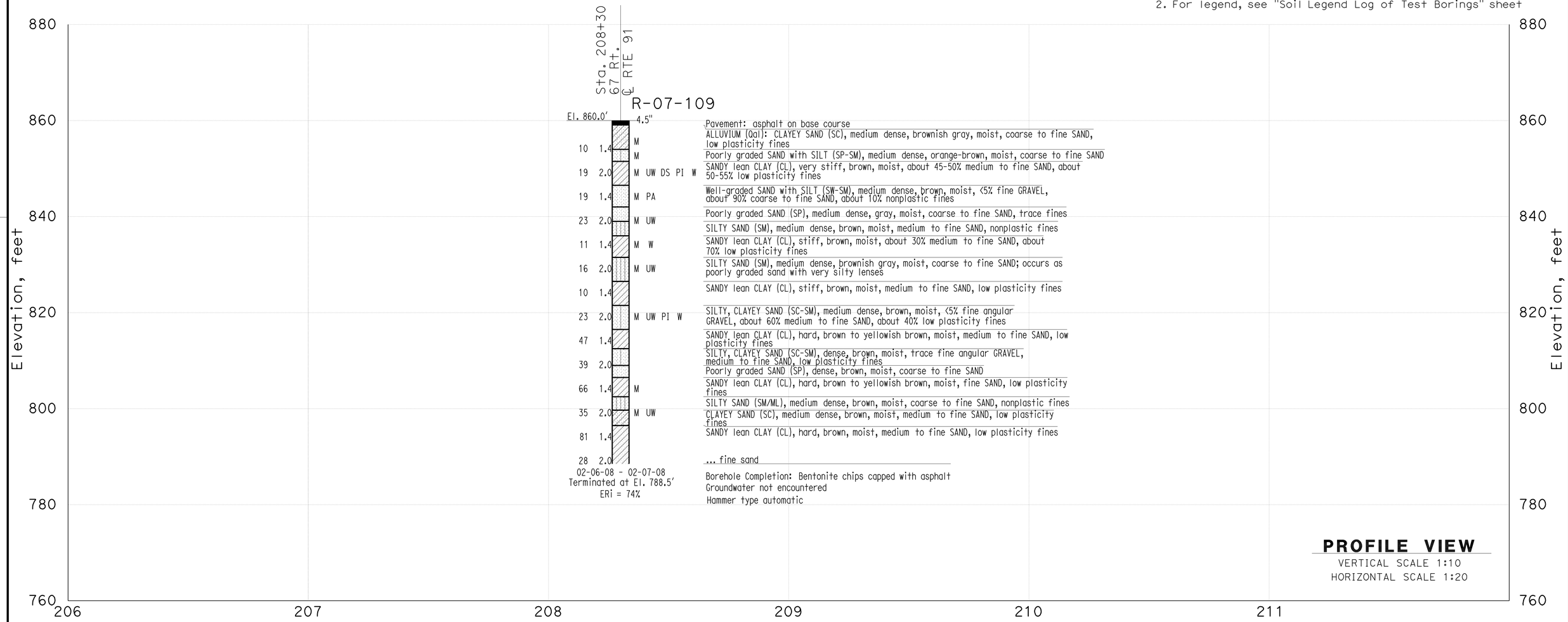

THIS PLAN ACCURATE FOR SOUND WALL AND RETAINING WALL WORK ONLY

DESIGN OVERSIGHT X SIGN OFF DATE	GINA PURSELL FUNCTIONAL SUPERVISOR	DRAWN BY CHECKED BY	P. QUACH S. PIRATHIVIRAJ	P.CHAU/D.WADER/C.CARBINO FIELD INVESTIGATION BY: DATE: Nov 6 2007 to March 7 2008	PREPARED FOR THE STATE OF CALIFORNIA DEPARTMENT OF TRANSPORTATION	A. LEE PROJECT ENGINEER	BRIDGE NO. X POST MILE X	Retaining Wall 200 R5-4 LOG OF TEST BORINGS SHEET 2 OF 3

OSF GEOTECHNICAL LOG OF TEST BORINGS SHEET (ENGLISH) (REV. 2/25/05)

ORIGINAL SCALE IN INCHES FOR REDUCED PLANS 0 1 2 3

CU 59A0590
EA 08-448400

DISREGARD PRINTS BEARING EARLIER REVISION DATES

REVISION DATES (PRELIMINARY STAGE ONLY) X

SHEET 2 OF 3

FILE => 844840qe004.dgn

USERNAME => trmnguye DATE PLOTTED => 30-APR-2011 TIME PLOTTED =>

DIST	COUNTY	ROUTE	POST MILES TOTAL PROJECT	SHEET No	TOTAL SHEETS
08	Riv	91	15.6/21.6	829	2028

GEOTECHNICAL PROFESSIONAL — DATE 10/2008

4-25-11
PLANS APPROVAL DATE

REGISTERED PROFESSIONAL ENGINEER — ANDREW C. LEE — No. 2616 — Exp. 6-30-12 — GEOTECHNICAL — STATE OF CALIFORNIA

The State of California or its officers or agents shall not be responsible for the accuracy or completeness of electronic copies of this plan sheet.

California Department of Transportation
5900 Folsom Boulevard
Sacramento, CA 95819

URS Corporation
2020 East First Street, Suite 400
Santa Ana, CA 92705

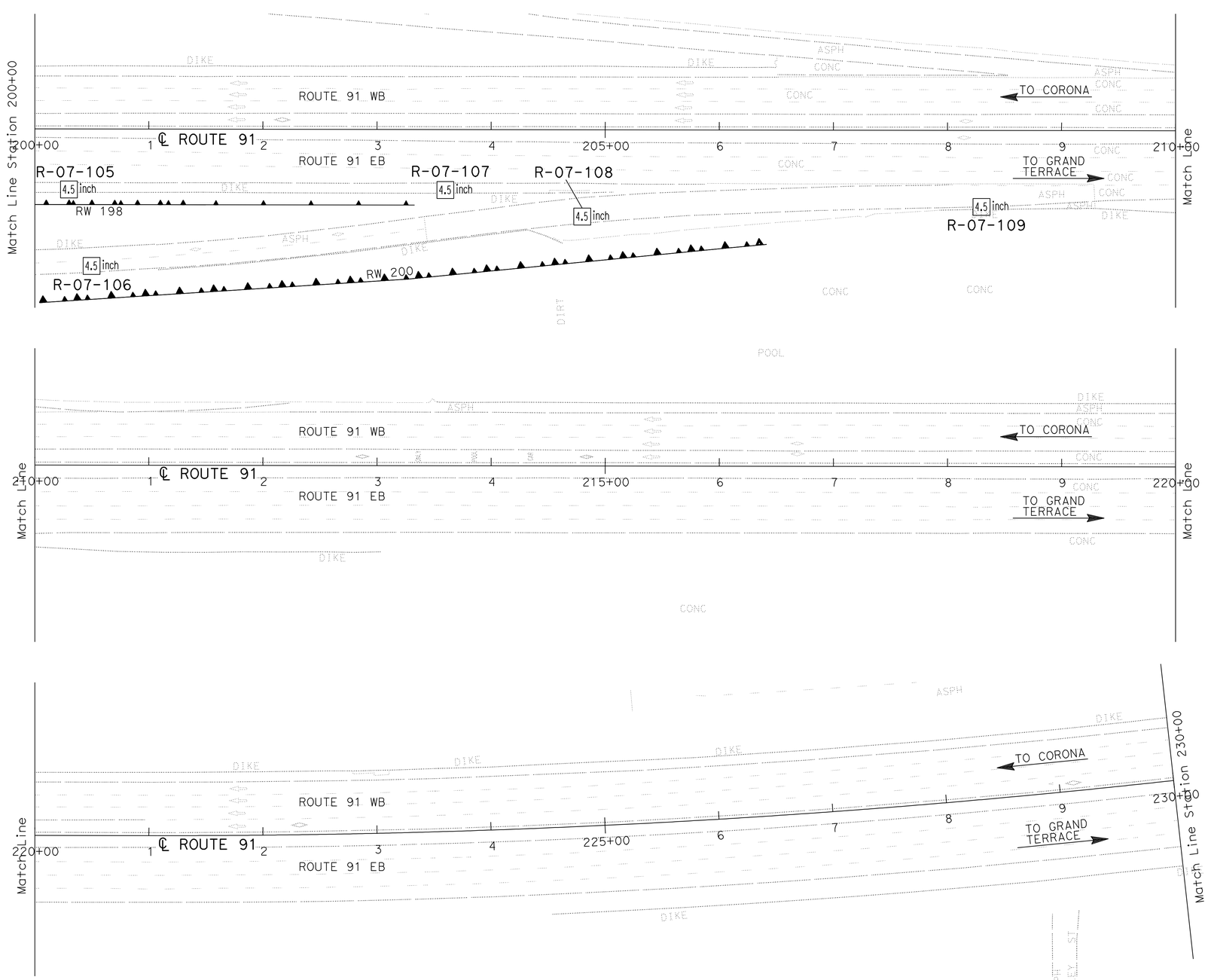

PLAN
SCALE 1"=50'

Borehole Number	Drill Rig	Hammer Type	Avg. Hammer Efficiency, ETR (%)
R-07-105	Acker Rig	Automatic	74
R-07-106	CS-2000	Automatic	84
R-07-107	Mobile B-47	Manual trip	60*
R-07-108	CS-2000	Automatic	84
R-07-109	Acker Rig	Automatic	74

Sampler Type	Inside Diameter (Inches)	Borehole Numbers
SPT	1.375	R-07-105, R-07-106 R-07-107, R-07-108 R-07-109
Modified California 1	1.94	R-07-105, R-07-107 R-07-109
Modified California 2	2.40	-

*Estimated Hammer Efficiency Rating.

DESIGN OVERSIGHT	GINA PURSELL FUNCTIONAL SUPERVISOR	DRAWN BY	P. QUACH	P.CHAU/D.WADER/C.CARBINO FIELD INVESTIGATION BY:	PREPARED FOR THE STATE OF CALIFORNIA DEPARTMENT OF TRANSPORTATION
X SIGN OFF DATE		CHECKED BY	S. PIRATHIVIRAJ	DATE: Nov 6 2007 to March 7 2008	

A. LEE
PROJECT ENGINEER

BRIDGE NO. X
POST MILE X

RETAINING WALL 200 R5-5

LOG OF TEST BORINGS 3 OF 3

OSF GEOTECHNICAL LOG OF TEST BORINGS SHEET (ENGLISH) (REV. 2/25/05)

ORIGINAL SCALE IN INCHES FOR REDUCED PLANS 0 1 2 3

CU 59A0590
EA 08-448400

DISREGARD PRINTS BEARING EARLIER REVISION DATES

REVISION DATES (PRELIMINARY STAGE ONLY) X

SHEET 3 OF 3

FILE => 844840qe005.dgn

USERNAME => trmnguye DATE PLOTTED => 30-APR-2011 TIME PLOTTED =>

Dist	COUNTY	ROUTE	POST MILES TOTAL PROJECT	SHEET No.	TOTAL SHEETS
08	Riv	91	15.6/21.6	830	2028

REGISTERED CIVIL ENGINEER 12-1-10 DATE

4-25-11
PLANS APPROVAL DATE

REGISTERED PROFESSIONAL ENGINEER THOMAS HIEN NGO No. 68383 Exp. 9/30/11 CIVIL STATE OF CALIFORNIA

THE STATE OF CALIFORNIA OR ITS OFFICERS OR AGENTS SHALL NOT BE RESPONSIBLE FOR THE ACCURACY OR COMPLETENESS OF SCANNED COPIES OF THIS PLAN SHEET.

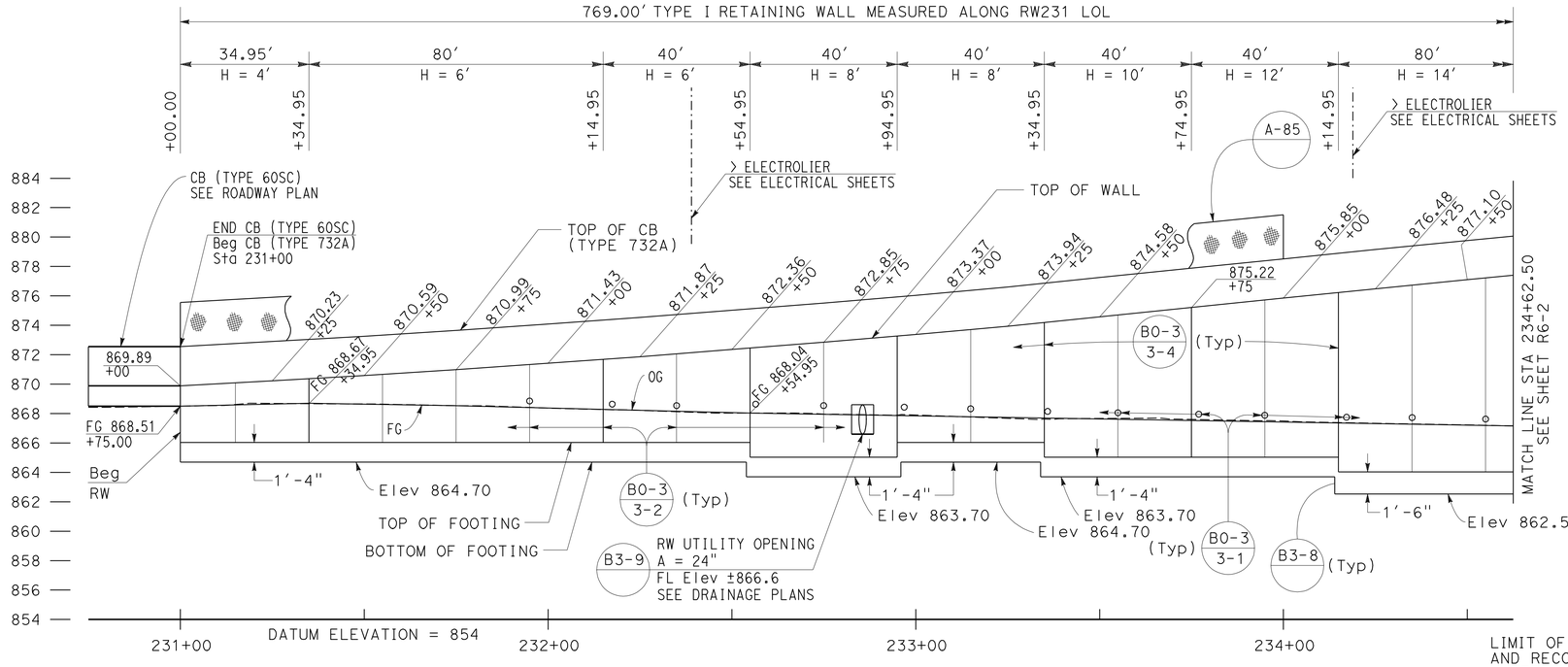

ELEVATION

SCALE Horiz 1"=20'
Vert 1"=5'

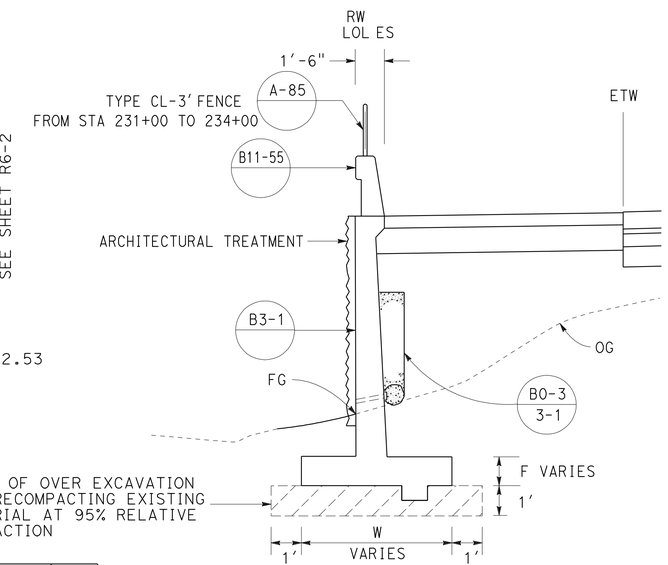

TYPICAL SECTION

NO SCALE
FROM STA 231+00.00 TO STA 238+69.00

QUANTITIES

STRUCTURAL CONCRETE (RETAINING WALL)	869.10	CY
BAR REINFORCING STEEL (RETAINING WALL)	100379	LB
STRUCTURAL EXCAVATION (RETAINING WALL)	734.65	CY
STRUCTURAL BACKFILL (RETAINING WALL)	1008.19	CY
PERVIOUS BACKFILL MATERIAL (RETAINING WALL)	66.97	CY
CONCRETE BARRIER (TYPE 732A)	769.00	LF
PLASTIC PIPE (N)	52.63	LF
WATERSTOP (N)	178.00	LF
ARCHITECTURAL SURFACE (TEXTURED CONCRETE)	8284.50	SF
CHAIN LINK FENCE (TYPE CL-3')	300.00	LF

(N) = NOT A SEPARATE PAY ITEM, FOR INFORMATION ONLY

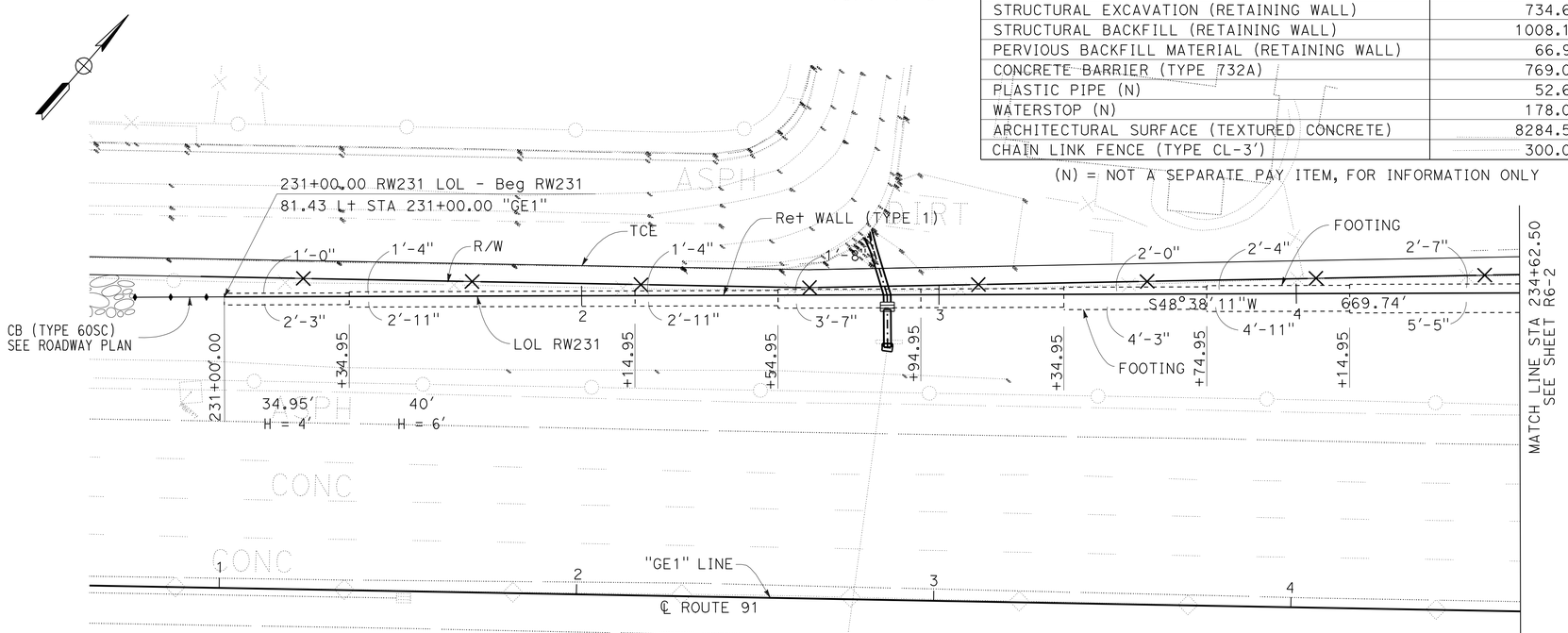

THIS PLAN ACCURATE FOR RETAINING WALL WORK ONLY.

PLAN

SCALE: 1"=20'

NOTES:

1. ARCHITECTURAL TREATMENT SHOULD EXTEND 6 IN BELOW FG OR 6 IN BELOW TOP CB (TYPE 60D MOD)
2. FOR STRUCTURAL SECTIONS, SEE ROADWAY PLANS
3. WATERSTOP IN EXPANSION JOINT SHALL BE EXTEND 6 IN INTO THE BARRIER
4. FOR POST ANCHORAGE DETAILS, SEE B11-52

RETAINING WALL PLAN

RETAINING WALL No. 231

SCALE AS SHOWN

R6-1

STATE OF CALIFORNIA - DEPARTMENT OF TRANSPORTATION
Caltrans DESIGN
FUNCTIONAL SUPERVISOR MARK PERTILE
CALCULATED-DESIGNED BY THAI VAN HGUYEN
CHECKED BY THOMAS HIEN NGO
REVISED BY
DATE REVISED

LAST REVISION 12-01-10
DATE PLOTTED => 30-APR-2011
TIME PLOTTED => 06:53

Dist	COUNTY	ROUTE	POST MILES TOTAL PROJECT	SHEET No.	TOTAL SHEETS
08	Riv	91	15.6/21.6	831	2028

REGISTERED CIVIL ENGINEER 12-1-10 DATE

4-25-11
PLANS APPROVAL DATE

REGISTERED PROFESSIONAL ENGINEER THOMAS HIEN NGO No. 68383 Exp. 9/30/11 CIVIL STATE OF CALIFORNIA

THE STATE OF CALIFORNIA OR ITS OFFICERS OR AGENTS SHALL NOT BE RESPONSIBLE FOR THE ACCURACY OR COMPLETENESS OF SCANNED COPIES OF THIS PLAN SHEET.

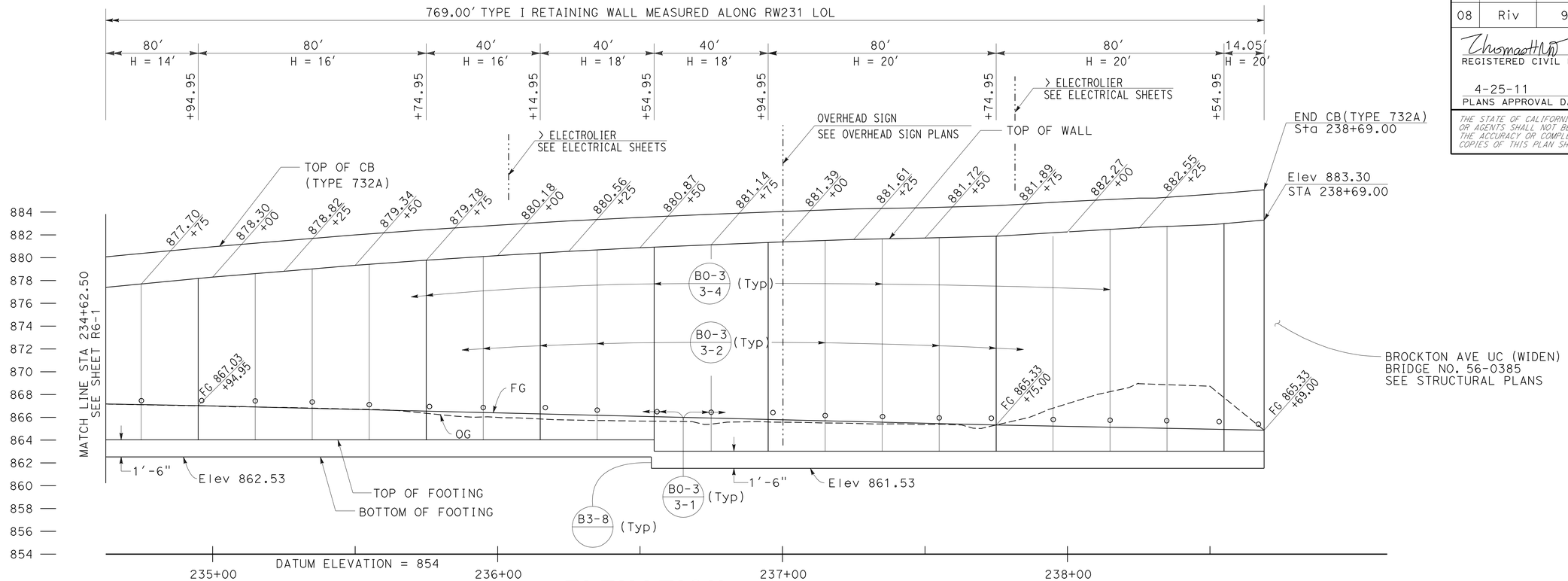

ELEVATION

SCALE Horiz 1"=20'
Vert 1"=5'

NOTES:

(5) LOWER TOP OF WALL 12" WITHIN STRUCTURE APPROACH LIMITS (SEE STRUCTURAL PLANS)

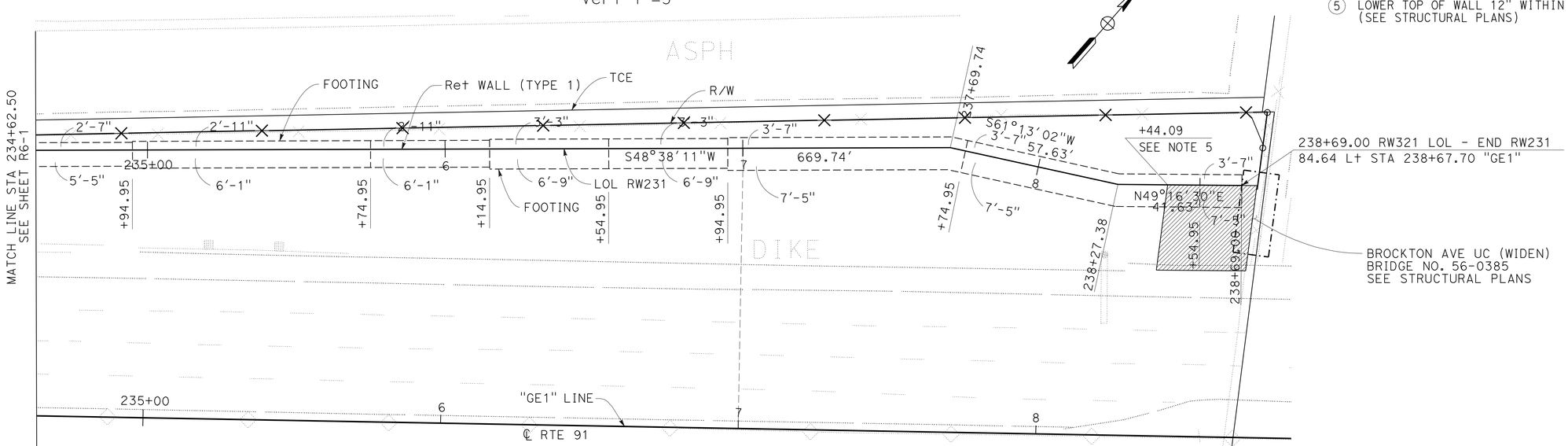

PLAN

SCALE: 1"=20'

THIS PLAN ACCURATE FOR RETAINING WALL WORK ONLY.

RETAINING WALL PLAN
RETAINING WALL No. 231

SCALE AS SHOWN

R6-2

STATE OF CALIFORNIA - DEPARTMENT OF TRANSPORTATION
Caltrans® DESIGN

FUNCTIONAL SUPERVISOR: MARK PERTILE
CALCULATED-DESIGNED BY: THAI VAN HGUYEN
CHECKED BY: THOMAS HIEN NGO
REVISED BY / DATE REVISED

LAST REVISION 12-01-10
DATE PLOTTED => 30-APR-2011
TIME PLOTTED => 06:53

Dist	COUNTY	ROUTE	POST MILES TOTAL PROJECT	SHEET No.	TOTAL SHEETS
08	Riv	91	15.6/21.6	832	2028

LICENSED LANDSCAPE ARCHITECT

4-25-11
PLANS APPROVAL DATE

LICENSED LANDSCAPE ARCHITECT
Matthew Harry Hall No. 2011
Signature
10/31/2011
Renewal Date
12-1-10
Date
STATE OF CALIFORNIA

THE STATE OF CALIFORNIA OR ITS OFFICERS OR AGENTS SHALL NOT BE RESPONSIBLE FOR THE ACCURACY OR COMPLETENESS OF SCANNED COPIES OF THIS PLAN SHEET.

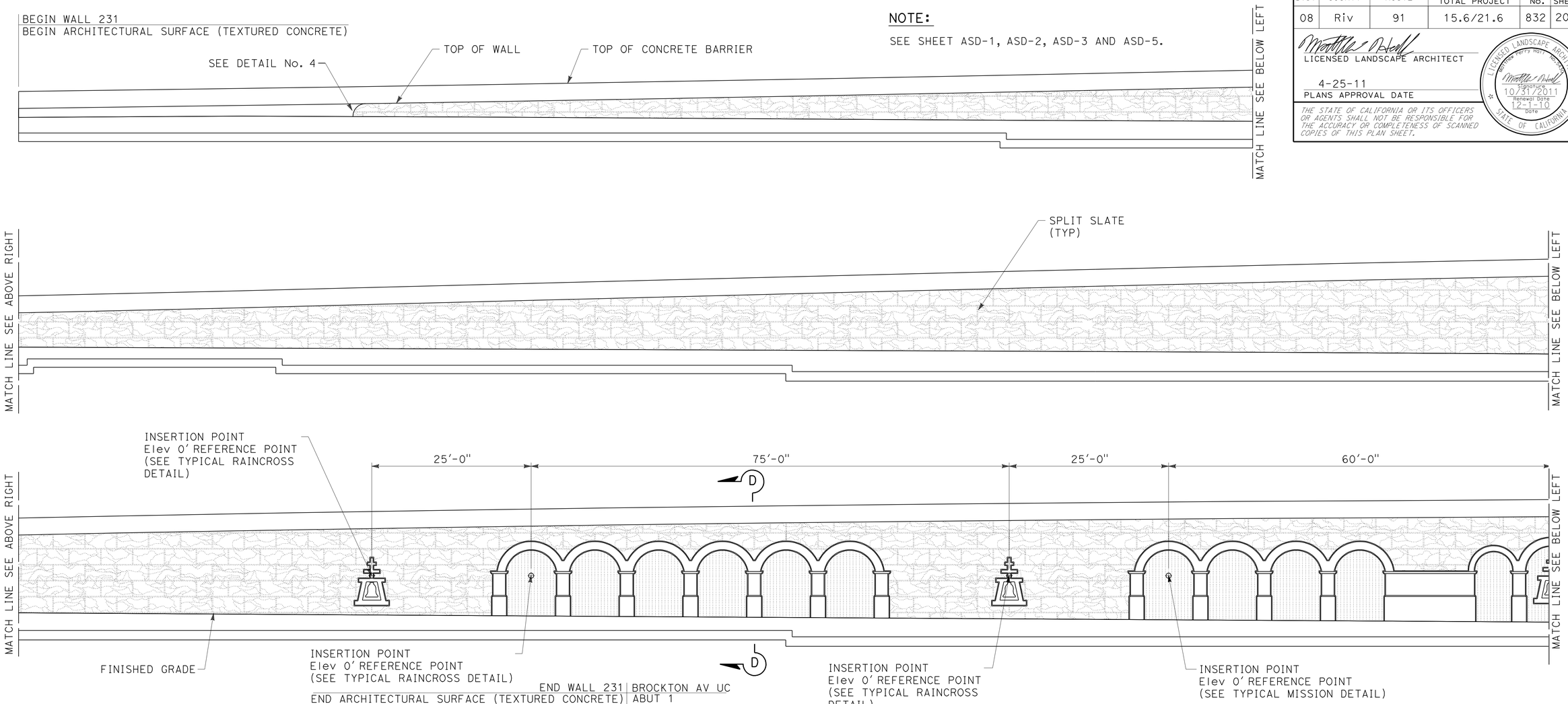

NOTE:

SEE SHEET ASD-1, ASD-2, ASD-3 AND ASD-5.

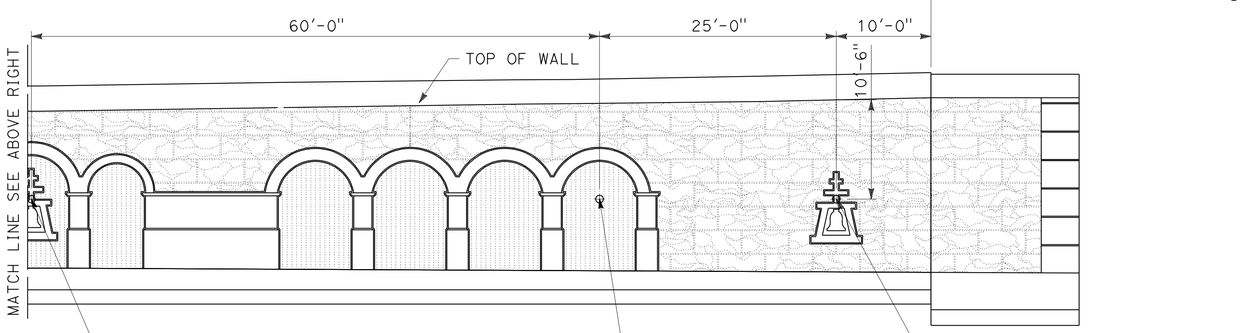

MIRRORED ELEVATION FOR FRACTURED RIB SPLIT SLATE TEXTURE RETAINING WALL No. 231

THIS PLAN IS ACCURATE FOR ARCHITECTUAL TREATMENT WORK ONLY.

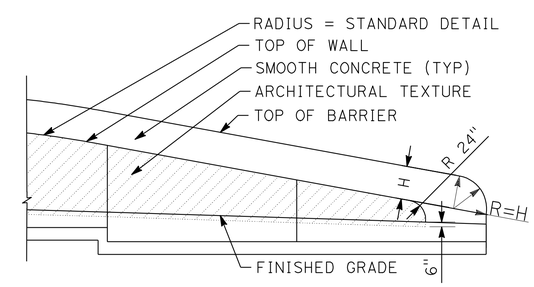

DETAIL No. 4

TYPICAL END OF WALL WITH CONCRETE BARRIER ON TOP OF WALL AND TYPE 60D MOD. CONCRETE BARRIER

ARCHITECTURAL SURFACE
RETAINING WALL No. 231

SCALE: 1/8"=1'-0"

R6-3

STATE OF CALIFORNIA - DEPARTMENT OF TRANSPORTATION
Caltrans® LANDSCAPE ARCHITECTURE

SENIOR LANDSCAPE ARCHITECT: BYRON STROUT
CALCULATED-DESIGNED BY: MATTHEW HALL
CHECKED BY: MIRIAM BISHOP
REVISED BY
DATE REVISED

LAST REVISION 12-01-10
DATE PLOTTED => 02-MAY-2011
TIME PLOTTED => 08:02

DIST	COUNTY	ROUTE	POST MILES TOTAL PROJECT	SHEET No	TOTAL SHEETS
08	Riv	91	15.6/21.6	833	2028

GEOTECHNICAL PROFESSIONAL — DATE 10/2008

4-25-11
PLANS APPROVAL DATE

REGISTERED PROFESSIONAL ENGINEER — ANDREW C. LEE — No. 2616 — Exp. 6-30-12 — GEOTECHNICAL — STATE OF CALIFORNIA

The State of California or its officers or agents shall not be responsible for the accuracy or completeness of electronic copies of this plan sheet.

California Department of Transportation
5900 Folsom Boulevard
Sacramento, CA 95819

URS Corporation
2020 East First Street, Suite 400
Santa Ana, CA 92705

FOR PLAN VIEW, SEE SHEET R6-6

NOTE: 1. This LOTB sheet was prepared in accordance with the Caltrans Soil & Rock Logging, Classification, and Presentation Manual (June 2007).

2. For legend, see "Log of Test Borings" 1 of 83

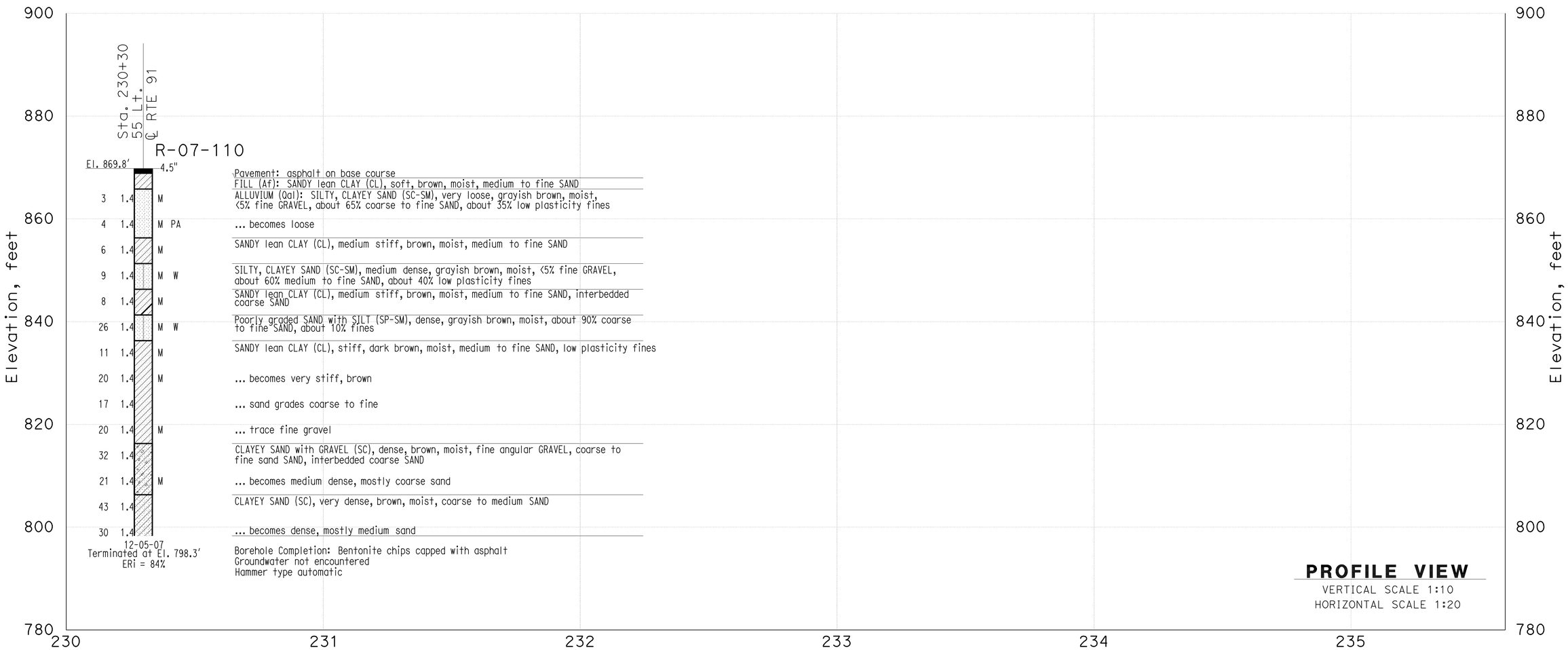

PROFILE VIEW
VERTICAL SCALE 1:10
HORIZONTAL SCALE 1:20

THIS PLAN ACCURATE FOR SOUND WALL AND RETAINING WALL WORK ONLY

DESIGN OVERSIGHT X SIGN OFF DATE	GINA PURSELL FUNCTIONAL SUPERVISOR	DRAWN BY	P. QUACH	P.CHAU/D.WADER/C.CARBINO FIELD INVESTIGATION BY: DATE: Nov 6 2007 to March 7 2008	PREPARED FOR THE STATE OF CALIFORNIA DEPARTMENT OF TRANSPORTATION	A. LEE PROJECT ENGINEER	BRIDGE NO. X POST MILE X	Retaining Wall 231 R6-4 **LOG OF TEST BORINGS SHEET 1 OF 3**
		CHECKED BY	S. PIRATHIVIRAJ					

OSF GEOTECHNICAL LOG OF TEST BORINGS SHEET (ENGLISH) (REV. 2/25/05)

ORIGINAL SCALE IN INCHES FOR REDUCED PLANS 0 1 2 3

CU 59A0590
EA 08-448400

DISREGARD PRINTS BEARING EARLIER REVISION DATES

REVISION DATES (PRELIMINARY STAGE ONLY) X

SHEET 1 OF 3

FILE => 844840qf004.dgn

USERNAME => trmnguye DATE PLOTTED => 30-APR-2011 TIME PLOTTED =>

DIST	COUNTY	ROUTE	POST MILES TOTAL PROJECT	SHEET No	TOTAL SHEETS
08	Riv	91	15.6/21.6	834	2028

GEOTECHNICAL PROFESSIONAL — DATE 10/2008

4-25-11
PLANS APPROVAL DATE

REGISTERED PROFESSIONAL ENGINEER — ANDREW C. LEE — No. 2616 — Exp. 6-30-12 — GEOTECHNICAL — STATE OF CALIFORNIA

The State of California or its officers or agents shall not be responsible for the accuracy or completeness of electronic copies of this plan sheet.

California Department of Transportation
5900 Folsom Boulevard
Sacramento, CA 95819

URS Corporation
2020 East First Street, Suite 400
Santa Ana, CA 92705

FOR PLAN VIEW, SEE SHEET R6-6

NOTE: 1. This LOTB sheet was prepared in accordance with the Caltrans Soil & Rock Logging, Classification, and Presentation Manual (June 2007).

2. For legend, see "Log of Test Borings" 1 of 83

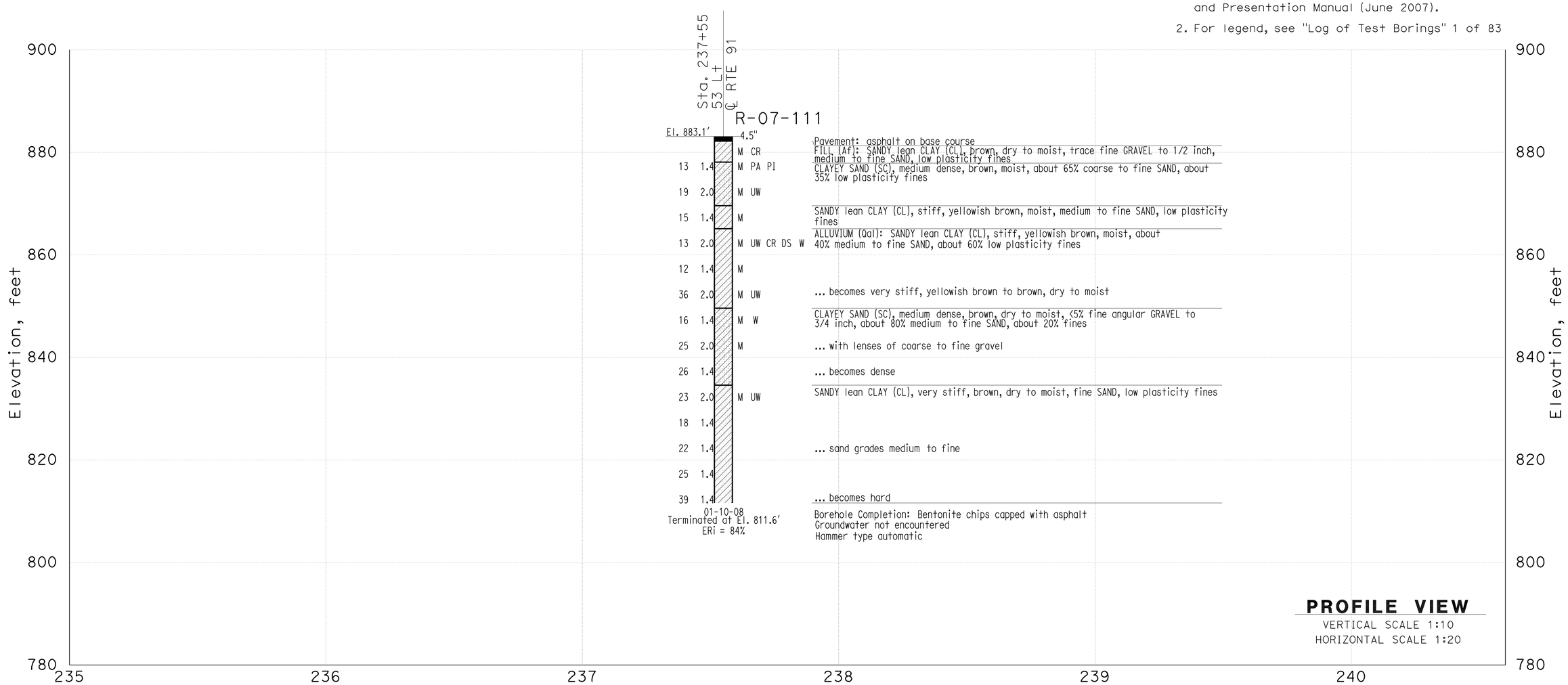

THIS PLAN ACCURATE FOR SOUND WALL AND RETAINING WALL WORK ONLY

DESIGN OVERSIGHT	GINA PURSELL FUNCTIONAL SUPERVISOR	DRAWN BY	P. QUACH	P.CHAU/D.WADER/C.CARBINO FIELD INVESTIGATION BY:	PREPARED FOR THE STATE OF CALIFORNIA DEPARTMENT OF TRANSPORTATION	A. LEE PROJECT ENGINEER	BRIDGE NO. X
X SIGN OFF DATE		CHECKED BY	S. PIRATHIVIRAJ	DATE: Nov 6 2007 to March 7 2008			POST MILE X

Retaining Wall 231 R6-5

LOG OF TEST BORINGS SHEET 2 OF 3

OSF GEOTECHNICAL LOG OF TEST BORINGS SHEET (ENGLISH) (REV. 2/25/05)

ORIGINAL SCALE IN INCHES FOR REDUCED PLANS 0 1 2 3

CU 59A0590
EA 08-448400

DISREGARD PRINTS BEARING EARLIER REVISION DATES

REVISION DATES (PRELIMINARY STAGE ONLY) X

SHEET 2 OF 3

FILE => 844840qf005.dgn

USERNAME => trmnguye DATE PLOTTED => 30-APR-2011 TIME PLOTTED =>

DIST	COUNTY	ROUTE	POST MILES TOTAL PROJECT	SHEET No	TOTAL SHEETS
08	Riv	91	15.6/21.6	835	2028

GEOTECHNICAL PROFESSIONAL — DATE 10/2008

4-25-11
PLANS APPROVAL DATE

REGISTERED PROFESSIONAL ENGINEER — ANDREW C. LEE — No. 2616 — Exp. 6-30-12 — GEOTECHNICAL — STATE OF CALIFORNIA

The State of California or its officers or agents shall not be responsible for the accuracy or completeness of electronic copies of this plan sheet.

California Department of Transportation
5900 Folsom Boulevard
Sacramento, CA 95819

URS Corporation
2020 East First Street, Suite 400
Santa Ana, CA 92705

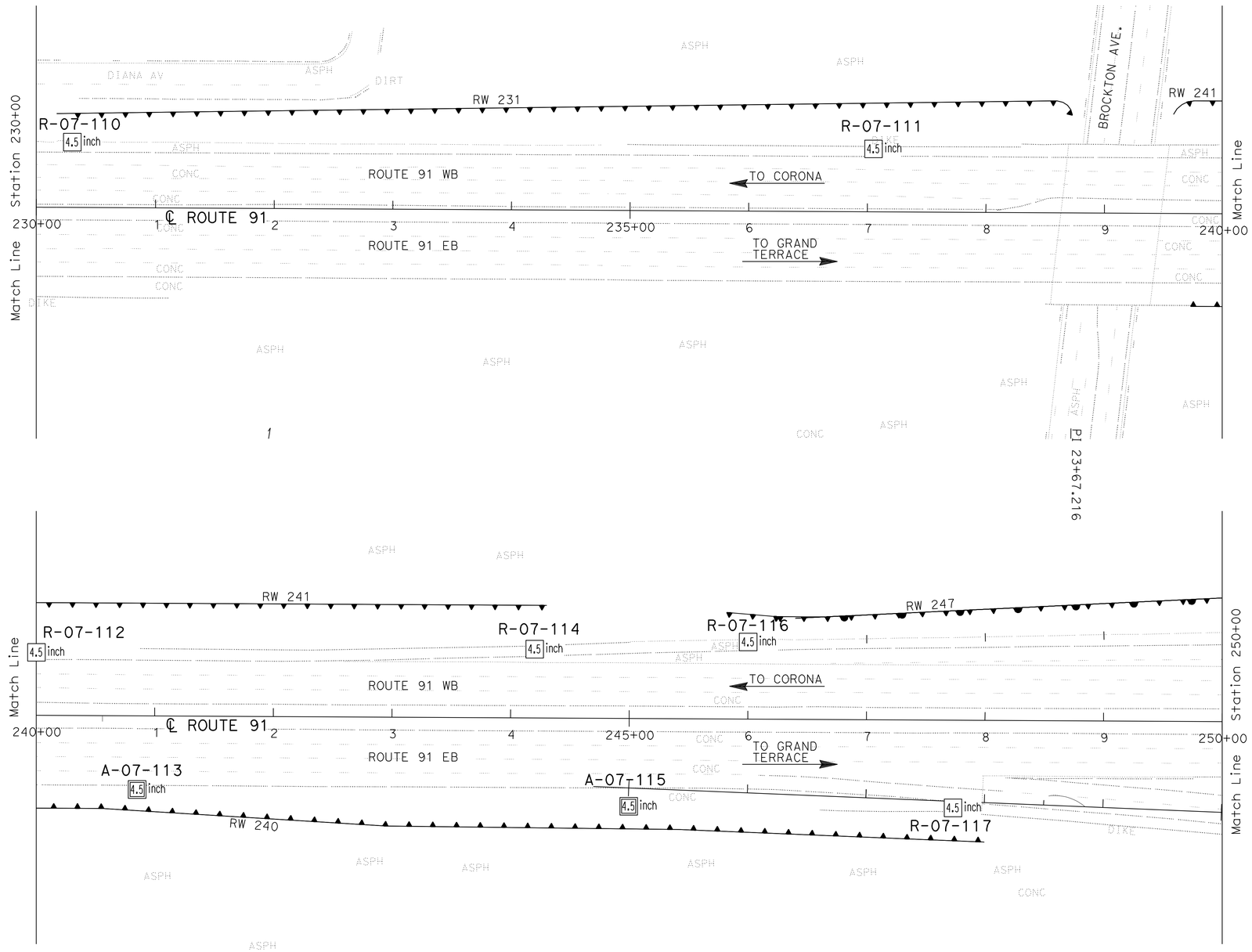

PLAN
SCALE 1"=50'

Borehole Number	Drill Rig	Hammer Type	Avg. Hammer Efficiency, ETR (%)
R-07-110	CS-2000	Automatic	84
R-07-111	CS-2000	Automatic	84
R-07-112	CS-2000	Automatic	84
A-07-113	CS-2000	Automatic	84
R-07-114	CME 85	Automatic	87
A-07-115	CS-2000	Automatic	84
R-07-116	CS-2000	Automatic	84
R-07-117	CS-2000	Automatic	84

Sampler Type	Inside Diameter (Inches)	Borehole Numbers
SPT	1.375	R-07-110, R-07-111 R-07-112, A-07-113 R-07-114, A-07-115 R-07-116, R-07-117
Modified California 1	1.94	R-07-111, A-07-113 R-07-114
Modified California 2	2.40	-

DESIGN OVERSIGHT X SIGN OFF DATE	GINA PURSELL FUNCTIONAL SUPERVISOR	DRAWN BY CHECKED BY	P. QUACH S. PIRATHIVIRAJ	P.CHAU/D.WADER/C.CARBINO FIELD INVESTIGATION BY: DATE: Nov 6 2007 to March 7 2008	PREPARED FOR THE STATE OF CALIFORNIA DEPARTMENT OF TRANSPORTATION

A. LEE
PROJECT ENGINEER

BRIDGE NO. X
POST MILE X

RETAINING WALL 231 R6-6

LOG OF TEST BORINGS 3 OF 3

OSF GEOTECHNICAL LOG OF TEST BORINGS SHEET (ENGLISH) (REV. 2/25/05)

ORIGINAL SCALE IN INCHES FOR REDUCED PLANS 0 1 2 3

CU 59A0590
EA 08-448400

DISREGARD PRINTS BEARING EARLIER REVISION DATES

REVISION DATES (PRELIMINARY STAGE ONLY) X

SHEET 3 OF 3

FILE => 844840qf006.dgn

USERNAME => trmnguye DATE PLOTTED => 30-APR-2011 TIME PLOTTED =>

Dist	COUNTY	ROUTE	POST MILES TOTAL PROJECT	SHEET No.	TOTAL SHEETS
08	Riv	91	15.6/21.6	836	2028

REGISTERED CIVIL ENGINEER 12-1-10 DATE

4-25-11
PLANS APPROVAL DATE

REGISTERED PROFESSIONAL ENGINEER THOMAS HIEN NGO No. 68383 Exp. 9/30/11 CIVIL STATE OF CALIFORNIA

THE STATE OF CALIFORNIA OR ITS OFFICERS OR AGENTS SHALL NOT BE RESPONSIBLE FOR THE ACCURACY OR COMPLETENESS OF SCANNED COPIES OF THIS PLAN SHEET.

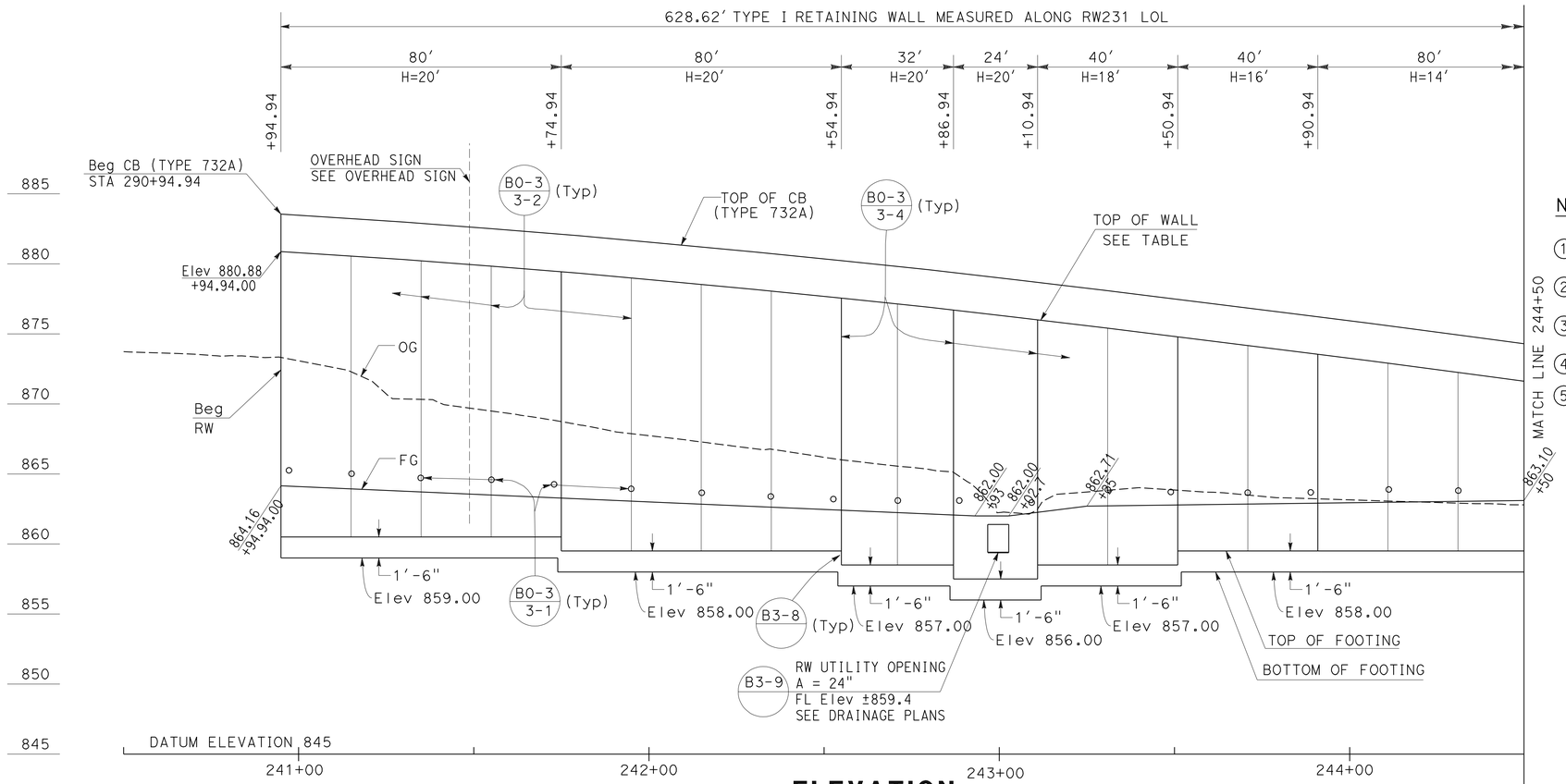

ELEVATION

SCALE Horiz 1"=20'
Vert 1"=5'

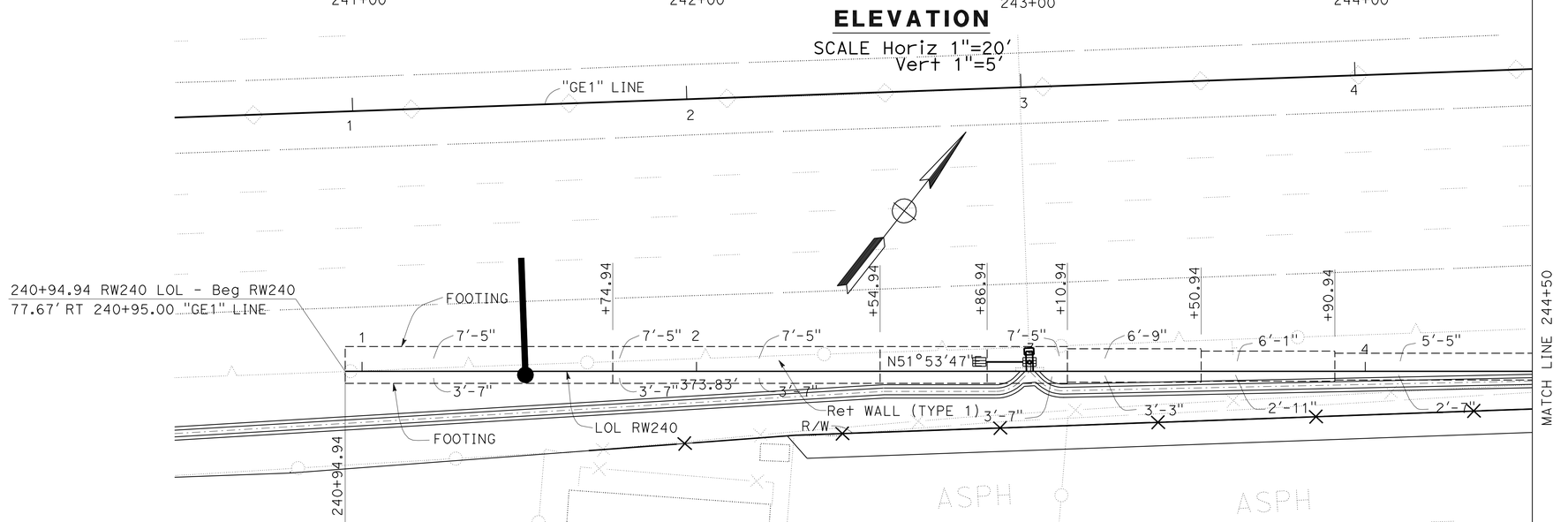

PLAN

SCALE 1"=20'

NOTES:

1. ARCHITECTURAL TREATMENT SHOULD EXTEND 6 IN BELOW FG OR 6 IN BELOW TOP CB (TYPE 60D MOD)
2. FOR STRUCTURAL SECTIONS, SEE ROADWAY PLANS
3. WATERSTOP IN EXPANSION JOINT SHALL BE EXTEND 6 IN INTO THE BARRIER
4. FOR ROUNDING DETAILS, SEE ARCHITECTURAL TREATMENT PLANS
5. FOR POST ANCHORAGE DETAILS, SEE B11-52

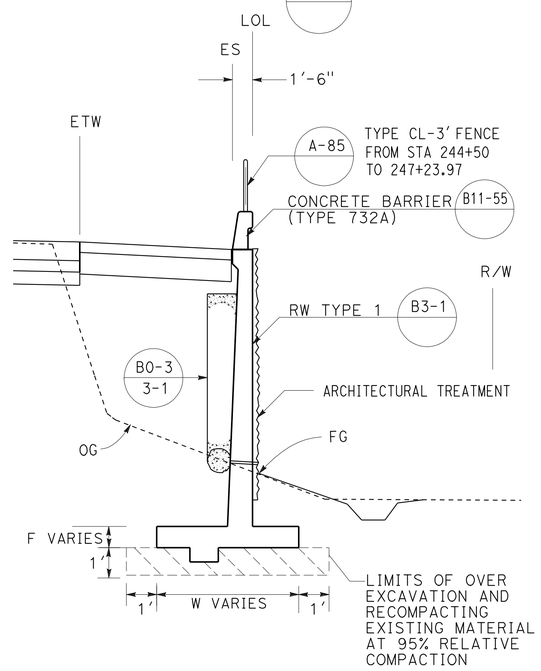

TYPICAL SECTION

NO SCALE

RETAINING WALL PLAN
RETAINING WALL No. 240

SCALE AS SHOWN

THIS PLAN ACCURATE FOR RETAINING WALL WORK ONLY.

R7-1

REVISED BY	DATE REVISED

THAI VAN HGUYEN — THOMAS HIEN NGO

CALCULATED-DESIGNED BY — CHECKED BY

FUNCTIONAL SUPERVISOR: MARK PERTILE

STATE OF CALIFORNIA - DEPARTMENT OF TRANSPORTATION — DESIGN

Caltrans

LAST REVISION 12-01-10 | DATE PLOTTED => 30-APR-2011 | TIME PLOTTED => 06:54

Dist	COUNTY	ROUTE	POST MILES TOTAL PROJECT	SHEET No.	TOTAL SHEETS
08	Riv	91	15.6/21.6	837	2028

REGISTERED CIVIL ENGINEER 12-1-10 DATE

4-25-11
PLANS APPROVAL DATE

REGISTERED PROFESSIONAL ENGINEER THOMAS HIEN NGO No. 68383 Exp. 9/30/11 CIVIL STATE OF CALIFORNIA

THE STATE OF CALIFORNIA OR ITS OFFICERS OR AGENTS SHALL NOT BE RESPONSIBLE FOR THE ACCURACY OR COMPLETENESS OF SCANNED COPIES OF THIS PLAN SHEET.

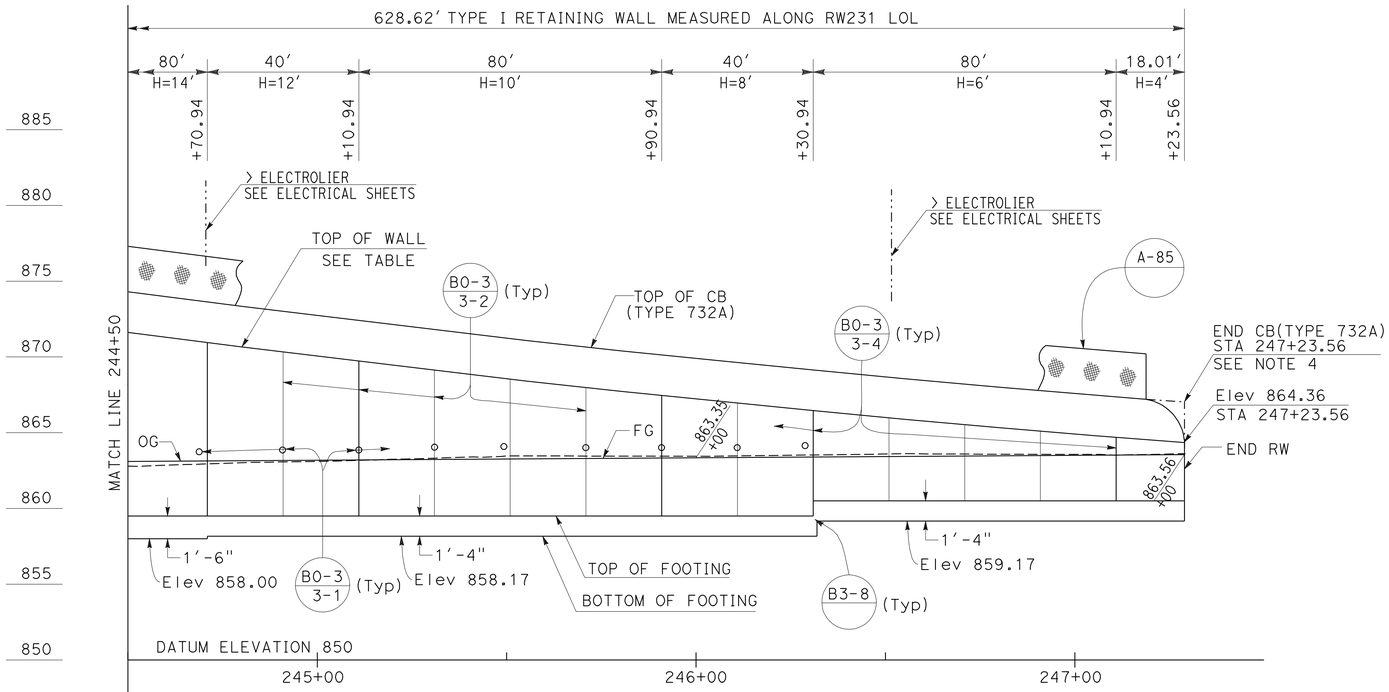

ELEVATION

SCALE Horiz 1"=20'
Vert 1"=5'

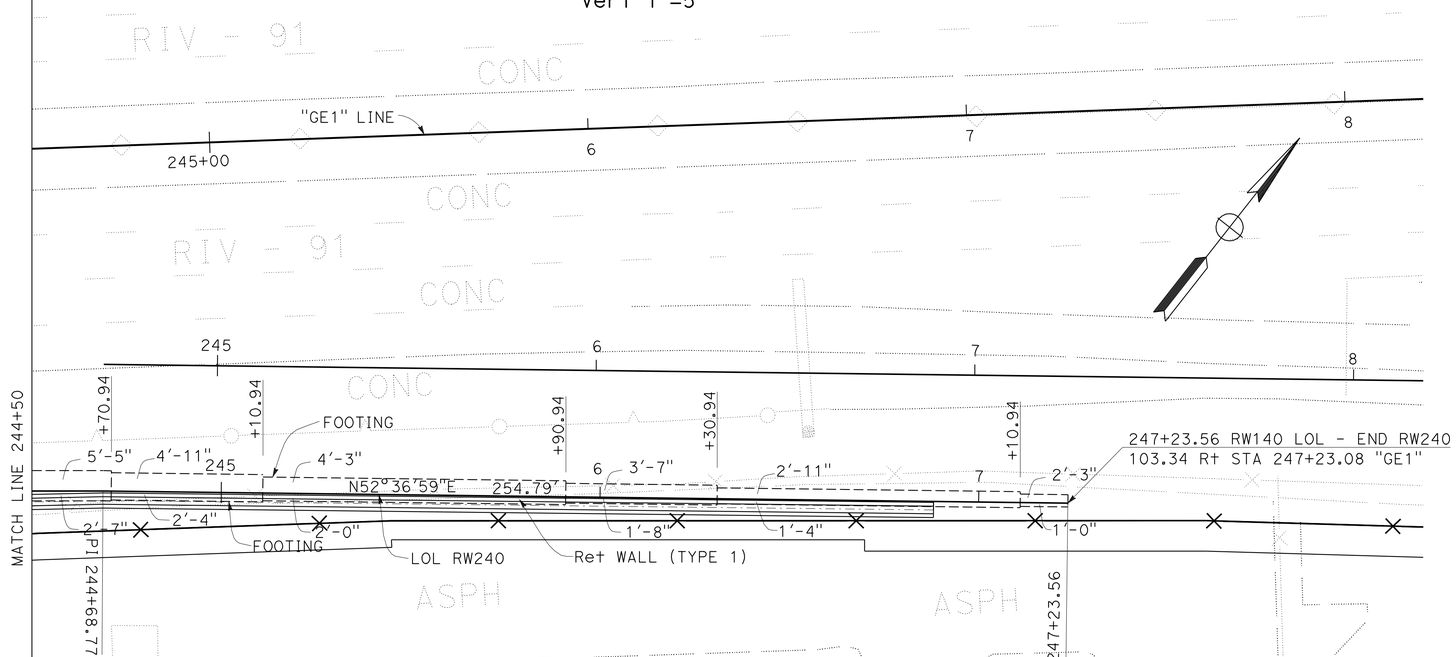

PLAN

SCALE 1"=20'

ELEVATION TABLE	
STATION	TOP OF WALL
240+94.94	880.88
240+00.00	880.75
241+25.00	880.32
241+50.00	879.84
241+75.00	879.34
242+00.00	878.76
242+25.00	878.18
242+50.00	877.55
242+75.00	876.90
243+00.00	876.18
243+25.00	875.44
243+50.00	874.66
243+75.00	873.89
244+00.00	873.10
244+25.00	872.27
244+50.00	871.46
244+75.00	870.66
245+00.00	869.91
245+25.00	869.16
245+50.00	868.40
245+75.00	867.73
246+00.00	867.10
246+25.00	866.48
246+50.00	865.88
246+75.00	865.33
247+00.00	864.81
247+23.56	864.36

QUANTITIES

STRUCTURAL CONCRETE (RETAINING WALL)	708.20	CY
BAR REINFORCING STEEL (RETAINING WALL)	89815	LB
STRUCTURAL EXCAVATION (RETAINING WALL)	2946.33	CY
STRUCTURAL BACKFILL (RETAINING WALL)	2751.79	CY
PERVIOUS BACKFILL MATERIAL (RETAINING WALL)	227.24	CY
CONCRETE BARRIER (TYPE 732A)	628.62	LF
PLASTIC PIPE (N)	41.62	LF
WATERSTOP (N)	153.37	LF
ARCHITECTURAL SURFACE (TEXTURED CONCRETE)	6447.40	SF
CHAIN LINK FENCE (TYPE CL-3')	273.97	LF

(N) = NOT A SEPARATE PAY ITEM, FOR INFORMATION ONLY

RETAINING WALL PLAN
RETAINING WALL No. 240
SCALE AS SHOWN

R7-2

THIS PLAN ACCURATE FOR RETAINING WALL WORK ONLY.

STATE OF CALIFORNIA - DEPARTMENT OF TRANSPORTATION
Caltrans
DESIGN
FUNCTIONAL SUPERVISOR: MARK PERTILE
CALCULATED-DESIGNED BY: THAI VAN HGUYEN
CHECKED BY: THOMAS HIEN NGO
REVISED BY
DATE REVISED

LAST REVISION 12-01-10
DATE PLOTTED => 30-APR-2011
TIME PLOTTED => 06:54

Dist	COUNTY	ROUTE	POST MILES TOTAL PROJECT	SHEET No.	TOTAL SHEETS
08	Riv	91	15.6/21.6	838	2028

LICENSED LANDSCAPE ARCHITECT

4-25-11
PLANS APPROVAL DATE

LICENSED LANDSCAPE ARCHITECT
Matthew Harry Hall No. 2011
Signature
10/31/2011
Renewal Date
12-1-10
Date
STATE OF CALIFORNIA

THE STATE OF CALIFORNIA OR ITS OFFICERS OR AGENTS SHALL NOT BE RESPONSIBLE FOR THE ACCURACY OR COMPLETENESS OF SCANNED COPIES OF THIS PLAN SHEET.

NOTE:

SEE SHEET ASD-1, ASD-2, ASD-4 AND ASD-5.

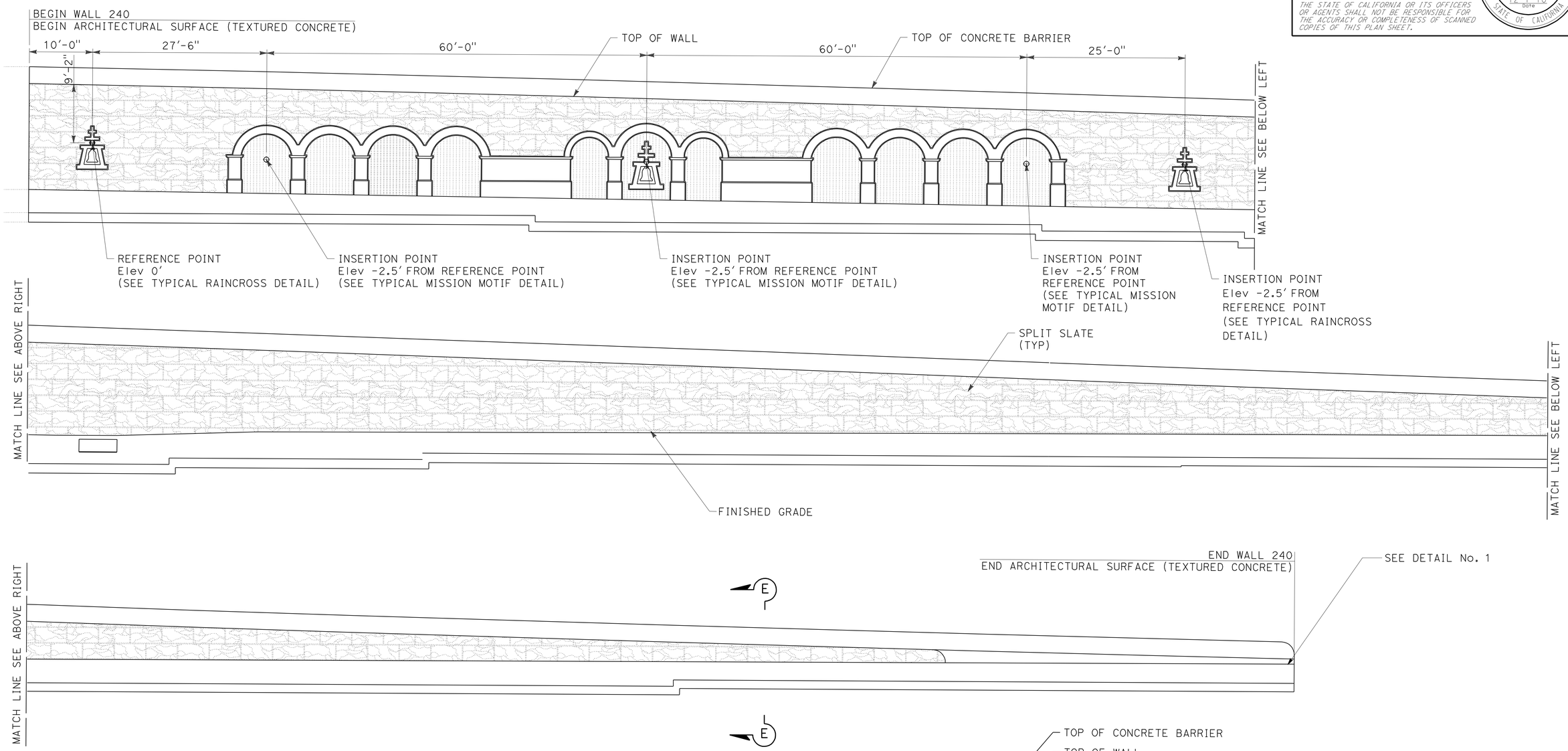

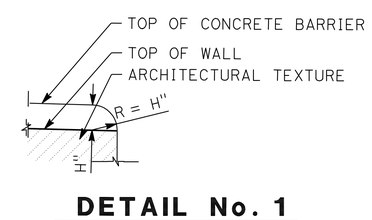

DETAIL No. 1

TYPICAL END OF WALL
WITH CONCRETE BARRIER
ON TOP OF WALL DETAIL

ELEVATION FOR FRACTURED RIB TEXTURE RETAINING WALL No. 240

THIS PLAN IS ACCURATE FOR ARCHITECTUAL TREATMENT WORK ONLY.

ARCHITECTURAL SURFACE RETAINING WALL No. 240

SCALE: 1/8"=1'-0"

R7-3

STATE OF CALIFORNIA - DEPARTMENT OF TRANSPORTATION
Caltrans® LANDSCAPE ARCHITECTURE

SENIOR LANDSCAPE ARCHITECT: BYRON STROUT
CALCULATED-DESIGNED BY: MATTHEW HALL
CHECKED BY: MIRIAM BISHOP
REVISED BY
DATE REVISED

LAST REVISION 12-01-10
DATE PLOTTED => 30-APR-2011
TIME PLOTTED => 06:54

DIST	COUNTY	ROUTE	POST MILES TOTAL PROJECT	SHEET No	TOTAL SHEETS
08	Riv	91	15.6/21.6	839	2028

GEOTECHNICAL PROFESSIONAL 10/2008 DATE

4-25-11
PLANS APPROVAL DATE

REGISTERED PROFESSIONAL ENGINEER
ANDREW C. LEE
No. 2616
Exp. 6-30-12
GEOTECHNICAL
STATE OF CALIFORNIA

The State of California or its officers or agents shall not be responsible for the accuracy or completeness of electronic copies of this plan sheet.

California Department of Transportation
5900 Folsom Boulevard
Sacramento, CA 95819

URS Corporation
2020 East First Street, Suite 400
Santa Ana, CA 92705

NOTE: 1. This LOTB sheet was prepared in accordance with the Caltrans Soil & Rock Logging, Classification, and Presentation Manual (June 2007).

2. For legend, see "Soil Legend Log of Test Borings" sheet

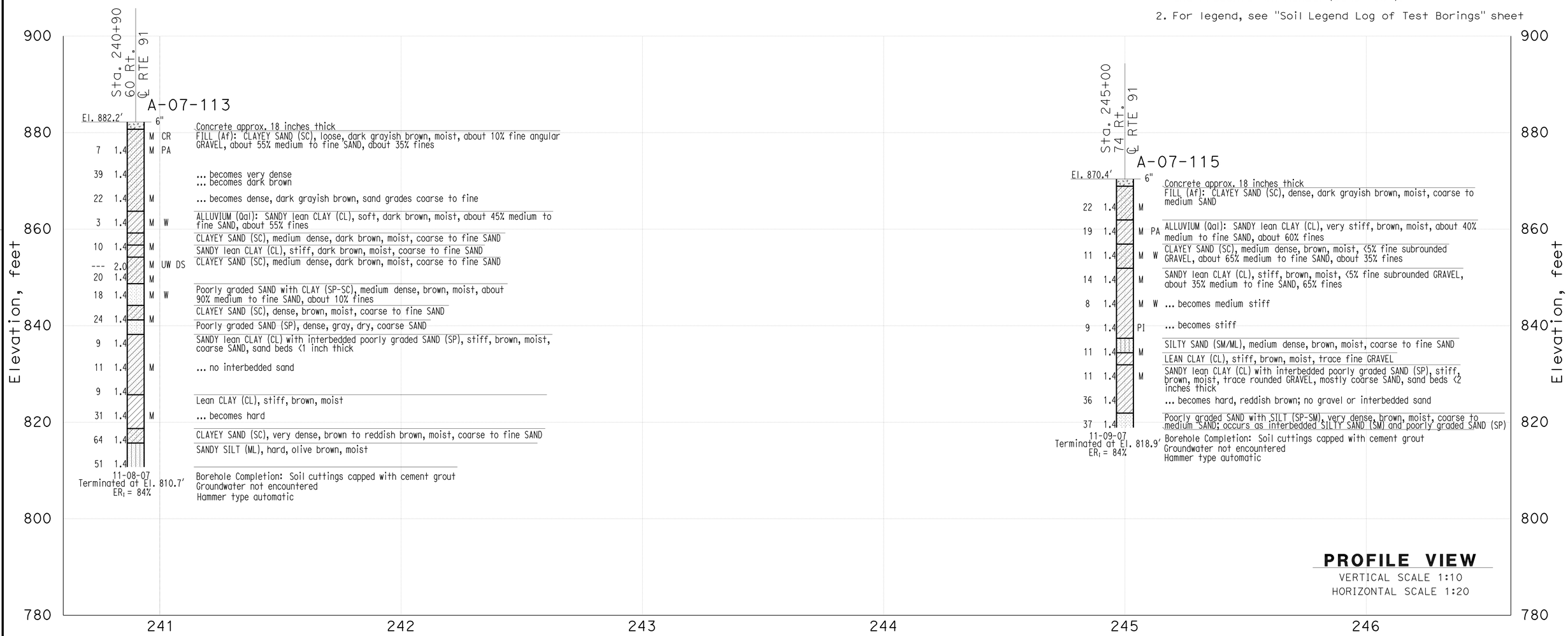

PROFILE VIEW
VERTICAL SCALE 1:10
HORIZONTAL SCALE 1:20

THIS PLAN ACCURATE FOR SOUND WALL AND RETAINING WALL WORK ONLY

DESIGN OVERSIGHT X SIGN OFF DATE	GINA PURSELL FUNCTIONAL SUPERVISOR	DRAWN BY CHECKED BY	P. QUACH S. PIRATHIVIRAJ	P.CHAU/D.WADER/C.CARBINO FIELD INVESTIGATION BY: DATE: Nov 6 2007 to March 7 2008	PREPARED FOR THE STATE OF CALIFORNIA DEPARTMENT OF TRANSPORTATION	A. LEE PROJECT ENGINEER	BRIDGE NO. X POST MILE X	Retaining Wall 240 R7-4 **LOG OF TEST BORINGS SHEET 1 OF 2**

OSF GEOTECHNICAL LOG OF TEST BORINGS SHEET (ENGLISH) (REV. 2/25/05)

ORIGINAL SCALE IN INCHES FOR REDUCED PLANS 0 1 2 3

CU 59A0590
EA 08-448400

DISREGARD PRINTS BEARING EARLIER REVISION DATES

REVISION DATES (PRELIMINARY STAGE ONLY) X

SHEET 1 OF 3

FILE => 844840qg004.dgn

USERNAME => trmnguye DATE PLOTTED => 30-APR-2011 TIME PLOTTED =>

DIST	COUNTY	ROUTE	POST MILES TOTAL PROJECT	SHEET No	TOTAL SHEETS
08	Riv	91	15.6/21.6	840	2028

GEOTECHNICAL PROFESSIONAL DATE 10/2008

4-25-11
PLANS APPROVAL DATE

REGISTERED PROFESSIONAL ENGINEER
ANDREW C. LEE
No. 2616
Exp. 6-30-12
GEOTECHNICAL
STATE OF CALIFORNIA

The State of California or its officers or agents shall not be responsible for the accuracy or completeness of electronic copies of this plan sheet.

California Department of Transportation
5900 Folsom Boulevard
Sacramento, CA 95819

URS Corporation
2020 East First Street, Suite 400
Santa Ana, CA 92705

NOTE: 1. This LOTB sheet was prepared in accordance with the Caltrans Soil & Rock Logging, Classification, and Presentation Manual (June 2007).

2. For legend, see "Soil Legend Log of Test Borings" sheet

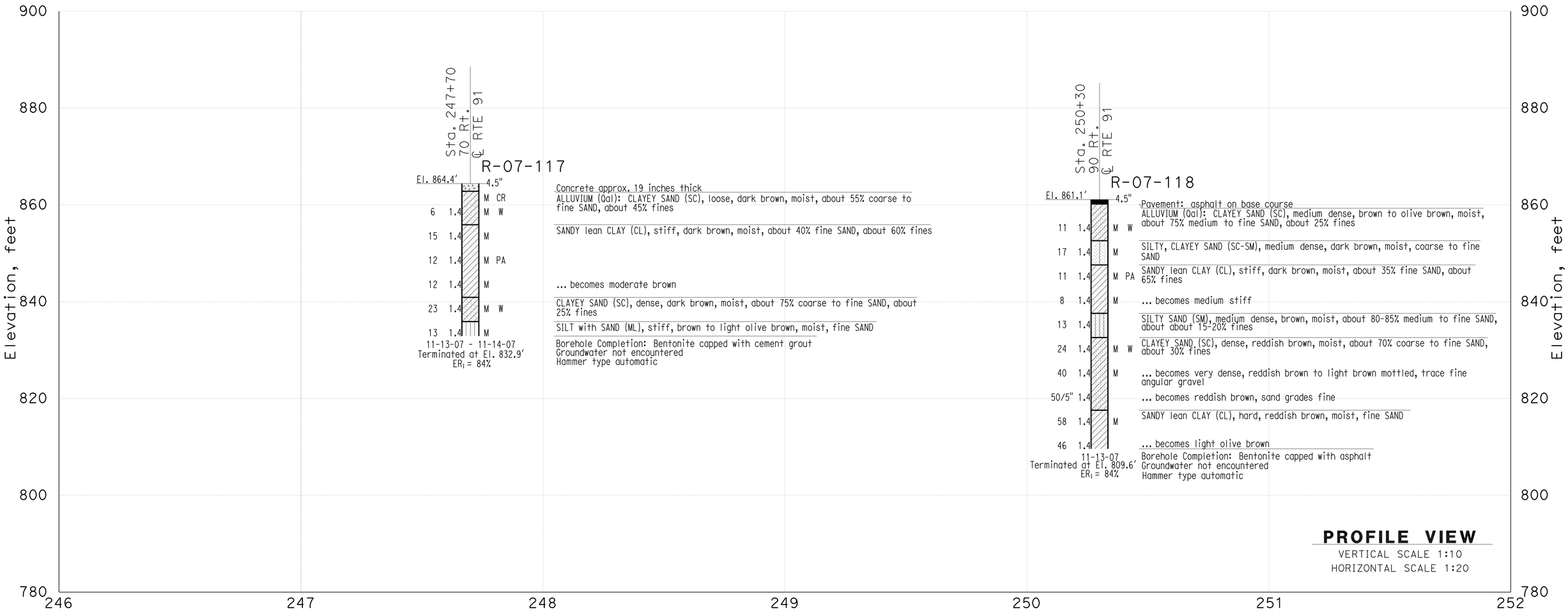

THIS PLAN ACCURATE FOR SOUND WALL AND RETAINING WALL WORK ONLY

DESIGN OVERSIGHT	GINA PURSELL	DRAWN BY	P. QUACH	P.CHAU/D.WADER/C.CARBINO	PREPARED FOR THE STATE OF CALIFORNIA DEPARTMENT OF TRANSPORTATION	A. LEE	BRIDGE NO. X
X	FUNCTIONAL SUPERVISOR	CHECKED BY	S. PIRATHIVIRAJ	FIELD INVESTIGATION BY: DATE: Nov 6 2007 to March 7 2008		PROJECT ENGINEER	POST MILE X
SIGN OFF DATE							

Retaining Wall 240 R7-5

LOG OF TEST BORINGS SHEET 2 OF 2

OSF GEOTECHNICAL LOG OF TEST BORINGS SHEET (ENGLISH) (REV. 2/25/05)

ORIGINAL SCALE IN INCHES FOR REDUCED PLANS 0 1 2 3

CU 59A0590
EA 08-448400

DISREGARD PRINTS BEARING EARLIER REVISION DATES

REVISION DATES (PRELIMINARY STAGE ONLY) X

SHEET 2 OF 3

FILE => 844840qg005.dgn

USERNAME => rrmnguye DATE PLOTTED => 30-APR-2011 TIME PLOTTED =>

DIST	COUNTY	ROUTE	POST MILES TOTAL PROJECT	SHEET No	TOTAL SHEETS
08	Riv	91	15.6/21.6	841	2028

GEOTECHNICAL PROFESSIONAL — DATE 10/2008

4-25-11
PLANS APPROVAL DATE

REGISTERED PROFESSIONAL ENGINEER — ANDREW C. LEE — No. 2616 — Exp. 6-30-12 — GEOTECHNICAL — STATE OF CALIFORNIA

The State of California or its officers or agents shall not be responsible for the accuracy or completeness of electronic copies of this plan sheet.

California Department of Transportation
5900 Folsom Boulevard
Sacramento, CA 95819

URS Corporation
2020 East First Street, Suite 400
Santa Ana, CA 92705

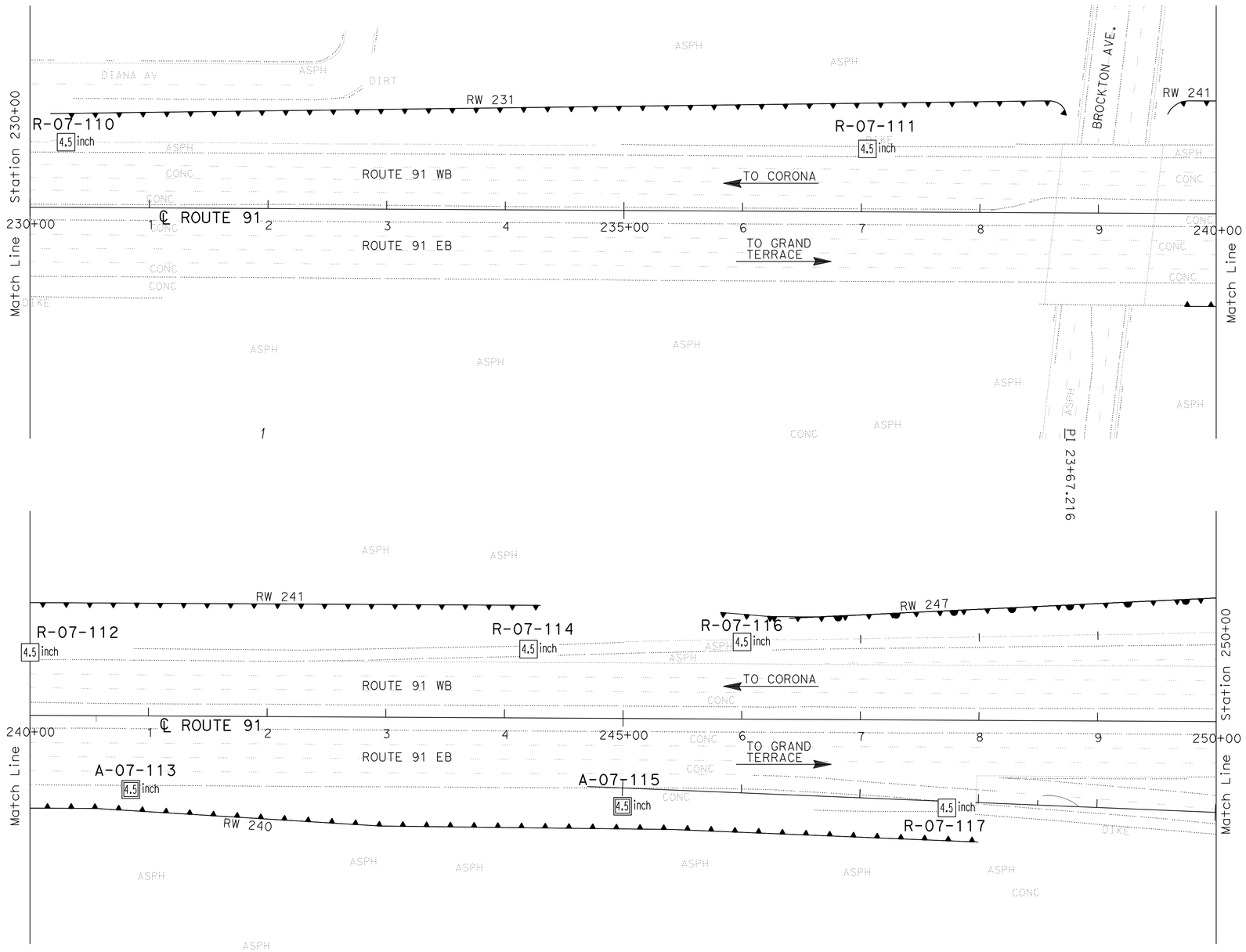

PLAN
SCALE 1"=50'

Borehole Number	Drill Rig	Hammer Type	Avg. Hammer Efficiency, ETR (%)
R-07-110	CS-2000	Automatic	84
R-07-111	CS-2000	Automatic	84
R-07-112	CS-2000	Automatic	84
A-07-113	CS-2000	Automatic	84
R-07-114	CME 85	Automatic	87
A-07-115	CS-2000	Automatic	84
R-07-116	CS-2000	Automatic	84
R-07-117	CS-2000	Automatic	84

Sampler Type	Inside Diameter (Inches)	Borehole Numbers
SPT	1.375	R-07-110, R-07-111 R-07-112, A-07-113 R-07-114, A-07-115 R-07-116, R-07-117
Modified California 1	1.94	R-07-111, A-07-113 R-07-114
Modified California 2	2.40	-

DESIGN OVERSIGHT — X — SIGN OFF DATE

GINA PURSELL — FUNCTIONAL SUPERVISOR

DRAWN BY: P. QUACH
CHECKED BY: S. PIRATHIVIRAJ

P.CHAU/D.WADER/C.CARBINO
FIELD INVESTIGATION BY:
DATE: Nov 6 2007 to March 7 2008

PREPARED FOR THE STATE OF CALIFORNIA DEPARTMENT OF TRANSPORTATION

A. LEE — PROJECT ENGINEER

BRIDGE NO. X
POST MILE X

RETAINING WALL 240 — R7-6

LOG OF TEST BORINGS 3 OF 3

OSF GEOTECHNICAL LOG OF TEST BORINGS SHEET (ENGLISH) (REV. 2/25/05)

ORIGINAL SCALE IN INCHES FOR REDUCED PLANS 0 1 2 3

CU 59A0590
EA 08-448400

DISREGARD PRINTS BEARING EARLIER REVISION DATES

REVISION DATES (PRELIMINARY STAGE ONLY) X

SHEET 3 OF 3

FILE => 844840qg006.dgn

USERNAME => trmnguye — DATE PLOTTED => 30-APR-2011 — TIME PLOTTED =>

Dist	COUNTY	ROUTE	POST MILES TOTAL PROJECT	SHEET No.	TOTAL SHEETS
08	Riv	91	15.6/21.6	842	2028

REGISTERED CIVIL ENGINEER 12-1-10 DATE

4-25-11
PLANS APPROVAL DATE

REGISTERED PROFESSIONAL ENGINEER THOMAS HIEN NGO No. 68383 Exp. 9/30/11 CIVIL STATE OF CALIFORNIA

THE STATE OF CALIFORNIA OR ITS OFFICERS OR AGENTS SHALL NOT BE RESPONSIBLE FOR THE ACCURACY OR COMPLETENESS OF SCANNED COPIES OF THIS PLAN SHEET.

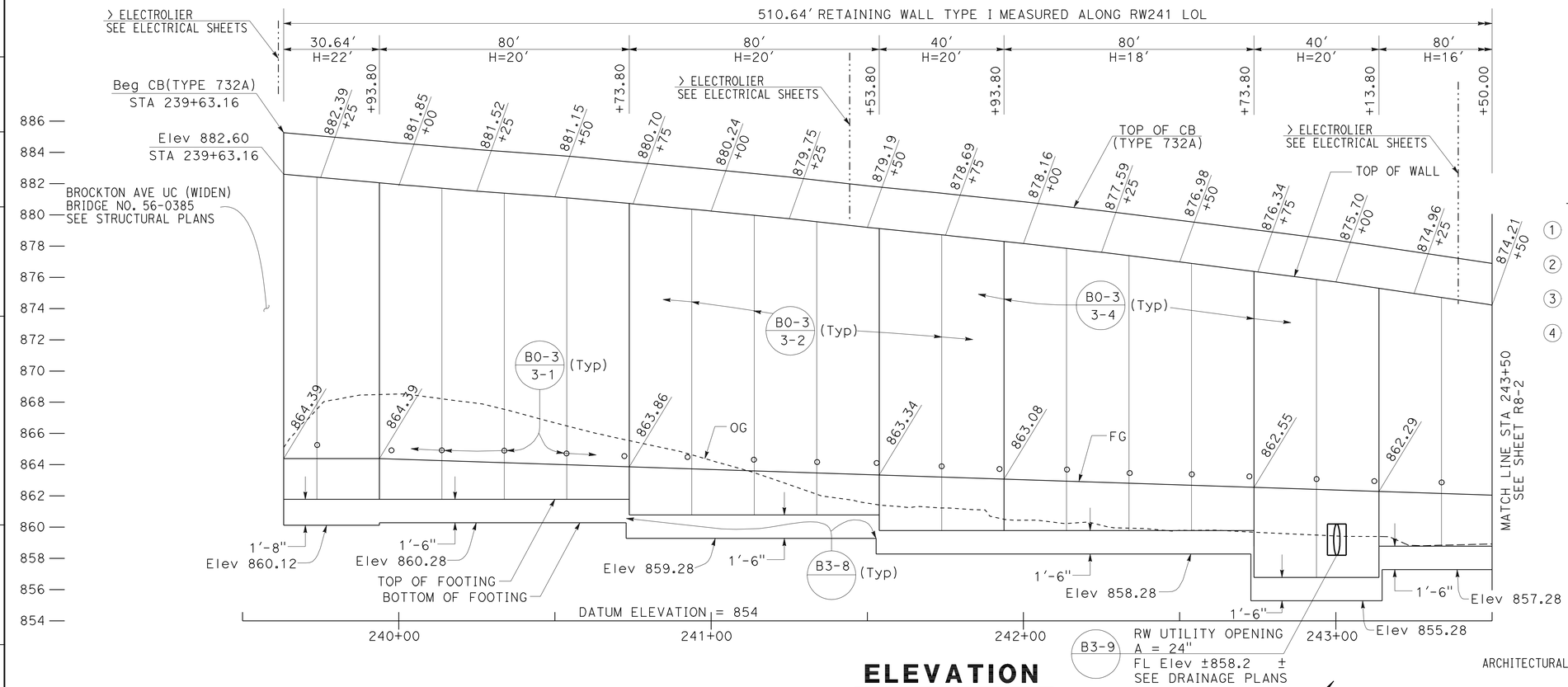

ELEVATION

SCALE Horiz 1"=20'
Vert 1"=4'

NOTES:

1. ARCHITECTURAL TREATMENT SHOULD EXTEND 6 IN BELOW FG OR 6 IN BELOW TOP CB (TYPE 60D MOD)
2. FOR STRUCTURAL SECTIONS, SEE ROADWAY PLANS
3. WATERSTOP IN EXPANSION JOINT SHALL BE EXTEND 6 IN INTO THE BARRIER
4. LOWER TOP OF WALL 12" WITHIN STRUCTURE APPROACH LIMITS (SEE STRUCTURAL PLANS)

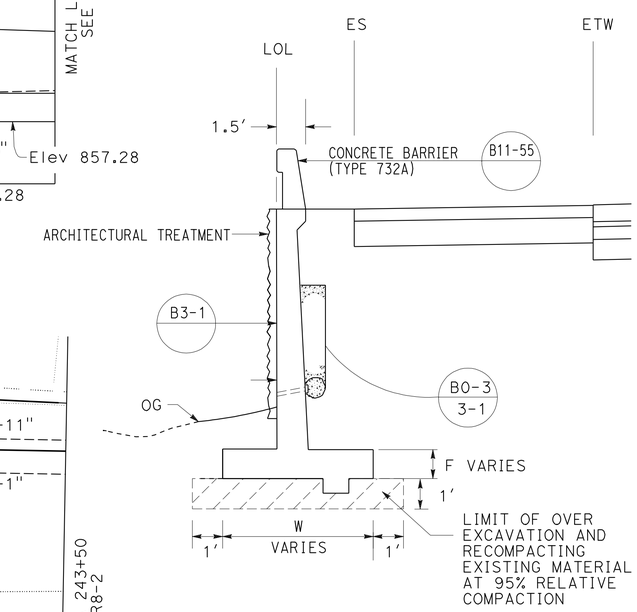

TYPICAL SECTION

NO SCALE
FROM STA 239+63.16 TO STA 244+73.80

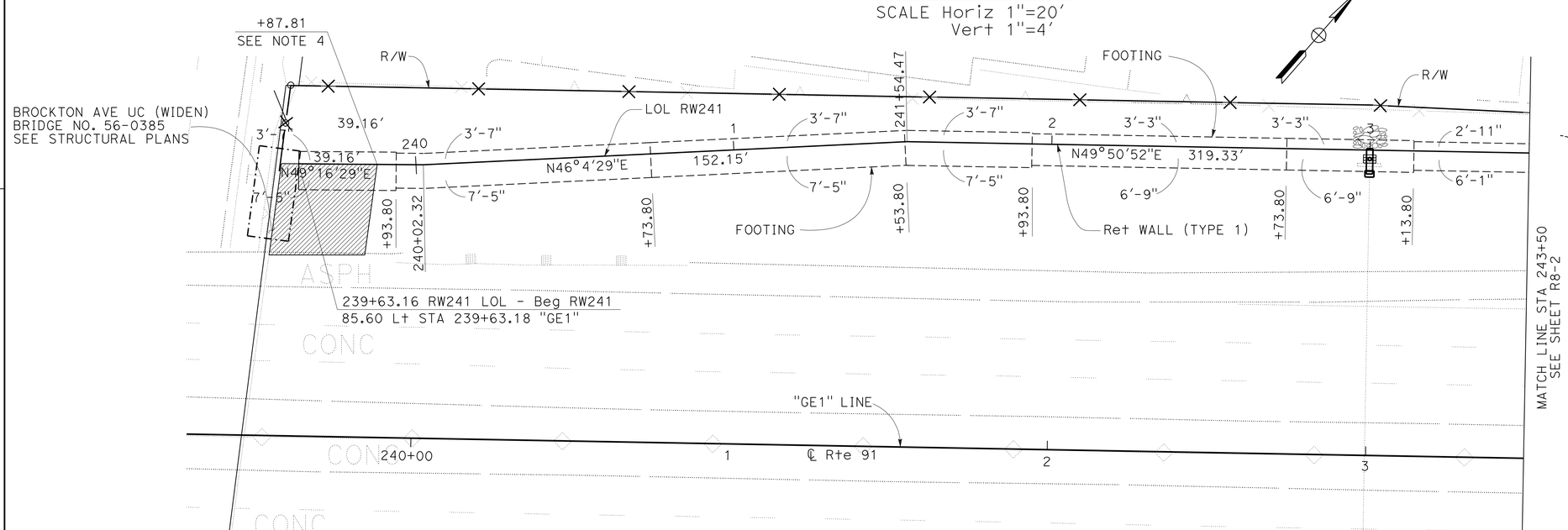

PLAN

SCALE: 1"=20'

THIS PLAN ACCURATE FOR RETAINING WALL WORK ONLY.

RETAINING WALL PLAN
RETAINING WALL No. 241

SCALE AS SHOWN

R8-1

REVISED BY | DATE REVISED
THAI VAN HGUYEN | THOMAS HIEN NGO
CALCULATED-DESIGNED BY | CHECKED BY
FUNCTIONAL SUPERVISOR | MARK PERTILE

STATE OF CALIFORNIA - DEPARTMENT OF TRANSPORTATION
Caltrans
DESIGN

LAST REVISION 12-01-10 | DATE PLOTTED => 30-APR-2011 | TIME PLOTTED => 06:54

Dist	COUNTY	ROUTE	POST MILES TOTAL PROJECT	SHEET No.	TOTAL SHEETS
08	Riv	91	15.6/21.6	843	2028

REGISTERED CIVIL ENGINEER 12-1-10 DATE

4-25-11
PLANS APPROVAL DATE

REGISTERED PROFESSIONAL ENGINEER THOMAS HIEN NGO No. 68383 Exp. 9/30/11 CIVIL STATE OF CALIFORNIA

THE STATE OF CALIFORNIA OR ITS OFFICERS OR AGENTS SHALL NOT BE RESPONSIBLE FOR THE ACCURACY OR COMPLETENESS OF SCANNED COPIES OF THIS PLAN SHEET.

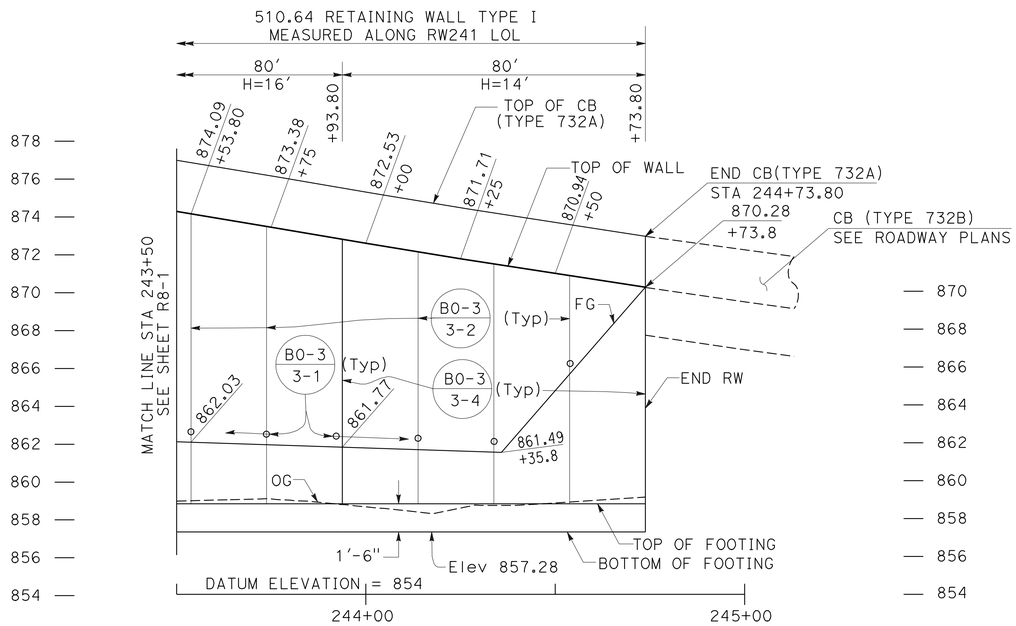

ELEVATION

SCALE Horiz 1"=20'
Vert 1"=4'

QUANTITIES

STRUCTURAL CONCRETE (RETAINING WALL)	804.80	CY
BAR REINFORCING STEEL (RETAINING WALL)	105023	LB
STRUCTURAL EXCAVATION (RETAINING WALL)	1287.72	CY
STRUCTURAL BACKFILL (RETAINING WALL)	2453.62	CY
PERVIOUS BACKFILL MATERIAL (RETAINING WALL)	205.39	CY
CONCRETE BARRIER (TYPE 732A)	510.64	LF
PLASTIC PIPE (N)	42.81	LF
WATERSTOP (N)	138.61	LF
ARCHITECTURAL SURFACE (TEXTURED CONCRETE)	7405.30	SF

(N) = NOT A SEPARATE PAY ITEM, FOR INFORMATION ONLY

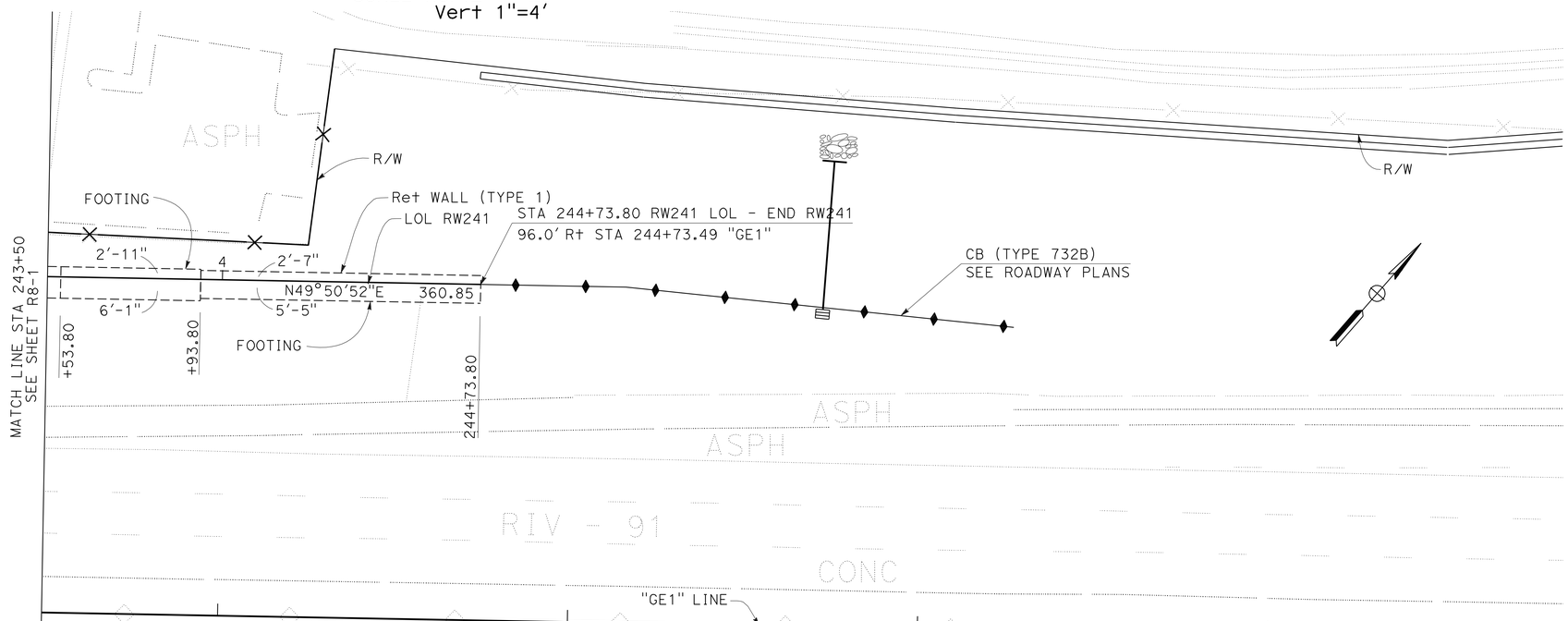

PLAN

SCALE: 1"=20'

THIS PLAN ACCURATE FOR RETAINING WALL WORK ONLY.

RETAINING WALL PLAN
RETAINING WALL No. 241
SCALE AS SHOWN

R8-2

STATE OF CALIFORNIA - DEPARTMENT OF TRANSPORTATION
Caltrans
DESIGN

FUNCTIONAL SUPERVISOR: MARK PERTILE
CALCULATED-DESIGNED BY: THAI VAN HGUYEN
CHECKED BY: THOMAS HIEN NGO
REVISED BY
DATE REVISED

LAST REVISION 12-01-10
DATE PLOTTED => 30-APR-2011
TIME PLOTTED => 05:26

Dist	COUNTY	ROUTE	POST MILES TOTAL PROJECT	SHEET No.	TOTAL SHEETS
08	Riv	91	15.6/21.6	844	2028

LICENSED LANDSCAPE ARCHITECT

4-25-11

PLANS APPROVAL DATE

LICENSED LANDSCAPE ARCHITECT Matthew Harry Hall No. 2028 Signature 10/31/2011 Renewal Date 12-1-10 Date STATE OF CALIFORNIA

THE STATE OF CALIFORNIA OR ITS OFFICERS OR AGENTS SHALL NOT BE RESPONSIBLE FOR THE ACCURACY OR COMPLETENESS OF SCANNED COPIES OF THIS PLAN SHEET.

NOTE:

SEE SHEET ASD-1, ASD-2, ASD-3 AND ASD-5.

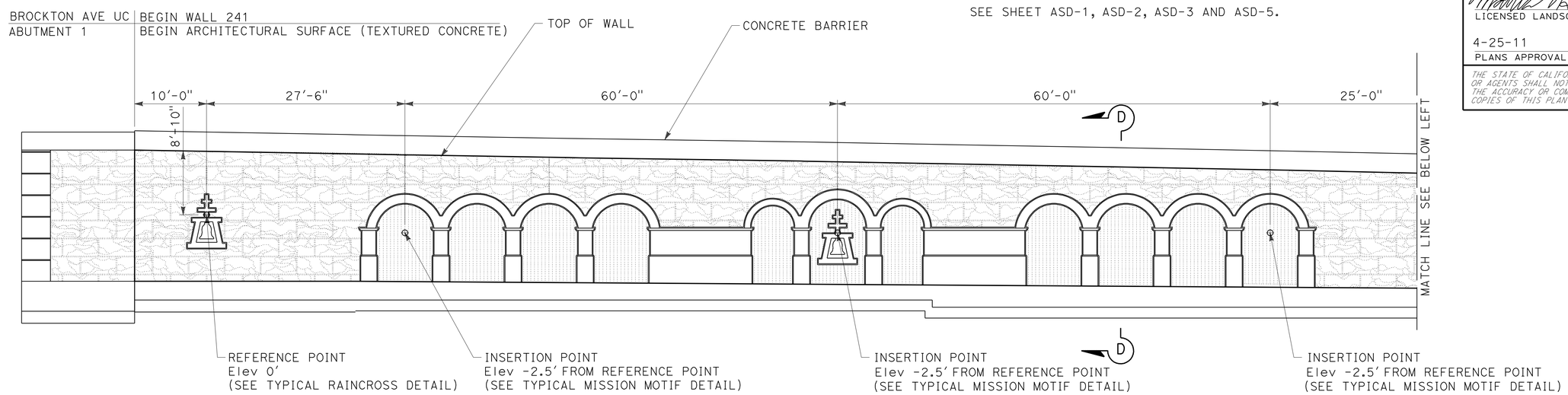

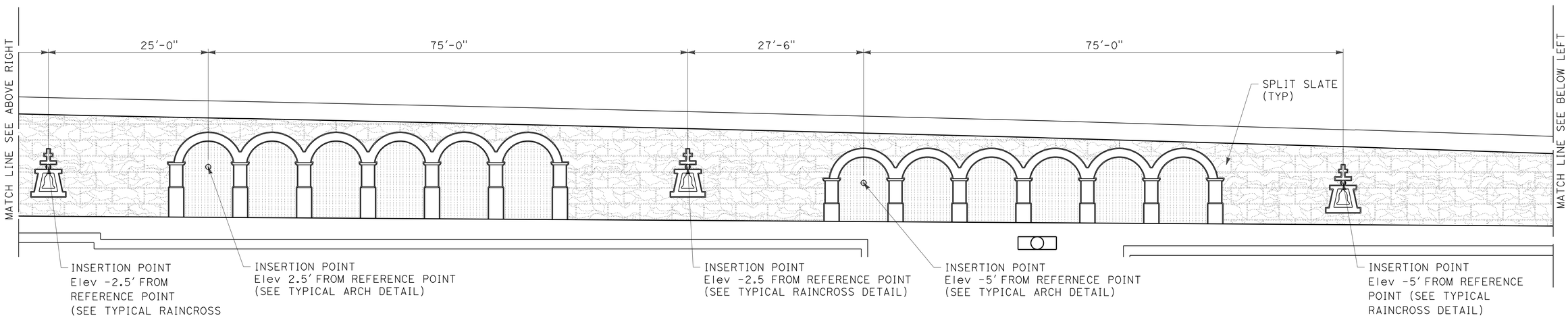

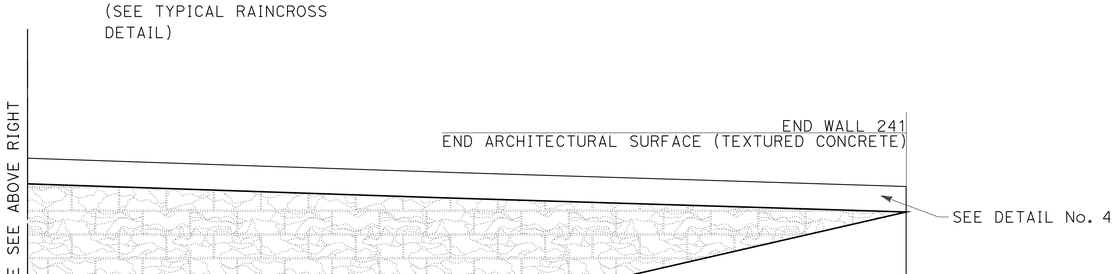

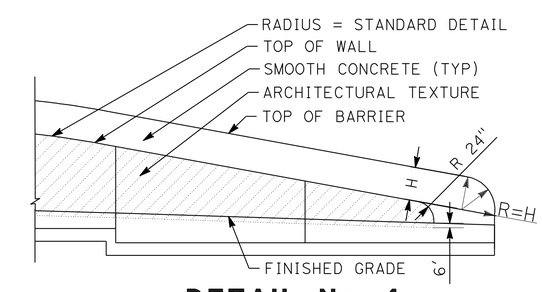

DETAIL No. 4

TYPICAL END OF WALL WITH CONCRETE BARRIER ON TOP OF WALL AND TYPE 60D MOD. CONCRETE BARRIER

MIRRORED ELEVATION FOR FRACTURED RIB SPLIT SLATE TEXTURE RETAINING WALL No. 241

THIS PLAN IS ACCURATE FOR ARCHITECTUAL TREATMENT WORK ONLY.

ARCHITECTURAL SURFACE RETAINING WALL No. 241

SCALE: 1/8"=1'-0"

R8-3

REVISED BY | DATE REVISED

MATTHEW HALL | MIRIAM BISHOP

CALCULATED-DESIGNED BY | CHECKED BY

SENIOR LANDSCAPE ARCHITECT

BYRON STROUT

STATE OF CALIFORNIA - DEPARTMENT OF TRANSPORTATION

Caltrans® LANDSCAPE ARCHITECTURE

LAST REVISION 12-01-10 | DATE PLOTTED => 30-APR-2011 TIME PLOTTED => 05:26

DIST	COUNTY	ROUTE	POST MILES TOTAL PROJECT	SHEET No	TOTAL SHEETS
08	Riv	91	15.6/21.6	845	2028

GEOTECHNICAL PROFESSIONAL — DATE 10/2008

4-25-11
PLANS APPROVAL DATE

REGISTERED PROFESSIONAL ENGINEER — ANDREW C. LEE — No. 2616 — Exp. 6-30-12 — GEOTECHNICAL — STATE OF CALIFORNIA

The State of California or its officers or agents shall not be responsible for the accuracy or completeness of electronic copies of this plan sheet.

California Department of Transportation
5900 Folsom Boulevard
Sacramento, CA 95819

URS Corporation
2020 East First Street, Suite 400
Santa Ana, CA 92705

FOR PLAN VIEW, SEE SHEET R8-6

NOTE: 1. This LOTB sheet was prepared in accordance with the Caltrans Soil & Rock Logging, Classification, and Presentation Manual (June 2007).

2. For legend, see "Log of Test Borings" 1 of 83

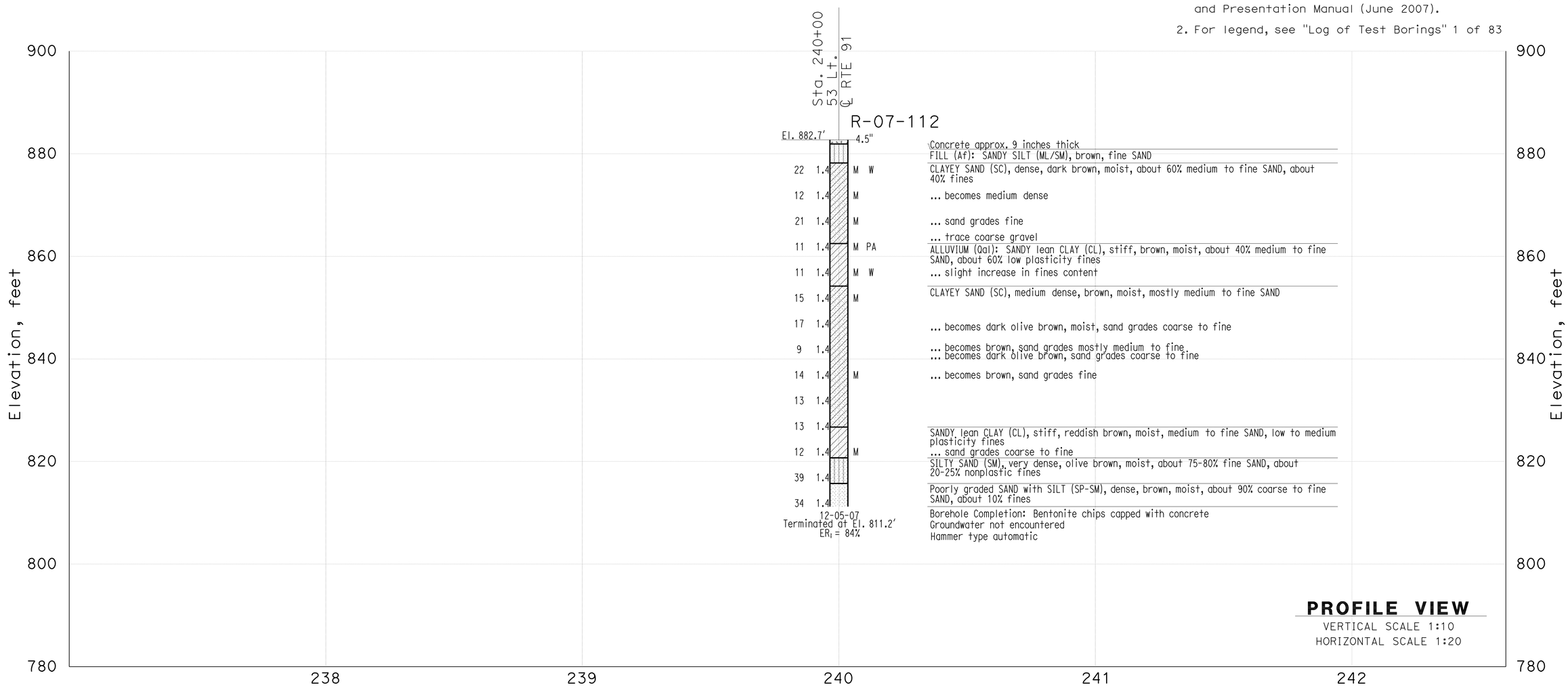

THIS PLAN ACCURATE FOR SOUND WALL AND RETAINING WALL WORK ONLY

DESIGN OVERSIGHT X SIGN OFF DATE	GINA PURSELL FUNCTIONAL SUPERVISOR	DRAWN BY CHECKED BY	P. QUACH S. PIRATHIVIRAJ	P.CHAU/D.WADER/C.CARBINO FIELD INVESTIGATION BY: DATE: Nov 6 2007 to March 7 2008	PREPARED FOR THE STATE OF CALIFORNIA DEPARTMENT OF TRANSPORTATION	A. LEE PROJECT ENGINEER	BRIDGE NO. X POST MILE X	Retaining Wall 241 R8-4 LOG OF TEST BORINGS SHEET 1 OF 3

OSF GEOTECHNICAL LOG OF TEST BORINGS SHEET (ENGLISH) (REV. 2/25/05)

ORIGINAL SCALE IN INCHES FOR REDUCED PLANS 0 1 2 3

CU 59A0590
EA 08-448400

DISREGARD PRINTS BEARING EARLIER REVISION DATES

REVISION DATES (PRELIMINARY STAGE ONLY) X

SHEET 1 OF 3

FILE => 844840qh004.dgn

USERNAME => trlehard DATE PLOTTED => 30-APR-2011 TIME PLOTTED =>

DIST	COUNTY	ROUTE	POST MILES TOTAL PROJECT	SHEET No	TOTAL SHEETS
08	Riv	91	15.6/21.6	846	2028

GEOTECHNICAL PROFESSIONAL — DATE 10/2008

4-25-11
PLANS APPROVAL DATE

REGISTERED PROFESSIONAL ENGINEER — ANDREW C. LEE — No. 2616 — Exp. 6-30-12 — GEOTECHNICAL — STATE OF CALIFORNIA

The State of California or its officers or agents shall not be responsible for the accuracy or completeness of electronic copies of this plan sheet.

California Department of Transportation
5900 Folsom Boulevard
Sacramento, CA 95819

URS Corporation
2020 East First Street, Suite 400
Santa Ana, CA 92705

FOR PLAN VIEW, SEE SHEET R8-6

NOTE: 1. This LOTB sheet was prepared in accordance with the Caltrans Soil & Rock Logging, Classification, and Presentation Manual (June 2007).

2. For legend, see "Log of Test Borings" 1 of 83

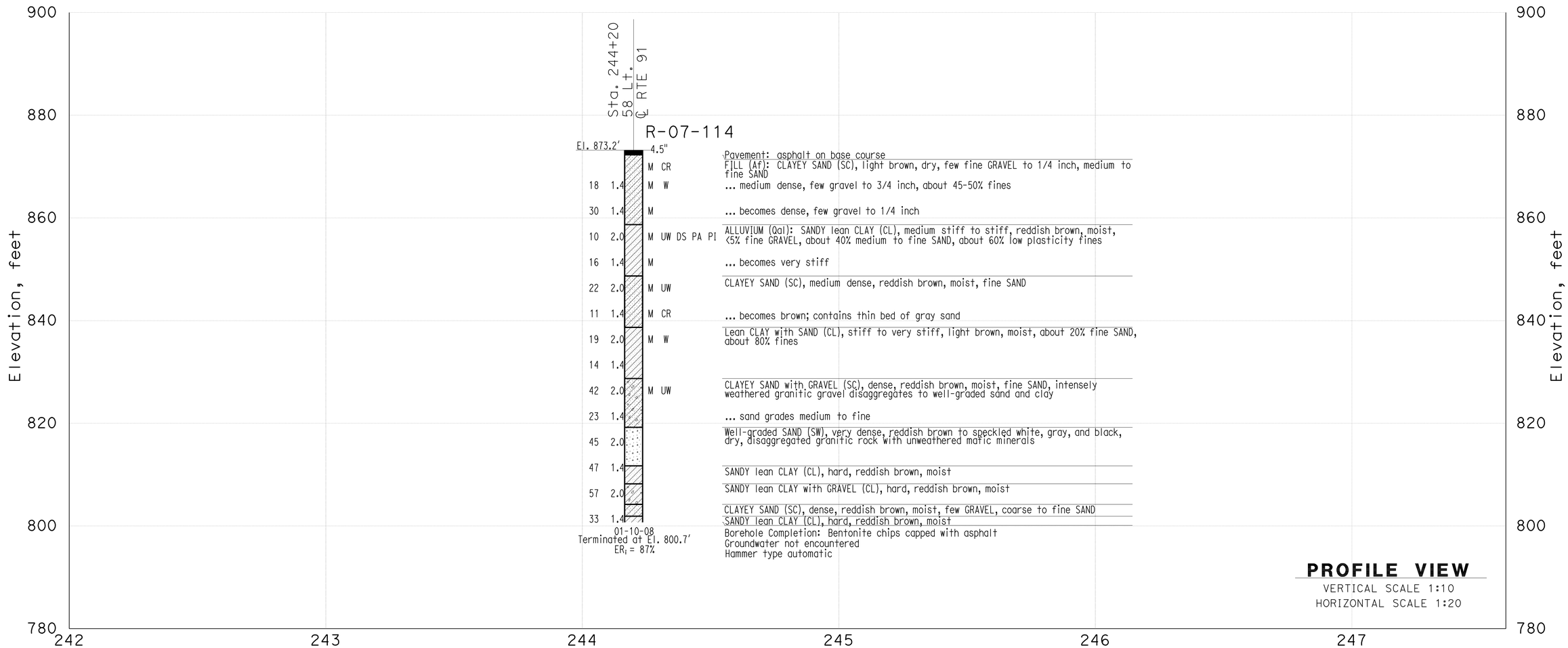

THIS PLAN ACCURATE FOR SOUND WALL AND RETAINING WALL WORK ONLY

DESIGN OVERSIGHT X SIGN OFF DATE	GINA PURSELL FUNCTIONAL SUPERVISOR	DRAWN BY CHECKED BY	P. QUACH S. PIRATHIVIRAJ	P.CHAU/D.WADER/C.CARBINO FIELD INVESTIGATION BY: DATE: Nov 6 2007 to March 7 2008	PREPARED FOR THE STATE OF CALIFORNIA DEPARTMENT OF TRANSPORTATION	A. LEE PROJECT ENGINEER	BRIDGE NO. X POST MILE X

Retaining Wall 241 R8-5

LOG OF TEST BORINGS SHEET 2 OF 3

OSF GEOTECHNICAL LOG OF TEST BORINGS SHEET (ENGLISH) (REV. 2/25/05)

ORIGINAL SCALE IN INCHES FOR REDUCED PLANS 0 1 2 3

CU 59A0590
EA 08-448400

DISREGARD PRINTS BEARING EARLIER REVISION DATES

REVISION DATES (PRELIMINARY STAGE ONLY) X

SHEET 2 OF 3

FILE => 844840qh005.dgn

USERNAME => trlehard DATE PLOTTED => 30-APR-2011 TIME PLOTTED =>

DIST	COUNTY	ROUTE	POST MILES TOTAL PROJECT	SHEET No	TOTAL SHEETS
08	Riv	91	15.6/21.6	847	2028

GEOTECHNICAL PROFESSIONAL — DATE 10/2008

4-25-11
PLANS APPROVAL DATE

REGISTERED PROFESSIONAL ENGINEER — ANDREW C. LEE — No. 2616 — Exp. 6-30-12 — GEOTECHNICAL — STATE OF CALIFORNIA

The State of California or its officers or agents shall not be responsible for the accuracy or completeness of electronic copies of this plan sheet.

California Department of Transportation
5900 Folsom Boulevard
Sacramento, CA 95819

URS Corporation
2020 East First Street, Suite 400
Santa Ana, CA 92705

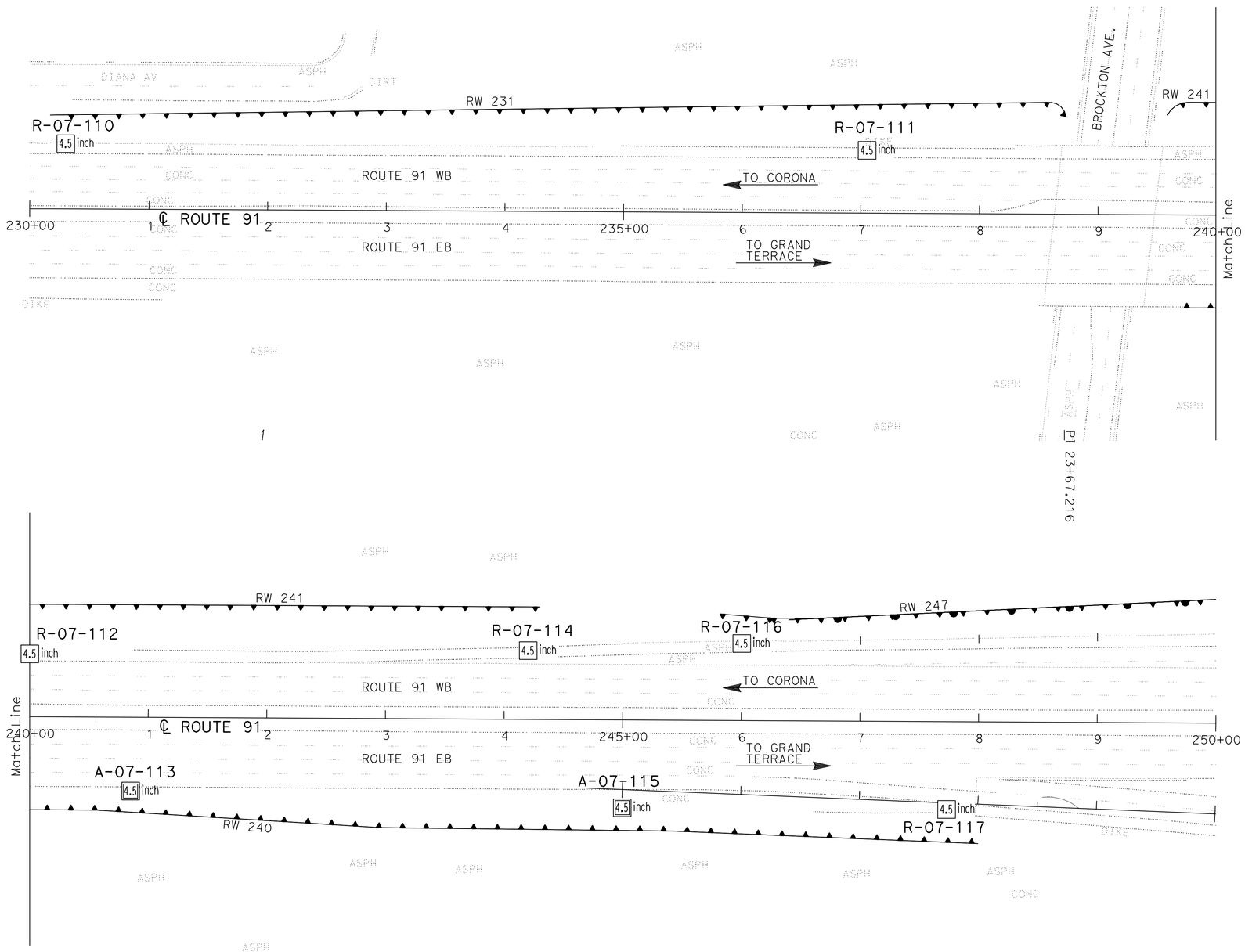

PLAN
SCALE 1"=50'

Borehole Number	Drill Rig	Hammer Type	Avg. Hammer Efficiency, ETR (%)
R-07-110	CS-2000	Automatic	84
R-07-111	CS-2000	Automatic	84
R-07-112	CS-2000	Automatic	84
A-07-113	CS-2000	Automatic	84
R-07-114	CME 85	Automatic	87
A-07-115	CS-2000	Automatic	84
R-07-116	CS-2000	Automatic	84
R-07-117	CS-2000	Automatic	84

Sampler Type	Inside Diameter (Inches)	Borehole Numbers
SPT	1.375	R-07-110, R-07-111 R-07-112, A-07-113 R-07-114, A-07-115 R-07-116, R-07-117
Modified California 1	1.94	R-07-111, A-07-113 R-07-114
Modified California 2	2.40	-

DESIGN OVERSIGHT — GINA PURSELL, FUNCTIONAL SUPERVISOR — X — SIGN OFF DATE

DRAWN BY: P. QUACH
CHECKED BY: S. PIRATHIVIRAJ

P.CHAU/D.WADER/C.CARBINO
FIELD INVESTIGATION BY:
DATE: Nov 6 2007 to March 7 2008

PREPARED FOR THE STATE OF CALIFORNIA DEPARTMENT OF TRANSPORTATION

A. LEE
PROJECT ENGINEER

BRIDGE NO. X
POST MILE X

RETAINING WALL 241 R8-6
LOG OF TEST BORINGS 3 OF 3

OSF GEOTECHNICAL LOG OF TEST BORINGS SHEET (ENGLISH) (REV. 2/25/05)

ORIGINAL SCALE IN INCHES FOR REDUCED PLANS 0 1 2 3

CU 59A0590
EA 08-448400

DISREGARD PRINTS BEARING EARLIER REVISION DATES

REVISION DATES (PRELIMINARY STAGE ONLY) X

SHEET 3 OF 3

FILE => 844840qh006.dgn

USERNAME => trlenard DATE PLOTTED => 30-APR-2011 TIME PLOTTED =>

Dist	COUNTY	ROUTE	POST MILES TOTAL PROJECT	SHEET No.	TOTAL SHEETS
08	Riv	91	15.6/21.6	848	2028

REGISTERED CIVIL ENGINEER 12-1-10 DATE

4-25-11
PLANS APPROVAL DATE

REGISTERED PROFESSIONAL ENGINEER THOMAS HIEN NGO No. 68383 Exp. 9/30/11 CIVIL STATE OF CALIFORNIA

THE STATE OF CALIFORNIA OR ITS OFFICERS OR AGENTS SHALL NOT BE RESPONSIBLE FOR THE ACCURACY OR COMPLETENESS OF SCANNED COPIES OF THIS PLAN SHEET.

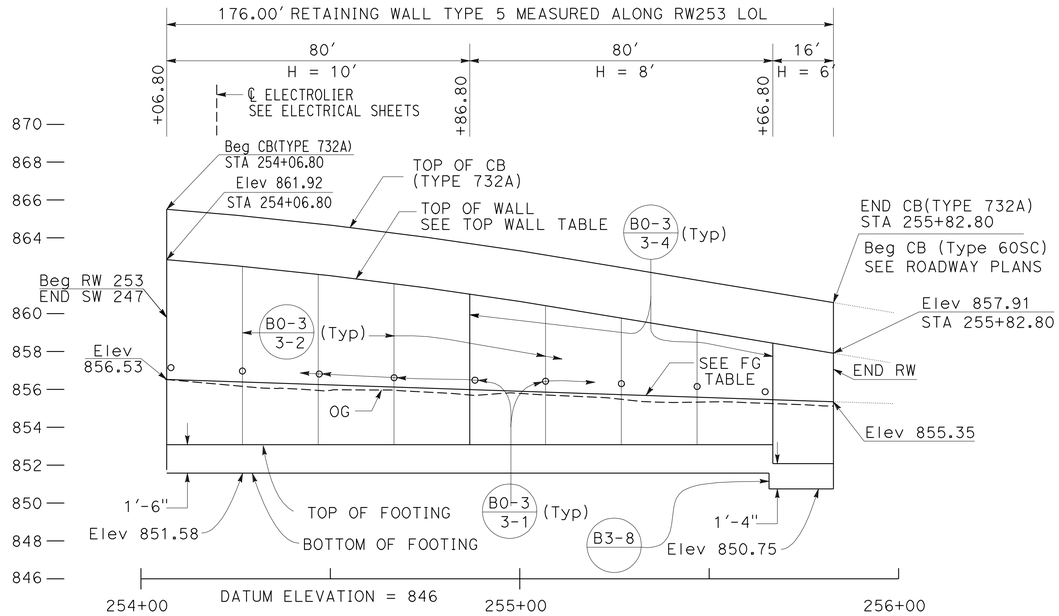

ELEVATION

SCALE Horiz 1"=20'
Vert 1"=4'

TOP OF WALL TABLE	
STATION	ELEVATION
254+25.00	862.54
254+50.00	862.01
254+75.00	861.37
255+00.00	860.64
255+25.00	859.83
255+50.00	859.00
255+75.00	858.17

FINISH GRADE (FG) TABLE	
STATION	ELEVATION
254+25.00	856.41
254+50.00	856.24
254+75.00	856.07
255+00.00	855.91
255+25.00	855.74
255+50.00	855.57
255+75.00	855.40

QUANTITIES

STRUCTURAL CONCRETE (RETAINING WALL)	164.30	CY
BAR REINFORCING STEEL (RETAINING WALL)	11164	LB
STRUCTURAL EXCAVATION (RETAINING WALL)	318.30	CY
STRUCTURAL BACKFILL (RETAINING WALL)	378.60	CY
PERVIOUS BACKFILL MATERIAL (RETAINING WALL)	9.80	CY
CONCRETE BARRIER (TYPE 732A)	176.00	LF
PLASTIC PIPE (N)	11.32	LF
WATERSTOP (N)	28.63	LF
ARCHITECTURAL SURFACE (TEXTURED CONCRETE)	916.40	SF

(N) = NOT A SEPARATE PAY ITEM, FOR INFORMATION ONLY

NOTES:

1. ARCHITECTURAL TREATMENT SHOULD EXTEND 6 IN BELOW FG OR 6 IN BELOW TOP CB (TYPE 60D MOD)
2. FOR STRUCTURAL SECTIONS, SEE ROADWAY PLANS
3. WATERSTOP IN EXPANSION JOINT SHALL BE EXTEND 6 IN INTO THE BARRIER

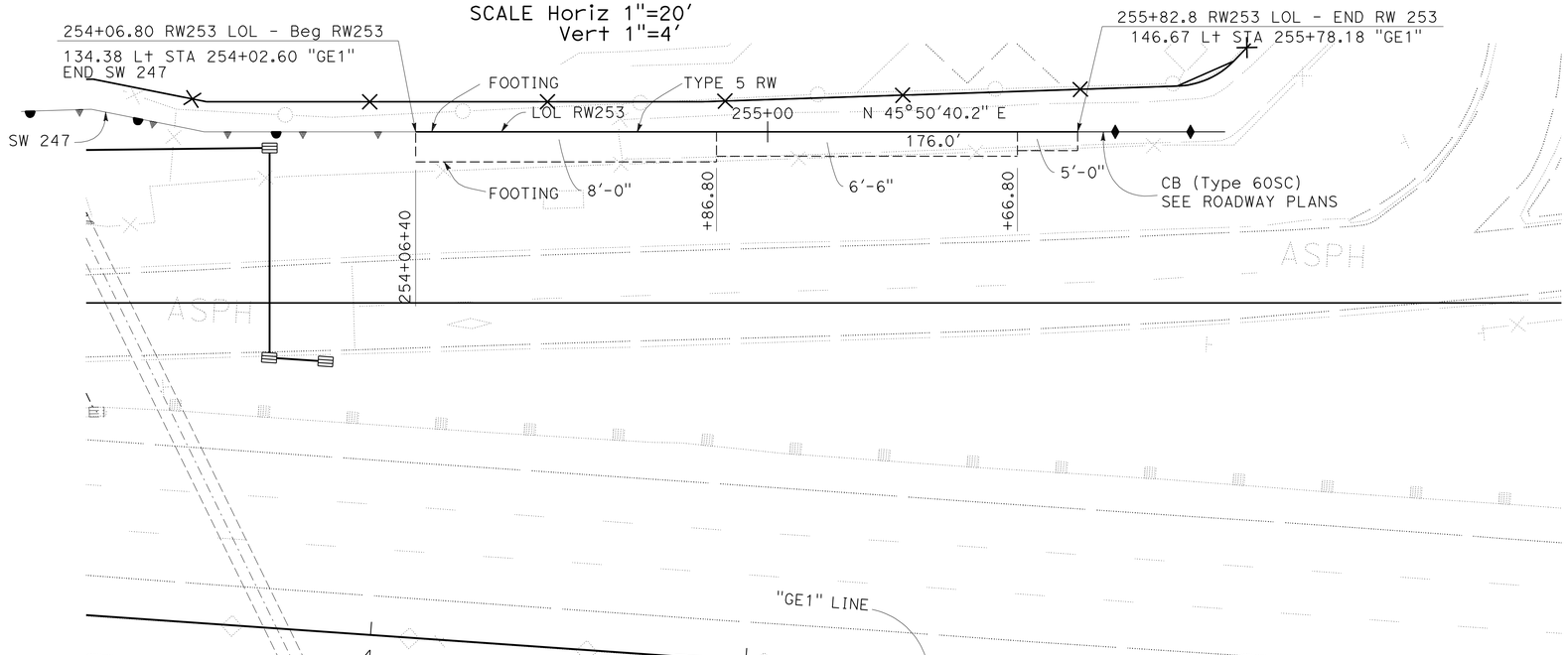

PLAN

SCALE: 1"=20'

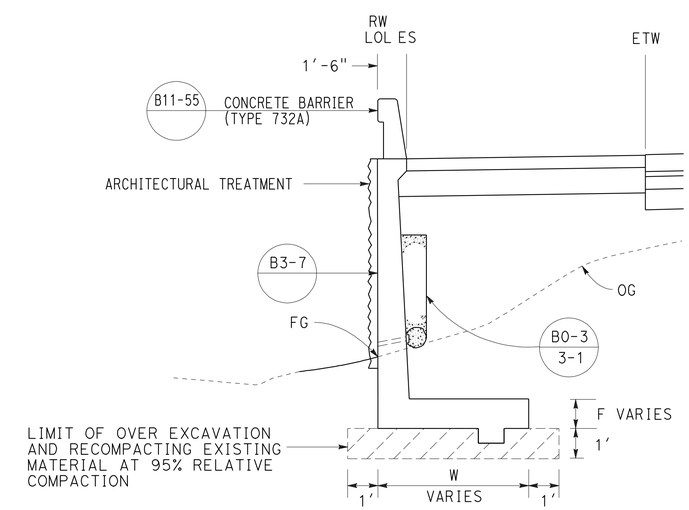

TYPICAL SECTION

NO SCALE
FROM STA 254+06.80 TO STA 255+82.80

THIS PLAN ACCURATE FOR RETAINING WALL WORK ONLY.

RETAINING WALL PLAN
RETAINING WALL No. 253

SCALE AS SHOWN

R9-1

STATE OF CALIFORNIA - DEPARTMENT OF TRANSPORTATION
Caltrans® DESIGN
FUNCTIONAL SUPERVISOR MARK PERTILE
CALCULATED-DESIGNED BY THAI VAN HGUYEN
CHECKED BY THOMAS HIEN NGO
REVISED BY
DATE REVISED

LAST REVISION 12-01-10
DATE PLOTTED => 30-APR-2011
TIME PLOTTED => 05:27

Dist	COUNTY	ROUTE	POST MILES TOTAL PROJECT	SHEET No.	TOTAL SHEETS
08	Riv	91	15.6/21.6	849	2028

LICENSED LANDSCAPE ARCHITECT

4-25-11
PLANS APPROVAL DATE

LICENSED LANDSCAPE ARCHITECT
Matthew Harry Hall
No. 2011
Signature
10/31/2011
Renewal Date
12-1-10
Date
STATE OF CALIFORNIA

THE STATE OF CALIFORNIA OR ITS OFFICERS OR AGENTS SHALL NOT BE RESPONSIBLE FOR THE ACCURACY OR COMPLETENESS OF SCANNED COPIES OF THIS PLAN SHEET.

NOTE:

SEE SHEET ASD-4 AND ASD-5.

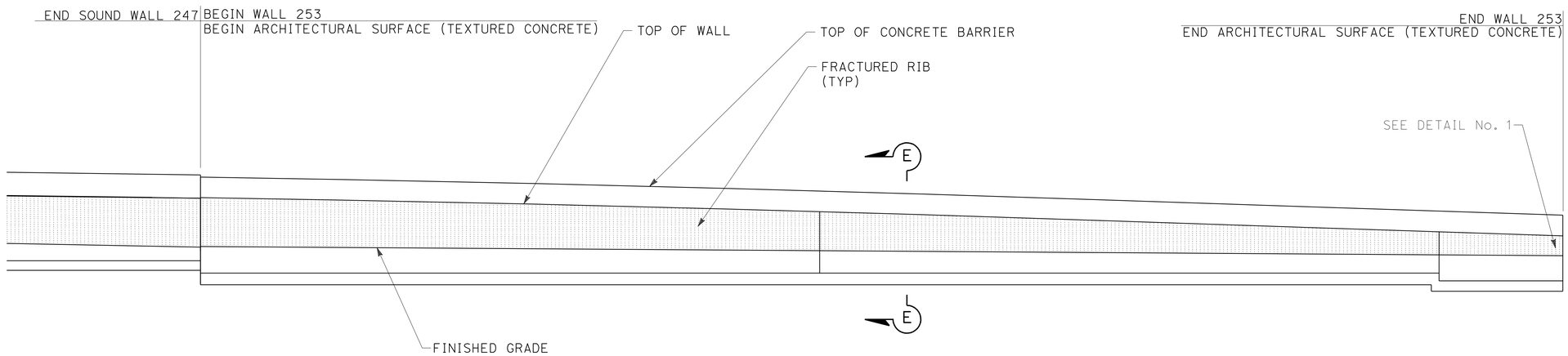

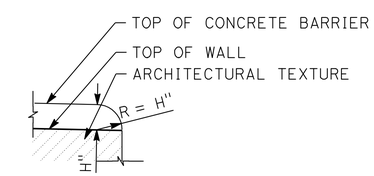

DETAIL No. 1

TYPICAL END OF WALL
WITH CONCRETE BARRIER
ON TOP OF WALL DETAIL

MIRRORED ELEVATION FOR FRACTURED RIB TEXTURE RETAINING WALL No. 253

THIS PLAN IS ACCURATE FOR ARCHITECTUAL TREATMENT WORK ONLY.

ARCHITECTURAL SURFACE
RETAINING WALL No. 253

SCALE: 1/8"=1'-0"

R9-2

STATE OF CALIFORNIA - DEPARTMENT OF TRANSPORTATION
Caltrans® LANDSCAPE ARCHITECTURE

SENIOR LANDSCAPE ARCHITECT: BYRON STROUT
CALCULATED-DESIGNED BY: MATTHEW HALL
CHECKED BY: MIRIAM BISHOP
REVISED BY
DATE REVISED

LAST REVISION 12-01-10
DATE PLOTTED => 30-APR-2011
TIME PLOTTED => 09:27

DIST	COUNTY	ROUTE	POST MILES TOTAL PROJECT	SHEET No	TOTAL SHEETS
08	Riv	91	15.6/21.6	850	2028

GEOTECHNICAL PROFESSIONAL DATE 10/2008

4-25-11
PLANS APPROVAL DATE

REGISTERED PROFESSIONAL ENGINEER
ANDREW C. LEE
No. 2616
Exp. 6-30-12
GEOTECHNICAL
STATE OF CALIFORNIA

The State of California or its officers or agents shall not be responsible for the accuracy or completeness of electronic copies of this plan sheet.

California Department of Transportation
5900 Folsom Boulevard
Sacramento, CA 95819

URS Corporation
2020 East First Street, Suite 400
Santa Ana, CA 92705

FOR PLAN VIEW, SEE SHEET R9-4

NOTE: 1. This LOTB sheet was prepared in accordance with the Caltrans Soil & Rock Logging, Classification, and Presentation Manual (June 2007).

2. For legend, see "Log of Test Borings" 1 of 83

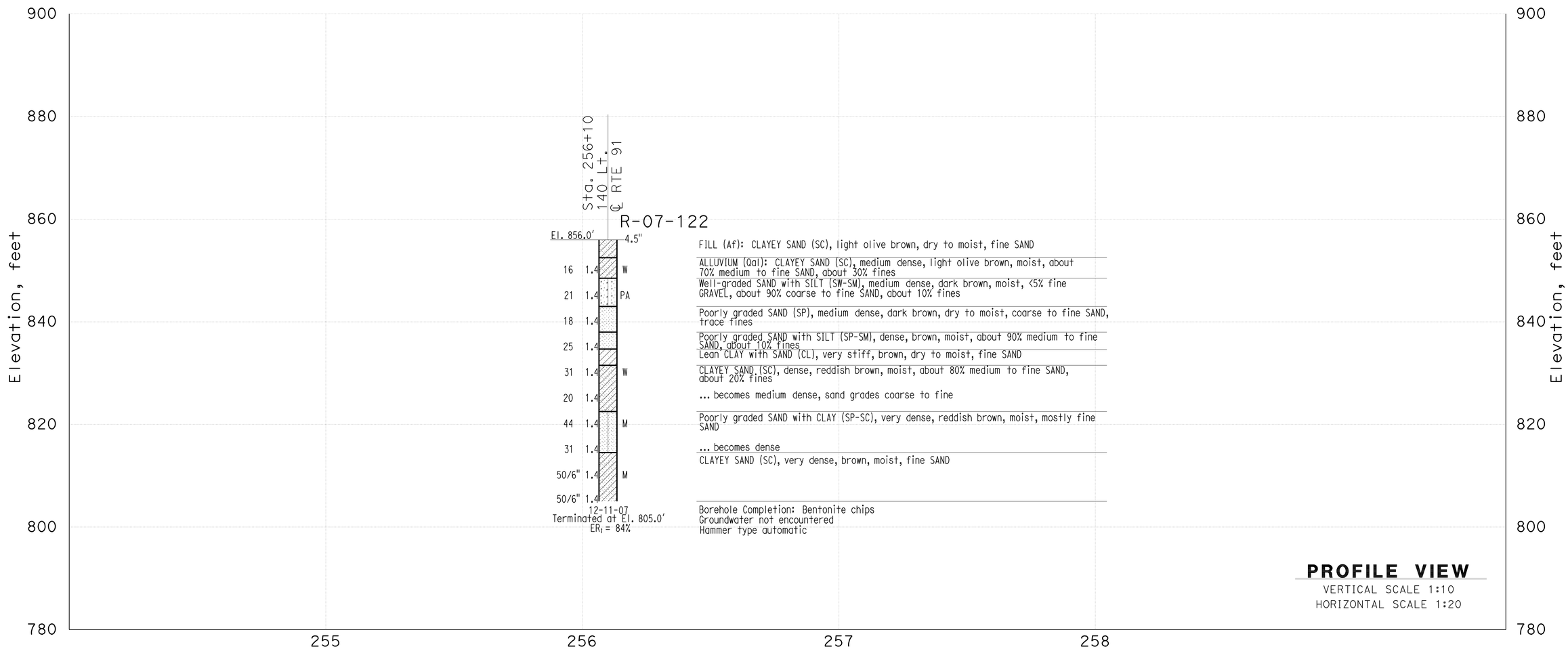

THIS PLAN ACCURATE FOR SOUND WALL AND RETAINING WALL WORK ONLY

DESIGN OVERSIGHT X SIGN OFF DATE	GINA PURSELL FUNCTIONAL SUPERVISOR	DRAWN BY	P. QUACH	P.CHAU/D.WADER/C.CARBINO FIELD INVESTIGATION BY: DATE: Nov 6 2007 to March 7 2008	PREPARED FOR THE STATE OF CALIFORNIA DEPARTMENT OF TRANSPORTATION	A. LEE PROJECT ENGINEER	BRIDGE NO. X POST MILE X	Retaining Wall 253 R9-3 LOG OF TEST BORINGS
		CHECKED BY	S. PIRATHIVIRAJ					

OSF GEOTECHNICAL LOG OF TEST BORINGS SHEET (ENGLISH) (REV. 2/25/05)

ORIGINAL SCALE IN INCHES FOR REDUCED PLANS 0 1 2 3

CU 59A0590
EA 08-448400

DISREGARD PRINTS BEARING EARLIER REVISION DATES

REVISION DATES (PRELIMINARY STAGE ONLY) X

SHEET 1 OF 2

FILE => 844840qi003.dgn

USERNAME => trienord DATE PLOTTED => 30-APR-2011 TIME PLOTTED =>

DIST	COUNTY	ROUTE	POST MILES TOTAL PROJECT	SHEET No	TOTAL SHEETS
08	Riv	91	15.6/21.6	851	2028

GEOTECHNICAL PROFESSIONAL — DATE 10/2008

PLANS APPROVAL DATE 4-25-11

REGISTERED PROFESSIONAL ENGINEER — ANDREW C. LEE — No. 2616 — Exp. 6-30-12 — GEOTECHNICAL — STATE OF CALIFORNIA

The State of California or its officers or agents shall not be responsible for the accuracy or completeness of electronic copies of this plan sheet.

California Department of Transportation
5900 Folsom Boulevard
Sacramento, CA 95819

URS Corporation
2020 East First Street, Suite 400
Santa Ana, CA 92705

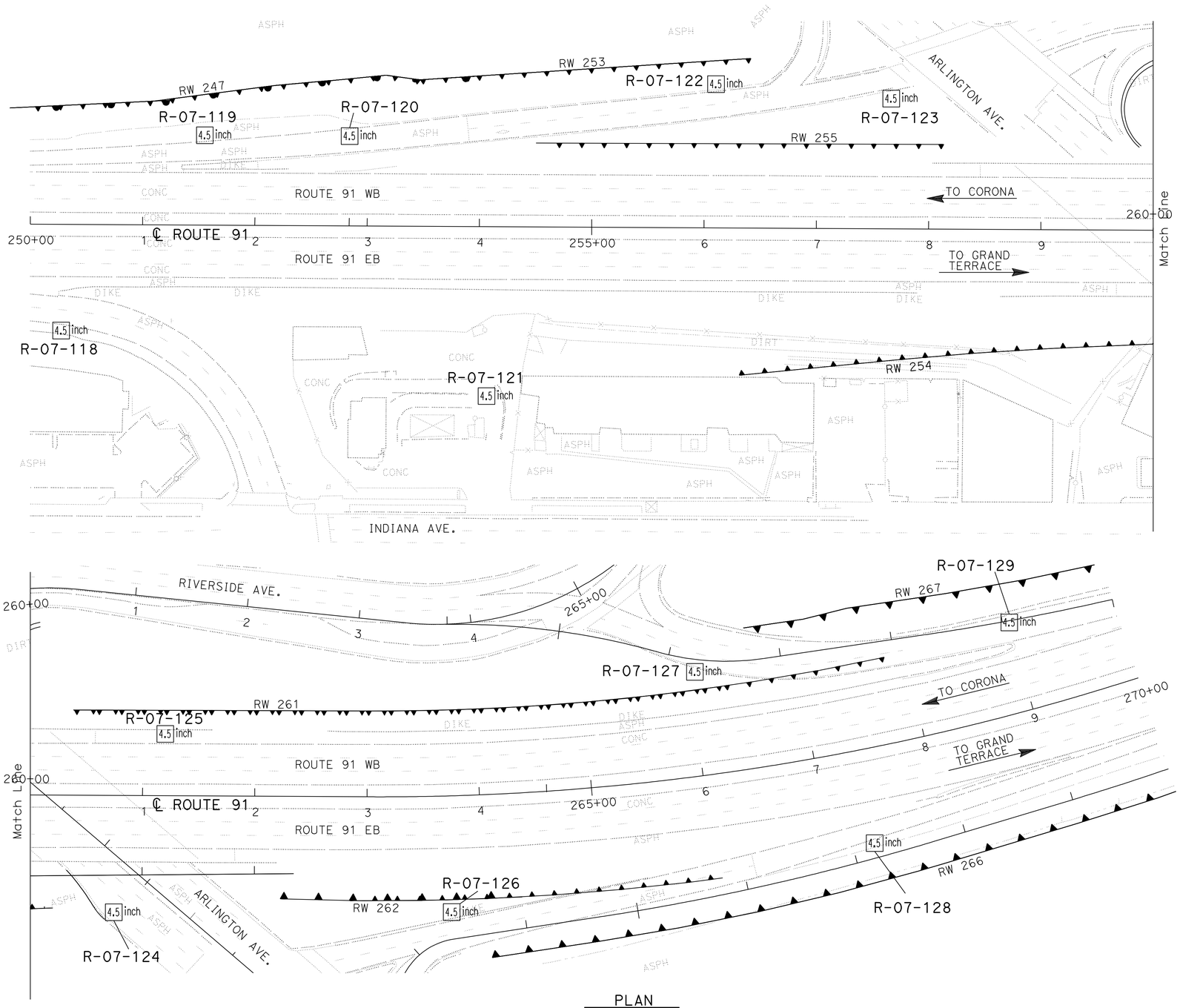

PLAN
SCALE 1"=50'

Borehole Number	Drill Rig	Hammer Type	Avg. Hammer Efficiency, ETR (%)
R-07-118	CS-2000	Automatic	84
R-07-119	CS-2000	Automatic	84
R-07-120	Mobile B-47	Manual trip	60*
R-07-121	CS-2000	Automatic	84
R-07-122	CS-2000	Automatic	84
R-07-123	CS-2000	Automatic	84
R-07-124	CS-2000	Automatic	84
R-07-125	CME 85	Automatic	87
R-07-126	CS-2000	Automatic	84
R-07-127	CME 85	Automatic	87
R-07-128	CS-2000	Automatic	84
R-07-129	CME 85	Automatic	87

Sampler Type	Inside Diameter (Inches)	Borehole Numbers
SPT	1.375	R-07-118, R-07-119, R-07-120 R-07-121, R-07-122, R-07-123 R-07-124, R-07-125, R-07-126 R-07-127, R-07-128, R-07-129
Modified California 1	1.94	R-07-119, R-07-120, R-07-121 R-07-124, R-07-125, R-07-127 R-07-129
Modified California 2	2.40	-

*Estimated Hammer Efficiency Rating.

DESIGN OVERSIGHT X SIGN OFF DATE	GINA PURSELL FUNCTIONAL SUPERVISOR	DRAWN BY	P. QUACH	P.CHAU/D.WADER/C.CARBINO FIELD INVESTIGATION BY: DATE: Nov 6 2007 to March 7 2008	PREPARED FOR THE STATE OF CALIFORNIA DEPARTMENT OF TRANSPORTATION	A. LEE PROJECT ENGINEER	BRIDGE NO. X POST MILE X
		CHECKED BY	S. PIRATHIVIRAJ				

RETAINING WALL 253 R9-4

LOG OF TEST BORINGS 2 OF 2

OSF GEOTECHNICAL LOG OF TEST BORINGS SHEET (ENGLISH) (REV. 2/25/05)

ORIGINAL SCALE IN INCHES FOR REDUCED PLANS 0 1 2 3

CU 59A0590
EA 08-448400

DISREGARD PRINTS BEARING EARLIER REVISION DATES

REVISION DATES (PRELIMINARY STAGE ONLY) X

SHEET 2 OF 2

FILE => 844840qi004.dgn

USERNAME => trlenard DATE PLOTTED => 30-APR-2011 TIME PLOTTED =>

Dist	COUNTY	ROUTE	POST MILES TOTAL PROJECT	SHEET No.	TOTAL SHEETS
08	Riv	91	15.6/21.6	852	2028

REGISTERED CIVIL ENGINEER 12-1-10 DATE

4-25-11
PLANS APPROVAL DATE

REGISTERED PROFESSIONAL ENGINEER THOMAS HIEN NGO No. 68383 Exp. 9/30/11 CIVIL STATE OF CALIFORNIA

THE STATE OF CALIFORNIA OR ITS OFFICERS OR AGENTS SHALL NOT BE RESPONSIBLE FOR THE ACCURACY OR COMPLETENESS OF SCANNED COPIES OF THIS PLAN SHEET.

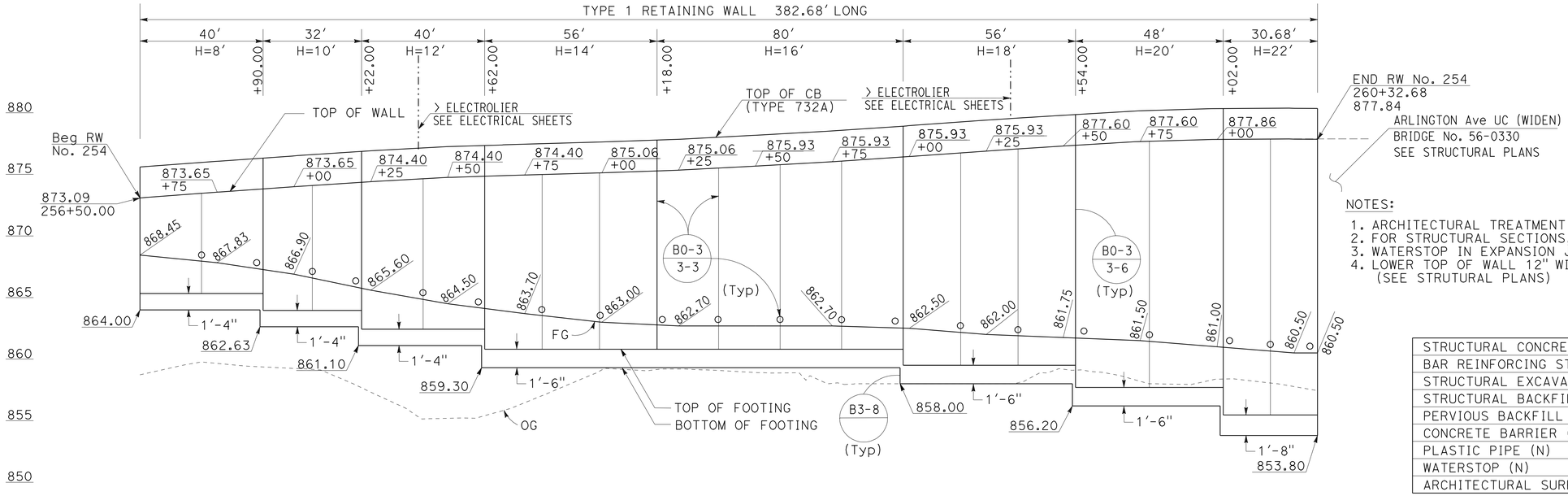

ELEVATION

SCALE Horiz 1"=20'
Vert 1"=5'

NOTES:

1. ARCHITECTURAL TREATMENT SHOULD EXTEND 6 IN BELOW FG
2. FOR STRUCTURAL SECTIONS, SEE ROADWAY PLANS
3. WATERSTOP IN EXPANSION JOINT SHALL BE EXTEND 6 IN INTO THE BARRIER
4. LOWER TOP OF WALL 12" WITHIN STRUCTURE APPROACH LIMITS (SEE STRUTURAL PLANS)

QUANTITIES

STRUCTURAL CONCRETE (RETAINING WALL)	467.9	CY
BAR REINFORCING STEEL (RETAINING WALL)	58427	LB
STRUCTURAL EXCAVATION (RETAINING WALL)	448.45	CY
STRUCTURAL BACKFILL (RETAINING WALL)	1342.11	CY
PERVIOUS BACKFILL MATERIAL (RETAINING WALL)	129.00	CY
CONCRETE BARRIER (TYPE 732A)	382.68	LF
PLASTIC PIPE (N)	28.9	LF
WATERSTOP (N)	113.3	LF
ARCHITECTURAL SURFACE (TEXTURED CONCRETE)	4890.40	SF

(N) = NOT A SEPARATE PAY ITEM, FOR INFORMATION ONLY

CURVE DATA

No.	R	Δ	T	L
1	2951.23'	3°12'33"	82.67'	165.29'

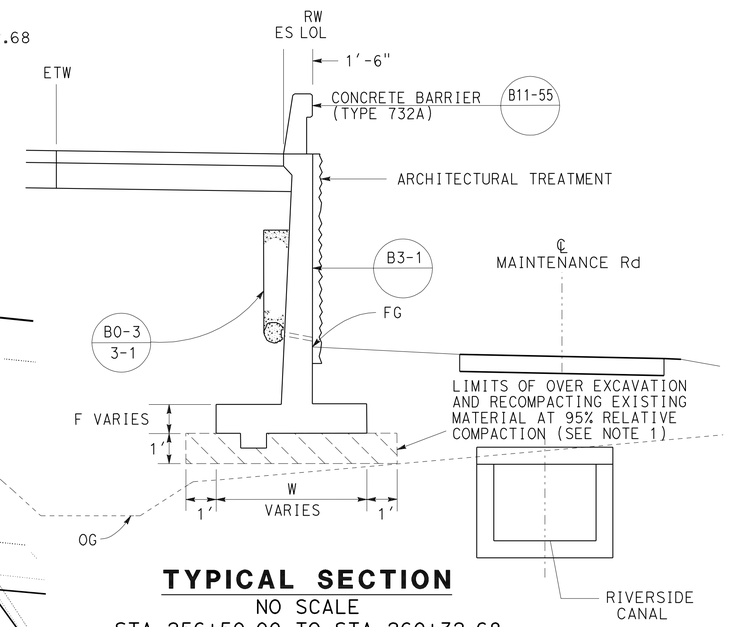

TYPICAL SECTION

NO SCALE
STA 256+50.00 TO STA 260+32.68

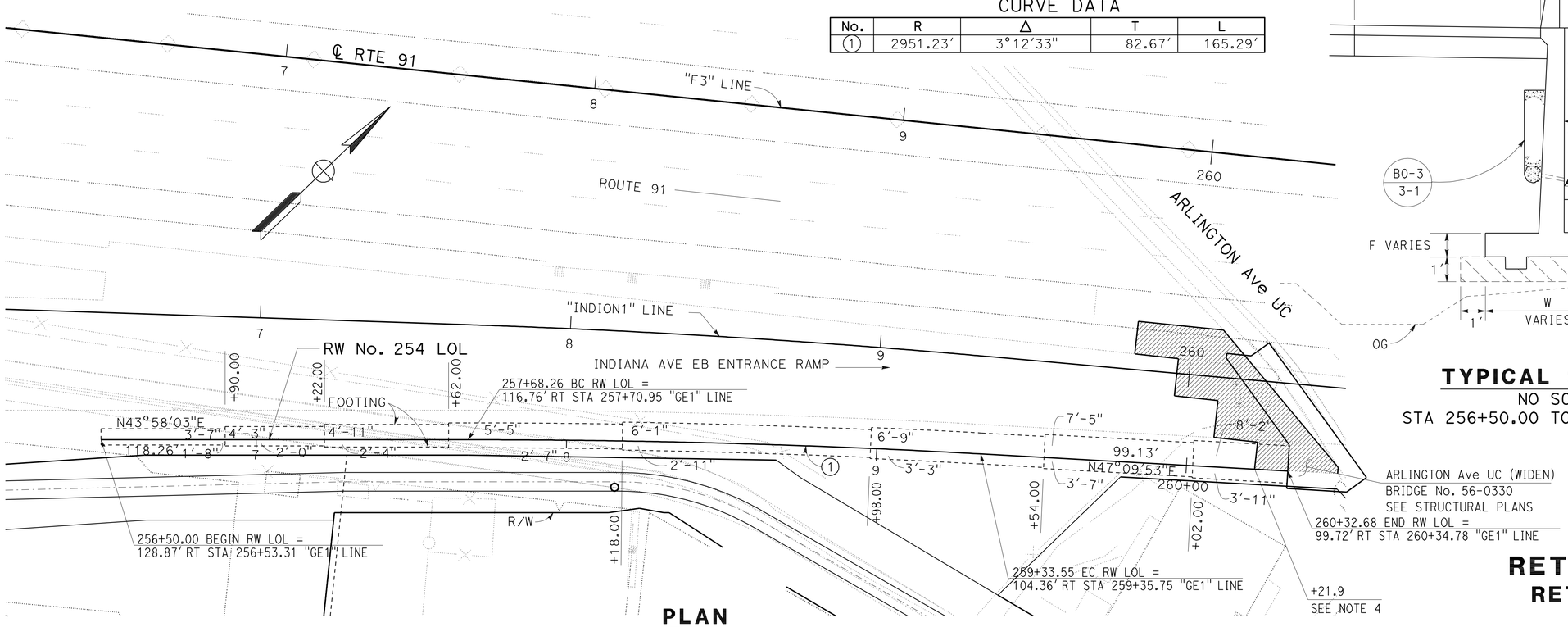

PLAN

SCALE 1"=20'

THIS PLAN ACCURATE FOR RETAINING WALL WORK ONLY.

RETAINING WALL PLAN
RETAINING WALL No. 254

SCALE AS SHOWN

R10-1

REVISED BY | DATE REVISED
THAI VAN HGUYEN | THOMAS HIEN NGO
CALCULATED-DESIGNED BY | CHECKED BY
FUNCTIONAL SUPERVISOR | MARK PERTILE

STATE OF CALIFORNIA - DEPARTMENT OF TRANSPORTATION
Caltrans
DESIGN

LAST REVISION 12-01-10 | DATE PLOTTED => 30-APR-2011 | TIME PLOTTED => 08:42

Dist	COUNTY	ROUTE	POST MILES TOTAL PROJECT	SHEET No.	TOTAL SHEETS
08	Riv	91	15.6/21.6	853	2028

LICENSED LANDSCAPE ARCHITECT

4-25-11
PLANS APPROVAL DATE

LICENSED LANDSCAPE ARCHITECT
Matthew Harry Hall
No. 5000
Signature
10/31/2011
Renewal Date
12-1-10
Date
STATE OF CALIFORNIA

THE STATE OF CALIFORNIA OR ITS OFFICERS OR AGENTS SHALL NOT BE RESPONSIBLE FOR THE ACCURACY OR COMPLETENESS OF SCANNED COPIES OF THIS PLAN SHEET.

NOTE:

SEE SHEET ASD-2, ASD-4 AND ASD-5.

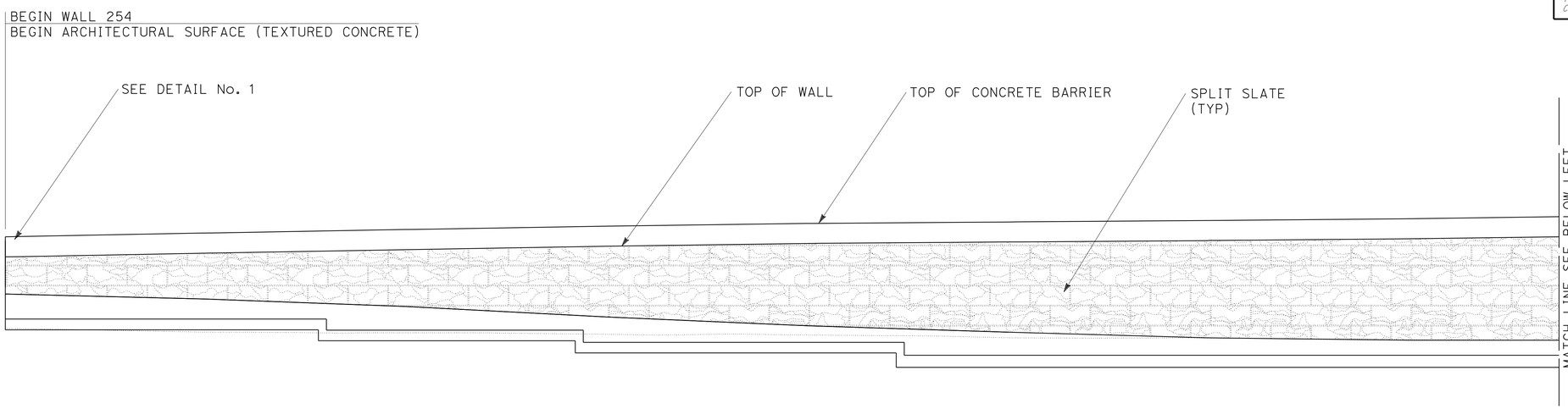

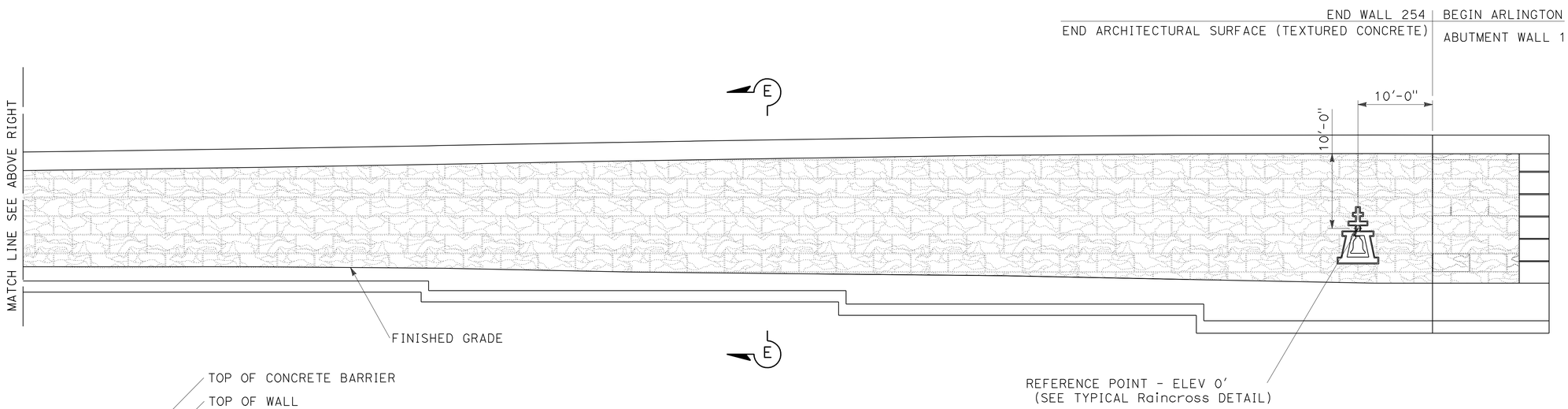

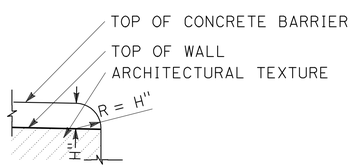

DETAIL No. 1

TYPICAL END OF WALL
WITH CONCRETE BARRIER
ON TOP OF WALL DETAIL

ELEVATION FOR SPLIT SLATE TEXTURE RETAINING WALL No. 254

THIS PLAN IS ACCURATE FOR ARCHITECTUAL TREATMENT WORK ONLY.

ARCHITECTURAL SURFACE
RETAINING WALL No. 254

SCALE: 1/8"=1'-0"

R10-2

STATE OF CALIFORNIA - DEPARTMENT OF TRANSPORTATION
Caltrans® LANDSCAPE ARCHITECTURE

SENIOR LANDSCAPE ARCHITECT: BYRON STROUT
CALCULATED-DESIGNED BY: MATTHEW HALL
CHECKED BY: MIRIAM BISHOP
REVISED BY
DATE REVISED

LAST REVISION 12-01-10
DATE PLOTTED => 30-APR-2011
TIME PLOTTED => 08:42

DIST	COUNTY	ROUTE	POST MILES TOTAL PROJECT	SHEET No	TOTAL SHEETS
08	Riv	91	15.6/21.6	854	2028

GEOTECHNICAL PROFESSIONAL — DATE 10/2008

4-25-11
PLANS APPROVAL DATE

REGISTERED PROFESSIONAL ENGINEER — ANDREW C. LEE — No. 2616 — Exp. 6-30-12 — GEOTECHNICAL — STATE OF CALIFORNIA

The State of California or its officers or agents shall not be responsible for the accuracy or completeness of electronic copies of this plan sheet.

California Department of Transportation
5900 Folsom Boulevard
Sacramento, CA 95819

URS Corporation
2020 East First Street, Suite 400
Santa Ana, CA 92705

NOTE: 1. This LOTB sheet was prepared in accordance with the Caltrans Soil & Rock Logging, Classification, and Presentation Manual (June 2007).

2. For legend, see "Soil Legend Log of Test Borings" sheet

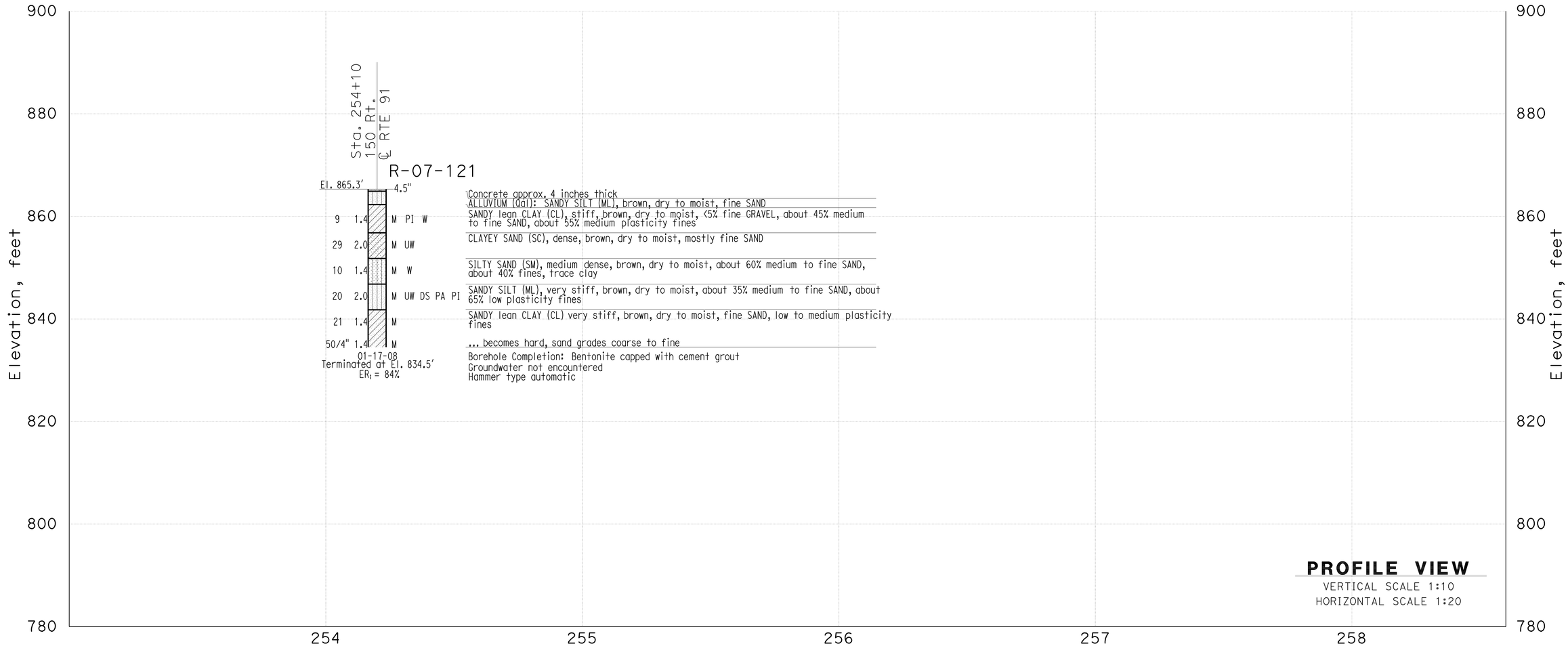

THIS PLAN ACCURATE FOR SOUND WALL AND RETAINING WALL WORK ONLY

DESIGN OVERSIGHT	GINA PURSELL FUNCTIONAL SUPERVISOR	DRAWN BY	P. QUACH	P.CHAU/D.WADER/C.CARBINO FIELD INVESTIGATION BY:	PREPARED FOR THE STATE OF CALIFORNIA DEPARTMENT OF TRANSPORTATION	A. LEE PROJECT ENGINEER	BRIDGE NO. X
X SIGN OFF DATE		CHECKED BY	S. PIRATHIVIRAJ	DATE: Nov 6 2007 to March 7 2008			POST MILE X

Retaining Wall 254 R10-3

LOG OF TEST BORINGS SHEET 1 OF 2

OSF GEOTECHNICAL LOG OF TEST BORINGS SHEET (ENGLISH) (REV. 2/25/05)

ORIGINAL SCALE IN INCHES FOR REDUCED PLANS 0 1 2 3

CU 59A0590
EA 08-448400

DISREGARD PRINTS BEARING EARLIER REVISION DATES

REVISION DATES (PRELIMINARY STAGE ONLY) X

SHEET 1 OF 3

FILE => 844840qj003.dgn

USERNAME => trlehard DATE PLOTTED => 30-APR-2011 TIME PLOTTED =>

DIST	COUNTY	ROUTE	POST MILES TOTAL PROJECT	SHEET No	TOTAL SHEETS
08	Riv	91	15.6/21.6	855	2028

GEOTECHNICAL PROFESSIONAL DATE 10/2008

4-25-11
PLANS APPROVAL DATE

REGISTERED PROFESSIONAL ENGINEER
ANDREW C. LEE
No. 2616
Exp. 6-30-12
GEOTECHNICAL
STATE OF CALIFORNIA

The State of California or its officers or agents shall not be responsible for the accuracy or completeness of electronic copies of this plan sheet.

California Department of Transportation
5900 Folsom Boulevard
Sacramento, CA 95819

URS Corporation
2020 East First Street, Suite 400
Santa Ana, CA 92705

NOTE: 1. This LOTB sheet was prepared in accordance with the Caltrans Soil & Rock Logging, Classification, and Presentation Manual (June 2007).

2. For legend, see "Soil Legend Log of Test Borings" sheet

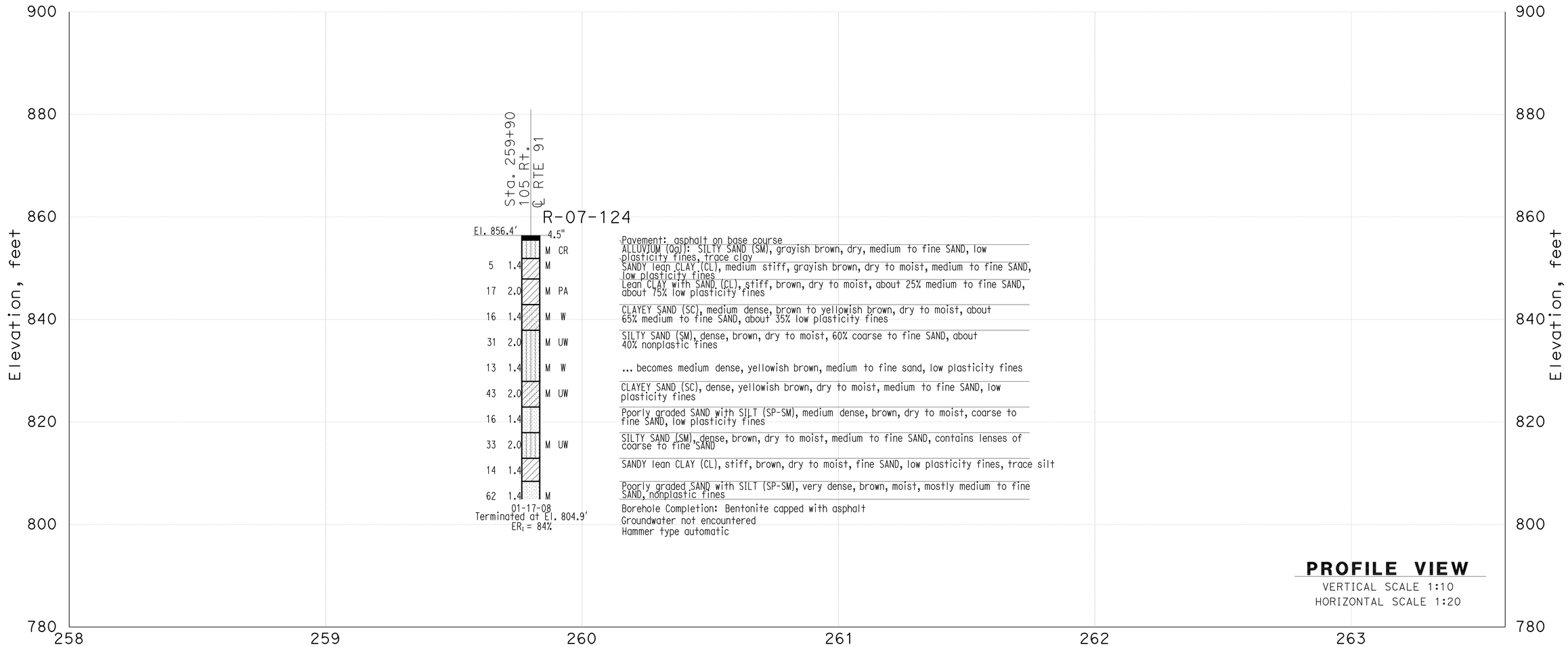

THIS PLAN ACCURATE FOR SOUND WALL AND RETAINING WALL WORK ONLY

DESIGN OVERSIGHT	GINA PURSELL FUNCTIONAL SUPERVISOR	DRAWN BY	P. QUACH	P.CHAU/D.WADER/C.CARBINO FIELD INVESTIGATION BY: DATE: Nov 6 2007 to March 7 2008	PREPARED FOR THE STATE OF CALIFORNIA DEPARTMENT OF TRANSPORTATION	A. LEE PROJECT ENGINEER	BRIDGE NO. X POST MILE X	Retaining Wall 254 R10-4 LOG OF TEST BORINGS SHEET 2 OF 2
X SIGN OFF DATE		CHECKED BY	S. PIRATHIVIRAJ					

OSF GEOTECHNICAL LOG OF TEST BORINGS SHEET (ENGLISH) (REV. 2/25/05)

ORIGINAL SCALE IN INCHES FOR REDUCED PLANS 0 1 2 3

CU 59A0590
EA 08-448400

DISREGARD PRINTS BEARING EARLIER REVISION DATES

REVISION DATES (PRELIMINARY STAGE ONLY) X

SHEET 2 OF 3

FILE => 844840qj004.dgn

USERNAME => trlenard DATE PLOTTED => 30-APR-2011 TIME PLOTTED =>

DIST	COUNTY	ROUTE	POST MILES TOTAL PROJECT	SHEET No	TOTAL SHEETS
08	Riv	91	15.6/21.6	856	2028

GEOTECHNICAL PROFESSIONAL — DATE 10/2008

4-25-11
PLANS APPROVAL DATE

REGISTERED PROFESSIONAL ENGINEER — ANDREW C. LEE — No. 2616 — Exp. 6-30-12 — GEOTECHNICAL — STATE OF CALIFORNIA

The State of California or its officers or agents shall not be responsible for the accuracy or completeness of electronic copies of this plan sheet.

California Department of Transportation
5900 Folsom Boulevard
Sacramento, CA 95819

URS Corporation
2020 East First Street, Suite 400
Santa Ana, CA 92705

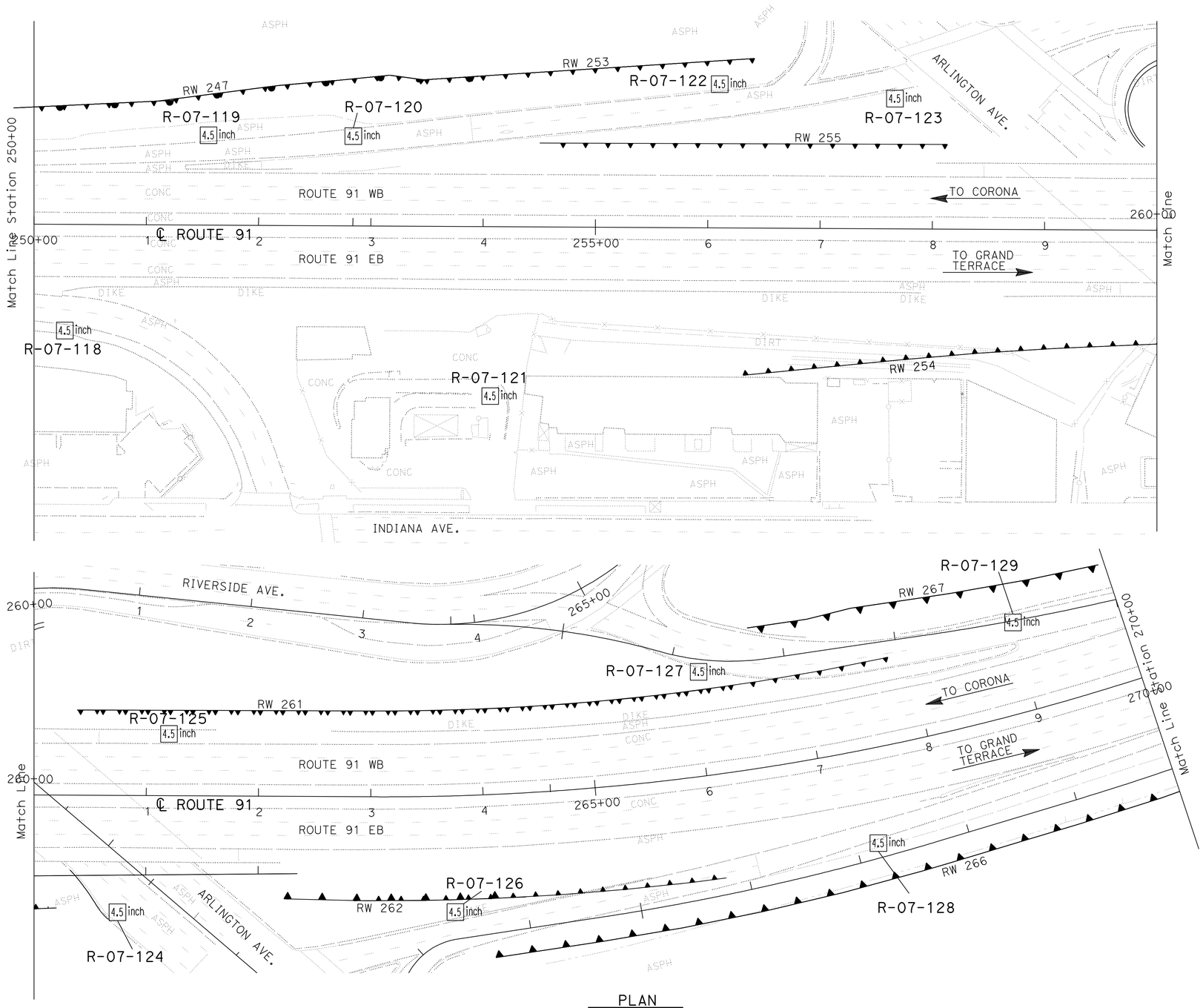

PLAN
SCALE 1"=50'

Borehole Number	Drill Rig	Hammer Type	Avg. Hammer Efficiency, ETR (%)
R-07-118	CS-2000	Automatic	84
R-07-119	CS-2000	Automatic	84
R-07-120	Mobile B-47	Manual trip	60*
R-07-121	CS-2000	Automatic	84
R-07-122	CS-2000	Automatic	84
R-07-123	CS-2000	Automatic	84
R-07-124	CS-2000	Automatic	84
R-07-125	CME 85	Automatic	87
R-07-126	CS-2000	Automatic	84
R-07-127	CME 85	Automatic	87
R-07-128	CS-2000	Automatic	84
R-07-129	CME 85	Automatic	87

Sampler Type	Inside Diameter (Inches)	Borehole Numbers
SPT	1.375	R-07-118, R-07-119, R-07-120 R-07-121, R-07-122, R-07-123 R-07-124, R-07-125, R-07-126 R-07-127, R-07-128, R-07-129
Modified California 1	1.94	R-07-119, R-07-120, R-07-121 R-07-124, R-07-125, R-07-127 R-07-129
Modified California 2	2.40	-

*Estimated Hammer Efficiency Rating.

DESIGN OVERSIGHT X SIGN OFF DATE	GINA PURSELL FUNCTIONAL SUPERVISOR	DRAWN BY	P. QUACH	P.CHAU/D.WADER/C.CARBINO FIELD INVESTIGATION BY: DATE: Nov 6 2007 to March 7 2008	PREPARED FOR THE STATE OF CALIFORNIA DEPARTMENT OF TRANSPORTATION	A. LEE PROJECT ENGINEER	BRIDGE NO. X POST MILE X
		CHECKED BY	S. PIRATHIVIRAJ				

RETAINING WALL 254 R10-5

LOG OF TEST BORINGS 3 OF 3

OSF GEOTECHNICAL LOG OF TEST BORINGS SHEET (ENGLISH) (REV. 2/25/05)

ORIGINAL SCALE IN INCHES FOR REDUCED PLANS 0 1 2 3

CU 59A0590
EA 08-448400

DISREGARD PRINTS BEARING EARLIER REVISION DATES

REVISION DATES (PRELIMINARY STAGE ONLY) X

SHEET 3 OF 3

FILE => 844840qj005.dgn

USERNAME => trlenard DATE PLOTTED => 30-APR-2011 TIME PLOTTED =>

Dist	COUNTY	ROUTE	POST MILES TOTAL PROJECT	SHEET No.	TOTAL SHEETS
08	Riv	91	15.6/21.6	857	2028

REGISTERED CIVIL ENGINEER — DATE 12-1-10

4-25-11
PLANS APPROVAL DATE

REGISTERED PROFESSIONAL ENGINEER — THOMAS HIEN NGO No. 68383 Exp. 9/30/11 CIVIL — STATE OF CALIFORNIA

THE STATE OF CALIFORNIA OR ITS OFFICERS OR AGENTS SHALL NOT BE RESPONSIBLE FOR THE ACCURACY OR COMPLETENESS OF SCANNED COPIES OF THIS PLAN SHEET.

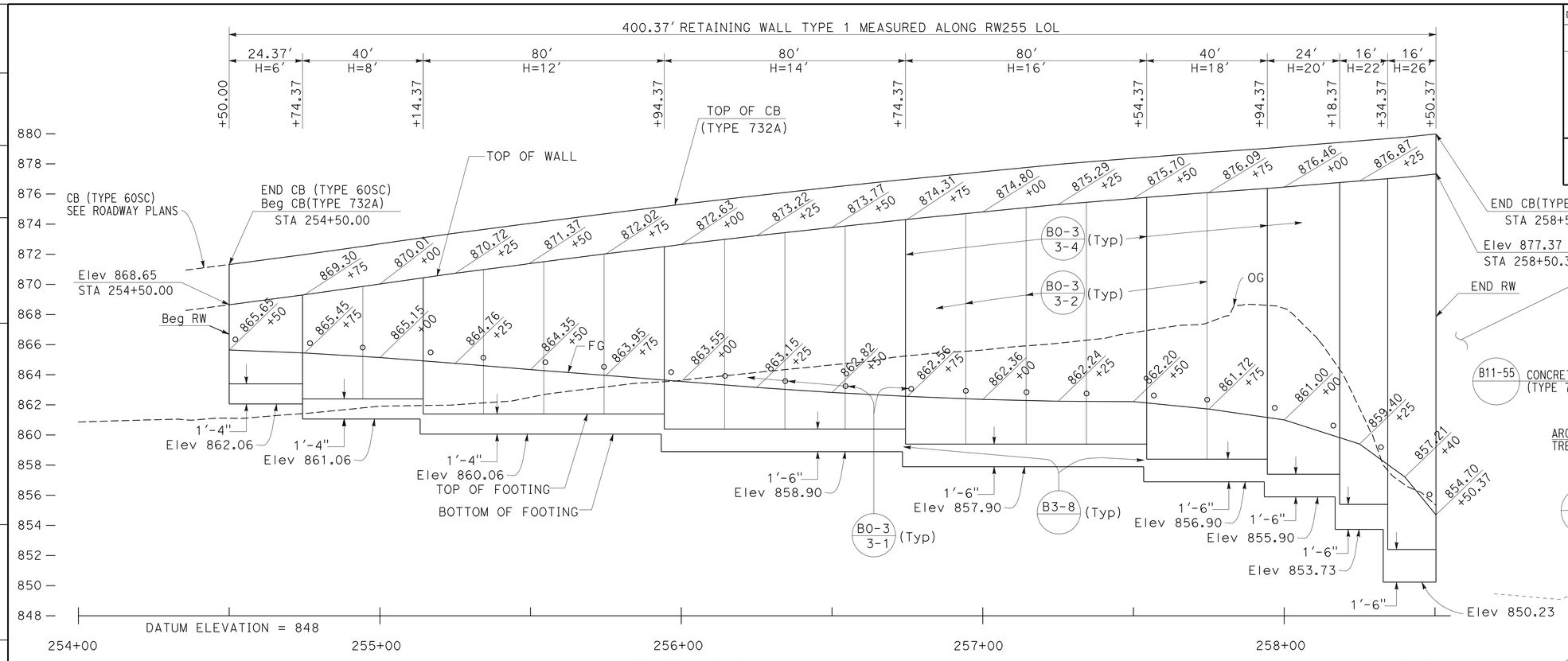

ELEVATION

SCALE Horiz 1"=20'
Vert 1"=4'

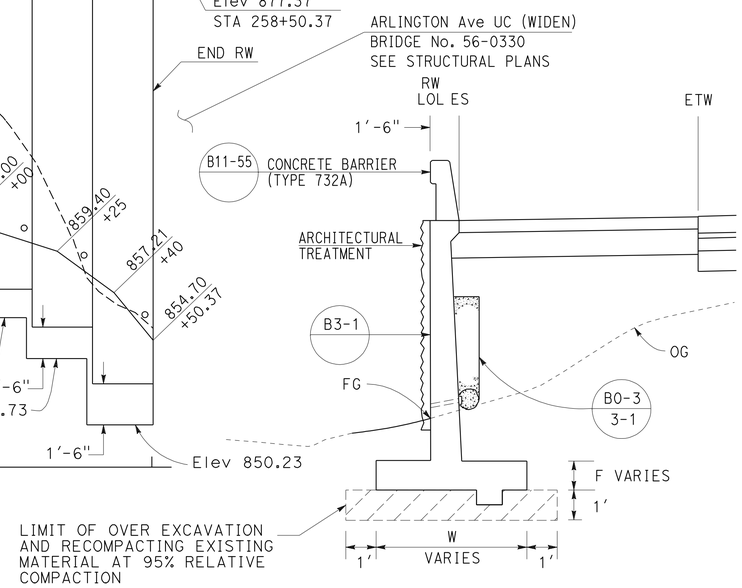

TYPICAL SECTION

NO SCALE
FROM STA 254+50.00 TO STA 258+50.37

NOTES:

1. ARCHITECTURAL TREATMENT SHOULD EXTEND 6 IN BELOW FG OR 6 IN BELOW TOP CB (TYPE 60D MOD)
2. FOR STRUCTURAL SECTIONS, SEE ROADWAY PLANS
3. WATERSTOP IN EXPANSION JOINT SHALL BE EXTEND 6 IN INTO THE BARRIER
4. LOWER TOP OF WALL 12" WITHIN STRUCTURE APPROACH LIMITS (SEE STRUCTURAL PLANS)

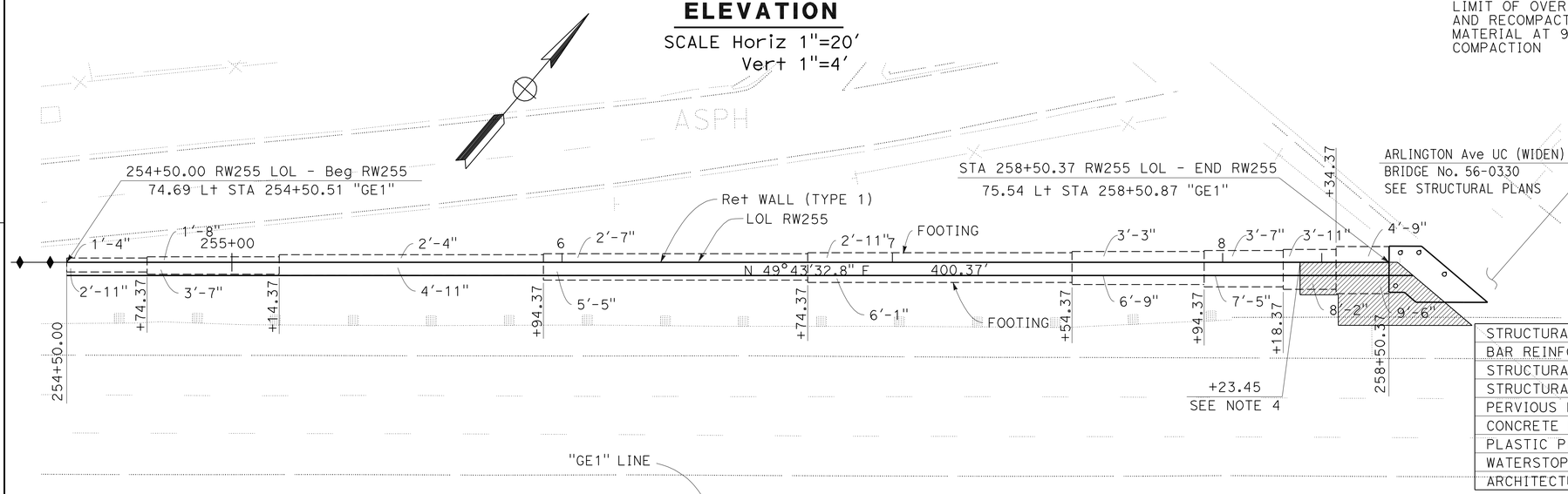

PLAN

SCALE: 1"=20'

QUANTITIES

STRUCTURAL CONCRETE (RETAINING WALL)	500.60	CY
BAR REINFORCING STEEL (RETAINING WALL)	57124	LB
STRUCTURAL EXCAVATION (RETAINING WALL)	1223.90	CY
STRUCTURAL BACKFILL (RETAINING WALL)	1289.80	CY
PERVIOUS BACKFILL MATERIAL (RETAINING WALL)	109.6	CY
CONCRETE BARRIER (TYPE 732A)	400.37	LF
PLASTIC PIPE (N)	32.22	LF
WATERSTOP (N)	119.74	LF
ARCHITECTURAL SURFACE (TEXTURED CONCRETE)	4471.10	SF

(N) = NOT A SEPARATE PAY ITEM, FOR INFORMATION ONLY

THIS PLAN ACCURATE FOR RETAINING WALL WORK ONLY.

RETAINING WALL PLAN
RETAINING WALL No. 255
SCALE AS SHOWN

R11-1

STATE OF CALIFORNIA - DEPARTMENT OF TRANSPORTATION
Caltrans® DESIGN
FUNCTIONAL SUPERVISOR: MARK PERTILE
CALCULATED-DESIGNED BY: THAI VAN HGUYEN
CHECKED BY: THOMAS HIEN NGO
REVISED BY / DATE REVISED

LAST REVISION 12-01-10
DATE PLOTTED => 30-APR-2011
TIME PLOTTED => 08:42

Dist	COUNTY	ROUTE	POST MILES TOTAL PROJECT	SHEET No.	TOTAL SHEETS
08	Riv	91	15.6/21.6	858	2028

LICENSED LANDSCAPE ARCHITECT

4-25-11
PLANS APPROVAL DATE

LICENSED LANDSCAPE ARCHITECT
Matthew Harry Hall
No. 2011
Signature
10/31/2011
Renewal Date
12-1-10
Date
STATE OF CALIFORNIA

THE STATE OF CALIFORNIA OR ITS OFFICERS OR AGENTS SHALL NOT BE RESPONSIBLE FOR THE ACCURACY OR COMPLETENESS OF SCANNED COPIES OF THIS PLAN SHEET.

NOTE:

SEE SHEET ASD-2, ASD-4 AND ASD-5.

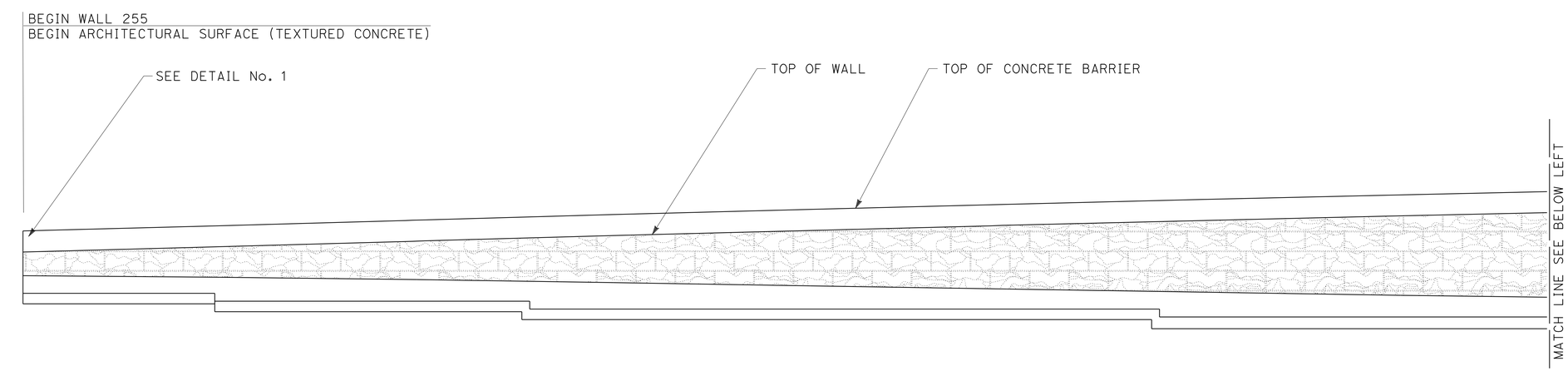

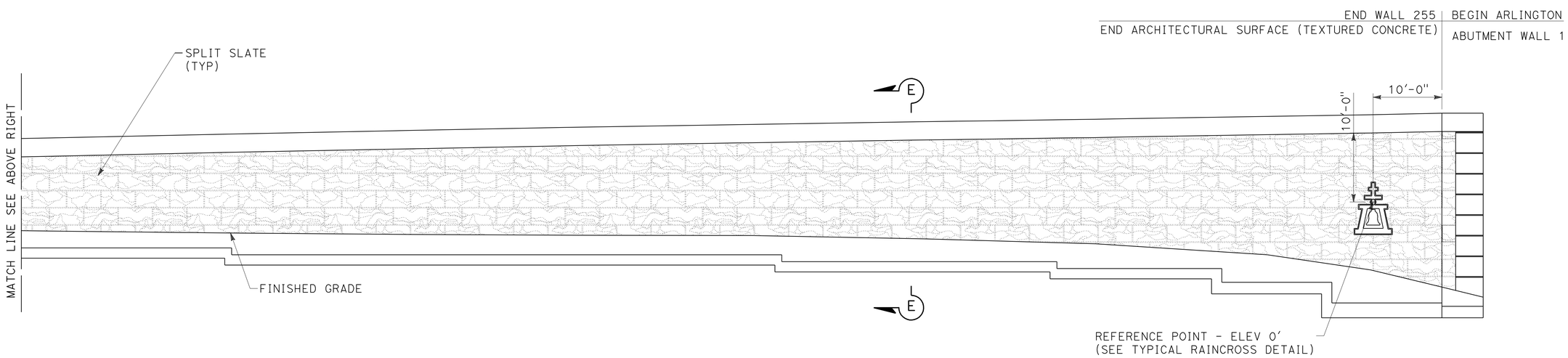

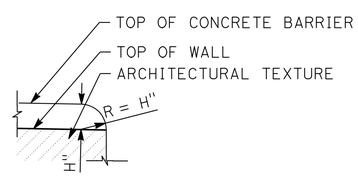

DETAIL No. 1

TYPICAL END OF WALL
WITH CONCRETE BARRIER
ON TOP OF WALL DETAIL

MIRRORED ELEVATION FOR SPLIT SLATE TEXTURE RETAINING WALL No. 255

THIS PLAN IS ACCURATE FOR ARCHITECTUAL TREATMENT WORK ONLY.

ARCHITECTURAL SURFACE
RETAINING WALL No. 255

SCALE: 1/8"=1'-0"

R11-2

REVISED BY | DATE REVISED
MATTHEW HALL | MIRIAM BISHOP
CALCULATED-DESIGNED BY | CHECKED BY
SENIOR LANDSCAPE ARCHITECT
BYRON STROUT

STATE OF CALIFORNIA - DEPARTMENT OF TRANSPORTATION
Caltrans® LANDSCAPE ARCHITECTURE

LAST REVISION 12-01-10 | DATE PLOTTED => 30-APR-2011 | TIME PLOTTED => 08:43

DIST	COUNTY	ROUTE	POST MILES TOTAL PROJECT	SHEET No	TOTAL SHEETS
08	Riv	91	15.6/21.6	859	2028

GEOTECHNICAL PROFESSIONAL — DATE 10/2008

4-25-11
PLANS APPROVAL DATE

REGISTERED PROFESSIONAL ENGINEER — ANDREW C. LEE — No. 2616 — Exp. 6-30-12 — GEOTECHNICAL — STATE OF CALIFORNIA

The State of California or its officers or agents shall not be responsible for the accuracy or completeness of electronic copies of this plan sheet.

California Department of Transportation
5900 Folsom Boulevard
Sacramento, CA 95819

URS Corporation
2020 East First Street, Suite 400
Santa Ana, CA 92705

FOR PLAN VIEW, SEE SHEET R11-4

NOTE: 1. This LOTB sheet was prepared in accordance with the Caltrans Soil & Rock Logging, Classification, and Presentation Manual (June 2007).

2. For legend, see "Log of Test Borings" 1 of 83

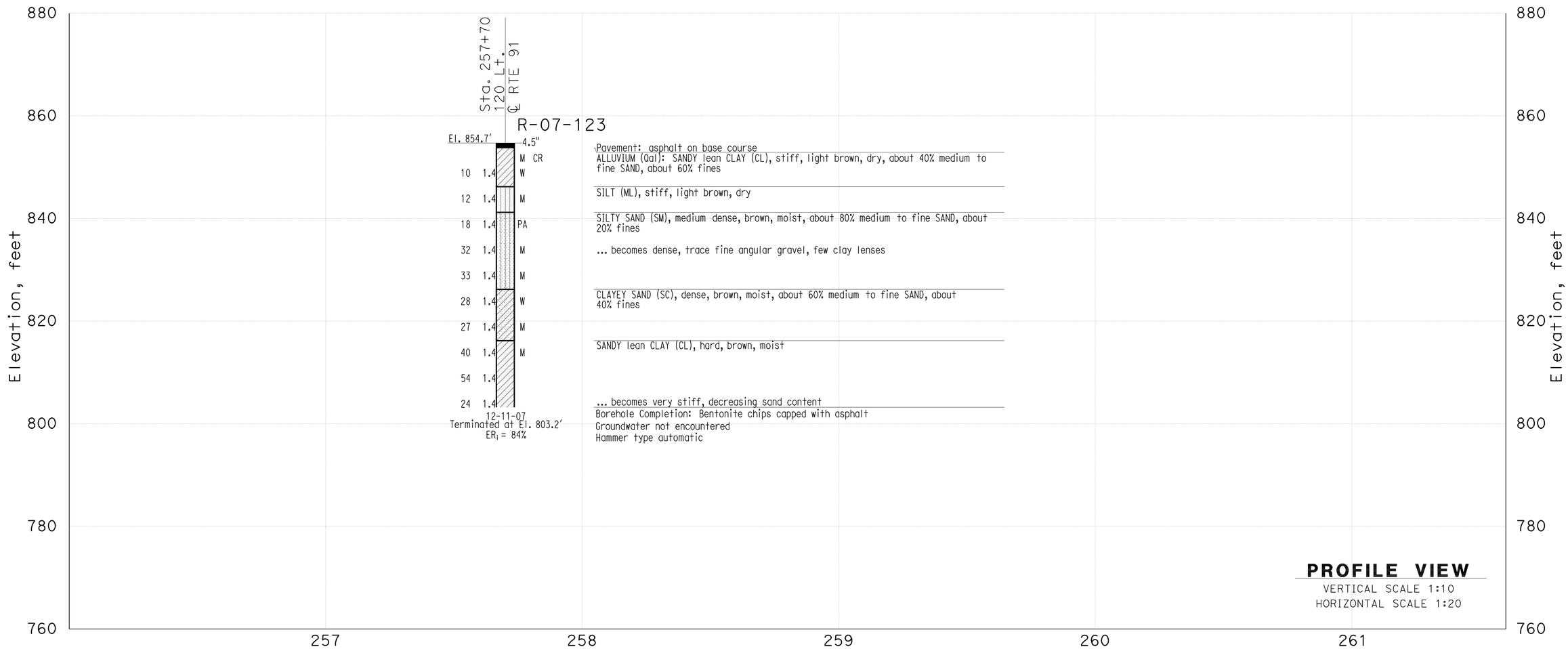

THIS PLAN ACCURATE FOR SOUND WALL AND RETAINING WALL WORK ONLY

DESIGN OVERSIGHT X SIGN OFF DATE	GINA PURSELL FUNCTIONAL SUPERVISOR	DRAWN BY CHECKED BY	P. QUACH S. PIRATHIVIRAJ	P.CHAU/D.WADER/C.CARBINO FIELD INVESTIGATION BY: DATE: Nov 6 2007 to March 7 2008	PREPARED FOR THE STATE OF CALIFORNIA DEPARTMENT OF TRANSPORTATION	A. LEE PROJECT ENGINEER	BRIDGE NO. X POST MILE X	Retaining Wall 255 R11-3 LOG OF TEST BORINGS SHEET 1OF 2

OSF GEOTECHNICAL LOG OF TEST BORINGS SHEET (ENGLISH) (REV. 2/25/05)

ORIGINAL SCALE IN INCHES FOR REDUCED PLANS 0 1 2 3

CU 59A0590
EA 08-448400

DISREGARD PRINTS BEARING EARLIER REVISION DATES

REVISION DATES (PRELIMINARY STAGE ONLY) X

SHEET 1 OF 2

FILE => 844840qk003.dgn

USERNAME => trlenard DATE PLOTTED => 30-APR-2011 TIME PLOTTED =>

DIST	COUNTY	ROUTE	POST MILES TOTAL PROJECT	SHEET No	TOTAL SHEETS
08	Riv	91	15.6/21.6	860	2028

GEOTECHNICAL PROFESSIONAL — DATE 10/2008

4-25-11
PLANS APPROVAL DATE

REGISTERED PROFESSIONAL ENGINEER — ANDREW C. LEE — No. 2616 — Exp. 6-30-12 — GEOTECHNICAL — STATE OF CALIFORNIA

The State of California or its officers or agents shall not be responsible for the accuracy or completeness of electronic copies of this plan sheet.

California Department of Transportation
5900 Folsom Boulevard
Sacramento, CA 95819

URS Corporation
2020 East First Street, Suite 400
Santa Ana, CA 92705

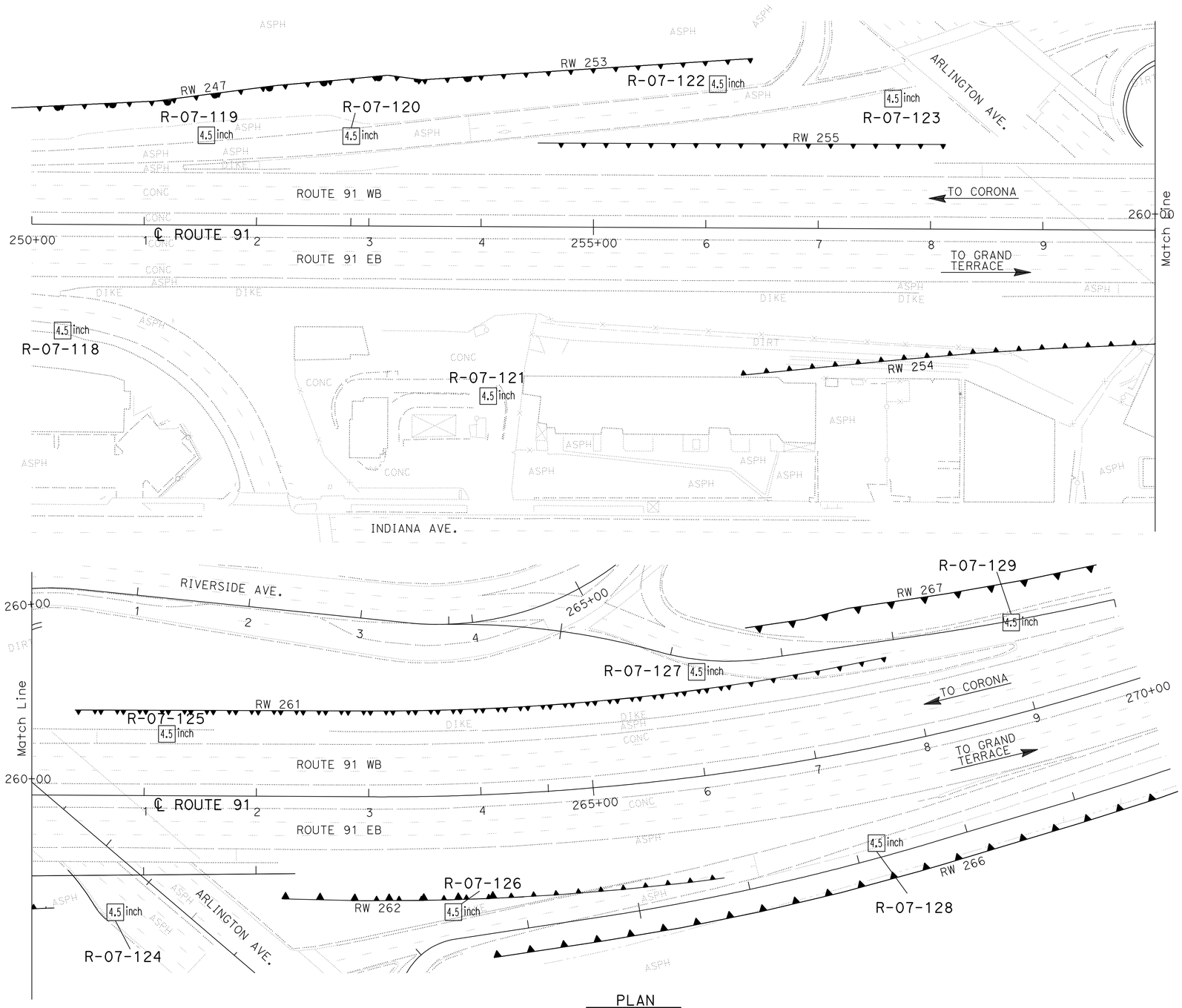

PLAN
SCALE 1"=50'

Borehole Number	Drill Rig	Hammer Type	Avg. Hammer Efficiency, ETR (%)
R-07-118	CS-2000	Automatic	84
R-07-119	CS-2000	Automatic	84
R-07-120	Mobile B-47	Manual trip	60*
R-07-121	CS-2000	Automatic	84
R-07-122	CS-2000	Automatic	84
R-07-123	CS-2000	Automatic	84
R-07-124	CS-2000	Automatic	84
R-07-125	CME 85	Automatic	87
R-07-126	CS-2000	Automatic	84
R-07-127	CME 85	Automatic	87
R-07-128	CS-2000	Automatic	84
R-07-129	CME 85	Automatic	87

Sampler Type	Inside Diameter (Inches)	Borehole Numbers
SPT	1.375	R-07-118, R-07-119, R-07-120 R-07-121, R-07-122, R-07-123 R-07-124, R-07-125, R-07-126 R-07-127, R-07-128, R-07-129
Modified California 1	1.94	R-07-119, R-07-120, R-07-121 R-07-124, R-07-125, R-07-127 R-07-129
Modified California 2	2.40	-

*Estimated Hammer Efficiency Rating.

DESIGN OVERSIGHT — GINA PURSELL, FUNCTIONAL SUPERVISOR — X — SIGN OFF DATE

DRAWN BY: P. QUACH
CHECKED BY: S. PIRATHIVIRAJ

P.CHAU/D.WADER/C.CARBINO
FIELD INVESTIGATION BY:
DATE: Nov 6 2007 to March 7 2008

PREPARED FOR THE STATE OF CALIFORNIA DEPARTMENT OF TRANSPORTATION

A. LEE — PROJECT ENGINEER

BRIDGE NO. X
POST MILE X

RETAINING WALL 255 R11-4

LOG OF TEST BORINGS 2 OF 2

OSF GEOTECHNICAL LOG OF TEST BORINGS SHEET (ENGLISH) (REV. 2/25/05)

ORIGINAL SCALE IN INCHES FOR REDUCED PLANS 0 1 2 3

CU 59A0590
EA 08-448400

DISREGARD PRINTS BEARING EARLIER REVISION DATES

REVISION DATES (PRELIMINARY STAGE ONLY) X

SHEET 2 OF 2

FILE => 844840qk004.dgn

USERNAME => trlenard — DATE PLOTTED => 30-APR-2011 — TIME PLOTTED =>

Dist	COUNTY	ROUTE	POST MILES TOTAL PROJECT	SHEET No.	TOTAL SHEETS
08	Riv	91	15.6/21.6	861	2028

REGISTERED CIVIL ENGINEER — DATE 12-1-10

PLANS APPROVAL DATE 4-25-11

REGISTERED PROFESSIONAL ENGINEER THOMAS HIEN NGO No. 68383 Exp. 9/30/11 CIVIL STATE OF CALIFORNIA

THE STATE OF CALIFORNIA OR ITS OFFICERS OR AGENTS SHALL NOT BE RESPONSIBLE FOR THE ACCURACY OR COMPLETENESS OF SCANNED COPIES OF THIS PLAN SHEET.

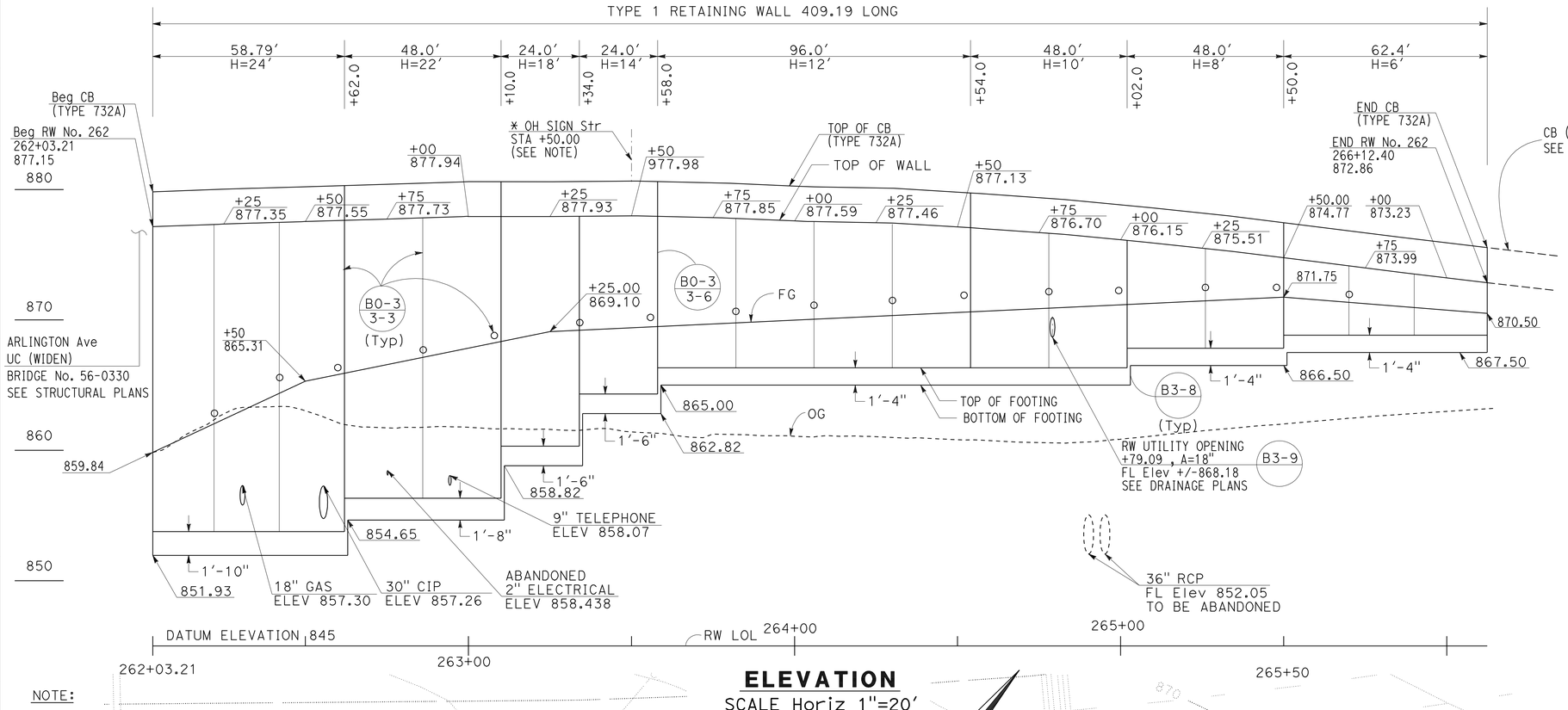

ELEVATION

SCALE Horiz 1"=20'
Vert 1"=5'

NOTE:

1. FOR OVERHEAD SIGN STRUCTURE DETAILS, SEE OVERHEAD SIGN STRUCTURE DETAIL SHEETS.
2. FOR UTILITY OPENINGS, SEE Std PLAN B3-9.
3. ARCHITECTURAL TREATMENT SHOULD EXTEND 6" BELOW FG.
4. FOR STRUCTURAL SECTIONS, SEE ROADWAY PLANS.
5. WATERSTOP IN EXPANSION JOINT SHALL BE EXTEND 6" INTO THE BARRIER.
6. LOWER TOP OF WALL 12" WITHIN STRUCTURE APPROACH LIMITS (SEE STRUCTURAL PLANS)

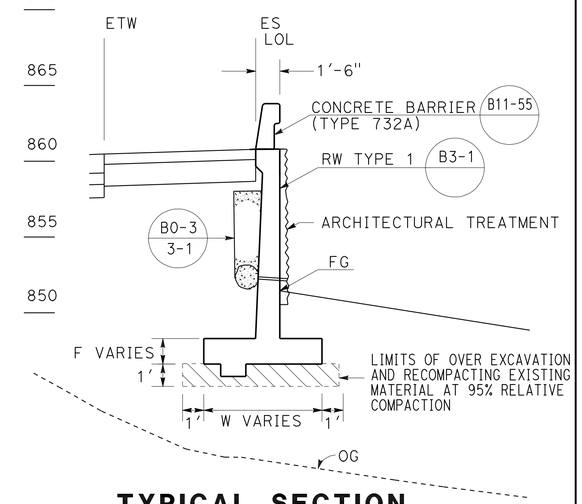

TYPICAL SECTION

NO SCALE
FROM STA 262+03.21 TO STA 266+12.40

QUANTITIES

STRUCTURAL CONCRETE (RETAINING WALL)	559.90	CY
BAR REINFORCING STEEL (RETAINING WALL)	62485	LB
STRUCTURAL EXCAVATION (RETAINING WALL)	1118.28	CY
STRUCTURAL BACKFILL (RETAINING WALL)	1453.95	CY
PERVIOUS BACKFILL MATERIAL (RETAINING WALL)	69.40	CY
CONCRETE BARRIER (TYPE 732A)	409.19	LF
PLASTIC PIPE (N)	24.81	LF
WATERSTOP (N)	69.19	LF
ARCHITECTURAL SURFACE (TEXTURED CONCRETE)	3260.32	SF

(N) = NOT A SEPARATE PAY ITEM, FOR INFORMATION ONLY

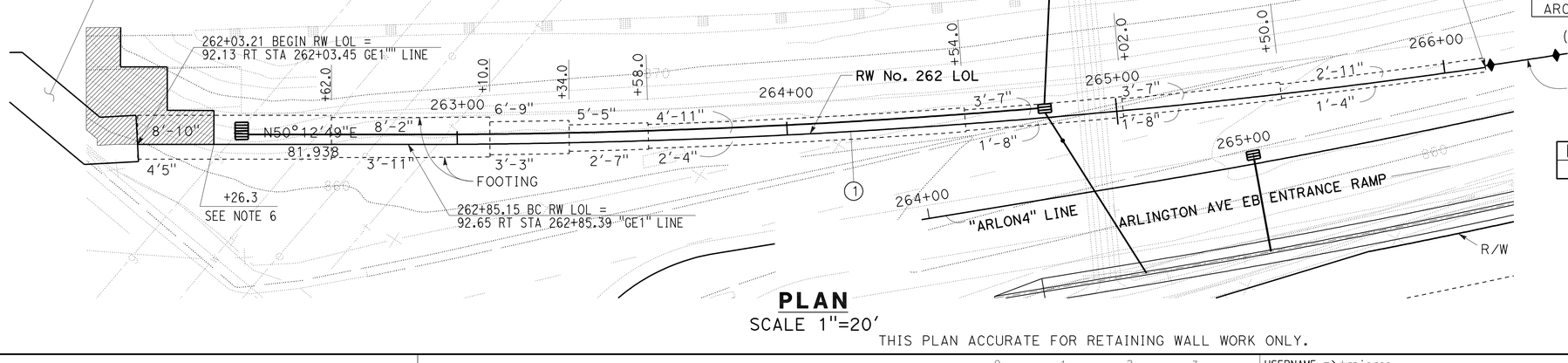

PLAN

SCALE 1"=20'

THIS PLAN ACCURATE FOR RETAINING WALL WORK ONLY.

CURVE DATA

No.	R	Δ	T	L
1	2292.70'	8°10'41"	163.90'	327.25'

RETAINING WALL PLAN
RETAINING WALL No. 262

SCALE AS SHOWN

R12-1

STATE OF CALIFORNIA - DEPARTMENT OF TRANSPORTATION — DESIGN — Caltrans

FUNCTIONAL SUPERVISOR: MARK PERTILE

CALCULATED-DESIGNED BY: THAI VAN HGUYEN — CHECKED BY: THOMAS HIEN NGO

REVISED BY — DATE REVISED

LAST REVISION 12-01-10 — DATE PLOTTED => 29-APR-2011 — TIME PLOTTED => 20:52

Dist	COUNTY	ROUTE	POST MILES TOTAL PROJECT	SHEET No.	TOTAL SHEETS
08	Riv	91	15.6/21.6	862	2028

LICENSED LANDSCAPE ARCHITECT

4-25-11
PLANS APPROVAL DATE

LICENSED LANDSCAPE ARCHITECT
Matthew Harry Hall
No. 5000
Signature
10/31/2011
Renewal Date
12-1-10
Date
STATE OF CALIFORNIA

THE STATE OF CALIFORNIA OR ITS OFFICERS OR AGENTS SHALL NOT BE RESPONSIBLE FOR THE ACCURACY OR COMPLETENESS OF SCANNED COPIES OF THIS PLAN SHEET.

NOTE:

SEE SHEET ASD-2, ASD-4 AND ASD-5.

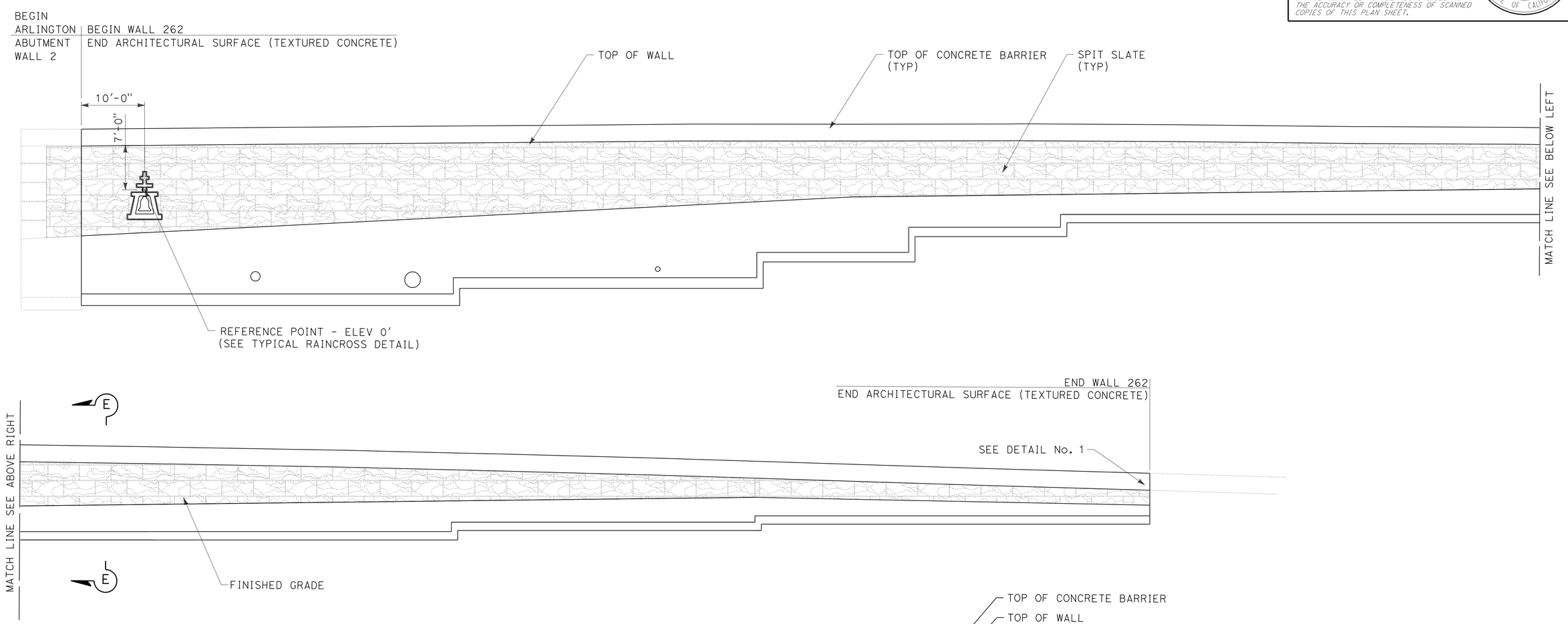

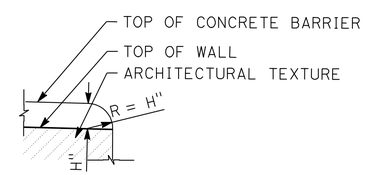

DETAIL No. 1

TYPICAL END OF WALL
WITH CONCRETE BARRIER
ON TOP OF WALL DETAIL

ELEVATION FOR SPLIT SLATE TEXTURE RETAINING WALL No. 262

THIS PLAN IS ACCURATE FOR ARCHITECTUAL TREATMENT WORK ONLY.

ARCHITECTURAL SURFACE RETAINING WALL No. 262

SCALE: 1/8"=1'-0"

R12-2

REVISED BY | DATE REVISED

MATTHEW HALL | MIRIAM BISHOP

CALCULATED-DESIGNED BY | CHECKED BY

SENIOR LANDSCAPE ARCHITECT | BYRON STROUT

STATE OF CALIFORNIA - DEPARTMENT OF TRANSPORTATION
Caltrans® LANDSCAPE ARCHITECTURE

LAST REVISION 12-01-10 | DATE PLOTTED => 29-APR-2011 | TIME PLOTTED => 20:53

DIST	COUNTY	ROUTE	POST MILES TOTAL PROJECT	SHEET No	TOTAL SHEETS
08	Riv	91	15.6/21.6	863	2028

GEOTECHNICAL PROFESSIONAL — DATE 10/2008

4-25-11
PLANS APPROVAL DATE

REGISTERED PROFESSIONAL ENGINEER — ANDREW C. LEE — No. 2616 — Exp. 6-30-12 — GEOTECHNICAL — STATE OF CALIFORNIA

The State of California or its officers or agents shall not be responsible for the accuracy or completeness of electronic copies of this plan sheet.

California Department of Transportation
5900 Folsom Boulevard
Sacramento, CA 95819

URS Corporation
2020 East First Street, Suite 400
Santa Ana, CA 92705

NOTE: 1. This LOTB sheet was prepared in accordance with the Caltrans Soil & Rock Logging, Classification, and Presentation Manual (June 2007).

2. For legend, see "Soil Legend Log of Test Borings" sheet

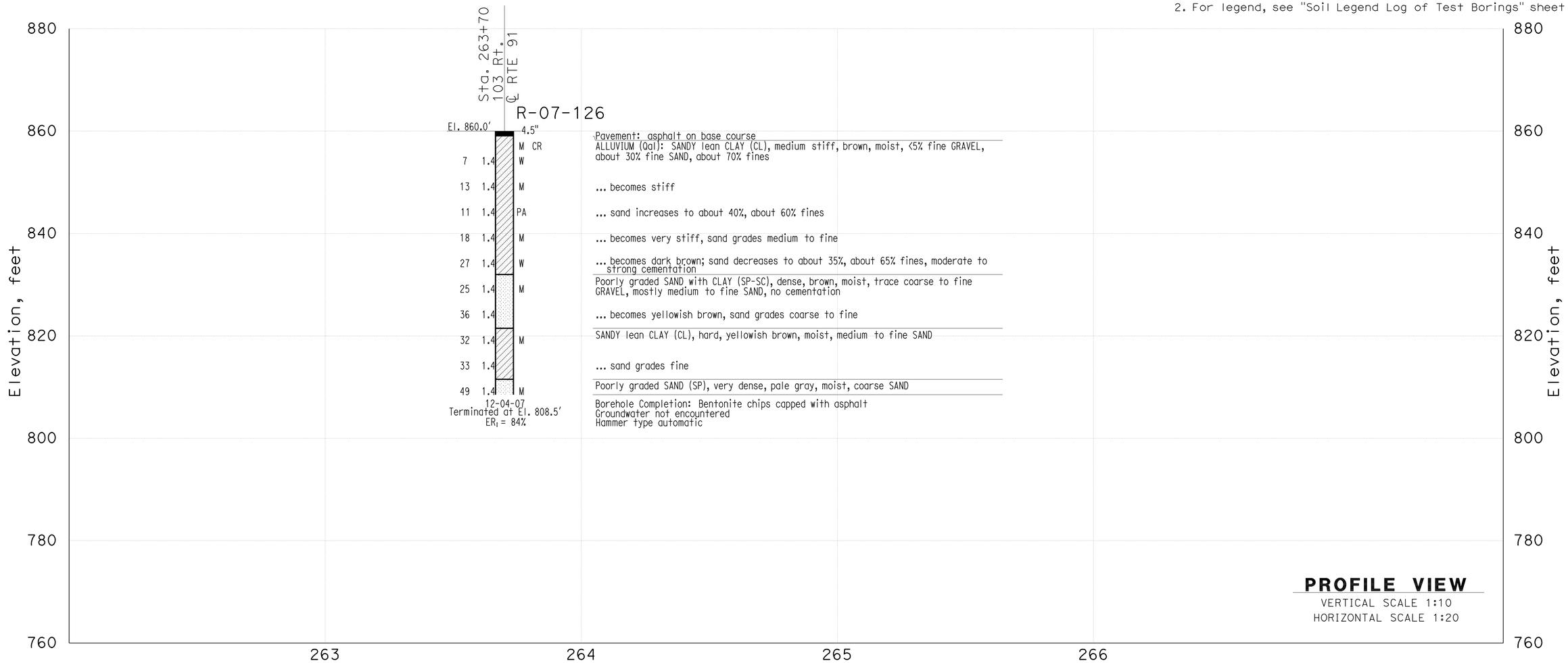

THIS PLAN ACCURATE FOR SOUND WALL AND RETAINING WALL WORK ONLY

DESIGN OVERSIGHT	GINA PURSELL	DRAWN BY	P. QUACH	P.CHAU/D.WADER/C.CARBINO	PREPARED FOR THE STATE OF CALIFORNIA DEPARTMENT OF TRANSPORTATION	A. LEE	BRIDGE NO. X	Retaining Wall 262 R12-3
X	FUNCTIONAL SUPERVISOR	CHECKED BY	S. PIRATHIVIRAJ	FIELD INVESTIGATION BY: DATE: Nov 6 2007 to March 7 2008		PROJECT ENGINEER	POST MILE X	LOG OF TEST BORINGS
SIGN OFF DATE								

OSF GEOTECHNICAL LOG OF TEST BORINGS SHEET (ENGLISH) (REV. 2/25/05)

ORIGINAL SCALE IN INCHES FOR REDUCED PLANS 0 1 2 3

CU 59A0590
EA 08-448400

DISREGARD PRINTS BEARING EARLIER REVISION DATES

REVISION DATES (PRELIMINARY STAGE ONLY) X

SHEET 1 OF 2

FILE => 844840q1003.dgn

USERNAME => trlenard DATE PLOTTED => 30-APR-2011 TIME PLOTTED =>

DIST	COUNTY	ROUTE	POST MILES TOTAL PROJECT	SHEET No	TOTAL SHEETS
08	Riv	91	15.6/21.6	864	2028

GEOTECHNICAL PROFESSIONAL — DATE 10/2008

4-25-11
PLANS APPROVAL DATE

REGISTERED PROFESSIONAL ENGINEER — ANDREW C. LEE — No. 2616 — Exp. 6-30-12 — GEOTECHNICAL — STATE OF CALIFORNIA

The State of California or its officers or agents shall not be responsible for the accuracy or completeness of electronic copies of this plan sheet.

California Department of Transportation
5900 Folsom Boulevard
Sacramento, CA 95819

URS Corporation
2020 East First Street, Suite 400
Santa Ana, CA 92705

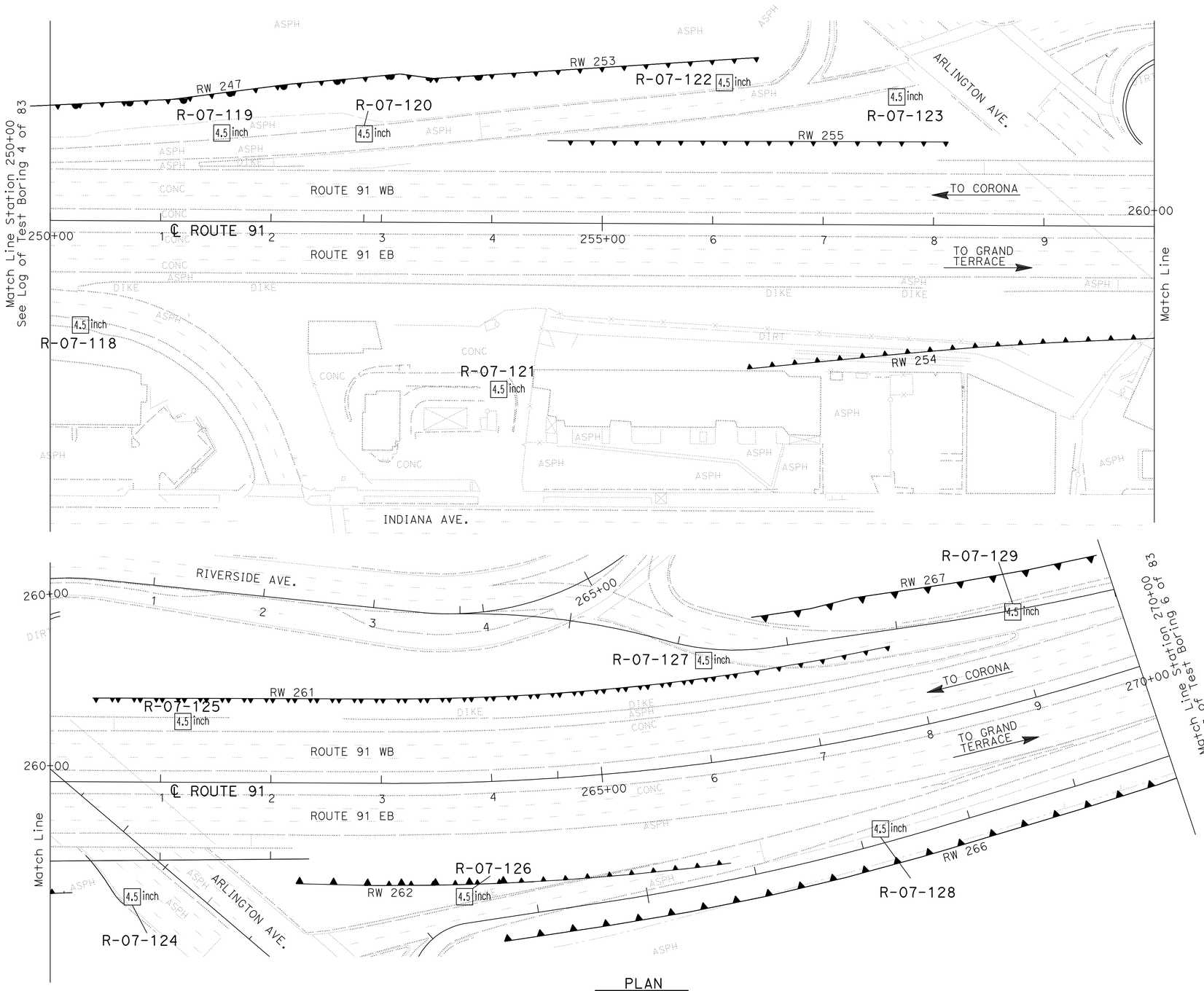

PLAN
SCALE 1"=50'

Borehole Number	Drill Rig	Hammer Type	Avg. Hammer Efficiency, ETR (%)
R-07-118	CS-2000	Automatic	84
R-07-119	CS-2000	Automatic	84
R-07-120	Mobile B-47	Manual trip	60*
R-07-121	CS-2000	Automatic	84
R-07-122	CS-2000	Automatic	84
R-07-123	CS-2000	Automatic	84
R-07-124	CS-2000	Automatic	84
R-07-125	CME 85	Automatic	87
R-07-126	CS-2000	Automatic	84
R-07-127	CME 85	Automatic	87
R-07-128	CS-2000	Automatic	84
R-07-129	CME 85	Automatic	87

Sampler Type	Inside Diameter (Inches)	Borehole Numbers
SPT	1.375	R-07-118, R-07-119, R-07-120 R-07-121, R-07-122, R-07-123 R-07-124, R-07-125, R-07-126 R-07-127, R-07-128, R-07-129
Modified California 1	1.94	R-07-119, R-07-120, R-07-121 R-07-124, R-07-125, R-07-127 R-07-129
Modified California 2	2.40	-

*Estimated Hammer Efficiency Rating.

DESIGN OVERSIGHT: X	GINA PURSELL, FUNCTIONAL SUPERVISOR	DRAWN BY: P. QUACH	P.CHAU/D.WADER/C.CARBINO	PREPARED FOR THE STATE OF CALIFORNIA DEPARTMENT OF TRANSPORTATION	A. LEE, PROJECT ENGINEER	BRIDGE NO. X	RETAINING WALL 262 R12-4
SIGN OFF DATE		CHECKED BY: S. PIRATHIVIRAJ	FIELD INVESTIGATION BY: DATE: Nov 6 2007 to March 7 2008			POST MILE X	LOG OF TEST BORINGS 2 OF 2

OSF GEOTECHNICAL LOG OF TEST BORINGS SHEET (ENGLISH) (REV. 2/25/05)

ORIGINAL SCALE IN INCHES FOR REDUCED PLANS 0 1 2 3

CU 59A0590
EA 08-448400

DISREGARD PRINTS BEARING EARLIER REVISION DATES

REVISION DATES (PRELIMINARY STAGE ONLY) X

SHEET 2 OF 2

FILE => 844840q1004.dgn

USERNAME => trlenard DATE PLOTTED => 30-APR-2011 TIME PLOTTED =>

Dist	COUNTY	ROUTE	POST MILES TOTAL PROJECT	SHEET No.	TOTAL SHEETS
08	Riv	91	15.6/21.6	865	2028

REGISTERED CIVIL ENGINEER — DATE 12-1-10

4-25-11
PLANS APPROVAL DATE

REGISTERED PROFESSIONAL ENGINEER — THOMAS HIEN NGO No. 68383 Exp. 9/30/11 CIVIL — STATE OF CALIFORNIA

THE STATE OF CALIFORNIA OR ITS OFFICERS OR AGENTS SHALL NOT BE RESPONSIBLE FOR THE ACCURACY OR COMPLETENESS OF SCANNED COPIES OF THIS PLAN SHEET.

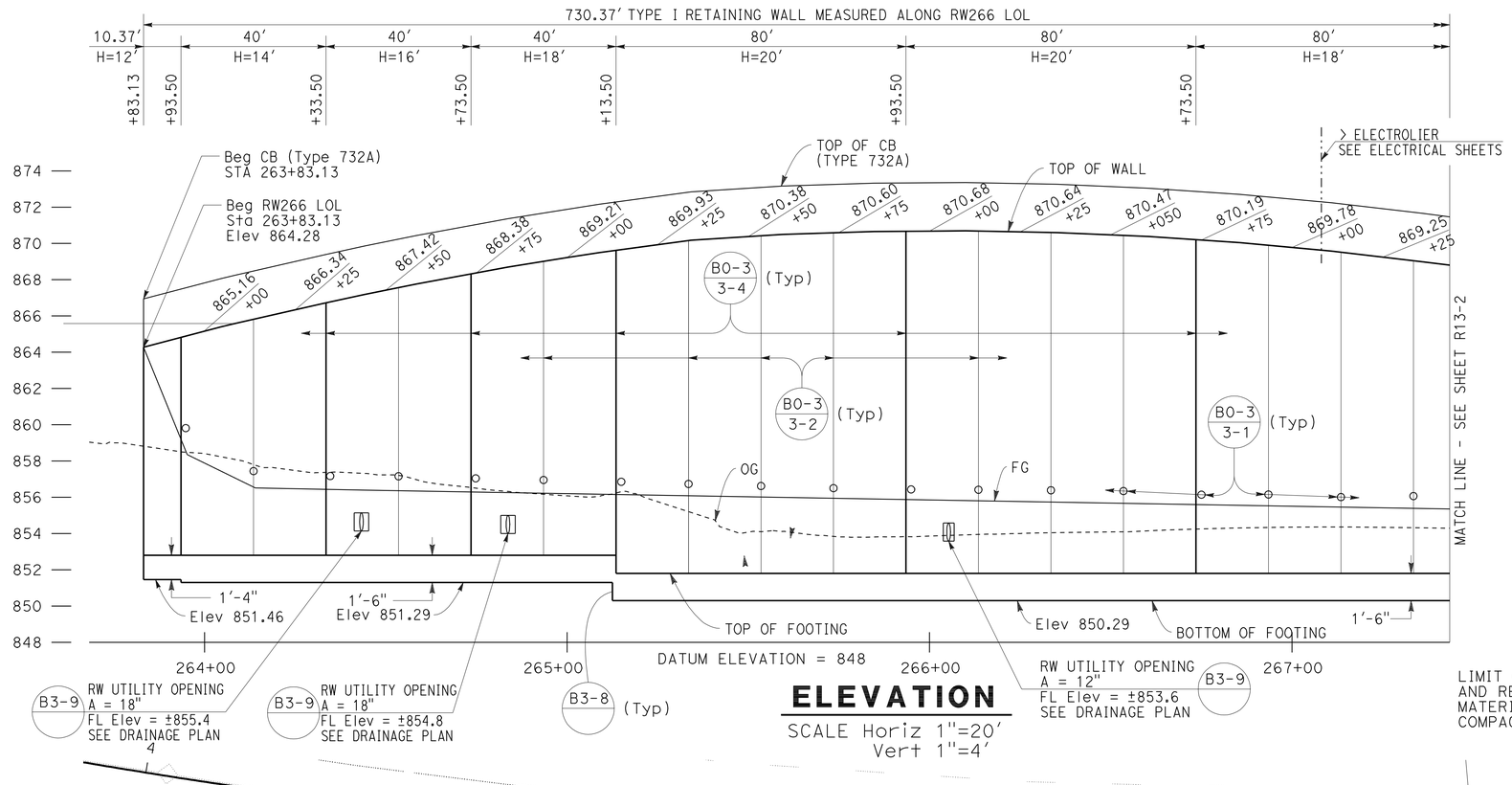

ELEVATION

SCALE Horiz 1"=20'
Vert 1"=4'

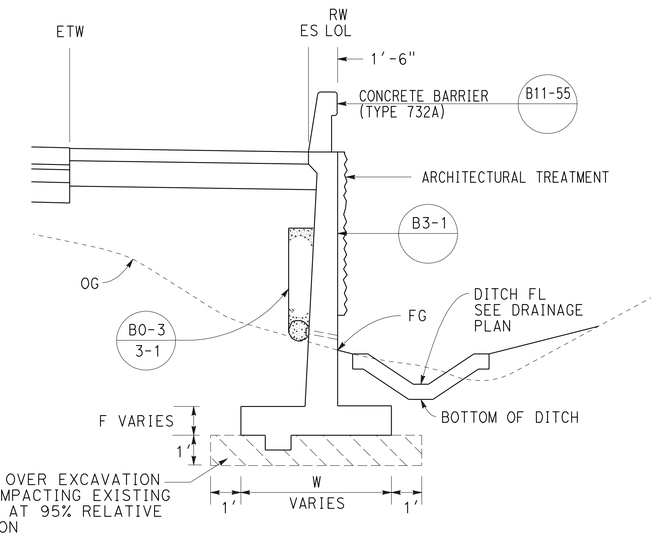

TYPICAL SECTION

NO SCALE
FROM STA 263+83.13 TO STA 271+13.50

FINISHED GRADE (FG) TABLE	
STATION	ELEVATION
263+83.13	864.28
263+95.18	858.35
264+14.00	856.51
264+44.08	856.39
267+59.60	855.29
268+63.30	854.92
270+98.66	854.10
271+13.50	861.52

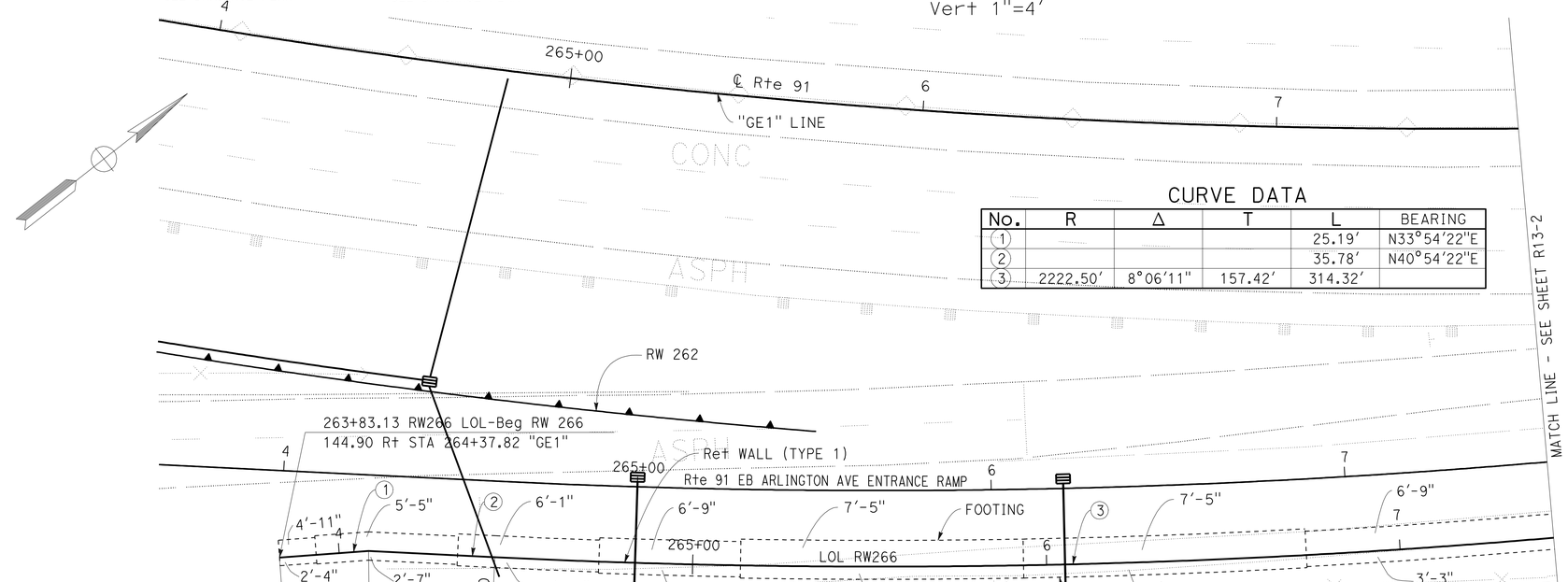

PLAN

SCALE: 1"=20'

THIS PLAN ACCURATE FOR RETAINING WALL WORK ONLY.

CURVE DATA

No.	R	Δ	T	L	BEARING
1				25.19'	N33°54'22"E
2				35.78'	N40°54'22"E
3	2222.50'	8°06'11"	157.42'	314.32'	

NOTES:

1. ARCHITECTURAL TREATMENT SHOULD EXTEND 6 IN BELOW FG OR 6 IN BELOW TOP CB (TYPE 60D MOD)
2. FOR STRUCTURAL SECTIONS, SEE ROADWAY PLANS
3. WATERSTOP IN EXPANSION JOINT SHALL BE EXTEND 6 IN INTO THE BARRIER
4. FOR ROUNDING DETAILS, SEE ARCHITECTURAL TREATMENT PLANS

SHEET 1 OF 2

RETAINING WALL PLAN
RETAINING WALL No. 266

SCALE AS SHOWN

R13-1

REVISED BY	DATE REVISED

CALCULATED-DESIGNED BY: THAI VAN HGUYEN
CHECKED BY: THOMAS HIEN NGO
FUNCTIONAL SUPERVISOR: MARK PERTILE

STATE OF CALIFORNIA - DEPARTMENT OF TRANSPORTATION
Caltrans®
DESIGN

LAST REVISION 12-01-10
DATE PLOTTED => 30-APR-2011
TIME PLOTTED => 05:48

Dist	COUNTY	ROUTE	POST MILES TOTAL PROJECT	SHEET No.	TOTAL SHEETS
08	Riv	91	15.6/21.6	866	2028

REGISTERED CIVIL ENGINEER 12-1-10 DATE

4-25-11
PLANS APPROVAL DATE

REGISTERED PROFESSIONAL ENGINEER THOMAS HIEN NGO No. 68383 Exp. 9/30/11 CIVIL STATE OF CALIFORNIA

THE STATE OF CALIFORNIA OR ITS OFFICERS OR AGENTS SHALL NOT BE RESPONSIBLE FOR THE ACCURACY OR COMPLETENESS OF SCANNED COPIES OF THIS PLAN SHEET.

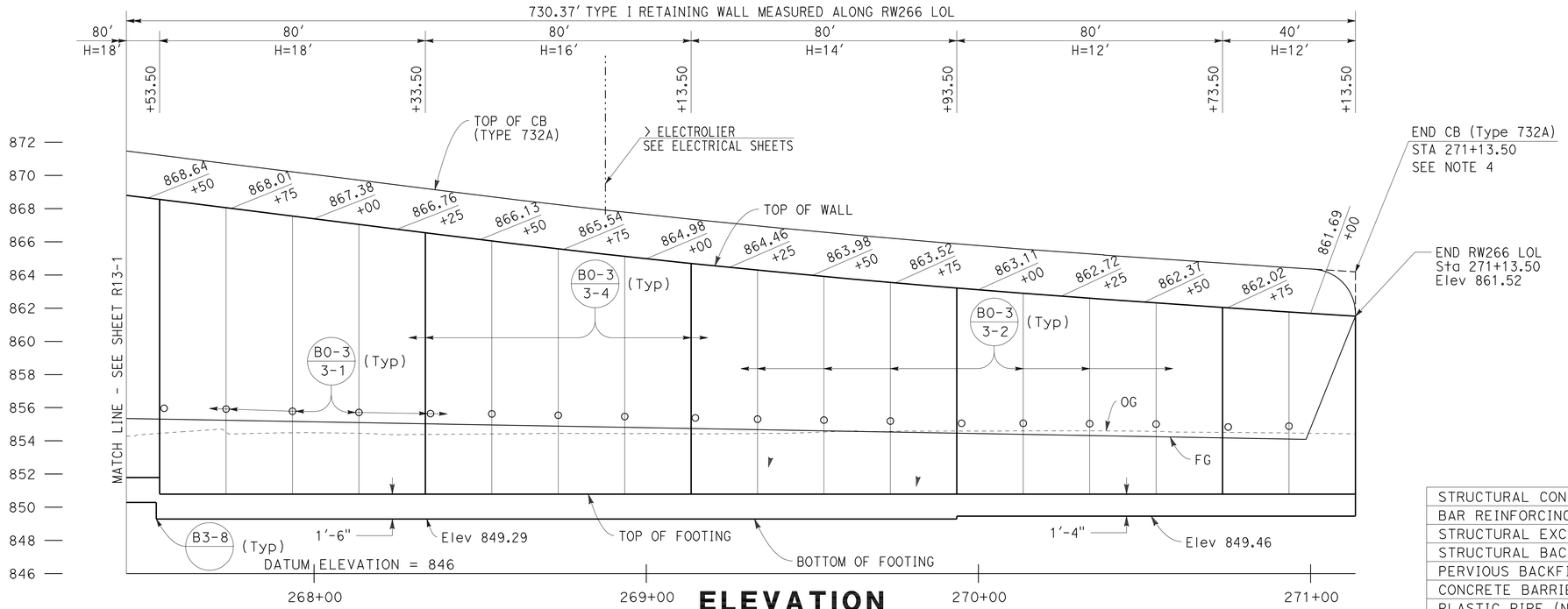

ELEVATION

SCALE Horiz 1"=20'
Vert 1"=4'

QUANTITIES

STRUCTURAL CONCRETE (RETAINING WALL)	1006.80	CY
BAR REINFORCING STEEL (RETAINING WALL)	121042	LB
STRUCTURAL EXCAVATION (RETAINING WALL)	1792.60	CY
STRUCTURAL BACKFILL (RETAINING WALL)	2844.40	CY
PERVIOUS BACKFILL MATERIAL (RETAINING WALL)	223.60	LF
CONCRETE BARRIER (TYPE 732A)	730.37	LF
PLASTIC PIPE (N)	56.60	LF
WATERSTOP (N)	173.17	LF
ARCHITECTURAL SURFACES (TEXTURED CONCRETE)	8664.89	SF

(N) = NOT A SEPARATE PAY ITEM, FOR INFORMATION ONLY

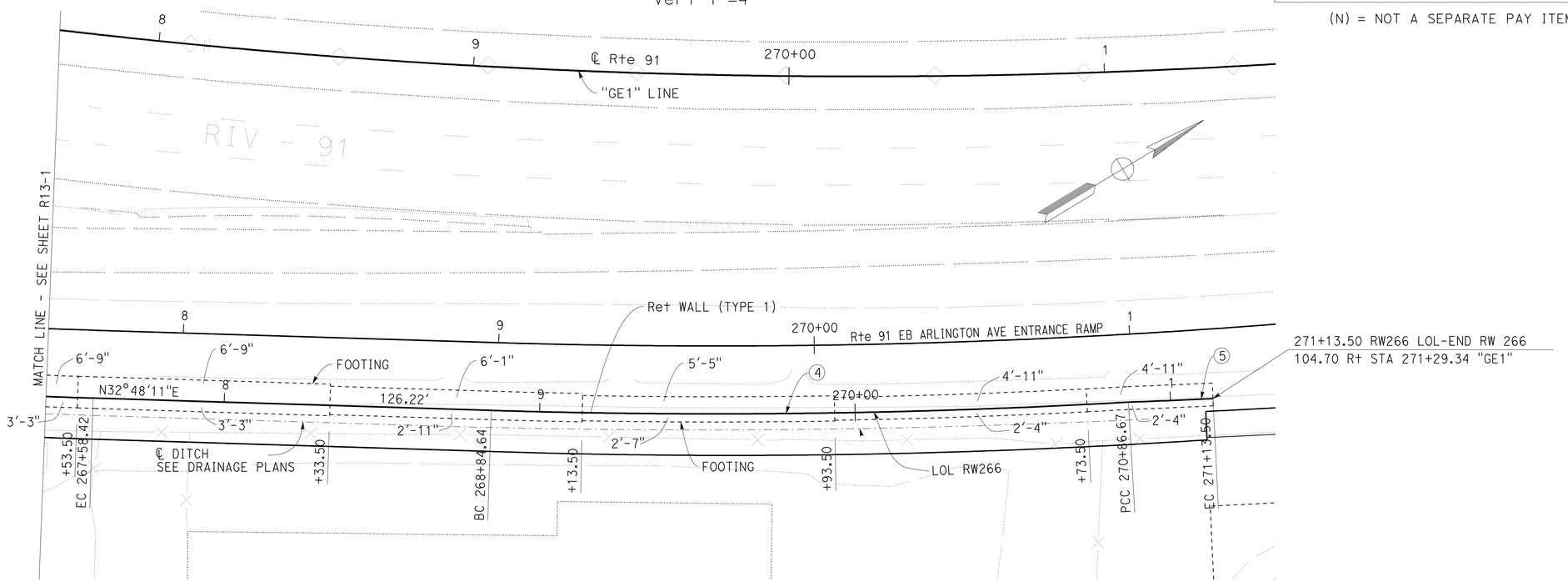

CURVE DATA

No.	R	Δ	T	L
4	2305.36'	5°01'16"	101.08'	202.03'
5	2303.11'	0°40'02"	13.41'	26.83'

PLAN

SCALE: 1"=20'

THIS PLAN ACCURATE FOR RETAINING WALL WORK ONLY.

SHEET 2 OF 2

RETAINING WALL PLAN
RETAINING WALL No. 266

SCALE AS SHOWN

R13-2

STATE OF CALIFORNIA - DEPARTMENT OF TRANSPORTATION
Caltrans®
DESIGN
FUNCTIONAL SUPERVISOR: MARK PERTILE
CALCULATED-DESIGNED BY: THAI VAN HGUYEN
CHECKED BY: THOMAS HIEN NGO
REVISED BY
DATE REVISED

LAST REVISION 12-01-10
DATE PLOTTED => 30-APR-2011
TIME PLOTTED => 05:48

Dist	COUNTY	ROUTE	POST MILES TOTAL PROJECT	SHEET No.	TOTAL SHEETS
08	Riv	91	15.6/21.6	867	2028

LICENSED LANDSCAPE ARCHITECT

4-25-11
PLANS APPROVAL DATE

LICENSED LANDSCAPE ARCHITECT
Matthew Harry Hall
No. 2011
Signature
10/31/2011
Renewal Date
12-1-10
Date
STATE OF CALIFORNIA

THE STATE OF CALIFORNIA OR ITS OFFICERS OR AGENTS SHALL NOT BE RESPONSIBLE FOR THE ACCURACY OR COMPLETENESS OF SCANNED COPIES OF THIS PLAN SHEET.

NOTE:

SEE SHEET ASD-1, ASD-2, ASD-3 AND ASD-5.

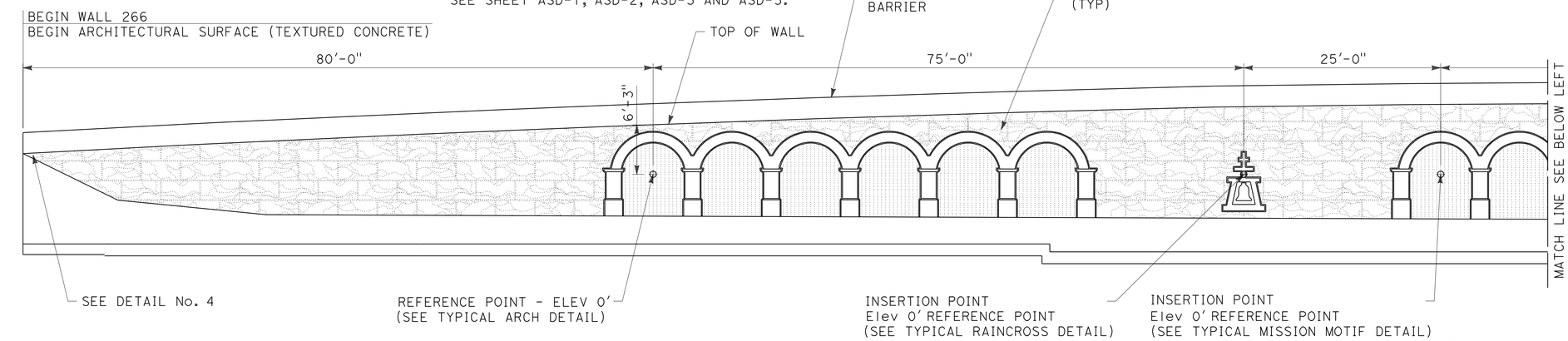

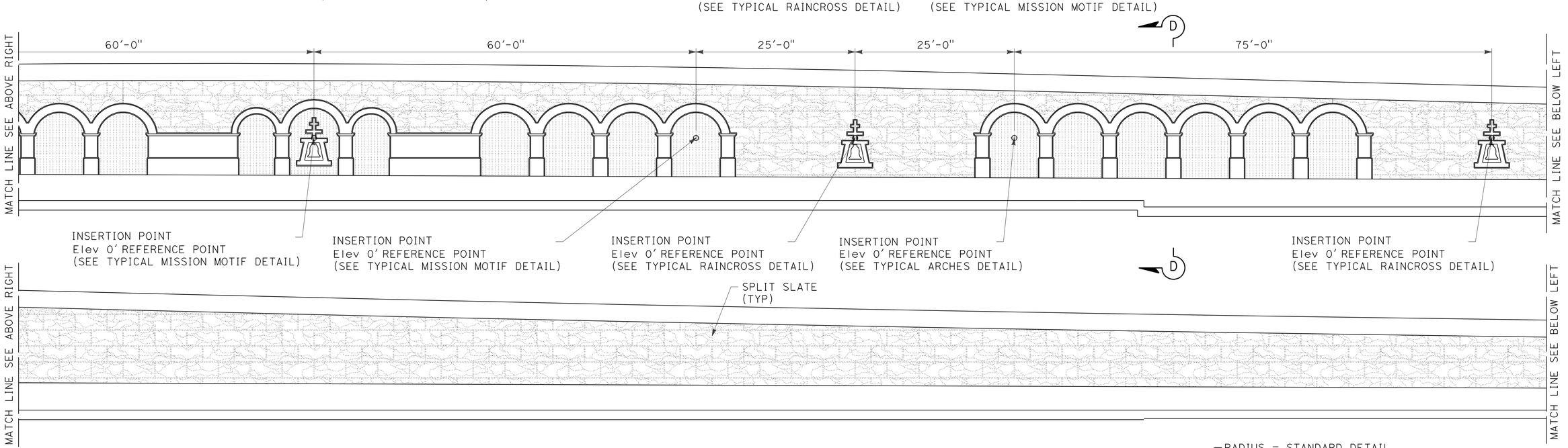

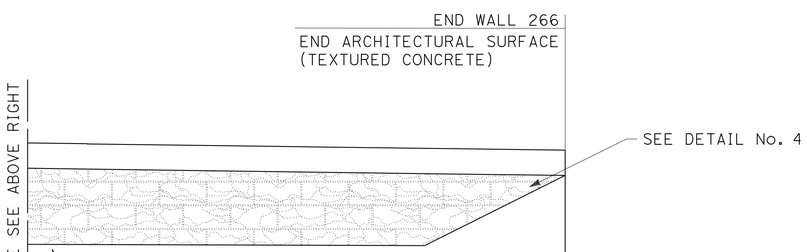

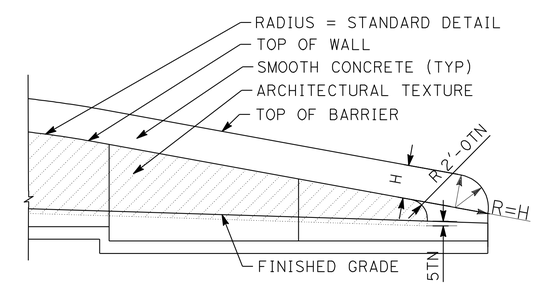

DETAIL No. 4

TYPICAL END OF WALL WITH CONCRETE BARRIER ON TOP OF WALL AND TYPE 60D MOD. CONCRETE BARRIER

ELEVATION FOR SPLIT SLATE TEXTURE RETAINING WALL No. 266

THIS PLAN IS ACCURATE FOR ARCHITECTUAL TREATMENT WORK ONLY.

ARCHITECTURAL SURFACE RETAINING WALL No. 266

SCALE: 1/8"=1'-0"

R13-3

REVISED BY | DATE REVISED
MATTHEW HALL | MIRIAM BISHOP
CALCULATED-DESIGNED BY | CHECKED BY
SENIOR LANDSCAPE ARCHITECT | BYRON STROUT

STATE OF CALIFORNIA - DEPARTMENT OF TRANSPORTATION
Caltrans® LANDSCAPE ARCHITECTURE

LAST REVISION 12-01-10 | DATE PLOTTED => 30-APR-2011 | TIME PLOTTED => 05:49

DIST	COUNTY	ROUTE	POST MILES TOTAL PROJECT	SHEET No	TOTAL SHEETS
08	Riv	91	15.6/21.6	868	2028

GEOTECHNICAL PROFESSIONAL 10/2008 DATE

4-25-11
PLANS APPROVAL DATE

REGISTERED PROFESSIONAL ENGINEER
ANDREW C. LEE
No. 2616
Exp. 6-30-12
GEOTECHNICAL
STATE OF CALIFORNIA

The State of California or its officers or agents shall not be responsible for the accuracy or completeness of electronic copies of this plan sheet.

California Department of Transportation
5900 Folsom Boulevard
Sacramento, CA 95819

URS Corporation
2020 East First Street, Suite 400
Santa Ana, CA 92705

FOR PLAN VIEW, SEE SHEET R13-7

NOTE: 1. This LOTB sheet was prepared in accordance with the Caltrans Soil & Rock Logging, Classification, and Presentation Manual (June 2007).

2. For legend, see "Log of Test Borings" 1 of 83

THIS PLAN ACCURATE FOR SOUND WALL AND RETAINING WALL WORK ONLY

DESIGN OVERSIGHT X SIGN OFF DATE	GINA PURSELL FUNCTIONAL SUPERVISOR	DRAWN BY CHECKED BY	P. QUACH S. PIRATHIVIRAJ	P.CHAU/D.WADER/C.CARBINO FIELD INVESTIGATION BY: DATE: Nov 6 2007 to March 7 2008	PREPARED FOR THE STATE OF CALIFORNIA DEPARTMENT OF TRANSPORTATION	A. LEE PROJECT ENGINEER	BRIDGE NO. X POST MILE X	Retaining Wall 266 R13-4 LOG OF TEST BORINGS SHEET 1 OF 5

OSF GEOTECHNICAL LOG OF TEST BORINGS SHEET (ENGLISH) (REV. 2/25/05)

ORIGINAL SCALE IN INCHES FOR REDUCED PLANS 0 1 2 3

CU 59A0590
EA 08-448400

DISREGARD PRINTS BEARING EARLIER REVISION DATES

REVISION DATES (PRELIMINARY STAGE ONLY) X

SHEET 1 OF 5

FILE => 844840qm004.dgn

USERNAME => trpierce DATE PLOTTED => 30-APR-2011 TIME PLOTTED =>

DIST	COUNTY	ROUTE	POST MILES TOTAL PROJECT	SHEET No	TOTAL SHEETS
08	Riv	91	15.6/21.6	869	2028

GEOTECHNICAL PROFESSIONAL 10/2008 DATE

4-25-11
PLANS APPROVAL DATE

REGISTERED PROFESSIONAL ENGINEER
ANDREW C. LEE
No. 2616
Exp. 6-30-12
GEOTECHNICAL
STATE OF CALIFORNIA

The State of California or its officers or agents shall not be responsible for the accuracy or completeness of electronic copies of this plan sheet.

California Department of Transportation
5900 Folsom Boulevard
Sacramento, CA 95819

URS Corporation
2020 East First Street, Suite 400
Santa Ana, CA 92705

FOR PLAN VIEW, SEE SHEET R13-8

NOTE: 1. This LOTB sheet was prepared in accordance with the Caltrans Soil & Rock Logging, Classification, and Presentation Manual (June 2007).

2. For legend, see "Log of Test Borings" 1 of 83

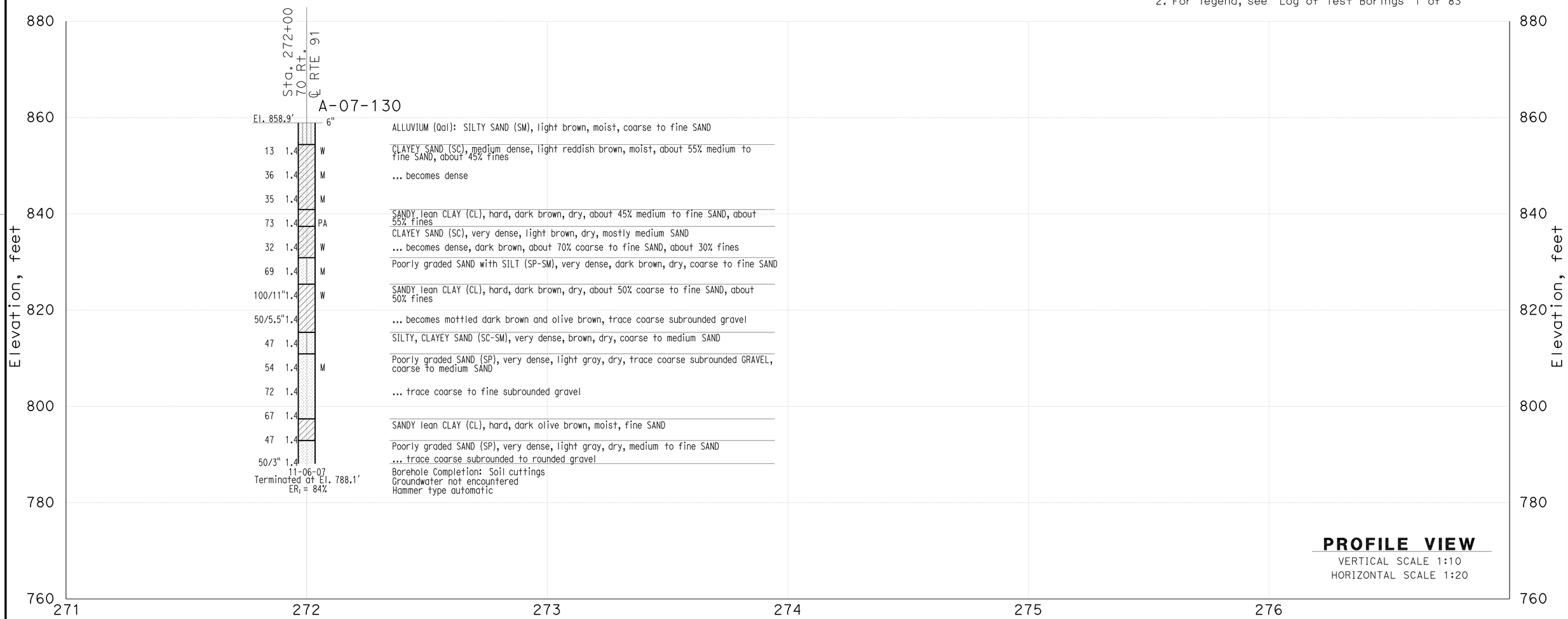

THIS PLAN ACCURATE FOR SOUND WALL AND RETAINING WALL WORK ONLY

DESIGN OVERSIGHT X SIGN OFF DATE	GINA PURSELL FUNCTIONAL SUPERVISOR	DRAWN BY CHECKED BY	P. QUACH S. PIRATHIVIRAJ	P.CHAU/D.WADER/C.CARBINO FIELD INVESTIGATION BY: DATE: Nov 6 2007 to March 7 2008	PREPARED FOR THE STATE OF CALIFORNIA DEPARTMENT OF TRANSPORTATION	A. LEE PROJECT ENGINEER	BRIDGE NO. X POST MILE X	Retaining Wall 266 R13-5 LOG OF TEST BORINGS SHEET 2 OF 5

OSF GEOTECHNICAL LOG OF TEST BORINGS SHEET (ENGLISH) (REV. 2/25/05)

ORIGINAL SCALE IN INCHES FOR REDUCED PLANS 0 1 2 3

CU 59A0590
EA 08-448400

DISREGARD PRINTS BEARING EARLIER REVISION DATES

REVISION DATES (PRELIMINARY STAGE ONLY) X

SHEET 2 OF 5

FILE => 844840qm005.dgn

USERNAME => trpierce DATE PLOTTED => 30-APR-2011 TIME PLOTTED =>

DIST	COUNTY	ROUTE	POST MILES TOTAL PROJECT	SHEET No	TOTAL SHEETS
08	Riv	91	15.6/21.6	870	2028

GEOTECHNICAL PROFESSIONAL — DATE 10/2008

4-25-11
PLANS APPROVAL DATE

REGISTERED PROFESSIONAL ENGINEER — ANDREW C. LEE — No. 2616 — Exp. 6-30-12 — GEOTECHNICAL — STATE OF CALIFORNIA

The State of California or its officers or agents shall not be responsible for the accuracy or completeness of electronic copies of this plan sheet.

California Department of Transportation
5900 Folsom Boulevard
Sacramento, CA 95819

URS Corporation
2020 East First Street, Suite 400
Santa Ana, CA 92705

FOR PLAN VIEW, SEE SHEET R13-8

NOTE: 1. This LOTB sheet was prepared in accordance with the Caltrans Soil & Rock Logging, Classification, and Presentation Manual (June 2007).

2. For legend, see "Log of Test Borings" 1 of 83

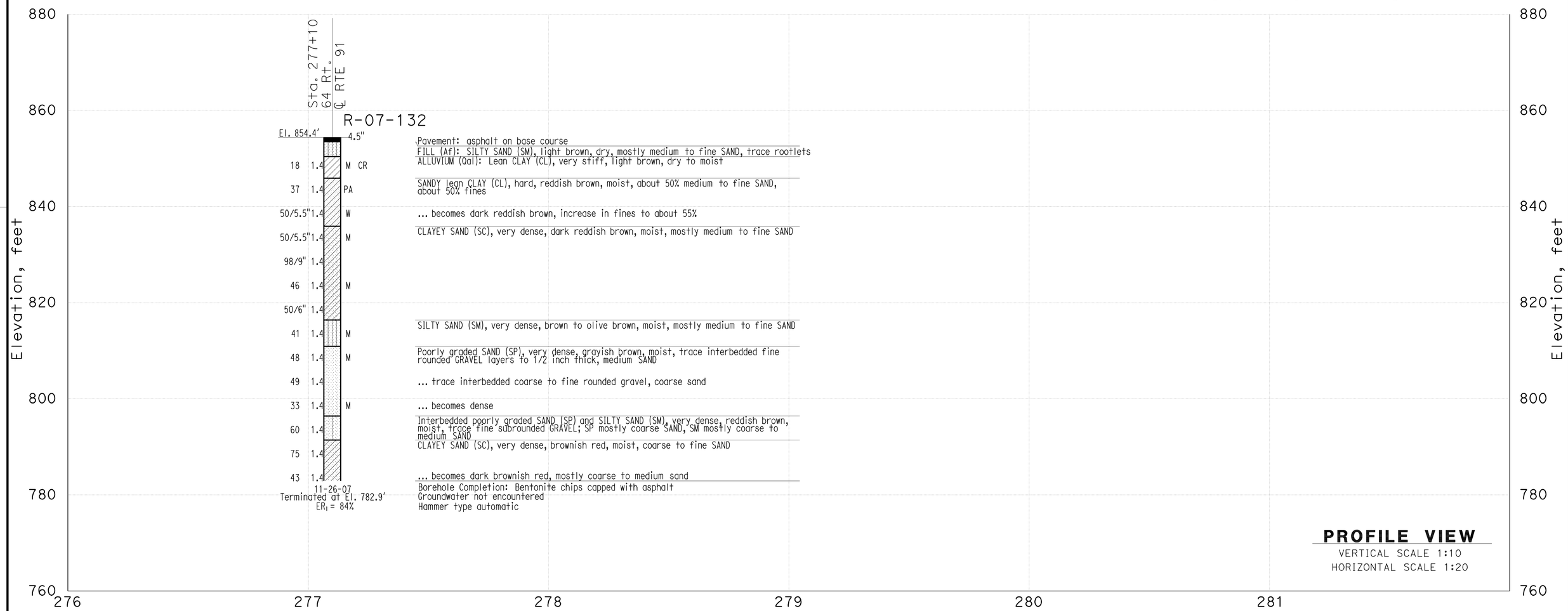

THIS PLAN ACCURATE FOR SOUND WALL AND RETAINING WALL WORK ONLY

DESIGN OVERSIGHT X SIGN OFF DATE	GINA PURSELL FUNCTIONAL SUPERVISOR	DRAWN BY CHECKED BY	P. QUACH S. PIRATHIVIRAJ	P.CHAU/D.WADER/C.CARBINO FIELD INVESTIGATION BY: DATE: Nov 6 2007 to March 7 2008	PREPARED FOR THE STATE OF CALIFORNIA DEPARTMENT OF TRANSPORTATION	A. LEE PROJECT ENGINEER	BRIDGE NO. X POST MILE X	Retaining Wall 266 R13-6 LOG OF TEST BORINGS SHEET 3 OF 5

OSF GEOTECHNICAL LOG OF TEST BORINGS SHEET (ENGLISH) (REV. 2/25/05)

ORIGINAL SCALE IN INCHES FOR REDUCED PLANS 0 1 2 3

CU 59A0590
EA 08-448400

DISREGARD PRINTS BEARING EARLIER REVISION DATES

REVISION DATES (PRELIMINARY STAGE ONLY) X

SHEET 3 OF 5

FILE => 844840qm006.dgn

USERNAME => trpierce DATE PLOTTED => 30-APR-2011 TIME PLOTTED =>

DIST	COUNTY	ROUTE	POST MILES TOTAL PROJECT	SHEET No	TOTAL SHEETS
08	Riv	91	15.6/21.6	871	2028

GEOTECHNICAL PROFESSIONAL — DATE 10/2008

4-25-11
PLANS APPROVAL DATE

REGISTERED PROFESSIONAL ENGINEER — ANDREW C. LEE — No. 2616 — Exp. 6-30-12 — GEOTECHNICAL — STATE OF CALIFORNIA

The State of California or its officers or agents shall not be responsible for the accuracy or completeness of electronic copies of this plan sheet.

California Department of Transportation
5900 Folsom Boulevard
Sacramento, CA 95819

URS Corporation
2020 East First Street, Suite 400
Santa Ana, CA 92705

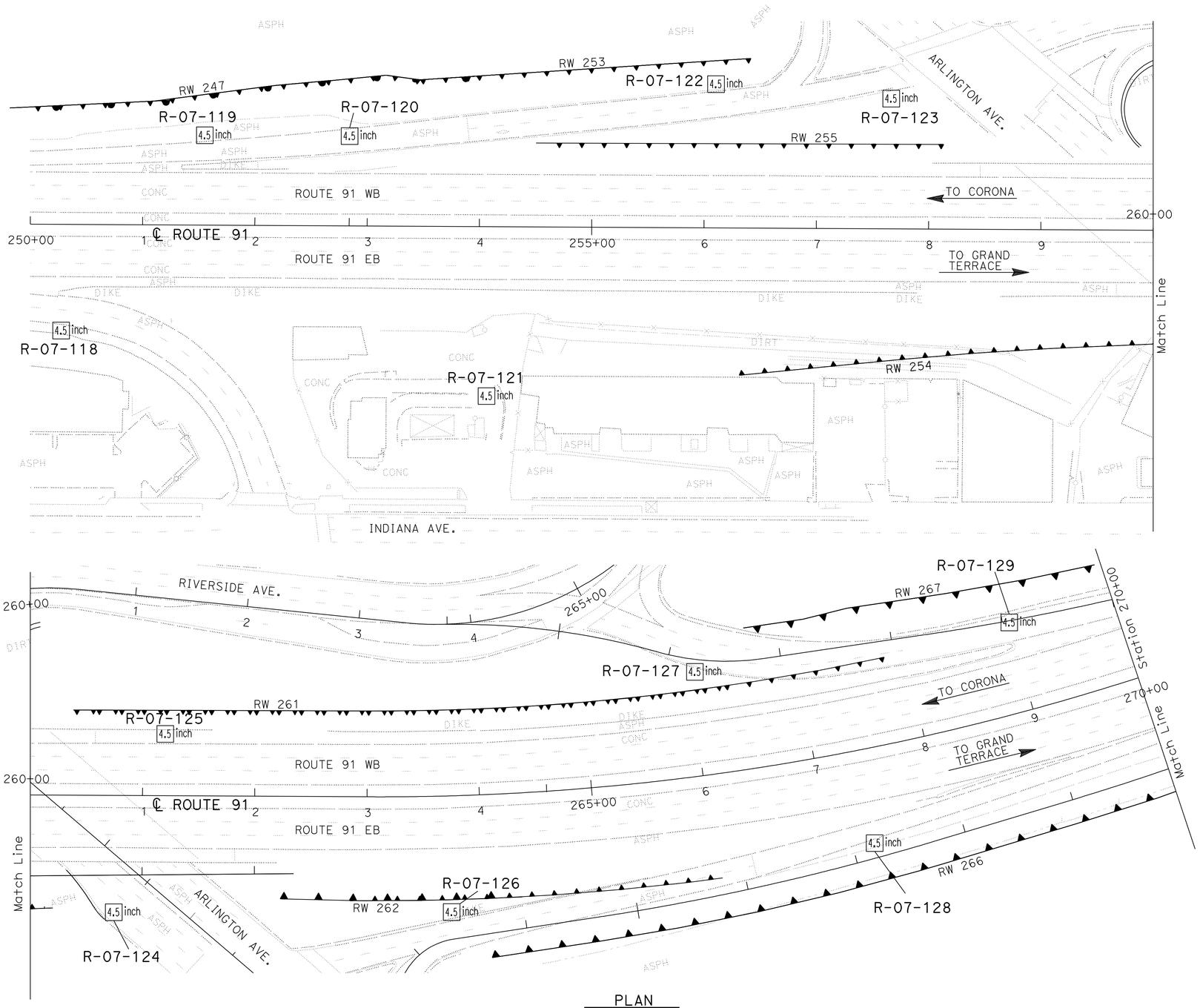

PLAN
SCALE 1"=50'

Borehole Number	Drill Rig	Hammer Type	Avg. Hammer Efficiency, ETR (%)
R-07-118	CS-2000	Automatic	84
R-07-119	CS-2000	Automatic	84
R-07-120	Mobile B-47	Manual trip	60*
R-07-121	CS-2000	Automatic	84
R-07-122	CS-2000	Automatic	84
R-07-123	CS-2000	Automatic	84
R-07-124	CS-2000	Automatic	84
R-07-125	CME 85	Automatic	87
R-07-126	CS-2000	Automatic	84
R-07-127	CME 85	Automatic	87
R-07-128	CS-2000	Automatic	84
R-07-129	CME 85	Automatic	87

Sampler Type	Inside Diameter (Inches)	Borehole Numbers
SPT	1.375	R-07-118, R-07-119, R-07-120 R-07-121, R-07-122, R-07-123 R-07-124, R-07-125, R-07-126 R-07-127, R-07-128, R-07-129
Modified California 1	1.94	R-07-119, R-07-120, R-07-121 R-07-124, R-07-125, R-07-127 R-07-129
Modified California 2	2.40	-

*Estimated Hammer Efficiency Rating.

DESIGN OVERSIGHT X SIGN OFF DATE	GINA PURSELL FUNCTIONAL SUPERVISOR	DRAWN BY P. QUACH	P.CHAU/D.WADER/C.CARBINO FIELD INVESTIGATION BY:	PREPARED FOR THE STATE OF CALIFORNIA DEPARTMENT OF TRANSPORTATION	A. LEE PROJECT ENGINEER	BRIDGE NO. X
		CHECKED BY S. PIRATHIVIRAJ	DATE: Nov 6 2007 to March 7 2008			POST MILE X

RETAINING WALL 266 — R13-7

LOG OF TEST BORINGS 4 OF 5

OSF GEOTECHNICAL LOG OF TEST BORINGS SHEET (ENGLISH) (REV. 2/25/05)

ORIGINAL SCALE IN INCHES FOR REDUCED PLANS 0 1 2 3

CU 59A0590
EA 08-448400

DISREGARD PRINTS BEARING EARLIER REVISION DATES

REVISION DATES (PRELIMINARY STAGE ONLY) X

SHEET 4 OF 5

FILE => 844840qm007.dgn

USERNAME => trpierce DATE PLOTTED => 30-APR-2011 TIME PLOTTED =>

DIST	COUNTY	ROUTE	POST MILES TOTAL PROJECT	SHEET No	TOTAL SHEETS
08	Riv	91	15.6/21.6	872	2028

GEOTECHNICAL PROFESSIONAL — DATE 10/2008

4-25-11
PLANS APPROVAL DATE

REGISTERED PROFESSIONAL ENGINEER — ANDREW C. LEE — No. 2616 — Exp. 6-30-12 — GEOTECHNICAL — STATE OF CALIFORNIA

The State of California or its officers or agents shall not be responsible for the accuracy or completeness of electronic copies of this plan sheet.

California Department of Transportation
5900 Folsom Boulevard
Sacramento, CA 95819

URS Corporation
2020 East First Street, Suite 400
Santa Ana, CA 92705

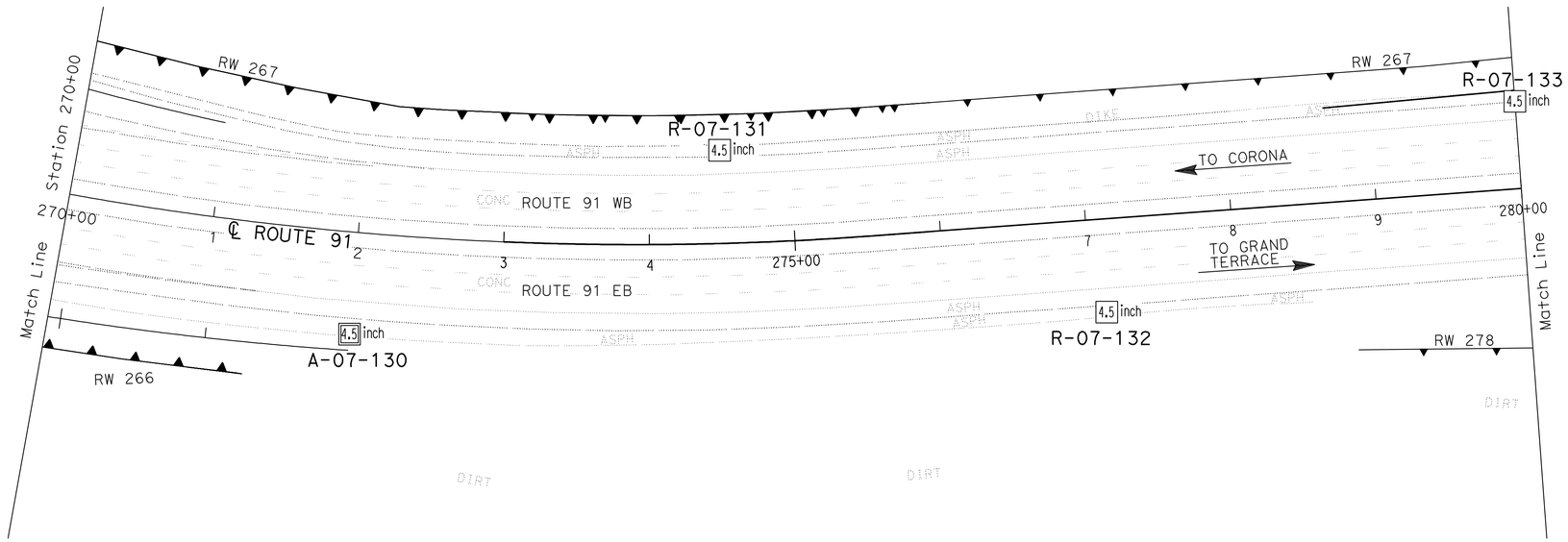

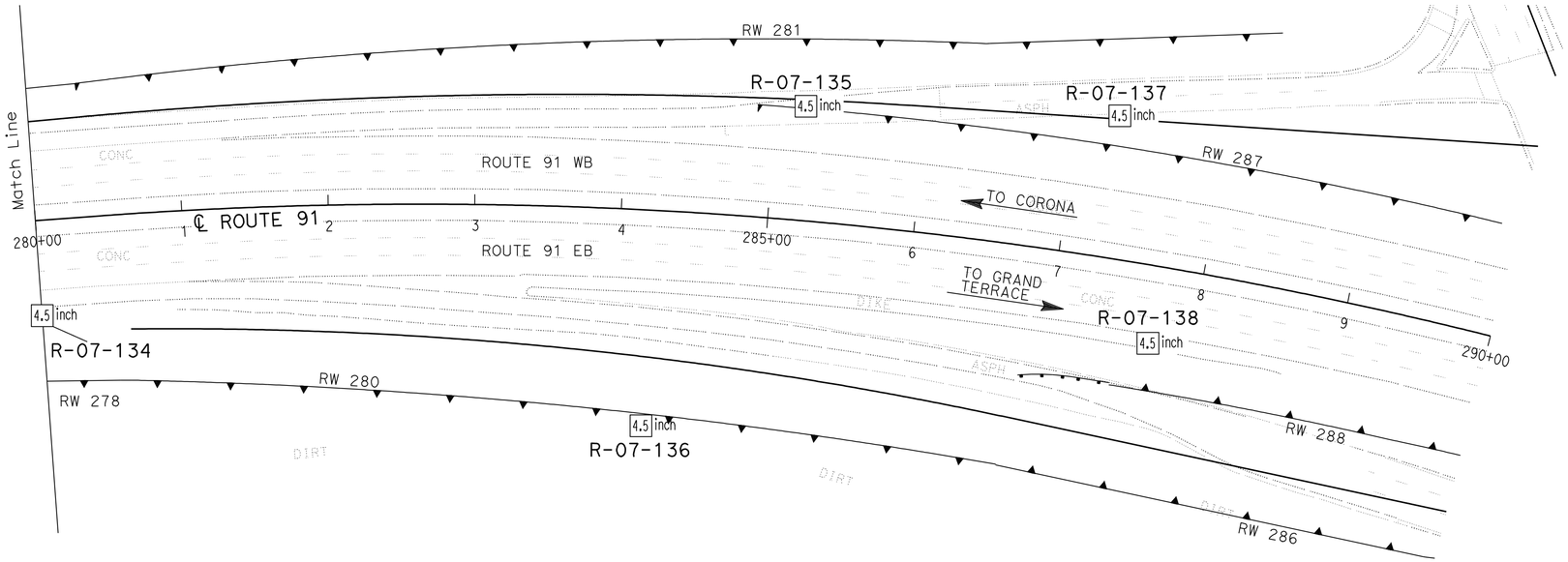

PLAN
SCALE 1"=50'

Borehole Number	Drill Rig	Hammer Type	Avg. Hammer Efficiency, ETR (%)
A-07-130	CS-2000	Automatic	84
R-07-131	CS-2000	Automatic	84
R-07-132	CS-2000	Automatic	84
R-07-133	CME 85	Automatic	87
R-07-134	CS-2000	Automatic	84
R-07-135	CS-2000	Automatic	84
R-07-136	CS-2000	Automatic	84
R-07-137	CS-2000	Automatic	84
R-07-138	CS-2000	Automatic	84

Sampler Type	Inside Diameter (Inches)	Borehole Numbers
SPT	1.375	A-07-130, R-07-131, R-07-132 R-07-133, R-07-134, R-07-135 R-07-136, R-07-137
Modified California 1	1.94	R-07-131, R-07-133 R-07-135, R-07-136
Modified California 2	2.40	-

DESIGN OVERSIGHT — GINA PURSELL, FUNCTIONAL SUPERVISOR
X
SIGN OFF DATE

DRAWN BY: P. QUACH
CHECKED BY: S. PIRATHIVIRAJ

P.CHAU/D.WADER/C.CARBINO
FIELD INVESTIGATION BY:
DATE: Nov 6 2007 to March 7 2008

PREPARED FOR THE STATE OF CALIFORNIA DEPARTMENT OF TRANSPORTATION

A. LEE
PROJECT ENGINEER

BRIDGE NO. X
POST MILE X

RETAINING WALL 266 R13-8

LOG OF TEST BORINGS 5 OF 5

OSF GEOTECHNICAL LOG OF TEST BORINGS SHEET (ENGLISH) (REV. 2/25/05)

ORIGINAL SCALE IN INCHES FOR REDUCED PLANS 0 1 2 3

CU 59A0590
EA 08-448400

DISREGARD PRINTS BEARING EARLIER REVISION DATES

REVISION DATES (PRELIMINARY STAGE ONLY) X

SHEET 5 OF 5

FILE => 844840qm008.dgn

USERNAME => trpierce DATE PLOTTED => 30-APR-2011 TIME PLOTTED =>

Dist	COUNTY	ROUTE	POST MILES TOTAL PROJECT	SHEET No.	TOTAL SHEETS
08	Riv	91	15.6/21.6	873	2028

REGISTERED CIVIL ENGINEER — DATE 12-1-10

4-25-11
PLANS APPROVAL DATE

REGISTERED PROFESSIONAL ENGINEER — THOMAS HIEN NGO No. 68383 Exp. 9/30/11 CIVIL — STATE OF CALIFORNIA

THE STATE OF CALIFORNIA OR ITS OFFICERS OR AGENTS SHALL NOT BE RESPONSIBLE FOR THE ACCURACY OR COMPLETENESS OF SCANNED COPIES OF THIS PLAN SHEET.

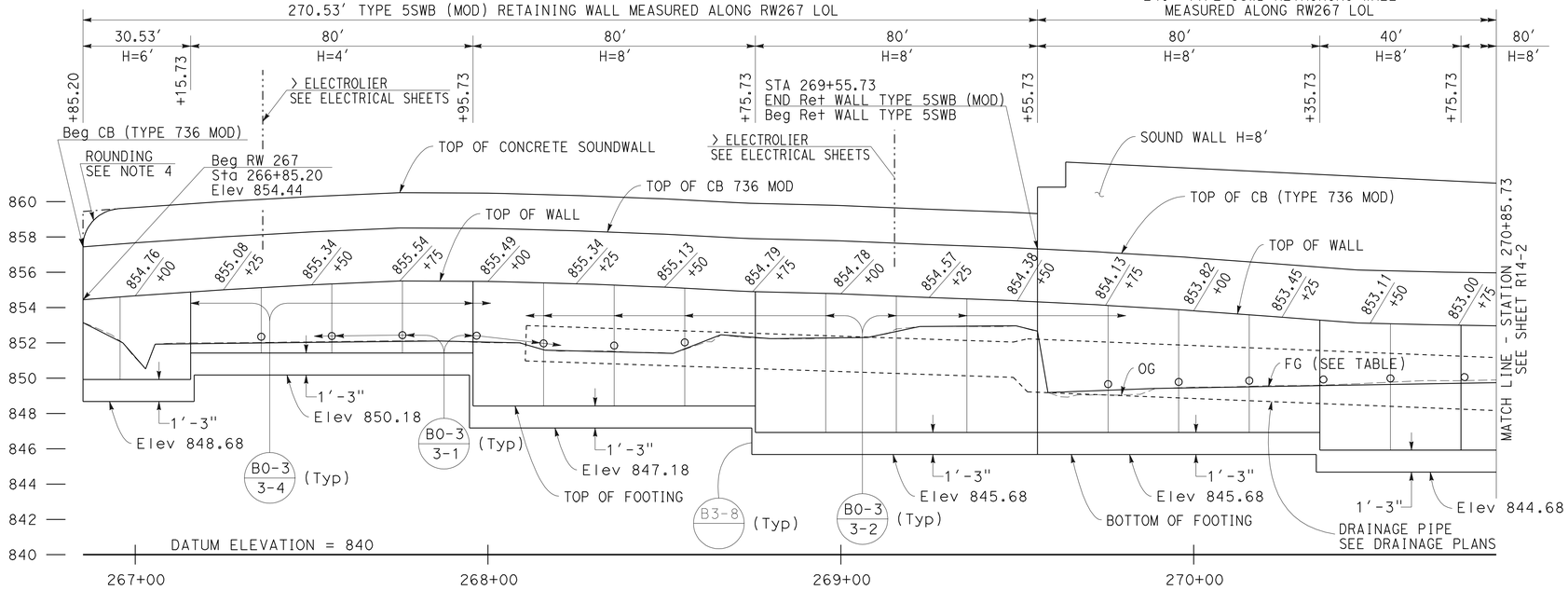

ELEVATION

SCALE Horiz 1"=20'
Vert 1"=4'

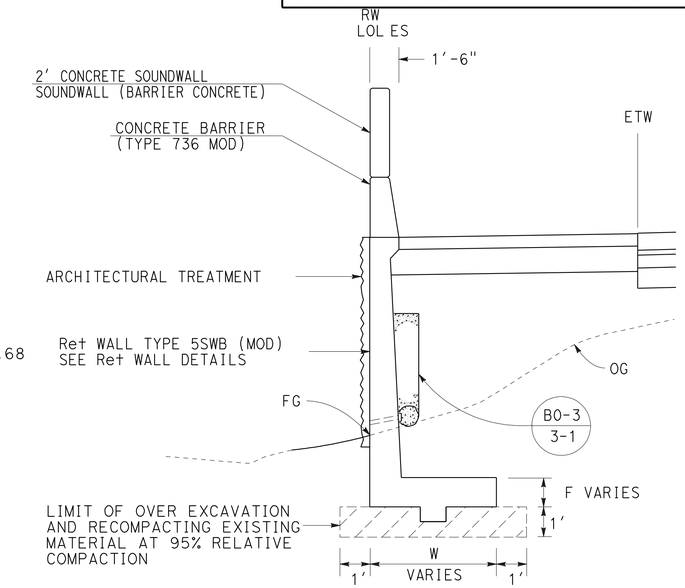

TYPICAL SECTION

NO SCALE
FROM STA 266+85.20 TO STA 269+55.73

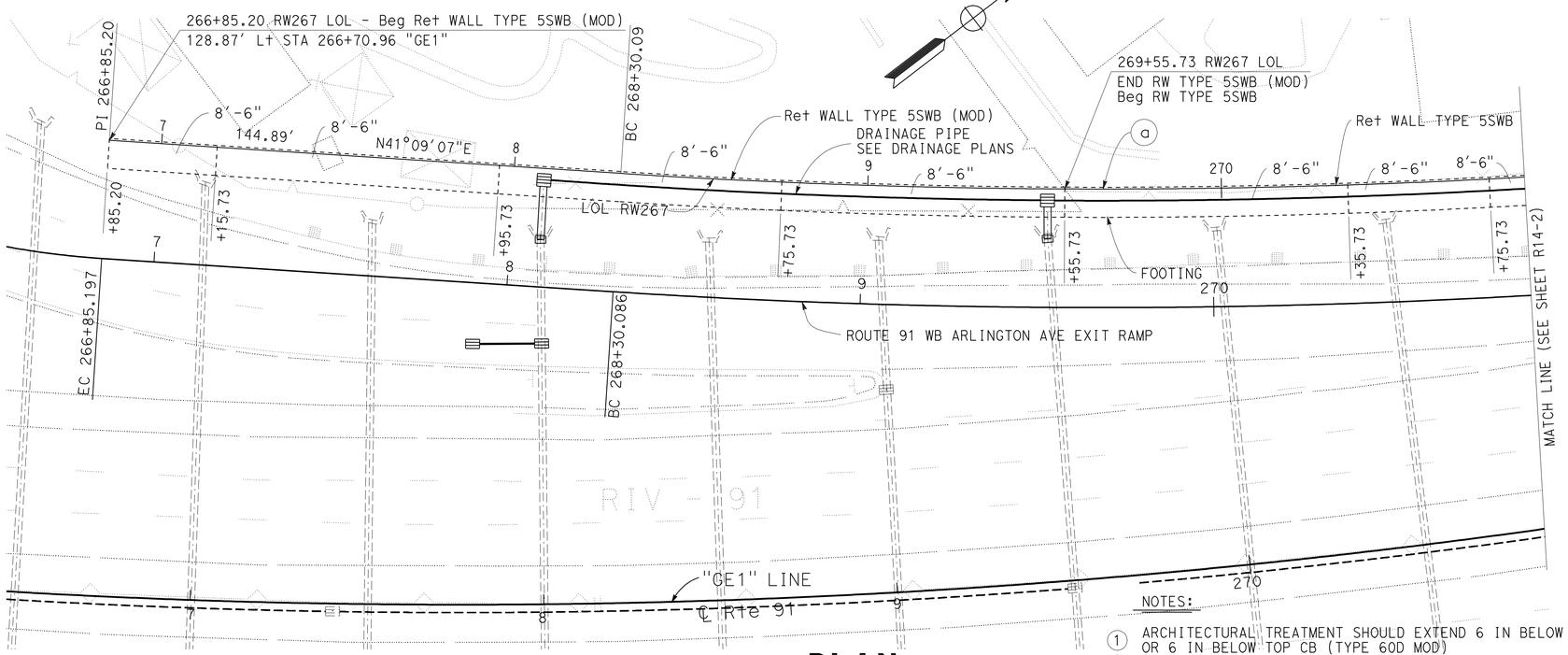

FINISHED GRADE (FG) TABLE			
STATION	ELEVATION	STATION	ELEVATION
266+85.20	853.15	269+49.62	852.96
266+96.52	852.00	269+55.73	852.66
267+02.95	850.53	269+58.68	849.18
267+05.69	851.93	269+89.19	849.41
267+86.14	852.11	272+77.11	850.40
268+09.28	852.00	273+48.11	850.12
268+16.16	851.59	274+06.15	850.75
268+52.42	851.41	274+92.49	849.81
268+55.99	852.46	277+06.22	850.12
268+80.03	852.24	277+90.55	847.87
269+07.61	852.31	278+68.74	848.51
269+22.35	852.93		

CURVE DATA

No.	R	Δ	T	L
(a)	2101.50'	10°20'40"	190.22'	379.41'

PLAN

SCALE: 1"=20'

THIS PLAN ACCURATE FOR RETAINING WALL WORK ONLY.

NOTES:

1. ARCHITECTURAL TREATMENT SHOULD EXTEND 6 IN BELOW FG OR 6 IN BELOW TOP CB (TYPE 60D MOD)
2. FOR STRUCTURAL SECTIONS, SEE ROADWAY PLANS
3. WATERSTOP IN EXPANSION JOINT SHALL BE EXTEND 6 IN INTO THE BARRIER
4. FOR ROUNDING DETAILS, SEE ARCHITECTURAL TREATMENT PLANS

RETAINING WALL PLAN
RETAINING WALL No. 267

SCALE AS SHOWN

R14-1

STATE OF CALIFORNIA - DEPARTMENT OF TRANSPORTATION
Caltrans® DESIGN

FUNCTIONAL SUPERVISOR: MARK PERTILE
CALCULATED-DESIGNED BY: THAI VAN HGUYEN
CHECKED BY: THOMAS HIEN NGO
REVISED BY / DATE REVISED

LAST REVISION 12-01-10 | DATE PLOTTED => 30-APR-2011 | TIME PLOTTED => 05:49

Dist	COUNTY	ROUTE	POST MILES TOTAL PROJECT	SHEET No.	TOTAL SHEETS
08	Riv	91	15.6/21.6	874	2028

REGISTERED CIVIL ENGINEER 12-1-10 DATE

4-25-11
PLANS APPROVAL DATE

REGISTERED PROFESSIONAL ENGINEER THOMAS HIEN NGO No. 68383 Exp. 9/30/11 CIVIL STATE OF CALIFORNIA

THE STATE OF CALIFORNIA OR ITS OFFICERS OR AGENTS SHALL NOT BE RESPONSIBLE FOR THE ACCURACY OR COMPLETENESS OF SCANNED COPIES OF THIS PLAN SHEET.

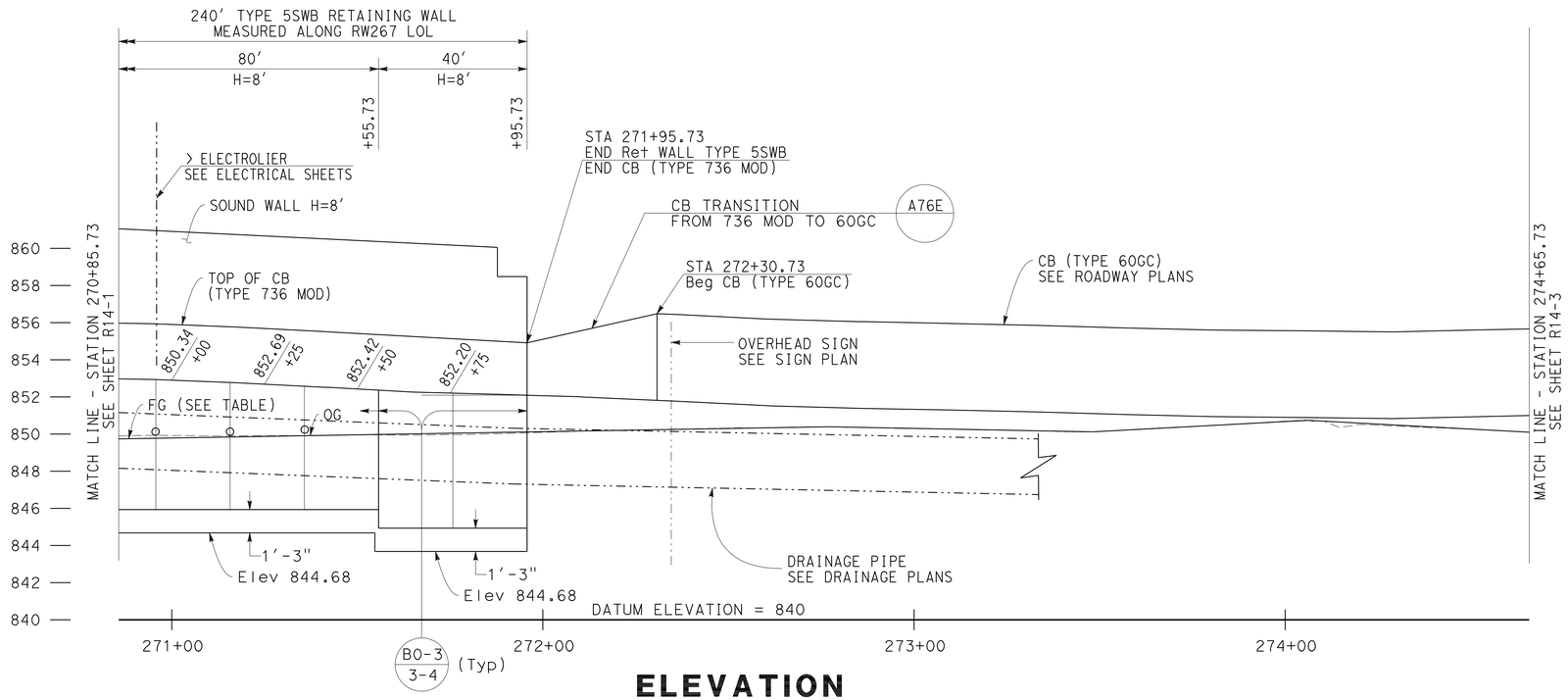

ELEVATION

SCALE Horiz 1"=20'
Vert 1"=4'

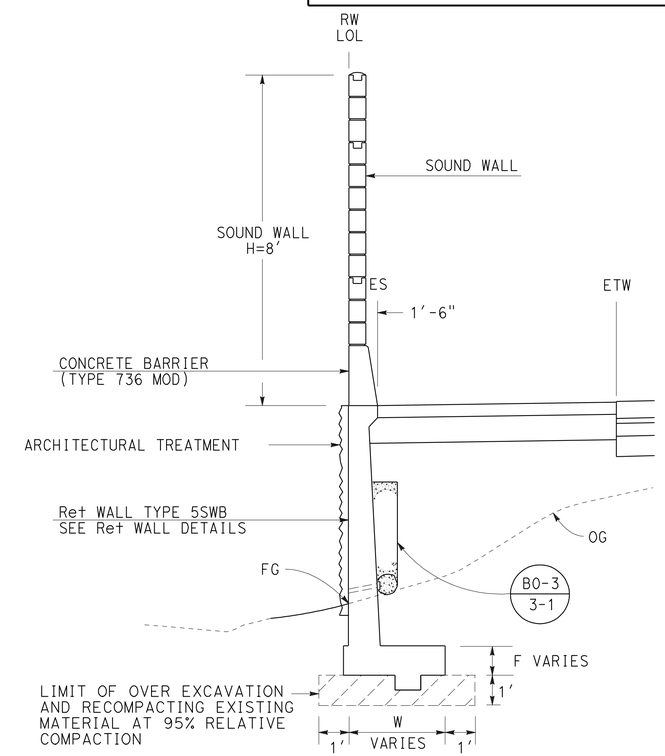

TYPICAL SECTION

NO SCALE
FROM STA 269+55.73 TO STA 271+95.73

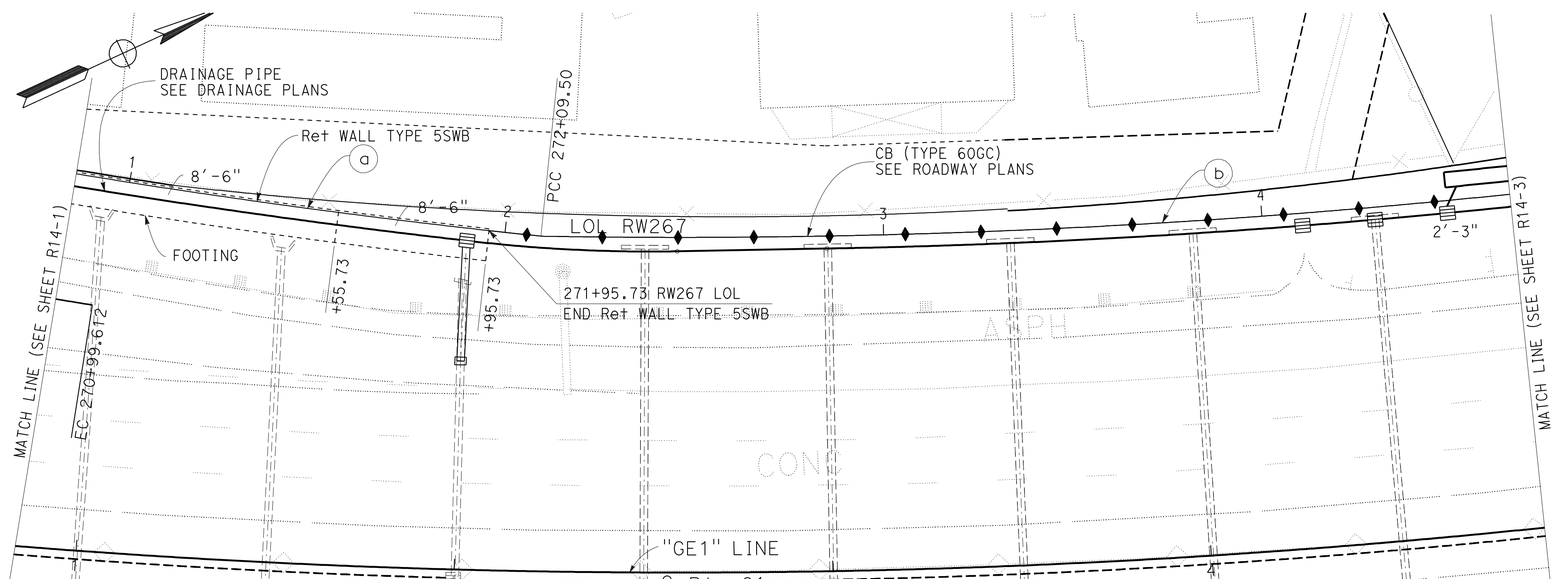

PLAN

SCALE: 1"=20'

CURVE DATA

No.	R	Δ	T	L
a	2101.50'	10°20'40"	190.22'	379.41'
b	2111.50'	8°35'22"	158.57'	316.55'

QUANTITIES

STRUCTURAL CONCRETE (RETAINING WALL)	563.4	CY
BAR REINFORCING STEEL (RETAINING WALL)	50615	LB
STRUCTURAL EXCAVATION (RETAINING WALL)	1487.50	CY
STRUCTURAL BACKFILL (RETAINING WALL)	1313.40	CY
PERVIOUS BACKFILL MATERIAL (RETAINING WALL)	10.61	CY
CONCRETE BARRIER (TYPE 736 MOD)	683.54	LF
SOUND WALL (BARRIER MASONRY BLOCK)	1200.00	SF
SOUND WALL (BARRIER CONCRETE)	887.00	SF
PLASTIC PIPE (N)	29.96	LF
WATERSTOP (N)	76.28	LF
STRUCTURAL SURFACE (TEXTURED CONCRETE)	2711.44	SF

(N) = NOT A SEPARATE PAY ITEM, FOR INFORMATION ONLY

THIS PLAN ACCURATE FOR RETAINING WALL WORK ONLY.

RETAINING WALL PLAN
RETAINING WALL No. 267

SCALE AS SHOWN

R14-2

STATE OF CALIFORNIA - DEPARTMENT OF TRANSPORTATION
Caltrans® DESIGN

FUNCTIONAL SUPERVISOR: MARK PERTILE
CALCULATED-DESIGNED BY: THAI VAN HGUYEN
CHECKED BY: THOMAS HIEN NGO
REVISED BY / DATE REVISED

LAST REVISION 12-01-10 | DATE PLOTTED => 30-APR-2011 | TIME PLOTTED => 05:50

Dist	COUNTY	ROUTE	POST MILES TOTAL PROJECT	SHEET No.	TOTAL SHEETS
08	Riv	91	15.6/21.6	875	2028

REGISTERED CIVIL ENGINEER — DATE 12-1-10

4-25-11
PLANS APPROVAL DATE

REGISTERED PROFESSIONAL ENGINEER — THOMAS HIEN NGO No. 68383 Exp. 9/30/11 CIVIL — STATE OF CALIFORNIA

THE STATE OF CALIFORNIA OR ITS OFFICERS OR AGENTS SHALL NOT BE RESPONSIBLE FOR THE ACCURACY OR COMPLETENESS OF SCANNED COPIES OF THIS PLAN SHEET.

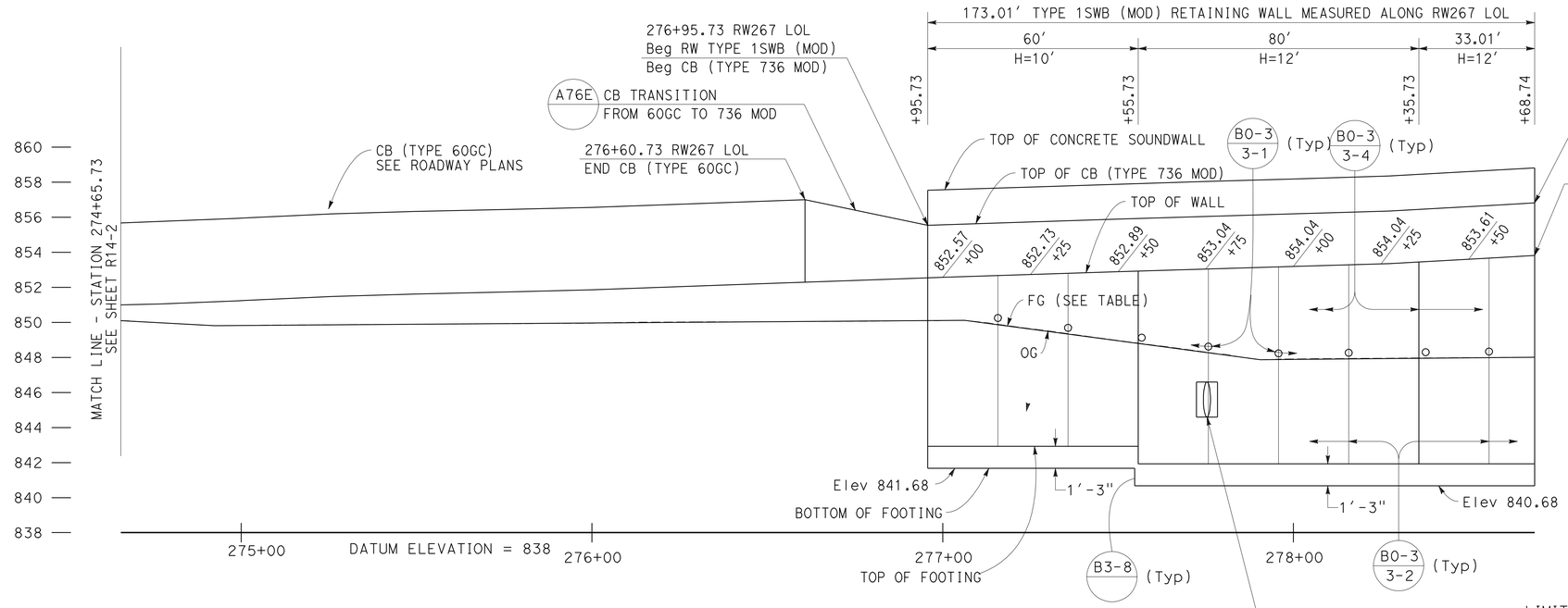

ELEVATION

SCALE Horiz 1"=20'
Vert 1"=4'

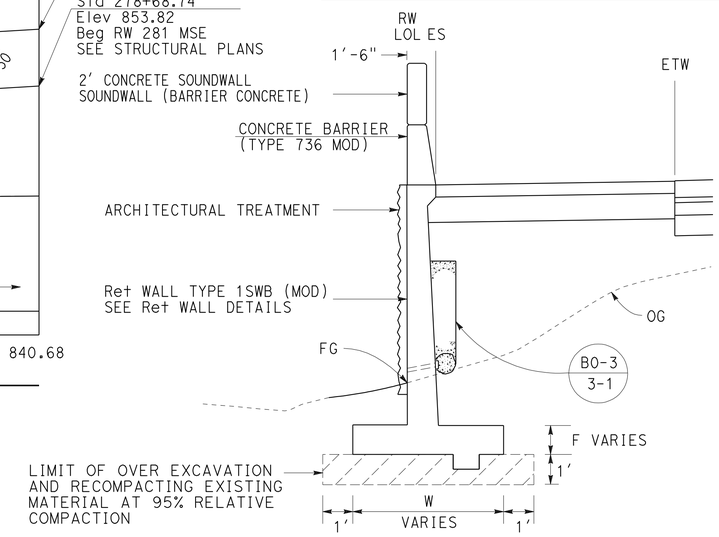

TYPICAL SECTION

NO SCALE
FROM STA 276+95.73 TO STA 278+68.74

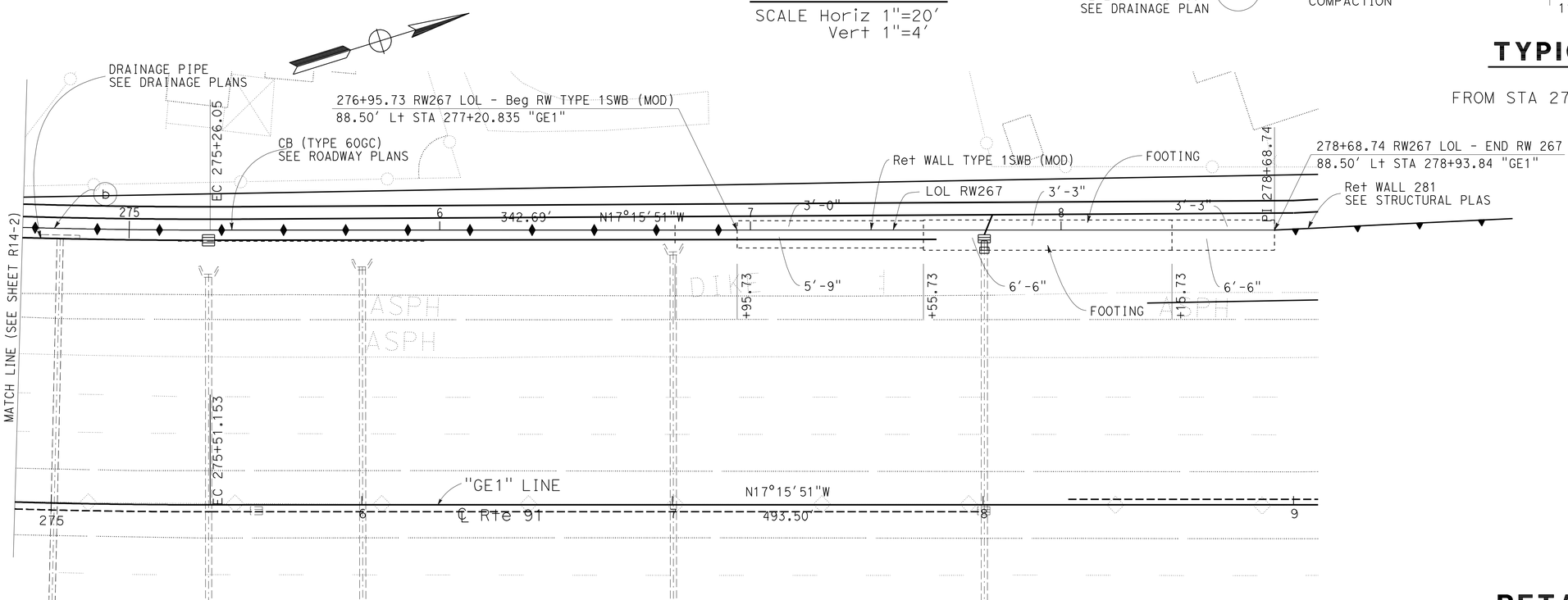

CURVE DATA

No.	R	Δ	T	L
(b)	2111.50'	8°35'22"	158.57'	316.55'

PLAN

SCALE: 1"=20'

THIS PLAN ACCURATE FOR RETAINING WALL WORK ONLY.

RETAINING WALL PLAN
RETAINING WALL No. 267

SCALE AS SHOWN

R14-3

STATE OF CALIFORNIA - DEPARTMENT OF TRANSPORTATION
Caltrans® DESIGN

FUNCTIONAL SUPERVISOR: MARK PERTILE
CALCULATED-DESIGNED BY: THAI VAN HGUYEN
CHECKED BY: THOMAS HIEN NGO
REVISED BY / DATE REVISED

LAST REVISION 12-01-10 | DATE PLOTTED => 30-APR-2011 | TIME PLOTTED => 05:50

Dist	COUNTY	ROUTE	POST MILES TOTAL PROJECT	SHEET No.	TOTAL SHEETS
08	Riv	91	15.6/21.6	876	2028

REGISTERED CIVIL ENGINEER 12-1-10 DATE

4-25-11
PLANS APPROVAL DATE

REGISTERED PROFESSIONAL ENGINEER THOMAS HIEN NGO No. 68383 Exp. 9/30/11 CIVIL STATE OF CALIFORNIA

THE STATE OF CALIFORNIA OR ITS OFFICERS OR AGENTS SHALL NOT BE RESPONSIBLE FOR THE ACCURACY OR COMPLETENESS OF SCANNED COPIES OF THIS PLAN SHEET.

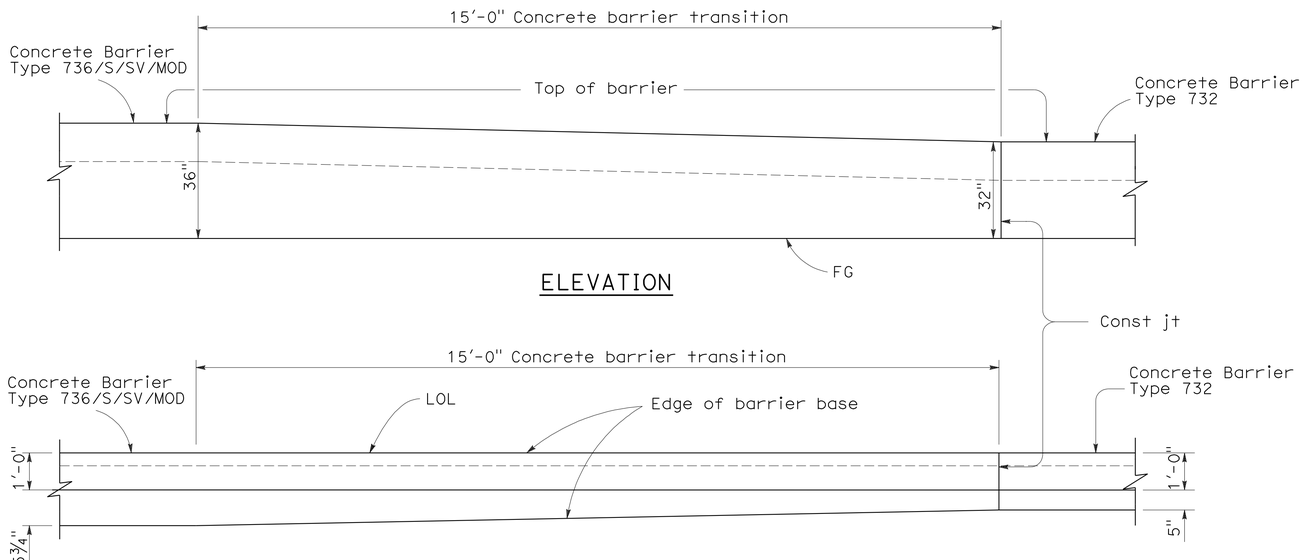

TRANSITION CONCRETE BARRIER TYPE 736/S/V/MOD
TO CONCRETE BARRIER TYPE 732

THIS PLAN ACCURATE FOR RETAINING WALL WORK ONLY.

RETAINING WALL DETAILS
RETAINING WALL No. 267
NO SCALE

R14-4

REVISED BY	DATE REVISED
THAI VAN HGUYEN	THOMAS HIEN NGO
CALCULATED-DESIGNED BY	CHECKED BY
FUNCTIONAL SUPERVISOR	MARK PERTILE

STATE OF CALIFORNIA - DEPARTMENT OF TRANSPORTATION
Caltrans DESIGN

LAST REVISION 12-01-10 | DATE PLOTTED => 30-APR-2011 | TIME PLOTTED => 05:50

DIST.	COUNTY	ROUTE	POST MILES TOTAL PROJECT	SHEET NO.	TOTAL SHEETS
08	Riv	91	15.6/21.6	877	2028

REGISTERED ENGINEER - CIVIL 12-1-10

PLANS APPROVAL DATE 4-25-11

REGISTERED PROFESSIONAL ENGINEER THOMAS NGO No. C68383 Exp. 09/30/11 CIVIL STATE OF CALIFORNIA

The State of California or its officers or agents shall not be responsible for the accuracy or completeness of electronic copies of this plan sheet.

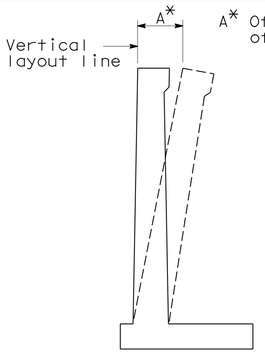

A* Offset = ½" per 10' of wall stem height

WALL OFFSET

NO SCALE

Values for offsetting forms to be determined by the engineer

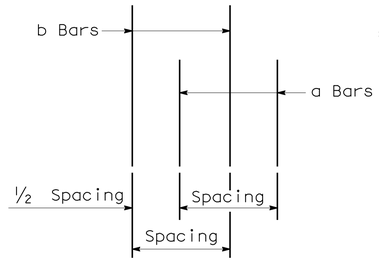

DETAIL A

NO SCALE

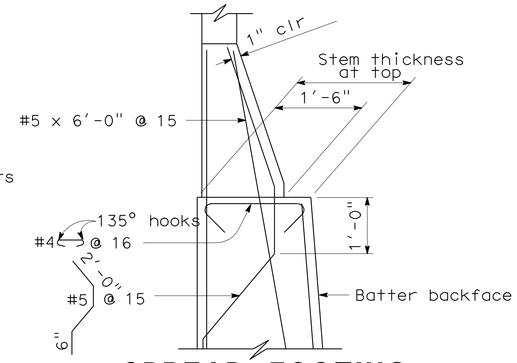

SPREAD FOOTING SECTION WITHOUT HAUNCH

NO SCALE

TABLE 1 : TABLE OF REINFORCING STEEL DIMENSION AND DATA

STEM WITH HAUNCH

DESIGN H	6'	8'	10'	12'	14'	16'	18'	20'	22'	24'	26'	28'	30'	32'
W	8'-6"	8'-6"	9'-3"	10'-0"	11'-3"	12'-3"	13'-3"	14'-6"	15'-9"	17'-0"	18'-6"	20'-0"	21'-3"	22'-9"
F SPREAD FTG.	1'-3"	1'-3"	1'-3"	1'-6"	1'-6"	1'-9"	2'-0"	2'-0"	2'-3"	2'-6"	3'-0"	3'-3"	3'-9"	4'-0"
BATTER	0	½:12	½:12	½:12	½:12	½:12	½:12	½:12	½:12	⅝:12	¾:12	⅞:12	1:12	1:12
STEM THICKNESS @ HAUNCH	1'-0"	1'-0"	1'-0"	1'-0"	1'-0"	1'-0"	1'-0"	1'-0"	1'-0"	1'-0"	1'-0"	1'-0"	1'-0"	1'-0"
a BARS				#6@18**	#7@18**	#8@18**	#9@18**	#10@18**	#8 @ 9*	#8 @ 9*	#7 @ 6*	#10@12**	#9 @ 9*	#11@12**
Y				8'-0"	6'-6"	7'-6"	8'-0"	9'-0"	9'-6"	11'-0"	11'-6"	13'-0"	14'-0"	15'-6"
b BARS	#5 @ 12	#5 @ 12	#5 @ 9	#6@18**	#7@18**	#8@18**	#9@18**	#10@18**	#8 @ 9*	#8 @ 9*	#7 @ 6*	#10@12**	#9 @ 9*	#11@12**
Y	CONT	CONT	CONT	CONT	10'-6"	13'-0"	15'-0"	17'-6"	19'-6"	21'-0"	18'-6"	19'-0"	25'-6"	23'-6"
c BARS					#6 @ 18	#6 @ 18	#6 @ 18	#6 @ 18	#6 @ 18	#6 @ 18	#6 @ 12	#7 @ 12	#7 @ 18	#7 @ 12
SHORT d BARS	#5 @ 12	#5 @ 9	#6 @ 9	#7@18**	#8@18**	#8@18**	#9@18**	#10@18**	#8 @ 9*	#8 @ 9*	#7 @ 6*	#10@12*	#9 @ 9*	#11@12**
X	CONT	CONT	CONT	5'-6"	6'-6"	7'-6"	8'-0"	8'-6"	9'-6"	10'-6"	11'-6"	12'-6"	13'-6"	15'-0"
d BARS				#7@18**	#8@18**	#8@18**	#9@18**	#10@18**	#8 @ 9*	#8 @ 9*	#7 @ 6*	#10@12*	#9 @ 9*	#11@12**
X				CONT	CONT	CONT	CONT	CONT	CONT	CONT	CONT	CONT	CONT	CONT
ULTIMATE BEARING CAPACITY REQUIRED k/sf	6.3	7.8	8.8	10.3	11.4	13.2	15	16.2	17.8	19.4	21.1	22.4	24.4	25.8

TABLE 2 : TABLE OF REINFORCING STEEL DIMENSION AND DATA

	STEM WITH HAUNCH							STEM WITHOUT HAUNCH						
DESIGN H	6'	8'	10'	12'	14'	16'	18'	20'	22'	24'	26'	28'	30'	32'
W		8'-6"	9'-0"	9'-9"	10'-6"	12'-6"	13'-3"	14'-3"	16'-3"	17'-0"	18'-9"	20'-3"	21'-3"	22'-6"
F SPREAD FTG.		1'-3"	1'-3"	1'-3"	1'-3"	1'-6"	1'-6"	1'-9"	2'-3"	2'-3"	2'-9"	3'-3"	3'-9"	3'-9"
BATTER		0	0	0	0	0	0	0	0	0	¼:12	½:12	½:12	½:12
STEM THICKNESS @ HAUNCH		1'-0"	1'-0"	1'-0"	1'-0"	1'-3"	1'-3"							
STEM THICKN @ TOP								1'-6"	2'-0"	2'-0"	2'-0"	2'-0"	2'-0"	2'-0"
a BARS				#6@12**	#5 @ 6*	#8@12**	#8 @ 9*	#9@12**	#9@12**	#7 @ 6*	#7 @ 6*	#7 @ 6*	#9 @ 9*	#11@12**
Y				5'-6"	5'-6"	6'-0"	6'-6"	8'-0"	8'-6"	9'-6"	11'-0"	12'-6"	13'-6"	14'-6"
b BARS		#5 @ 9	#6 @ 9	#6@12**	#5 @ 6*	#8@12**	#8 @ 9*	#9@12**	#9@12**	#7 @ 6*	#7 @ 6*	#7 @ 6*	#9 @ 9*	#11@12**
Y		CONT	CONT	CONT	CONT	8'-6"	11'-0"	11'-0"	11'-6"	17'-0"	19'-6"	21'-6"	24'-0"	24'-0"
c BARS						#6 @ 12	#7 @ 18	#7 @ 12	#7 @ 12	#6 @ 12	#6 @ 12	#6 @ 12	#7 @ 18	#7 @ 12
SHORT d BARS		#5 @ 9	#6 @ 9	#7@18**	#5 @ 6*	#8@12**	#8 @ 9*	#9@12**	#9@12**	#7 @ 6*	#9 @ 6*	#9 @ 6*	#9 @ 9*	#8 @ 6*
X		CONT	CONT	6'-0"	5'-6"	7'-0"	8'-6"	9'-0"	10'-0"	11'-0"	12'-0"	13'-0"	14'-0"	15'-0"
d BARS				#7@18**	#5 @ 6*	#9@18**	#8 @ 9*	#9@12**	#9@12**	#7 @ 6*	#9 @ 6*	#9 @ 6*	#9 @ 9*	#8 @ 6*
X				CONT	CONT	CONT	CONT	CONT	CONT	CONT	CONT	CONT	CONT	CONT
ULTIMATE BEARING CAPACITY REQUIRED k/sf		7.8	9	10.3	11.8	12.6	14.3	16.2	17.3	19.1	20.6	22.3	24.5	25.8

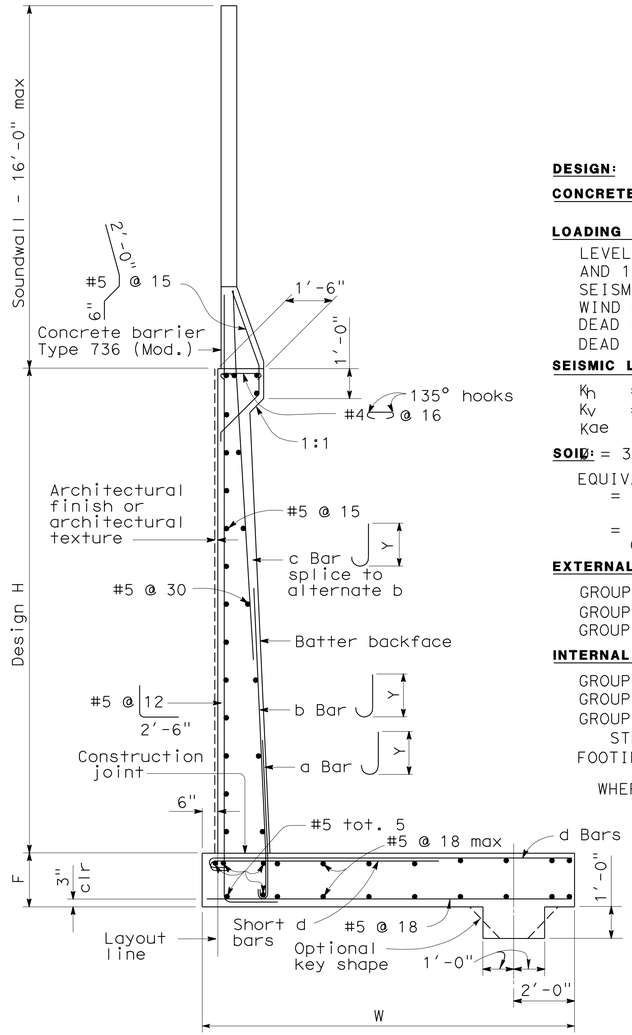

SPREAD FOOTING SECTION

NO SCALE

CONT = CONTINUOUS
* = a AND b [SHORT d & d] BARS ARE BUNDLED TOGETHER.
** = ALTERNATE a AND b BARS AS SHOWN IN DETAIL A.
= ALTERNATE SHORT d AND d BARS.

DESIGN DATA

DESIGN: LOAD FACTOR DESIGN (LFD)

CONCRETE: REINFORCED CONCRETE, fc = 3600 psi
fy = 60000 psi

LOADING CASE:

LEVEL GROUND WITH 240 psf SURCHARGE AND 16' SOUNDWALL.
SEISMIC LOAD = 0.3 DEAD LOAD
WIND LOAD = 30 psf
DEAD LOAD OF SOUNDWALL = 1414 lb/lf
DEAD LOAD OF BARRIER = 372 lb/lf

SEISMIC LOAD: SOIL

K_h = 0.3g
K_v = 0.0
K_{ae} : MONOBE-OKABE METHOD

SOIL: ϕ = 34° γ = 120 pcf

EQUIVALENT FLUID PRESSURE:
= 36 pcf MAX. FOR DETERMINATION OF TOE PRESSURE
= 27 pcf MAX. FOR DETERMINATION OF HEEL PRESSURE

EXTERNAL STABILITY:

GROUP 1 : D+E = SC
GROUP 2 : D+E+SC+W
GROUP 3 : D = PYM

INTERNAL STABILITY (LFD):

GROUP A : βD+1.7E+1.7SC
GROUP B : βD+1.7E+1.7SC+W
GROUP C :
STEM : 1.0D+1.0E+1.0EQD+1.0EQE
FOOTING : D+PYM

WHERE : β = 1.0 OR 1.3 WHICHEVER CONTROLS DESIGN
D = DEAD LOAD
E = LATERAL EARTH PRESSURE
SC = SURCHARGE
W = WIND LOAD
EQD = SEISMIC DEAD LOAD
EQE = SEISMIC LATERAL EARTH PRESSURE
PYM = PROBABLE YIELD MOMENT (1.3* NOMINAL YIELD MOMENT OF STEM)

GENERAL NOTES

1. FOR SOUNDWALL AND RETAINING WALL ARCHITECTURAL FINISH OR TEXTURE SEE DETAILS ELSEWHERE IN PROJECT PLANS.
2. FOR DETAILS NOT SHOWN AND DRAINAGE NOTES SEE B3-8
3. FOOTING COVER, 1'-6" MINIMUM.
4. FOR SOUNDWALL REINFORCEMENTS, SEE "SOUNDWALL MASONRY BLOCK" SHEETS IN STANDARD PLANS.

STANDARD DRAWING

FILE NO. xs14-350e

APPROVED BY G. WANG — RESPONSIBLE TECHNICAL SPECIALIST
APPROVAL DATE 5-13-08

RELEASED BY ROBERTO LACALLE — RESPONSIBLE OFFICE CHIEF
RELEASE DATE 5-13-08

STATE OF CALIFORNIA DEPARTMENT OF TRANSPORTATION

DIVISION OF ENGINEERING SERVICES

BRIDGE NO.

POST MILE

RETAINING WALL NO 267 R14-5

RETAINING WALL TYPE 5SWB

DS OSD 2147A (ENGLISH STANDARD DRAWING "XS" BORDER REV. 01/11/08)

ORIGINAL SCALE IN INCHES FOR REDUCED PLANS 0 1 2 3

CU
EA

DISREGARD PRINTS BEARING EARLIER REVISION DATES

REVISION DATES (PRELIMINARY STAGE ONLY) SHEET OF

USERNAME => trpierce

844840qn005.dgn

DATE PLOTTED => 30-APR-2011 TIME PLOTTED => 05:50

DIST.	COUNTY	ROUTE	POST MILES TOTAL PROJECT	SHEET NO.	TOTAL SHEETS
08	Riv	91	15.6/21.6	878	2028

12-1-10
REGISTERED ENGINEER - CIVIL

4-25-11
PLANS APPROVAL DATE

REGISTERED PROFESSIONAL ENGINEER MINH THUONG VO No. C59297 Exp. 6/30/2011 CIVIL STATE OF CALIFORNIA

The State of California or its officers or agents shall not be responsible for the accuracy or completeness of electronic copies of this plan sheet.

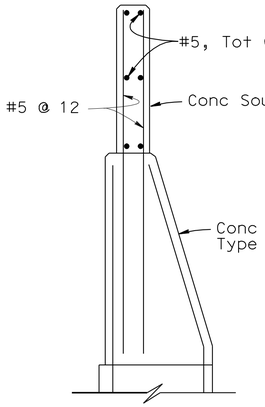

DETAIL C
No Scale

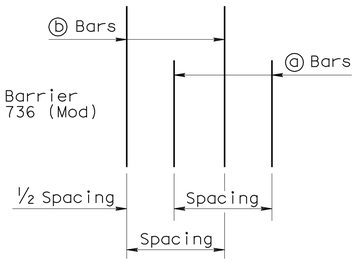

DETAIL B
No Scale

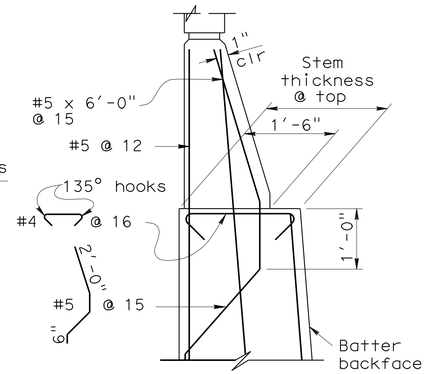

DETAIL A WITHOUT HAUNCH
No Scale

GENERAL NOTES

1. For soundwall and retaining wall architectural finish or texture, see details elsewhere in project plans.
2. For details not shown and drainage notes, see B3-8
3. Footing cover, 1'-6" minimum.
4. Limit of no splicing rebars = 3 times the bottom thickness of the stem.
5. Placement of reinforcements :
   - ⓑ & ⓒ bars are spliced together.
   - ✳ ⓐ & ⓑ bars are bundled together.
   - ✳✳ Alternate ⓐ & ⓑ bars are shown in "Detail B".
   - Cont = Continuous.
6. For Barrier Reinfocement not shown, see B11-56 △2

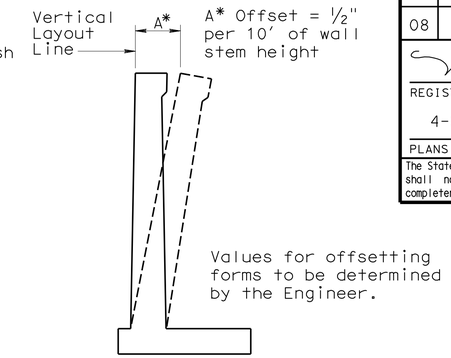

WALL OFFSET
No Scale

TABLE 1: TABLE OF REINFORCING STEEL DIMENSIONS AND DATA

	Stem With Haunch													
Design H	6'	8'	10'	12'	14'	16'	18'	20'	22'	24'	26'	28'	30'	32'
W	7'-9"	8'-0"	8'-9"	9'-9"	10'-9"	12'-0"	13'-0"	14'-3"	15'-3"	16'-6"	18'-6"	19'-9"	21'-3"	22'-6"
C	2'-9"	2'-9"	3'-0"	3'-3"	3'-6"	4'-0"	4'-3"	4'-9"	5'-0"	5'-6"	6'-3"	6'-9"	7'-3"	7'-9"
B	5'-0"	5'-3"	5'-9"	6'-6"	7'-3"	8'-0"	8'-9"	9'-6"	10'-3"	11'-0"	12'-3"	13'-0"	14'-0"	14'-9"
F Spread footing	1'-3"	1'-3"	1'-3"	1'-3"	1'-3"	1'-6"	1'-6"	1'-9"	2'-0"	2'-3"	2'-9"	3'-0"	3'-3"	3'-9"
Batter	0	½:12	½:12	½:12	½:12	½:12	½:12	½:12	½:12	⅝:12	¾:12	⅞:12	1:12	1:12
Stem thickn. @ Haunch	1'-0"	1'-0"	1'-0"	1'-0"	1'-0"	1'-0"	1'-0"	1'-0"	1'-0"	1'-0"	1'-0"	1'-0"	1'-0"	1'-0"
ⓐ Bars				#6 @18✳✳	#7 @18✳✳	#8 @18✳✳	#9 @18✳✳	#10 @18✳✳	#8 @ 9✳	#8 @ 9✳	#7 @ 6✳	#10 @12✳✳	#9 @ 9✳	#11@12✳✳
X				Cont	Cont	Cont	Cont	Cont	Cont	Cont	Cont	Cont	Cont	Cont
Y				8'-0"	6'-6"	7'-6"	8'-6"	9'-6"	9'-6"	11'-0"	11'-6"	13'-0"	14'-0"	15'-6"
ⓑ Bars	#5 @12	#5 @12	#5 @ 9	#6 @18✳✳	#7 @18✳✳	#8 @18✳✳	#9 @18✳✳	#10 @18✳✳	#8 @ 9✳	#8 @ 9✳	#7 @ 6✳	#10 @12✳✳	#9 @ 9✳	#11@12✳✳
X	Cont	Cont	Cont	Cont	Cont	Cont	Cont	Cont	Cont	5'-6"	6'-6"	7'-0"	8'-0"	8'-6"
Y	Cont	Cont	Cont	Cont	10'-6"	13'-0"	15'-0"	17'-6"	19'-6"	21'-0"	18'-6"	19'-0"	25'-6"	23'-6"
ⓒ Bars					#6 @18	#6 @18	#6 @18	#6 @18	#6 @18	#6 @18	#6 @12	#7 @12	#7 @18	#7 @12
ⓓ Bars	#5 @12	#5 @12	#5 @12	#5 @ 9	#6 @ 9	#6 @ 9	#6 @ 6	#8 @ 9	#8 @ 9	#8 @ 9	#7 @ 6	#7 @ 6	#9 @ 9	#9 @ 9
Ultimate Bearing Capacity Req'd k/sf	4.6	5.5	6.1	6.6	7.3	8.1	9.0	9.9	11.3	12.2	12.5	13.4	14.1	15.4

TABLE 2: TABLE OF REINFORCING STEEL DIMENSIONS AND DATA

	Stem With Haunch						Stem Without Haunch						
Design H	8'	10'	12'	14'	16'	18'	20'	22'	24'	26'	28'	30'	32'
W	8'-0"	8'-6"	9'-3"	10'-3"	11'-3"	13'-0"	13'-9"	16'-0"	16'-6"	18'-6"	20'-0"	20'-6"	21'-9"
C	2'-9"	2'-9"	3'-0"	3'-6"	3'-9"	4'-3"	4'-6"	5'-3"	5'-6"	6'-3"	6'-9"	6'-9"	7'-6"
B	5'-3"	5'-9"	6'-3"	6'-9"	7'-6"	8'-9"	9'-3"	10'-9"	11'-0"	12'-3"	13'-3"	13'-9"	14'-3"
F Spread footing	1'-3"	1'-3"	1'-3"	1'-3"	1'-6"	1'-6"	1'-9"	2'-0"	2'-3"	2'-9"	3'-0"	3'-3"	3'-6"
Batter	0	0	0	0	0	0	0	0	0	¼:12	½:12	½:12	½:12
Stem thickn. @ Haunch	1'-0"	1'-0"	1'-0"	1'-0"	1'-3"	1'-3"							
Stem thickn. @ top							1'-6"	2'-0"	2'-0"	2'-0"	2'-0"	2'-0"	2'-0"
ⓐ Bars			#6 @12✳✳	#5 @ 6✳	#9 @18✳✳	#9 @12✳✳	#9 @12✳✳	#9 @12✳✳	#7 @ 6✳	#7 @ 6✳	#7 @ 6✳	#9 @ 9✳	#11@12✳✳
X			Cont	Cont	Cont	Cont	Cont	Cont	Cont	Cont	Cont	Cont	Cont
Y			5'-6"	5'-6"	8'-6"	8'-6"	8'-6"	8'-6"	9'-6"	11'-0"	12'-6"	13'-6"	14'-6"
ⓑ Bars	#5 @ 9	#6 @ 9	#6 @12✳✳	#5 @ 6✳	#9 @18✳✳	#9 @12✳✳	#9 @12✳✳	#9 @12✳✳	#7 @ 6✳	#7 @ 6✳	#7 @ 6✳	#9 @ 9✳	#11@12✳✳
X	Cont	Cont	Cont	Cont	Cont	Cont	Cont	Cont	5'-6"	6'-0"	7'-6"	7'-6"	8'-0"
Y	Cont	Cont	Cont	Cont	11'-6"	11'-6"	12'-0"	12'-0"	17'-6"	20'-0"	21'-6"	24'-0"	24'-0"
ⓒ Bars					#7 @18	#7 @12	#7 @12	#7 @12	#6 @ 12	#6 @ 12	#6 @12	#7 @18	#7 @12
ⓓ Bars	#5 @12	#5 @ 9	#5 @9	#6 @9	#6 @ 9	#9 @12	#9 @12	#7 @#7	6 @ 6	#7 @ 6	#7 @ 6	#9 @ 9	#9 @ 9
Ultimate Bearing Capacity Req'd k/sf	5.5	6.5	7.3	7.6	9.0	9.0	10.6	10.5	12.2	12.6	13.3	15.4	16.0

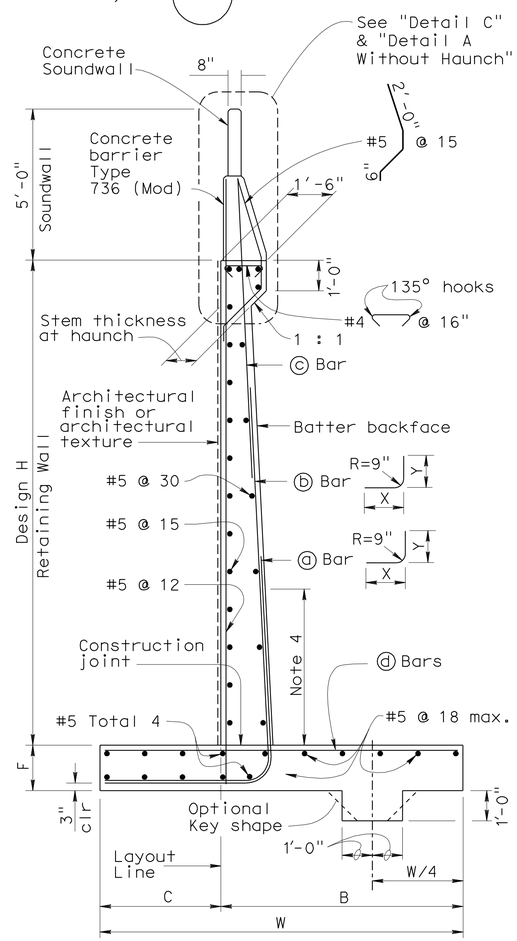

SPREAD FOOTING SECTION
No Scale △1

DESIGN DATA

DESIGN: Load Factor Design (LFD)

CONCRETE: Reinforced Concrete, f'c = 3600 psi
fy = 60,000 psi

LOADING CASE:
Level ground with 240 psf surcharge
and 16' Soundwall

△3
Seismic Load = 0.3 Dead Load
Wind Load = 30 psf
Dead Load of Soundwall = 200 lb/ft
Dead Load of Barrier = 372 lb/ft

SEISMIC LOAD: SOIL
Kh = 0.3g
Kv = 0.0
Kae : Mononobe-Okabe Method

SOIL: Ø = 34° γ = 120 pcf
Equivalent fluid pressure:
= 36 pcf for determination of toe pressure
= 27 pcf for determination of heel pressure

EXTERNAL STABILITY:
Group 1 : D + E + SC
Group 2 : D + E + SC + W
Group 3 : D + PYM

INTERNAL STABILITY (LFD):
Group A : βD + 1.7E + 1.7SC
Group B : βD + 1.7E + 1.3W
Group C (stem) : 1.0D + 1.0E + 1.0EQD + 1.0EQE
Group C (footing) : D + PYM

Where : β = 1.0 or 1.3 whichever controls design
D = Dead Load
E = Lateral Earth Pressure
SC = Surcharge
W = Wind load
EQD = Seismic Dead Load
EQE = Seismic Lateral Earth Pressure
PYM = Probable Yield Moment
(1.3 x Nominal Yield Moment of Stem)

STANDARD DRAWING

FILE NO. xs14-220e

APPROVED BY G. WANG
RESPONSIBLE TECHNICAL SPECIALIST
APPROVAL DATE 5-19-08

RELEASED BY ROBERTO LACALLE
RESPONSIBLE OFFICE CHIEF
RELEASE DATE 5-19-08

△1 Changed/Added Detail
△2 Changed Note
△3 Changed Soundwall Loading

STATE OF CALIFORNIA
DEPARTMENT OF TRANSPORTATION

DIVISION OF ENGINEERING SERVICES

BRIDGE NO.
POST MILE

RETAINING WALL NO 267 R14-6

RETAINING WALL TYPE 1SWB (Mod)

DS OSD 2147A (ENGLISH STANDARD DRAWING "XS" BORDER REV. 01/11/08)

ORIGINAL SCALE IN INCHES FOR REDUCED PLANS 0 1 2 3

CU
EA

DISREGARD PRINTS BEARING EARLIER REVISION DATES

REVISION DATES (PRELIMINARY STAGE ONLY) SHEET OF

USERNAME => trpierce

844840qn006.dgn

DATE PLOTTED => 30-APR-2011 TIME PLOTTED => 06:50

DIST.	COUNTY	ROUTE	POST MILES TOTAL PROJECT	SHEET NO.	TOTAL SHEETS
08	Riv	91	15.6/21.6	879	2028

12-1-10
REGISTERED ENGINEER - CIVIL

4-25-11
PLANS APPROVAL DATE

REGISTERED PROFESSIONAL ENGINEER MINH THUONG VO No. C59297 Exp. 6/30/2011 CIVIL STATE OF CALIFORNIA

The State of California or its officers or agents shall not be responsible for the accuracy or completeness of electronic copies of this plan sheet.

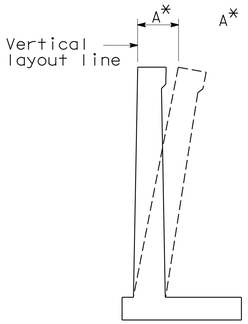

A* Offset = ½" per 10' of wall stem height

WALL OFFSET
NO SCALE

Values for offsetting forms to be determined by the Engineer.

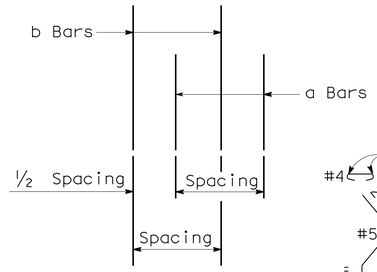

DETAIL A
NO SCALE

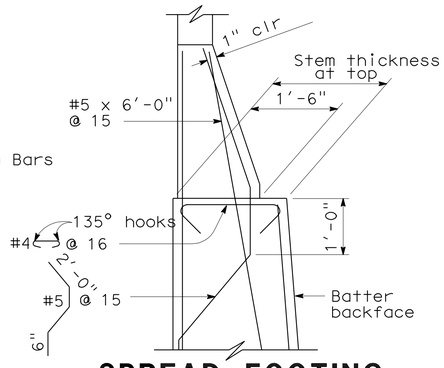

SPREAD FOOTING SECTION WITHOUT HAUNCH
NO SCALE

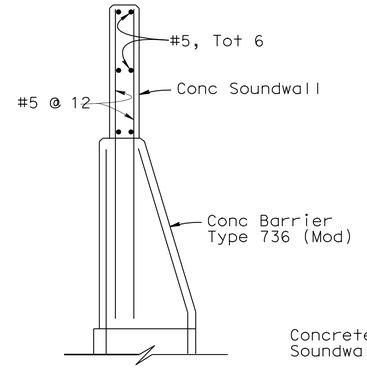

DETAIL B
No Scale

TABLE 1 : TABLE OF REINFORCING STEEL DIMENSION AND DATA

STEM WITH HAUNCH

DESIGN H	6'	8'	10'	12'	14'	16'	18'	20'	22'	24'	26'	28'	30'	32'
W	8'-6"	8'-6"	9'-3"	10'-0"	11'-3"	12'-3"	13'-3"	14'-6"	15'-9"	17'-0"	18'-6"	20'-0"	21'-3"	22'-9"
F SPREAD FTG.	1'-3"	1'-3"	1'-3"	1'-6"	1'-6"	1'-9"	2'-0"	2'-0"	2'-3"	2'-6"	3'-0"	3'-3"	3'-9"	4'-0"
BATTER	0	½:12	½:12	½:12	½:12	½:12	½:12	½:12	½:12	⅝:12	¾:12	⅞:12	1:12	1:12
STEM THICKNESS @ HAUNCH	1'-0"	1'-0"	1'-0"	1'-0"	1'-0"	1'-0"	1'-0"	1'-0"	1'-0"	1'-0"	1'-0"	1'-0"	1'-0"	1'-0"
a BARS				#6@18**	#7@18**	#8@18**	#9@18**	#10@18**	#8 @ 9*	#8 @ 9*	#7 @ 6*	#10@12**	#9 @ 9*	#11@12**
Y				8'-0"	6'-6"	7'-6"	8'-0"	9'-0"	9'-6"	11'-0"	11'-6"	13'-0"	14'-0"	15'-6"
b BARS	#5 @ 12	#5 @ 12	#5 @ 9	#6@18**	#7@18**	#8@18**	#9@18**	#10@18**	#8 @ 9*	#8 @ 9*	#7 @ 6*	#10@12**	#9 @ 9*	#11@12**
Y	CONT	CONT	CONT	CONT	10'-6"	13'-0"	15'-0"	17'-6"	19'-6"	21'-0"	18'-6"	19'-0"	25'-6"	23'-6"
c BARS					#6 @ 18	#6 @ 18	#6 @ 18	#6 @ 18	#6 @ 18	#6 @ 18	#6 @ 12	#7 @ 12	#7 @ 18	#7 @ 12
SHORTd BARS	#5 @ 12	#5 @ 9	#6 @ 9	#7@18**	#8@18**	#8@18**	#9@18**	#10@18**	#8 @ 9*	#8 @ 9*	#7 @ 6*	#10@12*	#9 @ 9*	#11@12**
X	CONT	CONT	CONT	5'-6"	6'-6"	7'-6"	8'-0"	8'-6"	9'-6"	10'-6"	11'-6"	12'-6"	13'-6"	15'-0"
d BARS				#7@18**	#8@18**	#8@18**	#9@18**	#10@18**	#8 @ 9*	#8 @ 9*	#7 @ 6*	#10@12*	#9 @ 9*	#11@12**
X				CONT	CONT	CONT	CONT	CONT	CONT	CONT	CONT	CONT	CONT	CONT
ULTIMATE BEARING CAPACITY REQUIRED k/sf	6.3	7.8	8.8	10.3	11.4	13.2	15	16.2	17.8	19.4	21.1	22.4	24.4	25.8

TABLE 2 : TABLE OF REINFORCING STEEL DIMENSION AND DATA

	STEM WITH HAUNCH							STEM WITHOUT HAUNCH						
DESIGN H	6'	8'	10'	12'	14'	16'	18'	20'	22'	24'	26'	28'	30'	32'
W		8'-6"	9'-0"	9'-9"	10'-6"	12'-6"	13'-3"	14'-3"	16'-3"	17'-0"	18'-9"	20'-3"	21'-3"	22'-6"
F SPREAD FTG.		1'-3"	1'-3"	1'-3"	1'-3"	1'-6"	1'-6"	1'-9"	2'-3"	2'-3"	2'-9"	3'-3"	3'-9"	3'-9"
BATTER		0	0	0	0	0	0	0	0	0	¼:12	½:12	½:12	½:12
STEM THICKNESS @ HAUNCH		1'-0"	1'-0"	1'-0"	1'-0"	1'-3"	1'-3"							
STEM THICKN @ TOP								1'-6"	2'-0"	2'-0"	2'-0"	2'-0"	2'-0"	2'-0"
a BARS				#6@12**	#5 @ 6*	#8@12**	#8 @ 9*	#9@12**	#9@12**	#7 @ 6*	#7 @ 6*	#7 @ 6*	#9 @ 9*	#11@12**
Y				5'-6"	5'-6"	6'-0"	6'-6"	8'-0"	8'-6"	9'-6"	11'-0"	12'-6"	13'-6"	14'-6"
b BARS		#5 @ 9	#6 @ 9	#6@12**	#5 @ 6*	#8@12**	#8 @ 9*	#9@12**	#9@12**	#7 @ 6*	#7 @ 6*	#7 @ 6*	#9 @ 9*	#11@12**
Y		CONT	CONT	CONT	CONT	8'-6"	11'-0"	11'-0"	11'-6"	17'-0"	19'-6"	21'-6"	24'-0"	24'-0"
c BARS						#6 @ 12	#7 @ 18	#7 @ 12	#7 @ 12	#6 @ 12	#6 @ 12	#6 @ 12	#7 @ 18	#7 @ 12
SHORTd BARS		#5 @ 9	#6 @ 9	#7@18**	#5 @ 6*	#8@12**	#8 @ 9*	#9@12**	#9@12**	#7 @ 6*	#9 @ 6*	#9 @ 6*	#9 @ 9*	#8 @ 6*
X		CONT	CONT	6'-0"	5'-6"	7'-0"	8'-6"	9'-0"	10'-0"	11'-0"	12'-0"	13'-0"	14'-0"	15'-0"
d BARS				#7@18**	#5 @ 6*	#9@18**	#8 @ 9*	#9@12**	#9@12**	#7 @ 6*	#9 @ 6*	#9 @ 6*	#9 @ 9*	#8 @ 6*
X				CONT	CONT	CONT	CONT	CONT	CONT	CONT	CONT	CONT	CONT	CONT
ULTIMATE BEARING CAPACITY REQUIRED k/sf		7.8	9	10.3	11.8	12.6	14.3	16.2	17.3	19.1	20.6	22.3	24.5	25.8

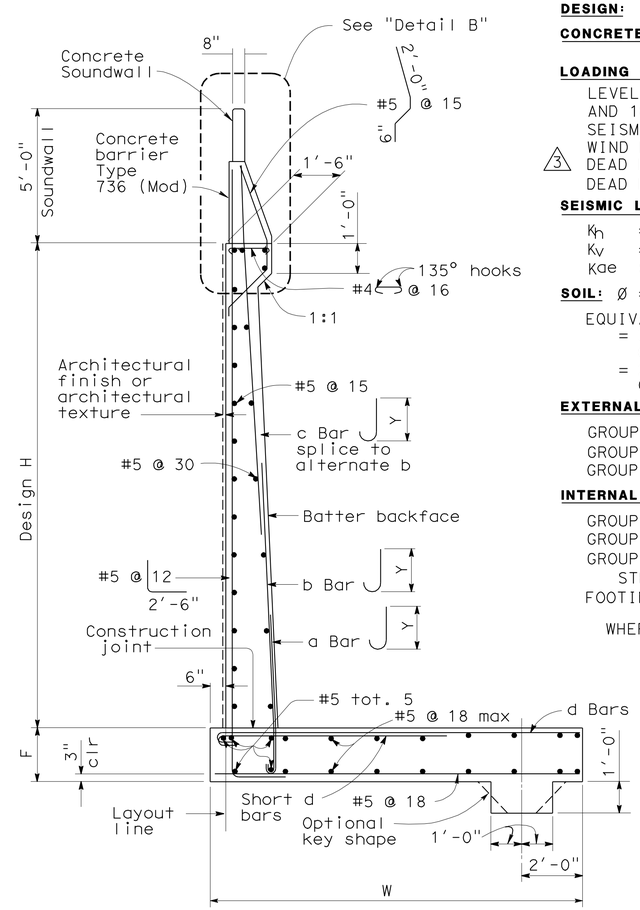

SPREAD FOOTING SECTION
NO SCALE

CONT = CONTINUOUS
* = a AND b [SHORT d & d] BARS ARE BUNDLED TOGETHER.
** = ALTERNATE a AND b BARS AS SHOWN IN DETAIL A.
= ALTERNATE SHORT d AND d BARS.

DESIGN DATA

DESIGN: LOAD FACTOR DESIGN (LFD)

CONCRETE: REINFORCED CONCRETE, fc = 3600 psi
fy = 60000 psi

LOADING CASE:

LEVEL GROUND WITH 240 psf SURCHARGE AND 16' SOUNDWALL.
SEISMIC LOAD = 0.3 DEAD LOAD
WIND LOAD = 30 psf
3 DEAD LOAD OF SOUNDWALL = 200 lb/lf
DEAD LOAD OF BARRIER = 372 lb/lf

SEISMIC LOAD: SOIL

K_h = 0.3g
K_v = 0.0
K_{ae} : MONOBE-OKABE METHOD

SOIL: Ø = 34° γ = 120 pcf

EQUIVALENT FLUID PRESSURE:
= 36 pcf MAX. FOR DETERMINATION OF TOE PRESSURE
= 27 pcf MAX. FOR DETERMINATION OF HEEL PRESSURE

EXTERNAL STABILITY:

GROUP 1 : D+E = SC
GROUP 2 : D+E+SC+W
GROUP 3 : D = PYM

INTERNAL STABILITY (LFD):

GROUP A : βD+1.7E+1.7SC
GROUP B : βD+1.7E+1.7SC+W
GROUP C :
STEM : 1.0D+1.0E+1.0EQD+1.0EQE
FOOTING : D+PYM

WHERE : β = 1.0 OR 1.3 WHICHEVER CONTROLS DESIGN
D = DEAD LOAD
E = LATERAL EARTH PRESSURE
SC = SURCHARGE
W = WIND LOAD
EQD = SEISMIC DEAD LOAD
EQE = SEISMIC LATERAL EARTH PRESSURE
PYM = PROBABLE YIELD MOMENT (1.3* NOMINAL YIELD MOMENT OF STEM)

GENERAL NOTES

1. FOR SOUNDWALL AND RETAINING WALL ARCHITECTURAL FINISH OR TEXTURE SEE DETAILS ELSEWHERE IN PROJECT PLANS.
2. FOR DETAILS NOT SHOWN AND DRAINAGE NOTES SEE B3-8
3. FOOTING COVER, 1'-6" MINIMUM.
4. FOR BARRIER REINFORCEMENT NOT SHOWN, SEE B11-56 2

STANDARD DRAWING

FILE NO. xs14-350e

APPROVED BY G. WANG (RESPONSIBLE TECHNICAL SPECIALIST)
APPROVAL DATE 5-13-08

RELEASED BY ROBERTO LACALLE (RESPONSIBLE OFFICE CHIEF)
RELEASE DATE 5-13-08

1 Changed/Added Detail
2 Changed Note
3 Changed Soundwall Loading

STATE OF CALIFORNIA
DEPARTMENT OF TRANSPORTATION

DIVISION OF ENGINEERING SERVICES

CU
EA

BRIDGE NO.
POST MILE

RETAINING WALL NO 267 R14-7
RETAINING WALL TYPE 5SWB (Mod)

DS OSD 2147A (ENGLISH STANDARD DRAWING "XS" BORDER REV. 01/11/08)

ORIGINAL SCALE IN INCHES FOR REDUCED PLANS 0 1 2 3

DISREGARD PRINTS BEARING EARLIER REVISION DATES

REVISION DATES (PRELIMINARY STAGE ONLY) SHEET OF

USERNAME => trpierce

844840qn007.dgn

DATE PLOTTED => 30-APR-2011 TIME PLOTTED => 05:50

Dist	COUNTY	ROUTE	POST MILES TOTAL PROJECT	SHEET No.	TOTAL SHEETS
08	Riv	91	15.6/21.6	880	2028

12-1-10
LICENSED LANDSCAPE ARCHITECT

4-25-11
PLANS APPROVAL DATE

LICENSED LANDSCAPE ARCHITECT
Matthew Harry Hall
No. 2011
Signature
10/31/2011
Renewal Date
Date
STATE OF CALIFORNIA

THE STATE OF CALIFORNIA OR ITS OFFICERS OR AGENTS SHALL NOT BE RESPONSIBLE FOR THE ACCURACY OR COMPLETENESS OF SCANNED COPIES OF THIS PLAN SHEET.

NOTE:

SEE SHEET ASD-4 AND ASD-5.

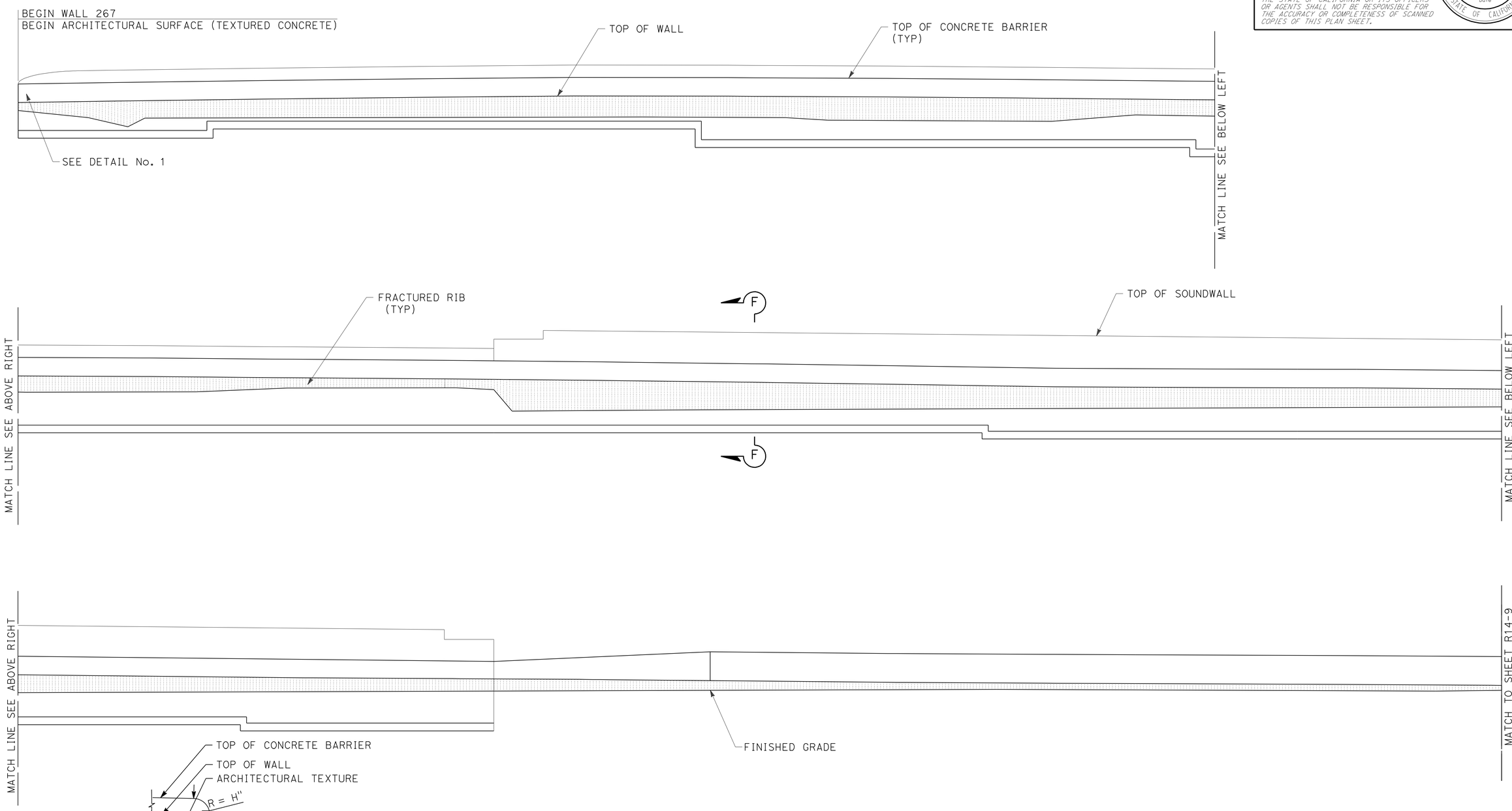

DETAIL No. 1

TYPICAL END OF WALL WITH CONCRETE BARRIER ON TOP OF WALL DETAIL

MIRRORED ELEVATION FOR SPLIT FACE TEXTURE RETAINING WALL No. 267

THIS PLAN IS ACCURATE FOR ARCHITECTUAL TREATMENT WORK ONLY.

ARCHITECTURAL SURFACE
RETAINING WALL No. 267

SCALE: 1/8"=1'-0"

R14-8

STATE OF CALIFORNIA - DEPARTMENT OF TRANSPORTATION
Caltrans® LANDSCAPE ARCHITECTURE

SENIOR LANDSCAPE ARCHITECT: BYRON STROUT
CALCULATED-DESIGNED BY: MATTHEW HALL
CHECKED BY: MIRIAM BISHOP
REVISED BY
DATE REVISED

LAST REVISION 12-01-10 | DATE PLOTTED => 30-APR-2011 | TIME PLOTTED => 05:51

Dist	COUNTY	ROUTE	POST MILES TOTAL PROJECT	SHEET No.	TOTAL SHEETS
08	Riv	91	15.6/21.6	881	2028

LICENSED LANDSCAPE ARCHITECT

4-25-11
PLANS APPROVAL DATE

LICENSED LANDSCAPE ARCHITECT
Matthew Harry Hall
No. 2008
Signature
10/31/2011
Renewal Date
12-1-10
Date
STATE OF CALIFORNIA

THE STATE OF CALIFORNIA OR ITS OFFICERS OR AGENTS SHALL NOT BE RESPONSIBLE FOR THE ACCURACY OR COMPLETENESS OF SCANNED COPIES OF THIS PLAN SHEET.

NOTE:

SEE SHEET ASD-4 AND ASD-5.

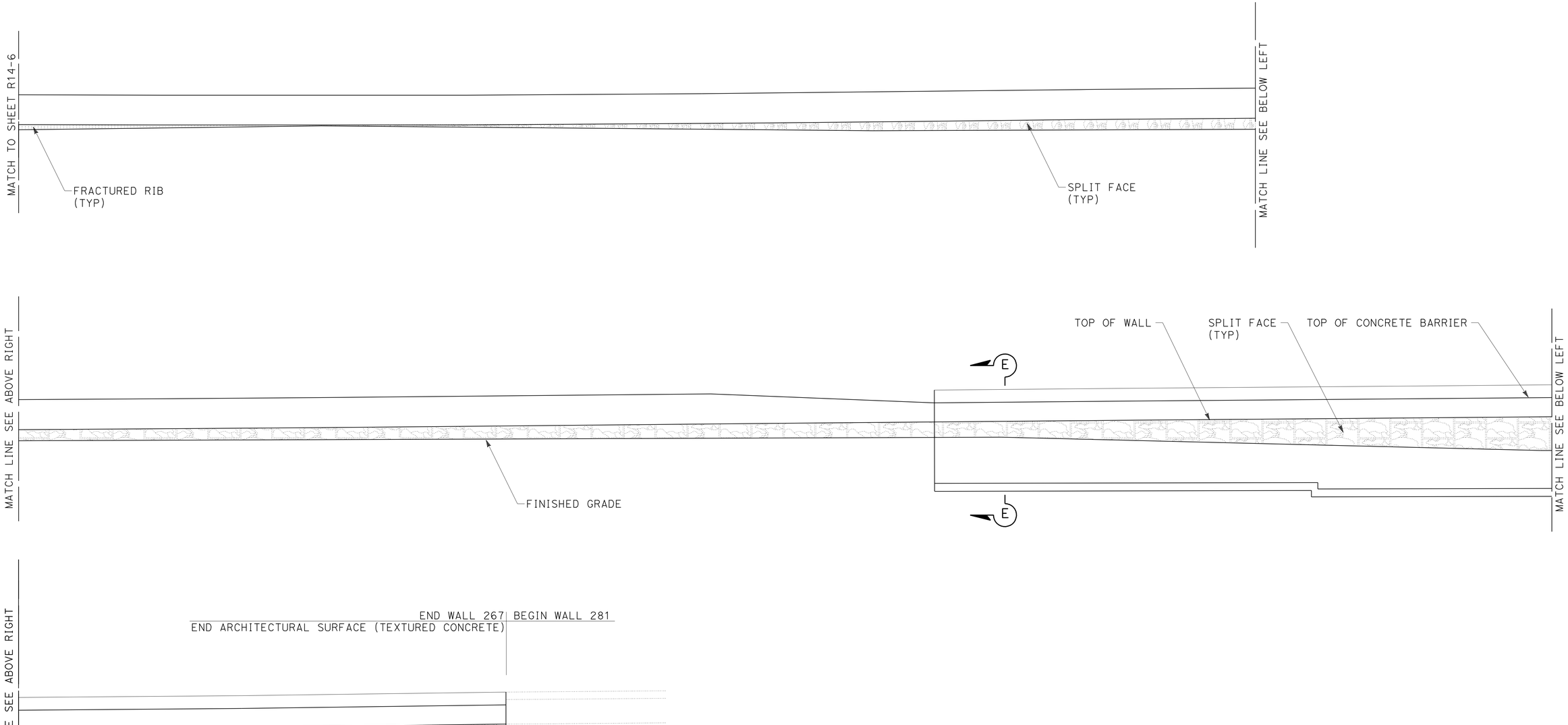

ELEVATION FOR SPLIT FACE TEXTURE RETAINING WALL No. 267

THIS PLAN IS ACCURATE FOR ARCHITECTUAL TREATMENT WORK ONLY.

ARCHITECTURAL SURFACE
RETAINING WALL No. 267

SCALE: 1/8"=1'-0"

R14-9

REVISED BY	DATE REVISED

CALCULATED-DESIGNED BY	CHECKED BY
MATTHEW HALL	MIRIAM BISHOP

SENIOR LANDSCAPE ARCHITECT
BYRON STROUT

STATE OF CALIFORNIA - DEPARTMENT OF TRANSPORTATION
Caltrans® LANDSCAPE ARCHITECTURE

LAST REVISION 12-01-10
DATE PLOTTED => 30-APR-2011
TIME PLOTTED => 05:51

DIST	COUNTY	ROUTE	POST MILES TOTAL PROJECT	SHEET No	TOTAL SHEETS
08	Riv	91	15.6/21.6	882	2028

GEOTECHNICAL PROFESSIONAL — DATE 10/2008

4-25-11
PLANS APPROVAL DATE

REGISTERED PROFESSIONAL ENGINEER — ANDREW C. LEE — No. 2616 — Exp. 6-30-12 — GEOTECHNICAL — STATE OF CALIFORNIA

The State of California or its officers or agents shall not be responsible for the accuracy or completeness of electronic copies of this plan sheet.

California Department of Transportation
5900 Folsom Boulevard
Sacramento, CA 95819

URS Corporation
2020 East First Street, Suite 400
Santa Ana, CA 92705

FOR PLAN VIEW, SEE SHEET R14-13

NOTE: 1. This LOTB sheet was prepared in accordance with the Caltrans Soil & Rock Logging, Classification, and Presentation Manual (June 2007).

2. For legend, see "Log of Test Borings" 1 of 83

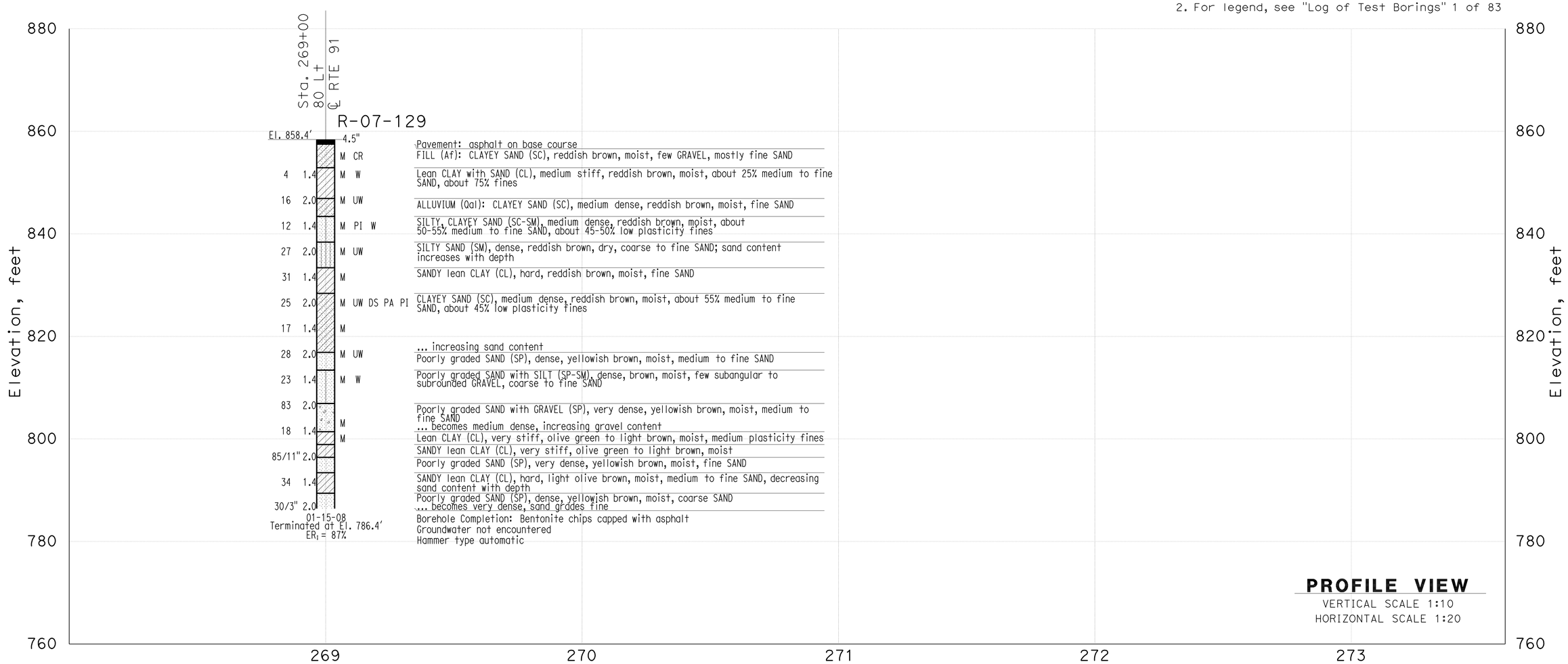

THIS PLAN ACCURATE FOR SOUND WALL AND RETAINING WALL WORK ONLY

DESIGN OVERSIGHT	GINA PURSELL	DRAWN BY	P. QUACH	P.CHAU/D.WADER/C.CARBINO	PREPARED FOR THE STATE OF CALIFORNIA DEPARTMENT OF TRANSPORTATION	A. LEE	BRIDGE NO. X	Retaining Wall 267 R14-10
X	FUNCTIONAL SUPERVISOR	CHECKED BY	S. PIRATHIVIRAJ	FIELD INVESTIGATION BY: DATE: Nov 6 2007 to March 7 2008		PROJECT ENGINEER	POST MILE X	LOG OF TEST BORINGS SHEET 1 OF 5
SIGN OFF DATE								

OSF GEOTECHNICAL LOG OF TEST BORINGS SHEET (ENGLISH) (REV. 2/25/05)

ORIGINAL SCALE IN INCHES FOR REDUCED PLANS 0 1 2 3

CU 59A0590
EA 08-448400

DISREGARD PRINTS BEARING EARLIER REVISION DATES

REVISION DATES (PRELIMINARY STAGE ONLY) X

SHEET 1 OF 5

FILE => 844840qn010.dgn

DATE PLOTTED => 30-APR-2011 TIME PLOTTED =>

USERNAME => trpierce

DIST	COUNTY	ROUTE	POST MILES TOTAL PROJECT	SHEET No	TOTAL SHEETS
08	Riv	91	15.6/21.6	883	2028

GEOTECHNICAL PROFESSIONAL — DATE 10/2008

4-25-11
PLANS APPROVAL DATE

REGISTERED PROFESSIONAL ENGINEER — ANDREW C. LEE — No. 2616 — Exp. 6-30-12 — GEOTECHNICAL — STATE OF CALIFORNIA

The State of California or its officers or agents shall not be responsible for the accuracy or completeness of electronic copies of this plan sheet.

California Department of Transportation
5900 Folsom Boulevard
Sacramento, CA 95819

URS Corporation
2020 East First Street, Suite 400
Santa Ana, CA 92705

FOR PLAN VIEW, SEE SHEET R14-14

NOTE: 1. This LOTB sheet was prepared in accordance with the Caltrans Soil & Rock Logging, Classification, and Presentation Manual (June 2007).

2. For legend, see "Log of Test Borings" 1 of 83

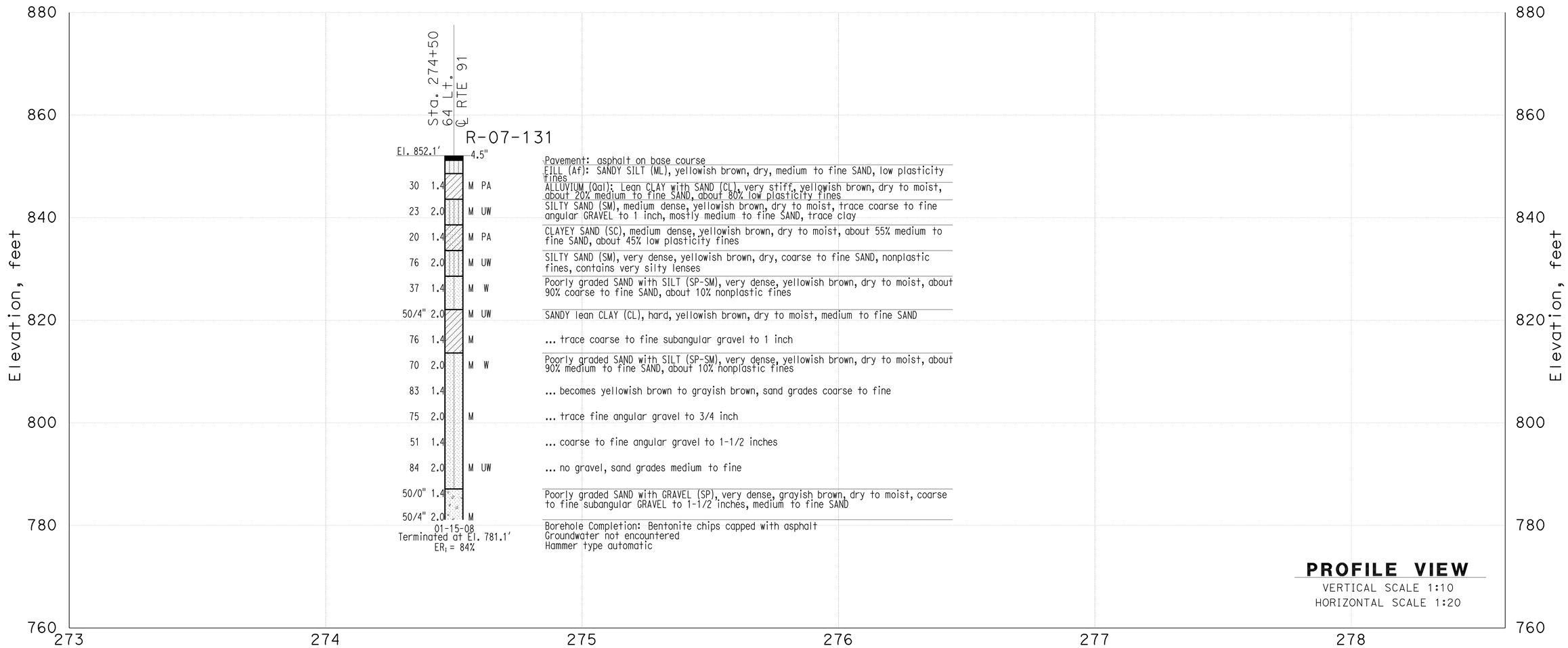

THIS PLAN ACCURATE FOR SOUND WALL AND RETAINING WALL WORK ONLY

DESIGN OVERSIGHT: X	GINA PURSELL, FUNCTIONAL SUPERVISOR	DRAWN BY	P. QUACH	P.CHAU/D.WADER/C.CARBINO	PREPARED FOR THE STATE OF CALIFORNIA DEPARTMENT OF TRANSPORTATION	A. LEE, PROJECT ENGINEER	BRIDGE NO. X
SIGN OFF DATE		CHECKED BY	S. PIRATHIVIRAJ	FIELD INVESTIGATION BY: DATE: Nov 6 2007 to March 7 2008			POST MILE X

Retaining Wall 267 — R14-11

LOG OF TEST BORINGS SHEET 2 OF 5

OSF GEOTECHNICAL LOG OF TEST BORINGS SHEET (ENGLISH) (REV. 2/25/05)

ORIGINAL SCALE IN INCHES FOR REDUCED PLANS 0 1 2 3

CU 59A0590
EA 08-448400

DISREGARD PRINTS BEARING EARLIER REVISION DATES

REVISION DATES (PRELIMINARY STAGE ONLY) X

SHEET 2 OF 5

FILE => 844840qn011.dgn

USERNAME => trpierce DATE PLOTTED => 30-APR-2011 TIME PLOTTED =>

DIST	COUNTY	ROUTE	POST MILES TOTAL PROJECT	SHEET No	TOTAL SHEETS
08	Riv	91	15.6/21.6	884	2028

GEOTECHNICAL PROFESSIONAL DATE 10/2008

4-25-11
PLANS APPROVAL DATE

REGISTERED PROFESSIONAL ENGINEER
ANDREW C. LEE
No. 2616
Exp. 6-30-12
GEOTECHNICAL
STATE OF CALIFORNIA

The State of California or its officers or agents shall not be responsible for the accuracy or completeness of electronic copies of this plan sheet.

California Department of Transportation
5900 Folsom Boulevard
Sacramento, CA 95819

URS Corporation
2020 East First Street, Suite 400
Santa Ana, CA 92705

FOR PLAN VIEW, SEE SHEET R14-14

NOTE: 1. This LOTB sheet was prepared in accordance with the Caltrans Soil & Rock Logging, Classification, and Presentation Manual (June 2007).

2. For legend, see "Log of Test Borings" 1 of 83

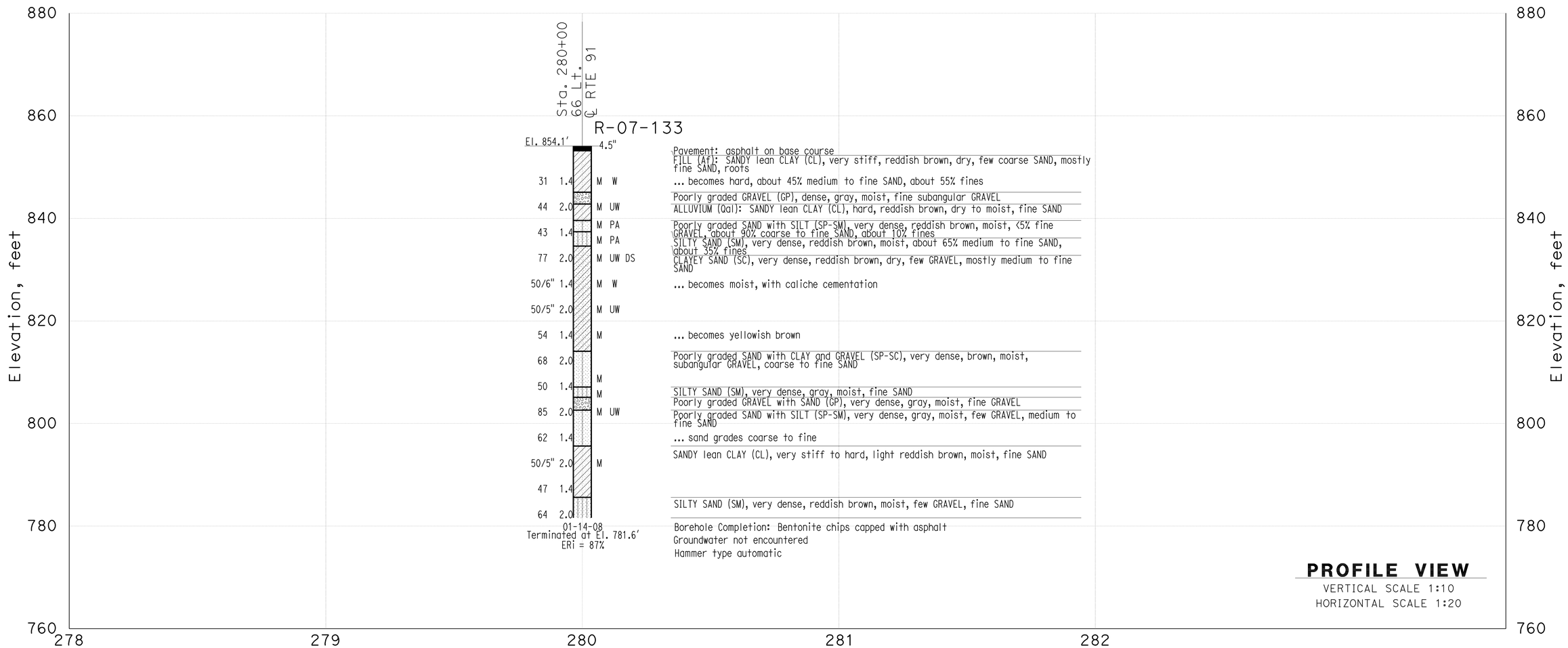

THIS PLAN ACCURATE FOR SOUND WALL AND RETAINING WALL WORK ONLY

DESIGN OVERSIGHT	GINA PURSELL FUNCTIONAL SUPERVISOR	DRAWN BY	P. QUACH	P.CHAU/D.WADER/C.CARBINO FIELD INVESTIGATION BY:	PREPARED FOR THE STATE OF CALIFORNIA DEPARTMENT OF TRANSPORTATION	A. LEE PROJECT ENGINEER	BRIDGE NO. X	Retaining Wall 267 R14-12
X SIGN OFF DATE		CHECKED BY	S. PIRATHIVIRAJ	DATE: Nov 6 2007 to March 7 2008			POST MILE X	LOG OF TEST BORINGS SHEET 3 OF 5

OSF GEOTECHNICAL LOG OF TEST BORINGS SHEET (ENGLISH) (REV. 2/25/05)

ORIGINAL SCALE IN INCHES FOR REDUCED PLANS 0 1 2 3

CU 59A0590
EA 08-448400

DISREGARD PRINTS BEARING EARLIER REVISION DATES

REVISION DATES (PRELIMINARY STAGE ONLY) X

SHEET 3 OF 5

FILE => 844840qn012.dgn

USERNAME => trpierce DATE PLOTTED => 30-APR-2011 TIME PLOTTED =>

DIST	COUNTY	ROUTE	POST MILES TOTAL PROJECT	SHEET No	TOTAL SHEETS
08	Riv	91	15.6/21.6	885	2028

GEOTECHNICAL PROFESSIONAL — DATE 10/2008

4-25-11
PLANS APPROVAL DATE

REGISTERED PROFESSIONAL ENGINEER — ANDREW C. LEE — No. 2616 — Exp. 6-30-12 — GEOTECHNICAL — STATE OF CALIFORNIA

The State of California or its officers or agents shall not be responsible for the accuracy or completeness of electronic copies of this plan sheet.

California Department of Transportation
5900 Folsom Boulevard
Sacramento, CA 95819

URS Corporation
2020 East First Street, Suite 400
Santa Ana, CA 92705

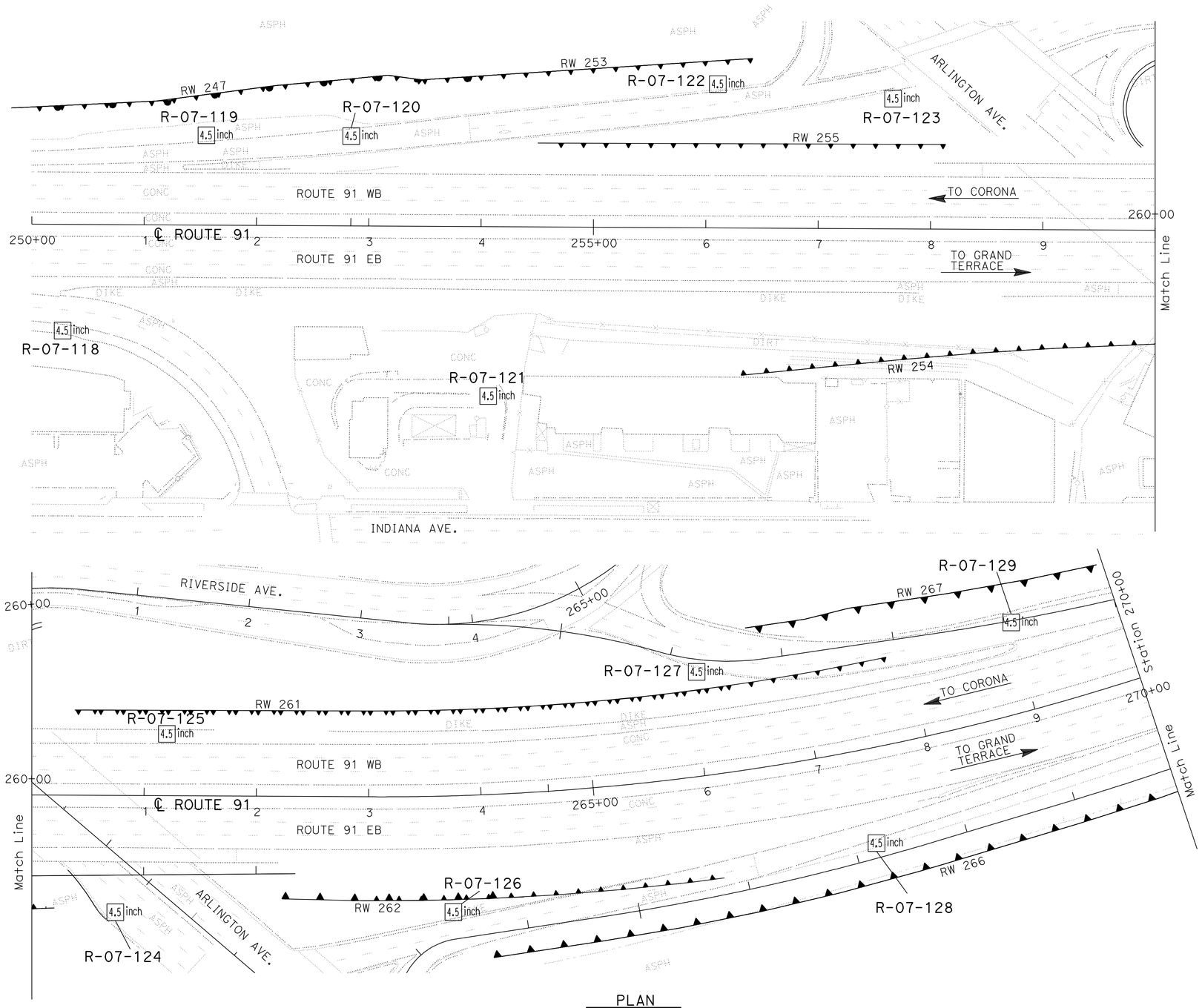

PLAN
SCALE 1"=50'

Borehole Number	Drill Rig	Hammer Type	Avg. Hammer Efficiency, ETR (%)
R-07-118	CS-2000	Automatic	84
R-07-119	CS-2000	Automatic	84
R-07-120	Mobile B-47	Manual trip	60*
R-07-121	CS-2000	Automatic	84
R-07-122	CS-2000	Automatic	84
R-07-123	CS-2000	Automatic	84
R-07-124	CS-2000	Automatic	84
R-07-125	CME 85	Automatic	87
R-07-126	CS-2000	Automatic	84
R-07-127	CME 85	Automatic	87
R-07-128	CS-2000	Automatic	84
R-07-129	CME 85	Automatic	87

Sampler Type	Inside Diameter (Inches)	Borehole Numbers
SPT	1.375	R-07-118, R-07-119, R-07-120 R-07-121, R-07-122, R-07-123 R-07-124, R-07-125, R-07-126 R-07-127, R-07-128, R-07-129
Modified California 1	1.94	R-07-119, R-07-120, R-07-121 R-07-124, R-07-125, R-07-127 R-07-129
Modified California 2	2.40	-

*Estimated Hammer Efficiency Rating.

DESIGN OVERSIGHT — GINA PURSELL, FUNCTIONAL SUPERVISOR — X — SIGN OFF DATE

DRAWN BY: P. QUACH
CHECKED BY: S. PIRATHIVIRAJ

P.CHAU/D.WADER/C.CARBINO
FIELD INVESTIGATION BY:
DATE: Nov 6 2007 to March 7 2008

PREPARED FOR THE STATE OF CALIFORNIA DEPARTMENT OF TRANSPORTATION

A. LEE, PROJECT ENGINEER

BRIDGE NO. X
POST MILE X

RETAINING WALL 267 R14-13

LOG OF TEST BORINGS 4 OF 5

OSF GEOTECHNICAL LOG OF TEST BORINGS SHEET (ENGLISH) (REV. 2/25/05)

ORIGINAL SCALE IN INCHES FOR REDUCED PLANS 0 1 2 3

CU 59A0590
EA 08-448400

DISREGARD PRINTS BEARING EARLIER REVISION DATES

REVISION DATES (PRELIMINARY STAGE ONLY) X

SHEET 4 OF 5

FILE => 844840qn013.dgn

USERNAME => trlenard — DATE PLOTTED => 30-APR-2011 — TIME PLOTTED =>

DIST	COUNTY	ROUTE	POST MILES TOTAL PROJECT	SHEET No	TOTAL SHEETS
08	Riv	91	15.6/21.6	886	2028

GEOTECHNICAL PROFESSIONAL — DATE 10/2008

4-25-11
PLANS APPROVAL DATE

REGISTERED PROFESSIONAL ENGINEER — ANDREW C. LEE — No. 2616 — Exp. 6-30-12 — GEOTECHNICAL — STATE OF CALIFORNIA

The State of California or its officers or agents shall not be responsible for the accuracy or completeness of electronic copies of this plan sheet.

California Department of Transportation
5900 Folsom Boulevard
Sacramento, CA 95819

URS Corporation
2020 East First Street, Suite 400
Santa Ana, CA 92705

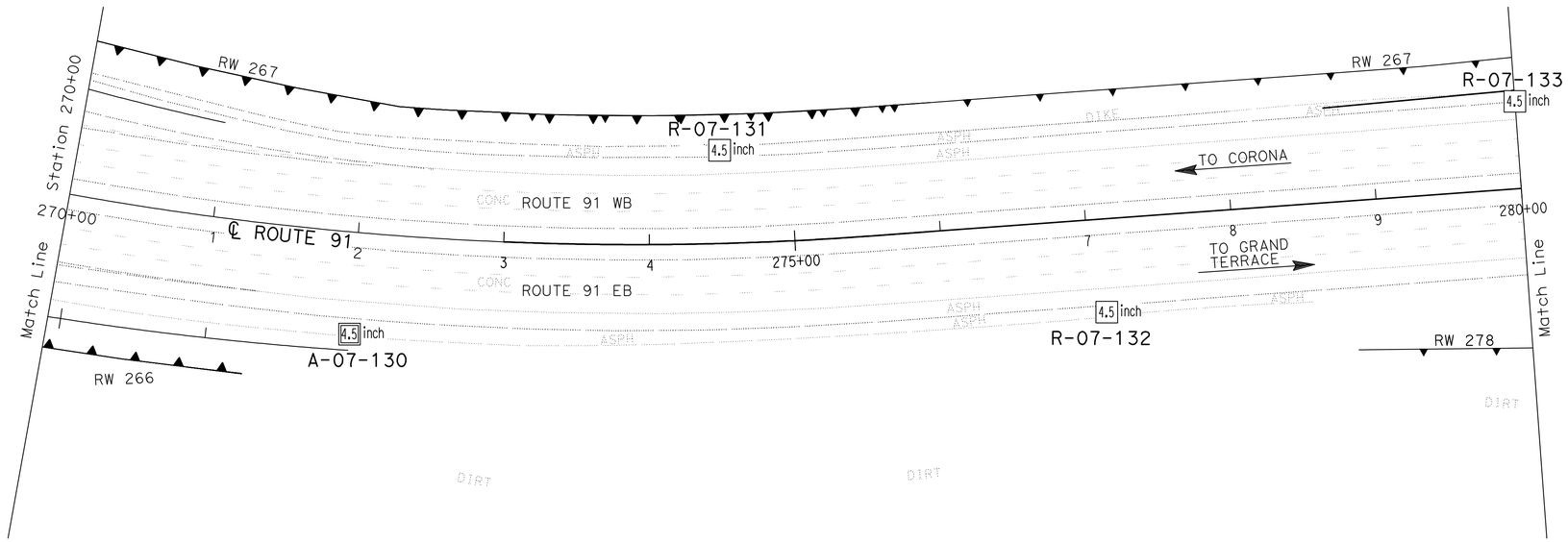

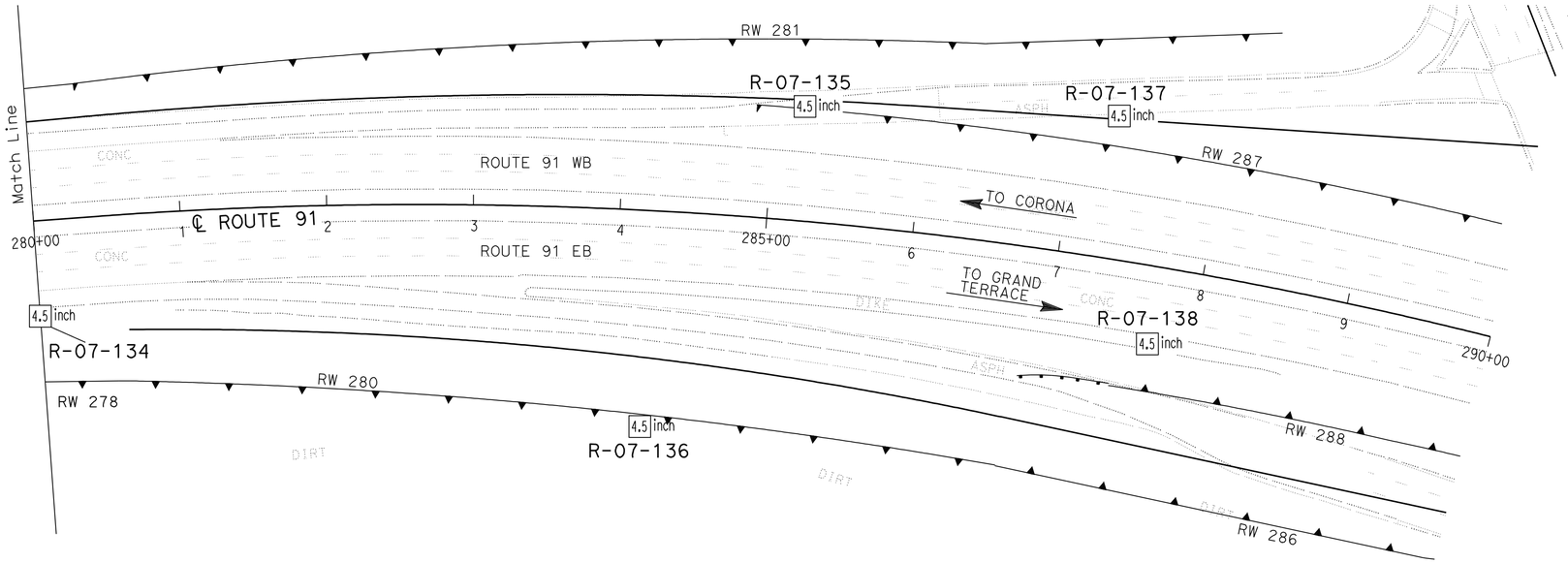

PLAN
SCALE 1"=50'

Borehole Number	Drill Rig	Hammer Type	Avg. Hammer Efficiency, ETR (%)
A-07-130	CS-2000	Automatic	84
R-07-131	CS-2000	Automatic	84
R-07-132	CS-2000	Automatic	84
R-07-133	CME 85	Automatic	87
R-07-134	CS-2000	Automatic	84
R-07-135	CS-2000	Automatic	84
R-07-136	CS-2000	Automatic	84
R-07-137	CS-2000	Automatic	84
R-07-138	CS-2000	Automatic	84

Sampler Type	Inside Diameter (Inches)	Borehole Numbers
SPT	1.375	A-07-130, R-07-131, R-07-132 R-07-133, R-07-134, R-07-135 R-07-136, R-07-137
Modified California 1	1.94	R-07-131, R-07-133 R-07-135, R-07-136
Modified California 2	2.40	-

DESIGN OVERSIGHT — GINA PURSELL, FUNCTIONAL SUPERVISOR
X
SIGN OFF DATE

DRAWN BY: P. QUACH
CHECKED BY: S. PIRATHIVIRAJ

P.CHAU/D.WADER/C.CARBINO
FIELD INVESTIGATION BY:
DATE: Nov 6 2007 to March 7 2008

PREPARED FOR THE STATE OF CALIFORNIA DEPARTMENT OF TRANSPORTATION

A. LEE
PROJECT ENGINEER

BRIDGE NO. X
POST MILE X

RETAINING WALL 267 R14-14

LOG OF TEST BORINGS 5 OF 5

OSF GEOTECHNICAL LOG OF TEST BORINGS SHEET (ENGLISH) (REV. 2/25/05)

ORIGINAL SCALE IN INCHES FOR REDUCED PLANS 0 1 2 3

CU 59A0590
EA 08-448400

DISREGARD PRINTS BEARING EARLIER REVISION DATES

REVISION DATES (PRELIMINARY STAGE ONLY) X

SHEET 5 OF 5

FILE => 844840qn014.dgn

USERNAME => trlehard DATE PLOTTED => 30-APR-2011 TIME PLOTTED =>

Dist	COUNTY	ROUTE	POST MILES TOTAL PROJECT	SHEET No.	TOTAL SHEETS
08	Riv	91	15.6/21.6	887	2028

REGISTERED CIVIL ENGINEER 12-1-10 DATE

4-25-11
PLANS APPROVAL DATE

REGISTERED PROFESSIONAL ENGINEER CUONG LE TRAN No. C60436 Exp. 6-30-12 CIVIL STATE OF CALIFORNIA

THE STATE OF CALIFORNIA OR ITS OFFICERS OR AGENTS SHALL NOT BE RESPONSIBLE FOR THE ACCURACY OR COMPLETENESS OF SCANNED COPIES OF THIS PLAN SHEET.

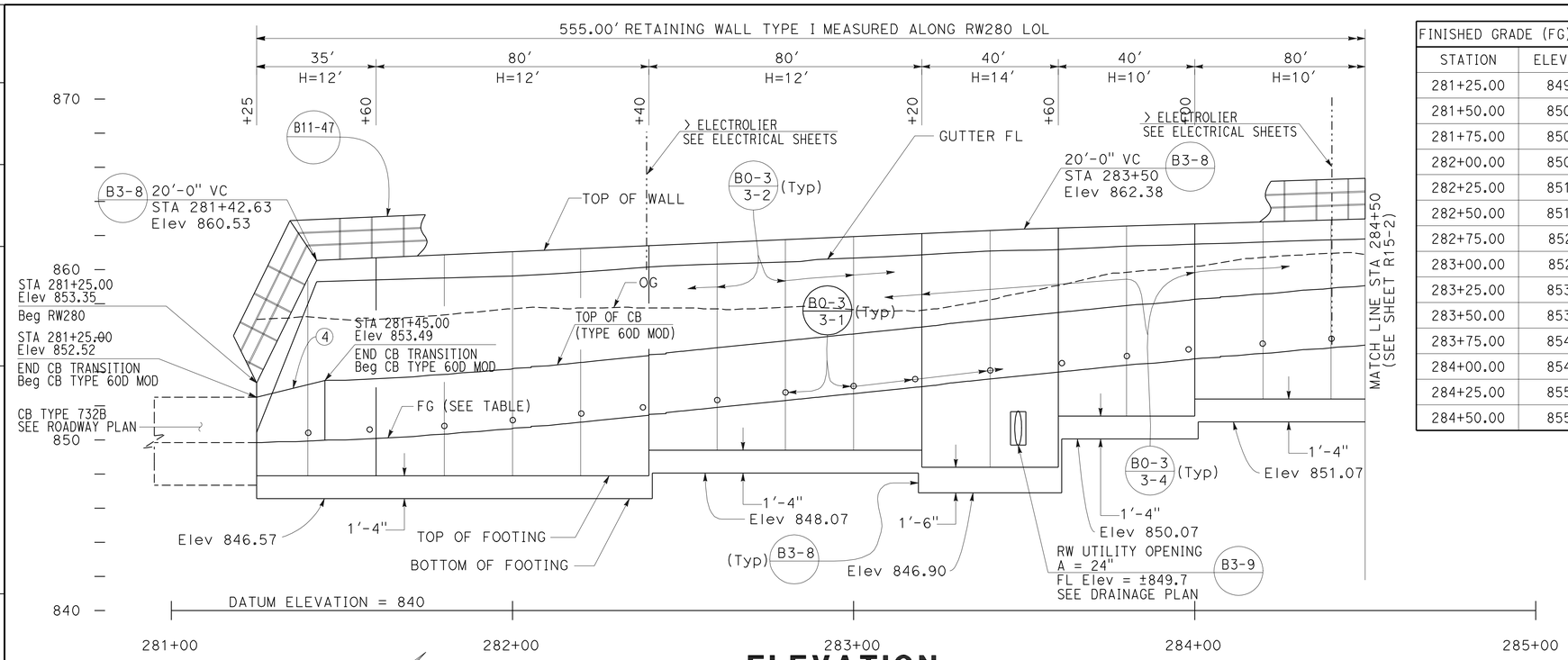

ELEVATION

SCALE Horiz 1"=20'
Vert 1"=4'

FINISHED GRADE (FG) TABLE	
STATION	ELEVATION
281+25.00	849.90
281+50.00	850.00
281+75.00	850.29
282+00.00	850.68
282+25.00	851.15
282+50.00	851.70
282+75.00	852.21
283+00.00	852.71
283+25.00	853.23
283+50.00	853.78
283+75.00	854.29
284+00.00	854.76
284+25.00	855.15
284+50.00	855.56

FINISHED GRADE (FG) TABLE	
STATION	ELEVATION
284+75.00	855.92
285+00.00	856.22
285+25.00	856.50
285+50.00	856.74
285+75.00	856.94
286+00.00	857.10
286+25.00	857.40
286+50.00	857.65
286+75.00	857.75

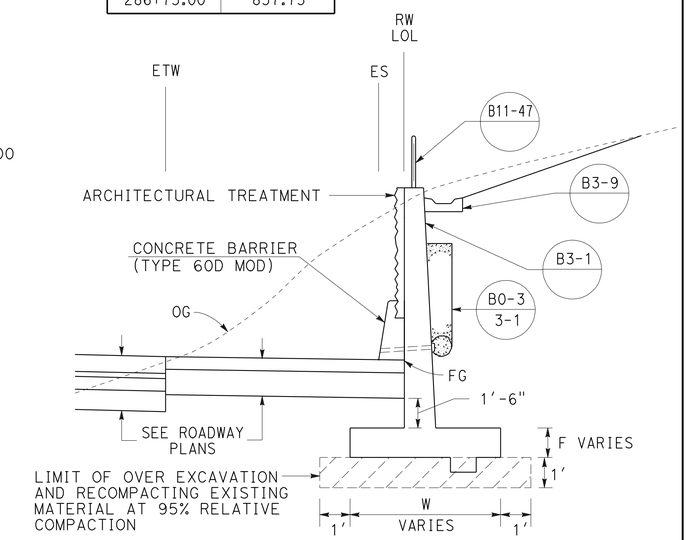

TYPICAL SECTION

NO SCALE
FROM STA 281+25.00 TO STA 286+80.00

NOTES:

1. ARCHITECTURAL TREATMENT SHOULD EXTEND 6 IN BELOW FG OR 6 IN BELOW TOP CB (TYPE 60D MOD)
2. FOR STRUCTURAL SECTIONS, SEE ROADWAY PLANS
3. FOR POST ANCHORAGE DETAILS, SEE B11-52
4. CONCRETE BARRIER TRANSITION FROM TYPE 732 TO TYPE 60D MOD SEE Rt WALL DETAILS SHEET

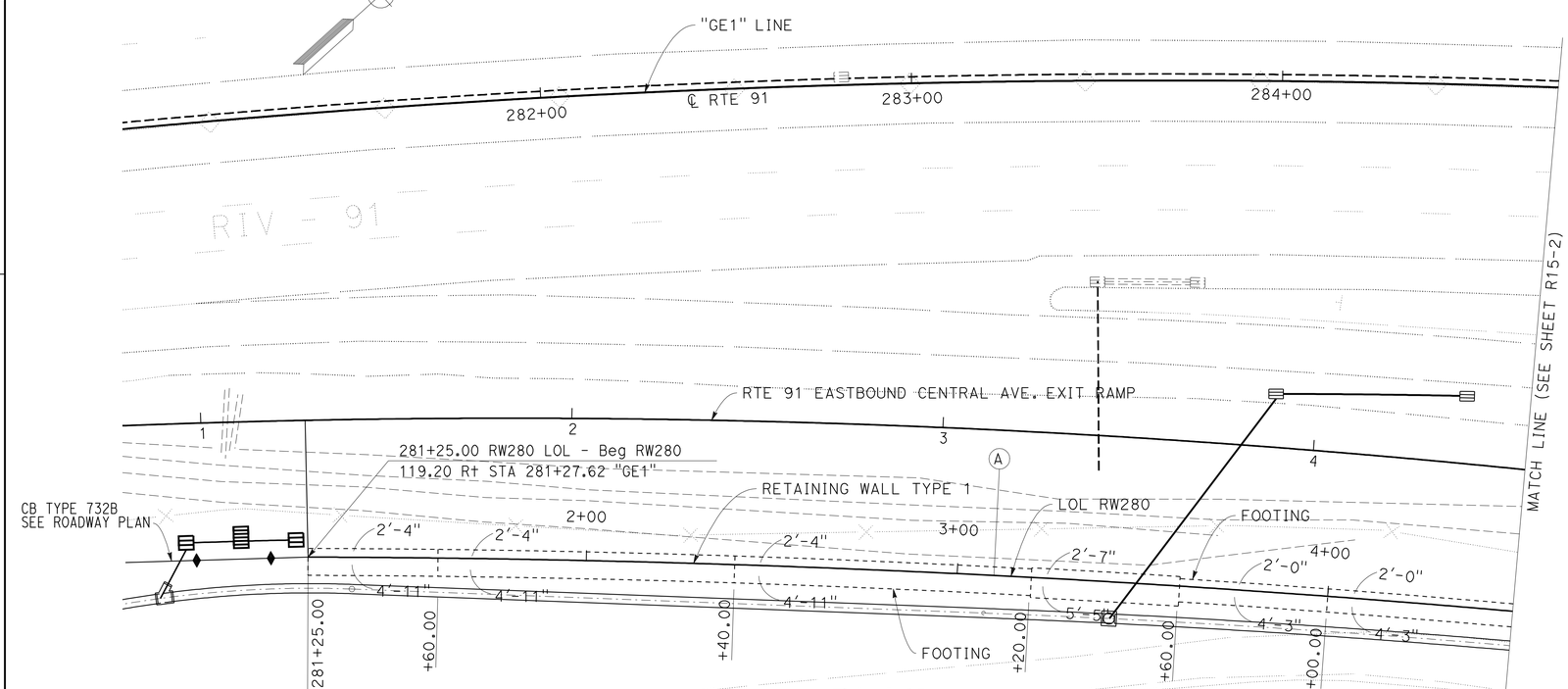

PLAN

SCALE: 1"=20'

CURVE DATA

No.	R	Δ	T	L
A	3857.26'	7°48'20"	263.15'	525.48'

THIS PLAN ACCURATE FOR RETAINING WALL WORK ONLY.

RETAINING WALL PLAN
RETAINING WALL No. 280

SCALE AS SHOWN

R15-1

STATE OF CALIFORNIA - DEPARTMENT OF TRANSPORTATION
Caltrans DESIGN

FUNCTIONAL SUPERVISOR: MARK PERTILE
CALCULATED-DESIGNED BY: ANNABELL WANG
CHECKED BY: CUONG LE TRAN
REVISED BY / DATE REVISED

LAST REVISION 12-01-10
DATE PLOTTED => 30-APR-2011
TIME PLOTTED => 06:24

Dist	COUNTY	ROUTE	POST MILES TOTAL PROJECT	SHEET No.	TOTAL SHEETS
08	Riv	91	15.6/21.6	888	2028

REGISTERED CIVIL ENGINEER 12-1-10 DATE

4-25-11
PLANS APPROVAL DATE

REGISTERED PROFESSIONAL ENGINEER CUONG LE TRAN No. C60436 Exp. 6-30-12 CIVIL STATE OF CALIFORNIA

THE STATE OF CALIFORNIA OR ITS OFFICERS OR AGENTS SHALL NOT BE RESPONSIBLE FOR THE ACCURACY OR COMPLETENESS OF SCANNED COPIES OF THIS PLAN SHEET.

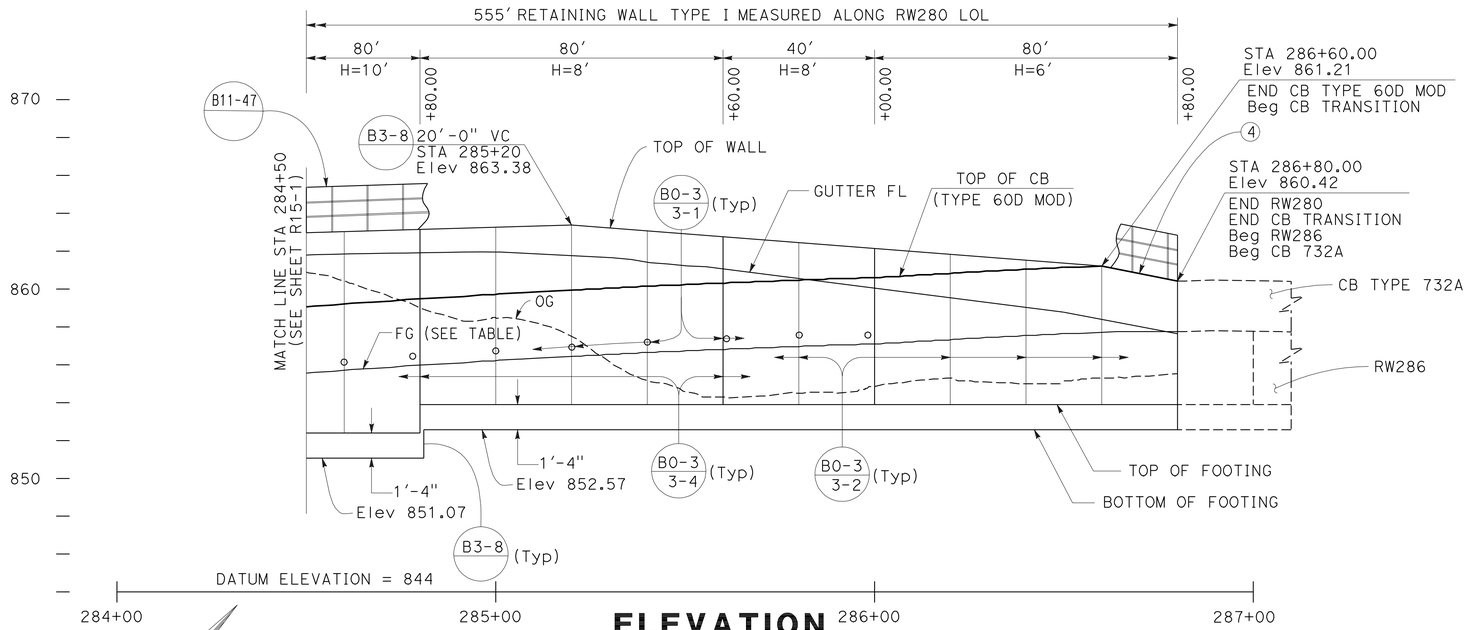

ELEVATION

SCALE Horiz 1"=20'
Vert 1"=4'

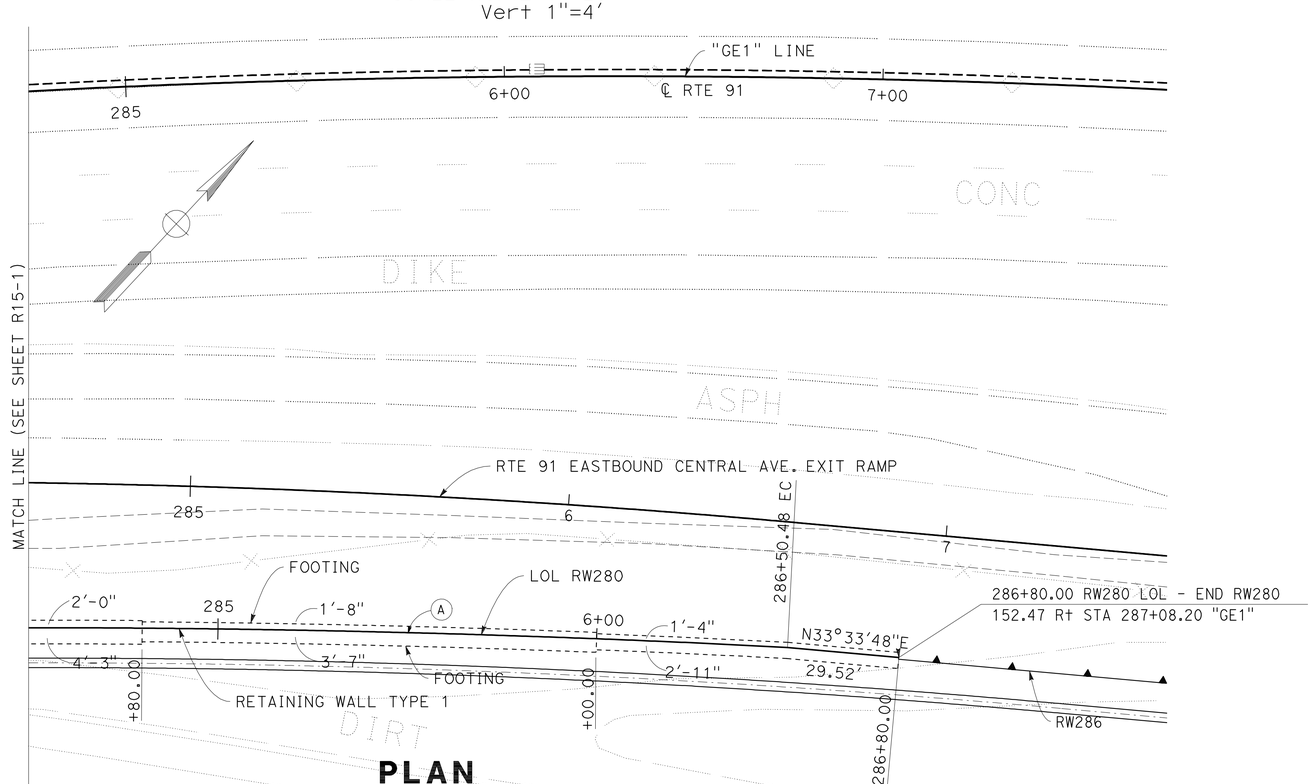

PLAN

SCALE: 1"=20'

QUANTITIES

STRUCTURAL CONCRETE (RETAINING WALL)	456.00	CY
BAR REINFORCING STEEL (RETAINING WALL)	32817	LB
STRUCTURAL EXCAVATION (RETAINING WALL)	1581.80	CY
STRUCTURAL BACKFILL (RETAINING WALL)	1106.90	CY
PERVIOUS BACKFILL MATERIAL (RETAINING WALL)	60.50	CY
CONCRETE BARRIER (TYPE 60D MOD)	555.00	LF
CABLE RAILING	555.00	LF
MINOR CONCRETE (GUTTER)	555.00	LF
PLASTIC PIPE (N)	31.79	LF
WATERSTOP (N)	93.16	LF
ARCHITECTURAL SURFACE (TEXTURED CONCRETE)	2576.64	SF

(N) = NOT A SEPARATE PAY ITEM, FOR INFORMATION ONLY

THIS PLAN ACCURATE FOR RETAINING WALL WORK ONLY.

RETAINING WALL PLAN
RETAINING WALL No. 280

SCALE AS SHOWN

R15-2

STATE OF CALIFORNIA - DEPARTMENT OF TRANSPORTATION
Caltrans®
DESIGN
FUNCTIONAL SUPERVISOR: MARK PERTILE
CALCULATED-DESIGNED BY: ANNABELL WANG
CHECKED BY: CUONG LE TRAN
REVISED BY
DATE REVISED

LAST REVISION 12-01-10
DATE PLOTTED => 30-APR-2011
TIME PLOTTED => 06:24

Dist	COUNTY	ROUTE	POST MILES TOTAL PROJECT	SHEET No.	TOTAL SHEETS
08	Riv	91	15.6/21.6	889	2028

REGISTERED CIVIL ENGINEER 12-1-10 DATE

4-25-11
PLANS APPROVAL DATE

REGISTERED PROFESSIONAL ENGINEER CUONG LE TRAN No. C60436 Exp. 6-30-12 CIVIL STATE OF CALIFORNIA

THE STATE OF CALIFORNIA OR ITS OFFICERS OR AGENTS SHALL NOT BE RESPONSIBLE FOR THE ACCURACY OR COMPLETENESS OF SCANNED COPIES OF THIS PLAN SHEET.

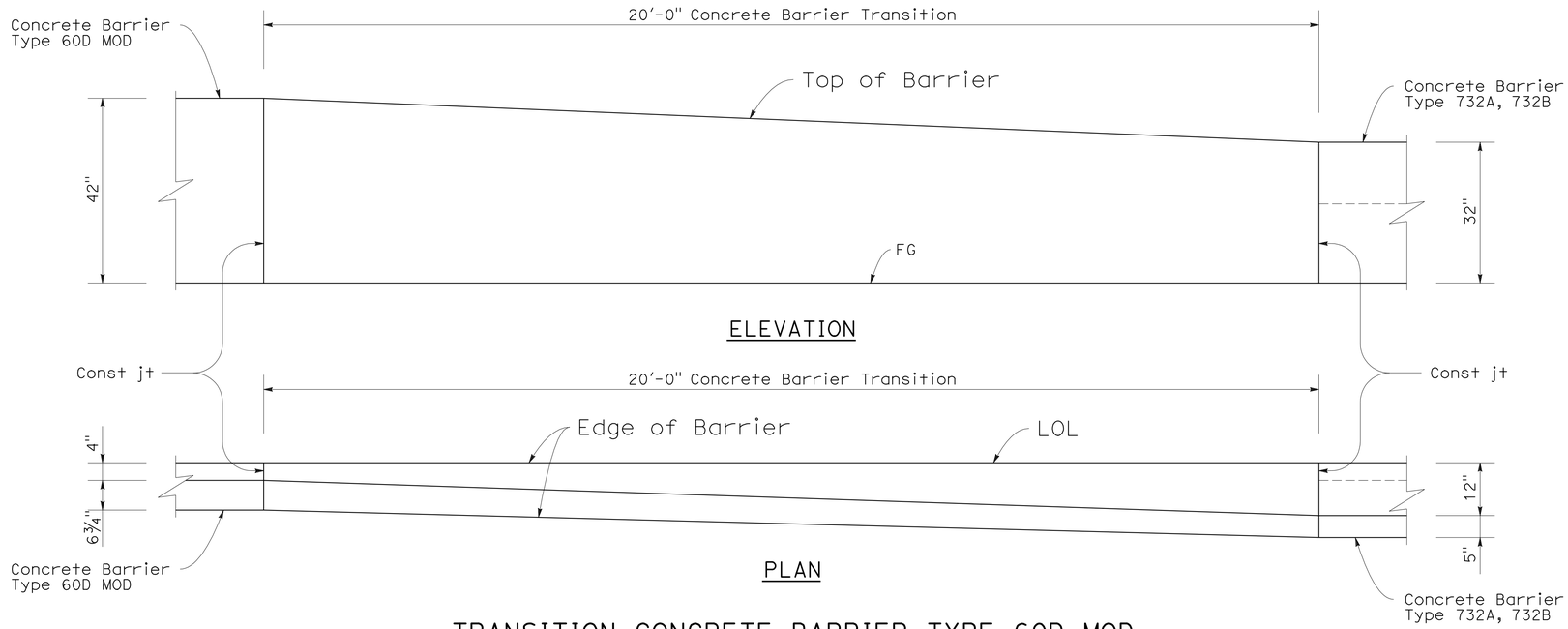

TRANSITION CONCRETE BARRIER TYPE 60D MOD TO CONCRETE BARRIER TYPE 732

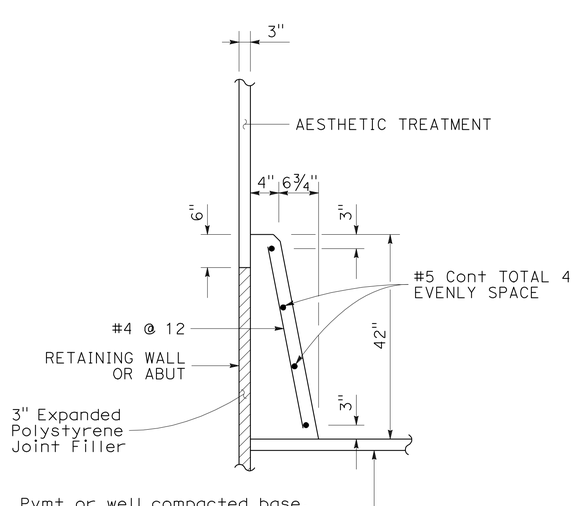

CONCRETE BARRIER
(TYPE 60D MOD)

THIS PLAN ACCURATE FOR RETAINING WALL WORK ONLY.

RETAINING WALL DETAILS
RETAINING WALL No. 280
NO SCALE

R15-3

STATE OF CALIFORNIA - DEPARTMENT OF TRANSPORTATION
Caltrans
DESIGN

FUNCTIONAL SUPERVISOR: MARK PERTILE
CALCULATED-DESIGNED BY: ANNABELL WANG
CHECKED BY: CUONG LE TRAN
REVISED BY
DATE REVISED

LAST REVISION 12-01-10 | DATE PLOTTED => 30-APR-2011 | TIME PLOTTED => 06:25

Dist	COUNTY	ROUTE	POST MILES TOTAL PROJECT	SHEET No.	TOTAL SHEETS
08	Riv	91	15.6/21.6	890	2028

LICENSED LANDSCAPE ARCHITECT

4-25-11
PLANS APPROVAL DATE

LICENSED LANDSCAPE ARCHITECT
Matthew Harry Hall
No. 4825
Signature
10/31/2011
Renewal Date
12-1-10
Date
STATE OF CALIFORNIA

THE STATE OF CALIFORNIA OR ITS OFFICERS OR AGENTS SHALL NOT BE RESPONSIBLE FOR THE ACCURACY OR COMPLETENESS OF SCANNED COPIES OF THIS PLAN SHEET.

NOTE:

SEE SHEET ASD-4 AND ASD-5.

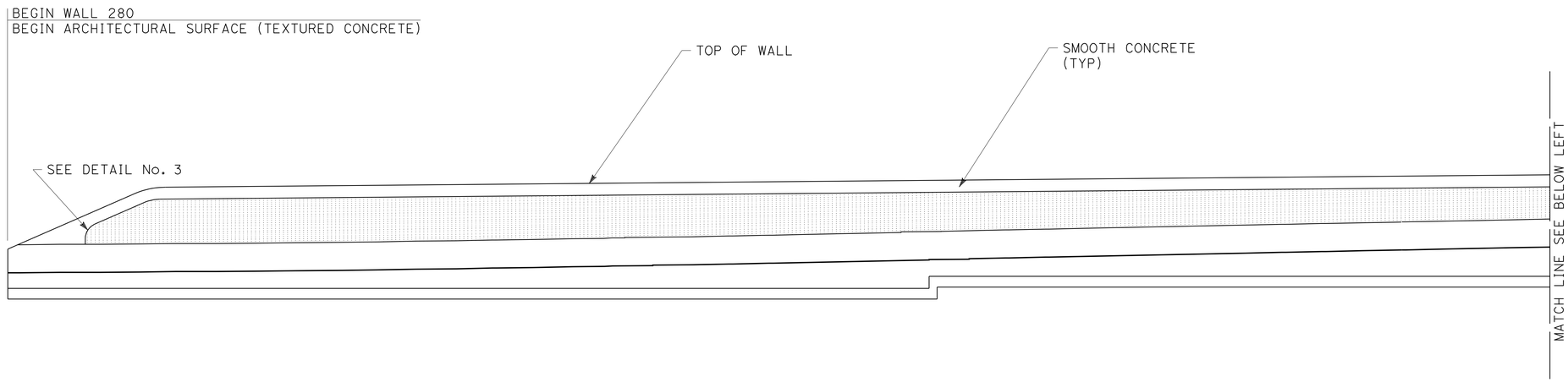

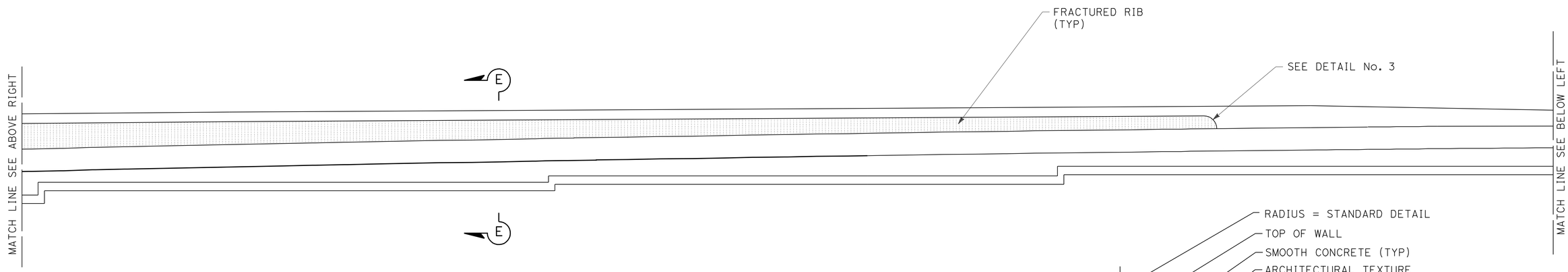

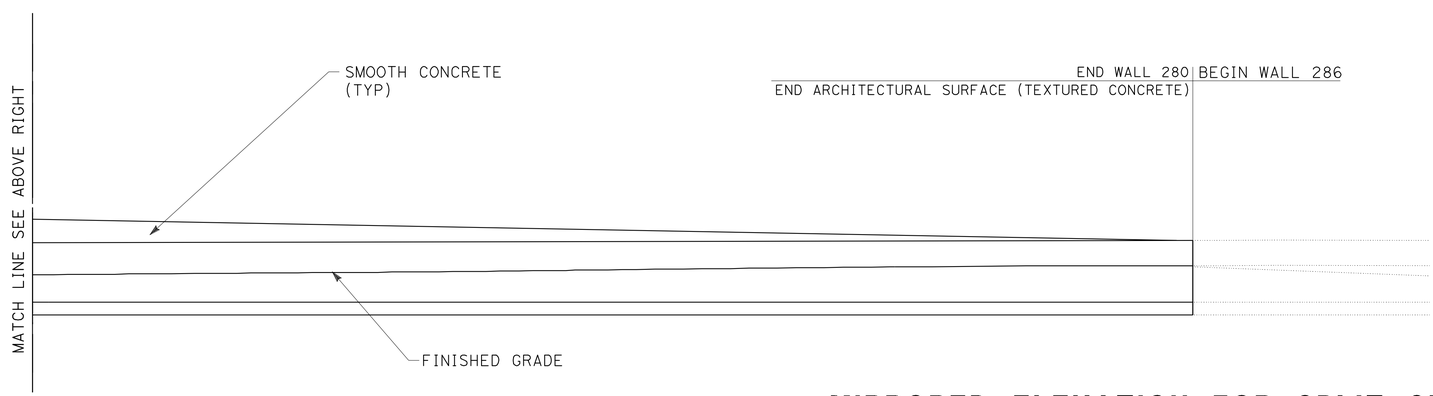

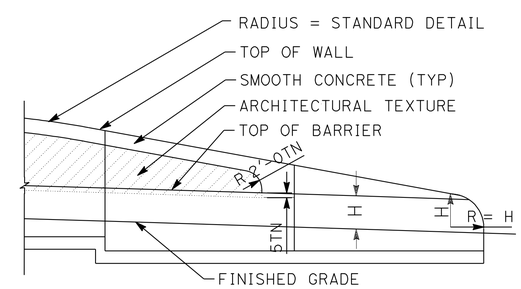

DETAIL No. 3

TYPICAL END OF WALL WITH
TYPE 60D MOD. CONCRETE BARRIER

MIRRORED ELEVATION FOR SPLIT SLATE TEXTURE RETAINING WALL No. 280

THIS PLAN IS ACCURATE FOR ARCHITECTUAL TREATMENT WORK ONLY.

ARCHITECTURAL SURFACE RETAINING WALL No. 280

SCALE: 1/8"=1'-0"

R15-4

REVISED BY	DATE REVISED

CALCULATED-DESIGNED BY	MATTHEW HALL
CHECKED BY	MIRIAM BISHOP

SENIOR LANDSCAPE ARCHITECT: BYRON STROUT

STATE OF CALIFORNIA - DEPARTMENT OF TRANSPORTATION
Caltrans LANDSCAPE ARCHITECTURE

LAST REVISION 12-01-10 | DATE PLOTTED => 30-APR-2011 | TIME PLOTTED => 06:25

DIST	COUNTY	ROUTE	POST MILES TOTAL PROJECT	SHEET No	TOTAL SHEETS
08	Riv	91	15.6/21.6	891	2028

GEOTECHNICAL PROFESSIONAL — DATE 10/2008

4-25-11
PLANS APPROVAL DATE

REGISTERED PROFESSIONAL ENGINEER — ANDREW C. LEE — No. 2616 — Exp. 6-30-12 — GEOTECHNICAL — STATE OF CALIFORNIA

The State of California or its officers or agents shall not be responsible for the accuracy or completeness of electronic copies of this plan sheet.

California Department of Transportation
5900 Folsom Boulevard
Sacramento, CA 95819

URS Corporation
2020 East First Street, Suite 400
Santa Ana, CA 92705

FOR PLAN VIEW, SEE SHEET R15-6

NOTE: 1. This LOTB sheet was prepared in accordance with the Caltrans Soil & Rock Logging, Classification, and Presentation Manual (June 2007).

2. For legend, see "Log of Test Borings" 1 of 83

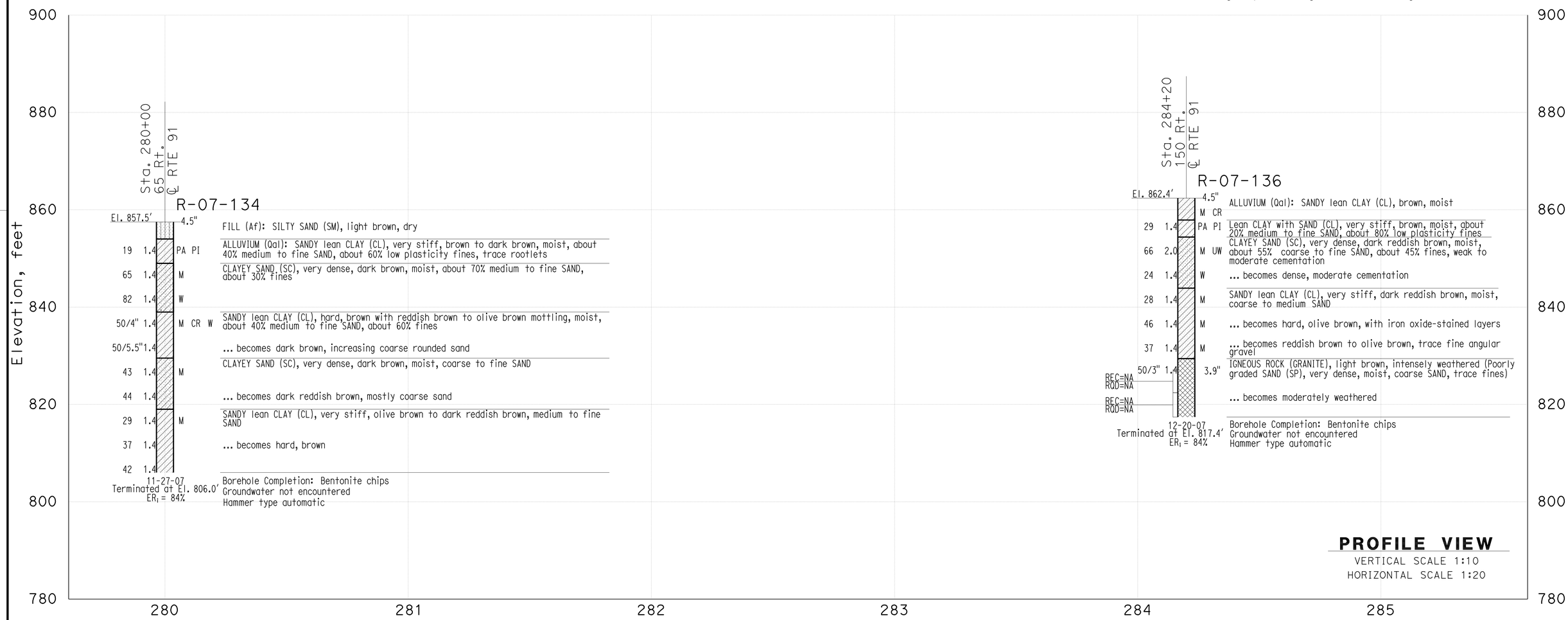

PROFILE VIEW
VERTICAL SCALE 1:10
HORIZONTAL SCALE 1:20

THIS PLAN ACCURATE FOR SOUND WALL AND RETAINING WALL WORK ONLY

DESIGN OVERSIGHT X SIGN OFF DATE	GINA PURSELL FUNCTIONAL SUPERVISOR	DRAWN BY CHECKED BY	P. QUACH S. PIRATHIVIRAJ	P.CHAU/D.WADER/C.CARBINO FIELD INVESTIGATION BY: DATE: Nov 6 2007 to March 7 2008	PREPARED FOR THE STATE OF CALIFORNIA DEPARTMENT OF TRANSPORTATION	A. LEE PROJECT ENGINEER	BRIDGE NO. X POST MILE X

Retaining Wall 280 — R15-5

LOG OF TEST BORINGS SHEET 1 OF 2

OSF GEOTECHNICAL LOG OF TEST BORINGS SHEET (ENGLISH) (REV. 2/25/05)

ORIGINAL SCALE IN INCHES FOR REDUCED PLANS 0 1 2 3

CU 59A0590
EA 08-448400

DISREGARD PRINTS BEARING EARLIER REVISION DATES

REVISION DATES (PRELIMINARY STAGE ONLY) X

SHEET 1 OF 2

FILE => 844840qo005.dgn

DATE PLOTTED => 30-APR-2011 TIME PLOTTED =>
USERNAME => trlenard

DIST	COUNTY	ROUTE	POST MILES TOTAL PROJECT	SHEET No	TOTAL SHEETS
08	Riv	91	15.6/21.6	892	2028

GEOTECHNICAL PROFESSIONAL — DATE 10/2008

4-25-11
PLANS APPROVAL DATE

REGISTERED PROFESSIONAL ENGINEER — ANDREW C. LEE — No. 2616 — Exp. 6-30-12 — GEOTECHNICAL — STATE OF CALIFORNIA

The State of California or its officers or agents shall not be responsible for the accuracy or completeness of electronic copies of this plan sheet.

California Department of Transportation
5900 Folsom Boulevard
Sacramento, CA 95819

URS Corporation
2020 East First Street, Suite 400
Santa Ana, CA 92705

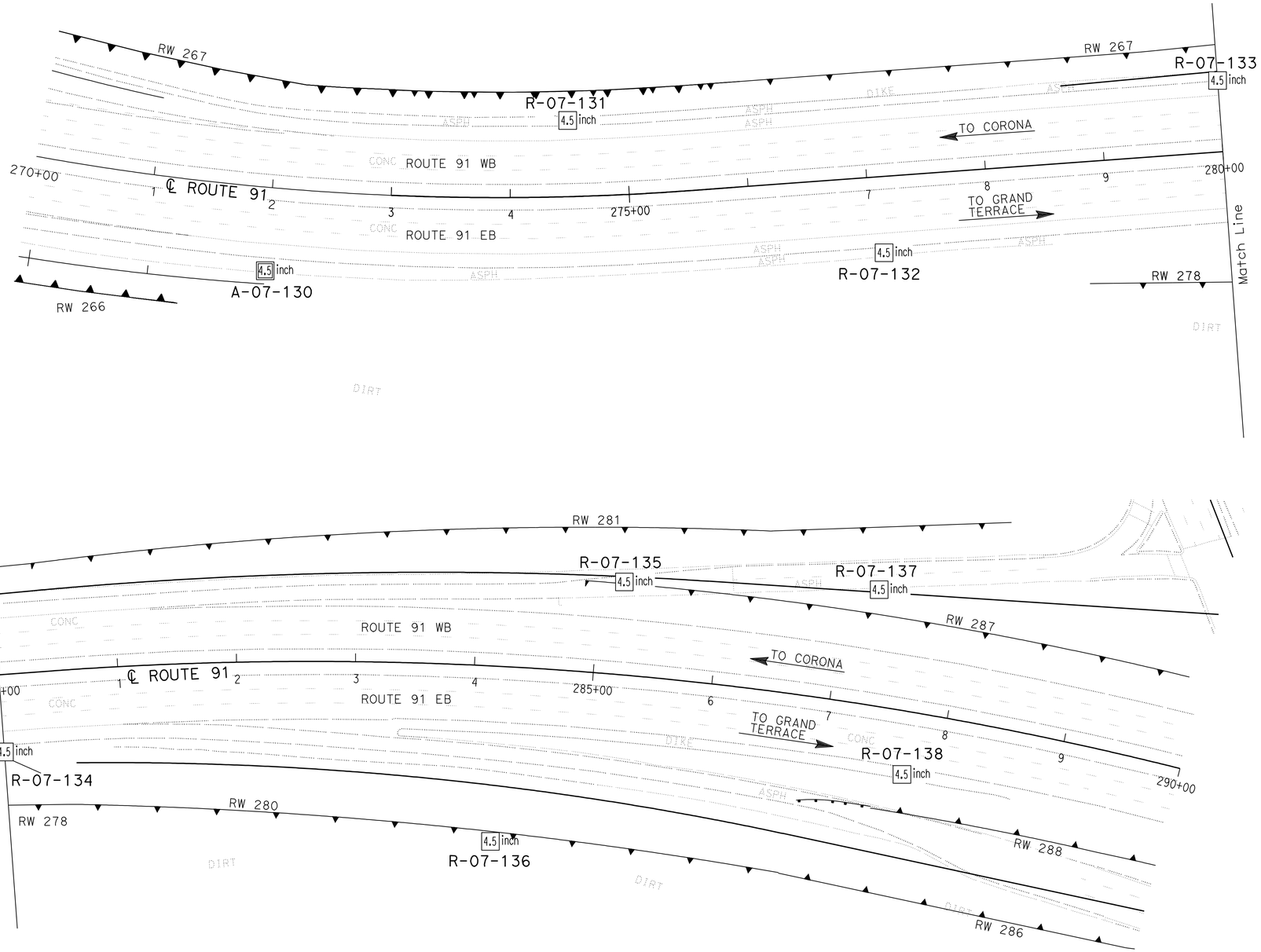

PLAN
SCALE 1"=50'

Borehole Number	Drill Rig	Hammer Type	Avg. Hammer Efficiency, ETR (%)
A-07-130	CS-2000	Automatic	84
R-07-131	CS-2000	Automatic	84
R-07-132	CS-2000	Automatic	84
R-07-133	CME 85	Automatic	87
R-07-134	CS-2000	Automatic	84
R-07-135	CS-2000	Automatic	84
R-07-136	CS-2000	Automatic	84
R-07-137	CS-2000	Automatic	84
R-07-138	CS-2000	Automatic	84

Sampler Type	Inside Diameter (Inches)	Borehole Numbers
SPT	1.375	A-07-130, R-07-131, R-07-132 R-07-133, R-07-134, R-07-135 R-07-136, R-07-137
Modified California 1	1.94	R-07-131, R-07-133 R-07-135, R-07-136
Modified California 2	2.40	-

DESIGN OVERSIGHT — GINA PURSELL, FUNCTIONAL SUPERVISOR
X
SIGN OFF DATE

DRAWN BY: P. QUACH
CHECKED BY: S. PIRATHIVIRAJ

P.CHAU/D.WADER/C.CARBINO
FIELD INVESTIGATION BY:
DATE: Nov 6 2007 to March 7 2008

PREPARED FOR THE STATE OF CALIFORNIA DEPARTMENT OF TRANSPORTATION

A. LEE
PROJECT ENGINEER

BRIDGE NO. X
POST MILE X

RETAINING WALL 280 — R15-6

LOG OF TEST BORINGS 2 OF 2

OSF GEOTECHNICAL LOG OF TEST BORINGS SHEET (ENGLISH) (REV. 2/25/05)

ORIGINAL SCALE IN INCHES FOR REDUCED PLANS 0 1 2 3

CU 59A0590
EA 08-448400

DISREGARD PRINTS BEARING EARLIER REVISION DATES

REVISION DATES (PRELIMINARY STAGE ONLY) X

SHEET 2 OF 2

FILE => 844840qo006.dgn

USERNAME => trlehard — DATE PLOTTED => 30-APR-2011 — TIME PLOTTED =>

Dist	COUNTY	ROUTE	POST MILES TOTAL PROJECT	SHEET No.	TOTAL SHEETS
08	Riv	91	15.6/21.6	893	2028

REGISTERED CIVIL ENGINEER 12-1-10 DATE

4-25-11
PLANS APPROVAL DATE

REGISTERED PROFESSIONAL ENGINEER CUONG LE TRAN No. C60436 Exp. 6-30-12 CIVIL STATE OF CALIFORNIA

THE STATE OF CALIFORNIA OR ITS OFFICERS OR AGENTS SHALL NOT BE RESPONSIBLE FOR THE ACCURACY OR COMPLETENESS OF SCANNED COPIES OF THIS PLAN SHEET.

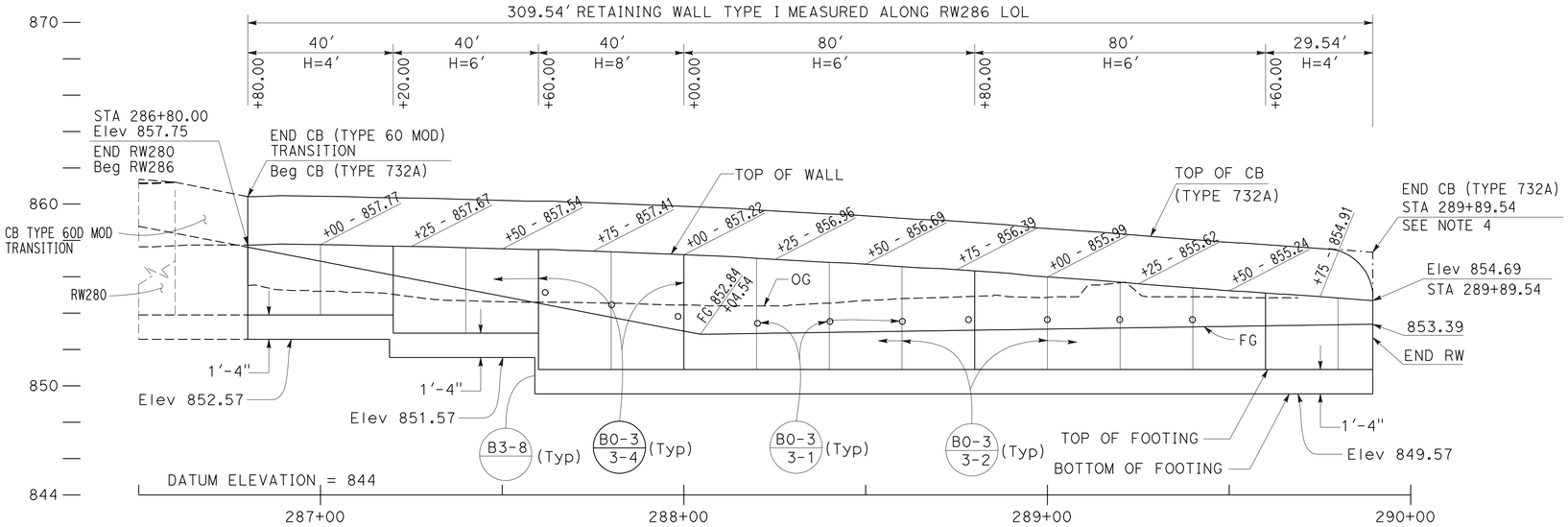

ELEVATION

SCALE Horiz 1"=20'
Vert 1"=4'

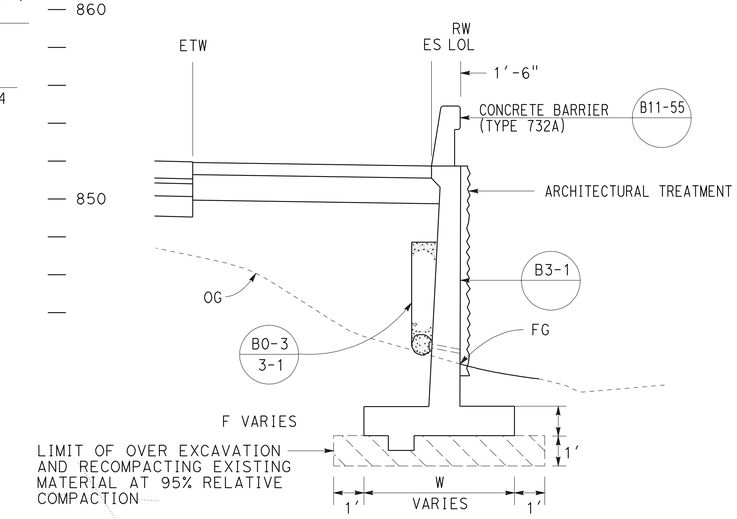

TYPICAL SECTION

NO SCALE
FROM STA 286+80.00 TO STA 289+89.54

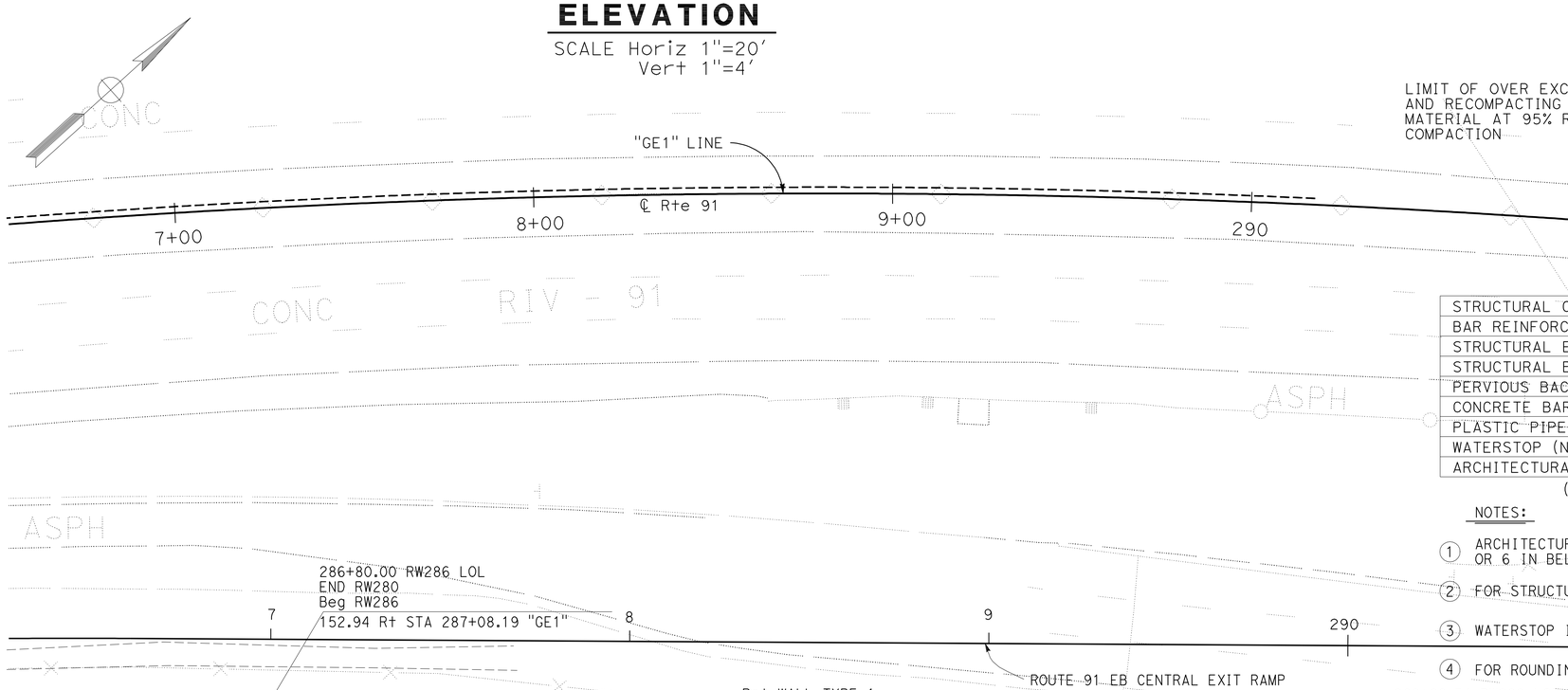

PLAN

SCALE: 1"=20'

THIS PLAN ACCURATE FOR RETAINING WALL WORK ONLY.

QUANTITIES

STRUCTURAL CONCRETE (RETAINING WALL)	146.90	CY
BAR REINFORCING STEEL (RETAINING WALL)	13253	LB
STRUCTURAL EXCAVATION (RETAINING WALL)	396.60	CY
STRUCTURAL BACKFILL (RETAINING WALL)	283.70	CY
PERVIOUS BACKFILL MATERIAL (RETAINING WALL)	2.40	CY
CONCRETE BARRIER (TYPE 732A)	309.54	LF
PLASTIC PIPE (N)	11.62	LF
WATERSTOP (N)	29.83	LF
ARCHITECTURAL SURFACE (TEXTURED CONCRETE)	987.72	SF

(N) = NOT A SEPARATE PAY ITEM, FOR INFORMATION ONLY

NOTES:

1. ARCHITECTURAL TREATMENT SHOULD EXTEND 6 IN BELOW FG OR 6 IN BELOW TOP CB (TYPE 60D MOD)
2. FOR STRUCTURAL SECTIONS, SEE ROADWAY PLANS
3. WATERSTOP IN EXPANSION JOINT SHALL BE EXTEND 6 IN INTO THE BARRIER
4. FOR ROUNDING DETAILS, SEE ARCHITECTURAL TREATMENT PLANS

RETAINING WALL PLAN
RETAINING WALL No. 286

SCALE AS SHOWN

R16-1

REVISED BY	DATE REVISED	CALCULATED-DESIGNED BY	CHECKED BY	FUNCTIONAL SUPERVISOR
ANNABELL WANG	CUONG LE TRAN			MARK PERTILE

STATE OF CALIFORNIA - DEPARTMENT OF TRANSPORTATION
Caltrans® DESIGN

LAST REVISION 12-01-10 | DATE PLOTTED => 30-APR-2011 | TIME PLOTTED => 06:25

Dist	COUNTY	ROUTE	POST MILES TOTAL PROJECT	SHEET No.	TOTAL SHEETS
08	Riv	91	15.6/21.6	894	2028

LICENSED LANDSCAPE ARCHITECT

4-25-11
PLANS APPROVAL DATE

LICENSED LANDSCAPE ARCHITECT
Matthew Harry Hall
No. 2504
Signature
10/31/2011
Renewal Date
12-1-10
Date
STATE OF CALIFORNIA

THE STATE OF CALIFORNIA OR ITS OFFICERS OR AGENTS SHALL NOT BE RESPONSIBLE FOR THE ACCURACY OR COMPLETENESS OF SCANNED COPIES OF THIS PLAN SHEET.

NOTE:

SEE SHEET ASD-4 AND ASD-5.

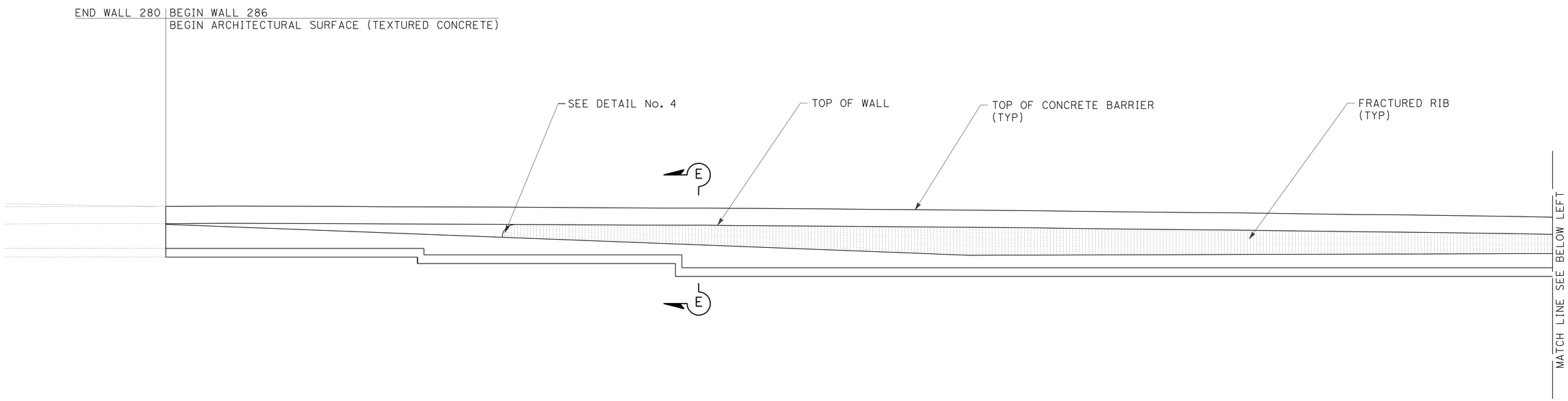

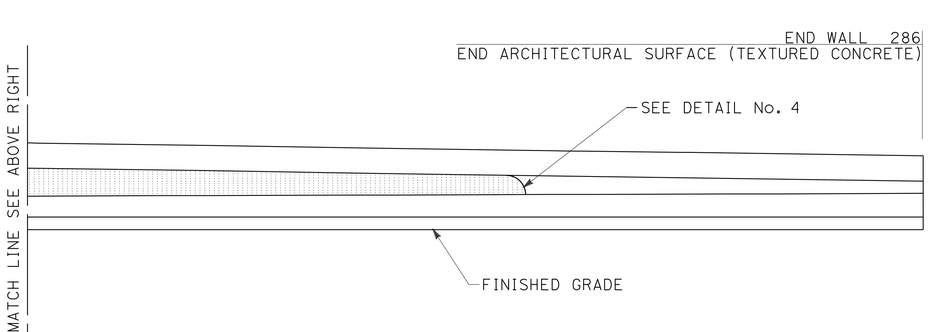

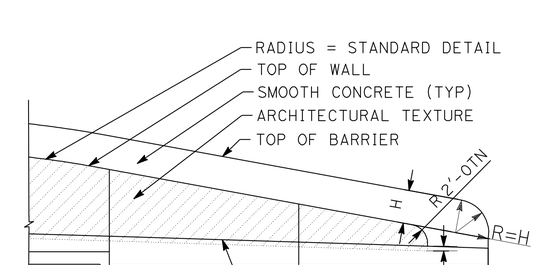

DETAIL No. 4

TYPICAL END OF WALL WITH CONCRETE BARRIER ON TOP OF WALL AND TYPE 60D MOD. CONCRETE BARRIER

ELEVATION FOR FRACTURED RIB TEXTURE RETAINING WALL No. 286

THIS PLAN IS ACCURATE FOR ARCHITECTUAL TREATMENT WORK ONLY.

ARCHITECTURAL SURFACE RETAINING WALL No. 286

SCALE: 1/8"=1'-0"

R16-2

STATE OF CALIFORNIA - DEPARTMENT OF TRANSPORTATION
Caltrans® LANDSCAPE ARCHITECTURE

SENIOR LANDSCAPE ARCHITECT: BYRON STROUT
CALCULATED-DESIGNED BY: MATTHEW HALL
CHECKED BY: MIRIAM BISHOP
REVISED BY
DATE REVISED

LAST REVISION 12-01-10
DATE PLOTTED => 30-APR-2011
TIME PLOTTED => 06:25

DIST	COUNTY	ROUTE	POST MILES TOTAL PROJECT	SHEET No	TOTAL SHEETS
08	Riv	91	15.6/21.6	895	2028

GEOTECHNICAL PROFESSIONAL DATE 10/2008

4-25-11
PLANS APPROVAL DATE

REGISTERED PROFESSIONAL ENGINEER
ANDREW C. LEE
No. 2616
Exp. 6-30-12
GEOTECHNICAL
STATE OF CALIFORNIA

The State of California or its officers or agents shall not be responsible for the accuracy or completeness of electronic copies of this plan sheet.

California Department of Transportation
5900 Folsom Boulevard
Sacramento, CA 95819

URS Corporation
2020 East First Street, Suite 400
Santa Ana, CA 92705

FOR PLAN VIEW, SEE SHEET R16-4 AND R16-5

NOTE: 1. This LOTB sheet was prepared in accordance with the Caltrans Soil & Rock Logging, Classification, and Presentation Manual (June 2007).

2. For legend, see "Log of Test Borings" 1 of 83

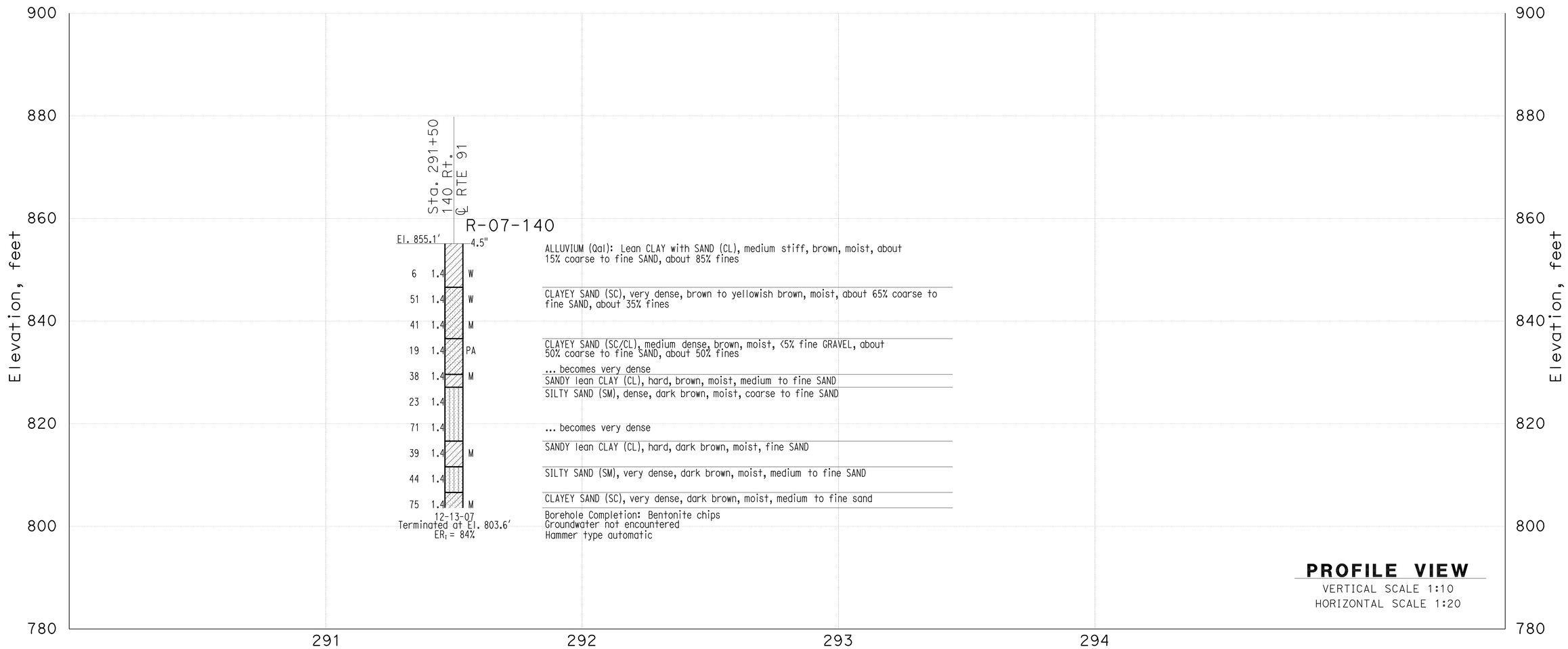

THIS PLAN ACCURATE FOR SOUND WALL AND RETAINING WALL WORK ONLY

DESIGN OVERSIGHT X SIGN OFF DATE	GINA PURSELL FUNCTIONAL SUPERVISOR	DRAWN BY CHECKED BY	P. QUACH S. PIRATHIVIRAJ	P.CHAU/D.WADER/C.CARBINO FIELD INVESTIGATION BY: DATE: Nov 6 2007 to March 7 2008	PREPARED FOR THE STATE OF CALIFORNIA DEPARTMENT OF TRANSPORTATION	A. LEE PROJECT ENGINEER	BRIDGE NO. X POST MILE X

Retaining Wall 286 R16-3

LOG OF TEST BORINGS SHEET 1 OF 3

OSF GEOTECHNICAL LOG OF TEST BORINGS SHEET (ENGLISH) (REV. 2/25/05)

ORIGINAL SCALE IN INCHES FOR REDUCED PLANS 0 1 2 3

CU 59A0590
EA 08-448400

DISREGARD PRINTS BEARING EARLIER REVISION DATES

REVISION DATES (PRELIMINARY STAGE ONLY) X

SHEET 1 OF 3

FILE => 844840qp003.dgn

USERNAME => trpierce DATE PLOTTED => 30-APR-2011 TIME PLOTTED =>

DIST	COUNTY	ROUTE	POST MILES TOTAL PROJECT	SHEET No	TOTAL SHEETS
08	Riv	91	15.6/21.6	896	2028

GEOTECHNICAL PROFESSIONAL DATE 10/2008

4-25-11
PLANS APPROVAL DATE

REGISTERED PROFESSIONAL ENGINEER
ANDREW C. LEE
No. 2616
Exp. 6-30-12
GEOTECHNICAL
STATE OF CALIFORNIA

The State of California or its officers or agents shall not be responsible for the accuracy or completeness of electronic copies of this plan sheet.

California Department of Transportation
5900 Folsom Boulevard
Sacramento, CA 95819

URS Corporation
2020 East First Street, Suite 400
Santa Ana, CA 92705

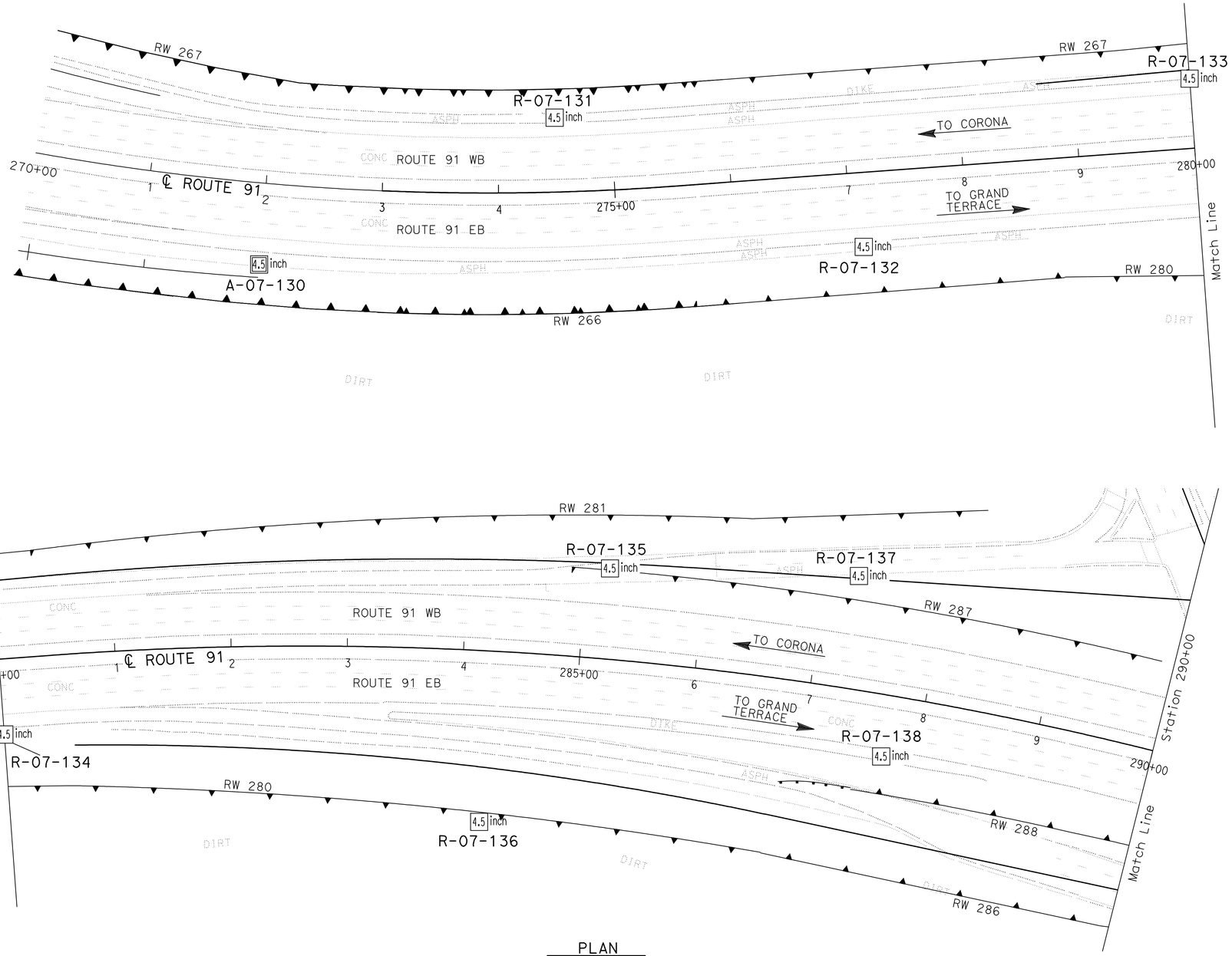

PLAN
SCALE 1"=50'

Borehole Number	Drill Rig	Hammer Type	Avg. Hammer Efficiency, ETR (%)
A-07-130	CS-2000	Automatic	84
R-07-131	CS-2000	Automatic	84
R-07-132	CS-2000	Automatic	84
R-07-133	CME 85	Automatic	87
R-07-134	CS-2000	Automatic	84
R-07-135	CS-2000	Automatic	84
R-07-136	CS-2000	Automatic	84
R-07-137	CS-2000	Automatic	84
R-07-138	CS-2000	Automatic	84

Sampler Type	Inside Diameter (Inches)	Borehole Numbers
SPT	1.375	A-07-130, R-07-131, R-07-132 R-07-133, R-07-134, R-07-135 R-07-136, R-07-137
Modified California 1	1.94	R-07-131, R-07-133 R-07-135, R-07-136
Modified California 2	2.40	-

DESIGN OVERSIGHT: GINA PURSELL, FUNCTIONAL SUPERVISOR
X
SIGN OFF DATE

DRAWN BY: P. QUACH
CHECKED BY: S. PIRATHIVIRAJ

P.CHAU/D.WADER/C.CARBINO
FIELD INVESTIGATION BY:
DATE: Nov 6 2007 to March 7 2008

PREPARED FOR THE STATE OF CALIFORNIA DEPARTMENT OF TRANSPORTATION

A. LEE
PROJECT ENGINEER

BRIDGE NO. X
POST MILE X

RETAINING WALL 286 R16-4

LOG OF TEST BORINGS 2 OF 3

OSF GEOTECHNICAL LOG OF TEST BORINGS SHEET (ENGLISH) (REV. 2/25/05)

ORIGINAL SCALE IN INCHES FOR REDUCED PLANS 0 1 2 3

CU 59A0590
EA 08-448400

DISREGARD PRINTS BEARING EARLIER REVISION DATES

REVISION DATES (PRELIMINARY STAGE ONLY) X

SHEET 2 OF 3

FILE => 844840qp004.dgn

USERNAME => trpierce DATE PLOTTED => 30-APR-2011 TIME PLOTTED =>

DIST	COUNTY	ROUTE	POST MILES TOTAL PROJECT	SHEET No	TOTAL SHEETS
08	Riv	91	15.6/21.6	897	2028

GEOTECHNICAL PROFESSIONAL — DATE 10/2008

4-25-11
PLANS APPROVAL DATE

REGISTERED PROFESSIONAL ENGINEER — ANDREW C. LEE — No. 2616 — Exp. 6-30-12 — GEOTECHNICAL — STATE OF CALIFORNIA

The State of California or its officers or agents shall not be responsible for the accuracy or completeness of electronic copies of this plan sheet.

California Department of Transportation
5900 Folsom Boulevard
Sacramento, CA 95819

URS Corporation
2020 East First Street, Suite 400
Santa Ana, CA 92705

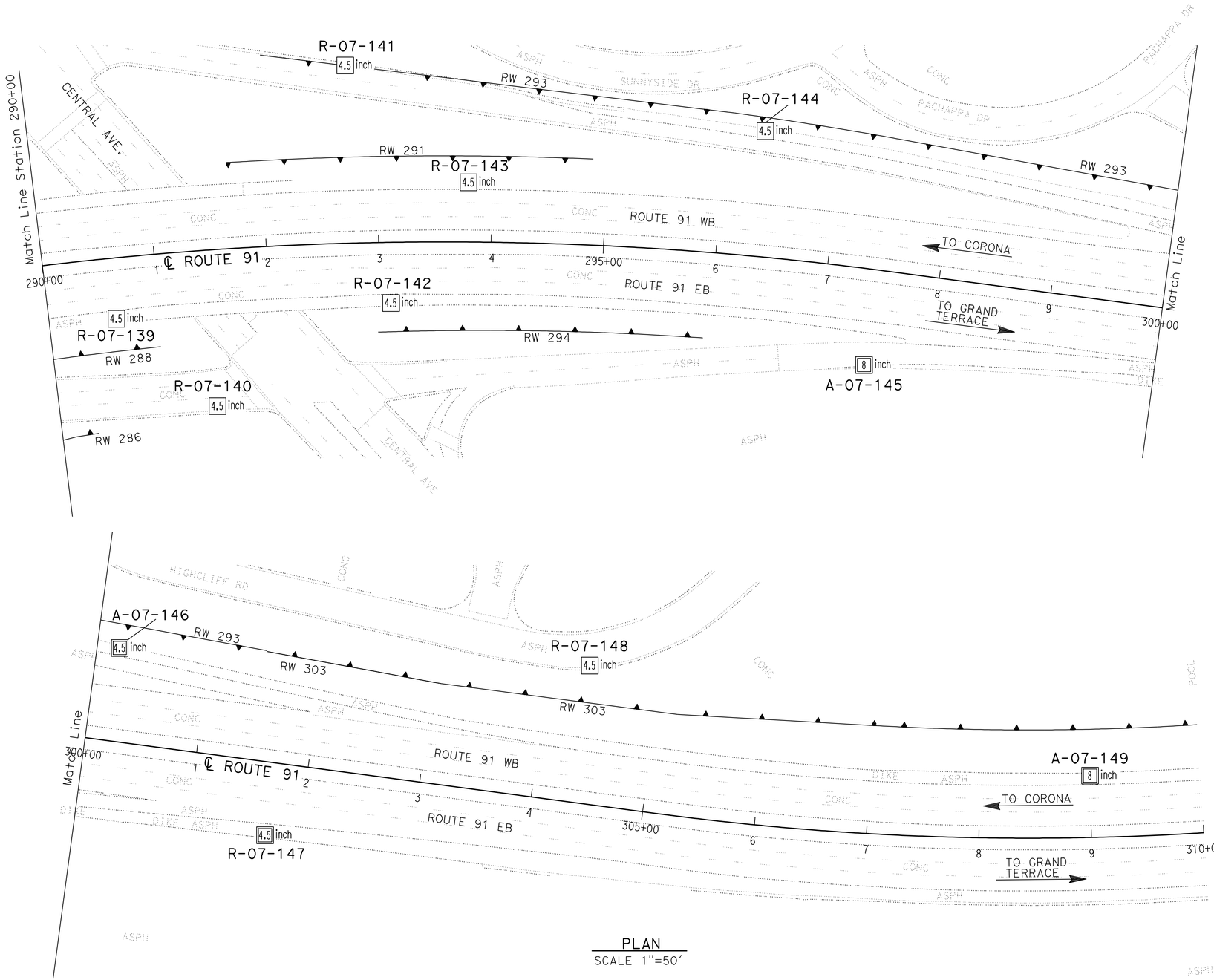

PLAN
SCALE 1"=50'

Borehole Number	Drill Rig	Hammer Type	Avg. Hammer Efficiency, ETR (%)
R-07-139	Acker Rig	Automatic	74
R-07-140	CS-2000	Automatic	84
R-07-141	CS-2000	Automatic	84
R-07-142	Acker Rig	Automatic	74
R-07-143	Acker Rig	Automatic	74
R-07-144	CS-2000	Automatic	84
A-07-145	Diedrich D-120	Automatic	75*
A-07-146	CS-2000	Automatic	84
R-07-147	CS-2000	Automatic	84
R-07-148	CS-2000	Automatic	84
A-07-149	Diedrich D-120	Automatic	75*

Sampler Type	Inside Diameter (Inches)	Borehole Numbers
SPT	1.375	R-07-139, R-07-140, R-07-141 R-07-142, R-07-143, R-07-144 A-07-145, A-07-146, AR-07-147 R-07-148, A-07-149
Modified California 1	1.94	R-07-139, R-07-141, R-07-142 R-07-143, R-07-148
Modified California 2	2.40	A-07-145, A-07-149

*Estimated Hammer Efficiency Rating.

DESIGN OVERSIGHT: X	GINA PURSELL, FUNCTIONAL SUPERVISOR	DRAWN BY	P. QUACH	P.CHAU/D.WADER/C.CARBINO	PREPARED FOR THE STATE OF CALIFORNIA DEPARTMENT OF TRANSPORTATION
SIGN OFF DATE		CHECKED BY	S. PIRATHIVIRAJ	FIELD INVESTIGATION BY: DATE: Nov 6 2007 to March 7 2008	

A. LEE, PROJECT ENGINEER

BRIDGE NO. X — POST MILE X

RETAINING WALL 286 — R16-5

LOG OF TEST BORINGS 3 of 3

OSF GEOTECHNICAL LOG OF TEST BORINGS SHEET (ENGLISH) (REV. 2/25/05)

ORIGINAL SCALE IN INCHES FOR REDUCED PLANS: 0 1 2 3

CU 59A0590
EA 08-448400

DISREGARD PRINTS BEARING EARLIER REVISION DATES

REVISION DATES (PRELIMINARY STAGE ONLY): X

SHEET 2 OF 2

FILE => 844840qp005.dgn

USERNAME => trpierce — DATE PLOTTED => 30-APR-2011 — TIME PLOTTED =>

Dist	COUNTY	ROUTE	POST MILES TOTAL PROJECT	SHEET No.	TOTAL SHEETS
08	Riv	91	15.6/21.6	898	2028

REGISTERED CIVIL ENGINEER — DATE 12-1-10

4-25-11
PLANS APPROVAL DATE

REGISTERED PROFESSIONAL ENGINEER — CUONG LE TRAN — No. C60436 — Exp. 6-30-12 — CIVIL — STATE OF CALIFORNIA

THE STATE OF CALIFORNIA OR ITS OFFICERS OR AGENTS SHALL NOT BE RESPONSIBLE FOR THE ACCURACY OR COMPLETENESS OF SCANNED COPIES OF THIS PLAN SHEET.

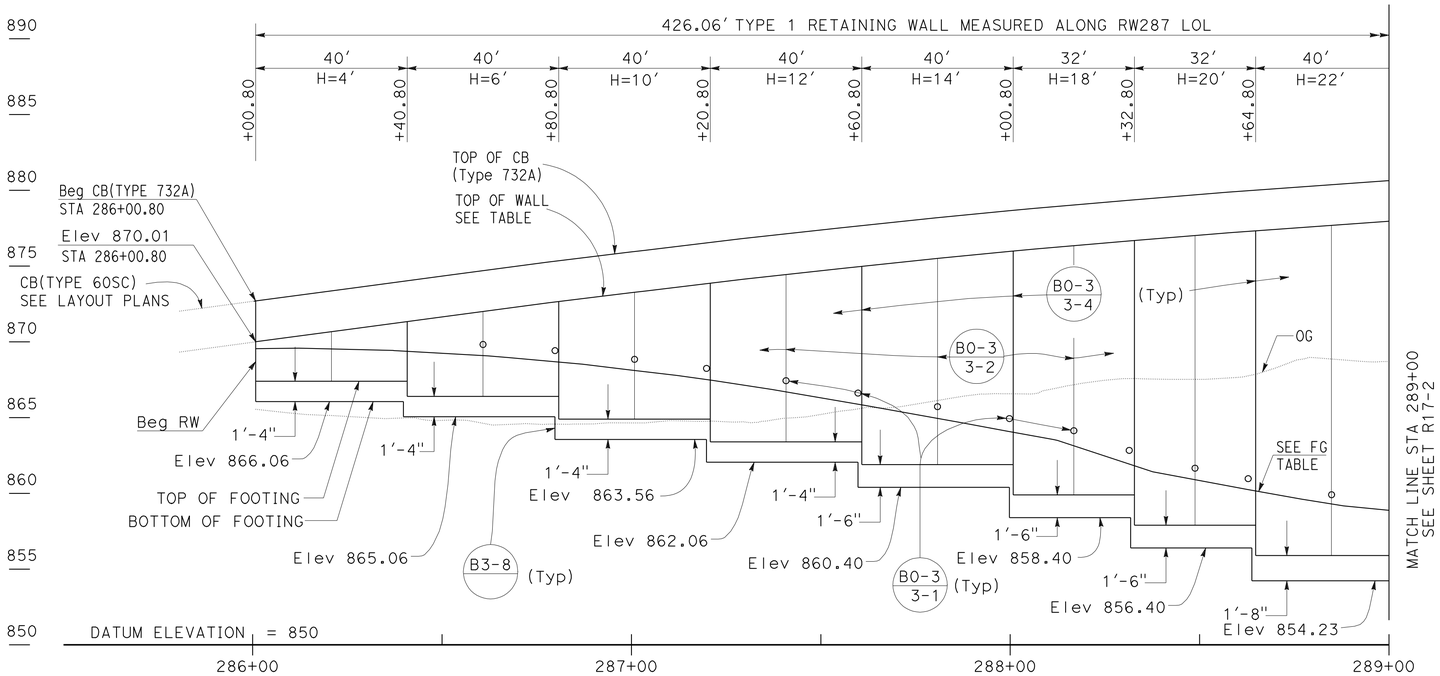

ELEVATION

SCALE Horiz 1"=20'
Vert 1"=5'

CURVE DATA

No.	R	Δ	T	L
(A)	3078.26'	7°55'49"	213.37'	426.06'

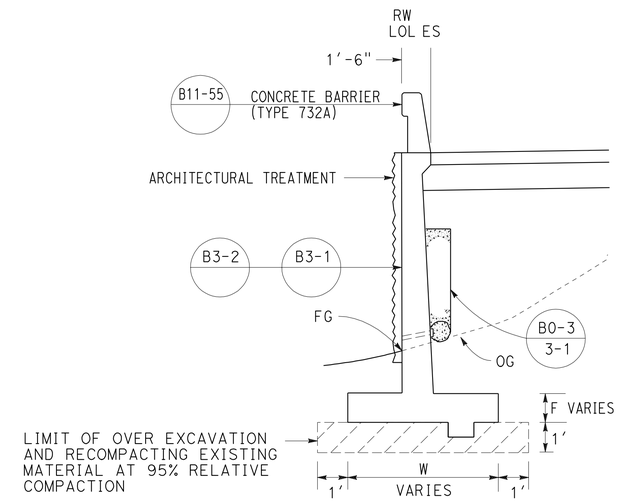

TYPICAL SECTION

NO SCALE

FROM STA 286+00.80 TO STA 290+26.86

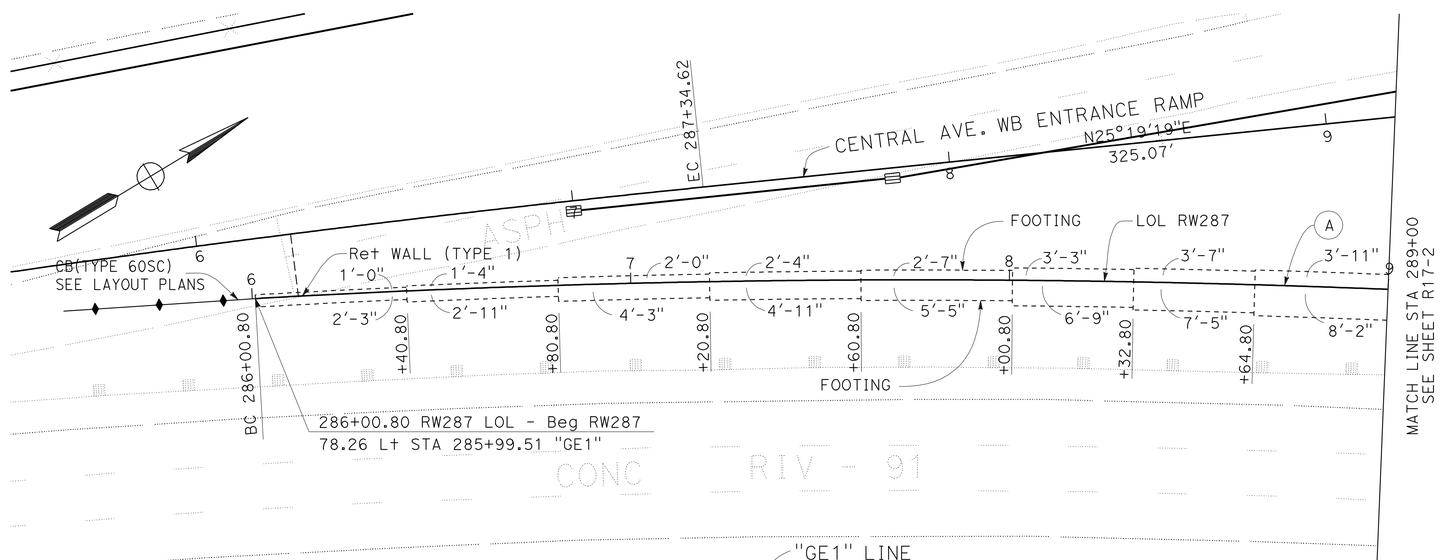

PLAN

SCALE: 1"=20'

THIS PLAN ACCURATE FOR RETAINING WALL WORK ONLY.

QUANTITIES

STRUCTURAL CONCRETE (RETAINING WALL)	706.90	CY
BAR REINFORCING STEEL (RETAINING WALL)	99069	LB
STRUCTURAL EXCAVATION (RETAINING WALL)	2184.60	CY
STRUCTURAL BACKFILL (RETAINING WALL)	2119.40	CY
PERVIOUS BACKFILL MATERIAL (RETAINING WALL)	153.40	CY
CONCRETE BARRIER (TYPE 732A)	426.06	LF
PLASTIC PIPE (N)	38.50	LF
WATERSTOP (N)	232.64	LF
ARCHITECTURAL SURFACE (TEXTURED CONCRETE)	5650.86	SF

(N) = NOT A SEPARATE PAY ITEM, FOR INFORMATION ONLY

NOTES:

1. ARCHITECTURAL TREATMENT SHOULD EXTEND 6 IN BELOW FG OR 6 IN BELOW TOP CB (TYPE 60D MOD)
2. FOR STRUCTURAL SECTIONS, SEE ROADWAY PLANS
3. WATERSTOP IN EXPANSION JOINT SHALL BE EXTEND 6 IN INTO THE BARRIER
4. LOWER TOP OF WALL 12" WITHIN STRUCTURE APPROACH LIMITS (SEE STRUCTURAL PLANS)

RETAINING WALL PLAN
RETAINING WALL No. 287

SCALE AS SHOWN

R17-1

REVISED BY | DATE REVISED
ANNABELL WANG | CUONG LE TRAN
CALCULATED-DESIGNED BY | CHECKED BY
FUNCTIONAL SUPERVISOR: MARK PERTILE
STATE OF CALIFORNIA - DEPARTMENT OF TRANSPORTATION
Caltrans® DESIGN

LAST REVISION 12-01-10 | DATE PLOTTED => 30-APR-2011 | TIME PLOTTED => 06:26

Dist	COUNTY	ROUTE	POST MILES TOTAL PROJECT	SHEET No.	TOTAL SHEETS
08	Riv	91	15.6/21.6	899	2028

REGISTERED CIVIL ENGINEER 12-1-10 DATE

4-25-11
PLANS APPROVAL DATE

REGISTERED PROFESSIONAL ENGINEER CUONG LE TRAN No. C60436 Exp. 6-30-12 CIVIL STATE OF CALIFORNIA

THE STATE OF CALIFORNIA OR ITS OFFICERS OR AGENTS SHALL NOT BE RESPONSIBLE FOR THE ACCURACY OR COMPLETENESS OF SCANNED COPIES OF THIS PLAN SHEET.

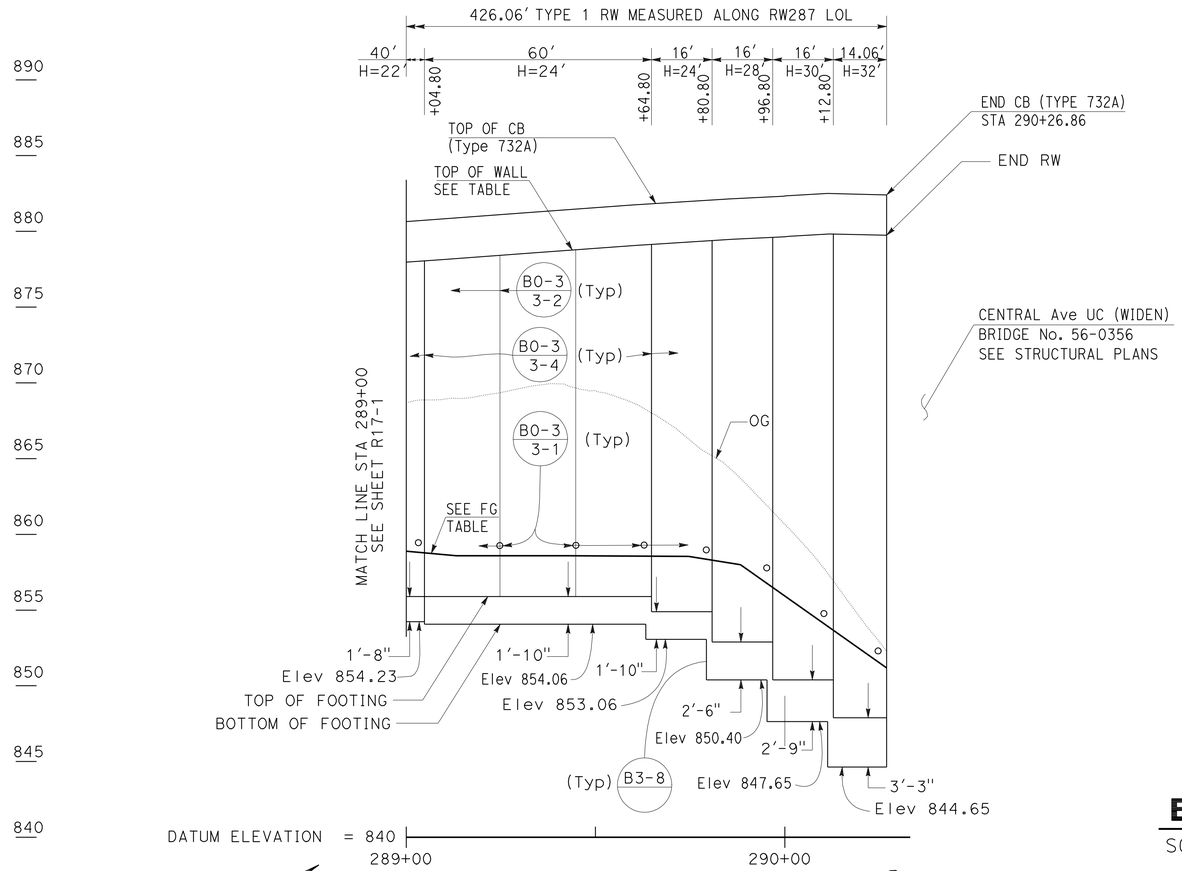

ELEVATION

SCALE Horiz 1"=20'
Vert 1"=5'

ELEVATION TABLE		
STATION	TOP OF WALL	FG
286+00.80	870.01	869.55
286+25.00	870.81	869.50
286+50.00	871.65	869.25
286+75.00	872.48	868.80
287+00.00	873.25	868.14
287+25.00	874.00	867.32
287+50.00	874.70	866.31
287+75.00	875.36	865.21
288+00.00	875.97	864.07
288+25.00	876.52	862.46
288+50.00	877.04	860.84
288+75.00	877.52	859.70
289+00.00	877.96	858.89
289+25.00	878.42	858.58
289+50.00	878.88	858.82
289+75.00	879.30	858.55
290+00.00	879.64	855.93
290+26.86	879.75	851.51

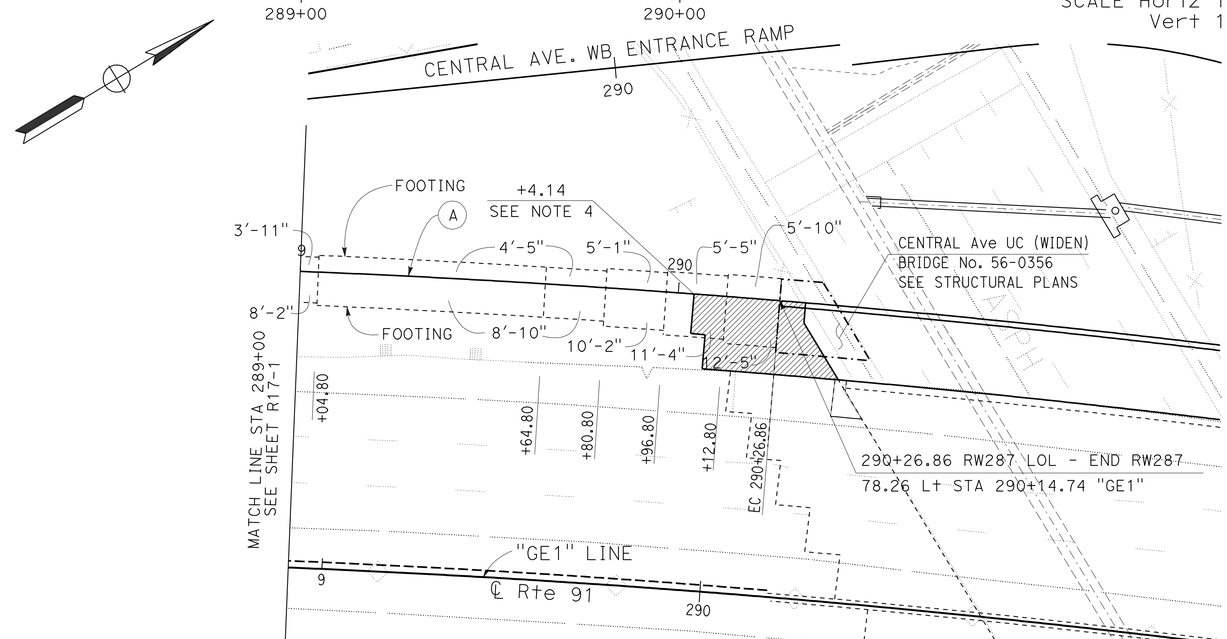

PLAN

SCALE: 1"=20'

THIS PLAN ACCURATE FOR RETAINING WALL WORK ONLY.

RETAINING WALL PLAN
RETAINING WALL No. 287

SCALE AS SHOWN

R17-2

REVISED BY	DATE REVISED
ANNABELL WANG	CUONG LE TRAN
CALCULATED-DESIGNED BY	CHECKED BY
FUNCTIONAL SUPERVISOR	MARK PERTILE

STATE OF CALIFORNIA - DEPARTMENT OF TRANSPORTATION
Caltrans
DESIGN

LAST REVISION 12-01-10 | DATE PLOTTED => 30-APR-2011 | TIME PLOTTED => 06:26

Dist	COUNTY	ROUTE	POST MILES TOTAL PROJECT	SHEET No.	TOTAL SHEETS
08	Riv	91	15.6/21.6	900	2028

LICENSED LANDSCAPE ARCHITECT

4-25-11
PLANS APPROVAL DATE

LICENSED LANDSCAPE ARCHITECT
Matthew Harry Hall
No. 2011
Signature
10/31/2011
Renewal Date
12-1-10
Date
STATE OF CALIFORNIA

THE STATE OF CALIFORNIA OR ITS OFFICERS OR AGENTS SHALL NOT BE RESPONSIBLE FOR THE ACCURACY OR COMPLETENESS OF SCANNED COPIES OF THIS PLAN SHEET.

NOTE:

SEE SHEET ASD-2, ASD-4 AND ASD-5.

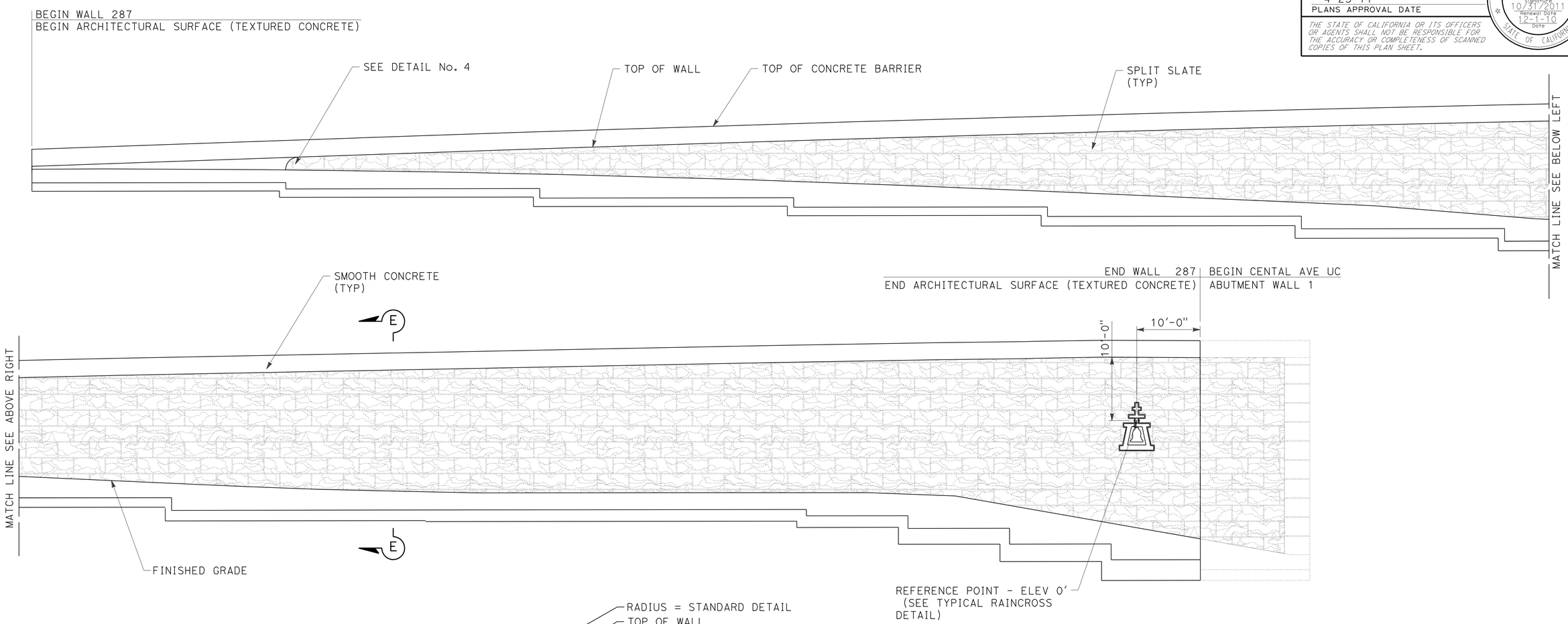

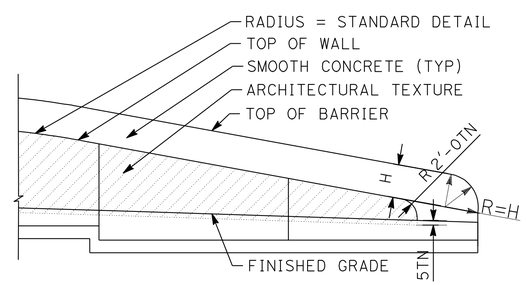

DETAIL No. 4

CONCRETE BARRIER ON TOP OF WALL
AND TYPE 60D MOD. CONCRETE BARRIER

MIRRORED ELEVATION FOR SPLIT SLATE TEXTURE RETAINING WALL No. 287

THIS PLAN IS ACCURATE FOR ARCHITECTUAL TREATMENT WORK ONLY.

ARCHITECTURAL SURFACE
RETAINING WALL No. 287

SCALE: 1/8"=1'-0"

R17-3

STATE OF CALIFORNIA - DEPARTMENT OF TRANSPORTATION
Caltrans® LANDSCAPE ARCHITECTURE

SENIOR LANDSCAPE ARCHITECT: BYRON STROUT
CALCULATED-DESIGNED BY: MATTHEW HALL
CHECKED BY: MIRIAM BISHOP
REVISED BY
DATE REVISED

LAST REVISION 12-01-10
DATE PLOTTED => 30-APR-2011
TIME PLOTTED => 06:26