Dist	COUNTY	ROUTE	POST MILES TOTAL PROJECT	SHEET No.	TOTAL SHEETS
08	Riv	91	15.6/21.6	301	2028

REGISTERED CIVIL ENGINEER 3-29-10 DATE

4-25-11
PLANS APPROVAL DATE

REGISTERED PROFESSIONAL ENGINEER ALAN R. BISI No. C62808 Exp. 6-30-12 CIVIL STATE OF CALIFORNIA

THE STATE OF CALIFORNIA OR ITS OFFICERS OR AGENTS SHALL NOT BE RESPONSIBLE FOR THE ACCURACY OR COMPLETENESS OF SCANNED COPIES OF THIS PLAN SHEET.

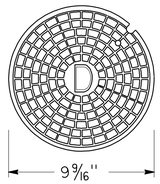

TOP VIEW OF VALVE BOX COVER

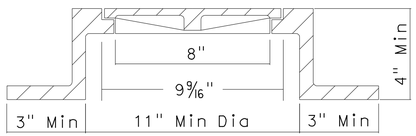

VALVE BOX AND COVER DETAIL

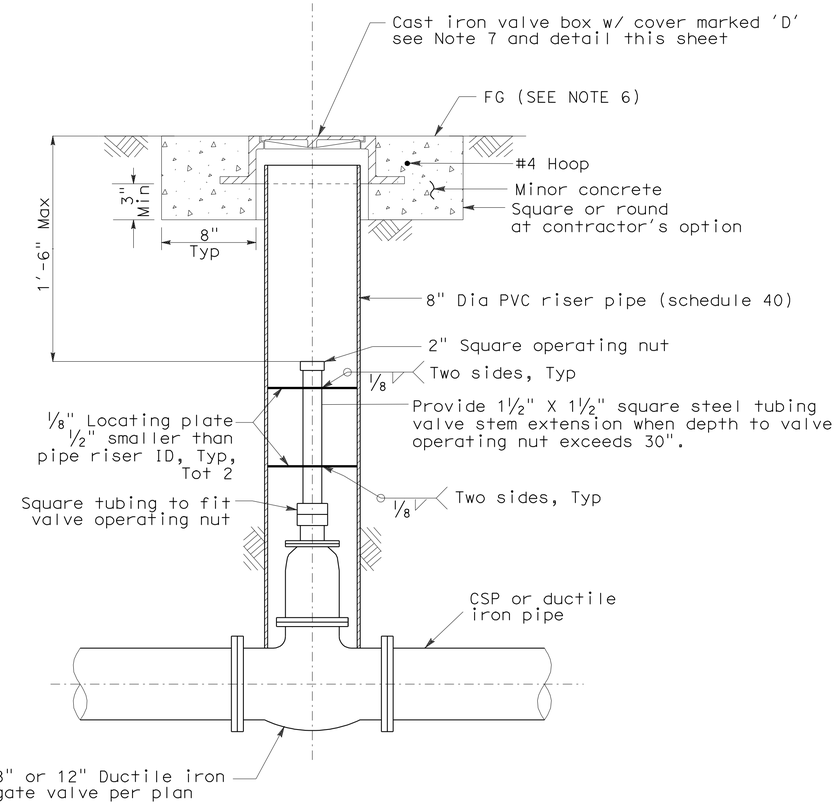

MAINTENANCE DRAIN VALVE DETAIL

VALVE BOX NOTES:

1. THE VALVE BOX FRAME AND COVER SHALL BE MADE OF GRAY CAST IRON. WEIGHT FOR PAYMENT IS 25 LBS.
2. ALL PARTS OF THE VALVE BOX FRAME AND COVER EXCEPT MACHINED SURFACES SHALL BE COATED WITH ASPHALTUM PAINT.
3. THE VALVE BOX FRAME AND COVER SHALL BE TESTED FOR ACCURACY OF FIT AND SHALL BE MARKED IN SETS BEFORE DELIVERY. THE COVER SHALL FIT THE FRAME SNUGLY BUT NOT TIGHTLY.
4. COVERS FOR USE ON STORM DRAIN STRUCTURES SHALL BEAR THE LETTER "D" RAISED 1/4".
5. MATERIALS PER STANDARD SPECIFICATIONS, SECTION 75
6. VALVE BOX COVER AND CONCRETE APRON SHALL EXTEND 3" MIN ABOVE FS IN UNPAVED AREAS
7. ALL VALVE BOX COVERS SUBJECT TO VEHICLE TRAFFIC SHALL BE OF LOCKING OR BOLT-DOWN VARIETY AND RATED FOR HS20-44 TRUCK LOADING.

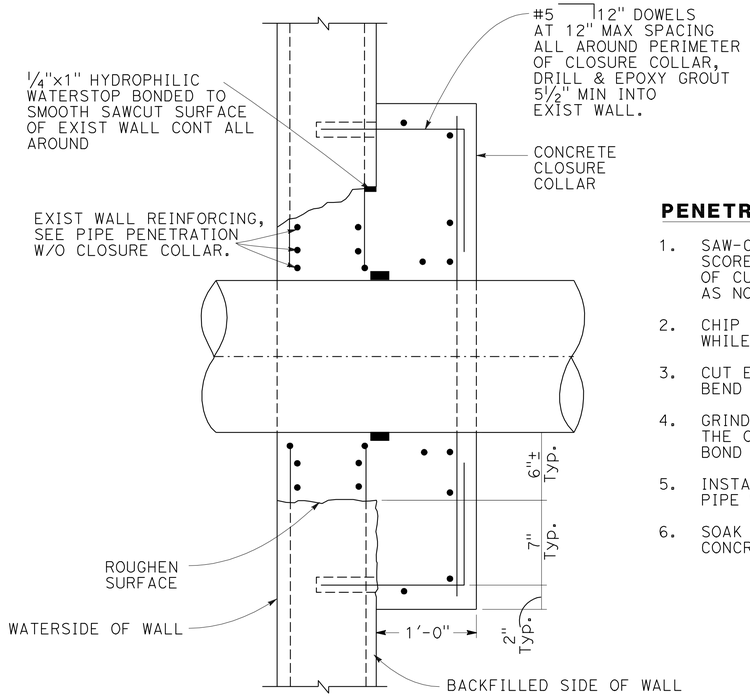

PIPE PENETRATION-EXISTING WALL

PENETRATION NOTES:

1. SAW-CUT 1-INCH DEEP X PIPE OD + 12" SQUARE SCORE LINE ON EACH FACE OF WALL (VERIFY DEPTH OF CUT TO CLEAR REINFORCING.) (INCREASE HEIGHT AS NOTED AT TOP ON WATERSIDE FACE FOR POURING.)
2. CHIP TO REMOVE THE CONCRETE WITHIN THE SCORE LINE, WHILE PRESERVING THE EXISTING WALL REINFORCING.
3. CUT EXISTING REINFORCING AT CENTER OF OPENING AND BEND TO CLEAR PIPE.
4. GRIND 1 1/2" WIDE X CONT SMOOTH SURFACE ALL AROUND THE OPENING AT CENTER OF WALL. CLEAN SURFACES AND BOND CONTINOUS HYDROPHILIC WATERSTOP IN PLACE.
5. INSTALL WALL PIPE (COAT CONCRETE ENCASED PORTION OF PIPE WITH SPECIFIED COATING SYSTEM)
6. SOAK CONCRETE SURFACES AND WITHIN 15-MINUTES OF CAST CONCRETE CLOSURE.

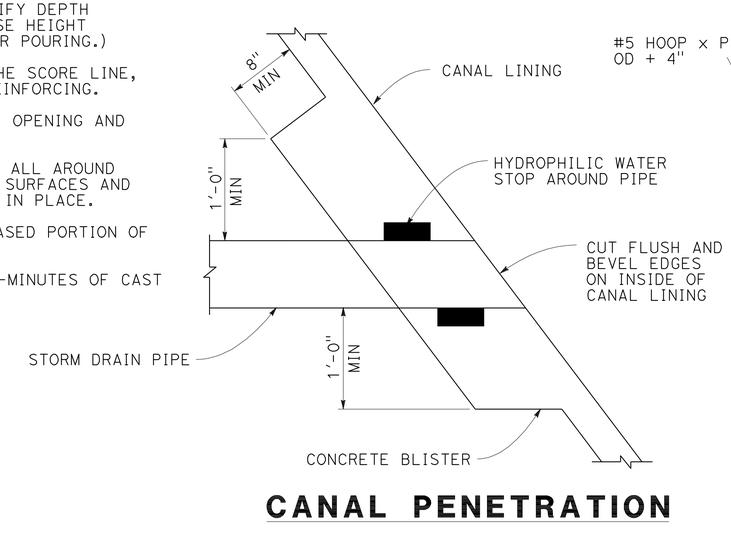

CANAL PENETRATION

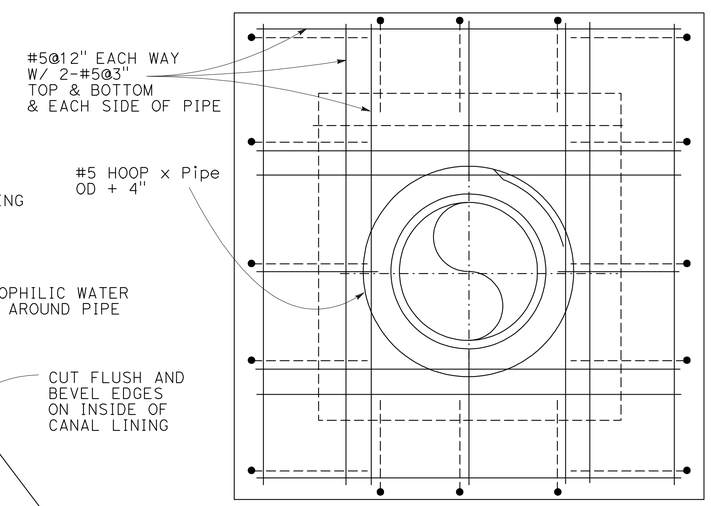

ELEVATION

DRAINAGE DETAILS

NO SCALE

DD-28

THIS PLAN ACCURATE FOR DRAINAGE WORK ONLY.

STATE OF CALIFORNIA - DEPARTMENT OF TRANSPORTATION
Caltrans® DESIGN
FUNCTIONAL SUPERVISOR: MARK PERTILE
CALCULATED-DESIGNED BY: MOHAMMAD ABDRABOH
CHECKED BY: ALAN R. BISI
REVISED BY
DATE REVISED

LAST REVISION 03-29-11
DATE PLOTTED => 29-APR-2011
TIME PLOTTED => 18:45

Dist	COUNTY	ROUTE	POST MILES TOTAL PROJECT	SHEET No.	TOTAL SHEETS
08	Riv	91	15.6/21.6	302	2028

REGISTERED CIVIL ENGINEER 3-29-10 DATE

4-25-11
PLANS APPROVAL DATE

REGISTERED PROFESSIONAL ENGINEER ALAN R. BISI No. C62808 Exp. 6-30-12 CIVIL STATE OF CALIFORNIA

THE STATE OF CALIFORNIA OR ITS OFFICERS OR AGENTS SHALL NOT BE RESPONSIBLE FOR THE ACCURACY OR COMPLETENESS OF SCANNED COPIES OF THIS PLAN SHEET.

NOTE:
FOR AFES DIMENSIONS
SEE STANDARD PLANS NO. D94A AND D94B.

* LEGEND

D - DIAMETER OF PIPE OR RCB TOTAL WIDTH
T - THICKNESS OF RSP
L - LENGHT OF RSP
W - WIDTH OF RSP
* DIMENTION PER DETAILS, UNLESS OTHERWISE SHOWN

CLASS OF RSP	T(in)
NO. 2 BACKING	12"
FACING	18"
1/4 TON	30"
1/2 TON	36"
1 TON	48"

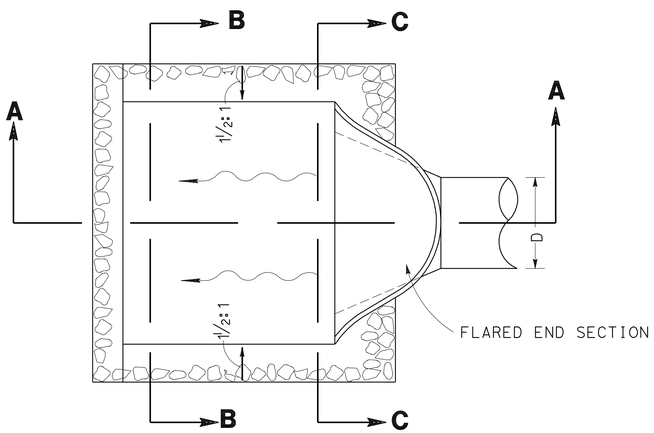

PLAN VIEW

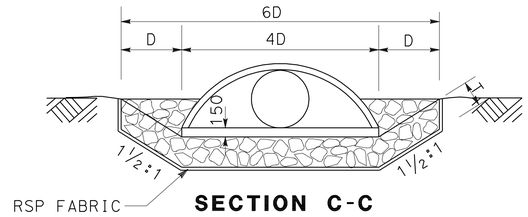

SECTION C-C

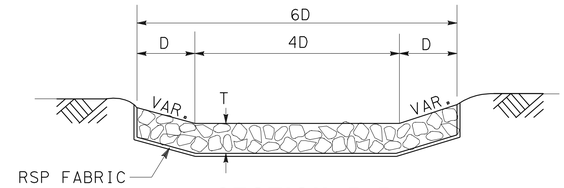

SECTION B-B

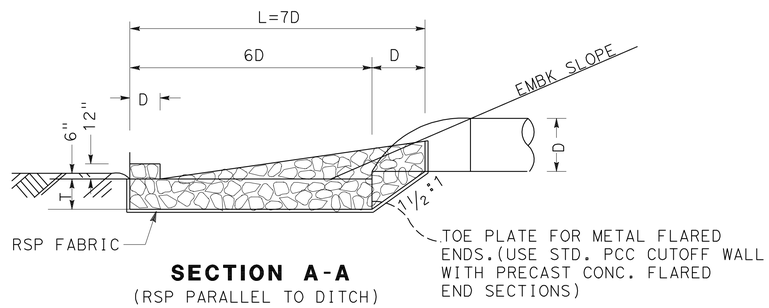

SECTION A-A
(RSP PARALLEL TO DITCH)

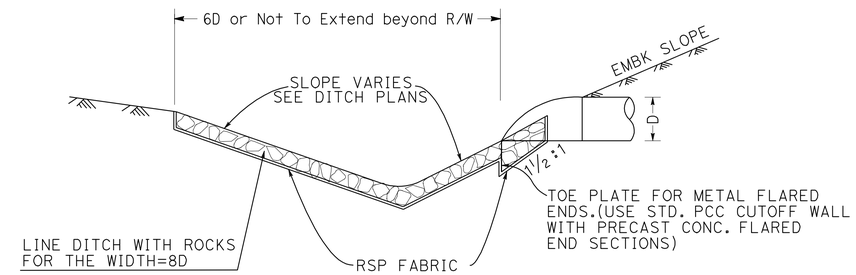

SECTION A-A
(RSP PERPENDICULAR TO DITCH)

CASE I - ROCK SLOPE PROTECTION FOR FLARE END SECTION

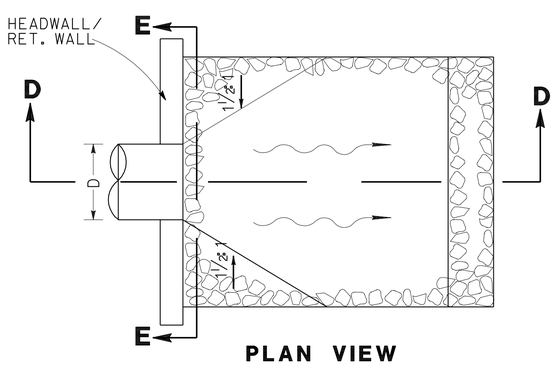

PLAN VIEW

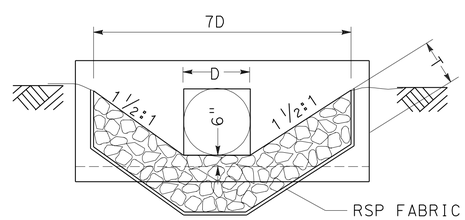

SECTION E-E

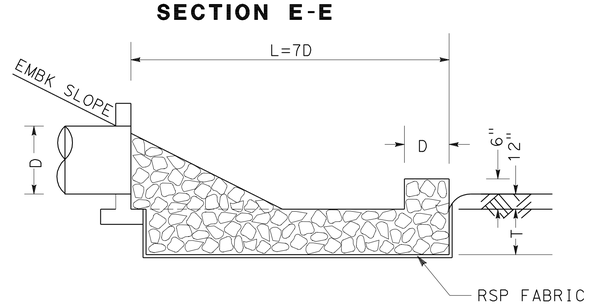

SECTION D-D
(RSP PARALLEL TO DITCH)

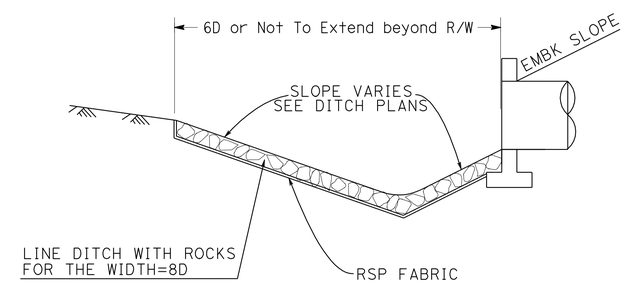

SECTION D-D
(RSP PERPENDICULAR TO DITCH)

CASE II - ROCK SLOPE PROTECTION FOR HEADWALL

DRAINAGE DETAILS

NO SCALE

DD-29

THIS PLAN ACCURATE FOR DRAINAGE WORK ONLY.

STATE OF CALIFORNIA - DEPARTMENT OF TRANSPORTATION
Caltrans® DESIGN
FUNCTIONAL SUPERVISOR: MARK PERTILE
CALCULATED-DESIGNED BY: MOHAMMAD ABDRABOH
CHECKED BY: ALAN R. BISI
REVISED BY
DATE REVISED

LAST REVISION 03-29-11
DATE PLOTTED => 29-APR-2011
TIME PLOTTED => 18:45

Dist	COUNTY	ROUTE	POST MILES TOTAL PROJECT	SHEET No.	TOTAL SHEETS
08	Riv	91	15.6/21.6	303	2028

REGISTERED CIVIL ENGINEER 3-29-10 DATE

4-25-11
PLANS APPROVAL DATE

REGISTERED PROFESSIONAL ENGINEER ALAN R. BISI No. C62808 Exp. 6-30-12 CIVIL STATE OF CALIFORNIA

THE STATE OF CALIFORNIA OR ITS OFFICERS OR AGENTS SHALL NOT BE RESPONSIBLE FOR THE ACCURACY OR COMPLETENESS OF SCANNED COPIES OF THIS PLAN SHEET.

NOTE:
FOR AFES DIMENSIONS
SEE STANDARD PLANS NO. D94A AND D94B.

* LEGEND

D - DIAMETER OF PIPE OR RCB TOTAL WIDTH
T - THICKNESS OF RSP
L - LENGTH OF RSP
W - WIDTH OF RSP
* DIMENTION PER DETAILS, UNLESS OTHERWISE SHOWN

CLASS OF RSP	T(in)
NO. 2 BACKING	12"
FACING	18"
1/4 TON	30"
1/2 TON	36"
1 TON	48"

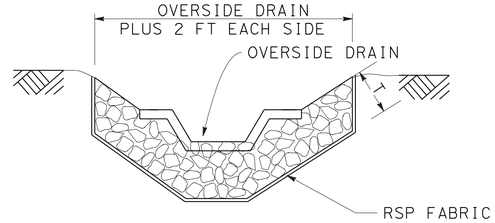

SECTION F-F

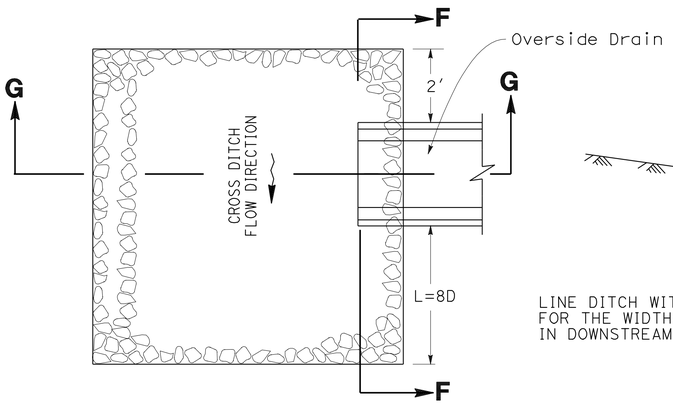

PLAN VIEW

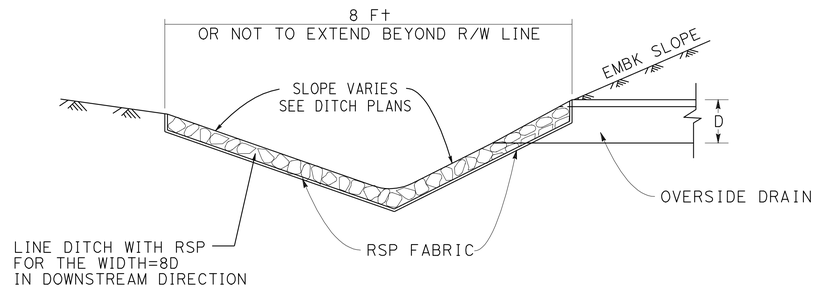

SECTION G-G

(RSP PERPENDICULAR TO OVERSIDE DRAIN FLOW)

CASE III - ROCK SLOPE PROTECTION FOR OVERSIDE DRAIN

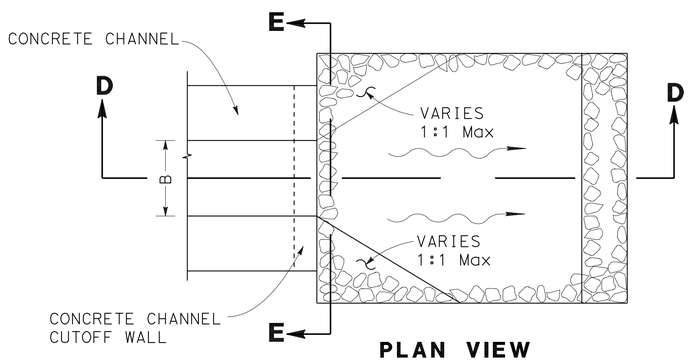

PLAN VIEW

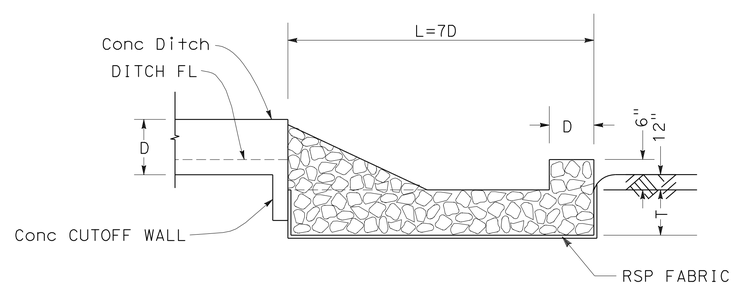

SECTION D-D

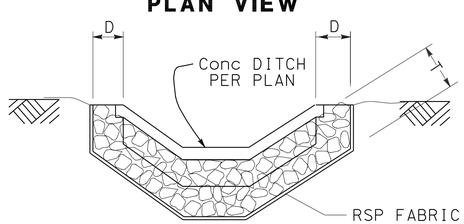

SECTION E-E

(TRAPEZOIDAL SECTION SHOWN
OTHER CROSS SECTIONS SIMILAR)

CASE IV - ROCK SLOPE PROTECTION FOR CONCRETE DITCH

ROCK SLOPE PROTECTION		
NO. 2 BACKING, METHOD B	FACING, METHOD B	1/4TON, METHOD B
DRAINAGE SYSTEM UNIT NO	DRAINAGE SYSTEM UNIT NO	DRAINAGE SYSTEM UNIT NO
15 (a)	2 (a)	52 (a)
16 (a)	5 (a)	80 (a)
17 (a)	7 (a)	82 (a)
20 (a)	8 (a)	84 (e)
22 (a)	9 (a)	85 (e)
25 (a)	11 (a)	86 (e)
30 (a)	32 (a)	125 (a)
92 (f)	49 (a)	131 (a)
	55 (a)	
	61 (a)	
	62 (a)	
	127 (a)	
	137 (e)	

THIS PLAN ACCURATE FOR DRAINAGE WORK ONLY.

DRAINAGE DETAILS

NO SCALE

DD-30

STATE OF CALIFORNIA - DEPARTMENT OF TRANSPORTATION
Caltrans® DESIGN
FUNCTIONAL SUPERVISOR MARK PERTILE
CALCULATED-DESIGNED BY MOHAMMAD ABDRABOH
CHECKED BY ALAN R. BISI
REVISED BY
DATE REVISED

LAST REVISION 03-29-11
DATE PLOTTED => 29-APR-2011
TIME PLOTTED => 18:46

Dist	COUNTY	ROUTE	POST MILES TOTAL PROJECT	SHEET No.	TOTAL SHEETS
08	Riv	91	15.6/21.6	304	2028

REGISTERED CIVIL ENGINEER 12-1-10 DATE

4-25-11
PLANS APPROVAL DATE

REGISTERED PROFESSIONAL ENGINEER ALAN R. BISI No. C62808 Exp. 6-30-12 CIVIL STATE OF CALIFORNIA

THE STATE OF CALIFORNIA OR ITS OFFICERS OR AGENTS SHALL NOT BE RESPONSIBLE FOR THE ACCURACY OR COMPLETENESS OF SCANNED COPIES OF THIS PLAN SHEET.

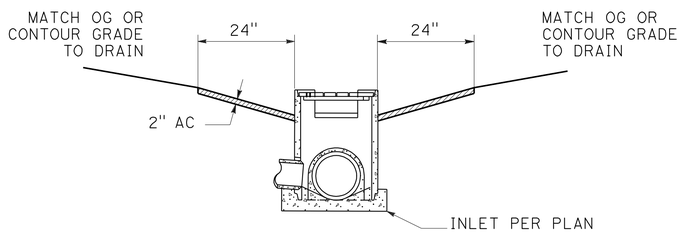

SECTION C-C

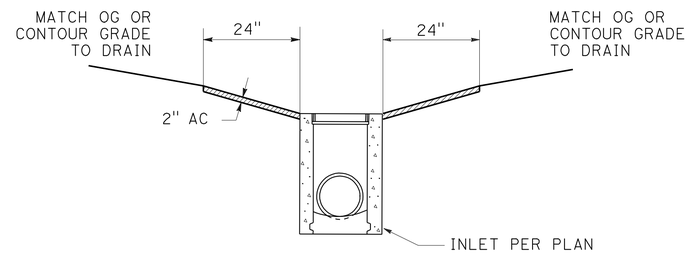

SECTION B-B

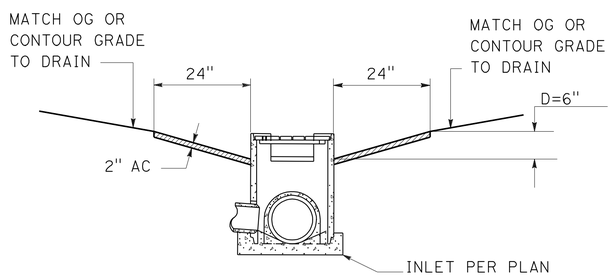

SECTION C-C

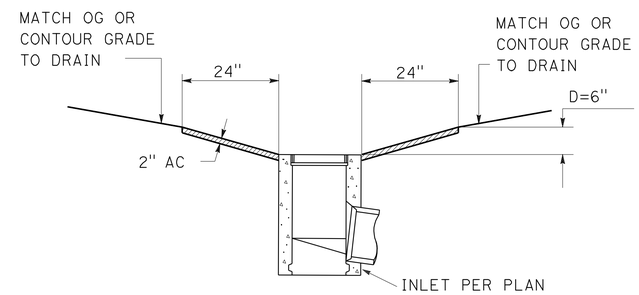

SECTION A-A

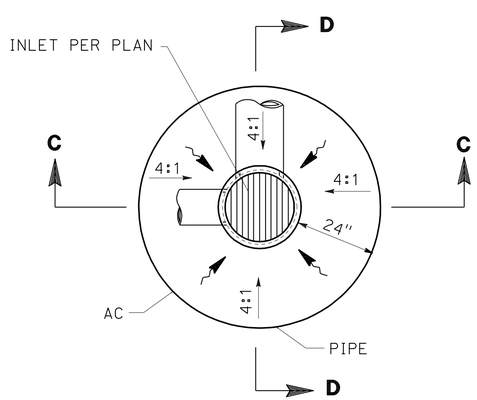

PLAN CIRCULAR

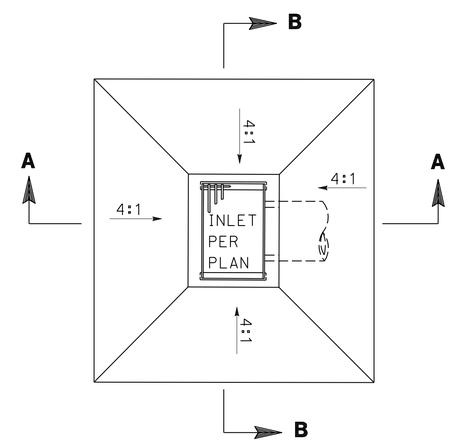

PLAN RECTANGULAR

INLET APRON

THIS PLAN ACCURATE FOR DRAINAGE WORK ONLY.

DRAINAGE DETAILS

NO SCALE

DD-31

STATE OF CALIFORNIA - DEPARTMENT OF TRANSPORTATION
Caltrans® DESIGN

FUNCTIONAL SUPERVISOR: MARK PERTILE

CALCULATED-DESIGNED BY: MOHAMMAD ABDRABOH
CHECKED BY: ALAN R. BISI

REVISED BY | DATE REVISED

LAST REVISION 12-01-10 | DATE PLOTTED => 29-APR-2011 | TIME PLOTTED => 18:46

Dist	COUNTY	ROUTE	POST MILES TOTAL PROJECT	SHEET No.	TOTAL SHEETS
08	Riv	91	15.6/21.6	305	2028

REGISTERED CIVIL ENGINEER 3-29-10 DATE

4-25-11
PLANS APPROVAL DATE

REGISTERED PROFESSIONAL ENGINEER ALAN R. BISI No. C62808 Exp. 6-30-12 CIVIL STATE OF CALIFORNIA

THE STATE OF CALIFORNIA OR ITS OFFICERS OR AGENTS SHALL NOT BE RESPONSIBLE FOR THE ACCURACY OR COMPLETENESS OF SCANNED COPIES OF THIS PLAN SHEET.

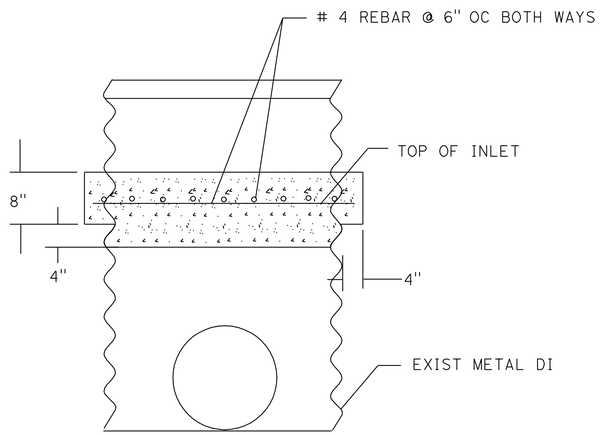

METAL INLET

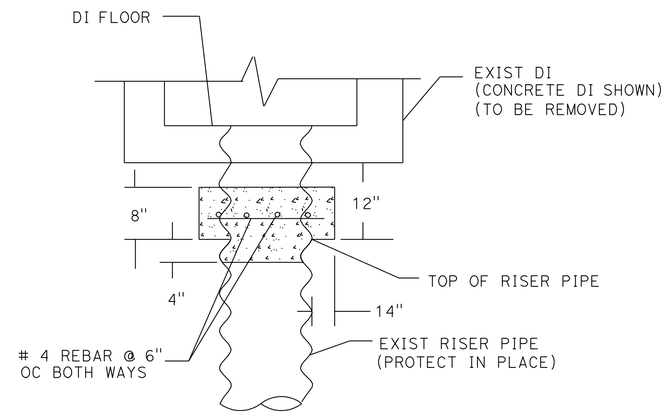

VERTICAL RISER

DRAINAGE SYSTEMS APPLICABLE TO THIS SHEET						
13a	25g	25h	25i	36d	39d	44b
44d	44f	44g	44i	44k	44l	44n
44p	44r	44t	44v	44y	44ab	44ae
44ag	44ai	74c	75f	75g	78f	78h
86h	88b	89a	89b	90g	120c	123i
125d	125f					

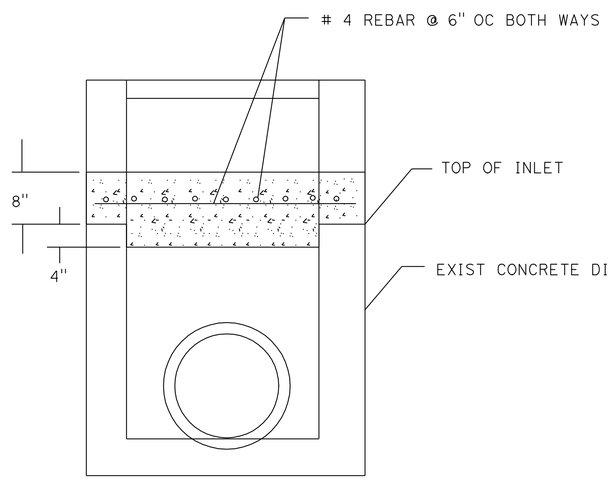

CONCRETE INLET
CAP INLET DETAIL

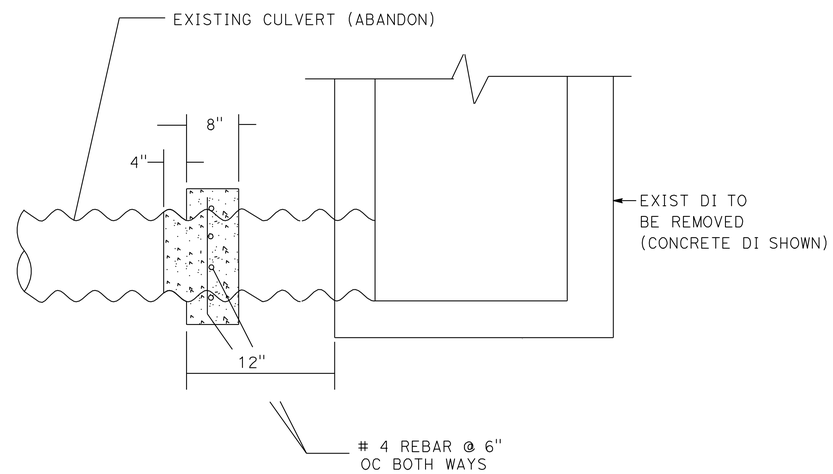

HORIZONTAL STORM DRAIN
CONCRETE PLUG DETAIL

CAP INLET/ABANDONMENT

THIS PLAN ACCURATE FOR DRAINAGE WORK ONLY.

DRAINAGE DETAILS
NO SCALE

DD-32

STATE OF CALIFORNIA - DEPARTMENT OF TRANSPORTATION
Caltrans® DESIGN

FUNCTIONAL SUPERVISOR: MARK PERTILE
CALCULATED-DESIGNED BY: MOHAMMAD ABDRABOH
CHECKED BY: ALAN R. BISI
REVISED BY
DATE REVISED

LAST REVISION 03-29-11 DATE PLOTTED => 29-APR-2011 TIME PLOTTED => 18:46

Dist	COUNTY	ROUTE	POST MILES TOTAL PROJECT	SHEET No.	TOTAL SHEETS
08	Riv	91	15.6/21.6	306	2028

REGISTERED CIVIL ENGINEER 12-1-10 DATE

4-25-11
PLANS APPROVAL DATE

REGISTERED PROFESSIONAL ENGINEER ALAN R. BISI No. C62808 Exp. 6-30-12 CIVIL STATE OF CALIFORNIA

THE STATE OF CALIFORNIA OR ITS OFFICERS OR AGENTS SHALL NOT BE RESPONSIBLE FOR THE ACCURACY OR COMPLETENESS OF SCANNED COPIES OF THIS PLAN SHEET.

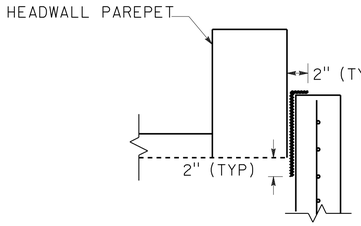

WATER SEAL DETAIL
TEMPORARY APPLICATION

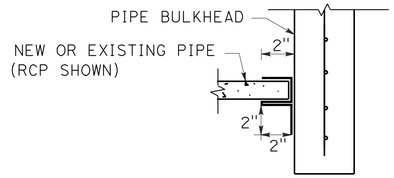

WATER SEAL DETAIL
TEMPORARY APPLICATION

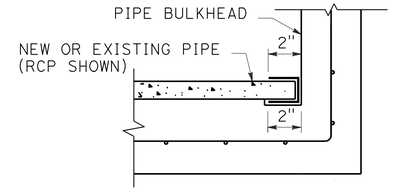

WATER SEAL DETAIL
PERMANENT APPLICATION

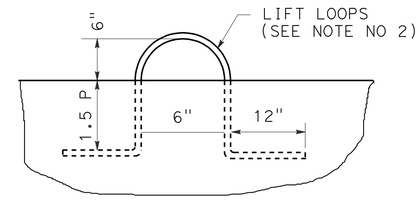

LIFT DETAIL

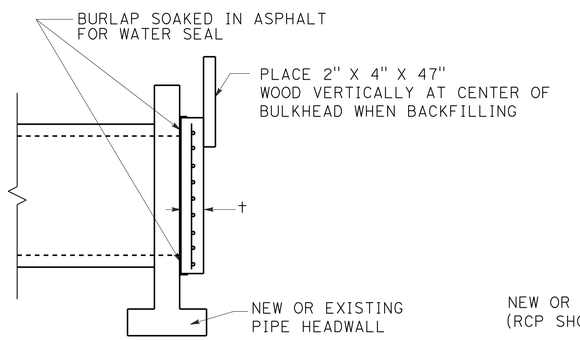

SECTION A-A

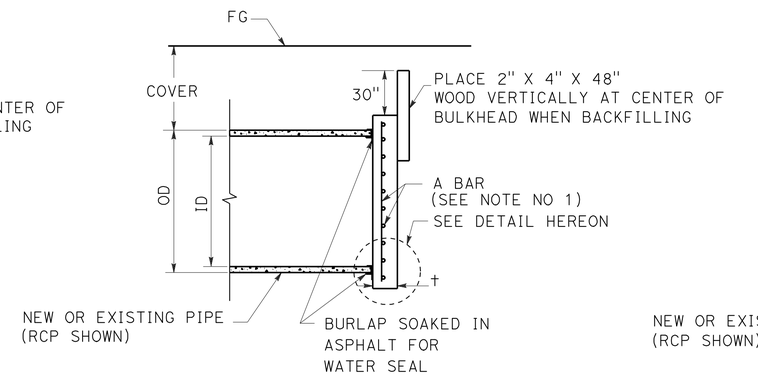

SECTION B-B

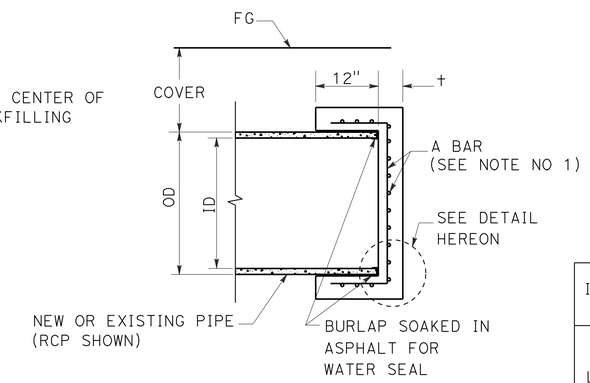

SECTION B-B

I. D.	COVER (ft)	† (in)	A BARS BOTH WAYS	L , P (in)
48" OR LESS	4	4	#5 @ 10"	18"
	9	4	#5 @ 6"	
	>15	5	#5 @ 6"	
TO 60"	4	4	#5 @ 6"	20"
	9	5	#5 @ 6"	
	>15	5	#5 @ 6"	
66"	4	5	#5 @ 6"	22"
	9	5	#5 @ 6"	
	>15	5	#5 @ 6"	
72"	4	5	#5 @ 6"	24"
	9	5	#5 @ 6"	
	>15	5	#6 @ 6"	
78"	4	5	#5 @ 6"	26"
	9	5	#6 @ 6"	
	>15	6	#6 @ 6"	
84"	4	5	#5 @ 6"	28"
	9	5	#6 @ 6"	
	>15	6	#6 @ 5"	

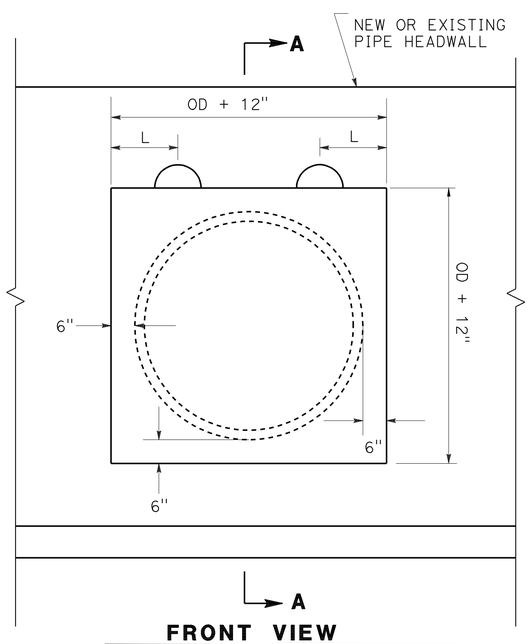

FRONT VIEW
PIPEHEADWALL BULKHEAD
(TEMPORARY)

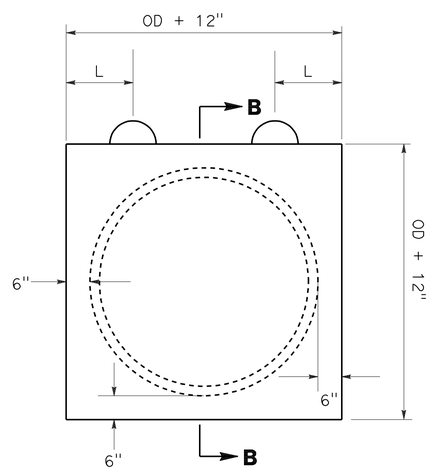

FRONT VIEW
PIPE BULKHEAD
(TEMPORARY)

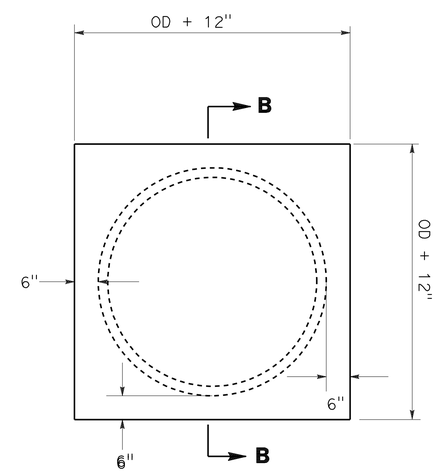

FRONT VIEW
PIPE BULKHEAD
(PERMANENT)

PIPE BULKHEAD - TEMPORARY AND PERMANENT

NOTES:

1. REINFORCEMENT STEEL SHALL BE CENTERED IN BULKHEAD WITH HORINZONTAL "A" BARS TOWARDS OUTSIDE FACE OF BULKHEAD
2. LIFT LOOPS SHALL BE WOVEN STEEL CABLE WITH SAME MIN. DIAMETER (d) AS "A" BARS. WEAVE CABLE THROUGH HORIZONTAL "A" BARS. COAT EXPOSED POTION OF CABLE LIFT LOOPS WITH BITUMINOUS PAINT PRIOR TO BACKFILLING TRENCH
3. BULKHEAD SHALL BE CONSTRUCTED OF MINOR CONCRETE.

DRAINAGE DETAILS

NO SCALE

DD-33

THIS PLAN ACCURATE FOR DRAINAGE WORK ONLY.

STATE OF CALIFORNIA - DEPARTMENT OF TRANSPORTATION
Caltrans® DESIGN
FUNCTIONAL SUPERVISOR: MARK PERTILE
CALCULATED-DESIGNED BY: MOHAMMAD ABDRABOH
CHECKED BY: ALAN R. BISI
REVISED BY
DATE REVISED

LAST REVISION 12-01-10
DATE PLOTTED => 29-APR-2011
TIME PLOTTED => 18:46

Dist	COUNTY	ROUTE	POST MILES TOTAL PROJECT	SHEET No.	TOTAL SHEETS
08	Riv	91	15.6/21.6	307	2028

REGISTERED CIVIL ENGINEER 3-29-10 DATE

4-25-11
PLANS APPROVAL DATE

REGISTERED PROFESSIONAL ENGINEER ALAN R. BISI No. C62808 Exp. 6-30-12 CIVIL STATE OF CALIFORNIA

THE STATE OF CALIFORNIA OR ITS OFFICERS OR AGENTS SHALL NOT BE RESPONSIBLE FOR THE ACCURACY OR COMPLETENESS OF SCANNED COPIES OF THIS PLAN SHEET.

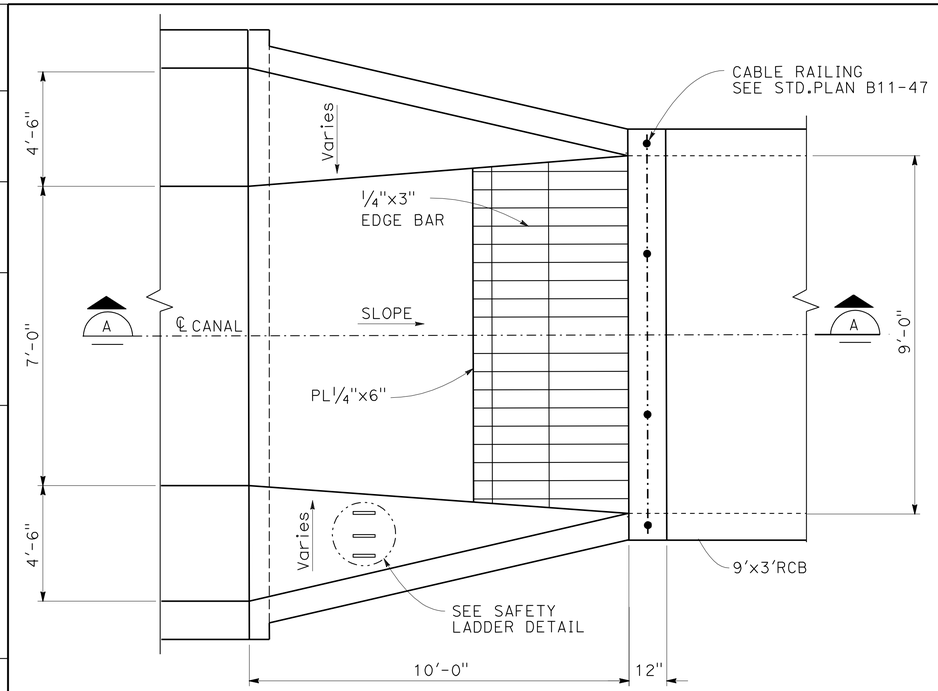

PLAN
1/2"=1'-0"

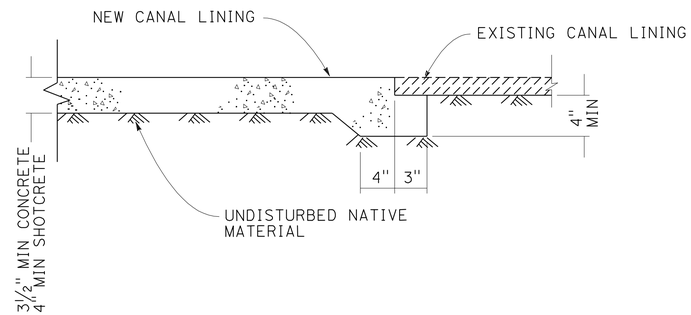

TYPICAL TRANSITION SECTION FROM NEW TO EXIST CANAL LINING
NTS

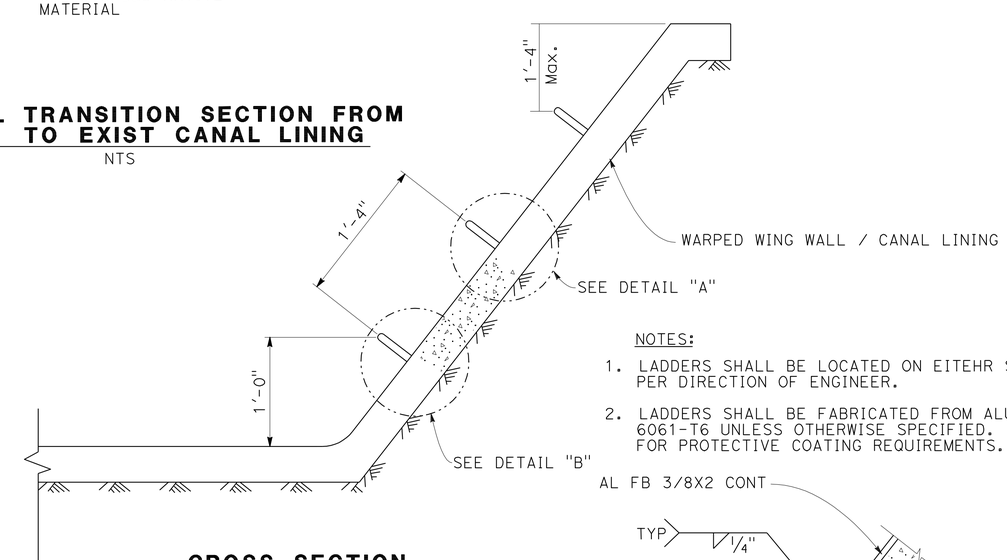

CROSS SECTION
NTS

NOTES:

1. LADDERS SHALL BE LOCATED ON EITEHR SIDE, PER DIRECTION OF ENGINEER.
2. LADDERS SHALL BE FABRICATED FROM ALUMINUM ALLOY 6061-T6 UNLESS OTHERWISE SPECIFIED. SEE SPECIFICATIONS FOR PROTECTIVE COATING REQUIREMENTS.

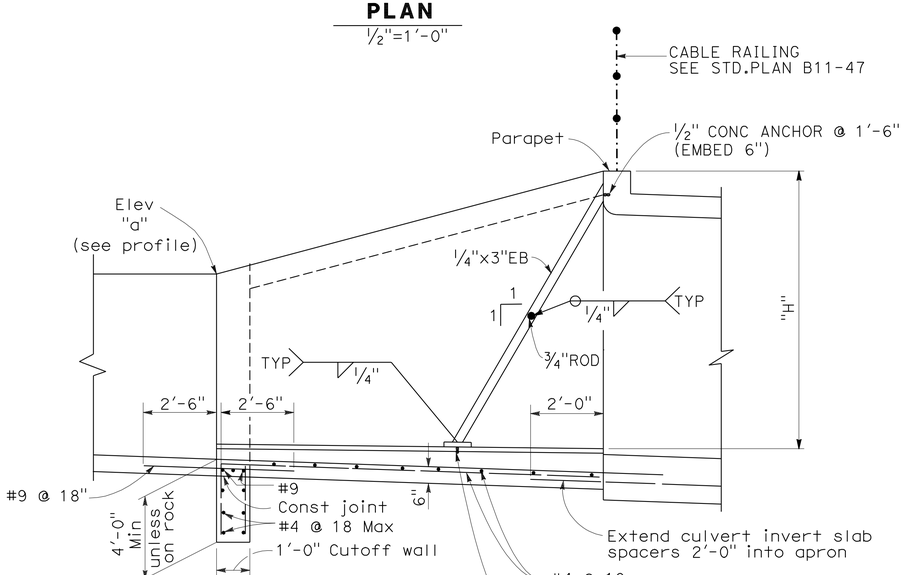

CANAL TO CALTRANS WARPED WINGWALL

SECTION A
1/2"=1'-0"

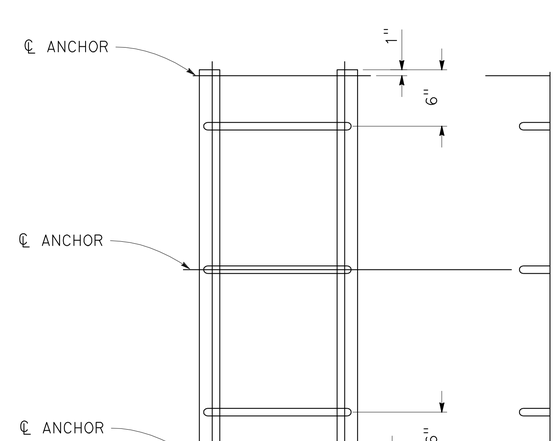

FRONT SECTION
NTS

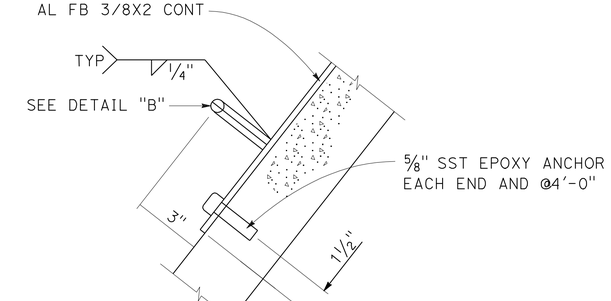

DETAIL "A"
NTS

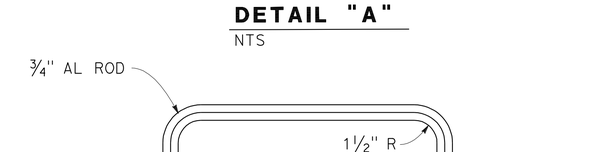

DETAIL "B"
NTS

SAFETY LADDER
NTS

RIVERSIDE CANAL - CITY OF RIVERSIDE
MISCELLANEOUS STRUCTURES
(SHEET 1 OF 4)

DRAINAGE DETAILS
NO SCALE

DD-34

STATE OF CALIFORNIA - DEPARTMENT OF TRANSPORTATION
Caltrans® DESIGN

FUNCTIONAL SUPERVISOR: MARK PERTILE
CALCULATED-DESIGNED BY: MOHAMMAD ABDRABOH
CHECKED BY: ALAN R. BISI
REVISED BY
DATE REVISED

THIS PLAN ACCURATE FOR DRAINAGE WORK ONLY.

BORDER LAST REVISED 4/11/2008
RELATIVE BORDER SCALE IS IN INCHES 0 1 2 3
USERNAME => trpierce
DGN FILE => 844840ic034.dgn
CU 08227
EA 448401
LAST REVISION 03-29-11
DATE PLOTTED => 29-APR-2011
TIME PLOTTED => 18:46

Dist	COUNTY	ROUTE	POST MILES TOTAL PROJECT	SHEET No.	TOTAL SHEETS
08	Riv	91	15.6/21.6	308	2028

REGISTERED CIVIL ENGINEER 4-11-10 DATE

4-25-11
PLANS APPROVAL DATE

REGISTERED PROFESSIONAL ENGINEER ALAN R. BISI No. C62808 Exp. 6-30-12 CIVIL STATE OF CALIFORNIA

THE STATE OF CALIFORNIA OR ITS OFFICERS OR AGENTS SHALL NOT BE RESPONSIBLE FOR THE ACCURACY OR COMPLETENESS OF SCANNED COPIES OF THIS PLAN SHEET.

GENERAL NOTES:

1. 2½" MIN. COVER BETWEEN REINFORCING STEEL AND FINISHED CONCRETE SURFACE.
2. CHAMFER ¾" AT ALL EXPOSED CORNERS.
3. CONCRETE SHALL BE STRUCTURAL CONCRETE, BOX CULVERT.
4. REMOVE LINING WHERE NECESSARY TO PROVIDE CLEARANCE AS SHOWN.
5. PROPOSED 6'X4' RCB EXTENSION SHALL BE PER CALTRANS STD. PLAN D80 SINGLE CELL RCB WITH MEMBER THICKNESS AND REINFORCEMENT FOR 20' MAXIMUM COVER. SPACING FOR "a" AND "e" BARS SHALL BE CHANGED FROM 5" TO 4".

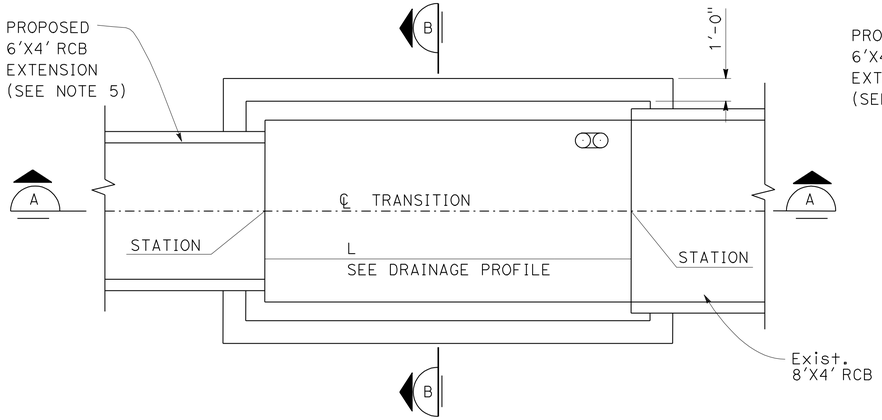

FOUNDATION PLAN
NTS

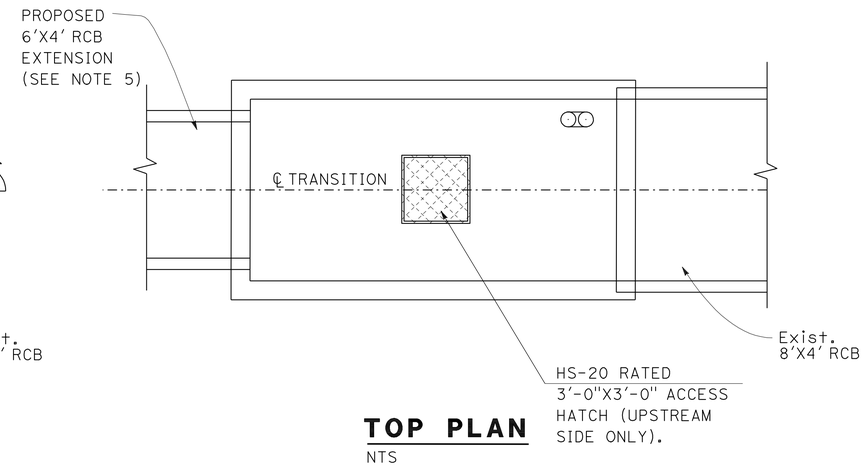

TOP PLAN
NTS

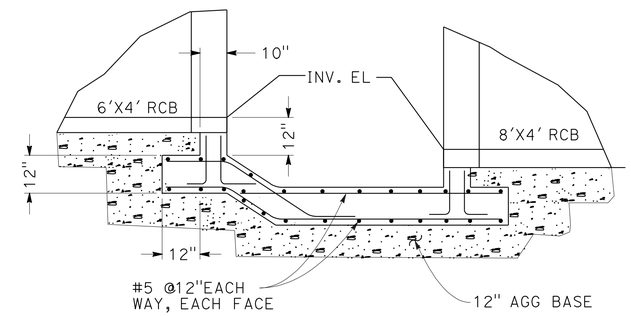

DETAIL "A"
NTS

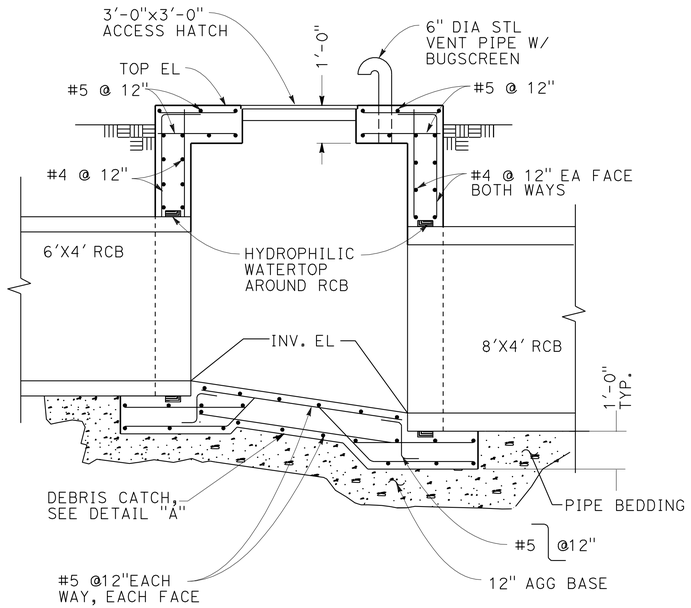

SECTION A
NTS

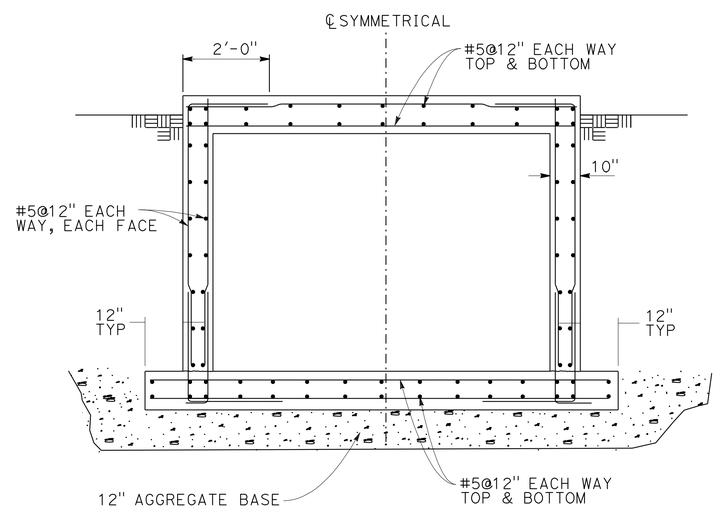

SECTION B
NTS

RIVERSIDE CANAL - CITY OF RIVERSIDE

MISCELLANEOUS STRUCTURES (SHEET 2 OF 4)

THIS PLAN ACCURATE FOR DRAINAGE WORK ONLY.

DRAINAGE DETAILS
NO SCALE

DD-35

STATE OF CALIFORNIA - DEPARTMENT OF TRANSPORTATION
Caltrans® DESIGN
FUNCTIONAL SUPERVISOR: MARK PERTILE
CALCULATED-DESIGNED BY: MOHAMMAD ABDRABOH
CHECKED BY: ALAN R. BISI
REVISED BY
DATE REVISED

LAST REVISION 04-11-11
DATE PLOTTED => 11-JUL-2011
TIME PLOTTED => 13:48

Dist	COUNTY	ROUTE	POST MILES TOTAL PROJECT	SHEET No.	TOTAL SHEETS
08	Riv	91	15.6/21.6	309	2028

REGISTERED CIVIL ENGINEER 12-1-10 DATE

4-25-11
PLANS APPROVAL DATE

REGISTERED PROFESSIONAL ENGINEER ALAN R. BISI No. C62808 Exp. 6-30-12 CIVIL STATE OF CALIFORNIA

THE STATE OF CALIFORNIA OR ITS OFFICERS OR AGENTS SHALL NOT BE RESPONSIBLE FOR THE ACCURACY OR COMPLETENESS OF SCANNED COPIES OF THIS PLAN SHEET.

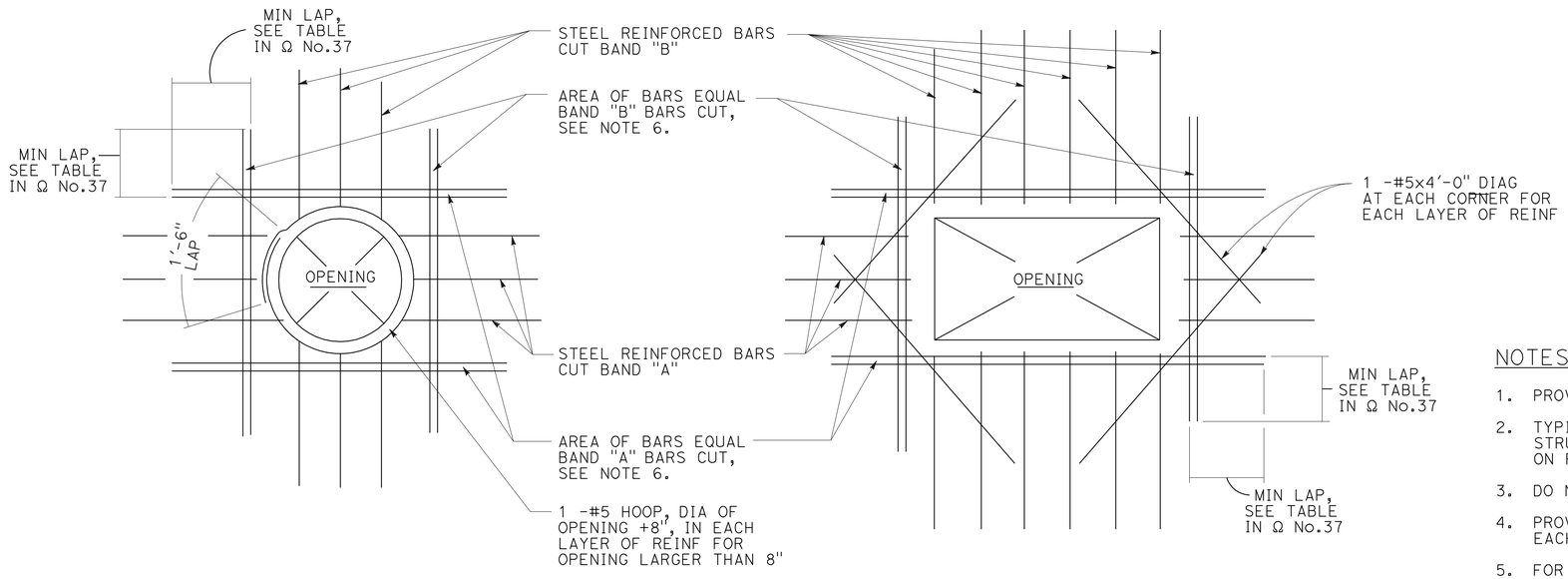

OPENING REINFORCING

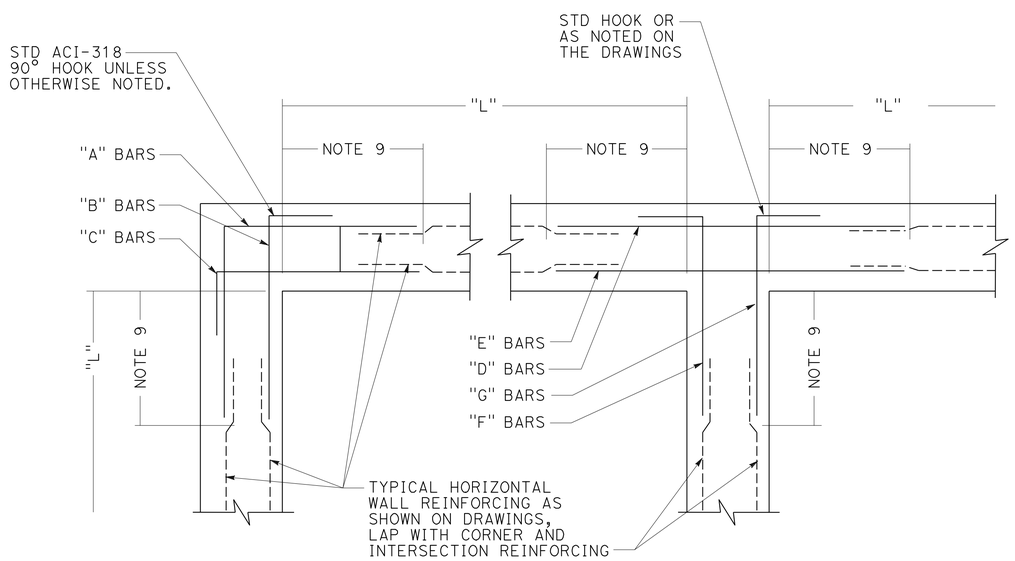

TYPICAL WALL CORNER AND INTERSECTION REINFORCING

NOTES:

1. PROVIDE MINIMUM LAP, SEE GENERAL STRUCTURAL NOTES Ω No.37.
2. TYPICAL FOR ALL OPENINGS IN CONCRETE WALLS OF BELOW GRADE AND HYDRAULIC STRUCTURES AND ALL STRUCTURAL CONCRETE SLABS UNLESS INDICATED OTHERWISE ON PLANS.
3. DO NOT WELD REINFORCEMENT TO PIPE SLEEVES AND INSERTS.
4. PROVIDE A MINIMUM OF 2 "A" BARS AND 2 "B" BARS EACH SIDE OF OPENING (ONE EACH FACE).
5. FOR OPENINGS LARGER THAN 8'-0", REINFORCE SAME AS FOR 8'-0" OPENINGS.
6. SPACE AT 3 BAR DIAMETERS (OR 3" MINIMUM) ON CENTER.
7. TYPICAL HORIZONTAL WALL CORNER AND INTERSECTION REINFORCING LAYOUT IS SHOWN TO AVOID CONGESTION AND PERMIT PROPER PLACEMENT. FOR SIZE AND SPACING SEE DRAWING DETAILS. ALL HORIZONTAL REINFORCING AT CORNERS AND INTERSECTIONS SHALL BE FABRICATED AND INSTALLED WITH SPLICES LOCATED WHERE SHOWN REGARDLESS OF BAR SIZE AND SPACING.
8. WHERE THE CORNER OR INTERSECTION REINFORCING SIZE AND SPACING IS NOT SHOWN, NOTED OR TABULATED ON THE PLANS. THE SIZE AND SPACING SHALL BE THE SAME AS THE WALL HORIZONTAL REINFORCING SHOWN ON THE WALL SECTIONS OR AS NOTED FOR THE REINFORCING BETWEEN THE CORNERS OR INTERSECTIONS.
9. EXCEPT WHERE OTHERWISE SHOWN ON THE PLANS, THE LENGTH INDICATED AS "NOTE 3" SHALL BE THE LESSER OF L/4, 10 FEET, OR 1.0 TIMES THE HEIGHT OF THE WALL, EXCEPT THAT NO CASE SHALL IT BE LESS THAN 2 FEET.
10. L = LENGTH OF WALL PARALLEL TO THE BAR LENGTH AS SHOWN ON PLANS.
11. EXCEPT WHERE OTHERWISE SHOWN ON THE DETAILS, THE LENGTH INDICATED AS "NOTE 5" SHALL BE EQUAL TO ONE "LAP LENGTH" AS REQUIRED BY THE GENERAL STRUCTURE NOTES, Ω No.37. USE THE LAP LENGTH AS REQUIRED FOR THE SMALLER OF THE TWO REINFORCING BARS BEING SPLICED.
12. UNLESS OTHERWISE NOTED, "B" AND "C" BARS ARE THE SAME SIZE AND SPACING AND, "F" AND "G" BARS ARE THE SAME SIZE AND SPACING.

RIVERSIDE CANAL - CITY OF RIVERSIDE

MISCELLANEOUS STRUCTURES (SHEET 3 OF 4)

DRAINAGE DETAILS

NO SCALE

DD-36

THIS PLAN ACCURATE FOR DRAINAGE WORK ONLY.

STATE OF CALIFORNIA - DEPARTMENT OF TRANSPORTATION
Caltrans DESIGN
FUNCTIONAL SUPERVISOR: MARK PERTILE
CALCULATED-DESIGNED BY: MOHAMMAD ABDRABOH
CHECKED BY: ALAN R. BISI
REVISED BY / DATE REVISED

LAST REVISION 12-01-10 | DATE PLOTTED => 29-APR-2011 | TIME PLOTTED => 18:47

Dist	COUNTY	ROUTE	POST MILES TOTAL PROJECT	SHEET No.	TOTAL SHEETS
08	Riv	91	15.6/21.6	310	2028

REGISTERED CIVIL ENGINEER 12-1-10 DATE

4-25-11
PLANS APPROVAL DATE

REGISTERED PROFESSIONAL ENGINEER ALAN R. BISI No. C62808 Exp. 6-30-12 CIVIL STATE OF CALIFORNIA

THE STATE OF CALIFORNIA OR ITS OFFICERS OR AGENTS SHALL NOT BE RESPONSIBLE FOR THE ACCURACY OR COMPLETENESS OF SCANNED COPIES OF THIS PLAN SHEET.

GENERAL STRUCTURAL NOTES:

CONCRETE REINFORCING:

1. MINIMUM REINFORCING FOR ALL CONCRETE WALLS AND SLABS SHALL BE AS FOLLOWS:

WALL THICKNESS	REINF EACH WAY	LOCATION
6"	#4@12"	CENTERED
8"	#5@12"	CENTERED
10"	#4@12"	EACH FACE
12"	#5@12"	EACH FACE

PROVIDE LARGER SIZES AND MORE REINFORCING IN SECTIONS OF CONCRETE WHERE REQUIRED BY THE DETAILS ON THE DRAWINGS OR BY THE SPECIFICATIONS.

2. CLEARANCE FOR REINFORCEMENT BARS, UNLESS SHOWN OTHERWISE, SHALL BE:
   - WHEN PLACED ON GROUND: 3"
   - BEAM STIRRUPS AND COLUMN TIES 1½"
   - ALL OTHER CONCRETE SURFACES 2"

3. REFER TO WALL CORNER AND WALL INTERSECTION REINFORCING, Ω No.36. WALL CORNER REINFORCING SIZES AND SPACINGS SHALL BE AS SHOWN ON THE DRAWING DETAILS. TYPICAL HORIZONTAL WALL REINFORCING SHALL LAP WITH THE CORNER HORIZONTAL REINFORCING.

4. 90 DEGREE BENDS, UNLESS OTHERWISE SHOWN, SHALL BE ACI 318 STANDARD HOOKS.

5. WALL CORNER AND WALL INTERSECTION REINFORCEMENT BARS SHALL BE CONTINUOUS AROUND CORNERS AND THROUGH COLUMNS OR PILASTERS. REINFORCEMENT SHALL BE EXTENDED INTO CONNECTING WALLS AND LAPPED ON THE OPPOSITE FACE OF THE CONNECTING WALLS, AS INDICATED IN DETAIL Ω No.36.

6. LAP VERTICAL WALL BARS WITH DOWELS FROM BASE SLABS AND EXTEND INTO TOP FACE OF ROOF SLABS AND LAP WITH TOP SLAB REINFORCEMENT. PROVIDE A MINIMUM OF FOUR FULL HEIGHT VERTICAL BARS WITH MATCHING DOWELS AT WALL ENDS, CORNERS AND INTERSECTIONS WITH SIZE TO MATCH TYPICAL VERTICAL REINFORCING STEEL SHOWN OR REQUIRED BY NOTES ABOVE.

7. LOCATE SLAB AND BEAM TOP BAR SPLICES AT MIDSPAN AND BOTTOM BAR SPLICES AT SUPPORTS.

8. REINFORCEMENT BENDS AND LAPS, UNLESS OTHERWISE NOTED, SHALL SATISFY THE FOLLOWING MINIMUM REQUIREMENTS:

CONCRETE DESIGN STRENGTH = 4000 PSI						GRADE 60 REINFORCING STEEL				
BAR SIZE		#3	#4	#5	#6	#7	#8	#9	#10	#11
LAP SPLICE LENGTH										
SPACING < 6"	TOP BAR*	1'-4"	2'-0"	3'-0"	4'-0"	5'-10"	6'-8"	7'-7"	8'-6"	9'-5"
	OTHER BAR	1'-4"	1'-7"	2'-4"	3'-1"	4'-6"	5'-2"	5'-10"	6'-7"	7'-3"
SPACING ≥ 6"	TOP BAR*	1'-4"	1'-8"	2'-0"	2'-5"	3'-6"	4'-0"	5'-0"	6'-2"	7'-5"
	OTHER BAR	1'-4"	1'-4"	1'-7"	1'-10"	2'-9"	3'-1"	3'-10"	4'-9"	5'-8"
EMBEDMENT LENGTH										
SPACING < 6"	TOP BAR*	1'-0"	1'-7"	2'-4"	3'-1"	4'-6"	5'-2"	5'-10"	6'-7"	7'-3"
	OTHER BAR	1'-0"	1'-3"	1'-9"	2'-5"	3'-6"	4'-0"	4'-6"	5'-1"	5'-7"
SPACING ≥ 6"	TOP BAR*	1'-0"	1'-3"	1'-7"	1'-10"	2'-9"	3'-1"	3'-10"	4'-9"	5'-8"
	OTHER BAR	1'-0"	1'-0"	1'-3"	1'-5"	2'-1"	2'-5"	3'-0"	3'-8"	4'-5"

* TOP BARS SHALL BE DEFINED AS ANY HORIZONTAL BARS PLACED SUCH THAT MORE THAN 12 INCHES OF CONCRETE IS CAST IN THE MEMBER BELOW THE BAR IN ANY SINGLE POUR. HORIZONTAL WALL BARS ARE CONSIDERED TOP BARS.

CONCRETE:

1. 28-DAY CAST-IN-PLACE CONCRETE STRENGTHS:
   - STRUCTURES: 4000 PSI
   - CONCRETE FILL: 2500 PSI
   - OTHERWISE: 3000 PSI

2. REINFORCING STEEL:
   TYPICAL: ASTM A706, GRADE 60 RF1 #7

3. FABRICATION AND PLACEMENT OF REINFORCING STEEL SHALL BE IN ACCORDANCE WITH CRSI MSP-1 "MANUAL OF STANDARD PRACTICE" AND ACI 301 "SPECIFICATIONS FOR STRUCTURAL CONCRETE FOR BUILDINGS"

4. CONSTRUCTION JOINTS INDICATED ARE SUGGESTED LOCATIONS. CONTRACTOR MAY REVISE LOCATION OF JOINTS, SUBJECT TO SPECIFIED REQUIREMENTS. ADDITIONAL CONSTRUCTIO JOINT LOCATIONS, INCLUDING ADDITIONAL REQUIRED FOR CONSTRUCTION, SHALL BE SUBMITTED FOR REVIEW BY ENGINEER.

5. ROUGHEN AND CLEAN CONSTRUCTION JOINTS IN WALLS AND SLABS AS SPECIFIED PRIOR TO PLACING ADJACENT CONCRETE.

6. THE CONTRACTOR SHALL COORDINATE PLACEMENT OF OPENINGS, CURBS, DOWELS, SLEEVES, CONDUITS, BOLTS AND INSERTS PRIOR TO PLACEMENT OF CONCRETE.

7. NO ALUMINUM CONDUIT OR PRODUCTS CONTAINING ALUMINUM OR ANY OTHER MATERIAL INJURIOUS TO THE CONCRETE SHALL BE EMBEDDED IN THE CONCRETE.

WELDING:

1. WELDS SHALL CONFORM TO AWS D1.1 LATEST EDITIONS AS SPECIFIED.

2. REPAIR WELDS FOUND DEFECTIVE IN ACCORDANCE WITH AWS D1.1, 5.26

3. USE INTERMITTENT WELDS AT FIELD WELDS OF EMBED PLATES AND ANGLES TO AVOID SPALLING OR CRACKING OF THE EXISTING CONCRETE.

4. BUTT JOINT WELDS SHALL BE COMPLETE JOINT PENETRATION (CJP) UNLESS INDICATED OTHERWISE.

RIVERSIDE CANAL - CITY OF RIVERSIDE

MISCELLANEOUS STRUCTURES
(SHEET 4 OF 4)

THIS PLAN ACCURATE FOR DRAINAGE WORK ONLY.

DRAINAGE DETAILS
NO SCALE
DD-37

STATE OF CALIFORNIA - DEPARTMENT OF TRANSPORTATION
Caltrans® DESIGN
FUNCTIONAL SUPERVISOR: MARK PERTILE
CALCULATED-DESIGNED BY: MOHAMMAD ABDRABOH
CHECKED BY: ALAN R. BISI
REVISED BY
DATE REVISED

LAST REVISION 12-01-10 | DATE PLOTTED => 29-APR-2011 | TIME PLOTTED => 18:48

Dist	COUNTY	ROUTE	POST MILES TOTAL PROJECT	SHEET No.	TOTAL SHEETS
08	Riv	91	15.6/21.6	311	2028

REGISTERED CIVIL ENGINEER 3-29-10 DATE

4-25-11
PLANS APPROVAL DATE

REGISTERED PROFESSIONAL ENGINEER ALAN R. BISI No. C62808 Exp. 6-30-12 CIVIL STATE OF CALIFORNIA

THE STATE OF CALIFORNIA OR ITS OFFICERS OR AGENTS SHALL NOT BE RESPONSIBLE FOR THE ACCURACY OR COMPLETENESS OF SCANNED COPIES OF THIS PLAN SHEET.

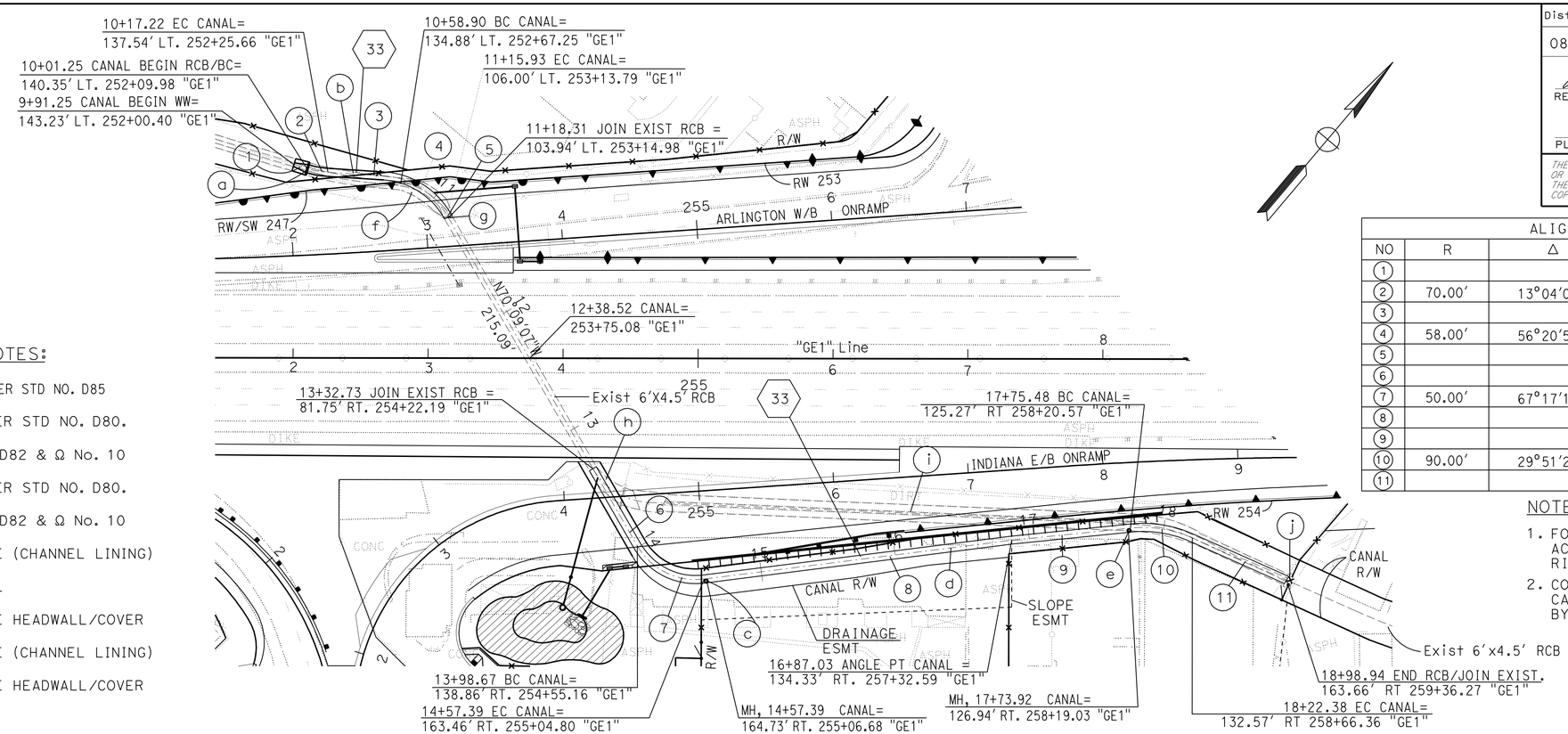

CONSTRUCTION NOTES:

- (a) WINGWALL TYPE D PER STD NO. D85
- (b) 6'Wx4.5'H RCB PER STD NO. D80.
- (c) MH PER STD NO. D82 & Ω No. 10
- (d) 6'Wx4.5'H RCB PER STD NO. D80.
- (e) MH PER STD NO. D82 & Ω No. 10
- (f) REMOVE CONCRETE (CHANNEL LINING)
- (g) REMOVE HEADWALL
- (h) REMOVE CONCRETE HEADWALL/COVER
- (i) REMOVE CONCRETE (CHANNEL LINING)
- (j) REMOVE CONCRETE HEADWALL/COVER

ALIGNMENT DATA				
NO	R	Δ	TANGENT/BEARING	L
1			N66°34'11"E	41.84'
2	70.00'	13°04'08"	8.02'	15.97'
3			N53°30'03"E	46.90'
4	58.00'	56°20'50"	31.06'	57.04'
5			N70°09'07"W	2.38'
6			N70°09'07"W	65.94'
7	50.00'	67°17'11"	33.27'	58.72'
8			N42°33'42"E	229.64'
9			N43°58'03"E	88.45'
10	90.00'	29°51'24"	23.99'	46.90'
11			N73°49'27"E	76.51'

NOTE:

1. FOR COMPLETE RIGHT OF WAY AND ACCURATE ACCESS DATA, SEE RIGHT OF WAY MAPS AT DISTRICT OFFICE.
2. CONTRACTOR TO MAINTAIN FLOW WITHIN CANAL DURING CONSTRUCTION AS DIRECTED BY PURVEYOR.

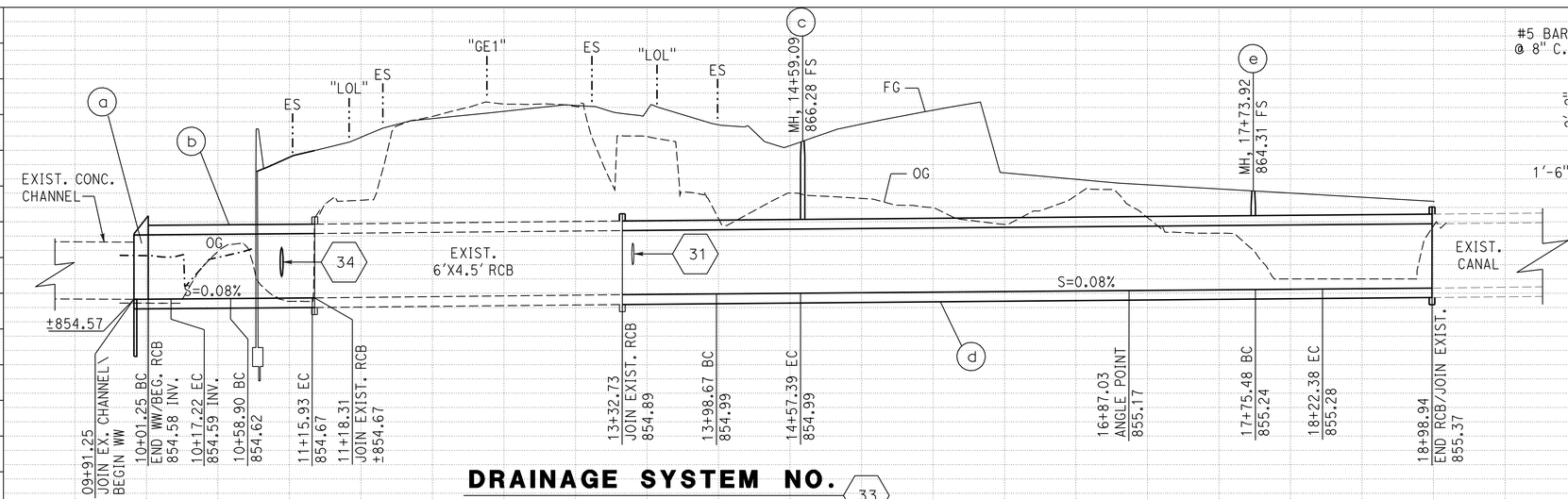

DRAINAGE SYSTEM NO. 33

RIVERSIDE CANAL REALIGNMENT

THIS PLAN ACCURATE FOR DRAINAGE WORK ONLY.

STATION	10+00	11+00	12+00	13+00	14+00	15+00	16+00	17+00	18+00	19+00	TOTAL
CY Exc											
CY Emb											

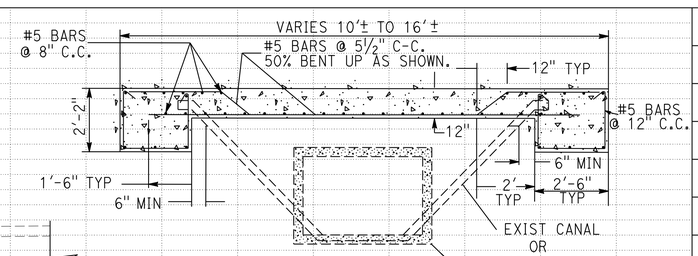

EXISTING REINFORCED COVER
TYPICAL SECTION
(FOR REMOVAL ESTIMATION)
NTS

DRAINAGE DETAILS

SCALE: (EXCEPT AS SHOWN)
H - 1"=50'
V - 1"=5'

DD-38

REVISED BY | DATE REVISED
MOHAMMAD ABDRABOH | ALAN R. BISI
CALCULATED-DESIGNED BY | CHECKED BY
FUNCTIONAL SUPERVISOR: MARK PERTILE

STATE OF CALIFORNIA - DEPARTMENT OF TRANSPORTATION
Caltrans® DESIGN

LAST REVISION 03-29-11 | DATE PLOTTED => 29-APR-2011 | TIME PLOTTED => 18:48

Dist	COUNTY	ROUTE	POST MILES TOTAL PROJECT	SHEET No.	TOTAL SHEETS
08	Riv	91	15.6/21.6	312	2028

REGISTERED CIVIL ENGINEER — DATE 12-1-10

4-25-11
PLANS APPROVAL DATE

REGISTERED PROFESSIONAL ENGINEER ALAN R. BISI No. C62808 Exp. 6-30-12 CIVIL STATE OF CALIFORNIA

THE STATE OF CALIFORNIA OR ITS OFFICERS OR AGENTS SHALL NOT BE RESPONSIBLE FOR THE ACCURACY OR COMPLETENESS OF SCANNED COPIES OF THIS PLAN SHEET.

NOTE:

1. FOR COMPLETE RIGHT OF WAY AND ACCURATE ACCESS DATA, SEE RIGHT OF WAY MAPS AT DISTRICT OFFICE.
2. Ω: SEE DRAINAGE DETAIL NUMBER INDICATED.

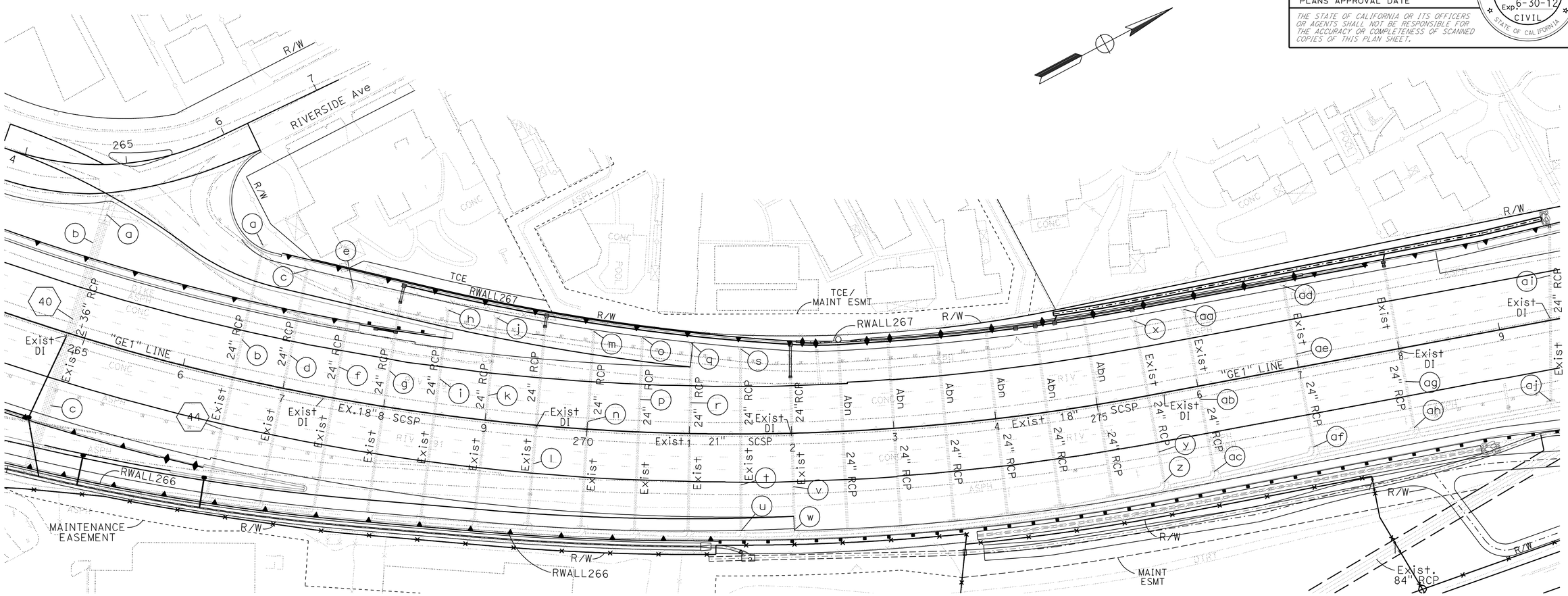

REMOVAL/ABANDON SUMMARY				
SYSTEM NO.	XX	DESCRIPTION	SR-91 LOL STATION	REMOVE/ABANDON LIMITS
40	a	REMOVE Conc. Str.	264+85	112′ Lt.-142′ Lt.
	b	REMOVE PIPE	264+80	78′ Lt.-112′ Lt.
				88′ Rt.-140′ Rt.
			264+90	78′ Lt.-112′ Lt.
				88′ Rt.-140′ Rt.
	c	ABANDON PIPE	264+80	MEDIAN DI - 88′ Rt.
			264+90	78′ Lt.-88′ Rt.

REMOVAL/ABANDON SUMMARY				
SYSTEM NO.	XX	DESCRIPTION	SR-91 LOL STATION	REMOVE/ABANDON LIMITS
44	a	REMOVE HEADWALL	266+50	133′ Lt.
	b	ABANDON PIPE		133′ Lt.-100′ Rt.
	c	REMOVE HEADWALL	267+00	118′ Lt.
	d	ABANDON PIPE		118′ Lt.-110′ Rt.
	e	REMOVE HEADWALL	267+50	110′ Lt.
	f	ABANDON PIPE		110′ Lt.-105′ Rt.
	g	ABANDON PIPE	268+00	98′ Lt.-102′ Rt.
	h	REMOVE HEADWALL	268+50	102′ Lt.
	i	ABANDON PIPE		102′ Lt.-99′ Rt.
	j	REMOVE HEADWALL	269+00	100′ Lt.
	k	ABANDON PIPE		100′ Lt.-97′ Rt.
	l	ABANDON PIPE	269+50	MEDIAN DI - 95′ Rt.

REMOVAL/ABANDON SUMMARY				
SYSTEM NO.	XX	DESCRIPTION	SR-91 LOL STATION	REMOVE/ABANDON LIMITS
44	m	REMOVE HEADWALL	270+00	95′ Lt.
	n	ABANDON PIPE		95′ Lt.-95′ Rt.
	o	REMOVE HEADWALL	270+50	92′ Lt.
	p	ABANDON PIPE		92′ Lt.-94′ Rt.
	q	REMOVE HEADWALL	271+00	88′ Lt.
	r	ABANDON PIPE		88′ Lt.-92′ Rt.
	s	REMOVE HEADWALL	271+50	84′ Lt.
	t	ABANDON PIPE		84′ Lt.-94′ Rt.
	u	REMOVE HEADWALL		94′ Rt.
	v	ABANDON PIPE	272+00	MEDIAN - 90′ Rt.
	w	REMOVE HEADWALL		90′ Rt.
	x	REMOVE HEADWALL	275+50	74′ Lt.

REMOVAL/ABANDON SUMMARY				
SYSTEM NO.	XX	DESCRIPTION	SR-91 LOL STATION	REMOVE/ABANDON LIMITS
44	y	ABANDON PIPE	275+50	74′ Lt.-88′ Rt.
	z	REMOVE HEADWALL		88′ Rt.
	aa	REMOVE HEADWALL	276+00	76′ Lt.
	ab	ABANDON PIPE		76′ Lt.-84′ Rt.
	ac	REMOVE HEADWALL		84′ Rt.
	ad	REMOVE HEADWALL	277+00	80′ Lt.
	ae	ABANDON PIPE		80′ Lt.-80′ Rt.
	af	REMOVE HEADWALL		80′ Rt.
	ag	ABANDON PIPE	278+00	MEDIAN DI - 76′ Rt.
	ah	REMOVE HEADWALL		76′ Rt.
	ai	ABANDON PIPE	279+50	90′ Lt.-78′ Rt.
	aj	REMOVE HEADWALL		78′ Rt.

DRAINAGE SYSTEM No. 40 & 44

ABANDON AND REMOVAL LIMITS

THIS PLAN ACCURATE FOR DRAINAGE WORK ONLY.

DRAINAGE DETAILS

SCALE: 1" = 50′

DD-39

STATE OF CALIFORNIA - DEPARTMENT OF TRANSPORTATION

Caltrans® DESIGN

FUNCTIONAL SUPERVISOR: MARK PERTILE

CALCULATED-DESIGNED BY: MOHAMMAD ABDRABOH

CHECKED BY: ALAN R. BISI

REVISED BY | DATE REVISED

LAST REVISION 12-01-10 | DATE PLOTTED => 29-APR-2011 | TIME PLOTTED => 18:48

Dist	COUNTY	ROUTE	POST MILES TOTAL PROJECT	SHEET No.	TOTAL SHEETS
08	Riv	91	15.6/21.6	313	2028

REGISTERED CIVIL ENGINEER 3-29-10 DATE

4-25-11
PLANS APPROVAL DATE

REGISTERED PROFESSIONAL ENGINEER ALAN R. BISI No. C62808 Exp. 6-30-12 CIVIL STATE OF CALIFORNIA

THE STATE OF CALIFORNIA OR ITS OFFICERS OR AGENTS SHALL NOT BE RESPONSIBLE FOR THE ACCURACY OR COMPLETENESS OF SCANNED COPIES OF THIS PLAN SHEET.

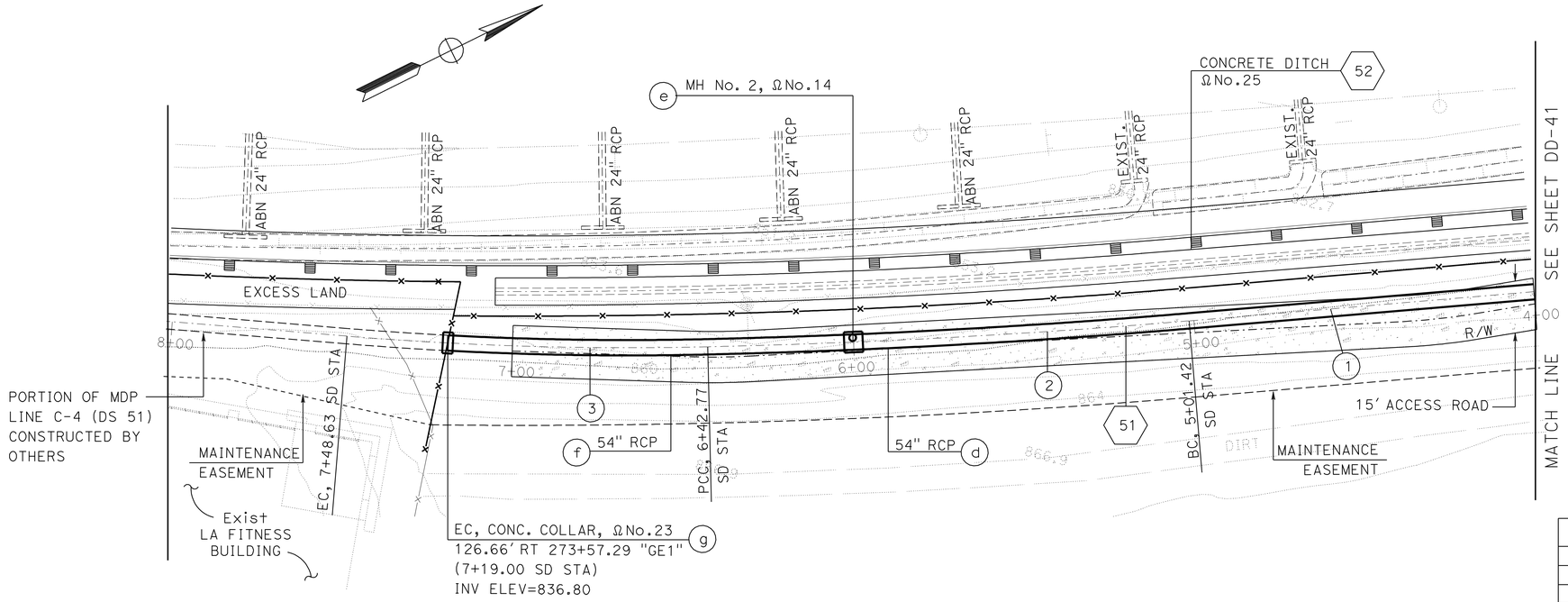

STORM DRAIN ALIGNMENT DATA (THIS SHEET ONLY)				
No.	R	Δ/BEARING	T	L
1		N 16°57'32" E		167.49
2	2328.00	3°28'44"	70.70	141.35
3	1000.00	4°22'04"	38.13	76.23

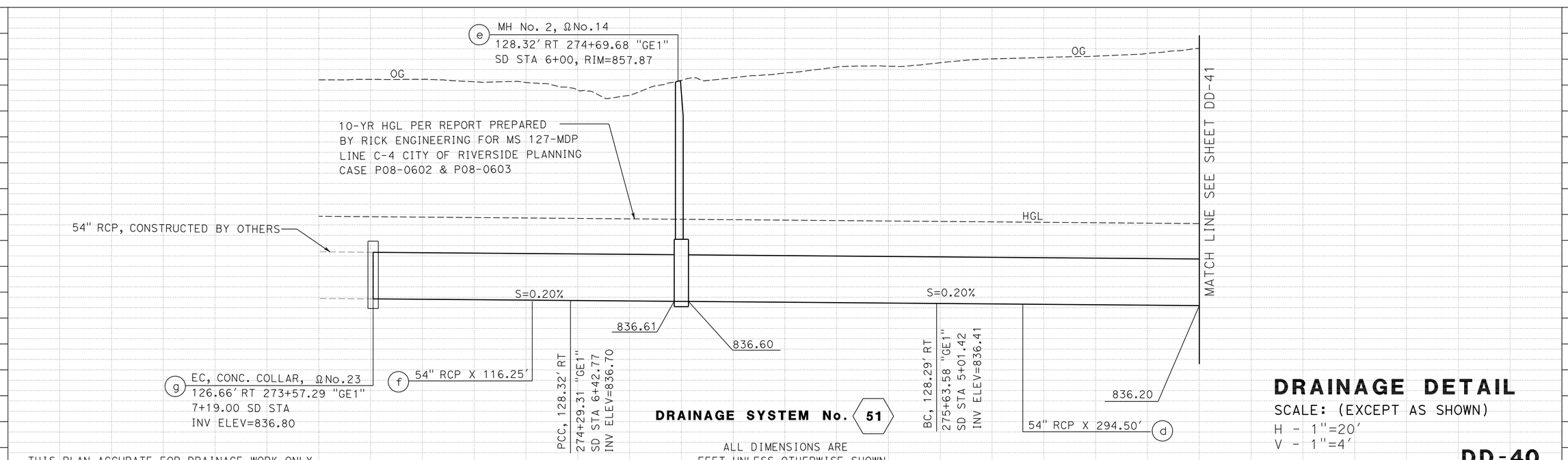

DRAINAGE DETAIL

SCALE: (EXCEPT AS SHOWN)
H - 1"=20'
V - 1"=4'

DD-40

THIS PLAN ACCURATE FOR DRAINAGE WORK ONLY.

STATE OF CALIFORNIA - DEPARTMENT OF TRANSPORTATION
Caltrans
DESIGN
FUNCTIONAL SUPERVISOR: MARK PERTILE
CALCULATED-DESIGNED BY: MOHAMMAD ABDRABOH
CHECKED BY: ALAN R. BISI
REVISED BY
DATE REVISED

LAST REVISION 03-29-11
DATE PLOTTED => 29-APR-2011
TIME PLOTTED => 18:48

Dist	COUNTY	ROUTE	POST MILES TOTAL PROJECT	SHEET No.	TOTAL SHEETS
08	Riv	91	15.6/21.6	314	2028

REGISTERED CIVIL ENGINEER 3-29-10 DATE

4-25-11
PLANS APPROVAL DATE

REGISTERED PROFESSIONAL ENGINEER ALAN R. BISI No. C62808 Exp. 6-30-12 CIVIL STATE OF CALIFORNIA

THE STATE OF CALIFORNIA OR ITS OFFICERS OR AGENTS SHALL NOT BE RESPONSIBLE FOR THE ACCURACY OR COMPLETENESS OF SCANNED COPIES OF THIS PLAN SHEET.

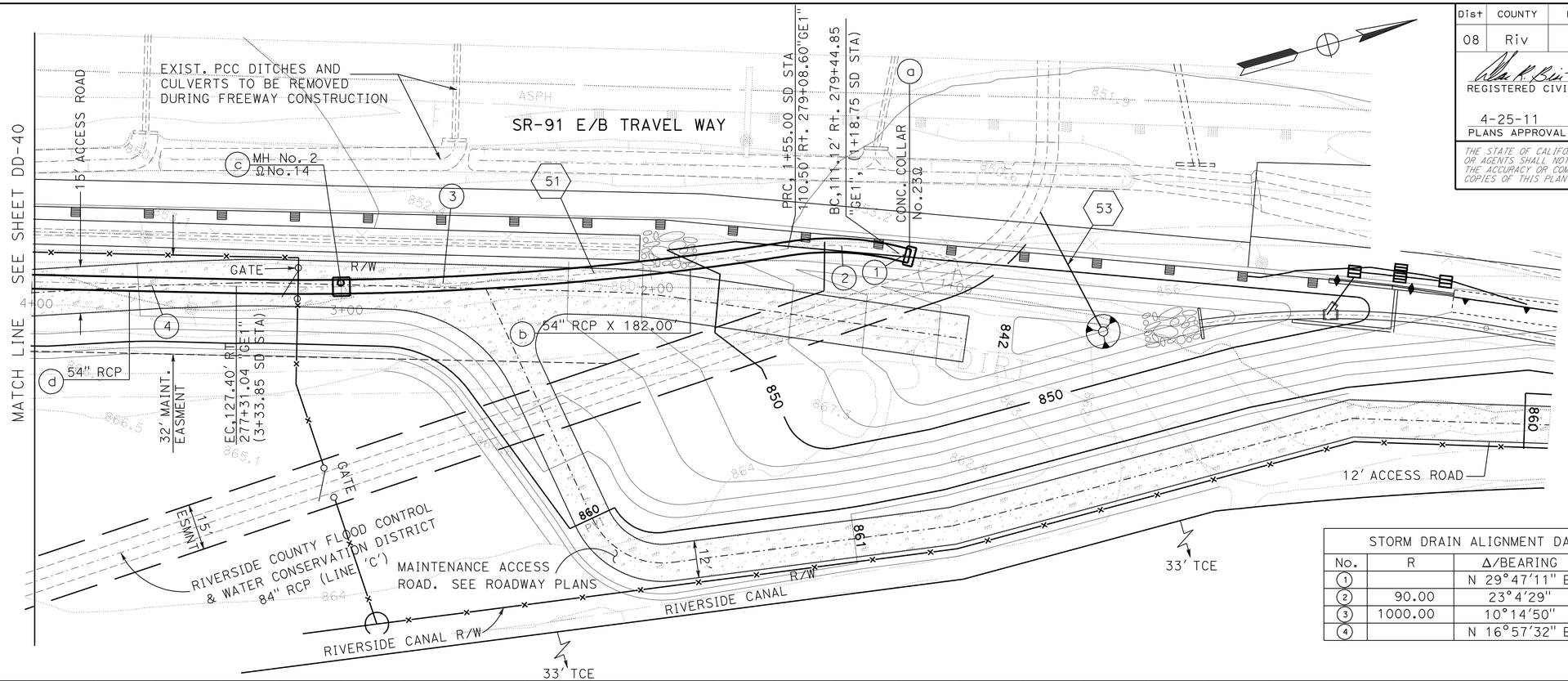

STORM DRAIN ALIGNMENT DATA (THIS SHEET ONLY)				
No.	R	Δ/BEARING	T	L
1		N 29°47'11" E		3.45
2	90.00	23°4'29"	18.37	36.25
3	1000.00	10°14'50"	89.66	178.85
4		N 16°57'32" E		167.49

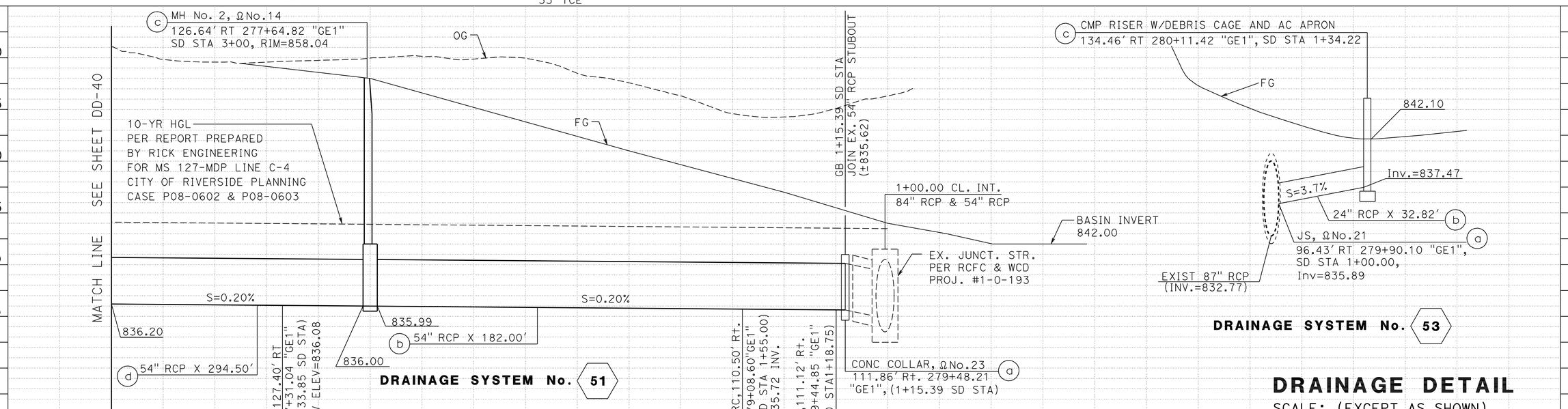

DRAINAGE DETAIL

SCALE: (EXCEPT AS SHOWN)
H - 1"=20'
V - 1"=4'

THIS PLAN ACCURATE FOR DRAINAGE WORK ONLY.

ALL DIMENSIONS ARE FEET UNLESS OTHERWISE SHOWN

DD-41

THIS PLAN ACCURATE FOR DRAINAGE WORK ONLY.

STATE OF CALIFORNIA - DEPARTMENT OF TRANSPORTATION
Caltrans DESIGN
FUNCTIONAL SUPERVISOR MARK PERTILE
CALCULATED-DESIGNED BY MOHAMMAD ABDRABOH
CHECKED BY ALAN R. BISI
REVISED BY
DATE REVISED
LAST REVISION 03-29-11
DATE PLOTTED => 29-APR-2011
TIME PLOTTED => 18:48

Dist	COUNTY	ROUTE	POST MILES TOTAL PROJECT	SHEET No.	TOTAL SHEETS
08	Riv	91	15.6/21.6	315	2028

REGISTERED CIVIL ENGINEER 3-29-10 DATE

4-25-11
PLANS APPROVAL DATE

REGISTERED PROFESSIONAL ENGINEER ALAN R. BISI No. C62808 Exp. 6-30-12 CIVIL STATE OF CALIFORNIA

THE STATE OF CALIFORNIA OR ITS OFFICERS OR AGENTS SHALL NOT BE RESPONSIBLE FOR THE ACCURACY OR COMPLETENESS OF SCANNED COPIES OF THIS PLAN SHEET.

QUANTITIES

Minor Concrete (Water Quality Outlet Riser) 5.1CY

Miscellaneous Metal (Overflow Riser):

Ladder	10 LB/LF
Debris Rack Cage	204 LB
Anchor Bolts	9 LB
Wire Mesh & Support Frame	101 LB
Guide Angles	9 LB
Band Clamp	9 LB

DESIGN DATA

REINFORCED CONCRETE:
Minor Concrete
F_y = 60,000 psi

NOTE:

1. Seal bolt holes and coat connection steel with asphalt mastic (ASTM A491). Trowel asphalt mastic a minimum of 1/2" thick on and around connection steel. Use mastic to fill corrugations behind washer plates.

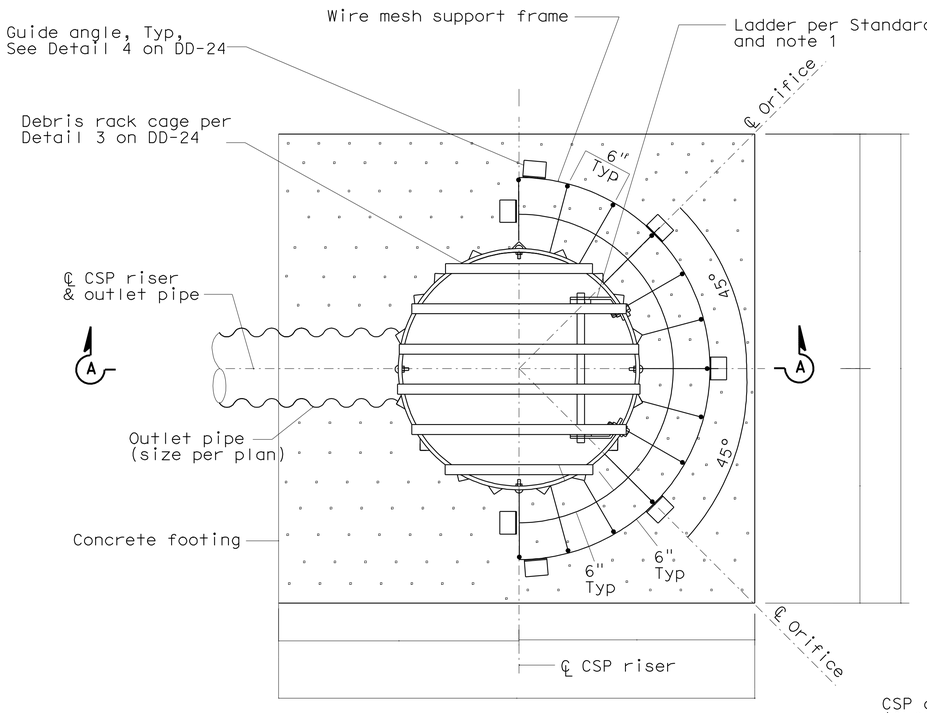

PLAN

DRAINAGE SYSTEMS APPLICABLE TO THIS SHEET		
31c	53c	59e
136c	137d	

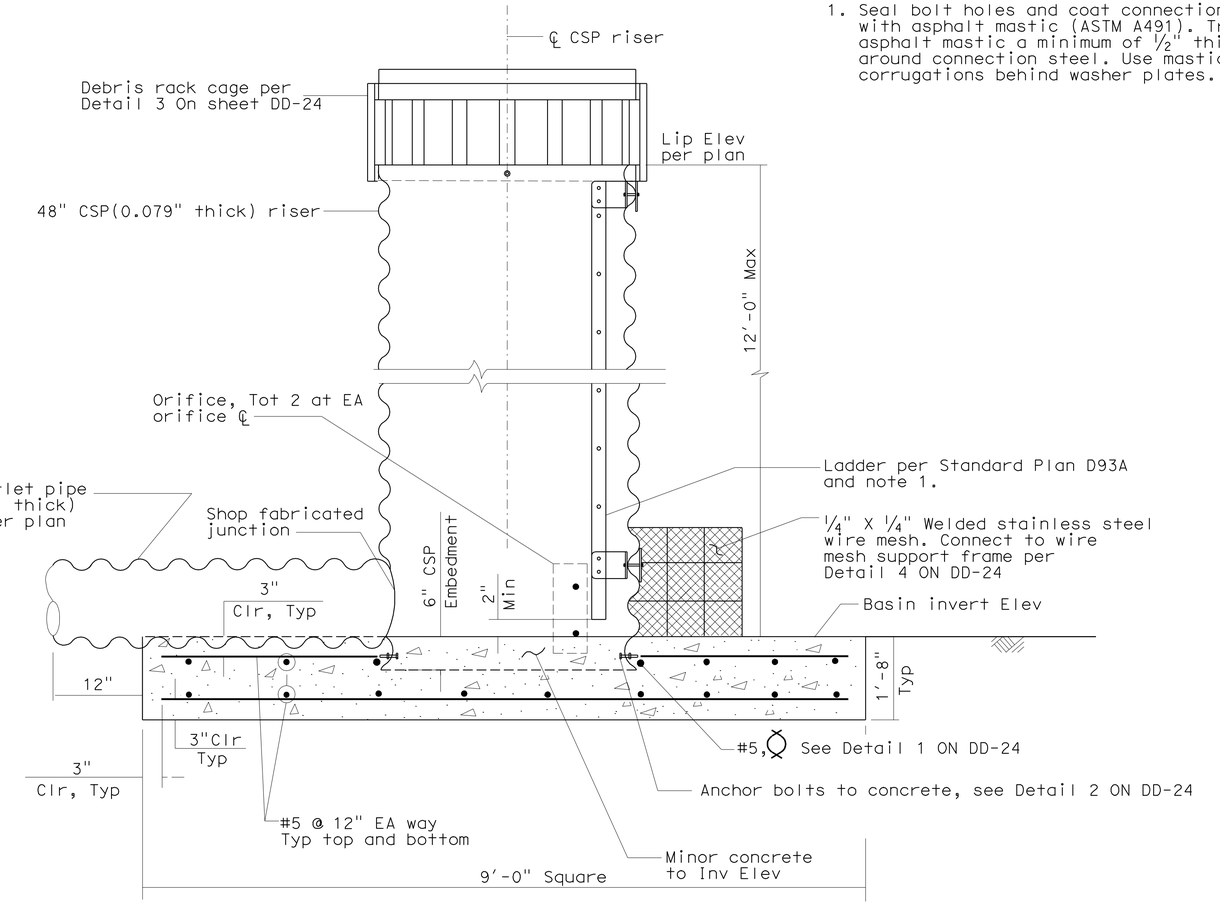

SECTION A-A

WATER QUALITY OUTLET RISER - TYPE 1

DRAINAGE DETAILS

NO SCALE

DD-42

THIS PLAN ACCURATE FOR DRAINAGE WORK ONLY.

STATE OF CALIFORNIA - DEPARTMENT OF TRANSPORTATION
Caltrans DESIGN
FUNCTIONAL SUPERVISOR: MARK PERTILE
CALCULATED-DESIGNED BY: MOHAMMAD ABDRABOH
CHECKED BY: ALAN R. BISI
REVISED BY
DATE REVISED

LAST REVISION 03-29-11
DATE PLOTTED => 29-APR-2011
TIME PLOTTED => 18:48

Dist	COUNTY	ROUTE	POST MILES TOTAL PROJECT	SHEET No.	TOTAL SHEETS
08	Riv	91	15.6/21.6	316	2028

REGISTERED CIVIL ENGINEER 3-29-10 DATE

4-25-11
PLANS APPROVAL DATE

REGISTERED PROFESSIONAL ENGINEER ALAN R. BISI No. C62808 Exp. 6-30-12 CIVIL STATE OF CALIFORNIA

THE STATE OF CALIFORNIA OR ITS OFFICERS OR AGENTS SHALL NOT BE RESPONSIBLE FOR THE ACCURACY OR COMPLETENESS OF SCANNED COPIES OF THIS PLAN SHEET.

LAYOUT NOTE:

1. FOR COMPLETE RIGHT OF WAY AND ACCURATE ACCESS DATA, SEE RIGHT OF WAY MAPS AT DISTRICT OFFICE.
2. SYSTEM 69 (CONC. DITCH) NOT SHOWN FOR CLARITY.
3. CONTRACTOR TO REMOVE ABANDONED CULVERTS 5-FEET BEYOND STATE RIGHT-OF-WAY. ENDS OF PIPE SHALL BE CAPPED WITH CONCRETE PLUG PER CALTRANS STANDARD SPECIFICATIONS OR AS DIRECTED BY ENGINEER.
4. HEADWALL SHALL BE POURED MONOTHICALLY WITH CHANNEL.

CURVE DATA

NO	R	BEARING/Δ	T	L
1	15000.00	1°22'53"	180.84	361.67

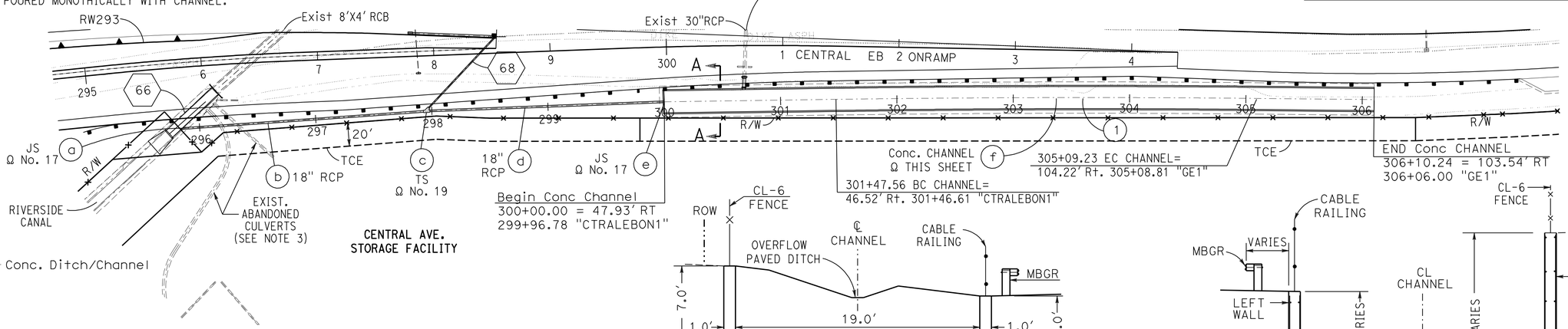

CENTRAL AVE. STORAGE FACILITY

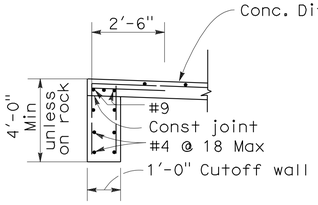

CUTOFF WALL DETAIL
NO SCALE

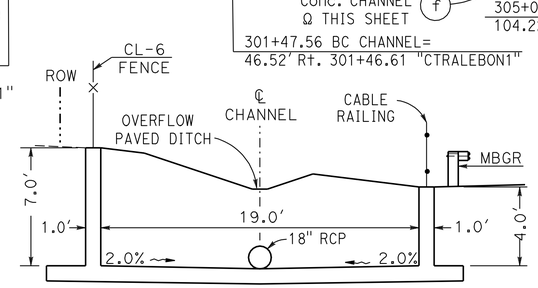

HEADWALL FRONT VIEW A-A
NO SCALE

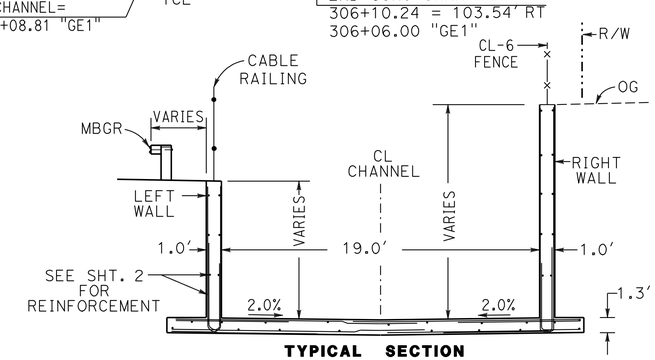

TYPICAL SECTION (LOOKING UPSTREAM)
NO SCALE

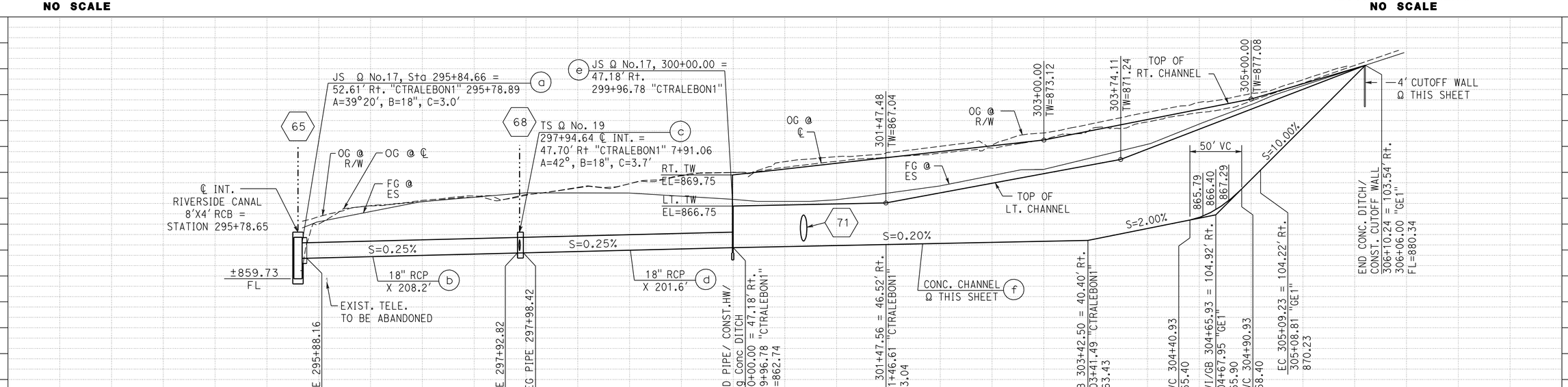

DRAINAGE SYSTEM No.67
SHEET 1 OF 3

DRAINAGE DETAILS
SCALE: (EXCEPT AS SHOWN)
H - 1"=50'
V - 1"=5'

THIS PLAN ACCURATE FOR DRAINAGE WORK ONLY.

DD-43

STATION		296	297	298	299	300	301	302	303	304	305	306	TOTAL
CY	Exc												
	Emb												

REVISED BY | DATE REVISED
MOHAMMAD ABDRABOH | ALAN R. BISI
CALCULATED-DESIGNED BY | CHECKED BY
FUNCTIONAL SUPERVISOR: MARK PERTILE
STATE OF CALIFORNIA - DEPARTMENT OF TRANSPORTATION
Caltrans DESIGN

LAST REVISION 03-29-11 | DATE PLOTTED => 29-APR-2011 | TIME PLOTTED => 18:49

Dist	COUNTY	ROUTE	POST MILES TOTAL PROJECT	SHEET No.	TOTAL SHEETS
08	Riv	91	15.6/21.6	317	2028

REGISTERED CIVIL ENGINEER 4-11-10 DATE

4-25-11
PLANS APPROVAL DATE

REGISTERED PROFESSIONAL ENGINEER ALAN R. BISI No. C62808 Exp. 6-30-12 CIVIL STATE OF CALIFORNIA

THE STATE OF CALIFORNIA OR ITS OFFICERS OR AGENTS SHALL NOT BE RESPONSIBLE FOR THE ACCURACY OR COMPLETENESS OF SCANNED COPIES OF THIS PLAN SHEET.

DATA		LEFT SIDE			RIGHT SIDE		
DESIGN H		6′	10′	6′	10′	12′	6′
LOCATION	FROM	300+00	301+48	305+44	300+00	301+48	305+44
(SD STATIONING)	TO	301+48	305+44	306+10	301+48	305+44	306+10
T1		1.0′	1.0′	1.0′	1.0′	1.0′	1.0′
T2		1.3′	1.3′	1.3′	1.3′	1.3′	1.3′
T3		0.7′	0.7′	0.7′	0.7′	0.7′	0.7′
B		3.0′	4.3′	3.0′	4.3′	5.0′	3.0′
C		1.3′	2.0′	1.3′	2.0′	2.3′	1.3′
A BARS		#5@12	#6@12	#5@12	#6@12	#6@12	#5@12
B BARS		#5@12	#5@12	#5@12	#5@12	#5@12	#5@12
C BARS		#5@12	#6@12	#5@12	#6@12	#6@12	#5@12
D BARS		#5@12	#5@12	#5@12	#5@12	#5@12	#5@12
E BARS		#5@12	#5@12	#5@12	#5@12	#5@12	#5@12
F BARS		#5@12	#5@12	#5@12	#5@12	#5@12	#5@12

NOTES

1. Channel concrete shall be structural concrete, box culvert.
2. All longitudinal bars shall be #4 @ 18 inches unless otherwise noted. Place bars in bottom slab symmetrically about centerline. Place bars in walls starting at top with 2 inches of clear cover.
3. Clear cover for steel shall be 2 inches for walls and 3 inches each face for bottom slab.
4. Steel is dimensioned to back of bar bend.
5. For construction on curves, straight transverse bars. shall be aligned radially with spacing measured at face of wall. For L-bars in walls, spacing shall be measured between the vertical legs of bars.
6. All transverse construction joints shall be in a vertical plane normal to the centerline and the spacing thereof shall not exceed 50 feet or be less than 10 feet. Continuous keyways shall be constructed as shown in detail 'A'. A complete curtain of transverse steel shall be placed 3 inches from each face of the joints and longitudinal steel will not be continuous through the joints. In addition, expansion joints shall be constructed as shown in detail B. Dowels shall be placed at 12 inches spacing centered in the middle third of the bottom slab and the top third of side walls. A minimum of 3 dowels per slab and walls shall be placed.
7. Weepholes shall be formed as shown in both walls at a spacing of 10 feet with one cubic foot of pervious Backfill material wrapped in filter fabric, securely tied and placed at each hole.
8. All splices are subject to approval by the Engineer.

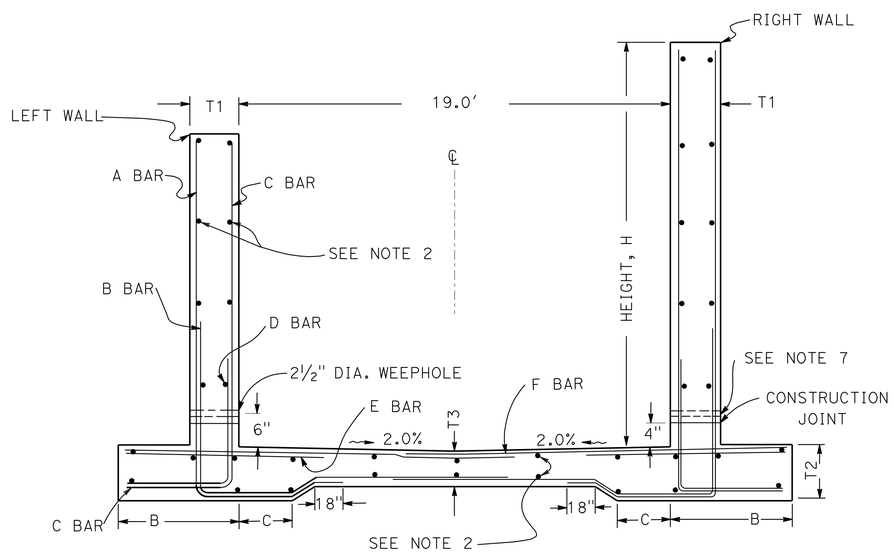

TYPICAL SECTION
(LOOKING UPSTREAM)

DESIGN DATA:
LIVE LOAD =
SOIL DENSITY =
ALLOWABLE STRESSES:
$f_c' =$ $f_c =$
$f_y =$ $f_s =$

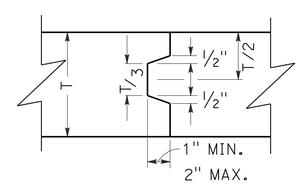

TRANSVERSE CONSTRUCTION JOINT
DETAIL A

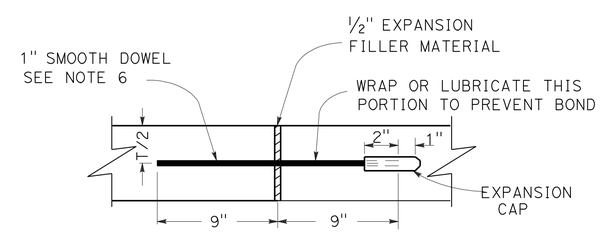

TRANSVERSE EXPANSION JOINT
DETAIL B

CONCRETE CHANNEL DETAIL
SHEET 2 OF 3

THIS PLAN ACCURATE FOR DRAINAGE WORK ONLY.

DRAINAGE DETAILS
NO SCALE
DD-44

STATE OF CALIFORNIA - DEPARTMENT OF TRANSPORTATION
Caltrans® DESIGN
FUNCTIONAL SUPERVISOR MARK PERTILE
CALCULATED-DESIGNED BY MOHAMMAD ABDRABOH
CHECKED BY ALAN R. BISI
REVISED BY
DATE REVISED

LAST REVISION 04-11-11
DATE PLOTTED => 11-JUL-2011
TIME PLOTTED => 13:48

Dist	COUNTY	ROUTE	POST MILES TOTAL PROJECT	SHEET No.	TOTAL SHEETS
08	Riv	91	15.6/21.6	318	2028

REGISTERED CIVIL ENGINEER 4-11-10 DATE

4-25-11
PLANS APPROVAL DATE

REGISTERED PROFESSIONAL ENGINEER ALAN R. BISI No. C62808 Exp. 6-30-12 CIVIL STATE OF CALIFORNIA

THE STATE OF CALIFORNIA OR ITS OFFICERS OR AGENTS SHALL NOT BE RESPONSIBLE FOR THE ACCURACY OR COMPLETENESS OF SCANNED COPIES OF THIS PLAN SHEET.

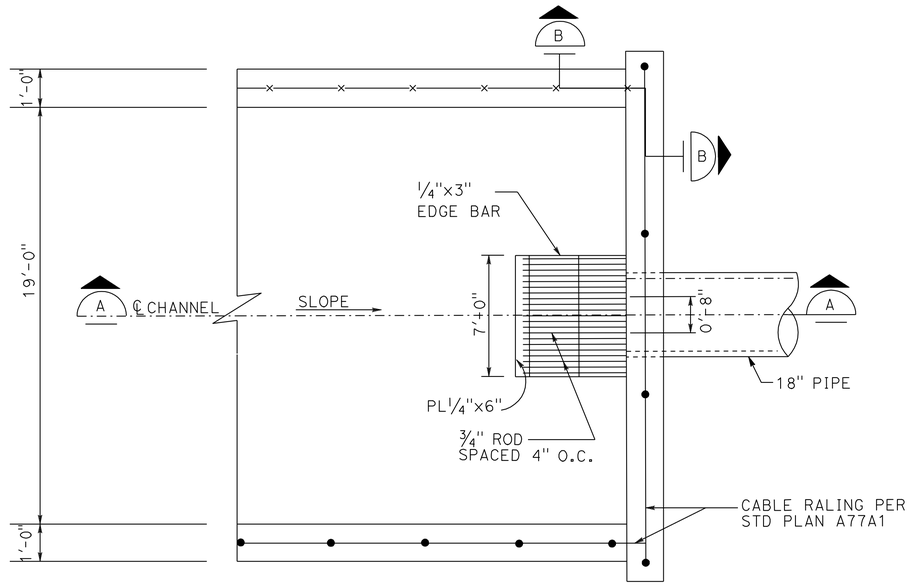

PLAN
NO SCALE

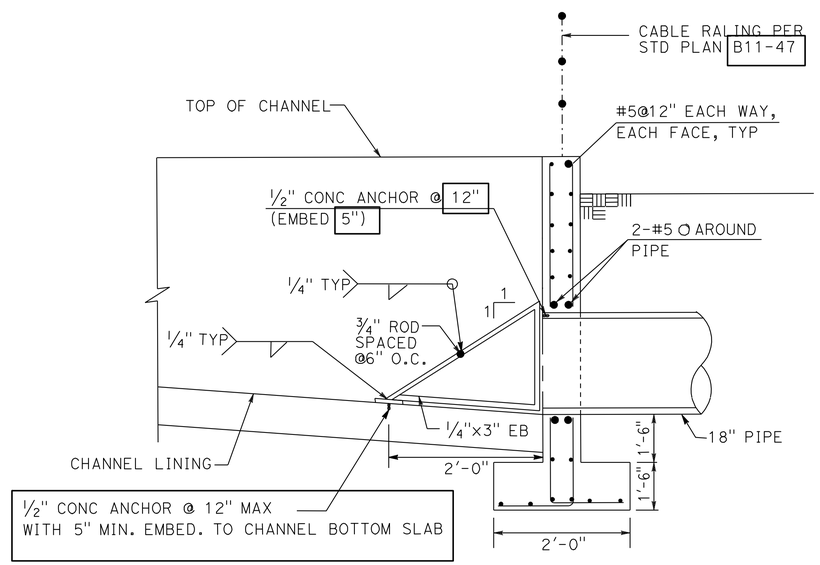

SECTION A
NO SCALE

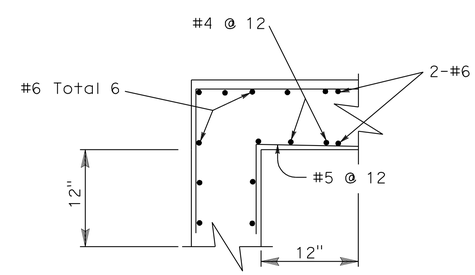

SECTION B
NO SCALE

CONCRETE CHANNEL DETAIL

SHEET 3 OF 3

THIS PLAN ACCURATE FOR DRAINAGE WORK ONLY.

DRAINAGE DETAILS

NO SCALE

DD-45

STATE OF CALIFORNIA - DEPARTMENT OF TRANSPORTATION
Caltrans®
DESIGN

FUNCTIONAL SUPERVISOR: MARK PERTILE

CALCULATED-DESIGNED BY: MOHAMMAD ABDRABOH
CHECKED BY: ALAN R. BISI

REVISED BY | DATE REVISED

LAST REVISION 04-11-11
DATE PLOTTED => 29-APR-2011
TIME PLOTTED => 18:49

Dist	COUNTY	ROUTE	POST MILES TOTAL PROJECT	SHEET No.	TOTAL SHEETS
08	Riv	91	15.6/21.6	319	2028

REGISTERED CIVIL ENGINEER 12-1-10 DATE

4-25-11
PLANS APPROVAL DATE

REGISTERED PROFESSIONAL ENGINEER ALAN R. BISI No. C62808 Exp. 6-30-12 CIVIL STATE OF CALIFORNIA

THE STATE OF CALIFORNIA OR ITS OFFICERS OR AGENTS SHALL NOT BE RESPONSIBLE FOR THE ACCURACY OR COMPLETENESS OF SCANNED COPIES OF THIS PLAN SHEET.

CONSTRUCTION NOTES:

(a) 6" PVC STORM DRAIN

(b) INSTALL 12" X 12" GRATE INLET W/STEEL GRATE (TRAFFIC RATED) PER BROOKS Std 1212CB OR EQUIVALENT. (SEE NOTE 2)

(c) 6" PVC STORM DRAIN

(d) REMOVE DI

(e) INSTALL 12" X 12" GRATE INLET W/STEEL GRATE (TRAFFIC RATED) PER BROOKS Std 1212CB OR EQUIVALENT. (SEE NOTE 2)

(f) REMOVE EXISTING STORM DRAIN

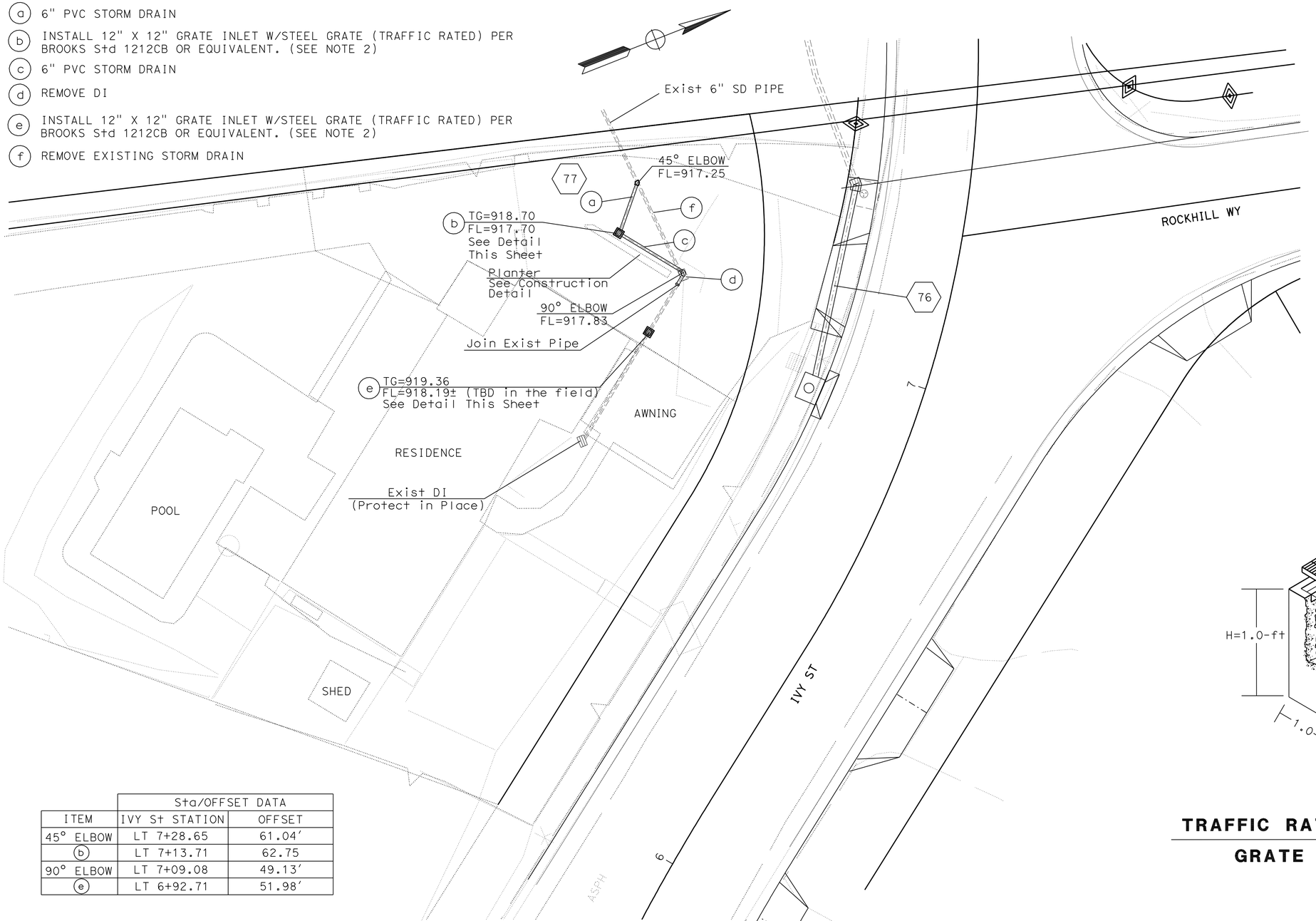

NOTE:

1. SEE ROADWAY CONSTRUCTION DETAIL FOR DRIVEWAY CONSTRUCTION
2. POSSIBLE EQUIVALENT PRODUCTS:
   NDS (MANUFACTURER):
   INLET; 12"x12" PART No. 1200, CLASS 10ND.
   GRATE; 12"x12" GALVANIZED STEEL GRATE PART No. 1215, CLASS 10ND.
3. FINAL LOCATION OF ALL PIPE BENDS AND STRUCTURES SHALL BE DETERMINED IN THE FIELD BY THE ENGINEER.

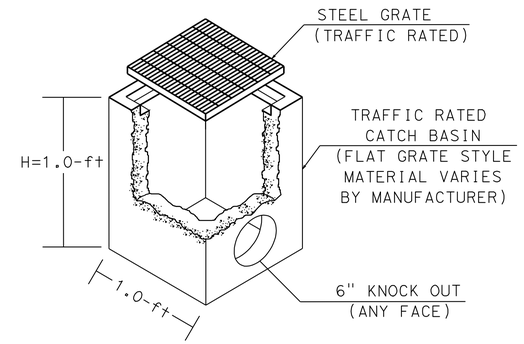

TRAFFIC RATED PRE-FABRICATED GRATE INLET (PRIVATE)

	Sta/OFFSET DATA	
ITEM	IVY St STATION	OFFSET
45° ELBOW	LT 7+28.65	61.04'
(b)	LT 7+13.71	62.75
90° ELBOW	LT 7+09.08	49.13'
(e)	LT 6+92.71	51.98'

DRAINAGE SYSTEM No. 77

THIS PLAN ACCURATE FOR DRAINAGE WORK ONLY.

DRAINAGE DETAILS

SCALE: 1" = 10'

DD-46

STATE OF CALIFORNIA - DEPARTMENT OF TRANSPORTATION
Caltrans® DESIGN
FUNCTIONAL SUPERVISOR: MARK PERTILE
MOHAMMAD ABDRABOH
ALAN R. BISI
CALCULATED-DESIGNED BY
CHECKED BY
REVISED BY
DATE REVISED

LAST REVISION 12-01-10 DATE PLOTTED => 29-APR-2011 TIME PLOTTED => 18:49

Dist	COUNTY	ROUTE	POST MILES TOTAL PROJECT	SHEET No.	TOTAL SHEETS
08	Riv	91	15.6/21.6	320	2028

REGISTERED CIVIL ENGINEER 12-1-10 DATE

4-25-11
PLANS APPROVAL DATE

REGISTERED PROFESSIONAL ENGINEER ALAN R. BISI No. C62808 Exp. 6-30-12 CIVIL STATE OF CALIFORNIA

THE STATE OF CALIFORNIA OR ITS OFFICERS OR AGENTS SHALL NOT BE RESPONSIBLE FOR THE ACCURACY OR COMPLETENESS OF SCANNED COPIES OF THIS PLAN SHEET.

CURVE DATA

No.	R	Δ	T	L
1	90.00′	61°38′45"	53.70′	96.83′
2	22.50′	66°59′32"	14.89′	26.31′
3	22.50′	88°58′17"	22.10′	34.94′

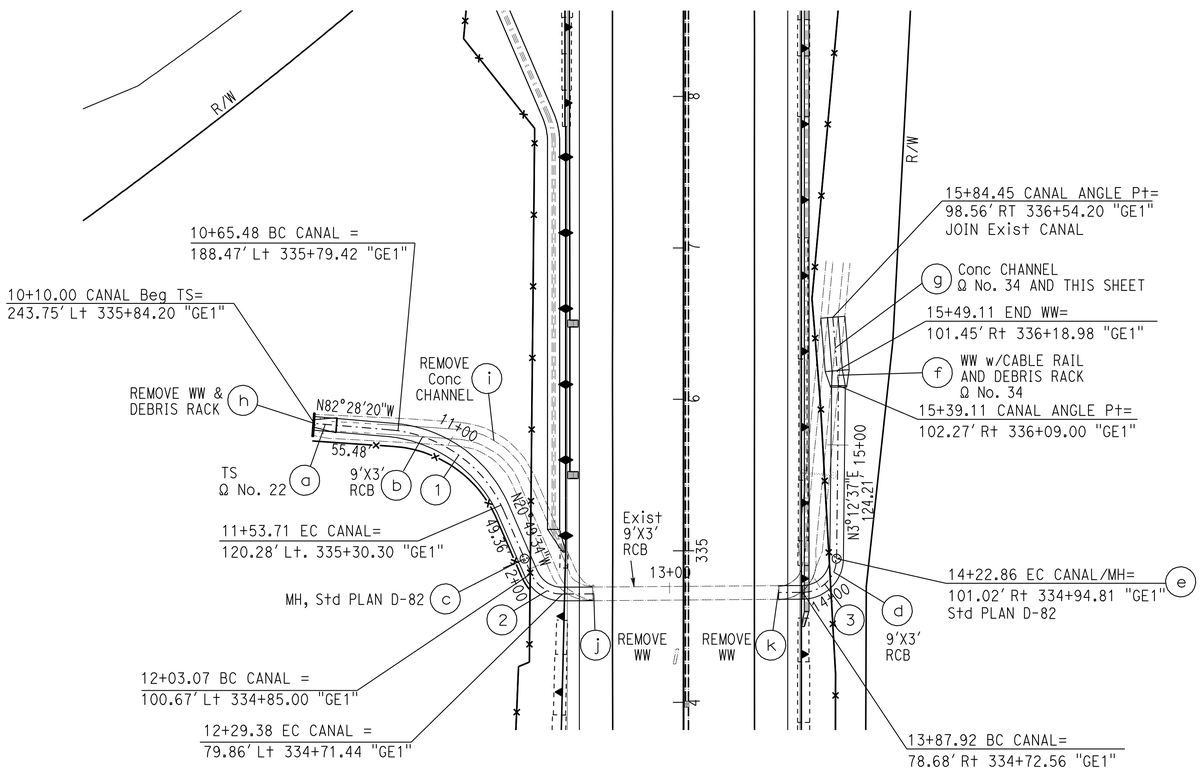

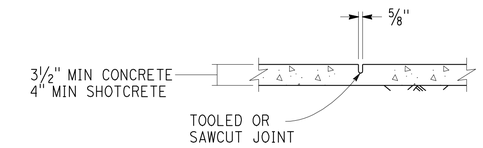

DETAIL "A" - TRANSVERSE JOINT

NOTES:

1. CONNECT EXISTING EXISTING CANAL TO NEW CANAL, Ω No.34
2. FILL UNDER NEW CANAL LINING MAY BE EITHER SELECT NATIVE MATERIAL OR SHOTCRETE (CONCRETE) AS NECESSARY TO ESTABLISH THE DESIGN GRADE. SEE SPECIFICATIONS.
3. TRANSVERSE JOINTS SPAN ENTIRE CANAL CROSS-SECTION PERPENDICULAR TO CANAL CENTERLINE.
4. INSTALL JOINTS AT 12 FEET SPACING ON ALL NEW LINING
5. SEAL JOINTS WITH ELASTOMERIC SEALER.

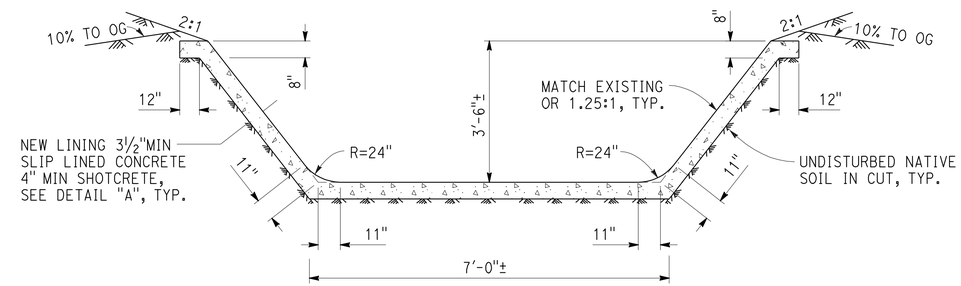

TYPICAL CANAL LINING SECTION

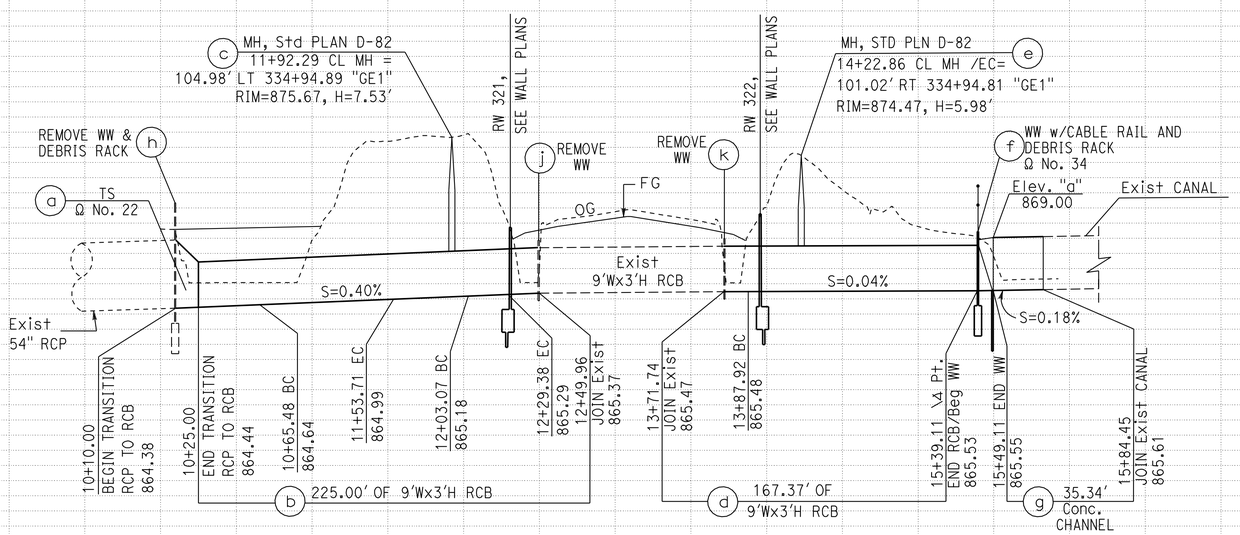

DRAINAGE SYSTEM No. 79

RIVERSIDE CANAL REALIGNMENT

THIS PLAN ACCURATE FOR DRAINAGE WORK ONLY.

DRAINAGE DETAILS

SCALE: (EXCEPT AS SHOWN)
H - 1"=50′
V - 1"=5′

DD-47

STATION	10+00	11+00	12+00	13+00	14+00	15+00	16+00	17+00	TOTAL
CY Exc									
CY Emb									

REVISED BY | DATE REVISED
MOHAMMAD ABDRABOH | ALAN R. BISI
CALCULATED-DESIGNED BY | CHECKED BY
FUNCTIONAL SUPERVISOR: MARK PERTILE
STATE OF CALIFORNIA - DEPARTMENT OF TRANSPORTATION
Caltrans DESIGN

LAST REVISION 12-01-10 | DATE PLOTTED => 29-APR-2011 | TIME PLOTTED => 18:49

Dist	COUNTY	ROUTE	POST MILES TOTAL PROJECT	SHEET No.	TOTAL SHEETS
08	Riv	91	15.6/21.6	321	2028

REGISTERED CIVIL ENGINEER 12-1-10 DATE

4-25-11
PLANS APPROVAL DATE

REGISTERED PROFESSIONAL ENGINEER ALAN R. BISI No. C62808 Exp. 6-30-12 CIVIL STATE OF CALIFORNIA

THE STATE OF CALIFORNIA OR ITS OFFICERS OR AGENTS SHALL NOT BE RESPONSIBLE FOR THE ACCURACY OR COMPLETENESS OF SCANNED COPIES OF THIS PLAN SHEET.

NOTE:

1. FOR COMPLETE RIGHT OF WAY AND ACCURATE ACCESS DATA, SEE RIGHT OF WAY MAPS AT DISTRICT OFFICE.
2. Ω: SEE DRAINAGE DETAIL NUMBER INDICATED.

ALIGNMENT DATA				
NO	R	Δ	T	L
1	1137.53′	17°43′09″	177.31′	351.79′

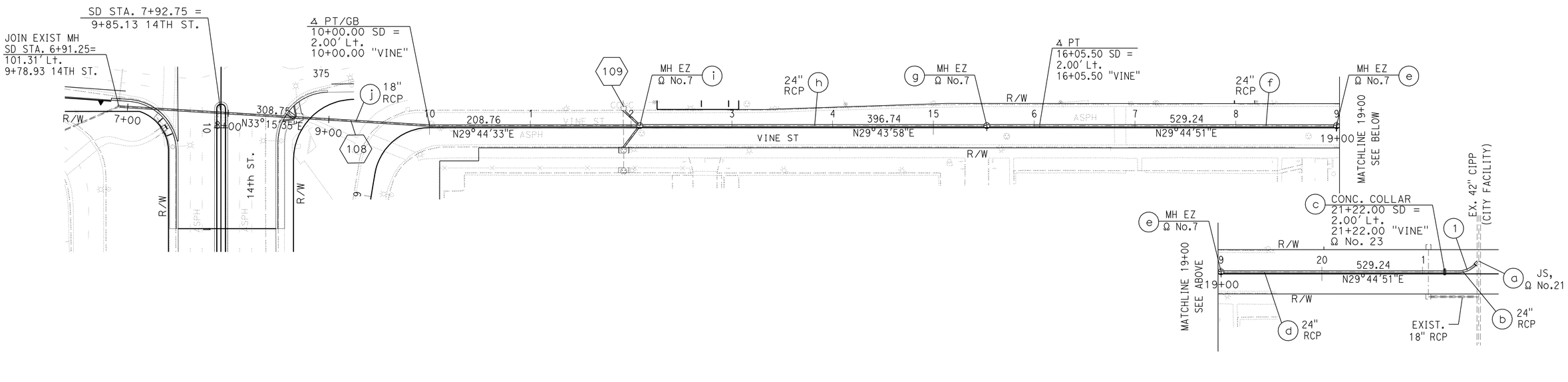

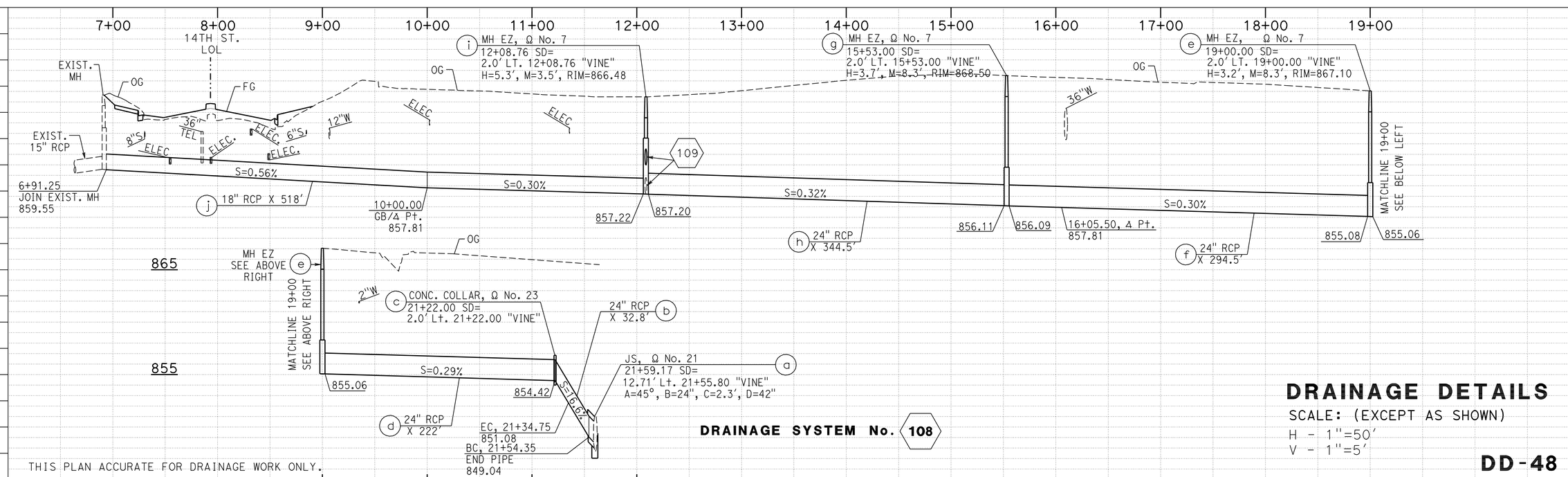

DRAINAGE DETAILS

SCALE: (EXCEPT AS SHOWN)
H - 1"=50′
V - 1"=5′

DD-48

STATE OF CALIFORNIA - DEPARTMENT OF TRANSPORTATION
Caltrans® DESIGN
FUNCTIONAL SUPERVISOR MARK PERTILE
CALCULATED-DESIGNED BY MOHAMMAD ABDRABOH
CHECKED BY ALAN R. BISI
REVISED BY
DATE REVISED

LAST REVISION 12-01-10
DATE PLOTTED => 29-APR-2011
TIME PLOTTED => 18:50

Dist	COUNTY	ROUTE	POST MILES TOTAL PROJECT	SHEET No.	TOTAL SHEETS
08	Riv	91	15.6/21.6	322	2028

REGISTERED CIVIL ENGINEER 3-29-10 DATE

4-25-11
PLANS APPROVAL DATE

REGISTERED PROFESSIONAL ENGINEER ALAN R. BISI No. C62808 Exp. 6-30-12 CIVIL STATE OF CALIFORNIA

THE STATE OF CALIFORNIA OR ITS OFFICERS OR AGENTS SHALL NOT BE RESPONSIBLE FOR THE ACCURACY OR COMPLETENESS OF SCANNED COPIES OF THIS PLAN SHEET.

LAYOUT NOTE:

1. FOR COMPLETE RIGHT OF WAY AND ACCURATE ACCESS DATA, SEE RIGHT OF WAY MAPS AT DISTRICT OFFICE.

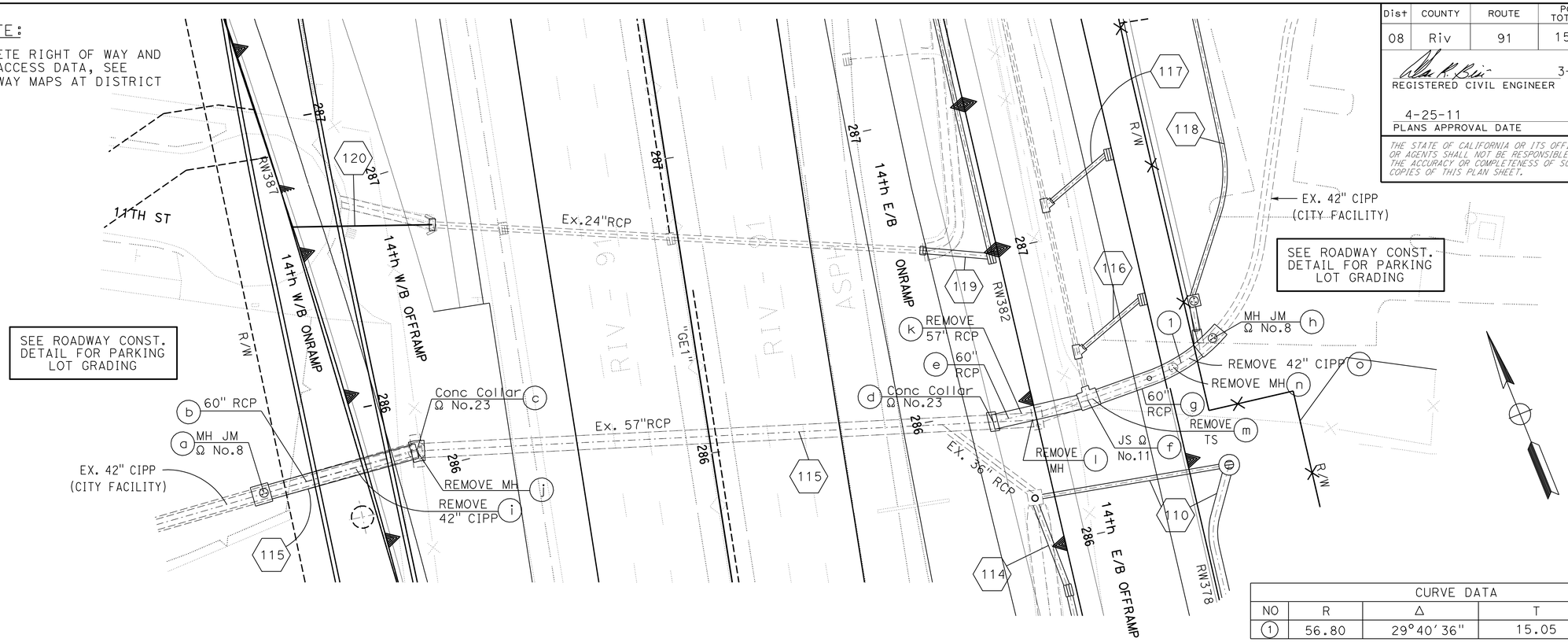

CURVE DATA				
NO	R	Δ	T	L
1	56.80	29°40′36″	15.05	29.42

PROFILE NOTE:

1. REMOVALS NOT SHOWN IN PROFILE FOR CLARITY. REFERENCE PLAN VIEW FOR REMOVAL ITEMS.

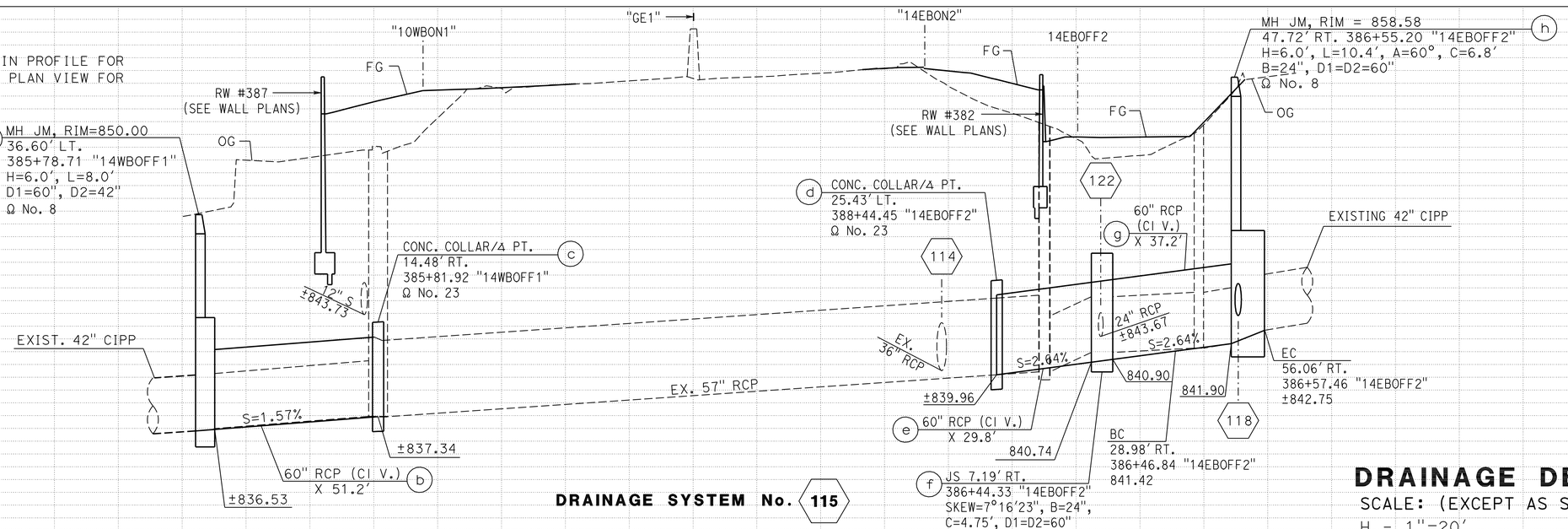

DRAINAGE SYSTEM No. 115

THIS PLAN ACCURATE FOR DRAINAGE WORK ONLY.

DRAINAGE DETAILS

SCALE: (EXCEPT AS SHOWN)
H - 1"=20′
V - 1"=4′

DD-49

STATION		TOTAL
CY	Exc	
	Emb	

STATE OF CALIFORNIA - DEPARTMENT OF TRANSPORTATION
Caltrans DESIGN

FUNCTIONAL SUPERVISOR: MARK PERTILE
CALCULATED-DESIGNED BY: MOHAMMAD ABDRABOH
CHECKED BY: ALAN R. BISI
REVISED BY / DATE REVISED

LAST REVISION 03-29-11
DATE PLOTTED => 29-APR-2011
TIME PLOTTED => 18:50

Dist	COUNTY	ROUTE	POST MILES TOTAL PROJECT	SHEET No.	TOTAL SHEETS
08	Riv	91	15.6/21.6	323	2028

REGISTERED CIVIL ENGINEER — DATE: 12-1-10

4-25-11
PLANS APPROVAL DATE

REGISTERED PROFESSIONAL ENGINEER — ALAN R. BISI — No. C62808 — Exp. 6-30-12 — CIVIL — STATE OF CALIFORNIA

THE STATE OF CALIFORNIA OR ITS OFFICERS OR AGENTS SHALL NOT BE RESPONSIBLE FOR THE ACCURACY OR COMPLETENESS OF SCANNED COPIES OF THIS PLAN SHEET.

LAYOUT NOTE:

1. FOR COMPLETE RIGHT OF WAY AND ACCURATE ACCESS DATA, SEE RIGHT OF WAY MAPS AT DISTRICT OFFICE.

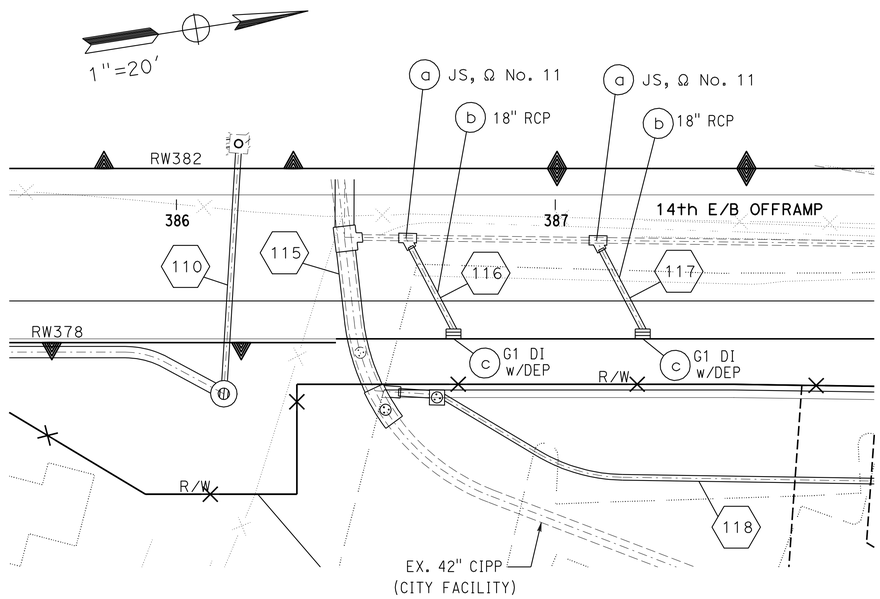

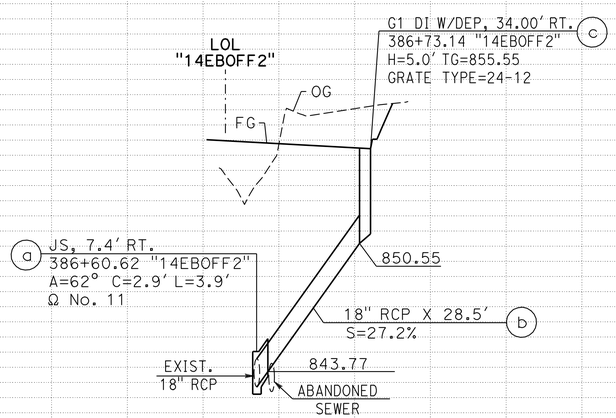

DRAINAGE SYSTEM NO. 116

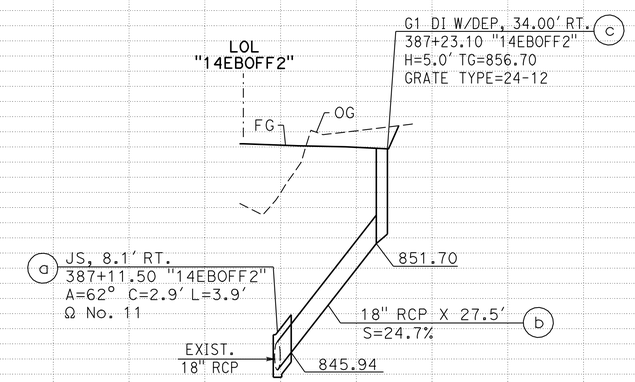

DRAINAGE SYSTEM NO. 117

DRAINAGE SYSTEM No.

116 117

THIS PLAN ACCURATE FOR DRAINAGE WORK ONLY.

DRAINAGE DETAILS

SCALE: (EXCEPT AS SHOWN)
H - 1"=20'
V - 1"=4'

DD-50

STATION		TOTAL
CY	Exc	
	Emb	

REVISED BY | DATE REVISED
MOHAMMAD ABDRABOH | ALAN R. BISI
CALCULATED-DESIGNED BY | CHECKED BY
FUNCTIONAL SUPERVISOR: MARK PERTILE

STATE OF CALIFORNIA - DEPARTMENT OF TRANSPORTATION — DESIGN — Caltrans

LAST REVISION 12-01-10 | DATE PLOTTED => 29-APR-2011 | TIME PLOTTED => 18:50

Dist	COUNTY	ROUTE	POST MILES TOTAL PROJECT	SHEET No.	TOTAL SHEETS
08	Riv	91	15.6/21.6	324	2028

REGISTERED CIVIL ENGINEER 3-29-10 DATE

4-25-11
PLANS APPROVAL DATE

REGISTERED PROFESSIONAL ENGINEER ALAN R. BISI No. C62808 Exp. 6-30-12 CIVIL STATE OF CALIFORNIA

THE STATE OF CALIFORNIA OR ITS OFFICERS OR AGENTS SHALL NOT BE RESPONSIBLE FOR THE ACCURACY OR COMPLETENESS OF SCANNED COPIES OF THIS PLAN SHEET.

NOTE:

1. FOR COMPLETE RIGHT OF WAY AND ACCURATE ACCESS DATA, SEE RIGHT OF WAY MAPS AT DISTRICT OFFICE.
2. SEE DRAINAGE DETAIL 55 FOR SPILLWAY INFORMATION.
3. SEE DRAINAGE DETAIL 24 AND 42 FOR OUTLET RISER AND MAINTENANCE VALVE INFORMATION.

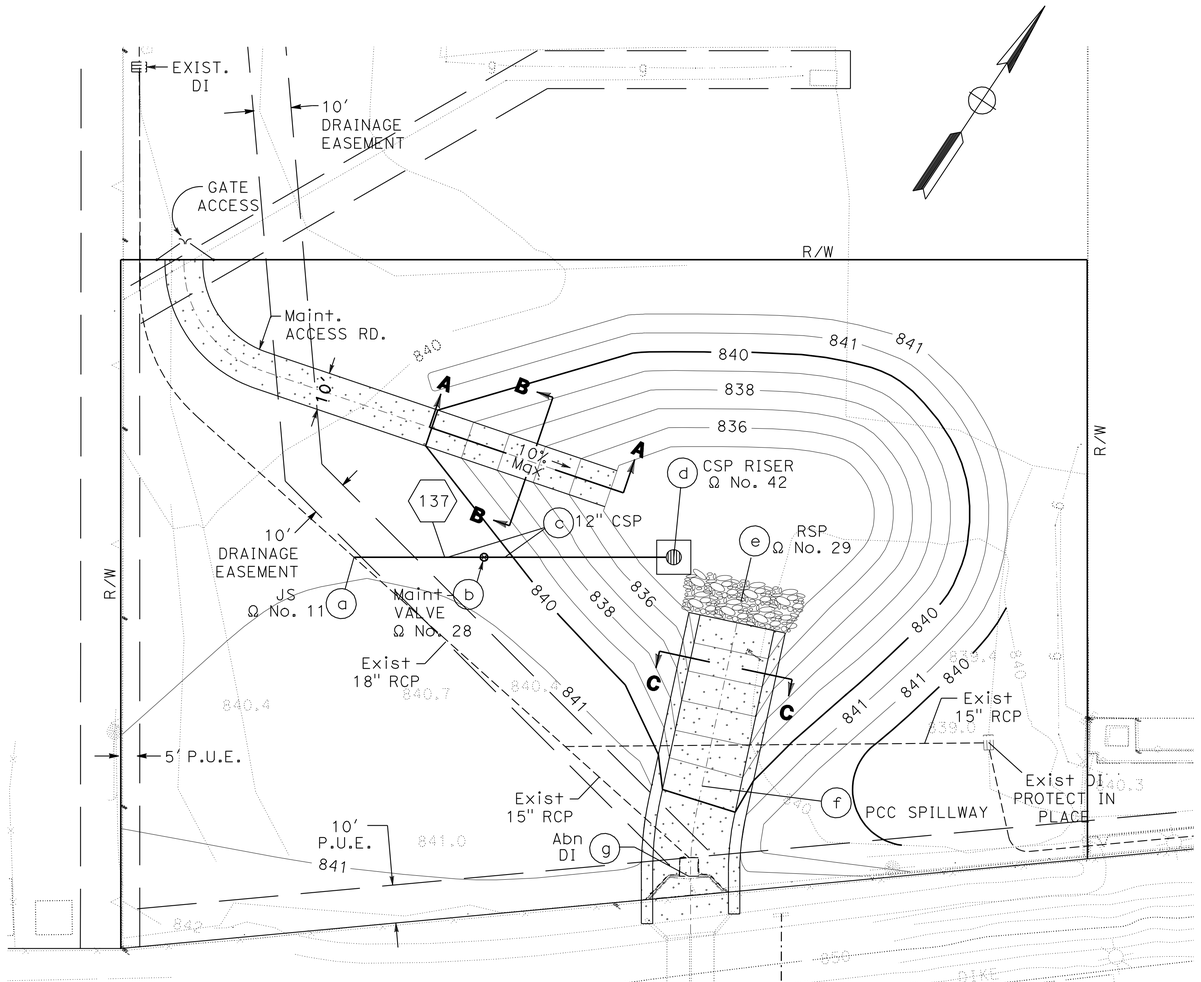

BASIN No. 1 DETAIL

Lt Sta 193+00 "F3" LINE

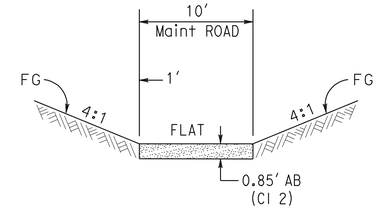

SECTION B-B

NTS

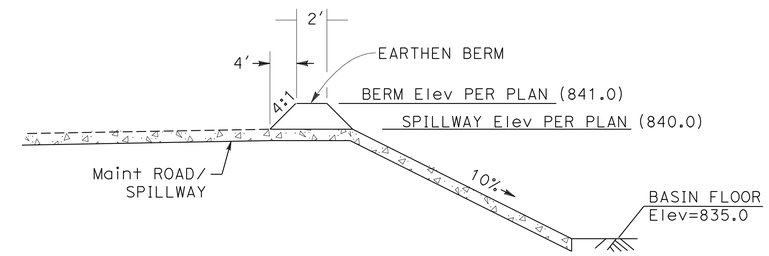

SECTION A-A

NTS

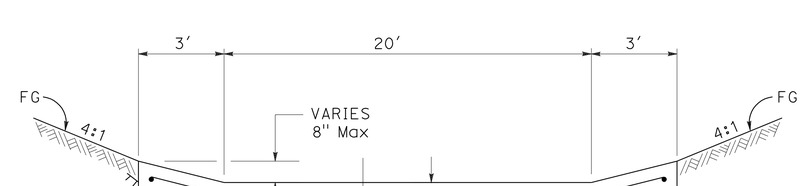

SECTION C-C

NTS

THIS PLAN ACCURATE FOR DRAINAGE WORK ONLY.

DRAINAGE DETAILS

SCALE: 1" = 20'

DD-51

STATE OF CALIFORNIA - DEPARTMENT OF TRANSPORTATION
Caltrans DESIGN
FUNCTIONAL SUPERVISOR MARK PERTILE
CALCULATED-DESIGNED BY MOHAMMAD ABDRABOH
CHECKED BY ALAN R. BISI
REVISED BY
DATE REVISED

LAST REVISION 03-29-11
DATE PLOTTED => 29-APR-2011
TIME PLOTTED => 18:50

Dist	COUNTY	ROUTE	POST MILES TOTAL PROJECT	SHEET No.	TOTAL SHEETS
08	Riv	91	15.6/21.6	325	2028

REGISTERED CIVIL ENGINEER 3-29-10 DATE

4-25-11
PLANS APPROVAL DATE

REGISTERED PROFESSIONAL ENGINEER ALAN R. BISI No. C62808 Exp. 6-30-12 CIVIL STATE OF CALIFORNIA

THE STATE OF CALIFORNIA OR ITS OFFICERS OR AGENTS SHALL NOT BE RESPONSIBLE FOR THE ACCURACY OR COMPLETENESS OF SCANNED COPIES OF THIS PLAN SHEET.

NOTE:

1. FOR COMPLETE RIGHT OF WAY AND ACCURATE ACCESS DATA, SEE RIGHT OF WAY MAPS AT DISTRICT OFFICE.
2. SEE DRAINAGE DETAIL 55 FOR SPILLWAY INFORMATION.
3. SEE DRAINAGE DETAIL 42 & 28 FOR WATER QYALITY RISER AND MAINTENANCE VALVE NFORMATION.

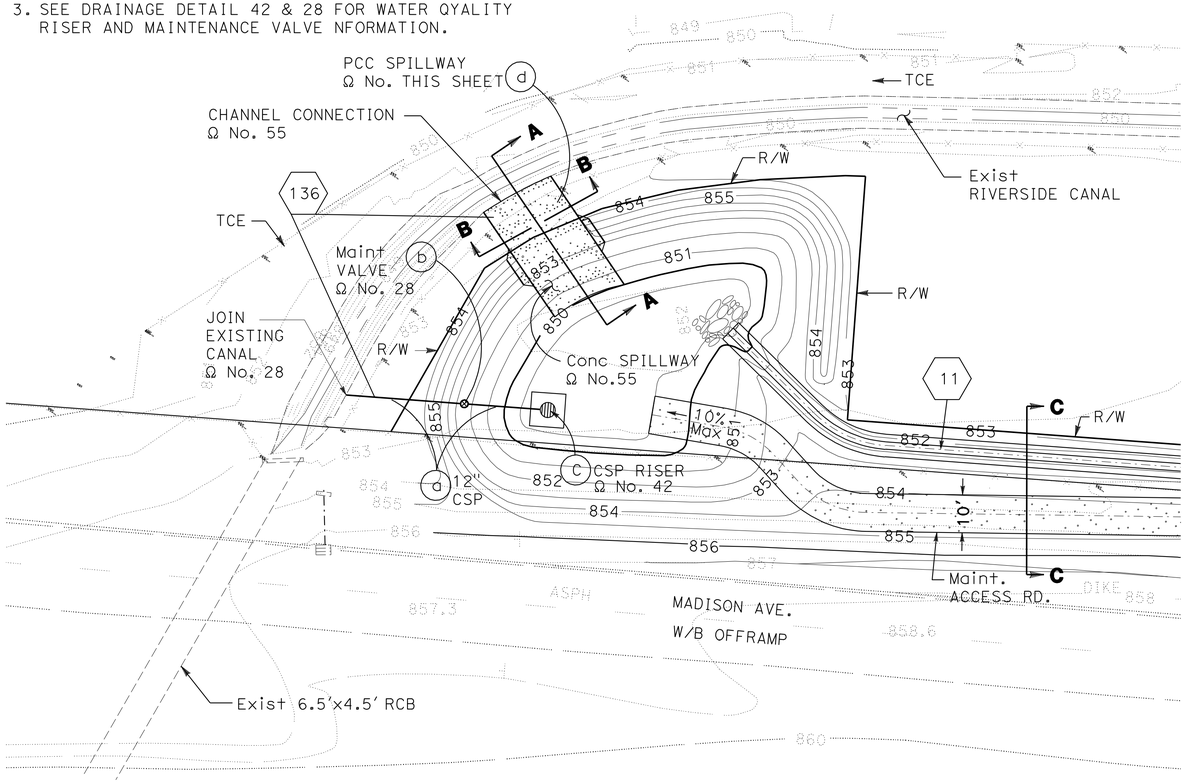

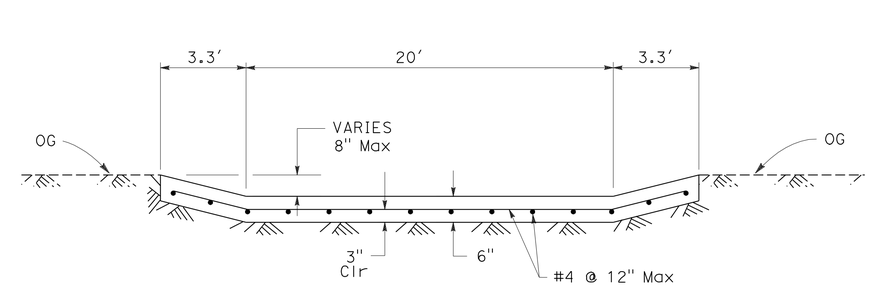

SECTION B-B
NTS

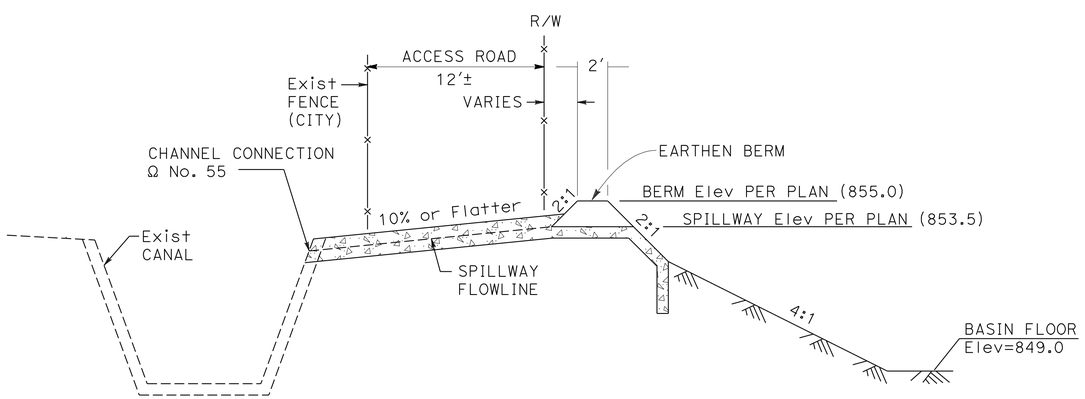

SECTION A-A
NTS

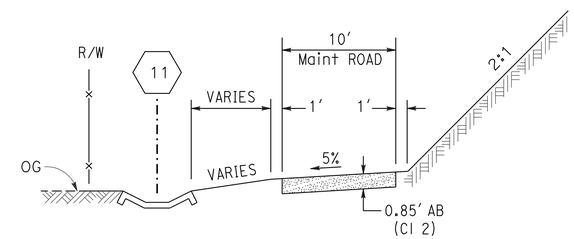

SECTION C-C
NTS

BASIN No. 2 DETAIL

Lt Sta 202+00 "F3" LINE

THIS PLAN ACCURATE FOR DRAINAGE WORK ONLY.

DRAINAGE DETAILS

SCALE: 1" = 20'

DD-52

STATE OF CALIFORNIA - DEPARTMENT OF TRANSPORTATION
Caltrans
DESIGN

FUNCTIONAL SUPERVISOR: MARK PERTILE
CALCULATED-DESIGNED BY: MOHAMMAD ABDRABOH
CHECKED BY: ALAN R. BISI
REVISED BY
DATE REVISED

LAST REVISION 03-29-11
DATE PLOTTED => 29-APR-2011
TIME PLOTTED => 18:50

Dist	COUNTY	ROUTE	POST MILES TOTAL PROJECT	SHEET No.	TOTAL SHEETS
08	Riv	91	15.6/21.6	326	2028

REGISTERED CIVIL ENGINEER — DATE 12-1-10

4-25-11
PLANS APPROVAL DATE

REGISTERED PROFESSIONAL ENGINEER — ALAN R. BISI — No. C62808 — Exp. 6-30-12 — CIVIL — STATE OF CALIFORNIA

THE STATE OF CALIFORNIA OR ITS OFFICERS OR AGENTS SHALL NOT BE RESPONSIBLE FOR THE ACCURACY OR COMPLETENESS OF SCANNED COPIES OF THIS PLAN SHEET.

NOTE:

1. FOR COMPLETE RIGHT OF WAY AND ACCURATE ACCESS DATA, SEE RIGHT OF WAY MAPS AT DISTRICT OFFICE.
2. Ω: SEE DRAINAGE DETAIL NUMBER INDICATED.
3. CONTRACTOR SHALL OMIT 10" SLOTS IN RISER, AS SHOWN ON Std PLAN D93C

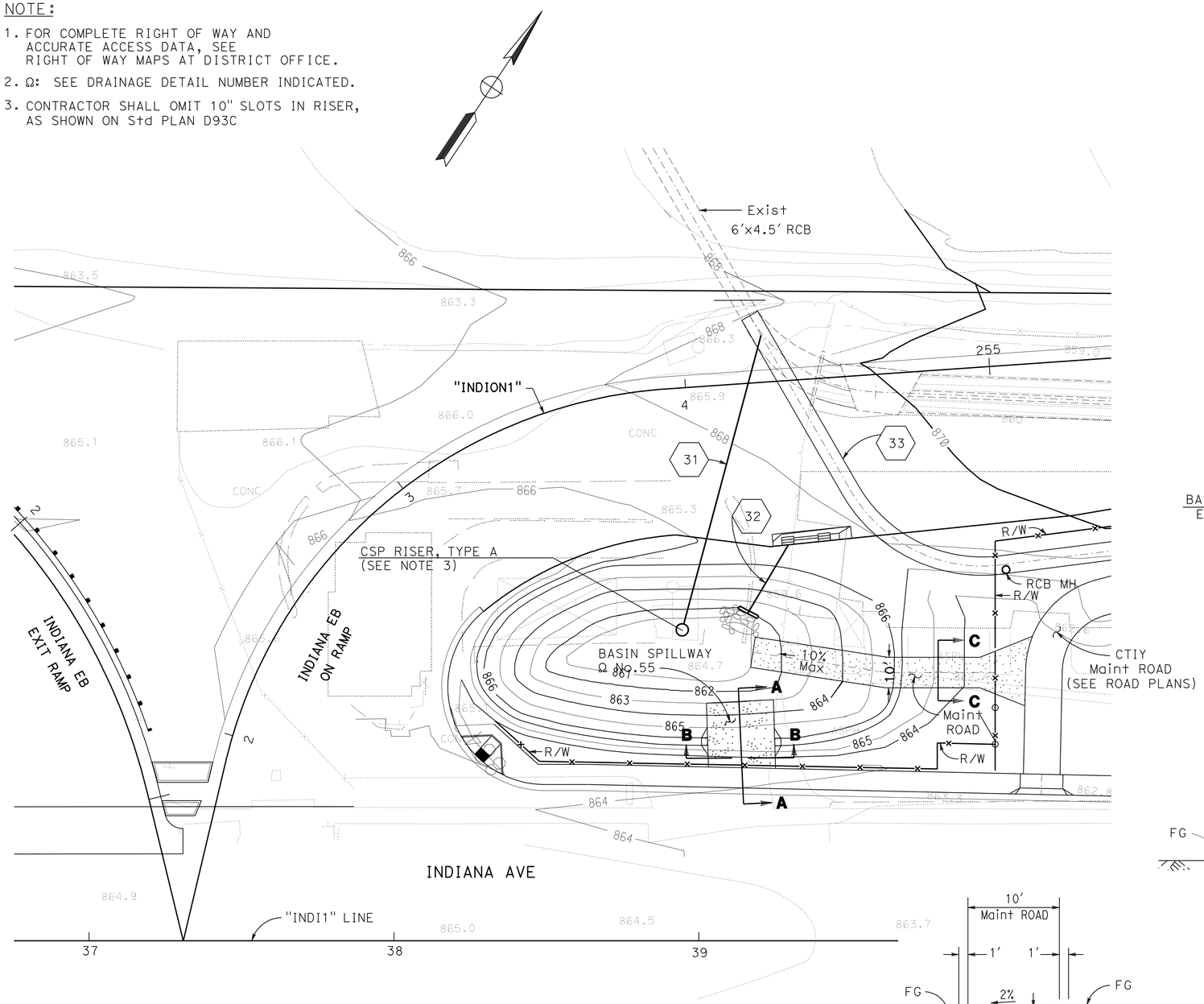

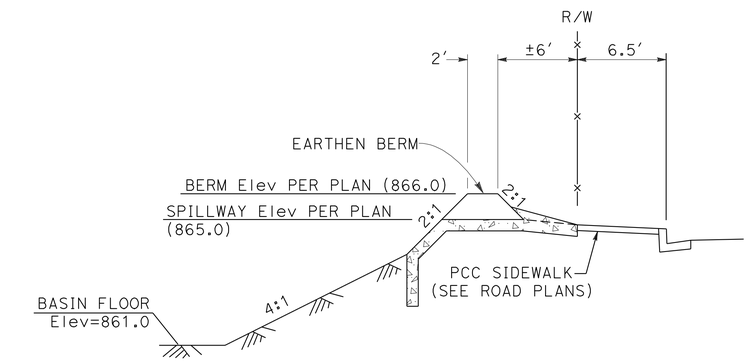

SECTION A-A
NTS

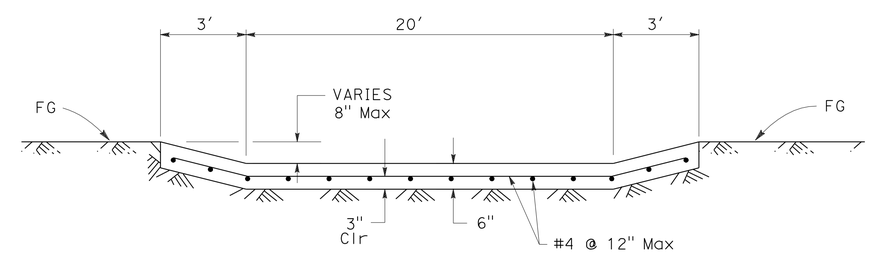

SECTION B-B
NTS

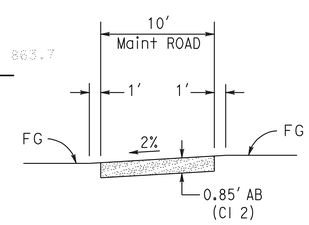

SECTION C-C
NTS

BASIN No. 3 DETAIL

R† Sta 254+00 "GE1" LINE

THIS PLAN ACCURATE FOR DRAINAGE WORK ONLY.

DRAINAGE DETAILS

SCALE: 1" = 20'

DD-53

STATE OF CALIFORNIA - DEPARTMENT OF TRANSPORTATION — DESIGN

FUNCTIONAL SUPERVISOR: MARK PERTILE

CALCULATED-DESIGNED BY: MOHAMMAD ABDRABOH — CHECKED BY: ALAN R. BISI

REVISED BY — DATE REVISED

LAST REVISION 12-01-10 — DATE PLOTTED => 29-APR-2011 — TIME PLOTTED => 18:50

NOTE:

1. FOR COMPLETE RIGHT OF WAY AND ACCURATE ACCESS DATA, SEE RIGHT OF WAY MAPS AT DISTRICT OFFICE.

Dist	COUNTY	ROUTE	POST MILES TOTAL PROJECT	SHEET No.	TOTAL SHEETS
08	Riv	91	15.6/21.6	327	2028

REGISTERED CIVIL ENGINEER — DATE 12-1-10

4-25-11
PLANS APPROVAL DATE

REGISTERED PROFESSIONAL ENGINEER — ALAN R. BISI — No. C62808 — Exp. 6-30-12 — CIVIL — STATE OF CALIFORNIA

THE STATE OF CALIFORNIA OR ITS OFFICERS OR AGENTS SHALL NOT BE RESPONSIBLE FOR THE ACCURACY OR COMPLETENESS OF SCANNED COPIES OF THIS PLAN SHEET.

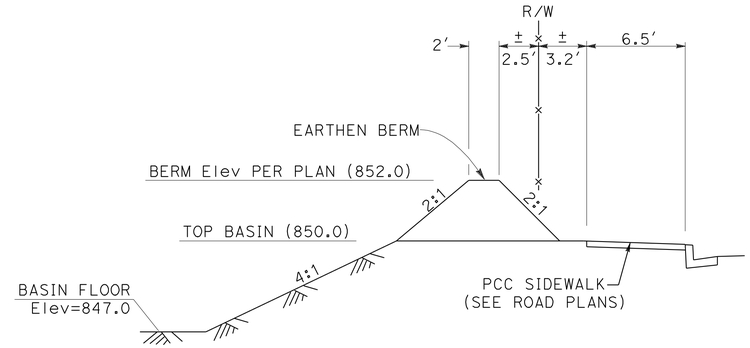

SECTION A-A

NTS

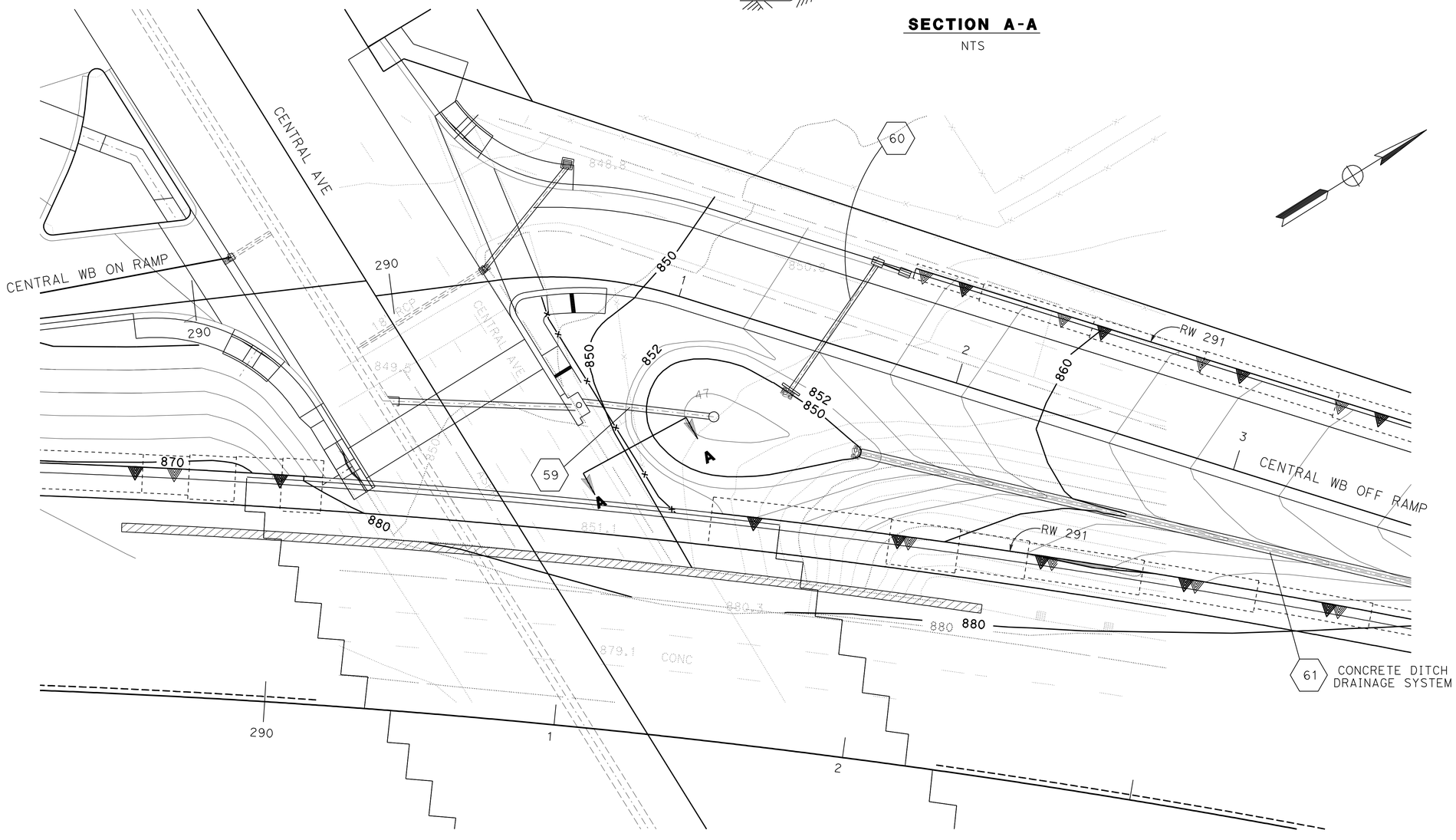

DRAINAGE DETAILS

SCALE: 1" = 20'

DD-54

THIS PLAN ACCURATE FOR DRAINAGE WORK ONLY.

STATE OF CALIFORNIA - DEPARTMENT OF TRANSPORTATION

Caltrans® DESIGN

FUNCTIONAL SUPERVISOR: MARK PERTILE

CALCULATED-DESIGNED BY: MOHAMMAD ABDRABOH

CHECKED BY: ALAN R. BISI

REVISED BY | DATE REVISED

LAST REVISION 12-01-10 | DATE PLOTTED => 29-APR-2011 | TIME PLOTTED => 18:50

Dist	COUNTY	ROUTE	POST MILES TOTAL PROJECT	SHEET No.	TOTAL SHEETS
08	Riv	91	15.6/21.6	328	2028

REGISTERED CIVIL ENGINEER 3-29-10 DATE

4-25-11
PLANS APPROVAL DATE

REGISTERED PROFESSIONAL ENGINEER ALAN R. BISI No. C62808 Exp. 6-30-12 CIVIL STATE OF CALIFORNIA

THE STATE OF CALIFORNIA OR ITS OFFICERS OR AGENTS SHALL NOT BE RESPONSIBLE FOR THE ACCURACY OR COMPLETENESS OF SCANNED COPIES OF THIS PLAN SHEET.

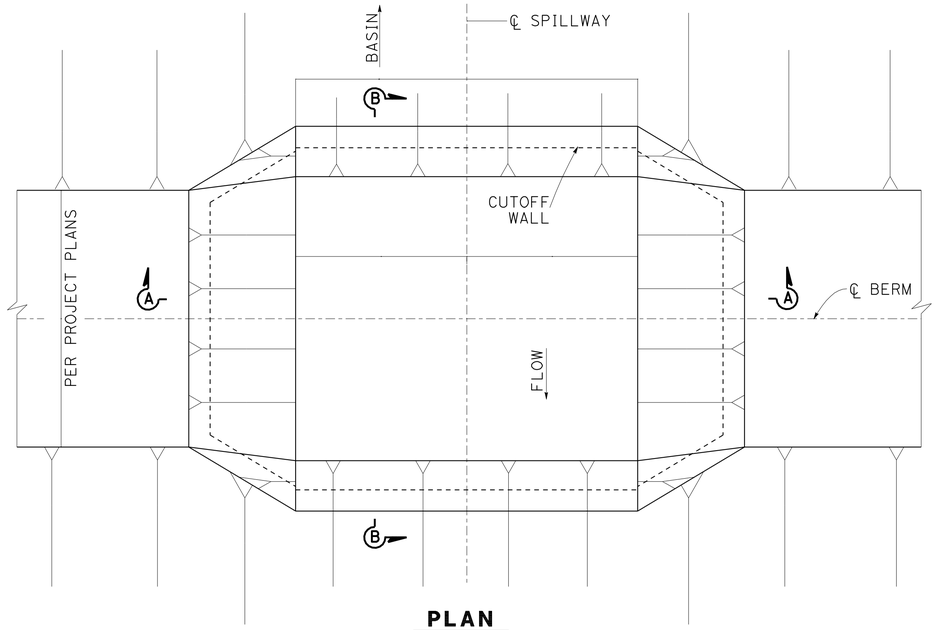

PLAN

DESIGN DATA

REINFORCED CONCRETE:
Minor Concrete
F_y = 60,000 psi

SPILLWAY DIMENSION TABLE

LOCATION	L	H	SPILLWAY ELEV.	Z
Basin # 1, see note 1 Lt Sta 193+00 "GE1"	N/A	N/A	840.0	N/A
Basin # 2 Lt Sta 202+00 "GE1"	20′	1.5′	853.5	2
Basin # 3 Rt Sta 254+00 "GE1"	20′	1.0′	865.0	2
Basin # 4 Lt Sta 291+50 "GE1"	N/A	N/A	N/A	N/A

NOTE:

1. Maint. Access Rd will also serve as Emergency SpillWay
2. "H" is measured from weir invert to top of berm

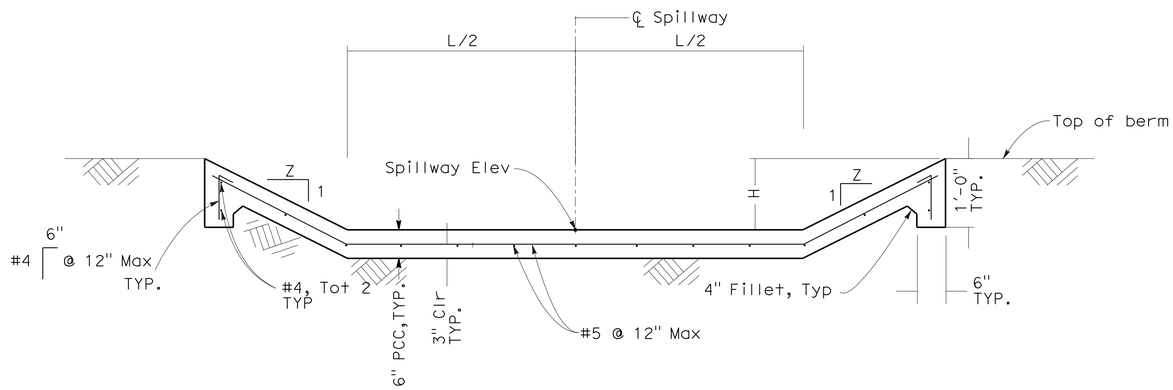

SECTION A-A

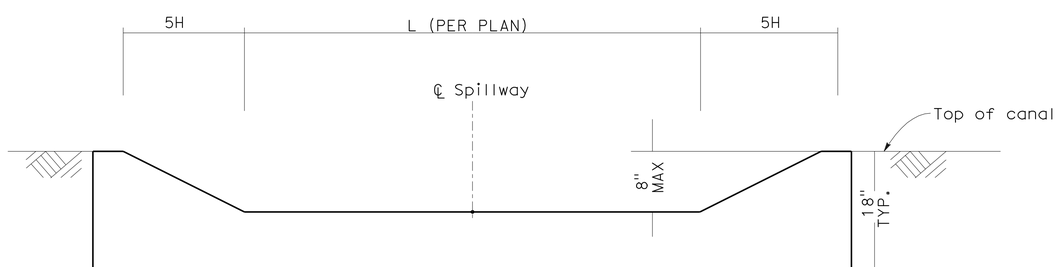

CONCRETE TRAPEZOIDAL DITCH TO CANAL LINING

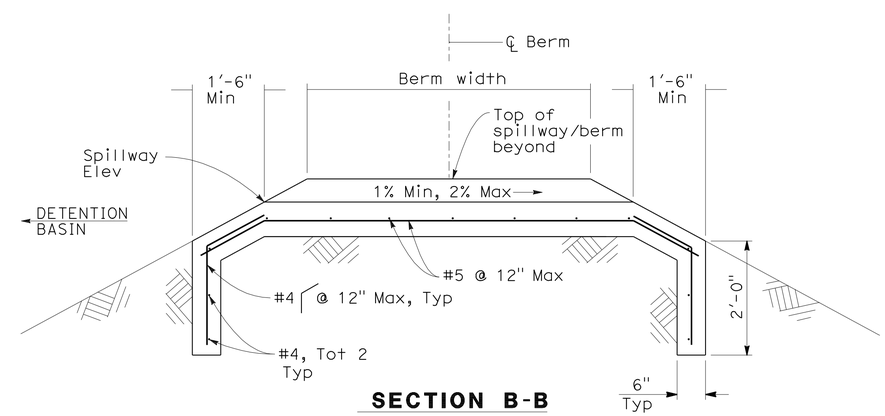

SECTION B-B

OVERFLOW SPILLWAY

BASIN SPILLWAY

THIS PLAN ACCURATE FOR DRAINAGE WORK ONLY.

DRAINAGE DETAILS

NO SCALE

DD-55

STATE OF CALIFORNIA - DEPARTMENT OF TRANSPORTATION
Caltrans® DESIGN

FUNCTIONAL SUPERVISOR: MARK PERTILE
CALCULATED-DESIGNED BY: MOHAMMAD ABDRABOH
CHECKED BY: ALAN R. BISI
REVISED BY
DATE REVISED

LAST REVISION 03-29-11
DATE PLOTTED => 29-APR-2011
TIME PLOTTED => 18:50

Dist	COUNTY	ROUTE	POST MILES TOTAL PROJECT	SHEET No.	TOTAL SHEETS
08	Riv	91	15.6/21.6	329	2028

REGISTERED CIVIL ENGINEER 3-29-10 DATE

4-25-11
PLANS APPROVAL DATE

REGISTERED PROFESSIONAL ENGINEER ALAN R. BISI No. C62808 Exp. 6-30-12 CIVIL STATE OF CALIFORNIA

THE STATE OF CALIFORNIA OR ITS OFFICERS OR AGENTS SHALL NOT BE RESPONSIBLE FOR THE ACCURACY OR COMPLETENESS OF SCANNED COPIES OF THIS PLAN SHEET.

NOTES:

1. PIPE JOINTS SHOULD BE WELDED, SEE STANDARD SPECIFICATIONS 70 AND 74.
2. FINAL LOCATIONS FOR ALL ITEMS SHALL BE DETERMINED IN THE FIELD BY THE ENGINEER.

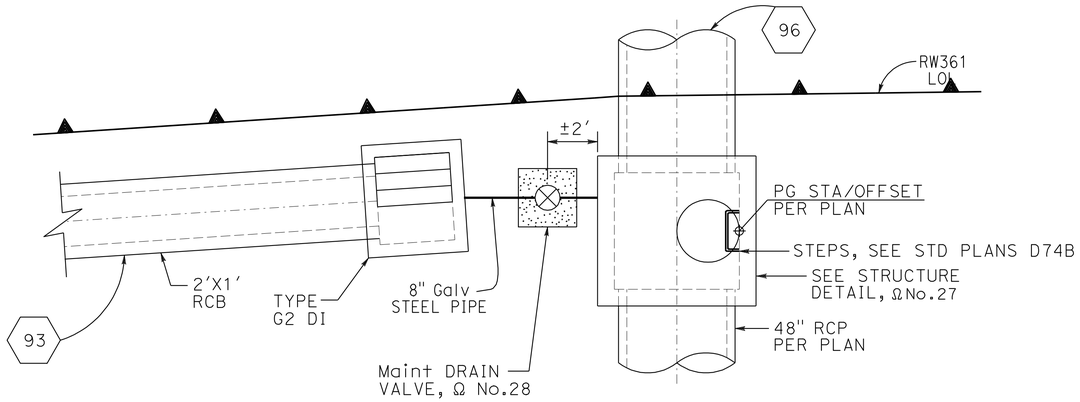

PLAN

100.20′ Lt 361+12 "GE1"
NO SCALE

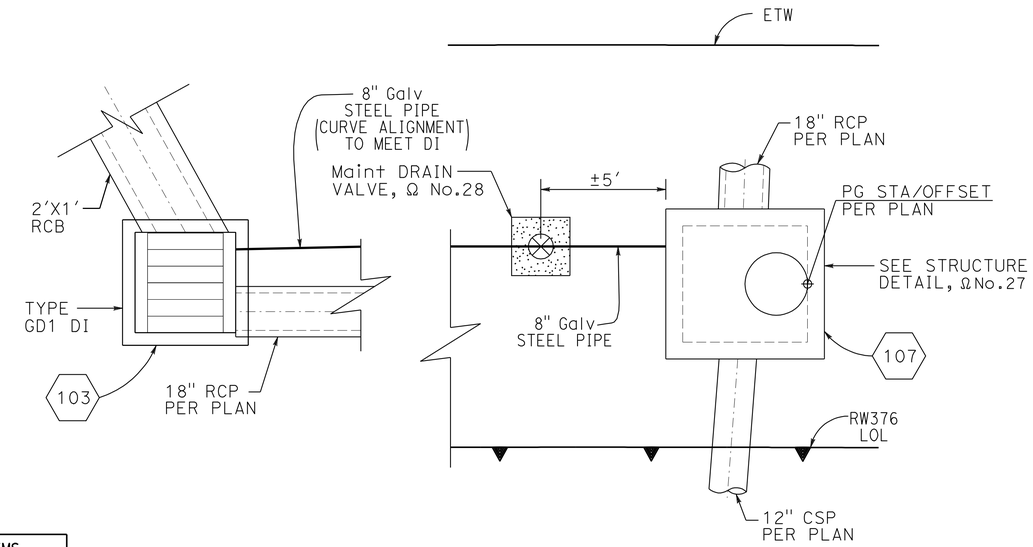

PLAN

29.00′ Lt 376+77 "14EBOFF2"
NO SCALE

DRAINAGE SYSTEMS APPLICABLE TO THIS SHEET		
96e	107e	

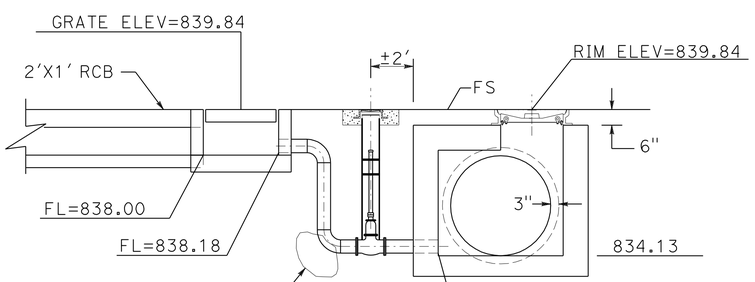

PROFILE

100.20′ Lt 361+12 "GE1"
NO SCALE

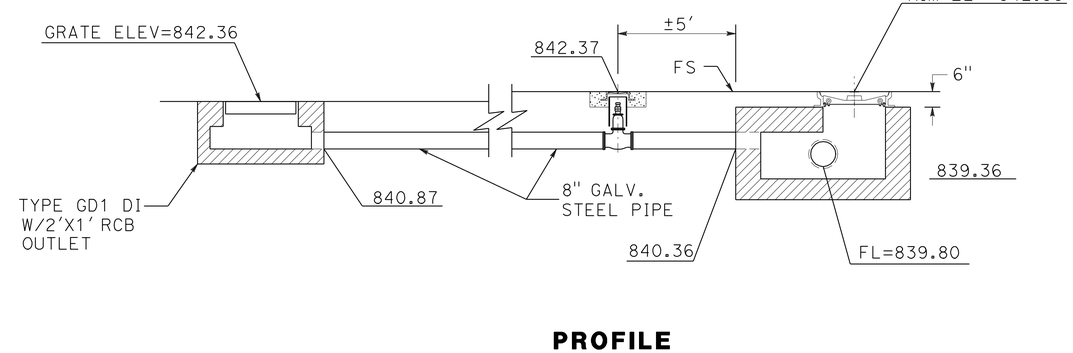

PROFILE

29.00′ Lt 376+77 "14EBOFF2"
NO SCALE

SIPHON/SAG CULVERT BLEEDER

THIS PLAN ACCURATE FOR DRAINAGE WORK ONLY.

DRAINAGE DETAIL

SCALE: NONE

DD-56

STATE OF CALIFORNIA - DEPARTMENT OF TRANSPORTATION
Caltrans® DESIGN

FUNCTIONAL SUPERVISOR: MARK PERTILE
CALCULATED-DESIGNED BY: MOHAMMAD ABDRABOH
CHECKED BY: ALAN R. BISI
REVISED BY
DATE REVISED

LAST REVISION 03-29-11
DATE PLOTTED => 29-APR-2011
TIME PLOTTED => 18:51

Dist	COUNTY	ROUTE	POST MILES TOTAL PROJECT	SHEET No.	TOTAL SHEETS
08	Riv	91	15.6/21.6	330	2028

REGISTERED CIVIL ENGINEER 3-29-10 DATE

4-25-11
PLANS APPROVAL DATE

REGISTERED PROFESSIONAL ENGINEER ALAN R. BISI No. C62808 Exp. 6-30-12 CIVIL STATE OF CALIFORNIA

THE STATE OF CALIFORNIA OR ITS OFFICERS OR AGENTS SHALL NOT BE RESPONSIBLE FOR THE ACCURACY OR COMPLETENESS OF SCANNED COPIES OF THIS PLAN SHEET.

ALTERNATIVE PIPE ALLOWABLE PIPE MATERIAL AND PROTECTION

DESIGNATION	RCP	CSP (2-2/3"x½")			SSRP (3/4"x1" @ 11-1/2" PITCH)			PPC(C)	PPC(D,S)
	SIZE (INCH)	SIZE (INCH)	BITUM. COAT. THICKNESS	PA/PS THICKNESS	SIZE (INCH)	BITUM. COAT. THICKNESS	PA/PS THICKNESS	SIZE (INCH)	SIZE (INCH)
6" APC									6
12" APC TYPE A		12	0.064"	0.052"				12	
12" APC TYPE B					12	0.064"	0.052"		12
12" APC TYPE C	12				12	0.064"	0.052"		12
18" APC TYPE A	18	18	0.064"	0.052"	18	0.064"	0.052"		
18" APC TYPE B	18	18	0.064"	0.052"				18	
18" APC TYPE C		18	0.064"	0.052"				18	
18" APC TYPE D	18				18	0.064"	0.052"		
18" APC TYPE E	18	18	0.064"	0.052"				18	18
18" APC TYPE F	18								18
24" APC		24	0.079"	0.064"				24	
30" APC	30				30	0.079"	0.064"		30
30"x10" ARCH		30x10	0.079"	0.064"	30x10	0.079"	0.064"		
48" APC		48	0.079"	0.064"					

LEGENDS AND ABBREVIATIONS

S - STANDARD JOINT TYPE
P - POSITIVE JOINT TYPE
D - DOWNDRAIN JOINT TYPE
RCP - REINFORCED CONCRETE PIPE
PPC(C) - PASTIC PIPE CULVERT, TYPE C (CORRUGATED INTERIOR WALL)
PPC(D,S) - PLASTIC PIPE CULVERT, TYPE D OR S (SMOOTH INTERIOR WALL)
CSP - CORRUGATED STEEL PIPE
SSRP - STEEL SPIRAL RIBBED PIPE
GA. - GAUGE
BITUM. - BITUMINOUS
PA - POLYMERIZED ASPHALT
PS - POLYMERIC SHEET
w/ - WITH
Ω - SEE DRAINAGE DETAIL

Notes:

1. SUFFICIENT SPACE WAS NOT AVALABLE TO LIST ALL DRAINAGE ITEMS WITHIN A SINGLE TABLE ON A SHEET BORDER, THEREFORE THE LISTING OF THE FIRST GROUPING OF DRAINAGE ITEMS ARE REPEATED ON THE ODD NUMBERED ID CODE SHEETS (DQ-1, DQ-3, ETC.) AND THE LISTINGS OF THE REMAINING GROUP OF DRAINAGE ITEMS ARE REPEATED ON THE EVEN NUMBERED ID CODE SHEETS (DQ-2, DQ-4, ETC.).
2. THE PRECISE DETERMINATION OF THE FOLLOWING ITEMS WILL BE MADE BY THE ENGINEER IN THE FIELD: STATION, SKEW, LENGTH, FL ELEVATION, AND DEPTH OF STRUCTURE.
3. (N) - NOT A SEPARATE PAY ITEM; FOR INFORMATION ONLY.
4. * - SEE ROADWAY QUANTITIES FOR DRAINAGE ITEM TOTAL

DITCH EXCAVATION	CONCRETE (CHANNEL LINING)	STRUCTURAL CONCRETE, BOX CULVERT	MINOR CONCRETE (MINOR STRUCTURE)	MINOR CONCRETE (MISC. CONSTRUCTION)	CL. IV CONCRETE (BACKFILL) *	HMA-A *	PLACE AC (MISC. AREA) *	MISC. IRON AND STEEL	BAR REINFORCING STEEL	RSP ¼-TON, METHOD B	RSP FACING, METHOD B	RSP NO. 2 BACKING, METHOD B	RSP RSP FABRIC	FRAMES, GRATES AND COVERS 24-12 (N)	24-13 (N)	¼" SOLID STEEL COVER (N)	12" X 12" PRECAST INLET	12" X 12" STEEL GRATE (TRAFFIC RATED)	DEBRIS RACK (N)	MANHOLE COVER (N)	MANHOLE COVER-PRESSURE LOCKING (N)	36" PRECAST MANHOLE SHAFT		MANHOLE SHAFT PIPE REDUCER	HEIGHT OF MANHOLE (N)	HEIGHT OF INLET "H" (N)	DRAINAGE INLET MARKER *	CONCRETE COLLAR (N)	RCP 12" RCP	15" RCP	18" RCP	24" RCP	30" RCP	36" RCP	48" RCP	54" RCP	60" RCP (CL. V SPECIAL)	DESCRIPTION	STATION	DRAINAGE PLAN SHEET NO.	DRAINAGE SYSTEM NO. ⬡	DRAINAGE UNIT ◯
CY	CY	CY	CY	CY	CY	ton	yd²	lb	lb	CY	CY	CY	yd²	EA	EA	EA	EA	EA	EA	EA	EA	LF		EA	FT	FT	EA	EA	LF	LF	LF	LF	LF	LF	LF	LF	LF					
																																						SYSTEM NOT USED			1	
											3.4		12																									RSP		D-1	2	a
						1.06	6.23																															AC OVERSIDE DRAIN	185+ 96.63 "F3" LINE			b
																												1										CONCRETE COLLAR	11.81′ RT "MADOF1" 189+67.4	D-2	3	a
					7.00																											6.2						24" RCP W/ CONC BACKFILL				b
			0.95					326						1											3.0													G1 DI	20′ RT "MADOF1" 189+67.3			c
																																						REMOVE HW				d
																																						SYSTEM NOT USED			4	
											3.9		13.5																									RSP		D-2	5	a
			0.91																																			HW	32.91′ RT "MADOF1" 190+71.98			b
																														46.2								18" RCP				c
			1.23					326						1											3.9													G3 DI	64.9′ RT 190+72 "GE1"			d
																														7.0								18" RCP				e
			1.24					326						1											3.0													G3 DI	64.9′ RT 190+82 "GE1"			f
																																						REMOVE 12" CMP				g
																																						REMOVE DI				h
		0.41							25.0																													JS	56′ LT "F3" 192+58.54	D-2	6	a
																														38.8								18" RCP				b
			1.61					326						1											6.0													G1 DI	55.21′ LT "F3" 192+18.16			c
											7.8		23.6																									RSP		D-2	7	a
84.4	33.63																																					CONCRETE DITCH				b
84.4	33.63	0.41	5.94		7.00	1.06	6.23	1304	25.0		15.1		49.1	4														1		92.0	6.2							SHEET TOTALS				

DRAINAGE QUANTITIES
DQ-1

THIS PLAN ACCURATE FOR DRAINAGE WORK ONLY.

STATE OF CALIFORNIA - DEPARTMENT OF TRANSPORTATION
Caltrans DESIGN

FUNCTIONAL SUPERVISOR: MARK PERTILE
CALCULATED-DESIGNED BY: MOHAMMAD ABDRABOH
CHECKED BY: ALAN R. BISI
REVISED BY
DATE REVISED

LAST REVISION 03-29-11
DATE PLOTTED => 11-JUL-2011
TIME PLOTTED => 12:38

Dist	COUNTY	ROUTE	POST MILES TOTAL PROJECT	SHEET No.	TOTAL SHEETS
08	Riv	91	15.6/21.6	331	2028

REGISTERED CIVIL ENGINEER 3-29-10 DATE

4-25-11
PLANS APPROVAL DATE

REGISTERED PROFESSIONAL ENGINEER ALAN R. BISI No. C62808 Exp. 6-30-12 CIVIL STATE OF CALIFORNIA

THE STATE OF CALIFORNIA OR ITS OFFICERS OR AGENTS SHALL NOT BE RESPONSIBLE FOR THE ACCURACY OR COMPLETENESS OF SCANNED COPIES OF THIS PLAN SHEET.

ALTERNATIVE PIPE ALLOWABLE PIPE MATERIAL AND PROTECTION

DESIGNATION	RCP	CSP (2-2/3"x½")			SSRP (3/4"x1" @ 11-1/2" PITCH)			PPC(C)	PPC(D,S)
	SIZE (INCH)	SIZE (INCH)	BITUM. COAT. THICKNESS	PA/PS THICKNESS	SIZE (INCH)	BITUM. COAT. THICKNESS	PA/PS THICKNESS	SIZE (INCH)	SIZE (INCH)
6" APC									6
12" APC TYPE A		12	0.064"	0.052"				12	
12" APC TYPE B					12	0.064"	0.052"		12
12" APC TYPE C	12				12	0.064"	0.052"		12
18" APC TYPE A	18	18	0.064"	0.052"	18	0.064"	0.052"		
18" APC TYPE B	18	18	0.064"	0.052"				18	
18" APC TYPE C		18	0.064"	0.052"				18	
18" APC TYPE D	18				18	0.064"	0.052"		
18" APC TYPE E	18	18	0.064"	0.052"				18	18
18" APC TYPE F	18								18
24" APC		24	0.079"	0.064"				24	
30" APC	30				30	0.079"	0.064"		30
30"x10" ARCH		30x10	0.079"	0.064"	30x10	0.079"	0.064"		
48" APC		48	0.079"	0.064"					

LEGENDS AND ABBREVIATIONS

S - STANDARD JOINT TYPE
P - POSITIVE JOINT TYPE
D - DOWNDRAIN JOINT TYPE
RCP - REINFORCED CONCRETE PIPE
PPC(C) - PASTIC PIPE CULVERT, TYPE C (CORRUGATED INTERIOR WALL)
PPC(D,S) - PLASTIC PIPE CULVERT, TYPE D OR S (SMOOTH INTERIOR WALL)
CSP - CORRUGATED STEEL PIPE
CAP - CORRUGATED ALUMINUM PIPE
SSRP - STEEL SPIRAL RIBBED PIPE
GA. - GAUGE
BITUM. - BITUMINOUS
PA - POLYMERIZED ASPHALT
PS - POLYMERIC SHEET
w/ - WITH
Ω - SEE DRAINAGE DETAIL

Notes:

1. SUFFICIENT SPACE WAS NOT AVALABLE TO LIST ALL DRAINAGE ITEMS WITHIN A SINGLE TABLE ON A SHEET BORDER, THEREFORE THE LISTING OF THE FIRST GROUPING OF DRAINAGE ITEMS ARE REPEATED ON THE ODD NUMBERED ID CODE SHEETS (DQ-1, DQ-3, ETC.) AND THE LISTINGS OF THE REMAINING GROUP OF DRAINAGE ITEMS ARE REPEATED ON THE EVEN NUMBERED ID CODE SHEETS (DQ-2, DQ-4, ETC.).
2. THE PRECISE DETERMINATION OF THE FOLLOWING ITEMS WILL BE MADE BY THE ENGINEER IN THE FIELD: STATION, SKEW, LENGTH, FL ELEVATION, AND DEPTH OF STRUCTURE.
3. (N) - NOT A SEPARATE PAY ITEM; FOR INFORMATION ONLY.
4. * - SEE ROADWAY QUANTITIES FOR DRAINAGE ITEM TOTAL

CSP 12" (14 GA.) LF	CSP 18" (14 GA.) LF	CSP 36" (10 GA.) LF	CSP 12" RISER (14 GA.) LF	CSP 48" RISER (10 GA.) LF	CSP 18" SLOTTED PIPE (14 GA.) LF	CSP 21" SLOTTED PIPE (14 GA.) LF	CSP 24" SLOTTED PIPE (14 GA.) LF	ALTERNATIVE PIPE 6" AP (TYPE __) LF	ALTERNATIVE PIPE 12" AP (TYPE __) LF	ALTERNATIVE PIPE 18" AP (TYPE __) LF	ALTERNATIVE PIPE 24" AP (TYPE __) LF	ALTERNATIVE PIPE 30" AP (TYPE __) LF	ALTERNATIVE PIPE 48" AP (TYPE __) LF	ALTERNATIVE PIPE 30" X 10" AP ARCH PIPE (TYPE __) LF	MAXIMUM COVER (N) FT	ELBOW (N) EA	PIPE JOINT CLASSIFICATION	8" GALVANIZED STEEL PIPE LF	8" GATE VALVE w/ SLEEVE & COVER EA	AFES 12" AFES EA	PIPE RISER 8" AP SLIPJOINT (N) EA	PIPE RISER 12" AP SLIPJOINT (N) EA	CABLE RAILING LF	ADJUST INLET EA	MODIFY INLET EA	REMOVAL/ABANDON PAY ITEMS REMOVE CONCRETE CY	REMOVE PIPE LF	REMOVE INLET EA	ABANDON INLET EA	ABANDON PIPE LF	SAND BACKFILL CY	CAP RISER EA	CAP INLET EA	DESCRIPTION	STATION	DRAINAGE PLAN SHEET NO.	DRAINAGE SYSTEM NO. ⬡	DRAINAGE UNIT ◯
																																	SYSTEM NOT USED			1	
																																	RSP		D-1	2	a
																																	AC OVERSIDE DRAIN	185+ 96.63 "F3" LINE			b
																																	CONCRETE COLLAR	11.81' RT "MADOF1" 189+67.4	D-2	3	a
															2.5		S																24" RCP W/ CONC BACKFILL				b
																																	G1 DI	20' RT "MADOF1" 189+67.3			c
																									1.2								REMOVE HW				d
																																	SYSTEM NOT USED			4	
																																	RSP		D-2	5	a
																																	HW	32.91' RT "MADOF1" 190+71.98			b
															3.0		S																18" RCP				c
																																	G3 DI	64.9' RT 190+72 "GE1"			d
															2.0		S																18" RCP				e
																																	G3 DI	64.9' RT 190+82 "GE1"			f
																										51.0							REMOVE 12" CMP				g
																											1						REMOVE DI				h
																																	JS	56' LT "F3" 192+58.54	D-2	6	a
															11.0		S																18" RCP				b
																																	G1 DI	55.21' LT "F3" 192+18.16			c
																																	RSP		D-2	7	a
																																	CONCRETE DITCH				b
																									1.2	51.0	1						SHEET TOTALS				

THIS PLAN ACCURATE FOR DRAINAGE WORK ONLY.

DRAINAGE QUANTITIES
DQ-2

REVISED BY | DATE REVISED

CALCULATED-DESIGNED BY: MOHAMMAD ABDRABOH
CHECKED BY: ALAN R. BISI
FUNCTIONAL SUPERVISOR: MARK PERTILE

STATE OF CALIFORNIA - DEPARTMENT OF TRANSPORTATION
Caltrans DESIGN

LAST REVISION 03-29-11 | DATE PLOTTED => 29-APR-2011 | TIME PLOTTED => 18:51

Dist	COUNTY	ROUTE	POST MILES TOTAL PROJECT	SHEET No.	TOTAL SHEETS
08	Riv	91	15.6/21.6	332	2028

REGISTERED CIVIL ENGINEER 3-29-10 DATE

4-25-11
PLANS APPROVAL DATE

REGISTERED PROFESSIONAL ENGINEER ALAN R. BISI No. C62808 Exp. 6-30-12 CIVIL STATE OF CALIFORNIA

THE STATE OF CALIFORNIA OR ITS OFFICERS OR AGENTS SHALL NOT BE RESPONSIBLE FOR THE ACCURACY OR COMPLETENESS OF SCANNED COPIES OF THIS PLAN SHEET.

ALTERNATIVE PIPE ALLOWABLE PIPE MATERIAL AND PROTECTION

DESIGNATION	RCP	CSP (2-2/3"x½")			SSRP (3/4"x1" @ 11-1/2" PITCH)			PPC(C)	PPC(D,S)
	SIZE (INCH)	SIZE (INCH)	BITUM. COAT. THICKNESS	PA/PS THICKNESS	SIZE (INCH)	BITUM. COAT. THICKNESS	PA/PS THICKNESS	SIZE (INCH)	SIZE (INCH)
6" APC									6
12" APC TYPE A		12	0.064"	0.052"				12	
12" APC TYPE B					12	0.064"	0.052"		12
12" APC TYPE C	12				12	0.064"	0.052"		12
18" APC TYPE A	18	18	0.064"	0.052"	18	0.064"	0.052"		
18" APC TYPE B	18	18	0.064"	0.052"				18	
18" APC TYPE C		18	0.064"	0.052"				18	
18" APC TYPE D	18				18	0.064"	0.052"		
18" APC TYPE E	18	18	0.064"	0.052"				18	18
18" APC TYPE F	18								18
24" APC		24	0.079"	0.064"				24	
30" APC	30				30	0.079"	0.064"		30
30"x10" ARCH		30x10	0.079"	0.064"	30x10	0.079"	0.064"		
48" APC		48	0.079"	0.064"					

LEGENDS AND ABBREVIATIONS

S - STANDARD JOINT TYPE
P - POSITIVE JOINT TYPE
D - DOWNDRAIN JOINT TYPE
RCP - REINFORCED CONCRETE PIPE
PPC(C) - PASTIC PIPE CULVERT, TYPE C (CORRUGATED INTERIOR WALL)
PPC(D,S) - PLASTIC PIPE CULVERT, TYPE D OR S (SMOOTH INTERIOR WALL)
CSP - CORRUGATED STEEL PIPE
SSRP - STEEL SPIRAL RIBBED PIPE
GA. - GAUGE
BITUM. - BITUMINOUS
PA - POLYMERIZED ASPHALT
PS - POLYMERIC SHEET
w/ - WITH
Ω - SEE DRAINAGE DETAIL

Notes:

1. SUFFICIENT SPACE WAS NOT AVALABLE TO LIST ALL DRAINAGE ITEMS WITHIN A SINGLE TABLE ON A SHEET BORDER, THEREFORE THE LISTING OF THE FIRST GROUPING OF DRAINAGE ITEMS ARE REPEATED ON THE ODD NUMBERED ID CODE SHEETS (DQ-1, DQ-3, ETC.) AND THE LISTINGS OF THE REMAINING GROUP OF DRAINAGE ITEMS ARE REPEATED ON THE EVEN NUMBERED ID CODE SHEETS (DQ-2, DQ-4, ETC.).
2. THE PRECISE DETERMINATION OF THE FOLLOWING ITEMS WILL BE MADE BY THE ENGINEER IN THE FIELD: STATION, SKEW, LENGTH, FL ELEVATION, AND DEPTH OF STRUCTURE.
3. (N) - NOT A SEPARATE PAY ITEM; FOR INFORMATION ONLY.
4. * - SEE ROADWAY QUANTITIES FOR DRAINAGE ITEM TOTAL

DITCH EXCAVATION	CONCRETE (CHANNEL LINING)	STRUCTURAL CONCRETE, BOX CULVERT	MINOR CONCRETE (MINOR STRUCTURE)	MINOR CONCRETE (MISC. CONSTRUCTION)	CL. IV CONCRETE (BACKFILL) *	HMA-A *	PLACE AC (MISC. AREA) *	MISC. IRON AND STEEL	BAR REINFORCING STEEL	RSP: ¼-TON, METHOD B	RSP: FACING, METHOD B	RSP: NO. 2 BACKING, METHOD B	RSP: RSP FABRIC	FRAMES, GRATES AND COVERS: 24-12 (N)	24-13 (N)	¼" SOLID STEEL COVER (N)	12" X 12" PRECAST INLET	12" X 12" STEEL GRATE (TRAFFIC RATED)	DEBRIS RACK (N)	MANHOLE COVER (N)	MANHOLE COVER-PRESSURE LOCKING (N)	36" PRECAST MANHOLE SHAFT		MANHOLE SHAFT PIPE REDUCER	HEIGHT OF MANHOLE (N)	HEIGHT OF INLET "H" (N)	DRAINAGE INLET MARKER *	CONCRETE COLLAR (N)	RCP: 12" RCP	15" RCP	18" RCP	24" RCP	30" RCP	36" RCP	48" RCP	54" RCP	60" RCP (CL. V SPECIAL)	DESCRIPTION	STATION	DRAINAGE PLAN SHEET NO.	DRAINAGE SYSTEM NO. ⬡	DRAINAGE UNIT ◯
CY	CY	CY	CY	CY	CY	ton	yd²	lb	lb	CY	CY	CY	yd²	EA	EA	EA	EA	EA	EA	EA	EA	LF		EA	FT	FT	EA	EA	LF	LF	LF	LF	LF	LF	LF	LF	LF					
												2.22	8.78																									RSP		D-2	8	a
						0.41	2.38																															AC OVERSIDE DRAIN	20' RT "MADOF1" 196+83.5			b
											3.6		12.5																									RSP		D-3	9	a
135.60	53.21																																					CONCRETE DITCH				b
																												3.8										12" RCP		D-3	10	a
			0.98					326						1												3.2												G1 DI	118' RT "F3" 204+47.62			b
																												51.6										12" RCP				c
			1.16					326						1																								G1 DI	64.90' RT "F3" 204+36.42			d
																																						Remove DI				e
																																						Abandon 12" RCP				f
																																						Remove HW				g
											7.8		23.6																									RSP		D-3	11	a
273.90	98.31																										2											Concrete Ditch				b
						0.40	2.20																															AC OVERSIDE DRAIN	206+80.95 "MAD2"	D-3	12	a
																																						ABANDON 24" RCP		D-3	13	a
																																						REMOVE DI				b
																																						REMOVE 12" RCP				c
																																						REMOVE DI				d
																																						REMOVE 12" RCP				e
																																						REMOVE DI				f
						0.20	1.10																															AC OVERSIDE DRAIN	215+38 "F3" LINE	D-3	14	a
409.50	151.52		2.14			1.01	5.68	652			11.4	2.22	44.88	2													2		55.4									SHEET TOTALS				

DRAINAGE QUANTITIES
DQ-3

THIS PLAN ACCURATE FOR DRAINAGE WORK ONLY.

MOHAMMAD ABDRABOH — CALCULATED-DESIGNED BY
ALAN R. BISI — CHECKED BY
REVISED BY — DATE REVISED
MARK PERTILE — FUNCTIONAL SUPERVISOR

STATE OF CALIFORNIA - DEPARTMENT OF TRANSPORTATION
Caltrans
DESIGN

LAST REVISION 03-29-11
DATE PLOTTED => 11-JUL-2011
TIME PLOTTED => 12:38

Dist	COUNTY	ROUTE	POST MILES TOTAL PROJECT	SHEET No.	TOTAL SHEETS
08	Riv	91	15.6/21.6	333	2028

REGISTERED CIVIL ENGINEER 3-29-10 DATE

4-25-11
PLANS APPROVAL DATE

REGISTERED PROFESSIONAL ENGINEER ALAN R. BISI No. C62808 Exp. 6-30-12 CIVIL STATE OF CALIFORNIA

THE STATE OF CALIFORNIA OR ITS OFFICERS OR AGENTS SHALL NOT BE RESPONSIBLE FOR THE ACCURACY OR COMPLETENESS OF SCANNED COPIES OF THIS PLAN SHEET.

ALTERNATIVE PIPE ALLOWABLE PIPE MATERIAL AND PROTECTION

DESIGNATION	RCP	CSP (2-2/3"x½")			SSRP (3/4"x1" @ 11-1/2" PITCH)			PPC(C)	PPC(D,S)
	SIZE (INCH)	SIZE (INCH)	BITUM. COAT. THICKNESS	PA/PS THICKNESS	SIZE (INCH)	BITUM. COAT. THICKNESS	PA/PS THICKNESS	SIZE (INCH)	SIZE (INCH)
6" APC									6
12" APC TYPE A		12	0.064"	0.052"				12	
12" APC TYPE B					12	0.064"	0.052"		12
12" APC TYPE C	12				12	0.064"	0.052"		12
18" APC TYPE A	18	18	0.064"	0.052"	18	0.064"	0.052"		
18" APC TYPE B	18	18	0.064"	0.052"				18	
18" APC TYPE C		18	0.064"	0.052"				18	
18" APC TYPE D	18				18	0.064"	0.052"		
18" APC TYPE E	18	18	0.064"	0.052"				18	18
18" APC TYPE F	18								18
24" APC		24	0.079"	0.064"				24	
30" APC	30				30	0.079"	0.064"		30
30"x10" ARCH		30x10	0.079"	0.064"	30x10	0.079"	0.064"		
48" APC		48	0.079"	0.064"					

LEGENDS AND ABBREVIATIONS

S - STANDARD JOINT TYPE
P - POSITIVE JOINT TYPE
D - DOWNDRAIN JOINT TYPE
RCP - REINFORCED CONCRETE PIPE
PPC(C) - PASTIC PIPE CULVERT, TYPE C (CORRUGATED INTERIOR WALL)
PPC(D,S) - PLASTIC PIPE CULVERT, TYPE D OR S (SMOOTH INTERIOR WALL)
CSP - CORRUGATED STEEL PIPE
CAP - CORRUGATED ALUMINUM PIPE
SSRP - STEEL SPIRAL RIBBED PIPE
GA. - GAUGE
BITUM. - BITUMINOUS
PA - POLYMERIZED ASPHALT
PS - POLYMERIC SHEET
w/ - WITH
Ω - SEE DRAINAGE DETAIL

Notes:

1. SUFFICIENT SPACE WAS NOT AVALABLE TO LIST ALL DRAINAGE ITEMS WITHIN A SINGLE TABLE ON A SHEET BORDER, THEREFORE THE LISTING OF THE FIRST GROUPING OF DRAINAGE ITEMS ARE REPEATED ON THE ODD NUMBERED ID CODE SHEETS (DQ-1, DQ-3, ETC.) AND THE LISTINGS OF THE REMAINING GROUP OF DRAINAGE ITEMS ARE REPEATED ON THE EVEN NUMBERED ID CODE SHEETS (DQ-2, DQ-4, ETC.).
2. THE PRECISE DETERMINATION OF THE FOLLOWING ITEMS WILL BE MADE BY THE ENGINEER IN THE FIELD: STATION, SKEW, LENGTH, FL ELEVATION, AND DEPTH OF STRUCTURE.
3. (N) - NOT A SEPARATE PAY ITEM; FOR INFORMATION ONLY.
4. * - SEE ROADWAY QUANTITIES FOR DRAINAGE ITEM TOTAL

CSP 12" (14 GA.) LF	CSP 18" (14 GA.) LF	CSP 36" (10 GA.) LF	CSP 12" RISER (14 GA.) LF	CSP 48" RISER (10 GA.) LF	CSP 18" SLOTTED PIPE (14 GA.) LF	CSP 21" SLOTTED PIPE (14 GA.) LF	CSP 24" SLOTTED PIPE (14 GA.) LF	ALTERNATIVE PIPE 6" AP (TYPE __) LF	ALTERNATIVE PIPE 12" AP (TYPE __) LF	ALTERNATIVE PIPE 18" AP (TYPE __) LF	ALTERNATIVE PIPE 24" AP (TYPE __) LF	ALTERNATIVE PIPE 30" AP (TYPE __) LF	ALTERNATIVE PIPE 48" AP (TYPE __) LF	ALTERNATIVE PIPE 30" X 10" AP ARCH PIPE (TYPE __) LF	MAXIMUM COVER (N) FT	ELBOW (N) EA	PIPE JOINT CLASSIFICATION	8" GALVANIZED STEEL PIPE LF	8" GATE VALVE w/ SLEEVE & COVER EA	AFES 12" AFES EA	PIPE RISER 8" AP SLIPJOINT (N) EA	PIPE RISER 12" AP SLIPJOINT (N) EA	CABLE RAILING LF	ADJUST INLET EA	MODIFY INLET EA	REMOVAL/ABANDON PAY ITEMS REMOVE CONCRETE CY	REMOVE PIPE LF	REMOVE INLET EA	ABANDON INLET EA	ABANDON PIPE LF	SAND BACKFILL CY	CAP RISER EA	CAP INLET EA	DESCRIPTION	STATION	DRAINAGE PLAN SHEET NO.	DRAINAGE SYSTEM NO. ⬡	DRAINAGE UNIT ◯
																																	RSP		D-2	8	a
																																	AC OVERSIDE DRAIN	20' RT "MADOF1" 196+83.5			b
																																	RSP		D-3	9	a
																																	CONCRETE DITCH				b
															3.0		S																12" RCP		D-3	10	a
																																	G1 DI	118' RT "F3" 204+47.62			b
															1.0		S																12" RCP				c
																																	G1 DI	64.90' RT "F3" 204+36.42			d
																										1							Remove DI				e
																												53.3					Abandon 12" RCP				f
																									1.2								Remove HW				g
																																	RSP		D-3	11	a
																																	Concrete Ditch				b
																																	AC OVERSIDE DRAIN	206+80.95 "MAD2"	D-3	12	a
																												170.0					ABANDON 24" RCP		D-3	13	a
																										1							REMOVE DI				b
																											20.0						REMOVE 12" RCP				c
																										1							REMOVE DI				d
																											20.0						REMOVE 12" RCP				e
																										1							REMOVE DI				f
																																	AC OVERSIDE DRAIN	215+38 "F3" LINE	D-3	14	a
																									1.2	40.0	4		223.3				SHEET TOTALS				

THIS PLAN ACCURATE FOR DRAINAGE WORK ONLY.

DRAINAGE QUANTITIES
DQ-4

STATE OF CALIFORNIA - DEPARTMENT OF TRANSPORTATION
Caltrans® DESIGN

FUNCTIONAL SUPERVISOR: MARK PERTILE
CALCULATED-DESIGNED BY: MOHAMMAD ABDRABOH
CHECKED BY: ALAN R. BISI
REVISED BY
DATE REVISED

LAST REVISION 03-29-11 | DATE PLOTTED => 29-APR-2011 | TIME PLOTTED => 18:51

Dist	COUNTY	ROUTE	POST MILES TOTAL PROJECT	SHEET No.	TOTAL SHEETS
08	Riv	91	15.6/21.6	334	2028

REGISTERED CIVIL ENGINEER 3-29-10 DATE

4-25-11
PLANS APPROVAL DATE

REGISTERED PROFESSIONAL ENGINEER ALAN R. BISI No. C62808 Exp. 6-30-12 CIVIL STATE OF CALIFORNIA

THE STATE OF CALIFORNIA OR ITS OFFICERS OR AGENTS SHALL NOT BE RESPONSIBLE FOR THE ACCURACY OR COMPLETENESS OF SCANNED COPIES OF THIS PLAN SHEET.

ALTERNATIVE PIPE
ALLOWABLE PIPE MATERIAL AND PROTECTION

DESIGNATION	RCP	CSP (2-2/3"x½")			SSRP (3/4"x1" @ 11-1/2" PITCH)			PPC(C)	PPC(D,S)
	SIZE (INCH)	SIZE (INCH)	BITUM. COAT. THICKNESS	PA/PS THICKNESS	SIZE (INCH)	BITUM. COAT. THICKNESS	PA/PS THICKNESS	SIZE (INCH)	SIZE (INCH)
6" APC									6
12" APC TYPE A		12	0.064"	0.052"				12	
12" APC TYPE B					12	0.064"	0.052"		12
12" APC TYPE C	12				12	0.064"	0.052"		12
18" APC TYPE A	18	18	0.064"	0.052"	18	0.064"	0.052"		
18" APC TYPE B	18	18	0.064"	0.052"				18	
18" APC TYPE C		18	0.064"	0.052"				18	
18" APC TYPE D	18				18	0.064"	0.052"		
18" APC TYPE E	18	18	0.064"	0.052"				18	18
18" APC TYPE F	18								18
24" APC		24	0.079"	0.064"				24	
30" APC	30				30	0.079"	0.064"		30
30"x10" ARCH		30x10	0.079"	0.064"	30x10	0.079"	0.064"		
48" APC		48	0.079"	0.064"					

LEGENDS AND ABBREVIATIONS

S - STANDARD JOINT TYPE
P - POSITIVE JOINT TYPE
D - DOWNDRAIN JOINT TYPE
RCP - REINFORCED CONCRETE PIPE
PPC(C) - PASTIC PIPE CULVERT, TYPE C (CORRUGATED INTERIOR WALL)
PPC(D,S) - PLASTIC PIPE CULVERT, TYPE D OR S (SMOOTH INTERIOR WALL)
CSP - CORRUGATED STEEL PIPE
SSRP - STEEL SPIRAL RIBBED PIPE
GA. - GAUGE
BITUM. - BITUMINOUS
PA - POLYMERIZED ASPHALT
PS - POLYMERIC SHEET
w/ - WITH
Ω - SEE DRAINAGE DETAIL

Notes:

1. SUFFICIENT SPACE WAS NOT AVALABLE TO LIST ALL DRAINAGE ITEMS WITHIN A SINGLE TABLE ON A SHEET BORDER, THEREFORE THE LISTING OF THE FIRST GROUPING OF DRAINAGE ITEMS ARE REPEATED ON THE ODD NUMBERED ID CODE SHEETS (DQ-1, DQ-3, ETC.) AND THE LISTINGS OF THE REMAINING GROUP OF DRAINAGE ITEMS ARE REPEATED ON THE EVEN NUMBERED ID CODE SHEETS (DQ-2, DQ-4, ETC.).
2. THE PRECISE DETERMINATION OF THE FOLLOWING ITEMS WILL BE MADE BY THE ENGINEER IN THE FIELD: STATION, SKEW, LENGTH, FL ELEVATION, AND DEPTH OF STRUCTURE.
3. (N) - NOT A SEPARATE PAY ITEM; FOR INFORMATION ONLY.
4. * - SEE ROADWAY QUANTITIES FOR DRAINAGE ITEM TOTAL

DITCH EXCAVATION	CONCRETE (CHANNEL LINING)	STRUCTURAL CONCRETE, BOX CULVERT	MINOR CONCRETE (MINOR STRUCTURE)	MINOR CONCRETE (MISC. CONSTRUCTION)	CL. IV CONCRETE (BACKFILL) *	HMA-A *	PLACE AC (MISC. AREA) *	MISC. IRON AND STEEL	BAR REINFORCING STEEL	RSP: ¼-TON, METHOD B	RSP: FACING, METHOD B	RSP: NO. 2 BACKING, METHOD B	RSP: RSP FABRIC	FRAMES, GRATES AND COVERS: 24-12 (N)	24-13 (N)	¼" SOLID STEEL COVER (N)	12" X 12" PRECAST INLET	12" X 12" STEEL GRATE (TRAFFIC RATED)	DEBRIS RACK (N)	MANHOLE COVER (N)	MANHOLE COVER-PRESSURE LOCKING (N)	36" PRECAST MANHOLE SHAFT		MANHOLE SHAFT PIPE REDUCER	HEIGHT OF MANHOLE (N)	HEIGHT OF INLET "H" (N)	DRAINAGE INLET MARKER *	CONCRETE COLLAR (N)	RCP: 12" RCP	15" RCP	18" RCP	24" RCP	30" RCP	36" RCP	48" RCP	54" RCP	60" RCP (CL. V SPECIAL)	DESCRIPTION	STATION	DRAINAGE PLAN SHEET NO.	DRAINAGE SYSTEM NO. ⬡	DRAINAGE UNIT ◯
CY	CY	CY	CY	CY	CY	ton	yd²	lb	lb	CY	CY	CY	yd²	EA	EA	EA	EA	EA	EA	EA	EA	LF		EA	FT	FT	EA	EA	LF	LF	LF	LF	LF	LF	LF	LF	LF					
												3.6	11.6																									RSP		D-4	15	a
						0.68	4.03																															AC OVERSIDE DRAIN	54' LT "F3" 228+76.04			b
												3.6	11.6																									RSP		D-5	16	a
												4.9	16.5																									RSP		D-5	17	a
						1.13	7.33																															AC OVERSIDE DRAIN	231+10.45			b
4.97						2.80	12.70																															AC/HMA DITCH		D-5	18	a
																																2.2						24" RCP				b
			1.75					326						1												6.7												TYPE G1 DI	83.35' LT "GE1" 232+85.51			c
																																10.5						24" RCP				d
																												1										CONCRETE COLLAR	70.76' LT "GE1" 232+85.79			e
																																						REMOVE HEADWALL				f
																																						ADJUST DI				g
148.30	52.40																																					CONCRETE DITCH	239+74.94	D-5,6	19	a
												22.5	227.2																									RSP		D-5	20	a
																																8.0						24" RCP				b
			1.61					326						1												6.0												TYPE G1 DI	94' LT "GE1" 242+99.6			c
																																						12" AP TYPE A RISER				d
																												1										CONCRETE COLLAR	88.5' LT "GE1" 242+99.6			e
																												1										CONCRETE COLLAR	79' RT "GE1" 242+99.6			f
153.27	52.40		3.36			4.61	24.06	652				34.6	266.9	2														3				20.7						SHEET TOTALS				

DRAINAGE QUANTITIES
DQ-5

THIS PLAN ACCURATE FOR DRAINAGE WORK ONLY.

REVISED BY | DATE REVISED

CALCULATED-DESIGNED BY: MOHAMMAD ABDRABOH
CHECKED BY: ALAN R. BISI
FUNCTIONAL SUPERVISOR: MARK PERTILE

STATE OF CALIFORNIA - DEPARTMENT OF TRANSPORTATION
Caltrans DESIGN

LAST REVISION 03-29-11 | DATE PLOTTED => 11-JUL-2011 | TIME PLOTTED => 12:38

Dist	COUNTY	ROUTE	POST MILES TOTAL PROJECT	SHEET No.	TOTAL SHEETS
08	Riv	91	15.6/21.6	335	2028

REGISTERED CIVIL ENGINEER 3-29-10 DATE

4-25-11
PLANS APPROVAL DATE

REGISTERED PROFESSIONAL ENGINEER ALAN R. BISI No. C62808 Exp. 6-30-12 CIVIL STATE OF CALIFORNIA

THE STATE OF CALIFORNIA OR ITS OFFICERS OR AGENTS SHALL NOT BE RESPONSIBLE FOR THE ACCURACY OR COMPLETENESS OF SCANNED COPIES OF THIS PLAN SHEET.

ALTERNATIVE PIPE ALLOWABLE PIPE MATERIAL AND PROTECTION

DESIGNATION	RCP	CSP (2-2/3"x½")			SSRP (3/4"x1" @ 11-1/2" PITCH)			PPC(C)	PPC(D,S)
	SIZE (INCH)	SIZE (INCH)	BITUM. COAT. THICKNESS	PA/PS THICKNESS	SIZE (INCH)	BITUM. COAT. THICKNESS	PA/PS THICKNESS	SIZE (INCH)	SIZE (INCH)
6" APC									6
12" APC TYPE A		12	0.064"	0.052"				12	
12" APC TYPE B					12	0.064"	0.052"		12
12" APC TYPE C	12				12	0.064"	0.052"		12
18" APC TYPE A	18	18	0.064"	0.052"	18	0.064"	0.052"		
18" APC TYPE B	18	18	0.064"	0.052"				18	
18" APC TYPE C		18	0.064"	0.052"				18	
18" APC TYPE D	18				18	0.064"	0.052"		
18" APC TYPE E	18	18	0.064"	0.052"				18	18
18" APC TYPE F	18								18
24" APC		24	0.079"	0.064"				24	
30" APC	30				30	0.079"	0.064"		30
30"x10" ARCH		30x10	0.079"	0.064"	30x10	0.079"	0.064"		
48" APC		48	0.079"	0.064"					

LEGENDS AND ABBREVIATIONS

S - STANDARD JOINT TYPE
P - POSITIVE JOINT TYPE
D - DOWNDRAIN JOINT TYPE
RCP - REINFORCED CONCRETE PIPE
PPC(C) - PASTIC PIPE CULVERT, TYPE C (CORRUGATED INTERIOR WALL)
PPC(D,S) - PLASTIC PIPE CULVERT, TYPE D OR S (SMOOTH INTERIOR WALL)
CSP - CORRUGATED STEEL PIPE
CAP - CORRUGATED ALUMINUM PIPE
SSRP - STEEL SPIRAL RIBBED PIPE
GA. - GAUGE
BITUM. - BITUMINOUS
PA - POLYMERIZED ASPHALT
PS - POLYMERIC SHEET
w/ - WITH
Ω - SEE DRAINAGE DETAIL

Notes:

1. SUFFICIENT SPACE WAS NOT AVALABLE TO LIST ALL DRAINAGE ITEMS WITHIN A SINGLE TABLE ON A SHEET BORDER, THEREFORE THE LISTING OF THE FIRST GROUPING OF DRAINAGE ITEMS ARE REPEATED ON THE ODD NUMBERED ID CODE SHEETS (DQ-1, DQ-3, ETC.) AND THE LISTINGS OF THE REMAINING GROUP OF DRAINAGE ITEMS ARE REPEATED ON THE EVEN NUMBERED ID CODE SHEETS (DQ-2, DQ-4, ETC.).
2. THE PRECISE DETERMINATION OF THE FOLLOWING ITEMS WILL BE MADE BY THE ENGINEER IN THE FIELD: STATION, SKEW, LENGTH, FL ELEVATION, AND DEPTH OF STRUCTURE.
3. (N) - NOT A SEPARATE PAY ITEM; FOR INFORMATION ONLY.
4. * - SEE ROADWAY QUANTITIES FOR DRAINAGE ITEM TOTAL

CSP 12" (14 GA.) LF	CSP 18" (14 GA.) LF	CSP 36" (10 GA.) LF	CSP 12" RISER (14 GA.) LF	CSP 48" RISER (10 GA.) LF	CSP 18" SLOTTED PIPE (14 GA.) LF	CSP 21" SLOTTED PIPE (14 GA.) LF	CSP 24" SLOTTED PIPE (14 GA.) LF	ALTERNATIVE PIPE 6" AP (TYPE __) LF	ALTERNATIVE PIPE 12" AP (TYPE __) LF	ALTERNATIVE PIPE 18" AP (TYPE __) LF	ALTERNATIVE PIPE 24" AP (TYPE __) LF	ALTERNATIVE PIPE 30" AP (TYPE __) LF	ALTERNATIVE PIPE 48" AP (TYPE __) LF	ALTERNATIVE PIPE 30" X 10" AP ARCH PIPE (TYPE __) LF	MAXIMUM COVER (N) FT	ELBOW (N) EA	PIPE JOINT CLASSIFICATION	8" GALVANIZED STEEL PIPE LF	8" GATE VALVE w/ SLEEVE & COVER EA	AFES 12" AFES EA	PIPE RISER 8" AP SLIPJOINT (N) EA	PIPE RISER 12" AP SLIPJOINT (N) EA	CABLE RAILING LF	ADJUST INLET EA	MODIFY INLET EA	REMOVAL/ABANDON PAY ITEMS REMOVE CONCRETE CY	REMOVE PIPE LF	REMOVE INLET EA	ABANDON INLET EA	ABANDON PIPE LF	SAND BACKFILL CY	CAP RISER EA	CAP INLET EA	DESCRIPTION	STATION	DRAINAGE PLAN SHEET NO.	DRAINAGE SYSTEM NO. ⬡	DRAINAGE UNIT ◯
																																RSP		D-4	15	a
																																AC OVERSIDE DRAIN	54' LT "F3" 228+76.04			b
																																RSP		D-5	16	a
																																RSP		D-5	17	a
																																AC OVERSIDE DRAIN	231+10.45			b
																																AC/HMA DITCH		D-5	18	a
															5.8		S															24" RCP				b
																																TYPE G1 DI	83.35' LT "GE1" 232+85.51			c
															5.8		S															24" RCP				d
																																CONCRETE COLLAR	70.76' LT "GE1" 232+85.79			e
																									1.2							REMOVE HEADWALL				f
																								1								ADJUST DI				g
																																CONCRETE DITCH	239+74.94	D-5,6	19	a
																																RSP		D-5	20	a
															15.8		S															24" RCP				b
																																TYPE G1 DI	94' LT "GE1" 242+99.6			c
									9.8								DD				1											12" AP TYPE A RISER				d
																																CONCRETE COLLAR	88.5' LT "GE1" 242+99.6			e
																																CONCRETE COLLAR	79' RT "GE1" 242+99.6			f
									9.8												1		1		1.2							SHEET TOTALS				

THIS PLAN ACCURATE FOR DRAINAGE WORK ONLY.

DRAINAGE QUANTITIES
DQ-6

MOHAMMAD ABDRABOH — CALCULATED-DESIGNED BY
ALAN R. BISI — CHECKED BY
MARK PERTILE — FUNCTIONAL SUPERVISOR
REVISED BY — DATE REVISED

STATE OF CALIFORNIA - DEPARTMENT OF TRANSPORTATION
Caltrans DESIGN

LAST REVISION 03-29-11 | DATE PLOTTED => 29-APR-2011 | TIME PLOTTED => 18:51

Dist	COUNTY	ROUTE	POST MILES TOTAL PROJECT	SHEET No.	TOTAL SHEETS
08	Riv	91	15.6/21.6	336	2028

REGISTERED CIVIL ENGINEER 3-29-10 DATE

4-25-11
PLANS APPROVAL DATE

REGISTERED PROFESSIONAL ENGINEER ALAN R. BISI No. C62808 Exp. 6-30-12 CIVIL STATE OF CALIFORNIA

THE STATE OF CALIFORNIA OR ITS OFFICERS OR AGENTS SHALL NOT BE RESPONSIBLE FOR THE ACCURACY OR COMPLETENESS OF SCANNED COPIES OF THIS PLAN SHEET.

ALTERNATIVE PIPE ALLOWABLE PIPE MATERIAL AND PROTECTION

DESIGNATION	RCP	CSP (2-2/3"x½")			SSRP (3/4"x1" @ 11-1/2" PITCH)			PPC(C)	PPC(D,S)
	SIZE (INCH)	SIZE (INCH)	BITUM. COAT. THICKNESS	PA/PS THICKNESS	SIZE (INCH)	BITUM. COAT. THICKNESS	PA/PS THICKNESS	SIZE (INCH)	SIZE (INCH)
6" APC									6
12" APC TYPE A		12	0.064"	0.052"				12	
12" APC TYPE B					12	0.064"	0.052"		12
12" APC TYPE C	12				12	0.064"	0.052"		12
18" APC TYPE A	18	18	0.064"	0.052"	18	0.064"	0.052"		
18" APC TYPE B	18	18	0.064"	0.052"				18	
18" APC TYPE C		18	0.064"	0.052"				18	
18" APC TYPE D	18				18	0.064"	0.052"		
18" APC TYPE E	18	18	0.064"	0.052"				18	18
18" APC TYPE F	18								18
24" APC		24	0.079"	0.064"				24	
30" APC	30				30	0.079"	0.064"		30
30"x10" ARCH		30x10	0.079"	0.064"	30x10	0.079"	0.064"		
48" APC		48	0.079"	0.064"					

LEGENDS AND ABBREVIATIONS

S - STANDARD JOINT TYPE
P - POSITIVE JOINT TYPE
D - DOWNDRAIN JOINT TYPE
RCP - REINFORCED CONCRETE PIPE
PPC(C) - PASTIC PIPE CULVERT, TYPE C (CORRUGATED INTERIOR WALL)
PPC(D,S) - PLASTIC PIPE CULVERT, TYPE D OR S (SMOOTH INTERIOR WALL)
CSP - CORRUGATED STEEL PIPE
SSRP - STEEL SPIRAL RIBBED PIPE
GA. - GAUGE
BITUM. - BITUMINOUS
PA - POLYMERIZED ASPHALT
PS - POLYMERIC SHEET
w/ - WITH
Ω - SEE DRAINAGE DETAIL

Notes:

1. SUFFICIENT SPACE WAS NOT AVALABLE TO LIST ALL DRAINAGE ITEMS WITHIN A SINGLE TABLE ON A SHEET BORDER, THEREFORE THE LISTING OF THE FIRST GROUPING OF DRAINAGE ITEMS ARE REPEATED ON THE ODD NUMBERED ID CODE SHEETS (DQ-1, DQ-3, ETC.) AND THE LISTINGS OF THE REMAINING GROUP OF DRAINAGE ITEMS ARE REPEATED ON THE EVEN NUMBERED ID CODE SHEETS (DQ-2, DQ-4, ETC.).
2. THE PRECISE DETERMINATION OF THE FOLLOWING ITEMS WILL BE MADE BY THE ENGINEER IN THE FIELD: STATION, SKEW, LENGTH, FL ELEVATION, AND DEPTH OF STRUCTURE.
3. (N) - NOT A SEPARATE PAY ITEM; FOR INFORMATION ONLY.
4. * - SEE ROADWAY QUANTITIES FOR DRAINAGE ITEM TOTAL

DITCH EXCAVATION	CONCRETE (CHANNEL LINING)	STRUCTURAL CONCRETE, BOX CULVERT	MINOR CONCRETE (MINOR STRUCTURE)	MINOR CONCRETE (MISC. CONSTRUCTION)	CL. IV CONCRETE (BACKFILL) *	HMA-A *	PLACE AC (MISC. AREA) *	MISC. IRON AND STEEL	BAR REINFORCING STEEL	RSP: ¼-TON, METHOD B	RSP: FACING, METHOD B	RSP: NO. 2 BACKING, METHOD B	RSP: RSP FABRIC	FRAMES, GRATES AND COVERS: 24-12 (N)	24-13 (N)	¼" SOLID STEEL COVER (N)	12" X 12" PRECAST INLET	12" X 12" STEEL GRATE (TRAFFIC RATED)	DEBRIS RACK (N)	MANHOLE COVER (N)	MANHOLE COVER-PRESSURE LOCKING (N)	36" PRECAST MANHOLE SHAFT		MANHOLE SHAFT PIPE REDUCER	HEIGHT OF MANHOLE (N)	HEIGHT OF INLET, "H" (N)	DRAINAGE INLET MARKER *	CONCRETE COLLAR (N)	RCP: 12" RCP	15" RCP	18" RCP	24" RCP	30" RCP	36" RCP	48" RCP	54" RCP	60" RCP (CL. V SPECIAL)	DESCRIPTION	STATION	DRAINAGE PLAN SHEET NO.	DRAINAGE SYSTEM NO. ⬡	DRAINAGE UNIT ◯
CY	CY	CY	CY	CY	CY	ton	yd²	lb	lb	CY	CY	CY	yd²	EA	EA	EA	EA	EA	EA	EA	EA	LF		EA	FT	FT	EA	EA	LF	LF	LF	LF	LF	LF	LF	LF	LF					
																																6.0						24" RCP		D-5	20	g
			1.61					326						1												6.0												TYPE G1 DI	83' RT "GE1" 242+99.6			h
																																						12" AP TYPE A RISER				i
																												12.0										12" RCP				j
			1.17					326						1												4.0												TYPE G1 DI	82.45' RT "GE1" 242+84.6			k
			1.20																																			REMOVE HEADWALL				l
																																						REMOVE 24" RCP				m
			1.20																																			REMOVE HEADWALL				n
																																						REMOVE 12" CMP		D-6	21	a
											2.5	9.9																										RSP		D-6	22	a
			0.91																																			HEADWALL	133' RT "GE1" 245+74			b
																																						18" AP TYPE C				c
			1.61					326						1												6.0												TYPE G1 DI	89.7' LT "GE1" 245+74			d
																																						System Not Used		D-6	23	
																																						System Not Used		D-6	24	
											4.5	16.9																										RSP		D-6	25	a
			1.20																																			HEADWALL	139.83" RT "GE1" 249+98.00			b
																																						24" AP				c
			1.10					326						1												3.7												TYPE G1 DI	102.86' LT "GE1" 249+99.45			d
			10.00					1304				7.0	26.8	4														12.0			6.0							SHEET TOTALS				

DRAINAGE QUANTITIES
DQ-7

THIS PLAN ACCURATE FOR DRAINAGE WORK ONLY.

STATE OF CALIFORNIA - DEPARTMENT OF TRANSPORTATION
Caltrans DESIGN

FUNCTIONAL SUPERVISOR: MARK PERTILE
CALCULATED-DESIGNED BY: MOHAMMAD ABDRABOH
CHECKED BY: ALAN R. BISI
REVISED BY
DATE REVISED

LAST REVISION 03-29-11
DATE PLOTTED => 11-JUL-2011
TIME PLOTTED => 12:38

Dist	COUNTY	ROUTE	POST MILES TOTAL PROJECT	SHEET No.	TOTAL SHEETS
08	Riv	91	15.6/21.6	337	2028

REGISTERED CIVIL ENGINEER 3-29-10 DATE

4-25-11
PLANS APPROVAL DATE

REGISTERED PROFESSIONAL ENGINEER ALAN R. BISI No. C62808 Exp. 6-30-12 CIVIL STATE OF CALIFORNIA

THE STATE OF CALIFORNIA OR ITS OFFICERS OR AGENTS SHALL NOT BE RESPONSIBLE FOR THE ACCURACY OR COMPLETENESS OF SCANNED COPIES OF THIS PLAN SHEET.

ALTERNATIVE PIPE ALLOWABLE PIPE MATERIAL AND PROTECTION

DESIGNATION	RCP	CSP (2-2/3"x½")			SSRP (3/4"x1" @ 11-1/2" PITCH)			PPC(C)	PPC(D,S)
	SIZE (INCH)	SIZE (INCH)	BITUM. COAT. THICKNESS	PA/PS THICKNESS	SIZE (INCH)	BITUM. COAT. THICKNESS	PA/PS THICKNESS	SIZE (INCH)	SIZE (INCH)
6" APC									6
12" APC TYPE A		12	0.064"	0.052"				12	
12" APC TYPE B					12	0.064"	0.052"		12
12" APC TYPE C	12				12	0.064"	0.052"		12
18" APC TYPE A	18	18	0.064"	0.052"	18	0.064"	0.052"		
18" APC TYPE B	18	18	0.064"	0.052"				18	
18" APC TYPE C		18	0.064"	0.052"				18	
18" APC TYPE D	18				18	0.064"	0.052"		
18" APC TYPE E	18	18	0.064"	0.052"				18	18
18" APC TYPE F	18								18
24" APC		24	0.079"	0.064"				24	
30" APC	30				30	0.079"	0.064"		30
30"x10" ARCH		30x10	0.079"	0.064"	30x10	0.079"	0.064"		
48" APC		48	0.079"	0.064"					

LEGENDS AND ABBREVIATIONS

S - STANDARD JOINT TYPE
P - POSITIVE JOINT TYPE
D - DOWNDRAIN JOINT TYPE
RCP - REINFORCED CONCRETE PIPE
PPC(C) - PASTIC PIPE CULVERT, TYPE C (CORRUGATED INTERIOR WALL)
PPC(D,S) - PLASTIC PIPE CULVERT, TYPE D OR S (SMOOTH INTERIOR WALL)
CSP - CORRUGATED STEEL PIPE
CAP - CORRUGATED ALUMINUM PIPE
SSRP - STEEL SPIRAL RIBBED PIPE
GA. - GAUGE
BITUM. - BITUMINOUS
PA - POLYMERIZED ASPHALT
PS - POLYMERIC SHEET
w/ - WITH
Ω - SEE DRAINAGE DETAIL

Notes:

1. SUFFICIENT SPACE WAS NOT AVALABLE TO LIST ALL DRAINAGE ITEMS WITHIN A SINGLE TABLE ON A SHEET BORDER, THEREFORE THE LISTING OF THE FIRST GROUPING OF DRAINAGE ITEMS ARE REPEATED ON THE ODD NUMBERED ID CODE SHEETS (DQ-1, DQ-3, ETC.) AND THE LISTINGS OF THE REMAINING GROUP OF DRAINAGE ITEMS ARE REPEATED ON THE EVEN NUMBERED ID CODE SHEETS (DQ-2, DQ-4, ETC.).
2. THE PRECISE DETERMINATION OF THE FOLLOWING ITEMS WILL BE MADE BY THE ENGINEER IN THE FIELD: STATION, SKEW, LENGTH, FL ELEVATION, AND DEPTH OF STRUCTURE.
3. (N) - NOT A SEPARATE PAY ITEM; FOR INFORMATION ONLY.
4. * - SEE ROADWAY QUANTITIES FOR DRAINAGE ITEM TOTAL

CSP 12" (14 GA.) LF	CSP 18" (14 GA.) LF	CSP 36" (10 GA.) LF	CSP 12" RISER (14 GA.) LF	CSP 48" RISER (10 GA.) LF	CSP 18" SLOTTED PIPE (14 GA.) LF	CSP 21" SLOTTED PIPE (14 GA.) LF	CSP 24" SLOTTED PIPE (14 GA.) LF	ALTERNATIVE PIPE 6" AP (TYPE __) LF	ALTERNATIVE PIPE 12" AP (TYPE __) LF	ALTERNATIVE PIPE 18" AP (TYPE __) LF	ALTERNATIVE PIPE 24" AP (TYPE __) LF	ALTERNATIVE PIPE 30" AP (TYPE __) LF	ALTERNATIVE PIPE 48" AP (TYPE __) LF	ALTERNATIVE PIPE 30" X 10" AP ARCH PIPE (TYPE __) LF	MAXIMUM COVER (N) FT	ELBOW (N) EA	PIPE JOINT CLASSIFICATION	8" GALVANIZED STEEL PIPE LF	8" GATE VALVE w/ SLEEVE & COVER EA	AFES 12" AFES EA	PIPE RISER 8" AP SLIPJOINT (N) EA	PIPE RISER 12" AP SLIPJOINT (N) EA	CABLE RAILING LF	ADJUST INLET EA	MODIFY INLET EA	REMOVAL/ABANDON PAY ITEMS REMOVE CONCRETE CY	REMOVE PIPE LF	REMOVE INLET EA	ABANDON INLET EA	ABANDON PIPE LF	SAND BACKFILL CY	CAP RISER EA	CAP INLET EA	DESCRIPTION	STATION	DRAINAGE PLAN SHEET NO.	DRAINAGE SYSTEM NO. ⬡	DRAINAGE UNIT ◯
															15.1		S																	24" RCP		D-5	20	g
																																		TYPE G1 DI	83' RT "GE1" 242+99.6			h
									9.1								DD				1													12" AP TYPE A RISER				i
															4.9		S																	12" RCP				j
																																		TYPE G1 DI	82.45' RT "GE1" 242+84.6			k
																									1.2									REMOVE HEADWALL				l
																										5.0								REMOVE 24" RCP				m
																									1.2									REMOVE HEADWALL				n
																										35.0								REMOVE 12" CMP		D-6	21	a
																																		RSP		D-6	22	a
																																		HEADWALL	133' RT "GE1" 245+74			b
										43.3					4.5		S																	18" AP TYPE C				c
																																		TYPE G1 DI	89.7' LT "GE1" 245+74			d
																																		System Not Used		D-6	23	
																																		System Not Used		D-6	24	
																																		RSP		D-6	25	a
																																		HEADWALL	139.83" RT "GE1" 249+98.00			b
											37.1				1.7		S																	24" AP				c
																																		TYPE G1 DI	102.86' LT "GE1" 249+99.45			d
									9.1	43.3	37.1										1				2.4	40.0								SHEET TOTALS				

THIS PLAN ACCURATE FOR DRAINAGE WORK ONLY.

DRAINAGE QUANTITIES
DQ-8

MOHAMMAD ABDRABOH — ALAN R. BISI — MARK PERTILE

STATE OF CALIFORNIA - DEPARTMENT OF TRANSPORTATION — DESIGN — Caltrans

REVISED BY — DATE REVISED — CALCULATED-DESIGNED BY — CHECKED BY — FUNCTIONAL SUPERVISOR

LAST REVISION 03-29-11 — DATE PLOTTED => 29-APR-2011 — TIME PLOTTED => 18:52

Dist	COUNTY	ROUTE	POST MILES TOTAL PROJECT	SHEET No.	TOTAL SHEETS
08	Riv	91	15.6/21.6	338	2028

REGISTERED CIVIL ENGINEER 3-29-10 DATE

4-25-11
PLANS APPROVAL DATE

REGISTERED PROFESSIONAL ENGINEER ALAN R. BISI No. C62808 Exp. 6-30-12 CIVIL STATE OF CALIFORNIA

THE STATE OF CALIFORNIA OR ITS OFFICERS OR AGENTS SHALL NOT BE RESPONSIBLE FOR THE ACCURACY OR COMPLETENESS OF SCANNED COPIES OF THIS PLAN SHEET.

ALTERNATIVE PIPE ALLOWABLE PIPE MATERIAL AND PROTECTION

DESIGNATION	RCP	CSP (2-2/3"x½")			SSRP (3/4"x1" @ 11-1/2" PITCH)			PPC(C)	PPC(D,S)
	SIZE (INCH)	SIZE (INCH)	BITUM. COAT. THICKNESS	PA/PS THICKNESS	SIZE (INCH)	BITUM. COAT. THICKNESS	PA/PS THICKNESS	SIZE (INCH)	SIZE (INCH)
6" APC									6
12" APC TYPE A		12	0.064"	0.052"				12	
12" APC TYPE B					12	0.064"	0.052"		12
12" APC TYPE C	12				12	0.064"	0.052"		12
18" APC TYPE A	18	18	0.064"	0.052"	18	0.064"	0.052"		
18" APC TYPE B	18	18	0.064"	0.052"				18	
18" APC TYPE C		18	0.064"	0.052"				18	
18" APC TYPE D	18				18	0.064"	0.052"		
18" APC TYPE E	18	18	0.064"	0.052"				18	18
18" APC TYPE F	18								18
24" APC		24	0.079"	0.064"				24	
30" APC	30				30	0.079"	0.064"		30
30"x10" ARCH		30x10	0.079"	0.064"	30x10	0.079"	0.064"		
48" APC		48	0.079"	0.064"					

LEGENDS AND ABBREVIATIONS

S - STANDARD JOINT TYPE
P - POSITIVE JOINT TYPE
D - DOWNDRAIN JOINT TYPE
RCP - REINFORCED CONCRETE PIPE
PPC(C) - PASTIC PIPE CULVERT, TYPE C (CORRUGATED INTERIOR WALL)
PPC(D,S) - PLASTIC PIPE CULVERT, TYPE D OR S (SMOOTH INTERIOR WALL)
CSP - CORRUGATED STEEL PIPE
SSRP - STEEL SPIRAL RIBBED PIPE
GA. - GAUGE
BITUM. - BITUMINOUS
PA - POLYMERIZED ASPHALT
PS - POLYMERIC SHEET
w/ - WITH
Ω - SEE DRAINAGE DETAIL

Notes:

1. SUFFICIENT SPACE WAS NOT AVALABLE TO LIST ALL DRAINAGE ITEMS WITHIN A SINGLE TABLE ON A SHEET BORDER, THEREFORE THE LISTING OF THE FIRST GROUPING OF DRAINAGE ITEMS ARE REPEATED ON THE ODD NUMBERED ID CODE SHEETS (DQ-1, DQ-3, ETC.) AND THE LISTINGS OF THE REMAINING GROUP OF DRAINAGE ITEMS ARE REPEATED ON THE EVEN NUMBERED ID CODE SHEETS (DQ-2, DQ-4, ETC.).
2. THE PRECISE DETERMINATION OF THE FOLLOWING ITEMS WILL BE MADE BY THE ENGINEER IN THE FIELD: STATION, SKEW, LENGTH, FL ELEVATION, AND DEPTH OF STRUCTURE.
3. (N) - NOT A SEPARATE PAY ITEM; FOR INFORMATION ONLY.
4. * - SEE ROADWAY QUANTITIES FOR DRAINAGE ITEM TOTAL

DITCH EXCAVATION	CONCRETE (CHANNEL LINING)	STRUCTURAL CONCRETE, BOX CULVERT	MINOR CONCRETE (MINOR STRUCTURE)	MINOR CONCRETE (MISC. CONSTRUCTION)	CL. IV CONCRETE (BACKFILL) *	HMA-A *	PLACE AC (MISC. AREA) *	MISC. IRON AND STEEL	BAR REINFORCING STEEL	RSP ¼-TON, METHOD B	RSP FACING, METHOD B	RSP NO. 2 BACKING, METHOD B	RSP FABRIC	FRAMES, GRATES AND COVERS 24-12 (N)	24-13 (N)	¼" SOLID STEEL COVER (N)	12" X 12" PRECAST INLET	12" X 12" STEEL GRATE (TRAFFIC RATED)	DEBRIS RACK (N)	MANHOLE COVER (N)	MANHOLE COVER-PRESSURE LOCKING (N)	36" PRECAST MANHOLE SHAFT		MANHOLE SHAFT PIPE REDUCER	HEIGHT OF MANHOLE (N)	HEIGHT OF INLET "H" (N)	DRAINAGE INLET MARKER *	CONCRETE COLLAR (N)	RCP 12" RCP	15" RCP	18" RCP	24" RCP	30" RCP	36" RCP	48" RCP	54" RCP	60" RCP (CL. V SPECIAL)	DESCRIPTION	STATION	DRAINAGE PLAN SHEET NO.	DRAINAGE SYSTEM NO. ⬡	DRAINAGE UNIT ◯
CY	CY	CY	CY	CY	CY	ton	yd²	lb	lb	CY	CY	CY	yd²	EA	EA	EA	EA	EA	EA	EA	EA	LF		EA	FT	FT	EA	EA	LF	LF	LF	LF	LF	LF	LF	LF	LF					
																																						24" AP		D-6	25	e
																												1										CONCRETE COLLAR	83.41' LT "GE1" 250			f
																																						CAP DI				g
																																						CAP DI				h
																																						ABANDON PIPE				i
																																						ABANDON DI				j
																															64.5							18" RCP		D-6	26	a
			1.10				326							1												3.5												TYPE G1 DI	71.61' RT "GE1" 251+03.5			b
																															11.1							18" RCP				c
			1.10				326							1												3.3												TYPE G1 DI	71.7' RT "GE1" 251+03.5			d
																																						REMOVE HW		D-6	27	a
																																						REMOVE 12" RCP				b
																																						REMOVE DI				c
																																22.4						24" RCP		D-6	28	a
			1.15				634							2												3.3												TYPE GD-1 DI	104.23' LT "GE1" 250+25.75			b
																															22.4							18" RCP				c
			0.98				326							1												3.1												TYPE G1 DI	105.56' LT "GE1" 250+50.71			d
																															215.0							18" RCP				e
			1.15				326							2												3.1												TYPE G3 DI	73.0' LT "GE1" 252+67.00			f
																												1										CONCRETE COLLAR	49.1' RT 250+24.9	D-6	29	a
																															20.0							18" RCP				b
			1.31				326							1												3.0												TYPE G2 DI	71.60' RT "GE1" 250+24.94			c
			14.80					2230.8																														2'X1' RCB				d
			0.92				326																			1.7												TYPE GO DI w/DEPRESSION	113.92' RT "GE1" 249+72.87			e
			22.51				2590	2230.8						8														2			333.0	22.4						SHEET TOTALS				

THIS PLAN ACCURATE FOR DRAINAGE WORK ONLY.

DRAINAGE QUANTITIES
DQ-9

REVISED BY | DATE REVISED

CALCULATED-DESIGNED BY: MOHAMMAD ABDRABOH
CHECKED BY: ALAN R. BISI
FUNCTIONAL SUPERVISOR: MARK PERTILE

STATE OF CALIFORNIA - DEPARTMENT OF TRANSPORTATION
Caltrans
DESIGN

LAST REVISION 03-29-11 | DATE PLOTTED => 11-JUL-2011 | TIME PLOTTED => 12:38

Dist	COUNTY	ROUTE	POST MILES TOTAL PROJECT	SHEET No.	TOTAL SHEETS
08	Riv	91	15.6/21.6	339	2028

REGISTERED CIVIL ENGINEER 3-29-10 DATE

4-25-11
PLANS APPROVAL DATE

REGISTERED PROFESSIONAL ENGINEER ALAN R. BISI No. C62808 Exp. 6-30-12 CIVIL STATE OF CALIFORNIA

THE STATE OF CALIFORNIA OR ITS OFFICERS OR AGENTS SHALL NOT BE RESPONSIBLE FOR THE ACCURACY OR COMPLETENESS OF SCANNED COPIES OF THIS PLAN SHEET.

ALTERNATIVE PIPE ALLOWABLE PIPE MATERIAL AND PROTECTION

DESIGNATION	RCP	CSP (2-2/3"x½")			SSRP (3/4"x1" @ 11-1/2" PITCH)			PPC(C)	PPC(D,S)
	SIZE (INCH)	SIZE (INCH)	BITUM. COAT. THICKNESS	PA/PS THICKNESS	SIZE (INCH)	BITUM. COAT. THICKNESS	PA/PS THICKNESS	SIZE (INCH)	SIZE (INCH)
6" APC									6
12" APC TYPE A		12	0.064"	0.052"				12	
12" APC TYPE B					12	0.064"	0.052"		12
12" APC TYPE C	12				12	0.064"	0.052"		12
18" APC TYPE A	18	18	0.064"	0.052"	18	0.064"	0.052"		
18" APC TYPE B	18	18	0.064"	0.052"				18	
18" APC TYPE C		18	0.064"	0.052"				18	
18" APC TYPE D	18				18	0.064"	0.052"		
18" APC TYPE E	18	18	0.064"	0.052"				18	18
18" APC TYPE F	18								18
24" APC		24	0.079"	0.064"				24	
30" APC	30				30	0.079"	0.064"		30
30"x10" ARCH		30x10	0.079"	0.064"	30x10	0.079"	0.064"		
48" APC		48	0.079"	0.064"					

LEGENDS AND ABBREVIATIONS

S - STANDARD JOINT TYPE
P - POSITIVE JOINT TYPE
D - DOWNDRAIN JOINT TYPE
RCP - REINFORCED CONCRETE PIPE
PPC(C) - PASTIC PIPE CULVERT, TYPE C (CORRUGATED INTERIOR WALL)
PPC(D,S) - PLASTIC PIPE CULVERT, TYPE D OR S (SMOOTH INTERIOR WALL)
CSP - CORRUGATED STEEL PIPE
CAP - CORRUGATED ALUMINUM PIPE
SSRP - STEEL SPIRAL RIBBED PIPE
GA. - GAUGE
BITUM. - BITUMINOUS
PA - POLYMERIZED ASPHALT
PS - POLYMERIC SHEET
w/ - WITH
Ω - SEE DRAINAGE DETAIL

Notes:

1. SUFFICIENT SPACE WAS NOT AVALABLE TO LIST ALL DRAINAGE ITEMS WITHIN A SINGLE TABLE ON A SHEET BORDER, THEREFORE THE LISTING OF THE FIRST GROUPING OF DRAINAGE ITEMS ARE REPEATED ON THE ODD NUMBERED ID CODE SHEETS (DQ-1, DQ-3, ETC.) AND THE LISTINGS OF THE REMAINING GROUP OF DRAINAGE ITEMS ARE REPEATED ON THE EVEN NUMBERED ID CODE SHEETS (DQ-2, DQ-4, ETC.).
2. THE PRECISE DETERMINATION OF THE FOLLOWING ITEMS WILL BE MADE BY THE ENGINEER IN THE FIELD: STATION, SKEW, LENGTH, FL ELEVATION, AND DEPTH OF STRUCTURE.
3. (N) - NOT A SEPARATE PAY ITEM; FOR INFORMATION ONLY.
4. * - SEE ROADWAY QUANTITIES FOR DRAINAGE ITEM TOTAL

CSP 12" (14 GA.) LF	CSP 18" (14 GA.) LF	CSP 36" (10 GA.) LF	CSP 12" RISER (14 GA.) LF	CSP 48" RISER (10 GA.) LF	CSP 18" SLOTTED PIPE (14 GA.) LF	CSP 21" SLOTTED PIPE (14 GA.) LF	CSP 24" SLOTTED PIPE (14 GA.) LF	ALTERNATIVE PIPE 6" AP (TYPE __) LF	ALTERNATIVE PIPE 12" AP (TYPE __) LF	ALTERNATIVE PIPE 18" AP (TYPE __) LF	ALTERNATIVE PIPE 24" AP (TYPE __) LF	ALTERNATIVE PIPE 30" AP (TYPE __) LF	ALTERNATIVE PIPE 48" AP (TYPE __) LF	ALTERNATIVE PIPE 30" X 10" AP ARCH PIPE (TYPE __) LF	MAXIMUM COVER (N) FT	ELBOW (N) EA	PIPE JOINT CLASSIFICATION	8" GALVANIZED STEEL PIPE LF	8" GATE VALVE w/ SLEEVE & COVER EA	AFES 12" AFES EA	PIPE RISER 8" AP SLIPJOINT (N) EA	PIPE RISER 12" AP SLIPJOINT (N) EA	CABLE RAILING LF	ADJUST INLET EA	MODIFY INLET EA	REMOVAL/ABANDON PAY ITEMS REMOVE CONCRETE CY	REMOVE PIPE LF	REMOVE INLET EA	ABANDON INLET EA	ABANDON PIPE LF	SAND BACKFILL CY	CAP RISER EA	CAP INLET EA	DESCRIPTION	STATION	DRAINAGE PLAN SHEET NO.	DRAINAGE SYSTEM NO. ⬡	DRAINAGE UNIT ◯
											16.4				1.6		S																	24" AP		D-6	25	e
																																		CONCRETE COLLAR	83.41' LT "GE1" 250			f
																																	1	CAP DI				g
																																	1	CAP DI				h
																														23.1	2.69			ABANDON PIPE				i
																												1						ABANDON DI				j
															4.1		S																	18" RCP		D-6	26	a
																																		TYPE G1 DI	71.61' RT "GE1" 251+03.5			b
															3.7		S																	18" RCP				c
																																		TYPE G1 DI	71.7' RT "GE1" 251+03.5			d
																										1.2								REMOVE HW		D-6	27	a
																											23.93							REMOVE 12" RCP				b
																												1						REMOVE DI				c
															1.9		S																	24" RCP		D-6	28	a
																																		TYPE GD-1 DI	104.23' LT "GE1" 250+25.75			b
															1.8		S																	18" RCP				c
																																		TYPE G1 DI	105.56' LT "GE1" 250+50.71			d
															1.8		S																	18" RCP				e
																																		TYPE G3 DI	73.00' LT "GE1" 252+67.00			f
																																		CONCRETE COLLAR	49.1' RT 250+24.9	D-6	29	a
															4.3		S																	18" RCP				b
																																		TYPE G2 DI	71.60' RT "GE1" 250+24.94			c
															4.8																			2'X1' RCB				d
																																		TYPE GO DI w/DEPRESSION	113.92' RT "GE1" 249+72.87			e
											16.4															1.2	23.93	1	1	23.1	2.69		2	SHEET TOTALS				

THIS PLAN ACCURATE FOR DRAINAGE WORK ONLY.

DRAINAGE QUANTITIES
DQ-10

REVISED BY | DATE REVISED

CALCULATED-DESIGNED BY: MOHAMMAD ABDRABOH
CHECKED BY: ALAN R. BISI
FUNCTIONAL SUPERVISOR: MARK PERTILE

STATE OF CALIFORNIA - DEPARTMENT OF TRANSPORTATION
Caltrans® DESIGN

LAST REVISION 03-29-11 | DATE PLOTTED => 02-MAY-2011 | TIME PLOTTED => 09:14

Dist	COUNTY	ROUTE	POST MILES TOTAL PROJECT	SHEET No.	TOTAL SHEETS
08	Riv	91	15.6/21.6	340	2028

REGISTERED CIVIL ENGINEER 3-29-10 DATE

4-25-11
PLANS APPROVAL DATE

REGISTERED PROFESSIONAL ENGINEER ALAN R. BISI No. C62808 Exp. 6-30-12 CIVIL STATE OF CALIFORNIA

THE STATE OF CALIFORNIA OR ITS OFFICERS OR AGENTS SHALL NOT BE RESPONSIBLE FOR THE ACCURACY OR COMPLETENESS OF SCANNED COPIES OF THIS PLAN SHEET.

ALTERNATIVE PIPE ALLOWABLE PIPE MATERIAL AND PROTECTION

DESIGNATION	RCP	CSP (2-2/3"x½")			SSRP (3/4"x1" @ 11-1/2" PITCH)			PPC(C)	PPC(D,S)
	SIZE (INCH)	SIZE (INCH)	BITUM. COAT. THICKNESS	PA/PS THICKNESS	SIZE (INCH)	BITUM. COAT. THICKNESS	PA/PS THICKNESS	SIZE (INCH)	SIZE (INCH)
6" APC									6
12" APC TYPE A		12	0.064"	0.052"				12	
12" APC TYPE B					12	0.064"	0.052"		12
12" APC TYPE C	12				12	0.064"	0.052"		12
18" APC TYPE A	18	18	0.064"	0.052"	18	0.064"	0.052"		
18" APC TYPE B	18	18	0.064"	0.052"				18	
18" APC TYPE C		18	0.064"	0.052"				18	
18" APC TYPE D	18				18	0.064"	0.052"		
18" APC TYPE E	18	18	0.064"	0.052"				18	18
18" APC TYPE F	18								18
24" APC		24	0.079"	0.064"				24	
30" APC	30				30	0.079"	0.064"		30
30"x10" ARCH		30x10	0.079"	0.064"	30x10	0.079"	0.064"		
48" APC		48	0.079"	0.064"					

LEGENDS AND ABBREVIATIONS

S - STANDARD JOINT TYPE
P - POSITIVE JOINT TYPE
D - DOWNDRAIN JOINT TYPE
RCP - REINFORCED CONCRETE PIPE
PPC(C) - PASTIC PIPE CULVERT, TYPE C (CORRUGATED INTERIOR WALL)
PPC(D,S) - PLASTIC PIPE CULVERT, TYPE D OR S (SMOOTH INTERIOR WALL)
CSP - CORRUGATED STEEL PIPE
SSRP - STEEL SPIRAL RIBBED PIPE
GA. - GAUGE
BITUM. - BITUMINOUS
PA - POLYMERIZED ASPHALT
PS - POLYMERIC SHEET
w/ - WITH
Ω - SEE DRAINAGE DETAIL

Notes:

1. SUFFICIENT SPACE WAS NOT AVALABLE TO LIST ALL DRAINAGE ITEMS WITHIN A SINGLE TABLE ON A SHEET BORDER, THEREFORE THE LISTING OF THE FIRST GROUPING OF DRAINAGE ITEMS ARE REPEATED ON THE ODD NUMBERED ID CODE SHEETS (DQ-1, DQ-3, ETC.) AND THE LISTINGS OF THE REMAINING GROUP OF DRAINAGE ITEMS ARE REPEATED ON THE EVEN NUMBERED ID CODE SHEETS (DQ-2, DQ-4, ETC.).
2. THE PRECISE DETERMINATION OF THE FOLLOWING ITEMS WILL BE MADE BY THE ENGINEER IN THE FIELD: STATION, SKEW, LENGTH, FL ELEVATION, AND DEPTH OF STRUCTURE.
3. (N) - NOT A SEPARATE PAY ITEM; FOR INFORMATION ONLY.
4. * - SEE ROADWAY QUANTITIES FOR DRAINAGE ITEM TOTAL

DITCH EXCAVATION	CONCRETE (CHANNEL LINING)	STRUCTURAL CONCRETE, BOX CULVERT	MINOR CONCRETE (MINOR STRUCTURE)	MINOR CONCRETE (MISC. CONSTRUCTION)	CL. IV CONCRETE (BACKFILL) *	HMA-A *	PLACE AC (MISC. AREA) *	MISC. IRON AND STEEL	BAR REINFORCING STEEL	RSP: ¼-TON, METHOD B	RSP: FACING, METHOD B	RSP: NO. 2 BACKING, METHOD B	RSP: RSP FABRIC	FRAMES, GRATES AND COVERS: 24-12 (N)	24-13 (N)	¼" SOLID STEEL COVER (N)	12" X 12" PRECAST INLET	12" X 12" STEEL GRATE (TRAFFIC RATED)	DEBRIS RACK (N)	MANHOLE COVER (N)	MANHOLE COVER-PRESSURE LOCKING (N)	36" PRECAST MANHOLE SHAFT		MANHOLE SHAFT PIPE REDUCER	HEIGHT OF MANHOLE (N)	HEIGHT OF INLET "H" (N)	DRAINAGE INLET MARKER *	CONCRETE COLLAR (N)	RCP: 12" RCP	15" RCP	18" RCP	24" RCP	30" RCP	36" RCP	48" RCP	54" RCP	60" RCP (CL. V SPECIAL)	DESCRIPTION	STATION	DRAINAGE PLAN SHEET NO.	DRAINAGE SYSTEM NO. ⬡	DRAINAGE UNIT ◯
CY	CY	CY	CY	CY	CY	ton	yd²	lb	lb	CY	CY	CY	yd²	EA	EA	EA	EA	EA	EA	EA	EA	LF		EA	FT	FT	EA	EA	LF	LF	LF	LF	LF	LF	LF	LF	LF					
												7.4	28.9																									RSP	150' LT "GE1" 244+60	D-6	30	a
		0.45							47.0																													JUNCTION STRUCTURE	88' RT "GE1" 254+26.04	D-6	31	a
																																						18" AP TYPE A				b
			5.1					362																														OUTLET RISER	79.16' RT "INDION1" 253+93.2			c
										2.3		5.7																									RSP		D-5	32	a
			0.91																																			HEADWALL	74.50' RT 254+15.20 ON RAMP			b
																																						18"AP TYPE B				c
			1.73	1.71				652						2												2.5												TYPE GT3 DI w/ DEPRESSION	53.79' RT 254+30.16 ON RAMP			d
		5.20							426.0																													WINGWALL, TYPE D	143.23' LT 252 "GE1"	D-6,7	33	a
			60.30						11124.0																													RCB - 6' W X 4.5' H				b
			0.82					435											1		7.00		1	7.0														MANHOLE	164.73' RT 255+06.68 "GE1"			c
			297.80						54922.0																													RCB - 6' W X 4.5' H				d
			0.34					435											1		3.00		1	3.0														MANHOLE	126.94' RT 258+19.03 "GE1"			e
																																						REMOVE CONCRETE CHANNEL				f
																																						REMOVE CONCRETE HEADWALL				g
																																						REMOVE CONCRETE HEADWALL/COVER				h
																																						REMOVE CONCRETE CHANNEL				i
																																						REMOVE CONCRETE HEADWALL/COVER				j
		5.65	367	1.71				1884	66519.0		2.3	7.4	34.6	2					2		10.00		2															SHEET TOTALS				

THIS PLAN ACCURATE FOR DRAINAGE WORK ONLY.

DRAINAGE QUANTITIES
DQ-11

REVISED BY | DATE REVISED

CALCULATED-DESIGNED BY: MOHAMMAD ABDRABOH
CHECKED BY: ALAN R. BISI
FUNCTIONAL SUPERVISOR: MARK PERTILE

STATE OF CALIFORNIA - DEPARTMENT OF TRANSPORTATION
Caltrans DESIGN

LAST REVISION 03-29-11 | DATE PLOTTED => 11-JUL-2011 | TIME PLOTTED => 12:38

Dist	COUNTY	ROUTE	POST MILES TOTAL PROJECT	SHEET No.	TOTAL SHEETS
08	Riv	91	15.6/21.6	341	2028

REGISTERED CIVIL ENGINEER 3-29-10 DATE

4-25-11
PLANS APPROVAL DATE

REGISTERED PROFESSIONAL ENGINEER ALAN R. BISI No. C62808 Exp. 6-30-12 CIVIL STATE OF CALIFORNIA

THE STATE OF CALIFORNIA OR ITS OFFICERS OR AGENTS SHALL NOT BE RESPONSIBLE FOR THE ACCURACY OR COMPLETENESS OF SCANNED COPIES OF THIS PLAN SHEET.

ALTERNATIVE PIPE ALLOWABLE PIPE MATERIAL AND PROTECTION

DESIGNATION	RCP	CSP (2-2/3"x½")			SSRP (3/4"x1" @ 11-1/2" PITCH)			PPC(C)	PPC(D,S)
	SIZE (INCH)	SIZE (INCH)	BITUM. COAT. THICKNESS	PA/PS THICKNESS	SIZE (INCH)	BITUM. COAT. THICKNESS	PA/PS THICKNESS	SIZE (INCH)	SIZE (INCH)
6" APC									6
12" APC TYPE A		12	0.064"	0.052"				12	
12" APC TYPE B					12	0.064"	0.052"		12
12" APC TYPE C	12				12	0.064"	0.052"		12
18" APC TYPE A	18	18	0.064"	0.052"	18	0.064"	0.052"		
18" APC TYPE B	18	18	0.064"	0.052"				18	
18" APC TYPE C		18	0.064"	0.052"				18	
18" APC TYPE D	18				18	0.064"	0.052"		
18" APC TYPE E	18	18	0.064"	0.052"				18	18
18" APC TYPE F	18								18
24" APC		24	0.079"	0.064"				24	
30" APC	30				30	0.079"	0.064"		30
30"x10" ARCH		30x10	0.079"	0.064"	30x10	0.079"	0.064"		
48" APC		48	0.079"	0.064"					

LEGENDS AND ABBREVIATIONS

S - STANDARD JOINT TYPE
P - POSITIVE JOINT TYPE
D - DOWNDRAIN JOINT TYPE
RCP - REINFORCED CONCRETE PIPE
PPC(C) - PASTIC PIPE CULVERT, TYPE C (CORRUGATED INTERIOR WALL)
PPC(D,S) - PLASTIC PIPE CULVERT, TYPE D OR S (SMOOTH INTERIOR WALL)
CSP - CORRUGATED STEEL PIPE
CAP - CORRUGATED ALUMINUM PIPE
SSRP - STEEL SPIRAL RIBBED PIPE
GA. - GAUGE
BITUM. - BITUMINOUS
PA - POLYMERIZED ASPHALT
PS - POLYMERIC SHEET
w/ - WITH
Ω - SEE DRAINAGE DETAIL

Notes:

1. SUFFICIENT SPACE WAS NOT AVALABLE TO LIST ALL DRAINAGE ITEMS WITHIN A SINGLE TABLE ON A SHEET BORDER, THEREFORE THE LISTING OF THE FIRST GROUPING OF DRAINAGE ITEMS ARE REPEATED ON THE ODD NUMBERED ID CODE SHEETS (DQ-1, DQ-3, ETC.) AND THE LISTINGS OF THE REMAINING GROUP OF DRAINAGE ITEMS ARE REPEATED ON THE EVEN NUMBERED ID CODE SHEETS (DQ-2, DQ-4, ETC.).
2. THE PRECISE DETERMINATION OF THE FOLLOWING ITEMS WILL BE MADE BY THE ENGINEER IN THE FIELD: STATION, SKEW, LENGTH, FL ELEVATION, AND DEPTH OF STRUCTURE.
3. (N) - NOT A SEPARATE PAY ITEM; FOR INFORMATION ONLY.
4. * - SEE ROADWAY QUANTITIES FOR DRAINAGE ITEM TOTAL

CSP 12" (14 GA.) LF	CSP 18" (14 GA.) LF	CSP 36" (10 GA.) LF	CSP 12" RISER (14 GA.) LF	CSP 48" RISER (10 GA.) LF	CSP 18" SLOTTED PIPE (14 GA.) LF	CSP 21" SLOTTED PIPE (14 GA.) LF	CSP 24" SLOTTED PIPE (14 GA.) LF	ALTERNATIVE PIPE 6" AP (TYPE __) LF	ALTERNATIVE PIPE 12" AP (TYPE __) LF	ALTERNATIVE PIPE 18" AP (TYPE __) LF	ALTERNATIVE PIPE 24" AP (TYPE __) LF	ALTERNATIVE PIPE 30" AP (TYPE __) LF	ALTERNATIVE PIPE 48" AP (TYPE __) LF	ALTERNATIVE PIPE 30" X 10" AP ARCH PIPE (TYPE __) LF	MAXIMUM COVER (N) FT	ELBOW (N) EA	PIPE JOINT CLASSIFICATION	8" GALVANIZED STEEL PIPE LF	8" GATE VALVE w/ SLEEVE & COVER EA	AFES 12" AFES EA	PIPE RISER 8" AP SLIPJOINT (N) EA	PIPE RISER 12" AP SLIPJOINT (N) EA	CABLE RAILING LF	ADJUST INLET EA	MODIFY INLET EA	REMOVAL/ABANDON PAY ITEMS REMOVE CONCRETE CY	REMOVE PIPE LF	REMOVE INLET EA	ABANDON INLET EA	ABANDON PIPE LF	SAND BACKFILL CY	CAP RISER EA	CAP INLET EA	DESCRIPTION	STATION	DRAINAGE PLAN SHEET NO.	DRAINAGE SYSTEM NO. ⬡	DRAINAGE UNIT ◯
																																RSP	150' LT "GE1" 244+60	D-6	30	a
																																JUNCTION STRUCTURE	88' RT "GE1" 254+26.04	D-6	31	a
				3.0						95.3					9.1		S															18" AP TYPE A				b
																																OUTLET RISER	79.16' RT "INDION1" 253+93.2			c
																																RSP		D-5	32	a
																																HEADWALL	74.50' RT 254+15.20 ON RAMP			b
										41.0					1.5		S															18"AP TYPE B				c
																																TYPE GT3 DI w/ DEPRESSION	53.79' RT 254+30.16 ON RAMP			d
																																WINGWALL, TYPE D	143.23' LT 252 "GE1"	D-6,7	33	a
															5.1																	RCB - 6' W X 4.5' H				b
																																MANHOLE	164.73' RT 255+06.68 "GE1"			c
															8.1																	RCB - 6' W X 4.5' H				d
																																MANHOLE	126.94' RT 258+19.03 "GE1"			e
																										58.3						REMOVE CONCRETE CHANNEL				f
																										10.2						REMOVE CONCRETE HEADWALL				g
																										27.6						REMOVE CONCRETE HEADWALL/COVER				h
																										88.1						REMOVE CONCRETE CHANNEL				i
																										17.4						REMOVE CONCRETE HEADWALL/COVER				j
				3.0						136.3					9.1											201.6						SHEET TOTALS				

STATE OF CALIFORNIA - DEPARTMENT OF TRANSPORTATION
Caltrans® DESIGN

REVISED BY | DATE REVISED
MOHAMMAD ABDRABOH | ALAN R. BISI
CALCULATED-DESIGNED BY | CHECKED BY
FUNCTIONAL SUPERVISOR
MARK PERTILE

DRAINAGE QUANTITIES
DQ-12

THIS PLAN ACCURATE FOR DRAINAGE WORK ONLY.

LAST REVISION 03-29-11 | DATE PLOTTED => 29-APR-2011 | TIME PLOTTED => 18:52

Dist	COUNTY	ROUTE	POST MILES TOTAL PROJECT	SHEET No.	TOTAL SHEETS
08	Riv	91	15.6/21.6	342	2028

REGISTERED CIVIL ENGINEER 3-29-10 DATE

4-25-11
PLANS APPROVAL DATE

REGISTERED PROFESSIONAL ENGINEER ALAN R. BISI No. C62808 Exp. 6-30-12 CIVIL STATE OF CALIFORNIA

THE STATE OF CALIFORNIA OR ITS OFFICERS OR AGENTS SHALL NOT BE RESPONSIBLE FOR THE ACCURACY OR COMPLETENESS OF SCANNED COPIES OF THIS PLAN SHEET.

ALTERNATIVE PIPE ALLOWABLE PIPE MATERIAL AND PROTECTION

DESIGNATION	RCP	CSP (2-2/3"x½")			SSRP (3/4"x1" @ 11-1/2" PITCH)			PPC(C)	PPC(D,S)
	SIZE (INCH)	SIZE (INCH)	BITUM. COAT. THICKNESS	PA/PS THICKNESS	SIZE (INCH)	BITUM. COAT. THICKNESS	PA/PS THICKNESS	SIZE (INCH)	SIZE (INCH)
6" APC									6
12" APC TYPE A		12	0.064"	0.052"				12	
12" APC TYPE B					12	0.064"	0.052"		12
12" APC TYPE C	12				12	0.064"	0.052"		12
18" APC TYPE A	18	18	0.064"	0.052"	18	0.064"	0.052"		
18" APC TYPE B	18	18	0.064"	0.052"				18	
18" APC TYPE C		18	0.064"	0.052"				18	
18" APC TYPE D	18				18	0.064"	0.052"		
18" APC TYPE E	18	18	0.064"	0.052"				18	18
18" APC TYPE F	18								18
24" APC		24	0.079"	0.064"				24	
30" APC	30				30	0.079"	0.064"		30
30"x10" ARCH		30x10	0.079"	0.064"	30x10	0.079"	0.064"		
48" APC		48	0.079"	0.064"					

LEGENDS AND ABBREVIATIONS

S - STANDARD JOINT TYPE
P - POSITIVE JOINT TYPE
D - DOWNDRAIN JOINT TYPE
RCP - REINFORCED CONCRETE PIPE
PPC(C) - PASTIC PIPE CULVERT, TYPE C (CORRUGATED INTERIOR WALL)
PPC(D,S) - PLASTIC PIPE CULVERT, TYPE D OR S (SMOOTH INTERIOR WALL)
CSP - CORRUGATED STEEL PIPE
SSRP - STEEL SPIRAL RIBBED PIPE
GA. - GAUGE
BITUM. - BITUMINOUS
PA - POLYMERIZED ASPHALT
PS - POLYMERIC SHEET
w/ - WITH
Ω - SEE DRAINAGE DETAIL

Notes:

1. SUFFICIENT SPACE WAS NOT AVALABLE TO LIST ALL DRAINAGE ITEMS WITHIN A SINGLE TABLE ON A SHEET BORDER, THEREFORE THE LISTING OF THE FIRST GROUPING OF DRAINAGE ITEMS ARE REPEATED ON THE ODD NUMBERED ID CODE SHEETS (DQ-1, DQ-3, ETC.) AND THE LISTINGS OF THE REMAINING GROUP OF DRAINAGE ITEMS ARE REPEATED ON THE EVEN NUMBERED ID CODE SHEETS (DQ-2, DQ-4, ETC.).
2. THE PRECISE DETERMINATION OF THE FOLLOWING ITEMS WILL BE MADE BY THE ENGINEER IN THE FIELD: STATION, SKEW, LENGTH, FL ELEVATION, AND DEPTH OF STRUCTURE.
3. (N) - NOT A SEPARATE PAY ITEM; FOR INFORMATION ONLY.
4. * - SEE ROADWAY QUANTITIES FOR DRAINAGE ITEM TOTAL

DITCH EXCAVATION	CONCRETE (CHANNEL LINING)	STRUCTURAL CONCRETE, BOX CULVERT	MINOR CONCRETE (MINOR STRUCTURE)	MINOR CONCRETE (MISC. CONSTRUCTION)	CL. IV CONCRETE (BACKFILL) *	HMA-A *	PLACE AC (MISC. AREA) *	MISC. IRON AND STEEL	BAR REINFORCING STEEL	RSP ¼-TON, METHOD B	RSP FACING, METHOD B	RSP NO. 2 BACKING, METHOD B	RSP FABRIC	FRAMES, GRATES AND COVERS 24-12 (N)	24-13 (N)	¼" SOLID STEEL COVER (N)	12" X 12" PRECAST INLET	12" X 12" STEEL GRATE (TRAFFIC RATED)	DEBRIS RACK (N)	MANHOLE COVER (N)	MANHOLE COVER-PRESSURE LOCKING (N)	36" PRECAST MANHOLE SHAFT		MANHOLE SHAFT PIPE REDUCER	HEIGHT OF MANHOLE (N)	HEIGHT OF INLET "H" (N)	DRAINAGE INLET MARKER *	CONCRETE COLLAR (N)	RCP 12" RCP	15" RCP	18" RCP	24" RCP	30" RCP	36" RCP	48" RCP	54" RCP	60" RCP (CL. V SPECIAL)	DESCRIPTION	STATION	DRAINAGE PLAN SHEET NO.	DRAINAGE SYSTEM NO. ⬡	DRAINAGE UNIT ◯
CY	CY	CY	CY	CY	CY	ton	yd²	lb	lb	CY	CY	CY	yd²	EA	EA	EA	EA	EA	EA	EA	EA	LF		EA	FT	FT	EA	EA	LF	LF	LF	LF	LF	LF	LF	LF	LF					
		0.80							46.4																													JUNCTION STRUCTURE	42.20' LT 253+05.65 ON RAMP	D-6	34	a
																																						24" AP				b
			1.60	1.30				326						1												6.0	1											TYPE G1 DI w/ DEPRESSION	43.50' LT "ONRAMP" 253+67.53			c
																																						24" AP				d
			1.40	1.30				326						1												5.0	1											TYPE G1 DI w/ DEPRESSION	13.30' RT "ONRAMP" 253+67.53			e
																																						18" AP TYPE B				f
			1.21	1.30				326						1												4.2	1											TYPE G1 DI w/ DEPRESSION	14.32' RT "ONRAMP" 253+82.50			g
			1.30					235												1						2.5	1											Type 405 DI w/ Gutter Depression	17.90' RT "Indiana" 46+23.31	D-7	35	a
																														67.4								15" RCP				b
			1.30																																			JS	17.90' LT "Indiana" 46+80.22			c
																											1												CAP DI		D-7	36	a
																																						30" x 10" AP ARCH PIPE				b
			5.00					235											1																			PARKWAY DRAIN				c
																																						CAP DI				d
						1.12	5.00																															AC Overside drain	262+39.56 Arlington e/b onramp	D-7	37	a
			2.50					634						2												4.0												TYPE GD1 DI	262+35.00 Arlington e/b shoulder	D-7	38	a
																																						18" AP TYPE E				b
			3.80					326						1												8.1												G2 DI	91.20' RT "GE1" 264+71.35			c
																																						18" AP TYPE E				d
																																						18" AP TYPE E				e
																																						18" AP TYPE E				f
		0.80	18.11	3.90		1.12	5.00	2408	46.4					6					1	1							5			67.4								SHEET TOTALS				

THIS PLAN ACCURATE FOR DRAINAGE WORK ONLY.

DRAINAGE QUANTITIES
DQ-13

REVISED BY | DATE REVISED

CALCULATED-DESIGNED BY: MOHAMMAD ABDRABOH
CHECKED BY: ALAN R. BISI
FUNCTIONAL SUPERVISOR: MARK PERTILE

STATE OF CALIFORNIA - DEPARTMENT OF TRANSPORTATION
Caltrans DESIGN

LAST REVISION 03-29-11 | DATE PLOTTED => 11-JUL-2011 | TIME PLOTTED => 12:38

Dist	COUNTY	ROUTE	POST MILES TOTAL PROJECT	SHEET No.	TOTAL SHEETS
08	Riv	91	15.6/21.6	343	2028

REGISTERED CIVIL ENGINEER 3-29-10 DATE

4-25-11
PLANS APPROVAL DATE

REGISTERED PROFESSIONAL ENGINEER ALAN R. BISI No. C62808 Exp. 6-30-12 CIVIL STATE OF CALIFORNIA

THE STATE OF CALIFORNIA OR ITS OFFICERS OR AGENTS SHALL NOT BE RESPONSIBLE FOR THE ACCURACY OR COMPLETENESS OF SCANNED COPIES OF THIS PLAN SHEET.

ALTERNATIVE PIPE ALLOWABLE PIPE MATERIAL AND PROTECTION

DESIGNATION	RCP	CSP (2-2/3"x½")			SSRP (3/4"x1" @ 11-1/2" PITCH)			PPC(C)	PPC(D,S)
	SIZE (INCH)	SIZE (INCH)	BITUM. COAT. THICKNESS	PA/PS THICKNESS	SIZE (INCH)	BITUM. COAT. THICKNESS	PA/PS THICKNESS	SIZE (INCH)	SIZE (INCH)
6" APC									6
12" APC TYPE A		12	0.064"	0.052"				12	
12" APC TYPE B					12	0.064"	0.052"		12
12" APC TYPE C	12				12	0.064"	0.052"		12
18" APC TYPE A	18	18	0.064"	0.052"	18	0.064"	0.052"		
18" APC TYPE B	18	18	0.064"	0.052"				18	
18" APC TYPE C		18	0.064"	0.052"				18	
18" APC TYPE D	18				18	0.064"	0.052"		
18" APC TYPE E	18	18	0.064"	0.052"				18	18
18" APC TYPE F	18								18
24" APC		24	0.079"	0.064"				24	
30" APC	30				30	0.079"	0.064"		30
30"x10" ARCH		30x10	0.079"	0.064"	30x10	0.079"	0.064"		
48" APC		48	0.079"	0.064"					

LEGENDS AND ABBREVIATIONS

S - STANDARD JOINT TYPE
P - POSITIVE JOINT TYPE
D - DOWNDRAIN JOINT TYPE
RCP - REINFORCED CONCRETE PIPE
PPC(C) - PASTIC PIPE CULVERT, TYPE C (CORRUGATED INTERIOR WALL)
PPC(D,S) - PLASTIC PIPE CULVERT, TYPE D OR S (SMOOTH INTERIOR WALL)
CSP - CORRUGATED STEEL PIPE
CAP - CORRUGATED ALUMINUM PIPE
SSRP - STEEL SPIRAL RIBBED PIPE
GA. - GAUGE
BITUM. - BITUMINOUS
PA - POLYMERIZED ASPHALT
PS - POLYMERIC SHEET
w/ - WITH
Ω - SEE DRAINAGE DETAIL

Notes:

1. SUFFICIENT SPACE WAS NOT AVALABLE TO LIST ALL DRAINAGE ITEMS WITHIN A SINGLE TABLE ON A SHEET BORDER, THEREFORE THE LISTING OF THE FIRST GROUPING OF DRAINAGE ITEMS ARE REPEATED ON THE ODD NUMBERED ID CODE SHEETS (DQ-1, DQ-3, ETC.) AND THE LISTINGS OF THE REMAINING GROUP OF DRAINAGE ITEMS ARE REPEATED ON THE EVEN NUMBERED ID CODE SHEETS (DQ-2, DQ-4, ETC.).
2. THE PRECISE DETERMINATION OF THE FOLLOWING ITEMS WILL BE MADE BY THE ENGINEER IN THE FIELD: STATION, SKEW, LENGTH, FL ELEVATION, AND DEPTH OF STRUCTURE.
3. (N) - NOT A SEPARATE PAY ITEM; FOR INFORMATION ONLY.
4. * - SEE ROADWAY QUANTITIES FOR DRAINAGE ITEM TOTAL

CSP								ALTERNATIVE PIPE													AFES	PIPE RISER						REMOVAL/ABANDON PAY ITEMS									DESCRIPTION	STATION	DRAINAGE PLAN SHEET NO.	DRAINAGE SYSTEM NO. ⬡	DRAINAGE UNIT ◯
12" (14 GA.)	18" (14 GA.)	36" (10 GA.)	12" RISER (14 GA.)	48" RISER (10 GA.)	18" SLOTTED PIPE (14 GA.)	21" SLOTTED PIPE (14 GA.)	24" SLOTTED PIPE (14 GA.)	6" AP (TYPE __)	12" AP (TYPE __)	18" AP (TYPE __)	24" AP (TYPE __)	30" AP (TYPE __)	48" AP (TYPE __)	30" X 10" AP ARCH PIPE (TYPE __)	MAXIMUM COVER (N)	ELBOW (N)	PIPE JOINT CLASSIFICATION	8" GALVANIZED STEEL PIPE	8" GATE VALVE w/ SLEEVE & COVER	12" AFES	8" AP SLIPJOINT (N)	12" AP SLIPJOINT (N)	CABLE RAILING	ADJUST INLET	MODIFY INLET	REMOVE CONCRETE	REMOVE PIPE	REMOVE INLET	ABANDON INLET	ABANDON PIPE	SAND BACKFILL	CAP RISER	CAP INLET					
LF	LF	LF	LF	LF	LF	LF	LF	LF	LF	LF	LF	LF	LF	LF	FT	EA		LF	EA	EA	EA	EA	LF	EA	EA	CY	LF	EA	EA	LF	CY	EA	EA					
																																		JUNCTION STRUCTURE	42.20' LT 253+05.65 ON RAMP	D-6	34	a
											61.0				6.0		S																	24" AP				b
																																		TYPE G1 DI w/ DEPRESSION	43.50' LT "ONRAMP" 253+67.53			c
											53.0				4.2		S																	24" AP				d
																																		TYPE G1 DI w/ DEPRESSION	13.30' RT "ONRAMP" 253+67.53			e
										20.0					3.1		S																	18" AP TYPE B				f
																																		TYPE G1 DI w/ DEPRESSION	14.32' RT "ONRAMP" 253+82.50			g
																																		Type 405 DI w/ Gutter Depression	17.90' RT "Indiana" 46+23.31	D-7	35	a
															3.0		S																	15" RCP				b
																																		JS	17.90' LT "Indiana" 46+80.22			c
																																	1	CAP DI		D-7	36	a
														56.0																				30" x 10" AP ARCH PIPE				b
																																		PARKWAY DRAIN				c
																																	1	CAP DI				d
																																		AC Overside drain	262+39.56 Arlington e/b onramp	D-7	37	a
																																		TYPE GD1 DI	262+35.00 Arlington e/b shoulder	D-7	38	a
										241.0					7.0		S																	18" AP TYPE E				b
																																		G2 DI	91.20' RT "GE1" 264+71.35			c
										10.0					5.0		S																	18" AP TYPE E				d
										33.7						2	DD				1													18" AP TYPE E				e
										50.7					14.0		S																	18" AP TYPE E				f
										355.4	114.0			56.0		2					1												2	SHEET TOTALS				

THIS PLAN ACCURATE FOR DRAINAGE WORK ONLY.

DRAINAGE QUANTITIES
DQ-14

REVISED BY | DATE REVISED

CALCULATED-DESIGNED BY: MOHAMMAD ABDRABOH
CHECKED BY: ALAN R. BISI
FUNCTIONAL SUPERVISOR: MARK PERTILE

STATE OF CALIFORNIA - DEPARTMENT OF TRANSPORTATION
Caltrans® DESIGN

LAST REVISION 03-29-11 | DATE PLOTTED => 29-APR-2011 | TIME PLOTTED => 18:52

Dist	COUNTY	ROUTE	POST MILES TOTAL PROJECT	SHEET No.	TOTAL SHEETS
08	Riv	91	15.6/21.6	344	2028

REGISTERED CIVIL ENGINEER 3-29-10 DATE

4-25-11
PLANS APPROVAL DATE

REGISTERED PROFESSIONAL ENGINEER ALAN R. BISI No. C62808 Exp. 6-30-12 CIVIL STATE OF CALIFORNIA

THE STATE OF CALIFORNIA OR ITS OFFICERS OR AGENTS SHALL NOT BE RESPONSIBLE FOR THE ACCURACY OR COMPLETENESS OF SCANNED COPIES OF THIS PLAN SHEET.

ALTERNATIVE PIPE
ALLOWABLE PIPE MATERIAL AND PROTECTION

DESIGNATION	RCP	CSP (2-2/3"x1/2")			SSRP (3/4"x1" @ 11-1/2" PITCH)			PPC(C)	PPC(D,S)
	SIZE (INCH)	SIZE (INCH)	BITUM. COAT. THICKNESS	PA/PS THICKNESS	SIZE (INCH)	BITUM. COAT. THICKNESS	PA/PS THICKNESS	SIZE (INCH)	SIZE (INCH)
6" APC									6
12" APC TYPE A		12	0.064"	0.052"				12	
12" APC TYPE B					12	0.064"	0.052"		12
12" APC TYPE C	12				12	0.064"	0.052"		12
18" APC TYPE A	18	18	0.064"	0.052"	18	0.064"	0.052"		
18" APC TYPE B	18	18	0.064"	0.052"				18	
18" APC TYPE C		18	0.064"	0.052"				18	
18" APC TYPE D	18				18	0.064"	0.052"		
18" APC TYPE E	18	18	0.064"	0.052"				18	18
18" APC TYPE F	18								18
24" APC		24	0.079"	0.064"				24	
30" APC	30				30	0.079"	0.064"		30
30"x10" ARCH		30x10	0.079"	0.064"	30x10	0.079"	0.064"		
48" APC		48	0.079"	0.064"					

LEGENDS AND ABBREVIATIONS

S - STANDARD JOINT TYPE
P - POSITIVE JOINT TYPE
D - DOWNDRAIN JOINT TYPE
RCP - REINFORCED CONCRETE PIPE
PPC(C) - PASTIC PIPE CULVERT, TYPE C (CORRUGATED INTERIOR WALL)
PPC(D,S) - PLASTIC PIPE CULVERT, TYPE D OR S (SMOOTH INTERIOR WALL)
CSP - CORRUGATED STEEL PIPE
SSRP - STEEL SPIRAL RIBBED PIPE
GA. - GAUGE
BITUM. - BITUMINOUS
PA - POLYMERIZED ASPHALT
PS - POLYMERIC SHEET
w/ - WITH
Ω - SEE DRAINAGE DETAIL

Notes:

1. SUFFICIENT SPACE WAS NOT AVALABLE TO LIST ALL DRAINAGE ITEMS WITHIN A SINGLE TABLE ON A SHEET BORDER, THEREFORE THE LISTING OF THE FIRST GROUPING OF DRAINAGE ITEMS ARE REPEATED ON THE ODD NUMBERED ID CODE SHEETS (DQ-1, DQ-3, ETC.) AND THE LISTINGS OF THE REMAINING GROUP OF DRAINAGE ITEMS ARE REPEATED ON THE EVEN NUMBERED ID CODE SHEETS (DQ-2, DQ-4, ETC.).
2. THE PRECISE DETERMINATION OF THE FOLLOWING ITEMS WILL BE MADE BY THE ENGINEER IN THE FIELD: STATION, SKEW, LENGTH, FL ELEVATION, AND DEPTH OF STRUCTURE.
3. (N) - NOT A SEPARATE PAY ITEM; FOR INFORMATION ONLY.
4. * - SEE ROADWAY QUANTITIES FOR DRAINAGE ITEM TOTAL

DITCH EXCAVATION	CONCRETE (CHANNEL LINING)	STRUCTURAL CONCRETE, BOX CULVERT	MINOR CONCRETE (MINOR STRUCTURE)	MINOR CONCRETE (MISC. CONSTRUCTION)	CL. IV CONCRETE (BACKFILL) *	HMA-A *	PLACE AC (MISC. AREA) *	MISC. IRON AND STEEL	BAR REINFORCING STEEL	RSP 1/4-TON, METHOD B	RSP FACING, METHOD B	RSP NO. 2 BACKING, METHOD B	RSP FABRIC	FRAMES, GRATES AND COVERS 24-12 (N)	24-13 (N)	1/4" SOLID STEEL COVER (N)	12" X 12" PRECAST INLET	12" X 12" STEEL GRATE (TRAFFIC RATED)	DEBRIS RACK (N)	MANHOLE COVER (N)	MANHOLE COVER-PRESSURE LOCKING (N)	36" PRECAST MANHOLE SHAFT		MANHOLE SHAFT PIPE REDUCER	HEIGHT OF MANHOLE (N)	HEIGHT OF INLET "H" (N)	DRAINAGE INLET MARKER *	CONCRETE COLLAR (N)	RCP 12" RCP	15" RCP	18" RCP	24" RCP	30" RCP	36" RCP	48" RCP	54" RCP	60" RCP (CL. V SPECIAL)	DESCRIPTION	STATION	DRAINAGE PLAN SHEET NO.	DRAINAGE SYSTEM NO. ⬡	DRAINAGE UNIT ◯
CY	CY	CY	CY	CY	CY	ton	yd²	lb	lb	CY	CY	CY	yd²	EA	EA	EA	EA	EA	EA	EA	EA	LF		EA	FT	FT	EA	EA	LF	LF	LF	LF	LF	LF	LF	LF	LF					
																															86.0							18" RCP		D-7	39	a
			0.95					263						1												2.8												G1 DI	264+82.91			b
																																						REMOVE DI				c
																																						CAP EXISTING RISER				d
																																						REMOVE CONCRETE		D-7	40	a
																																						REMOVE PIPE (Dbl 36" RCP)	from Cutline to the left end			b
																																						REMOVE PIPE (Dbl 36" RCP)	from Cutline to the right end			c
																																						18" AP TYPE C	265+00.00	D-7	41	a
			4.20	1.20				326						1												9.7												TYPE G2 DI w/ Depression	2.7' LT 265 "ARLON4"			b
																																						18" AP TYPE C	266+20.38	D-7	42	a
			4.60	1.20				326						1												10.9												TYPE G2 DI	4.0' LT 266+20.38 "ARLON4"			b
																																						18" AP TYPE C				c
			5.15					326						1												5.0												TYPE G3 DI	4.0' LT 267+15 "ARLON4"			d
																												1										CONCRETE COLLAR	115' RT 271+50 "GE1"	D-7,8	43	a
																																	38.5					36" RCP				b
		4.50						332	376.0									1																				WARPED WINGWALL w/ TRASHRACK	110.2' RT 271+22.3 "GE1"			c
281.00	73.30																																					CONCRETE DITCH				d
281.00	73.30	4.50	14.90	2.40				1573	376.0					4				1										1			86.0			38.5				SHEET TOTALS				

THIS PLAN ACCURATE FOR DRAINAGE WORK ONLY.

DRAINAGE QUANTITIES
DQ-15

REVISED BY | DATE REVISED

MOHAMMAD ABDRABOH | ALAN R. BISI
CALCULATED-DESIGNED BY | CHECKED BY

FUNCTIONAL SUPERVISOR: MARK PERTILE

STATE OF CALIFORNIA - DEPARTMENT OF TRANSPORTATION
Caltrans
DESIGN

LAST REVISION 03-29-11 | DATE PLOTTED => 11-JUL-2011 | TIME PLOTTED => 12:38

Dist	COUNTY	ROUTE	POST MILES TOTAL PROJECT	SHEET No.	TOTAL SHEETS
08	Riv	91	15.6/21.6	345	2028

REGISTERED CIVIL ENGINEER 3-29-10 DATE

4-25-11
PLANS APPROVAL DATE

REGISTERED PROFESSIONAL ENGINEER ALAN R. BISI No. C62808 Exp. 6-30-12 CIVIL STATE OF CALIFORNIA

THE STATE OF CALIFORNIA OR ITS OFFICERS OR AGENTS SHALL NOT BE RESPONSIBLE FOR THE ACCURACY OR COMPLETENESS OF SCANNED COPIES OF THIS PLAN SHEET.

ALTERNATIVE PIPE ALLOWABLE PIPE MATERIAL AND PROTECTION

DESIGNATION	RCP	CSP (2-2/3"x½")			SSRP (3/4"x1" @ 11-1/2" PITCH)			PPC(C)	PPC(D,S)
	SIZE (INCH)	SIZE (INCH)	BITUM. COAT. THICKNESS	PA/PS THICKNESS	SIZE (INCH)	BITUM. COAT. THICKNESS	PA/PS THICKNESS	SIZE (INCH)	SIZE (INCH)
6" APC									6
12" APC TYPE A		12	0.064"	0.052"				12	
12" APC TYPE B					12	0.064"	0.052"		12
12" APC TYPE C	12				12	0.064"	0.052"		12
18" APC TYPE A	18	18	0.064"	0.052"	18	0.064"	0.052"		
18" APC TYPE B	18	18	0.064"	0.052"				18	
18" APC TYPE C		18	0.064"	0.052"				18	
18" APC TYPE D	18				18	0.064"	0.052"		
18" APC TYPE E	18	18	0.064"	0.052"				18	18
18" APC TYPE F	18								18
24" APC		24	0.079"	0.064"				24	
30" APC	30				30	0.079"	0.064"		30
30"x10" ARCH		30x10	0.079"	0.064"	30x10	0.079"	0.064"		
48" APC		48	0.079"	0.064"					

LEGENDS AND ABBREVIATIONS

S - STANDARD JOINT TYPE
P - POSITIVE JOINT TYPE
D - DOWNDRAIN JOINT TYPE
RCP - REINFORCED CONCRETE PIPE
PPC(C) - PASTIC PIPE CULVERT, TYPE C (CORRUGATED INTERIOR WALL)
PPC(D,S) - PLASTIC PIPE CULVERT, TYPE D OR S (SMOOTH INTERIOR WALL)
CSP - CORRUGATED STEEL PIPE
CAP - CORRUGATED ALUMINUM PIPE
SSRP - STEEL SPIRAL RIBBED PIPE
GA. - GAUGE
BITUM. - BITUMINOUS
PA - POLYMERIZED ASPHALT
PS - POLYMERIC SHEET
w/ - WITH
Ω - SEE DRAINAGE DETAIL

Notes:

1. SUFFICIENT SPACE WAS NOT AVALABLE TO LIST ALL DRAINAGE ITEMS WITHIN A SINGLE TABLE ON A SHEET BORDER, THEREFORE THE LISTING OF THE FIRST GROUPING OF DRAINAGE ITEMS ARE REPEATED ON THE ODD NUMBERED ID CODE SHEETS (DQ-1, DQ-3, ETC.) AND THE LISTINGS OF THE REMAINING GROUP OF DRAINAGE ITEMS ARE REPEATED ON THE EVEN NUMBERED ID CODE SHEETS (DQ-2, DQ-4, ETC.).
2. THE PRECISE DETERMINATION OF THE FOLLOWING ITEMS WILL BE MADE BY THE ENGINEER IN THE FIELD: STATION, SKEW, LENGTH, FL ELEVATION, AND DEPTH OF STRUCTURE.
3. (N) - NOT A SEPARATE PAY ITEM; FOR INFORMATION ONLY.
4. * - SEE ROADWAY QUANTITIES FOR DRAINAGE ITEM TOTAL

CSP 12" (14 GA.) LF	CSP 18" (14 GA.) LF	CSP 36" (10 GA.) LF	CSP 12" RISER (14 GA.) LF	CSP 48" RISER (10 GA.) LF	CSP 18" SLOTTED PIPE (14 GA.) LF	CSP 21" SLOTTED PIPE (14 GA.) LF	CSP 24" SLOTTED PIPE (14 GA.) LF	ALTERNATIVE PIPE 6" AP (TYPE __) LF	ALTERNATIVE PIPE 12" AP (TYPE __) LF	ALTERNATIVE PIPE 18" AP (TYPE __) LF	ALTERNATIVE PIPE 24" AP (TYPE __) LF	ALTERNATIVE PIPE 30" AP (TYPE __) LF	ALTERNATIVE PIPE 48" AP (TYPE __) LF	ALTERNATIVE PIPE 30" X 10" AP ARCH PIPE (TYPE __) LF	MAXIMUM COVER (N) FT	ELBOW (N) EA	PIPE JOINT CLASSIFICATION	8" GALVANIZED STEEL PIPE LF	8" GATE VALVE w/ SLEEVE & COVER EA	AFES 12" AFES EA	PIPE RISER 8" AP SLIPJOINT (N) EA	PIPE RISER 12" AP SLIPJOINT (N) EA	CABLE RAILING LF	ADJUST INLET EA	MODIFY INLET EA	REMOVAL/ABANDON PAY ITEMS REMOVE CONCRETE CY	REMOVE PIPE LF	REMOVE INLET EA	ABANDON INLET EA	ABANDON PIPE LF	SAND BACKFILL CY	CAP RISER EA	CAP INLET EA	DESCRIPTION	STATION	DRAINAGE PLAN SHEET NO.	DRAINAGE SYSTEM NO. ⬡	DRAINAGE UNIT ◯
															6.0		S																	18" RCP		D-7	39	a
																																		G1 DI	264+82.91			b
																											1							REMOVE DI				c
																																	1	CAP EXISTING RISER				d
																									16.5									REMOVE CONCRETE		D-7	40	a
																										132.0								REMOVE PIPE (Dbl 36" RCP)	from Cutline to the left end			b
																										192.0								REMOVE PIPE (Dbl 36" RCP)	from Cutline to the right end			c
										29.0					14.0		S																	18" AP TYPE C	265+00.00	D-7	41	a
																																		TYPE G2 DI w/ Depression	2.7' LT 265 "ARLON4"			b
										29.0					14.0		S																	18" AP TYPE C	266+20.38	D-7	42	a
																																		TYPE G2 DI w/ Depression	2.7' LT 266+20.38 "ARLON4"			b
										95.0					9.0		S																	18" AP TYPE C				c
																																		TYPE G3 DI	4.0' LT 267+15 "ARLON4"			d
																																		CONCRETE COLLAR	115' RT 271+50 "GE1"	D-7,8	43	a
															13.0		S																	36" RCP				b
																							25.0											WARPED WINGWALL w/ TRASHRACK	110.2' RT 271+22.3 "GE1"			c
																																		CONCRETE DITCH				d
										153.0													25.0		16.5	324.0	1					1	SHEET TOTALS				

THIS PLAN ACCURATE FOR DRAINAGE WORK ONLY.

DRAINAGE QUANTITIES
DQ-16

STATE OF CALIFORNIA - DEPARTMENT OF TRANSPORTATION
Caltrans® DESIGN

FUNCTIONAL SUPERVISOR: MARK PERTILE
CALCULATED-DESIGNED BY: MOHAMMAD ABDRABOH
CHECKED BY: ALAN R. BISI
REVISED BY
DATE REVISED

LAST REVISION 03-29-11 | DATE PLOTTED => 29-APR-2011 | TIME PLOTTED => 18:53

Dist	COUNTY	ROUTE	POST MILES TOTAL PROJECT	SHEET No.	TOTAL SHEETS
08	Riv	91	15.6/21.6	346	2028

REGISTERED CIVIL ENGINEER 3-29-10 DATE

4-25-11
PLANS APPROVAL DATE

REGISTERED PROFESSIONAL ENGINEER ALAN R. BISI No. C62808 Exp. 6-30-12 CIVIL STATE OF CALIFORNIA

THE STATE OF CALIFORNIA OR ITS OFFICERS OR AGENTS SHALL NOT BE RESPONSIBLE FOR THE ACCURACY OR COMPLETENESS OF SCANNED COPIES OF THIS PLAN SHEET.

ALTERNATIVE PIPE ALLOWABLE PIPE MATERIAL AND PROTECTION

DESIGNATION	RCP	CSP (2-2/3"x½")			SSRP (3/4"x1" @ 11-1/2" PITCH)			PPC(C)	PPC(D,S)
	SIZE (INCH)	SIZE (INCH)	BITUM. COAT. THICKNESS	PA/PS THICKNESS	SIZE (INCH)	BITUM. COAT. THICKNESS	PA/PS THICKNESS	SIZE (INCH)	SIZE (INCH)
6" APC									6
12" APC TYPE A		12	0.064"	0.052"				12	
12" APC TYPE B					12	0.064"	0.052"		12
12" APC TYPE C	12				12	0.064"	0.052"		12
18" APC TYPE A	18	18	0.064"	0.052"	18	0.064"	0.052"		
18" APC TYPE B	18	18	0.064"	0.052"				18	
18" APC TYPE C		18	0.064"	0.052"				18	
18" APC TYPE D	18				18	0.064"	0.052"		
18" APC TYPE E	18	18	0.064"	0.052"				18	18
18" APC TYPE F	18								18
24" APC		24	0.079"	0.064"				24	
30" APC	30				30	0.079"	0.064"		30
30"x10" ARCH		30x10	0.079"	0.064"	30x10	0.079"	0.064"		
48" APC		48	0.079"	0.064"					

LEGENDS AND ABBREVIATIONS

S - STANDARD JOINT TYPE
P - POSITIVE JOINT TYPE
D - DOWNDRAIN JOINT TYPE
RCP - REINFORCED CONCRETE PIPE
PPC(C) - PASTIC PIPE CULVERT, TYPE C (CORRUGATED INTERIOR WALL)
PPC(D,S) - PLASTIC PIPE CULVERT, TYPE D OR S (SMOOTH INTERIOR WALL)
CSP - CORRUGATED STEEL PIPE
SSRP - STEEL SPIRAL RIBBED PIPE
GA. - GAUGE
BITUM. - BITUMINOUS
PA - POLYMERIZED ASPHALT
PS - POLYMERIC SHEET
w/ - WITH
Ω - SEE DRAINAGE DETAIL

Notes:

1. SUFFICIENT SPACE WAS NOT AVALABLE TO LIST ALL DRAINAGE ITEMS WITHIN A SINGLE TABLE ON A SHEET BORDER, THEREFORE THE LISTING OF THE FIRST GROUPING OF DRAINAGE ITEMS ARE REPEATED ON THE ODD NUMBERED ID CODE SHEETS (DQ-1, DQ-3, ETC.) AND THE LISTINGS OF THE REMAINING GROUP OF DRAINAGE ITEMS ARE REPEATED ON THE EVEN NUMBERED ID CODE SHEETS (DQ-2, DQ-4, ETC.).
2. THE PRECISE DETERMINATION OF THE FOLLOWING ITEMS WILL BE MADE BY THE ENGINEER IN THE FIELD: STATION, SKEW, LENGTH, FL ELEVATION, AND DEPTH OF STRUCTURE.
3. (N) - NOT A SEPARATE PAY ITEM; FOR INFORMATION ONLY.
4. * - SEE ROADWAY QUANTITIES FOR DRAINAGE ITEM TOTAL

DITCH EXCAVATION	CONCRETE (CHANNEL LINING)	STRUCTURAL CONCRETE, BOX CULVERT	MINOR CONCRETE (MINOR STRUCTURE)	MINOR CONCRETE (MISC. CONSTRUCTION)	CL. IV CONCRETE (BACKFILL) *	HMA-A *	PLACE AC (MISC. AREA) *	MISC. IRON AND STEEL	BAR REINFORCING STEEL	RSP: ¼-TON, METHOD B	RSP: FACING, METHOD B	RSP: NO. 2 BACKING, METHOD B	RSP: RSP FABRIC	FRAMES, GRATES AND COVERS: 24-12 (N)	24-13 (N)	¼" SOLID STEEL COVER (N)	12" X 12" PRECAST INLET	12" X 12" STEEL GRATE (TRAFFIC RATED)	DEBRIS RACK (N)	MANHOLE COVER (N)	MANHOLE COVER-PRESSURE LOCKING (N)	36" PRECAST MANHOLE SHAFT		MANHOLE SHAFT PIPE REDUCER	HEIGHT OF MANHOLE (N)	HEIGHT OF INLET "H" (N)	DRAINAGE INLET MARKER *	CONCRETE COLLAR (N)	RCP: 12" RCP	15" RCP	18" RCP	24" RCP	30" RCP	36" RCP	48" RCP	54" RCP	60" RCP (CL. V SPECIAL)	DESCRIPTION	STATION	DRAINAGE PLAN SHEET NO.	DRAINAGE SYSTEM NO. ⬡	DRAINAGE UNIT ◯
CY	CY	CY	CY	CY	CY	ton	yd²	lb	lb	CY	CY	CY	yd²	EA	EA	EA	EA	EA	EA	EA	EA	LF		EA	FT	FT	EA	EA	LF	LF	LF	LF	LF	LF	LF	LF	LF					
																																						REMOVE HEADWALL	266+50 "GE1"	D-7	44	a
																																						ABANDON EXISTING 24" RCP	266+50 "GE1"			b
																																						REMOVE HEADWALL	267+00 "GE1"			c
																																						ABANDON EXISTING 24" RCP	267+00 "GE1"			d
																																						REMOVE HEADWALL	267+50 "GE1"			e
																																						ABANDON EXISTING 24" RCP	267+50 "GE1"			f
																																						ABANDON EXISTING 24" RCP	268+00 "GE1"			g
																																						FROM PROPOSE G2 DI OF DS-45				
																																						REMOVE HEADWALL	268+50 "GE1"			h
																																						ABANDON EXISTING 24" RCP	268+50 "GE1"			i
																																						REMOVE HEADWALL	269+00 "GE1"			j
																																						ABANDON EXISTING 24" RCP	269+00 "GE1"			k
																																						ABANDON EXISTING 24" RCP	269+50 "GE1"			l
																																						FROM EXISTING MEDIAN DI				
																																						REMOVE HEADWALL	270+00 "GE1"			m
																																						ABANDON EXISTING 24" RCP	270+00 "GE1"			n
																																						REMOVE HEADWALL	270+50 "GE1"			o
																																						ABANDON EXISTING 24" RCP	270+50 "GE1"	D-8		p
																																						REMOVE HEADWALL	271+00 "GE1"			q
																																						ABANDON EXISTING 24" RCP	271+00 "GE1"			r
																																						REMOVE HEADWALL	271+50 "GE1"			s
																																						ABANDON EXISTING 24" RCP	271+50 "GE1"			t
																																						REMOVE HEADWALL	271+50 "GE1"			u
																																						ABANDON EXISTING 24" RCP	272+00 "GE1"			v
																																						FROM EXISTING MEDIAN DI				
																																						REMOVE HEADWALL	272+00 "GE1"			w
																																						SHEET TOTALS				

THIS PLAN ACCURATE FOR DRAINAGE WORK ONLY.

DRAINAGE QUANTITIES
DQ-17

STATE OF CALIFORNIA - DEPARTMENT OF TRANSPORTATION
Caltrans DESIGN

FUNCTIONAL SUPERVISOR: MARK PERTILE
CALCULATED-DESIGNED BY: MOHAMMAD ABDRABOH
CHECKED BY: ALAN R. BISI
REVISED BY
DATE REVISED

LAST REVISION 03-29-11
DATE PLOTTED => 11-JUL-2011
TIME PLOTTED => 12:39

Dist	COUNTY	ROUTE	POST MILES TOTAL PROJECT	SHEET No.	TOTAL SHEETS
08	Riv	91	15.6/21.6	347	2028

REGISTERED CIVIL ENGINEER 3-29-10 DATE

4-25-11
PLANS APPROVAL DATE

REGISTERED PROFESSIONAL ENGINEER ALAN R. BISI No. C62808 Exp. 6-30-12 CIVIL STATE OF CALIFORNIA

THE STATE OF CALIFORNIA OR ITS OFFICERS OR AGENTS SHALL NOT BE RESPONSIBLE FOR THE ACCURACY OR COMPLETENESS OF SCANNED COPIES OF THIS PLAN SHEET.

ALTERNATIVE PIPE ALLOWABLE PIPE MATERIAL AND PROTECTION

DESIGNATION	RCP	CSP (2-2/3"x½")			SSRP (3/4"x1" @ 11-1/2" PITCH)			PPC(C)	PPC(D,S)
	SIZE (INCH)	SIZE (INCH)	BITUM. COAT. THICKNESS	PA/PS THICKNESS	SIZE (INCH)	BITUM. COAT. THICKNESS	PA/PS THICKNESS	SIZE (INCH)	SIZE (INCH)
6" APC									6
12" APC TYPE A		12	0.064"	0.052"				12	
12" APC TYPE B					12	0.064"	0.052"		12
12" APC TYPE C	12				12	0.064"	0.052"		12
18" APC TYPE A	18	18	0.064"	0.052"	18	0.064"	0.052"		
18" APC TYPE B	18	18	0.064"	0.052"				18	
18" APC TYPE C		18	0.064"	0.052"				18	
18" APC TYPE D	18				18	0.064"	0.052"		
18" APC TYPE E	18	18	0.064"	0.052"				18	18
18" APC TYPE F	18								18
24" APC		24	0.079"	0.064"				24	
30" APC	30				30	0.079"	0.064"		30
30"x10" ARCH		30x10	0.079"	0.064"	30x10	0.079"	0.064"		
48" APC		48	0.079"	0.064"					

LEGENDS AND ABBREVIATIONS

S - STANDARD JOINT TYPE
P - POSITIVE JOINT TYPE
D - DOWNDRAIN JOINT TYPE
RCP - REINFORCED CONCRETE PIPE
PPC(C) - PASTIC PIPE CULVERT, TYPE C (CORRUGATED INTERIOR WALL)
PPC(D,S) - PLASTIC PIPE CULVERT, TYPE D OR S (SMOOTH INTERIOR WALL)
CSP - CORRUGATED STEEL PIPE
CAP - CORRUGATED ALUMINUM PIPE
SSRP - STEEL SPIRAL RIBBED PIPE
GA. - GAUGE
BITUM. - BITUMINOUS
PA - POLYMERIZED ASPHALT
PS - POLYMERIC SHEET
w/ - WITH
Ω - SEE DRAINAGE DETAIL

Notes:

1. SUFFICIENT SPACE WAS NOT AVALABLE TO LIST ALL DRAINAGE ITEMS WITHIN A SINGLE TABLE ON A SHEET BORDER, THEREFORE THE LISTING OF THE FIRST GROUPING OF DRAINAGE ITEMS ARE REPEATED ON THE ODD NUMBERED ID CODE SHEETS (DQ-1, DQ-3, ETC.) AND THE LISTINGS OF THE REMAINING GROUP OF DRAINAGE ITEMS ARE REPEATED ON THE EVEN NUMBERED ID CODE SHEETS (DQ-2, DQ-4, ETC.).
2. THE PRECISE DETERMINATION OF THE FOLLOWING ITEMS WILL BE MADE BY THE ENGINEER IN THE FIELD: STATION, SKEW, LENGTH, FL ELEVATION, AND DEPTH OF STRUCTURE.
3. (N) - NOT A SEPARATE PAY ITEM; FOR INFORMATION ONLY.
4. * - SEE ROADWAY QUANTITIES FOR DRAINAGE ITEM TOTAL

CSP 12" (14 GA.) LF	CSP 18" (14 GA.) LF	CSP 36" (10 GA.) LF	CSP 12" RISER (14 GA.) LF	CSP 48" RISER (10 GA.) LF	CSP 18" SLOTTED PIPE (14 GA.) LF	CSP 21" SLOTTED PIPE (14 GA.) LF	CSP 24" SLOTTED PIPE (14 GA.) LF	ALTERNATIVE PIPE 6" AP (TYPE __) LF	ALTERNATIVE PIPE 12" AP (TYPE __) LF	ALTERNATIVE PIPE 18" AP (TYPE __) LF	ALTERNATIVE PIPE 24" AP (TYPE __) LF	ALTERNATIVE PIPE 30" AP (TYPE __) LF	ALTERNATIVE PIPE 48" AP (TYPE __) LF	ALTERNATIVE PIPE 30" X 10" AP ARCH PIPE (TYPE __) LF	MAXIMUM COVER (N) FT	ELBOW (N) EA	PIPE JOINT CLASSIFICATION	8" GALVANIZED STEEL PIPE LF	8" GATE VALVE w/ SLEEVE & COVER EA	AFES 12" AFES EA	PIPE RISER 8" AP SLIPJOINT (N) EA	PIPE RISER 12" AP SLIPJOINT (N) EA	CABLE RAILING LF	ADJUST INLET EA	MODIFY INLET EA	REMOVAL/ABANDON PAY ITEMS REMOVE CONCRETE CY	REMOVE PIPE LF	REMOVE INLET EA	ABANDON INLET EA	ABANDON PIPE LF	SAND BACKFILL CY	CAP RISER EA	CAP INLET EA	DESCRIPTION	STATION	DRAINAGE PLAN SHEET NO.	DRAINAGE SYSTEM NO. ⬡	DRAINAGE UNIT ◯
																									1.2								REMOVE HEADWALL	266+50 "GE1"	D-7	44	a
																												180.0	20.94			ABANDON EXISTING 24" RCP	266+50 "GE1"			b
																									1.2								REMOVE HEADWALL	267+00 "GE1"			c
																												180.0	20.94			ABANDON EXISTING 24" RCP	267+00 "GE1"			d
																									1.2								REMOVE HEADWALL	267+50 "GE1"			e
																												180.0	20.94			ABANDON EXISTING 24" RCP	267+50 "GE1"			f
																												170.0	19.78			ABANDON EXISTING 24" RCP	268+00 "GE1"			g
																																FROM PROPOSE G2 DI OF DS-45				
																									1.2								REMOVE HEADWALL	268+50 "GE1"			h
																												180.0	20.94			ABANDON EXISTING 24" RCP	268+50 "GE1"			i
																									1.2								REMOVE HEADWALL	269+00 "GE1"			j
																												190.0	22.11			ABANDON EXISTING 24" RCP	269+00 "GE1"			k
																												90.0	10.47			ABANDON EXISTING 24" RCP	269+50 "GE1"			l
																																FROM EXISTING MEDIAN DI				
																									1.2								REMOVE HEADWALL	270+00 "GE1"			m
																												180.0	20.94			ABANDON EXISTING 24" RCP	270+00 "GE1"			n
																									1.2								REMOVE HEADWALL	270+50 "GE1"			o
																												190.0	22.11			ABANDON EXISTING 24" RCP	270+50 "GE1"	D-8		p
																									1.2								REMOVE HEADWALL	271+00 "GE1"			q
																												180.0	20.94			ABANDON EXISTING 24" RCP	271+00 "GE1"			r
																									1.2								REMOVE HEADWALL	271+50 "GE1"			s
																												190.0	22.11			ABANDON EXISTING 24" RCP	271+50 "GE1"			t
																									1.2								REMOVE HEADWALL	271+50 "GE1"			u
																												90.0	10.47			ABANDON EXISTING 24" RCP	272+00 "GE1"			v
																																FROM EXISTING MEDIAN DI				
																									1.2								REMOVE HEADWALL	272+00 "GE1"			w
																									13.2			2000.0	232.69			SHEET TOTALS				

THIS PLAN ACCURATE FOR DRAINAGE WORK ONLY.

DRAINAGE QUANTITIES
DQ-18

REVISED BY | DATE REVISED

CALCULATED-DESIGNED BY: MOHAMMAD ABDRABOH
CHECKED BY: ALAN R. BISI
FUNCTIONAL SUPERVISOR: MARK PERTILE

STATE OF CALIFORNIA - DEPARTMENT OF TRANSPORTATION
Caltrans® DESIGN

LAST REVISION 03-29-11 | DATE PLOTTED => 29-APR-2011 | TIME PLOTTED => 18:53

Dist	COUNTY	ROUTE	POST MILES TOTAL PROJECT	SHEET No.	TOTAL SHEETS
08	Riv	91	15.6/21.6	348	2028

REGISTERED CIVIL ENGINEER 3-29-10 DATE

4-25-11
PLANS APPROVAL DATE

REGISTERED PROFESSIONAL ENGINEER ALAN R. BISI No. C62808 Exp. 6-30-12 CIVIL STATE OF CALIFORNIA

THE STATE OF CALIFORNIA OR ITS OFFICERS OR AGENTS SHALL NOT BE RESPONSIBLE FOR THE ACCURACY OR COMPLETENESS OF SCANNED COPIES OF THIS PLAN SHEET.

ALTERNATIVE PIPE ALLOWABLE PIPE MATERIAL AND PROTECTION

DESIGNATION	RCP	CSP (2-2/3"x½")			SSRP (3/4"x1" @ 11-1/2" PITCH)			PPC(C)	PPC(D,S)
	SIZE (INCH)	SIZE (INCH)	BITUM. COAT. THICKNESS	PA/PS THICKNESS	SIZE (INCH)	BITUM. COAT. THICKNESS	PA/PS THICKNESS	SIZE (INCH)	SIZE (INCH)
6" APC									6
12" APC TYPE A		12	0.064"	0.052"				12	
12" APC TYPE B					12	0.064"	0.052"		12
12" APC TYPE C	12				12	0.064"	0.052"		12
18" APC TYPE A	18	18	0.064"	0.052"	18	0.064"	0.052"		
18" APC TYPE B	18	18	0.064"	0.052"				18	
18" APC TYPE C		18	0.064"	0.052"				18	
18" APC TYPE D	18				18	0.064"	0.052"		
18" APC TYPE E	18	18	0.064"	0.052"				18	18
18" APC TYPE F	18								18
24" APC		24	0.079"	0.064"				24	
30" APC	30				30	0.079"	0.064"		30
30"x10" ARCH		30x10	0.079"	0.064"	30x10	0.079"	0.064"		
48" APC		48	0.079"	0.064"					

LEGENDS AND ABBREVIATIONS

S - STANDARD JOINT TYPE
P - POSITIVE JOINT TYPE
D - DOWNDRAIN JOINT TYPE
RCP - REINFORCED CONCRETE PIPE
PPC(C) - PASTIC PIPE CULVERT, TYPE C (CORRUGATED INTERIOR WALL)
PPC(D,S) - PLASTIC PIPE CULVERT, TYPE D OR S (SMOOTH INTERIOR WALL)
CSP - CORRUGATED STEEL PIPE
SSRP - STEEL SPIRAL RIBBED PIPE
GA. - GAUGE
BITUM. - BITUMINOUS
PA - POLYMERIZED ASPHALT
PS - POLYMERIC SHEET
w/ - WITH
Ω - SEE DRAINAGE DETAIL

Notes:

1. SUFFICIENT SPACE WAS NOT AVALABLE TO LIST ALL DRAINAGE ITEMS WITHIN A SINGLE TABLE ON A SHEET BORDER, THEREFORE THE LISTING OF THE FIRST GROUPING OF DRAINAGE ITEMS ARE REPEATED ON THE ODD NUMBERED ID CODE SHEETS (DQ-1, DQ-3, ETC.) AND THE LISTINGS OF THE REMAINING GROUP OF DRAINAGE ITEMS ARE REPEATED ON THE EVEN NUMBERED ID CODE SHEETS (DQ-2, DQ-4, ETC.).
2. THE PRECISE DETERMINATION OF THE FOLLOWING ITEMS WILL BE MADE BY THE ENGINEER IN THE FIELD: STATION, SKEW, LENGTH, FL ELEVATION, AND DEPTH OF STRUCTURE.
3. (N) - NOT A SEPARATE PAY ITEM; FOR INFORMATION ONLY.
4. * - SEE ROADWAY QUANTITIES FOR DRAINAGE ITEM TOTAL

DITCH EXCAVATION	CONCRETE (CHANNEL LINING)	STRUCTURAL CONCRETE, BOX CULVERT	MINOR CONCRETE (MINOR STRUCTURE)	MINOR CONCRETE (MISC. CONSTRUCTION)	CL. IV CONCRETE (BACKFILL) *	HMA-A *	PLACE AC (MISC. AREA) *	MISC. IRON AND STEEL	BAR REINFORCING STEEL	RSP ¼-TON, METHOD B	RSP FACING, METHOD B	RSP NO. 2 BACKING, METHOD B	RSP FABRIC	FRAMES, GRATES AND COVERS 24-12 (N)	24-13 (N)	¼" SOLID STEEL COVER (N)	12" X 12" PRECAST INLET	12" X 12" STEEL GRATE (TRAFFIC RATED)	DEBRIS RACK (N)	MANHOLE COVER (N)	MANHOLE COVER-PRESSURE LOCKING (N)	36" PRECAST MANHOLE SHAFT		MANHOLE SHAFT PIPE REDUCER	HEIGHT OF MANHOLE (N)	HEIGHT OF INLET "H" (N)	DRAINAGE INLET MARKER *	CONCRETE COLLAR (N)	RCP 12" RCP	15" RCP	18" RCP	24" RCP	30" RCP	36" RCP	48" RCP	54" RCP	60" RCP (CL. V SPECIAL)	DESCRIPTION	STATION	DRAINAGE PLAN SHEET NO.	DRAINAGE SYSTEM NO. ⬡	DRAINAGE UNIT ◯
CY	CY	CY	CY	CY	CY	ton	yd²	lb	lb	CY	CY	CY	yd²	EA	EA	EA	EA	EA	EA	EA	EA	LF		EA	FT	FT	EA	EA	LF	LF	LF	LF	LF	LF	LF	LF	LF					
																																						REMOVE HEADWALL	275+50		44	x
																																						ABANDON EXISTING 24" RCP	275+50			y
																																						REMOVE HEADWALL	275+50			z
																																						REMOVE HEADWALL	276+00	D-8		aa
																																						ABANDON EXISTING 24" RCP	276+00			ab
																																						REMOVE HEADWALL	276+00			ac
																																						REMOVE HEADWALL	277+00			ad
																																						ABANDON EXISTING 24" RCP	277+00			ae
																																						REMOVE HEADWALL	277+00			af
																																						ABANDON EXISTING 24" RCP	278+00			ag
																																						FROM EXISTING MEDIAN DI				
																																						REMOVE HEADWALL	278+00			ah
																																						ABANDON EXISTING 24" RCP	279+50			ai
																																						REMOVE HEADWALL	279+50			aj
			3.80				326							1												8.5												TYPE G2 DI	73.7' LT 268 "ARLON1"	D-7	45	a
																																						18" AP TYPE D				b
			1.20	1.30			263							1												4.0												TYPE G1 DI w/ Depression	73.7' LT 267+80 "ARLON1"			c
			5.00	1.30			589							2																								SHEET TOTALS				

THIS PLAN ACCURATE FOR DRAINAGE WORK ONLY.

DRAINAGE QUANTITIES
DQ-19

STATE OF CALIFORNIA - DEPARTMENT OF TRANSPORTATION
Caltrans DESIGN

FUNCTIONAL SUPERVISOR: MARK PERTILE
CALCULATED-DESIGNED BY: MOHAMMAD ABDRABOH
CHECKED BY: ALAN R. BISI
REVISED BY
DATE REVISED

LAST REVISION 03-29-11
DATE PLOTTED => 11-JUL-2011
TIME PLOTTED => 12:39

Dist	COUNTY	ROUTE	POST MILES TOTAL PROJECT	SHEET No.	TOTAL SHEETS
08	Riv	91	15.6/21.6	349	2028

REGISTERED CIVIL ENGINEER 3-29-10 DATE

4-25-11
PLANS APPROVAL DATE

REGISTERED PROFESSIONAL ENGINEER ALAN R. BISI No. C62808 Exp. 6-30-12 CIVIL STATE OF CALIFORNIA

THE STATE OF CALIFORNIA OR ITS OFFICERS OR AGENTS SHALL NOT BE RESPONSIBLE FOR THE ACCURACY OR COMPLETENESS OF SCANNED COPIES OF THIS PLAN SHEET.

ALTERNATIVE PIPE ALLOWABLE PIPE MATERIAL AND PROTECTION

DESIGNATION	RCP	CSP (2-2/3"x½")			SSRP (3/4"x1" @ 11-1/2" PITCH)			PPC(C)	PPC(D,S)
	SIZE (INCH)	SIZE (INCH)	BITUM. COAT. THICKNESS	PA/PS THICKNESS	SIZE (INCH)	BITUM. COAT. THICKNESS	PA/PS THICKNESS	SIZE (INCH)	SIZE (INCH)
6" APC									6
12" APC TYPE A		12	0.064"	0.052"				12	
12" APC TYPE B					12	0.064"	0.052"		12
12" APC TYPE C	12				12	0.064"	0.052"		12
18" APC TYPE A	18	18	0.064"	0.052"	18	0.064"	0.052"		
18" APC TYPE B	18	18	0.064"	0.052"				18	
18" APC TYPE C		18	0.064"	0.052"				18	
18" APC TYPE D	18				18	0.064"	0.052"		
18" APC TYPE E	18	18	0.064"	0.052"				18	18
18" APC TYPE F	18								18
24" APC		24	0.079"	0.064"				24	
30" APC	30				30	0.079"	0.064"		30
30"x10" ARCH		30x10	0.079"	0.064"	30x10	0.079"	0.064"		
48" APC		48	0.079"	0.064"					

LEGENDS AND ABBREVIATIONS

S - STANDARD JOINT TYPE
P - POSITIVE JOINT TYPE
D - DOWNDRAIN JOINT TYPE
RCP - REINFORCED CONCRETE PIPE
PPC(C) - PASTIC PIPE CULVERT, TYPE C (CORRUGATED INTERIOR WALL)
PPC(D,S) - PLASTIC PIPE CULVERT, TYPE D OR S (SMOOTH INTERIOR WALL)
CSP - CORRUGATED STEEL PIPE
CAP - CORRUGATED ALUMINUM PIPE
SSRP - STEEL SPIRAL RIBBED PIPE
GA. - GAUGE
BITUM. - BITUMINOUS
PA - POLYMERIZED ASPHALT
PS - POLYMERIC SHEET
w/ - WITH
Ω - SEE DRAINAGE DETAIL

Notes:

1. SUFFICIENT SPACE WAS NOT AVALABLE TO LIST ALL DRAINAGE ITEMS WITHIN A SINGLE TABLE ON A SHEET BORDER, THEREFORE THE LISTING OF THE FIRST GROUPING OF DRAINAGE ITEMS ARE REPEATED ON THE ODD NUMBERED ID CODE SHEETS (DQ-1, DQ-3, ETC.) AND THE LISTINGS OF THE REMAINING GROUP OF DRAINAGE ITEMS ARE REPEATED ON THE EVEN NUMBERED ID CODE SHEETS (DQ-2, DQ-4, ETC.).
2. THE PRECISE DETERMINATION OF THE FOLLOWING ITEMS WILL BE MADE BY THE ENGINEER IN THE FIELD: STATION, SKEW, LENGTH, FL ELEVATION, AND DEPTH OF STRUCTURE.
3. (N) - NOT A SEPARATE PAY ITEM; FOR INFORMATION ONLY.
4. * - SEE ROADWAY QUANTITIES FOR DRAINAGE ITEM TOTAL

CSP 12" (14 GA.) LF	CSP 18" (14 GA.) LF	CSP 36" (10 GA.) LF	CSP 12" RISER (14 GA.) LF	CSP 48" RISER (10 GA.) LF	CSP 18" SLOTTED PIPE (14 GA.) LF	CSP 21" SLOTTED PIPE (14 GA.) LF	CSP 24" SLOTTED PIPE (14 GA.) LF	ALTERNATIVE PIPE 6" AP (TYPE __) LF	ALTERNATIVE PIPE 12" AP (TYPE __) LF	ALTERNATIVE PIPE 18" AP (TYPE __) LF	ALTERNATIVE PIPE 24" AP (TYPE __) LF	ALTERNATIVE PIPE 30" AP (TYPE __) LF	ALTERNATIVE PIPE 48" AP (TYPE __) LF	ALTERNATIVE PIPE 30" X 10" AP ARCH PIPE (TYPE __) LF	MAXIMUM COVER (N) FT	ELBOW (N) EA	PIPE JOINT CLASSIFICATION	8" GALVANIZED STEEL PIPE LF	8" GATE VALVE w/ SLEEVE & COVER EA	AFES 12" AFES EA	PIPE RISER 8" AP SLIPJOINT (N) EA	PIPE RISER 12" AP SLIPJOINT (N) EA	CABLE RAILING LF	ADJUST INLET EA	MODIFY INLET EA	REMOVAL/ABANDON PAY ITEMS REMOVE CONCRETE CY	REMOVE PIPE LF	REMOVE INLET EA	ABANDON INLET EA	ABANDON PIPE LF	SAND BACKFILL CY	CAP RISER EA	CAP INLET EA	DESCRIPTION	STATION	DRAINAGE PLAN SHEET NO.	DRAINAGE SYSTEM NO. ⬡	DRAINAGE UNIT ◯
																									1.2								REMOVE HEADWALL	275+50			x
																													180.0	20.94			ABANDON EXISTING 24" RCP	275+50			y
																									1.2								REMOVE HEADWALL	275+50			z
																									1.2								REMOVE HEADWALL	276+00	D-8		aa
																													170.0	19.78			ABANDON EXISTING 24" RCP	276+00			ab
																									1.2								REMOVE HEADWALL	276+00			ac
																									1.2								REMOVE HEADWALL	277+00			ad
																													160.0	18.62			ABANDON EXISTING 24" RCP	277+00			ae
																									1.2								REMOVE HEADWALL	277+00			af
																													70.0	8.14			ABANDON EXISTING 24" RCP	278+00			ag
																																	FROM EXISTING MEDIAN DI				
																									1.2								REMOVE HEADWALL	278+00			ah
																													170.0	19.78			ABANDON EXISTING 24" RCP	279+50			ai
																									1.2								REMOVE HEADWALL	279+50			aj
																																	TYPE G2 DI	73.7' LT 268 "ARLON1"	D-7	45	a
										16.0					3.0		S																18" AP TYPE D				b
																																	TYPE G1 DI w/ Depression	73.7' LT 267+80 "ARLON1"			c
										16															9.6				750.0	87.26			SHEET TOTALS				

THIS PLAN ACCURATE FOR DRAINAGE WORK ONLY.

DRAINAGE QUANTITIES
DQ-20

STATE OF CALIFORNIA - DEPARTMENT OF TRANSPORTATION
Caltrans® DESIGN

FUNCTIONAL SUPERVISOR: MARK PERTILE
CALCULATED-DESIGNED BY: MOHAMMAD ABDRABOH
CHECKED BY: ALAN R. BISI
REVISED BY
DATE REVISED

LAST REVISION 03-29-11 | DATE PLOTTED => 29-APR-2011 | TIME PLOTTED => 18:53

Dist	COUNTY	ROUTE	POST MILES TOTAL PROJECT	SHEET No.	TOTAL SHEETS
08	Riv	91	15.6/21.6	350	2028

REGISTERED CIVIL ENGINEER 3-29-10 DATE

4-25-11
PLANS APPROVAL DATE

REGISTERED PROFESSIONAL ENGINEER ALAN R. BISI No. C62808 Exp. 6-30-12 CIVIL STATE OF CALIFORNIA

THE STATE OF CALIFORNIA OR ITS OFFICERS OR AGENTS SHALL NOT BE RESPONSIBLE FOR THE ACCURACY OR COMPLETENESS OF SCANNED COPIES OF THIS PLAN SHEET.

ALTERNATIVE PIPE
ALLOWABLE PIPE MATERIAL AND PROTECTION

DESIGNATION	RCP	CSP (2-2/3"x½")			SSRP (3/4"x1" @ 11-1/2" PITCH)			PPC(C)	PPC(D,S)
	SIZE (INCH)	SIZE (INCH)	BITUM. COAT. THICKNESS	PA/PS THICKNESS	SIZE (INCH)	BITUM. COAT. THICKNESS	PA/PS THICKNESS	SIZE (INCH)	SIZE (INCH)
6" APC									6
12" APC TYPE A		12	0.064"	0.052"				12	
12" APC TYPE B					12	0.064"	0.052"		12
12" APC TYPE C	12				12	0.064"	0.052"		12
18" APC TYPE A	18	18	0.064"	0.052"	18	0.064"	0.052"		
18" APC TYPE B	18	18	0.064"	0.052"				18	
18" APC TYPE C		18	0.064"	0.052"				18	
18" APC TYPE D	18				18	0.064"	0.052"		
18" APC TYPE E	18	18	0.064"	0.052"				18	18
18" APC TYPE F	18								18
24" APC		24	0.079"	0.064"				24	
30" APC	30				30	0.079"	0.064"		30
30"x10" ARCH		30x10	0.079"	0.064"	30x10	0.079"	0.064"		
48" APC		48	0.079"	0.064"					

LEGENDS AND ABBREVIATIONS

S - STANDARD JOINT TYPE
P - POSITIVE JOINT TYPE
D - DOWNDRAIN JOINT TYPE
RCP - REINFORCED CONCRETE PIPE
PPC(C) - PASTIC PIPE CULVERT, TYPE C (CORRUGATED INTERIOR WALL)
PPC(D,S) - PLASTIC PIPE CULVERT, TYPE D OR S (SMOOTH INTERIOR WALL)
CSP - CORRUGATED STEEL PIPE
SSRP - STEEL SPIRAL RIBBED PIPE
GA. - GAUGE
BITUM. - BITUMINOUS
PA - POLYMERIZED ASPHALT
PS - POLYMERIC SHEET
w/ - WITH
Ω - SEE DRAINAGE DETAIL

Notes:

1. SUFFICIENT SPACE WAS NOT AVALABLE TO LIST ALL DRAINAGE ITEMS WITHIN A SINGLE TABLE ON A SHEET BORDER, THEREFORE THE LISTING OF THE FIRST GROUPING OF DRAINAGE ITEMS ARE REPEATED ON THE ODD NUMBERED ID CODE SHEETS (DQ-1, DQ-3, ETC.) AND THE LISTINGS OF THE REMAINING GROUP OF DRAINAGE ITEMS ARE REPEATED ON THE EVEN NUMBERED ID CODE SHEETS (DQ-2, DQ-4, ETC.).
2. THE PRECISE DETERMINATION OF THE FOLLOWING ITEMS WILL BE MADE BY THE ENGINEER IN THE FIELD: STATION, SKEW, LENGTH, FL ELEVATION, AND DEPTH OF STRUCTURE.
3. (N) - NOT A SEPARATE PAY ITEM; FOR INFORMATION ONLY.
4. * - SEE ROADWAY QUANTITIES FOR DRAINAGE ITEM TOTAL

DITCH EXCAVATION	CONCRETE (CHANNEL LINING)	STRUCTURAL CONCRETE, BOX CULVERT	MINOR CONCRETE (MINOR STRUCTURE)	MINOR CONCRETE (MISC. CONSTRUCTION)	CL. IV CONCRETE (BACKFILL) *	HMA-A *	PLACE AC (MISC. AREA) *	MISC. IRON AND STEEL	BAR REINFORCING STEEL	RSP: ¼-TON, METHOD B	RSP: FACING, METHOD B	RSP: NO. 2 BACKING, METHOD B	RSP: RSP FABRIC	FRAMES, GRATES AND COVERS: 24-12 (N)	24-13 (N)	¼" SOLID STEEL COVER (N)	12" X 12" PRECAST INLET	12" X 12" STEEL GRATE (TRAFFIC RATED)	DEBRIS RACK (N)	MANHOLE COVER (N)	MANHOLE COVER-PRESSURE LOCKING (N)	36" PRECAST MANHOLE SHAFT		MANHOLE SHAFT PIPE REDUCER	HEIGHT OF MANHOLE (N)	HEIGHT OF INLET "H" (N)	DRAINAGE INLET MARKER *	CONCRETE COLLAR (N)	RCP: 12" RCP	15" RCP	18" RCP	24" RCP	30" RCP	36" RCP	48" RCP	54" RCP	60" RCP (CL. V SPECIAL)	DESCRIPTION	STATION	DRAINAGE PLAN SHEET NO.	DRAINAGE SYSTEM NO. ⬡	DRAINAGE UNIT ◯
CY	CY	CY	CY	CY	CY	ton	yd²	lb	lb	CY	CY	CY	yd²	EA	EA	EA	EA	EA	EA	EA	EA	LF		EA	FT	FT	EA	EA	LF	LF	LF	LF	LF	LF	LF	LF	LF					
																																						24" SCSP	Arlington w/b Exit Ramp	D-7	46	a
			1.60					326						1												4.9												TYPE G2 DI	85.7' LT 275+50.6 "GE1"			b
																																73.0						24" RCP				c
			1.60					326						1												4.7												TYPE G2 DI	85.7' LT 274+70.8 "GE1"			d
																																	15.0					36" RCP				e
			1.80					326						1												4.6												TYPE G2 DI	85.7' LT 274+50.8 "GE1"			f
																																	15.0					36" RCP				g
			1.80					326						1												4.5												TYPE G2 DI	85.7' LT 274+30.8 "GE1"			h
																																	216.0					36" RCP				i
			1.80					326						1												4.9												TYPE G2 DI	87.4' LT 272+01.1 "GE1"			j
																																	236.0					36" RCP				k
			1.80					326						1												4.9												TYPE G2 DI	108.1' LT 269+52.8 ON RAMP			l
																																139.0						24" RCP				m
			1.60					326						1												4.0												TYPE G2 DI	30.7' LT 268+08.54 ON RAMP			n
																																15.0						24" RCP				o
																												1										CONCRETE COLLAR	14.8' LT 268+08.53 ON RAMP			p
																																						REMOVE HEADWALL				q
																												1										CONCRETE COLLAR	96.9' LT 269+50.3 "G1"	D-7	47	a
																																9.0						24" RCP				b
																																						REMOVE HEADWALL				c
																												1										CONCRETE COLLAR	55.1' LT 272 "G1"	D-8	48	a
																																30.0						24" RCP				b
																																						REMOVE 24" RCP				c
																																						REMOVE HEADWALL				d
			12.00					2282						7														3				266.0		482.0				SHEET TOTALS				

THIS PLAN ACCURATE FOR DRAINAGE WORK ONLY.

DRAINAGE QUANTITIES
DQ-21

STATE OF CALIFORNIA - DEPARTMENT OF TRANSPORTATION
Caltrans DESIGN

FUNCTIONAL SUPERVISOR: MARK PERTILE
CALCULATED-DESIGNED BY: MOHAMMAD ABDRABOH
CHECKED BY: ALAN R. BISI
REVISED BY
DATE REVISED

LAST REVISION 03-29-11
DATE PLOTTED => 11-JUL-2011
TIME PLOTTED => 12:39

Dist	COUNTY	ROUTE	POST MILES TOTAL PROJECT	SHEET No.	TOTAL SHEETS
08	Riv	91	15.6/21.6	351	2028

REGISTERED CIVIL ENGINEER 3-29-10 DATE

4-25-11
PLANS APPROVAL DATE

REGISTERED PROFESSIONAL ENGINEER ALAN R. BISI No. C62808 Exp. 6-30-12 CIVIL STATE OF CALIFORNIA

THE STATE OF CALIFORNIA OR ITS OFFICERS OR AGENTS SHALL NOT BE RESPONSIBLE FOR THE ACCURACY OR COMPLETENESS OF SCANNED COPIES OF THIS PLAN SHEET.

ALTERNATIVE PIPE ALLOWABLE PIPE MATERIAL AND PROTECTION

DESIGNATION	RCP	CSP (2-2/3"x½")			SSRP (3/4"x1" @ 11-1/2" PITCH)			PPC(C)	PPC(D,S)
	SIZE (INCH)	SIZE (INCH)	BITUM. COAT. THICKNESS	PA/PS THICKNESS	SIZE (INCH)	BITUM. COAT. THICKNESS	PA/PS THICKNESS	SIZE (INCH)	SIZE (INCH)
6" APC									6
12" APC TYPE A		12	0.064"	0.052"				12	
12" APC TYPE B					12	0.064"	0.052"		12
12" APC TYPE C	12				12	0.064"	0.052"		12
18" APC TYPE A	18	18	0.064"	0.052"	18	0.064"	0.052"		
18" APC TYPE B	18	18	0.064"	0.052"				18	
18" APC TYPE C		18	0.064"	0.052"				18	
18" APC TYPE D	18				18	0.064"	0.052"		
18" APC TYPE E	18	18	0.064"	0.052"				18	18
18" APC TYPE F	18								18
24" APC		24	0.079"	0.064"				24	
30" APC	30				30	0.079"	0.064"		30
30"x10" ARCH		30x10	0.079"	0.064"	30x10	0.079"	0.064"		
48" APC		48	0.079"	0.064"					

LEGENDS AND ABBREVIATIONS

S - STANDARD JOINT TYPE
P - POSITIVE JOINT TYPE
D - DOWNDRAIN JOINT TYPE
RCP - REINFORCED CONCRETE PIPE
PPC(C) - PASTIC PIPE CULVERT, TYPE C (CORRUGATED INTERIOR WALL)
PPC(D,S) - PLASTIC PIPE CULVERT, TYPE D OR S (SMOOTH INTERIOR WALL)
CSP - CORRUGATED STEEL PIPE
CAP - CORRUGATED ALUMINUM PIPE
SSRP - STEEL SPIRAL RIBBED PIPE
GA. - GAUGE
BITUM. - BITUMINOUS
PA - POLYMERIZED ASPHALT
PS - POLYMERIC SHEET
w/ - WITH
Ω - SEE DRAINAGE DETAIL

Notes:

1. SUFFICIENT SPACE WAS NOT AVALABLE TO LIST ALL DRAINAGE ITEMS WITHIN A SINGLE TABLE ON A SHEET BORDER, THEREFORE THE LISTING OF THE FIRST GROUPING OF DRAINAGE ITEMS ARE REPEATED ON THE ODD NUMBERED ID CODE SHEETS (DQ-1, DQ-3, ETC.) AND THE LISTINGS OF THE REMAINING GROUP OF DRAINAGE ITEMS ARE REPEATED ON THE EVEN NUMBERED ID CODE SHEETS (DQ-2, DQ-4, ETC.).
2. THE PRECISE DETERMINATION OF THE FOLLOWING ITEMS WILL BE MADE BY THE ENGINEER IN THE FIELD: STATION, SKEW, LENGTH, FL ELEVATION, AND DEPTH OF STRUCTURE.
3. (N) - NOT A SEPARATE PAY ITEM; FOR INFORMATION ONLY.
4. * - SEE ROADWAY QUANTITIES FOR DRAINAGE ITEM TOTAL

CSP								ALTERNATIVE PIPE													AFES	PIPE RISER						REMOVAL/ABANDON PAY ITEMS											
12" (14 GA.)	18" (14 GA.)	36" (10 GA.)	12" RISER (14 GA.)	48" RISER (10 GA.)	18" SLOTTED PIPE (14 GA.)	21" SLOTTED PIPE (14 GA.)	24" SLOTTED PIPE (14 GA.)	6" AP (TYPE __)	12" AP (TYPE __)	18" AP (TYPE __)	24" AP (TYPE __)	30" AP (TYPE __)	48" AP (TYPE __)	30" X 10" AP ARCH PIPE (TYPE __)	MAXIMUM COVER (N)	ELBOW (N)	PIPE JOINT CLASSIFICATION	8" GALVANIZED STEEL PIPE	8" GATE VALVE w/ SLEEVE & COVER	12" AFES	8" AP SLIPJOINT (N)	12" AP SLIPJOINT (N)	CABLE RAILING	ADJUST INLET	MODIFY INLET	REMOVE CONCRETE	REMOVE PIPE	REMOVE INLET	ABANDON INLET	ABANDON PIPE	SAND BACKFILL	CAP RISER	CAP INLET	DESCRIPTION	STATION	DRAINAGE PLAN SHEET NO.	DRAINAGE SYSTEM NO. ⬡	DRAINAGE UNIT ◯
LF	LF	LF	LF	LF	LF	LF	LF	LF	LF	LF	LF	LF	LF	LF	FT	EA		LF	EA	EA	EA	EA	LF	EA	EA	CY	LF	EA	EA	LF	CY	EA	EA					
							234.0																											24" SCSP	Arlington w/b Exit Ramp	D-7	46	a
																																		TYPE G2 DI	85.7' LT 275+50.6 "GE1"			b
															2.5		S																	24" RCP				c
																																		TYPE G2 DI	85.7' LT 274+70.8 "GE1"			d
															2.0		S																	36" RCP				e
																																		TYPE G2 DI	85.7' LT 274+50.8 "GE1"			f
															1.5		S																	36" RCP				g
																																		TYPE G2 DI	85.7' LT 274+30.8 "GE1"			h
															1.5		S																	36" RCP				i
																																		TYPE G2 DI	87.4' LT 272+01.1 "GE1"			j
															2.0		S																	36" RCP				k
																																		TYPE G2 DI	108.1' LT 269+52.8 ON RAMP			l
															2.0		S																	24" RCP				m
																																		TYPE G2 DI	30.7' LT 268+08.54 ON RAMP			n
															1.5		S																	24" RCP				o
																																		CONCRETE COLLAR	14.8' LT 268+08.53 ON RAMP			p
																										1.2								REMOVE HEADWALL				q
																																		CONCRETE COLLAR	96.9' LT 269+50.3 "G1"	D-7	47	a
															2.0		S																	24" RCP				b
																										1.2								REMOVE HEADWALL				c
																																		CONCRETE COLLAR	55.1' LT 272 "G1"	D-8	48	a
															2.5		S																	24" RCP				b
																											22.0							REMOVE 24" RCP				c
																										1.2								REMOVE HEADWALL				d
							234.0																			3.6	22.0							SHEET TOTALS				

THIS PLAN ACCURATE FOR DRAINAGE WORK ONLY.

DRAINAGE QUANTITIES
DQ-22

STATE OF CALIFORNIA - DEPARTMENT OF TRANSPORTATION
Caltrans® DESIGN

FUNCTIONAL SUPERVISOR: MARK PERTILE
CALCULATED-DESIGNED BY: MOHAMMAD ABDRABOH
CHECKED BY: ALAN R. BISI
REVISED BY
DATE REVISED

LAST REVISION 03-29-11 | DATE PLOTTED => 29-APR-2011 | TIME PLOTTED => 18:53

Dist	COUNTY	ROUTE	POST MILES TOTAL PROJECT	SHEET No.	TOTAL SHEETS
08	Riv	91	15.6/21.6	352	2028

REGISTERED CIVIL ENGINEER 3-29-10 DATE

4-25-11
PLANS APPROVAL DATE

REGISTERED PROFESSIONAL ENGINEER ALAN R. BISI No. C62808 Exp. 6-30-12 CIVIL STATE OF CALIFORNIA

THE STATE OF CALIFORNIA OR ITS OFFICERS OR AGENTS SHALL NOT BE RESPONSIBLE FOR THE ACCURACY OR COMPLETENESS OF SCANNED COPIES OF THIS PLAN SHEET.

ALTERNATIVE PIPE ALLOWABLE PIPE MATERIAL AND PROTECTION

DESIGNATION	RCP	CSP (2-2/3"x½")			SSRP (3/4"x1" @ 11-1/2" PITCH)			PPC(C)	PPC(D,S)
	SIZE (INCH)	SIZE (INCH)	BITUM. COAT. THICKNESS	PA/PS THICKNESS	SIZE (INCH)	BITUM. COAT. THICKNESS	PA/PS THICKNESS	SIZE (INCH)	SIZE (INCH)
6" APC									6
12" APC TYPE A		12	0.064"	0.052"				12	
12" APC TYPE B					12	0.064"	0.052"		12
12" APC TYPE C	12				12	0.064"	0.052"		12
18" APC TYPE A	18	18	0.064"	0.052"	18	0.064"	0.052"		
18" APC TYPE B	18	18	0.064"	0.052"				18	
18" APC TYPE C		18	0.064"	0.052"				18	
18" APC TYPE D	18				18	0.064"	0.052"		
18" APC TYPE E	18	18	0.064"	0.052"				18	18
18" APC TYPE F	18								18
24" APC		24	0.079"	0.064"				24	
30" APC	30				30	0.079"	0.064"		30
30"x10" ARCH		30x10	0.079"	0.064"	30x10	0.079"	0.064"		
48" APC		48	0.079"	0.064"					

LEGENDS AND ABBREVIATIONS

S - STANDARD JOINT TYPE
P - POSITIVE JOINT TYPE
D - DOWNDRAIN JOINT TYPE
RCP - REINFORCED CONCRETE PIPE
PPC(C) - PASTIC PIPE CULVERT, TYPE C (CORRUGATED INTERIOR WALL)
PPC(D,S) - PLASTIC PIPE CULVERT, TYPE D OR S (SMOOTH INTERIOR WALL)
CSP - CORRUGATED STEEL PIPE
SSRP - STEEL SPIRAL RIBBED PIPE
GA. - GAUGE
BITUM. - BITUMINOUS
PA - POLYMERIZED ASPHALT
PS - POLYMERIC SHEET
w/ - WITH
Ω - SEE DRAINAGE DETAIL

Notes:

1. SUFFICIENT SPACE WAS NOT AVALABLE TO LIST ALL DRAINAGE ITEMS WITHIN A SINGLE TABLE ON A SHEET BORDER, THEREFORE THE LISTING OF THE FIRST GROUPING OF DRAINAGE ITEMS ARE REPEATED ON THE ODD NUMBERED ID CODE SHEETS (DQ-1, DQ-3, ETC.) AND THE LISTINGS OF THE REMAINING GROUP OF DRAINAGE ITEMS ARE REPEATED ON THE EVEN NUMBERED ID CODE SHEETS (DQ-2, DQ-4, ETC.).
2. THE PRECISE DETERMINATION OF THE FOLLOWING ITEMS WILL BE MADE BY THE ENGINEER IN THE FIELD: STATION, SKEW, LENGTH, FL ELEVATION, AND DEPTH OF STRUCTURE.
3. (N) - NOT A SEPARATE PAY ITEM; FOR INFORMATION ONLY.
4. * - SEE ROADWAY QUANTITIES FOR DRAINAGE ITEM TOTAL

DITCH EXCAVATION	CONCRETE (CHANNEL LINING)	STRUCTURAL CONCRETE, BOX CULVERT	MINOR CONCRETE (MINOR STRUCTURE)	MINOR CONCRETE (MISC. CONSTRUCTION)	CL. IV CONCRETE (BACKFILL) *	HMA-A *	PLACE AC (MISC. AREA) *	MISC. IRON AND STEEL	BAR REINFORCING STEEL	RSP: ¼-TON, METHOD B	RSP: FACING, METHOD B	RSP: NO. 2 BACKING, METHOD B	RSP: RSP FABRIC	FRAMES, GRATES AND COVERS: 24-12 (N)	24-13 (N)	¼" SOLID STEEL COVER (N)	12" X 12" PRECAST INLET	12" X 12" STEEL GRATE (TRAFFIC RATED)	DEBRIS RACK (N)	MANHOLE COVER (N)	MANHOLE COVER-PRESSURE LOCKING (N)	36" PRECAST MANHOLE SHAFT		MANHOLE SHAFT PIPE REDUCER	HEIGHT OF MANHOLE (N)	HEIGHT OF INLET "H" (N)	DRAINAGE INLET MARKER *	CONCRETE COLLAR (N)	RCP: 12" RCP	15" RCP	18" RCP	24" RCP	30" RCP	36" RCP	48" RCP	54" RCP	60" RCP (CL. V SPECIAL)	DESCRIPTION	STATION	DRAINAGE PLAN SHEET NO.	DRAINAGE SYSTEM NO. ⬡	DRAINAGE UNIT ◯
CY	CY	CY	CY	CY	CY	ton	yd²	lb	lb	CY	CY	CY	yd²	EA	EA	EA	EA	EA	EA	EA	EA	LF		EA	FT	FT	EA	EA	LF	LF	LF	LF	LF	LF	LF	LF	LF					
											9.3		19																									RSP		D-8	49	a
318.00	66.00																																					CONCRETE CHANNEL				b
																																		5.8				36" RCP				c
																																6.0						24" RCP		D-8	50	a
			2.60					263						1												7.8												TYPE G1 DI w/ Depression	87.00' LT 278+00 "GE1"			b
																																3.9						24" RCP				c
																												1										CONCRETE COLLAR	82.00' LT 278+00 "GE1"			d
																												1										CONCRETE COLLAR	111.86' RT 279+48.21 "GE1"	D-8	51	a
																																				182.0		54" RCP				b
			5.00					430											1		17.5		1	17.5														MANHOLE No.2	126.64' RT 277+64.82 "GE1"			c
																																				295.0		54" RCP				d
			5.00					430											1		17		1	17.0														MANHOLE No.2	128.32' RT 274+69.68 "GE1"			e
																																				117.0		54" RCP				f
																												1										CONCRETE COLLAR	126.62' RT 273+54.76 "GE1"			g
										88.7			106.4																								RSP		D-8	52	a
457.00	43.00																																					CONCRETE DITCH				b
			13.00																																			JUNCTION STRUCTURE	95.00' RT 279+89 "GE1"	D-8	53	a
																																43.0						24" RCP				b
			1.50			0.60	1.80	800											1																			CMP Riser w/Debris Cage AND AC Apron				c
775.00	109.00		27.10			0.60	1.80	1923		88.7	9.3		125.4	1					1	2				2				3				52.9		5.8		594.0		SHEET TOTALS				

THIS PLAN ACCURATE FOR DRAINAGE WORK ONLY.

DRAINAGE QUANTITIES
DQ-23

REVISED BY | DATE REVISED

CALCULATED-DESIGNED BY: MOHAMMAD ABDRABOH
CHECKED BY: ALAN R. BISI
FUNCTIONAL SUPERVISOR: MARK PERTILE

STATE OF CALIFORNIA - DEPARTMENT OF TRANSPORTATION
Caltrans
DESIGN

LAST REVISION 03-29-11 | DATE PLOTTED => 11-JUL-2011 | TIME PLOTTED => 12:39

Dist	COUNTY	ROUTE	POST MILES TOTAL PROJECT	SHEET No.	TOTAL SHEETS
08	Riv	91	15.6/21.6	353	2028

REGISTERED CIVIL ENGINEER 3-29-10 DATE

4-25-11
PLANS APPROVAL DATE

REGISTERED PROFESSIONAL ENGINEER ALAN R. BISI No. C62808 Exp. 6-30-12 CIVIL STATE OF CALIFORNIA

THE STATE OF CALIFORNIA OR ITS OFFICERS OR AGENTS SHALL NOT BE RESPONSIBLE FOR THE ACCURACY OR COMPLETENESS OF SCANNED COPIES OF THIS PLAN SHEET.

ALTERNATIVE PIPE ALLOWABLE PIPE MATERIAL AND PROTECTION

DESIGNATION	RCP	CSP (2-2/3"x½")			SSRP (3/4"x1" @ 11-1/2" PITCH)			PPC(C)	PPC(D,S)
	SIZE (INCH)	SIZE (INCH)	BITUM. COAT. THICKNESS	PA/PS THICKNESS	SIZE (INCH)	BITUM. COAT. THICKNESS	PA/PS THICKNESS	SIZE (INCH)	SIZE (INCH)
6" APC									6
12" APC TYPE A		12	0.064"	0.052"				12	
12" APC TYPE B					12	0.064"	0.052"		12
12" APC TYPE C	12				12	0.064"	0.052"		12
18" APC TYPE A	18	18	0.064"	0.052"	18	0.064"	0.052"		
18" APC TYPE B	18	18	0.064"	0.052"				18	
18" APC TYPE C		18	0.064"	0.052"				18	
18" APC TYPE D	18				18	0.064"	0.052"		
18" APC TYPE E	18	18	0.064"	0.052"				18	18
18" APC TYPE F	18								18
24" APC		24	0.079"	0.064"				24	
30" APC	30				30	0.079"	0.064"		30
30"x10" ARCH		30x10	0.079"	0.064"	30x10	0.079"	0.064"		
48" APC		48	0.079"	0.064"					

LEGENDS AND ABBREVIATIONS

S - STANDARD JOINT TYPE
P - POSITIVE JOINT TYPE
D - DOWNDRAIN JOINT TYPE
RCP - REINFORCED CONCRETE PIPE
PPC(C) - PASTIC PIPE CULVERT, TYPE C (CORRUGATED INTERIOR WALL)
PPC(D,S) - PLASTIC PIPE CULVERT, TYPE D OR S (SMOOTH INTERIOR WALL)
CSP - CORRUGATED STEEL PIPE
CAP - CORRUGATED ALUMINUM PIPE
SSRP - STEEL SPIRAL RIBBED PIPE
GA. - GAUGE
BITUM. - BITUMINOUS
PA - POLYMERIZED ASPHALT
PS - POLYMERIC SHEET
w/ - WITH
Ω - SEE DRAINAGE DETAIL

Notes:

1. SUFFICIENT SPACE WAS NOT AVALABLE TO LIST ALL DRAINAGE ITEMS WITHIN A SINGLE TABLE ON A SHEET BORDER, THEREFORE THE LISTING OF THE FIRST GROUPING OF DRAINAGE ITEMS ARE REPEATED ON THE ODD NUMBERED ID CODE SHEETS (DQ-1, DQ-3, ETC.) AND THE LISTINGS OF THE REMAINING GROUP OF DRAINAGE ITEMS ARE REPEATED ON THE EVEN NUMBERED ID CODE SHEETS (DQ-2, DQ-4, ETC.).
2. THE PRECISE DETERMINATION OF THE FOLLOWING ITEMS WILL BE MADE BY THE ENGINEER IN THE FIELD: STATION, SKEW, LENGTH, FL ELEVATION, AND DEPTH OF STRUCTURE.
3. (N) - NOT A SEPARATE PAY ITEM; FOR INFORMATION ONLY.
4. * - SEE ROADWAY QUANTITIES FOR DRAINAGE ITEM TOTAL

CSP 12" (14 GA.) LF	CSP 18" (14 GA.) LF	CSP 36" (10 GA.) LF	CSP 12" RISER (14 GA.) LF	CSP 48" RISER (10 GA.) LF	CSP 18" SLOTTED PIPE (14 GA.) LF	CSP 21" SLOTTED PIPE (14 GA.) LF	CSP 24" SLOTTED PIPE (14 GA.) LF	ALTERNATIVE PIPE 6" AP (TYPE __) LF	ALTERNATIVE PIPE 12" AP (TYPE __) LF	ALTERNATIVE PIPE 18" AP (TYPE __) LF	ALTERNATIVE PIPE 24" AP (TYPE __) LF	ALTERNATIVE PIPE 30" AP (TYPE __) LF	ALTERNATIVE PIPE 48" AP (TYPE __) LF	ALTERNATIVE PIPE 30" X 10" AP ARCH PIPE (TYPE __) LF	MAXIMUM COVER (N) FT	ELBOW (N) EA	PIPE JOINT CLASSIFICATION	8" GALVANIZED STEEL PIPE LF	8" GATE VALVE w/ SLEEVE & COVER EA	AFES 12" AFES EA	PIPE RISER 8" AP SLIPJOINT (N) EA	PIPE RISER 12" AP SLIPJOINT (N) EA	CABLE RAILING LF	ADJUST INLET EA	MODIFY INLET EA	REMOVAL/ABANDON PAY ITEMS REMOVE CONCRETE CY	REMOVE PIPE LF	REMOVE INLET EA	ABANDON INLET EA	ABANDON PIPE LF	SAND BACKFILL CY	CAP RISER EA	CAP INLET EA	DESCRIPTION	STATION	DRAINAGE PLAN SHEET NO.	DRAINAGE SYSTEM NO. ⬡	DRAINAGE UNIT ◯
																																RSP		D-8	49	a
																																CONCRETE CHANNEL				b
															1.5		S															36" RCP				c
															1.0		S															24" RCP		D-8	50	a
																																TYPE G1 DI w/ Depression	87.00' LT 278+00 "GE1"			b
																	S															24" RCP				c
																																CONCRETE COLLAR	82.00' LT 278+00 "GE1"			d
																																CONCRETE COLLAR	111.86' RT 279+48.21 "GE1"	D-8	51	a
															17.0		S															54" RCP				b
																																MANHOLE No.2	126.64' RT 277+64.82 "GE1"			c
															17.0		S															54" RCP				d
																																MANHOLE No.2	128.32' RT 274+69.68 "GE1"			e
															17.0		S															54" RCP				f
																																CONCRETE COLLAR	126.62' RT 273+54.76 "GE1"			g
																																RSP		D-8	52	a
																																CONCRETE DITCH				b
																																JUNCTION STRUCTURE	95.00' RT 279+89 "GE1"	D-8	53	a
															7.0		S															24" RCP				b
				6.0																												CMP Riser w/Debris Cage AND AC Apron				c
				6.0																												SHEET TOTALS				

THIS PLAN ACCURATE FOR DRAINAGE WORK ONLY.

DRAINAGE QUANTITIES
DQ-24

REVISED BY | DATE REVISED

CALCULATED-DESIGNED BY: MOHAMMAD ABDRABOH
CHECKED BY: ALAN R. BISI
FUNCTIONAL SUPERVISOR: MARK PERTILE

STATE OF CALIFORNIA - DEPARTMENT OF TRANSPORTATION
Caltrans® DESIGN

LAST REVISION 03-29-11 | DATE PLOTTED => 29-APR-2011 | TIME PLOTTED => 18:54

Dist	COUNTY	ROUTE	POST MILES TOTAL PROJECT	SHEET No.	TOTAL SHEETS
08	Riv	91	15.6/21.6	354	2028

REGISTERED CIVIL ENGINEER 3-29-10 DATE

4-25-11
PLANS APPROVAL DATE

REGISTERED PROFESSIONAL ENGINEER ALAN R. BISI No. C62808 Exp. 6-30-12 CIVIL STATE OF CALIFORNIA

THE STATE OF CALIFORNIA OR ITS OFFICERS OR AGENTS SHALL NOT BE RESPONSIBLE FOR THE ACCURACY OR COMPLETENESS OF SCANNED COPIES OF THIS PLAN SHEET.

ALTERNATIVE PIPE ALLOWABLE PIPE MATERIAL AND PROTECTION

DESIGNATION	RCP	CSP (2-2/3"x½")			SSRP (3/4"x1" @ 11-1/2" PITCH)			PPC(C)	PPC(D,S)
	SIZE (INCH)	SIZE (INCH)	BITUM. COAT. THICKNESS	PA/PS THICKNESS	SIZE (INCH)	BITUM. COAT. THICKNESS	PA/PS THICKNESS	SIZE (INCH)	SIZE (INCH)
6" APC									6
12" APC TYPE A		12	0.064"	0.052"				12	
12" APC TYPE B					12	0.064"	0.052"		12
12" APC TYPE C	12				12	0.064"	0.052"		12
18" APC TYPE A	18	18	0.064"	0.052"	18	0.064"	0.052"		
18" APC TYPE B	18	18	0.064"	0.052"				18	
18" APC TYPE C		18	0.064"	0.052"				18	
18" APC TYPE D	18				18	0.064"	0.052"		
18" APC TYPE E	18	18	0.064"	0.052"				18	18
18" APC TYPE F	18								18
24" APC		24	0.079"	0.064"				24	
30" APC	30				30	0.079"	0.064"		30
30"x10" ARCH		30x10	0.079"	0.064"	30x10	0.079"	0.064"		
48" APC		48	0.079"	0.064"					

LEGENDS AND ABBREVIATIONS

S - STANDARD JOINT TYPE
P - POSITIVE JOINT TYPE
D - DOWNDRAIN JOINT TYPE
RCP - REINFORCED CONCRETE PIPE
PPC(C) - PASTIC PIPE CULVERT, TYPE C (CORRUGATED INTERIOR WALL)
PPC(D,S) - PLASTIC PIPE CULVERT, TYPE D OR S (SMOOTH INTERIOR WALL)
CSP - CORRUGATED STEEL PIPE
SSRP - STEEL SPIRAL RIBBED PIPE
GA. - GAUGE
BITUM. - BITUMINOUS
PA - POLYMERIZED ASPHALT
PS - POLYMERIC SHEET
w/ - WITH
Ω - SEE DRAINAGE DETAIL

Notes:

1. SUFFICIENT SPACE WAS NOT AVALABLE TO LIST ALL DRAINAGE ITEMS WITHIN A SINGLE TABLE ON A SHEET BORDER, THEREFORE THE LISTING OF THE FIRST GROUPING OF DRAINAGE ITEMS ARE REPEATED ON THE ODD NUMBERED ID CODE SHEETS (DQ-1, DQ-3, ETC.) AND THE LISTINGS OF THE REMAINING GROUP OF DRAINAGE ITEMS ARE REPEATED ON THE EVEN NUMBERED ID CODE SHEETS (DQ-2, DQ-4, ETC.).
2. THE PRECISE DETERMINATION OF THE FOLLOWING ITEMS WILL BE MADE BY THE ENGINEER IN THE FIELD: STATION, SKEW, LENGTH, FL ELEVATION, AND DEPTH OF STRUCTURE.
3. (N) - NOT A SEPARATE PAY ITEM; FOR INFORMATION ONLY.
4. * - SEE ROADWAY QUANTITIES FOR DRAINAGE ITEM TOTAL

DITCH EXCAVATION	CONCRETE (CHANNEL LINING)	STRUCTURAL CONCRETE, BOX CULVERT	MINOR CONCRETE (MINOR STRUCTURE)	MINOR CONCRETE (MISC. CONSTRUCTION)	CL. IV CONCRETE (BACKFILL) *	HMA-A *	PLACE AC (MISC. AREA) *	MISC. IRON AND STEEL	BAR REINFORCING STEEL	RSP: ¼-TON, METHOD B	RSP: FACING, METHOD B	RSP: NO. 2 BACKING, METHOD B	RSP: RSP FABRIC	FRAMES, GRATES AND COVERS: 24-12 (N)	24-13 (N)	¼" SOLID STEEL COVER (N)	12" X 12" PRECAST INLET	12" X 12" STEEL GRATE (TRAFFIC RATED)	DEBRIS RACK (N)	MANHOLE COVER (N)	MANHOLE COVER-PRESSURE LOCKING (N)	36" PRECAST MANHOLE SHAFT		MANHOLE SHAFT PIPE REDUCER	HEIGHT OF MANHOLE (N)	HEIGHT OF INLET "H" (N)	DRAINAGE INLET MARKER *	CONCRETE COLLAR (N)	RCP: 12" RCP	15" RCP	18" RCP	24" RCP	30" RCP	36" RCP	48" RCP	54" RCP	60" RCP (CL. V SPECIAL)	DESCRIPTION	STATION	DRAINAGE PLAN SHEET NO.	DRAINAGE SYSTEM NO. ⬡	DRAINAGE UNIT ◯
CY	CY	CY	CY	CY	CY	ton	yd²	lb	lb	CY	CY	CY	yd²	EA	EA	EA	EA	EA	EA	EA	EA	LF		EA	FT	FT	EA	EA	LF	LF	LF	LF	LF	LF	LF	LF	LF					
			1.64																																			JUNCTION STRUCTURE	46.87' RT 280+87.4 "CTRLEBOFF2"		54	a
																																						18" AP TYPE E				b
			1.20					263						1												4.0												TYPE G1 DI	34.00' RT 280+95 "CTRLEBOFF2"			c
																																						18" AP TYPE E				d
			2.50					634						2												3.8												TYPE GD1 DI	34.00' RT 281+10 "CTRLEBOFF2"			e
																																						18" AP TYPE E				f
			1.20					263						1												3.5												TYPE G1 DI	34.00' RT 281+25 "CTRLEBOFF2"			g
										25.5		48																										RSP		D-8,9	55	a
			1.52																																			HEADWALL	131.1' RT 280+42.6 "G1"			b
																																						30" AP				c
																																						30" AP				d
			6.00					435											1		8		1	8.8														MANHOLE	48.88' RT 283+47.8 "CTRLEBOFF2"			e
																																						30" AP				f
			1.52																																			HEADWALL	38.60' RT 288+14.5 "CTRLEBOFF2"			g
88.00	27.00																																					CONCRETE DITCH				h
																													5.7									12" RCP				i
			1.73					652						2										2.1														TYPE GT3 DI w/Depression	32.00' RT 290+15 "CTRLEBOFF2"			j
																													8.5									12" RCP				k
			1.73	2.89				652						2										1.9														TYPE GT3 DI w/Depression	32.00' RT 290+30 "CTRLEBOFF2"			l
																												1										CONCRETE COLLAR	14.85' RT 290+17.6 "CTRALWBON1"	D-9	56	a
																														99.3								18" RCP				b
																												1										CONCRETE COLLAR	7.38' RT 289+15.6 "CTRALWBON1"			c
																														134.0								18" RCP				d
			1.65	1.30				263						1												6.2												TYPE G1 DI w/Depression	4.00' RT 287+84.6 "CTRALWBON1"			e
																														78.6								18" RCP				f
			1.65	1.30				263						1												6.2												TYPE G1 DI w/Depression	4.00' RT 287+00 "CTRALWBON1"			g
																																						REMOVE DI				h
																																						REMOVE 24" RCP				i
88.00	27.00		22.34	5.49				3425			25.5		48	10					1		8		1				2	14.2		311.9								SHEET TOTALS				

THIS PLAN ACCURATE FOR DRAINAGE WORK ONLY.

DRAINAGE QUANTITIES
DQ-25

REVISED BY | DATE REVISED

CALCULATED-DESIGNED BY: MOHAMMAD ABDRABOH
CHECKED BY: ALAN R. BISI
FUNCTIONAL SUPERVISOR: MARK PERTILE

STATE OF CALIFORNIA - DEPARTMENT OF TRANSPORTATION
Caltrans
DESIGN

LAST REVISION 03-29-11 | DATE PLOTTED => 11-JUL-2011 | TIME PLOTTED => 12:39

Dist	COUNTY	ROUTE	POST MILES TOTAL PROJECT	SHEET No.	TOTAL SHEETS
08	Riv	91	15.6/21.6	355	2028

REGISTERED CIVIL ENGINEER 3-29-10 DATE

4-25-11
PLANS APPROVAL DATE

REGISTERED PROFESSIONAL ENGINEER ALAN R. BISI No. C62808 Exp. 6-30-12 CIVIL STATE OF CALIFORNIA

THE STATE OF CALIFORNIA OR ITS OFFICERS OR AGENTS SHALL NOT BE RESPONSIBLE FOR THE ACCURACY OR COMPLETENESS OF SCANNED COPIES OF THIS PLAN SHEET.

ALTERNATIVE PIPE ALLOWABLE PIPE MATERIAL AND PROTECTION

DESIGNATION	RCP	CSP (2-2/3"x½")			SSRP (3/4"x1" @ 11-1/2" PITCH)			PPC(C)	PPC(D,S)
	SIZE (INCH)	SIZE (INCH)	BITUM. COAT. THICKNESS	PA/PS THICKNESS	SIZE (INCH)	BITUM. COAT. THICKNESS	PA/PS THICKNESS	SIZE (INCH)	SIZE (INCH)
6" APC									6
12" APC TYPE A		12	0.064"	0.052"				12	
12" APC TYPE B					12	0.064"	0.052"		12
12" APC TYPE C	12				12	0.064"	0.052"		12
18" APC TYPE A	18	18	0.064"	0.052"	18	0.064"	0.052"		
18" APC TYPE B	18	18	0.064"	0.052"				18	
18" APC TYPE C		18	0.064"	0.052"				18	
18" APC TYPE D	18				18	0.064"	0.052"		
18" APC TYPE E	18	18	0.064"	0.052"				18	18
18" APC TYPE F	18								18
24" APC		24	0.079"	0.064"				24	
30" APC	30				30	0.079"	0.064"		30
30"x10" ARCH		30x10	0.079"	0.064"	30x10	0.079"	0.064"		
48" APC		48	0.079"	0.064"					

LEGENDS AND ABBREVIATIONS

S - STANDARD JOINT TYPE
P - POSITIVE JOINT TYPE
D - DOWNDRAIN JOINT TYPE
RCP - REINFORCED CONCRETE PIPE
PPC(C) - PASTIC PIPE CULVERT, TYPE C (CORRUGATED INTERIOR WALL)
PPC(D,S) - PLASTIC PIPE CULVERT, TYPE D OR S (SMOOTH INTERIOR WALL)
CSP - CORRUGATED STEEL PIPE
CAP - CORRUGATED ALUMINUM PIPE
SSRP - STEEL SPIRAL RIBBED PIPE
GA. - GAUGE
BITUM. - BITUMINOUS
PA - POLYMERIZED ASPHALT
PS - POLYMERIC SHEET
w/ - WITH
Ω - SEE DRAINAGE DETAIL

Notes:

1. SUFFICIENT SPACE WAS NOT AVALABLE TO LIST ALL DRAINAGE ITEMS WITHIN A SINGLE TABLE ON A SHEET BORDER, THEREFORE THE LISTING OF THE FIRST GROUPING OF DRAINAGE ITEMS ARE REPEATED ON THE ODD NUMBERED ID CODE SHEETS (DQ-1, DQ-3, ETC.) AND THE LISTINGS OF THE REMAINING GROUP OF DRAINAGE ITEMS ARE REPEATED ON THE EVEN NUMBERED ID CODE SHEETS (DQ-2, DQ-4, ETC.).
2. THE PRECISE DETERMINATION OF THE FOLLOWING ITEMS WILL BE MADE BY THE ENGINEER IN THE FIELD: STATION, SKEW, LENGTH, FL ELEVATION, AND DEPTH OF STRUCTURE.
3. (N) - NOT A SEPARATE PAY ITEM; FOR INFORMATION ONLY.
4. * - SEE ROADWAY QUANTITIES FOR DRAINAGE ITEM TOTAL

CSP								ALTERNATIVE PIPE													AFES	PIPE RISER						REMOVAL/ABANDON PAY ITEMS								DESCRIPTION	STATION	DRAINAGE PLAN SHEET NO.	DRAINAGE SYSTEM NO. ⬡	DRAINAGE UNIT ◯
12" (14 GA.)	18" (14 GA.)	36" (10 GA.)	12" RISER (14 GA.)	48" RISER (10 GA.)	18" SLOTTED PIPE (14 GA.)	21" SLOTTED PIPE (14 GA.)	24" SLOTTED PIPE (14 GA.)	6" AP (TYPE __)	12" AP (TYPE __)	18" AP (TYPE __)	24" AP (TYPE __)	30" AP (TYPE __)	48" AP (TYPE __)	30" X 10" AP ARCH PIPE (TYPE __)	MAXIMUM COVER (N)	ELBOW (N)	PIPE JOINT CLASSIFICATION	8" GALVANIZED STEEL PIPE	8" GATE VALVE w/ SLEEVE & COVER	12" AFES	8" AP SLIPJOINT (N)	12" AP SLIPJOINT (N)	CABLE RAILING	ADJUST INLET	MODIFY INLET	REMOVE CONCRETE	REMOVE PIPE	REMOVE INLET	ABANDON INLET	ABANDON PIPE	SAND BACKFILL	CAP RISER	CAP INLET					
LF	LF	LF	LF	LF	LF	LF	LF	LF	LF	LF	LF	LF	LF	LF	FT	EA		LF	EA	EA	EA	EA	LF	EA	EA	CY	LF	EA	EA	LF	CY	EA	EA					
																																		JUNCTION STRUCTURE	46.87′ RT 280+87.4 "CTRLEBOFF2"		54	a
										11.5					6.0		S																	18" AP TYPE E				b
																																		TYPE G1 DI	34.00′ RT 280+95 "CTRLEBOFF2"			c
										10.9					3.0		S																	18" AP TYPE E				d
																																		TYPE GD1 DI	34.00′ RT 281+10 "CTRLEBOFF2"			e
										10.9					3.0		S																	18" AP TYPE E				f
																																		TYPE G1 DI	34.00′ RT 281+25 "CTRLEBOFF2"			g
																																		RSP		D-8,9	55	a
																																		HEADWALL	131.1′ RT 280+42.6 "G1"			b
												41.2			6.0		S																	30" AP				c
												255.8			11.0		S																	30" AP				d
																																		MANHOLE	48.88′ RT 283+47.8 "CTRLEBOFF2"			e
												461.7			11.0		S																	30" AP				f
																																		HEADWALL	38.60′ RT 288+14.5 "CTRLEBOFF2"			g
																																		CONCRETE DITCH				h
															1.0		S																	12" RCP				i
																																		TYPE GT3 DI w/Depression	32.00′ RT 290+15 "CTRLEBOFF2"			j
															1.0		S																	12" RCP				k
																																		TYPE GT3 DI w/Depression	32.00′ RT 290+30 "CTRLEBOFF2"			l
																																		CONCRETE COLLAR	14.85′ RT 290+17.6 "CTRALWBON1"	D-9	56	a
															4.0		S																	18" RCP				b
																																		CONCRETE COLLAR	7.38′ RT 289+15.6 "CTRALWBON1"			c
															5.0		S																	18" RCP				d
																																		TYPE G1 DI w/Depression	4.00′ RT 287+84.6 "CTRALWBON1"			e
															5.0		S																	18" RCP				f
																																		TYPE G1 DI w/Depression	4.00′ RT 287+00 "CTRALWBON1"			g
																												1						REMOVE DI				h
																											6.0							REMOVE 24" RCP				i
										33.3		758.7															6.0	1						SHEET TOTALS				

THIS PLAN ACCURATE FOR DRAINAGE WORK ONLY.

DRAINAGE QUANTITIES
DQ-26

REVISED BY | DATE REVISED

MOHAMMAD ABDRABOH | ALAN R. BISI
CALCULATED-DESIGNED BY | CHECKED BY

FUNCTIONAL SUPERVISOR
MARK PERTILE

STATE OF CALIFORNIA - DEPARTMENT OF TRANSPORTATION
Caltrans® DESIGN

LAST REVISION 03-29-11 | DATE PLOTTED => 29-APR-2011 | TIME PLOTTED => 18:54

Dist	COUNTY	ROUTE	POST MILES TOTAL PROJECT	SHEET No.	TOTAL SHEETS
08	Riv	91	15.6/21.6	356	2028

REGISTERED CIVIL ENGINEER 3-29-10 DATE

4-25-11
PLANS APPROVAL DATE

REGISTERED PROFESSIONAL ENGINEER ALAN R. BISI No. C62808 Exp. 6-30-12 CIVIL STATE OF CALIFORNIA

THE STATE OF CALIFORNIA OR ITS OFFICERS OR AGENTS SHALL NOT BE RESPONSIBLE FOR THE ACCURACY OR COMPLETENESS OF SCANNED COPIES OF THIS PLAN SHEET.

ALTERNATIVE PIPE ALLOWABLE PIPE MATERIAL AND PROTECTION

DESIGNATION	RCP	CSP (2-2/3"x½")			SSRP (3/4"x1" @ 11-1/2" PITCH)			PPC(C)	PPC(D,S)
	SIZE (INCH)	SIZE (INCH)	BITUM. COAT. THICKNESS	PA/PS THICKNESS	SIZE (INCH)	BITUM. COAT. THICKNESS	PA/PS THICKNESS	SIZE (INCH)	SIZE (INCH)
6" APC									6
12" APC TYPE A		12	0.064"	0.052"				12	
12" APC TYPE B					12	0.064"	0.052"		12
12" APC TYPE C	12				12	0.064"	0.052"		12
18" APC TYPE A	18	18	0.064"	0.052"	18	0.064"	0.052"		
18" APC TYPE B	18	18	0.064"	0.052"				18	
18" APC TYPE C		18	0.064"	0.052"				18	
18" APC TYPE D	18				18	0.064"	0.052"		
18" APC TYPE E	18	18	0.064"	0.052"				18	18
18" APC TYPE F	18								18
24" APC		24	0.079"	0.064"				24	
30" APC	30				30	0.079"	0.064"		30
30"x10" ARCH		30x10	0.079"	0.064"	30x10	0.079"	0.064"		
48" APC		48	0.079"	0.064"					

LEGENDS AND ABBREVIATIONS

S - STANDARD JOINT TYPE
P - POSITIVE JOINT TYPE
D - DOWNDRAIN JOINT TYPE
RCP - REINFORCED CONCRETE PIPE
PPC(C) - PASTIC PIPE CULVERT, TYPE C (CORRUGATED INTERIOR WALL)
PPC(D,S) - PLASTIC PIPE CULVERT, TYPE D OR S (SMOOTH INTERIOR WALL)
CSP - CORRUGATED STEEL PIPE
SSRP - STEEL SPIRAL RIBBED PIPE
GA. - GAUGE
BITUM. - BITUMINOUS
PA - POLYMERIZED ASPHALT
PS - POLYMERIC SHEET
w/ - WITH
Ω - SEE DRAINAGE DETAIL

Notes:

1. SUFFICIENT SPACE WAS NOT AVALABLE TO LIST ALL DRAINAGE ITEMS WITHIN A SINGLE TABLE ON A SHEET BORDER, THEREFORE THE LISTING OF THE FIRST GROUPING OF DRAINAGE ITEMS ARE REPEATED ON THE ODD NUMBERED ID CODE SHEETS (DQ-1, DQ-3, ETC.) AND THE LISTINGS OF THE REMAINING GROUP OF DRAINAGE ITEMS ARE REPEATED ON THE EVEN NUMBERED ID CODE SHEETS (DQ-2, DQ-4, ETC.).
2. THE PRECISE DETERMINATION OF THE FOLLOWING ITEMS WILL BE MADE BY THE ENGINEER IN THE FIELD: STATION, SKEW, LENGTH, FL ELEVATION, AND DEPTH OF STRUCTURE.
3. (N) - NOT A SEPARATE PAY ITEM; FOR INFORMATION ONLY.
4. * - SEE ROADWAY QUANTITIES FOR DRAINAGE ITEM TOTAL

DITCH EXCAVATION	CONCRETE (CHANNEL LINING)	STRUCTURAL CONCRETE, BOX CULVERT	MINOR CONCRETE (MINOR STRUCTURE)	MINOR CONCRETE (MISC. CONSTRUCTION)	CL. IV CONCRETE (BACKFILL) *	HMA-A *	PLACE AC (MISC. AREA) *	MISC. IRON AND STEEL	BAR REINFORCING STEEL	RSP ¼-TON, METHOD B	RSP FACING, METHOD B	RSP NO. 2 BACKING, METHOD B	RSP RSP FABRIC	FRAMES, GRATES AND COVERS 24-12 (N)	24-13 (N)	¼" SOLID STEEL COVER (N)	12" X 12" PRECAST INLET	12" X 12" STEEL GRATE (TRAFFIC RATED)	DEBRIS RACK (N)	MANHOLE COVER (N)	MANHOLE COVER-PRESSURE LOCKING (N)	36" PRECAST MANHOLE SHAFT		MANHOLE SHAFT PIPE REDUCER	HEIGHT OF MANHOLE (N)	HEIGHT OF INLET "H" (N)	DRAINAGE INLET MARKER *	CONCRETE COLLAR (N)	RCP 12" RCP	15" RCP	18" RCP	24" RCP	30" RCP	36" RCP	48" RCP	54" RCP	60" RCP (CL. V SPECIAL)	DESCRIPTION	STATION	DRAINAGE PLAN SHEET NO.	DRAINAGE SYSTEM NO. ⬡	DRAINAGE UNIT ◯
CY	CY	CY	CY	CY	CY	ton	yd²	lb	lb	CY	CY	CY	yd²	EA	EA	EA	EA	EA	EA	EA	EA	LF		EA	FT	FT	EA	EA	LF	LF	LF	LF	LF	LF	LF	LF	LF					
																																72.5						24" RCP		D-9	57	a
			1.61	1.30				263						1												6.0												TYPE G1 DI w/Depression	85.57' RT 283+99.2 "GE1"			b
																										4.5					48.5							18" RCP				c
			1.30	1.30				263						1																								TYPE G1 DI w/Depression	82.2' RT 284+52.1 "GE1"			d
																																						ABANDON 12" RCP				e
																																						REMOVE DI				f
																																						ABANDON 12" RCP				g
																																						REMOVE DI				h
																												1										CONCRETE COLLAR	14.85' RT "CTRALWBON1" 290+17.60	D-9	58	a
																															18.6							18" RCP				b
			4.29					170												1						8.1	1											TYPE OL DI	52.88' RT "CENTRAL" 19+01.39			c
																																						12" AP TYPE B				d
			0.30			0.38	3.50	177								1										5.5												TYPE OMP DI w/Apron	70.04' LT "CTRALWBON1" 288+53.52			e
																																						12" AP TYPE B				f
			0.30			0.38	3.50	177								1										3.9												TYPE OMP DI w/Apron	56.40' LT "CTRALWBON1" 286+97.60			g
																																						12" AP TYPE B				h
			0.30			0.38	3.50	177								1										2.1												TYPE OMP DI w/Apron	45.50' LT "CTRALWBON1" 285+13.27			i
																																						REMOVE DI				j
																																						REMOVE 18" RCP				k
				13.00																																		JUNCTION STRUCTURE	14.75' RT "CENTRAL1" 20+99.46	D-9	59	a
																																63.1						24" RCP				b
			1.50					235												1						9.3												TYPE 405 DI	36.42' LT "CENTRAL1" 21+54.34			c
																																47.0						24" RCP				d
			1.50					800										1								8.3												CMP RISER, TYPE A				e
																												1										CONCRETE COLLAR	4' LT "CTRALWBOF1" 290+32.16	D-9	60	a
																															45.4							18" RCP				b
			1.60	1.30				326						1												4.0	1											TYPE GO DI w/Depression	40.91' LT "CTRALWBOF1" 290+59.87			c
																																						REMOVE DI				d
			12.70	16.90		1.14	10.50	2588						3		3			1	2							2	2			112.5	182.6						SHEET TOTALS				

THIS PLAN ACCURATE FOR DRAINAGE WORK ONLY.

DRAINAGE QUANTITIES
DQ-27

STATE OF CALIFORNIA - DEPARTMENT OF TRANSPORTATION
Caltrans DESIGN

FUNCTIONAL SUPERVISOR: MARK PERTILE
CALCULATED-DESIGNED BY: MOHAMMAD ABDRABOH
CHECKED BY: ALAN R. BISI
REVISED BY
DATE REVISED

LAST REVISION 03-29-11
DATE PLOTTED => 11-JUL-2011
TIME PLOTTED => 12:39

Dist	COUNTY	ROUTE	POST MILES TOTAL PROJECT	SHEET No.	TOTAL SHEETS
08	Riv	91	15.6/21.6	357	2028

REGISTERED CIVIL ENGINEER 3-29-10 DATE

4-25-11
PLANS APPROVAL DATE

REGISTERED PROFESSIONAL ENGINEER ALAN R. BISI No. C62808 Exp. 6-30-12 CIVIL STATE OF CALIFORNIA

THE STATE OF CALIFORNIA OR ITS OFFICERS OR AGENTS SHALL NOT BE RESPONSIBLE FOR THE ACCURACY OR COMPLETENESS OF SCANNED COPIES OF THIS PLAN SHEET.

ALTERNATIVE PIPE ALLOWABLE PIPE MATERIAL AND PROTECTION

DESIGNATION	RCP	CSP (2-2/3"x½")			SSRP (3/4"x1" @ 11-1/2" PITCH)			PPC(C)	PPC(D,S)
	SIZE (INCH)	SIZE (INCH)	BITUM. COAT. THICKNESS	PA/PS THICKNESS	SIZE (INCH)	BITUM. COAT. THICKNESS	PA/PS THICKNESS	SIZE (INCH)	SIZE (INCH)
6" APC									6
12" APC TYPE A		12	0.064"	0.052"				12	
12" APC TYPE B					12	0.064"	0.052"		12
12" APC TYPE C	12				12	0.064"	0.052"		12
18" APC TYPE A	18	18	0.064"	0.052"	18	0.064"	0.052"		
18" APC TYPE B	18	18	0.064"	0.052"				18	
18" APC TYPE C		18	0.064"	0.052"				18	
18" APC TYPE D	18				18	0.064"	0.052"		
18" APC TYPE E	18	18	0.064"	0.052"				18	18
18" APC TYPE F	18								18
24" APC		24	0.079"	0.064"				24	
30" APC	30				30	0.079"	0.064"		30
30"x10" ARCH		30x10	0.079"	0.064"	30x10	0.079"	0.064"		
48" APC		48	0.079"	0.064"					

LEGENDS AND ABBREVIATIONS

S - STANDARD JOINT TYPE
P - POSITIVE JOINT TYPE
D - DOWNDRAIN JOINT TYPE
RCP - REINFORCED CONCRETE PIPE
PPC(C) - PASTIC PIPE CULVERT, TYPE C (CORRUGATED INTERIOR WALL)
PPC(D,S) - PLASTIC PIPE CULVERT, TYPE D OR S (SMOOTH INTERIOR WALL)
CSP - CORRUGATED STEEL PIPE
CAP - CORRUGATED ALUMINUM PIPE
SSRP - STEEL SPIRAL RIBBED PIPE
GA. - GAUGE
BITUM. - BITUMINOUS
PA - POLYMERIZED ASPHALT
PS - POLYMERIC SHEET
w/ - WITH
Ω - SEE DRAINAGE DETAIL

Notes:

1. SUFFICIENT SPACE WAS NOT AVALABLE TO LIST ALL DRAINAGE ITEMS WITHIN A SINGLE TABLE ON A SHEET BORDER, THEREFORE THE LISTING OF THE FIRST GROUPING OF DRAINAGE ITEMS ARE REPEATED ON THE ODD NUMBERED ID CODE SHEETS (DQ-1, DQ-3, ETC.) AND THE LISTINGS OF THE REMAINING GROUP OF DRAINAGE ITEMS ARE REPEATED ON THE EVEN NUMBERED ID CODE SHEETS (DQ-2, DQ-4, ETC.).
2. THE PRECISE DETERMINATION OF THE FOLLOWING ITEMS WILL BE MADE BY THE ENGINEER IN THE FIELD: STATION, SKEW, LENGTH, FL ELEVATION, AND DEPTH OF STRUCTURE.
3. (N) - NOT A SEPARATE PAY ITEM; FOR INFORMATION ONLY.
4. * - SEE ROADWAY QUANTITIES FOR DRAINAGE ITEM TOTAL

CSP								ALTERNATIVE PIPE																																	
12" (14 GA.)	18" (14 GA.)	36" (10 GA.)	12" RISER (14 GA.)	48" RISER (10 GA.)	18" SLOTTED PIPE (14 GA.)	21" SLOTTED PIPE (14 GA.)	24" SLOTTED PIPE (14 GA.)	6" AP (TYPE __)	12" AP (TYPE __)	18" AP (TYPE __)	24" AP (TYPE __)	30" AP (TYPE __)	48" AP (TYPE __)	30" X 10" AP ARCH PIPE (TYPE __)	MAXIMUM COVER (N)	ELBOW (N)	PIPE JOINT CLASSIFICATION	8" GALVANIZED STEEL PIPE	8" GATE VALVE w/ SLEEVE & COVER	AFES: 12" AFES	PIPE RISER: 8" AP SLIPJOINT (N)	PIPE RISER: 12" AP SLIPJOINT (N)	CABLE RAILING	ADJUST INLET	MODIFY INLET	REMOVAL/ABANDON PAY ITEMS: REMOVE CONCRETE	REMOVE PIPE	REMOVE INLET	ABANDON INLET	ABANDON PIPE	SAND BACKFILL	CAP RISER	CAP INLET	DESCRIPTION	STATION	DRAINAGE PLAN SHEET NO.	DRAINAGE SYSTEM NO. ⬡	DRAINAGE UNIT ◯
LF	LF	LF	LF	LF	LF	LF	LF	LF	LF	LF	LF	LF	LF	LF	FT	EA		LF	EA	EA	EA	EA	LF	EA	EA	CY	LF	EA	EA	LF	CY	EA	EA					
															10.0		S																	24" RCP		D-9	57	a
																																		TYPE G1 DI w/Depression	85.57' RT 283+99.2 "GE1"			b
															4.0		S																	18" RCP				c
																																		TYPE G1 DI w/Depression	82.2' RT 284+52.1 "GE1"			d
																														50.94				ABANDON 12" RCP				e
																												1						REMOVE DI				f
																														23.07				ABANDON 12" RCP				g
																												1						REMOVE DI				h
															6.5		S																	CONCRETE COLLAR	14.85' RT "CTRALWBON1" 290+17.60	D-9	58	a
																																		18" RCP				b
																																		TYPE OL DI	52.88' RT "CENTRAL" 19+01.39			c
									110.8						7.0		S																	12" AP TYPE B				d
																																		TYPE OMP DI w/Apron	70.04' LT "CTRALWBON1" 288+53.52			e
									157.0						5.0		S																	12" AP TYPE B				f
																																		TYPE OMP DI w/Apron	56.40' LT "CTRALWBON1" 286+97.60			g
									180.3						4.0		S																	12" AP TYPE B				h
																																		TYPE OMP DI w/Apron	45.50' LT "CTRALWBON1" 285+13.27			i
																												1						REMOVE DI				j
																											19.6							REMOVE 18" RCP				k
																																		JUNCTION STRUCTURE	14.75' RT "CENTRAL1" 20+99.46	D-9	59	a
															14.0		S																	24" RCP				b
																																		TYPE 405 DI	36.42' LT "CENTRAL1" 21+54.34			c
															8.0		S																	24" RCP				d
				8.0																														CMP RISER, TYPE A				e
																																		CONCRETE COLLAR	4' LT "CTRALWBOF1" 290+32.16	D-9	60	a
															6.0		S																	18" RCP				b
																																		TYPE GO DI w/Depression	40.91' LT "CTRALWBOF1" 290+59.87			c
																												1						REMOVE DI				d
				8.0					448.1																		19.6	4		74.01			SHEET TOTALS				

THIS PLAN ACCURATE FOR DRAINAGE WORK ONLY.

DRAINAGE QUANTITIES
DQ-28

REVISED BY | DATE REVISED

CALCULATED-DESIGNED BY: MOHAMMAD ABDRABOH
CHECKED BY: ALAN R. BISI
FUNCTIONAL SUPERVISOR: MARK PERTILE

STATE OF CALIFORNIA - DEPARTMENT OF TRANSPORTATION
Caltrans® DESIGN

LAST REVISION 03-29-11 | DATE PLOTTED => 29-APR-2011 | TIME PLOTTED => 18:12

Dist	COUNTY	ROUTE	POST MILES TOTAL PROJECT	SHEET No.	TOTAL SHEETS
08	Riv	91	15.6/21.6	358	2028

REGISTERED CIVIL ENGINEER 3-29-10 DATE

4-25-11
PLANS APPROVAL DATE

REGISTERED PROFESSIONAL ENGINEER ALAN R. BISI No. C62808 Exp. 6-30-12 CIVIL STATE OF CALIFORNIA

THE STATE OF CALIFORNIA OR ITS OFFICERS OR AGENTS SHALL NOT BE RESPONSIBLE FOR THE ACCURACY OR COMPLETENESS OF SCANNED COPIES OF THIS PLAN SHEET.

ALTERNATIVE PIPE
ALLOWABLE PIPE MATERIAL AND PROTECTION

DESIGNATION	RCP	CSP (2-2/3"x½")			SSRP (3/4"x1" @ 11-1/2" PITCH)			PPC(C)	PPC(D,S)
	SIZE (INCH)	SIZE (INCH)	BITUM. COAT. THICKNESS	PA/PS THICKNESS	SIZE (INCH)	BITUM. COAT. THICKNESS	PA/PS THICKNESS	SIZE (INCH)	SIZE (INCH)
6" APC									6
12" APC TYPE A		12	0.064"	0.052"				12	
12" APC TYPE B					12	0.064"	0.052"		12
12" APC TYPE C	12				12	0.064"	0.052"		12
18" APC TYPE A	18	18	0.064"	0.052"	18	0.064"	0.052"		
18" APC TYPE B	18	18	0.064"	0.052"				18	
18" APC TYPE C		18	0.064"	0.052"				18	
18" APC TYPE D	18				18	0.064"	0.052"		
18" APC TYPE E	18	18	0.064"	0.052"				18	18
18" APC TYPE F	18								18
24" APC		24	0.079"	0.064"				24	
30" APC	30				30	0.079"	0.064"		30
30"x10" ARCH		30x10	0.079"	0.064"	30x10	0.079"	0.064"		
48" APC		48	0.079"	0.064"					

LEGENDS AND ABBREVIATIONS

S - STANDARD JOINT TYPE
P - POSITIVE JOINT TYPE
D - DOWNDRAIN JOINT TYPE
RCP - REINFORCED CONCRETE PIPE
PPC(C) - PASTIC PIPE CULVERT, TYPE C (CORRUGATED INTERIOR WALL)
PPC(D,S) - PLASTIC PIPE CULVERT, TYPE D OR S (SMOOTH INTERIOR WALL)
CSP - CORRUGATED STEEL PIPE
SSRP - STEEL SPIRAL RIBBED PIPE
GA. - GAUGE
BITUM. - BITUMINOUS
PA - POLYMERIZED ASPHALT
PS - POLYMERIC SHEET
w/ - WITH
Ω - SEE DRAINAGE DETAIL

Notes:

1. SUFFICIENT SPACE WAS NOT AVALABLE TO LIST ALL DRAINAGE ITEMS WITHIN A SINGLE TABLE ON A SHEET BORDER, THEREFORE THE LISTING OF THE FIRST GROUPING OF DRAINAGE ITEMS ARE REPEATED ON THE ODD NUMBERED ID CODE SHEETS (DQ-1, DQ-3, ETC.) AND THE LISTINGS OF THE REMAINING GROUP OF DRAINAGE ITEMS ARE REPEATED ON THE EVEN NUMBERED ID CODE SHEETS (DQ-2, DQ-4, ETC.).
2. THE PRECISE DETERMINATION OF THE FOLLOWING ITEMS WILL BE MADE BY THE ENGINEER IN THE FIELD: STATION, SKEW, LENGTH, FL ELEVATION, AND DEPTH OF STRUCTURE.
3. (N) - NOT A SEPARATE PAY ITEM; FOR INFORMATION ONLY.
4. * - SEE ROADWAY QUANTITIES FOR DRAINAGE ITEM TOTAL

DITCH EXCAVATION	CONCRETE (CHANNEL LINING)	STRUCTURAL CONCRETE, BOX CULVERT	MINOR CONCRETE (MINOR STRUCTURE)	MINOR CONCRETE (MISC. CONSTRUCTION)	CL. IV CONCRETE (BACKFILL) *	HMA-A *	PLACE AC (MISC. AREA) *	MISC. IRON AND STEEL	BAR REINFORCING STEEL	RSP: ¼-TON, METHOD B	RSP: FACING, METHOD B	RSP: NO. 2 BACKING, METHOD B	RSP: RSP FABRIC	FRAMES, GRATES AND COVERS: 24-12 (N)	24-13 (N)	¼" SOLID STEEL COVER (N)	12" X 12" PRECAST INLET	12" X 12" STEEL GRATE (TRAFFIC RATED)	DEBRIS RACK (N)	MANHOLE COVER (N)	MANHOLE COVER-PRESSURE LOCKING (N)	36" PRECAST MANHOLE SHAFT		MANHOLE SHAFT PIPE REDUCER	HEIGHT OF MANHOLE (N)	HEIGHT OF INLET "H" (N)	DRAINAGE INLET MARKER *	CONCRETE COLLAR (N)	RCP: 12" RCP	15" RCP	18" RCP	24" RCP	30" RCP	36" RCP	48" RCP	54" RCP	60" RCP (CL. V SPECIAL)	DESCRIPTION	STATION	DRAINAGE PLAN SHEET NO.	DRAINAGE SYSTEM NO. ⬡	DRAINAGE UNIT ◯
CY	CY	CY	CY	CY	CY	ton	yd²	lb	lb	CY	CY	CY	yd²	EA	EA	EA	EA	EA	EA	EA	EA	LF		EA	FT	FT	EA	EA	LF	LF	LF	LF	LF	LF	LF	LF	LF					
											11.4		21.4																									RSP		D-9	61	a
			0.91																																			HEADWALL	19.45' RT "CTRALWBOF1" 291+46.21			b
																															52.1							18" RCP				c
			1.50					263						1												4.5	1											TYPE G1 DI	32.94' LT "CTRALWBOF1" 291+61.86			d
																															6.1							18" RCP				e
			1.50					263						1												5.1	1											TYPE G1 DI	32.22' LT "CTRALWBOF1" 291+71.87			f
											7.2		14.5																									RSP		D-9	62	a
127.00	20.40																																					CONCRETE DITCH	14.83' RT "CTRALWBOF1" 294+25			b
			0.91																																			HEADWALL				c
																															105.9							18" RCP				d
			1.20	1.60				326						1												6.0												TYPE G1 DI w/Depression	1.3' LT "CTRALWBOF1" 295+35.19			e
																												1										CONCRETE COLLAR	33.90' RT "CTRLEBOFF2" 291+68.17	D-9	63	a
																															19.0							18" RCP				b
			2.84					188							1											3.0	1											TYPE GOL DI	55.65' RT "CTRLEBOFF2" 291+72.14			c
																												1										CONCRETE COLLAR	80.56' RT "CTRALEBON1" 293+85.47	D-9	64	a
																															28.0							18" RCP				b
			6.40					188							1											10.4	1											TYPE GOL DI w/Depression	74.85' RT "CTRALEBON1" 294+13.26			c
																															83.0							18" RCP				d
			1.50					326											1							7.7												TYPE GO DI	7.0' LT "CTRALEBON1" 294+05.00			e
																																						REMOVE 12" RCP				f
																																						REMOVE DI				g
																																						REMOVE DI				h
																																						REMOVE PIPE				i
																																						REMOVE DI				j
																																						REMOVE PIPE				k
127.00	20.40		16.76	1.60				1554			18.6		35.9	3	2				1								4	2			294.1							SHEET TOTALS				

THIS PLAN ACCURATE FOR DRAINAGE WORK ONLY.

DRAINAGE QUANTITIES
DQ-29

REVISED BY | DATE REVISED

CALCULATED-DESIGNED BY: MOHAMMAD ABDRABOH
CHECKED BY: ALAN R. BISI
FUNCTIONAL SUPERVISOR: MARK PERTILE

STATE OF CALIFORNIA - DEPARTMENT OF TRANSPORTATION
Caltrans
DESIGN

LAST REVISION 03-29-11 | DATE PLOTTED => 11-JUL-2011 | TIME PLOTTED => 12:39

Dist	COUNTY	ROUTE	POST MILES TOTAL PROJECT	SHEET No.	TOTAL SHEETS
08	Riv	91	15.6/21.6	359	2028

REGISTERED CIVIL ENGINEER 3-29-10 DATE

4-25-11
PLANS APPROVAL DATE

REGISTERED PROFESSIONAL ENGINEER ALAN R. BISI No. C62808 Exp. 6-30-12 CIVIL STATE OF CALIFORNIA

THE STATE OF CALIFORNIA OR ITS OFFICERS OR AGENTS SHALL NOT BE RESPONSIBLE FOR THE ACCURACY OR COMPLETENESS OF SCANNED COPIES OF THIS PLAN SHEET.

ALTERNATIVE PIPE ALLOWABLE PIPE MATERIAL AND PROTECTION

DESIGNATION	RCP	CSP (2-2/3"x½")			SSRP (3/4"x1" @ 11-1/2" PITCH)			PPC(C)	PPC(D,S)
	SIZE (INCH)	SIZE (INCH)	BITUM. COAT. THICKNESS	PA/PS THICKNESS	SIZE (INCH)	BITUM. COAT. THICKNESS	PA/PS THICKNESS	SIZE (INCH)	SIZE (INCH)
6" APC									6
12" APC TYPE A		12	0.064"	0.052"				12	
12" APC TYPE B					12	0.064"	0.052"		12
12" APC TYPE C	12				12	0.064"	0.052"		12
18" APC TYPE A	18	18	0.064"	0.052"	18	0.064"	0.052"		
18" APC TYPE B	18	18	0.064"	0.052"				18	
18" APC TYPE C		18	0.064"	0.052"				18	
18" APC TYPE D	18				18	0.064"	0.052"		
18" APC TYPE E	18	18	0.064"	0.052"				18	18
18" APC TYPE F	18								18
24" APC		24	0.079"	0.064"				24	
30" APC	30				30	0.079"	0.064"		30
30"x10" ARCH		30x10	0.079"	0.064"	30x10	0.079"	0.064"		
48" APC		48	0.079"	0.064"					

LEGENDS AND ABBREVIATIONS

S - STANDARD JOINT TYPE
P - POSITIVE JOINT TYPE
D - DOWNDRAIN JOINT TYPE
RCP - REINFORCED CONCRETE PIPE
PPC(C) - PASTIC PIPE CULVERT, TYPE C (CORRUGATED INTERIOR WALL)
PPC(D,S) - PLASTIC PIPE CULVERT, TYPE D OR S (SMOOTH INTERIOR WALL)
CSP - CORRUGATED STEEL PIPE
CAP - CORRUGATED ALUMINUM PIPE
SSRP - STEEL SPIRAL RIBBED PIPE
GA. - GAUGE
BITUM. - BITUMINOUS
PA - POLYMERIZED ASPHALT
PS - POLYMERIC SHEET
w/ - WITH
Ω - SEE DRAINAGE DETAIL

Notes:

1. SUFFICIENT SPACE WAS NOT AVALABLE TO LIST ALL DRAINAGE ITEMS WITHIN A SINGLE TABLE ON A SHEET BORDER, THEREFORE THE LISTING OF THE FIRST GROUPING OF DRAINAGE ITEMS ARE REPEATED ON THE ODD NUMBERED ID CODE SHEETS (DQ-1, DQ-3, ETC.) AND THE LISTINGS OF THE REMAINING GROUP OF DRAINAGE ITEMS ARE REPEATED ON THE EVEN NUMBERED ID CODE SHEETS (DQ-2, DQ-4, ETC.).
2. THE PRECISE DETERMINATION OF THE FOLLOWING ITEMS WILL BE MADE BY THE ENGINEER IN THE FIELD: STATION, SKEW, LENGTH, FL ELEVATION, AND DEPTH OF STRUCTURE.
3. (N) - NOT A SEPARATE PAY ITEM; FOR INFORMATION ONLY.
4. * - SEE ROADWAY QUANTITIES FOR DRAINAGE ITEM TOTAL

CSP 12" (14 GA.) LF	CSP 18" (14 GA.) LF	CSP 36" (10 GA.) LF	CSP 12" RISER (14 GA.) LF	CSP 48" RISER (10 GA.) LF	CSP 18" SLOTTED PIPE (14 GA.) LF	CSP 21" SLOTTED PIPE (14 GA.) LF	CSP 24" SLOTTED PIPE (14 GA.) LF	ALTERNATIVE PIPE 6" AP (TYPE __) LF	ALTERNATIVE PIPE 12" AP (TYPE __) LF	ALTERNATIVE PIPE 18" AP (TYPE __) LF	ALTERNATIVE PIPE 24" AP (TYPE __) LF	ALTERNATIVE PIPE 30" AP (TYPE __) LF	ALTERNATIVE PIPE 48" AP (TYPE __) LF	ALTERNATIVE PIPE 30" X 10" AP ARCH PIPE (TYPE __) LF	MAXIMUM COVER (N) FT	ELBOW (N) EA	PIPE JOINT CLASSIFICATION	8" GALVANIZED STEEL PIPE LF	8" GATE VALVE w/ SLEEVE & COVER EA	AFES 12" AFES EA	PIPE RISER 8" AP SLIPJOINT (N) EA	PIPE RISER 12" AP SLIPJOINT (N) EA	CABLE RAILING LF	ADJUST INLET EA	MODIFY INLET EA	REMOVAL/ABANDON PAY ITEMS REMOVE CONCRETE CY	REMOVE PIPE LF	REMOVE INLET EA	ABANDON INLET EA	ABANDON PIPE LF	SAND BACKFILL CY	CAP RISER EA	CAP INLET EA	DESCRIPTION	STATION	DRAINAGE PLAN SHEET NO.	DRAINAGE SYSTEM NO. ⬡	DRAINAGE UNIT ◯
																																RSP		D-9	61	a
															3.5		S															HEADWALL	19.45' RT "CTRALWBOF1" 291+46.21			b
																																18" RCP				c
															3.0		S															TYPE G1 DI	32.94' LT "CTRALWBOF1" 291+61.86			d
																																18" RCP				e
																																TYPE G1 DI	32.22' LT "CTRALWBOF1" 291+71.87			f
																																RSP		D-9	62	a
																																CONCRETE DITCH	14.83' RT "CTRALWBOF1" 294+25			b
															2.0		S															HEADWALL				c
																																18" RCP				d
																1																TYPE G1 DI w/Depression	1.3' LT "CTRALWBOF1" 295+35.19			e
															2.0		S															CONCRETE COLLAR	33.90' RT "CTRLEBOFF2" 291+68.17	D-9	63	a
																																18" RCP				b
																																TYPE GOL DI	55.65' RT "CTRLEBOFF2" 291+72.14			c
															7.0		S															CONCRETE COLLAR	80.56' RT "CTRALEBON1" 293+85.47	D-9	64	a
																																18" RCP				b
															8.0		S															TYPE GOL DI w/Depression	74.85' RT "CTRALEBON1" 294+13.26			c
																																18" RCP				d
																																TYPE GO DI	7.0' LT "CTRALEBON1" 294+05.00			e
																										85.0						REMOVE 12" RCP				f
																											1					REMOVE DI				g
																											1					REMOVE DI				h
															162.0																	REMOVE PIPE				i
																											1					REMOVE DI				j
															12.0																	REMOVE PIPE				k
																1										259.0	3					SHEET TOTALS				

THIS PLAN ACCURATE FOR DRAINAGE WORK ONLY.

DRAINAGE QUANTITIES
DQ-30

MOHAMMAD ABDRABOH — CALCULATED-DESIGNED BY
ALAN R. BISI — CHECKED BY
MARK PERTILE — FUNCTIONAL SUPERVISOR
REVISED BY — DATE REVISED

STATE OF CALIFORNIA - DEPARTMENT OF TRANSPORTATION
Caltrans® DESIGN

LAST REVISION 03-29-11 | DATE PLOTTED => 29-APR-2011 | TIME PLOTTED => 18:12

ALTERNATIVE PIPE
ALLOWABLE PIPE MATERIAL AND PROTECTION

DESIGNATION	RCP	CSP (2-2/3"x½")			SSRP (3/4"x1" @ 11-1/2" PITCH)			PPC(C)	PPC(D,S)
	SIZE (INCH)	SIZE (INCH)	BITUM. COAT. THICKNESS	PA/PS THICKNESS	SIZE (INCH)	BITUM. COAT. THICKNESS	PA/PS THICKNESS	SIZE (INCH)	SIZE (INCH)
6" APC									6
12" APC TYPE A		12	0.064"	0.052"				12	
12" APC TYPE B					12	0.064"	0.052"		12
12" APC TYPE C	12				12	0.064"	0.052"		12
18" APC TYPE A	18	18	0.064"	0.052"	18	0.064"	0.052"		
18" APC TYPE B	18	18	0.064"	0.052"				18	
18" APC TYPE C		18	0.064"	0.052"				18	
18" APC TYPE D	18				18	0.064"	0.052"		
18" APC TYPE E	18	18	0.064"	0.052"				18	18
18" APC TYPE F	18								18
24" APC		24	0.079"	0.064"				24	
30" APC	30				30	0.079"	0.064"		30
30"x10" ARCH		30x10	0.079"	0.064"	30x10	0.079"	0.064"		
48" APC		48	0.079"	0.064"					

LEGENDS AND ABBREVIATIONS

S - STANDARD JOINT TYPE
P - POSITIVE JOINT TYPE
D - DOWNDRAIN JOINT TYPE
RCP - REINFORCED CONCRETE PIPE
PPC(C) - PASTIC PIPE CULVERT, TYPE C (CORRUGATED INTERIOR WALL)
PPC(D,S) - PLASTIC PIPE CULVERT, TYPE D OR S (SMOOTH INTERIOR WALL)
CSP - CORRUGATED STEEL PIPE
SSRP - STEEL SPIRAL RIBBED PIPE
GA. - GAUGE
BITUM. - BITUMINOUS
PA - POLYMERIZED ASPHALT
PS - POLYMERIC SHEET
w/ - WITH
Ω - SEE DRAINAGE DETAIL

Notes:

1. SUFFICIENT SPACE WAS NOT AVALABLE TO LIST ALL DRAINAGE ITEMS WITHIN A SINGLE TABLE ON A SHEET BORDER, THEREFORE THE LISTING OF THE FIRST GROUPING OF DRAINAGE ITEMS ARE REPEATED ON THE ODD NUMBERED ID CODE SHEETS (DQ-1, DQ-3, ETC.) AND THE LISTINGS OF THE REMAINING GROUP OF DRAINAGE ITEMS ARE REPEATED ON THE EVEN NUMBERED ID CODE SHEETS (DQ-2, DQ-4, ETC.).
2. THE PRECISE DETERMINATION OF THE FOLLOWING ITEMS WILL BE MADE BY THE ENGINEER IN THE FIELD: STATION, SKEW, LENGTH, FL ELEVATION, AND DEPTH OF STRUCTURE.
3. (N) - NOT A SEPARATE PAY ITEM; FOR INFORMATION ONLY.
4. * - SEE ROADWAY QUANTITIES FOR DRAINAGE ITEM TOTAL

Dist	COUNTY	ROUTE	POST MILES TOTAL PROJECT	SHEET No.	TOTAL SHEETS
08	Riv	91	15.6/21.6	360	2028

REGISTERED CIVIL ENGINEER 4-11-10 DATE

4-25-11
PLANS APPROVAL DATE

REGISTERED PROFESSIONAL ENGINEER ALAN R. BISI No. C62808 Exp. 6-30-12 CIVIL STATE OF CALIFORNIA

THE STATE OF CALIFORNIA OR ITS OFFICERS OR AGENTS SHALL NOT BE RESPONSIBLE FOR THE ACCURACY OR COMPLETENESS OF SCANNED COPIES OF THIS PLAN SHEET.

DITCH EXCAVATION CY	CONCRETE (CHANNEL LINING) CY	STRUCTURAL CONCRETE, BOX CULVERT CY	MINOR CONCRETE (MINOR STRUCTURE) CY	MINOR CONCRETE (MISC. CONSTRUCTION) CY	CI. IV CONCRETE (BACKFILL) * CY	HMA-A * ton	PLACE AC (MISC. AREA) * yd²	MISC. IRON AND STEEL lb	BAR REINFORCING STEEL lb	RSP ¼-TON, METHOD B CY	RSP FACING, METHOD B CY	RSP NO. 2 BACKING, METHOD B CY	RSP FABRIC yd²	FRAMES, GRATES AND COVERS 24-12 (N) EA	24-13 (N) EA	¼" SOLID STEEL COVER (N) EA	12" X 12" PRECAST INLET EA	12" X 12" STEEL GRATE (TRAFFIC RATED) EA	DEBRIS RACK (N) EA	MANHOLE COVER (N) EA	MANHOLE COVER-PRESSURE LOCKING (N) EA	36" PRECAST MANHOLE SHAFT LF	[ ]	MANHOLE SHAFT PIPE REDUCER EA	HEIGHT OF MANHOLE (N) FT	HEIGHT OF INLET "H" (N) FT	DRAINAGE INLET MARKER * EA	CONCRETE COLLAR (N) EA	RCP 12" RCP LF	15" RCP LF	18" RCP LF	24" RCP LF	30" RCP LF	36" RCP LF	48" RCP LF	54" RCP LF	60" RCP (CL. V SPECIAL) LF	DESCRIPTION	STATION	DRAINAGE PLAN SHEET NO.	DRAINAGE SYSTEM NO. ⬡	DRAINAGE UNIT ◯
			4.80																																				JUNCTION STRUCTURE	14.75' RT "CENTRAL1" 25+92.69	D-9	65	a
																															75.0								18" RCP				b
			1.60					235												1						4.0	1											TYPE 405 DI	47.39' LT "CENTRAL1" 26+36.20			c
		4.80							962																													WARPED WINGWALL w/ CABLE RAIL	56.89' RT "CTRALEBON1" 295+67.11	D-9	66	a
		32.80							6642																													8' X 4' RCB				b
																																						Remvoe HW				c
																																						Abandon 24" RCP				d
																																						Abandon 36" RCP				e
		0.50							25.0																													JUNCTION STRUCTURE	52.61' Rt. 295+78.9 "CTRALEBON1"	D-10	67	a
																															208.2								18" RCP				b
			1.20																																			TRANSITION STRUCTURE	47.70' Rt. 7+91.06 "CTRALEBON1"			c
																															201.6								18" RCP				d
		0.45							47.0																													JUNCTION STRUCTURE	47.18' Rt. 299+96.78 "CTRALEBON1"			e
3095.00		791.00							119210																													CONCRETE CHANNEL				f
																															86.7								18" RCP		D-10	68	a
			1.60	1.30				326						1												4.5												TYPE G1 DI w/Depression	13.11' LT "CTRLEBON1" 298+52.32			b
																															68.3								18" RCP				c
			1.60	1.30				326						1												3.0												TYPE G1 DI w/Depression	18.56' LT "CTRLEBON1" 297+80.32			d
																																						System Not Used		D-10	69	
3095.00		829.55	10.80	2.60				887	126886					2						1							1				639.8								SHEET TOTALS				

THIS PLAN ACCURATE FOR DRAINAGE WORK ONLY.

DRAINAGE QUANTITIES
DQ-31

REVISED BY | DATE REVISED

CALCULATED-DESIGNED BY: MOHAMMAD ABDRABOH
CHECKED BY: ALAN R. BISI
FUNCTIONAL SUPERVISOR: MARK PERTILE

STATE OF CALIFORNIA - DEPARTMENT OF TRANSPORTATION
Caltrans
DESIGN

LAST REVISION 04-11-11 | DATE PLOTTED => 11-JUL-2011 | TIME PLOTTED => 12:39

Dist	COUNTY	ROUTE	POST MILES TOTAL PROJECT	SHEET No.	TOTAL SHEETS
08	Riv	91	15.6/21.6	361	2028

REGISTERED CIVIL ENGINEER 3-29-10 DATE

4-25-11
PLANS APPROVAL DATE

REGISTERED PROFESSIONAL ENGINEER ALAN R. BISI No. C62808 Exp. 6-30-12 CIVIL STATE OF CALIFORNIA

THE STATE OF CALIFORNIA OR ITS OFFICERS OR AGENTS SHALL NOT BE RESPONSIBLE FOR THE ACCURACY OR COMPLETENESS OF SCANNED COPIES OF THIS PLAN SHEET.

ALTERNATIVE PIPE ALLOWABLE PIPE MATERIAL AND PROTECTION

DESIGNATION	RCP	CSP (2-2/3"x½")			SSRP (3/4"x1" @ 11-1/2" PITCH)			PPC(C)	PPC(D,S)
	SIZE (INCH)	SIZE (INCH)	BITUM. COAT. THICKNESS	PA/PS THICKNESS	SIZE (INCH)	BITUM. COAT. THICKNESS	PA/PS THICKNESS	SIZE (INCH)	SIZE (INCH)
6" APC									6
12" APC TYPE A		12	0.064"	0.052"				12	
12" APC TYPE B					12	0.064"	0.052"		12
12" APC TYPE C	12				12	0.064"	0.052"		12
18" APC TYPE A	18	18	0.064"	0.052"	18	0.064"	0.052"		
18" APC TYPE B	18	18	0.064"	0.052"				18	
18" APC TYPE C		18	0.064"	0.052"				18	
18" APC TYPE D	18				18	0.064"	0.052"		
18" APC TYPE E	18	18	0.064"	0.052"				18	18
18" APC TYPE F	18								18
24" APC		24	0.079"	0.064"				24	
30" APC	30				30	0.079"	0.064"		30
30"x10" ARCH		30x10	0.079"	0.064"	30x10	0.079"	0.064"		
48" APC		48	0.079"	0.064"					

LEGENDS AND ABBREVIATIONS

S - STANDARD JOINT TYPE
P - POSITIVE JOINT TYPE
D - DOWNDRAIN JOINT TYPE
RCP - REINFORCED CONCRETE PIPE
PPC(C) - PASTIC PIPE CULVERT, TYPE C (CORRUGATED INTERIOR WALL)
PPC(D,S) - PLASTIC PIPE CULVERT, TYPE D OR S (SMOOTH INTERIOR WALL)
CSP - CORRUGATED STEEL PIPE
CAP - CORRUGATED ALUMINUM PIPE
SSRP - STEEL SPIRAL RIBBED PIPE
GA. - GAUGE
BITUM. - BITUMINOUS
PA - POLYMERIZED ASPHALT
PS - POLYMERIC SHEET
w/ - WITH
Ω - SEE DRAINAGE DETAIL

Notes:

1. SUFFICIENT SPACE WAS NOT AVALABLE TO LIST ALL DRAINAGE ITEMS WITHIN A SINGLE TABLE ON A SHEET BORDER, THEREFORE THE LISTING OF THE FIRST GROUPING OF DRAINAGE ITEMS ARE REPEATED ON THE ODD NUMBERED ID CODE SHEETS (DQ-1, DQ-3, ETC.) AND THE LISTINGS OF THE REMAINING GROUP OF DRAINAGE ITEMS ARE REPEATED ON THE EVEN NUMBERED ID CODE SHEETS (DQ-2, DQ-4, ETC.).
2. THE PRECISE DETERMINATION OF THE FOLLOWING ITEMS WILL BE MADE BY THE ENGINEER IN THE FIELD: STATION, SKEW, LENGTH, FL ELEVATION, AND DEPTH OF STRUCTURE.
3. (N) - NOT A SEPARATE PAY ITEM; FOR INFORMATION ONLY.
4. * - SEE ROADWAY QUANTITIES FOR DRAINAGE ITEM TOTAL

CSP 12" (14 GA.) LF	CSP 18" (14 GA.) LF	CSP 36" (10 GA.) LF	CSP 12" RISER (14 GA.) LF	CSP 48" RISER (10 GA.) LF	CSP 18" SLOTTED PIPE (14 GA.) LF	CSP 21" SLOTTED PIPE (14 GA.) LF	CSP 24" SLOTTED PIPE (14 GA.) LF	ALTERNATIVE PIPE 6" AP (TYPE __) LF	ALTERNATIVE PIPE 12" AP (TYPE __) LF	ALTERNATIVE PIPE 18" AP (TYPE __) LF	ALTERNATIVE PIPE 24" AP (TYPE __) LF	ALTERNATIVE PIPE 30" AP (TYPE __) LF	ALTERNATIVE PIPE 48" AP (TYPE __) LF	ALTERNATIVE PIPE 30" X 10" AP ARCH PIPE (TYPE __) LF	MAXIMUM COVER (N) FT	ELBOW (N) EA	PIPE JOINT CLASSIFICATION	8" GALVANIZED STEEL PIPE LF	8" GATE VALVE w/ SLEEVE & COVER EA	AFES 12" AFES EA	PIPE RISER 8" AP SLIPJOINT (N) EA	PIPE RISER 12" AP SLIPJOINT (N) EA	CABLE RAILING LF	ADJUST INLET EA	MODIFY INLET EA	REMOVAL/ABANDON PAY ITEMS REMOVE CONCRETE CY	REMOVE PIPE LF	REMOVE INLET EA	ABANDON INLET EA	ABANDON PIPE LF	SAND BACKFILL CY	CAP RISER EA	CAP INLET EA	DESCRIPTION	STATION	DRAINAGE PLAN SHEET NO.	DRAINAGE SYSTEM NO. ⬡	DRAINAGE UNIT ◯
																																	JUNCTION STRUCTURE	14.75' RT "CENTRAL1" 25+92.69	D-9	65	a
															14.0		S																18" RCP				b
																																	TYPE 405 DI	47.39' LT "CENTRAL1" 26+36.20			c
																							21										WARPED WINGWALL w/ CABLE RAIL	56.89' RT "CTRALEBON1" 295+67.11	D-9	66	a
															2.0		S																8' X 4' RCB				b
																									4.3								Remvoe HW				c
																										41			20	2.5			Abandon 24" RCP				d
																										31			20	5.5			Abandon 36" RCP				e
																																	JUNCTION STRUCTURE	52.61' Rt. 295+78.9 "CTRALEBON1"	D-10	67	a
															3.0		S																18" RCP				b
																																	TRANSITION STRUCTURE	47.70' Rt. 7+91.06 "CTRALEBON1"			c
															5.0		S																18" RCP				d
																							21.0										JUNCTION STRUCTURE	47.18' Rt. 299+96.78 "CTRALEBON1"			e
																							613.0										CONCRETE CHANNEL				f
															4.0		S																18" RCP		D-10	68	a
																																	TYPE G1 DI w/Depression	13.11' LT "CTRLEBON1" 298+52.32			b
															3.0		S																18" RCP				c
																																	TYPE G1 DI w/Depression	18.56' LT "CTRLEBON1" 297+80.32			d
																																	System Not Used		D-10	69	
																							655.0		4.3	72			40	8			SHEET TOTALS				

THIS PLAN ACCURATE FOR DRAINAGE WORK ONLY.

DRAINAGE QUANTITIES
DQ-32

REVISED BY | DATE REVISED

CALCULATED-DESIGNED BY: MOHAMMAD ABDRABOH
CHECKED BY: ALAN R. BISI
FUNCTIONAL SUPERVISOR: MARK PERTILE

STATE OF CALIFORNIA - DEPARTMENT OF TRANSPORTATION
Caltrans® DESIGN

LAST REVISION 03-29-11 | DATE PLOTTED => 29-APR-2011 | TIME PLOTTED => 18:12

Dist	COUNTY	ROUTE	POST MILES TOTAL PROJECT	SHEET No.	TOTAL SHEETS
08	Riv	91	15.6/21.6	362	2028

REGISTERED CIVIL ENGINEER 3-29-10 DATE

4-25-11
PLANS APPROVAL DATE

REGISTERED PROFESSIONAL ENGINEER ALAN R. BISI No. C62808 Exp. 6-30-12 CIVIL STATE OF CALIFORNIA

THE STATE OF CALIFORNIA OR ITS OFFICERS OR AGENTS SHALL NOT BE RESPONSIBLE FOR THE ACCURACY OR COMPLETENESS OF SCANNED COPIES OF THIS PLAN SHEET.

ALTERNATIVE PIPE
ALLOWABLE PIPE MATERIAL AND PROTECTION

DESIGNATION	RCP	CSP (2-2/3"x½")			SSRP (3/4"x1" @ 11-1/2" PITCH)			PPC(C)	PPC(D,S)
	SIZE (INCH)	SIZE (INCH)	BITUM. COAT. THICKNESS	PA/PS THICKNESS	SIZE (INCH)	BITUM. COAT. THICKNESS	PA/PS THICKNESS	SIZE (INCH)	SIZE (INCH)
6" APC									6
12" APC TYPE A		12	0.064"	0.052"				12	
12" APC TYPE B					12	0.064"	0.052"		12
12" APC TYPE C	12				12	0.064"	0.052"		12
18" APC TYPE A	18	18	0.064"	0.052"	18	0.064"	0.052"		
18" APC TYPE B	18	18	0.064"	0.052"				18	
18" APC TYPE C		18	0.064"	0.052"				18	
18" APC TYPE D	18				18	0.064"	0.052"		
18" APC TYPE E	18	18	0.064"	0.052"				18	18
18" APC TYPE F	18								18
24" APC		24	0.079"	0.064"				24	
30" APC	30				30	0.079"	0.064"		30
30"x10" ARCH		30x10	0.079"	0.064"	30x10	0.079"	0.064"		
48" APC		48	0.079"	0.064"					

LEGENDS AND ABBREVIATIONS

S - STANDARD JOINT TYPE
P - POSITIVE JOINT TYPE
D - DOWNDRAIN JOINT TYPE
RCP - REINFORCED CONCRETE PIPE
PPC(C) - PASTIC PIPE CULVERT, TYPE C (CORRUGATED INTERIOR WALL)
PPC(D,S) - PLASTIC PIPE CULVERT, TYPE D OR S (SMOOTH INTERIOR WALL)
CSP - CORRUGATED STEEL PIPE
SSRP - STEEL SPIRAL RIBBED PIPE
GA. - GAUGE
BITUM. - BITUMINOUS
PA - POLYMERIZED ASPHALT
PS - POLYMERIC SHEET
w/ - WITH
Ω - SEE DRAINAGE DETAIL

Notes:

1. SUFFICIENT SPACE WAS NOT AVALABLE TO LIST ALL DRAINAGE ITEMS WITHIN A SINGLE TABLE ON A SHEET BORDER, THEREFORE THE LISTING OF THE FIRST GROUPING OF DRAINAGE ITEMS ARE REPEATED ON THE ODD NUMBERED ID CODE SHEETS (DQ-1, DQ-3, ETC.) AND THE LISTINGS OF THE REMAINING GROUP OF DRAINAGE ITEMS ARE REPEATED ON THE EVEN NUMBERED ID CODE SHEETS (DQ-2, DQ-4, ETC.).
2. THE PRECISE DETERMINATION OF THE FOLLOWING ITEMS WILL BE MADE BY THE ENGINEER IN THE FIELD: STATION, SKEW, LENGTH, FL ELEVATION, AND DEPTH OF STRUCTURE.
3. (N) - NOT A SEPARATE PAY ITEM; FOR INFORMATION ONLY.
4. * - SEE ROADWAY QUANTITIES FOR DRAINAGE ITEM TOTAL

DITCH EXCAVATION	CONCRETE (CHANNEL LINING)	STRUCTURAL CONCRETE, BOX CULVERT	MINOR CONCRETE (MINOR STRUCTURE)	MINOR CONCRETE (MISC. CONSTRUCTION)	CL. IV CONCRETE (BACKFILL) *	HMA-A *	PLACE AC (MISC. AREA) *	MISC. IRON AND STEEL	BAR REINFORCING STEEL	RSP: ¼-TON, METHOD B	RSP: FACING, METHOD B	RSP: NO. 2 BACKING, METHOD B	RSP: RSP FABRIC	FRAMES, GRATES AND COVERS: 24-12 (N)	24-13 (N)	¼" SOLID STEEL COVER (N)	12" X 12" PRECAST INLET	12" X 12" STEEL GRATE (TRAFFIC RATED)	DEBRIS RACK (N)	MANHOLE COVER (N)	MANHOLE COVER-PRESSURE LOCKING (N)	36" PRECAST MANHOLE SHAFT		MANHOLE SHAFT PIPE REDUCER	HEIGHT OF MANHOLE (N)	HEIGHT OF INLET "H" (N)	DRAINAGE INLET MARKER *	CONCRETE COLLAR (N)	RCP: 12" RCP	15" RCP	18" RCP	24" RCP	30" RCP	36" RCP	48" RCP	54" RCP	60" RCP (CL. V SPECIAL)	DESCRIPTION	STATION	DRAINAGE PLAN SHEET NO.	DRAINAGE SYSTEM NO. ⬡	DRAINAGE UNIT ◯
CY	CY	CY	CY	CY	CY	ton	yd²	lb	lb	CY	CY	CY	yd²	EA	EA	EA	EA	EA	EA	EA	EA	LF		EA	FT	FT	EA	EA	LF	LF	LF	LF	LF	LF	LF	LF	LF					
																																						REMOVE HEADWALL		D-10	70	a
																																						REMOVE 12" RCP				b
																																						REMOVE DI				c
		0.50							25.0																													JUNCTION STRUCTURE	37.69' RT "CTRLEBON1" 300+66.35	D-10	71	a
																																	9.1					30" RCP				b
																												1										CONCRETE COLLAR	27.37' RT "CTRLEBON1" 300+66.85			c
																																						REMOVE HEADWALL				d
																																						System Not Used		D-10	72	
277.10	110.00																																					CONCRETE DITCH	WB FROM 302+00 TO 312+63	D-10	73	a
			0.95	1.20				326						1																								G1 DI w/Depression	88.28' LT "GE1" 304+25.97	D-10	74	a
																																87.5						24" RCP				b
																																						ABANDON 18" RCP				c
																																						REMOVE DI				d
			0.95	1.20				326						1																								G1 DI w/Depression	86.74' LT "GE1" 307+08.85	D-10	75	a
																															28.4							18" RCP				b
			0.95	1.20				326						1																								G1 DI w/Depression	87.14' LT "GE1" 306+76.78			c
																																86.9						24" RCP				d
																																						REMOVE DI				e
																																						ABANDON 18" RCP				f
																																						ABANDON 12" RCP				g
																																						REMOVE DI				h
277.10	110.00	0.50	2.85	3.60				978	25.0					3														1			28.4	174.4	9.1					SHEET TOTALS				

DRAINAGE QUANTITIES
DQ-33

THIS PLAN ACCURATE FOR DRAINAGE WORK ONLY.

REVISED BY | DATE REVISED
CALCULATED-DESIGNED BY: MOHAMMAD ABDRABOH
CHECKED BY: ALAN R. BISI
FUNCTIONAL SUPERVISOR: MARK PERTILE
STATE OF CALIFORNIA - DEPARTMENT OF TRANSPORTATION
Caltrans DESIGN

LAST REVISION 03-29-11 | DATE PLOTTED => 11-JUL-2011 | TIME PLOTTED => 12:39

Dist	COUNTY	ROUTE	POST MILES TOTAL PROJECT	SHEET No.	TOTAL SHEETS
08	Riv	91	15.6/21.6	363	2028

REGISTERED CIVIL ENGINEER 3-29-10 DATE

4-25-11
PLANS APPROVAL DATE

REGISTERED PROFESSIONAL ENGINEER ALAN R. BISI No. C62808 Exp. 6-30-12 CIVIL STATE OF CALIFORNIA

THE STATE OF CALIFORNIA OR ITS OFFICERS OR AGENTS SHALL NOT BE RESPONSIBLE FOR THE ACCURACY OR COMPLETENESS OF SCANNED COPIES OF THIS PLAN SHEET.

ALTERNATIVE PIPE ALLOWABLE PIPE MATERIAL AND PROTECTION

DESIGNATION	RCP	CSP (2-2/3"x½")			SSRP (3/4"x1" @ 11-1/2" PITCH)			PPC(C)	PPC(D,S)
	SIZE (INCH)	SIZE (INCH)	BITUM. COAT. THICKNESS	PA/PS THICKNESS	SIZE (INCH)	BITUM. COAT. THICKNESS	PA/PS THICKNESS	SIZE (INCH)	SIZE (INCH)
6" APC									6
12" APC TYPE A		12	0.064"	0.052"				12	
12" APC TYPE B					12	0.064"	0.052"		12
12" APC TYPE C	12				12	0.064"	0.052"		12
18" APC TYPE A	18	18	0.064"	0.052"	18	0.064"	0.052"		
18" APC TYPE B	18	18	0.064"	0.052"				18	
18" APC TYPE C		18	0.064"	0.052"				18	
18" APC TYPE D	18				18	0.064"	0.052"		
18" APC TYPE E	18	18	0.064"	0.052"				18	18
18" APC TYPE F	18								18
24" APC		24	0.079"	0.064"				24	
30" APC	30				30	0.079"	0.064"		30
30"x10" ARCH		30x10	0.079"	0.064"	30x10	0.079"	0.064"		
48" APC		48	0.079"	0.064"					

LEGENDS AND ABBREVIATIONS

S - STANDARD JOINT TYPE
P - POSITIVE JOINT TYPE
D - DOWNDRAIN JOINT TYPE
RCP - REINFORCED CONCRETE PIPE
PPC(C) - PASTIC PIPE CULVERT, TYPE C (CORRUGATED INTERIOR WALL)
PPC(D,S) - PLASTIC PIPE CULVERT, TYPE D OR S (SMOOTH INTERIOR WALL)
CSP - CORRUGATED STEEL PIPE
CAP - CORRUGATED ALUMINUM PIPE
SSRP - STEEL SPIRAL RIBBED PIPE
GA. - GAUGE
BITUM. - BITUMINOUS
PA - POLYMERIZED ASPHALT
PS - POLYMERIC SHEET
w/ - WITH
Ω - SEE DRAINAGE DETAIL

Notes:

1. SUFFICIENT SPACE WAS NOT AVALABLE TO LIST ALL DRAINAGE ITEMS WITHIN A SINGLE TABLE ON A SHEET BORDER, THEREFORE THE LISTING OF THE FIRST GROUPING OF DRAINAGE ITEMS ARE REPEATED ON THE ODD NUMBERED ID CODE SHEETS (DQ-1, DQ-3, ETC.) AND THE LISTINGS OF THE REMAINING GROUP OF DRAINAGE ITEMS ARE REPEATED ON THE EVEN NUMBERED ID CODE SHEETS (DQ-2, DQ-4, ETC.).
2. THE PRECISE DETERMINATION OF THE FOLLOWING ITEMS WILL BE MADE BY THE ENGINEER IN THE FIELD: STATION, SKEW, LENGTH, FL ELEVATION, AND DEPTH OF STRUCTURE.
3. (N) - NOT A SEPARATE PAY ITEM; FOR INFORMATION ONLY.
4. * - SEE ROADWAY QUANTITIES FOR DRAINAGE ITEM TOTAL

CSP 12" (14 GA.) LF	CSP 18" (14 GA.) LF	CSP 36" (10 GA.) LF	CSP 12" RISER (14 GA.) LF	CSP 48" RISER (10 GA.) LF	CSP 18" SLOTTED PIPE (14 GA.) LF	CSP 21" SLOTTED PIPE (14 GA.) LF	CSP 24" SLOTTED PIPE (14 GA.) LF	ALTERNATIVE PIPE 6" AP (TYPE __) LF	ALTERNATIVE PIPE 12" AP (TYPE __) LF	ALTERNATIVE PIPE 18" AP (TYPE __) LF	ALTERNATIVE PIPE 24" AP (TYPE __) LF	ALTERNATIVE PIPE 30" AP (TYPE __) LF	ALTERNATIVE PIPE 48" AP (TYPE __) LF	ALTERNATIVE PIPE 30" X 10" AP ARCH PIPE (TYPE __) LF	MAXIMUM COVER (N) FT	ELBOW (N) EA	PIPE JOINT CLASSIFICATION	8" GALVANIZED STEEL PIPE LF	8" GATE VALVE w/ SLEEVE & COVER EA	AFES 12" AFES EA	PIPE RISER 8" AP SLIPJOINT (N) EA	PIPE RISER 12" AP SLIPJOINT (N) EA	CABLE RAILING LF	ADJUST INLET EA	MODIFY INLET EA	REMOVAL/ABANDON PAY ITEMS REMOVE CONCRETE CY	REMOVE PIPE LF	REMOVE INLET EA	ABANDON INLET EA	ABANDON PIPE LF	SAND BACKFILL CY	CAP RISER EA	CAP INLET EA	DESCRIPTION	STATION	DRAINAGE PLAN SHEET NO.	DRAINAGE SYSTEM NO. ⬡	DRAINAGE UNIT ◯
																									1.2								REMOVE HEADWALL		D-10	70	a
																										48.5							REMOVE 12" RCP				b
																											1						REMOVE DI				c
																																	JUNCTION STRUCTURE	37.69' RT "CTRLEBON1" 300+66.35	D-10	71	a
															2.5		S																30" RCP				b
																																	CONCRETE COLLAR	27.37' RT "CTRLEBON1" 300+66.85			c
																									1.52								REMOVE HEADWALL				d
																																	System Not Used		D-10	72	
																																	CONCRETE DITCH	WB FROM 302+00 TO 312+63	D-10	73	a
															5.0		S																G1 DI w/Depression	88.28' LT "GE1" 304+25.97	D-10	74	a
																																	24" RCP				b
																													60.0	3.93			ABANDON 18" RCP				c
																											1						REMOVE DI				d
																																	G1 DI w/Depression	86.74' LT "GE1" 307+08.85	D-10	75	a
															3.0		S																18" RCP				b
																																	G1 DI w/Depression	87.14' LT "GE1" 306+76.78			c
															6.0		S																24" RCP				d
																											1						REMOVE DI				e
																													60.0	3.93			ABANDON 18" RCP				f
																													60.0	1.75			ABANDON 12" RCP				g
																											1						REMOVE DI				h
																									2.72	48.5	4		180.0	9.61			SHEET TOTALS				

THIS PLAN ACCURATE FOR DRAINAGE WORK ONLY.

DRAINAGE QUANTITIES
DQ-34

MOHAMMAD ABDRABOH — CALCULATED-DESIGNED BY
ALAN R. BISI — CHECKED BY
MARK PERTILE — FUNCTIONAL SUPERVISOR
REVISED BY — DATE REVISED
STATE OF CALIFORNIA - DEPARTMENT OF TRANSPORTATION
Caltrans® DESIGN

LAST REVISION 03-29-11 | DATE PLOTTED => 29-APR-2011 | TIME PLOTTED => 18:12

Dist	COUNTY	ROUTE	POST MILES TOTAL PROJECT	SHEET No.	TOTAL SHEETS
08	Riv	91	15.6/21.6	364	2028

REGISTERED CIVIL ENGINEER 3-29-10 DATE

4-25-11
PLANS APPROVAL DATE

REGISTERED PROFESSIONAL ENGINEER ALAN R. BISI No. C62808 Exp. 6-30-12 CIVIL STATE OF CALIFORNIA

THE STATE OF CALIFORNIA OR ITS OFFICERS OR AGENTS SHALL NOT BE RESPONSIBLE FOR THE ACCURACY OR COMPLETENESS OF SCANNED COPIES OF THIS PLAN SHEET.

ALTERNATIVE PIPE ALLOWABLE PIPE MATERIAL AND PROTECTION

DESIGNATION	RCP	CSP (2-2/3"x½")			SSRP (3/4"x1" @ 11-1/2" PITCH)			PPC(C)	PPC(D,S)
	SIZE (INCH)	SIZE (INCH)	BITUM. COAT. THICKNESS	PA/PS THICKNESS	SIZE (INCH)	BITUM. COAT. THICKNESS	PA/PS THICKNESS	SIZE (INCH)	SIZE (INCH)
6" APC									6
12" APC TYPE A		12	0.064"	0.052"				12	
12" APC TYPE B					12	0.064"	0.052"		12
12" APC TYPE C	12				12	0.064"	0.052"		12
18" APC TYPE A	18	18	0.064"	0.052"	18	0.064"	0.052"		
18" APC TYPE B	18	18	0.064"	0.052"				18	
18" APC TYPE C		18	0.064"	0.052"				18	
18" APC TYPE D	18				18	0.064"	0.052"		
18" APC TYPE E	18	18	0.064"	0.052"				18	18
18" APC TYPE F	18								18
24" APC		24	0.079"	0.064"				24	
30" APC	30				30	0.079"	0.064"		30
30"x10" ARCH		30x10	0.079"	0.064"	30x10	0.079"	0.064"		
48" APC		48	0.079"	0.064"					

LEGENDS AND ABBREVIATIONS

S - STANDARD JOINT TYPE
P - POSITIVE JOINT TYPE
D - DOWNDRAIN JOINT TYPE
RCP - REINFORCED CONCRETE PIPE
PPC(C) - PASTIC PIPE CULVERT, TYPE C (CORRUGATED INTERIOR WALL)
PPC(D,S) - PLASTIC PIPE CULVERT, TYPE D OR S (SMOOTH INTERIOR WALL)
CSP - CORRUGATED STEEL PIPE
SSRP - STEEL SPIRAL RIBBED PIPE
GA. - GAUGE
BITUM. - BITUMINOUS
PA - POLYMERIZED ASPHALT
PS - POLYMERIC SHEET
w/ - WITH
Ω - SEE DRAINAGE DETAIL

Notes:

1. SUFFICIENT SPACE WAS NOT AVALABLE TO LIST ALL DRAINAGE ITEMS WITHIN A SINGLE TABLE ON A SHEET BORDER, THEREFORE THE LISTING OF THE FIRST GROUPING OF DRAINAGE ITEMS ARE REPEATED ON THE ODD NUMBERED ID CODE SHEETS (DQ-1, DQ-3, ETC.) AND THE LISTINGS OF THE REMAINING GROUP OF DRAINAGE ITEMS ARE REPEATED ON THE EVEN NUMBERED ID CODE SHEETS (DQ-2, DQ-4, ETC.).
2. THE PRECISE DETERMINATION OF THE FOLLOWING ITEMS WILL BE MADE BY THE ENGINEER IN THE FIELD: STATION, SKEW, LENGTH, FL ELEVATION, AND DEPTH OF STRUCTURE.
3. (N) - NOT A SEPARATE PAY ITEM; FOR INFORMATION ONLY.
4. * - SEE ROADWAY QUANTITIES FOR DRAINAGE ITEM TOTAL

DITCH EXCAVATION	CONCRETE (CHANNEL LINING)	STRUCTURAL CONCRETE, BOX CULVERT	MINOR CONCRETE (MINOR STRUCTURE)	MINOR CONCRETE (MISC. CONSTRUCTION)	CL. IV CONCRETE (BACKFILL) *	HMA-A *	PLACE AC (MISC. AREA) *	MISC. IRON AND STEEL	BAR REINFORCING STEEL	RSP ¼-TON, METHOD B	RSP FACING, METHOD B	RSP NO. 2 BACKING, METHOD B	RSP FABRIC	FRAMES, GRATES AND COVERS 24-12 (N)	24-13 (N)	¼" SOLID STEEL COVER (N)	12" X 12" PRECAST INLET	12" X 12" STEEL GRATE (TRAFFIC RATED)	DEBRIS RACK (N)	MANHOLE COVER (N)	MANHOLE COVER-PRESSURE LOCKING (N)	36" PRECAST MANHOLE SHAFT		MANHOLE SHAFT PIPE REDUCER	HEIGHT OF MANHOLE (N)	HEIGHT OF INLET "H" (N)	DRAINAGE INLET MARKER *	CONCRETE COLLAR (N)	RCP 12" RCP	15" RCP	18" RCP	24" RCP	30" RCP	36" RCP	48" RCP	54" RCP	60" RCP (CL. V SPECIAL)	DESCRIPTION	STATION	DRAINAGE PLAN SHEET NO.	DRAINAGE SYSTEM NO. ⬡	DRAINAGE UNIT ◯
CY	CY	CY	CY	CY	CY	ton	yd²	lb	lb	CY	CY	CY	yd²	EA	EA	EA	EA	EA	EA	EA	EA	LF		EA	FT	FT	EA	EA	LF	LF	LF	LF	LF	LF	LF	LF	LF					
																												1										CONCRETE COLLAR	20.88' LT "IVY3" 7+35.91	D-11	76	a
																													33.3									12" RCP				b
			1.15					235												1						4.0												TYPE 405 DI	18.00' LT "IVY3" 6+96.40			c
																																						REMOVE DI				d
																																						6" AP		D-11	77	a
																	1	1																				12" X 12" GRATE INLET				b
																																						6" AP				c
																																						REMOVE DI				d
																	1	1																				12" X 12" GRATE INLET				e
																																						REMOVE PIPE				f
																											1											CONCRETE COLLAR	28.74' LT "RKHILL1" 8+20.61	D-11	78	a
																													35.4									12" RCP				b
			1.50					235												1						7.8												TYPE 405 DI	11.91' LT "RKHILL1" 8+50.84			c
																													20.0									12" RCP				d
			1.40					235												1						7.0												TYPE 405 DI	12.48' RT "RKHILL1" 8+50.84			e
																																						ABANDON 12" CMP				f
																																						ABANDON DI				g
																																						ABANDON 12" CMP				h
																																						ABANDON DI				i
			4.05					705									2	2		3								2	88.7									SHEET TOTALS				

THIS PLAN ACCURATE FOR DRAINAGE WORK ONLY.

DRAINAGE QUANTITIES
DQ-35

STATE OF CALIFORNIA - DEPARTMENT OF TRANSPORTATION
Caltrans DESIGN

FUNCTIONAL SUPERVISOR: MARK PERTILE
CALCULATED-DESIGNED BY: MOHAMMAD ABDRABOH
CHECKED BY: ALAN R. BISI
REVISED BY
DATE REVISED

LAST REVISION 03-29-11
DATE PLOTTED => 11-JUL-2011
TIME PLOTTED => 12:40

Dist	COUNTY	ROUTE	POST MILES TOTAL PROJECT	SHEET No.	TOTAL SHEETS
08	Riv	91	15.6/21.6	365	2028

REGISTERED CIVIL ENGINEER 3-29-10 DATE

4-25-11
PLANS APPROVAL DATE

REGISTERED PROFESSIONAL ENGINEER ALAN R. BISI No. C62808 Exp. 6-30-12 CIVIL STATE OF CALIFORNIA

THE STATE OF CALIFORNIA OR ITS OFFICERS OR AGENTS SHALL NOT BE RESPONSIBLE FOR THE ACCURACY OR COMPLETENESS OF SCANNED COPIES OF THIS PLAN SHEET.

ALTERNATIVE PIPE ALLOWABLE PIPE MATERIAL AND PROTECTION

DESIGNATION	RCP	CSP (2-2/3"x½")			SSRP (3/4"x1" @ 11-1/2" PITCH)			PPC(C)	PPC(D,S)
	SIZE (INCH)	SIZE (INCH)	BITUM. COAT. THICKNESS	PA/PS THICKNESS	SIZE (INCH)	BITUM. COAT. THICKNESS	PA/PS THICKNESS	SIZE (INCH)	SIZE (INCH)
6" APC									6
12" APC TYPE A		12	0.064"	0.052"				12	
12" APC TYPE B					12	0.064"	0.052"		12
12" APC TYPE C	12				12	0.064"	0.052"		12
18" APC TYPE A	18	18	0.064"	0.052"	18	0.064"	0.052"		
18" APC TYPE B	18	18	0.064"	0.052"				18	
18" APC TYPE C		18	0.064"	0.052"				18	
18" APC TYPE D	18				18	0.064"	0.052"		
18" APC TYPE E	18	18	0.064"	0.052"				18	18
18" APC TYPE F	18								18
24" APC		24	0.079"	0.064"				24	
30" APC	30				30	0.079"	0.064"		30
30"x10" ARCH		30x10	0.079"	0.064"	30x10	0.079"	0.064"		
48" APC		48	0.079"	0.064"					

LEGENDS AND ABBREVIATIONS

S - STANDARD JOINT TYPE
P - POSITIVE JOINT TYPE
D - DOWNDRAIN JOINT TYPE
RCP - REINFORCED CONCRETE PIPE
PPC(C) - PASTIC PIPE CULVERT, TYPE C (CORRUGATED INTERIOR WALL)
PPC(D,S) - PLASTIC PIPE CULVERT, TYPE D OR S (SMOOTH INTERIOR WALL)
CSP - CORRUGATED STEEL PIPE
CAP - CORRUGATED ALUMINUM PIPE
SSRP - STEEL SPIRAL RIBBED PIPE
GA. - GAUGE
BITUM. - BITUMINOUS
PA - POLYMERIZED ASPHALT
PS - POLYMERIC SHEET
w/ - WITH
Ω - SEE DRAINAGE DETAIL

Notes:

1. SUFFICIENT SPACE WAS NOT AVALABLE TO LIST ALL DRAINAGE ITEMS WITHIN A SINGLE TABLE ON A SHEET BORDER, THEREFORE THE LISTING OF THE FIRST GROUPING OF DRAINAGE ITEMS ARE REPEATED ON THE ODD NUMBERED ID CODE SHEETS (DQ-1, DQ-3, ETC.) AND THE LISTINGS OF THE REMAINING GROUP OF DRAINAGE ITEMS ARE REPEATED ON THE EVEN NUMBERED ID CODE SHEETS (DQ-2, DQ-4, ETC.).
2. THE PRECISE DETERMINATION OF THE FOLLOWING ITEMS WILL BE MADE BY THE ENGINEER IN THE FIELD: STATION, SKEW, LENGTH, FL ELEVATION, AND DEPTH OF STRUCTURE.
3. (N) - NOT A SEPARATE PAY ITEM; FOR INFORMATION ONLY.
4. * - SEE ROADWAY QUANTITIES FOR DRAINAGE ITEM TOTAL

CSP 12" (14 GA.) LF	CSP 18" (14 GA.) LF	CSP 36" (10 GA.) LF	CSP 12" RISER (14 GA.) LF	CSP 48" RISER (10 GA.) LF	CSP 18" SLOTTED PIPE (14 GA.) LF	CSP 21" SLOTTED PIPE (14 GA.) LF	CSP 24" SLOTTED PIPE (14 GA.) LF	ALTERNATIVE PIPE 6" AP (TYPE __) LF	ALTERNATIVE PIPE 12" AP (TYPE __) LF	ALTERNATIVE PIPE 18" AP (TYPE __) LF	ALTERNATIVE PIPE 24" AP (TYPE __) LF	ALTERNATIVE PIPE 30" AP (TYPE __) LF	ALTERNATIVE PIPE 48" AP (TYPE __) LF	ALTERNATIVE PIPE 30" X 10" AP ARCH PIPE (TYPE __) LF	MAXIMUM COVER (N) FT	ELBOW (N) EA	PIPE JOINT CLASSIFICATION	8" GALVANIZED STEEL PIPE LF	8" GATE VALVE w/ SLEEVE & COVER EA	AFES 12" AFES EA	PIPE RISER 8" AP SLIPJOINT (N) EA	PIPE RISER 12" AP SLIPJOINT (N) EA	CABLE RAILING LF	ADJUST INLET EA	MODIFY INLET EA	REMOVAL/ABANDON PAY ITEMS REMOVE CONCRETE CY	REMOVE PIPE LF	REMOVE INLET EA	ABANDON INLET EA	ABANDON PIPE LF	SAND BACKFILL CY	CAP RISER EA	CAP INLET EA	DESCRIPTION	STATION	DRAINAGE PLAN SHEET NO.	DRAINAGE SYSTEM NO. ⬡	DRAINAGE UNIT ◯
																																CONCRETE COLLAR	20.88' LT "IVY3" 7+35.91	D-11	76	a
															5.5		S															12" RCP				b
																																TYPE 405 DI	18.00' LT "IVY3" 6+96.40			c
																										1						REMOVE DI				d
								9.2							1.0		S															6" AP		D-11	77	a
																																12" X 12" GRATE INLET				b
								13.0							1.0		S															6" AP				c
																										1						REMOVE DI				d
																																12" X 12" GRATE INLET				e
																									18.0							REMOVE PIPE				f
																																CONCRETE COLLAR	28.74' LT "RKHILL1" 8+20.61	D-11	78	a
															8.0		S															12" RCP				b
																																TYPE 405 DI	11.91' LT "RKHILL1" 8+50.84			c
															7.5		S															12" RCP				d
																																TYPE 405 DI	12.48' RT "RKHILL1" 8+50.84			e
																												15.0	0.44			ABANDON 12" CMP				f
																										1						ABANDON DI				g
																												25.0	0.73			ABANDON 12" CMP				h
																										1						ABANDON DI				i
								22.2																	18.0	2	2	40.0	1.17			SHEET TOTALS				

THIS PLAN ACCURATE FOR DRAINAGE WORK ONLY.

DRAINAGE QUANTITIES
DQ-36

STATE OF CALIFORNIA - DEPARTMENT OF TRANSPORTATION
Caltrans® DESIGN

CALCULATED-DESIGNED BY MOHAMMAD ABDRABOH
CHECKED BY ALAN R. BISI
FUNCTIONAL SUPERVISOR MARK PERTILE
REVISED BY
DATE REVISED

LAST REVISION 03-29-11
DATE PLOTTED => 29-APR-2011
TIME PLOTTED => 18:13

Dist	COUNTY	ROUTE	POST MILES TOTAL PROJECT	SHEET No.	TOTAL SHEETS
08	Riv	91	15.6/21.6	366	2028

REGISTERED CIVIL ENGINEER 3-29-10 DATE

4-25-11
PLANS APPROVAL DATE

REGISTERED PROFESSIONAL ENGINEER ALAN R. BISI No. C62808 Exp. 6-30-12 CIVIL STATE OF CALIFORNIA

THE STATE OF CALIFORNIA OR ITS OFFICERS OR AGENTS SHALL NOT BE RESPONSIBLE FOR THE ACCURACY OR COMPLETENESS OF SCANNED COPIES OF THIS PLAN SHEET.

ALTERNATIVE PIPE
ALLOWABLE PIPE MATERIAL AND PROTECTION

DESIGNATION	RCP	CSP (2-2/3"x½")			SSRP (3/4"x1" @ 11-1/2" PITCH)			PPC(C)	PPC(D,S)
	SIZE (INCH)	SIZE (INCH)	BITUM. COAT. THICKNESS	PA/PS THICKNESS	SIZE (INCH)	BITUM. COAT. THICKNESS	PA/PS THICKNESS	SIZE (INCH)	SIZE (INCH)
6" APC									6
12" APC TYPE A		12	0.064"	0.052"				12	
12" APC TYPE B					12	0.064"	0.052"		12
12" APC TYPE C	12				12	0.064"	0.052"		12
18" APC TYPE A	18	18	0.064"	0.052"	18	0.064"	0.052"		
18" APC TYPE B	18	18	0.064"	0.052"				18	
18" APC TYPE C		18	0.064"	0.052"				18	
18" APC TYPE D	18				18	0.064"	0.052"		
18" APC TYPE E	18	18	0.064"	0.052"				18	18
18" APC TYPE F	18								18
24" APC		24	0.079"	0.064"				24	
30" APC	30				30	0.079"	0.064"		30
30"x10" ARCH		30x10	0.079"	0.064"	30x10	0.079"	0.064"		
48" APC		48	0.079"	0.064"					

LEGENDS AND ABBREVIATIONS

S - STANDARD JOINT TYPE
P - POSITIVE JOINT TYPE
D - DOWNDRAIN JOINT TYPE
RCP - REINFORCED CONCRETE PIPE
PPC(C) - PASTIC PIPE CULVERT, TYPE C (CORRUGATED INTERIOR WALL)
PPC(D,S) - PLASTIC PIPE CULVERT, TYPE D OR S (SMOOTH INTERIOR WALL)
CSP - CORRUGATED STEEL PIPE
SSRP - STEEL SPIRAL RIBBED PIPE
GA. - GAUGE
BITUM. - BITUMINOUS
PA - POLYMERIZED ASPHALT
PS - POLYMERIC SHEET
w/ - WITH
Ω - SEE DRAINAGE DETAIL

Notes:

1. SUFFICIENT SPACE WAS NOT AVALABLE TO LIST ALL DRAINAGE ITEMS WITHIN A SINGLE TABLE ON A SHEET BORDER, THEREFORE THE LISTING OF THE FIRST GROUPING OF DRAINAGE ITEMS ARE REPEATED ON THE ODD NUMBERED ID CODE SHEETS (DQ-1, DQ-3, ETC.) AND THE LISTINGS OF THE REMAINING GROUP OF DRAINAGE ITEMS ARE REPEATED ON THE EVEN NUMBERED ID CODE SHEETS (DQ-2, DQ-4, ETC.).
2. THE PRECISE DETERMINATION OF THE FOLLOWING ITEMS WILL BE MADE BY THE ENGINEER IN THE FIELD: STATION, SKEW, LENGTH, FL ELEVATION, AND DEPTH OF STRUCTURE.
3. (N) - NOT A SEPARATE PAY ITEM; FOR INFORMATION ONLY.
4. * - SEE ROADWAY QUANTITIES FOR DRAINAGE ITEM TOTAL

DITCH EXCAVATION	CONCRETE (CHANNEL LINING)	STRUCTURAL CONCRETE, BOX CULVERT	MINOR CONCRETE (MINOR STRUCTURE)	MINOR CONCRETE (MISC. CONSTRUCTION)	CL. IV CONCRETE (BACKFILL) *	HMA-A *	PLACE AC (MISC. AREA) *	MISC. IRON AND STEEL	BAR REINFORCING STEEL	RSP: ¼-TON, METHOD B	RSP: FACING, METHOD B	RSP: NO. 2 BACKING, METHOD B	RSP: RSP FABRIC	FRAMES, GRATES AND COVERS: 24-12 (N)	24-13 (N)	¼" SOLID STEEL COVER (N)	12" X 12" PRECAST INLET	12" X 12" STEEL GRATE (TRAFFIC RATED)	DEBRIS RACK (N)	MANHOLE COVER (N)	MANHOLE COVER-PRESSURE LOCKING (N)	36" PRECAST MANHOLE SHAFT		MANHOLE SHAFT PIPE REDUCER	HEIGHT OF MANHOLE (N)	HEIGHT OF INLET "H" (N)	DRAINAGE INLET MARKER *	CONCRETE COLLAR (N)	RCP: 12" RCP	15" RCP	18" RCP	24" RCP	30" RCP	36" RCP	48" RCP	54" RCP	60" RCP (CL. V SPECIAL)	DESCRIPTION	STATION	DRAINAGE PLAN SHEET NO.	DRAINAGE SYSTEM NO. ⬡	DRAINAGE UNIT ◯
CY	CY	CY	CY	CY	CY	ton	yd²	lb	lb	CY	CY	CY	yd²	EA	EA	EA	EA	EA	EA	EA	EA	LF		EA	FT	FT	EA	EA	LF	LF	LF	LF	LF	LF	LF	LF	LF					
		4.37							846.0																													TRANSITION STRUCTURE		D-12	79	a
		179.16							42975.0																													9' X 3' RCB				b
		0.60						485	528.0											1		5.50		1	8.0													MH	104.98 LT "GE1" 334+94.89			c
		133.62							31886.0																													9' X 3' RCB				d
		0.60						485	528.0											1		3.50		1	6.0													MH	101.02' RT "GE1" 334+94.81			e
		8.90						652	739.5										1																			WINGWALL w/ DEBRIS RACK				f
	20.40																																					CONCRETE CHANNEL w/ CUTOFF WALL				g
																																						REMOVE WINGWALL w/ DEBRIS RACK				h
																																						REMOVE CONCRETE CHANNEL				i
																																						REMOVE WINGWALL				j
																																						REMOVE WINGWALL				k
										6.0			7.2																									RSP		D-12,13	80	a
73.70	27.20																																					CONCRETE DITCH				b
																												1										CONCRETE COLLAR	86.56' LT "GE1" 339+00.00	D-12,13	81	a
																																						12" AP TYPE C				b
			1.40					666						2												6.0												GD-1 DI	76.76' LT "GE1" 339+00.00			c
																																						18" AP TYPE E				d
			1.42					666						2												6.2												GD-1 DI	76.76' LT "GE1" 336+50.00			e
																																						18" AP TYPE E				f
			1.41					666						2												6.2												GD-1 DI	76.76' LT "GE1" 335+50.00			g
																																						REMOVE 12" DD				h
73.70	47.60	327.25	4.23					3620	77502.5	6.0			7.2	6					1	2		9.00		2				1										SHEET TOTALS				

THIS PLAN ACCURATE FOR DRAINAGE WORK ONLY.

DRAINAGE QUANTITIES
DQ-37

REVISED BY | DATE REVISED

CALCULATED-DESIGNED BY: MOHAMMAD ABDRABOH
CHECKED BY: ALAN R. BISI
FUNCTIONAL SUPERVISOR: MARK PERTILE

STATE OF CALIFORNIA - DEPARTMENT OF TRANSPORTATION
Caltrans
DESIGN

LAST REVISION 03-29-11 | DATE PLOTTED => 11-JUL-2011 | TIME PLOTTED => 12:40

Dist	COUNTY	ROUTE	POST MILES TOTAL PROJECT	SHEET No.	TOTAL SHEETS
08	Riv	91	15.6/21.6	367	2028

REGISTERED CIVIL ENGINEER 3-29-10 DATE

4-25-11
PLANS APPROVAL DATE

REGISTERED PROFESSIONAL ENGINEER ALAN R. BISI No. C62808 Exp. 6-30-12 CIVIL STATE OF CALIFORNIA

THE STATE OF CALIFORNIA OR ITS OFFICERS OR AGENTS SHALL NOT BE RESPONSIBLE FOR THE ACCURACY OR COMPLETENESS OF SCANNED COPIES OF THIS PLAN SHEET.

ALTERNATIVE PIPE ALLOWABLE PIPE MATERIAL AND PROTECTION

DESIGNATION	RCP	CSP (2-2/3"x½")			SSRP (3/4"x1" @ 11-1/2" PITCH)			PPC(C)	PPC(D,S)
	SIZE (INCH)	SIZE (INCH)	BITUM. COAT. THICKNESS	PA/PS THICKNESS	SIZE (INCH)	BITUM. COAT. THICKNESS	PA/PS THICKNESS	SIZE (INCH)	SIZE (INCH)
6" APC									6
12" APC TYPE A		12	0.064"	0.052"				12	
12" APC TYPE B					12	0.064"	0.052"		12
12" APC TYPE C	12				12	0.064"	0.052"		12
18" APC TYPE A	18	18	0.064"	0.052"	18	0.064"	0.052"		
18" APC TYPE B	18	18	0.064"	0.052"				18	
18" APC TYPE C		18	0.064"	0.052"				18	
18" APC TYPE D	18				18	0.064"	0.052"		
18" APC TYPE E	18	18	0.064"	0.052"				18	18
18" APC TYPE F	18								18
24" APC		24	0.079"	0.064"				24	
30" APC	30				30	0.079"	0.064"		30
30"x10" ARCH		30x10	0.079"	0.064"	30x10	0.079"	0.064"		
48" APC		48	0.079"	0.064"					

LEGENDS AND ABBREVIATIONS

S - STANDARD JOINT TYPE
P - POSITIVE JOINT TYPE
D - DOWNDRAIN JOINT TYPE
RCP - REINFORCED CONCRETE PIPE
PPC(C) - PASTIC PIPE CULVERT, TYPE C (CORRUGATED INTERIOR WALL)
PPC(D,S) - PLASTIC PIPE CULVERT, TYPE D OR S (SMOOTH INTERIOR WALL)
CSP - CORRUGATED STEEL PIPE
CAP - CORRUGATED ALUMINUM PIPE
SSRP - STEEL SPIRAL RIBBED PIPE
GA. - GAUGE
BITUM. - BITUMINOUS
PA - POLYMERIZED ASPHALT
PS - POLYMERIC SHEET
w/ - WITH
Ω - SEE DRAINAGE DETAIL

Notes:

1. SUFFICIENT SPACE WAS NOT AVALABLE TO LIST ALL DRAINAGE ITEMS WITHIN A SINGLE TABLE ON A SHEET BORDER, THEREFORE THE LISTING OF THE FIRST GROUPING OF DRAINAGE ITEMS ARE REPEATED ON THE ODD NUMBERED ID CODE SHEETS (DQ-1, DQ-3, ETC.) AND THE LISTINGS OF THE REMAINING GROUP OF DRAINAGE ITEMS ARE REPEATED ON THE EVEN NUMBERED ID CODE SHEETS (DQ-2, DQ-4, ETC.).
2. THE PRECISE DETERMINATION OF THE FOLLOWING ITEMS WILL BE MADE BY THE ENGINEER IN THE FIELD: STATION, SKEW, LENGTH, FL ELEVATION, AND DEPTH OF STRUCTURE.
3. (N) - NOT A SEPARATE PAY ITEM; FOR INFORMATION ONLY.
4. * - SEE ROADWAY QUANTITIES FOR DRAINAGE ITEM TOTAL

CSP 12" (14 GA.) LF	CSP 18" (14 GA.) LF	CSP 36" (10 GA.) LF	CSP 12" RISER (14 GA.) LF	CSP 48" RISER (10 GA.) LF	CSP 18" SLOTTED PIPE (14 GA.) LF	CSP 21" SLOTTED PIPE (14 GA.) LF	CSP 24" SLOTTED PIPE (14 GA.) LF	ALTERNATIVE PIPE 6" AP (TYPE __) LF	ALTERNATIVE PIPE 12" AP (TYPE __) LF	ALTERNATIVE PIPE 18" AP (TYPE __) LF	ALTERNATIVE PIPE 24" AP (TYPE __) LF	ALTERNATIVE PIPE 30" AP (TYPE __) LF	ALTERNATIVE PIPE 48" AP (TYPE __) LF	ALTERNATIVE PIPE 30" X 10" AP ARCH PIPE (TYPE __) LF	MAXIMUM COVER (N) FT	ELBOW (N) EA	PIPE JOINT CLASSIFICATION	8" GALVANIZED STEEL PIPE LF	8" GATE VALVE w/ SLEEVE & COVER EA	AFES 12" AFES EA	PIPE RISER 8" AP SLIPJOINT (N) EA	PIPE RISER 12" AP SLIPJOINT (N) EA	CABLE RAILING LF	ADJUST INLET EA	MODIFY INLET EA	REMOVAL/ABANDON PAY ITEMS REMOVE CONCRETE CY	REMOVE PIPE LF	REMOVE INLET EA	ABANDON INLET EA	ABANDON PIPE LF	SAND BACKFILL CY	CAP RISER EA	CAP INLET EA	DESCRIPTION	STATION	DRAINAGE PLAN SHEET NO.	DRAINAGE SYSTEM NO. ⬡	DRAINAGE UNIT ◯
																																TRANSITION STRUCTURE		D-12	79	a
															10.5		S															9' X 3' RCB				b
																																MH	104.98 LT "GE1" 334+94.89			c
															9.0		S															9' X 3' RCB				d
																																MH	101.02' RT "GE1" 334+94.81			e
																							17.0									WINGWALL w/ DEBRIS RACK				f
																																CONCRETE CHANNEL w/ CUTOFF WALL				g
																										7.7						REMOVE WINGWALL w/ DEBRIS RACK				h
																										109.4						REMOVE CONCRETE CHANNEL				i
																										5.3						REMOVE WINGWALL				j
																										5.3						REMOVE WINGWALL				k
																																RSP		D-12,13	80	a
																																CONCRETE DITCH				b
																																CONCRETE COLLAR	86.56' LT "GE1" 339+00.00	D-12,13	81	a
									9.8						10.0		S															12" AP TYPE C				b
																																GD-1 DI	76.76' LT "GE1" 339+00.00			c
										254.0					7.0		S															18" AP TYPE E				d
																																GD-1 DI	76.76' LT "GE1" 336+50.00			e
										97.0					7.0		S															18" AP TYPE E				f
																																GD-1 DI	76.76' LT "GE1" 335+50.00			g
																											10.0					REMOVE 12" DD				h
									9.8	351.0													17.0			127.7	10.0					SHEET TOTALS				

THIS PLAN ACCURATE FOR DRAINAGE WORK ONLY.

DRAINAGE QUANTITIES
DQ-38

STATE OF CALIFORNIA - DEPARTMENT OF TRANSPORTATION
Caltrans® DESIGN

REVISED BY | DATE REVISED
CALCULATED-DESIGNED BY MOHAMMAD ABDRABOH
CHECKED BY ALAN R. BISI
FUNCTIONAL SUPERVISOR MARK PERTILE

LAST REVISION 03-29-11 | DATE PLOTTED => 29-APR-2011 | TIME PLOTTED => 18:13

Dist	COUNTY	ROUTE	POST MILES TOTAL PROJECT	SHEET No.	TOTAL SHEETS
08	Riv	91	15.6/21.6	368	2028

REGISTERED CIVIL ENGINEER 3-29-10 DATE

4-25-11
PLANS APPROVAL DATE

REGISTERED PROFESSIONAL ENGINEER ALAN R. BISI No. C62808 Exp. 6-30-12 CIVIL STATE OF CALIFORNIA

THE STATE OF CALIFORNIA OR ITS OFFICERS OR AGENTS SHALL NOT BE RESPONSIBLE FOR THE ACCURACY OR COMPLETENESS OF SCANNED COPIES OF THIS PLAN SHEET.

ALTERNATIVE PIPE ALLOWABLE PIPE MATERIAL AND PROTECTION

DESIGNATION	RCP	CSP (2-2/3"x½")			SSRP (3/4"x1" @ 11-1/2" PITCH)			PPC(C)	PPC(D,S)
	SIZE (INCH)	SIZE (INCH)	BITUM. COAT. THICKNESS	PA/PS THICKNESS	SIZE (INCH)	BITUM. COAT. THICKNESS	PA/PS THICKNESS	SIZE (INCH)	SIZE (INCH)
6" APC									6
12" APC TYPE A		12	0.064"	0.052"				12	
12" APC TYPE B					12	0.064"	0.052"		12
12" APC TYPE C	12				12	0.064"	0.052"		12
18" APC TYPE A	18	18	0.064"	0.052"	18	0.064"	0.052"		
18" APC TYPE B	18	18	0.064"	0.052"				18	
18" APC TYPE C		18	0.064"	0.052"				18	
18" APC TYPE D	18				18	0.064"	0.052"		
18" APC TYPE E	18	18	0.064"	0.052"				18	18
18" APC TYPE F	18								18
24" APC		24	0.079"	0.064"				24	
30" APC	30				30	0.079"	0.064"		30
30"x10" ARCH		30x10	0.079"	0.064"	30x10	0.079"	0.064"		
48" APC		48	0.079"	0.064"					

LEGENDS AND ABBREVIATIONS

S - STANDARD JOINT TYPE
P - POSITIVE JOINT TYPE
D - DOWNDRAIN JOINT TYPE
RCP - REINFORCED CONCRETE PIPE
PPC(C) - PASTIC PIPE CULVERT, TYPE C (CORRUGATED INTERIOR WALL)
PPC(D,S) - PLASTIC PIPE CULVERT, TYPE D OR S (SMOOTH INTERIOR WALL)
CSP - CORRUGATED STEEL PIPE
SSRP - STEEL SPIRAL RIBBED PIPE
GA. - GAUGE
BITUM. - BITUMINOUS
PA - POLYMERIZED ASPHALT
PS - POLYMERIC SHEET
w/ - WITH
Ω - SEE DRAINAGE DETAIL

Notes:

1. SUFFICIENT SPACE WAS NOT AVALABLE TO LIST ALL DRAINAGE ITEMS WITHIN A SINGLE TABLE ON A SHEET BORDER, THEREFORE THE LISTING OF THE FIRST GROUPING OF DRAINAGE ITEMS ARE REPEATED ON THE ODD NUMBERED ID CODE SHEETS (DQ-1, DQ-3, ETC.) AND THE LISTINGS OF THE REMAINING GROUP OF DRAINAGE ITEMS ARE REPEATED ON THE EVEN NUMBERED ID CODE SHEETS (DQ-2, DQ-4, ETC.).
2. THE PRECISE DETERMINATION OF THE FOLLOWING ITEMS WILL BE MADE BY THE ENGINEER IN THE FIELD: STATION, SKEW, LENGTH, FL ELEVATION, AND DEPTH OF STRUCTURE.
3. (N) - NOT A SEPARATE PAY ITEM; FOR INFORMATION ONLY.
4. * - SEE ROADWAY QUANTITIES FOR DRAINAGE ITEM TOTAL

DITCH EXCAVATION	CONCRETE (CHANNEL LINING)	STRUCTURAL CONCRETE, BOX CULVERT	MINOR CONCRETE (MINOR STRUCTURE)	MINOR CONCRETE (MISC. CONSTRUCTION)	CL. IV CONCRETE (BACKFILL) *	HMA-A *	PLACE AC (MISC. AREA) *	MISC. IRON AND STEEL	BAR REINFORCING STEEL	RSP: ¼-TON, METHOD B	RSP: FACING, METHOD B	RSP: NO. 2 BACKING, METHOD B	RSP: RSP FABRIC	FRAMES, GRATES AND COVERS: 24-12 (N)	24-13 (N)	¼" SOLID STEEL COVER (N)	12" X 12" PRECAST INLET	12" X 12" STEEL GRATE (TRAFFIC RATED)	DEBRIS RACK (N)	MANHOLE COVER (N)	MANHOLE COVER-PRESSURE LOCKING (N)	36" PRECAST MANHOLE SHAFT		MANHOLE SHAFT PIPE REDUCER	HEIGHT OF MANHOLE (N)	HEIGHT OF INLET "H" (N)	DRAINAGE INLET MARKER *	CONCRETE COLLAR (N)	RCP: 12" RCP	15" RCP	18" RCP	24" RCP	30" RCP	36" RCP	48" RCP	54" RCP	60" RCP (CL. V SPECIAL)	DESCRIPTION	STATION	DRAINAGE PLAN SHEET NO.	DRAINAGE SYSTEM NO. ⬡	DRAINAGE UNIT ◯
CY	CY	CY	CY	CY	CY	ton	yd²	lb	lb	CY	CY	CY	yd²	EA	EA	EA	EA	EA	EA	EA	EA	LF		EA	FT	FT	EA	EA	LF	LF	LF	LF	LF	LF	LF	LF	LF					
										33.4			40																									RSP		D-12,13	82	a
73.70	27.20																																					CONCRETE DITCH				b
																											1											CONCRETE COLLAR	86.76' LT "GE1" 339+41.96	D-13	83	a
																																						12" CSP				b
																																						12" CMP RISER				c
			1.17	1.15				343						1																								G1-DI w/ DEPRESSION	76.96' LT "GE1" 339+41.96			d
																																						REMOVE PIPE				e
			1.17	1.15				343						1																								G1-DI w/ DEPRESSION	76.76' RT "GE1" 339+99.66	D-13	84	a
																																						12" CSP RISER				b
																																						12" CSP				c
			0.60																																			HEADWALL	98.59' RT "GE1" 339+99.66			d
										2.5			10																									RSP				e
																																						REMOVE 12" CSP				f
			1.17	1.15				343						1												4.0												G1-DI w/ DEPRESSION	76.76' RT "GE1" 340+49.24	D-13	85	a
																																						12" CSP RISER				b
																																						12" CSP				c
			0.60																																			HEADWALL	98.59' RT "GE1" 340+49.24			d
										2.5			10																									RSP				e
																																						REMOVE 12" CSP				f
73.70	27.20		4.71	3.45				1029		38.4			60	3														1										SHEET TOTALS				

THIS PLAN ACCURATE FOR DRAINAGE WORK ONLY.

DRAINAGE QUANTITIES
DQ-39

MOHAMMAD ABDRABOH — ALAN R. BISI — MARK PERTILE

STATE OF CALIFORNIA - DEPARTMENT OF TRANSPORTATION — DESIGN

REVISED BY — DATE REVISED — CALCULATED-DESIGNED BY — CHECKED BY — FUNCTIONAL SUPERVISOR

LAST REVISION 03-29-11 — DATE PLOTTED => 11-JUL-2011 — TIME PLOTTED => 12:40

Dist	COUNTY	ROUTE	POST MILES TOTAL PROJECT	SHEET No.	TOTAL SHEETS
08	Riv	91	15.6/21.6	369	2028

REGISTERED CIVIL ENGINEER 3-29-10 DATE

4-25-11
PLANS APPROVAL DATE

REGISTERED PROFESSIONAL ENGINEER ALAN R. BISI No. C62808 Exp. 6-30-12 CIVIL STATE OF CALIFORNIA

THE STATE OF CALIFORNIA OR ITS OFFICERS OR AGENTS SHALL NOT BE RESPONSIBLE FOR THE ACCURACY OR COMPLETENESS OF SCANNED COPIES OF THIS PLAN SHEET.

ALTERNATIVE PIPE ALLOWABLE PIPE MATERIAL AND PROTECTION

DESIGNATION	RCP	CSP (2-2/3"x½")			SSRP (3/4"x1" @ 11-1/2" PITCH)			PPC(C)	PPC(D,S)
	SIZE (INCH)	SIZE (INCH)	BITUM. COAT. THICKNESS	PA/PS THICKNESS	SIZE (INCH)	BITUM. COAT. THICKNESS	PA/PS THICKNESS	SIZE (INCH)	SIZE (INCH)
6" APC									6
12" APC TYPE A		12	0.064"	0.052"				12	
12" APC TYPE B					12	0.064"	0.052"		12
12" APC TYPE C	12				12	0.064"	0.052"		12
18" APC TYPE A	18	18	0.064"	0.052"	18	0.064"	0.052"		
18" APC TYPE B	18	18	0.064"	0.052"				18	
18" APC TYPE C		18	0.064"	0.052"				18	
18" APC TYPE D	18				18	0.064"	0.052"		
18" APC TYPE E	18	18	0.064"	0.052"				18	18
18" APC TYPE F	18								18
24" APC		24	0.079"	0.064"				24	
30" APC	30				30	0.079"	0.064"		30
30"x10" ARCH		30x10	0.079"	0.064"	30x10	0.079"	0.064"		
48" APC		48	0.079"	0.064"					

LEGENDS AND ABBREVIATIONS

S - STANDARD JOINT TYPE
P - POSITIVE JOINT TYPE
D - DOWNDRAIN JOINT TYPE
RCP - REINFORCED CONCRETE PIPE
PPC(C) - PASTIC PIPE CULVERT, TYPE C (CORRUGATED INTERIOR WALL)
PPC(D,S) - PLASTIC PIPE CULVERT, TYPE D OR S (SMOOTH INTERIOR WALL)
CSP - CORRUGATED STEEL PIPE
CAP - CORRUGATED ALUMINUM PIPE
SSRP - STEEL SPIRAL RIBBED PIPE
GA. - GAUGE
BITUM. - BITUMINOUS
PA - POLYMERIZED ASPHALT
PS - POLYMERIC SHEET
w/ - WITH
Ω - SEE DRAINAGE DETAIL

Notes:

1. SUFFICIENT SPACE WAS NOT AVALABLE TO LIST ALL DRAINAGE ITEMS WITHIN A SINGLE TABLE ON A SHEET BORDER, THEREFORE THE LISTING OF THE FIRST GROUPING OF DRAINAGE ITEMS ARE REPEATED ON THE ODD NUMBERED ID CODE SHEETS (DQ-1, DQ-3, ETC.) AND THE LISTINGS OF THE REMAINING GROUP OF DRAINAGE ITEMS ARE REPEATED ON THE EVEN NUMBERED ID CODE SHEETS (DQ-2, DQ-4, ETC.).
2. THE PRECISE DETERMINATION OF THE FOLLOWING ITEMS WILL BE MADE BY THE ENGINEER IN THE FIELD: STATION, SKEW, LENGTH, FL ELEVATION, AND DEPTH OF STRUCTURE.
3. (N) - NOT A SEPARATE PAY ITEM; FOR INFORMATION ONLY.
4. * - SEE ROADWAY QUANTITIES FOR DRAINAGE ITEM TOTAL

CSP 12" (14 GA.) LF	CSP 18" (14 GA.) LF	CSP 36" (10 GA.) LF	CSP 12" RISER (14 GA.) LF	CSP 48" RISER (10 GA.) LF	CSP 18" SLOTTED PIPE (14 GA.) LF	CSP 21" SLOTTED PIPE (14 GA.) LF	CSP 24" SLOTTED PIPE (14 GA.) LF	ALTERNATIVE PIPE 6" AP (TYPE __) LF	ALTERNATIVE PIPE 12" AP (TYPE __) LF	ALTERNATIVE PIPE 18" AP (TYPE __) LF	ALTERNATIVE PIPE 24" AP (TYPE __) LF	ALTERNATIVE PIPE 30" AP (TYPE __) LF	ALTERNATIVE PIPE 48" AP (TYPE __) LF	ALTERNATIVE PIPE 30" X 10" AP ARCH PIPE (TYPE __) LF	MAXIMUM COVER (N) FT	ELBOW (N) EA	PIPE JOINT CLASSIFICATION	8" GALVANIZED STEEL PIPE LF	8" GATE VALVE w/ SLEEVE & COVER EA	AFES 12" AFES EA	PIPE RISER 8" AP SLIPJOINT (N) EA	PIPE RISER 12" AP SLIPJOINT (N) EA	CABLE RAILING LF	ADJUST INLET EA	MODIFY INLET EA	REMOVAL/ABANDON PAY ITEMS REMOVE CONCRETE CY	REMOVE PIPE LF	REMOVE INLET EA	ABANDON INLET EA	ABANDON PIPE LF	SAND BACKFILL CY	CAP RISER EA	CAP INLET EA	DESCRIPTION	STATION	DRAINAGE PLAN SHEET NO.	DRAINAGE SYSTEM NO. ⬡	DRAINAGE UNIT ◯
																																RSP		D-12,13	82	a
																																CONCRETE DITCH				b
																																CONCRETE COLLAR	86.76' LT "GE1" 339+41.96	D-13	83	a
12.6															10.0	1	DD															12" CSP				b
			4.0													1	DD					1										12" CMP RISER				c
																																G1-DI w/ DEPRESSION	76.96' LT "GE1" 339+41.96			d
																										17.0						REMOVE PIPE				e
																																G1-DI w/ DEPRESSION	76.76' RT "GE1" 339+99.66	D-13	84	a
			5.5													1	DD					1										12" CSP RISER				b
25.5															18.0	1	DD															12" CSP				c
																																HEADWALL	98.59' RT "GE1" 339+99.66			d
																																RSP				e
																										20.0						REMOVE 12" CSP				f
																																G1-DI w/ DEPRESSION	76.76' RT "GE1" 340+49.24	D-13	85	a
			6.6													1	DD					1										12" CSP RISER				b
28.8															18.0	1	S															12" CSP				c
																																HEADWALL	98.59' RT "GE1" 340+49.24			d
																																RSP				e
																										20.0						REMOVE 12" CSP				f
66.9			16.1													6						3				57.0						SHEET TOTALS				

THIS PLAN ACCURATE FOR DRAINAGE WORK ONLY.

DRAINAGE QUANTITIES
DQ-40

REVISED BY | DATE REVISED

CALCULATED-DESIGNED BY: MOHAMMAD ABDRABOH
CHECKED BY: ALAN R. BISI
FUNCTIONAL SUPERVISOR: MARK PERTILE

STATE OF CALIFORNIA - DEPARTMENT OF TRANSPORTATION
Caltrans® DESIGN

LAST REVISION 03-29-11 | DATE PLOTTED => 29-APR-2011 | TIME PLOTTED => 18:13

Dist	COUNTY	ROUTE	POST MILES TOTAL PROJECT	SHEET No.	TOTAL SHEETS
08	Riv	91	15.6/21.6	370	2028

REGISTERED CIVIL ENGINEER 3-29-10 DATE

4-25-11
PLANS APPROVAL DATE

REGISTERED PROFESSIONAL ENGINEER ALAN R. BISI No. C62808 Exp. 6-30-12 CIVIL STATE OF CALIFORNIA

THE STATE OF CALIFORNIA OR ITS OFFICERS OR AGENTS SHALL NOT BE RESPONSIBLE FOR THE ACCURACY OR COMPLETENESS OF SCANNED COPIES OF THIS PLAN SHEET.

ALTERNATIVE PIPE
ALLOWABLE PIPE MATERIAL AND PROTECTION

DESIGNATION	RCP	CSP (2-2/3"x½")			SSRP (3/4"x1" @ 11-1/2" PITCH)			PPC(C)	PPC(D,S)
	SIZE (INCH)	SIZE (INCH)	BITUM. COAT. THICKNESS	PA/PS THICKNESS	SIZE (INCH)	BITUM. COAT. THICKNESS	PA/PS THICKNESS	SIZE (INCH)	SIZE (INCH)
6" APC									6
12" APC TYPE A		12	0.064"	0.052"				12	
12" APC TYPE B					12	0.064"	0.052"		12
12" APC TYPE C	12				12	0.064"	0.052"		12
18" APC TYPE A	18	18	0.064"	0.052"	18	0.064"	0.052"		
18" APC TYPE B	18	18	0.064"	0.052"				18	
18" APC TYPE C		18	0.064"	0.052"				18	
18" APC TYPE D	18				18	0.064"	0.052"		
18" APC TYPE E	18	18	0.064"	0.052"				18	18
18" APC TYPE F	18								18
24" APC		24	0.079"	0.064"				24	
30" APC	30				30	0.079"	0.064"		30
30"x10" ARCH		30x10	0.079"	0.064"	30x10	0.079"	0.064"		
48" APC		48	0.079"	0.064"					

LEGENDS AND ABBREVIATIONS

S - STANDARD JOINT TYPE
P - POSITIVE JOINT TYPE
D - DOWNDRAIN JOINT TYPE
RCP - REINFORCED CONCRETE PIPE
PPC(C) - PASTIC PIPE CULVERT, TYPE C (CORRUGATED INTERIOR WALL)
PPC(D,S) - PLASTIC PIPE CULVERT, TYPE D OR S (SMOOTH INTERIOR WALL)
CSP - CORRUGATED STEEL PIPE
SSRP - STEEL SPIRAL RIBBED PIPE
GA. - GAUGE
BITUM. - BITUMINOUS
PA - POLYMERIZED ASPHALT
PS - POLYMERIC SHEET
w/ - WITH
Ω - SEE DRAINAGE DETAIL

Notes:

1. SUFFICIENT SPACE WAS NOT AVALABLE TO LIST ALL DRAINAGE ITEMS WITHIN A SINGLE TABLE ON A SHEET BORDER, THEREFORE THE LISTING OF THE FIRST GROUPING OF DRAINAGE ITEMS ARE REPEATED ON THE ODD NUMBERED ID CODE SHEETS (DQ-1, DQ-3, ETC.) AND THE LISTINGS OF THE REMAINING GROUP OF DRAINAGE ITEMS ARE REPEATED ON THE EVEN NUMBERED ID CODE SHEETS (DQ-2, DQ-4, ETC.).
2. THE PRECISE DETERMINATION OF THE FOLLOWING ITEMS WILL BE MADE BY THE ENGINEER IN THE FIELD: STATION, SKEW, LENGTH, FL ELEVATION, AND DEPTH OF STRUCTURE.
3. (N) - NOT A SEPARATE PAY ITEM; FOR INFORMATION ONLY.
4. * - SEE ROADWAY QUANTITIES FOR DRAINAGE ITEM TOTAL

DITCH EXCAVATION	CONCRETE (CHANNEL LINING)	STRUCTURAL CONCRETE, BOX CULVERT	MINOR CONCRETE (MINOR STRUCTURE)	MINOR CONCRETE (MISC. CONSTRUCTION)	CL. IV CONCRETE (BACKFILL) *	HMA-A *	PLACE AC (MISC. AREA) *	MISC. IRON AND STEEL	BAR REINFORCING STEEL	RSP: ¼-TON, METHOD B	RSP: FACING, METHOD B	RSP: NO. 2 BACKING, METHOD B	RSP: RSP FABRIC	FRAMES, GRATES AND COVERS: 24-12 (N)	24-13 (N)	¼" SOLID STEEL COVER (N)	12" X 12" PRECAST INLET	12" X 12" STEEL GRATE (TRAFFIC RATED)	DEBRIS RACK (N)	MANHOLE COVER (N)	MANHOLE COVER-PRESSURE LOCKING (N)	36" PRECAST MANHOLE SHAFT		MANHOLE SHAFT PIPE REDUCER	HEIGHT OF MANHOLE (N)	HEIGHT OF INLET "H" (N)	DRAINAGE INLET MARKER *	CONCRETE COLLAR (N)	RCP: 12" RCP	15" RCP	18" RCP	24" RCP	30" RCP	36" RCP	48" RCP	54" RCP	60" RCP (CL. V SPECIAL)	DESCRIPTION	STATION	DRAINAGE PLAN SHEET NO.	DRAINAGE SYSTEM NO. ⬡	DRAINAGE UNIT ◯
CY	CY	CY	CY	CY	CY	ton	yd²	lb	lb	CY	CY	CY	yd²	EA	EA	EA	EA	EA	EA	EA	EA	LF		EA	FT	FT	EA	EA	LF	LF	LF	LF	LF	LF	LF	LF	LF					
			1.17	1.15				343						1												4.0												G1-DI w/ DEPRESSION	76.76′ RT "GE1" 341+49.24	D-13	86	a
																																						12" CSP RISER				b
																																						12" CSP				c
			0.60																																			HEADWALL	97′ RT "GE1" 341+49.24			d
										2.5			10																									RSP				e
																																						REMOVE 12" CSP				f
																																						Remove DI				g
																																						ABN 12" RCP				h
																												1										CONCRETE COLLAR	51.85′ RT "GE1" 347+21.00	D-13	87	a
																																66.0						24" RCP				b
			1.24					545											1							5.0												CMP RISER TYPE A				c
																																						REMOVE 24" RCP				d
																																						REMOVE HW				e
																																						ABANDON DI		D-13	88	a
																																						ABANDON 18" RCP				b
																																						CAP DI		D-13	89	a
																																						ABANDON 18" RCP				b
																																						ABANDON DI				c
			3.01	1.15				888		2.5			10	1					1									1				66.0						SHEET TOTALS				

THIS PLAN ACCURATE FOR DRAINAGE WORK ONLY.

DRAINAGE QUANTITIES
DQ-41

STATE OF CALIFORNIA - DEPARTMENT OF TRANSPORTATION
Caltrans® DESIGN

FUNCTIONAL SUPERVISOR: MARK PERTILE
CALCULATED-DESIGNED BY: MOHAMMAD ABDRABOH
CHECKED BY: ALAN R. BISI
REVISED BY
DATE REVISED

LAST REVISION 03-29-11
DATE PLOTTED => 11-JUL-2011
TIME PLOTTED => 12:40

Dist	COUNTY	ROUTE	POST MILES TOTAL PROJECT	SHEET No.	TOTAL SHEETS
08	Riv	91	15.6/21.6	371	2028

REGISTERED CIVIL ENGINEER 3-29-10 DATE

4-25-11
PLANS APPROVAL DATE

REGISTERED PROFESSIONAL ENGINEER ALAN R. BISI No. C62808 Exp. 6-30-12 CIVIL STATE OF CALIFORNIA

THE STATE OF CALIFORNIA OR ITS OFFICERS OR AGENTS SHALL NOT BE RESPONSIBLE FOR THE ACCURACY OR COMPLETENESS OF SCANNED COPIES OF THIS PLAN SHEET.

ALTERNATIVE PIPE ALLOWABLE PIPE MATERIAL AND PROTECTION

DESIGNATION	RCP	CSP (2-2/3"x½")			SSRP (3/4"x1" @ 11-1/2" PITCH)			PPC(C)	PPC(D,S)
	SIZE (INCH)	SIZE (INCH)	BITUM. COAT. THICKNESS	PA/PS THICKNESS	SIZE (INCH)	BITUM. COAT. THICKNESS	PA/PS THICKNESS	SIZE (INCH)	SIZE (INCH)
6" APC									6
12" APC TYPE A		12	0.064"	0.052"				12	
12" APC TYPE B					12	0.064"	0.052"		12
12" APC TYPE C	12				12	0.064"	0.052"		12
18" APC TYPE A	18	18	0.064"	0.052"	18	0.064"	0.052"		
18" APC TYPE B	18	18	0.064"	0.052"				18	
18" APC TYPE C		18	0.064"	0.052"				18	
18" APC TYPE D	18				18	0.064"	0.052"		
18" APC TYPE E	18	18	0.064"	0.052"				18	18
18" APC TYPE F	18								18
24" APC		24	0.079"	0.064"				24	
30" APC	30				30	0.079"	0.064"		30
30"x10" ARCH		30x10	0.079"	0.064"	30x10	0.079"	0.064"		
48" APC		48	0.079"	0.064"					

LEGENDS AND ABBREVIATIONS

S - STANDARD JOINT TYPE
P - POSITIVE JOINT TYPE
D - DOWNDRAIN JOINT TYPE
RCP - REINFORCED CONCRETE PIPE
PPC(C) - PASTIC PIPE CULVERT, TYPE C (CORRUGATED INTERIOR WALL)
PPC(D,S) - PLASTIC PIPE CULVERT, TYPE D OR S (SMOOTH INTERIOR WALL)
CSP - CORRUGATED STEEL PIPE
CAP - CORRUGATED ALUMINUM PIPE
SSRP - STEEL SPIRAL RIBBED PIPE
GA. - GAUGE
BITUM. - BITUMINOUS
PA - POLYMERIZED ASPHALT
PS - POLYMERIC SHEET
w/ - WITH
Ω - SEE DRAINAGE DETAIL

Notes:

1. SUFFICIENT SPACE WAS NOT AVALABLE TO LIST ALL DRAINAGE ITEMS WITHIN A SINGLE TABLE ON A SHEET BORDER, THEREFORE THE LISTING OF THE FIRST GROUPING OF DRAINAGE ITEMS ARE REPEATED ON THE ODD NUMBERED ID CODE SHEETS (DQ-1, DQ-3, ETC.) AND THE LISTINGS OF THE REMAINING GROUP OF DRAINAGE ITEMS ARE REPEATED ON THE EVEN NUMBERED ID CODE SHEETS (DQ-2, DQ-4, ETC.).
2. THE PRECISE DETERMINATION OF THE FOLLOWING ITEMS WILL BE MADE BY THE ENGINEER IN THE FIELD: STATION, SKEW, LENGTH, FL ELEVATION, AND DEPTH OF STRUCTURE.
3. (N) - NOT A SEPARATE PAY ITEM; FOR INFORMATION ONLY.
4. * - SEE ROADWAY QUANTITIES FOR DRAINAGE ITEM TOTAL

CSP								ALTERNATIVE PIPE													AFES	PIPE RISER						REMOVAL/ABANDON PAY ITEMS								DESCRIPTION	STATION	DRAINAGE PLAN SHEET NO.	DRAINAGE SYSTEM NO. ⬡	DRAINAGE UNIT ◯
12" (14 GA.)	18" (14 GA.)	36" (10 GA.)	12" RISER (14 GA.)	48" RISER (10 GA.)	18" SLOTTED PIPE (14 GA.)	21" SLOTTED PIPE (14 GA.)	24" SLOTTED PIPE (14 GA.)	6" AP (TYPE __)	12" AP (TYPE __)	18" AP (TYPE __)	24" AP (TYPE __)	30" AP (TYPE __)	48" AP (TYPE __)	30" X 10" AP ARCH PIPE (TYPE __)	MAXIMUM COVER (N)	ELBOW (N)	PIPE JOINT CLASSIFICATION	8" GALVANIZED STEEL PIPE	8" GATE VALVE w/ SLEEVE & COVER	12" AFES	8" AP SLIPJOINT (N)	12" AP SLIPJOINT (N)	CABLE RAILING	ADJUST INLET	MODIFY INLET	REMOVE CONCRETE	REMOVE PIPE	REMOVE INLET	ABANDON INLET	ABANDON PIPE	SAND BACKFILL	CAP RISER	CAP INLET					
LF	LF	LF	LF	LF	LF	LF	LF	LF	LF	LF	LF	LF	LF	LF	FT	EA		LF	EA	EA	EA	EA	LF	EA	EA	CY	LF	EA	EA	LF	CY	EA	EA					
																																		G1-DI w/ DEPRESSION	76.76′ RT "GE1" 341+49.24	D-13	86	a
			7.8													1	DD					1												12" CSP RISER				b
24.7															18.5	1	S																	12" CSP				c
																																		HEADWALL	97′ RT "GE1" 341+49.24			d
																																		RSP				e
																											24.7							REMOVE 12" CSP				f
																													1					Remove DI				g
																														62.5	1.82			ABN 12" RCP				h
																																		CONCRETE COLLAR	51.85′ RT "GE1" 347+21.00	D-13	87	a
															11.6		S																	24" RCP				b
																																		CMP RISER TYPE A				c
																											28.0							REMOVE 24" RCP				d
																										1.2								REMOVE HW				e
																													1					ABANDON DI		D-13	88	a
																														52.0	3.40			ABANDON 18" RCP				b
																																	1	CAP DI		D-13	89	a
																														53.0	3.41			ABANDON 18" RCP				b
																													1					ABANDON DI				c
24.7			7.8													2						1				1.2	52.7		3	167.5	8.63		1	SHEET TOTALS				

THIS PLAN ACCURATE FOR DRAINAGE WORK ONLY.

DRAINAGE QUANTITIES
DQ-42

STATE OF CALIFORNIA - DEPARTMENT OF TRANSPORTATION
Caltrans® DESIGN

FUNCTIONAL SUPERVISOR: MARK PERTILE
CALCULATED-DESIGNED BY: MOHAMMAD ABDRABOH
CHECKED BY: ALAN R. BISI
REVISED BY
DATE REVISED

LAST REVISION 03-29-11 | DATE PLOTTED => 29-APR-2011 | TIME PLOTTED => 18:13

Dist	COUNTY	ROUTE	POST MILES TOTAL PROJECT	SHEET No.	TOTAL SHEETS
08	Riv	91	15.6/21.6	372	2028

REGISTERED CIVIL ENGINEER 3-29-10 DATE

4-25-11
PLANS APPROVAL DATE

REGISTERED PROFESSIONAL ENGINEER ALAN R. BISI No. C62808 Exp. 6-30-12 CIVIL STATE OF CALIFORNIA

THE STATE OF CALIFORNIA OR ITS OFFICERS OR AGENTS SHALL NOT BE RESPONSIBLE FOR THE ACCURACY OR COMPLETENESS OF SCANNED COPIES OF THIS PLAN SHEET.

ALTERNATIVE PIPE
ALLOWABLE PIPE MATERIAL AND PROTECTION

DESIGNATION	RCP	CSP (2-2/3"x½")			SSRP (3/4"x1" @ 11-1/2" PITCH)			PPC(C)	PPC(D,S)
	SIZE (INCH)	SIZE (INCH)	BITUM. COAT. THICKNESS	PA/PS THICKNESS	SIZE (INCH)	BITUM. COAT. THICKNESS	PA/PS THICKNESS	SIZE (INCH)	SIZE (INCH)
6" APC									6
12" APC TYPE A		12	0.064"	0.052"				12	
12" APC TYPE B					12	0.064"	0.052"		12
12" APC TYPE C	12				12	0.064"	0.052"		12
18" APC TYPE A	18	18	0.064"	0.052"	18	0.064"	0.052"		
18" APC TYPE B	18	18	0.064"	0.052"				18	
18" APC TYPE C		18	0.064"	0.052"				18	
18" APC TYPE D	18				18	0.064"	0.052"		
18" APC TYPE E	18	18	0.064"	0.052"				18	18
18" APC TYPE F	18								18
24" APC		24	0.079"	0.064"				24	
30" APC	30				30	0.079"	0.064"		30
30"x10" ARCH		30x10	0.079"	0.064"	30x10	0.079"	0.064"		
48" APC		48	0.079"	0.064"					

LEGENDS AND ABBREVIATIONS

S - STANDARD JOINT TYPE
P - POSITIVE JOINT TYPE
D - DOWNDRAIN JOINT TYPE
RCP - REINFORCED CONCRETE PIPE
PPC(C) - PASTIC PIPE CULVERT, TYPE C (CORRUGATED INTERIOR WALL)
PPC(D,S) - PLASTIC PIPE CULVERT, TYPE D OR S (SMOOTH INTERIOR WALL)
CSP - CORRUGATED STEEL PIPE
SSRP - STEEL SPIRAL RIBBED PIPE
GA. - GAUGE
BITUM. - BITUMINOUS
PA - POLYMERIZED ASPHALT
PS - POLYMERIC SHEET
w/ - WITH
Ω - SEE DRAINAGE DETAIL

Notes:

1. SUFFICIENT SPACE WAS NOT AVALABLE TO LIST ALL DRAINAGE ITEMS WITHIN A SINGLE TABLE ON A SHEET BORDER, THEREFORE THE LISTING OF THE FIRST GROUPING OF DRAINAGE ITEMS ARE REPEATED ON THE ODD NUMBERED ID CODE SHEETS (DQ-1, DQ-3, ETC.) AND THE LISTINGS OF THE REMAINING GROUP OF DRAINAGE ITEMS ARE REPEATED ON THE EVEN NUMBERED ID CODE SHEETS (DQ-2, DQ-4, ETC.).
2. THE PRECISE DETERMINATION OF THE FOLLOWING ITEMS WILL BE MADE BY THE ENGINEER IN THE FIELD: STATION, SKEW, LENGTH, FL ELEVATION, AND DEPTH OF STRUCTURE.
3. (N) - NOT A SEPARATE PAY ITEM; FOR INFORMATION ONLY.
4. * - SEE ROADWAY QUANTITIES FOR DRAINAGE ITEM TOTAL

DITCH EXCAVATION	CONCRETE (CHANNEL LINING)	STRUCTURAL CONCRETE, BOX CULVERT	MINOR CONCRETE (MINOR STRUCTURE)	MINOR CONCRETE (MISC. CONSTRUCTION)	CL. IV CONCRETE (BACKFILL) *	HMA-A *	PLACE AC (MISC. AREA) *	MISC. IRON AND STEEL	BAR REINFORCING STEEL	RSP: ¼-TON, METHOD B	RSP: FACING, METHOD B	RSP: NO. 2 BACKING, METHOD B	RSP: RSP FABRIC	FRAMES, GRATES AND COVERS: 24-12 (N)	24-13 (N)	¼" SOLID STEEL COVER (N)	12" X 12" PRECAST INLET	12" X 12" STEEL GRATE (TRAFFIC RATED)	DEBRIS RACK (N)	MANHOLE COVER (N)	MANHOLE COVER-PRESSURE LOCKING (N)	36" PRECAST MANHOLE SHAFT		MANHOLE SHAFT PIPE REDUCER	HEIGHT OF MANHOLE (N)	HEIGHT OF INLET "H" (N)	DRAINAGE INLET MARKER *	CONCRETE COLLAR (N)	RCP: 12" RCP	15" RCP	18" RCP	24" RCP	30" RCP	36" RCP	48" RCP	54" RCP	60" RCP (CL. V SPECIAL)	DESCRIPTION	STATION	DRAINAGE PLAN SHEET NO.	DRAINAGE SYSTEM NO. ⬡	DRAINAGE UNIT ◯
CY	CY	CY	CY	CY	CY	ton	yd²	lb	lb	CY	CY	CY	yd²	EA	EA	EA	EA	EA	EA	EA	EA	LF		EA	FT	FT	EA	EA	LF	LF	LF	LF	LF	LF	LF	LF	LF					
																																84.5						24" RCP		D-14	90	a
			1.17	1.10				326						1												4.0												TYPE G1 DI w/DEP	88.75' RT "GE1" 353+70.80			b
																															190.0							18" RCP				c
			1.17	1.10				326						1												4.0												TYPE G1 DI w/DEP	88.76' RT "GE1" 355+66.50			d
																																						18" AP TYPE F				e
			1.06	1.10				326						1												3.5												TYPE G1 DI w/DEP	88.76' RT "GE1" 356+50.00			f
																																						ABANDON 18" RCP				g
																																						REMOVE DI				h
			4.60					326						1												11.1												TYPE G2 DI	1.2' LT "GE1" 353+70.78	D-14	91	a
																																	228.0					30" RCP				b
			4.60					326						1												11.1												TYPE G2 DI	1.2' LT "GE1" 355+79.00			c
																																						REMOVE DI				d
																												1										CONCRETE COLLAR	25.62' LT "CRIDGE2" 5+32.81	D-14	92	a
																													36.2									12" RCP				b
			1.35					235											1							3.8	1											405 DI	20.00' LT "CRIDGE2" 5+73.12			c
																																						12" AP TYPE A				d
																																						AFES				e
											3.2	9.8																										RSP				f
																																						REMOVE PIPE				g
																																						REMOVE DI				h
																																						REMOVE DITCH				I
			13.95	3.30				1865				3.2	9.8	5					1								1	1	36.2		190.0	84.5	228.0					SHEET TOTALS				

DRAINAGE QUANTITIES
DQ-43

THIS PLAN ACCURATE FOR DRAINAGE WORK ONLY.

REVISED BY | DATE REVISED

CALCULATED-DESIGNED BY: MOHAMMAD ABDRABOH
CHECKED BY: ALAN R. BISI
FUNCTIONAL SUPERVISOR: MARK PERTILE

STATE OF CALIFORNIA - DEPARTMENT OF TRANSPORTATION
Caltrans
DESIGN

LAST REVISION 03-29-11 | DATE PLOTTED => 11-JUL-2011 | TIME PLOTTED => 12:40

Dist	COUNTY	ROUTE	POST MILES TOTAL PROJECT	SHEET No.	TOTAL SHEETS
08	Riv	91	15.6/21.6	373	2028

REGISTERED CIVIL ENGINEER 3-29-10 DATE

4-25-11
PLANS APPROVAL DATE

REGISTERED PROFESSIONAL ENGINEER ALAN R. BISI No. C62808 Exp. 6-30-12 CIVIL STATE OF CALIFORNIA

THE STATE OF CALIFORNIA OR ITS OFFICERS OR AGENTS SHALL NOT BE RESPONSIBLE FOR THE ACCURACY OR COMPLETENESS OF SCANNED COPIES OF THIS PLAN SHEET.

ALTERNATIVE PIPE ALLOWABLE PIPE MATERIAL AND PROTECTION

DESIGNATION	RCP	CSP (2-2/3"x½")			SSRP (3/4"x1" @ 11-1/2" PITCH)			PPC(C)	PPC(D,S)
	SIZE (INCH)	SIZE (INCH)	BITUM. COAT. THICKNESS	PA/PS THICKNESS	SIZE (INCH)	BITUM. COAT. THICKNESS	PA/PS THICKNESS	SIZE (INCH)	SIZE (INCH)
6" APC									6
12" APC TYPE A		12	0.064"	0.052"				12	
12" APC TYPE B					12	0.064"	0.052"		12
12" APC TYPE C	12				12	0.064"	0.052"		12
18" APC TYPE A	18	18	0.064"	0.052"	18	0.064"	0.052"		
18" APC TYPE B	18	18	0.064"	0.052"				18	
18" APC TYPE C		18	0.064"	0.052"				18	
18" APC TYPE D	18				18	0.064"	0.052"		
18" APC TYPE E	18	18	0.064"	0.052"				18	18
18" APC TYPE F	18								18
24" APC		24	0.079"	0.064"				24	
30" APC	30				30	0.079"	0.064"		30
30"x10" ARCH		30x10	0.079"	0.064"	30x10	0.079"	0.064"		
48" APC		48	0.079"	0.064"					

LEGENDS AND ABBREVIATIONS

S - STANDARD JOINT TYPE
P - POSITIVE JOINT TYPE
D - DOWNDRAIN JOINT TYPE
RCP - REINFORCED CONCRETE PIPE
PPC(C) - PASTIC PIPE CULVERT, TYPE C (CORRUGATED INTERIOR WALL)
PPC(D,S) - PLASTIC PIPE CULVERT, TYPE D OR S (SMOOTH INTERIOR WALL)
CSP - CORRUGATED STEEL PIPE
CAP - CORRUGATED ALUMINUM PIPE
SSRP - STEEL SPIRAL RIBBED PIPE
GA. - GAUGE
BITUM. - BITUMINOUS
PA - POLYMERIZED ASPHALT
PS - POLYMERIC SHEET
w/ - WITH
Ω - SEE DRAINAGE DETAIL

Notes:

1. SUFFICIENT SPACE WAS NOT AVALABLE TO LIST ALL DRAINAGE ITEMS WITHIN A SINGLE TABLE ON A SHEET BORDER, THEREFORE THE LISTING OF THE FIRST GROUPING OF DRAINAGE ITEMS ARE REPEATED ON THE ODD NUMBERED ID CODE SHEETS (DQ-1, DQ-3, ETC.) AND THE LISTINGS OF THE REMAINING GROUP OF DRAINAGE ITEMS ARE REPEATED ON THE EVEN NUMBERED ID CODE SHEETS (DQ-2, DQ-4, ETC.).
2. THE PRECISE DETERMINATION OF THE FOLLOWING ITEMS WILL BE MADE BY THE ENGINEER IN THE FIELD: STATION, SKEW, LENGTH, FL ELEVATION, AND DEPTH OF STRUCTURE.
3. (N) - NOT A SEPARATE PAY ITEM; FOR INFORMATION ONLY.
4. * - SEE ROADWAY QUANTITIES FOR DRAINAGE ITEM TOTAL

CSP								ALTERNATIVE PIPE													AFES	PIPE RISER						REMOVAL/ABANDON PAY ITEMS											
12" (14 GA.)	18" (14 GA.)	36" (10 GA.)	12" RISER (14 GA.)	48" RISER (10 GA.)	18" SLOTTED PIPE (14 GA.)	21" SLOTTED PIPE (14 GA.)	24" SLOTTED PIPE (14 GA.)	6" AP (TYPE __)	12" AP (TYPE __)	18" AP (TYPE __)	24" AP (TYPE __)	30" AP (TYPE __)	48" AP (TYPE __)	30" X 10" AP ARCH PIPE (TYPE __)	MAXIMUM COVER (N)	ELBOW (N)	PIPE JOINT CLASSIFICATION	8" GALVANIZED STEEL PIPE	8" GATE VALVE w/ SLEEVE & COVER	12" AFES	8" AP SLIPJOINT (N)	12" AP SLIPJOINT (N)	CABLE RAILING	ADJUST INLET	MODIFY INLET	REMOVE CONCRETE	REMOVE PIPE	REMOVE INLET	ABANDON INLET	ABANDON PIPE	SAND BACKFILL	CAP RISER	CAP INLET	DESCRIPTION	STATION	DRAINAGE PLAN SHEET NO.	DRAINAGE SYSTEM NO. ⬡	DRAINAGE UNIT ◯
LF	LF	LF	LF	LF	LF	LF	LF	LF	LF	LF	LF	LF	LF	LF	FT	EA		LF	EA	EA	EA	EA	LF	EA	EA	CY	LF	EA	EA	LF	CY	EA	EA					
															5.8		S																	24" RCP		D-14	90	a
																																		TYPE G1 DI w/DEP	88.75' RT "GE1" 353+70.80			b
															2.5		S																	18" RCP				c
																																		TYPE G1 DI w/DEP	88.76' RT "GE1" 355+66.50			d
										83.0					2.0		S																	18" AP TYPE F				e
																																		TYPE G1 DI w/DEP	88.76' RT "GE1" 356+50.00			f
																														57.0	3.73			ABANDON 18" RCP				g
																												1						REMOVE DI				h
																																		TYPE G2 DI	1.2' LT "GE1" 353+70.78	D-14	91	a
															9.0		S																	30" RCP				b
																																		TYPE G2 DI	1.2' LT "GE1" 355+79.00			c
																												1						REMOVE DI				d
																																		CONCRETE COLLAR	25.62' LT "CRIDGE2" 5+32.81	D-14	92	a
															2.5		S																	12" RCP				b
																																		405 DI	20.00' LT "CRIDGE2" 5+73.12			c
									29.2						2.4		S																	12" AP TYPE A				d
																				1														AFES				e
																																		RSP				f
																											16.0							REMOVE PIPE				g
																												1						REMOVE DI				h
																										18.33								REMOVE DITCH				I
									29.2	83.0										1						18.33	16.0	3		57.0	3.73			SHEET TOTALS				

THIS PLAN ACCURATE FOR DRAINAGE WORK ONLY.

DRAINAGE QUANTITIES
DQ-44

STATE OF CALIFORNIA - DEPARTMENT OF TRANSPORTATION
Caltrans® DESIGN

CALCULATED-DESIGNED BY MOHAMMAD ABDRABOH
CHECKED BY ALAN R. BISI
FUNCTIONAL SUPERVISOR MARK PERTILE
REVISED BY
DATE REVISED

LAST REVISION 03-29-11 DATE PLOTTED => 29-APR-2011 TIME PLOTTED => 18:14

Dist	COUNTY	ROUTE	POST MILES TOTAL PROJECT	SHEET No.	TOTAL SHEETS
08	Riv	91	15.6/21.6	374	2028

REGISTERED CIVIL ENGINEER 3-29-10 DATE

4-25-11
PLANS APPROVAL DATE

REGISTERED PROFESSIONAL ENGINEER ALAN R. BISI No. C62808 Exp. 6-30-12 CIVIL STATE OF CALIFORNIA

THE STATE OF CALIFORNIA OR ITS OFFICERS OR AGENTS SHALL NOT BE RESPONSIBLE FOR THE ACCURACY OR COMPLETENESS OF SCANNED COPIES OF THIS PLAN SHEET.

ALTERNATIVE PIPE ALLOWABLE PIPE MATERIAL AND PROTECTION

DESIGNATION	RCP	CSP (2-2/3"x½")			SSRP (3/4"x1" @ 11-1/2" PITCH)			PPC(C)	PPC(D,S)
	SIZE (INCH)	SIZE (INCH)	BITUM. COAT. THICKNESS	PA/PS THICKNESS	SIZE (INCH)	BITUM. COAT. THICKNESS	PA/PS THICKNESS	SIZE (INCH)	SIZE (INCH)
6" APC									6
12" APC TYPE A		12	0.064"	0.052"				12	
12" APC TYPE B					12	0.064"	0.052"		12
12" APC TYPE C	12				12	0.064"	0.052"		12
18" APC TYPE A	18	18	0.064"	0.052"	18	0.064"	0.052"		
18" APC TYPE B	18	18	0.064"	0.052"				18	
18" APC TYPE C		18	0.064"	0.052"				18	
18" APC TYPE D	18				18	0.064"	0.052"		
18" APC TYPE E	18	18	0.064"	0.052"				18	18
18" APC TYPE F	18								18
24" APC		24	0.079"	0.064"				24	
30" APC	30				30	0.079"	0.064"		30
30"x10" ARCH		30x10	0.079"	0.064"	30x10	0.079"	0.064"		
48" APC		48	0.079"	0.064"					

LEGENDS AND ABBREVIATIONS

S - STANDARD JOINT TYPE
P - POSITIVE JOINT TYPE
D - DOWNDRAIN JOINT TYPE
RCP - REINFORCED CONCRETE PIPE
PPC(C) - PASTIC PIPE CULVERT, TYPE C (CORRUGATED INTERIOR WALL)
PPC(D,S) - PLASTIC PIPE CULVERT, TYPE D OR S (SMOOTH INTERIOR WALL)
CSP - CORRUGATED STEEL PIPE
SSRP - STEEL SPIRAL RIBBED PIPE
GA. - GAUGE
BITUM. - BITUMINOUS
PA - POLYMERIZED ASPHALT
PS - POLYMERIC SHEET
w/ - WITH
Ω - SEE DRAINAGE DETAIL

Notes:

1. SUFFICIENT SPACE WAS NOT AVALABLE TO LIST ALL DRAINAGE ITEMS WITHIN A SINGLE TABLE ON A SHEET BORDER, THEREFORE THE LISTING OF THE FIRST GROUPING OF DRAINAGE ITEMS ARE REPEATED ON THE ODD NUMBERED ID CODE SHEETS (DQ-1, DQ-3, ETC.) AND THE LISTINGS OF THE REMAINING GROUP OF DRAINAGE ITEMS ARE REPEATED ON THE EVEN NUMBERED ID CODE SHEETS (DQ-2, DQ-4, ETC.).
2. THE PRECISE DETERMINATION OF THE FOLLOWING ITEMS WILL BE MADE BY THE ENGINEER IN THE FIELD: STATION, SKEW, LENGTH, FL ELEVATION, AND DEPTH OF STRUCTURE.
3. (N) - NOT A SEPARATE PAY ITEM; FOR INFORMATION ONLY.
4. * - SEE ROADWAY QUANTITIES FOR DRAINAGE ITEM TOTAL

DITCH EXCAVATION	CONCRETE (CHANNEL LINING)	STRUCTURAL CONCRETE, BOX CULVERT	MINOR CONCRETE (MINOR STRUCTURE)	MINOR CONCRETE (MISC. CONSTRUCTION)	CL. IV CONCRETE (BACKFILL) *	HMA-A *	PLACE AC (MISC. AREA) *	MISC. IRON AND STEEL	BAR REINFORCING STEEL	RSP ¼-TON, METHOD B	RSP FACING, METHOD B	RSP NO. 2 BACKING, METHOD B	RSP FABRIC	FRAMES, GRATES AND COVERS 24-12 (N)	24-13 (N)	¼" SOLID STEEL COVER (N)	12" X 12" PRECAST INLET	12" X 12" STEEL GRATE (TRAFFIC RATED)	DEBRIS RACK (N)	MANHOLE COVER (N)	MANHOLE COVER-PRESSURE LOCKING (N)	36" PRECAST MANHOLE SHAFT		MANHOLE SHAFT PIPE REDUCER	HEIGHT OF MANHOLE (N)	HEIGHT OF INLET "H" (N)	DRAINAGE INLET MARKER *	CONCRETE COLLAR (N)	RCP 12" RCP	15" RCP	18" RCP	24" RCP	30" RCP	36" RCP	48" RCP	54" RCP	60" RCP (CL. V SPECIAL)	DESCRIPTION	STATION	DRAINAGE PLAN SHEET NO.	DRAINAGE SYSTEM NO. ⬡	DRAINAGE UNIT ◯
CY	CY	CY	CY	CY	CY	ton	yd²	lb	lb	CY	CY	CY	yd²	EA	EA	EA	EA	EA	EA	EA	EA	LF		EA	FT	FT	EA	EA	LF	LF	LF	LF	LF	LF	LF	LF	LF					
			0.95	1.00				326						1												3.0												G1 DI W/ DEPRESSION	95.93' LT "GE1" 358+00.00	D-14	93	a
																																						18" AP TYPE D				b
		9.33							2688.0																													2' x 1' RCB				c
			1.62	1.00				634						2												2.8												GD1 DI W/ DEPRESSION	95.96' LT "GE1" 359+00.00			d
		1.66							504.0																													2' x 1' RCB				e
			1.31	0.70				326						1												2.7												G2 DI W/ DEPRESSION	95.96' LT "GE1" 359+15.00			f
		26.66							7680.0																													2' x 1' RCB				g
			0.79	0.70				326						1												1.8												G2 DI W/ DEPRESSION	102.78' LT "GE1" 360+77.67			h
		3.33							960.0																													2' x 1' RCB				i
			0.75					326						1												1.7												G2 DI W/ DEPRESSION	103.67' RT "GE1" 361+01.59			j
																											1												CONCRETE COLLAR	34.82' LT "GE1" 358+39.51	D-14	94	a
																																42.0						24" RCP				b
			1.37	0.69				326						1												3.3												G2 DI W/ DEPRESSION	95.96' LT "GE1" 358+39.54			c
																																						REMOVE DI				d
																											1												CONCRETE COLLAR	46.88' RT "GE1" 358+39.50	D-14	95	a
																														39.0								18" RCP				b
			0.99	1.00				326						1												3.2												G1 DI W/ DEPRESSION	88.50' RT 358+39.52			c
																														20.0								18" RCP				d
			0.95	1.00				326						1												2.9												G1 DI W/ DEPRESSION	88.50' RT 358+63.50			e
																																						REMOVE DI				f
		40.98	8.73	6.09				2916	11832.0					9													2			59.0	42.0						SHEET TOTALS				

THIS PLAN ACCURATE FOR DRAINAGE WORK ONLY.

DRAINAGE QUANTITIES
DQ-45

REVISED BY | DATE REVISED

CALCULATED-DESIGNED BY: MOHAMMAD ABDRABOH
CHECKED BY: ALAN R. BISI
FUNCTIONAL SUPERVISOR: MARK PERTILE

STATE OF CALIFORNIA - DEPARTMENT OF TRANSPORTATION
Caltrans
DESIGN

LAST REVISION 03-29-11 | DATE PLOTTED => 11-JUL-2011 | TIME PLOTTED => 12:40

Dist	COUNTY	ROUTE	POST MILES TOTAL PROJECT	SHEET No.	TOTAL SHEETS
08	Riv	91	15.6/21.6	375	2028

REGISTERED CIVIL ENGINEER 3-29-10 DATE

4-25-11
PLANS APPROVAL DATE

REGISTERED PROFESSIONAL ENGINEER ALAN R. BISI No. C62808 Exp. 6-30-12 CIVIL STATE OF CALIFORNIA

THE STATE OF CALIFORNIA OR ITS OFFICERS OR AGENTS SHALL NOT BE RESPONSIBLE FOR THE ACCURACY OR COMPLETENESS OF SCANNED COPIES OF THIS PLAN SHEET.

ALTERNATIVE PIPE ALLOWABLE PIPE MATERIAL AND PROTECTION

DESIGNATION	RCP	CSP (2-2/3"x½")			SSRP (3/4"x1" @ 11-1/2" PITCH)			PPC(C)	PPC(D,S)
	SIZE (INCH)	SIZE (INCH)	BITUM. COAT. THICKNESS	PA/PS THICKNESS	SIZE (INCH)	BITUM. COAT. THICKNESS	PA/PS THICKNESS	SIZE (INCH)	SIZE (INCH)
6" APC									6
12" APC TYPE A		12	0.064"	0.052"				12	
12" APC TYPE B					12	0.064"	0.052"		12
12" APC TYPE C	12				12	0.064"	0.052"		12
18" APC TYPE A	18	18	0.064"	0.052"	18	0.064"	0.052"		
18" APC TYPE B	18	18	0.064"	0.052"				18	
18" APC TYPE C		18	0.064"	0.052"				18	
18" APC TYPE D	18				18	0.064"	0.052"		
18" APC TYPE E	18	18	0.064"	0.052"				18	18
18" APC TYPE F	18								18
24" APC		24	0.079"	0.064"				24	
30" APC	30				30	0.079"	0.064"		30
30"x10" ARCH		30x10	0.079"	0.064"	30x10	0.079"	0.064"		
48" APC		48	0.079"	0.064"					

LEGENDS AND ABBREVIATIONS

S - STANDARD JOINT TYPE
P - POSITIVE JOINT TYPE
D - DOWNDRAIN JOINT TYPE
RCP - REINFORCED CONCRETE PIPE
PPC(C) - PASTIC PIPE CULVERT, TYPE C (CORRUGATED INTERIOR WALL)
PPC(D,S) - PLASTIC PIPE CULVERT, TYPE D OR S (SMOOTH INTERIOR WALL)
CSP - CORRUGATED STEEL PIPE
CAP - CORRUGATED ALUMINUM PIPE
SSRP - STEEL SPIRAL RIBBED PIPE
GA. - GAUGE
BITUM. - BITUMINOUS
PA - POLYMERIZED ASPHALT
PS - POLYMERIC SHEET
w/ - WITH
Ω - SEE DRAINAGE DETAIL

Notes:

1. SUFFICIENT SPACE WAS NOT AVALABLE TO LIST ALL DRAINAGE ITEMS WITHIN A SINGLE TABLE ON A SHEET BORDER, THEREFORE THE LISTING OF THE FIRST GROUPING OF DRAINAGE ITEMS ARE REPEATED ON THE ODD NUMBERED ID CODE SHEETS (DQ-1, DQ-3, ETC.) AND THE LISTINGS OF THE REMAINING GROUP OF DRAINAGE ITEMS ARE REPEATED ON THE EVEN NUMBERED ID CODE SHEETS (DQ-2, DQ-4, ETC.).
2. THE PRECISE DETERMINATION OF THE FOLLOWING ITEMS WILL BE MADE BY THE ENGINEER IN THE FIELD: STATION, SKEW, LENGTH, FL ELEVATION, AND DEPTH OF STRUCTURE.
3. (N) - NOT A SEPARATE PAY ITEM; FOR INFORMATION ONLY.
4. * - SEE ROADWAY QUANTITIES FOR DRAINAGE ITEM TOTAL

CSP								ALTERNATIVE PIPE													AFES	PIPE RISER						REMOVAL/ABANDON PAY ITEMS								DESCRIPTION	STATION	DRAINAGE PLAN SHEET NO.	DRAINAGE SYSTEM NO. ⬡	DRAINAGE UNIT ◯
12" (14 GA.)	18" (14 GA.)	36" (10 GA.)	12" RISER (14 GA.)	48" RISER (10 GA.)	18" SLOTTED PIPE (14 GA.)	21" SLOTTED PIPE (14 GA.)	24" SLOTTED PIPE (14 GA.)	6" AP (TYPE __)	12" AP (TYPE __)	18" AP (TYPE __)	24" AP (TYPE __)	30" AP (TYPE __)	48" AP (TYPE __)	30" X 10" AP ARCH PIPE (TYPE __)	MAXIMUM COVER (N)	ELBOW (N)	PIPE JOINT CLASSIFICATION	8" GALVANIZED STEEL PIPE	8" GATE VALVE w/ SLEEVE & COVER	12" AFES	8" AP SLIPJOINT (N)	12" AP SLIPJOINT (N)	CABLE RAILING	ADJUST INLET	MODIFY INLET	REMOVE CONCRETE	REMOVE PIPE	REMOVE INLET	ABANDON INLET	ABANDON PIPE	SAND BACKFILL	CAP RISER	CAP INLET					
LF	LF	LF	LF	LF	LF	LF	LF	LF	LF	LF	LF	LF	LF	LF	FT	EA		LF	EA	EA	EA	EA	LF	EA	EA	CY	LF	EA	EA	LF	CY	EA	EA					
																																		G1 DI W/ DEPRESSION	95.93' LT "GE1" 358+00.00	D-14	93	a
										35.7					1.6		S																	18" AP TYPE D				b
															1.0																			2' x 1' RCB				c
																																		GD1 DI W/ DEPRESSION	95.96' LT "GE1" 359+00.00			d
															1.0																			2' x 1' RCB				e
																																		G2 DI W/ DEPRESSION	95.96' LT "GE1" 359+15.00			f
															1.0																			2' x 1' RCB				g
																																		G2 DI W/ DEPRESSION	102.78' LT "GE1" 360+77.67			h
															1.0																			2' x 1' RCB				i
																																		G2 DI W/ DEPRESSION	103.67' RT "GE1" 361+01.59			j
																																		CONCRETE COLLAR	34.82' LT "GE1" 358+39.51	D-14	94	a
															2.4		S																	24" RCP				b
																																		G2 DI W/ DEPRESSION	95.96' LT "GE1" 358+39.54			c
																												1						REMOVE DI				d
																																		CONCRETE COLLAR	46.88' RT "GE1" 358+39.50	D-14	95	a
															3.0		S																	18" RCP				b
																																		G1 DI W/ DEPRESSION	88.50' RT 358+39.52			c
															1.5		S																	18" RCP				d
																																		G1 DI W/ DEPRESSION	88.50' RT 358+63.50			e
																												1						REMOVE DI				f
										35.7																		2						SHEET TOTALS				

THIS PLAN ACCURATE FOR DRAINAGE WORK ONLY.

DRAINAGE QUANTITIES
DQ-46

STATE OF CALIFORNIA - DEPARTMENT OF TRANSPORTATION
Caltrans DESIGN

CALCULATED-DESIGNED BY MOHAMMAD ABDRABOH
CHECKED BY ALAN R. BISI
FUNCTIONAL SUPERVISOR MARK PERTILE
REVISED BY
DATE REVISED

LAST REVISION 03-29-11
DATE PLOTTED => 29-APR-2011
TIME PLOTTED => 18:14

Dist	COUNTY	ROUTE	POST MILES TOTAL PROJECT	SHEET No.	TOTAL SHEETS
08	Riv	91	15.6/21.6	376	2028

REGISTERED CIVIL ENGINEER 3-29-10 DATE

4-25-11
PLANS APPROVAL DATE

REGISTERED PROFESSIONAL ENGINEER ALAN R. BISI No. C62808 Exp. 6-30-12 CIVIL STATE OF CALIFORNIA

THE STATE OF CALIFORNIA OR ITS OFFICERS OR AGENTS SHALL NOT BE RESPONSIBLE FOR THE ACCURACY OR COMPLETENESS OF SCANNED COPIES OF THIS PLAN SHEET.

ALTERNATIVE PIPE ALLOWABLE PIPE MATERIAL AND PROTECTION

DESIGNATION	RCP	CSP (2-2/3"x1/2")			SSRP (3/4"x1" @ 11-1/2" PITCH)			PPC(C)	PPC(D,S)
	SIZE (INCH)	SIZE (INCH)	BITUM. COAT. THICKNESS	PA/PS THICKNESS	SIZE (INCH)	BITUM. COAT. THICKNESS	PA/PS THICKNESS	SIZE (INCH)	SIZE (INCH)
6" APC									6
12" APC TYPE A		12	0.064"	0.052"				12	
12" APC TYPE B					12	0.064"	0.052"		12
12" APC TYPE C	12				12	0.064"	0.052"		12
18" APC TYPE A	18	18	0.064"	0.052"	18	0.064"	0.052"		
18" APC TYPE B	18	18	0.064"	0.052"				18	
18" APC TYPE C		18	0.064"	0.052"				18	
18" APC TYPE D	18				18	0.064"	0.052"		
18" APC TYPE E	18	18	0.064"	0.052"				18	18
18" APC TYPE F	18								18
24" APC		24	0.079"	0.064"				24	
30" APC	30				30	0.079"	0.064"		30
30"x10" ARCH		30x10	0.079"	0.064"	30x10	0.079"	0.064"		
48" APC		48	0.079"	0.064"					

LEGENDS AND ABBREVIATIONS

S - STANDARD JOINT TYPE
P - POSITIVE JOINT TYPE
D - DOWNDRAIN JOINT TYPE
RCP - REINFORCED CONCRETE PIPE
PPC(C) - PASTIC PIPE CULVERT, TYPE C (CORRUGATED INTERIOR WALL)
PPC(D,S) - PLASTIC PIPE CULVERT, TYPE D OR S (SMOOTH INTERIOR WALL)
CSP - CORRUGATED STEEL PIPE
SSRP - STEEL SPIRAL RIBBED PIPE
GA. - GAUGE
BITUM. - BITUMINOUS
PA - POLYMERIZED ASPHALT
PS - POLYMERIC SHEET
w/ - WITH
Ω - SEE DRAINAGE DETAIL

Notes:

1. SUFFICIENT SPACE WAS NOT AVALABLE TO LIST ALL DRAINAGE ITEMS WITHIN A SINGLE TABLE ON A SHEET BORDER, THEREFORE THE LISTING OF THE FIRST GROUPING OF DRAINAGE ITEMS ARE REPEATED ON THE ODD NUMBERED ID CODE SHEETS (DQ-1, DQ-3, ETC.) AND THE LISTINGS OF THE REMAINING GROUP OF DRAINAGE ITEMS ARE REPEATED ON THE EVEN NUMBERED ID CODE SHEETS (DQ-2, DQ-4, ETC.).
2. THE PRECISE DETERMINATION OF THE FOLLOWING ITEMS WILL BE MADE BY THE ENGINEER IN THE FIELD: STATION, SKEW, LENGTH, FL ELEVATION, AND DEPTH OF STRUCTURE.
3. (N) - NOT A SEPARATE PAY ITEM; FOR INFORMATION ONLY.
4. * - SEE ROADWAY QUANTITIES FOR DRAINAGE ITEM TOTAL

DITCH EXCAVATION	CONCRETE (CHANNEL LINING)	STRUCTURAL CONCRETE, BOX CULVERT	MINOR CONCRETE (MINOR STRUCTURE)	MINOR CONCRETE (MISC. CONSTRUCTION)	CL. IV CONCRETE (BACKFILL) *	HMA-A *	PLACE AC (MISC. AREA) *	MISC. IRON AND STEEL	BAR REINFORCING STEEL	RSP 1/4-TON, METHOD B	RSP FACING, METHOD B	RSP NO. 2 BACKING, METHOD B	RSP FABRIC	FRAMES, GRATES AND COVERS 24-12 (N)	24-13 (N)	1/4" SOLID STEEL COVER (N)	12" X 12" PRECAST INLET	12" X 12" STEEL GRATE (TRAFFIC RATED)	DEBRIS RACK (N)	MANHOLE COVER (N)	MANHOLE COVER-PRESSURE LOCKING (N)	36" PRECAST MANHOLE SHAFT		MANHOLE SHAFT PIPE REDUCER	HEIGHT OF MANHOLE (N)	HEIGHT OF INLET "H" (N)	DRAINAGE INLET MARKER *	CONCRETE COLLAR (N)	RCP 12" RCP	15" RCP	18" RCP	24" RCP	30" RCP	36" RCP	48" RCP	54" RCP	60" RCP (CL. V SPECIAL)	DESCRIPTION	STATION	DRAINAGE PLAN SHEET NO.	DRAINAGE SYSTEM NO. ⬡	DRAINAGE UNIT ◯
CY	CY	CY	CY	CY	CY	ton	yd²	lb	lb	CY	CY	CY	yd²	EA	EA	EA	EA	EA	EA	EA	EA	LF		EA	FT	FT	EA	EA	LF	LF	LF	LF	LF	LF	LF	LF	LF					
																																						48" AP		D-14	96	a
				2.31																								1										CONCRETE COLLAR W/ THRUST BLOCK	112.40' LT "GE1" 361+09.37			b
																																			8.0			48" RCP				c
					7.00																																	CONC. BACKFILL				d
			2.05					435												1				5.9														PRESSURE MH W/ BLEEDER ASS'Y	100.20' LT "GE1" 361+11.92			e
																																			54.0			48" RCP				f
																																			52.9			48" RCP				g
					3.30																																	CONC. BACKFILL				h
				2.31																								1										CONCRETE COLLAR W/ THRUST BLOCK	96.79' RT "GE1" 361+06.82			i
																																						48" AP				j
			3.58					235											1					8.3														MH	126.68' RT "GE1" 361+06.44			k
																																						REMOVE CULVERT				l
																																						REMOVE CULVERT				m
																												1										CONCRETE COLLAR	64.87' LT "GE1" 362+89.90	D-14	97	a
																													40.0									12" RCP				b
			0.99	1.00				326						1												3.2												G1 DI W/ DEPRESSION	107.50' LT "GE1" 362+89.90			c
																																						REMOVE DI				d
																																						ABANDON 12" RCP				e
																																						ABANDON DI				f
			6.62	5.62	10.30			996						1					1	1							3	40.0							114.9			SHEET TOTALS				

THIS PLAN ACCURATE FOR DRAINAGE WORK ONLY.

DRAINAGE QUANTITIES
DQ-47

REVISED BY | DATE REVISED

CALCULATED-DESIGNED BY: MOHAMMAD ABDRABOH
CHECKED BY: ALAN R. BISI
FUNCTIONAL SUPERVISOR: MARK PERTILE

STATE OF CALIFORNIA - DEPARTMENT OF TRANSPORTATION
Caltrans DESIGN

LAST REVISION 03-29-11 | DATE PLOTTED => 11-JUL-2011 | TIME PLOTTED => 12:40

Dist	COUNTY	ROUTE	POST MILES TOTAL PROJECT	SHEET No.	TOTAL SHEETS
08	Riv	91	15.6/21.6	377	2028

REGISTERED CIVIL ENGINEER 3-29-10 DATE

4-25-11
PLANS APPROVAL DATE

REGISTERED PROFESSIONAL ENGINEER ALAN R. BISI No. C62808 Exp. 6-30-12 CIVIL STATE OF CALIFORNIA

THE STATE OF CALIFORNIA OR ITS OFFICERS OR AGENTS SHALL NOT BE RESPONSIBLE FOR THE ACCURACY OR COMPLETENESS OF SCANNED COPIES OF THIS PLAN SHEET.

ALTERNATIVE PIPE ALLOWABLE PIPE MATERIAL AND PROTECTION

DESIGNATION	RCP	CSP (2-2/3"x½")			SSRP (3/4"x1" @ 11-1/2" PITCH)			PPC(C)	PPC(D,S)
	SIZE (INCH)	SIZE (INCH)	BITUM. COAT. THICKNESS	PA/PS THICKNESS	SIZE (INCH)	BITUM. COAT. THICKNESS	PA/PS THICKNESS	SIZE (INCH)	SIZE (INCH)
6" APC									6
12" APC TYPE A		12	0.064"	0.052"				12	
12" APC TYPE B					12	0.064"	0.052"		12
12" APC TYPE C	12				12	0.064"	0.052"		12
18" APC TYPE A	18	18	0.064"	0.052"	18	0.064"	0.052"		
18" APC TYPE B	18	18	0.064"	0.052"				18	
18" APC TYPE C		18	0.064"	0.052"				18	
18" APC TYPE D	18				18	0.064"	0.052"		
18" APC TYPE E	18	18	0.064"	0.052"				18	18
18" APC TYPE F	18								18
24" APC		24	0.079"	0.064"				24	
30" APC	30				30	0.079"	0.064"		30
30"x10" ARCH		30x10	0.079"	0.064"	30x10	0.079"	0.064"		
48" APC		48	0.079"	0.064"					

LEGENDS AND ABBREVIATIONS

S - STANDARD JOINT TYPE
P - POSITIVE JOINT TYPE
D - DOWNDRAIN JOINT TYPE
RCP - REINFORCED CONCRETE PIPE
PPC(C) - PASTIC PIPE CULVERT, TYPE C (CORRUGATED INTERIOR WALL)
PPC(D,S) - PLASTIC PIPE CULVERT, TYPE D OR S (SMOOTH INTERIOR WALL)
CSP - CORRUGATED STEEL PIPE
CAP - CORRUGATED ALUMINUM PIPE
SSRP - STEEL SPIRAL RIBBED PIPE
GA. - GAUGE
BITUM. - BITUMINOUS
PA - POLYMERIZED ASPHALT
PS - POLYMERIC SHEET
w/ - WITH
Ω - SEE DRAINAGE DETAIL

Notes:

1. SUFFICIENT SPACE WAS NOT AVALABLE TO LIST ALL DRAINAGE ITEMS WITHIN A SINGLE TABLE ON A SHEET BORDER, THEREFORE THE LISTING OF THE FIRST GROUPING OF DRAINAGE ITEMS ARE REPEATED ON THE ODD NUMBERED ID CODE SHEETS (DQ-1, DQ-3, ETC.) AND THE LISTINGS OF THE REMAINING GROUP OF DRAINAGE ITEMS ARE REPEATED ON THE EVEN NUMBERED ID CODE SHEETS (DQ-2, DQ-4, ETC.).
2. THE PRECISE DETERMINATION OF THE FOLLOWING ITEMS WILL BE MADE BY THE ENGINEER IN THE FIELD: STATION, SKEW, LENGTH, FL ELEVATION, AND DEPTH OF STRUCTURE.
3. (N) - NOT A SEPARATE PAY ITEM; FOR INFORMATION ONLY.
4. * - SEE ROADWAY QUANTITIES FOR DRAINAGE ITEM TOTAL

CSP 12" (14 GA.) LF	CSP 18" (14 GA.) LF	CSP 36" (10 GA.) LF	CSP 12" RISER (14 GA.) LF	CSP 48" RISER (10 GA.) LF	CSP 18" SLOTTED PIPE (14 GA.) LF	CSP 21" SLOTTED PIPE (14 GA.) LF	CSP 24" SLOTTED PIPE (14 GA.) LF	ALTERNATIVE PIPE 6" AP (TYPE __) LF	ALTERNATIVE PIPE 12" AP (TYPE __) LF	ALTERNATIVE PIPE 18" AP (TYPE __) LF	ALTERNATIVE PIPE 24" AP (TYPE __) LF	ALTERNATIVE PIPE 30" AP (TYPE __) LF	ALTERNATIVE PIPE 48" AP (TYPE __) LF	ALTERNATIVE PIPE 30" X 10" AP ARCH PIPE (TYPE __) LF	MAXIMUM COVER (N) FT	ELBOW (N) EA	PIPE JOINT CLASSIFICATION	8" GALVANIZED STEEL PIPE LF	8" GATE VALVE w/ SLEEVE & COVER EA	AFES 12" AFES EA	PIPE RISER 8" AP SLIPJOINT (N) EA	PIPE RISER 12" AP SLIPJOINT (N) EA	CABLE RAILING LF	ADJUST INLET EA	MODIFY INLET EA	REMOVAL/ABANDON PAY ITEMS REMOVE CONCRETE CY	REMOVE PIPE LF	REMOVE INLET EA	ABANDON INLET EA	ABANDON PIPE LF	SAND BACKFILL CY	CAP RISER EA	CAP INLET EA	DESCRIPTION	STATION	DRAINAGE PLAN SHEET NO.	DRAINAGE SYSTEM NO. ⬡	DRAINAGE UNIT ◯
													27.6		23.0		P																		48" AP		D-14	96	a
																																			CONCRETE COLLAR W/ THRUST BLOCK	112.40' LT "GE1" 361+09.37			b
															23.0		P																		48" RCP				c
																																			CONC. BACKFILL				d
																		20.0	1																PRESSURE MH W/ BLEEDER ASS'Y	100.20' LT "GE1" 361+11.92			e
															2.0		P																		48" RCP				f
															2.0		P																		48" RCP				g
																																			CONC. BACKFILL				h
																																			CONCRETE COLLAR W/ THRUST BLOCK	96.79' RT "GE1" 361+06.82			i
													39.4		20.0		P																		48" AP				j
																																			MH	126.68' RT "GE1" 361+06.44			k
																											20.0								REMOVE CULVERT				l
																											20.0								REMOVE CULVERT				m
																																			CONCRETE COLLAR	64.87' LT "GE1" 362+89.90	D-14	97	a
															4.0		S																		12" RCP				b
																																			G1 DI W/ DEPRESSION	107.50' LT "GE1" 362+89.90			c
																												1							REMOVE DI				d
																														64.0	1.85				ABANDON 12" RCP				e
																													1						ABANDON DI				f
													67.0					20.0	1								40.0	1	1	64.0	1.85				SHEET TOTALS				

THIS PLAN ACCURATE FOR DRAINAGE WORK ONLY.

DRAINAGE QUANTITIES
DQ-48

STATE OF CALIFORNIA - DEPARTMENT OF TRANSPORTATION
Caltrans® DESIGN

FUNCTIONAL SUPERVISOR: MARK PERTILE
CALCULATED-DESIGNED BY: MOHAMMAD ABDRABOH
CHECKED BY: ALAN R. BISI
REVISED BY
DATE REVISED

LAST REVISION 03-29-11 | DATE PLOTTED => 29-APR-2011 | TIME PLOTTED => 18:14

Dist	COUNTY	ROUTE	POST MILES TOTAL PROJECT	SHEET No.	TOTAL SHEETS
08	Riv	91	15.6/21.6	378	2028

REGISTERED CIVIL ENGINEER 3-29-10 DATE

4-25-11
PLANS APPROVAL DATE

REGISTERED PROFESSIONAL ENGINEER ALAN R. BISI No. C62808 Exp. 6-30-12 CIVIL STATE OF CALIFORNIA

THE STATE OF CALIFORNIA OR ITS OFFICERS OR AGENTS SHALL NOT BE RESPONSIBLE FOR THE ACCURACY OR COMPLETENESS OF SCANNED COPIES OF THIS PLAN SHEET.

ALTERNATIVE PIPE
ALLOWABLE PIPE MATERIAL AND PROTECTION

DESIGNATION	RCP	CSP (2-2/3"x½")			SSRP (3/4"x1" @ 11-1/2" PITCH)			PPC(C)	PPC(D,S)
	SIZE (INCH)	SIZE (INCH)	BITUM. COAT. THICKNESS	PA/PS THICKNESS	SIZE (INCH)	BITUM. COAT. THICKNESS	PA/PS THICKNESS	SIZE (INCH)	SIZE (INCH)
6" APC									6
12" APC TYPE A		12	0.064"	0.052"				12	
12" APC TYPE B					12	0.064"	0.052"		12
12" APC TYPE C	12				12	0.064"	0.052"		12
18" APC TYPE A	18	18	0.064"	0.052"	18	0.064"	0.052"		
18" APC TYPE B	18	18	0.064"	0.052"				18	
18" APC TYPE C		18	0.064"	0.052"				18	
18" APC TYPE D	18				18	0.064"	0.052"		
18" APC TYPE E	18	18	0.064"	0.052"				18	18
18" APC TYPE F	18								18
24" APC		24	0.079"	0.064"				24	
30" APC	30				30	0.079"	0.064"		30
30"x10" ARCH		30x10	0.079"	0.064"	30x10	0.079"	0.064"		
48" APC		48	0.079"	0.064"					

LEGENDS AND ABBREVIATIONS

S - STANDARD JOINT TYPE
P - POSITIVE JOINT TYPE
D - DOWNDRAIN JOINT TYPE
RCP - REINFORCED CONCRETE PIPE
PPC(C) - PASTIC PIPE CULVERT, TYPE C (CORRUGATED INTERIOR WALL)
PPC(D,S) - PLASTIC PIPE CULVERT, TYPE D OR S (SMOOTH INTERIOR WALL)
CSP - CORRUGATED STEEL PIPE
SSRP - STEEL SPIRAL RIBBED PIPE
GA. - GAUGE
BITUM. - BITUMINOUS
PA - POLYMERIZED ASPHALT
PS - POLYMERIC SHEET
w/ - WITH
Ω - SEE DRAINAGE DETAIL

Notes:

1. SUFFICIENT SPACE WAS NOT AVALABLE TO LIST ALL DRAINAGE ITEMS WITHIN A SINGLE TABLE ON A SHEET BORDER, THEREFORE THE LISTING OF THE FIRST GROUPING OF DRAINAGE ITEMS ARE REPEATED ON THE ODD NUMBERED ID CODE SHEETS (DQ-1, DQ-3, ETC.) AND THE LISTINGS OF THE REMAINING GROUP OF DRAINAGE ITEMS ARE REPEATED ON THE EVEN NUMBERED ID CODE SHEETS (DQ-2, DQ-4, ETC.).
2. THE PRECISE DETERMINATION OF THE FOLLOWING ITEMS WILL BE MADE BY THE ENGINEER IN THE FIELD: STATION, SKEW, LENGTH, FL ELEVATION, AND DEPTH OF STRUCTURE.
3. (N) - NOT A SEPARATE PAY ITEM; FOR INFORMATION ONLY.
4. * - SEE ROADWAY QUANTITIES FOR DRAINAGE ITEM TOTAL

DITCH EXCAVATION	CONCRETE (CHANNEL LINING)	STRUCTURAL CONCRETE, BOX CULVERT	MINOR CONCRETE (MINOR STRUCTURE)	MINOR CONCRETE (MISC. CONSTRUCTION)	CL. IV CONCRETE (BACKFILL) *	HMA-A *	PLACE AC (MISC. AREA) *	MISC. IRON AND STEEL	BAR REINFORCING STEEL	RSP: ¼-TON, METHOD B	RSP: FACING, METHOD B	RSP: NO. 2 BACKING, METHOD B	RSP: RSP FABRIC	FRAMES, GRATES AND COVERS: 24-12 (N)	24-13 (N)	¼" SOLID STEEL COVER (N)	12" X 12" PRECAST INLET	12" X 12" STEEL GRATE (TRAFFIC RATED)	DEBRIS RACK (N)	MANHOLE COVER (N)	MANHOLE COVER-PRESSURE LOCKING (N)	36" PRECAST MANHOLE SHAFT		MANHOLE SHAFT PIPE REDUCER	HEIGHT OF MANHOLE (N)	HEIGHT OF INLET "H" (N)	DRAINAGE INLET MARKER *	CONCRETE COLLAR (N)	RCP: 12" RCP	15" RCP	18" RCP	24" RCP	30" RCP	36" RCP	48" RCP	54" RCP	60" RCP (CL. V SPECIAL)	DESCRIPTION	STATION	DRAINAGE PLAN SHEET NO.	DRAINAGE SYSTEM NO. ⬡	DRAINAGE UNIT ◯
CY	CY	CY	CY	CY	CY	ton	yd²	lb	lb	CY	CY	CY	yd²	EA	EA	EA	EA	EA	EA	EA	EA	LF		EA	FT	FT	EA	EA	LF	LF	LF	LF	LF	LF	LF	LF	LF					
			1.90					435												1					5.3													MH	3.0' RT "GE1" 364+74.80	D-15	98	a
																															107.0							24" RCP				b
			0.99	1.00				326						1												3.2												G1 DI W/ DEPRESSION	33.73' RT "14EBOFF1" 364+78			c
																															26.0							18" RCP				d
			1.62	1.50				634						2												2.8												GD1 DI W/ DEP	33.73' RT "14EBOFF1" 365+08			e
																													26.1									12" RCP				f
			0.95	1.00				326						1												2.5												G1 DI W/ DEPRESSION	38.0' RT "14EBOFF1" 365+38			g
																											1											CONCRETE COLLLAR	69.56' LT "GE1" 366+20.21	D-15	99	a
					0.59																										4.6							18" RCP w/ CONC. BACKFILL				b
			0.73	1.00				326						1												2.3												G1 DI W/ DEPRESSION	76.76' LT "GE1" 366+20.20			c
																																						REMOVE DI				d
			0.53	1.00				326						1												1.6												G1 DI W/ DEPRESSION	6.30' RT "14WBON1" 365+44.30	D-15	100	a
					7.46																								71.9									12" RCP W/ CONC. BACKFILL				b
					5.18																								69.5									12" RCP W/ CONC. BACKFILL				c
			0.30			0.38	3.50	177								1										3.5									3.5			OMP DI W/ AC APRON	9.10' RT "14WBON1" 366+93.31			d
																													53.3									12" RCP				e
			0.76	1.00				326						1												2.4												G1 DI W/ DEPRESSION	46.00' LT "14WBON1" 367+06.00			f
																																						12" CSP				g
																																						12" CSP RISER				h
			0.30					177								1										4.0												OMP DI	51.34' LT "14WBON1" 367+06.41			i
			8.08	6.50	13.23	0.38	3.50	3053						7		2				1								1	220.8		137.6			3.5				SHEET TOTALS				

THIS PLAN ACCURATE FOR DRAINAGE WORK ONLY.

DRAINAGE QUANTITIES
DQ-49

STATE OF CALIFORNIA - DEPARTMENT OF TRANSPORTATION
Caltrans® DESIGN

FUNCTIONAL SUPERVISOR: MARK PERTILE
CALCULATED-DESIGNED BY: MOHAMMAD ABDRABOH
CHECKED BY: ALAN R. BISI
REVISED BY
DATE REVISED

LAST REVISION 03-29-11
DATE PLOTTED => 11-JUL-2011
TIME PLOTTED => 12:40

Dist	COUNTY	ROUTE	POST MILES TOTAL PROJECT	SHEET No.	TOTAL SHEETS
08	Riv	91	15.6/21.6	379	2028

REGISTERED CIVIL ENGINEER 3-29-10 DATE

4-25-11
PLANS APPROVAL DATE

REGISTERED PROFESSIONAL ENGINEER ALAN R. BISI No. C62808 Exp. 6-30-12 CIVIL STATE OF CALIFORNIA

THE STATE OF CALIFORNIA OR ITS OFFICERS OR AGENTS SHALL NOT BE RESPONSIBLE FOR THE ACCURACY OR COMPLETENESS OF SCANNED COPIES OF THIS PLAN SHEET.

ALTERNATIVE PIPE ALLOWABLE PIPE MATERIAL AND PROTECTION

DESIGNATION	RCP	CSP (2-2/3"x½")			SSRP (3/4"x1" @ 11-1/2" PITCH)			PPC(C)	PPC(D,S)
	SIZE (INCH)	SIZE (INCH)	BITUM. COAT. THICKNESS	PA/PS THICKNESS	SIZE (INCH)	BITUM. COAT. THICKNESS	PA/PS THICKNESS	SIZE (INCH)	SIZE (INCH)
6" APC									6
12" APC TYPE A		12	0.064"	0.052"				12	
12" APC TYPE B					12	0.064"	0.052"		12
12" APC TYPE C	12				12	0.064"	0.052"		12
18" APC TYPE A	18	18	0.064"	0.052"	18	0.064"	0.052"		
18" APC TYPE B	18	18	0.064"	0.052"				18	
18" APC TYPE C		18	0.064"	0.052"				18	
18" APC TYPE D	18				18	0.064"	0.052"		
18" APC TYPE E	18	18	0.064"	0.052"				18	18
18" APC TYPE F	18								18
24" APC		24	0.079"	0.064"				24	
30" APC	30				30	0.079"	0.064"		30
30"x10" ARCH		30x10	0.079"	0.064"	30x10	0.079"	0.064"		
48" APC		48	0.079"	0.064"					

LEGENDS AND ABBREVIATIONS

S - STANDARD JOINT TYPE
P - POSITIVE JOINT TYPE
D - DOWNDRAIN JOINT TYPE
RCP - REINFORCED CONCRETE PIPE
PPC(C) - PASTIC PIPE CULVERT, TYPE C (CORRUGATED INTERIOR WALL)
PPC(D,S) - PLASTIC PIPE CULVERT, TYPE D OR S (SMOOTH INTERIOR WALL)
CSP - CORRUGATED STEEL PIPE
CAP - CORRUGATED ALUMINUM PIPE
SSRP - STEEL SPIRAL RIBBED PIPE
GA. - GAUGE
BITUM. - BITUMINOUS
PA - POLYMERIZED ASPHALT
PS - POLYMERIC SHEET
w/ - WITH
Ω - SEE DRAINAGE DETAIL

Notes:

1. SUFFICIENT SPACE WAS NOT AVALABLE TO LIST ALL DRAINAGE ITEMS WITHIN A SINGLE TABLE ON A SHEET BORDER, THEREFORE THE LISTING OF THE FIRST GROUPING OF DRAINAGE ITEMS ARE REPEATED ON THE ODD NUMBERED ID CODE SHEETS (DQ-1, DQ-3, ETC.) AND THE LISTINGS OF THE REMAINING GROUP OF DRAINAGE ITEMS ARE REPEATED ON THE EVEN NUMBERED ID CODE SHEETS (DQ-2, DQ-4, ETC.).
2. THE PRECISE DETERMINATION OF THE FOLLOWING ITEMS WILL BE MADE BY THE ENGINEER IN THE FIELD: STATION, SKEW, LENGTH, FL ELEVATION, AND DEPTH OF STRUCTURE.
3. (N) - NOT A SEPARATE PAY ITEM; FOR INFORMATION ONLY.
4. * - SEE ROADWAY QUANTITIES FOR DRAINAGE ITEM TOTAL

CSP								ALTERNATIVE PIPE													AFES	PIPE RISER						REMOVAL/ABANDON PAY ITEMS															
12" (14 GA.)	18" (14 GA.)	36" (10 GA.)	12" RISER (14 GA.)	48" RISER (10 GA.)	18" SLOTTED PIPE (14 GA.)	21" SLOTTED PIPE (14 GA.)	24" SLOTTED PIPE (14 GA.)	6" AP (TYPE __)	12" AP (TYPE __)	18" AP (TYPE __)	24" AP (TYPE __)	30" AP (TYPE __)	48" AP (TYPE __)	30" X 10" AP ARCH PIPE (TYPE __)	MAXIMUM COVER (N)	ELBOW (N)	PIPE JOINT CLASSIFICATION	8" GALVANIZED STEEL PIPE	8" GATE VALVE w/ SLEEVE & COVER	12" AFES	8" AP SLIPJOINT (N)	12" AP SLIPJOINT (N)	CABLE RAILING	ADJUST INLET	MODIFY INLET	REMOVE CONCRETE	REMOVE PIPE	REMOVE INLET	ABANDON INLET	ABANDON PIPE	SAND BACKFILL	CAP RISER	CAP INLET	DESCRIPTION	STATION	DRAINAGE PLAN SHEET NO.	DRAINAGE SYSTEM NO. ⬡	DRAINAGE UNIT ◯
LF	LF	LF	LF	LF	LF	LF	LF	LF	LF	LF	LF	LF	LF	LF	FT	EA		LF	EA	EA	EA	EA	LF	EA	EA	CY	LF	EA	EA	LF	CY	EA	EA					
																																		MH	3.0' RT "GE1" 364+74.80	D-15	98	a
															4.0		S																	24" RCP				b
																																		G1 DI W/ DEPRESSION	33.73' RT "14EBOFF1" 364+78			c
															1.5		S																	18" RCP				d
																																		GD1 DI W/ DEP	33.73' RT "14EBOFF1" 365+08			e
															1.5		S																	12" RCP				f
																																		G1 DI W/ DEPRESSION	38.0' RT "14EBOFF1" 365+38			g
																																		CONCRETE COLLLAR	69.56' LT "GE1" 366+20.21	D-15	99	a
															1.0		S																	18" RCP w/ CONC. BACKFILL				b
																																		G1 DI W/ DEPRESSION	76.76' LT "GE1" 366+20.20			c
																												1						REMOVE DI				d
																																		G1 DI W/ DEPRESSION	6.30' RT "14WBON1" 365+44.30	D-15	100	a
															1.0		S																	12" RCP W/ CONC. BACKFILL				b
															2.0		S																	12" RCP W/ CONC. BACKFILL				c
		3.5																																OMP DI W/ AC APRON	9.10' RT "14WBON1" 366+93.31			d
															2.5		S																	12" RCP				e
																																		G1 DI W/ DEPRESSION	46.00' LT "14WBON1" 367+06.00			f
6.9																																		12" CSP				g
			22.3												22.5	1	DD					1												12" CSP RISER				h
		4.0																																OMP DI	51.34' LT "14WBON1" 367+06.41			i
6.9		7.5	22.3													1						1						1						SHEET TOTALS				

THIS PLAN ACCURATE FOR DRAINAGE WORK ONLY.

DRAINAGE QUANTITIES
DQ-50

STATE OF CALIFORNIA - DEPARTMENT OF TRANSPORTATION
Caltrans® DESIGN

REVISED BY | DATE REVISED
CALCULATED-DESIGNED BY: MOHAMMAD ABDRABOH
CHECKED BY: ALAN R. BISI
FUNCTIONAL SUPERVISOR: MARK PERTILE

LAST REVISION 03-29-11 | DATE PLOTTED => 29-APR-2011 | TIME PLOTTED => 18:14

Dist	COUNTY	ROUTE	POST MILES TOTAL PROJECT	SHEET No.	TOTAL SHEETS
08	Riv	91	15.6/21.6	380	2028

REGISTERED CIVIL ENGINEER 3-29-10 DATE

4-25-11
PLANS APPROVAL DATE

REGISTERED PROFESSIONAL ENGINEER ALAN R. BISI No. C62808 Exp. 6-30-12 CIVIL STATE OF CALIFORNIA

THE STATE OF CALIFORNIA OR ITS OFFICERS OR AGENTS SHALL NOT BE RESPONSIBLE FOR THE ACCURACY OR COMPLETENESS OF SCANNED COPIES OF THIS PLAN SHEET.

ALTERNATIVE PIPE
ALLOWABLE PIPE MATERIAL AND PROTECTION

DESIGNATION	RCP	CSP (2-2/3"x½")			SSRP (3/4"x1" @ 11-1/2" PITCH)			PPC(C)	PPC(D,S)
	SIZE (INCH)	SIZE (INCH)	BITUM. COAT. THICKNESS	PA/PS THICKNESS	SIZE (INCH)	BITUM. COAT. THICKNESS	PA/PS THICKNESS	SIZE (INCH)	SIZE (INCH)
6" APC									6
12" APC TYPE A		12	0.064"	0.052"				12	
12" APC TYPE B					12	0.064"	0.052"		12
12" APC TYPE C	12				12	0.064"	0.052"		12
18" APC TYPE A	18	18	0.064"	0.052"	18	0.064"	0.052"		
18" APC TYPE B	18	18	0.064"	0.052"				18	
18" APC TYPE C		18	0.064"	0.052"				18	
18" APC TYPE D	18				18	0.064"	0.052"		
18" APC TYPE E	18	18	0.064"	0.052"				18	18
18" APC TYPE F	18								18
24" APC		24	0.079"	0.064"				24	
30" APC	30				30	0.079"	0.064"		30
30"x10" ARCH		30x10	0.079"	0.064"	30x10	0.079"	0.064"		
48" APC		48	0.079"	0.064"					

LEGENDS AND ABBREVIATIONS

S - STANDARD JOINT TYPE
P - POSITIVE JOINT TYPE
D - DOWNDRAIN JOINT TYPE
RCP - REINFORCED CONCRETE PIPE
PPC(C) - PASTIC PIPE CULVERT, TYPE C (CORRUGATED INTERIOR WALL)
PPC(D,S) - PLASTIC PIPE CULVERT, TYPE D OR S (SMOOTH INTERIOR WALL)
CSP - CORRUGATED STEEL PIPE
SSRP - STEEL SPIRAL RIBBED PIPE
GA. - GAUGE
BITUM. - BITUMINOUS
PA - POLYMERIZED ASPHALT
PS - POLYMERIC SHEET
w/ - WITH
Ω - SEE DRAINAGE DETAIL

Notes:

1. SUFFICIENT SPACE WAS NOT AVALABLE TO LIST ALL DRAINAGE ITEMS WITHIN A SINGLE TABLE ON A SHEET BORDER, THEREFORE THE LISTING OF THE FIRST GROUPING OF DRAINAGE ITEMS ARE REPEATED ON THE ODD NUMBERED ID CODE SHEETS (DQ-1, DQ-3, ETC.) AND THE LISTINGS OF THE REMAINING GROUP OF DRAINAGE ITEMS ARE REPEATED ON THE EVEN NUMBERED ID CODE SHEETS (DQ-2, DQ-4, ETC.).
2. THE PRECISE DETERMINATION OF THE FOLLOWING ITEMS WILL BE MADE BY THE ENGINEER IN THE FIELD: STATION, SKEW, LENGTH, FL ELEVATION, AND DEPTH OF STRUCTURE.
3. (N) - NOT A SEPARATE PAY ITEM; FOR INFORMATION ONLY.
4. * - SEE ROADWAY QUANTITIES FOR DRAINAGE ITEM TOTAL

DITCH EXCAVATION	CONCRETE (CHANNEL LINING)	STRUCTURAL CONCRETE, BOX CULVERT	MINOR CONCRETE (MINOR STRUCTURE)	MINOR CONCRETE (MISC. CONSTRUCTION)	CL. IV CONCRETE (BACKFILL) *	HMA-A *	PLACE AC (MISC. AREA) *	MISC. IRON AND STEEL	BAR REINFORCING STEEL	RSP: ¼-TON, METHOD B	RSP: FACING, METHOD B	RSP: NO. 2 BACKING, METHOD B	RSP: RSP FABRIC	FRAMES, GRATES AND COVERS: 24-12 (N)	24-13 (N)	¼" SOLID STEEL COVER (N)	12" X 12" PRECAST INLET	12" X 12" STEEL GRATE (TRAFFIC RATED)	DEBRIS RACK (N)	MANHOLE COVER (N)	MANHOLE COVER-PRESSURE LOCKING (N)	36" PRECAST MANHOLE SHAFT		MANHOLE SHAFT PIPE REDUCER	HEIGHT OF MANHOLE (N)	HEIGHT OF INLET "H" (N)	DRAINAGE INLET MARKER *	CONCRETE COLLAR (N)	RCP: 12" RCP	15" RCP	18" RCP	24" RCP	30" RCP	36" RCP	48" RCP	54" RCP	60" RCP (CL. V SPECIAL)	DESCRIPTION	STATION	DRAINAGE PLAN SHEET NO.	DRAINAGE SYSTEM NO. ⬡	DRAINAGE UNIT ◯
CY	CY	CY	CY	CY	CY	ton	yd²	lb	lb	CY	CY	CY	yd²	EA	EA	EA	EA	EA	EA	EA	EA	LF		EA	FT	FT	EA	EA	LF	LF	LF	LF	LF	LF	LF	LF	LF					
		0.51							70.0																													TS	45.98' LT "GE1" 367+79.49	D-15	101	a
		6.35							1829.0																													2' x 1' RCB				b
			0.81	0.69				326						1												1.9												G2 DI W/ DEPRESSION	79.57' LT "GE1" 368+06.67			c
																																						18" SCSP				d
																																						REMOVE DI				e
																																						REMOVE PIPE				f
																																						REMOVE DI				g
			0.74	0.69				326						1												1.7												G2 DI W/ DEPRESSION	76.76' LT "GE1" 366+36.97	D-15	102	a
		4.38							1263.0																													2' x 1' RCB				b
			0.86	0.69				326						1												2.0												G2 DI W/ DEPRESSION	77.47' LT "GE1" 366+77.41			c
		4.38							1263.0																													2' x 1' RCB				d
			0.81	0.69				326						1												1.9												G2 DI W/ DEPRESSION	79.48' LT "GE1" 367+07.40			e
		4.38							1263.0																													2' x 1' RCB				f
			0.71	0.69				326						1												1.6												G2 DI W/ DEPRESSION	81.47' LT "GE1" 367+37.40			g
		5.63							1623.0																													2' x 1' RCB				h
		0.51							70.0																													TS	50.14' LT "GE1" 366+99.67			i
																																						REMOVE DI				j
																																						REMOVE 18" RCP				k
																																						REMOVE DI				l
																																						REMOVE 18"RCP				m
																																						REMOVE DI				n
		0.51							70.0																													TS	56.63' RT "GE1" 371+79.90	D-15	103	a
		6.08							1752.0																													2' x 1' RCB				b
			0.79					634						2												1.9												GD1 DI	96.73' RT "GE1" 371+94.325			c
		6.78							1954.0																													2' x 1' RCB				d
			0.53	1.00				326						1												1.7												G1 DI W/ DEPRESSION	100.40' RT "GE1" 372+39.10			e
																																						18" SCSP				f
																																						REMOVE DI				g
		39.51	5.25	4.45				2590	11157.0					8																								SHEET TOTALS				

THIS PLAN ACCURATE FOR DRAINAGE WORK ONLY.

DRAINAGE QUANTITIES
DQ-51

REVISED BY | DATE REVISED

CALCULATED-DESIGNED BY: MOHAMMAD ABDRABOH
CHECKED BY: ALAN R. BISI
FUNCTIONAL SUPERVISOR: MARK PERTILE

STATE OF CALIFORNIA - DEPARTMENT OF TRANSPORTATION
Caltrans
DESIGN

LAST REVISION 03-29-11 | DATE PLOTTED => 11-JUL-2011 | TIME PLOTTED => 12:40

Dist	COUNTY	ROUTE	POST MILES TOTAL PROJECT	SHEET No.	TOTAL SHEETS
08	Riv	91	15.6/21.6	381	2028

REGISTERED CIVIL ENGINEER 3-29-10 DATE

4-25-11
PLANS APPROVAL DATE

REGISTERED PROFESSIONAL ENGINEER ALAN R. BISI No. C62808 Exp. 6-30-12 CIVIL STATE OF CALIFORNIA

THE STATE OF CALIFORNIA OR ITS OFFICERS OR AGENTS SHALL NOT BE RESPONSIBLE FOR THE ACCURACY OR COMPLETENESS OF SCANNED COPIES OF THIS PLAN SHEET.

ALTERNATIVE PIPE ALLOWABLE PIPE MATERIAL AND PROTECTION

DESIGNATION	RCP	CSP (2-2/3"x½")			SSRP (3/4"x1" @ 11-1/2" PITCH)			PPC(C)	PPC(D,S)
	SIZE (INCH)	SIZE (INCH)	BITUM. COAT. THICKNESS	PA/PS THICKNESS	SIZE (INCH)	BITUM. COAT. THICKNESS	PA/PS THICKNESS	SIZE (INCH)	SIZE (INCH)
6" APC									6
12" APC TYPE A		12	0.064"	0.052"				12	
12" APC TYPE B					12	0.064"	0.052"		12
12" APC TYPE C	12				12	0.064"	0.052"		12
18" APC TYPE A	18	18	0.064"	0.052"	18	0.064"	0.052"		
18" APC TYPE B	18	18	0.064"	0.052"				18	
18" APC TYPE C		18	0.064"	0.052"				18	
18" APC TYPE D	18				18	0.064"	0.052"		
18" APC TYPE E	18	18	0.064"	0.052"				18	18
18" APC TYPE F	18								18
24" APC		24	0.079"	0.064"				24	
30" APC	30				30	0.079"	0.064"		30
30"x10" ARCH		30x10	0.079"	0.064"	30x10	0.079"	0.064"		
48" APC		48	0.079"	0.064"					

LEGENDS AND ABBREVIATIONS

S - STANDARD JOINT TYPE
P - POSITIVE JOINT TYPE
D - DOWNDRAIN JOINT TYPE
RCP - REINFORCED CONCRETE PIPE
PPC(C) - PASTIC PIPE CULVERT, TYPE C (CORRUGATED INTERIOR WALL)
PPC(D,S) - PLASTIC PIPE CULVERT, TYPE D OR S (SMOOTH INTERIOR WALL)
CSP - CORRUGATED STEEL PIPE
CAP - CORRUGATED ALUMINUM PIPE
SSRP - STEEL SPIRAL RIBBED PIPE
GA. - GAUGE
BITUM. - BITUMINOUS
PA - POLYMERIZED ASPHALT
PS - POLYMERIC SHEET
w/ - WITH
Ω - SEE DRAINAGE DETAIL

Notes:

1. SUFFICIENT SPACE WAS NOT AVALABLE TO LIST ALL DRAINAGE ITEMS WITHIN A SINGLE TABLE ON A SHEET BORDER, THEREFORE THE LISTING OF THE FIRST GROUPING OF DRAINAGE ITEMS ARE REPEATED ON THE ODD NUMBERED ID CODE SHEETS (DQ-1, DQ-3, ETC.) AND THE LISTINGS OF THE REMAINING GROUP OF DRAINAGE ITEMS ARE REPEATED ON THE EVEN NUMBERED ID CODE SHEETS (DQ-2, DQ-4, ETC.).
2. THE PRECISE DETERMINATION OF THE FOLLOWING ITEMS WILL BE MADE BY THE ENGINEER IN THE FIELD: STATION, SKEW, LENGTH, FL ELEVATION, AND DEPTH OF STRUCTURE.
3. (N) - NOT A SEPARATE PAY ITEM; FOR INFORMATION ONLY.
4. * - SEE ROADWAY QUANTITIES FOR DRAINAGE ITEM TOTAL

CSP								ALTERNATIVE PIPE														AFES	PIPE RISER						REMOVAL/ABANDON PAY ITEMS													
12" (14 GA.)	18" (14 GA.)	36" (10 GA.)	12" RISER (14 GA.)	48" RISER (10 GA.)	18" SLOTTED PIPE (14 GA.)	21" SLOTTED PIPE (14 GA.)	24" SLOTTED PIPE (14 GA.)	6" AP (TYPE __)	12" AP (TYPE __)	18" AP (TYPE __)	24" AP (TYPE __)	30" AP (TYPE __)	48" AP (TYPE __)	30" X 10" AP ARCH PIPE (TYPE __)	MAXIMUM COVER (N)	ELBOW (N)	PIPE JOINT CLASSIFICATION	8" GALVANIZED STEEL PIPE	8" GATE VALVE w/ SLEEVE & COVER	12" AFES	8" AP SLIPJOINT (N)	12" AP SLIPJOINT (N)	CABLE RAILING	ADJUST INLET	MODIFY INLET	REMOVE CONCRETE	REMOVE PIPE	REMOVE INLET	ABANDON INLET	ABANDON PIPE	SAND BACKFILL	CAP RISER	CAP INLET	DESCRIPTION	STATION	DRAINAGE PLAN SHEET NO.	DRAINAGE SYSTEM NO. ⬡	DRAINAGE UNIT ◯
LF	LF	LF	LF	LF	LF	LF	LF	LF	LF	LF	LF	LF	LF	LF	FT	EA		LF	EA	EA	EA	EA	LF	EA	EA	CY	LF	EA	EA	LF	CY	EA	EA					
																																		TS	45.98' LT "GE1" 367+79.49	D-15	101	a
															1.0																			2' x 1' RCB				b
																																		G2 DI W/ DEPRESSION	79.57' LT "GE1" 368+06.67			c
					31.0												S																	18" SCSP				d
																												1						REMOVE DI				e
																											30.0							REMOVE PIPE				f
																												1						REMOVE DI				g
																																		G2 DI W/ DEPRESSION	76.76' LT "GE1" 366+36.97	D-15	102	a
															1.5		S																	2' x 1' RCB				b
																																		G2 DI W/ DEPRESSION	77.47' LT "GE1" 366+77.41			c
															1.5		S																	2' x 1' RCB				d
																																		G2 DI W/ DEPRESSION	79.48' LT "GE1" 367+07.40			e
															2.0		S																	2' x 1' RCB				f
																																		G2 DI W/ DEPRESSION	81.47' LT "GE1" 367+37.40			g
															3.5		S																	2' x 1' RCB				h
																																		TS	50.14' LT "GE1" 366+99.67			i
																												1						REMOVE DI				j
																											42.0							REMOVE 18" RCP				k
																												1						REMOVE DI				l
																											23.8							REMOVE 18"RCP				m
																												1						REMOVE DI				n
																																		TS	56.63' RT "GE1" 371+79.90	D-15	103	a
															1.5		S																	2' x 1' RCB				b
																																		GD1 DI	96.73' RT "GE1" 371+94.325			c
															1.0		S																	2' x 1' RCB				d
																																		G1 DI W/ DEPRESSION	100.40' RT "GE1" 372+39.10			e
					100.0																													18" SCSP				f
																												1						REMOVE DI				g
					131.0																						95.8	6					SHEET TOTALS				

THIS PLAN ACCURATE FOR DRAINAGE WORK ONLY.

DRAINAGE QUANTITIES
DQ-52

STATE OF CALIFORNIA - DEPARTMENT OF TRANSPORTATION
Caltrans® DESIGN

FUNCTIONAL SUPERVISOR: MARK PERTILE
CALCULATED-DESIGNED BY: MOHAMMAD ABDRABOH
CHECKED BY: ALAN R. BISI
REVISED BY
DATE REVISED

LAST REVISION 03-29-11
DATE PLOTTED => 29-APR-2011
TIME PLOTTED => 18:14

Dist	COUNTY	ROUTE	POST MILES TOTAL PROJECT	SHEET No.	TOTAL SHEETS
08	Riv	91	15.6/21.6	382	2028

REGISTERED CIVIL ENGINEER 3-29-10 DATE

4-25-11
PLANS APPROVAL DATE

REGISTERED PROFESSIONAL ENGINEER ALAN R. BISI No. C62808 Exp. 6-30-12 CIVIL STATE OF CALIFORNIA

THE STATE OF CALIFORNIA OR ITS OFFICERS OR AGENTS SHALL NOT BE RESPONSIBLE FOR THE ACCURACY OR COMPLETENESS OF SCANNED COPIES OF THIS PLAN SHEET.

ALTERNATIVE PIPE ALLOWABLE PIPE MATERIAL AND PROTECTION

DESIGNATION	RCP	CSP (2-2/3"x½")			SSRP (3/4"x1" @ 11-1/2" PITCH)			PPC(C)	PPC(D,S)
	SIZE (INCH)	SIZE (INCH)	BITUM. COAT. THICKNESS	PA/PS THICKNESS	SIZE (INCH)	BITUM. COAT. THICKNESS	PA/PS THICKNESS	SIZE (INCH)	SIZE (INCH)
6" APC									6
12" APC TYPE A		12	0.064"	0.052"				12	
12" APC TYPE B					12	0.064"	0.052"		12
12" APC TYPE C	12				12	0.064"	0.052"		12
18" APC TYPE A	18	18	0.064"	0.052"	18	0.064"	0.052"		
18" APC TYPE B	18	18	0.064"	0.052"				18	
18" APC TYPE C		18	0.064"	0.052"				18	
18" APC TYPE D	18				18	0.064"	0.052"		
18" APC TYPE E	18	18	0.064"	0.052"				18	18
18" APC TYPE F	18								18
24" APC		24	0.079"	0.064"				24	
30" APC	30				30	0.079"	0.064"		30
30"x10" ARCH		30x10	0.079"	0.064"	30x10	0.079"	0.064"		
48" APC		48	0.079"	0.064"					

LEGENDS AND ABBREVIATIONS

S - STANDARD JOINT TYPE
P - POSITIVE JOINT TYPE
D - DOWNDRAIN JOINT TYPE
RCP - REINFORCED CONCRETE PIPE
PPC(C) - PASTIC PIPE CULVERT, TYPE C (CORRUGATED INTERIOR WALL)
PPC(D,S) - PLASTIC PIPE CULVERT, TYPE D OR S (SMOOTH INTERIOR WALL)
CSP - CORRUGATED STEEL PIPE
SSRP - STEEL SPIRAL RIBBED PIPE
GA. - GAUGE
BITUM. - BITUMINOUS
PA - POLYMERIZED ASPHALT
PS - POLYMERIC SHEET
w/ - WITH
Ω - SEE DRAINAGE DETAIL

Notes:

1. SUFFICIENT SPACE WAS NOT AVALABLE TO LIST ALL DRAINAGE ITEMS WITHIN A SINGLE TABLE ON A SHEET BORDER, THEREFORE THE LISTING OF THE FIRST GROUPING OF DRAINAGE ITEMS ARE REPEATED ON THE ODD NUMBERED ID CODE SHEETS (DQ-1, DQ-3, ETC.) AND THE LISTINGS OF THE REMAINING GROUP OF DRAINAGE ITEMS ARE REPEATED ON THE EVEN NUMBERED ID CODE SHEETS (DQ-2, DQ-4, ETC.).
2. THE PRECISE DETERMINATION OF THE FOLLOWING ITEMS WILL BE MADE BY THE ENGINEER IN THE FIELD: STATION, SKEW, LENGTH, FL ELEVATION, AND DEPTH OF STRUCTURE.
3. (N) - NOT A SEPARATE PAY ITEM; FOR INFORMATION ONLY.
4. * - SEE ROADWAY QUANTITIES FOR DRAINAGE ITEM TOTAL

DITCH EXCAVATION	CONCRETE (CHANNEL LINING)	STRUCTURAL CONCRETE, BOX CULVERT	MINOR CONCRETE (MINOR STRUCTURE)	MINOR CONCRETE (MISC. CONSTRUCTION)	CL. IV CONCRETE (BACKFILL) *	HMA-A *	PLACE AC (MISC. AREA) *	MISC. IRON AND STEEL	BAR REINFORCING STEEL	RSP ¼-TON, METHOD B	RSP FACING, METHOD B	RSP NO. 2 BACKING, METHOD B	RSP FABRIC	FRAMES, GRATES AND COVERS 24-12 (N)	24-13 (N)	¼" SOLID STEEL COVER (N)	12" X 12" PRECAST INLET	12" X 12" STEEL GRATE (TRAFFIC RATED)	DEBRIS RACK (N)	MANHOLE COVER (N)	MANHOLE COVER-PRESSURE LOCKING (N)	36" PRECAST MANHOLE SHAFT		MANHOLE SHAFT PIPE REDUCER	HEIGHT OF MANHOLE (N)	HEIGHT OF INLET "H" (N)	DRAINAGE INLET MARKER *	CONCRETE COLLAR (N)	RCP 12" RCP	15" RCP	18" RCP	24" RCP	30" RCP	36" RCP	48" RCP	54" RCP	60" RCP (CL. V SPECIAL)	DESCRIPTION	STATION	DRAINAGE PLAN SHEET NO.	DRAINAGE SYSTEM NO. ⬡	DRAINAGE UNIT ◯
CY	CY	CY	CY	CY	CY	ton	yd²	lb	lb	CY	CY	CY	yd²	EA	EA	EA	EA	EA	EA	EA	EA	LF		EA	FT	FT	EA	EA	LF	LF	LF	LF	LF	LF	LF	LF	LF					
																												1										CONCRETE COLLAR	54.76' LT "GE1" 371+79.97	D-15	104	a
					3.90																										29.7							18" RCP W/ CONC BACKFILL				b
			0.52	1.00				326						1												1.7												G1 DI W/ DEPRESSION	87.0' LT "GE1" 371+79.97			c
					3.00																																	12" AP TYPE C W/ CONC BACKFILL				d
			0.52	1.00				326						1												1.7												G1 DI W/ DEPRESSION	88.0' LT "GE1" 372+28.19			e
																																						REMOVE DI				f
																												1										CONCRETE COLLAR	1.76' LT "GE1" 372+94.00	D-15	105	a
																																302.0						30" RCP				b
																												1										CONCRETE COLLAR	1.76' LT "GE1" 375+94.06			c
																																						REMOVE 30" RCP				d
																												1										CONCRETE COLLAR	47.1' LT "GE1" 376+20.30	D-15	106	a
					2.52																										39.1							18" RCP W/ CONC. BACKFILL				b
			0.67	1.00				326						1												2.1												G1 DI W/ DEPRESSION	88.76' LT "GE1" 376+20.30			c
					14.95																																	12" AP TYPE D W/ CONC. BACKFILL				d
			0.73	1.00				326						1												2.3												G1 DI W/ DEPRESSION	88.8' LT "GE1" 378+00.00			e
																																						REMOVE DI				f
			2.44	4.00	24.37			1304						4														4			68.8	302.0						SHEET TOTALS				

THIS PLAN ACCURATE FOR DRAINAGE WORK ONLY.

DRAINAGE QUANTITIES
DQ-53

REVISED BY | DATE REVISED

CALCULATED-DESIGNED BY: MOHAMMAD ABDRABOH
CHECKED BY: ALAN R. BISI
FUNCTIONAL SUPERVISOR: MARK PERTILE

STATE OF CALIFORNIA - DEPARTMENT OF TRANSPORTATION
Caltrans
DESIGN

LAST REVISION 03-29-11 | DATE PLOTTED => 11-JUL-2011 | TIME PLOTTED => 12:41

Dist	COUNTY	ROUTE	POST MILES TOTAL PROJECT	SHEET No.	TOTAL SHEETS
08	Riv	91	15.6/21.6	383	2028

REGISTERED CIVIL ENGINEER 3-29-10 DATE

4-25-11
PLANS APPROVAL DATE

REGISTERED PROFESSIONAL ENGINEER ALAN R. BISI No. C62808 Exp. 6-30-12 CIVIL STATE OF CALIFORNIA

THE STATE OF CALIFORNIA OR ITS OFFICERS OR AGENTS SHALL NOT BE RESPONSIBLE FOR THE ACCURACY OR COMPLETENESS OF SCANNED COPIES OF THIS PLAN SHEET.

ALTERNATIVE PIPE ALLOWABLE PIPE MATERIAL AND PROTECTION

DESIGNATION	RCP	CSP (2-2/3"x½")			SSRP (3/4"x1" @ 11-1/2" PITCH)			PPC(C)	PPC(D,S)
	SIZE (INCH)	SIZE (INCH)	BITUM. COAT. THICKNESS	PA/PS THICKNESS	SIZE (INCH)	BITUM. COAT. THICKNESS	PA/PS THICKNESS	SIZE (INCH)	SIZE (INCH)
6" APC									6
12" APC TYPE A		12	0.064"	0.052"				12	
12" APC TYPE B					12	0.064"	0.052"		12
12" APC TYPE C	12				12	0.064"	0.052"		12
18" APC TYPE A	18	18	0.064"	0.052"	18	0.064"	0.052"		
18" APC TYPE B	18	18	0.064"	0.052"				18	
18" APC TYPE C		18	0.064"	0.052"				18	
18" APC TYPE D	18				18	0.064"	0.052"		
18" APC TYPE E	18	18	0.064"	0.052"				18	18
18" APC TYPE F	18								18
24" APC		24	0.079"	0.064"				24	
30" APC	30				30	0.079"	0.064"		30
30"x10" ARCH		30x10	0.079"	0.064"	30x10	0.079"	0.064"		
48" APC		48	0.079"	0.064"					

LEGENDS AND ABBREVIATIONS

S - STANDARD JOINT TYPE
P - POSITIVE JOINT TYPE
D - DOWNDRAIN JOINT TYPE
RCP - REINFORCED CONCRETE PIPE
PPC(C) - PASTIC PIPE CULVERT, TYPE C (CORRUGATED INTERIOR WALL)
PPC(D,S) - PLASTIC PIPE CULVERT, TYPE D OR S (SMOOTH INTERIOR WALL)
CSP - CORRUGATED STEEL PIPE
CAP - CORRUGATED ALUMINUM PIPE
SSRP - STEEL SPIRAL RIBBED PIPE
GA. - GAUGE
BITUM. - BITUMINOUS
PA - POLYMERIZED ASPHALT
PS - POLYMERIC SHEET
w/ - WITH
Ω - SEE DRAINAGE DETAIL

Notes:

1. SUFFICIENT SPACE WAS NOT AVALABLE TO LIST ALL DRAINAGE ITEMS WITHIN A SINGLE TABLE ON A SHEET BORDER, THEREFORE THE LISTING OF THE FIRST GROUPING OF DRAINAGE ITEMS ARE REPEATED ON THE ODD NUMBERED ID CODE SHEETS (DQ-1, DQ-3, ETC.) AND THE LISTINGS OF THE REMAINING GROUP OF DRAINAGE ITEMS ARE REPEATED ON THE EVEN NUMBERED ID CODE SHEETS (DQ-2, DQ-4, ETC.).
2. THE PRECISE DETERMINATION OF THE FOLLOWING ITEMS WILL BE MADE BY THE ENGINEER IN THE FIELD: STATION, SKEW, LENGTH, FL ELEVATION, AND DEPTH OF STRUCTURE.
3. (N) - NOT A SEPARATE PAY ITEM; FOR INFORMATION ONLY.
4. * - SEE ROADWAY QUANTITIES FOR DRAINAGE ITEM TOTAL

CSP								ALTERNATIVE PIPE													AFES	PIPE RISER						REMOVAL/ABANDON PAY ITEMS								DESCRIPTION	STATION	DRAINAGE PLAN SHEET NO.	DRAINAGE SYSTEM NO. ⬡	DRAINAGE UNIT ◯
12" (14 GA.)	18" (14 GA.)	36" (10 GA.)	12" RISER (14 GA.)	48" RISER (10 GA.)	18" SLOTTED PIPE (14 GA.)	21" SLOTTED PIPE (14 GA.)	24" SLOTTED PIPE (14 GA.)	6" AP (TYPE __)	12" AP (TYPE __)	18" AP (TYPE __)	24" AP (TYPE __)	30" AP (TYPE __)	48" AP (TYPE __)	30" X 10" AP ARCH PIPE (TYPE __)	MAXIMUM COVER (N)	ELBOW (N)	PIPE JOINT CLASSIFICATION	8" GALVANIZED STEEL PIPE	8" GATE VALVE w/ SLEEVE & COVER	12" AFES	8" AP SLIPJOINT (N)	12" AP SLIPJOINT (N)	CABLE RAILING	ADJUST INLET	MODIFY INLET	REMOVE CONCRETE	REMOVE PIPE	REMOVE INLET	ABANDON INLET	ABANDON PIPE	SAND BACKFILL	CAP RISER	CAP INLET					
LF	LF	LF	LF	LF	LF	LF	LF	LF	LF	LF	LF	LF	LF	LF	FT	EA		LF	EA	EA	EA	EA	LF	EA	EA	CY	LF	EA	EA	LF	CY	EA	EA					
																																		CONCRETE COLLAR	54.76' LT "GE1" 371+79.97	D-15	104	a
															1.5		S																	18" RCP W/ CONC BACKFILL				b
																																		G1 DI W/ DEPRESSION	87.0' LT "GE1" 371+79.97			c
									44.3						1.0		S																	12" AP TYPE C W/ CONC BACKFILL				d
																																		G1 DI W/ DEPRESSION	88.0' LT "GE1" 372+28.19			e
																												1						REMOVE DI				f
																																		CONCRETE COLLAR	1.76' LT "GE1" 372+94.00	D-15	105	a
															2.0		S																	30" RCP				b
																																		CONCRETE COLLAR	1.76' LT "GE1" 375+94.06			c
																											263.3							REMOVE 30" RCP				d
																																		CONCRETE COLLAR	47.1' LT "GE1" 376+20.30	D-15	106	a
															2.5		S																	18" RCP W/ CONC. BACKFILL				b
																																		G1 DI W/ DEPRESSION	88.76' LT "GE1" 376+20.30			c
									175.8						1.0		S																	12" AP TYPE C W/ CONC. BACKFILL				d
																																		G1 DI W/ DEPRESSION	88.8' LT "GE1" 378+00.00			e
																												1						REMOVE DI				f
									220.1																		263.3	2						SHEET TOTALS				

THIS PLAN ACCURATE FOR DRAINAGE WORK ONLY.

DRAINAGE QUANTITIES
DQ-54

STATE OF CALIFORNIA - DEPARTMENT OF TRANSPORTATION
Caltrans® DESIGN

FUNCTIONAL SUPERVISOR: MARK PERTILE
CALCULATED-DESIGNED BY: MOHAMMAD ABDRABOH
CHECKED BY: ALAN R. BISI
REVISED BY
DATE REVISED

LAST REVISION 03-29-11 | DATE PLOTTED => 29-APR-2011 | TIME PLOTTED => 18:15

Dist	COUNTY	ROUTE	POST MILES TOTAL PROJECT	SHEET No.	TOTAL SHEETS
08	Riv	91	15.6/21.6	384	2028

REGISTERED CIVIL ENGINEER 3-29-10 DATE

4-25-11
PLANS APPROVAL DATE

REGISTERED PROFESSIONAL ENGINEER ALAN R. BISI No. C62808 Exp. 6-30-12 CIVIL STATE OF CALIFORNIA

THE STATE OF CALIFORNIA OR ITS OFFICERS OR AGENTS SHALL NOT BE RESPONSIBLE FOR THE ACCURACY OR COMPLETENESS OF SCANNED COPIES OF THIS PLAN SHEET.

ALTERNATIVE PIPE ALLOWABLE PIPE MATERIAL AND PROTECTION

DESIGNATION	RCP	CSP (2-2/3"x½")			SSRP (3/4"x1" @ 11-1/2" PITCH)			PPC(C)	PPC(D,S)
	SIZE (INCH)	SIZE (INCH)	BITUM. COAT. THICKNESS	PA/PS THICKNESS	SIZE (INCH)	BITUM. COAT. THICKNESS	PA/PS THICKNESS	SIZE (INCH)	SIZE (INCH)
6" APC									6
12" APC TYPE A		12	0.064"	0.052"				12	
12" APC TYPE B					12	0.064"	0.052"		12
12" APC TYPE C	12				12	0.064"	0.052"		12
18" APC TYPE A	18	18	0.064"	0.052"	18	0.064"	0.052"		
18" APC TYPE B	18	18	0.064"	0.052"				18	
18" APC TYPE C		18	0.064"	0.052"				18	
18" APC TYPE D	18				18	0.064"	0.052"		
18" APC TYPE E	18	18	0.064"	0.052"				18	18
18" APC TYPE F	18								18
24" APC		24	0.079"	0.064"				24	
30" APC	30				30	0.079"	0.064"		30
30"x10" ARCH		30x10	0.079"	0.064"	30x10	0.079"	0.064"		
48" APC		48	0.079"	0.064"					

LEGENDS AND ABBREVIATIONS

S - STANDARD JOINT TYPE
P - POSITIVE JOINT TYPE
D - DOWNDRAIN JOINT TYPE
RCP - REINFORCED CONCRETE PIPE
PPC(C) - PASTIC PIPE CULVERT, TYPE C (CORRUGATED INTERIOR WALL)
PPC(D,S) - PLASTIC PIPE CULVERT, TYPE D OR S (SMOOTH INTERIOR WALL)
CSP - CORRUGATED STEEL PIPE
SSRP - STEEL SPIRAL RIBBED PIPE
GA. - GAUGE
BITUM. - BITUMINOUS
PA - POLYMERIZED ASPHALT
PS - POLYMERIC SHEET
w/ - WITH
Ω - SEE DRAINAGE DETAIL

Notes:

1. SUFFICIENT SPACE WAS NOT AVALABLE TO LIST ALL DRAINAGE ITEMS WITHIN A SINGLE TABLE ON A SHEET BORDER, THEREFORE THE LISTING OF THE FIRST GROUPING OF DRAINAGE ITEMS ARE REPEATED ON THE ODD NUMBERED ID CODE SHEETS (DQ-1, DQ-3, ETC.) AND THE LISTINGS OF THE REMAINING GROUP OF DRAINAGE ITEMS ARE REPEATED ON THE EVEN NUMBERED ID CODE SHEETS (DQ-2, DQ-4, ETC.).
2. THE PRECISE DETERMINATION OF THE FOLLOWING ITEMS WILL BE MADE BY THE ENGINEER IN THE FIELD: STATION, SKEW, LENGTH, FL ELEVATION, AND DEPTH OF STRUCTURE.
3. (N) - NOT A SEPARATE PAY ITEM; FOR INFORMATION ONLY.
4. * - SEE ROADWAY QUANTITIES FOR DRAINAGE ITEM TOTAL

DITCH EXCAVATION	CONCRETE (CHANNEL LINING)	STRUCTURAL CONCRETE, BOX CULVERT	MINOR CONCRETE (MINOR STRUCTURE)	MINOR CONCRETE (MISC. CONSTRUCTION)	CL. IV CONCRETE (BACKFILL) *	HMA-A *	PLACE AC (MISC. AREA) *	MISC. IRON AND STEEL	BAR REINFORCING STEEL	RSP ¼-TON, METHOD B	RSP FACING, METHOD B	RSP NO. 2 BACKING, METHOD B	RSP FABRIC	FRAMES, GRATES AND COVERS 24-12 (N)	24-13 (N)	¼" SOLID STEEL COVER (N)	12" X 12" PRECAST INLET	12" X 12" STEEL GRATE (TRAFFIC RATED)	DEBRIS RACK (N)	MANHOLE COVER (N)	MANHOLE COVER-PRESSURE LOCKING (N)	36" PRECAST MANHOLE SHAFT		MANHOLE SHAFT PIPE REDUCER	HEIGHT OF MANHOLE (N)	HEIGHT OF INLET "H" (N)	DRAINAGE INLET MARKER *	CONCRETE COLLAR (N)	RCP 12" RCP	15" RCP	18" RCP	24" RCP	30" RCP	36" RCP	48" RCP	54" RCP	60" RCP (CL. V SPECIAL)	DESCRIPTION	STATION	DRAINAGE PLAN SHEET NO.	DRAINAGE SYSTEM NO. ⬡	DRAINAGE UNIT ◯
CY	CY	CY	CY	CY	CY	ton	yd²	lb	lb	CY	CY	CY	yd²	EA	EA	EA	EA	EA	EA	EA	EA	LF		EA	FT	FT	EA	EA	LF	LF	LF	LF	LF	LF	LF	LF	LF					
																												1										CONCRETE COLLAR	47.6' RT "GE1" 376+20.46	D-15	107	a
																															26.8							18" RCP				b
			1.57	1.00				326						1												3.4												G1 DI W/ DEPRESSION	76.91' RT "GE1" 376+18.00			c
					5.83																										51.0							18" RCP W/ CONC BACKFILL				d
			0.87					450												1					2.0													PRESSURE MH w/BLEEDER ASS'Y	30.00' RT "14EBOFF2" 376+15.00			e
																																						12" CMP				f
																																						12" CMP RISER				g
			0.30					177								1										7.0												OMP DI	20.80' LT "14EBON2" 375+75.34			h
																																						18" AP TYPE F				i
			0.30					177								1										4.0												OMP DI	26.10' LT "14EBON2" 375+19.65			j
																																						8" STEEL PIPE BLEEDER w/ GATE VALVE				k
																																						REMOVE DI				l
			0.48																													32.8						JS	12.71' LT "VINE" 21+55.80	D-15	108	a
																												1										24" RCP				b
																																222.0						CONCRETE COLLAR	2.0' LT "VINE" 21+22.00			c
			3.88					450											1		8.5		1	5.0													24" RCP				d
																																294.5						MH EZ	2.0' LT "VINE" 19+00.00			e
			3.88					450											1		8.5		1	5.0													24" RCP				f
																																344.5						MH EZ	2.0' LT "VINE" 15+53.00			g
			4.09					450											1		4		1	6.0													24" RCP				h
																															518.0							MH EZ	2.0' LT "VINE" 12+08.76			i
																																						18" RCP				j
			15.37	1.00	5.83			2480						1		2			3	1	21.0		3					2			595.8	893.8						SHEET TOTALS				

THIS PLAN ACCURATE FOR DRAINAGE WORK ONLY.

DRAINAGE QUANTITIES
DQ-55

REVISED BY | DATE REVISED

CALCULATED-DESIGNED BY: MOHAMMAD ABDRABOH
CHECKED BY: ALAN R. BISI
FUNCTIONAL SUPERVISOR: MARK PERTILE

STATE OF CALIFORNIA - DEPARTMENT OF TRANSPORTATION
Caltrans
DESIGN

LAST REVISION 03-29-11 | DATE PLOTTED => 11-JUL-2011 | TIME PLOTTED => 12:41

Dist	COUNTY	ROUTE	POST MILES TOTAL PROJECT	SHEET No.	TOTAL SHEETS
08	Riv	91	15.6/21.6	385	2028

REGISTERED CIVIL ENGINEER 3-29-10 DATE

4-25-11
PLANS APPROVAL DATE

REGISTERED PROFESSIONAL ENGINEER ALAN R. BISI No. C62808 Exp. 6-30-12 CIVIL STATE OF CALIFORNIA

THE STATE OF CALIFORNIA OR ITS OFFICERS OR AGENTS SHALL NOT BE RESPONSIBLE FOR THE ACCURACY OR COMPLETENESS OF SCANNED COPIES OF THIS PLAN SHEET.

ALTERNATIVE PIPE ALLOWABLE PIPE MATERIAL AND PROTECTION

DESIGNATION	RCP	CSP (2-2/3"x½")			SSRP (3/4"x1" @ 11-1/2" PITCH)			PPC(C)	PPC(D,S)
	SIZE (INCH)	SIZE (INCH)	BITUM. COAT. THICKNESS	PA/PS THICKNESS	SIZE (INCH)	BITUM. COAT. THICKNESS	PA/PS THICKNESS	SIZE (INCH)	SIZE (INCH)
6" APC									6
12" APC TYPE A		12	0.064"	0.052"				12	
12" APC TYPE B					12	0.064"	0.052"		12
12" APC TYPE C	12				12	0.064"	0.052"		12
18" APC TYPE A	18	18	0.064"	0.052"	18	0.064"	0.052"		
18" APC TYPE B	18	18	0.064"	0.052"				18	
18" APC TYPE C		18	0.064"	0.052"				18	
18" APC TYPE D	18				18	0.064"	0.052"		
18" APC TYPE E	18	18	0.064"	0.052"				18	18
18" APC TYPE F	18								18
24" APC		24	0.079"	0.064"				24	
30" APC	30				30	0.079"	0.064"		30
30"x10" ARCH		30x10	0.079"	0.064"	30x10	0.079"	0.064"		
48" APC		48	0.079"	0.064"					

LEGENDS AND ABBREVIATIONS

S - STANDARD JOINT TYPE
P - POSITIVE JOINT TYPE
D - DOWNDRAIN JOINT TYPE
RCP - REINFORCED CONCRETE PIPE
PPC(C) - PASTIC PIPE CULVERT, TYPE C (CORRUGATED INTERIOR WALL)
PPC(D,S) - PLASTIC PIPE CULVERT, TYPE D OR S (SMOOTH INTERIOR WALL)
CSP - CORRUGATED STEEL PIPE
CAP - CORRUGATED ALUMINUM PIPE
SSRP - STEEL SPIRAL RIBBED PIPE
GA. - GAUGE
BITUM. - BITUMINOUS
PA - POLYMERIZED ASPHALT
PS - POLYMERIC SHEET
w/ - WITH
Ω - SEE DRAINAGE DETAIL

Notes:

1. SUFFICIENT SPACE WAS NOT AVALABLE TO LIST ALL DRAINAGE ITEMS WITHIN A SINGLE TABLE ON A SHEET BORDER, THEREFORE THE LISTING OF THE FIRST GROUPING OF DRAINAGE ITEMS ARE REPEATED ON THE ODD NUMBERED ID CODE SHEETS (DQ-1, DQ-3, ETC.) AND THE LISTINGS OF THE REMAINING GROUP OF DRAINAGE ITEMS ARE REPEATED ON THE EVEN NUMBERED ID CODE SHEETS (DQ-2, DQ-4, ETC.).
2. THE PRECISE DETERMINATION OF THE FOLLOWING ITEMS WILL BE MADE BY THE ENGINEER IN THE FIELD: STATION, SKEW, LENGTH, FL ELEVATION, AND DEPTH OF STRUCTURE.
3. (N) - NOT A SEPARATE PAY ITEM; FOR INFORMATION ONLY.
4. * - SEE ROADWAY QUANTITIES FOR DRAINAGE ITEM TOTAL

CSP 12" (14 GA.) LF	CSP 18" (14 GA.) LF	CSP 36" (10 GA.) LF	CSP 12" RISER (14 GA.) LF	CSP 48" RISER (10 GA.) LF	CSP 18" SLOTTED PIPE (14 GA.) LF	CSP 21" SLOTTED PIPE (14 GA.) LF	CSP 24" SLOTTED PIPE (14 GA.) LF	ALTERNATIVE PIPE 6" AP (TYPE __) LF	ALTERNATIVE PIPE 12" AP (TYPE __) LF	ALTERNATIVE PIPE 18" AP (TYPE __) LF	ALTERNATIVE PIPE 24" AP (TYPE __) LF	ALTERNATIVE PIPE 30" AP (TYPE __) LF	ALTERNATIVE PIPE 48" AP (TYPE __) LF	ALTERNATIVE PIPE 30" X 10" AP ARCH PIPE (TYPE __) LF	MAXIMUM COVER (N) FT	ELBOW (N) EA	PIPE JOINT CLASSIFICATION	8" GALVANIZED STEEL PIPE LF	8" GATE VALVE w/ SLEEVE & COVER EA	AFES 12" AFES EA	PIPE RISER 8" AP SLIPJOINT (N) EA	PIPE RISER 12" AP SLIPJOINT (N) EA	CABLE RAILING LF	ADJUST INLET EA	MODIFY INLET EA	REMOVAL/ABANDON PAY ITEMS REMOVE CONCRETE CY	REMOVE PIPE LF	REMOVE INLET EA	ABANDON INLET EA	ABANDON PIPE LF	SAND BACKFILL CY	CAP RISER EA	CAP INLET EA	DESCRIPTION	STATION	DRAINAGE PLAN SHEET NO.	DRAINAGE SYSTEM NO. ⬡	DRAINAGE UNIT ◯
																																	CONCRETE COLLAR	47.6' RT "GE1" 376+20.46	D-15	107	a
															2.0		S																18" RCP				b
																																	G1 DI W/ DEPRESSION	76.91' RT "GE1" 376+18.00			c
															1.0		P																18" RCP W/ CONC BACKFILL				d
																																	PRESSURE MH w/BLEEDER ASS'Y	30.00' RT "14EBOFF2" 376+15.00			e
7.5															26.0	1	P																12" CMP				f
			17.0																		1												12" CMP RISER				g
		7.0																															OMP DI	20.80' LT "14EBON2" 375+75.34			h
										56.0					5.0																		18" AP TYPE F				i
		4.0																															OMP DI	26.10' LT "14EBON2" 375+19.65			j
																		440.0	1														8" STEEL PIPE BLEEDER w/ GATE VALVE				k
																											1						REMOVE DI				l
																																	JS	12.71' LT "VINE" 21+55.80	D-15	108	a
															14.0		S																24" RCP				b
																																	CONCRETE COLLAR	2.0' LT "VINE" 21+22.00			c
															12.0		S																24" RCP				d
																																	MH EZ	2.0' LT "VINE" 19+00.00			e
															12.0		S																24" RCP				f
																																	MH EZ	2.0' LT "VINE" 15+53.00			g
															11.0		S																24" RCP				h
																																	MH EZ	2.0' LT "VINE" 12+08.76			i
															8.0		S																18" RCP				j
7.5		11.0	17.0							56.0						1		440.0	1			1					1						SHEET TOTALS				

THIS PLAN ACCURATE FOR DRAINAGE WORK ONLY.

DRAINAGE QUANTITIES
DQ-56

STATE OF CALIFORNIA - DEPARTMENT OF TRANSPORTATION
Caltrans® DESIGN

FUNCTIONAL SUPERVISOR: MARK PERTILE
CALCULATED-DESIGNED BY: MOHAMMAD ABDRABOH
CHECKED BY: ALAN R. BISI
REVISED BY
DATE REVISED

LAST REVISION 03-29-11 | DATE PLOTTED => 29-APR-2011 | TIME PLOTTED => 18:15

Dist	COUNTY	ROUTE	POST MILES TOTAL PROJECT	SHEET No.	TOTAL SHEETS
08	Riv	91	15.6/21.6	386	2028

REGISTERED CIVIL ENGINEER 3-29-10 DATE

4-25-11
PLANS APPROVAL DATE

REGISTERED PROFESSIONAL ENGINEER ALAN R. BISI No. C62808 Exp. 6-30-12 CIVIL STATE OF CALIFORNIA

THE STATE OF CALIFORNIA OR ITS OFFICERS OR AGENTS SHALL NOT BE RESPONSIBLE FOR THE ACCURACY OR COMPLETENESS OF SCANNED COPIES OF THIS PLAN SHEET.

ALTERNATIVE PIPE
ALLOWABLE PIPE MATERIAL AND PROTECTION

DESIGNATION	RCP	CSP (2-2/3"x½")			SSRP (3/4"x1" @ 11-1/2" PITCH)			PPC(C)	PPC(D,S)
	SIZE (INCH)	SIZE (INCH)	BITUM. COAT. THICKNESS	PA/PS THICKNESS	SIZE (INCH)	BITUM. COAT. THICKNESS	PA/PS THICKNESS	SIZE (INCH)	SIZE (INCH)
6" APC									6
12" APC TYPE A		12	0.064"	0.052"				12	
12" APC TYPE B					12	0.064"	0.052"		12
12" APC TYPE C	12				12	0.064"	0.052"		12
18" APC TYPE A	18	18	0.064"	0.052"	18	0.064"	0.052"		
18" APC TYPE B	18	18	0.064"	0.052"				18	
18" APC TYPE C		18	0.064"	0.052"				18	
18" APC TYPE D	18				18	0.064"	0.052"		
18" APC TYPE E	18	18	0.064"	0.052"				18	18
18" APC TYPE F	18								18
24" APC		24	0.079"	0.064"				24	
30" APC	30				30	0.079"	0.064"		30
30"x10" ARCH		30x10	0.079"	0.064"	30x10	0.079"	0.064"		
48" APC		48	0.079"	0.064"					

LEGENDS AND ABBREVIATIONS

S - STANDARD JOINT TYPE
P - POSITIVE JOINT TYPE
D - DOWNDRAIN JOINT TYPE
RCP - REINFORCED CONCRETE PIPE
PPC(C) - PASTIC PIPE CULVERT, TYPE C (CORRUGATED INTERIOR WALL)
PPC(D,S) - PLASTIC PIPE CULVERT, TYPE D OR S (SMOOTH INTERIOR WALL)
CSP - CORRUGATED STEEL PIPE
SSRP - STEEL SPIRAL RIBBED PIPE
GA. - GAUGE
BITUM. - BITUMINOUS
PA - POLYMERIZED ASPHALT
PS - POLYMERIC SHEET
w/ - WITH
Ω - SEE DRAINAGE DETAIL

Notes:

1. SUFFICIENT SPACE WAS NOT AVALABLE TO LIST ALL DRAINAGE ITEMS WITHIN A SINGLE TABLE ON A SHEET BORDER, THEREFORE THE LISTING OF THE FIRST GROUPING OF DRAINAGE ITEMS ARE REPEATED ON THE ODD NUMBERED ID CODE SHEETS (DQ-1, DQ-3, ETC.) AND THE LISTINGS OF THE REMAINING GROUP OF DRAINAGE ITEMS ARE REPEATED ON THE EVEN NUMBERED ID CODE SHEETS (DQ-2, DQ-4, ETC.).
2. THE PRECISE DETERMINATION OF THE FOLLOWING ITEMS WILL BE MADE BY THE ENGINEER IN THE FIELD: STATION, SKEW, LENGTH, FL ELEVATION, AND DEPTH OF STRUCTURE.
3. (N) - NOT A SEPARATE PAY ITEM; FOR INFORMATION ONLY.
4. * - SEE ROADWAY QUANTITIES FOR DRAINAGE ITEM TOTAL

DITCH EXCAVATION	CONCRETE (CHANNEL LINING)	STRUCTURAL CONCRETE, BOX CULVERT	MINOR CONCRETE (MINOR STRUCTURE)	MINOR CONCRETE (MISC. CONSTRUCTION)	CL. IV CONCRETE (BACKFILL) *	HMA-A *	PLACE AC (MISC. AREA) *	MISC. IRON AND STEEL	BAR REINFORCING STEEL	RSP: ¼-TON, METHOD B	RSP: FACING, METHOD B	RSP: NO. 2 BACKING, METHOD B	RSP: RSP FABRIC	FRAMES, GRATES AND COVERS: 24-12 (N)	24-13 (N)	¼" SOLID STEEL COVER (N)	12" X 12" PRECAST INLET	12" X 12" STEEL GRATE (TRAFFIC RATED)	DEBRIS RACK (N)	MANHOLE COVER (N)	MANHOLE COVER-PRESSURE LOCKING (N)	36" PRECAST MANHOLE SHAFT		MANHOLE SHAFT PIPE REDUCER	HEIGHT OF MANHOLE (N)	HEIGHT OF INLET "H" (N)	DRAINAGE INLET MARKER *	CONCRETE COLLAR (N)	RCP: 12" RCP	15" RCP	18" RCP	24" RCP	30" RCP	36" RCP	48" RCP	54" RCP	60" RCP (CL. V SPECIAL)	DESCRIPTION	STATION	DRAINAGE PLAN SHEET NO.	DRAINAGE SYSTEM NO. ⬡	DRAINAGE UNIT ◯
CY	CY	CY	CY	CY	CY	ton	yd²	lb	lb	CY	CY	CY	yd²	EA	EA	EA	EA	EA	EA	EA	EA	LF		EA	FT	FT	EA	EA	LF	LF	LF	LF	LF	LF	LF	LF	LF					
																															25.0							18" RCP		D-15	109	a
			2.15					235												1						5.0												405 DI	19.20' LT "VINE" 11+92.77			b
																															22.0							18" RCP				c
			2.43					235												1						6.0												405 DI	17.00' LT "VINE" 11+92.77			d
																																						REMOVE DI				e
																																						REMOVE PIPE				f
																																						REMOVE DI				g
			0.28																																			JS	107.40' RT "GE1" 385+68.29	D-16	110	a
																															61.0							18" RCP				b
			0.30			0.38	3.50	177								1																						OMP DI W/APRON	48.52' RT "14EBON2" 386+12.50			c
61.65	35.42																																					CONCRETE DITCH				d
			0.95	1.70				326						1												1.9												TYPE G1 DI w/ DEPRESSION	13.12' LT "14EBOFF2" 375+15	D-15,16	111	a
																													99.2									12" RCP				b
																															98.3							18" RCP				c
			1.04																																			HEADWALL "L"	24.23' LT "14EBOFF2" 377+16.13			d
230.33																																						BIOSWALE				e
291.98	35.42		7.15	1.70		0.38	3.50	973						1		1				2									99.2		206.3							SHEET TOTALS				

THIS PLAN ACCURATE FOR DRAINAGE WORK ONLY.

DRAINAGE QUANTITIES
DQ-57

REVISED BY | DATE REVISED

CALCULATED-DESIGNED BY: MOHAMMAD ABDRABOH
CHECKED BY: ALAN R. BISI
FUNCTIONAL SUPERVISOR: MARK PERTILE

STATE OF CALIFORNIA - DEPARTMENT OF TRANSPORTATION
Caltrans DESIGN

LAST REVISION 03-29-11 | DATE PLOTTED => 11-JUL-2011 | TIME PLOTTED => 12:41

Dist	COUNTY	ROUTE	POST MILES TOTAL PROJECT	SHEET No.	TOTAL SHEETS
08	Riv	91	15.6/21.6	387	2028

REGISTERED CIVIL ENGINEER 3-29-10 DATE

4-25-11
PLANS APPROVAL DATE

REGISTERED PROFESSIONAL ENGINEER ALAN R. BISI No. C62808 Exp. 6-30-12 CIVIL STATE OF CALIFORNIA

THE STATE OF CALIFORNIA OR ITS OFFICERS OR AGENTS SHALL NOT BE RESPONSIBLE FOR THE ACCURACY OR COMPLETENESS OF SCANNED COPIES OF THIS PLAN SHEET.

ALTERNATIVE PIPE ALLOWABLE PIPE MATERIAL AND PROTECTION

DESIGNATION	RCP	CSP (2-2/3"x½")			SSRP (3/4"x1" @ 11-1/2" PITCH)			PPC(C)	PPC(D,S)
	SIZE (INCH)	SIZE (INCH)	BITUM. COAT. THICKNESS	PA/PS THICKNESS	SIZE (INCH)	BITUM. COAT. THICKNESS	PA/PS THICKNESS	SIZE (INCH)	SIZE (INCH)
6" APC									6
12" APC TYPE A		12	0.064"	0.052"				12	
12" APC TYPE B					12	0.064"	0.052"		12
12" APC TYPE C	12				12	0.064"	0.052"		12
18" APC TYPE A	18	18	0.064"	0.052"	18	0.064"	0.052"		
18" APC TYPE B	18	18	0.064"	0.052"				18	
18" APC TYPE C		18	0.064"	0.052"				18	
18" APC TYPE D	18				18	0.064"	0.052"		
18" APC TYPE E	18	18	0.064"	0.052"				18	18
18" APC TYPE F	18								18
24" APC		24	0.079"	0.064"				24	
30" APC	30				30	0.079"	0.064"		30
30"x10" ARCH		30x10	0.079"	0.064"	30x10	0.079"	0.064"		
48" APC		48	0.079"	0.064"					

LEGENDS AND ABBREVIATIONS

S - STANDARD JOINT TYPE
P - POSITIVE JOINT TYPE
D - DOWNDRAIN JOINT TYPE
RCP - REINFORCED CONCRETE PIPE
PPC(C) - PASTIC PIPE CULVERT, TYPE C (CORRUGATED INTERIOR WALL)
PPC(D,S) - PLASTIC PIPE CULVERT, TYPE D OR S (SMOOTH INTERIOR WALL)
CSP - CORRUGATED STEEL PIPE
CAP - CORRUGATED ALUMINUM PIPE
SSRP - STEEL SPIRAL RIBBED PIPE
GA. - GAUGE
BITUM. - BITUMINOUS
PA - POLYMERIZED ASPHALT
PS - POLYMERIC SHEET
w/ - WITH
Ω - SEE DRAINAGE DETAIL

Notes:

1. SUFFICIENT SPACE WAS NOT AVALABLE TO LIST ALL DRAINAGE ITEMS WITHIN A SINGLE TABLE ON A SHEET BORDER, THEREFORE THE LISTING OF THE FIRST GROUPING OF DRAINAGE ITEMS ARE REPEATED ON THE ODD NUMBERED ID CODE SHEETS (DQ-1, DQ-3, ETC.) AND THE LISTINGS OF THE REMAINING GROUP OF DRAINAGE ITEMS ARE REPEATED ON THE EVEN NUMBERED ID CODE SHEETS (DQ-2, DQ-4, ETC.).
2. THE PRECISE DETERMINATION OF THE FOLLOWING ITEMS WILL BE MADE BY THE ENGINEER IN THE FIELD: STATION, SKEW, LENGTH, FL ELEVATION, AND DEPTH OF STRUCTURE.
3. (N) - NOT A SEPARATE PAY ITEM; FOR INFORMATION ONLY.
4. * - SEE ROADWAY QUANTITIES FOR DRAINAGE ITEM TOTAL

CSP								ALTERNATIVE PIPE																																
12" (14 GA.)	18" (14 GA.)	36" (10 GA.)	12" RISER (14 GA.)	48" RISER (10 GA.)	18" SLOTTED PIPE (14 GA.)	21" SLOTTED PIPE (14 GA.)	24" SLOTTED PIPE (14 GA.)	6" AP (TYPE __)	12" AP (TYPE __)	18" AP (TYPE __)	24" AP (TYPE __)	30" AP (TYPE __)	48" AP (TYPE __)	30" X 10" AP ARCH PIPE (TYPE __)	MAXIMUM COVER (N)	ELBOW (N)	PIPE JOINT CLASSIFICATION	8" GALVANIZED STEEL PIPE	8" GATE VALVE w/ SLEEVE & COVER	AFES: 12" AFES	PIPE RISER: 8" AP SLIPJOINT (N)	PIPE RISER: 12" AP SLIPJOINT (N)	CABLE RAILING	ADJUST INLET	MODIFY INLET	REMOVAL/ABANDON PAY ITEMS: REMOVE CONCRETE	REMOVE PIPE	REMOVE INLET	ABANDON INLET	ABANDON PIPE	SAND BACKFILL	CAP RISER	CAP INLET	DESCRIPTION	STATION	DRAINAGE PLAN SHEET NO.	DRAINAGE SYSTEM NO. ⬡	DRAINAGE UNIT ◯
LF	LF	LF	LF	LF	LF	LF	LF	LF	LF	LF	LF	LF	LF	LF	FT	EA		LF	EA	EA	EA	EA	LF	EA	EA	CY	LF	EA	EA	LF	CY	EA	EA					
															5.0		S																	18" RCP		D-15	109	a
																																		405 DI	19.20' LT "VINE" 11+92.77			b
															8.0		S																	18" RCP				c
																																		405 DI	17.00' LT "VINE" 11+92.77			d
																												1						REMOVE DI				e
																										110.0								REMOVE PIPE				f
																												1						REMOVE DI				g
																																		JS	107.40' RT "GE1" 385+68.29	D-16	110	a
															4.0		S																	18" RCP				b
		9.5																																OMP DI W/APRON	48.52' RT "14EBON2" 386+12.50			c
																																		CONCRETE DITCH				d
																																		TYPE G1 DI w/ DEPRESSION	13.12' LT "14EBOFF2" 375+15	D-15,16	111	a
															2.3		S																	12" RCP				b
															2.3		S																	18" RCP				c
																																		HEADWALL "L"	24.23' LT "14EBOFF2" 377+16.13			d
																																		BIOSWALE				e
		9.5																								110.0		2						SHEET TOTALS				

THIS PLAN ACCURATE FOR DRAINAGE WORK ONLY.

DRAINAGE QUANTITIES
DQ-58

REVISED BY | DATE REVISED

CALCULATED-DESIGNED BY: MOHAMMAD ABDRABOH
CHECKED BY: ALAN R. BISI
FUNCTIONAL SUPERVISOR: MARK PERTILE

STATE OF CALIFORNIA - DEPARTMENT OF TRANSPORTATION
Caltrans® DESIGN

LAST REVISION 03-29-11 | DATE PLOTTED => 29-APR-2011 | TIME PLOTTED => 18:00

Dist	COUNTY	ROUTE	POST MILES TOTAL PROJECT	SHEET No.	TOTAL SHEETS
08	Riv	91	15.6/21.6	388	2028

REGISTERED CIVIL ENGINEER 3-29-10 DATE

4-25-11
PLANS APPROVAL DATE

REGISTERED PROFESSIONAL ENGINEER ALAN R. BISI No. C62808 Exp. 6-30-12 CIVIL STATE OF CALIFORNIA

THE STATE OF CALIFORNIA OR ITS OFFICERS OR AGENTS SHALL NOT BE RESPONSIBLE FOR THE ACCURACY OR COMPLETENESS OF SCANNED COPIES OF THIS PLAN SHEET.

ALTERNATIVE PIPE
ALLOWABLE PIPE MATERIAL AND PROTECTION

DESIGNATION	RCP	CSP (2-2/3"x½")			SSRP (3/4"x1" @ 11-1/2" PITCH)			PPC(C)	PPC(D,S)
	SIZE (INCH)	SIZE (INCH)	BITUM. COAT. THICKNESS	PA/PS THICKNESS	SIZE (INCH)	BITUM. COAT. THICKNESS	PA/PS THICKNESS	SIZE (INCH)	SIZE (INCH)
6" APC									6
12" APC TYPE A		12	0.064"	0.052"				12	
12" APC TYPE B					12	0.064"	0.052"		12
12" APC TYPE C	12				12	0.064"	0.052"		12
18" APC TYPE A	18	18	0.064"	0.052"	18	0.064"	0.052"		
18" APC TYPE B	18	18	0.064"	0.052"				18	
18" APC TYPE C		18	0.064"	0.052"				18	
18" APC TYPE D	18				18	0.064"	0.052"		
18" APC TYPE E	18	18	0.064"	0.052"				18	18
18" APC TYPE F	18								18
24" APC		24	0.079"	0.064"				24	
30" APC	30				30	0.079"	0.064"		30
30"x10" ARCH		30x10	0.079"	0.064"	30x10	0.079"	0.064"		
48" APC		48	0.079"	0.064"					

LEGENDS AND ABBREVIATIONS

S - STANDARD JOINT TYPE
P - POSITIVE JOINT TYPE
D - DOWNDRAIN JOINT TYPE
RCP - REINFORCED CONCRETE PIPE
PPC(C) - PASTIC PIPE CULVERT, TYPE C (CORRUGATED INTERIOR WALL)
PPC(D,S) - PLASTIC PIPE CULVERT, TYPE D OR S (SMOOTH INTERIOR WALL)
CSP - CORRUGATED STEEL PIPE
SSRP - STEEL SPIRAL RIBBED PIPE
GA. - GAUGE
BITUM. - BITUMINOUS
PA - POLYMERIZED ASPHALT
PS - POLYMERIC SHEET
w/ - WITH
Ω - SEE DRAINAGE DETAIL

Notes:

1. SUFFICIENT SPACE WAS NOT AVALABLE TO LIST ALL DRAINAGE ITEMS WITHIN A SINGLE TABLE ON A SHEET BORDER, THEREFORE THE LISTING OF THE FIRST GROUPING OF DRAINAGE ITEMS ARE REPEATED ON THE ODD NUMBERED ID CODE SHEETS (DQ-1, DQ-3, ETC.) AND THE LISTINGS OF THE REMAINING GROUP OF DRAINAGE ITEMS ARE REPEATED ON THE EVEN NUMBERED ID CODE SHEETS (DQ-2, DQ-4, ETC.).
2. THE PRECISE DETERMINATION OF THE FOLLOWING ITEMS WILL BE MADE BY THE ENGINEER IN THE FIELD: STATION, SKEW, LENGTH, FL ELEVATION, AND DEPTH OF STRUCTURE.
3. (N) - NOT A SEPARATE PAY ITEM; FOR INFORMATION ONLY.
4. * - SEE ROADWAY QUANTITIES FOR DRAINAGE ITEM TOTAL

DITCH EXCAVATION	CONCRETE (CHANNEL LINING)	STRUCTURAL CONCRETE, BOX CULVERT	MINOR CONCRETE (MINOR STRUCTURE)	MINOR CONCRETE (MISC. CONSTRUCTION)	CL. IV CONCRETE (BACKFILL) *	HMA-A *	PLACE AC (MISC. AREA) *	MISC. IRON AND STEEL	BAR REINFORCING STEEL	RSP ¼-TON, METHOD B	RSP FACING, METHOD B	RSP NO. 2 BACKING, METHOD B	RSP FABRIC	FRAMES, GRATES AND COVERS 24-12 (N)	24-13 (N)	¼" SOLID STEEL COVER (N)	12" X 12" PRECAST INLET	12" X 12" STEEL GRATE (TRAFFIC RATED)	DEBRIS RACK (N)	MANHOLE COVER (N)	MANHOLE COVER-PRESSURE LOCKING (N)	36" PRECAST MANHOLE SHAFT		MANHOLE SHAFT PIPE REDUCER	HEIGHT OF MANHOLE (N)	HEIGHT OF INLET "H" (N)	DRAINAGE INLET MARKER *	CONCRETE COLLAR (N)	RCP 12" RCP	15" RCP	18" RCP	24" RCP	30" RCP	36" RCP	48" RCP	54" RCP	60" RCP (CL. V SPECIAL)	DESCRIPTION	STATION	DRAINAGE PLAN SHEET NO.	DRAINAGE SYSTEM NO. ⬡	DRAINAGE UNIT ◯
CY	CY	CY	CY	CY	CY	ton	yd²	lb	lb	CY	CY	CY	yd²	EA	EA	EA	EA	EA	EA	EA	EA	LF		EA	FT	FT	EA	EA	LF	LF	LF	LF	LF	LF	LF	LF	LF					
																																						REMOVE DI		D-16	112	a
																																						ABANDON 18" RCP				b
																																						ABANDON 18" RCP				c
																																						REMOVE DI				d
																																						REMOVE PIPE				e
																																						REMOVE DI				f
						1.51	9.44																															AC OVERSIDE DRAIN	32.10' RT "14EBON2" 381+85.16	D-16	113	a
			0.95					435											1						1.3												MODIFY DI, ADJUST TO GRADE		D-16	114	a
																																30.0						24" RCP				b
			2.33	1.70				326						1											7.0												TYPE G2 DI w/ DEPRESSION	36.85' RT "14EBON2" 385+35.00			c
																																30.0						24" RCP				d
			1.50	1.70				326						1											5.5												TYPE G1 DI w/ DEPRESSION	37.50' RT "14EBON2" 385+01.10			e
																																202.2						24" RCP				f
			1.50	1.70				326						1											5.5												TYPE G1 DI w/ DEPRESSION	4.0' LT "14EBON2" 382+98.70			g
																															19.5							18" RCP				h
			1.40	1.70				326						1											5.0												TYPE G1 DI w/ DEPRESSION	4.0' LT "14EBON2" 382+75.30			i
			7.68	6.80		1.51	9.44	1739						4					1												19.5	262.2						SHEET TOTALS				

DRAINAGE QUANTITIES
DQ-59

THIS PLAN ACCURATE FOR DRAINAGE WORK ONLY.

REVISED BY | DATE REVISED

CALCULATED-DESIGNED BY: MOHAMMAD ABDRABOH
CHECKED BY: ALAN R. BISI
FUNCTIONAL SUPERVISOR: MARK PERTILE

STATE OF CALIFORNIA - DEPARTMENT OF TRANSPORTATION
Caltrans
DESIGN

LAST REVISION 03-29-11 | DATE PLOTTED => 11-JUL-2011 | TIME PLOTTED => 12:41

Dist	COUNTY	ROUTE	POST MILES TOTAL PROJECT	SHEET No.	TOTAL SHEETS
08	Riv	91	15.6/21.6	389	2028

REGISTERED CIVIL ENGINEER 4-11-10 DATE

4-25-11
PLANS APPROVAL DATE

REGISTERED PROFESSIONAL ENGINEER ALAN R. BISI No. C62808 Exp. 6-30-12 CIVIL STATE OF CALIFORNIA

THE STATE OF CALIFORNIA OR ITS OFFICERS OR AGENTS SHALL NOT BE RESPONSIBLE FOR THE ACCURACY OR COMPLETENESS OF SCANNED COPIES OF THIS PLAN SHEET.

ALTERNATIVE PIPE ALLOWABLE PIPE MATERIAL AND PROTECTION

DESIGNATION	RCP	CSP (2-2/3"x½")			SSRP (3/4"x1" @ 11-1/2" PITCH)			PPC(C)	PPC(D,S)
	SIZE (INCH)	SIZE (INCH)	BITUM. COAT. THICKNESS	PA/PS THICKNESS	SIZE (INCH)	BITUM. COAT. THICKNESS	PA/PS THICKNESS	SIZE (INCH)	SIZE (INCH)
6" APC									6
12" APC TYPE A		12	0.064"	0.052"				12	
12" APC TYPE B					12	0.064"	0.052"		12
12" APC TYPE C	12				12	0.064"	0.052"		12
18" APC TYPE A	18	18	0.064"	0.052"	18	0.064"	0.052"		
18" APC TYPE B	18	18	0.064"	0.052"				18	
18" APC TYPE C		18	0.064"	0.052"				18	
18" APC TYPE D	18				18	0.064"	0.052"		
18" APC TYPE E	18	18	0.064"	0.052"				18	18
18" APC TYPE F	18								18
24" APC		24	0.079"	0.064"				24	
30" APC	30				30	0.079"	0.064"		30
30"x10" ARCH		30x10	0.079"	0.064"	30x10	0.079"	0.064"		
48" APC		48	0.079"	0.064"					

LEGENDS AND ABBREVIATIONS

S - STANDARD JOINT TYPE
P - POSITIVE JOINT TYPE
D - DOWNDRAIN JOINT TYPE
RCP - REINFORCED CONCRETE PIPE
PPC(C) - PASTIC PIPE CULVERT, TYPE C (CORRUGATED INTERIOR WALL)
PPC(D,S) - PLASTIC PIPE CULVERT, TYPE D OR S (SMOOTH INTERIOR WALL)
CSP - CORRUGATED STEEL PIPE
CAP - CORRUGATED ALUMINUM PIPE
SSRP - STEEL SPIRAL RIBBED PIPE
GA. - GAUGE
BITUM. - BITUMINOUS
PA - POLYMERIZED ASPHALT
PS - POLYMERIC SHEET
w/ - WITH
Ω - SEE DRAINAGE DETAIL

Notes:

1. SUFFICIENT SPACE WAS NOT AVALABLE TO LIST ALL DRAINAGE ITEMS WITHIN A SINGLE TABLE ON A SHEET BORDER, THEREFORE THE LISTING OF THE FIRST GROUPING OF DRAINAGE ITEMS ARE REPEATED ON THE ODD NUMBERED ID CODE SHEETS (DQ-1, DQ-3, ETC.) AND THE LISTINGS OF THE REMAINING GROUP OF DRAINAGE ITEMS ARE REPEATED ON THE EVEN NUMBERED ID CODE SHEETS (DQ-2, DQ-4, ETC.).
2. THE PRECISE DETERMINATION OF THE FOLLOWING ITEMS WILL BE MADE BY THE ENGINEER IN THE FIELD: STATION, SKEW, LENGTH, FL ELEVATION, AND DEPTH OF STRUCTURE.
3. (N) - NOT A SEPARATE PAY ITEM; FOR INFORMATION ONLY.
4. * - SEE ROADWAY QUANTITIES FOR DRAINAGE ITEM TOTAL

CSP 12" (14 GA.) LF	CSP 18" (14 GA.) LF	CSP 36" (10 GA.) LF	CSP 12" RISER (14 GA.) LF	CSP 48" RISER (10 GA.) LF	CSP 18" SLOTTED PIPE (14 GA.) LF	CSP 21" SLOTTED PIPE (14 GA.) LF	CSP 24" SLOTTED PIPE (14 GA.) LF	ALTERNATIVE PIPE 6" AP (TYPE __) LF	ALTERNATIVE PIPE 12" AP (TYPE __) LF	ALTERNATIVE PIPE 18" AP (TYPE __) LF	ALTERNATIVE PIPE 24" AP (TYPE __) LF	ALTERNATIVE PIPE 30" AP (TYPE __) LF	ALTERNATIVE PIPE 48" AP (TYPE __) LF	ALTERNATIVE PIPE 30" X 10" AP ARCH PIPE (TYPE __) LF	MAXIMUM COVER (N) FT	ELBOW (N) EA	PIPE JOINT CLASSIFICATION	8" GALVANIZED STEEL PIPE LF	8" GATE VALVE w/ SLEEVE & COVER EA	AFES 12" AFES EA	PIPE RISER 8" AP SLIPJOINT (N) EA	PIPE RISER 12" AP SLIPJOINT (N) EA	CABLE RAILING LF	ADJUST INLET EA	MODIFY INLET EA	REMOVAL/ABANDON PAY ITEMS REMOVE CONCRETE CY	REMOVE PIPE LF	REMOVE INLET EA	ABANDON INLET EA	ABANDON PIPE LF	SAND BACKFILL CY	CAP RISER EA	CAP INLET EA	DESCRIPTION	STATION	DRAINAGE PLAN SHEET NO.	DRAINAGE SYSTEM NO. ⬡	DRAINAGE UNIT ◯
																										1							REMOVE DI		D-16	112	a
																											75.0	4.91					ABANDON 18" RCP				b
																											80.0	5.23					ABANDON 18" RCP				c
																										1							REMOVE DI				d
																									25.0								REMOVE PIPE				e
																										1							REMOVE DI				f
																																	AC OVERSIDE DRAIN	32.10' RT "14EBON2" 381+85.16	D-16	113	a
																							1										ADJUST DI TO GRADE		D-16	114	a
															14.0		S																24" RCP				b
																																	TYPE G2 DI w/ DEPRESSION	36.85' RT "14EBON2" 385+35.00			c
															4.5		S																24" RCP				d
																																	TYPE G1 DI w/ DEPRESSION	37.50' RT "14EBON2" 385+01.10			e
															3.7		S																24" RCP				f
																																	TYPE G1 DI w/ DEPRESSION	4.0' LT "14EBON2" 382+98.70			g
															3.5		S																18" RCP				h
																																	TYPE G1 DI w/ DEPRESSION	4.0' LT "14EBON2" 382+75.30			i
																							1		25.0	3		155.0	10.14				SHEET TOTALS				

THIS PLAN ACCURATE FOR DRAINAGE WORK ONLY.

DRAINAGE QUANTITIES
DQ-60

STATE OF CALIFORNIA - DEPARTMENT OF TRANSPORTATION
Caltrans® DESIGN

FUNCTIONAL SUPERVISOR: MARK PERTILE
CALCULATED-DESIGNED BY: MOHAMMAD ABDRABOH
CHECKED BY: ALAN R. BISI
REVISED BY
DATE REVISED

LAST REVISION 04-11-11
DATE PLOTTED => 29-APR-2011
TIME PLOTTED => 18:00

Dist	COUNTY	ROUTE	POST MILES TOTAL PROJECT	SHEET No.	TOTAL SHEETS
08	Riv	91	15.6/21.6	390	2028

REGISTERED CIVIL ENGINEER 3-29-10 DATE

4-25-11
PLANS APPROVAL DATE

REGISTERED PROFESSIONAL ENGINEER ALAN R. BISI No. C62808 Exp. 6-30-12 CIVIL STATE OF CALIFORNIA

THE STATE OF CALIFORNIA OR ITS OFFICERS OR AGENTS SHALL NOT BE RESPONSIBLE FOR THE ACCURACY OR COMPLETENESS OF SCANNED COPIES OF THIS PLAN SHEET.

ALTERNATIVE PIPE ALLOWABLE PIPE MATERIAL AND PROTECTION

DESIGNATION	RCP	CSP (2-2/3"x½")			SSRP (3/4"x1" @ 11-1/2" PITCH)			PPC(C)	PPC(D,S)
	SIZE (INCH)	SIZE (INCH)	BITUM. COAT. THICKNESS	PA/PS THICKNESS	SIZE (INCH)	BITUM. COAT. THICKNESS	PA/PS THICKNESS	SIZE (INCH)	SIZE (INCH)
6" APC									6
12" APC TYPE A		12	0.064"	0.052"				12	
12" APC TYPE B					12	0.064"	0.052"		12
12" APC TYPE C	12				12	0.064"	0.052"		12
18" APC TYPE A	18	18	0.064"	0.052"	18	0.064"	0.052"		
18" APC TYPE B	18	18	0.064"	0.052"				18	
18" APC TYPE C		18	0.064"	0.052"				18	
18" APC TYPE D	18				18	0.064"	0.052"		
18" APC TYPE E	18	18	0.064"	0.052"				18	18
18" APC TYPE F	18								18
24" APC		24	0.079"	0.064"				24	
30" APC	30				30	0.079"	0.064"		30
30"x10" ARCH		30x10	0.079"	0.064"	30x10	0.079"	0.064"		
48" APC		48	0.079"	0.064"					

LEGENDS AND ABBREVIATIONS

S - STANDARD JOINT TYPE
P - POSITIVE JOINT TYPE
D - DOWNDRAIN JOINT TYPE
RCP - REINFORCED CONCRETE PIPE
PPC(C) - PASTIC PIPE CULVERT, TYPE C (CORRUGATED INTERIOR WALL)
PPC(D,S) - PLASTIC PIPE CULVERT, TYPE D OR S (SMOOTH INTERIOR WALL)
CSP - CORRUGATED STEEL PIPE
SSRP - STEEL SPIRAL RIBBED PIPE
GA. - GAUGE
BITUM. - BITUMINOUS
PA - POLYMERIZED ASPHALT
PS - POLYMERIC SHEET
w/ - WITH
Ω - SEE DRAINAGE DETAIL

Notes:

1. SUFFICIENT SPACE WAS NOT AVALABLE TO LIST ALL DRAINAGE ITEMS WITHIN A SINGLE TABLE ON A SHEET BORDER, THEREFORE THE LISTING OF THE FIRST GROUPING OF DRAINAGE ITEMS ARE REPEATED ON THE ODD NUMBERED ID CODE SHEETS (DQ-1, DQ-3, ETC.) AND THE LISTINGS OF THE REMAINING GROUP OF DRAINAGE ITEMS ARE REPEATED ON THE EVEN NUMBERED ID CODE SHEETS (DQ-2, DQ-4, ETC.).
2. THE PRECISE DETERMINATION OF THE FOLLOWING ITEMS WILL BE MADE BY THE ENGINEER IN THE FIELD: STATION, SKEW, LENGTH, FL ELEVATION, AND DEPTH OF STRUCTURE.
3. (N) - NOT A SEPARATE PAY ITEM; FOR INFORMATION ONLY.
4. * - SEE ROADWAY QUANTITIES FOR DRAINAGE ITEM TOTAL

DITCH EXCAVATION	CONCRETE (CHANNEL LINING)	STRUCTURAL CONCRETE, BOX CULVERT	MINOR CONCRETE (MINOR STRUCTURE)	MINOR CONCRETE (MISC. CONSTRUCTION)	CL. IV CONCRETE (BACKFILL) *	HMA-A *	PLACE AC (MISC. AREA) *	MISC. IRON AND STEEL	BAR REINFORCING STEEL	RSP: ¼-TON, METHOD B	RSP: FACING, METHOD B	RSP: NO. 2 BACKING, METHOD B	RSP: RSP FABRIC	FRAMES, GRATES AND COVERS: 24-12 (N)	24-13 (N)	¼" SOLID STEEL COVER (N)	12" X 12" PRECAST INLET	12" X 12" STEEL GRATE (TRAFFIC RATED)	DEBRIS RACK (N)	MANHOLE COVER (N)	MANHOLE COVER-PRESSURE LOCKING (N)	36" PRECAST MANHOLE SHAFT		MANHOLE SHAFT PIPE REDUCER	HEIGHT OF MANHOLE (N)	HEIGHT OF INLET "H" (N)	DRAINAGE INLET MARKER *	CONCRETE COLLAR (N)	RCP: 12" RCP	15" RCP	18" RCP	24" RCP	30" RCP	36" RCP	48" RCP	54" RCP	60" RCP (CL. V SPECIAL)	DESCRIPTION	STATION	DRAINAGE PLAN SHEET NO.	DRAINAGE SYSTEM NO. ⬡	DRAINAGE UNIT ◯
CY	CY	CY	CY	CY	CY	ton	yd²	lb	lb	CY	CY	CY	yd²	EA	EA	EA	EA	EA	EA	EA	EA	LF		EA	FT	FT	EA	EA	LF	LF	LF	LF	LF	LF	LF	LF	LF					
		5.90						500	80.5											1		6.9		1	6.0													MANHOLE TYPE JM	36.60' LT "14WBOFF1" 385+78.71	D-16	115	a
																																					51.2	60" RCP, CLASS V, SPECIAL				b
																												1										CONCRETE COLLAR	14.48' RT "14WBOFF1" 385+81.92			c
																												1										CONCRETE COLLAR	25.43' RT "14EBOFF2" 388+44.45			d
																																					29.8	60" RCP, CLASS V, SPECIAL				e
		4.80							880.7																													JUNCTION STRUCTURE	7.19' RT "14EBOFF2" 386+44.33			f
																																					37.2	60" RCP, CLASS V, SPECIAL				g
		7.20						525	110.0											1		11.1		1	6.0													MANHOLE TYPE JM	47.72' RT "14WBOFF1" 386+55.20			h
																																						REMOVE 42" CIPP				i
																																						REMOVE MANHOLE				j
																																						REMOVE 57" RCP				k
																																						REMOVE MANHOLE				l
																																						REMOVE TRANS. STRUCTURE				m
																																						REMOVE MANHOLE				n
																																						REMOVE 42" CIPP				o
			1.30																																			JUNCTION STRUCTURE,	7.40' RT "14EBOFF2" 386+60.62	D-16	116	a
																															28.5							18" RCP				b
			1.40	1.70				326						1												5.0												TYPE G1 DI w/ DEPRESSION	34.0' RT "14EBOFF2" 386+73.14			c
			1.70																																			JUNCTION STRUCTURE,	8.10' RT "14EBOFF2" 387+11.50	D-16	117	a
																															27.5							18" RCP				b
			1.40	1.70				326						1												5.0												TYPE G1 DI w/ DEPRESSION	34.0' RT "14EBOFF2" 387+23.10			c
		17.90	5.80	3.40				1677	1071.2					2						2		18.0		2				2			56.0						118.2	SHEET TOTALS				

THIS PLAN ACCURATE FOR DRAINAGE WORK ONLY.

DRAINAGE QUANTITIES
DQ-61

CALCULATED-DESIGNED BY: MOHAMMAD ABDRABOH
CHECKED BY: ALAN R. BISI
REVISED BY
DATE REVISED
FUNCTIONAL SUPERVISOR: MARK PERTILE

STATE OF CALIFORNIA - DEPARTMENT OF TRANSPORTATION
Caltrans
DESIGN

LAST REVISION 03-29-11
DATE PLOTTED => 11-JUL-2011
TIME PLOTTED => 12:41

Dist	COUNTY	ROUTE	POST MILES TOTAL PROJECT	SHEET No.	TOTAL SHEETS
08	Riv	91	15.6/21.6	391	2028

REGISTERED CIVIL ENGINEER 3-29-10 DATE

4-25-11
PLANS APPROVAL DATE

REGISTERED PROFESSIONAL ENGINEER ALAN R. BISI No. C62808 Exp. 6-30-12 CIVIL STATE OF CALIFORNIA

THE STATE OF CALIFORNIA OR ITS OFFICERS OR AGENTS SHALL NOT BE RESPONSIBLE FOR THE ACCURACY OR COMPLETENESS OF SCANNED COPIES OF THIS PLAN SHEET.

ALTERNATIVE PIPE ALLOWABLE PIPE MATERIAL AND PROTECTION

DESIGNATION	RCP	CSP (2-2/3"x½")			SSRP (3/4"x1" @ 11-1/2" PITCH)			PPC(C)	PPC(D,S)
	SIZE (INCH)	SIZE (INCH)	BITUM. COAT. THICKNESS	PA/PS THICKNESS	SIZE (INCH)	BITUM. COAT. THICKNESS	PA/PS THICKNESS	SIZE (INCH)	SIZE (INCH)
6" APC									6
12" APC TYPE A		12	0.064"	0.052"				12	
12" APC TYPE B					12	0.064"	0.052"		12
12" APC TYPE C	12				12	0.064"	0.052"		12
18" APC TYPE A	18	18	0.064"	0.052"	18	0.064"	0.052"		
18" APC TYPE B	18	18	0.064"	0.052"				18	
18" APC TYPE C		18	0.064"	0.052"				18	
18" APC TYPE D	18				18	0.064"	0.052"		
18" APC TYPE E	18	18	0.064"	0.052"				18	18
18" APC TYPE F	18								18
24" APC		24	0.079"	0.064"				24	
30" APC	30				30	0.079"	0.064"		30
30"x10" ARCH		30x10	0.079"	0.064"	30x10	0.079"	0.064"		
48" APC		48	0.079"	0.064"					

LEGENDS AND ABBREVIATIONS

S - STANDARD JOINT TYPE
P - POSITIVE JOINT TYPE
D - DOWNDRAIN JOINT TYPE
RCP - REINFORCED CONCRETE PIPE
PPC(C) - PASTIC PIPE CULVERT, TYPE C (CORRUGATED INTERIOR WALL)
PPC(D,S) - PLASTIC PIPE CULVERT, TYPE D OR S (SMOOTH INTERIOR WALL)
CSP - CORRUGATED STEEL PIPE
CAP - CORRUGATED ALUMINUM PIPE
SSRP - STEEL SPIRAL RIBBED PIPE
GA. - GAUGE
BITUM. - BITUMINOUS
PA - POLYMERIZED ASPHALT
PS - POLYMERIC SHEET
w/ - WITH
Ω - SEE DRAINAGE DETAIL

Notes:

1. SUFFICIENT SPACE WAS NOT AVALABLE TO LIST ALL DRAINAGE ITEMS WITHIN A SINGLE TABLE ON A SHEET BORDER, THEREFORE THE LISTING OF THE FIRST GROUPING OF DRAINAGE ITEMS ARE REPEATED ON THE ODD NUMBERED ID CODE SHEETS (DQ-1, DQ-3, ETC.) AND THE LISTINGS OF THE REMAINING GROUP OF DRAINAGE ITEMS ARE REPEATED ON THE EVEN NUMBERED ID CODE SHEETS (DQ-2, DQ-4, ETC.).
2. THE PRECISE DETERMINATION OF THE FOLLOWING ITEMS WILL BE MADE BY THE ENGINEER IN THE FIELD: STATION, SKEW, LENGTH, FL ELEVATION, AND DEPTH OF STRUCTURE.
3. (N) - NOT A SEPARATE PAY ITEM; FOR INFORMATION ONLY.
4. * - SEE ROADWAY QUANTITIES FOR DRAINAGE ITEM TOTAL

CSP 12" (14 GA.) LF	CSP 18" (14 GA.) LF	CSP 36" (10 GA.) LF	CSP 12" RISER (14 GA.) LF	CSP 48" RISER (10 GA.) LF	CSP 18" SLOTTED PIPE (14 GA.) LF	CSP 21" SLOTTED PIPE (14 GA.) LF	CSP 24" SLOTTED PIPE (14 GA.) LF	ALTERNATIVE PIPE 6" AP (TYPE __) LF	ALTERNATIVE PIPE 12" AP (TYPE __) LF	ALTERNATIVE PIPE 18" AP (TYPE __) LF	ALTERNATIVE PIPE 24" AP (TYPE __) LF	ALTERNATIVE PIPE 30" AP (TYPE __) LF	ALTERNATIVE PIPE 48" AP (TYPE __) LF	ALTERNATIVE PIPE 30" X 10" AP ARCH PIPE (TYPE __) LF	MAXIMUM COVER (N) FT	ELBOW (N) EA	PIPE JOINT CLASSIFICATION	8" GALVANIZED STEEL PIPE LF	8" GATE VALVE w/ SLEEVE & COVER EA	AFES 12" AFES EA	PIPE RISER 8" AP SLIPJOINT (N) EA	PIPE RISER 12" AP SLIPJOINT (N) EA	CABLE RAILING LF	ADJUST INLET EA	MODIFY INLET EA	REMOVAL/ABANDON PAY ITEMS REMOVE CONCRETE CY	REMOVE PIPE LF	REMOVE INLET EA	ABANDON INLET EA	ABANDON PIPE LF	SAND BACKFILL CY	CAP RISER EA	CAP INLET EA	DESCRIPTION	STATION	DRAINAGE PLAN SHEET NO.	DRAINAGE SYSTEM NO. ⬡	DRAINAGE UNIT ◯
																																MANHOLE TYPE JM	36.60' LT "14WBOFF1" 385+78.71	D-16	115	a
															14.2		S															60" RCP, CLASS V, SPECIAL				b
																																CONCRETE COLLAR	14.48' RT "14WBOFF1" 385+81.92			c
																																CONCRETE COLLAR	25.43' RT "14EBOFF2" 388+44.45			d
															13.5		S															60" RCP, CLASS V, SPECIAL				e
																																JUNCTION STRUCTURE	7.19' RT "14EBOFF2" 386+44.33			f
															10.7		S															60" RCP, CLASS V, SPECIAL				g
																																MANHOLE TYPE JM	47.72' RT "14WBOFF1" 386+55.20			h
																										55.0						REMOVE 42" CIPP				i
																												1				REMOVE MANHOLE				j
																										32.0						REMOVE 57" RCP				k
																												1				REMOVE MANHOLE				l
																									4.8							REMOVE TRANS. STRUCTURE				m
																												1				REMOVE MANHOLE				n
																										38.0						REMOVE 42" CIPP				o
																																JUNCTION STRUCTURE,	7.40' RT "14EBOFF2" 386+60.62	D-16	116	a
															10.6		S															18" RCP				b
																																TYPE G1 DI w/ DEPRESSION	34.0' RT "14EBOFF2" 386+73.14			c
																																JUNCTION STRUCTURE,	8.10' RT "14EBOFF2" 387+11.50	D-16	117	a
															9.4		S															18" RCP				b
																																TYPE G1 DI w/ DEPRESSION	34.0' RT "14EBOFF2" 387+23.10			c
																									4.8	125.0		3				SHEET TOTALS				

THIS PLAN ACCURATE FOR DRAINAGE WORK ONLY.

DRAINAGE QUANTITIES
DQ-62

STATE OF CALIFORNIA - DEPARTMENT OF TRANSPORTATION
Caltrans DESIGN

FUNCTIONAL SUPERVISOR: MARK PERTILE
CALCULATED-DESIGNED BY: MOHAMMAD ABDRABOH
CHECKED BY: ALAN R. BISI
REVISED BY
DATE REVISED

LAST REVISION 03-29-11 | DATE PLOTTED => 29-APR-2011 | TIME PLOTTED => 18:00

Dist	COUNTY	ROUTE	POST MILES TOTAL PROJECT	SHEET No.	TOTAL SHEETS
08	Riv	91	15.6/21.6	392	2028

REGISTERED CIVIL ENGINEER 3-29-10 DATE

4-25-11
PLANS APPROVAL DATE

REGISTERED PROFESSIONAL ENGINEER ALAN R. BISI No. C62808 Exp. 6-30-12 CIVIL STATE OF CALIFORNIA

THE STATE OF CALIFORNIA OR ITS OFFICERS OR AGENTS SHALL NOT BE RESPONSIBLE FOR THE ACCURACY OR COMPLETENESS OF SCANNED COPIES OF THIS PLAN SHEET.

ALTERNATIVE PIPE
ALLOWABLE PIPE MATERIAL AND PROTECTION

DESIGNATION	RCP	CSP (2-2/3"x1/2")			SSRP (3/4"x1" @ 11-1/2" PITCH)			PPC(C)	PPC(D,S)
	SIZE (INCH)	SIZE (INCH)	BITUM. COAT. THICKNESS	PA/PS THICKNESS	SIZE (INCH)	BITUM. COAT. THICKNESS	PA/PS THICKNESS	SIZE (INCH)	SIZE (INCH)
6" APC									6
12" APC TYPE A		12	0.064"	0.052"				12	
12" APC TYPE B					12	0.064"	0.052"		12
12" APC TYPE C	12				12	0.064"	0.052"		12
18" APC TYPE A	18	18	0.064"	0.052"	18	0.064"	0.052"		
18" APC TYPE B	18	18	0.064"	0.052"				18	
18" APC TYPE C		18	0.064"	0.052"				18	
18" APC TYPE D	18				18	0.064"	0.052"		
18" APC TYPE E	18	18	0.064"	0.052"				18	18
18" APC TYPE F	18								18
24" APC		24	0.079"	0.064"				24	
30" APC	30				30	0.079"	0.064"		30
30"x10" ARCH		30x10	0.079"	0.064"	30x10	0.079"	0.064"		
48" APC		48	0.079"	0.064"					

LEGENDS AND ABBREVIATIONS

S - STANDARD JOINT TYPE
P - POSITIVE JOINT TYPE
D - DOWNDRAIN JOINT TYPE
RCP - REINFORCED CONCRETE PIPE
PPC(C) - PASTIC PIPE CULVERT, TYPE C (CORRUGATED INTERIOR WALL)
PPC(D,S) - PLASTIC PIPE CULVERT, TYPE D OR S (SMOOTH INTERIOR WALL)
CSP - CORRUGATED STEEL PIPE
SSRP - STEEL SPIRAL RIBBED PIPE
GA. - GAUGE
BITUM. - BITUMINOUS
PA - POLYMERIZED ASPHALT
PS - POLYMERIC SHEET
w/ - WITH
Ω - SEE DRAINAGE DETAIL

Notes:

1. SUFFICIENT SPACE WAS NOT AVALABLE TO LIST ALL DRAINAGE ITEMS WITHIN A SINGLE TABLE ON A SHEET BORDER, THEREFORE THE LISTING OF THE FIRST GROUPING OF DRAINAGE ITEMS ARE REPEATED ON THE ODD NUMBERED ID CODE SHEETS (DQ-1, DQ-3, ETC.) AND THE LISTINGS OF THE REMAINING GROUP OF DRAINAGE ITEMS ARE REPEATED ON THE EVEN NUMBERED ID CODE SHEETS (DQ-2, DQ-4, ETC.).
2. THE PRECISE DETERMINATION OF THE FOLLOWING ITEMS WILL BE MADE BY THE ENGINEER IN THE FIELD: STATION, SKEW, LENGTH, FL ELEVATION, AND DEPTH OF STRUCTURE.
3. (N) - NOT A SEPARATE PAY ITEM; FOR INFORMATION ONLY.
4. * - SEE ROADWAY QUANTITIES FOR DRAINAGE ITEM TOTAL

DITCH EXCAVATION	CONCRETE (CHANNEL LINING)	STRUCTURAL CONCRETE, BOX CULVERT	MINOR CONCRETE (MINOR STRUCTURE)	MINOR CONCRETE (MISC. CONSTRUCTION)	CL. IV CONCRETE (BACKFILL) *	HMA-A *	PLACE AC (MISC. AREA) *	MISC. IRON AND STEEL	BAR REINFORCING STEEL	RSP 1/4-TON, METHOD B	RSP FACING, METHOD B	RSP NO. 2 BACKING, METHOD B	RSP FABRIC	FRAMES, GRATES AND COVERS 24-12 (N)	24-13 (N)	1/4" SOLID STEEL COVER (N)	12" X 12" PRECAST INLET	12" X 12" STEEL GRATE (TRAFFIC RATED)	DEBRIS RACK (N)	MANHOLE COVER (N)	MANHOLE COVER-PRESSURE LOCKING (N)	36" PRECAST MANHOLE SHAFT		MANHOLE SHAFT PIPE REDUCER	HEIGHT OF MANHOLE (N)	HEIGHT OF INLET "H" (N)	DRAINAGE INLET MARKER *	CONCRETE COLLAR (N)	RCP 12" RCP	15" RCP	18" RCP	24" RCP	30" RCP	36" RCP	48" RCP	54" RCP	60" RCP (CL. V SPECIAL)	DESCRIPTION	STATION	DRAINAGE PLAN SHEET NO.	DRAINAGE SYSTEM NO. ⬡	DRAINAGE UNIT ◯
CY	CY	CY	CY	CY	CY	ton	yd²	lb	lb	CY	CY	CY	yd²	EA	EA	EA	EA	EA	EA	EA	EA	LF		EA	FT	FT	EA	EA	LF	LF	LF	LF	LF	LF	LF	LF	LF					
																																						18" AP TYPE A		D-16	118	a
																																						18" AP TYPE C RISER				b
			3.50	0.40				233																			1											TYPE 405 DI	167.89 RT "GE1" 386+25.28			c
																																						18" AP TYPE F				d
																												1										CONCRETE COLLAR	12.66' RT "14EBON2" 386+56.31	D-16	119	a
																																20.5						24" RCP				b
			1.50	1.70				326						1												5.5												TYPE G1 DI w/ DEPRESSION	34.60' RT "14EBON2" 386+49.60			c
																																108.0						24" RCP				d
			1.30	1.70				326						1												4.5												TYPE G1 DI w/ DEPRESSION	32.44' RT "14EBON2" 387+61.50			e
																																						REMOVE DI				f
																																						REMOVE HEADWALL				g
																												1										CONCRETE COLLAR	11.80' RT "10STWBON1" 386+78.70	D-16	120	a
																																47.0						24" RCP				b
																																						CAP DI				c
																																						REMOVE HEADWALL				d
																																						REMOVE PIPE		D-16	121	a
																																						REMOVE INLET				b
																																						REMOVE PIPE				c
																																						REMOVE INLET				d
			6.3	3.80				885						2													1	2				175.5						SHEET TOTALS				

THIS PLAN ACCURATE FOR DRAINAGE WORK ONLY.

DRAINAGE QUANTITIES
DQ-63

REVISED BY | DATE REVISED

CALCULATED-DESIGNED BY: MOHAMMAD ABDRABOH
CHECKED BY: ALAN R. BISI
FUNCTIONAL SUPERVISOR: MARK PERTILE

STATE OF CALIFORNIA - DEPARTMENT OF TRANSPORTATION
Caltrans
DESIGN

LAST REVISION 03-29-11 | DATE PLOTTED => 11-JUL-2011 | TIME PLOTTED => 12:41

Dist	COUNTY	ROUTE	POST MILES TOTAL PROJECT	SHEET No.	TOTAL SHEETS
08	Riv	91	15.6/21.6	393	2028

REGISTERED CIVIL ENGINEER 3-29-10 DATE

4-25-11
PLANS APPROVAL DATE

REGISTERED PROFESSIONAL ENGINEER ALAN R. BISI No. C62808 Exp. 6-30-12 CIVIL STATE OF CALIFORNIA

THE STATE OF CALIFORNIA OR ITS OFFICERS OR AGENTS SHALL NOT BE RESPONSIBLE FOR THE ACCURACY OR COMPLETENESS OF SCANNED COPIES OF THIS PLAN SHEET.

ALTERNATIVE PIPE ALLOWABLE PIPE MATERIAL AND PROTECTION

DESIGNATION	RCP	CSP (2-2/3"x½")			SSRP (3/4"x1" @ 11-1/2" PITCH)			PPC(C)	PPC(D,S)
	SIZE (INCH)	SIZE (INCH)	BITUM. COAT. THICKNESS	PA/PS THICKNESS	SIZE (INCH)	BITUM. COAT. THICKNESS	PA/PS THICKNESS	SIZE (INCH)	SIZE (INCH)
6" APC									6
12" APC TYPE A		12	0.064"	0.052"				12	
12" APC TYPE B					12	0.064"	0.052"		12
12" APC TYPE C	12				12	0.064"	0.052"		12
18" APC TYPE A	18	18	0.064"	0.052"	18	0.064"	0.052"		
18" APC TYPE B	18	18	0.064"	0.052"				18	
18" APC TYPE C		18	0.064"	0.052"				18	
18" APC TYPE D	18				18	0.064"	0.052"		
18" APC TYPE E	18	18	0.064"	0.052"				18	18
18" APC TYPE F	18								18
24" APC		24	0.079"	0.064"				24	
30" APC	30				30	0.079"	0.064"		30
30"x10" ARCH		30x10	0.079"	0.064"	30x10	0.079"	0.064"		
48" APC		48	0.079"	0.064"					

LEGENDS AND ABBREVIATIONS

S - STANDARD JOINT TYPE
P - POSITIVE JOINT TYPE
D - DOWNDRAIN JOINT TYPE
RCP - REINFORCED CONCRETE PIPE
PPC(C) - PASTIC PIPE CULVERT, TYPE C (CORRUGATED INTERIOR WALL)
PPC(D,S) - PLASTIC PIPE CULVERT, TYPE D OR S (SMOOTH INTERIOR WALL)
CSP - CORRUGATED STEEL PIPE
CAP - CORRUGATED ALUMINUM PIPE
SSRP - STEEL SPIRAL RIBBED PIPE
GA. - GAUGE
BITUM. - BITUMINOUS
PA - POLYMERIZED ASPHALT
PS - POLYMERIC SHEET
w/ - WITH
Ω - SEE DRAINAGE DETAIL

Notes:

1. SUFFICIENT SPACE WAS NOT AVALABLE TO LIST ALL DRAINAGE ITEMS WITHIN A SINGLE TABLE ON A SHEET BORDER, THEREFORE THE LISTING OF THE FIRST GROUPING OF DRAINAGE ITEMS ARE REPEATED ON THE ODD NUMBERED ID CODE SHEETS (DQ-1, DQ-3, ETC.) AND THE LISTINGS OF THE REMAINING GROUP OF DRAINAGE ITEMS ARE REPEATED ON THE EVEN NUMBERED ID CODE SHEETS (DQ-2, DQ-4, ETC.).
2. THE PRECISE DETERMINATION OF THE FOLLOWING ITEMS WILL BE MADE BY THE ENGINEER IN THE FIELD: STATION, SKEW, LENGTH, FL ELEVATION, AND DEPTH OF STRUCTURE.
3. (N) - NOT A SEPARATE PAY ITEM; FOR INFORMATION ONLY.
4. * - SEE ROADWAY QUANTITIES FOR DRAINAGE ITEM TOTAL

CSP								ALTERNATIVE PIPE													AFES	PIPE RISER						REMOVAL/ABANDON PAY ITEMS								DESCRIPTION	STATION	DRAINAGE PLAN SHEET NO.	DRAINAGE SYSTEM NO. ⬡	DRAINAGE UNIT ◯
12" (14 GA.)	18" (14 GA.)	36" (10 GA.)	12" RISER (14 GA.)	48" RISER (10 GA.)	18" SLOTTED PIPE (14 GA.)	21" SLOTTED PIPE (14 GA.)	24" SLOTTED PIPE (14 GA.)	6" AP (TYPE __)	12" AP (TYPE __)	18" AP (TYPE __)	24" AP (TYPE __)	30" AP (TYPE __)	48" AP (TYPE __)	30" X 10" AP ARCH PIPE (TYPE __)	MAXIMUM COVER (N)	ELBOW (N)	PIPE JOINT CLASSIFICATION	8" GALVANIZED STEEL PIPE	8" GATE VALVE w/ SLEEVE & COVER	12" AFES	8" AP SLIPJOINT (N)	12" AP SLIPJOINT (N)	CABLE RAILING	ADJUST INLET	MODIFY INLET	REMOVE CONCRETE	REMOVE PIPE	REMOVE INLET	ABANDON INLET	ABANDON PIPE	SAND BACKFILL	CAP RISER	CAP INLET					
LF	LF	LF	LF	LF	LF	LF	LF	LF	LF	LF	LF	LF	LF	LF	FT	EA		LF	EA	EA	EA	EA	LF	EA	EA	CY	LF	EA	EA	LF	CY	EA	EA					
										12.0					10.5		S																	18" AP TYPE A		D-16	118	a
										5.1						1						1												18" AP TYPE CRISER				b
																																		TYPE 405 DI	167.89 RT "GE1" 386+25.28			c
										416.0					6.2		S																	18" AP TYPE F				d
																																		CONCRETE COLLAR	12.66' RT "14EBON2" 386+56.31	D-16	119	a
															5.1		S																	24" RCP				b
																																		TYPE G1 DI w/ DEPRESSION	34.60' RT "14EBON2" 386+49.60			c
															2.7		S																	24" RCP				d
																																		TYPE G1 DI w/ DEPRESSION	32.44' RT "14EBON2" 387+61.50			e
																												1						REMOVE DI				f
																										1.2								REMOVE HEADWALL				g
																																		CONCRETE COLLAR	11.80' RT "10STWBON1" 386+78.70	D-16	120	a
															5.8		S																	24" RCP				b
																																	1	CAP DI				c
																										1.2								REMOVE HEADWALL				d
																											95.5							REMOVE PIPE		D-16	121	a
																												1						REMOVE INLET				b
																											31.5							REMOVE PIPE				c
																												1						REMOVE INLET				d
										433.1						1						1				2.4	127.0	3					1	SHEET TOTALS				

THIS PLAN ACCURATE FOR DRAINAGE WORK ONLY.

DRAINAGE QUANTITIES
DQ-64

STATE OF CALIFORNIA - DEPARTMENT OF TRANSPORTATION
Caltrans® DESIGN

FUNCTIONAL SUPERVISOR: MARK PERTILE
CALCULATED-DESIGNED BY: MOHAMMAD ABDRABOH
CHECKED BY: ALAN R. BISI
REVISED BY
DATE REVISED

LAST REVISION 03-29-11 | DATE PLOTTED => 29-APR-2011 | TIME PLOTTED => 18:00

Dist	COUNTY	ROUTE	POST MILES TOTAL PROJECT	SHEET No.	TOTAL SHEETS
08	Riv	91	15.6/21.6	394	2028

REGISTERED CIVIL ENGINEER 3-29-10 DATE

4-25-11
PLANS APPROVAL DATE

REGISTERED PROFESSIONAL ENGINEER ALAN R. BISI No. C62808 Exp. 6-30-12 CIVIL STATE OF CALIFORNIA

THE STATE OF CALIFORNIA OR ITS OFFICERS OR AGENTS SHALL NOT BE RESPONSIBLE FOR THE ACCURACY OR COMPLETENESS OF SCANNED COPIES OF THIS PLAN SHEET.

ALTERNATIVE PIPE ALLOWABLE PIPE MATERIAL AND PROTECTION

DESIGNATION	RCP	CSP (2-2/3"x½")			SSRP (3/4"x1" @ 11-1/2" PITCH)			PPC(C)	PPC(D,S)
	SIZE (INCH)	SIZE (INCH)	BITUM. COAT. THICKNESS	PA/PS THICKNESS	SIZE (INCH)	BITUM. COAT. THICKNESS	PA/PS THICKNESS	SIZE (INCH)	SIZE (INCH)
6" APC									6
12" APC TYPE A		12	0.064"	0.052"				12	
12" APC TYPE B					12	0.064"	0.052"		12
12" APC TYPE C	12				12	0.064"	0.052"		12
18" APC TYPE A	18	18	0.064"	0.052"	18	0.064"	0.052"		
18" APC TYPE B	18	18	0.064"	0.052"				18	
18" APC TYPE C		18	0.064"	0.052"				18	
18" APC TYPE D	18				18	0.064"	0.052"		
18" APC TYPE E	18	18	0.064"	0.052"				18	18
18" APC TYPE F	18								18
24" APC		24	0.079"	0.064"				24	
30" APC	30				30	0.079"	0.064"		30
30"x10" ARCH		30x10	0.079"	0.064"	30x10	0.079"	0.064"		
48" APC		48	0.079"	0.064"					

LEGENDS AND ABBREVIATIONS

S - STANDARD JOINT TYPE
P - POSITIVE JOINT TYPE
D - DOWNDRAIN JOINT TYPE
RCP - REINFORCED CONCRETE PIPE
PPC(C) - PASTIC PIPE CULVERT, TYPE C (CORRUGATED INTERIOR WALL)
PPC(D,S) - PLASTIC PIPE CULVERT, TYPE D OR S (SMOOTH INTERIOR WALL)
CSP - CORRUGATED STEEL PIPE
SSRP - STEEL SPIRAL RIBBED PIPE
GA. - GAUGE
BITUM. - BITUMINOUS
PA - POLYMERIZED ASPHALT
PS - POLYMERIC SHEET
w/ - WITH
Ω - SEE DRAINAGE DETAIL

Notes:

1. SUFFICIENT SPACE WAS NOT AVALABLE TO LIST ALL DRAINAGE ITEMS WITHIN A SINGLE TABLE ON A SHEET BORDER, THEREFORE THE LISTING OF THE FIRST GROUPING OF DRAINAGE ITEMS ARE REPEATED ON THE ODD NUMBERED ID CODE SHEETS (DQ-1, DQ-3, ETC.) AND THE LISTINGS OF THE REMAINING GROUP OF DRAINAGE ITEMS ARE REPEATED ON THE EVEN NUMBERED ID CODE SHEETS (DQ-2, DQ-4, ETC.).
2. THE PRECISE DETERMINATION OF THE FOLLOWING ITEMS WILL BE MADE BY THE ENGINEER IN THE FIELD: STATION, SKEW, LENGTH, FL ELEVATION, AND DEPTH OF STRUCTURE.
3. (N) - NOT A SEPARATE PAY ITEM; FOR INFORMATION ONLY.
4. * - SEE ROADWAY QUANTITIES FOR DRAINAGE ITEM TOTAL

DITCH EXCAVATION	CONCRETE (CHANNEL LINING)	STRUCTURAL CONCRETE, BOX CULVERT	MINOR CONCRETE (MINOR STRUCTURE)	MINOR CONCRETE (MISC. CONSTRUCTION)	CL. IV CONCRETE (BACKFILL) *	HMA-A *	PLACE AC (MISC. AREA) *	MISC. IRON AND STEEL	BAR REINFORCING STEEL	RSP ¼-TON, METHOD B	RSP FACING, METHOD B	RSP NO. 2 BACKING, METHOD B	RSP FABRIC	FRAMES, GRATES AND COVERS 24-12 (N)	24-13 (N)	¼" SOLID STEEL COVER (N)	12" X 12" PRECAST INLET	12" X 12" STEEL GRATE (TRAFFIC RATED)	DEBRIS RACK (N)	MANHOLE COVER (N)	MANHOLE COVER-PRESSURE LOCKING (N)	36" PRECAST MANHOLE SHAFT		MANHOLE SHAFT PIPE REDUCER	HEIGHT OF MANHOLE (N)	HEIGHT OF INLET "H" (N)	DRAINAGE INLET MARKER *	CONCRETE COLLAR (N)	RCP 12" RCP	15" RCP	18" RCP	24" RCP	30" RCP	36" RCP	48" RCP	54" RCP	60" RCP (CL. V SPECIAL)	DESCRIPTION	STATION	DRAINAGE PLAN SHEET NO.	DRAINAGE SYSTEM NO. ⬡	DRAINAGE UNIT ◯
CY	CY	CY	CY	CY	CY	ton	yd²	lb	lb	CY	CY	CY	yd²	EA	EA	EA	EA	EA	EA	EA	EA	LF		EA	FT	FT	EA	EA	LF	LF	LF	LF	LF	LF	LF	LF	LF					
																												1										CONCRETE COLLAR	22.32' RT "14EBOFF2" 389+49.61	D-16	122	a
																															125.0							18" RCP				b
			1.50	1.70				326						1												4.0												TYPE GO DI w/ DEPRESSION	24.0' RT "14EBOFF2" 390+74.65			c
																															31.8							18" RCP				d
			1.50	1.70				326						1												4.0												TYPE GO DI w/ DEPRESSION	11.12' LT "14EBOFF2" 390+68.70			e
																																						REMOVE MANHOLE				f
																																						REMOVE 18" RCP CULVERT				g
																																						REMOVE 18" RCP CULVERT				h
																																						REMOVE DI				i
			3.50						250.0																													CONC. SPLASHWALL		D-16	123	a
																																29.3						24" RCP				b
			1.61	1.70				326						1												6.0												TYPE G1 DI w/ DEPRESSION	4.0' RT "14WBOFF1" 386+91.63			c
																																						12" CSP RISER				d
																												1										CONCRETE COLLAR	7.17' RT "14WBOFF1" 390+72.46			e
																																						REMOVE HEADWALL				f
																																						REMOVE INLET				g
			2.30	1.70				326						1												6.8												TYPE G2 DI w/ DEPRESSION	76.73' RT "GE1" 391+04.28			h
																																						CAP INLET				i
																																						18" AP TYPE C CULVERT		D-16	124	a
			1.40	1.70				326						1												5.0												TYPE G1 DI w/ DEPRESSION	4.0' RT "14WBOFF1" 391+02.40			b
																																						18" AP TYPE C CULVERT				c
			1.20	1.70				326						1												4.0												TYPE G1 DI w/ DEPRESSION	4.0' RT "14WBOFF1" 391+27.49			d
			13.01	10.20				1956	250.0					6														2			156.8	29.3						SHEET TOTALS				

THIS PLAN ACCURATE FOR DRAINAGE WORK ONLY.

DRAINAGE QUANTITIES
DQ-65

REVISED BY | DATE REVISED

CALCULATED-DESIGNED BY: MOHAMMAD ABDRABOH
CHECKED BY: ALAN R. BISI
FUNCTIONAL SUPERVISOR: MARK PERTILE

STATE OF CALIFORNIA - DEPARTMENT OF TRANSPORTATION
Caltrans® DESIGN

LAST REVISION 03-29-11 | DATE PLOTTED => 11-JUL-2011 | TIME PLOTTED => 12:41

Dist	COUNTY	ROUTE	POST MILES TOTAL PROJECT	SHEET No.	TOTAL SHEETS
08	Riv	91	15.6/21.6	395	2028

REGISTERED CIVIL ENGINEER 3-29-10 DATE

4-25-11
PLANS APPROVAL DATE

REGISTERED PROFESSIONAL ENGINEER ALAN R. BISI No. C62808 Exp. 6-30-12 CIVIL STATE OF CALIFORNIA

THE STATE OF CALIFORNIA OR ITS OFFICERS OR AGENTS SHALL NOT BE RESPONSIBLE FOR THE ACCURACY OR COMPLETENESS OF SCANNED COPIES OF THIS PLAN SHEET.

ALTERNATIVE PIPE ALLOWABLE PIPE MATERIAL AND PROTECTION

DESIGNATION	RCP	CSP (2-2/3"x½")			SSRP (3/4"x1" @ 11-1/2" PITCH)			PPC(C)	PPC(D,S)
	SIZE (INCH)	SIZE (INCH)	BITUM. COAT. THICKNESS	PA/PS THICKNESS	SIZE (INCH)	BITUM. COAT. THICKNESS	PA/PS THICKNESS	SIZE (INCH)	SIZE (INCH)
6" APC									6
12" APC TYPE A		12	0.064"	0.052"				12	
12" APC TYPE B					12	0.064"	0.052"		12
12" APC TYPE C	12				12	0.064"	0.052"		12
18" APC TYPE A	18	18	0.064"	0.052"	18	0.064"	0.052"		
18" APC TYPE B	18	18	0.064"	0.052"				18	
18" APC TYPE C		18	0.064"	0.052"				18	
18" APC TYPE D	18				18	0.064"	0.052"		
18" APC TYPE E	18	18	0.064"	0.052"				18	18
18" APC TYPE F	18								18
24" APC		24	0.079"	0.064"				24	
30" APC	30				30	0.079"	0.064"		30
30"x10" ARCH		30x10	0.079"	0.064"	30x10	0.079"	0.064"		
48" APC		48	0.079"	0.064"					

LEGENDS AND ABBREVIATIONS

S - STANDARD JOINT TYPE
P - POSITIVE JOINT TYPE
D - DOWNDRAIN JOINT TYPE
RCP - REINFORCED CONCRETE PIPE
PPC(C) - PASTIC PIPE CULVERT, TYPE C (CORRUGATED INTERIOR WALL)
PPC(D,S) - PLASTIC PIPE CULVERT, TYPE D OR S (SMOOTH INTERIOR WALL)
CSP - CORRUGATED STEEL PIPE
CAP - CORRUGATED ALUMINUM PIPE
SSRP - STEEL SPIRAL RIBBED PIPE
GA. - GAUGE
BITUM. - BITUMINOUS
PA - POLYMERIZED ASPHALT
PS - POLYMERIC SHEET
w/ - WITH
Ω - SEE DRAINAGE DETAIL

Notes:

1. SUFFICIENT SPACE WAS NOT AVALABLE TO LIST ALL DRAINAGE ITEMS WITHIN A SINGLE TABLE ON A SHEET BORDER, THEREFORE THE LISTING OF THE FIRST GROUPING OF DRAINAGE ITEMS ARE REPEATED ON THE ODD NUMBERED ID CODE SHEETS (DQ-1, DQ-3, ETC.) AND THE LISTINGS OF THE REMAINING GROUP OF DRAINAGE ITEMS ARE REPEATED ON THE EVEN NUMBERED ID CODE SHEETS (DQ-2, DQ-4, ETC.).
2. THE PRECISE DETERMINATION OF THE FOLLOWING ITEMS WILL BE MADE BY THE ENGINEER IN THE FIELD: STATION, SKEW, LENGTH, FL ELEVATION, AND DEPTH OF STRUCTURE.
3. (N) - NOT A SEPARATE PAY ITEM; FOR INFORMATION ONLY.
4. * - SEE ROADWAY QUANTITIES FOR DRAINAGE ITEM TOTAL

CSP								ALTERNATIVE PIPE													AFES	PIPE RISER						REMOVAL/ABANDON PAY ITEMS								DESCRIPTION	STATION	DRAINAGE PLAN SHEET NO.	DRAINAGE SYSTEM NO. ⬡	DRAINAGE UNIT ◯
12" (14 GA.)	18" (14 GA.)	36" (10 GA.)	12" RISER (14 GA.)	48" RISER (10 GA.)	18" SLOTTED PIPE (14 GA.)	21" SLOTTED PIPE (14 GA.)	24" SLOTTED PIPE (14 GA.)	6" AP (TYPE __)	12" AP (TYPE __)	18" AP (TYPE __)	24" AP (TYPE __)	30" AP (TYPE __)	48" AP (TYPE __)	30" X 10" AP ARCH PIPE (TYPE __)	MAXIMUM COVER (N)	ELBOW (N)	PIPE JOINT CLASSIFICATION	8" GALVANIZED STEEL PIPE	8" GATE VALVE w/ SLEEVE & COVER	12" AFES	8" AP SLIPJOINT (N)	12" AP SLIPJOINT (N)	CABLE RAILING	ADJUST INLET	MODIFY INLET	REMOVE CONCRETE	REMOVE PIPE	REMOVE INLET	ABANDON INLET	ABANDON PIPE	SAND BACKFILL	CAP RISER	CAP INLET					
LF	LF	LF	LF	LF	LF	LF	LF	LF	LF	LF	LF	LF	LF	LF	FT	EA		LF	EA	EA	EA	EA	LF	EA	EA	CY	LF	EA	EA	LF	CY	EA	EA					
																																		CONCRETE COLLAR	22.32' RT "14EBOFF2" 389+49.61	D-16	122	a
															5.6		S																	18" RCP				b
																																		TYPE GO DI w/ DEPRESSION	24.0' RT "14EBOFF2" 390+74.65			c
															2.5		S																	18" RCP				d
																																		TYPE GO DI w/ DEPRESSION	11.12' LT "14EBOFF2" 390+68.70			e
																													1					REMOVE MANHOLE				f
																											46.5							REMOVE 18" RCP CULVERT				g
																											39.5							REMOVE 18" RCP CULVERT				h
																												1						REMOVE DI				i
																																		CONC. SPLASHWALL		D-16	123	a
															20.9		S																	24" RCP				b
																																		TYPE G1 DI w/ DEPRESSION	4.0' RT "14WBOFF1" 386+91.63			c
			16.5													1						1												12" CSP RISER				d
																																		CONCRETE COLLAR	7.17' RT "14WBOFF1" 390+72.46			e
																										1.2								REMOVE HEADWALL				f
																												1						REMOVE INLET				g
																																		TYPE G2 DI w/ DEPRESSION	76.73' RT "GE1" 391+04.28			h
																																	1	CAP INLET				i
										26.3					4.5		S																	18" AP TYPE C CULVERT		D-16	124	a
																																		TYPE G1 DI w/ DEPRESSION	4.0' RT "14WBOFF1" 391+02.40			b
										21.2					2.9		S																	18" AP TYPE C CULVERT				c
																																		TYPE G1 DI w/ DEPRESSION	4.0' RT "14WBOFF1" 391+27.49			d
			16.5							47.5						1						1				1.2	86.0	2	1				1	SHEET TOTALS				

THIS PLAN ACCURATE FOR DRAINAGE WORK ONLY.

DRAINAGE QUANTITIES
DQ-66

STATE OF CALIFORNIA - DEPARTMENT OF TRANSPORTATION
Caltrans DESIGN

FUNCTIONAL SUPERVISOR: MARK PERTILE
CALCULATED-DESIGNED BY: MOHAMMAD ABDRABOH
CHECKED BY: ALAN R. BISI
REVISED BY
DATE REVISED

LAST REVISION 03-29-11 | DATE PLOTTED => 29-APR-2011 | TIME PLOTTED => 18:00

Dist	COUNTY	ROUTE	POST MILES TOTAL PROJECT	SHEET No.	TOTAL SHEETS
08	Riv	91	15.6/21.6	396	2028

REGISTERED CIVIL ENGINEER 3-29-10 DATE

4-25-11
PLANS APPROVAL DATE

REGISTERED PROFESSIONAL ENGINEER ALAN R. BISI No. C62808 Exp. 6-30-12 CIVIL STATE OF CALIFORNIA

THE STATE OF CALIFORNIA OR ITS OFFICERS OR AGENTS SHALL NOT BE RESPONSIBLE FOR THE ACCURACY OR COMPLETENESS OF SCANNED COPIES OF THIS PLAN SHEET.

ALTERNATIVE PIPE ALLOWABLE PIPE MATERIAL AND PROTECTION

DESIGNATION	RCP	CSP (2-2/3"x½")			SSRP (3/4"x1" @ 11-1/2" PITCH)			PPC(C)	PPC(D,S)
	SIZE (INCH)	SIZE (INCH)	BITUM. COAT. THICKNESS	PA/PS THICKNESS	SIZE (INCH)	BITUM. COAT. THICKNESS	PA/PS THICKNESS	SIZE (INCH)	SIZE (INCH)
6" APC									6
12" APC TYPE A		12	0.064"	0.052"				12	
12" APC TYPE B					12	0.064"	0.052"		12
12" APC TYPE C	12				12	0.064"	0.052"		12
18" APC TYPE A	18	18	0.064"	0.052"	18	0.064"	0.052"		
18" APC TYPE B	18	18	0.064"	0.052"				18	
18" APC TYPE C		18	0.064"	0.052"				18	
18" APC TYPE D	18				18	0.064"	0.052"		
18" APC TYPE E	18	18	0.064"	0.052"				18	18
18" APC TYPE F	18								18
24" APC		24	0.079"	0.064"				24	
30" APC	30				30	0.079"	0.064"		30
30"x10" ARCH		30x10	0.079"	0.064"	30x10	0.079"	0.064"		
48" APC		48	0.079"	0.064"					

LEGENDS AND ABBREVIATIONS

S - STANDARD JOINT TYPE
P - POSITIVE JOINT TYPE
D - DOWNDRAIN JOINT TYPE
RCP - REINFORCED CONCRETE PIPE
PPC(C) - PASTIC PIPE CULVERT, TYPE C (CORRUGATED INTERIOR WALL)
PPC(D,S) - PLASTIC PIPE CULVERT, TYPE D OR S (SMOOTH INTERIOR WALL)
CSP - CORRUGATED STEEL PIPE
SSRP - STEEL SPIRAL RIBBED PIPE
GA. - GAUGE
BITUM. - BITUMINOUS
PA - POLYMERIZED ASPHALT
PS - POLYMERIC SHEET
w/ - WITH
Ω - SEE DRAINAGE DETAIL

Notes:

1. SUFFICIENT SPACE WAS NOT AVALABLE TO LIST ALL DRAINAGE ITEMS WITHIN A SINGLE TABLE ON A SHEET BORDER, THEREFORE THE LISTING OF THE FIRST GROUPING OF DRAINAGE ITEMS ARE REPEATED ON THE ODD NUMBERED ID CODE SHEETS (DQ-1, DQ-3, ETC.) AND THE LISTINGS OF THE REMAINING GROUP OF DRAINAGE ITEMS ARE REPEATED ON THE EVEN NUMBERED ID CODE SHEETS (DQ-2, DQ-4, ETC.).
2. THE PRECISE DETERMINATION OF THE FOLLOWING ITEMS WILL BE MADE BY THE ENGINEER IN THE FIELD: STATION, SKEW, LENGTH, FL ELEVATION, AND DEPTH OF STRUCTURE.
3. (N) - NOT A SEPARATE PAY ITEM; FOR INFORMATION ONLY.
4. * - SEE ROADWAY QUANTITIES FOR DRAINAGE ITEM TOTAL

DITCH EXCAVATION	CONCRETE (CHANNEL LINING)	STRUCTURAL CONCRETE, BOX CULVERT	MINOR CONCRETE (MINOR STRUCTURE)	MINOR CONCRETE (MISC. CONSTRUCTION)	CL. IV CONCRETE (BACKFILL) *	HMA-A *	PLACE AC (MISC. AREA) *	MISC. IRON AND STEEL	BAR REINFORCING STEEL	RSP: ¼-TON, METHOD B	RSP: FACING, METHOD B	RSP: NO. 2 BACKING, METHOD B	RSP: RSP FABRIC	FRAMES, GRATES AND COVERS: 24-12 (N)	24-13 (N)	¼" SOLID STEEL COVER (N)	12" X 12" PRECAST INLET	12" X 12" STEEL GRATE (TRAFFIC RATED)	DEBRIS RACK (N)	MANHOLE COVER (N)	MANHOLE COVER-PRESSURE LOCKING (N)	36" PRECAST MANHOLE SHAFT		MANHOLE SHAFT PIPE REDUCER	HEIGHT OF MANHOLE (N)	HEIGHT OF INLET "H" (N)	DRAINAGE INLET MARKER *	CONCRETE COLLAR (N)	RCP: 12" RCP	15" RCP	18" RCP	24" RCP	30" RCP	36" RCP	48" RCP	54" RCP	60" RCP (CL. V SPECIAL)	DESCRIPTION	STATION	DRAINAGE PLAN SHEET NO.	DRAINAGE SYSTEM NO. ⬡	DRAINAGE UNIT ◯
CY	CY	CY	CY	CY	CY	ton	yd²	lb	lb	CY	CY	CY	yd²	EA	EA	EA	EA	EA	EA	EA	EA	LF		EA	FT	FT	EA	EA	LF	LF	LF	LF	LF	LF	LF	LF	LF					
										21.5			37.3																									RSP		D-18	125	a
35.50			16.90																																			CONC. SPILLWAY				b
																																						REMOVE INLET				c
																																						ABANDON PIPE				d
																																						ABANDON INLET				e
																																						ABANDON PIPE				f
				0.50																																		PARKWAY DRAIN	4+97.50 "Jane St."	D-18	126	a
																																						REMOVE CONCRETE				b
											89		99.1																									RSP		D-13	127	a
																																						12" METAL FES	104.1' Rt. "PMT1" 72+53.23			b
																																						12" CSP CULVERT				c
																																						12" CSP RISER				d
			0.40					486								1									4.0													TYPE OMP DI	76.54' LT "PMT1" 72+53.18			e
			2.40	2.00					123.2																													SLOPE PAVING				f
																																						SYSTEM NOT USED			128	
			0.95					326						1											2.0													TYPE G1 DI	1.30' LT "GE1" 342+85.12	D-13	129	a
																																						18" SLOTTED CSP CULVERT				b
35.50			20.65	2.50				812	123.2	21.5	89		136.4	1		1																						SHEET TOTALS				

THIS PLAN ACCURATE FOR DRAINAGE WORK ONLY.

DRAINAGE QUANTITIES
DQ-67

REVISED BY | DATE REVISED

CALCULATED-DESIGNED BY: MOHAMMAD ABDRABOH
CHECKED BY: ALAN R. BISI
FUNCTIONAL SUPERVISOR: MARK PERTILE

STATE OF CALIFORNIA - DEPARTMENT OF TRANSPORTATION
Caltrans
DESIGN

LAST REVISION 03-29-11 | DATE PLOTTED => 11-JUL-2011 | TIME PLOTTED => 12:41

Dist	COUNTY	ROUTE	POST MILES TOTAL PROJECT	SHEET No.	TOTAL SHEETS
08	Riv	91	15.6/21.6	397	2028

REGISTERED CIVIL ENGINEER 3-29-10 DATE

4-25-11
PLANS APPROVAL DATE

REGISTERED PROFESSIONAL ENGINEER ALAN R. BISI No. C62808 Exp. 6-30-12 CIVIL STATE OF CALIFORNIA

THE STATE OF CALIFORNIA OR ITS OFFICERS OR AGENTS SHALL NOT BE RESPONSIBLE FOR THE ACCURACY OR COMPLETENESS OF SCANNED COPIES OF THIS PLAN SHEET.

ALTERNATIVE PIPE ALLOWABLE PIPE MATERIAL AND PROTECTION

DESIGNATION	RCP	CSP (2-2/3"x½")			SSRP (3/4"x1" @ 11-1/2" PITCH)			PPC(C)	PPC(D,S)
	SIZE (INCH)	SIZE (INCH)	BITUM. COAT. THICKNESS	PA/PS THICKNESS	SIZE (INCH)	BITUM. COAT. THICKNESS	PA/PS THICKNESS	SIZE (INCH)	SIZE (INCH)
6" APC									6
12" APC TYPE A		12	0.064"	0.052"				12	
12" APC TYPE B					12	0.064"	0.052"		12
12" APC TYPE C	12				12	0.064"	0.052"		12
18" APC TYPE A	18	18	0.064"	0.052"	18	0.064"	0.052"		
18" APC TYPE B	18	18	0.064"	0.052"				18	
18" APC TYPE C		18	0.064"	0.052"				18	
18" APC TYPE D	18				18	0.064"	0.052"		
18" APC TYPE E	18	18	0.064"	0.052"				18	18
18" APC TYPE F	18								18
24" APC		24	0.079"	0.064"				24	
30" APC	30				30	0.079"	0.064"		30
30"x10" ARCH		30x10	0.079"	0.064"	30x10	0.079"	0.064"		
48" APC		48	0.079"	0.064"					

LEGENDS AND ABBREVIATIONS

S - STANDARD JOINT TYPE
P - POSITIVE JOINT TYPE
D - DOWNDRAIN JOINT TYPE
RCP - REINFORCED CONCRETE PIPE
PPC(C) - PASTIC PIPE CULVERT, TYPE C (CORRUGATED INTERIOR WALL)
PPC(D,S) - PLASTIC PIPE CULVERT, TYPE D OR S (SMOOTH INTERIOR WALL)
CSP - CORRUGATED STEEL PIPE
CAP - CORRUGATED ALUMINUM PIPE
SSRP - STEEL SPIRAL RIBBED PIPE
GA. - GAUGE
BITUM. - BITUMINOUS
PA - POLYMERIZED ASPHALT
PS - POLYMERIC SHEET
w/ - WITH
Ω - SEE DRAINAGE DETAIL

Notes:

1. SUFFICIENT SPACE WAS NOT AVALABLE TO LIST ALL DRAINAGE ITEMS WITHIN A SINGLE TABLE ON A SHEET BORDER, THEREFORE THE LISTING OF THE FIRST GROUPING OF DRAINAGE ITEMS ARE REPEATED ON THE ODD NUMBERED ID CODE SHEETS (DQ-1, DQ-3, ETC.) AND THE LISTINGS OF THE REMAINING GROUP OF DRAINAGE ITEMS ARE REPEATED ON THE EVEN NUMBERED ID CODE SHEETS (DQ-2, DQ-4, ETC.).
2. THE PRECISE DETERMINATION OF THE FOLLOWING ITEMS WILL BE MADE BY THE ENGINEER IN THE FIELD: STATION, SKEW, LENGTH, FL ELEVATION, AND DEPTH OF STRUCTURE.
3. (N) - NOT A SEPARATE PAY ITEM; FOR INFORMATION ONLY.
4. * - SEE ROADWAY QUANTITIES FOR DRAINAGE ITEM TOTAL

CSP								ALTERNATIVE PIPE													AFES	PIPE RISER						REMOVAL/ABANDON PAY ITEMS								DESCRIPTION	STATION	DRAINAGE PLAN SHEET NO.	DRAINAGE SYSTEM NO. ⬡	DRAINAGE UNIT ◯
12" (14 GA.)	18" (14 GA.)	36" (10 GA.)	12" RISER (14 GA.)	48" RISER (10 GA.)	18" SLOTTED PIPE (14 GA.)	21" SLOTTED PIPE (14 GA.)	24" SLOTTED PIPE (14 GA.)	6" AP (TYPE __)	12" AP (TYPE __)	18" AP (TYPE __)	24" AP (TYPE __)	30" AP (TYPE __)	48" AP (TYPE __)	30" X 10" AP ARCH PIPE (TYPE __)	MAXIMUM COVER (N)	ELBOW (N)	PIPE JOINT CLASSIFICATION	8" GALVANIZED STEEL PIPE	8" GATE VALVE w/ SLEEVE & COVER	12" AFES	8" AP SLIPJOINT (N)	12" AP SLIPJOINT (N)	CABLE RAILING	ADJUST INLET	MODIFY INLET	REMOVE CONCRETE	REMOVE PIPE	REMOVE INLET	ABANDON INLET	ABANDON PIPE	SAND BACKFILL	CAP RISER	CAP INLET					
LF	LF	LF	LF	LF	LF	LF	LF	LF	LF	LF	LF	LF	LF	LF	FT	EA		LF	EA	EA	EA	EA	LF	EA	EA	CY	LF	EA	EA	LF	CY	EA	EA					
																																		RSP		D-18	125	a
																																		CONC. SPILLWAY				b
																												1						REMOVE INLET				c
																														25.8	3.00			ABANDON PIPE				d
																													1					ABANDON INLET				e
																														27.3	3.17			ABANDON PIPE				f
																										0.5								PARKWAY DRAIN	4+97.50 "Jane St."	D-18	126	a
																																		REMOVE CONCRETE				b
																																		RSP		D-13	127	a
																				1														12" METAL FES	104.1' Rt. "PMT1" 72+53.23			b
29.4															2.4		S																	12" CSP CULVERT				c
			14.0													1																		12" CSP RISER				d
		4.0																																TYPE OMP DI	76.54' LT "PMT1" 72+53.18			e
																																		SLOPE PAVING				f
																																		SYSTEM NOT USED			128	
					229.0												S																	TYPE G1 DI	1.30' LT "GE1" 342+85.12	D-13	129	a
																																		18" SLOTTED CSP CULVERT				b
29.4		4.0	14.0		229.0											1				1						0.5		1	1	53.1	6.17			SHEET TOTALS				

THIS PLAN ACCURATE FOR DRAINAGE WORK ONLY.

DRAINAGE QUANTITIES
DQ-68

STATE OF CALIFORNIA - DEPARTMENT OF TRANSPORTATION
Caltrans® DESIGN

FUNCTIONAL SUPERVISOR: MARK PERTILE
CALCULATED-DESIGNED BY: MOHAMMAD ABDRABOH
CHECKED BY: ALAN R. BISI
REVISED BY
DATE REVISED

LAST REVISION 03-29-11 | DATE PLOTTED => 29-APR-2011 | TIME PLOTTED => 18:01

Dist	COUNTY	ROUTE	POST MILES TOTAL PROJECT	SHEET No.	TOTAL SHEETS
08	Riv	91	15.6/21.6	398	2028

REGISTERED CIVIL ENGINEER 3-29-10 DATE

4-25-11
PLANS APPROVAL DATE

REGISTERED PROFESSIONAL ENGINEER ALAN R. BISI No. C62808 Exp. 6-30-12 CIVIL STATE OF CALIFORNIA

THE STATE OF CALIFORNIA OR ITS OFFICERS OR AGENTS SHALL NOT BE RESPONSIBLE FOR THE ACCURACY OR COMPLETENESS OF SCANNED COPIES OF THIS PLAN SHEET.

ALTERNATIVE PIPE ALLOWABLE PIPE MATERIAL AND PROTECTION

DESIGNATION	RCP	CSP (2-2/3"x½")			SSRP (3/4"x1" @ 11-1/2" PITCH)			PPC(C)	PPC(D,S)
	SIZE (INCH)	SIZE (INCH)	BITUM. COAT. THICKNESS	PA/PS THICKNESS	SIZE (INCH)	BITUM. COAT. THICKNESS	PA/PS THICKNESS	SIZE (INCH)	SIZE (INCH)
6" APC									6
12" APC TYPE A		12	0.064"	0.052"				12	
12" APC TYPE B					12	0.064"	0.052"		12
12" APC TYPE C	12				12	0.064"	0.052"		12
18" APC TYPE A	18	18	0.064"	0.052"	18	0.064"	0.052"		
18" APC TYPE B	18	18	0.064"	0.052"				18	
18" APC TYPE C		18	0.064"	0.052"				18	
18" APC TYPE D	18				18	0.064"	0.052"		
18" APC TYPE E	18	18	0.064"	0.052"				18	18
18" APC TYPE F	18								18
24" APC		24	0.079"	0.064"				24	
30" APC	30				30	0.079"	0.064"		30
30"x10" ARCH		30x10	0.079"	0.064"	30x10	0.079"	0.064"		
48" APC		48	0.079"	0.064"					

LEGENDS AND ABBREVIATIONS

S - STANDARD JOINT TYPE
P - POSITIVE JOINT TYPE
D - DOWNDRAIN JOINT TYPE
RCP - REINFORCED CONCRETE PIPE
PPC(C) - PASTIC PIPE CULVERT, TYPE C (CORRUGATED INTERIOR WALL)
PPC(D,S) - PLASTIC PIPE CULVERT, TYPE D OR S (SMOOTH INTERIOR WALL)
CSP - CORRUGATED STEEL PIPE
SSRP - STEEL SPIRAL RIBBED PIPE
GA. - GAUGE
BITUM. - BITUMINOUS
PA - POLYMERIZED ASPHALT
PS - POLYMERIC SHEET
w/ - WITH
Ω - SEE DRAINAGE DETAIL

Notes:

1. SUFFICIENT SPACE WAS NOT AVALABLE TO LIST ALL DRAINAGE ITEMS WITHIN A SINGLE TABLE ON A SHEET BORDER, THEREFORE THE LISTING OF THE FIRST GROUPING OF DRAINAGE ITEMS ARE REPEATED ON THE ODD NUMBERED ID CODE SHEETS (DQ-1, DQ-3, ETC.) AND THE LISTINGS OF THE REMAINING GROUP OF DRAINAGE ITEMS ARE REPEATED ON THE EVEN NUMBERED ID CODE SHEETS (DQ-2, DQ-4, ETC.).
2. THE PRECISE DETERMINATION OF THE FOLLOWING ITEMS WILL BE MADE BY THE ENGINEER IN THE FIELD: STATION, SKEW, LENGTH, FL ELEVATION, AND DEPTH OF STRUCTURE.
3. (N) - NOT A SEPARATE PAY ITEM; FOR INFORMATION ONLY.
4. * - SEE ROADWAY QUANTITIES FOR DRAINAGE ITEM TOTAL

DITCH EXCAVATION	CONCRETE (CHANNEL LINING)	STRUCTURAL CONCRETE, BOX CULVERT	MINOR CONCRETE (MINOR STRUCTURE)	MINOR CONCRETE (MISC. CONSTRUCTION)	CL. IV CONCRETE (BACKFILL) *	HMA-A *	PLACE AC (MISC. AREA) *	MISC. IRON AND STEEL	BAR REINFORCING STEEL	RSP: ¼-TON, METHOD B	RSP: FACING, METHOD B	RSP: NO. 2 BACKING, METHOD B	RSP: RSP FABRIC	FRAMES, GRATES AND COVERS: 24-12 (N)	24-13 (N)	¼" SOLID STEEL COVER (N)	12" X 12" PRECAST INLET	12" X 12" STEEL GRATE (TRAFFIC RATED)	DEBRIS RACK (N)	MANHOLE COVER (N)	MANHOLE COVER-PRESSURE LOCKING (N)	36" PRECAST MANHOLE SHAFT		MANHOLE SHAFT PIPE REDUCER	HEIGHT OF MANHOLE (N)	HEIGHT OF INLET "H" (N)	DRAINAGE INLET MARKER *	CONCRETE COLLAR (N)	RCP: 12" RCP	15" RCP	18" RCP	24" RCP	30" RCP	36" RCP	48" RCP	54" RCP	60" RCP (CL. V SPECIAL)	DESCRIPTION	STATION	DRAINAGE PLAN SHEET NO.	DRAINAGE SYSTEM NO. ⬡	DRAINAGE UNIT ◯
CY	CY	CY	CY	CY	CY	ton	yd²	lb	lb	CY	CY	CY	yd²	EA	EA	EA	EA	EA	EA	EA	EA	LF		EA	FT	FT	EA	EA	LF	LF	LF	LF	LF	LF	LF	LF	LF					
		9.80						235	2114.0											1																		TRANSITION STRUCTURE	31.29' Rt. 83+05.31 "IMT2"	D-13	130	a
																																						REMOVE CONCRETE (RCB)				b
		34.40							6890.0																													RCB - 6.0' W X 4.0' H				c
																																						REMOVE CONCRETE (TS)				d
										8.8		10.5																										RSP		D-13	131	a
																																						METAL FES	85.6' Rt. "IMT2" 79+47.00			b
																																						18" CSP CULVERT				c
																																						18" CSP RISER				d
			0.40					486								1									4.0												TYPE OMP DI	11.51' RT "IMT2" 79+92.00			e
			0.95					326						1											2.1												TYPE G1 DI	1.80' LT "GE1" 393+50.61	D-17	132	a
																																						21" SLOTTED CSP CULVERT				b
			0.95					326						1											2.0												TYPE G1 DI	2.80' LT "GE1" 395+00.00			c
																																						21" SLOTTED CSP CULVERT				d
			0.95					326						1											2.0												TYPE G1 DI	2.80' LT "GE1" 396+50.00			e
																																						21" SLOTTED CSP CULVERT				f
																																						REMOVE INLET				g
		44.20	3.25					1699	9004.0	8.8			10.5	3		1				1																		SHEET TOTALS				

THIS PLAN ACCURATE FOR DRAINAGE WORK ONLY.

DRAINAGE QUANTITIES
DQ-69

CALCULATED-DESIGNED BY MOHAMMAD ABDRABOH
CHECKED BY ALAN R. BISI
FUNCTIONAL SUPERVISOR MARK PERTILE
REVISED BY
DATE REVISED

STATE OF CALIFORNIA - DEPARTMENT OF TRANSPORTATION
Caltrans DESIGN

LAST REVISION 03-29-11
DATE PLOTTED => 11-JUL-2011
TIME PLOTTED => 12:41

Dist	COUNTY	ROUTE	POST MILES TOTAL PROJECT	SHEET No.	TOTAL SHEETS
08	Riv	91	15.6/21.6	399	2028

REGISTERED CIVIL ENGINEER 3-29-10 DATE

4-25-11
PLANS APPROVAL DATE

REGISTERED PROFESSIONAL ENGINEER ALAN R. BISI No. C62808 Exp. 6-30-12 CIVIL STATE OF CALIFORNIA

THE STATE OF CALIFORNIA OR ITS OFFICERS OR AGENTS SHALL NOT BE RESPONSIBLE FOR THE ACCURACY OR COMPLETENESS OF SCANNED COPIES OF THIS PLAN SHEET.

ALTERNATIVE PIPE ALLOWABLE PIPE MATERIAL AND PROTECTION

DESIGNATION	RCP	CSP (2-2/3"x½")			SSRP (3/4"x1" @ 11-1/2" PITCH)			PPC(C)	PPC(D,S)
	SIZE (INCH)	SIZE (INCH)	BITUM. COAT. THICKNESS	PA/PS THICKNESS	SIZE (INCH)	BITUM. COAT. THICKNESS	PA/PS THICKNESS	SIZE (INCH)	SIZE (INCH)
6" APC									6
12" APC TYPE A		12	0.064"	0.052"				12	
12" APC TYPE B					12	0.064"	0.052"		12
12" APC TYPE C	12				12	0.064"	0.052"		12
18" APC TYPE A	18	18	0.064"	0.052"	18	0.064"	0.052"		
18" APC TYPE B	18	18	0.064"	0.052"				18	
18" APC TYPE C		18	0.064"	0.052"				18	
18" APC TYPE D	18				18	0.064"	0.052"		
18" APC TYPE E	18	18	0.064"	0.052"				18	18
18" APC TYPE F	18								18
24" APC		24	0.079"	0.064"				24	
30" APC	30				30	0.079"	0.064"		30
30"x10" ARCH		30x10	0.079"	0.064"	30x10	0.079"	0.064"		
48" APC		48	0.079"	0.064"					

LEGENDS AND ABBREVIATIONS

S - STANDARD JOINT TYPE
P - POSITIVE JOINT TYPE
D - DOWNDRAIN JOINT TYPE
RCP - REINFORCED CONCRETE PIPE
PPC(C) - PASTIC PIPE CULVERT, TYPE C (CORRUGATED INTERIOR WALL)
PPC(D,S) - PLASTIC PIPE CULVERT, TYPE D OR S (SMOOTH INTERIOR WALL)
CSP - CORRUGATED STEEL PIPE
CAP - CORRUGATED ALUMINUM PIPE
SSRP - STEEL SPIRAL RIBBED PIPE
GA. - GAUGE
BITUM. - BITUMINOUS
PA - POLYMERIZED ASPHALT
PS - POLYMERIC SHEET
w/ - WITH
Ω - SEE DRAINAGE DETAIL

Notes:

1. SUFFICIENT SPACE WAS NOT AVALABLE TO LIST ALL DRAINAGE ITEMS WITHIN A SINGLE TABLE ON A SHEET BORDER, THEREFORE THE LISTING OF THE FIRST GROUPING OF DRAINAGE ITEMS ARE REPEATED ON THE ODD NUMBERED ID CODE SHEETS (DQ-1, DQ-3, ETC.) AND THE LISTINGS OF THE REMAINING GROUP OF DRAINAGE ITEMS ARE REPEATED ON THE EVEN NUMBERED ID CODE SHEETS (DQ-2, DQ-4, ETC.).
2. THE PRECISE DETERMINATION OF THE FOLLOWING ITEMS WILL BE MADE BY THE ENGINEER IN THE FIELD: STATION, SKEW, LENGTH, FL ELEVATION, AND DEPTH OF STRUCTURE.
3. (N) - NOT A SEPARATE PAY ITEM; FOR INFORMATION ONLY.
4. * - SEE ROADWAY QUANTITIES FOR DRAINAGE ITEM TOTAL

CSP								ALTERNATIVE PIPE													AFES	PIPE RISER						REMOVAL/ABANDON PAY ITEMS								DESCRIPTION	STATION	DRAINAGE PLAN SHEET NO.	DRAINAGE SYSTEM NO. ⬡	DRAINAGE UNIT ◯
12" (14 GA.)	18" (14 GA.)	36" (10 GA.)	12" RISER (14 GA.)	48" RISER (10 GA.)	18" SLOTTED PIPE (14 GA.)	21" SLOTTED PIPE (14 GA.)	24" SLOTTED PIPE (14 GA.)	6" AP (TYPE __)	12" AP (TYPE __)	18" AP (TYPE __)	24" AP (TYPE __)	30" AP (TYPE __)	48" AP (TYPE __)	30" X 10" AP ARCH PIPE (TYPE __)	MAXIMUM COVER (N)	ELBOW (N)	PIPE JOINT CLASSIFICATION	8" GALVANIZED STEEL PIPE	8" GATE VALVE w/ SLEEVE & COVER	12" AFES	8" AP SLIPJOINT (N)	12" AP SLIPJOINT (N)	CABLE RAILING	ADJUST INLET	MODIFY INLET	REMOVE CONCRETE	REMOVE PIPE	REMOVE INLET	ABANDON INLET	ABANDON PIPE	SAND BACKFILL	CAP RISER	CAP INLET					
LF	LF	LF	LF	LF	LF	LF	LF	LF	LF	LF	LF	LF	LF	LF	FT	EA		LF	EA	EA	EA	EA	LF	EA	EA	CY	LF	EA	EA	LF	CY	EA	EA					
																																		TRANSITION STRUCTURE	31.29' Rt. 83+05.31 "IMT2"	D-13	130	a
																										30.6								REMOVE CONCRETE (RCB)				b
																																		RCB - 6.0' W X 4.0' H				c
																										10								REMOVE CONCRETE (TS)				d
																																		RSP		D-13	131	a
																				1														METAL FES	85.6' Rt. "IMT2" 79+47.00			b
	92.1														3.3	1	S				1													18" CSP CULVERT				c
	24.5																																	18" CSP RISER				d
		4.0																																TYPE OMP DI	11.51' RT "IMT2" 79+92.00			e
																																		TYPE G1 DI	1.80' LT "GE1" 393+50.61	D-17	132	a
						155.0											S																	21" SLOTTED CSP CULVERT				b
																																		TYPE G1 DI	2.80' LT "GE1" 395+00.00			c
						155.0											S																	21" SLOTTED CSP CULVERT				d
																																		TYPE G1 DI	2.80' LT "GE1" 396+50.00			e
						155.0											S																	21" SLOTTED CSP CULVERT				f
																												1						REMOVE INLET				g
116.6	4.0					465.0										1				1	1					40.6		1						SHEET TOTALS				

STATE OF CALIFORNIA - DEPARTMENT OF TRANSPORTATION

Caltrans® DESIGN

FUNCTIONAL SUPERVISOR MARK PERTILE

CALCULATED-DESIGNED BY MOHAMMAD ABDRABOH

CHECKED BY ALAN R. BISI

REVISED BY

DATE REVISED

DRAINAGE QUANTITIES
DQ-70

THIS PLAN ACCURATE FOR DRAINAGE WORK ONLY.

LAST REVISION 03-29-11 DATE PLOTTED => 29-APR-2011 TIME PLOTTED => 18:01

ALTERNATIVE PIPE
ALLOWABLE PIPE MATERIAL AND PROTECTION

DESIGNATION	RCP	CSP (2-2/3"x1/2")			SSRP (3/4"x1" @ 11-1/2" PITCH)			PPC(C)	PPC(D,S)
	SIZE (INCH)	SIZE (INCH)	BITUM. COAT. THICKNESS	PA/PS THICKNESS	SIZE (INCH)	BITUM. COAT. THICKNESS	PA/PS THICKNESS	SIZE (INCH)	SIZE (INCH)
6" APC									6
12" APC TYPE A		12	0.064"	0.052"				12	
12" APC TYPE B					12	0.064"	0.052"		12
12" APC TYPE C	12				12	0.064"	0.052"		12
18" APC TYPE A	18	18	0.064"	0.052"	18	0.064"	0.052"		
18" APC TYPE B	18	18	0.064"	0.052"				18	
18" APC TYPE C		18	0.064"	0.052"				18	
18" APC TYPE D	18				18	0.064"	0.052"		
18" APC TYPE E	18	18	0.064"	0.052"				18	18
18" APC TYPE F	18								18
24" APC		24	0.079"	0.064"				24	
30" APC	30				30	0.079"	0.064"		30
30"x10" ARCH		30x10	0.079"	0.064"	30x10	0.079"	0.064"		
48" APC		48	0.079"	0.064"					

LEGENDS AND ABBREVIATIONS

S - STANDARD JOINT TYPE
P - POSITIVE JOINT TYPE
D - DOWNDRAIN JOINT TYPE
RCP - REINFORCED CONCRETE PIPE
PPC(C) - PLASTIC PIPE CULVERT, TYPE C (CORRUGATED INTERIOR WALL)
PPC(D,S) - PLASTIC PIPE CULVERT, TYPE D OR S (SMOOTH INTERIOR WALL)
CSP - CORRUGATED STEEL PIPE
SSRP - STEEL SPIRAL RIBBED PIPE
GA. - GAUGE
BITUM. - BITUMINOUS
PA - POLYMERIZED ASPHALT
PS - POLYMERIC SHEET
w/ - WITH
Ω - SEE DRAINAGE DETAIL

Notes:

1. SUFFICIENT SPACE WAS NOT AVAILABLE TO LIST ALL DRAINAGE ITEMS WITHIN A SINGLE TABLE ON A SHEET BORDER, THEREFORE THE LISTING OF THE FIRST GROUPING OF DRAINAGE ITEMS ARE REPEATED ON THE ODD NUMBERED ID CODE SHEETS (DQ-1, DQ-3, ETC.) AND THE LISTINGS OF THE REMAINING GROUP OF DRAINAGE ITEMS ARE REPEATED ON THE EVEN NUMBERED ID CODE SHEETS (DQ-2, DQ-4, ETC.).
2. THE PRECISE DETERMINATION OF THE FOLLOWING ITEMS WILL BE MADE BY THE ENGINEER IN THE FIELD: STATION, SKEW, LENGTH, FL ELEVATION, AND DEPTH OF STRUCTURE.
3. (N) - NOT A SEPARATE PAY ITEM; FOR INFORMATION ONLY.
4. * - SEE ROADWAY QUANTITIES FOR DRAINAGE ITEM TOTAL

Dist	COUNTY	ROUTE	POST MILES TOTAL PROJECT	SHEET No.	TOTAL SHEETS
08	Riv	91	15.6/21.6	400	2028

REGISTERED CIVIL ENGINEER 4-11-10 DATE

4-25-11
PLANS APPROVAL DATE

REGISTERED PROFESSIONAL ENGINEER ALAN R. BISI No. C62808 Exp. 6-30-12 CIVIL STATE OF CALIFORNIA

THE STATE OF CALIFORNIA OR ITS OFFICERS OR AGENTS SHALL NOT BE RESPONSIBLE FOR THE ACCURACY OR COMPLETENESS OF SCANNED COPIES OF THIS PLAN SHEET.

REVISED BY | DATE REVISED

CALCULATED-DESIGNED BY: MOHAMMAD ABDRABOH
CHECKED BY: ALAN R. BISI
FUNCTIONAL SUPERVISOR: MARK PERTILE

DITCH EXCAVATION	CONCRETE (CHANNEL LINING)	STRUCTURAL CONCRETE, BOX CULVERT	MINOR CONCRETE (MINOR STRUCTURE)	MINOR CONCRETE (MISC. CONSTRUCTION)	CL. IV CONCRETE (BACKFILL) *	HMA-A *	PLACE AC (MISC. AREA) *	MISC. IRON AND STEEL	BAR REINFORCING STEEL	RSP 1/4-TON, METHOD B	RSP FACING, METHOD B	RSP NO. 2 BACKING, METHOD B	RSP RSP FABRIC	FRAMES, GRATES AND COVERS 24-12 (N)	24-13 (N)	1/4" SOLID STEEL COVER (N)	12" X 12" PRECAST INLET	12" X 12" STEEL GRATE (TRAFFIC RATED)	DEBRIS RACK (N)	MANHOLE COVER (N)	MANHOLE COVER-PRESSURE LOCKING (N)	36" PRECAST MANHOLE SHAFT		MANHOLE SHAFT PIPE REDUCER	HEIGHT OF MANHOLE (N)	HEIGHT OF INLET "H" (N)	DRAINAGE INLET MARKER *	CONCRETE COLLAR (N)	RCP 12" RCP	15" RCP	18" RCP	24" RCP	30" RCP	36" RCP	48" RCP	54" RCP	60" RCP (CL. V SPECIAL)	DESCRIPTION	STATION	DRAINAGE PLAN SHEET NO.	DRAINAGE SYSTEM NO. ⬡	DRAINAGE UNIT ◯
CY	CY	CY	CY	CY	CY	ton	yd²	lb	lb	CY	CY	CY	yd²	EA	EA	EA	EA	EA	EA	EA	EA	LF		EA	FT	FT	EA	EA	LF	LF	LF	LF	LF	LF	LF	LF	LF					
			1.00					235												1																		Parkway Drain	30' RT LIME ST. 21+75	D-16	133	a
			1.00					235												1																		Parkway Drain	53.3' RT. LIME ST. 26+35	D-17	134	a
			0.90					600								1																						Parkway Drain	40.13' RT UNIVERSITY AVE 3+98.4	D-17	135	a
																																						12" CSP		D-3	136	a
																																						MAIN VALVE	167' Lt 201+73.00 "GE1"			b
			5.10					342											1																			CSP RISER	164' Lt. 202+02.00 "GE1"			c
			16.70																																			Conc SPILLWAY	210' Lt 202+00.00 "GE1"			d
			1.70																																			Junction Structure	202' Lt 191+75.74 "GE1"	D-2	137	a
																																						MAIN VALVE				b
																																						12" CSP	206' Lt 192+60.00 "GE1"			c
			5.10					342											1																			CSP RISER				d
											22.2		33.3																									RSP	112' Lt 192+65.00 "GE1"			e
			40.30																																			Conc SPILLWAY	122' Lt 192+65.00 "GE1"			f
																																						ABANDON INLET				g
			71.80					1754			22.2		33.3			1			2	2																		SHEET TOTALS				
5765.15	687.47	1311.25	765.61	103.47	60.73	11.81	69.71	59494	307048.1	165.9	193.4	54.5	899.9	127	2	11	2	2	8	28	3	66		12			16	44	566.5	67.4	3387.5	2586.5	237.1	530.0	115.0	594	118.2	GRAND TOTALS				

STATE OF CALIFORNIA - DEPARTMENT OF TRANSPORTATION
Caltrans DESIGN

THIS PLAN ACCURATE FOR DRAINAGE WORK ONLY.

DRAINAGE QUANTITIES
DQ-71

LAST REVISION 04-11-11 | DATE PLOTTED => 11-JUL-2011 | TIME PLOTTED => 12:42