SARRA-P078(108)E

Dist	COUNTY	ROUTE	POST MILES TOTAL PROJECT	SHEET No.	TOTAL SHEETS
08	Riv	78	3.3	1	36

STATE OF CALIFORNIA
DEPARTMENT OF TRANSPORTATION

PROJECT PLANS FOR CONSTRUCTION ON
STATE HIGHWAY
IN RIVERSIDE COUNTY
NEAR PALO VERDE
AT PALO VERDE DRAIN BRIDGE

TO BE SUPPLEMENTED BY STANDARD PLANS DATED MAY 2006

INDEX OF PLANS

SHEET No.	DESCRIPTION
1	TITLE AND LOCATION MAP
2	TYPICAL CROSS SECTIONS
3	LAYOUT
4	PROFILES
5	CONSTRUCTION DETAILS
6-7	TEMPORARY WATER POLLUTION CONTROL PLAN, AND DETAILS
8	CONTOUR GRADING
9	UTILITY PLANS
10	CONSTRUCTION AREA SIGNS
11-12	TRAFFIC HANDLING PLANS
13-14	PAVEMENT DELINEATION PLAN AND QUANTITIES AND SIGN PLAN
15	SIGN QUANTITIES
16	SUMMARY OF QUANTITIES
17	HIGHWAY PLANTING
18-27	REVISED STANDARD PLANS

STRUCTURE PLANS

28-36	PALO VERDE DRAIN BRIDGE No. 560830

THE STANDARD PLANS LIST APPLICABLE TO THIS CONTRACT IS INCLUDED IN THE NOTICE TO BIDDERS AND SPECIAL PROVISIONS BOOK.

LOCATION MAP

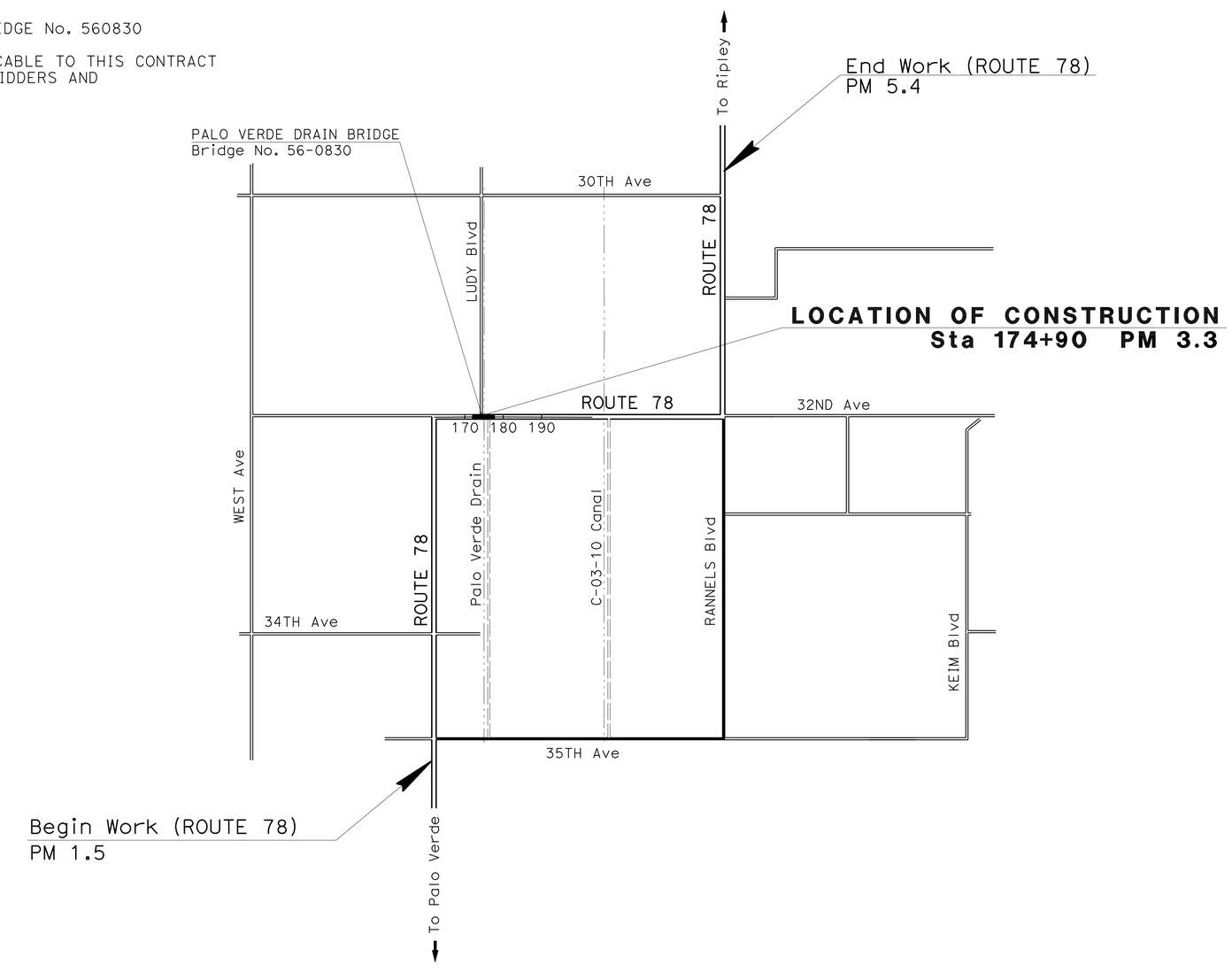

NO SCALE

THE CONTRACTOR SHALL POSSESS THE CLASS (OR CLASSES) OF LICENSE AS SPECIFIED IN THE "NOTICE TO BIDDERS."

PROJECT MANAGER: HONG VAN

DESIGN ENGINEER: JONATHAN DEN HARTOG

12-12-08
PROJECT ENGINEER REGISTERED CIVIL ENGINEER — DATE

REGISTERED PROFESSIONAL ENGINEER
JONATHAN DEN HARTOG
No. 65292
Exp. 9/30/09
CIVIL
STATE OF CALIFORNIA

March 23, 2009
PLANS APPROVAL DATE

THE STATE OF CALIFORNIA OR ITS OFFICERS OR AGENTS SHALL NOT BE RESPONSIBLE FOR THE ACCURACY OR COMPLETENESS OF SCANNED COPIES OF THIS PLAN SHEET.

CONTRACT No. **08-422204**

LAST REVISION 12-12-08

DATE PLOTTED => 04-JUN-2009
TIME PLOTTED => 06:10

Dist	COUNTY	ROUTE	POST MILES TOTAL PROJECT	SHEET No.	TOTAL SHEETS
08	Riv	78	3.3	2	36

REGISTERED CIVIL ENGINEER 12-12-08 DATE

3-23-09
PLANS APPROVAL DATE

REGISTERED PROFESSIONAL ENGINEER JONATHAN DEN HARTOG No. 65292 Exp. 9/30/09 CIVIL STATE OF CALIFORNIA

THE STATE OF CALIFORNIA OR ITS OFFICERS OR AGENTS SHALL NOT BE RESPONSIBLE FOR THE ACCURACY OR COMPLETENESS OF SCANNED COPIES OF THIS PLAN SHEET.

NOTES:

1. DIMENSIONS OF THE STRUCTURAL SECTIONS ARE SUBJECT TO TOLERANCES SPECIFIED IN THE STANDARD SPECIFICATIONS.
2. SEE STRUCTURE PLANS FOR BRIDGE DETAILS.
3. SEE LAYOUT & QUANTITY SHEETS FOR LIMITS OF MBGR.

DESIGN DESIGNATION:

ADT (2007)	2,160	D	62%
ADT (2027)	4,560	T	12%
DHV	420	V	50 mph
ESAL	1,980,000	TI_{20}	10.0

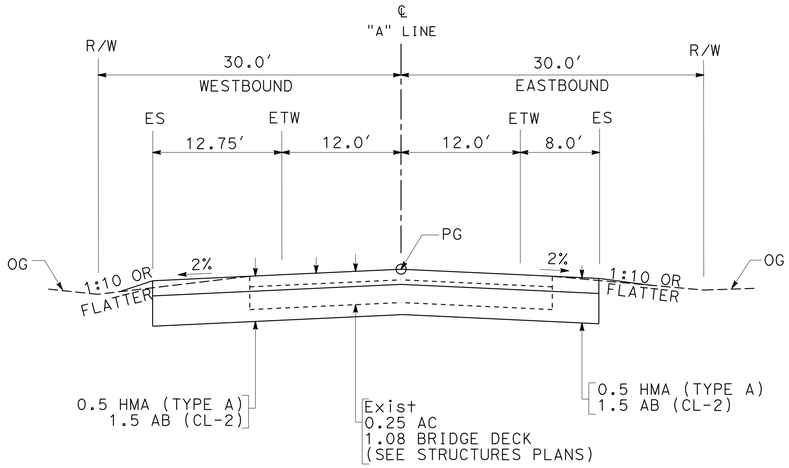

ROUTE 78

STA 174+62.58 TO STA 174+66.63
STA 175+32.63 TO STA 175+35.72

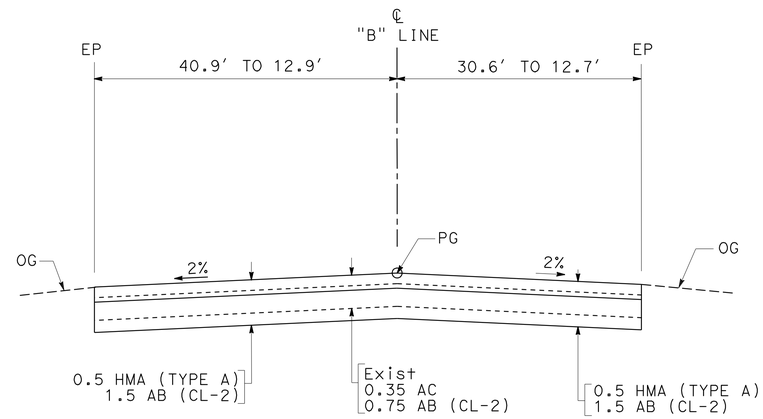

LUDY Blvd

STA 0+24.75 TO STA 0+46.58

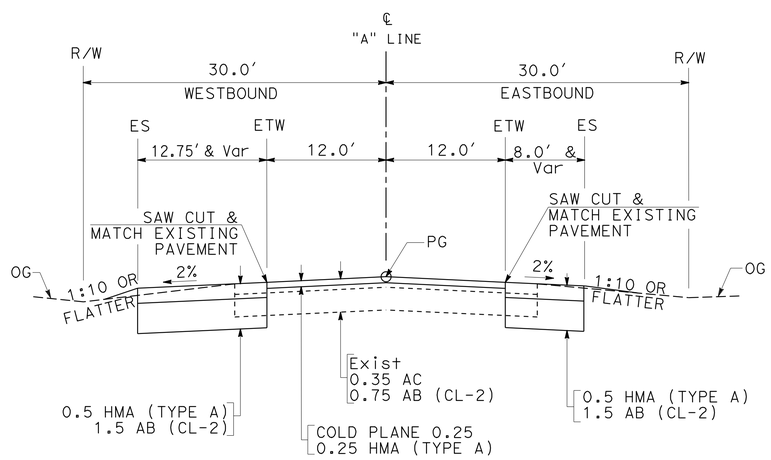

ROUTE 78

STA 172+00.00 TO STA 174+62.58
STA 175+35.72 TO STA 177+80.00

TYPICAL CROSS SECTIONS

NO SCALE

X-1

STATE OF CALIFORNIA - DEPARTMENT OF TRANSPORTATION
Caltrans
DESIGN

FUNCTIONAL SUPERVISOR: DAMODARA NAIDU ATHULURU
CALCULATED-DESIGNED BY: JONATHAN DEN HARTOG
CHECKED BY: CHRIS HOVICK
REVISED BY
DATE REVISED

LAST REVISION 12-12-08
DATE PLOTTED => 04-JUN-2009
TIME PLOTTED => 06:10

Dist	COUNTY	ROUTE	POST MILES TOTAL PROJECT	SHEET No.	TOTAL SHEETS
08	Riv	78	3.3	3	36

REGISTERED CIVIL ENGINEER 12-12-08 DATE

3-23-09
PLANS APPROVAL DATE

REGISTERED PROFESSIONAL ENGINEER JONATHAN DEN HARTOG No. 65292 Exp. 9/30/09 CIVIL STATE OF CALIFORNIA

THE STATE OF CALIFORNIA OR ITS OFFICERS OR AGENTS SHALL NOT BE RESPONSIBLE FOR THE ACCURACY OR COMPLETENESS OF SCANNED COPIES OF THIS PLAN SHEET.

NOTE: FOR COMPLETE RIGHT OF WAY DATA, SEE RIGHT OF WAY RECORD MAPS AT DISTRICT OFFICE.

LEGEND:

SHOULDER WIDENING

COLD PLANE & HMA

PVID - PALO VERDE IRRIGATION DISTRICT

TCE - TEMPORARY CONSTRUCTION EASEMENT

CURVE DATA

No.	R	Δ	T	L
1	30.00	84°27′57″	27.23	44.23
2	19.00	89°15′00″	18.75′	29.60′

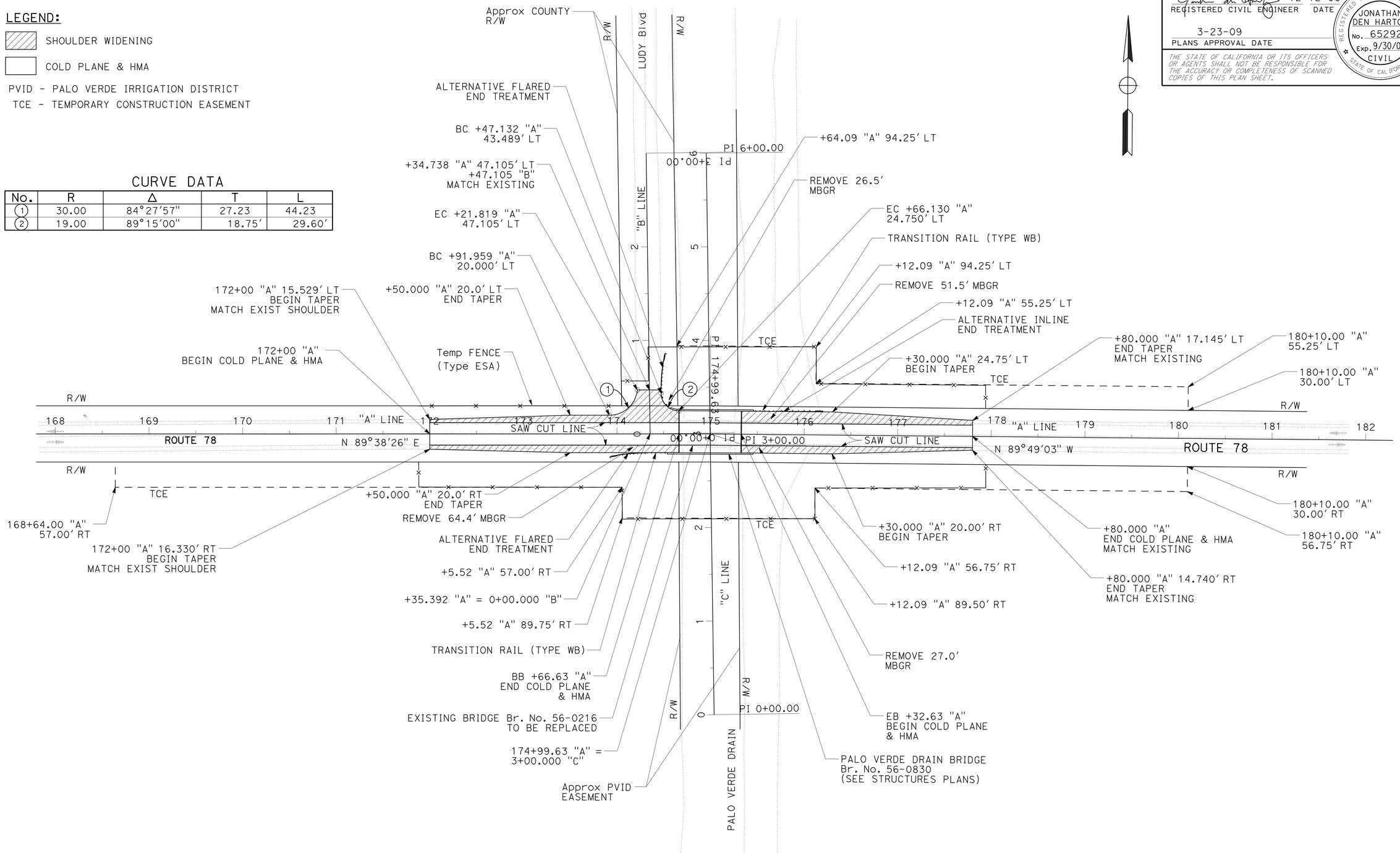

LAYOUT

SCALE 1" = 50′

L-1

STATE OF CALIFORNIA - DEPARTMENT OF TRANSPORTATION

Caltrans

DESIGN

FUNCTIONAL SUPERVISOR: DAMODARA NAIDU ATHULURU

CALCULATED-DESIGNED BY: JONATHAN DEN HARTOG

CHECKED BY: CHRIS HOVICK

REVISED BY

DATE REVISED

LAST REVISION 12-12-08

DATE PLOTTED => 04-JUN-2009

TIME PLOTTED => 06:10

Dist	COUNTY	ROUTE	POST MILES TOTAL PROJECT	SHEET No.	TOTAL SHEETS
08	Riv	78	3.3	4	36

REGISTERED CIVIL ENGINEER 12-12-08 DATE

3-23-09
PLANS APPROVAL DATE

REGISTERED PROFESSIONAL ENGINEER JONATHAN DEN HARTOG No. 65292 Exp. 9/30/09 CIVIL STATE OF CALIFORNIA

THE STATE OF CALIFORNIA OR ITS OFFICERS OR AGENTS SHALL NOT BE RESPONSIBLE FOR THE ACCURACY OR COMPLETENESS OF SCANNED COPIES OF THIS PLAN SHEET.

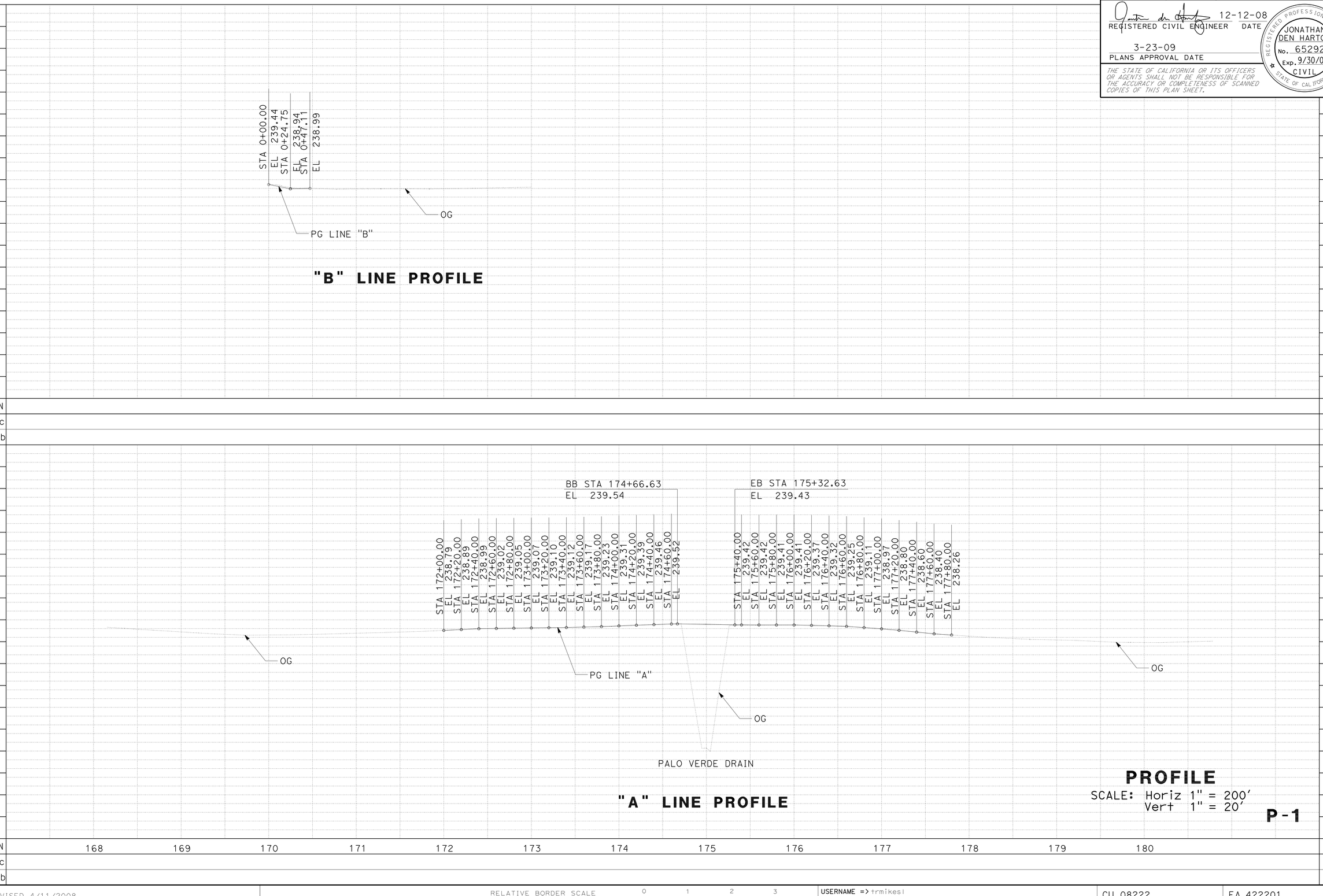

STATE OF CALIFORNIA - DEPARTMENT OF TRANSPORTATION
DESIGN

FUNCTIONAL SUPERVISOR: DAMODARA NAIDU ATHULURU

CALCULATED-DESIGNED BY: JONATHAN DEN HARTOG
CHECKED BY: CHRIS HOVICK

REVISED BY
DATE REVISED

LAST REVISION 08-22-08
DATE PLOTTED => 04-JUN-2009
TIME PLOTTED => 06:10

Dist	COUNTY	ROUTE	POST MILES TOTAL PROJECT	SHEET No.	TOTAL SHEETS
08	Riv	78	3.3	5	36

REGISTERED CIVIL ENGINEER 12-12-08 DATE

3-23-09
PLANS APPROVAL DATE

REGISTERED PROFESSIONAL ENGINEER JONATHAN DEN HARTOG No. 65292 Exp. 9/30/09 CIVIL STATE OF CALIFORNIA

THE STATE OF CALIFORNIA OR ITS OFFICERS OR AGENTS SHALL NOT BE RESPONSIBLE FOR THE ACCURACY OR COMPLETENESS OF SCANNED COPIES OF THIS PLAN SHEET.

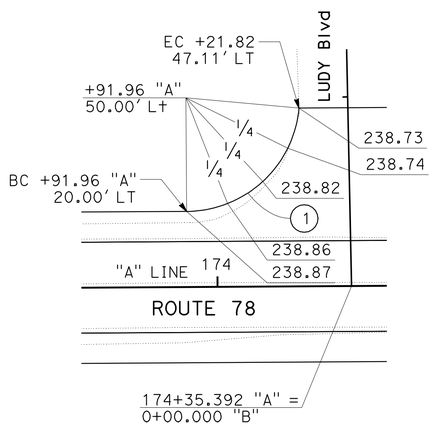

DETAIL A

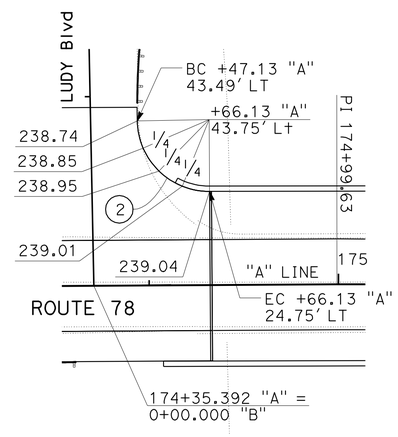

DETAIL B

NOTE:

FOR ADDITIONAL DETAILS, SEE STD PLANS A77B1, A77F5, A77J1 AND A77L1 OR A77L5.

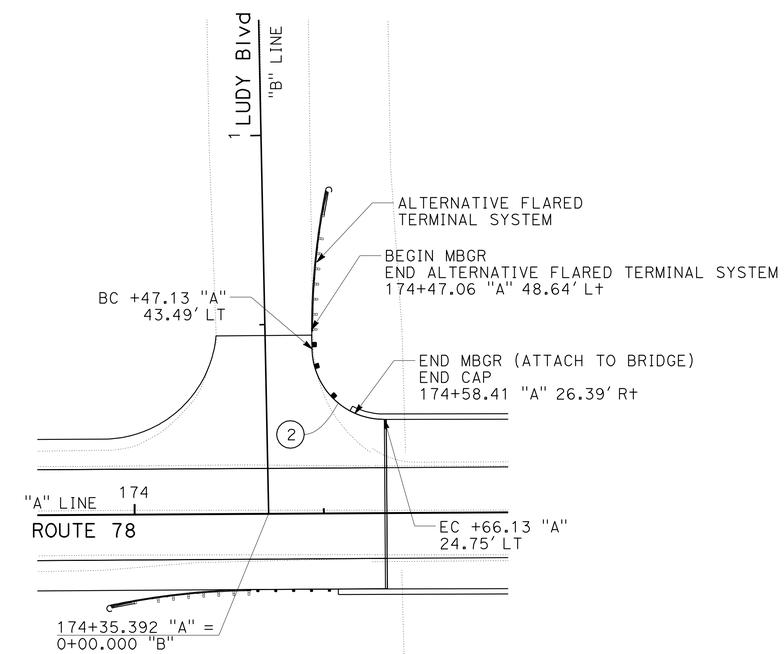

MBGR DETAIL

CURVE DATA

No.	R	Δ	T	L
1	30.00'	84°27'57"	27.23'	44.23'
2	19.00'	89°15'00"	18.75'	29.60'

CONSTRUCTION DETAILS

SCALE 1" = 20'

C-1

STATE OF CALIFORNIA - DEPARTMENT OF TRANSPORTATION
Caltrans
DESIGN

FUNCTIONAL SUPERVISOR: DAMODARA NAIDU ATHULURU
CALCULATED-DESIGNED BY: JONATHAN DEN HARTOG
CHECKED BY: CHRIS HOVICK
REVISED BY
DATE REVISED

LAST REVISION 12-12-08
DATE PLOTTED => 04-JUN-2009
TIME PLOTTED => 06:11

Dist	COUNTY	ROUTE	POST MILES TOTAL PROJECT	SHEET No.	TOTAL SHEETS
08	Riv	78	3.3	6	36

REGISTERED CIVIL ENGINEER 12-12-08 DATE

3-23-09
PLANS APPROVAL DATE

REGISTERED PROFESSIONAL ENGINEER RAJNIKANT PATEL No. 46082 Exp 12/31/08 CIVIL STATE OF CALIFORNIA

THE STATE OF CALIFORNIA OR ITS OFFICERS OR AGENTS SHALL NOT BE RESPONSIBLE FOR THE ACCURACY OR COMPLETENESS OF SCANNED COPIES OF THIS PLAN SHEET.

LEGEND:

- TEMPORARY FENCE (TYPE ESA)
- SILT FENCE
- PLASTIC COVERS
- GRAVEL BAG BARRIERS
- FIBER ROLLS
- AREA WITH SOIL BINDER
- TEMPORARY CONSTRUCTION EASEMENT
- COFFER DAM

NOTE:

EXACT LOCATION OF TEMPORARY FENCE (TYPE ESA) TO BE DETERMINED BY THE ENGINEER.

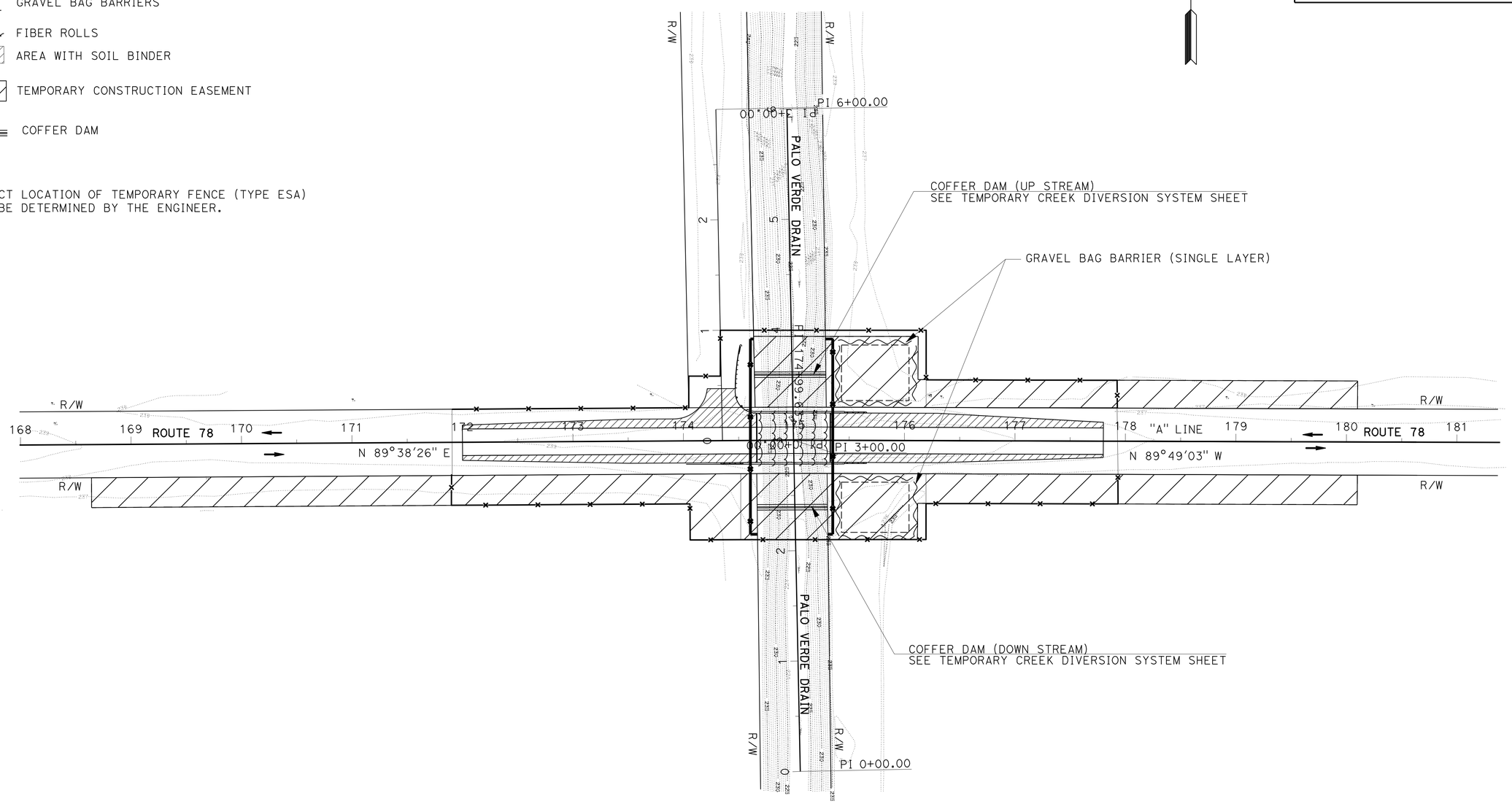

NOTE: FOR COMPLETE RIGHT OF WAY DATA, SEE RIGHT OF WAY RECORD MAPS AT DISTRICT OFFICE.

TEMPORARY WATER POLLUTION CONTROL PLAN

SCALE 1"=50'

WPCP-1

THIS PLAN ACCURATE FOR TEMPORARY WATER POLLUTION CONTROL WORK ONLY

REVISED BY	DATE REVISED

CALCULATED-DESIGNED BY	TOUHIDA HAIDER
CHECKED BY	RAJNIKANT PATEL
FUNCTIONAL SUPERVISOR	PAUL LAMBERT

STATE OF CALIFORNIA - DEPARTMENT OF TRANSPORTATION
Caltrans
DESIGN

LAST REVISION DATE PLOTTED => 04-JUN-2009
TIME PLOTTED => 06:11
12-12-08

Dist	COUNTY	ROUTE	POST MILES TOTAL PROJECT	SHEET No.	TOTAL SHEETS
08	Riv	78	3.3	7	36

REGISTERED CIVIL ENGINEER 12-12-08 DATE

3-23-09
PLANS APPROVAL DATE

REGISTERED PROFESSIONAL ENGINEER JONATHAN DEN HARTOG No. 65292 Exp. 9/30/09 CIVIL STATE OF CALIFORNIA

THE STATE OF CALIFORNIA OR ITS OFFICERS OR AGENTS SHALL NOT BE RESPONSIBLE FOR THE ACCURACY OR COMPLETENESS OF SCANNED COPIES OF THIS PLAN SHEET.

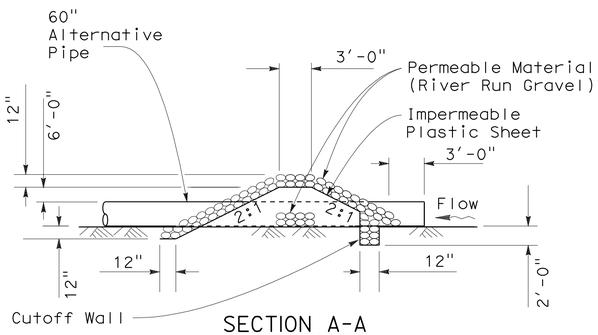

SECTION A-A

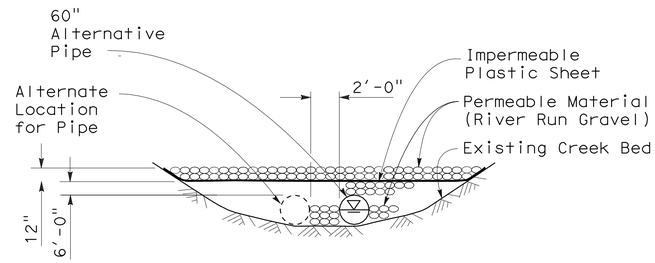

SECTION C-C

NOTES:

1. Exact length and location of the plastic pipe to be determined in the field by the Engineer.
2. Gravel-filled bag anchors to be placed at intermediate locations as determined by Engineer.
3. Use flexible pipe or rigid pipe with water tight joints as necessary to follow creek alignment.

COFFER DAM (TYPE I)

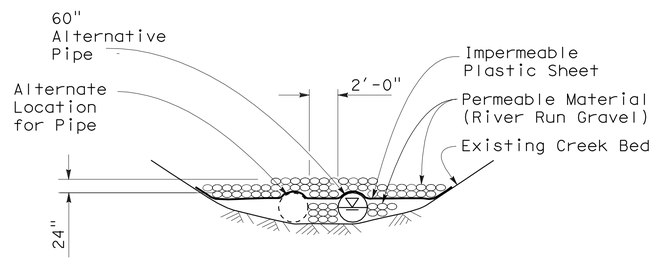

SECTION D-D

DOWNSTREAM BERM (TYPE I)

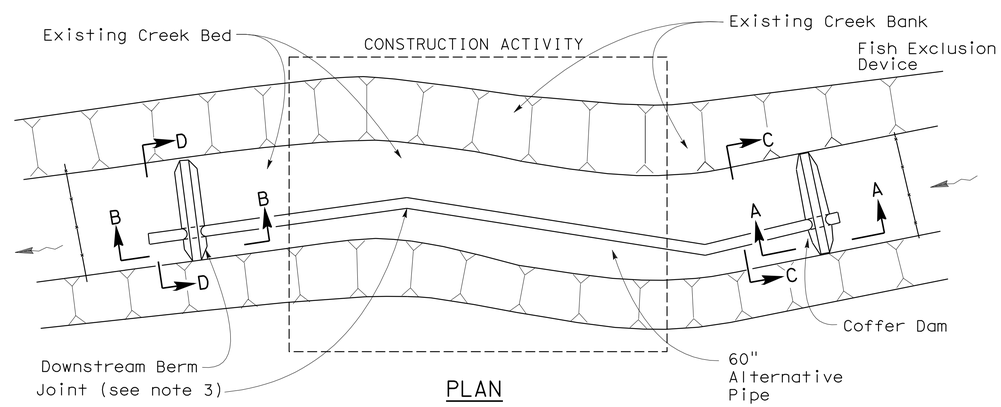

PLAN

TEMPORARY CREEK DIVERSION SYSTEM SCHEMATIC

COFFER DAM (TYPE I)

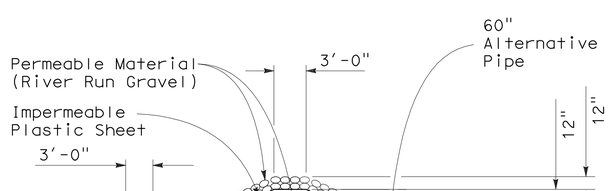

SECTION B-B

DOWNSTREAM BERM (TYPE I)

TEMPORARY WATER POLLUTION CONTROL DETAILS (TEMPORARY CREEK DIVERSION SYSTEM)

NO SCALE

WPCD-1

STATE OF CALIFORNIA - DEPARTMENT OF TRANSPORTATION
Caltrans® DESIGN

FUNCTIONAL SUPERVISOR: DAMODARA NAIDU ATHULURU

CALCULATED-DESIGNED BY: JONATHAN DEN HARTOG
CHECKED BY: CHRIS HOVICK

REVISED BY | DATE REVISED

LAST REVISION 12-12-08 | DATE PLOTTED => 04-JUN-2009 | TIME PLOTTED => 06:11

Dist	COUNTY	ROUTE	POST MILES TOTAL PROJECT	SHEET No.	TOTAL SHEETS
08	Riv	78	3.3	8	36

REGISTERED CIVIL ENGINEER 12-12-08 DATE

3-23-09
PLANS APPROVAL DATE

REGISTERED PROFESSIONAL ENGINEER
JONATHAN DEN HARTOG
No. 65292
Exp. 9/30/09
CIVIL
STATE OF CALIFORNIA

THE STATE OF CALIFORNIA OR ITS OFFICERS OR AGENTS SHALL NOT BE RESPONSIBLE FOR THE ACCURACY OR COMPLETENESS OF SCANNED COPIES OF THIS PLAN SHEET.

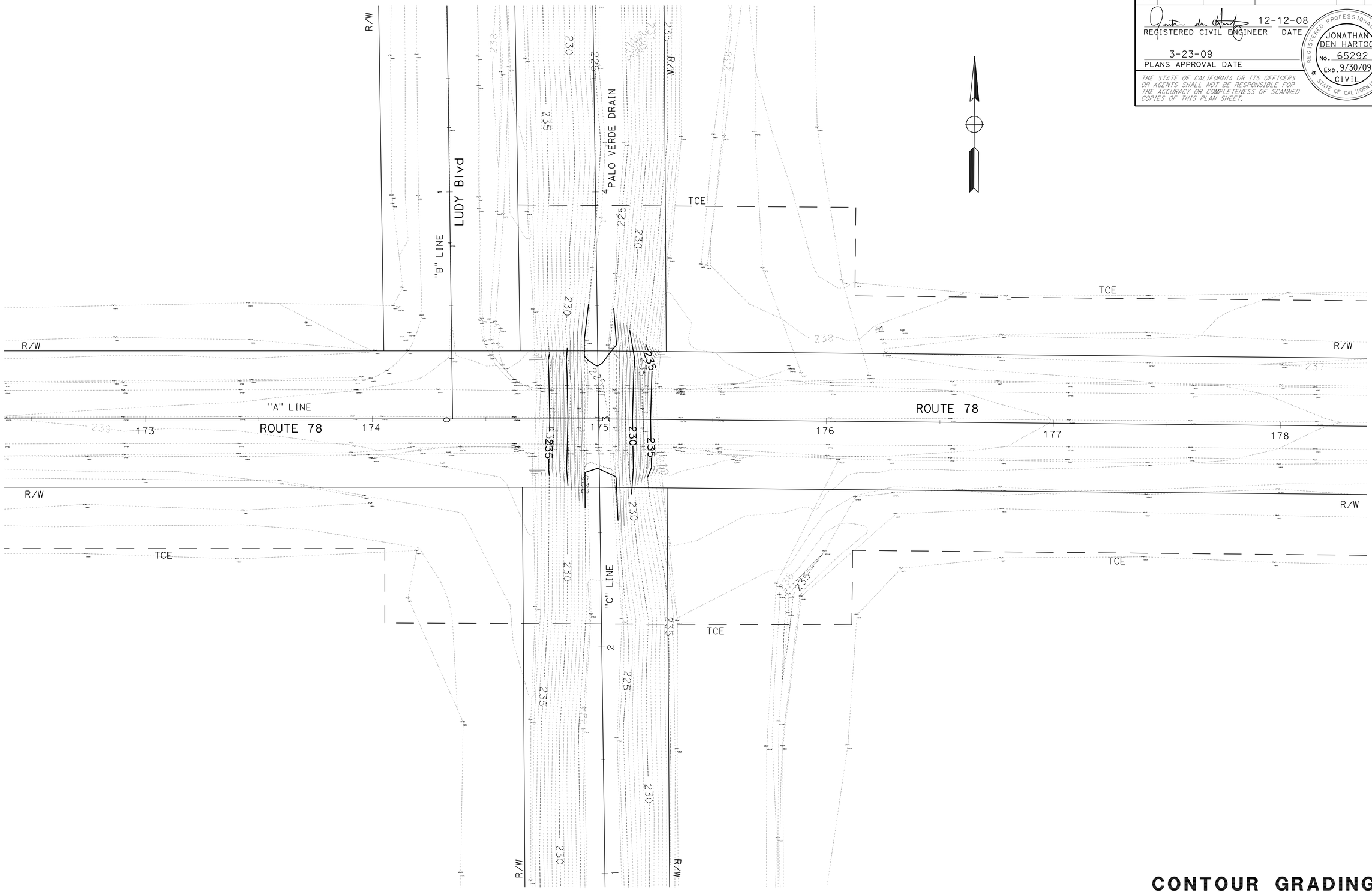

NOTE: FOR COMPLETE RIGHT OF WAY DATA, SEE RIGHT OF WAY RECORD MAPS AT DISTRICT OFFICE.

THIS PLAN ACCURATE FOR CONTOUR GRADING WORK ONLY.

CONTOUR GRADING
SCALE 1"=20'

G-1

STATE OF CALIFORNIA - DEPARTMENT OF TRANSPORTATION
Caltrans
DESIGN

FUNCTIONAL SUPERVISOR: DAMODARA NAIDU ATHULURU

CALCULATED-DESIGNED BY: JONATHAN DEN HARTOG
CHECKED BY: CHRIS HOVICK

REVISED BY
DATE REVISED

LAST REVISION 12-12-08
DATE PLOTTED => 04-JUN-2009
TIME PLOTTED => 06:11

Dist	COUNTY	ROUTE	POST MILES TOTAL PROJECT	SHEET No.	TOTAL SHEETS
08	Riv	78	3.3	9	36

REGISTERED CIVIL ENGINEER 12-12-08 DATE

3-23-09
PLANS APPROVAL DATE

REGISTERED PROFESSIONAL ENGINEER JONATHAN DEN HARTOG No. 65292 Exp. 9/30/09 CIVIL STATE OF CALIFORNIA

THE STATE OF CALIFORNIA OR ITS OFFICERS OR AGENTS SHALL NOT BE RESPONSIBLE FOR THE ACCURACY OR COMPLETENESS OF SCANNED COPIES OF THIS PLAN SHEET.

NOTES:

1. LOCATIONS OF UTILITY FACILITIES SHOWN ON THESE PLANS ARE APPROXIMATE AND SHALL BE VERIFIED BY THE CONTRACTOR PRIOR TO CONSTRUCTION.
2. UTILITY OWNERSHIP ON THIS PROJECT:
   TELEPHONE - VERIZON
   ELECTRIC - SOUTHERN CALIFORNIA EDISON (SCE)
3. ALL ELEVATIONS SHOWN REFER TO THE TOP OF UTILITY UNLESS OTHERWISE INDICATED.

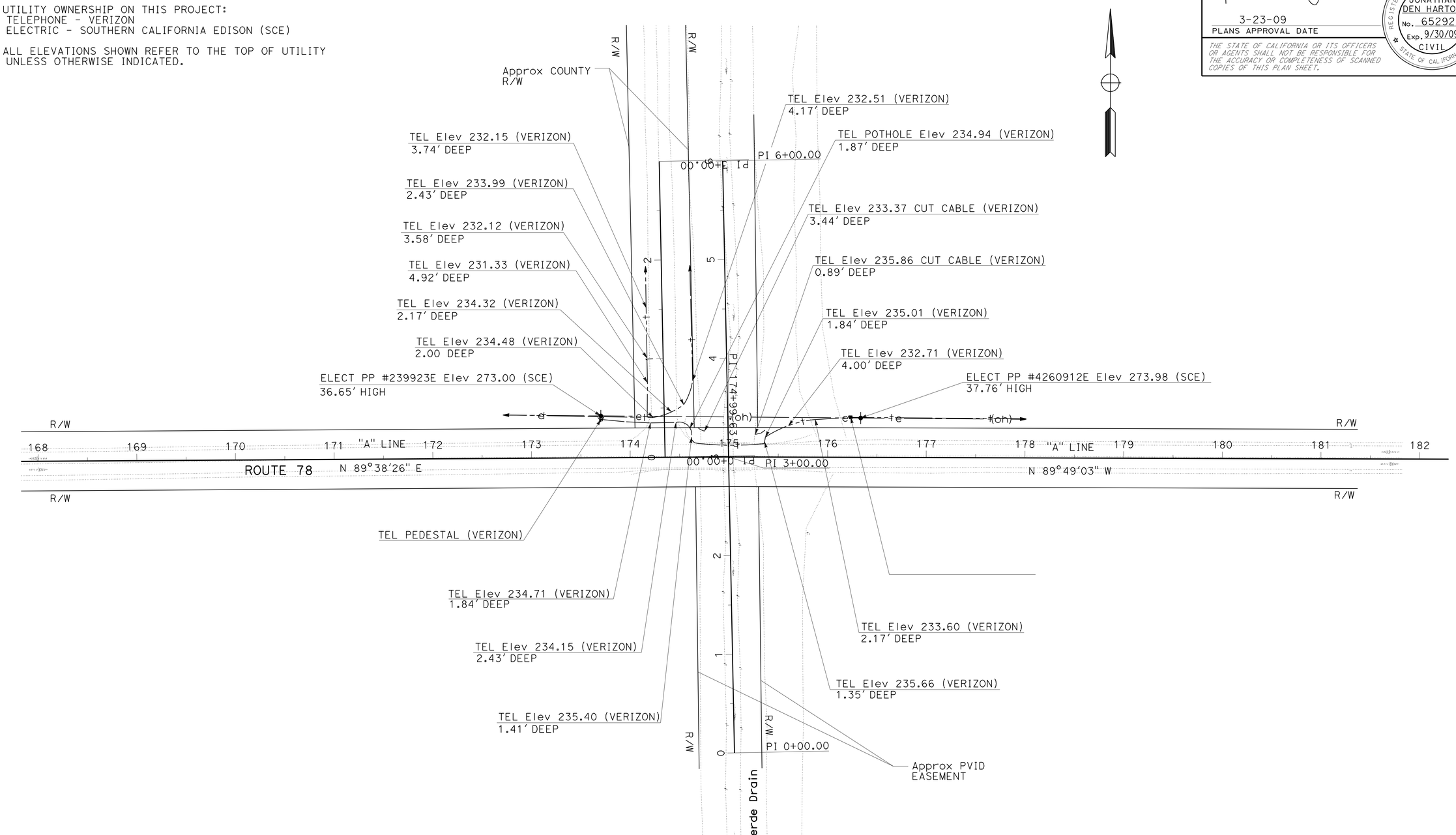

NOTE: FOR COMPLETE RIGHT OF WAY DATA SEE RIGHT OF WAY RECORD MAPS AT DISTRICT OFFICE.

UTILITY PLAN

SCALE 1" = 50'

U-1

THIS PLAN ACCURATE FOR UTILITIES ONLY.

REVISED BY	DATE REVISED

CALCULATED-DESIGNED BY	CHECKED BY
JONATHAN DEN HARTOG	CHRIS HOVICK

FUNCTIONAL SUPERVISOR: DAMODARA NAIDU ATHULURU

STATE OF CALIFORNIA - DEPARTMENT OF TRANSPORTATION

DESIGN

Caltrans

LAST REVISION 12-12-08 | DATE PLOTTED => 04-JUN-2009 TIME PLOTTED => 06:11

Dist	COUNTY	ROUTE	POST MILES TOTAL PROJECT	SHEET No.	TOTAL SHEETS
08	Riv	78	3.3	10	36

REGISTERED CIVIL ENGINEER 12-12-08 DATE

3-23-09
PLANS APPROVAL DATE

REGISTERED PROFESSIONAL ENGINEER TRAN HOANG No. C54996 Exp. 06/30/10 CIVIL STATE OF CALIFORNIA

THE STATE OF CALIFORNIA OR ITS OFFICERS OR AGENTS SHALL NOT BE RESPONSIBLE FOR THE ACCURACY OR COMPLETENESS OF SCANNED COPIES OF THIS PLAN SHEET.

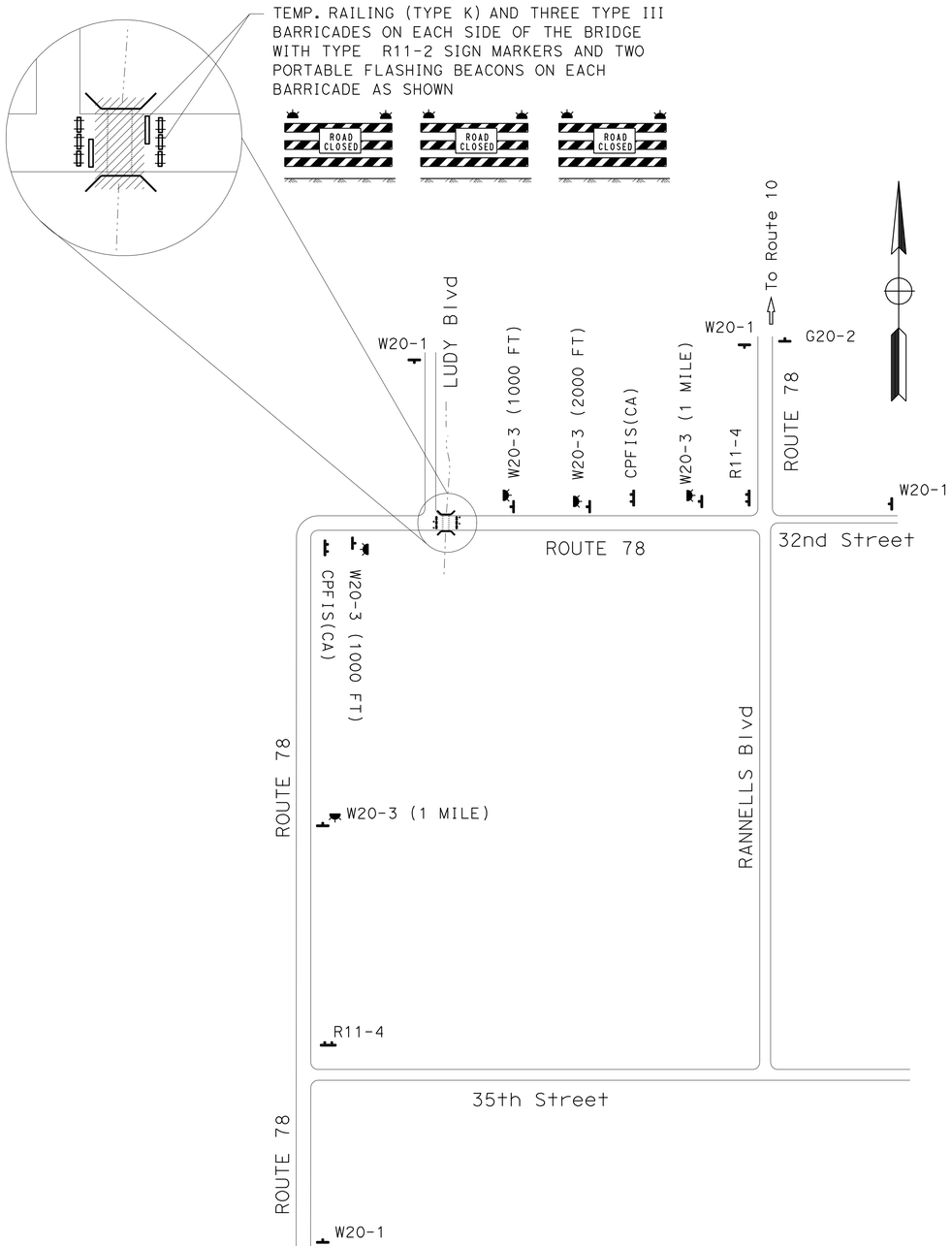

NOTES:

1. LOCATION OF CONSTRUCTION AREA SIGNS SHOWN ARE APPROXIMATE, EXACT LOCATIONS WILL BE DETERMINED BY THE ENGINEER.
2. QUANTITIES SHOWN ON THIS SHEET ARE FOR SHEETS CS-1, TH-1, & TH-2.
3. LEGEND SHOWN ON THIS SHEET ARE FOR SHEETS CS-1, TH-1, & TH-2.

LEGEND:

- CONSTRUCTION AREA SIGN (ONE POST)
- CONSTRUCTION AREA SIGN (TWO POST)
- PORTABLE FLASHING BEACON
- TEMP. RAILING (TYPE K)
- TYPE III BARRICADES
- DIRECTION OF TRAFFIC
- CPFIS(CA) CONSTRUCTION PROJECT FUNDING IDENTIFICATION SIGN (SEE STD PLAN T7)

BARRICADE MOUNTED CONSTRUCTION AREA SIGNS

SIGN CODE	PANEL SIZE (in x in)	NO. OF SIGNS	SIGN MESSAGE
R11-2	48 x 30	6	ROAD CLOSED

TYPE III BARRICADE

QUANTITY (EA)
6

TEMPORARY RAILING (TYPE K)

QUANTITY (LF)
40

PORTABLE CHANGEABLE MESSAGE SIGN

QUANTITY (EA)	COMMENTS
2	LOCATION OF PLACEMENT TO BE DETERMINED BY ENGINEER

FLASHING BEACON (PORTABLE)

SHEET #	QUANTITY (EA)
CS-1	17
TH-1	5
TOTAL	22

THIS PLAN IS ACCURATE FOR CONSTRUCTION AREA SIGNS ONLY.

CONSTRUCTION AREA SIGNS

NO SCALE

CS-1

STATE OF CALIFORNIA - DEPARTMENT OF TRANSPORTATION
Caltrans® TRAFFIC DESIGN

FUNCTIONAL SUPERVISOR: LARRY SARTORI
CALCULATED-DESIGNED BY: HORMUZD SETHNA
CHECKED BY: TRAN HOANG
REVISED BY
DATE REVISED

LAST REVISION 12-12-08
DATE PLOTTED => 04-JUN-2009
TIME PLOTTED => 06:12

Dist	COUNTY	ROUTE	POST MILES TOTAL PROJECT	SHEET No.	TOTAL SHEETS
08	Riv	78	3.3	11	36

REGISTERED CIVIL ENGINEER 12-12-08 DATE

3-23-09
PLANS APPROVAL DATE

REGISTERED PROFESSIONAL ENGINEER TRAN HOANG No. C54996 Exp. 06/30/10 CIVIL STATE OF CALIFORNIA

THE STATE OF CALIFORNIA OR ITS OFFICERS OR AGENTS SHALL NOT BE RESPONSIBLE FOR THE ACCURACY OR COMPLETENESS OF SCANNED COPIES OF THIS PLAN SHEET.

NOTES:

1. THE LOCATION OF THE W3-1 SIGNS AND "STOP AHEAD" PAVEMENT MARKINGS WILL BE APPROXIMATELY 700 FEET IN ADVANCE OF THE LIMIT LINES.
2. USE STD. PLAN T13 FOR TRAFFIC CONTROL DURING INSTALLATION & REMOVAL OF TEMPORARY PAVEMENT DELINEATION.

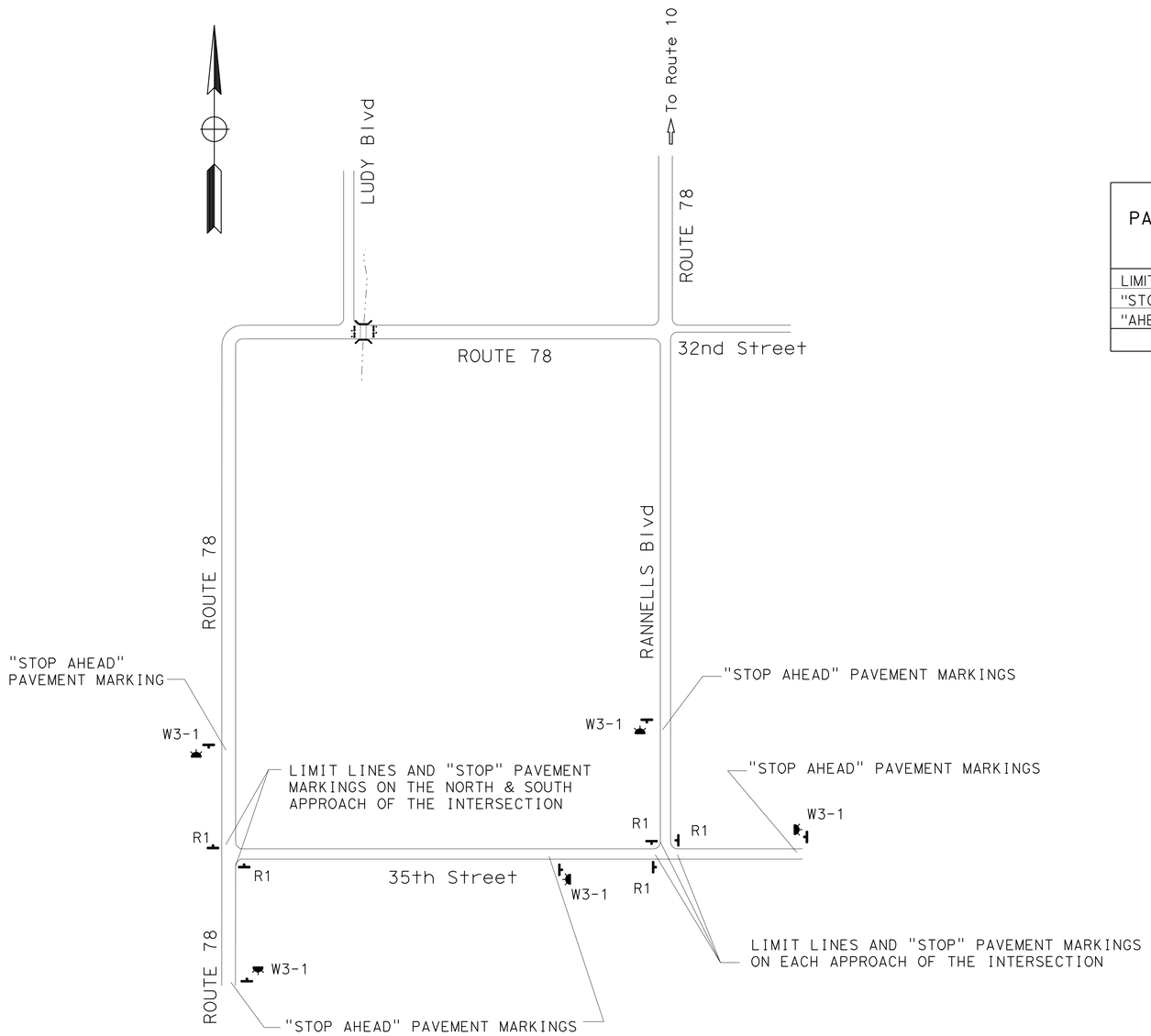

TEMPORARY PAVEMENT DELINEATION QUANTITIES

PAVEMENT MARKING TYPE	TEMPORARY PAVEMENT MARKING (PAINT) SQFT
LIMIT LINE 12" WHITE	100
"STOP" PAVEMENT MARKING	220
"AHEAD" PAVEMENT MARKING	155
TOTAL	475

INSTALL TEMPORARY STOP CONTROL AT INTERSECTIONS

TRAFFIC HANDLING PLAN
NO SCALE
TH-1

STATE OF CALIFORNIA - DEPARTMENT OF TRANSPORTATION
Caltrans® **TRAFFIC DESIGN**

FUNCTIONAL SUPERVISOR: LARRY SARTORI
CALCULATED-DESIGNED BY: HORMUZD SETHNA
CHECKED BY: TRAN HOANG
REVISED BY
DATE REVISED

LAST REVISION 12-12-08
DATE PLOTTED => 04-JUN-2009
TIME PLOTTED => 06:12

Dist	COUNTY	ROUTE	POST MILES TOTAL PROJECT	SHEET No.	TOTAL SHEETS
08	Riv	78	3.3	12	36

REGISTERED CIVIL ENGINEER 12-12-08 DATE

3-23-09
PLANS APPROVAL DATE

REGISTERED PROFESSIONAL ENGINEER TRAN HOANG No. C54996 Exp. 06/30/10 CIVIL STATE OF CALIFORNIA

THE STATE OF CALIFORNIA OR ITS OFFICERS OR AGENTS SHALL NOT BE RESPONSIBLE FOR THE ACCURACY OR COMPLETENESS OF SCANNED COPIES OF THIS PLAN SHEET.

NOTES:

1. QUANTITIES SHOWN ON THIS SHEET ARE FOR SHEETS CS-1, TH-1, AND TH-2.
2. ALL CONSTRUCTION SIGNS HAVE BLACK LEGEND ON ORANGE BACKGROUND EXCEPT FOR CPFIS(CA), N-7(CA), R11-2, R11-4, R1-1, R3-2, G28-2(CA), M3-2, & M3-4.

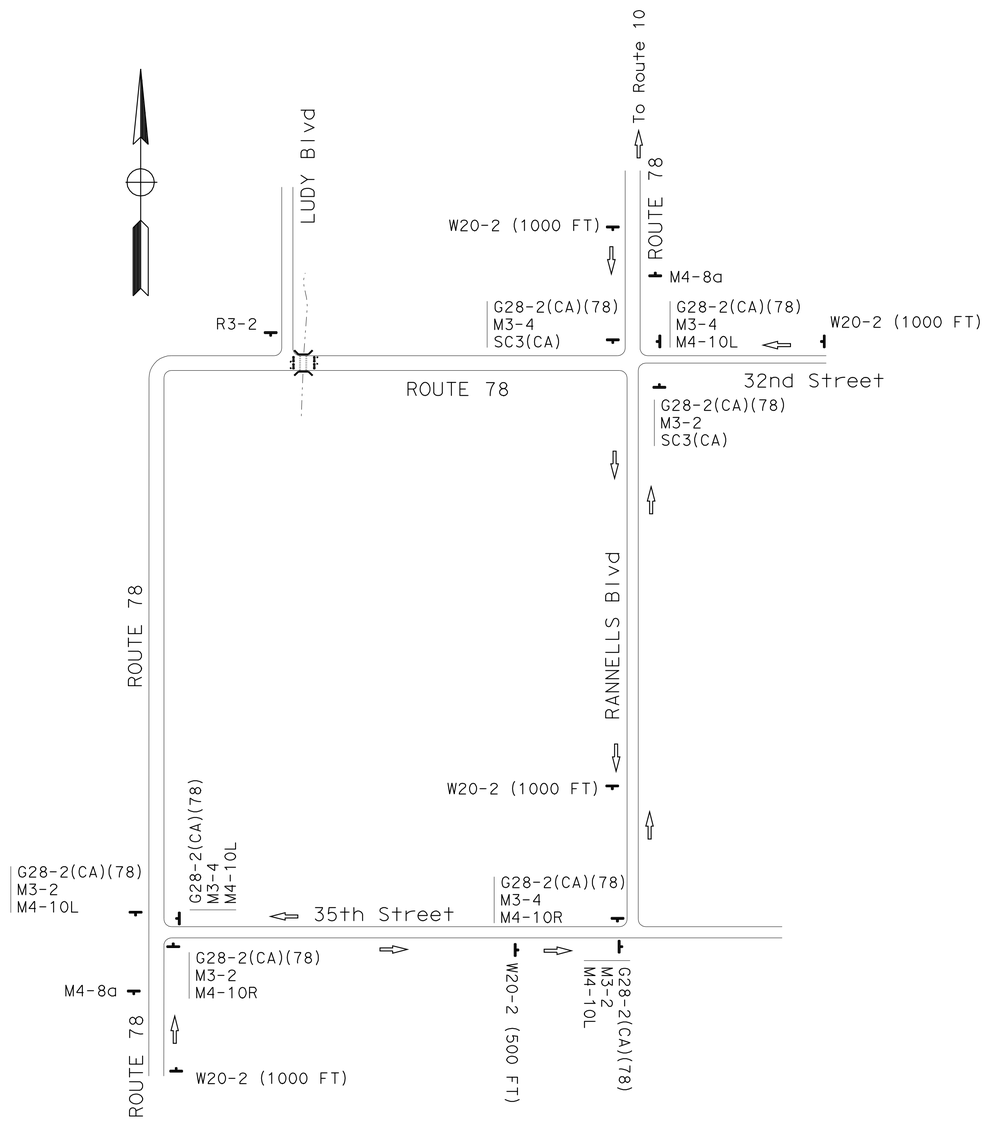

TRAFFIC DETOUR LAYOUT

STATIONARY CONSTRUCTION AREA SIGNS

SIGN CODE	PANEL SIZE (in x in)	NO. OF POST AND SIZE (in x in)	NO. OF SIGNS	SIGN MESSAGE
W20-1	48 x 48	1 - 6 x 6	4	ROAD WORK AHEAD
G20-2	36 x 18	1 - 4 x 4	2	END ROAD WORK
W20-3	48 x 48	1 - 6 x 6	5	ROAD CLOSED _____
R11-4	60 x 30	2 - 4 x 6	2	ROAD CLOSED TO THRU TRAFFIC
W3-1	48 x 48	1 - 6 x 6	5	STOP AHEAD
R1-1	48 x 48	1 - 6 x 6	5	STOP
R3-2	36 x 36	1 - 4 x 6	1	NO LEFT TURN
W20-2	36 x 36	1 - 4 x 6	5	DETOUR _____
M4-8a	24 x 18	1 - 4 x 4	2	END DETOUR
G28-2(CA)	24 x 25	1 - 6 x 6	2	ROUTE 78 STATE SHIELD
M3-2	24 x 12			EAST
M4-10L	48 x 18			DETOUR LEFT ARROW
G28-2(CA)	24 x 25	1 - 6 x 6	1	ROUTE 78 STATE SHIELD
M3-2	24 x 12			EAST
SC3(CA)	48 x 18			DETOUR STRAIGHT ARROW
G28-2(CA)	24 x 25	1 - 6 x 6	1	ROUTE 78 STATE SHIELD
M3-2	24 x 12			EAST
M4-10R	48 x 18			DETOUR RIGHT ARROW
G28-2(CA)	24 x 25	1 - 6 x 6	2	ROUTE 78 STATE SHIELD
M3-4	24 x 12			WEST
M4-10L	48 x 18			DETOUR LEFT ARROW
G28-2(CA)	24 x 25	1 - 6 x 6	1	ROUTE 78 STATE SHIELD
M3-4	24 x 12			WEST
SC3(CA)	48 x 18			DETOUR STRAIGHT ARROW
G28-2(CA)	24 x 25	1 - 6 x 6	1	ROUTE 78 STATE SHIELD
M3-4	24 x 12			WEST
M4-10R	48 x 18			DETOUR RIGHT ARROW
CPFIS(CA)	90 x 60	2 - 6 x 6	2	CONSTRUCTION FUNDING SIGN

TRAFFIC HANDLING PLAN
NO SCALE

TH-2

STATE OF CALIFORNIA - DEPARTMENT OF TRANSPORTATION
Caltrans® TRAFFIC DESIGN

FUNCTIONAL SUPERVISOR: LARRY SARTORI
CALCULATED-DESIGNED BY: HORMUZD SETHNA
CHECKED BY: TRAN HOANG
REVISED BY
DATE REVISED

LAST REVISION 12-12-08
DATE PLOTTED => 04-JUN-2009
TIME PLOTTED => 06:12

Dist	COUNTY	ROUTE	POST MILES TOTAL PROJECT	SHEET No.	TOTAL SHEETS
08	Riv	78	3.3	13	36

REGISTERED CIVIL ENGINEER 12-12-08 DATE

3-23-09
PLANS APPROVAL DATE

REGISTERED PROFESSIONAL ENGINEER TRAN HOANG No. C54996 Exp. 06/30/10 CIVIL STATE OF CALIFORNIA

THE STATE OF CALIFORNIA OR ITS OFFICERS OR AGENTS SHALL NOT BE RESPONSIBLE FOR THE ACCURACY OR COMPLETENESS OF SCANNED COPIES OF THIS PLAN SHEET.

NOTES:

LANE WIDTHS = 12 FEET

LEGEND:

- ROADSIDE SIGN (EXISTING)
- (XX) REMOVE ROADSIDE SIGN
- (XX) RESET ROADSIDE SIGN

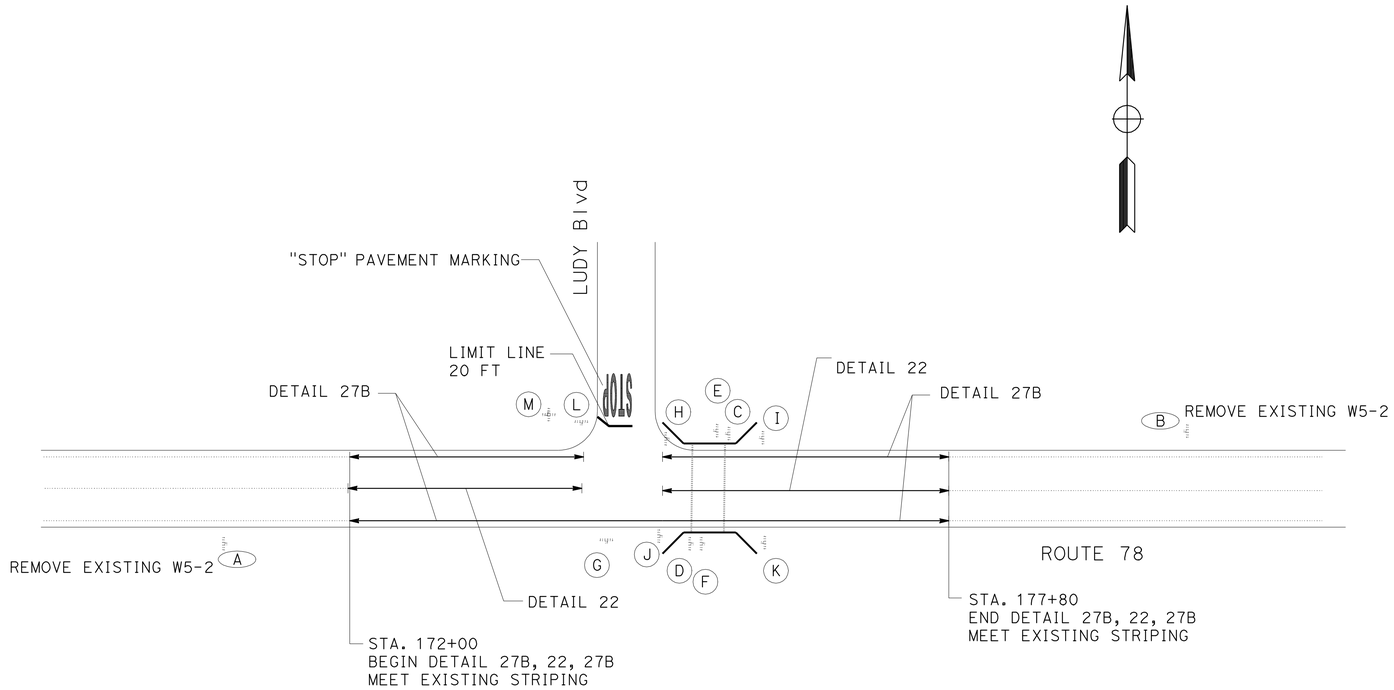

PAVEMENT DELINEATION AND SIGN PLAN

NO SCALE

PD-1

REVISED BY	DATE REVISED

CALCULATED-DESIGNED BY	HORMUZD SETHNA
CHECKED BY	TRAN HOANG
FUNCTIONAL SUPERVISOR	LARRY SARTORI

STATE OF CALIFORNIA - DEPARTMENT OF TRANSPORTATION
Caltrans
TRAFFIC DESIGN

LAST REVISION 12-12-08 | DATE PLOTTED => 04-JUN-2009 | TIME PLOTTED => 06:12

Dist	COUNTY	ROUTE	POST MILES TOTAL PROJECT	SHEET No.	TOTAL SHEETS
08	Riv	78	3.3	14	36

REGISTERED CIVIL ENGINEER 12-12-08 DATE

3-23-09
PLANS APPROVAL DATE

REGISTERED PROFESSIONAL ENGINEER TRAN HOANG No. C54996 Exp. 06/30/10 CIVIL STATE OF CALIFORNIA

THE STATE OF CALIFORNIA OR ITS OFFICERS OR AGENTS SHALL NOT BE RESPONSIBLE FOR THE ACCURACY OR COMPLETENESS OF SCANNED COPIES OF THIS PLAN SHEET.

PAVEMENT DELINEATION QUANTITIES

SHEET No.	LOCATION	DETAIL No. OR PAVEMENT MARKING	PAVEMENT MARKER	THERMOPLASTIC TRAFFIC STRIPE (SPRAYABLE)		THERMOPLASTIC PAVEMENT MARKING
			RETROREFLECTIVE			
			TYPE D	4 INCH YELLOW	4 INCH WHITE	
			EA	LF		SQFT
PD-1	ROUTE 78 CENTERLINE	22	50	530		
PD-1	ROUTE 78 EB EDGELINE	27B			530	
PD-1	ROUTE 78 WB EDGELINE	27B			530	
PD-1	LUDY BLVD. SB AT ROUTE 78	LIMIT LINE				20
PD-1	LUDY BLVD. SB AT ROUTE 78	"STOP"				22
-	SUBTOTAL	-	50	530	1060	
-	TOTAL	-	50	1590		42

STATE OF CALIFORNIA - DEPARTMENT OF TRANSPORTATION
Caltrans TRAFFIC DESIGN

FUNCTIONAL SUPERVISOR: LARRY SARTORI

CALCULATED-DESIGNED BY: HORMUZD SETHNA
CHECKED BY: TRAN HOANG

REVISED BY
DATE REVISED

PAVEMENT DELINEATION QUANTITIES
PDQ-1

LAST REVISION 12-12-08 DATE PLOTTED => 04-JUN-2009 TIME PLOTTED => 06:12

Dist	COUNTY	ROUTE	POST MILES TOTAL PROJECT	SHEET No.	TOTAL SHEETS
08	Riv	78	3.3	15	36

REGISTERED CIVIL ENGINEER 12-12-08 DATE

3-23-09
PLANS APPROVAL DATE

REGISTERED PROFESSIONAL ENGINEER
TRAN HOANG
No. C54996
Exp. 06/30/10
CIVIL
STATE OF CALIFORNIA

THE STATE OF CALIFORNIA OR ITS OFFICERS OR AGENTS SHALL NOT BE RESPONSIBLE FOR THE ACCURACY OR COMPLETENESS OF SCANNED COPIES OF THIS PLAN SHEET.

ROADSIDE SIGN QUANTITIES

SIGN No.	SIGN CODE	ROADSIDE SIGN REMOVE	ROADSIDE SIGN RESET	REMARKS
		EA	EA	
A	W5-2 (NARROW BRIDGE)	1		
B	W5-2 (NARROW BRIDGE)	1		
C	POST MILE MARKER		1	
D	POST MILE MARKER		1	
E	BRIDGE NUMBER MARKER		1	
F	BRIDGE NUMBER MARKER		1	
G	TYPE N (CA) MARKER & WI-7		1	
H	TYPE P (CA) MARKER		1	
I	TYPE P (CA) MARKER		1	
J	TYPE P (CA) MARKER		1	
K	TYPE P (CA) MARKER		1	
L	RI-1 (STOP)		1	
M	D3-1 (STREET NAME)		1	
TOTAL		2	11	

NOTE: EXACT LOCATION & POSITION OF ROADSIDE SIGNS TO BE DETERMINED BY THE ENGINEER.

REVISED BY | DATE REVISED

HORMUZD SETHNA | TRAN HOANG

CALCULATED-DESIGNED BY | CHECKED BY

FUNCTIONAL SUPERVISOR

LARRY SARTORI

STATE OF CALIFORNIA - DEPARTMENT OF TRANSPORTATION

Caltrans® TRAFFIC DESIGN

SIGN QUANTITIES
SQ-1

LAST REVISION 12-12-08 | DATE PLOTTED => 04-JUN-2009 | TIME PLOTTED => 06:12

Dist	COUNTY	ROUTE	POST MILES TOTAL PROJECT	SHEET No.	TOTAL SHEETS
08	Riv	78	3.3	16	36

REGISTERED CIVIL ENGINEER 12-12-08 DATE

3-23-09
PLANS APPROVAL DATE

REGISTERED PROFESSIONAL ENGINEER JONATHAN DEN HARTOG No. 65292 Exp. 9/30/09 CIVIL STATE OF CALIFORNIA

THE STATE OF CALIFORNIA OR ITS OFFICERS OR AGENTS SHALL NOT BE RESPONSIBLE FOR THE ACCURACY OR COMPLETENESS OF SCANNED COPIES OF THIS PLAN SHEET.

ROADWAY QUANTITIES

STATION TO STATION	COLD PLANE ASPHALT CONCRETE PAVEMENT	ROADWAY EXCAVATION	(N) EMBANKMENT	CLASS 2 AGGREGATE BASE	HOT MIX ASPHALT (TYPE A)
	SQYD	CY	CY	CY	TON
"A" 172+00.00 TO 174+62.58	710	281	16	220	241
"A" 174+62.58 TO 174+66.63		15	0	5	3
"A" 175+32.63 TO 175+35.72		12	0	4	3
"A" 175+35.72 TO 177+80.00	659	282	82	232	241
Subtotal	1,369	590	98	461	488
"B" 0+24.75 TO 0+46.58		29		41	25
"C" 2+75.39 TO 3+29.01		191	2		
TOTAL	1,369	810		502	513

(N) - NOT A SEPARATE PAY ITEM, FOR INFORMATION ONLY.

QUANTITIES FOR TEMPORARY CONSTRUCTION BMPs

TEMPORARY CONSTRUCTION SITE BMPs	UNITS	QUANTITIES
MOVE-IN/MOVE-OUT (TEMPORARY EROSION CONTROL)	EA	2
TEMPORARY FENCE (TYPE ESA)	LF	1600
TEMPORARY SOIL BINDER	SQYD	1481
TEMPORARY SILT FENCE	LF	400
TEMPORARY FIBER ROLL	LF	375
TEMPORARY GRAVEL BAG BERM	LF	450
TEMPORARY CONSTRUCTION ENTRANCE	EA	2
TEMPORARY COVER	SQYD	934

METAL BEAM GUARD RAILING

STATION TO STATION	SIDE	REMOVE METAL BEAM GUARD RAILING	METAL BEAM GUARD RAILING	END CAP	TRANSITION RAILING (TYPE WB)	ALTERNATIVE FLARED TERMINAL SYSTEM	ALTERNATIVE IN-LINE TERMINAL SYSTEM
		LF	LF	EA	EA	EA	EA
"A" 174+47 TO 174+74	Lt	26.5	25.0	1		1	
"A" 173+92 TO 174+65	Rt	64.4			1	1	
"A" 175+33 TO 176+20	Lt	51.5			1		1
"A" 175+33 TO 175+60	Rt	27.0					
TOTAL		169.4	25.0	1	2	2	1

SUMMARY OF QUANTITIES
Q-1

STATE OF CALIFORNIA - DEPARTMENT OF TRANSPORTATION
DESIGN
Caltrans

FUNCTIONAL SUPERVISOR: DAMODARA NAIDU ATHULURU
CALCULATED-DESIGNED BY: JONATHAN DEN HARTOG
CHECKED BY: CHRIS HOVICK
REVISED BY
DATE REVISED

LAST REVISION 12-12-08
DATE PLOTTED => 04-JUN-2009
TIME PLOTTED => 06:13

Dist	COUNTY	ROUTE	POST MILES TOTAL PROJECT	SHEET No.	TOTAL SHEETS
08	Riv	78	3.3	17	36

LICENSED LANDSCAPE ARCHITECT

3-23-09
PLANS APPROVAL DATE

LICENSED LANDSCAPE ARCHITECT — Byron Strout No. 2498 — Signature — Licensed Date 07-30-09 — Date 12-12-08 — STATE OF CALIFORNIA

THE STATE OF CALIFORNIA OR ITS OFFICERS OR AGENTS SHALL NOT BE RESPONSIBLE FOR THE ACCURACY OR COMPLETENESS OF SCANNED COPIES OF THIS PLAN SHEET.

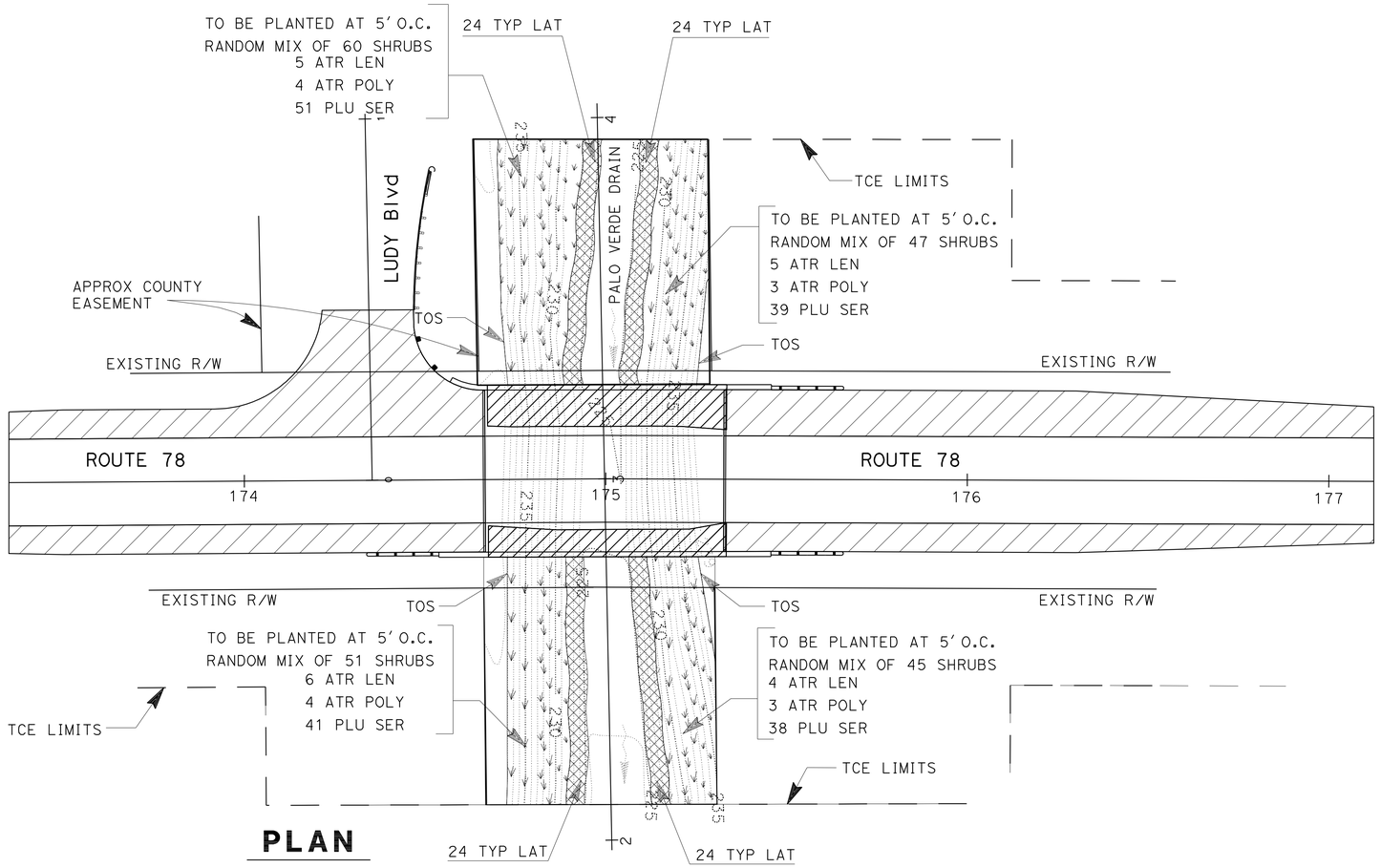

PLAN

SCALE 1"= 20'

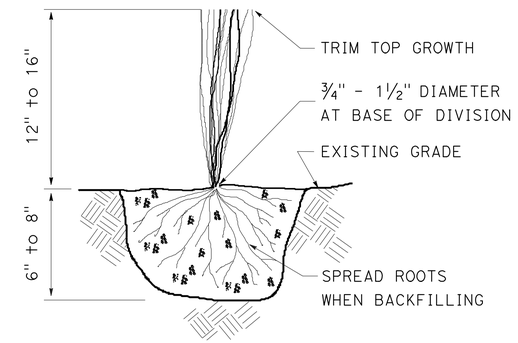

TYPHA (CATTAIL) ROOT CLUMP SECTION

NO SCALE

PLANT LIST AND PLANTING SPECIFICATIONS

PLANT GROUP	PLANT No.	SYMBOL	BOTANICAL NAME	COMMON NAME	SIZE	QUANTITY EACH	HOLE SIZE (INCH) Dia	HOLE SIZE (INCH) DEPTH	BASIN TYPE	IRON SULFATE	SOIL AMEND	COMMERCIAL FERTILIZER PLANTING	COMMERCIAL FERTILIZER PLT ESTB	BASIN MULCH	STAKING	PLANTING LIMITS MINIMUM DISTANCE (Ft) FROM TRVD WAY	PVMT	FENCE	WALL	PAVED DITCH	EARTH DITCH	ON CENTER (Ft)	REMARKS
A	1		PLUCHEA SERICEA	ARROW-WEED	No. 1	169	②	②	1	—	—	—	—	—	—	—	—	—	—	—	—	④	⑧ SHRUB
	2		ATRIPLEX LENTIFORMIS	QUAIL BUSH	No. 1	20	②	②	1	—	—	—	—	—	—	—	—	—	—	—	—	④	⑧ SHRUB
	3		ATRIPLEX POLYCARPA	CATTLE BUSH	No. 1	14	②	②	1	—	—	—	—	—	—	—	—	—	—	—	—	④	⑧ SHRUB
D	4		TYPHA LATIFOLIA	COMMON CATTAIL	ROOT CLUMP	96	②	②	1	—	—	—	—	—	—	—	—	—	—	—	—	4	④ ⑥ SHRUB

APPLICABLE WHEN CIRCLED:

1 - Quantities shown are "per plant" unless shown as SQFT or SQYD application rates.
② - Sufficient to receive root ball.
3 - Does not apply to mulch areas.
④ - As shown on plans.
5 - Unless otherwise shown on plans.
⑥ - See detail.
7 - See Special Provisions.
⑧ - Location of plants to be determine by contractor

ABBREVIATIONS

AMEND — amendment
B & B — balled and burlapped
Dia — diameter
EA — each
lb — pound
oz. — ounce
Ft — foot/feet
SQFT — square feet
CF — cubic feet
Max — maximum
Min — minimum
NCN — no common name
No. — number
Pkt — packet
PLT ESTB — plant establishment
Pvmt — pavement
R/W — right of way
SF — state furnished
TRVD — traveled
TCE — temporary construction easement
TOS — top of slope

NOTE:

Underlined portions of botanical name indicate abbreviations used on Planting Plans.

PLANT PLAN AND PLANT LIST

SCALE IS SHOWN

PP-1

STATE OF CALIFORNIA - DEPARTMENT OF TRANSPORTATION
Caltrans® LANDSCAPE ARCHITECTURE
SENIOR LANDSCAPE ARCHITECT: BYRON STROUT
CALCULATED-DESIGNED BY: ALFREDO CORNEJO
CHECKED BY: MIKE STIVERS
REVISED BY / DATE REVISED

LAST REVISION 12-12-08
DATE PLOTTED => 04-JUN-2009
TIME PLOTTED => 06:13

DIST	COUNTY	ROUTE	POST MILES TOTAL PROJECT	SHEET NO.	TOTAL SHEETS
08	Riv	78	3.3	18	36

Randell D. Hiatt
REGISTERED CIVIL ENGINEER

June 6, 2008
PLANS APPROVAL DATE

REGISTERED PROFESSIONAL ENGINEER
Randell D. Hiatt
No. C50200
Exp. 6-30-09
CIVIL
STATE OF CALIFORNIA

The State of California or its officers or agents shall not be responsible for the accuracy or completeness of electronic copies of this plan sheet.

To accompany plans dated 3-23-06

NOTES:

1. When necessary to place dike in front of face of guard railing, only Type C dike may be used. For dike details, see Standard Plan A87B.
2. For standard railing post embedment, see Standard Plans A77C3.
3. Guard railing delineation to be used where shown on the Project Plans.
4. When dike or curb is placed under guard railing, the maximum height of the dike or curb shall be 4". Mountable dike should not be used. For dike and curb details, see Revised Standard Plans RSP A87A and Standard Plan A87B.
5. For details of typical distance between the face of rail and hinge point, see Standard Plan A77C3.

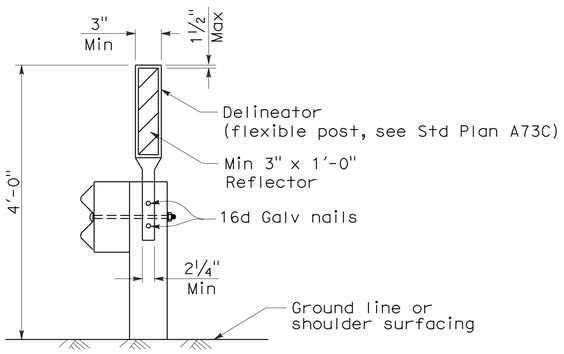

GUARD RAILING DELINEATION

See Note 3

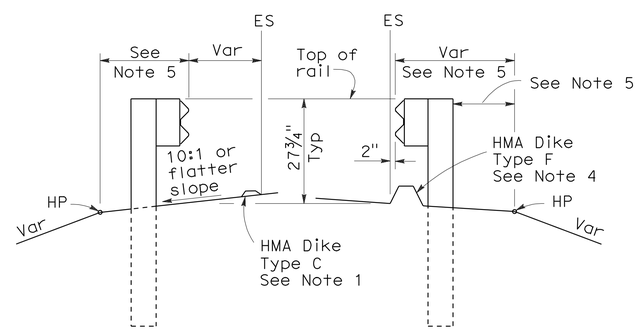

DIKE POSITIONING

See Note 1

STATE OF CALIFORNIA
DEPARTMENT OF TRANSPORTATION

METAL BEAM GUARD RAILING TYPICAL RAILING DELINEATION AND DIKE POSITIONING DETAILS

NO SCALE

RSP A77C4 DATED JUNE 6, 2008 SUPERSEDES STANDARD PLAN A77C4
DATED MAY 1, 2006 - PAGE 47 OF THE STANDARD PLANS BOOK DATED MAY 2006.

REVISED STANDARD PLAN RSP A77C4

2006 REVISED STANDARD PLAN RSP A77C4

12-10-07

DIST	COUNTY	ROUTE	POST MILES TOTAL PROJECT	SHEET NO.	TOTAL SHEETS
08	Riv	78	3.3	19	36

Randell D. Hiatt
REGISTERED CIVIL ENGINEER

June 6, 2008
PLANS APPROVAL DATE

REGISTERED PROFESSIONAL ENGINEER
Randell D. Hiatt
No. C50200
Exp. 6-30-09
CIVIL
STATE OF CALIFORNIA

The State of California or its officers or agents shall not be responsible for the accuracy or completeness of electronic copies of this plan sheet.

To accompany plans dated 3-23-06

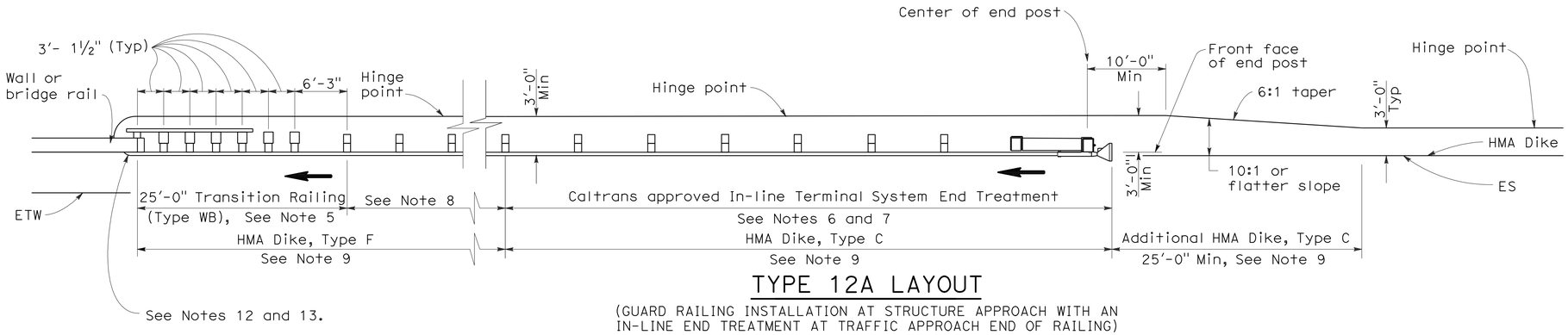

TYPE 12A LAYOUT

(GUARD RAILING INSTALLATION AT STRUCTURE APPROACH WITH AN IN-LINE END TREATMENT AT TRAFFIC APPROACH END OF RAILING)
See Notes 10

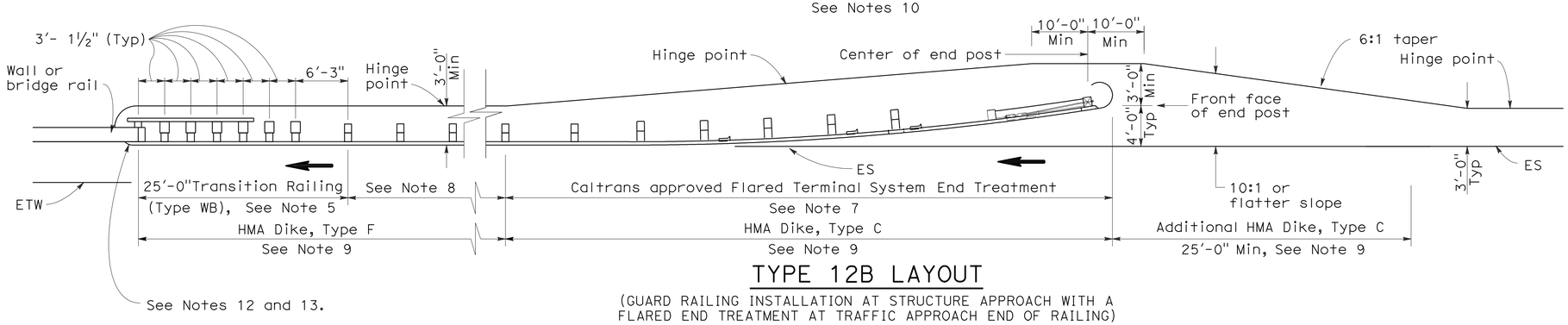

TYPE 12B LAYOUT

(GUARD RAILING INSTALLATION AT STRUCTURE APPROACH WITH A FLARED END TREATMENT AT TRAFFIC APPROACH END OF RAILING)
See Notes 10

NOTES:

1. Line post, blocks and hardware to be used are shown on Standard Plans A77A1, A77A2, A77B1, A77C1 and A77C2.
2. Guard rail post spacing to be 6'-3" center to center, except as otherwise noted.
3. Except as noted, line posts are 6" x 8" x 6'-0" wood with 6" x 8" x 1'-2" wood blocks. W6 x 9 steel posts, 6'-0" in length, with 6" x 8" x 1'-2" notched wood blocks or plastic blocks may be used for 6" x 8" x 6'-0" wood posts with 6" x 8" x 1'-2" wood blocks where applicable and when specified.
4. Direction of adjacent traffic indicated by ➡.
5. For Transition Railing (Type WB) details for Types 12A and 12B Layouts, see Standard Plan A77J4.
6. In-line Terminal System End Treatments are used where site conditions will not accommodate a flared end treatment.
7. The type of terminal system end treatment to be used will be shown on the Project Plans.
8. Dependent on site conditions (embankment height, side slopes, or other fixed objects), it may be advisable to construct additional guard railing (a length equal to multiples of 12'-6" with 6'-3" post spacing) between the transition railing and end treatment.
9. Where placement of dike is required with guard railing installations, see Revised Standard Plan RSP A77C4 for dike positioning details.
10. Type 12A or Type 12B Layouts are typically used:
    a. To the right of approaching traffic, at the end of a structure, on two-lane conventional highway where the roadbed width across the structure is less than 40 feet.
    b. To the left of approaching traffic, at the end of a structure, on two-lane conventional highway where the roadbed width across the structure is less than 40 feet.
    c. To the right of approaching traffic at the end of each structure on multilane freeways or expressways with separate adjacent or parallel bridges.
    d. To the right of approaching traffic at the end of the structure on multilane freeways or expressways with decked median on the bridge.
11. See Revised Standard Plan RSP A77F3 for typical layout used left of approaching traffic at the ends of each structure on multilane freeways or expressways with separate adjacent or parallel bridges.
12. For additional details of typical connections to bridge rail, see Connection Detail AA on Revised Standard Plans RSP A77J1 and RSP A77J2 and Connection Detail FF on Standard Plans A77K1 and A77K2.
13. For additional details of a typical connection to walls or abutments, see Standard Plan A77J3.

STATE OF CALIFORNIA
DEPARTMENT OF TRANSPORTATION

METAL BEAM GUARD RAILING TYPICAL LAYOUTS FOR STRUCTURE APPROACH

NO SCALE

RSP A77F1 DATED JUNE 6, 2008 SUPERSEDES STANDARD PLAN A77F1
DATED MAY 1, 2006 - PAGE 54 OF THE STANDARD PLANS BOOK DATED MAY 2006.

REVISED STANDARD PLAN RSP A77F1

2006 REVISED STANDARD PLAN RSP A77F1

12-10-07

DIST	COUNTY	ROUTE	POST MILES TOTAL PROJECT	SHEET NO.	TOTAL SHEETS
08	Riv	78	3.3	20	36

Randell D. Hiatt
REGISTERED CIVIL ENGINEER

June 6, 2008
PLANS APPROVAL DATE

REGISTERED PROFESSIONAL ENGINEER
Randell D. Hiatt
No. C50200
Exp. 6-30-09
CIVIL
STATE OF CALIFORNIA

The State of California or its officers or agents shall not be responsible for the accuracy or completeness of electronic copies of this plan sheet.

To accompany plans dated 3-23-06

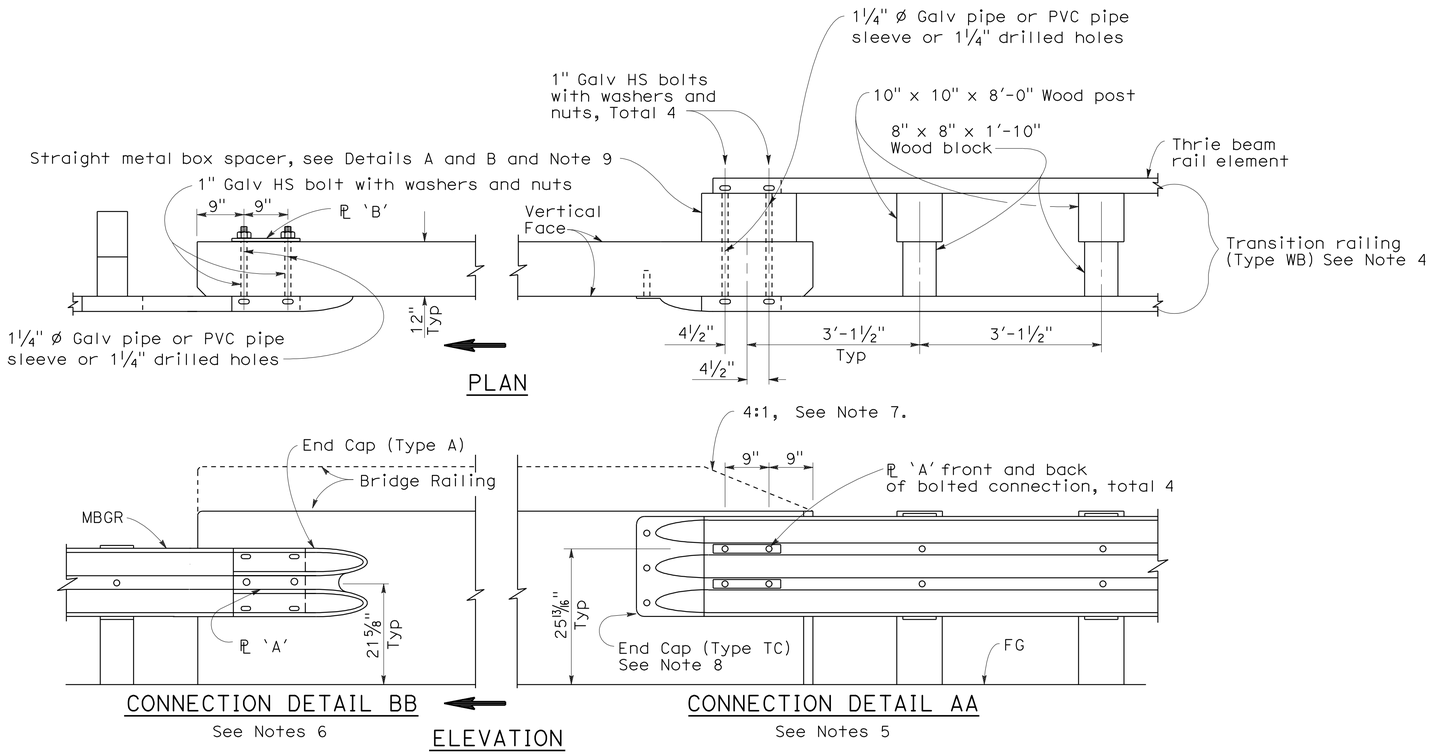

GUARD RAILING CONNECTION TO BRIDGE RAILING WITHOUT SIDEWALK

NOTES:

1. See Revised Standard Plan RSP A77J2 for additional connection details to bridges without sidewalks.
2. Additional details of posts, blocks and hardware are shown on Standard Plan A77B1, A77C1 and A77C2.
3. Direction of adjacent traffic indicated by ➡.
4. For additional details of Transition Railing (Type WB), see Standard Plan A77J4. Transition Railing (Type WB) transitions the 12 gage w-beam standard railing section of guard railing to a heavier gage nested thrie beam railing section which is connected to the concrete bridge railing.
5. For typical use of Connection Detail AA, see Layout Types 12A and 12B on Revised Standard Plan RSP A77F1, Layout Types 12C and 12D on Standard Plan A77F2, and Layout Type 12E on Revised Standard Plan RSP A77F3.
6. For typical use of Connection Detail BB, see Layout Type 12D (structure departure railing connection) on Standard Plan A77F2 and Layout Type 12DD on Standard Plan A77F5.
7. Where the height of the bridge railing exceeds the height of the thrie beam railing by more than 1" at Connection Detail AA, taper the top of the end of the bridge railing at 4:1 to match the top elevation of the thrie beam rail.
8. For details of End Cap (Type TC), see Standard Plan A77J4.
9. See Standard Plan A77J4 for additional details regarding depth dimension for straight metal box spacer.

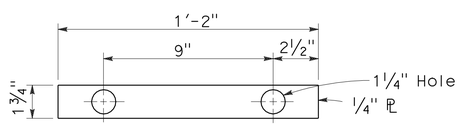

PLATE 'A'

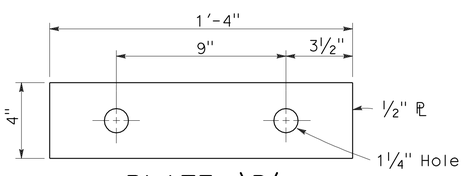

PLATE 'B'
(For backside of connection BB)

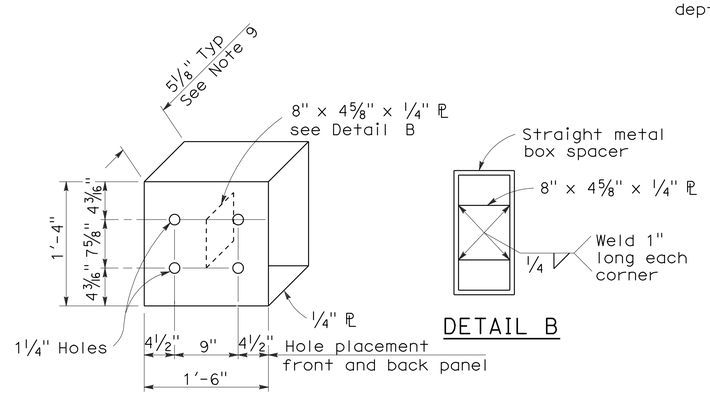

DETAIL A

DETAIL B

STRAIGHT METAL BOX SPACER

STATE OF CALIFORNIA
DEPARTMENT OF TRANSPORTATION

METAL BEAM GUARD RAILING CONNECTIONS TO BRIDGE RAILINGS WITHOUT SIDEWALKS DETAILS No.1

NO SCALE

RSP A77J1 DATED JUNE 6, 2008 SUPERSEDES STANDARD PLAN A77J1 DATED MAY 1, 2006 - PAGE 72 OF THE STANDARD PLANS BOOK DATED MAY 2006.

REVISED STANDARD PLAN RSP A77J1

2006 REVISED STANDARD PLAN RSP A77J1

12-10-07

DIST	COUNTY	ROUTE	POST MILES TOTAL PROJECT	SHEET NO.	TOTAL SHEETS
08	Riv	78	3.3	21	36

Randell D. Hiatt
REGISTERED CIVIL ENGINEER

June 6, 2008
PLANS APPROVAL DATE

REGISTERED PROFESSIONAL ENGINEER
Randell D. Hiatt
No. C50200
Exp. 6-30-09
CIVIL
STATE OF CALIFORNIA

The State of California or its officers or agents shall not be responsible for the accuracy or completeness of electronic copies of this plan sheet.

To accompany plans dated 3-23-06

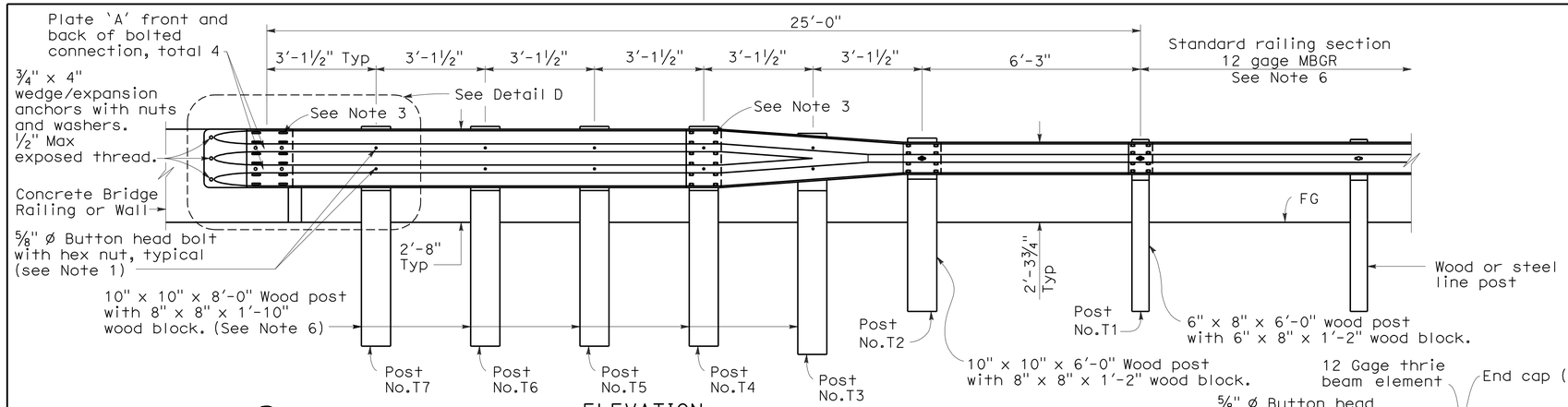

ELEVATION

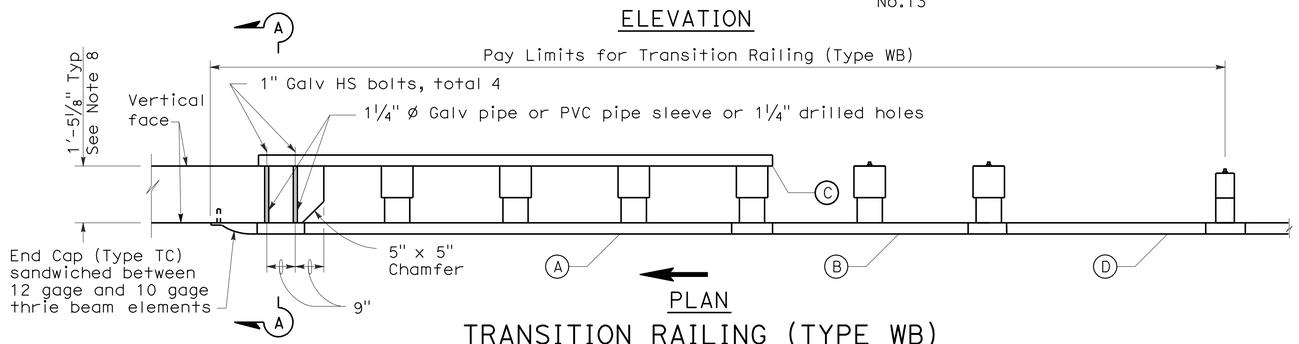

PLAN

TRANSITION RAILING (TYPE WB)

(No Blockout Attachment)

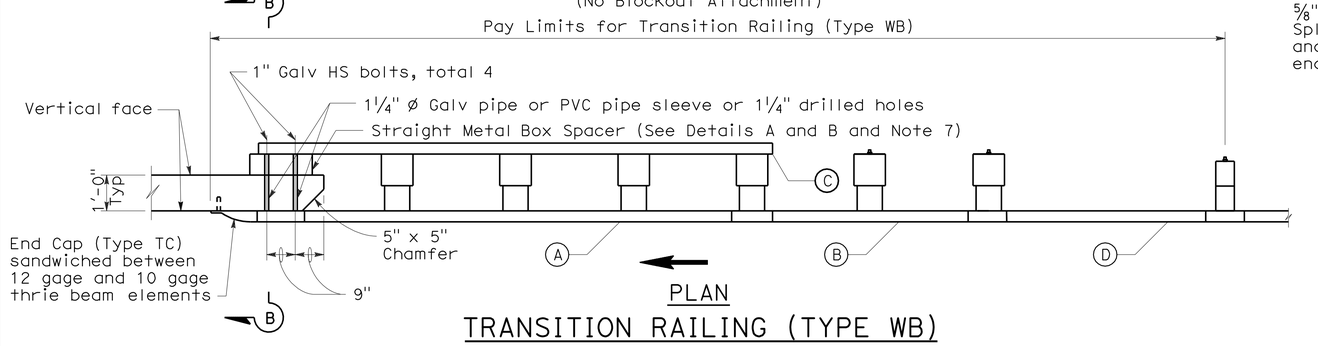

PLAN

TRANSITION RAILING (TYPE WB)

(Blockout Attachment)

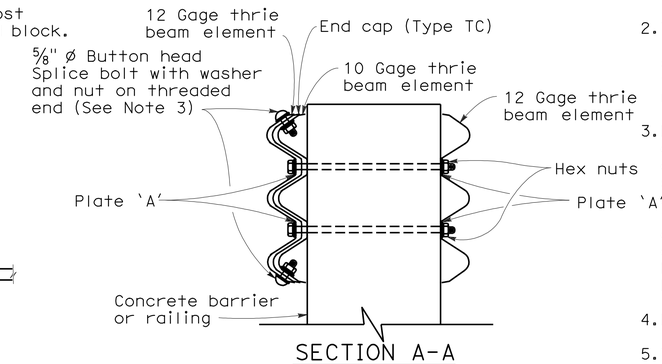

SECTION A-A

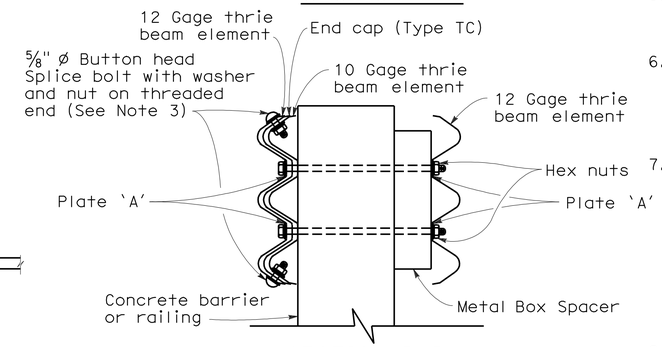

SECTION B-B

NOTES:

1. Use ⅝" Ø Button head bolts and hex nuts for connections to posts. No washer on rail face for bolted connections to post.
2. The nested rail elements, end cap, and 'W' beam to thrie beam element may be spliced together prior to bolting the elements to the wood post and concrete barrier or railing.
3. Exterior splice bolt holes for rail element splices at Post No.T4 and the connection to the concrete barrier or railing shall be the standard 29/32" x 1⅛" slot size. Interior splice bolt holes at these locations may be increased up to 1¼" Ø. Only the top 2 and the bottom 2 splice bolts with washers and nuts are required for rail splices at Post No.T4 and the connection to the concrete barrier or railing.
4. Direction of adjacent traffic indicated by →.
5. The top elevation of Post Nos.T2 through T7 shall not project more than 1" above the top elevation of the rail element.
6. Typically, the railing connected to Transition Railing (Type WB) will be either standard railing section of metal beam guard railing or an approved Caltrans end treatment attached to Post No.T1.
7. The depth of the metal box spacer varies from the 5⅛" to 1½" and is dependent on the width of the concrete railing or wall. The combined dimension for the depth of the metal box spacer plus the width of railing or wall is typically 17⅛". Where the space between the backside of the concrete railing or wall and the rear thrie beam element is less than 1½", metal plates similar to Plate 'A' are to be used as spacers.
8. Where the width of the concrete railing or wall is greater than 17⅛", wood blocks are to be used to fill the space created between the backside of Posts No.4 through No.7 and the rear thrie beam element. These wood blocks shall be 8" in width and 1'-2" in length. The dimension between the front thrie beam element and the rear thrie beam element is to match the width of the concrete railing or wall.

LEGEND

(A) Nested thrie beam elements (one 12 gage element nested over one 10 gage element).

(B) One 10 gage "W" beam to thrie beam element.

(C) One 12 gage thrie beam element.

(D) One 10 gage "W" beam rail element (7'-3½" length)

10 gage = 0.135" thick

12 gage = 0.108" thick

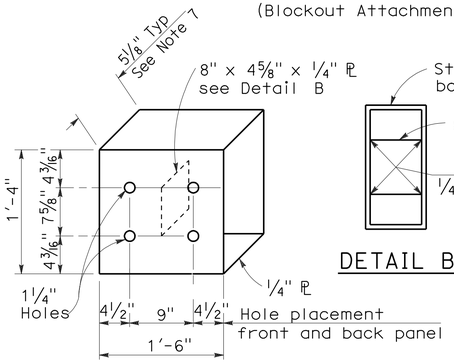

DETAIL A

STRAIGHT METAL BOX SPACER

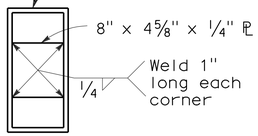

DETAIL B

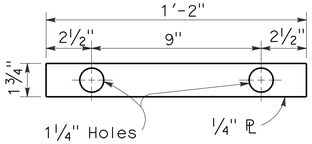

DETAIL C

PLATE 'A'

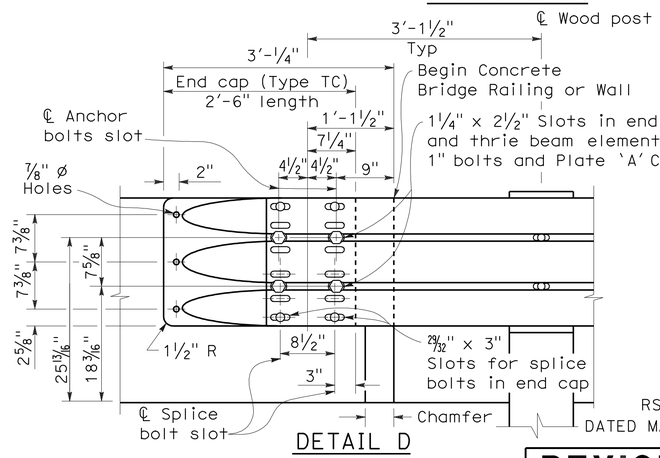

DETAIL D

STATE OF CALIFORNIA
DEPARTMENT OF TRANSPORTATION

METAL BEAM GUARD RAILING TRANSITION RAILING (TYPE WB)

NO SCALE

RSP A77J4 DATED JUNE 6, 2008 SUPERSEDES STANDARD PLAN A77J4 DATED MAY 1, 2006 - PAGE 75 OF THE STANDARD PLANS BOOK DATED MAY 2006.

REVISED STANDARD PLAN RSP A77J4

2006 REVISED STANDARD PLAN RSP A77J4

4-21-08

DIST	COUNTY	ROUTE	POST MILES TOTAL PROJECT	SHEET NO.	TOTAL SHEETS
08	Riv	78	3.3	22	36

LICENSED LANDSCAPE ARCHITECT

March 7, 2008
PLANS APPROVAL DATE

LICENSED LANDSCAPE ARCHITECT
Gregory A. Balzer 2576
10-31-2009 REGISTRATION EXPIRATION DATE
02-28-2009 BUSINESS EXPIRATION DATE
02-21-2008 DATE
STATE OF CALIFORNIA

The State of California or its officers or agents shall not be responsible for the accuracy or completeness of electronic copies of this plan sheet.

To accompany plans dated 3-23-06

EXISTING	PROPOSED	ITEM DESCRIPTION
		WATER METER (WM)
		BACKFLOW PREVENTER ASSEMBLY (BPA)
		BACKFLOW PREVENTER ASSEMBLY IN ENCLOSURE (BPAE)
		BACKFLOW PREVENTER ENCLOSURE (BPE)
		BOOSTER PUMP (BP)
		TRUCK LOADING STANDPIPE (TLS)
FS	FS	FLOW SENSOR (FS)
		MASTER IRRIGATION CONTROLLER (MIC)
		AUXILIARY IRRIGATION CONTROLLER (AIC)
		IRRIGATION CONTROLLER (IC)/ IRRIGATION CONTROLLER (IC) (BATTERY)
		IRRIGATION CONTROLLER(S) IN CONTROLLER ENCLOSURE CABINET (ICC)
		CONTROL AND NEUTRAL CONDUCTORS (CNC)
SCC	SCC	SPRINKLER CONTROL CONDUIT (SCC)
		CONDUIT (COND)
		IRRIGATION SLEEVE
dip	DIP	DUCTILE IRON PIPE (SUPPLY LINE) (MAIN) (DIP)
		GALVANIZED STEEL PIPE (SUPPLY LINE) (MAIN) (GSP)
		GALVANIZED STEEL PIPE (SUPPLY LINE) (LATERAL) (GSP)
		PLASTIC PIPE (PR 200) (SUPPLY LINE) (MAIN)
		PLASTIC PIPE (PR 200) (SUPPLY LINE) (LATERAL)
		PLASTIC PIPE (IRRIGATION LINE)
		REMOTE CONTROL VALVE (RCV) REMOTE CONTROL VALVE (MASTER) (RCVM)
		MANUAL CONTROL VALVE (MCV)
		VALVE ASSEMBLY UNIT (VAU)
		WYE STRAINER (WS)
		FILTER ASSEMBLY UNIT (FAU)
		GATE VALVE (GV)
		BALL VALVE (BV)

EXISTING	PROPOSED	ITEM DESCRIPTION
		QUICK COUPLER VALVE (QCV)
		CAM COUPLING ASSEMBLY (CCA)
		PRESSURE REDUCING VALVE (PRV)
		PRESSURE RELIEF VALVE (PRLV)
		FLOW CONTROL VALVE (FCV)
		COMBINATION AIR RELEASE VALVE (CARV)
		CHECK VALVE (CV)
		FLUSH VALVE (FV)
		NOZZLE LINE W/TURNING UNION
		IRRIGATION SYSTEM
		IRRIGATION SYSTEM TO BE REMOVED
		CHAIN LINK GATE
		QUICK COUPLING VALVE W/SPRINKLER PROTECTOR
3	3	SPRINKLER W/SPRINKLER PROTECTOR
		CONNECT TO EXISTING SYSTEM
		CAP
		CAP EXISTING

VALVE CODE

- RCV SIZE
- IRRIGATION CONTROLLER
- CONTROLLER STATION
- VALVE IN PARALLEL (IF APPLICABLE)
- GPM
- QUANTITY OF SPRINKLERS (WHEN SHOWN)

* 2½"-A-2b-40 -60

- MCV SIZE
- VALVE NUMBER
- GPM
- QUANTITY OF TYPE SPRINKLERS (WHEN SHOWN)

* 2"-3-30 -50

* VALVE CODES FOR EXISTING VALVES ARE SHOWN IN A DASHED ENCLOSURE.

STATE OF CALIFORNIA
DEPARTMENT OF TRANSPORTATION

PLANTING AND IRRIGATION SYMBOLS

NO SCALE

RSP H2 DATED MARCH 7, 2008 SUPERSEDES STANDARD PLAN H2
DATED MAY 1, 2006 - PAGE 202 OF THE STANDARD PLANS BOOK DATED MAY 2006.

REVISED STANDARD PLAN RSP H2

2006 REVISED STANDARD PLAN RSP H2

2-20-08

DIST	COUNTY	ROUTE	POST MILES TOTAL PROJECT	SHEET NO.	TOTAL SHEETS
08	Riv	78	3.3	23	36

Randell D. Hiatt
REGISTERED CIVIL ENGINEER

June 6, 2008
PLANS APPROVAL DATE

REGISTERED PROFESSIONAL ENGINEER
Randell D. Hiatt
No. C50200
Exp. 6-30-09
CIVIL
STATE OF CALIFORNIA

The State of California or its officers or agents shall not be responsible for the accuracy or completeness of electronic copies of this plan sheet.

To accompany plans dated 3-23-06

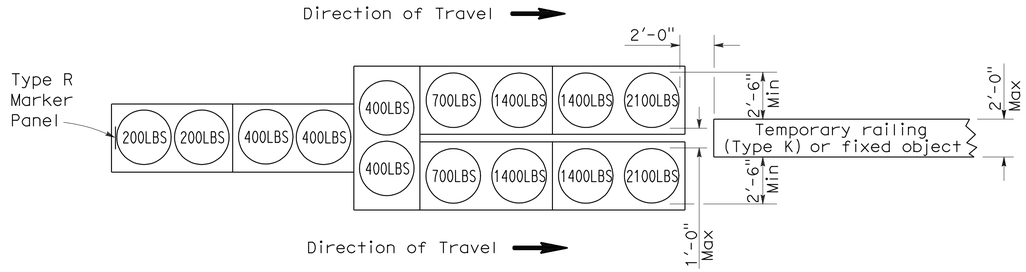

ARRAY 'TU14'

Approach speed 45 mph or more

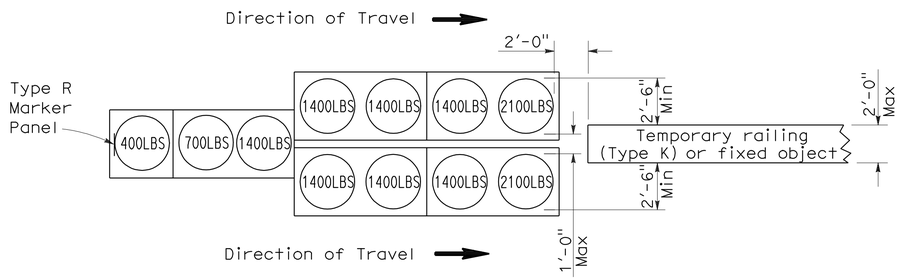

ARRAY 'TU11'

Approach speed less than 45 mph

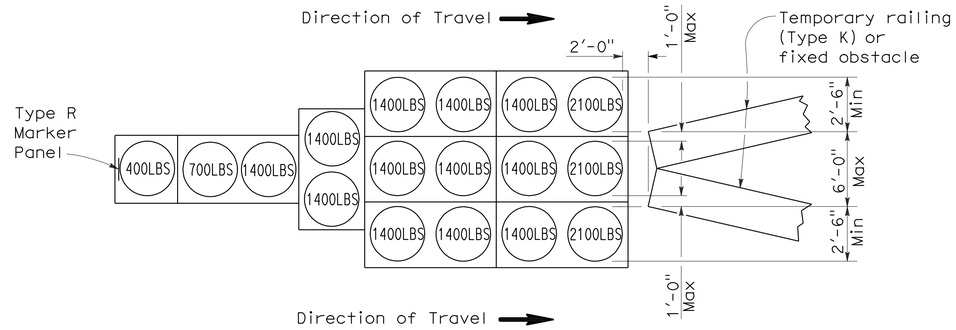

ARRAY 'TU17'

Approach speed less than 45 mph

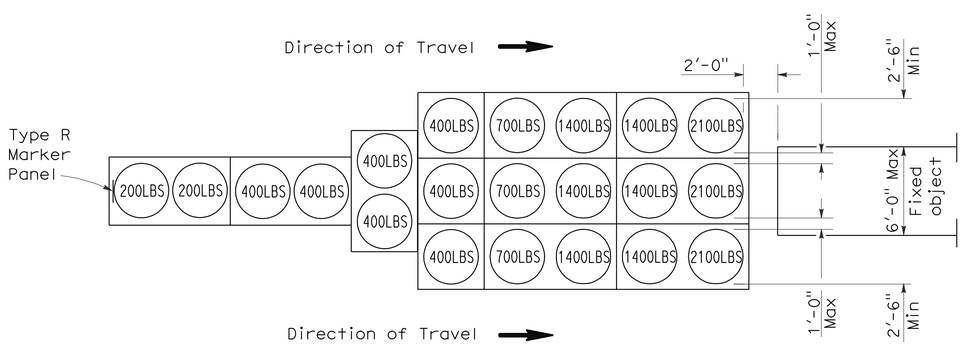

ARRAY 'TU21'

Approach speed 45 mph or more

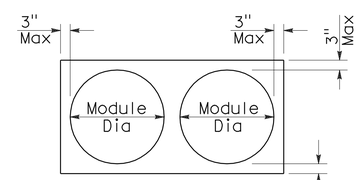

PLAN

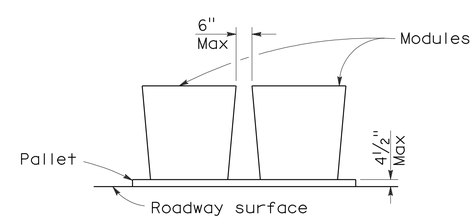

ELEVATION

CRASH CUSHION PALLET DETAIL

See Note 7

NOTES:

1. (XXX) Indicates sand filled module location and weight of sand in pounds for each module. Module spacing is based on the greater diameter of the module.
2. All sand weights are nominal.
3. Temporary crash cushion arrays shall not encroach on the traveled way.
4. Place the top of Type R marker panel 1" below the module lid.
5. Refer to Standard Plan A73B for marker details.
6. Approach speeds indicated conform to NCHRP 350 Report criteria.
7. Use of pallets is optional.

STATE OF CALIFORNIA
DEPARTMENT OF TRANSPORTATION

TEMPORARY CRASH CUSHION, SAND FILLED (UNIDIRECTIONAL)

NO SCALE

RSP T1A DATED JUNE 6, 2008 SUPERSEDES STANDARD PLAN T1A
DATED MAY 1, 2006 - PAGE 211 OF THE STANDARD PLANS BOOK DATED MAY 2006.

REVISED STANDARD PLAN RSP T1A

2006 REVISED STANDARD PLAN RSP T1A

5-15-08

DIST	COUNTY	ROUTE	POST MILES TOTAL PROJECT	SHEET NO.	TOTAL SHEETS
08	Riv	78	3.3	24	36

Randell D. Hiatt
REGISTERED CIVIL ENGINEER

June 6, 2008
PLANS APPROVAL DATE

REGISTERED PROFESSIONAL ENGINEER
Randell D. Hiatt
No. C50200
Exp. 6-30-09
CIVIL
STATE OF CALIFORNIA

The State of California or its officers or agents shall not be responsible for the accuracy or completeness of electronic copies of this plan sheet.

To accompany plans dated 3-23-06

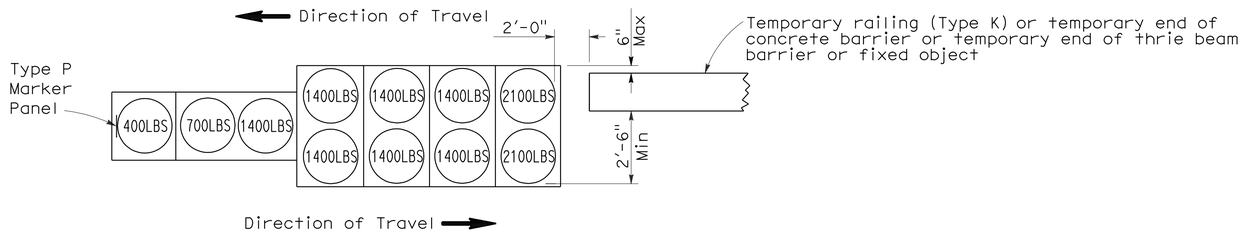

ARRAY 'TB11'

Approach speed less than 45 mph

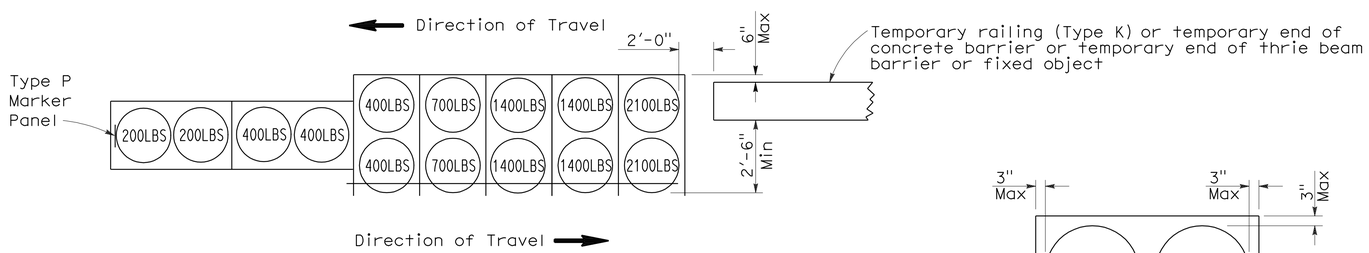

ARRAY 'TB14'

Approach speed 45 mph or more

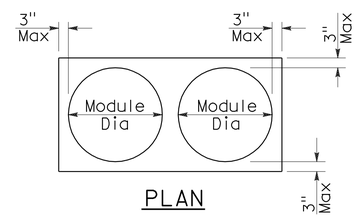

PLAN

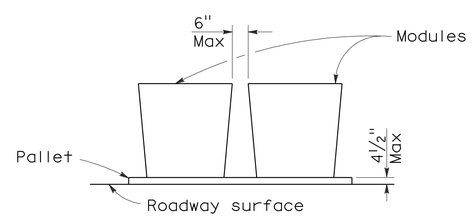

ELEVATION

CRASH CUSHION PALLET DETAIL

See Note 7

NOTES:

1. (XXX) Indicates sand filled module location and weight of sand in pounds for each module. Module spacing is based on the greater diameter of the module.
2. All sand weights are nominal.
3. Temporary crash cushion arrays shall not encroach on the traveled way.
4. Place the Type P marker panel so that the bottom of the panel rests upon the pallet.
5. Refer to Standard Plan A73B for marker details.
6. Approach speeds indicated conform to NCHRP 350 Report criteria.
7. Use of pallets is optional.

STATE OF CALIFORNIA
DEPARTMENT OF TRANSPORTATION

TEMPORARY CRASH CUSHION, SAND FILLED (BIDIRECTIONAL)

NO SCALE

RSP T1B DATED JUNE 6, 2008 SUPERSEDES STANDARD PLAN T1B
DATED MAY 1, 2006 - PAGE 212 OF THE STANDARD PLANS BOOK DATED MAY 2006.

REVISED STANDARD PLAN RSP T1B

2006 REVISED STANDARD PLAN RSP T1B

5-15-08

DIST	COUNTY	ROUTE	POST MILES TOTAL PROJECT	SHEET NO.	TOTAL SHEETS
08	Riv	78	3.3	25	36

Randell D. Hiatt
REGISTERED CIVIL ENGINEER

June 6, 2008
PLANS APPROVAL DATE

REGISTERED PROFESSIONAL ENGINEER
Randell D. Hiatt
No. C50200
Exp. 6-30-09
CIVIL
STATE OF CALIFORNIA

The State of California or its officers or agents shall not be responsible for the accuracy or completeness of electronic copies of this plan sheet.

To accompany plans dated 3-23-06

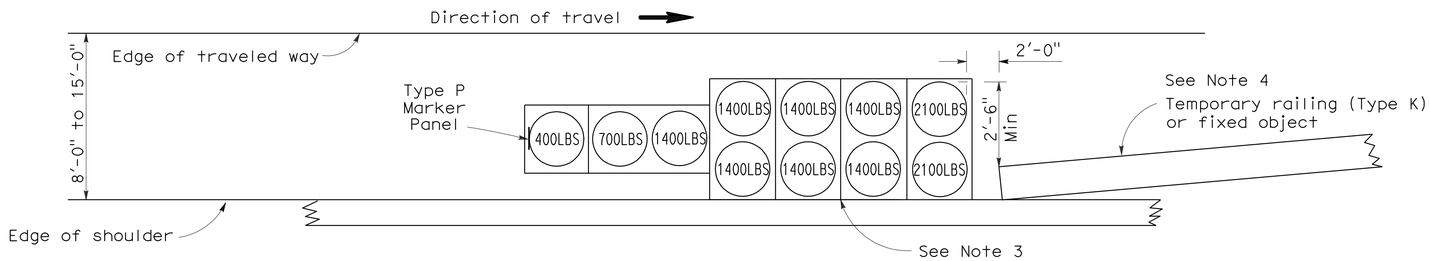

ARRAY 'TS11'

Approach speed less than 45 mph
See Note 9

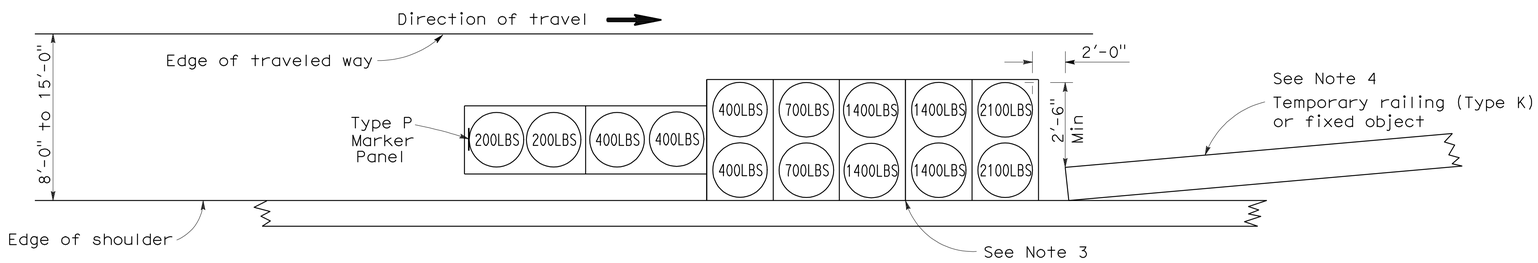

ARRAY 'TS14'

Approach speed 45 mph or more
See Note 9

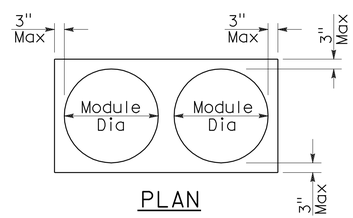

PLAN

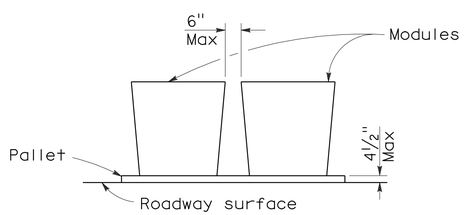

ELEVATION

CRASH CUSHION PALLET DETAIL

See Note 11

NOTES:

1. (XXX) Indicates sand filled module location and weight of sand in pounds for each module. Module spacing is based on the greater diameter of the module.
2. All sand weights are nominal.
3. The temporary crash cushion arrays shown on this plan shall be used only in locations where there will be traffic on one side of the temporary crash cushion array.
4. If the fixed object or approach end of the temporary railing is less than 15'-0" from the edge of traveled way, a temporary crash cushion is required in a construction or work zone.
5. Temporary crash cushion arrays shall not encroach on the traveled way.
6. Arrays for median shoulders shall conform to details shown on this plan for outside shoulders.
7. Place the Type P marker panel so that the bottom of the panel rests upon the pallet and faces traffic.
8. Refer to Standard Plan A73B for marker details.
9. For shoulder widths less than 8'-0", appropriate approved crash cushion protection, other than sand filled modules, shall be provided at fixed objects and at approach ends of temporary railing. The specific type of crash cushion shall be as shown on the project plans or as specified in the Special Provisions, or if not shown on the project plans or specified in the Special Provisions, shall be as approved by the Engineer.
10. Approach speeds indicated conform to NCHRP 350 Report criteria.
11. Use of pallets is optional.

STATE OF CALIFORNIA
DEPARTMENT OF TRANSPORTATION

TEMPORARY CRASH CUSHION, SAND FILLED (SHOULDER INSTALLATIONS)

NO SCALE

RSP T2 DATED JUNE 6, 2008 SUPERSEDES STANDARD PLAN T2
DATED MAY 1, 2006 - PAGE 213 OF THE STANDARD PLANS BOOK DATED MAY 2006.

REVISED STANDARD PLAN RSP T2

2006 REVISED STANDARD PLAN RSP T2

5-15-08

DIST	COUNTY	ROUTE	POST MILES TOTAL PROJECT	SHEET NO.	TOTAL SHEETS
08	Riv	78	3.3	26	36

REGISTERED CIVIL ENGINEER

November 17, 2006
PLANS APPROVAL DATE

REGISTERED PROFESSIONAL ENGINEER
Greg W. Edwards
No. C36386
Exp. 6-30-08
CIVIL
STATE OF CALIFORNIA

The State of California or its officers or agents shall not be responsible for the accuracy or completeness of electronic copies of this plan sheet.

To accompany plans dated 3-23-06

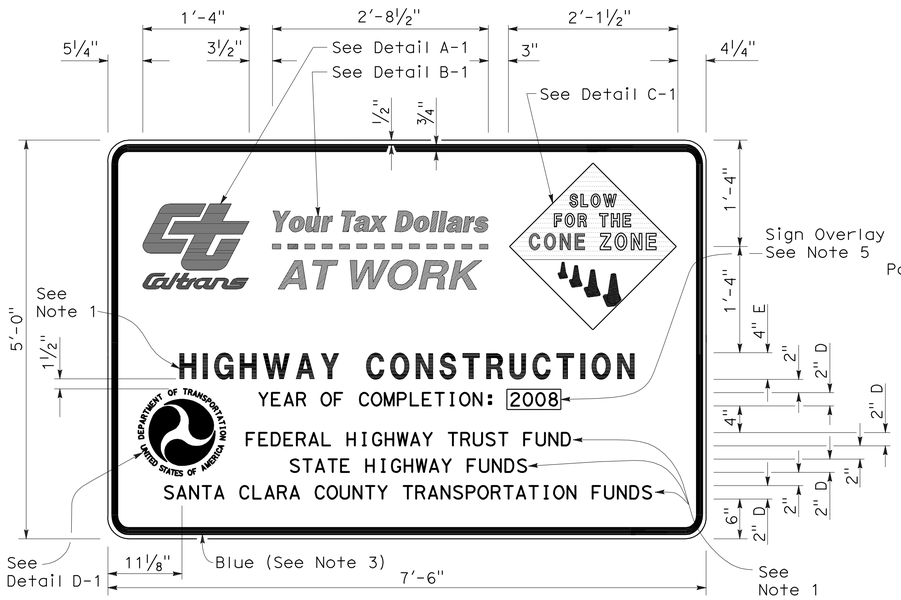

TYPE 1

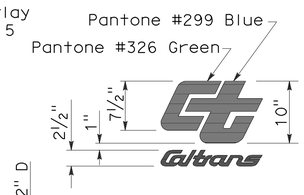

DETAIL A-1

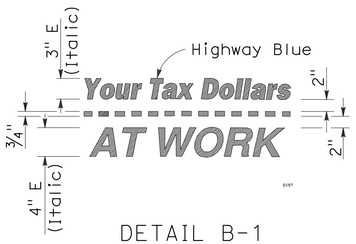

DETAIL B-1
(See Note 3)

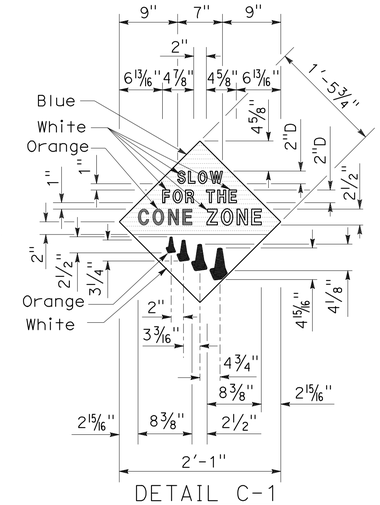

DETAIL C-1
(See Note 4)

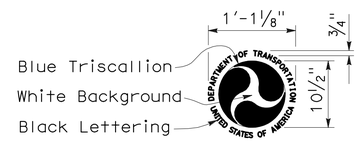

DETAIL D-1
(See Note 6)

NOTES:

1. The sign messages shown for type of project and fund types are examples only. See the Special Provisions for the applicable type of project and fund type messages to be used.
2. Except as otherwise shown, the legend of sign shall be black on a white background (non-reflective).
3. The border of the signs and details "B-1" and "B-2" shall be blue (non-reflective).
4. The diamond in details "C-1" and "C-2" shall be blue for the background of message, " SLOW FOR THE CONE ZONE", and white background for the orange cones. The color and type of font for the "SLOW FOR THE CONE ZONE" message shall be: "SLOW" white D; "FOR THE" white D; "CONE" orange Arial font; "ZONE" white Arial font.
5. Year of completion of project construction shown on the overlay is an example only. See the Special Provisions.
6. Use when the Project involves Federal Highway Trust Fund.

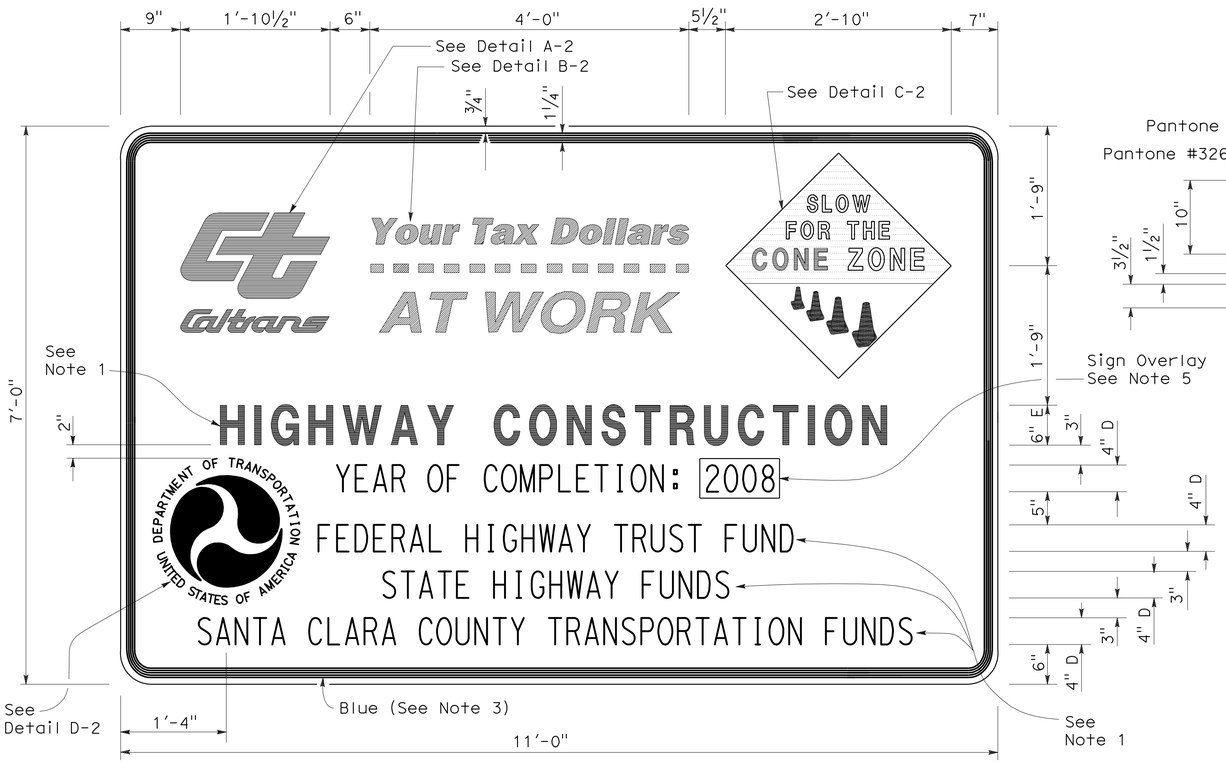

TYPE 2

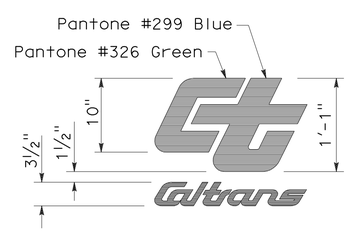

DETAIL A-2

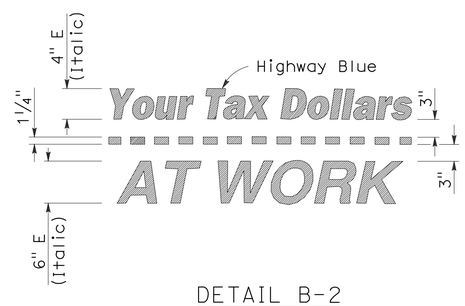

DETAIL B-2
(See Note 3)

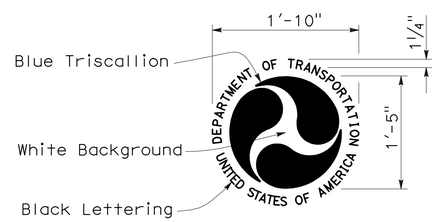

DETAIL D-2
(See Note 6)

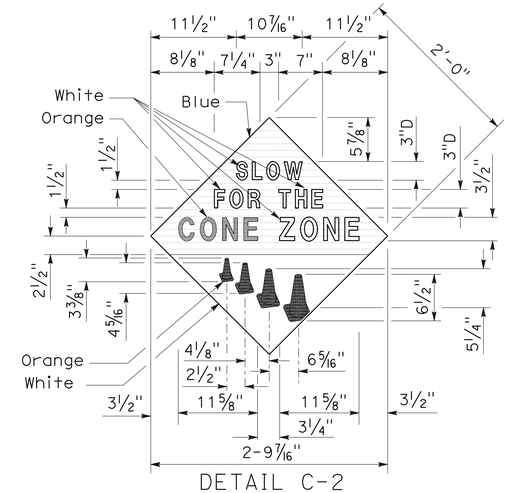

DETAIL C-2
(See Note 4)

STATE OF CALIFORNIA
DEPARTMENT OF TRANSPORTATION

CONSTRUCTION PROJECT FUNDING IDENTIFICATION SIGNS

NO SCALE

RSP T7 DATED NOVEMBER 17, 2006 SUPERSEDES STANDARD PLAN T7
DATED MAY 1, 2006 - PAGE 217 OF THE STANDARD PLANS BOOK DATED MAY 2006.

REVISED STANDARD PLAN RSP T7

2006 REVISED STANDARD PLAN RSP T7

9-7-06

DIST	COUNTY	ROUTE	POST MILES TOTAL PROJECT	SHEET NO.	TOTAL SHEETS
08	Riv	78	3.3	27	36

REGISTERED CIVIL ENGINEER

October 5, 2007
PLANS APPROVAL DATE

REGISTERED PROFESSIONAL ENGINEER Efthymios Delis No. C51434 Exp. 6-30-08 CIVIL STATE OF CALIFORNIA

The State of California or its officers or agents shall not be responsible for the accuracy or completeness of electronic copies of this plan sheet.

To accompany plans dated 3-23-06

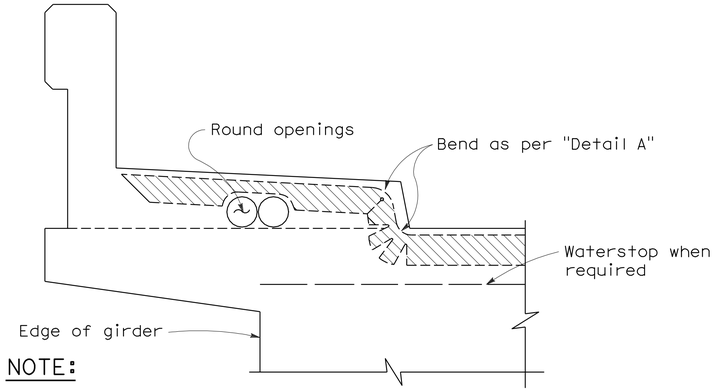

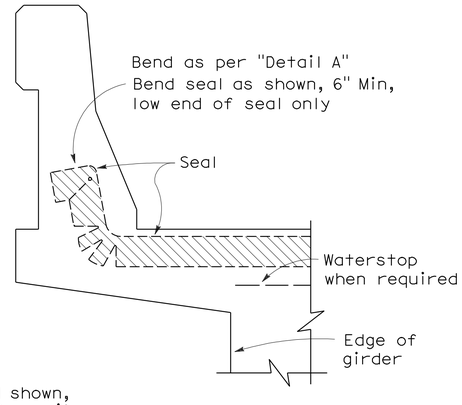

NOTE:

Type "B" seal shown. Type "A" seals to comform to the general path of seal shown, cuts for bending not required. Bend Type "A" seals 3" up into curb or barrier rail on only the low end of the seal.

CONCRETE BARRIER AND SIDEWALK

CONCRETE BARRIER

JOINT SEALS DETAILS

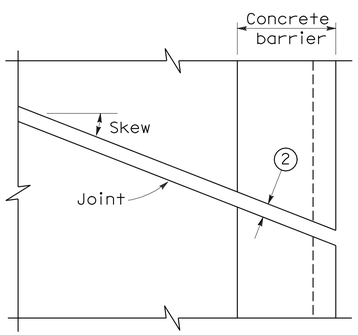

PLAN OF JOINT (SKEW ≤ 20°)

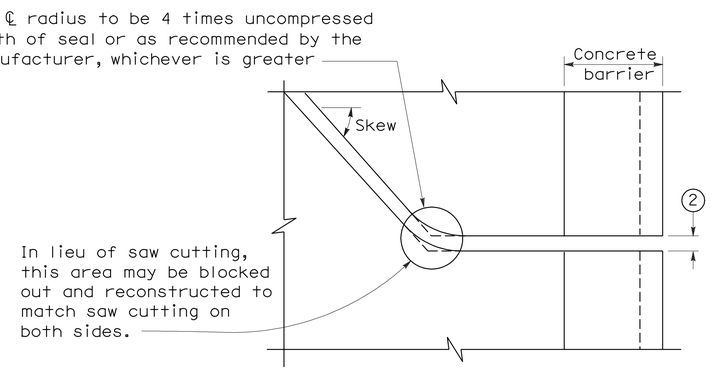

PLAN OF JOINT (SKEW > 20°)

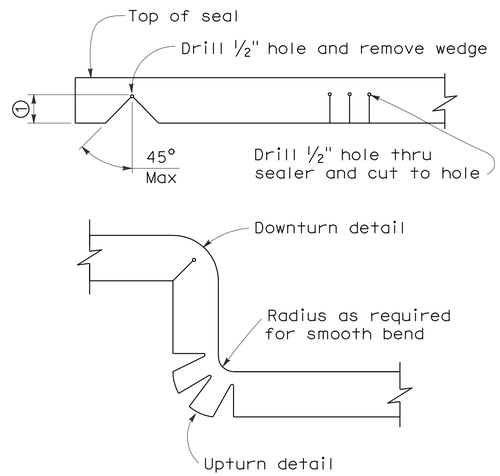

DETAIL A

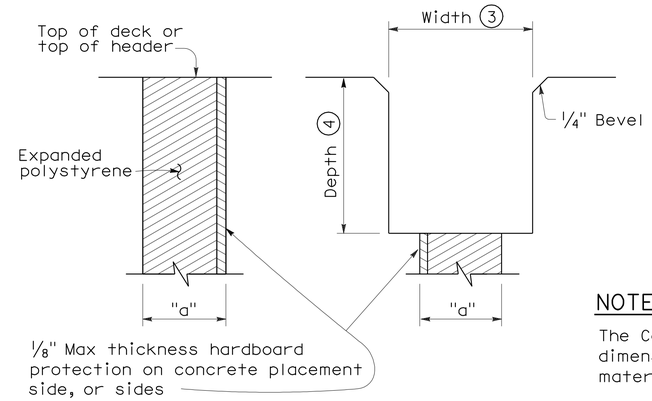

FORMING DETAIL SAWCUT DETAIL

NOTE:

The Contractor shall verify all controlling field dimensions before ordering or fabricatiing any material.

NOTES:

1. Make smooth cuts from the bottom of seal to 1½" clear of top leaving at least one complete cell between the top of the cut and top of the seal. When necessary cut back of seal to clear conduit and round openings.
2. Opening in barrier to match width of sawn deck joint.
3. Sawcut groove widths shall be as ordered by the Engineer.
4. Depth of sawcut: Type A - Depth to be 2" minimum.
   Type B - Depth to be equal to or greater than the depth of seal measured along the contact surface, when compressed to minimum width position (W_2) plus dimensions shown.
5. MR (movement rating) as shown on other plan sheets.
6. Other depths must be approved by the Engineer.

DIMENSIONS "a" OF JOINT REQUIRED

Movement Rating (MR) 5	Bridge Type	"a" Dimension Deck Concrete Placed		
		Winter	Fall-Spring	Summer
2"	All except CIP/PS	1½"	1¼"	¾"
	CIP/PS	1¼"	1"	½"
1½"	All except CIP/PS	1¼"	1"	½"
	CIP/PS	1"	¾"	½"
1"	All except CIP/PS	1"	¾"	½"
	CIP/PS	¾"	½"	½"
½"	All except CIP/PS	¾"	¾"	½"
	CIP/PS	½"	½"	½"

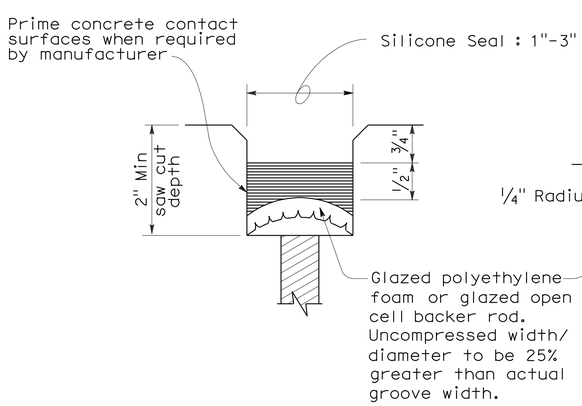

TYPE A SEAL

Movement rating : Silicone = 1" Max

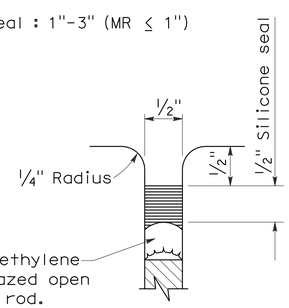

TYPE AL SEAL

Longitudinal joints only

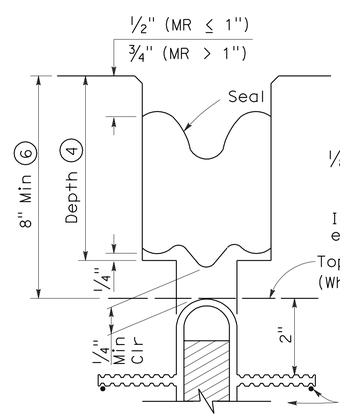

TYPE B JOINT SEAL IN MINIMUM WIDTH POSITION (W_2)

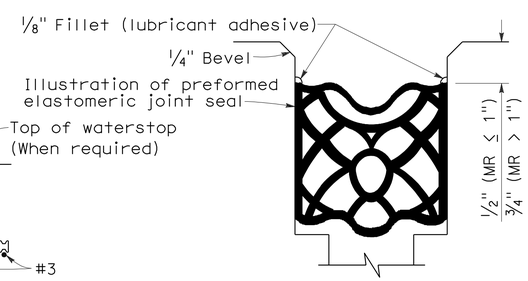

TYPE B SEAL

Movement Rating ≤ 2"

STATE OF CALIFORNIA
DEPARTMENT OF TRANSPORTATION

JOINT SEALS (MAXIMUM MOVEMENT RATING = 2")

NO SCALE

RSP B6-21 DATED OCTOBER 5, 2007 SUPERSEDES STANDARD PLAN B6-21 DATED MAY 1, 2006 - PAGE 258 OF THE STANDARD PLANS BOOK DATED MAY 2006.

REVISED STANDARD PLAN RSP B6-21

2006 REVISED STANDARD PLAN RSP B6-21

5-8-07

DIST	COUNTY	ROUTE	POST MILES TOTAL PROJECT	SHEET No	TOTAL SHEETS
08	Riv	78	3.3	28	36

Tierney L. Sanderson 11-14-08
REGISTERED CIVIL ENGINEER DATE

3-23-09
PLANS APPROVAL DATE

REGISTERED PROFESSIONAL ENGINEER Tierney L. Sanderson No. 48605 Exp. 6-30-2010 CIVIL STATE OF CALIFORNIA

The State of California or its officers or agents shall not be responsible for the accuracy or completeness of electronic copies of this plan sheet.

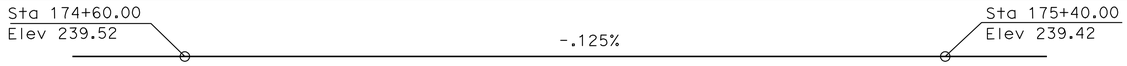

PROFILE GRADE

No Scale

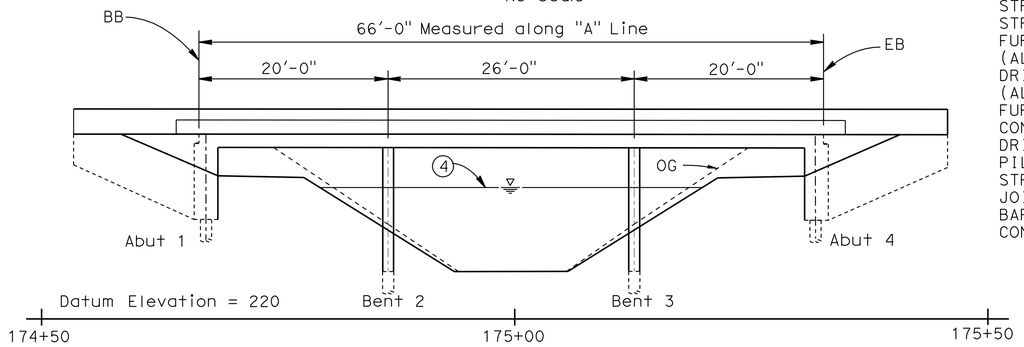

ELEVATION

1/8"=1'-0"

QUANTITIES

BRIDGE REMOVAL	LUMP	SUM
STRUCTURE EXCAVATION (BRIDGE)	166	CY
STRUCTURE BACKFILL (BRIDGE)	64	CY
FURNISH PILING (CLASS 90) (ALTERNATIVE V)	249	LF
DRIVE PILE (CLASS 90) (ALTERNATIVE V)	12	EA
FURNISH 16" CAST-IN-STEEL SHELL CONCRETE PILING	759	LF
DRIVE 16" CAST-IN-STEEL SHELL CONCRETE PILE	12	EA
STRUCTURAL CONCRETE, BRIDGE	227	CY
JOINT SEAL (MR 1/2")	92	LF
BAR REINFORCING STEEL (BRIDGE)	46,300	LB
CONCRETE BARRIER (TYPE 732)	181	LF

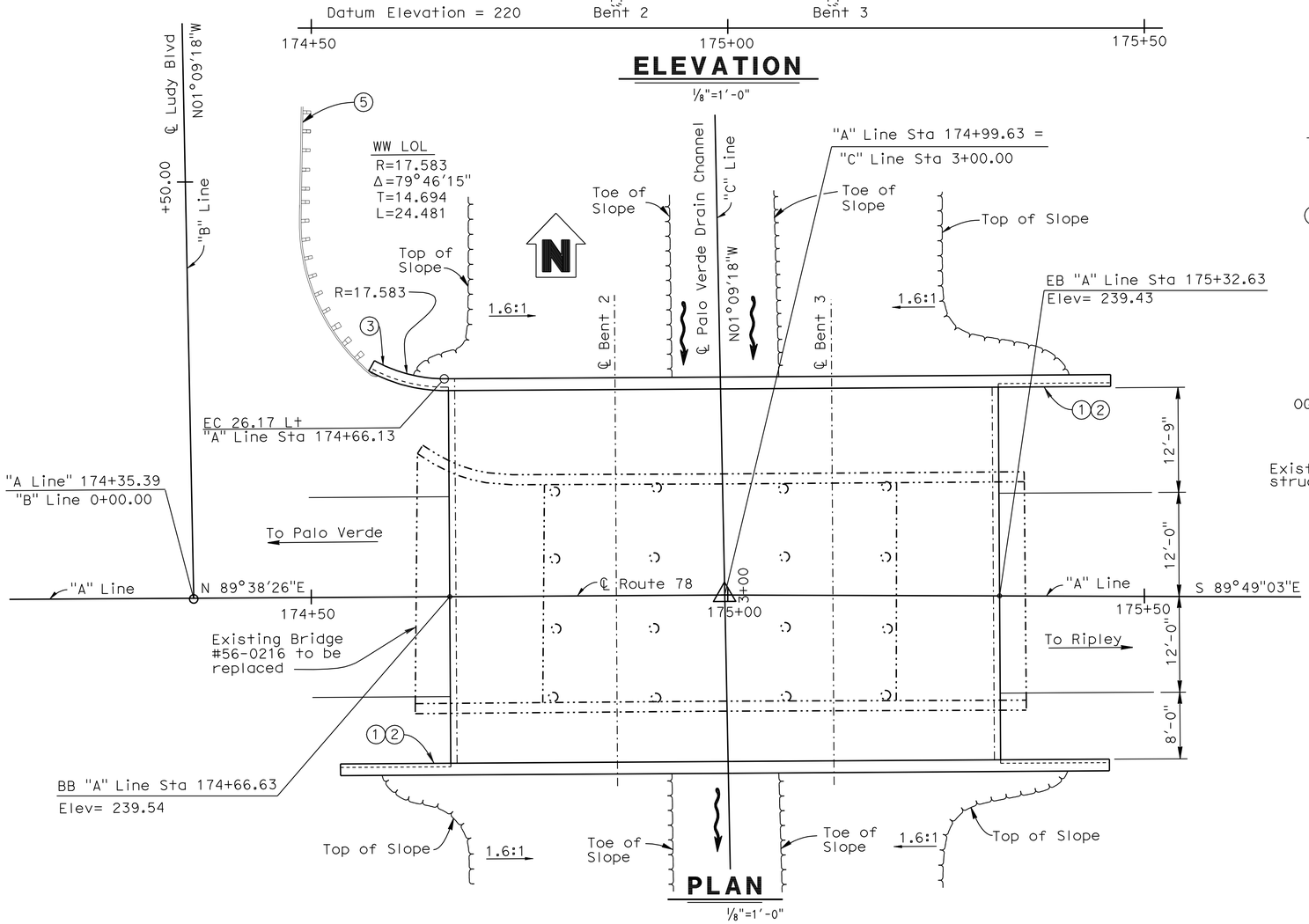

PLAN

1/8"=1'-0"

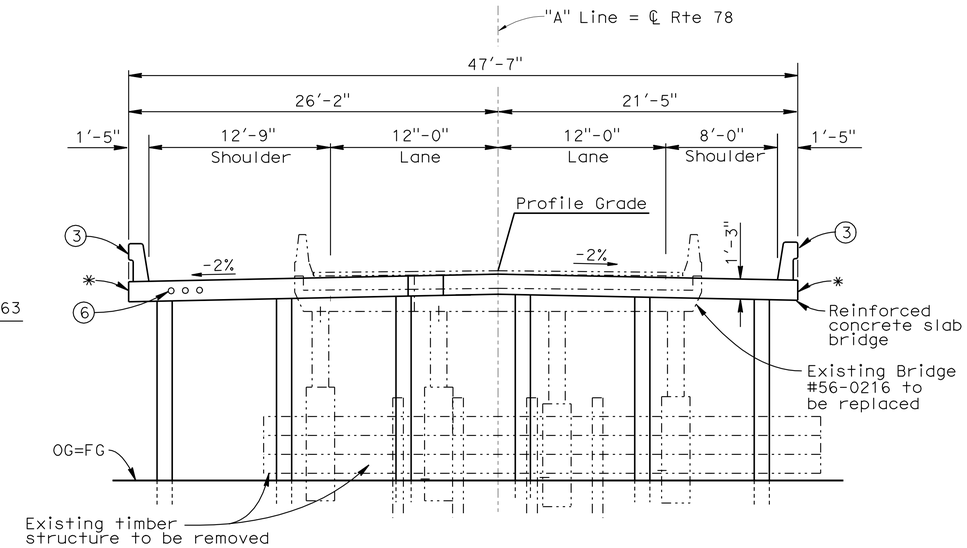

TYPICAL SECTION

3/16" =1'-0"

LEGEND

1. Paint "PALO VERDE DRAIN BRIDGE"
2. Paint "BR. NO. 56-0830"
3. Concrete Barrier TYPE 732
4. For "HYDROLOGIC SUMMARY", see "FOUNDATION PLAN" sheet.
5. MBGR, see "ROAD PLANS"
6. 2 - 5" Dia Opening (Verizon)
   1 - 5" Dia Opening (Future Utility)

——— Indicates New Construction

—··—·· Indicates Existing Structure

* Edge of deck bearing = N 89°38'26"E

For "General Notes", "Index to Plans", "Standard Plans", and "Pile Data", see "INDEX TO PLANS" Sheet.

x DANIEL T. ADAMS
DESIGN ENGINEER

	BY	CHECKED
DESIGN	T. Sanderson	L. Wu
DETAILS	D.Radley / Y. Tang	L. Wu
QUANTITIES	G. Hallstrom	T. Sanderson

LOAD & RESISTANCE FACTOR DESIGN — LIVE LOADING: HL93 W/"LOW-BOY"; PERMIT DESIGN VEHICLE

	BY	CHECKED
LAYOUT	T. Sanderson	T. Sanderson
SPECIFICATIONS	K. Ellingson	PLANS AND SPECS COMPARED K. Ellingson

STATE OF CALIFORNIA
DEPARTMENT OF TRANSPORTATION

DIVISION OF ENGINEERING SERVICES
STRUCTURE DESIGN
DESIGN BRANCH 10

BRIDGE NO. 56-0830
POST MILE 3.28

PALO VERDE DRAIN BRIDGE (REPLACE)
GENERAL PLAN

STRUCTURES DESIGN GENERAL PLAN SHEET (ENGLISH) (REV. 10/25/05)

ORIGINAL SCALE IN INCHES FOR REDUCED PLANS 0 1 2 3

CU 08
EA 422201

DISREGARD PRINTS BEARING EARLIER REVISION DATES

REVISION DATES: 7-11-08 7-24-08 8-21-08

SHEET 1 OF 9

FILE => 560830agp01.dgn

STRUCTURES DESIGN GENERAL PLAN SHEET (ENGLISH) (REV.07-24-06)

USERNAME => trmikest DATE PLOTTED => 04-JUN-2009 TIME PLOTTED => 06:15

DIST	COUNTY	ROUTE	POST MILES TOTAL PROJECT	SHEET No	TOTAL SHEETS
08	Riv	78	3.3	29	36

Tierney L. Sanderson 11-14-08
REGISTERED CIVIL ENGINEER DATE

3-23-09
PLANS APPROVAL DATE

REGISTERED PROFESSIONAL ENGINEER Tierney L. Sanderson No. 48605 Exp. 6-30-2010 CIVIL STATE OF CALIFORNIA

The State of California or its officers or agents shall not be responsible for the accuracy or completeness of electronic copies of this plan sheet.

INDEX TO PLANS

Sheet No.	Title
1.	GENERAL PLAN
2.	INDEX TO PLANS
3.	FOUNDATION PLAN
4.	ABUTMENT DETAILS
5.	TYPICAL SECTION & BENT DETAILS
6.	SLAB REINFORCEMENT
7.	SLAB REINFORCEMENT DETAILS
8.	SLAB BRIDGE PILE DETAILS
9.	LOG OF TEST BORINGS

STANDARD PLANS DATED MAY 2006

A10A	ACRONYMS AND ABBREVIATIONS (A-L)
A10B	ACRONYMS AND ABBREVIATIONS (M-Z)
A10C	SYMBOLS (SHEET 1 OF 2)
A10D	SYMBOLS (SHEET 2 OF 2)
A62C	LIMITS OF PAYMENT FOR EXCAVATION AND BACKFILL - BRIDGE
B0-1	BRIDGE DETAILS
B0-3	BRIDGE DETAILS
B2-5	PILE DETAILS CLASS 90 AND CLASS 140
RSP B6-21	JOINT SEALS (MAXIMUM MOVEMENT RATING = 2")
B11-55	CONCRETE BARRIER TYPE 732

STANDARD PLAN SHEET NO.

DETAIL NO.

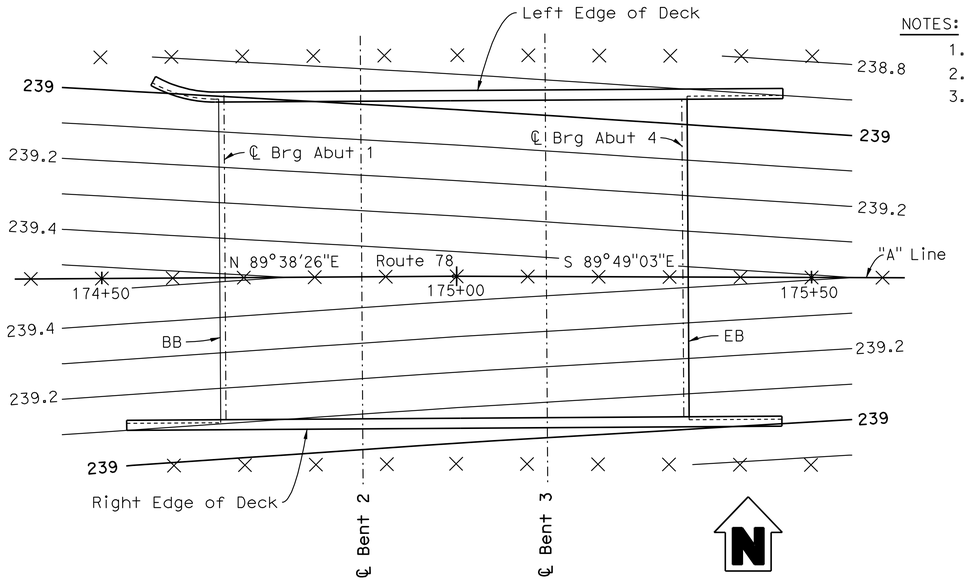

PLAN-DECK CONTOURS

3/32"=1'-0"

NOTES:

1. X - 10' intervals along station line.
2. Contour interval = 0.1'.
3. Contours do not include camber.

GENERAL NOTES
LOAD AND RESISTANCE FACTOR DESIGN

DESIGN: AASHTO LRFD SPECIFICATIONS, 3rd EDITION with 06 Interims and CALTRANS Amendments, V3.06.01

SEISMIC DESIGN: Caltrans Seismic Design Criteria (SDC) Version 1.4, July, 2006

DEAD LOAD: Includes 35 Psf for future wearing surface.

LIVE LOADING: HL93 W/"Low Boy" and permit design vehicle.

SEISMIC LOADING: CALTRANS SDC ARS Curve : Figure B.7 (Soil Profile Type D) Spectrum Peak Rock Acceleration = 0.2 g

REINFORCED CONCRETE: f_y = 60 ksi
f'_c = 3600 psi, unless otherwise noted
n = 8

Structural Concrete, Bridge.

CISS Piling

CLass 90 Pile, Alternative V (B2-5)

CONCRETE STRENGTH AND TYPE LIMITS

No Scale

PILE DATA TABLE

LOCATION	PILE TYPE	NOMINAL RESISTANCE (Kips) COMPRESSION	NOMINAL RESISTANCE (Kips) TENSION	DESIGN TIP ELEV (ft)	SPECIFIED TIP ELEV (ft)	NOMINAL DRIVING RESISTANCE (Kips)
Abut 1	Class 90,** Alternative V	80 kips	0 kips	210 (a)	210	80
Bent 2	CISS 16" DIA.*	220 kips	0 kips	175 (a-I)	175	320
Bent 3	CISS 16" DIA.*	220 kips	0 kips	175 (a-I)	175	320
Abut 4	Class 90,** Alternative V	80 kips	0 kips	210 (a)	210	80

Design Tip Elev. is controlled by the following demands:
(a) Compression (a-I) Compression (Strength Limit)
* For Details see "SLAB BRIDGE PILE DETAILS" sheet.
** See (B2-5)

	BY	CHECKED
DESIGN	T.Sanderson	L. Wu
DETAILS	D.Wooten	L. Wu
QUANTITIES	G. Hallstrom	T.Sanderson

STATE OF CALIFORNIA
DEPARTMENT OF TRANSPORTATION

DIVISION OF ENGINEERING SERVICES
STRUCTURE DESIGN
DESIGN BRANCH 10

BRIDGE NO. 56-0830
POST MILE 3.28

PALO VERDE DRAIN BRIDGE (REPLACE)
INDEX TO PLANS

STRUCTURES DESIGN DETAIL SHEET (ENGLISH) (REV. 10/25/05)

ORIGINAL SCALE IN INCHES FOR REDUCED PLANS 0 1 2 3

CU 08
EA 422201

DISREGARD PRINTS BEARING EARLIER REVISION DATES 7-23-08 10-07-08

REVISION DATES

SHEET 2 OF 9

FILE => 560830aitp02.dgn

USERNAME => trmikesl DATE PLOTTED => 04-JUN-2009 TIME PLOTTED => 06:15

DIST	COUNTY	ROUTE	POST MILES TOTAL PROJECT	SHEET No	TOTAL SHEETS
08	Riv	78	3.3	30	36

Tierney L. Sanderson 11-14-08
REGISTERED CIVIL ENGINEER DATE

3-23-09
PLANS APPROVAL DATE

REGISTERED PROFESSIONAL ENGINEER Tierney L. Sanderson No. 48605 Exp. 6-30-2010 CIVIL STATE OF CALIFORNIA

The State of California or its officers or agents shall not be responsible for the accuracy or completeness of electronic copies of this plan sheet.

HYDROLOGIC SUMMARY

DRAINAGE AREA: N/A SQUARE MILES

	DESIGN FLOOD	BASE FLOOD	OVERTOPPING FLOOD
FREQUENCY (YEARS)	N/A	N/A	N/A
DISCHARGE (CUBIC FT. PER SECOND)	706.3	N/A	N/A
WATER SURFACE ELEV. AT BRIDGE (FT)	236.9	N/A	N/A

FLOOD PLAIN DATA ARE BASED UPON INFORMATION AVAILABLE WHEN THE PLANS WERE PREPARED AND ARE SHOWN TO MEET FEDERAL REQUIREMENTS. THE ACCURACY OF SAID INFORMATION IS NOT WARRANTED BY THE STATE AND INTERESTED OR AFFECTED PARTIES SHOULD MAKE THEIR OWN INVESTIGATIONS.

Bridge Location

① - 17.209 Lt. ℄, RTE 78 Sta.174+62.83, Elev.=239.246 ±
② - 13.719 Lt. ℄, RTE 78 Sta.175+35.55, Elev.=239.349 ±
③ - 12.519 Rt. ℄, RTE 78 Sta.175+35.88, Elev.=239.317 ±
④ - 12.831 Rt. ℄, RTE 78 Sta.174+62.39, Elev.=239.195 ±

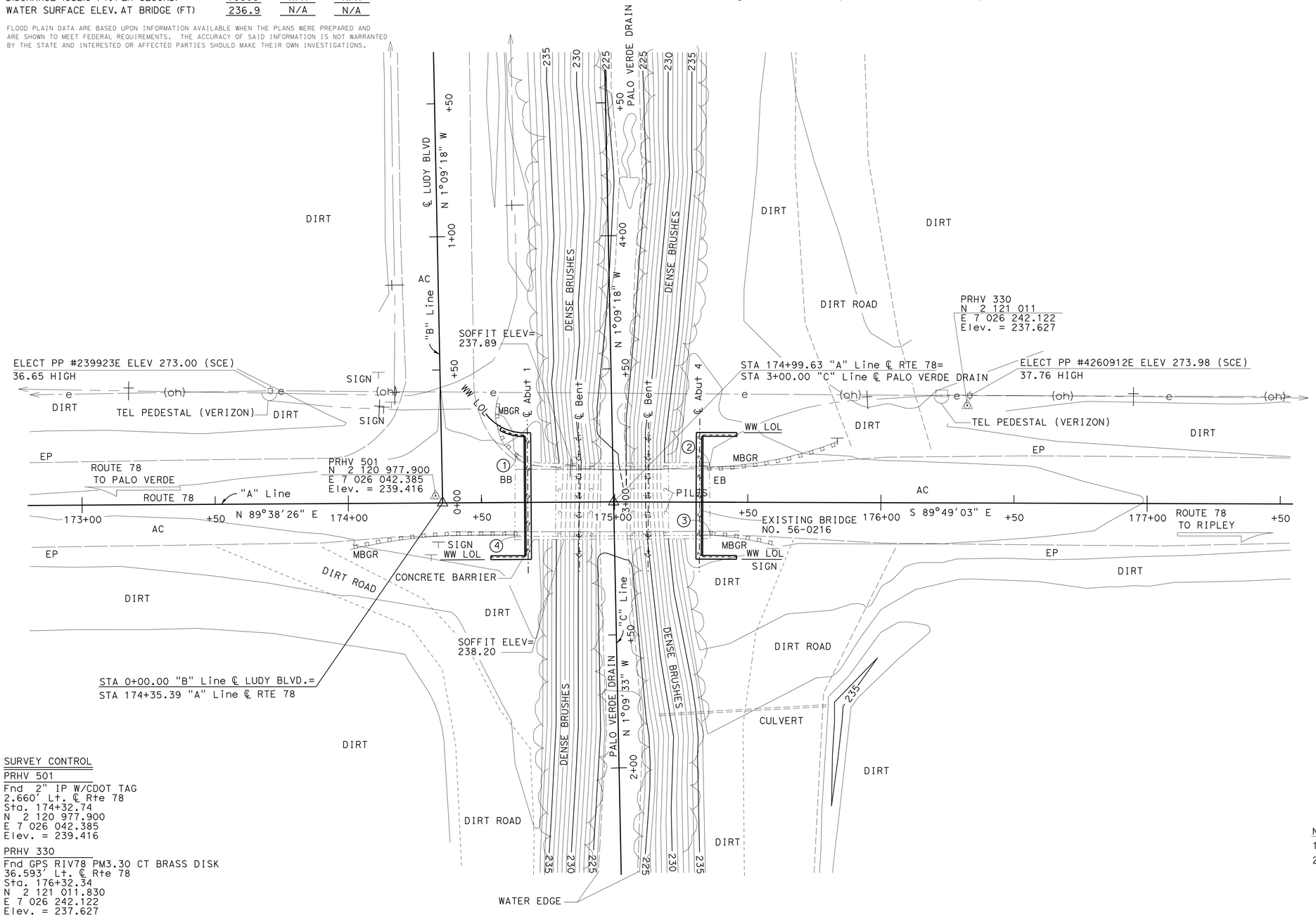

SURVEY CONTROL

PRHV 501
Fnd 2" IP W/CDOT TAG
2.660' Lt. ℄ Rte 78
Sta. 174+32.74
N 2 120 977.900
E 7 026 042.385
Elev. = 239.416

PRHV 330
Fnd GPS RIV78 PM3.30 CT BRASS DISK
36.593' Lt. ℄ Rte 78
Sta. 176+32.34
N 2 121 011.830
E 7 026 242.122
Elev. = 237.627

NOTES:

1. ALL ABUTMENTS AND BENTS AT N00°21'34"W
2. UNDERGROUND UTILITIES AS SHOWN ARE APPROXIMATE

PRELIMINARY INVESTIGATION SECTION

SCALE	VERT.DATUM NAVD 88	PHOTOGRAMMETRY AS OF:			
1"=20'	HORZ.DATUM NAD 83(1991.35)	SURVEYED	BY DISTRICT 8	CHECKED	BY
ALIGNMENT TIES	DIST. TRAV. SHEETS	DRAFTED	BY M.Sadaghiani 09/07	CHECKED	BY S. Alivio 09/07

DESIGN	BY T. Sanderson	CHECKED L. Wu	
DETAILS	BY G. Hallstrom	CHECKED L. Wu	
QUANTITIES	BY G. Hallstrom	CHECKED T. Sanderson	

STATE OF CALIFORNIA
DEPARTMENT OF TRANSPORTATION

DIVISION OF ENGINEERING SERVICES
STRUCTURE DESIGN
DESIGN BRANCH 10

BRIDGE NO. 56-0830
POST MILE 3.28

PALO VERDE DRAIN BRIDGE (REPLACE)
FOUNDATION PLAN

STRUCTURES FOUNDATION PLAN SHEET (ENGLISH) (REV. 10/25/05)

ORIGINAL SCALE IN INCHES FOR REDUCED PLANS 0 1 2 3

CU 08
EA 422201

DISREGARD PRINTS BEARING EARLIER REVISION DATES → 09/25/07 02/21/08 07/11/08

REVISION DATES

SHEET 3 OF 9

FILE => 560830efdp03.dgn

USERNAME => trmikesl DATE PLOTTED => 04-JUN-2009 TIME PLOTTED => 06:16

DIST	COUNTY	ROUTE	POST MILES TOTAL PROJECT	SHEET No	TOTAL SHEETS
08	Riv	78	3.3	31	36

Tierney L. Sanderson 11-14-08
REGISTERED CIVIL ENGINEER DATE

3-23-09
PLANS APPROVAL DATE

REGISTERED PROFESSIONAL ENGINEER Tierney L. Sanderson No. 48605 Exp. 6-30-2010 CIVIL STATE OF CALIFORNIA

The State of California or its officers or agents shall not be responsible for the accuracy or completeness of electronic copies of this plan sheet.

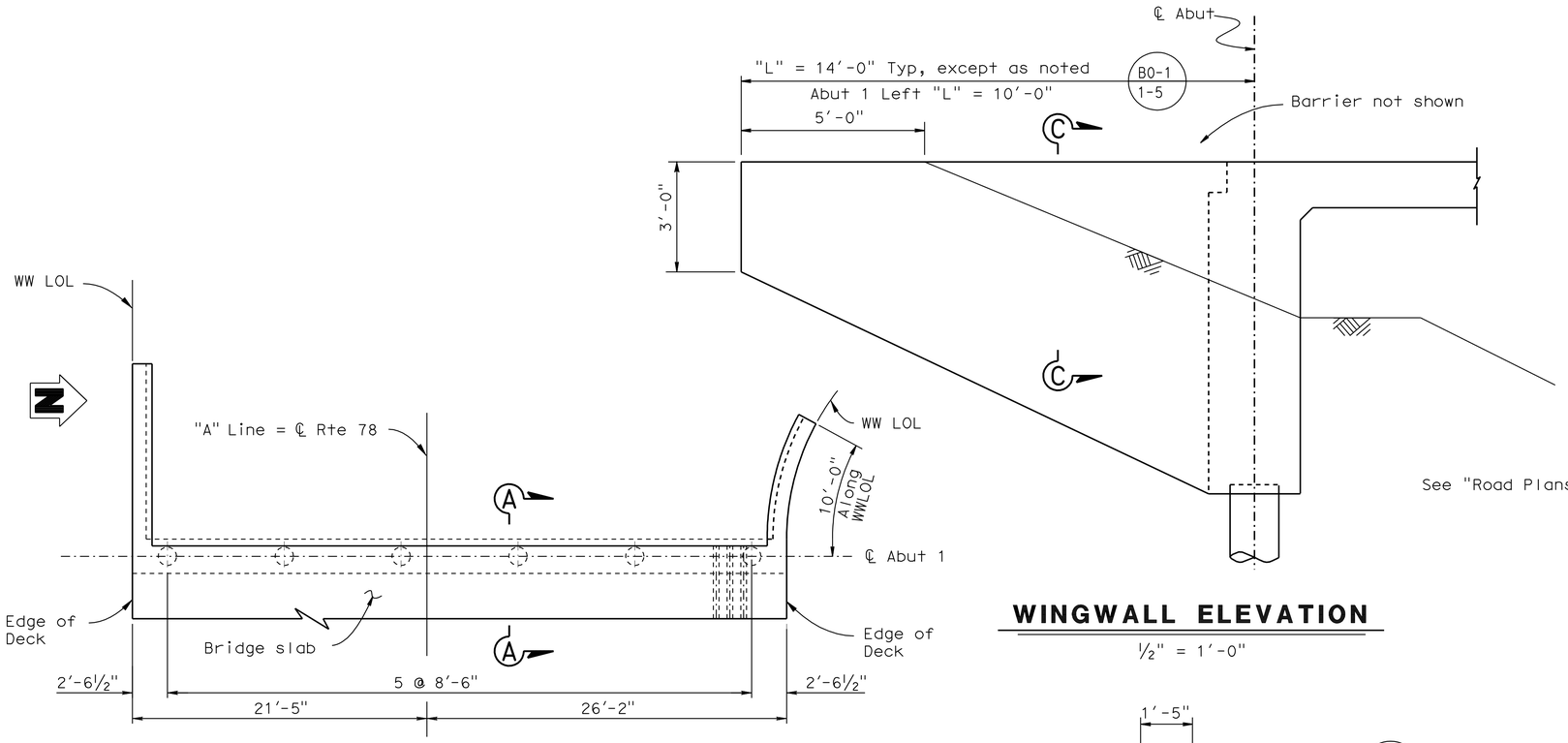

WINGWALL ELEVATION

½" = 1'-0"

PLAN

3/16"=1'-0"

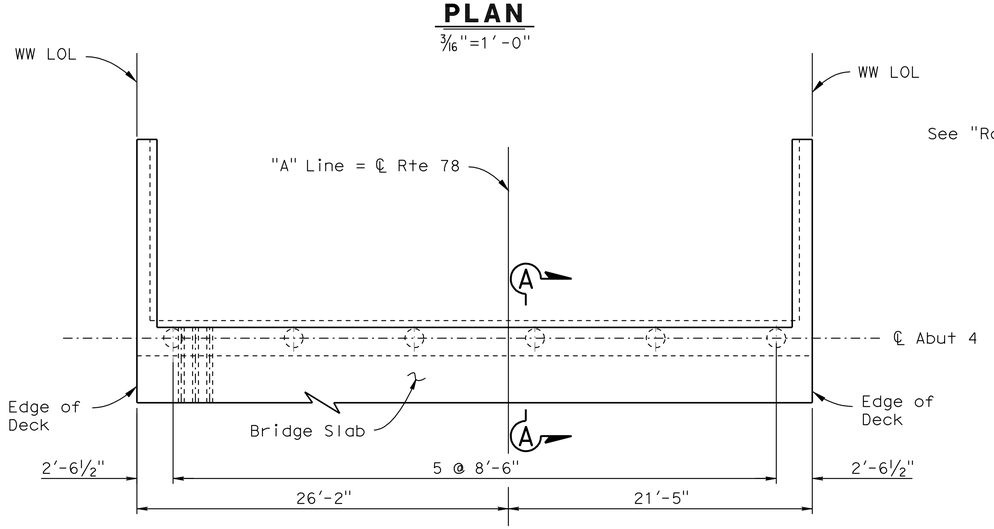

PLAN

3/16"=1'-0"

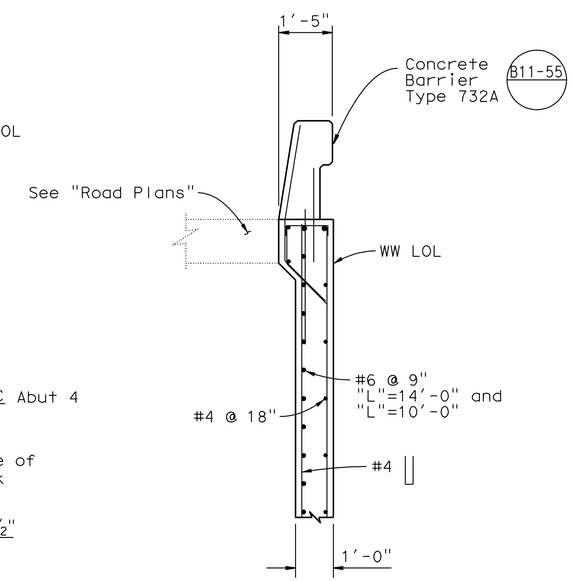

SECTION C-C

½" = 1'-0"

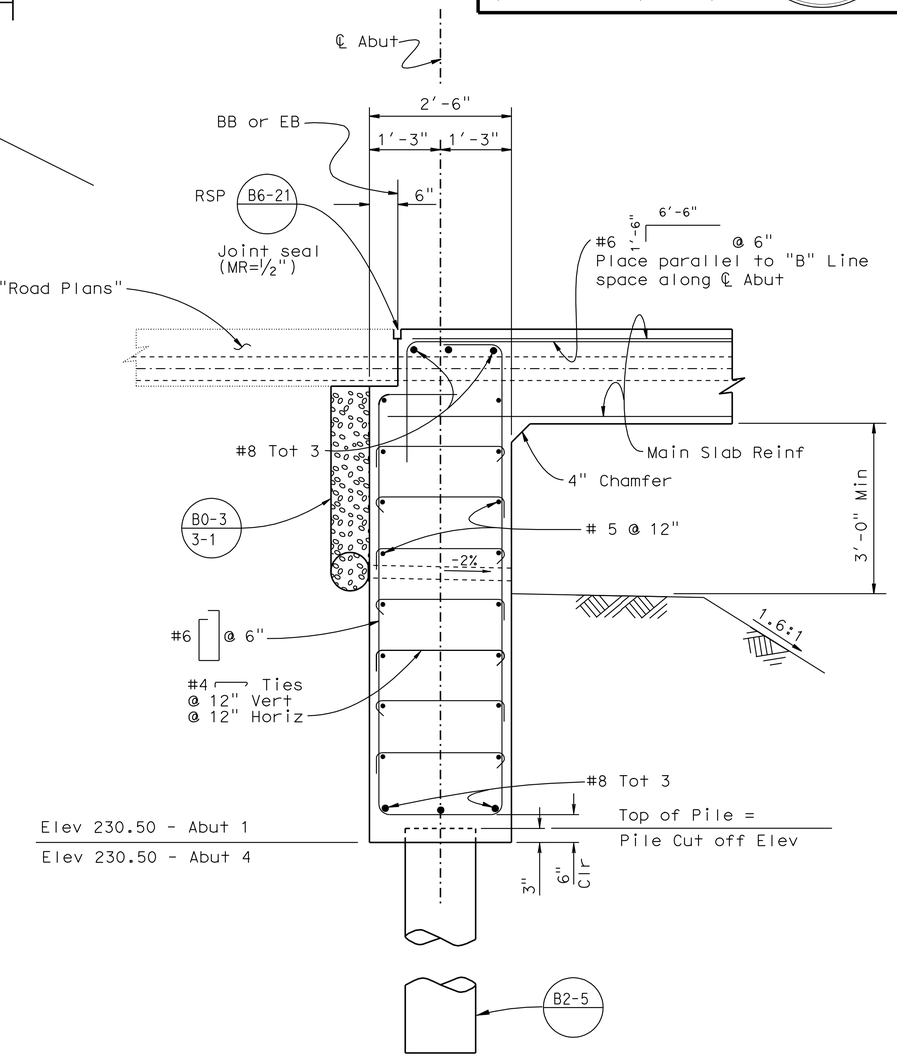

SECTION A-A

¾"=1'-0"

DESIGN	BY T.Sanderson	CHECKED L. Wu	
DETAILS	BY D.Wooten	CHECKED L. Wu	
QUANTITIES	BY G. Hallstrom	CHECKED T.Sanderson	

STATE OF CALIFORNIA
DEPARTMENT OF TRANSPORTATION

DIVISION OF ENGINEERING SERVICES
STRUCTURE DESIGN
DESIGN BRANCH 10

BRIDGE NO. 56-0830
POST MILE 3.28

PALO VERDE DRAIN BRIDGE (REPLACE)
ABUTMENT DETAILS

STRUCTURES DESIGN DETAIL SHEET (ENGLISH) (REV. 10/25/05)

ORIGINAL SCALE IN INCHES FOR REDUCED PLANS 0 1 2 3

CU 08
EA 422201

DISREGARD PRINTS BEARING EARLIER REVISION DATES

REVISION DATES: 7-08-08 7-28-08 7-24-08 10-10-08

SHEET 4 OF 9

FILE => 560830jfadt04.dgn

USERNAME => trmikesl DATE PLOTTED => 04-JUN-2009 TIME PLOTTED => 06:16

DIST	COUNTY	ROUTE	POST MILES TOTAL PROJECT	SHEET No	TOTAL SHEETS
08	Riv	78	3.3	32	36

Tierney L. Sanderson 11-14-08
REGISTERED CIVIL ENGINEER DATE

3-23-09
PLANS APPROVAL DATE

REGISTERED PROFESSIONAL ENGINEER Tierney L. Sanderson No. 48605 Exp. 6-30-2010 CIVIL STATE OF CALIFORNIA

The State of California or its officers or agents shall not be responsible for the accuracy or completeness of electronic copies of this plan sheet.

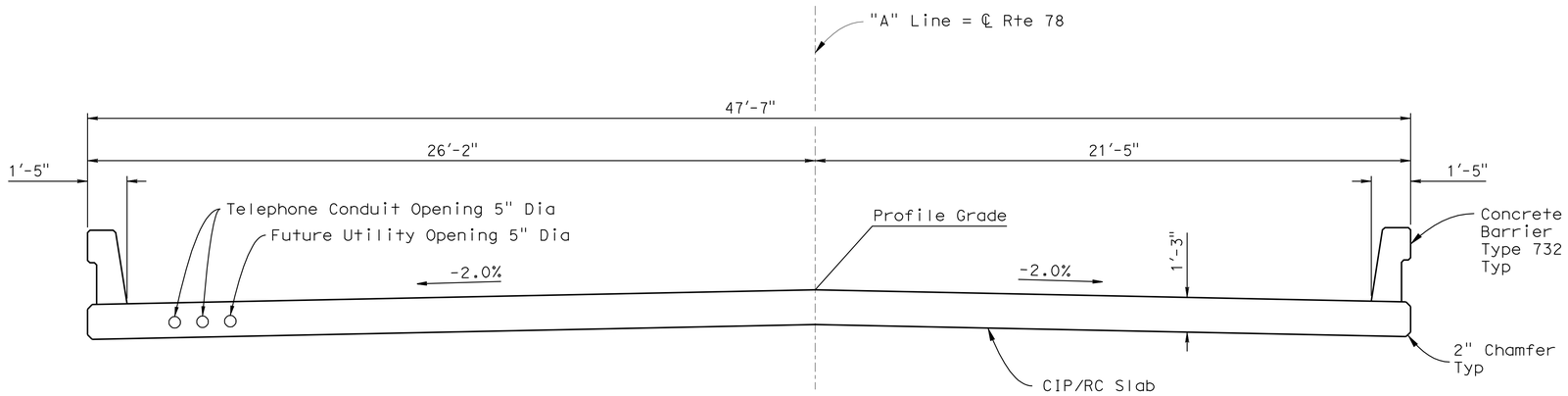

TYPICAL SECTION

3/8" = 1'-0"

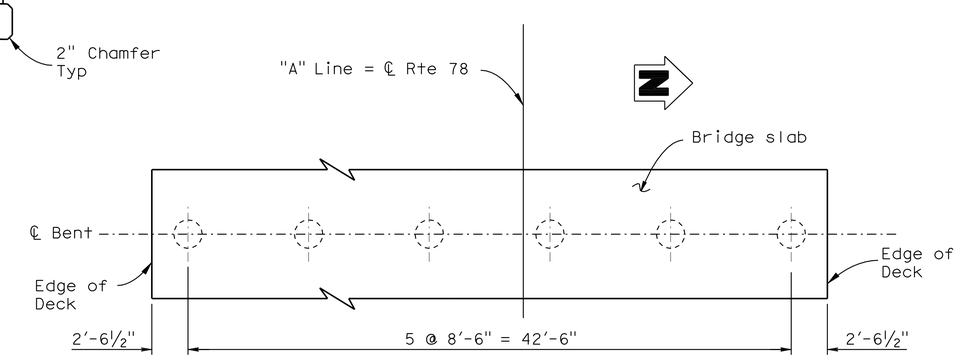

PLAN - BENT

3/16"=1'-0"

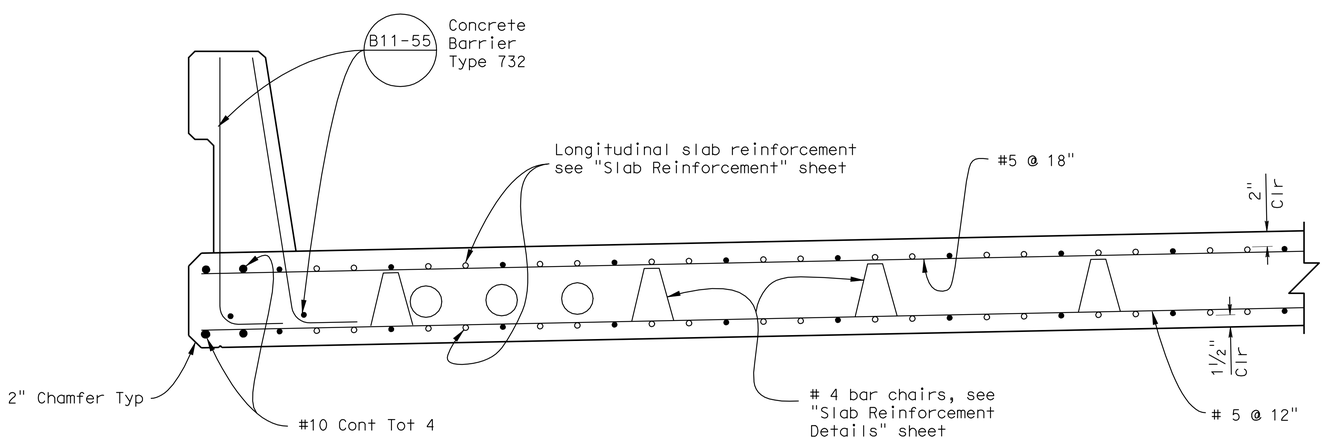

PART TYPICAL SECTION

1" = 1'-0"

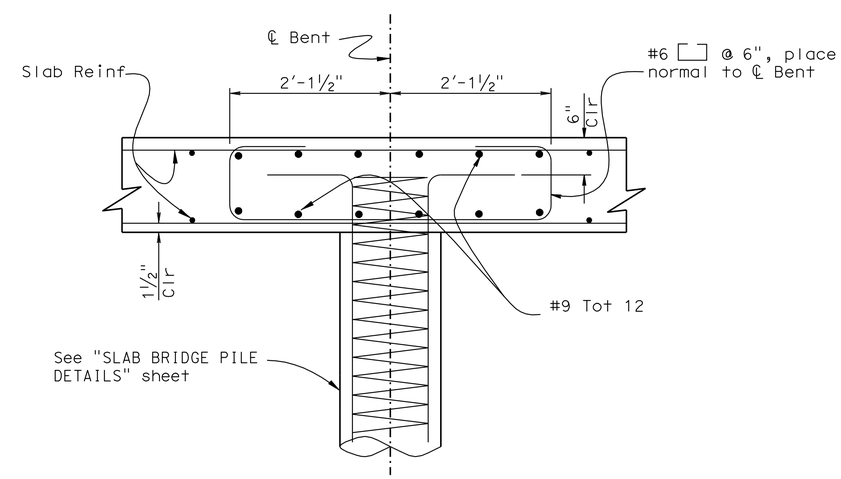

TYPICAL SECTION - BENT CAP

1" = 1'-0"

DESIGN	BY T.Sanderson	CHECKED L. Wu	
DETAILS	BY D.Wooten	CHECKED L. Wu	
QUANTITIES	BY G. Hallstrom	CHECKED T.Sanderson	

STATE OF CALIFORNIA
DEPARTMENT OF TRANSPORTATION

DIVISION OF ENGINEERING SERVICES
STRUCTURE DESIGN
DESIGN BRANCH 10

BRIDGE NO. 56-0830
POST MILE 3.28

PALO VERDE DRAIN BRIDGE (REPLACE)
TYPICAL SECTION & BENT DETAILS

STRUCTURES DESIGN DETAIL SHEET (ENGLISH) (REV. 10/25/05)

ORIGINAL SCALE IN INCHES FOR REDUCED PLANS 0 1 2 3

CU 08
EA 422201

DISREGARD PRINTS BEARING EARLIER REVISION DATES → 7-10-08

REVISION DATES

SHEET 5 OF 9

FILE => 560830ktsbdt05.dgn

USERNAME => trmikest DATE PLOTTED => 04-JUN-2009 TIME PLOTTED => 06:16

DIST	COUNTY	ROUTE	POST MILES TOTAL PROJECT	SHEET No	TOTAL SHEETS
08	Riv	78	3.3	33	36

Tierney L. Sanderson 11-14-08
REGISTERED CIVIL ENGINEER DATE

3-23-09
PLANS APPROVAL DATE

REGISTERED PROFESSIONAL ENGINEER Tierney L. Sanderson No. 48605 Exp. 6-30-2010 CIVIL STATE OF CALIFORNIA

The State of California or its officers or agents shall not be responsible for the accuracy or completeness of electronic copies of this plan sheet.

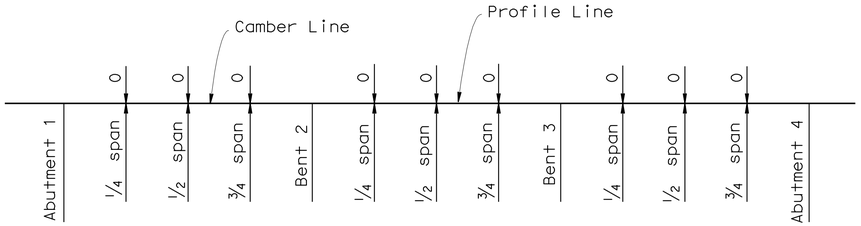

Does not include allowance for falsework settlement

CAMBER DIAGRAM

no scale

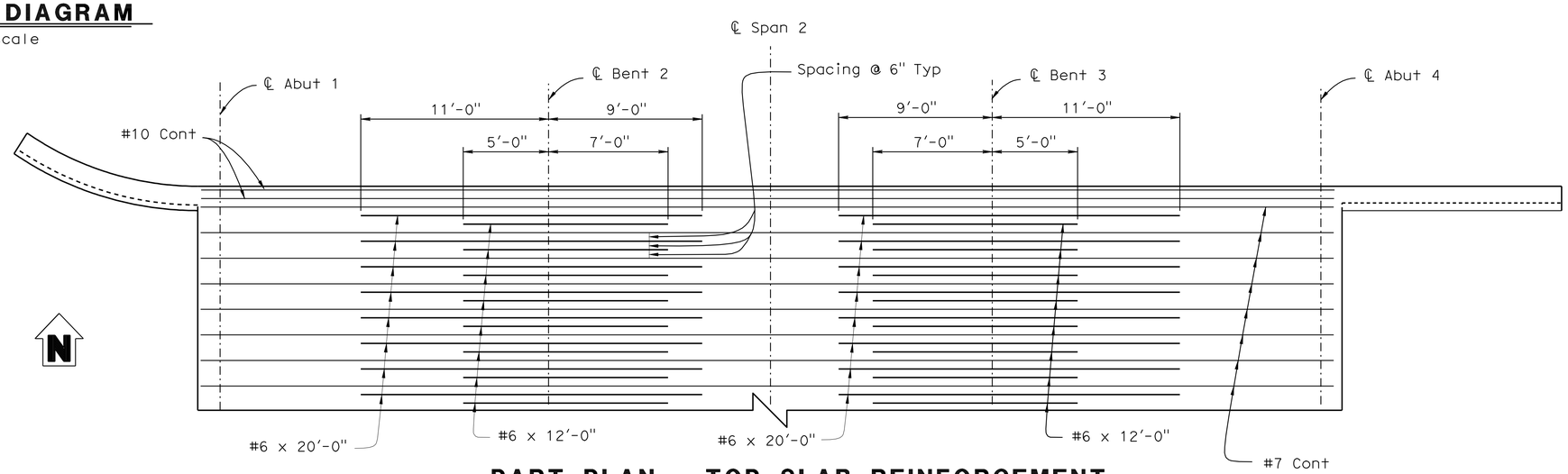

PART PLAN - TOP SLAB REINFORCEMENT

1/4" = 1'-0"

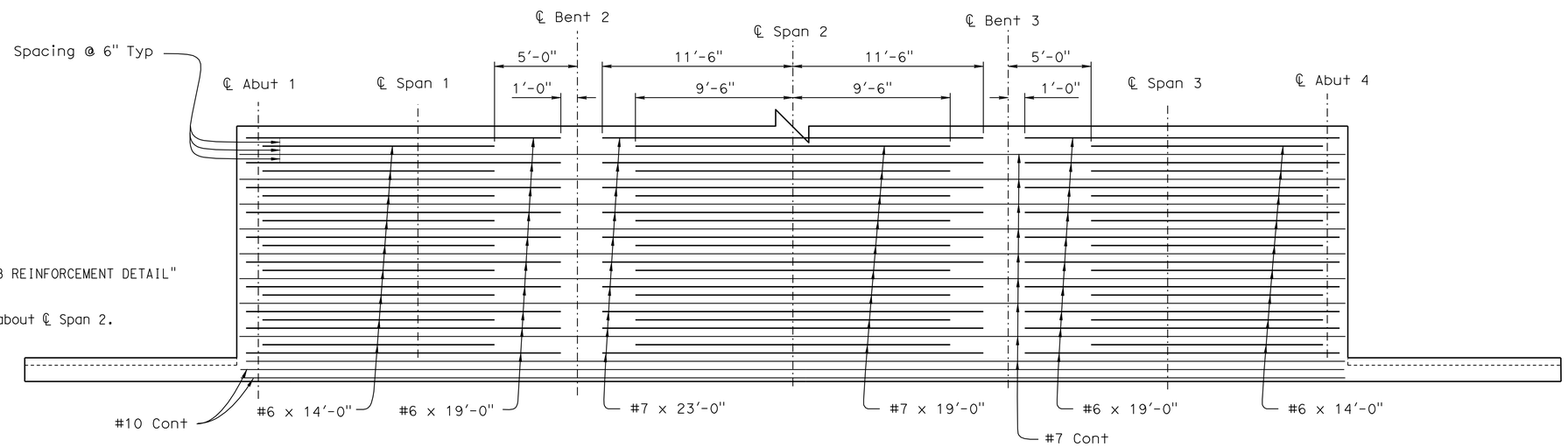

NOTES:

1. For details not shown see "SLAB REINFORCEMENT DETAIL" sheet
2. All reinforcement symmetrical about ℄ Span 2.

PART PLAN - BOTTOM SLAB REINFORCEMENT

1/4" = 1'-0"

	BY	CHECKED
DESIGN	T.Sanderson	L. Wu
DETAILS	D.Wooten	L. Wu
QUANTITIES	G. Hallstrom	T.Sanderson

STATE OF CALIFORNIA
DEPARTMENT OF TRANSPORTATION

DIVISION OF ENGINEERING SERVICES
STRUCTURE DESIGN
DESIGN BRANCH 10

BRIDGE NO. 56-0830
POST MILE 3.28

PALO VERDE DRAIN BRIDGE (REPLACE)
SLAB REINFORCEMENT

STRUCTURES DESIGN DETAIL SHEET (ENGLISH) (REV. 10/25/05)

ORIGINAL SCALE IN INCHES FOR REDUCED PLANS 0 1 2 3

CU 08
EA 422201

DISREGARD PRINTS BEARING EARLIER REVISION DATES 7-21-08

REVISION DATES

SHEET 6 OF 9

FILE => 560830oslbr06.dgn

USERNAME => trmikest DATE PLOTTED => 04-JUN-2009 TIME PLOTTED => 06:16

RELEASED 11-20-97

DIST.	COUNTY	ROUTE	POST MILES TOTAL PROJECT	SHEET NO.	TOTAL SHEETS
08	Riv	78	3.3	34	36

Tierney L. Sanderson 11-14-08
REGISTERED ENGINEER - CIVIL

REGISTERED PROFESSIONAL ENGINEER Tierney L. Sanderson No. 48605 Exp. 6-30-2010 CIVIL STATE OF CALIFORNIA

3-23-09
PLANS APPROVAL DATE

The State of California or its officers or agents shall not be responsible for the accuracy or completeness of electronic copies of this plan sheet.

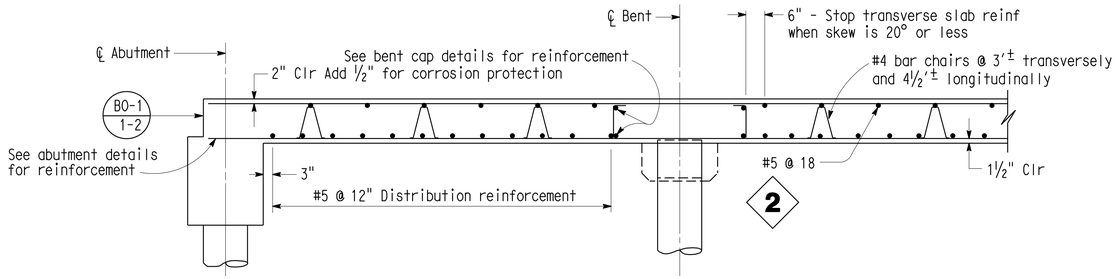

LONGITUDINAL SECTION

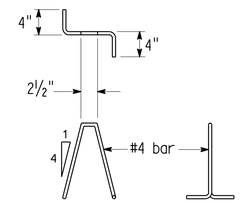

BAR CHAIR DETAIL

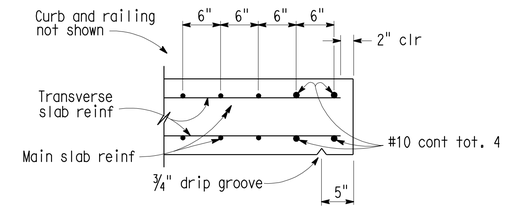

EDGE OF SLAB DETAILS

BAR SPLICE LENGTH								
Bar size	#4	#5	#6	#7	#8	#9	#10	#11
All bars, except top bars in spans over 24'	23"	28"	34"	39"	45"	68"	76"	85"
Top bars in spans over 24'	23"	28"	34"	53"	60"	77"	97"	120"

Reinforcement notes:

Splices in top main bars to be located near center of span.
Splices in bottom main bars to be located near bent.
Spacing of all transverse bars is measured along ℄ roadway.
Skew 0° to 20°: Place all transverse bars parallel to bent.
Skew over 20°: Place transverse slab bars perpendicular to ℄ bridge. See details at right and below.

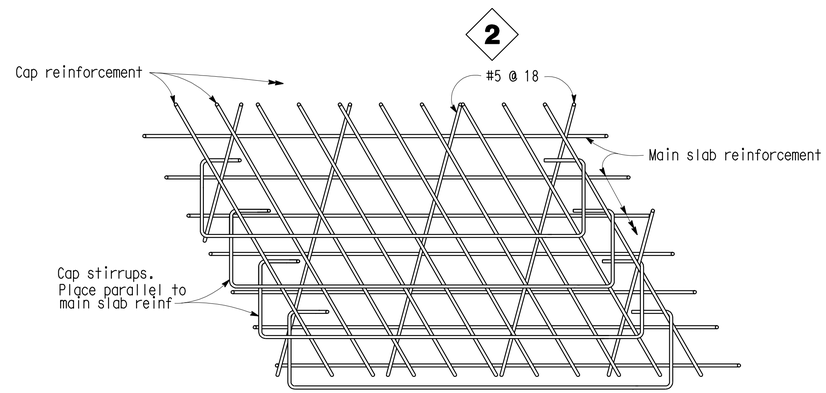

1

TOP SLAB REINFORCEMENT AT BENT

Note: View for main span over 24'.
Bar placement similar for spans under 24'

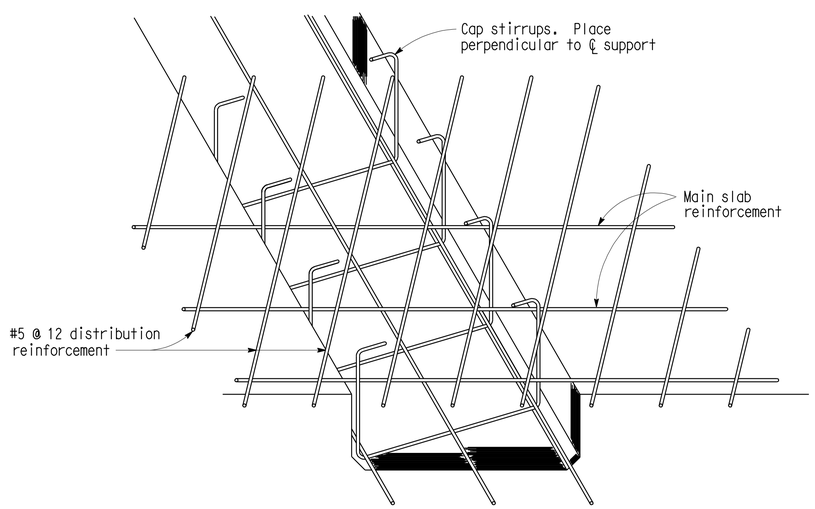

DROPPED CAP

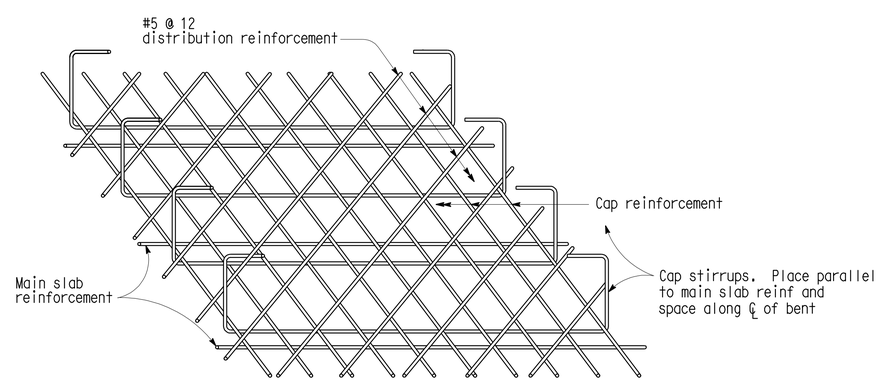

FLUSH CAP

BOTTOM SLAB REINFORCEMENT AT BENT

STANDARD DRAWING

FILE NO. XS 12-55	DESIGN BY L.Y. LEE	CHECKED T. FARNAN	APPROVAL RECOMMENDED BY
DESIGN DATE 8/86	DETAILS BY R. YEE	CHECKED T. FARNAN	DESIGN SUPERVISOR
	SUBMITTED BY R.S. WATANABE		

1 Deleted General Notes
2 Revised Details

STATE OF CALIFORNIA
DEPARTMENT OF TRANSPORTATION

DIVISION OF STRUCTURES
STRUCTURE DESIGN 10

BRIDGE NO. 56-0830
POST MILE 3.28

PALO VERDE DRAIN BRIDGE (REPLACE)
SLAB REINFORCEMENT DETAILS

DS OSD 2147A (CADD 7/97)

ORIGINAL SCALE IN INCHES FOR REDUCED PLANS 0 1 2 3

CU 08
EA 422201

DISREGARD PRINTS BEARING EARLIER REVISION DATES → 7-10-08

REVISION DATES (PRELIMINARY STAGE ONLY) SHEET 7 OF 9

FILE => 560830oslbrdt07.dgn

XS1255.DGN VI=1

USERNAME => trmikes1 DATE PLOTTED => 04-JUN-2009 TIME PLOTTED => 06:17

DIST	COUNTY	ROUTE	POST MILES TOTAL PROJECT	SHEET No	TOTAL SHEETS
08	Riv	78	3.3	35	36

Tierney L. Sanderson 11-14-08
REGISTERED CIVIL ENGINEER DATE

3-23-09
PLANS APPROVAL DATE

REGISTERED PROFESSIONAL ENGINEER Tierney L. Sanderson No. 48605 Exp. 6-30-2010 CIVIL STATE OF CALIFORNIA

The State of California or its officers or agents shall not be responsible for the accuracy or completeness of electronic copies of this plan sheet.

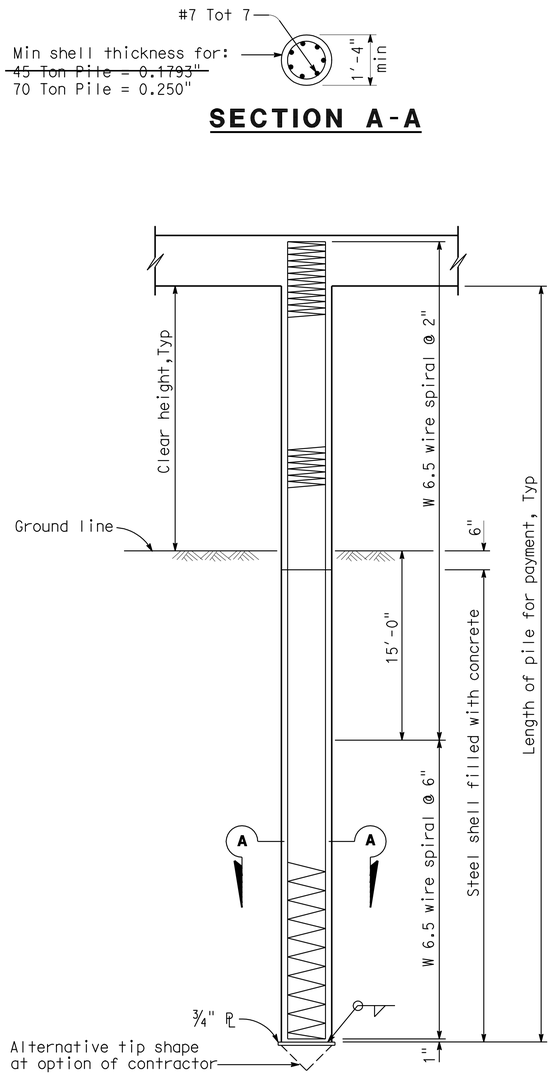

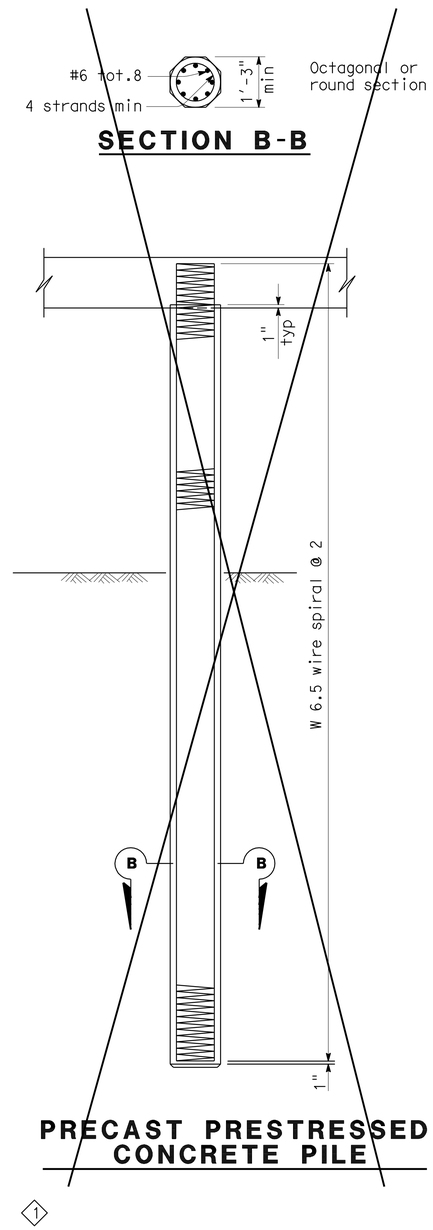

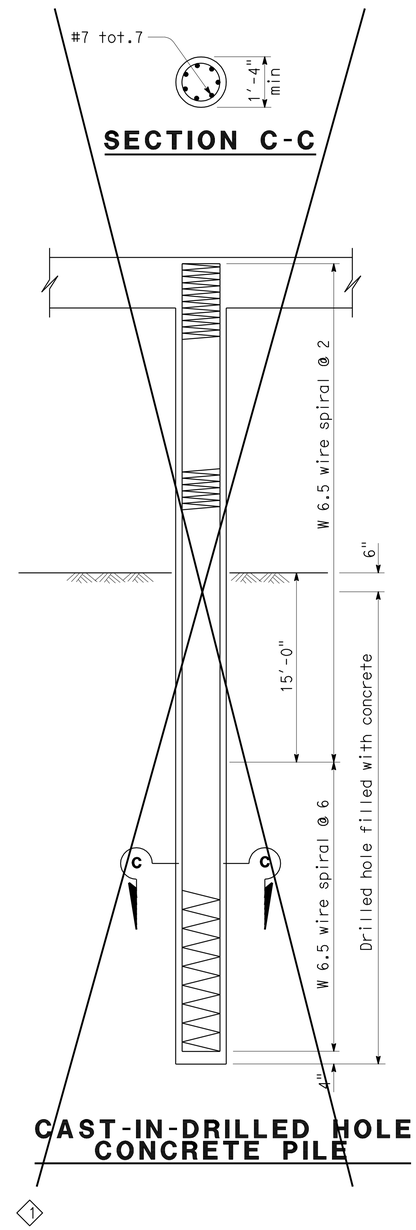

NOTES:

1. Design service level loading is 70 tons or less as noted.
2. Maximum size of aggregate is 1".
3. For the prestressed concrete pile:
   A. The prestress force after all losses shall provide 700 psi minimum stress and shall not be less than 130 kips.
   B. The concrete strength shall not be less than 6000 psi at 28 days.
4. No splices allowed in the longitudinal reinforcement within the "clear height " or within 10' below the ground line.

STANDARD DRAWING			
FILE NO. XS 12-55.1	DESIGN	BY JIM H. GATES	CHECKED STEVE MCBRIDE
DESIGN DATE 2/89	DETAILS	BY R. YEE	CHECKED R.A. ROGERSON
	SUBMITTED BY R.A. ROGERSON		

APPROVAL RECOMMENDED BY
DESIGN SUPERVISOR

1 Deleted detail

STATE OF CALIFORNIA
DEPARTMENT OF TRANSPORTATION

DIVISION OF ENGINEERING SERVICES
STRUCTURE DESIGN
DESIGN BRANCH 10

BRIDGE NO. 56-0830
POST MILE 3.28

PALO VERDE DRAIN BRIDGE (REPLACE)
SLAB BRIDGE PILE DETAILS

DS OSD 2147A (CADD 7/97)

ORIGINAL SCALE IN INCHES FOR REDUCED PLANS 0 1 2 3

CU 10
EA 422201

DISREGARD PRINTS BEARING EARLIER REVISION DATES

REVISION DATES

SHEET 8 OF 9

FILE => 560830ppdt08.dgn

USERNAME => trmikest DATE PLOTTED => 04-JUN-2009 TIME PLOTTED => 06:17

DIST	COUNTY	ROUTE	POST MILES TOTAL PROJECT	SHEET No	TOTAL SHEETS
08	Riv	78	3.3	36	36

REGISTERED CIVIL ENGINEER 5-30-08

3-23-09
PLANS APPROVAL DATE

REGISTERED PROFESSIONAL ENGINEER Hassan Ibrahim No. C59016 Exp. 6-30-09 CIVIL STATE OF CALIFORNIA

The State of California or its officers or agents shall not be responsible for the accuracy or completeness of electronic copies of this plan sheet.

BENCH MARK

SURVEY CONTROL

PRHV 501 Elev 239.416′
Fnd 2" IP W/CDOT TAG
2.111′ Lt. ℄ Rte 78
Sta. 174+32.72
N 2 120 977.900
E 7 026 042.385

PRHV 330 Elev 237.627′
Fnd GPS RIV78 PM3.30
CT BRASS DISK
36.591′ Lt. ℄ Rte 78
Sta. 176+32.35
N 2 121 011.830
E 7 026 242.122

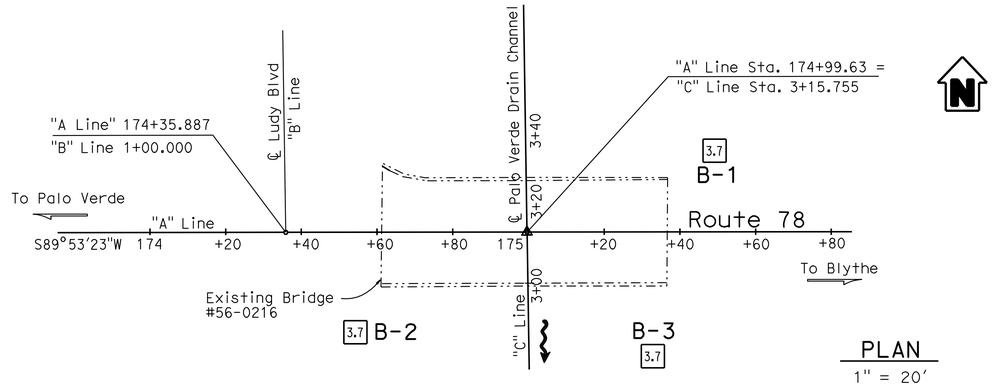

PLAN
1" = 20′

NOTES:

1. Ground water levels indicated in the Log of Test Borings sheets reflect the measured ground water level measurement in the bore-hole on the specified date. Ground water surface elevations are subject to seasonal fluctuations and will be encountered at higher or lower elevations depending on conditions at time of construction.
2. The descriptions and classifications of soil, including consistency and relative density descriptors, used by the field personnel for the exploration boreholes shown on this sheet are based on the "Soil & Rock Logging Classification Manual (Field Guide)," Engineering Service Center, Office of Structural Foundations, August 1996.
3. Test borings utilized a Mobile B-47 Drill rig to advance the sampler. Penetration shown on the Log of Test Boring (LOTB) sheets were recorded in the field. Soil description shown on the LOTB sheets are based on the penetration index values.
4. Unconfined compressive strength (qu) is determined in the field by "Pocket Torvane," units shown are TSF.

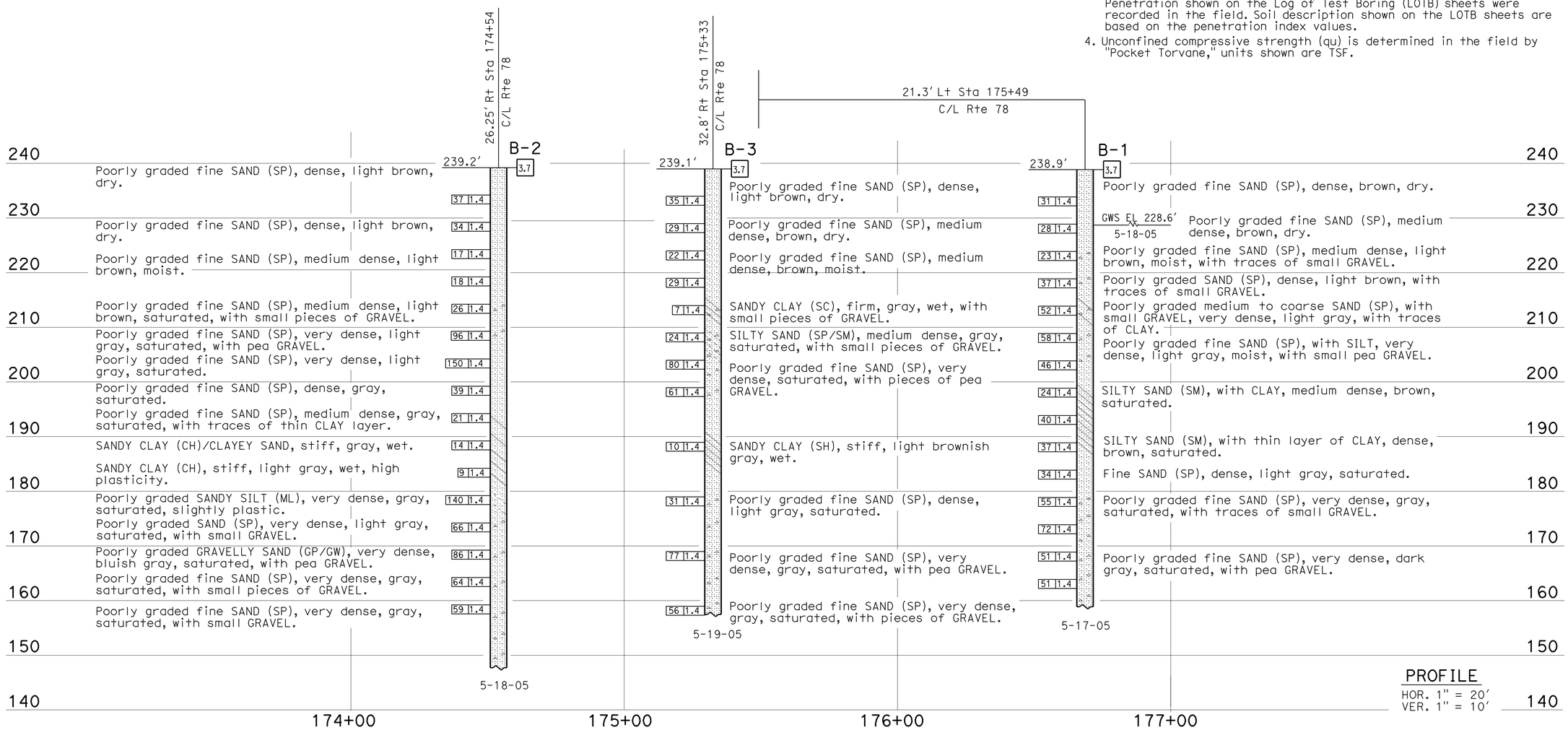

PROFILE
HOR. 1" = 20′
VER. 1" = 10′

LEGEND OF BORING OPERATIONS

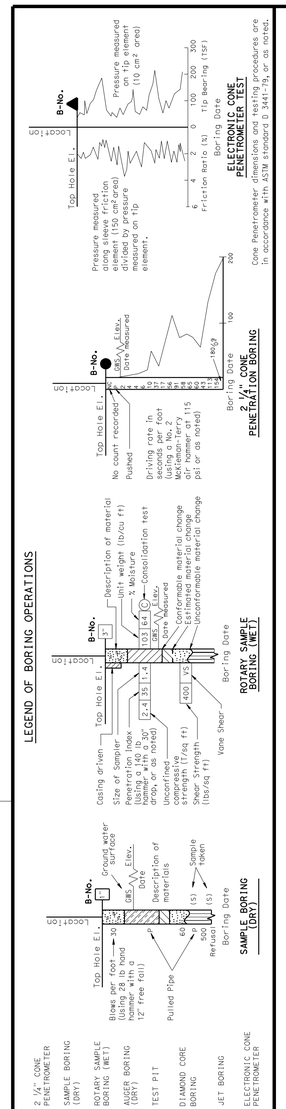

LEGEND OF EARTH MATERIALS

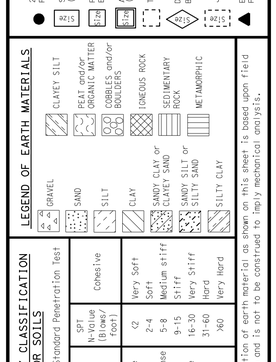

CONSISTENCY CLASSIFICATION FOR SOILS

According to the Standard Penetration Test

SPT N-Value (Blows/foot)	Granular	SPT N-Value (Blows/foot)	Cohesive
0-4	Very Loose	<2	Very Soft
5-10	Loose	2-4	Soft
11-30	Medium Dense	5-8	Medium stiff
31-50	Dense	9-15	Stiff
>50	Very Dense	16-30	Very Stiff
		31-60	Hard
		>60	Very Hard

NOTE: Classification of earth material as shown on this sheet is based upon field inspection and is not to be construed to imply mechanical analysis.

ENGINEERING SERVICES	GEOTECHNICAL SERVICES
DRAWN BY	I.G-Remmen 1/08
CHECKED BY	H. Ibrahim

FIELD INVESTIGATION BY: H. Ibrahim

STATE OF CALIFORNIA
DEPARTMENT OF TRANSPORTATION

DIVISION OF ENGINEERING SERVICES
STRUCTURE DESIGN
DESIGN BRANCH

BRIDGE NO. 56-0830
POST MILE

PALO VERDE DRAIN BRIDGE
LOG OF TEST BORINGS

CU 08
EA 422201

OGS LOG OF TEST BORINGS SHEET (ENGLISH) (REV. 5/25/07)

ORIGINAL SCALE IN INCHES FOR REDUCED PLANS 0 1 2 3

DISREGARD PRINTS BEARING EARLIER REVISION DATES

REVISION DATES (PRELIMINARY STAGE ONLY) 02-22-08 02-27-08 05-02-08

SHEET 9 OF 9

FILE => 560830zltb09.dgn

USERNAME => trmikest DATE PLOTTED => 04-JUN-2009 TIME PLOTTED => 06:17