SARRA-P018(039)E

Dist	COUNTY	ROUTE	POST MILES TOTAL PROJECT	SHEET No.	TOTAL SHEETS
08	SBd	18	66.6/67.2	1	90

STATE OF CALIFORNIA
DEPARTMENT OF TRANSPORTATION

PROJECT PLANS FOR CONSTRUCTION ON
STATE HIGHWAY
IN SAN BERNARDINO COUNTY
NEAR LUCERNE VALLEY FROM 1.3 MILES SOUTH OF ARTIC CANYON WASH TO 0.8 MILE NORTH OF MARBLE CANYON ROAD

TO BE SUPPLEMENTED BY STANDARD PLANS DATED MAY 2006

INDEX OF PLANS

SHEET No.	DESCRIPTION
1	TITLE AND LOCATION MAP
2-3	TYPICAL CROSS SECTIONS
4	KEY MAP AND LINE INDEX
5-8	LAYOUTS
9-12	PROFILES AND SUPERELEVATION DIAGRAM
13-21	CONSTRUCTION DETAILS
22-32	DRAINAGE AND CONTOUR GRADING PLANS, PROFILES, DETAILS AND QUANTITIES
33-36	UTILITY PLANS
37	CONSTRUCTION AREA SIGNS
38-40	STAGE CONSTRUCTION PLANS
41-44	TRAFFIC HANDLING PLANS AND QUANTITIES
45	DETOUR PLANS
46-52	PAVEMENT DELINEATION, SIGN PLANS AND QUANTITIES
53-54	SUMMARY OF QUANTITIES
55-57	HIGHWAY PLANTING PLANS
58-77	REVISED AND NEW STANDARD PLANS

STRUCTURE PLANS

78-90	CUSHENBERRY CREEK BRIDGE (REPLACE) Br No. 54-1283

THE STANDARD PLANS LIST APPLICABLE TO THIS CONTRACT IS INCLUDED IN THE NOTICE TO BIDDERS AND SPECIAL PROVISIONS BOOK.

LOCATION MAP

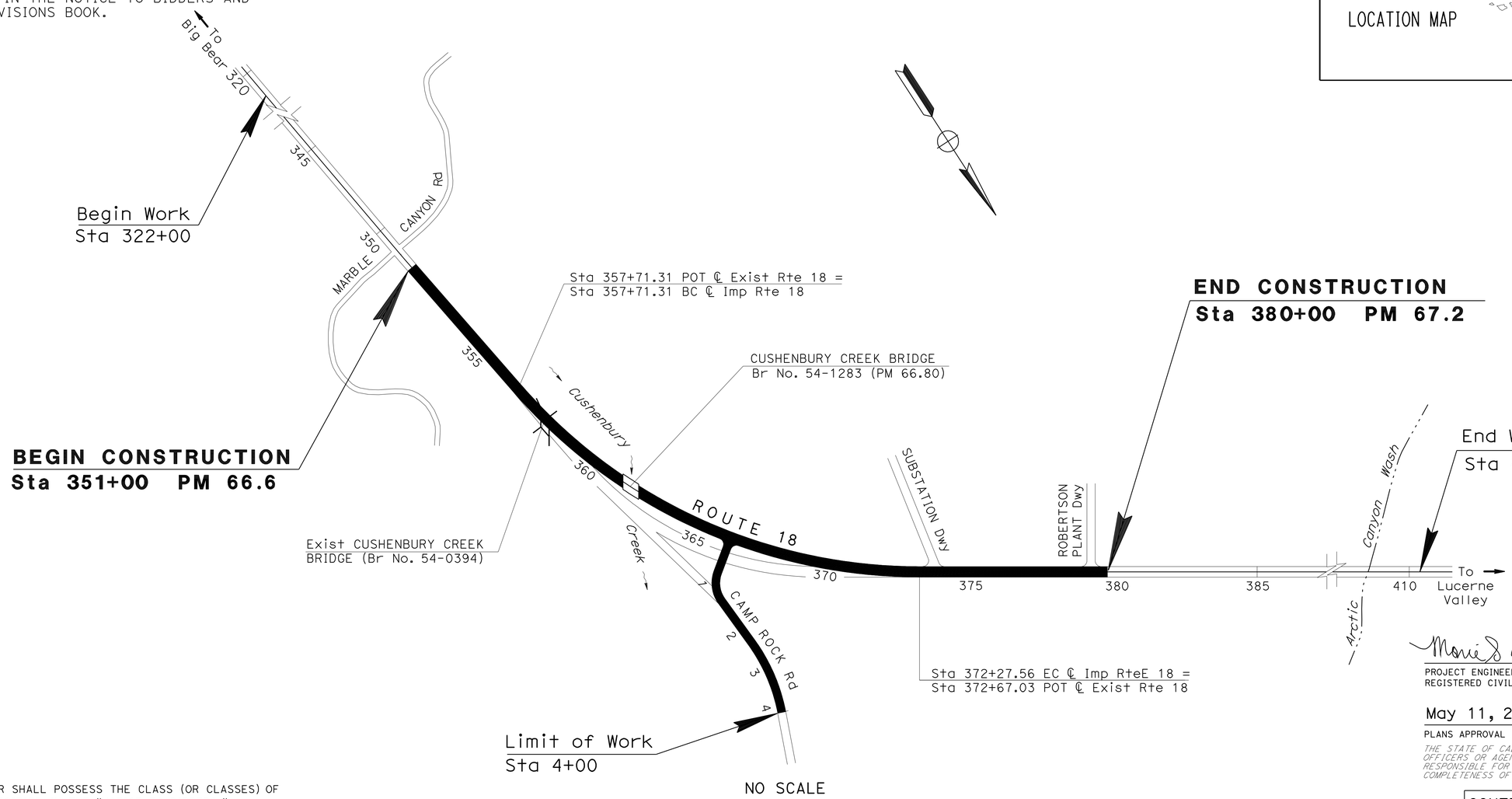

NO SCALE

THE CONTRACTOR SHALL POSSESS THE CLASS (OR CLASSES) OF LICENSE AS SPECIFIED IN THE "NOTICE TO BIDDERS."

PROJECT MANAGER: JIM ROBINSON

DESIGN ENGINEER: MONIE KEO

Monie S. Keo 12-11-08
PROJECT ENGINEER REGISTERED CIVIL ENGINEER — DATE

May 11, 2009
PLANS APPROVAL DATE

REGISTERED PROFESSIONAL ENGINEER — MONIE S. KEO — No. C65498 — Exp. 9-30-09 — CIVIL — STATE OF CALIFORNIA

THE STATE OF CALIFORNIA OR ITS OFFICERS OR AGENTS SHALL NOT BE RESPONSIBLE FOR THE ACCURACY OR COMPLETENESS OF SCANNED COPIES OF THIS PLAN SHEET.

CONTRACT No. **08-394704**

LAST REVISION 12-11-08 — DATE PLOTTED => 08-JUL-2009 — TIME PLOTTED => 10:38

Dist	COUNTY	ROUTE	POST MILES TOTAL PROJECT	SHEET No.	TOTAL SHEETS
08	SBd	18	66.6/67.2	2	90

REGISTERED CIVIL ENGINEER 12-11-08 DATE

5-11-09
PLANS APPROVAL DATE

REGISTERED PROFESSIONAL ENGINEER MONIE S. KEO No. C65498 Exp. 9-30-09 CIVIL STATE OF CALIFORNIA

THE STATE OF CALIFORNIA OR ITS OFFICERS OR AGENTS SHALL NOT BE RESPONSIBLE FOR THE ACCURACY OR COMPLETENESS OF SCANNED COPIES OF THIS PLAN SHEET.

NOTES:

1. DIMENSIONS OF THE STRUCTURAL SECTIONS ARE SUBJECT TO TOLERANCES SPECIFIED IN THE STANDARD SPECIFICATIONS.
2. SUPERELEVATION AS SHOWN OR AS DIRECTED BY THE ENGINEER.
3. SEE LAYOUT PLANS AND QUANTITY SHEETS FOR LOCATIONS, TYPE AND LENGTH OF HMA DIKE AND MBGR.
4. SEE DRAINAGE PLANS AND DETAILS FOR V-DITCH.

Exist STRUCTURAL SECTION:

1 — 0.04′ OGAC
0.25′ AC (TYPE B)

DESIGN DESIGNATION (ROUTE 18)

		YR 2007	YR 2029
ADT	=	3,750	8,500
DVH	=	500	1,000
D	=	70/30	55/45
T	=	6.3%	8.0%
V	=	55MPH	

TI	MAINLINE	SHOULDER
10 YR	10.0	6.0
20 YR	11.0	7.0

ESAL	MAINLINE	SHOULDER
10 YR	1,064,379	21,288
20 YR	3,423,222	68,464

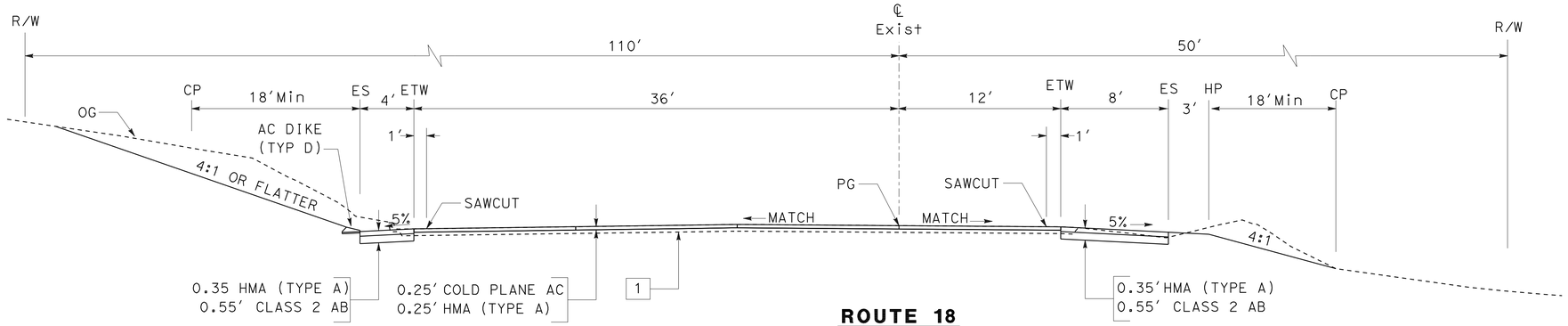

ROUTE 18
375+00 TO 378+00

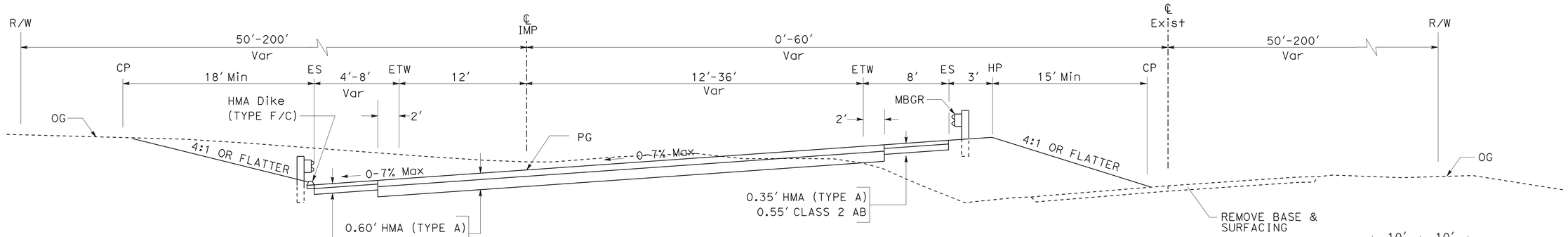

ROUTE 18
356+50.00 TO 360+35.27
361+05.27 TO 375+00.00

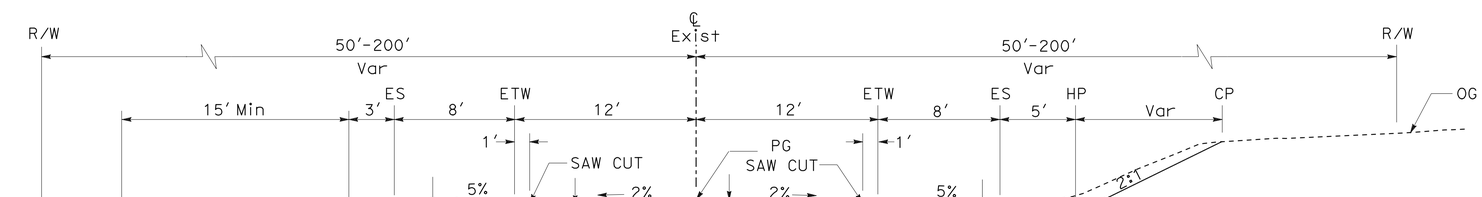

ROUTE 18
351+00.00 TO 356+50.00

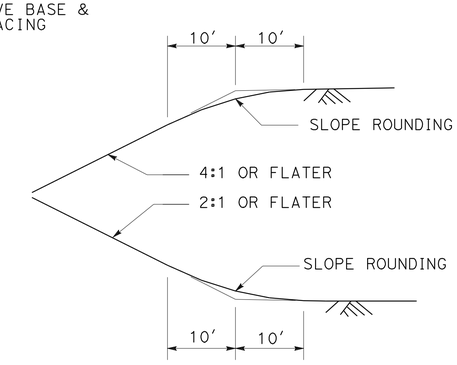

SLOPE ROUNDING DETAIL
(TYPICAL)

TYPICAL CROSS SECTIONS

NO SCALE

X-1

STATE OF CALIFORNIA - DEPARTMENT OF TRANSPORTATION
Caltrans® DESIGN DIVISION

FUNCTIONAL SUPERVISOR: BEN AMIRI
CALCULATED-DESIGNED BY: MONIE KEO
CHECKED BY: JUSTINE NUI
REVISED BY / DATE REVISED

LAST REVISION 12-11-08 | DATE PLOTTED => 08-JUL-2009 | TIME PLOTTED => 10:38

Dist	COUNTY	ROUTE	POST MILES TOTAL PROJECT	SHEET No.	TOTAL SHEETS
08	SBd	18	66.6/67.2	3	90

REGISTERED CIVIL ENGINEER 12-11-08 DATE

5-11-09
PLANS APPROVAL DATE

REGISTERED PROFESSIONAL ENGINEER MONIE S. KEO No. C65498 Exp. 9-30-09 CIVIL STATE OF CALIFORNIA

THE STATE OF CALIFORNIA OR ITS OFFICERS OR AGENTS SHALL NOT BE RESPONSIBLE FOR THE ACCURACY OR COMPLETENESS OF SCANNED COPIES OF THIS PLAN SHEET.

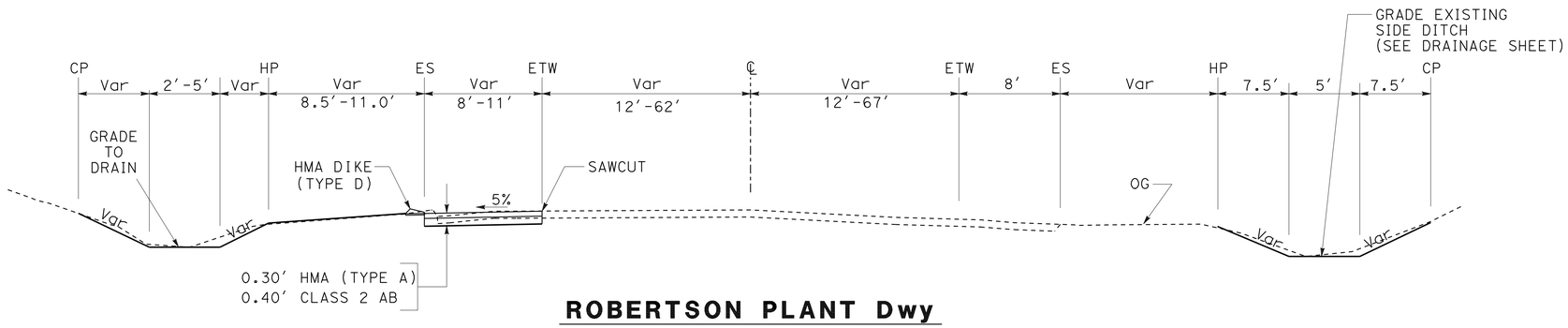

ROBERTSON PLANT Dwy

STA 0+36 TO 1+00

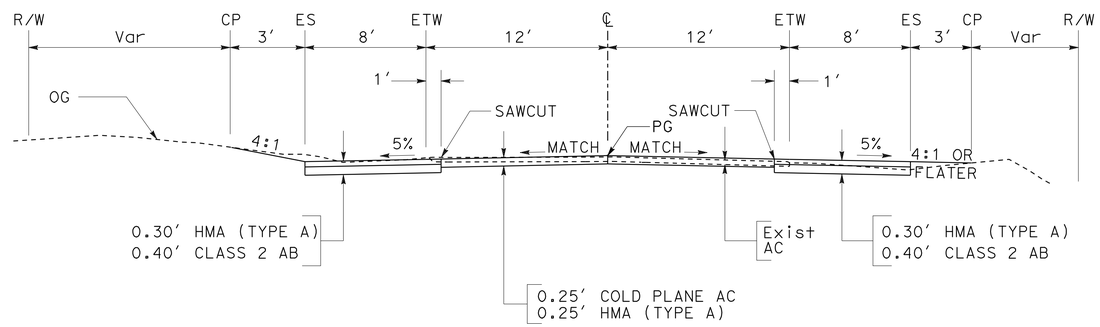

CAMP ROCK Rd

STA 2+50 TO 4+00

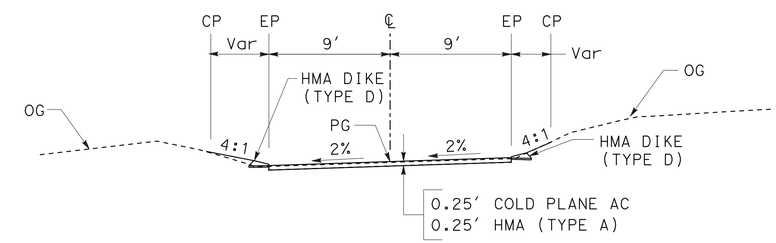

SUBSTATION Dwy

STA 0+50 TO 1+00

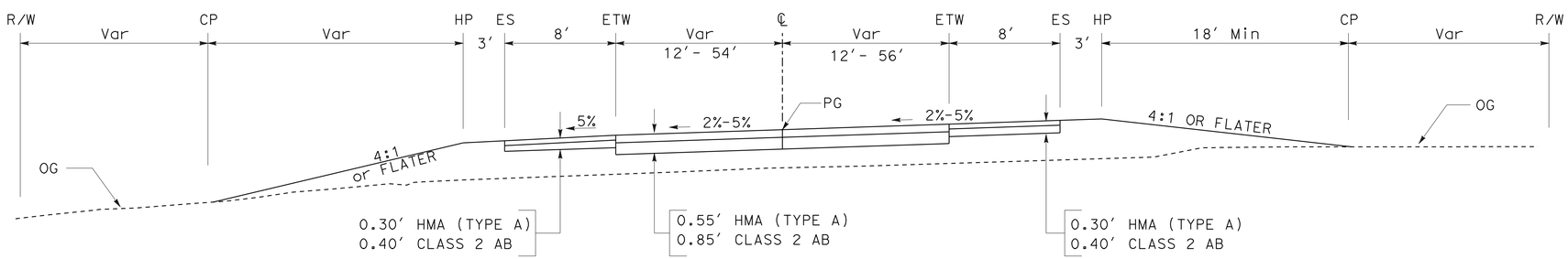

CAMP ROCK Rd

STA 0+36 TO 2+50

TYPICAL CROSS SECTIONS

NO SCALE

X-2

STATE OF CALIFORNIA - DEPARTMENT OF TRANSPORTATION
Caltrans® DESIGN DIVISION

FUNCTIONAL SUPERVISOR: BEN AMIRI
CALCULATED-DESIGNED BY: MONIE KEO
CHECKED BY: MARK DE LA VEGA
REVISED BY
DATE REVISED

LAST REVISION 12-11-08
DATE PLOTTED => 08-JUL-2009
TIME PLOTTED => 10:39

Dist	COUNTY	ROUTE	POST MILES TOTAL PROJECT	SHEET No.	TOTAL SHEETS
08	SBd	18	66.6/67.2	4	90

REGISTERED CIVIL ENGINEER 12-11-08 DATE

5-11-09
PLANS APPROVAL DATE

REGISTERED PROFESSIONAL ENGINEER
MONIE S. KEO
No. C65498
Exp. 9-30-09
CIVIL
STATE OF CALIFORNIA

THE STATE OF CALIFORNIA OR ITS OFFICERS OR AGENTS SHALL NOT BE RESPONSIBLE FOR THE ACCURACY OR COMPLETENESS OF SCANNED COPIES OF THIS PLAN SHEET.

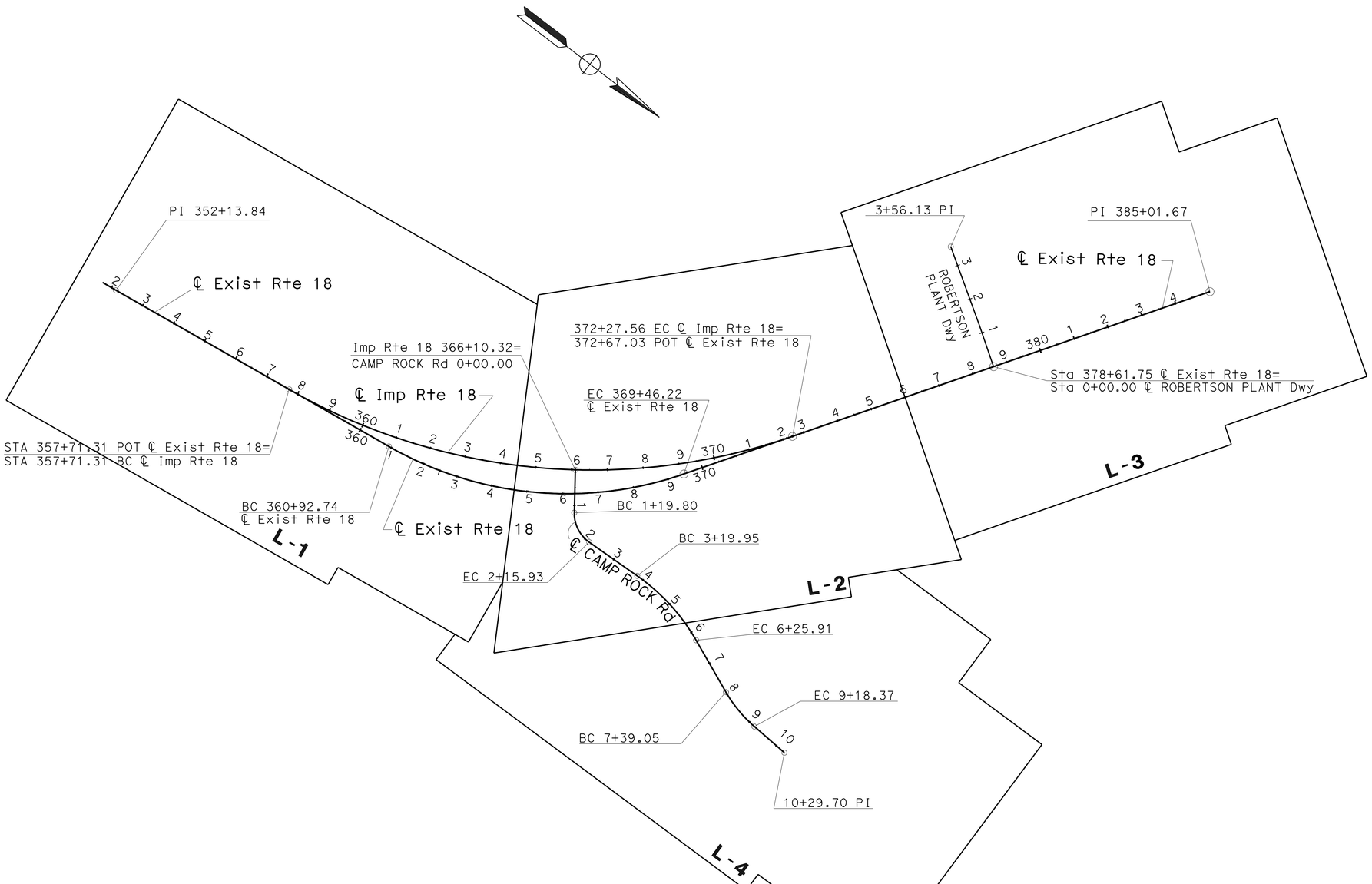

KEY MAP AND LINE INDEX

NO SCALE

K-1

REVISED BY	DATE REVISED

CALCULATED-DESIGNED BY	CHECKED BY
MONIE KEO	JUSTINE NUI

FUNCTIONAL SUPERVISOR: BEN AMIRI

STATE OF CALIFORNIA - DEPARTMENT OF TRANSPORTATION
Caltrans® DESIGN DIVISION

LAST REVISION 12-11-08
DATE PLOTTED => 08-JUL-2009
TIME PLOTTED => 13:57

Dist	COUNTY	ROUTE	POST MILES TOTAL PROJECT	SHEET No.	TOTAL SHEETS
08	SBd	18	66.6/67.2	5	90

REGISTERED CIVIL ENGINEER — DATE 4-22-09

5-11-09
PLANS APPROVAL DATE

REGISTERED PROFESSIONAL ENGINEER — MONIE S. KEO — No. C65498 — Exp. 9-30-09 — CIVIL — STATE OF CALIFORNIA

THE STATE OF CALIFORNIA OR ITS OFFICERS OR AGENTS SHALL NOT BE RESPONSIBLE FOR THE ACCURACY OR COMPLETENESS OF SCANNED COPIES OF THIS PLAN SHEET.

NOTE: FOR COMPLETE RIGHT OF WAY DATA, SEE RIGHT OF WAY RECORD MAPS AT DISTRICT OFFICE.

LEGEND

- COLD PLANE AC
- REMOVE BASE & SURFACING
- ESA FENCE

ABBREVIATIONS

AFTS - ALTERNATIVE FLARED TERMINAL SYSTEM
VC(MC) - VEGETATION CONTROL (MINOR CONCRETE)
TR(WB) - TRANSITION RAILING (TYPE WB)
TCE - TEMPORARY CONSTRUCTION EASEMENT

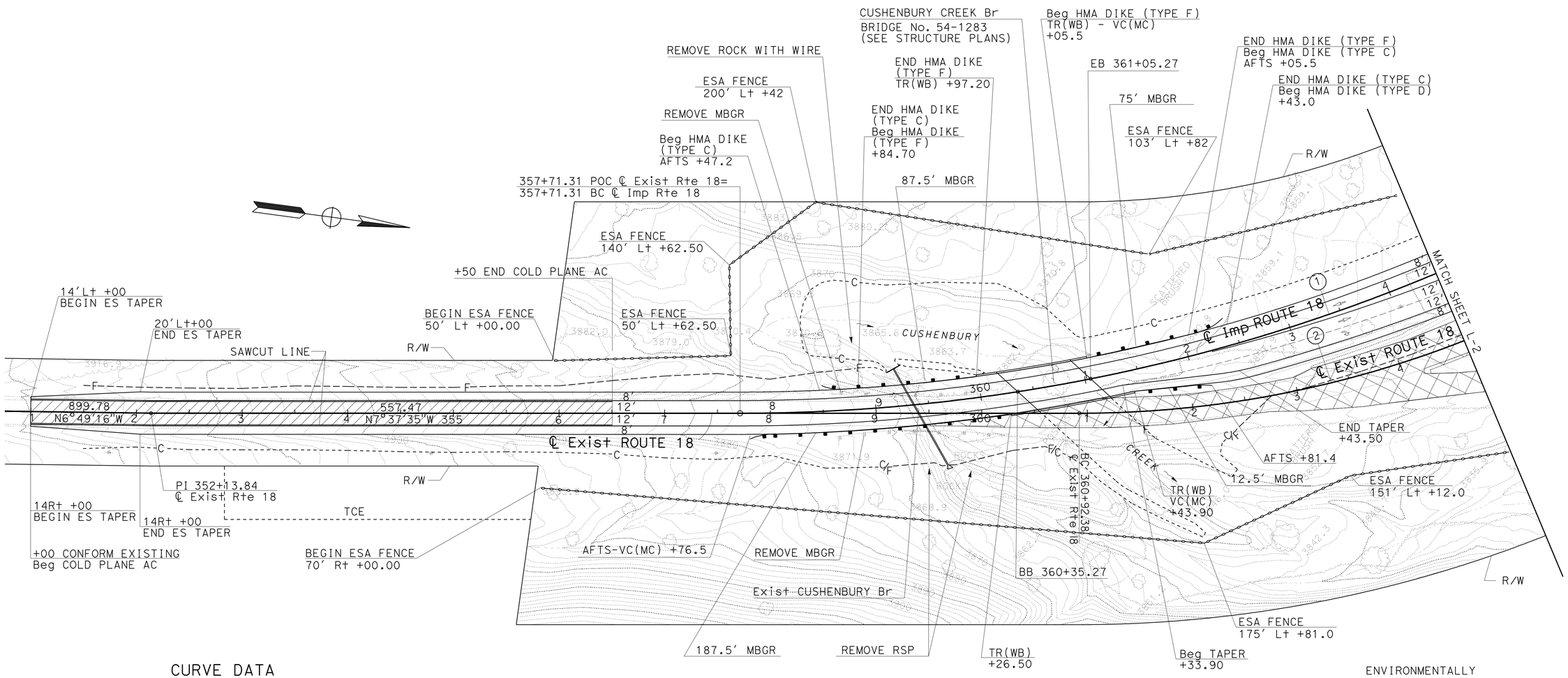

CURVE DATA

No.	R	Δ	T	L
1	1706.03	48°54'25"	775.81	1456.25
2	1000.00	48°54'03"	454.68	853.48

ENVIRONMENTALLY
SENSITIVE AREA

LAYOUT

SCALE: 1"=50'

L-1

STATE OF CALIFORNIA - DEPARTMENT OF TRANSPORTATION
Caltrans DESIGN DIVISION

FUNCTIONAL SUPERVISOR: BEN AMIRI
MONIE KEO — JUSTINE NUI
CALCULATED-DESIGNED BY — CHECKED BY
REVISED BY — DATE REVISED

LAST REVISION 04-22-09 — DATE PLOTTED => 08-JUL-2009 — TIME PLOTTED => 10:39

Dist	COUNTY	ROUTE	POST MILES TOTAL PROJECT	SHEET No.	TOTAL SHEETS
08	SBd	18	66.6/67.2	6	90

REGISTERED CIVIL ENGINEER — DATE 4-22-09

5-11-09
PLANS APPROVAL DATE

REGISTERED PROFESSIONAL ENGINEER — MONIE S. KEO — No. C65498 — Exp. 9-30-09 — CIVIL — STATE OF CALIFORNIA

THE STATE OF CALIFORNIA OR ITS OFFICERS OR AGENTS SHALL NOT BE RESPONSIBLE FOR THE ACCURACY OR COMPLETENESS OF SCANNED COPIES OF THIS PLAN SHEET.

NOTE: FOR COMPLETE RIGHT OF WAY DATA, SEE RIGHT OF WAY RECORD MAPS AT DISTRICT OFFICE.

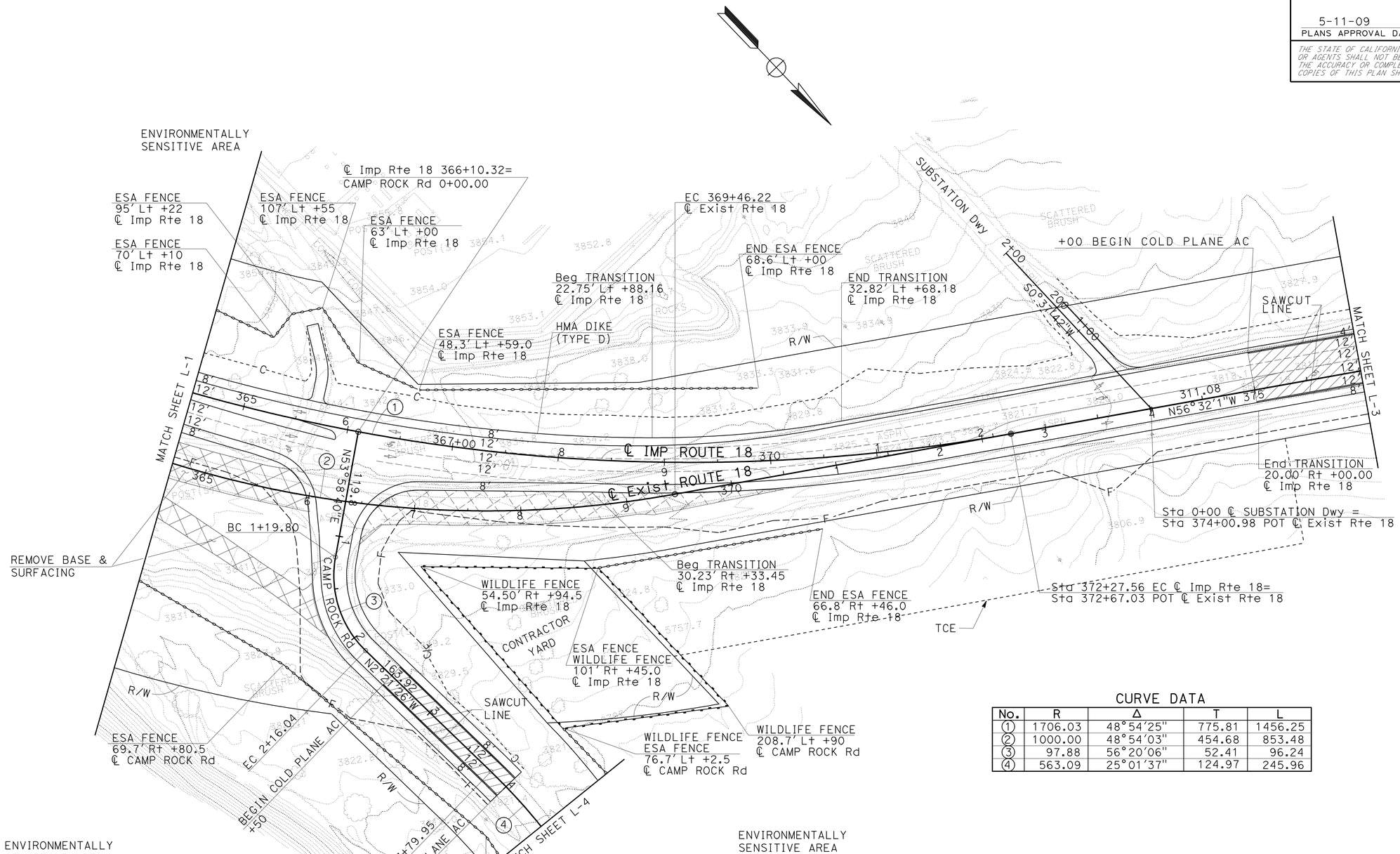

CURVE DATA

No.	R	Δ	T	L
1	1706.03	48°54'25"	775.81	1456.25
2	1000.00	48°54'03"	454.68	853.48
3	97.88	56°20'06"	52.41	96.24
4	563.09	25°01'37"	124.97	245.96

LAYOUT

SCALE: 1"=50'

L-2

STATE OF CALIFORNIA - DEPARTMENT OF TRANSPORTATION
Caltrans® DESIGN DIVISION

FUNCTIONAL SUPERVISOR: BEN AMIRI
CALCULATED-DESIGNED BY: MONIE KEO
CHECKED BY: M. A. DE LA VEGA
REVISED BY
DATE REVISED

LAST REVISION 04-22-09
DATE PLOTTED => 08-JUL-2009
TIME PLOTTED => 10:39

Dist	COUNTY	ROUTE	POST MILES TOTAL PROJECT	SHEET No.	TOTAL SHEETS
08	SBd	18	66.6/67.2	7	90

REGISTERED CIVIL ENGINEER 4-22-09 DATE

5-11-09
PLANS APPROVAL DATE

REGISTERED PROFESSIONAL ENGINEER MONIE S. KEO No. C65498 Exp. 9-30-09 CIVIL STATE OF CALIFORNIA

THE STATE OF CALIFORNIA OR ITS OFFICERS OR AGENTS SHALL NOT BE RESPONSIBLE FOR THE ACCURACY OR COMPLETENESS OF SCANNED COPIES OF THIS PLAN SHEET.

NOTE: FOR COMPLETE RIGHT OF WAY DATA, SEE RIGHT OF WAY RECORD MAPS AT DISTRICT OFFICE.

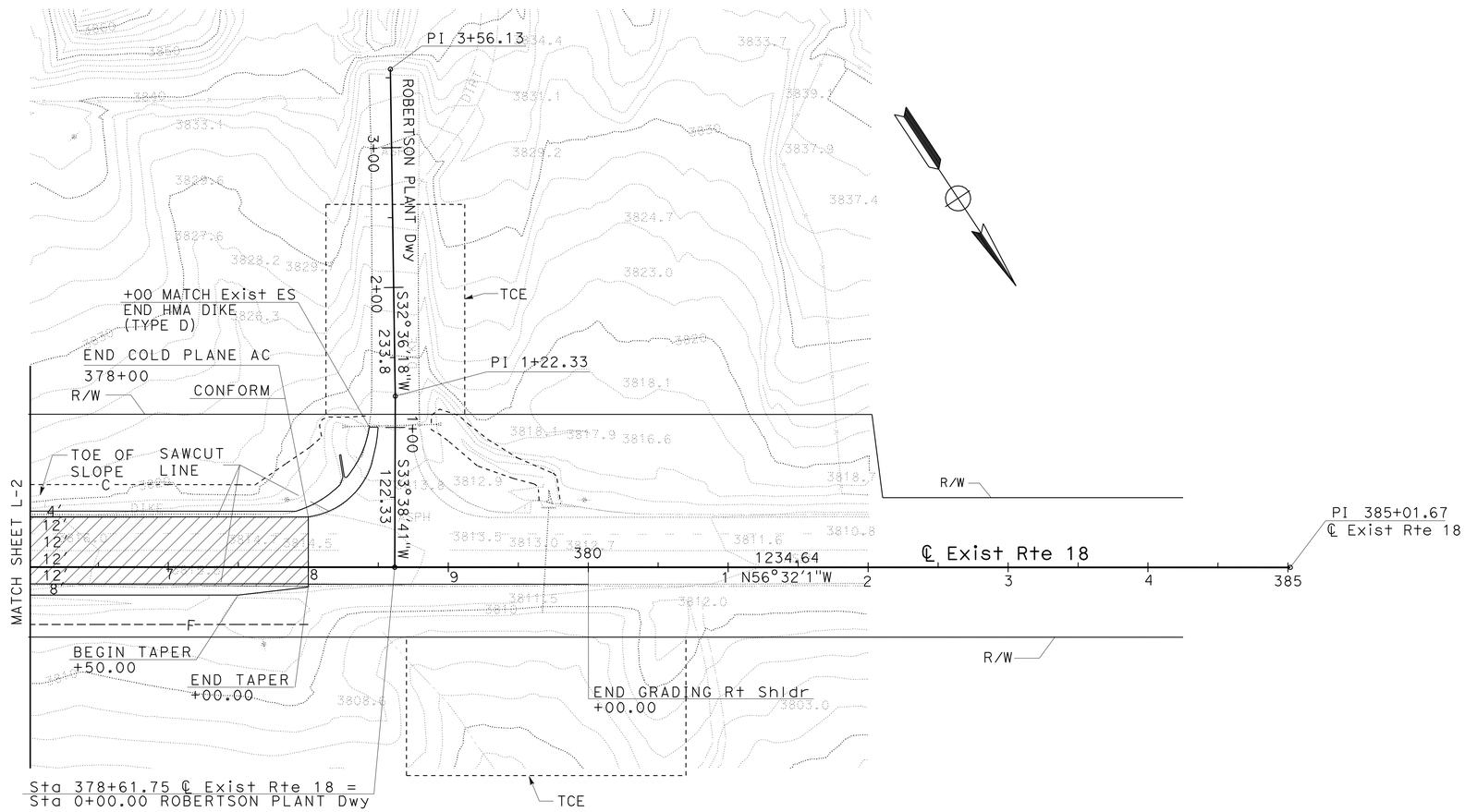

LAYOUT

SCALE: 1"=50'

L-3

STATE OF CALIFORNIA - DEPARTMENT OF TRANSPORTATION
Caltrans® DESIGN DIVISION

FUNCTIONAL SUPERVISOR: BEN AMIRI
CALCULATED-DESIGNED BY: MONIE KEO
CHECKED BY: JUSTINE NUI
REVISED BY
DATE REVISED

LAST REVISION 04-22-09
DATE PLOTTED => 08-JUL-2009
TIME PLOTTED => 10:40

Dist	COUNTY	ROUTE	POST MILES TOTAL PROJECT	SHEET No.	TOTAL SHEETS
08	SBd	18	66.6/67.2	8	90

Monie S. Keo 12-11-08
REGISTERED CIVIL ENGINEER DATE

5-11-09
PLANS APPROVAL DATE

REGISTERED PROFESSIONAL ENGINEER
MONIE S. KEO
No. C65498
Exp. 9-30-09
CIVIL
STATE OF CALIFORNIA

THE STATE OF CALIFORNIA OR ITS OFFICERS OR AGENTS SHALL NOT BE RESPONSIBLE FOR THE ACCURACY OR COMPLETENESS OF SCANNED COPIES OF THIS PLAN SHEET.

NOTE: FOR COMPLETE RIGHT OF WAY DATA, SEE RIGHT OF WAY RECORD MAPS AT DISTRICT OFFICE.

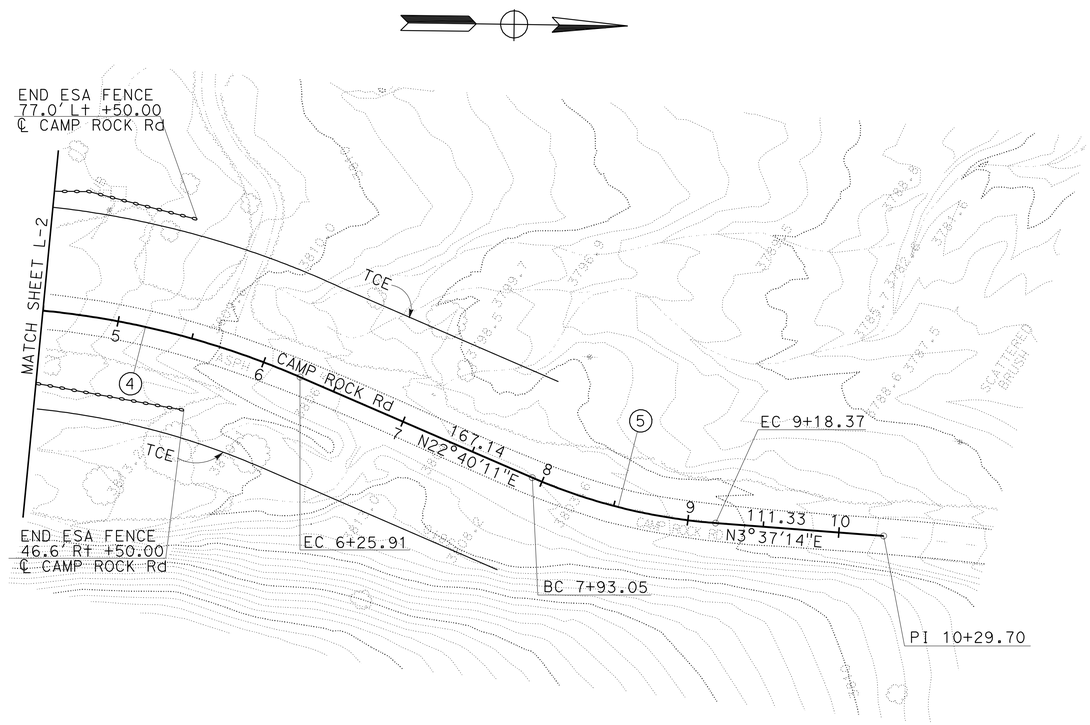

CURVE DATA

No.	R	Δ	T	L
4	563.09	25°01'37"	124.97	245.96
5	376.92	19°02'57"	63.24	125.32

LAYOUT

SCALE: 1"=50'

L-4

STATE OF CALIFORNIA - DEPARTMENT OF TRANSPORTATION
Caltrans DESIGN DIVISION

FUNCTIONAL SUPERVISOR: BEN AMIRI
CALCULATED-DESIGNED BY: MONIE KEO
CHECKED BY: M. A. DE LA VEGA
REVISED BY
DATE REVISED

LAST REVISION 12-11-08 | DATE PLOTTED => 08-JUL-2009 | TIME PLOTTED => 10:40

Dist	COUNTY	ROUTE	POST MILES TOTAL PROJECT	SHEET No.	TOTAL SHEETS
08	SBd	18	66.6/67.2	9	90

REGISTERED CIVIL ENGINEER 12-11-08 DATE

5-11-09
PLANS APPROVAL DATE

REGISTERED PROFESSIONAL ENGINEER MONIE S. KEO No. C65498 Exp. 9-30-09 CIVIL STATE OF CALIFORNIA

THE STATE OF CALIFORNIA OR ITS OFFICERS OR AGENTS SHALL NOT BE RESPONSIBLE FOR THE ACCURACY OR COMPLETENESS OF SCANNED COPIES OF THIS PLAN SHEET.

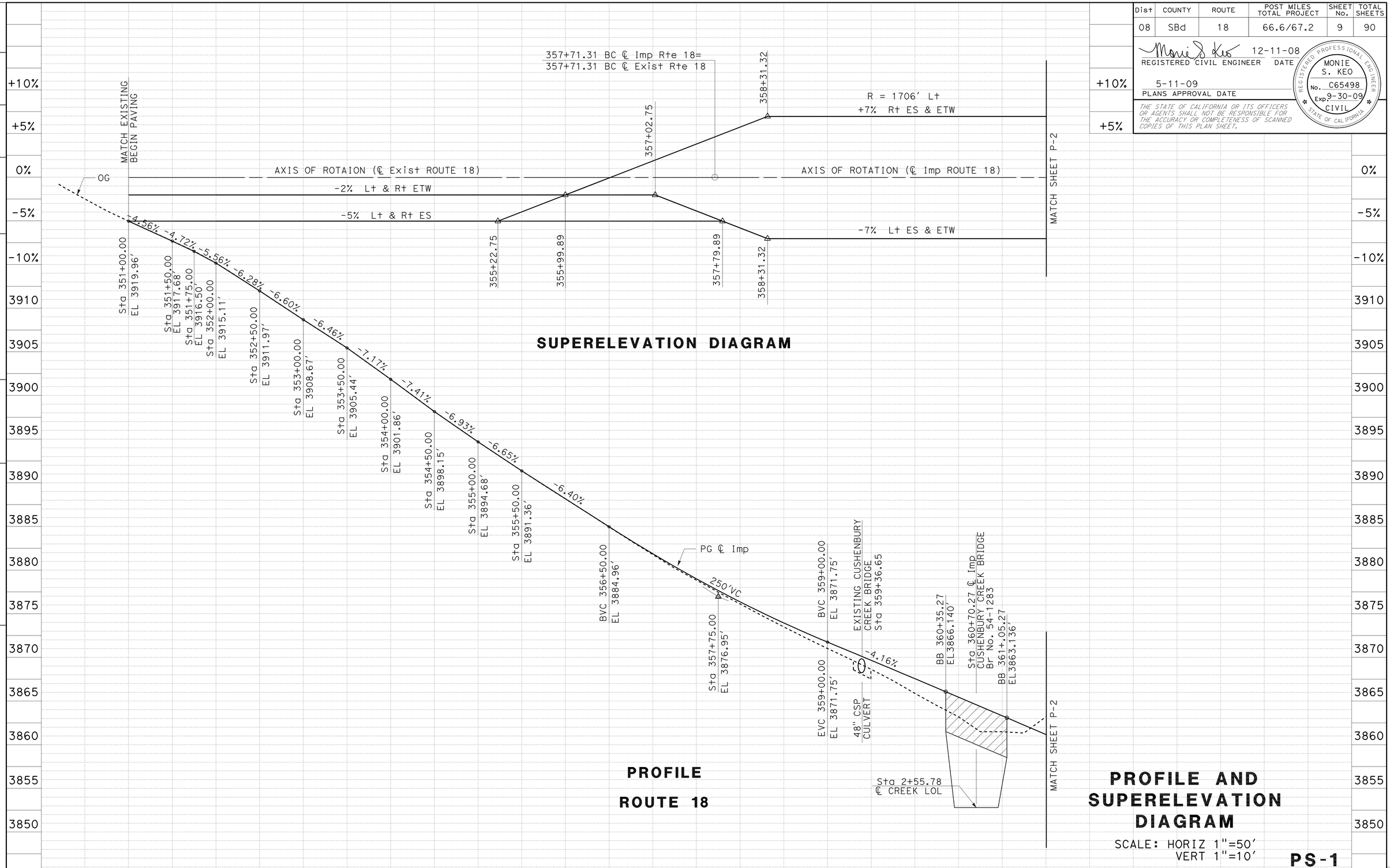

SUPERELEVATION DIAGRAM

PROFILE

ROUTE 18

PROFILE AND SUPERELEVATION DIAGRAM

SCALE: HORIZ 1"=50'
VERT 1"=10'

PS-1

STATE OF CALIFORNIA - DEPARTMENT OF TRANSPORTATION
Caltrans® **DESIGN DIVISION**

FUNCTIONAL SUPERVISOR: BEN AMIRI
CALCULATED-DESIGNED BY: MONIE KEO
CHECKED BY: TRUC BUI
REVISED BY
DATE REVISED

LAST REVISION 12-11-08
DATE PLOTTED => 08-JUL-2009
TIME PLOTTED => 10:40

Dist	COUNTY	ROUTE	POST MILES TOTAL PROJECT	SHEET No.	TOTAL SHEETS
08	SBd	18	66.6/67.2	10	90

REGISTERED CIVIL ENGINEER — DATE 12-11-08

5-11-09
PLANS APPROVAL DATE

REGISTERED PROFESSIONAL ENGINEER — MONIE S. KEO — No. C65498 — Exp. 9-30-09 — CIVIL — STATE OF CALIFORNIA

THE STATE OF CALIFORNIA OR ITS OFFICERS OR AGENTS SHALL NOT BE RESPONSIBLE FOR THE ACCURACY OR COMPLETENESS OF SCANNED COPIES OF THIS PLAN SHEET.

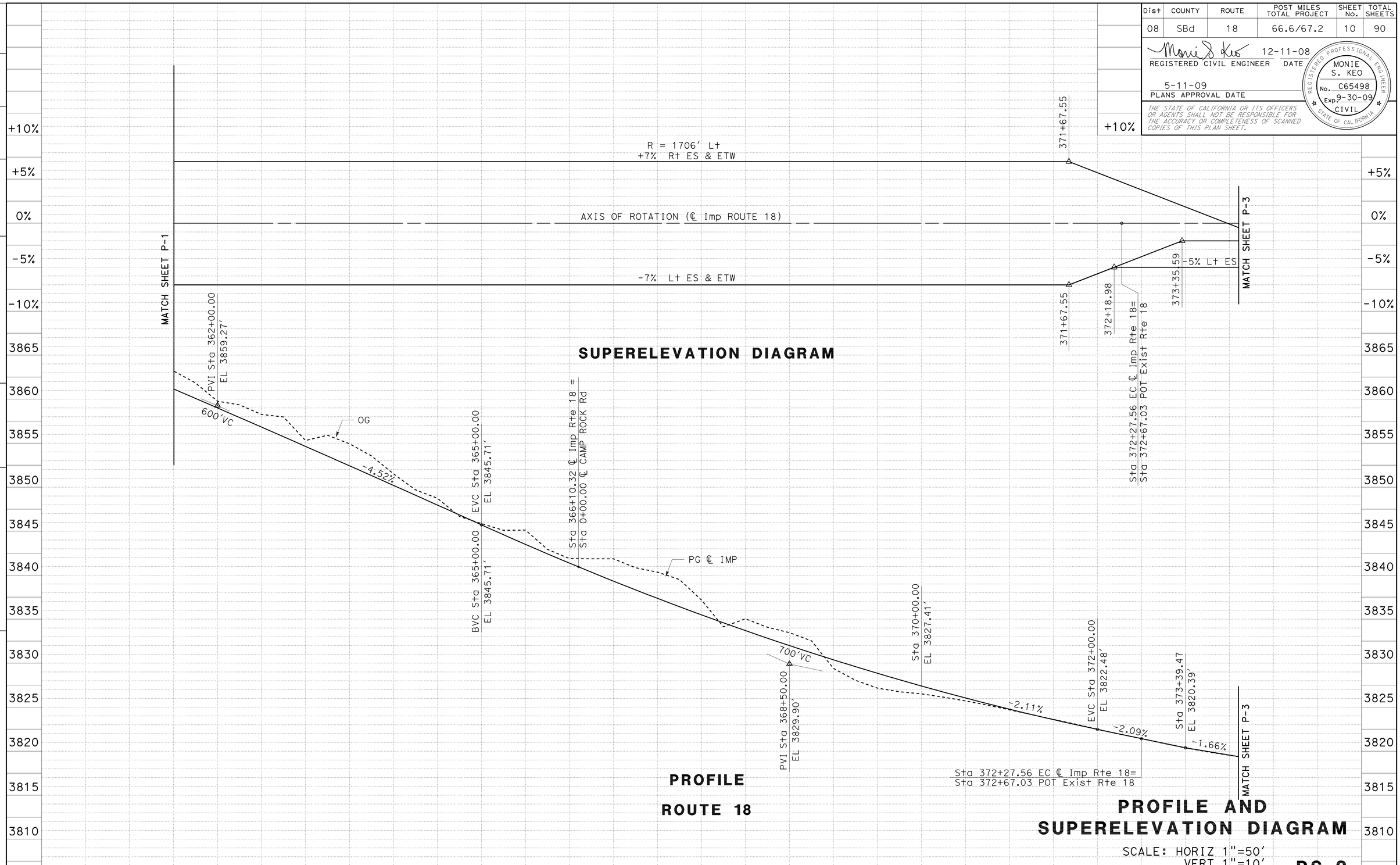

STATE OF CALIFORNIA - DEPARTMENT OF TRANSPORTATION
Caltrans DESIGN DIVISION

FUNCTIONAL SUPERVISOR: BEN AMIRI
CALCULATED-DESIGNED BY: MONIE KEO
CHECKED BY: TRUC BUI
REVISED BY
DATE REVISED

LAST REVISION 12-11-08
DATE PLOTTED => 08-JUL-2009
TIME PLOTTED => 10:40

Dist	COUNTY	ROUTE	POST MILES TOTAL PROJECT	SHEET No.	TOTAL SHEETS
08	SBd	18	66.6/67.2	11	90

REGISTERED CIVIL ENGINEER 12-11-08 DATE

5-11-09
PLANS APPROVAL DATE

REGISTERED PROFESSIONAL ENGINEER MONIE S. KEO No. C65498 Exp. 9-30-09 CIVIL STATE OF CALIFORNIA

THE STATE OF CALIFORNIA OR ITS OFFICERS OR AGENTS SHALL NOT BE RESPONSIBLE FOR THE ACCURACY OR COMPLETENESS OF SCANNED COPIES OF THIS PLAN SHEET.

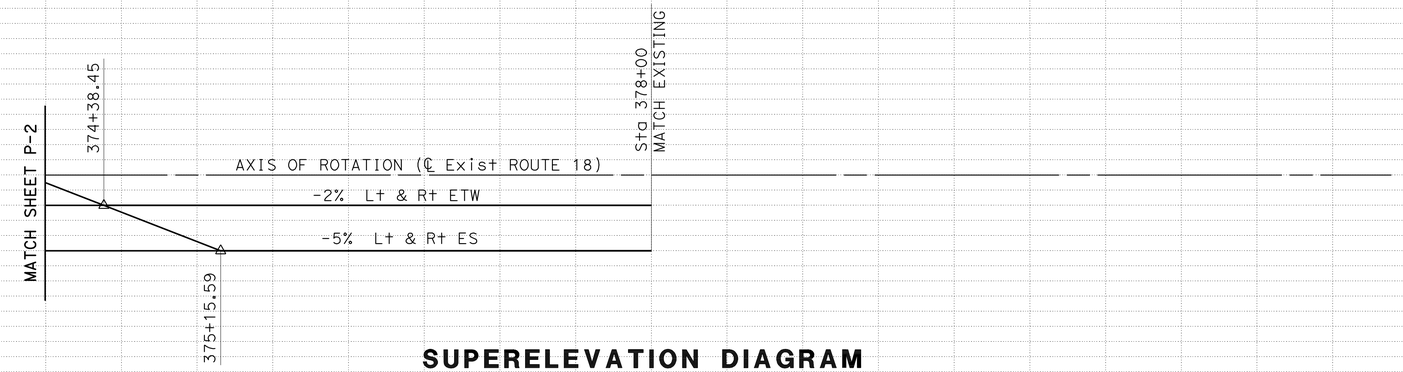

SUPERELEVATION DIAGRAM

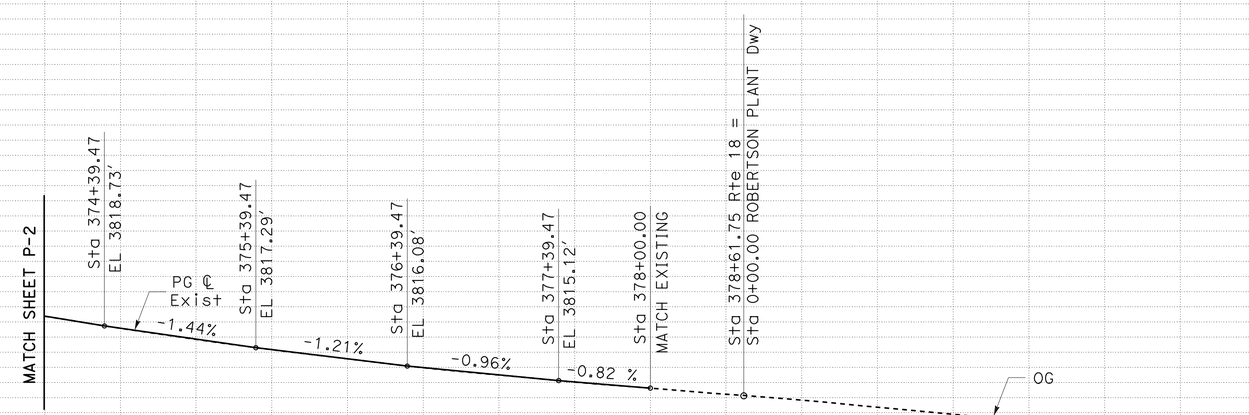

PROFILE

ROUTE 18

PROFILE AND SUPERELEVATION DIAGRAM

SCALE: HORIZ 1"=50'
VERT 1"=10'

PS-3

STATION		3	4	375	6	7	8	9	380	1	2	TOTAL
CY	Exc		2680									
	Emb		1570									

STATE OF CALIFORNIA - DEPARTMENT OF TRANSPORTATION
Caltrans DESIGN DIVISION

FUNCTIONAL SUPERVISOR: BEN AMIRI
CALCULATED-DESIGNED BY: MONIE KEO
CHECKED BY: TRUC BUI
REVISED BY
DATE REVISED

LAST REVISION 12-11-08
DATE PLOTTED => 08-JUL-2009
TIME PLOTTED => 10:40

Dist	COUNTY	ROUTE	POST MILES TOTAL PROJECT	SHEET No.	TOTAL SHEETS
08	SBd	18	66.6/67.2	12	90

REGISTERED CIVIL ENGINEER — DATE 12-11-08

5-11-09
PLANS APPROVAL DATE

REGISTERED PROFESSIONAL ENGINEER — MONIE S. KEO — No. C65498 — Exp. 9-30-09 — CIVIL — STATE OF CALIFORNIA

THE STATE OF CALIFORNIA OR ITS OFFICERS OR AGENTS SHALL NOT BE RESPONSIBLE FOR THE ACCURACY OR COMPLETENESS OF SCANNED COPIES OF THIS PLAN SHEET.

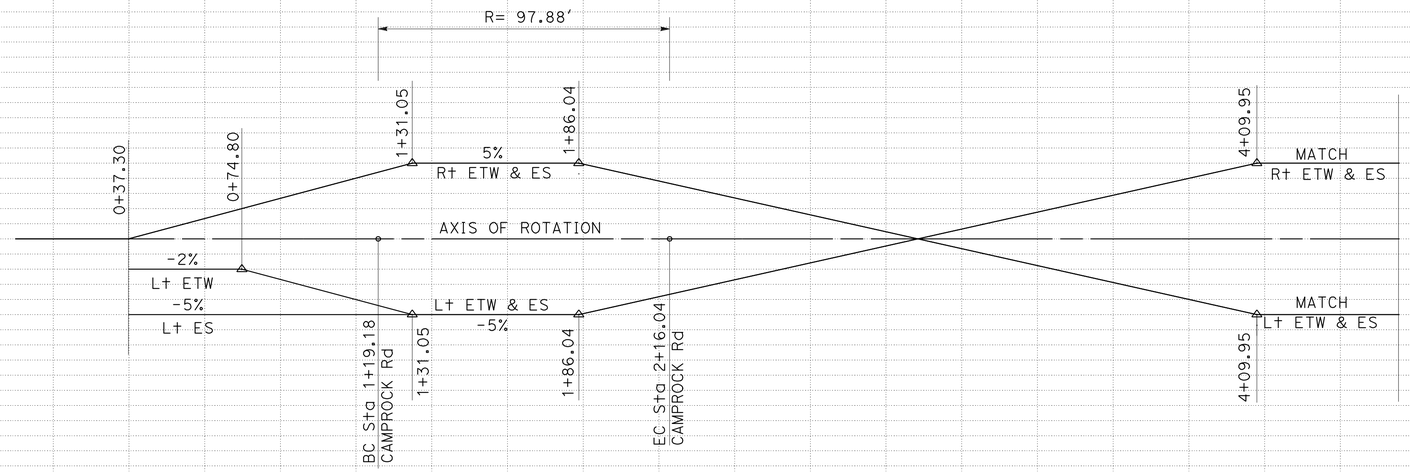

SUPERELEVATION DIAGRAM

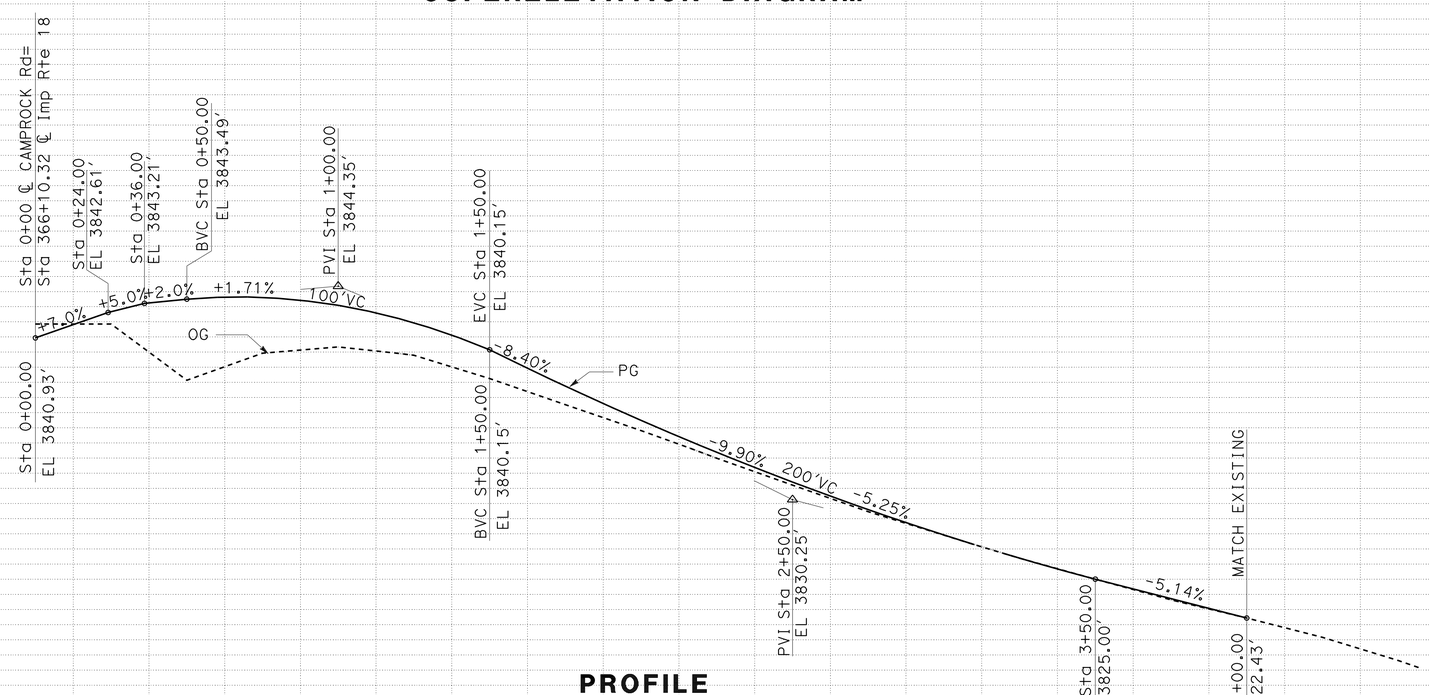

PROFILE

CAMP ROCK ROAD

PROFILE AND SUPERELEVATION DIAGRAM

SCALE: HORIZ 1"=25'
VERT 1"=5'

PS-4

STATE OF CALIFORNIA - DEPARTMENT OF TRANSPORTATION
Caltrans® DESIGN DIVISION

FUNCTIONAL SUPERVISOR: BEN AMIRI
CALCULATED-DESIGNED BY: MONIE KEO
CHECKED BY: TRUC BUI
REVISED BY
DATE REVISED

LAST REVISION 12-11-08 | DATE PLOTTED => 08-JUL-2009 | TIME PLOTTED => 10:40

Dist	COUNTY	ROUTE	POST MILES TOTAL PROJECT	SHEET No.	TOTAL SHEETS
08	SBd	18	66.6/67.2	13	90

REGISTERED CIVIL ENGINEER — DATE 12-11-08

5-11-09
PLANS APPROVAL DATE

REGISTERED PROFESSIONAL ENGINEER — MONIE S. KEO — No. C65498 — Exp. 9-30-09 — CIVIL — STATE OF CALIFORNIA

THE STATE OF CALIFORNIA OR ITS OFFICERS OR AGENTS SHALL NOT BE RESPONSIBLE FOR THE ACCURACY OR COMPLETENESS OF SCANNED COPIES OF THIS PLAN SHEET.

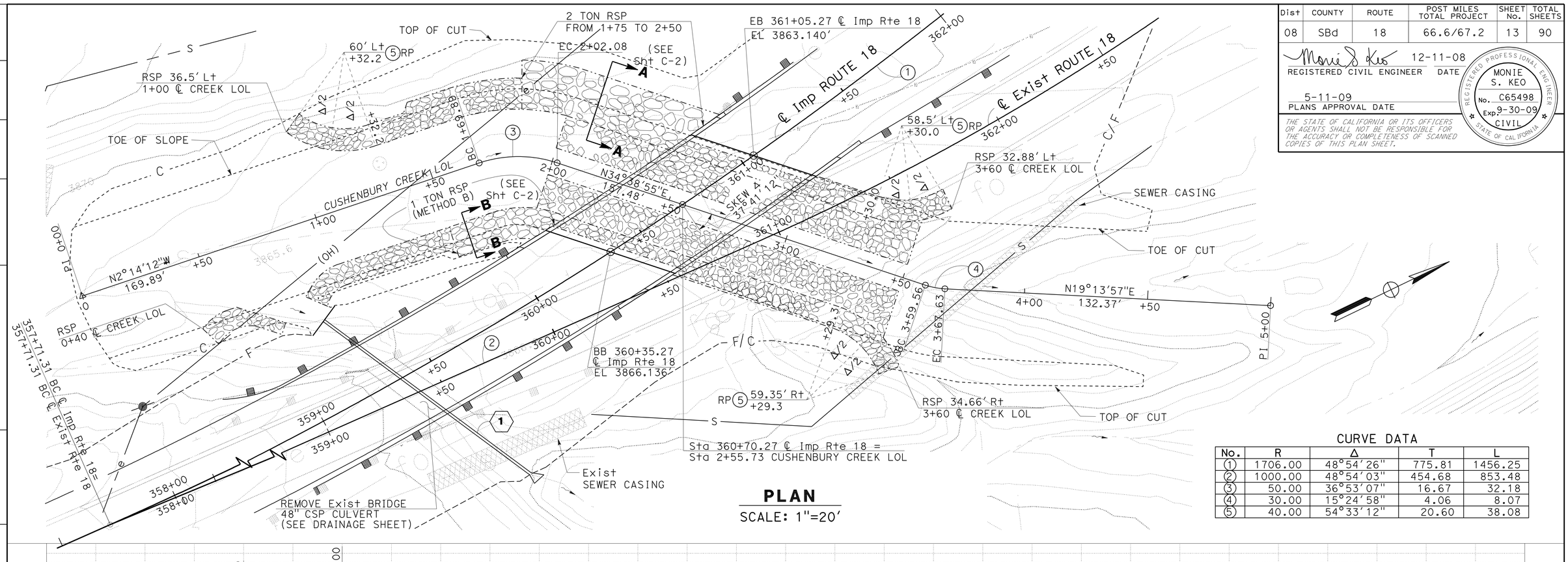

PLAN

SCALE: 1"=20'

CURVE DATA

No.	R	Δ	T	L
(1)	1706.00	48°54'26"	775.81	1456.25
(2)	1000.00	48°54'03"	454.68	853.48
(3)	50.00	36°53'07"	16.67	32.18
(4)	30.00	15°24'58"	4.06	8.07
(5)	40.00	54°33'12"	20.60	38.08

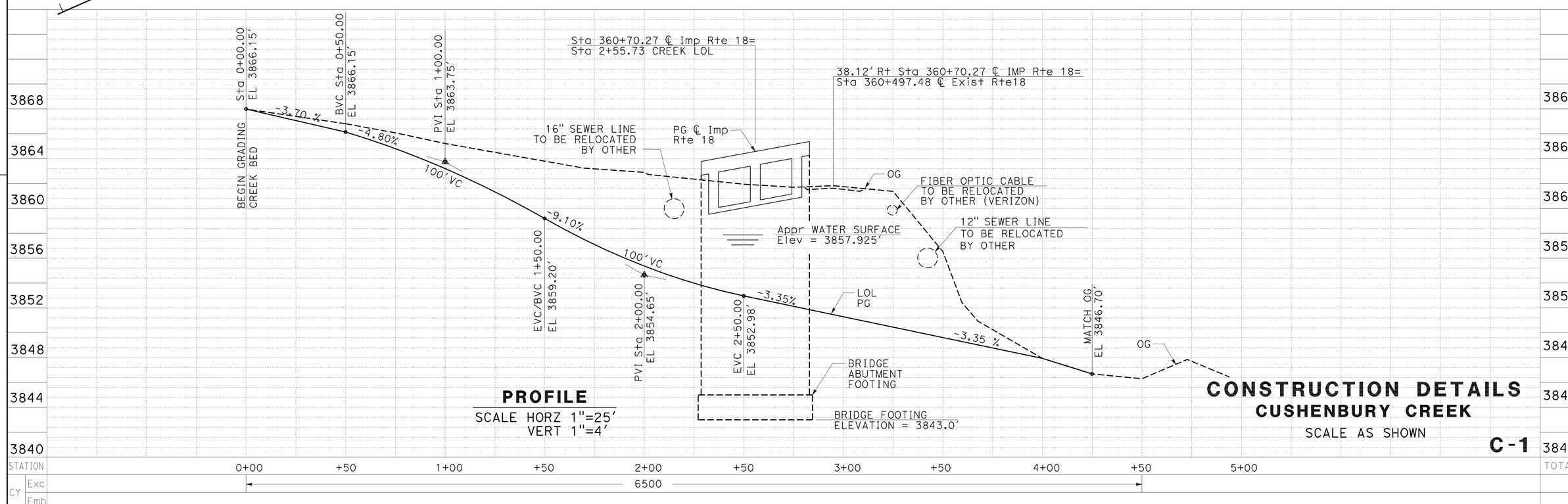

PROFILE

SCALE HORZ 1"=25'
VERT 1"=4'

CONSTRUCTION DETAILS

CUSHENBURY CREEK

SCALE AS SHOWN

C-1

STATE OF CALIFORNIA - DEPARTMENT OF TRANSPORTATION
DESIGN DIVISION

FUNCTIONAL SUPERVISOR: BEN AMIRI
CALCULATED-DESIGNED BY: MONIE KEO
CHECKED BY: TRUC BUI
REVISED BY
DATE REVISED

LAST REVISION 12-11-08 | DATE PLOTTED => 08-JUL-2009 | TIME PLOTTED => 10:41

Dist	COUNTY	ROUTE	POST MILES TOTAL PROJECT	SHEET No.	TOTAL SHEETS
08	SBd	18	66.6/67.2	14	90

REGISTERED CIVIL ENGINEER 12-11-08 DATE

5-11-09
PLANS APPROVAL DATE

REGISTERED PROFESSIONAL ENGINEER MONIE S. KEO No. C65498 Exp. 9-30-09 CIVIL STATE OF CALIFORNIA

THE STATE OF CALIFORNIA OR ITS OFFICERS OR AGENTS SHALL NOT BE RESPONSIBLE FOR THE ACCURACY OR COMPLETENESS OF SCANNED COPIES OF THIS PLAN SHEET.

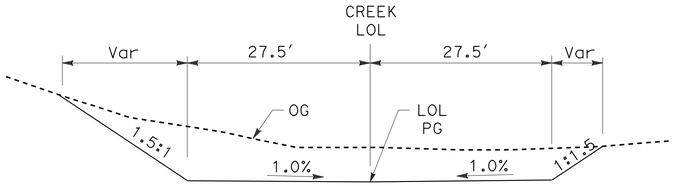

CUSHENBURY CREEK EXCAVATION
TYPICAL CROSS SECTION
Sta 0+00 To 4+50

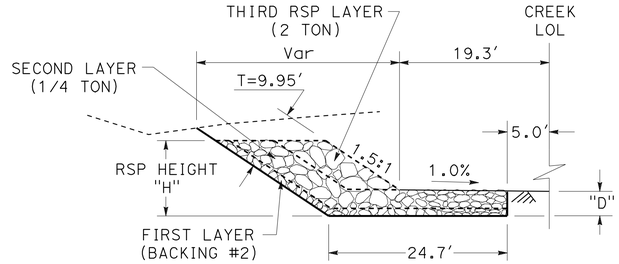

SECTION A-A
CUSHENBURY CREEK RSP (2 TON)
Sta 1+75 To 2+50 (LEFT LOL)

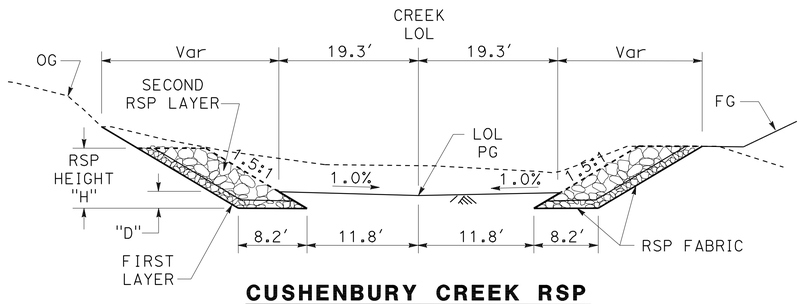

CUSHENBURY CREEK RSP
TYPICAL CROSS SECTION

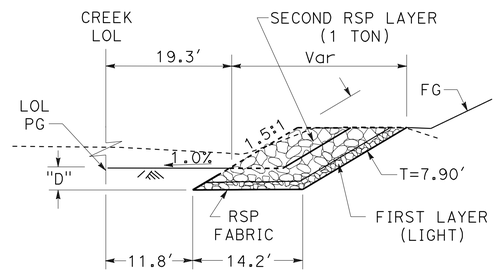

SECTION B-B
CUSHENBURY CREEK RSP (1 Ton)
Sta 1+50 To 2+05 (RIGHT LOL)

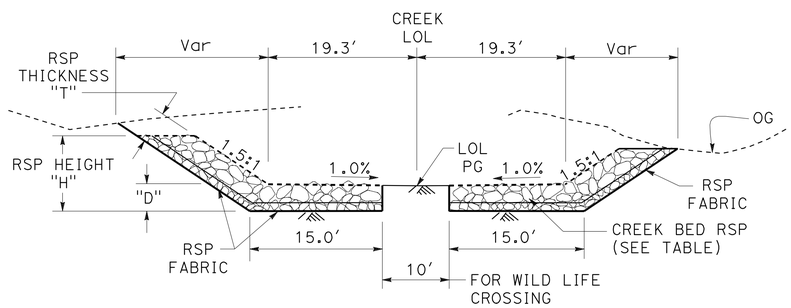

CUSHENBURY CREEK RSP
CROSS SECTION
Sta 2+00 To 3+50

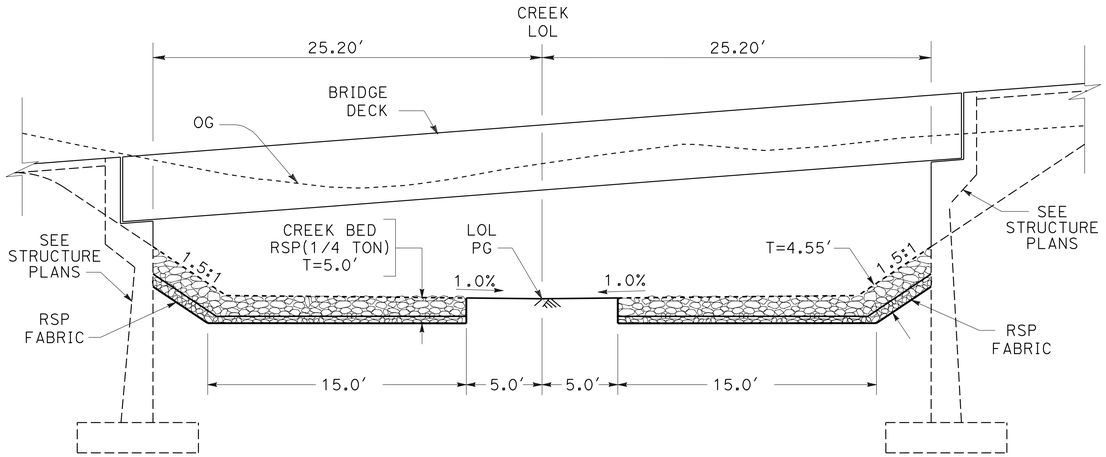

ROCK SLOPE PROTECTION UNDERNEATH BRIDGE
CROSS SECTION

CREEK SIDE SLOPE RSP LAYOUT (RIGHT SIDE)

LOCATION/DESCRIPTION							
STATION LIMIT	RSP HEIGHT "H"	"D"	RSP THICKNESS "T"	CLASS OF ROCK SLOPE PROTECTION			
				FIRST LAYER (METHOD B)		SECOND LAYER (METHOD B)	
0+40	8.0′	5.0′	4.55′	BACKING No.2	T=1.25′	¼TON	T=3.30′
1+00	10.0′	5.0′	4.55′	BACKING No.2	T=1.25′	¼TON	T=3.30′
1+50	10.0′	5.0′	7.90′	LIGHT	T=2.50′	1 TON	T=5.40′
2+05	11.0′	5.0′	7.90′	LIGHT	T=2.50′	1 TON	T=5.40′
2+50	11.0′	5.0′	4.55′	BACKING No.2	T=1.25′	¼TON	T=3.30′
2+75	11.0′	5.0′	4.55′	BACKING No.2	T=1.25′	¼TON	T=3.30′
3+00	11.0′	5.0′	4.55′	BACKING No.2	T=1.25′	¼TON	T=3.30′
3+60	11.0′	5.0′	4.55′	BACKING No.2	T=1.25′	¼TON	T=3.30′

CREEK SIDE SLOPE RSP LAYOUT (LEFT SIDE)

LOCATION/DESCRIPTION									
STATION LIMIT	RSP HEIGHT "H"	"D"	RSP THICKNESS "T"	CLASS OF ROCK SLOPE PROTECTION					
				FIRST LAYER (METHOD B)		SECOND LAYER (METHOD B)		THIRD LAYER (METHOD A)	
1+25	9.0′	5.0′	4.55′	BACKING No.2	T=1.25′	¼TON	T=3.30′	—	—
1+50	9.0′	5.0′	4.55′	BACKING No.2	T=1.25′	¼TON	T=3.30′	—	—
1+75	11.5′	5.0′	9.95′	BACKING No.2	T=1.25′	¼TON	T=3.30′	2 TON	T=5.40′
2+00	11.5′	5.0′	9.95′	BACKING No.2	T=1.25′	¼TON	T=3.30′	2 TON	T=5.40′
2+50	11.5′	5.0′	9.95′	BACKING No.2	T=1.25′	¼TON	T=3.30′	2 TON	T=5.40′
2+75	11.5′	5.0′	4.55′	BACKING No.2	T=1.25′	¼TON	T=3.30′	—	—
3+00	11.5′	5.0′	4.55′	BACKING No.2	T=1.25′	¼TON	T=3.30′	—	—
3+60	11.5′	5.0′	4.55′	BACKING No.2	T=1.25′	¼TON	T=3.30′	—	—

CREEK BED RSP LAYOUT

STATION LIMIT	LOCATION			CLASS OF ROCK SLOPE PROTECTION			
	DESCRIPTION	WIDTH	THICKNESS "T"	FIRST LAYER (METHOD B)		SECOND LAYER (METHOD B)	
2+00	FROM 5.0′ TO 20.0′ Lt & Rt LOL	15.0′	5.00′	BACKING No.2	T=1.70′	¼TON	T=3.30′
3+50	FROM 5.0′ TO 20.0′ Lt & Rt LOL	15.0′	5.00′	BACKING No.2	T=1.70′	¼TON	T=3.30′

CONSTRUCTION DETAILS
CUSHENBURY CREEK

NO SCALE

C-2

STATE OF CALIFORNIA - DEPARTMENT OF TRANSPORTATION
Caltrans DESIGN DIVISION

FUNCTIONAL SUPERVISOR: BEN AMIRI
CALCULATED-DESIGNED BY: MONIE KEO
CHECKED BY: TRUC BUI
REVISED BY
DATE REVISED

LAST REVISION 12-11-08
DATE PLOTTED => 08-JUL-2009
TIME PLOTTED => 10:41

Dist	COUNTY	ROUTE	POST MILES TOTAL PROJECT	SHEET No.	TOTAL SHEETS
08	SBd	18	66.6/67.2	15	90

REGISTERED CIVIL ENGINEER — DATE 4-22-09

5-11-09
PLANS APPROVAL DATE

REGISTERED PROFESSIONAL ENGINEER — MONIE S. KEO — No. C65498 — Exp. 9-30-09 — CIVIL — STATE OF CALIFORNIA

THE STATE OF CALIFORNIA OR ITS OFFICERS OR AGENTS SHALL NOT BE RESPONSIBLE FOR THE ACCURACY OR COMPLETENESS OF SCANNED COPIES OF THIS PLAN SHEET.

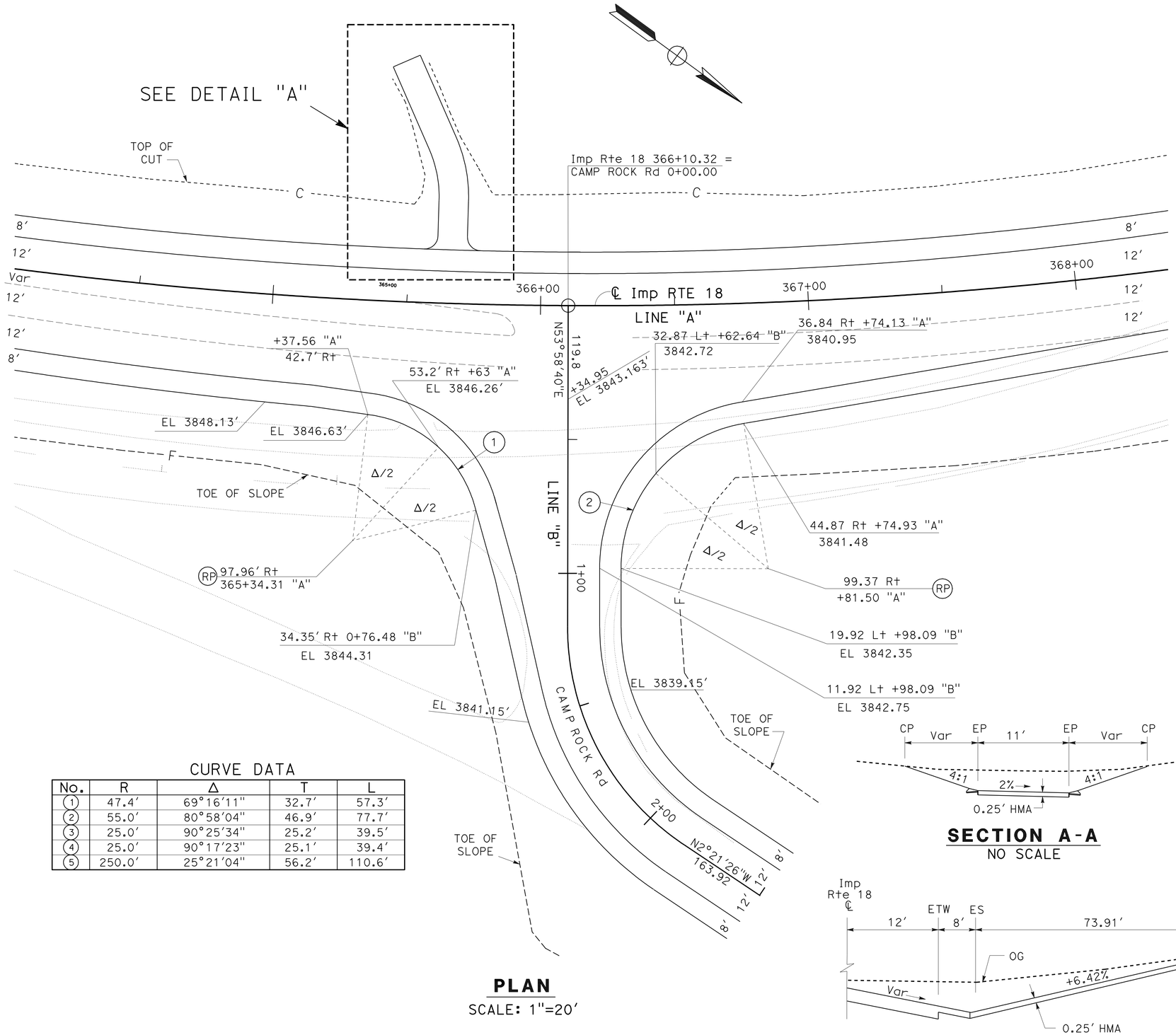

PLAN
SCALE: 1"=20'

CURVE DATA

No.	R	Δ	T	L
1	47.4'	69°16'11"	32.7'	57.3'
2	55.0'	80°58'04"	46.9'	77.7'
3	25.0'	90°25'34"	25.2'	39.5'
4	25.0'	90°17'23"	25.1'	39.4'
5	250.0'	25°21'04"	56.2'	110.6'

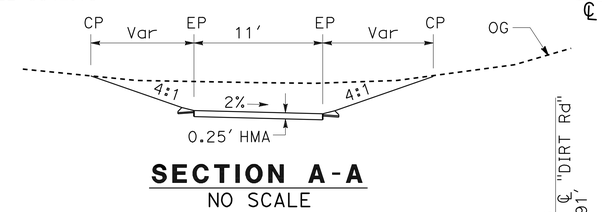

SECTION A-A
NO SCALE

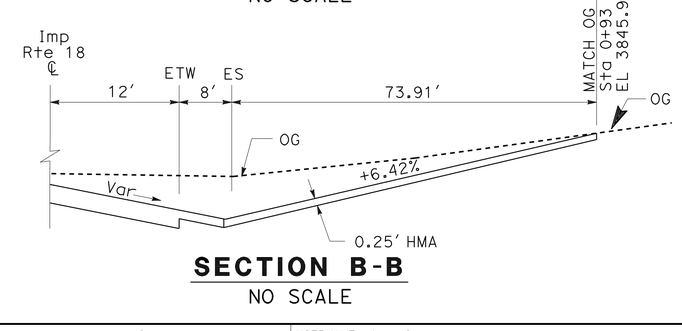

SECTION B-B
NO SCALE

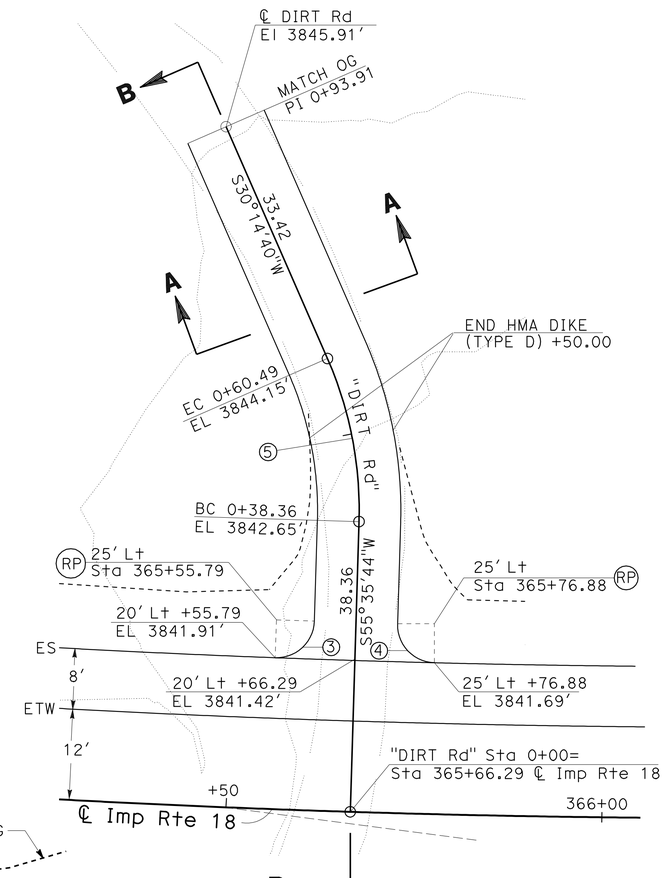

DETAIL "A"
NO SCALE

CONSTRUCTION DETAILS
PAVEMENT DIAGRAM

SCALE AS SHOWN

C-3

STATE OF CALIFORNIA - DEPARTMENT OF TRANSPORTATION
Caltrans® DESIGN DIVISION

FUNCTIONAL SUPERVISOR: BEN AMIRI
CALCULATED-DESIGNED BY: MONIE KEO
CHECKED BY: TRUC BUI
REVISED BY
DATE REVISED

LAST REVISION 04-22-09
DATE PLOTTED => 08-JUL-2009
TIME PLOTTED => 10:41

Dist	COUNTY	ROUTE	POST MILES TOTAL PROJECT	SHEET No.	TOTAL SHEETS
08	SBd	18	66.6/67.2	16	90

REGISTERED CIVIL ENGINEER 12-11-08 DATE

5-11-09
PLANS APPROVAL DATE

REGISTERED PROFESSIONAL ENGINEER MONIE S. KEO No. C65498 Exp. 9-30-09 CIVIL STATE OF CALIFORNIA

THE STATE OF CALIFORNIA OR ITS OFFICERS OR AGENTS SHALL NOT BE RESPONSIBLE FOR THE ACCURACY OR COMPLETENESS OF SCANNED COPIES OF THIS PLAN SHEET.

LEGEND

COLD PLANE 0.25′ HMA PAVEMENT (TYPE A)

CURVE DATA

No.	R	Δ	T	L
1	35.00	58°33′33″	19.62	35.77
2	12.00	122°50′29″	22.03	25.73

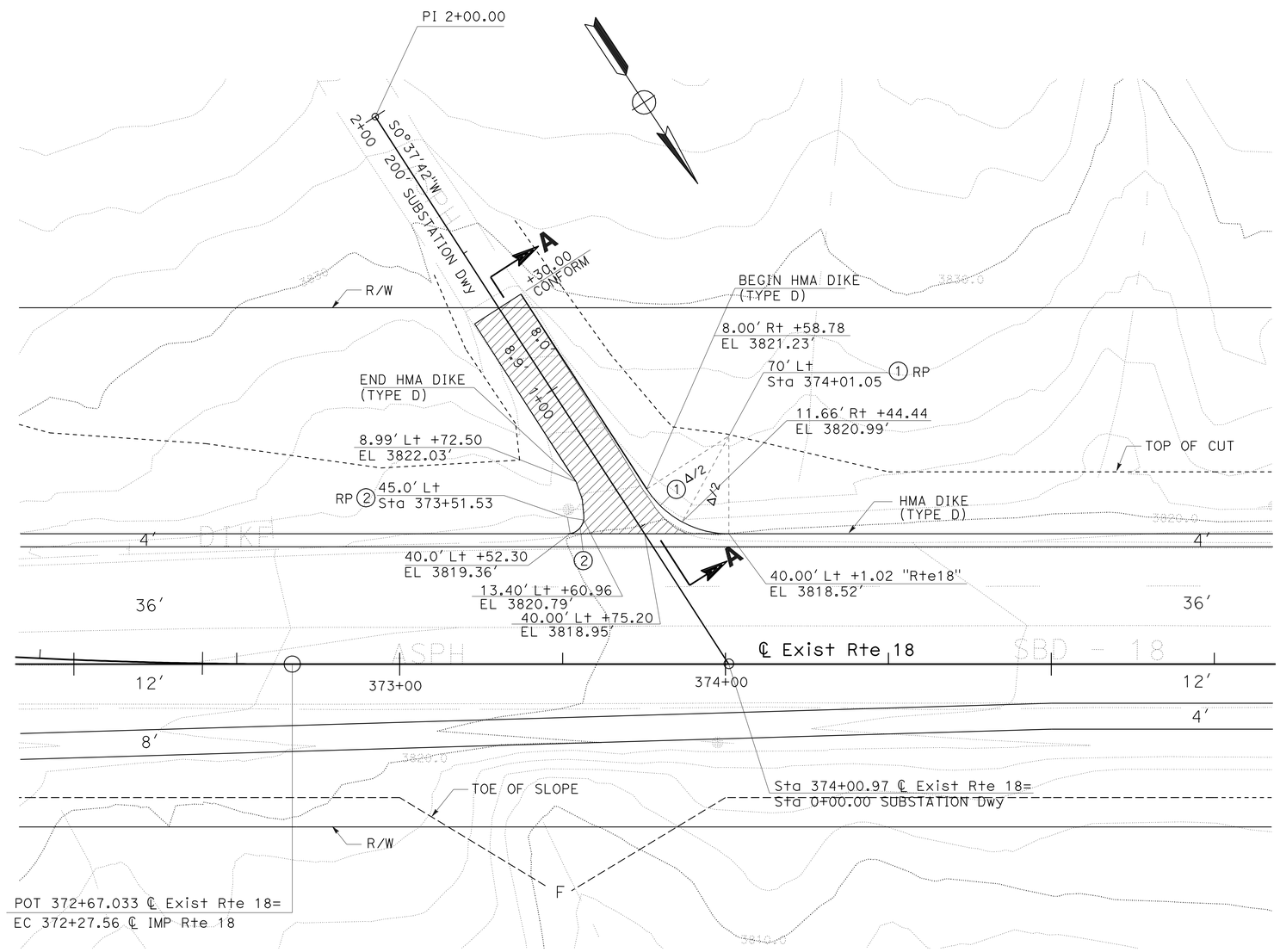

PLAN

SCALE: 1″=20′

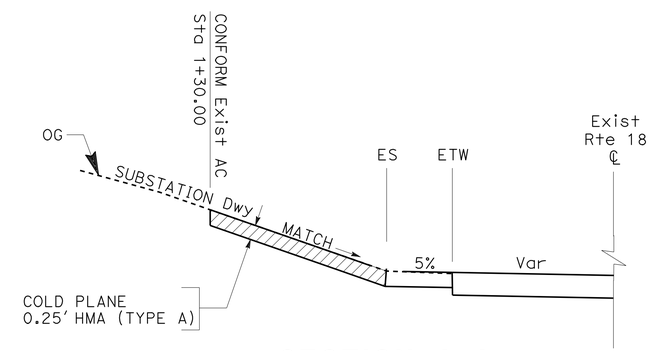

SECTION A-A

NO SCALE

CONSTRUCTION DETAILS
PAVING DIAGRAM

SCALE AS SHOWN

C-4

STATE OF CALIFORNIA - DEPARTMENT OF TRANSPORTATION
Caltrans DESIGN DIVISION

FUNCTIONAL SUPERVISOR: BEN AMIRI
CALCULATED-DESIGNED BY: MONIE KEO
CHECKED BY: JUSTINE NUI
REVISED BY
DATE REVISED

LAST REVISION 12-11-08
DATE PLOTTED => 08-JUL-2009
TIME PLOTTED => 10:41

Dist	COUNTY	ROUTE	POST MILES TOTAL PROJECT	SHEET No.	TOTAL SHEETS
08	SBd	18	66.6/67.2	17	90

REGISTERED CIVIL ENGINEER 12-11-08 DATE

5-11-09
PLANS APPROVAL DATE

REGISTERED PROFESSIONAL ENGINEER MONIE S. KEO No. C65498 Exp. 9-30-09 CIVIL STATE OF CALIFORNIA

THE STATE OF CALIFORNIA OR ITS OFFICERS OR AGENTS SHALL NOT BE RESPONSIBLE FOR THE ACCURACY OR COMPLETENESS OF SCANNED COPIES OF THIS PLAN SHEET.

CURVE DATA

No.	R	Δ	T	L
1	55.00	64°21'45"	34.61	61.78

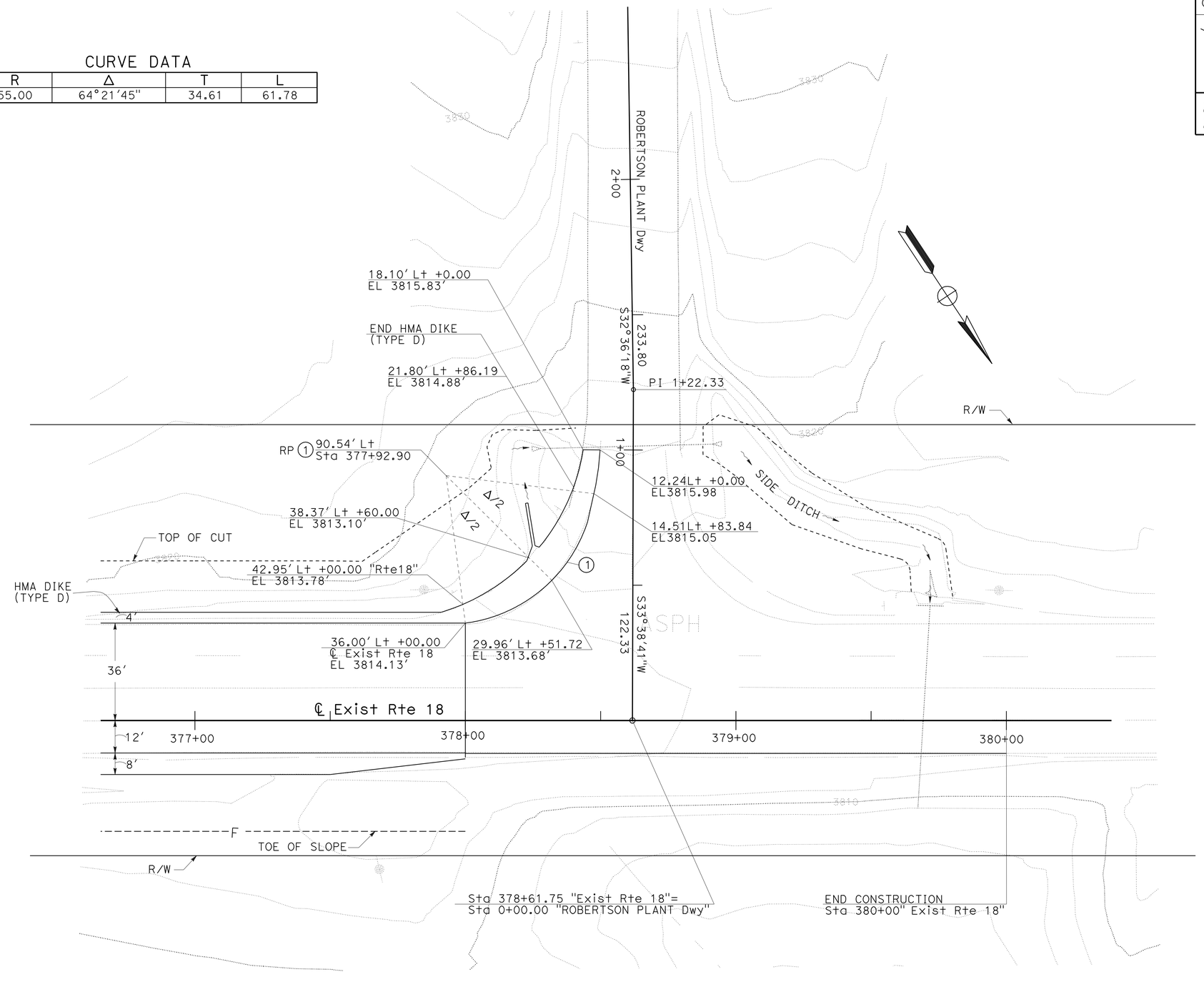

CONSTRUCTION DETAILS
PAVING DIAGRAM

SCALE: 1"=20'

C-5

STATE OF CALIFORNIA - DEPARTMENT OF TRANSPORTATION
Caltrans DESIGN DIVISION

FUNCTIONAL SUPERVISOR: BEN AMIRI
CALCULATED-DESIGNED BY: MONIE KEO
CHECKED BY: JUSTINE NUI
REVISED BY
DATE REVISED

LAST REVISION 12-11-08 | DATE PLOTTED => 08-JUL-2009 | TIME PLOTTED => 10:41

Dist	COUNTY	ROUTE	POST MILES TOTAL PROJECT	SHEET No.	TOTAL SHEETS
08	SBd	18	66.6/67.2	18	90

REGISTERED CIVIL ENGINEER 12-11-08 DATE

5-11-09
PLANS APPROVAL DATE

REGISTERED PROFESSIONAL ENGINEER MONIE S. KEO No. C65498 Exp. 9-30-09 CIVIL STATE OF CALIFORNIA

THE STATE OF CALIFORNIA OR ITS OFFICERS OR AGENTS SHALL NOT BE RESPONSIBLE FOR THE ACCURACY OR COMPLETENESS OF SCANNED COPIES OF THIS PLAN SHEET.

NOTE:

1. FOR DETAILS NOT SHOWN, SEE STANDARD PLAN.

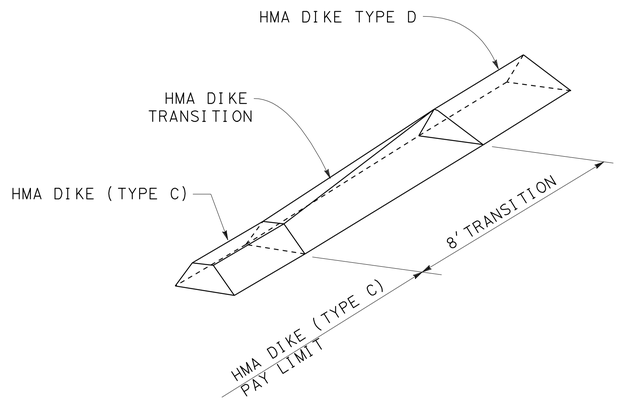

HMA DIKE (TYPE C) TO HMA DIKE (TYPE D) TRANSITION

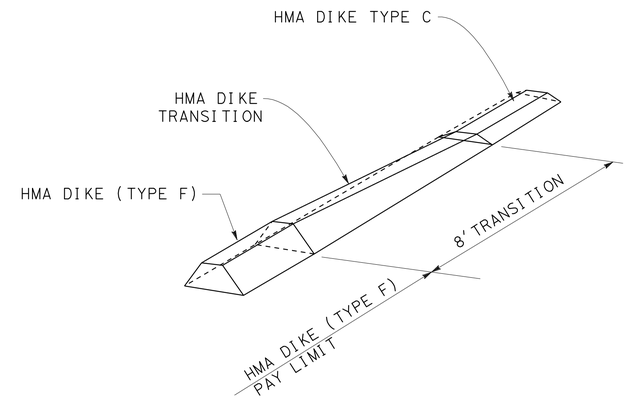

HMA DIKE (TYPE F) TO HMA DIKE (TYPE C) TRANSITION

HMA DIKE TRANSITIONS

CONSTRUCTION DETAILS

NO SCALE

C-6

STATE OF CALIFORNIA - DEPARTMENT OF TRANSPORTATION
Caltrans DESIGN DIVISION

FUNCTIONAL SUPERVISOR: BEN AMIRI
CALCULATED-DESIGNED BY: MONIE KEO
CHECKED BY: JUSTINE NUI
REVISED BY
DATE REVISED

LAST REVISION 12-11-08
DATE PLOTTED => 08-JUL-2009
TIME PLOTTED => 10:42

Dist	COUNTY	ROUTE	POST MILES TOTAL PROJECT	SHEET No.	TOTAL SHEETS
08	SBd	18	66.6/67.2	19	90

REGISTERED CIVIL ENGINEER 12-11-08 DATE

5-11-09
PLANS APPROVAL DATE

REGISTERED PROFESSIONAL ENGINEER MONIE S. KEO No. C65498 Exp. 9-30-09 CIVIL STATE OF CALIFORNIA

THE STATE OF CALIFORNIA OR ITS OFFICERS OR AGENTS SHALL NOT BE RESPONSIBLE FOR THE ACCURACY OR COMPLETENESS OF SCANNED COPIES OF THIS PLAN SHEET.

NOTE

1. TEMPORARY SILT FENCE AND TEMPORARY STRAW BALE BARRIER SHOWN FOR REFERENCE PURPOSES ONLY.

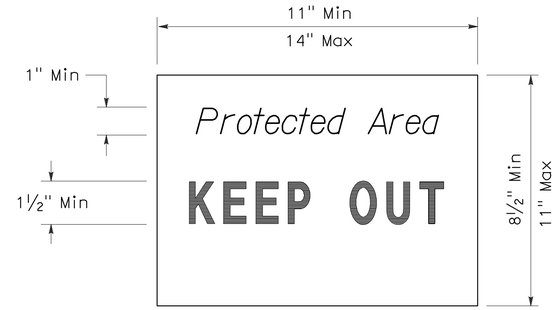

SIGN DETAIL

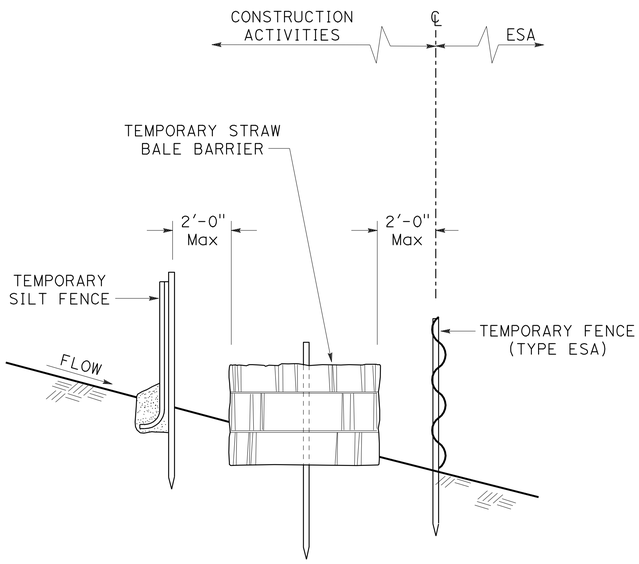

SECTION

PLACEMENT DETAIL FOR TEMPORARY SILT FENCE AND TEMPORARY STRAW BALE BARRIER USED WITH TEMPORARY FENCE (TYPE ESA)

(SEE NOTE 1)

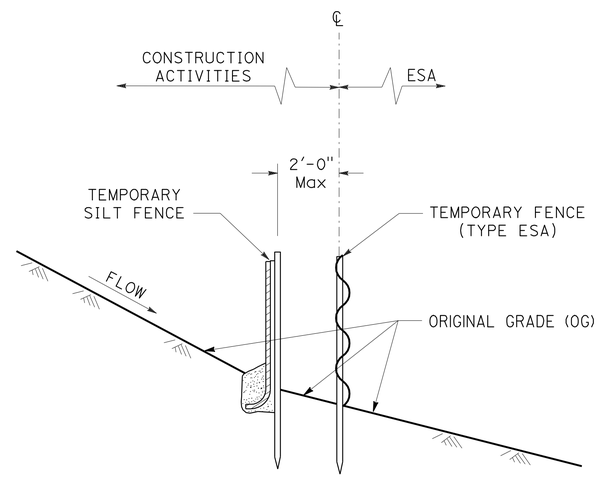

SECTION

PLACEMENT DETAIL FOR TEMPORARY SILT FENCE USED WITH TEMPORARY FENCE (TYPE ESA)

(SEE NOTE 1)

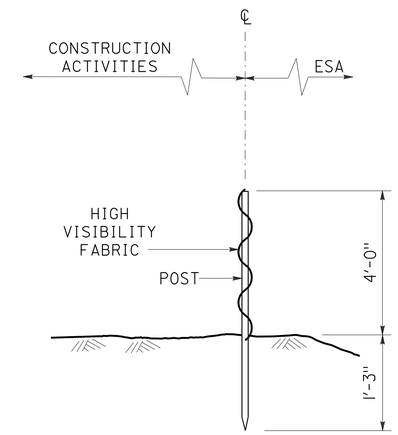

SECTION

TEMPORARY FENCE (TYPE ESA)

CONSTRUCTION DETAILS
TEMPORARY FENCE (TYPE ESA)

NO SCALE

C-7

STATE OF CALIFORNIA - DEPARTMENT OF TRANSPORTATION
Caltrans® DESIGN DIVISION

FUNCTIONAL SUPERVISOR: BEN AMIRI
CALCULATED-DESIGNED BY: JUSTINE NIU
CHECKED BY: MONIE KEO
REVISED BY
DATE REVISED

LAST REVISION 12-11-08 | DATE PLOTTED => 08-JUL-2009 | TIME PLOTTED => 10:42

Dist	COUNTY	ROUTE	POST MILES TOTAL PROJECT	SHEET No.	TOTAL SHEETS
08	SBd	18	66.6/67.2	20	90

REGISTERED CIVIL ENGINEER 12-11-08 DATE

5-11-09
PLANS APPROVAL DATE

REGISTERED PROFESSIONAL ENGINEER MONIE S. KEO No. C65498 Exp. 9-30-09 CIVIL STATE OF CALIFORNIA

THE STATE OF CALIFORNIA OR ITS OFFICERS OR AGENTS SHALL NOT BE RESPONSIBLE FOR THE ACCURACY OR COMPLETENESS OF SCANNED COPIES OF THIS PLAN SHEET.

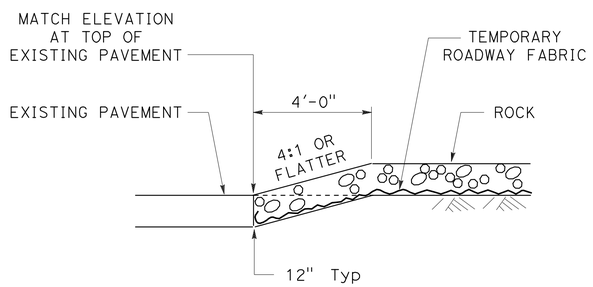

SECTION

CONFORM DETAIL

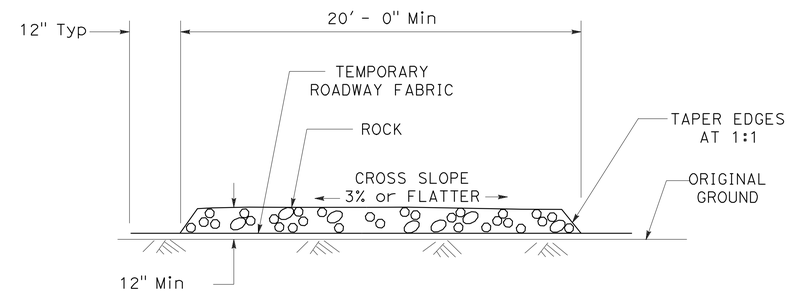

SECTION

TEMPORARY CONSTRUCTION ROADWAY

CONSTRUCTION DETAILS
TEMPORARY CONSTRUCTION ROADWAY

NO SCALE

C-8

STATE OF CALIFORNIA - DEPARTMENT OF TRANSPORTATION
Caltrans DESIGN DIVISION

FUNCTIONAL SUPERVISOR: BEN AMIRI
CALCULATED-DESIGNED BY: JUSTINE NIU
CHECKED BY: MONIE KEO
REVISED BY
DATE REVISED

LAST REVISION 12-11-08 | DATE PLOTTED => 08-JUL-2009 | TIME PLOTTED => 10:42

Dist	COUNTY	ROUTE	POST MILES TOTAL PROJECT	SHEET No.	TOTAL SHEETS
08	SBd	18	66.6/67.2	21	90

REGISTERED CIVIL ENGINEER 3-04-09 DATE

5-11-09
PLANS APPROVAL DATE

REGISTERED PROFESSIONAL ENGINEER MONIE S. KEO No. C65498 Exp. 9-30-09 CIVIL STATE OF CALIFORNIA

THE STATE OF CALIFORNIA OR ITS OFFICERS OR AGENTS SHALL NOT BE RESPONSIBLE FOR THE ACCURACY OR COMPLETENESS OF SCANNED COPIES OF THIS PLAN SHEET.

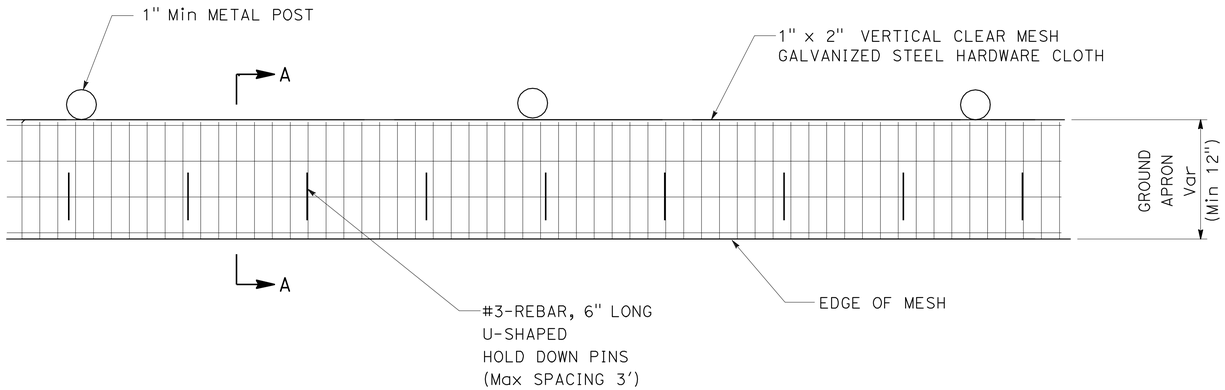

PLAN VIEW

NOTES:

1. EACH REACH LENGTH MAY NOT EXCEED 500 FEET.
2. SETBACK DIMENSIONS MAY VARY TO FIT FIELD CONDITIONS.
3. A MINIMUM OF 4 FASTENERS SHALL BE INSTALLED PER POST.
4. DIMENSIONS SHOWN ARE TYPICAL.
5. WILDLIFE FENCE SHALL BE ERRECTED AND REMOVED IN THE PRESENCE OF A BIOLOGIST.

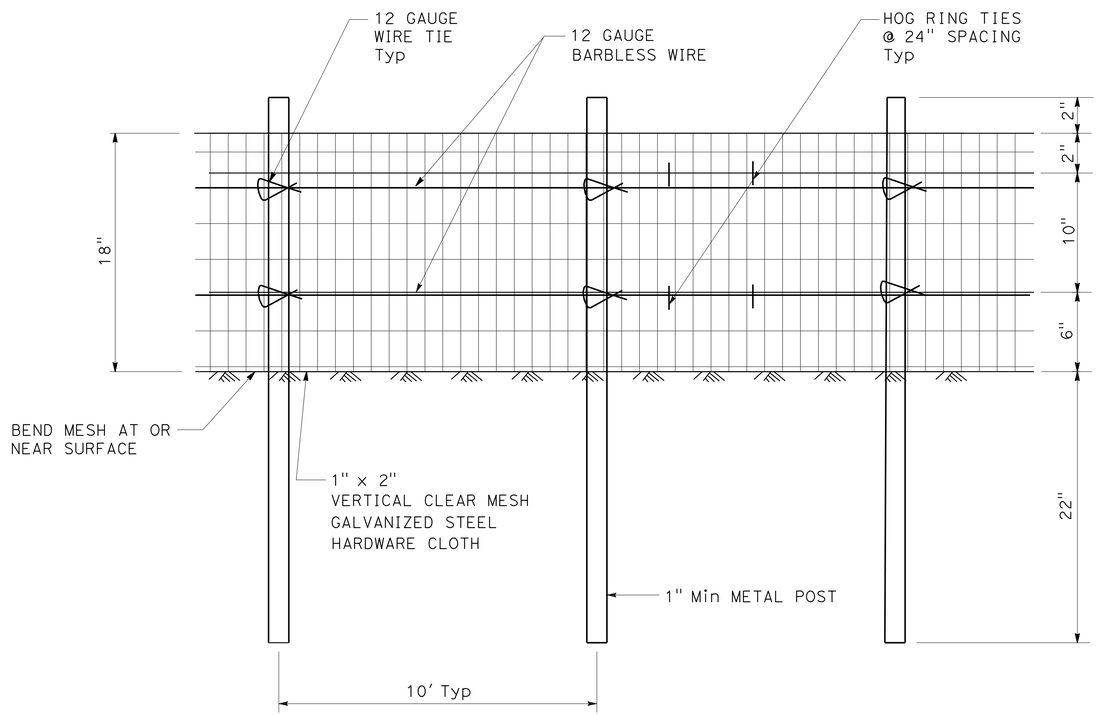

FRONT VIEW

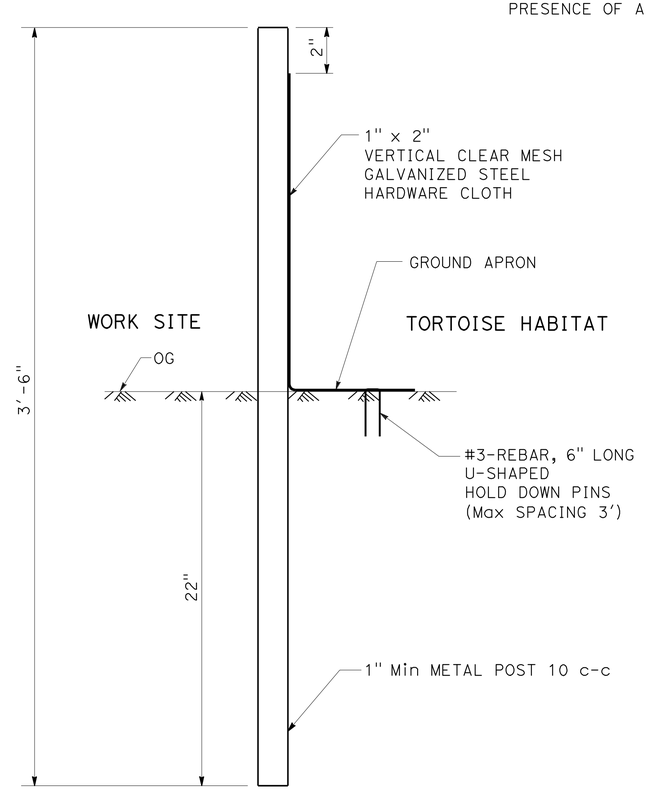

SECTION A-A

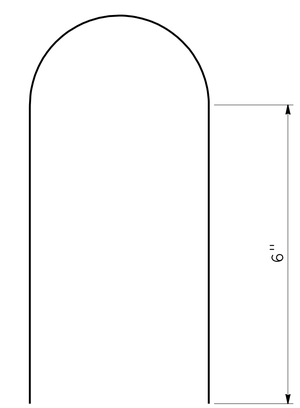

#3-REBAR, 6" LONG
U-SHAPED
HOLD DOWN PINS

PIN DETAIL

CONSTRUCTION DETAILS
TEMPORARY WILDLIFE FENCE

NO SCALE

C-9

REVISED BY	DATE REVISED
JUSTINE NIU	MONIE KEO
CALCULATED-DESIGNED BY	CHECKED BY
FUNCTIONAL SUPERVISOR	BEN AMIRI

STATE OF CALIFORNIA - DEPARTMENT OF TRANSPORTATION
Caltrans® DESIGN DIVISION

LAST REVISION 03-04-09 | DATE PLOTTED => 08-JUL-2009 | TIME PLOTTED => 10:42

Dist	COUNTY	ROUTE	POST MILES TOTAL PROJECT	SHEET No.	TOTAL SHEETS
08	SBd	18	66.6/67.2	22	90

REGISTERED CIVIL ENGINEER 4-22-09 DATE

5-11-09
PLANS APPROVAL DATE

REGISTERED PROFESSIONAL ENGINEER MONIE S. KEO No. C65498 Exp. 9-30-09 CIVIL STATE OF CALIFORNIA

THE STATE OF CALIFORNIA OR ITS OFFICERS OR AGENTS SHALL NOT BE RESPONSIBLE FOR THE ACCURACY OR COMPLETENESS OF SCANNED COPIES OF THIS PLAN SHEET.

NOTES:

1. FOR COMPLETE RIGHT OF WAY DATA, SEE RIGHT OF WAY RECORD MAPS AT DISTRICT OFFICE.
2. FOR AC OVERSIDE DRAIN, SEE STANDARD PLAN D87D.

LEGEND

- (X) DRAINAGE SYSTEM No.
- (X) DRAINAGE UNIT No.
- ROCK SLOPE PROTECTION (RSP)

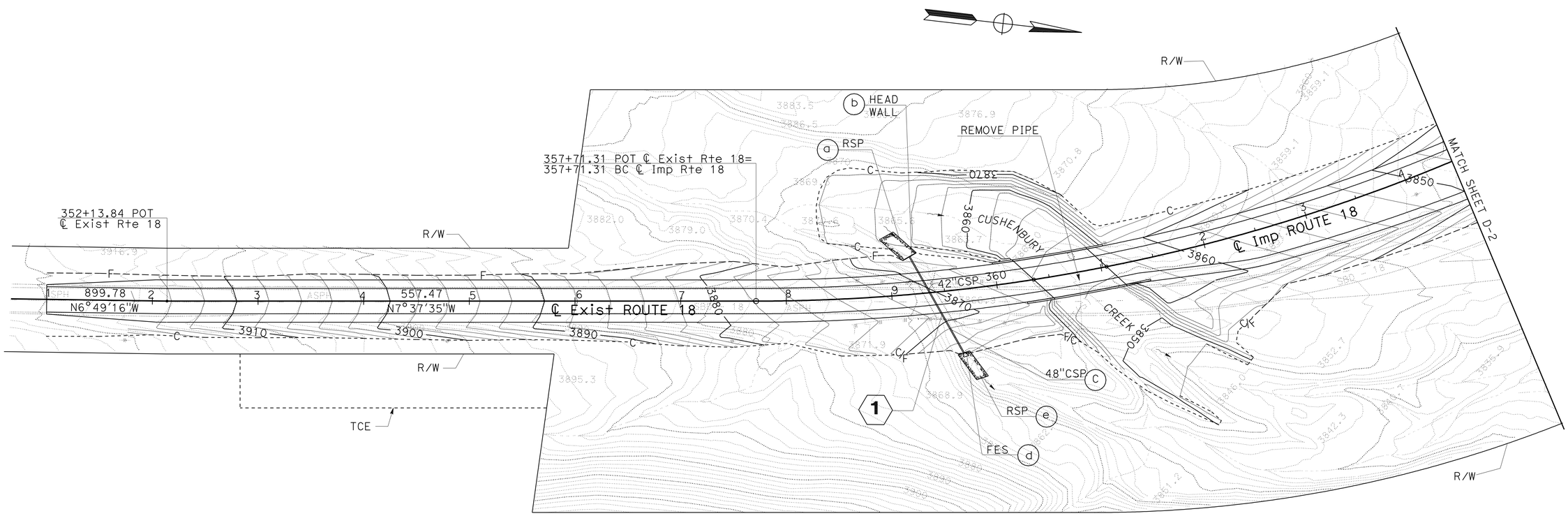

DRAINAGE AND CONTOUR GRADING PLAN

SCALE: 1"=50'

THIS PLAN ACCURATE FOR DRAINAGE AND CONTOUR WORK ONLY.

D-1

STATE OF CALIFORNIA - DEPARTMENT OF TRANSPORTATION
Caltrans DESIGN DIVISION

FUNCTIONAL SUPERVISOR: BEN AMIRI
MONIE KEO — JUSTINE NUI
CALCULATED-DESIGNED BY / CHECKED BY
REVISED BY / DATE REVISED

LAST REVISION 04-22-09 | DATE PLOTTED => 08-JUL-2009 | TIME PLOTTED => 10:42

Dist	COUNTY	ROUTE	POST MILES TOTAL PROJECT	SHEET No.	TOTAL SHEETS
08	SBd	18	66.6/67.2	23	90

REGISTERED CIVIL ENGINEER — DATE 4-22-09

5-11-09
PLANS APPROVAL DATE

REGISTERED PROFESSIONAL ENGINEER — MONIE S. KEO — No. C65498 — Exp. 9-30-09 — CIVIL — STATE OF CALIFORNIA

THE STATE OF CALIFORNIA OR ITS OFFICERS OR AGENTS SHALL NOT BE RESPONSIBLE FOR THE ACCURACY OR COMPLETENESS OF SCANNED COPIES OF THIS PLAN SHEET.

NOTE: FOR COMPLETE RIGHT OF WAY DATA,
SEE RIGHT OF WAY RECORD MAPS AT DISTRICT OFFICE.

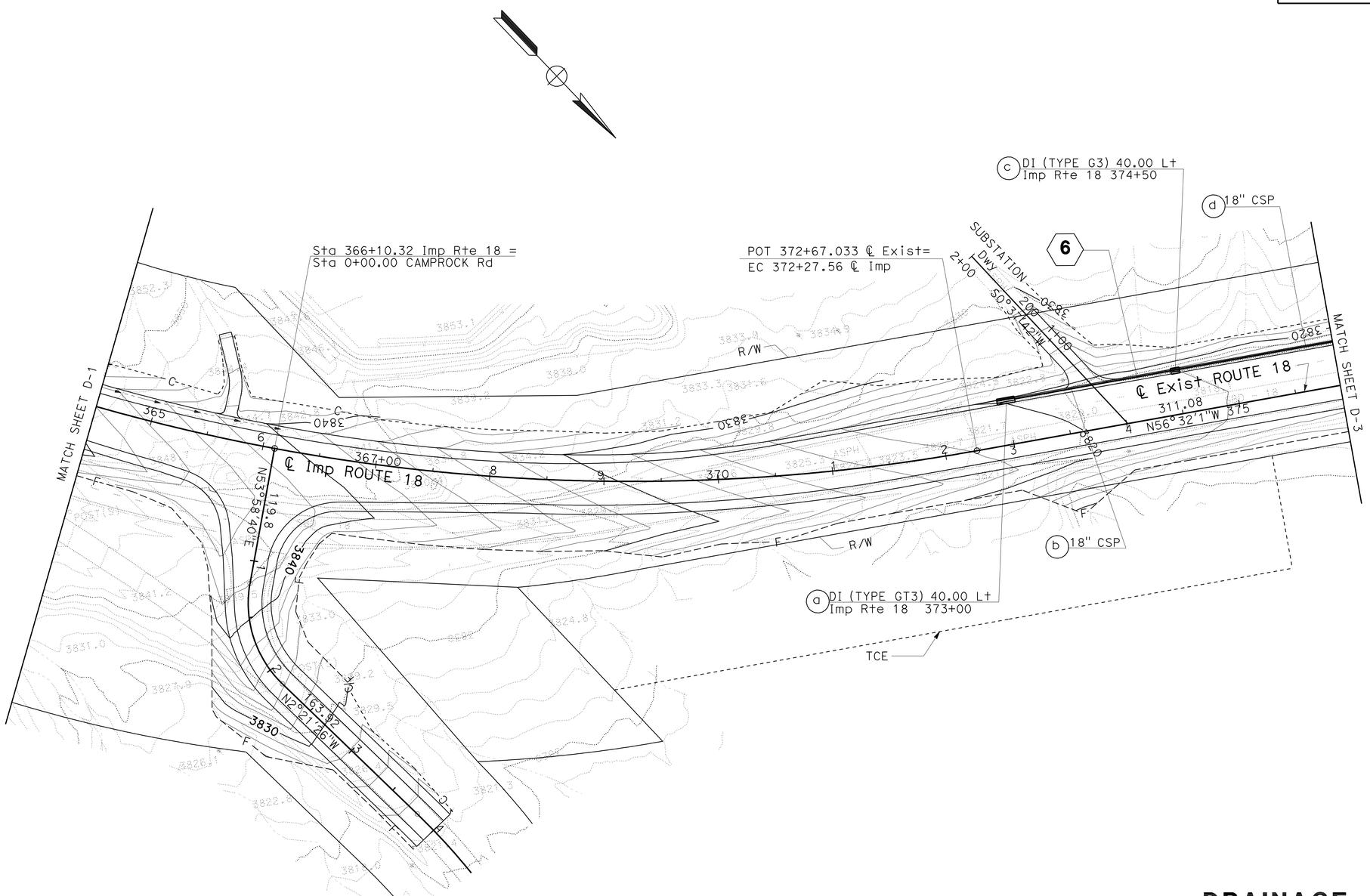

DRAINAGE AND CONTOUR GRADING PLAN

SCALE: 1"=50'

THIS PLAN ACCURATE FOR DRAINAGE AND CONTOUR WORK ONLY.

D-2

STATE OF CALIFORNIA - DEPARTMENT OF TRANSPORTATION
Caltrans® DESIGN DIVISION

FUNCTIONAL SUPERVISOR: BEN AMIRI
CALCULATED-DESIGNED BY: MONIE KEO
CHECKED BY: JUSTINE NUI
REVISED BY
DATE REVISED

LAST REVISION 04-22-09 | DATE PLOTTED => 08-JUL-2009 | TIME PLOTTED => 10:43

Dist	COUNTY	ROUTE	POST MILES TOTAL PROJECT	SHEET No.	TOTAL SHEETS
08	SBd	18	66.6/67.2	24	90

REGISTERED CIVIL ENGINEER 4-22-09 DATE

5-11-09
PLANS APPROVAL DATE

REGISTERED PROFESSIONAL ENGINEER MONIE S. KEO No. C65498 Exp. 9-30-09 CIVIL STATE OF CALIFORNIA

THE STATE OF CALIFORNIA OR ITS OFFICERS OR AGENTS SHALL NOT BE RESPONSIBLE FOR THE ACCURACY OR COMPLETENESS OF SCANNED COPIES OF THIS PLAN SHEET.

NOTE: FOR COMPLETE RIGHT OF WAY DATA,
SEE RIGHT OF WAY RECORD MAPS AT DISTRICT OFFICE.

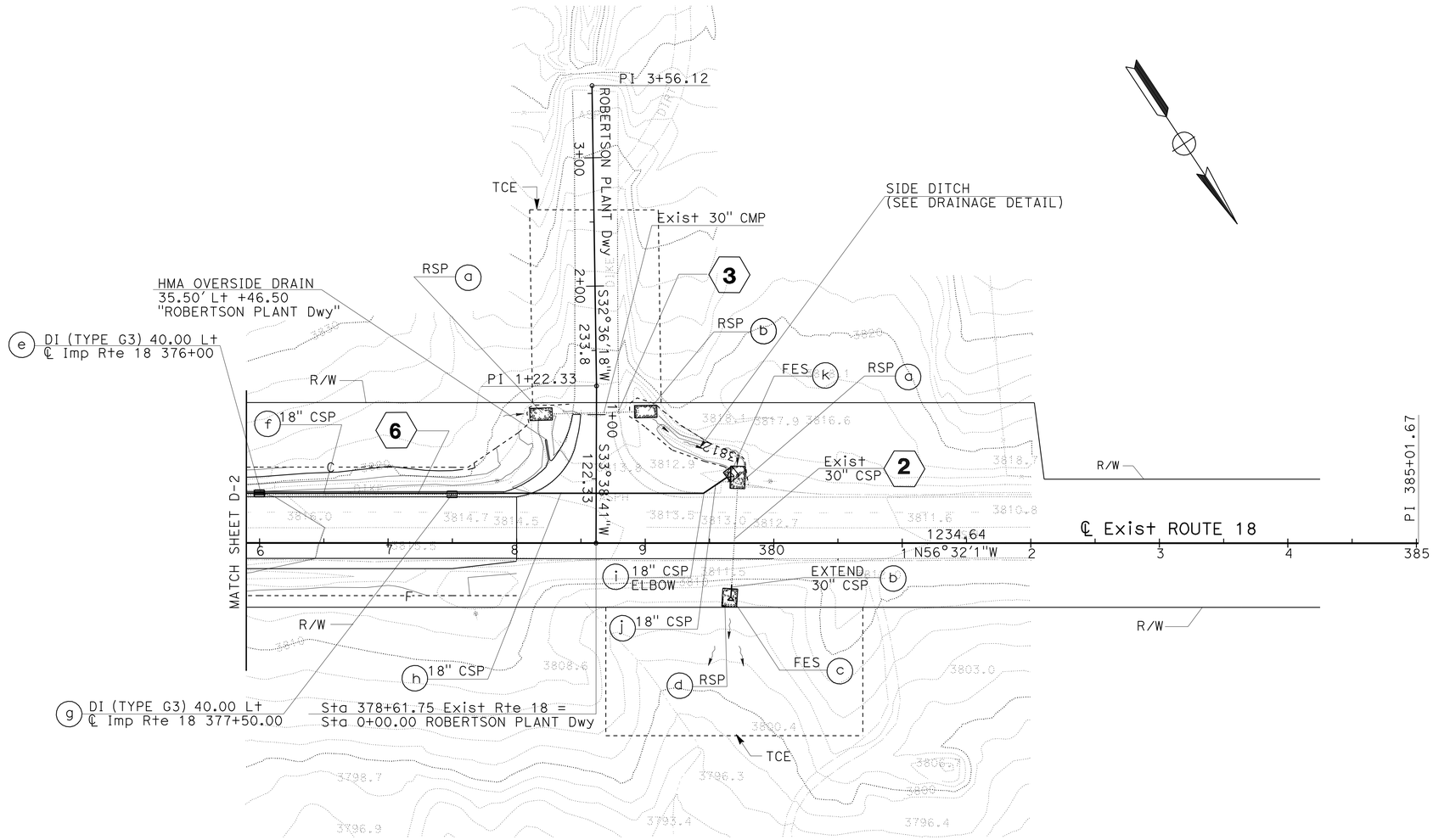

DRAINAGE AND CONTOUR GRADING PLAN

SCALE: 1"=50'

D-3

THIS PLAN ACCURATE FOR DRAINAGE AND CONTOUR WORK ONLY.

REVISED BY	DATE REVISED

CALCULATED-DESIGNED BY	CHECKED BY
MONIE KEO	JUSTINE NUI

FUNCTIONAL SUPERVISOR: BEN AMIRI

STATE OF CALIFORNIA - DEPARTMENT OF TRANSPORTATION
Caltrans® DESIGN DIVISION

LAST REVISION 04-22-09 | DATE PLOTTED => 08-JUL-2009 TIME PLOTTED => 10:43

Dist	COUNTY	ROUTE	POST MILES TOTAL PROJECT	SHEET No.	TOTAL SHEETS
08	SBd	18	66.6/67.2	25	90

REGISTERED CIVIL ENGINEER 12-11-08 DATE

5-11-09
PLANS APPROVAL DATE

REGISTERED PROFESSIONAL ENGINEER MONIE S. KEO No. C65498 Exp. 9-30-09 CIVIL STATE OF CALIFORNIA

THE STATE OF CALIFORNIA OR ITS OFFICERS OR AGENTS SHALL NOT BE RESPONSIBLE FOR THE ACCURACY OR COMPLETENESS OF SCANNED COPIES OF THIS PLAN SHEET.

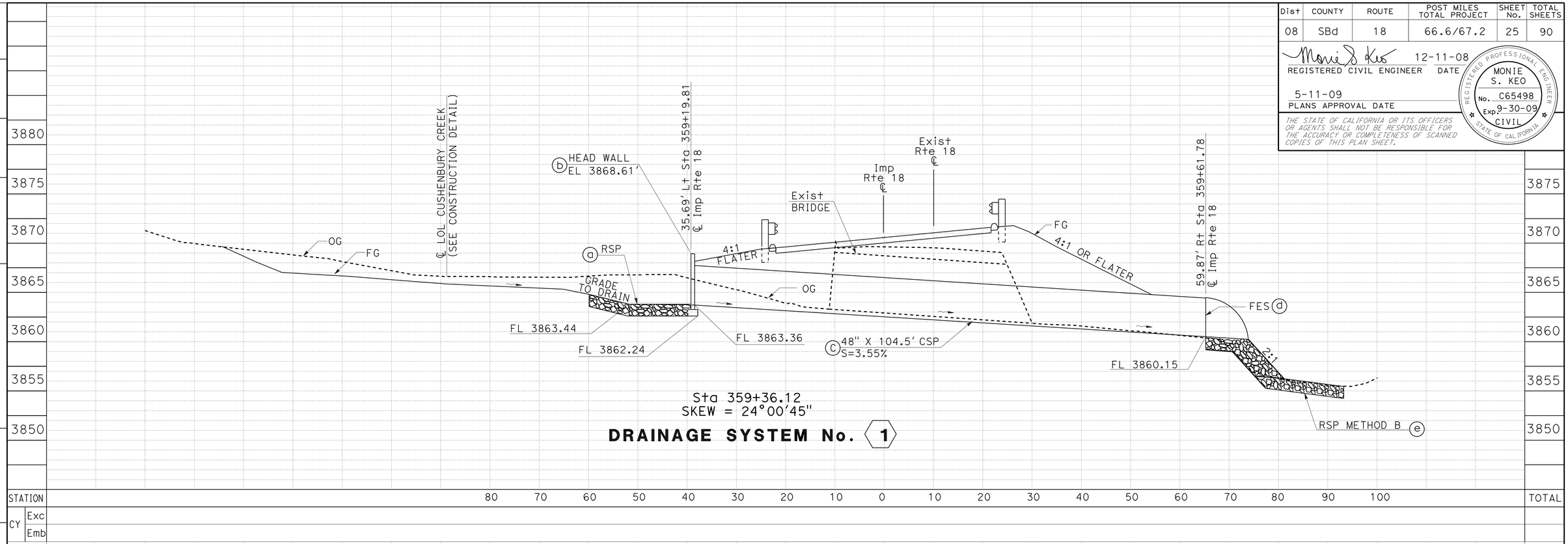

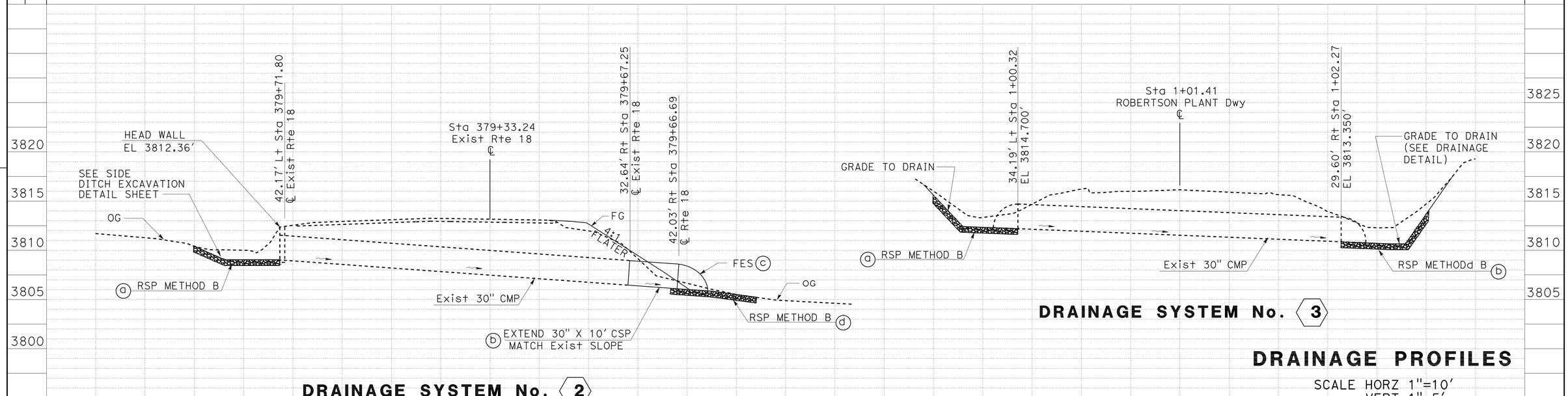

DRAINAGE PROFILES

SCALE HORZ 1"=10'
VERT 1"=5'

DP-1

REVISED BY | DATE REVISED
MONIE KEO | JUSTINE NUI
CALCULATED-DESIGNED BY | CHECKED BY
FUNCTIONAL SUPERVISOR: BEN AMIRI

STATE OF CALIFORNIA - DEPARTMENT OF TRANSPORTATION
Caltrans® DESIGN DIVISION

LAST REVISION 12-11-08
DATE PLOTTED => 08-JUL-2009
TIME PLOTTED => 10:43

Dist	COUNTY	ROUTE	POST MILES TOTAL PROJECT	SHEET No.	TOTAL SHEETS
08	SBd	18	66.6/67.2	26	90

REGISTERED CIVIL ENGINEER 12-11-08 DATE

5-11-09
PLANS APPROVAL DATE

REGISTERED PROFESSIONAL ENGINEER MONIE S. KEO No. C65498 Exp. 9-30-09 CIVIL STATE OF CALIFORNIA

THE STATE OF CALIFORNIA OR ITS OFFICERS OR AGENTS SHALL NOT BE RESPONSIBLE FOR THE ACCURACY OR COMPLETENESS OF SCANNED COPIES OF THIS PLAN SHEET.

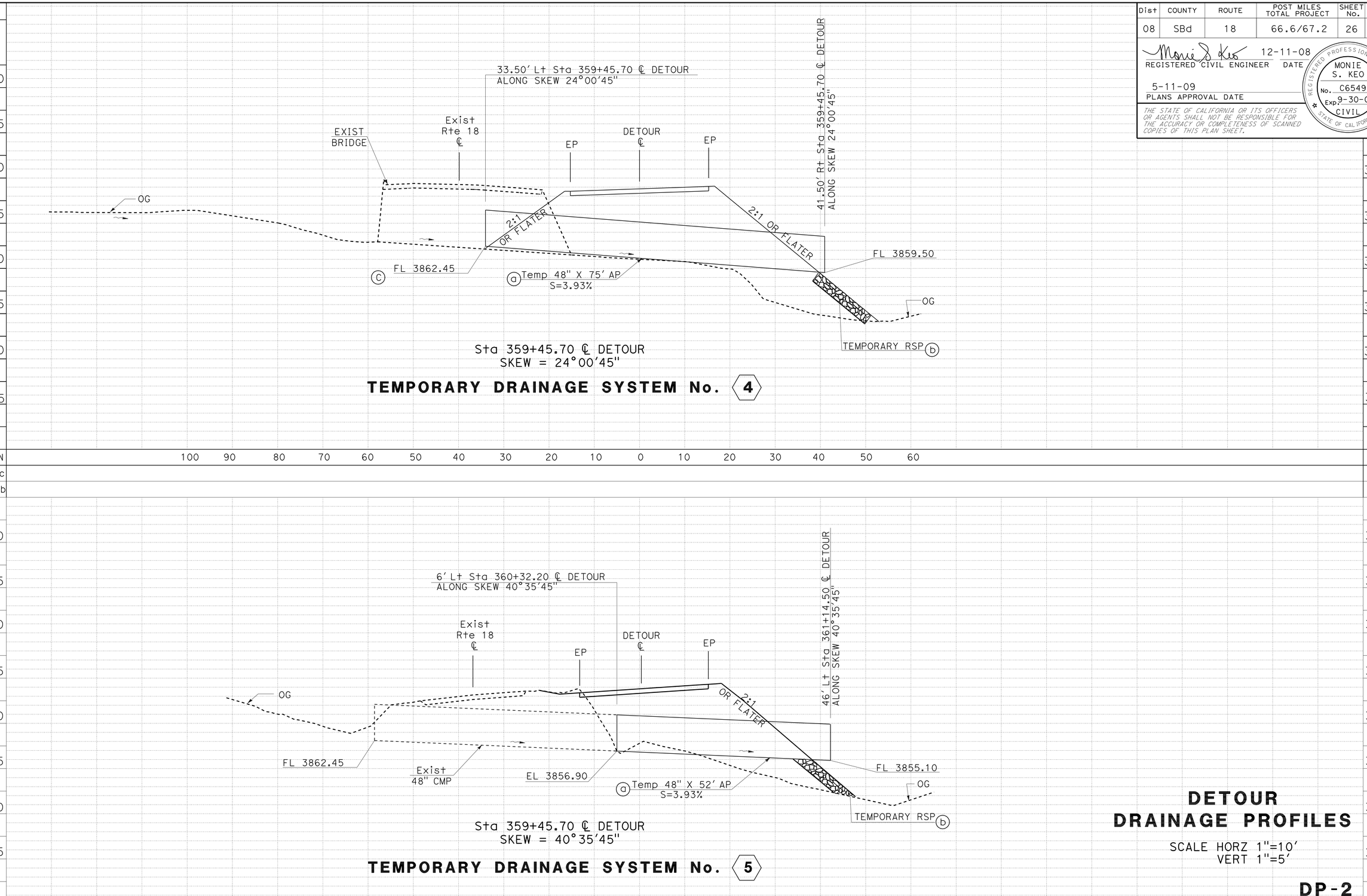

DETOUR DRAINAGE PROFILES

SCALE HORZ 1"=10'
VERT 1"=5'

DP-2

REVISED BY | DATE REVISED
MONIE KEO | JUSTINE NUI
CALCULATED-DESIGNED BY | CHECKED BY
FUNCTIONAL SUPERVISOR
BEN AMIRI

STATE OF CALIFORNIA - DEPARTMENT OF TRANSPORTATION
Caltrans® DESIGN DIVISION

LAST REVISION 12-11-08
DATE PLOTTED => 08-JUL-2009
TIME PLOTTED => 10:43

Dist	COUNTY	ROUTE	POST MILES TOTAL PROJECT	SHEET No.	TOTAL SHEETS
08	SBd	18	66.6/67.2	27	90

REGISTERED CIVIL ENGINEER 4-22-09 DATE

5-11-09
PLANS APPROVAL DATE

REGISTERED PROFESSIONAL ENGINEER MONIE S. KEO No. C65498 Exp. 9-30-09 CIVIL STATE OF CALIFORNIA

THE STATE OF CALIFORNIA OR ITS OFFICERS OR AGENTS SHALL NOT BE RESPONSIBLE FOR THE ACCURACY OR COMPLETENESS OF SCANNED COPIES OF THIS PLAN SHEET.

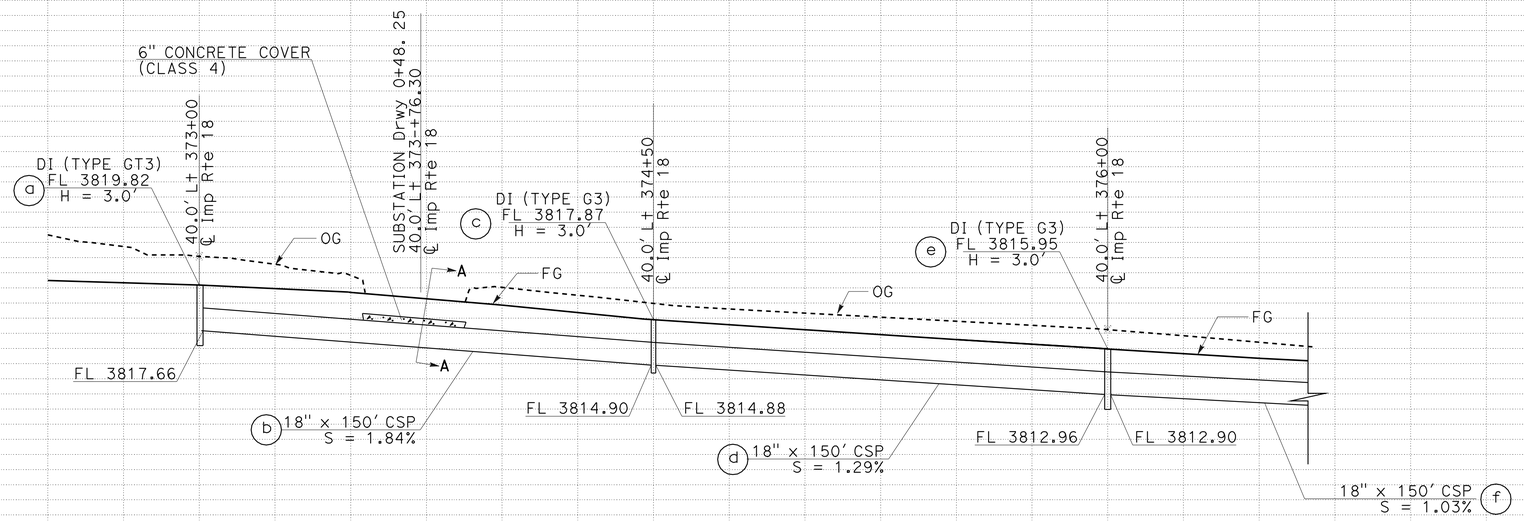

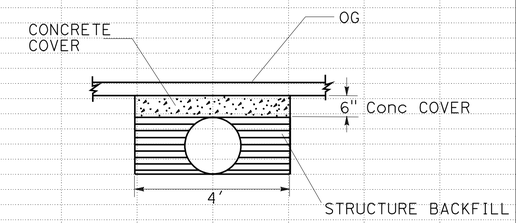

SECTION A-A

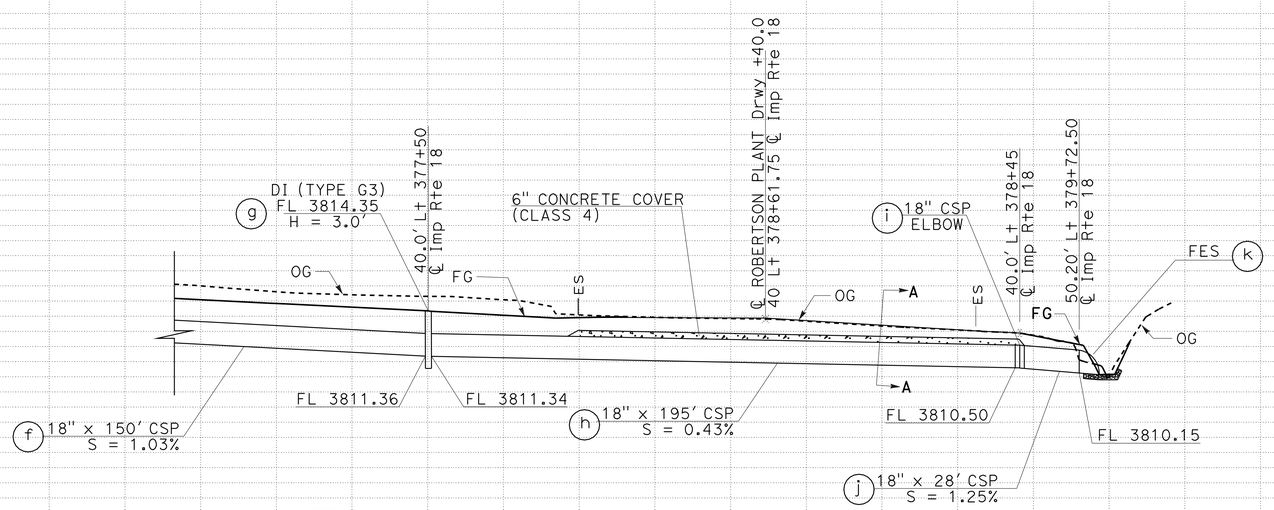

DRAINAGE SYSTEM No. 6

DRAINAGE PROFILES

SCALE HORZ 1"=25'
VERT 1"=10'

DP-3

STATION	
CY	Exc
	Emb

TOTAL

STATE OF CALIFORNIA - DEPARTMENT OF TRANSPORTATION
Caltrans® DESIGN DIVISION

FUNCTIONAL SUPERVISOR: BEN AMIRI
CALCULATED-DESIGNED BY: MONIE KEO
CHECKED BY: REFAAT ELSHERIF
REVISED BY / DATE REVISED

LAST REVISION 04-22-09
DATE PLOTTED => 08-JUL-2009
TIME PLOTTED => 10:43

Dist	COUNTY	ROUTE	POST MILES TOTAL PROJECT	SHEET No.	TOTAL SHEETS
08	SBd	18	66.6/67.2	28	90

REGISTERED CIVIL ENGINEER 12-11-08 DATE

5-11-09
PLANS APPROVAL DATE

REGISTERED PROFESSIONAL ENGINEER MONIE S. KEO No. C65498 Exp. 9-30-09 CIVIL STATE OF CALIFORNIA

THE STATE OF CALIFORNIA OR ITS OFFICERS OR AGENTS SHALL NOT BE RESPONSIBLE FOR THE ACCURACY OR COMPLETENESS OF SCANNED COPIES OF THIS PLAN SHEET.

NOTE:

1. FOR FLARED END SECTION DETAILS NOT SHOWN, SEE STANDARD PLAN D94A.

ROCK SLOPE PROTECTION

PIPE DIAMETER	LENGTH	WIDTH
(In)	(Ft)	(Ft)
30	17.5	10.0
48	28.0	15.5

CLASS OF RSP	T
LIGHT, METHOD B	2.50′

LEGENDS

D = DIAMETER OF PIPE
T = THICKNESS OF RSP
W = WIDTH OF FLARED END SECTION

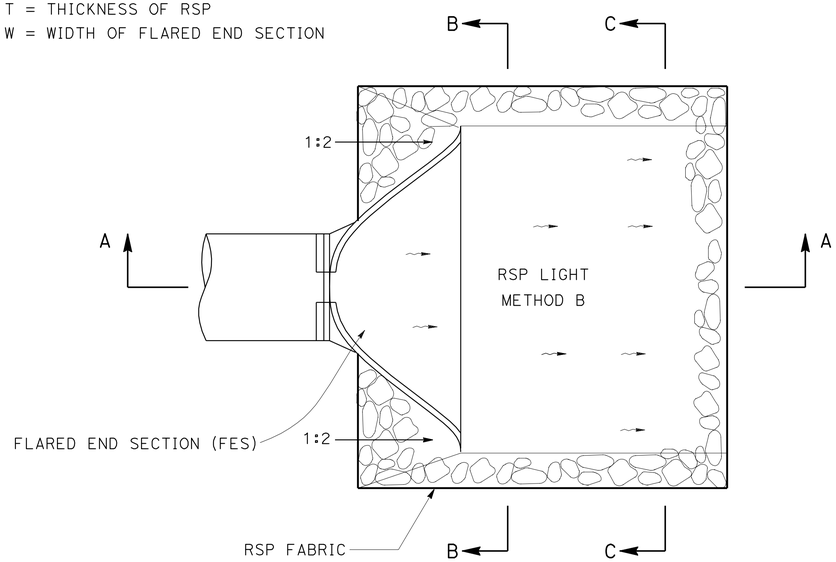

PLAN VIEW

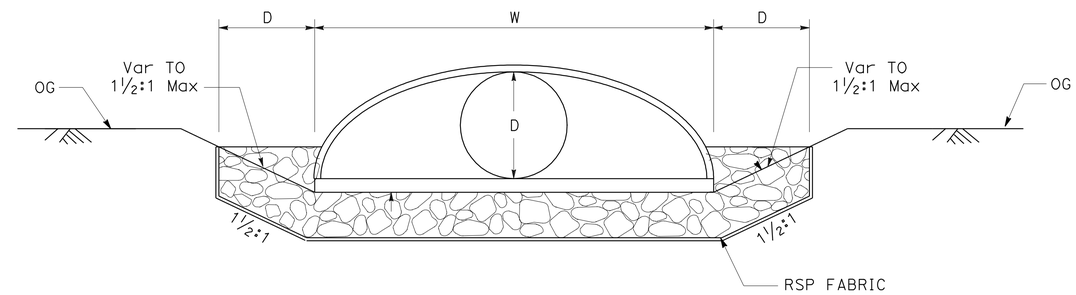

SECTION B-B

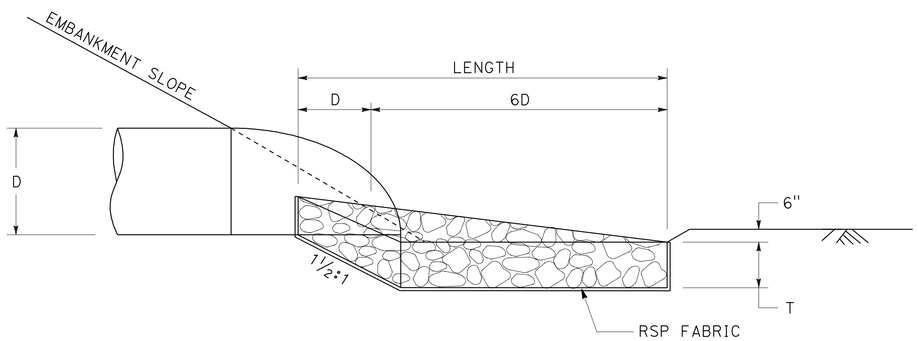

SECTION A-A

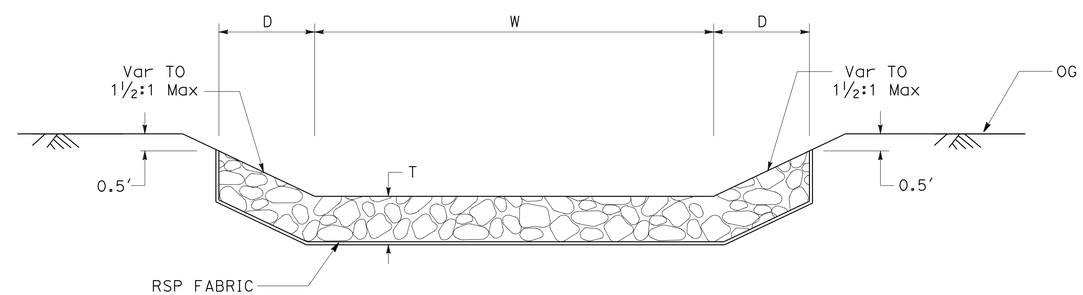

SECTION C-C

ROCK SLOPE PROTECTION FOR FLARED END SECTION (FES)

DRAINAGE SYSTEM No. 1 2 3

DRAINAGE DETAILS

NO SCALE

DD-1

STATE OF CALIFORNIA - DEPARTMENT OF TRANSPORTATION
Caltrans® DESIGN DIVISION

FUNCTIONAL SUPERVISOR: BEN AMIRI
CALCULATED-DESIGNED BY: MONIE KEO
CHECKED BY: JUSTINE NUI
REVISED BY / DATE REVISED

LAST REVISION 12-11-08 | DATE PLOTTED => 08-JUL-2009 | TIME PLOTTED => 10:43

Dist	COUNTY	ROUTE	POST MILES TOTAL PROJECT	SHEET No.	TOTAL SHEETS
08	SBd	18	66.6/67.2	29	90

REGISTERED CIVIL ENGINEER 12-11-08 DATE

5-11-09
PLANS APPROVAL DATE

REGISTERED PROFESSIONAL ENGINEER MONIE S. KEO No. C65498 Exp. 9-30-09 CIVIL STATE OF CALIFORNIA

THE STATE OF CALIFORNIA OR ITS OFFICERS OR AGENTS SHALL NOT BE RESPONSIBLE FOR THE ACCURACY OR COMPLETENESS OF SCANNED COPIES OF THIS PLAN SHEET.

ROCK SLOPE PROTECTION		
PIPE DIAMETER	LENGTH	WIDTH
(In)	(Ft)	(Ft)
30	17.5	10.0
48	28.0	15.5

DRAINAGE SYSTEM. No. 1	
CLASS OF RSP	T
BACKING No. 2, METHOD B	1.25′
1/4TON, METHOD B	3.30′

DRAINAGE SYSTEM. No. 2	
CLASS OF RSP	T
LIGHT, METHOD B	2.50′

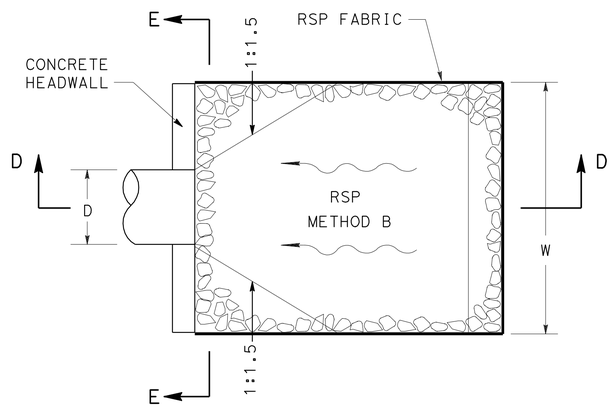

PLAN VIEW

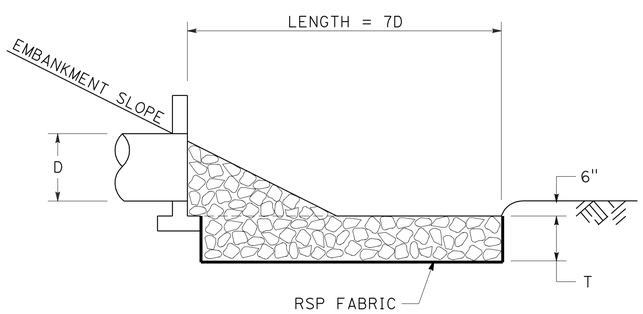

SECTION D-D

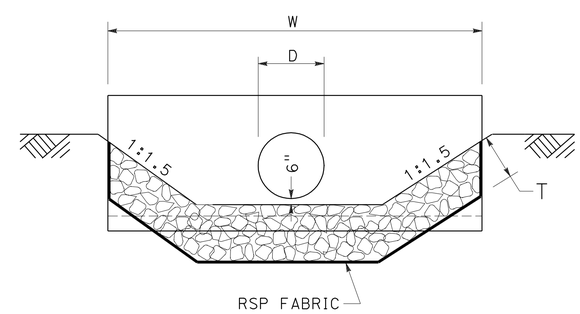

SECTION E-E

ROCK SLOPE PROTECTION FOR HEADWALL

DRAINAGE SYSTEM No. 1 2

DRAINAGE DETAILS

NO SCALE

DD-2

STATE OF CALIFORNIA - DEPARTMENT OF TRANSPORTATION
Caltrans® DESIGN DIVISION

FUNCTIONAL SUPERVISOR: BEN AMIRI
CALCULATED-DESIGNED BY: JUSTINE NUI
CHECKED BY: MONIE KEO
REVISED BY
DATE REVISED

LAST REVISION 12-11-08
DATE PLOTTED => 08-JUL-2009
TIME PLOTTED => 10:44

Dist	COUNTY	ROUTE	POST MILES TOTAL PROJECT	SHEET No.	TOTAL SHEETS
08	SBd	18	66.6/67.2	30	90

REGISTERED CIVIL ENGINEER 12-11-08 DATE

5-11-09
PLANS APPROVAL DATE

REGISTERED PROFESSIONAL ENGINEER MONIE S. KEO No. C65498 Exp. 9-30-09 CIVIL STATE OF CALIFORNIA

THE STATE OF CALIFORNIA OR ITS OFFICERS OR AGENTS SHALL NOT BE RESPONSIBLE FOR THE ACCURACY OR COMPLETENESS OF SCANNED COPIES OF THIS PLAN SHEET.

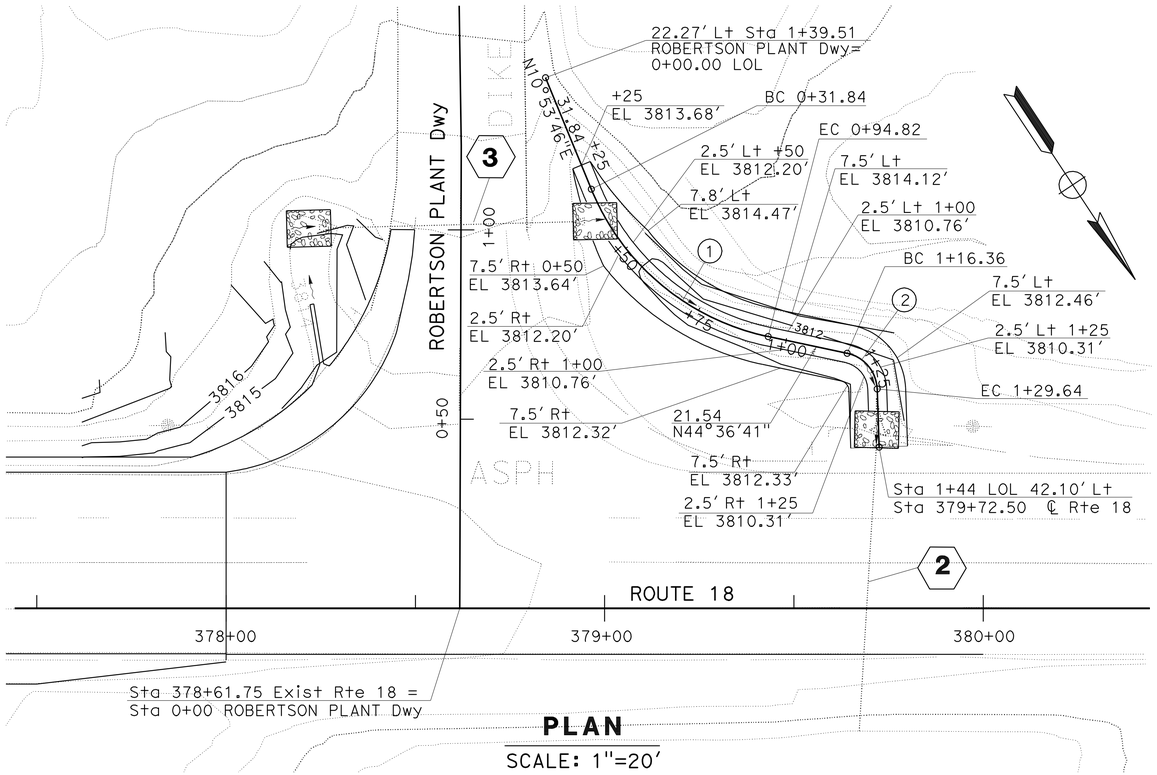

PLAN

SCALE: 1"=20'

CURVE DATA

No.	R	Δ	T	L
1	65.00	55°47'25"	34.41	63.29
2	10.00	76°7'27"	7.83	13.29

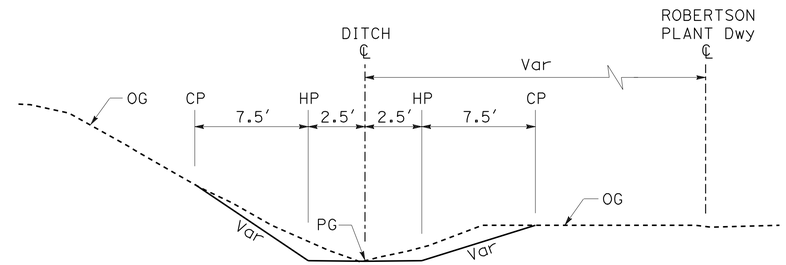

TYPICAL CROSS SECTION

NO SCALE

GRADING EXISTING SIDE DITCH

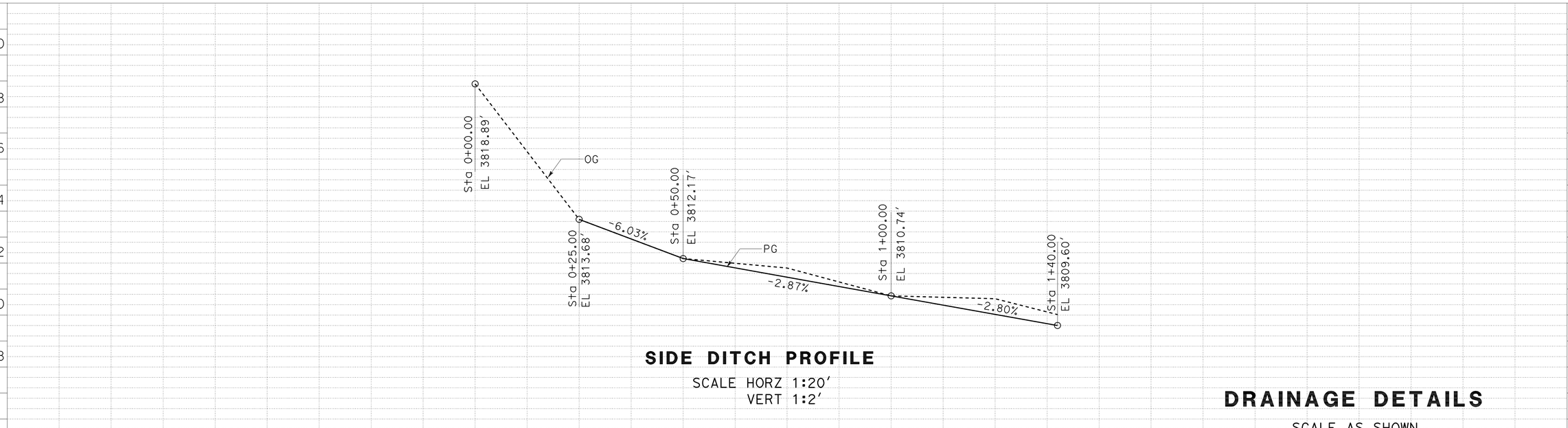

SIDE DITCH PROFILE

SCALE HORZ 1:20'
VERT 1:2'

STATION		0+00	0+50	1+00	1+50	TOTAL
CY	Exc		20			
	Emb		0			

DRAINAGE DETAILS

SCALE AS SHOWN

DD-3

STATE OF CALIFORNIA - DEPARTMENT OF TRANSPORTATION
Caltrans® DESIGN DIVISION

FUNCTIONAL SUPERVISOR: BEN AMIRI
CALCULATED-DESIGNED BY: MONIE KEO
CHECKED BY: JUSTINE NUI
REVISED BY
DATE REVISED

LAST REVISION 12-11-08
DATE PLOTTED => 08-JUL-2009
TIME PLOTTED => 10:44

Dist	COUNTY	ROUTE	POST MILES TOTAL PROJECT	SHEET No.	TOTAL SHEETS
08	SBd	18	66.6/67.2	31	90

REGISTERED CIVIL ENGINEER 4-22-09 DATE

5-11-09
PLANS APPROVAL DATE

REGISTERED PROFESSIONAL ENGINEER MONIE S. KEO No. C65498 Exp. 9-30-09 CIVIL STATE OF CALIFORNIA

THE STATE OF CALIFORNIA OR ITS OFFICERS OR AGENTS SHALL NOT BE RESPONSIBLE FOR THE ACCURACY OR COMPLETENESS OF SCANNED COPIES OF THIS PLAN SHEET.

LEGEND & ABBREVIATIONS

S - STANDARD JOINT TYPE

DRAINAGE QUANTITIES

DRAINAGE PLAN SHEET No.	DRAINAGE SYSTEM No. ⬡	DRAINAGE UNIT ◯	MINOR CONCRETE (MINOR STRUCTURE)	HEIGHT OF INLET (N)	GRATE (TYPE 24-12) (N)	Misc IRON & STEEL	PIPE CULVERT: REMOVE PIPE	PIPE CULVERT: 48" TEMPORARY CULVERT	PIPE CULVERT: 48" CSP (0.109" THICK)	PIPE CULVERT: 30" CSP (0.079" THICK)	PIPE CULVERT: 18" CSP (0.079" THICK)	STEEL FLARED END SECTION (FES): 48"	STEEL FLARED END SECTION (FES): 30"	STEEL FLARED END SECTION (FES): 18"	ROCK SLOPE PROTECTION: 2 TON, METHOD A	ROCK SLOPE PROTECTION: 1 TON, METHOD B	ROCK SLOPE PROTECTION: LIGHT METHOD B	ROCK SLOPE PROTECTION: ¼TON, METHOD B	ROCK SLOPE PROTECTION: BACKING No.2, METHOD B	ROCK SLOPE PROTECTION: FABRIC	CLASS 4 CONCRETE	PIPE JOINT CLASSIFICATION	CULVERT SKEW (DEGREES) RIGHT/LEFT	DESCRIPTION	STATION	DRAINAGE PLAN SHEET No.	DRAINAGE SYSTEM No. ⬡	DRAINAGE UNIT ◯
			CY	Ft	EA	LB	LF	LF	LF	LF	LF	EA	EA	EA	CY	CY	CY	CY	CY	SqYd	CY							
D-1	1	a																66	25	78				RSP AT CULVERT INLET	35.69′ Lt Sta 359+19.81 ℄ Imp Rte 18	D-1	1	a
		b	2.8																					SINGLE HEADWALL	35.69′ Lt Sta 359+19.81 ℄ Imp Rte 18			b
		c							105													S	24°00′45″ (Rt)	48″ CSP	Sta 359+36.12 ℄ Imp Rte 18			c
		d										1												48″ Dia METAL FLARE END SECTION	Sta 359+36.12 ℄ Imp Rte 18			d
		e															78			58				RSP AT CULVERT OUTLET	59.87′ Rt Sta 359+61.78 ℄ Imp Rte 18			e
D-1															104	194	51	925	509	2153				RSP AT CREEK (SEE C-1 & C-2)	Sta 0+50 TO 3+50 ℄ CUSHENBURY CREEK	D-1		
D-3	2	a															27			38				RSP AT CULVERT INLET	42.17′ Lt Sta 379+71.80 ℄ Exist Rte 18	D-3	2	a
		b								10												S		EXTEND 30″ CSP	Sta 379+33.24 ℄ Exist Rte 18			b
		c											1											30″ Dia METAL FLARE END SECTION	Sta 379+33.24 ℄ Exist Rte 18			c
		d															27			38				RSP AT CULVERT OUTLET	42.03′ Rt Sta 379+66.69 ℄ Exist Rte 18			d
D-3	3	a															27			38				RSP AT CULVERT INLET	34.19′ Lt Sta 1+00.32 ℄ ROBERTSON PLANT Dwy	D-3	3	a
		b															27			38				RSP AT CULVERT OUTLET	29.60′ Rt Sta 1+02.27 ℄ ROBERTSON PLANT Dwy			b
DE-1	4	a						75														S	24°00′45″ (Rt)	TEMPORARY 48″ AP CULVERT	Sta 359+67.85 ℄ DETOUR	DE-1	4	a
		b																7						TEMPORARY RSP AT CULVERT OUTLET	41.5′ Rt Sta 359+90 ℄ DETOUR			b
DE-1	5	a					56	52														S	40°35′45″ (Rt)	TEMPORARY 48″ AP CULVERT	Sta 360+32 ℄ DETOUR	DE-1	5	a
		b																7						TEMPORARY RSP AT CULVERT OUTLET	34.5′ Rt Sta 361+14.5 ℄ DETOUR			b
TOTAL (THIS Sh)			2.8				56	127	105	10		1	1		104	194	237	1005	534	2441								

(N) NOT A SEPARATE PAY ITEM, FOR INFORMATION ONLY.

DRAINAGE QUANTITIES

DQ-1

STATE OF CALIFORNIA - DEPARTMENT OF TRANSPORTATION
Caltrans® DESIGN DIVISION

FUNCTIONAL SUPERVISOR: BEN AMIRI
CALCULATED-DESIGNED BY: MONIE KEO
CHECKED BY: JUSTINE NUI
REVISED BY / DATE REVISED

LAST REVISION 04-22-09 | DATE PLOTTED => 08-JUL-2009 | TIME PLOTTED => 10:44

Dist	COUNTY	ROUTE	POST MILES TOTAL PROJECT	SHEET No.	TOTAL SHEETS
08	SBd	18	66.6/67.2	32	90

REGISTERED CIVIL ENGINEER 4-22-09 DATE

5-11-09
PLANS APPROVAL DATE

REGISTERED PROFESSIONAL ENGINEER MONIE S. KEO No. C65498 Exp. 9-30-09 CIVIL STATE OF CALIFORNIA

THE STATE OF CALIFORNIA OR ITS OFFICERS OR AGENTS SHALL NOT BE RESPONSIBLE FOR THE ACCURACY OR COMPLETENESS OF SCANNED COPIES OF THIS PLAN SHEET.

LEGEND & ABBREVIATIONS

S - STANDARD JOINT TYPE

DRAINAGE QUANTITIES

DRAINAGE PLAN SHEET No.	DRAINAGE SYSTEM No.	DRAINAGE UNIT	MINOR CONCRETE (MINOR STRUCTURE) CY	HEIGHT OF INLET (N) Ft	GRATE (TYPE 24-12) (N) EA	Misc IRON & STEEL LB	PIPE CULVERT: REMOVE PIPE LF	PIPE CULVERT: 48" TEMPORARY CULVERT LF	PIPE CULVERT: 48" CSP (0.109" THICK) LF	PIPE CULVERT: 30" CSP (0.079" THICK) LF	PIPE CULVERT: 18" CSP (0.079" THICK) LF	STEEL FLARED END SECTION (FES): 48" EA	STEEL FLARED END SECTION (FES): 30" EA	STEEL FLARED END SECTION (FES): 18" EA	ROCK SLOPE PROTECTION: 2 TON, METHOD A CY	ROCK SLOPE PROTECTION: 1 TON, METHOD B CY	ROCK SLOPE PROTECTION: LIGHT, METHOD B CY	ROCK SLOPE PROTECTION: 1/4TON, METHOD B CY	ROCK SLOPE PROTECTION: BACKING No.2, METHOD B CY	ROCK SLOPE PROTECTION: FABRIC SqYd	CLASS 4 CONCRETE CY	PIPE JOINT CLASSIFICATION	CULVERT SKEW (DEGREES) RIGHT/LEFT	DESCRIPTION	STATION	DRAINAGE PLAN SHEET No.	DRAINAGE SYSTEM No.	DRAINAGE UNIT
D-2	6	a	1.73	3.0	2	652																		DRAINAGE INLET (TYPE GT3)	40.00' Lt Sta 373+00 ℄ IMP RTE 18	D-2	6	a
		b									150										2.1	S		18" CSP	40.00' Lt Sta 373+00 to 374+50 ℄ IMP RTE 18			b
		c	1.03	3.0	1	326																		DRAINAGE INLET (TYPE G3)	40.00' Lt Sta 374+50 ℄ IMP RTE 18			c
		d									150											S		18" CSP	40.00' Lt Sta 374+50 TO 376+00 ℄ IMP RTE 18			d
D-3	6	e	1.03	3.0	1	326																		DRAINAGE INLET (TYPE G3)	40.00' Lt Sta 376+00 ℄ IMP RTE 18	D-3	6	e
		f									150											S		18" CSP	40.00' Lt Sta 376+00 to 377+50 ℄ IMP RTE 18			f
		g	1.03	3.0	1	326																		DRAINAGE INLET (TYPE G3)	40.00' Lt Sta 377+50 ℄ IMP RTE 18			g
		h									195										14.2	S		18" CSP	40.00' Lt Sta 377+50 to 378+45 ℄ IMP RTE 18			h
		i																						18" CSP 146° ELBOW	40.00' Lt Sta 378+45 ℄ IMP RTE 18			i
		j									28											S	34° (Lt)	18" CSP	50.20' Lt Sta 378+45 tO 379+72.50 ℄ IMP RTE 18			j
		k												1										FES				k
TOTAL (THIS Sh)			4.82		5	1630					673			1							16.3							
TOTAL (SHEET 1)			2.8				56	127	105	10		1	1		104	194	237	1015	534	2441								
GRAND TOTAL			7.62		5	1630	56	127	105	10	673	1	1	1	104	194	237	1015	534	2441	16.3							

(N) NOT A SEPARATE PAY ITEM, FOR INFORMATION ONLY.

MONIE KEO — REVISED BY — DATE REVISED

REFAAT ELSHERIF — CALCULATED-DESIGNED BY — CHECKED BY

BEN AMIRI — FUNCTIONAL SUPERVISOR

STATE OF CALIFORNIA - DEPARTMENT OF TRANSPORTATION

Caltrans DESIGN DIVISION

DRAINAGE QUANTITIES

DQ-2

LAST REVISION 04-22-09 — DATE PLOTTED => 08-JUL-2009 — TIME PLOTTED => 10:44

Dist	COUNTY	ROUTE	POST MILES TOTAL PROJECT	SHEET No.	TOTAL SHEETS
08	SBd	18	66.6/67.2	33	90

REGISTERED CIVIL ENGINEER 12-11-08 DATE

5-11-09
PLANS APPROVAL DATE

REGISTERED PROFESSIONAL ENGINEER MONIE S. KEO No. C65498 Exp. 9-30-09 CIVIL STATE OF CALIFORNIA

THE STATE OF CALIFORNIA OR ITS OFFICERS OR AGENTS SHALL NOT BE RESPONSIBLE FOR THE ACCURACY OR COMPLETENESS OF SCANNED COPIES OF THIS PLAN SHEET.

NOTES:

1. LOCATIONS OF UTILITY FACILITY SHOWN ON THESE PLANS ARE APPROXIMATE AND SHALL BE VERIFIED BY THE CONTRACTORS PRIOR TO CONSTRUCTION.
2. FOR POTHOLE INFORMATION, SEE SHEET U-4.

LEGEND

(X) POTHOLE

ABBREVIATIONS

BBARWA	BIG BEAR AREA REGIONAL WASTEWATER AGENCY
DIP	DUCTLE IRON PIPE
IDS	IRON DUCTILE STEEL
FM	FOUND MONUMENT
MCCP	MITSUBISHI CEMENT COMPANY PLANT
PG&E	PACIFIC GAS AND ELECTRIC
SCE	SOUTHERN CALIFORNIA EDISON COMPANY
SWG	SOUTHWEST GAS
VERIZ	VERIZON COMMUNICATIONS
UGC	UNDERGROUND CONDUIT
WWL	WASTEWATER LINE

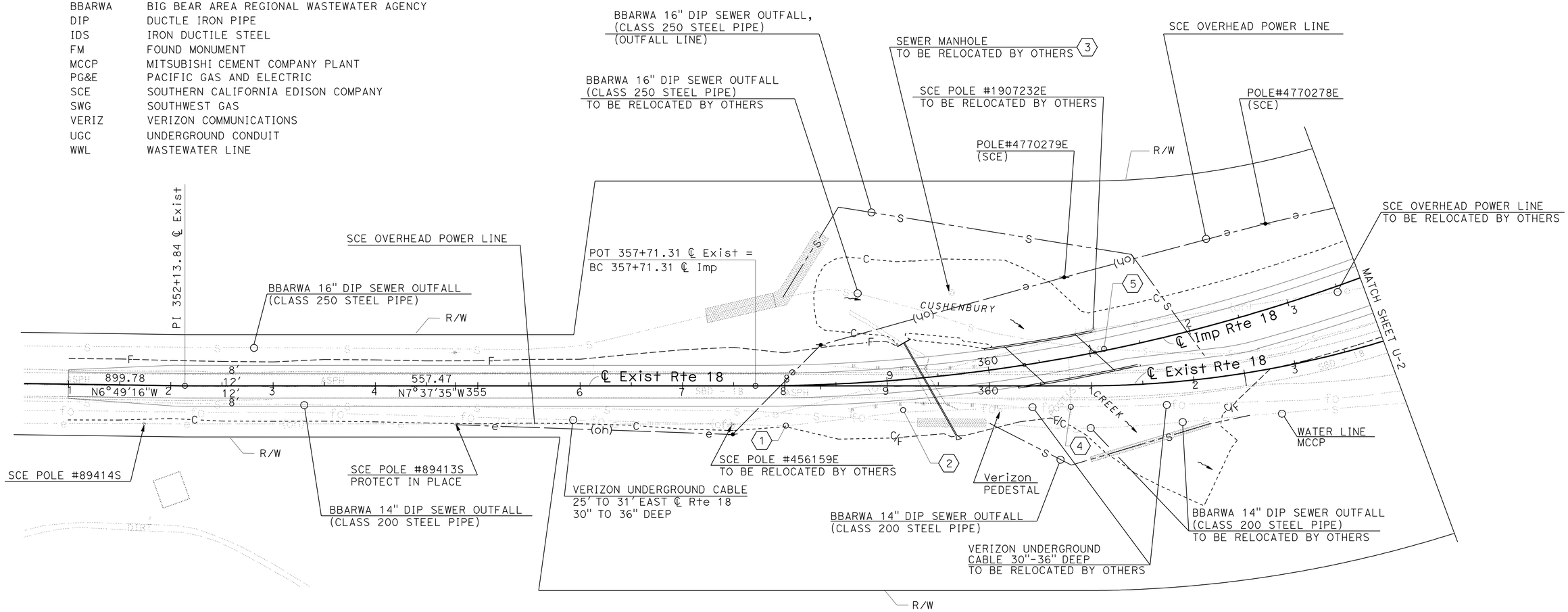

THIS PLAN ACCURATE FOR UTILITY WORK ONLY

UTILITY PLAN

SCALE: 1"=50'

U-1

STATE OF CALIFORNIA - DEPARTMENT OF TRANSPORTATION
Caltrans DESIGN DIVISION

FUNCTIONAL SUPERVISOR: BEN AMIRI
CALCULATED-DESIGNED BY: MONIE KEO
CHECKED BY: JUSTINE NUI
REVISED BY
DATE REVISED

LAST REVISION 12-11-08
DATE PLOTTED => 08-JUL-2009
TIME PLOTTED => 10:45

Dist	COUNTY	ROUTE	POST MILES TOTAL PROJECT	SHEET No.	TOTAL SHEETS
08	SBd	18	66.6/67.2	34	90

REGISTERED CIVIL ENGINEER — DATE 12-11-08

5-11-09
PLANS APPROVAL DATE

REGISTERED PROFESSIONAL ENGINEER — MONIE S. KEO — No. C65498 — Exp. 9-30-09 — CIVIL — STATE OF CALIFORNIA

THE STATE OF CALIFORNIA OR ITS OFFICERS OR AGENTS SHALL NOT BE RESPONSIBLE FOR THE ACCURACY OR COMPLETENESS OF SCANNED COPIES OF THIS PLAN SHEET.

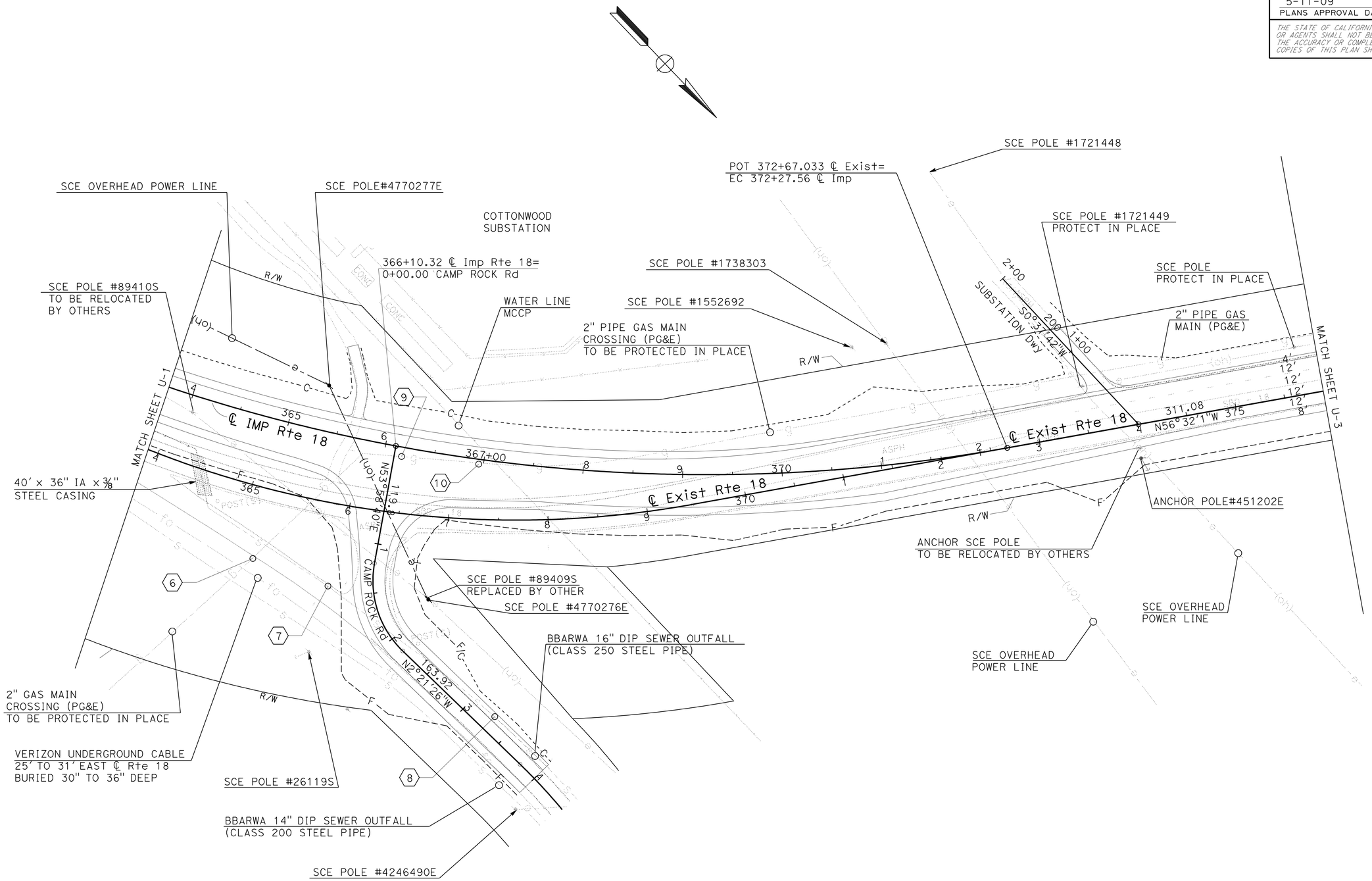

THIS PLAN ACCURATE FOR UTILITY WORK ONLY

UTILITY PLAN

SCALE: 1"=50'

U-2

STATE OF CALIFORNIA - DEPARTMENT OF TRANSPORTATION
Caltrans DESIGN DIVISION

FUNCTIONAL SUPERVISOR: BEN AMIRI
CALCULATED-DESIGNED BY: MONIE KEO
CHECKED BY: JUSTINE NUI
REVISED BY
DATE REVISED

LAST REVISION 12-11-08
DATE PLOTTED => 08-JUL-2009
TIME PLOTTED => 10:45

Dist	COUNTY	ROUTE	POST MILES TOTAL PROJECT	SHEET No.	TOTAL SHEETS
08	SBd	18	66.6/67.2	35	90

REGISTERED CIVIL ENGINEER 12-11-08 DATE

5-11-09
PLANS APPROVAL DATE

REGISTERED PROFESSIONAL ENGINEER MONIE S. KEO No. C65498 Exp. 9-30-09 CIVIL STATE OF CALIFORNIA

THE STATE OF CALIFORNIA OR ITS OFFICERS OR AGENTS SHALL NOT BE RESPONSIBLE FOR THE ACCURACY OR COMPLETENESS OF SCANNED COPIES OF THIS PLAN SHEET.

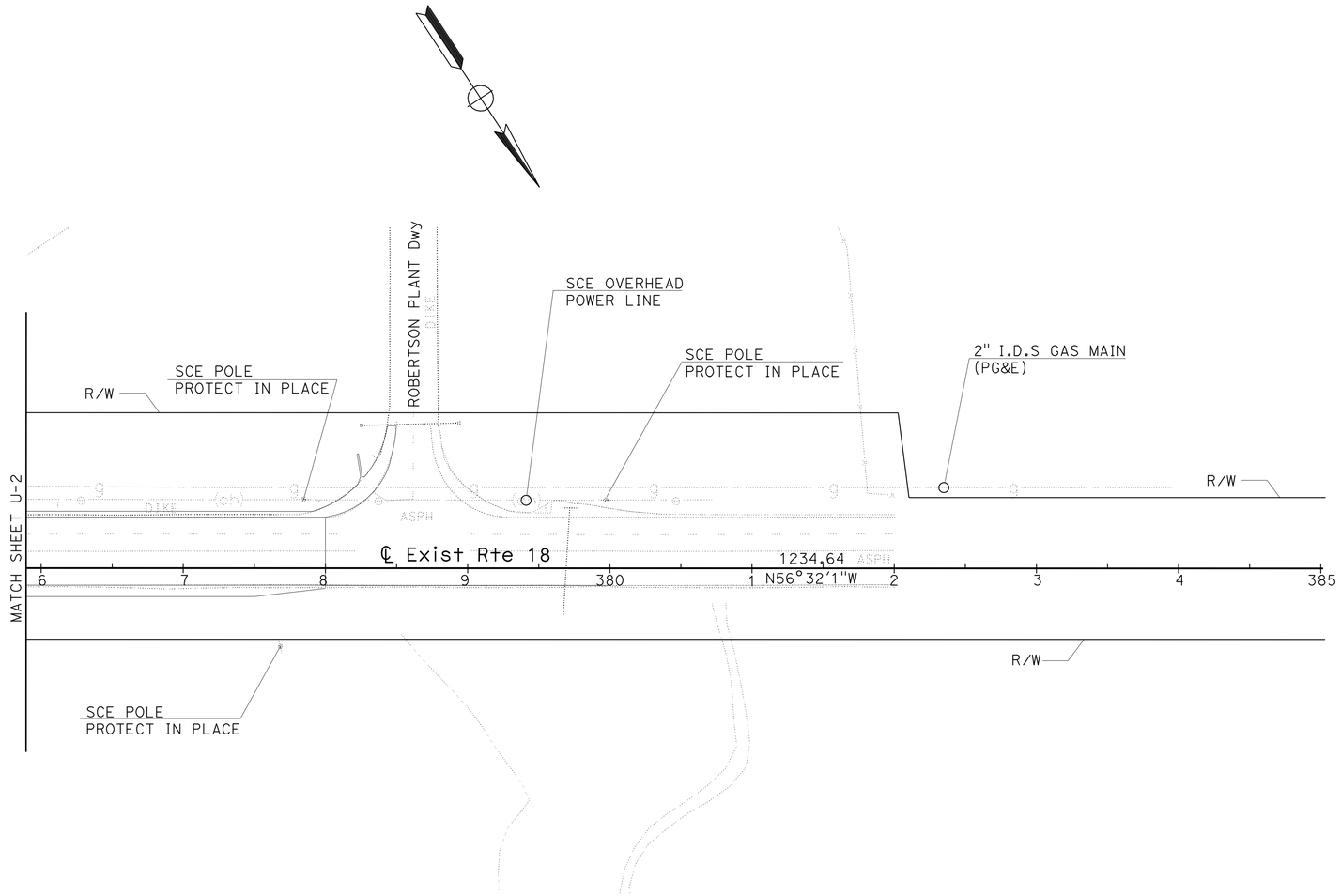

THIS PLAN ACCURATE FOR UTILITY WORK ONLY

UTILITY PLAN

SCALE: 1"=50'

U-3

STATE OF CALIFORNIA - DEPARTMENT OF TRANSPORTATION
Caltrans DESIGN DIVISION

FUNCTIONAL SUPERVISOR: BEN AMIRI
CALCULATED-DESIGNED BY: MONIE KEO
CHECKED BY: JUSTINE NUI
REVISED BY
DATE REVISED

LAST REVISION 12-11-08
DATE PLOTTED => 08-JUL-2009
TIME PLOTTED => 10:45

Dist	COUNTY	ROUTE	POST MILES TOTAL PROJECT	SHEET No.	TOTAL SHEETS
08	SBd	18	66.6/67.2	36	90

REGISTERED CIVIL ENGINEER 12-11-08 DATE

5-11-09
PLANS APPROVAL DATE

REGISTERED PROFESSIONAL ENGINEER MONIE S. KEO No. C65498 Exp. 9-30-09 CIVIL STATE OF CALIFORNIA

THE STATE OF CALIFORNIA OR ITS OFFICERS OR AGENTS SHALL NOT BE RESPONSIBLE FOR THE ACCURACY OR COMPLETENESS OF SCANNED COPIES OF THIS PLAN SHEET.

POTHOLE LOCATION TABLE

SHEET No.	⬡	POINT	NORTHING	EASTING	UTILITY ELEVATION	DEPTH	UTILITY DESCRIPTION
U-1	1	2018	1959274	6905967	3877.3	2.1	VERIZON - 1" CABLE
	2	2013	1959387	6905936	3870.1	2.4	VERIZON - 1" CABLE
	3	2016	1959417	6905817	3865.4	-	TOP OF SEWER MANHOLE
	4	2011	1959547	6905912	3862.7	2.6	VERIZON - 1" CABLE
	5	2014	1959573	6905852	3855.9	4.5	BBARWA - SEWER 16" Dia
U-2	6	2004	1959994	6905807	3837.4	5.6	PG&E - 2" GAS
	7	2002	1960066	6905772	3836.0	3.7	BBARWA - SEWER 16" Dia
	8	2000	1960276	6905741	3822.9	2.6	BBARWA - SEWER 16" Dia
	9	2006	1960023	6905628	3837.7	3.2	PG&E - 2" GAS
	10	2008	1960082	6905577	3834.9	4.8	PG&E - 2" GAS
	11	1002	1960217	6905565	3826.34	4.6	MITSUBISHI WATERLINE - 8" Dia
	12	1004	1960069	6905565	3833.8	7.0	MITSUBISHI WATERLINE - 8" Dia

THIS PLAN ACCURATE FOR UTILITY WORK ONLY

UTILITY PLAN

U-4

REVISED BY | DATE REVISED
MONIE KEO | JUSTINE NUI
CALCULATED-DESIGNED BY | CHECKED BY
FUNCTIONAL SUPERVISOR
BEN AMIRI

STATE OF CALIFORNIA - DEPARTMENT OF TRANSPORTATION
Caltrans® DESIGN DIVISION

LAST REVISION 12-11-08
DATE PLOTTED => 08-JUL-2009
TIME PLOTTED => 10:46

Dist	COUNTY	ROUTE	POST MILES TOTAL PROJECT	SHEET No.	TOTAL SHEETS
08	SBd	18	66.6/67.2	37	90

REGISTERED CIVIL ENGINEER 12-11-08 DATE

5-11-09
PLANS APPROVAL DATE

REGISTERED PROFESSIONAL ENGINEER TRAN HOANG No. C54996 Exp. 6-30-10 CIVIL STATE OF CALIFORNIA

THE STATE OF CALIFORNIA OR ITS OFFICERS OR AGENTS SHALL NOT BE RESPONSIBLE FOR THE ACCURACY OR COMPLETENESS OF SCANNED COPIES OF THIS PLAN SHEET.

LEGEND

- CONSTRUCTION AREA
- CONSTRUCTION AREA SIGN (ONE POST)
- CONSTRUCTION AREA SIGN (TWO POST)
- (X) CONSTRUCTION AREA SIGN LETTER
- FLASHING BEACON (PORTABLE)

NOTES:

1. CONSTRUCTION AREA SIGN LOCATIONS SHOWN ARE APPROXIMATE. EXACT LOCATIONS WILL BE DETERMINED BY THE ENGINEER.
2. REFER TO STANDARD PLANS T13 & T17 FOR TRAFFIC CONTROL REQUIREMENTS.

PORTABLE CHANGEABLE MESSAGE SIGNS (PCMS)
(EA)
4

FLASHING BEACON (PORTABLE)
(EA)
3

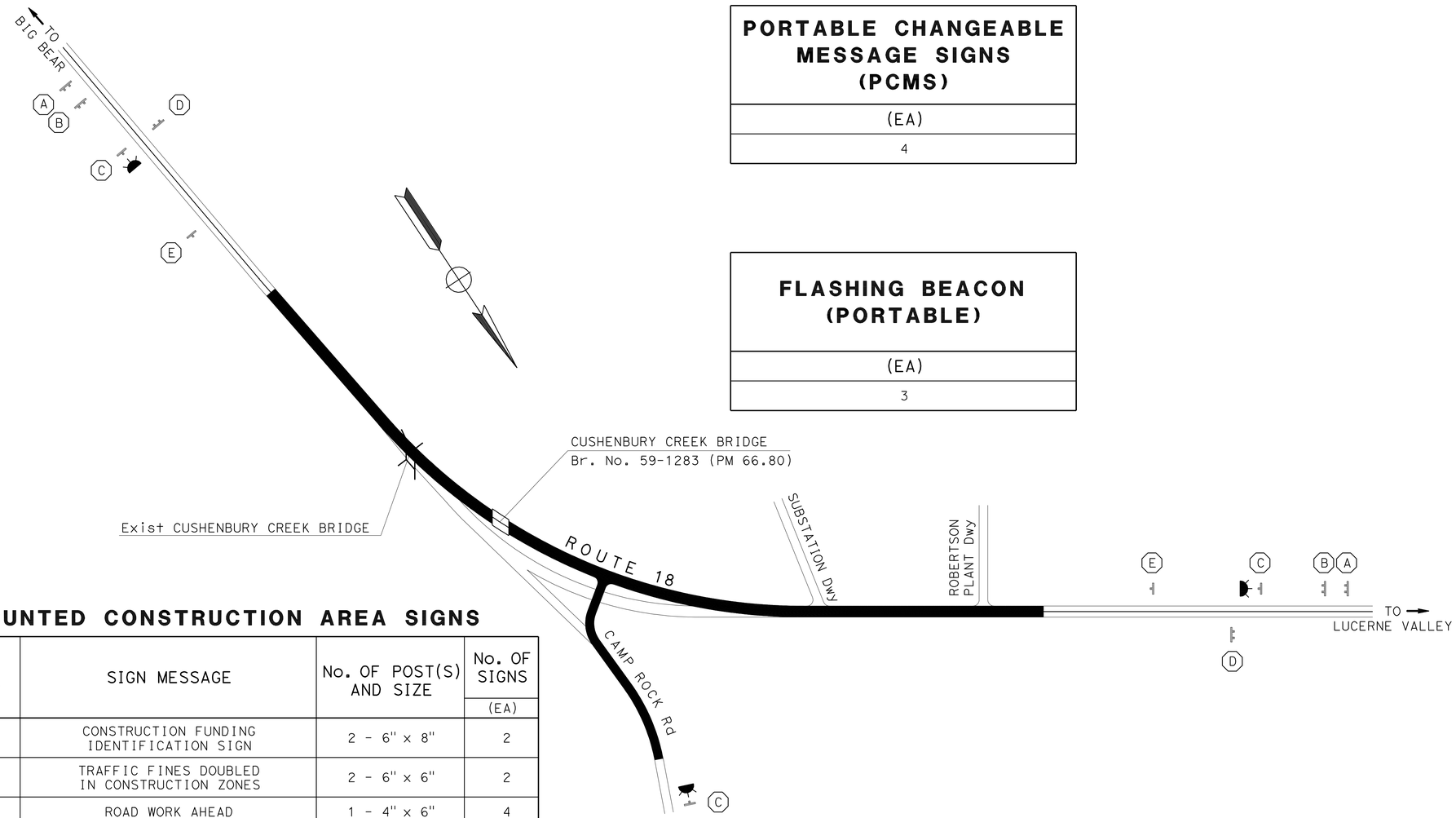

STATIONARY MOUNTED CONSTRUCTION AREA SIGNS

SIGN No.	SIGN CODE	PANEL SIZE	SIGN MESSAGE	No. OF POST(S) AND SIZE	No. OF SIGNS (EA)
A	C-SPECIAL	90" x 60"	CONSTRUCTION FUNDING IDENTIFICATION SIGN	2 - 6" x 8"	2
B	C40 (CA)	144" x 60"	TRAFFIC FINES DOUBLED IN CONSTRUCTION ZONES	2 - 6" x 6"	2
C	W20-1	36" x 36"	ROAD WORK AHEAD	1 - 4" x 6"	4
D	G20-2	48" x 24"	END ROAD WORK	2 - 4" x 4"	2
E	C31A(CA)	36" x 36"	NO SHOULDER	1 - 4" x 6"	2
				TOTAL	12

THIS PLAN ACCURATE FOR CONSTRUCTION AREA SIGN WORK ONLY

CONSTRUCTION AREA SIGNS

NO SCALE

CS-1

STATE OF CALIFORNIA - DEPARTMENT OF TRANSPORTATION
Caltrans® TRAFFIC DESIGN

FUNCTIONAL SUPERVISOR: LARRY SARTORI
CALCULATED-DESIGNED BY: H. SETHNA
CHECKED BY: TRAN HOANG
REVISED BY
DATE REVISED

LAST REVISION 12-11-08
DATE PLOTTED => 08-JUL-2009
TIME PLOTTED => 10:46

Dist	COUNTY	ROUTE	POST MILES TOTAL PROJECT	SHEET No.	TOTAL SHEETS
08	SBd	18	66.6/67.2	38	90

REGISTERED CIVIL ENGINEER 12-11-08 DATE

5-11-09
PLANS APPROVAL DATE

REGISTERED PROFESSIONAL ENGINEER MONIE S. KEO No. C65498 Exp. 9-30-09 CIVIL STATE OF CALIFORNIA

THE STATE OF CALIFORNIA OR ITS OFFICERS OR AGENTS SHALL NOT BE RESPONSIBLE FOR THE ACCURACY OR COMPLETENESS OF SCANNED COPIES OF THIS PLAN SHEET.

NOTES:

1. SEE DETOUR LAYOUT FOR MORE DETAIL.
2. SEE TRAFFIC HANDLING PLANS FOR ROUTE 18 REALIGNMENT AND CAMP ROCK ROAD.

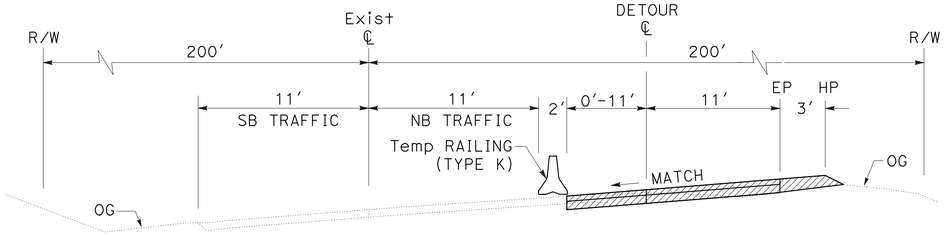

DETOUR CROSS SECTION

TYPICAL
Sta 361+00 TO 363+50

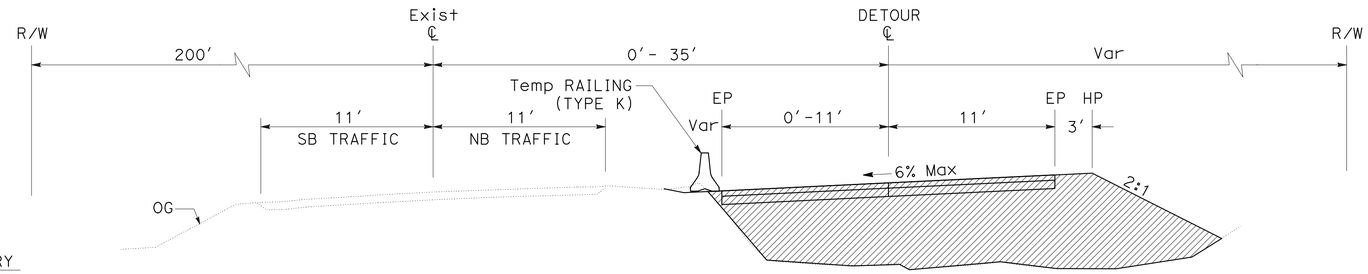

DETOUR CROSS SECTION

TYPICAL
Sta 357+00 TO 361+00

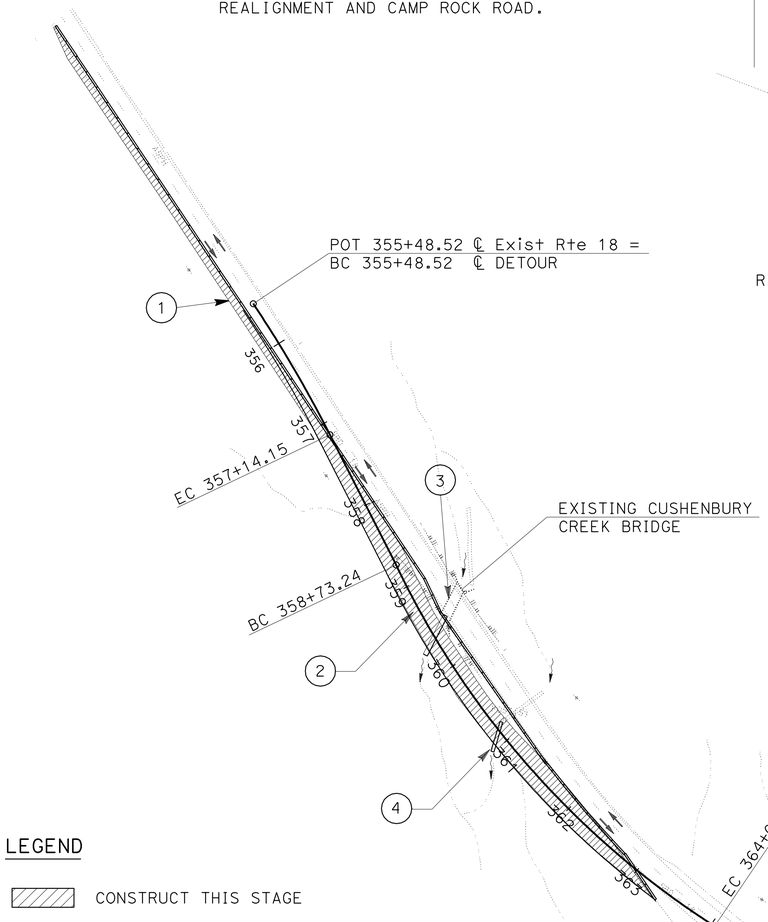

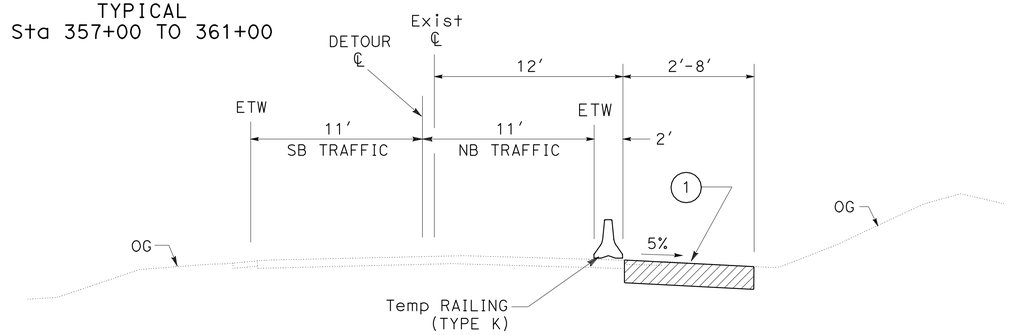

Exist Rte 18 CROSS SECTION

TYPICAL
Sta 351+00 TO 357+00

LEGEND

- CONSTRUCT THIS STAGE
- REMOVE EXISTING/TEMPORARY
- TRAFFIC THIS STAGE
- TEMPORARY RAILING (TYPE K)

CONSTRUCTION ACTIVITIES IN STAGE #1:

1. REMOVE AND CONSTRUCT RIGHT SHOULDER FROM STA 351+00 TO 357+00.
2. CONSTRUCT A TEMPORARY DETOUR TO EAST OF EXISTING ROUTE 18 FROM 357+00 TO 363+00.
3. CONSTRUCT A TEMPORARY PIPE CULVERT AT EXISTING BRIDGE SITE
4. EXTEND 48" TEMPORARY PIPE CULVERT AT EXISTING 48"CSP CULVERT AT AN ANGLE TO FOLLOW THE TERRIAN FLOW LINE

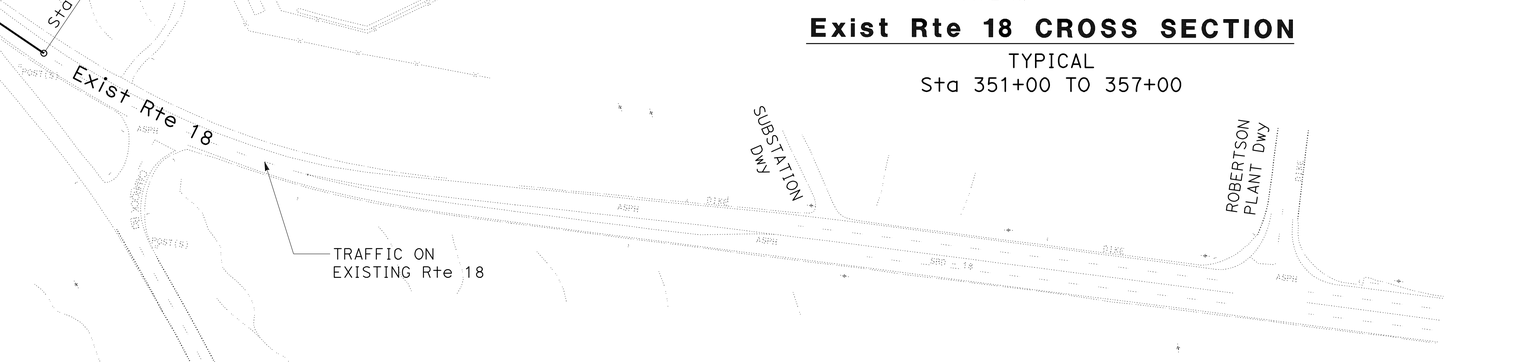

STAGE 1
STAGE CONSTRUCTION

NO SCALE

THIS PLAN ACCURATE FOR STAGE CONSTRUCTION WORK ONLY

SC-1

STATE OF CALIFORNIA - DEPARTMENT OF TRANSPORTATION
Caltrans DESIGN DIVISION

FUNCTIONAL SUPERVISOR: BEN AMIRI
CALCULATED-DESIGNED BY: MONIE KEO
CHECKED BY: MARK DE LA VEGA
REVISED BY
DATE REVISED

LAST REVISION 12-11-08
DATE PLOTTED => 08-JUL-2009
TIME PLOTTED => 10:46

Dist	COUNTY	ROUTE	POST MILES TOTAL PROJECT	SHEET No.	TOTAL SHEETS
08	SBd	18	66.6/67.2	39	90

REGISTERED CIVIL ENGINEER 12-11-08 DATE

5-11-09
PLANS APPROVAL DATE

REGISTERED PROFESSIONAL ENGINEER MONIE S. KEO No. C65498 Exp. 9-30-09 CIVIL STATE OF CALIFORNIA

THE STATE OF CALIFORNIA OR ITS OFFICERS OR AGENTS SHALL NOT BE RESPONSIBLE FOR THE ACCURACY OR COMPLETENESS OF SCANNED COPIES OF THIS PLAN SHEET.

NOTE:

1. SEE TRAFFIC HANDLING PLANS FOR ROUTE 18 REALIGNMENT AND CAMP ROCK Rd WIDENING.

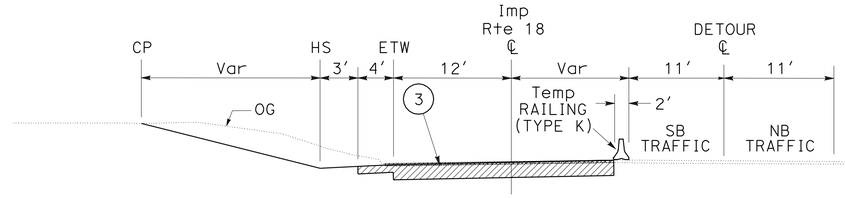

TYPICAL CROSS SECTION

374+00 TO 378+00

TYPICAL CROSS SECTION

362+50 TO 374+00

TYPICAL CROSS SECTION

359+50 TO 362+50

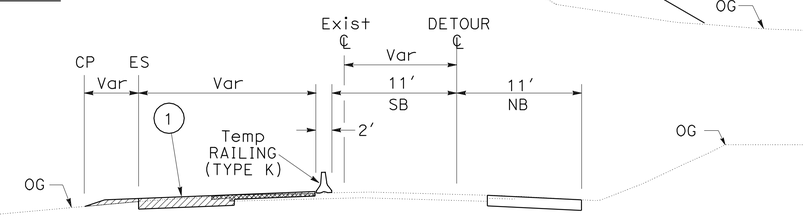

TYPICAL CROSS SECTION

351+00 TO 359+50

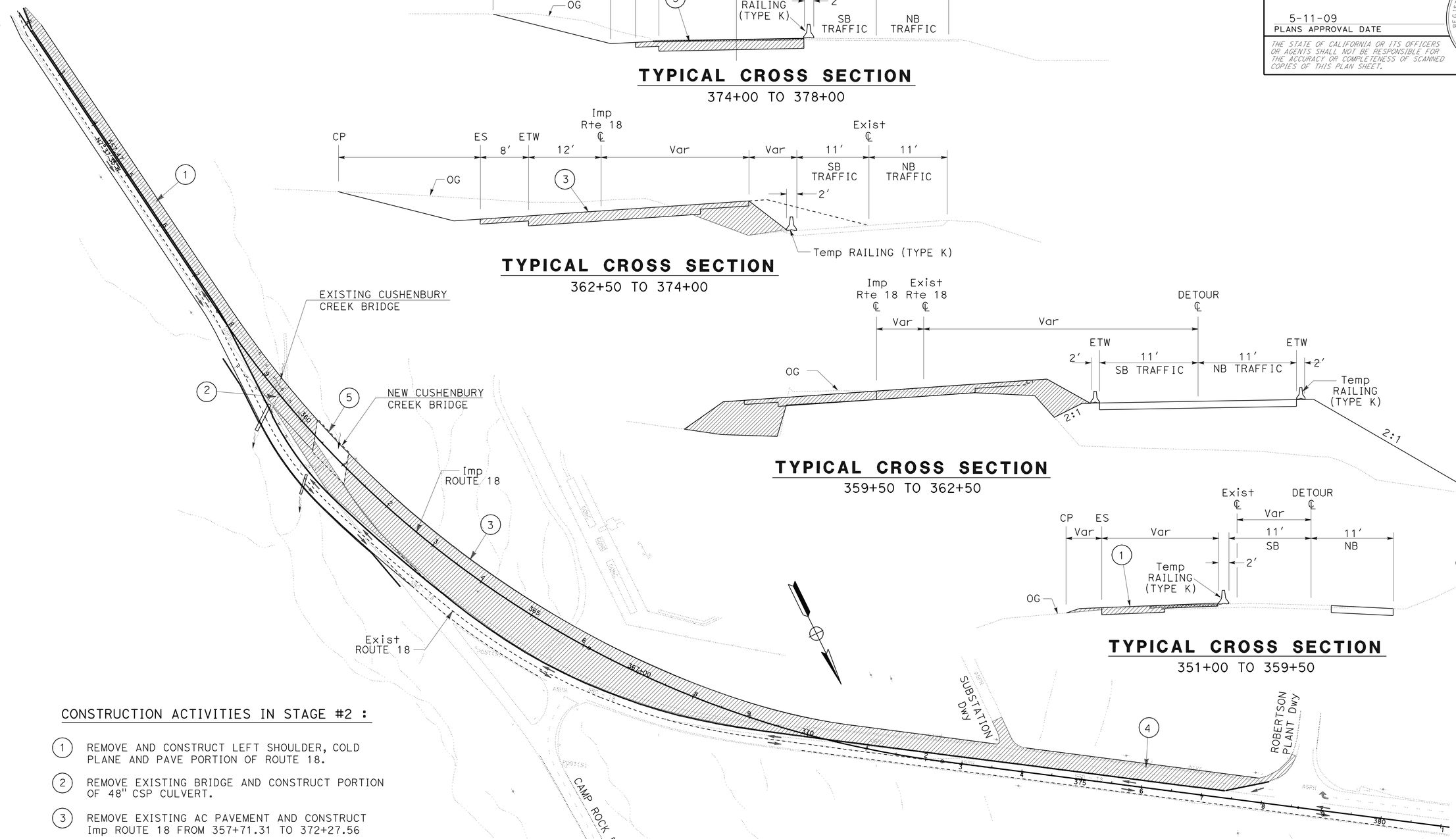

CONSTRUCTION ACTIVITIES IN STAGE #2 :

1. REMOVE AND CONSTRUCT LEFT SHOULDER, COLD PLANE AND PAVE PORTION OF ROUTE 18.
2. REMOVE EXISTING BRIDGE AND CONSTRUCT PORTION OF 48" CSP CULVERT.
3. REMOVE EXISTING AC PAVEMENT AND CONSTRUCT Imp ROUTE 18 FROM 357+71.31 TO 372+27.56
4. REMOVE AND CONSTRUCTION LEFT SHOULDER, COLD PLANE AND PAVE PORTION AC PAVEMENT FROM 374+00 TO 378+00.
5. PROVIDE TEMPORARY CROSS DRAIN DURING THE CONSTRUCTION OF CUSHENBURY CREEK BRIDGE (SEE STRUCTURE PLANS BRIDGE DETAILS).

THIS PLAN ACCURATE FOR STAGE CONSTRUCTION WORK ONLY

STAGE 2
STAGE CONSTRUCTION

NO SCALE

SC-2

STATE OF CALIFORNIA - DEPARTMENT OF TRANSPORTATION
Caltrans® DESIGN DIVISION

FUNCTIONAL SUPERVISOR: BEN AMIRI
CALCULATED-DESIGNED BY: MONIE KEO
CHECKED BY: MARK DE LA VEGA
REVISED BY
DATE REVISED

LAST REVISION 12-11-08
DATE PLOTTED => 08-JUL-2009
TIME PLOTTED => 10:46

Dist	COUNTY	ROUTE	POST MILES TOTAL PROJECT	SHEET No.	TOTAL SHEETS
08	SBd	18	66.6/67.2	40	90

REGISTERED CIVIL ENGINEER — DATE 12-11-08

PLANS APPROVAL DATE 5-11-09

MONIE S. KEO No. C65498 Exp. 9-30-09 CIVIL — REGISTERED PROFESSIONAL ENGINEER — STATE OF CALIFORNIA

THE STATE OF CALIFORNIA OR ITS OFFICERS OR AGENTS SHALL NOT BE RESPONSIBLE FOR THE ACCURACY OR COMPLETENESS OF SCANNED COPIES OF THIS PLAN SHEET.

NOTES:

1. SEE TRAFFIC HANDLING PLANS FOR ROUTE 18 REALIGNMENT AND CAMP ROCK Rd WIDENING.
2. SEE CONSTRUCTION DETAIL FOR CUSHENBURY CREEK.

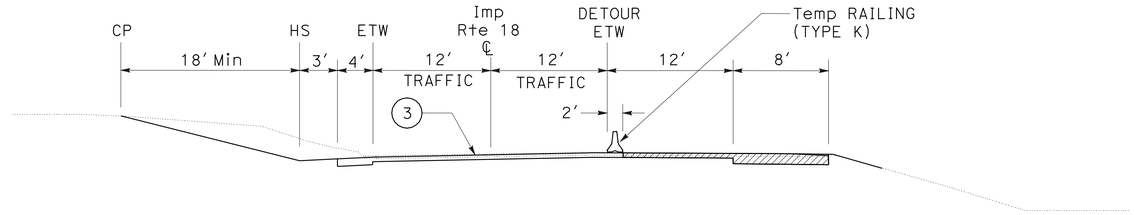

Imp Rte 18 CROSS SECTION

TYPICAL
373+71 TO 378+00

Imp Rte 18 CROSS SECTION

TYPICAL
362+00 TO 373+00

Exist Rte 18 CROSS SECTION

TYPICAL
351+00 TO 362+00

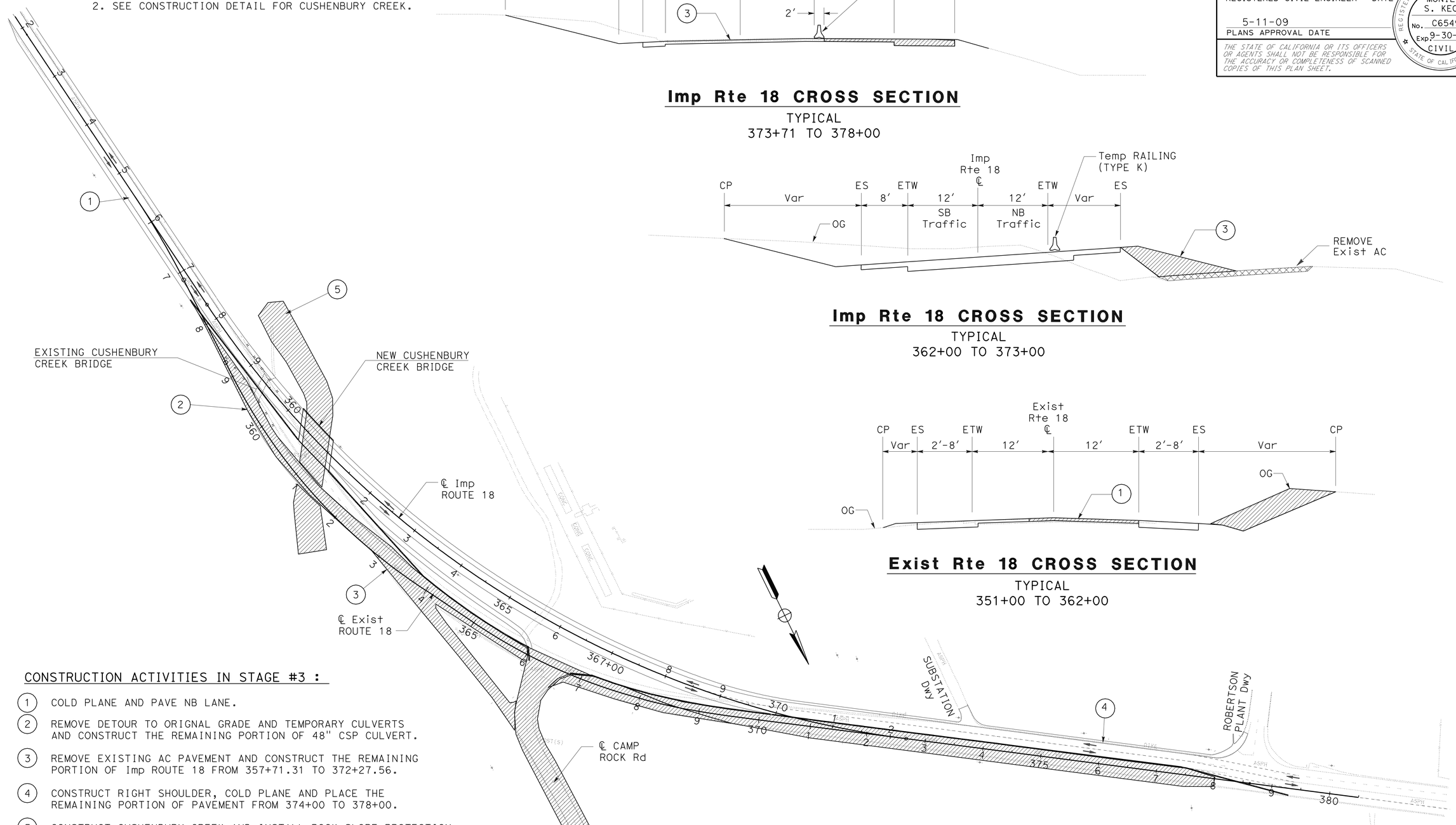

CONSTRUCTION ACTIVITIES IN STAGE #3 :

1. COLD PLANE AND PAVE NB LANE.
2. REMOVE DETOUR TO ORIGNAL GRADE AND TEMPORARY CULVERTS AND CONSTRUCT THE REMAINING PORTION OF 48" CSP CULVERT.
3. REMOVE EXISTING AC PAVEMENT AND CONSTRUCT THE REMAINING PORTION OF Imp ROUTE 18 FROM 357+71.31 TO 372+27.56.
4. CONSTRUCT RIGHT SHOULDER, COLD PLANE AND PLACE THE REMAINING PORTION OF PAVEMENT FROM 374+00 TO 378+00.
5. CONSTRUCT CUSHENBURY CREEK AND INSTALL ROCK SLOPE PROTECTION (SEE CONSTRUCTION DETAIL).
6. CONSTRUCT CAMP ROCK Rd (PROVIDE TEMPORARY ACCESS THRU CAMP ROCK Rd DURING CONSTRUCTION AND AFTER WORKING HOUR).

THIS PLAN ACCURATE FOR STAGE CONSTRUCTION WORK ONLY

STAGE 3
STAGE CONSTRUCTION

NO SCALE

SC-3

STATE OF CALIFORNIA - DEPARTMENT OF TRANSPORTATION
Caltrans DESIGN DIVISION

FUNCTIONAL SUPERVISOR: BEN AMIRI
CALCULATED-DESIGNED BY: MONIE KEO
CHECKED BY: MARK DE LA VEGA
REVISED BY / DATE REVISED

LAST REVISION 12-11-08
DATE PLOTTED => 08-JUL-2009
TIME PLOTTED => 10:46

Dist	COUNTY	ROUTE	POST MILES TOTAL PROJECT	SHEET No.	TOTAL SHEETS
08	SBd	18	66.6/67.2	41	90

REGISTERED CIVIL ENGINEER 12-11-08 DATE

5-11-09
PLANS APPROVAL DATE

REGISTERED PROFESSIONAL ENGINEER
TRAN HOANG
No. C54996
Exp. 6-30-10
CIVIL
STATE OF CALIFORNIA

THE STATE OF CALIFORNIA OR ITS OFFICERS OR AGENTS SHALL NOT BE RESPONSIBLE FOR THE ACCURACY OR COMPLETENESS OF SCANNED COPIES OF THIS PLAN SHEET.

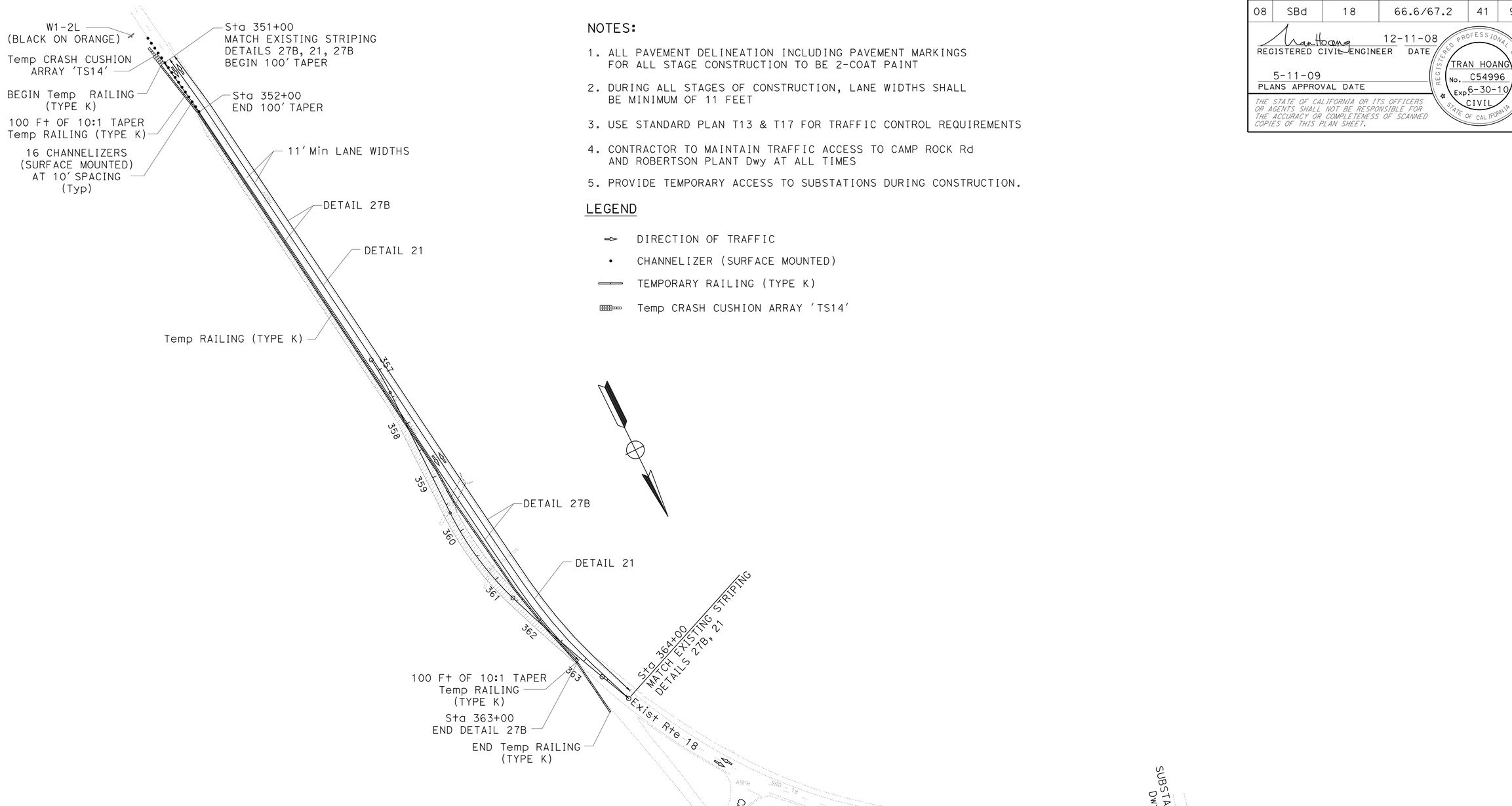

NOTES:

1. ALL PAVEMENT DELINEATION INCLUDING PAVEMENT MARKINGS FOR ALL STAGE CONSTRUCTION TO BE 2-COAT PAINT
2. DURING ALL STAGES OF CONSTRUCTION, LANE WIDTHS SHALL BE MINIMUM OF 11 FEET
3. USE STANDARD PLAN T13 & T17 FOR TRAFFIC CONTROL REQUIREMENTS
4. CONTRACTOR TO MAINTAIN TRAFFIC ACCESS TO CAMP ROCK Rd AND ROBERTSON PLANT Dwy AT ALL TIMES
5. PROVIDE TEMPORARY ACCESS TO SUBSTATIONS DURING CONSTRUCTION.

LEGEND

- DIRECTION OF TRAFFIC
- CHANNELIZER (SURFACE MOUNTED)
- TEMPORARY RAILING (TYPE K)
- Temp CRASH CUSHION ARRAY 'TS14'

STAGE 1
TRAFFIC HANDLING PLAN

NO SCALE

THIS PLAN ACCURATE FOR TRAFFIC HANDLING WORK ONLY

TH-1

STATE OF CALIFORNIA - DEPARTMENT OF TRANSPORTATION
Caltrans
TRAFFIC DESIGN

FUNCTIONAL SUPERVISOR: LARRY SARTORI
CALCULATED-DESIGNED BY: H. SETHNA
CHECKED BY: TRAN HOANG
REVISED BY
DATE REVISED

LAST REVISION 12-11-08
DATE PLOTTED => 08-JUL-2009
TIME PLOTTED => 10:47

BORDER LAST REVISED 4/11/2008
RELATIVE BORDER SCALE IS IN INCHES 0 1 2 3
USERNAME => trmikesl
DGN FILE => 839470md001.dgn
CU 08381
EA 394701

Dist	COUNTY	ROUTE	POST MILES TOTAL PROJECT	SHEET No.	TOTAL SHEETS
08	SBd	18	66.6/67.2	42	90

REGISTERED CIVIL ENGINEER 12-11-08 DATE

5-11-09
PLANS APPROVAL DATE

REGISTERED PROFESSIONAL ENGINEER
TRAN HOANG
No. C54996
Exp. 6-30-10
CIVIL
STATE OF CALIFORNIA

THE STATE OF CALIFORNIA OR ITS OFFICERS OR AGENTS SHALL NOT BE RESPONSIBLE FOR THE ACCURACY OR COMPLETENESS OF SCANNED COPIES OF THIS PLAN SHEET.

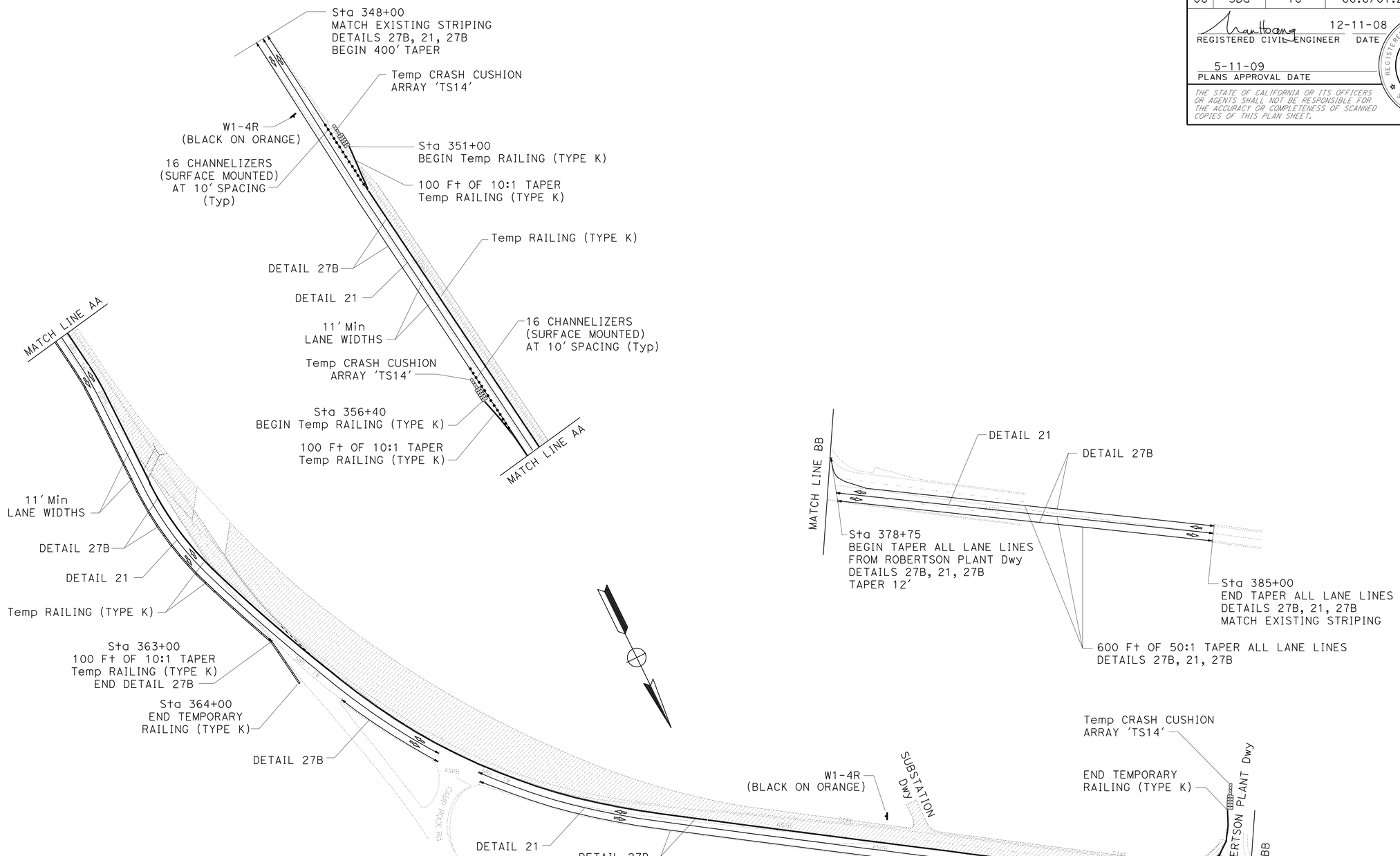

STAGE 2
TRAFFIC HANDLING PLAN

NO SCALE

THIS PLAN ACCURATE FOR TRAFFIC HANDLING WORK ONLY

TH-2

STATE OF CALIFORNIA - DEPARTMENT OF TRANSPORTATION
Caltrans® **TRAFFIC DESIGN**

FUNCTIONAL SUPERVISOR: LARRY SARTORI
CALCULATED-DESIGNED BY: H. SETHNA
CHECKED BY: TRAN HOANG
REVISED BY
DATE REVISED

LAST REVISION 12-11-08
DATE PLOTTED => 08-JUL-2009
TIME PLOTTED => 10:47

Dist	COUNTY	ROUTE	POST MILES TOTAL PROJECT	SHEET No.	TOTAL SHEETS
08	SBd	18	66.6/67.2	43	90

REGISTERED CIVIL ENGINEER — DATE 12-11-08

5-11-09
PLANS APPROVAL DATE

REGISTERED PROFESSIONAL ENGINEER — TRAN HOANG No. C54996 Exp. 6-30-10 CIVIL — STATE OF CALIFORNIA

THE STATE OF CALIFORNIA OR ITS OFFICERS OR AGENTS SHALL NOT BE RESPONSIBLE FOR THE ACCURACY OR COMPLETENESS OF SCANNED COPIES OF THIS PLAN SHEET.

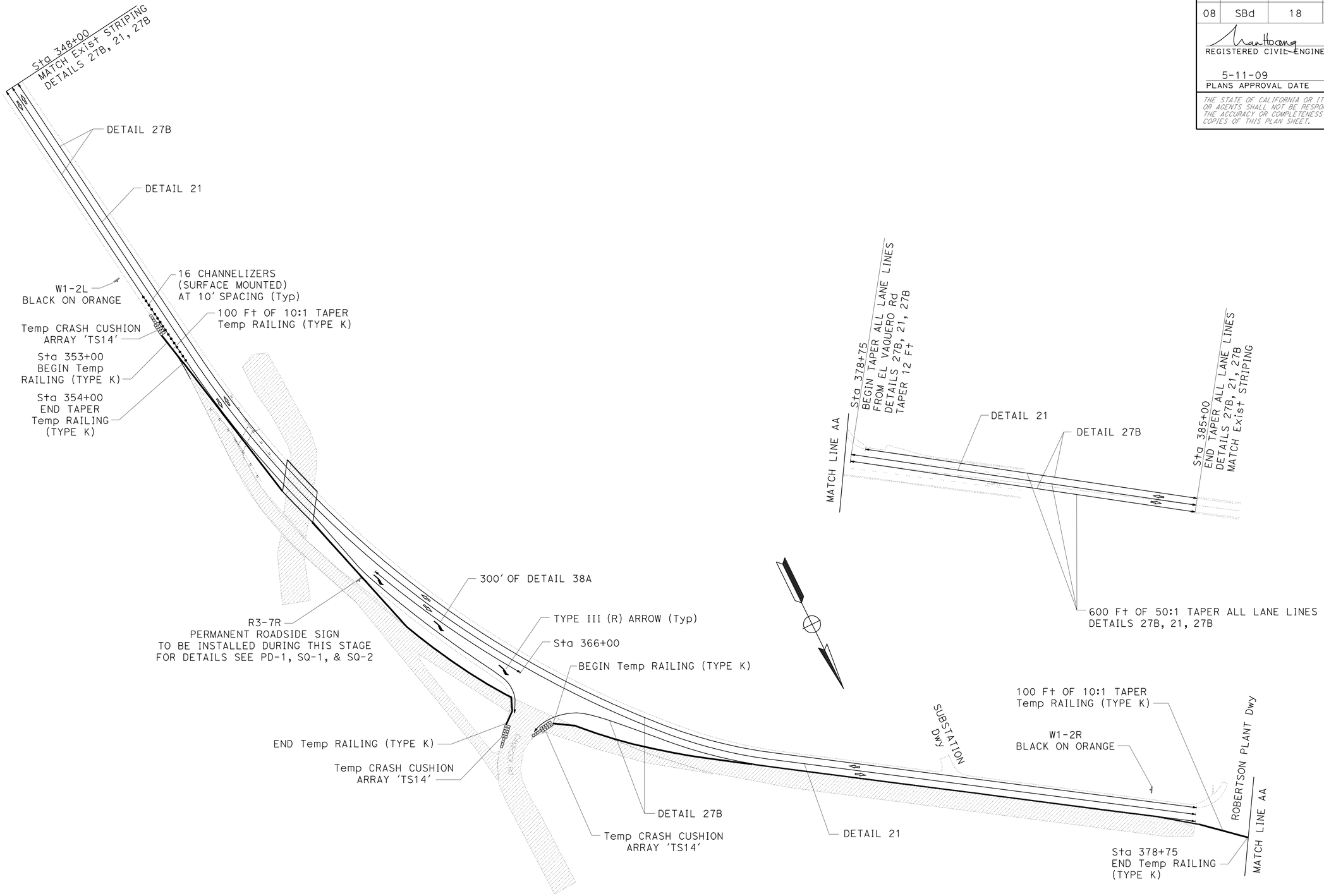

STAGE 3
TRAFFIC HANDLING PLAN

NO SCALE

THIS PLAN ACCURATE FOR TRAFFIC HANDLING WORK ONLY

TH-3

REVISED BY	DATE REVISED
H. SETHNA	TRAN HOANG

CALCULATED-DESIGNED BY	CHECKED BY

FUNCTIONAL SUPERVISOR
LARRY SARTORI

STATE OF CALIFORNIA - DEPARTMENT OF TRANSPORTATION
Caltrans
TRAFFIC DESIGN

LAST REVISION 12-11-08 | DATE PLOTTED => 08-JUL-2009 | TIME PLOTTED => 10:47

Dist	COUNTY	ROUTE	POST MILES TOTAL PROJECT	SHEET No.	TOTAL SHEETS
08	SBd	18	66.6/67.2	44	90

REGISTERED CIVIL ENGINEER 12-11-08 DATE

5-11-09
PLANS APPROVAL DATE

REGISTERED PROFESSIONAL ENGINEER TRAN HOANG No. C54996 Exp. 6-30-10 CIVIL STATE OF CALIFORNIA

THE STATE OF CALIFORNIA OR ITS OFFICERS OR AGENTS SHALL NOT BE RESPONSIBLE FOR THE ACCURACY OR COMPLETENESS OF SCANNED COPIES OF THIS PLAN SHEET.

TEMPORARY PAVEMENT DELINEATION QUANTITIES

SHEET No.	LOCATION	DETAIL No. OR PAVEMENT MARKING	PAINT TRAFFIC STRIPE (2-COAT)			PAINT PAVEMENT MARKING (2 COAT)
			4 INCH YELLOW	4 INCH WHITE	8 INCH WHITE	
			LF			Sq Ft
TH-1	NB/SB ROUTE 18	21	1300	-	-	-
		27B	-	2600	-	-
TH-2	NB/SB ROUTE 18	21	3700	-	-	-
		27B	-	7400	-	-
TH-3	NB/SB ROUTE 18	21	3700	-	-	-
		27B	-	7400	-	-
		38A	-	-	300	-
		TYPE III (R) ARROW	-	-	-	126
SUBTOTAL			8700	17400	300	126
TOTAL			26400			126

TRAFFIC CONTROL DEVICES

SHEET No.	TEMPORARY RAILING (TYPE K)	TEMPORARY RAILING (TYPE K) (RESET)	TEMPORARY TRAFFIC SCREEN	CHANNELIZER (SURFACE MOUNTED)	TEMPORARY CRASH CUSHION MODULE (SAND FILLED)	(N) TEMPORARY RAILING MARKERS
	LF	LF	LF	EA	EA	EA
TH-1	1300		1300	16	14	30
TH-2	2360	1300	3660	42	42	80
TH-3		2575	2575	16	42	55
SUBTOTAL	3660	3875	7535	74	98	165
SHEET TOTAL	7535		7535	74	98	165

(N) NOT A SEPARATE PAY ITEM; FOR INFORMATION ONLY.

STATIONARY MOUNTED CONSTRUCTION AREA SIGNS

SHEET No.	SIGN CODE	PANEL SIZE	SIGN MESSAGE	No. OF POST(S) AND SIZE	No. OF SIGNS
					EA
TH-1	W1-2L	36" x 36"	CURVE WARNING	1 - 4" x 6"	1
TH-2	W1-4R	36" x 36"	REVERSE CURVE WARNING	1 - 4" x 6"	2
TH-3	W1-2L	36" x 36"	CURVE WARNING	1 - 4" x 6"	1
	W1-2R	36" x 36"	CURVE WARNING	1 - 4" x 6"	1
TOTAL					5

TRAFFIC HANDLING QUANTITIES

THQ-1

REVISED BY | DATE REVISED
H. SETHNA | TRAN HOANG
CALCULATED-DESIGNED BY | CHECKED BY
FUNCTIONAL SUPERVISOR
LARRY SARTORI

STATE OF CALIFORNIA - DEPARTMENT OF TRANSPORTATION
Caltrans® TRAFFIC DESIGN

LAST REVISION 12-11-08 | DATE PLOTTED => 08-JUL-2009 | TIME PLOTTED => 10:47

Dist	COUNTY	ROUTE	POST MILES TOTAL PROJECT	SHEET No.	TOTAL SHEETS
08	SBd	18	66.6/67.2	45	90

REGISTERED CIVIL ENGINEER 12-11-08 DATE

5-11-09
PLANS APPROVAL DATE

REGISTERED PROFESSIONAL ENGINEER MONIE S. KEO No. C65498 Exp. 9-30-09 CIVIL STATE OF CALIFORNIA

THE STATE OF CALIFORNIA OR ITS OFFICERS OR AGENTS SHALL NOT BE RESPONSIBLE FOR THE ACCURACY OR COMPLETENESS OF SCANNED COPIES OF THIS PLAN SHEET.

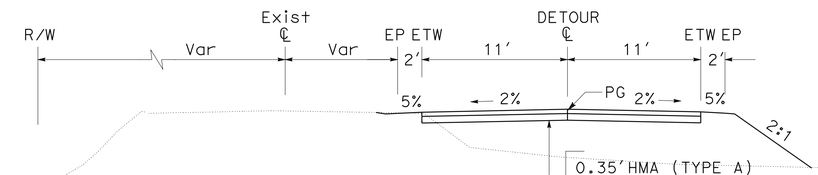

TYPICAL DETOUR STRUCTURE SECTION

NO SCALE

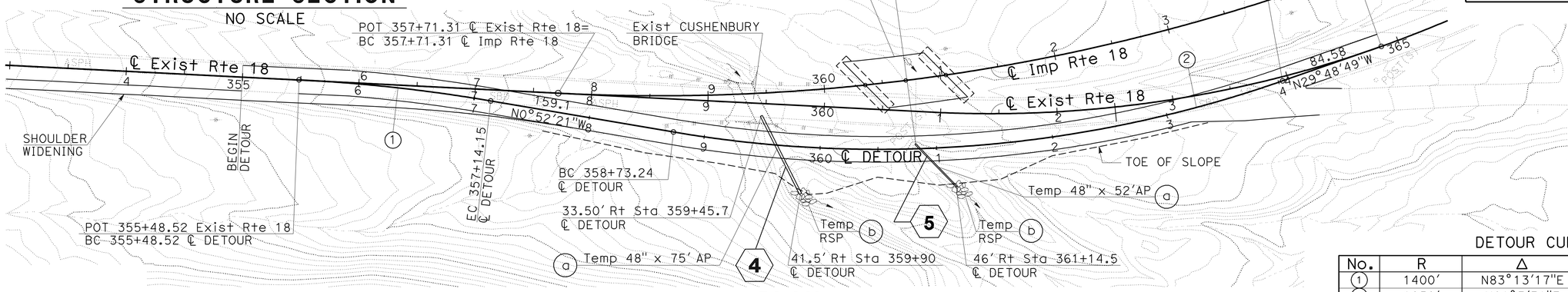

PLAN

SCALE: 1"=50′

DETOUR CURVE DATA

No.	R	Δ	T	L
1	1400′	N83°13′17″E	82.91	165.63
2	1050′	N61°3′31″E	270.97	530.37

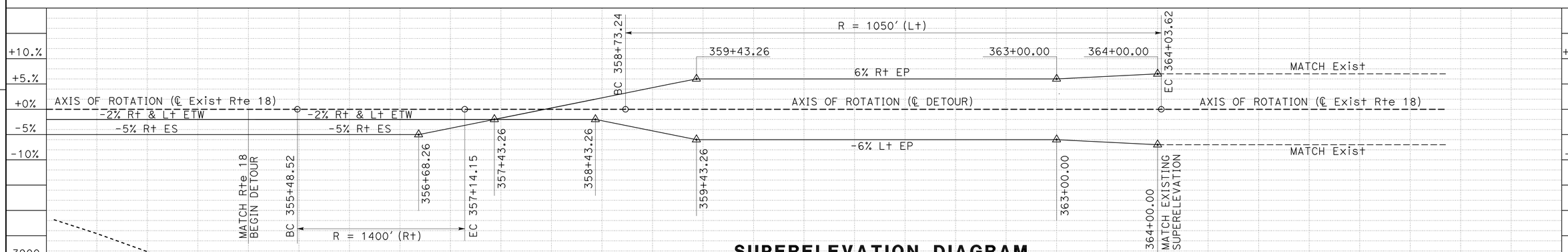

SUPERELEVATION DIAGRAM

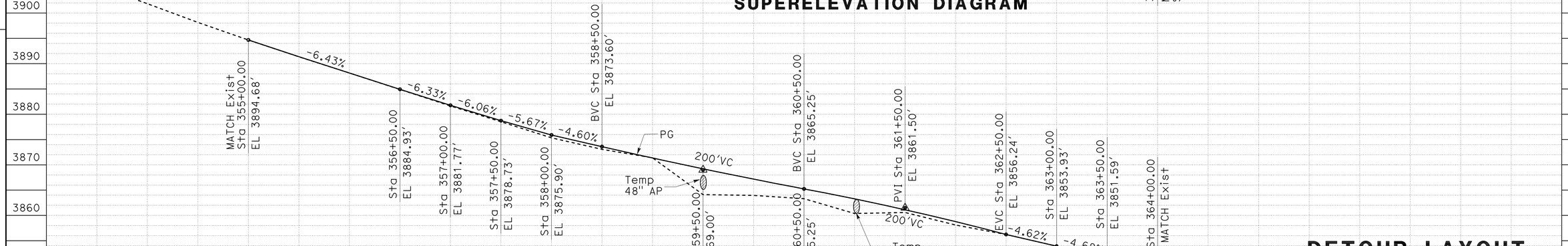

PROFILE DETOUR

SCALE HORZ 1:50′
VERT 1:20′

STATION	4	355	6	7	8	9	360	1	2	3	4	365	TOTAL
CY Exc	528												
CY Emb	1435												

DETOUR LAYOUT

SCALE AS SHOWN

DE-1

STATE OF CALIFORNIA - DEPARTMENT OF TRANSPORTATION
Caltrans® DESIGN DIVISION

FUNCTIONAL SUPERVISOR: BEN AMIRI
CALCULATED-DESIGNED BY: MONIE KEO
CHECKED BY: JUSTINE NUI
REVISED BY / DATE REVISED

LAST REVISION 12-11-08
DATE PLOTTED => 08-JUL-2009
TIME PLOTTED => 10:47

Dist	COUNTY	ROUTE	POST MILES TOTAL PROJECT	SHEET No.	TOTAL SHEETS
08	SBd	18	66.6/67.2	46	90

REGISTERED CIVIL ENGINEER 12-11-08 DATE

5-11-09
PLANS APPROVAL DATE

REGISTERED PROFESSIONAL ENGINEER
TRAN HOANG
No. C54996
Exp. 6-30-10
CIVIL
STATE OF CALIFORNIA

THE STATE OF CALIFORNIA OR ITS OFFICERS OR AGENTS SHALL NOT BE RESPONSIBLE FOR THE ACCURACY OR COMPLETENESS OF SCANNED COPIES OF THIS PLAN SHEET.

LEGEND

- ROADSIDE SIGN (ONE POST)
- ROADSIDE SIGN (TWO POST)
- PAVEMENT MARKING ARROW (TYPE VI)
- PAVEMENT MARKING ARROW (TYPE III)
- PAVEMENT MARKING ARROW (TYPE V)
- [XX] THERMOPLASTIC TRAFFIC STRIPE (SPRAYABLE) DETAIL NUMBER
- (X-X) ROADSIDE SIGN NUMBER

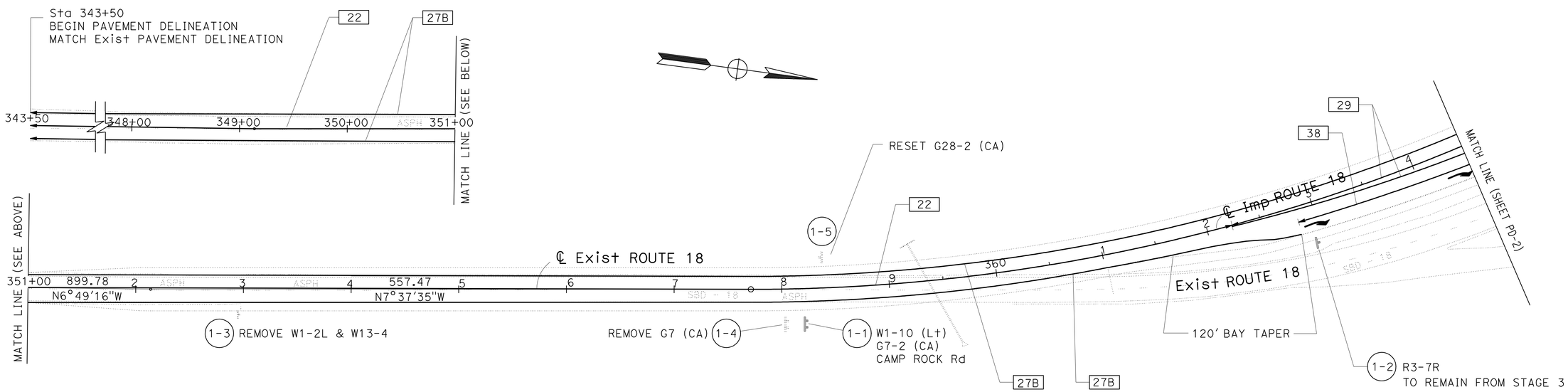

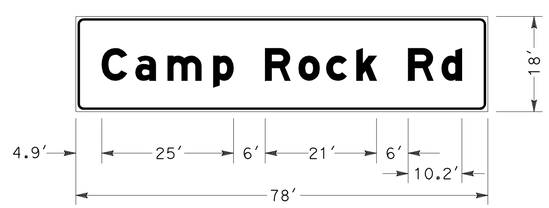

G7-2(CA) BLACK LETTERS ON YELLOW BACKGROUND
8" UPPERCASE & 6" LOWERCASE LETTERS

PAVEMENT DELINEATION AND SIGN PLAN

SCALE: 1"=50'

THIS PLAN ACCURATE FOR PAVEMENT DELINEATION AND SIGN WORK ONLY

PD-1

STATE OF CALIFORNIA - DEPARTMENT OF TRANSPORTATION
Caltrans® TRAFFIC DESIGN

FUNCTIONAL SUPERVISOR: LARRY SARTORI
CALCULATED-DESIGNED BY: H. SETHNA
CHECKED BY: TRAN HOANG
REVISED BY
DATE REVISED

LAST REVISION 12-11-08 | DATE PLOTTED => 08-JUL-2009 | TIME PLOTTED => 10:47

Dist	COUNTY	ROUTE	POST MILES TOTAL PROJECT	SHEET No.	TOTAL SHEETS
08	SBd	18	66.6/67.2	47	90

REGISTERED CIVIL ENGINEER — DATE 4-22-09

5-11-09
PLANS APPROVAL DATE

REGISTERED PROFESSIONAL ENGINEER — TRAN HOANG No. C54996 Exp. 6-30-10 CIVIL — STATE OF CALIFORNIA

THE STATE OF CALIFORNIA OR ITS OFFICERS OR AGENTS SHALL NOT BE RESPONSIBLE FOR THE ACCURACY OR COMPLETENESS OF SCANNED COPIES OF THIS PLAN SHEET.

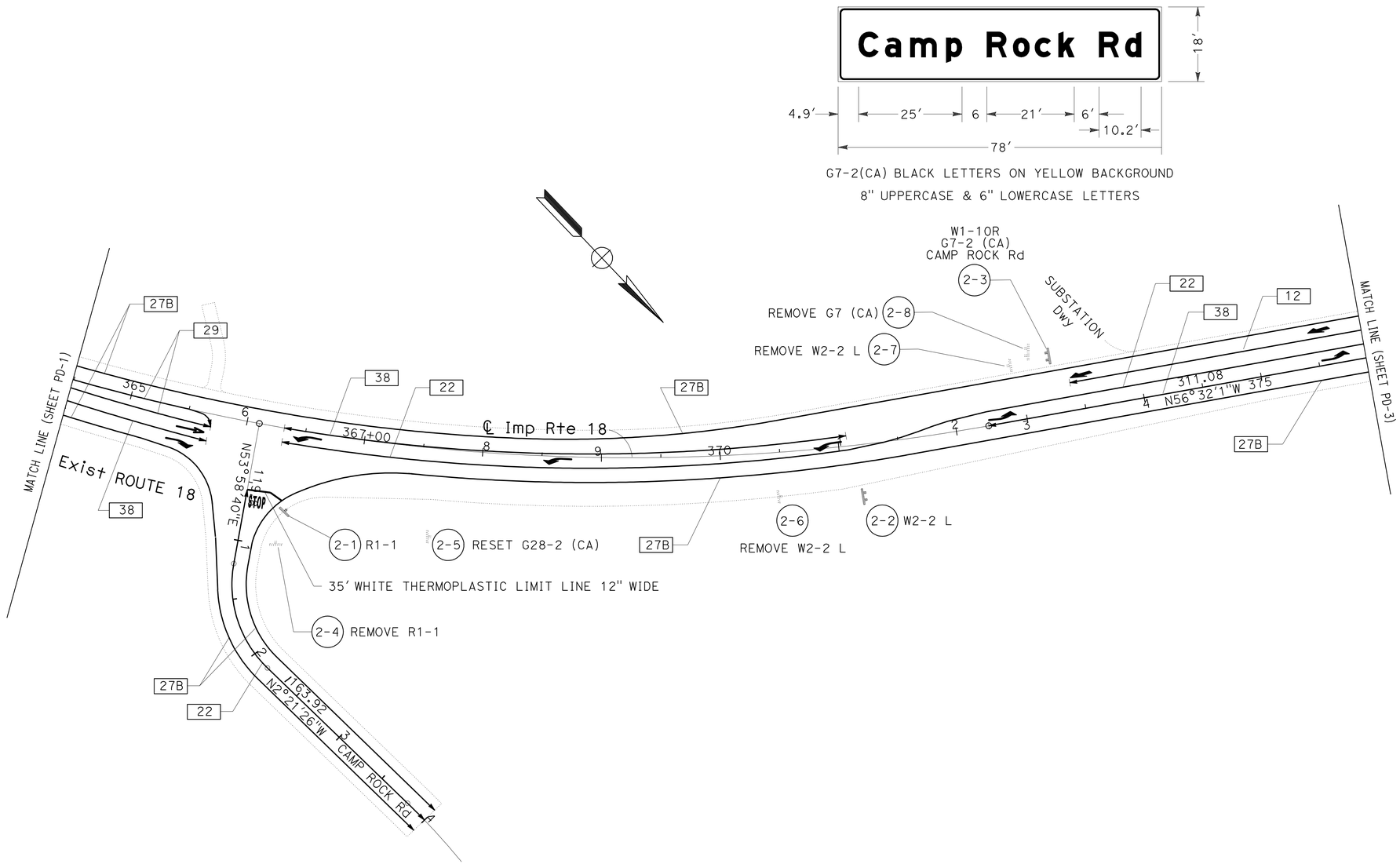

PAVEMENT DELINEATION AND SIGN PLAN

SCALE: 1"=50′

THIS PLAN ACCURATE FOR PAVEMENT DELINEATION AND SIGN WORK ONLY

PD-2

STATE OF CALIFORNIA - DEPARTMENT OF TRANSPORTATION
Caltrans® TRAFFIC DESIGN

FUNCTIONAL SUPERVISOR: LARRY SARTORI

CALCULATED-DESIGNED BY: H. SETHNA
CHECKED BY: TRAN HOANG

REVISED BY
DATE REVISED

LAST REVISION 04-22-09
DATE PLOTTED => 08-JUL-2009
TIME PLOTTED => 10:48

Dist	COUNTY	ROUTE	POST MILES TOTAL PROJECT	SHEET No.	TOTAL SHEETS
08	SBd	18	66.6/67.2	48	90

REGISTERED CIVIL ENGINEER 12-11-08 DATE

5-11-09
PLANS APPROVAL DATE

REGISTERED PROFESSIONAL ENGINEER
TRAN HOANG
No. C54996
Exp. 6-30-10
CIVIL
STATE OF CALIFORNIA

THE STATE OF CALIFORNIA OR ITS OFFICERS OR AGENTS SHALL NOT BE RESPONSIBLE FOR THE ACCURACY OR COMPLETENESS OF SCANNED COPIES OF THIS PLAN SHEET.

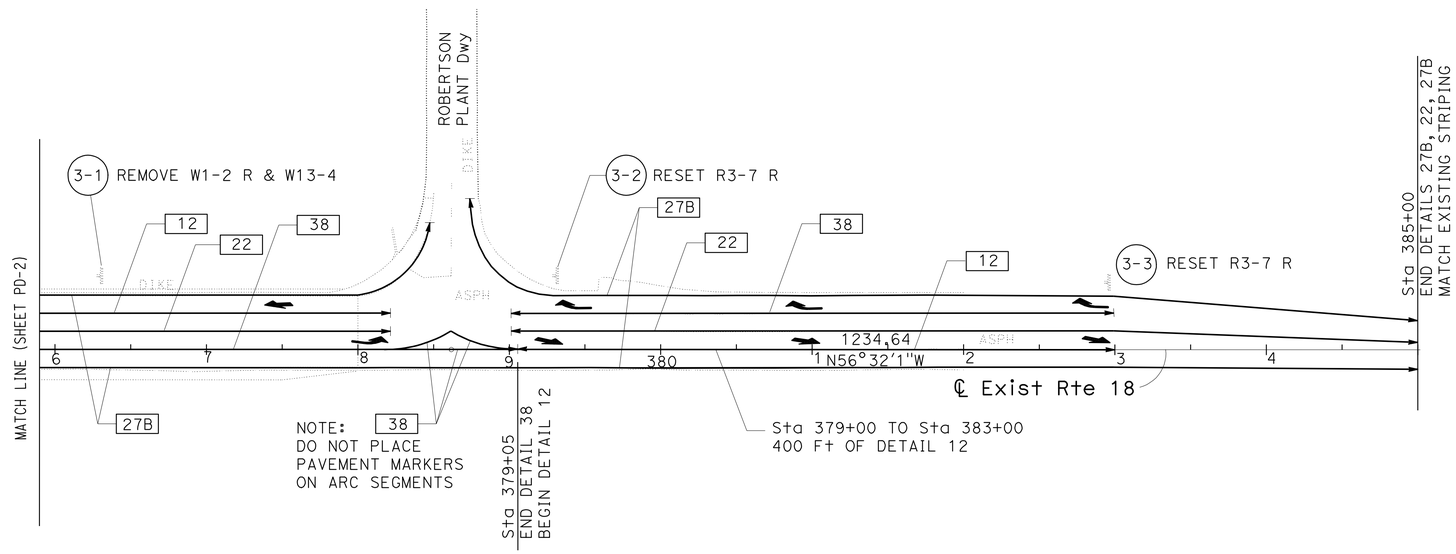

PAVEMENT DELINEATION AND SIGN PLAN

SCALE: 1"=50'

THIS PLAN ACCURATE FOR PAVEMENT DELINEATION AND SIGN WORK ONLY

PD-3

STATE OF CALIFORNIA - DEPARTMENT OF TRANSPORTATION
Caltrans® **TRAFFIC DESIGN**

FUNCTIONAL SUPERVISOR: LARRY SARTORI

CALCULATED-DESIGNED BY: H. SETHNA
CHECKED BY: TRAN HOANG

REVISED BY
DATE REVISED

LAST REVISION 12-11-08
DATE PLOTTED => 08-JUL-2009
TIME PLOTTED => 10:48

Dist	COUNTY	ROUTE	POST MILES TOTAL PROJECT	SHEET No.	TOTAL SHEETS
08	SBd	18	66.6/67.2	49	90

REGISTERED CIVIL ENGINEER 4-22-09 DATE

5-11-09
PLANS APPROVAL DATE

REGISTERED PROFESSIONAL ENGINEER TRAN HOANG No. C54996 Exp. 6-30-10 CIVIL STATE OF CALIFORNIA

THE STATE OF CALIFORNIA OR ITS OFFICERS OR AGENTS SHALL NOT BE RESPONSIBLE FOR THE ACCURACY OR COMPLETENESS OF SCANNED COPIES OF THIS PLAN SHEET.

PAVEMENT DELINEATION QUANTITIES

SHEET No.	LOCATION	DETAIL No. OR PAVEMENT MARKING	REMOVE PAVEMENT MARKERS	REMOVE THERMO-PLASTIC PAVEMENT MARKING		REMOVE THERMOPLASTIC TRAFFIC STRIPE			PAVEMENT MARKER									PAINT TRAFFIC STRIPE (2-COAT)				PAINT PAVEMENT MARKING (2-COAT)	THERMOPLASTIC TRAFFIC STRIPE (SPRAYABLE)				THERMOPLASTIC PAVEMENT MARKING
						YELLOW	WHITE		NON-REFLECTIVE TYPE	RETROREFLECTIVE TYPE						RECESSED TYPE											
				YELLOW	WHITE	4 INCH	4 INCH	8 INCH	A	AY	C	D	E	G	H	D	G	4 INCH YELLOW	4 INCH WHITE	6 INCH WHITE	8 INCH WHITE		4 INCH YELLOW	4 INCH WHITE	6 INCH WHITE	8 INCH WHITE	
			EA	Sq Ft		LF	LF		EA	EA						EA		Ft				Sq Ft	LF				Sq Ft
1	NB/SB ROUTE 18	22														162							1,870				
1	NB ROUTE 18	27B																						2,100			
1	NB/SB ROUTE 18	29														22							460				
1	NB ROUTE 18	38															8									168	
1	NB ROUTE 18	TYPE III ARROW																									84
1	SB ROUTE 18	27B																						2,100			
2	NB/SB ROUTE 18	22														84							940				
2	NB ROUTE 18	27B																						1070			
2	NB/SB ROUTE 18	29														14							256				
2	NB ROUTE 18	38															16									325	
2	NB ROUTE 18	TYPE III ARROW																									126
2	NB ROUTE 18	TYPE V ARROW																									33
2	SB ROUTE 18	12															7							235			
2	SB ROUTE 18	27B																						1,125			
2	SB ROUTE 18	38															22									480	
2	SB ROUTE 18	TYPE III ARROW																									126
2	SB ROUTE 18	TYPE VI ARROW																									84
2	EB/WB CAMP ROCK Rd	22														36							400				
2	EB CAMP ROCK Rd	27B																						400			
2	WB CAMP ROCK Rd	27B																						400			
2	WB CAMP ROCK Rd	STOP																									22
2	WB CAMP ROCK Rd	LIMIT LINE																									35
3	NB/SB ROUTE 18	22														82							925				
3	NB ROUTE 18	27B																						925			
3	NB ROUTE 18	38															20									425	
3	NB ROUTE 18	TYPE III ARROW																									42
3	NB ROUTE 18	TYPE VI ARROW																									126
3	SB ROUTE 18	27B																						950			
3	SB ROUTE 18	38															19									400	
3	SB ROUTE 18	TYPE III ARROW																									126
3	SB ROUTE 18	TYPE VI ARROW																									42
3	SB ROUTE 18	12															8							250			
SUBTOTAL (THIS SHEET)																400	100						4,851	9,555		1,798	846
TOTAL (THIS SHEET)																500							16,204				846

REVISED BY | DATE REVISED

H. SETHNA | TRAN HOANG

CALCULATED-DESIGNED BY | CHECKED BY

FUNCTIONAL SUPERVISOR: LARRY SARTORI

STATE OF CALIFORNIA - DEPARTMENT OF TRANSPORTATION

Caltrans® TRAFFIC DESIGN

PAVEMENT DELINEATION QUANTITIES

PDQ-1

LAST REVISION 04-22-09 | DATE PLOTTED => 08-JUL-2009 | TIME PLOTTED => 10:48

Dist	COUNTY	ROUTE	POST MILES TOTAL PROJECT	SHEET No.	TOTAL SHEETS
08	SBd	18	66.6/67.2	50	90

REGISTERED CIVIL ENGINEER — DATE 4-22-09

5-11-09
PLANS APPROVAL DATE

REGISTERED PROFESSIONAL ENGINEER — TRAN HOANG No. C54996 Exp. 6-30-10 CIVIL — STATE OF CALIFORNIA

THE STATE OF CALIFORNIA OR ITS OFFICERS OR AGENTS SHALL NOT BE RESPONSIBLE FOR THE ACCURACY OR COMPLETENESS OF SCANNED COPIES OF THIS PLAN SHEET.

PAVEMENT DELINEATION QUANTITIES

SHEET No.	LOCATION	DETAIL No. OR PAVEMENT MARKING	REMOVE PAVEMENT MARKERS	REMOVE THERMO-PLASTIC PAVEMENT MARKING		REMOVE THERMOPLASTIC TRAFFIC STRIPE			PAVEMENT MARKER									PAINT TRAFFIC STRIPE (2-COAT)				PAINT PAVEMENT MARKING (2-COAT)	THERMOPLASTIC TRAFFIC STRIPE (SPRAYABLE)				THERMOPLASTIC PAVEMENT MARKING
						YELLOW	WHITE		NON-REFLECTIVE TYPE	RETROREFLECTIVE TYPE						RECESSED TYPE											
				YELLOW	WHITE	4 INCH	4 INCH	8 INCH	A	AY	C	D	E	G	H	D	G	4 INCH YELLOW	4 INCH WHITE	6 INCH WHITE	8 INCH WHITE		4 INCH YELLOW	4 INCH WHITE	6 INCH WHITE	8 INCH WHITE	
			EA	Sq Ft		LF	LF		EA	EA						EA		Ft				Sq Ft	LF				Sq Ft
1	NB/SB ROUTE 18 (343+50 TO 355+10)	6	26			290																					
1	NB/SB ROUTE 18 (355+10 TO 361+96)	19	46			858																					
1	NB/SB ROUTE 18 (361+96 TO 364+50)	22	24			508																					
1	NB ROUTE 18 (343+50 TO 364+50)	27B					2,100																				
1	SB ROUTE 18 (343+50 TO 364+50)	27B					2,100																				
2	NB/SB ROUTE 18 (364+50 TO 375+75)	22	92			3,044	-																				
2	NB ROUTE 18 (364+50 TO 375+75)	27B					1,125																				
2	NB ROUTE 18 (373+75 TO 375+75)	38	10					200																			
2	NB ROUTE 18 (373+75 TO 375+75)	TYPE III ARROW			84																						
2	WB CAMP ROCK Rd (1+00)	STOP			22																						
2	WB CAMP ROCK Rd (1+00)	LIMIT LINE			35																						
2	EB/WB CAMP ROCK Rd (0+90 TO 4+00)	22/29	28			620																					
2	EB CAMP ROCK Rd (0+88 TO 4+00)	27B					312																				
2	WB CAMP ROCK Rd (0+98 TO 4+00)	27B					302																				
2	SB ROUTE 18 (364+50 TO 375+75)	27B					1,125																				
2	SB ROUTE 18 (372+25 TO 375+75)	38	16					350																			
2	SB ROUTE 18 (372+75 TO 374+75)	TYPE VI ARROW			126																						
3	NB ROUTE 18 (375+75 TO 385+00)	27B					925																				
3	NB/SB ROUTE 18 (375+75 TO 385+00)	22	42			1,850																					
3	NB ROUTE 18 (375+75 TO 385+00)	38	40					925																			
3	NB ROUTE 18 (377+35)	TYPE III ARROW			42																						
3	NB ROUTE 18 (381+40 TO 383+51)	TYPE VI ARROW			126																						
3	SB ROUTE 18 (375+75 TO 385+00)	27B					925																				
3	SB ROUTE 18 (375+75 TO 383+51)	38	34					776																			
3	SB ROUTE 18 (378+76 TO 383+51)	TYPE III ARROW			126																						
SUBTOTAL (THIS SHEET)			358		561	7,170	8,914	2,251																			
SUBTOTAL (SHEET PDQ-1)																400	100						4,851	9,555		1,798	846
TOTAL			358		561	7,170	11,165									500							16,204				846

PAVEMENT DELINEATION QUANTITIES

PDQ-2

REVISED BY | DATE REVISED
H. SETHNA | TRAN HOANG
CALCULATED-DESIGNED BY | CHECKED BY
FUNCTIONAL SUPERVISOR
LARRY SARTORI

STATE OF CALIFORNIA - DEPARTMENT OF TRANSPORTATION
Caltrans® TRAFFIC DESIGN

LAST REVISION 04-22-09 | DATE PLOTTED => 08-JUL-2009 | TIME PLOTTED => 10:48

Dist	COUNTY	ROUTE	POST MILES TOTAL PROJECT	SHEET No.	TOTAL SHEETS
08	SBd	18	66.6/67.2	51	90

REGISTERED CIVIL ENGINEER 12-11-08 DATE

5-11-09
PLANS APPROVAL DATE

REGISTERED PROFESSIONAL ENGINEER TRAN HOANG No. C54996 Exp. 6-30-10 CIVIL STATE OF CALIFORNIA

THE STATE OF CALIFORNIA OR ITS OFFICERS OR AGENTS SHALL NOT BE RESPONSIBLE FOR THE ACCURACY OR COMPLETENESS OF SCANNED COPIES OF THIS PLAN SHEET.

NOTE:

1. EXACT LOCATION & POSITION OF ROADSIDE SIGNS TO BE DETERMINED BY THE ENGINEER.
   POST LENGTHS GIVEN ARE APPROXIMATE. EXACT LENGTH TO BE DETERMINED BY THE ENGINEER.

ROADSIDE SIGN QUANTITIES

SIGN No.	SIGN CODE	POST LENGTH		POST SIZE			ROADSIDE SIGN				REMARKS
		L†	R†	4x4	4x6	6x6	ONE POST	TWO POST	REMOVE	RESET	
		F†		In x In			EA				
1-1	WI-10 L & G7-2 (CA)	18	14		X			I			CURVE WARNING & CAMP ROCK Rd
1-2	R3-7 R	14		X			I				RIGHT LANE MUST TURN RIGHT
1-3	WI-2 L & WI3-4								I		CURVE WARNING & ADVISORY SPEED
1-4	G7 (CA)								I		CAMP ROCK Rd
1-5	G28-2 (CA)									I	ROUTE 18 SHIELD
2-1	RI-1	15			X		I				STOP
2-2	W2-2 L	18	14		X			I			CURVE WARNING
2-3	WI-10 R & G7-2 (CA)	18	14		X			I			CURVE WARNING & CAMP ROCK Rd
2-4	RI-1								I		STOP
2-5	G28-2 (CA)									I	ROUTE 18 SHIELD
2-6	W2-2 L								I		INTERSECTION WARNING
2-7	W2-2 L								I		INTERSECTION WARNING
2-8	G7 (CA)								I		CAMP ROCK Rd
3-1	WI-2 R & WI3-4								I		CURVE WARNING & ADVISORY SPEED
3-2	R3-7 R									I	RIGHT LANE MUST TURN RIGHT
3-3	R3-7 R									I	RIGHT LANE MUST TURN RIGHT
TOTAL							2	3	7	4	

REVISED BY | DATE REVISED

H. SETHNA | TRAN HOANG

CALCULATED-DESIGNED BY | CHECKED BY

FUNCTIONAL SUPERVISOR

LARRY SARTORI

STATE OF CALIFORNIA - DEPARTMENT OF TRANSPORTATION

Caltrans® TRAFFIC DESIGN

SIGN QUANTITIES

SQ-1

LAST REVISION 12-11-08 | DATE PLOTTED => 08-JUL-2009 | TIME PLOTTED => 10:48

Dist	COUNTY	ROUTE	POST MILES TOTAL PROJECT	SHEET No.	TOTAL SHEETS
08	SBd	18	66.6/67.2	52	90

REGISTERED CIVIL ENGINEER 12-11-08 DATE

5-11-09
PLANS APPROVAL DATE

REGISTERED PROFESSIONAL ENGINEER TRAN HOANG No. C54996 Exp. 6-30-10 CIVIL STATE OF CALIFORNIA

THE STATE OF CALIFORNIA OR ITS OFFICERS OR AGENTS SHALL NOT BE RESPONSIBLE FOR THE ACCURACY OR COMPLETENESS OF SCANNED COPIES OF THIS PLAN SHEET.

NOTE:

1. CALIFORNIA SIGN CODES ARE DESIGNATED BY (CA); OTHERWISE, FEDERAL SIGN CODES ARE SHOWN

ABREVIATIONS

FRP = FIBERGLASS REINFORCED PLASTIC

L = LENGTH OF SIGN

D = DEPTH OF SIGN

RSPF = REMOVABLE SIGN PANEL FRAME

SIGN PANEL MATERIAL SUMMARY

SIGN No.	SIGN CODE	SIGN DIMENSION L x D (In x In) OR AS SPECIFIED	SINGLE FACED	BACKGROUND		LEGEND		GRAFFITI FILM	ROADSIDE SINGLE-SHEET				REMARKS
									FRAMED ALUMINUM		UNFRAMED ALUMINUM		
				SHEETING COLOR	RETRO-REFLECTIVE ASTM TYPE	SHEETING COLOR	RETRO-REFLECTIVE ASTM TYPE	PREMIUM	0.063 INCH	0.080 INCH	0.063 INCH	0.080 INCH	
									Sq Ft				
1-1	W1-10L	36 X 36	X	YELLOW	X	BLACK		X			9		
1-1	G7-2 (CA)	78 X 18	X	YELLOW	X	BLACK		X		9.75			
1-2	R3-7 R	30 X 30	X	WHITE	X	BLACK		X			6.25		
2-1	R1-1	36 X 36	X	RED	X	WHITE	X	X			7.5		
2-2	W2-2 L	36 X 36	X	YELLOW	X	BLACK		X			9		
2-2	G7-2 (CA)	78 X 18	X	YELLOW	X	BLACK		X		9.75			
2-3	W1-10 R	36 X 36	X	YELLOW	X	BLACK		X			9		
2-3	G7-2 (CA)	78 X 18	X	YELLOW	X	BLACK		X		9.75			
SHEET TOTAL (Sq Ft)										29.25	40.75		
GRAND TOTAL (Sq Ft)										30	41		

(CONTRACTOR FURNISHED)
SIGN QUANTITIES

SQ-2

STATE OF CALIFORNIA - DEPARTMENT OF TRANSPORTATION
Caltrans® TRAFFIC DESIGN

FUNCTIONAL SUPERVISOR: LARRY SARTORI
CALCULATED-DESIGNED BY: H. SETHNA
CHECKED BY: TRAN HOANG
REVISED BY
DATE REVISED

LAST REVISION 12-11-08
DATE PLOTTED => 08-JUL-2009
TIME PLOTTED => 10:48

Dist	COUNTY	ROUTE	POST MILES TOTAL PROJECT	SHEET No.	TOTAL SHEETS
08	SBd	18	66.6/67.2	53	90

REGISTERED CIVIL ENGINEER 12-11-08 DATE

5-11-09
PLANS APPROVAL DATE

REGISTERED PROFESSIONAL ENGINEER MONIE S. KEO No. C65498 Exp. 9-30-09 CIVIL STATE OF CALIFORNIA

THE STATE OF CALIFORNIA OR ITS OFFICERS OR AGENTS SHALL NOT BE RESPONSIBLE FOR THE ACCURACY OR COMPLETENESS OF SCANNED COPIES OF THIS PLAN SHEET.

ROADWAY QUANTITIES

LOCATION AND DESCRIPTION	HMA (TYPE A)	CLASS 2 AGGREGATE BASE	LIQUID ASPHALT SC-70 (PRIME COAT)	ROADWAY EXCAVATION	(N) EMBANKMENT	IMPORTED BORROW	ROADWAY EXCAVATION (DETOUR REMOVAL)	DITCH EXCAVATION
	TON	CY	TON	CY	CY	CY	CY	CY
"℄ Exist ROUTE 18" Sta 351+00 To Sta 357+71.31	584.0	293	6.9	1150	36			
"℄ Imp ROUTE 18" Sta 357+71.31 To Sta 372+27.56	3106.9	2574	20.9	7065	4310			
"℄ Exist ROUTE 18" Sta 357+72.03 To Sta 378+00	767.1	713	8.8	1355	411			
"℄ CAMP ROCK Rd" Sta 0+37 To Sta 4+50	567.0	413	4.6	188	2255			
"℄ ROBERTSON PLANT Dwy" Sta 0+37 To Sta 1+00	20.7	20	0.2	40	5			20
"CUSHENBURY CREEK LOL" Sta 0+00 To Sta 4+50				7000				
DETOURS								
"DETOUR" Sta 355+00 To Sta 363+00	432.0	291	5.1	528		1435		
"DETOUR REMOVAL" Sta 355+00 To Sta 363+00							1435	
SUBTOTAL	5477.7	4304	46.5	17326	7017	1435	1435	
FROM COLD PLANE AC	508.0							
FROM HMA DIKES	103.1							
FROM MISC AREAS	45.2							
"SUBSTATION Dwy" Sta 0+47 To Sta 1+30	27.1							
"DIRT Rd" Sta 0+66.29 TO Sta 0+93.91	17.0							
TOTAL	6178.1	4304	46.5	17326	7017	1435	1435	20

(N) - NOT A SEPARATE PAY ITEM, FOR INFORMATION ONLY

HMA DIKE QUANTITIES

STATION TO STATION ℄ Imp Rte 18 (UNLESS OTHERWISE NOTED)	PLACE HMA DIKE		
	TYPE C	TYPE D	TYPE F
	LF	LF	LF
358+47.2 TO 359+97.2 Lt	37.5		112.5
361+05.5 TO 362+43.0 Lt	37.5		100.0
362+43.0 To 378+00.0 Lt		1557.0	
0+20.0 To 0+50.0 Lt & Rt "SUBSTATION Dwy"		57.7	
0+36.0 To 1+00.0 Lt "ROBERTSON PLANT Dwy"		61.8	
0+20.0 To 0+50.0 Lt & Rt "DIRT Rd"		60.0	
TOTAL	75.0	1736.5	212.5

REMOVE BASE AND SURFACING

LOCATION AND DESCRIPTION	CY
"℄ Exist Rte 18" Sta 359+50 To Sta 370+50	715
"CAMP ROCK Rd" RIGHT TURNING LANE	353
TOTAL	1068

COLD PLANE AC PAVEMENT

LOCATION AND DESCRIPTION	0.25' Max
	Sq Yd
"℄ Exist Rte 18" Sta 251+00 To Sta 365+50	1470
"℄ Exist Rte 18" Sta 375+00 To Sta 378+00	1600
"℄ CAMP ROCK Rd" Sta 2+50 To Sta 4+00	400
"SUBSTATION Dwy" Sta 0+48 To Sta 0+80	67
TOTAL	3537

PLACE HMA (MISCELLANEOUS AREA)

LOCATION AND DESCRIPTION	Sq Yd
"OVERSIDE DRAIN" 35.5 Lt ROBERTSON PLANT Dwy Sta 0+46.50	62
TOTAL	62

SUMMARY OF QUANTITIES

Q-1

STATE OF CALIFORNIA - DEPARTMENT OF TRANSPORTATION
Caltrans DESIGN DIVISION

FUNCTIONAL SUPERVISOR: BEN AMIRI
CALCULATED-DESIGNED BY: MONIE KEO
CHECKED BY: JUSTINE NUI
REVISED BY
DATE REVISED

LAST REVISION 12-11-08
DATE PLOTTED => 08-JUL-2009
TIME PLOTTED => 10:48

Dist	COUNTY	ROUTE	POST MILES TOTAL PROJECT	SHEET No.	TOTAL SHEETS
08	SBd	18	66.6/67.2	54	90

REGISTERED CIVIL ENGINEER 4-22-09 DATE

5-11-09
PLANS APPROVAL DATE

REGISTERED PROFESSIONAL ENGINEER MONIE S. KEO No. C65498 Exp. 9-30-09 CIVIL STATE OF CALIFORNIA

THE STATE OF CALIFORNIA OR ITS OFFICERS OR AGENTS SHALL NOT BE RESPONSIBLE FOR THE ACCURACY OR COMPLETENESS OF SCANNED COPIES OF THIS PLAN SHEET.

REMOVE MISCELLANEOUS ITEMS

LOCATION AND DESCRIPTION	REMOVE RSP (N)	REMOVE ROCK WALL (N)
	CY	CY
"℄ Exist ROUTE 18" 60' Rt Sta 359+00 TO Sta 360+00	871	
"℄ Exist ROUTE 18" 60' Lt Sta 358+75 TO Sta 359+50		63
TOTAL	871	63

(N) - NOT A SEPARATE PAY ITEM; FOR INFORMATION ONLY

TEMPORARY CONSTRUCTION BMP's

TYPE/DESCRIPTION OF TEMPORARY CONSTRUCTION BMP'S	UNIT	QUANTITY
TEMPORARY FIBER ROLLS	LF	10 000
TEMPORARY SILT FENCE	LF	6500
TEMPORARY GRAVEL BAG BERM	LF	6500
TEMPORARY CONCRETE WASHOUT FACILITY	EA	2
TEMPORARY CONSTRUCTION ENTRANCE	EA	2
TEMPORARY COVER (PLASTIC)	SQYD	1000
TEMPORARY SOIL BINDER	SQYD	9205
TEMPORARY CONSTRUCTION ROADWAY	CY	255
TEMPORARY DRAINAGE INLET PROTECTION	EA	4

METAL BEAM GUARD RAILING

LOCATION AND DESCRIPTION	REMOVE METAL BEAM GUARD RAILING	METAL BEAM GUARD RAILING	ALTERNATIVE FLARED TERMINAL SYSTEM	TRANSITION RAILING (TYPE WB)	GUARD RAILING LAYOUT (N)
	LF	LF	EA	EA	TYPE
"Exist Rte 18" Sta 358+50.0 To Sta 360+00.0 Lt	150.0				
"Exist Rte 18" Sta 358+70.0 To Sta 360+25.0 Rt	155.0				
"℄ IMP Rte 18" Sta 358+47.2 TO Sta 359+97.2 Lt		87.5	1	1	12B
"℄ IMP Rte 18" Sta 357+76.5 TO Sta 360+26.5 Rt		187.5	1	1	12B
"℄ IMP Rte 18" Sta 361+05.5 TO Sta 362+43.0 Lt		75.0	1	1	12B
"℄ IMP Rte 18" Sta 361+43.9 TO Sta 362+18.9 Rt		12.5	1	1	12B
TOTAL	305.0	362.5	4	4	

(N) - NOT A SEPARATE PAY ITEM; FOR INFORMATION ONLY

TEMPORARY FENCE

LOCATION AND DESCRIPTION	ESA FENCE	WILDLIFE FENCE
	LF	LF
"℄ Imp ROUTE 18" FROM Sta 356+00 To Sta 369+50 Lt	1480	
"℄ Imp ROUTE 18" FROM Sta 356+00 To Sta 366+00 Rt	1130	
"℄ Imp ROUTE 18" FROM Sta 358+50 To Sta 370+50 Rt	215	
"CAMP ROCK Rd" FROM Sta 1+50 To Sta 5+50 Lt	390	
"CAMP ROCK Rd" FROM Sta 1+00 To Sta 5+50 Lt	550	700
TOTAL	3765	700

VEGETATION CONTROL (MINOR CONCRETE)

STATION TO STATION ℄ Imp Rte 18 (UNLESS OTHERWISE NOTED)	UNDER GUARDRAIL
	Sq Yd
358+47.2 TO 359+97.2 Lt	75.1
357+76.5 TO 360+26.5 Rt	113.1
361+05.5 TO 362+43.0 Lt	70.4
361+43.9 TO 362+18.9 Rt	46.6
TOTAL	305.2

SUMMARY OF QUANTITIES

Q-2

STATE OF CALIFORNIA - DEPARTMENT OF TRANSPORTATION
Caltrans DESIGN DIVISION

FUNCTIONAL SUPERVISOR: BEN AMIRI
CALCULATED-DESIGNED BY: MONIE KEO
CHECKED BY: JUSTINE NUI
REVISED BY
DATE REVISED

LAST REVISION 04-22-09 | DATE PLOTTED => 08-JUL-2009 | TIME PLOTTED => 10:49

Dist	COUNTY	ROUTE	POST MILES TOTAL PROJECT	SHEET No.	TOTAL SHEETS
08	SBd	18	66.6/67.2	55	90

12-11-08
LICENSED LANDSCAPE ARCHITECT

5-11-09
PLANS APPROVAL DATE

LICENSED LANDSCAPE ARCHITECT — RAY F. DESSELLE No. 2042 — Signature — 11/30/09 Renewal Date — 12/11/08 Date — STATE OF CALIFORNIA

THE STATE OF CALIFORNIA OR ITS OFFICERS OR AGENTS SHALL NOT BE RESPONSIBLE FOR THE ACCURACY OR COMPLETENESS OF SCANNED COPIES OF THIS PLAN SHEET.

PLANT LIST AND PLANTING SPECIFICATIONS

PLANT GROUP	PLANT No.	SYMBOL	BOTANICAL NAME	COMMON NAME	SIZE	QUANTITY EACH	HOLE SIZE (INCHES) Dia	HOLE SIZE (INCHES) DEPTH	BASIN TYPE	IRON SULFATE ①	SOIL AMEND ①	COMMERCIAL FERTILIZER ① PLANTING	COMMERCIAL FERTILIZER ① PLT ESTB	BASIN MULCH	STAKING	PLANTING LIMITS MINIMUM DISTANCE (m) FROM TRVD WAY	PVMT	FENCE	WALL	PAVED DITCH	EARTH DITCH	ON CENTER (m)	REMARKS
B	1		CHILOPSIS LINEARIS	DESERT WILLOW	No. 5	35	24	24	II	—	—	—	—	—	—	—	25	—	—	—	—	④	TREE

APPLICABLE WHEN CIRCLED:

① - QUANTITIES SHOWN ARE "PER PLANT" UNLESS SHOWN AS POUNDS APPLICATION RATES.
2 - SUFFICIENT TO RECEIVE ROOT BALL.
3 - DOES NOT APPLY TO MULCH AREAS.
④ - AS SHOWN ON PLANS.
5 - UNLESS OTHERWISE SHOWN ON PLANS.
⑥ - SEE STANDARD PLANS.
7 - SEE SPECIAL PROVISIONS.

ABBREVIATIONS

No. - NUMBER
DIA - DIAMETER
PLT ESTB - PLANT ESTABLISHMENT
R/W - RIGHT OF WAY

NOTES:

1. UNDERLINED PORTIONS OF BOTANICAL NAME INDICATE ABBREVIATIONS USED ON PLANTING PLANS.
2. TREES PLANTED BEHIND GUARD RAIL MAY BE PLANTED AS SHOWN ON PLAN.

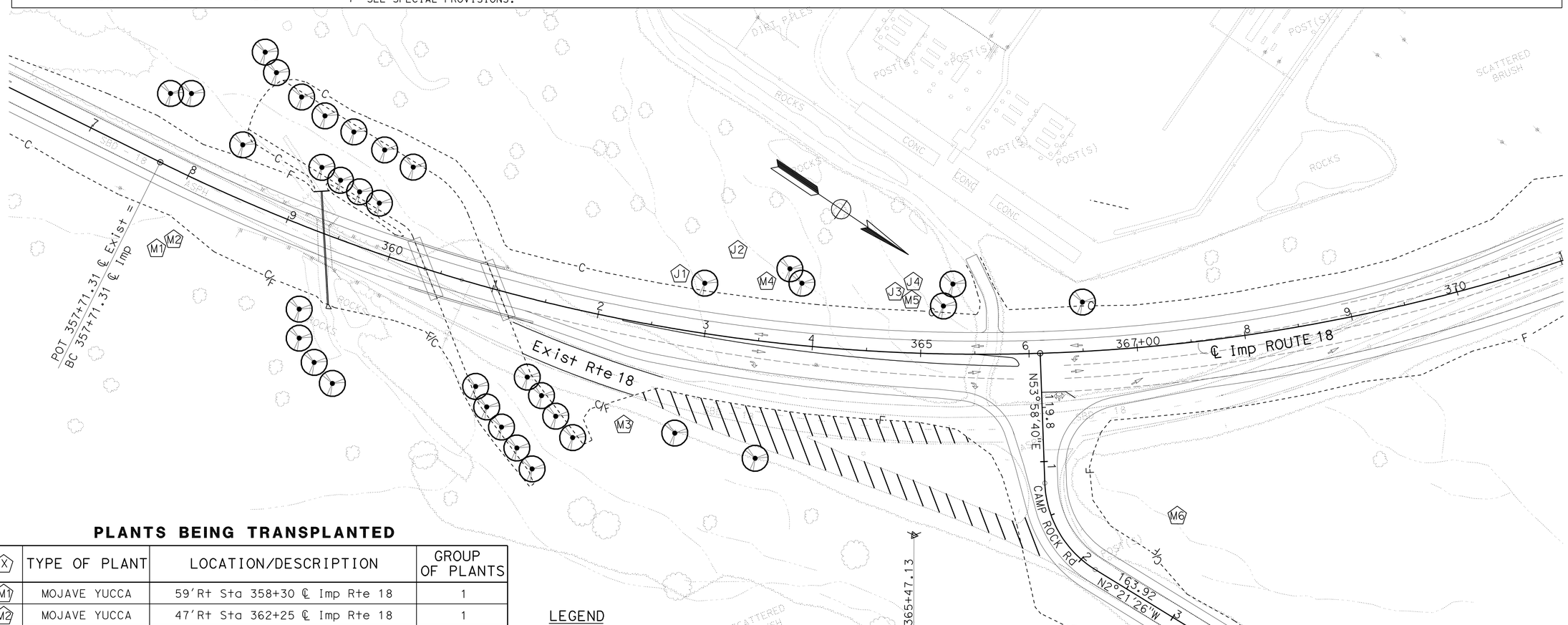

PLANTS BEING TRANSPLANTED

(X)	TYPE OF PLANT	LOCATION/DESCRIPTION	GROUP OF PLANTS
M1	MOJAVE YUCCA	59'Rt Sta 358+30 ℄ Imp Rte 18	1
M2	MOJAVE YUCCA	47'Rt Sta 362+25 ℄ Imp Rte 18	1
M3	MOJAVE YUCCA	51'Rt Sta 362+40 ℄ Imp Rte 18	1
M4	MOJAVE YUCCA	72'Lt Sta 364+00 ℄ Imp Rte 18	4
M5	MOJAVE YUCCA	71'Lt Sta 365+00 ℄ Imp Rte 18	1
M6	MOJAVE YUCCA	97'Rt Sta 367+30 ℄ Imp Rte 18	2
J1	JOSHUA TREE	55'Lt Sta 363+00 ℄ Imp Rte 18	1
J2	JOSHUA TREE	100'Lt Sta 363+65 ℄ Imp Rte 18	1
J3	JOSHUA TREE	55'Lt Sta 365+00 ℄ Imp Rte 18	1
J4	JOSHUA TREE	55'Lt Sta 365+00 ℄ Imp Rte 18	1

LEGEND

AREA TO RECEIVE TOPSOIL

PLANT TRANSPLANTING SUMMARY

TYPE OF PLANT	EA
JOSHUA TREE	4
MOJAVE YUCCA	10
TOTAL	14

PLANTING PLAN AND PLANT LIST

SCALE: 1"=50'

PP-1

STATE OF CALIFORNIA - DEPARTMENT OF TRANSPORTATION
Caltrans® LANDSCAPE ARCHITECTURE
SENIOR LANDSCAPE ARCHITECT: RAY DESSELLE
CALCULATED-DESIGNED BY: TIM WANDS
CHECKED BY
REVISED BY
DATE REVISED

LAST REVISION 12-11-08
DATE PLOTTED => 08-JUL-2009
TIME PLOTTED => 10:49

Dist	COUNTY	ROUTE	POST MILES TOTAL PROJECT	SHEET No.	TOTAL SHEETS
08	SBd	18	66.6/67.2	56	90

12-11-08
LICENSED LANDSCAPE ARCHITECT

5-11-09
PLANS APPROVAL DATE

LICENSED LANDSCAPE ARCHITECT
RAY F. DESSELLE No. 2042
Signature
11/30/09
Renewal Date
12/11/08
Date
STATE OF CALIFORNIA

THE STATE OF CALIFORNIA OR ITS OFFICERS OR AGENTS SHALL NOT BE RESPONSIBLE FOR THE ACCURACY OR COMPLETENESS OF SCANNED COPIES OF THIS PLAN SHEET.

NOTE:

1. THERE ARE APPROXIMATELY 21 MATURE DESERT WILLOW TREES (CHILOPSIS LINEARIS), ALL LESS THAN 20 FEET TALL THAT WILL BE REMOVED.

PLANTS TO BE REMOVED & TRANSPLANTED (SEE PP-1 FOR NEW LOCATIONS)

X	TYPE OF PLANT	LOCATION/DESCRIPTION	GROUP OF PLANTS
M1	MOJAVE YUCCA	57'Rt Sta 358+28 ℄ Exist Rte 18	1
M2	MOJAVE YUCCA	47'Rt Sta 358+26 ℄ Exist Rte 18	1
M3	MOJAVE YUCCA	51'Rt Sta 362+39 ℄ Exist Rte 18	1
M4	MOJAVE YUCCA	72'Lt Sta 364+00 ℄ Exist Rte 18	4
M5	MOJAVE YUCCA	72'Lt Sta 365+05 ℄ Exist Rte 18	1
M6	MOJAVE YUCCA	97'Rt Sta 367+28 ℄ Exist Rte 18	2
J1	JOSHUA TREE	50'Lt Sta 363+02 ℄ Exist Rte 18	1
J2	JOSHUA TREE	100'Lt Sta 363+64 ℄ Exist Rte 18	1
J3	JOSHUA TREE	53'Lt Sta 365+05 ℄ Exist Rte 18	1
J4	JOSHUA TREE	55'Lt Sta 365+15 ℄ Exist Rte 18	1

PLANT REMOVAL SUMMARY

TYPE OF PLANT	EA
JOSHUA TREE	4
MOJAVE YUCCA	10
TOTAL	14

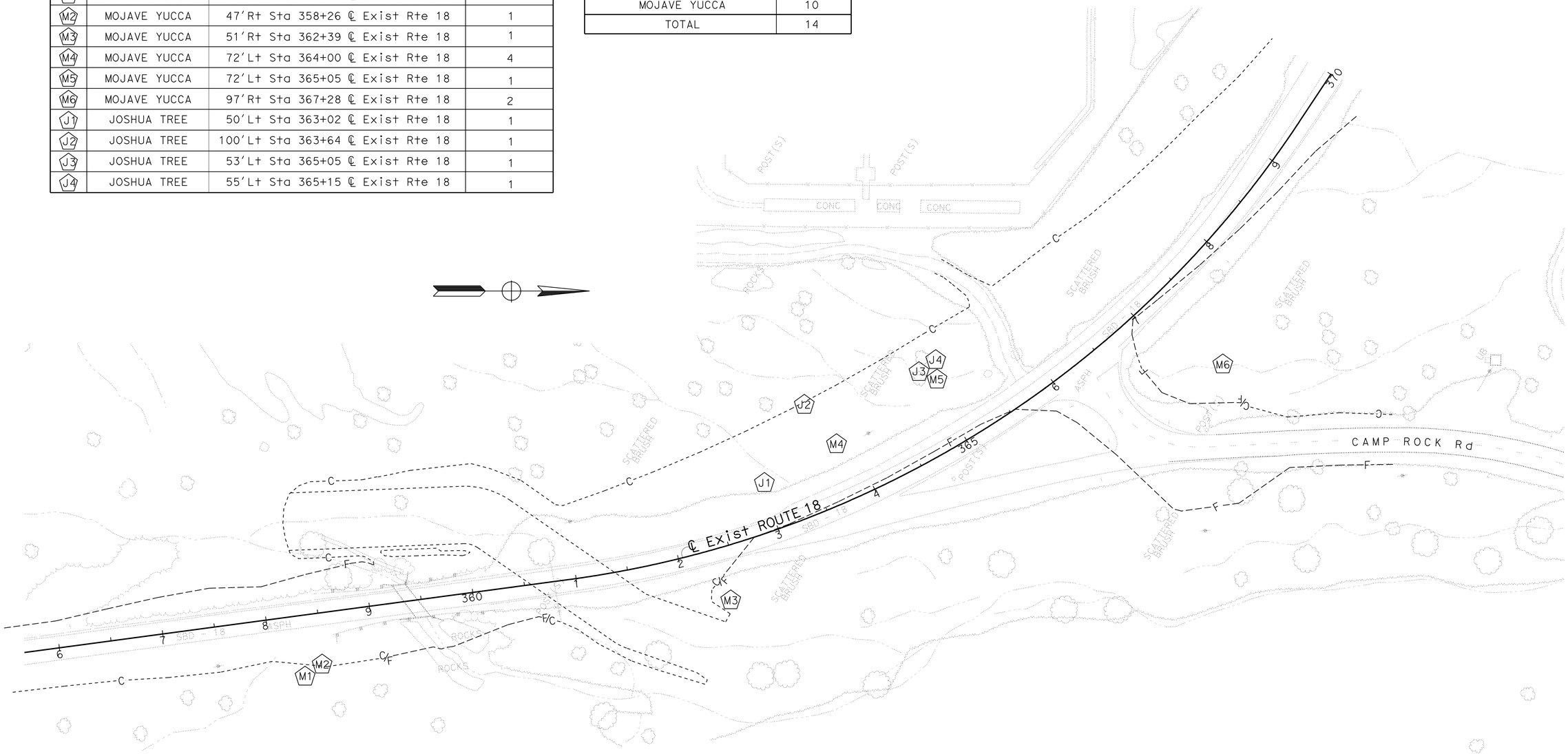

PLANT REMOVAL PLAN

SCALE: 1"=50'

PR-1

STATE OF CALIFORNIA - DEPARTMENT OF TRANSPORTATION
Caltrans® LANDSCAPE ARCHITECTURE

SENIOR LANDSCAPE ARCHITECT: RAY DESSELLE

CALCULATED-DESIGNED BY | CHECKED BY

REVISED BY | DATE REVISED

TIM WANDS

LAST REVISION 12-11-08 | DATE PLOTTED => 08-JUL-2009 | TIME PLOTTED => 10:49

Dist	COUNTY	ROUTE	POST MILES TOTAL PROJECT	SHEET No.	TOTAL SHEETS
08	SBd	18	66.6/67.2	57	90

12-11-08
LICENSED LANDSCAPE ARCHITECT

5-11-09
PLANS APPROVAL DATE

LICENSED LANDSCAPE ARCHITECT
RAY F. DESSELLE No. 2042
Signature
11/30/09
Renewal Date
12/11/08
Date
STATE OF CALIFORNIA

THE STATE OF CALIFORNIA OR ITS OFFICERS OR AGENTS SHALL NOT BE RESPONSIBLE FOR THE ACCURACY OR COMPLETENESS OF SCANNED COPIES OF THIS PLAN SHEET.

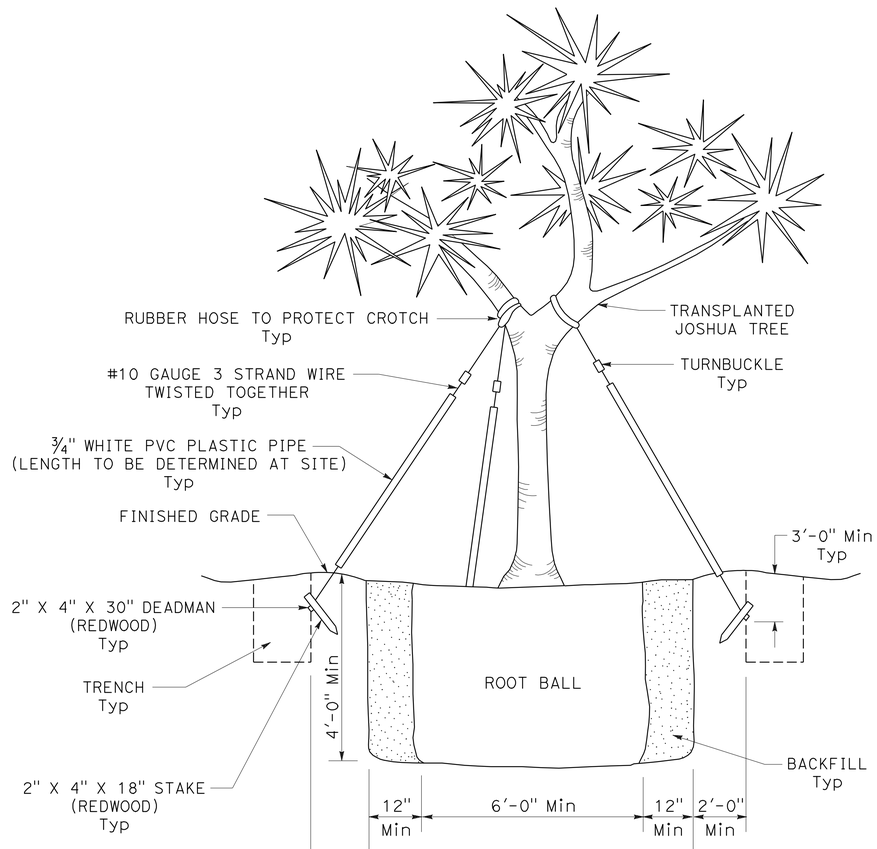

SECTION

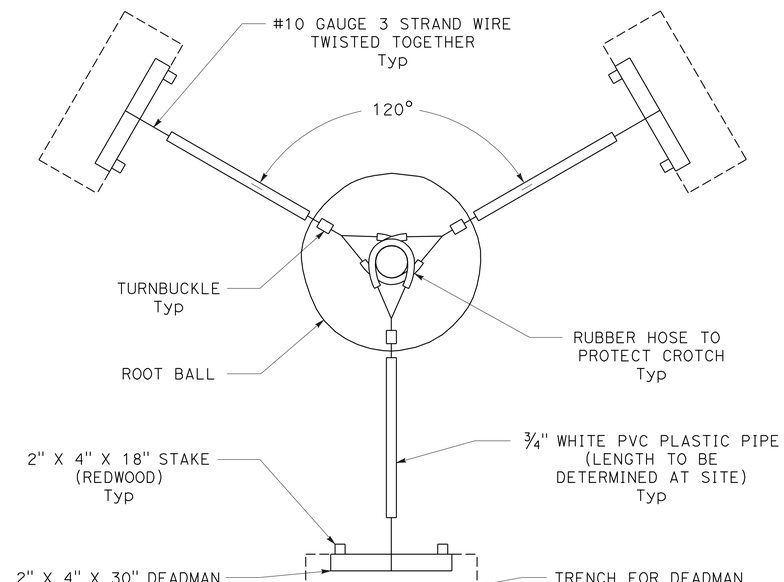

PLAN

TRANSPLANT JOSHUA TREE

NOTE: GUYING NOT REQUIRED FOR MULTI-TRUNK TREES OR TREES UNDER 5'-0" IN HEIGHT

LANDSCAPE DETAILS

NO SCALE

LD-1

STATE OF CALIFORNIA - DEPARTMENT OF TRANSPORTATION
Caltrans® LANDSCAPE ARCHITECTURE
SENIOR LANDSCAPE ARCHITECT
RAY DESSELLE
CALCULATED-DESIGNED BY
CHECKED BY
TIM WANDS
REVISED BY
DATE REVISED

LAST REVISION 12-11-08
DATE PLOTTED => 08-JUL-2009
TIME PLOTTED => 10:50

DIST	COUNTY	ROUTE	POST MILES TOTAL PROJECT	SHEET NO.	TOTAL SHEETS
08	SBd	18	66.6/67.2	58	90

REGISTERED CIVIL ENGINEER

November 17, 2006
PLANS APPROVAL DATE

REGISTERED PROFESSIONAL ENGINEER Dallas Forester No. C37765 Exp. 12-31-06 CIVIL STATE OF CALIFORNIA

The State of California or its officers or agents shall not be responsible for the accuracy or completeness of electronic copies of this plan sheet.

To accompany plans dated 5-11-09

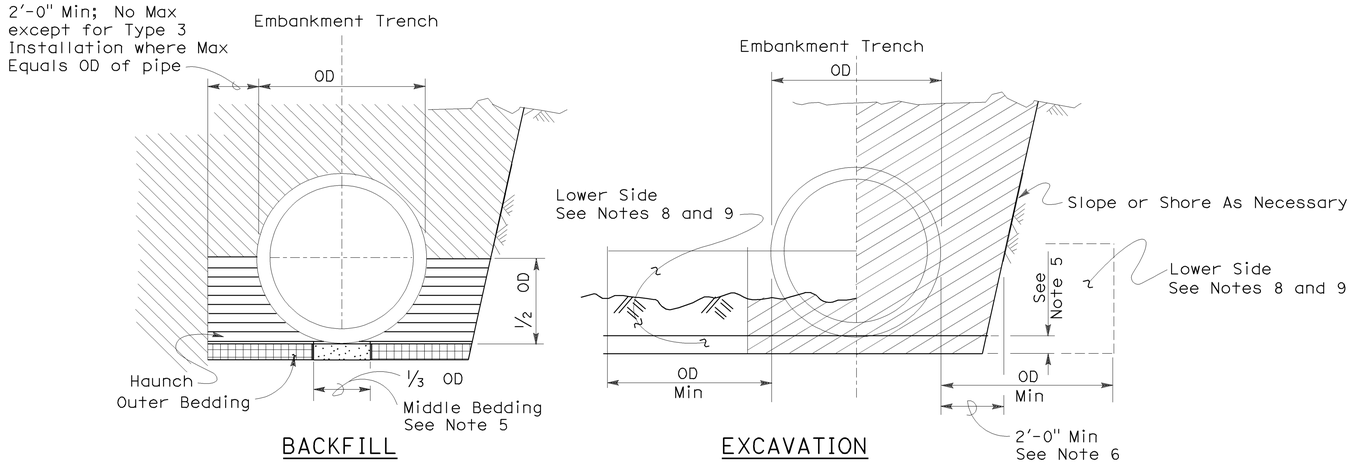

Roadway Embankment

Structure Backfill (Culvert) See Note 6

Structure Backfill (Culvert) See Note 6

Loose Backfill

Excavation Structure (Culvert)

TYPE 1 INSTALLATION:

The haunch and outer bedding shall be compacted to a minimum 90 percent relative compaction. In addition, the minimum sand equivalent in these areas shall be 30 and the maximum percentage passing the 75 μm sieve size shall be 12.

TYPE 2 INSTALLATION:

The haunch and outer bedding shall be compacted to a minimum 90 percent relative compaction. In addition, the minimum sand equivalent in these areas shall be 25.

TYPE 3 INSTALLATION:

The haunch and outer bedding shall be compacted to a minimum 85 percent relative compaction. 90 percent relative compaction will be required where the fill over the pipe is less than 4'-0" or 1/2 OD.

NOTES:

1. Unless otherwise shown on the plans or specified in the special provision, the Contractor shall have the option of selecting the class of RCP and the type of installation to be used, provided the height of cover does not exceed the value shown for the RCP selected.
   Example: 24" RCP culvert with maximum cover of 19'-0" the options are:
   a) Class III or stronger with Installation Type 1.
   b) Class III Special or stronger with Installation Type 2.
   c) Class IV Special or stronger with Installation Type 3.
   Cover is defined as the maximum vertical distance from top of the pipe to finished grade within the length of any given culvert.
2. The class of RCP and Installation Type selected shall be the same throughout the length of any given culvert.
3. The "length of any culvert" is defined as the culvert between:
   a) Successive drainage structure (inlets, junction boxes, headwalls, etc.).
   b) A drainage structure and the inlet or outlet end of the culvert.
   c) The inlet and outlet end of the culvert when there are no intervening drainage structures.
4. Oval and arch shaped RCP shall not be used.
5. 1/25 OD Min, not less than 3".
6. Slurry cement backfill may be substituted for backfill in the outer bedding and haunch areas. If slurry is used the outer and middle beddings shall be omitted. Prior to installation the soil under the middle 1/3 of the outside diameter of the pipe shall be softened by scarifying or other means to a minimum depth of 1/25 OD, but not less than 3". Where slurry cement backfill is used clear distance to trench wall may be reduced as set forth in Section 19-3.062 of the Standard Specifications.
7. Backfill shall be placed full width of excavation except where dimensions are shown for backfill width or thickness. Dimensions shown are minimums.
8. Lower side shall be suitable material as determined by the Engineer. Otherwise it shall be considered unsuitable as set forth in Section 19-2.02 of the Standard Specifications. See Note 9.
9. Where the pipe is placed in a trench, if the trench walls are sloped at 5 vertical to 1 horizontal or steeper for at least 90 percent of the trench height or up to not less than 12" from the grading plane, the firmness of the soil in the lower side need not be considered.
10. Non-reinforced precast concrete pipe sizes 3'-0" or smaller may be placed under installation Types 1, 2 or 3.

INSTALLATION TYPE 1

MINIMUM CLASS AND D-LOAD	COVER	
	108" Dia AND SMALLER	OVER 108" Dia
Class II 1000D	14.9'	12.9'
Class III 1350D	15.0' - 20.9'	13.0' - 18.9'
Class III Special 1700D	21.0' - 26.9'	19.0' - 24.9'
Class IV 2000D	27.0' - 31.9'	25.0' - 29.9'
Class IV Special 2500D	32.0' - 40.9'	30.0' - 38.9'
Class V 3000D	41.0' - 49.9'	39.0' - 46.9'
Class V Special 3600D	50.0' - 59.0'	47.0' - 58.0'

INSTALLATION TYPE 2

MINIMUM CLASS AND D-LOAD	COVER
Class II 1000D	9.9'
Class III 1350D	10.0'- 14.9'
Class III Special 1700D	15.0' - 19.9'
Class IV 2000D	20.0' - 24.9'
Class IV Special 2500D	25.0' - 31.9'
Class V 3000D	32.0' - 38.9'
Class V Special 3600D	39.0' - 47.0'

INSTALLATION TYPE 3

MINIMUM CLASS AND D-LOAD	COVER	
	48" Dia AND SMALLER	OVER 48" Dia
Class II 1000D	7.9'	5.9'
Class III 1350D	8.0' - 10.9'	6.0' - 8.9'
Class III Special 1700D	11.0' - 14.9'	9.0' - 12.9'
Class IV 2000D	15.0' - 17.9'	13.0' - 15.9'
Class IV Special 2500D	18.0' - 21.9'	16.0' - 19.9'
Class V 3000D	22.0' - 26.9'	20.0' - 24.9'
Class V Special 3600D	30.0' - 33.0'	25.0' - 31.0'

STATE OF CALIFORNIA
DEPARTMENT OF TRANSPORTATION

EXCAVATION AND BACKFILL CONCRETE PIPE CULVERTS

NO SCALE

RSP A62DA DATED NOVEMBER 17, 2006 SUPERSEDES STANDARD PLAN A62DA DATED MAY 1, 2006 - PAGE 20 OF THE STANDARD PLANS BOOK DATED MAY 2006.

REVISED STANDARD PLAN RSP A62DA

2006 REVISED STANDARD PLAN RSP A62DA

10-26-06

DIST	COUNTY	ROUTE	POST MILES TOTAL PROJECT	SHEET NO.	TOTAL SHEETS
08	SBd	18	66.6/67.2	59	90

Randell D. Hiatt
REGISTERED CIVIL ENGINEER

June 6, 2008
PLANS APPROVAL DATE

REGISTERED PROFESSIONAL ENGINEER
Randell D. Hiatt
No. C50200
Exp. 6-30-09
CIVIL
STATE OF CALIFORNIA

The State of California or its officers or agents shall not be responsible for the accuracy or completeness of electronic copies of this plan sheet.

To accompany plans dated 5-11-09

NOTES:

1. When necessary to place dike in front of face of guard railing, only Type C dike may be used. For dike details, see Standard Plan A87B.
2. For standard railing post embedment, see Standard Plans A77C3.
3. Guard railing delineation to be used where shown on the Project Plans.
4. When dike or curb is placed under guard railing, the maximum height of the dike or curb shall be 4". Mountable dike should not be used. For dike and curb details, see Revised Standard Plans RSP A87A and Standard Plan A87B.
5. For details of typical distance between the face of rail and hinge point, see Standard Plan A77C3.

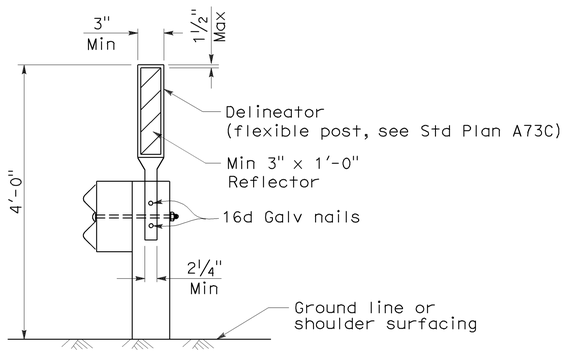

GUARD RAILING DELINEATION

See Note 3

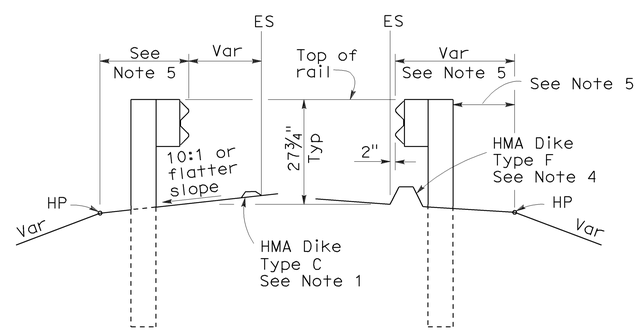

DIKE POSITIONING

See Note 1

STATE OF CALIFORNIA
DEPARTMENT OF TRANSPORTATION

METAL BEAM GUARD RAILING TYPICAL RAILING DELINEATION AND DIKE POSITIONING DETAILS

NO SCALE

RSP A77C4 DATED JUNE 6, 2008 SUPERSEDES STANDARD PLAN A77C4
DATED MAY 1, 2006 - PAGE 47 OF THE STANDARD PLANS BOOK DATED MAY 2006.

REVISED STANDARD PLAN RSP A77C4

2006 REVISED STANDARD PLAN RSP A77C4

12-10-07

DIST	COUNTY	ROUTE	POST MILES TOTAL PROJECT	SHEET NO.	TOTAL SHEETS
08	SBd	18	66.6/67.2	60	90

Randell D. Hiatt
REGISTERED CIVIL ENGINEER

October 20, 2006
PLANS APPROVAL DATE

REGISTERED PROFESSIONAL ENGINEER
Randell D. Hiatt
No. C50200
Exp. 6-30-07
CIVIL
STATE OF CALIFORNIA

The State of California or its officers or agents shall not be responsible for the accuracy or completeness of electronic copies of this plan sheet.

To accompany plans dated 5-11-09

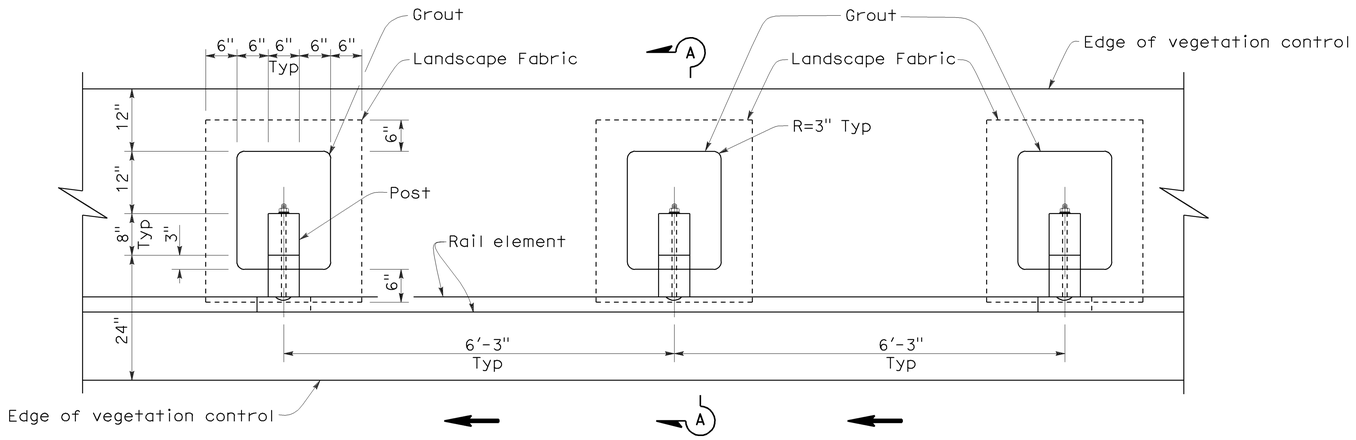

PLAN

NOTES:

1. Where the distance between back of post and hinge point is less than 24", vegetation control to be constructed flush with the back edge of the post.
2. Where dike is constructed under railing, construct vegetation control to back edge of dike. Where paved shoulder is constructed within 24" in front of the post, construct vegetation control to the edge of paved shoulder.
3. Direction of adjacent traffic indicated by ← .

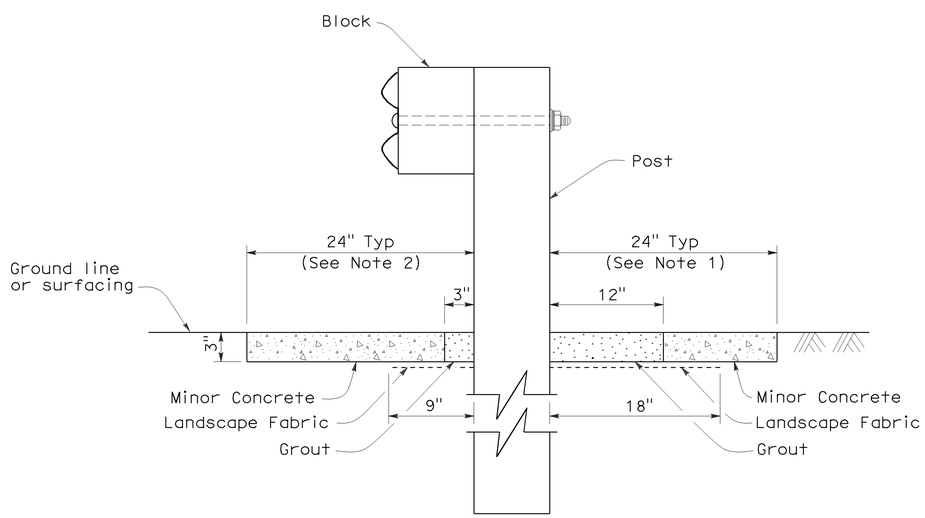

SECTION A-A

STATE OF CALIFORNIA
DEPARTMENT OF TRANSPORTATION

METAL BEAM GUARD RAILING TYPICAL VEGETATION CONTROL STANDARD RAILING SECTION

NO SCALE

NSP A77C5 DATED OCTOBER 20, 2006 SUPPLEMENTS THE STANDARD PLANS BOOK DATED MAY 2006.

NEW STANDARD PLAN NSP A77C5

2006 NEW STANDARD PLAN NSP A77C5

7-17-06

DIST	COUNTY	ROUTE	POST MILES TOTAL PROJECT	SHEET NO.	TOTAL SHEETS
08	SBd	18	66.6/67.2	61	90

Randell D. Hiatt
REGISTERED CIVIL ENGINEER

October 20, 2006
PLANS APPROVAL DATE

REGISTERED PROFESSIONAL ENGINEER
Randell D. Hiatt
No. C50200
Exp. 6-30-07
CIVIL
STATE OF CALIFORNIA

The State of California or its officers or agents shall not be responsible for the accuracy or completeness of electronic copies of this plan sheet.

To accompany plans dated 5-11-09

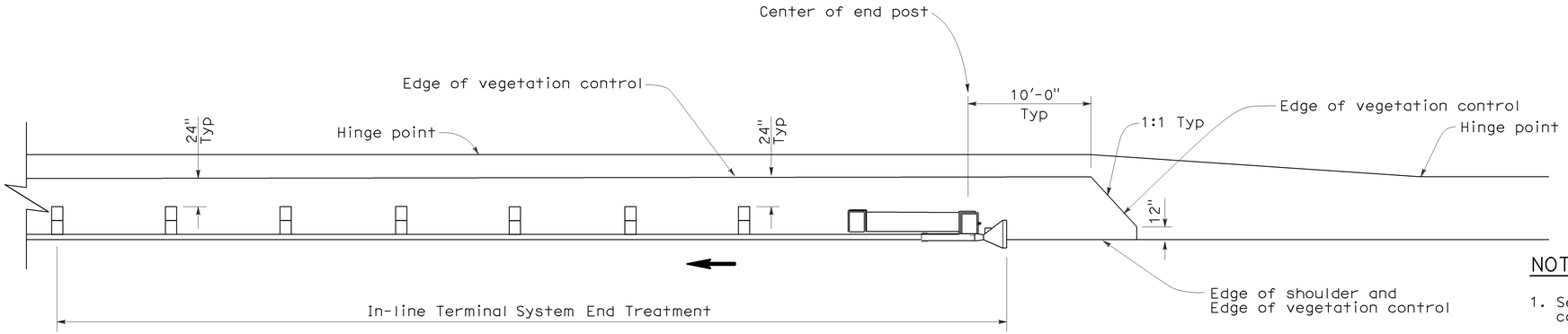

PLAN

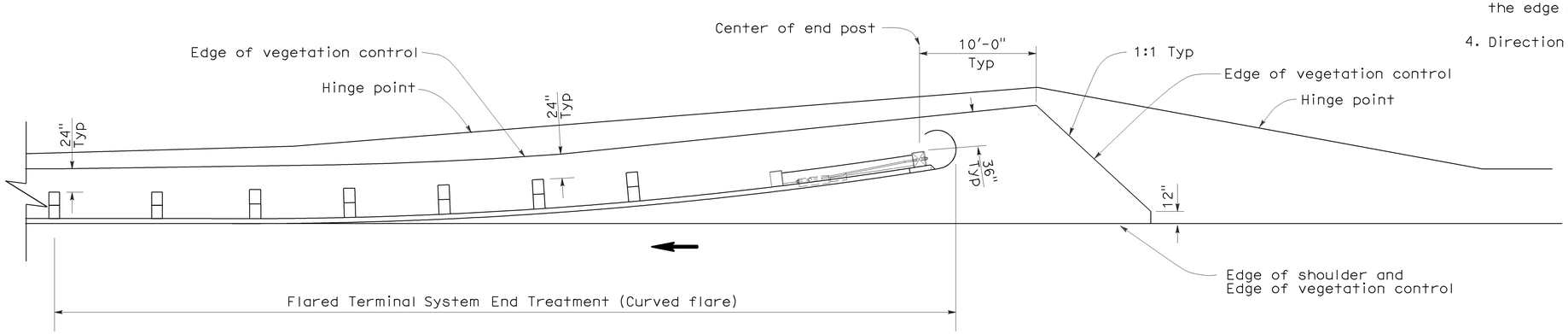

PLAN

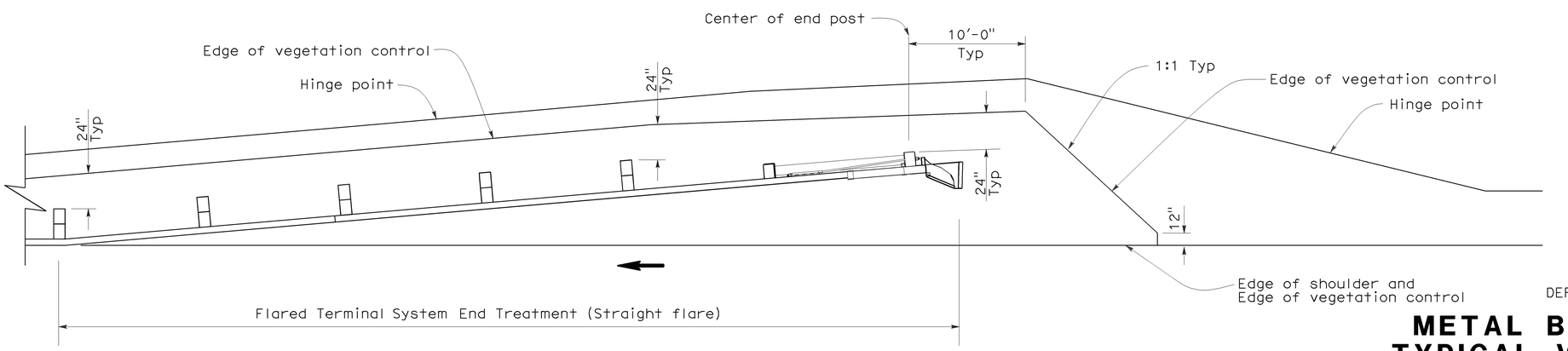

PLAN

NOTES:

1. See New Standard Plan NSP A77C5 for additional vegetation control details.
2. Where the distance between back of post and hinge point is less than 24", vegetation control to be constructed flush with the back edge of the post.
3. Where dike is constructed under railing, construct vegetation control to back edge of dike. Where paved shoulder is constructed within 24" in front of the post, construct vegetation control to the edge of paved shoulder.
4. Direction of adjacent traffic indicated by ←.

STATE OF CALIFORNIA
DEPARTMENT OF TRANSPORTATION

METAL BEAM GUARD RAILING TYPICAL VEGETATION CONTROL FOR TERMINAL SYSTEM END TREATMENTS

NO SCALE

NSP A77C6 DATED OCTOBER 20, 2006 SUPPLEMENTS THE STANDARD PLANS BOOK DATED MAY 2006.

NEW STANDARD PLAN NSP A77C6

2006 NEW STANDARD PLAN NSP A77C6

7-17-06

DIST	COUNTY	ROUTE	POST MILES TOTAL PROJECT	SHEET NO.	TOTAL SHEETS
08	SBd	18	66.6/67.2	62	90

Randell D. Hiatt
REGISTERED CIVIL ENGINEER

October 20, 2006
PLANS APPROVAL DATE

REGISTERED PROFESSIONAL ENGINEER
Randell D. Hiatt
No. C50200
Exp. 6-30-07
CIVIL
STATE OF CALIFORNIA

The State of California or its officers or agents shall not be responsible for the accuracy or completeness of electronic copies of this plan sheet.

To accompany plans dated 5-11-09

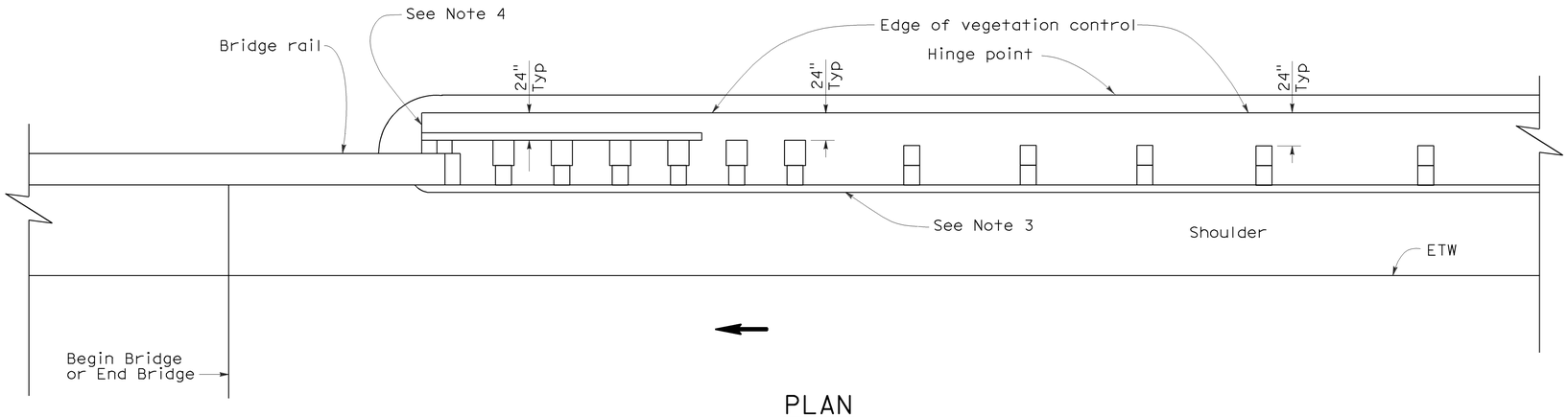

PLAN

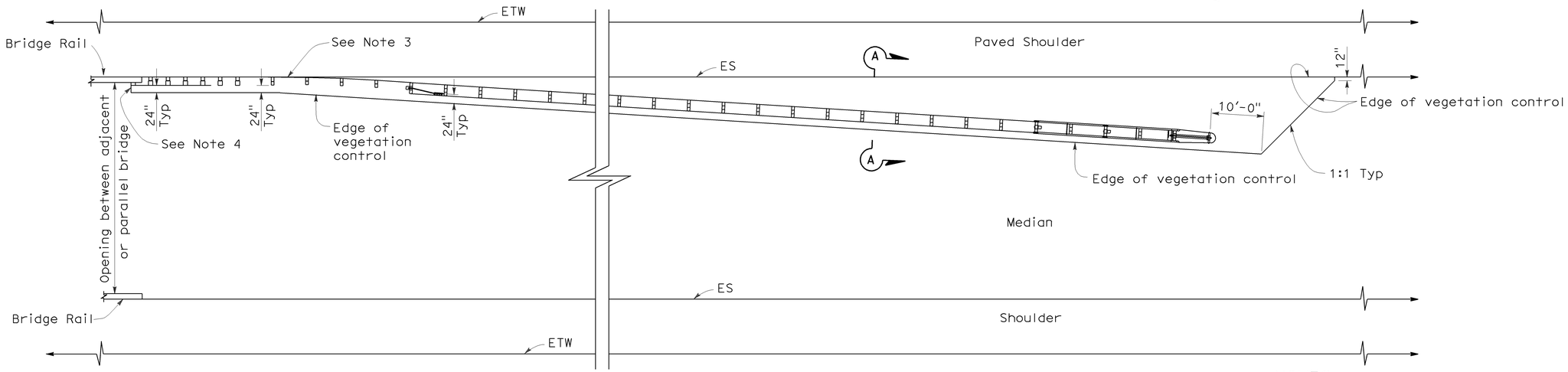

PLAN

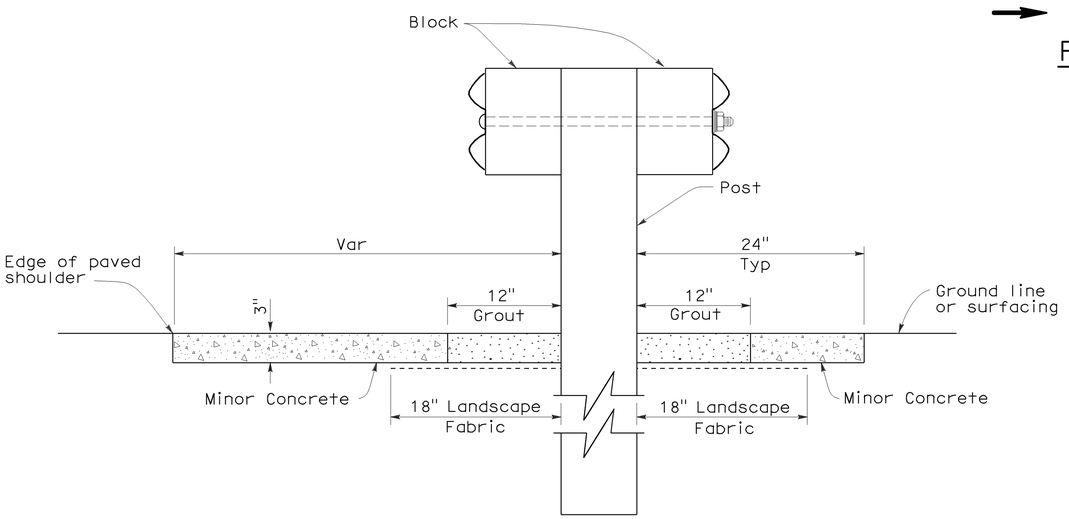

SECTION A-A

NOTES:

1. See New Standard Plan NSP A77C5 for additional vegetation control details.
2. Where the distance between back of post and hinge point is less than 24", vegetation control to be constructed flush with the back edge of the post.
3. Where dike is constructed under railing, construct vegetation control to back edge of dike. Where paved shoulder is constructed within 24" in front of the post, construct vegetation control to the edge of paved shoulder.
4. End vegetation control at end of backside rail element.
5. Direction of adjacent traffic indicated by ←.

STATE OF CALIFORNIA
DEPARTMENT OF TRANSPORTATION

METAL BEAM GUARD RAILING TYPICAL VEGETATION CONTROL AT STRUCTURE APPROACH AND DEPARTURE

NO SCALE

NSP A77C7 DATED OCTOBER 20, 2006 SUPPLEMENTS THE STANDARD PLANS BOOK DATED MAY 2006.

NEW STANDARD PLAN NSP A77C7

2006 NEW STANDARD PLAN NSP A77C7

7-17-06

DIST	COUNTY	ROUTE	POST MILES TOTAL PROJECT	SHEET NO.	TOTAL SHEETS
08	SBd	18	66.6/67.2	63	90

Randell D. Hiatt
REGISTERED CIVIL ENGINEER

June 6, 2008
PLANS APPROVAL DATE

REGISTERED PROFESSIONAL ENGINEER
Randell D. Hiatt
No. C50200
Exp. 6-30-09
CIVIL
STATE OF CALIFORNIA

The State of California or its officers or agents shall not be responsible for the accuracy or completeness of electronic copies of this plan sheet.

To accompany plans dated 5-11-09

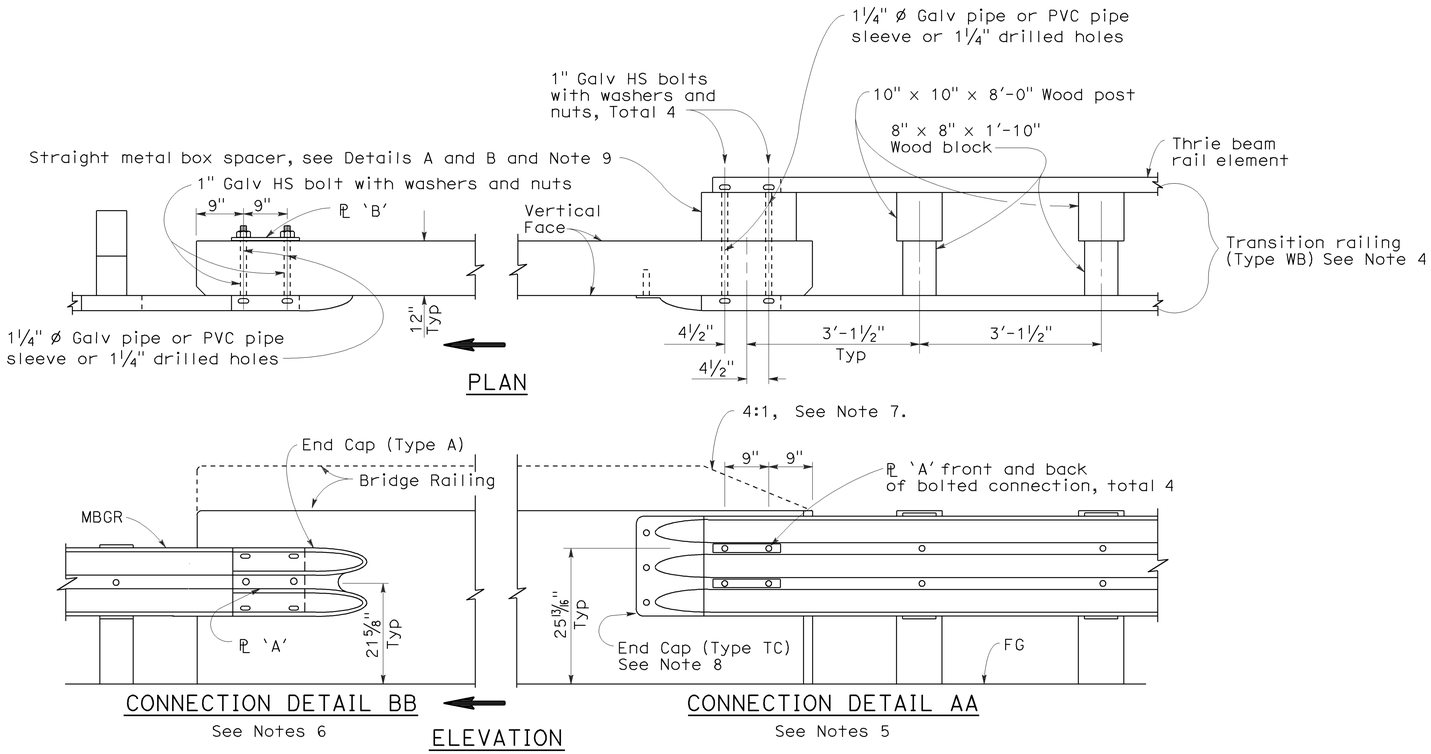

GUARD RAILING CONNECTION TO BRIDGE RAILING WITHOUT SIDEWALK

NOTES:

1. See Revised Standard Plan RSP A77J2 for additional connection details to bridges without sidewalks.
2. Additional details of posts, blocks and hardware are shown on Standard Plan A77B1, A77C1 and A77C2.
3. Direction of adjacent traffic indicated by ➡.
4. For additional details of Transition Railing (Type WB), see Standard Plan A77J4. Transition Railing (Type WB) transitions the 12 gage w-beam standard railing section of guard railing to a heavier gage nested thrie beam railing section which is connected to the concrete bridge railing.
5. For typical use of Connection Detail AA, see Layout Types 12A and 12B on Revised Standard Plan RSP A77F1, Layout Types 12C and 12D on Standard Plan A77F2, and Layout Type 12E on Revised Standard Plan RSP A77F3.
6. For typical use of Connection Detail BB, see Layout Type 12D (structure departure railing connection) on Standard Plan A77F2 and Layout Type 12DD on Standard Plan A77F5.
7. Where the height of the bridge railing exceeds the height of the thrie beam railing by more than 1" at Connection Detail AA, taper the top of the end of the bridge railing at 4:1 to match the top elevation of the thrie beam rail.
8. For details of End Cap (Type TC), see Standard Plan A77J4.
9. See Standard Plan A77J4 for additional details regarding depth dimension for straight metal box spacer.

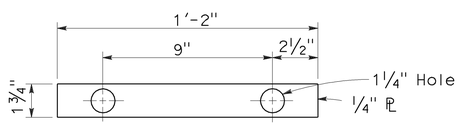

PLATE 'A'

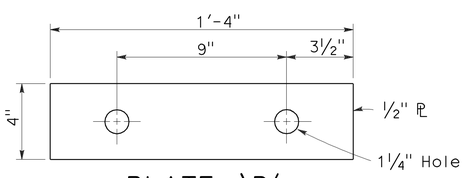

PLATE 'B'
(For backside of connection BB)

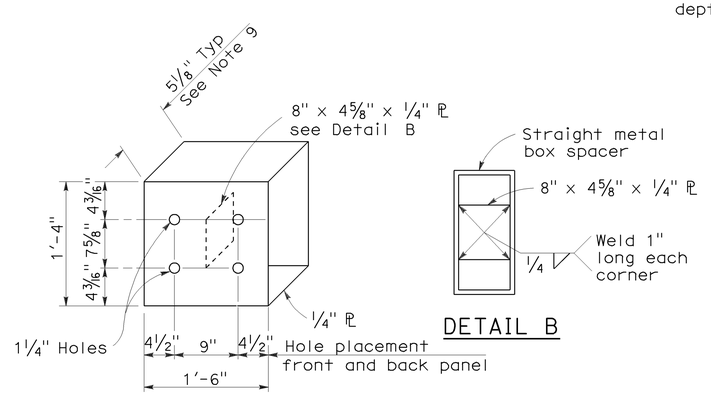

DETAIL B

DETAIL A

STRAIGHT METAL BOX SPACER

STATE OF CALIFORNIA
DEPARTMENT OF TRANSPORTATION

METAL BEAM GUARD RAILING CONNECTIONS TO BRIDGE RAILINGS WITHOUT SIDEWALKS DETAILS No.1

NO SCALE

RSP A77J1 DATED JUNE 6, 2008 SUPERSEDES STANDARD PLAN A77J1
DATED MAY 1, 2006 - PAGE 72 OF THE STANDARD PLANS BOOK DATED MAY 2006.

REVISED STANDARD PLAN RSP A77J1

2006 REVISED STANDARD PLAN RSP A77J1

12-10-07

DIST	COUNTY	ROUTE	POST MILES TOTAL PROJECT	SHEET NO.	TOTAL SHEETS
08	SBd	18	66.6/67.2	64	90

Randell D. Hiatt
REGISTERED CIVIL ENGINEER

June 6, 2008
PLANS APPROVAL DATE

REGISTERED PROFESSIONAL ENGINEER
Randell D. Hiatt
No. C50200
Exp. 6-30-09
CIVIL
STATE OF CALIFORNIA

The State of California or its officers or agents shall not be responsible for the accuracy or completeness of electronic copies of this plan sheet.

To accompany plans dated 5-11-09

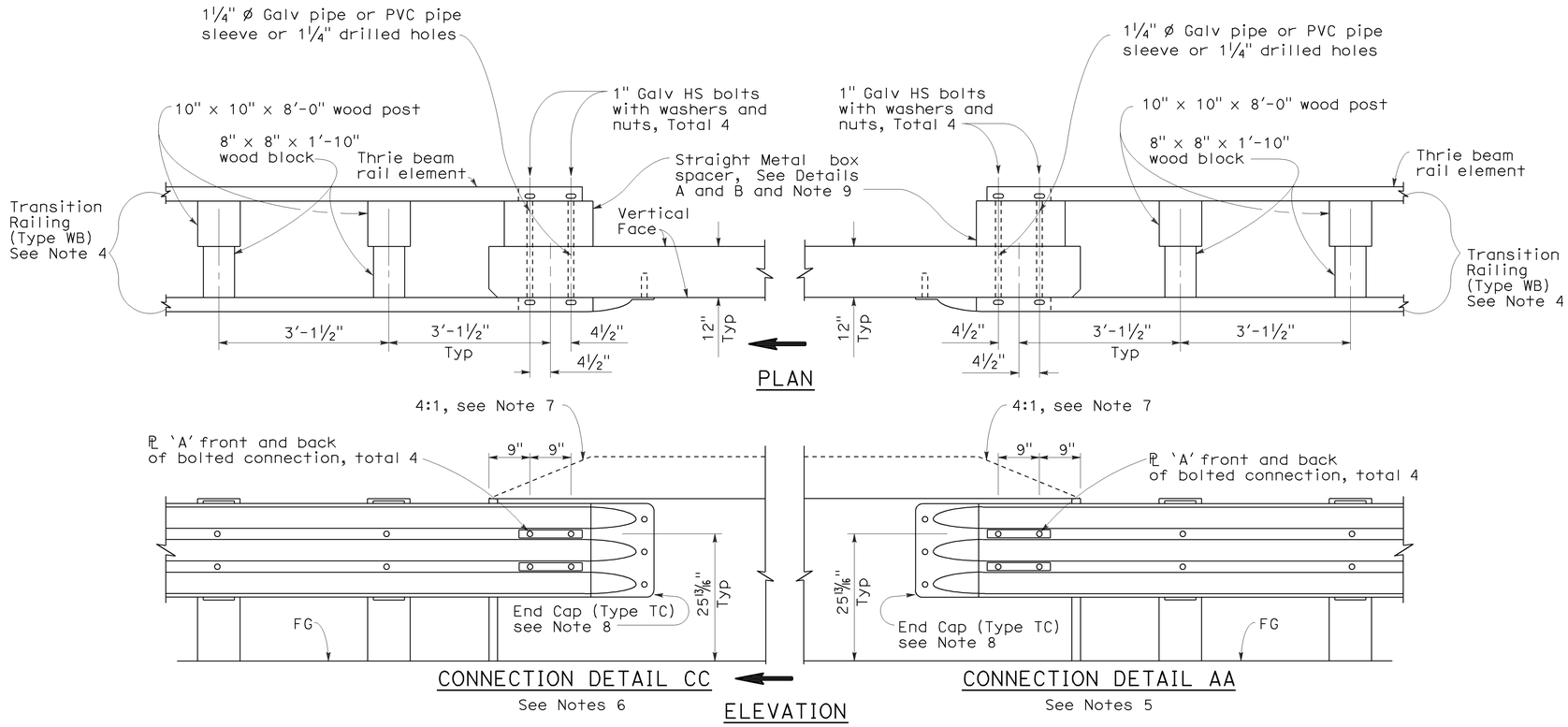

GUARD RAILING CONNECTION TO BRIDGE RAILING WITHOUT SIDEWALK

NOTES:

1. See Revised Standard Plan RSP A77J1 for additional connection details to bridges without sidewalks.
2. Additional details of posts, blocks and hardware are shown on Standard Plan A77B1, A77C1 and A77C2.
3. Direction of adjacent traffic indicated by ⟹.
4. For additional details of Transition Railing (Type WB), see Standard Plan A77J4. Transition Railing (Type WB) transitions the 12 gage w-beam standard railing section of guard railing to a heavier gage nested thrie beam railing section which is connected to the concrete bridge railing.
5. For typical use of Connection Detail AA, see Layout Types 12A and 12B on Revised Standard Plan RSP A77F1, Layout Types 12C and 12D on Standard Plan A77F2, and Layout Type 12E on Revised Standard Plan RSP A77F3.
6. For typical use of Connection Detail CC, see Layout Types 12AA and 12BB on Standard Plan A77F4 and Layout Type 12CC on Standard Plan A77F5.
7. Where the height of the bridge railing exceeds the height of the thrie beam railing by more than 1" at Connection Detail AA and connection Detail CC, taper the top of the end of the bridge railing at 4:1 to match the top elevation of the thrie beam railing.
8. For details of End Cap (Type TC), see Standard Plans A77J4.
9. See Standard Plans A77J4 for additional details regarding depth dimension for straight metal box spacer.

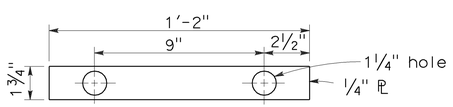

PLATE 'A'

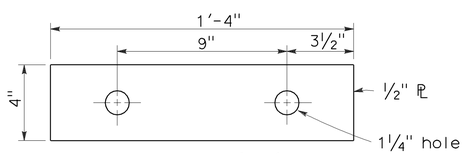

PLATE 'B'
(For backside of connection BB)

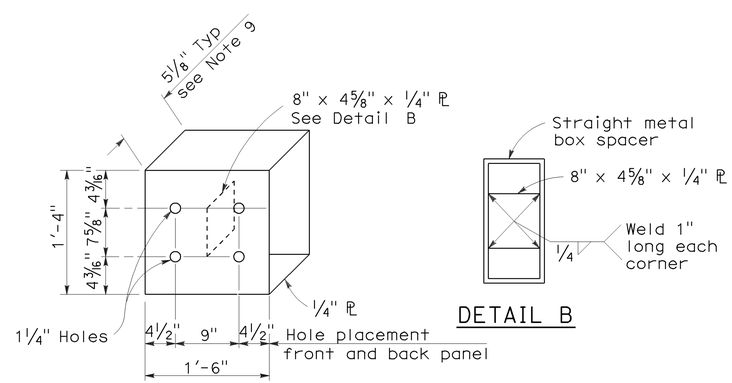

DETAIL A

DETAIL B

STRAIGHT METAL BOX SPACER

STATE OF CALIFORNIA
DEPARTMENT OF TRANSPORTATION

METAL BEAM GUARD RAILING CONNECTIONS TO BRIDGE RAILINGS WITHOUT SIDEWALKS DETAILS No.2

NO SCALE

RSP A77J2 DATED JUNE 6, 2008 SUPERSEDES STANDARD PLAN A77J2 DATED MAY 1, 2006 - PAGE 73 OF THE STANDARD PLANS BOOK DATED MAY 2006.

REVISED STANDARD PLAN RSP A77J2

2006 REVISED STANDARD PLAN RSP A77J2

12-10-07

DIST	COUNTY	ROUTE	POST MILES TOTAL PROJECT	SHEET NO.	TOTAL SHEETS
08	SBd	18	66.6/67.2	65	90

Randell D. Hiatt
REGISTERED CIVIL ENGINEER

June 6, 2008
PLANS APPROVAL DATE

REGISTERED PROFESSIONAL ENGINEER
Randell D. Hiatt
No. C50200
Exp. 6-30-09
CIVIL
STATE OF CALIFORNIA

The State of California or its officers or agents shall not be responsible for the accuracy or completeness of electronic copies of this plan sheet.

To accompany plans dated 5-11-09

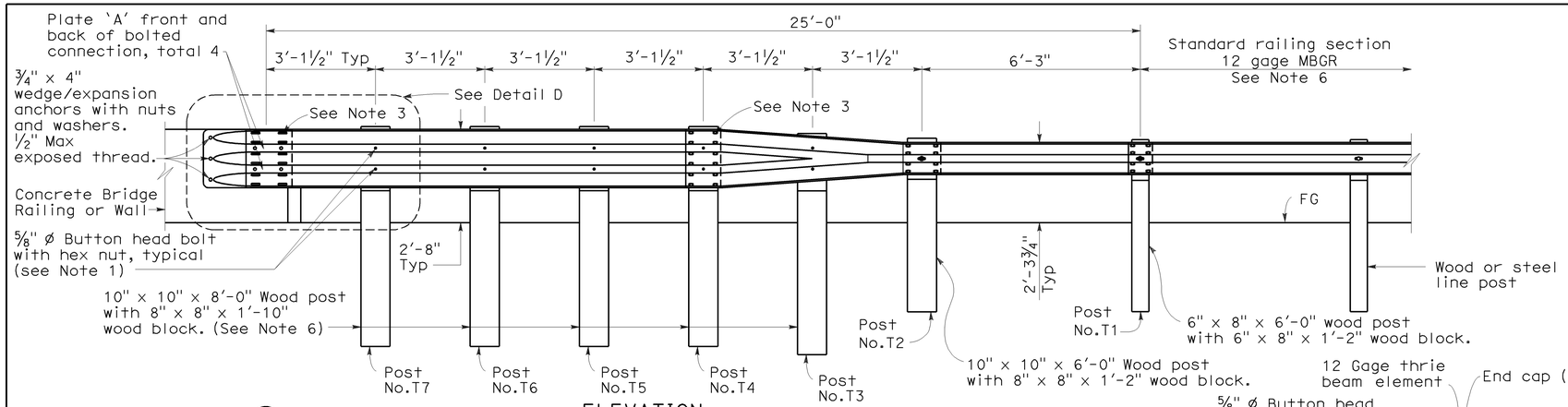

ELEVATION

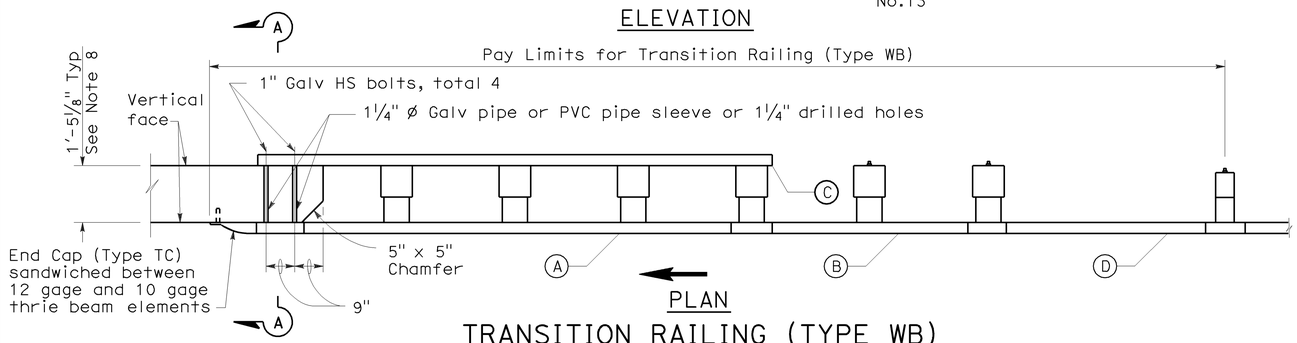

PLAN

TRANSITION RAILING (TYPE WB)

(No Blockout Attachment)

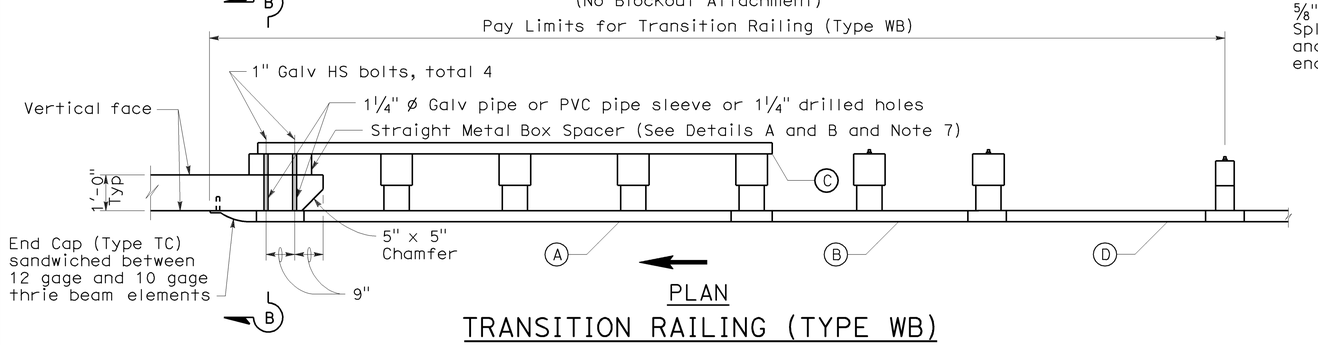

PLAN

TRANSITION RAILING (TYPE WB)

(Blockout Attachment)

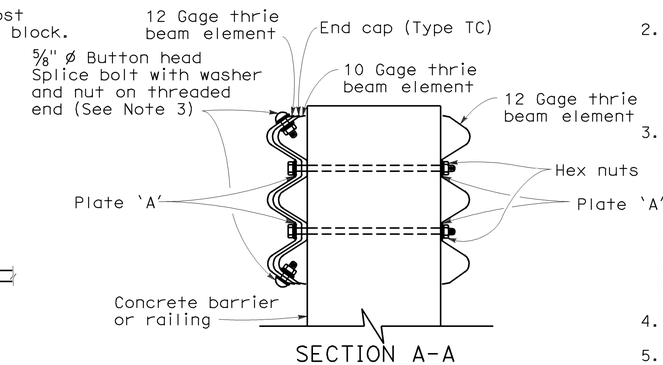

SECTION A-A

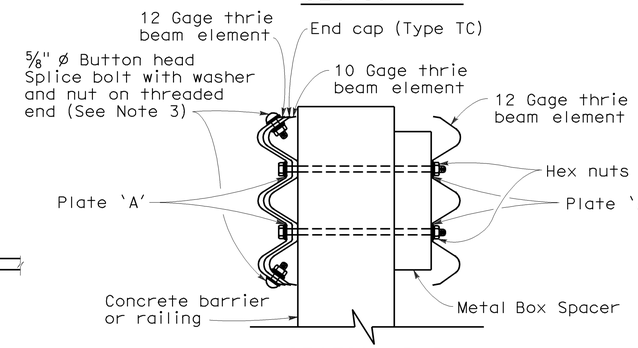

SECTION B-B

NOTES:

1. Use ⅝" ø Button head bolts and hex nuts for connections to posts. No washer on rail face for bolted connections to post.
2. The nested rail elements, end cap, and 'W' beam to thrie beam element may be spliced together prior to bolting the elements to the wood post and concrete barrier or railing.
3. Exterior splice bolt holes for rail element splices at Post No.T4 and the connection to the concrete barrier or railing shall be the standard 29/32" x 1⅛" slot size. Interior splice bolt holes at these locations may be increased up to 1¼" ø. Only the top 2 and the bottom 2 splice bolts with washers and nuts are required for rail splices at Post No.T4 and the connection to the concrete barrier or railing.
4. Direction of adjacent traffic indicated by →.
5. The top elevation of Post Nos.T2 through T7 shall not project more than 1" above the top elevation of the rail element.
6. Typically, the railing connected to Transition Railing (Type WB) will be either standard railing section of metal beam guard railing or an approved Caltrans end treatment attached to Post No.T1.
7. The depth of the metal box spacer varies from the 5⅛" to 1½" and is dependent on the width of the concrete railing or wall. The combined dimension for the depth of the metal box spacer plus the width of railing or wall is typically 17⅛". Where the space between the backside of the concrete railing or wall and the rear thrie beam element is less than 1½", metal plates similar to Plate 'A' are to be used as spacers.
8. Where the width of the concrete railing or wall is greater than 17⅛", wood blocks are to be used to fill the space created between the backside of Posts No.4 through No.7 and the rear thrie beam element. These wood blocks shall be 8" in width and 1'-2" in length. The dimension between the front thrie beam element and the rear thrie beam element is to match the width of the concrete railing or wall.

LEGEND

- (A) Nested thrie beam elements (one 12 gage element nested over one 10 gage element).
- (B) One 10 gage "W" beam to thrie beam element.
- (C) One 12 gage thrie beam element.
- (D) One 10 gage "W" beam rail element (7'-3½" length)

10 gage = 0.135" thick

12 gage = 0.108" thick

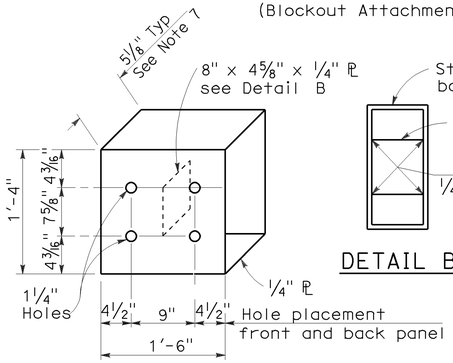

DETAIL A

STRAIGHT METAL BOX SPACER

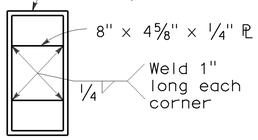

DETAIL B

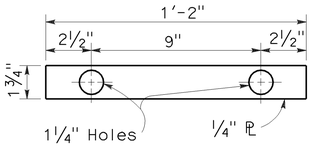

DETAIL C

PLATE 'A'

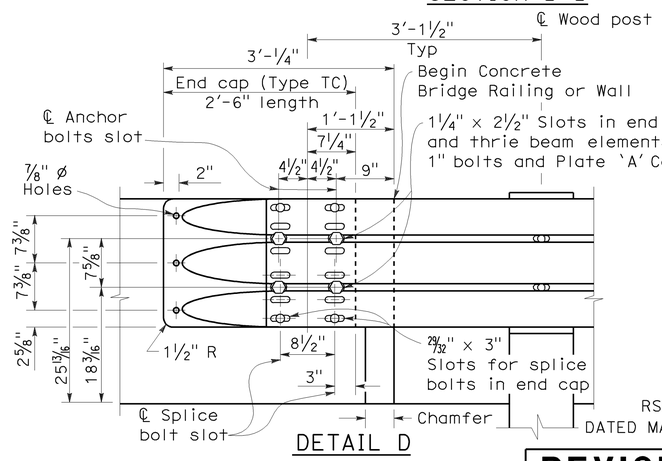

DETAIL D

STATE OF CALIFORNIA
DEPARTMENT OF TRANSPORTATION

METAL BEAM GUARD RAILING TRANSITION RAILING (TYPE WB)

NO SCALE

RSP A77J4 DATED JUNE 6, 2008 SUPERSEDES STANDARD PLAN A77J4 DATED MAY 1, 2006 - PAGE 75 OF THE STANDARD PLANS BOOK DATED MAY 2006.

REVISED STANDARD PLAN RSP A77J4

2006 REVISED STANDARD PLAN RSP A77J4

4-21-08

DIST	COUNTY	ROUTE	POST MILES TOTAL PROJECT	SHEET NO.	TOTAL SHEETS
08	SBd	18	66.6/67.2	66	90

Raymond Don Tsztoo
REGISTERED CIVIL ENGINEER

January 18, 2008
PLANS APPROVAL DATE

REGISTERED PROFESSIONAL ENGINEER
Raymond Don Tsztoo
No. C37332
Exp. 6-30-08
CIVIL
STATE OF CALIFORNIA

The State of California or its officers or agents shall not be responsible for the accuracy or completeness of electronic copies of this plan sheet.

To accompany plans dated 5-11-09

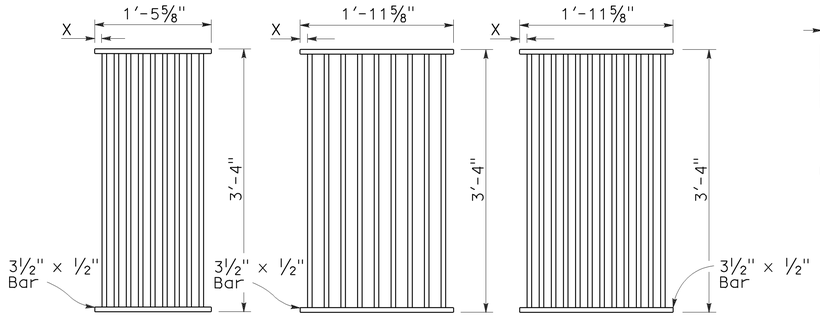

TYPE 18-9

1⅜" Clear spacing. Use within the roadbed on highways where bicycles and pedestrians are excluded.

TYPE 24-9

2" Clear spacing. Use in locations off the roadbed on all types of highways.

TYPE 24-12

1⅜" Clear spacing. Use within the roadbed on highways where bicycles and pedestrians are excluded.

RECTANGULAR GRATE DETAILS

(See table below)

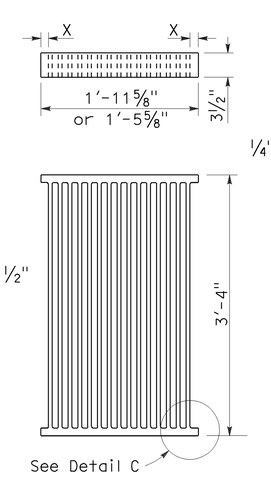

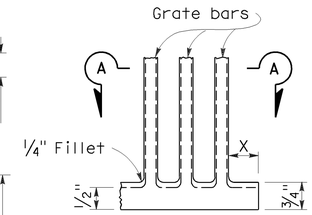

DETAIL C

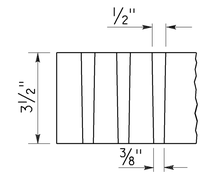

SECTION A-A

ALTERNATIVE CAST NODULAR IRON GRATE OR CAST STEEL GRATE

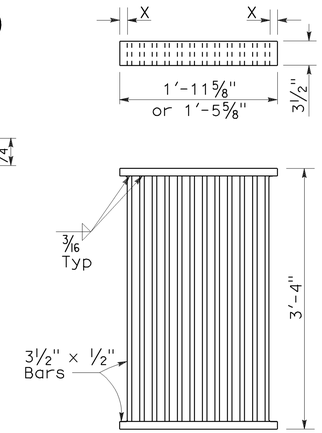

ALTERNATIVE WELDED GRATE

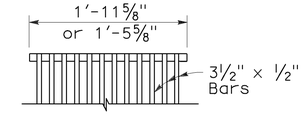

CAST END BLOCK

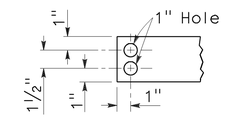

END OF BAR

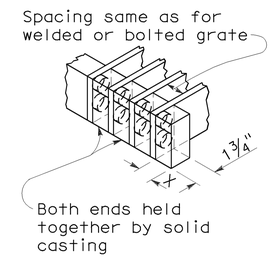

ALTERNATIVE CAST NODULAR IRON OR CAST STEEL END BLOCK GRATE

NOTES:

1. Grate type numbers refer to approximate width of grate in inches and number of bars, respectively.
2. Contractor has the option of using cast nodular iron, cast steel, welded, bolted, or cast end block grate.
3. See Special Provisions for requirements pertaining to galvanizing or asphalt dipping of grates and frames.
4. Rounded top of bars optional on all grates.
5. Pipe inlets with a grate shall be placed so that bars parallel direction of principle surface flow.
6. Full penetration butt welds may be substituted for the fillet welds on all anchors.
7. Standard square, hexagon, round or equivalent headed anchors may be substituted for the right angle hooks on the anchors shown on this plan.
8. Grate and frame weights are based on welded grates (weights of face angles, steps, protection bars, etc. are not included).

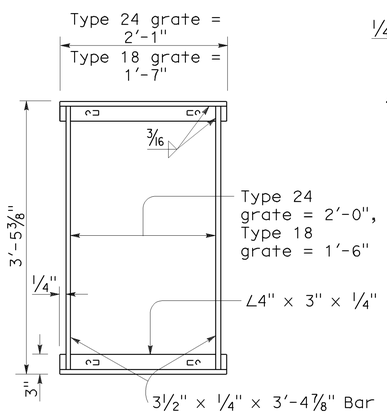

TYPICAL FRAME

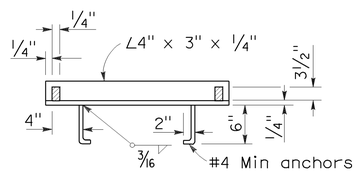

CROSS SECTION

(Thru frame)

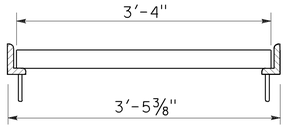

LONGITUDINAL SECTION

(Thru frame and grate)

RECTANGULAR FRAME DETAILS

(For all rectangular grates)

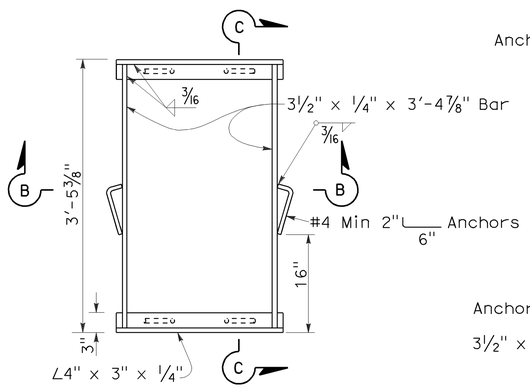

TYPICAL FRAME

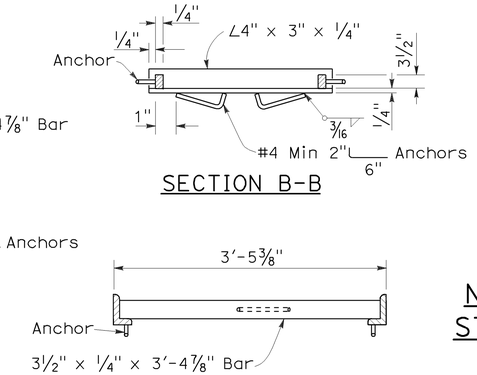

SECTION B-B

SECTION C-C

ALTERNATIVE ANCHOR FOR RECTANGULAR FRAME

(For details not shown, See Rectangular Frame Details)

INLET TYPE	GRATE TYPE	No. OF GRATES	WEIGHT LB
GDO	24-12	2	634
GOL-7	24-12	1	326
GOL-10	24-12	1	326
GO,G1,G2,G3,G4 (TYPE 24)	24-9	1	263
	24-12	1	326
G4 (TYPE 18),G5,G6	18-9	1	249
GT1	18-9	2	498
GT2	18-9	2	498
GT3	24-12	2	652
GT4	24-12	2	652
TRASH RACK			22

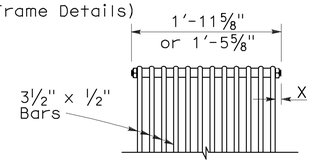

BOLTED END BLOCK

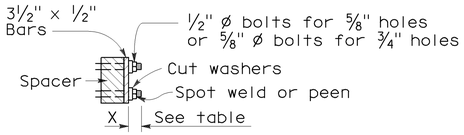

BOLTING DETAIL

ALTERNATIVE BOLTED GRATE

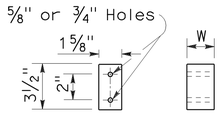

BAR SPACER

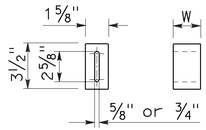

ALTERNATIVE SPACER

W = 1⅜" or 2"

GRATE BAR SPACING TABLE

TYPE	No. OF BARS	CLEAR BAR SPACING	X
18-9	9	1⅜"	1 1/16"
24-9	9	2"	1 9/16"
24-12	12	1⅜"	1¼"

INLET TYPE	COVER TYPE	WEIGHT LB
OS	PLATE	174
OL-7	PLATE	170
OL-10	PLATE	170
OL-14	PLATE	170
OL-21	PLATE	170
OCP	PLATE	112
OCPI	PLATE	112
OCPI	REDWOOD	42
OMP	PLATE	177
OMPI	PLATE	177

BASIS FOR MISC IRON & STEEL FINAL PAY WEIGHTS FOR DRAINAGE INLETS

(See General Notes, No 8)

STATE OF CALIFORNIA
DEPARTMENT OF TRANSPORTATION

GRATE DETAILS

NO SCALE

RSP D77A DATED JANUARY 18, 2008 SUPERSEDES STANDARD PLAN D77A DATED MAY 1, 2006 - PAGE 155 OF THE STANDARD PLANS BOOK DATED MAY 2006.

REVISED STANDARD PLAN RSP D77A

2006 REVISED STANDARD PLAN RSP D77A

12-14-07

DIST	COUNTY	ROUTE	POST MILES TOTAL PROJECT	SHEET NO.	TOTAL SHEETS
08	SBd	18	66.6/67.2	67	90

Randell D. Hiatt
REGISTERED CIVIL ENGINEER

June 6, 2008
PLANS APPROVAL DATE

REGISTERED PROFESSIONAL ENGINEER
Randell D. Hiatt
No. C50200
Exp. 6-30-09
CIVIL
STATE OF CALIFORNIA

The State of California or its officers or agents shall not be responsible for the accuracy or completeness of electronic copies of this plan sheet.

To accompany plans dated 5-11-09

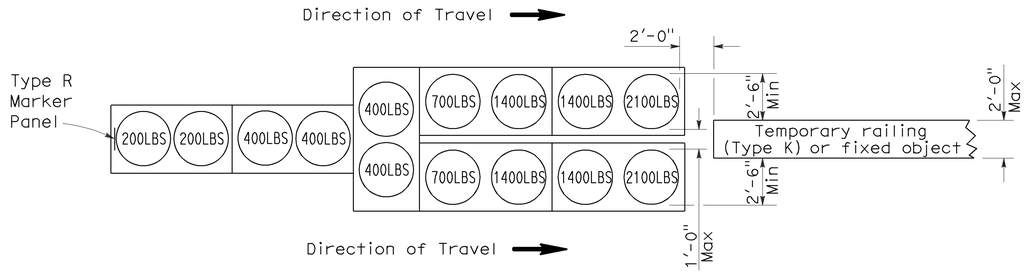

ARRAY 'TU14'

Approach speed 45 mph or more

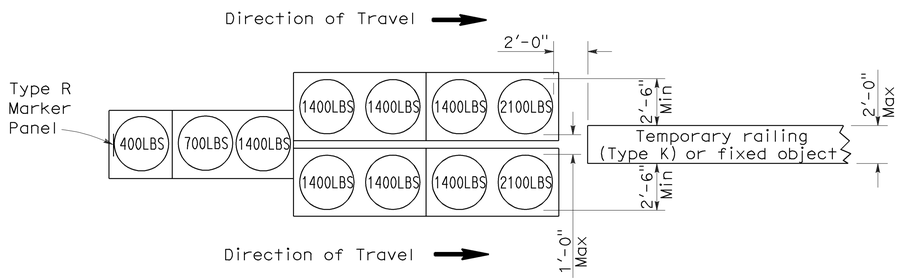

ARRAY 'TU11'

Approach speed less than 45 mph

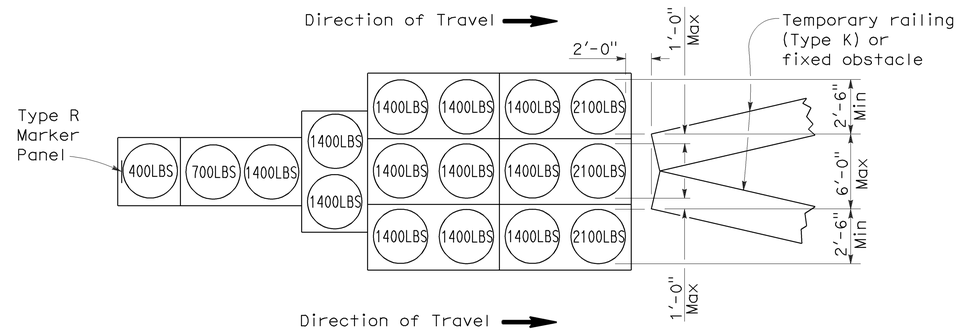

ARRAY 'TU17'

Approach speed less than 45 mph

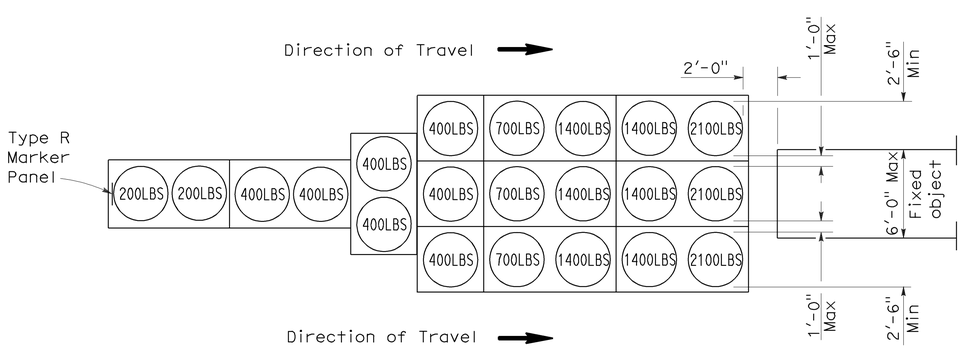

ARRAY 'TU21'

Approach speed 45 mph or more

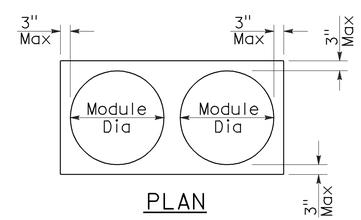

PLAN

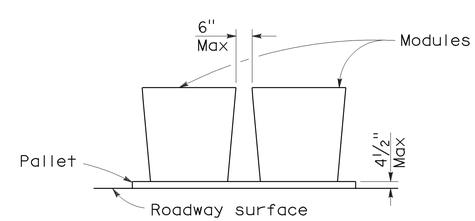

ELEVATION

CRASH CUSHION PALLET DETAIL

See Note 7

NOTES:

1. (XXX) Indicates sand filled module location and weight of sand in pounds for each module. Module spacing is based on the greater diameter of the module.
2. All sand weights are nominal.
3. Temporary crash cushion arrays shall not encroach on the traveled way.
4. Place the top of Type R marker panel 1" below the module lid.
5. Refer to Standard Plan A73B for marker details.
6. Approach speeds indicated conform to NCHRP 350 Report criteria.
7. Use of pallets is optional.

STATE OF CALIFORNIA
DEPARTMENT OF TRANSPORTATION

TEMPORARY CRASH CUSHION, SAND FILLED (UNIDIRECTIONAL)

NO SCALE

RSP T1A DATED JUNE 6, 2008 SUPERSEDES STANDARD PLAN T1A
DATED MAY 1, 2006 - PAGE 211 OF THE STANDARD PLANS BOOK DATED MAY 2006.

REVISED STANDARD PLAN RSP T1A

2006 REVISED STANDARD PLAN RSP T1A

5-15-08

DIST	COUNTY	ROUTE	POST MILES TOTAL PROJECT	SHEET NO.	TOTAL SHEETS
08	SBd	18	66.6/67.2	68	90

Randell D. Hiatt
REGISTERED CIVIL ENGINEER

June 6, 2008
PLANS APPROVAL DATE

REGISTERED PROFESSIONAL ENGINEER
Randell D. Hiatt
No. C50200
Exp. 6-30-09
CIVIL
STATE OF CALIFORNIA

The State of California or its officers or agents shall not be responsible for the accuracy or completeness of electronic copies of this plan sheet.

To accompany plans dated 5-11-09

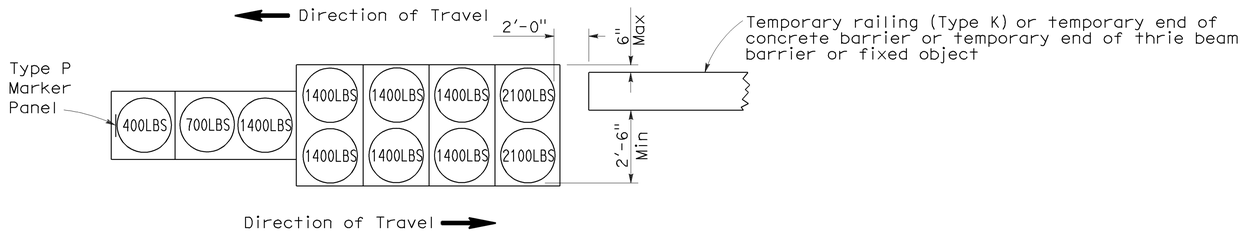

ARRAY 'TB11'

Approach speed less than 45 mph

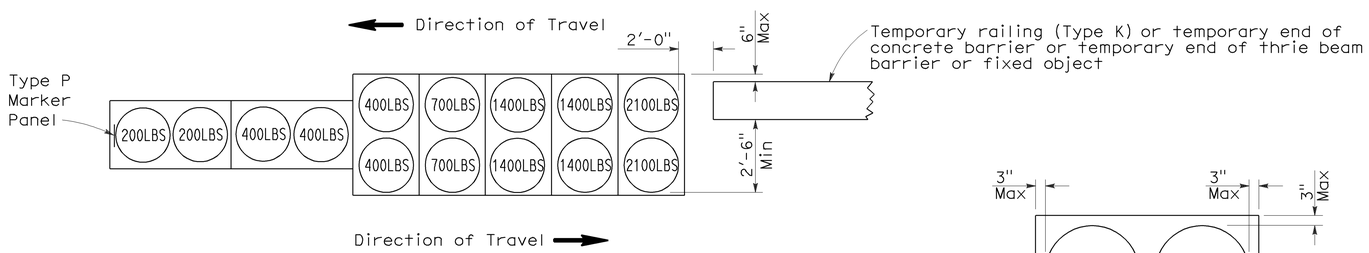

ARRAY 'TB14'

Approach speed 45 mph or more

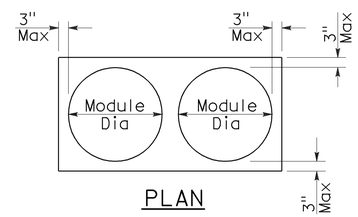

PLAN

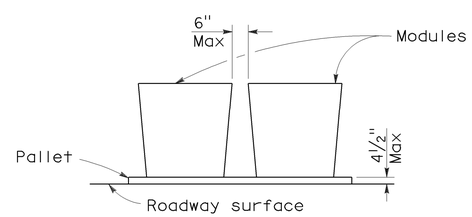

ELEVATION

CRASH CUSHION PALLET DETAIL

See Note 7

NOTES:

1. (XXX) Indicates sand filled module location and weight of sand in pounds for each module. Module spacing is based on the greater diameter of the module.
2. All sand weights are nominal.
3. Temporary crash cushion arrays shall not encroach on the traveled way.
4. Place the Type P marker panel so that the bottom of the panel rests upon the pallet.
5. Refer to Standard Plan A73B for marker details.
6. Approach speeds indicated conform to NCHRP 350 Report criteria.
7. Use of pallets is optional.

STATE OF CALIFORNIA
DEPARTMENT OF TRANSPORTATION

TEMPORARY CRASH CUSHION, SAND FILLED (BIDIRECTIONAL)

NO SCALE

RSP T1B DATED JUNE 6, 2008 SUPERSEDES STANDARD PLAN T1B
DATED MAY 1, 2006 - PAGE 212 OF THE STANDARD PLANS BOOK DATED MAY 2006.

REVISED STANDARD PLAN RSP T1B

2006 REVISED STANDARD PLAN RSP T1B

5-15-08

DIST	COUNTY	ROUTE	POST MILES TOTAL PROJECT	SHEET NO.	TOTAL SHEETS
08	SBd	18	66.6/67.2	69	90

Randell D. Hiatt
REGISTERED CIVIL ENGINEER

June 6, 2008
PLANS APPROVAL DATE

REGISTERED PROFESSIONAL ENGINEER
Randell D. Hiatt
No. C50200
Exp. 6-30-09
CIVIL
STATE OF CALIFORNIA

The State of California or its officers or agents shall not be responsible for the accuracy or completeness of electronic copies of this plan sheet.

To accompany plans dated 5-11-09

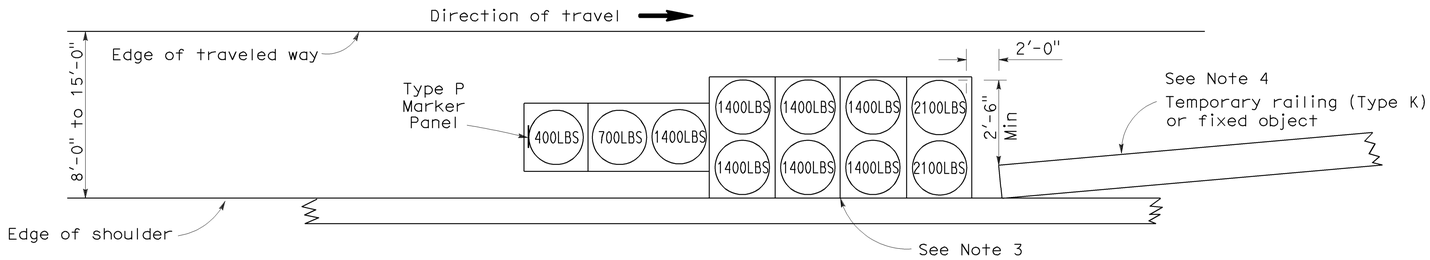

ARRAY 'TS11'

Approach speed less than 45 mph
See Note 9

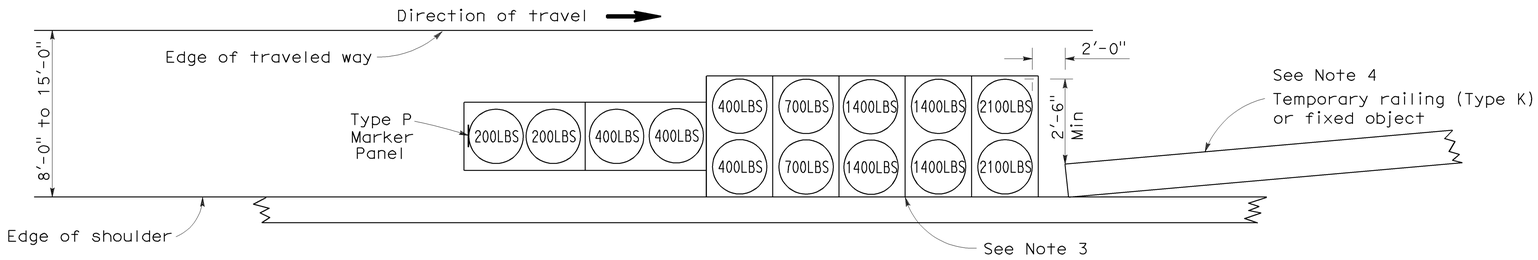

ARRAY 'TS14'

Approach speed 45 mph or more
See Note 9

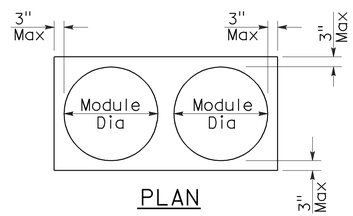

PLAN

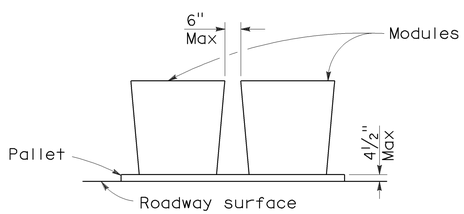

ELEVATION

CRASH CUSHION PALLET DETAIL

See Note 11

NOTES:

1. (XXX) Indicates sand filled module location and weight of sand in pounds for each module. Module spacing is based on the greater diameter of the module.
2. All sand weights are nominal.
3. The temporary crash cushion arrays shown on this plan shall be used only in locations where there will be traffic on one side of the temporary crash cushion array.
4. If the fixed object or approach end of the temporary railing is less than 15'-0" from the edge of traveled way, a temporary crash cushion is required in a construction or work zone.
5. Temporary crash cushion arrays shall not encroach on the traveled way.
6. Arrays for median shoulders shall conform to details shown on this plan for outside shoulders.
7. Place the Type P marker panel so that the bottom of the panel rests upon the pallet and faces traffic.
8. Refer to Standard Plan A73B for marker details.
9. For shoulder widths less than 8'-0", appropriate approved crash cushion protection, other than sand filled modules, shall be provided at fixed objects and at approach ends of temporary railing. The specific type of crash cushion shall be as shown on the project plans or as specified in the Special Provisions, or if not shown on the project plans or specified in the Special Provisions, shall be as approved by the Engineer.
10. Approach speeds indicated conform to NCHRP 350 Report criteria.
11. Use of pallets is optional.

STATE OF CALIFORNIA
DEPARTMENT OF TRANSPORTATION

TEMPORARY CRASH CUSHION, SAND FILLED (SHOULDER INSTALLATIONS)

NO SCALE

RSP T2 DATED JUNE 6, 2008 SUPERSEDES STANDARD PLAN T2
DATED MAY 1, 2006 - PAGE 213 OF THE STANDARD PLANS BOOK DATED MAY 2006.

REVISED STANDARD PLAN RSP T2

2006 REVISED STANDARD PLAN RSP T2

5-15-08

DIST	COUNTY	ROUTE	POST MILES TOTAL PROJECT	SHEET NO.	TOTAL SHEETS
08	SBd	18	66.6/67.2	70	90

REGISTERED CIVIL ENGINEER

November 17, 2006
PLANS APPROVAL DATE

REGISTERED PROFESSIONAL ENGINEER
Greg W. Edwards
No. C36386
Exp. 6-30-08
CIVIL
STATE OF CALIFORNIA

The State of California or its officers or agents shall not be responsible for the accuracy or completeness of electronic copies of this plan sheet.

To accompany plans dated 5-11-09

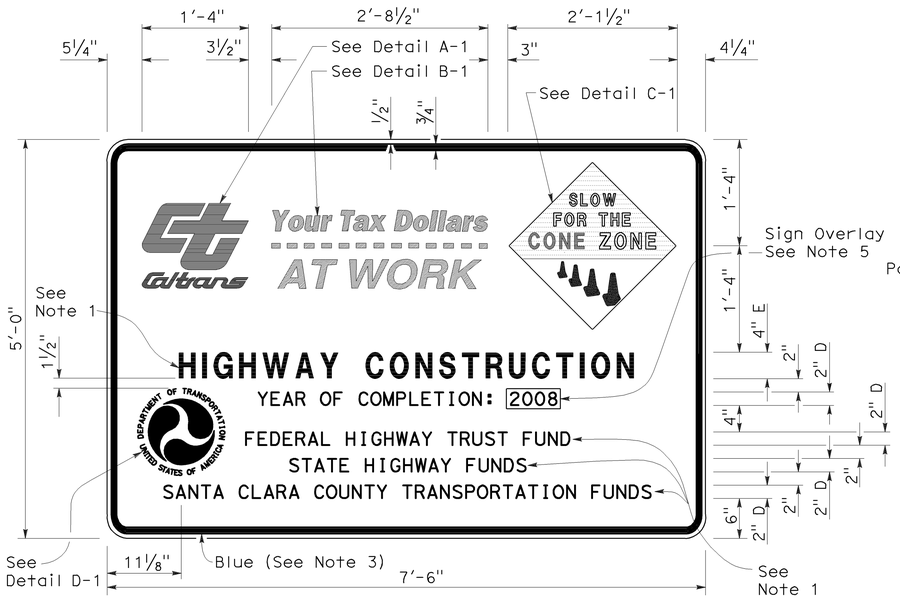

TYPE 1

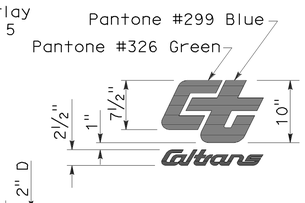

DETAIL A-1

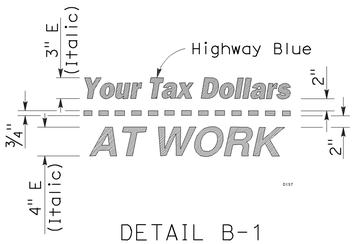

DETAIL B-1
(See Note 3)

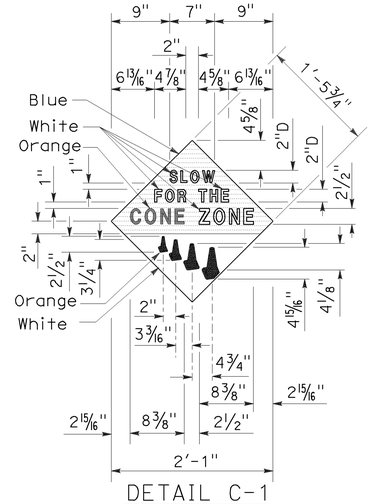

DETAIL C-1
(See Note 4)

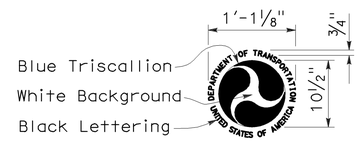

DETAIL D-1
(See Note 6)

NOTES:

1. The sign messages shown for type of project and fund types are examples only. See the Special Provisions for the applicable type of project and fund type messages to be used.
2. Except as otherwise shown, the legend of sign shall be black on a white background (non-reflective).
3. The border of the signs and details "B-1" and "B-2" shall be blue (non-reflective).
4. The diamond in details "C-1" and "C-2" shall be blue for the background of message, " SLOW FOR THE CONE ZONE", and white background for the orange cones. The color and type of font for the "SLOW FOR THE CONE ZONE" message shall be: "SLOW" white D; "FOR THE" white D; "CONE" orange Arial font; "ZONE" white Arial font.
5. Year of completion of project construction shown on the overlay is an example only. See the Special Provisions.
6. Use when the Project involves Federal Highway Trust Fund.

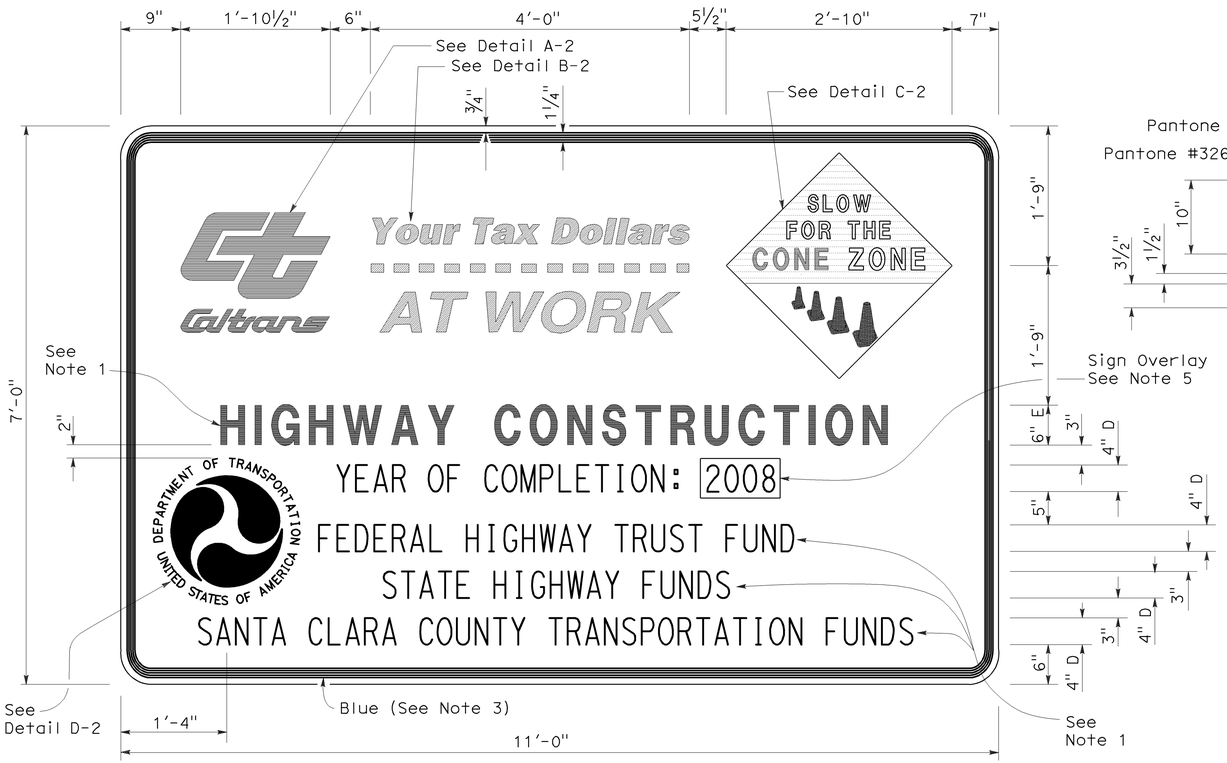

TYPE 2

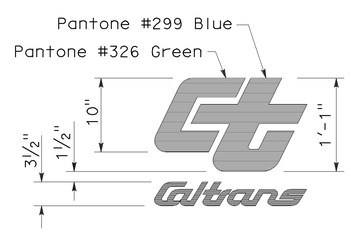

DETAIL A-2

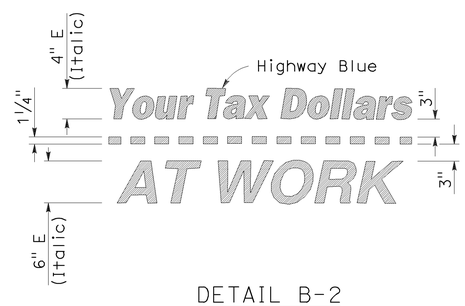

DETAIL B-2
(See Note 3)

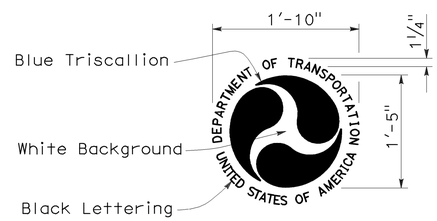

DETAIL D-2
(See Note 6)

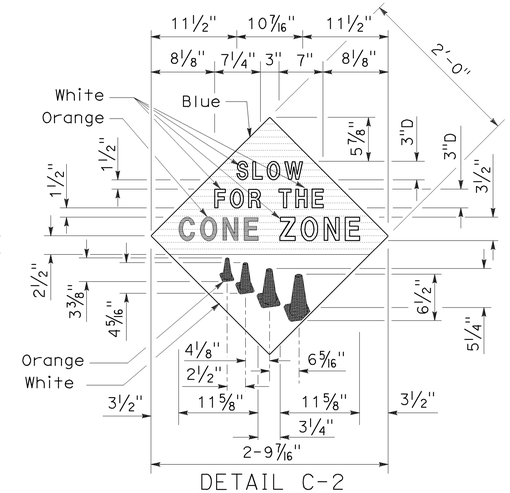

DETAIL C-2
(See Note 4)

STATE OF CALIFORNIA
DEPARTMENT OF TRANSPORTATION

CONSTRUCTION PROJECT FUNDING IDENTIFICATION SIGNS

NO SCALE

RSP T7 DATED NOVEMBER 17, 2006 SUPERSEDES STANDARD PLAN T7
DATED MAY 1, 2006 - PAGE 217 OF THE STANDARD PLANS BOOK DATED MAY 2006.

REVISED STANDARD PLAN RSP T7

2006 REVISED STANDARD PLAN RSP T7

9-7-06

DIST	COUNTY	ROUTE	POST MILES TOTAL PROJECT	SHEET NO.	TOTAL SHEETS
08	SBd	18	66.6/67.2	71	90

LICENSED LANDSCAPE ARCHITECT

April 3, 2009
PLANS APPROVAL DATE

The State of California or its officers or agents shall not be responsible for the accuracy or completeness of electronic copies of this plan sheet.

LICENSED LANDSCAPE ARCHITECT — Robert B. Schott — 3635 — 11-30-10 Renewal Date — 2-25-09 Date — STATE OF CALIFORNIA

To accompany plans dated 5-11-09

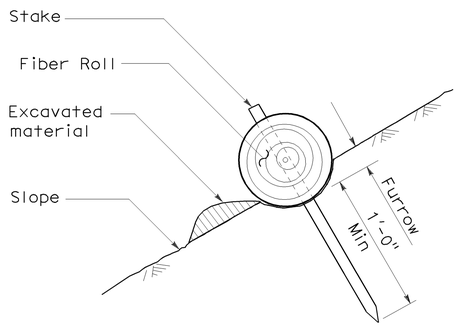

SECTION

TEMPORARY FIBER ROLL (TYPE 1)

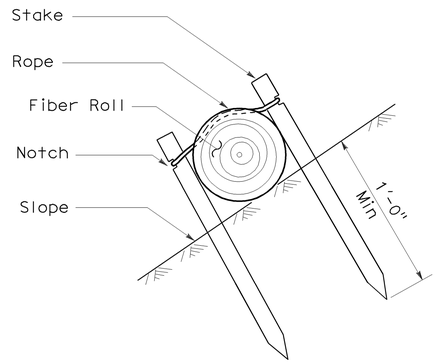

SECTION

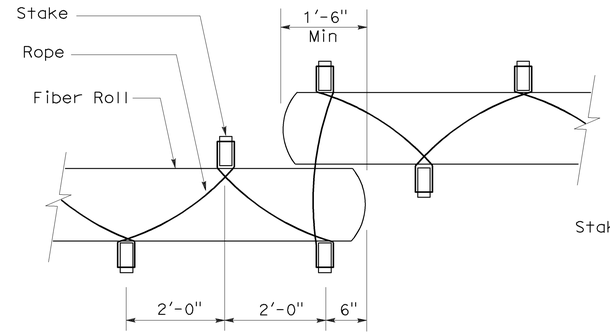

PLAN

TEMPORARY FIBER ROLL (TYPE 2)

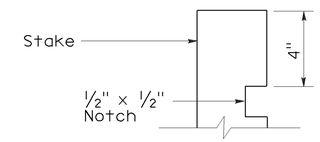

ELEVATION

STAKE NOTCH DETAIL

NOTES:

1. Temporary fiber roll spacing varies depending upon slope inclination.
2. Installations shown in the perspectives are for slope inclination of 10:1 and steeper.

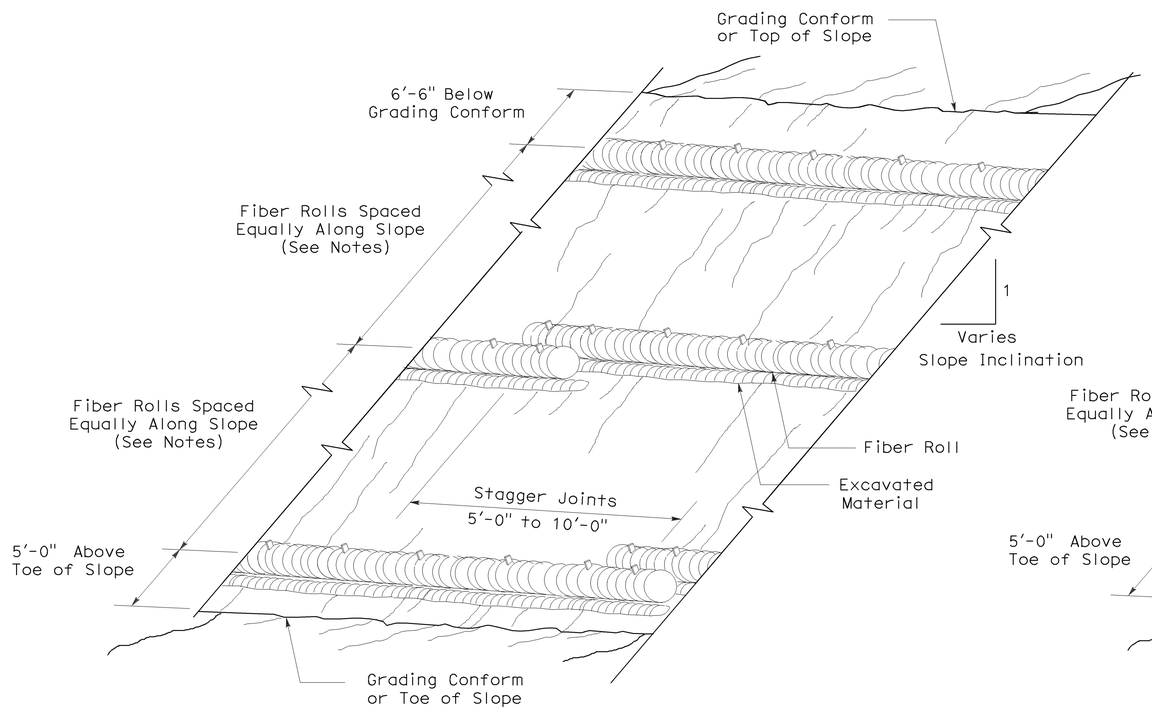

PERSPECTIVE

TEMPORARY FIBER ROLL (TYPE 1)

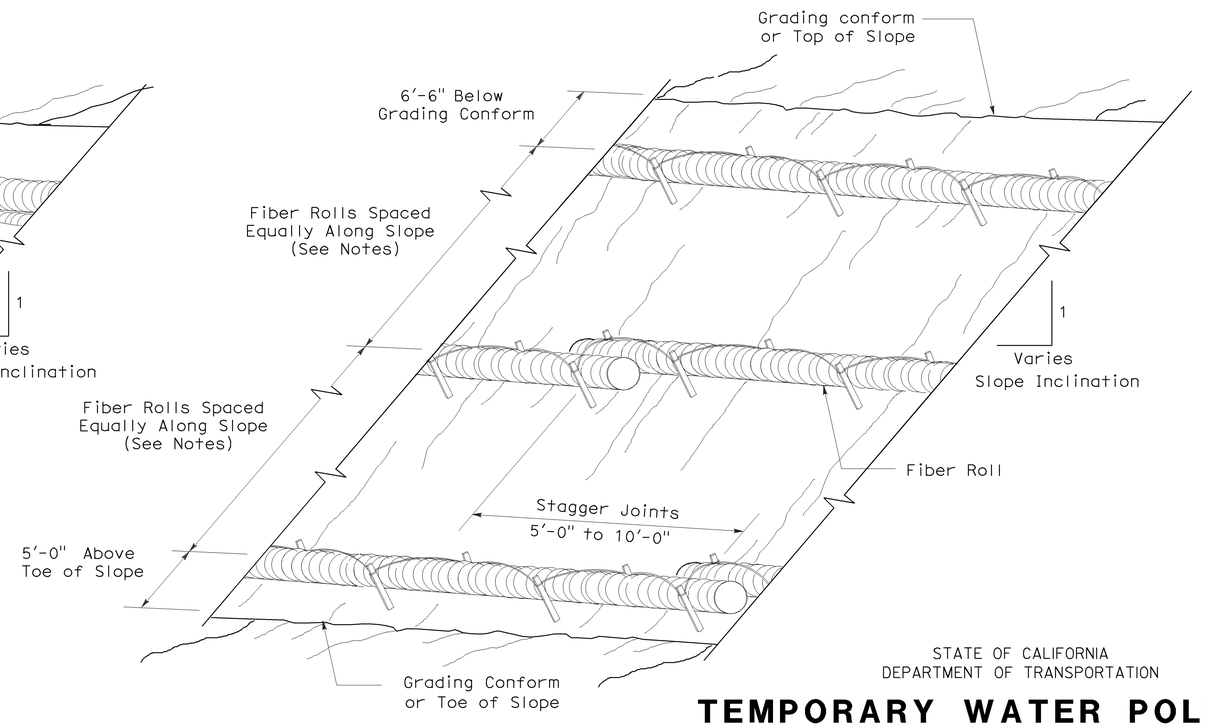

PERSPECTIVE

TEMPORARY FIBER ROLL (TYPE 2)

STATE OF CALIFORNIA
DEPARTMENT OF TRANSPORTATION

TEMPORARY WATER POLLUTION CONTROL DETAILS (TEMPORARY FIBER ROLL)

NO SCALE

RSP T56 DATED APRIL 3, 2009 SUPERSEDES STANDARD PLAN T56
DATED MAY 1, 2006 - PAGE 232 OF THE STANDARD PLANS BOOK DATED MAY 2006.

REVISED STANDARD PLAN RSP T56

2006 REVISED STANDARD PLAN RSP T56

232

2-23-09

DIST	COUNTY	ROUTE	POST MILES TOTAL PROJECT	SHEET NO.	TOTAL SHEETS
08	SBd	18	66.6/67.2	72	90

LICENSED LANDSCAPE ARCHITECT

August 15, 2008
PLANS Approval DATE

The State of California or its officers or agents shall not be responsible for the accuracy or completeness of electronic copies of this plan sheet.

LICENSED LANDSCAPE ARCHITECT
Robert B. Schott 3635
Signature
11-04-08
Renewal Date
08-11-08
Date
STATE OF CALIFORNIA

To accompany plans dated 5-11-09

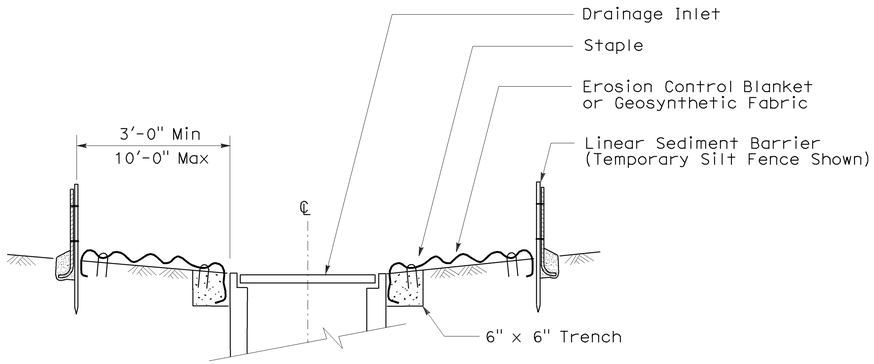

SECTION A-A

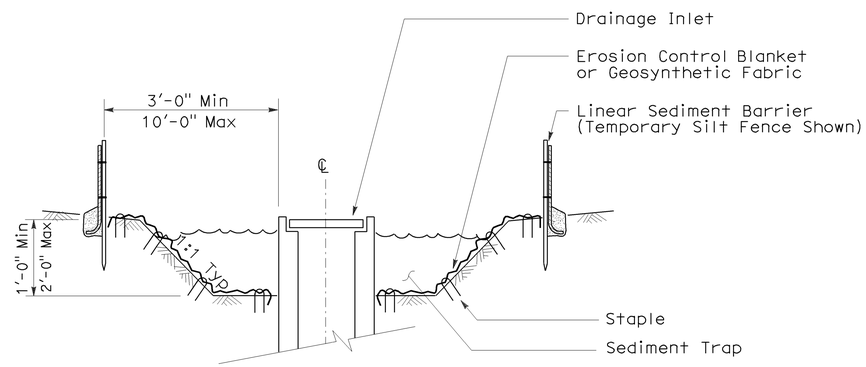

SECTION B-B

NOTES:

1. See Standard Plan T51 for Temporary Silt Fence.
2. Dimensions may vary to fit field conditions.

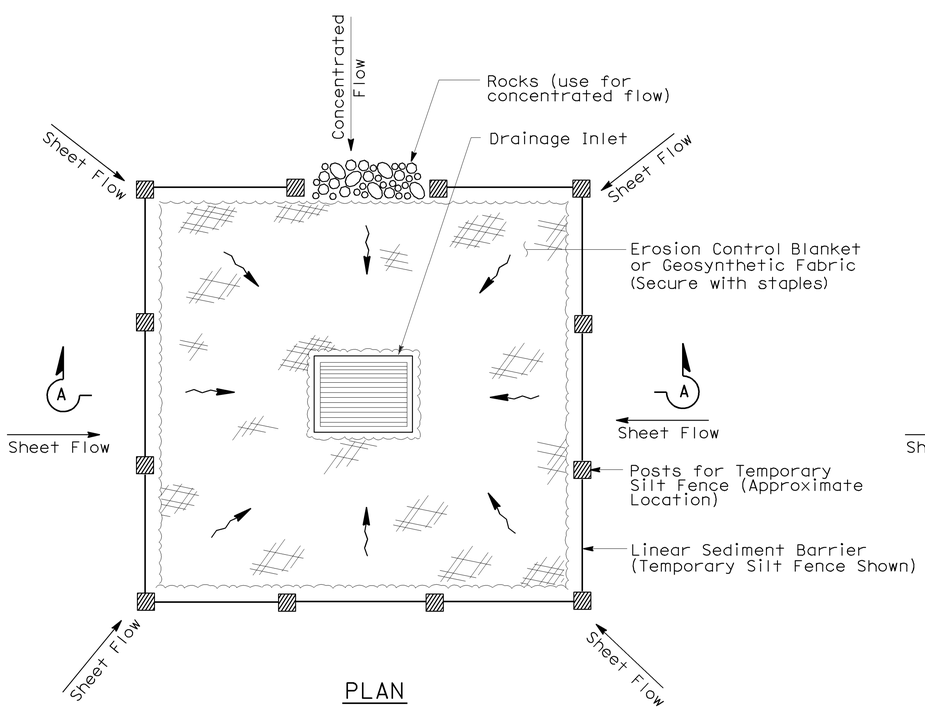

PLAN

TEMPORARY DRAINAGE INLET PROTECTION (TYPE 1)

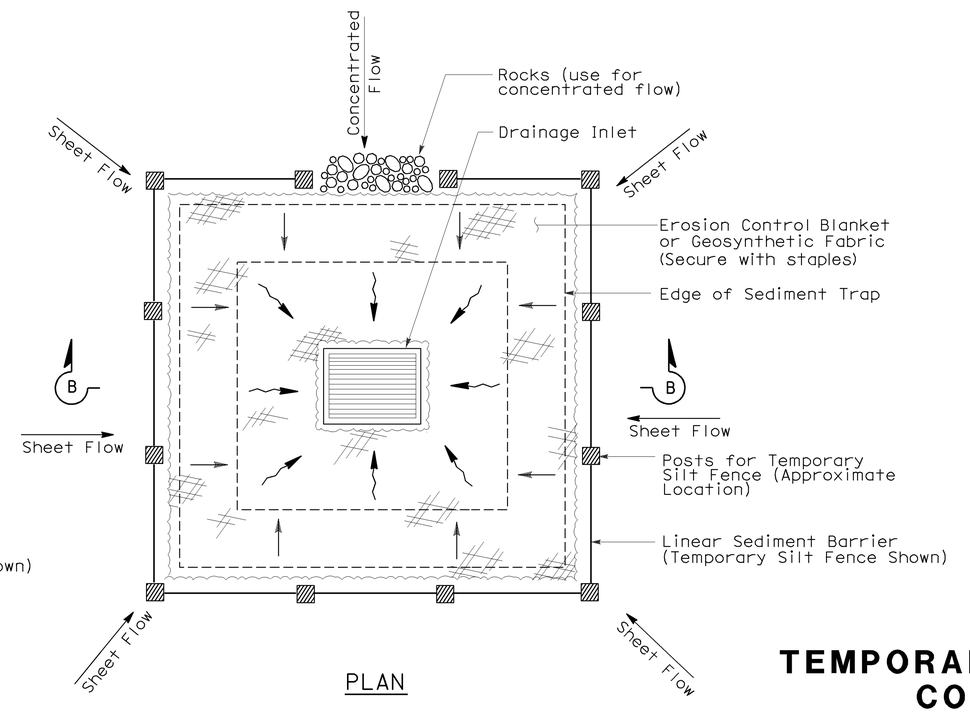

PLAN

TEMPORARY DRAINAGE INLET PROTECTION (TYPE 2) (EXCAVATED SEDIMENT TRAP)

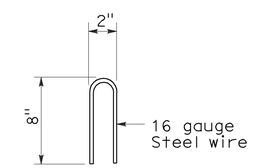

STAPLE DETAIL

STATE OF CALIFORNIA
DEPARTMENT OF TRANSPORTATION

TEMPORARY WATER POLLUTION CONTROL DETAILS (TEMPORARY DRAINAGE INLET PROTECTION)

NO SCALE

NSP T61 DATED AUGUST 15, 2008 SUPPLEMENTS THE STANDARD PLANS BOOK DATED MAY 2006.

NEW STANDARD PLAN NSP T61

2006 NEW STANDARD PLAN NSP T61

7-11-08

DIST	COUNTY	ROUTE	POST MILES TOTAL PROJECT	SHEET NO.	TOTAL SHEETS
08	SBd	18	66.6/67.2	73	90

LICENSED LANDSCAPE ARCHITECT

August 15, 2008
PLANS APPROVAL DATE

The State of California or its officers or agents shall not be responsible for the accuracy or completeness of electronic copies of this plan sheet.

LICENSED LANDSCAPE ARCHITECT — Robert B. Schott — Signature — 11-04-08 Renewal Date — 08-11-08 Date — STATE OF CALIFORNIA

To accompany plans dated 5-11-09

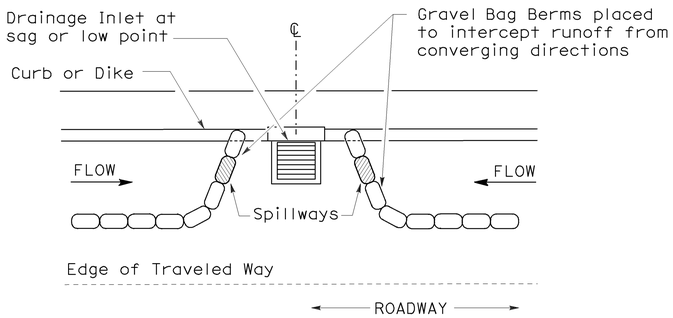

PLAN

CONFIGURATION FOR SAG POINT INLET (GRAVEL BAG BERM)

GRAVEL BAG BERM (TYPE 3A) SPACING TABLE

SLOPE OF ROADWAY (PERCENT)	1 to 3.9	4 to 5.9	6 to 7.9	8 to 10	10+
INTERVAL BETWEEN BERM	100′	75′	50′	25′	12′

For slope of less than 1%, install barriers only if erosion/sediment is prevalent

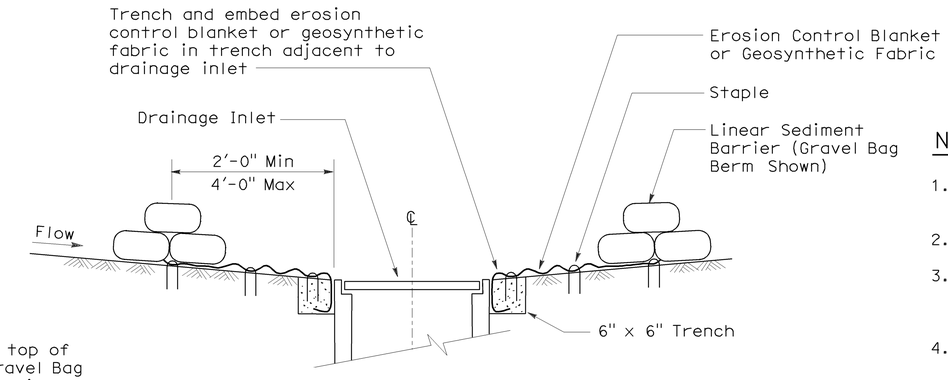

SECTION A-A

NOTES:

1. Place safety cones adjacent to drainage inlet protection.
2. Dimensions may vary to fit field conditions.
3. Install a minimum of 3 gravel bag berms upstream of each drainage inlet to be protected.
4. Position erosion control blanket or geosynthetic fabric at edge of concrete apron and secure in trench.
5. Erosion control blanket or geosynthetic fabric is not required if the area adjacent to the drainage inlet is vegetated or paved.

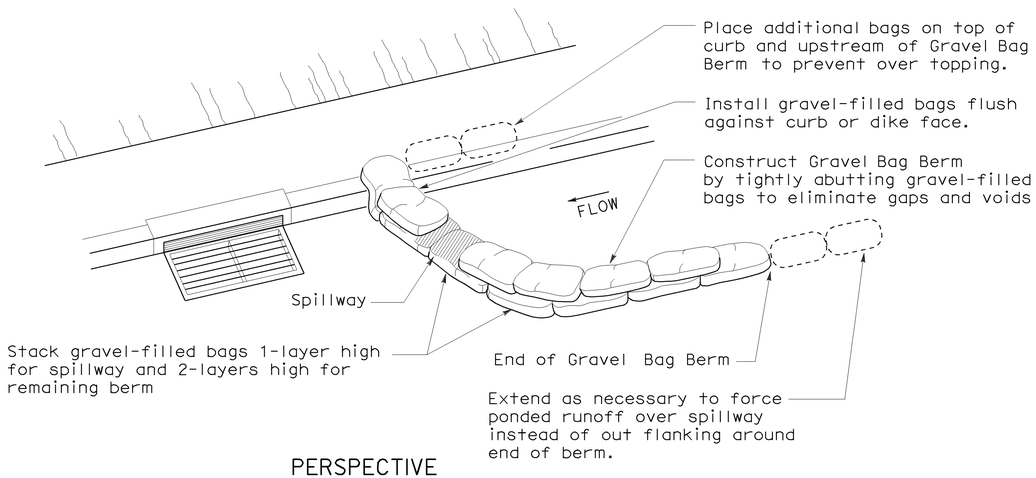

PERSPECTIVE

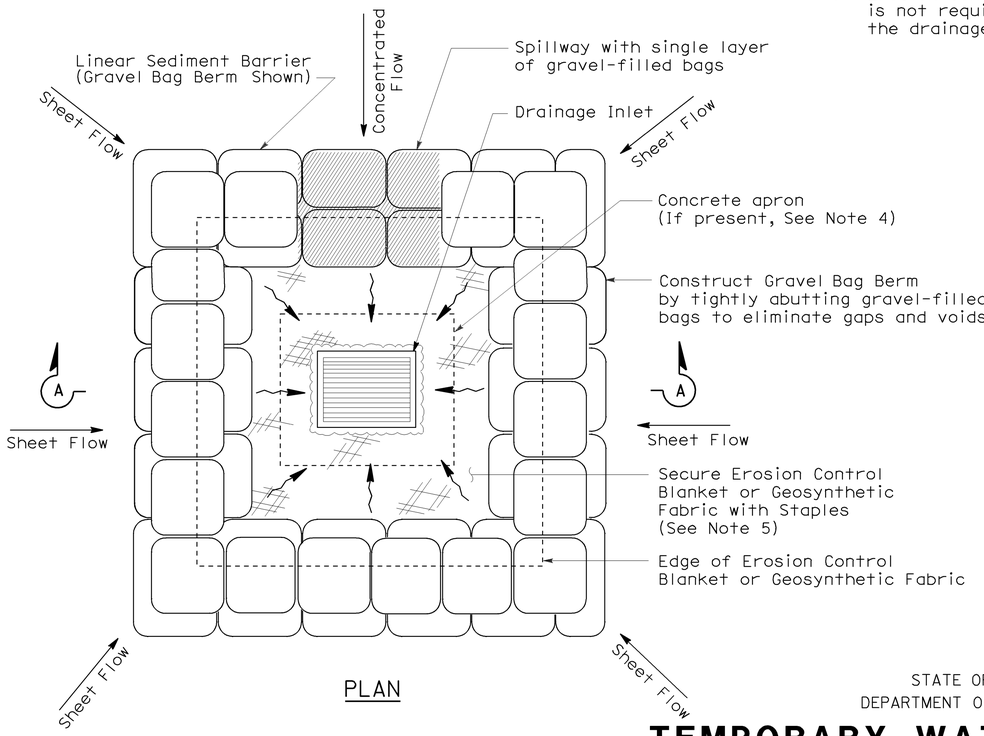

PLAN

TEMPORARY DRAINAGE INLET PROTECTION (TYPE 3B)

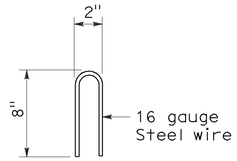

STAPLE DETAIL

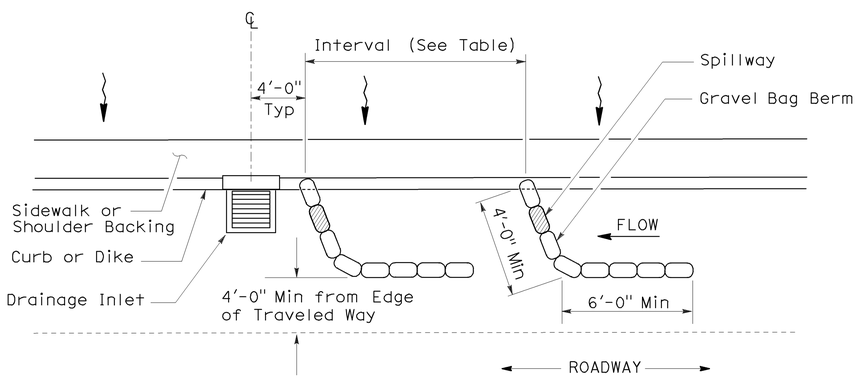

PLAN

TEMPORARY DRAINAGE INLET PROTECTION (TYPE 3A) (GRAVEL BAG BERM)

STATE OF CALIFORNIA
DEPARTMENT OF TRANSPORTATION

TEMPORARY WATER POLLUTION CONTROL DETAILS (TEMPORARY DRAINAGE INLET PROTECTION)

NO SCALE

NSP T62 DATED AUGUST 15, 2008 SUPPLEMENTS THE STANDARD PLANS BOOK DATED MAY 2006.

NEW STANDARD PLAN NSP T62

2006 NEW STANDARD PLAN NSP T62

7-11-08

DIST	COUNTY	ROUTE	POST MILES TOTAL PROJECT	SHEET NO.	TOTAL SHEETS
08	SBd	18	66.6/67.2	74	90

LICENSED LANDSCAPE ARCHITECT

August 15, 2008
PLANS APPROVAL DATE

LICENSED LANDSCAPE ARCHITECT — Robert B. Schott — 3635 — Signature — 11-04-08 Renewal Date — 08-11-08 Date — STATE OF CALIFORNIA

The State of California or its officers or agents shall not be responsible for the accuracy or completeness of electronic copies of this plan sheet.

To accompany plans dated 5-11-09

FLEXIBLE SEDIMENT BARRIER SPACING TABLE

SLOPE OF ROADWAY (PERCENT)	0 to 0.9	1 to 1.9	2 to 2.9	3 to 4	5+
INTERVAL BETWEEN BARRIERS	50′	35′	30′	25′	20′
ANGLE FROM FACE OF CURB	70°	70°	70°	45°	45°
SUGGESTED BARRIER LENGTH	6′	6′	6′	6′	6′

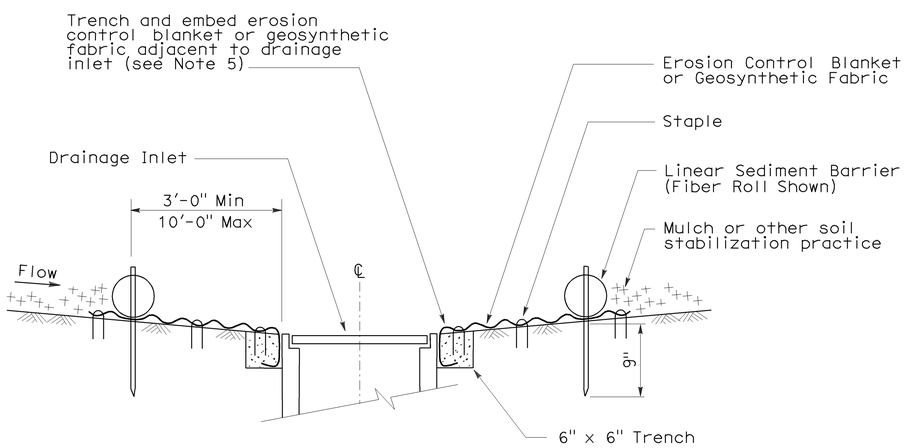

SECTION A-A

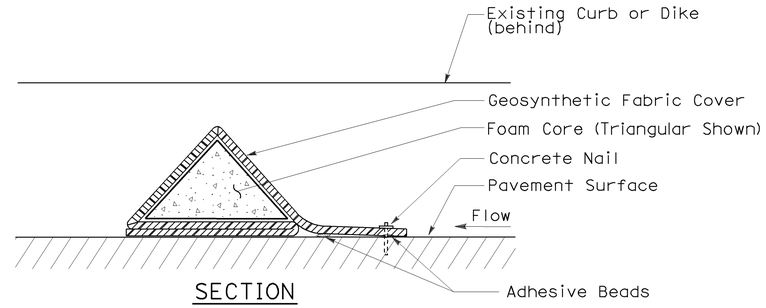

SECTION

FLEXIBLE SEDIMENT BARRIER DETAIL (FOAM BARRIER SHOWN)

NOTES:

1. See Standard Plan T51 for Temporary Silt Fence.
2. Dimensions may vary to fit field conditions.
3. Install a minimum of 3 flexible sediment barriers upstream of each drainage inlet to be protected.
4. Position erosion control blanket or geosynthetic fabric at edge of concrete apron and secure in trench.
5. Erosion control blanket or geosynthetic fabric is not required if the area adjacent to the drainage inlet is vegetated.

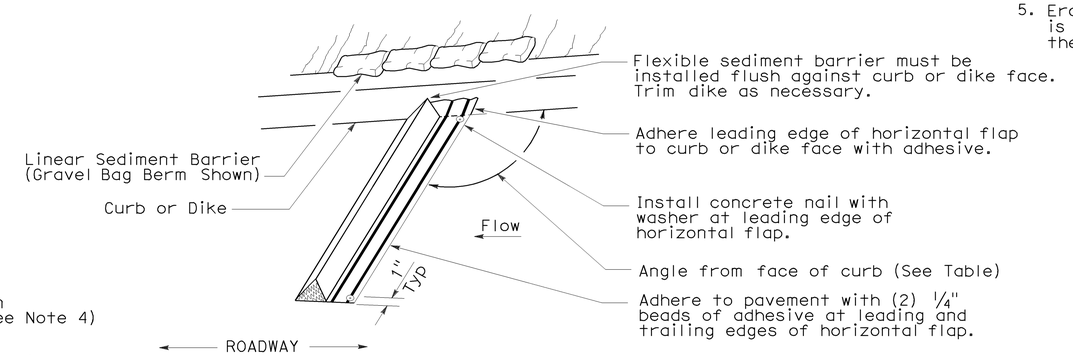

PERSPECTIVE

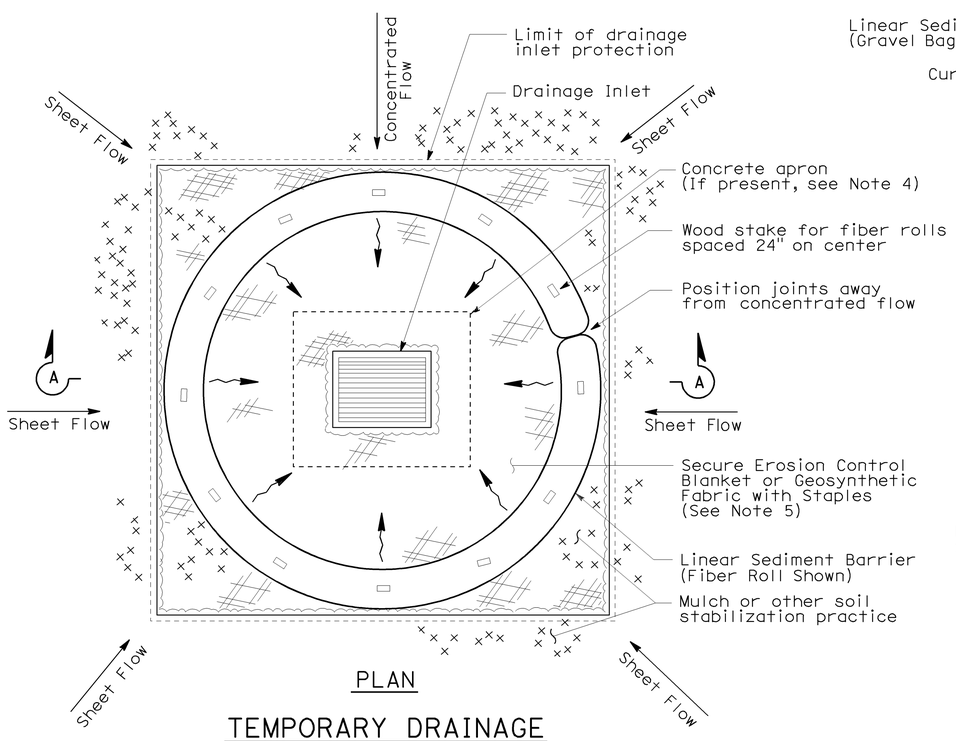

PLAN

TEMPORARY DRAINAGE INLET PROTECTION (TYPE 4A)

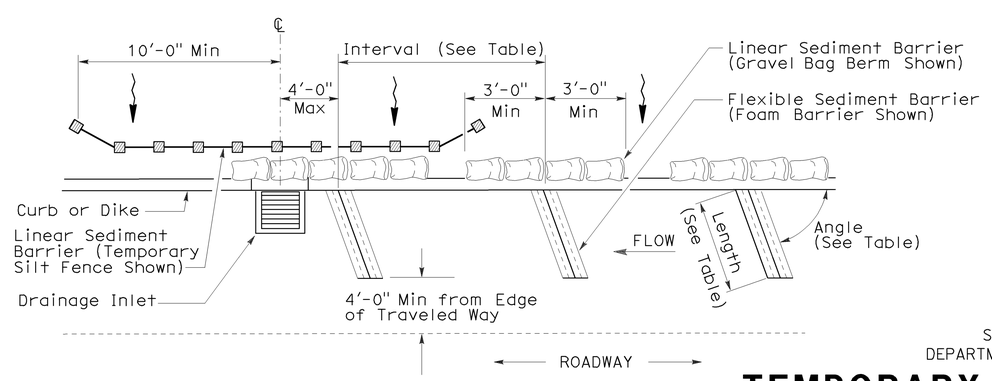

PLAN

TEMPORARY DRAINAGE INLET PROTECTION (TYPE 4B) FLEXIBLE SEDIMENT BARRIER

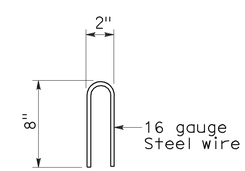

STAPLE DETAIL

STATE OF CALIFORNIA
DEPARTMENT OF TRANSPORTATION

TEMPORARY WATER POLLUTION CONTROL DETAILS (TEMPORARY DRAINAGE INLET PROTECTION)

NO SCALE

NSP T63 DATED AUGUST 15, 2008 SUPPLEMENTS THE STANDARD PLANS BOOK DATED MAY 2006.

NEW STANDARD PLAN NSP T63

2006 NEW STANDARD PLAN NSP T63

7-11-08

DIST	COUNTY	ROUTE	POST MILES TOTAL PROJECT	SHEET NO.	TOTAL SHEETS
08	SBd	18	66.6/67.2	75	90

LICENSED LANDSCAPE ARCHITECT

August 15, 2008
PLANS APPROVAL DATE

LICENSED LANDSCAPE ARCHITECT
Robert B. Schott 3635
Signature
11-04-08
Renewal Date
08-11-08
Date
STATE OF CALIFORNIA

The State of California or its officers or agents shall not be responsible for the accuracy or completeness of electronic copies of this plan sheet.

To accompany plans dated 5-11-09

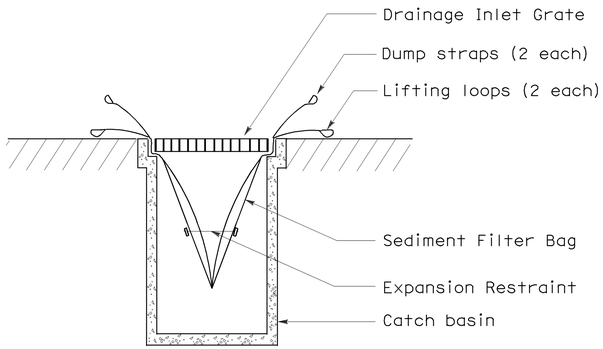

SECTION B-B

SEDIMENT FILTER BAG DETAIL

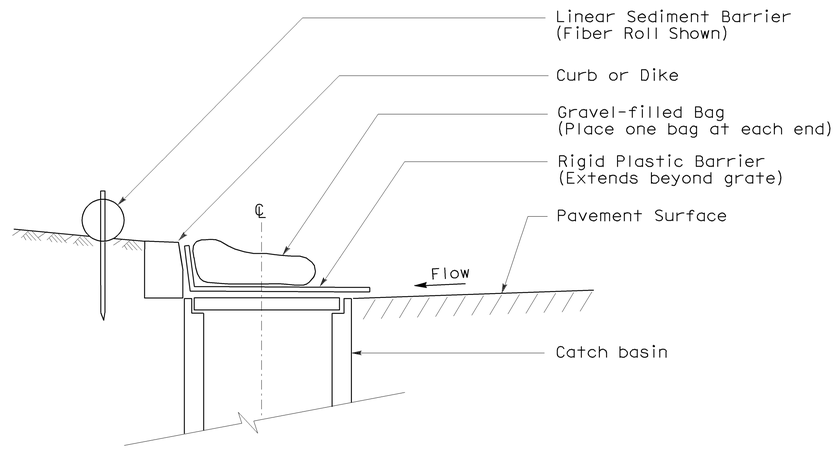

SECTION

TEMPORARY DRAINAGE INLET PROTECTION (TYPE 6A) (CATCH BASIN WITH GRATE)

NOTES:

1. See Standard Plan T51 for Temporary Silt Fence.
2. Dimensions may vary to fit field conditions.

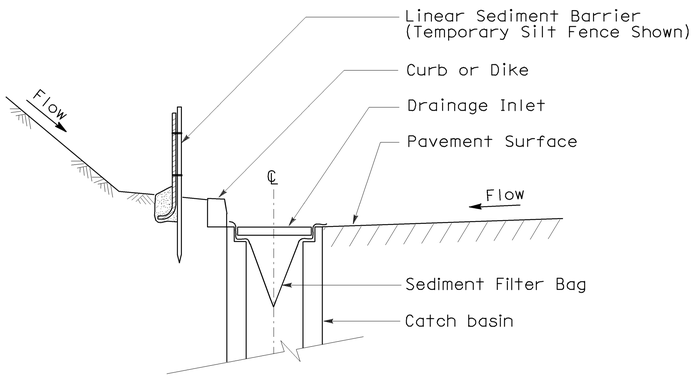

SECTION A-A

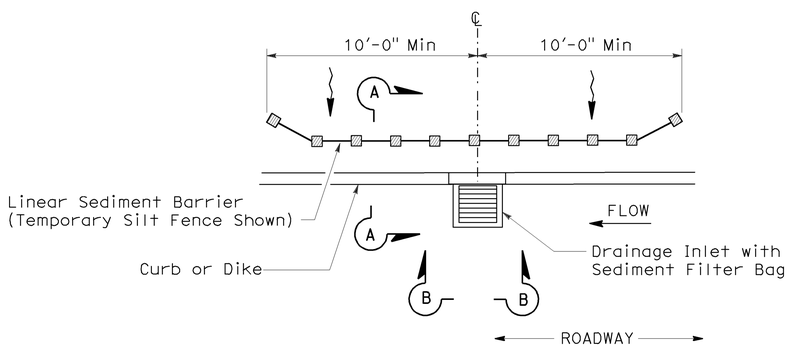

PLAN

TEMPORARY DRAINAGE INLET PROTECTION (TYPE 5) (SEDIMENT FILTER BAG)

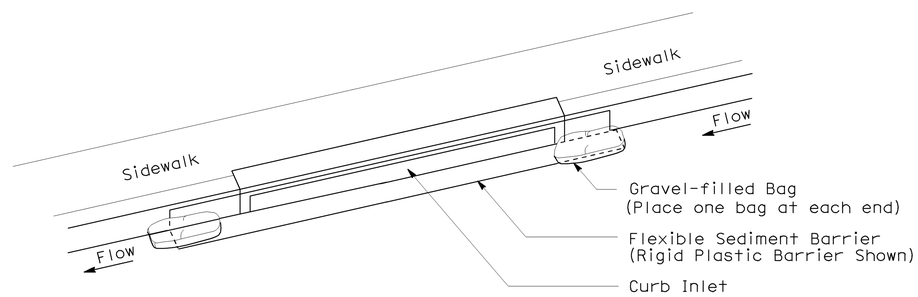

PERSPECTIVE

TEMPORARY DRAINAGE INLET PROTECTION (TYPE 6B) (CURB INLET WITHOUT GRATE)

STATE OF CALIFORNIA
DEPARTMENT OF TRANSPORTATION

TEMPORARY WATER POLLUTION CONTROL DETAILS (TEMPORARY DRAINAGE INLET PROTECTION)

NO SCALE

NSP T64 DATED AUGUST 15, 2008 SUPPLEMENTS
THE STANDARD PLANS BOOK DATED MAY 2006.

NEW STANDARD PLAN NSP T64

2006 NEW STANDARD PLAN NSP T64

7-11-08

DIST	COUNTY	ROUTE	POST MILES TOTAL PROJECT	SHEET NO.	TOTAL SHEETS
08	SBd	18	66.6/67.2	76	90

LICENSED LANDSCAPE ARCHITECT

April 3, 2009
PLANS APPROVAL DATE

The State of California or its officers or agents shall not be responsible for the accuracy or completeness of electronic copies of this plan sheet.

LICENSED LANDSCAPE ARCHITECT — Robert B. Schott 3635 — Signature — 11-30-10 Renewal Date — 2-25-09 Date — STATE OF CALIFORNIA

To accompany plans dated 5-11-09

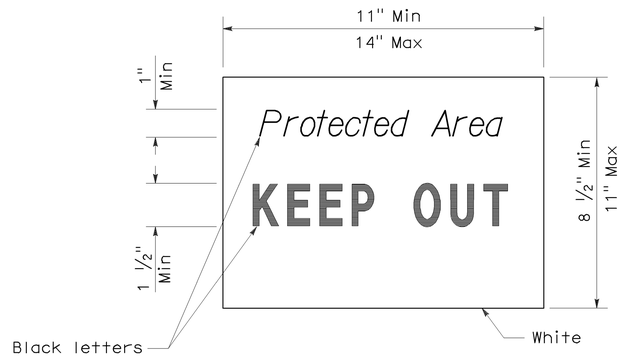

SIGN DETAIL

NOTE:

1. Temporary silt fence and temporary straw bale barrier shown for reference purposes only.

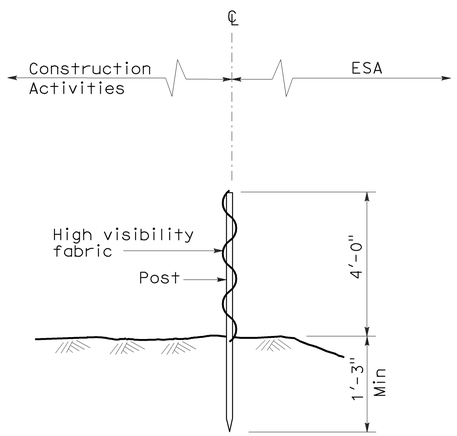

SECTION
TEMPORARY FENCE (TYPE ESA)

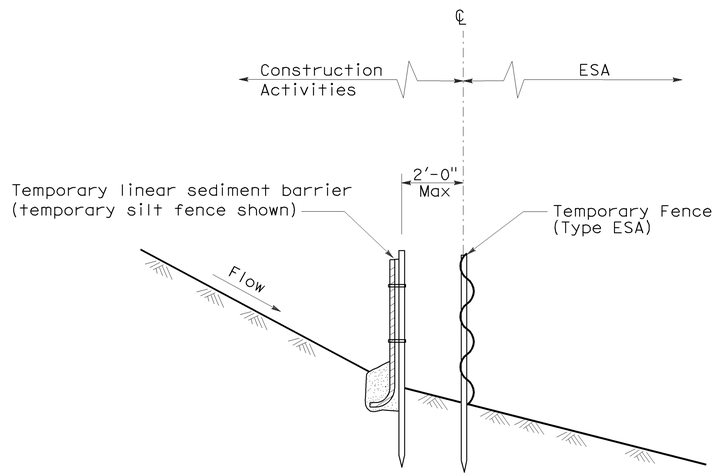

SECTION
PLACEMENT DETAIL
FOR TEMPORARY LINEAR SEDIMENT BARRIER
USED WITH TEMPORARY
FENCE (TYPE ESA)
(See Note 1)

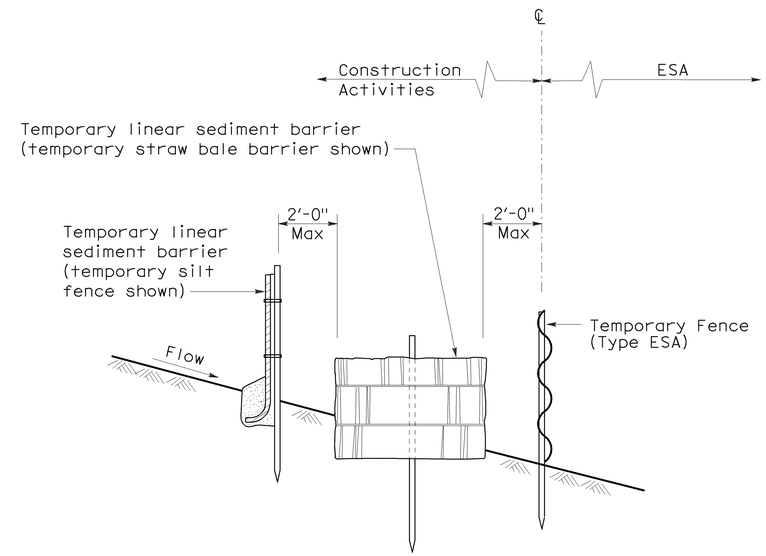

SECTION
PLACEMENT DETAIL
FOR TEMPORARY SILT FENCE
AND TEMPORARY STRAW BALE BARRIER
USED WITH TEMPORARY FENCE (TYPE ESA)
(See Note 1)

STATE OF CALIFORNIA
DEPARTMENT OF TRANSPORTATION

TEMPORARY WATER POLLUTION CONTROL DETAILS [TEMPORARY FENCE (TYPE ESA)]

NO SCALE

NSP T65 DATED APRIL 3, 2009 SUPPLEMENTS
THE STANDARD PLANS BOOK DATED MAY 2006.

NEW STANDARD PLAN NSP T65

2006 NEW STANDARD PLAN NSP T65

DIST	COUNTY	ROUTE	POST MILES TOTAL PROJECT	SHEET NO.	TOTAL SHEETS
08	SBd	18	66.6/67.2	77	90

REGISTERED CIVIL ENGINEER

October 5, 2007
PLANS APPROVAL DATE

REGISTERED PROFESSIONAL ENGINEER Efthymios Delis No. C51434 Exp. 6-30-08 CIVIL STATE OF CALIFORNIA

The State of California or its officers or agents shall not be responsible for the accuracy or completeness of electronic copies of this plan sheet.

To accompany plans dated 5-11-09

2006 REVISED STANDARD PLAN RSP B6-21

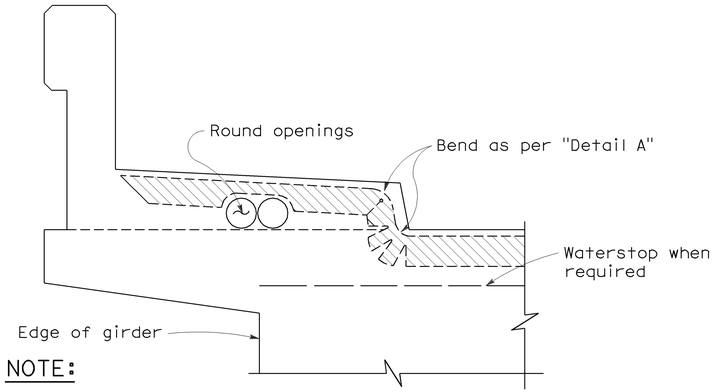

NOTE:

Type "B" seal shown. Type "A" seals to comform to the general path of seal shown, cuts for bending not required. Bend Type "A" seals 3" up into curb or barrier rail on only the low end of the seal.

CONCRETE BARRIER AND SIDEWALK

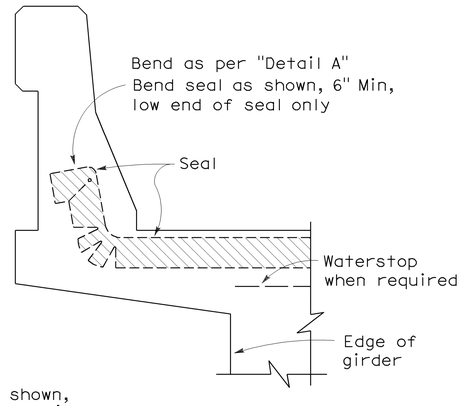

CONCRETE BARRIER

JOINT SEALS DETAILS

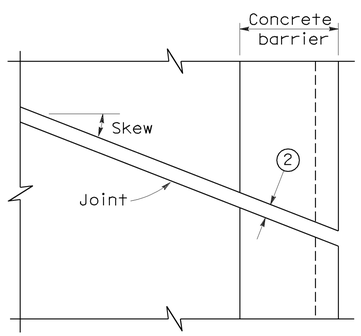

PLAN OF JOINT (SKEW ≤ 20°)

Min ℄ radius to be 4 times uncompressed width of seal or as recommended by the manufacturer, whichever is greater

In lieu of saw cutting, this area may be blocked out and reconstructed to match saw cutting on both sides.

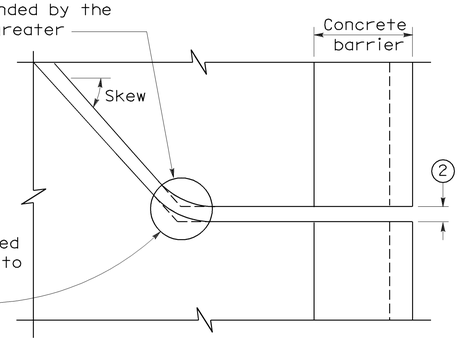

PLAN OF JOINT (SKEW > 20°)

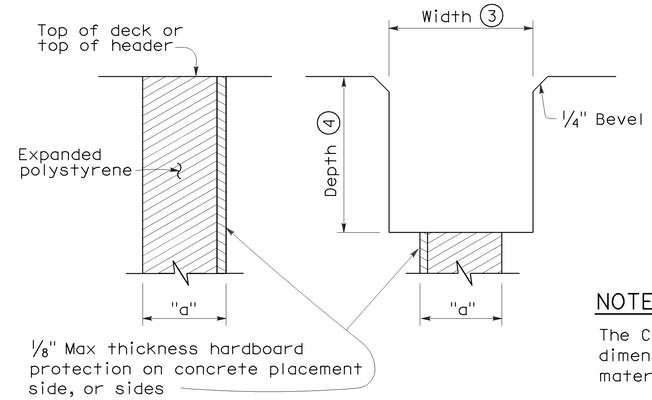

FORMING DETAIL SAWCUT DETAIL

NOTE:

The Contractor shall verify all controlling field dimensions before ordering or fabricatiing any material.

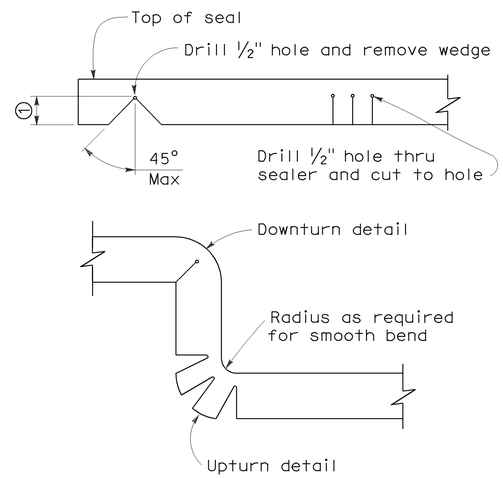

DETAIL A

NOTES:

1. Make smooth cuts from the bottom of seal to 1½" clear of top leaving at least one complete cell between the top of the cut and top of the seal. When necessary cut back of seal to clear conduit and round openings.
2. Opening in barrier to match width of sawn deck joint.
3. Sawcut groove widths shall be as ordered by the Engineer.
4. Depth of sawcut: Type A - Depth to be 2" minimum.
   Type B - Depth to be equal to or greater than the depth of seal measured along the contact surface, when compressed to minimum width position (W_2) plus dimensions shown.
5. MR (movement rating) as shown on other plan sheets.
6. Other depths must be approved by the Engineer.

DIMENSIONS "a" OF JOINT REQUIRED

Movement Rating (MR) 5	Bridge Type	"a" Dimension Deck Concrete Placed		
		Winter	Fall-Spring	Summer
2"	All except CIP/PS	1½"	1¼"	¾"
	CIP/PS	1¼"	1"	½"
1½"	All except CIP/PS	1¼"	1"	½"
	CIP/PS	1"	¾"	½"
1"	All except CIP/PS	1"	¾"	½"
	CIP/PS	¾"	½"	½"
½"	All except CIP/PS	¾"	¾"	½"
	CIP/PS	½"	½"	½"

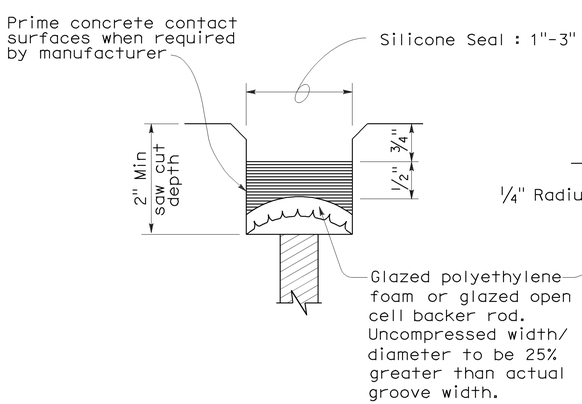

TYPE A SEAL

Movement rating : Silicone = 1" Max

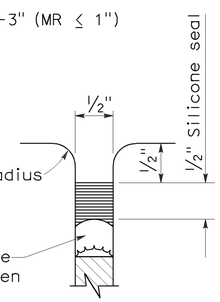

TYPE AL SEAL

Longitudinal joints only

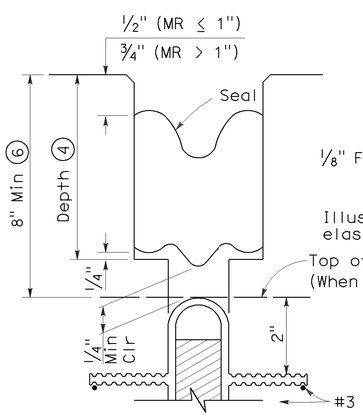

TYPE B JOINT SEAL
IN MINIMUM WIDTH POSITION (W_2)

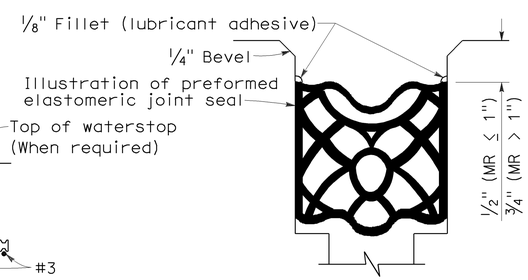

TYPE B SEAL

Movement Rating ≤ 2"

STATE OF CALIFORNIA
DEPARTMENT OF TRANSPORTATION

JOINT SEALS (MAXIMUM MOVEMENT RATING = 2")

NO SCALE

RSP B6-21 DATED OCTOBER 5, 2007 SUPERSEDES STANDARD PLAN B6-21 DATED MAY 1, 2006 - PAGE 258 OF THE STANDARD PLANS BOOK DATED MAY 2006.

REVISED STANDARD PLAN RSP B6-21

5-8-07

DIST	COUNTY	ROUTE	POST MILES TOTAL PROJECT	SHEET No	TOTAL SHEETS
08	SBd	18	66.6/67.2	78	90

Tierney L. Sanderson 10-10-08
REGISTERED CIVIL ENGINEER DATE

5-11-09
PLANS APPROVAL DATE

REGISTERED PROFESSIONAL ENGINEER Tierney L. Sanderson No. 48605 Exp. 6-30-2010 CIVIL STATE OF CALIFORNIA

The State of California or its officers or agents shall not be responsible for the accuracy or completeness of electronic copies of this plan sheet.

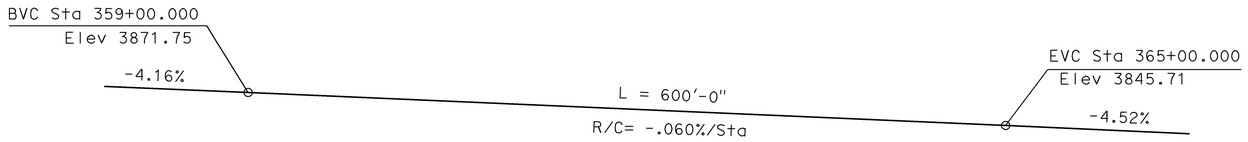

PROFILE GRADE

NO SCALE

QUANTITIES

SALVAGE METAL BRIDGE RAILING	LUMP	SUM
BRIDGE REMOVAL	LUMP	SUM
STRUCTURE EXCAVATION (BRIDGE)	1,065	CY
STRUCTURE BACKFILL (BRIDGE)	703	CY
STRUCTURAL CONCRETE, BRIDGE FOOTING	102	CY
STRUCTURAL CONCRETE, BRIDGE	430	CY
MINOR CONCRETE (MINOR STRUCTURE)	2.3	CY
JOINT SEAL (MR 1")	111	LF
BAR REINFORCING STEEL (BRIDGE)	128,300	LB
CONCRETE BARRIER (TYPE 742)	226	LF

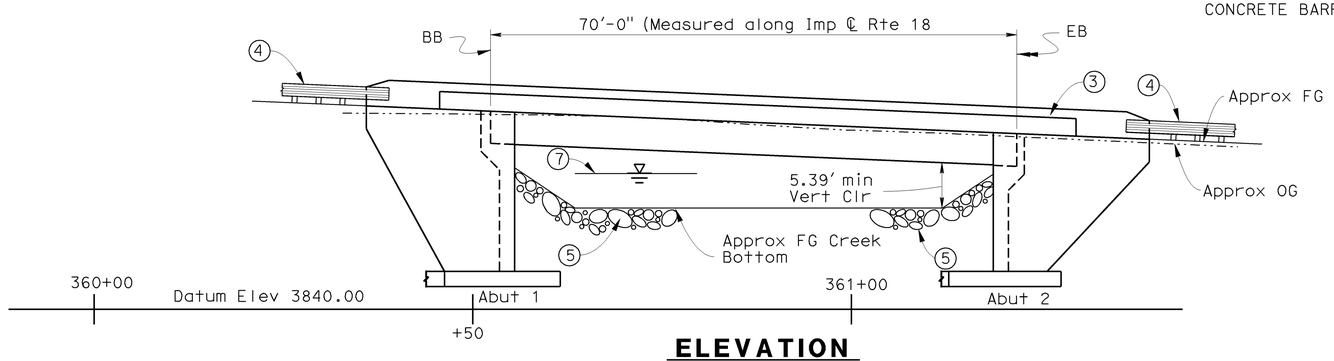

ELEVATION

1"=10'-0"

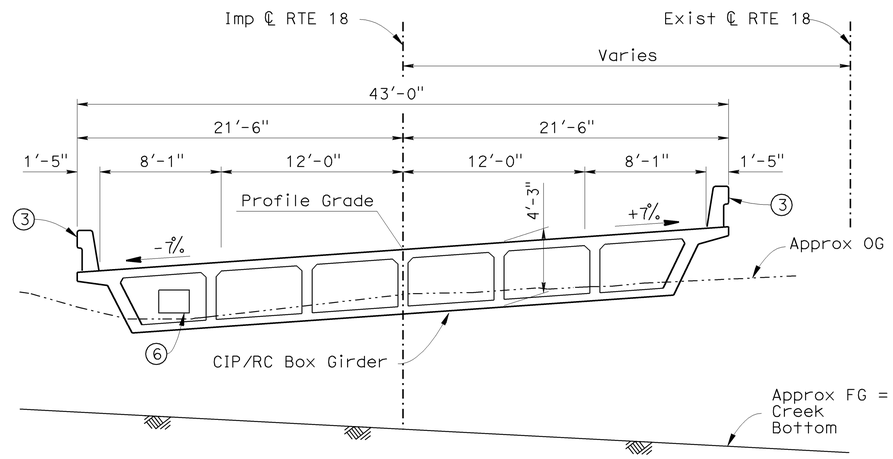

TYPICAL SECTION

1"= 5'-0"

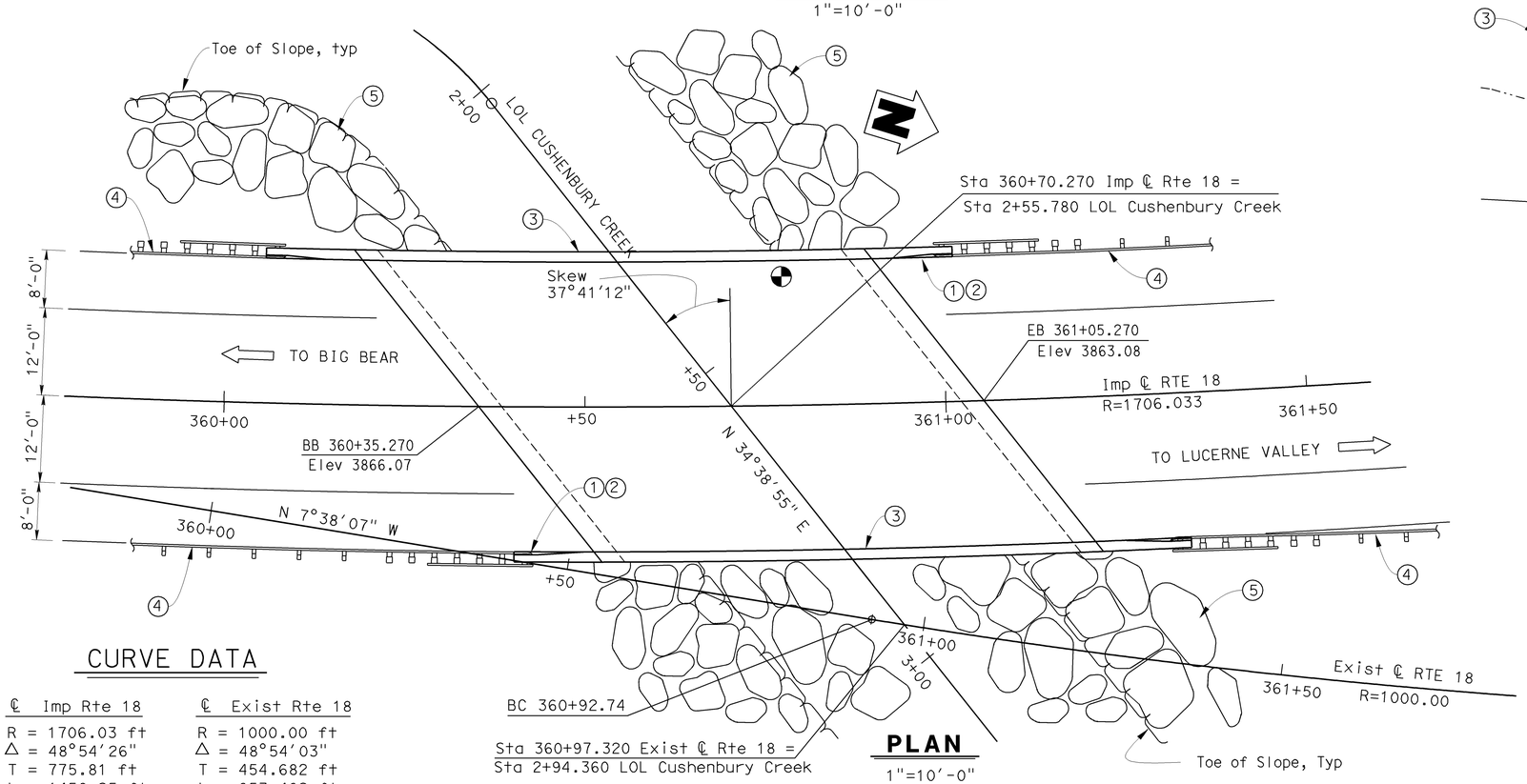

PLAN

1"=10'-0"

CURVE DATA

℄ Imp Rte 18	℄ Exist Rte 18
R = 1706.03 ft	R = 1000.00 ft
Δ = 48°54'26"	Δ = 48°54'03"
T = 775.81 ft	T = 454.682 ft
L = 1456.25 ft	L = 853.482 ft

LEGEND

1. Paint "BR. NO. 54-1283"
2. Paint "CUSHENBURY CREEK BRIDGE"
3. Concrete Barrier Type 742
4. MBGR, see "ROAD PLANS"
5. Rock Slope Protection, see "Road Plans"
6. Future utility opening
7. For "Hydrologic Summary, see "Foundation Plan" sheet

Point of minimum vertical clearance

NOTES:

1. Bridge replacement on new alignment
2. Existing Bridge No. 54-0394 is approximately 102 feet south of new Bridge No. 54-1283 along Existing ℄ Rte 18. See "Index to Plans" sheet for removal details
3. Existing Bridge No. 54-0394 to be removed and replaced with 48" CSP, see "Road Plans"

DANIEL T. ADAMS
DESIGN ENGINEER

	BY	CHECKED
DESIGN	R. Anderson	A. Christensen
DETAILS	D.Wooten	T. Sanderson
QUANTITIES	M.Vu	M.Dang

LOAD & RESISTANCE FACTOR DESIGN — LIVE LOADING: HL93 W/"LOW-BOY"; PERMIT DESIGN VEHICLE

	BY	CHECKED
LAYOUT	R. Anderson	T. Sanderson
SPECIFICATIONS	M. Zariv	PLANS AND SPECS COMPARED M. Zariv

STATE OF CALIFORNIA
DEPARTMENT OF TRANSPORTATION

DIVISION OF ENGINEERING SERVICES
STRUCTURE DESIGN
DESIGN BRANCH 10

BRIDGE NO. 54-1283
POST MILE R66.80

CUSHENBURY CREEK BRIDGE (REPLACE)
GENERAL PLAN

ALL DIMENSIONS ARE IN FEET UNLESS OTHERWISE SHOWN

ORIGINAL SCALE IN INCHES FOR REDUCED PLANS 0 1 2 3

CU 08
EA 394701

DISREGARD PRINTS BEARING EARLIER REVISION DATES

REVISION DATES: 12-5-07 01-8-08 02-8-08 03-12-08 4-08-08 10-01-08 2-03-09

SHEET 1 OF 13

STRUCTURES DESIGN GENERAL PLAN SHEET (ENGLISH) (REV.07-24-06)

FILE => 541283agp01.dgn

USERNAME => trmikest DATE PLOTTED => 11-MAY-2009 TIME PLOTTED => 10:07

DIST	COUNTY	ROUTE	POST MILES TOTAL PROJECT	SHEET No	TOTAL SHEETS
08	SBd	18	66.6/67.2	79	90

Tierney L. Sanderson 10-10-08
REGISTERED CIVIL ENGINEER DATE

5-11-09
PLANS APPROVAL DATE

REGISTERED PROFESSIONAL ENGINEER Tierney L. Sanderson No. 48605 Exp. 6-30-2010 CIVIL STATE OF CALIFORNIA

The State of California or its officers or agents shall not be responsible for the accuracy or completeness of electronic copies of this plan sheet.

INDEX TO PLANS

Sheet No.	Title
1.	GENERAL PLAN
2.	INDEX TO PLANS
3.	FOUNDATION PLAN
4.	ABUTMENT DETAILS NO.1
5.	ABUTMENT DETAILS NO.2
6.	ABUTMENT DETAILS NO.3
7.	TYPICAL SECTION
8.	GIRDER LAYOUT
9.	GIRDER REINFORCEMENT
10.	STRUCTURE DRAINAGE DETAILS
11.	LOG OF TEST BORINGS 1 OF 3
12.	LOG OF TEST BORINGS 2 OF 3
13.	LOG OF TEST BORINGS 3 OF 3

STANDARD PLANS DATED MAY 2006

A10A	ACRONYMS AND ABBREVIATIONS (A-L)
A10B	ACRONYMS AND ABBREVIATIONS (M-Z)
A62C	LIMITS OF PAYMENT FOR EXCAVATION AND BACKFILL - BRIDGE
B0-1	BRIDGE DETAILS
B0-3	BRIDGE DETAILS
B0-5	BRIDGE DETAILS
B0-13	BRIDGE DETAILS
RSP B6-21	JOINT SEALS (MAXIMUM MOVEMENT RATING = 2")
B7-1	BOX GIRDER DETAILS
B7-10	UTILITY OPENING BOX GIRDER
B11-57	CONCRETE BARRIER TYPE 742

STANDARD PLAN SHEET NO.

DETAIL NO.

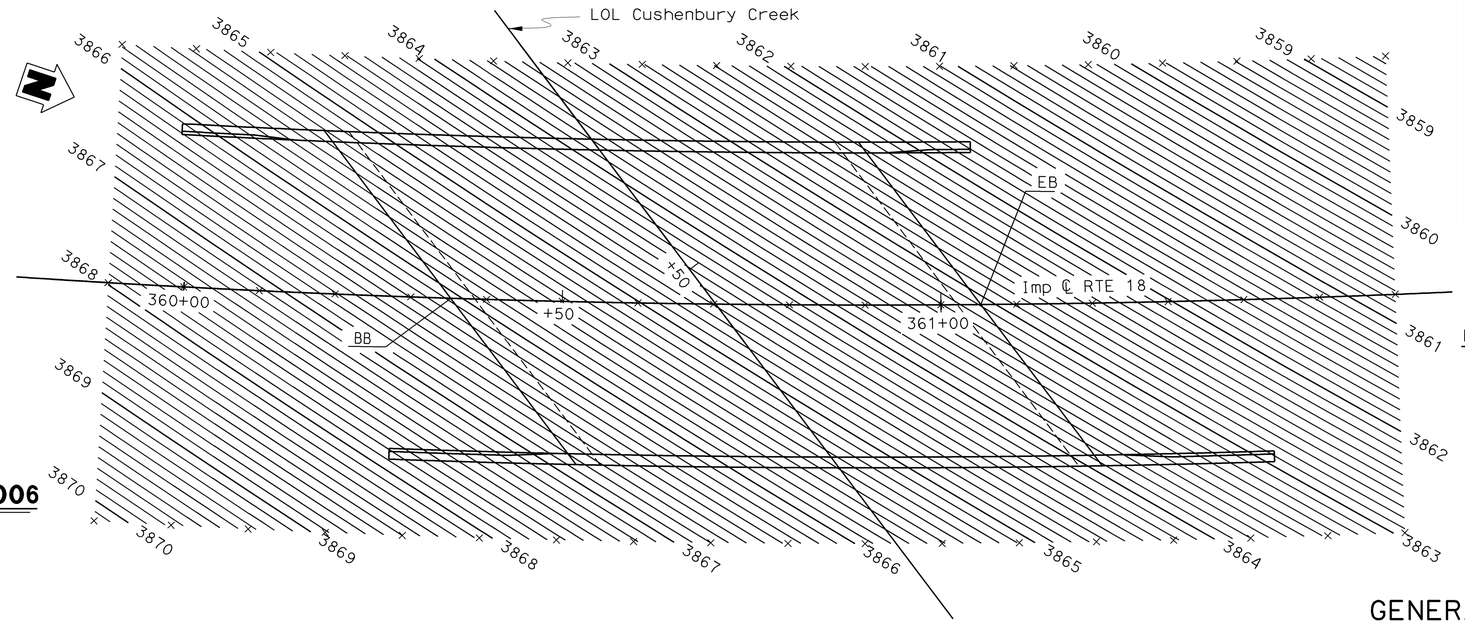

PLAN-DECK CONTOURS

1"=10'-0"

NOTES:

1. X - 10' intervals along station line.
2. Contour interval = 0.1'.
3. Contours do not include camber.

GENERAL NOTES
LOAD AND RESISTANCE FACTOR DESIGN

DESIGN: AASHTO LRFD SPECIFICATIONS, 3rd EDITION with 06 Interims and CALTRANS Amendments, V3.06.01

SEISMIC DESIGN: Caltrans Seismic Design Criteria (SDC) Version 1.4, July, 2006

DEAD LOAD: Includes 35 Psf for future wearing surface.

LIVE LOADING: HL93 W/"Low Boy" and permit design vehicle.

SEISMIC LOADING: CALTRANS SDC ARS Curve : Figure B.9 (Soil Profile Type D) Spectrum Peak Rock Acceleration = 0.7 g, modified for near-fault effect.

SPREAD FOOTING DATA TABLE

SUPPORT LOCATION	WORKING STRESS DESIGN (WSD)	LOAD AND RESISTANCE FACTOR DESIGN (LRFD)		
		SERVICE	STRENGTH	EXTREME EVENT
	ALLOWABLE GROSS BEARING CAPACITY (ksf)	PERMISSIBLE NET CONTACT STRESS (SETTLEMENT) (ksf)	FACTORED GROSS NOMINAL BEARING RESISTANCE $\varphi_b = X$ (ksf)	FACTORED GROSS NOMINAL BEARING RESISTANCE $\varphi_b = 1.00$ (ksf)
Abut 1	6.0	N/A	N/A	N/A
Abut 2	6.0	N/A	N/A	N/A

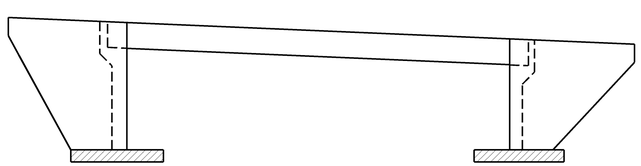

Structural Concrete, Bridge

Structural Concrete, Bridge Footing

CONCRETE STRENGTH AND TYPE LIMITS

No Scale

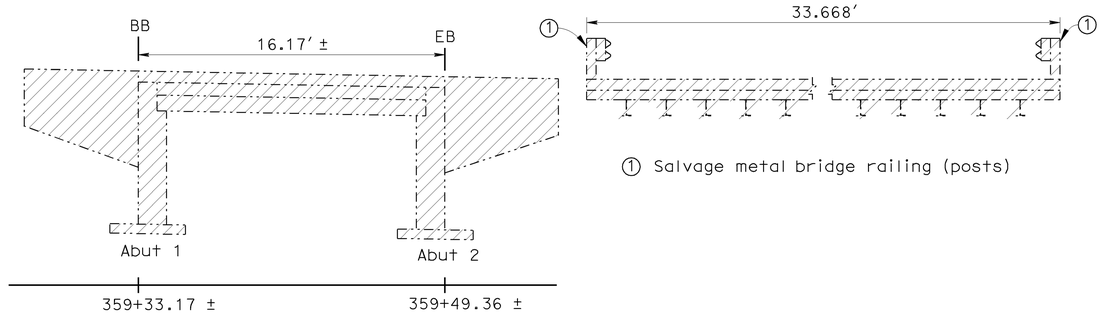

1 Salvage metal bridge railing (posts)

- Indicates Existing Bridge Removal

EXISTING BRIDGE NO. 54-0394 REMOVAL

No Scale

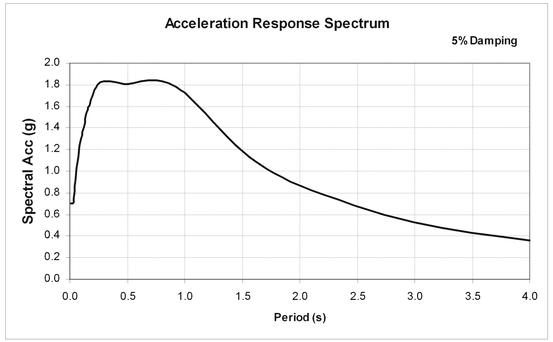

REINFORCED CONCRETE:

f_y = 60 ksi

f'_c = 3600 psi

n = 8

DESIGN	BY A.Christensen	CHECKED T.Sanderson	
DETAILS	BY D.Wooten	CHECKED T.Sanderson	
QUANTITIES	BY M.Vo	CHECKED M.Dang	

STATE OF CALIFORNIA
DEPARTMENT OF TRANSPORTATION

DIVISION OF ENGINEERING SERVICES
STRUCTURE DESIGN
DESIGN BRANCH 10

BRIDGE NO. 54-1283
POST MILE R66.80

CUSHENBURY CREEK BRIDGE (REPLACE)
INDEX TO PLANS

STRUCTURES DESIGN DETAIL SHEET (ENGLISH) (REV. 10/25/05)

ORIGINAL SCALE IN INCHES FOR REDUCED PLANS 0 1 2 3

CU 08
EA 394701

DISREGARD PRINTS BEARING EARLIER REVISION DATES

REVISION DATES 10-01-08

SHEET 2 OF 13

FILE => 541283aitp02.dgn

USERNAME => trmikest DATE PLOTTED => 11-MAY-2009 TIME PLOTTED => 10:07

DIST	COUNTY	ROUTE	POST MILES TOTAL PROJECT	SHEET No	TOTAL SHEETS
08	SBd	18	66.6/67.2	80	90

Tierney L. Sanderson 10-10-08
REGISTERED CIVIL ENGINEER DATE

5-11-09
PLANS APPROVAL DATE

REGISTERED PROFESSIONAL ENGINEER — Tierney L. Sanderson No. 48605 Exp. 6-30-2010 CIVIL — STATE OF CALIFORNIA

The State of California or its officers or agents shall not be responsible for the accuracy or completeness of electronic copies of this plan sheet.

HYDROLOGIC SUMMARY

DRAINAGE AREA: 13.2 SQUARE MILES

	DESIGN FLOOD	BASE FLOOD	OVERTOPPING FLOOD
FREQUENCY (YEARS)	50	100	—
DISCHARGE (CUBIC FEET PER SECOND)	4000	5000	22,000
WATER SURFACE ELEV. AT BRIDGE	3856	3857	3864

FLOOD PLAIN DATA ARE BASED UPON INFORMATION AVAILABLE WHEN THE PLANS WERE PREPARED AND ARE SHOWN TO MEET FEDERAL REQUIREMENTS. THE ACCURACY OF SAID INFORMATION IS NOT WARRANTED BY THE STATE AND INTERESTED OR AFFECTED PARTIES SHOULD MAKE THEIR OWN INVESTIGATIONS.

CURVE DATA

No.	R	Δ	T	L
1	1706.03	48°54′25"	775.81	1456.25
2	1000.001	48°54′03"	454.682	853.482
3	50.000	36°53′07"	16.674	32.188
4	30.000	15°24′58"	4.060	8.072

(AA) STA. 360+97.32 EXIST ℄ RTE 18= STA. 2+94.36 CUSHENBURY CREEK LOL

(BB) STA. 360+70.27 PROPOSED ℄ RTE 18= STA. 2+55.73 CUSHENBURY CREEK LOL

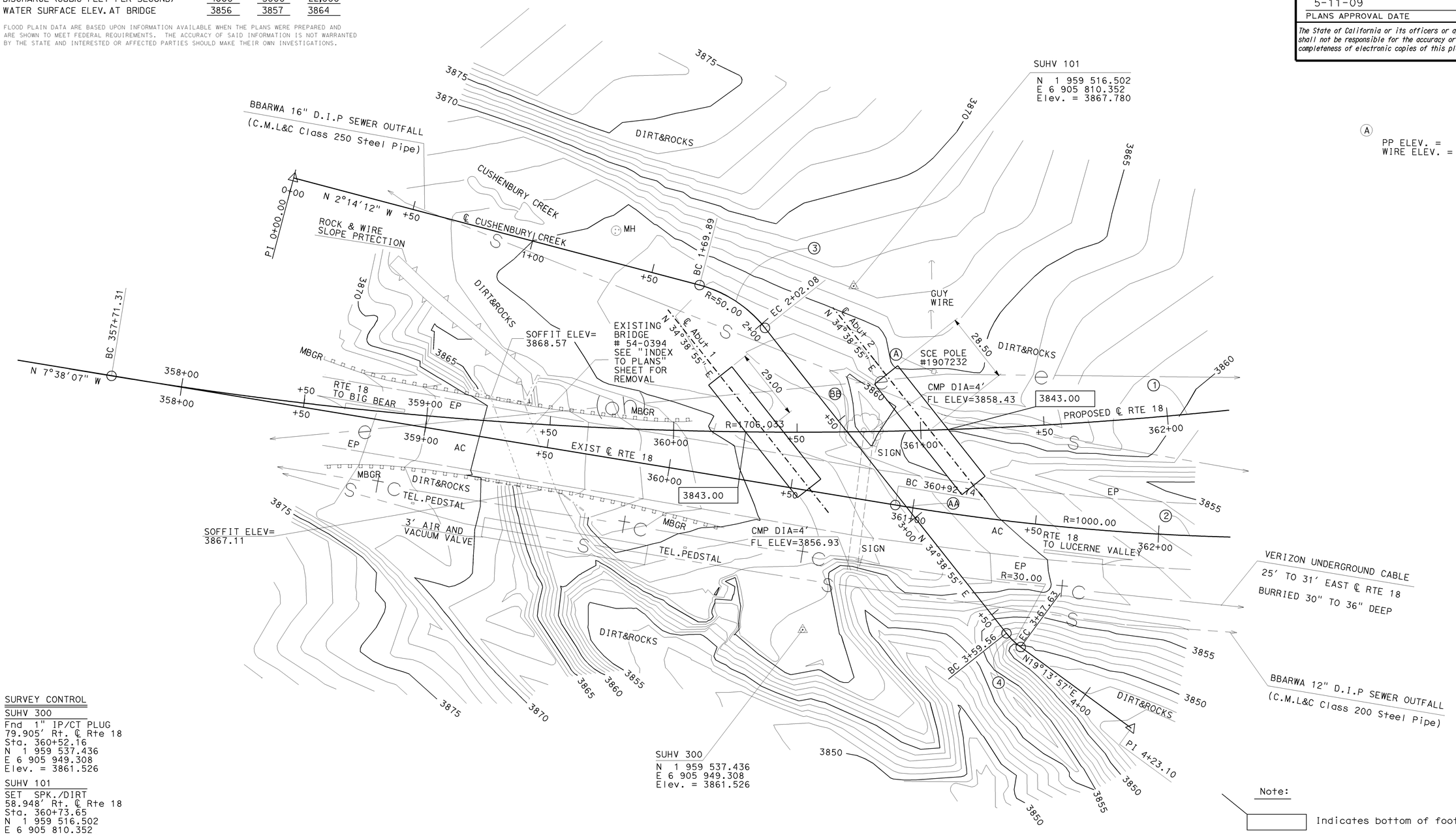

SURVEY CONTROL

SUHV 300
Fnd 1" IP/CT PLUG
79.905′ Rt. ℄ Rte 18
Sta. 360+52.16
N 1 959 537.436
E 6 905 949.308
Elev. = 3861.526

SUHV 101
SET SPK./DIRT
58.948′ Rt. ℄ Rte 18
Sta. 360+73.65
N 1 959 516.502
E 6 905 810.352
Elev. = 3867.780

Note:
Indicates bottom of footing elevation

PRELIMINARY INVESTIGATION SECTION

SCALE 1"=20′	VERT.DATUM NGVD 29	PHOTOGRAMMETRY AS OF:			
	HORZ.DATUM NAD 83	SURVEYED	BY C. Stewart 08/07	CHECKED	BY L. Manabo 09/07
	ALIGNMENT TIES DIST TRAV SHEETS	DRAFTED	BY M. Sadaghiani 10/07	CHECKED	BY L. Manabo 10/07

DESIGN	BY A.Christensen	CHECKED	T.Sanderson
DETAILS	BY D.Wooten	CHECKED	T.Sanderson
QUANTITIES	BY M.Vo	CHECKED	M.Dang

STATE OF CALIFORNIA
DEPARTMENT OF TRANSPORTATION

DIVISION OF ENGINEERING SERVICES
STRUCTURE DESIGN
DESIGN BRANCH

BRIDGE NO. 54-1283
POST MILE R66.80

CUSHENBURY CREEK BRIDGE (REPLACE)
FOUNDATION PLAN

STRUCTURES FOUNDATION PLAN SHEET (ENGLISH) (REV. 10/25/05)

ORIGINAL SCALE IN INCHES FOR REDUCED PLANS 0 1 2 3

CU 08=185.05
EA 394701

DISREGARD PRINTS BEARING EARLIER REVISION DATES 10/10/07 10/10/07

REVISION DATES

SHEET 3 OF 13

FILE => 541283efp03.dgn

USERNAME => trmikes1 DATE PLOTTED => 11-MAY-2009 TIME PLOTTED => 10:12

DIST	COUNTY	ROUTE	POST MILES TOTAL PROJECT	SHEET No	TOTAL SHEETS
08	SBd	18	66.6/67.2	81	90

Tierney L. Sanderson 10-10-08
REGISTERED CIVIL ENGINEER DATE

5-11-09
PLANS APPROVAL DATE

REGISTERED PROFESSIONAL ENGINEER Tierney L. Sanderson No. 48605 Exp. 6-30-2010 CIVIL STATE OF CALIFORNIA

The State of California or its officers or agents shall not be responsible for the accuracy or completeness of electronic copies of this plan sheet.

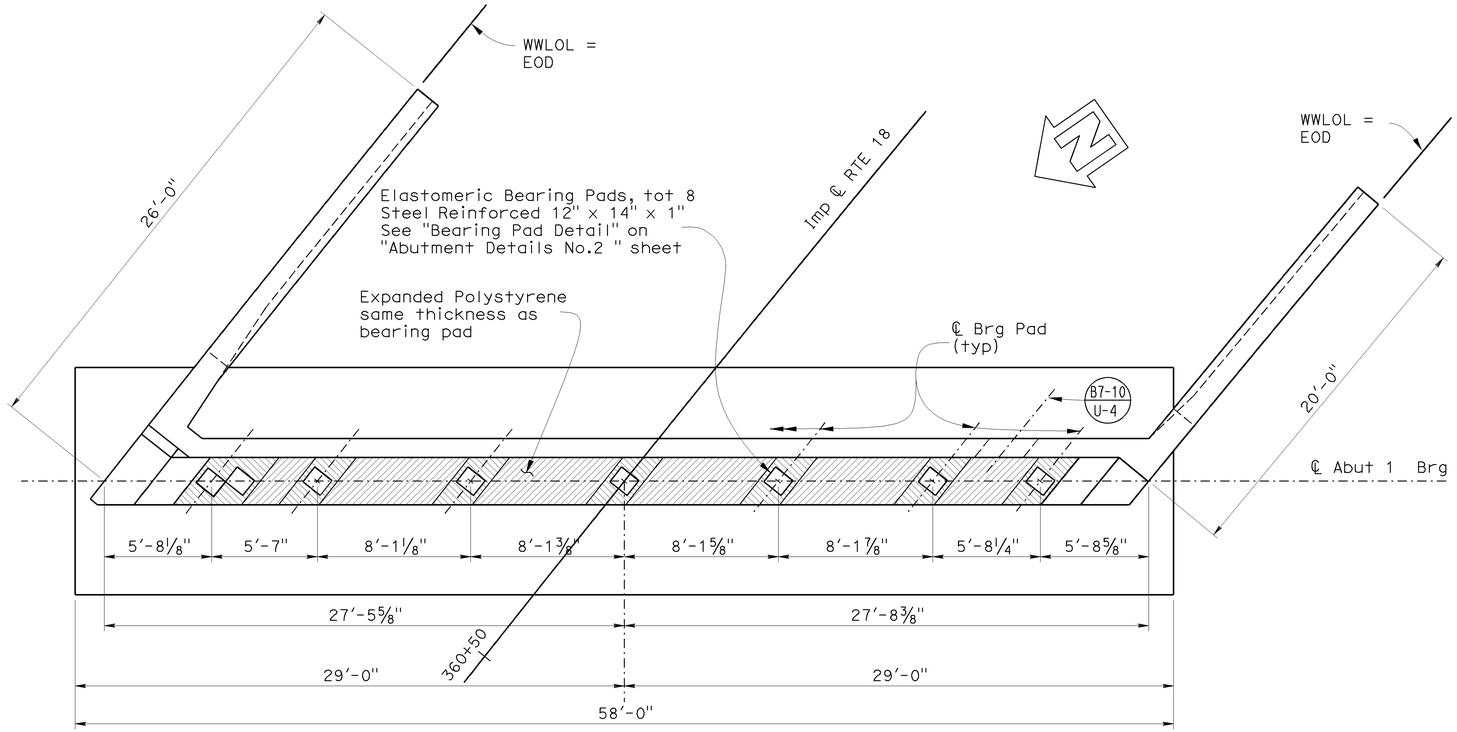

PLAN - ABUTMENT 1

1/4"=1'-0"

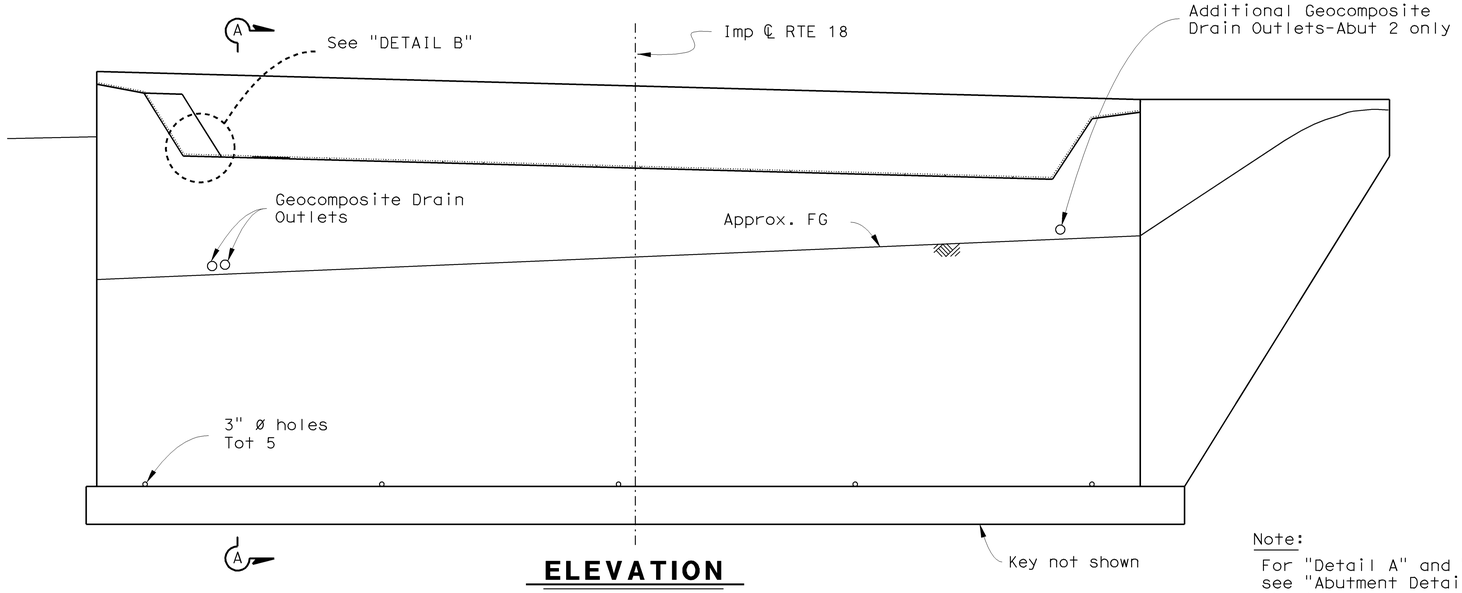

ELEVATION

ABUTMENT NO.1 SHOWN, ABUTMENT 2 SIMILAR

1/4"=1'-0"

Note:
For "Detail A" and "Detail B", see "Abutment Details No.2" sheet

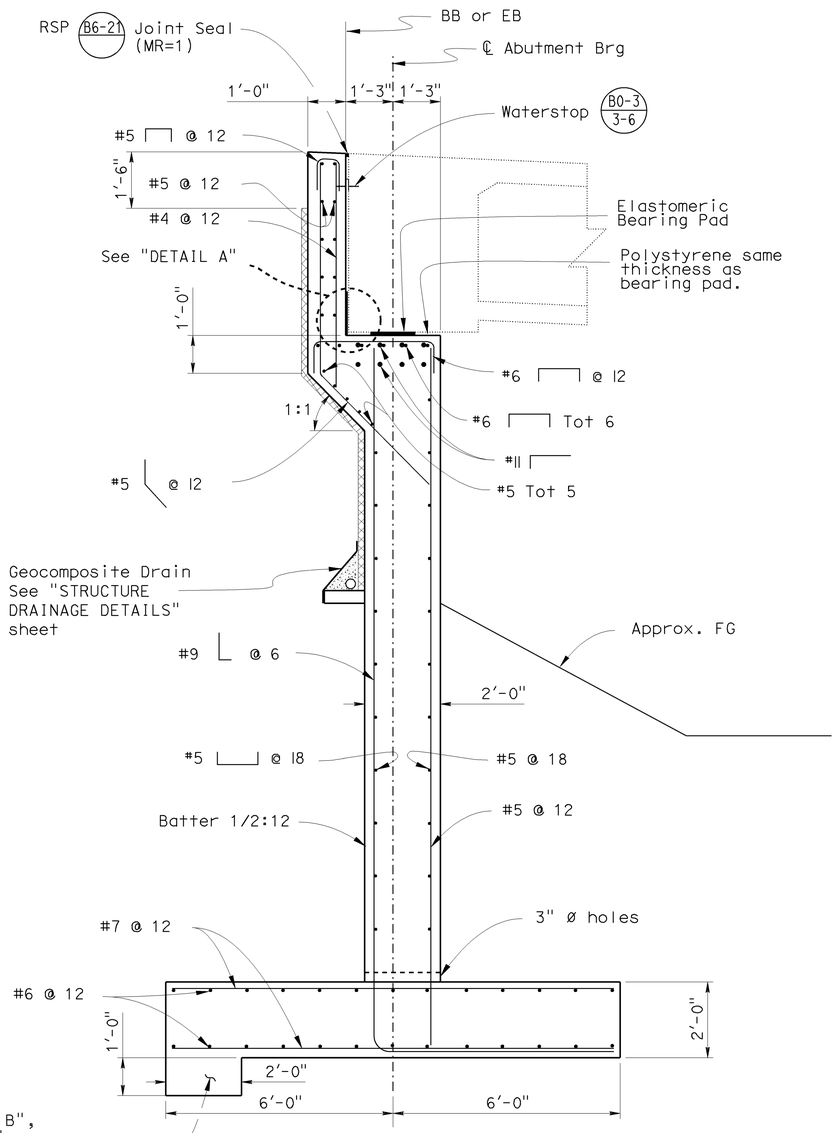

SECTION A-A

1/2"=1'-0"

DESIGN	BY A.Christensen	CHECKED T.Sanderson	
DETAILS	BY D.Wooten	CHECKED T.Sanderson	
QUANTITIES	BY M.Vo	CHECKED M.Dang	

STATE OF CALIFORNIA
DEPARTMENT OF TRANSPORTATION

DIVISION OF ENGINEERING SERVICES
STRUCTURE DESIGN
DESIGN BRANCH 10

BRIDGE NO. 54-1283
POST MILE R66.80

CUSHENBURY CREEK BRIDGE (REPLACE)
ABUTMENT DETAILS NO.1

STRUCTURES DESIGN DETAIL SHEET (ENGLISH) (REV. 10/25/05)

ORIGINAL SCALE IN INCHES FOR REDUCED PLANS 0 1 2 3

CU 08
EA 394701

DISREGARD PRINTS BEARING EARLIER REVISION DATES

REVISION DATES: 10-08-08 2-03-09

SHEET 4 OF 13

FILE => 541283fadt_104.dgn

USERNAME => trmikest DATE PLOTTED => 11-MAY-2009 TIME PLOTTED => 10:07

DIST	COUNTY	ROUTE	POST MILES TOTAL PROJECT	SHEET No	TOTAL SHEETS
08	SBd	18	66.6/67.2	82	90

Tierney L. Sanderson 10-10-08
REGISTERED CIVIL ENGINEER DATE

5-11-09
PLANS APPROVAL DATE

REGISTERED PROFESSIONAL ENGINEER Tierney L. Sanderson No. 48605 Exp. 6-30-2010 CIVIL STATE OF CALIFORNIA

The State of California or its officers or agents shall not be responsible for the accuracy or completeness of electronic copies of this plan sheet.

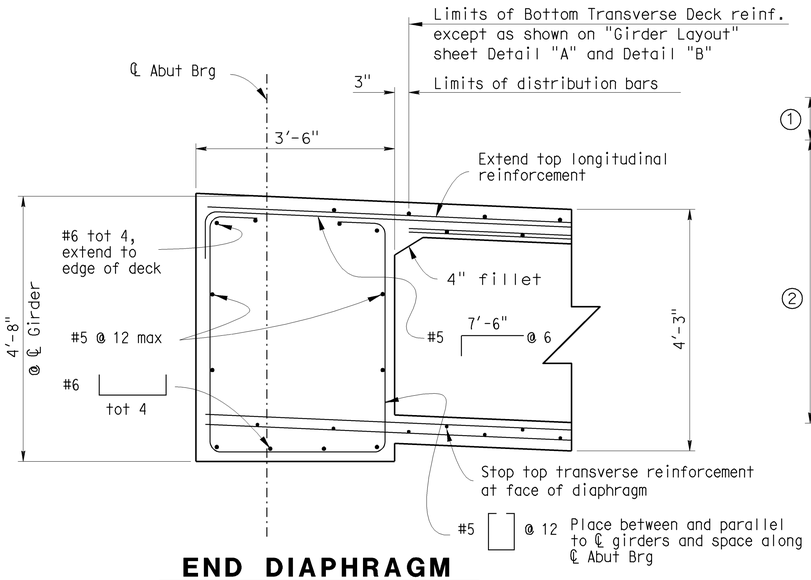

END DIAPHRAGM

3/4"=1'-0"

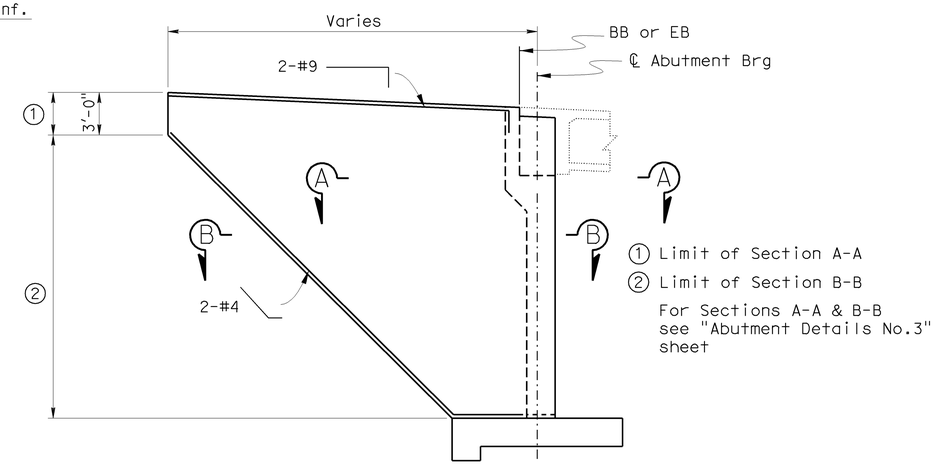

ABUTMENT WINGWALL ELEVATION

B0-1

3/16"=1'-0"

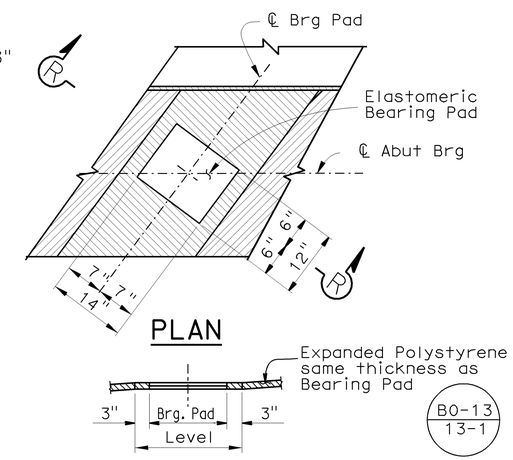

PLAN

SECTION R-R

BEARING PAD DETAIL

No Scale

Details typical at all bearing pads

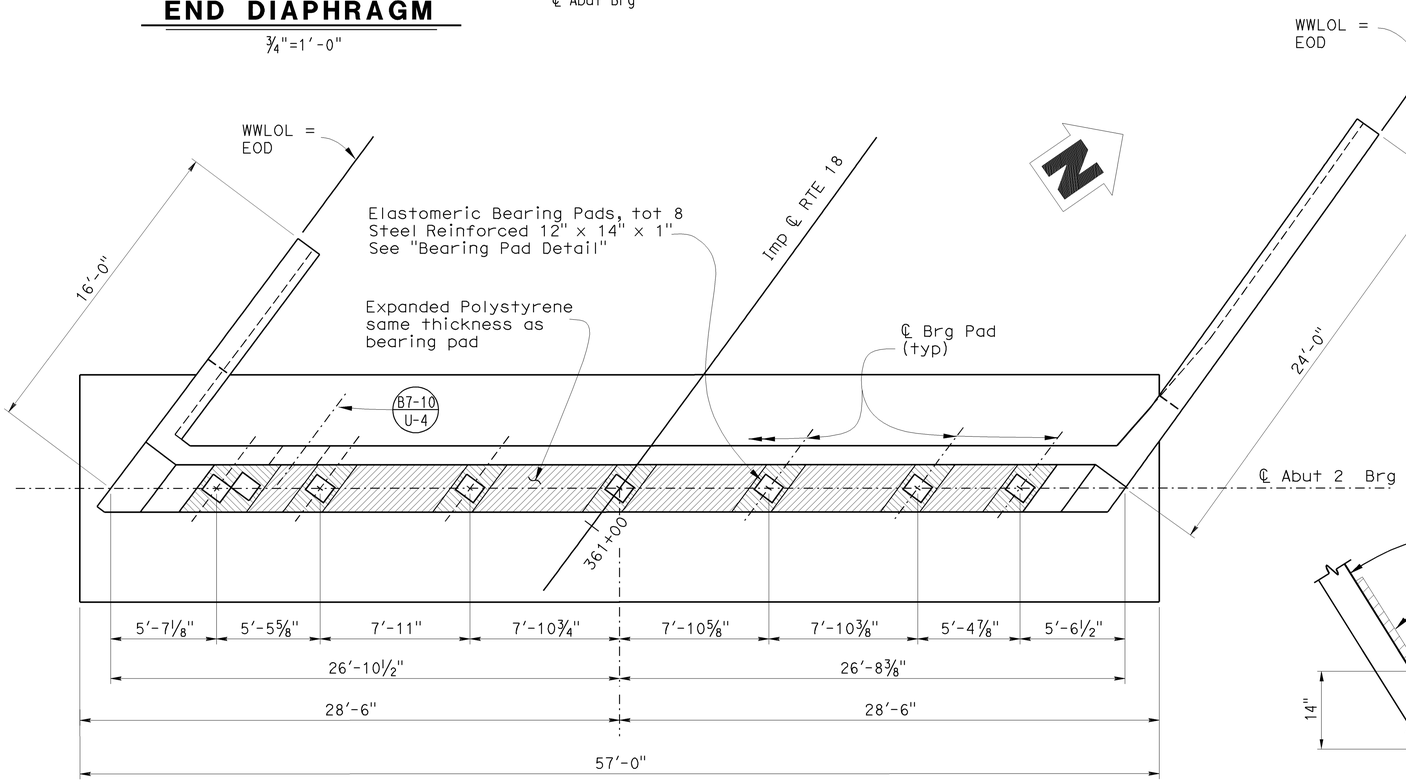

Note:

For Abutment Details not shown, see "Abutment Details No.1" sheet

PLAN - ABUTMENT 2

1/4"=1'-0"

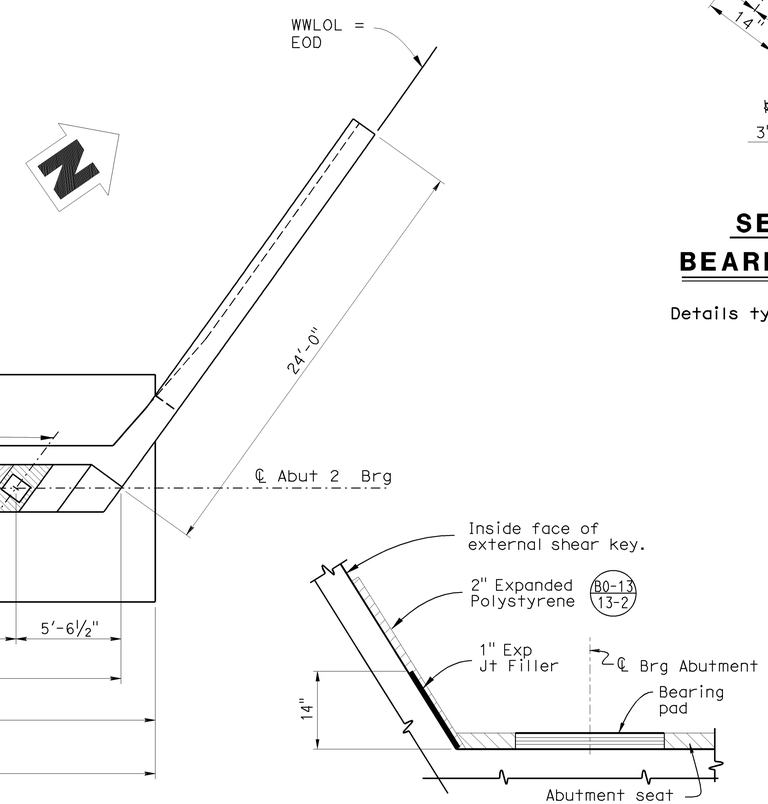

DETAIL "B"

No Scale

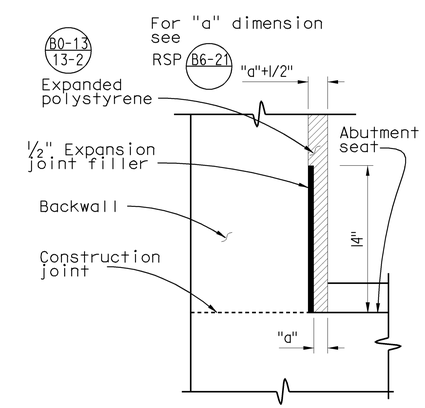

DETAIL "A"

No Scale

DESIGN	BY A.Christensen	CHECKED T.Sanderson	
DETAILS	BY D.Wooten	CHECKED T.Sanderson	
QUANTITIES	BY M.Vo	CHECKED M.Dang	

STATE OF CALIFORNIA
DEPARTMENT OF TRANSPORTATION

DIVISION OF ENGINEERING SERVICES
STRUCTURE DESIGN
DESIGN BRANCH 10

BRIDGE NO. 54-1283
POST MILE R66.80

CUSHENBURY CREEK BRIDGE (REPLACE)

ABUTMENT DETAILS NO.2

STRUCTURES DESIGN DETAIL SHEET (ENGLISH) (REV. 10/25/05)

ORIGINAL SCALE IN INCHES FOR REDUCED PLANS 0 1 2 3

CU 08
EA 394701

DISREGARD PRINTS BEARING EARLIER REVISION DATES

REVISION DATES: 10-09-08 2-03-09

SHEET 5 OF 13

FILE => 541283fadt_205.dgn

USERNAME => trmikest DATE PLOTTED => 11-MAY-2009 TIME PLOTTED => 10:07

DIST	COUNTY	ROUTE	POST MILES TOTAL PROJECT	SHEET No	TOTAL SHEETS
08	SBd	18	66.6/67.2	83	90

Tierney L. Sanderson 10-10-08
REGISTERED CIVIL ENGINEER DATE

5-11-09
PLANS APPROVAL DATE

REGISTERED PROFESSIONAL ENGINEER Tierney L. Sanderson No. 48605 Exp. 6-30-2010 CIVIL STATE OF CALIFORNIA

The State of California or its officers or agents shall not be responsible for the accuracy or completeness of electronic copies of this plan sheet.

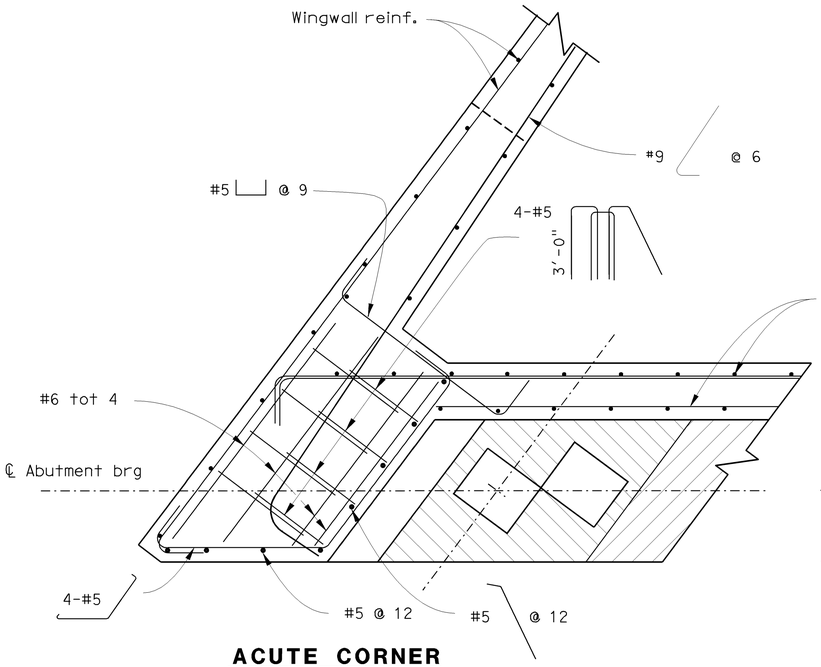

ACUTE CORNER

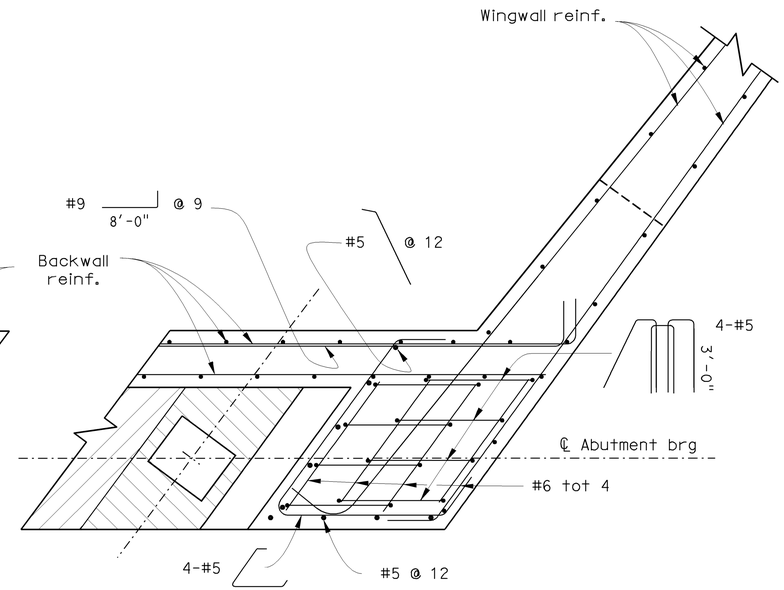

OBTUSE CORNER

PART PLANS C-C EXTERNAL SHEAR KEYS

¾" = 1'-0"

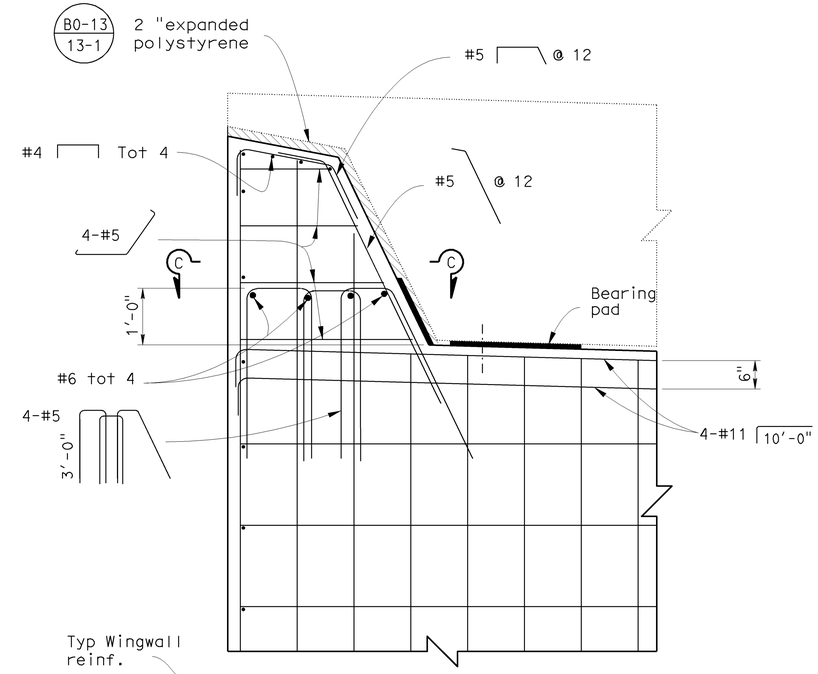

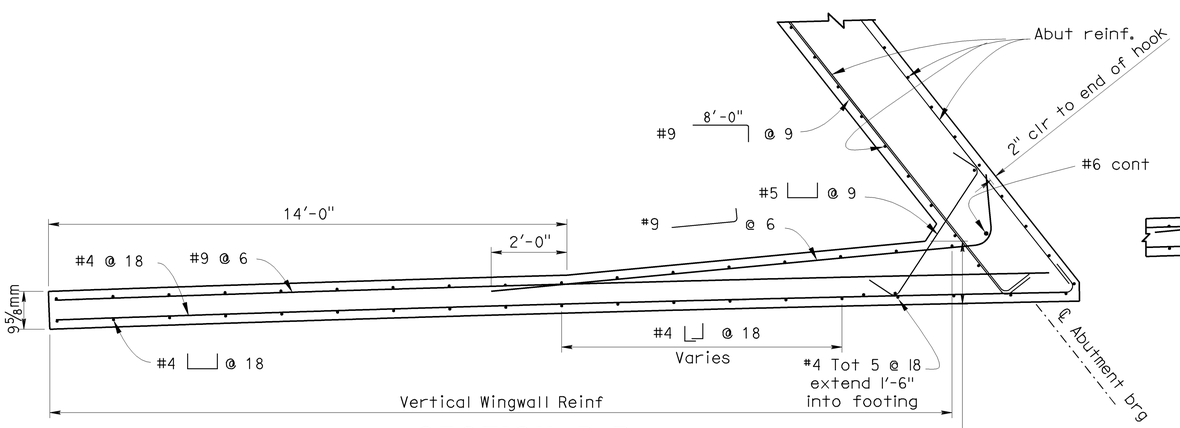

SECTION B-B

½" = 1'-0"

ABUTMENT 1 SHOWN, ABUTMENT 2 SIMILAR

1'-10" Abut 1 Right & Abut 2 Right.
1'-8" Abut 1 Left, 12" Abut 2 Left
measured at top of footing

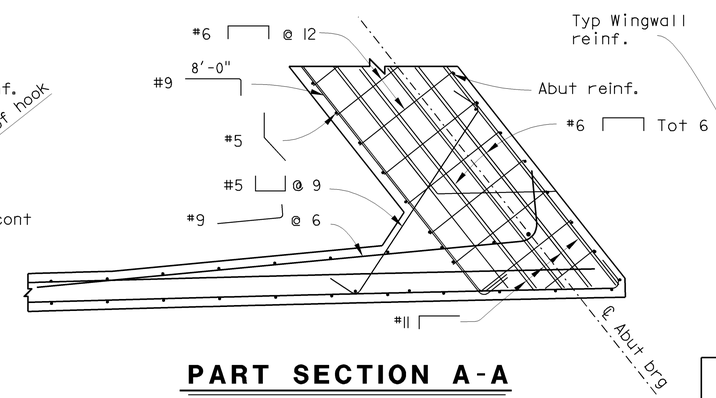

PART SECTION A-A

½" = 1'-0"

FOR DETAILS NOT SHOWN SEE SECTION B-B

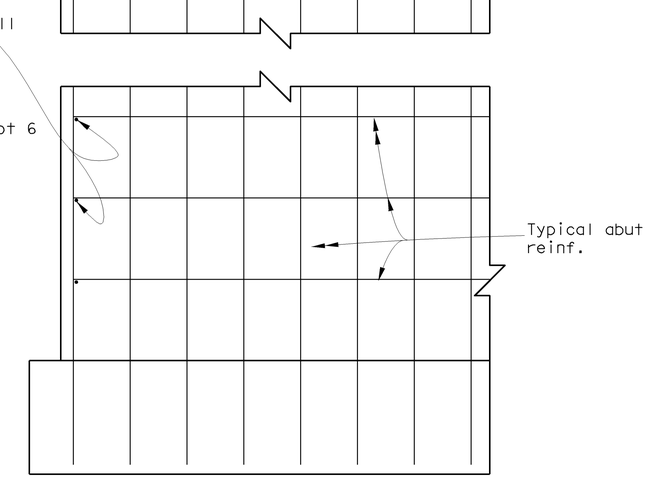

PART TYPICAL SECTION

¾"=1'-0"

DESIGN	BY A.Christensen	CHECKED T.Sanderson	
DETAILS	BY D.Wooten	CHECKED T.Sanderson	
QUANTITIES	BY M.Vo	CHECKED M.Dang	

STATE OF CALIFORNIA
DEPARTMENT OF TRANSPORTATION

DIVISION OF ENGINEERING SERVICES
STRUCTURE DESIGN
DESIGN BRANCH 10

BRIDGE NO. 54-1283
POST MILE R66.80

CUSHENBURY CREEK BRIDGE (REPLACE)
ABUTMENT DETAILS NO.3

STRUCTURES DESIGN DETAIL SHEET (ENGLISH) (REV. 10/25/05)

ORIGINAL SCALE IN INCHES FOR REDUCED PLANS 0 1 2 3

CU 08
EA 394701

DISREGARD PRINTS BEARING EARLIER REVISION DATES

REVISION DATES 10-06-08 2-03-09

SHEET 6 OF 13

FILE => 541283fadt_306.dgn

USERNAME => trmikes1 DATE PLOTTED => 11-MAY-2009 TIME PLOTTED => 10:07

DIST	COUNTY	ROUTE	POST MILES TOTAL PROJECT	SHEET No	TOTAL SHEETS
08	SBd	18	66.6/67.2	84	90

Tierney L. Sanderson 10-10-08
REGISTERED CIVIL ENGINEER DATE

5-11-09
PLANS APPROVAL DATE

REGISTERED PROFESSIONAL ENGINEER Tierney L. Sanderson No. 48605 Exp. 6-30-2010 CIVIL STATE OF CALIFORNIA

The State of California or its officers or agents shall not be responsible for the accuracy or completeness of electronic copies of this plan sheet.

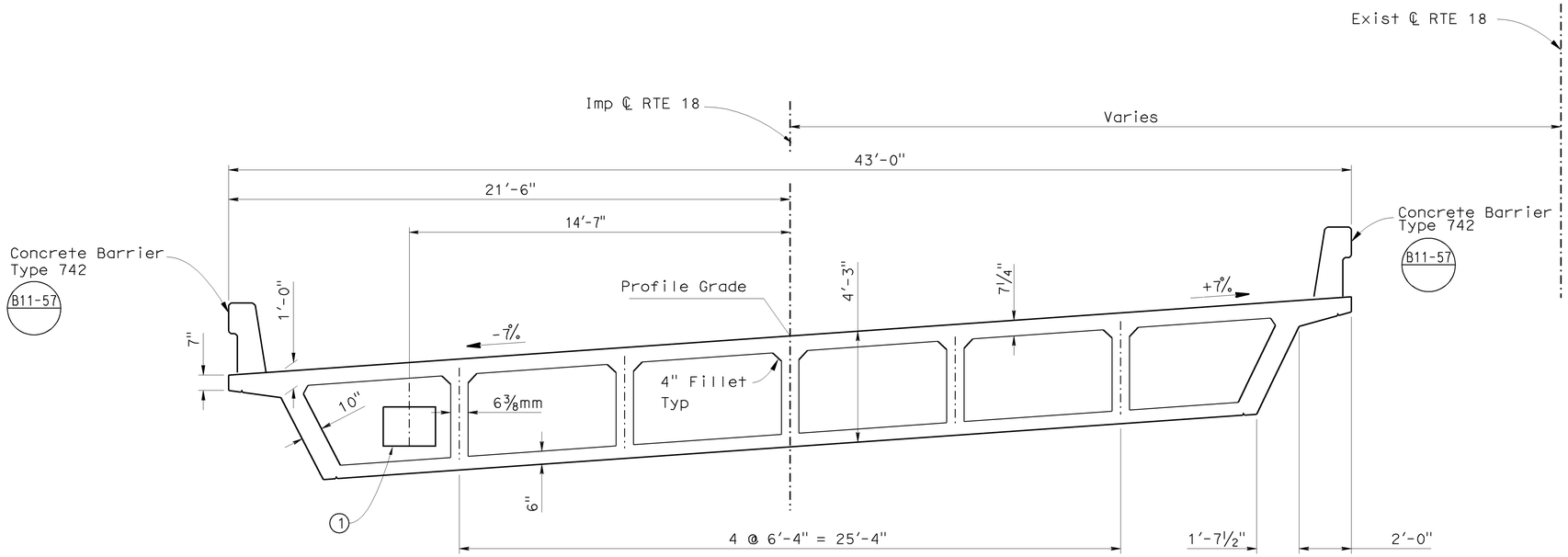

TYPICAL SECTION (B7-10)

3/8"= 1'-0"

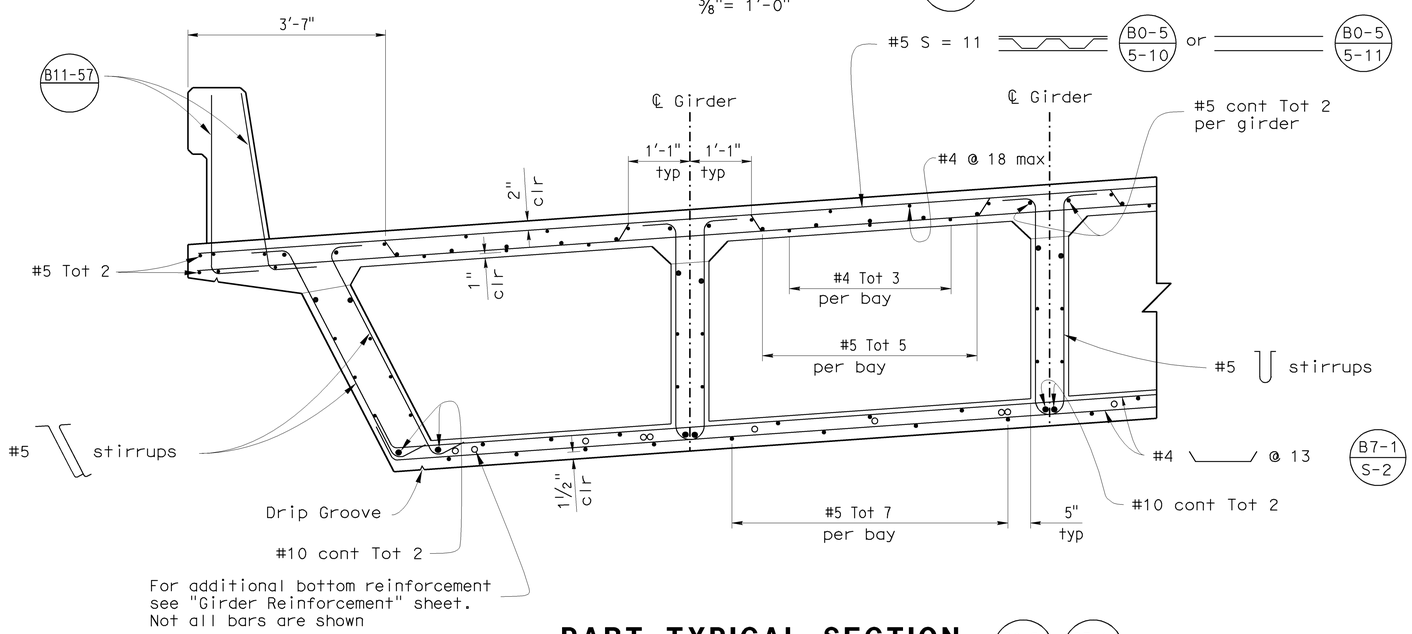

PART TYPICAL SECTION (B0-5) (B7-1)

3/4"= 1'-0"

Notes:

1. Future utility opening

DESIGN	BY A.Christensen	CHECKED T.Sanderson	
DETAILS	BY D.Wooten	CHECKED T.Sanderson	
QUANTITIES	BY M.Vo	CHECKED M.Dang	

STATE OF CALIFORNIA
DEPARTMENT OF TRANSPORTATION

DIVISION OF ENGINEERING SERVICES
STRUCTURE DESIGN
DESIGN BRANCH 10

BRIDGE NO. 54-1283
POST MILE R66.80

CUSHENBURY CREEK BRIDGE (REPLACE)
TYPICAL SECTION

STRUCTURES DESIGN DETAIL SHEET (ENGLISH) (REV. 10/25/05)

ORIGINAL SCALE IN INCHES FOR REDUCED PLANS 0 1 2 3

CU 08
EA 394701

DISREGARD PRINTS BEARING EARLIER REVISION DATES

REVISION DATES: 10-08-08 2-03-09

SHEET 7 OF 13

FILE => 541283kts07.dgn

USERNAME => trmikest DATE PLOTTED => 11-MAY-2009 TIME PLOTTED => 10:07

DIST	COUNTY	ROUTE	POST MILES TOTAL PROJECT	SHEET No	TOTAL SHEETS
08	SBd	18	66.6/67.2	85	90

Tierney L. Sanderson 10-10-08
REGISTERED CIVIL ENGINEER DATE

5-11-09
PLANS APPROVAL DATE

REGISTERED PROFESSIONAL ENGINEER Tierney L. Sanderson No. 48605 Exp. 6-30-2010 CIVIL STATE OF CALIFORNIA

The State of California or its officers or agents shall not be responsible for the accuracy or completeness of electronic copies of this plan sheet.

Note:

Bottom Slab transverse reinforcement to be placed similarly to deck transverse reinforcement. See "End Diaphragm" detail on "Abutment Details No.2" sheet for additional information.

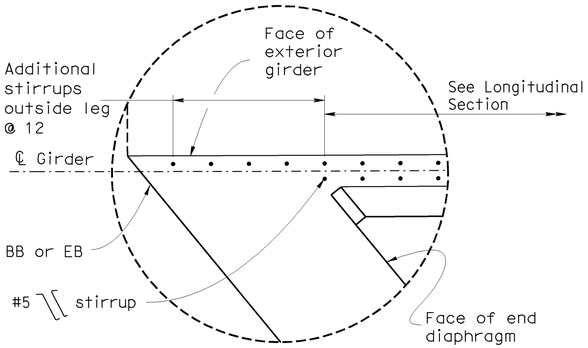

DETAIL "D"

½"=1'-0"

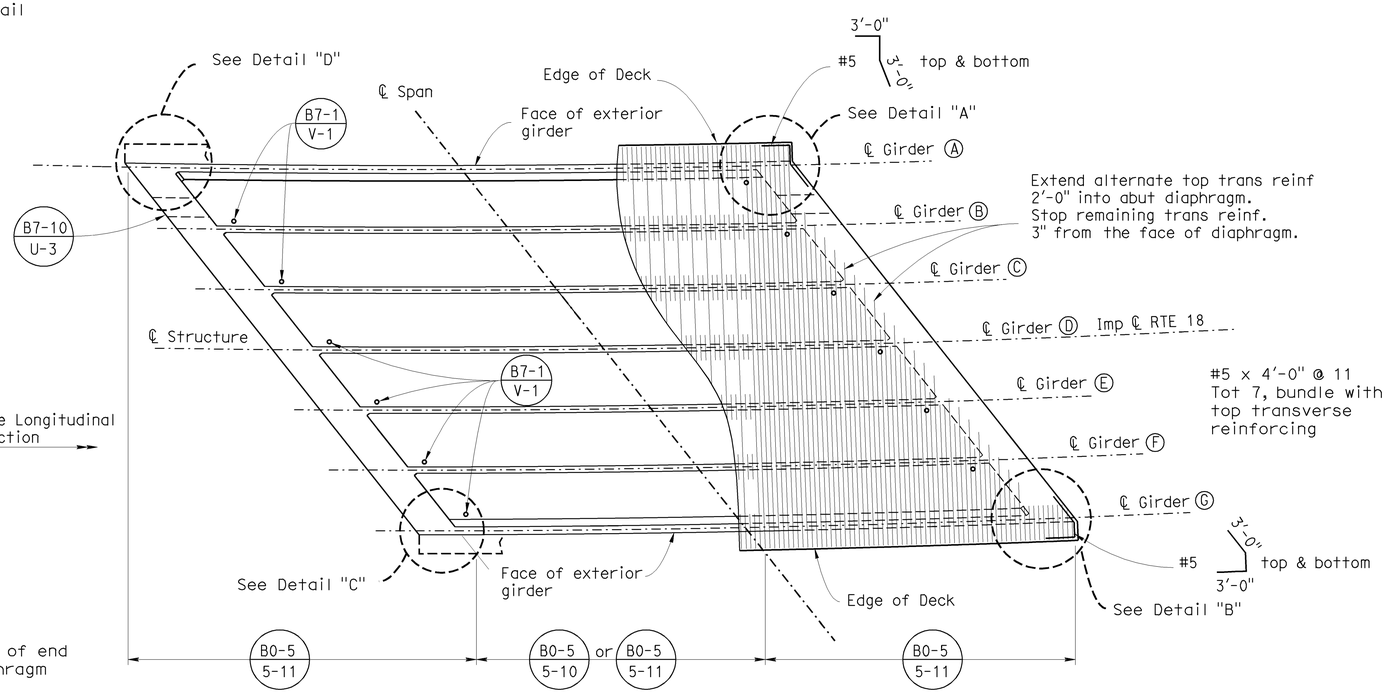

PLAN

⅛"=1'-0"

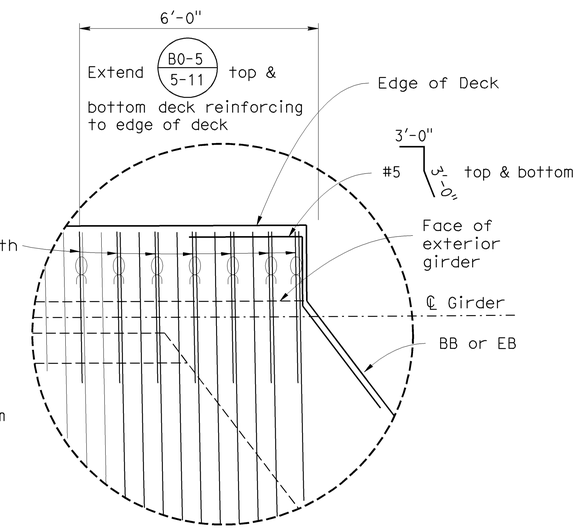

DETAIL "A"

½"=1'-0"

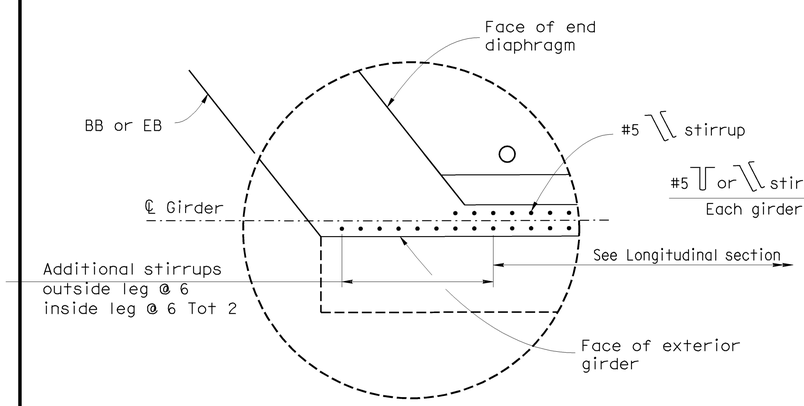

DETAIL "C"

½"=1'-0"

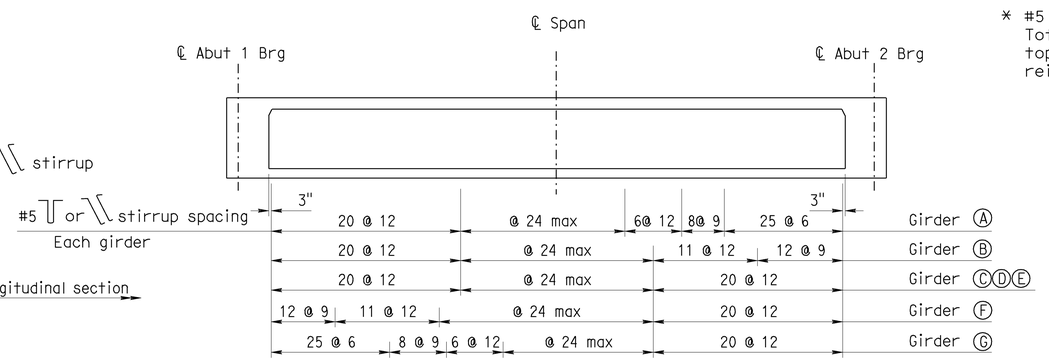

LONGITUDINAL SECTION

B7-1 / S-3

Horiz. = ⅛"=1'-0"
Vert. = ¼"=1'-0"

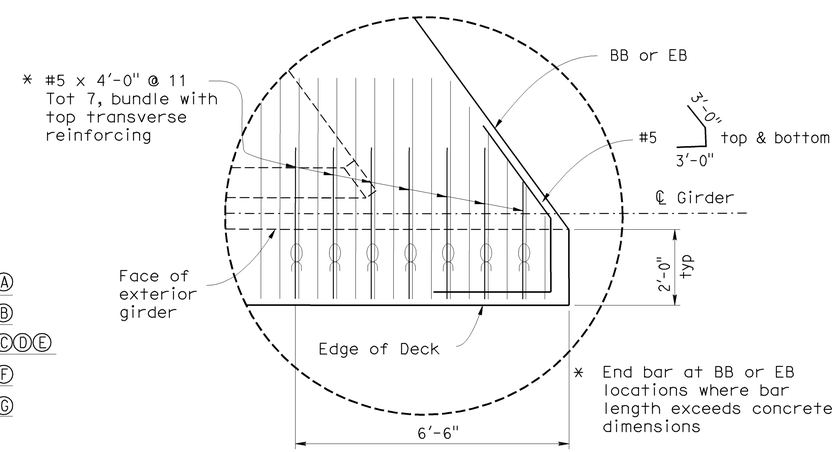

DETAIL "B"

½"=1'-0"

DESIGN	BY A.Christensen	CHECKED T.Sanderson	
DETAILS	BY D.Wooten	CHECKED T.Sanderson	
QUANTITIES	BY M.Vo	CHECKED M.Dang	

STATE OF CALIFORNIA
DEPARTMENT OF TRANSPORTATION

DIVISION OF ENGINEERING SERVICES
STRUCTURE DESIGN
DESIGN BRANCH 10

BRIDGE NO. 54-1283
POST MILE R66.80

CUSHENBURY CREEK BRIDGE (REPLACE)
GIRDER LAYOUT

STRUCTURES DESIGN DETAIL SHEET (ENGLISH) (REV. 10/25/05)

ORIGINAL SCALE IN INCHES FOR REDUCED PLANS 0 1 2 3

CU 08
EA 394701

DISREGARD PRINTS BEARING EARLIER REVISION DATES

REVISION DATES: 10-06-08 2-03-09

SHEET 8 OF 13

FILE => 5412831gl08.dgn

USERNAME => trmikest DATE PLOTTED => 11-MAY-2009 TIME PLOTTED => 11:47

DIST	COUNTY	ROUTE	POST MILES TOTAL PROJECT	SHEET No	TOTAL SHEETS
08	SBd	18	66.6/67.2	86	90

Tierney L. Sanderson 10-10-08
REGISTERED CIVIL ENGINEER DATE

5-11-09
PLANS APPROVAL DATE

REGISTERED PROFESSIONAL ENGINEER
Tierney L. Sanderson
No. 48605
Exp. 6-30-2010
CIVIL
STATE OF CALIFORNIA

The State of California or its officers or agents shall not be responsible for the accuracy or completeness of electronic copies of this plan sheet.

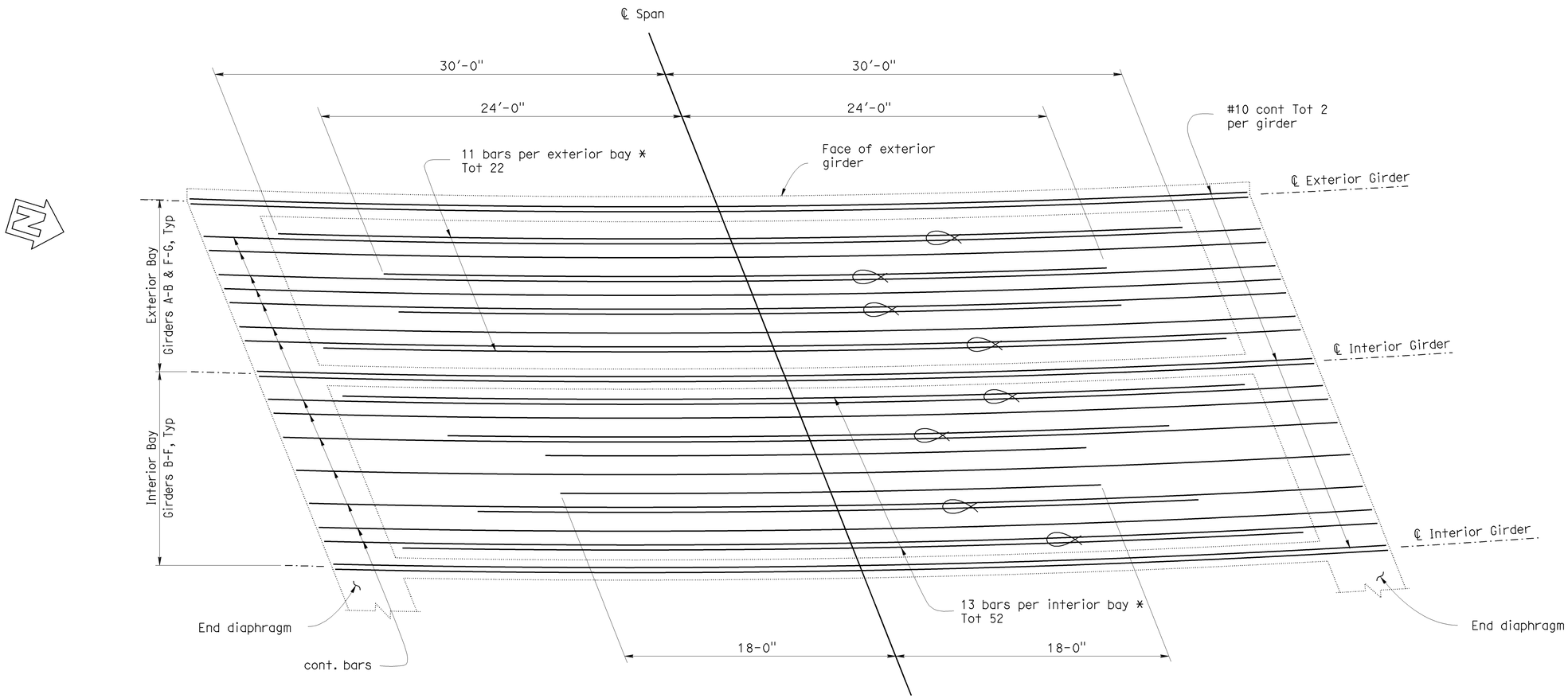

All bottom reinforcement bars are # 10

* Reinforcement placed in addition to that shown on "Typical Section" sheet

BOTTOM REINFORCEMENT PLAN

Horiz.: 1/4"=1'-0"
Vert.: 1/2"=1'-0"

	BY	CHECKED
DESIGN	A.Christensen	T.Sanderson
DETAILS	D.Wooten	T.Sanderson
QUANTITIES	M.Vo	M.Dang

STATE OF CALIFORNIA
DEPARTMENT OF TRANSPORTATION

DIVISION OF ENGINEERING SERVICES
STRUCTURE DESIGN
DESIGN BRANCH 10

BRIDGE NO. 54-1283
POST MILE R66.80

CUSHENBURY CREEK BRIDGE (REPLACE)
GIRDER REINFORCEMENT

STRUCTURES DESIGN DETAIL SHEET (ENGLISH) (REV. 10/25/05)

ORIGINAL SCALE IN INCHES FOR REDUCED PLANS 0 1 2 3

CU 08
EA 394701

DISREGARD PRINTS BEARING EARLIER REVISION DATES

REVISION DATES: 10-01-08

SHEET 9 OF 13

FILE => 541283ogr09.dgn

USERNAME => trmikest DATE PLOTTED => 11-MAY-2009 TIME PLOTTED => 11:49

DIST	COUNTY	ROUTE	POST MILES TOTAL PROJECT	SHEET No	TOTAL SHEETS
08	SBd	18	66.6/67.2	87	90

Tierney L. Sanderson 10-10-08
REGISTERED CIVIL ENGINEER DATE

5-11-09
PLANS APPROVAL DATE

REGISTERED PROFESSIONAL ENGINEER Tierney L. Sanderson No. 48605 Exp. 6-30-2010 CIVIL STATE OF CALIFORNIA

The State of California or its officers or agents shall not be responsible for the accuracy or completeness of electronic copies of this plan sheet.

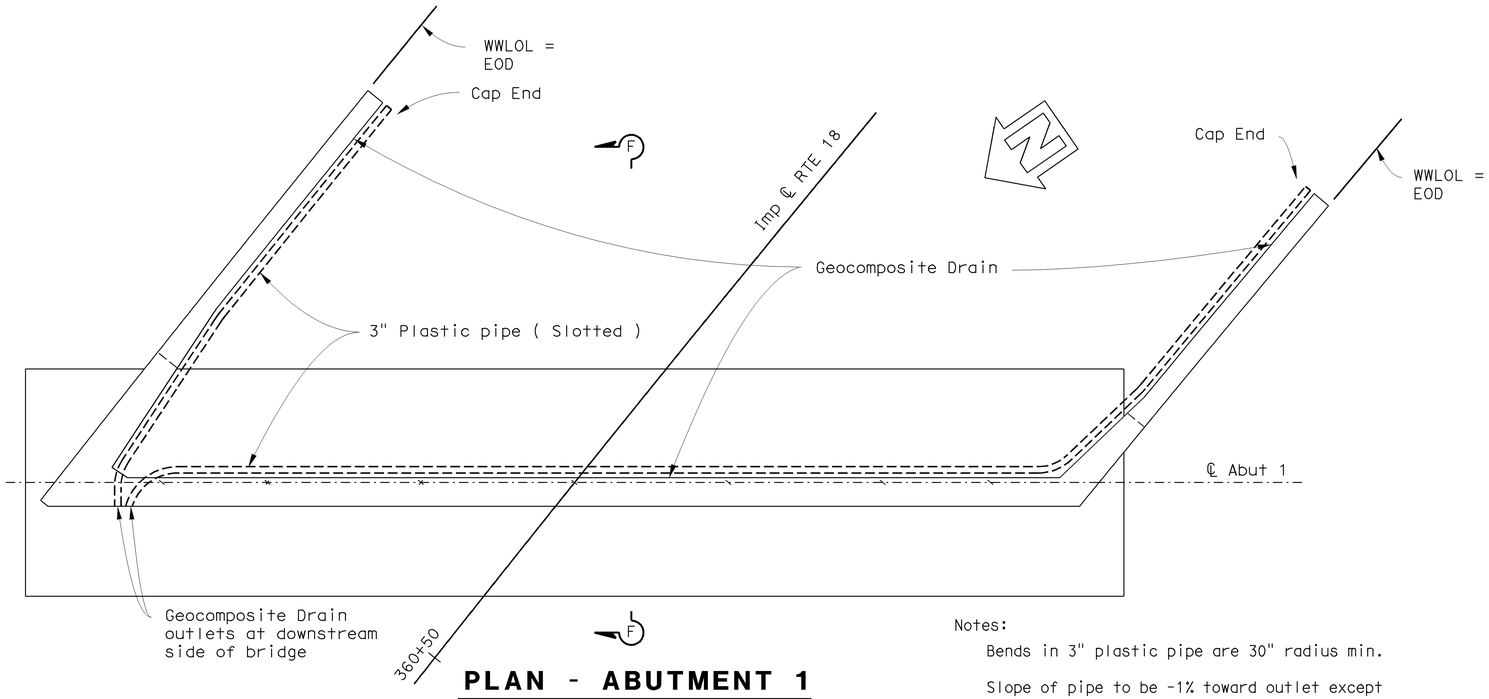

PLAN - ABUTMENT 1

1/4"=1'-0"

Notes:

Bends in 3" plastic pipe are 30" radius min.

Slope of pipe to be -1% toward outlet except as noted

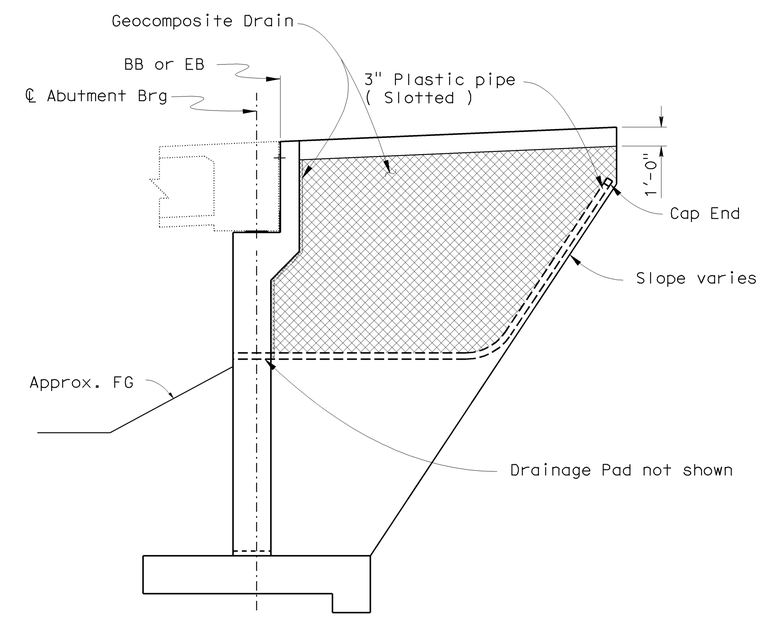

CANTILEVER WINGWALL

SECTION F-F

1/4" = 1'-0"

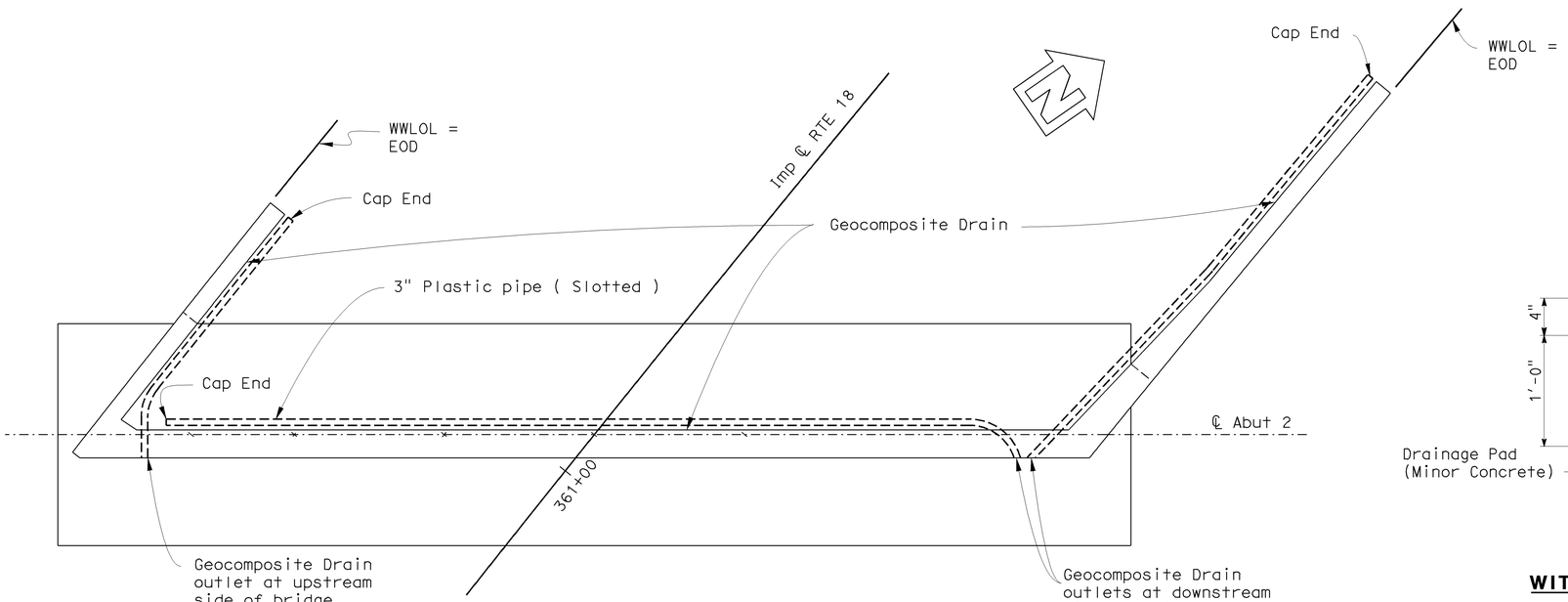

PLAN - ABUTMENT 2

1/4"=1'-0"

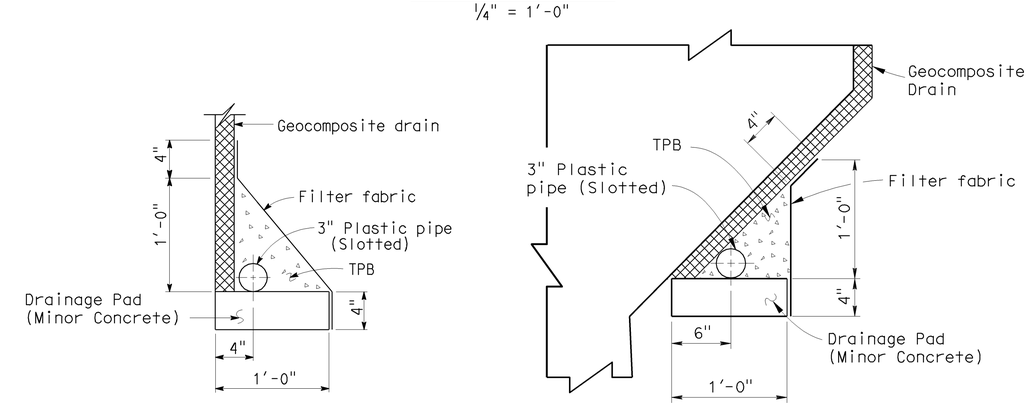

WITHOUT FOOTING

AT ABUTMENT HAUNCH

DRAINAGE DETAILS

1 1/2" = 1'-0"

	BY	CHECKED
DESIGN	A.Christensen	T.Sanderson
DETAILS	D.Wooten	T.Sanderson
QUANTITIES	M.Vo	M.Dang

STATE OF CALIFORNIA
DEPARTMENT OF TRANSPORTATION

DIVISION OF ENGINEERING SERVICES
STRUCTURE DESIGN
DESIGN BRANCH 10

BRIDGE NO. 54-1283
POST MILE R66.80

CUSHENBURY CREEK BRIDGE (REPLACE)
STRUCTURE DRAINAGE DETAILS

STRUCTURES DESIGN DETAIL SHEET (ENGLISH) (REV. 10/25/05)

ORIGINAL SCALE IN INCHES FOR REDUCED PLANS 0 1 2 3

CU 08
EA 394701

DISREGARD PRINTS BEARING EARLIER REVISION DATES 10-04-08 2-03-09

REVISION DATES

SHEET 10 OF 13

FILE => 541283ssapdrndts10.dgn

USERNAME => trmikest DATE PLOTTED => 11-MAY-2009 TIME PLOTTED => 10:08

DIST	COUNTY	ROUTE	POST MILES TOTAL PROJECT	SHEET No	TOTAL SHEETS
08	SBd	18	66.6/67.2	88	90

REGISTERED CIVIL ENGINEER 6-18-08

5-11-09
PLANS APPROVAL DATE

The State of California or its officers or agents shall not be responsible for the accuracy or completeness of electronic copies of this plan sheet.

REGISTERED PROFESSIONAL ENGINEER
Brian Gutierrez
No. C66258
Exp. 6-30-08
CIVIL
STATE OF CALIFORNIA

This LOTB sheet was prepared in accordance with the Caltrans Soil & Rock Logging, Classification, & Presentation Manual (June 2007).

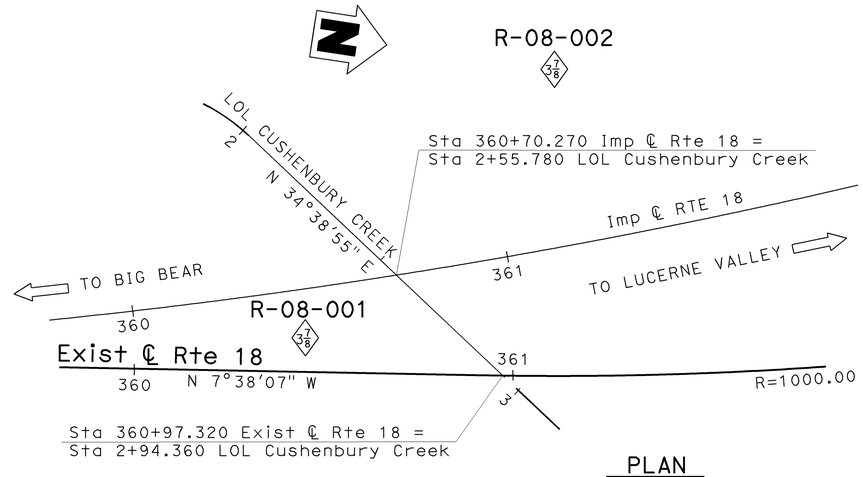

BENCH MARK

Elevations and offset taken from topo map supplied by Design.

PLAN

1" = 20'

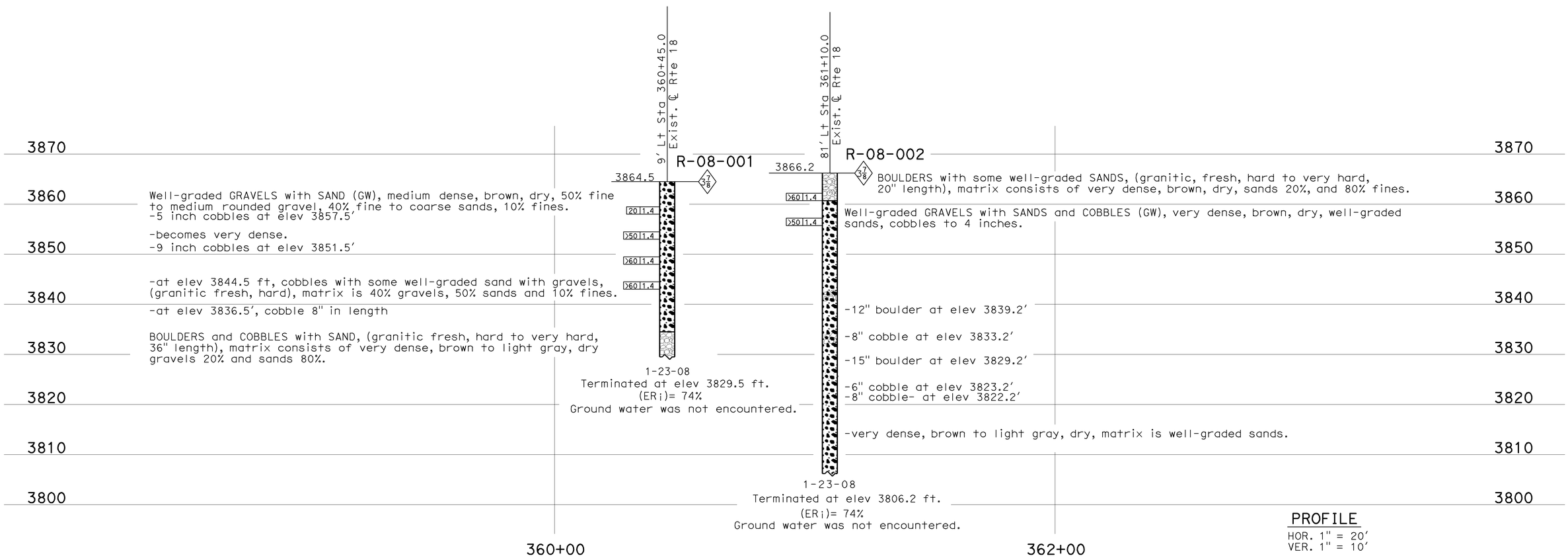

PROFILE

HOR. 1" = 20'
VER. 1" = 10'

ENGINEERING SERVICES	GEOTECHNICAL SERVICES	STATE OF CALIFORNIA DEPARTMENT OF TRANSPORTATION	DIVISION OF ENGINEERING SERVICES STRUCTURE DESIGN DESIGN BRANCH	BRIDGE NO. 54-0394 POST MILES 66.89	CUSHENBURY CREEK BRIDGE (REPLACE) LOG OF TEST BORINGS 1 OF 3
FUNCTIONAL SUPERVISOR NAME: XX	DRAWN BY: A. Yan 4/ 08, F. Nguyen 5/ 08 CHECKED BY: XX	FIELD INVESTIGATION BY: B. Gutierrez			

OGS CIVIL LOG OF TEST BORINGS SHEET

ORIGINAL SCALE IN INCHES FOR REDUCED PLANS 0 1 2 3

CU 08
EA 394701

DISREGARD PRINTS BEARING EARLIER REVISION DATES 06-18-08 06-18-08

REVISION DATES

SHEET 11 OF 13

FILE => 541283zltb01_11.dgn

USERNAME => trmikes1 DATE PLOTTED => 11-MAY-2009 TIME PLOTTED => 10:08

DIST	COUNTY	ROUTE	POST MILES TOTAL PROJECT	SHEET No	TOTAL SHEETS
08	SBd	18	66.6/67.2	89	90

REGISTERED CIVIL ENGINEER 6-18-08

5-11-09
PLANS APPROVAL DATE

The State of California or its officers or agents shall not be responsible for the accuracy or completeness of electronic copies of this plan sheet.

REGISTERED PROFESSIONAL ENGINEER Brian Gutierrez No. C66258 Exp. 6-30-08 CIVIL STATE OF CALIFORNIA

REFERENCE: CALTRANS SOIL & ROCK LOGGING, CLASSIFICATION, AND PRESENTATION MANUAL (JUNE 2007)

CEMENTATION

Description	Criteria
Weak	Crumbles or breaks with handling or little finger pressure.
Moderate	Crumbles or breaks with considerable finger pressure.
Strong	Will not crumble or break with finger pressure.

CONSISTENCY OF COHESIVE SOILS

Description	Unconfined Compressive Strength (tsf)	Pocket Penetrometer Measurement (tsf)	Torvane Measurement (tsf)	Field Approximation
Very Soft	< 0.25	< 0.25	< 0.12	Easily penetrated several inches by fist
Soft	0.25 to 0.50	0.25 to 0.50	0.12 to 0.25	Easily penetrated several inches by thumb
Medium Stiff	0.50 to 1.0	0.50 to 1.0	0.25 to 0.50	Penetrated several inches by thumb with moderate effort
Stiff	1 to 2	1 to 2	0.50 to 1.0	Readily indented by thumb but penetrated only with great effort
Very Stiff	2 to 4	2 to 4	1.0 to 2.0	Readily indented by thumbnail
Hard	> 4.0	> 4.0	> 2.0	Indented by thumbnail with difficulty

BOREHOLE IDENTIFICATION

Symbol	Hole Type	Description
Size	A	Auger Boring
Size	R P	Rotary drilled boring Rotary percussion boring (air)
Size	R	Rotary drilled diamond core
Size	HD HA	Hand driven (1-inch soil tube) Hand Auger
●	D	Dynamic Cone Penetration Boring
▲	CPT	Cone Penetration Test (ASTM D 5778-95)
⬚	O	Other

Note: Size in inches.

PLASTICITY OF FINE-GRAINED SOILS

Description	Criteria
Nonplastic	A 1/8-inch thread cannot be rolled at any water content.
Low	The thread can barely be rolled and the lump cannot be formed when drier than the plastic limit.
Medium	The thread is easy to roll and not much time is required to reach the plastic limit. The thread cannot be rerolled after reaching the plastic limit. The lump crumbles when drier than the plastic limit.
High	It takes considerable time rolling and kneading to reach the plastic limit. The thread can be rerolled several times after reaching the plastic limit. The lump can be formed without crumbling when drier than the plastic limit.

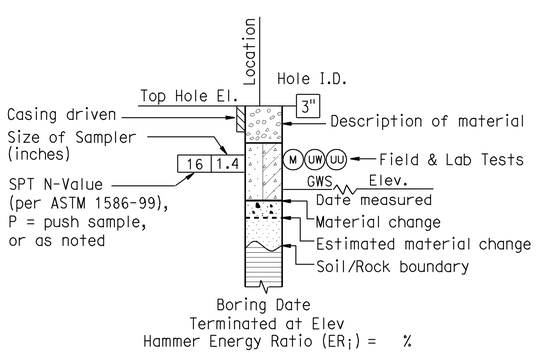

ROTARY BORING

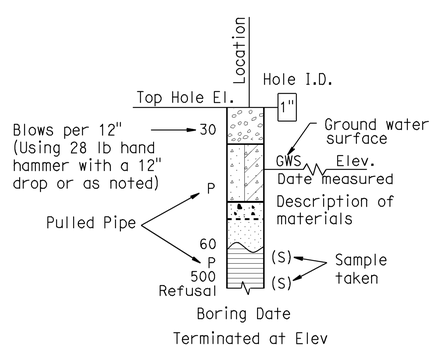

HAND BORING

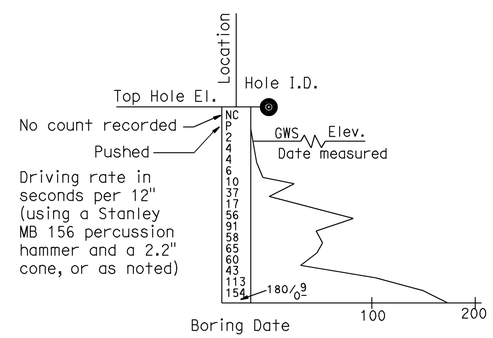

DYNAMIC CONE PENETRATION BORING

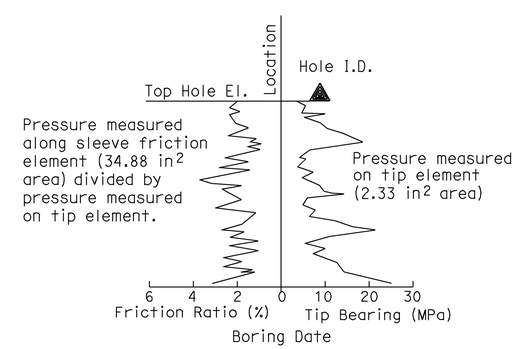

CONE PENETRATION TEST (CPT) SOUNDING

ENGINEERING SERVICES	GEOTECHNICAL SERVICES	STATE OF CALIFORNIA DEPARTMENT OF TRANSPORTATION	DIVISION OF ENGINEERING SERVICES STRUCTURE DESIGN DESIGN BRANCH	BRIDGE NO. 54-0394 POST MILES 66.89	CUSHENBURY CREEK BRIDGE (REPLACE) LOG OF TEST BORINGS 2 OF 3
FUNCTIONAL SUPERVISOR NAME: XX	DRAWN BY: F. Nguyen 5/ 08 CHECKED BY:	FIELD INVESTIGATION BY:			

OGS CIVIL LOG OF TEST BORINGS SHEET

ORIGINAL SCALE IN INCHES FOR REDUCED PLANS 0 1 2 3

CU 08
EA 394701

DISREGARD PRINTS BEARING EARLIER REVISION DATES 06-18-08

REVISION DATES

SHEET 12 OF 13

FILE => 541283zltb02_12.dgn

USERNAME => trmikes1 DATE PLOTTED => 11-MAY-2009 TIME PLOTTED => 10:08

REFERENCE: CALTRANS SOIL & ROCK LOGGING, CLASSIFICATION, AND PRESENTATION MANUAL (JUNE 2007)

DIST	COUNTY	ROUTE	POST MILES TOTAL PROJECT	SHEET No	TOTAL SHEETS
08	SBd	18	66.6/67.2	90	90

REGISTERED CIVIL ENGINEER 6-18-08

5-11-09
PLANS APPROVAL DATE

REGISTERED PROFESSIONAL ENGINEER Brian Gutierrez No. C66258 Exp. 6-30-08 CIVIL STATE OF CALIFORNIA

The State of California or its officers or agents shall not be responsible for the accuracy or completeness of electronic copies of this plan sheet.

GROUP SYMBOLS AND NAMES

Graphic/Symbol	Group Names	Graphic/Symbol	Group Names
GW	Well-graded GRAVEL Well-graded GRAVEL with SAND	CL	Lean CLAY Lean CLAY with SAND Lean CLAY with GRAVEL SANDY lean CLAY SANDY lean CLAY with GRAVEL GRAVELLY lean CLAY GRAVELLY lean CLAY with SAND
GP	Poorly graded GRAVEL Poorly graded GRAVEL with SAND		
GW-GM	Well-graded GRAVEL with SILT Well-graded GRAVEL with SILT and SAND	CL-ML	SILTY CLAY SILTY CLAY with SAND SILTY CLAY with GRAVEL SANDY SILTY CLAY SANDY SILTY CLAY with GRAVEL GRAVELLY SILTY CLAY GRAVELLY SILTY CLAY with SAND
GW-GC	Well-graded GRAVEL with CLAY (or SILTY CLAY) Well-graded GRAVEL with CLAY and SAND (or SILTY CLAY and SAND)		
GP-GM	Poorly graded GRAVEL with SILT Poorly graded GRAVEL with SILT and SAND	ML	SILT SILT with SAND SILT with GRAVEL SANDY SILT SANDY SILT with GRAVEL GRAVELLY SILT GRAVELLY SILT with SAND
GP-GC	Poorly graded GRAVEL with CLAY (or SILTY CLAY) Poorly graded GRAVEL with CLAY and SAND (or SILTY CLAY and SAND)		
GM	SILTY GRAVEL SILTY GRAVEL with SAND	OL	ORGANIC lean CLAY ORGANIC lean CLAY with SAND ORGANIC lean CLAY with GRAVEL SANDY ORGANIC lean CLAY SANDY ORGANIC lean CLAY with GRAVEL GRAVELLY ORGANIC lean CLAY GRAVELLY ORGANIC lean CLAY with SAND
GC	CLAYEY GRAVEL CLAYEY GRAVEL with SAND		
GC-GM	SILTY, CLAYEY GRAVEL SILTY, CLAYEY GRAVEL with SAND	OL	ORGANIC SILT ORGANIC SILT with SAND ORGANIC SILT with GRAVEL SANDY ORGANIC SILT SANDY ORGANIC SILT with GRAVEL GRAVELLY ORGANIC SILT GRAVELLY ORGANIC SILT with SAND
SW	Well-graded SAND Well-graded SAND with GRAVEL		
SP	Poorly graded SAND Poorly graded SAND with GRAVEL	CH	Fat CLAY Fat CLAY with SAND Fat CLAY with GRAVEL SANDY fat CLAY SANDY fat CLAY with GRAVEL GRAVELLY fat CLAY GRAVELLY fat CLAY with SAND
SW-SM	Well-graded SAND with SILT Well-graded SAND with SILT and GRAVEL		
SW-SC	Well-graded SAND with CLAY (or SILTY CLAY) Well-graded SAND with CLAY and GRAVEL (or SILTY CLAY and GRAVEL)	MH	Elastic SILT Elastic SILT with SAND Elastic SILT with GRAVEL SANDY elastic SILT SANDY elastic SILT with GRAVEL GRAVELLY elastic SILT GRAVELLY elastic SILT with SAND
SP-SM	Poorly graded SAND with SILT Poorly graded SAND with SILT and GRAVEL		
SP-SC	Poorly graded SAND with CLAY (or SILTY CLAY) Poorly graded SAND with CLAY and GRAVEL (or SILTY CLAY and GRAVEL)	OH	ORGANIC fat CLAY ORGANIC fat CLAY with SAND ORGANIC fat CLAY with GRAVEL SANDY ORGANIC fat CLAY SANDY ORGANIC fat CLAY with GRAVEL GRAVELLY ORGANIC fat CLAY GRAVELLY ORGANIC fat CLAY with SAND
SM	SILTY SAND SILTY SAND with GRAVEL		
SC	CLAYEY SAND CLAYEY SAND with GRAVEL	OH	ORGANIC elastic SILT ORGANIC elastic SILT with SAND ORGANIC elastic SILT with GRAVEL SANDY ORGANIC elastic SILT SANDY ORGANIC elastic SILT with GRAVEL GRAVELLY ORGANIC elastic SILT GRAVELLY ORGANIC elastic SILT with SAND
SC-SM	SILTY, CLAYEY SAND SILTY, CLAYEY SAND with GRAVEL		
PT	PEAT	OL/OH	ORGANIC SOIL ORGANIC SOIL with SAND ORGANIC SOIL with GRAVEL SANDY ORGANIC SOIL SANDY ORGANIC SOIL with GRAVEL GRAVELLY ORGANIC SOIL GRAVELLY ORGANIC SOIL with SAND
	COBBLES COBBLES and BOULDERS BOULDERS		

FIELD AND LABORATORY TESTING

- (C) Consolidation (ASTM D 2435)
- (CL) Collapse Potential (ASTM D 5333)
- (CP) Compaction Curve (CTM 216)
- (CR) Corrosivity Testing (CTM 643, CTM 422, CTM 417)
- (CU) Consolidated Undrained Triaxial (ASTM D 4767)
- (DS) Direct Shear (ASTM D 3080)
- (EI) Expansion Index (ASTM D 4829)
- (M) Moisture Content (ASTM D 2216)
- (OC) Organic Content-% (ASTM D 2974)
- (P) Permeability (CTM 220)
- (PA) Particle Size Analysis (ASTM D 422)
- (PI) Plasticity Index (AASHTO T 90) Liquid Limit (AASHTO T 89)
- (PL) Point Load Index (ASTM D 5731)
- (PM) Pressure Meter
- (PP) Pocket Penetrometer
- (R) R-Value (CTM 301)
- (SE) Sand Equivalent (CTM 217)
- (SG) Specific Gravity (AASHTO T 100)
- (SL) Shrinkage Limit (ASTM D 427)
- (SW) Swell Potential (ASTM D 4546)
- (TV) Pocket Torvane
- (UC) Unconfined Compression-Soil (ASTM D 2166) Unconfined Compression-Rock (ASTM D 2938)
- (UU) Unconsolidated Undrained Triaxial (ASTM D 2850)
- (UW) Unit Weight (ASTM D 4767)
- (VS) Vane Shear (AASHTO T 223)

APPARENT DENSITY OF COHESIONLESS SOILS

Description	SPT N_{60} (Blows / 12 inches)
Very loose	0 - 4
Loose	5 - 10
Medium Dense	11 - 30
Dense	31 - 50
Very Dense	> 50

MOISTURE

Description	Criteria
Dry	Absence of moisture, dusty, dry to the touch
Moist	Damp but no visible water
Wet	Visible free water, usually soil is below water table

PERCENT OR PROPORTION OF SOILS

Description	Criteria
Trace	Particles are present but estimated to be less than 5%
Few	5 to 10%
Little	15 to 25%
Some	30 to 45%
Mostly	50 to 100%

PARTICLE SIZE

Description		Size
Boulder		> 12"
Cobble		3" to 12"
Gravel	Coarse	3/4" to 3"
	Fine	No. 4 to 3/4"
Sand	Coarse	No. 10 to No. 4
	Medium	No. 40 to No. 10
	Fine	No. 200 to No. 40

ENGINEERING SERVICES	GEOTECHNICAL SERVICES	STATE OF CALIFORNIA DEPARTMENT OF TRANSPORTATION	DIVISION OF ENGINEERING SERVICES STRUCTURE DESIGN DESIGN BRANCH	BRIDGE NO. 54-0394 POST MILES 66.89	CUSHENBURY CREEK BRIDGE (REPLACE) LOG OF TEST BORINGS 3 OF 3
FUNCTIONAL SUPERVISOR NAME: XX	DRAWN BY: F. Nguyen 5/ 08 CHECKED BY:	FIELD INVESTIGATION BY:			

OGS CIVIL LOG OF TEST BORINGS SHEET

ORIGINAL SCALE IN INCHES FOR REDUCED PLANS 0 1 2 3

CU 08
EA 394701

DISREGARD PRINTS BEARING EARLIER REVISION DATES → 06-18-08

REVISION DATES

SHEET 13 OF 13

FILE => 541283zltb03_13.dgn

USERNAME => trmirkes1 DATE PLOTTED => 11-MAY-2009 TIME PLOTTED => 10:08