Dist	COUNTY	ROUTE	POST MILES TOTAL PROJECT	SHEET No.	TOTAL SHEETS
08	SBd	10	9.9/R24.5	1	260

STATE OF CALIFORNIA

DEPARTMENT OF TRANSPORTATION

PROJECT PLANS FOR CONSTRUCTION ON

STATE HIGHWAY

IN SAN BERNARDINO COUNTY AT VARIOUS LOCATIONS FROM 0.1 MILE EAST OF ROUTE 15 SEPARATION TO 0.3 MILE EAST OF ROUTE 215 SEPARATION

TO BE SUPPLEMENTED BY STANDARD PLANS DATED MAY 2006

INDEX OF PLANS

SHEET No.	DESCRIPTION
1	TITLE AND LOCATION MAP
2-16	TYPICAL CROSS SECTIONS
17	KEY MAP AND LINE INDEX
18-34	LAYOUTS
35-44	PROFILES AND SUPERELEVATION DIAGRAMS
35-55	CONSTRUCTION DETAILS
56	TEMPORARY WATER POLLUTION CONTROL QUANTITIES
57-86	DRAINAGE PROFILES, DETAILS AND QUANTITIES
87-98	UTILITY PLANS, DETAILS AND QUANTITIES
99-104	STAGE CONSTRUCTION, TRAFFIC HANDLING PLANS, DETAILS AND QUANTITIES
105-118	PAVEMENT DELINEATION AND SIGN PLANS, AND QUANTITIES
119-120	SIGN QUANTITIES
121-124	SUMMARY OF QUANTITIES
125-139	RETAINING WALL PLANS, QUANTITIES AND LOG OF TEST BORING SHEETS
140	PLANTING LIST
141-152	PLANTING PLANS
153-162	IRRIGATION PLANS
163-164	LANDSCAPE DETAILS
165	CONSTRUCTION AREA SIGNS
166-210	ELECTRICAL PLANS
211-251	REVISED AND NEW STANDARD PLANS

STRUCTURE PLANS

252-260	Mt VEMON WB ENTRANCERAMP - RETAINING WALL No. 62

THE STANDARD PLANS LIST APPLICABLE TO THIS CONTRACT IS INCLUDED IN THE NOTICE TO BIDDERS AND SPECIAL PROVISIONS BOOK.

LOCATION MAP

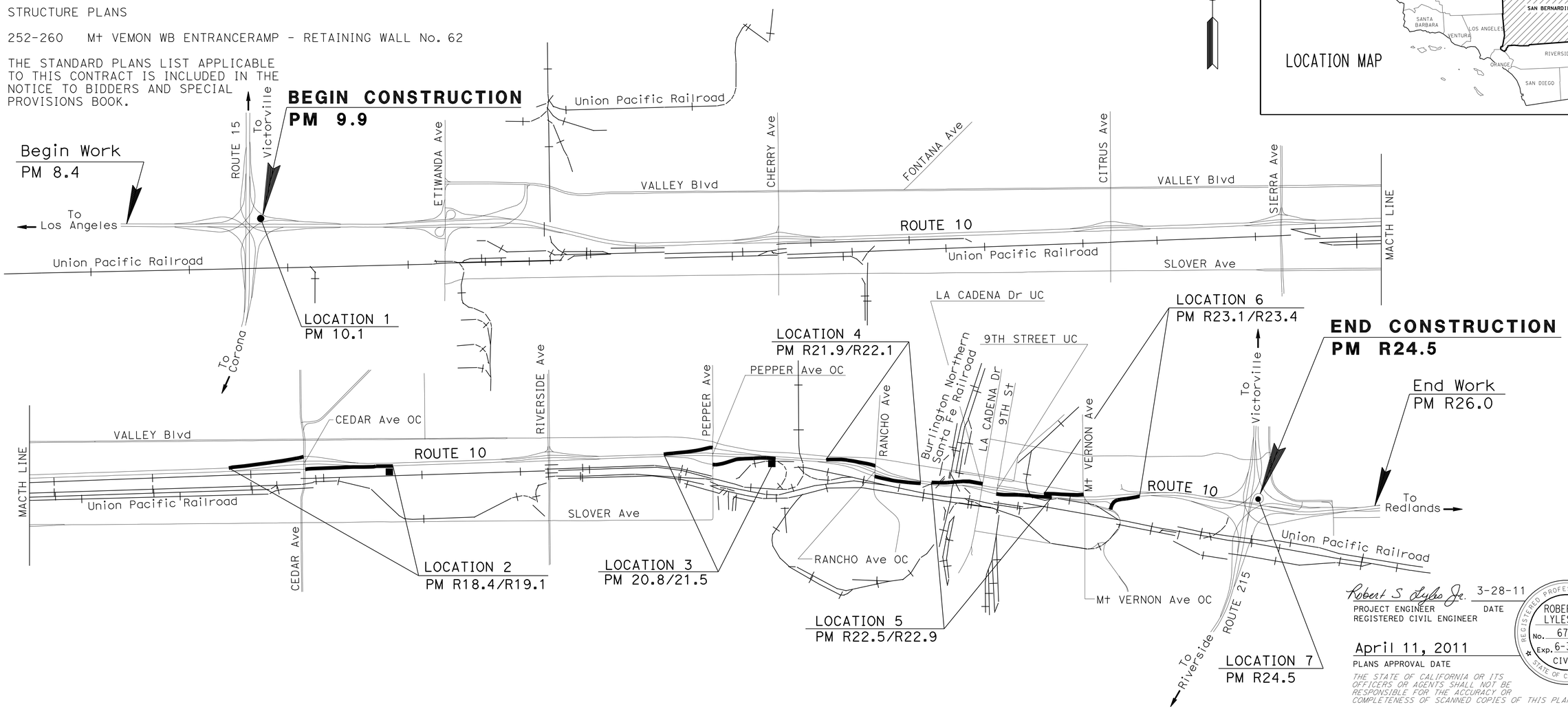

NO SCALE

Robert S Lyles Jr. 3-28-11
PROJECT ENGINEER DATE
REGISTERED CIVIL ENGINEER

April 11, 2011
PLANS APPROVAL DATE

REGISTERED PROFESSIONAL ENGINEER ROBERT S. LYLES Jr. No. 67873 Exp. 6-30-11 CIVIL STATE OF CALIFORNIA

THE STATE OF CALIFORNIA OR ITS OFFICERS OR AGENTS SHALL NOT BE RESPONSIBLE FOR THE ACCURACY OR COMPLETENESS OF SCANNED COPIES OF THIS PLAN SHEET.

THE CONTRACTOR SHALL POSSESS THE CLASS (OR CLASSES) OF LICENSE AS SPECIFIED IN THE "NOTICE TO BIDDERS."

CONTRACT No.	08-384344
PROJECT ID	0800000640

PROJECT MANAGER MARK LANCASTER
DESIGN ENGINEER ROBERT S. LYLES Jr.

LAST REVISION 03-28-11 DATE PLOTTED => 15-APR-2011 TIME PLOTTED => 10:59

Dist	COUNTY	ROUTE	POST MILES TOTAL PROJECT	SHEET No.	TOTAL SHEETS
08	SBd	10	9.9/R24.5	2	260

Robert S Lyles Jr. 1-13-11
REGISTERED CIVIL ENGINEER DATE

4-11-11
PLANS APPROVAL DATE

REGISTERED PROFESSIONAL ENGINEER ROBERT S. LYLES Jr. No. 67873 Exp. 6-30-11 CIVIL STATE OF CALIFORNIA

THE STATE OF CALIFORNIA OR ITS OFFICERS OR AGENTS SHALL NOT BE RESPONSIBLE FOR THE ACCURACY OR COMPLETENESS OF SCANNED COPIES OF THIS PLAN SHEET.

NOTES:

1. DIMENSIONS OF THE STRUCTURAL SECTION ARE SUBJECT TO TOLERANCES SPECIFIED IN THE STANDARD SPECIFICATIONS.
2. SUPERELEVATION AS SHOWN & AS DIRECTED BY THE ENGINEER.

* EXCEPT IN SUPERELEVATION

DESIGN DESIGNATION

2008 ADT = 213,900 D = 55
2030 ADT = 243,800 T = 11%
DHV = 20,500 V = 65 MPH
TI_{20} = 12.5

TYPICAL STRUCTURAL SECTIONS

[1] Exist CEDAR Ave ENTRANCE RAMPS
0.44′ AC
0.67′ ACB CL-B PMCTB
0.75′ CL2 AS

Exist RANCHO Ave, 9th STREET, Mt VERNON Ave ENTRANCE RAMPS
0.40′ AC
0.70′ AB
0.95′ CL2 AB

Exist PEPPER Ave ENTRANCE RAMPS
0.50′ AC
0.67′ AB

[2] COLD PLANE AC 0.25′
PLACE HMA (TYPE C) 0.25′

[3] 1.20′ HMA (TYPE C)
0.50′ CL2 AB

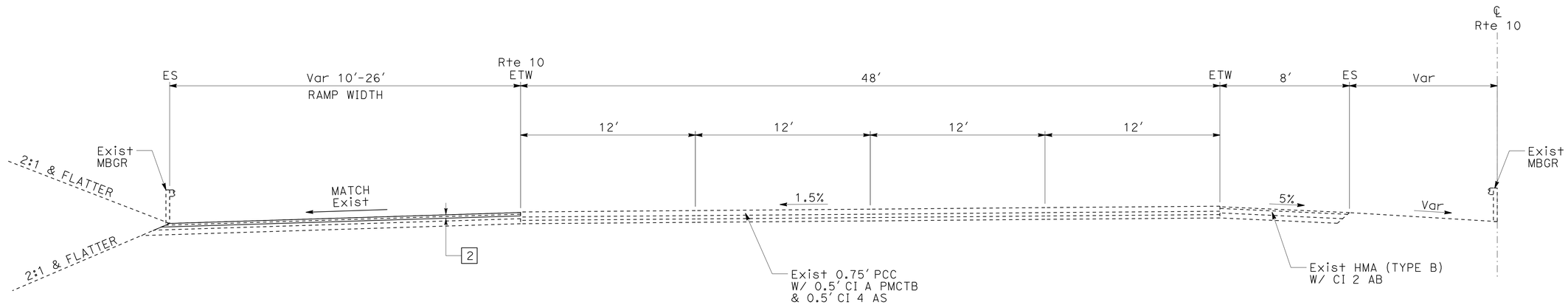

ROUTE 10 WB

Sta 701+30.00 TO Sta 713+17.15 ℄ Rte 10
Sta 839+00.00 TO Sta 844+78.01 ℄ Rte 10
Sta 891+50.00 TO Sta 895+60.72 ℄ Rte 10

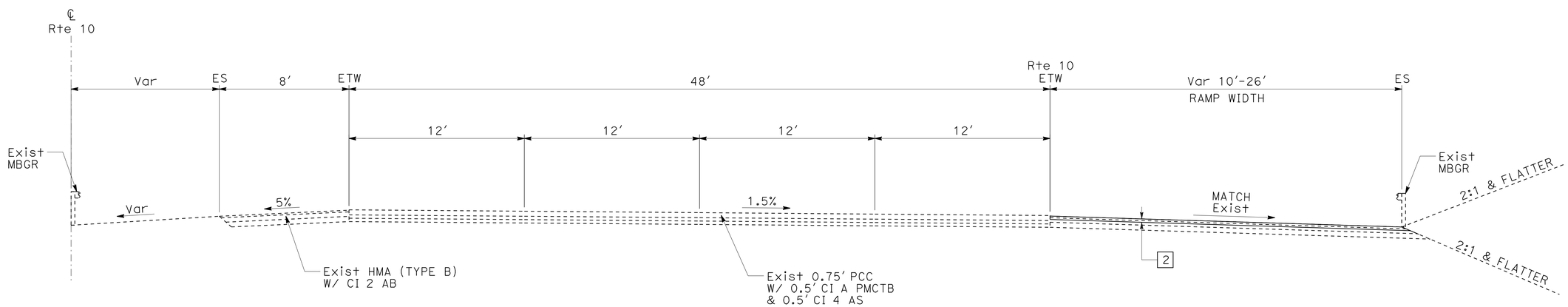

ROUTE 10 EB

Sta 742+59.81 TO Sta 750+30.00 ℄ Rte 10
Sta 868+91.32 TO Sta 874+60.00 ℄ Rte 10
Sta 921+41.77 TO Sta 926+63.41 ℄ Rte 10
Sta 83+93.46 TO Sta 87+37.35 ℄ Rte 10

TYPICAL CROSS SECTIONS

NO SCALE

X-1

STATE OF CALIFORNIA - DEPARTMENT OF TRANSPORTATION
Caltrans® DESIGN
FUNCTIONAL SUPERVISOR: DU LU
CALCULATED-DESIGNED BY: ROBERT S. LYLES Jr.
CHECKED BY: JOE DAMIAN
REVISED BY / DATE REVISED

LAST REVISION 01-13-11 | DATE PLOTTED => 15-APR-2011 | TIME PLOTTED => 09:24

Dist	COUNTY	ROUTE	POST MILES TOTAL PROJECT	SHEET No.	TOTAL SHEETS
08	SBd	10	9.9/R24.5	3	260

Robert S Lyles Jr. 1-13-11
REGISTERED CIVIL ENGINEER DATE

4-11-11
PLANS APPROVAL DATE

REGISTERED PROFESSIONAL ENGINEER ROBERT S. LYLES Jr. No. 67873 Exp. 6-30-11 CIVIL STATE OF CALIFORNIA

THE STATE OF CALIFORNIA OR ITS OFFICERS OR AGENTS SHALL NOT BE RESPONSIBLE FOR THE ACCURACY OR COMPLETENESS OF SCANNED COPIES OF THIS PLAN SHEET.

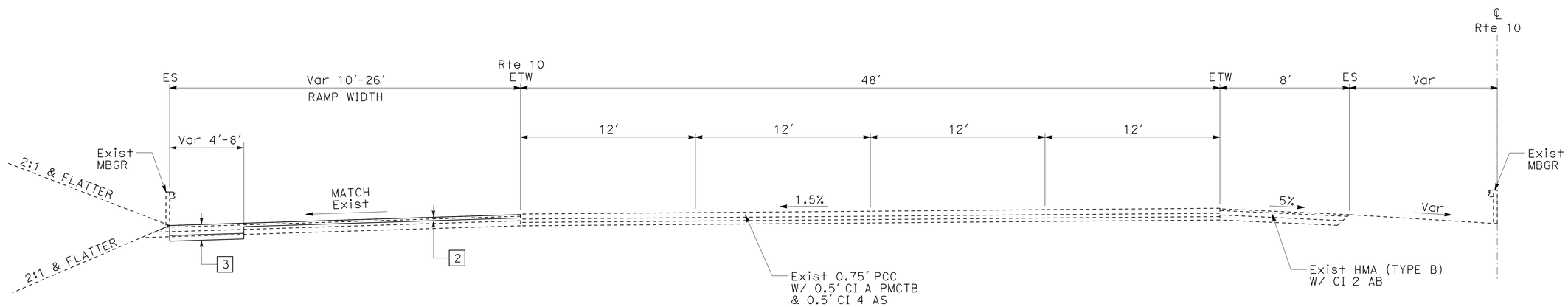

ROUTE 10 WB

Sta 844+78.01 TO Sta 845+23.89 ℄ Rte 10
Sta 895+60.72 TO Sta 896+85.92 ℄ Rte 10

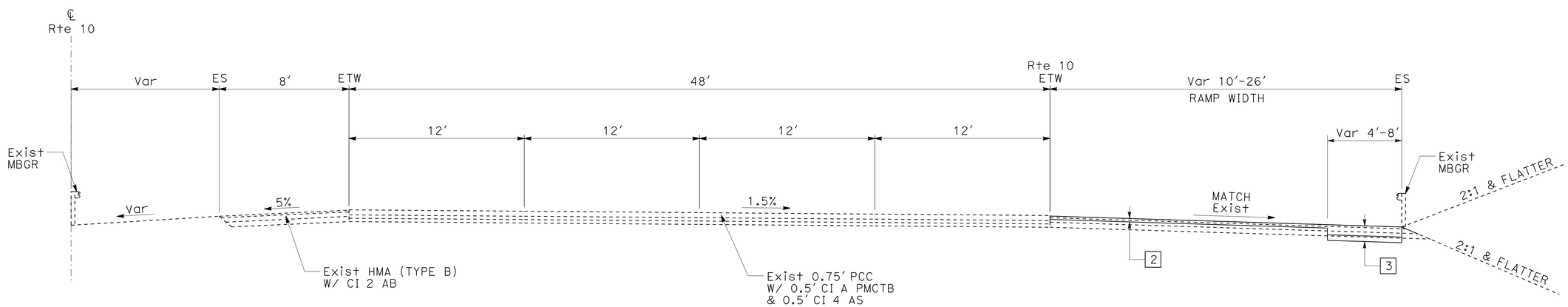

ROUTE 10 EB

Sta 868+15.58 TO Sta 868+91.32 ℄ Rte 10

TYPICAL CROSS SECTIONS

NO SCALE

X-2

STATE OF CALIFORNIA - DEPARTMENT OF TRANSPORTATION
Caltrans® DESIGN
FUNCTIONAL SUPERVISOR: DU LU
CALCULATED-DESIGNED BY: ROBERT S. LYLES Jr.
CHECKED BY: JOE DAMIAN
REVISED BY
DATE REVISED

LAST REVISION 01-13-11
DATE PLOTTED => 15-APR-2011
TIME PLOTTED => 09:24

Dist	COUNTY	ROUTE	POST MILES TOTAL PROJECT	SHEET No.	TOTAL SHEETS
08	SBd	10	9.9/R24.5	4	260

Robert S Lyles Jr. 1-13-11
REGISTERED CIVIL ENGINEER DATE

4-11-11
PLANS APPROVAL DATE

REGISTERED PROFESSIONAL ENGINEER ROBERT S. LYLES Jr. No. 67873 Exp. 6-30-11 CIVIL STATE OF CALIFORNIA

THE STATE OF CALIFORNIA OR ITS OFFICERS OR AGENTS SHALL NOT BE RESPONSIBLE FOR THE ACCURACY OR COMPLETENESS OF SCANNED COPIES OF THIS PLAN SHEET.

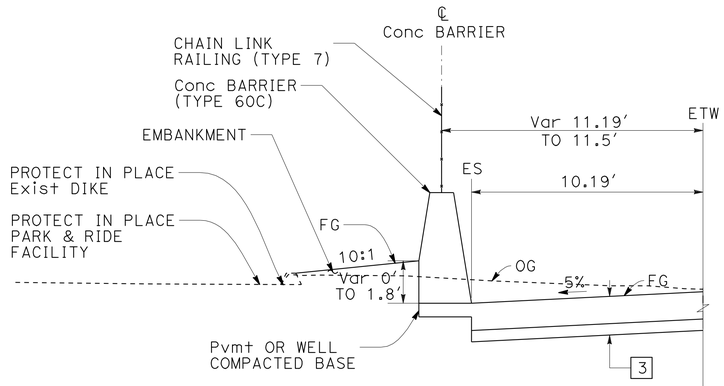

Sta 720+79.50 TO Sta 721+43.50 LOL A1

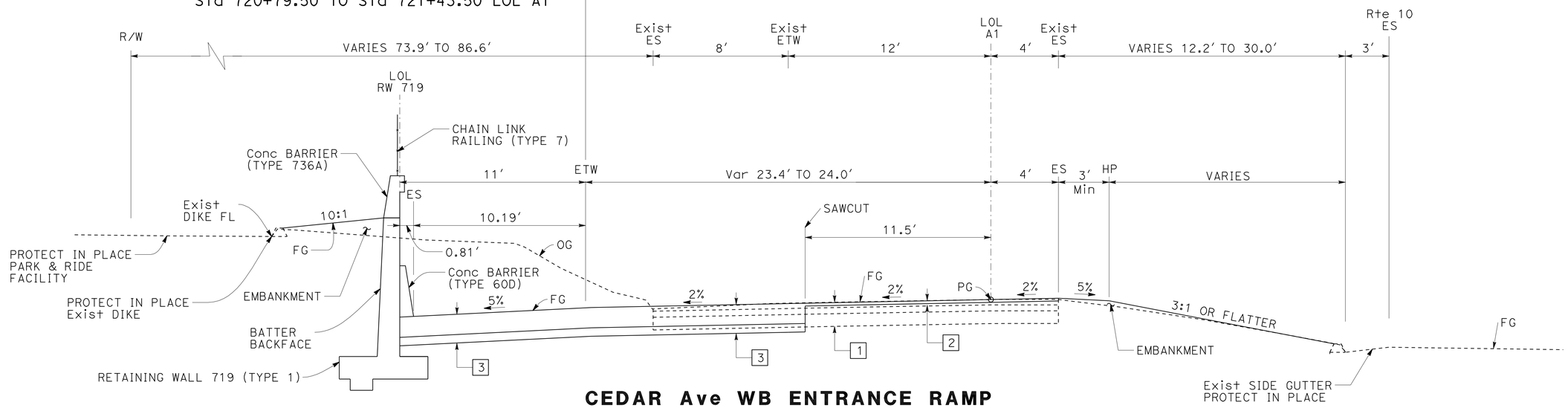

CEDAR Ave WB ENTRANCE RAMP
Sta 718+87.50 TO Sta 721+43.50 LOL A1

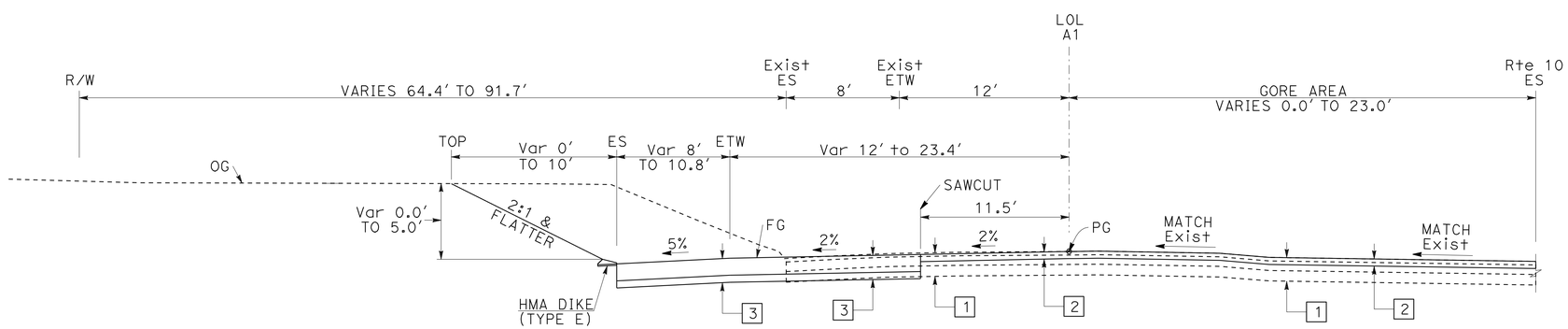

CEDAR Ave WB ENTRANCE RAMP
Sta 713+17.21 TO Sta 718+87.50 LOL A1

TYPICAL CROSS SECTIONS
NO SCALE

X-3

STATE OF CALIFORNIA - DEPARTMENT OF TRANSPORTATION
Caltrans® **DESIGN**
FUNCTIONAL SUPERVISOR: DU LU
CALCULATED-DESIGNED BY: ROBERT S. LYLES Jr.
CHECKED BY: JOE DAMIAN
REVISED BY
DATE REVISED

LAST REVISION 01-13-11
DATE PLOTTED => 15-APR-2011
TIME PLOTTED => 09:24

Dist	COUNTY	ROUTE	POST MILES TOTAL PROJECT	SHEET No.	TOTAL SHEETS
08	SBd	10	9.9/R24.5	5	260

Robert S Lyles Jr. 1-13-11
REGISTERED CIVIL ENGINEER DATE

4-11-11
PLANS APPROVAL DATE

REGISTERED PROFESSIONAL ENGINEER ROBERT S. LYLES Jr. No. 67873 Exp. 6-30-11 CIVIL STATE OF CALIFORNIA

THE STATE OF CALIFORNIA OR ITS OFFICERS OR AGENTS SHALL NOT BE RESPONSIBLE FOR THE ACCURACY OR COMPLETENESS OF SCANNED COPIES OF THIS PLAN SHEET.

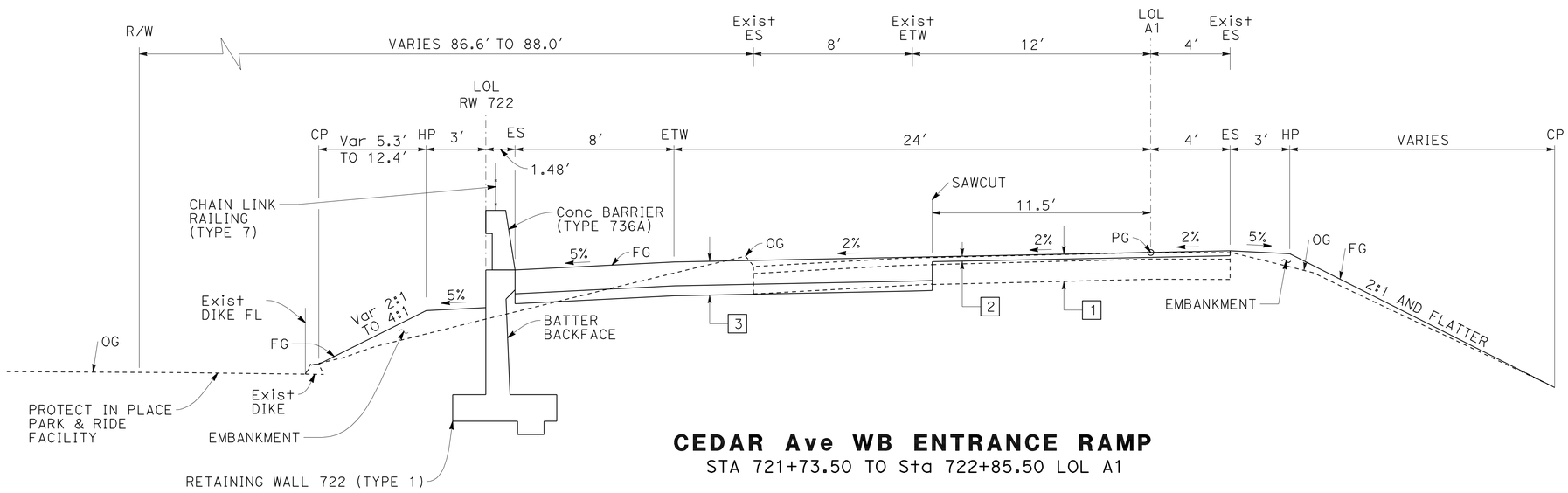

CEDAR Ave WB ENTRANCE RAMP

STA 721+73.50 TO Sta 722+85.50 LOL A1

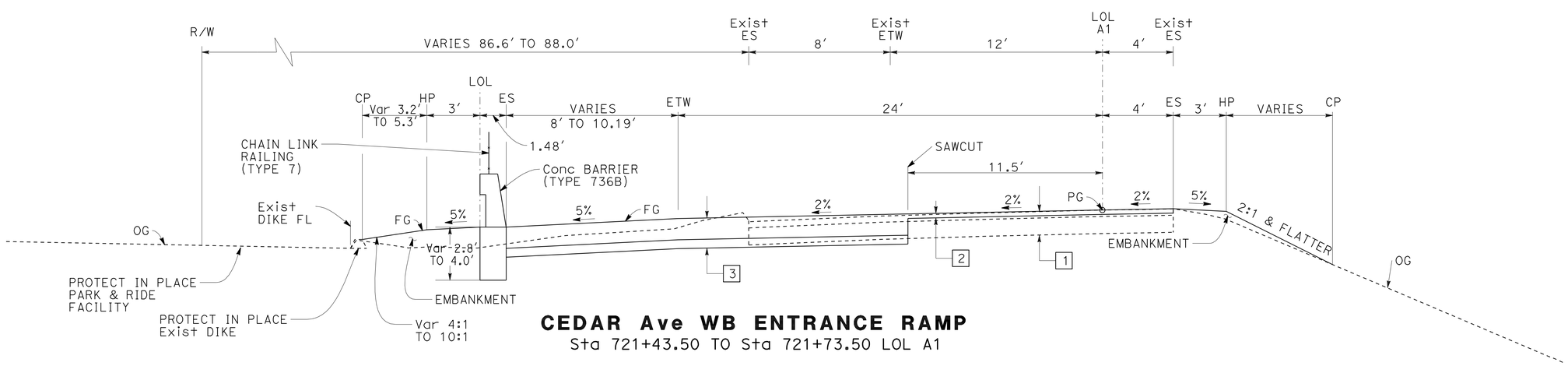

CEDAR Ave WB ENTRANCE RAMP

Sta 721+43.50 TO Sta 721+73.50 LOL A1

TYPICAL CROSS SECTIONS

NO SCALE

X-4

REVISED BY	DATE REVISED

CALCULATED-DESIGNED BY	CHECKED BY
ROBERT S. LYLES Jr.	JOE DAMIAN

FUNCTIONAL SUPERVISOR: DU LU

STATE OF CALIFORNIA - DEPARTMENT OF TRANSPORTATION

Caltrans® DESIGN

LAST REVISION 01-13-11 | DATE PLOTTED => 15-APR-2011 | TIME PLOTTED => 09:24

Dist	COUNTY	ROUTE	POST MILES TOTAL PROJECT	SHEET No.	TOTAL SHEETS
08	SBd	10	9.9/R24.5	6	260

Robert S Lyles Jr. 1-13-11
REGISTERED CIVIL ENGINEER DATE

4-11-11
PLANS APPROVAL DATE

REGISTERED PROFESSIONAL ENGINEER
ROBERT S. LYLES Jr.
No. 67873
Exp. 6-30-11
CIVIL
STATE OF CALIFORNIA

THE STATE OF CALIFORNIA OR ITS OFFICERS OR AGENTS SHALL NOT BE RESPONSIBLE FOR THE ACCURACY OR COMPLETENESS OF SCANNED COPIES OF THIS PLAN SHEET.

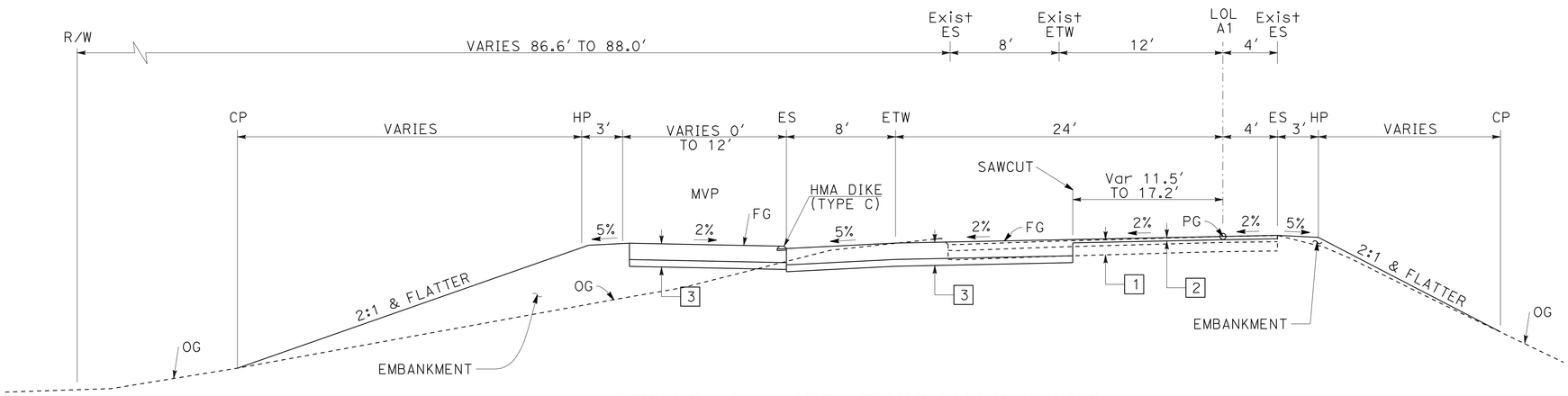

CEDAR Ave WB ENTRANCE RAMP

Sta 722+85.50 TO Sta 724+47.64 LOL A1

TYPICAL CROSS SECTIONS

NO SCALE

X-5

STATE OF CALIFORNIA - DEPARTMENT OF TRANSPORTATION
Caltrans
DESIGN

FUNCTIONAL SUPERVISOR: DU LU

CALCULATED-DESIGNED BY: ROBERT S. LYLES Jr.
CHECKED BY: JOE DAMIAN

REVISED BY
DATE REVISED

LAST REVISION 01-13-11
DATE PLOTTED => 15-APR-2011
TIME PLOTTED => 09:24

Dist	COUNTY	ROUTE	POST MILES TOTAL PROJECT	SHEET No.	TOTAL SHEETS
08	SBd	10	9.9/R24.5	7	260

Robert S Lyles Jr. 1-13-11
REGISTERED CIVIL ENGINEER DATE

4-11-11
PLANS APPROVAL DATE

REGISTERED PROFESSIONAL ENGINEER ROBERT S. LYLES Jr. No. 67873 Exp. 6-30-11 CIVIL STATE OF CALIFORNIA

THE STATE OF CALIFORNIA OR ITS OFFICERS OR AGENTS SHALL NOT BE RESPONSIBLE FOR THE ACCURACY OR COMPLETENESS OF SCANNED COPIES OF THIS PLAN SHEET.

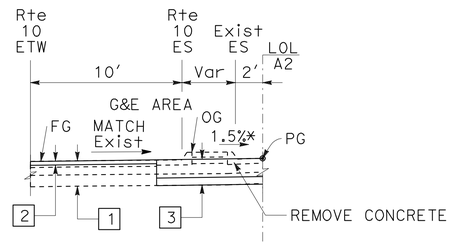

Sta 740+39.68 TO Sta 742+59.81 LOL A2

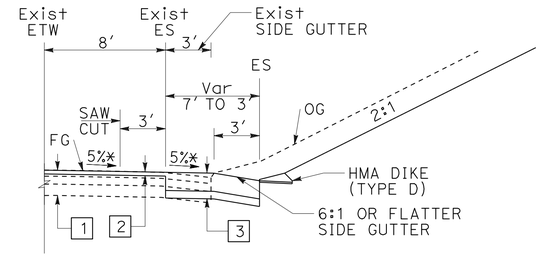

Sta 739+94.81 TO Sta 742+59.81 LOL A2

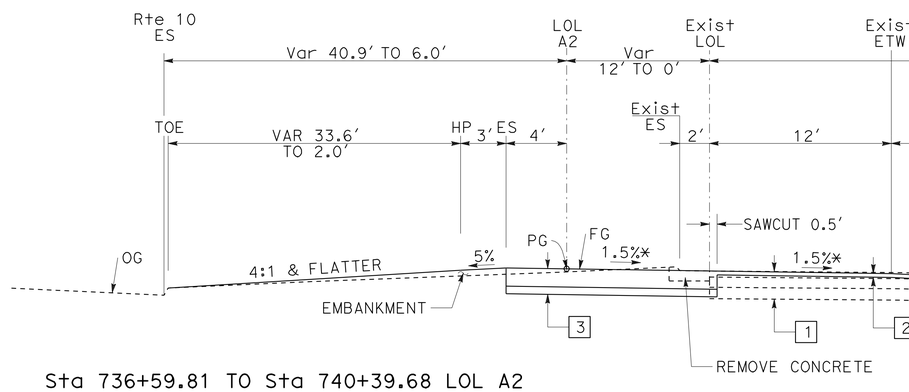

Sta 736+59.81 TO Sta 740+39.68 LOL A2

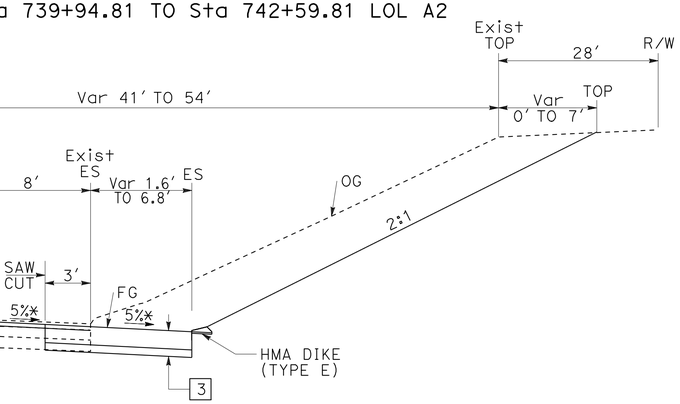

Sta 736+59.81 TO Sta 739+94.81 LOL A2

CEDAR Ave EB ENTRANCE RAMP

Sta 736+59.81 TO Sta 742+59.81 LOL A2

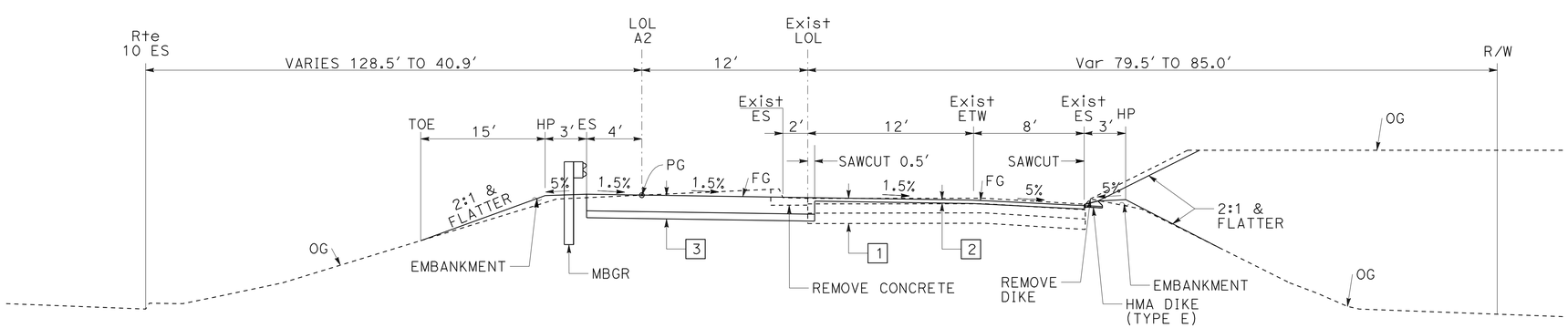

CEDAR Ave EB ENTRANCE RAMP

Sta 725+75.58 TO Sta 736+59.81 LOL A2

TYPICAL CROSS SECTIONS

NO SCALE

X-6

STATE OF CALIFORNIA - DEPARTMENT OF TRANSPORTATION
Caltrans® DESIGN

FUNCTIONAL SUPERVISOR: DU LU
CALCULATED-DESIGNED BY: ROBERT S. LYLES Jr.
CHECKED BY: JOE DAMIAN
REVISED BY
DATE REVISED

LAST REVISION 01-13-11
DATE PLOTTED => 15-APR-2011
TIME PLOTTED => 09:24

Dist	COUNTY	ROUTE	POST MILES TOTAL PROJECT	SHEET No.	TOTAL SHEETS
08	SBd	10	9.9/R24.5	8	260

Robert S Lyles Jr. 1-13-11
REGISTERED CIVIL ENGINEER DATE

4-11-11
PLANS APPROVAL DATE

REGISTERED PROFESSIONAL ENGINEER ROBERT S. LYLES Jr. No. 67873 Exp. 6-30-11 CIVIL STATE OF CALIFORNIA

THE STATE OF CALIFORNIA OR ITS OFFICERS OR AGENTS SHALL NOT BE RESPONSIBLE FOR THE ACCURACY OR COMPLETENESS OF SCANNED COPIES OF THIS PLAN SHEET.

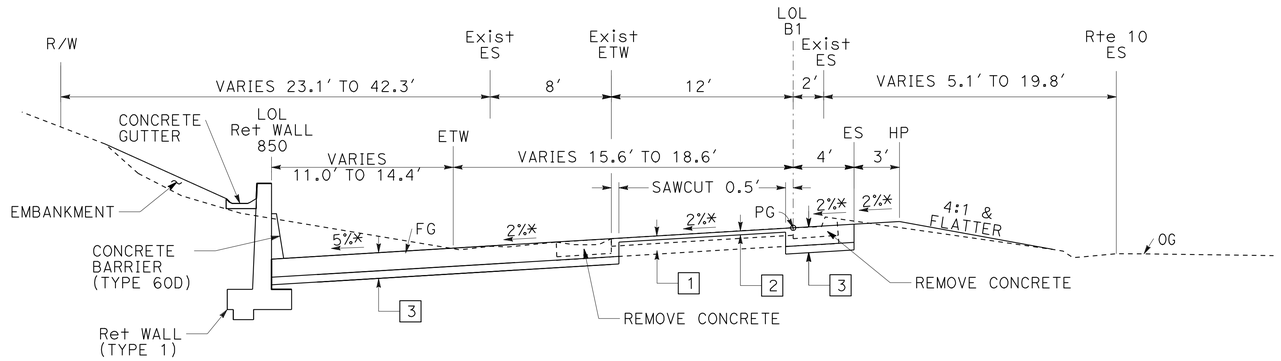

PEPPER Ave WB ENTRANCE RAMP

Sta 849+31.26 TO Sta 850+20.27 LOL B1

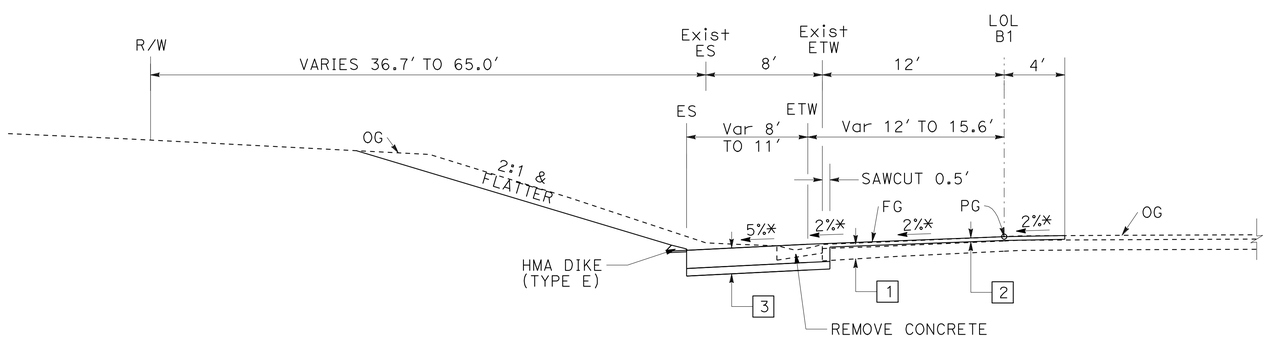

PEPPER Ave WB ENTRANCE RAMP

Sta 845+23.89 TO Sta 849+31.26 LOL B1

TYPICAL CROSS SECTIONS

NO SCALE

X-7

STATE OF CALIFORNIA - DEPARTMENT OF TRANSPORTATION
Caltrans® DESIGN

FUNCTIONAL SUPERVISOR: DU LU
CALCULATED-DESIGNED BY: ROBERT S. LYLES Jr.
CHECKED BY: JOE DAMIAN
REVISED BY
DATE REVISED

LAST REVISION 01-13-11
DATE PLOTTED => 15-APR-2011
TIME PLOTTED => 09:24

Dist	COUNTY	ROUTE	POST MILES TOTAL PROJECT	SHEET No.	TOTAL SHEETS
08	SBd	10	9.9/R24.5	9	260

Robert S Lyles Jr. 1-13-11
REGISTERED CIVIL ENGINEER DATE

4-11-11
PLANS APPROVAL DATE

REGISTERED PROFESSIONAL ENGINEER
ROBERT S. LYLES Jr.
No. 67873
Exp. 6-30-11
CIVIL
STATE OF CALIFORNIA

THE STATE OF CALIFORNIA OR ITS OFFICERS OR AGENTS SHALL NOT BE RESPONSIBLE FOR THE ACCURACY OR COMPLETENESS OF SCANNED COPIES OF THIS PLAN SHEET.

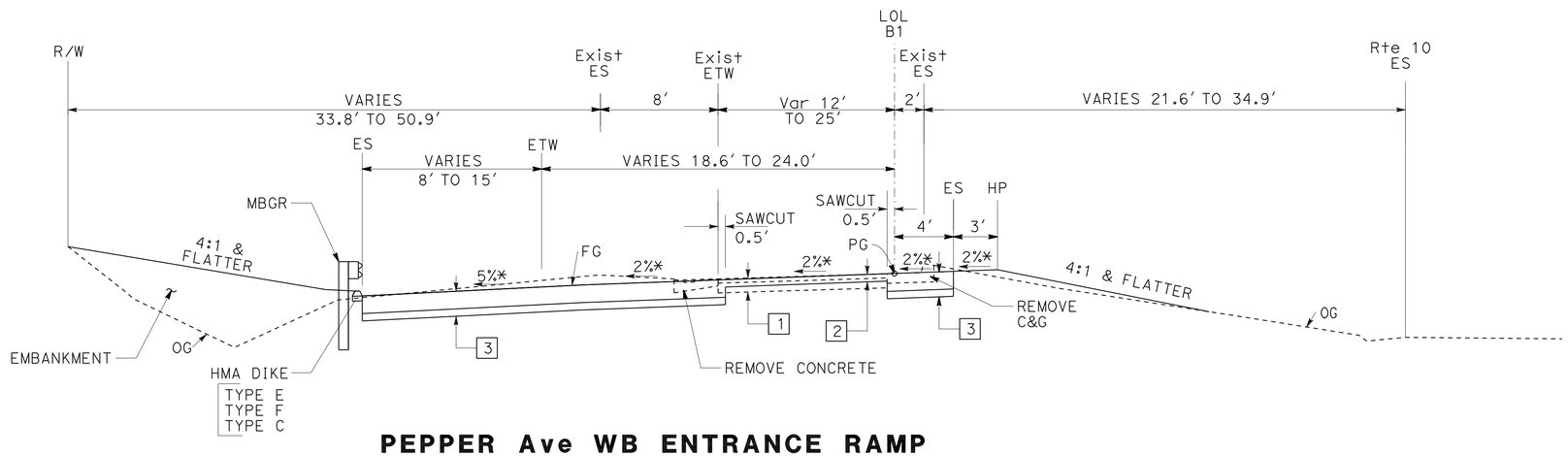

PEPPER Ave WB ENTRANCE RAMP
Sta 850+20.27 TO Sta 854+94.85 LOL B1

STATE OF CALIFORNIA - DEPARTMENT OF TRANSPORTATION
Caltrans®
DESIGN

FUNCTIONAL SUPERVISOR: DU LU
CALCULATED-DESIGNED BY: ROBERT S. LYLES Jr.
CHECKED BY: JOE DAMIAN
REVISED BY
DATE REVISED

TYPICAL CROSS SECTIONS
NO SCALE

X-8

LAST REVISION 01-13-11
DATE PLOTTED => 15-APR-2011
TIME PLOTTED => 09:24

Dist	COUNTY	ROUTE	POST MILES TOTAL PROJECT	SHEET No.	TOTAL SHEETS
08	SBd	10	9.9/R24.5	10	260

Robert S Lyles Jr. 1-13-11
REGISTERED CIVIL ENGINEER DATE

4-11-11
PLANS APPROVAL DATE

REGISTERED PROFESSIONAL ENGINEER ROBERT S. LYLES Jr. No. 67873 Exp. 6-30-11 CIVIL STATE OF CALIFORNIA

THE STATE OF CALIFORNIA OR ITS OFFICERS OR AGENTS SHALL NOT BE RESPONSIBLE FOR THE ACCURACY OR COMPLETENESS OF SCANNED COPIES OF THIS PLAN SHEET.

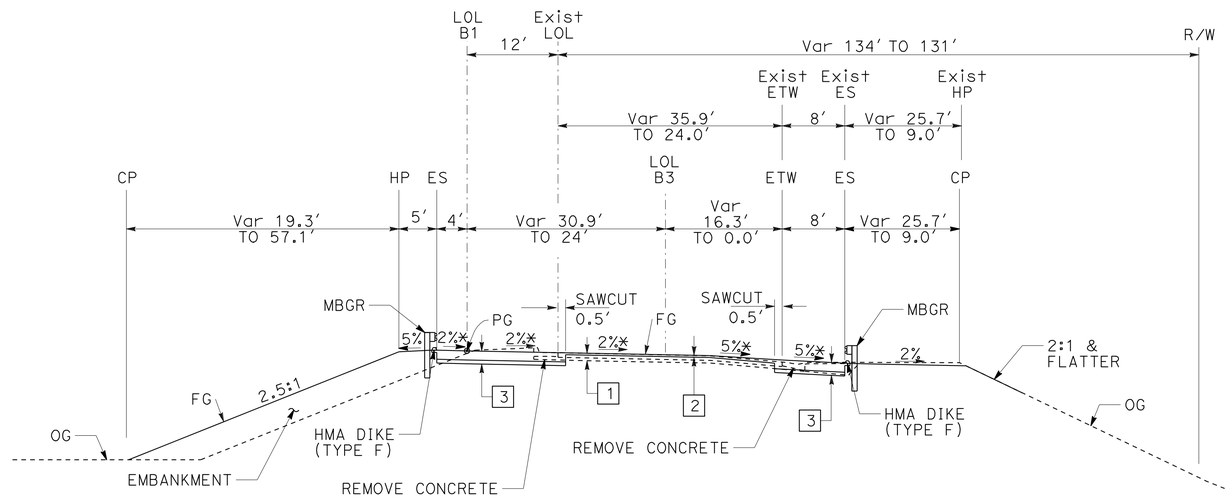

PEPPER Ave EB ENTRANCE RAMP

STA 856+34.39 TO 859+66.40 LOL B2

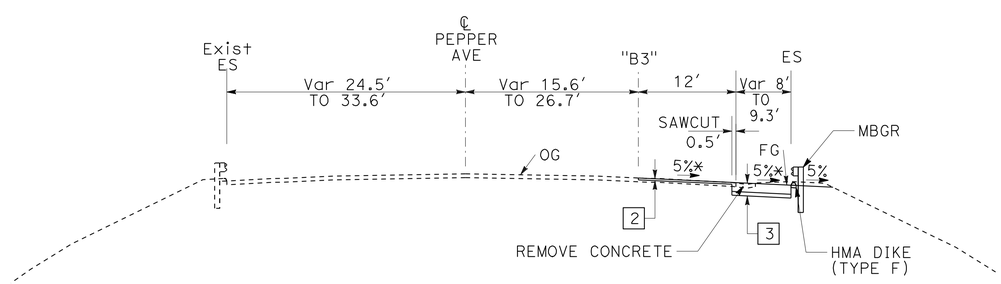

Sta 11+44.36 TO Sta 12+62.84 ℄ PEPPER Ave

TYPICAL CROSS SECTIONS

NO SCALE

X-9

STATE OF CALIFORNIA - DEPARTMENT OF TRANSPORTATION
Caltrans® DESIGN

FUNCTIONAL SUPERVISOR: DU LU

CALCULATED-DESIGNED BY: ROBERT S. LYLES Jr.
CHECKED BY: JOE DAMIAN

REVISED BY
DATE REVISED

LAST REVISION 01-13-11
DATE PLOTTED => 15-APR-2011
TIME PLOTTED => 09:24

Dist	COUNTY	ROUTE	POST MILES TOTAL PROJECT	SHEET No.	TOTAL SHEETS
08	SBd	10	9.9/R24.5	11	260

Robert S Lyles Jr. 1-13-11
REGISTERED CIVIL ENGINEER DATE

4-11-11
PLANS APPROVAL DATE

REGISTERED PROFESSIONAL ENGINEER ROBERT S. LYLES Jr. No. 67873 Exp. 6-30-11 CIVIL STATE OF CALIFORNIA

THE STATE OF CALIFORNIA OR ITS OFFICERS OR AGENTS SHALL NOT BE RESPONSIBLE FOR THE ACCURACY OR COMPLETENESS OF SCANNED COPIES OF THIS PLAN SHEET.

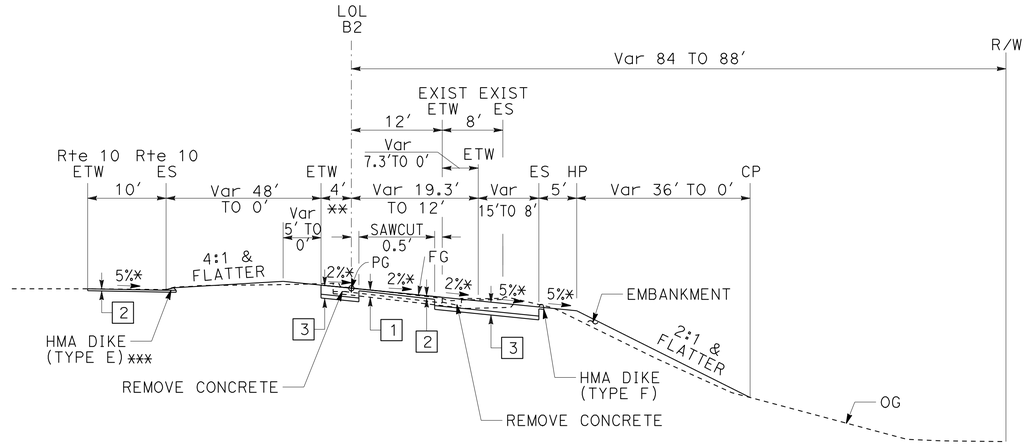

** Sta 862+60.64 TO Sta 864+54.27 LOL B2
*** Sta 863+00.72 TO Sta 864+59.88 ℄ Rte 10

PEPPER Ave EB ENTRANCE RAMP
Sta 862+60.64 TO Sta 868+15.58 LOL B2

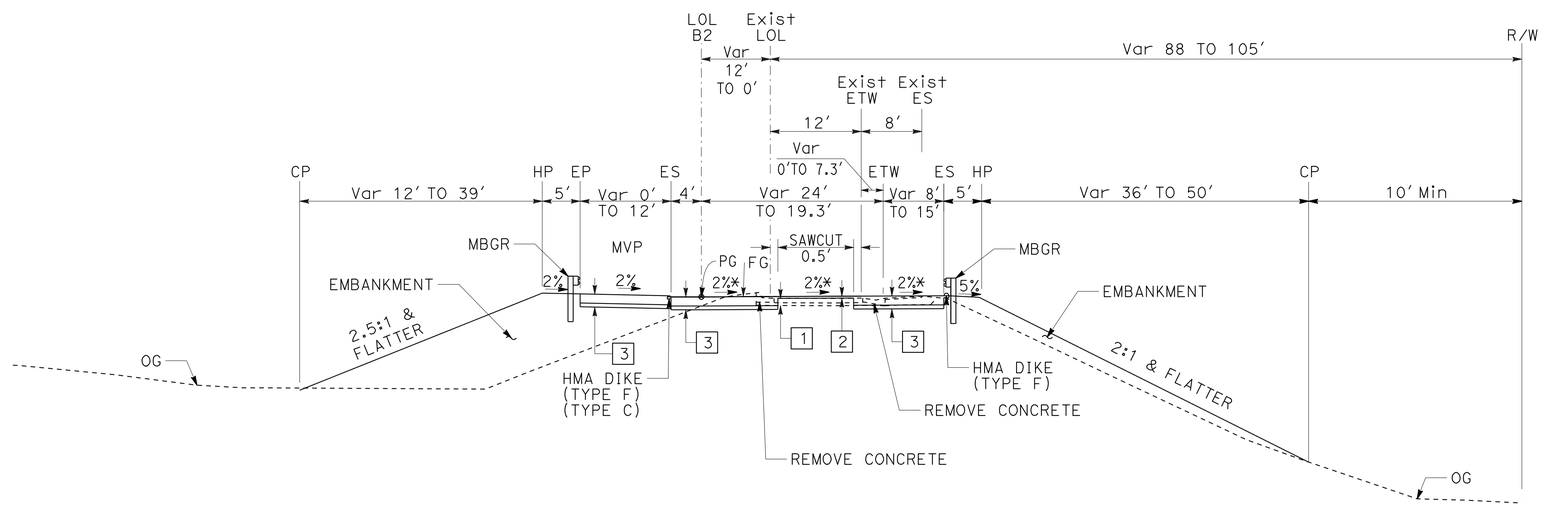

PEPPER Ave EB ENTRANCE RAMP
Sta 859+66.40 TO Sta 862+60.64 LOL B2

TYPICAL CROSS SECTIONS
NO SCALE

X-10

STATE OF CALIFORNIA - DEPARTMENT OF TRANSPORTATION
Caltrans® DESIGN

FUNCTIONAL SUPERVISOR: DU LU
CALCULATED-DESIGNED BY: ROBERT S. LYLES Jr.
CHECKED BY: JOE DAMIAN
REVISED BY
DATE REVISED

LAST REVISION 01-13-11
DATE PLOTTED => 15-APR-2011
TIME PLOTTED => 09:24

Dist	COUNTY	ROUTE	POST MILES TOTAL PROJECT	SHEET No.	TOTAL SHEETS
08	SBd	10	9.9/R24.5	12	260

Robert S Lyles Jr. 1-13-11
REGISTERED CIVIL ENGINEER DATE

4-11-11
PLANS APPROVAL DATE

REGISTERED PROFESSIONAL ENGINEER
ROBERT S. LYLES Jr.
No. 67873
Exp. 6-30-11
CIVIL
STATE OF CALIFORNIA

THE STATE OF CALIFORNIA OR ITS OFFICERS OR AGENTS SHALL NOT BE RESPONSIBLE FOR THE ACCURACY OR COMPLETENESS OF SCANNED COPIES OF THIS PLAN SHEET.

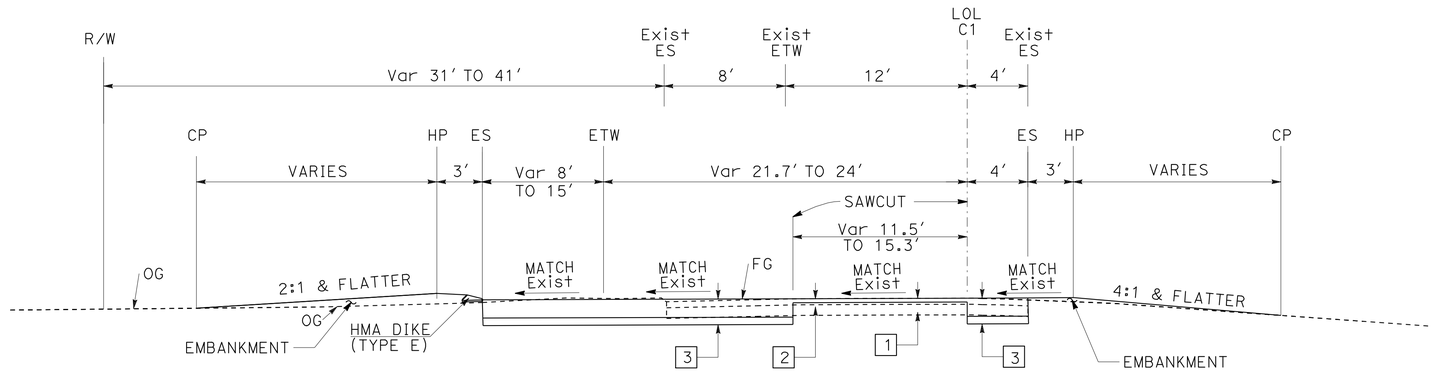

RANCHO Ave WB ENTRANCE RAMP

Sta 902+77.53 TO Sta 907+17.87 LOL C1

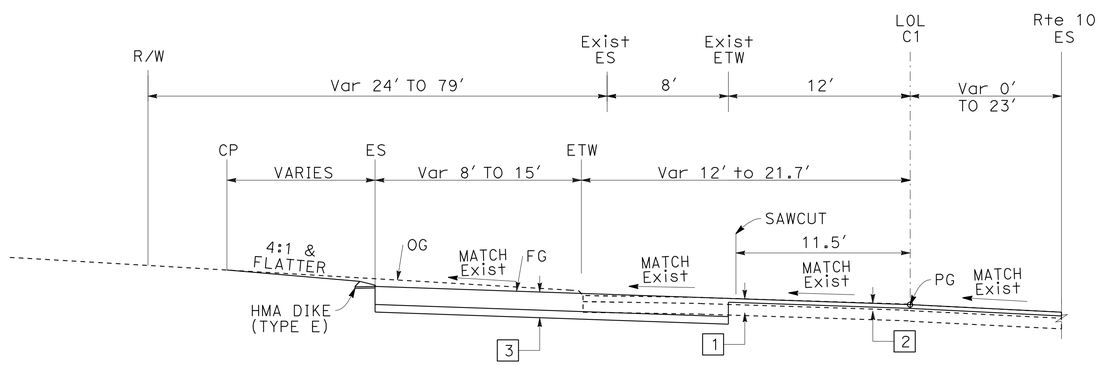

RANCHO Ave WB ENTRANCE RAMP

Sta 896+85.92 TO Sta 902+77.53 LOL C1

TYPICAL CROSS SECTIONS

NO SCALE

X-11

STATE OF CALIFORNIA - DEPARTMENT OF TRANSPORTATION
Caltrans® DESIGN

FUNCTIONAL SUPERVISOR: DU LU
CALCULATED-DESIGNED BY: ROBERT S. LYLES Jr.
CHECKED BY: JOE DAMIAN
REVISED BY
DATE REVISED

LAST REVISION 01-13-11
DATE PLOTTED => 15-APR-2011
TIME PLOTTED => 09:24

Dist	COUNTY	ROUTE	POST MILES TOTAL PROJECT	SHEET No.	TOTAL SHEETS
08	SBd	10	9.9/R24.5	13	260

Robert S Lyles Jr. 1-13-11
REGISTERED CIVIL ENGINEER DATE

4-11-11
PLANS APPROVAL DATE

REGISTERED PROFESSIONAL ENGINEER ROBERT S. LYLES Jr. No. 67873 Exp. 6-30-11 CIVIL STATE OF CALIFORNIA

THE STATE OF CALIFORNIA OR ITS OFFICERS OR AGENTS SHALL NOT BE RESPONSIBLE FOR THE ACCURACY OR COMPLETENESS OF SCANNED COPIES OF THIS PLAN SHEET.

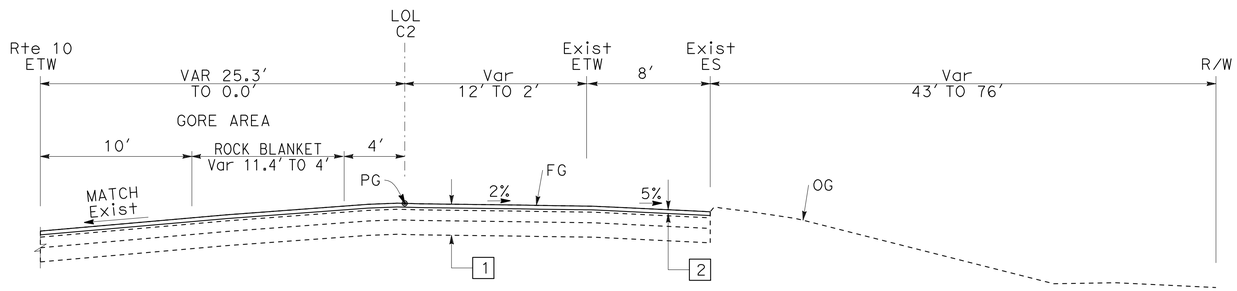

RANCHO Ave EB ENTRANCE RAMP
Sta 914+84.37 TO Sta 921+41.77 LOL C2

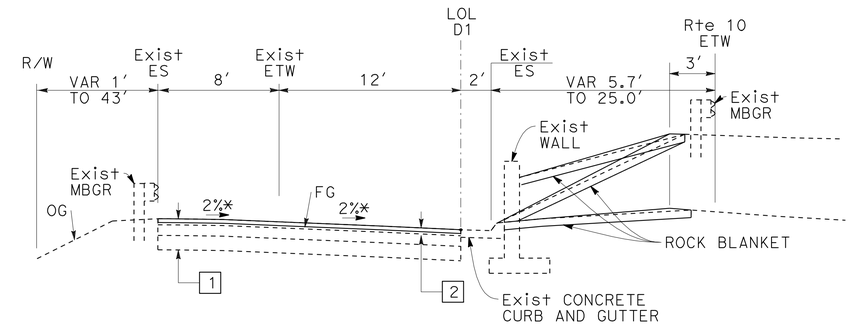

9th St WB ENTRANCE RAMP
Sta 935+85.07 TO Sta 943+19.93 LOL D1

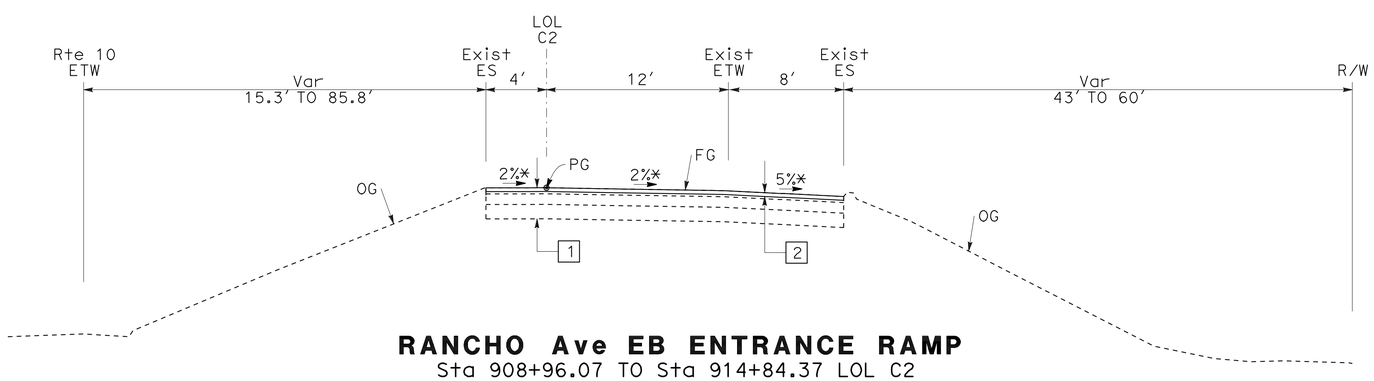

RANCHO Ave EB ENTRANCE RAMP
Sta 908+96.07 TO Sta 914+84.37 LOL C2

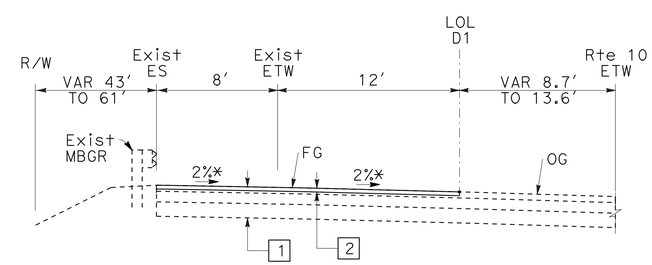

9th St WB ENTRANCE RAMP
Sta 934+36.45 TO Sta 935+85.07 LOL D1

TYPICAL CROSS SECTIONS
NO SCALE

X-12

STATE OF CALIFORNIA - DEPARTMENT OF TRANSPORTATION
Caltrans®
DESIGN

FUNCTIONAL SUPERVISOR: DU LU
CALCULATED-DESIGNED BY: ROBERT S. LYLES Jr.
CHECKED BY: JOE DAMIAN
REVISED BY
DATE REVISED

LAST REVISION 01-13-11
DATE PLOTTED => 15-APR-2011
TIME PLOTTED => 09:24

Dist	COUNTY	ROUTE	POST MILES TOTAL PROJECT	SHEET No.	TOTAL SHEETS
08	SBd	10	9.9/R24.5	14	260

Robert S Lyles Jr. 1-13-11
REGISTERED CIVIL ENGINEER DATE

4-11-11
PLANS APPROVAL DATE

REGISTERED PROFESSIONAL ENGINEER ROBERT S. LYLES Jr. No. 67873 Exp. 6-30-11 CIVIL STATE OF CALIFORNIA

THE STATE OF CALIFORNIA OR ITS OFFICERS OR AGENTS SHALL NOT BE RESPONSIBLE FOR THE ACCURACY OR COMPLETENESS OF SCANNED COPIES OF THIS PLAN SHEET.

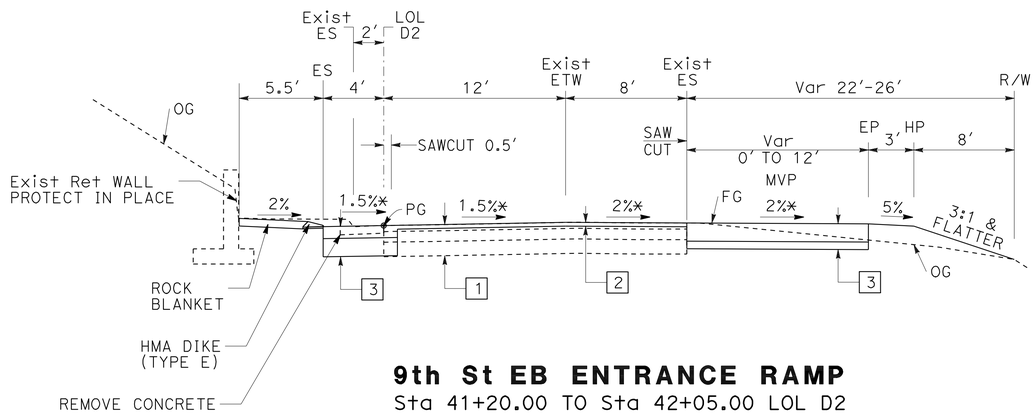

9th St EB ENTRANCE RAMP
Sta 41+20.00 TO Sta 42+05.00 LOL D2

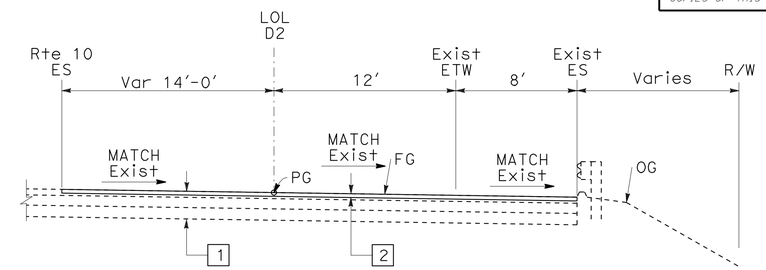

9th St EB ENTRANCE RAMP
Sta 48+60.14 TO Sta 48+69.92 LOL D2
Sta 49+32.09 TO Sta 53+26.45 LOL D2

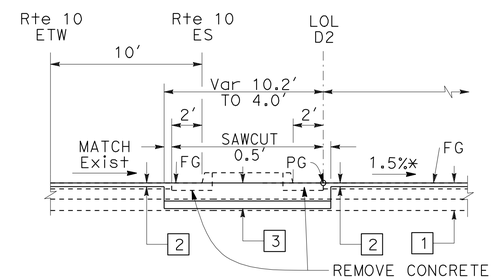

Sta 48+08.23 TO Sta 48+60.14 LOL D2

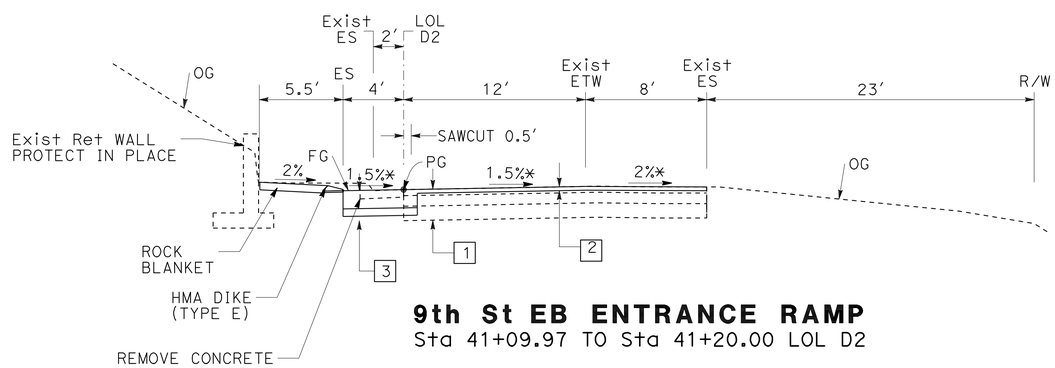

9th St EB ENTRANCE RAMP
Sta 41+09.97 TO Sta 41+20.00 LOL D2

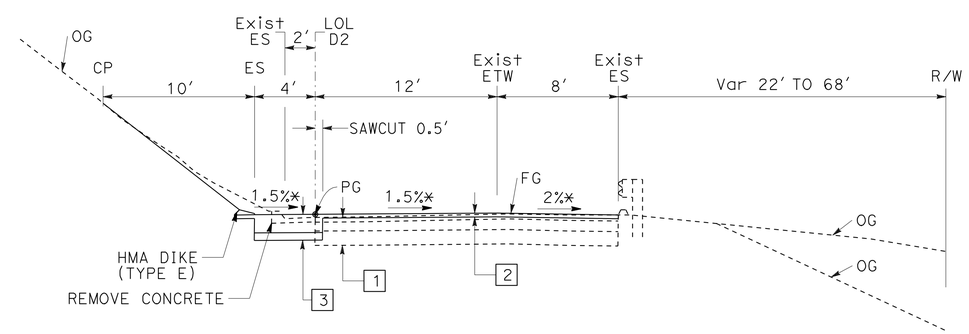

9th St EB ENTRANCE RAMP
Sta 42+05.00 TO Sta 48+60.14 LOL D2

TYPICAL CROSS SECTIONS
NO SCALE

X-13

STATE OF CALIFORNIA - DEPARTMENT OF TRANSPORTATION
Caltrans® DESIGN

FUNCTIONAL SUPERVISOR: DU LU
CALCULATED-DESIGNED BY: ROBERT S. LYLES Jr.
CHECKED BY: JOE DAMIAN
REVISED BY
DATE REVISED

LAST REVISION 01-13-11
DATE PLOTTED => 15-APR-2011
TIME PLOTTED => 09:24

Dist	COUNTY	ROUTE	POST MILES TOTAL PROJECT	SHEET No.	TOTAL SHEETS
08	SBd	10	9.9/R24.5	15	260

Robert S Lyles Jr. 1-13-11
REGISTERED CIVIL ENGINEER DATE

4-11-11
PLANS APPROVAL DATE

REGISTERED PROFESSIONAL ENGINEER ROBERT S. LYLES Jr. No. 67873 Exp. 6-30-11 CIVIL STATE OF CALIFORNIA

THE STATE OF CALIFORNIA OR ITS OFFICERS OR AGENTS SHALL NOT BE RESPONSIBLE FOR THE ACCURACY OR COMPLETENESS OF SCANNED COPIES OF THIS PLAN SHEET.

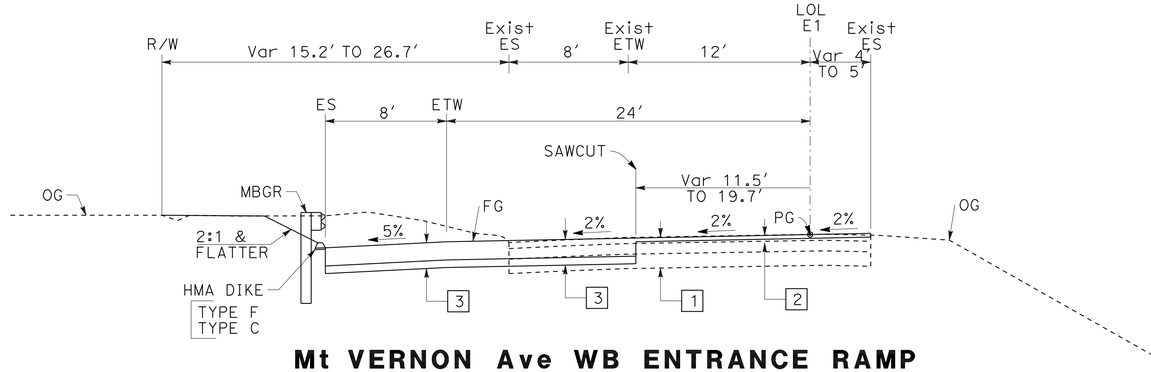

Mt VERNON Ave WB ENTRANCE RAMP
STA 66+82.97 TO STA 67+66.14 LOL E1

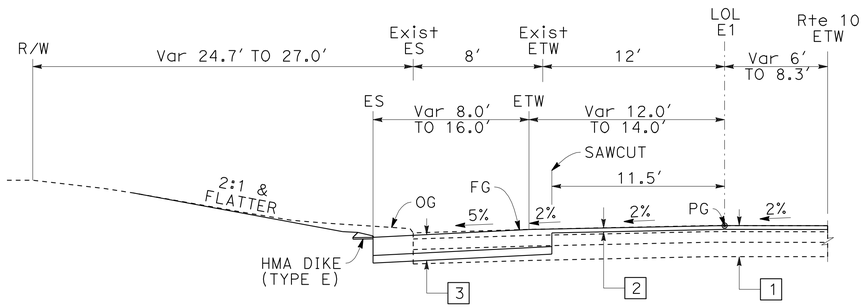

Mt VERNON Ave WB ENTRANCE RAMP
STA 60+21.86 TO STA 60+90.21 LOL E1

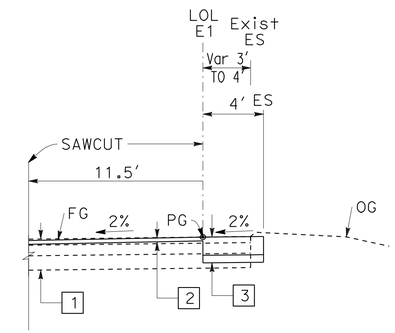

STA 63+96.00 TO STA 65+88.32 LOL E1

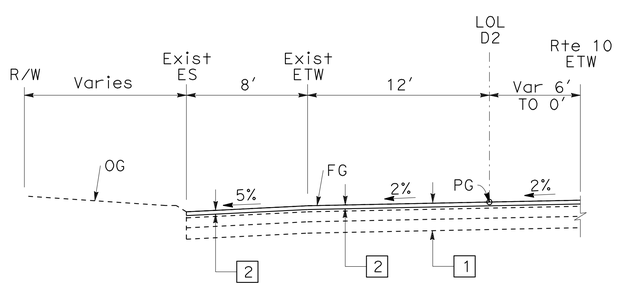

Mt VERNON Ave WB ENTRANCE RAMP
STA 57+29.19 TO STA 60+21.86 LOL E1

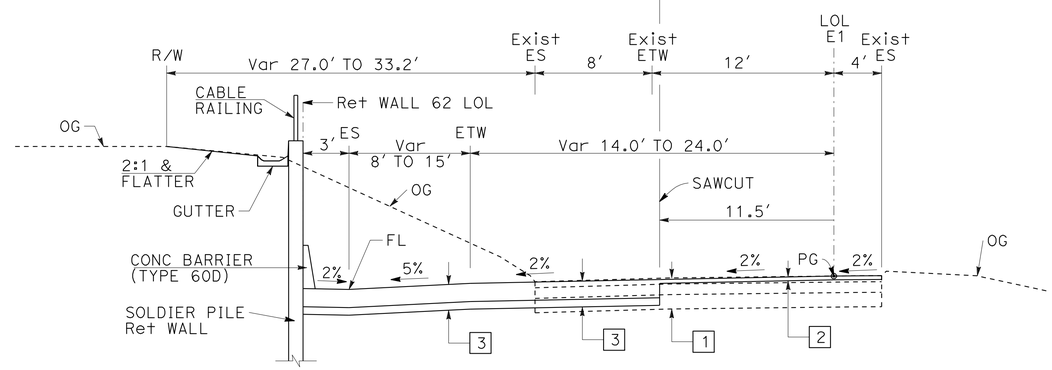

Mt VERNON Ave WB ENTRANCE RAMP
STA 60+90.21 TO STA 66+82.97 LOL E1

TYPICAL CROSS SECTIONS
NO SCALE

X-14

STATE OF CALIFORNIA - DEPARTMENT OF TRANSPORTATION
Caltrans® **DESIGN**
FUNCTIONAL SUPERVISOR: DU LU
CALCULATED-DESIGNED BY: ROBERT S. LYLES Jr.
CHECKED BY: JOE DAMIAN
REVISED BY
DATE REVISED

LAST REVISION 01-13-11
DATE PLOTTED => 15-APR-2011
TIME PLOTTED => 09:24

Dist	COUNTY	ROUTE	POST MILES TOTAL PROJECT	SHEET No.	TOTAL SHEETS
08	SBd	10	9.9/R24.5	16	260

Robert S Lyles Jr. 1-13-11
REGISTERED CIVIL ENGINEER DATE

4-11-11
PLANS APPROVAL DATE

REGISTERED PROFESSIONAL ENGINEER ROBERT S. LYLES Jr. No. 67873 Exp. 6-30-11 CIVIL STATE OF CALIFORNIA

THE STATE OF CALIFORNIA OR ITS OFFICERS OR AGENTS SHALL NOT BE RESPONSIBLE FOR THE ACCURACY OR COMPLETENESS OF SCANNED COPIES OF THIS PLAN SHEET.

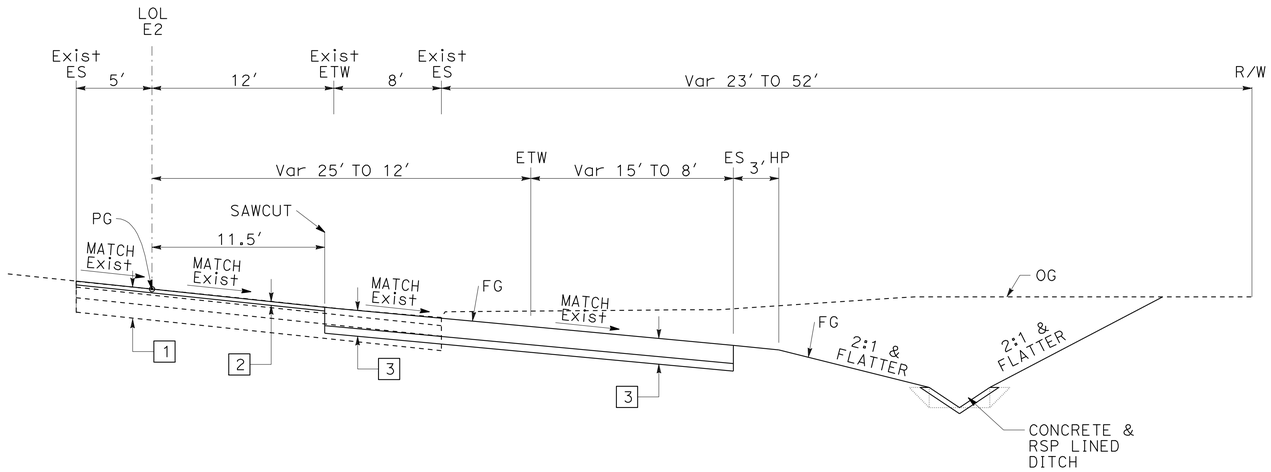

Mt VERNON Ave EB ENTRANCE RAMP

STA 76+80.81 TO STA 81+68.02 LOL E2

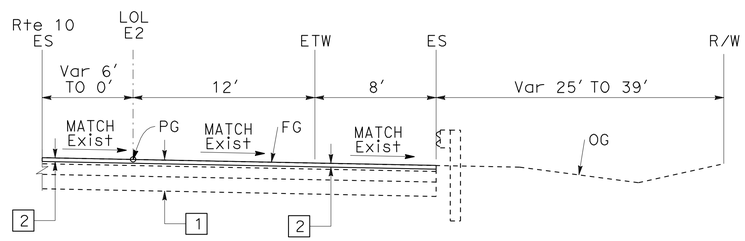

Mt VERNON Ave EB ENTRANCE RAMP

STA 81+68.02 TO STA 83+93.46 LOL E2

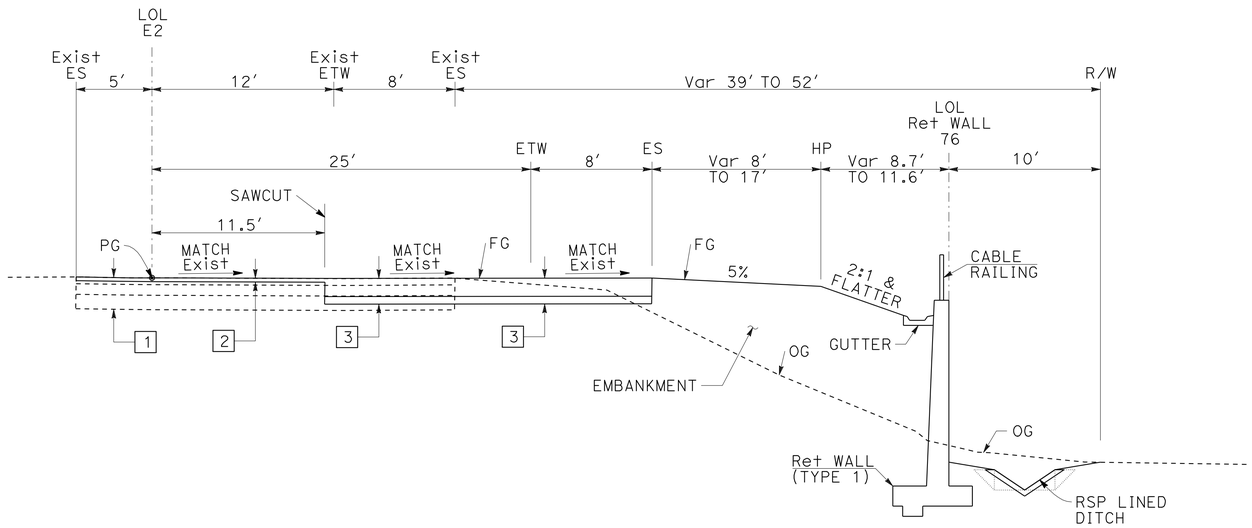

Mt VERNON Ave EB ENTRANCE RAMP

STA 75+91.59 TO STA 76+80.81 LOL E2

TYPICAL CROSS SECTIONS

NO SCALE

X-15

STATE OF CALIFORNIA - DEPARTMENT OF TRANSPORTATION
Caltrans® DESIGN

FUNCTIONAL SUPERVISOR: DU LU
CALCULATED-DESIGNED BY: ROBERT S. LYLES Jr.
CHECKED BY: JOE DAMIAN
REVISED BY
DATE REVISED

LAST REVISION 01-13-11
DATE PLOTTED => 15-APR-2011
TIME PLOTTED => 09:24

Dist	COUNTY	ROUTE	POST MILES TOTAL PROJECT	SHEET No.	TOTAL SHEETS
08	SBd	10	9.9/R24.5	17	260

REGISTERED CIVIL ENGINEER 1-13-11 DATE

4-11-11
PLANS APPROVAL DATE

REGISTERED PROFESSIONAL ENGINEER
ROBERT S. LYLES Jr.
No. 67873
Exp. 6-30-11
CIVIL
STATE OF CALIFORNIA

THE STATE OF CALIFORNIA OR ITS OFFICERS OR AGENTS SHALL NOT BE RESPONSIBLE FOR THE ACCURACY OR COMPLETENESS OF SCANNED COPIES OF THIS PLAN SHEET.

KEYMAP
NO SCALE

K-1

STATE OF CALIFORNIA - DEPARTMENT OF TRANSPORTATION
Caltrans®
DESIGN

FUNCTIONAL SUPERVISOR: DU LU

CALCULATED-DESIGNED BY: ROBERT S. LYLES Jr.
CHECKED BY: DAVID MA

REVISED BY
DATE REVISED

LAST REVISION 01-13-11
DATE PLOTTED => 15-APR-2011
TIME PLOTTED => 09:25

Dist	COUNTY	ROUTE	POST MILES TOTAL PROJECT	SHEET No.	TOTAL SHEETS
08	SBd	10	9.9/R24.5	18	260

Robert S Lyles Jr. 1-13-11
REGISTERED CIVIL ENGINEER DATE

4-11-11
PLANS APPROVAL DATE

REGISTERED PROFESSIONAL ENGINEER ROBERT S. LYLES Jr. No. 67873 Exp. 6-30-11 CIVIL STATE OF CALIFORNIA

THE STATE OF CALIFORNIA OR ITS OFFICERS OR AGENTS SHALL NOT BE RESPONSIBLE FOR THE ACCURACY OR COMPLETENESS OF SCANNED COPIES OF THIS PLAN SHEET.

NOTES:

1. FOR ACCURATE RIGHT OF WAY DATA, CONTACT RIGHT OF WAY ENGINEERING AT THE DISTRICT OFFICE.
2. FOR RAMP INTERSECTIONS, SEE CONSTRUCTION DETAILS.
3. FOR MAINTENANCE PULLOUT, SEE 2006 STANDARD PLAN H9.
4. FOR ROCK BLANKET AT GORE AREA, SEE ROADWAY PLANS AND SUMMARY OF QUANTITIES FOR LOCATIONS AND TOTAL, AND SEE CONSTRUCTION DETAILS.
5. FOR CURB AND DIKE TRANSITION, SEE CONSTRUCTION DETAILS.
6. FOR OVERSIDE DRAINS, DOWN DRAINS, SEE DRAINAGE PLANS.
7. FOR HMA DIKE LOCATION, TYPE AND TOTALS, SEE SUMMARY OF QUANTITIES.
8. FOR MBGR LAYOUT, TYPE AND TOTALS, SEE SUMMARY OF QUANTITIES.
9. ALL ROADWAY WORKS SHALL CONFORM TO EXISTING.
10. SEE SUMMARY OF QUANTITIES SHEETS FOR LOCATIONS AND QUANTITES OF ITEMS.

LEGEND:

COLD PLANE AC PAVEMENT AND PLACE HMA (TYPE C)

ABBREVIATIONS:

AFTS	ALTERNATIVE FLARED TERMINAL SYSTEM
AITS	ALTERNATIVE IN-LINE TERMINAL SYSTEM
TR(WB)	TRANSITION RAILING (TYPE WB)
SFT	END ANCHOR ASSEMBLY (TYPE SFT)
CB60C	CONCRETE BARRIER (TYPE 60C)
CB60D	CONCRETE BARRIER (TYPE 60D)
CB736A	CONCRETE BARRIER (TYPE 732A)
CB736B	CONCRETE BARRIER (TYPE 736B)
MVP	MAINTENANCE VEHICLE PULLOUT
GB	GRADE BREAK

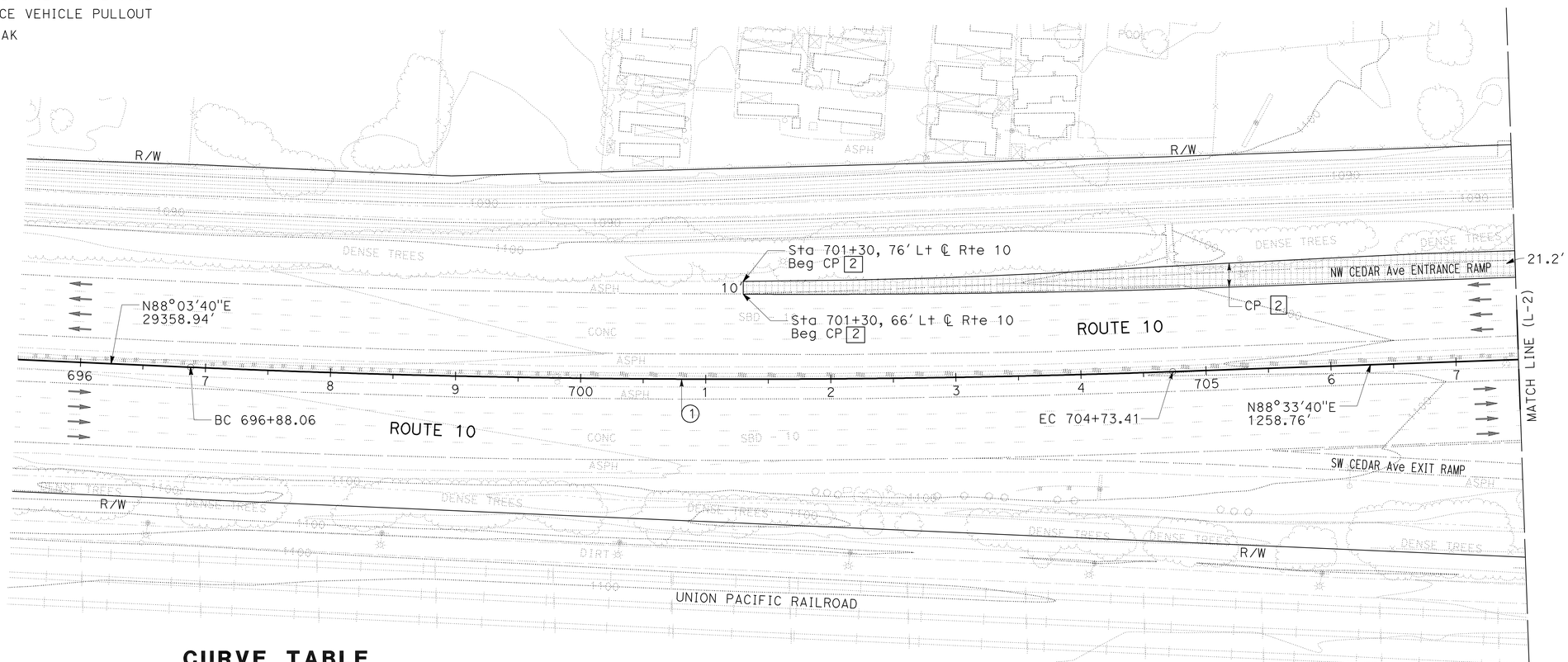

CURVE TABLE

No.	R	Δ	T	L
1	9999.59'	4°30'00"	392.88'	785.35'

LAYOUT

SCALE: 1" = 50'

L-1

STATE OF CALIFORNIA - DEPARTMENT OF TRANSPORTATION
Caltrans® DESIGN

FUNCTIONAL SUPERVISOR: DU LU
CALCULATED-DESIGNED BY: ROBERT S. LYLES Jr.
CHECKED BY: TUAN A. TRUONG
REVISED BY
DATE REVISED

LAST REVISION 01-13-11
DATE PLOTTED => 15-JUN-2011
TIME PLOTTED => 06:42

Dist	COUNTY	ROUTE	POST MILES TOTAL PROJECT	SHEET No.	TOTAL SHEETS
08	SBd	10	9.9/R24.5	19	260

Robert S Lyles Jr. 1-13-11
REGISTERED CIVIL ENGINEER DATE

4-11-11
PLANS APPROVAL DATE

REGISTERED PROFESSIONAL ENGINEER ROBERT S. LYLES Jr. No. 67873 Exp. 6-30-11 CIVIL STATE OF CALIFORNIA

THE STATE OF CALIFORNIA OR ITS OFFICERS OR AGENTS SHALL NOT BE RESPONSIBLE FOR THE ACCURACY OR COMPLETENESS OF SCANNED COPIES OF THIS PLAN SHEET.

NOTE:

FOR ACCURATE RIGHT OF WAY DATA, CONTACT RIGHT OF WAY ENGINEERING AT THE DISTRICT OFFICE.

CURVE TABLE

No.	R	Δ	T	L
2	3000.00′	1°34′48″	41.37′	82.73′
3	10005.15′	9°58′11″	872.67′	1740.94′

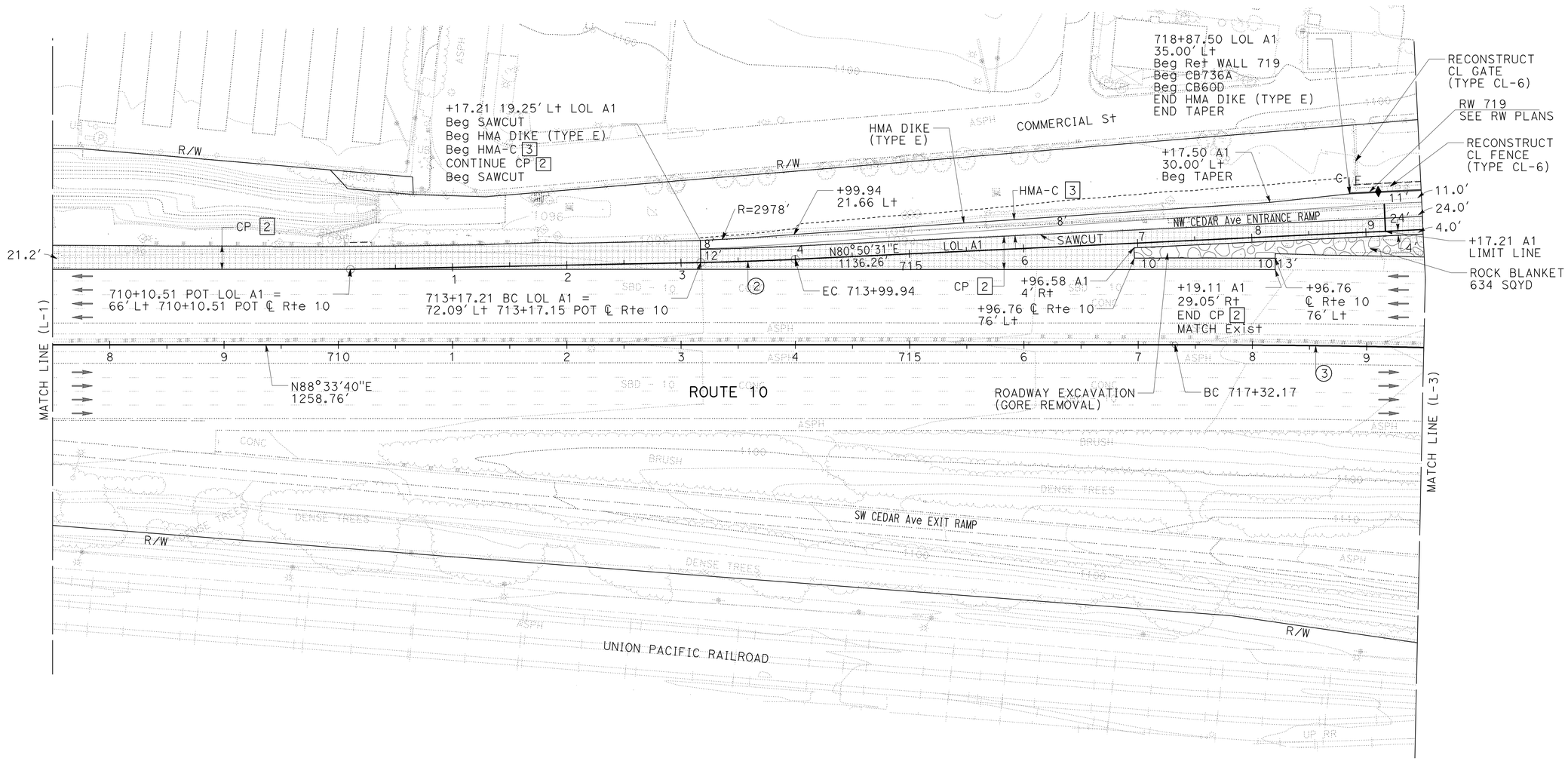

LAYOUT

SCALE: 1″ = 50′

L-2

STATE OF CALIFORNIA - DEPARTMENT OF TRANSPORTATION
Caltrans
DESIGN

FUNCTIONAL SUPERVISOR: DU LU
CALCULATED-DESIGNED BY: ROBERT S. LYLES Jr.
CHECKED BY: TUAN A. TRUONG
REVISED BY
DATE REVISED

LAST REVISION 01-13-11
DATE PLOTTED => 15-JUN-2011
TIME PLOTTED => 06:42

Dist	COUNTY	ROUTE	POST MILES TOTAL PROJECT	SHEET No.	TOTAL SHEETS
08	SBd	10	9.9/R24.5	20	260

Robert S Lyles Jr. 1-13-11
REGISTERED CIVIL ENGINEER DATE

4-11-11
PLANS APPROVAL DATE

REGISTERED PROFESSIONAL ENGINEER ROBERT S. LYLES Jr. No. 67873 Exp. 6-30-11 CIVIL STATE OF CALIFORNIA

THE STATE OF CALIFORNIA OR ITS OFFICERS OR AGENTS SHALL NOT BE RESPONSIBLE FOR THE ACCURACY OR COMPLETENESS OF SCANNED COPIES OF THIS PLAN SHEET.

NOTE:

FOR ACCURATE RIGHT OF WAY DATA, CONTACT RIGHT OF WAY ENGINEERING AT THE DISTRICT OFFICE.

CURVE TABLE

No.	R	Δ	T	L
3	10005.15′	9°58′11"	872.67′	1740.94′

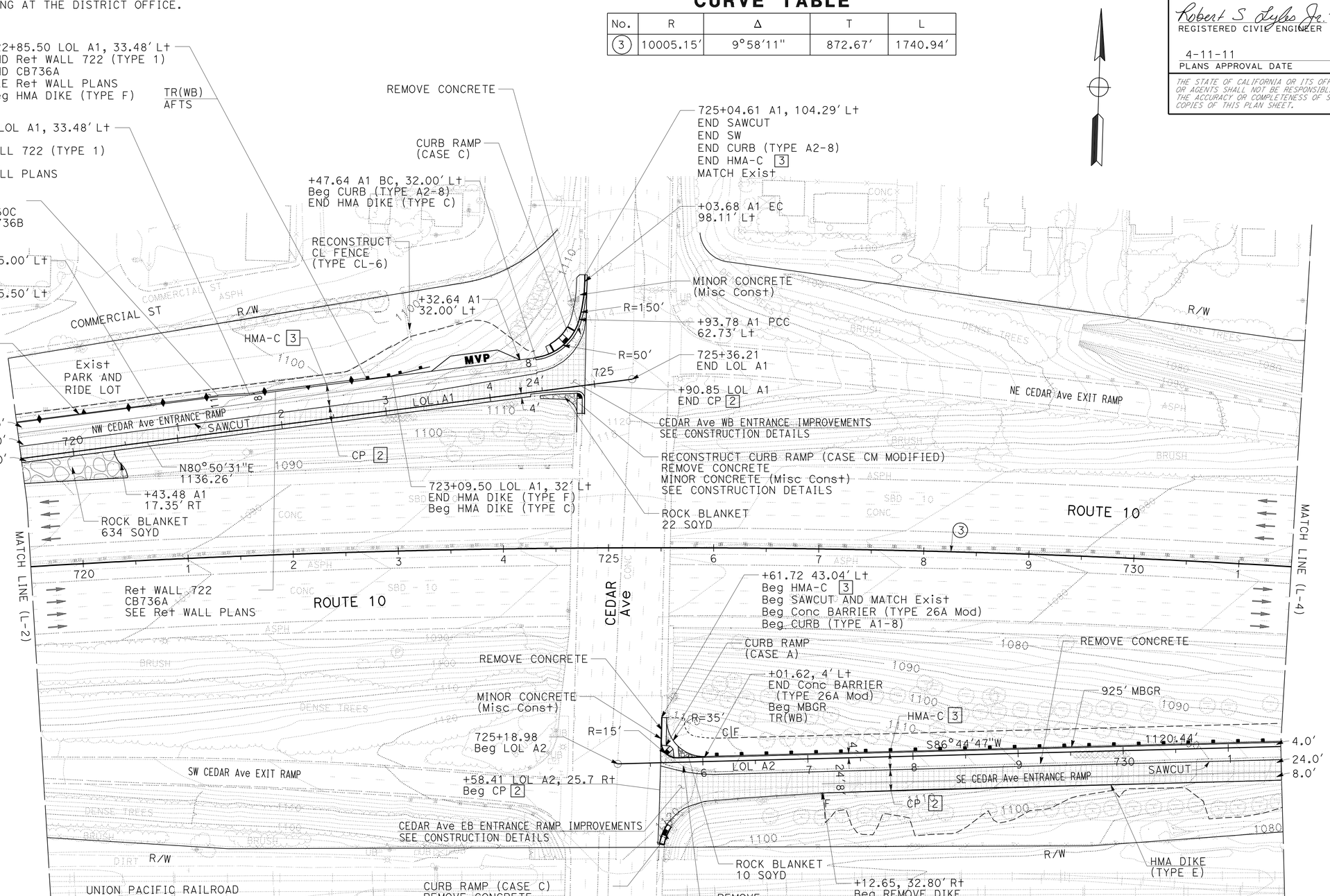

LAYOUT

SCALE: 1" = 50′

L-3

STATE OF CALIFORNIA - DEPARTMENT OF TRANSPORTATION
Caltrans® DESIGN

FUNCTIONAL SUPERVISOR: DU LU
CALCULATED-DESIGNED BY: ROBERT S. LYLES Jr.
CHECKED BY: TUAN A. TRUONG
REVISED BY
DATE REVISED

LAST REVISION 01-13-11
DATE PLOTTED => 15-JUN-2011
TIME PLOTTED => 06:42

Dist	COUNTY	ROUTE	POST MILES TOTAL PROJECT	SHEET No.	TOTAL SHEETS
08	SBd	10	9.9/R24.5	21	260

Robert S Lyles Jr. 1-13-11
REGISTERED CIVIL ENGINEER DATE

4-11-11
PLANS APPROVAL DATE

REGISTERED PROFESSIONAL ENGINEER ROBERT S. LYLES Jr. No. 67873 Exp. 6-30-11 CIVIL STATE OF CALIFORNIA

THE STATE OF CALIFORNIA OR ITS OFFICERS OR AGENTS SHALL NOT BE RESPONSIBLE FOR THE ACCURACY OR COMPLETENESS OF SCANNED COPIES OF THIS PLAN SHEET.

NOTE:

FOR ACCURATE RIGHT OF WAY DATA, CONTACT RIGHT OF WAY ENGINEERING AT THE DISTRICT OFFICE.

CURVE TABLE

No.	R	Δ	T	L
3	10005.15′	9°58′11"	872.67′	1740.94′
4	5000.00′	2°25′00"	105.47′	210.90′
5	3000.00′	3°11′29"	83.57′	167.10′
6	9999.54′	5°28′30"	478.13′	955.53′

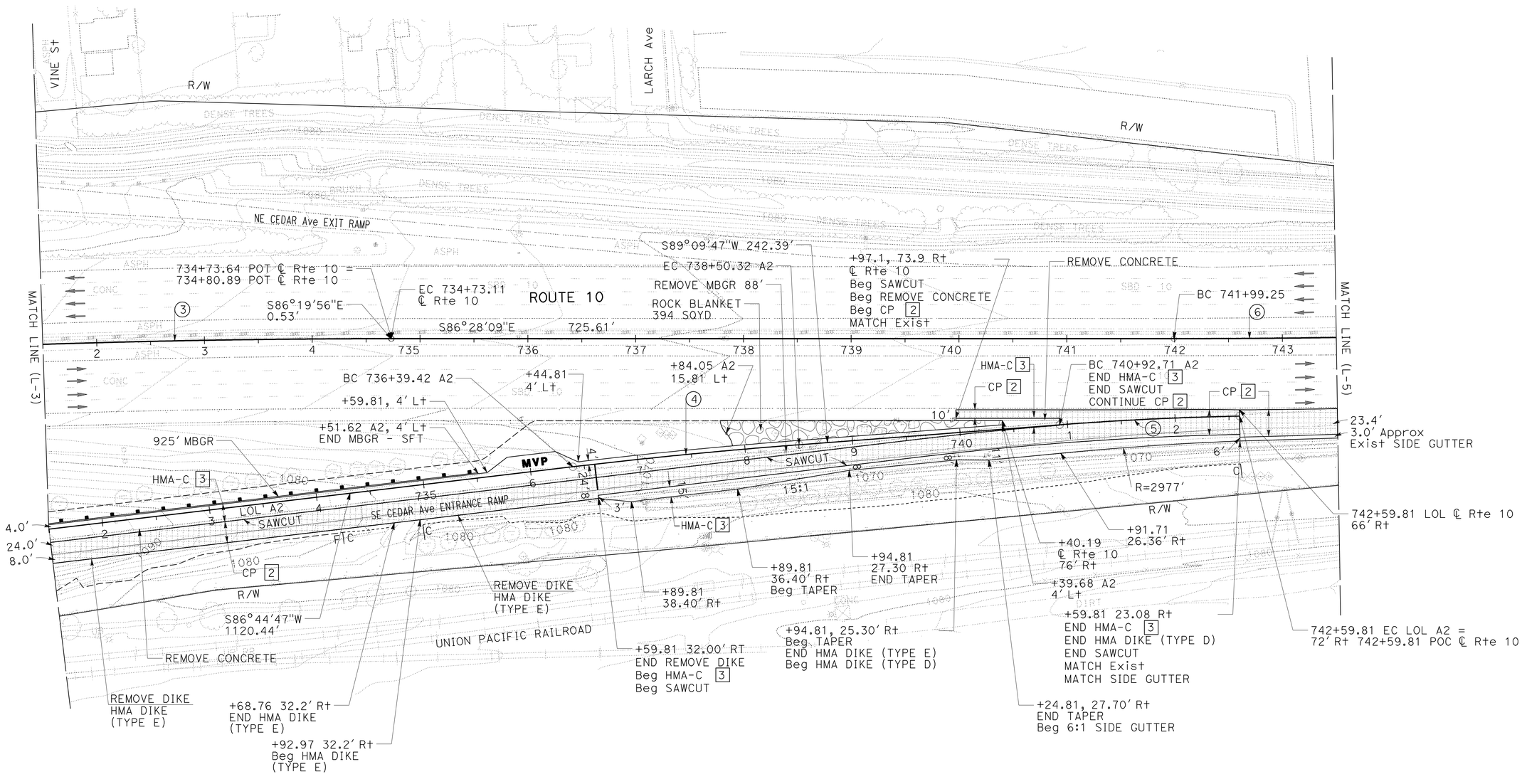

LAYOUT

SCALE: 1" = 50′

L-4

STATE OF CALIFORNIA - DEPARTMENT OF TRANSPORTATION
Caltrans
DESIGN

FUNCTIONAL SUPERVISOR: DU LU
CALCULATED-DESIGNED BY: ROBERT S. LYLES Jr.
CHECKED BY: TUAN A. TRUONG
REVISED BY
DATE REVISED

LAST REVISION 01-13-11
DATE PLOTTED => 15-APR-2011
TIME PLOTTED => 09:07

Dist	COUNTY	ROUTE	POST MILES TOTAL PROJECT	SHEET No.	TOTAL SHEETS
08	SBd	10	9.9/R24.5	22	260

Robert S Lyles Jr. 1-13-11
REGISTERED CIVIL ENGINEER DATE

4-11-11
PLANS APPROVAL DATE

REGISTERED PROFESSIONAL ENGINEER
ROBERT S. LYLES Jr.
No. 67873
Exp. 6-30-11
CIVIL
STATE OF CALIFORNIA

THE STATE OF CALIFORNIA OR ITS OFFICERS OR AGENTS SHALL NOT BE RESPONSIBLE FOR THE ACCURACY OR COMPLETENESS OF SCANNED COPIES OF THIS PLAN SHEET.

NOTE:

FOR ACCURATE RIGHT OF WAY DATA, CONTACT RIGHT OF WAY ENGINEERING AT THE DISTRICT OFFICE.

CURVE TABLE

No.	R	Δ	T	L
6	9999.54′	5°28′30″	478.13′	955.53′

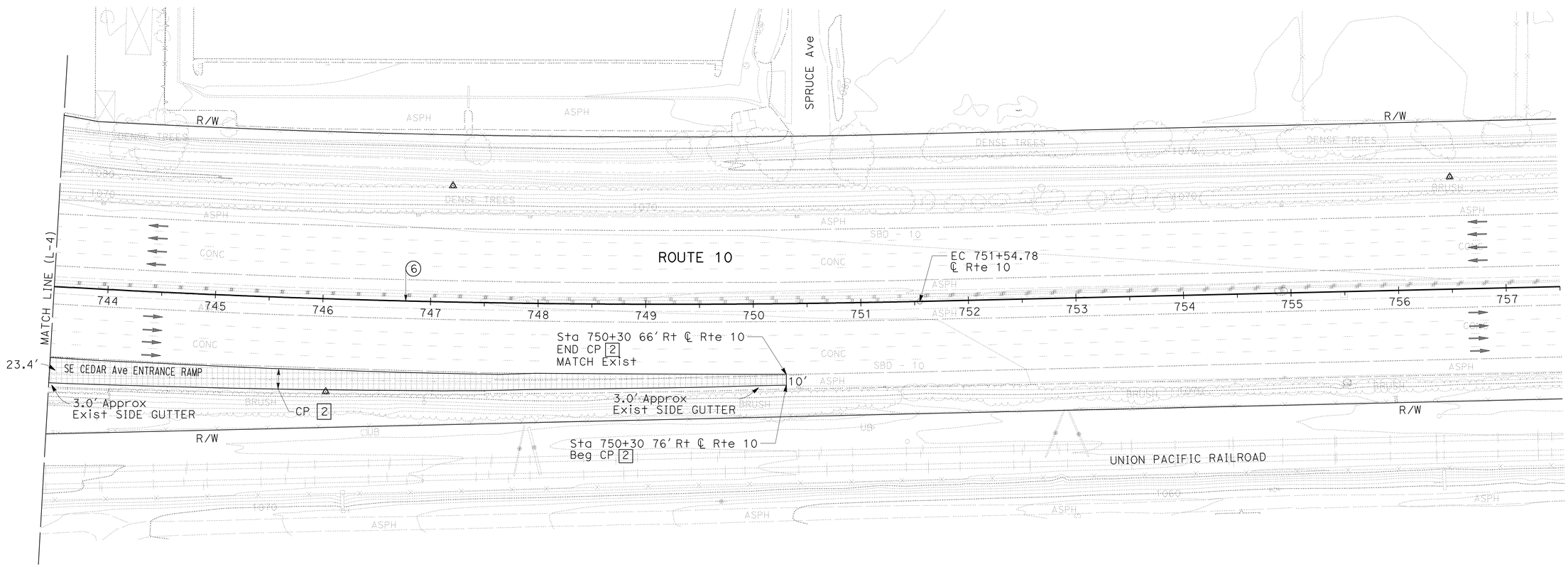

LAYOUT

SCALE: 1" = 50′

L-5

STATE OF CALIFORNIA - DEPARTMENT OF TRANSPORTATION
DESIGN

FUNCTIONAL SUPERVISOR: DU LU

CALCULATED-DESIGNED BY: ROBERT S. LYLES Jr.
CHECKED BY: TUAN A. TRUONG

REVISED BY
DATE REVISED

LAST REVISION 01-13-11
DATE PLOTTED => 15-APR-2011
TIME PLOTTED => 09:07

Dist	COUNTY	ROUTE	POST MILES TOTAL PROJECT	SHEET No.	TOTAL SHEETS
08	SBd	10	9.9/R24.5	23	260

Robert S Lyles Jr. 1-13-11
REGISTERED CIVIL ENGINEER DATE

4-11-11
PLANS APPROVAL DATE

REGISTERED PROFESSIONAL ENGINEER ROBERT S. LYLES Jr. No. 67873 Exp. 6-30-11 CIVIL STATE OF CALIFORNIA

THE STATE OF CALIFORNIA OR ITS OFFICERS OR AGENTS SHALL NOT BE RESPONSIBLE FOR THE ACCURACY OR COMPLETENESS OF SCANNED COPIES OF THIS PLAN SHEET.

NOTE:

FOR ACCURATE RIGHT OF WAY DATA, CONTACT RIGHT OF WAY ENGINEERING AT THE DISTRICT OFFICE.

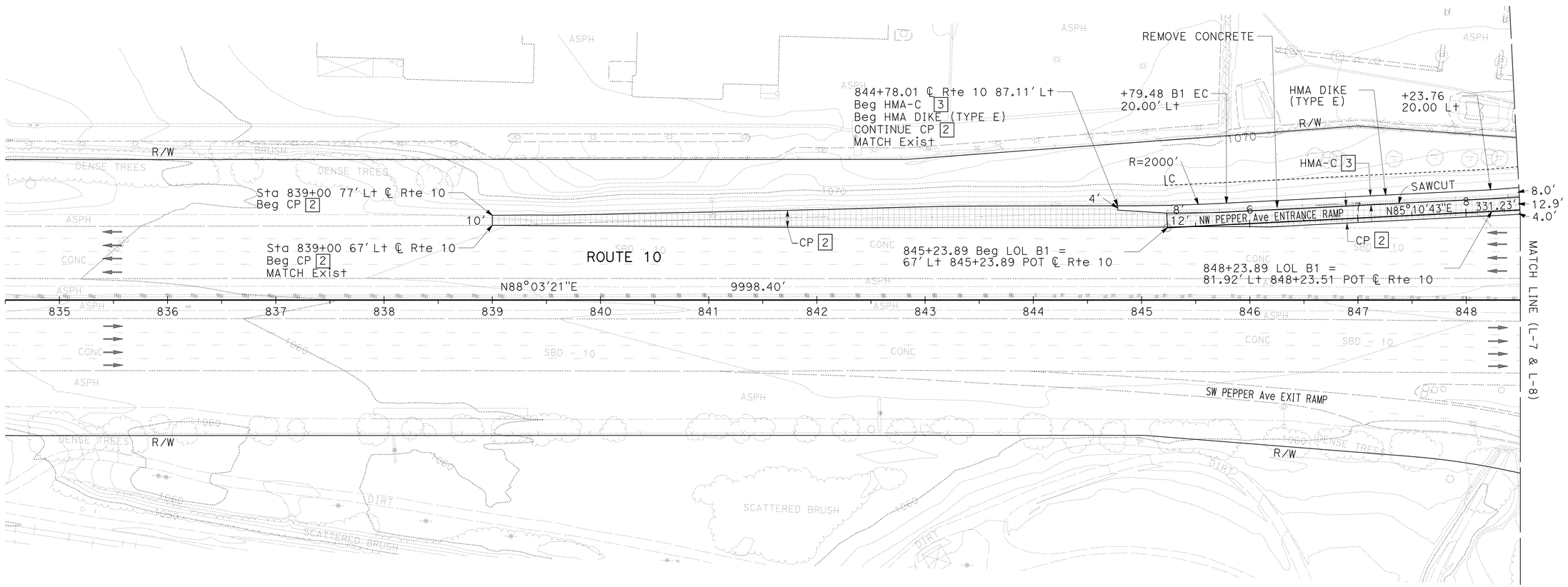

LAYOUT

SCALE: 1″ = 50′

L-6

STATE OF CALIFORNIA - DEPARTMENT OF TRANSPORTATION
Caltrans
DESIGN

FUNCTIONAL SUPERVISOR: DU LU

CALCULATED-DESIGNED BY: ROBERT S. LYLES Jr.
CHECKED BY: TUAN A. TRUONG

REVISED BY
DATE REVISED

LAST REVISION 01-13-11
DATE PLOTTED => 15-APR-2011
TIME PLOTTED => 09:07

Dist	COUNTY	ROUTE	POST MILES TOTAL PROJECT	SHEET No.	TOTAL SHEETS
08	SBd	10	9.9/R24.5	24	260

Robert S Lyles Jr. 1-13-11
REGISTERED CIVIL ENGINEER DATE

4-11-11
PLANS APPROVAL DATE

REGISTERED PROFESSIONAL ENGINEER ROBERT S. LYLES Jr. No. 67873 Exp. 6-30-11 CIVIL STATE OF CALIFORNIA

THE STATE OF CALIFORNIA OR ITS OFFICERS OR AGENTS SHALL NOT BE RESPONSIBLE FOR THE ACCURACY OR COMPLETENESS OF SCANNED COPIES OF THIS PLAN SHEET.

NOTE:

FOR ACCURATE RIGHT OF WAY DATA, CONTACT RIGHT OF WAY ENGINEERING AT THE DISTRICT OFFICE.

CURVE TABLE

No.	R	Δ	T	L
7	2000.00′	6°43′41″	117.56′	234.85′
8	19998.99′	5°26′15″	949.70′	1897.97′

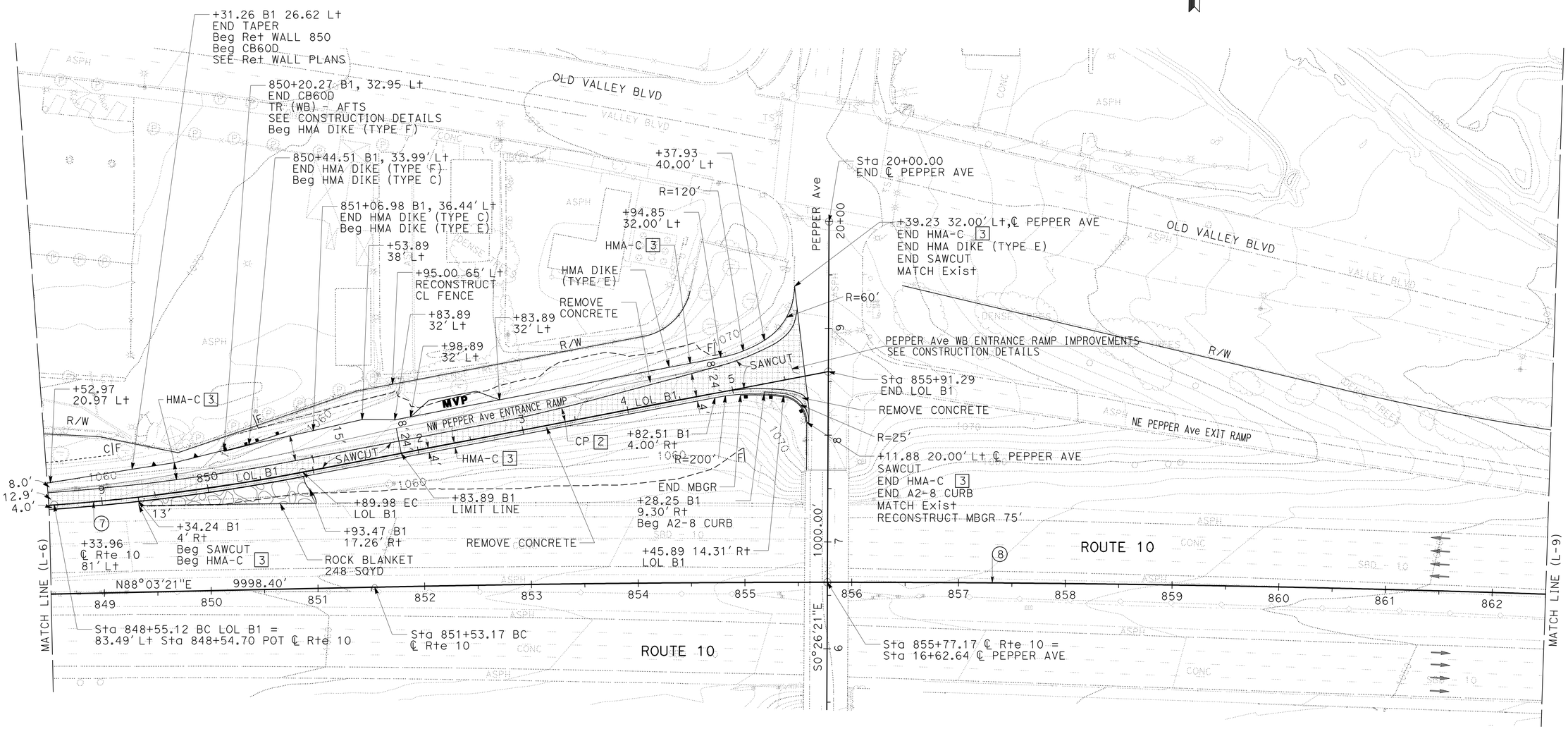

LAYOUT

SCALE: 1″ = 50′

L-7

STATE OF CALIFORNIA - DEPARTMENT OF TRANSPORTATION
Caltrans DESIGN

ROBERT S. LYLES Jr. | REVISED BY
TUAN A. TRUONG | DATE REVISED
CALCULATED-DESIGNED BY
CHECKED BY
FUNCTIONAL SUPERVISOR
DU LU

LAST REVISION 01-13-11 | DATE PLOTTED => 15-APR-2011 | TIME PLOTTED => 09:08

BORDER LAST REVISED 7/2/2010 | USERNAME => trmikesl | DGN FILE => 838434ea007.dgn | RELATIVE BORDER SCALE IS IN INCHES 0 1 2 3 | UNIT 2245 | PROJECT NUMBER & PHASE 08000006401

Dist	COUNTY	ROUTE	POST MILES TOTAL PROJECT	SHEET No.	TOTAL SHEETS
08	SBd	10	9.9/R24.5	25	260

Robert S Lyles Jr. 1-13-11
REGISTERED CIVIL ENGINEER DATE

4-11-11
PLANS APPROVAL DATE

REGISTERED PROFESSIONAL ENGINEER ROBERT S. LYLES Jr. No. 67873 Exp. 6-30-11 CIVIL STATE OF CALIFORNIA

THE STATE OF CALIFORNIA OR ITS OFFICERS OR AGENTS SHALL NOT BE RESPONSIBLE FOR THE ACCURACY OR COMPLETENESS OF SCANNED COPIES OF THIS PLAN SHEET.

NOTE:

FOR ACCURATE RIGHT OF WAY DATA, CONTACT RIGHT OF WAY ENGINEERING AT THE DISTRICT OFFICE.

CURVE TABLE

No.	R	Δ	T	L
8	19998.99′	5°26′15"	949.70′	1897.97′
9	1000.00′	8°45′44"	76.62′	152.93′
10	1024.00′	4°35′08"	41.00′	81.95′
11	100.00′	77°40′08"	80.50′	135.56′

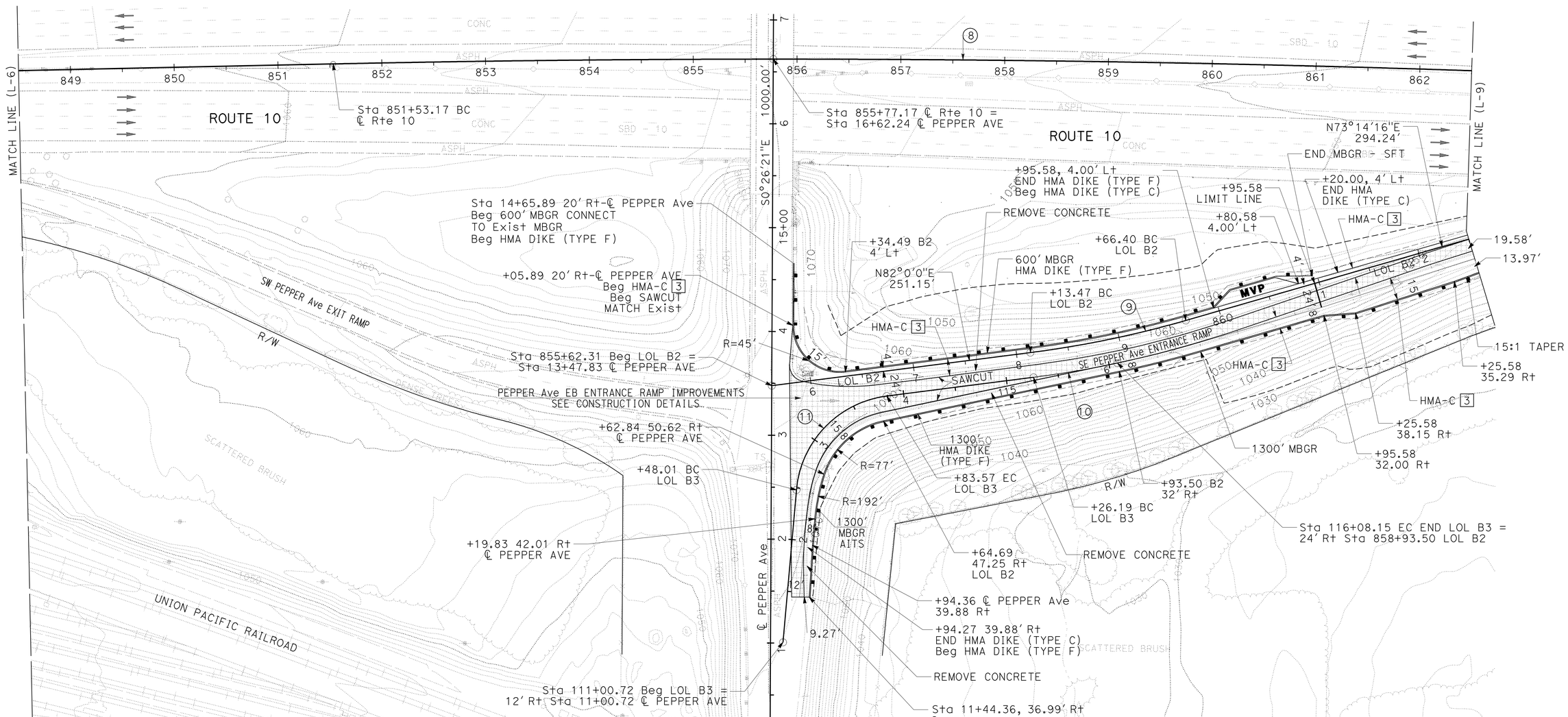

LAYOUT

SCALE: 1" = 50′

L-8

REVISED BY	DATE REVISED

CALCULATED-DESIGNED BY	CHECKED BY
ROBERT S. LYLES Jr.	TUAN A. TRUONG

FUNCTIONAL SUPERVISOR: DU LU

STATE OF CALIFORNIA - DEPARTMENT OF TRANSPORTATION

Caltrans® **DESIGN**

LAST REVISION 01-13-11 | DATE PLOTTED => 15-JUN-2011 | TIME PLOTTED => 06:43

Dist	COUNTY	ROUTE	POST MILES TOTAL PROJECT	SHEET No.	TOTAL SHEETS
08	SBd	10	9.9/R24.5	26	260

Robert S Lyles Jr. 1-13-11
REGISTERED CIVIL ENGINEER DATE

4-11-11
PLANS APPROVAL DATE

REGISTERED PROFESSIONAL ENGINEER ROBERT S. LYLES Jr. No. 67873 Exp. 6-30-11 CIVIL STATE OF CALIFORNIA

THE STATE OF CALIFORNIA OR ITS OFFICERS OR AGENTS SHALL NOT BE RESPONSIBLE FOR THE ACCURACY OR COMPLETENESS OF SCANNED COPIES OF THIS PLAN SHEET.

NOTE:

FOR ACCURATE RIGHT OF WAY DATA, CONTACT RIGHT OF WAY ENGINEERING AT THE DISTRICT OFFICE.

CURVE TABLE

No.	R	Δ	T	L
8	19998.99′	5°26′15″	949.70′	1897.97′
12	850.00′	15°8′57″	113.03′	224.74′

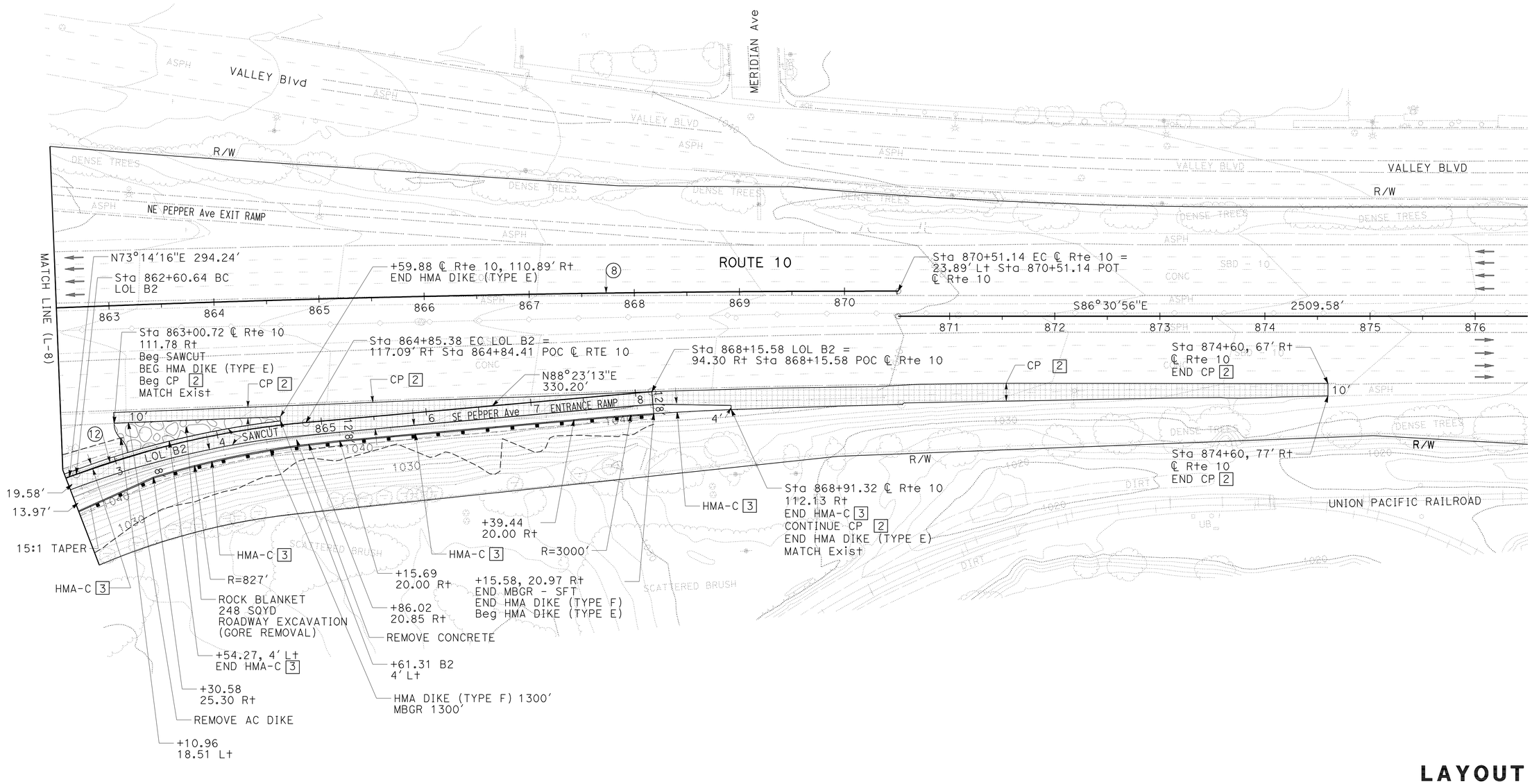

LAYOUT

SCALE: 1″ = 50′

L-9

STATE OF CALIFORNIA - DEPARTMENT OF TRANSPORTATION
Caltrans
DESIGN

FUNCTIONAL SUPERVISOR: DU LU
CALCULATED-DESIGNED BY: ROBERT S. LYLES Jr.
CHECKED BY: TUAN A. TRUONG
REVISED BY
DATE REVISED

LAST REVISION: DATE PLOTTED => 15-JUN-2011
01-13-11 TIME PLOTTED => 06:43

Dist	COUNTY	ROUTE	POST MILES TOTAL PROJECT	SHEET No.	TOTAL SHEETS
08	SBd	10	9.9/R24.5	27	260

Robert S Lyles Jr. 1-13-11
REGISTERED CIVIL ENGINEER DATE

4-11-11
PLANS APPROVAL DATE

REGISTERED PROFESSIONAL ENGINEER ROBERT S. LYLES Jr. No. 67873 Exp. 6-30-11 CIVIL STATE OF CALIFORNIA

THE STATE OF CALIFORNIA OR ITS OFFICERS OR AGENTS SHALL NOT BE RESPONSIBLE FOR THE ACCURACY OR COMPLETENESS OF SCANNED COPIES OF THIS PLAN SHEET.

NOTE:

FOR ACCURATE RIGHT OF WAY DATA, CONTACT RIGHT OF WAY ENGINEERING AT THE DISTRICT OFFICE.

CURVE TABLE

No.	R	Δ	T	L
13	3000.00′	6°05′33"	159.65′	319.00′
14	2999.85′	18°25′11"	486.40′	964.40′

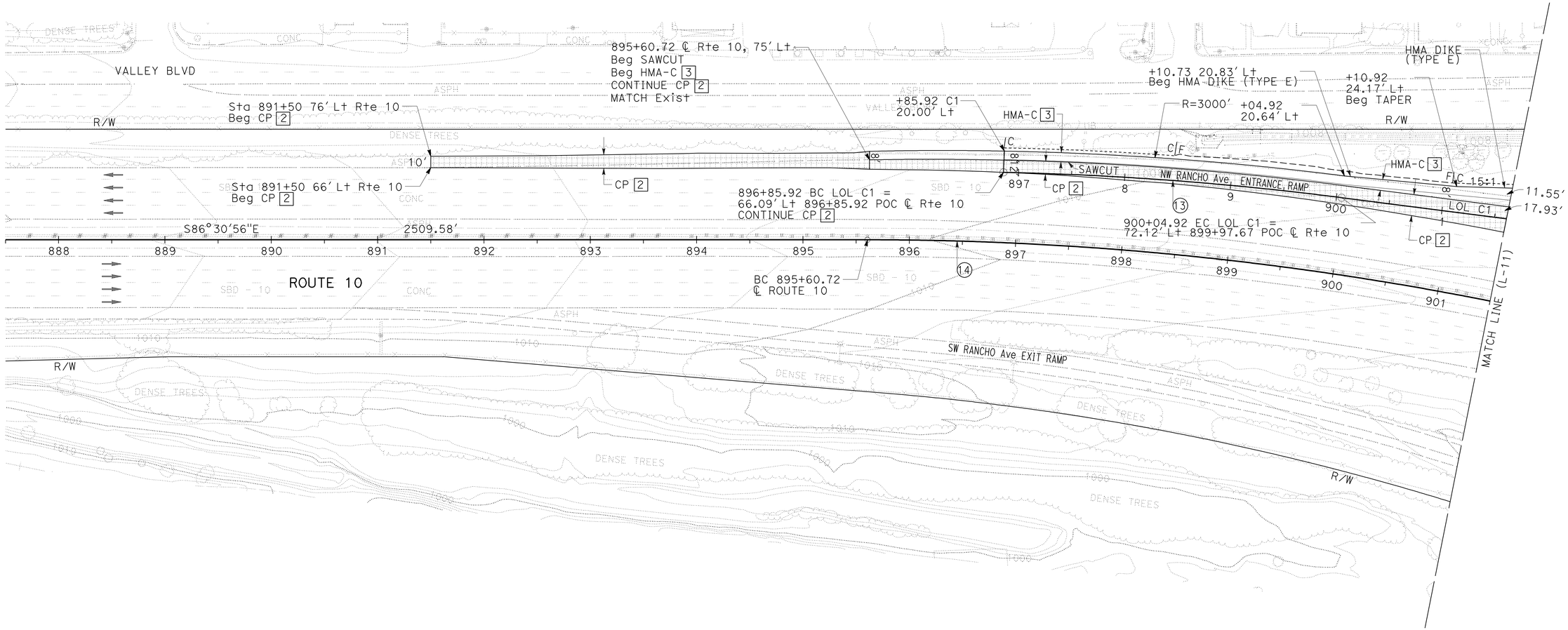

LAYOUT

SCALE: 1" = 50′

L-10

STATE OF CALIFORNIA - DEPARTMENT OF TRANSPORTATION

Caltrans® **DESIGN**

FUNCTIONAL SUPERVISOR: DU LU

CALCULATED-DESIGNED BY: ROBERT S. LYLES Jr.

CHECKED BY: TUAN A. TRUONG

REVISED BY

DATE REVISED

LAST REVISION 01-13-11 | DATE PLOTTED => 15-JUN-2011 | TIME PLOTTED => 06:43

Dist	COUNTY	ROUTE	POST MILES TOTAL PROJECT	SHEET No.	TOTAL SHEETS
08	SBd	10	9.9/R24.5	28	260

Robert S Lyles Jr. 1-13-11
REGISTERED CIVIL ENGINEER DATE

4-11-11
PLANS APPROVAL DATE

REGISTERED PROFESSIONAL ENGINEER ROBERT S. LYLES Jr. No. 67873 Exp. 6-30-11 CIVIL STATE OF CALIFORNIA

THE STATE OF CALIFORNIA OR ITS OFFICERS OR AGENTS SHALL NOT BE RESPONSIBLE FOR THE ACCURACY OR COMPLETENESS OF SCANNED COPIES OF THIS PLAN SHEET.

NOTE:

FOR ACCURATE RIGHT OF WAY DATA, CONTACT RIGHT OF WAY ENGINEERING AT THE DISTRICT OFFICE.

CURVE TABLE

No.	R	Δ	T	L
14	2999.85′	18°25′11"	486.40′	964.40′
15	5000.00′	1°30′00"	65.45′	130.90′
16	3000.00′	4°34′43"	119.93′	239.73′
17	2999.84′	12°33′39"	330.15′	657.65′

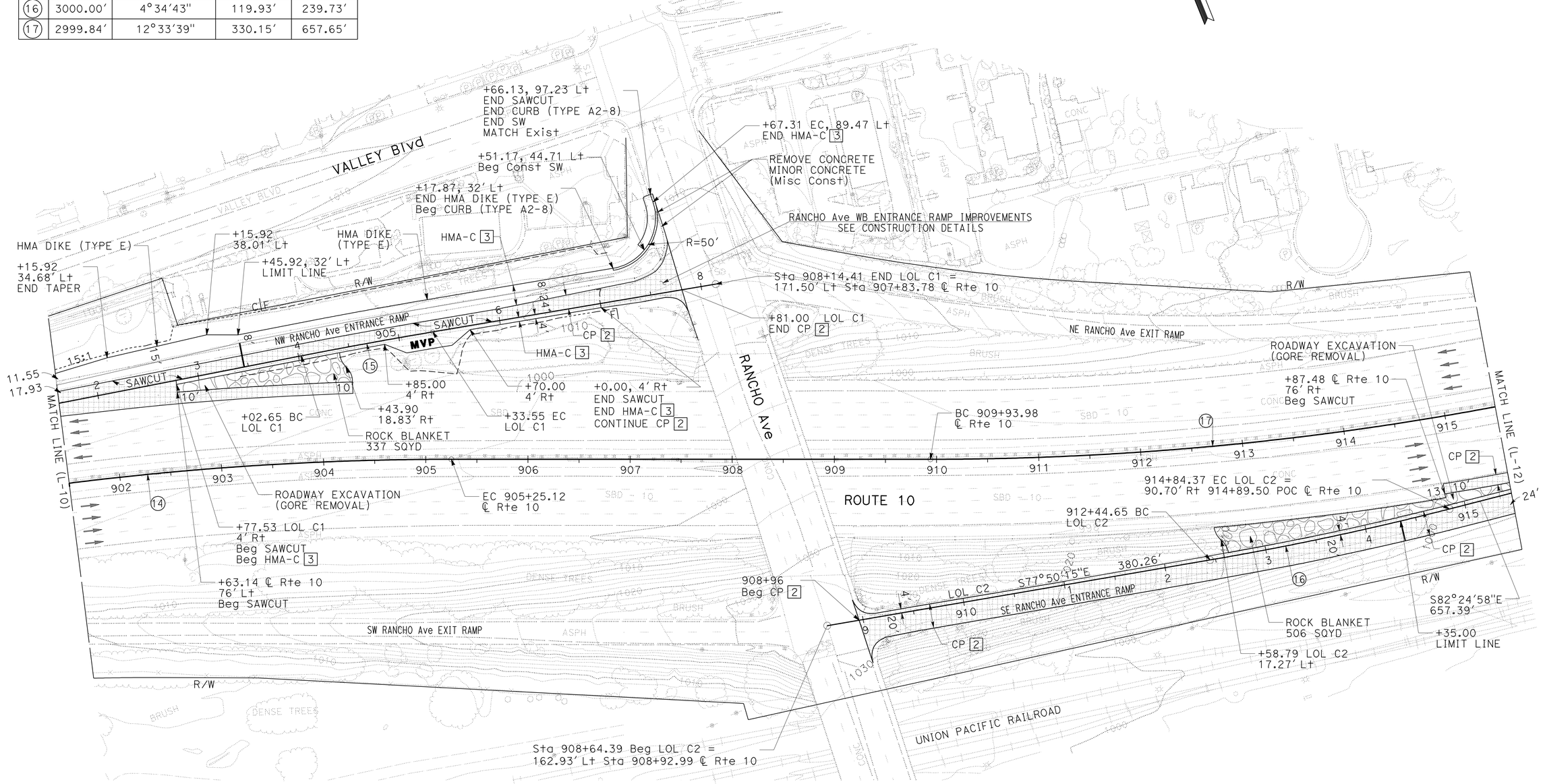

LAYOUT

SCALE: 1" = 50′

L-11

STATE OF CALIFORNIA - DEPARTMENT OF TRANSPORTATION
Caltrans
DESIGN

FUNCTIONAL SUPERVISOR: DU LU
CALCULATED-DESIGNED BY: ROBERT S. LYLES Jr.
CHECKED BY: TUAN A. TRUONG
REVISED BY
DATE REVISED

LAST REVISION 01-13-11
DATE PLOTTED => 15-JUN-2011
TIME PLOTTED => 06:43

Dist	COUNTY	ROUTE	POST MILES TOTAL PROJECT	SHEET No.	TOTAL SHEETS
08	SBd	10	9.9/R24.5	29	260

Robert S Lyles Jr. 1-13-11
REGISTERED CIVIL ENGINEER DATE

4-11-11
PLANS APPROVAL DATE

REGISTERED PROFESSIONAL ENGINEER ROBERT S. LYLES Jr. No. 67873 Exp. 6-30-11 CIVIL STATE OF CALIFORNIA

THE STATE OF CALIFORNIA OR ITS OFFICERS OR AGENTS SHALL NOT BE RESPONSIBLE FOR THE ACCURACY OR COMPLETENESS OF SCANNED COPIES OF THIS PLAN SHEET.

NOTE:

FOR ACCURATE RIGHT OF WAY DATA, CONTACT RIGHT OF WAY ENGINEERING AT THE DISTRICT OFFICE.

CURVE TABLE

No.	R	Δ	T	L
17	2999.84′	12°33′39"	330.15′	657.65′
18	1999.92′	12°16′25"	215.03′	428.41′

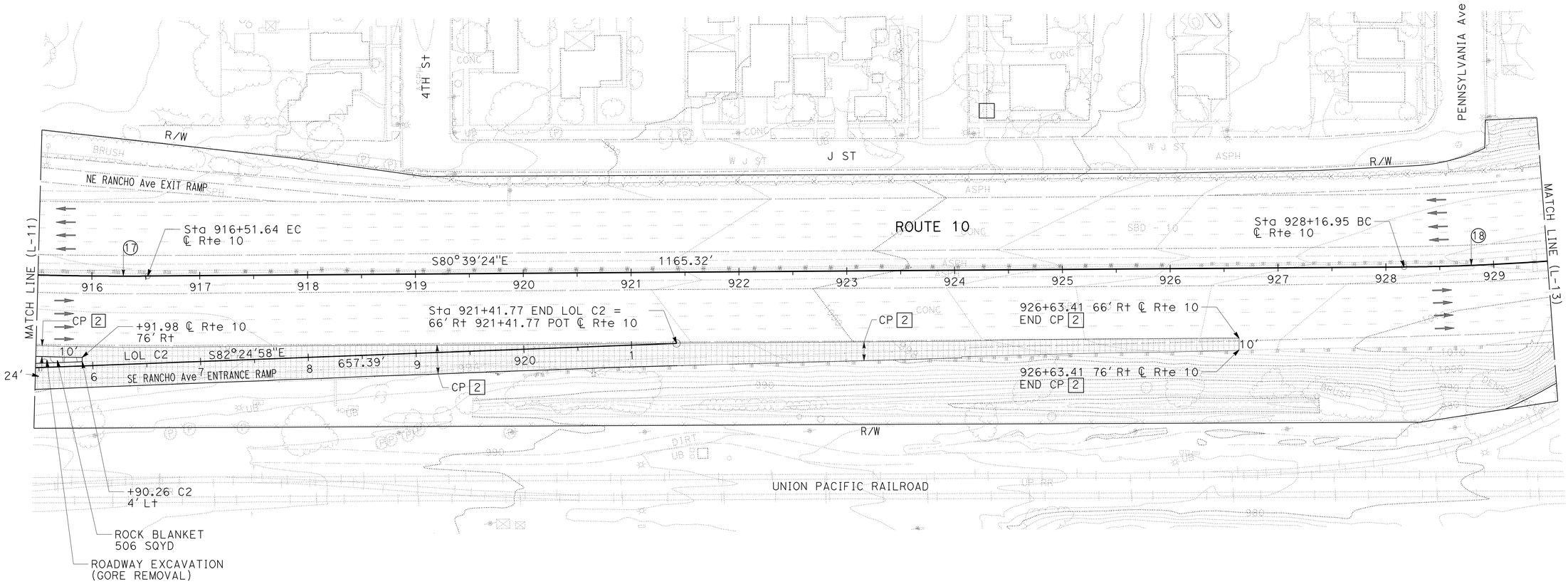

LAYOUT

SCALE: 1" = 50′

L-12

STATE OF CALIFORNIA - DEPARTMENT OF TRANSPORTATION
Caltrans
DESIGN

FUNCTIONAL SUPERVISOR: DU LU
CALCULATED-DESIGNED BY: ROBERT S. LYLES Jr.
CHECKED BY: TUAN A. TRUONG
REVISED BY
DATE REVISED

LAST REVISION 01-13-11
DATE PLOTTED => 15-JUN-2011
TIME PLOTTED => 06:43

Dist	COUNTY	ROUTE	POST MILES TOTAL PROJECT	SHEET No.	TOTAL SHEETS
08	SBd	10	9.9/R24.5	30	260

Robert S Lyles Jr. 1-13-11
REGISTERED CIVIL ENGINEER DATE

4-11-11
PLANS APPROVAL DATE

REGISTERED PROFESSIONAL ENGINEER ROBERT S. LYLES Jr. No. 67873 Exp. 6-30-11 CIVIL STATE OF CALIFORNIA

THE STATE OF CALIFORNIA OR ITS OFFICERS OR AGENTS SHALL NOT BE RESPONSIBLE FOR THE ACCURACY OR COMPLETENESS OF SCANNED COPIES OF THIS PLAN SHEET.

NOTE:

FOR ACCURATE RIGHT OF WAY DATA, CONTACT RIGHT OF WAY ENGINEERING AT THE DISTRICT OFFICE.

CURVE TABLE

No.	R	Δ	T	L
18	1999.92′	12°16′25"	215.03′	428.41′
19	1999.89′	12°26′05"	217.87′	434.02′
20	1500.00′	14°20′04"	188.62′	375.27′

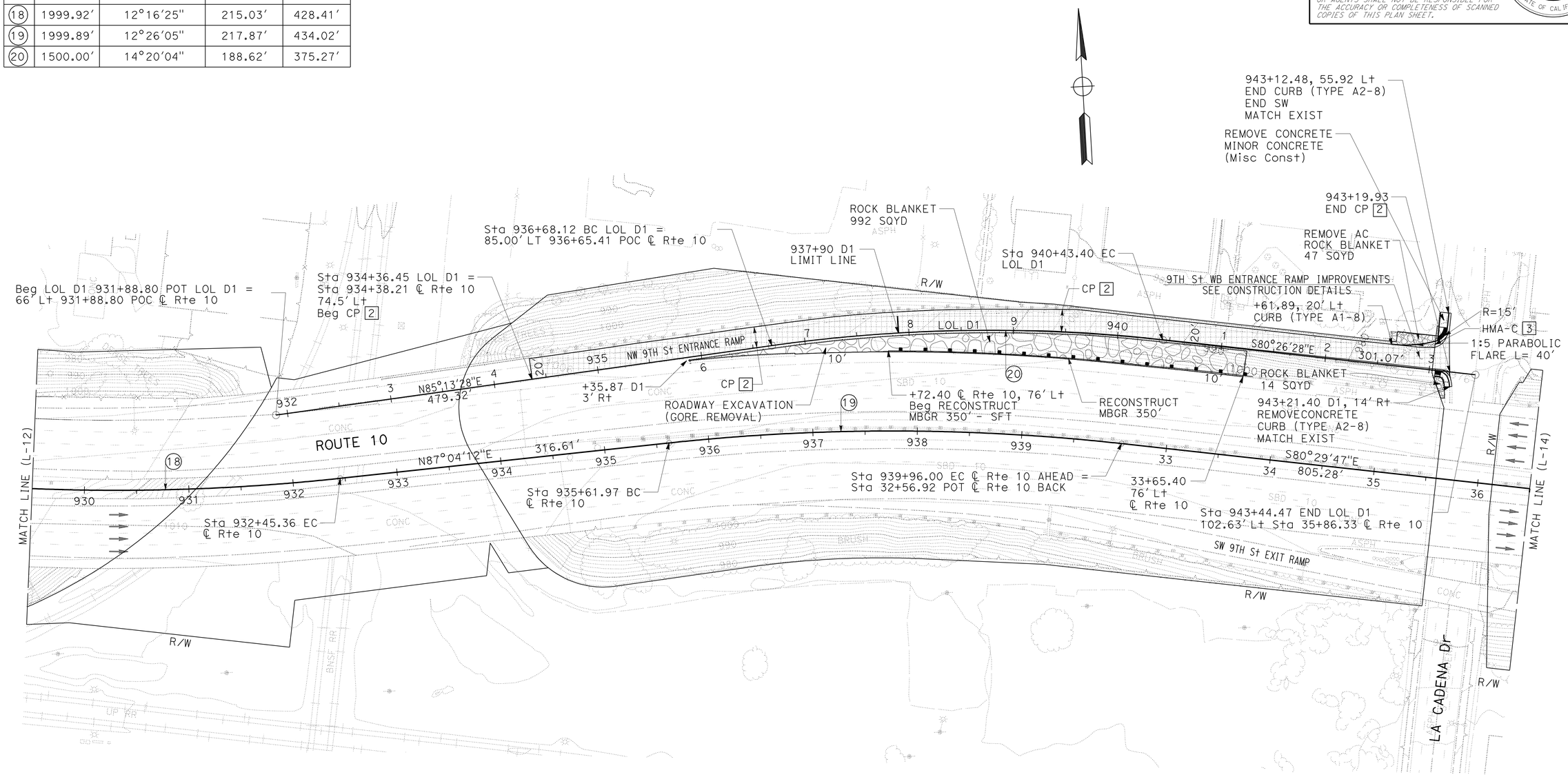

LAYOUT

SCALE: 1" = 50′

L-13

STATE OF CALIFORNIA - DEPARTMENT OF TRANSPORTATION
Caltrans
DESIGN

FUNCTIONAL SUPERVISOR: DU LU
CALCULATED-DESIGNED BY: ROBERT S. LYLES Jr.
CHECKED BY: TUAN A. TRUONG
REVISED BY
DATE REVISED

LAST REVISION 01-13-11 | DATE PLOTTED => 15-JUN-2011 | TIME PLOTTED => 06:43

Dist	COUNTY	ROUTE	POST MILES TOTAL PROJECT	SHEET No.	TOTAL SHEETS
08	SBd	10	9.9/R24.5	31	260

Robert S Lyles Jr. 1-13-11
REGISTERED CIVIL ENGINEER DATE

4-11-11
PLANS APPROVAL DATE

REGISTERED PROFESSIONAL ENGINEER ROBERT S. LYLES Jr. No. 67873 Exp. 6-30-11 CIVIL STATE OF CALIFORNIA

THE STATE OF CALIFORNIA OR ITS OFFICERS OR AGENTS SHALL NOT BE RESPONSIBLE FOR THE ACCURACY OR COMPLETENESS OF SCANNED COPIES OF THIS PLAN SHEET.

NOTE:

FOR ACCURATE RIGHT OF WAY DATA, CONTACT RIGHT OF WAY ENGINEERING AT THE DISTRICT OFFICE.

CURVE TABLE

No.	R	Δ	T	L
21	9999.97′	3°27′59"	302.60′	605.01′
22	1000.00′	7°51′10"	68.64′	137.06′
23	3000.00′	3°11′29"	83.57′	167.10′

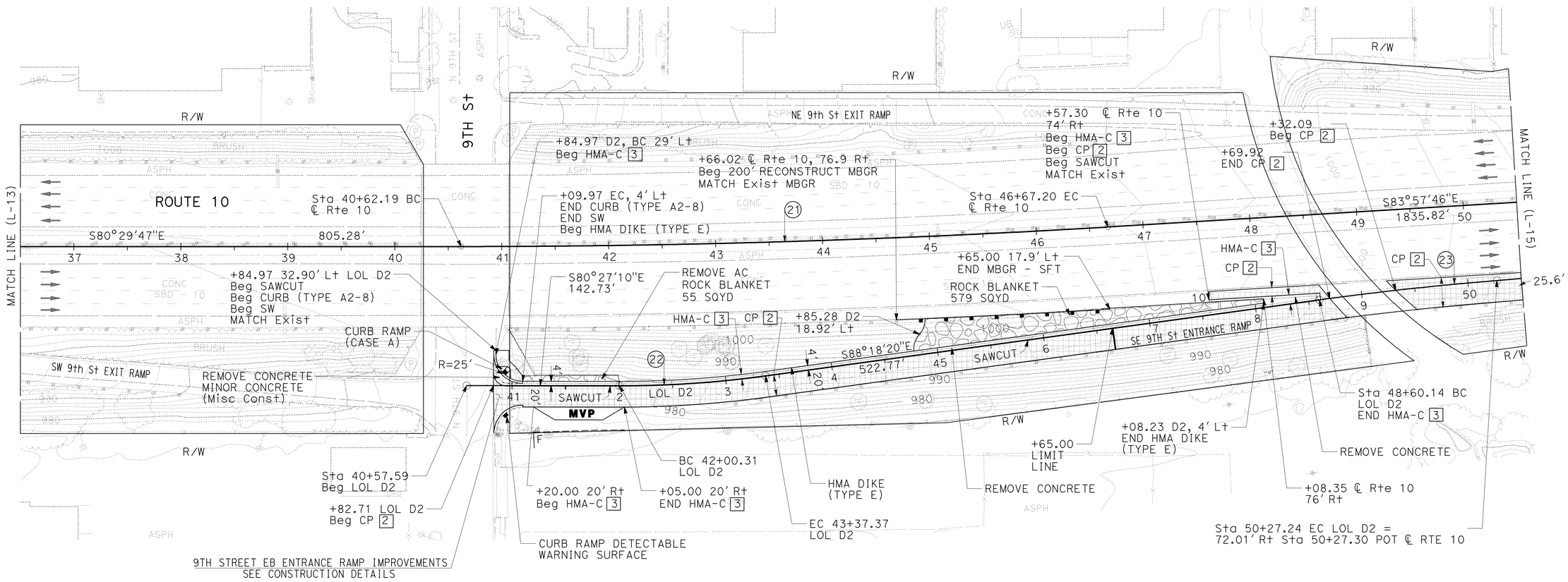

LAYOUT

SCALE: 1" = 50′

L-14

STATE OF CALIFORNIA - DEPARTMENT OF TRANSPORTATION
Caltrans
DESIGN

ROBERT S. LYLES Jr. | REVISED BY
TUAN A. TRUONG | DATE REVISED
CALCULATED-DESIGNED BY
CHECKED BY
FUNCTIONAL SUPERVISOR
DU LU

LAST REVISION 01-13-11
DATE PLOTTED => 15-JUN-2011
TIME PLOTTED => 06:44

Dist	COUNTY	ROUTE	POST MILES TOTAL PROJECT	SHEET No.	TOTAL SHEETS
08	SBd	10	9.9/R24.5	32	260

Robert S Lyles Jr. 1-13-11
REGISTERED CIVIL ENGINEER DATE

4-11-11
PLANS APPROVAL DATE

REGISTERED PROFESSIONAL ENGINEER
ROBERT S. LYLES Jr.
No. 67873
Exp. 6-30-11
CIVIL
STATE OF CALIFORNIA

THE STATE OF CALIFORNIA OR ITS OFFICERS OR AGENTS SHALL NOT BE RESPONSIBLE FOR THE ACCURACY OR COMPLETENESS OF SCANNED COPIES OF THIS PLAN SHEET.

NOTE:

FOR ACCURATE RIGHT OF WAY DATA, CONTACT RIGHT OF WAY ENGINEERING AT THE DISTRICT OFFICE.

CURVE TABLE

No.	R	Δ	T	L
24	3000.00′	3°11′29″	83.57′	167.10′

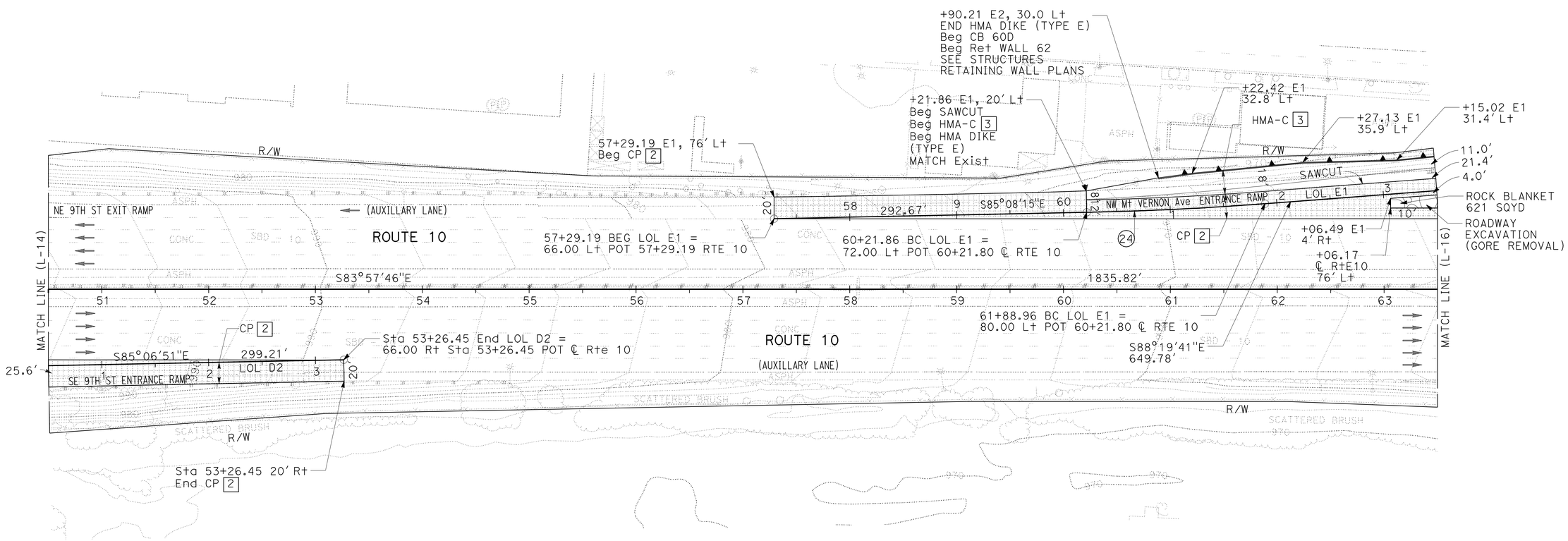

LAYOUT

SCALE: 1″ = 50′

L-15

STATE OF CALIFORNIA - DEPARTMENT OF TRANSPORTATION
Caltrans
DESIGN

FUNCTIONAL SUPERVISOR: DU LU
CALCULATED-DESIGNED BY: ROBERT S. LYLES Jr.
CHECKED BY: TUAN A. TRUONG
REVISED BY
DATE REVISED

LAST REVISION 01-13-11
DATE PLOTTED => 15-JUN-2011
TIME PLOTTED => 06:44

Dist	COUNTY	ROUTE	POST MILES TOTAL PROJECT	SHEET No.	TOTAL SHEETS
08	SBd	10	9.9/R24.5	33	260

Robert S Lyles Jr. 1-13-11
REGISTERED CIVIL ENGINEER DATE

4-11-11
PLANS APPROVAL DATE

REGISTERED PROFESSIONAL ENGINEER ROBERT S. LYLES Jr. No. 67873 Exp. 6-30-11 CIVIL STATE OF CALIFORNIA

THE STATE OF CALIFORNIA OR ITS OFFICERS OR AGENTS SHALL NOT BE RESPONSIBLE FOR THE ACCURACY OR COMPLETENESS OF SCANNED COPIES OF THIS PLAN SHEET.

NOTE:

FOR ACCURATE RIGHT OF WAY DATA, CONTACT RIGHT OF WAY ENGINEERING AT THE DISTRICT OFFICE.

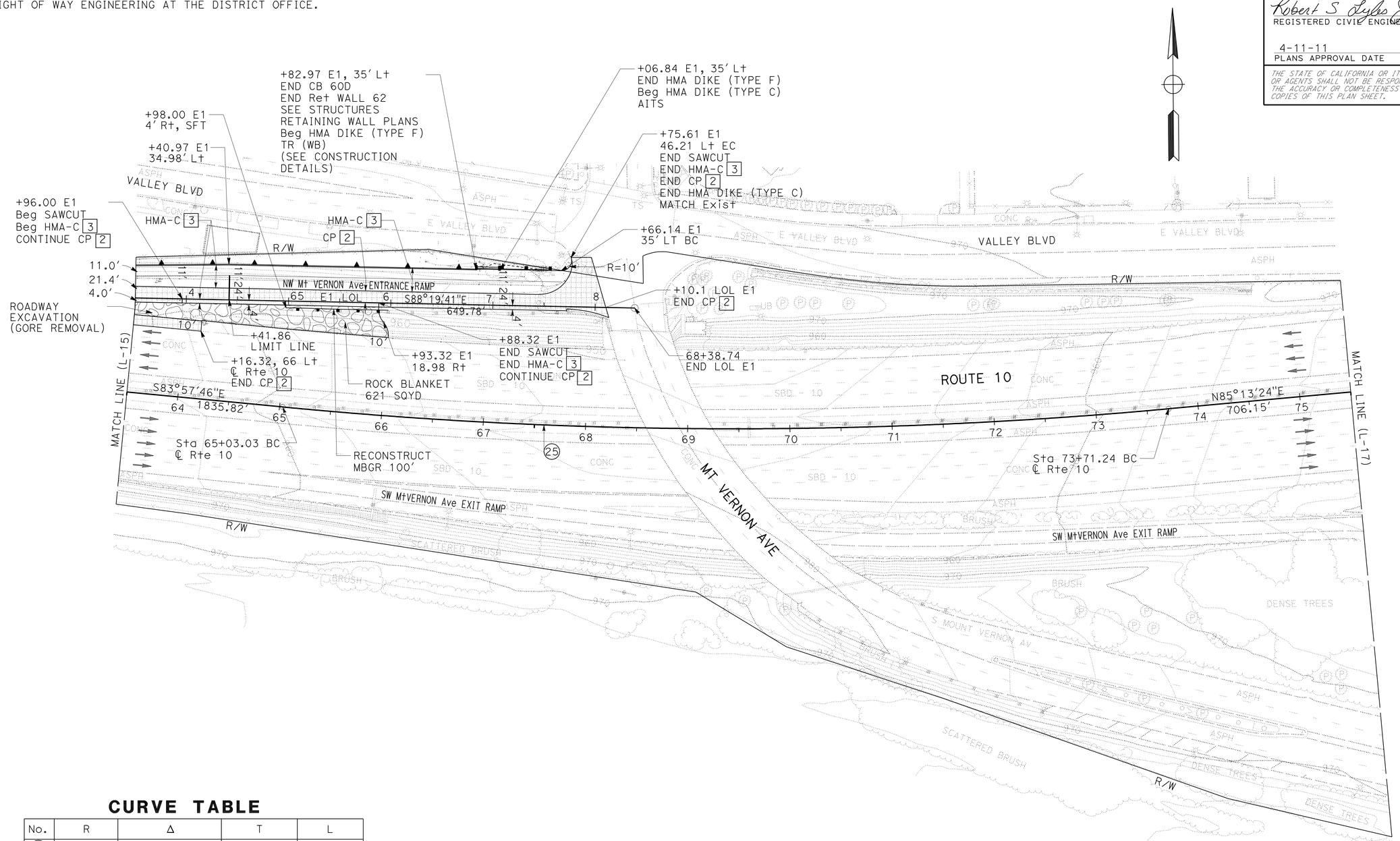

CURVE TABLE

No.	R	Δ	T	L
25	4599.99'	10°48'51"	435.40'	868.21'

LAYOUT

SCALE: 1" = 50'

L-16

STATE OF CALIFORNIA - DEPARTMENT OF TRANSPORTATION
Caltrans
DESIGN

FUNCTIONAL SUPERVISOR: DU LU
CALCULATED-DESIGNED BY: ROBERT S. LYLES Jr.
CHECKED BY: TUAN A. TRUONG
REVISED BY
DATE REVISED

LAST REVISION 01-13-11
DATE PLOTTED => 15-JUN-2011
TIME PLOTTED => 06:44

Dist	COUNTY	ROUTE	POST MILES TOTAL PROJECT	SHEET No.	TOTAL SHEETS
08	SBd	10	9.9/R24.5	34	260

Robert S Lyles Jr. 1-13-11
REGISTERED CIVIL ENGINEER DATE

4-11-11
PLANS APPROVAL DATE

REGISTERED PROFESSIONAL ENGINEER ROBERT S. LYLES Jr. No. 67873 Exp. 6-30-11 CIVIL STATE OF CALIFORNIA

THE STATE OF CALIFORNIA OR ITS OFFICERS OR AGENTS SHALL NOT BE RESPONSIBLE FOR THE ACCURACY OR COMPLETENESS OF SCANNED COPIES OF THIS PLAN SHEET.

NOTE:

FOR ACCURATE RIGHT OF WAY DATA, CONTACT RIGHT OF WAY ENGINEERING AT THE DISTRICT OFFICE.

CURVE TABLE

No.	R	Δ	T	L
26	300.00′	64°27′27"	189.13′	337.50′
27	3000.00′	3°44′26"	97.96′	195.85′
28	19999.99′	3°27′49"	604.70′	1209.04′

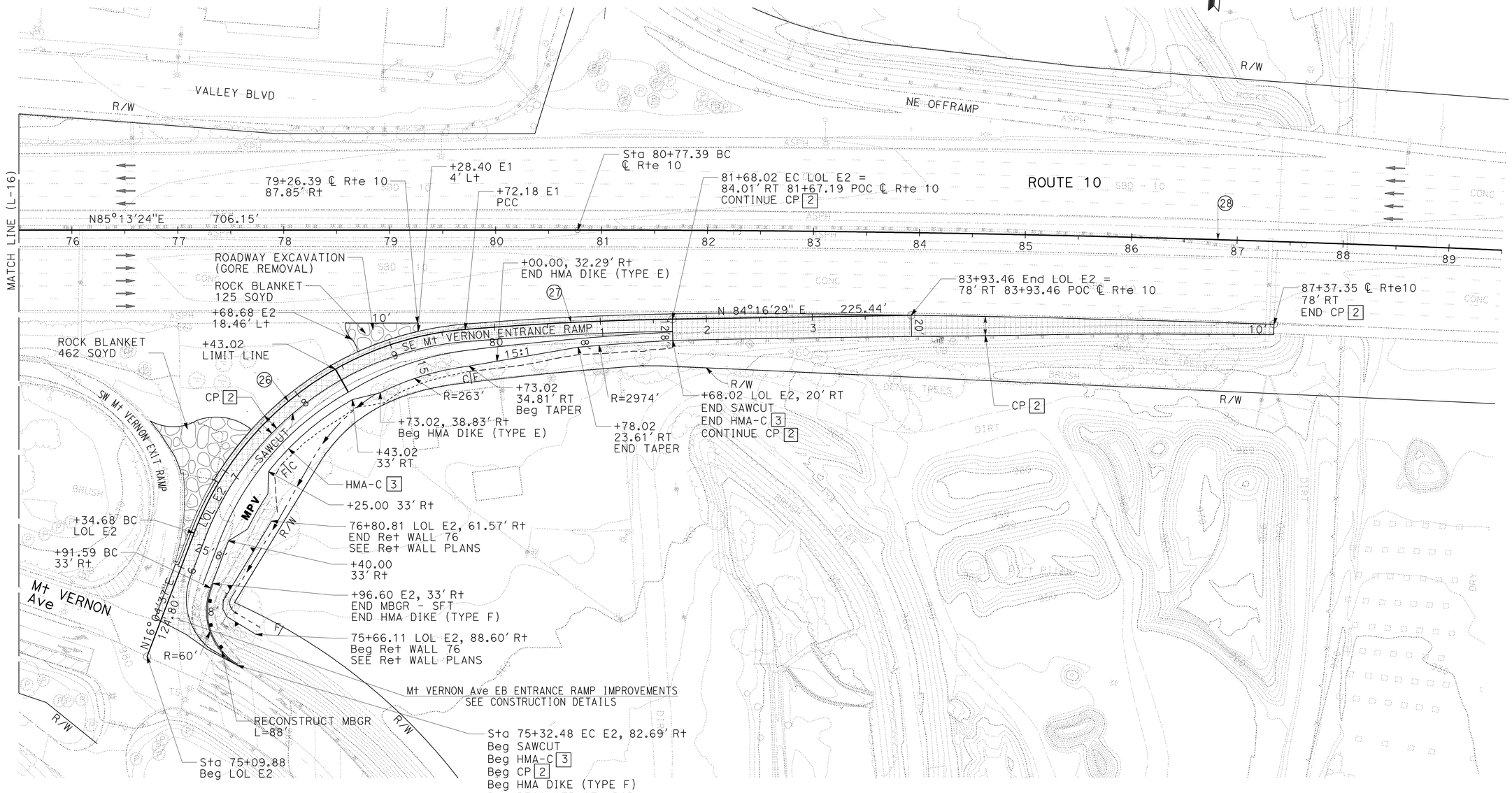

LAYOUT

SCALE: 1" = 50′

L-17

STATE OF CALIFORNIA - DEPARTMENT OF TRANSPORTATION
Caltrans DESIGN

ROBERT S. LYLES Jr. | REVISED BY
TUAN A. TRUONG | DATE REVISED
CALCULATED-DESIGNED BY
CHECKED BY
FUNCTIONAL SUPERVISOR
DU LU

LAST REVISION 01-13-11 | DATE PLOTTED => 15-JUN-2011 | TIME PLOTTED => 06:44

Dist	COUNTY	ROUTE	POST MILES TOTAL PROJECT	SHEET No.	TOTAL SHEETS
08	SBd	10	9.9/R24.5	35	260

Robert S Lyles Jr. 1-13-11
REGISTERED CIVIL ENGINEER DATE

4-11-11
PLANS APPROVAL DATE

REGISTERED PROFESSIONAL ENGINEER ROBERT S. LYLES Jr. No. 67873 Exp. 6-30-11 CIVIL STATE OF CALIFORNIA

THE STATE OF CALIFORNIA OR ITS OFFICERS OR AGENTS SHALL NOT BE RESPONSIBLE FOR THE ACCURACY OR COMPLETENESS OF SCANNED COPIES OF THIS PLAN SHEET.

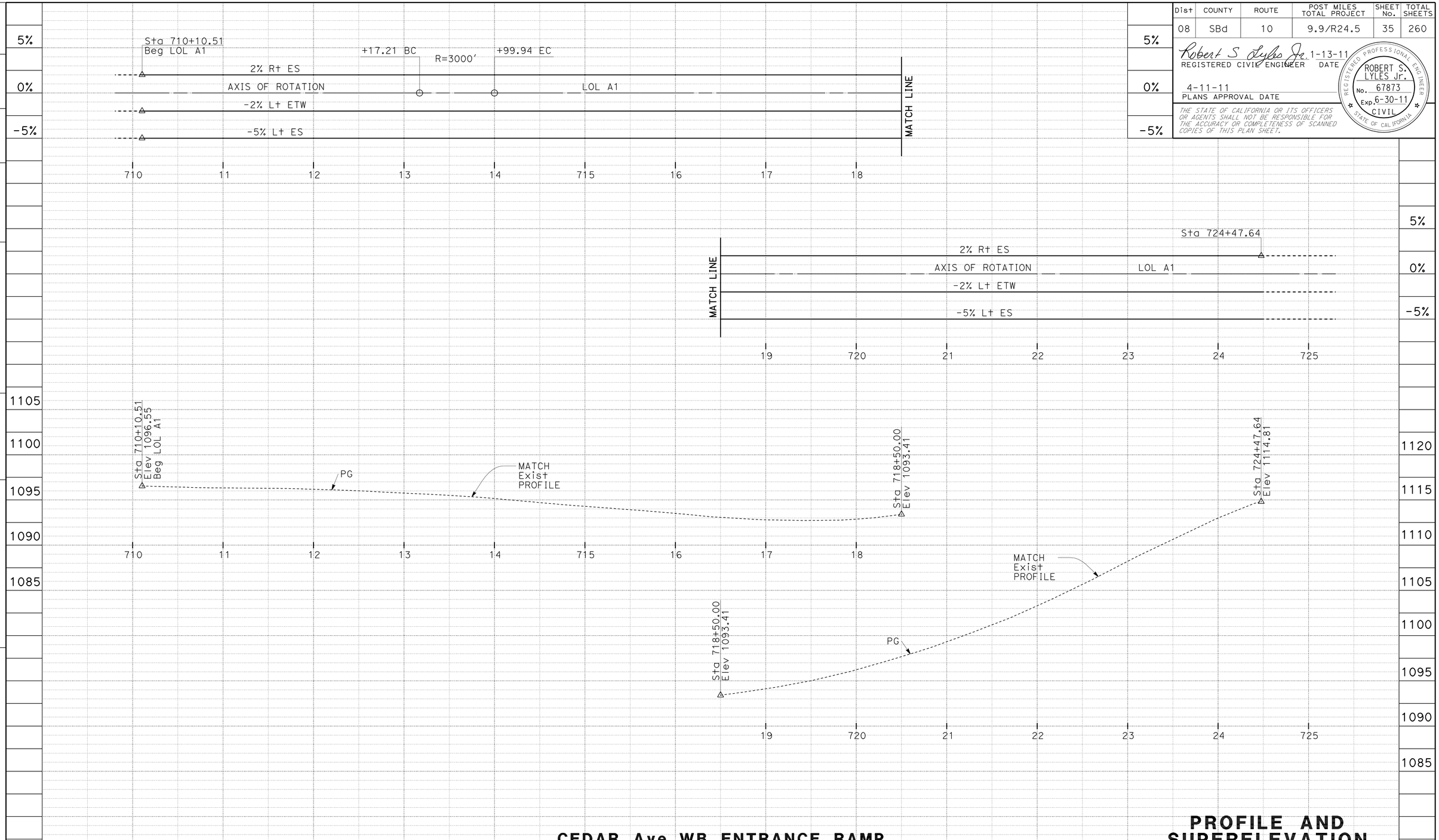

CEDAR Ave WB ENTRANCE RAMP

Sta 710+10.51 to Sta 724+47.64 LOL A1

PROFILE AND SUPERELEVATION

SCALE: Horiz 1" = 50'
Vert 1" = 5'

PS-1

STATION	710	11	12	13	14	715	16	19	20	21	22	23	24	725	TOTAL
CY Exc	2370 CY														
CY Emb	747 CY														

STATE OF CALIFORNIA - DEPARTMENT OF TRANSPORTATION
Caltrans® DESIGN

FUNCTIONAL SUPERVISOR: DU LU
CALCULATED-DESIGNED BY: ROBERT S. LYLES Jr.
CHECKED BY
REVISED BY
DATE REVISED

LAST REVISION 01-13-11
DATE PLOTTED => 16-APR-2011
TIME PLOTTED => 07:12

Dist	COUNTY	ROUTE	POST MILES TOTAL PROJECT	SHEET No.	TOTAL SHEETS
08	SBd	10	9.9/R24.5	36	260

Robert S Lyles Jr. 1-13-11
REGISTERED CIVIL ENGINEER DATE

4-11-11
PLANS APPROVAL DATE

REGISTERED PROFESSIONAL ENGINEER ROBERT S. LYLES Jr. No. 67873 Exp. 6-30-11 CIVIL STATE OF CALIFORNIA

THE STATE OF CALIFORNIA OR ITS OFFICERS OR AGENTS SHALL NOT BE RESPONSIBLE FOR THE ACCURACY OR COMPLETENESS OF SCANNED COPIES OF THIS PLAN SHEET.

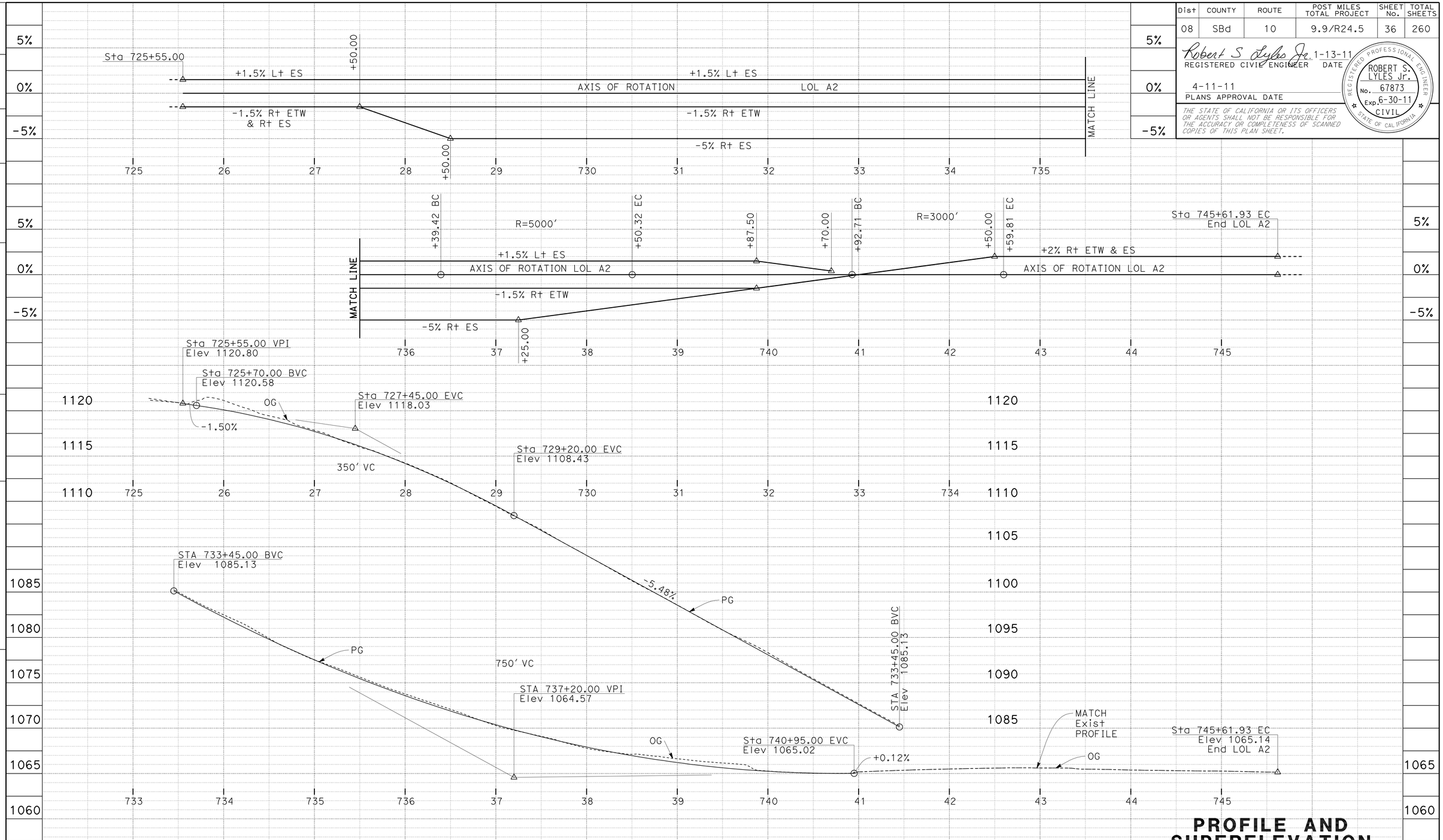

CY		
Exc	3317 CY	
Emb	812 CY	

CEDAR Ave EB ENTRANCE RAMP

Sta 725+55.00 to Sta 745+61.93 LOL A2

PROFILE AND SUPERELEVATION

SCALE: Horiz 1" = 50'
Vert 1" = 5'

PS-2

STATE OF CALIFORNIA - DEPARTMENT OF TRANSPORTATION
Caltrans®
DESIGN

FUNCTIONAL SUPERVISOR: DU LU
CALCULATED-DESIGNED BY
CHECKED BY
REVISED BY
DATE REVISED
ROBERT S. LYLES Jr.

LAST REVISION 01-13-11
DATE PLOTTED => 16-APR-2011
TIME PLOTTED => 07:07

BORDER LAST REVISED 7/2/2010
USERNAME => trlenard
DGN FILE => 838434fb002.dgn
RELATIVE BORDER SCALE IS IN INCHES 0 1 2 3
UNIT 2245
PROJECT NUMBER & PHASE 08000006401

Dist	COUNTY	ROUTE	POST MILES TOTAL PROJECT	SHEET No.	TOTAL SHEETS
08	SBd	10	9.9/R24.5	37	260

Robert S Lyles Jr. 1-13-11
REGISTERED CIVIL ENGINEER DATE

4-11-11
PLANS APPROVAL DATE

REGISTERED PROFESSIONAL ENGINEER ROBERT S. LYLES Jr. No. 67873 Exp. 6-30-11 CIVIL STATE OF CALIFORNIA

THE STATE OF CALIFORNIA OR ITS OFFICERS OR AGENTS SHALL NOT BE RESPONSIBLE FOR THE ACCURACY OR COMPLETENESS OF SCANNED COPIES OF THIS PLAN SHEET.

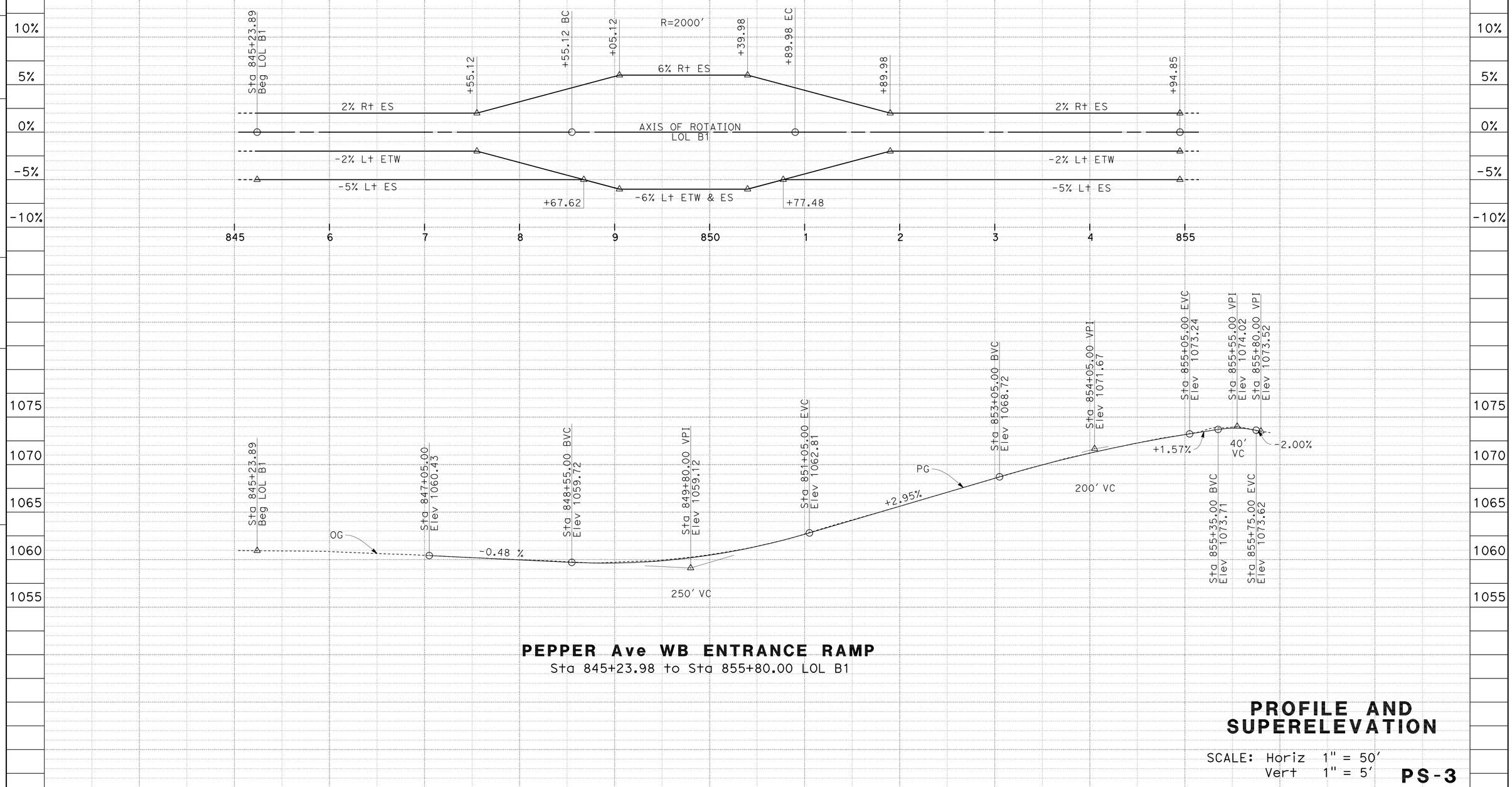

PEPPER Ave WB ENTRANCE RAMP

Sta 845+23.98 to Sta 855+80.00 LOL B1

PROFILE AND SUPERELEVATION

SCALE: Horiz 1" = 50'
Vert 1" = 5'

PS-3

STATION	845	6	7	8	9	850	1	2	3	4	855	6	TOTAL
CY Exc	1806 CY												
CY Emb	671 CY												

STATE OF CALIFORNIA - DEPARTMENT OF TRANSPORTATION
Caltrans® DESIGN

FUNCTIONAL SUPERVISOR: DU LU
CALCULATED-DESIGNED BY
CHECKED BY
REVISED BY
DATE REVISED
ROBERT S. LYLES Jr.

LAST REVISION 01-13-11
DATE PLOTTED => 16-APR-2011
TIME PLOTTED => 07:07

Dist	COUNTY	ROUTE	POST MILES TOTAL PROJECT	SHEET No.	TOTAL SHEETS
08	SBd	10	9.9/R24.5	38	260

Robert S Lyles Jr. 1-13-11
REGISTERED CIVIL ENGINEER DATE

4-11-11
PLANS APPROVAL DATE

REGISTERED PROFESSIONAL ENGINEER ROBERT S. LYLES Jr. No. 67873 Exp. 6-30-11 CIVIL STATE OF CALIFORNIA

THE STATE OF CALIFORNIA OR ITS OFFICERS OR AGENTS SHALL NOT BE RESPONSIBLE FOR THE ACCURACY OR COMPLETENESS OF SCANNED COPIES OF THIS PLAN SHEET.

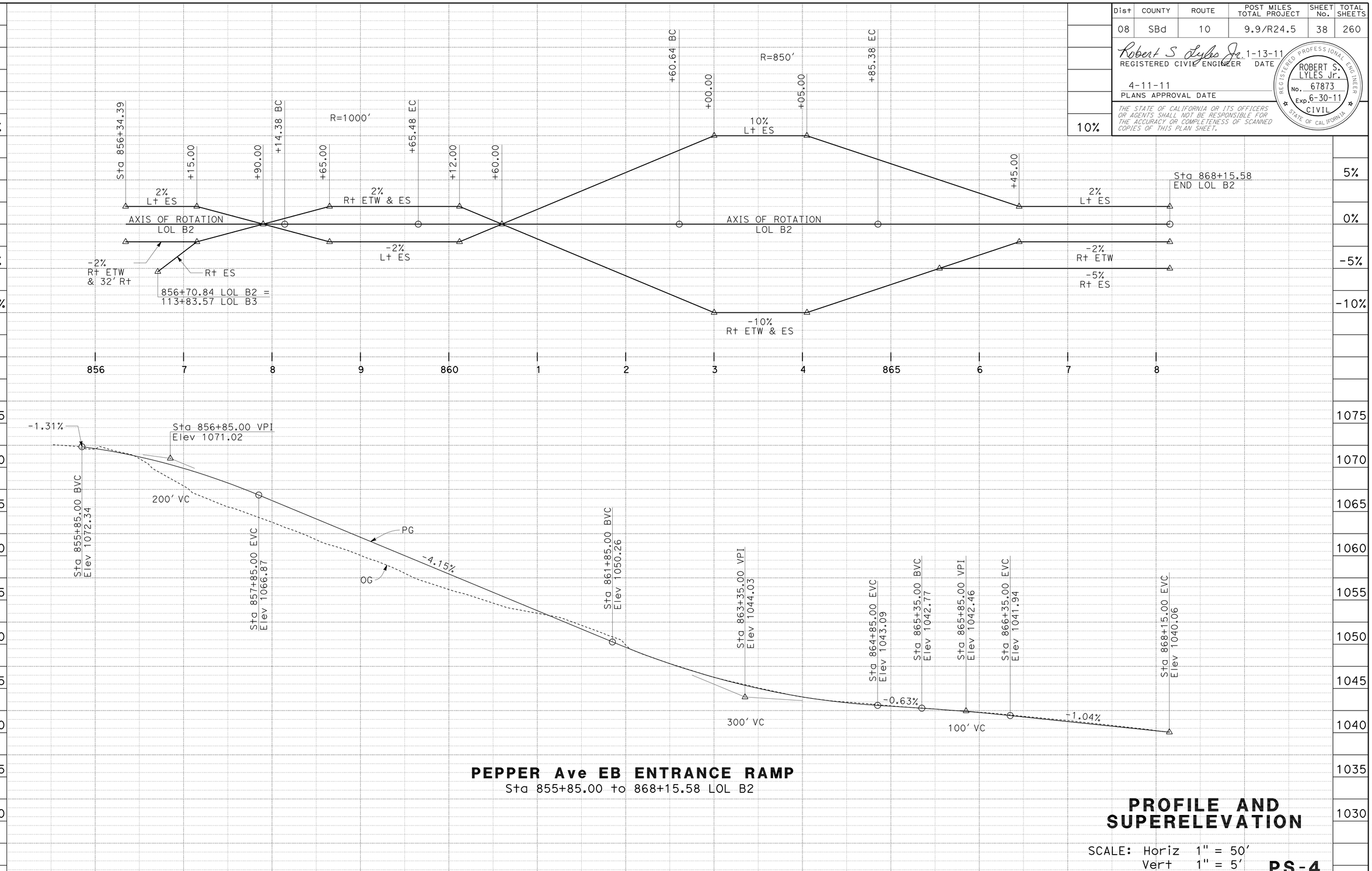

PEPPER Ave EB ENTRANCE RAMP
Sta 855+85.00 to 868+15.58 LOL B2

PROFILE AND SUPERELEVATION

SCALE: Horiz 1" = 50'
Vert 1" = 5'

PS-4

STATION	6	7	8	9	860+00	1	2	3	4	865+00	6	7	8	9	TOTAL
CY Exc	1780 CY														
CY Emb	9160 CY														

STATE OF CALIFORNIA - DEPARTMENT OF TRANSPORTATION
Caltrans DESIGN

FUNCTIONAL SUPERVISOR: DU LU
CALCULATED-DESIGNED BY: ROBERT S. LYLES Jr.
CHECKED BY
REVISED BY
DATE REVISED

LAST REVISION 01-13-11
DATE PLOTTED => 16-APR-2011
TIME PLOTTED => 07:07

Dist	COUNTY	ROUTE	POST MILES TOTAL PROJECT	SHEET No.	TOTAL SHEETS
08	SBd	10	9.9/R24.5	39	260

Robert S Lyles Jr. 1-13-11
REGISTERED CIVIL ENGINEER DATE

4-11-11
PLANS APPROVAL DATE

REGISTERED PROFESSIONAL ENGINEER
ROBERT S. LYLES Jr.
No. 67873
Exp. 6-30-11
CIVIL
STATE OF CALIFORNIA

THE STATE OF CALIFORNIA OR ITS OFFICERS OR AGENTS SHALL NOT BE RESPONSIBLE FOR THE ACCURACY OR COMPLETENESS OF SCANNED COPIES OF THIS PLAN SHEET.

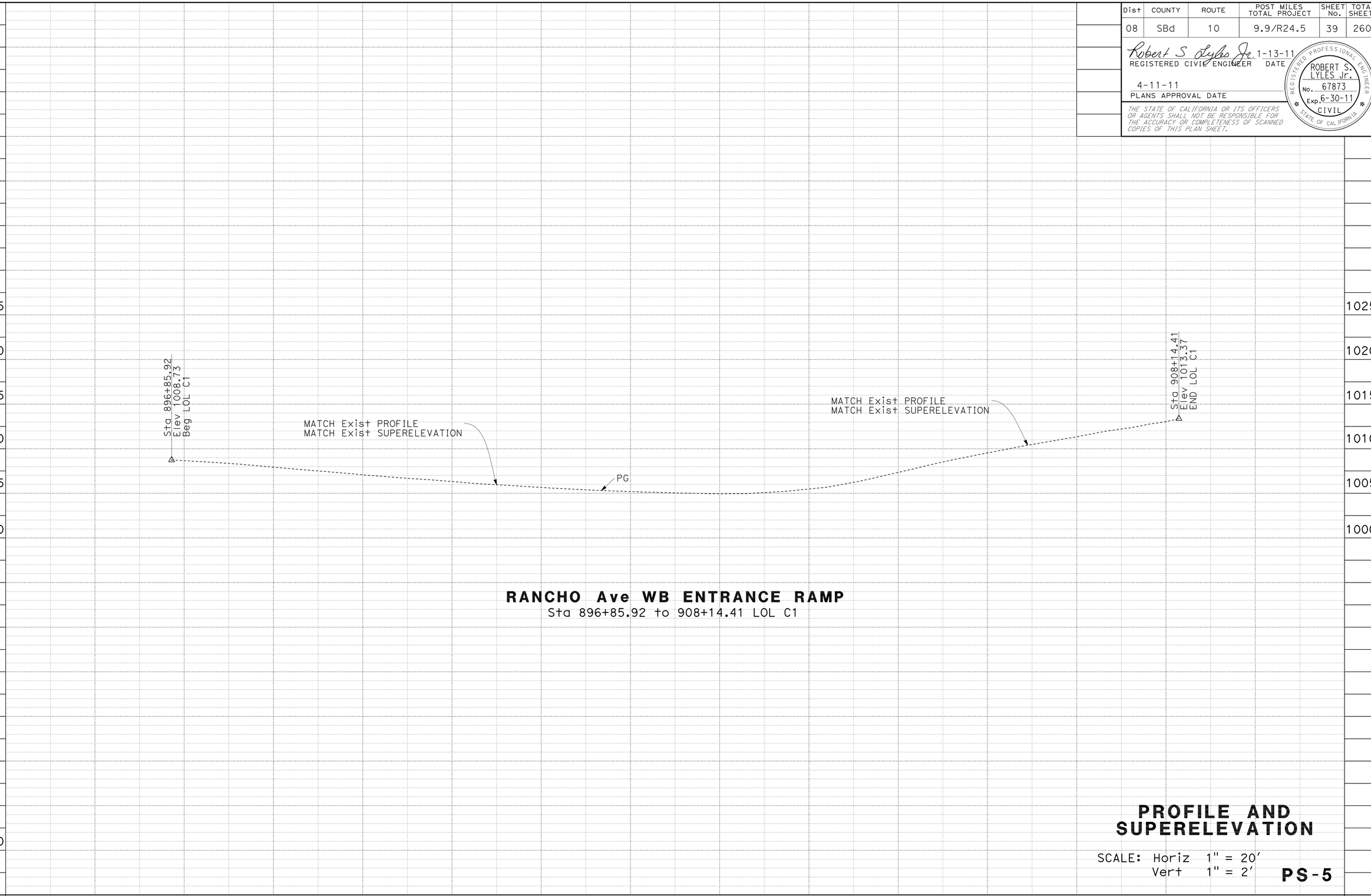

RANCHO Ave WB ENTRANCE RAMP
Sta 896+85.92 to 908+14.41 LOL C1

PROFILE AND SUPERELEVATION

SCALE: Horiz 1" = 20'
Vert 1" = 2'

PS-5

STATE OF CALIFORNIA - DEPARTMENT OF TRANSPORTATION
Caltrans
DESIGN

FUNCTIONAL SUPERVISOR: DU LU
CALCULATED-DESIGNED BY: ROBERT S. LYLES Jr.
CHECKED BY
REVISED BY
DATE REVISED

LAST REVISION 01-13-11
DATE PLOTTED => 16-APR-2011
TIME PLOTTED => 07:07

Dist	COUNTY	ROUTE	POST MILES TOTAL PROJECT	SHEET No.	TOTAL SHEETS
08	SBd	10	9.9/R24.5	40	260

Robert S Lyles Jr. 1-13-11
REGISTERED CIVIL ENGINEER DATE

4-11-11
PLANS APPROVAL DATE

REGISTERED PROFESSIONAL ENGINEER
ROBERT S. LYLES Jr.
No. 67873
Exp. 6-30-11
CIVIL
STATE OF CALIFORNIA

THE STATE OF CALIFORNIA OR ITS OFFICERS OR AGENTS SHALL NOT BE RESPONSIBLE FOR THE ACCURACY OR COMPLETENESS OF SCANNED COPIES OF THIS PLAN SHEET.

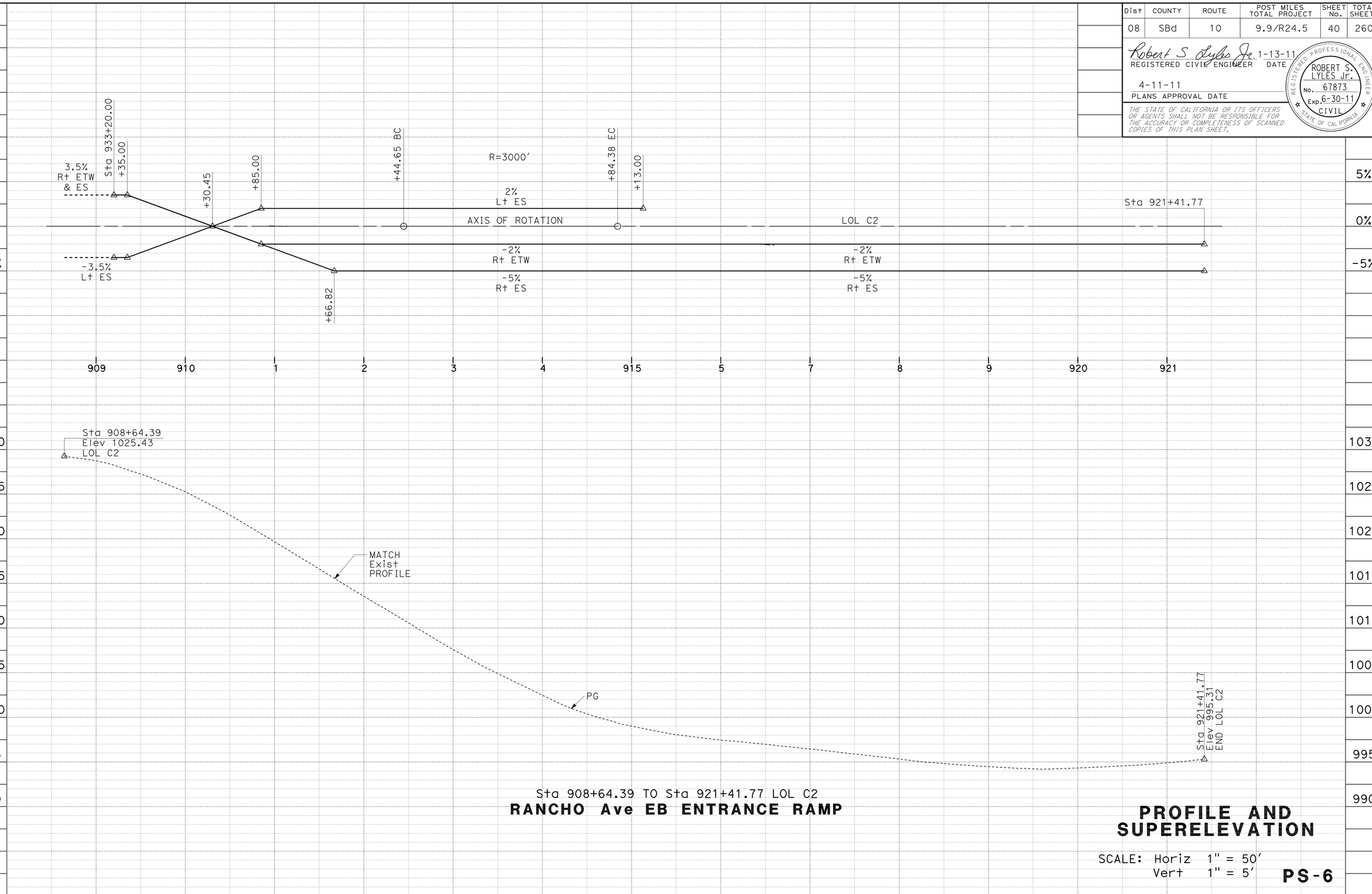

Sta 908+64.39 TO Sta 921+41.77 LOL C2

RANCHO Ave EB ENTRANCE RAMP

PROFILE AND SUPERELEVATION

SCALE: Horiz 1" = 50'
Vert 1" = 5'

PS-6

STATION		909	910	1	2	3	4	915	6	7	8	9	920	921	TOTAL
CY	Exc							0 CY							
	Emb							0 CY							

STATE OF CALIFORNIA - DEPARTMENT OF TRANSPORTATION
Caltrans DESIGN

FUNCTIONAL SUPERVISOR: DU LU

CALCULATED-DESIGNED BY: ROBERT S. LYLES Jr.
CHECKED BY

REVISED BY
DATE REVISED

LAST REVISION 01-13-11
DATE PLOTTED => 16-APR-2011
TIME PLOTTED => 07:07

Dist	COUNTY	ROUTE	POST MILES TOTAL PROJECT	SHEET No.	TOTAL SHEETS
08	SBd	10	9.9/R24.5	41	260

Robert S Lyles Jr. 1-13-11
REGISTERED CIVIL ENGINEER DATE

4-11-11
PLANS APPROVAL DATE

REGISTERED PROFESSIONAL ENGINEER
ROBERT S. LYLES Jr.
No. 67873
Exp. 6-30-11
CIVIL
STATE OF CALIFORNIA

THE STATE OF CALIFORNIA OR ITS OFFICERS OR AGENTS SHALL NOT BE RESPONSIBLE FOR THE ACCURACY OR COMPLETENESS OF SCANNED COPIES OF THIS PLAN SHEET.

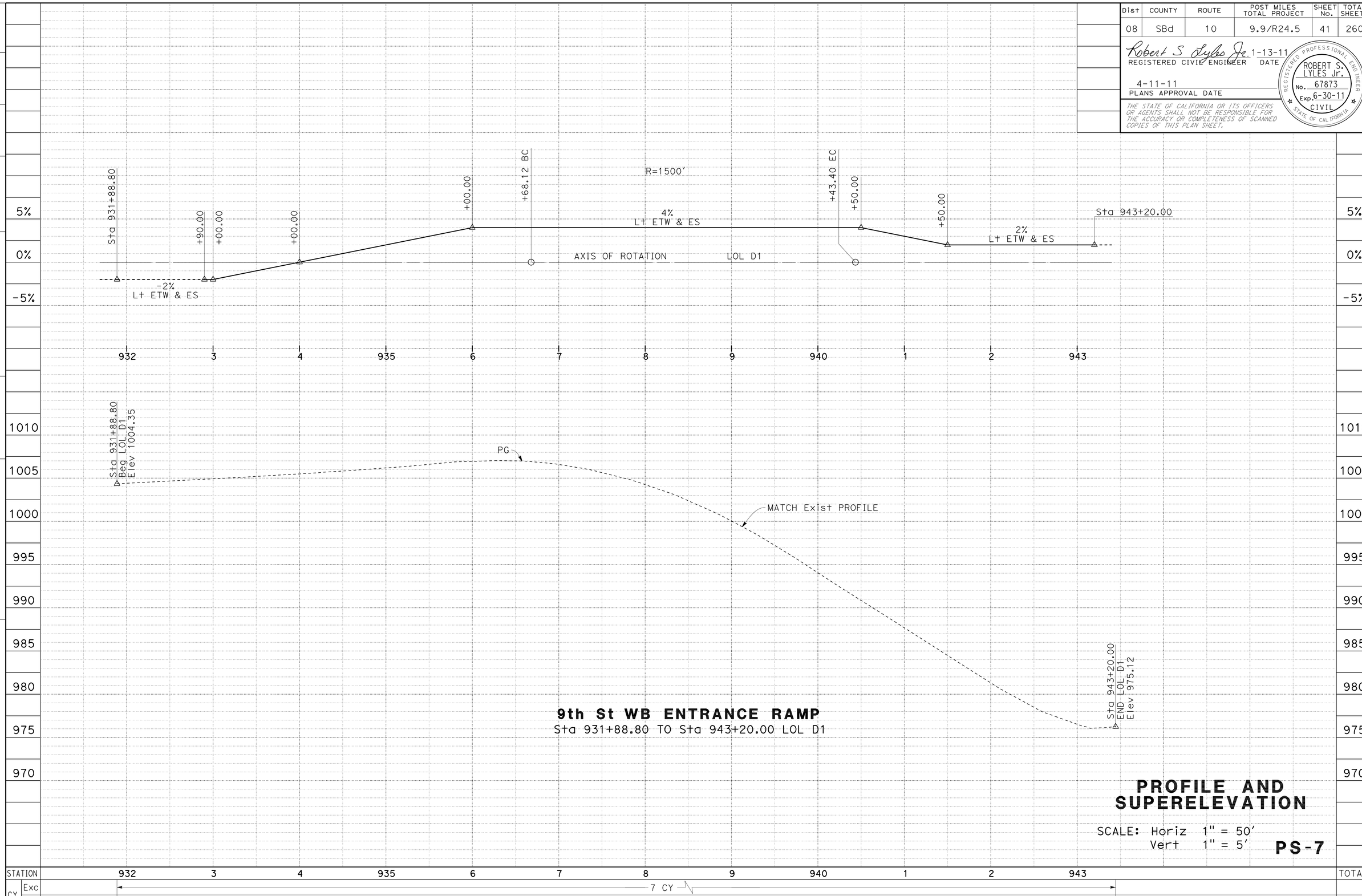

PROFILE AND SUPERELEVATION

SCALE: Horiz 1" = 50'
Vert 1" = 5'

PS-7

STATE OF CALIFORNIA - DEPARTMENT OF TRANSPORTATION
Caltrans
DESIGN

FUNCTIONAL SUPERVISOR: DU LU
CALCULATED-DESIGNED BY
CHECKED BY
REVISED BY
DATE REVISED
ROBERT S. LYLES Jr.

LAST REVISION 01-13-11
DATE PLOTTED => 16-APR-2011
TIME PLOTTED => 07:07

Dist	COUNTY	ROUTE	POST MILES TOTAL PROJECT	SHEET No.	TOTAL SHEETS
08	SBd	10	9.9/R24.5	42	260

Robert S Lyles Jr. 1-13-11
REGISTERED CIVIL ENGINEER DATE

4-11-11
PLANS APPROVAL DATE

REGISTERED PROFESSIONAL ENGINEER ROBERT S. LYLES Jr. No. 67873 Exp. 6-30-11 CIVIL STATE OF CALIFORNIA

THE STATE OF CALIFORNIA OR ITS OFFICERS OR AGENTS SHALL NOT BE RESPONSIBLE FOR THE ACCURACY OR COMPLETENESS OF SCANNED COPIES OF THIS PLAN SHEET.

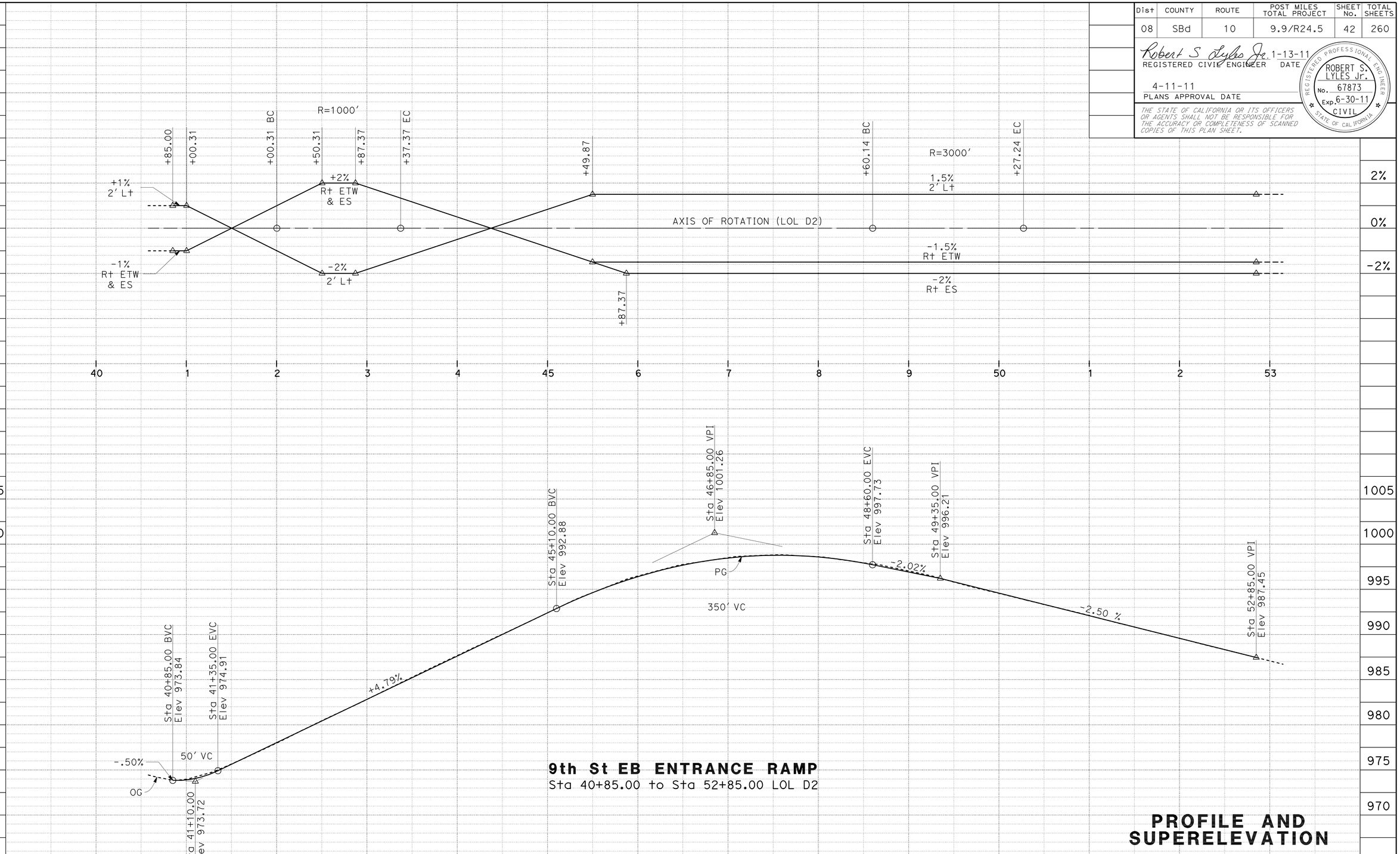

STATION	40	1	2	3	4	45	6	7	8	9	50	1	2	53	TOTAL
CY Exc		313 CY													
CY Emb		12 CY													

STATE OF CALIFORNIA - DEPARTMENT OF TRANSPORTATION
Caltrans DESIGN

FUNCTIONAL SUPERVISOR: DU LU

CALCULATED-DESIGNED BY: ROBERT S. LYLES Jr.
CHECKED BY

REVISED BY
DATE REVISED

LAST REVISION 01-13-11
DATE PLOTTED => 16-APR-2011
TIME PLOTTED => 07:07

Dist	COUNTY	ROUTE	POST MILES TOTAL PROJECT	SHEET No.	TOTAL SHEETS
08	SBd	10	9.9/R24.5	43	260

Robert S Lyles Jr. 1-13-11
REGISTERED CIVIL ENGINEER DATE

4-11-11
PLANS APPROVAL DATE

REGISTERED PROFESSIONAL ENGINEER ROBERT S. LYLES Jr. No. 67873 Exp. 6-30-11 CIVIL STATE OF CALIFORNIA

THE STATE OF CALIFORNIA OR ITS OFFICERS OR AGENTS SHALL NOT BE RESPONSIBLE FOR THE ACCURACY OR COMPLETENESS OF SCANNED COPIES OF THIS PLAN SHEET.

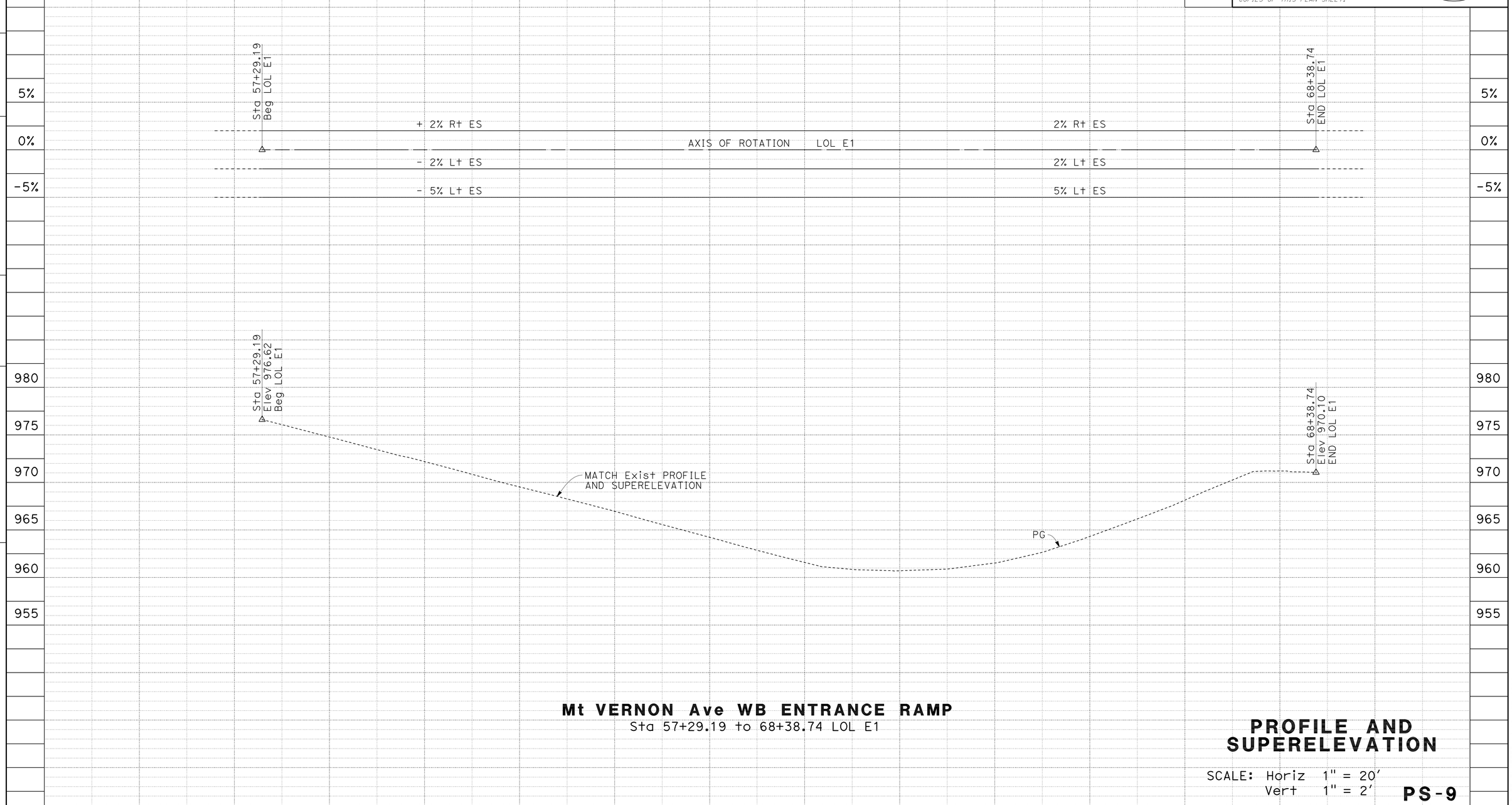

Mt VERNON Ave WB ENTRANCE RAMP

Sta 57+29.19 to 68+38.74 LOL E1

PROFILE AND SUPERELEVATION

SCALE: Horiz 1" = 20'
Vert 1" = 2'

PS-9

STATE OF CALIFORNIA - DEPARTMENT OF TRANSPORTATION
Caltrans® DESIGN

FUNCTIONAL SUPERVISOR: DU LU
CALCULATED-DESIGNED BY
CHECKED BY
REVISED BY
DATE REVISED
ROBERT S. LYLES Jr.

LAST REVISION 01-13-11
DATE PLOTTED => 16-APR-2011
TIME PLOTTED => 07:08

Dist	COUNTY	ROUTE	POST MILES TOTAL PROJECT	SHEET No.	TOTAL SHEETS
08	SBd	10	9.9/R24.5	44	260

Robert S Lyles Jr. 1-13-11
REGISTERED CIVIL ENGINEER DATE

4-11-11
PLANS APPROVAL DATE

REGISTERED PROFESSIONAL ENGINEER
ROBERT S. LYLES Jr.
No. 67873
Exp. 6-30-11
CIVIL
STATE OF CALIFORNIA

THE STATE OF CALIFORNIA OR ITS OFFICERS OR AGENTS SHALL NOT BE RESPONSIBLE FOR THE ACCURACY OR COMPLETENESS OF SCANNED COPIES OF THIS PLAN SHEET.

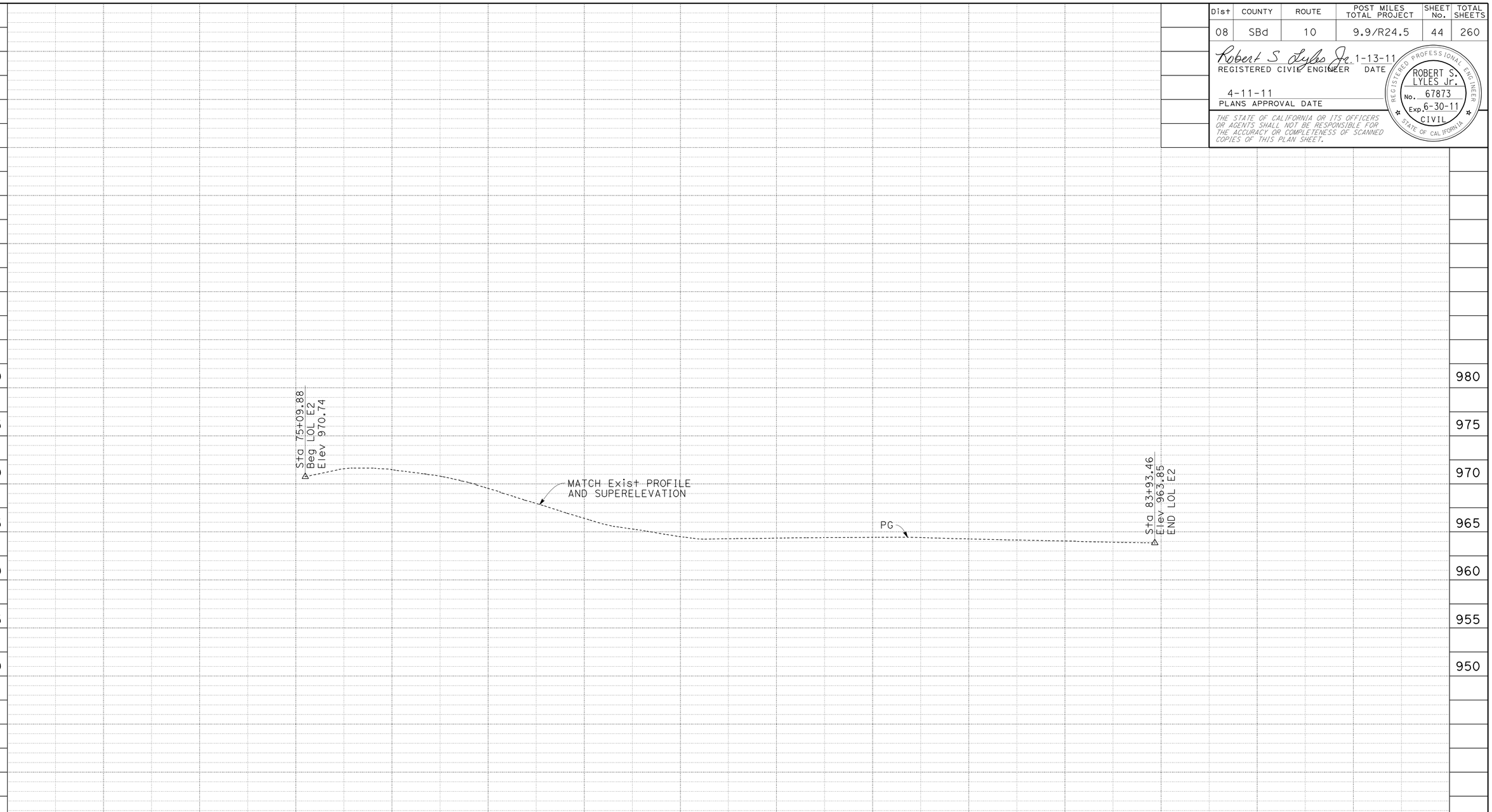

Mt VERNON Ave EB ENTRANCE RAMP
Sta 75+09.88 to 83+93.46 LOL B2

PROFILE AND SUPERELEVATION

SCALE: Horiz 1" = 20'
Vert 1" = 2'

PS-10

STATION		75	6	7	8	9	80	1	2	3	4	9	TOTAL
CY	Exc	1487 CY											
	Emb	460 CY											

STATE OF CALIFORNIA - DEPARTMENT OF TRANSPORTATION
Caltrans®
DESIGN

FUNCTIONAL SUPERVISOR: DU LU
CALCULATED-DESIGNED BY: ROBERT S. LYLES Jr.
CHECKED BY: ALEN NOU
REVISED BY
DATE REVISED

LAST REVISION 01-13-11
DATE PLOTTED => 16-APR-2011
TIME PLOTTED => 07:08

Dist	COUNTY	ROUTE	POST MILES TOTAL PROJECT	SHEET No.	TOTAL SHEETS
08	SBd	10	9.9/R24.5	45	260

Robert S Lyles Jr. 1-13-11
REGISTERED CIVIL ENGINEER DATE

4-11-11
PLANS APPROVAL DATE

REGISTERED PROFESSIONAL ENGINEER ROBERT S. LYLES Jr. No. 67873 Exp. 6-30-11 CIVIL STATE OF CALIFORNIA

THE STATE OF CALIFORNIA OR ITS OFFICERS OR AGENTS SHALL NOT BE RESPONSIBLE FOR THE ACCURACY OR COMPLETENESS OF SCANNED COPIES OF THIS PLAN SHEET.

NOTE:

1. SEE STANDARD PLANS RSP A88A FOR CURB RAMP NOTES AND DETAILS NOT SHOWN.
   SEE STANDARD PLAN B11-54 FOR CONCRETE BARRIER TYPE 26 NOTES AND DETAILS NOT SHOWN.

PCC

ROCK BLANKET

MAINTENANCE VEHICLE PULLOUT

CURB RAMP DETECTABLE WARNING SURFACE

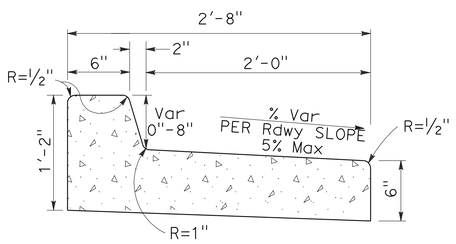

MODIFIED TYPE A2-8 CURB
(USE AT CURB RAMP TERMINI) *
(NON-WATER CARRYING GUTTER)

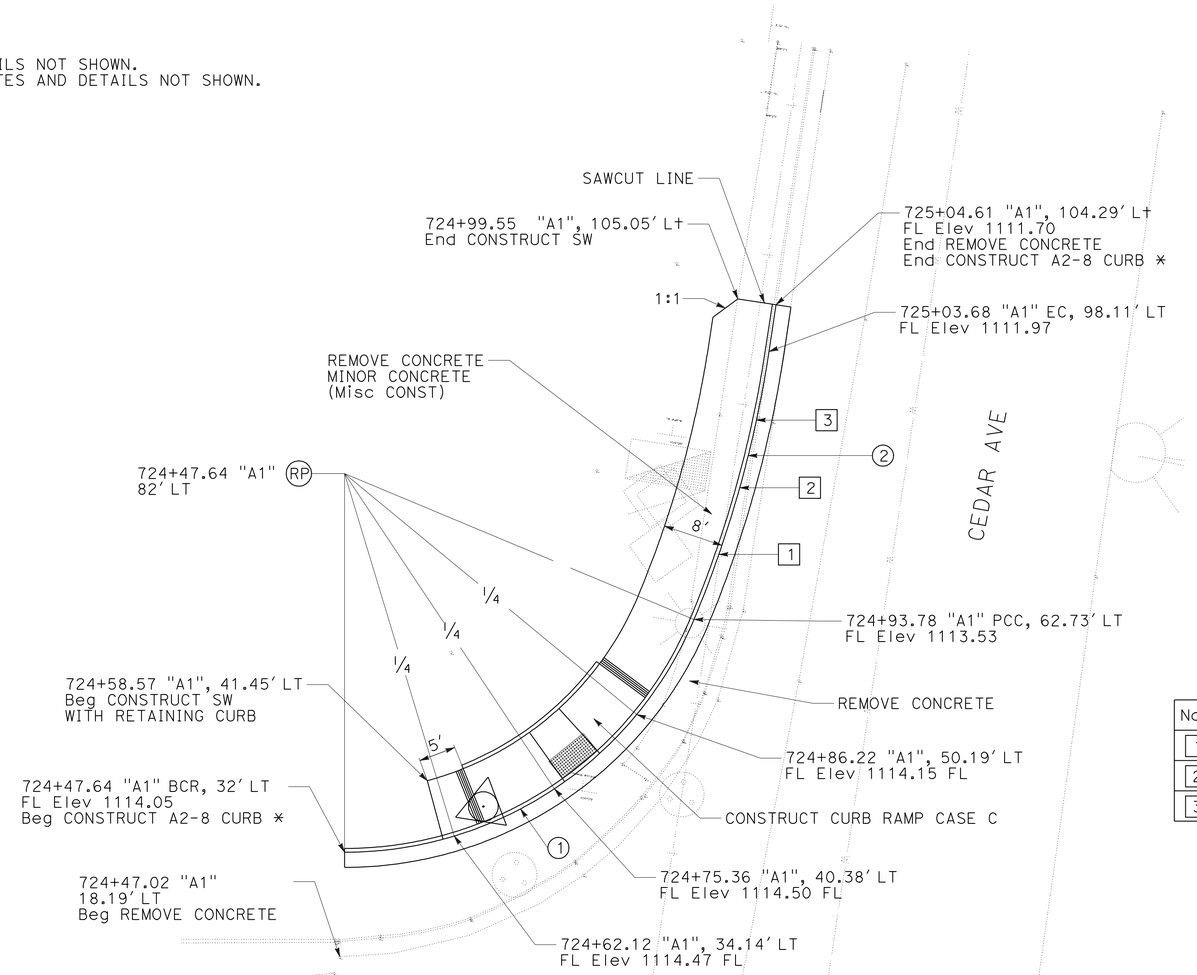

No.	LOCATION	FL Elev
1	724+97.06, 71.33 Lt	1113.14
2	724+99.82, 80.11 Lt	1112.75
3	725+02.02, 89.05 Lt	1112.36

CURVE DATA

No.	R	Δ	T	L
1	50.00'	67°19'43"	33.30'	58.76'
2	150.00'	14°4'12"	18.51'	36.83'

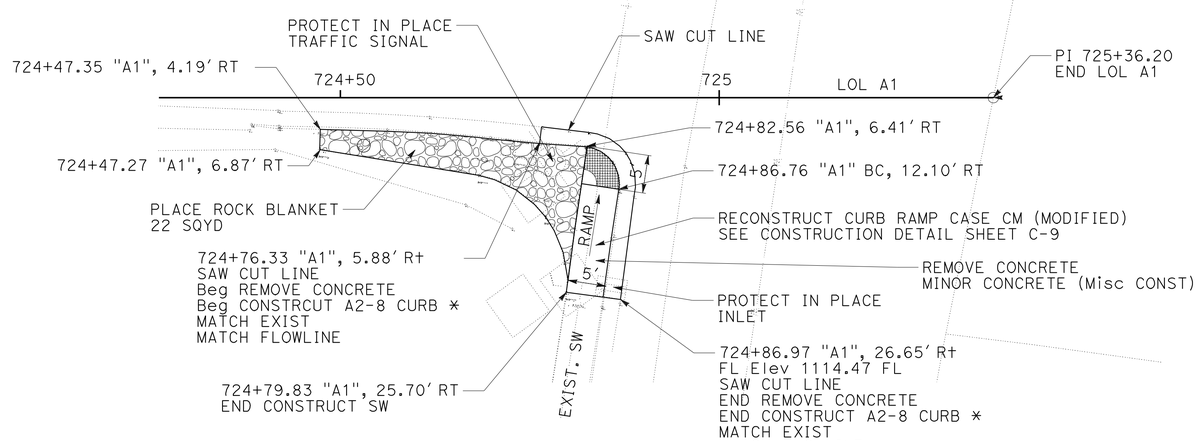

CEDAR Ave WB ENTRANCE RAMP IMPROVEMENTS

CONSTRUCTION DETAILS

SCALE: 1" = 10'

C-1

STATE OF CALIFORNIA - DEPARTMENT OF TRANSPORTATION
DESIGN
Caltrans

FUNCTIONAL SUPERVISOR: DU LU
CALCULATED-DESIGNED BY: DON D. NGUYEN
CHECKED BY: ROBERT S. LYLES Jr.
REVISED BY
DATE REVISED

LAST REVISION 01-13-11
DATE PLOTTED => 15-JUN-2011
TIME PLOTTED => 06:44

Dist	COUNTY	ROUTE	POST MILES TOTAL PROJECT	SHEET No.	TOTAL SHEETS
08	SBd	10	9.9/R24.5	46	260

Robert S Lyles Jr. 1-13-11
REGISTERED CIVIL ENGINEER DATE

4-11-11
PLANS APPROVAL DATE

REGISTERED PROFESSIONAL ENGINEER ROBERT S. LYLES Jr. No. 67873 Exp. 6-30-11 CIVIL STATE OF CALIFORNIA

THE STATE OF CALIFORNIA OR ITS OFFICERS OR AGENTS SHALL NOT BE RESPONSIBLE FOR THE ACCURACY OR COMPLETENESS OF SCANNED COPIES OF THIS PLAN SHEET.

CURVE DATA

No.	R	Δ	T	L
1	15.00′	92°46′46"	15.75′	24.29′
2	35.00′	92°46′46"	36.74′	56.68′

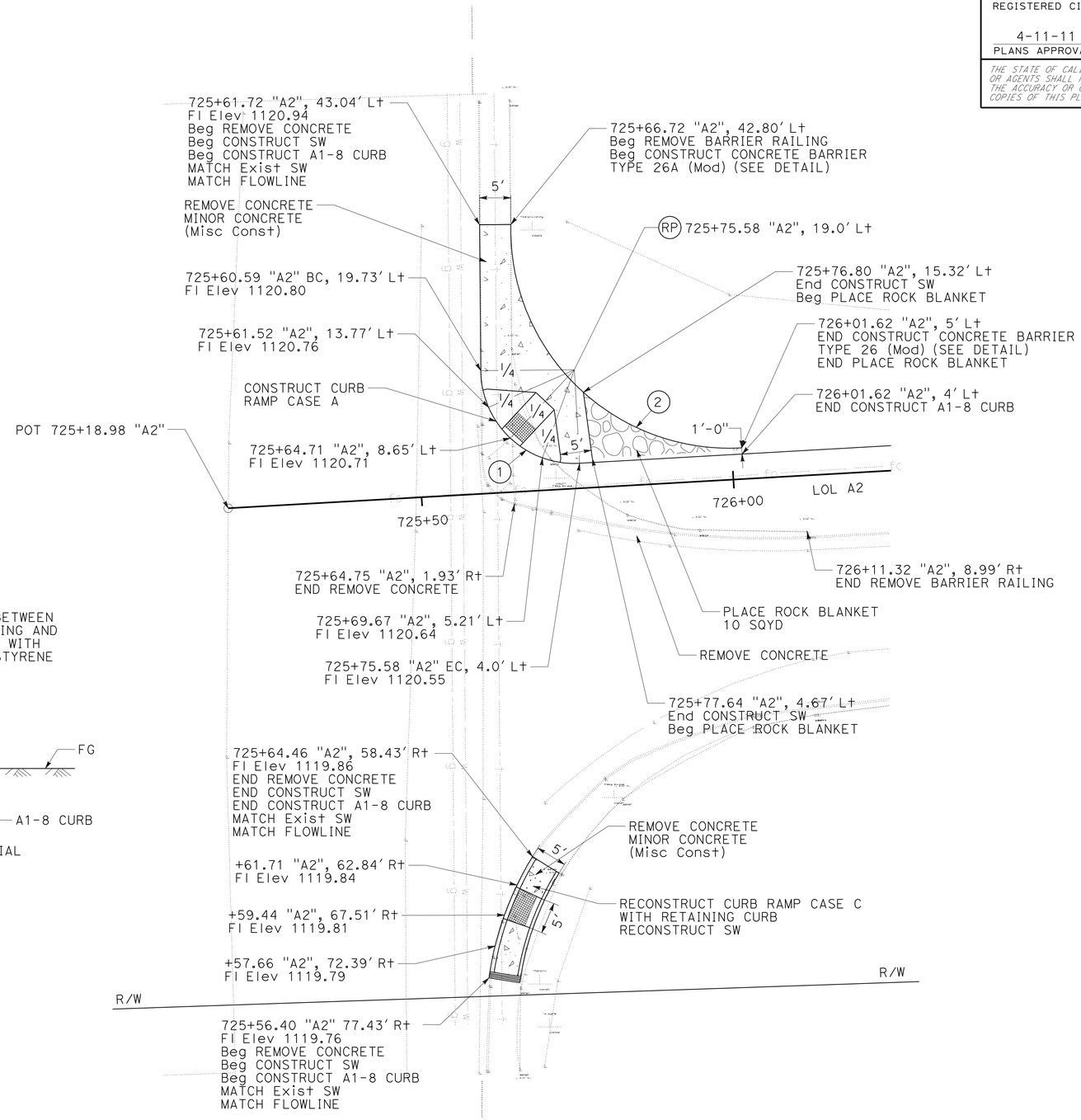

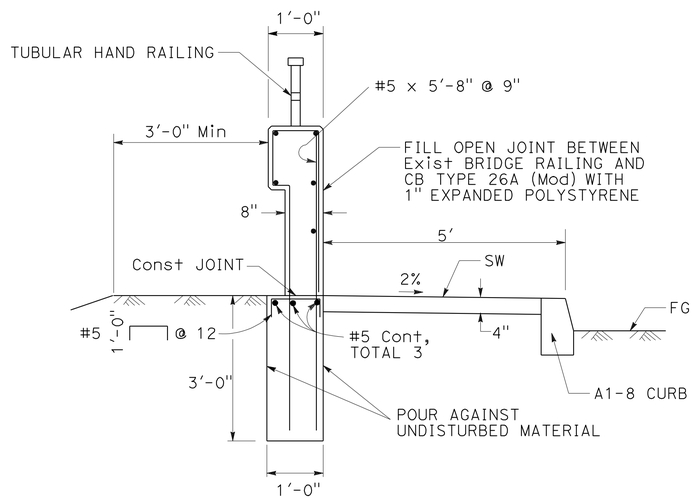

CONCRETE BARRIER TYPE 26A (Mod)

OFF BRIDGE DECK

TYPE 26A (Mod) BARRIER SIMILAR TO TYPE 26 EXCEPT AS NOTED.

CEDAR Ave EB ENTRANCE RAMP IMPROVEMENTS

CONSTRUCTION DETAILS

SCALE: 1" = 10′

C-2

STATE OF CALIFORNIA - DEPARTMENT OF TRANSPORTATION
Caltrans DESIGN

FUNCTIONAL SUPERVISOR: DU LU
CALCULATED-DESIGNED BY: DON D. NGUYEN
CHECKED BY: ROBERT S. LYLES Jr.
REVISED BY
DATE REVISED

LAST REVISION 01-13-11
DATE PLOTTED => 15-APR-2011
TIME PLOTTED => 13:31

Dist	COUNTY	ROUTE	POST MILES TOTAL PROJECT	SHEET No.	TOTAL SHEETS
08	SBd	10	9.9/R24.5	47	260

Robert S Lyles Jr. 1-13-11
REGISTERED CIVIL ENGINEER DATE

4-11-11
PLANS APPROVAL DATE

REGISTERED PROFESSIONAL ENGINEER ROBERT S. LYLES Jr. No. 67873 Exp. 6-30-11 CIVIL STATE OF CALIFORNIA

THE STATE OF CALIFORNIA OR ITS OFFICERS OR AGENTS SHALL NOT BE RESPONSIBLE FOR THE ACCURACY OR COMPLETENESS OF SCANNED COPIES OF THIS PLAN SHEET.

CURVE DATA

No.	R	Δ	T	L
1	60.00′	57°51′01"	33.16′	60.58′
2	120.00′	21°2′22"	22.28′	44.07′
3	25.00′	82°38′01"	21.98′	36.06′
4	200.00′	18°28′36"	32.53′	64.50′

No.	LOCATION	FL Elev
1	855+05.85, 32.51 Lt	1072.37
2	855+16.76, 34.02′ Lt	1072.56
3	855+27.48, 36.52′ Lt	1072.69
4	854+98.61, 4.65′ Rt	1073.23
5	855+14.61, 6.59′ Rt	1073.52
6	855+30.41, 9.82′ Rt	1073.81

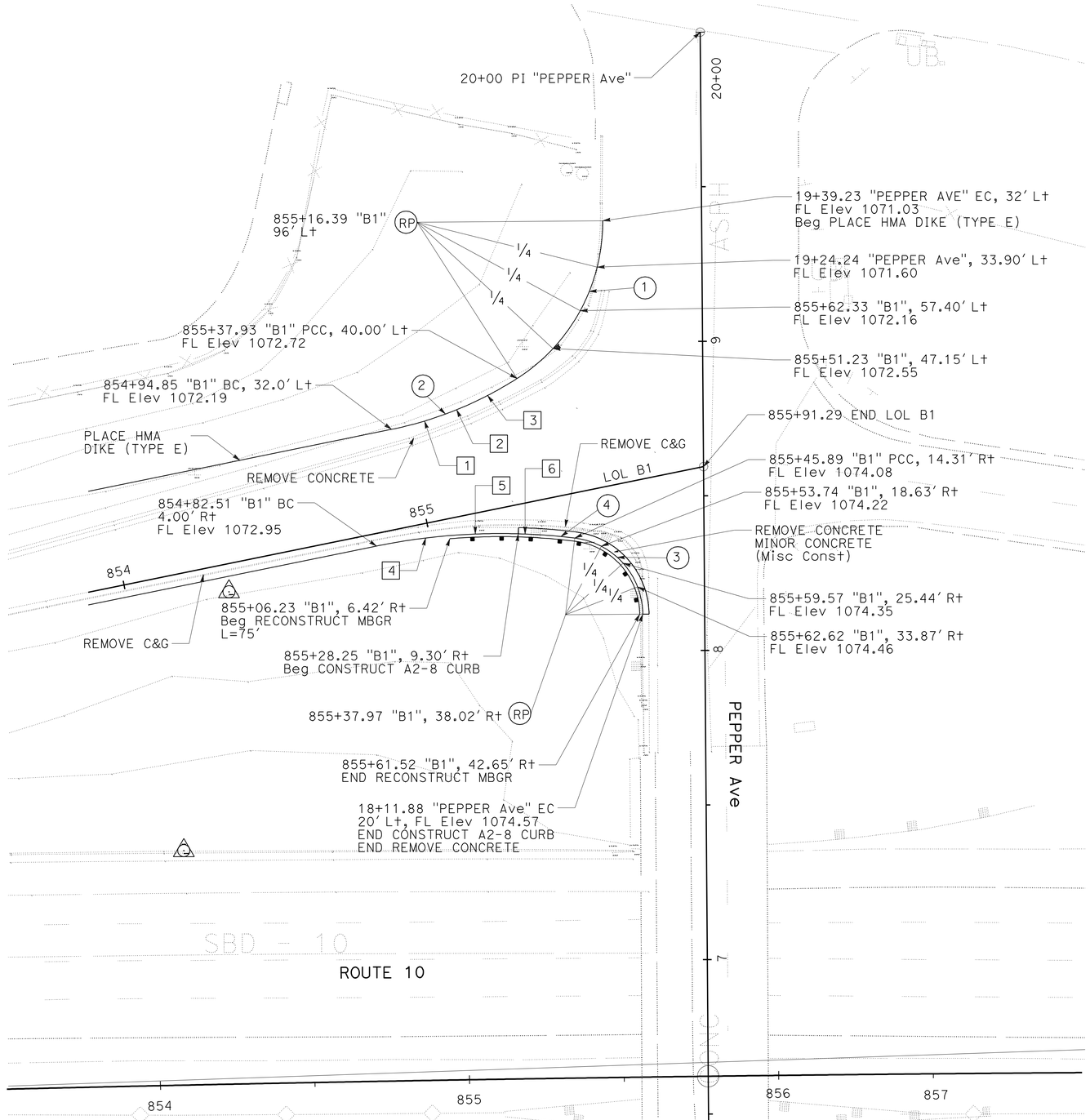

PEPPER Ave WB ENTRANCE RAMP IMPROVEMENTS

CONSTRUCTION DETAILS

SCALE: 1" = 20′

C-3

STATE OF CALIFORNIA - DEPARTMENT OF TRANSPORTATION
Caltrans® DESIGN

FUNCTIONAL SUPERVISOR: DU LU
CALCULATED-DESIGNED BY: DON D. NGUYEN
CHECKED BY: ROBERT S. LYLES Jr.
REVISED BY
DATE REVISED

LAST REVISION 01-13-11
DATE PLOTTED => 15-APR-2011
TIME PLOTTED => 13:32

Dist	COUNTY	ROUTE	POST MILES TOTAL PROJECT	SHEET No.	TOTAL SHEETS
08	SBd	10	9.9/R24.5	48	260

Robert S Lyles Jr. 1-13-11
REGISTERED CIVIL ENGINEER DATE

4-11-11
PLANS APPROVAL DATE

REGISTERED PROFESSIONAL ENGINEER ROBERT S. LYLES Jr. No. 67873 Exp. 6-30-11 CIVIL STATE OF CALIFORNIA

THE STATE OF CALIFORNIA OR ITS OFFICERS OR AGENTS SHALL NOT BE RESPONSIBLE FOR THE ACCURACY OR COMPLETENESS OF SCANNED COPIES OF THIS PLAN SHEET.

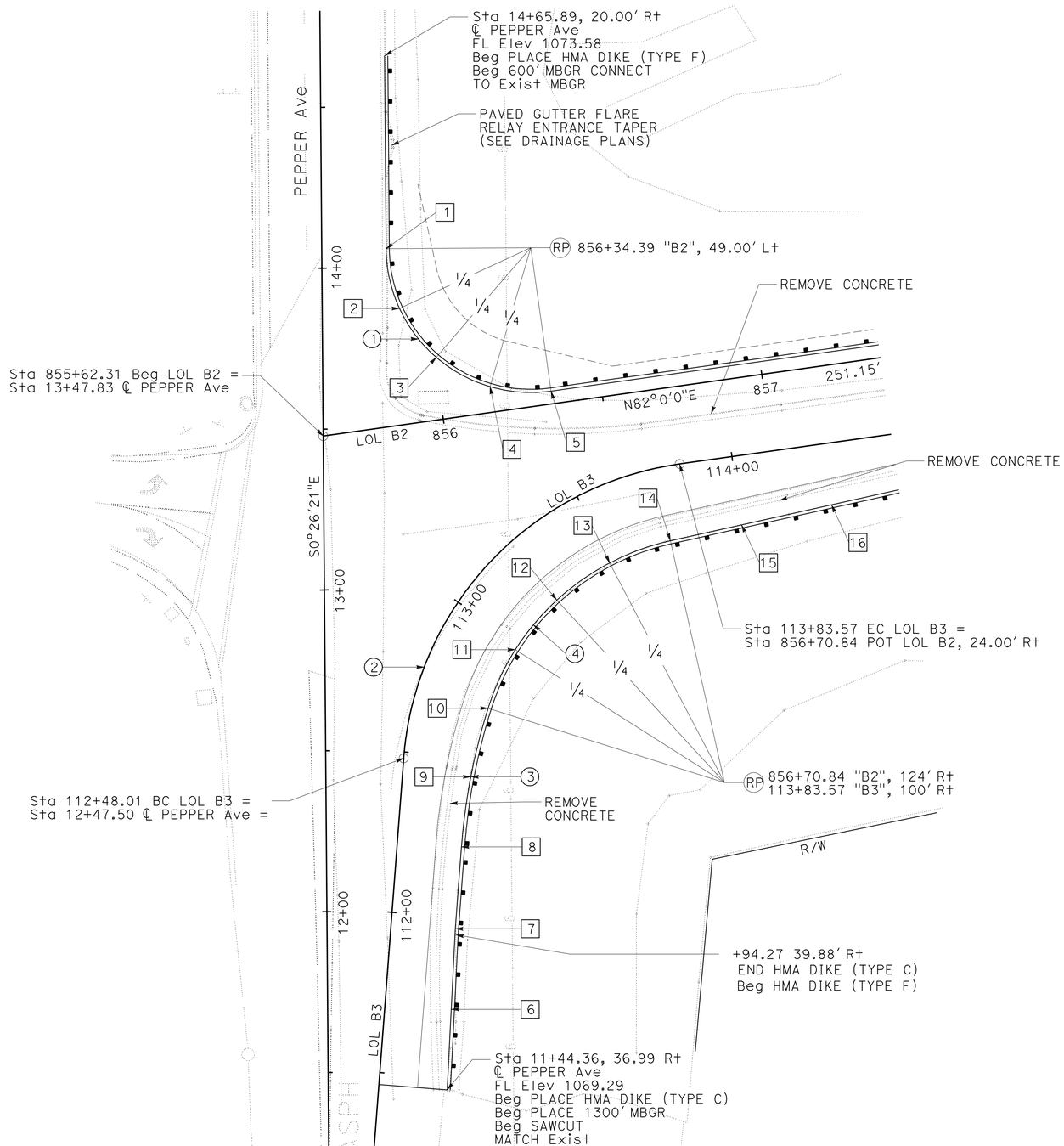

CURVE DATA

No.	R	Δ	T	L
1	45.00'	97°33'39"	51.37'	76.62'
2	100.00'	77°40'08"	80.50'	135.56'
3	192.00'	13°6'57"	22.07'	43.95'
4	77.00'	59°58'03"	44.43'	80.59'

No.	LOCATION	ELEVATION
1	Sta 14+05.89 "PEPPER Ave", 20.00' Rt	1072.69'
2	Sta 13+87.30 "PEPPER Ave", 24.02' Rt	1072.43'
3	Sta 856+00.54 "B2", 19.35' Lt	1072.17'
4	Sta 856+15.81 "B2", 8.02' Lt	1071.91'
5	Sta 856+34.39 "B2", 4.00' Lt	1071.60'
6	Sta 111+71.32 "B3", 20.64' Rt	1069.42'
7	Sta 111+96.35 "B3", 20.00' Rt	1069.54'
8	Sta 112+21.92 "B3", 20.00' Rt	1069.67'
9	Sta 112+43.85 "B3", 21.26' Rt	1069.78'
10	Sta 112+70.90 "B3", 23.00' Rt	1069.88'
11	Sta 112+97.07 "B3", 23.00' Rt	1069.89'
12	Sta 113+23.24 "B3", 23.00' Rt	1069.80'
13	Sta 113+49.40 "B3", 23.00' Rt	1069.63'
14	Sta 113+75.57 "B3", 23.00' Rt	1069.37'
15	Sta 114+00.00 "B3", 21.44' Rt	1069.04'
16	Sta 114+28.59 "B3", 19.14' Rt	1068.55'

PEPPER Ave EB ENTRANCE RAMP IMPROVEMENTS

CONSTRUCTION DETAILS

SCALE: 1" = 20'

C-4

STATE OF CALIFORNIA - DEPARTMENT OF TRANSPORTATION
Caltrans DESIGN

FUNCTIONAL SUPERVISOR: DU LU
CALCULATED-DESIGNED BY: DON D. NGUYEN
CHECKED BY: ROBERT S. LYLES Jr.
REVISED BY
DATE REVISED

LAST REVISION 01-13-11 | DATE PLOTTED => 15-JUN-2011 | TIME PLOTTED => 06:45

Dist	COUNTY	ROUTE	POST MILES TOTAL PROJECT	SHEET No.	TOTAL SHEETS
08	SBd	10	9.9/R24.5	49	260

Robert S Lyles Jr. 1-13-11
REGISTERED CIVIL ENGINEER DATE

4-11-11
PLANS APPROVAL DATE

REGISTERED PROFESSIONAL ENGINEER
ROBERT S. LYLES Jr.
No. 67873
Exp. 6-30-11
CIVIL
STATE OF CALIFORNIA

THE STATE OF CALIFORNIA OR ITS OFFICERS OR AGENTS SHALL NOT BE RESPONSIBLE FOR THE ACCURACY OR COMPLETENESS OF SCANNED COPIES OF THIS PLAN SHEET.

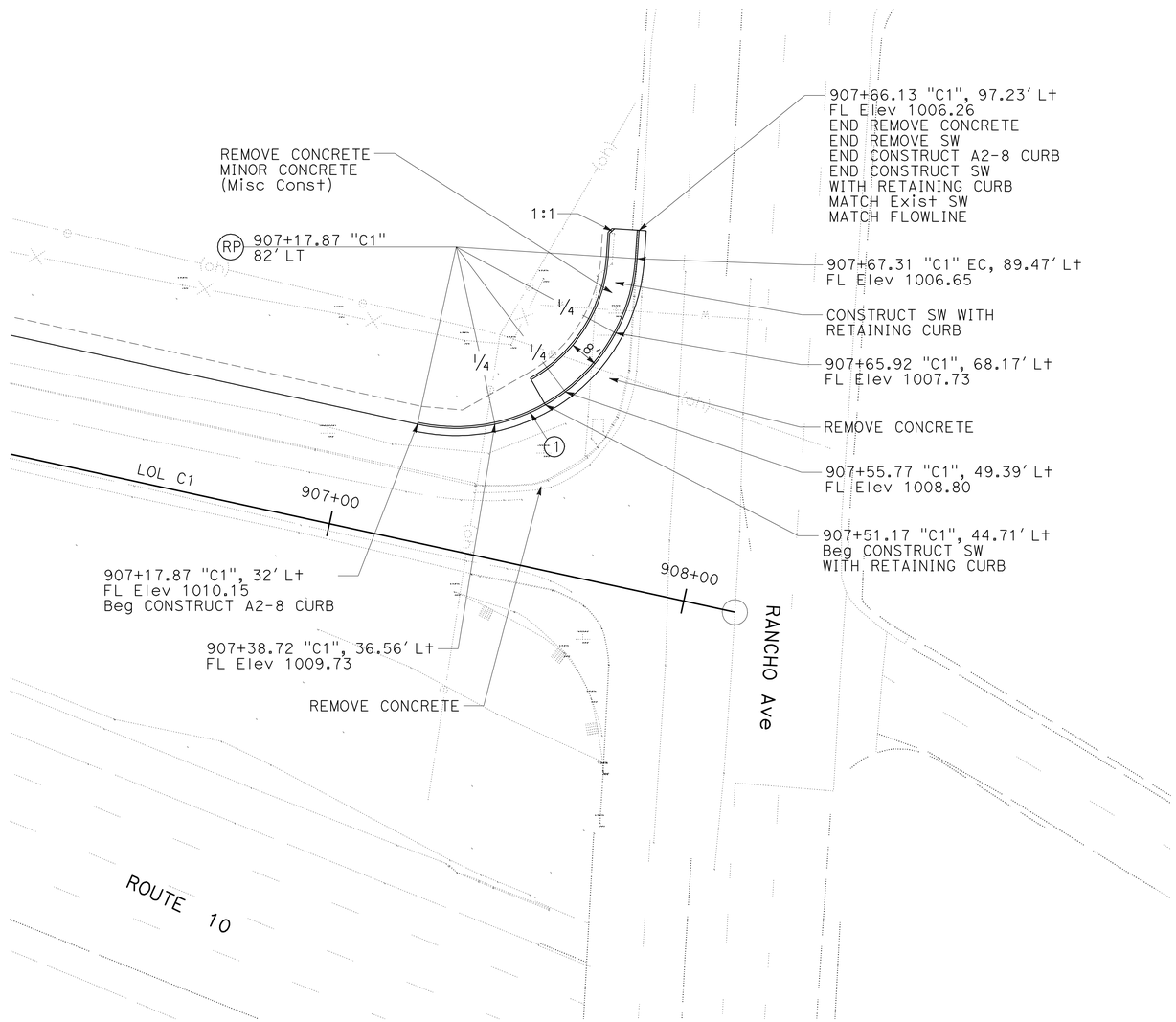

CURVE DATA

No.	R	Δ	T	L
1	50.00'	98°35'27"	58.12'	86.04'

RANCHO Ave WB ENTRANCE RAMP IMPROVEMENTS

CONSTRUCTION DETAILS

SCALE: 1" = 20'

C-5

STATE OF CALIFORNIA - DEPARTMENT OF TRANSPORTATION
Caltrans
DESIGN

FUNCTIONAL SUPERVISOR: DU LU
CALCULATED-DESIGNED BY: DON D. NGUYEN
CHECKED BY: ROBERT S. LYLES Jr.
REVISED BY
DATE REVISED

LAST REVISION 01-13-11
DATE PLOTTED => 15-APR-2011
TIME PLOTTED => 13:26

Dist	COUNTY	ROUTE	POST MILES TOTAL PROJECT	SHEET No.	TOTAL SHEETS
08	SBd	10	9.9/R24.5	50	260

Robert S Lyles Jr. 1-13-11
REGISTERED CIVIL ENGINEER DATE

4-11-11
PLANS APPROVAL DATE

REGISTERED PROFESSIONAL ENGINEER ROBERT S. LYLES Jr. No. 67873 Exp. 6-30-11 CIVIL STATE OF CALIFORNIA

THE STATE OF CALIFORNIA OR ITS OFFICERS OR AGENTS SHALL NOT BE RESPONSIBLE FOR THE ACCURACY OR COMPLETENESS OF SCANNED COPIES OF THIS PLAN SHEET.

CURVE DATA

No.	R	Δ	T	L
1	15.00′	61°58′23"	9.01′	16.22′
2	10.00′	62°44′17"	6.10′	10.95′
3	5.00′	62°44′17"	3.05′	5.47′

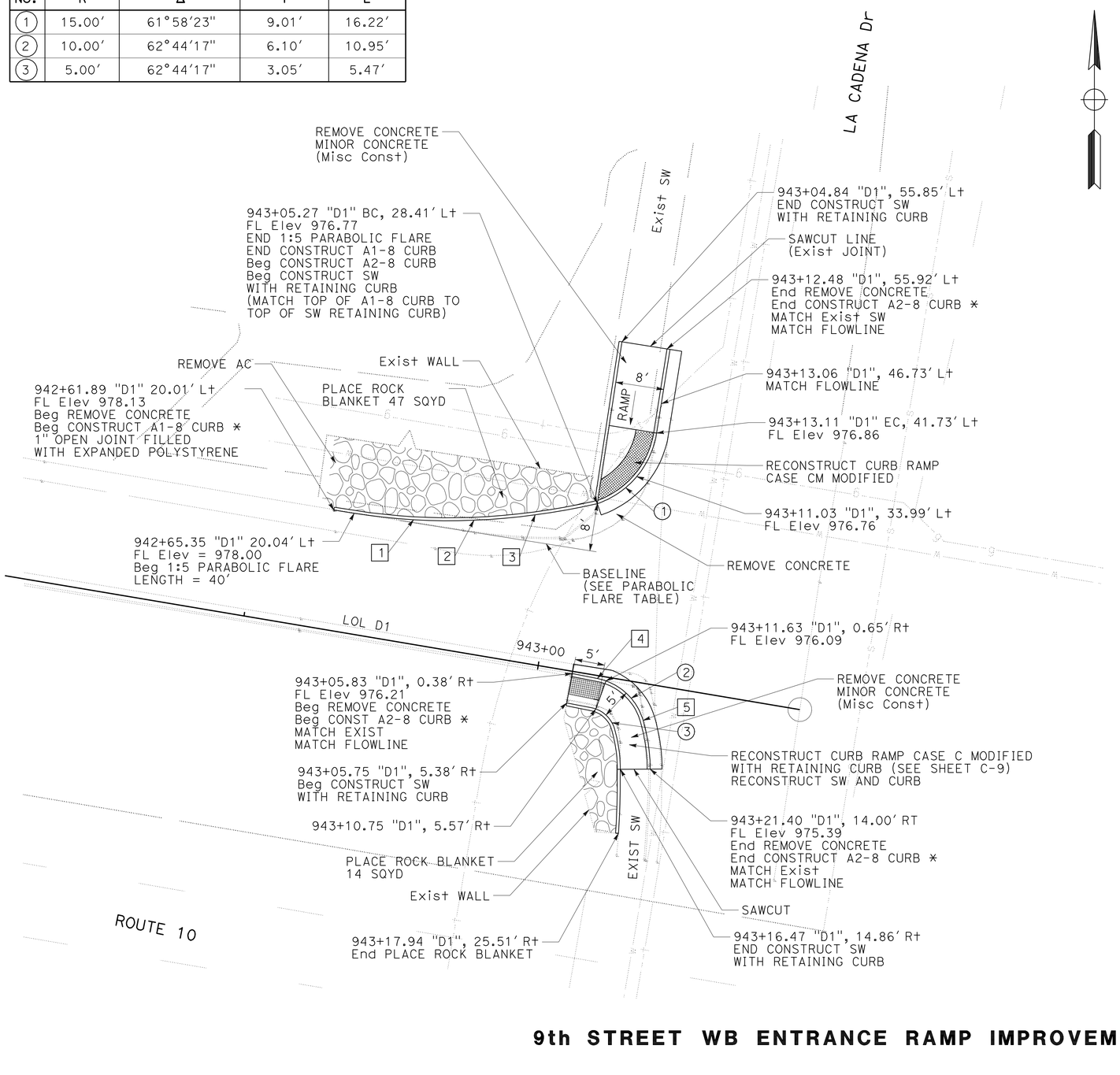

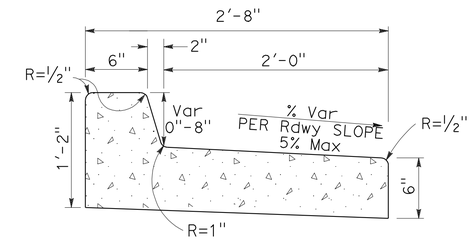

MODIFIED TYPE A2-8 CURB

(USE AT CURB RAMP TERMINI) *
(NON-WATER CARRYING GUTTER)

No.	LOCATION	ELEVATION
1	Sta 942+75.34 "D1", 20.63′ Lt	977.65′
2	Sta 942+85.33 "D1", 22.23′ Lt	977.30′
3	Sta 942+95.31 "D1", 24.82′ Lt	976.96′
4	Sta 943+10.14 "D1" BC, 6.16′ Rt	976.12′
5	Sta 943+18.88 "D1" EC, 0.50′ Rt	975.72′

PARABOLIC FLARE TABLE

OFFSET IN FEET FOR GIVEN "X" DISTANCE								
(L) \ (W)	5	10	15	20	25	30	35	40
1:5 FLARE								
40	0.13′	0.50′	1.13′	2.00′	3.13′	4.50′	6.13′	*8.00′

* MAXIMUM OFFSET = 8.00′

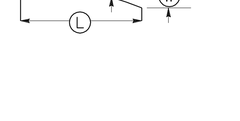

$$Y = \frac{WX^2}{L^2}$$

(L) = LENGTH OF FLARE
(W) = MAXIMUM OFFSET
(X) = DISTANCE ALONG BASE LINE
(Y) = OFFSET FROM BASE LINE

9th STREET WB ENTRANCE RAMP IMPROVEMENTS

CONSTRUCTION DETAILS

SCALE: 1" = 10′

C-6

STATE OF CALIFORNIA - DEPARTMENT OF TRANSPORTATION
Caltrans DESIGN
FUNCTIONAL SUPERVISOR: DU LU
CALCULATED-DESIGNED BY: DON D. NGUYEN
CHECKED BY: ROBERT S. LYLES Jr.
REVISED BY
DATE REVISED

LAST REVISION 01-13-11
DATE PLOTTED => 15-JUN-2011
TIME PLOTTED => 06:45

Dist	COUNTY	ROUTE	POST MILES TOTAL PROJECT	SHEET No.	TOTAL SHEETS
08	SBd	10	9.9/R24.5	51	260

Robert S Lyles Jr. 1-13-11
REGISTERED CIVIL ENGINEER DATE

4-11-11
PLANS APPROVAL DATE

REGISTERED PROFESSIONAL ENGINEER
ROBERT S. LYLES Jr.
No. 67873
Exp. 6-30-11
CIVIL
STATE OF CALIFORNIA

THE STATE OF CALIFORNIA OR ITS OFFICERS OR AGENTS SHALL NOT BE RESPONSIBLE FOR THE ACCURACY OR COMPLETENESS OF SCANNED COPIES OF THIS PLAN SHEET.

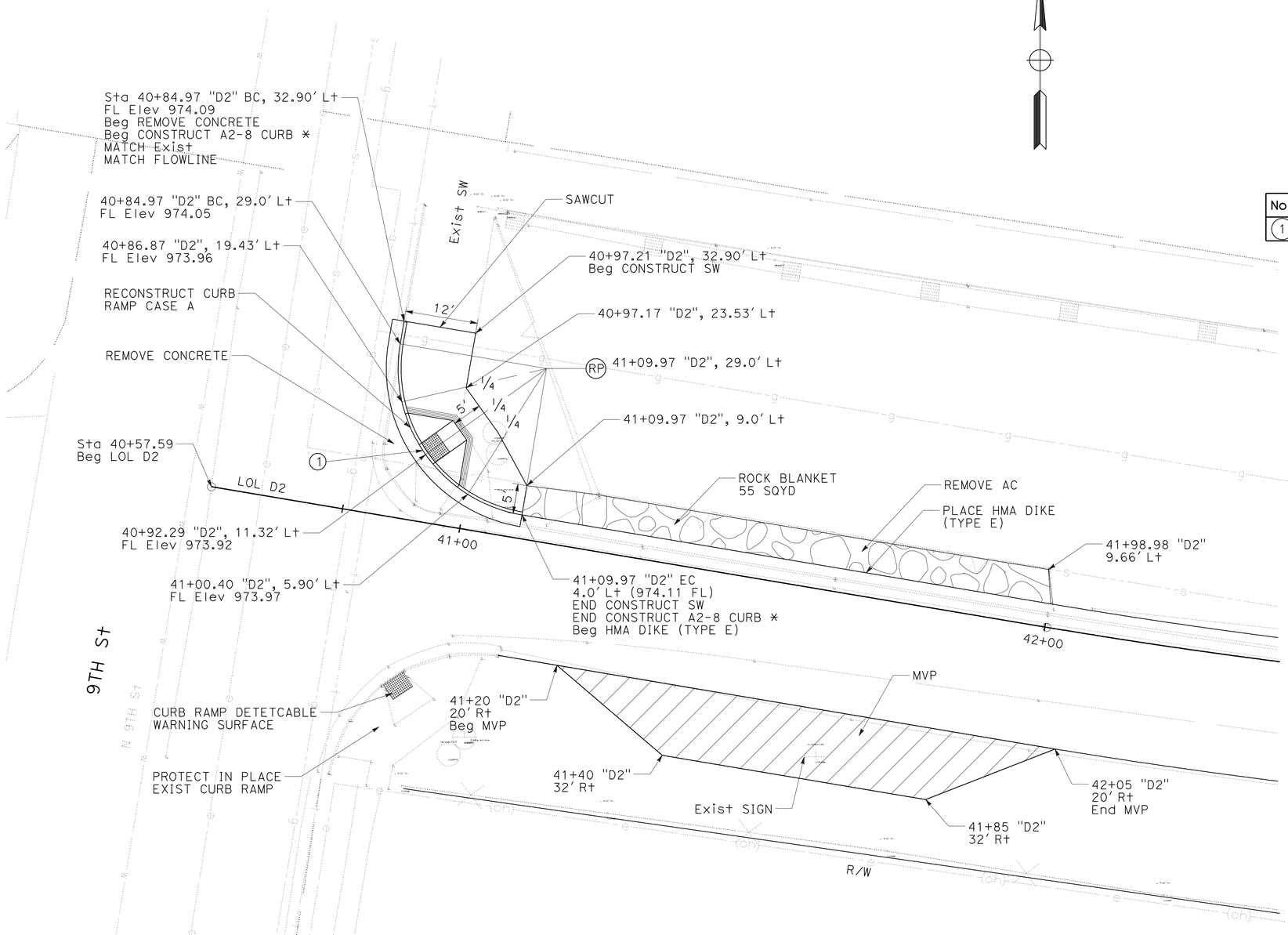

CURVE DATA

No.	R	Δ	T	L
1	25.00'	90°0'17"	25.00'	39.27'

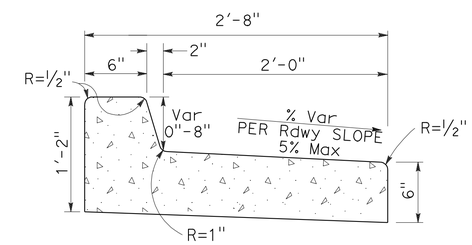

MODIFIED TYPE A2-8 CURB

(USE AT CURB RAMP TERMINI) *

9th STREET EB ENTRANCE RAMP IMPROVEMENTS

CONSTRUCTION DETAILS

SCALE: 1" = 10'

C-7

STATE OF CALIFORNIA - DEPARTMENT OF TRANSPORTATION
Caltrans DESIGN

FUNCTIONAL SUPERVISOR: DU LU
CALCULATED-DESIGNED BY: DON D. NGUYEN
CHECKED BY: ROBERT S. LYLES Jr.
REVISED BY
DATE REVISED

LAST REVISION 01-13-11
DATE PLOTTED => 15-APR-2011
TIME PLOTTED => 15:52

Dist	COUNTY	ROUTE	POST MILES TOTAL PROJECT	SHEET No.	TOTAL SHEETS
08	SBd	10	9.9/R24.5	52	260

Robert S Lyles Jr. 1-13-11
REGISTERED CIVIL ENGINEER DATE

4-11-11
PLANS APPROVAL DATE

REGISTERED PROFESSIONAL ENGINEER ROBERT S. LYLES Jr. No. 67873 Exp. 6-30-11 CIVIL STATE OF CALIFORNIA

THE STATE OF CALIFORNIA OR ITS OFFICERS OR AGENTS SHALL NOT BE RESPONSIBLE FOR THE ACCURACY OR COMPLETENESS OF SCANNED COPIES OF THIS PLAN SHEET.

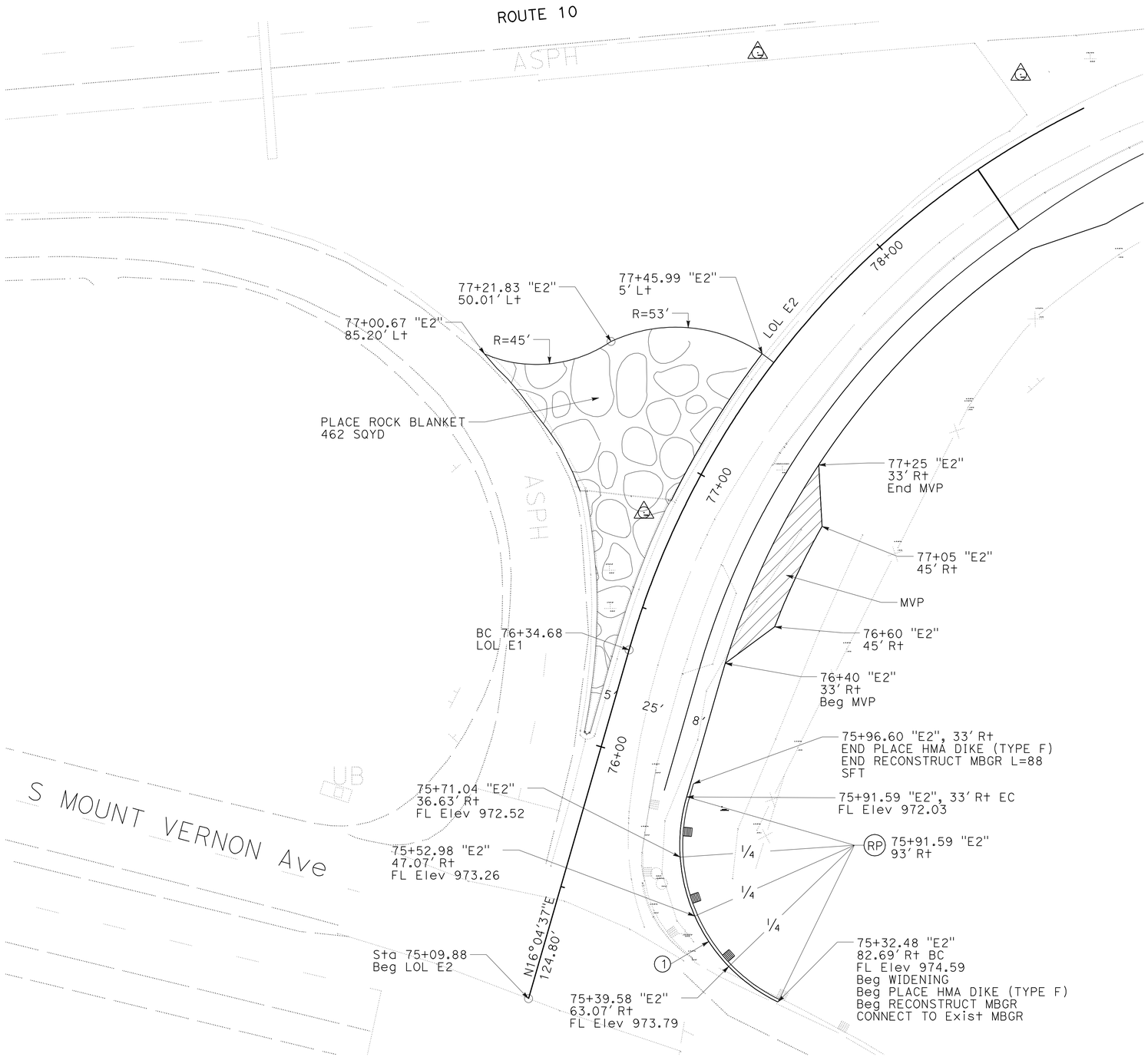

CURVE DATA

No.	R	Δ	T	L
1	60.00'	80°6'06"	50.44'	83.88'

Mt VERNON Ave EB ENTRANCE RAMP IMPROVEMENTS

CONSTRUCTION DETAILS

SCALE: 1" = 20'

C-8

STATE OF CALIFORNIA - DEPARTMENT OF TRANSPORTATION
DESIGN
Caltrans

FUNCTIONAL SUPERVISOR: DU LU
CALCULATED-DESIGNED BY: DON D. NGUYEN
CHECKED BY: ROBERT S. LYLES Jr.
REVISED BY
DATE REVISED

LAST REVISION 01-13-11
DATE PLOTTED => 15-JUN-2011
TIME PLOTTED => 06:45

Dist	COUNTY	ROUTE	POST MILES TOTAL PROJECT	SHEET No.	TOTAL SHEETS
08	SBd	10	9.9/R24.5	53	260

Robert S Lyles Jr. 1-13-11
REGISTERED CIVIL ENGINEER DATE

4-11-11
PLANS APPROVAL DATE

REGISTERED PROFESSIONAL ENGINEER ROBERT S. LYLES Jr. No. 67873 Exp. 6-30-11 CIVIL STATE OF CALIFORNIA

THE STATE OF CALIFORNIA OR ITS OFFICERS OR AGENTS SHALL NOT BE RESPONSIBLE FOR THE ACCURACY OR COMPLETENESS OF SCANNED COPIES OF THIS PLAN SHEET.

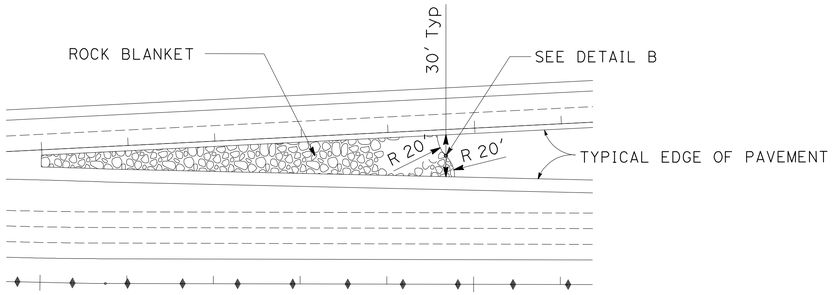

TYPICAL ROCK BLANKET AT GORE AREA

NO SCALE PLAN

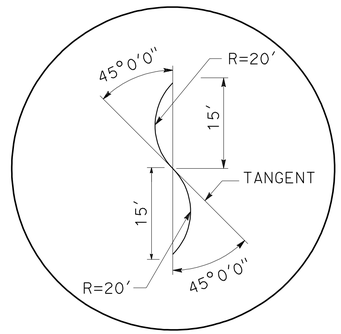

DETAIL B

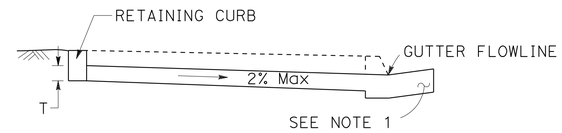

SECTION A-A

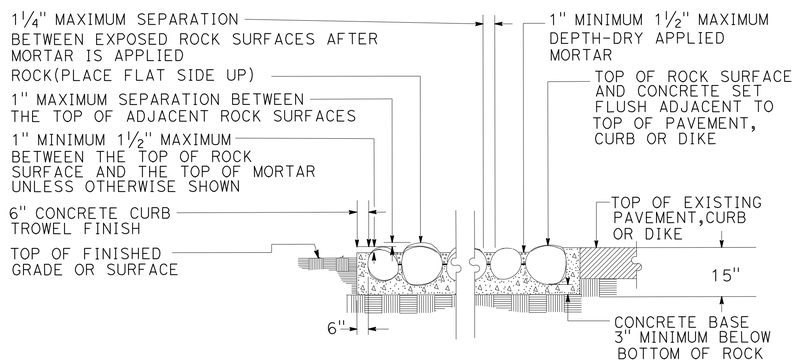

NO SCALE **ROCK BLANKET** SECTION

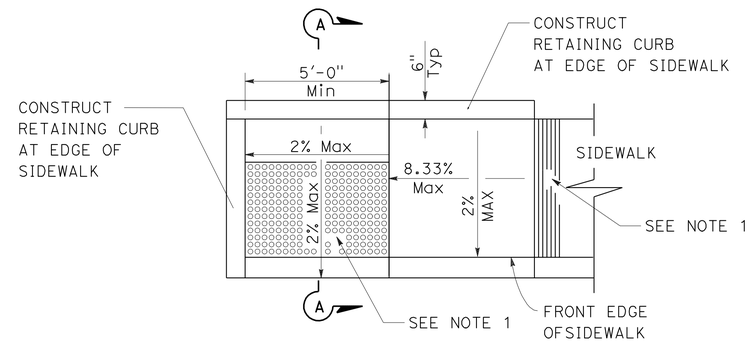

CURB RAMP CASE C MODIFIED

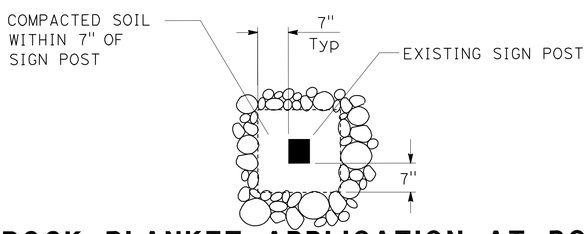

ROCK BLANKET APPLICATION AT POST

NO SCALE PLAN

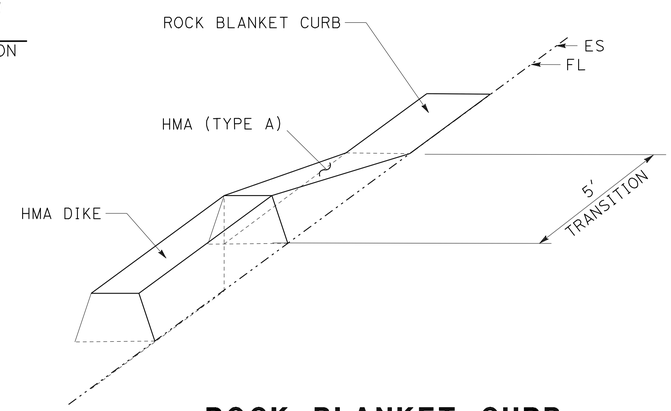

ROCK BLANKET CURB TRANSITION TO HMA DIKE

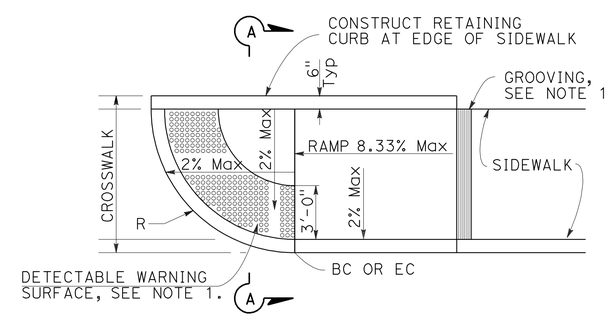

CURB RAMP CASE CM MODIFIED

CONSTRUCTION DETAILS

NO SCALE

C-9

STATE OF CALIFORNIA - DEPARTMENT OF TRANSPORTATION
Caltrans DESIGN

FUNCTIONAL SUPERVISOR: DU LU
CALCULATED-DESIGNED BY: DON D. NGUYEN
CHECKED BY: ROBERT S. LYLES Jr.
REVISED BY
DATE REVISED

LAST REVISION 01/03/11 | DATE PLOTTED => 15-APR-2011 | TIME PLOTTED => 13:27

Dist	COUNTY	ROUTE	POST MILES TOTAL PROJECT	SHEET No.	TOTAL SHEETS
08	SBd	10	9.9/R24.5	54	260

Robert S Lyles Jr. 1-13-11
REGISTERED CIVIL ENGINEER DATE

4-11-11
PLANS APPROVAL DATE

REGISTERED PROFESSIONAL ENGINEER ROBERT S. LYLES Jr. No. 67873 Exp. 6-30-11 CIVIL STATE OF CALIFORNIA

THE STATE OF CALIFORNIA OR ITS OFFICERS OR AGENTS SHALL NOT BE RESPONSIBLE FOR THE ACCURACY OR COMPLETENESS OF SCANNED COPIES OF THIS PLAN SHEET.

NOTE:

CURB TRANSITIONS FROM 0 TO FULL HEIGHT IS NEEDED ONLY WHERE TRAFFIC IS APPROACHING THE CURB. OTHERWISE, CURB SHALL REMAIN AT FULL HEIGHT THROUGHOUT.

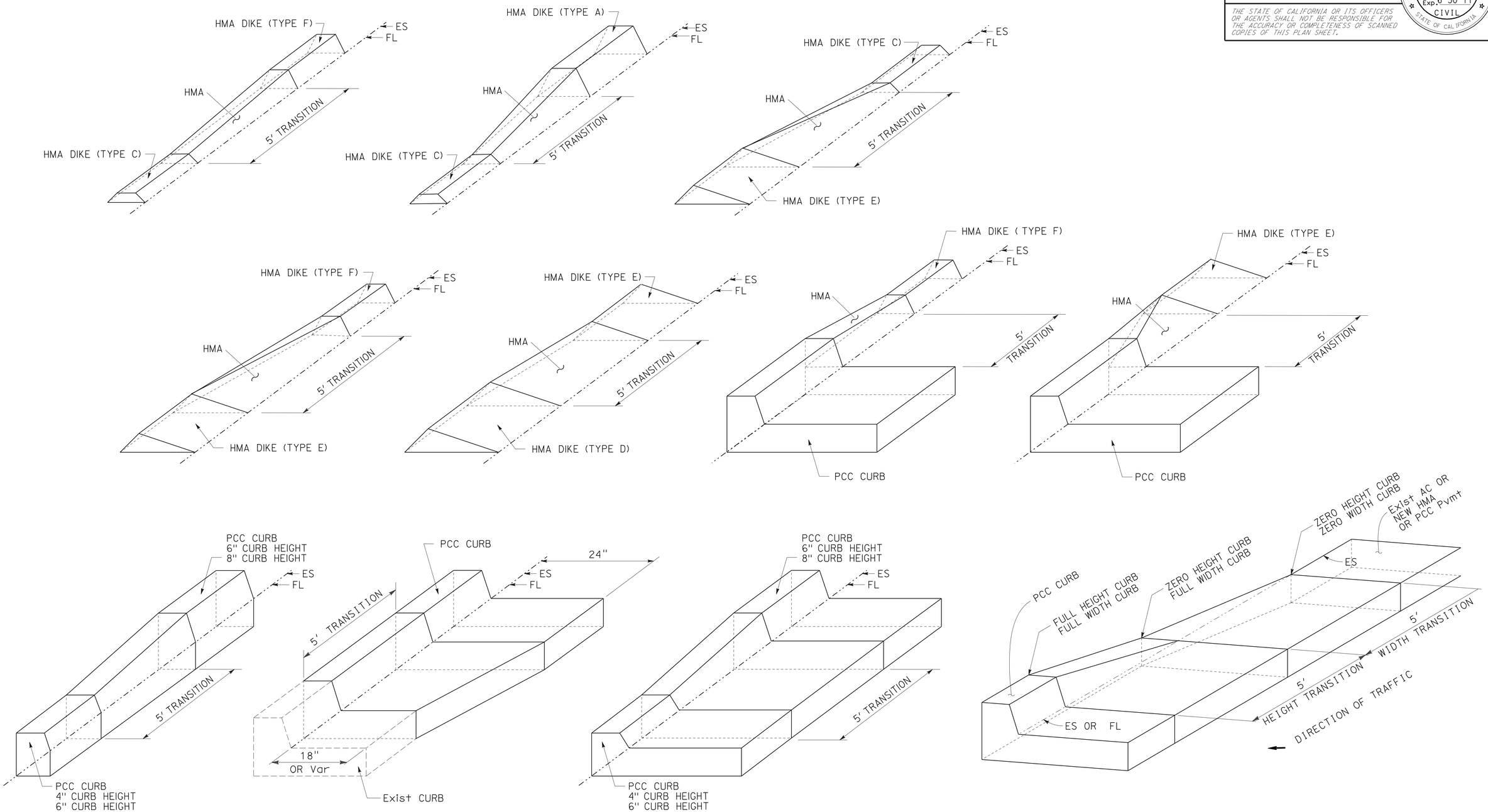

CURB AND DIKE TRANSITIONS

CONSTRUCTION DETAILS

NO SCALE

C-10

STATE OF CALIFORNIA - DEPARTMENT OF TRANSPORTATION
Caltrans® DESIGN

FUNCTIONAL SUPERVISOR: DU LU
CALCULATED-DESIGNED BY: ROBERT S. LYLES Jr.
CHECKED BY: ALEN NOU
REVISED BY
DATE REVISED

LAST REVISION 01-13-11
DATE PLOTTED => 15-JUN-2011
TIME PLOTTED => 06:45

Dist	COUNTY	ROUTE	POST MILES TOTAL PROJECT	SHEET No.	TOTAL SHEETS
08	SBd	10	9.9/R24.5	55	260

Robert S Lyles Jr. 1-13-11
REGISTERED CIVIL ENGINEER DATE

4-11-11
PLANS APPROVAL DATE

REGISTERED PROFESSIONAL ENGINEER ROBERT S. LYLES Jr. No. 67873 Exp. 6-30-11 CIVIL STATE OF CALIFORNIA

THE STATE OF CALIFORNIA OR ITS OFFICERS OR AGENTS SHALL NOT BE RESPONSIBLE FOR THE ACCURACY OR COMPLETENESS OF SCANNED COPIES OF THIS PLAN SHEET.

NOTES:

1. These connection details apply to walls with concrete barrier (Type 60D).
2. Additional details of posts, blocks and hardware are shown on Standard Plans A77B1, A77C1 and A77C2.
3. Direction of adjacent traffic indicated by →
4. For additional details of Concrete Barrier (Type 60D), see Standard Plan A76A.
5. For additional details of Transition Railing (Type WB), see Standard Plan A77J4.
6. Metal plates similar to Plate 'A' are to be used as spacers between the backside of the wall and the rear thrie beam element.
7. For typical use of Connection Detail DD, See Layout Types 12A and 12B on Standard Plan A77F1 and Layout Types 12C and 12D on Standard Plan A77F2.

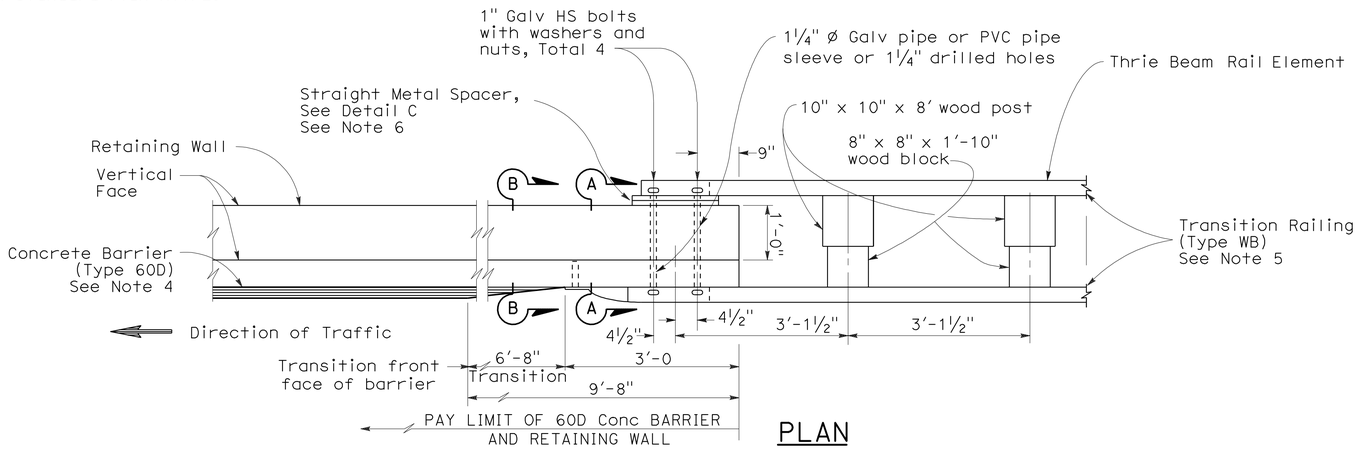

PLAN

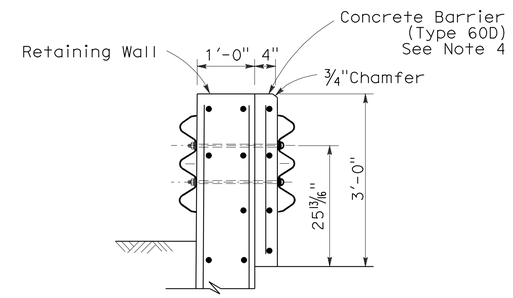

SECTION A-A

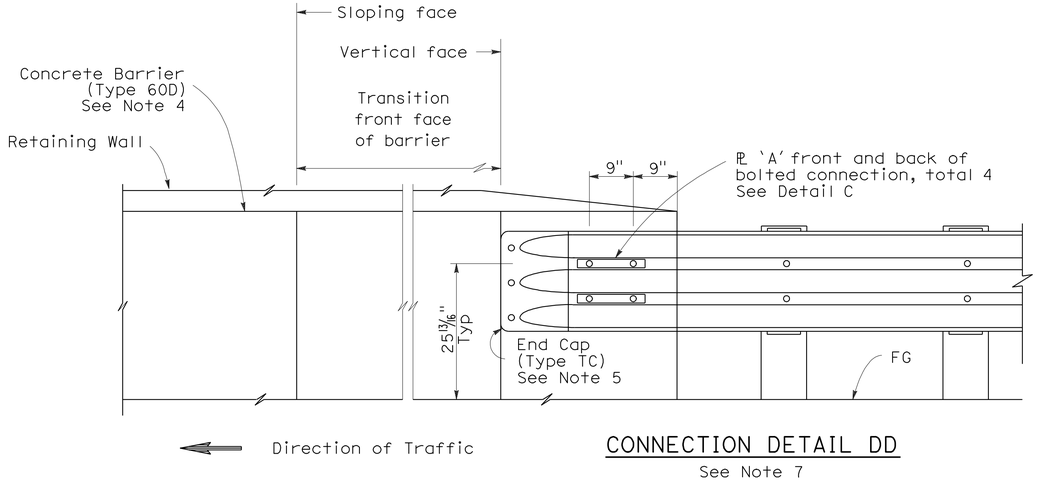

CONNECTION DETAIL DD
See Note 7

ELEVATION

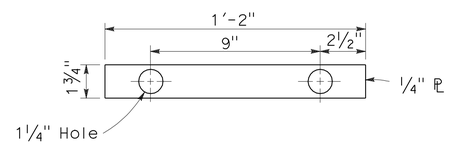

DETAIL C

PLATE 'A'
See Note 6

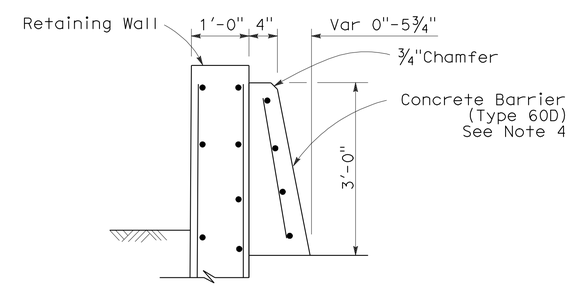

SECTION B-B

RETAINING WALL/CONCRETE BARRIER TO MBGR TRANSITION DETAIL

THIS PLAN ACCURATE FOR RETAINING WALL WORK ONLY.

CONSTRUCTION DETAILS

NO SCALE

C-11

STATE OF CALIFORNIA - DEPARTMENT OF TRANSPORTATION
Caltrans DESIGN
FUNCTIONAL SUPERVISOR: DU LU
CALCULATED-DESIGNED BY: ROBERT S. LYLES Jr.
CHECKED BY: ALEN NOU
REVISED BY
DATE REVISED

LAST REVISION 01-13-11 | DATE PLOTTED => 15-APR-2011 | TIME PLOTTED => 13:27

Dist	COUNTY	ROUTE	POST MILES TOTAL PROJECT	SHEET No.	TOTAL SHEETS
08	SBd	10	9.9/R24.5	56	260

Robert S Lyles Jr. 1-24-11
REGISTERED CIVIL ENGINEER DATE

4-11-11
PLANS APPROVAL DATE

REGISTERED PROFESSIONAL ENGINEER
ROBERT S. LYLES Jr.
No. 67873
Exp. 6-30-11
CIVIL
STATE OF CALIFORNIA

THE STATE OF CALIFORNIA OR ITS OFFICERS OR AGENTS SHALL NOT BE RESPONSIBLE FOR THE ACCURACY OR COMPLETENESS OF SCANNED COPIES OF THIS PLAN SHEET.

QUANTITIES FOR TEMPORARY CONSTRUCTION BMPs

TEMPORARY CONSTRUCTION SITE BMPS	UNITS	QUANTITIES
TEMPORARY SOIL BINDER	SQYD	43600
TEMPORARY FIBER ROLL	LF	16900
TEMPORARY COVER	SQYD	34
TEMPORARY DRAINAGE INLET PROTECTION	EA	45
TEMPORARY CONCRETE WASHOUT BIN	EA	20
RAIN EVENT ACTION PLAN	WDAY	27
STORM WATER ANNUAL REPORT	EA	1
STORM WATER SAMPLING AND ANALYSIS DAY	EA	8

THIS PLAN ACCURATE FOR TEMPORARY WATER POLLUTION CONTROL WORK ONLY

TEMPORARY WATER POLLUTION CONTROL QUANTITIES

WPCQ-1

STATE OF CALIFORNIA - DEPARTMENT OF TRANSPORTATION
Caltrans DESIGN

FUNCTIONAL SUPERVISOR: DU LU
CALCULATED-DESIGNED BY: ROBERT S. LYLES Jr.
CHECKED BY: JOE DAMIAN
REVISED BY
DATE REVISED

LAST REVISION 01-24-11
DATE PLOTTED => 15-APR-2011
TIME PLOTTED => 13:27

Dist	COUNTY	ROUTE	POST MILES TOTAL PROJECT	SHEET No.	TOTAL SHEETS
08	SBd	10	9.9/R24.5	57	260

Robert S Lyles Jr. 1-24-11
REGISTERED CIVIL ENGINEER DATE

4-11-11
PLANS APPROVAL DATE

REGISTERED PROFESSIONAL ENGINEER
ROBERT S. LYLES Jr.
No. 67873
Exp. 6-30-11
CIVIL
STATE OF CALIFORNIA

THE STATE OF CALIFORNIA OR ITS OFFICERS OR AGENTS SHALL NOT BE RESPONSIBLE FOR THE ACCURACY OR COMPLETENESS OF SCANNED COPIES OF THIS PLAN SHEET.

NOTE:

FOR ACCURATE RIGHT OF WAY AND ACCESS DATA,
CONTACT RIGHT OF WAY ENGINEERING AT THE DISTRICT OFFICE.

LEGEND:

- DRAINAGE SYSTEM No.
- DRAINAGE UNIT No.
- RSP

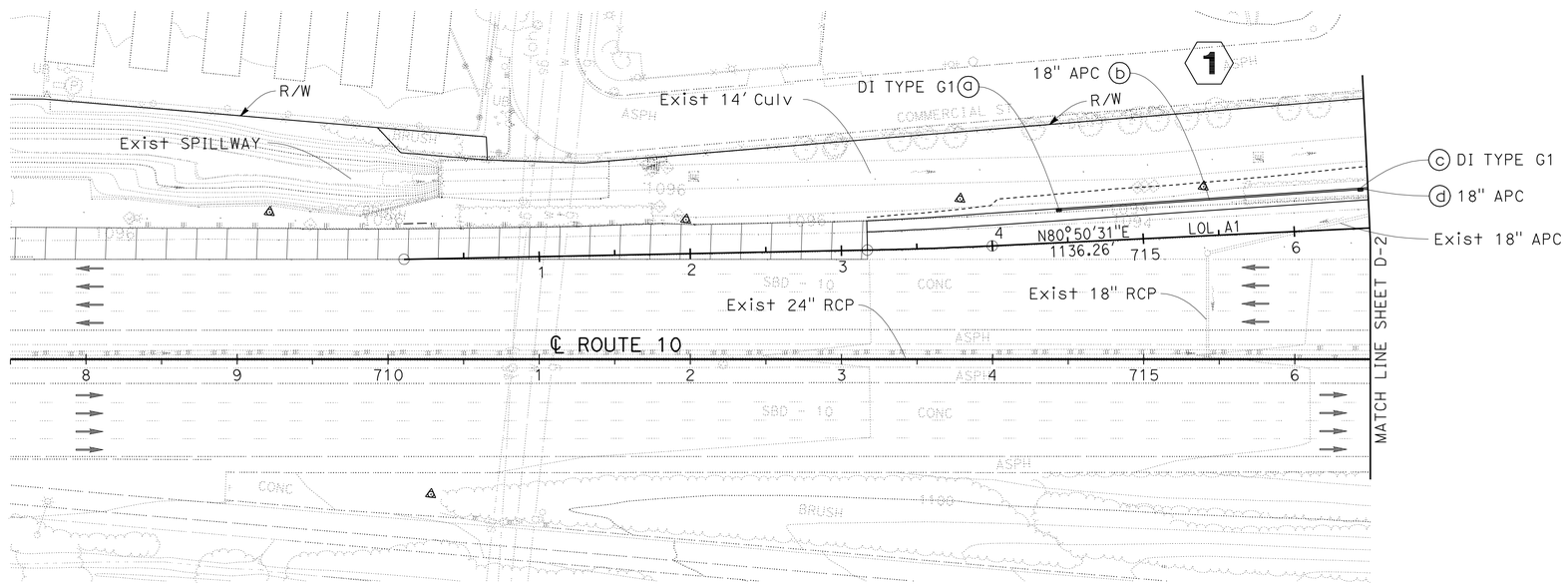

CEDAR Ave WB ENTRANCE RAMP

DRAINAGE PLAN

SCALE: 1" = 50'

D-1

THIS PLAN ACCURATE FOR DRAINAGE WORK ONLY.

STATE OF CALIFORNIA - DEPARTMENT OF TRANSPORTATION
Caltrans
DESIGN

FUNCTIONAL SUPERVISOR: DU LU
CALCULATED-DESIGNED BY: ROBERT S. LYLES Jr.
CHECKED BY: KHA PHAM
REVISED BY
DATE REVISED

LAST REVISION 01-24-11
DATE PLOTTED => 15-JUN-2011
TIME PLOTTED => 06:45

Dist	COUNTY	ROUTE	POST MILES TOTAL PROJECT	SHEET No.	TOTAL SHEETS
08	SBd	10	9.9/R24.5	58	260

Robert S Lyles Jr. 1-24-11
REGISTERED CIVIL ENGINEER DATE

4-11-11
PLANS APPROVAL DATE

REGISTERED PROFESSIONAL ENGINEER
ROBERT S. LYLES Jr.
No. 67873
Exp. 6-30-11
CIVIL
STATE OF CALIFORNIA

THE STATE OF CALIFORNIA OR ITS OFFICERS OR AGENTS SHALL NOT BE RESPONSIBLE FOR THE ACCURACY OR COMPLETENESS OF SCANNED COPIES OF THIS PLAN SHEET.

NOTE:

FOR ACCURATE RIGHT OF WAY AND ACCESS DATA,
CONTACT RIGHT OF WAY ENGINEERING AT THE DISTRICT OFFICE.

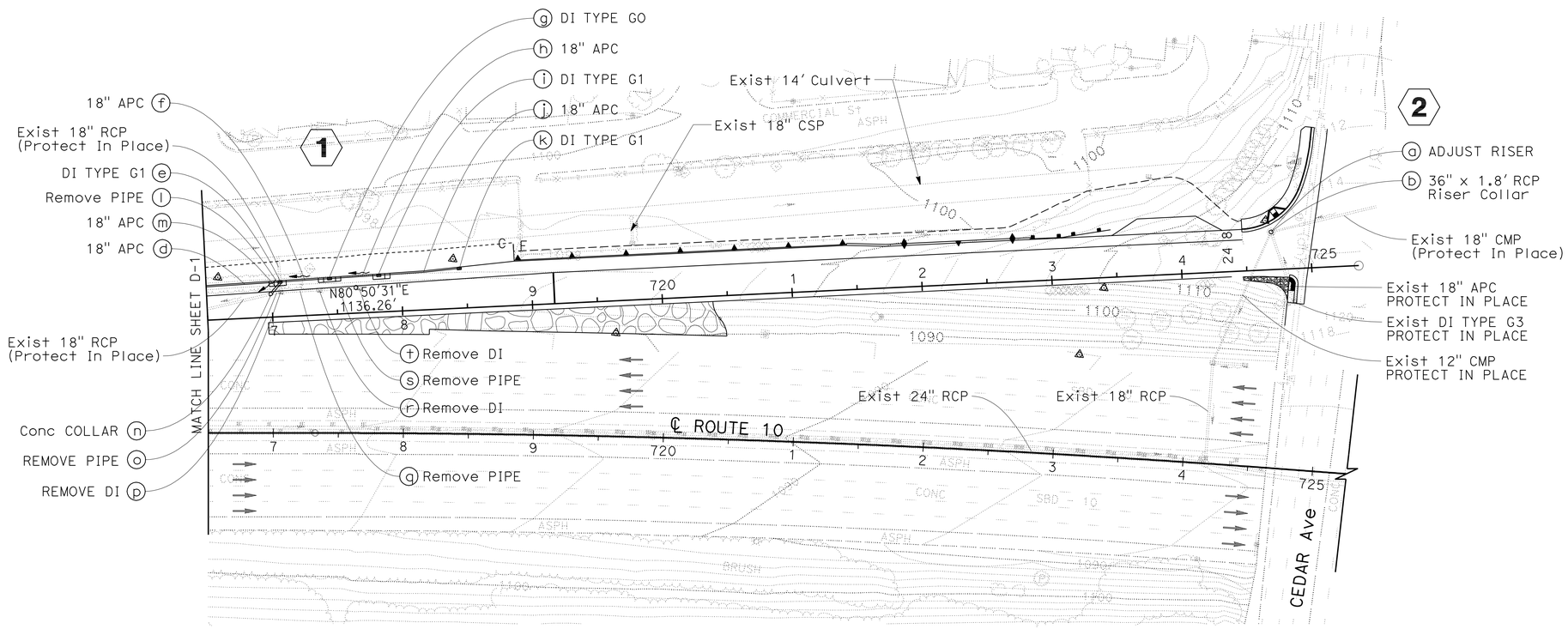

CEDAR Ave WB ENTRANCE RAMP

DRAINAGE PLAN

SCALE: 1" = 50'

D-2

THIS PLAN ACCURATE FOR DRAINAGE WORK ONLY.

STATE OF CALIFORNIA - DEPARTMENT OF TRANSPORTATION
Caltrans
DESIGN

FUNCTIONAL SUPERVISOR: DU LU

CALCULATED-DESIGNED BY: ROBERT S. LYLES Jr.
CHECKED BY: KHA PHAM

REVISED BY
DATE REVISED

LAST REVISION 01-24-11
DATE PLOTTED => 15-APR-2011
TIME PLOTTED => 13:14

Dist	COUNTY	ROUTE	POST MILES TOTAL PROJECT	SHEET No.	TOTAL SHEETS
08	SBd	10	9.9/R24.5	59	260

Robert S Lyles Jr. 1-24-11
REGISTERED CIVIL ENGINEER DATE

4-11-11
PLANS APPROVAL DATE

REGISTERED PROFESSIONAL ENGINEER
ROBERT S. LYLES Jr.
No. 67873
Exp. 6-30-11
CIVIL
STATE OF CALIFORNIA

THE STATE OF CALIFORNIA OR ITS OFFICERS OR AGENTS SHALL NOT BE RESPONSIBLE FOR THE ACCURACY OR COMPLETENESS OF SCANNED COPIES OF THIS PLAN SHEET.

NOTE:

FOR ACCURATE RIGHT OF WAY AND ACCESS DATA,
CONTACT RIGHT OF WAY ENGINEERING AT THE DISTRICT OFFICE.

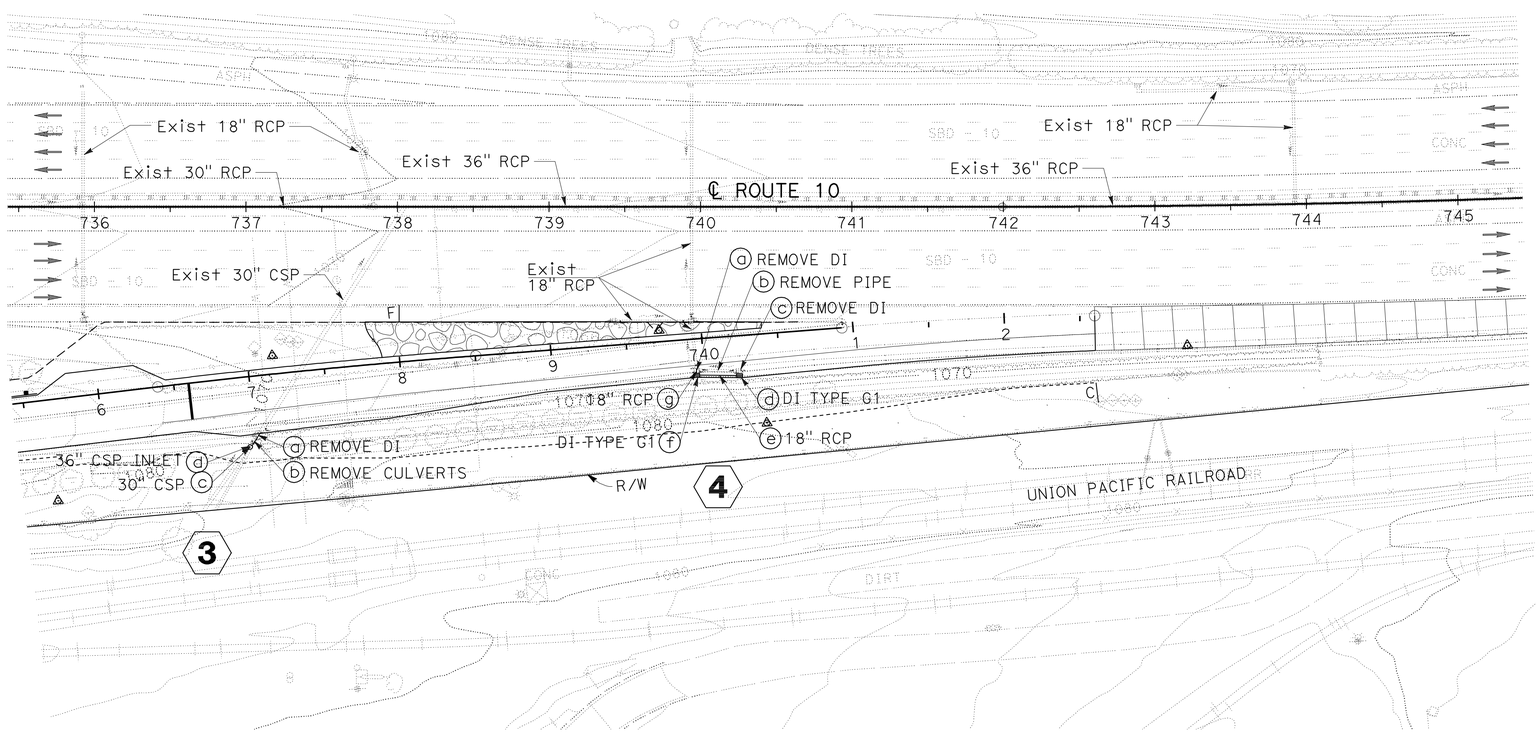

CEDAR Ave EB ENTRANCE RAMP

DRAINAGE PLAN

SCALE: 1" = 50'

D-3

THIS PLAN ACCURATE FOR DRAINAGE WORK ONLY.

STATE OF CALIFORNIA - DEPARTMENT OF TRANSPORTATION
Caltrans
DESIGN

FUNCTIONAL SUPERVISOR: DU LU

CALCULATED-DESIGNED BY: ROBERT S. LYLES Jr.
CHECKED BY: KHA PHAM

REVISED BY
DATE REVISED

LAST REVISION 01-24-11
DATE PLOTTED => 15-JUN-2011
TIME PLOTTED => 06:45

Dist	COUNTY	ROUTE	POST MILES TOTAL PROJECT	SHEET No.	TOTAL SHEETS
08	SBd	10	9.9/R24.5	60	260

Robert S Lyles Jr. 1-24-11
REGISTERED CIVIL ENGINEER DATE

4-11-11
PLANS APPROVAL DATE

REGISTERED PROFESSIONAL ENGINEER
ROBERT S. LYLES Jr.
No. 67873
Exp. 6-30-11
CIVIL
STATE OF CALIFORNIA

THE STATE OF CALIFORNIA OR ITS OFFICERS OR AGENTS SHALL NOT BE RESPONSIBLE FOR THE ACCURACY OR COMPLETENESS OF SCANNED COPIES OF THIS PLAN SHEET.

NOTE:

FOR ACCURATE RIGHT OF WAY AND ACCESS DATA,
CONTACT RIGHT OF WAY ENGINEERING AT THE DISTRICT OFFICE.

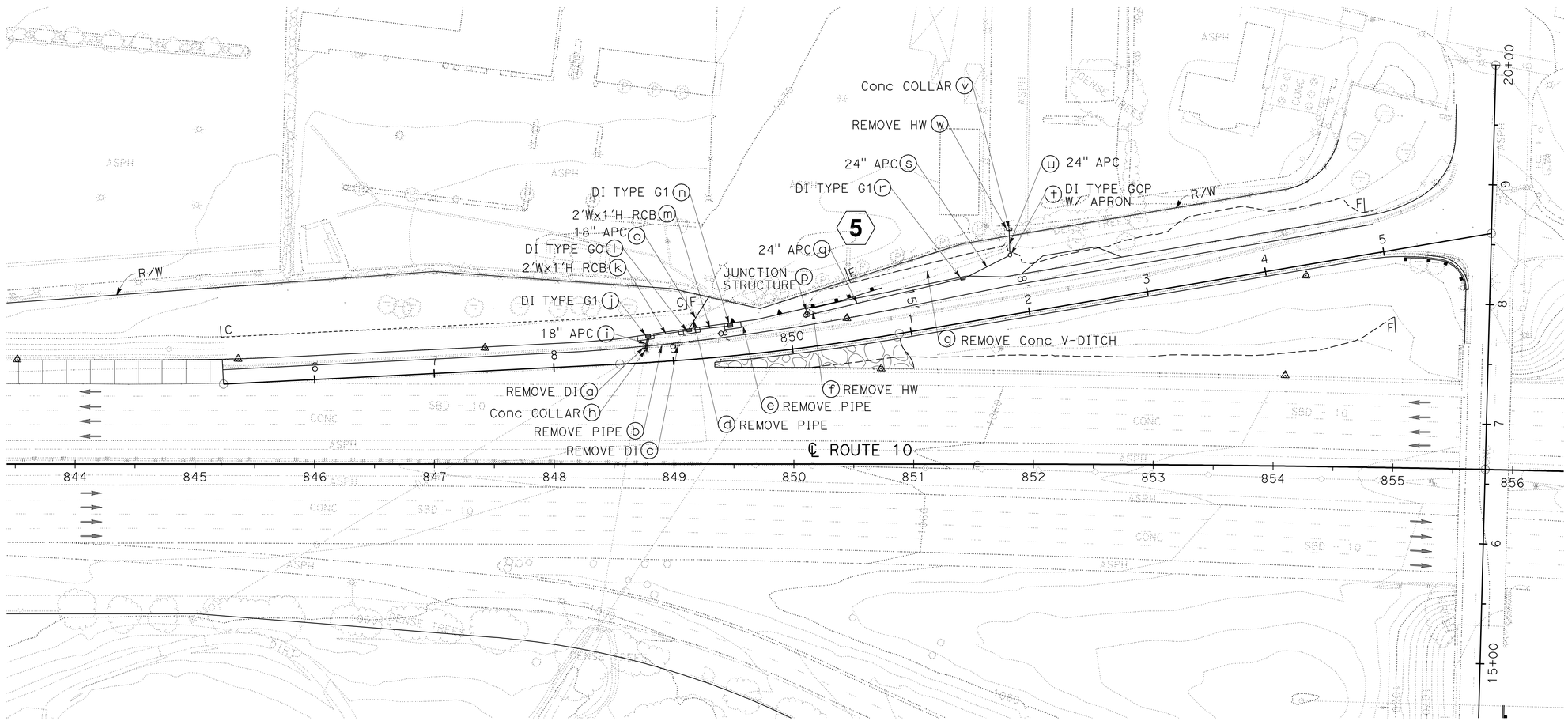

PEPPER Ave WB ENTRANCE RAMP

DRAINAGE PLAN

SCALE: 1" = 50'

D-4

THIS PLAN ACCURATE FOR DRAINAGE WORK ONLY.

STATE OF CALIFORNIA - DEPARTMENT OF TRANSPORTATION
Caltrans DESIGN

FUNCTIONAL SUPERVISOR: DU LU
CALCULATED-DESIGNED BY: ROBERT S. LYLES Jr.
CHECKED BY: KHA PHAM
REVISED BY
DATE REVISED

LAST REVISION 01-24-11
DATE PLOTTED => 15-JUN-2011
TIME PLOTTED => 06:45

Dist	COUNTY	ROUTE	POST MILES TOTAL PROJECT	SHEET No.	TOTAL SHEETS
08	SBd	10	9.9/R24.5	61	260

Robert S Lyles Jr. 1-24-11
REGISTERED CIVIL ENGINEER DATE

4-11-11
PLANS APPROVAL DATE

REGISTERED PROFESSIONAL ENGINEER ROBERT S. LYLES Jr. No. 67873 Exp. 6-30-11 CIVIL STATE OF CALIFORNIA

THE STATE OF CALIFORNIA OR ITS OFFICERS OR AGENTS SHALL NOT BE RESPONSIBLE FOR THE ACCURACY OR COMPLETENESS OF SCANNED COPIES OF THIS PLAN SHEET.

NOTE:

FOR ACCURATE RIGHT OF WAY AND ACCESS DATA, CONTACT RIGHT OF WAY ENGINEERING AT THE DISTRICT OFFICE.

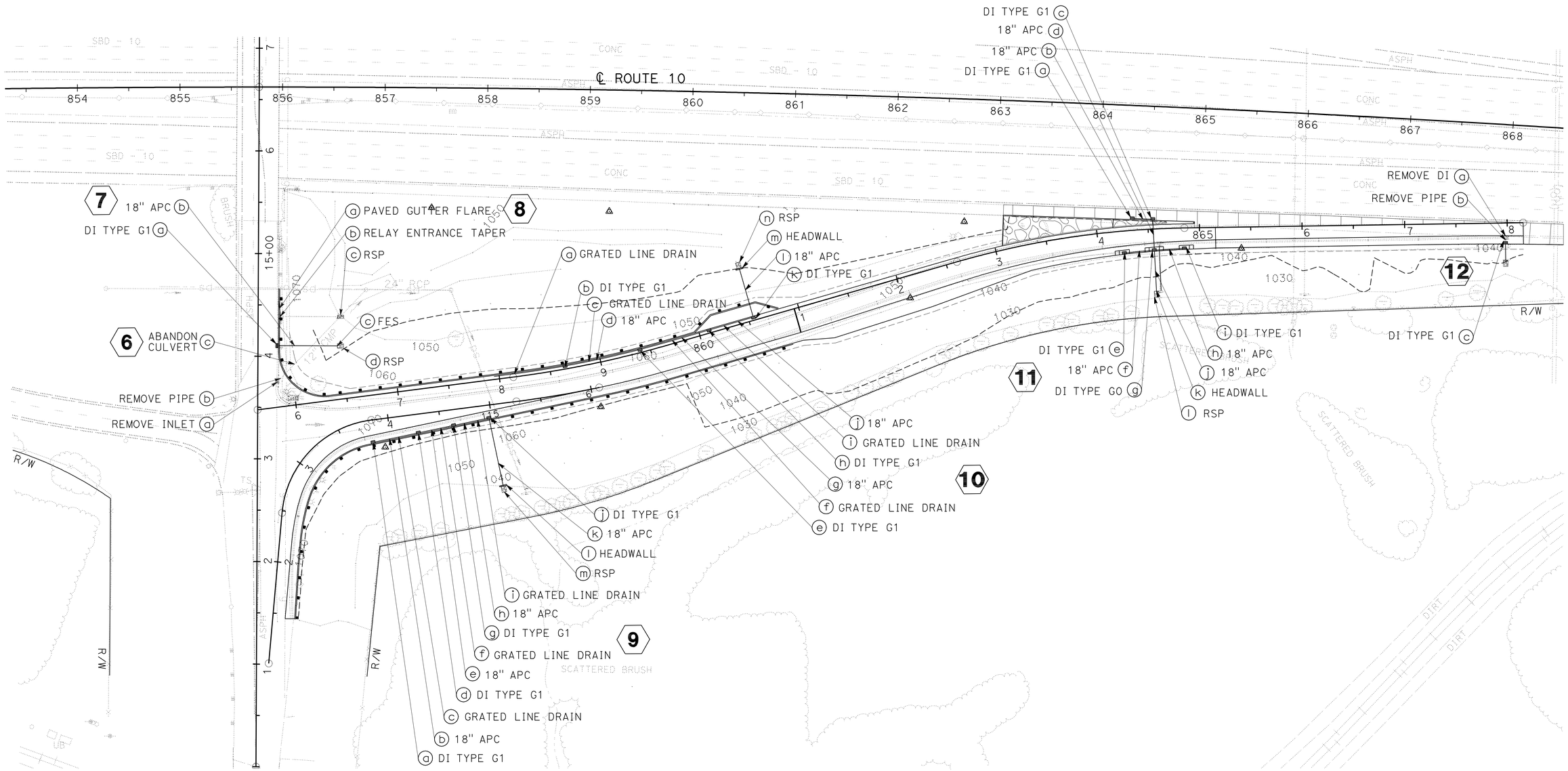

PEPPER Ave EB ENTRANCE RAMP

DRAINAGE PLAN

SCALE: 1" = 50'

D-5

THIS PLAN ACCURATE FOR DRAINAGE WORK ONLY.

STATE OF CALIFORNIA - DEPARTMENT OF TRANSPORTATION
Caltrans
DESIGN

FUNCTIONAL SUPERVISOR: DU LU
CALCULATED-DESIGNED BY: ROBERT S. LYLES Jr.
CHECKED BY: KHA PHAM
REVISED BY
DATE REVISED

LAST REVISION 01-24-11
DATE PLOTTED => 15-JUN-2011
TIME PLOTTED => 06:46

Dist	COUNTY	ROUTE	POST MILES TOTAL PROJECT	SHEET No.	TOTAL SHEETS
08	SBd	10	9.9/R24.5	62	260

Robert S Lyles Jr. 1-24-11
REGISTERED CIVIL ENGINEER DATE

4-11-11
PLANS APPROVAL DATE

REGISTERED PROFESSIONAL ENGINEER ROBERT S. LYLES Jr. No. 67873 Exp. 6-30-11 CIVIL STATE OF CALIFORNIA

THE STATE OF CALIFORNIA OR ITS OFFICERS OR AGENTS SHALL NOT BE RESPONSIBLE FOR THE ACCURACY OR COMPLETENESS OF SCANNED COPIES OF THIS PLAN SHEET.

NOTE:

FOR ACCURATE RIGHT OF WAY AND ACCESS DATA,
CONTACT RIGHT OF WAY ENGINEERING AT THE DISTRICT OFFICE.

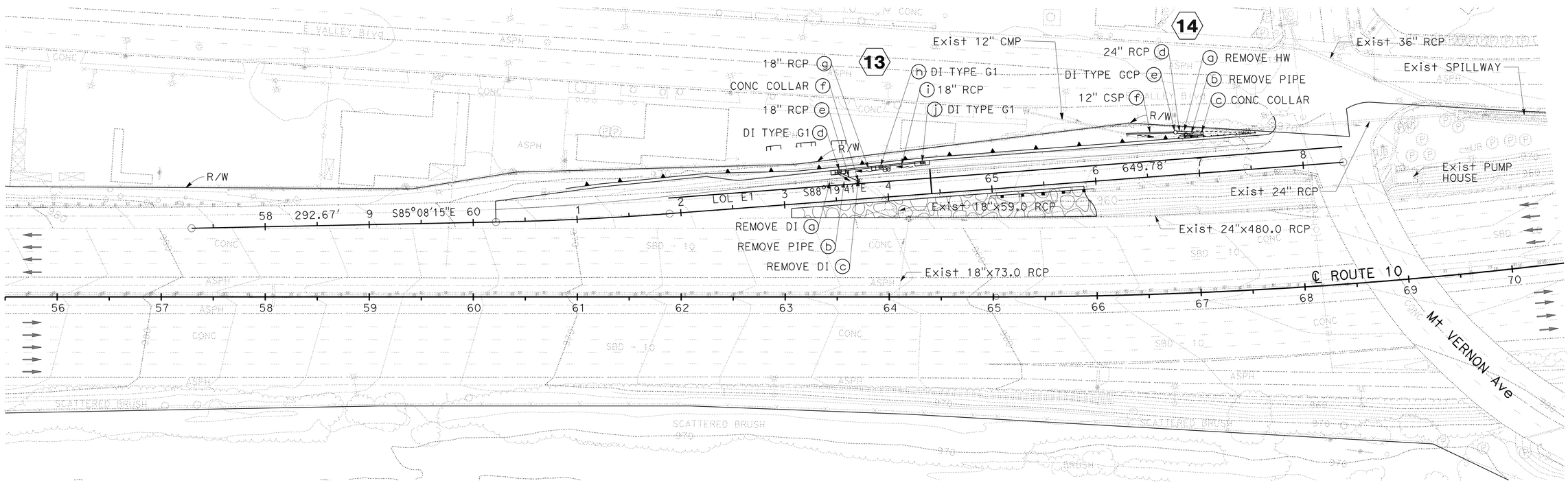

Mt VERNON WB ENTRANCE RAMP

DRAINAGE PLAN

SCALE: 1" = 50'

D-6

THIS PLAN ACCURATE FOR DRAINAGE WORK ONLY.

STATE OF CALIFORNIA - DEPARTMENT OF TRANSPORTATION
DESIGN
Caltrans

FUNCTIONAL SUPERVISOR: DU LU
CALCULATED-DESIGNED BY: ROBERT S. LYLES Jr.
CHECKED BY: KHA PHAM
REVISED BY
DATE REVISED

LAST REVISION 01-24-11
DATE PLOTTED => 15-APR-2011
TIME PLOTTED => 13:15

Dist	COUNTY	ROUTE	POST MILES TOTAL PROJECT	SHEET No.	TOTAL SHEETS
08	SBd	10	9.9/R24.5	63	260

Robert S Lyles Jr. 1-24-11
REGISTERED CIVIL ENGINEER DATE

4-11-11
PLANS APPROVAL DATE

REGISTERED PROFESSIONAL ENGINEER ROBERT S. LYLES Jr. No. 67873 Exp. 6-30-11 CIVIL STATE OF CALIFORNIA

THE STATE OF CALIFORNIA OR ITS OFFICERS OR AGENTS SHALL NOT BE RESPONSIBLE FOR THE ACCURACY OR COMPLETENESS OF SCANNED COPIES OF THIS PLAN SHEET.

NOTE:

FOR ACCURATE RIGHT OF WAY AND ACCESS DATA,
CONTACT RIGHT OF WAY ENGINEERING AT THE DISTRICT OFFICE.

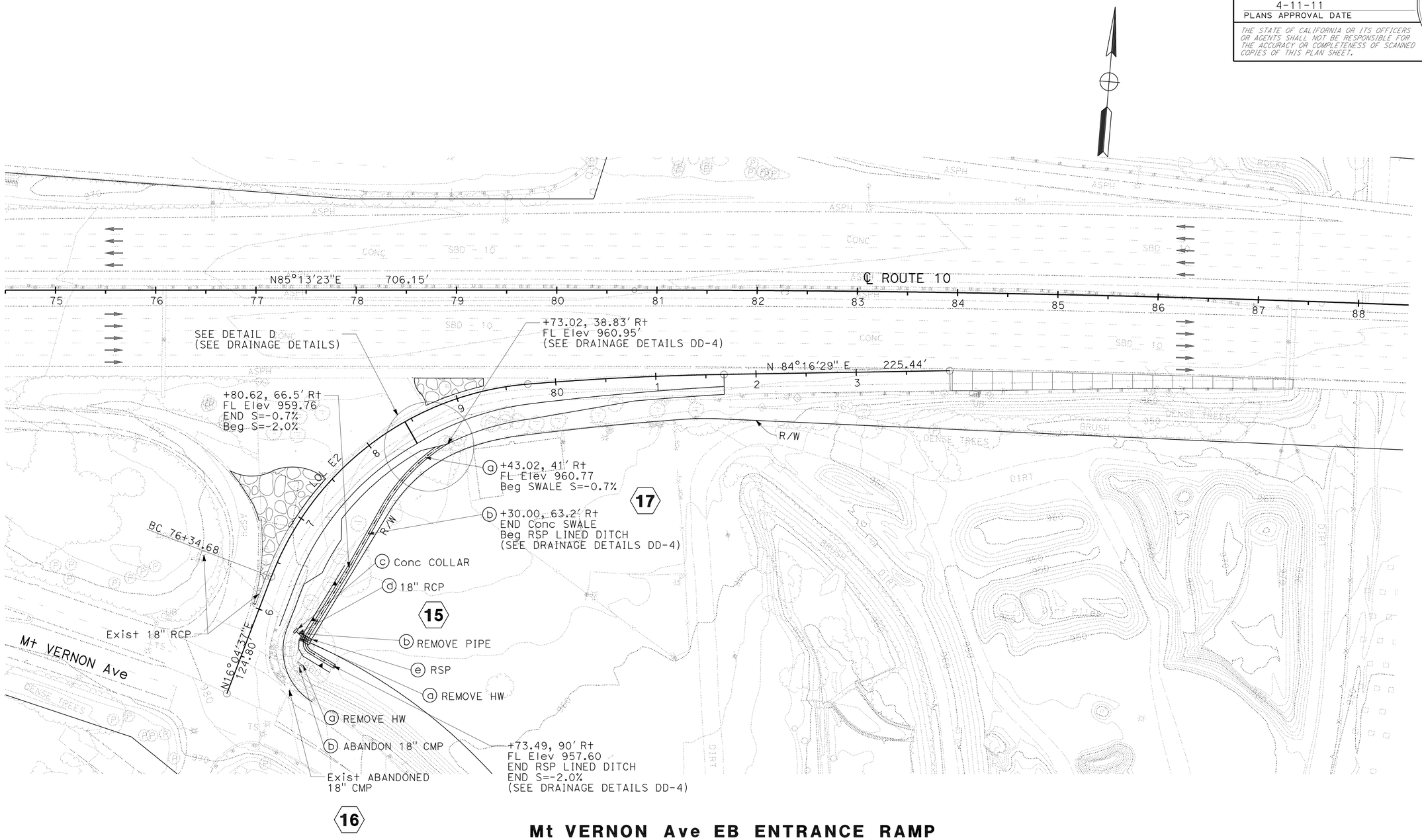

Mt VERNON Ave EB ENTRANCE RAMP

DRAINAGE PLAN

SCALE: 1" = 50'

D-7

THIS PLAN ACCURATE FOR DRAINAGE WORK ONLY.

STATE OF CALIFORNIA - DEPARTMENT OF TRANSPORTATION
Caltrans
DESIGN

FUNCTIONAL SUPERVISOR: DU LU

CALCULATED-DESIGNED BY: ROBERT S. LYLES Jr.
CHECKED BY: KHA PHAM

REVISED BY
DATE REVISED

LAST REVISION 01-24-11
DATE PLOTTED => 15-JUN-2011
TIME PLOTTED => 06:46

Dist	COUNTY	ROUTE	POST MILES TOTAL PROJECT	SHEET No.	TOTAL SHEETS
08	SBd	10	9.9/R24.5	64	260

Robert S Lyles Jr. 1-24-11
REGISTERED CIVIL ENGINEER DATE

4-11-11
PLANS APPROVAL DATE

REGISTERED PROFESSIONAL ENGINEER ROBERT S. LYLES Jr. No. 67873 Exp. 6-30-11 CIVIL STATE OF CALIFORNIA

THE STATE OF CALIFORNIA OR ITS OFFICERS OR AGENTS SHALL NOT BE RESPONSIBLE FOR THE ACCURACY OR COMPLETENESS OF SCANNED COPIES OF THIS PLAN SHEET.

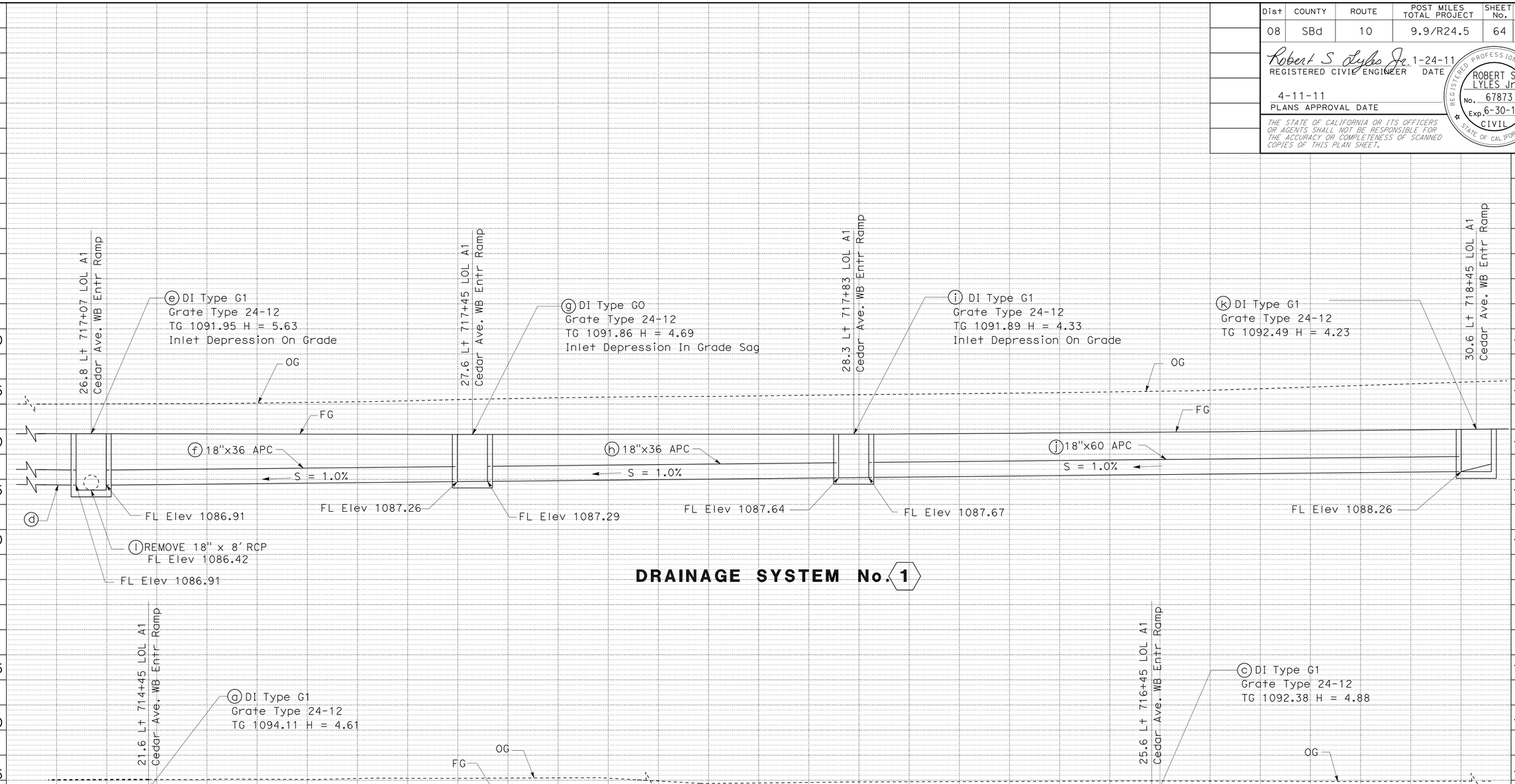

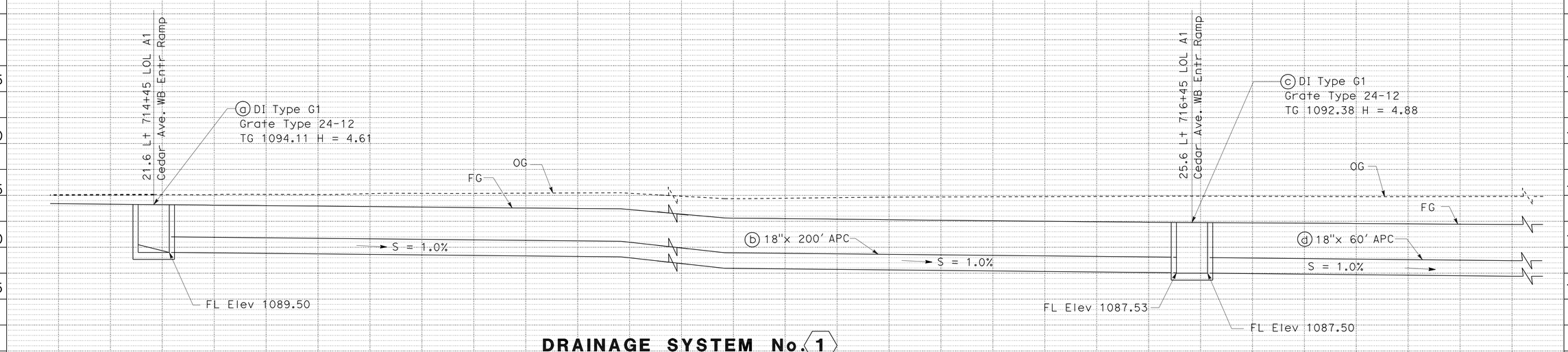

DRAINAGE PROFILE

SCALE: 1" = 5'

DP-1

STATION		TOTAL
CY	Exc	
	Emb	

STATE OF CALIFORNIA - DEPARTMENT OF TRANSPORTATION
Caltrans® DESIGN

FUNCTIONAL SUPERVISOR: DU LU
CALCULATED-DESIGNED BY: DAI HOANG
CHECKED BY: ROBERT S. LYLES Jr.
REVISED BY
DATE REVISED

LAST REVISION 01-24-11
DATE PLOTTED => 15-APR-2011
TIME PLOTTED => 10:14

Dist	COUNTY	ROUTE	POST MILES TOTAL PROJECT	SHEET No.	TOTAL SHEETS
08	SBd	10	9.9/R24.5	65	260

Robert S Lyles Jr. 1-24-11
REGISTERED CIVIL ENGINEER DATE

4-11-11
PLANS APPROVAL DATE

REGISTERED PROFESSIONAL ENGINEER ROBERT S. LYLES Jr. No. 67873 Exp. 6-30-11 CIVIL STATE OF CALIFORNIA

THE STATE OF CALIFORNIA OR ITS OFFICERS OR AGENTS SHALL NOT BE RESPONSIBLE FOR THE ACCURACY OR COMPLETENESS OF SCANNED COPIES OF THIS PLAN SHEET.

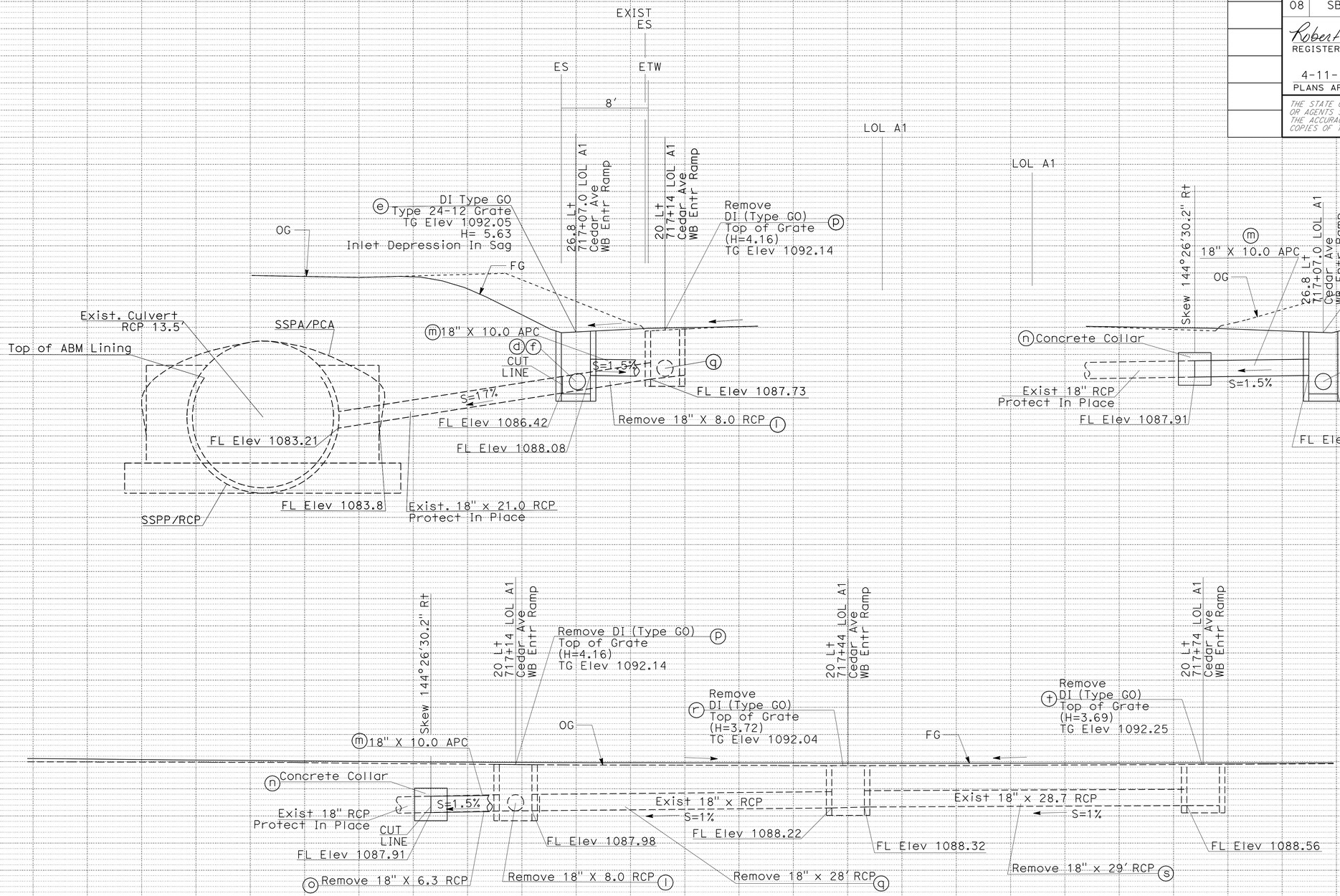

DRAINAGE SYSTEM No. 1

DRAINAGE PROFILE

SCALE: 1" = 5'

DP-2

STATION | TOTAL
CY Exc
CY Emb

STATE OF CALIFORNIA - DEPARTMENT OF TRANSPORTATION
Caltrans
DESIGN
FUNCTIONAL SUPERVISOR: DU LU
CALCULATED-DESIGNED BY: DAI HOANG
CHECKED BY: ROBERT S. LYLES Jr.
REVISED BY
DATE REVISED

LAST REVISION DATE PLOTTED => 15-APR-2011
01-24-11 TIME PLOTTED => 10:14

Dist	COUNTY	ROUTE	POST MILES TOTAL PROJECT	SHEET No.	TOTAL SHEETS
08	SBd	10	9.9/R24.5	66	260

Robert S Lyles Jr. 1-24-11
REGISTERED CIVIL ENGINEER DATE

4-11-11
PLANS APPROVAL DATE

REGISTERED PROFESSIONAL ENGINEER ROBERT S. LYLES Jr. No. 67873 Exp. 6-30-11 CIVIL STATE OF CALIFORNIA

THE STATE OF CALIFORNIA OR ITS OFFICERS OR AGENTS SHALL NOT BE RESPONSIBLE FOR THE ACCURACY OR COMPLETENESS OF SCANNED COPIES OF THIS PLAN SHEET.

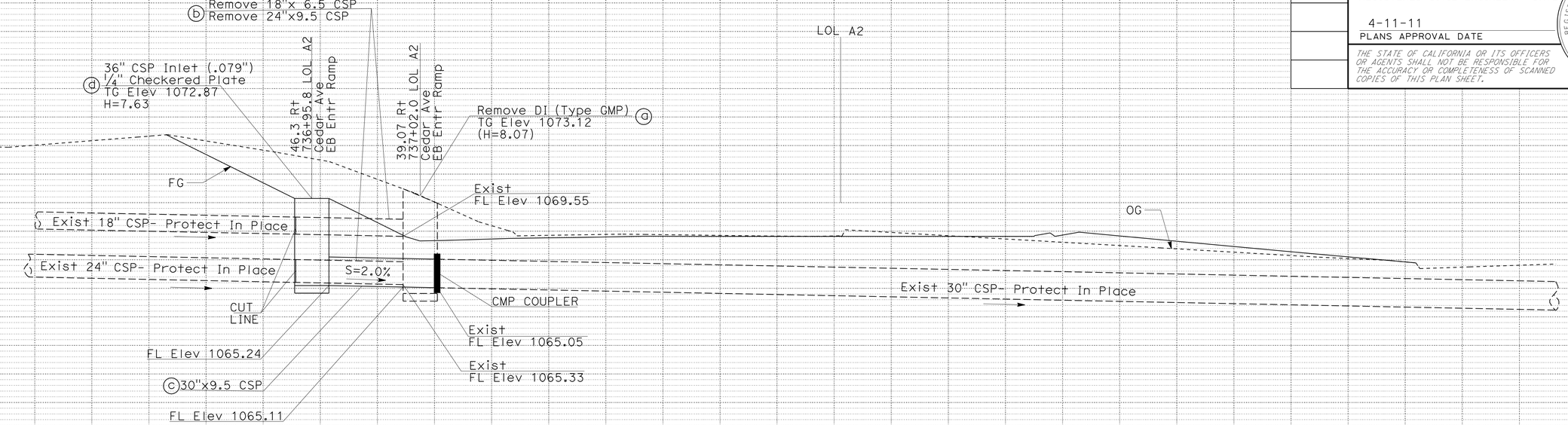

DRAINAGE SYSTEM No. 3

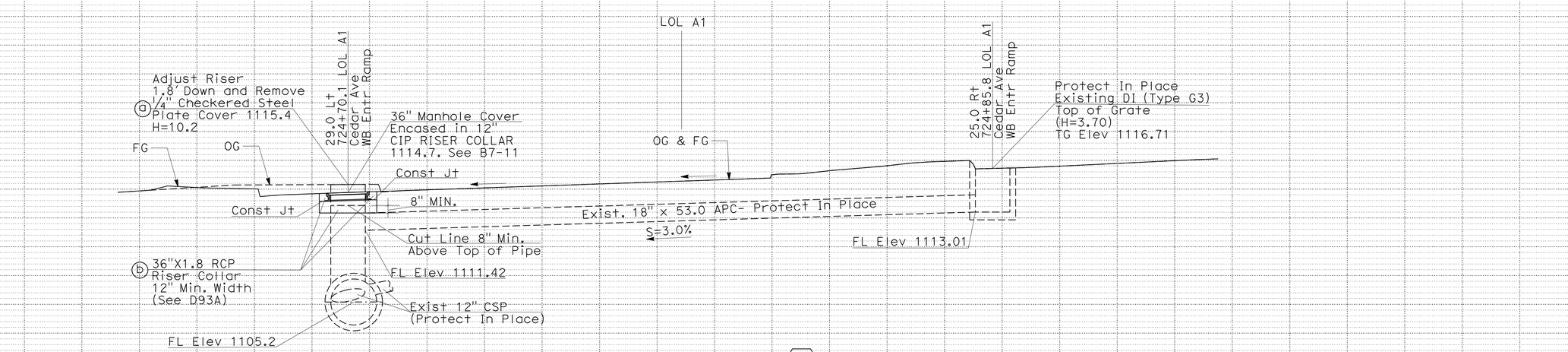

DRAINAGE SYSTEM No. 2

DRAINAGE PROFILE

SCALE: 1" = 5'

DP-3

STATION		TOTAL
CY	Exc	
	Emb	

STATE OF CALIFORNIA - DEPARTMENT OF TRANSPORTATION
Caltrans® DESIGN

FUNCTIONAL SUPERVISOR: DU LU
CALCULATED-DESIGNED BY: DAI HOANG
CHECKED BY: ROBERT S. LYLES Jr.
REVISED BY
DATE REVISED

LAST REVISION 01-24-11
DATE PLOTTED => 15-APR-2011
TIME PLOTTED => 10:14

Dist	COUNTY	ROUTE	POST MILES TOTAL PROJECT	SHEET No.	TOTAL SHEETS
08	SBd	10	9.9/R24.5	67	260

Robert S Lyles Jr. 1-24-11
REGISTERED CIVIL ENGINEER DATE

4-11-11
PLANS APPROVAL DATE

REGISTERED PROFESSIONAL ENGINEER ROBERT S. LYLES Jr. No. 67873 Exp. 6-30-11 CIVIL STATE OF CALIFORNIA

THE STATE OF CALIFORNIA OR ITS OFFICERS OR AGENTS SHALL NOT BE RESPONSIBLE FOR THE ACCURACY OR COMPLETENESS OF SCANNED COPIES OF THIS PLAN SHEET.

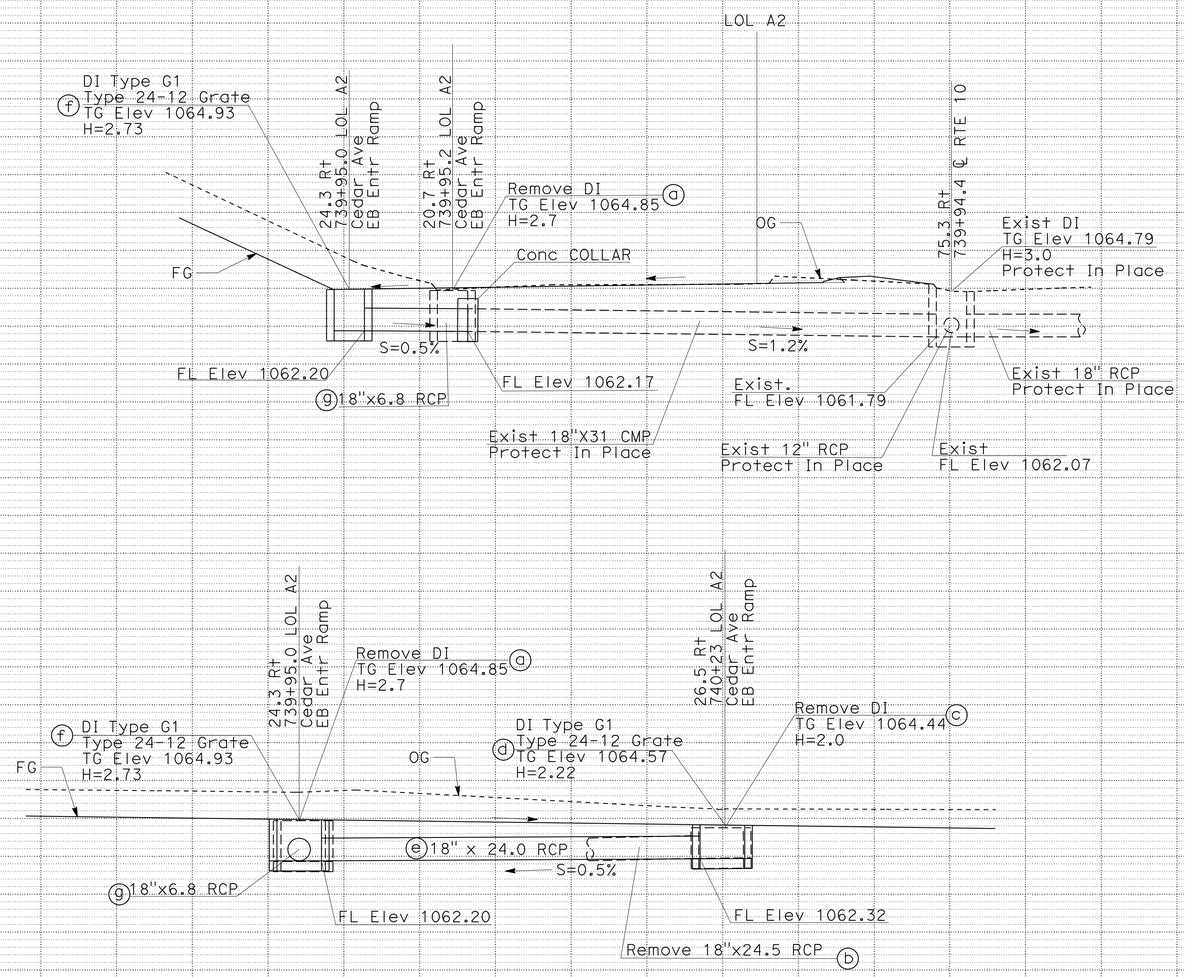

DRAINAGE SYSTEM No. 4

DRAINAGE PROFILE

SCALE: 1" = 5'

DP-4

STATION		TOTAL
CY	Exc	
	Emb	

STATE OF CALIFORNIA - DEPARTMENT OF TRANSPORTATION
Caltrans DESIGN

FUNCTIONAL SUPERVISOR: DU LU
CALCULATED-DESIGNED BY: DAI HOANG
CHECKED BY: ROBERT S. LYLES Jr.
REVISED BY
DATE REVISED

LAST REVISION 01-24-11
DATE PLOTTED => 15-APR-2011
TIME PLOTTED => 10:14

Dist	COUNTY	ROUTE	POST MILES TOTAL PROJECT	SHEET No.	TOTAL SHEETS
08	SBd	10	9.9/R24.5	68	260

Robert S Lyles Jr. 1-24-11
REGISTERED CIVIL ENGINEER DATE

4-11-11
PLANS APPROVAL DATE

REGISTERED PROFESSIONAL ENGINEER ROBERT S. LYLES Jr. No. 67873 Exp. 6-30-11 CIVIL STATE OF CALIFORNIA

THE STATE OF CALIFORNIA OR ITS OFFICERS OR AGENTS SHALL NOT BE RESPONSIBLE FOR THE ACCURACY OR COMPLETENESS OF SCANNED COPIES OF THIS PLAN SHEET.

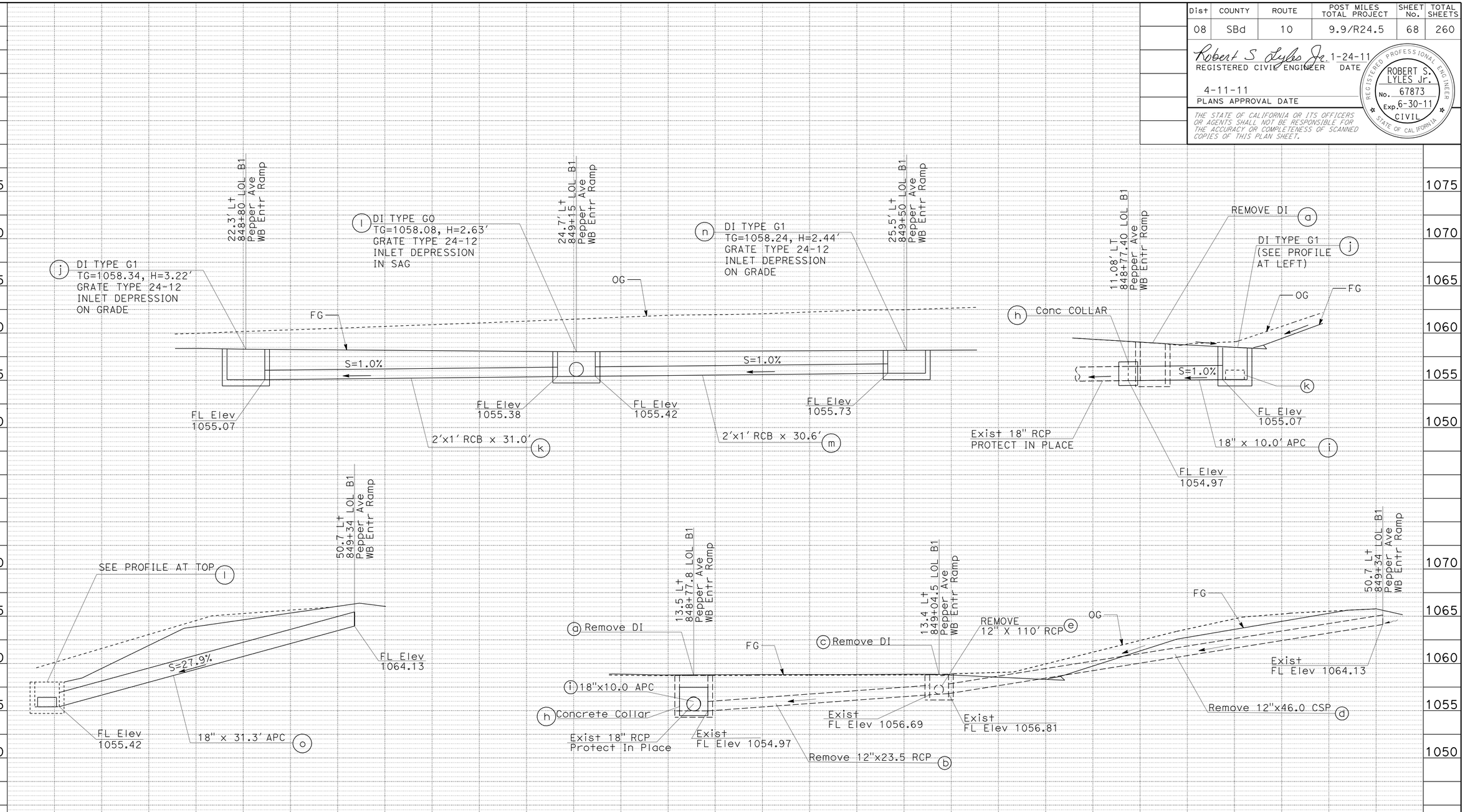

DRAINAGE SYSTEM No. 5

DRAINAGE PROFILE

SCALE: 1" = 5' **DP-5**

STATION | TOTAL

CY Exc | Emb

STATE OF CALIFORNIA - DEPARTMENT OF TRANSPORTATION

Caltrans® **DESIGN**

FUNCTIONAL SUPERVISOR: DU LU

CALCULATED-DESIGNED BY: KHA PHAM

CHECKED BY: ROBERT S. LYLES Jr.

REVISED BY | DATE REVISED

LAST REVISION 01-24-11 | DATE PLOTTED => 15-APR-2011 | TIME PLOTTED => 10:14

Dist	COUNTY	ROUTE	POST MILES TOTAL PROJECT	SHEET No.	TOTAL SHEETS
08	SBd	10	9.9/R24.5	69	260

Robert S Lyles Jr. 1-24-11
REGISTERED CIVIL ENGINEER DATE

4-11-11
PLANS APPROVAL DATE

REGISTERED PROFESSIONAL ENGINEER ROBERT S. LYLES Jr. No. 67873 Exp. 6-30-11 CIVIL STATE OF CALIFORNIA

THE STATE OF CALIFORNIA OR ITS OFFICERS OR AGENTS SHALL NOT BE RESPONSIBLE FOR THE ACCURACY OR COMPLETENESS OF SCANNED COPIES OF THIS PLAN SHEET.

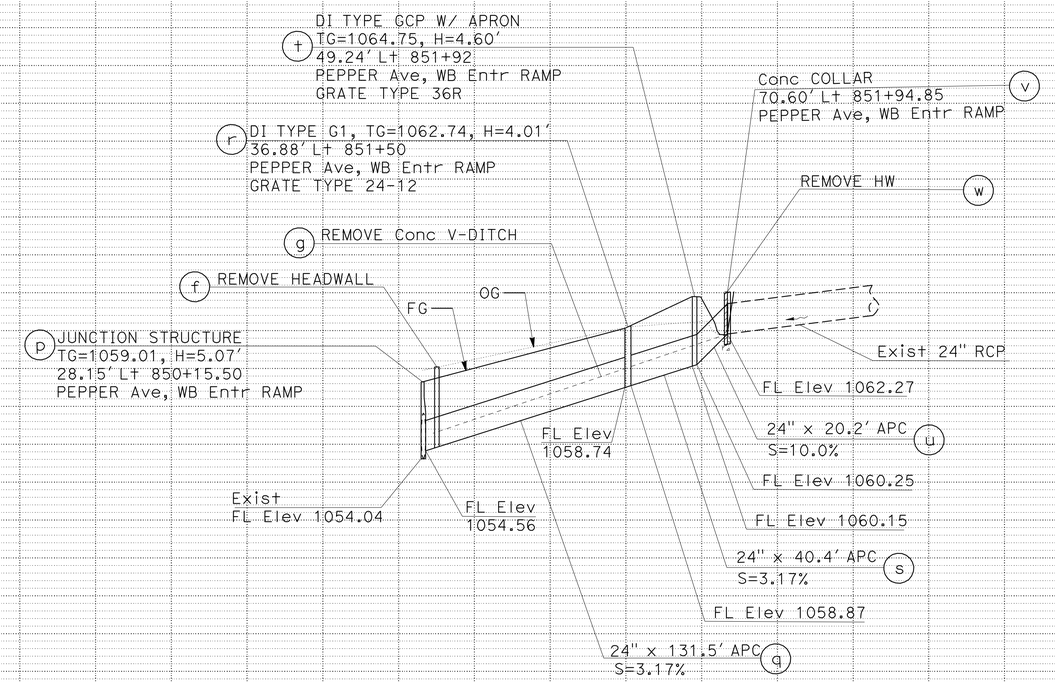

DRAINAGE SYSTEM No. 5

DRAINAGE PROFILE

SCALE: Hori 1" = 50'
Vert 1" = 5'

DP-6

STATION		TOTAL
CY	Exc	
	Emb	

STATE OF CALIFORNIA - DEPARTMENT OF TRANSPORTATION
Caltrans
DESIGN

FUNCTIONAL SUPERVISOR: DU LU
CALCULATED-DESIGNED BY: KHA PHAM
CHECKED BY: ROBERT S. LYLES Jr.
REVISED BY
DATE REVISED

LAST REVISION DATE PLOTTED => 20-APR-2011
01-24-11 TIME PLOTTED => 09:29

Dist	COUNTY	ROUTE	POST MILES TOTAL PROJECT	SHEET No.	TOTAL SHEETS
08	SBd	10	9.9/R24.5	70	260

Robert S Lyles Jr. 1-24-11
REGISTERED CIVIL ENGINEER DATE

4-11-11
PLANS APPROVAL DATE

REGISTERED PROFESSIONAL ENGINEER ROBERT S. LYLES Jr. No. 67873 Exp. 6-30-11 CIVIL STATE OF CALIFORNIA

THE STATE OF CALIFORNIA OR ITS OFFICERS OR AGENTS SHALL NOT BE RESPONSIBLE FOR THE ACCURACY OR COMPLETENESS OF SCANNED COPIES OF THIS PLAN SHEET.

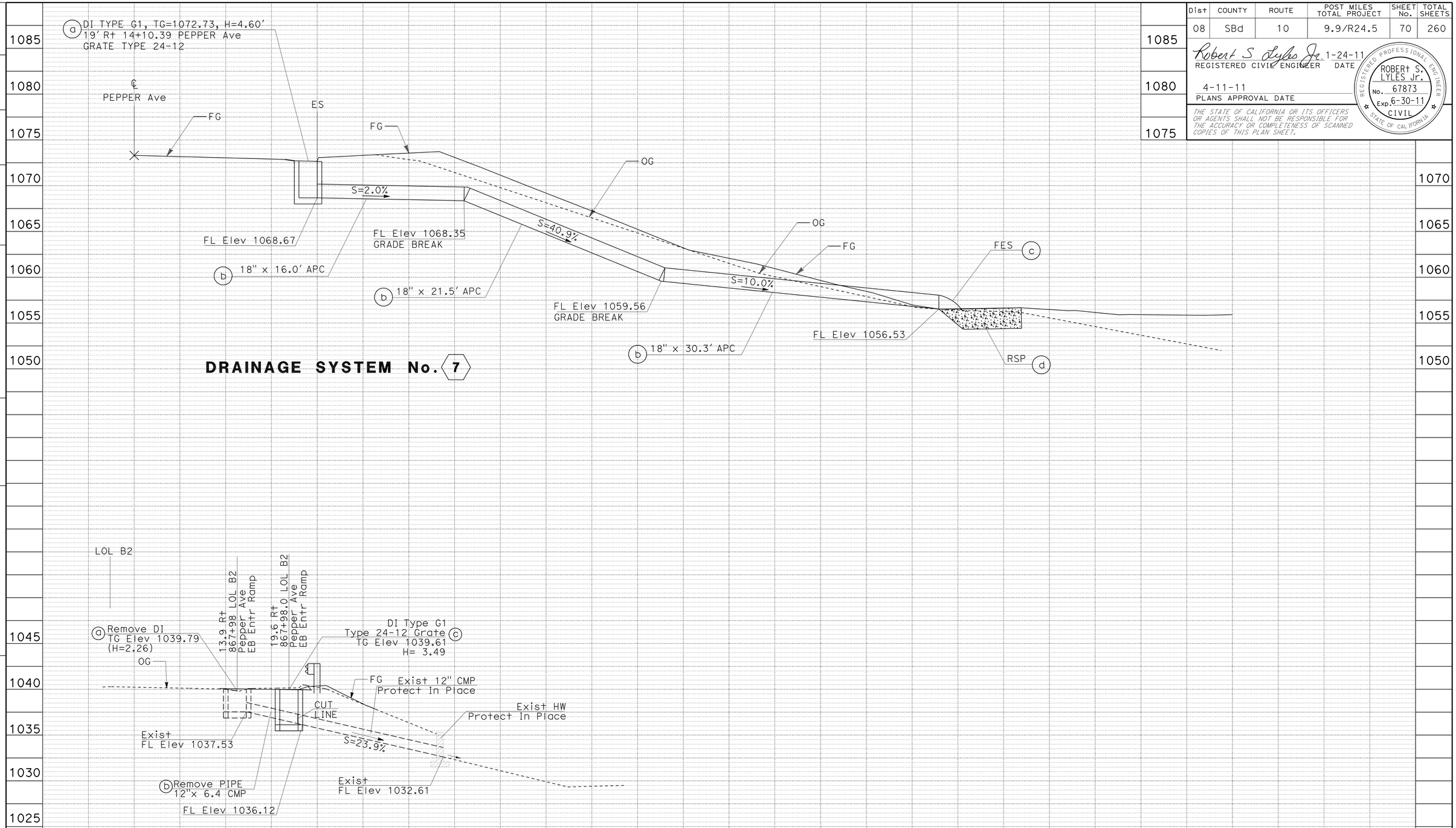

DRAINAGE PROFILE

SCALE: 1" = 5'

DP-7

STATION		TOTAL
CY	Exc	
	Emb	

REVISED BY | DATE REVISED
KHA PHAM | ROBERT S. LYLES Jr.
CALCULATED-DESIGNED BY | CHECKED BY
FUNCTIONAL SUPERVISOR: DU LU

STATE OF CALIFORNIA - DEPARTMENT OF TRANSPORTATION
Caltrans®
DESIGN

LAST REVISION 01-24-11 | DATE PLOTTED => 15-APR-2011 | TIME PLOTTED => 10:15

Dist	COUNTY	ROUTE	POST MILES TOTAL PROJECT	SHEET No.	TOTAL SHEETS
08	SBd	10	9.9/R24.5	71	260

Robert S Lyles Jr. 1-24-11
REGISTERED CIVIL ENGINEER DATE

4-11-11
PLANS APPROVAL DATE

REGISTERED PROFESSIONAL ENGINEER ROBERT S. LYLES Jr. No. 67873 Exp. 6-30-11 CIVIL STATE OF CALIFORNIA

THE STATE OF CALIFORNIA OR ITS OFFICERS OR AGENTS SHALL NOT BE RESPONSIBLE FOR THE ACCURACY OR COMPLETENESS OF SCANNED COPIES OF THIS PLAN SHEET.

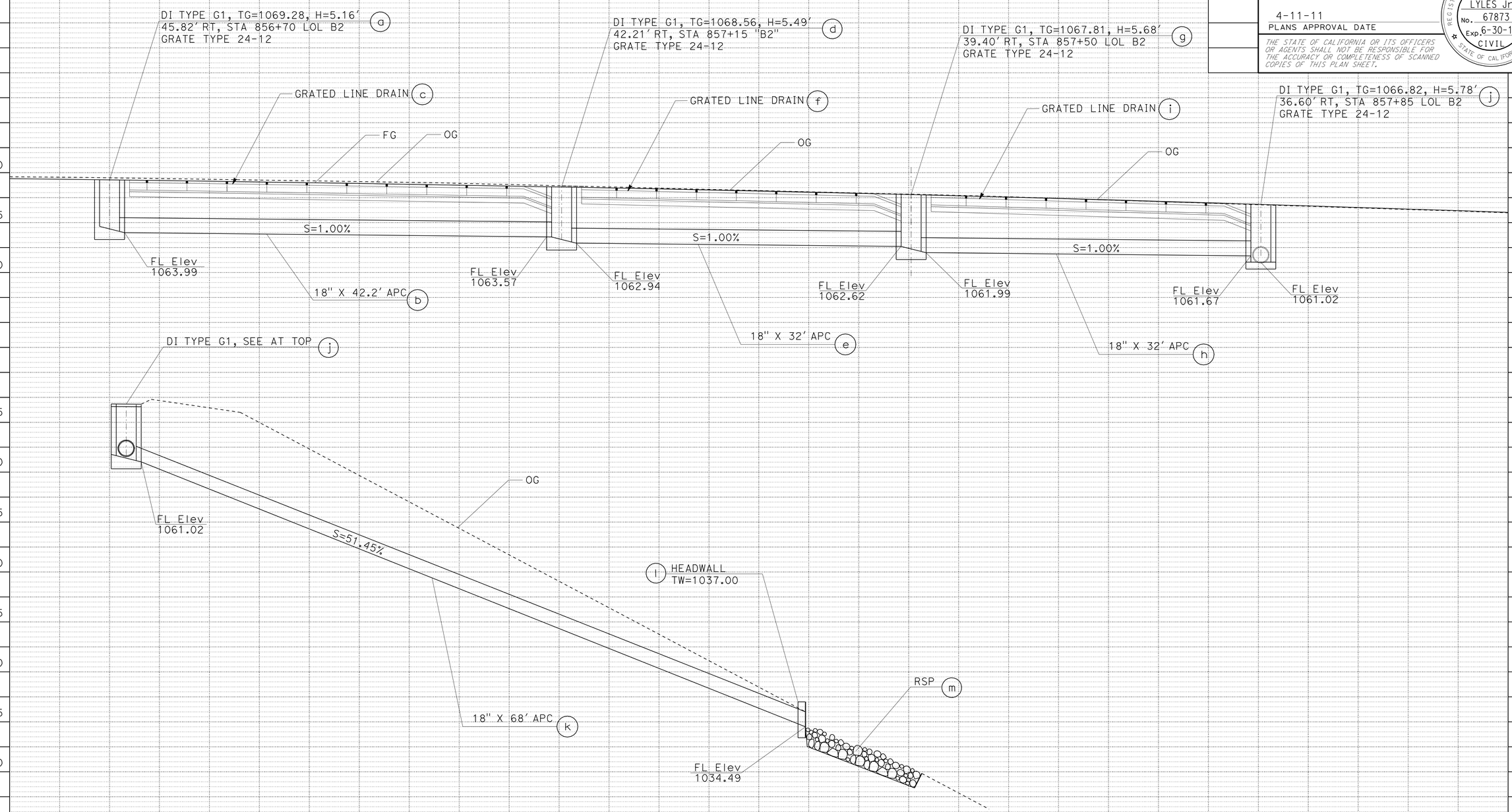

DRAINAGE SYSTEM No. 9

DRAINAGE PROFILE

SCALE: 1" = 5'

DP-8

STATION		TOTAL
CY	Exc	
	Emb	

STATE OF CALIFORNIA - DEPARTMENT OF TRANSPORTATION
Caltrans® DESIGN

FUNCTIONAL SUPERVISOR: DU LU
CALCULATED-DESIGNED BY: RICK LAM
CHECKED BY: ROBERT S. LYLES Jr.
REVISED BY
DATE REVISED

LAST REVISION 01-24-11
DATE PLOTTED => 15-APR-2011
TIME PLOTTED => 10:15

Dist	COUNTY	ROUTE	POST MILES TOTAL PROJECT	SHEET No.	TOTAL SHEETS
08	SBd	10	9.9/R24.5	72	260

Robert S Lyles Jr. 1-24-11
REGISTERED CIVIL ENGINEER DATE

4-11-11
PLANS APPROVAL DATE

REGISTERED PROFESSIONAL ENGINEER ROBERT S. LYLES Jr. No. 67873 Exp. 6-30-11 CIVIL STATE OF CALIFORNIA

THE STATE OF CALIFORNIA OR ITS OFFICERS OR AGENTS SHALL NOT BE RESPONSIBLE FOR THE ACCURACY OR COMPLETENESS OF SCANNED COPIES OF THIS PLAN SHEET.

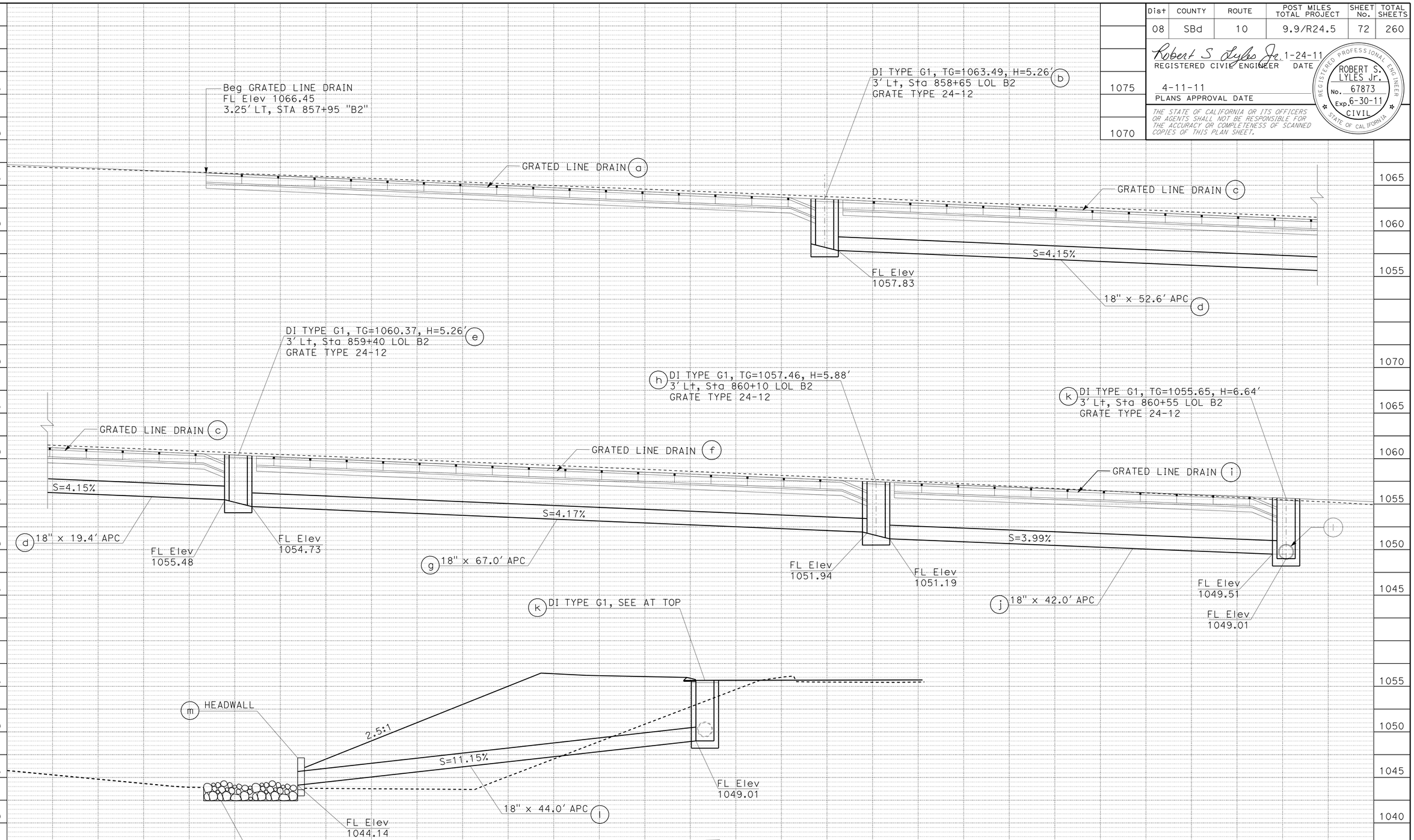

DRAINAGE SYSTEM No. 10

DRAINAGE PROFILE

SCALE: 1" = 5'

DP-9

STATION		TOTAL
CY	Exc	
	Emb	

STATE OF CALIFORNIA - DEPARTMENT OF TRANSPORTATION
Caltrans DESIGN

FUNCTIONAL SUPERVISOR: DU LU

CALCULATED-DESIGNED BY: RICK LAM
CHECKED BY: ROBERT S. LYLES Jr.

REVISED BY | DATE REVISED

LAST REVISION 01-24-11
DATE PLOTTED => 15-APR-2011
TIME PLOTTED => 10:15

Dist	COUNTY	ROUTE	POST MILES TOTAL PROJECT	SHEET No.	TOTAL SHEETS
08	SBd	10	9.9/R24.5	73	260

Robert S Lyles Jr. 1-24-11
REGISTERED CIVIL ENGINEER DATE

4-11-11
PLANS APPROVAL DATE

REGISTERED PROFESSIONAL ENGINEER ROBERT S. LYLES Jr. No. 67873 Exp. 6-30-11 CIVIL STATE OF CALIFORNIA

THE STATE OF CALIFORNIA OR ITS OFFICERS OR AGENTS SHALL NOT BE RESPONSIBLE FOR THE ACCURACY OR COMPLETENESS OF SCANNED COPIES OF THIS PLAN SHEET.

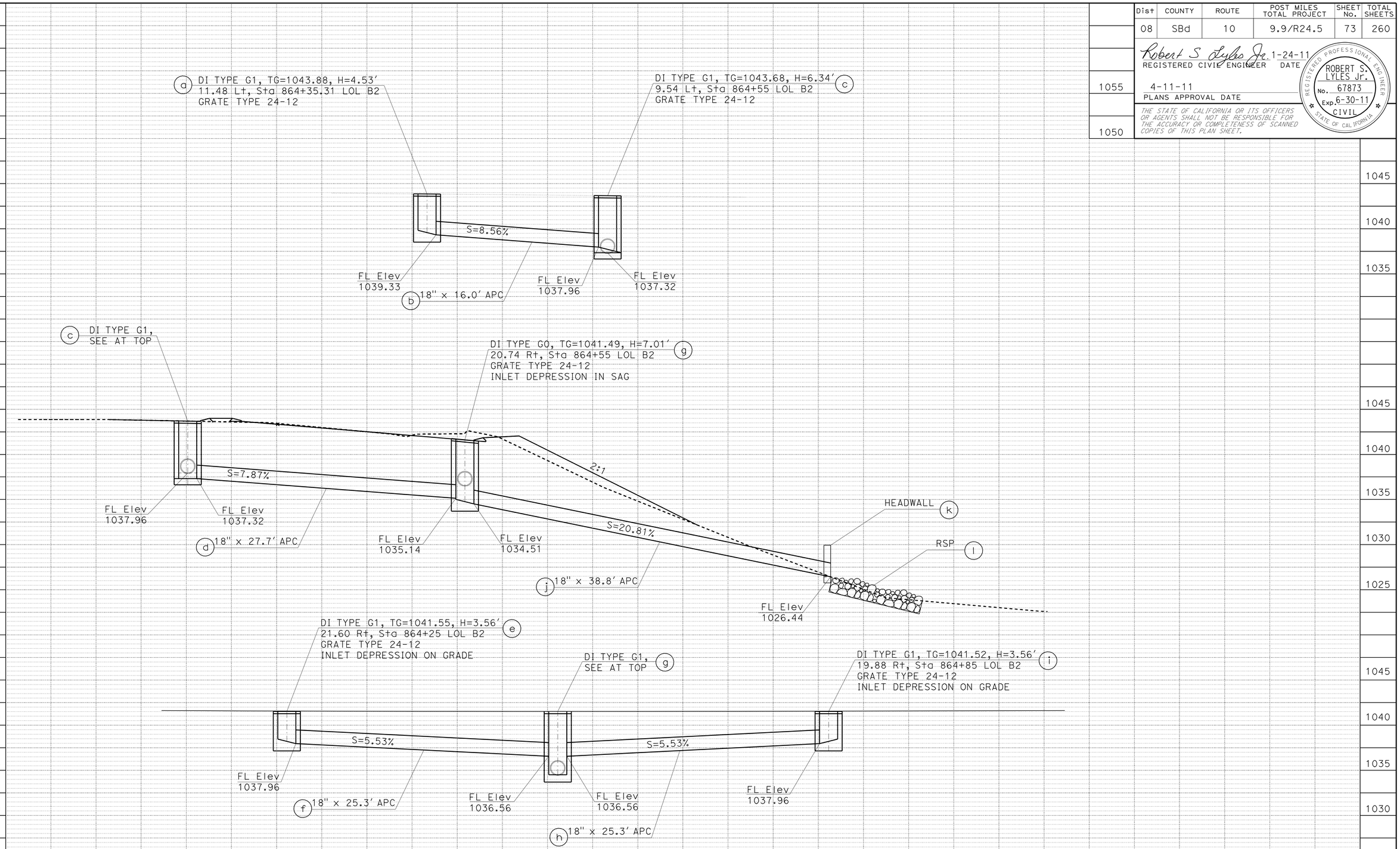

DRAINAGE SYSTEM No. 11

DRAINAGE PROFILE
SCALE: 1" = 5′ **DP-10**

STATION		TOTAL
CY	Exc	
	Emb	

STATE OF CALIFORNIA - DEPARTMENT OF TRANSPORTATION
DESIGN
Caltrans

FUNCTIONAL SUPERVISOR: DU LU
CALCULATED-DESIGNED BY: RICK LAM
CHECKED BY: ROBERT S. LYLES Jr.
REVISED BY
DATE REVISED

LAST REVISION 01-24-11
DATE PLOTTED => 15-APR-2011
TIME PLOTTED => 10:15

Dist	COUNTY	ROUTE	POST MILES TOTAL PROJECT	SHEET No.	TOTAL SHEETS
08	SBd	10	9.9/R24.5	74	260

Robert S Lyles Jr. 1-24-11
REGISTERED CIVIL ENGINEER DATE

4-11-11
PLANS APPROVAL DATE

REGISTERED PROFESSIONAL ENGINEER ROBERT S. LYLES Jr. No. 67873 Exp. 6-30-11 CIVIL STATE OF CALIFORNIA

THE STATE OF CALIFORNIA OR ITS OFFICERS OR AGENTS SHALL NOT BE RESPONSIBLE FOR THE ACCURACY OR COMPLETENESS OF SCANNED COPIES OF THIS PLAN SHEET.

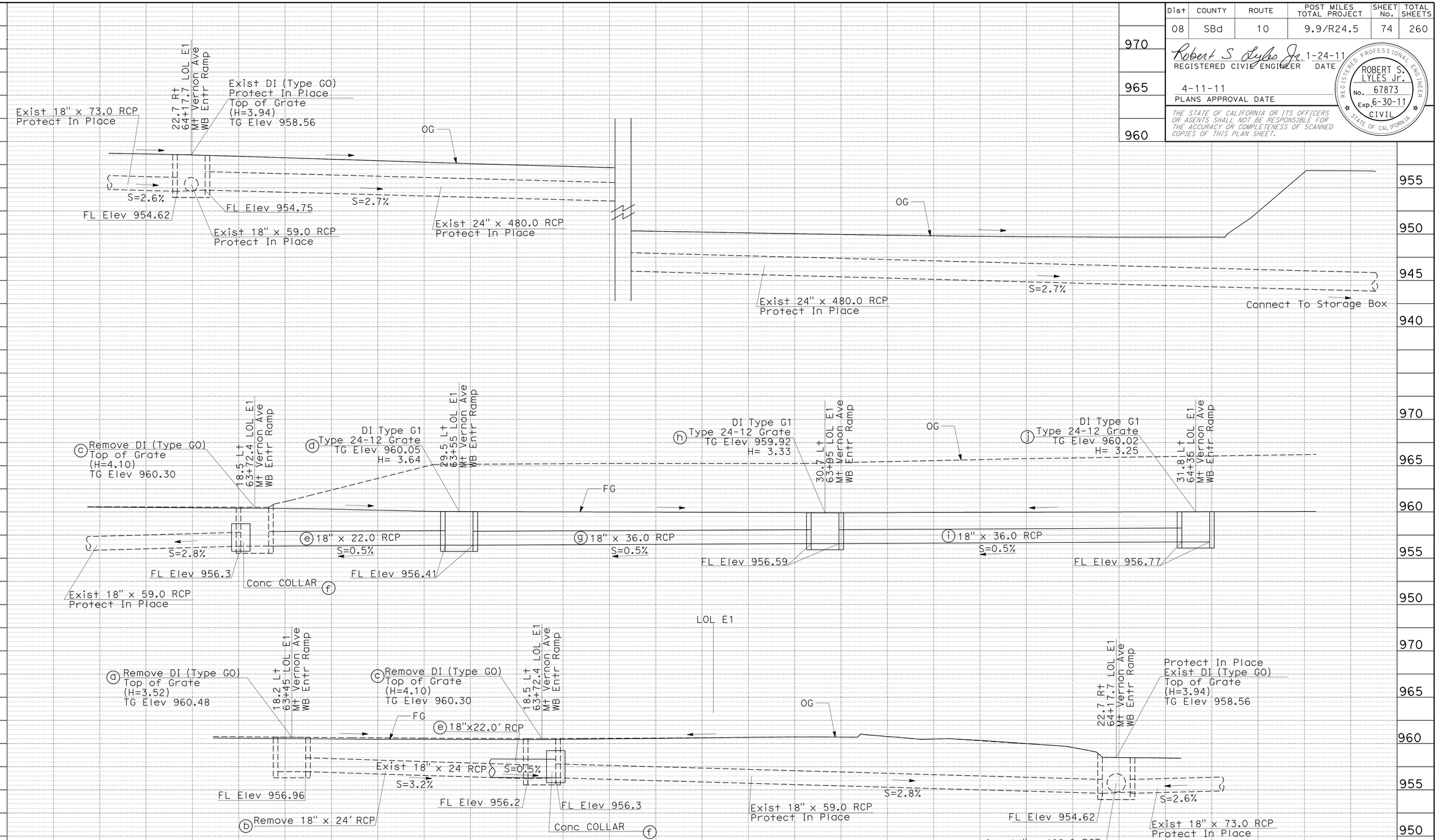

DRAINAGE SYSTEM No. 13

DRAINAGE PROFILE

SCALE: 1" = 5'

DP-11

STATION	
CY	Exc
	Emb

TOTAL

REVISED BY | DATE REVISED

DAI HOANG | ROBERT S. LYLES Jr.

CALCULATED-DESIGNED BY | CHECKED BY

FUNCTIONAL SUPERVISOR: DU LU

STATE OF CALIFORNIA - DEPARTMENT OF TRANSPORTATION

Caltrans® DESIGN

LAST REVISION 01-24-11 | DATE PLOTTED => 15-APR-2011 | TIME PLOTTED => 10:15

Dist	COUNTY	ROUTE	POST MILES TOTAL PROJECT	SHEET No.	TOTAL SHEETS
08	SBd	10	9.9/R24.5	75	260

Robert S Lyles Jr. 1-24-11
REGISTERED CIVIL ENGINEER DATE

4-11-11
PLANS APPROVAL DATE

REGISTERED PROFESSIONAL ENGINEER
ROBERT S. LYLES Jr.
No. 67873
Exp. 6-30-11
CIVIL
STATE OF CALIFORNIA

THE STATE OF CALIFORNIA OR ITS OFFICERS OR AGENTS SHALL NOT BE RESPONSIBLE FOR THE ACCURACY OR COMPLETENESS OF SCANNED COPIES OF THIS PLAN SHEET.

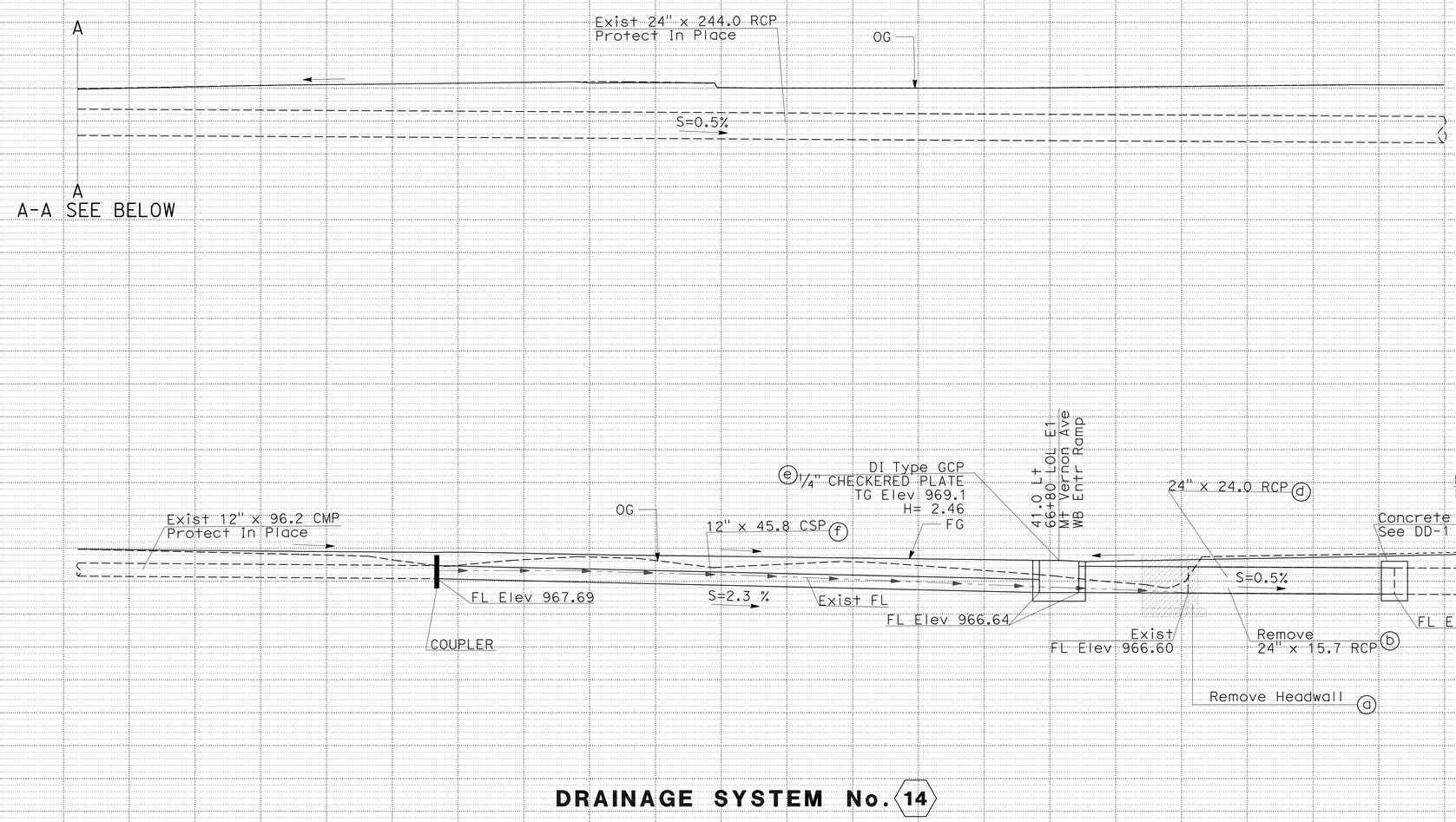

DRAINAGE SYSTEM No. 14

DRAINAGE PROFILE

SCALE: 1" = 5'

DP-12

STATION		TOTAL
CY	Exc	
	Emb	

REVISED BY | DATE REVISED
DAI HOANG | ROBERT S. LYLES Jr.
CALCULATED-DESIGNED BY | CHECKED BY
FUNCTIONAL SUPERVISOR: DU LU

STATE OF CALIFORNIA - DEPARTMENT OF TRANSPORTATION
Caltrans
DESIGN

LAST REVISION 01-24-11 | DATE PLOTTED => 15-APR-2011 | TIME PLOTTED => 10:15

Dist	COUNTY	ROUTE	POST MILES TOTAL PROJECT	SHEET No.	TOTAL SHEETS
08	SBd	10	9.9/R24.5	76	260

Robert S Lyles Jr. 1-24-11
REGISTERED CIVIL ENGINEER DATE

4-11-11
PLANS APPROVAL DATE

REGISTERED PROFESSIONAL ENGINEER ROBERT S. LYLES Jr. No. 67873 Exp. 6-30-11 CIVIL STATE OF CALIFORNIA

THE STATE OF CALIFORNIA OR ITS OFFICERS OR AGENTS SHALL NOT BE RESPONSIBLE FOR THE ACCURACY OR COMPLETENESS OF SCANNED COPIES OF THIS PLAN SHEET.

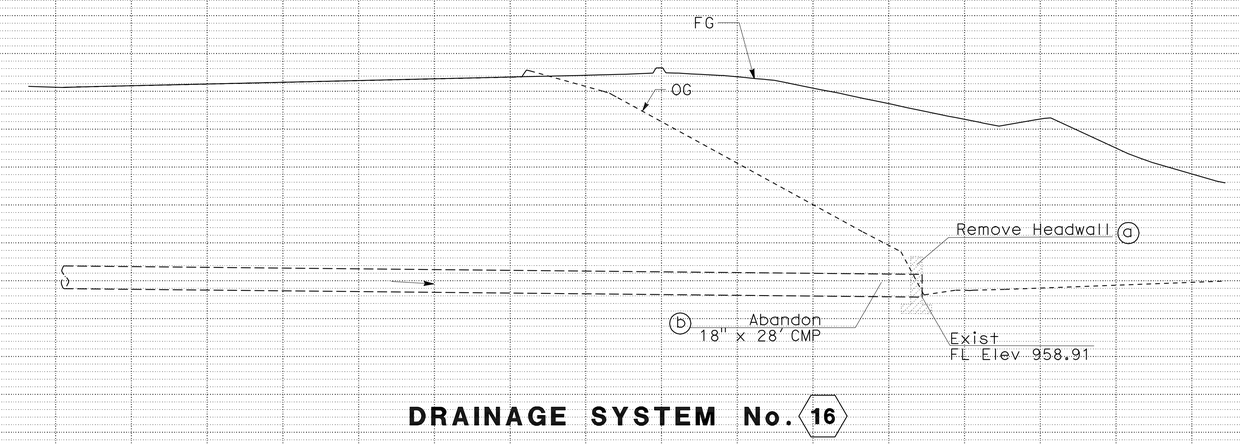

DRAINAGE SYSTEM No. 16

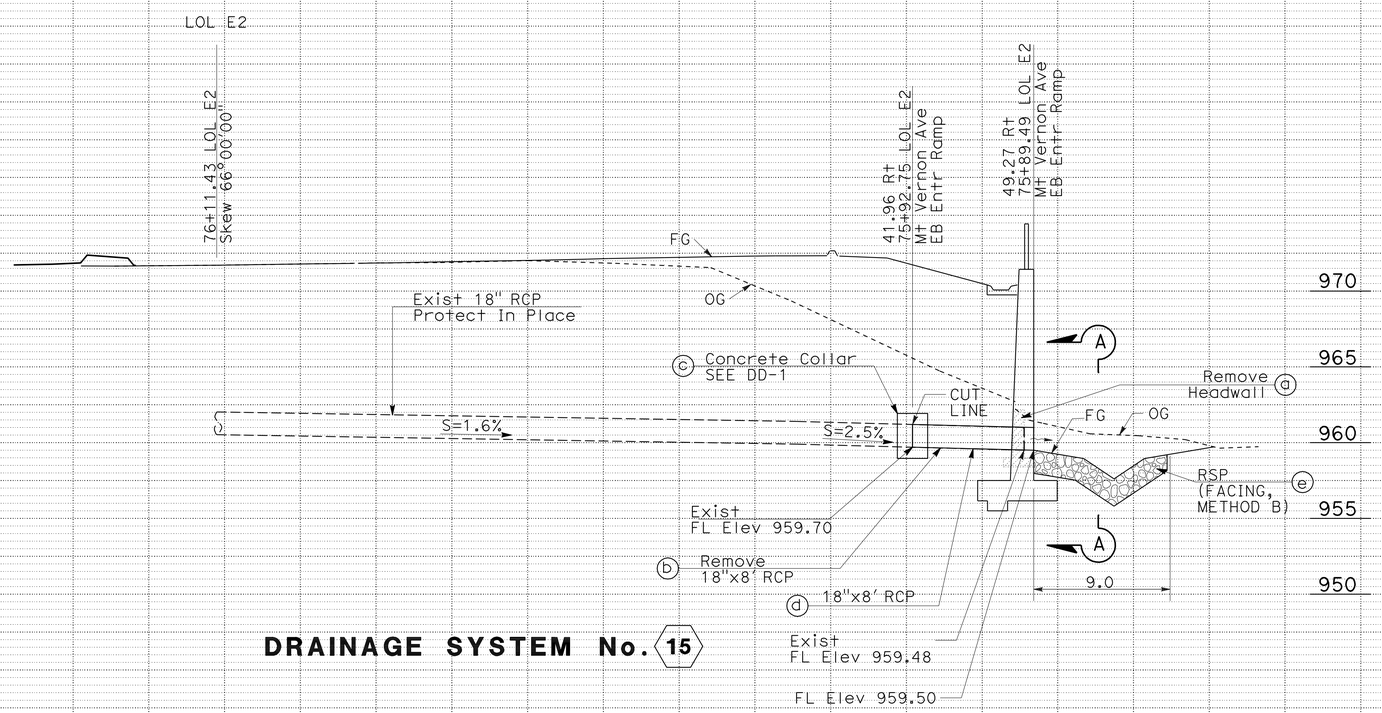

DRAINAGE SYSTEM No. 15

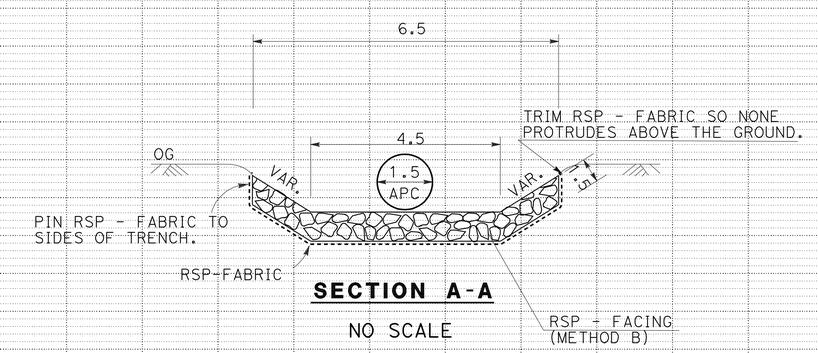

SECTION A-A

NO SCALE

DRAINAGE PROFILE

SCALE: 1" = 5'

DP-13

STATION		TOTAL
CY	Exc	
	Emb	

STATE OF CALIFORNIA - DEPARTMENT OF TRANSPORTATION
Caltrans
DESIGN

FUNCTIONAL SUPERVISOR: DU LU

CALCULATED-DESIGNED BY: RICK LAM
CHECKED BY: ROBERT S. LYLES Jr.

REVISED BY
DATE REVISED

LAST REVISION 01-24-11
DATE PLOTTED => 15-APR-2011
TIME PLOTTED => 10:15

Dist	COUNTY	ROUTE	POST MILES TOTAL PROJECT	SHEET No.	TOTAL SHEETS
08	SBd	10	9.9/R24.5	77	260

Robert S Lyles Jr. 1-24-11
REGISTERED CIVIL ENGINEER DATE

4-11-11
PLANS APPROVAL DATE

REGISTERED PROFESSIONAL ENGINEER
ROBERT S. LYLES Jr.
No. 67873
Exp. 6-30-11
CIVIL
STATE OF CALIFORNIA

THE STATE OF CALIFORNIA OR ITS OFFICERS OR AGENTS SHALL NOT BE RESPONSIBLE FOR THE ACCURACY OR COMPLETENESS OF SCANNED COPIES OF THIS PLAN SHEET.

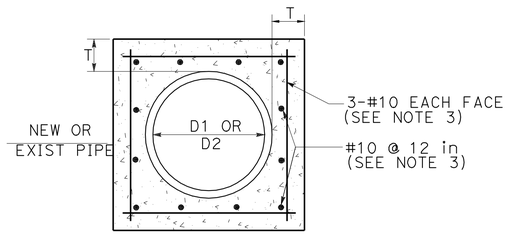

SECTION B-B

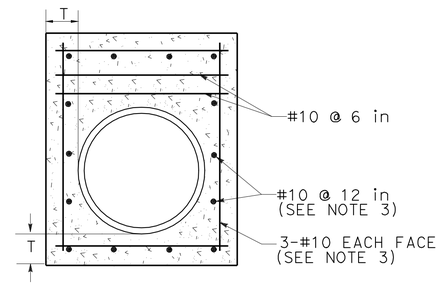

SECTION A-A

D(in)	L (*)(in)	T(in)
12	12	4
18	12	5
24	12	6
36	18	8
48	18	10
54	18	10
60	22	11
66	22	11
72	24	12
78	24	12
84	26	12
90	28	14
96	30	14

(*) THE VALUES OF L IN THE TABLE SHOULD BE USED FOR PHASE II ONLY.
USE L= 12 in FOR ALL SIZES OF PIPE IN PHASE I

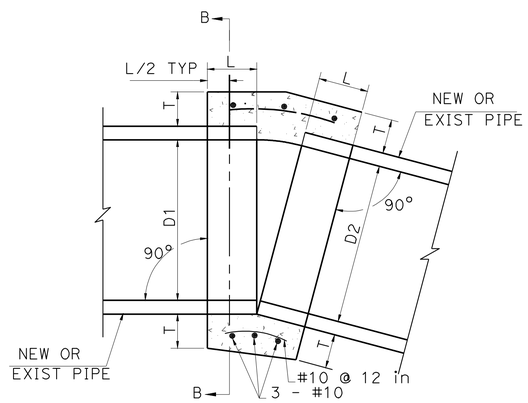

CASE-I

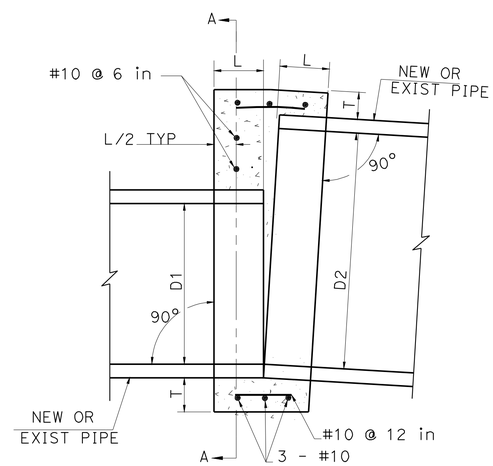

CASE-II

NOTES:

1. WHERE PIPES OF DIFFERENT DIAMETERS ARE JOINED WITH A CONCRETE COLLAR, L AND T SHALL BE THOSE OF THE LARGER PIPE. D=D1 OR D2 WHICH EVER IS GREATER.
2. FOR PIPE SIZE NOT LISTED USE NEXT SIZE LARGER.
3. OMIT REINFORCING ON PIPES 24 in AND LESS IN DIAMETER AND ON ALL PIPES WHERE ANGLE A IS LESS THAN 10°.

DRAINAGE DETAIL

CONCRETE COLLAR

DRAINAGE DETAILS

NO SCALE

DD-1

STATE OF CALIFORNIA - DEPARTMENT OF TRANSPORTATION
Caltrans
DESIGN

FUNCTIONAL SUPERVISOR: DU LU
CALCULATED-DESIGNED BY: DAI HOANG
CHECKED BY: ROBERT S. LYLES Jr.
REVISED BY
DATE REVISED

LAST REVISION 01-24-11
DATE PLOTTED => 15-APR-2011
TIME PLOTTED => 10:36

Dist	COUNTY	ROUTE	POST MILES TOTAL PROJECT	SHEET No.	TOTAL SHEETS
08	SBd	10	9.9/R24.5	78	260

Robert S Lyles Jr. 1-24-11
REGISTERED CIVIL ENGINEER DATE

4-11-11
PLANS APPROVAL DATE

REGISTERED PROFESSIONAL ENGINEER ROBERT S. LYLES Jr. No. 67873 Exp. 6-30-11 CIVIL STATE OF CALIFORNIA

THE STATE OF CALIFORNIA OR ITS OFFICERS OR AGENTS SHALL NOT BE RESPONSIBLE FOR THE ACCURACY OR COMPLETENESS OF SCANNED COPIES OF THIS PLAN SHEET.

NOTE:

1. SEE STD. PLAN D94A FOR FLARED END SECTIONS

CSP Dia D	LENGTH L	WIDTH W
IN	FT	FT
12"	6'	3'

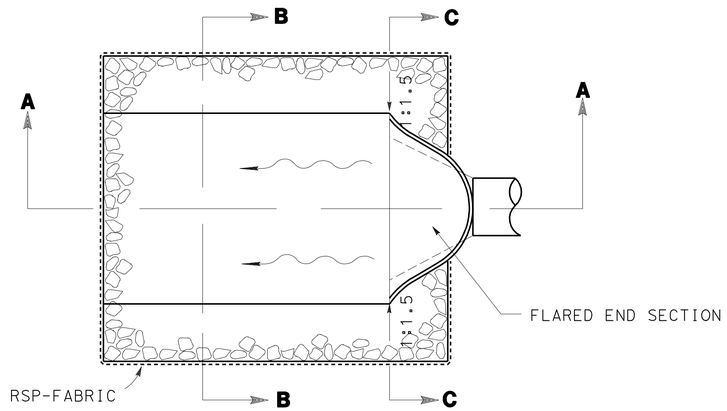

PLAN VIEW

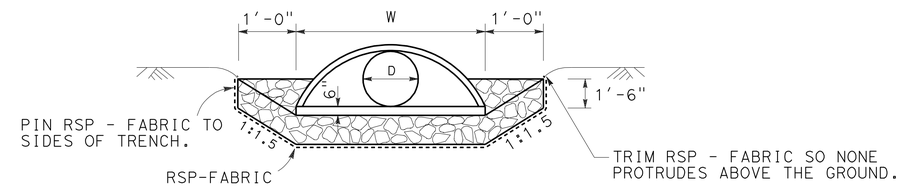

SECTION C-C

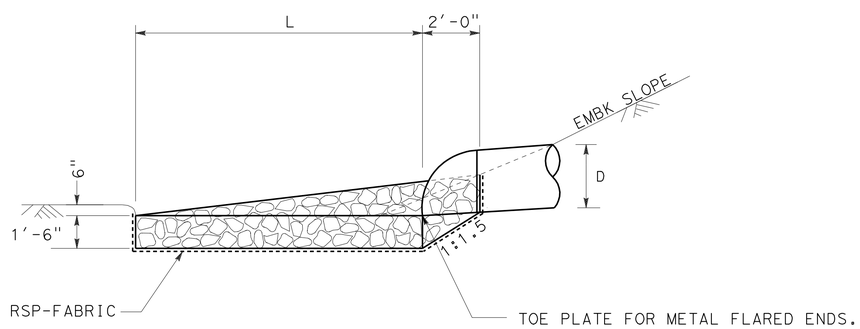

SECTION A-A
FLARED END SECTION

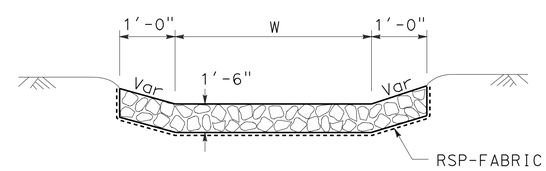

SECTION B-B

ROCK SLOPE PROTECTION AT PIPE OUTLET

DRAINAGE DETAILS
NO SCALE
DD-2

STATE OF CALIFORNIA - DEPARTMENT OF TRANSPORTATION
Caltrans® **DESIGN**

FUNCTIONAL SUPERVISOR: DU LU
CALCULATED-DESIGNED BY: DAI HOANG
CHECKED BY: ROBERT S. LYLES Jr.
REVISED BY
DATE REVISED

LAST REVISION 01-24-11
DATE PLOTTED => 15-JUN-2011
TIME PLOTTED => 06:46

Dist	COUNTY	ROUTE	POST MILES TOTAL PROJECT	SHEET No.	TOTAL SHEETS
08	SBd	10	9.9/R24.5	79	260

Robert S Lyles Jr. 1-24-11
REGISTERED CIVIL ENGINEER DATE

4-11-11
PLANS APPROVAL DATE

REGISTERED PROFESSIONAL ENGINEER ROBERT S. LYLES Jr. No. 67873 Exp. 6-30-11 CIVIL STATE OF CALIFORNIA

THE STATE OF CALIFORNIA OR ITS OFFICERS OR AGENTS SHALL NOT BE RESPONSIBLE FOR THE ACCURACY OR COMPLETENESS OF SCANNED COPIES OF THIS PLAN SHEET.

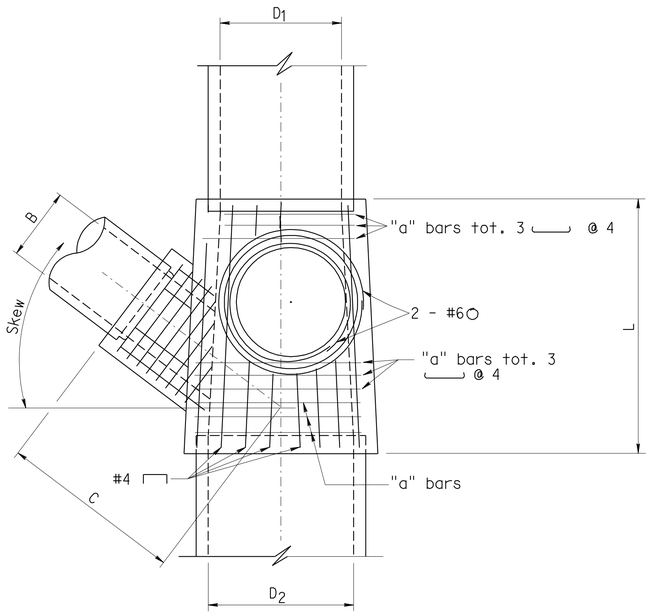

PLAN

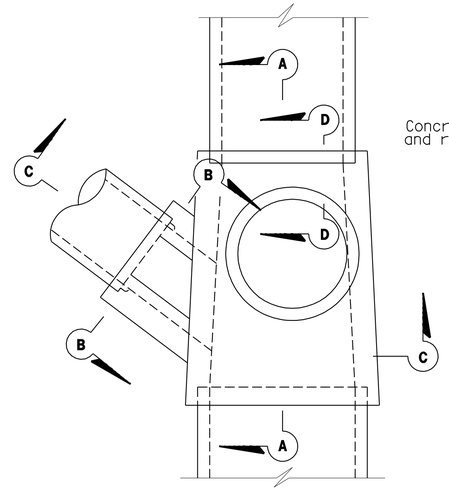

PLAN

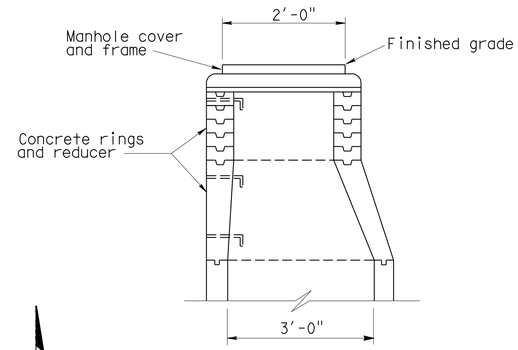

TYPE MH
UPPER STRUCTURE

Span	"a" bars	Top and Bottom slab thickness (ts,bs)*
3.5'	#4 @ 4"	8"
4.0'	#4 @ 4"	8"
4.5'	#5 @ 5"	8"
5.0'	#5 @ 4.5"	8"
5.5'	#6 @ 5.5"	8"
6.0'	#6 @ 5.5"	9"
6.5'	#6 @ 4.5"	9"
7.0'	#6 @ 4"	9.5"

* When fill over junction structure is 2'-0" or less, ts shall be increased by 2".

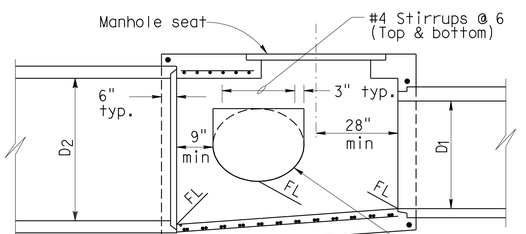

SECTION A-A

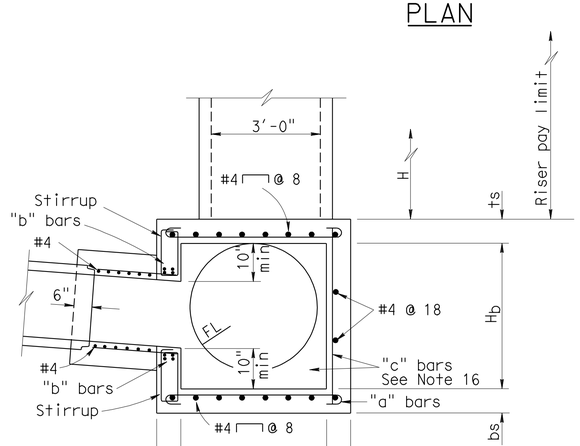

SECTION C-C

Hb	"c" bars	Sidewall thickness (t)
5.5'	#4 @ 4"	8"
6.5'	#5 @ 4"	8.5"
7.0'	#5 @ 4"	9"
8.0'	#6 @ 4"	9.5"

B	"b" bars Top & bottom
2.5'	#5 tot. 4
3.0'	#5 tot. 4
3.5'	#5 tot. 4
4.0'	#5 tot. 4
4.5'	#5 tot. 4
5.0'	#6 tot. 4

DESIGN NOTES

1. Designed in conformance with Bridge Design Specifications (1983 AASHTO Specifications with revisions by Caltrans).
2. Live load: HS20-44 truck. Earth pressures: 140 PCF vertical, 100 PCF horizontal.
3. Unit stresses: f'c = 3600 PSI; fy = 60,000 PSI.
4. Maximum fill height = 20'.

GENERAL NOTES

1. Plans shall designate: inlet and outlet pipe diameters, upper structure or manhole (if required), lateral pipe diameter and skew (if required), C,H, and Hb. Manhole or lateral may be omitted.
2. Upper structure, when required, may be any designated inlet type as shown on Standard Plan D72, D73, D74, D75 or this sheet.
3. Risers shall be positioned to either side of the structure as shown.
4. Each riser shall have a ladder. For details see Standard Plan D93.
5. Thickness of deck shall vary as necessary to provide a level manhole seat.
6. Reinforcing steel shall be placed 2" clear, except as shown.
7. Maximum skew of lateral pipe B is 45°.
8. Lateral may be placed in either side wall.
9. Where D1 and/or D2 are less than 3.5', clear distance between side walls shall be 3.5'. End walls shall be 6" thick with #4 @ 12" placed both ways.
10. Side walls shall be flush with the inside of the inlet and outlet pipes when pipe diameters are 3.5' or more.
11. L is 5'-0" minimum.
12. When C is not specified, bring the lateral directly into the wall of the structure.
13. When C is specified, contractor may, at his option, bring the lateral directly into the wall for use as an inside form. A collar conforming with the wall thickness and reinforcement as shown in section B-B shall be poured around the pipe.
14. When lateral is extended directly into the wall, it shall be mitered as necessary to be flush with wall.
15. "b" bars shall extend a minimum of 8" on either side of the opening.
16. Adjacent to each side of the opening, place additional reinforcement equivalent to half the interrupted main reinforcement.

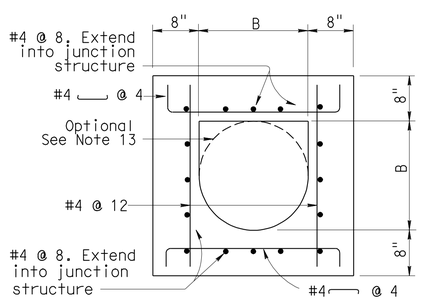

SECTION B-B

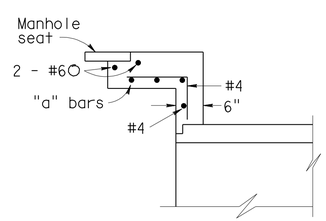

SECTION D-D

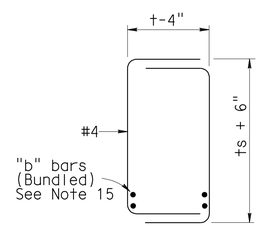

STIRRUPS

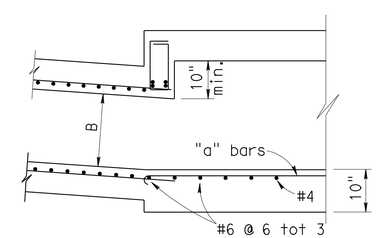

SECTION C-C (OPTIONAL)

Maximum fill height = 8.0'
For reinforcement and details not shown, see Section C-C

JUNCTION STRUCTURE

DRAINAGE DETAIL

SCALE: NONE

DD-3

THIS PLAN ACCURATE FOR DRAINAGE WORK ONLY.

REVISED BY | DATE REVISED
DAI HOANG | ROBERT S. LYLES Jr.
CALCULATED-DESIGNED BY | CHECKED BY
FUNCTIONAL SUPERVISOR: DU LU
STATE OF CALIFORNIA - DEPARTMENT OF TRANSPORTATION
Caltrans
DESIGN

LAST REVISION 01-24-11 | DATE PLOTTED => 15-APR-2011 | TIME PLOTTED => 10:37

Dist	COUNTY	ROUTE	POST MILES TOTAL PROJECT	SHEET No.	TOTAL SHEETS
08	SBd	10	9.9/R24.5	80	260

Robert S Lyles Jr. 1-24-11
REGISTERED CIVIL ENGINEER DATE

4-11-11
PLANS APPROVAL DATE

REGISTERED PROFESSIONAL ENGINEER ROBERT S. LYLES Jr. No. 67873 Exp. 6-30-11 CIVIL STATE OF CALIFORNIA

THE STATE OF CALIFORNIA OR ITS OFFICERS OR AGENTS SHALL NOT BE RESPONSIBLE FOR THE ACCURACY OR COMPLETENESS OF SCANNED COPIES OF THIS PLAN SHEET.

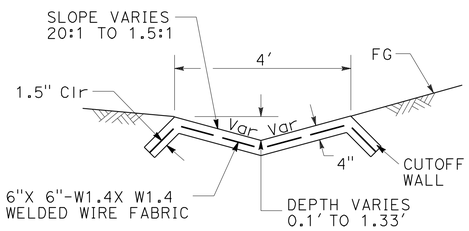

CONCRETE SWALE

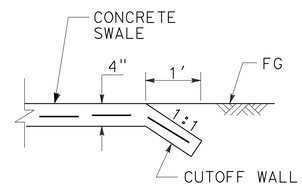

SWALE CUTOFF WALL

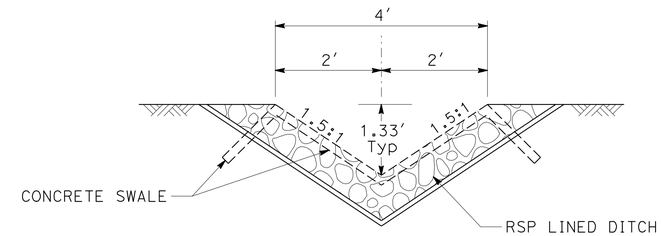

CONCRETE SWALE RSP LINED DITCH TRANSITION

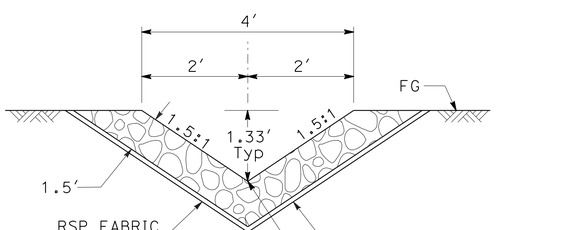

RSP LINED DITCH

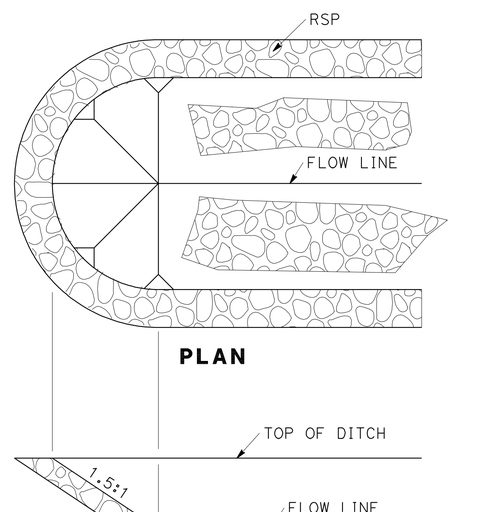

END RSP LINED DITCH

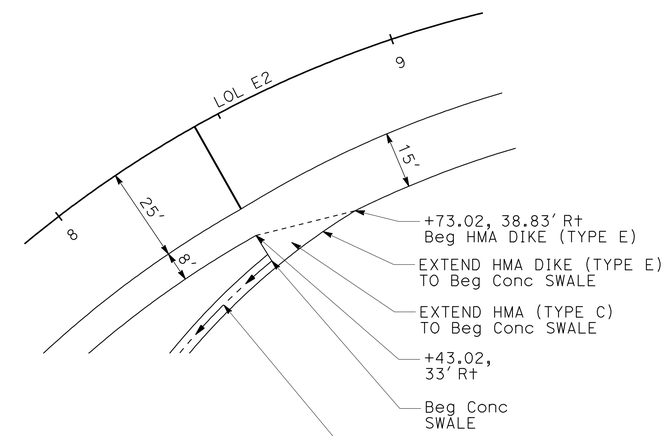

DETAIL D

THIS PLAN ACCURATE FOR DRAINAGE WORK ONLY.

DRAINAGE DETAIL

SCALE: NONE

DD-4

STATE OF CALIFORNIA - DEPARTMENT OF TRANSPORTATION
Caltrans® DESIGN

FUNCTIONAL SUPERVISOR: DU LU

CALCULATED-DESIGNED BY: DAI HOANG
CHECKED BY: ROBERT S. LYLES Jr.

REVISED BY | DATE REVISED

LAST REVISION 01-24-11 | DATE PLOTTED => 15-APR-2011 | TIME PLOTTED => 10:37

Dist	COUNTY	ROUTE	POST MILES TOTAL PROJECT	SHEET No.	TOTAL SHEETS
08	SBd	10	9.9/R24.5	81	260

Robert S Lyles Jr. 3-28-11
REGISTERED CIVIL ENGINEER DATE

4-11-11
PLANS APPROVAL DATE

REGISTERED PROFESSIONAL ENGINEER ROBERT S. LYLES Jr. No. 67873 Exp. 6-30-11 CIVIL STATE OF CALIFORNIA

THE STATE OF CALIFORNIA OR ITS OFFICERS OR AGENTS SHALL NOT BE RESPONSIBLE FOR THE ACCURACY OR COMPLETENESS OF SCANNED COPIES OF THIS PLAN SHEET.

NOTES:

1. ALL JOINTS SHALL BE STANDARD JOINT TYPE, EXCEPT FOR PIPE DOWNDRAINS THAT REQUIRE WATER TIGHT DOWNDRAIN JOINTS AND IN STEEP SLOPE AREAS THAT REQUIRE POSITIVE JOINTS.

ABBREVIATIONS

CSSRP COMPOSITE STEEL SPIRAL RIB PIPE
SJ STANDARD JOINT
PJ POSITIVE JOINT
DJ DOWNDRAIN JOINT
(N) NOT A SEPARATE PAY ITEM, FOR INFORMATION ONLY

ALLOWABLE PIPE MATERIAL AND PROTECTION

DESIGNATION	RCP	CSP				SSRP				CSSRP			
	SIZE (IN)	SIZE (IN)	THICKNESS (IN)	BITUM COATING	BITUM PAVED INVERT	SIZE (IN)	THICKNESS (IN)	BITUM COATING	BITUM PAVED INVERT	SIZE (IN)	THICKNESS (IN)	BITUM COATING	BITUM PAVED INVERT
18" APC TYPE A	18	18	0.109"	No	No	18	0.109"	No	No	18	0.109"	No	No
24" APC TYPE A	24	24	0.109"	No	No	24	0.109"	No	No	24	0.109"	No	No

DRAINAGE QUANTITIES

DRAINAGE PLAN SHEET No.	DRAINAGE SYSTEM No. ⬡	DRAINAGE UNIT No. ◯	STATION	REMOVE CULVERT LF	REMOVE PIPE * LF	REMOVE INLET EA	ADJUST RISER EA	REMOVE HEADWALL EA	REMOVE CONCRETE V- DITCH CY	ABANDON CULVERT LF	18" APC LF	24" APC LF	12" CSP (.109" THICK) LF	30" CSP (.109" THICK) LF	36" CSP INLET (.109" THICK) LF	36" RCP RISER LF	18" RCP LF	24" RCP LF	GRATED LINE DRAIN LF	RSP FABRIC SQYD	MINOR CONCRETE (MINOR STRUCTURE) CY	MISCELLANEOUS IRON AND STEEL LB	STRUCTURAL CONCRETE CY	BAR REINFORCING STEEL LB	(N) CONCRETE COLLAR EA	RSP (LIGHT, METHOD B) CY	RSP (FACING, METHOD B) CY	(N) PAVED GUTTER FLARE SQFT	RELAY ENTRANCE TAPER EA	18" ALTERNATIVE FLARED END SECTION EA	DITCH EXCAVATION CY	DESCRIPTION	DRAINAGE UNIT No. ◯	DRAINAGE SYSTEM No. ⬡	DRAINAGE PLAN SHEET No.
D-1	1	a	714+45 A1																		2.0	326										DI TYPE G1, H=4.61, GRATE TYPE 24-12	a	1	D-1
		b									200																					18" x 200′ APC, SJ	b		
		c	716+45 A1																		2.0	326										DI TYPE G1, H=4.88, GRATE TYPE 24-12	c		
		d									60																					18" x 60′ APC, SJ	d		
D-2	1	e	717+07 A1																		3.0	326										DI TYPE G1, H=5.63, GRATE TYPE 24-12, INLET DEPRESSION ON GRADE	e	1	D-2
		f									36																					18" x 36′ APC, SJ	f		
		g	717+45 A1																		3.0	326										DI TYPE GO, H=4.69, GRATE TYPE 24-12, INLET DEPRESSION ON SAG	g		
		h									36																					18" x 36′ APC, SJ	h		
		i	717+83 A1																		3.0	326										DI TYPE G1, H=4.33, GRATE TYPE 24-12, INLET DEPRESSION ON GRADE	i		
		j									60																					18" x 60′ APC, SJ	j		
		k	718+45 A1																		2.0	326										DI TYPE G1, H=4.23, GRATE TYPE 24-12	k		
		l			8																											REMOVE 18" x 8.0′ RCP	l		
		m									10																					18" x 10′ APC, SJ	m		
		n																							1							CONCRETE COLLAR, SEE DRAINAGE DETAIL DD-1	n		
		o			6																											REMOVE 18" x 6.3′ RCP	o		
		p	717+14 A1			1																										REMOVE DI TYPE GO TG = 1092.14 (H=4.16′)	p		
		q			28																											REMOVE 18" x 28.0′ RCP	q		
		r	717+44 A1			1																										REMOVE DI TYPE GO TG = 1092.04 (H=3.72′)	r		
		s			29																											REMOVE 18" x 29.0′ RCP	s		
		t	717+74 A1			1																										REMOVE DI TYPE GO TG = 1092.25 (H=3.69′)	t		
	2	a	724+70 A1				1															235										ADJUST RISER 1.8′ DOWN, REMOVE CHECKERED STEEL PLATE COVER, 36" MANHOLE COVER	a	2	
		b														2																36" RCP RISER COLLAR - 12" WIDTH	b		
SUBTOTAL					71	3	1				402					2					15.0	2191			1										

DRAINAGE QUANTITIES
DQ-1

STATE OF CALIFORNIA - DEPARTMENT OF TRANSPORTATION
Caltrans® DESIGN

CALCULATED-DESIGNED BY: DON D. NGUYEN
CHECKED BY: ROBERT S. LYLES Jr.
FUNCTIONAL SUPERVISOR: DU LU
REVISED BY / DATE REVISED

LAST REVISION 03-28-11 | DATE PLOTTED => 20-APR-2011 | TIME PLOTTED => 09:29

Dist	COUNTY	ROUTE	POST MILES TOTAL PROJECT	SHEET No.	TOTAL SHEETS
08	SBd	10	9.9/R24.5	82	260

Robert S Lyles Jr. 3-28-11
REGISTERED CIVIL ENGINEER DATE

4-11-11
PLANS APPROVAL DATE

REGISTERED PROFESSIONAL ENGINEER ROBERT S. LYLES Jr. No. 67873 Exp. 6-30-11 CIVIL STATE OF CALIFORNIA

THE STATE OF CALIFORNIA OR ITS OFFICERS OR AGENTS SHALL NOT BE RESPONSIBLE FOR THE ACCURACY OR COMPLETENESS OF SCANNED COPIES OF THIS PLAN SHEET.

DRAINAGE QUANTITIES

DRAINAGE PLAN SHEET No.	DRAINAGE SYSTEM No.	DRAINAGE UNIT No.	STATION	REMOVE CULVERT (LF)	REMOVE PIPE * (LF)	REMOVE INLET (EA)	ADJUST RISER (EA)	REMOVE HEADWALL (EA)	REMOVE CONCRETE V- DITCH (CY)	ABANDON CULVERT (LF)	18" APC (LF)	24" APC (LF)	12" CSP (.109" THICK) (LF)	30" CSP (.109" THICK) (LF)	36" CSP INLET (.109" THICK) (LF)	36" RCP RISER (LF)	18" RCP (LF)	24" RCP (LF)	GRATED LINE DRAIN (LF)	RSP FABRIC (SQYD)	MINOR CONCRETE (MINOR STRUCTURE) (CY)	MISCELLANEOUS IRON AND STEEL (LB)	STRUCTURAL CONCRETE (CY)	BAR REINFORCING STEEL (LB)	(N) CONCRETE COLLAR (EA)	RSP (LIGHT, METHOD B) (CY)	RSP (FACING, METHOD B) (CY)	(N) PAVED GUTTER FLARE (SQFT)	RELAY ENTRANCE TAPER (EA)	18" ALTERNATIVE FLARED END SECTION (EA)	DITCH EXCAVATION (CY)	DESCRIPTION	DRAINAGE UNIT No.	DRAINAGE SYSTEM No.	DRAINAGE PLAN SHEET No.
D-3	3	a	737+02 A2			1																										REMOVE DI (TYPE GMP) TG=1073.12 (H= 8.07)	a	3	D-3
		b		17																												REMOVE 18" CSP L=7′ AND 24" CSP L=10′	b		
		c												10																		30" CSP (.109" THICK) x 9.5′; CMP COUPLER, PJ	c		
		d	736+96 A2												8																	36" CSP INLET TG=1072.87 H=7.63; 1/4" CHECKERED PLATE, PJ	d		
	4	a	739+95 A2			1																										REMOVE DI TG = 1064.85 (H = 2.7)	a	4	
		b			25																											REMOVE 18" x 24.5′ RCP	b		
		c	740+23 A2			1																										REMOVE DI TG = 1064.44 (H = 2.0)	c		
		d	740+23 A2																		2.0	326										DI TYPE G1, H=2.22, GRATE TYPE 24-12	d		
		e															24															18" x 24.0′ RCP, SJ	e		
		f	739+95 A2																		2.0	326										DI TYPE G1, H=2.73, GRATE TYPE 24-12	f		
		g															7								1							18" x 6.8′ RCP; Conc COLLAR (SEE DETAIL DD-1), SJ	g		
D-4	5	a	848+78 B1			1																										REMOVE DI	a	5	D-4
		b			24																											REMOVE 12" x 23.5 RCP	b		
		c	849+05 B1			1																										REMOVE DI	c		
		d			46																											REMOVE 12" x 46.0′ CSP	d		
		e			110																											REMOVE 12" x 110′ RCP	e		
		f						1																								REMOVE HEADWALL	f		
		g							33																							REMOVE CONCRETE V-DITCH	g		
		h	848+77 B1																						1							CONCRETE COLLAR, SEE DRAINAGE DETAIL DD-1	h		
		i									10																					18" x 10.0′ APC, SJ	i		
		j	848+80 B1																		3.0	326										DI TYPE G1, H=3.22, GRATE TYPE 24-12, INLET DEPRESSION ON GRADE	j		
		k																			5.0	868										2′x1′ RCB x 31.0′	k		
		l	849+15 B1																		3.0	326										DI TYPE GO, H=2.63, GRATE TYPE 24-12, INLET DEPRESSION IN SAG	l		
		m																			5.0	868										2′x1′ RCB x 30.6′	m		
		n	849+50 B1																		3.0	326										DI TYPE G1, H=2.44, GRATE TYPE 24-12, INLET DEPRESSION ON GRADE	n		
		o									32																					18" x 31.3′ APC, SJ	o		
		p	850+15 B1																				3.0	400								JUNCTION STRUCTURE	p		
SUBTOTAL				17	205	5		1	33		42			10	8		31				23.0	3366	3.0	400	2									

DRAINAGE QUANTITIES
DQ-2

STATE OF CALIFORNIA - DEPARTMENT OF TRANSPORTATION
Caltrans® DESIGN

FUNCTIONAL SUPERVISOR: DU LU
CALCULATED-DESIGNED BY: DON D. NGUYEN
CHECKED BY: ROBERT S. LYLES Jr.
REVISED BY
DATE REVISED

LAST REVISION 03-28-11
DATE PLOTTED => 20-APR-2011
TIME PLOTTED => 09:29

Dist	COUNTY	ROUTE	POST MILES TOTAL PROJECT	SHEET No.	TOTAL SHEETS
08	SBd	10	9.9/R24.5	83	260

Robert S Lyles Jr. 3-28-11
REGISTERED CIVIL ENGINEER DATE

4-11-11
PLANS APPROVAL DATE

REGISTERED PROFESSIONAL ENGINEER ROBERT S. LYLES Jr. No. 67873 Exp. 6-30-11 CIVIL STATE OF CALIFORNIA

THE STATE OF CALIFORNIA OR ITS OFFICERS OR AGENTS SHALL NOT BE RESPONSIBLE FOR THE ACCURACY OR COMPLETENESS OF SCANNED COPIES OF THIS PLAN SHEET.

DRAINAGE QUANTITIES

DRAINAGE PLAN SHEET No.	DRAINAGE SYSTEM No.	DRAINAGE UNIT No.	STATION	REMOVE CULVERT (LF)	REMOVE PIPE * (LF)	REMOVE INLET (EA)	ADJUST RISER (EA)	REMOVE HEADWALL (EA)	REMOVE CONCRETE V- DITCH (CY)	ABANDON CULVERT (LF)	18" APC (LF)	24" APC (LF)	12" CSP (.109" THICK) (LF)	30" CSP (.109" THICK) (LF)	36" CSP INLET (.109" THICK) (LF)	36" RCP RISER (LF)	18" RCP (LF)	24" RCP (LF)	GRATED LINE DRAIN (LF)	RSP FABRIC (SQYD)	MINOR CONCRETE (MINOR STRUCTURE) (CY)	MISCELLANEOUS IRON AND STEEL (LB)	STRUCTURAL CONCRETE (CY)	BAR REINFORCING STEEL (LB)	(N) CONCRETE COLLAR (EA)	RSP (LIGHT, METHOD B) (CY)	RSP (FACING, METHOD B) (CY)	(N) PAVED GUTTER FLARE (SQFT)	RELAY ENTRANCE TAPER (EA)	18" ALTERNATIVE FLARED END SECTION (EA)	DITCH EXCAVATION (CY)	DESCRIPTION	DRAINAGE UNIT No.	DRAINAGE SYSTEM No.	DRAINAGE PLAN SHEET No.
D-4	5	q										132																				24" x 131.5′ APC, SJ	q	5	D-4
		r	851+50 B1																		2.0	326										DI TYPE G1, H=4.01, GRATE TYPE 24-12	r		
		s										41																				24" x 40.4′ APC, SJ	s		
		t	851+92 B1																		3.0	326										DI TYPE GCP W/APRON, H=4.60, GRATE TYPE 36R	t		
		u										21																				24" x 20.2′ APC, SJ	u		
		v	851+95 B1																						1							CONCRETE COLLAR, SEE DRAINAGE DETAIL DD-1	v		
		w	851+95 B1					1																								REMOVE HEADWALL	w		
D-5	6	a	13+75 PEPPER			1																										REMOVE DI	a	6	
		b			20																											REMOVE CMP	b		
		c								106																						ABANDON CULVERT	c		
	7	a	14+10 PEPPER																		2.0	326										DI TYPE G1, H=4.60, GRATE TYPE 24-12	a	7	
		b									68																					18" x 68′ APC, DJ	b		
		c																												1		FLARED END SECTION	c		
		d																		10						3						RSP (LIGHT, METHOD B), RSP FABRIC	d		
	8	a	14+39 PEPPER																									14				PAVED GUTTER FLARE	a	8	
		b																											1			RELAY ENTRANCE TAPER	b		
		c																		10						3						RSP (LIGHT, METHOD B), RSP FABRIC	c		
	9	a	856+70 B2																		2.0	326										DI TYPE G1, H=5.16, GRATE TYPE 24-12	a	9	
		b									43																					18" x 42.2′ APC, SJ	b		
		c																	43													GRATED LINE DRAIN L = 43′	c		
		d	857+15 B2																		2.0	326										DI TYPE G1, H=5.49, GRATE TYPE 24-12	d		
		e									32																					18" x 32′ APC, SJ	e		
		f																	32													GRATED LINE DRAIN L = 32′	f		
		g	857+50 B2																		2.0	326										DI TYPE G1, H=5.68, GRATE TYPE 24-12	g		
		h									32																					18" x 32′ APC, SJ	h		
		i																	32													GRATED LINE DRAIN L = 32′	i		
		j	857+85 B2																		2.0	326										DI TYPE G1, H=5.78′, GRATE TYPE 24-12	j		
SUBTOTAL					20	1		1		106	175	194							107	20	15.0	2282			1	6		14	1	1					

DRAINAGE QUANTITIES
DQ-3

STATE OF CALIFORNIA - DEPARTMENT OF TRANSPORTATION
Caltrans® DESIGN

FUNCTIONAL SUPERVISOR: DU LU
CALCULATED-DESIGNED BY: DON D. NGUYEN
CHECKED BY: ROBERT S. LYLES Jr.
REVISED BY
DATE REVISED

LAST REVISION 03-28-11
DATE PLOTTED => 20-APR-2011
TIME PLOTTED => 09:29

Dist	COUNTY	ROUTE	POST MILES TOTAL PROJECT	SHEET No.	TOTAL SHEETS
08	SBd	10	9.9/R24.5	84	260

Robert S Lyles Jr. 3-28-11
REGISTERED CIVIL ENGINEER DATE

4-11-11
PLANS APPROVAL DATE

REGISTERED PROFESSIONAL ENGINEER ROBERT S. LYLES Jr. No. 67873 Exp. 6-30-11 CIVIL STATE OF CALIFORNIA

THE STATE OF CALIFORNIA OR ITS OFFICERS OR AGENTS SHALL NOT BE RESPONSIBLE FOR THE ACCURACY OR COMPLETENESS OF SCANNED COPIES OF THIS PLAN SHEET.

DRAINAGE QUANTITIES

DRAINAGE PLAN SHEET No.	DRAINAGE SYSTEM No.	DRAINAGE UNIT No.	STATION	REMOVE CULVERT (LF)	REMOVE PIPE * (LF)	REMOVE INLET (EA)	ADJUST RISER (EA)	REMOVE HEADWALL (EA)	REMOVE CONCRETE V- DITCH (CY)	ABANDON CULVERT (LF)	18" APC (LF)	24" APC (LF)	12" CSP (.109" THICK) (LF)	30" CSP (.109" THICK) (LF)	36" CSP INLET (.109" THICK) (LF)	36" RCP RISER (LF)	18" RCP (LF)	24" RCP (LF)	GRATED LINE DRAIN (LF)	RSP FABRIC (SQYD)	MINOR CONCRETE (MINOR STRUCTURE) (CY)	MISCELLANEOUS IRON AND STEEL (LB)	STRUCTURAL CONCRETE (CY)	BAR REINFORCING STEEL (LB)	(N) CONCRETE COLLAR (EA)	RSP (LIGHT, METHOD B) (CY)	RSP (FACING, METHOD B) (CY)	(N) PAVED GUTTER FLARE (SQFT)	RELAY ENTRANCE TAPER (EA)	18" ALTERNATIVE FLARED END SECTION (EA)	DITCH EXCAVATION (CY)	DESCRIPTION	DRAINAGE UNIT No.	DRAINAGE SYSTEM No.	DRAINAGE PLAN SHEET No.
D-5	9	k									68																					18" x 68' APC, DJ	k	9	D-5
		l																			1.0	50										HEADWALL - STRAIGHT	l		
		m																		10						3						RSP (LIGHT, METHOD B), RSP FABRIC	m		
	10	a																	67													GRATED LINE DRAIN L = 67'	a	10	
		b	858+65 B2																		2.0	326										DI TYPE G1, H=5.26', GRATE TYPE 24-12	b		
		c																	72													GRATED LINE DRAIN L = 72'	c		
		d									72																					18" x 72' APC, SJ	d		
		e	859+40 B2																		2.0	326										DI TYPE G1, H=5.26', GRATE TYPE 24-12	e		
		f																	67													GRATED LINE DRAIN L = 67'	f		
		g									67																					18" x 67' APC, SJ	g		
		h	860+10 B2																		2.0	326										DI TYPE G1, H=5.88', GRATE TYPE 24-12	h		
		i																	42													GRATED LINE DRAIN L = 42'	i		
		j									42																					18" x 42' APC, SJ	j		
		k	860+55 B2																		2.0	326										DI TYPE G1, H=6.64', GRATE TYPE 24-12	k		
		l									44																					18" x 44' APC, DJ	l		
		m																			1.0	50										HEADWALL - STRAIGHT	m		
		n																		10						3						RSP (LIGHT, METHOD B), RSP FABRIC	n		
	11	a	864+35 B2																		2.0	326										DI TYPE G1, H=4.53', GRATE TYPE 24-12	a	11	
		b									16																					18" x 16' APC, SJ	b		
		c	864+55 B2																		2.0	326										DI TYPE G1, H=6.34', GRATE TYPE 24-12	c		
		d									28																					18" x 28' APC, SJ	d		
		e	864+25 B2																		3.0	326										DI TYPE G1, H=3.56', GRATE TYPE 24-12; INLET DEPRESSION ON GRADE	e		
		f									26																					18" x 26' APC, SJ	f		
		g	864+55 B2																		3.0	326										DI TYPE GO, H=7.01', GRATE TYPE 24-12; INLET DEPRESSION IN SAG	g		
		h									26																					18" x 26' APC, SJ	h		
		i	864+85 B2																		3.0	326										DI TYPE G1, H=3.56', GRATE TYPE 24-12; INLET DEPRESSION ON GRADE	i		
		j									39																					18" x 39' APC, DJ	j		
SUBTOTAL											428								248	20	23.0	3034				6									

DRAINAGE QUANTITIES
DQ-4

REVISED BY	DATE REVISED

CALCULATED-DESIGNED BY	CHECKED BY
DON D. NGUYEN	ROBERT S. LYLES Jr.

FUNCTIONAL SUPERVISOR: DU LU

STATE OF CALIFORNIA - DEPARTMENT OF TRANSPORTATION
Caltrans® DESIGN

LAST REVISION 03-28-11 | DATE PLOTTED => 20-APR-2011 | TIME PLOTTED => 09:29

Dist	COUNTY	ROUTE	POST MILES TOTAL PROJECT	SHEET No.	TOTAL SHEETS
08	SBd	10	9.9/R24.5	85	260

Robert S Lyles Jr. 3-28-11
REGISTERED CIVIL ENGINEER DATE

4-11-11
PLANS APPROVAL DATE

REGISTERED PROFESSIONAL ENGINEER ROBERT S. LYLES Jr. No. 67873 Exp. 6-30-11 CIVIL STATE OF CALIFORNIA

THE STATE OF CALIFORNIA OR ITS OFFICERS OR AGENTS SHALL NOT BE RESPONSIBLE FOR THE ACCURACY OR COMPLETENESS OF SCANNED COPIES OF THIS PLAN SHEET.

DRAINAGE QUANTITIES

DRAINAGE PLAN SHEET No.	DRAINAGE SYSTEM No.	DRAINAGE UNIT No.	STATION	REMOVE CULVERT (LF)	REMOVE PIPE * (LF)	REMOVE INLET (EA)	ADJUST RISER (EA)	REMOVE HEADWALL (EA)	REMOVE CONCRETE V- DITCH (CY)	ABANDON CULVERT (LF)	18" APC (LF)	24" APC (LF)	12" CSP (.109" THICK) (LF)	30" CSP (.109" THICK) (LF)	36" CSP INLET (.109" THICK) (LF)	36" RCP RISER (LF)	18" RCP (LF)	24" RCP (LF)	GRATED LINE DRAIN (LF)	RSP FABRIC (SQYD)	MINOR CONCRETE (MINOR STRUCTURE) (CY)	MISCELLANEOUS IRON AND STEEL (LB)	STRUCTURAL CONCRETE (CY)	BAR REINFORCING STEEL (LB)	(N) CONCRETE COLLAR (EA)	RSP (LIGHT, METHOD B) (CY)	RSP (FACING, METHOD B) (CY)	(N) PAVED GUTTER FLARE (SQFT)	RELAY ENTRANCE TAPER (EA)	18" ALTERNATIVE FLARED END SECTION (EA)	DITCH EXCAVATION (CY)	DESCRIPTION	DRAINAGE UNIT No.	DRAINAGE SYSTEM No.	DRAINAGE PLAN SHEET No.
D-5	11	k																			1.0	50										HEADWALL - STRAIGHT	k	11	D-5
		l																		10						3						RSP (LIGHT, METHOD B), RSP FABRIC	l		
	12	a	867+98 B2			1																										REMOVE DI, TG Elev 1039.79, (H=2.26′)	a	12	
		b			7																											REMOVE 12" x 7′ CMP	b		
		c	867+98 B2																		2.0	326										DI TYPE G1, H=3.49′, TYPE 24-12 GRATE	c		
D-6	13	a	63+45 E1			1																										REMOVE DI TYPE GO, TG Elev 960.48, (H=3.52′)	a	13	D-6
		b			24																											REMOVE 18" x 24′ RCP	b		
		c	63+72 E1			1																										REMOVE DI TYPE GO, TG Elev 960.30, (H=4.10′)	c		
		d	63+55 E1																		2.0	326										DI TYPE G1, H=3.64′, GRATE TYPE 24-12 INLET DEPRESSION ON GRADE	d		
		e															22															18" x 22′ RCP, SJ	e		
		f																							1							CONCRETE COLLAR, SEE DRAINAGE DETAIL DD-1	f		
		g															36															18" x 36′ RCP, SJ	g		
		h	63+95 E1																		2.0	326										DI TYPE G1, H=3.33′, GRATE TYPE 24-12 INLET DEPRESSION IN SAG	h		
		i															36															18" x 36′ RCP, SJ	i		
		j	64+35 E1																		2.0	326										DI TYPE G1, H=3.25′, GRATE TYPE 24-12 INLET DEPRESSION ON GRADE	j		
	14	a						1																								REMOVE HEADWALL	a	14	
		b			16																											REMOVE 24" x 15.7′ RCP	b		
		c																							1							CONCRETE COLLAR, SEE DRAINAGE DETAIL DD-1	c		
		d																24														24" x 24′ RCP, PJ	d		
		e	66+80 E1																		2.0	326										DI TYPE GCP, H=2.46′, TG Elev = 969.10 ¼" CHECKERED PLATE	e		
		f											46																			12" x 45.8′ CSP, PJ	f		
D-7	15	a						1																								REMOVE HEADWALL	a	15	D-7
		b			8																											REMOVE 18" x 8′ RCP	b		
		c	75+93 E2																						1							CONCRETE COLLAR, SEE DRAINAGE DETAIL DD-1	c		
		d															8															18" x 8′ RCP, PJ	d		
		e																		10							3					RSP (FACING, METHOD B), RSP FABRIC	e		
SUBTOTAL					55	3		2					46				102	24		20	11.0	1680			3	3	3							

DRAINAGE QUANTITIES
DQ-5

STATE OF CALIFORNIA - DEPARTMENT OF TRANSPORTATION
Caltrans® DESIGN

FUNCTIONAL SUPERVISOR: DU LU
CALCULATED-DESIGNED BY: DON D. NGUYEN
CHECKED BY: ROBERT S. LYLES Jr.
REVISED BY
DATE REVISED

LAST REVISION 03-28-11
DATE PLOTTED => 20-APR-2011
TIME PLOTTED => 09:29

Dist	COUNTY	ROUTE	POST MILES TOTAL PROJECT	SHEET No.	TOTAL SHEETS
08	SBd	10	9.9/R24.5	86	260

Robert S Lyles Jr. 3-28-11
REGISTERED CIVIL ENGINEER DATE

4-11-11
PLANS APPROVAL DATE

REGISTERED PROFESSIONAL ENGINEER ROBERT S. LYLES Jr. No. 67873 Exp. 6-30-11 CIVIL STATE OF CALIFORNIA

THE STATE OF CALIFORNIA OR ITS OFFICERS OR AGENTS SHALL NOT BE RESPONSIBLE FOR THE ACCURACY OR COMPLETENESS OF SCANNED COPIES OF THIS PLAN SHEET.

DRAINAGE QUANTITIES

DRAINAGE PLAN SHEET No.	DRAINAGE SYSTEM No.	DRAINAGE UNIT No.	STATION	REMOVE CULVERT	REMOVE PIPE *	REMOVE INLET	ADJUST RISER	REMOVE HEADWALL	REMOVE CONCRETE V- DITCH	ABANDON CULVERT	18" APC	24" APC	12" CSP (.109" THICK)	30" CSP (.109" THICK)	36" CSP INLET (.109" THICK)	36" RCP RISER	18" RCP	24" RCP	GRATED LINE DRAIN	RSP FABRIC	MINOR CONCRETE (MINOR STRUCTURE)	MISCELLANEOUS IRON AND STEEL	STRUCTURAL CONCRETE	BAR REINFORCING STEEL	(N) CONCRETE COLLAR	RSP (LIGHT, METHOD B)	RSP (FACING, METHOD B)	(N) PAVED GUTTER FLARE	RELAY ENTRANCE TAPER	18" ALTERNATIVE FLARED END SECTION	DITCH EXCAVATION	DESCRIPTION	DRAINAGE UNIT No.	DRAINAGE SYSTEM No.	DRAINAGE PLAN SHEET No.
				LF	LF	EA	EA	EA	CY	LF	LF	LF	LF	LF	LF	LF	LF	LF	LF	SQYD	CY	LB	CY	LB	EA	CY	CY	SQFT	EA	EA	CY				
D-7	16	a						1																								REMOVE HEADWALL	a	16	D-7
		b								28																						ABANDON 18" x 28' CMP	b		
	17	a	78+43																		7.0	50									17	Beg CONCRETE SWALE, SEE DD-4	a	17	
		b	77+30																	100							68				17	Beg RSP LINED DITCH, SEE DD-4, RSP FABRIC	b		
SUBTOTAL								1		28										100	7.0	50					68				34				
SUBTOTAL SHEET DQ-1					71	3	1				402					2					15.0	2191			1										
SUBTOTAL SHEET DQ-2				17	205	5		1	33		42			10	8		31				23.0	3366	3.0	400	2										
SUBTOTAL SHEET DQ-3					20	1		1		106	175	194							107	20	15.0	2282			1	6		14	1	1					
SUBTOTAL SHEET DQ-4											428								248	20	23.0	3034				6									
SUBTOTAL SHEET DQ-5					55	3		2					46				102	24		20	11.0	1680			3	3	3								
TOTAL				17	351	12	1	5	33	134	1047	194	46	10	8	2	133	24	355	160	94.0	12603	3.0	400	7	15	71	14	1	1	34				

* PAID FOR AS REMOVE CULVERT

REVISED BY | DATE REVISED

DON D. NGUYEN | ROBERT S. LYLES Jr.

CALCULATED-DESIGNED BY | CHECKED BY

FUNCTIONAL SUPERVISOR: DU LU

STATE OF CALIFORNIA - DEPARTMENT OF TRANSPORTATION

Caltrans DESIGN

DRAINAGE QUANTITIES
DQ-6

LAST REVISION 03-28-11 | DATE PLOTTED => 20-APR-2011 | TIME PLOTTED => 09:30

Dist	COUNTY	ROUTE	POST MILES TOTAL PROJECT	SHEET No.	TOTAL SHEETS
08	SBd	10	9.9/R24.5	87	260

Robert S Lyles Jr. 1-13-11
REGISTERED CIVIL ENGINEER DATE

4-11-11
PLANS APPROVAL DATE

REGISTERED PROFESSIONAL ENGINEER ROBERT S. LYLES Jr. No. 67873 Exp. 6-30-11 CIVIL STATE OF CALIFORNIA

THE STATE OF CALIFORNIA OR ITS OFFICERS OR AGENTS SHALL NOT BE RESPONSIBLE FOR THE ACCURACY OR COMPLETENESS OF SCANNED COPIES OF THIS PLAN SHEET.

NOTE:

FOR ACCURATE RIGHT OF WAY AND ACCESS DATA,
CONTACT RIGHT OF WAY ENGINEERING AT THE DISTRICT OFFICE.

NOTES:

1. LOCATIONS OF UTILITIES FACILITIES SHOWN ON THESE PLANS ARE APPROXIMATE AND SHALL BE VERIFIED BY THE CONTRACTOR PRIOR TO CONSTRUCTION.
2. UTILITY OWNERSHIP ON THIS PROJECT OR AS SHOWN:

GAS - KINDER MORGAN
SOUTHERN CALIFORNIA GAS (SCG)

ELECTRIC - SOUTHERN CALIFORNIA EDISON (SCE)
CITY OF COLTON PUBLIC WORKS DEPARTMENT (CCPWD)

TELEPHONE - MCI TELECOMMUNICATION CORPORATION (MCI)
AMERICAN TELEPHONE AND TELEGRAPH COMPANY (AT&T)

WATER - WEST VALLEY WATER DISTRICT (WVWD)
CITY OF COLTON PUBLIC WORKS DEPARTMENT (CCPWD)

SEWER - CITY OF COLTON PUBLIC WORKS DEPARTMENT (CCPWD)

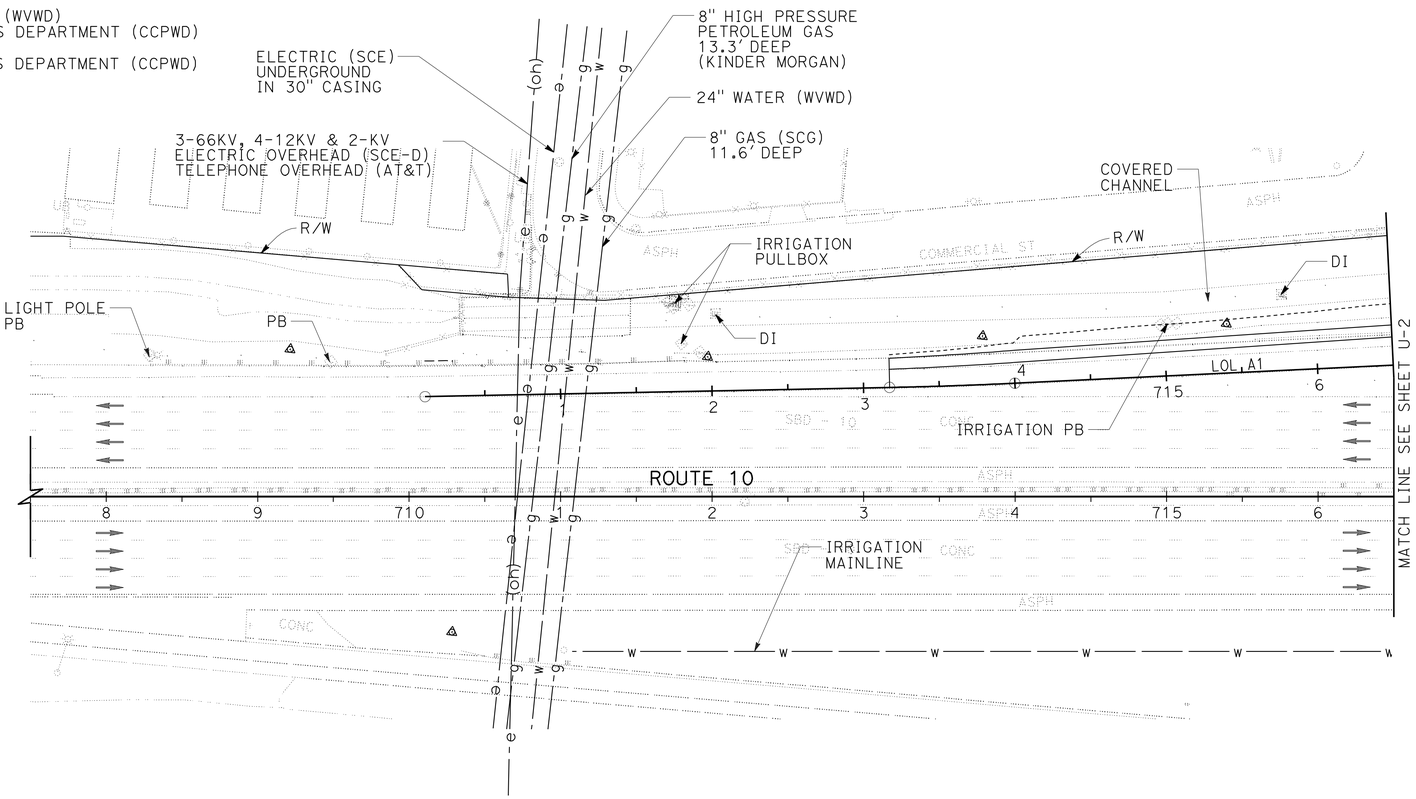

CEDAR Ave WB ENTRANCE RAMP

THIS PLAN FOR UTILITY INFORMATION ONLY.

UTILITY PLAN

SCALE: 1" = 50'

U-1

STATE OF CALIFORNIA - DEPARTMENT OF TRANSPORTATION
Caltrans
DESIGN

FUNCTIONAL SUPERVISOR: DU LU
CALCULATED-DESIGNED BY: RICK LAM
CHECKED BY: ROBERT S. LYLES Jr.
REVISED BY
DATE REVISED

LAST REVISION 01-13-11
DATE PLOTTED => 15-APR-2011
TIME PLOTTED => 10:37

Dist	COUNTY	ROUTE	POST MILES TOTAL PROJECT	SHEET No.	TOTAL SHEETS
08	SBd	10	9.9/R24.5	88	260

Robert S Lyles Jr. 1-13-11
REGISTERED CIVIL ENGINEER DATE

4-11-11
PLANS APPROVAL DATE

REGISTERED PROFESSIONAL ENGINEER ROBERT S. LYLES Jr. No. 67873 Exp. 6-30-11 CIVIL STATE OF CALIFORNIA

THE STATE OF CALIFORNIA OR ITS OFFICERS OR AGENTS SHALL NOT BE RESPONSIBLE FOR THE ACCURACY OR COMPLETENESS OF SCANNED COPIES OF THIS PLAN SHEET.

NOTE:

FOR ACCURATE RIGHT OF WAY AND ACCESS DATA,
CONTACT RIGHT OF WAY ENGINEERING AT THE DISTRICT OFFICE.

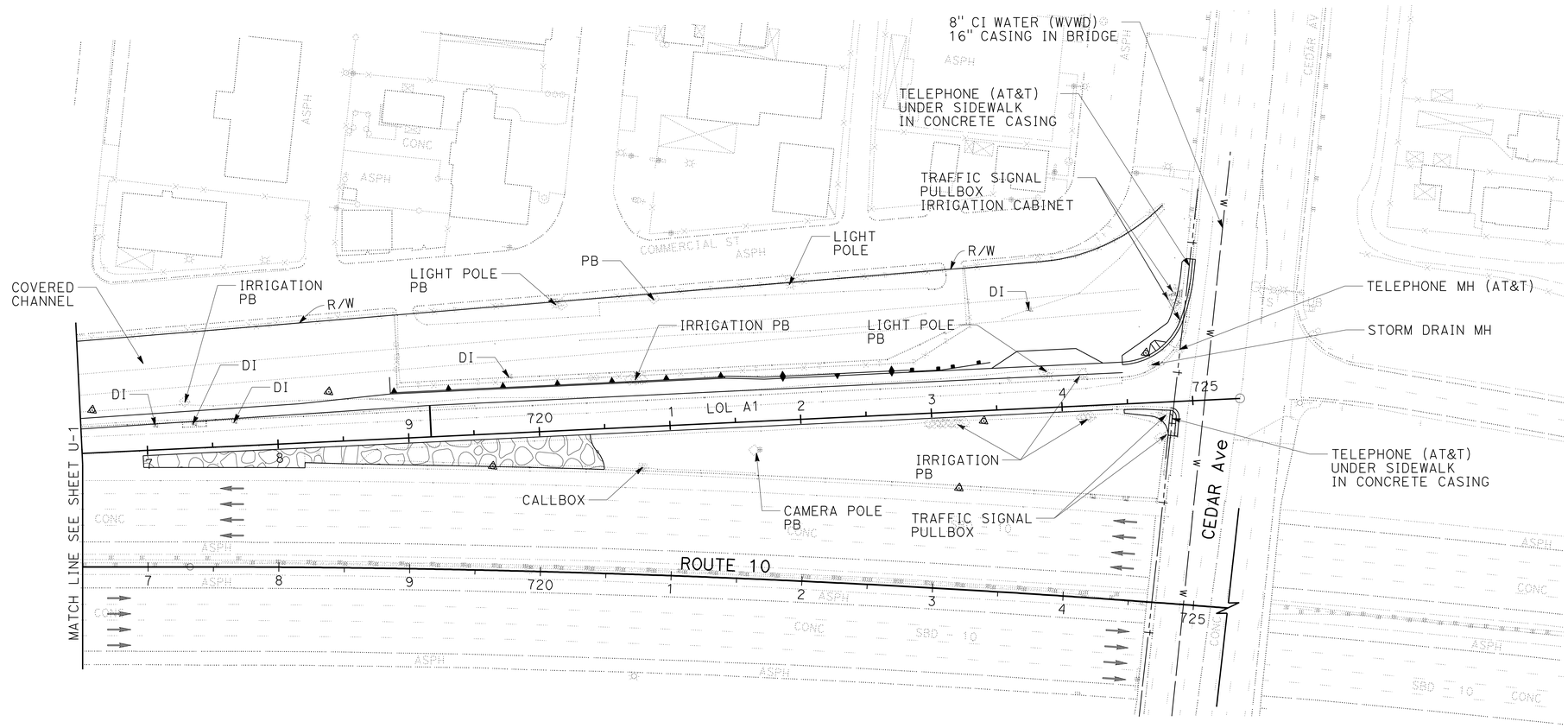

CEDAR Ave WB ENTRANCE RAMP

THIS PLAN FOR UTILITY INFORMATION ONLY.

UTILITY PLAN

SCALE: 1" = 50'

U-2

STATE OF CALIFORNIA - DEPARTMENT OF TRANSPORTATION
Caltrans
DESIGN

FUNCTIONAL SUPERVISOR: DU LU
CALCULATED-DESIGNED BY: RICK LAM
CHECKED BY: ROBERT S. LYLES Jr.
REVISED BY
DATE REVISED

LAST REVISION 01-13-11
DATE PLOTTED => 15-APR-2011
TIME PLOTTED => 10:37

Dist	COUNTY	ROUTE	POST MILES TOTAL PROJECT	SHEET No.	TOTAL SHEETS
08	SBd	10	9.9/R24.5	89	260

Robert S Lyles Jr. 3-28-11
REGISTERED CIVIL ENGINEER DATE

4-11-11
PLANS APPROVAL DATE

REGISTERED PROFESSIONAL ENGINEER ROBERT S. LYLES Jr. No. 67873 Exp. 6-30-11 CIVIL STATE OF CALIFORNIA

THE STATE OF CALIFORNIA OR ITS OFFICERS OR AGENTS SHALL NOT BE RESPONSIBLE FOR THE ACCURACY OR COMPLETENESS OF SCANNED COPIES OF THIS PLAN SHEET.

NOTE:

FOR ACCURATE RIGHT OF WAY DATA, CONTACT
RIGHT OF WAY ENGINEERING AT THE DISTRICT OFFICE.

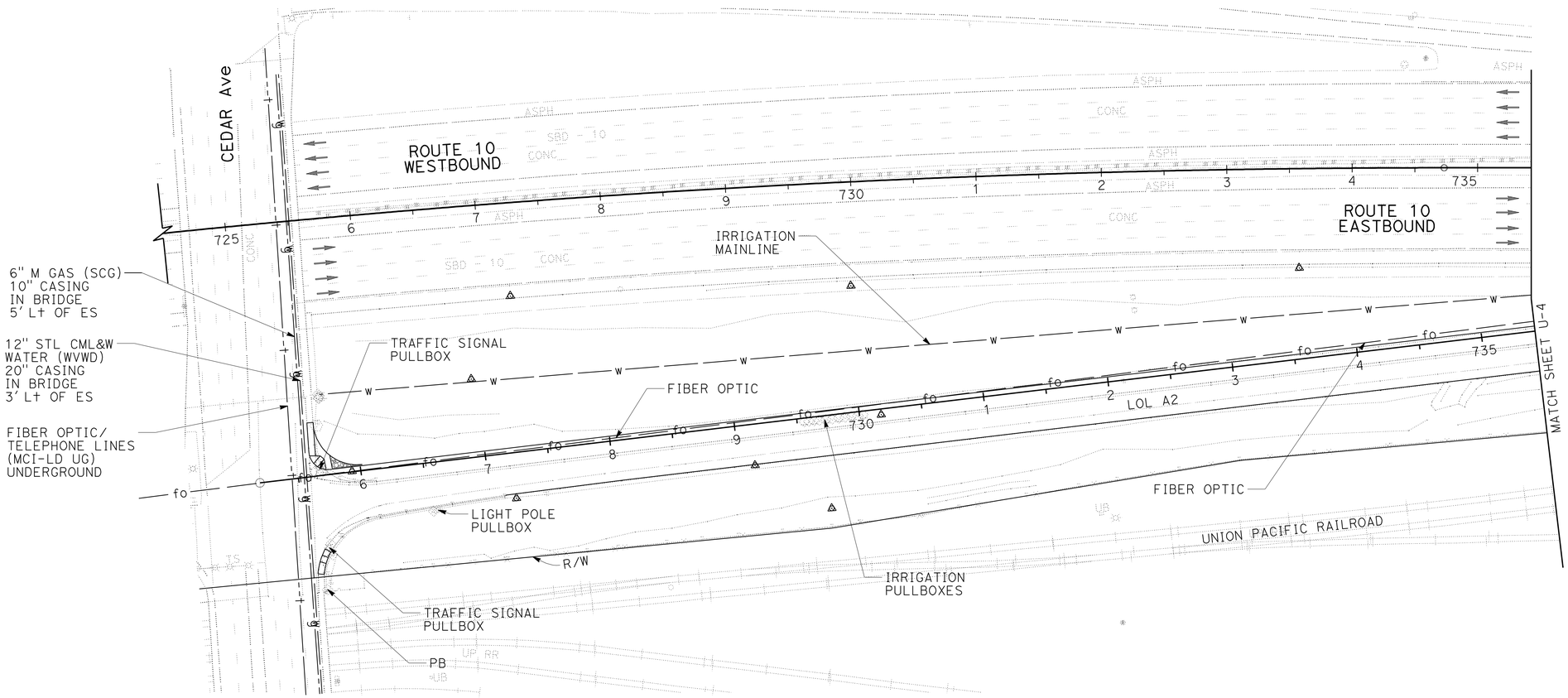

CEDAR Ave EB ENTRANCE RAMP

UTILITY PLAN

SCALE: 1" = 50'

U-3

THIS PLAN FOR UTILITY INFORMATION ONLY.

STATE OF CALIFORNIA - DEPARTMENT OF TRANSPORTATION
Caltrans DESIGN

FUNCTIONAL SUPERVISOR: DU LU

CALCULATED-DESIGNED BY: RICK LAM
CHECKED BY: ROBERT S. LYLES Jr.
REVISED BY
DATE REVISED

LAST REVISION 03-28-11 | DATE PLOTTED => 15-APR-2011 | TIME PLOTTED => 10:37

Dist	COUNTY	ROUTE	POST MILES TOTAL PROJECT	SHEET No.	TOTAL SHEETS
08	SBd	10	9.9/R24.5	90	260

Robert S Lyles Jr. 1-13-11
REGISTERED CIVIL ENGINEER DATE

4-11-11
PLANS APPROVAL DATE

REGISTERED PROFESSIONAL ENGINEER ROBERT S. LYLES Jr. No. 67873 Exp. 6-30-11 CIVIL STATE OF CALIFORNIA

THE STATE OF CALIFORNIA OR ITS OFFICERS OR AGENTS SHALL NOT BE RESPONSIBLE FOR THE ACCURACY OR COMPLETENESS OF SCANNED COPIES OF THIS PLAN SHEET.

NOTE:

FOR ACCURATE RIGHT OF WAY AND ACCESS DATA,
CONTACT RIGHT OF WAY ENGINEERING AT THE DISTRICT OFFICE.

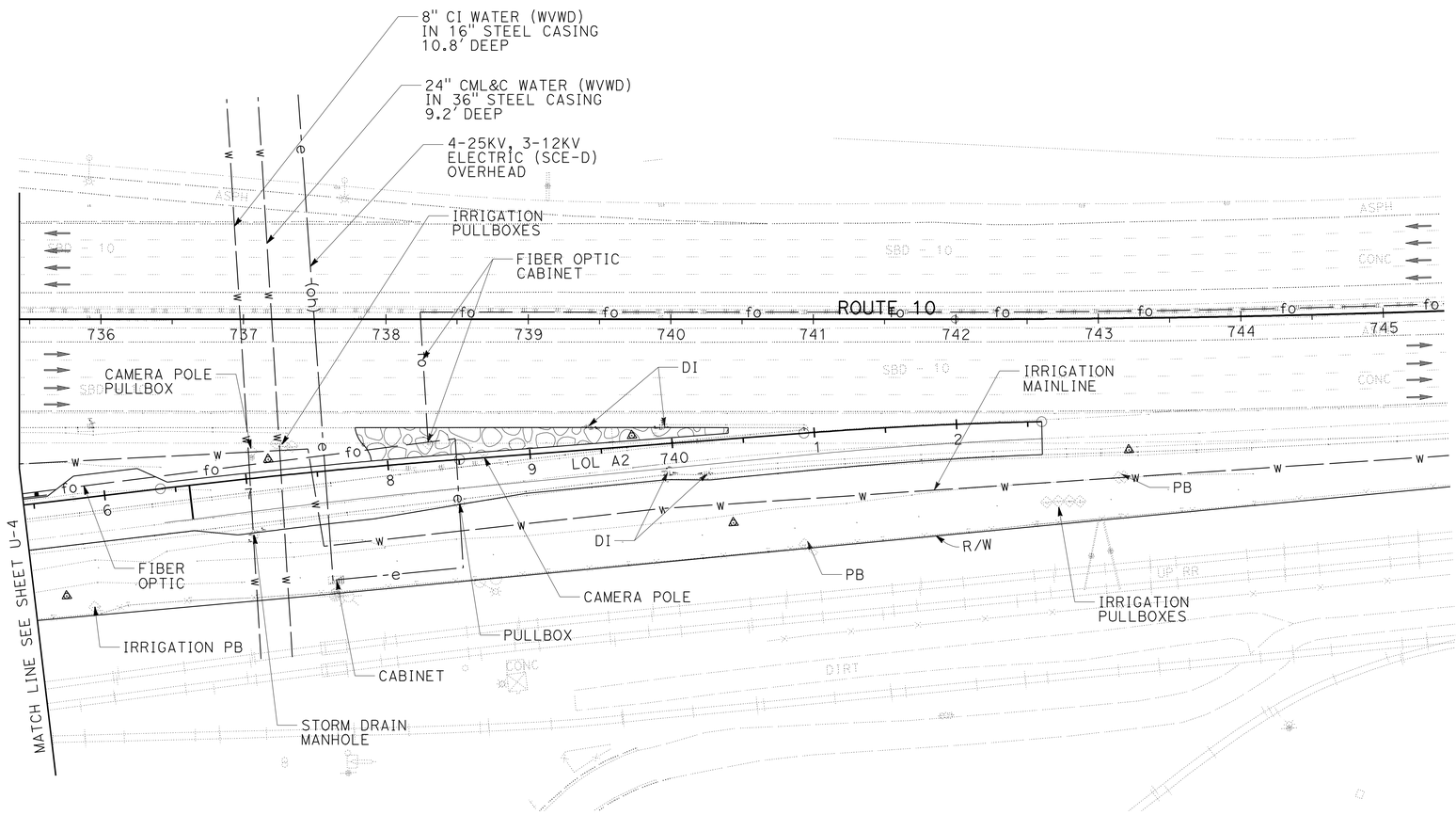

CEDAR Ave EB ENTRANCE RAMP

THIS PLAN FOR UTILITY INFORMATION ONLY.

UTILITY PLAN

SCALE: 1" = 50'

U-4

STATE OF CALIFORNIA - DEPARTMENT OF TRANSPORTATION
Caltrans
DESIGN

FUNCTIONAL SUPERVISOR: DU LU

CALCULATED-DESIGNED BY: RICK LAM
CHECKED BY: ROBERT S. LYLES Jr.

REVISED BY
DATE REVISED

LAST REVISION
DATE PLOTTED => 15-APR-2011
TIME PLOTTED => 10:37
01-13-11

Dist	COUNTY	ROUTE	POST MILES TOTAL PROJECT	SHEET No.	TOTAL SHEETS
08	SBd	10	9.9/R24.5	91	260

Robert S Lyles Jr. 1-13-11
REGISTERED CIVIL ENGINEER DATE

4-11-11
PLANS APPROVAL DATE

REGISTERED PROFESSIONAL ENGINEER ROBERT S. LYLES Jr. No. 67873 Exp. 6-30-11 CIVIL STATE OF CALIFORNIA

THE STATE OF CALIFORNIA OR ITS OFFICERS OR AGENTS SHALL NOT BE RESPONSIBLE FOR THE ACCURACY OR COMPLETENESS OF SCANNED COPIES OF THIS PLAN SHEET.

NOTE:

FOR ACCURATE RIGHT OF WAY AND ACCESS DATA,
CONTACT RIGHT OF WAY ENGINEERING AT THE DISTRICT OFFICE.

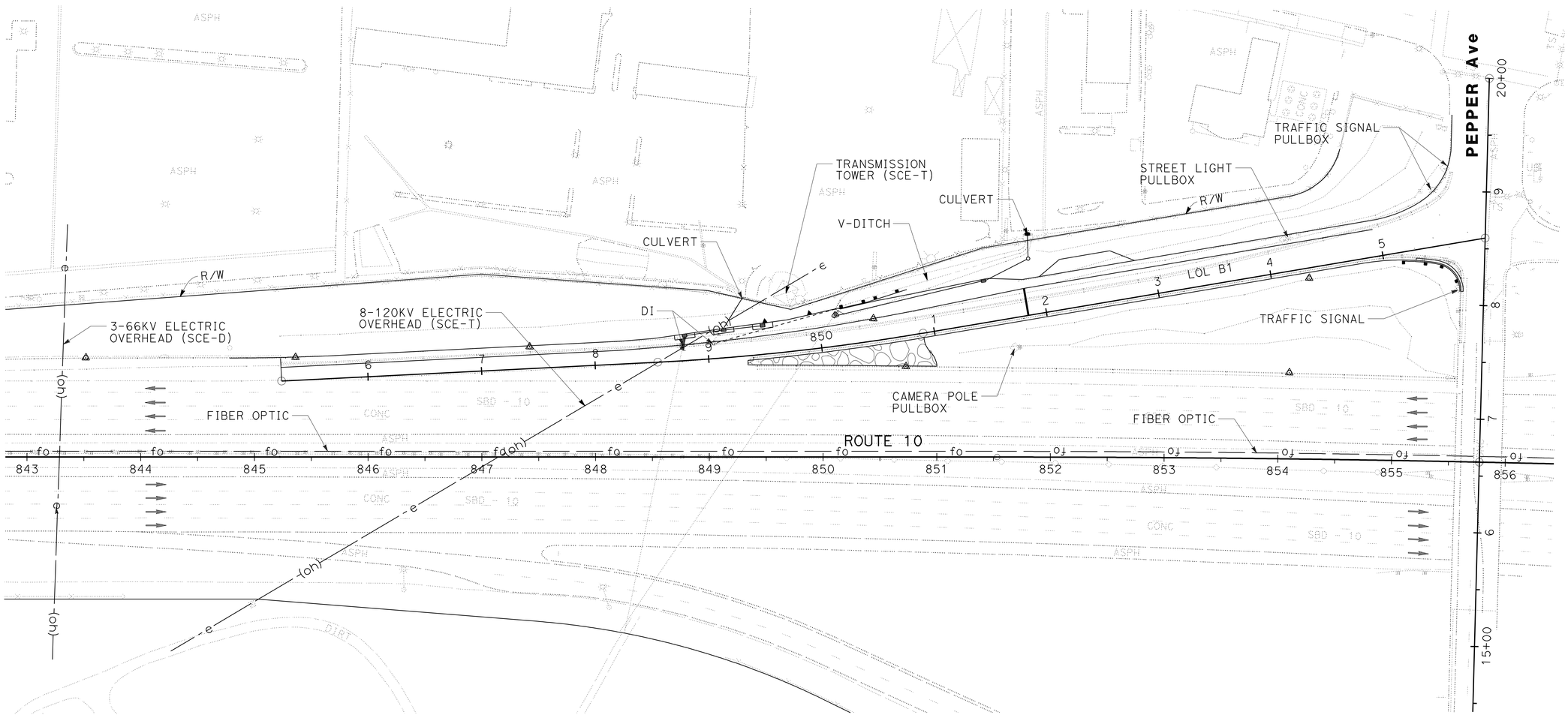

PEPPER Ave WB ENTRANCE RAMP

THIS PLAN FOR UTILITY INFORMATION ONLY.

UTILITY PLAN

SCALE: 1" = 50'

U-5

STATE OF CALIFORNIA - DEPARTMENT OF TRANSPORTATION
Caltrans
DESIGN

FUNCTIONAL SUPERVISOR: DU LU

CALCULATED-DESIGNED BY: RICK LAM
CHECKED BY: ROBERT S. LYLES Jr.
REVISED BY
DATE REVISED

LAST REVISION 01-13-11
DATE PLOTTED => 15-APR-2011
TIME PLOTTED => 10:37

BORDER LAST REVISED 7/2/2010
USERNAME => trlenard
DGN FILE => 838434ka005.dgn
RELATIVE BORDER SCALE IS IN INCHES 0 1 2 3
UNIT 2245
PROJECT NUMBER & PHASE 08000006401

Dist	COUNTY	ROUTE	POST MILES TOTAL PROJECT	SHEET No.	TOTAL SHEETS
08	SBd	10	9.9/R24.5	92	260

Robert S Lyles Jr. 1-13-11
REGISTERED CIVIL ENGINEER DATE

4-11-11
PLANS APPROVAL DATE

REGISTERED PROFESSIONAL ENGINEER ROBERT S. LYLES Jr. No. 67873 Exp. 6-30-11 CIVIL STATE OF CALIFORNIA

THE STATE OF CALIFORNIA OR ITS OFFICERS OR AGENTS SHALL NOT BE RESPONSIBLE FOR THE ACCURACY OR COMPLETENESS OF SCANNED COPIES OF THIS PLAN SHEET.

NOTE:

FOR ACCURATE RIGHT OF WAY AND ACCESS DATA,
CONTACT RIGHT OF WAY ENGINEERING AT THE DISTRICT OFFICE.

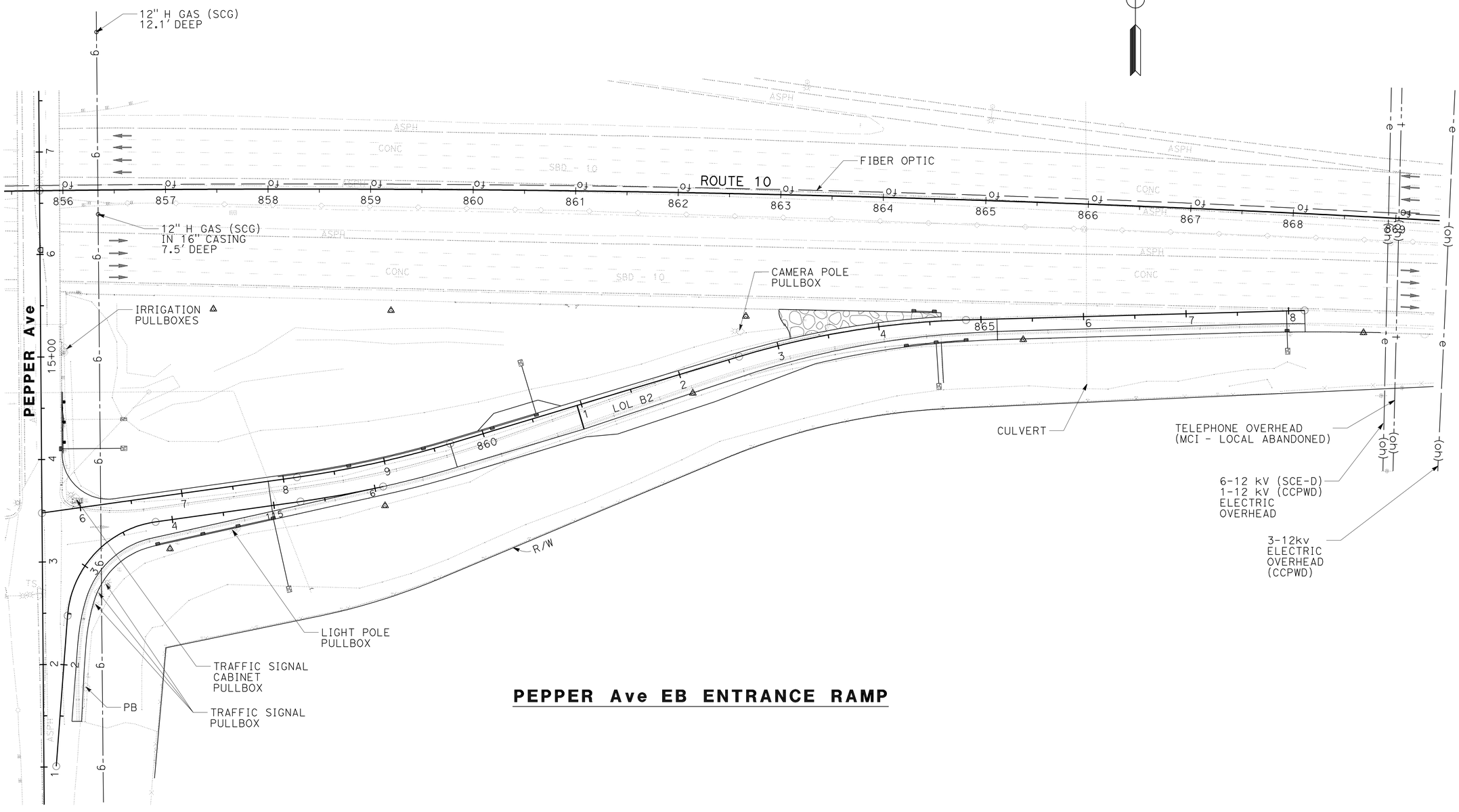

PEPPER Ave EB ENTRANCE RAMP

UTILITY PLAN

SCALE: 1" = 50'

U-6

THIS PLAN FOR UTILITY INFORMATION ONLY.

STATE OF CALIFORNIA - DEPARTMENT OF TRANSPORTATION
Caltrans
DESIGN

FUNCTIONAL SUPERVISOR: DU LU
CALCULATED-DESIGNED BY: RICK LAM
CHECKED BY: ROBERT S. LYLES Jr.
REVISED BY
DATE REVISED

LAST REVISION 01-13-11
DATE PLOTTED => 15-APR-2011
TIME PLOTTED => 10:38

Dist	COUNTY	ROUTE	POST MILES TOTAL PROJECT	SHEET No.	TOTAL SHEETS
08	SBd	10	9.9/R24.5	93	260

Robert S Lyles Jr. 1-13-11
REGISTERED CIVIL ENGINEER DATE

4-11-11
PLANS APPROVAL DATE

REGISTERED PROFESSIONAL ENGINEER ROBERT S. LYLES Jr. No. 67873 Exp. 6-30-11 CIVIL STATE OF CALIFORNIA

THE STATE OF CALIFORNIA OR ITS OFFICERS OR AGENTS SHALL NOT BE RESPONSIBLE FOR THE ACCURACY OR COMPLETENESS OF SCANNED COPIES OF THIS PLAN SHEET.

NOTE:

FOR ACCURATE RIGHT OF WAY AND ACCESS DATA,
CONTACT RIGHT OF WAY ENGINEERING AT THE DISTRICT OFFICE.

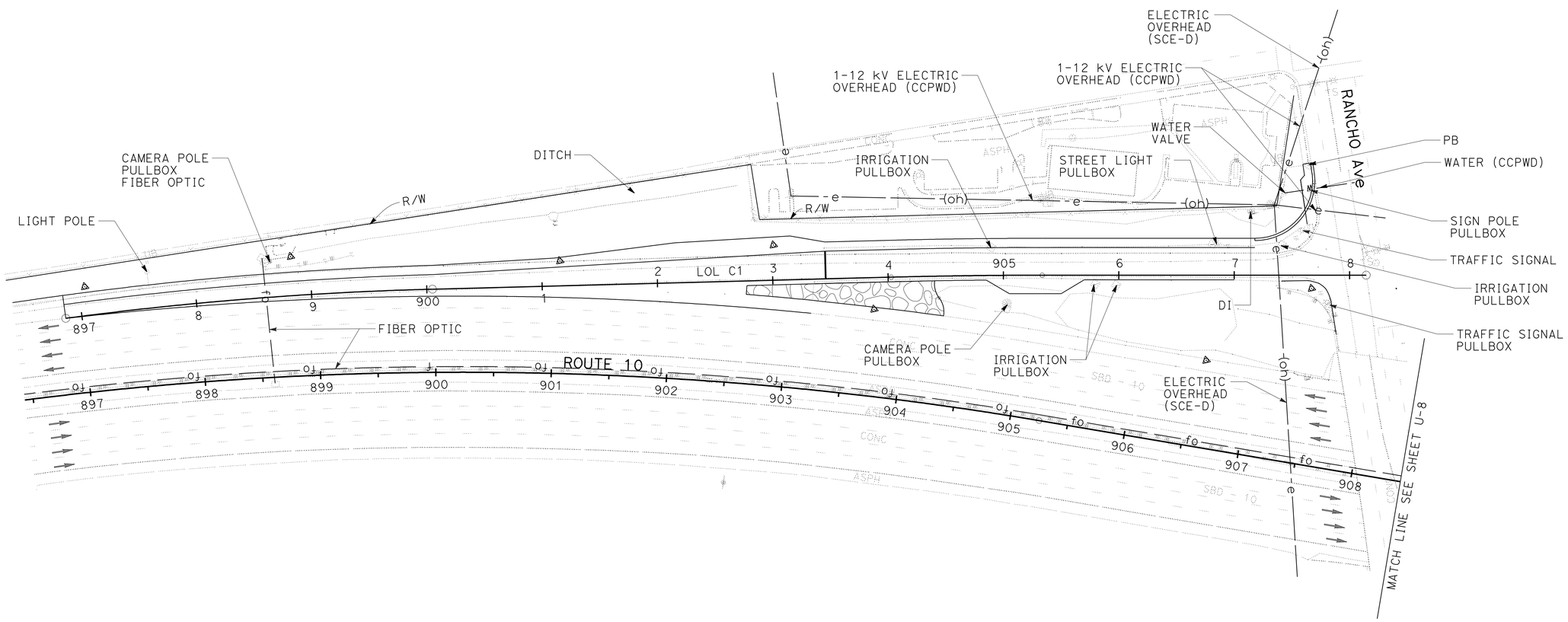

RANCHO Ave WB ENTRANCE RAMP

UTILITY PLAN

SCALE: 1" = 50'

U-7

THIS PLAN FOR UTILITY INFORMATION ONLY.

STATE OF CALIFORNIA - DEPARTMENT OF TRANSPORTATION
Caltrans DESIGN

FUNCTIONAL SUPERVISOR: DU LU
CALCULATED-DESIGNED BY: RICK LAM
CHECKED BY: ROBERT S. LYLES Jr.
REVISED BY
DATE REVISED

LAST REVISION DATE PLOTTED => 15-APR-2011
01-13-11 TIME PLOTTED => 10:38

Dist	COUNTY	ROUTE	POST MILES TOTAL PROJECT	SHEET No.	TOTAL SHEETS
08	SBd	10	9.9/R24.5	94	260

Robert S Lyles Jr. 1-13-11
REGISTERED CIVIL ENGINEER DATE

4-11-11
PLANS APPROVAL DATE

REGISTERED PROFESSIONAL ENGINEER ROBERT S. LYLES Jr. No. 67873 Exp. 6-30-11 CIVIL STATE OF CALIFORNIA

THE STATE OF CALIFORNIA OR ITS OFFICERS OR AGENTS SHALL NOT BE RESPONSIBLE FOR THE ACCURACY OR COMPLETENESS OF SCANNED COPIES OF THIS PLAN SHEET.

NOTE:

FOR ACCURATE RIGHT OF WAY AND ACCESS DATA,
CONTACT RIGHT OF WAY ENGINEERING AT THE DISTRICT OFFICE.

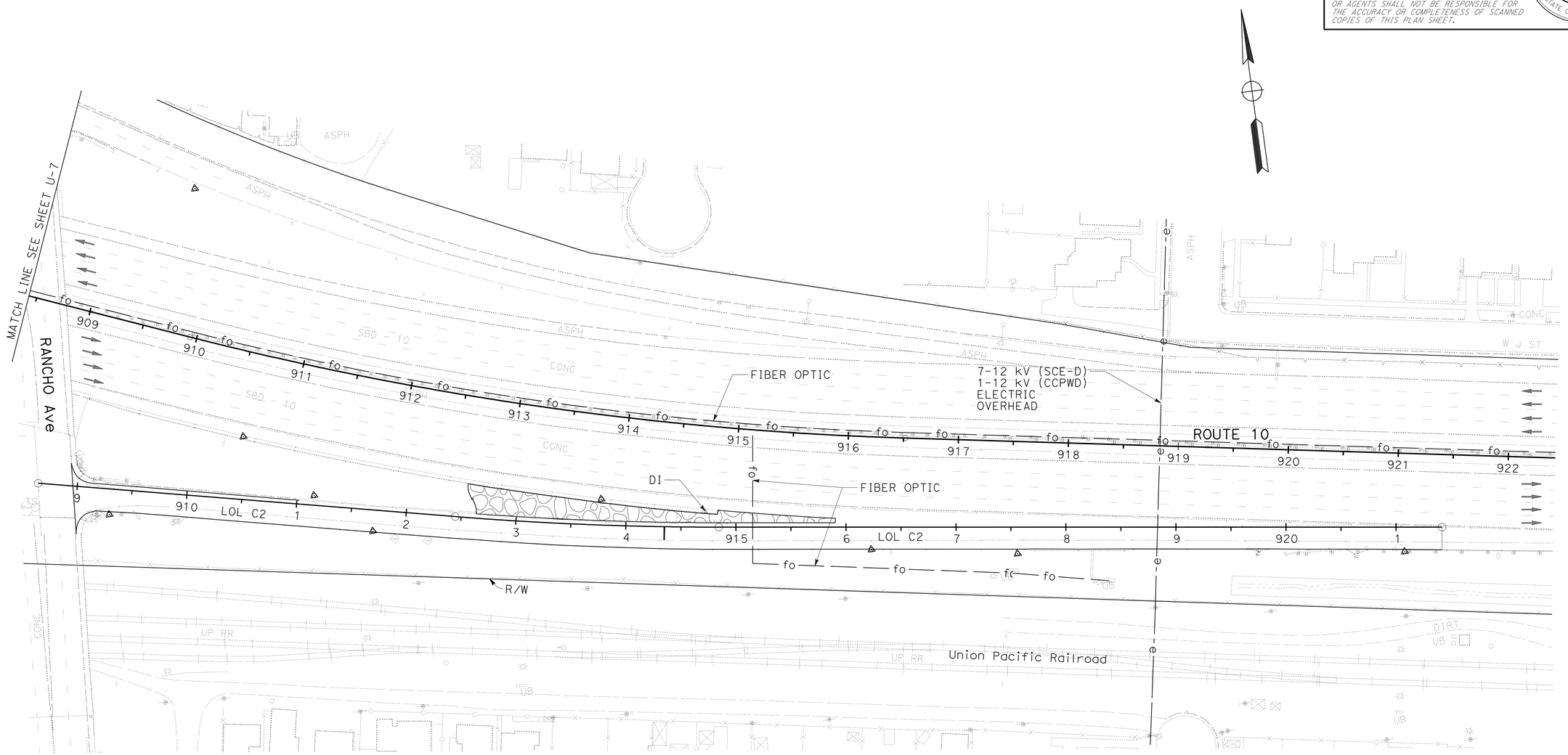

RANCHO Ave EB ENTRANCE RAMP

THIS PLAN FOR UTILITY INFORMATION ONLY.

UTILITY PLAN

SCALE: 1" = 50'

U-8

STATE OF CALIFORNIA - DEPARTMENT OF TRANSPORTATION
Caltrans® DESIGN

FUNCTIONAL SUPERVISOR: DU LU
CALCULATED-DESIGNED BY: RICK LAM
CHECKED BY: ROBERT S. LYLES Jr.
REVISED BY
DATE REVISED

LAST REVISION 01-13-11
DATE PLOTTED => 15-APR-2011
TIME PLOTTED => 10:38

Dist	COUNTY	ROUTE	POST MILES TOTAL PROJECT	SHEET No.	TOTAL SHEETS
08	SBd	10	9.9/R24.5	95	260

Robert S Lyles Jr. 1-13-11
REGISTERED CIVIL ENGINEER DATE

4-11-11
PLANS APPROVAL DATE

REGISTERED PROFESSIONAL ENGINEER
ROBERT S. LYLES Jr.
No. 67873
Exp. 6-30-11
CIVIL
STATE OF CALIFORNIA

THE STATE OF CALIFORNIA OR ITS OFFICERS OR AGENTS SHALL NOT BE RESPONSIBLE FOR THE ACCURACY OR COMPLETENESS OF SCANNED COPIES OF THIS PLAN SHEET.

NOTE:

FOR ACCURATE RIGHT OF WAY AND ACCESS DATA,
CONTACT RIGHT OF WAY ENGINEERING AT THE DISTRICT OFFICE.

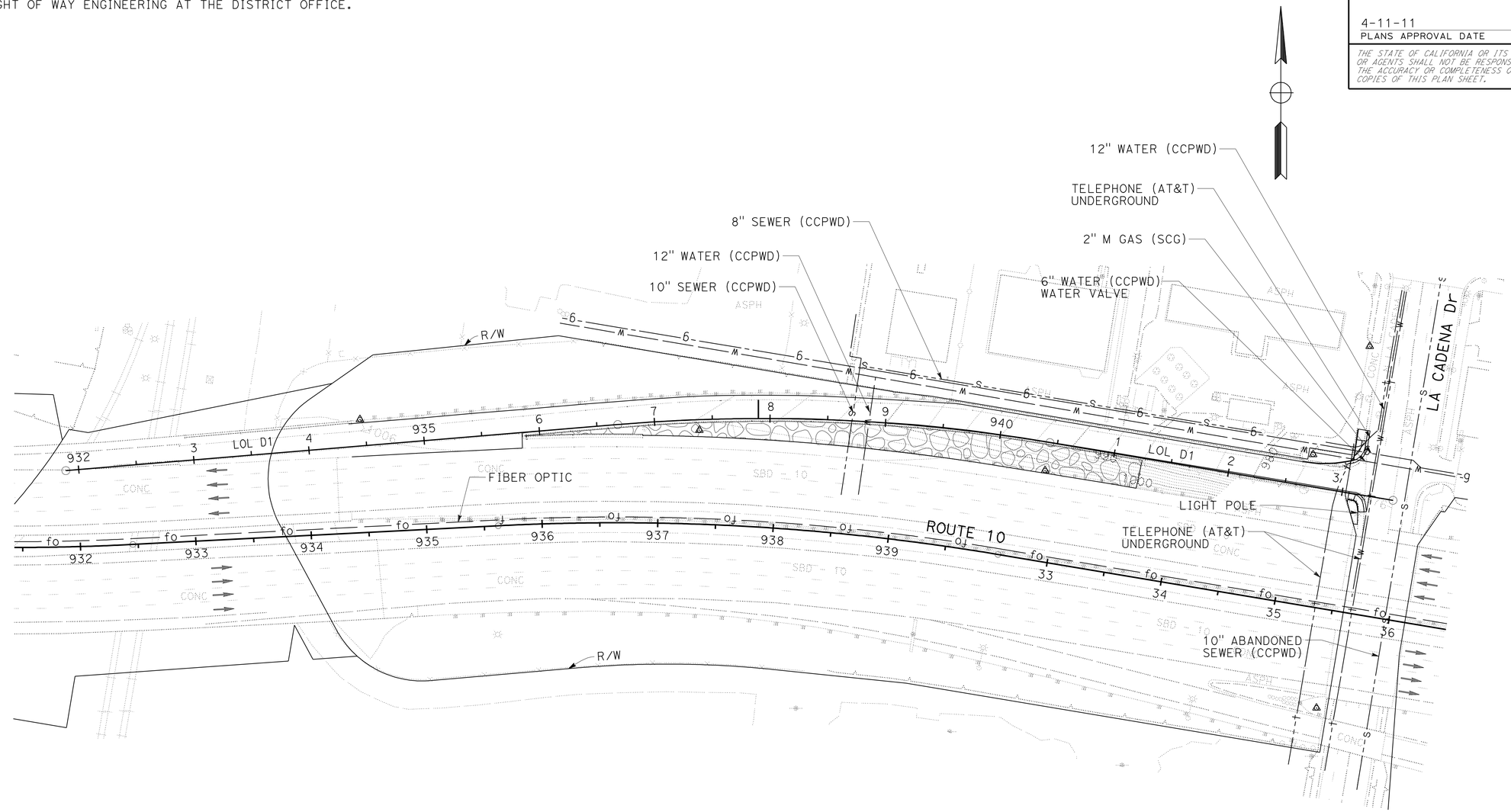

9th St WB ENTRANCE RAMP

THIS PLAN FOR UTILITY INFORMATION ONLY.

UTILITY PLAN

SCALE: 1" = 50'

U-9

STATE OF CALIFORNIA - DEPARTMENT OF TRANSPORTATION
Caltrans
DESIGN

FUNCTIONAL SUPERVISOR: DU LU
CALCULATED-DESIGNED BY: RICK LAM
CHECKED BY: ROBERT S. LYLES Jr.
REVISED BY
DATE REVISED

LAST REVISION 01-13-11
DATE PLOTTED => 15-APR-2011
TIME PLOTTED => 10:38

Dist	COUNTY	ROUTE	POST MILES TOTAL PROJECT	SHEET No.	TOTAL SHEETS
08	SBd	10	9.9/R24.5	96	260

Robert S Lyles Jr. 3-28-11
REGISTERED CIVIL ENGINEER DATE

4-11-11
PLANS APPROVAL DATE

REGISTERED PROFESSIONAL ENGINEER ROBERT S. LYLES Jr. No. 67873 Exp. 6-30-11 CIVIL STATE OF CALIFORNIA

THE STATE OF CALIFORNIA OR ITS OFFICERS OR AGENTS SHALL NOT BE RESPONSIBLE FOR THE ACCURACY OR COMPLETENESS OF SCANNED COPIES OF THIS PLAN SHEET.

NOTE:

FOR ACCURATE RIGHT OF WAY DATA, CONTACT RIGHT OF WAY ENGINEERING AT THE DISTRICT OFFICE.

POTHOLE DATA

No.	STATION	OFFSET	NORTHING	EASTING	ELEV	DEPTH	DESCRIPTION
1	40+80.09 D2	10.56 Lt	1846881.84	6766725.65	970.88	3.15′	SCG-D - 12" HP GAS LINE
2	40+85.18 D2	1.32 Lt	1846871.88	6766729.13	971.72	2.15′	CALTRANS - 1½" ELECTRIC CONDUIT TO LIGHTPOLE
3	40+75.36 D2	5.69 Lt	1846877.82	6766720.17	970.04	4.05′	AT&T - FIBEROPTIC/TELEPHONE LINES IN Conc ENCASEMENT
4	40+79.27 D2	33.19 Lt	1846904.29	6766728.59	971.20	3.02′	AT&T - FIBEROPTIC/TELEPHONE LINES IN Conc ENCASEMENT CROSSES NEAR SCG-D - 12" HP GAS LINE

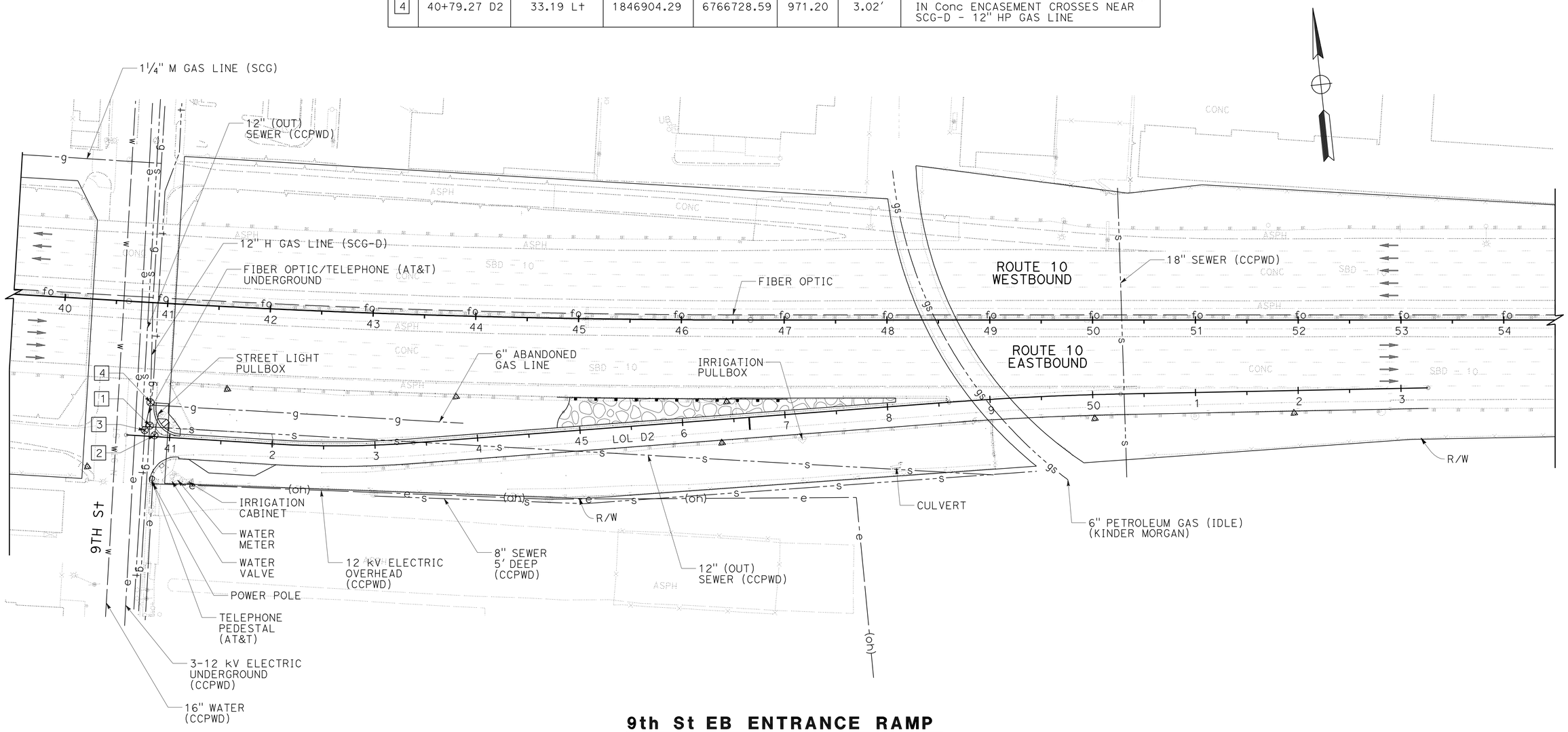

9th St EB ENTRANCE RAMP

UTILITY PLAN

SCALE: 1" = 50′ **U-10**

THIS PLAN FOR UTILITY INFORMATION ONLY.

STATE OF CALIFORNIA - DEPARTMENT OF TRANSPORTATION
Caltrans DESIGN

FUNCTIONAL SUPERVISOR: DU LU
CALCULATED-DESIGNED BY: RICK LAM
CHECKED BY: ROBERT S. LYLES Jr.
REVISED BY
DATE REVISED

LAST REVISION 03-28-11 | DATE PLOTTED => 15-APR-2011 | TIME PLOTTED => 10:38

Dist	COUNTY	ROUTE	POST MILES TOTAL PROJECT	SHEET No.	TOTAL SHEETS
08	SBd	10	9.9/R24.5	97	260

Robert S Lyles Jr. 1-13-11
REGISTERED CIVIL ENGINEER DATE

4-11-11
PLANS APPROVAL DATE

REGISTERED PROFESSIONAL ENGINEER ROBERT S. LYLES Jr. No. 67873 Exp. 6-30-11 CIVIL STATE OF CALIFORNIA

THE STATE OF CALIFORNIA OR ITS OFFICERS OR AGENTS SHALL NOT BE RESPONSIBLE FOR THE ACCURACY OR COMPLETENESS OF SCANNED COPIES OF THIS PLAN SHEET.

NOTE:

FOR ACCURATE RIGHT OF WAY AND ACCESS DATA,
CONTACT RIGHT OF WAY ENGINEERING AT THE DISTRICT OFFICE.

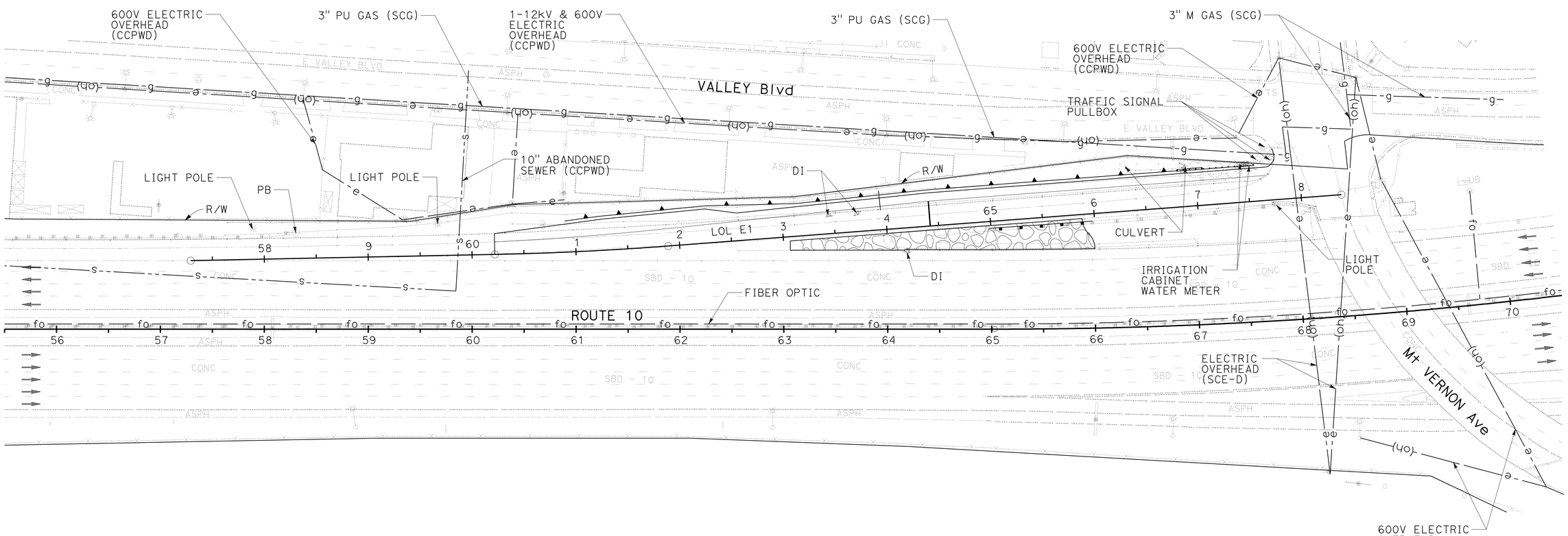

Mt VERNON Ave WB ENTRANCE RAMP

THIS PLAN FOR UTILITY INFORMATION ONLY.

UTILITY PLAN

SCALE: 1" = 50'

U-11

STATE OF CALIFORNIA - DEPARTMENT OF TRANSPORTATION
Caltrans
DESIGN

FUNCTIONAL SUPERVISOR: DU LU

CALCULATED-DESIGNED BY: RICK LAM
CHECKED BY: ROBERT S. LYLES Jr.
REVISED BY
DATE REVISED

LAST REVISION 01-13-11
DATE PLOTTED => 15-APR-2011
TIME PLOTTED => 10:38

Dist	COUNTY	ROUTE	POST MILES TOTAL PROJECT	SHEET No.	TOTAL SHEETS
08	SBd	10	9.9/R24.5	98	260

Robert S Lyles Jr. 1-13-11
REGISTERED CIVIL ENGINEER DATE

4-11-11
PLANS APPROVAL DATE

REGISTERED PROFESSIONAL ENGINEER ROBERT S. LYLES Jr. No. 67873 Exp. 6-30-11 CIVIL STATE OF CALIFORNIA

THE STATE OF CALIFORNIA OR ITS OFFICERS OR AGENTS SHALL NOT BE RESPONSIBLE FOR THE ACCURACY OR COMPLETENESS OF SCANNED COPIES OF THIS PLAN SHEET.

NOTE:

FOR ACCURATE RIGHT OF WAY AND ACCESS DATA,
CONTACT RIGHT OF WAY ENGINEERING AT THE DISTRICT OFFICE.

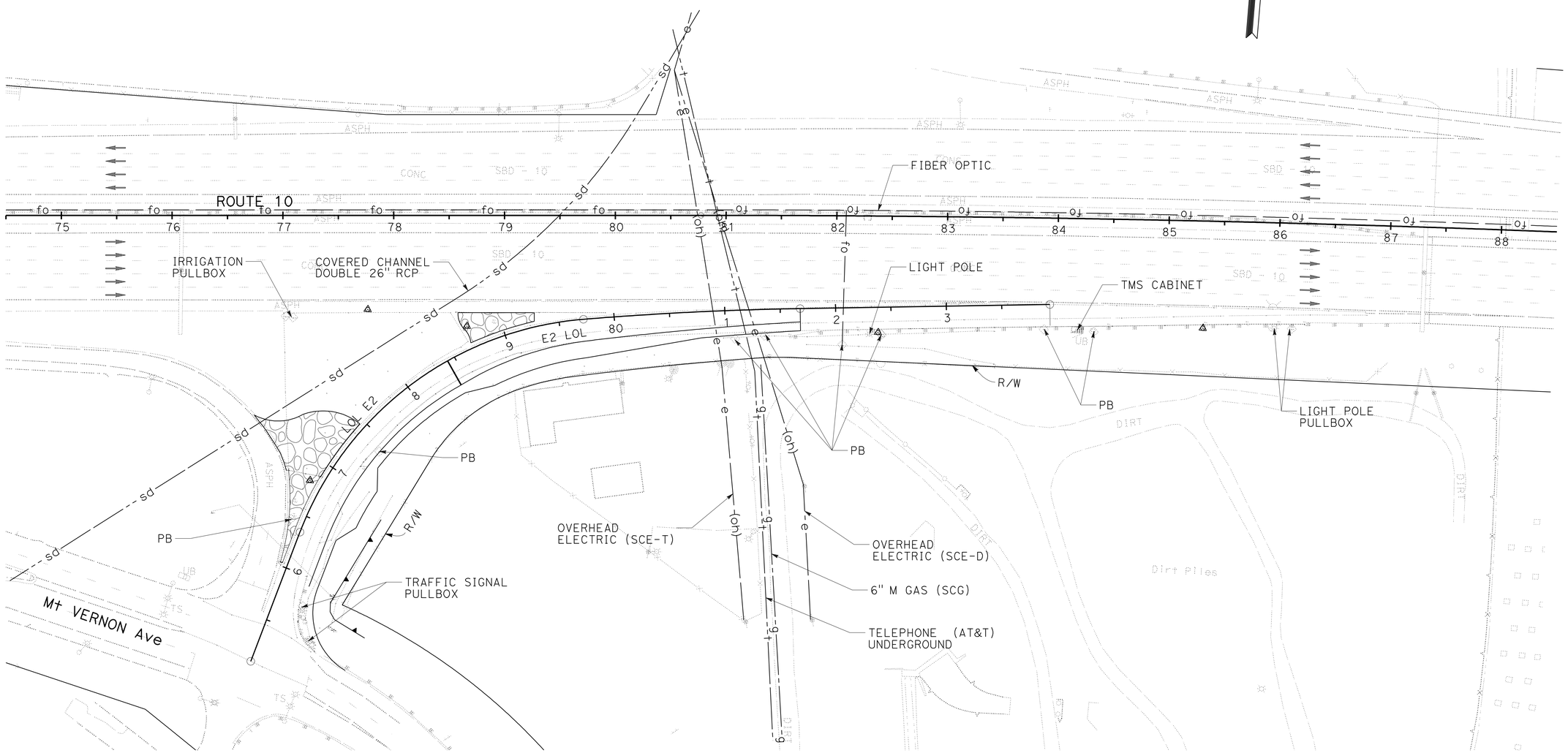

Mt VERNON Ave EB ENTRANCE RAMP

THIS PLAN FOR UTILITY INFORMATION ONLY.

UTILITY PLAN

SCALE: 1" = 50'

U-12

STATE OF CALIFORNIA - DEPARTMENT OF TRANSPORTATION
Caltrans
DESIGN

FUNCTIONAL SUPERVISOR: DU LU
CALCULATED-DESIGNED BY: RICK LAM
CHECKED BY: ROBERT S. LYLES Jr.
REVISED BY
DATE REVISED

LAST REVISION 01-13-11
DATE PLOTTED => 15-APR-2011
TIME PLOTTED => 10:38

Dist	COUNTY	ROUTE	POST MILES TOTAL PROJECT	SHEET No.	TOTAL SHEETS
08	SBd	10	9.9/R24.5	99	260

REGISTERED CIVIL ENGINEER 1-13-11 DATE

4-11-11
PLANS APPROVAL DATE

REGISTERED PROFESSIONAL ENGINEER TRAN HOANG No. 54996 Exp. 6-30-12 CIVIL STATE OF CALIFORNIA

THE STATE OF CALIFORNIA OR ITS OFFICERS OR AGENTS SHALL NOT BE RESPONSIBLE FOR THE ACCURACY OR COMPLETENESS OF SCANNED COPIES OF THIS PLAN SHEET.

NOTES:

1. LOCATIONS OF TEMPORARY RAILING ARE APPROXIMATE AND WILL BE DETERMINED BY THE ENGINEER IN THE FIELD. THE FIX END OF THE K-RAIL SHALL BE HIDE BEHIND CURB OR FLARE 15′ AWAY FROM TRAFFIC.
2. SIMILAR TRAFFIC HANDLING AND STAGE CONCEPT SHOWN ABOVE WILL BE APPLIED TO PEPPER WB ENTRANCE RAMP, MT. VERNON WB/EB AND RANCHO WB ENTRANCE RAMPS CONSTRUCTION. REFER TO STAGING CROSS-SECTION FOR ABOVE RAMPS ON TH-2 FOR DETAILS.
3. REFER TO STANDARD PLANS T14 AND CLOSURE CHARTS FOR RANCHO EB RAMPS RECONSTRUCTION.
4. REFER TO STANDARD PLANS T14 AND CLOSURE CHART FOR TRAFFIC CONTROL REQUIREMENT DURING RAMPS RECONSTRUCTION.

LEGEND:

- (X) TEMPORARY STRIPING DETAIL
- TEMPORARY RAILING (TYPE K)
- CHANNELIZERS
- (X) PERMANENT STRIPING DETAIL
- WORK AREA (STAGE 1)
- WORK AREA (STAGE 2)

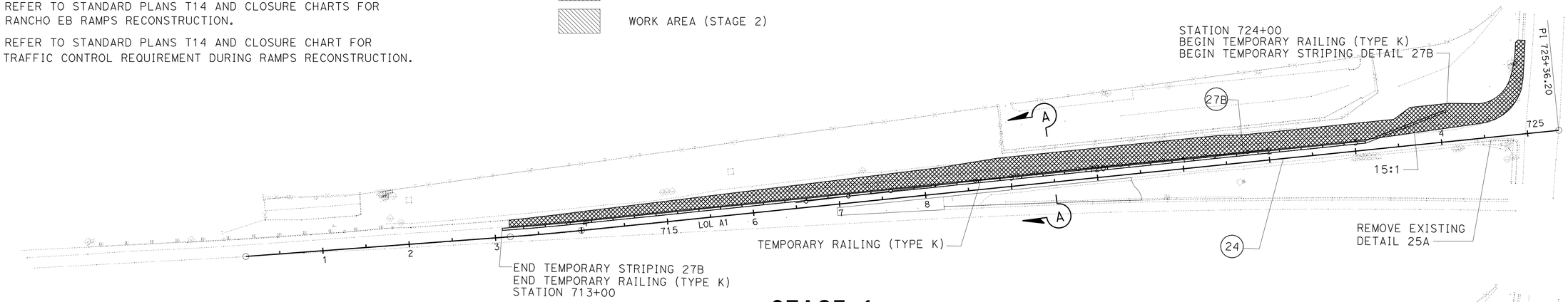

STAGE 1

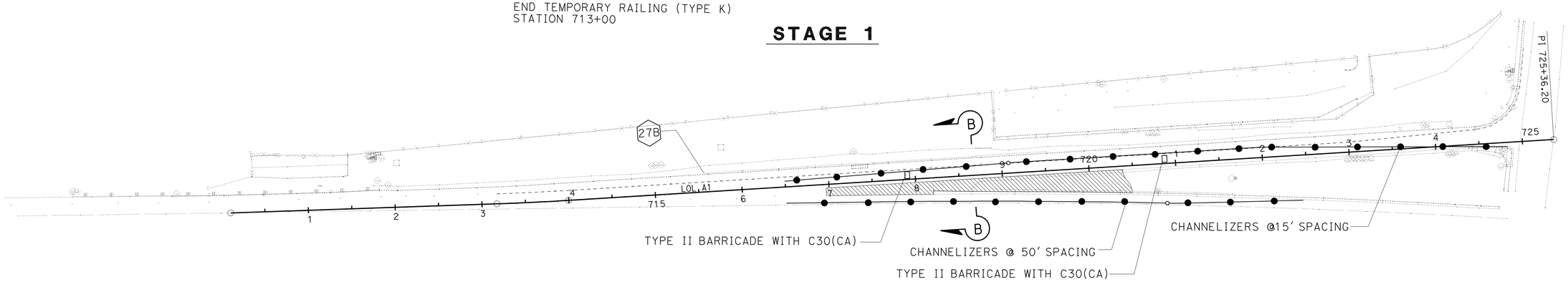

STAGE 2

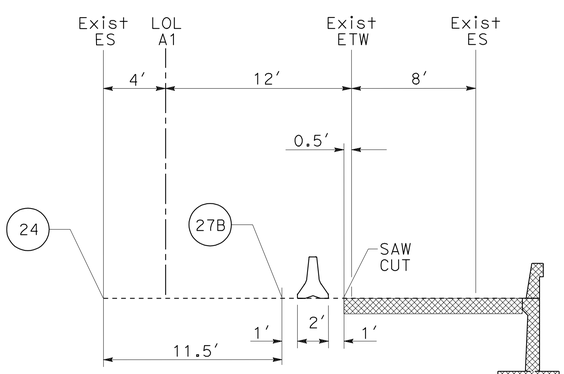

SECTION A-A

STAGE 1

CEDAR Ave WB ENTRANCE RAMP

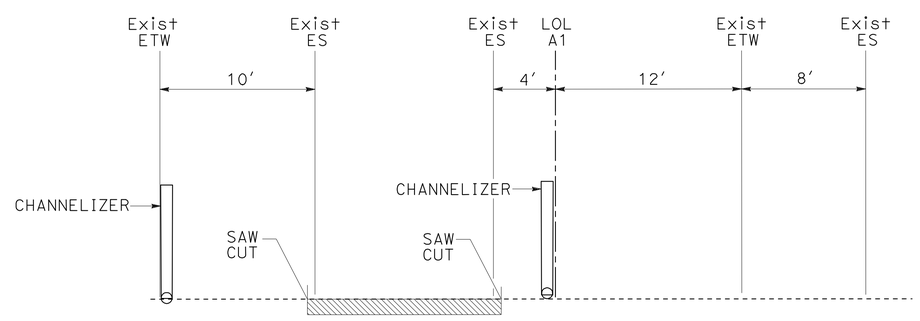

SECTION B-B

STAGE 2

CEDAR Ave WB ENTRANCE RAMP

STAGE CONSTRUCTION TRAFFIC HANDLING PLAN

NO SCALE

TH-1

THIS PLAN ACCURATE FOR STAGE CONSTRUCTION AND TRAFFIC HANDLING WORK ONLY

STATE OF CALIFORNIA - DEPARTMENT OF TRANSPORTATION
Caltrans TRAFFIC DESIGN B

FUNCTIONAL SUPERVISOR: LARRY SARTORI
CALCULATED-DESIGNED BY: TRAN HOANG
CHECKED BY: VU TRAN
REVISED BY / DATE REVISED

LAST REVISION 01-13-11
DATE PLOTTED => 15-JUN-2011
TIME PLOTTED => 06:46

Dist	COUNTY	ROUTE	POST MILES TOTAL PROJECT	SHEET No.	TOTAL SHEETS
08	SBd	10	9.9/R24.5	100	260

REGISTERED CIVIL ENGINEER 1-13-11 DATE

4-11-11
PLANS APPROVAL DATE

REGISTERED PROFESSIONAL ENGINEER TRAN HOANG No. 54996 Exp. 6-30-12 CIVIL STATE OF CALIFORNIA

THE STATE OF CALIFORNIA OR ITS OFFICERS OR AGENTS SHALL NOT BE RESPONSIBLE FOR THE ACCURACY OR COMPLETENESS OF SCANNED COPIES OF THIS PLAN SHEET.

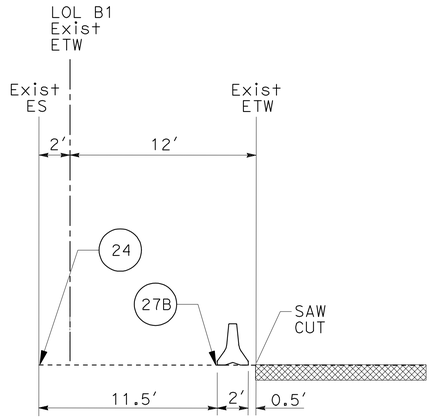

STAGE 1
PEPPER Ave WB ENTRANCE RAMP

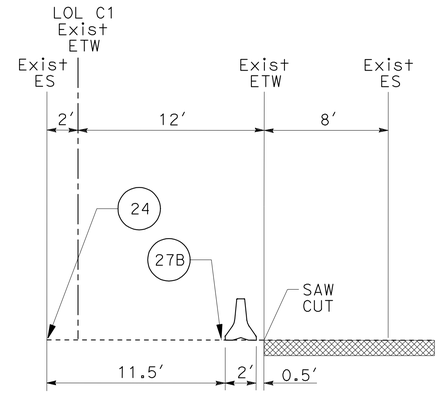

STAGE 1
RANCHO Ave WB ENTRANCE RAMP

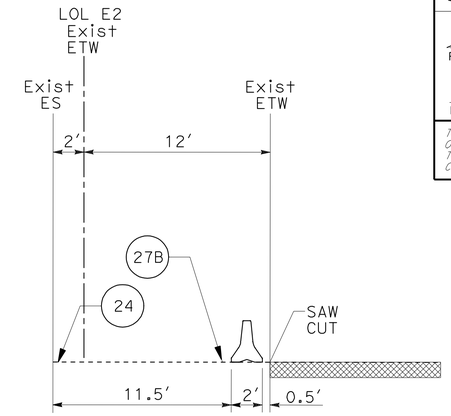

STAGE 1
MT VERNON EB ENTRANCE RAMP

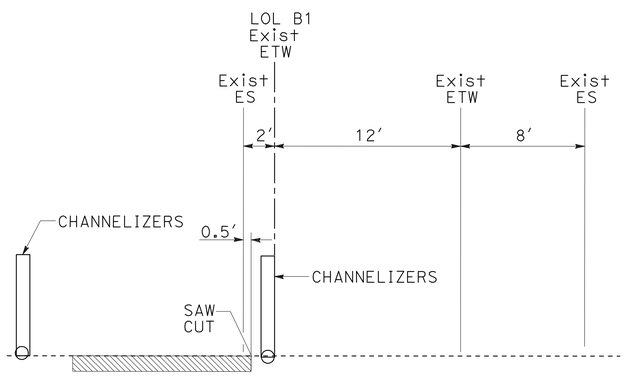

STAGE 2
PEPPER Ave WB ENTRANCE RAMP

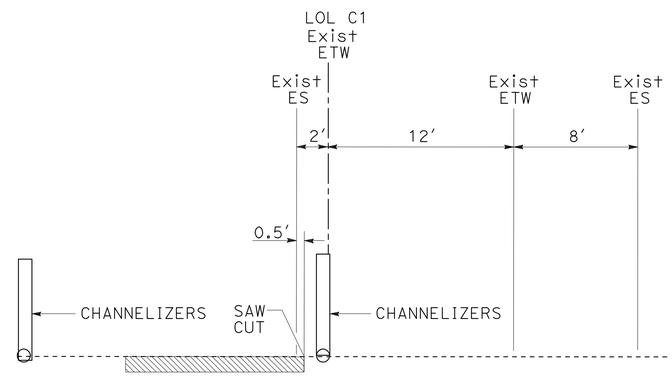

STAGE 2
RANCHO Ave WB ENTRANCE RAMP

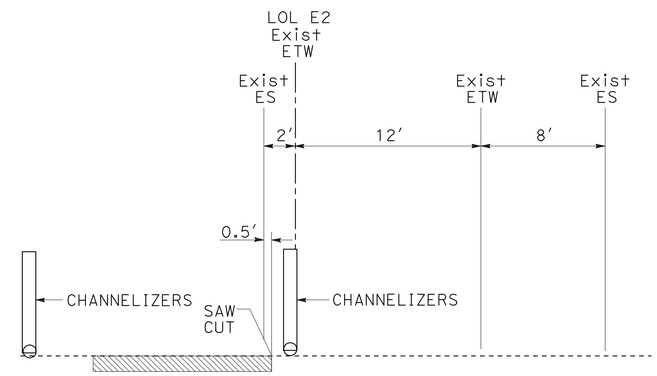

STAGE 2
MT VERNON EB ENTRANCE RAMP

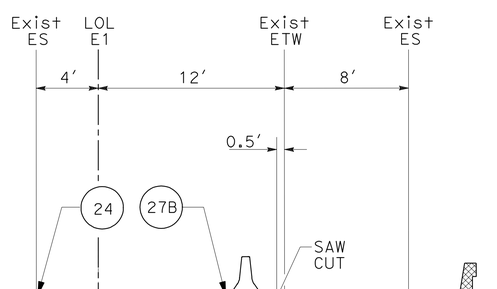

STAGE 1
MT VERNON WB ENTRANCE RAMP

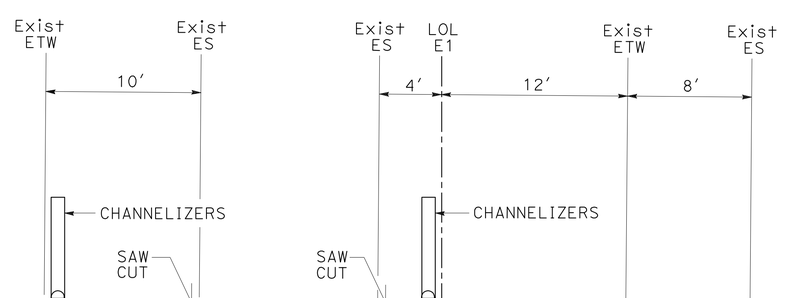

STAGE 2
MT VERNON WB ENTRANCE RAMP

THIS PLAN ACCURATE FOR STAGE CONSTRUCTION AND TRAFFIC HANDLING WORK ONLY

STAGE CONSTRUCTION TRAFFIC HANDLING PLAN

NO SCALE

TH-2

STATE OF CALIFORNIA - DEPARTMENT OF TRANSPORTATION
Caltrans® TRAFFIC DESIGN B

FUNCTIONAL SUPERVISOR: LARRY SARTORI
CALCULATED-DESIGNED BY: TRAN HOANG
CHECKED BY: VU TRAN
REVISED BY
DATE REVISED

LAST REVISION 01-13-11
DATE PLOTTED => 15-APR-2011
TIME PLOTTED => 13:15