Dist	COUNTY	LOCATION CODE	POST MILES TOTAL PROJECT	SHEET No.	TOTAL SHEETS
08	Riv	74	63.0	1	88

ACSTP-P074(059)E

STATE OF CALIFORNIA

DEPARTMENT OF TRANSPORTATION

PROJECT PLANS FOR CONSTRUCTION ON

STATE HIGHWAY

IN RIVERSIDE COUNTY

NEAR IDYLLWILD AT HURKEY CREEK BRIDGE

TO BE SUPPLEMENTED BY STANDARD PLANS DATED 2010

INDEX OF PLANS

SHEET No.	DESCRIPTION
1	TITLE AND LOCATION MAP
2	TYPICAL CROSS SECTIONS
3	LAYOUT
4	PROFILES
5	CONSTRUCTION DETAILS
6	CONTOUR GRADING
7-9	DRAINAGE PLAN, PROFILES AND QUANTITIES
10	UTILITY PLAN
11-12	CONSTRUCTION AREA SIGNS
13-16	STAGE CONSTRUCTION
17-25	TRAFFIC HANDLING PLANS AND QUANTITIES
27-29	PAVEMENT DELINEATION PLANS, SIGN PLANS AND QUANTITIES
30	SUMMARY OF QUANTITIES
31	PLANTING PLAN
32-35	ELECTRICAL PLANS
36-58	REVISED STANDARD PLANS

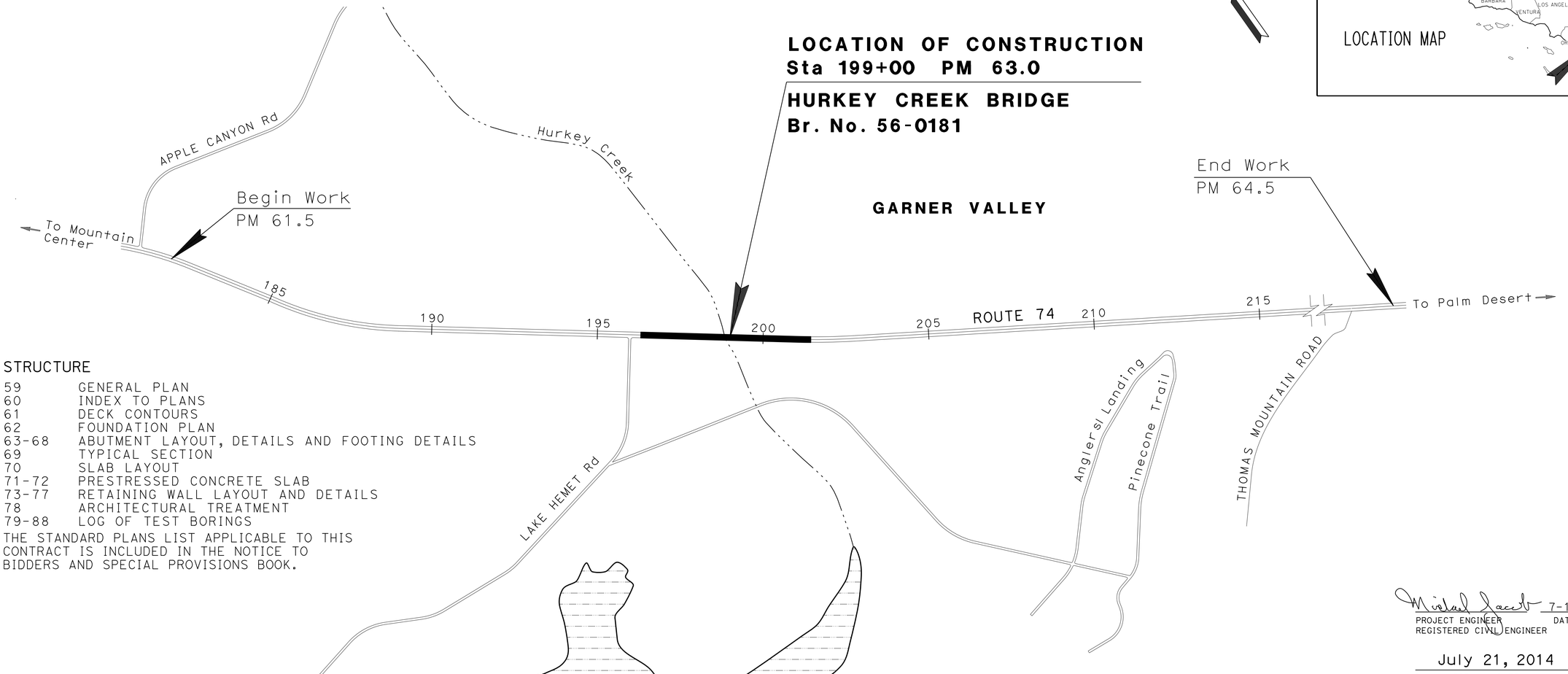

LOCATION OF CONSTRUCTION
Sta 199+00 PM 63.0

HURKEY CREEK BRIDGE
Br. No. 56-0181

STRUCTURE

59	GENERAL PLAN
60	INDEX TO PLANS
61	DECK CONTOURS
62	FOUNDATION PLAN
63-68	ABUTMENT LAYOUT, DETAILS AND FOOTING DETAILS
69	TYPICAL SECTION
70	SLAB LAYOUT
71-72	PRESTRESSED CONCRETE SLAB
73-77	RETAINING WALL LAYOUT AND DETAILS
78	ARCHITECTURAL TREATMENT
79-88	LOG OF TEST BORINGS

THE STANDARD PLANS LIST APPLICABLE TO THIS CONTRACT IS INCLUDED IN THE NOTICE TO BIDDERS AND SPECIAL PROVISIONS BOOK.

THE CONTRACTOR SHALL POSSESS THE CLASS (OR CLASSES) OF LICENSE AS SPECIFIED IN THE "NOTICE TO BIDDERS."

PROJECT ENGINEER
REGISTERED CIVIL ENGINEER

7-11-14
DATE

MICHAEL JACOB
No. 75503
Exp. 6/30/16
CIVIL
REGISTERED PROFESSIONAL ENGINEER
STATE OF CALIFORNIA

July 21, 2014
PLANS APPROVAL DATE

THE STATE OF CALIFORNIA OR ITS OFFICERS OR AGENTS SHALL NOT BE RESPONSIBLE FOR THE ACCURACY OR COMPLETENESS OF SCANNED COPIES OF THIS PLAN SHEET.

CONTRACT No.	08-383504
PROJECT ID	0800000638

PROJECT MANAGER: TIMOTHY WASSIL
DESIGN ENGINEER: MICHAEL JACOB

LAST REVISION: DATE PLOTTED => 18-JUL-2014
07-11-14 TIME PLOTTED => 10:22

Dist	COUNTY	ROUTE	POST MILES TOTAL PROJECT	SHEET No.	TOTAL SHEETS
08	Riv	74	63.0	2	88

7-11-14
REGISTERED CIVIL ENGINEER — DATE

7-21-14
PLANS APPROVAL DATE

REGISTERED PROFESSIONAL ENGINEER
MICHAEL JACOB
No. 75503
Exp. 6/30/16
CIVIL
STATE OF CALIFORNIA

THE STATE OF CALIFORNIA OR ITS OFFICERS OR AGENTS SHALL NOT BE RESPONSIBLE FOR THE ACCURACY OR COMPLETENESS OF SCANNED COPIES OF THIS PLAN SHEET.

NOTE:

1. DIMENSIONS OF THE PAVEMENT STRUCTURES (STRUCTURAL SECTIONS) ARE SUBJECT TO TOLERANCES SPECIFIED IN THE STANDARD SPECIFICATIONS.
2. EXACT LOCATIONS AND TYPES OF HMA DIKE ARE SHOWN ON THE LAYOUT AND SUMMARY OF QUANTITIES SHEETS.
3. FOR MIDWEST GUARDRAIL SYSTEM, SEE LAYOUTS.
4. FOR LOCATION AND EXTENT OF RETAINING WALLS, SEE STRUCTURE PLANS.
5. EXCAVATE AND STOCKPILE SELECTED MATERIAL. PLACE SELECTED MATERIAL EVENLY TO COVER FINAL EXPOSED EMBANKMENT AND SOIL FINISHED SURFACE.

ROUTE 74 DESIGN DESIGNATION

ADT (2015)	3,400	D	50%
ADT (2035)	6,300	T	8%
DHV	650	V	65 mph
$ESAL_{20}$	791,000	TI_{20}	9.0

PAVEMENT CLIMATE REGION

SOUTH MOUNTAIN

TYPICAL PAVEMENT STRUCTURAL SECTIONS

[1] 0.55′ HMA (TYPE A)
0.55′ CLASS 2 AB

(2) Exist
0.50′ AC

SELECTED MATERIAL

△3 Exist SOIL
0.25′ DEPTH

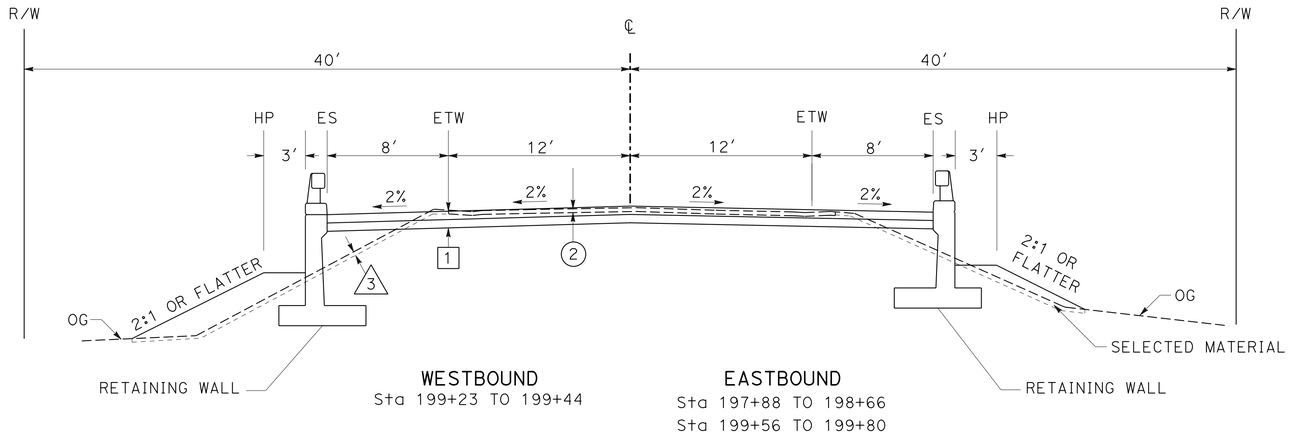

WESTBOUND
Sta 199+23 TO 199+44

EASTBOUND
Sta 197+88 TO 198+66
Sta 199+56 TO 199+80

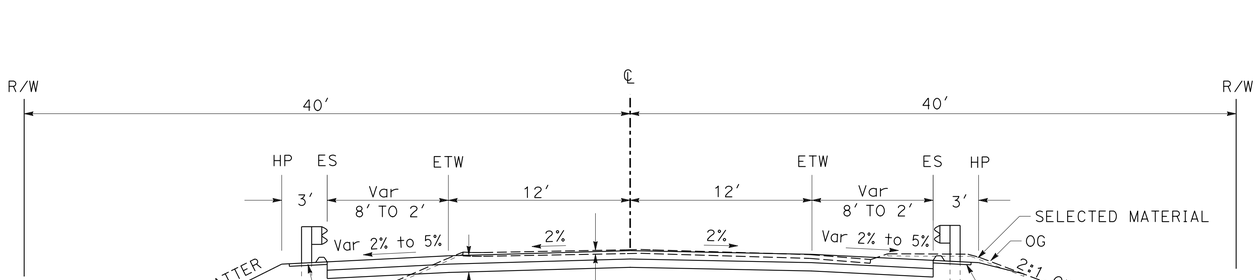

WESTBOUND
Sta 196+00 to 197+70
Sta 199+40 to 200+61

EASTBOUND
Sta 196+10 to 197+95
Sta 199+80 to 200+61

ROUTE 74

TYPICAL CROSS SECTIONS

NO SCALE

X-1

REVISED BY | DATE REVISED
MICHAEL JACOB | REZA TOOTOONCHI
CALCULATED-DESIGNED BY | CHECKED BY
FUNCTIONAL SUPERVISOR: SERGIO E. AVILA
STATE OF CALIFORNIA - DEPARTMENT OF TRANSPORTATION
DESIGN

LAST REVISION 07-11-14
DATE PLOTTED => 18-JUL-2014
TIME PLOTTED => 10:22

NOTE:

FOR ACCURATE RIGHT OF WAY DATA, CONTACT
RIGHT OF WAY ENGINEERING AT THE DISTRICT OFFICE.

ABBREVIATIONS:

TR	TRANSITION RAILING (TYPE WB-31)
AITS	ALTERNATIVE INLINE TERMINAL SYSTEM
AFTS	ALTERNATIVE FLARED TERMINAL SYSTEM
VC	VEGETATION CONTROL

Dist	COUNTY	ROUTE	POST MILES TOTAL PROJECT	SHEET No.	TOTAL SHEETS
08	Riv	74	63.0	3	88

Michael Jacob 7-11-14
REGISTERED CIVIL ENGINEER DATE

7-21-14
PLANS APPROVAL DATE

REGISTERED PROFESSIONAL ENGINEER
MICHAEL JACOB
No. 75503
Exp. 6/30/16
CIVIL
STATE OF CALIFORNIA

THE STATE OF CALIFORNIA OR ITS OFFICERS OR AGENTS SHALL NOT BE RESPONSIBLE FOR THE ACCURACY OR COMPLETENESS OF SCANNED COPIES OF THIS PLAN SHEET.

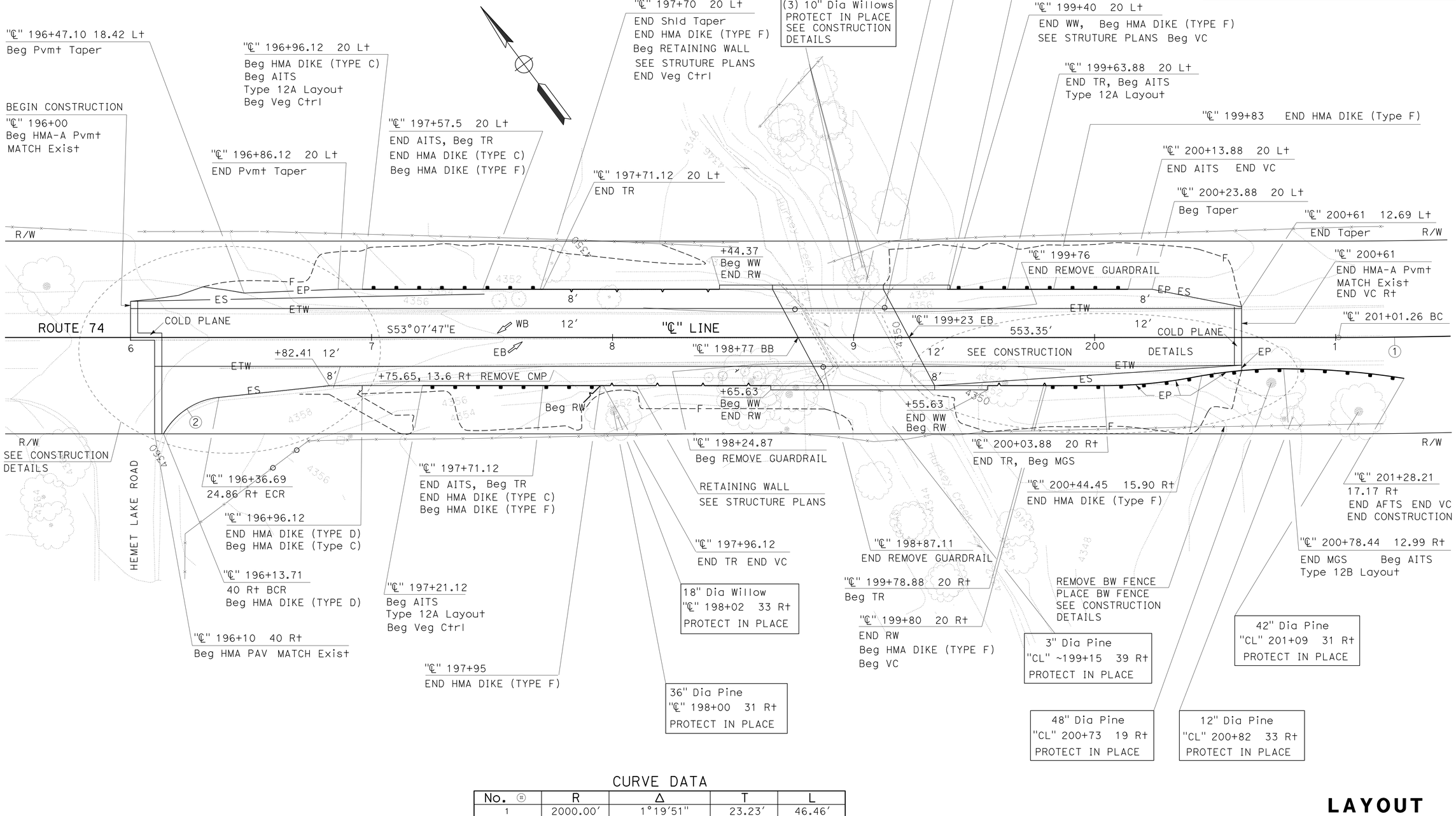

CURVE DATA

No. ⑪	R	Δ	T	L
1	2000.00′	1°19′51"	23.23′	46.46′
2	30.00′	54°36′22"	15.49′	28.59′

LAYOUT
SCALE 1:20

L-1

REVISED BY | DATE REVISED
MICHAEL JACOB | REZA TOOTOONCHI
CALCULATED-DESIGNED BY | CHECKED BY
FUNCTIONAL SUPERVISOR | SERGIO E. AVILA
STATE OF CALIFORNIA - DEPARTMENT OF TRANSPORTATION | DESIGN
Caltrans

LAST REVISION | DATE PLOTTED => 18-JUL-2014
07-11-14 | TIME PLOTTED => 10:22

BORDER LAST REVISED 7/2/2010 | USERNAME => s102458 | DGN FILE => 0800000638ea001.dgn | RELATIVE BORDER SCALE IS IN INCHES 0 1 2 3 | UNIT 2237 | PROJECT NUMBER & PHASE 08000006381

Dist	COUNTY	ROUTE	POST MILES TOTAL PROJECT	SHEET No.	TOTAL SHEETS
08	Riv	74	63.0	4	88

Michael Jacob 7-11-14
REGISTERED CIVIL ENGINEER DATE

7-21-14
PLANS APPROVAL DATE

REGISTERED PROFESSIONAL ENGINEER
MICHAEL JACOB
No. 75503
Exp. 6/30/16
CIVIL
STATE OF CALIFORNIA

THE STATE OF CALIFORNIA OR ITS OFFICERS OR AGENTS SHALL NOT BE RESPONSIBLE FOR THE ACCURACY OR COMPLETENESS OF SCANNED COPIES OF THIS PLAN SHEET.

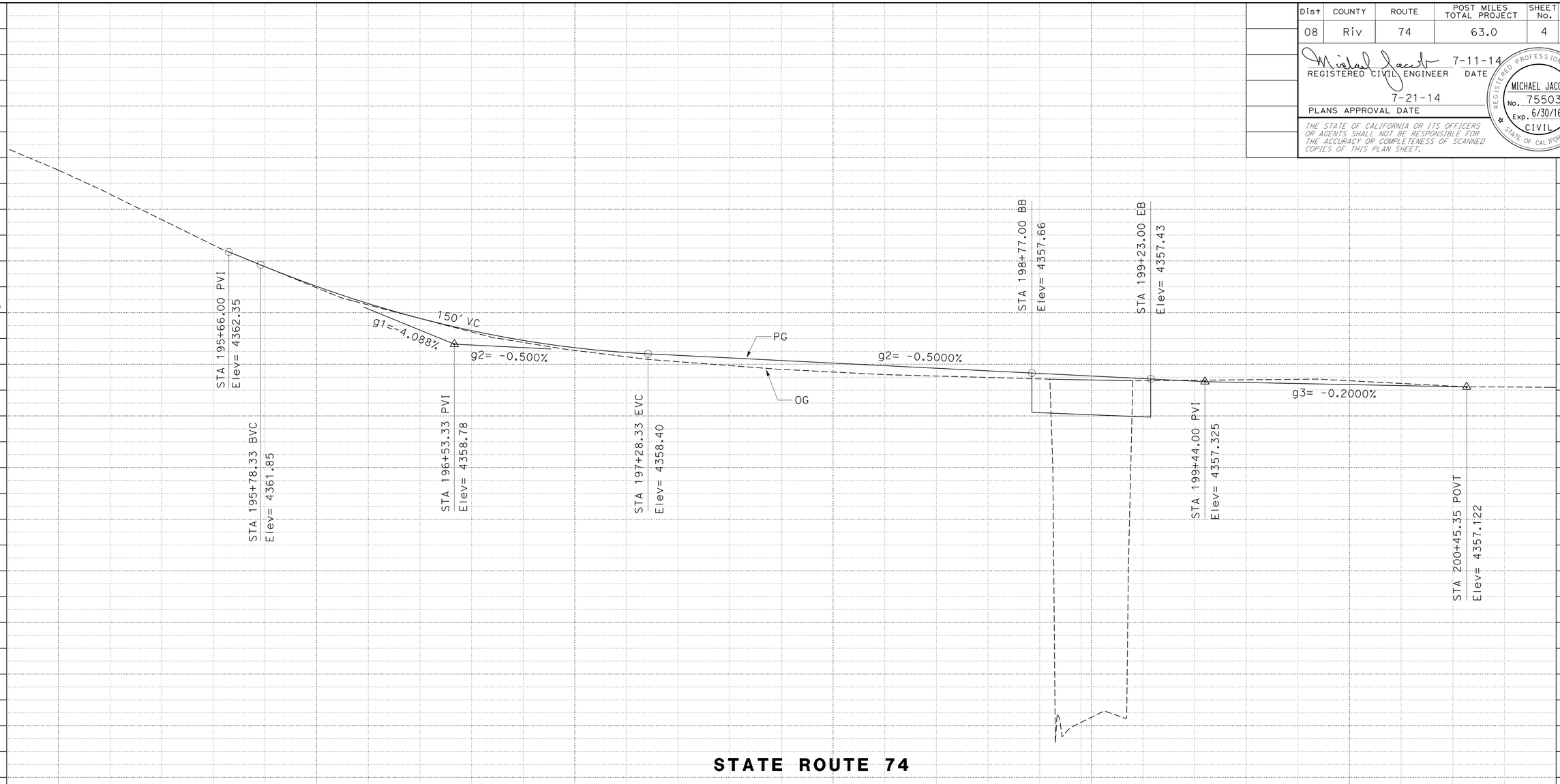

STATE ROUTE 74

"CL" LINE

PROFILE

SCALE: HORIZ 1" = 20'
VERT 1" = 2'

P-1

STATION	195	196	197	198	199	200	TOTAL
CY Exc							
CY Emb							

STATE OF CALIFORNIA - DEPARTMENT OF TRANSPORTATION
DESIGN

FUNCTIONAL SUPERVISOR: SERGIO E. AVILA

CALCULATED-DESIGNED BY: MICHAEL JACOB
CHECKED BY: REZA TOOTOONCHI

REVISED BY	DATE REVISED

LAST REVISION
DATE PLOTTED => 18-JUL-2014
TIME PLOTTED => 10:22
07-11-14

BORDER LAST REVISED 7/2/2010

USERNAME => s102458
DGN FILE => 08000006638fa001.dgn

RELATIVE BORDER SCALE IS IN INCHES 0 1 2 3

UNIT 2237

PROJECT NUMBER & PHASE 08000006381

Dist	COUNTY	ROUTE	POST MILES TOTAL PROJECT	SHEET No.	TOTAL SHEETS
08	Riv	74	63.0	5	88

Michael Jacob 7-11-14
REGISTERED CIVIL ENGINEER DATE

7-21-14
PLANS APPROVAL DATE

REGISTERED PROFESSIONAL ENGINEER
MICHAEL JACOB
No. 75503
Exp. 6/30/16
CIVIL
STATE OF CALIFORNIA

THE STATE OF CALIFORNIA OR ITS OFFICERS OR AGENTS SHALL NOT BE RESPONSIBLE FOR THE ACCURACY OR COMPLETENESS OF SCANNED COPIES OF THIS PLAN SHEET.

LEGEND:

COLD PLANE EXISTING HMA PAVEMENT 0.20′-0.35′

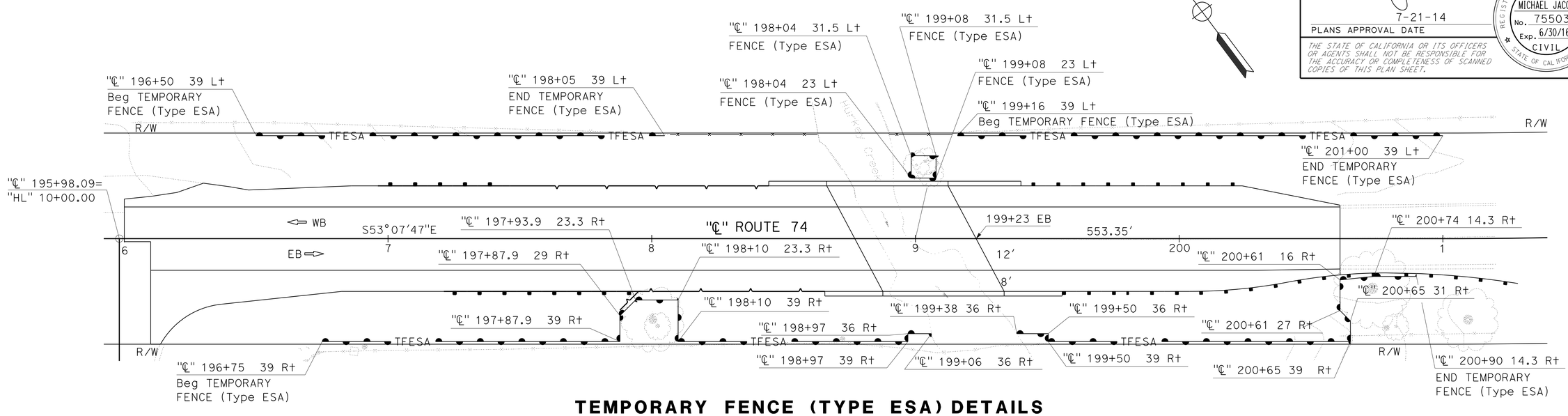

TEMPORARY FENCE (TYPE ESA) DETAILS

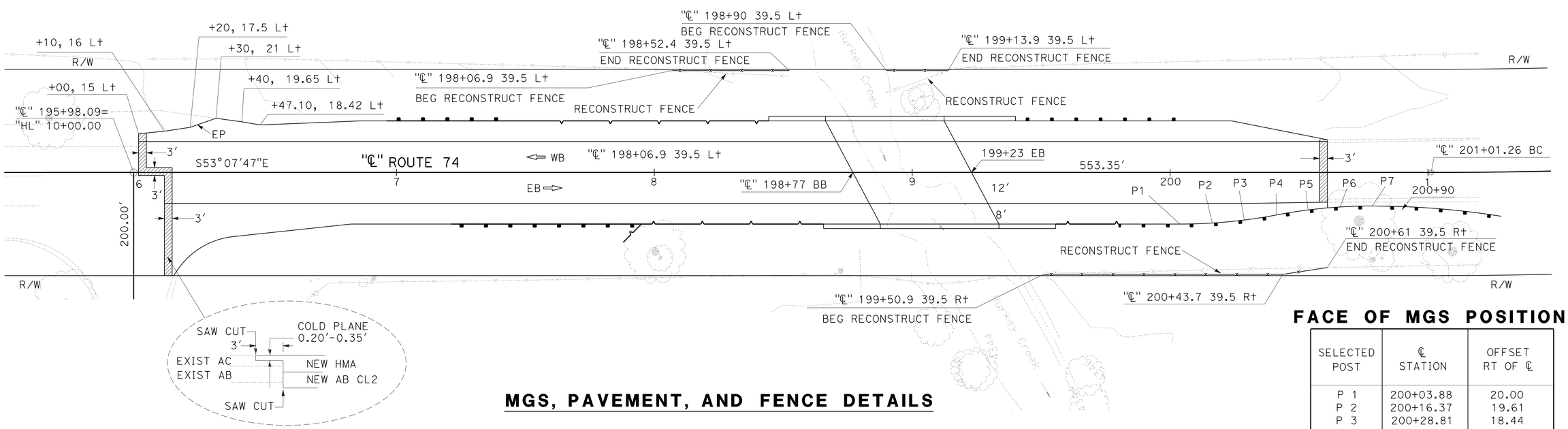

DETAIL

MGS, PAVEMENT, AND FENCE DETAILS

FACE OF MGS POSITION

SELECTED POST	℄ STATION	OFFSET RT OF ℄
P 1	200+03.88	20.00
P 2	200+16.37	19.61
P 3	200+28.81	18.44
P 4	200+41.16	16.49
P 5	200+53.51	14.55
P 6	200+65.95	13.38
P 7	200+78.44	13.00

CONSTRUCTION DETAILS

SCALE 1:20

C-1

REVISED BY | DATE REVISED
MICHAEL JACOB | REZA TOOTOONCHI
CALCULATED-DESIGNED BY | CHECKED BY
FUNCTIONAL SUPERVISOR: SERGIO E. AVILA
STATE OF CALIFORNIA - DEPARTMENT OF TRANSPORTATION
DESIGN
Caltrans

LAST REVISION 07-11-14
DATE PLOTTED => 18-JUL-2014
TIME PLOTTED => 10:22

Dist	COUNTY	ROUTE	POST MILES TOTAL PROJECT	SHEET No.	TOTAL SHEETS
08	Riv	74	63.0	6	88

Michael Jacob 7-11-14
REGISTERED CIVIL ENGINEER DATE

7-21-14
PLANS APPROVAL DATE

REGISTERED PROFESSIONAL ENGINEER
MICHAEL JACOB
No. 75503
Exp. 6/30/16
CIVIL
STATE OF CALIFORNIA

THE STATE OF CALIFORNIA OR ITS OFFICERS OR AGENTS SHALL NOT BE RESPONSIBLE FOR THE ACCURACY OR COMPLETENESS OF SCANNED COPIES OF THIS PLAN SHEET.

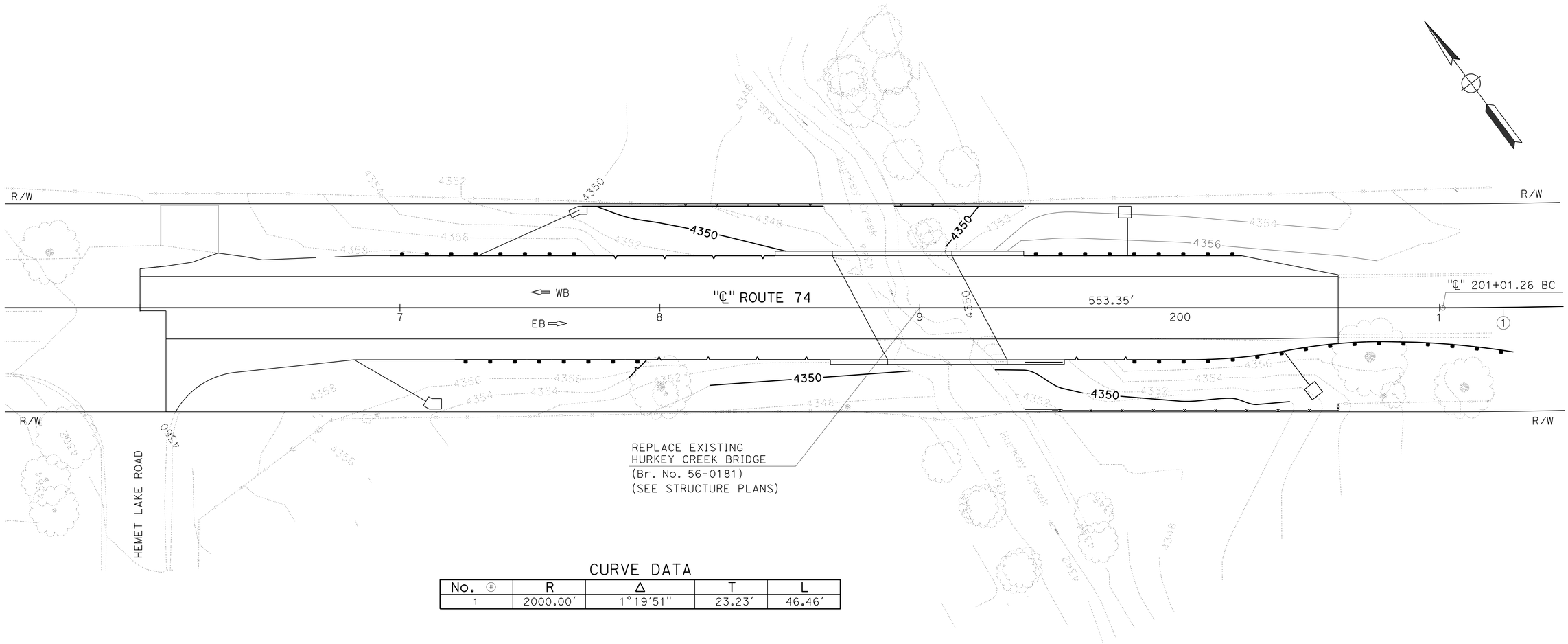

CURVE DATA

No. ⑪	R	Δ	T	L
1	2000.00′	1°19′51"	23.23′	46.46′

CONTOUR GRADING

SCALE 1:20

G-1

APPROVED FOR CONTOUR GRADING WORK ONLY

REVISED BY | DATE REVISED
MICHAEL JACOB | REZA TOOTOONCHI
CALCULATED-DESIGNED BY | CHECKED BY
FUNCTIONAL SUPERVISOR: SERGIO E. AVILA
STATE OF CALIFORNIA - DEPARTMENT OF TRANSPORTATION
DESIGN
Caltrans

LAST REVISION | DATE PLOTTED => 18-JUL-2014 | TIME PLOTTED => 10:22
07-11-14

BORDER LAST REVISED 7/2/2010 | USERNAME => s102458 | DGN FILE => 0800000638ha001.dgn | RELATIVE BORDER SCALE IS IN INCHES 0 1 2 3 | UNIT 2237 | PROJECT NUMBER & PHASE 08000006381

Dist	COUNTY	ROUTE	POST MILES TOTAL PROJECT	SHEET No.	TOTAL SHEETS
08	Riv	74	63.0	7	88

Michael Jacob 7-11-14
REGISTERED CIVIL ENGINEER DATE

7-21-14
PLANS APPROVAL DATE

REGISTERED PROFESSIONAL ENGINEER
MICHAEL JACOB
No. 75503
Exp. 6/30/16
CIVIL
STATE OF CALIFORNIA

THE STATE OF CALIFORNIA OR ITS OFFICERS OR AGENTS SHALL NOT BE RESPONSIBLE FOR THE ACCURACY OR COMPLETENESS OF SCANNED COPIES OF THIS PLAN SHEET.

REVISED BY | DATE REVISED

MICHAEL JACOB | REZA TOOTOONCHI

CALCULATED-DESIGNED BY | CHECKED BY

FUNCTIONAL SUPERVISOR: SERGIO E. AVILA

STATE OF CALIFORNIA - DEPARTMENT OF TRANSPORTATION
DESIGN

Caltrans

NOTE:

FOR HMA OVERSIDE DRAIN SEE STD PLAN D87D
RSP No.2, PLACEMENT METHOD 'B'
RSP FABRIC CLASS 8

FOR DRAINAGE SYSTEM 5 EXCAVATE 1.25' BELOW EXIST GRADE AND FILL WITH RSP PER DETAILS SHOWN BELOW.

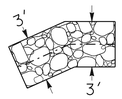

RSP DETAIL FOR SYSTEM 2

DETAIL

NO SCALE

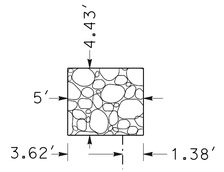

RSP DETAIL FOR SYSTEM 3

DETAIL

NO SCALE

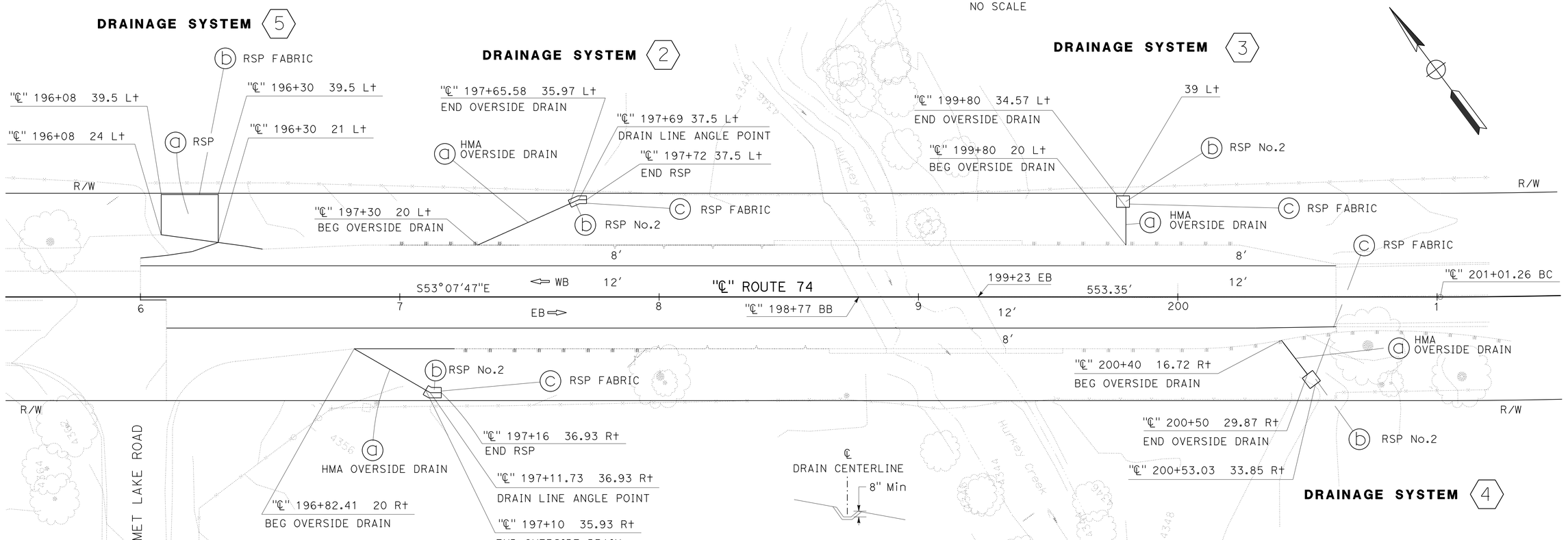

℄
DRAIN CENTERLINE
8" Min

TYPICAL SECTION FOR OVERSIDE DRAIN ACROSS SLOPE SYSTEMS 1, 2 AND 4

DETAIL

NO SCALE

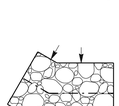

RSP DETAIL FOR SYSTEM 1

DETAIL

NO SCALE

#2 RSP (PLACEMENT METHOD B) OVER RSP FABRIC CL 8

DETAIL

NO SCALE

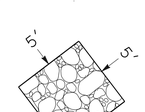

RSP DETAIL FOR SYSTEM 4

DETAIL

NO SCALE

NOTE:

FOR ACCURATE RIGHT OF WAY DATA, CONTACT RIGHT OF WAY ENGINEERING AT THE DISTRICT OFFICE.

APPROVED FOR DRAINAGE WORK ONLY

DRAINAGE PLAN

SCALE 1:20

D-1

LAST REVISION | DATE PLOTTED => 18-JUL-2014 | TIME PLOTTED => 10:22 | 07-11-14

BORDER LAST REVISED 7/2/2010 | USERNAME => s102458 | DGN FILE => 0800000638ia001.dgn | RELATIVE BORDER SCALE IS IN INCHES 0 1 2 3 | UNIT 2237 | PROJECT NUMBER & PHASE 08000006381

Dist	COUNTY	ROUTE	POST MILES TOTAL PROJECT	SHEET No.	TOTAL SHEETS
08	Riv	74	63.0	8	88

7-11-14
REGISTERED CIVIL ENGINEER — DATE

7-21-14
PLANS APPROVAL DATE

MICHAEL JACOB No. 75503 Exp. 6/30/16 CIVIL — REGISTERED PROFESSIONAL ENGINEER — STATE OF CALIFORNIA

THE STATE OF CALIFORNIA OR ITS OFFICERS OR AGENTS SHALL NOT BE RESPONSIBLE FOR THE ACCURACY OR COMPLETENESS OF SCANNED COPIES OF THIS PLAN SHEET.

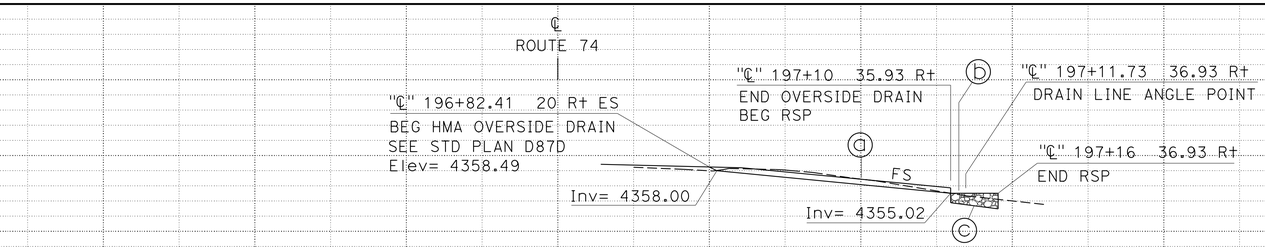

DRAINAGE SYSTEM 1

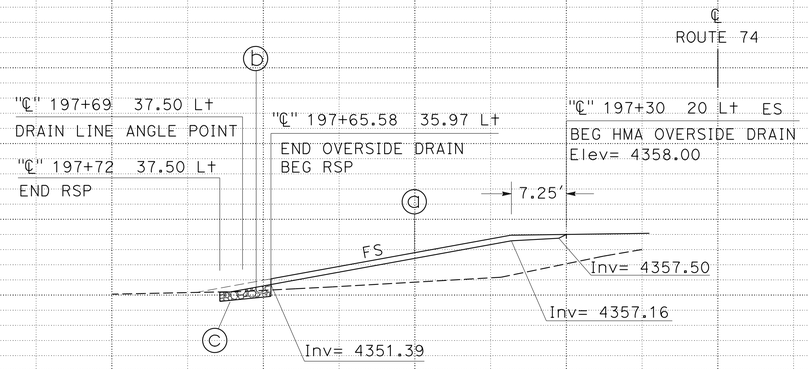

DRAINAGE SYSTEM 2

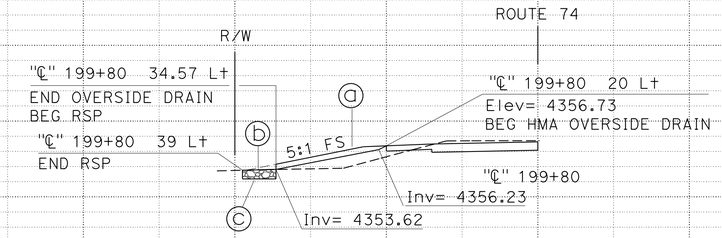

DRAINAGE SYSTEM 3

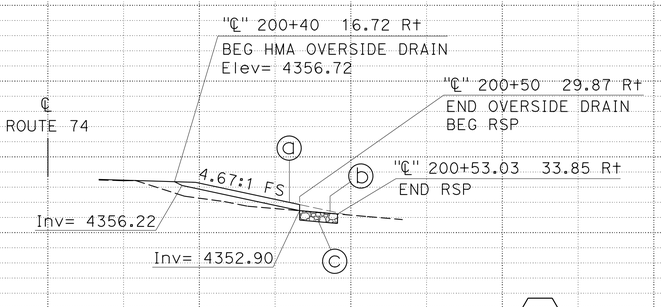

DRAINAGE SYSTEM 4

DRAINAGE PROFILES

SCALE 1:10

DP-1

STATION			TOTAL
CY	Exc		
	Emb		

REVISED BY | DATE REVISED
MICHAEL JACOB | REZA TOOTOONCHI
CALCULATED-DESIGNED BY | CHECKED BY
FUNCTIONAL SUPERVISOR: SERGIO E. AVILA
STATE OF CALIFORNIA - DEPARTMENT OF TRANSPORTATION
DESIGN

LAST REVISION | DATE PLOTTED => 18-JUL-2014
07-11-14 | TIME PLOTTED => 10:22

BORDER LAST REVISED 7/2/2010 | USERNAME => s102458 | DGN FILE => 08000006381ib001.dgn | RELATIVE BORDER SCALE IS IN INCHES 0 1 2 3 | UNIT 2237 | PROJECT NUMBER & PHASE 08000006381

Dist	COUNTY	ROUTE	POST MILES TOTAL PROJECT	SHEET No.	TOTAL SHEETS
08	Riv	74	63.0	9	88

REGISTERED CIVIL ENGINEER — DATE 7-11-14

PLANS APPROVAL DATE 7-21-14

REGISTERED PROFESSIONAL ENGINEER — MICHAEL JACOB — No. 75503 — Exp. 6/30/16 — CIVIL — STATE OF CALIFORNIA

THE STATE OF CALIFORNIA OR ITS OFFICERS OR AGENTS SHALL NOT BE RESPONSIBLE FOR THE ACCURACY OR COMPLETENESS OF SCANNED COPIES OF THIS PLAN SHEET.

DRAINAGE QUANTITIES

DRAINAGE SYST	DRAINAGE UNIT	PLACE HOT MIX ASPHALT (MISCELLANEOUS AREAS) SQYD	PLACE HOT MIX ASPHALT (MISCELLANEOUS AREAS) TON	ROCK SLOPE PROTECTION: RSP No. 2 METHOD B PLACEMENT CY	ROCK SLOPE PROTECTION: RSP FABRIC CLASS 8 SQYD	DESCRIPTION	STATION
1	a	12.2	1.99			HMA OVERSIDE DRAIN	"℄" 196+82.41 20 R†
	b			1.2		No. 2 RSP (PLACEMENT METHOD B)	
	c				9.8	RSP FABRIC	
2	a	14.8	2.41			HMA OVERSIDE DRAIN	"℄" 197+30 20 L†
	b			1.0		No. 2 RSP (PLACEMENT METHOD B)	
	c				9.2	RSP FABRIC	
3	a	5.9	0.96			HMA OVERSIDE DRAIN	"℄" 199+80 20 L†
	b			1.0		No. 2 RSP (PLACEMENT METHOD B)	
	c				6.6	RSP FABRIC	
4	a	6.7	1.09			HMA OVERSIDE DRAIN	"℄" 200+40 16.72 R†
	b			1.2		No. 2 RSP (PLACEMENT METHOD B)	
	c				7.1	RSP FABRIC	
5	a			17.4		No. 2 RSP (PLACEMENT METHOD B)	"℄" 196+08 24 L†
	b				60.2	RSP FABRIC	
TOTAL		39.6*	6.45*	21.8	92.9		

* QUANTITY INCLUDED IN HMA MISCELLANEOUS AREAS AND DIKES QUANTITIES SUMMARY.

REVISED BY | DATE REVISED

CALCULATED-DESIGNED BY: MICHAEL JACOB

CHECKED BY: REZA TOOTOONCHI

FUNCTIONAL SUPERVISOR: SERGIO E. AVILA

STATE OF CALIFORNIA - DEPARTMENT OF TRANSPORTATION

Caltrans® DESIGN

LAST REVISION | DATE PLOTTED => 18-JUL-2014 | TIME PLOTTED => 10:22

07-11-14

DRAINAGE QUANTITIES
DQ-1

Dist	COUNTY	ROUTE	POST MILES TOTAL PROJECT	SHEET No.	TOTAL SHEETS
08	Riv	74	63.0	10	88

7-11-14
REGISTERED CIVIL ENGINEER — DATE

7-21-14
PLANS APPROVAL DATE

REGISTERED PROFESSIONAL ENGINEER
MICHAEL JACOB
No. 75503
Exp. 6/30/16
CIVIL
STATE OF CALIFORNIA

THE STATE OF CALIFORNIA OR ITS OFFICERS OR AGENTS SHALL NOT BE RESPONSIBLE FOR THE ACCURACY OR COMPLETENESS OF SCANNED COPIES OF THIS PLAN SHEET.

NOTES:

1. FOR ACCURATE RIGHT OF WAY DATA, CONTACT RIGHT OF WAY ENGINEERING AT THE DISTRICT OFFICE.
2. EXISTING UTILITY FACILITY INFORMATION IS INCOMPLETE.
3. ELEVATIONS SHOWN ARE TO THE TOP OF PIPE OR CONDUIT, UNLESS OTHERWISE STATED.
4. HEIGHTS SHOWN ARE TO THE LOWEST WIRE ON OVERHEAD UTILITY LINES.
5. UNDERGROUND UTILITIES AND DEPTHS ARE APPROXIMATE, AND WERE MEASURED ELECTRONICALLY.

ABBREVIATIONS & SYMBOLS:

OH
T
W

AEC - INDICATES ANZA ELECTRIC CO-OPERATIVE, INC
GTE - INDICATES GENERAL TELEPHONE COMPANY (VERIZON)
LHMWD - INDICATES LAKE HEMET MUNICIPAL WATER DISTRICT
F.O. - INDICATES FIBER OPTIC CABLE

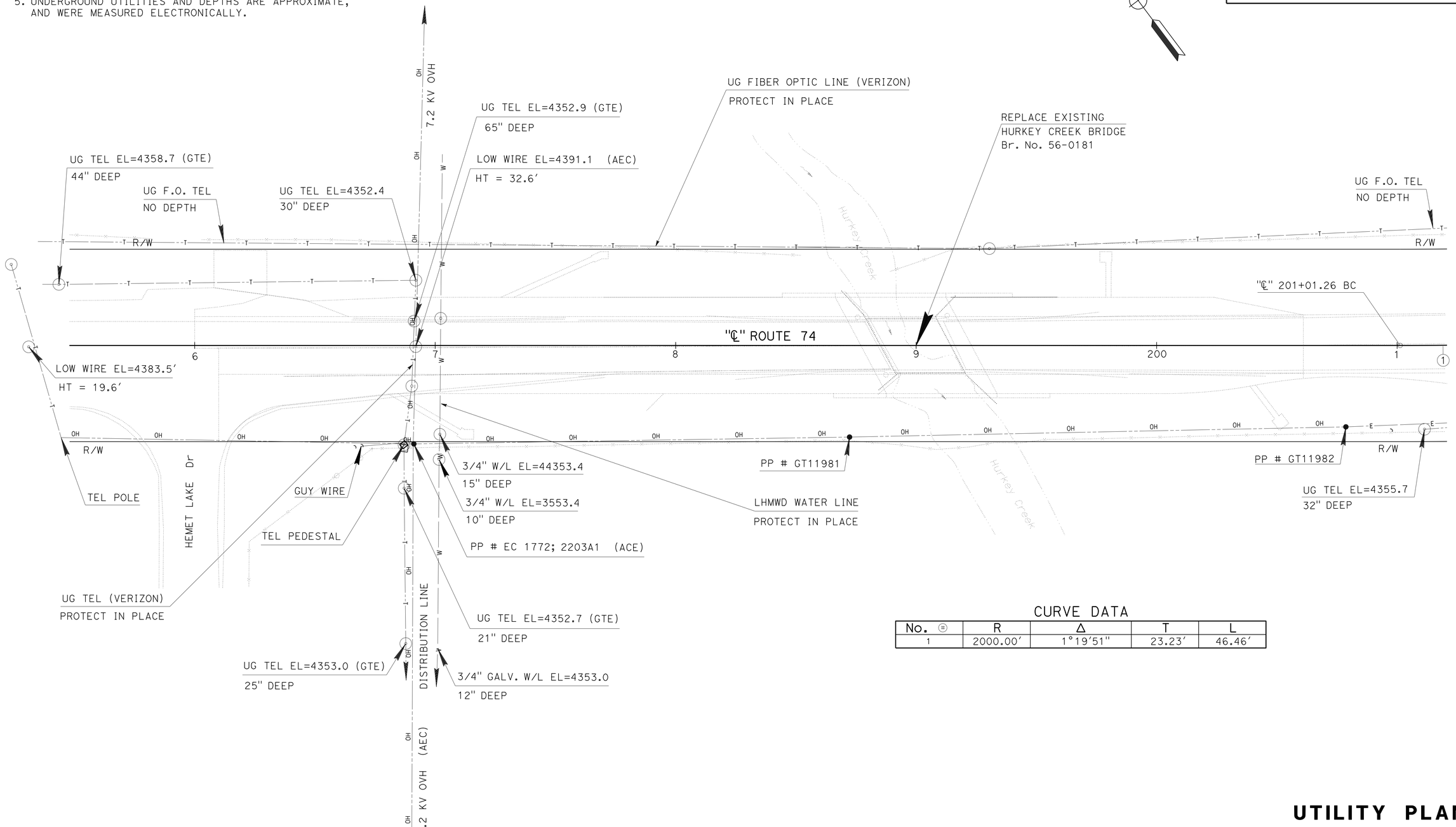

CURVE DATA

No. Ⓗ	R	Δ	T	L
1	2000.00'	1°19'51"	23.23'	46.46'

UTILITY PLAN

SCALE 1:20

U-1

APPROVED FOR UTILITY INFORMATION ONLY

REVISED BY | DATE REVISED
MICHAEL JACOB | REZA TOOTOONCHI
CALCULATED-DESIGNED BY | CHECKED BY
FUNCTIONAL SUPERVISOR | SERGIO E. AVILA
STATE OF CALIFORNIA - DEPARTMENT OF TRANSPORTATION | DESIGN
Caltrans

LAST REVISION | DATE PLOTTED => 18-JUL-2014
07-11-14 | TIME PLOTTED => 10:22

BORDER LAST REVISED 7/2/2010
USERNAME => s102458
DGN FILE => 0800000638ka001.dgn
RELATIVE BORDER SCALE IS IN INCHES 0 1 2 3
UNIT 2237
PROJECT NUMBER & PHASE 08000006381

Dist	COUNTY	ROUTE	POST MILES TOTAL PROJECT	SHEET No.	TOTAL SHEETS
08	Riv	74	63.0	11	88

W E Wasser 7-11-14
REGISTERED CIVIL ENGINEER DATE

7-21-14
PLANS APPROVAL DATE

REGISTERED PROFESSIONAL ENGINEER
W.E.WASSER
No. 37378
Exp.6-30-16
CIVIL
STATE OF CALIFORNIA

THE STATE OF CALIFORNIA OR ITS OFFICERS OR AGENTS SHALL NOT BE RESPONSIBLE FOR THE ACCURACY OR COMPLETENESS OF SCANNED COPIES OF THIS PLAN SHEET.

NOTES:

1. EXACT LOCATION AND POSTION OF SIGNS WILL BE DETERMINED BY THE ENGINEER.
2. SIGN POST LENGTH ARE APPROXIAMTE, EXACT SIZE AND LENGTH WILL BE DETERMINED BY THE ENGINEER.
3. REFER TO STANDARD PLANS T13 FOR TRAFFIC CONTROL SYSTEM
4. REFER TO TRAFFIC HANDLING PLANS FOR EXACT LOCATION OF SIGN (B) (C) (D) (E) (F) (H)

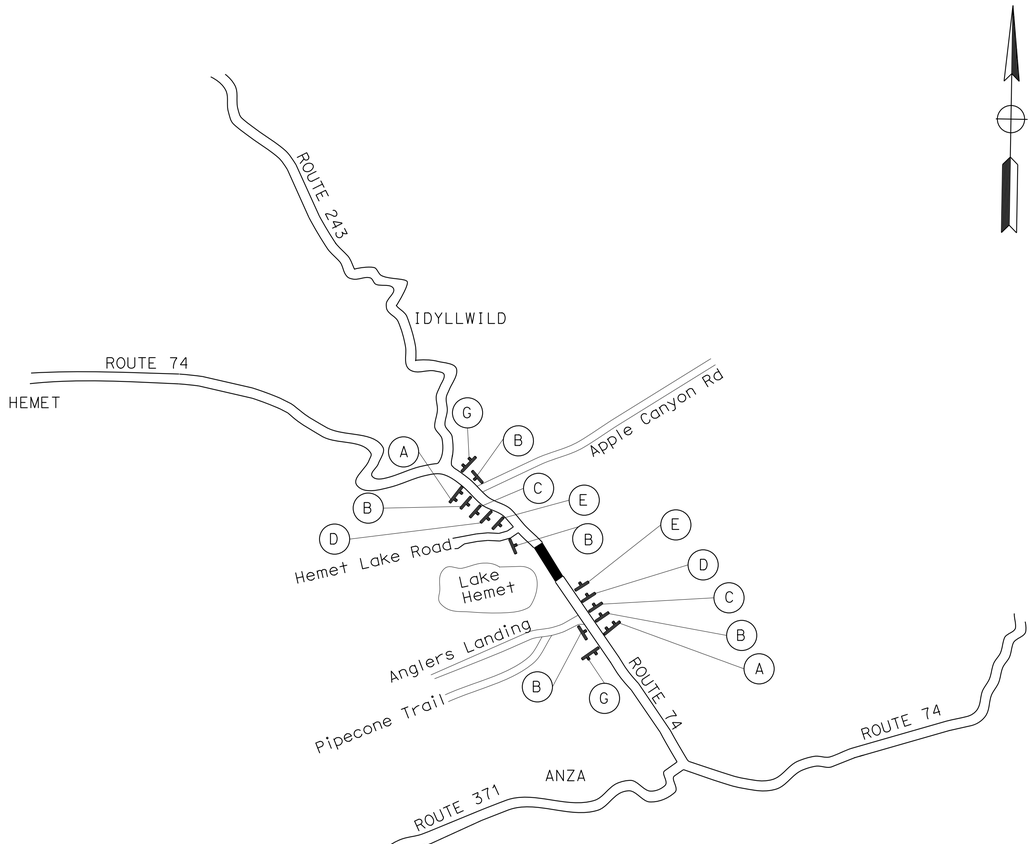

STATIONARY MOUNTED CONSTRUCTION AREA SIGNS

SIGN No. (X)	SIGN CODE		PANEL SIZE	SIGN MESSAGE	NUMBER OF POSTS AND SIZE	NUMBER OF SIGNS
	FEDERAL	CALIFORNIA				
A		C40	72" x 36"	TRAFFIC FINES DOUBLED IN CONSTRUCTION ZONE	2- 4" x 6"	2
B	W20-1		48" x 48"	ROAD WORK AHEAD	1- 6" x 6"	5
C	W20-4		48" x 48"	ONE LANE ROAD AHEAD	1- 6" x 6"	2
	W13-1(35)		24" x 24"	SPEED LIMIT (35)	1- 6" x 6"	2
D	W3-3		48" x 48"	"SIGNAL AHEAD" SYMBOL	1- 6" x 6"	2
E	R10-6		24" X 36"	STOP HERE ON RED	1- 4" x 6"	3
F	W1-4		48" x 48"	"CURVE ROAD" SYMBOL	1- 6" x 6"	2
G	G20-1		48" x 24"	END ROAD WORK	1- 4" x 6"	2
H	R10-6		24" x 36"	STOP HERE ON RED	1- 6" x 6"	1
	R10-11a		24" x 30"	NO TURN ON RED	1- 6" x 6"	1

PORTABLE CMS

EA
2

PORTABLE FLASHING BEACON

EA
4

APPROVED FOR CONSTRUCTION AREA SIGN WORK ONLY

CONSTRUCTION AREA SIGNS
NO SCALE

CS-1

STATE OF CALIFORNIA - DEPARTMENT OF TRANSPORTATION
Caltrans® TRAFFIC DESIGN
FUNCTIONAL SUPERVISOR: W.E. WASSER
CALCULATED-DESIGNED BY
CHECKED BY
DEAN TO SETHNA HORMUZD
REVISED BY
DATE REVISED

LAST REVISION DATE PLOTTED => 18-JUL-2014
TIME PLOTTED => 10:22
07-11-14

BORDER LAST REVISED 7/2/2010
USERNAME => s102458
DGN FILE => 08000006381a001.dgn
RELATIVE BORDER SCALE IS IN INCHES 0 1 2 3
UNIT 2284
PROJECT NUMBER & PHASE 08000006381

Dist	COUNTY	ROUTE	POST MILES TOTAL PROJECT	SHEET No.	TOTAL SHEETS
08	Riv	74	63.0	12	88

W E Wasser 7-11-14
REGISTERED CIVIL ENGINEER DATE

7-21-14
PLANS APPROVAL DATE

REGISTERED PROFESSIONAL ENGINEER
W.E.WASSER
No. 37378
Exp.6-30-16
CIVIL
STATE OF CALIFORNIA

THE STATE OF CALIFORNIA OR ITS OFFICERS OR AGENTS SHALL NOT BE RESPONSIBLE FOR THE ACCURACY OR COMPLETENESS OF SCANNED COPIES OF THIS PLAN SHEET.

NOTE:

1. CONFLICTING SIGNS SHALL BE COVERED AS DETERMINE BY THE ENGINEER.

LEGEND:

PORTABLE CHANGEABLE MESSAGE SIGN

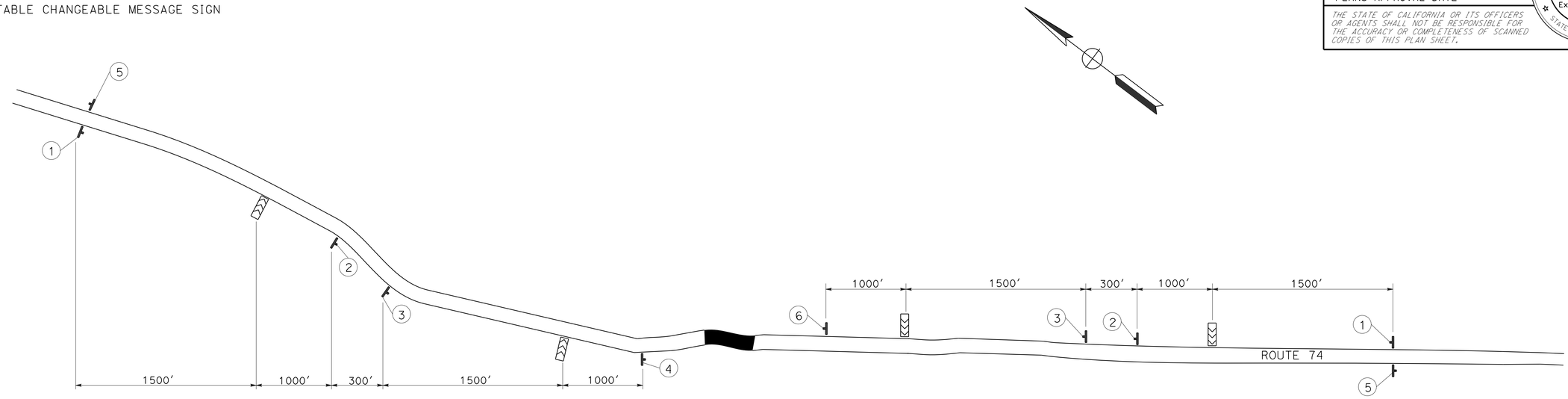

SPEED REDUCTION TYPICAL SIGNING

STATIONARY MOUNTED CONSTRUCTION AREA SIGNS

SIGN No. (X)	SIGN CODE		PANEL SIZE	SIGN MESSAGE	NUMBER OF POSTS AND SIZE	NUMBER OF SIGNS
	FEDERAL	CALIFORNIA				
1	R2-4(45)		36" x 48"	45 ZONE AHEAD	1- 4" x 6"	2
2	G20-5aP		36" x 24"	WORK ZONE	1- 6" x 6"	2
	R2-1(45)		36" x 48"	SPEED LIMIT 45		
3	R2-4(35)		36" x 48"	35 ZONE AHEAD	1- 4" x 6"	2
4	G20-5aP		24" x 18"	WORK ZONE	1- 6" x 6"	2
	R2-1(35)		36" x 48"	SPEED LIMIT 35		
5	R2-12		24" x 36"	END WORK ZONE SPEED LIMIT	1- 4" x 6"	2

PORTABLE CHANGEABLE MESSAGE SIGN

QUANTITY
EA
4

APPROVED FOR CONSTRUCTION AREA SIGN WORK ONLY

CONSTRUCTION AREA SIGNS

NO SCALE

CS-2

DEAN TO SETHNA HORMUZD — CALCULATED-DESIGNED BY / CHECKED BY

REVISED BY / DATE REVISED

FUNCTIONAL SUPERVISOR: W.E. WASSER

STATE OF CALIFORNIA - DEPARTMENT OF TRANSPORTATION
Caltrans® TRAFFIC DESIGN

LAST REVISION 07-11-14 | DATE PLOTTED => 18-JUL-2014 | TIME PLOTTED => 10:22

Dist	COUNTY	ROUTE	POST MILES TOTAL PROJECT	SHEET No.	TOTAL SHEETS
08	Riv	74	63.0	13	88

7-11-14
REGISTERED CIVIL ENGINEER DATE

7-21-14
PLANS APPROVAL DATE

REGISTERED PROFESSIONAL ENGINEER
MICHAEL JACOB
No. 75503
Exp. 6/30/16
CIVIL
STATE OF CALIFORNIA

THE STATE OF CALIFORNIA OR ITS OFFICERS OR AGENTS SHALL NOT BE RESPONSIBLE FOR THE ACCURACY OR COMPLETENESS OF SCANNED COPIES OF THIS PLAN SHEET.

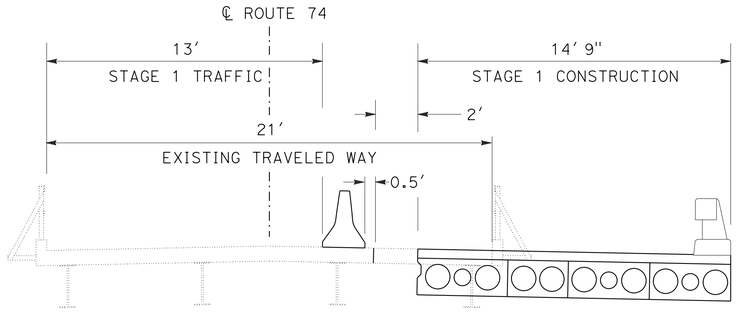

STAGE CONSTRUCTION CROSS SECTION
STAGE 1

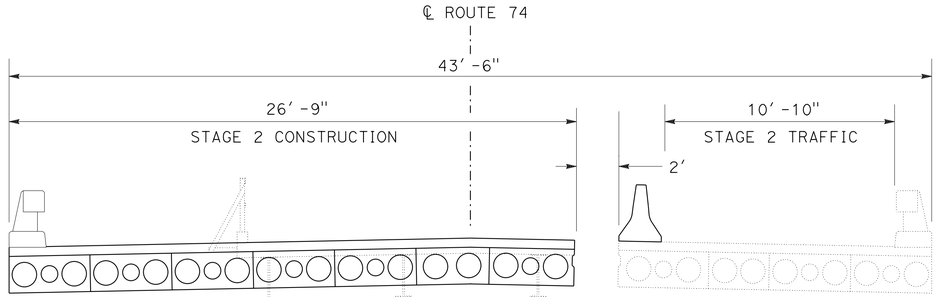

STAGE CONSTRUCTION CROSS SECTION
STAGE 2

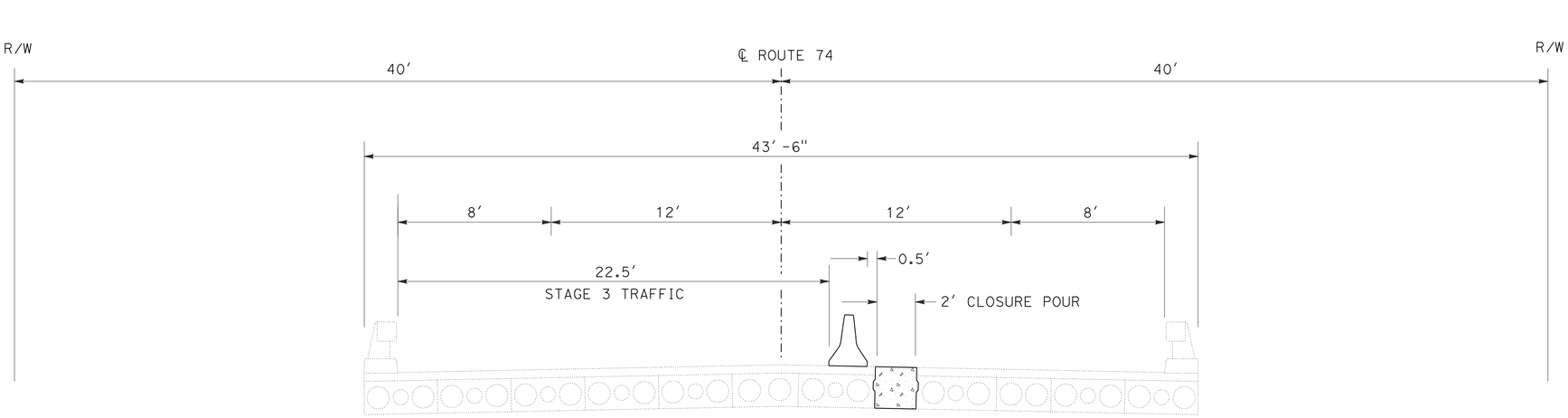

STAGE CONSTRUCTION CROSS SECTION
STAGE 3

APPROVED FOR STAGE CONSTRUCTION WORK ONLY

STAGE CONSTRUCTION

SCALE 1:50

SC-1

STATE OF CALIFORNIA - DEPARTMENT OF TRANSPORTATION
Caltrans®
DESIGN

FUNCTIONAL SUPERVISOR: SERGIO E. AVILA

CALCULATED-DESIGNED BY: MICHAEL JACOB
CHECKED BY: REZA TOOTOONCHI

REVISED BY	DATE REVISED

LAST REVISION
DATE PLOTTED => 18-JUL-2014
TIME PLOTTED => 10:22
07-11-14

BORDER LAST REVISED 7/2/2010

USERNAME => s102458
DGN FILE => 0800000638ma001.dgn

RELATIVE BORDER SCALE IS IN INCHES 0 1 2 3

UNIT 2237

PROJECT NUMBER & PHASE 08000006381

Dist	COUNTY	ROUTE	POST MILES TOTAL PROJECT	SHEET No.	TOTAL SHEETS
08	Riv	74	63.0	14	88

REGISTERED CIVIL ENGINEER — 7-11-14 DATE

7-21-14 PLANS APPROVAL DATE

MICHAEL JACOB No. 75503 Exp. 6/30/16 CIVIL — REGISTERED PROFESSIONAL ENGINEER — STATE OF CALIFORNIA

THE STATE OF CALIFORNIA OR ITS OFFICERS OR AGENTS SHALL NOT BE RESPONSIBLE FOR THE ACCURACY OR COMPLETENESS OF SCANNED COPIES OF THIS PLAN SHEET.

STAGE 1
CONSISTS OF THE FOLLOWING:

COLLECT DUFF (R+)

COLLECT SELECTED MATERIAL (R+)

CLEAR AND GRUB (R+)

REMOVE EXISTING BRIDGE (STAGE 1)

CONSTRUCT THE RIGHT 14.75′ OF NEW BRIDGE

CONSTRUCT RIGHT SIDE RETAINING WALLS

CONSTRUCT RIGHT ROAD BED

CONSTRUCT DRAINAGE SYSTEM 4

LEGEND:

STAGE 1 CONSTRUCTION

"℄" 197+00 to 200+61

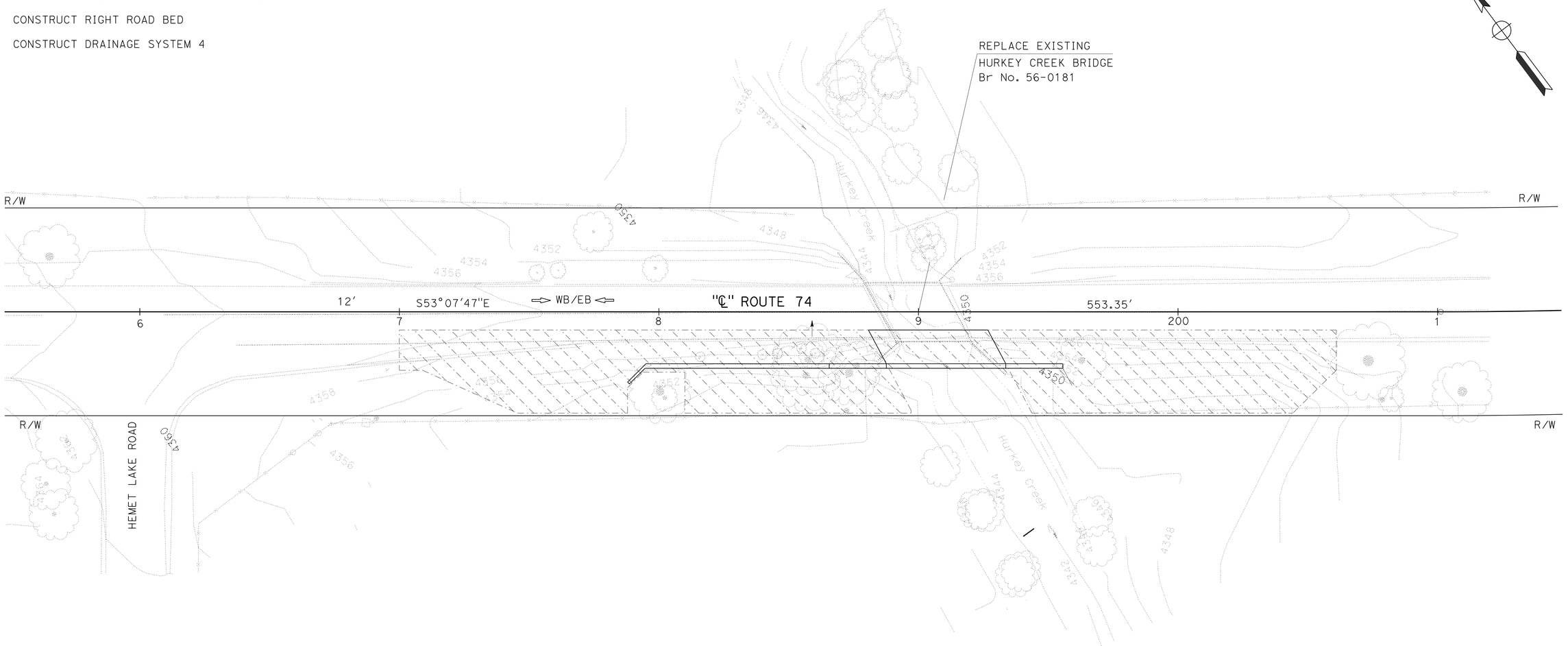

NOTE:

FOR ACCURATE RIGHT OF WAY DATA, CONTACT RIGHT OF WAY ENGINEERING AT THE DISTRICT OFFICE.

APPROVED FOR STAGE CONSTRUCTION WORK ONLY

STAGE CONSTRUCTION
STAGE 1
SCALE 1:20 **SC-2**

STATE OF CALIFORNIA - DEPARTMENT OF TRANSPORTATION
DESIGN
FUNCTIONAL SUPERVISOR: SERGIO E. AVILA
CALCULATED-DESIGNED BY: MICHAEL JACOB
CHECKED BY: REZA TOOTOONCHI
REVISED BY / DATE REVISED

LAST REVISION 07-11-14
DATE PLOTTED => 18-JUL-2014
TIME PLOTTED => 10:22

BORDER LAST REVISED 7/2/2010
USERNAME => s102458
DGN FILE => 0800000638ma002.dgn
RELATIVE BORDER SCALE IS IN INCHES 0 1 2 3
UNIT 2237
PROJECT NUMBER & PHASE 08000006381

Dist	COUNTY	ROUTE	POST MILES TOTAL PROJECT	SHEET No.	TOTAL SHEETS
08	Riv	74	63.0	15	88

7-11-14
REGISTERED CIVIL ENGINEER DATE

7-21-14
PLANS APPROVAL DATE

REGISTERED PROFESSIONAL ENGINEER
MICHAEL JACOB
No. 75503
Exp. 6/30/16
CIVIL
STATE OF CALIFORNIA

THE STATE OF CALIFORNIA OR ITS OFFICERS OR AGENTS SHALL NOT BE RESPONSIBLE FOR THE ACCURACY OR COMPLETENESS OF SCANNED COPIES OF THIS PLAN SHEET.

STAGE 2
CONSISTS OF THE FOLLOWING:

COLLECT DUFF (L+)

COLLECT SELECTED MATERIAL (L+)

CLEAR AND GRUB (L+)

REMOVE EXISTING BRIDGE (STAGE 2)

CONSTRUCT THE LEFT 26.75' OF NEW BRIDGE

CONSTRUCT LEFT SIDE RETAINING WALLS

CONSTRUCT LEFT ROAD BED

CONSTRUCT DRAINAGE SYSTEMS 2, 3, & 5

LEGEND:

STAGE 2 CONSTRUCTION

"℄" 196+00 TO 200+61

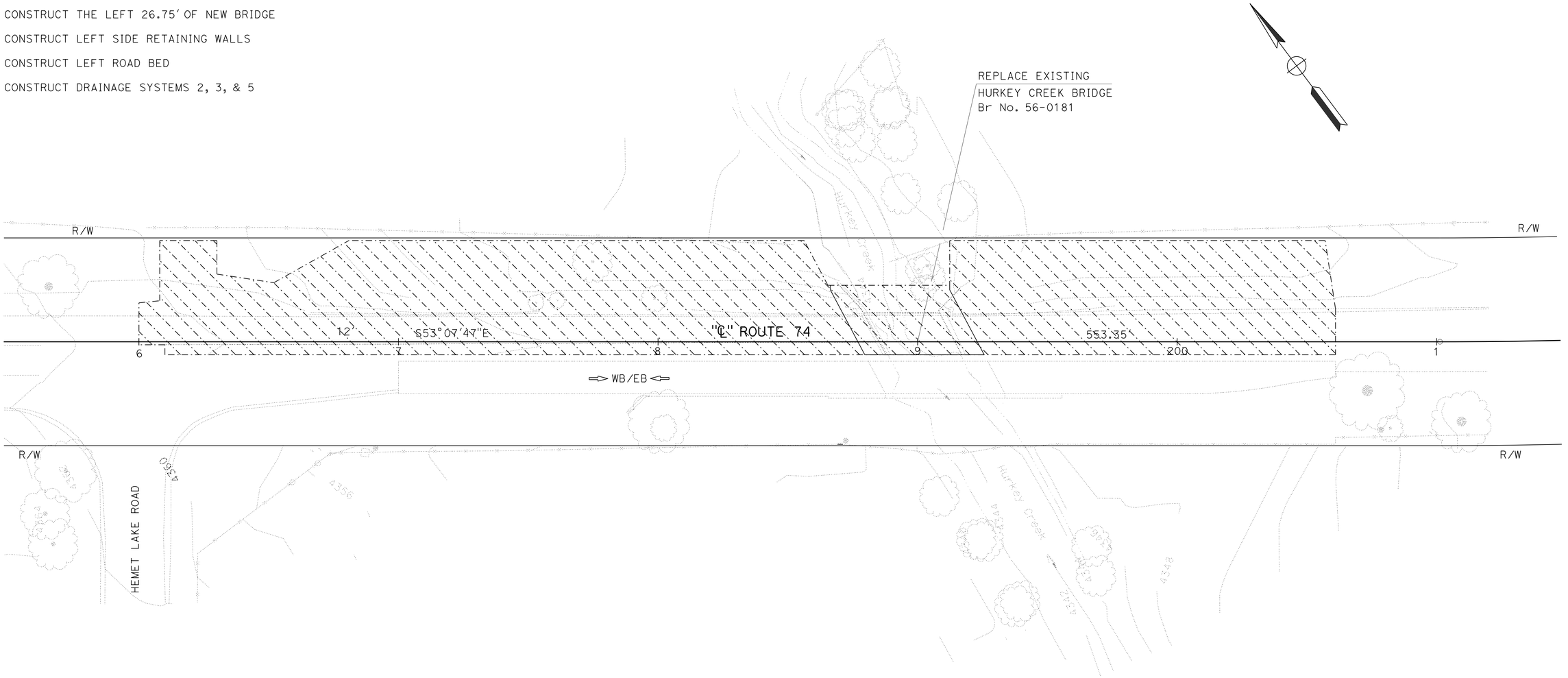

NOTE:

FOR ACCURATE RIGHT OF WAY DATA, CONTACT RIGHT OF WAY ENGINEERING AT THE DISTRICT OFFICE.

APPROVED FOR STAGE CONSTRUCTION WORK ONLY

STAGE CONSTRUCTION
STAGE 2
SCALE 1:20

SC-3

STATE OF CALIFORNIA - DEPARTMENT OF TRANSPORTATION
DESIGN
FUNCTIONAL SUPERVISOR: SERGIO E. AVILA
CALCULATED-DESIGNED BY: MICHAEL JACOB
CHECKED BY: REZA TOOTOONCHI
REVISED BY
DATE REVISED

LAST REVISION 07-11-14
DATE PLOTTED => 18-JUL-2014
TIME PLOTTED => 10:22

BORDER LAST REVISED 7/2/2010
USERNAME => s102458
DGN FILE => 0800000638ma003.dgn
RELATIVE BORDER SCALE IS IN INCHES 0 1 2 3
UNIT 2237
PROJECT NUMBER & PHASE 08000006381

Dist	COUNTY	ROUTE	POST MILES TOTAL PROJECT	SHEET No.	TOTAL SHEETS
08	Riv	74	63.0	16	88

Michael Jacob 7-11-14
REGISTERED CIVIL ENGINEER DATE

7-21-14
PLANS APPROVAL DATE

MICHAEL JACOB No. 75503 Exp. 6/30/16 CIVIL — REGISTERED PROFESSIONAL ENGINEER — STATE OF CALIFORNIA

THE STATE OF CALIFORNIA OR ITS OFFICERS OR AGENTS SHALL NOT BE RESPONSIBLE FOR THE ACCURACY OR COMPLETENESS OF SCANNED COPIES OF THIS PLAN SHEET.

STAGE 3
CONSISTS OF THE FOLLOWING:

COLLECT DUFF (R+)

COLLECT SELECTED MATERIAL (R+)

CLEAR AND GRUB (R+)

CONSTRUCT NEW BRIDGE CLOSURE POUR

CONSTRUCT RIGHT ROAD BED

CONSTRUCT DRAINAGE SYSTEM 1

LEGEND:

BRIDGE CLOSURE POUR (STAGE 3a)
"℄" 198+79.66 to 199+26.72

CONSTRUCTION (STAGE 3b)
"℄" 196+10 TO 197+00
TO BE DONE W/ LANE CLOSURE
REVERSIBLE CONTROL

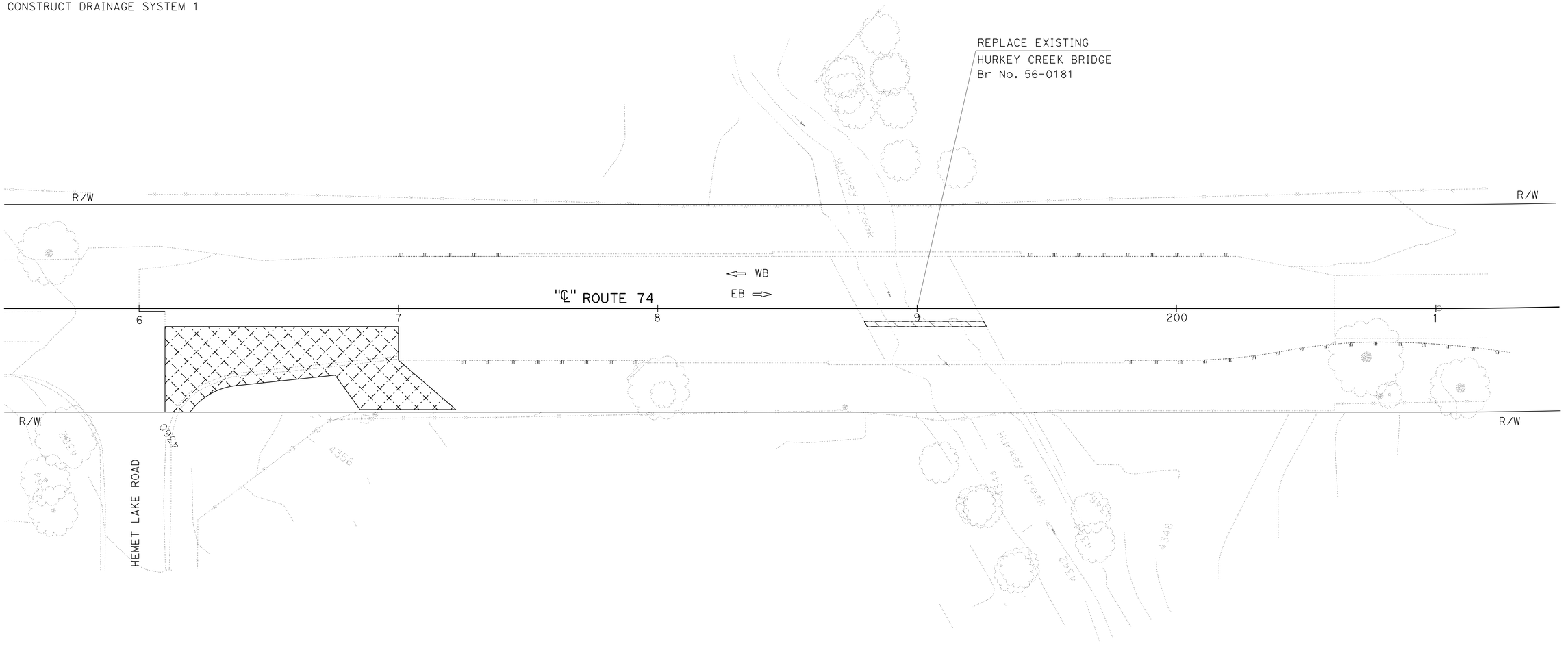

NOTE:
FOR ACCURATE RIGHT OF WAY DATA, CONTACT RIGHT OF WAY ENGINEERING AT THE DISTRICT OFFICE.

APPROVED FOR STAGE CONSTRUCTION WORK ONLY

STAGE CONSTRUCTION
STAGE 3
SCALE 1:20

SC-4

REVISED BY | DATE REVISED
MICHAEL JACOB | REZA TOOTOONCHI
CALCULATED-DESIGNED BY | CHECKED BY
FUNCTIONAL SUPERVISOR: SERGIO E. AVILA
STATE OF CALIFORNIA - DEPARTMENT OF TRANSPORTATION
DESIGN

LAST REVISION | DATE PLOTTED => 18-JUL-2014
07-11-14 | TIME PLOTTED => 10:23

BORDER LAST REVISED 7/2/2010 | USERNAME => s102458 | DGN FILE => 0800000638ma004.dgn | RELATIVE BORDER SCALE IS IN INCHES 0 1 2 3 | UNIT 2237 | PROJECT NUMBER & PHASE 08000006381

Dist	COUNTY	ROUTE	POST MILES TOTAL PROJECT	SHEET No.	TOTAL SHEETS
08	Riv	74	63.0	17	88

W E Wasser 7-11-14
REGISTERED CIVIL ENGINEER DATE

7-21-14
PLANS APPROVAL DATE

W.E.WASSER No. 37378 Exp. 6-30-16 CIVIL — REGISTERED PROFESSIONAL ENGINEER — STATE OF CALIFORNIA

THE STATE OF CALIFORNIA OR ITS OFFICERS OR AGENTS SHALL NOT BE RESPONSIBLE FOR THE ACCURACY OR COMPLETENESS OF SCANNED COPIES OF THIS PLAN SHEET.

NOTE:

1. REFER TO CONSTRUCTION AREA SIGNS CS1 FOR (B) (C) (D) (E) (F) (H) SIGN DETAILS
2. CONSTRUCTION AREA SIGN TO REMAIN DURING STAGE 1, STAGE 2, AND STAGE 3.
3. CONFLICTING SIGN SHALL BE COVERED AS DETERMINE BY THE ENGINEER.

LEGEND:

- BT (XX) BEGIN TEMPORARY TRAFFIC STRIPE
- ET (XX) END TEMPORARY TRAFFIC STRIPE
- BR (XX) BEGIN REMOVE PAVEMENT DELINEATION
- ER (XX) END REMOVE PAVEMENT DELINEATION
- T (XX) TEMPORARY TRAFFIC STRIPE (PAINT)
- CAS WITH PORTABLE FLASHING BEACON

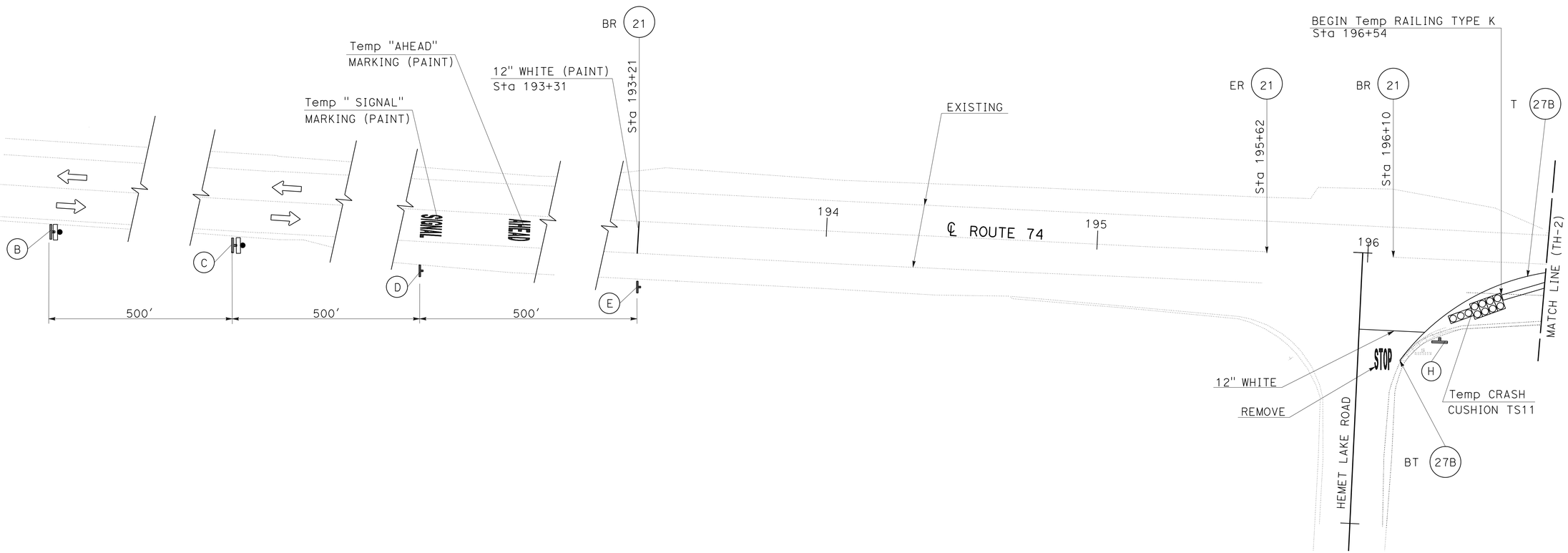

TRAFFIC HANDLING PLAN
STAGE 1
SCALE 1"=20'

TH-1

APPROVED FOR TRAFFIC HANDLING WORK ONLY

STATE OF CALIFORNIA - DEPARTMENT OF TRANSPORTATION
Caltrans® TRAFFIC DESIGN
FUNCTIONAL SUPERVISOR: W. E. WASSER
CALCULATED-DESIGNED BY: DEAN TO
CHECKED BY: SETHNA HORMUZD
REVISED BY / DATE REVISED

LAST REVISION DATE PLOTTED => 18-JUL-2014
07-11-14 TIME PLOTTED => 10:23

BORDER LAST REVISED 7/2/2010 | USERNAME => s102458 | DGN FILE => 0800000638md001.dgn | RELATIVE BORDER SCALE IS IN INCHES 0 1 2 3 | UNIT 2284 | PROJECT NUMBER & PHASE 08000006381

Dist	COUNTY	ROUTE	POST MILES TOTAL PROJECT	SHEET No.	TOTAL SHEETS
08	Riv	74	63.0	18	88

W E Wasser 7-11-14
REGISTERED CIVIL ENGINEER DATE

7-21-14
PLANS APPROVAL DATE

REGISTERED PROFESSIONAL ENGINEER
W.E.WASSER
No. 37378
Exp. 6-30-16
CIVIL
STATE OF CALIFORNIA

THE STATE OF CALIFORNIA OR ITS OFFICERS OR AGENTS SHALL NOT BE RESPONSIBLE FOR THE ACCURACY OR COMPLETENESS OF SCANNED COPIES OF THIS PLAN SHEET.

LEGEND:

WORK AREA

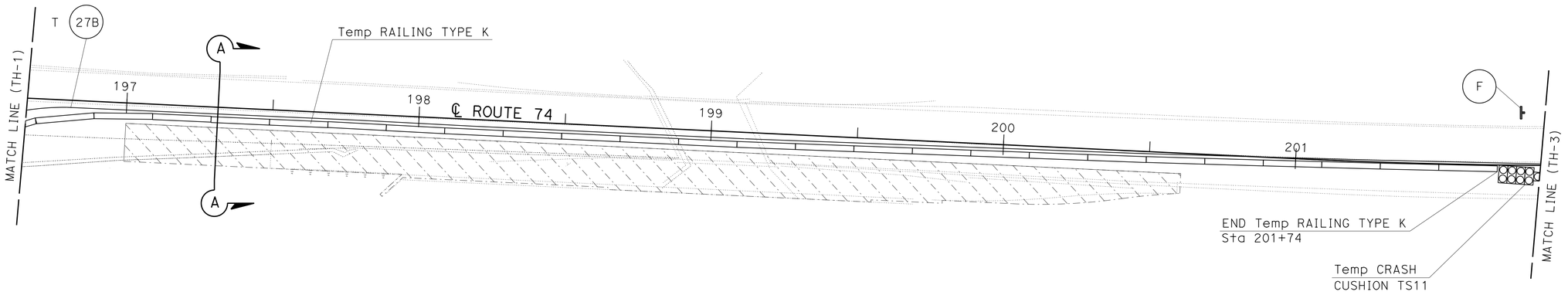

SECTION A-A

TRAFFIC HANDLING PLAN
STAGE 1
SCALE 1"=20'

TH-2

APPROVED FOR TRAFFIC HANDLING WORK ONLY

DEAN TO SETHNA HORMUZD
CALCULATED-DESIGNED BY
CHECKED BY
REVISED BY
DATE REVISED

STATE OF CALIFORNIA - DEPARTMENT OF TRANSPORTATION
Caltrans
TRAFFIC DESIGN
FUNCTIONAL SUPERVISOR
W. E. WASSER

LAST REVISION: DATE PLOTTED => 18-JUL-2014
07-11-14 TIME PLOTTED => 10:23

BORDER LAST REVISED 7/2/2010
USERNAME => s102458
DGN FILE => 0800000638md002.dgn
RELATIVE BORDER SCALE IS IN INCHES 0 1 2 3
UNIT 2284
PROJECT NUMBER & PHASE 08000006381

Dist	COUNTY	ROUTE	POST MILES TOTAL PROJECT	SHEET No.	TOTAL SHEETS
08	Riv	74	63.0	19	88

W E Wasser 7-11-14
REGISTERED CIVIL ENGINEER DATE

7-21-14
PLANS APPROVAL DATE

REGISTERED PROFESSIONAL ENGINEER
W.E.WASSER
No. 37378
Exp.6-30-16
CIVIL
STATE OF CALIFORNIA

THE STATE OF CALIFORNIA OR ITS OFFICERS OR AGENTS SHALL NOT BE RESPONSIBLE FOR THE ACCURACY OR COMPLETENESS OF SCANNED COPIES OF THIS PLAN SHEET.

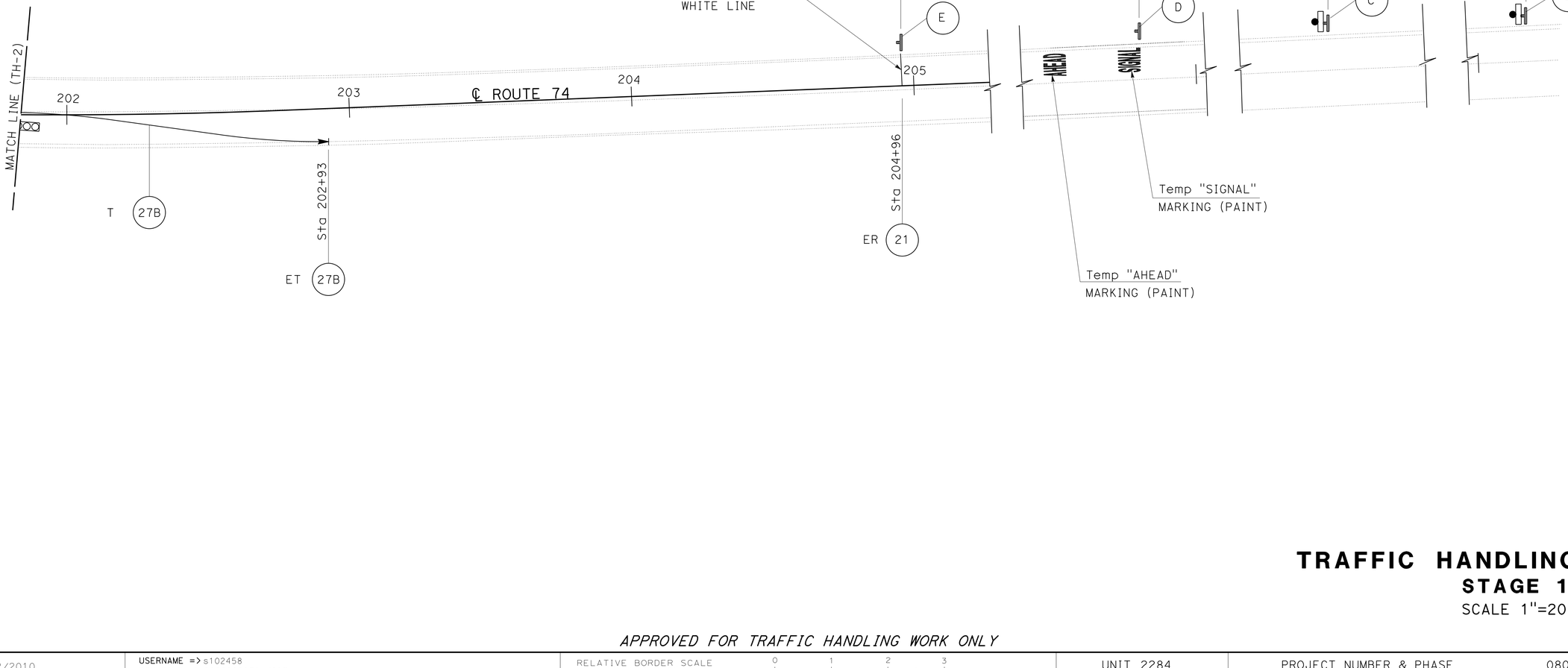

TRAFFIC HANDLING PLAN
STAGE 1
SCALE 1"=20′

TH-3

APPROVED FOR TRAFFIC HANDLING WORK ONLY

CALCULATED-DESIGNED BY
CHECKED BY
DEAN TO
SETHNA HORMUZD
REVISED BY
DATE REVISED
FUNCTIONAL SUPERVISOR
W. E. WASSER
STATE OF CALIFORNIA - DEPARTMENT OF TRANSPORTATION
Caltrans®
TRAFFIC DESIGN

LAST REVISION
DATE PLOTTED => 18-JUL-2014
TIME PLOTTED => 10:23
07-11-14

BORDER LAST REVISED 7/2/2010
USERNAME => s102458
DGN FILE => 0800000638md003.dgn
RELATIVE BORDER SCALE IS IN INCHES 0 1 2 3
UNIT 2284
PROJECT NUMBER & PHASE 08000006381

Dist	COUNTY	ROUTE	POST MILES TOTAL PROJECT	SHEET No.	TOTAL SHEETS
08	Riv	74	63.0	20	88

W E Wasser 7-11-14
REGISTERED CIVIL ENGINEER DATE

7-21-14
PLANS APPROVAL DATE

REGISTERED PROFESSIONAL ENGINEER
W.E.WASSER
No. 37378
Exp.6-30-16
CIVIL
STATE OF CALIFORNIA

THE STATE OF CALIFORNIA OR ITS OFFICERS OR AGENTS SHALL NOT BE RESPONSIBLE FOR THE ACCURACY OR COMPLETENESS OF SCANNED COPIES OF THIS PLAN SHEET.

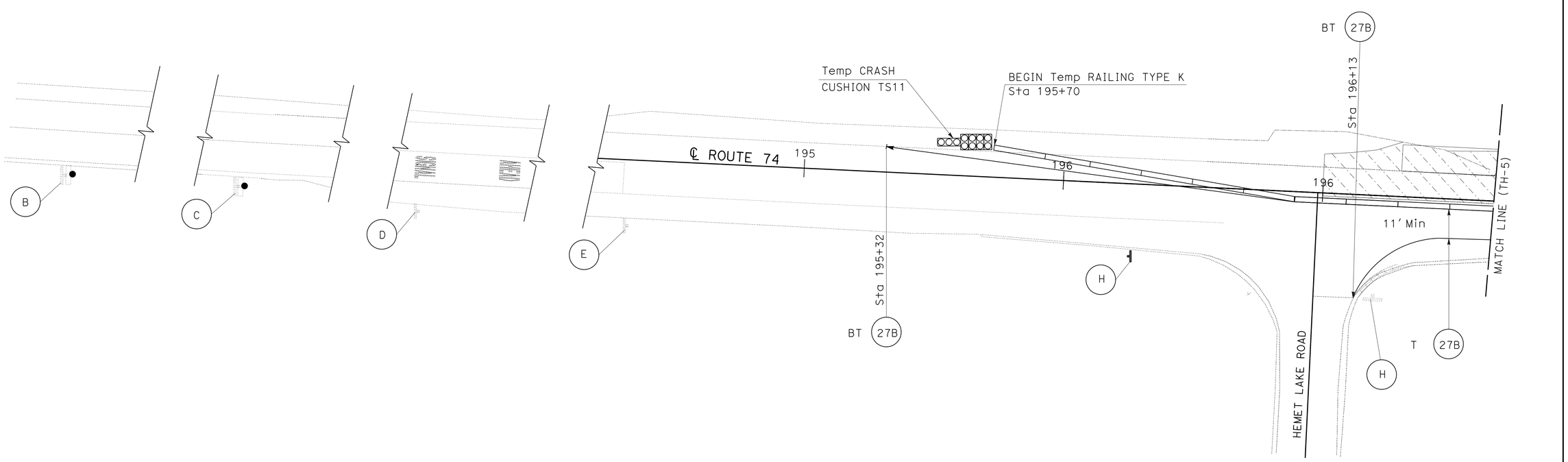

TRAFFIC HANDLING PLAN
STAGE 2
SCALE 1"=20'

TH-4

APPROVED FOR TRAFFIC HANDLING WORK ONLY

STATE OF CALIFORNIA - DEPARTMENT OF TRANSPORTATION
Caltrans® TRAFFIC DESIGN

FUNCTIONAL SUPERVISOR: W. E. WASSER

CALCULATED-DESIGNED BY: DEAN TO
CHECKED BY: SETHNA HORMUZD

REVISED BY | DATE REVISED

LAST REVISION: 07-11-14
DATE PLOTTED => 18-JUL-2014
TIME PLOTTED => 10:23

BORDER LAST REVISED 7/2/2010

USERNAME => s102458
DGN FILE => 0800000638md004.dgn

RELATIVE BORDER SCALE IS IN INCHES 0 1 2 3

UNIT 2284

PROJECT NUMBER & PHASE 08000006381

Dist	COUNTY	ROUTE	POST MILES TOTAL PROJECT	SHEET No.	TOTAL SHEETS
08	Riv	74	63.0	21	88

W E Wasser 7-11-14
REGISTERED CIVIL ENGINEER DATE

7-21-14
PLANS APPROVAL DATE

REGISTERED PROFESSIONAL ENGINEER
W.E.WASSER
No. 37378
Exp.6-30-16
CIVIL
STATE OF CALIFORNIA

THE STATE OF CALIFORNIA OR ITS OFFICERS OR AGENTS SHALL NOT BE RESPONSIBLE FOR THE ACCURACY OR COMPLETENESS OF SCANNED COPIES OF THIS PLAN SHEET.

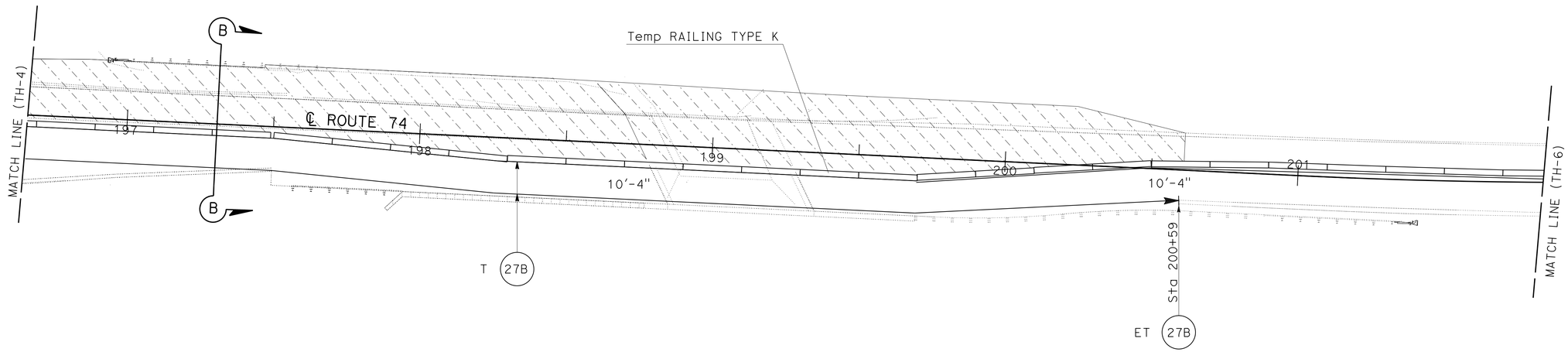

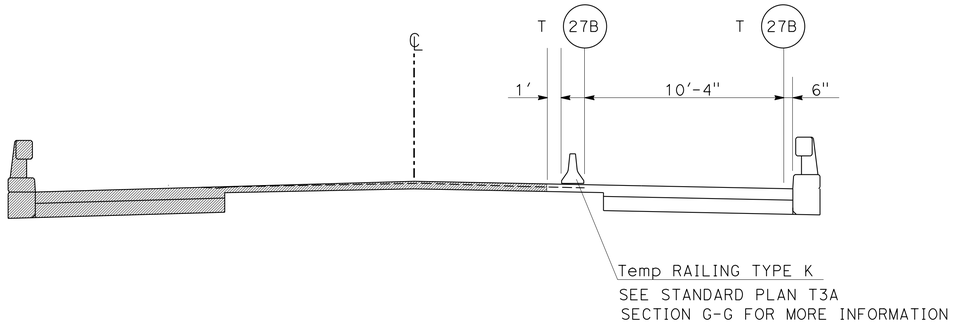

SECTION B-B

TRAFFIC HANDLING PLAN

STAGE 2

SCALE 1"=20′

TH-5

APPROVED FOR TRAFFIC HANDLING WORK ONLY

DEAN TO SETHNA HORMUZD — CALCULATED-DESIGNED BY / CHECKED BY

REVISED BY / DATE REVISED

FUNCTIONAL SUPERVISOR: W. E. WASSER

STATE OF CALIFORNIA - DEPARTMENT OF TRANSPORTATION
Caltrans®
TRAFFIC DESIGN

LAST REVISION DATE PLOTTED => 18-JUL-2014
07-11-14 TIME PLOTTED => 10:23

BORDER LAST REVISED 7/2/2010 | USERNAME => s102458 | DGN FILE => 0800000638md005.dgn | RELATIVE BORDER SCALE IS IN INCHES 0 1 2 3 | UNIT 2284 | PROJECT NUMBER & PHASE 08000006381

Dist	COUNTY	ROUTE	POST MILES TOTAL PROJECT	SHEET No.	TOTAL SHEETS
08	Riv	74	63.0	22	88

W E Wasser 7-11-14
REGISTERED CIVIL ENGINEER DATE

7-21-14
PLANS APPROVAL DATE

REGISTERED PROFESSIONAL ENGINEER
W.E.WASSER
No. 37378
Exp.6-30-16
CIVIL
STATE OF CALIFORNIA

THE STATE OF CALIFORNIA OR ITS OFFICERS OR AGENTS SHALL NOT BE RESPONSIBLE FOR THE ACCURACY OR COMPLETENESS OF SCANNED COPIES OF THIS PLAN SHEET.

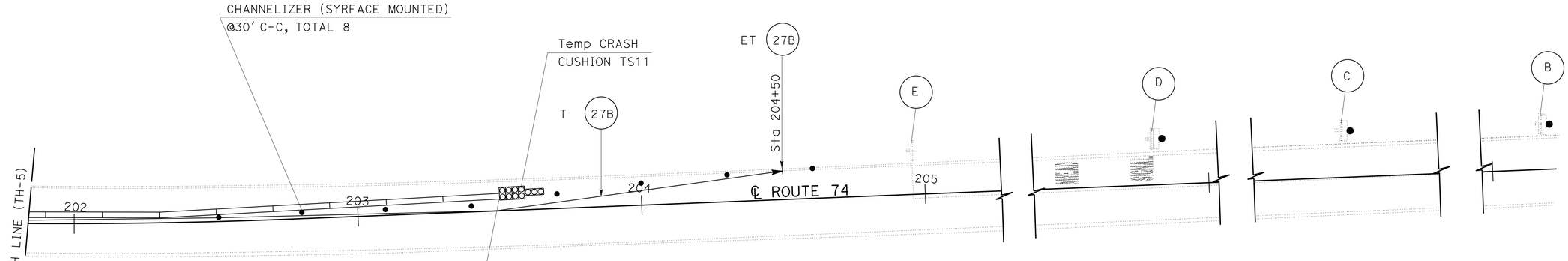

TRAFFIC HANDLING PLAN

STAGE 2

SCALE 1"=20'

TH-6

APPROVED FOR TRAFFIC HANDLING WORK ONLY

DEAN TO
SETHNA HORMUZD
CALCULATED-DESIGNED BY
CHECKED BY
REVISED BY
DATE REVISED

FUNCTIONAL SUPERVISOR
W. E. WASSER

STATE OF CALIFORNIA - DEPARTMENT OF TRANSPORTATION
Caltrans®
TRAFFIC DESIGN

LAST REVISION 07-11-14
DATE PLOTTED => 18-JUL-2014
TIME PLOTTED => 10:23

BORDER LAST REVISED 7/2/2010
USERNAME => s102458
DGN FILE => 0800000638md006.dgn
RELATIVE BORDER SCALE IS IN INCHES 0 1 2 3
UNIT 2284
PROJECT NUMBER & PHASE 08000006381

Dist	COUNTY	ROUTE	POST MILES TOTAL PROJECT	SHEET No.	TOTAL SHEETS
08	Riv	74	63.0	23	88

W E Wasser 7-11-14
REGISTERED CIVIL ENGINEER DATE

7-21-14
PLANS APPROVAL DATE

REGISTERED PROFESSIONAL ENGINEER
W.E.WASSER
No. 37378
Exp.6-30-16
CIVIL
STATE OF CALIFORNIA

THE STATE OF CALIFORNIA OR ITS OFFICERS OR AGENTS SHALL NOT BE RESPONSIBLE FOR THE ACCURACY OR COMPLETENESS OF SCANNED COPIES OF THIS PLAN SHEET.

NOTE:

REFER TO STANDARD PLAN T13 FOR TRAFFIC HANDLING
TO CONSTRUCT WORK FROM STATION 195+98.09 TO SATION 197+00

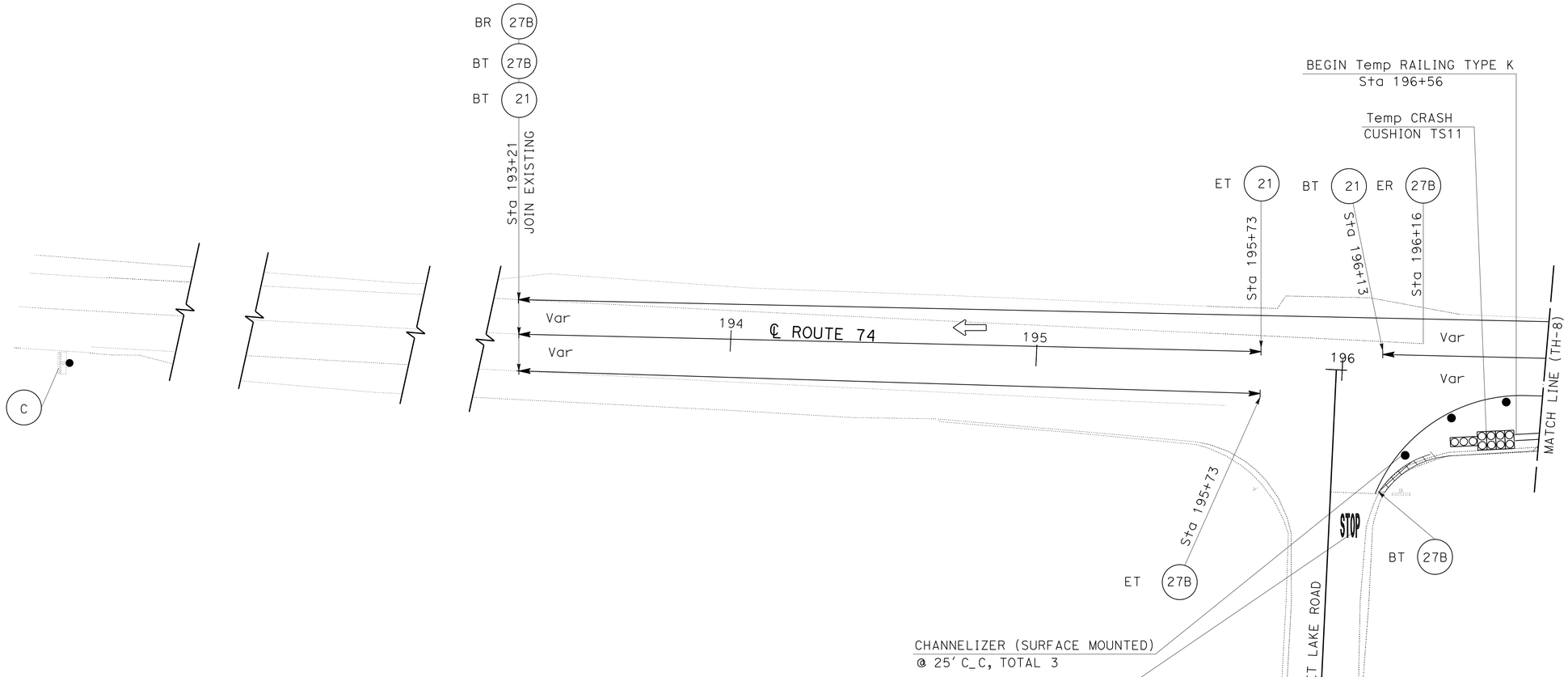

TRAFFIC HANDLING PLAN
STAGE 3
SCALE 1"=20'

TH-7

APPROVED FOR TRAFFIC HANDLING WORK ONLY

DEAN TO
SETHNA HORMUZD
CALCULATED-DESIGNED BY
CHECKED BY
REVISED BY
DATE REVISED

STATE OF CALIFORNIA - DEPARTMENT OF TRANSPORTATION
TRAFFIC DESIGN
FUNCTIONAL SUPERVISOR
W. E. WASSER

LAST REVISION 07-11-14
DATE PLOTTED => 18-JUL-2014
TIME PLOTTED => 10:23

BORDER LAST REVISED 7/2/2010
USERNAME => s102458
DGN FILE => 0800000638md007.dgn
RELATIVE BORDER SCALE IS IN INCHES 0 1 2 3
UNIT 2284
PROJECT NUMBER & PHASE 08000006381

Dist	COUNTY	ROUTE	POST MILES TOTAL PROJECT	SHEET No.	TOTAL SHEETS
08	Riv	74	63.0	24	88

W E Wasser 7-11-14
REGISTERED CIVIL ENGINEER DATE

7-21-14
PLANS APPROVAL DATE

REGISTERED PROFESSIONAL ENGINEER
W.E.WASSER
No. 37378
Exp.6-30-16
CIVIL
STATE OF CALIFORNIA

THE STATE OF CALIFORNIA OR ITS OFFICERS OR AGENTS SHALL NOT BE RESPONSIBLE FOR THE ACCURACY OR COMPLETENESS OF SCANNED COPIES OF THIS PLAN SHEET.

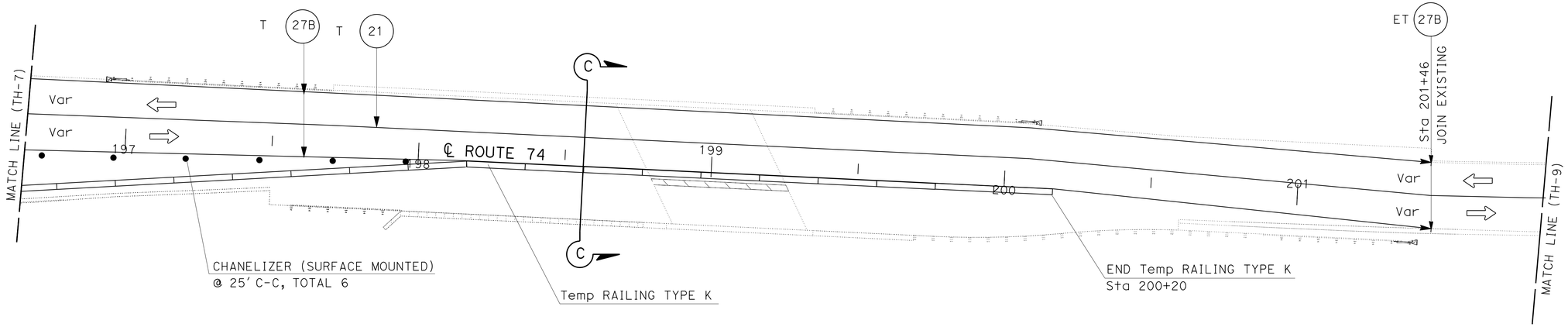

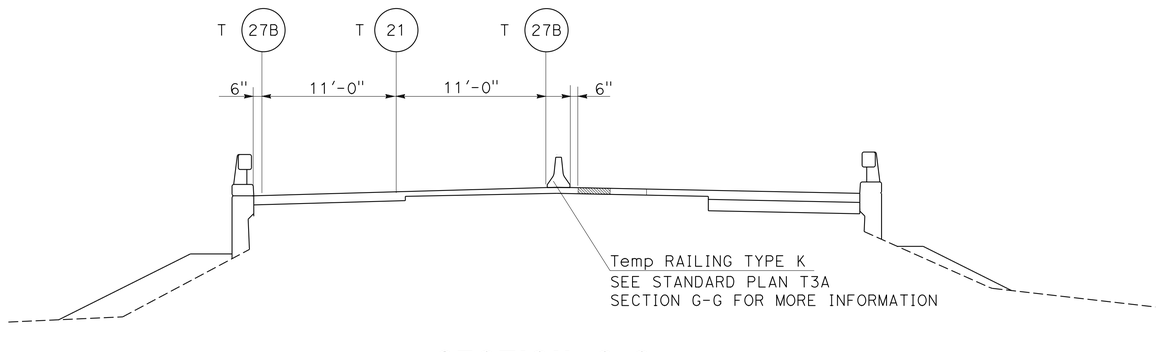

SECTION C-C
NO SCALE

TRAFFIC HANDLING PLAN
STAGE 3
SCALE 1"=20'

TH-8

APPROVED FOR TRAFFIC HANDLING WORK ONLY

STATE OF CALIFORNIA - DEPARTMENT OF TRANSPORTATION
Caltrans® TRAFFIC DESIGN
FUNCTIONAL SUPERVISOR: W. E. WASSER
CALCULATED-DESIGNED BY: DEAN TO
CHECKED BY: SETHNA HORMUZD
REVISED BY
DATE REVISED

LAST REVISION | DATE PLOTTED => 18-JUL-2014 | TIME PLOTTED => 10:23 | 07-11-14

BORDER LAST REVISED 7/2/2010 | USERNAME => s102458 | DGN FILE => 0800000638md008.dgn | RELATIVE BORDER SCALE IS IN INCHES 0 1 2 3 | UNIT 2284 | PROJECT NUMBER & PHASE 08000006381

Dist	COUNTY	ROUTE	POST MILES TOTAL PROJECT	SHEET No.	TOTAL SHEETS
08	Riv	74	63.0	25	88

W E Wasser 7-11-14
REGISTERED CIVIL ENGINEER DATE

7-21-14
PLANS APPROVAL DATE

REGISTERED PROFESSIONAL ENGINEER
W.E.WASSER
No. 37378
Exp.6-30-16
CIVIL
STATE OF CALIFORNIA

THE STATE OF CALIFORNIA OR ITS OFFICERS OR AGENTS SHALL NOT BE RESPONSIBLE FOR THE ACCURACY OR COMPLETENESS OF SCANNED COPIES OF THIS PLAN SHEET.

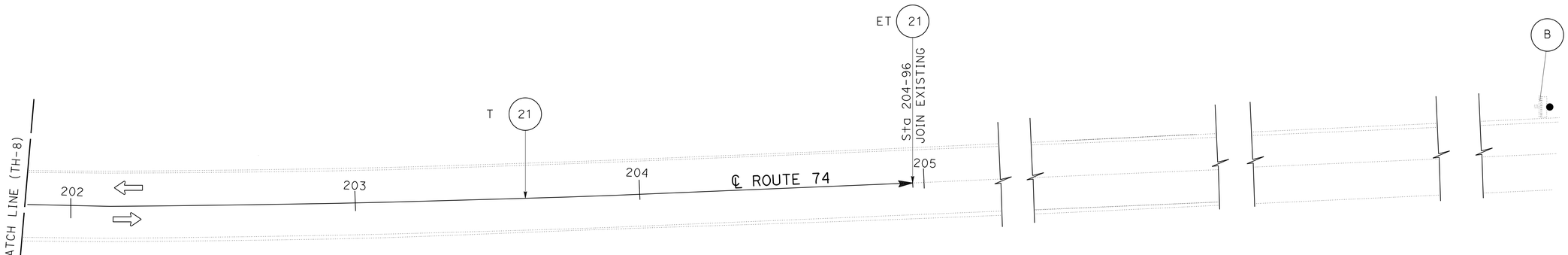

TRAFFIC HANDLING PLAN
STAGE 3
SCALE 1"=20'

TH-9

APPROVED FOR TRAFFIC HANDLING WORK ONLY

DEAN TO
SETHNA HORMUZD

CALCULATED-DESIGNED BY
CHECKED BY

REVISED BY
DATE REVISED

FUNCTIONAL SUPERVISOR
W. E. WASSER

STATE OF CALIFORNIA - DEPARTMENT OF TRANSPORTATION
Caltrans®
TRAFFIC DESIGN

LAST REVISION | DATE PLOTTED => 18-JUL-2014
07-11-14 | TIME PLOTTED => 10:23

BORDER LAST REVISED 7/2/2010

USERNAME => s102458
DGN FILE => 0800000638md009.dgn

RELATIVE BORDER SCALE IS IN INCHES 0 1 2 3

UNIT 2284

PROJECT NUMBER & PHASE 08000006381

Dist	COUNTY	ROUTE	POST MILES TOTAL PROJECT	SHEET No.	TOTAL SHEETS
08	Riv	74	63.0	26	88

W E Wasser 7-11-14
REGISTERED CIVIL ENGINEER DATE

7-21-14
PLANS APPROVAL DATE

REGISTERED PROFESSIONAL ENGINEER
W.E.WASSER
No. 37378
Exp.6-30-16
CIVIL
STATE OF CALIFORNIA

THE STATE OF CALIFORNIA OR ITS OFFICERS OR AGENTS SHALL NOT BE RESPONSIBLE FOR THE ACCURACY OR COMPLETENESS OF SCANNED COPIES OF THIS PLAN SHEET.

TEMPORARY PAVEMENT DELINEATION QUANTITIES

SHEET No.	DETAIL No. OR PAVEMENT MARKING	TEMPORARY TRAFFIC STRIPE PAINT		TEMPORARY PAVEMENT MARKING PAINT	REMOVE THERMOPLASTIC TRAFFIC STRIPE		REMOVE THERMOPLASTIC PAVEMENT MARKING
		4" WHITE	4" YELLOW		YELLOW	WHITE	WHITE
		LF	LF	SQFT	LF	LF	SQFT
TH-1	21				596		
	27B	70					
	12" WHITE			24			
	"SIGNAL" MARKING			32			
	"AHEAD" MARKING			31			
	"STOP" MARKING						22
TH-2	21				1040		
	27B	520					
	21				624		
	27B	110					
TH-3	12" WHITE			12			
	"SIGNAL" MARKING			32			
	"AHEAD" MARKING			31			
TH-4	27B	110					
TH-5	27B	910					
TH-6	27B	270					
TH-7	21		310				
	27B	680				345	
	"STOP" MARKING			22			
TH-8	27B	960					
	21		480				
TH-9	21		320				
SUBTOTAL		3630	1110	184	2260	345	22
TOTAL		4740		184	2260	345	22

TRAFFIC ITEM

SHEET No.	TEMPORARY K RAIL	CHANNELIZER SURFACE MOUNTED	Temp CRASH CRASH MODULE
	LF	EA	EA
TH-1	20		11
TH-2	500		11
TH-4	200		11
TH-5	520		
TH-6	160	8	11
TH-7	20	3	11
TH-8	340	6	
TOTAL	1760	17	55

TRAFFIC HANDLING QUANTITIES
THQ-1

REVISED BY | DATE REVISED
DEAN TO | SETHNA HORMUZD
CALCULATED-DESIGNED BY | CHECKED BY
FUNCTIONAL SUPERVISOR: W. E. WASSER
STATE OF CALIFORNIA - DEPARTMENT OF TRANSPORTATION
Caltrans® TRAFFIC DESIGN

LAST REVISION 07-11-14 | DATE PLOTTED => 18-JUL-2014 | TIME PLOTTED => 10:23

BORDER LAST REVISED 7/2/2010 | USERNAME => s102458 | DGN FILE => 08000006638mf001.dgn | RELATIVE BORDER SCALE IS IN INCHES 0 1 2 3 | UNIT 2284 | PROJECT NUMBER & PHASE 08000006381

Dist	COUNTY	ROUTE	POST MILES TOTAL PROJECT	SHEET No.	TOTAL SHEETS
08	Riv	74	63.0	27	88

W E Wasser 7-11-14
REGISTERED CIVIL ENGINEER DATE

7-21-14
PLANS APPROVAL DATE

W.E.WASSER No. 37378 Exp.6-30-16 CIVIL — REGISTERED PROFESSIONAL ENGINEER — STATE OF CALIFORNIA

THE STATE OF CALIFORNIA OR ITS OFFICERS OR AGENTS SHALL NOT BE RESPONSIBLE FOR THE ACCURACY OR COMPLETENESS OF SCANNED COPIES OF THIS PLAN SHEET.

LEGEND:

- STRIPING TERMINATION
- OBJECT MARKER
- DELINEATOR CLASS 1
- SIGN TO REMAIN
- REMOVE ROADSIDE SIGN
- ROADSIDE SIGN (WITH SHEET NUMBER AND NUMBER)

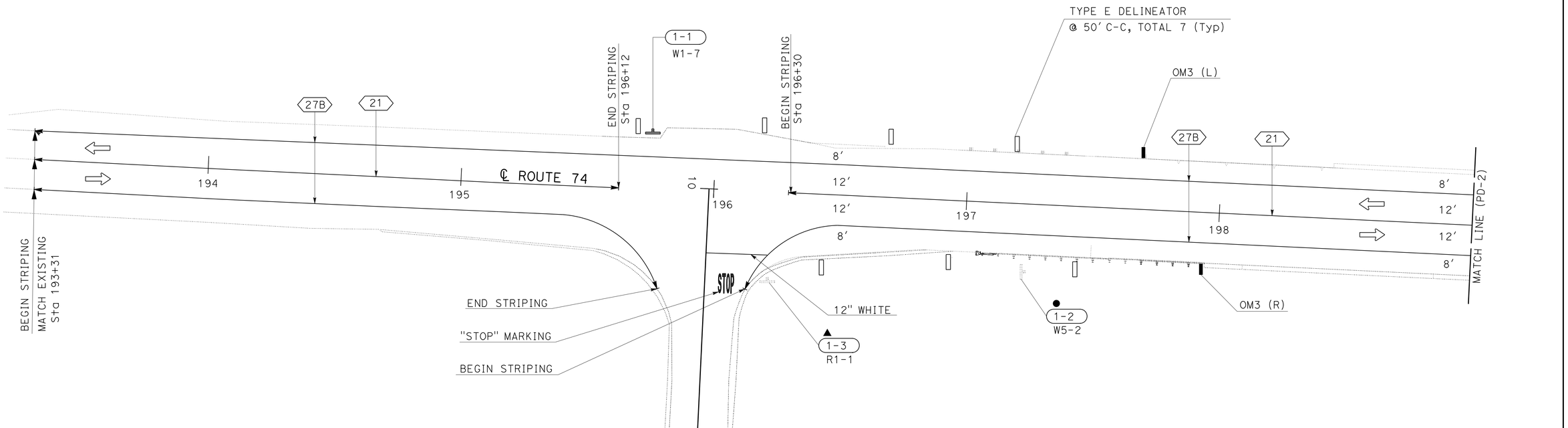

PAVEMENT DELINEATION PLAN AND SIGN PLAN

SCALE 1"=20'

PD-1

APPROVED FOR PAVEMENT DELINEATION AND SIGN WORK ONLY

DEAN TO SETHNA HORMUZD — CALCULATED-DESIGNED BY / CHECKED BY

REVISED BY / DATE REVISED

FUNCTIONAL SUPERVISOR: W. E. WASSER

STATE OF CALIFORNIA - DEPARTMENT OF TRANSPORTATION
Caltrans® TRAFFIC DESIGN

LAST REVISION 07-11-14 | DATE PLOTTED => 18-JUL-2014 | TIME PLOTTED => 10:23

BORDER LAST REVISED 7/2/2010

USERNAME => s102458
DGN FILE => 0800000638na001.dgn

RELATIVE BORDER SCALE IS IN INCHES 0 1 2 3

UNIT 2284

PROJECT NUMBER & PHASE 08000006381

Dist	COUNTY	ROUTE	POST MILES TOTAL PROJECT	SHEET No.	TOTAL SHEETS
08	Riv	74	63.0	28	88

W E Wasser 7-11-14
REGISTERED CIVIL ENGINEER DATE

7-21-14
PLANS APPROVAL DATE

REGISTERED PROFESSIONAL ENGINEER
W.E.WASSER
No. 37378
Exp.6-30-16
CIVIL
STATE OF CALIFORNIA

THE STATE OF CALIFORNIA OR ITS OFFICERS OR AGENTS SHALL NOT BE RESPONSIBLE FOR THE ACCURACY OR COMPLETENESS OF SCANNED COPIES OF THIS PLAN SHEET.

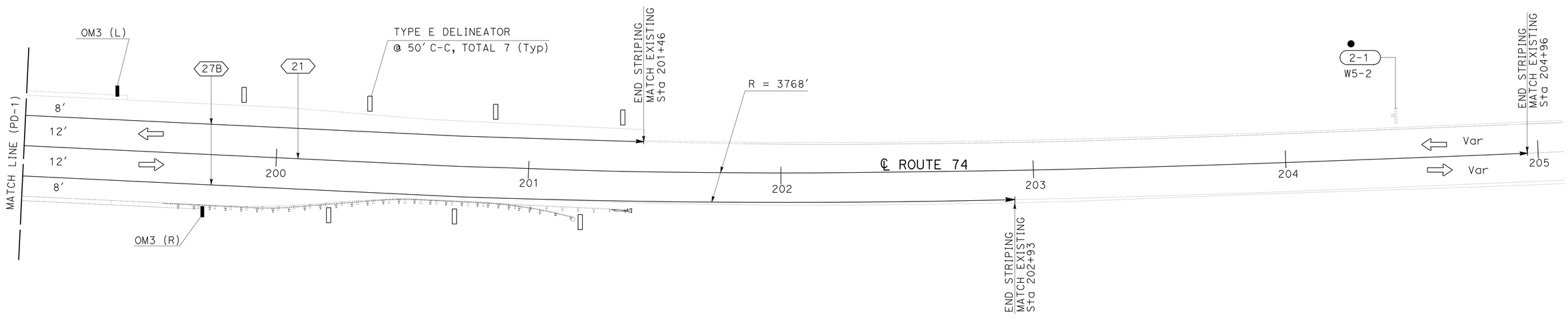

PAVEMENT DELINEATION PLAN AND SIGN PLAN

SCALE 1"=20'

PD-2

APPROVED FOR PAVEMENT DELINEATION WORK ONLY

DEAN TO SETHNA HORMUZD
CALCULATED-DESIGNED BY
CHECKED BY
REVISED BY
DATE REVISED

FUNCTIONAL SUPERVISOR: W. E. WASSER

STATE OF CALIFORNIA - DEPARTMENT OF TRANSPORTATION
Caltrans® TRAFFIC DESIGN

LAST REVISION DATE PLOTTED => 18-JUL-2014
TIME PLOTTED => 10:23
07-11-14

BORDER LAST REVISED 7/2/2010
USERNAME => s102458
DGN FILE => 0800000638na002.dgn
RELATIVE BORDER SCALE IS IN INCHES 0 1 2 3
UNIT 2284
PROJECT NUMBER & PHASE 08000006381

Dist	COUNTY	ROUTE	POST MILES TOTAL PROJECT	SHEET No.	TOTAL SHEETS
08	Riv	74	63.0	29	88

W E Wasser 7-11-14
REGISTERED CIVIL ENGINEER DATE

7-21-14
PLANS APPROVAL DATE

REGISTERED PROFESSIONAL ENGINEER
W.E.WASSER
No. 37378
Exp.6-30-16
CIVIL
STATE OF CALIFORNIA

THE STATE OF CALIFORNIA OR ITS OFFICERS OR AGENTS SHALL NOT BE RESPONSIBLE FOR THE ACCURACY OR COMPLETENESS OF SCANNED COPIES OF THIS PLAN SHEET.

PAVEMENT DELINEATION QUANTITIES

SHEET No.	STATION LIMITS	DETAIL No. OR PAVEMENT MARKING	THERMOPLASTIC TRAFFIC STRIPE (SPRAYABLE)		THERMOPLASTIC PAVEMENT MARKING	DELINEATOR CLASS 1	OBJECT MARKER	
			4" YELLOW	4" WHITE		TYPE E	OM3(L)	OM3(R)
			LF	LF	SQFT		EA	EA
PD-1	193+20 TO 199+00	21	551			7	1	1
		27B		1160				
		" STOP " MARKING			22			
		12" WHITE			20			
PD-2	19+00 TO 205+10	21	596			7	1	1
		27B		639				
SUBTOTAL			1147	1799	42	14	2	2
TOTAL			2946		42	14	4	

ROADSIDE SIGN QUANTITIES

SIGN No.	SIGN CODE	SIGN SIZE	POST LENGTH	POST SIZE	ROADSIDE SIGN	
					ONE POST	REMOVE
			(LF)	4" x 4"		
1-1	W1-7	36" x 18"	14	1	1	
1-2	W5-2					1
2-1	W5-2					1
TOTAL					1	2

SIGN PANEL MATERIAL

SIGN No.	SIGN CODE	SIGN DIMENSION	SINGLE FACE	BACK GROUND		LEGEND	GRAFFITI FILM	ROADSIDE	REMARK
				SHEETING COLOR	RETROREFLECTIVE ASTM TYPE	SHEETING COLOR	PREMIUM	SINGLE SHEET UNFRAMED ALUMINUM 0.063" SQFT	
1-1	W1-7	36" x 18"	x	YELLOW	VIII	BLACK	x	4.5	

REVISED BY | DATE REVISED
DEAN TO | SETHNA HORMUZD
CALCULATED-DESIGNED BY | CHECKED BY
FUNCTIONAL SUPERVISOR | W. E. WASSER
STATE OF CALIFORNIA - DEPARTMENT OF TRANSPORTATION
Caltrans® TRAFFIC DESIGN

PAVEMENT DELINEATION AND SIGN QUANTITIES
PDQ-1

LAST REVISION 07-11-14
DATE PLOTTED => 18-JUL-2014
TIME PLOTTED => 10:23

BORDER LAST REVISED 7/2/2010
USERNAME => s102458
DGN FILE => 0800000638nc001.dgn
RELATIVE BORDER SCALE IS IN INCHES 0 1 2 3
UNIT 2284
PROJECT NUMBER & PHASE 08000006381

Dist	COUNTY	ROUTE	POST MILES TOTAL PROJECT	SHEET No.	TOTAL SHEETS
08	Riv	74	63.0	30	88

7-11-14
REGISTERED CIVIL ENGINEER DATE

7-21-14
PLANS APPROVAL DATE

REGISTERED PROFESSIONAL ENGINEER
MICHAEL JACOB
No. 75503
Exp. 6/30/16
CIVIL
STATE OF CALIFORNIA

THE STATE OF CALIFORNIA OR ITS OFFICERS OR AGENTS SHALL NOT BE RESPONSIBLE FOR THE ACCURACY OR COMPLETENESS OF SCANNED COPIES OF THIS PLAN SHEET.

HMA MISCELLANEOUS AREAS AND DIKES

SHEET NO.	LOCATION	BEGIN STATION	END STATION	PLACE HMA DIKE (TYPE D)	PLACE HMA DIKE (TYPE C)	PLACE HMA DIKE (TYPE F)	PLACE HMA Misc AREA	* HMA (TYPE A)
				LF	LF	LF	SQYD	TON
L-1	WB	196+96.12	199+83.00	-	50	67	-	1.24
L-1	EB	196+13.71	200+44.45	88	75	88	-	6.74
DQ-1	SEE D-1	197+30	200+53.03	-	-	-	39.6	6.45
TOTAL				88	125	155	39.6	

* QUANTITY INCLUDED IN ROADWAY QUANTITIES

RECONSTRUCT FENCE (TYPE BW)

SHEET NO.	LOCATION	BEGIN STATION	END STATION	LN
C-1	WB	198+06.9	198+52.4	46
C-1	WB	198+90.0	199+13.9	24
C-1	EB	199+50.9	200+61.0	110
TOTAL				180

TEMPORARY FENCE (TYPE ESA)

LOCATION	BEGIN STATION	END STATION	LF
WB	173+00	196+50	2350
WB	196+50	201+00	340
WB	201+00	220+00	1900
EB	173+00	196+75	2375
EB	196+75	201+25	235
EB	201+25	220+00	1875
TOTAL			9075

*ENGINEER AND ARCHEOLOGIST TO DETERMINE FINAL LOCATION

TREATED WOOD WASTE

SHEET NO.	LOCATION	BEGIN STATION	END STATION	LB
L-1	WB	199+12.62	199+76	1040
L-1	EB	198+24.87	198+87.11	1040
TOTAL				2080

REMOVE PIPE

SHEET NO.	LOCATION	STATION	LF
L-1	EB	197+75.65	15
TOTAL			15

TEMPORARY CONSTRUCTION SITE BMPS

ITEM	UNIT	QUANTITY
Temp SOIL BINDER	SQYD	2420
Temp FIBER ROLL	LF	100

ROADWAY QUANTITIES

SHEET NO.	STATION	HOT MIX ASPHALT (TYPE A)	AGGREGATE BASE (CLASS 2)	TACK COAT	LIQUID ASPHALT (PRIME COAT)	ROADWAY EXCAVATION	(N) EMBANKMENT	COLD PLANE ASPHALT CONCRETE PAVEMENT
		TON	CY	TON	TON	CY	CY	SQYD
L-1	196+00.00 to 200+61.00	680	329	0.30	1.50	473	531	30

(N): NOT A SEPARATE PAY ITEM, FOR INFORMATION ONLY

GUARDRAIL

SHEET NO.	LOCATION	BEGIN STATION	END STATION	REMOVE GUARDRAIL	ALT IN-LINE TERMINAL SYSTEM	ALT FLARED TERMINAL SYSTEM	MGS STEEL POST	TRANS RAILLING (TYPE WB-31)	VEGETATION CONTROL
				FT	EA		FT	EA	SQ YD
L-1	EB	198+24.87	198+87.11	62.24					
L-1	WB	199+12.62	200+13.88	61.56	1			1	29
L-1	WB	196+96.12	197+70.00		1			1	29
L-1	EB	197+21.12	197+71.12		1			1	29
L-1	EB	199+78.88	201+28.21			1	75	1	32
TOTAL				124	3	1	75	4	119

SUMMARY OF QUANTITIES

Q-1

REVISED BY | DATE REVISED
MICHAEL JACOB | REZA TOOTOONCHI
CALCULATED-DESIGNED BY | CHECKED BY
FUNCTIONAL SUPERVISOR: SERGIO E. AVILA
STATE OF CALIFORNIA - DEPARTMENT OF TRANSPORTATION
DESIGN
Caltrans

LAST REVISION 07-11-14 | DATE PLOTTED => 18-JUL-2014 | TIME PLOTTED => 10:23

BORDER LAST REVISED 7/2/2010 | USERNAME => s102458 | DGN FILE => 0800000638pa001.dgn | RELATIVE BORDER SCALE IS IN INCHES 0 1 2 3 | UNIT 2237 | PROJECT NUMBER & PHASE 08000006381

NOTE: 1 FOR COMPLETE RIGHT OF WAY AND ACCURATE ACCESS DATA, SEE RIGHT OF WAY RECORD MAPS AT DISTRICT OFFICE

2 UNDERLINED PORTIONS OF BOTANICAL NAME INDICATE ABBREVIATIONS USED ON PLANTING PLANS.

APPLICABLE WHEN CIRCLED:

1 - QUANTITIES SHOWN ARE "PER PLANT" UNLESS SHOWN AS SQFT OR SQYD APPLICATION RATES
2 - BASIN MULCH IS INCLUDED WITH MULCH QUANTITIES SHOWN ON PLANTING PLAN
(3) - SUFFICIENT TO RECEIVE ROOT BALL AND AMENDMENTS IF REQUIRED
4 - FOLIAGE PROTECTOR REQUIRED
5 - ROOT PROTECTOR REQUIRED
6 - ROOT BARRIER REQUIRED
(7) - AS SHOWN

Dist	COUNTY	ROUTE	POST MILES TOTAL PROJECT	SHEET No.	TOTAL SHEETS
08	RIV	74	63.0	31	88

LICENSED LANDSCAPE ARCHITECT

7-21-14
PLANS APPROVAL DATE

LICENSED LANDSCAPE ARCHITECT — Matthew Henry Hall — Registered — 10/31/15 — Renewal Date — 7-11-14 — Date — STATE OF CALIFORNIA

THE STATE OF CALIFORNIA OR ITS OFFICERS OR AGENTS SHALL NOT BE RESPONSIBLE FOR THE ACCURACY OR COMPLETENESS OF SCANNED COPIES OF THIS PLAN SHEET.

PLANT LIST AND PLANTING SPECIFICATIONS

PLANT GROUP	PLANT No.	SYMBOL	BOTANICAL NAME	COMMON NAME	SIZE	QUANTITY EACH	HOLE SIZE (INCH) Dia	HOLE SIZE (INCH) DEPTH	BASIN TYPE	IRON SULFATE (1)	SOIL AMEND (1)	COMMERCIAL FERTILIZER (1) PLANTING	COMMERCIAL FERTILIZER (1) PLT ESTB	BASIN DUFF (CY)	STAKING	PLANTING LIMITS MINIMUM DISTANCE (ft) FROM ETW	Pvmt	FENCE	WALL	PAVED DITCH	EARTH DITCH	ON CENTER (ft)	REMARKS
A	1		ARCTOSTAPHYLOS GLAUCA	RAMONA MANZANITA	No. 1	7	(3)	(3)	I	-	-	-	-	0.02	-	-	-	5	5	5	5	(7)	SHRUB WITH ROOT PROTECTOR
	2		SALIX LAEVIGATA	RED WILLOW	No. 1	3	(3)	(3)	I	-	-	-	-	0.02	-	-	-	5	5	5	5	(7)	TREE/SHRUB WITH ROOT PROTECTOR
	3		SALIX LASIOLEPIS	ARROYO WILLOW	No. 1	4	(3)	(3)	I	-	-	-	-	0.02	-	-	-	5	5	5	5	(7)	TREE/SHRUB WITH ROOT PROTECTOR
	4		PINUS JEFFREYI	JEFFREY PINE	No. 1	21	(3)	(3)	I	-	-	-	-	0.02	-	-	-	5	5	5	5	(7)	TREE WITH ROOT PROTECTOR
			PLANT GROUP 'A' TOTAL			35																	

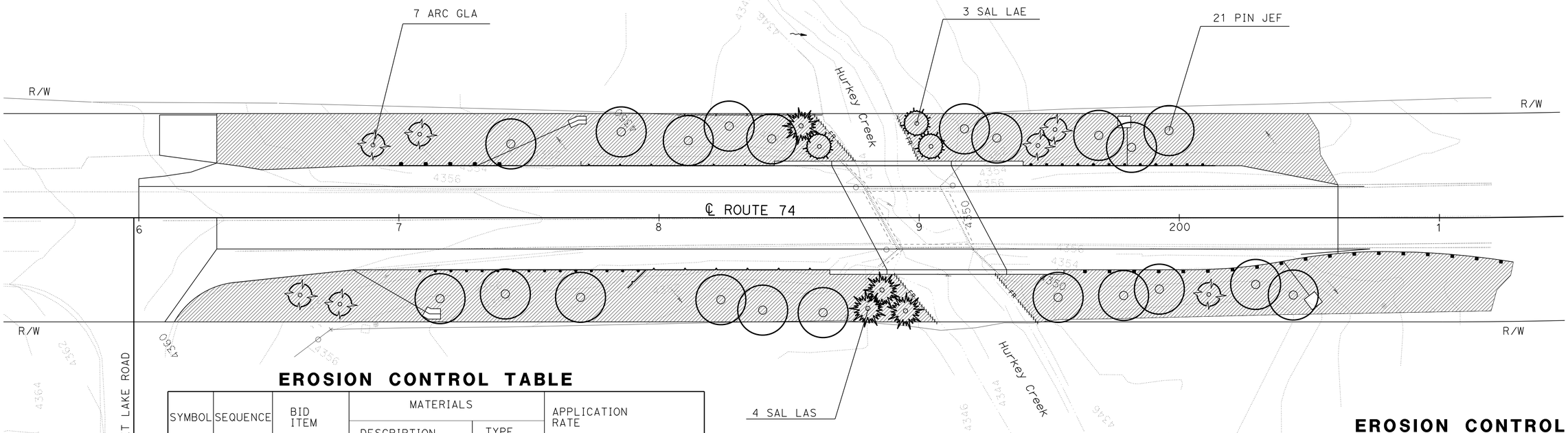

EROSION CONTROL TABLE

SYMBOL	SEQUENCE	BID ITEM	MATERIALS DESCRIPTION	MATERIALS TYPE	APPLICATION RATE
	1	TOPSOIL (N)	EARTHWORKS' SELECTED MATERIALS	———	COLLECT 3 INCH DEPTH SPREAD EVENLY
	2	DUFF	CHIPPED CLEARING AND GRUBBING	———	SPREAD TO A UNIFORM THICKNESS
FR	3	FIBER ROLL	———	B 2	———
	4	HYDROSEED	SEED	MIX	21.0 LBS/ACRE
			BFM FIBER	WOOD	2500 LBS/ACRE
			BFM TACKIFIER	ORGANIC	

(N) - NOT A SEPARATE PAY ITEM, FOR INFORMATION ONLY

SEED MIX

SEED	BOTANICAL NAME (COMMON NAME)	PERCENT GERMINATION (MINIMUM)	POUNDS PURE LIVE SEED PER ACRE (SLOPE MEASUREMENT)
MIX	Bromus carinatus (California brome)	40	16.0
	Lasthenia californica (Goldfields)	35	1.0
	Lupinus bicolor (Lupine)	40	4.0
		TOTAL	21.0

EROSION CONTROL QUANTITIES

BID ITEM	QUANTITY (UNITS)
HYDROSEED	16,925 SQ FT
FIBER ROLL	100 LF
DUFF	0.39 ACRES

PLANTING PLAN
SCALE 1" = 20'

PP-1

REVISED BY | DATE REVISED
TIM WANDS | MATTHEW HALL
CALCULATED-DESIGNED BY | CHECKED BY
SENIOR LANDSCAPE ARCHITECT | RAY DESSELLE
STATE OF CALIFORNIA - DEPARTMENT OF TRANSPORTATION
LANDSCAPE ARCHITECTURE

LAST REVISION 07-11-14 | DATE PLOTTED => 18-JUL-2014 | TIME PLOTTED => 10:23

BORDER LAST REVISED 7/2/2010 | USERNAME => s102458 | DGN FILE => 0800000638su001.dgn | RELATIVE BORDER SCALE IS IN INCHES 0 1 2 3 | UNIT 2271 | PROJECT NUMBER & PHASE 08000006381

Dist	COUNTY	ROUTE	POST MILES TOTAL PROJECT	SHEET No.	TOTAL SHEETS
08	Riv	74	63.0	32	88

REGISTERED ELECTRICAL ENGINEER — 7-11-14 DATE

PLANS APPROVAL DATE — 7-21-14

JAIME ESTRADA No. E 18351 Exp. 6/30/16 ELECTRICAL — REGISTERED PROFESSIONAL ENGINEER — STATE OF CALIFORNIA

THE STATE OF CALIFORNIA OR ITS OFFICERS OR AGENTS SHALL NOT BE RESPONSIBLE FOR THE ACCURACY OR COMPLETENESS OF SCANNED COPIES OF THIS PLAN SHEET.

LEGEND: (SHEET E-1 TO E-3)

1. INSTALL DEPARTMENT-FURNISHED MODEL 2070 CONTROLLER ASSEMBLY. AND TYPE 332 CABINET ON A MODIFIED FOUNDATION AS PER E-3 DETAIL B AND ES-3C.
2. WOOD POLE WITH 120/240 V, TYPE A SERVICE EQUIPMENT ENCLOSURE. SEE DETAIL A ON SHEET E-3.
3. WOOD POLE WITH SIGNAL AND LIGHTING EQUIPMENT. SEE DETAIL C ON SHEET E-3, LUMINAIRE SHALL BE 200 W LED, 240V.
4. WOOD POLE WITH SIGNAL SEE DETAIL D ON SHEET E-3.
5. MESSENGER CABLE 3#2 (CONDUCTORS BY UTILITY)
6. 2"C, 3 VIVDS CABLE, 3#14 (SIG Ø2), 3#14 (SIG Ø8), 3#14 (SIG Ø6), 2#8 (SIG), 1#8 (G).
7. MESSENGER CABLE 2"C, 1 VIVDS CABLE,3#14 (SIG Ø2), 2#8 (LTG), 1#8 (G).
8. MESSENGER CABLE 2"C, 2 VIVDS CABLE,3#14 (SIG Ø8), 3#14 (SIG Ø6), 2#8 (LTG), 1#8 (G).
9. MESSENGER CABLE 2"C, 1 VIVDS CABLE, 3#14 (SIG Ø8), 1#8 (G).
10. MESSENGER CABLE 1"C, 3#14 (SIG Ø8), 1#8 (G).
11. MESSENGER CABLE 2"C, 1 VIVDS CABLE, 3#14 (SIG Ø6), 2#8 (LTG), 1#8 (G).
12. MESSENGER CABLE 1"C, 3#14 (SIG Ø2), 1#8 (G).
13. MESSENGER CABLE 1"C, 3#14 (SIG Ø6), 1#8 (G).
14. INSTALL VIVDS PER STANDARD PLAN ES-7R, DETAIL D.
15. WOOD POLE SEE CASE 4N SHEET SES-2.

GENERAL NOTES:

1. MESSENGER CABLE MUST BE 7 STRAND SPAN WIRE, A MINIMUM VERTICAL CLEARANCE OF 18 FT.
2. OVERHEAD CONDUCTORS MUST BE TIED ON MESSENGER WIRE AT EVERY 3' MAXIMUM WITH SELF-CLINGING NYLON TIES.
3. OVERHEAD ENTRANCE CONDUIT FITTING MUST BE INSTALLED IN SUCH A WAY SO THAT RAINWATER MUST NOT SEEP INTO ELECTRICAL EQUIPMENT THROUGH THE ENTRANCE FITTING. FORM A DRIP LOOP AT ENTRANCE FITTING.
4. ESTABLISH CONTINUOUS GROUND WITH SYSTEM GROUND TO ALL METAL PARTS IN SYSTEM BY BONDING JUMPERS AND CONDUITS.
5. A GROUND ROD MUST BE INSTALLED IN THE PULL BOX ADJACENT TO WOOD POLES AND BOND TO RIGID METAL CONDUIT, UNLESS OTHERWISE NOTED.
6. WOOD POLE MUST BE INSTALLED AWAY FROM THE EDGE OF TRAVEL WAY AS FAR AS POSSIBLE.
7. REFER TO SES SHEETS FOR TEMPORARY WOOD POLES DETAILS.
8. FOR ACCURATE RIGHT OF WAY DATA, CONTACT RIGHT OF WAY ENGINEERING AT THE DISTRICT OFFICE.
9. WOODPOLE MUST BE PROTECTED FROM TRAFFIC BY MEANS ACCORDING TO CALIFORNIA DEPARTMENT OF TRANSPORTATION HIGHWAY MANUAL.

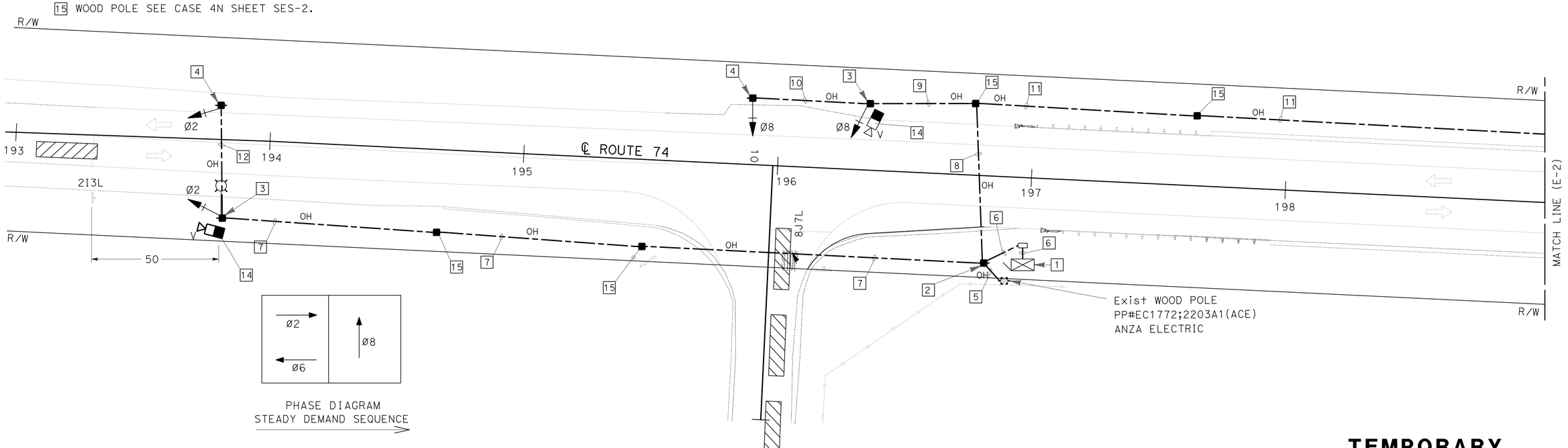

TEMPORARY SIGNAL AND LIGHTING

SCALE 1"=20'

E-1

APPROVED FOR ELECTRICAL WORK ONLY

REVISED BY | DATE REVISED

CALCULATED-DESIGNED BY: JAIME ESTRADA

CHECKED BY: DAVID A GONZALEZ

FUNCTIONAL SUPERVISOR: DAVID A GONZALEZ

STATE OF CALIFORNIA - DEPARTMENT OF TRANSPORTATION

Caltrans® ELECTRICAL DESIGN B

LAST REVISION | DATE PLOTTED => 18-JUL-2014 | TIME PLOTTED => 10:23

07-11-14

BORDER LAST REVISED 7/2/2010 | USERNAME => s102458 | DGN FILE => 0800000638ua001.dgn | RELATIVE BORDER SCALE IS IN INCHES 0 1 2 3 | UNIT 2292 | PROJECT NUMBER & PHASE 08000006381

NOTE:

FOR ACCURATE RIGHT OF WAY DATA, CONTACT
RIGHT OF WAY ENGINEERING AT THE DISTRICT OFFICE.

Dist	COUNTY	ROUTE	POST MILES TOTAL PROJECT	SHEET No.	TOTAL SHEETS
08	Riv	74	63.0	33	88

REGISTERED ELECTRICAL ENGINEER — 7-11-14 DATE

7-21-14
PLANS APPROVAL DATE

REGISTERED PROFESSIONAL ENGINEER
JAIME ESTRADA
No. E 18351
Exp. 6/30/16
ELECTRICAL
STATE OF CALIFORNIA

THE STATE OF CALIFORNIA OR ITS OFFICERS OR AGENTS SHALL NOT BE RESPONSIBLE FOR THE ACCURACY OR COMPLETENESS OF SCANNED COPIES OF THIS PLAN SHEET.

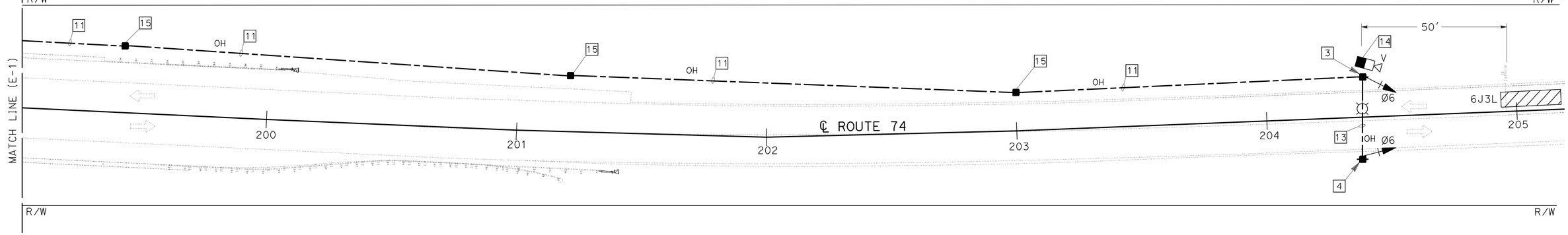

TEMPORARY SIGNAL AND LIGHTING

SCALE 1"=20'

E-2

APPROVED FOR ELECTRICAL WORK ONLY

CALCULATED-DESIGNED BY: JAIME ESTRADA
CHECKED BY: DAVID A GONZALEZ
FUNCTIONAL SUPERVISOR: DAVID A GONZALEZ
STATE OF CALIFORNIA - DEPARTMENT OF TRANSPORTATION
Caltrans® ELECTRICAL DESIGN B

REVISED BY | DATE REVISED

LAST REVISION 07-11-14 | DATE PLOTTED => 18-JUL-2014 | TIME PLOTTED => 10:23

BORDER LAST REVISED 7/2/2010 | USERNAME => s102458 | DGN FILE => 0800000638ua002.dgn | RELATIVE BORDER SCALE IS IN INCHES 0 1 2 3 | UNIT 2292 | PROJECT NUMBER & PHASE 08000006381

Dist	COUNTY	ROUTE	POST MILES TOTAL PROJECT	SHEET No.	TOTAL SHEETS
08	Riv	74	63.0	34	88

Jaime Estrada 7-11-14
REGISTERED ELECTRICAL ENGINEER DATE

7-21-14
PLANS APPROVAL DATE

JAIME ESTRADA No. E 18351 Exp. 6/30/16 ELECTRICAL — REGISTERED PROFESSIONAL ENGINEER — STATE OF CALIFORNIA

THE STATE OF CALIFORNIA OR ITS OFFICERS OR AGENTS SHALL NOT BE RESPONSIBLE FOR THE ACCURACY OR COMPLETENESS OF SCANNED COPIES OF THIS PLAN SHEET.

NOTE:

1. FOR NOTES AND LEGEND SEE SHEET E-1.

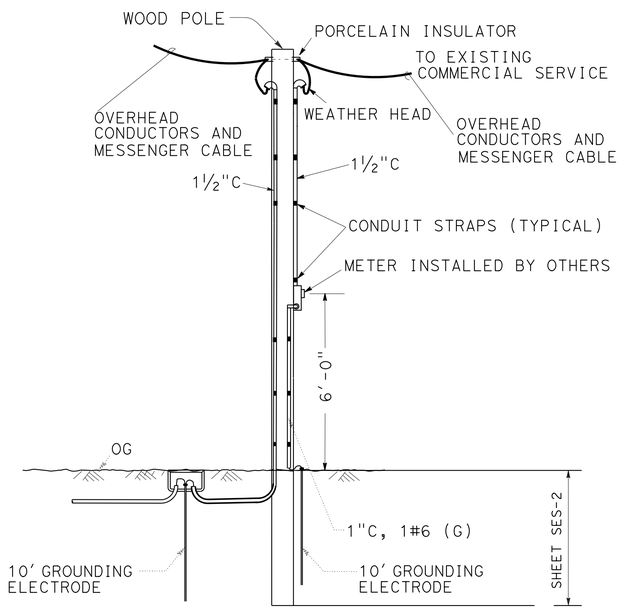

TEMPORARY SERVICE INSTALLATION ON WOOD POLE
DETAIL A

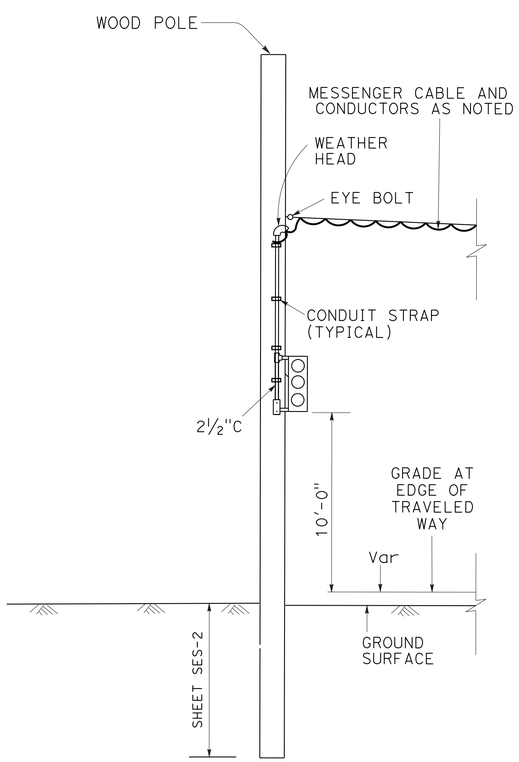

TEMPORARY SIGNAL INSTALLATION ON WOOD POLE
DETAIL D

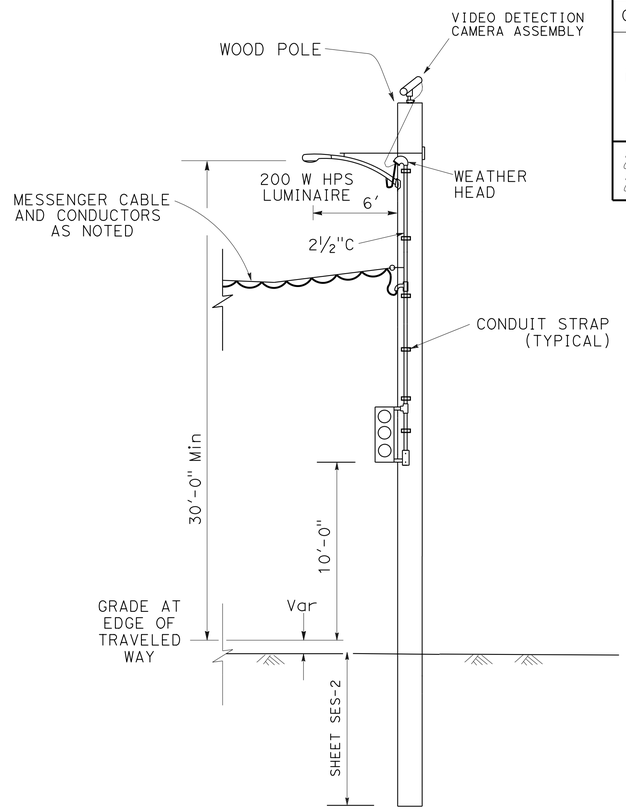

TEMPORARY SIGNAL AND LIGHTING INSTALLATION ON WOOD POLE
DETAIL C

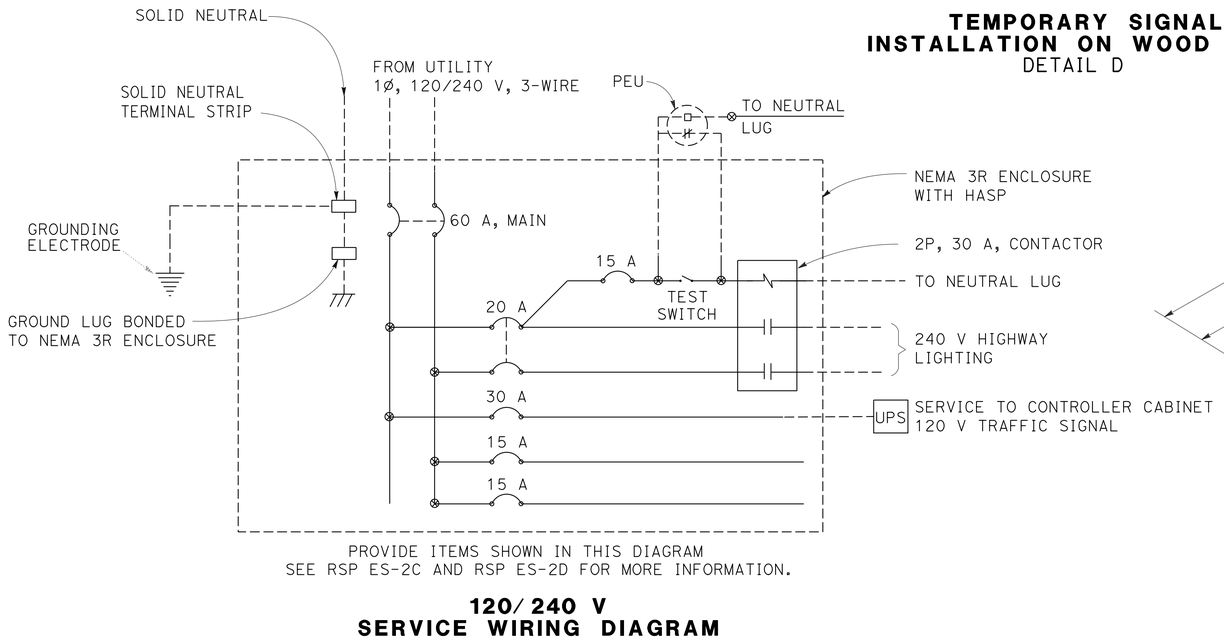

120/240 V SERVICE WIRING DIAGRAM

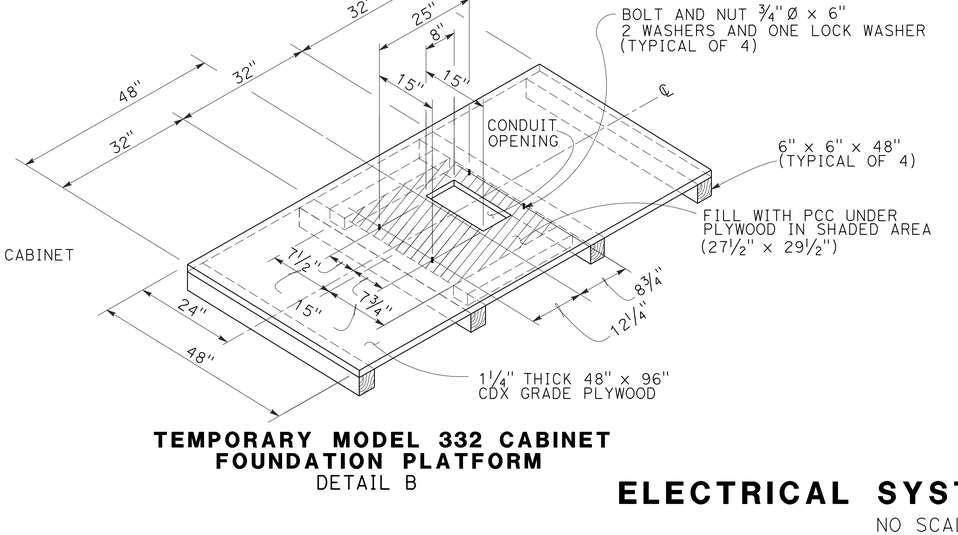

TEMPORARY MODEL 332 CABINET FOUNDATION PLATFORM
DETAIL B

ELECTRICAL SYSTEM DETAILS

NO SCALE

E-3

APPROVED FOR ELECTRICAL WORK ONLY

STATE OF CALIFORNIA - DEPARTMENT OF TRANSPORTATION
Caltrans® ELECTRICAL DESIGN B
FUNCTIONAL SUPERVISOR: DAVID A GONZALEZ
CALCULATED-DESIGNED BY: JAIME ESTRADA
CHECKED BY: DAVID A GONZALEZ
REVISED BY / DATE REVISED

LAST REVISION | DATE PLOTTED => 18-JUL-2014 | TIME PLOTTED => 10:23
07-11-14

BORDER LAST REVISED 7/2/2010 | USERNAME => s102458 | DGN FILE => 0800000638ua003.dgn | RELATIVE BORDER SCALE IS IN INCHES 0 1 2 3 | UNIT 2292 | PROJECT NUMBER & PHASE 08000006381

Dist	COUNTY	ROUTE	POST MILES TOTAL PROJECT	SHEET No.	TOTAL SHEETS
08	Riv	74	63.0	35	88

Jaime Estrada 7-11-14
REGISTERED ELECTRICAL ENGINEER DATE

7-21-14
PLANS APPROVAL DATE

REGISTERED PROFESSIONAL ENGINEER
JAIME ESTRADA
No. E 18351
Exp. 6/30/16
ELECTRICAL
STATE OF CALIFORNIA

THE STATE OF CALIFORNIA OR ITS OFFICERS OR AGENTS SHALL NOT BE RESPONSIBLE FOR THE ACCURACY OR COMPLETENESS OF SCANNED COPIES OF THIS PLAN SHEET.

NOTE:

1. THE QUANTITIES ON THIS SHEET ARE NOT A SEPARATE PAY ITEM AND ARE FOR INFORMATION ONLY.

SHEET No.	MODEL 332 CABINET	MODEL 332 CABINET FOUNDATION	BATTERY BACK-UP SYSTEM	No. 5 PB	2 "C TYPE 3	WOOD POLE CASE 1N	WOOD POLE CASE 2N	WOOD POLE CASE 3N	WOOD POLE CASE 4N	7 STRAND SPAN WIRE	No. 8 CONDUCTOR	No. 10 CONDUCTOR	No. 14 CONDUCTOR	VIVIDS POWER CABLE	VIVIDS VIDEO CABLE
	EA	EA	EA	EA	LF	EA	EA	EA	EA	LF	LF	LF	LF	LF	LF
E-1	1	1	1	1	10	3	7	3	2	4000	3000	3000	1500	1200	1200
E-2															
E-3															

EXISTING UTILITY FACILITIES HAVE NOT BEEN PLOTTED ON THESE PLANS.

ELETRICAL QUANTITIES

E-8

CALCULATED-DESIGNED BY: JAIME ESTRADA
CHECKED BY: DAVID A GONZALEZ
REVISED BY
DATE REVISED
FUNCTIONAL SUPERVISOR: DAVID A GONZALEZ

STATE OF CALIFORNIA - DEPARTMENT OF TRANSPORTATION
Caltrans® ELECTRICAL DESIGN B

LAST REVISION 07-11-14
DATE PLOTTED => 18-JUL-2014
TIME PLOTTED => 10:23

M

Maint	MAINTENANCE
Max	MAXIMUM
MB	METAL BEAM
MBB	METAL BEAM BARRIER
MBGR	METAL BEAM GUARD RAILING
Med	MEDIAN
MGS	MIDWEST GUARDRAIL SYSTEM
MH	MANHOLE
Min	MINIMUM
Misc	MISCELLANEOUS
Misc I & S	MISCELLANEOUS IRON AND STEEL
Mkr	MARKER
Mod	MODIFIED, MODIFY
Mon	MONUMENT
MP	METAL PLATE
MPGR	METAL PLATE GUARD RAILING
MR	MOVEMENT RATING
MSE	MECHANICALLY STABILIZED EMBANKMENT
Mt	MOUNTAIN, MOUNT
Mtl	MATERIAL
MVP	MAINTENANCE VEHICLE PULLOUT

N

N	NORTH
NB	NORTHBOUND
No.	NUMBER (MUST HAVE PERIOD)
Nos.	NUMBERS (MUST HAVE PERIOD)
NPS	NOMINAL PIPE SIZE
NS	NEAR SIDE
NSP	NEW STANDARD PLAN
NTS	NOT TO SCALE

O

Oblr	OBLITERATE
OC	OVERCROSSING
OD	OUTSIDE DIAMETER
OF	OUTSIDE FACE
OG	ORIGINAL GROUND
OGAC	OPEN GRADED ASPHALT CONCRETE
OGFC	OPEN GRADED FRICTION COURSE
OH	OVERHEAD
OHWM	ORDINARY HIGH WATER MARK
O-O	OUT TO OUT
Opp	OPPOSITE
OSD	OVERSIDE DRAIN

P

P	PAGE
PAP	PERFORATED ALUMINUM PIPE
PB	PULL BOX
PC	POINT OF CURVATURE, PRECAST
PCC	POINT OF COMPOUND CURVE, PORTLAND CEMENT CONCRETE
PCMS	PORTABLE CHANGEABLE MESSAGE SIGN
PCP	PERFORATED CONCRETE PIPE, PRESTRESSED CONCRETE PIPE
PCVC	POINT OF COMPOUND VERTICAL CURVE
PEC	PERMIT TO ENTER AND CONSTRUCT
Ped	PEDESTRIAN
Ped OC	PEDESTRIAN OVERCROSSING
Ped UC	PEDESTRIAN UNDERCROSSING
Perm Mtl	PERMEABLE MATERIAL

P continued

PG	PROFILE GRADE
PI	POINT OF INTERSECTION
PJP	PARTIAL JOINT PENETRATION
Pkwy	PARKWAY
℄,PL	PLATE
P/L	PROPERTY LINE
PM	POST MILE, TIME FROM NOON TO MIDNIGHT
PN	PAVING NOTCH
POC	POINT OF HORIZONTAL CURVE
POT	POINT OF TANGENT
POVC	POINT OF VERTICAL CURVE
PP	PIPE PILE, PLASTIC PIPE, POWER POLE
PPL	PREFORMED PERMEABLE LINER
PPP	PERFORATED PLASTIC PIPE
PRC	POINT OF REVERSE CURVE
PRF	PAVEMENT REINFORCING FABRIC
PRVC	POINT OF REVERSE VERTICAL CURVE
PS&E	PLANS, SPECIFICATIONS AND ESTIMATES
PS, P/S	PRESTRESSED
PSP	PERFORATED STEEL PIPE
PT	POINT OF TANGENCY
PVC	POLYVINYL CHLORIDE
Pvmt	PAVEMENT

Q

Qty	QUANTITY

R

R	RADIUS
R & D	REMOVE AND DISPOSE
R & S	REMOVE AND SALVAGE
R/C	RATE OF CHANGE
RCA	REINFORCED CONCRETE ARCH
RCB	REINFORCED CONCRETE BOX
RCP	REINFORCED CONCRETE PIPE
RCPA	REINFORCED CONCRETE PIPE ARCH
Rd	ROAD
Reinf	REINFORCED, REINFORCEMENT, REINFORCING
Rel	RELOCATE
Repl	REPLACEMENT
Ret	RETAINING
Rev	REVISED, REVISION
Rdwy	ROADWAY
RHMA	RUBBERIZED HOT MIX ASPHALT
Riv	RIVER
RM	ROAD-MIXED
RP	RADIUS POINT, REFERENCE POINT
RR	RAILROAD
RSP	ROCK SLOPE PROTECTION, REVISED STANDARD PLAN
Rt	RIGHT
Rte	ROUTE
RW	REDWOOD, RETAINING WALL
R/W	RIGHT OF WAY
Rwy	RAILWAY

S

S	SOUTH, SUPPLEMENT
SAE	STRUCTURE APPROACH EMBANKMENT
Salv	SALVAGE
SAPP	STRUCTURAL ALUMINUM PLATE PIPE
SB	SOUTHBOUND
SC	SAND CUSHION
SCSP	SLOTTED CORRUGATED STEEL PIPE
SD	STORM DRAIN
Sec	SECOND, SECTION
Sep	SEPARATION
SG	SUBGRADE
Shld	SHOULDER
Sht	SHEET
Sim	SIMILAR
℄	STATION LINE
SM	SELECTED MATERIAL
Spec	SPECIAL, SPECIFICATIONS
SPP	SLOTTED PLASTIC PIPE
SS	SLOPE STAKE
SSBM	STRAP AND SADDLE BRACKET METHOD
SSD	STRUCTURAL SECTION DRAIN
SSPA	STRUCTURAL STEEL PLATE ARCH
SSPP	STRUCTURAL STEEL PLATE PIPE
SSPPA	STRUCTURAL STEEL PLATE PIPE ARCH
SSRP	STEEL SPIRAL RIB PIPE
St	STREET
Sta	STATION
STBB	SINGLE THRIE BEAM BARRIER
Std	STANDARD
Str	STRUCTURE
Surf	SURFACING
SW	SIDEWALK, SOUND WALL
Swr	SEWER
Sym	SYMMETRICAL
S4S	SURFACE 4 SIDES

T

T	SEMI-TANGENT
Tan	TANGENT
TBB	THRIE BEAM BARRIER
Tbr	TIMBER
TC	TOP OF CURB
TCB	TRAFFIC CONTROL BOX
TCE	TEMPORARY CONSTRUCTION EASEMENT
Tel	TELEPHONE
Temp	TEMPORARY
TG	TOP OF GRADE
Tot	TOTAL
TP	TELEPHONE POLE
TPB	TREATED PERMEABLE BASE
TPM	TREATED PERMEABLE MATERIAL
Trans	TRANSITION

T continued

TS	TRANSVERSE, TRAFFIC SIGNAL, TUBULAR STEEL
Typ	TYPICAL

U

UC	UNDERCROSSING
UD	UNDERDRAIN
UG	UNDERGROUND
UON	UNLESS OTHERWISE NOTED
UP	UNDERPASS

V

V	VALVE, DESIGN SPEED
Var	VARIABLE, VARIES
VC	VERTICAL CURVE
VCP	VITRIFIED CLAY PIPE
Vert	VERTICAL
Via	VIADUCT
Vol	VOLUME

W

W	WEST, WIDTH
WB	WESTBOUND
WH	WEEP HOLE
WM	WIRE MESH
WS	WATER SURFACE
WSP	WELDED STEEL PIPE
Wt	WEIGHT
WV	WATER VALVE
WW	WINGWALL
WWLOL	WINGWALL LAYOUT LINE

X

X Sec	CROSS SECTION
Xing	CROSSING

Y

Yr	YEAR
Yrs	YEARS

Dist	COUNTY	ROUTE	POST MILES TOTAL PROJECT	SHEET No.	TOTAL SHEETS
08	Riv	74	63.0	36	88

Grace M. Tsushima
REGISTERED CIVIL ENGINEER

July 19, 2013
PLANS APPROVAL DATE

REGISTERED PROFESSIONAL ENGINEER — Grace M. Tsushima — No. C49814 — Exp. 9-30-14 — CIVIL — STATE OF CALIFORNIA

THE STATE OF CALIFORNIA OR ITS OFFICERS OR AGENTS SHALL NOT BE RESPONSIBLE FOR THE ACCURACY OR COMPLETENESS OF SCANNED COPIES OF THIS PLAN SHEET.

TO ACCOMPANY PLANS DATED 7-21-14

UNIT OF MEASUREMENT SYMBOLS:

Some of the symbols used in the project plan quantity tables and in the Bid Item List are:

TABLE A

SYMBOL USED	DEFINITIONS
ACRE	ACRE
CF	CUBIC FOOT
CY	CUBIC YARD
EA	EACH
GAL	GALLON
LB	POUND
LF	LINEAR FOOT
SQFT	SQUARE FOOT
SQYD	SQUARE YARD
STA	100 FEET
TAB	TABLET
TON	2,000 POUNDS

Some of the symbols used in the plans other than in the project plan quantity tables are:

TABLE B

SYMBOL USED	DEFINITIONS
ksi	KIPS PER SQUARE INCH
ksf	KIPS PER SQUARE FOOT
psi	POUNDS PER SQUARE INCH
psf	POUNDS PER SQUARE FOOT
lb/ft^3, pcf	POUNDS PER CUBIC FOOT
tsf	TONS PER SQUARE FOOT
mph, MPH *	MILES PER HOUR
ø	NOMINAL DIAMETER
oz	OUNCE
lb	POUND
kip	1,000 POUNDS
cal	CALORIE
ft	FOOT OR FEET
gal	GALLON

* For use on a sign panel only

STATE OF CALIFORNIA
DEPARTMENT OF TRANSPORTATION

ABBREVIATIONS (SHEET 2 OF 2)

NO SCALE

RSP A10B DATED JULY 19, 2013 SUPERSEDES STANDARD PLAN A10B DATED MAY 20, 2011 - PAGE 2 OF THE STANDARD PLANS BOOK DATED 2010.

REVISED STANDARD PLAN RSP A10B

2010 REVISED STANDARD PLAN RSP A10B

6-7-13

Dist	COUNTY	ROUTE	POST MILES TOTAL PROJECT	SHEET No.	TOTAL SHEETS
08	Riv	74	63.0	37	88

Randell D. Hiatt
REGISTERED CIVIL ENGINEER

July 19, 2013
PLANS APPROVAL DATE

REGISTERED PROFESSIONAL ENGINEER
Randell D. Hiatt
No. C50200
Exp. 6-30-15
CIVIL
STATE OF CALIFORNIA

THE STATE OF CALIFORNIA OR ITS OFFICERS OR AGENTS SHALL NOT BE RESPONSIBLE FOR THE ACCURACY OR COMPLETENESS OF SCANNED COPIES OF THIS PLAN SHEET.

TO ACCOMPANY PLANS DATED 7-21-14

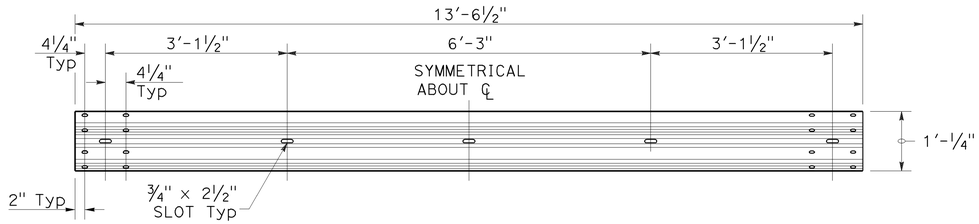

TYPICAL RAIL ELEMENT

NOTE:

1. Slotted holes for splice bolts to overlap ends of rail element.

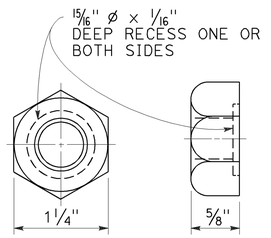

⅝" ø RECESS NUT

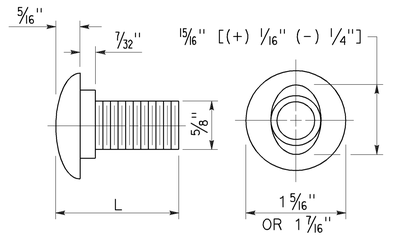

⅝" ø BUTTON HEAD BOLT

BUTTON HEAD BOLT

L	THREAD LENGTH
1⅜"	FULL THREAD LENGTH
2"	FULL THREAD LENGTH
10"	4" Min THREAD LENGTH
18"	4" Min THREAD LENGTH
20"	4" Min THREAD LENGTH
22"	4" Min THREAD LENGTH
26"	4" Min THREAD LENGTH
36"	4" Min THREAD LENGTH
** 2¾"	2" Min THREAD LENGTH
** 19"	4" Min THREAD LENGTH

** For nested rail applications.

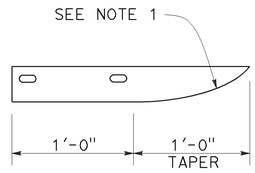

PLAN

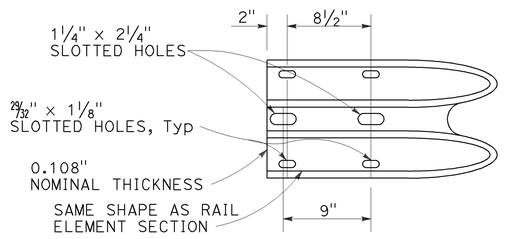

ELEVATION

END CAP (TYPE A)

STATE OF CALIFORNIA
DEPARTMENT OF TRANSPORTATION

MIDWEST GUARDRAIL SYSTEM STANDARD HARDWARE

NO SCALE

RSP A77M1 DATED JULY 19, 2013 SUPPLEMENTS THE STANDARD PLANS BOOK DATED 2010.

REVISED STANDARD PLAN RSP A77M1

2010 REVISED STANDARD PLAN RSP A77M1

7-3-13

Dist	COUNTY	ROUTE	POST MILES TOTAL PROJECT	SHEET No.	TOTAL SHEETS
08	Riv	74	63.0	38	88

Randell D. Hiatt
REGISTERED CIVIL ENGINEER

July 19, 2013
PLANS APPROVAL DATE

REGISTERED PROFESSIONAL ENGINEER
Randell D. Hiatt
No. C50200
Exp. 6-30-15
CIVIL
STATE OF CALIFORNIA

THE STATE OF CALIFORNIA OR ITS OFFICERS OR AGENTS SHALL NOT BE RESPONSIBLE FOR THE ACCURACY OR COMPLETENESS OF SCANNED COPIES OF THIS PLAN SHEET.

TO ACCOMPANY PLANS DATED 7-21-14

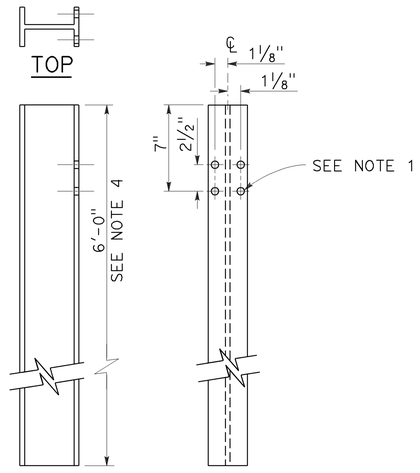

W6 x 9 OR W6 x 8.5
STEEL POST
See Note 4

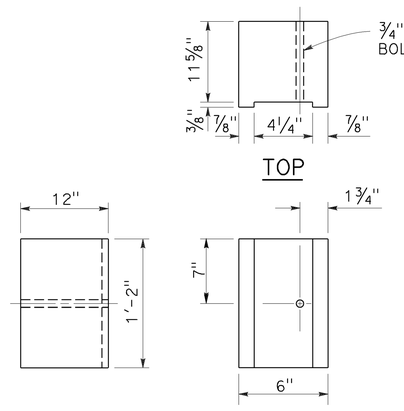

6" x 12"
NOTCHED WOOD BLOCK
See Notes 2 and 3

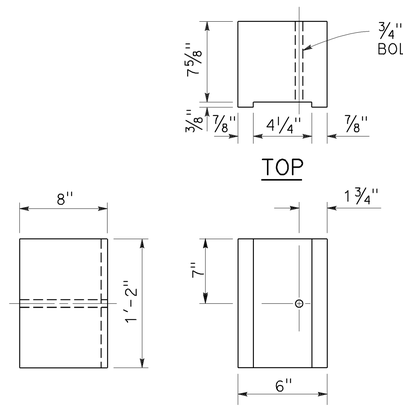

6" x 8"
NOTCHED WOOD BLOCK
Only for use with metal beam guard railing. See Note 5

NOTES:

1. All holes in steel post shall be 13/16" Dia maximum.
2. Dimensions shown for wood block are nominal.
3. Notched face of block faces steel post.
4. 6'-0" length posts to be used for typical roadway installation. 7'-0" length posts to be used for narrow roadway installation. See Revised Standard Plan RSP A77N3.
5. See Revised Standard Plan RSP A77L3 for use of 6" x 8" and 8" x 8" notched wood blocks.
6. This post and 8" x 12" block combination to be used for line post sections of MGS on narrow roadways and where strengthened line post sections of MGS are warranted to shield fixed objects.

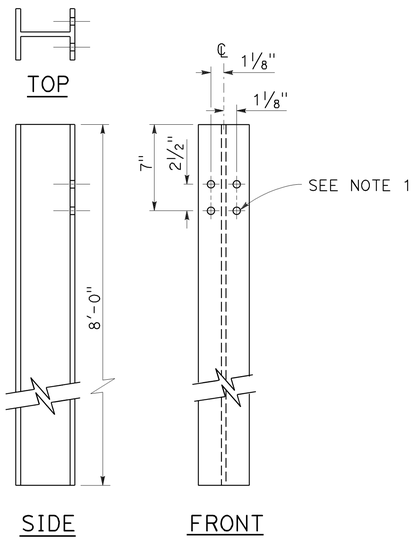

W6 x 15
STEEL POST
See Note 6

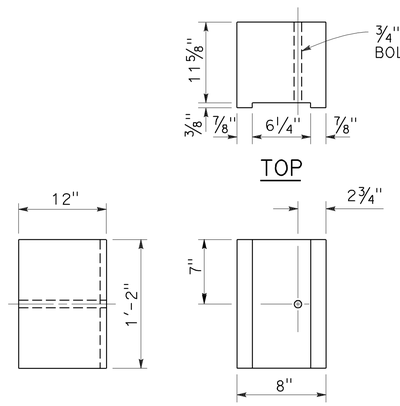

8" x 12"
NOTCHED WOOD BLOCK
See Notes 2 and 3

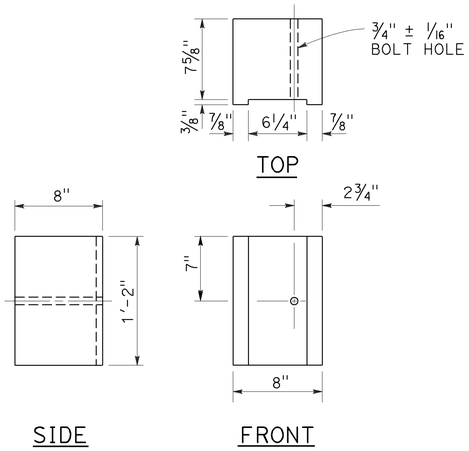

8" x 8"
NOTCHED WOOD BLOCK
Only for use with metal beam guard railing. See Note 5

STATE OF CALIFORNIA
DEPARTMENT OF TRANSPORTATION

MIDWEST GUARDRAIL SYSTEM STEEL POST AND NOTCHED WOOD BLOCK DETAILS

NO SCALE

RSP A77N2 DATED JULY 19, 2013 SUPPLEMENTS THE STANDARD PLANS BOOK DATED 2010.

REVISED STANDARD PLAN RSP A77N2

2010 REVISED STANDARD PLAN RSP A77N2

7-3-13

Dist	COUNTY	ROUTE	POST MILES TOTAL PROJECT	SHEET No.	TOTAL SHEETS
08	Riv	74	63.0	39	88

Randell D. Hiatt
REGISTERED CIVIL ENGINEER

July 19, 2013
PLANS APPROVAL DATE

REGISTERED PROFESSIONAL ENGINEER
Randell D. Hiatt
No. C50200
Exp. 6-30-15
CIVIL
STATE OF CALIFORNIA

THE STATE OF CALIFORNIA OR ITS OFFICERS OR AGENTS SHALL NOT BE RESPONSIBLE FOR THE ACCURACY OR COMPLETENESS OF SCANNED COPIES OF THIS PLAN SHEET.

TO ACCOMPANY PLANS DATED 7-21-14

2010 REVISED STANDARD PLAN RSP A77N3

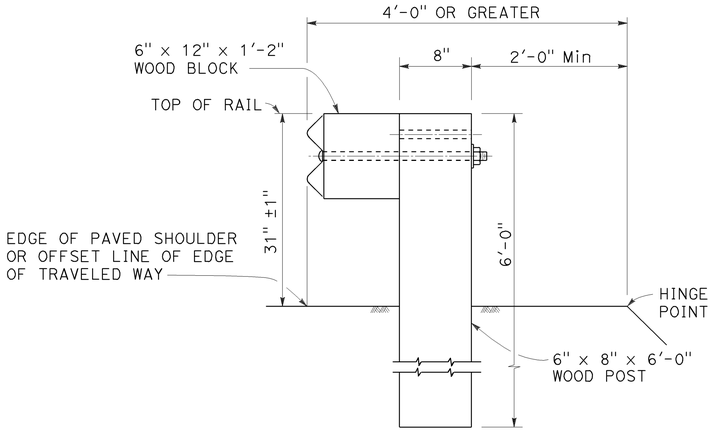

DETAIL A

TYPICAL ROADWAY INSTALLATION

See Note 1

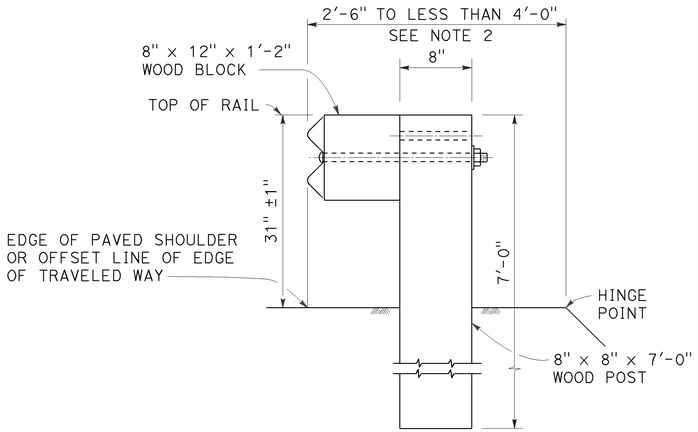

DETAIL B

NARROW ROADWAY INSTALLATION

See Note 1

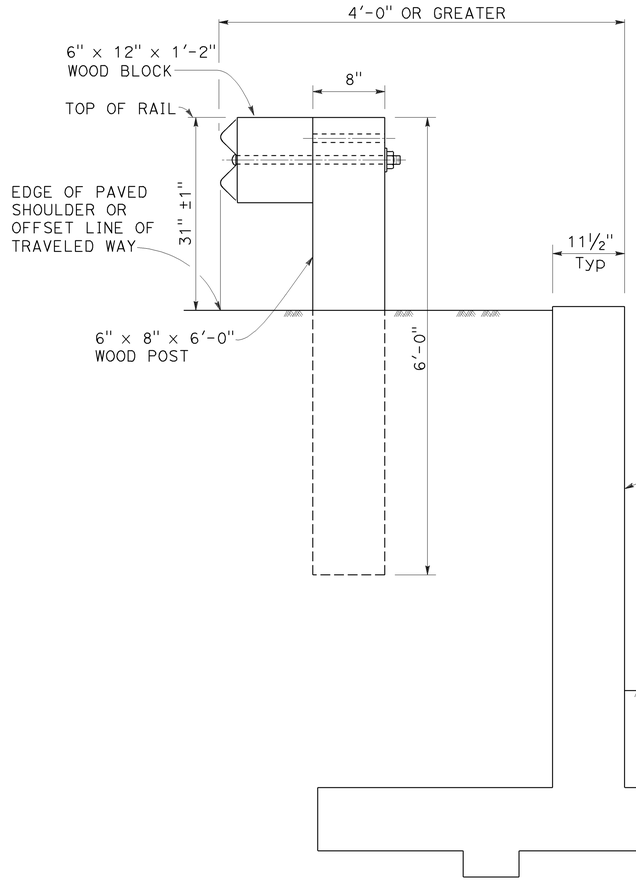

DETAIL C

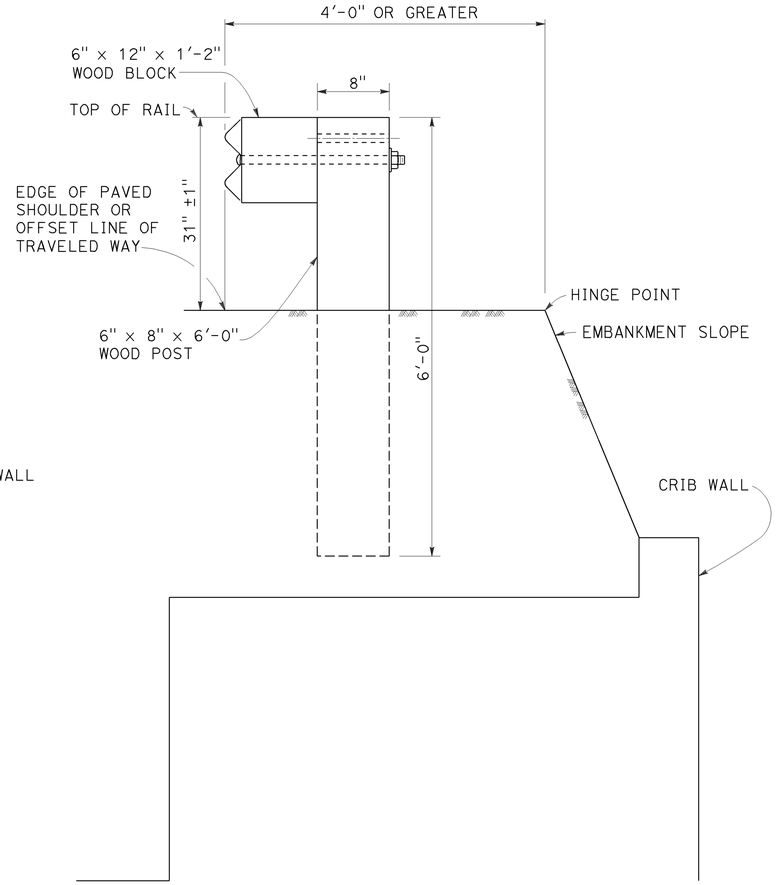

DETAIL D

POST EMBEDMENT

INSTALLATION AT EARTH RETAINING WALLS

NOTES:

1. These installation details also applicable to steel line post installations. For Detail A, C, and D, where steel line post installations are constructed, W6 x 8.5 or W6 x 9 steel post, 6'-0" in length, with 6" x 12" x 1'-2" notched wood blocks or notched recycled plastic blocks are to be used in place of the size of wood post and wood block shown. For Detail B, where steel line post installations are constructed, or W6 x 15 steel post, 8'-0" in length, with 8" x 12" x 1'-2" notched wood blocks or notched recycled plastic blocks are to be used in place of the size of wood post and wood block shown. For additional installation details, see Revised Standard Plan RSP A77L1 and RSP A77L2.
2. Where the distance between the face of the rail and the hinge point is less than 2'-6", see the Project Plans for special details.
3. For dike positioning with MGS installations, see Revised Standard Plan RSP A77N4.

STATE OF CALIFORNIA
DEPARTMENT OF TRANSPORTATION

MIDWEST GUARDRAIL SYSTEM TYPICAL LINE POST EMBEDMENT AND HINGE POINT OFFSET DETAILS

NO SCALE

RSP A77N3 DATED JULY 19, 2013 SUPPLEMENTS THE STANDARD PLANS BOOK DATED 2010.

REVISED STANDARD PLAN RSP A77N3

7-3-13

Dist	COUNTY	ROUTE	POST MILES TOTAL PROJECT	SHEET No.	TOTAL SHEETS
08	Riv	74	63.0	40	88

Randell D. Hiatt
REGISTERED CIVIL ENGINEER

July 19, 2013
PLANS APPROVAL DATE

REGISTERED PROFESSIONAL ENGINEER
Randell D. Hiatt
No. C50200
Exp. 6-30-15
CIVIL
STATE OF CALIFORNIA

THE STATE OF CALIFORNIA OR ITS OFFICERS OR AGENTS SHALL NOT BE RESPONSIBLE FOR THE ACCURACY OR COMPLETENESS OF SCANNED COPIES OF THIS PLAN SHEET.

TO ACCOMPANY PLANS DATED 7-21-14

NOTES:

1. When necessary to place dike more than 7" in front of face of MGS, only Type C dike may be used. For dike details, see Revised Standard Plan RSP A87B.
2. For standard railing post embedment, see Revised Standard Plan RSP A77N3.
3. MGS delineation to be used where shown on the Project Plans.
4. When dike or curb is placed under MGS, the maximum height of the dike or curb shall be 6". Mountable dike should not be used. For dike and curb details, see Revised Standard Plans RSP A87A and RSP A87B.
5. For details of typical distance between the face of rail and hinge point, see Revised Standard Plan RSP A77N3.
6. For steel line posts, use 1/4 - 20 self-tapping screws in 0.22" diameter holes or 1/4" bolts in 9/32" diameter holes.

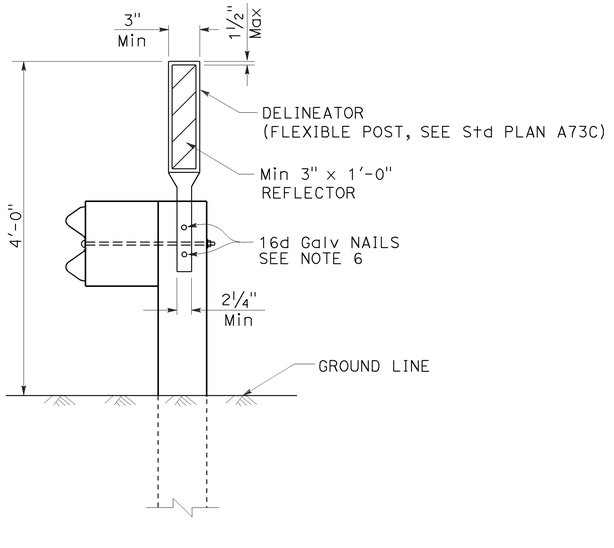

MGS DELINEATION

See Note 3

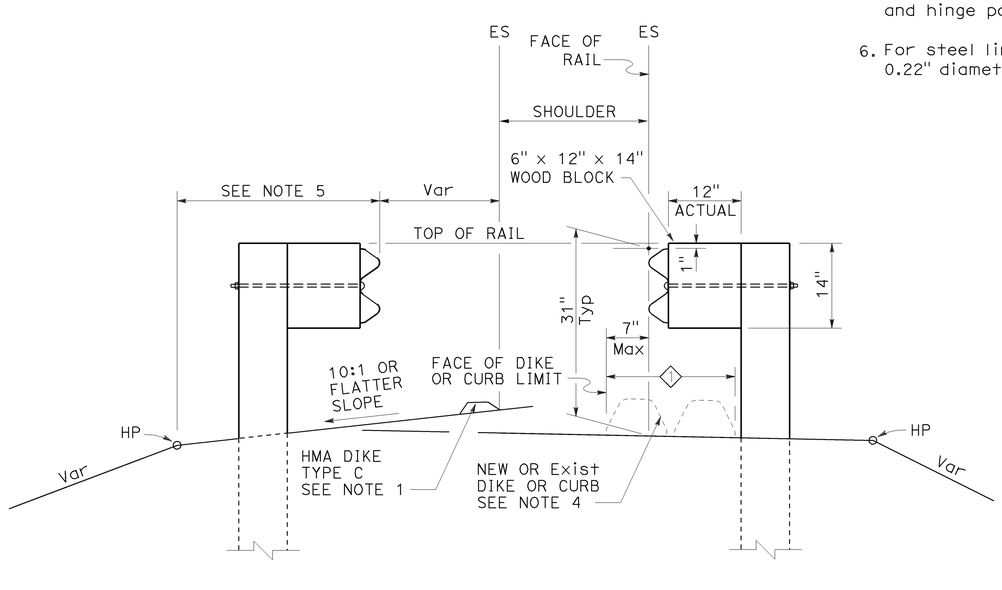

DIKE POSITIONING

See Note 1

1 PERMISSIBLE DIKE OR CURB PLACEMENT AREA

STATE OF CALIFORNIA
DEPARTMENT OF TRANSPORTATION

MIDWEST GUARDRAIL SYSTEM TYPICAL RAILING DELINEATION AND DIKE POSITIONING DETAILS

NO SCALE

RSP A77N4 DATED JULY 19, 2013 SUPPLEMENTS THE STANDARD PLANS BOOK DATED 2010.

REVISED STANDARD PLAN RSP A77N4

2010 REVISED STANDARD PLAN RSP A77N4

7-10-13

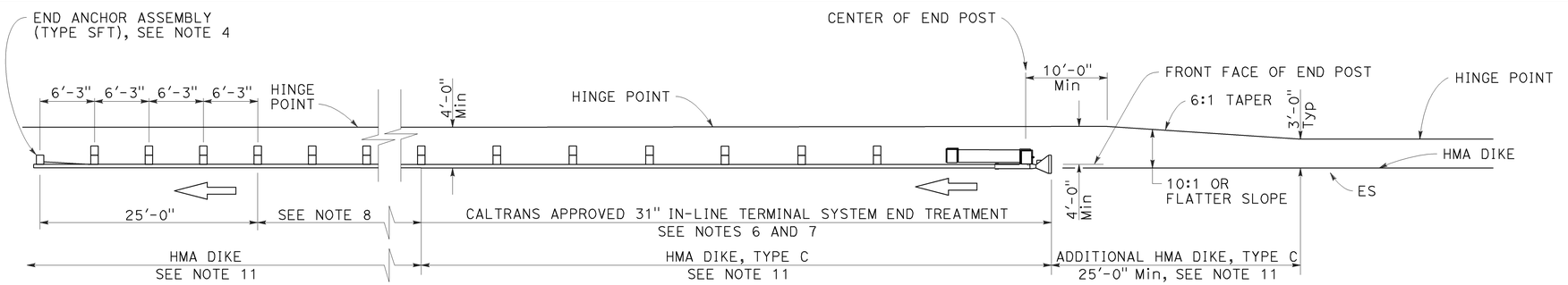

TYPE 11A LAYOUT

(Embankment MGS installation with 31" in-line end treatment at traffic approach end of railing) see Note 5

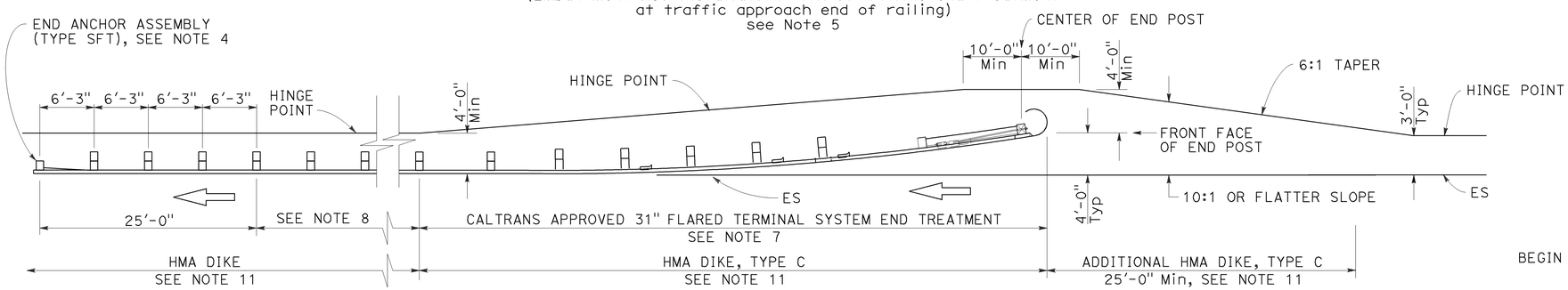

TYPE 11B LAYOUT

(Embankment MGS installation with 31" flared end treatment at traffic approach end of railing) see Note 5

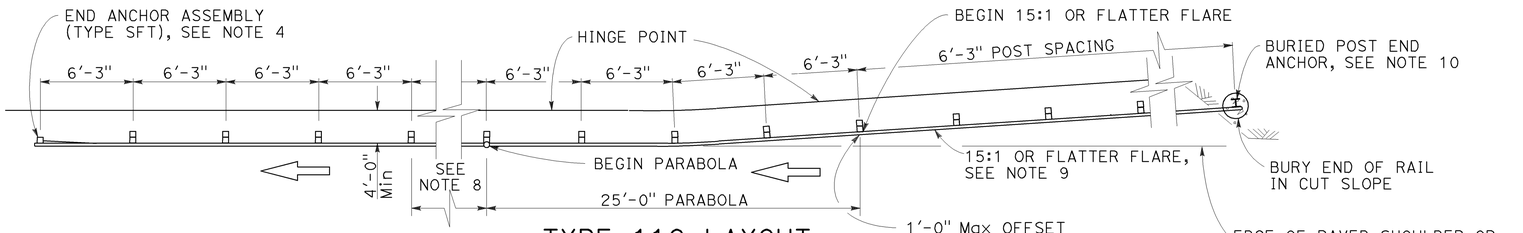

TYPE 11C LAYOUT

(Embankment MGS installation with buried end anchor treatment at traffic approach end of railing) see Notes 5 and 11

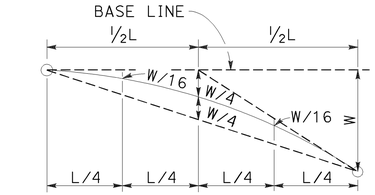

TYPICAL PARABOLIC LAYOUT

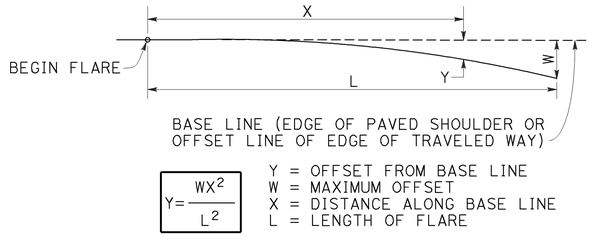

$$Y = \frac{WX^2}{L^2}$$

Y = OFFSET FROM BASE LINE
W = MAXIMUM OFFSET
X = DISTANCE ALONG BASE LINE
L = LENGTH OF FLARE

PARABOLIC FLARE OFFSETS

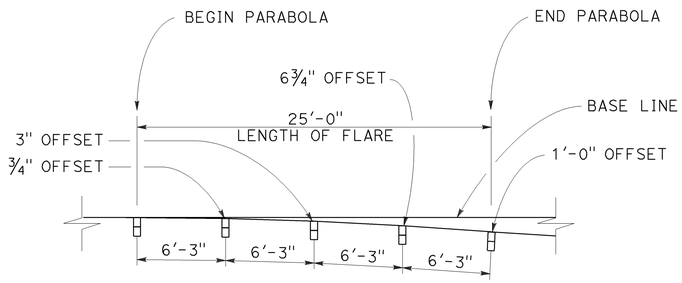

TYPICAL FLARE OFFSETS FOR 1 FOOT Max END OFFSET

NOTES:

1. Line post, blocks and hardware to be used are shown on Revised Standard Plans RSP A77L1, RSP A77L2, RSP A77M1, RSP A77N1 and RSP A77N2.
2. MGS post spacing to be 6'-3" center to center, except as otherwise noted.
3. Except as noted, line posts are 6" x 8" x 6'-0" wood with 6" x 12" x 1'-2" wood blocks. W6 x 8.5 or W6 x 9 steel posts, 6'-0" in length, with 6" x 12" x 1'-2" notched wood blocks or recycled plastic blocks may be used for 6" x 8" x 6'-0" wood post with 6" x 12" x 1'-2" wood blocks where applicable and when specified.
4. For End Anchor Assembly (Type SFT) details, see Revised Standard Plan RSP A77H1.
5. Layout Types 11A, 11B or 11C are typically used where MGS is recommended to shield embankment slopes and a crashworthy end treatment is required for only one direction of traffic.
6. 31" in-line terminal system end treatments are used where site conditions will not accommodate a flared end treatment.
7. The type of 31" terminal system end treatment to be used will be shown on the Project Plans.
8. Dependent on site conditions (embankment height and side slope), construction of additional MGS (length equal to multiples of 12'-6" with 6'-3" post spacing) may be advisable.
9. The 15:1 or flatter flare used with buried end anchors is based on the edge of the paved shoulder or offset line of edge of the traveled way. The length of MGS within the 15:1 or flatter flare is based on site conditions and should be a length equal to multiples of 12'-6".
10. For details of the buried post end anchor used with Type 11C Layout, see Revised Standard Plan RSP A77T2.
11. Where placement of dike is required with MGS installations, see Revised Standard Plan RSP A77N4 for dike positioning details.

Dist	COUNTY	ROUTE	POST MILES TOTAL PROJECT	SHEET No.	TOTAL SHEETS
08	Riv	74	63.0	41	88

Randell D. Hiatt
REGISTERED CIVIL ENGINEER

July 19, 2013
PLANS APPROVAL DATE

REGISTERED PROFESSIONAL ENGINEER — Randell D. Hiatt — No. C50200 — Exp. 6-30-15 — CIVIL — STATE OF CALIFORNIA

THE STATE OF CALIFORNIA OR ITS OFFICERS OR AGENTS SHALL NOT BE RESPONSIBLE FOR THE ACCURACY OR COMPLETENESS OF SCANNED COPIES OF THIS PLAN SHEET.

TO ACCOMPANY PLANS DATED 7-21-14

STATE OF CALIFORNIA
DEPARTMENT OF TRANSPORTATION

MIDWEST GUARDRAIL SYSTEM TYPICAL LAYOUTS FOR EMBANKMENTS

NO SCALE

RSP A77P1 DATED JULY 19, 2013 SUPPLEMENTS THE STANDARD PLANS BOOK DATED 2010.

REVISED STANDARD PLAN RSP A77P1

2010 REVISED STANDARD PLAN RSP A77P1

6-20-13

Dist	COUNTY	ROUTE	POST MILES TOTAL PROJECT	SHEET No.	TOTAL SHEETS
08	Riv	74	63.0	42	88

Randell D. Hiatt
REGISTERED CIVIL ENGINEER

July 19, 2013
PLANS APPROVAL DATE

REGISTERED PROFESSIONAL ENGINEER
Randell D. Hiatt
No. C50200
Exp. 6-30-15
CIVIL
STATE OF CALIFORNIA

THE STATE OF CALIFORNIA OR ITS OFFICERS OR AGENTS SHALL NOT BE RESPONSIBLE FOR THE ACCURACY OR COMPLETENESS OF SCANNED COPIES OF THIS PLAN SHEET.

TO ACCOMPANY PLANS DATED 7-21-14

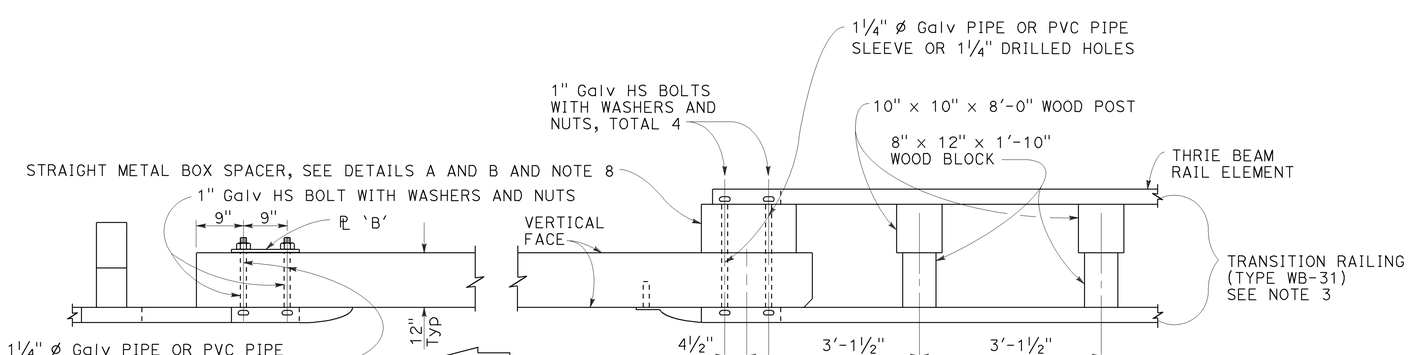

PLAN

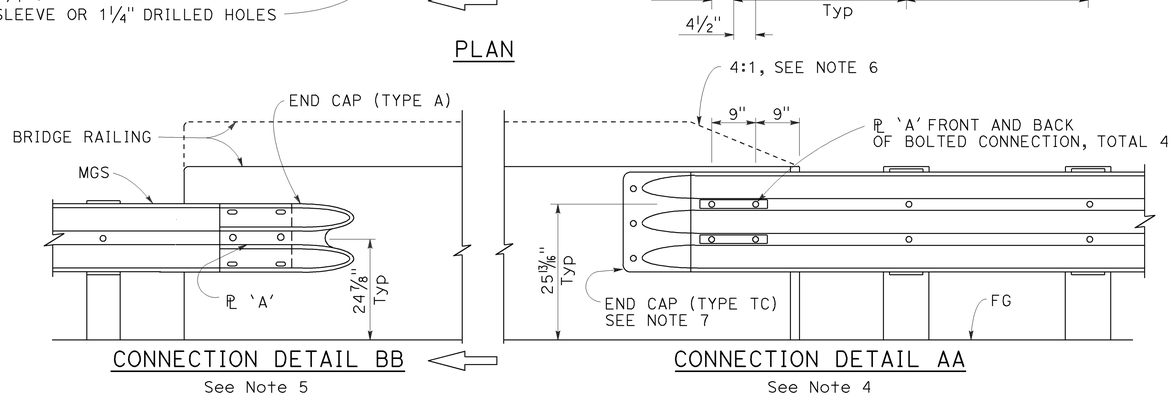

CONNECTION DETAIL BB
See Note 5

CONNECTION DETAIL AA
See Note 4

ELEVATION

MIDWEST GUARDRAIL SYSTEM CONNECTION TO BRIDGE RAILING WITHOUT SIDEWALK

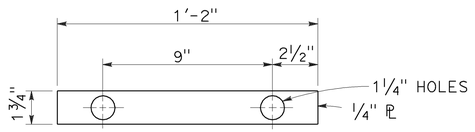

PLATE 'A'

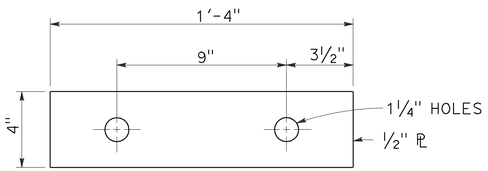

PLATE 'B'
(For backside of connection BB)

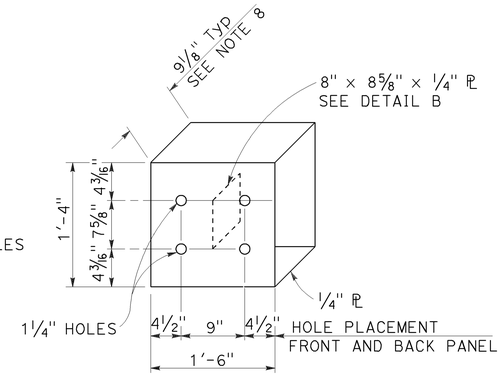

DETAIL A

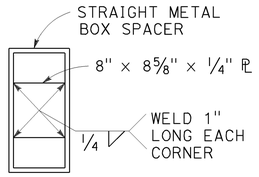

DETAIL B

STRAIGHT METAL BOX SPACER

NOTES:

1. See Revised Standard Plan RSP A77U2 for additional connection details to bridges without sidewalks.
2. Additional details of posts, blocks and hardware are shown on Revised Standard Plans RSP A77M1, RSP A77N1 and RSP A77N2.
3. For additional details of Transition Railing (Type WB-31), see Revised Standard Plan RSP A77U4. Transition Railing (Type WB-31) transitions the 12 gauge MGS railing section to a heavier gage nested thrie beam railing section which is connected to the concrete bridge railing.
4. For typical use of Connection Detail AA, see Layout Types 12A and 12B on Revised Standard Plan RSP A77Q1, Layout Types 12C and 12D on Revised Standard Plan RSP A77Q2, and Layout Type 12E on Revised Standard Plan RSP A77Q3.
5. For typical use of Connection Detail BB, see Layout Type 12D (structure departure railing connection) on Revised Standard Plan RSP A77Q2 and Layout Type 12DD on Revised Standard Plan RSP A77Q5.
6. Where the height of the bridge railing exceeds the height of the thrie beam railing by more than 1" at Connection Detail AA, taper the top of the end of the bridge railing at 4:1 to match the top elevation of the thrie beam rail.
7. For details of End Cap (Type TC), see Revised Standard Plan RSP A77U4.
8. See Revised Standard Plan RSP A77U4 for additional details regarding depth dimension for straight metal box spacer.

STATE OF CALIFORNIA
DEPARTMENT OF TRANSPORTATION

MIDWEST GUARDRAIL SYSTEM CONNECTIONS TO BRIDGE RAILINGS WITHOUT SIDEWALKS DETAILS No. 1

NO SCALE

RSP A77U1 DATED JULY 19, 2013 SUPPLEMENTS THE STANDARD PLANS BOOK DATED 2010.

REVISED STANDARD PLAN RSP A77U1

2010 REVISED STANDARD PLAN RSP A77U1

7-8-13

Dist	COUNTY	ROUTE	POST MILES TOTAL PROJECT	SHEET No.	TOTAL SHEETS
08	Riv	74	63.0	43	88

REGISTERED CIVIL ENGINEER

July 19, 2013
PLANS APPROVAL DATE

REGISTERED PROFESSIONAL ENGINEER
Michael Janzen
No. 44788
Exp. 03-31-14
CIVIL
STATE OF CALIFORNIA

THE STATE OF CALIFORNIA OR ITS OFFICERS OR AGENTS SHALL NOT BE RESPONSIBLE FOR THE ACCURACY OR COMPLETENESS OF SCANNED COPIES OF THIS PLAN SHEET.

TO ACCOMPANY PLANS DATED 7-21-14

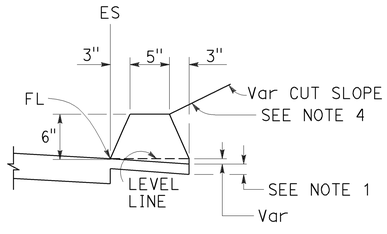

TYPE A
See Note 3

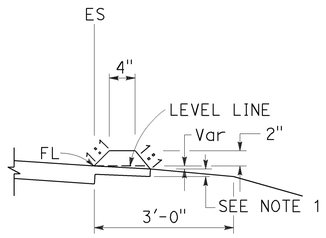

TYPE C

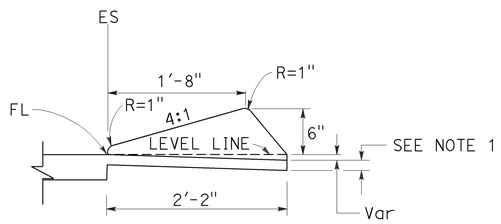

TYPE D

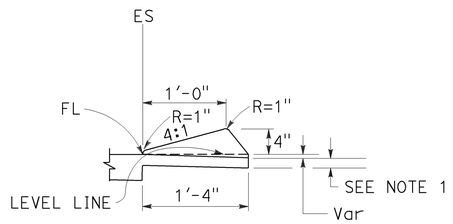

TYPE E

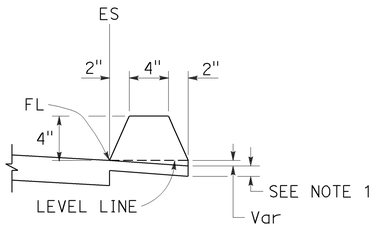

TYPE F
See Note 5

DIKES

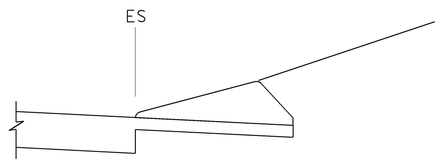

CASE C-1
Cut Slope

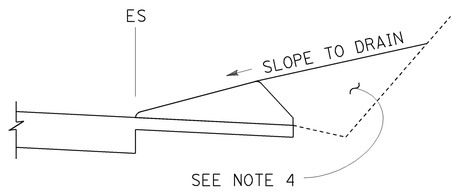

CASE C-2
Cut Slope

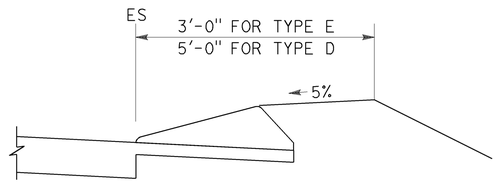

CASE F

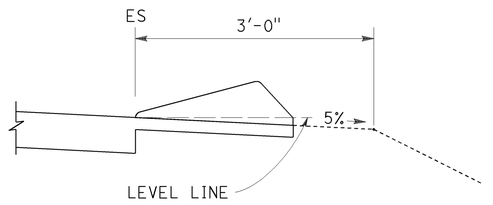

CASE R
See Note 2

TYPE D AND E BACKFILL DETAILS

NOTES:

1. For HMA shoulders only, extend top layer of HMA placed on the shoulder under dike with no joint at the ES. For projects with OGFC shoulders, do not extend OGFC under dike. See project plans for modified dike detail.
2. Case R applies to retrofit only projects where restrictive conditions do not provide enough width for Case F backfill.
3. Type A dike only to be used where restrictive slope conditions do not provide enough width to use Type D or Type E dike.
4. Fill and compact with excavated material to top of dike.
5. Use Type F dike, where dike is required with guard railing installations. See Revised Standard Plan RSP A77N4 for dike positioning details.

DIKE QUANTITIES

TYPE	CUBIC YARDS PER LINEAR FOOT
A	0.0135
C	0.0038
D	0.0293
E	0.0130
F	0.0066

Quantities based on 5% cross slope.

STATE OF CALIFORNIA
DEPARTMENT OF TRANSPORTATION

HOT MIX ASPHALT DIKES

NO SCALE

RSP A87B DATED JULY 19, 2013 SUPERSEDES STANDARD PLAN A87B
DATED MAY 20, 2011 - PAGE 120 OF THE STANDARD PLANS BOOK DATED 2010.

REVISED STANDARD PLAN RSP A87B

2010 REVISED STANDARD PLAN RSP A87B

6-27-13

Dist	COUNTY	ROUTE	POST MILES TOTAL PROJECT	SHEET No.	TOTAL SHEETS
08	Riv	74	63.0	44	88

Gary Wang
REGISTERED CIVIL ENGINEER

April 20, 2012
PLANS APPROVAL DATE

REGISTERED PROFESSIONAL ENGINEER — Gary Wang — No. C58298 — Exp. 6-30-12 — CIVIL — STATE OF CALIFORNIA

THE STATE OF CALIFORNIA OR ITS OFFICERS OR AGENTS SHALL NOT BE RESPONSIBLE FOR THE ACCURACY OR COMPLETENESS OF SCANNED COPIES OF THIS PLAN SHEET.

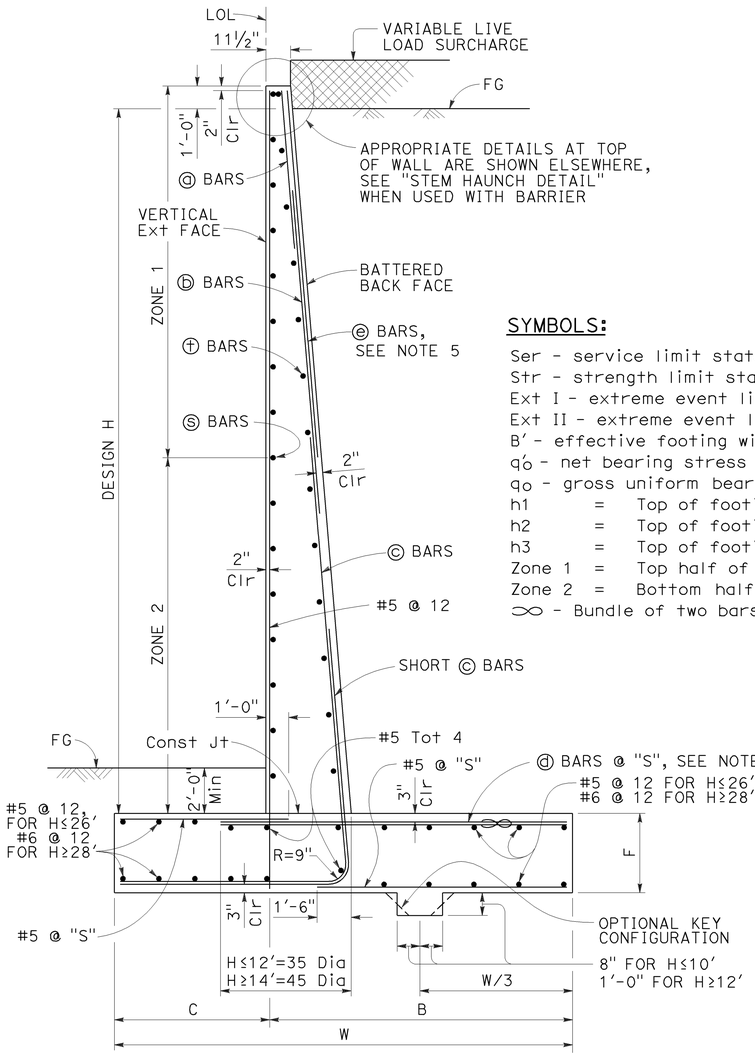

TYPICAL SECTION

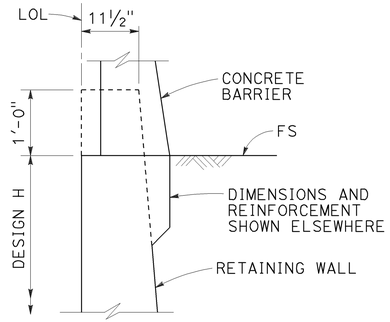

STEM HAUNCH DETAIL

SYMBOLS:

Ser - service limit state I
Str - strength limit state I
Ext I - extreme event limit state I
Ext II - extreme event limit state II
B' - effective footing width (ft)
q'_o - net bearing stress (ksf), OG assumed to be FG at toe
q_o - gross uniform bearing stress (ksf)
h1 = Top of footing to top of short ⓒ bar
h2 = Top of footing to top of ⓒ bar
h3 = Top of footing to top of ⓑ bar
Zone 1 = Top half of stem height
Zone 2 = Bottom half of stem height
⌒ - Bundle of two bars

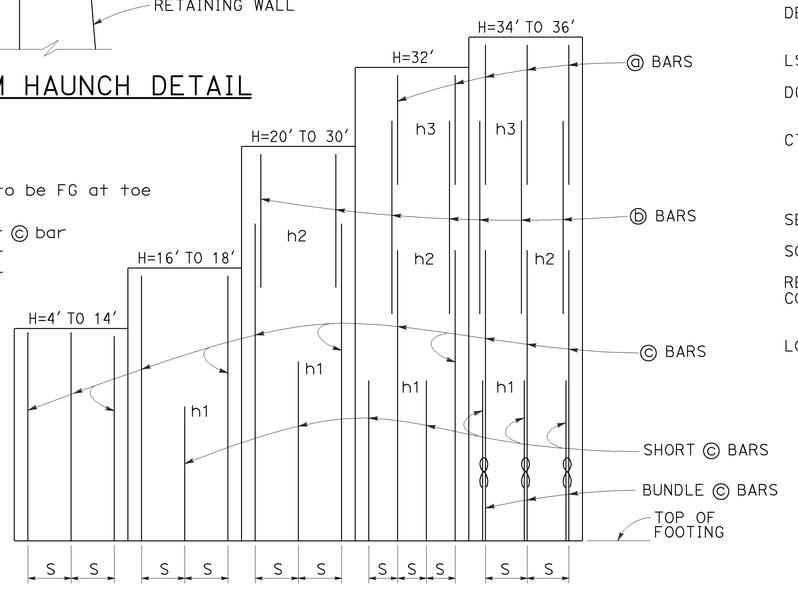

ELEVATION

NOTES:

1. For details not shown and drainage notes see RSP B3-5
2. For wall stem joint details see B0-3 / 3-3 and B0-3 / 3-4
3. At ⓒ bars:
   H ≤ 6', no splices are allowed within 1'-8" above the top of footing.
   H > 6', no splices are allowed within H/4 above the top of footing.
4. Bundle ⓓ bars for H = 34' & 36'.
5. Provide #6 @ 10" x 15'-0" ⓔ bars over a distance of 8'-0" measured from all expansion joints, begin wall and end wall locations. For H ≤ 14', hook ⓔ bar into footing and reduce bar length as needed to maintain Min Clr cover.

DESIGN CONDITIONS:

Design H may be exceeded by 6" before going to the next size. Special footing design is required where foundation material is incapable of supporting bearing stress listed in the table.

DESIGN NOTES:

TO ACCOMPANY PLANS DATED 7-21-14

DESIGN: AASHTO LRFD Bridge Design Specifications, 4th Edition with California Amendments

LS: Varied surcharge on level ground surface

DC: Stem Architectural Treatment of thickness up to 6" of concrete (75 psf) considered

CT: 54 kip transverse force applied at He = 32", distributed over 10 feet at the top of wall and 1 : 1 distribution down and outward. Distribution below footing taken no less than 40'.

SEISMIC: $k_h = 0.2$, $k_v = 0.0$

SOIL: $\phi = 34°$, $\gamma = 120$ pcf

REINFORCED CONCRETE: f'c = 3,600 psi, fy = 60,000 psi

LOAD COMBINATIONS AND LIMIT STATES:

Service I	Q = 1.00DC+1.00EV+1.00EH+1.00LS
Strength I	Q = αDC+βEV+ηEH+1.75LS
Extreme I	Q = 1.00DC+1.00EV+1.00EH+1.00EQD+1.00EQE
Extreme II	Q = 1.00DC+1.00EV+1.00EH+1.00CT

Where:

Q:	Force Effects
α:	1.25 or 0.90, Whichever Controls Design
β:	1.35 or 1.00, Whichever Controls Design
η:	1.50 or 0.90, Whichever Controls Design
DC:	Dead Load of Structure Components
EH:	Horizontal Earth Fill Pressure
EV:	Vertical Earth Pressure from Earth Fill Weight
LS:	Live Load Surcharge
EQE:	Seismic Earth Pressure
EQD:	Soil and Structural and Nonstructural Components Inertia
CT:	Vehicular Collision Force

TABLE OF REINFORCING STEEL, DIMENSIONS AND DATA

DESIGN H	4'	6'	8'	10'	12'	14'	16'	18'	20'	22'	24'	26'	28'	30'	32'	34'	36'
W	6'-10"	7'-0"	7'-3"	7'-7"	8'-4"	9'-7"	10'-9"	12'-0"	13'-3"	14'-6"	15'-9"	17'-1"	18'-5"	19'-10"	21'-2"	22'-7"	24'-0"
C	2'-2"	2'-3"	2'-3"	2'-4"	2'-6"	3'-0"	3'-6"	4'-0"	4'-6"	5'-0"	5'-5"	6'-0"	6'-6"	7'-2"	7'-8"	8'-2"	9'-0"
B	4'-8"	4'-9"	5'-0"	5'-3"	5'-10"	6'-7"	7'-3"	8'-0"	8'-9"	9'-6"	10'-4"	11'-1"	11'-11"	12'-8"	13'-6"	14'-5"	15'-0"
F	1'-4"	1'-4"	1'-4"	1'-4"	1'-6"	1'-8"	1'-8"	1'-9"	1'-9"	1'-11"	2'-2"	2'-5"	2'-10"	3'-3"	3'-6"	4'-0"	4'-3"
BATTER	½: 12	½: 12	½: 12	½: 12	½: 12	½: 12	½: 12	½: 12	½: 12	½: 12	⅝: 12	⅝: 12	¾: 12	⅞: 12	1 : 12	1 : 12	1 : 12
SPACING "S"	9"	9"	9"	9"	9"	7"	6"	5"	6"	6"	6"	6"	6"	6"	6"	10"	8"
ⓐ BARS	-	-	-	-	-	-	-	-	-	-	-	-	-	-	#7	#7	#6
ⓑ BARS	-	-	-	-	-	-	-	-	#7	#7	#7	#7	#7	#7	#9	#9	#8
ⓒ BARS	#6	#6	#6	#6	#6	#6	#7	#7	#8	#9	#9	#10	#10	#10	#11	#11	#11
ⓓ BARS	#5	#5	#6	#6	#6	#6	#9	#8	#8	#9	#9	#10	#10	#10	#11	#11	#11
h1	-	-	-	-	-	-	5'-9"	5'-10"	8'-0"	9'-0"	10'-1"	11'-0"	12'-1"	13'-0"	13'-0"	12'-7"	11'-6"
h2	-	-	-	-	-	-	-	-	10'-5"	13'-0"	14'-7"	17'-6"	19'-0"	20'-5"	19'-0"	18'-0"	20'-2"
h3	-	-	-	-	-	-	-	-	-	-	-	-	-	-	21'-2"	21'-10"	24'-0"
ZONE 1 ⓢ BARS	#5 @ 18	#5 @ 18	#5 @ 18	#5 @ 18	#5 @ 18	#5 @ 18	#5 @ 18	#5 @ 18	#5 @ 18	#5 @ 18	#5 @ 12	#5 @ 12	#5 @ 12	#5 @ 12	#5 @ 12	#5 @ 12	#5 @ 12
ZONE 2 ⓢ BARS	#5 @ 18	#5 @ 18	#5 @ 18	#5 @ 18	#5 @ 18	#5 @ 18	#5 @ 12	#5 @ 12	#5 @ 12	#5 @ 12	#5 @ 12	#5 @ 12	#6 @ 12	#6 @ 12	#6 @ 12	#7 @ 12	#7 @ 12
ZONE 1 ⓣ BARS	#4 @ 18	#4 @ 18	#4 @ 18	#4 @ 18	#4 @ 18	#4 @ 18	#4 @ 18	#4 @ 18	#4 @ 18	#4 @ 18	#4 @ 12	#4 @ 12	#4 @ 18	#4 @ 12	#4 @ 12	#4 @ 12	#4 @ 12
ZONE 2 ⓣ BARS	#4 @ 18	#4 @ 18	#4 @ 18	#4 @ 18	#4 @ 18	#4 @ 18	#4 @ 18	#4 @ 18	#4 @ 18	#4 @ 18	#4 @ 12	#4 @ 12	#4 @ 12	#4 @ 12	#5 @ 12	#5 @ 12	#5 @ 12
Ser: B', q'_o	6.8, 0.7	6.5, 1.0	6.2, 1.3	6.0, 1.6	6.3, 2.0	7.5, 2.1	8.6, 2.2	9.8, 2.3	11.0, 2.4	12.1, 2.5	13.2, 2.8	14.4, 2.9	15.5, 3.1	16.8, 3.3	18.0, 3.5	19.2, 3.7	20.6, 3.7
Str: B', q_o	6.6, 1.6	5.0, 1.8	3.6, 2.3	3.0, 3.3	3.2, 4.0	4.3, 3.8	5.3, 3.7	6.4, 3.7	7.4, 3.8	8.2, 4.1	9.0, 4.4	9.9, 4.6	10.7, 4.9	11.7, 5.2	12.6, 5.4	13.6, 5.8	14.6, 5.9
Ext I: B', q_o	5.2, 1.1	4.7, 1.5	3.9, 2.2	3.1, 3.4	2.8, 4.8	3.2, 5.3	3.6, 5.7	4.1, 6.1	4.6, 6.4	5.0, 6.9	5.3, 7.6	5.8, 8.1	6.1, 8.9	6.7, 9.4	7.1, 10.0	7.5, 10.7	8.2, 10.9
Ext II: B', q_o	2.6, 2.2	2.7, 2.6	2.8, 3.1	2.9, 3.6	3.7, 3.6	5.2, 3.3	6.7, 3.1	8.3, 3.0	9.8, 3.0	11.2, 3.1	12.5, 3.2	13.9, 3.4	15.2, 3.6	16.7, 3.8	18.0, 4.0	19.3, 4.2	20.8, 4.3

STATE OF CALIFORNIA
DEPARTMENT OF TRANSPORTATION

RETAINING WALL TYPE 1 (CASE 1)

NO SCALE

RSP B3-1A DATED APRIL 20, 2012 SUPPLEMENTS THE STANDARD PLANS BOOK DATED 2010.

REVISED STANDARD PLAN RSP B3-1A

2010 REVISED STANDARD PLAN RSP B3-1A

2-22-12

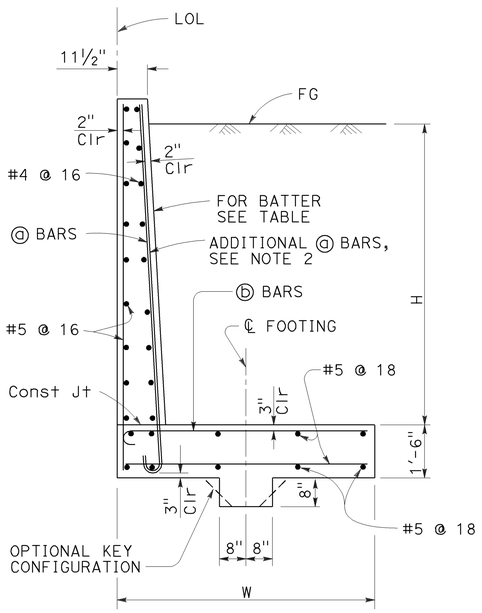

SPREAD FOOTING SECTION

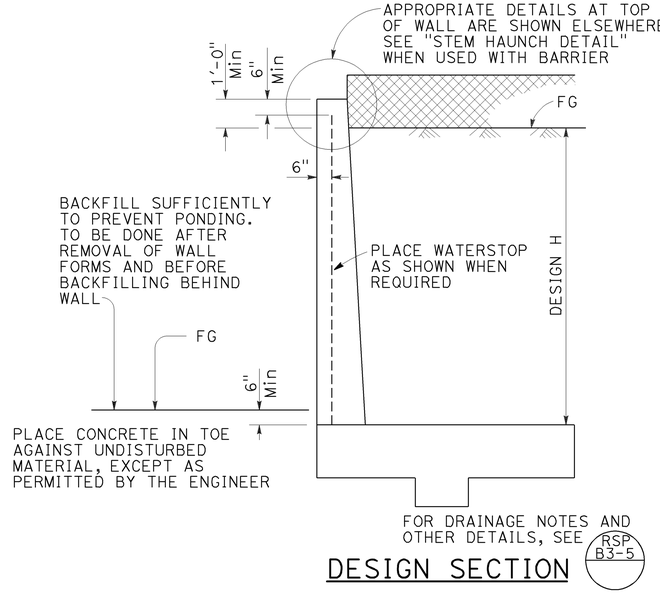

DESIGN SECTION

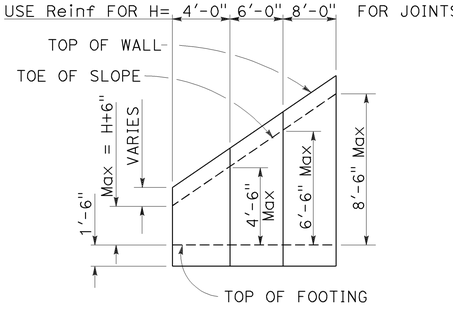

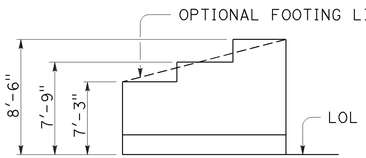

TYPICAL LAYOUT EXAMPLE

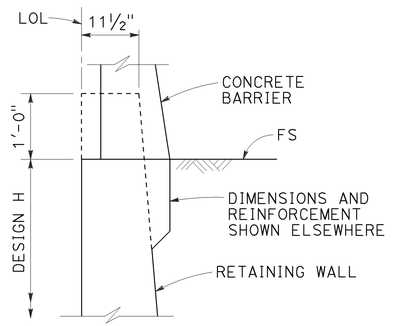

STEM HAUNCH DETAIL

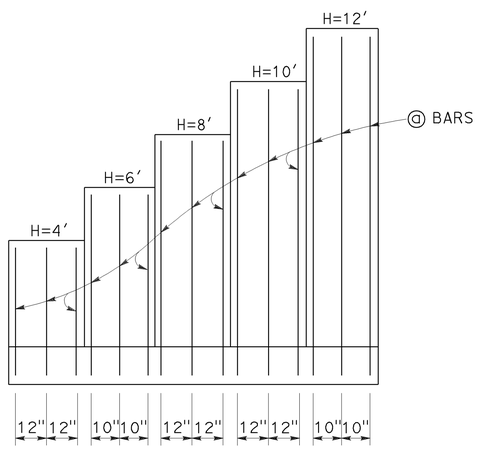

ELEVATION

SYMBOLS:

Ser - service limit state I
Str - strength limit state I
Ext I - extreme event limit state I
Ext II - extreme event limit state II
B′ - effective footing width (ft)
q'_o - net bearing stress (ksf), OG assumed to be FG at toe
q_o - gross uniform bearing stress (ksf)

TABLE OF REINFORCING STEEL, DIMENSIONS AND DATA

DESIGN H	4′	6′	8′	10′	12′
W	7′-3"	7′-9"	8′-6"	9′-6"	10′-6"
BATTER	NONE	NONE	100 : 2	100 : 3	100 : 4
ⓐ BARS	#7 @ 12	#7 @ 10	#7 @ 12	#7 @ 12	#7 @ 10
ⓑ BARS	#7 @ 12	#7 @ 10	#8 @ 12	#9 @ 12	#10 @ 10
Ser: B′, q'_o	6.2, 1.4	6.1, 1.8	6.4, 2.1	7.0, 2.5	7.7, 2.8
Str: B′, q_o	6.2, 2.4	6.1, 2.9	5.3, 3.0	6.0, 3.5	6.6, 4.0
Ext I: B′, q_o	4.4, 1.5	4.1, 2.2	4.0, 3.1	4.1, 3.9	4.2, 4.8
Ext II: B′, q_o	2.5, 2.7	3.1, 3.0	3.8, 3.2	4.9, 3.3	5.8, 3.5

Dist	COUNTY	ROUTE	POST MILES TOTAL PROJECT	SHEET No.	TOTAL SHEETS
08	Riv	74	63.0	45	88

Gary Wang
REGISTERED CIVIL ENGINEER

April 20, 2012
PLANS APPROVAL DATE

REGISTERED PROFESSIONAL ENGINEER — Gary Wang — No. C58298 — Exp. 6-30-12 — CIVIL — STATE OF CALIFORNIA

THE STATE OF CALIFORNIA OR ITS OFFICERS OR AGENTS SHALL NOT BE RESPONSIBLE FOR THE ACCURACY OR COMPLETENESS OF SCANNED COPIES OF THIS PLAN SHEET.

TO ACCOMPANY PLANS DATED 7-21-14

DESIGN CONDITIONS:

Design H may be exceeded by 6" before going to the next size. Special footing design is required where foundation material is incapable of supporting bearing stress listed in the table.

DESIGN NOTES:

DESIGN: AASHTO LRFD Bridge Design Specifications, 4th Edition with California Amendments

LS: Varied surcharge on level ground surface

DC: Stem Architectural Treatment of thickness up to 6" of concrete (75 psf) considered

CT: 54 kip transverse force applied at He = 32", distributed over 10 feet at the top of wall and 1 : 1 distribution down and outward. Distribution below footing taken no less than 40′.

SEISMIC: $k_h = 0.2$, $k_v = 0.0$

SOIL: $\phi = 34°$, $\gamma = 120$ pcf

REINFORCED CONCRETE: f′c = 3,600 psi, fy = 60,000 psi

LOAD COMBINATIONS AND LIMIT STATES:

Service I	Q = 1.00DC+1.00EV+1.00EH+1.00LS
Strength I	Q = αDC+βEV+ηEH+1.75LS
Extreme I	Q = 1.00DC+1.00EV+1.00EH+1.00EQD+1.00EQE
Extreme II	Q = 1.00DC+1.00EV+1.00EH+1.00CT

Where:

Q:	Force Effects
α:	1.25 or 0.90, Whichever Controls Design
β:	1.35 or 1.00, Whichever Controls Design
η:	1.50 or 0.90, Whichever Controls Design
DC:	Dead Load of Structure Components
EH:	Horizontal Earth Fill Pressure
EV:	Vertical Earth Pressure from Earth Fill Weight
LS:	Live Load Surcharge
EQE:	Seismic Earth Pressure
EQD:	Soil and Structural and Nonstructural Components Inertia
CT:	Vehicular Collision Force

NOTES:

1. At ⓐ bars:
   H ≤ 6′, no splices are allowed within 1′-8" above the top of footing.
   H > 6′, no splices are allowed within H/4 above the top of footing.

2. Provide #6 @ 8" ⓐ bars in addition to tabulated ⓐ bars over a distance of 8′-0" measured from all expansion joints, begin wall and end wall locations.

STATE OF CALIFORNIA
DEPARTMENT OF TRANSPORTATION

RETAINING WALL TYPE 5 (CASE 1)

NO SCALE

RSP B3-4A DATED APRIL 20, 2012 SUPPLEMENTS THE STANDARD PLANS BOOK DATED 2010.

REVISED STANDARD PLAN RSP B3-4A

2010 REVISED STANDARD PLAN RSP B3-4A

3-1-12

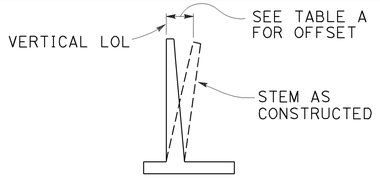

APPROXIMATE WALL OFFSET VALUES

Values for offseting forms to be determined by the Engineer.

TABLE A

H	OFFSET
4′-12′	H/200
14′-16′	H/160
18′-20′	H/140
22′-24′	H/130
26′-36′	2½"

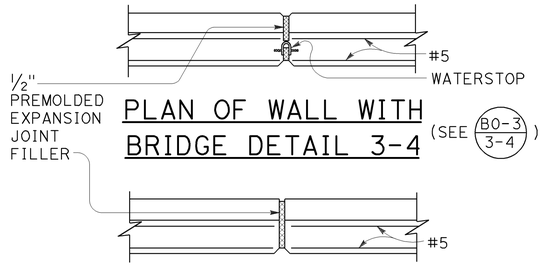

PLAN OF WALL WITH BRIDGE DETAIL 3-4

(SEE B0-3 / 3-4)

PLAN OF WALL WITH EXPANSION JOINT ONLY

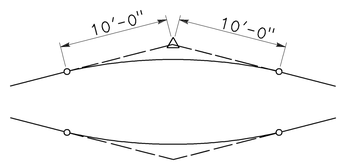

20′-0" VC AT TOP OF WALL SLOPE CHANGE

Where shown on the plans

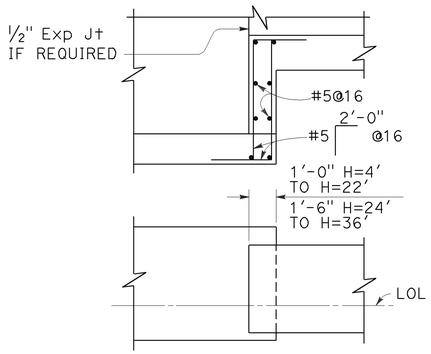

FOOTING STEP

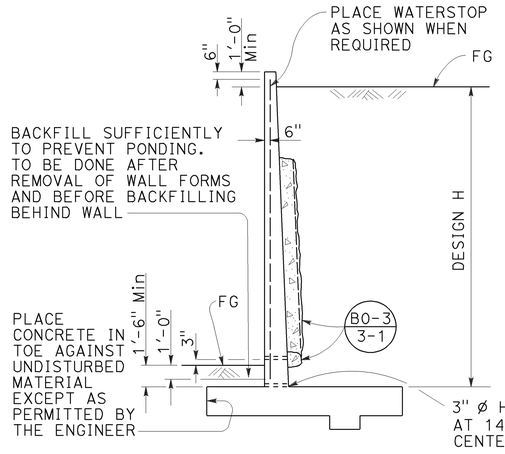

DESIGN AND DRAINAGE

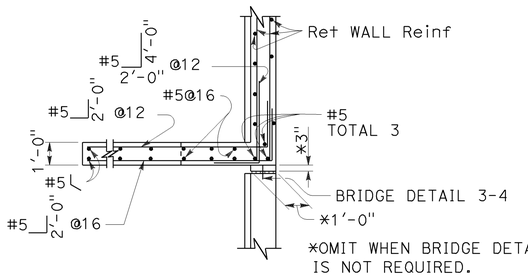

PLAN
(For return wall Type "A")

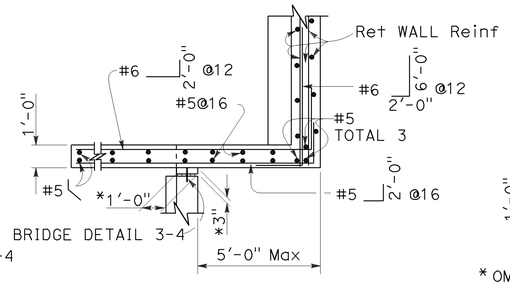

PLAN
(For return wall Type "B")

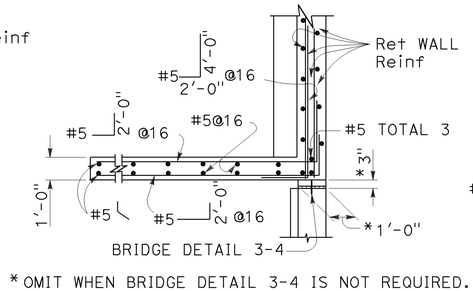

*OMIT WHEN BRIDGE DETAIL 3-4 IS NOT REQUIRED.

PLAN
(For return wall Type "C")

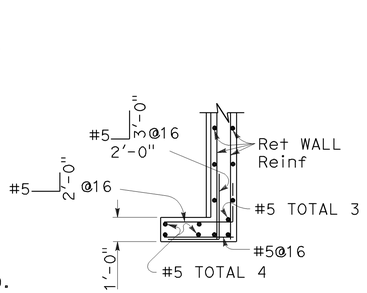

PLAN
(For return wall Type "D")

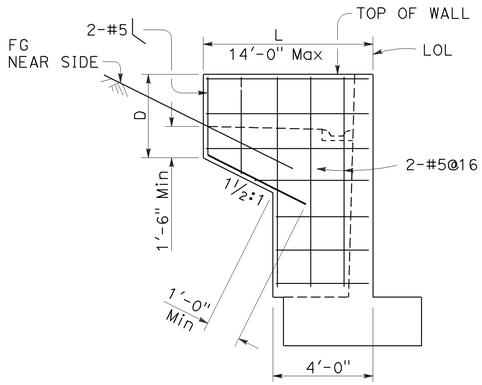

ELEVATION
RETURN WALL TYPE "A"
Use where H=8′ or less

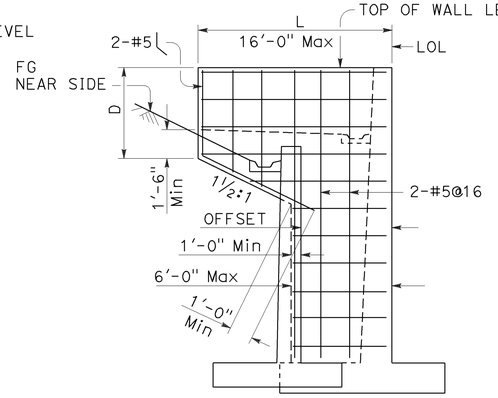

ELEVATION
RETURN WALL TYPE "B"
Use where H=10′ or more on offset walls

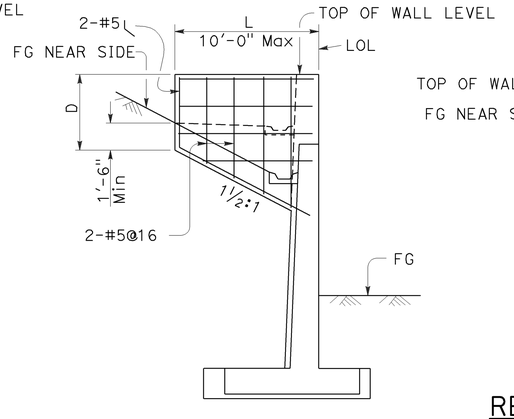

ELEVATION
RETURN WALL TYPE "C"
Use where H=10′ or more on straight walls

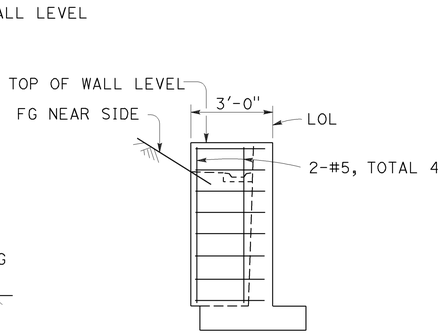

ELEVATION
RETURN WALL TYPE "D"
Use where H=6′ or less

Dist	COUNTY	ROUTE	POST MILES TOTAL PROJECT	SHEET No.	TOTAL SHEETS
08	Riv	74	63.0	46	88

Gary Wang
REGISTERED CIVIL ENGINEER

April 20, 2012
PLANS APPROVAL DATE

REGISTERED PROFESSIONAL ENGINEER — Gary Wang — No. C58298 — Exp. 6-30-12 — CIVIL — STATE OF CALIFORNIA

THE STATE OF CALIFORNIA OR ITS OFFICERS OR AGENTS SHALL NOT BE RESPONSIBLE FOR THE ACCURACY OR COMPLETENESS OF SCANNED COPIES OF THIS PLAN SHEET.

TO ACCOMPANY PLANS DATED 7-21-14

DESIGN CONDITIONS:

Design "H" may be exceeded by 6" before going to the next size. Special footing design is required where foundation material is incapable of supporting bearing stress listed in table

Return wall not required unless shown elsewhere

DESIGN NOTES:

DESIGN: AASHTO LRFD Bridge Design Specifications, 4th edition with California Amendments

LIVE LOAD: Surcharge on level ground surface

SOIL: ø = 34°
γ = 120 pcf

REINFORCED CONCRETE: fy = 60,000 psi
fc′ = 3,600 psi

STATE OF CALIFORNIA
DEPARTMENT OF TRANSPORTATION

RETAINING WALL DETAILS No. 1

NO SCALE

RSP B3-5 DATED APRIL 20, 2012 SUPERSEDES STANDARD PLAN B3-5 DATED MAY 20, 2011 - PAGE 277 OF THE STANDARD PLANS BOOK DATED 2010.

REVISED STANDARD PLAN RSP B3-5

2010 REVISED STANDARD PLAN RSP B3-5

2-22-12

Dist	COUNTY	ROUTE	POST MILES TOTAL PROJECT	SHEET No.	TOTAL SHEETS
08	Riv	74	63.0	47	88

REGISTERED CIVIL ENGINEER

July 19, 2013
PLANS APPROVAL DATE

REGISTERED PROFESSIONAL ENGINEER — Tillat Satter — No. C42892 — Exp. 3-31-14 — CIVIL — STATE OF CALIFORNIA

THE STATE OF CALIFORNIA OR ITS OFFICERS OR AGENTS SHALL NOT BE RESPONSIBLE FOR THE ACCURACY OR COMPLETENESS OF SCANNED COPIES OF THIS PLAN SHEET.

TO ACCOMPANY PLANS DATED 7-21-14

2010 REVISED STANDARD PLAN RSP B11-60

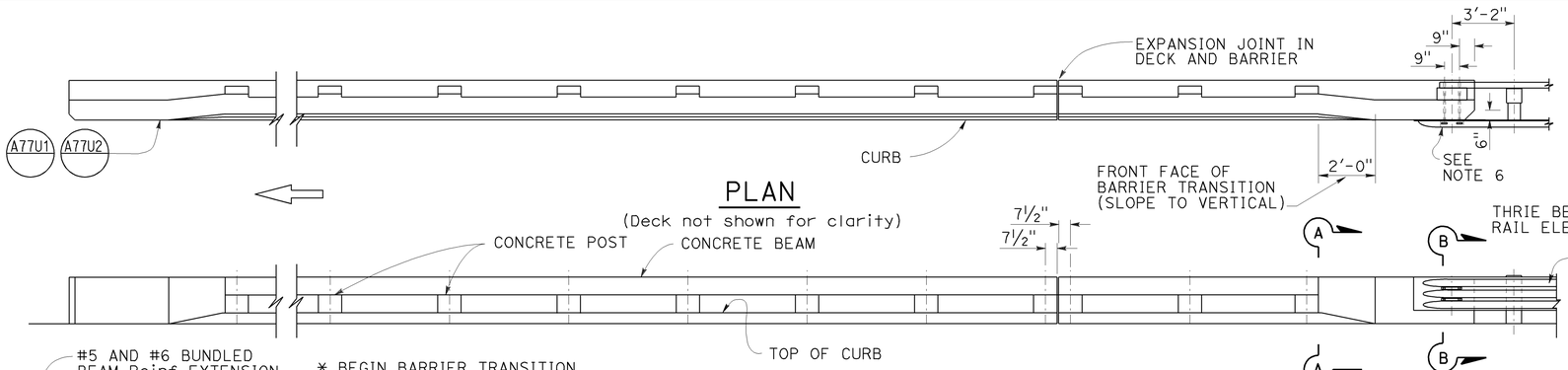

PLAN

(Deck not shown for clarity)

ELEVATION

#5 AND #6 BUNDLED BEAM Reinf EXTENSION Tot 6

* BEGIN BARRIER TRANSITION

** END BARRIER TRANSITION

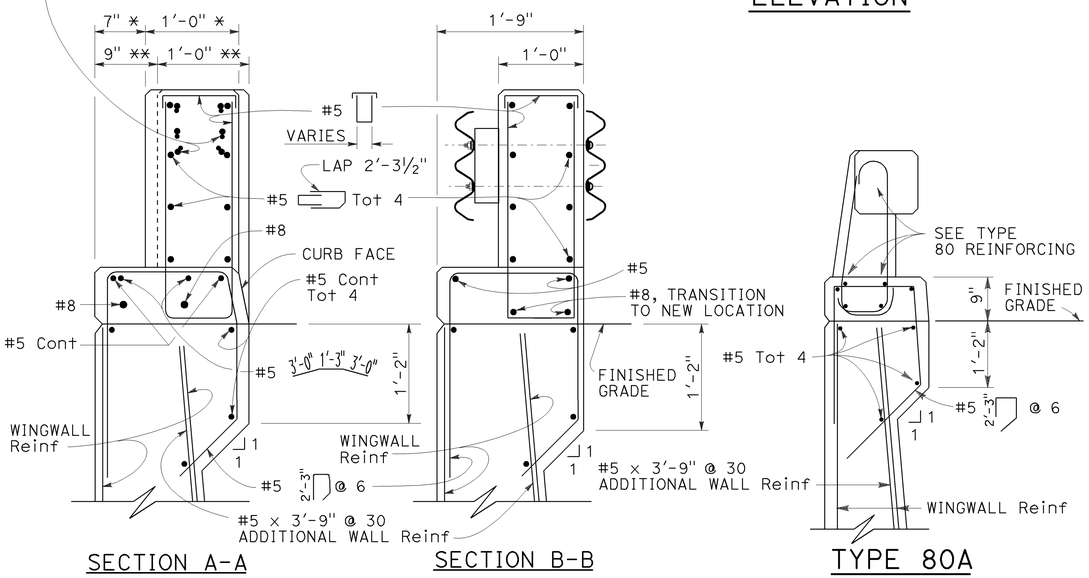

SECTION A-A

SECTION B-B

TYPE 80A

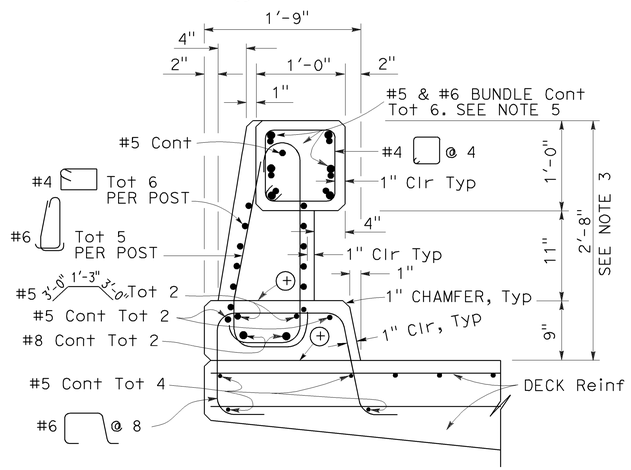

TYPE 80

⊕ Construction joint

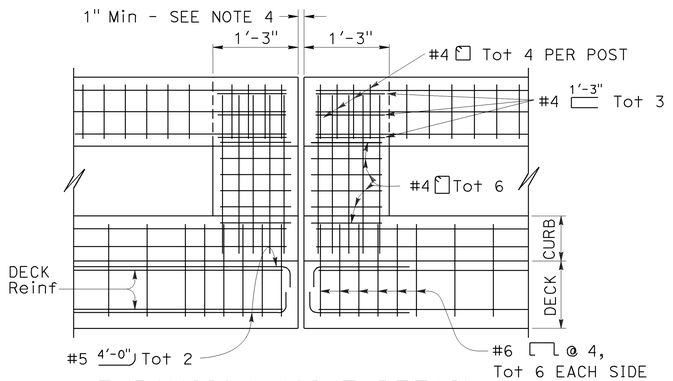

EXPANSION JOINT DETAIL

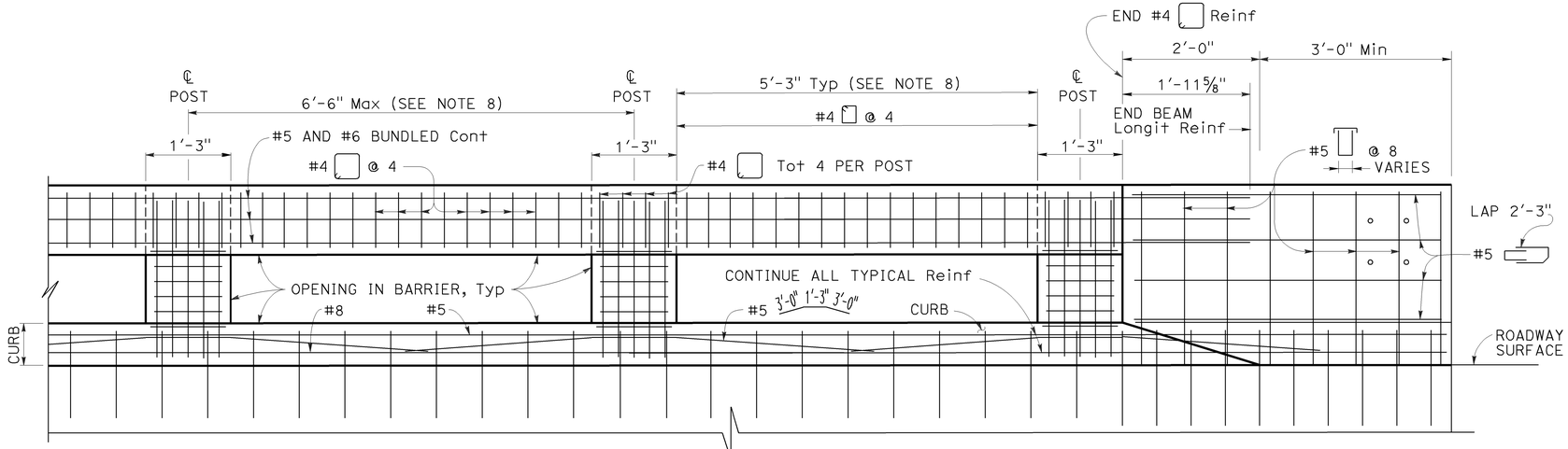

LONGITUDINAL SECTION

(Deck or wingwall reinforcing not shown)

NOTES:

1. Walls are to be backfilled before the barrier is placed.
2. Longitudinal reinforcing steel to stop at all expansion joints.
3. The front face dimensions are to be constant above the finish roadway profile, but the overall height will vary with certain thicknesses of surfacing and roadway slopes.
4. Expansion joint to match deck joint.
5. No lap splicing allowed on the longitudinal rail reinforcing. Splicing shall be staggered.
6. For typical metal railing connection details not shown, see Revised Standard Plans RSP A77U1 and RSP A77U2.
7. Chain link railing is not allowed on Type 80 Barriers.
8. Post to be spaced equally, typically 6'-6" spacing. Post spacing may be reduced where location of hinges or expansion joints or the length of wingwalls will not accommodate the 6'-6" spacing. Maximum see-through availability is to be strived for, where 6'-6" post spacing can not be achieved.

STATE OF CALIFORNIA
DEPARTMENT OF TRANSPORTATION

CONCRETE BARRIER TYPE 80 (SHEET 1 OF 2)

NO SCALE

RSP B11-60 DATED JULY 19, 2013 SUPERSEDES RSP B11-60 DATED APRIL 20, 2012 AND STANDARD PLAN B11-60 DATED MAY 20, 2011 - PAGE 300 OF THE STANDARD PLANS BOOK DATED 2010.

REVISED STANDARD PLAN RSP B11-60

6-27-13

LEGEND:

AB	ABANDON. IF APPLIED TO CONDUIT, REMOVE CONDUCTORS
BC	INSTALL PULL BOX IN EXISTING CONDUIT RUN
BP	PEDESTRIAN BARRICADE, TYPE AS INDICATED ON PLAN
CB	INSTALL CONDUIT INTO EXISTING PULL BOX
CC	CONNECT NEW AND EXISTING CONDUIT. REMOVE EXISTING CONDUCTORS AND INSTALL CONDUCTORS AS INDICATED
CF	CONDUIT TO REMAIN FOR FUTURE USE. REMOVE CONDUCTORS. INSTALL PULL TAPE
DH	DETECTOR HANDHOLE
FA	FOUNDATION TO BE ABANDONED
IS	INSTALL SIGN ON SIGNAL MAST ARM
NS	NO SLIP BASE ON STANDARD
PEC	PHOTOELECTRIC CONTROL
PEU	PHOTOELECTRIC UNIT
RC	EQUIPMENT OR MATERIAL TO BE REMOVED AND BECOME THE PROPERTY OF THE CONTRACTOR
RE	REMOVE ELECTROLIER, FUSES AND BALLAST. TAPE ENDS OF CONDUCTORS
RL	RELOCATE EQUIPMENT
RR	REMOVE AND REUSE EQUIPMENT
RS	REMOVE AND SALVAGE EQUIPMENT
SC	SPLICE NEW TO EXISTING CONDUCTORS
SD	SERVICE DISCONNECT
TSP	TELEPHONE SERVICE POINT

ABBREVIATIONS

APS	ACCESSIBLE PEDESTRIAN SIGNAL
BBS	BATTERY BACKUP SYSTEM
BC	BOLT CIRCLE
BPB	BICYCLE PUSH BUTTON
C	CONDUIT
CB	CIRCUIT BREAKER
CCTV	CLOSED CIRCUIT TELEVISION
Ckt	CIRCUIT
CMS	CHANGEABLE MESSAGE SIGN
Ctid	CALTRANS IDENTIFICATION
Comm	COMMUNICATION
DLC	LOOP DETECTOR LEAD-IN CABLE
EMS	EXTINGUISHABLE MESSAGE SIGN
EVUC	EMERGENCY VEHICLE UNIT CABLE
EVUD	EMERGENCY VEHICLE UNIT DETECTOR
FB	FLASHING BEACON
FBCA	FLASHING BEACON CONTROL ASSEMBLY
FBS	FLASHING BEACON WITH SLIP BASE
FO	FIBER OPTIC
G	EQUIPMENT GROUNDING CONDUCTOR
GB	GROUND BUS
GFCI	GROUND FAULT CIRCUIT INTERRUPTER
HAR	HIGHWAY ADVISORY RADIO
Hex	HEXAGONAL
HPS	HIGH PRESSURE SODIUM
IISNS	INTERNALLY ILLUMINATED STREET NAME SIGN
ISL	INDUCTION SIGN LIGHTING
LED	LIGHT EMITTING DIODE
LMA	LUMINAIRE MAST ARM
LPS	LOW PRESSURE SODIUM
Ltg	LIGHTING
Lum	LUMINAIRE
M	METERED
MAT	MAST ARM MOUNTING TOP ATTACHMENT
MAS	MAST ARM MOUNTING SIDE ATTACHMENT
M/M	MULTIPLE TO MULTIPLE TRANSFORMER
Mtg	MOUNTING
MV	MERCURY VAPOR LIGHTING FIXTURE
MVDS	MICROWAVE VEHICLE DETECTION SYSTEM
N	NEUTRAL (GROUNDED CONDUCTOR)
NB	NEUTRAL BUS
NC	NORMALLY CLOSE
NO	NORMALLY OPEN
P	CIRCUIT BREAKER'S POLE
PB	PULL BOX
PBA	PUSH BUTTON ASSEMBLY
PEC	PHOTOELECTRIC CONTROL
Ped	PEDESTRIAN
PEU	PHOTOELECTRIC UNIT
PT	CONDUIT WITH PULL TAPE
RE	RELOCATED EQUIPMENT
RM	RAMP METERING
RWIS	ROADSIDE WEATHER INFORMATION SYSTEM
SB	SLIP BASE
SIC	SIGNAL INTERCONNECT CABLE
Sig	SIGNAL
SMA	SIGNAL MAST ARM
SNS	STREET NAME SIGN
SP	SERVICE POINT
TDC	TELEPHONE DEMARCATION CABINET
TMS	TRAFFIC MONITORING STATION
TOS	TRAFFIC OPERATIONS SYSTEM
Veh	VEHICLE
VIVDS	VIDEO IMAGE VEHICLE DETECTION SYSTEM
WIM	WEIGH-IN-MOTION
Xfmr	TRANSFORMER

Dist	COUNTY	ROUTE	POST MILES TOTAL PROJECT	SHEET No.	TOTAL SHEETS
08	Riv	74	63.0	48	88

Theresa Gabriel
REGISTERED ELECTRICAL ENGINEER

July 19, 2013
PLANS APPROVAL DATE

REGISTERED PROFESSIONAL ENGINEER — Theresa Aziz Gabriel — No. E15129 — Exp. 6-30-14 — ELECTRICAL — STATE OF CALIFORNIA

THE STATE OF CALIFORNIA OR ITS OFFICERS OR AGENTS SHALL NOT BE RESPONSIBLE FOR THE ACCURACY OR COMPLETENESS OF SCANNED COPIES OF THIS PLAN SHEET.

TO ACCOMPANY PLANS DATED 7-21-14

SOFFIT AND WALL MOUNTED LUMINAIRES

- PENDANT, 70 W HPS UNLESS OTHERWISE SPECIFIED
- FLUSH, 70 W HPS UNLESS OTHERWISE SPECIFIED
- WALL SURFACE, 70 W HPS UNLESS OTHERWISE SPECIFIED
- EXISTING SOFFIT OR WALL LUMINAIRE TO REMAIN UNMODIFIED
- (M) EXISTING SOFFIT OR WALL LUMINAIRE TO BE MODIFIED AS SPECIFIED

NOTE:
Arrow indicates "street side" of luminaire.

COMMONLY USED SYMBOLS FOR UNITED STATES CUSTOMARY UNITS OF MEASUREMENT:

SYMBOL USED	DEFINITIONS
Ω	OHMS
min	MINUTE
s	SECOND
bps	BITS PER SECOND
Bps	BYTES PER SECOND
A	AMPERE
V	VOLT
V(dc)	VOLT (DIRECT CURRENT)
V(ac)	VOLT (ALTERNATING CURRENT)
FC	FOOT - CANDLE
W	WATTS
VA	VOLT-AMPERE
M	MEGA
k	KILO
m	MILLI
μ	MICRO
P	PICO
Hz	HERTZ

MISCELLANEOUS ELECTROLIERS

NEW	EXISTING	
		LUMINAIRE ON WOOD POLE
		NON-STANDARD ELECTROLIER (SEE PROJECT NOTES OR PROJECT PLANS)
		CITY ELECTROLIER
		ELECTROLIER FOUNDATION (FUTURE INSTALLATION)

NOTES:

1. HPS luminaires shall be 310 W HPS when installed on Type 21, 21D, 30, 31 and 32 Standards, unless otherwise specified. HPS luminaires shall be 200 W when installed on other type standards or poles, unless otherwise specified.
2. LED luminaires shall be 235 W when installed on Type 21, 21D, 30, 31 and 32 Standards, unless otherwise specified. LED luminaires shall be 165 W when installed on other type standards or poles, unless otherwise specified.
3. Luminaires shall be the cutoff type, ANSI Type III medium cutoff lighting distribution, unless otherwise specified.

STANDARD ELECTROLIER

NEW	EXISTING	STANDARD TYPE
		15
		15D
		15 STRUCTURE
		15D STRUCTURE
		21
		21D
		21 STRUCTURE
		21D STRUCTURE
		30
		31
		32

STATE OF CALIFORNIA
DEPARTMENT OF TRANSPORTATION

ELECTRICAL SYSTEMS (LEGEND AND ABBREVIATIONS)

NO SCALE

RSP ES-1A DATED JULY 19, 2013 SUPERSEDES STANDARD PLAN ES-1A DATED MAY 20, 2011 - PAGE 425 OF THE STANDARD PLANS BOOK DATED 2010.

REVISED STANDARD PLAN RSP ES-1A

2010 REVISED STANDARD PLAN RSP ES-1A

7-15-13

Dist	COUNTY	ROUTE	POST MILES TOTAL PROJECT	SHEET No.	TOTAL SHEETS
08	Riv	74	63.0	49	88

Theresa Gabriel
REGISTERED ELECTRICAL ENGINEER

Theresa Aziz Gabriel No. E15129 Exp. 6-30-14 ELECTRICAL — REGISTERED PROFESSIONAL ENGINEER — STATE OF CALIFORNIA

July 19, 2013
PLANS APPROVAL DATE

THE STATE OF CALIFORNIA OR ITS OFFICERS OR AGENTS SHALL NOT BE RESPONSIBLE FOR THE ACCURACY OR COMPLETENESS OF SCANNED COPIES OF THIS PLAN SHEET.

TO ACCOMPANY PLANS DATED 7-21-14

CONDUIT

NEW	EXISTING	
		LIGHTING CONDUIT, UNLESS OTHERWISE INDICATED OR NOTED
		TRAFFIC SIGNAL CONDUIT
C	c	COMMUNICATION CONDUIT
T	t	TELEPHONE CONDUIT
F	f	FIRE ALARM CONDUIT
FO	fo	FIBER OPTIC CONDUIT
		CONDUIT TERMINATION
R	r	CONDUIT RISER ATTACHED TO THE STRUCTURE OR SERVICE POLE

SERVICE EQUIPMENT

NEW	EXISTING	
OH	oh	OVERHEAD LINES
U	U	WOOD POLE, "U" INDICATES UTILITY OWNED
		POLE GUY WITH ANCHOR
		UTILITY TRANSFORMER - GROUND MOUNTED
III	III	SERVICE EQUIPMENT ENCLOSURE TYPE. DOOR INDICATES FRONT OF ENCLOSURE
T	t	TELEPHONE DEMARCATION CABINET

POLE-MOUNTED SERVICE DESIGNATION

TYPE H SERVICE, 28'-10" — TYPE OF INSTALLATION AND POLE HEIGHT ABOVE GRADE

FLASHING BEACON

NEW	EXISTING	
R	R	FLASHING BEACON (ONE VEHICLE SIGNAL HEAD WITH BACKPLATE AND VISOR) "R" INDICATES RED INDICATION, "Y" INDICATES YELLOW INDICATION
Y Y	Y Y	FLASHING BEACON WITH TYPE 15-FBS STANDARD AND A SIGN.
R R	R R	FLASHING BEACON WITH TYPES 9, 9A OR 9B SIGN UNLESS OTHERWISE SPECIFIED OR INDICATED

SIGNAL EQUIPMENT

NEW	EXISTING	
C	C	PEDESTRIAN SIGNAL HEAD "C" INDICATES COUNTDOWN PEDESTRIAN HEAD
		PUSH BUTTON ASSEMBLY POST
		PEDESTRIAN BARRICADE
		VEHICLE SIGNAL HEAD (WITH BACKPLATE AND 3-SECTIONS: RED, YELLOW AND GREEN)
		VEHICLE SIGNAL HEAD WITH ANGLE VISOR
PV	PV	MODIFICATIONS OF BASIC SYMBOL: "L" INDICATES ALL NON-ARROW SECTIONS LOUVERED "LG" INDICATES LOUVERED GREEN SECTION ONLY "PV" INDICATES ALL 12" SECTIONS PROGRAMMED VISIBILITY "8" INDICATES ALL 8" SECTIONS (ONLY WHEN SPECIFIED)
		VEHICLE SIGNAL HEAD CONSISTING OF RED, YELLOW AND GREEN LEFT ARROW SECTIONS
		VEHICLE SIGNAL HEAD CONSISTING OF RED AND YELLOW SECTIONS WITH AN UP GREEN ARROW SECTION
		VEHICLE SIGNAL HEAD (5 SECTION) CONSISTING OF RED, YELLOW AND GREEN SECTIONS WITH YELLOW AND GREEN RIGHT ARROW SECTIONS
		TYPE 15TS STANDARD WITH VEHICLE SIGNAL HEAD AND LUMINAIRE
		TYPE 21TS STANDARD WITH VEHICLE SIGNAL HEAD AND LUMINAIRE
		STANDARD WITH LUMINAIRE AND SIGNAL MAST ARMS AND ATTACHED VEHICLE SIGNAL HEADS
		TYPE 1 STANDARD WITH ATTACHED VEHICLE SIGNAL HEADS
		STANDARD WITH A SIGNAL MAST ARM, ATTACHED VEHICLE SIGNAL HEADS AND INTERNALLY ILLUMINATED STREET NAME SIGN
		CONTROLLER ASSEMBLY. DOOR INDICATES FRONT OF CABINET

SIGNAL EQUIPMENT Cont

NEW	EXISTING	
		GUARD POST
		TYPE 1 STANDARD WITH RAMP METERING SIGN
		OPTICAL DETECTOR FOR THE EMERGENCY VEHICLE DETECTION SYSTEM

NOTES:

1. All signal sections shall be 12" unless shown otherwise.
2. Signal heads shall be provided with backplates unless shown otherwise.

ILLUMINATED OVERHEAD SIGN

NEW	EXISTING	
		SINGLE POST, SINGLE ILLUMINATED SIGN, BALANCED BUTTERFLY
		SINGLE POST, DOUBLE ILLUMINATED SIGN, BALANCED BUTTERFLY
		SINGLE POST, SINGLE ILLUMINATED SIGN, FULL CANTILEVER
		DOUBLE POST, SINGLE ILLUMINATED SIGN
		SINGLE ILLUMINATED SIGN MOUNTED ON STRUCTURE
		DOUBLE POST, SINGLE ILLUMINATED SIGN WITH ELECTROLIER

STATE OF CALIFORNIA
DEPARTMENT OF TRANSPORTATION

ELECTRICAL SYSTEMS (LEGEND AND ABBREVIATIONS)

NO SCALE

RSP ES-1B DATED JULY 19, 2013 SUPERSEDES STANDARD PLAN ES-1B DATED MAY 20, 2011 - PAGE 426 OF THE STANDARD PLANS BOOK DATED 2010.

REVISED STANDARD PLAN RSP ES-1B

2010 REVISED STANDARD PLAN RSP ES-1B

7-15-13

Dist	COUNTY	ROUTE	POST MILES TOTAL PROJECT	SHEET No.	TOTAL SHEETS
08	Riv	74	63.0	50	88

Theresa Gabriel
REGISTERED ELECTRICAL ENGINEER

Theresa Aziz Gabriel No. E15129 Exp. 6-30-14 ELECTRICAL — REGISTERED PROFESSIONAL ENGINEER — STATE OF CALIFORNIA

July 19, 2013
PLANS APPROVAL DATE

THE STATE OF CALIFORNIA OR ITS OFFICERS OR AGENTS SHALL NOT BE RESPONSIBLE FOR THE ACCURACY OR COMPLETENESS OF SCANNED COPIES OF THIS PLAN SHEET.

TO ACCOMPANY PLANS DATED 7-21-14

EQUIPMENT IDENTIFICATION

ILLUMINATED SIGN IDENTIFICATION NUMBER:

SIGN No. 12345
10 ISL SCI 1.0

- SIGN NUMBER - PLACE ON POST OR STRUCTURE
- TRANSFORMER RATING (kVA)
- LIGHTING CONTROL TYPE
- NUMBER AND TYPE OF FIXTURES

} DO NOT PLACE ON STANDARD OR STRUCTURE

ELECTROLIER OR EQUIPMENT IDENTIFICATION NUMBER:

12345 - 15'-0"

- MAST ARM LENGTH, IF SHOWN. DO NOT PLACE ON STANDARD OR STRUCTURE
- EQUIPMENT NUMBER - PLACE ON STANDARD OR STRUCTURE. EXISTING EQUIPMENT NUMBERS ARE SHOWN IN PARENTHESIS

CONDUIT AND CONDUCTOR IDENTIFICATION:

1½"C, 2#10, 15#14, 2 DLC, 12P#18 (PAIR)

- NUMBER AND SIZE OF CONDUCTORS AND CABLES
- SIZE OF CONDUIT IN INCHES
- ø1, ø2, ø2P, etc. — TRAFFIC PHASE IDENTIFICATION FOR SIGNAL FACES, DETECTORS AND PHASE DIAGRAMS
- 1 2 3 — LEGEND NUMBERS
- (A) (B) (C) — EQUIPMENT, SIGNAL POLES, INSTALLATION OR ITEMS
- 1 2 3 — CONDUIT RUN NUMBERS

SIGNAL AND LIGHTING STANDARD (TYPICAL DESIGNATION):

19A - 3 - 100

- WIND VELOCITY = 100 mph
- CASE 3 ARM LOADING
- STANDARD TYPE
- STANDARD PLAN SHEET NUMBER
- DETAIL, NUMBER, SECTION, TYPE OR ELEVATION

MISCELLANEOUS EQUIPMENT

NEW	EXISTING	
CMS	cms	CHANGEABLE MESSAGE SIGN
		CLOSED CIRCUIT TELEVISION CAMERA
		HIGHWAY ADVISORY RADIO POLE AND ANTENNA
EMS	ems	EXTINGUISHABLE MESSAGE SIGN
M V	m v	DETECTION DEVICE M = MICROWAVE SENSOR V = VIDEO IMAGE SENSOR

WIRING DIAGRAM LEGEND

- EXTERNAL CONDUCTOR
- CONDUCTOR OR BUS
- TIE POINT
- CONTACTOR COIL
- CONTACTOR, NO CONTACT
- TERMINAL BLOCKS
- CONTACTOR, NC CONTACT
- ENCLOSURE BOND
- GROUNDING ELECTRODE
- CIRCUIT BREAKER
- RECEPTACLE

PULL BOXES

NEW	EXISTING	
		PULL BOX, No. 5 UNLESS OTHERWISE INDICATED OR NOTED
3	9A(21)	PULL BOX, ADDITIONAL DESIGNATIONS OR DESCRIPTIONS

3 No. 3½ PULL BOX
5 No. 5 PULL BOX
6 No. 6 PULL BOX
7 No. 7 (CEILING PULL BOX)
8 No. 8 (PENDANT SOFFIT PULL BOX)
9 No. 9 PULL BOX
9A No. 9A PULL BOX

(C) COMMUNICATIONS PULL BOX
(E) PULL BOX WITH EXTENSION
(S) SPRINKLER CONTROL PULL BOX
(21) ANCHOR BOLTS AND CONDUIT FOR FUTURE INSTALLATION OF TYPE 21 STANDARD
(T) TRAFFIC PULL BOX

VEHICLE DETECTORS

5 J 9 U

- VEHICLE DETECTOR DESIGNATION
- U = UPPER, L = LOWER
- SLOT NUMBER IN INPUT FILE
- INPUT FILE (I OR J)
- PHASE

NEW	EXISTING	
		TYPE A DETECTOR LOOP. OUTLINE OF SAWCUT SHOWN
		TYPE B DETECTOR LOOP. OUTLINE OF SAWCUT SHOWN
		TYPE C DETECTOR LOOP. OUTLINE OF SAWCUT SHOWN
		TYPE D DETECTOR LOOP. OUTLINE OF SAWCUT SHOWN
		TYPE E DETECTOR LOOP. OUTLINE OF SAWCUT SHOWN
		TYPE Q DETECTOR LOOP. OUTLINE OF SAWCUT SHOWN
		MAGNETIC DETECTOR
DH	dh	DETECTOR HANDHOLE
		MICROWAVE OR VIDEO DETECTION ZONE

STATE OF CALIFORNIA
DEPARTMENT OF TRANSPORTATION

ELECTRICAL SYSTEMS (LEGEND AND ABBREVIATIONS)

NO SCALE

RSP ES-1C DATED JULY 19, 2013 SUPERSEDES STANDARD PLAN ES-1C DATED MAY 20, 2011 - PAGE 427 OF THE STANDARD PLANS BOOK DATED 2010.

REVISED STANDARD PLAN RSP ES-1C

2010 REVISED STANDARD PLAN RSP ES-1C

7-11-13

Dist	COUNTY	ROUTE	POST MILES TOTAL PROJECT	SHEET No.	TOTAL SHEETS
08	Riv	74	63.0	51	88

Theresa Gabriel
REGISTERED ELECTRICAL ENGINEER

Theresa Aziz Gabriel
No. E15129
Exp. 6-30-14
ELECTRICAL
REGISTERED PROFESSIONAL ENGINEER
STATE OF CALIFORNIA

July 19, 2013
PLANS APPROVAL DATE

THE STATE OF CALIFORNIA OR ITS OFFICERS OR AGENTS SHALL NOT BE RESPONSIBLE FOR THE ACCURACY OR COMPLETENESS OF SCANNED COPIES OF THIS PLAN SHEET.

TO ACCOMPANY PLANS DATED 7-21-14

VISORS

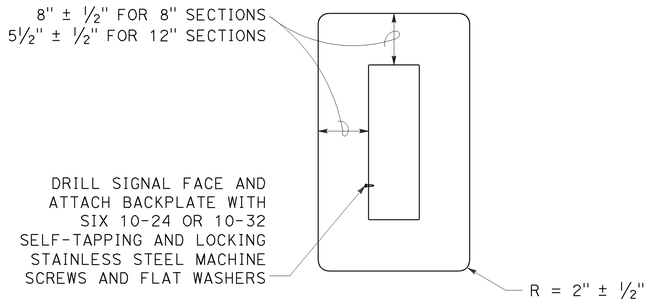

8" AND 12" SECTIONS

BACKPLATE

1/16" minimum thickness
3001-14 aluminum or plastic
when specified

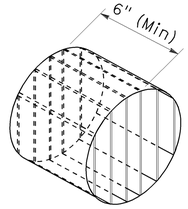

ISOMETRIC VIEW

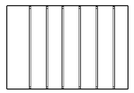

SECTION A-A

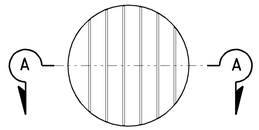

8" DIAMETER
FRONT VIEW

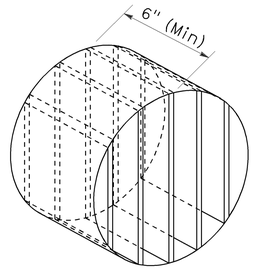

ISOMETRIC VIEW

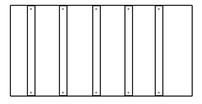

SECTION B-B

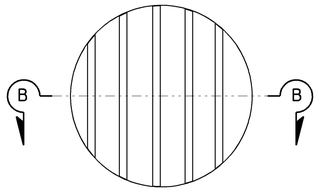

12" DIAMETER
FRONT VIEW

DIRECTIONAL LOUVER

Directional louvers shall be oriented as directed by the Engineer and secured in place with one plated brass machine screw and nut.

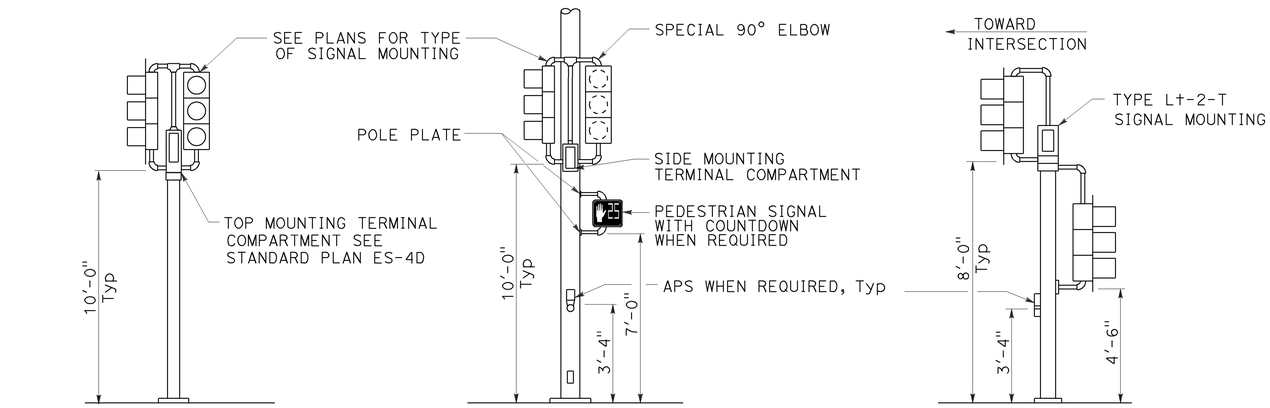

TOP MOUNTED SIGNALS (TV)

Type 1-A, 1-B, 1-C and 1-D standard as indicated on the plans

SIDE MOUNTED SIGNALS (SV AND SP)

Normally used on standards with luminaire or signal mast arm

LEFT TURN LANE SIGNAL

Type 1-A, 1-B, 1-C and 1-D standard as indicated on plans

TYPICAL SIGNAL INSTALLATIONS

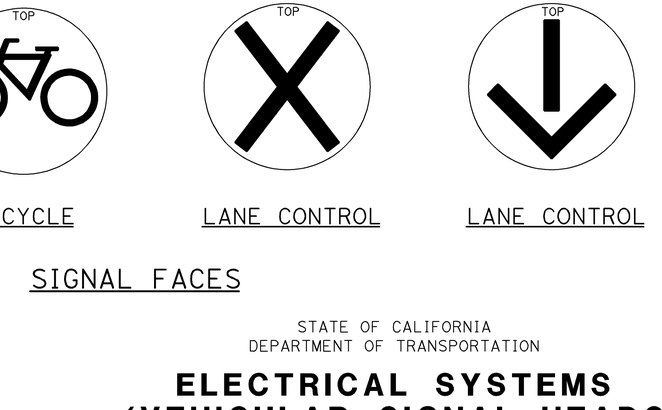

NOTES:

1. Typical signal pole placement unless dimensioned on plans.
2. For A and B dimensions, see Pole Schedule, or as directed by the Engineer.

SIGNAL STANDARD PLACEMENT DIMENSIONS AND EQUIPMENT LOCATIONS

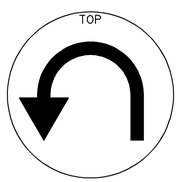

U-TURN

BICYCLE

LANE CONTROL

LANE CONTROL

SIGNAL FACES

STATE OF CALIFORNIA
DEPARTMENT OF TRANSPORTATION

ELECTRICAL SYSTEMS (VEHICULAR SIGNAL HEADS AND MOUNTINGS)

NO SCALE

RSP ES-4C DATED JULY 19, 2013 SUPERSEDES STANDARD PLAN ES-04C DATED MAY 20, 2011 - PAGE 445 OF THE STANDARD PLANS BOOK DATED 2010.

REVISED STANDARD PLAN RSP ES-4C

2010 REVISED STANDARD PLAN RSP ES-4C

7-10-13

Dist	COUNTY	ROUTE	POST MILES TOTAL PROJECT	SHEET No.	TOTAL SHEETS
08	Riv	74	63.0	52	88

Theresa Gabriel
REGISTERED ELECTRICAL ENGINEER

July 19, 2013
PLANS APPROVAL DATE

REGISTERED PROFESSIONAL ENGINEER
Theresa Aziz Gabriel
No. E15129
Exp. 6-30-14
ELECTRICAL
STATE OF CALIFORNIA

THE STATE OF CALIFORNIA OR ITS OFFICERS OR AGENTS SHALL NOT BE RESPONSIBLE FOR THE ACCURACY OR COMPLETENESS OF SCANNED COPIES OF THIS PLAN SHEET.

TO ACCOMPANY PLANS DATED 7-21-14

2010 REVISED STANDARD PLAN RSP ES-4E

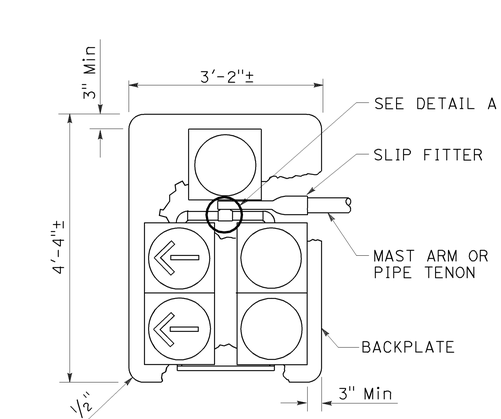

TYPE MAS-5A

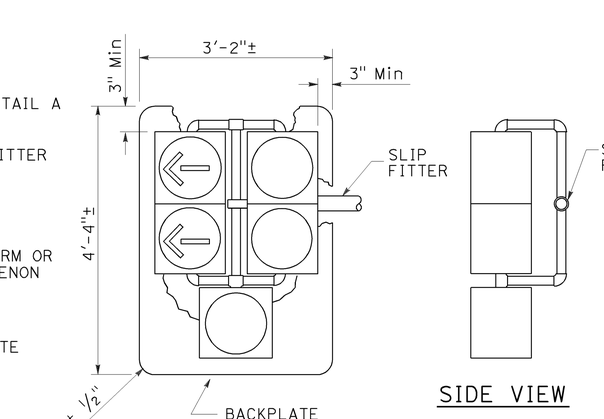

TYPE MAS-5B

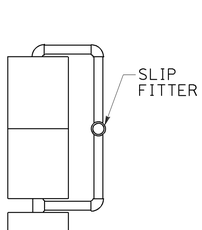

SIDE VIEW

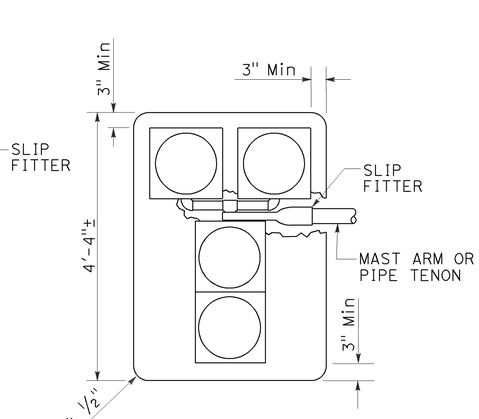

TYPE MAS-4A

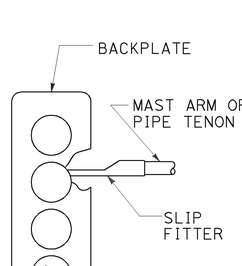

TYPE MAS-4B

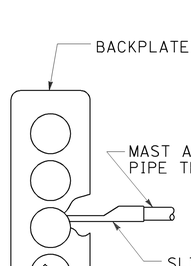

TYPE MAS-4C

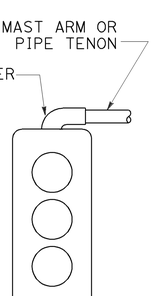

TYPE MAT

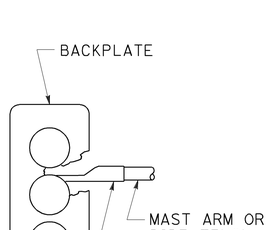

TYPE MAS

MAST ARM MOUNTINGS

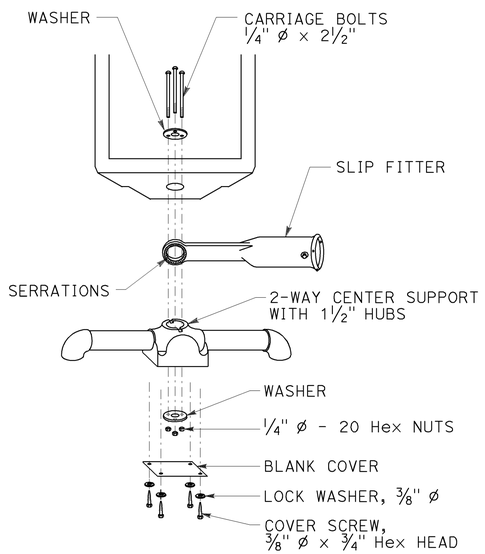

DETAIL A

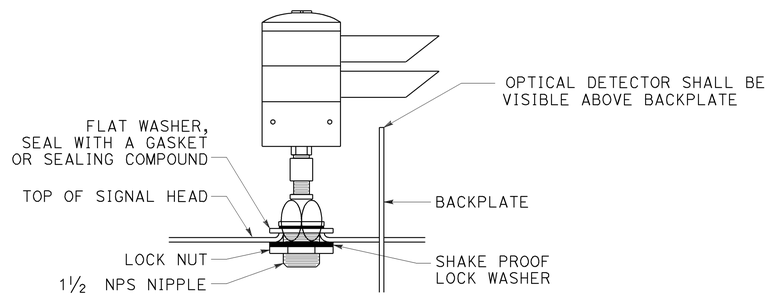

OPTICAL DETECTOR MOUNTING FOR EMERGENCY VEHICLE DETECTION SYSTEM

DETAIL B

STATE OF CALIFORNIA
DEPARTMENT OF TRANSPORTATION

ELECTRICAL SYSTEMS (VEHICULAR SIGNAL HEADS AND OPTICAL DETECTOR MOUNTING)

NO SCALE

RSP ES-4E DATED JULY 19, 2013 SUPERSEDES STANDARD PLAN ES-4E DATED MAY 20, 2011 - 447 OF THE STANDARD PLANS BOOK DATED 2010.

REVISED STANDARD PLAN RSP ES-4E

7-9-13

Dist	COUNTY	ROUTE	POST MILES TOTAL PROJECT	SHEET No.	TOTAL SHEETS
08	Riv	74	63.0	53	88

Theresa Gabriel
REGISTERED ELECTRICAL ENGINEER

July 19, 2013
PLANS APPROVAL DATE

REGISTERED PROFESSIONAL ENGINEER
Theresa Aziz Gabriel
No. E15129
Exp. 6-30-14
ELECTRICAL
STATE OF CALIFORNIA

THE STATE OF CALIFORNIA OR ITS OFFICERS OR AGENTS SHALL NOT BE RESPONSIBLE FOR THE ACCURACY OR COMPLETENESS OF SCANNED COPIES OF THIS PLAN SHEET.

TO ACCOMPANY PLANS DATED 7-21-14

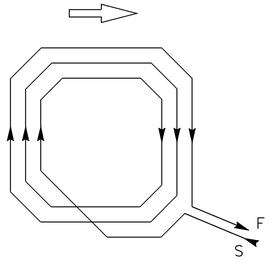

WINDING DETAIL

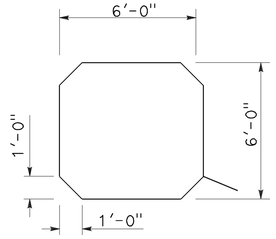

SAWCUT DETAIL

TYPE A LOOP DETECTOR CONFIGURATION

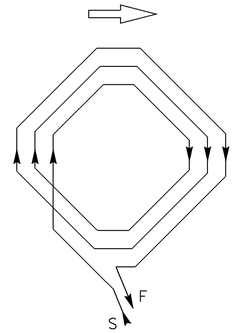

WINDING DETAIL

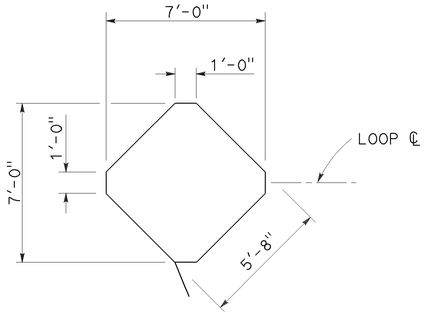

SAWCUT DETAIL

TYPE B LOOP DETECTOR CONFIGURATION

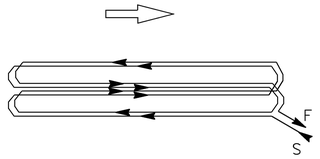

WINDING DETAIL

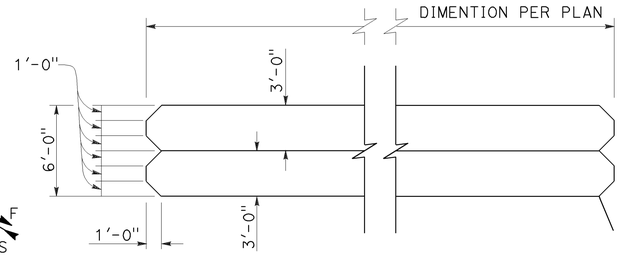

SAWCUT DETAIL

TYPE C LOOP DETECTOR CONFIGURATION

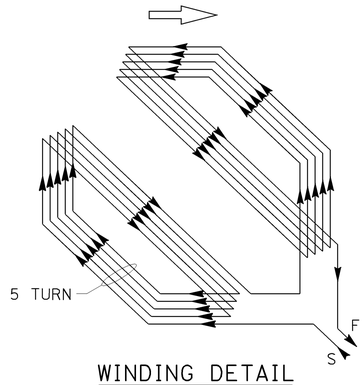

WINDING DETAIL

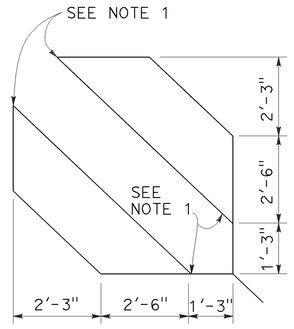

SAWCUT DETAIL

TYPE D LOOP DETECTOR CONFIGURATION

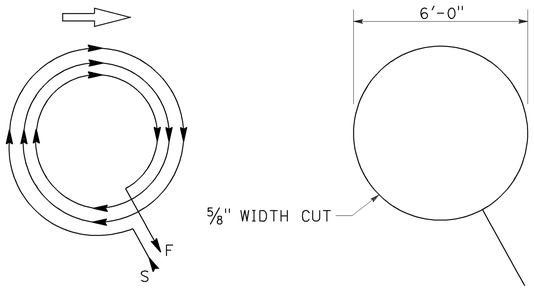

WINDING DETAIL SAWCUT DETAIL

TYPE E LOOP DETECTOR CONFIGURATION

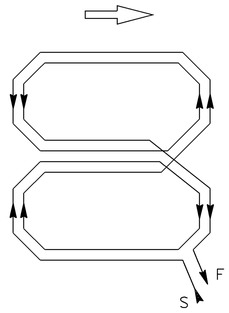

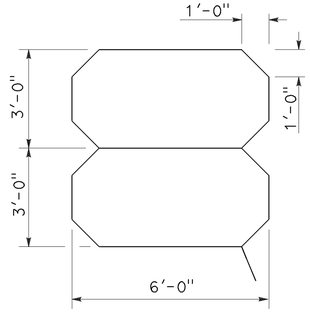

WINDING DETAIL SAWCUT DETAIL

TYPE Q LOOP DETECTOR CONFIGURATION

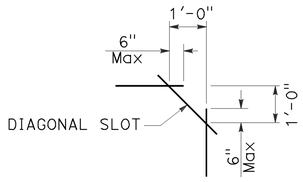

PLAN VIEW OF DIAGONAL SLOT AT CORNERS

NOTES:

1. Round corners of acute angle sawcuts to prevent damage to conductors.
2. Typical distance separating loops from edge to edge is 10' for Type A, B, D and E installation in single lane.

STATE OF CALIFORNIA
DEPARTMENT OF TRANSPORTATION

ELECTRICAL SYSTEMS (DETECTORS)

NO SCALE

RSP ES-5B DATED JULY 19, 2013 SUPERSEDES STANDARD PLAN ES-5B
DATED MAY 20, 2011 - PAGE 449 OF THE STANDARD PLANS BOOK DATED 2010.

REVISED STANDARD PLAN RSP ES-5B

2010 REVISED STANDARD PLAN RSP ES-5B

7-9-13

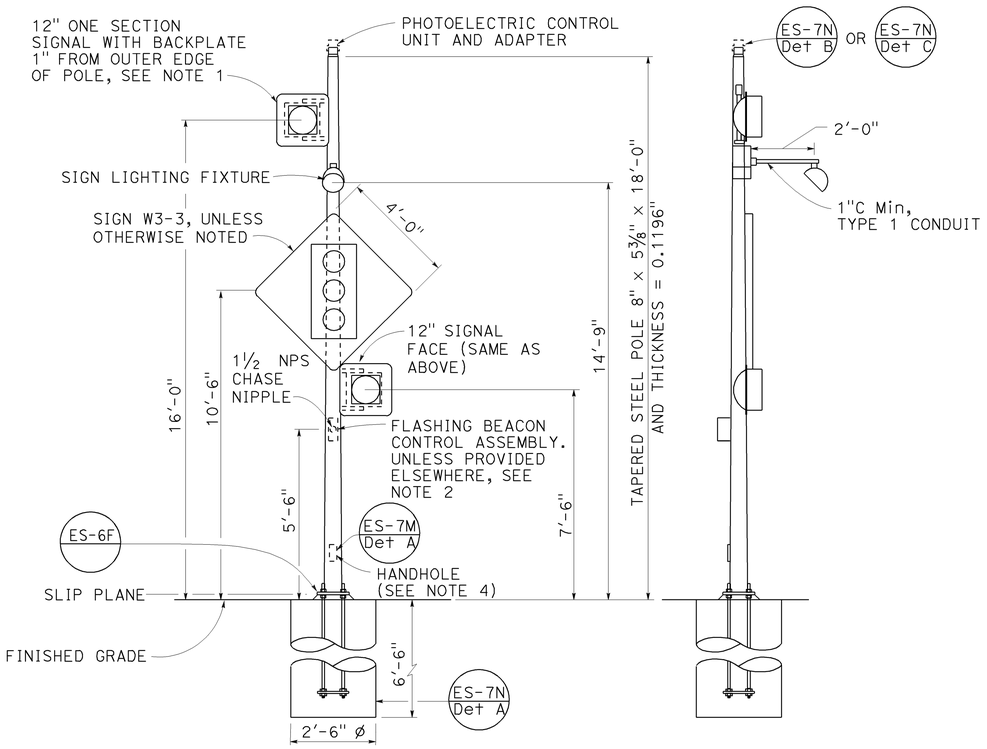

FRONT VIEW

SIDE VIEW

TYPE 15-FBS

ADVANCE FLASHING BEACON WITH SLIP BASE INSTALLATION

DETAIL A

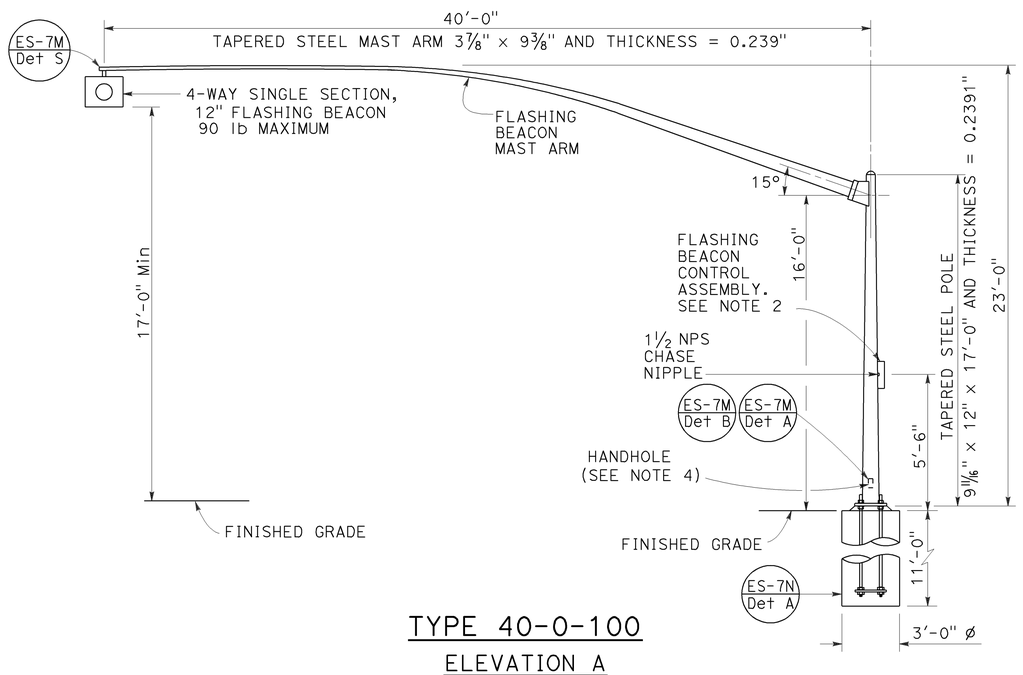

TYPE 40-0-100

ELEVATION A

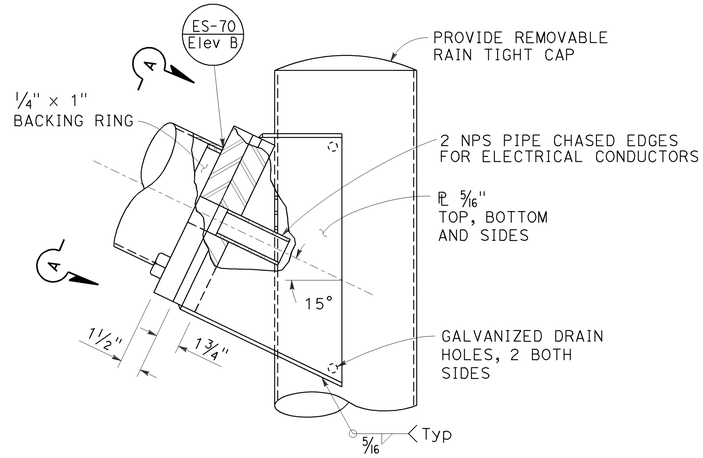

ELEVATION B

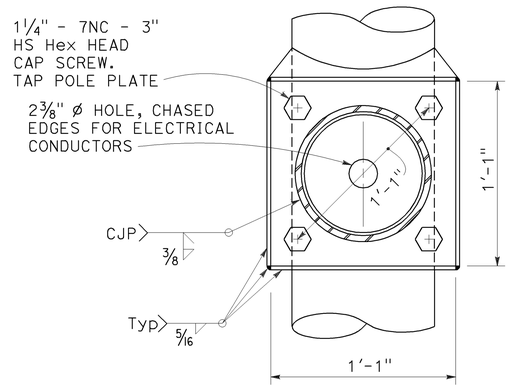

VIEW A-A

FLASHING BEACON MAST ARM CONNECTION DETAIL

DETAIL B

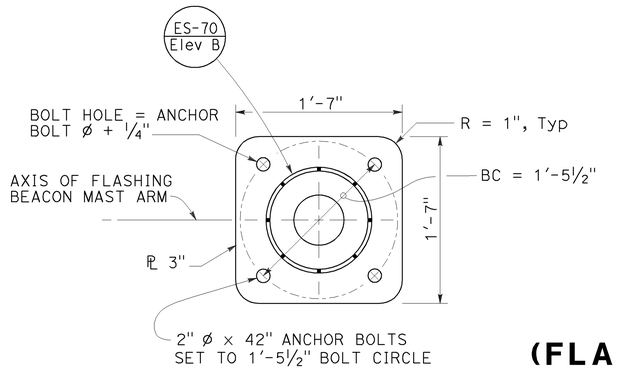

BASE PLATE

DETAIL C

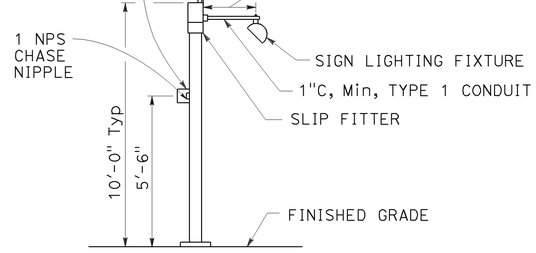

TYPE 1-A, 1-B, 1-C AND 1-D

ADVANCE FLASHING BEACON INSTALLATION

DETAIL D

See Note 5

Dist	COUNTY	ROUTE	POST MILES TOTAL PROJECT	SHEET No.	TOTAL SHEETS
08	Riv	74	63.0	54	88

REGISTERED CIVIL ENGINEER

July 19, 2013
PLANS APPROVAL DATE

REGISTERED PROFESSIONAL ENGINEER
Stanley P. Johnson
No. C57793
Exp. 3-31-14
CIVIL
STATE OF CALIFORNIA

THE STATE OF CALIFORNIA OR ITS OFFICERS OR AGENTS SHALL NOT BE RESPONSIBLE FOR THE ACCURACY OR COMPLETENESS OF SCANNED COPIES OF THIS PLAN SHEET.

TO ACCOMPANY PLANS DATED 7-21-14

NOTES:

1. See Revised Standard Plan RSP ES-4A and Standard Plan ES-4D for attachment fitting details.
2. For wiring diagram, see Standard Plan ES-14B.
3. For additional notes and details, see Standard Plans ES-7M and ES-7N.
4. Handhole shall be located on the downstream side of traffic.
5. See project plans for type of standard to be installed.

STATE OF CALIFORNIA
DEPARTMENT OF TRANSPORTATION

ELECTRICAL SYSTEMS (FLASHING BEACON ON A TYPE 1, TYPE 15-FBS AND TYPE 40 STANDARD)

NO SCALE

RSP ES-7J DATED JULY 19, 2013 SUPERSEDES STANDARD PLAN ES-7J DATED MAY 20, 2011 - PAGE 471 OF THE STANDARD PLANS BOOK DATED 2010.

REVISED STANDARD PLAN RSP ES-7J

2010 REVISED STANDARD PLAN RSP ES-7J

6-26-13

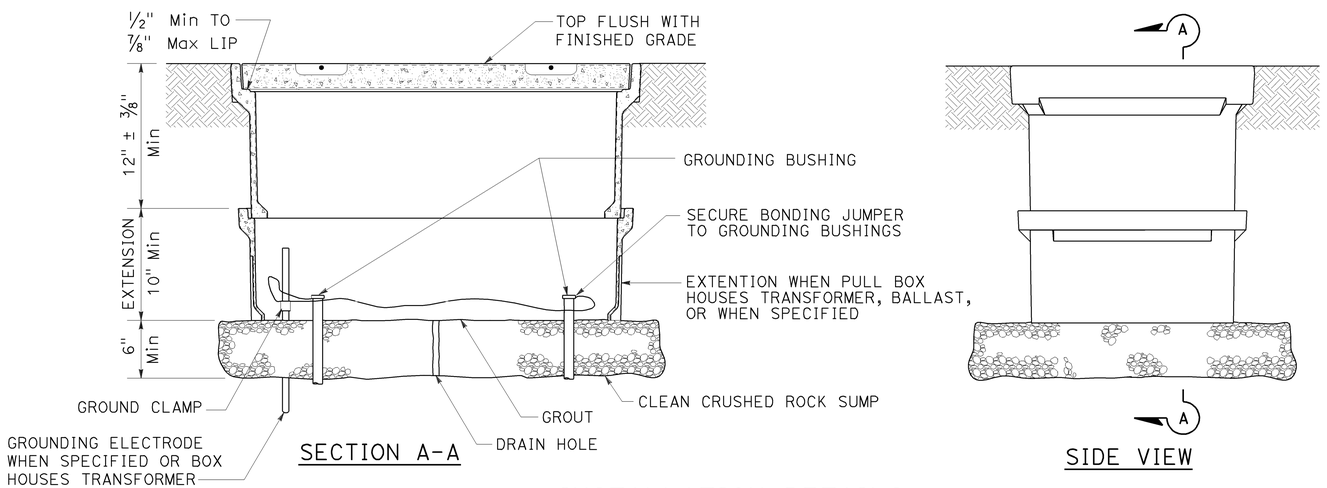

SECTION A-A

SIDE VIEW

INSTALLATION DETAILS

DETAIL A

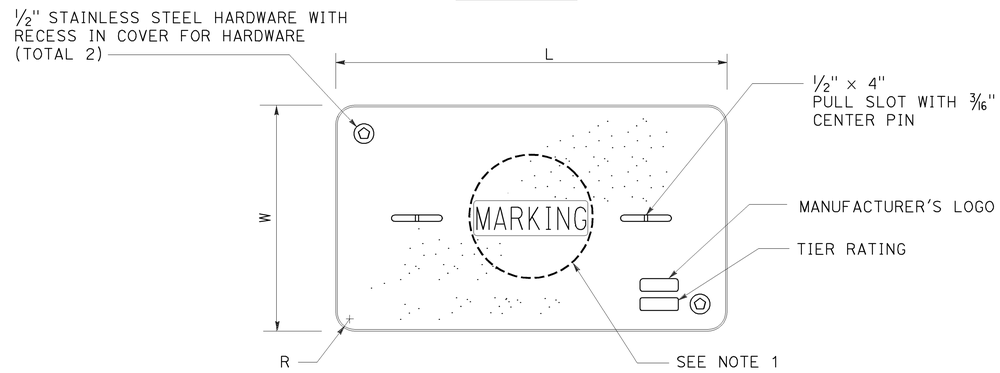

COVER TOP VIEW

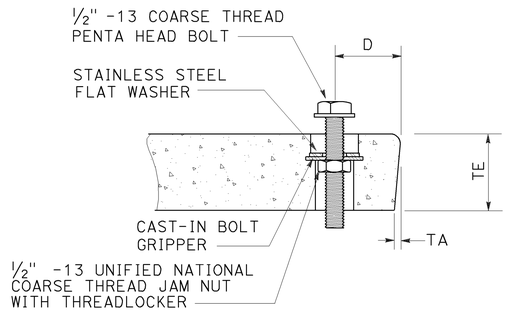

TYPICAL COVER CAPTIVE BOLT
OR SIMILAR

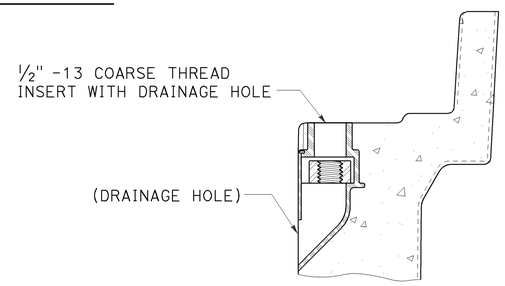

TYPICAL THREADED INSERT
OR SIMILAR

DIMENSION TABLE

PULL BOX	PULL BOX			COVER						
	MINIMUM DEPTH BOX	MINIMUM DEPTH EXTENSION	MAXIMUM WEIGHT	L	W	R	TE	TA	D	MAXIMUM WEIGHT
No. 3½	12"	N/A	40 lb	1′ - 3⅜"	10⅛"	1⅜"	2"	⅛"	1¾"	30 lb
No. 5	12"	10"	55 lb	1′ - 11¼"	1′ - 1¾"	1⅜"	2"	⅛"	1¾"	60 lb
No. 6	12"	10"	70 lb	2′ - 6½"	1′ - 5½"	1⅜"	2"	⅛"	2"	85 lb

DIST	COUNTY	ROUTE	POST MILES TOTAL PROJECT	SHEET NO.	TOTAL SHEETS
08	Riv	74	63.0	55	88

Theresa Gabriel
REGISTERED ELECTRICAL ENGINEER

REGISTERED PROFESSIONAL ENGINEER
Theresa Aziz Gabriel
No. E15129
Exp. 6-30-14
ELECTRICAL
STATE OF CALIFORNIA

July 19, 2013
PLANS APPROVAL DATE

THE STATE OF CALIFORNIA OR ITS OFFICERS OR AGENTS SHALL NOT BE RESPONSIBLE FOR THE ACCURACY OR COMPLETENESS OF SCANNED COPIES OF THIS PLAN SHEET.

TO ACCOMPANY PLANS DATED 7-21-14

NOTES:

1. Pull box covers shall be marked as follows: "SERVICE" Service circuits between service point and service disconnect; "SPRINKLER-CONTROL" sprinkler control circuits, 50 V or less; "CALTRANS" on all pull boxes, except pull boxes marked "SPRINKLER-CONTROL"; and "TELEPHONE" Telephone service;

   A) No. 3½ pull box.
      1) "SIGNAL" - Traffic signal circuits with or without lighting or sign lighting circuits.
      2) "LIGHTING" - Lighting or sign lighting circuits where voltage is under 600 V.

   B) No. 5, 6, 9 or 9A pull box.
      1) "TRAFFIC SIGNAL" - Traffic signal circuits with or without lighting or sign lighting circuits.
      2) "LIGHTING" - Lighting or sign lighting circuits where voltage is under 600 V.
      3) "LIGHTING-HIGH VOLTAGE" - Lighting or sign lighting circuits where voltage is above 600 V.
      4) "IRRIGATION" - Circuits to irrigation controller 120 V or more.
      5) "RAMP METER" - Ramp meter circuits.
      6) "COUNT STATION" - Count or speed monitor circuits.
      7) "COMMUNICATIONS" - Communication circuits.
      8) "TOS COMMUNICATIONS" - TOS communication line.
      9) "TOS POWER" - TOS power.
      10) "TDC POWER" - Telephone demarcation cabinet power.
      11) "CCTV" - Closed circuit television circuits.
      12) "TMS" - Traffic monitoring station circuits.
      13) "CMS" - Changeable message sign circuits.
      14) "HAR" - Highway advisory radio circuits.
      15) "BOOSTER PUMP" - Booster pump circuit.

2. The nominal dimensions of the opening in which the cover sets shall be the same as the cover dimensions except the length and width dimensions shall be ⅛" greater.
3. Covers and boxes shall be interchangeable with California standard male and female gages. When interchanged with a standard male or female gage, the top surfaces shall be flush within ⅛". Top outside radius of covers and pull boxes shall have a ⅛" radius.
4. Pull box extension may be another pull box as long as the bottom edge of the pull box can fit into the cover opening.
5. All dimensions for the cover for non-traffic pull box are nominal values.

STATE OF CALIFORNIA
DEPARTMENT OF TRANSPORTATION

ELECTRICAL SYSTEMS (NON-TRAFFIC PULL BOX)

NO SCALE

RSP ES-8A DATED JULY 19, 2013 SUPERSEDES RSP ES-8A DATED JANUARY 20, 2012 THAT SUPPLEMENTS THE STANDARD PLANS BOOK DATED 2010.

REVISED STANDARD PLAN RSP ES-8A

2010 REVISED STANDARD PLAN RSP ES-8A

7-15-13

Dist	COUNTY	ROUTE	POST MILES TOTAL PROJECT	SHEET No.	TOTAL SHEETS
08	Riv	74	63.0	56	88

LICENSED LANDSCAPE ARCHITECT

July 19, 2013
PLANS APPROVAL DATE

Gregory A. Balzer 2015
08 License Date
2-28-15
Renewal Date
7-19-13
Date
LICENSED LANDSCAPE ARCHITECT
STATE OF CALIFORNIA

THE STATE OF CALIFORNIA OR ITS OFFICERS OR AGENTS SHALL NOT BE RESPONSIBLE FOR THE ACCURACY OR COMPLETENESS OF SCANNED COPIES OF THIS PLAN SHEET.

TO ACCOMPANY PLANS DATED 7-21-14

A

AB	AGGREGATE BASE
ABS	ACRYLONITRILE-BUTADIENE-STYRENE
AC	ASPHALT CONCRETE
ACC	ARMOR-CLAD CONDUCTORS
Adj	ADJACENT/ADJUSTABLE
AIC	AUXILIARY IRRIGATION CONTROLLER
Alt	ALTERNATIVE
AMEND	AMENDMENT
ARV	AIR RELEASE VALVE
AUTO	AUTOMATIC
AUX	AUXILIARY
AVB	ATMOSPHERIC VACUUM BREAKER

B

B&B	BALLED AND BURLAPPED
B/B	BRASS/BRONZE
B/B/PL	BRASS/BRONZE/PLASTIC
B/PL	BRASS/PLASTIC
BFM	BONDED FIBER MATRIX
Bit Ctd	BITUMINOUS COATED
BP	BOOSTER PUMP
BPA	BACKFLOW PREVENTER ASSEMBLY
BPE	BACKFLOW PREVENTER ENCLOSURE
BV	BALL VALVE

C

C	CONDUIT
CAP	CORRUGATED ALUMINUM PIPE
CARV	COMBINATION AIR RELEASE VALVE
CB	COUPLING BAND
CCA	CAM COUPLER ASSEMBLY
CEC	CONTROLLER ENCLOSURE CABINET
CHDPE	CORRUGATED HIGH DENSITY POLYETHYLENE
CL	CHAIN LINK
CNC	CONTROL AND NEUTRAL CONDUCTORS
Conc	CONCRETE
CP	COPPER PIPE
CS	COMPOST SOCK
CSP	CORRUGATED STEEL PIPE
CST	CENTER STRIP
CV	CHECK VALVE

D

Dia	DIAMETER
DIP	DUCTILE IRON PIPE
DIT	DRIP IRRIGATION TUBING
DG	DECOMPOSED GRANITE
DN	DIAMETER NOMINAL
DVA	DRIP VALVE ASSEMBLY

E

EC	EROSION CONTROL
ECTC	EROSION CONTROL TECHNOLOGY COUNCIL
Elect	ELECTRIC/ELECTRICAL
Elev	ELEVATION
ELL	ELBOW
ENCL	ENCLOSURE
EP	EDGE OF PAVEMENT
ES	EDGE OF SHOULDER
EST	END STRIP
ESTB	ESTABLISHMENT
ETW	EDGE OF TRAVELED WAY

F

F	FULL CIRCLE
F/P	FULL/PART CIRCLE
FCV	FLOW CONTROL VALVE
FERT	FERTILIZER
FG	FINISHED GRADE
FH	FLEXIBLE HOSE
FIPT	FEMALE IRON PIPE THREAD
FIS	FERTILIZER INJECTOR SYSTEM
FL	FLOW LINE
FR	FIBER ROLL
FS	FLOW SENSOR
FSC	FLOW SENSOR CABLE
FV	FLUSH VALVE

G

Galv	GALVANIZED
GARV	GARDEN VALVE
GARVA	GARDEN VALVE ASSEMBLY
GM	GRAVEL MULCH
GPH	GALLONS PER HOUR
GPM	GALLONS PER MINUTE
GSP	GALVANIZED STEEL PIPE
GV	GATE VALVE

H

H	HALF CIRCLE
HDPE	HIGH DENSITY POLYETHYLENE
HP	HORSEPOWER/HINGE POINT
HPL	HIGH PRESSURE LINE
Hwy	HIGHWAY

I

IC	IRRIGATION CONTROLLER
ICC	IRRIGATION CONTROLLER(S) IN CONTROLLER ENCLOSURE CABINET
ID	INSIDE DIAMETER
IFS	IRRIGATION FILTRATION SYSTEM
IPS	IRON PIPE SIZE
IPT	IRON PIPE THREAD
Irr	IRRIGATION

L

L	LENGTH

M

Max	MAXIMUM
MBGR	METAL BEAM GUARD RAILING
MCV	MANUAL CONTROL VALVE
MIC	MASTER IRRIGATION CONTROLLER
Min	MINIMUM
MIPT	MALE IRON PIPE THREAD
Misc	MISCELLANEOUS
Mtl	MATERIAL
MVP	MAINTENANCE VEHICLE PULLOUT

N

NCN	NO COMMON NAME
NL	NOZZLE LINE
No.	NUMBER
NPT	NATIONAL PIPE THREAD

O

O/C	ON CENTER
OD	OUTSIDE DIAMETER
OL	OVERLAP

P

P	PART CIRCLE
PB	PULL BOX
PCC	PORTLAND CEMENT CONCRETE
PE	POLYETHYLENE
Pkt	PACKET
PL	PLASTIC
PLS	PURE LIVE SEED
PLT	PLANT/PLANTING
PLT ESTB	PLANT ESTABLISHMENT
PM	POST MILE
PR	PRESSURE RATED
PRLV	PRESSURE RELIEF VALVE
PRV	PRESSURE REGULATING VALVE
PVC	POLYVINYL CHLORIDE
Pvmt	PAVEMENT

Q

Q	QUARTER CIRCLE
QCV	QUICK COUPLING VALVE

NOTE:
For additional abbreviations, see Standard Plans A10A and A10B.

R

R	RADIUS
RCP	REINFORCED CONCRETE PIPE
RCV	REMOTE CONTROL VALVE
RCVM	REMOTE CONTROL VALVE (MASTER)
RCVMF	REMOTE CONTROL VALVE (MASTER) W/FLOW SENSOR
RCVP	REMOTE CONTROL VALVE W/PRESSURE REGULATOR
RCW	RECYCLED WATER
RECP	ROLLED EROSION CONTROL PRODUCT
REQ	REQUIRED
RICS	REMOTE IRRIGATION CONTROL SYSTEM
R/W	RIGHT OF WAY

S

S	SLIP
SCH	SCHEDULE
SF	STATE-FURNISHED
Shld	SHOULDER
Sq	SQUARE
SST	SIDE STRIP
Sta	STATION
Std	STANDARD
SW	SIDEWALK/SOUND WALL

T

T	THIRD CIRCLE/THREAD
TLS	TRUCK LOADING STANDPIPE
TQ	THREE QUARTER CIRCLE
TRM	TURF REINFORCEMENT MAT
TT	TWO-THIRDS CIRCLE
TWSA	TREE WELL SPRINKLER ASSEMBLY
Typ	TYPICAL

U

UG	UNDERGROUND

W

W	WIDTH
W/	WITH
WM	WATER METER
WS	WYE STRAINER
WSA	WYE STRAINER ASSEMBLY
WSP	WELDED STEEL PIPE
WWM	WELDED WIRE MESH

STATE OF CALIFORNIA
DEPARTMENT OF TRANSPORTATION

LANDSCAPE AND EROSION CONTROL ABBREVIATIONS

NO SCALE

RSP H1 DATED JULY 19, 2013 SUPERSEDES STANDARD PLAN H1
DATED MAY 20, 2011 - PAGE 218 OF THE STANDARD PLANS BOOK DATED 2010.

REVISED STANDARD PLAN RSP H1

2010 REVISED STANDARD PLAN RSP H1

6-28-13

Dist	COUNTY	ROUTE	POST MILES TOTAL PROJECT	SHEET No.	TOTAL SHEETS
08	Riv	74	63.0	57	88

Gregory A. Balzer
LICENSED LANDSCAPE ARCHITECT

July 19, 2013
PLANS APPROVAL DATE

LICENSED LANDSCAPE ARCHITECT
Gregory A. Balzer 2576
Signature
2-28-15
Renewal Date
7-19-13
Date
STATE OF CALIFORNIA

THE STATE OF CALIFORNIA OR ITS OFFICERS OR AGENTS SHALL NOT BE RESPONSIBLE FOR THE ACCURACY OR COMPLETENESS OF SCANNED COPIES OF THIS PLAN SHEET.

TO ACCOMPANY PLANS DATED 7-21-14

2010 REVISED STANDARD PLAN RSP H4

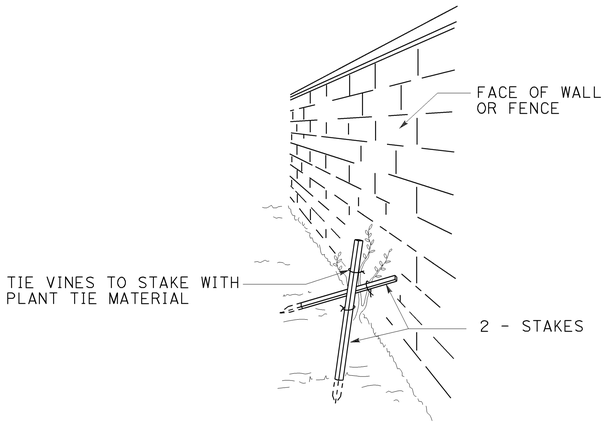

PERSPECTIVE
VINE STAKING

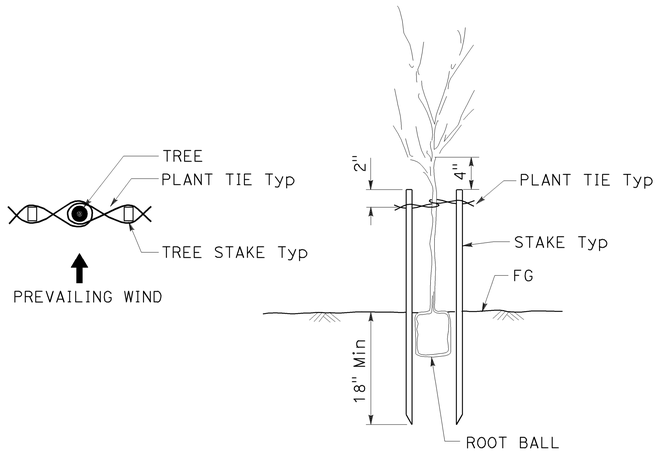

TREE STAKING

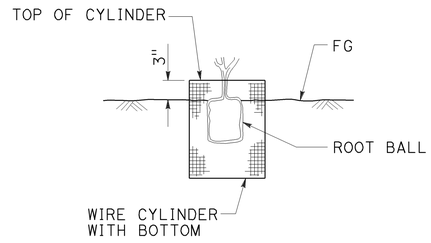

SECTION
ROOT PROTECTOR

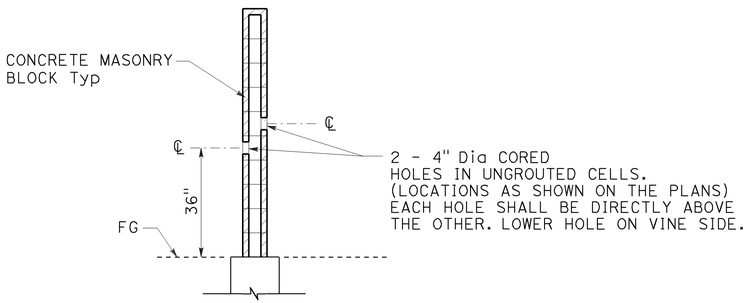

SECTION
CORE HOLE (VINE)

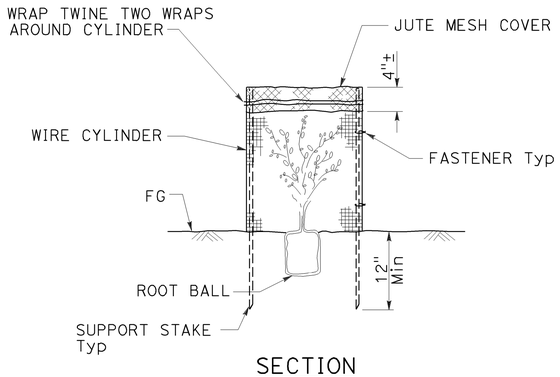

SECTION
FOLIAGE PROTECTOR

STATE OF CALIFORNIA
DEPARTMENT OF TRANSPORTATION

LANDSCAPE DETAILS

NO SCALE

RSP H4 DATED JULY 19, 2013 SUPERSEDES STANDARD PLAN H4
DATED MAY 20, 2011 - PAGE 221 OF THE STANDARD PLANS BOOK DATED 2010.

REVISED STANDARD PLAN RSP H4

6-28-13

Dist	COUNTY	ROUTE	POST MILES TOTAL PROJECT	SHEET No.	TOTAL SHEETS
08	Riv	74	63.0	58	88

REGISTERED CIVIL ENGINEER

April 19, 2013
PLANS APPROVAL DATE

REGISTERED PROFESSIONAL ENGINEER — Gurinderpal Bhullar — No. C48815 — Exp. 9-30-14 — CIVIL — STATE OF CALIFORNIA

THE STATE OF CALIFORNIA OR ITS OFFICERS OR AGENTS SHALL NOT BE RESPONSIBLE FOR THE ACCURACY OR COMPLETENESS OF SCANNED COPIES OF THIS PLAN SHEET.

TO ACCOMPANY PLANS DATED 7-21-14

NOTES:

See Revised Standard Plan RSP T9 for tables.

Use cone spacing X for taper segment, Y for tangent segment or Z for conflict situations, as approriate, per Table 1, unless X, Y, or Z cone spacing is shown on this sheet.

Unless otherwise specified in the special provisions, all temporary warning signs shall have black legend on fluorescent orange background.

California codes are designated by (CA). Otherwise, Federal (MUTCD) codes are shown.

TYPICAL LANE CLOSURE WITH REVERSIBLE CONTROL

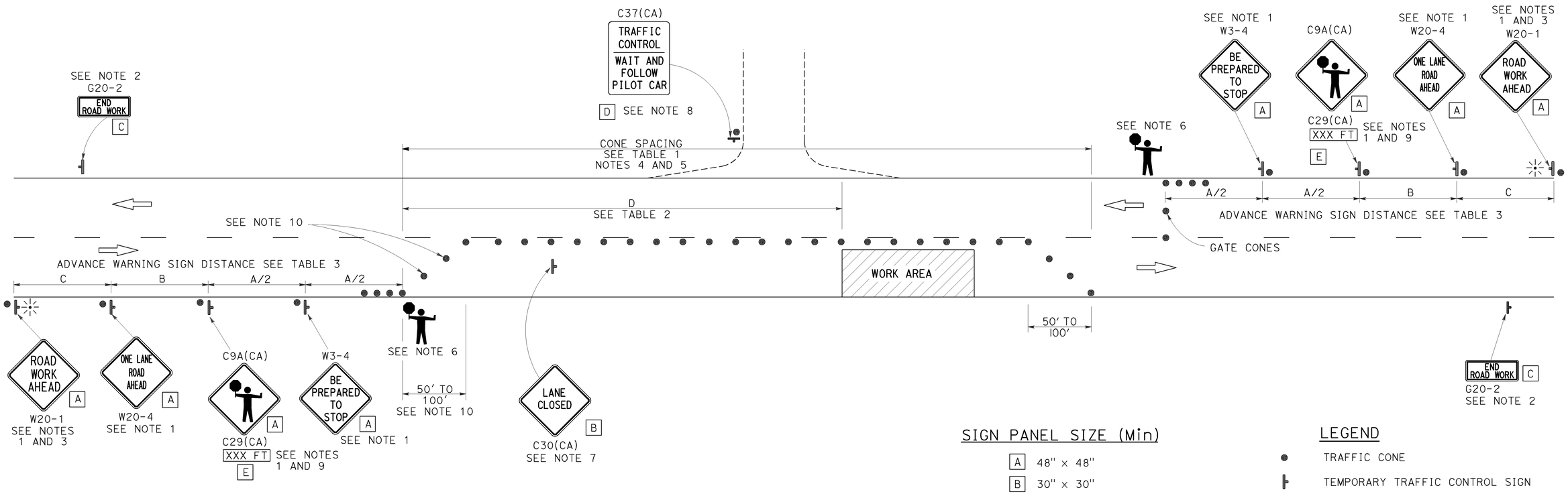

SIGN PANEL SIZE (Min)

A	48" × 48"
B	30" × 30"
C	36" × 18"
D	36" × 42"
E	20" × 7"

LEGEND

- TRAFFIC CONE
- TEMPORARY TRAFFIC CONTROL SIGN
- PORTABLE FLASHING BEACON
- FLAGGER

NOTES:

1. Each advance warning sign in each direction of travel shall be equipped with at least two flags for daytime closure. Each flag shall be at least 16" x 16" in size and shall be orange or fluorescent red-orange in color. Flashing beacons shall be placed at the locations indicated for lane closure during hours of darkness.
2. A G20-2 "END ROAD WORK" sign, as appropriate, shall be placed at the end of the lane control unless the end of work area is obvious, or ends within a larger project's limits.
3. If the W20-1 sign would follow within 2000' of a stationary W20-1 or G20-1 "ROAD WORK NEXT _____ MILES", use a W20-4 sign for the first advance warning sign.
4. All cones used for lane closures during the hours of darkness shall be fitted with retroreflective bands (or sleeves) as specified in the specifications.
5. Portable delineators, placed at one-half the spacing indicated for traffic cones, may be used instead of cones for daytime closures only.
6. Additional advance flaggers may be required. Flagger should stand in a conspicuous place, be visible to approaching traffic as well as approaching vehicles after the first vehicle has stopped. During the hours of darkness, the flagging-station and flagger shall be illuminated and clearly visible to approaching traffic. The illumination footprint of the lighting on the ground shall be at least 20' in diameter. Place a minimum of four cones at 50' intervals in advance of flagger station as shown.
7. Place C30(CA) "LANE CLOSED" sign at 500' to 1000' intervals throughout extended work areas. They are optional if the work area is visible from the flagger station.
8. When a pilot car is used, place a C37(CA) "TRAFFIC CONTROL-WAIT AND FOLLOW PILOT CAR" sign with black legend on white background at all intersections, driveways and alleys without a flagger within traffic control area. Signs shall be clean and visible at all times. Where traffic can not be effectively self-regulated, at least one flagger shall be used at each intersection within traffic control area.
9. An optional C29(CA) sign may be placed below the C9A(CA) sign.
10. Either traffic cones or barricades shall be placed on the taper. Barricades shall be Type I, II, or III.

STATE OF CALIFORNIA
DEPARTMENT OF TRANSPORTATION

TRAFFIC CONTROL SYSTEM FOR LANE CLOSURE ON TWO LANE CONVENTIONAL HIGHWAYS

NO SCALE

RSP T13 DATED APRIL 19, 2013 SUPERSEDES STANDARD PLAN T13 DATED MAY 20, 2011 - PAGE 241 OF THE STANDARD PLANS BOOK DATED 2010.

REVISED STANDARD PLAN RSP T13

2010 REVISED STANDARD PLAN RSP T13

4-2-13

DIST	COUNTY	ROUTE	POST MILES TOTAL PROJECT	SHEET No.	TOTAL SHEETS
08	Riv	74	63.0	59	88

Clarence Hensel 10-18-13
REGISTERED CIVIL ENGINEER DATE

7-21-14
PLANS APPROVAL DATE

CLARENCE HENSEL No. C62754 Exp. 06/30/16 CIVIL — REGISTERED PROFESSIONAL ENGINEER — STATE OF CALIFORNIA

The State of California or its officers or agents shall not be responsible for the accuracy or completeness of electronic copies of this plan sheet.

PROFILE GRADE
NO SCALE

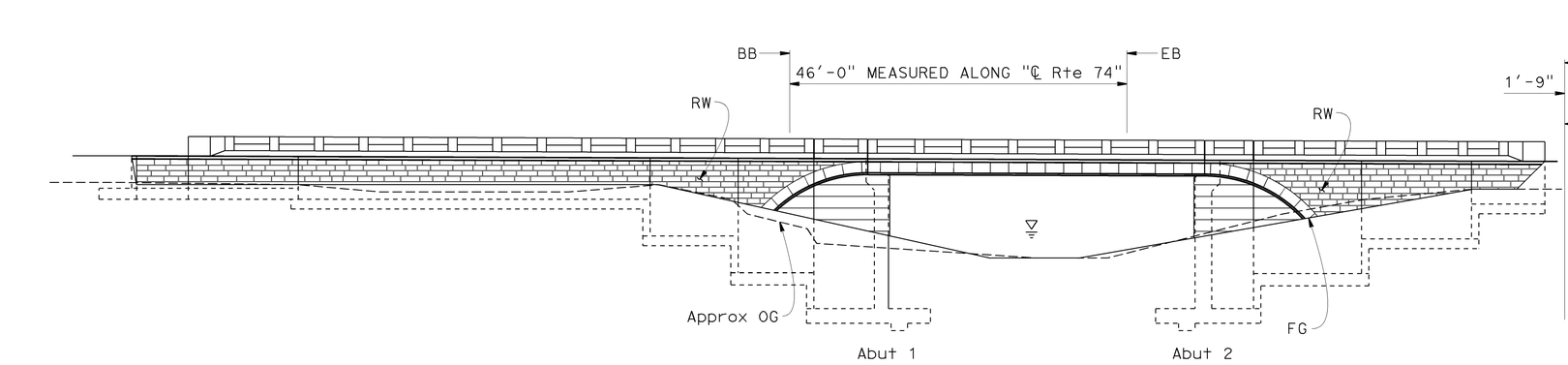

ELEVATION
NO SCALE

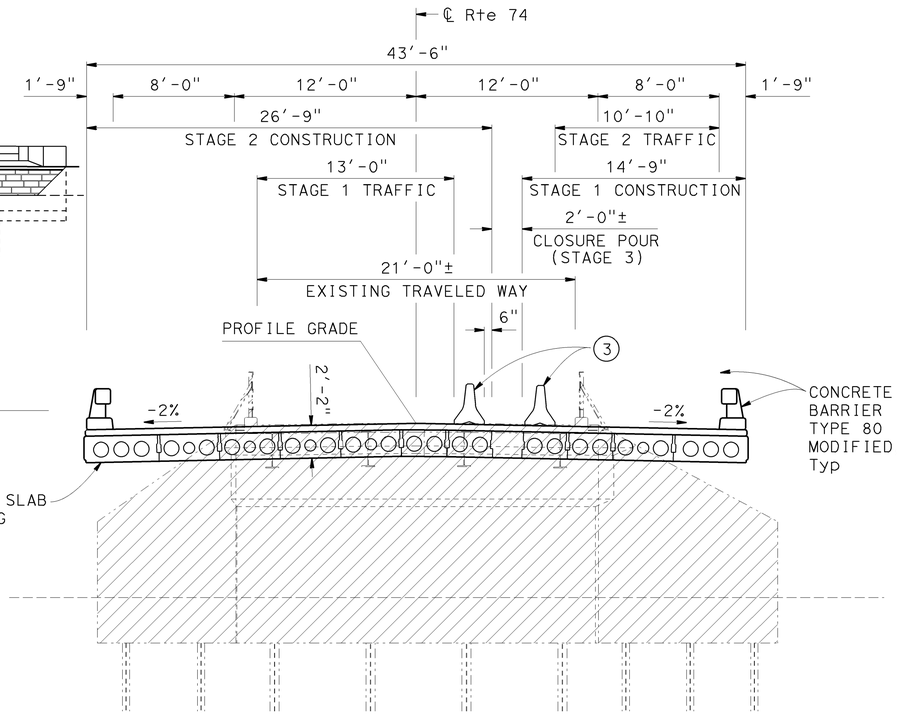

TYPICAL SECTION
1" = 5'-0"

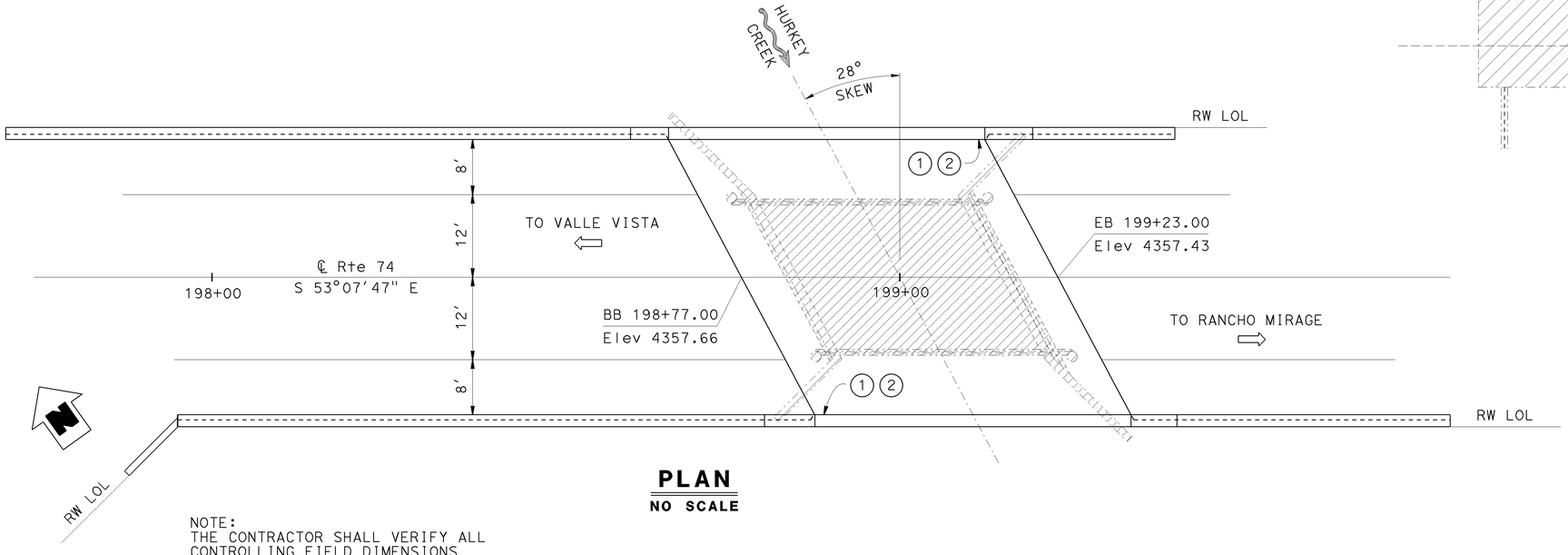

PLAN
NO SCALE

NOTE:
THE CONTRACTOR SHALL VERIFY ALL CONTROLLING FIELD DIMENSIONS BEFORE ORDERING OR FABRICATING ANY MATERIAL.

Notes:

1. Paint "HURKEY CREEK BRIDGE"
2. Paint "Bridge No. 56-0181"
3. Temporary Railing (Type K), see "ROAD PLANS".

Legend:

- Indicated existing structure
- Indicates limits of Bridge Removal
- Indicates high water mark

Note: For "INDEX TO PLANS", "STANDARD PLANS", "QUANTITIES" and "GENERAL NOTES", see "INDEX TO PLANS" sheet.

Matt Holm
DESIGN ENGINEER

	BY	CHECKED
DESIGN	C. Hensel	M. Kattaa
DETAILS	Kc	M. Kattaa
QUANTITIES	C. Hensel	M. Kattaa

LOAD & RESISTANCE FACTOR DESIGN — LIVE LOADING: LEVEL + 240 psf SURCHARGE

	BY	CHECKED
LAYOUT	C. Hensel	M. Kattaa
SPECIFICATIONS	X	PLANS AND SPECS COMPARED: X

STATE OF CALIFORNIA
DEPARTMENT OF TRANSPORTATION

DIVISION OF ENGINEERING SERVICES
STRUCTURE DESIGN
DESIGN BRANCH 12

BRIDGE NO. 56-0181
POST MILE 62.8/63.1

HURKEY CREEK BRIDGE (REPLACE)
GENERAL PLAN

ORIGINAL SCALE IN INCHES FOR REDUCED PLANS 0 1 2 3

UNIT: 3606
PROJECT NUMBER & PHASE: 0800000638
CONTRACT NO.: 08-383500

DISREGARD PRINTS BEARING EARLIER REVISION DATES →

REVISION DATES				SHEET	OF
10-16-12	10-16-13		10-8-13	1	30

STRUCTURES DESIGN GENERAL PLAN SHEET (ENGLISH) (REV.09-01-10)

FILE => 56-0181-a-gp.dgn

USERNAME => s1266699 DATE PLOTTED => 31-JAN-2014 TIME PLOTTED => 11:42

DIST	COUNTY	ROUTE	POST MILES TOTAL PROJECT	SHEET No.	TOTAL SHEETS
08	Riv	74	63.0	60	88

Clarence Hensel 10-18-13
REGISTERED CIVIL ENGINEER DATE

7-21-14
PLANS APPROVAL DATE

REGISTERED PROFESSIONAL ENGINEER
CLARENCE HENSEL
No. C62754
Exp. 06/30/16
CIVIL
STATE OF CALIFORNIA

The State of California or its officers or agents shall not be responsible for the accuracy or completeness of electronic copies of this plan sheet.

GENERAL NOTES
LOAD AND RESISTANCE FACTOR DESIGN

DESIGN:
AASHTO LRFD Bridge Design Specifications, 4th edition with California Amendments.

SEISMIC DESIGN:
Caltrans Seismic Design Criteria (SDC), Version 1.4 dated June 2006.

DEAD LOAD:
Includes 35 psf for future wearing surface.

LIVE LOADING:
HL93 and permit design load.
2 Foot surcharge on level ground surface.

SEISMIC LOADING:
SDC ARS Curve for soil profile C(M = 7.7)
(Peak rock acceleration = 0.72 g)

SOIL:
$\emptyset = 42°$, γ Soil = 120 pcf

REINFORCED CONCRETE:
f_y = 60 ksi

f'_c = See "CONCRETE STRENGTH AND TYPE LIMITS"

n = 8

PRESTRESSED CONCRETE:
See "Notes" on "PRESTRESSED CONCRETE SLAB NO. 1" sheet.

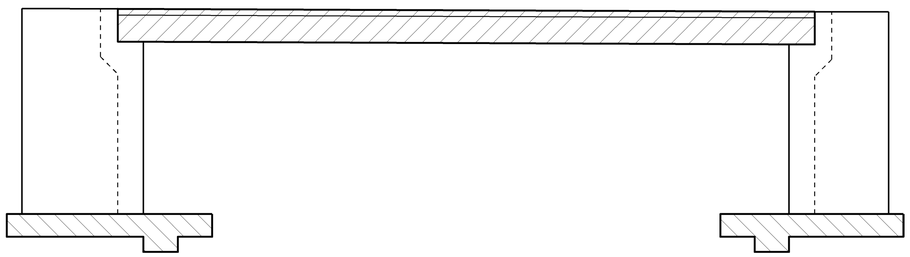

CONCRETE STRENGTH AND TYPE LIMITS

No scale

Legend:

Structural Concrete, Bridge (PC/PS Slab = 4.5 ksi @ 28 days, Topping = 3.6 ksi @ 28 days)

Structural Concrete, Bridge (3.6 ksi @ 28 days)

Structural Concrete, Bridge Footing (3.6 ksi @ 28 days)

STANDARD PLANS 2010

A10A	ABBREVIATIONS (SHEET 1 OF 2)
A10B	ABBREVIATIONS (SHEET 2 OF 2)
A10F	LEGEND - SOIL (SHEET 1 OF 2)
A10G	LEGEND - SOIL (SHEET 2 OF 2)
A62B	LIMITS OF PAYMENT FOR EXCAVATION AND BACKFILL BRIDGE SURCHARGE AND WALL
B0-3	BRIDGE DETAILS
RSP B3-1A	RETAINING WALL TYPE 1 (CASE 1)
RSP B3-4A	RETAINING WALL TYPE 5 (CASE 1)
RSP B3-5	RETAINING WALL DETAILS NO. 1
B6-21	JOINT SEALS (MAXIMUM MOVEMENT RATING = 2")
RSP B11-60	CONCRETE BARRIER TYPE 80 (SHEET 1 OF 2)
B11-61	CONCRETE BARRIER TYPE 80 (SHEET 2 OF 2)

INDEX TO PLANS

1	GENERAL PLAN
2	INDEX TO PLANS
3	DECK CONTOURS
4	FOUNDATION PLAN
5	ABUTMENT LAYOUT NO. 1
6	ABUTMENT LAYOUT NO. 2
7	ABUTMENT DETAILS NO. 1
8	ABUTMENT DETAILS NO. 2
9	ABUTMENT DETAILS NO. 3
10	ABUTMENT FOOTING DETAILS
11	TYPICAL SECTION
12	SLAB LAYOUT
13	PRESTRESSED CONCRETE SLAB NO. 1
14	PRESTRESSED CONCRETE SLAB NO. 2
15	RETAINING WALL LAYOUT NO. 1
16	RETAINING WALL LAYOUT NO. 2
17	RETAINING WALL LAYOUT NO. 3
18	RETAINING WALL LAYOUT NO. 4
19	RETAINING WALL DETAILS
20	ARCHITECTURAL TREATMENT
21	LOG OF TEST BORINGS NO. 1 OF 10
22	LOG OF TEST BORINGS NO. 2 OF 10
23	LOG OF TEST BORINGS NO. 3 OF 10
24	LOG OF TEST BORINGS NO. 4 OF 10
25	LOG OF TEST BORINGS NO. 5 OF 10
26	LOG OF TEST BORINGS NO. 6 OF 10
27	LOG OF TEST BORINGS NO. 7 OF 10
28	LOG OF TEST BORINGS NO. 8 OF 10
29	LOG OF TEST BORINGS NO. 9 OF 10
30	LOG OF TEST BORINGS NO. 10 OF 10

QUANTITIES

BRIDGE REMOVAL	LUMP	SUM
STRUCTURE EXCAVATION (BRIDGE)	696	CY
STRUCTURE EXCAVATION (RETAINING WALL) (TYPE D)	160	CY
STRUCTURE EXCAVATION (TYPE D)	604	CY
STRUCTURE EXCAVATION (RETAINING WALL)	676	CY
STRUCTURE BACKFILL (BRIDGE)	772	CY
STRUCTURE BACKFILL (RETAINING WALL)	839	CY
STRUCTURAL CONCRETE, BRIDGE FOOTING	109	CY
STRUCTURAL CONCRETE, BRIDGE	207	CY
STRUCTURAL CONCRETE, RETAINING WALL	235	CY
SANDBLAST SURFACE TEXTURE	1,585	SQFT
RANDOM CUT STONE TEXTURE	1,130	SQFT
FURNISH PRECAST PRESTRESSED CONCRETE SLAB (TYPE SIV)	1,879	SQFT
ERECT PRECAST PRESTRESSED CONCRETE DECK UNIT	11	EA
JOINT SEAL (MR ½")	99	LF
BAR REINFORCING STEEL (BRIDGE)	42,798	LB
BAR REINFORCING STEEL (RETAINING WALL)	31,135	LB
BAR REINFORCING STEEL (EPOXY COATED) (BRIDGE)	7,131	LB
PREPARE AND STAIN CONCRETE	1,130	SQFT
CONCRETE BARRIER (TYPE 80 MODIFIED)	355	LF

DESIGN	BY C. Hensel	CHECKED M. Kattaa	
DETAILS	BY kc	CHECKED M. Kattaa	
QUANTITIES	BY C. Hensel	CHECKED M. Kattaa	

STATE OF CALIFORNIA
DEPARTMENT OF TRANSPORTATION

DIVISION OF ENGINEERING SERVICES
STRUCTURE DESIGN
DESIGN BRANCH 12

BRIDGE NO. 56-0181
POST MILE 62.8/63.1

HURKEY CREEK BRIDGE (REPLACE)
INDEX TO PLANS

STRUCTURES DESIGN DETAIL SHEET (ENGLISH) (REV. 09-01-10)

ORIGINAL SCALE IN INCHES FOR REDUCED PLANS 0 1 2 3

UNIT: 3606
PROJECT NUMBER & PHASE: 0800000638
CONTRACT NO.: 08-383500

DISREGARD PRINTS BEARING EARLIER REVISION DATES →

REVISION DATES				SHEET	OF
6-28-13	10-18-13		10-15-13	2	30

FILE => 56-0181-b-itp.dgn

USERNAME => s126699 DATE PLOTTED => 31-JAN-2014 TIME PLOTTED => 11:42

DIST	COUNTY	ROUTE	POST MILES TOTAL PROJECT	SHEET No.	TOTAL SHEETS
08	Riv	74	63.0	61	88

Clarence Hensel 10-18-13
REGISTERED CIVIL ENGINEER DATE

7-21-14
PLANS APPROVAL DATE

REGISTERED PROFESSIONAL ENGINEER
CLARENCE HENSEL
No. C62754
Exp. 06/30/16
CIVIL
STATE OF CALIFORNIA

The State of California or its officers or agents shall not be responsible for the accuracy or completeness of electronic copies of this plan sheet.

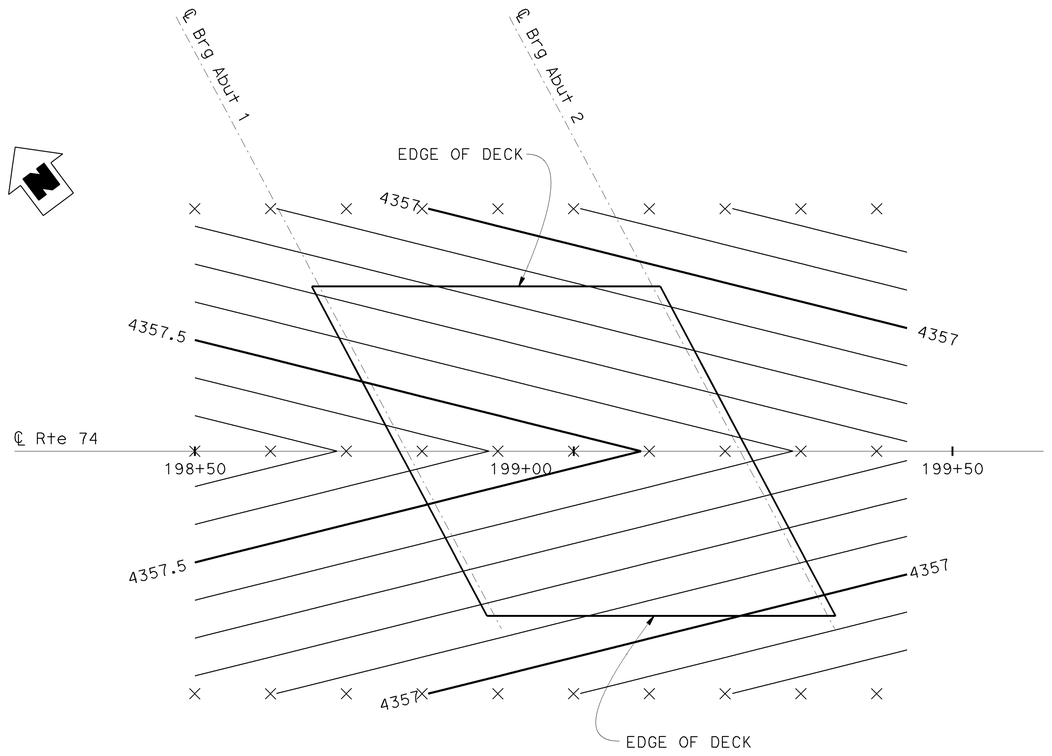

PLAN
1" = 10'

Notes:
x - Denotes 10' intervals along station line or adjacent station line
Contour interval = 0.1'
Contours do not include camber

DESIGN	BY C. Hensel	CHECKED M. Kattaa	STATE OF CALIFORNIA DEPARTMENT OF TRANSPORTATION	DIVISION OF ENGINEERING SERVICES STRUCTURE DESIGN DESIGN BRANCH 12	BRIDGE NO. 56-0181	HURKEY CREEK BRIDGE (REPLACE)
DETAILS	BY Kc	CHECKED M. Kattaa			POST MILE 62.8/63.1	DECK CONTOURS
QUANTITIES	BY C. Hensel	CHECKED M. Kattaa				

STRUCTURES DESIGN DETAIL SHEET (ENGLISH) (REV. 09-01-10)

ORIGINAL SCALE IN INCHES FOR REDUCED PLANS 0 1 2 3

UNIT: 3606
PROJECT NUMBER & PHASE: 0800000638 CONTRACT NO.: 08-383500

DISREGARD PRINTS BEARING EARLIER REVISION DATES →

REVISION DATES				SHEET	OF
9-24-13				3	30

FILE => 56-0181-c-dc.dgn

USERNAME => s126699 DATE PLOTTED => 31-JAN-2014 TIME PLOTTED => 11:42

DIST	COUNTY	ROUTE	POST MILES TOTAL PROJECT	SHEET No.	TOTAL SHEETS
8	Riv	74	63.0	62	88

Clarence Hensel 10-18-13
REGISTERED CIVIL ENGINEER DATE

7-21-14
PLANS APPROVAL DATE

REGISTERED PROFESSIONAL ENGINEER — CLARENCE HENSEL — No. C62754 — Exp. 06/30/16 — CIVIL — STATE OF CALIFORNIA

The State of California or its officers or agents shall not be responsible for the accuracy or completeness of electronic copies of this plan sheet.

Bridge Location

1. 10.092 Lt. ℄ Rte 74, Sta 198+78.512, Elev 4357.181
2. 10.217 Rt. ℄ Rte 74, Sta 198+89.490, Elev 4357.297
3. 10.160 Lt. ℄ Rte 74, Sta 199+11.311, Elev 4357.400
4. 10.127 Rt. ℄ Rte 74, Sta 199+20.856, Elev 4357.303

WSD (LRFD Service I Limit State Load Combination)	
Permissible Gross Contact Stress (ksf)	Allowable Gross Bearing Capacity (ksf)
14.5	10.0
14.5	10.0

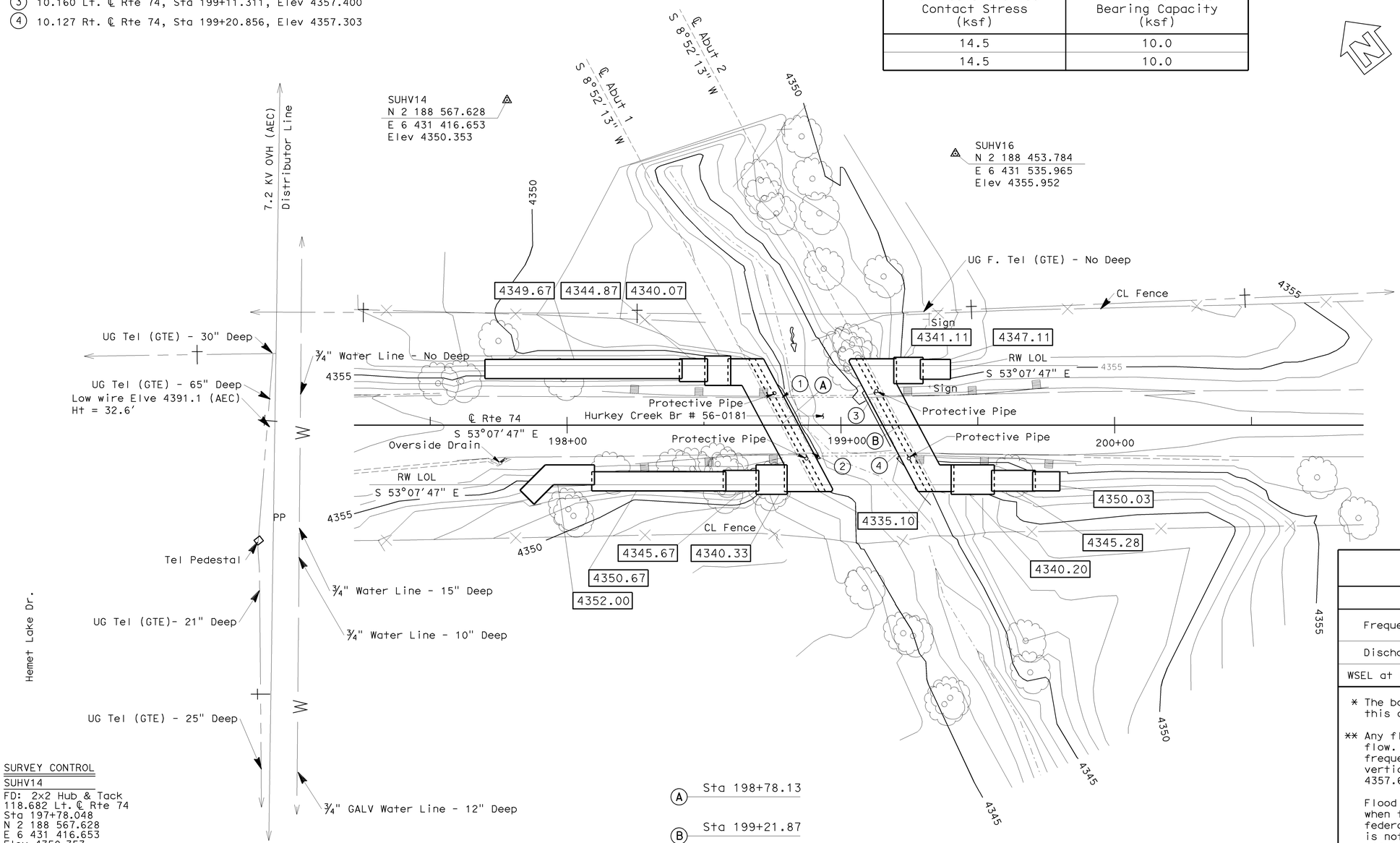

HYDROLOGIC SUMMARY
For the Proposed Structure on NGVD 29

Drainage Area: 16.7 mi²

Frequency	Q^*_{50}	Q^*_{100}	Overtopping Flood/ Flood of Record
Discharge	3000 cfs	4000 cfs	>3600 cfs **
WSEL at Bridge	4357.2 ft	4357.6 ft	>4357.6 ft **

* The base flood and the design flood for the basin in this case are not the same as Q_{50} and Q_{100} here.

** Any flow larger than 3600 cfs will be overtopping flow. Since roadway and bridge deck surface are frequently designed on different horizontal and vertical curves, any elevations lower than elevation 4357.6' will be overtopped by Q_{100}.

Flood plain data are based upon information available when the plans were prepared and are shown to meet federal requirements. The accuracy of said information is not warranted by the State and interested or affected parties should make their own investigation.

SURVEY CONTROL

SUHV14
FD: 2x2 Hub & Tack
118.682 Lt. ℄ Rte 74
Sta 197+78.048
N 2 188 567.628
E 6 431 416.653
Elev 4350.353

SUHV16
PD: 2x2 Hub & Tack
99.196 Lt. ℄ Rte 74
Sta 199+41.804
N 2 188 453.784
E 6 431 535.965
Elev 4355.952

NOTE:
THE CONTRACTOR SHALL VERIFY ALL CONTROLLING FIELD DIMENSIONS BEFORE ORDERING OR FABRICATING ANY MATERIAL.

NOTE:
Underground utilities as shown are approximate. See District Utility Plans for details.

PRELIMINARY INVESTIGATION SECTION					
SCALE 1"=20'	VERT.DATUM NGVD1929	PHOTOGRAMMETRY AS OF: X			
	HORZ.DATUM NAD1983	SURVEYED	BY D8	CHECKED	BY X
	ALIGNMENT TIES Dist. Traverse Sheet	DRAFTED	BY C. Pham	CHECKED	BY E. Vigar

DESIGN	BY C. Hensel	CHECKED	M. Kattaa
DETAILS	BY various	CHECKED	M. Kattaa
QUANTITIES	BY C. Hensel	CHECKED	M. Kattaa

STATE OF CALIFORNIA
DEPARTMENT OF TRANSPORTATION

DIVISION OF ENGINEERING SERVICES
STRUCTURE DESIGN
DESIGN BRANCH 12

BRIDGE NO. 56-0181
POST MILE 62.8/63.1

HURKEY CREEK
FOUNDATION PLAN

STRUCTURES FOUNDATION PLAN SHEET (ENGLISH) (REV. 09-01-10)

ORIGINAL SCALE IN INCHES FOR REDUCED PLANS 0 1 2 3

UNIT: 3647
PROJECT NUMBER & PHASE: 08 00000638 1 CONTRACT NO.: 08-383500

DISREGARD PRINTS BEARING EARLIER REVISION DATES →

REVISION DATES			SHEET	OF
11/21/12	10-15-13	9-3-13	4	30

FILE => 56-0181-c-fp.dgn

USERNAME => s126699 DATE PLOTTED => 31-JAN-2014 TIME PLOTTED => 11:42

DIST	COUNTY	ROUTE	POST MILES TOTAL PROJECT	SHEET No.	TOTAL SHEETS
08	Riv	74	63.0	63	88

Clarence Hensel 10-18-13
REGISTERED CIVIL ENGINEER DATE

7-21-14
PLANS APPROVAL DATE

REGISTERED PROFESSIONAL ENGINEER
CLARENCE HENSEL
No. C62754
Exp. 06/30/16
CIVIL
STATE OF CALIFORNIA

The State of California or its officers or agents shall not be responsible for the accuracy or completeness of electronic copies of this plan sheet.

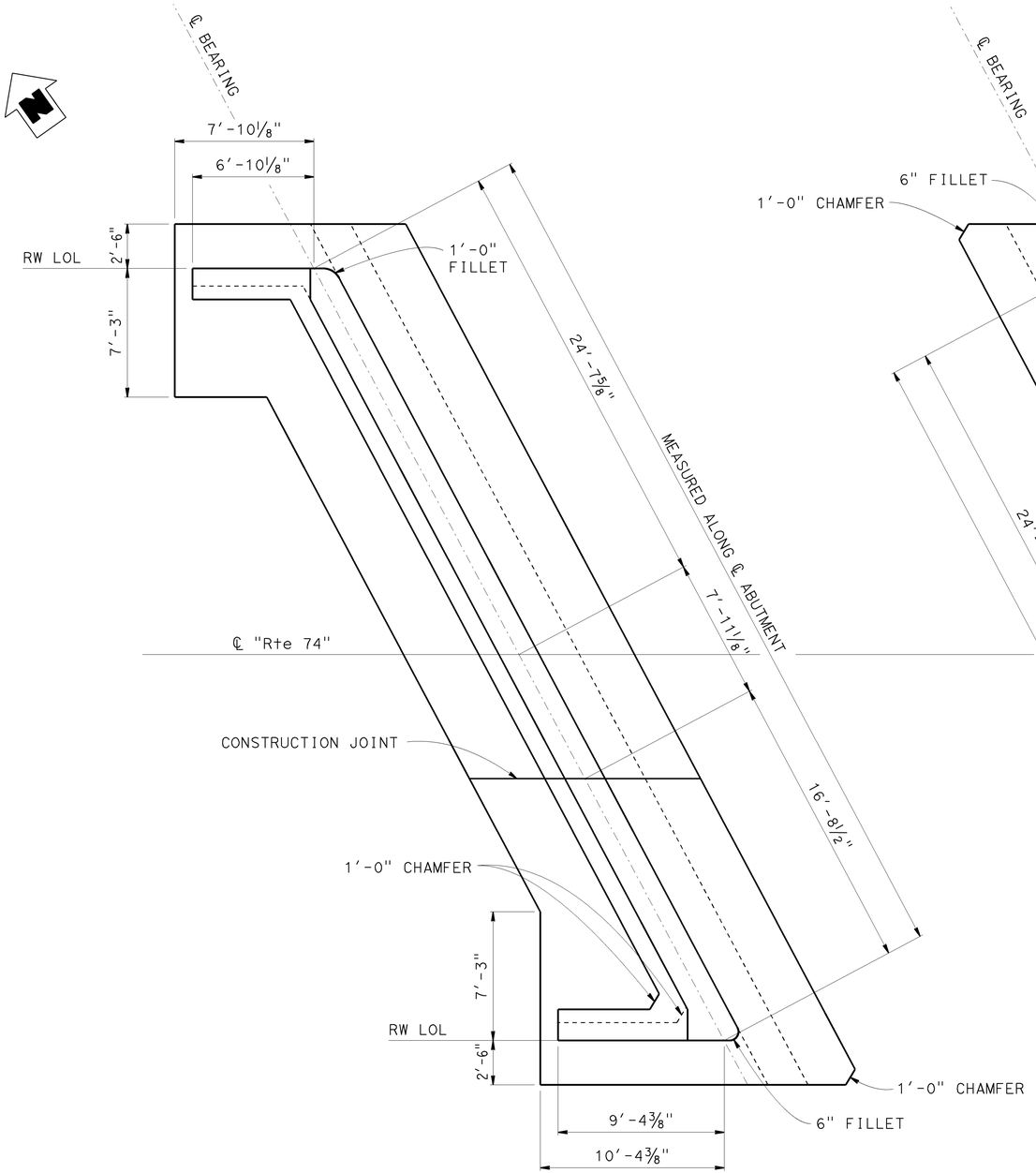

ABUTMENT 1 LAYOUT

1/4" = 1'-0"

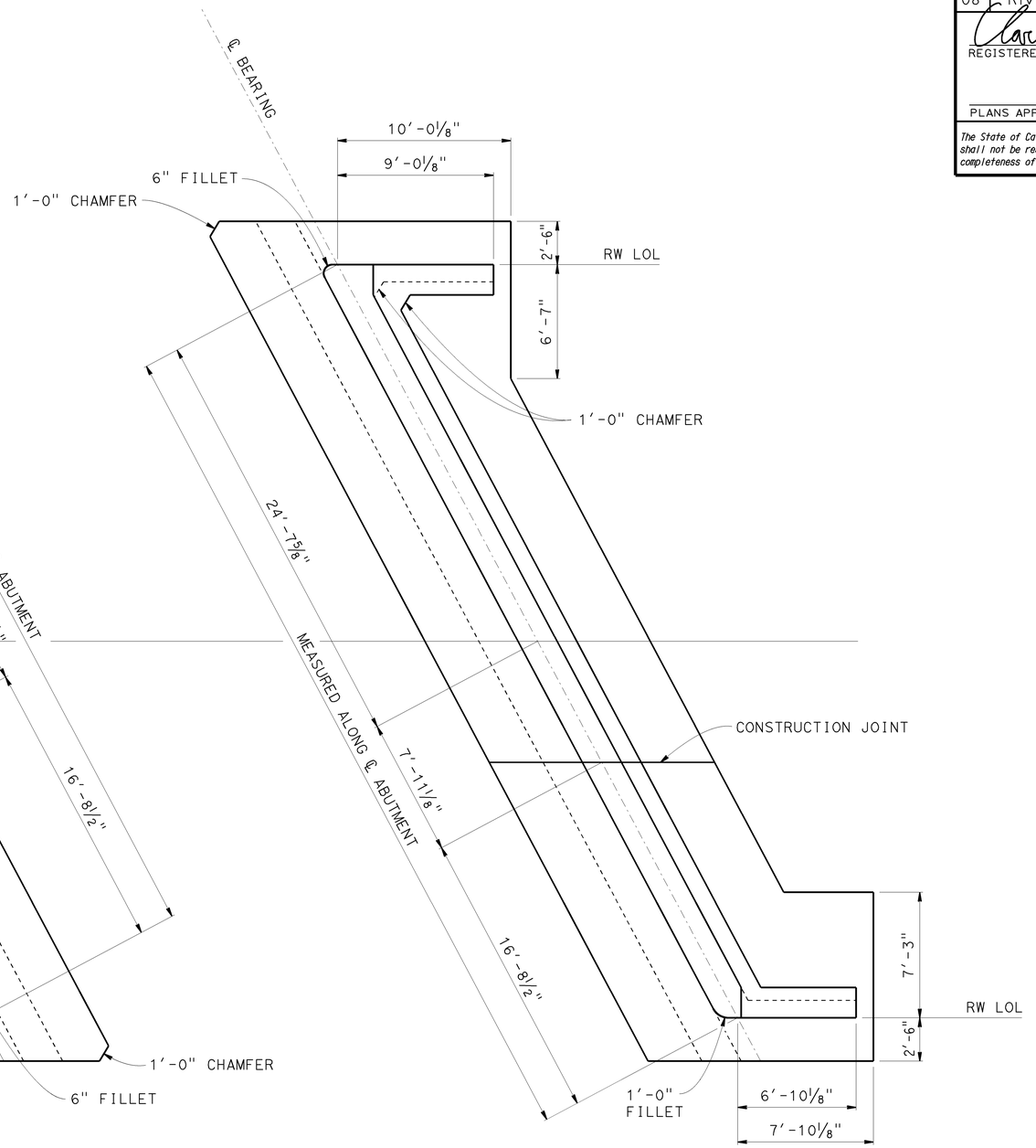

ABUTMENT 2 LAYOUT

1/4" = 1'-0"

DESIGN	BY C. Hensel	CHECKED M. Kattaa	STATE OF CALIFORNIA DEPARTMENT OF TRANSPORTATION	DIVISION OF ENGINEERING SERVICES STRUCTURE DESIGN DESIGN BRANCH 12	BRIDGE NO. 56-0181	HURKEY CREEK BRIDGE (REPLACE)
DETAILS	BY kc	CHECKED M. Kattaa			POST MILE 62.8/63.1	ABUTMENT LAYOUT NO. 1
QUANTITIES	BY C. Hensel	CHECKED M. Kattaa				

STRUCTURES DESIGN DETAIL SHEET (ENGLISH) (REV. 09-01-10)

ORIGINAL SCALE IN INCHES FOR REDUCED PLANS 0 1 2 3

UNIT: 3606
PROJECT NUMBER & PHASE: 0800000638 CONTRACT NO.: 08-383500

DISREGARD PRINTS BEARING EARLIER REVISION DATES →

REVISION DATES				SHEET	OF
6-26-13		9-25-13	9-30-13	5	30

FILE => 56-0181-d-abut01.dgn

USERNAME => s126699 DATE PLOTTED => 31-JAN-2014 TIME PLOTTED => 11:42

DIST	COUNTY	ROUTE	POST MILES TOTAL PROJECT	SHEET No.	TOTAL SHEETS
08	Riv	74	63.0	64	88

Clarence Hensel — REGISTERED CIVIL ENGINEER — 10-18-13 DATE

7-21-14
PLANS APPROVAL DATE

REGISTERED PROFESSIONAL ENGINEER — CLARENCE HENSEL — No. C62754 — Exp. 06/30/16 — CIVIL — STATE OF CALIFORNIA

The State of California or its officers or agents shall not be responsible for the accuracy or completeness of electronic copies of this plan sheet.

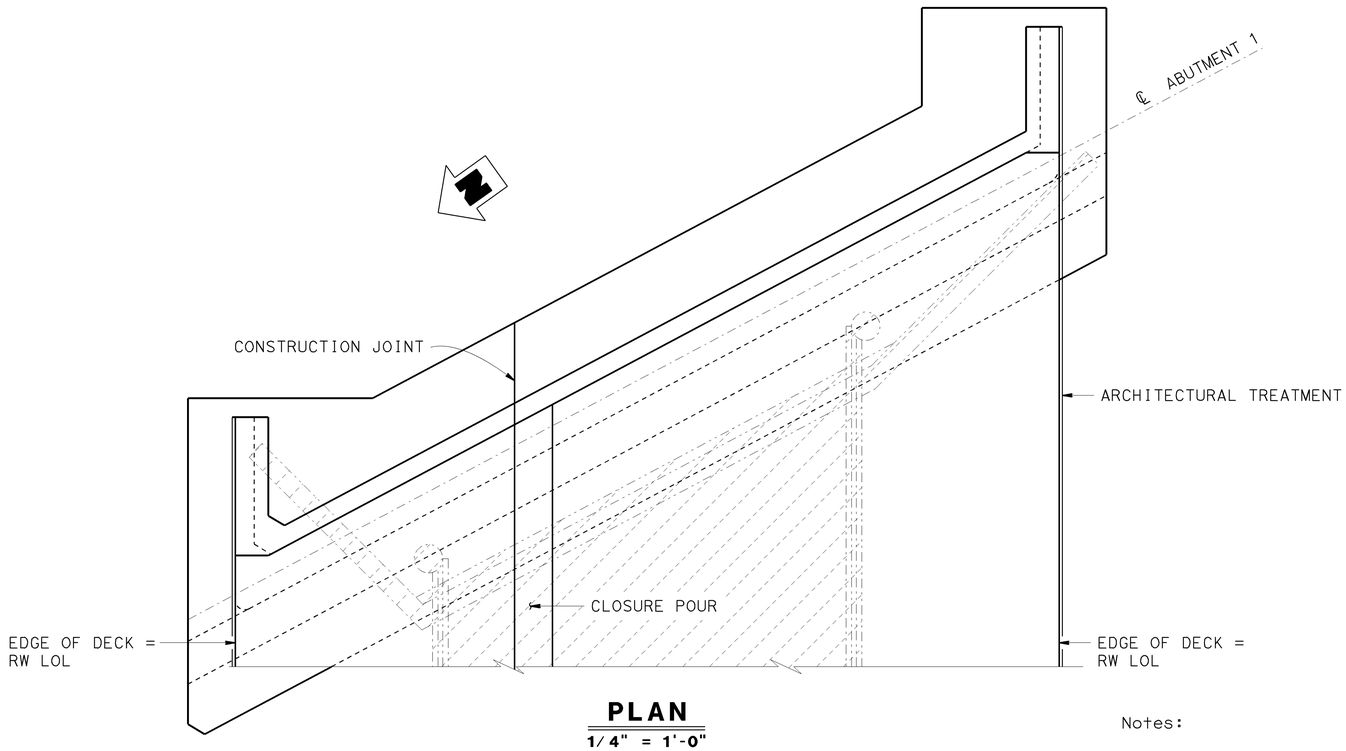

PLAN
1/4" = 1'-0"

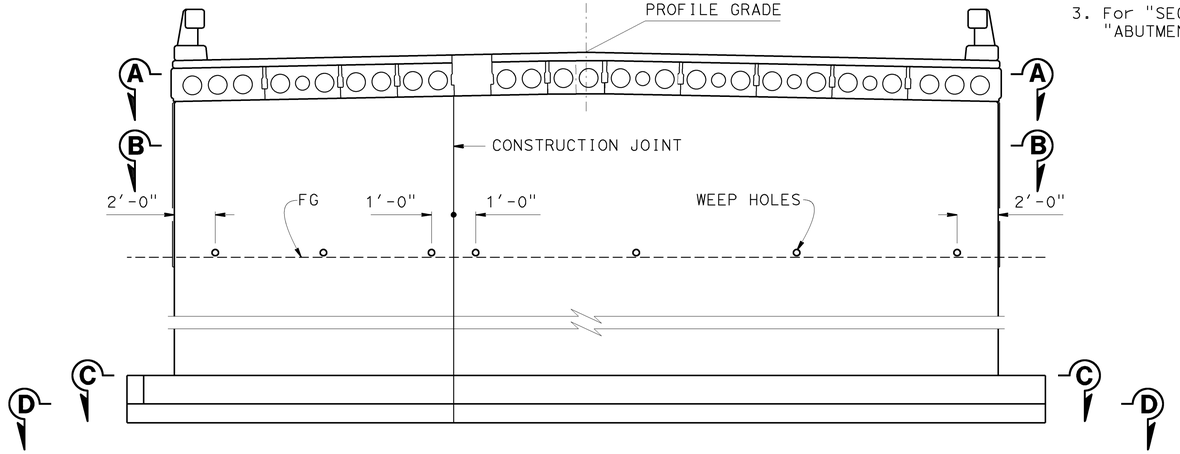

ELEVATION
1/4" = 1'-0"

NOTE:

THE CONTRACTOR SHALL VERIFY ALL CONTROLLING FIELD DIMENSIONS BEFORE ORDERING OR FABRICATING ANY MATERIAL.

Notes:

1. Abutment 1 shown, abutment 2 similar.
2. For architectural treatment details, see "ARCHITECTURAL TREATMENT" sheet.
3. For "SECTION A-A" and "SECTION B-B" see "ABUTMENT DETAILS NO. 2" sheet.

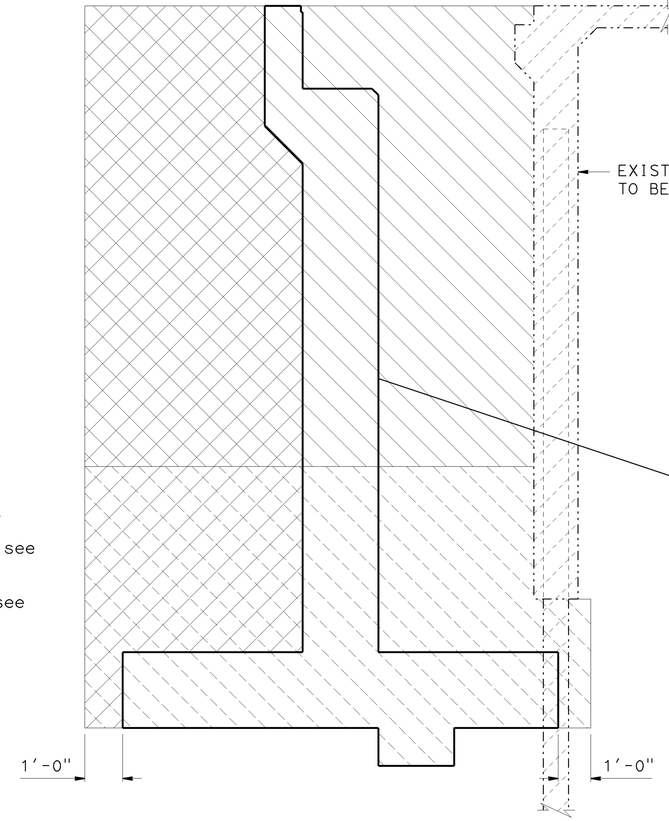

PAY LIMITS FOR STRUCTURE EXCAVATION FOR ABUTMENTS
NO SCALE

LEGEND:

- INDICATES LIMITS OF STRUCTURE EXCAVATION (BRIDGE)
- INDICATES LIMITS OF STRUCTURE EXCAVATION (TYPE D)
- INDICATES LIMITS OF STRUCTURE BACKFILL (BRIDGE)
- INDICATES EXISTING BRIDGE REMOVAL

DESIGN	BY C. Hensel	CHECKED M. Kattaa	STATE OF CALIFORNIA DEPARTMENT OF TRANSPORTATION	DIVISION OF ENGINEERING SERVICES STRUCTURE DESIGN DESIGN BRANCH 12	BRIDGE NO. 56-0181 / POST MILE 62.8/63.1
DETAILS	BY Kc	CHECKED M. Kattaa			
QUANTITIES	BY C. Hensel	CHECKED M. Kattaa			

HURKEY CREEK BRIDGE (REPLACE)
ABUTMENT LAYOUT NO. 2

STRUCTURES DESIGN DETAIL SHEET (ENGLISH) (REV. 09-01-10)

ORIGINAL SCALE IN INCHES FOR REDUCED PLANS 0 1 2 3

UNIT: 3606
PROJECT NUMBER & PHASE: 0800000638
CONTRACT NO.: 08-383500

DISREGARD PRINTS BEARING EARLIER REVISION DATES

REVISION DATES				SHEET	OF
5-12-13	10-11-13		9-30-13	6	30

FILE => 56-0181-d-abut02.dgn

DATE PLOTTED => 31-JAN-2014 TIME PLOTTED => 11:42
USERNAME => s126699

DIST	COUNTY	ROUTE	POST MILES TOTAL PROJECT	SHEET No.	TOTAL SHEETS
08	Riv	74	63.0	65	88

Clarence Hensel — REGISTERED CIVIL ENGINEER — 10-18-13 DATE

7-21-14 PLANS APPROVAL DATE

REGISTERED PROFESSIONAL ENGINEER — CLARENCE HENSEL No. C62754 Exp. 06/30/16 CIVIL — STATE OF CALIFORNIA

The State of California or its officers or agents shall not be responsible for the accuracy or completeness of electronic copies of this plan sheet.

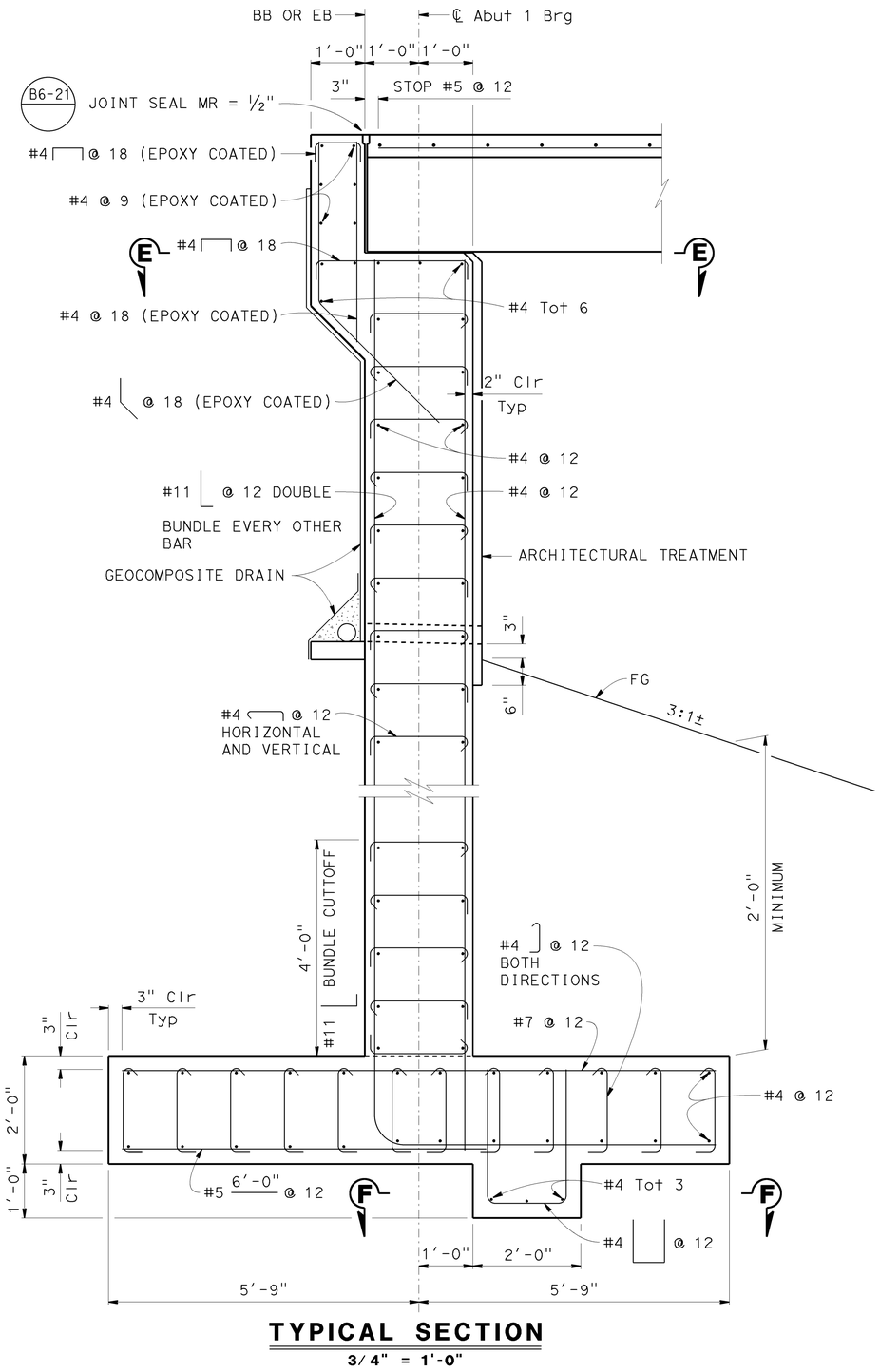

TYPICAL SECTION
3/4" = 1'-0"

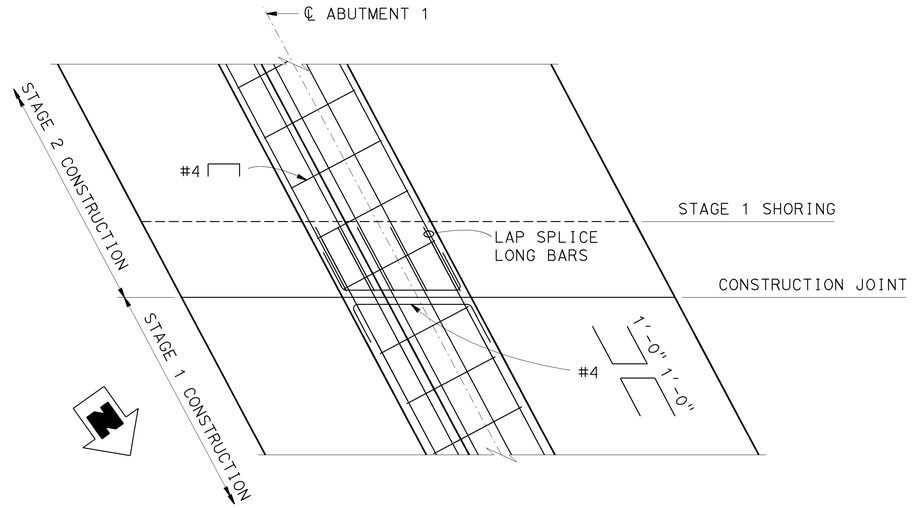

SECTION E-E
1/2" = 1'-0"

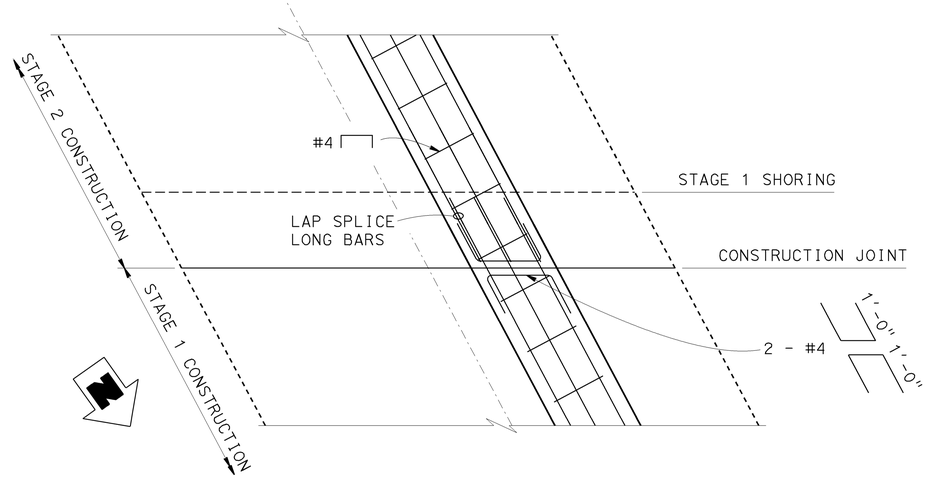

SECTION F-F
1/2" = 1'-0"

Notes:

1. Abutment 1 shown, abutment 2 similar.
2. For architectural treatment details, see "ARCHITECTURAL TREATMENT" sheet.

DESIGN	BY C. Hensel	CHECKED M. Kattaa	STATE OF CALIFORNIA DEPARTMENT OF TRANSPORTATION	DIVISION OF ENGINEERING SERVICES STRUCTURE DESIGN DESIGN BRANCH 12	BRIDGE NO. 56-0181 / POST MILE 62.8/63.1
DETAILS	BY kc	CHECKED M. Kattaa			
QUANTITIES	BY C. Hensel	CHECKED M. Kattaa			

HURKEY CREEK BRIDGE (REPLACE)
ABUTMENT DETAILS NO. 1

STRUCTURES DESIGN DETAIL SHEET (ENGLISH) (REV. 09-01-10)

ORIGINAL SCALE IN INCHES FOR REDUCED PLANS 0 1 2 3

UNIT: 3606
PROJECT NUMBER & PHASE: 0800000638
CONTRACT NO.: 08-383500

DISREGARD PRINTS BEARING EARLIER REVISION DATES →

REVISION DATES				SHEET	OF
5-28-13		9-25-13	10-15-13	7	30

FILE => 56-0181-d-abut03.dgn

USERNAME => s126699 DATE PLOTTED => 31-JAN-2014 TIME PLOTTED => 11:42

DIST	COUNTY	ROUTE	POST MILES TOTAL PROJECT	SHEET No.	TOTAL SHEETS
08	Riv	74	63.0	66	88

Clarence Hensel 10-18-13
REGISTERED CIVIL ENGINEER DATE

7-21-14
PLANS APPROVAL DATE

REGISTERED PROFESSIONAL ENGINEER
CLARENCE HENSEL
No. C62754
Exp. 06/30/16
CIVIL
STATE OF CALIFORNIA

The State of California or its officers or agents shall not be responsible for the accuracy or completeness of electronic copies of this plan sheet.

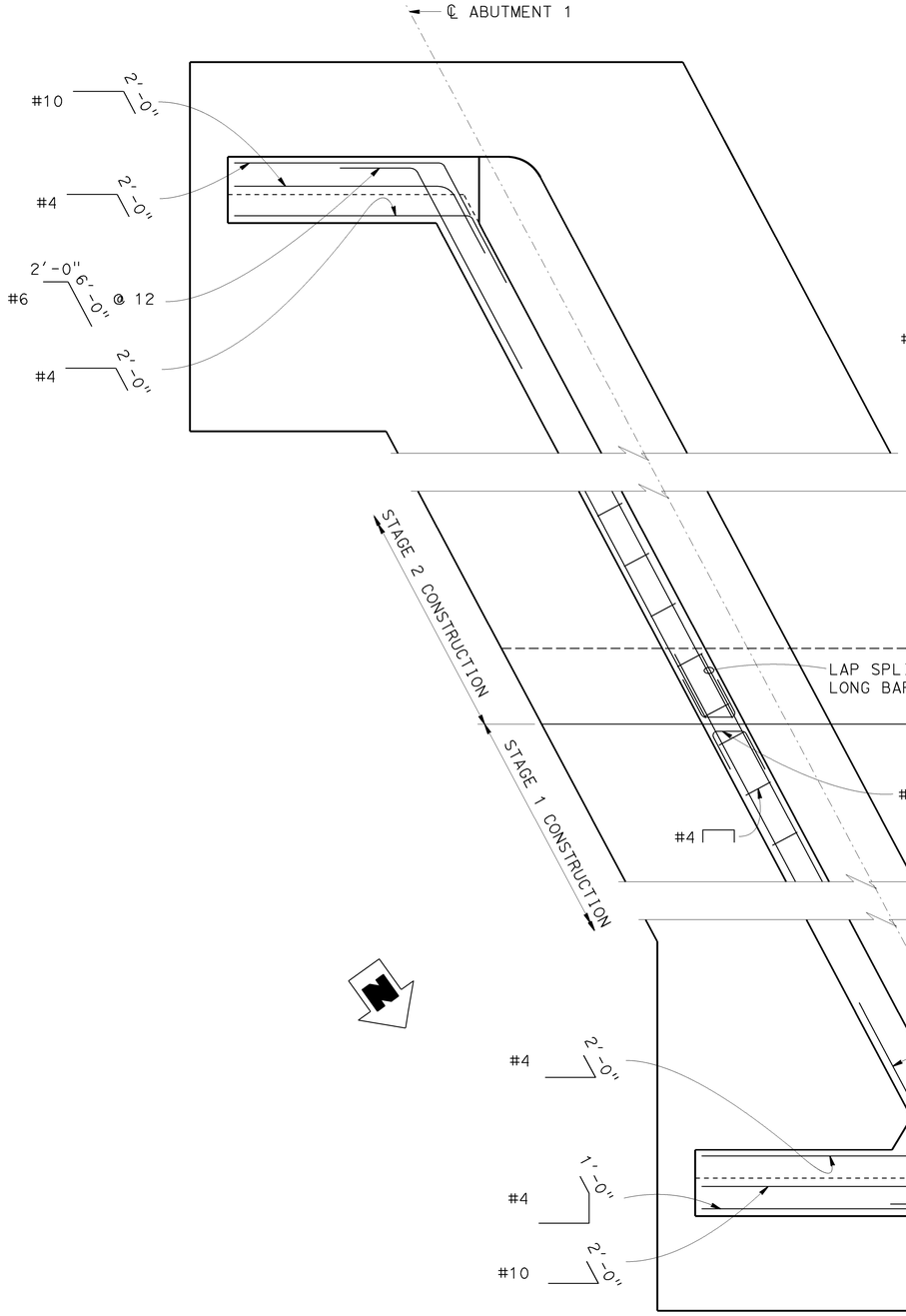

SECTION A-A

1/2" = 1'-0"

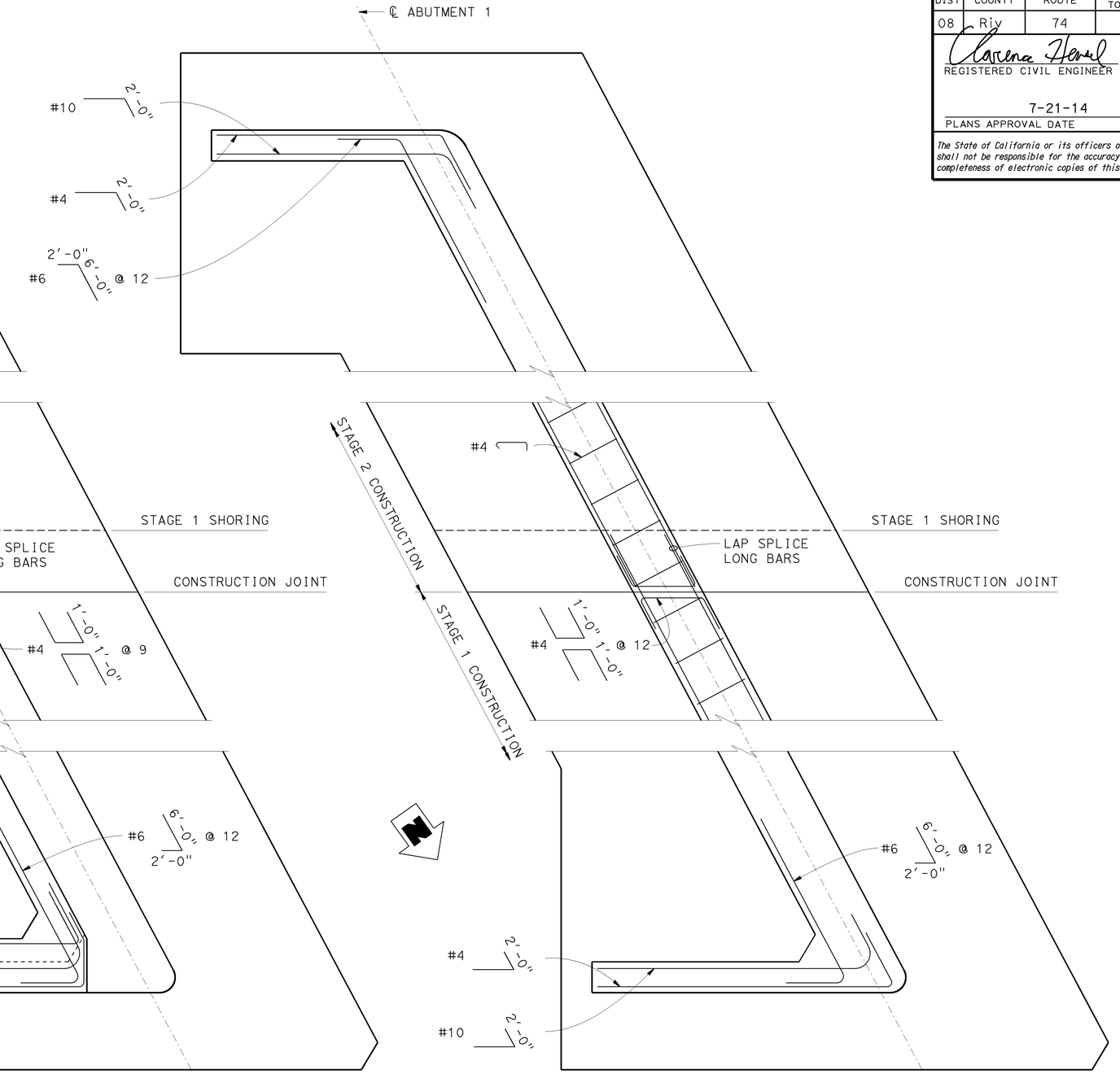

SECTION B-B

1/2" = 1'-0"

Note: Abutment 1 shown, Abutment 2 similar.

DESIGN	BY C. Hensel	CHECKED M. Kattaa	STATE OF CALIFORNIA DEPARTMENT OF TRANSPORTATION	DIVISION OF ENGINEERING SERVICES STRUCTURE DESIGN DESIGN BRANCH 12	BRIDGE NO. 56-0181	HURKEY CREEK BRIDGE (REPLACE)	
DETAILS	BY kc	CHECKED M. Kattaa			POST MILE 62.8/63.1	ABUTMENT DETAILS NO. 2	
QUANTITIES	BY C. Hensel	CHECKED M. Kattaa					

STRUCTURES DESIGN DETAIL SHEET (ENGLISH) (REV. 09-01-10)

ORIGINAL SCALE IN INCHES FOR REDUCED PLANS 0 1 2 3

UNIT: 3606
PROJECT NUMBER & PHASE: 0800000638
CONTRACT NO.: 08-383500

DISREGARD PRINTS BEARING EARLIER REVISION DATES →

REVISION DATES			SHEET	OF
6-28-13	9-30-13	10-1-13	8	30

FILE => 56-0181-d-abut04.dgn

DATE PLOTTED => 31-JAN-2014 TIME PLOTTED => 11:42
USERNAME => s126699

DIST	COUNTY	ROUTE	POST MILES TOTAL PROJECT	SHEET No.	TOTAL SHEETS
08	Riv	74	63.0	67	88

Clarence Hensel — REGISTERED CIVIL ENGINEER — 10-18-13 DATE

7-21-14 PLANS APPROVAL DATE

REGISTERED PROFESSIONAL ENGINEER — CLARENCE HENSEL — No. C62754 — Exp. 06/30/16 — CIVIL — STATE OF CALIFORNIA

The State of California or its officers or agents shall not be responsible for the accuracy or completeness of electronic copies of this plan sheet.

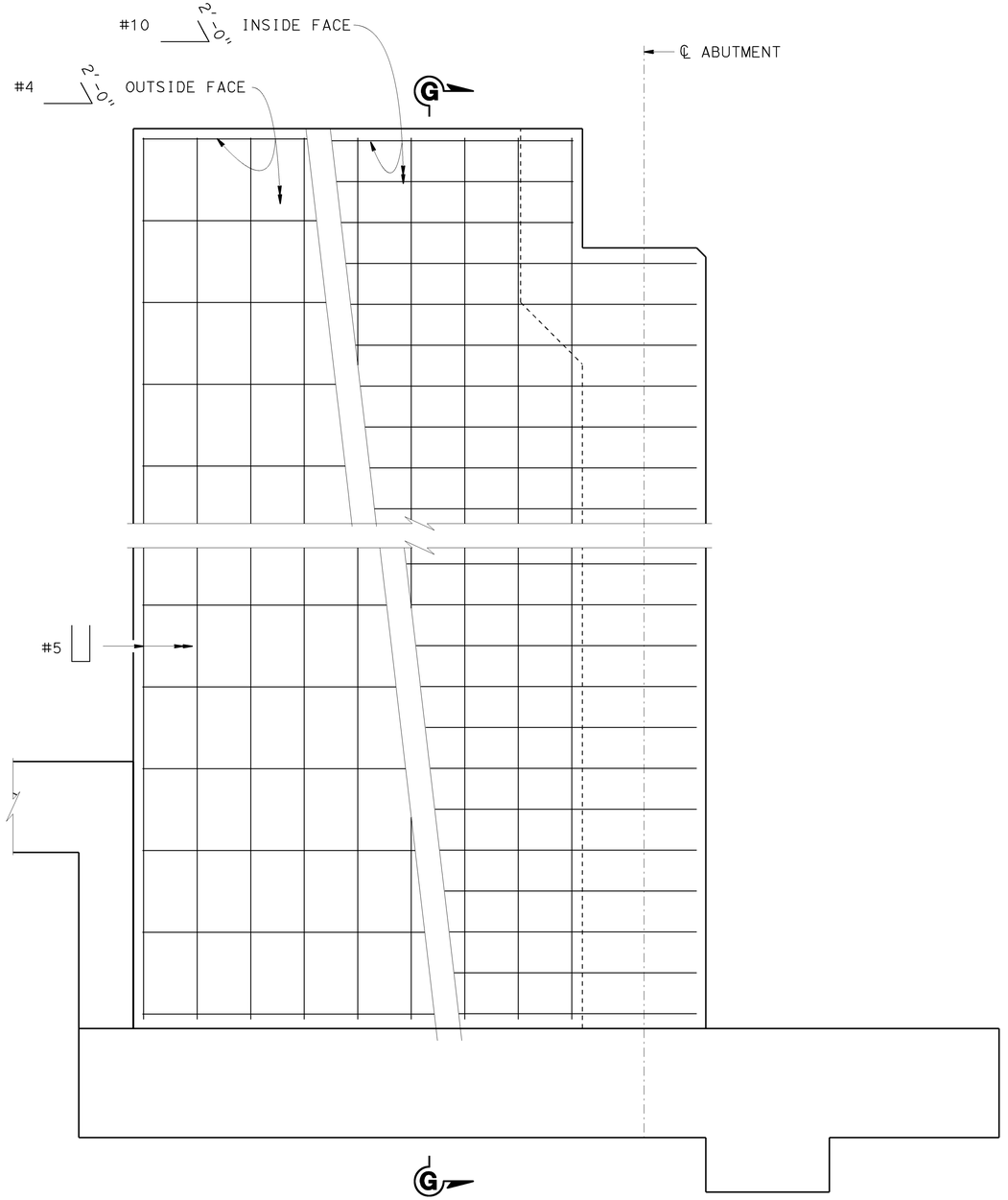

WINGWALL ELEVATION

3/4" = 1'-0"

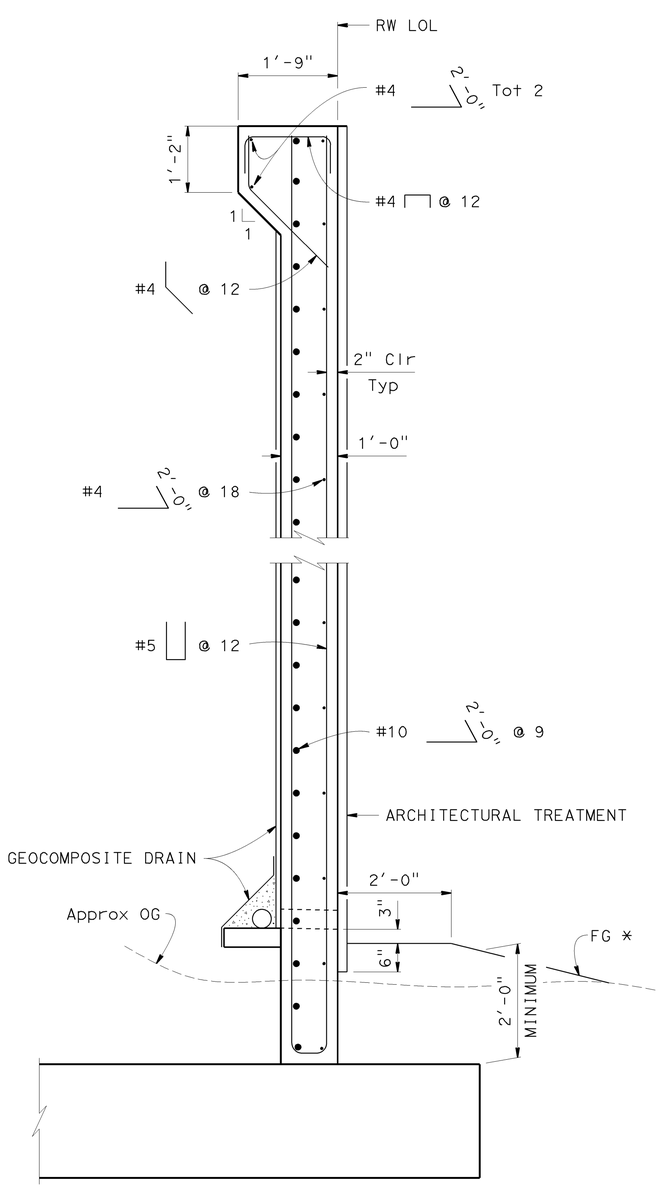

SECTION G-G

3/4" = 1'-0"

Note:

1. For architectural treatment details, see "ARCHITECTURAL TREATMENT" sheet.

* Slope shall not be less than 4:1, or more than 2:1. Where necessary, slope FG to intersect the OG at a 1 foot offset from R/W.

DESIGN	BY C. Hensel	CHECKED M. Kattaa	STATE OF CALIFORNIA DEPARTMENT OF TRANSPORTATION	DIVISION OF ENGINEERING SERVICES STRUCTURE DESIGN DESIGN BRANCH 12	BRIDGE NO. 56-0181 POST MILE 62.8/63.1	HURKEY CREEK BRIDGE (REPLACE) ABUTMENT DETAILS NO. 3
DETAILS	BY Kc	CHECKED M. Kattaa				
QUANTITIES	BY C. Hensel	CHECKED M. Kattaa				

STRUCTURES DESIGN DETAIL SHEET (ENGLISH) (REV. 09-01-10)

ORIGINAL SCALE IN INCHES FOR REDUCED PLANS 0 1 2 3

UNIT: 3606
PROJECT NUMBER & PHASE: 0800000638 CONTRACT NO.: 08-383500

DISREGARD PRINTS BEARING EARLIER REVISION DATES →

REVISION DATES				SHEET	OF
6-28-13		9-28-13	10-15-13	9	30

FILE => 56-0181-d-abut05.dgn

USERNAME => s126899 DATE PLOTTED => 31-JAN-2014 TIME PLOTTED => 11:42

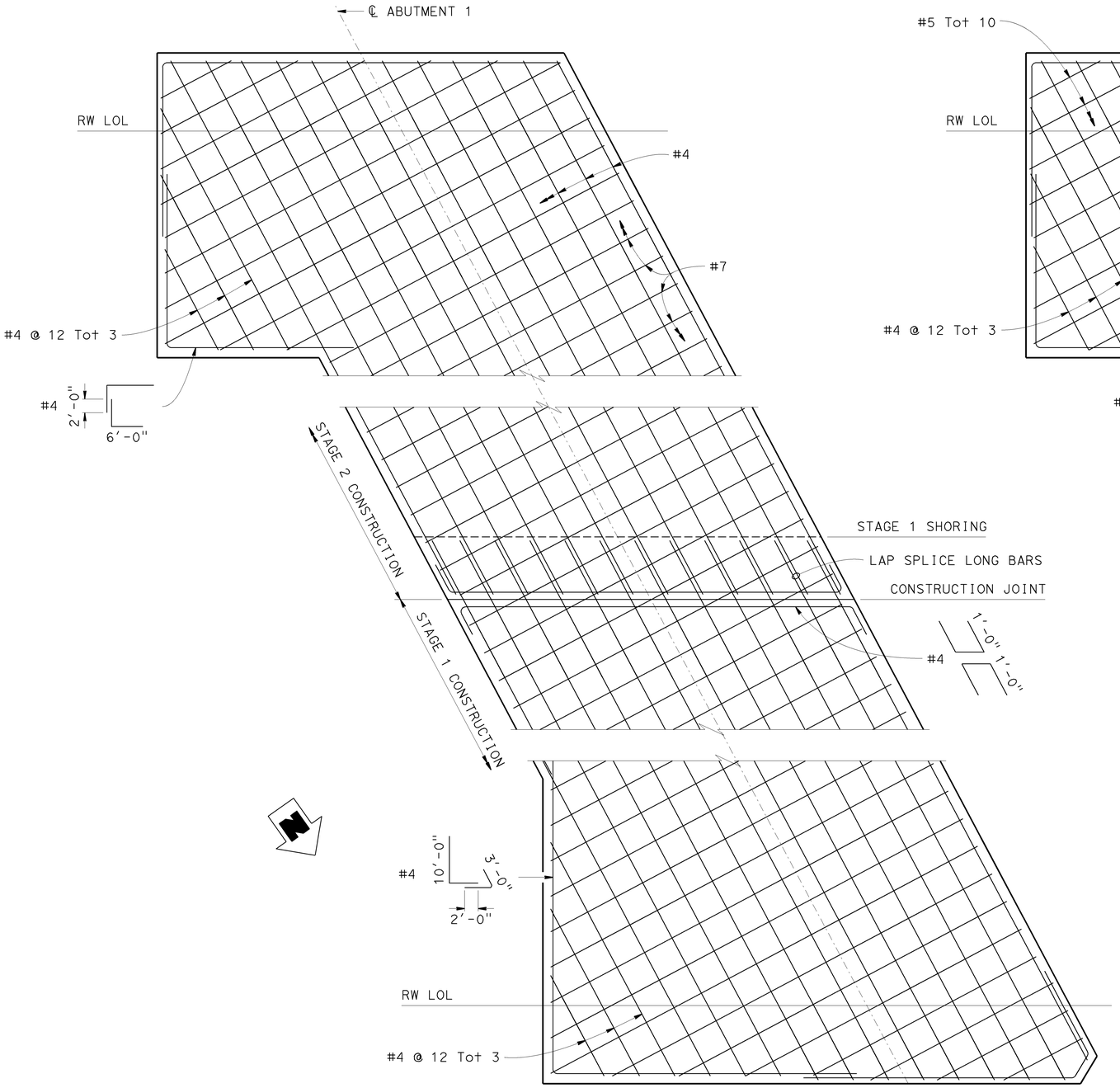

SECTION C-C

1/2" = 1'-0"

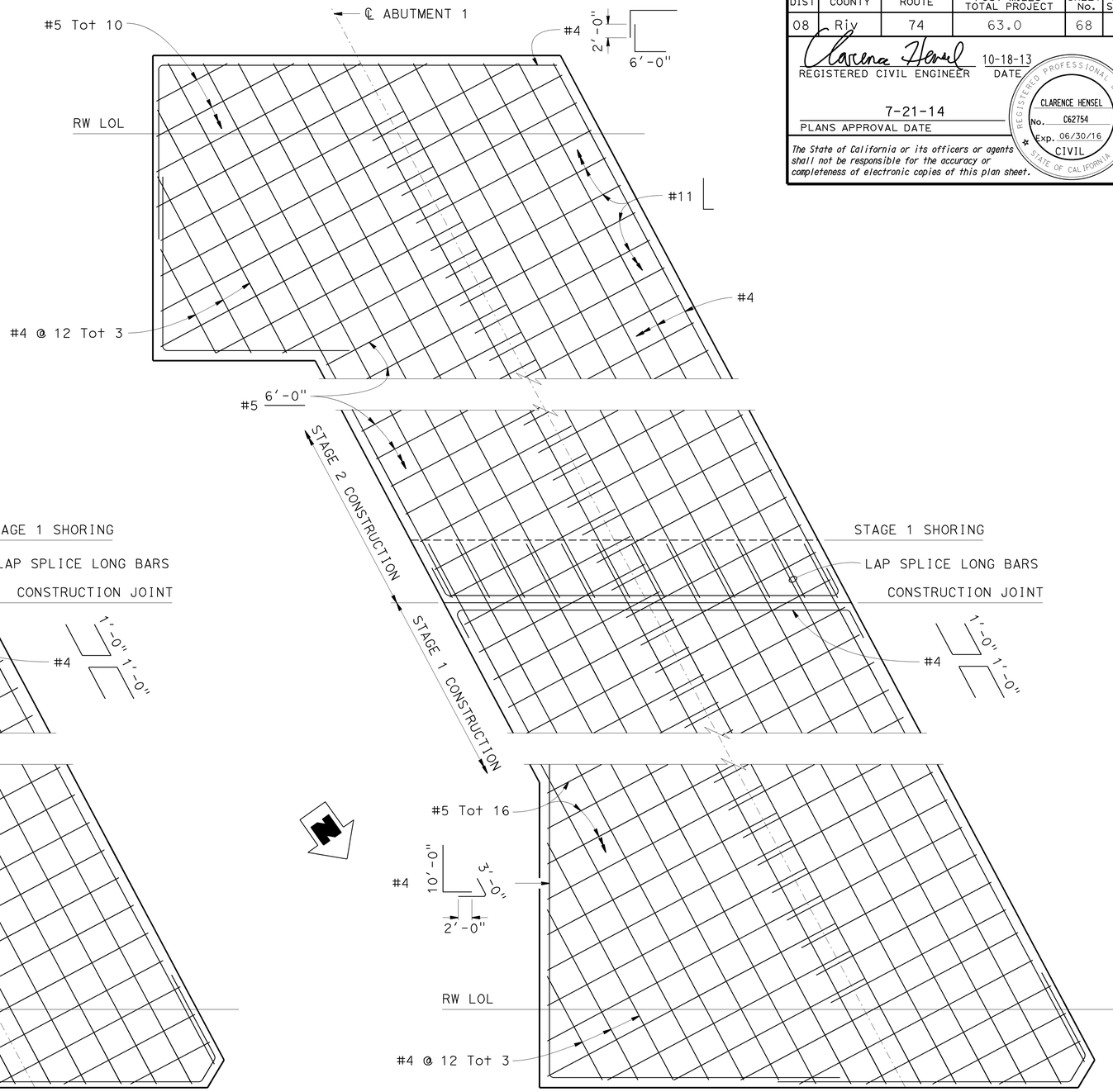

SECTION D-D

1/2" = 1'-0"

DIST	COUNTY	ROUTE	POST MILES TOTAL PROJECT	SHEET No.	TOTAL SHEETS
08	Riv	74	63.0	68	88

Clarence Hensel — REGISTERED CIVIL ENGINEER — 10-18-13 DATE

7-21-14 PLANS APPROVAL DATE

REGISTERED PROFESSIONAL ENGINEER — CLARENCE HENSEL — No. C62754 — Exp. 06/30/16 — CIVIL — STATE OF CALIFORNIA

The State of California or its officers or agents shall not be responsible for the accuracy or completeness of electronic copies of this plan sheet.

DESIGN	BY C. Hensel	CHECKED M. Kattaa	STATE OF CALIFORNIA DEPARTMENT OF TRANSPORTATION
DETAILS	BY kc	CHECKED M. Kattaa	
QUANTITIES	BY C. Hensel	CHECKED M. Kattaa	

DIVISION OF ENGINEERING SERVICES STRUCTURE DESIGN
DESIGN BRANCH 12

BRIDGE NO. 56-0181
POST MILE 62.8/63.1

HURKEY CREEK BRIDGE (REPLACE)

ABUTMENT FOOTING DETAILS

STRUCTURES DESIGN DETAIL SHEET (ENGLISH) (REV. 09-01-10)

ORIGINAL SCALE IN INCHES FOR REDUCED PLANS 0 1 2 3

UNIT: 3606
PROJECT NUMBER & PHASE: 0800000638
CONTRACT NO.: 08-383500

DISREGARD PRINTS BEARING EARLIER REVISION DATES →

REVISION DATES: 6-28-13 | 7-30-13 | 9-4-13

SHEET 10 OF 30

FILE => 56-0181-e-ftg.dgn

DATE PLOTTED => 31-JAN-2014 TIME PLOTTED => 11:42
USERNAME => s126699

DIST	COUNTY	ROUTE	POST MILES TOTAL PROJECT	SHEET No.	TOTAL SHEETS
08	Riv	74	63.0	69	88

Clarence Hensel — REGISTERED CIVIL ENGINEER — 10-18-13 DATE

7-21-14 PLANS APPROVAL DATE

REGISTERED PROFESSIONAL ENGINEER — CLARENCE HENSEL — No. C62754 — Exp. 06/30/16 — CIVIL — STATE OF CALIFORNIA

The State of California or its officers or agents shall not be responsible for the accuracy or completeness of electronic copies of this plan sheet.

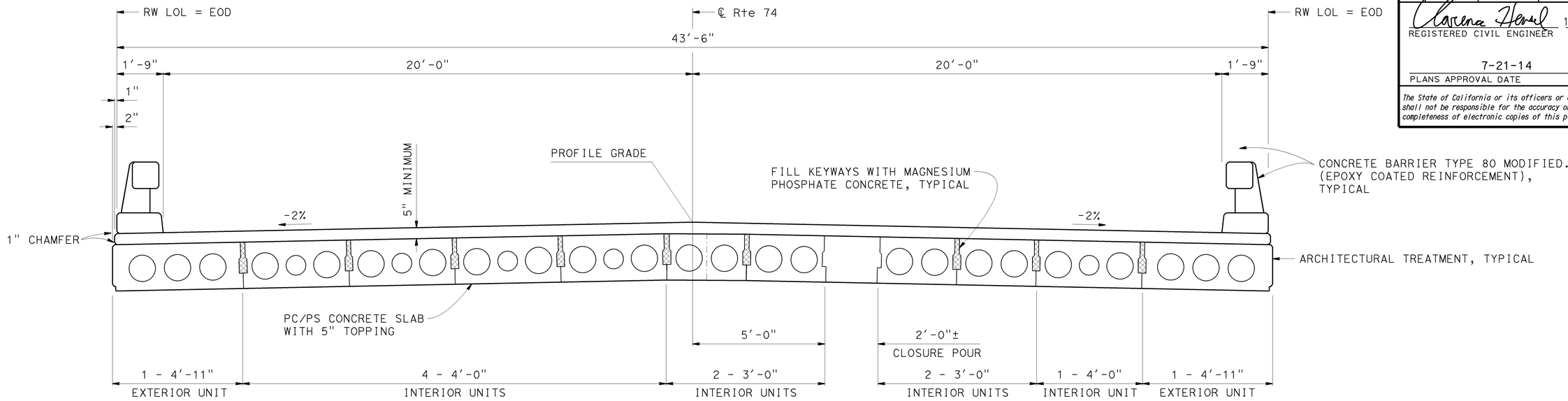

TYPICAL SECTION

1/2" = 1'-0"

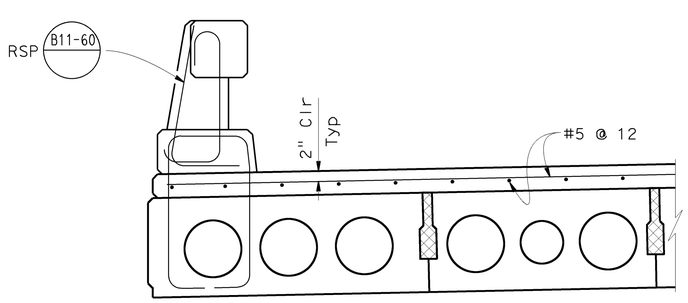

PART TYPICAL SECTION

3/4" = 1'-0"

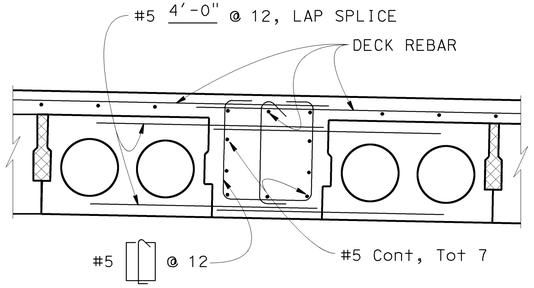

PART TYPICAL SECTION AT CLOSURE POUR

3/4" = 1'-0"

Notes:

1. For architectural treatment details, see "ARCHITECTURAL TREATMENT" sheet.
2. For more PC/PS concrete slab details, see "PRESTRESSED CONCRETE SLAB NO. 1" and "PRESTRESSED CONCRETE SLAB NO. 2" sheets.
3. All closure pour reinforcement shall be epoxy coated.

DESIGN	BY C. Hensel	CHECKED M. Kattaa	STATE OF CALIFORNIA DEPARTMENT OF TRANSPORTATION	DIVISION OF ENGINEERING SERVICES STRUCTURE DESIGN DESIGN BRANCH 12	BRIDGE NO. 56-0181	HURKEY CREEK BRIDGE (REPLACE)
DETAILS	BY kc	CHECKED M. Kattaa			POST MILE 62.8/63.1	TYPICAL SECTION
QUANTITIES	BY C. Hensel	CHECKED M. Kattaa				

STRUCTURES DESIGN DETAIL SHEET (ENGLISH) (REV. 09-01-10)

ORIGINAL SCALE IN INCHES FOR REDUCED PLANS 0 1 2 3

UNIT: 3606
PROJECT NUMBER & PHASE: 0800000638 CONTRACT NO.: 08-383500

DISREGARD PRINTS BEARING EARLIER REVISION DATES →

REVISION DATES				SHEET	OF
7-9-13	10-15-13		10-8-13	11	30

FILE => 56-0181-f-typ.dgn

USERNAME => s126699 DATE PLOTTED => 31-JAN-2014 TIME PLOTTED => 11:42

DIST	COUNTY	ROUTE	POST MILES TOTAL PROJECT	SHEET No.	TOTAL SHEETS
08	Riv	74	63.0	70	88

Clarence Hensel 10-18-13
REGISTERED CIVIL ENGINEER DATE

7-21-14
PLANS APPROVAL DATE

REGISTERED PROFESSIONAL ENGINEER
CLARENCE HENSEL
No. C62754
Exp. 06/30/16
CIVIL
STATE OF CALIFORNIA

The State of California or its officers or agents shall not be responsible for the accuracy or completeness of electronic copies of this plan sheet.

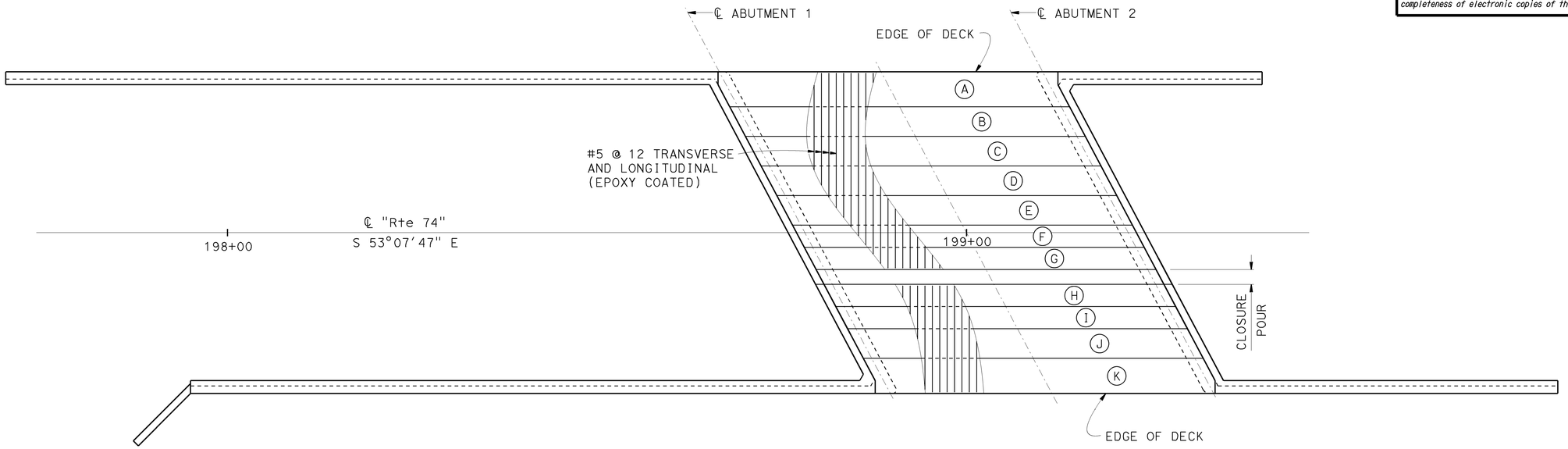

PLAN
1/8" = 1'-0"

◯ Indicates slab unit designation

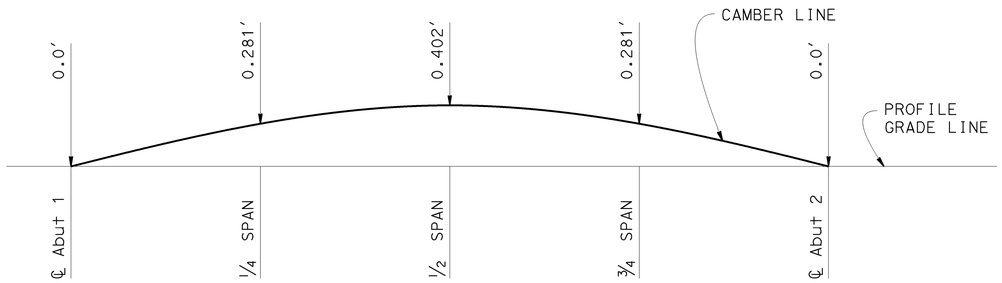

CAMBER DIAGRAM
NO SCALE

DOES NOT INCLUDE ALLOWANCE FOR FALSEWORK SETTLEMENT

DESIGN	BY C. Hensel	CHECKED M. Kattaa	STATE OF CALIFORNIA DEPARTMENT OF TRANSPORTATION	DIVISION OF ENGINEERING SERVICES STRUCTURE DESIGN DESIGN BRANCH 12	BRIDGE NO. 56-0181	HURKEY CREEK BRIDGE (REPLACE)
DETAILS	BY KC	CHECKED M. Kattaa			POST MILE 62.8/63.1	SLAB LAYOUT
QUANTITIES	BY C. Hensel	CHECKED M. Kattaa				

STRUCTURES DESIGN DETAIL SHEET (ENGLISH) (REV. 09-01-10)

ORIGINAL SCALE IN INCHES FOR REDUCED PLANS 0 1 2 3

UNIT: 3606
PROJECT NUMBER & PHASE: 0800000638
CONTRACT NO.: 08-383500

DISREGARD PRINTS BEARING EARLIER REVISION DATES →

REVISION DATES				SHEET	OF
2-14-13	9-24-13	9-30-13		12	30

FILE => 56-0181-g-sla01.dgn

USERNAME => s126699 DATE PLOTTED => 31-JAN-2014 TIME PLOTTED => 11:42

DIST	COUNTY	ROUTE	POST MILES TOTAL PROJECT	SHEET No.	TOTAL SHEETS
08	Riv	74	63.0	71	88

Clarence Hensel 10-18-13
REGISTERED CIVIL ENGINEER DATE

7-21-14
PLANS APPROVAL DATE

REGISTERED PROFESSIONAL ENGINEER — CLARENCE HENSEL No. C62754 Exp. 06/30/16 CIVIL — STATE OF CALIFORNIA

The State of California or its officers or agents shall not be responsible for the accuracy or completeness of electronic copies of this plan sheet.

Notes:

1. P_j is the force required at center of span after all losses.
2. Slab designed for pretensioning.
3. Deflection components are instantaneous deflections at mid span and are for information purposes only, to be used in setting deck screed line elevations.
4. Screed line elevations for deck concrete will be determined by the Engineer.
5. Keyways to be filled with magnesium phosphate concrete.
6. See other sheets for railing requirements.
7. All reinforcement, including prestressed strands, shall be epoxy coated.
8. For architectural treatment details, see "ARCHITECTURAL TREATMENT" sheet.
9. For "L" and "X" locations, see "PRESTRESSED CONCRETE SLAB NO. 2" sheet.

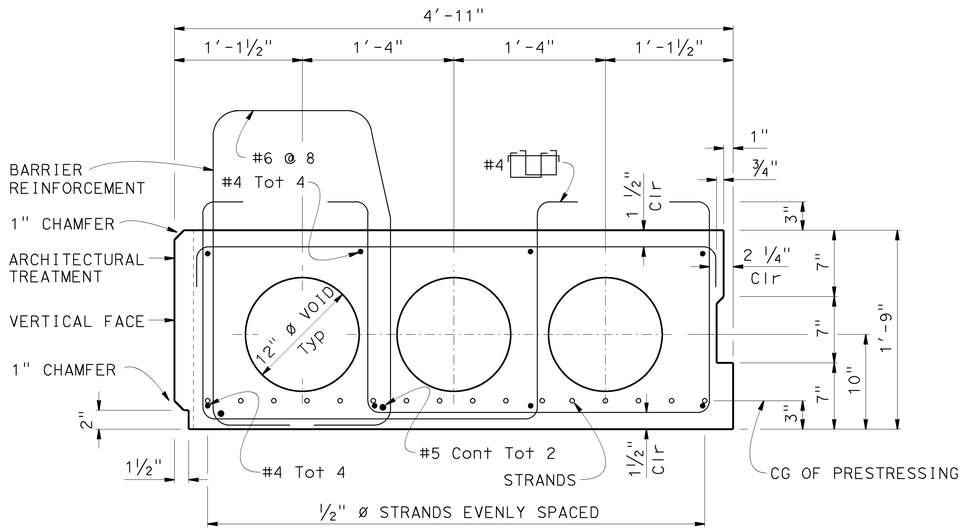

TYPICAL EXTERIOR UNIT

1 1/2" = 1'-0"

SCHEDULE

SLAB DESIGNATION	"L"	Pj = JACKING FORCE IN Kips	NO. OF STRANDS	DEFLECTION COMPONENTS IN FEET		"X"
				TOPPING SLAB	RAILING	
A, K	46'-0"	403	16	0.00	0.00	10"
B-E, J	46'-0"	341	14	0.00	0.00	10"
F-I	46'-0"	279	10	0.00	0.00	10"

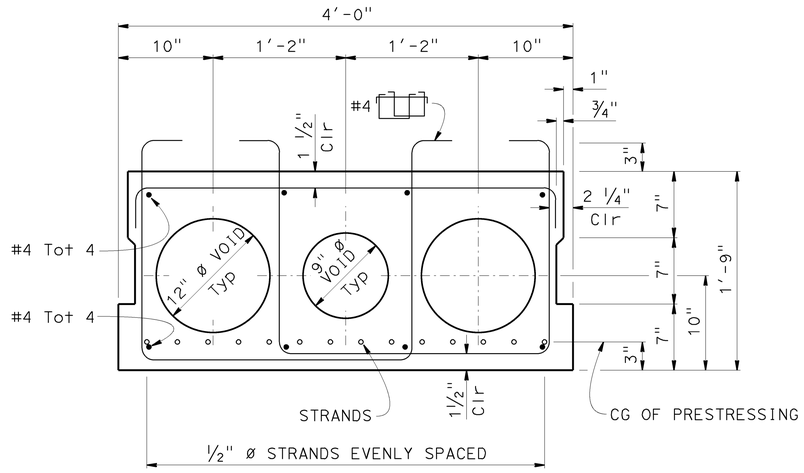

TYPICAL 4'-0" INTERIOR UNIT

1 1/2" = 1'-0"

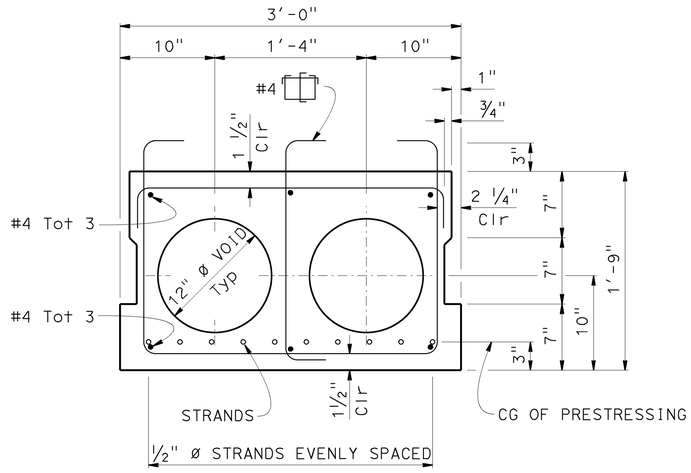

TYPICAL 3'-0" INTERIOR UNIT

1 1/2" = 1'-0"

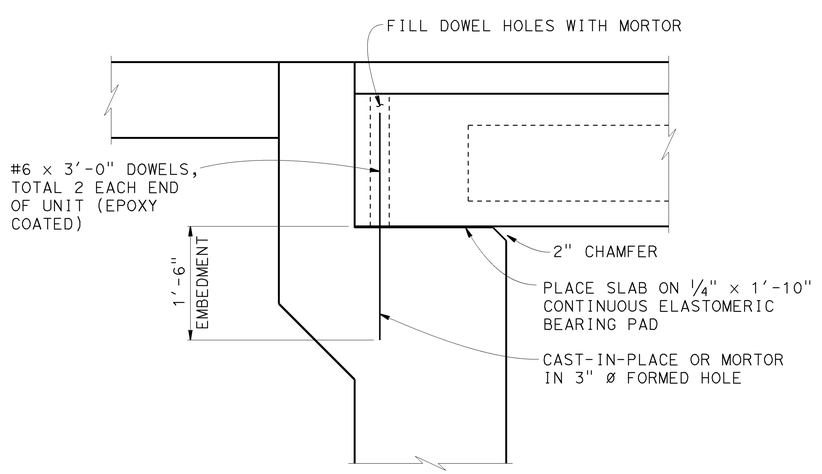

ABUTMENT SUPPORT DETAIL

1" = 1'-0"

DESIGN	BY C. Hensel	CHECKED M. Kattaa	STATE OF CALIFORNIA DEPARTMENT OF TRANSPORTATION	DIVISION OF ENGINEERING SERVICES STRUCTURE DESIGN DESIGN BRANCH 12	BRIDGE NO. 56-0181	HURKEY CREEK BRIDGE (REPLACE)	
DETAILS	BY kc	CHECKED M. Kattaa			POST MILE 62.8/63.1	PRESTRESSED CONCRETE SLAB NO. 1	
QUANTITIES	BY C. Hensel	CHECKED M. Kattaa					

STRUCTURES DESIGN DETAIL SHEET (ENGLISH) (REV. 09-01-10)

ORIGINAL SCALE IN INCHES FOR REDUCED PLANS 0 1 2 3

UNIT: 3606
PROJECT NUMBER & PHASE: 0800000638 CONTRACT NO.: 08-383500

DISREGARD PRINTS BEARING EARLIER REVISION DATES →

REVISION DATES				SHEET	OF
2-26-13		9-24-13	10-14-13	13	30

FILE => 56-0181-g-sl02.dgn

DATE PLOTTED => 31-JAN-2014 TIME PLOTTED => 11:42
USERNAME => s126699

DIST	COUNTY	ROUTE	POST MILES TOTAL PROJECT	SHEET No.	TOTAL SHEETS
08	Riv	74	63.0	72	88

Clarence Hensel 10-18-13
REGISTERED CIVIL ENGINEER DATE

7-21-14
PLANS APPROVAL DATE

REGISTERED PROFESSIONAL ENGINEER
CLARENCE HENSEL
No. C62754
Exp. 06/30/16
CIVIL
STATE OF CALIFORNIA

The State of California or its officers or agents shall not be responsible for the accuracy or completeness of electronic copies of this plan sheet.

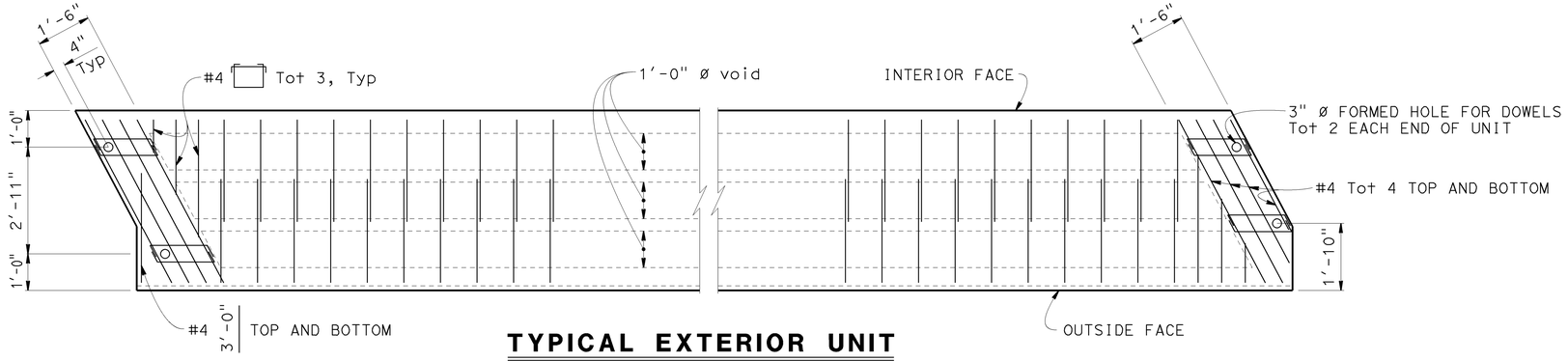

TYPICAL EXTERIOR UNIT

1/2" = 1'-0"

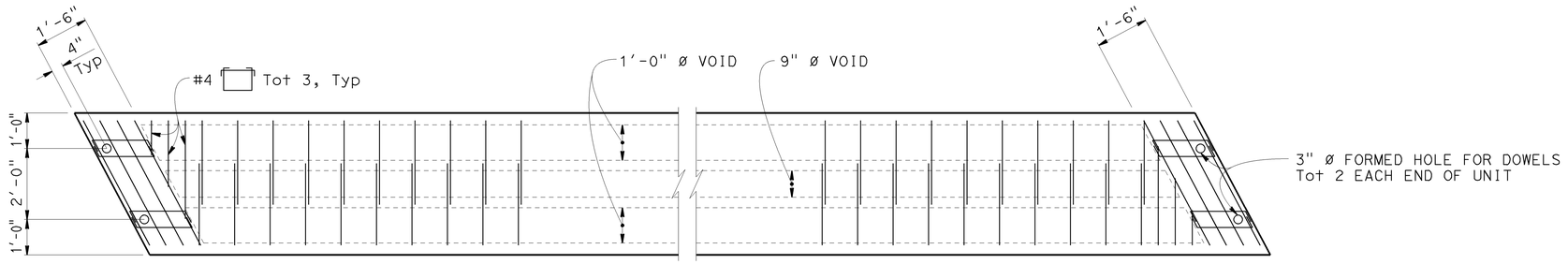

TYPICAL 4'-0" INTERIOR UNIT

1/2" = 1'-0"

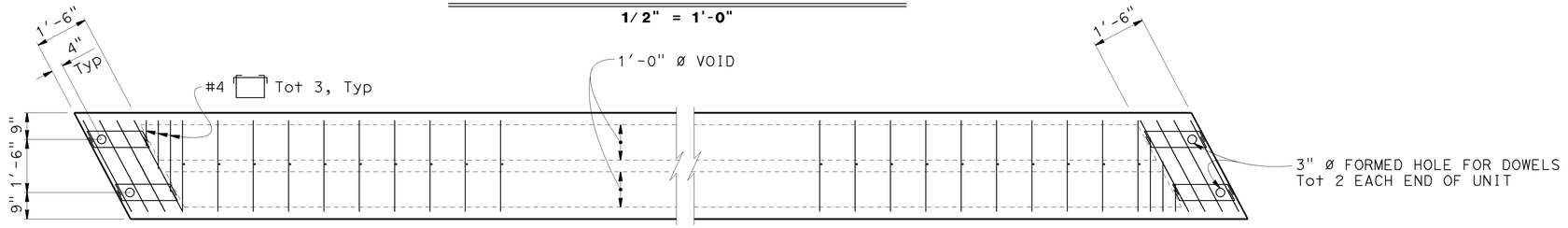

TYPICAL 3'-0" INTERIOR UNIT

1/2" = 1'-0"

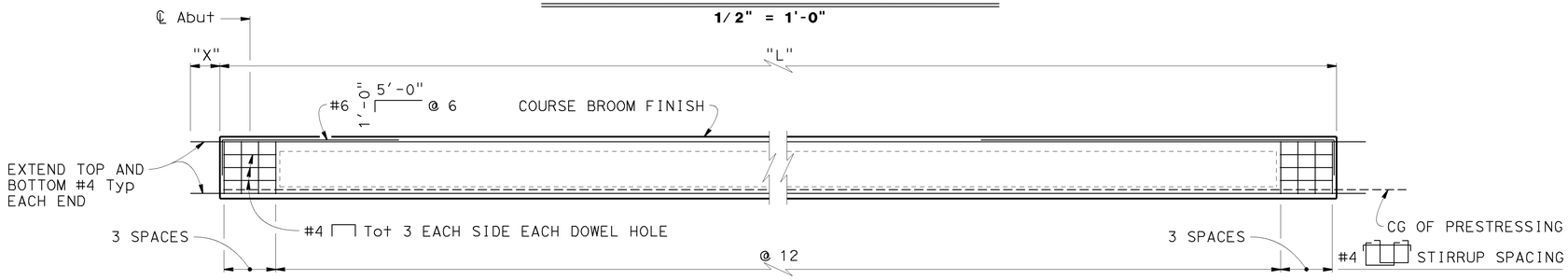

ELEVATION

1/2" = '-0"

Note:

For "L" and "X" values, see "PRESTRESSED CONCRETE SLAB NO. 1" sheet.

DESIGN	BY C. Hensel	CHECKED M. Kattaa	STATE OF CALIFORNIA DEPARTMENT OF TRANSPORTATION	DIVISION OF ENGINEERING SERVICES STRUCTURE DESIGN DESIGN BRANCH 12	BRIDGE NO. 56-0181 / POST MILE 62.8/63.1
DETAILS	BY Kc	CHECKED M. Kattaa			
QUANTITIES	BY C. Hensel	CHECKED M. Kattaa			

HURKEY CREEK BRIDGE (REPLACE)

PRESTRESSED CONCRETE SLAB NO. 2

STRUCTURES DESIGN DETAIL SHEET (ENGLISH) (REV. 09-01-10)

ORIGINAL SCALE IN INCHES FOR REDUCED PLANS 0 1 2 3

UNIT: 3606
PROJECT NUMBER & PHASE: 0800000638
CONTRACT NO.: 08-383500

DISREGARD PRINTS BEARING EARLIER REVISION DATES →

REVISION DATES				SHEET	OF
5-17-13		10-2-13	10-14-13	14	30

FILE => 56-0181-g-sto03.dgn

USERNAME => s126699 DATE PLOTTED => 31-JAN-2014 TIME PLOTTED => 11:42

DIST	COUNTY	ROUTE	POST MILES TOTAL PROJECT	SHEET No.	TOTAL SHEETS
08	Riv	74	63.0	73	88

Clarence Hensel 10-18-13
REGISTERED CIVIL ENGINEER DATE

7-21-14
PLANS APPROVAL DATE

REGISTERED PROFESSIONAL ENGINEER — CLARENCE HENSEL No. C62754 Exp. 06/30/16 CIVIL — STATE OF CALIFORNIA

The State of California or its officers or agents shall not be responsible for the accuracy or completeness of electronic copies of this plan sheet.

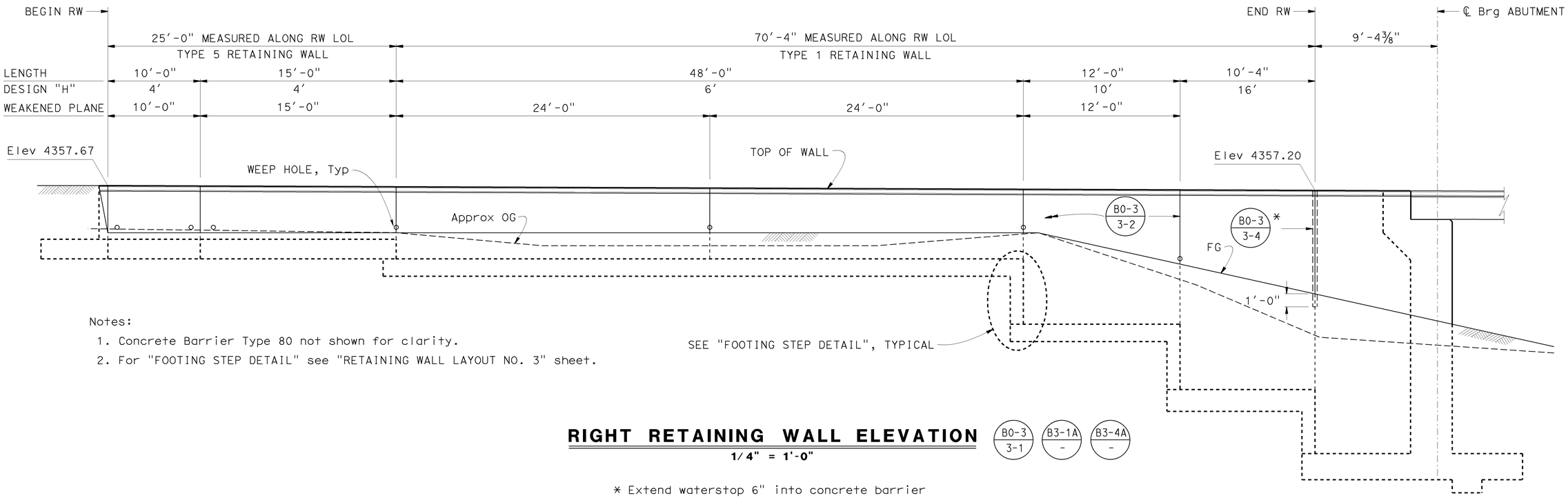

Notes:

1. Concrete Barrier Type 80 not shown for clarity.
2. For "FOOTING STEP DETAIL" see "RETAINING WALL LAYOUT NO. 3" sheet.

RIGHT RETAINING WALL ELEVATION

1/4" = 1'-0"

B0-3 3-1 B3-1A - B3-4A -

* Extend waterstop 6" into concrete barrier

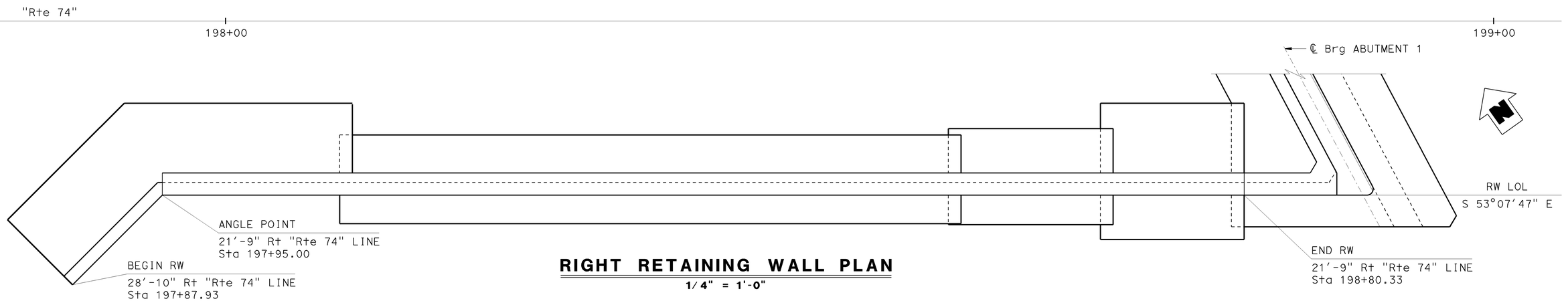

RIGHT RETAINING WALL PLAN

1/4" = 1'-0"

DESIGN	BY C. Hensel	CHECKED M. Kattaa	STATE OF CALIFORNIA DEPARTMENT OF TRANSPORTATION	DIVISION OF ENGINEERING SERVICES STRUCTURE DESIGN DESIGN BRANCH 12	BRIDGE NO. 56-0181	HURKEY CREEK BRIDGE (REPLACE)	
DETAILS	BY kc	CHECKED M. Kattaa			POST MILE 62.8/63.1	RETAINING WALL LAYOUT NO. 1	
QUANTITIES	BY C. Hensel	CHECKED M. Kattaa					

STRUCTURES DESIGN DETAIL SHEET (ENGLISH) (REV. 09-01-10)

ORIGINAL SCALE IN INCHES FOR REDUCED PLANS 0 1 2 3

UNIT: 3606
PROJECT NUMBER & PHASE: 0800000638 CONTRACT NO.: 08-383500

DISREGARD PRINTS BEARING EARLIER REVISION DATES →

REVISION DATES				SHEET	OF
5-20-13	9-30-13		8-18-13	15	30

FILE => 56-0181-h-rw01.dgn

USERNAME => s126699 DATE PLOTTED => 31-JAN-2014 TIME PLOTTED => 11:42

DIST	COUNTY	ROUTE	POST MILES TOTAL PROJECT	SHEET No.	TOTAL SHEETS
08	Riv	74	63.0	74	88

Clarence Hensel — REGISTERED CIVIL ENGINEER — 10-18-13 DATE

7-21-14 PLANS APPROVAL DATE

REGISTERED PROFESSIONAL ENGINEER — CLARENCE HENSEL — No. C62754 — Exp. 06/30/16 — CIVIL — STATE OF CALIFORNIA

The State of California or its officers or agents shall not be responsible for the accuracy or completeness of electronic copies of this plan sheet.

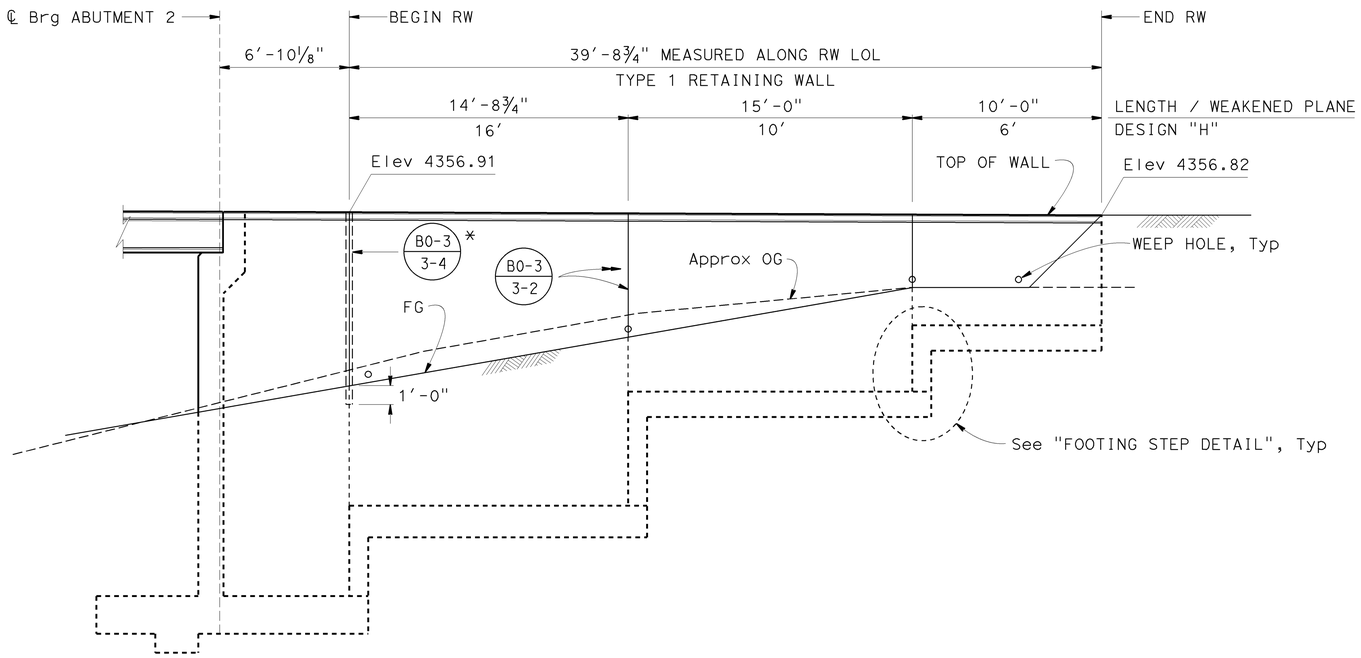

RIGHT RETAINING WALL ELEVATION

B0-3 3-1 B3-1A -

1/4" = 1'-0"

Notes:

1. Concrete Barrier Type 80 not shown for clarity.
2. For "FOOTING STEP DETAIL" see "RETAINING WALL LAYOUT NO. 3" sheet.

* Extend waterstop 6" into concrete barrier

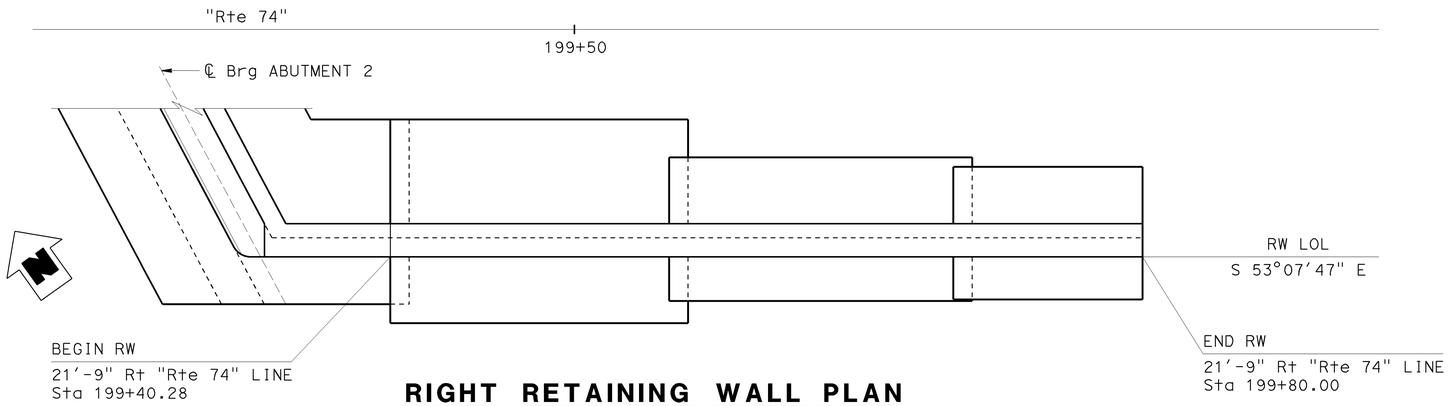

RIGHT RETAINING WALL PLAN

1/4" = 1'-0"

DESIGN	BY C. Hensel	CHECKED M. Kattaa	STATE OF CALIFORNIA DEPARTMENT OF TRANSPORTATION	DIVISION OF ENGINEERING SERVICES STRUCTURE DESIGN DESIGN BRANCH 12	BRIDGE NO. 56-0181	HURKEY CREEK BRIDGE (REPLACE)	
DETAILS	BY Kc	CHECKED M. Kattaa			POST MILE 62.8/63.1	RETAINING WALL LAYOUT NO. 2	
QUANTITIES	BY C. Hensel	CHECKED M. Kattaa					

STRUCTURES DESIGN DETAIL SHEET (ENGLISH) (REV. 09-01-10)

ORIGINAL SCALE IN INCHES FOR REDUCED PLANS 0 1 2 3

UNIT: 3606
PROJECT NUMBER & PHASE: 0800000638
CONTRACT NO.: 08-383500

DISREGARD PRINTS BEARING EARLIER REVISION DATES →

REVISION DATES				SHEET	OF
5-17-13		8-28-13	9-3-13	16	30

FILE => 56-0181-h-rw02.dgn

USERNAME => s126699 DATE PLOTTED => 31-JAN-2014 TIME PLOTTED => 11:42

DIST	COUNTY	ROUTE	POST MILES TOTAL PROJECT	SHEET No.	TOTAL SHEETS
08	Riv	74	63.0	75	88

Clarence Hensel 10-18-13
REGISTERED CIVIL ENGINEER DATE

7-21-14
PLANS APPROVAL DATE

REGISTERED PROFESSIONAL ENGINEER
CLARENCE HENSEL
No. C62754
Exp. 06/30/16
CIVIL
STATE OF CALIFORNIA

The State of California or its officers or agents shall not be responsible for the accuracy or completeness of electronic copies of this plan sheet.

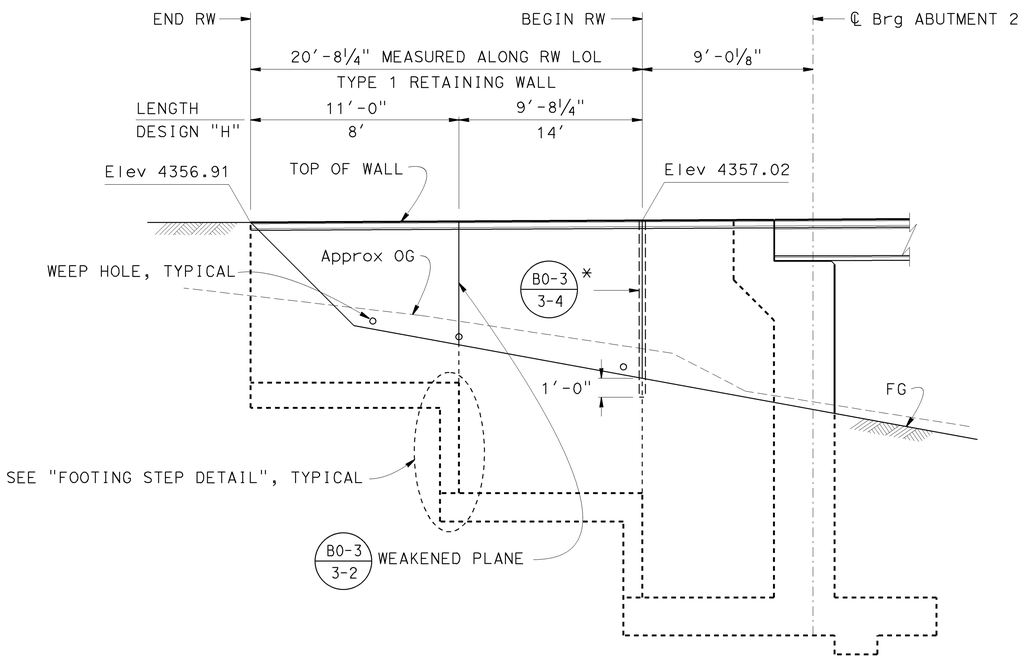

LEFT RETAINING WALL ELEVATION

B0-3 / 3-1 B3-1A / -

1/4" = 1'-0"

Note: Concrete Barrier Type 80 not shown for clarity.

* Extend waterstop 6" into concrete barrier

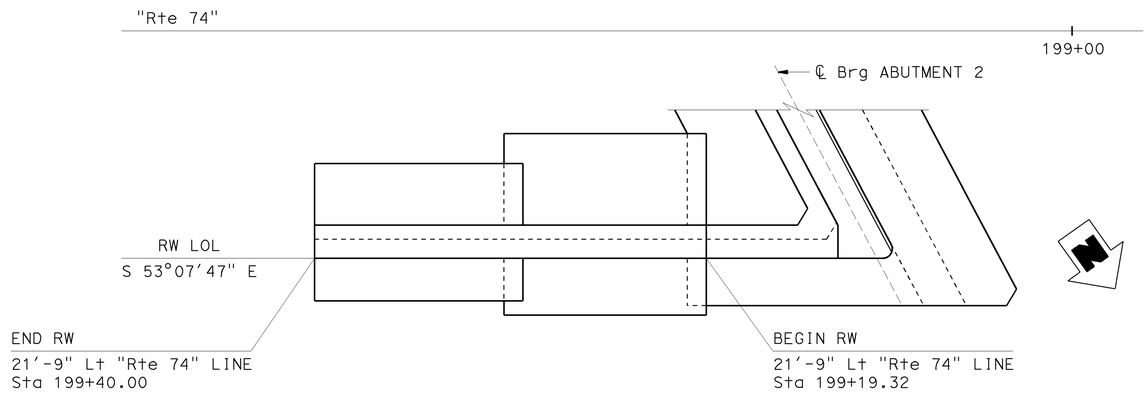

LEFT RETAINING WALL PLAN

1/4" = 1'-0"

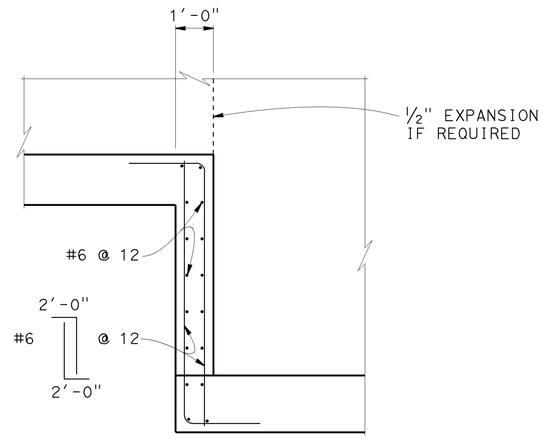

FOOTING STEP DETAIL

1/4" = 1'-0"

DESIGN	BY C. Hensel	CHECKED M. Kattaa	STATE OF CALIFORNIA DEPARTMENT OF TRANSPORTATION	DIVISION OF ENGINEERING SERVICES STRUCTURE DESIGN DESIGN BRANCH 12	BRIDGE NO. 56-0181	HURKEY CREEK BRIDGE (REPLACE)	
DETAILS	BY kc	CHECKED M. Kattaa			POST MILE 62.8/63.1	RETAINING WALL LAYOUT NO. 3	
QUANTITIES	BY C. Hensel	CHECKED M. Kattaa					

STRUCTURES DESIGN DETAIL SHEET (ENGLISH) (REV. 09-01-10)

ORIGINAL SCALE IN INCHES FOR REDUCED PLANS 0 1 2 3

UNIT: 3606
PROJECT NUMBER & PHASE: 0800000638 CONTRACT NO.: 08-383500

DISREGARD PRINTS BEARING EARLIER REVISION DATES →

REVISION DATES				SHEET	OF
5-22-13	9-30-13		8-30-13	17	30

FILE => 56-0181-h-rw03.dgn

USERNAME => s126699 DATE PLOTTED => 31-JAN-2014 TIME PLOTTED => 11:42

DIST	COUNTY	ROUTE	POST MILES TOTAL PROJECT	SHEET No.	TOTAL SHEETS
08	Riv	74	63.0	76	88

Clarence Hensel 10-18-13
REGISTERED CIVIL ENGINEER DATE

7-21-14
PLANS APPROVAL DATE

REGISTERED PROFESSIONAL ENGINEER
CLARENCE HENSEL
No. C62754
Exp. 06/30/16
CIVIL
STATE OF CALIFORNIA

The State of California or its officers or agents shall not be responsible for the accuracy or completeness of electronic copies of this plan sheet.

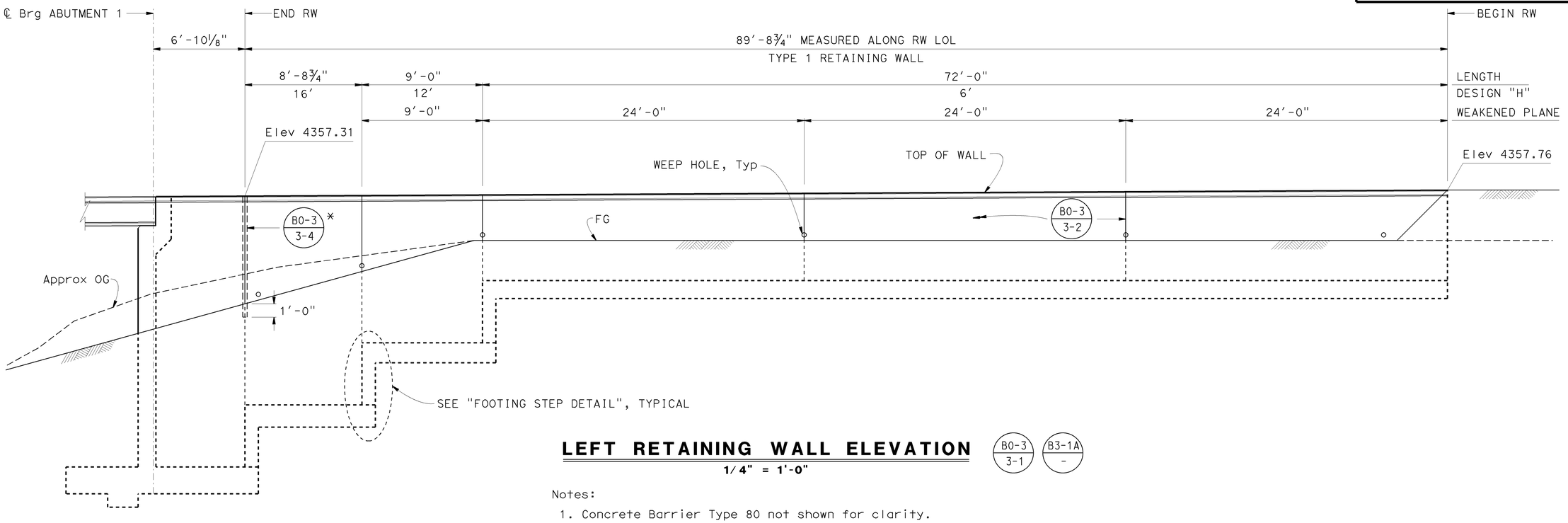

LEFT RETAINING WALL ELEVATION

1/4" = 1'-0"

B0-3 3-1 B3-1A -

* Extend waterstop 6" into concrete barrier

Notes:

1. Concrete Barrier Type 80 not shown for clarity.
2. For "FOOTING STEP DETAIL" see "RETAINING WALL LAYOUT NO. 3" sheet.

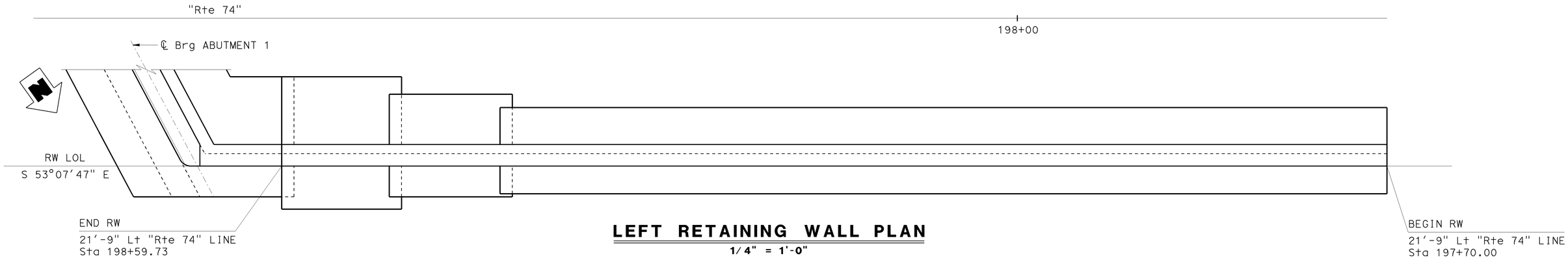

LEFT RETAINING WALL PLAN

1/4" = 1'-0"

DESIGN	BY C. Hensel	CHECKED M. Kattaa	STATE OF CALIFORNIA DEPARTMENT OF TRANSPORTATION	DIVISION OF ENGINEERING SERVICES STRUCTURE DESIGN DESIGN BRANCH 12	BRIDGE NO. 56-0181	HURKEY CREEK BRIDGE (REPLACE)	
DETAILS	BY kc	CHECKED M. Kattaa			POST MILE 62.8/63.1	RETAINING WALL LAYOUT NO. 4	
QUANTITIES	BY C. Hensel	CHECKED M. Kattaa					

STRUCTURES DESIGN DETAIL SHEET (ENGLISH) (REV. 09-01-10)

ORIGINAL SCALE IN INCHES FOR REDUCED PLANS 0 1 2 3

UNIT: 3606
PROJECT NUMBER & PHASE: 0800000638 CONTRACT NO.: 08-383500

DISREGARD PRINTS BEARING EARLIER REVISION DATES →

REVISION DATES				SHEET	OF
~~5-20-13~~	~~9-30-13~~		~~9-27-13~~	18	30

FILE => 56-0181-h-rw04.dgn

USERNAME => s126699 DATE PLOTTED => 31-JAN-2014 TIME PLOTTED => 11:43

DIST	COUNTY	ROUTE	POST MILES TOTAL PROJECT	SHEET No.	TOTAL SHEETS
08	Riv	74	63.0	77	88

Clarence Hensel 10-18-13
REGISTERED CIVIL ENGINEER DATE

7-21-14
PLANS APPROVAL DATE

REGISTERED PROFESSIONAL ENGINEER
CLARENCE HENSEL
No. C62754
Exp. 06/30/16
CIVIL
STATE OF CALIFORNIA

The State of California or its officers or agents shall not be responsible for the accuracy or completeness of electronic copies of this plan sheet.

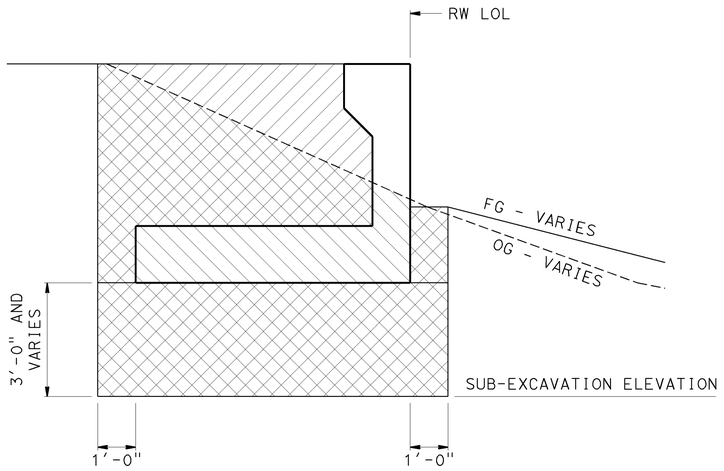

PAY LIMITS FOR STRUCTURE EXCAVATION AND BACKFILL FOR RETAINING WALL TYPE 5

NO SCALE

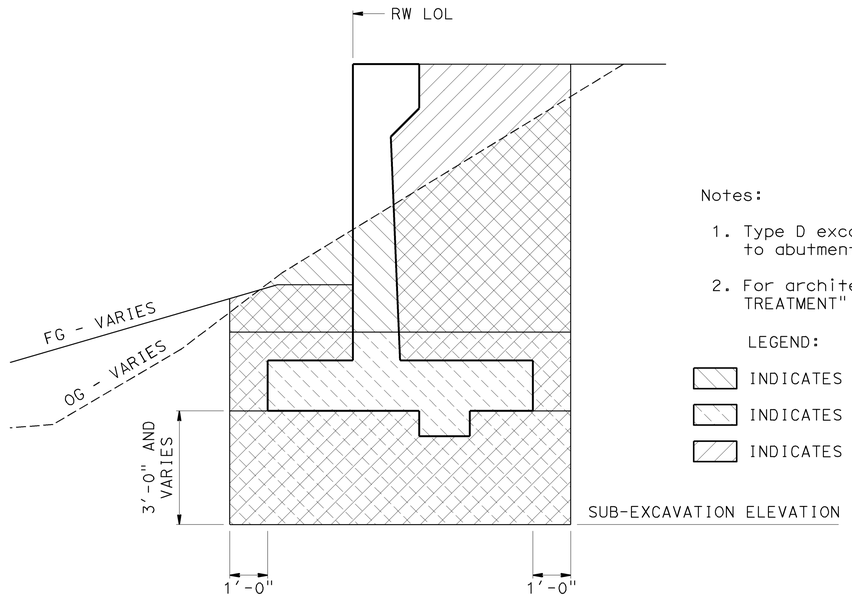

PAY LIMITS FOR STRUCTURE EXCAVATION AND BACKFILL FOR RETAINING WALL TYPE 1

NO SCALE

Notes:

1. Type D excavation applies only to RW's which are adjacent to abutment wingwalls.
2. For architectural treatment details, see "ARCHITECTURAL TREATMENT" sheet.

LEGEND:

- INDICATES LIMITS OF STRUCTURE EXCAVATION (RETAINING WALL)
- INDICATES LIMITS OF STRUCTURE EXCAVATION (RETAINING WALL) (TYPE D)
- INDICATES LIMITS OF STRUCTURE BACKFILL (RETAINING WALL)

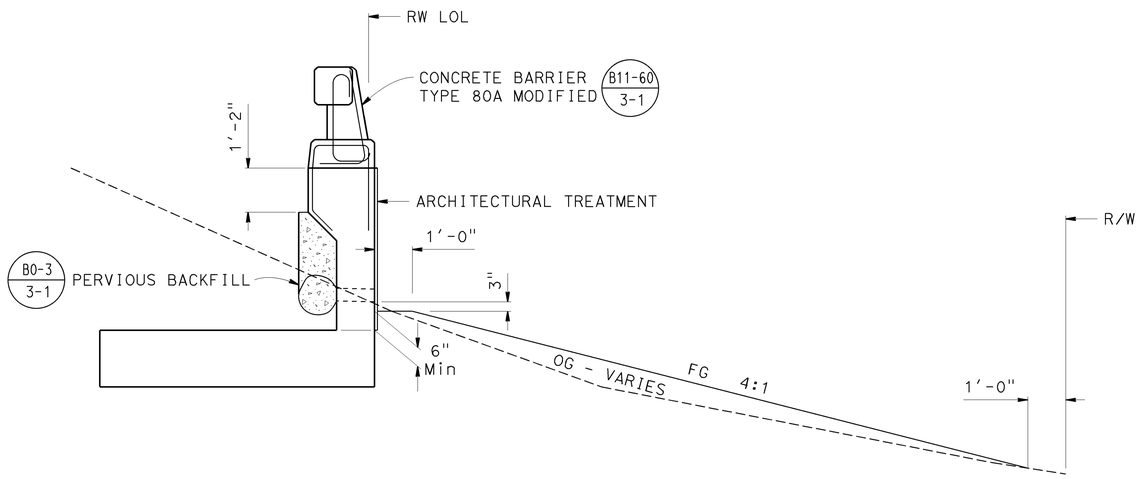

RETAINING WALL TYPE 5 TYPICAL SECTION

NO SCALE

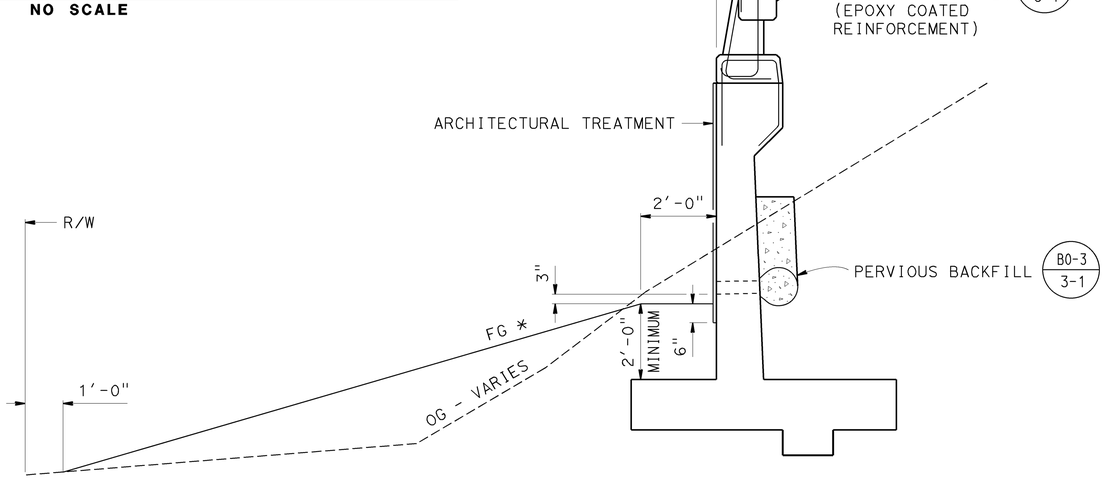

* Slope shall not be less than 4:1, or more than 2:1. Where necessary, slope FG to intersect the OG at a 1 foot offset from R/W as shown.

RETAINING WALL TYPE 1 TYPICAL SECTION

NO SCALE

DESIGN	BY C. Hensel	CHECKED M. Kattaa	STATE OF CALIFORNIA DEPARTMENT OF TRANSPORTATION	DIVISION OF ENGINEERING SERVICES STRUCTURE DESIGN DESIGN BRANCH 12	BRIDGE NO. 56-0181	HURKEY CREEK BRIDGE (REPLACE)	
DETAILS	BY Kc	CHECKED M. Kattaa			POST MILE 62.8/63.1	RETAINING WALL DETAILS	
QUANTITIES	BY C. Hensel	CHECKED M. Kattaa					

STRUCTURES DESIGN DETAIL SHEET (ENGLISH) (REV. 09-01-10)

ORIGINAL SCALE IN INCHES FOR REDUCED PLANS 0 1 2 3

UNIT: 3606
PROJECT NUMBER & PHASE: 0800000638 CONTRACT NO.: 08-383500

DISREGARD PRINTS BEARING EARLIER REVISION DATES →

REVISION DATES				SHEET	OF
7-8-13		10-8-13	10-15-13	19	30

FILE => 56-0181-h-rw05.dgn

USERNAME => s126899 DATE PLOTTED => 31-JAN-2014 TIME PLOTTED => 11:43

DIST	COUNTY	ROUTE	POST MILES TOTAL PROJECT	SHEET No.	TOTAL SHEETS
08	Riv	74	63.0	78	88

Clarence Hensel — REGISTERED CIVIL ENGINEER — 10-18-13 DATE

7-21-14 PLANS APPROVAL DATE

REGISTERED PROFESSIONAL ENGINEER — CLARENCE HENSEL — No. C62754 — Exp. 06/30/16 — CIVIL — STATE OF CALIFORNIA

The State of California or its officers or agents shall not be responsible for the accuracy or completeness of electronic copies of this plan sheet.

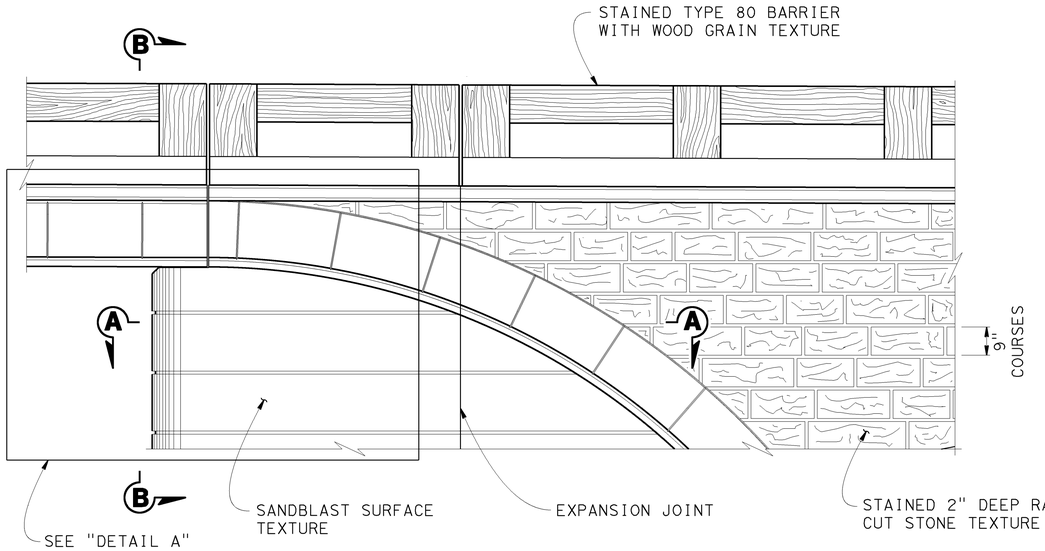

PARTIAL ELEVATION AT ABUTMENT
NO SCALE

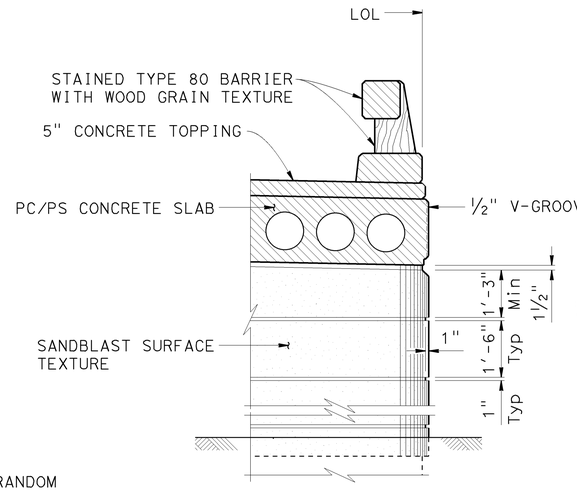

PARTIAL SECTION B-B
NO SCALE

STONE SIZE = 19" - 53"
MAXIMUM RELIEF = 2"

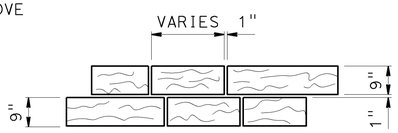

RANDOM CUT STONE
NO SCALE

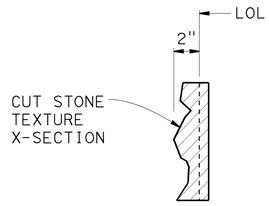

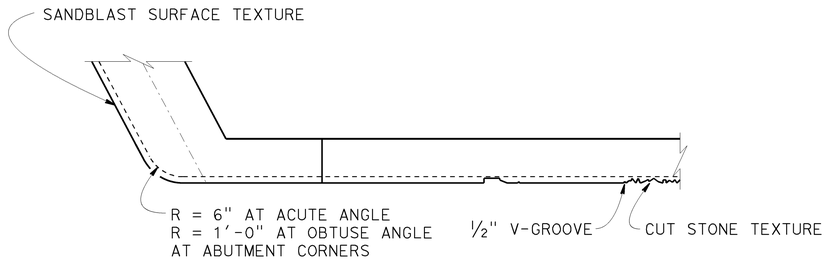

SECTION A-A
NO SCALE

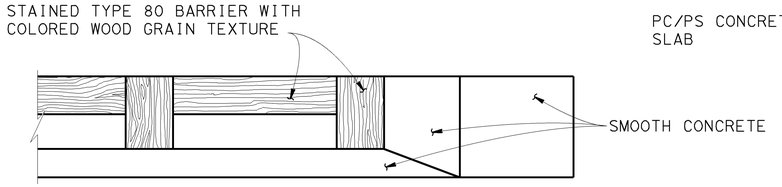

BARRIER END-BLOCK TMNT
NO SCALE

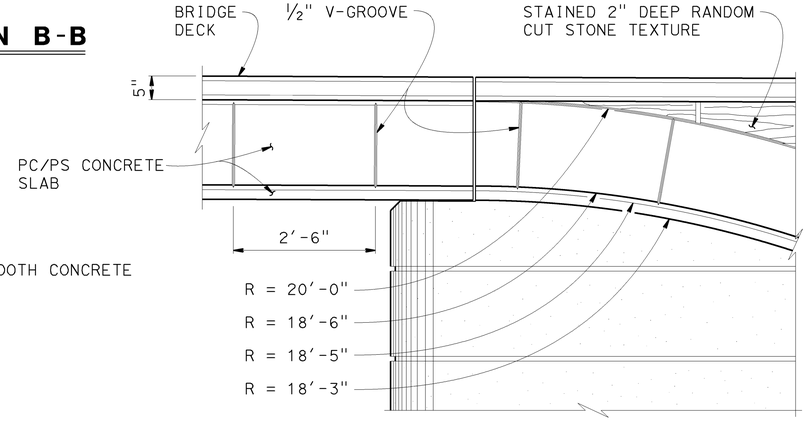

DETAIL A
NO SCALE

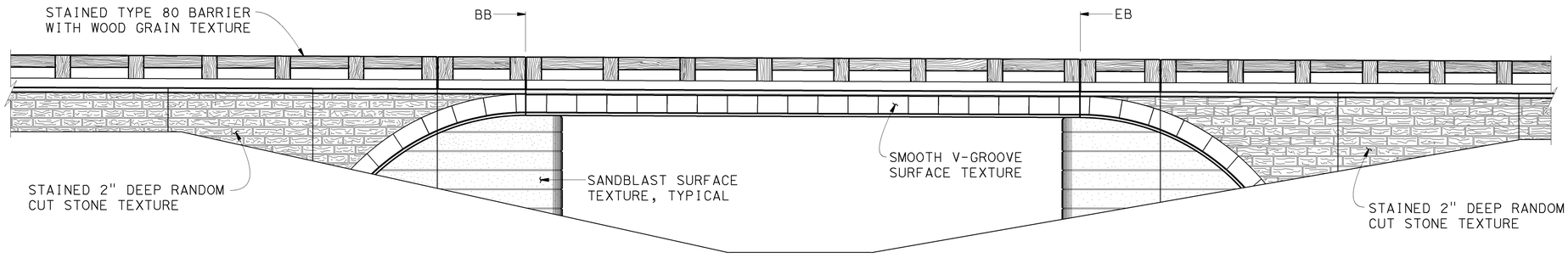

ELEVATION
NO SCALE

DESIGN	BY B. FLEMING	CHECKED M. Kattaa	STATE OF CALIFORNIA DEPARTMENT OF TRANSPORTATION	DIVISION OF ENGINEERING SERVICES STRUCTURE DESIGN DESIGN BRANCH 12	BRIDGE NO. 56-0181	HURKEY CREEK BRIDGE (REPLACE)	
DETAILS	BY kc/Various	CHECKED M. BISHOP			POST MILE 62.8/63.1	ARCHITECTURAL TREATMENT	
QUANTITIES	BY C. Hensel	CHECKED M. Kattaa					

STRUCTURES DESIGN DETAIL SHEET (ENGLISH) (REV. 09-01-10)

ORIGINAL SCALE IN INCHES FOR REDUCED PLANS 0 1 2 3

UNIT: 3606
PROJECT NUMBER & PHASE: 0800000638
CONTRACT NO.: 08-383500

DISREGARD PRINTS BEARING EARLIER REVISION DATES →

REVISION DATES			SHEET	OF
9-3-13		10-8-13 10-17-13	20	30

FILE => 56-0181-1-arch.dgn

USERNAME => s126699 DATE PLOTTED => 31-JAN-2014 TIME PLOTTED => 11:43

BENCH MARK

CP 2 Elev 4355.83
1" Iron Pipe Monument
CAL DOT PP
N 2188198.98
E 6431685.47

CP 6 Elev 4352.46
1" Iron Pipe Monument
CAL DOT PP
N 2188404.05
E 6431499.26

Vertical Datum: NGVD29

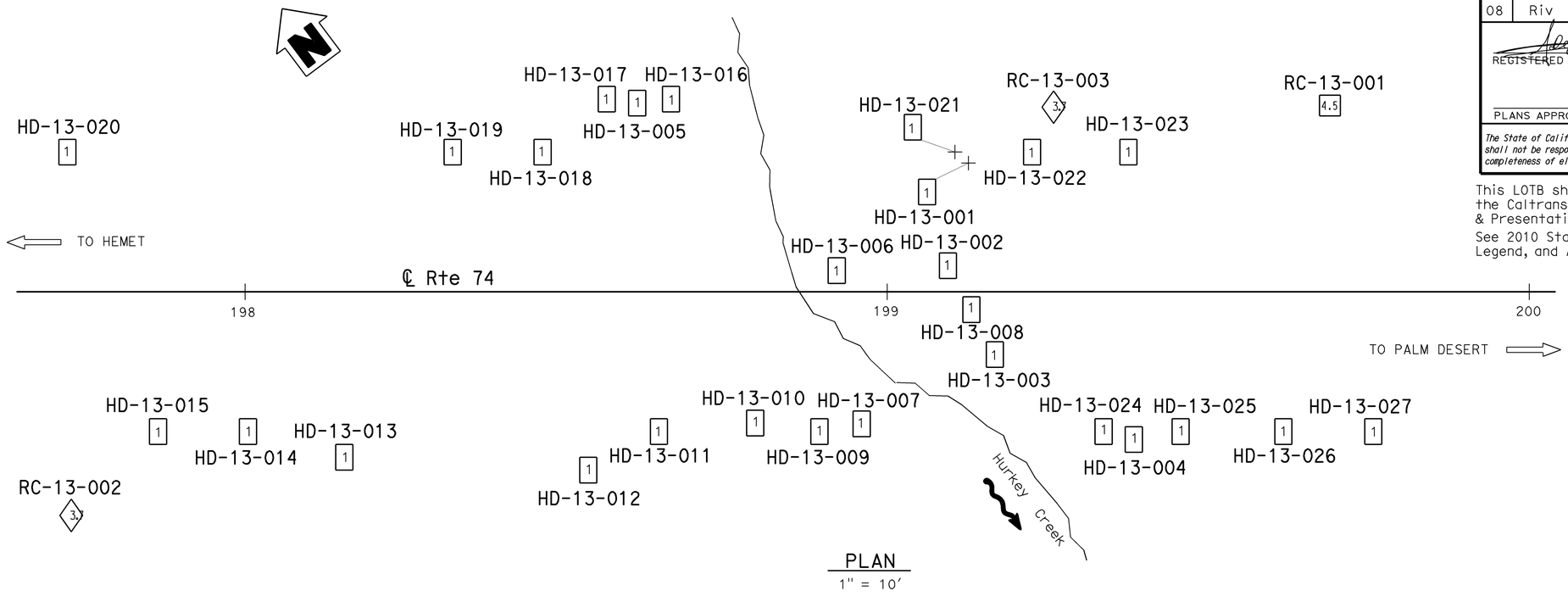

PLAN
1" = 10'

DIST	COUNTY	ROUTE	POST MILES TOTAL PROJECT	SHEET No.	TOTAL SHEETS
08	Riv	074	63.0	79	88

REGISTERED CIVIL ENGINEER — 9-5-13 DATE

7-21-14
PLANS APPROVAL DATE

REGISTERED PROFESSIONAL ENGINEER — Fernando De Haro — No. C65281 — Exp. 9-30-15 — CIVIL — STATE OF CALIFORNIA

The State of California or its officers or agents shall not be responsible for the accuracy or completeness of electronic copies of this plan sheet.

This LOTB sheet was prepared in accordance with the Caltrans Soil & Rock Logging, Classification, & Presentation Manual (2010 Edition).

See 2010 Standard Plans A10F and A10G for Soil Legend, and A10H for Rock Legend.

Note: Groundwater was encountered but not measured in borings HD-13-001, HD-13-004, HD-13-005, HD-13-007, HD-13-008, HD-13-011, HD-13-016, HD-13-017, HD-13-021, RC-13-001, RC-13-002, and RC-13-003.

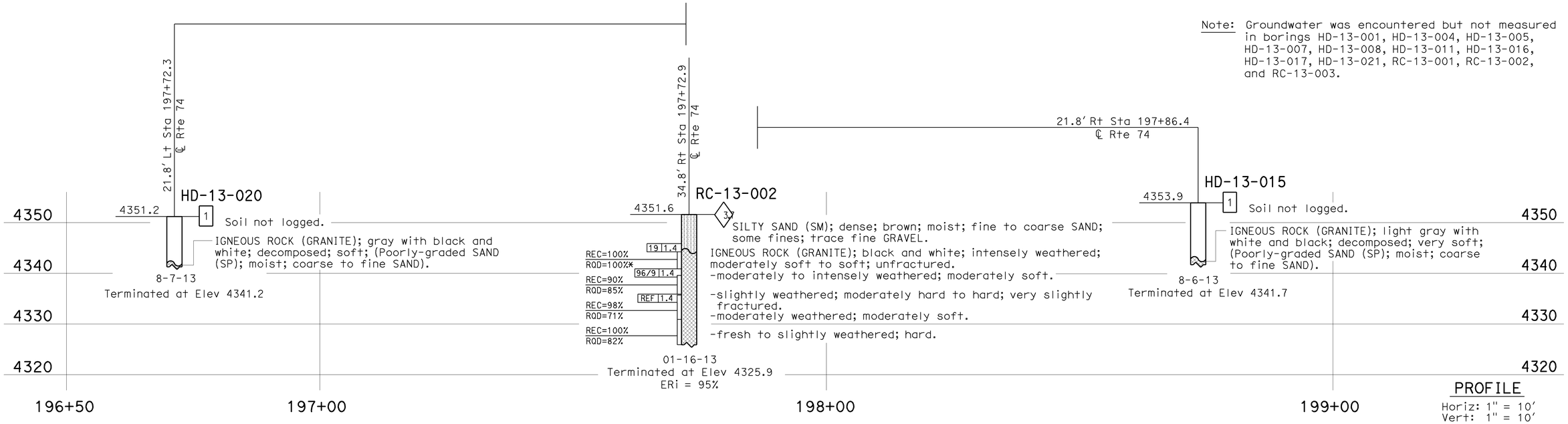

PROFILE
Horiz: 1" = 10'
Vert: 1" = 10'

ENGINEERING SERVICES	MATERIALS AND GEOTECHNICAL SERVICES	STATE OF CALIFORNIA DEPARTMENT OF TRANSPORTATION	DIVISION OF ENGINEERING SERVICES STRUCTURE DESIGN DESIGN BRANCH	BRIDGE NO. 56-0181 POST MILE 62.99	HURKEY CREEK BRIDGE (REPLACE) LOG OF TEST BORINGS 1 OF 10
FUNCTIONAL SUPERVISOR NAME: M. DeSalvatore	DRAWN BY: F. Nguyen, I.G-Remmen CHECKED BY: T-M Liao	FIELD INVESTIGATION BY: C. Manansala, F. De Haro			

OGS CIVIL LOG OF TEST BORINGS SHEET

ORIGINAL SCALE IN INCHES FOR REDUCED PLANS 0 1 2 3

UNIT: 3643
PROJECT NUMBER & PHASE: 08000006381 CONTRACT NO.: 08-383501

DISREGARD PRINTS BEARING EARLIER REVISION DATES →

REVISION DATES			SHEET	OF
01-29-13	09-05-13	09-04-13	21	30

FILE => 56-0181-z-lotb01.dgn

USERNAME => s126699 DATE PLOTTED => 31-JAN-2014 TIME PLOTTED => 11:43

DIST	COUNTY	ROUTE	POST MILES TOTAL PROJECT	SHEET No.	TOTAL SHEETS
08	Riv	074	63.0	80	88

REGISTERED CIVIL ENGINEER — 9-5-13 DATE

7-21-14
PLANS APPROVAL DATE

REGISTERED PROFESSIONAL ENGINEER — Fernando De Haro — No. C65281 — Exp. 9-30-15 — CIVIL — STATE OF CALIFORNIA

The State of California or its officers or agents shall not be responsible for the accuracy or completeness of electronic copies of this plan sheet.

This LOTB sheet was prepared in accordance with the Caltrans Soil & Rock Logging, Classification, & Presentation Manual (2010 Edition).

See 2010 Standard Plans A10F and A10G for Soil Legend, and A10H for Rock Legend.

FOR PLAN VIEW, SEE
"LOG OF TEST BORINGS 1 OF 10"

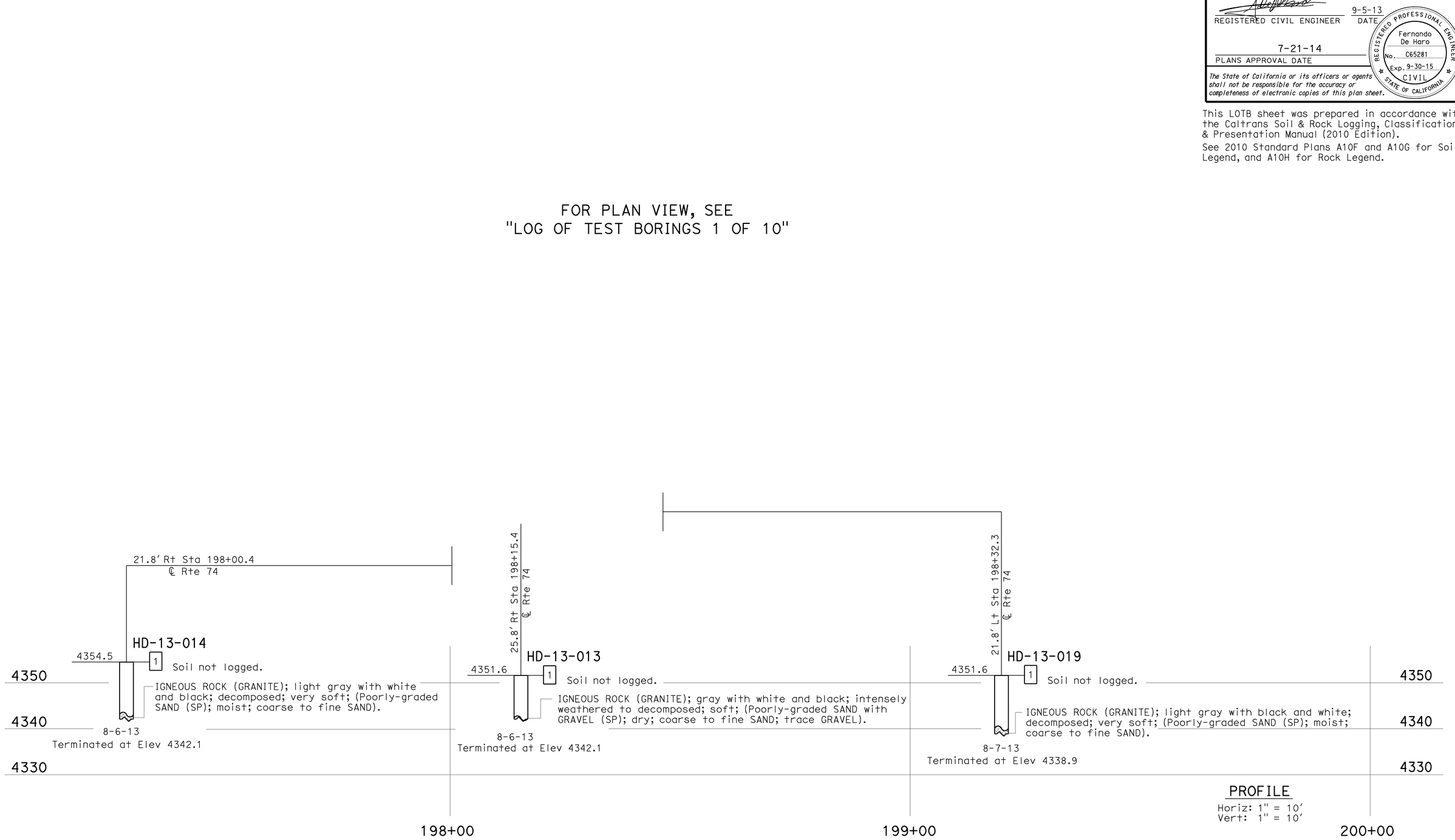

PROFILE
Horiz: 1" = 10'
Vert: 1" = 10'

ENGINEERING SERVICES	MATERIALS AND GEOTECHNICAL SERVICES	STATE OF CALIFORNIA DEPARTMENT OF TRANSPORTATION	DIVISION OF ENGINEERING SERVICES STRUCTURE DESIGN	BRIDGE NO.	HURKEY CREEK BRIDGE (REPLACE)
FUNCTIONAL SUPERVISOR	DRAWN BY: F. Nguyen, I.G-Remmen	FIELD INVESTIGATION BY:	DESIGN BRANCH	56-0181	LOG OF TEST BORINGS 2 OF 10
NAME: M. DeSalvatore	CHECKED BY: T-M Liao	C. Manansala, F. De Haro		POST MILE 62.99	

OGS CIVIL LOG OF TEST BORINGS SHEET

ORIGINAL SCALE IN INCHES FOR REDUCED PLANS 0 1 2 3

UNIT: 3643
PROJECT NUMBER & PHASE: 08000006381 CONTRACT NO.: 08-383501

DISREGARD PRINTS BEARING EARLIER REVISION DATES →

REVISION DATES			SHEET	OF
01-29-13		09-05-13	09-06-13	22	30

FILE => 56-0181-z-lotb02.dgn

USERNAME => s126699 DATE PLOTTED => 31-JAN-2014 TIME PLOTTED => 11:43

DIST	COUNTY	ROUTE	POST MILES TOTAL PROJECT	SHEET No.	TOTAL SHEETS
08	Riv	074	63.0	81	88

REGISTERED CIVIL ENGINEER — 9-5-13 DATE

7-21-14
PLANS APPROVAL DATE

REGISTERED PROFESSIONAL ENGINEER
Fernando De Haro
No. C65281
Exp. 9-30-15
CIVIL
STATE OF CALIFORNIA

The State of California or its officers or agents shall not be responsible for the accuracy or completeness of electronic copies of this plan sheet.

This LOTB sheet was prepared in accordance with the Caltrans Soil & Rock Logging, Classification, & Presentation Manual (2010 Edition).

See 2010 Standard Plans A10F and A10G for Soil Legend, and A10H for Rock Legend.

FOR PLAN VIEW, SEE
"LOG OF TEST BORINGS 1 OF 10"

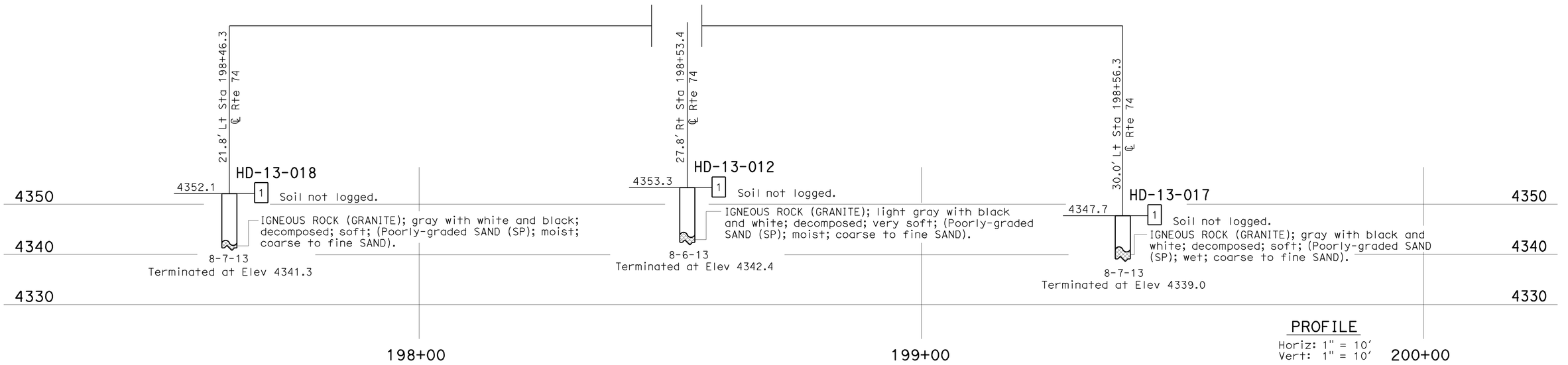

PROFILE
Horiz: 1" = 10'
Vert: 1" = 10'

ENGINEERING SERVICES	MATERIALS AND GEOTECHNICAL SERVICES		STATE OF CALIFORNIA DEPARTMENT OF TRANSPORTATION	DIVISION OF ENGINEERING SERVICES STRUCTURE DESIGN DESIGN BRANCH	BRIDGE NO. 56-0181	HURKEY CREEK BRIDGE (REPLACE)
FUNCTIONAL SUPERVISOR NAME: M. DeSalvatore	DRAWN BY: F. Nguyen, I.G-Remmen	FIELD INVESTIGATION BY: C. Manansala, F. De Haro			POST MILE 62.99	LOG OF TEST BORINGS 3 OF 10
	CHECKED BY: T-M Liao					

OGS CIVIL LOG OF TEST BORINGS SHEET

ORIGINAL SCALE IN INCHES FOR REDUCED PLANS 0 1 2 3

UNIT: 3643
PROJECT NUMBER & PHASE: 08000006381 CONTRACT NO.: 08-383501

DISREGARD PRINTS BEARING EARLIER REVISION DATES →

REVISION DATES				SHEET	OF
01-29-13		09-05-13	09-06-13	23	30

FILE => 56-0181-z-lotb03.dgn

USERNAME => s126699 DATE PLOTTED => 31-JAN-2014 TIME PLOTTED => 11:43

DIST	COUNTY	ROUTE	POST MILES TOTAL PROJECT	SHEET No.	TOTAL SHEETS
08	Riv	074	63.0	82	88

REGISTERED CIVIL ENGINEER — 9-5-13 DATE

7-21-14
PLANS APPROVAL DATE

REGISTERED PROFESSIONAL ENGINEER
Fernando De Haro
No. C65281
Exp. 9-30-15
CIVIL
STATE OF CALIFORNIA

The State of California or its officers or agents shall not be responsible for the accuracy or completeness of electronic copies of this plan sheet.

This LOTB sheet was prepared in accordance with the Caltrans Soil & Rock Logging, Classification, & Presentation Manual (2010 Edition).

See 2010 Standard Plans A10F and A10G for Soil Legend, and A10H for Rock Legend.

FOR PLAN VIEW, SEE
"LOG OF TEST BORINGS 1 OF 10"

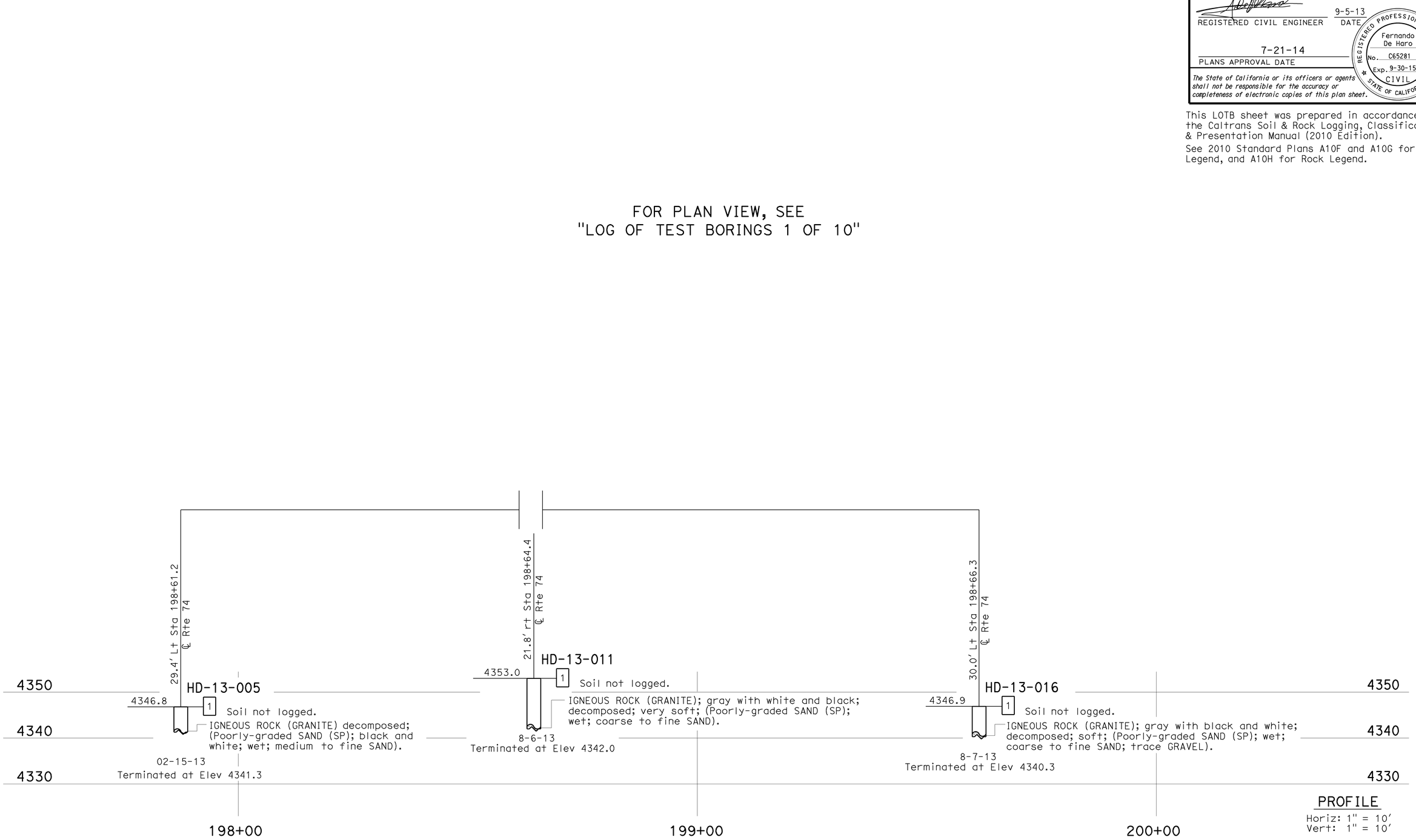

PROFILE
Horiz: 1" = 10'
Vert: 1" = 10'

ENGINEERING SERVICES	MATERIALS AND GEOTECHNICAL SERVICES	STATE OF CALIFORNIA DEPARTMENT OF TRANSPORTATION	DIVISION OF ENGINEERING SERVICES STRUCTURE DESIGN	BRIDGE NO.	HURKEY CREEK BRIDGE (REPLACE)
FUNCTIONAL SUPERVISOR	DRAWN BY: F. Nguyen, I.G-Remmen	FIELD INVESTIGATION BY:	DESIGN BRANCH	56-0181	LOG OF TEST BORINGS 4 OF 10
NAME: M. DeSalvatore	CHECKED BY: T-M Liao	C. Manansala, F. De Haro		POST MILE 62.99	

OGS CIVIL LOG OF TEST BORINGS SHEET

ORIGINAL SCALE IN INCHES FOR REDUCED PLANS 0 1 2 3

UNIT: 3643
PROJECT NUMBER & PHASE: 08000006381 CONTRACT NO.: 08-383501

DISREGARD PRINTS BEARING EARLIER REVISION DATES →

REVISION DATES			SHEET	OF
01-24-13		09-05-13	09-06-13	24	30

FILE => 56-0181-z-lotb04.dgn

USERNAME => s126699 DATE PLOTTED => 31-JAN-2014 TIME PLOTTED => 11:43

DIST	COUNTY	ROUTE	POST MILES TOTAL PROJECT	SHEET No.	TOTAL SHEETS
08	Riv	074	63.0	83	88

REGISTERED CIVIL ENGINEER — 9-5-13 DATE

7-21-14
PLANS APPROVAL DATE

REGISTERED PROFESSIONAL ENGINEER — Fernando De Haro — No. C65281 — Exp. 9-30-15 — CIVIL — STATE OF CALIFORNIA

The State of California or its officers or agents shall not be responsible for the accuracy or completeness of electronic copies of this plan sheet.

This LOTB sheet was prepared in accordance with the Caltrans Soil & Rock Logging, Classification, & Presentation Manual (2010 Edition).

See 2010 Standard Plans A10F and A10G for Soil Legend, and A10H for Rock Legend.

FOR PLAN VIEW, SEE
"LOG OF TEST BORINGS 1 OF 10"

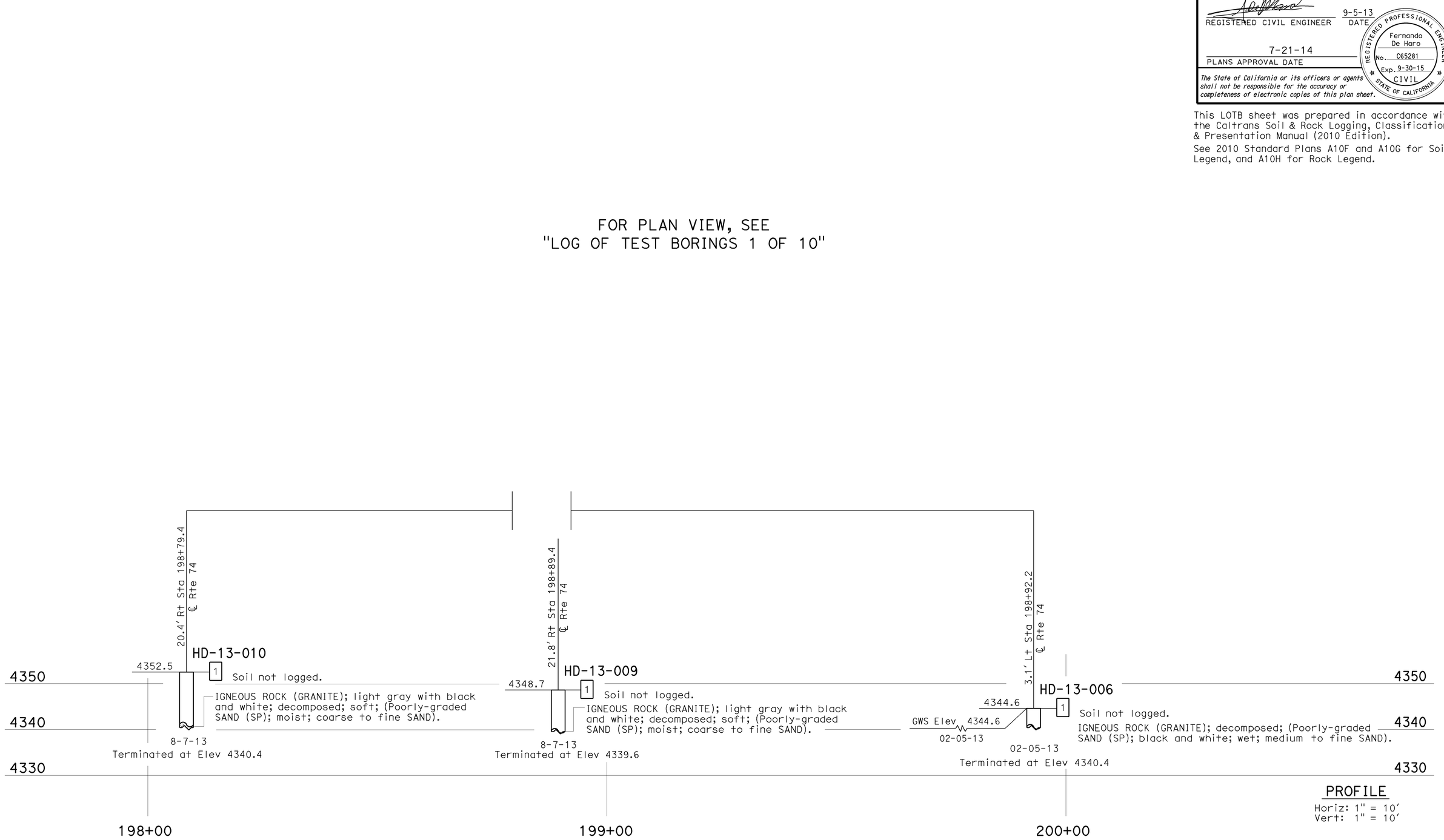

PROFILE
Horiz: 1" = 10'
Vert: 1" = 10'

ENGINEERING SERVICES	MATERIALS AND GEOTECHNICAL SERVICES		STATE OF CALIFORNIA DEPARTMENT OF TRANSPORTATION	DIVISION OF ENGINEERING SERVICES STRUCTURE DESIGN DESIGN BRANCH	BRIDGE NO. 56-0181	HURKEY CREEK BRIDGE (REPLACE)
FUNCTIONAL SUPERVISOR NAME: M. DeSalvatore	DRAWN BY: F. Nguyen, I.G-Remmen	FIELD INVESTIGATION BY: C. Manansala, F. De Haro			POST MILE 62.99	LOG OF TEST BORINGS 5 OF 10
	CHECKED BY: T-M Liao					

OGS CIVIL LOG OF TEST BORINGS SHEET

ORIGINAL SCALE IN INCHES FOR REDUCED PLANS 0 1 2 3

UNIT: 3643
PROJECT NUMBER & PHASE: 08000006381 CONTRACT NO.: 08-383501

DISREGARD PRINTS BEARING EARLIER REVISION DATES →

REVISION DATES				SHEET	OF
01-24-13		09-05-13	09-06-13	25	30

FILE => 56-0181-z-lotb05.dgn

USERNAME => s126699 DATE PLOTTED => 31-JAN-2014 TIME PLOTTED => 11:43

DIST	COUNTY	ROUTE	POST MILES TOTAL PROJECT	SHEET No.	TOTAL SHEETS
08	Riv	074	63.0	84	88

REGISTERED CIVIL ENGINEER — 9-5-13 DATE

7-21-14
PLANS APPROVAL DATE

REGISTERED PROFESSIONAL ENGINEER
Fernando De Haro
No. C65281
Exp. 9-30-15
CIVIL
STATE OF CALIFORNIA

The State of California or its officers or agents shall not be responsible for the accuracy or completeness of electronic copies of this plan sheet.

This LOTB sheet was prepared in accordance with the Caltrans Soil & Rock Logging, Classification, & Presentation Manual (2010 Edition).

See 2010 Standard Plans A10F and A10G for Soil Legend, and A10H for Rock Legend.

FOR PLAN VIEW, SEE
"LOG OF TEST BORINGS 1 OF 10"

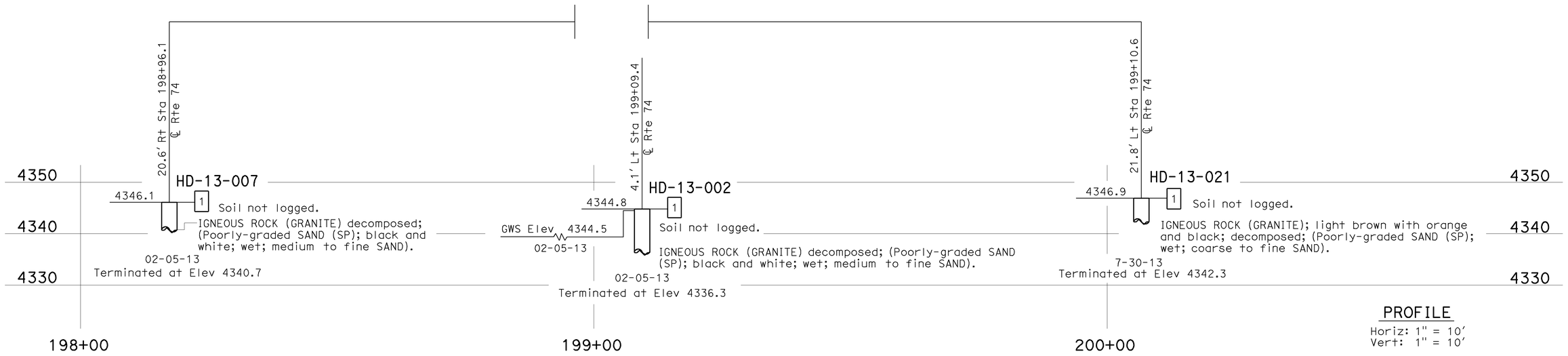

PROFILE
Horiz: 1" = 10'
Vert: 1" = 10'

ENGINEERING SERVICES	MATERIALS AND GEOTECHNICAL SERVICES	STATE OF CALIFORNIA DEPARTMENT OF TRANSPORTATION	DIVISION OF ENGINEERING SERVICES STRUCTURE DESIGN DESIGN BRANCH	BRIDGE NO. 56-0181	HURKEY CREEK BRIDGE (REPLACE)
FUNCTIONAL SUPERVISOR NAME: M. DeSalvatore	DRAWN BY: F. Nguyen, I.G-Remmen CHECKED BY: T-M Liao	FIELD INVESTIGATION BY: C. Manansala, F. De Haro		POST MILE 62.99	LOG OF TEST BORINGS 6 OF 10

OGS CIVIL LOG OF TEST BORINGS SHEET

ORIGINAL SCALE IN INCHES FOR REDUCED PLANS 0 1 2 3

UNIT: 3643
PROJECT NUMBER & PHASE: 08000006381
CONTRACT NO.: 08-383501

DISREGARD PRINTS BEARING EARLIER REVISION DATES →

REVISION DATES				SHEET	OF
01-24-13		09-05-13	09-06-13	26	30

FILE => 56-0181-z-lotb06.dgn

USERNAME => s126699 DATE PLOTTED => 31-JAN-2014 TIME PLOTTED => 11:43

DIST	COUNTY	ROUTE	POST MILES TOTAL PROJECT	SHEET No.	TOTAL SHEETS
08	Riv	074	63.0	85	88

REGISTERED CIVIL ENGINEER — 9-5-13 DATE

7-21-14
PLANS APPROVAL DATE

REGISTERED PROFESSIONAL ENGINEER
Fernando De Haro
No. C65281
Exp. 9-30-15
CIVIL
STATE OF CALIFORNIA

The State of California or its officers or agents shall not be responsible for the accuracy or completeness of electronic copies of this plan sheet.

This LOTB sheet was prepared in accordance with the Caltrans Soil & Rock Logging, Classification, & Presentation Manual (2010 Edition).

See 2010 Standard Plans A10F and A10G for Soil Legend, and A10H for Rock Legend.

FOR PLAN VIEW, SEE
"LOG OF TEST BORINGS 1 OF 10"

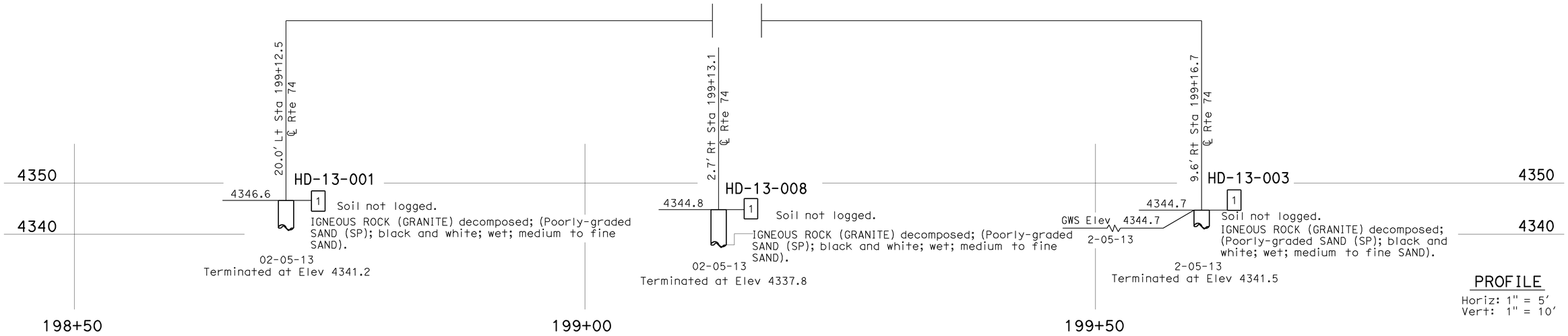

PROFILE
Horiz: 1" = 5'
Vert: 1" = 10'

ENGINEERING SERVICES	MATERIALS AND GEOTECHNICAL SERVICES	STATE OF CALIFORNIA DEPARTMENT OF TRANSPORTATION	DIVISION OF ENGINEERING SERVICES STRUCTURE DESIGN	BRIDGE NO.	HURKEY CREEK BRIDGE (REPLACE)
FUNCTIONAL SUPERVISOR	DRAWN BY: F. Nguyen, I.G-Remmen	FIELD INVESTIGATION BY:	DESIGN BRANCH	56-0181	LOG OF TEST BORINGS 7 OF 10
NAME: M. DeSalvatore	CHECKED BY: T-M Liao	C. Manansala, F. De Haro		POST MILE 62.99	

OGS CIVIL LOG OF TEST BORINGS SHEET

ORIGINAL SCALE IN INCHES FOR REDUCED PLANS 0 1 2 3

UNIT: 3643
PROJECT NUMBER & PHASE: 08000006381 CONTRACT NO.: 08-383501

DISREGARD PRINTS BEARING EARLIER REVISION DATES →

REVISION DATES				SHEET	OF
01-24-13		09-05-13	09-06-13	27	30

FILE => 56-0181-z-lotb07.dgn

USERNAME => s126699 DATE PLOTTED => 31-JAN-2014 TIME PLOTTED => 11:43

DIST	COUNTY	ROUTE	POST MILES TOTAL PROJECT	SHEET No.	TOTAL SHEETS
08	Riv	074	63.0	86	88

REGISTERED CIVIL ENGINEER — 9-5-13 DATE

7-21-14
PLANS APPROVAL DATE

REGISTERED PROFESSIONAL ENGINEER — Fernando De Haro — No. C65281 — Exp. 9-30-15 — CIVIL — STATE OF CALIFORNIA

The State of California or its officers or agents shall not be responsible for the accuracy or completeness of electronic copies of this plan sheet.

This LOTB sheet was prepared in accordance with the Caltrans Soil & Rock Logging, Classification, & Presentation Manual (2010 Edition).

See 2010 Standard Plans A10F and A10G for Soil Legend, and A10H for Rock Legend.

FOR PLAN VIEW, SEE
"LOG OF TEST BORINGS 1 OF 10"

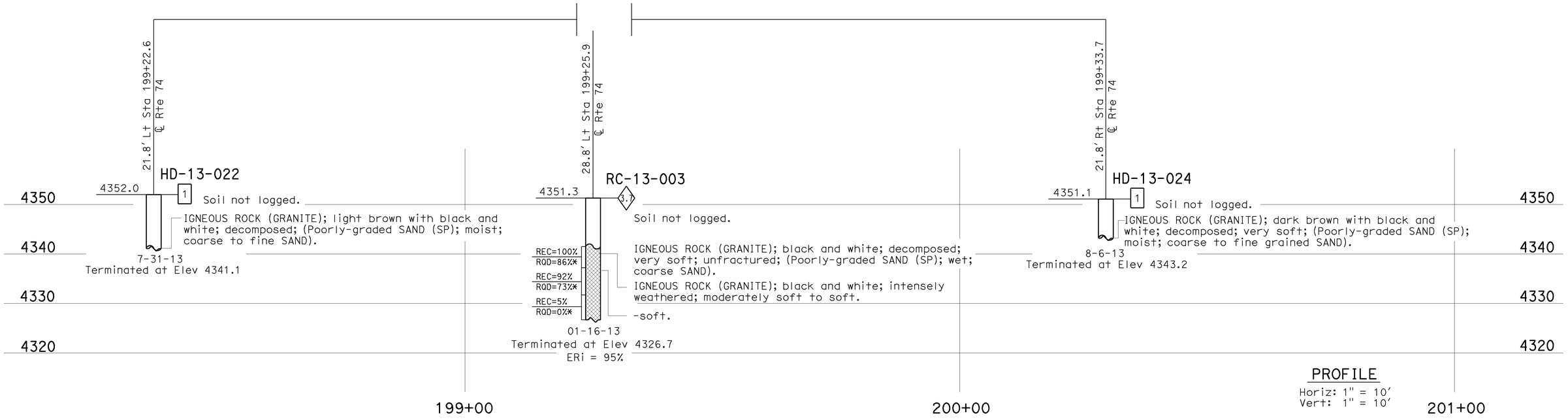

PROFILE
Horiz: 1" = 10'
Vert: 1" = 10'

ENGINEERING SERVICES	MATERIALS AND GEOTECHNICAL SERVICES	STATE OF CALIFORNIA DEPARTMENT OF TRANSPORTATION	DIVISION OF ENGINEERING SERVICES STRUCTURE DESIGN DESIGN BRANCH	BRIDGE NO. 56-0181 POST MILE 62.99	HURKEY CREEK BRIDGE (REPLACE) LOG OF TEST BORINGS 8 OF 10
FUNCTIONAL SUPERVISOR NAME: M. DeSalvatore	DRAWN BY: F. Nguyen, I.G-Remmen; CHECKED BY: T-M Liao	FIELD INVESTIGATION BY: C. Manansala, F. De Haro			

OGS CIVIL LOG OF TEST BORINGS SHEET

ORIGINAL SCALE IN INCHES FOR REDUCED PLANS 0 1 2 3

UNIT: 3643
PROJECT NUMBER & PHASE: 08000006381 CONTRACT NO.: 08-383501

DISREGARD PRINTS BEARING EARLIER REVISION DATES →

REVISION DATES				SHEET	OF
01-29-13		09-05-13	09-06-13	28	30

FILE => 56-0181-z-lotb08.dgn

USERNAME => s126699 DATE PLOTTED => 31-JAN-2014 TIME PLOTTED => 11:43

DIST	COUNTY	ROUTE	POST MILES TOTAL PROJECT	SHEET No.	TOTAL SHEETS
08	Riv	074	63.0	87	88

REGISTERED CIVIL ENGINEER — 9-5-13 DATE

7-21-14
PLANS APPROVAL DATE

REGISTERED PROFESSIONAL ENGINEER
Fernando De Haro
No. C65281
Exp. 9-30-15
CIVIL
STATE OF CALIFORNIA

The State of California or its officers or agents shall not be responsible for the accuracy or completeness of electronic copies of this plan sheet.

This LOTB sheet was prepared in accordance with the Caltrans Soil & Rock Logging, Classification, & Presentation Manual (2010 Edition).

See 2010 Standard Plans A10F and A10G for Soil Legend, and A10H for Rock Legend.

FOR PLAN VIEW, SEE
"LOG OF TEST BORINGS 1 OF 10"

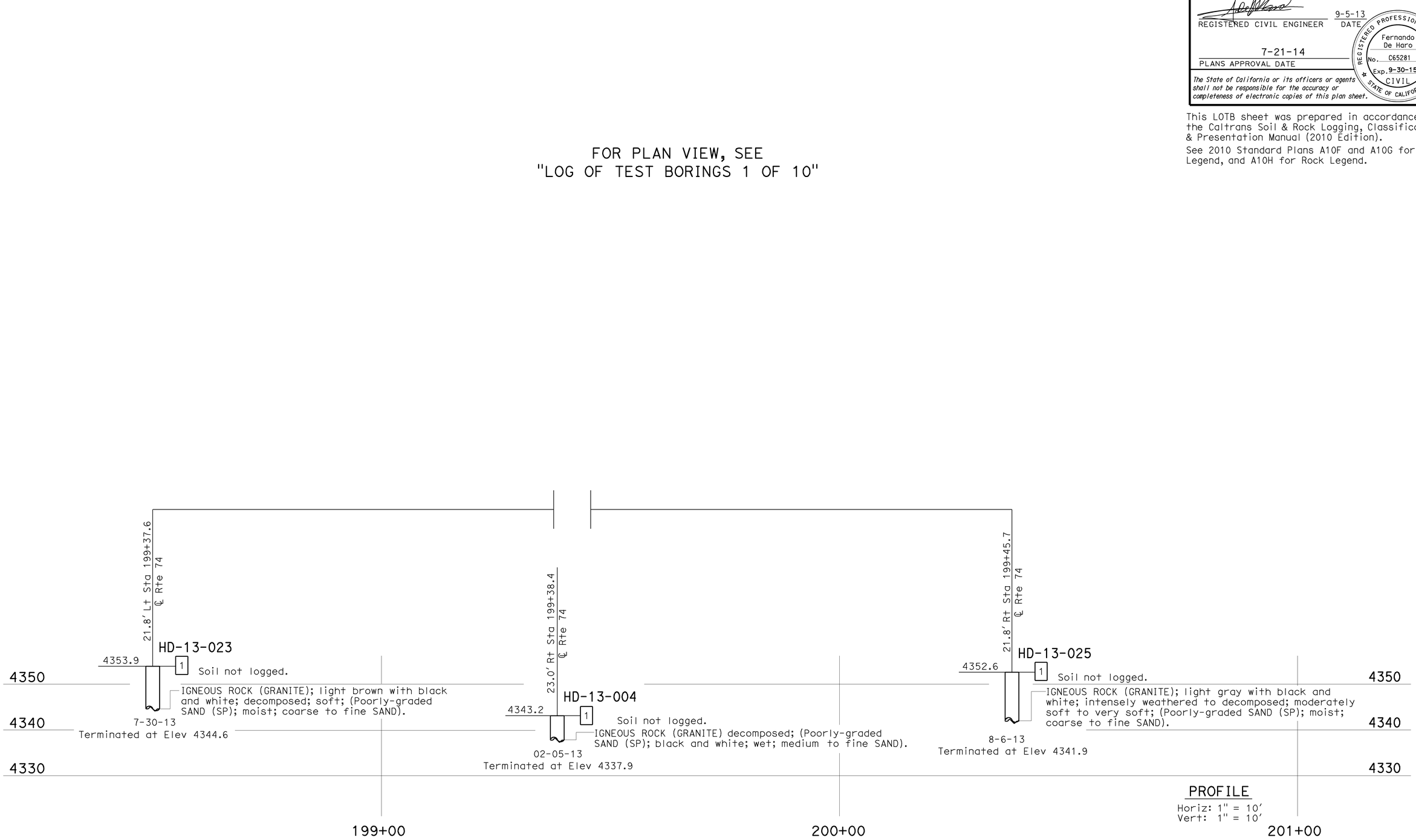

PROFILE
Horiz: 1" = 10'
Vert: 1" = 10'

ENGINEERING SERVICES	MATERIALS AND GEOTECHNICAL SERVICES	STATE OF CALIFORNIA DEPARTMENT OF TRANSPORTATION	DIVISION OF ENGINEERING SERVICES STRUCTURE DESIGN	BRIDGE NO.	HURKEY CREEK BRIDGE (REPLACE)
FUNCTIONAL SUPERVISOR	DRAWN BY: F. Nguyen, I.G-Remmen		DESIGN BRANCH	56-0181	
NAME: M. DeSalvatore	CHECKED BY: T-M Liao	FIELD INVESTIGATION BY: C. Manansala, F. De Haro		POST MILE 62.99	LOG OF TEST BORINGS 9 OF 10

OGS CIVIL LOG OF TEST BORINGS SHEET

ORIGINAL SCALE IN INCHES FOR REDUCED PLANS 0 1 2 3

UNIT: 3643
PROJECT NUMBER & PHASE: 08000006381 CONTRACT NO.: 08-383501

DISREGARD PRINTS BEARING EARLIER REVISION DATES →

REVISION DATES				SHEET	OF
01-29-13		09-05-13	09-06-13	29	30

FILE => 56-0181-z-lotb09.dgn

USERNAME => s126699 DATE PLOTTED => 31-JAN-2014 TIME PLOTTED => 11:43

DIST	COUNTY	ROUTE	POST MILES TOTAL PROJECT	SHEET No.	TOTAL SHEETS
08	Riv	074	63.0	88	88

REGISTERED CIVIL ENGINEER — 9-5-13 DATE

7-21-14
PLANS APPROVAL DATE

REGISTERED PROFESSIONAL ENGINEER — Fernando De Haro — No. C65281 — Exp. 9-30-15 — CIVIL — STATE OF CALIFORNIA

The State of California or its officers or agents shall not be responsible for the accuracy or completeness of electronic copies of this plan sheet.

This LOTB sheet was prepared in accordance with the Caltrans Soil & Rock Logging, Classification, & Presentation Manual (2010 Edition).

See 2010 Standard Plans A10F and A10G for Soil Legend, and A10H for Rock Legend.

FOR PLAN VIEW, SEE
"LOG OF TEST BORINGS 1 OF 10"

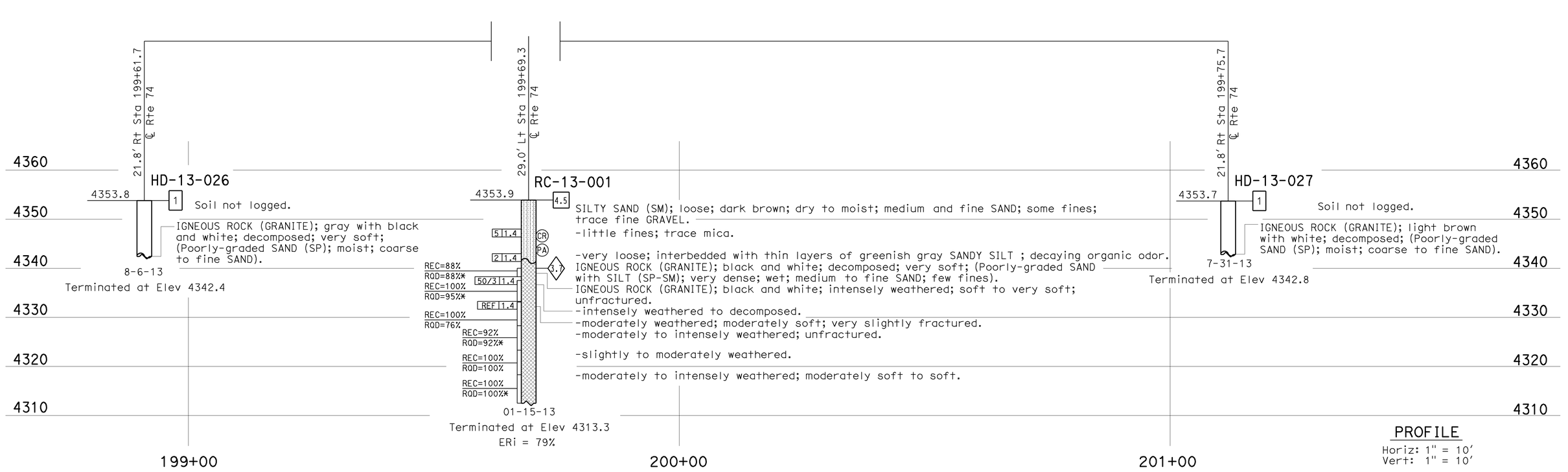

PROFILE
Horiz: 1" = 10'
Vert: 1" = 10'

ENGINEERING SERVICES	MATERIALS AND GEOTECHNICAL SERVICES	STATE OF CALIFORNIA DEPARTMENT OF TRANSPORTATION	DIVISION OF ENGINEERING SERVICES STRUCTURE DESIGN	BRIDGE NO. 56-0181	HURKEY CREEK BRIDGE (REPLACE)
FUNCTIONAL SUPERVISOR NAME: M. DeSalvatore	DRAWN BY: F. Nguyen, I.G-Remmen CHECKED BY: T-M Liao	FIELD INVESTIGATION BY: C. Manansala, F. De Haro	DESIGN BRANCH	POST MILE 62.99	LOG OF TEST BORINGS 10 OF 10

OGS CIVIL LOG OF TEST BORINGS SHEET

ORIGINAL SCALE IN INCHES FOR REDUCED PLANS 0 1 2 3

UNIT: 3643
PROJECT NUMBER & PHASE: 08000006381 CONTRACT NO.: 08-383501

DISREGARD PRINTS BEARING EARLIER REVISION DATES →

REVISION DATES				SHEET	OF
01-28-13		09-05-13	09-04-13	30	30

FILE => 56-0181-z-lotb10.dgn

USERNAME = s126699 DATE PLOTTED => 31-JAN-2014 TIME PLOTTED => 11:43