Dist	COUNTY	ROUTE	POST MILES TOTAL PROJECT	SHEET No.	TOTAL SHEETS
08	SBd	2,138	6.2/6.4, 2.3/R15.2	501	1168

REGISTERED CIVIL ENGINEER 9-5-13 DATE

3-3-14
PLANS APPROVAL DATE

REGISTERED PROFESSIONAL ENGINEER
TRAN HOANG
No. C54996
Exp. 6-30-14
CIVIL
STATE OF CALIFORNIA

THE STATE OF CALIFORNIA OR ITS OFFICERS OR AGENTS SHALL NOT BE RESPONSIBLE FOR THE ACCURACY OR COMPLETENESS OF SCANNED COPIES OF THIS PLAN SHEET.

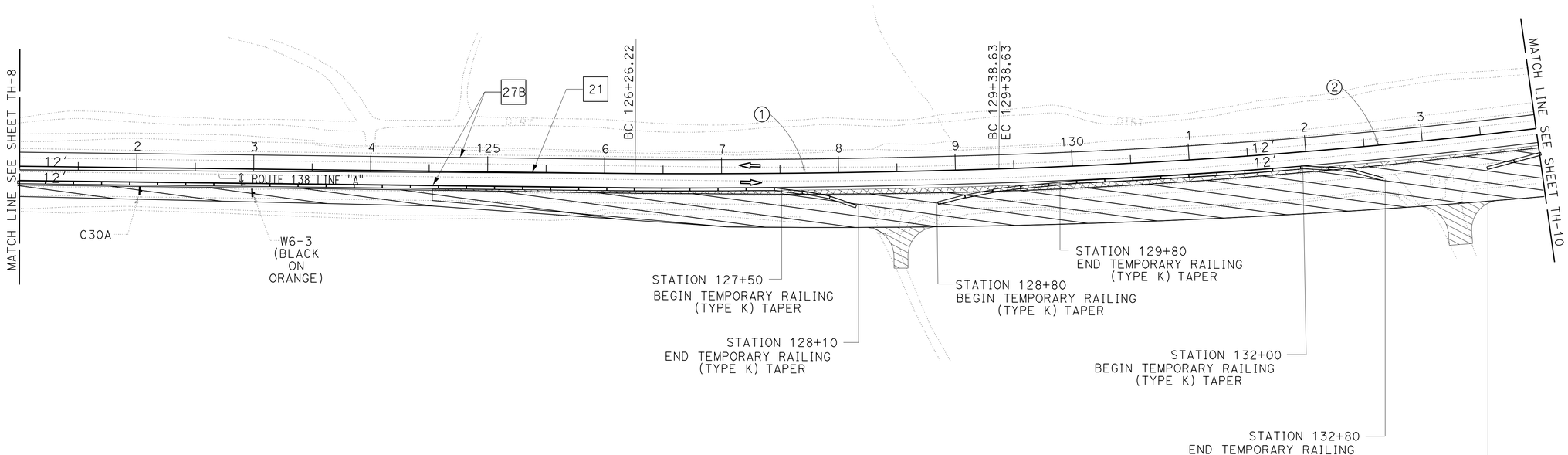

TRAFFIC HANDLING PLAN

STAGE 1 - PHASE B

NO SCALE

TH-9

APPROVED FOR TRAFFIC HANDLING WORK ONLY

STATE OF CALIFORNIA - DEPARTMENT OF TRANSPORTATION
Caltrans® TRAFFIC DESIGN

FUNCTIONAL SUPERVISOR: WILLIAM WASSER
CALCULATED-DESIGNED BY: TRAN HOANG
CHECKED BY: HORMUZD SETHNA
REVISED BY
DATE REVISED

LAST REVISION 09-05-13
DATE PLOTTED => 01-MAY-2014
TIME PLOTTED => 10:57

Dist	COUNTY	ROUTE	POST MILES TOTAL PROJECT	SHEET No.	TOTAL SHEETS
08	SBd	2,138	6.2/6.4, 2.3/R15.2	502	1168

REGISTERED CIVIL ENGINEER 9-5-13 DATE

3-3-14
PLANS APPROVAL DATE

REGISTERED PROFESSIONAL ENGINEER TRAN HOANG No. C54996 Exp. 6-30-14 CIVIL STATE OF CALIFORNIA

THE STATE OF CALIFORNIA OR ITS OFFICERS OR AGENTS SHALL NOT BE RESPONSIBLE FOR THE ACCURACY OR COMPLETENESS OF SCANNED COPIES OF THIS PLAN SHEET.

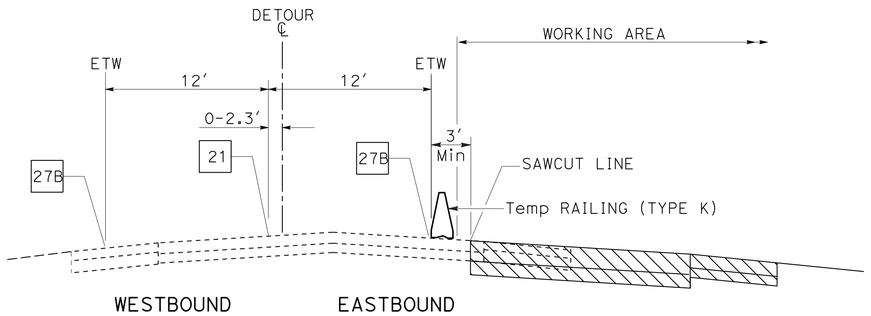

SECTION A-A

Sta 120+00 TO Sta 146+00 "DE1"
Sta 164+43 TO Sta 250+00 "DE1"
Sta 399+94 TO Sta 404+76 "DE2"

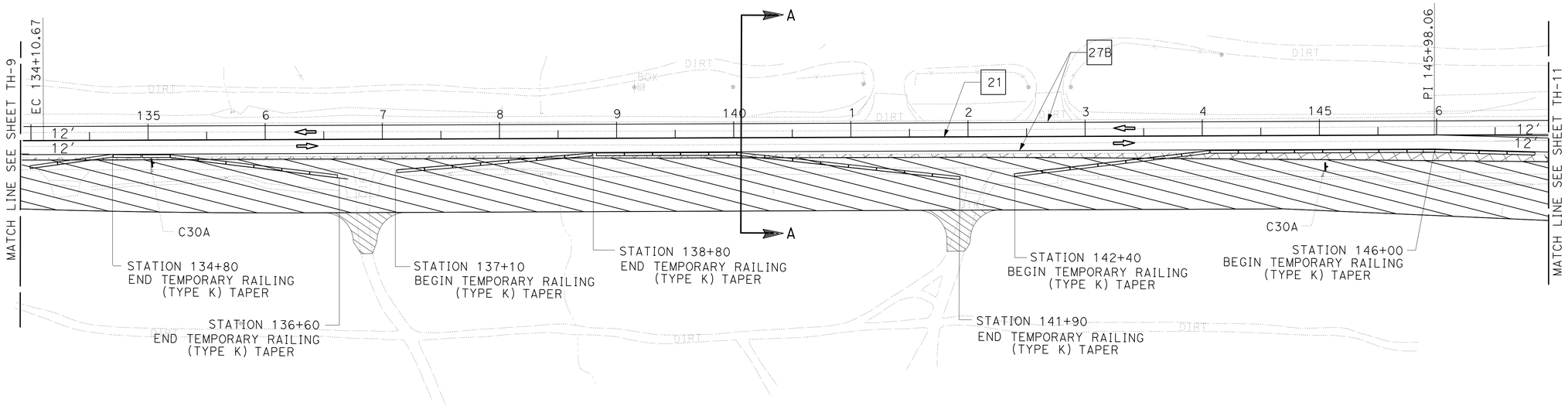

TRAFFIC HANDLING PLAN

STAGE 1 - PHASE B

NO SCALE

TH-10

APPROVED FOR TRAFFIC HANDLING WORK ONLY

STATE OF CALIFORNIA - DEPARTMENT OF TRANSPORTATION
Caltrans® **TRAFFIC DESIGN**

FUNCTIONAL SUPERVISOR: WILLIAM WASSER

CALCULATED-DESIGNED BY: TRAN HOANG
CHECKED BY: HORMUZD SETHNA

REVISED BY | DATE REVISED

LAST REVISION 09-05-13 | DATE PLOTTED => 01-MAY-2014 | TIME PLOTTED => 10:57

Dist	COUNTY	ROUTE	POST MILES TOTAL PROJECT	SHEET No.	TOTAL SHEETS
08	SBd	2,138	6.2/6.4, 2.3/R15.2	503	1168

REGISTERED CIVIL ENGINEER 9-5-13 DATE

3-3-14
PLANS APPROVAL DATE

REGISTERED PROFESSIONAL ENGINEER TRAN HOANG No. C54996 Exp. 6-30-14 CIVIL STATE OF CALIFORNIA

THE STATE OF CALIFORNIA OR ITS OFFICERS OR AGENTS SHALL NOT BE RESPONSIBLE FOR THE ACCURACY OR COMPLETENESS OF SCANNED COPIES OF THIS PLAN SHEET.

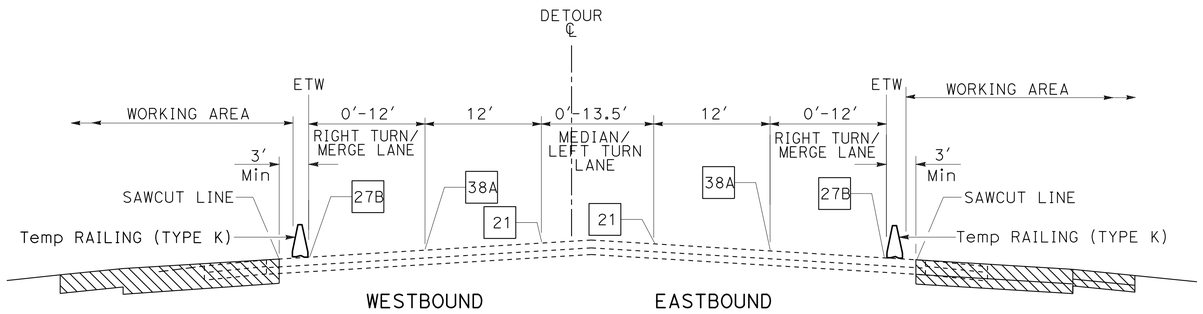

SECTION B-B

Sta 148+20 TO Sta 165+00 "DE1" LINE
Sta 393+00 TO Sta 412+50 "DE2" LINE

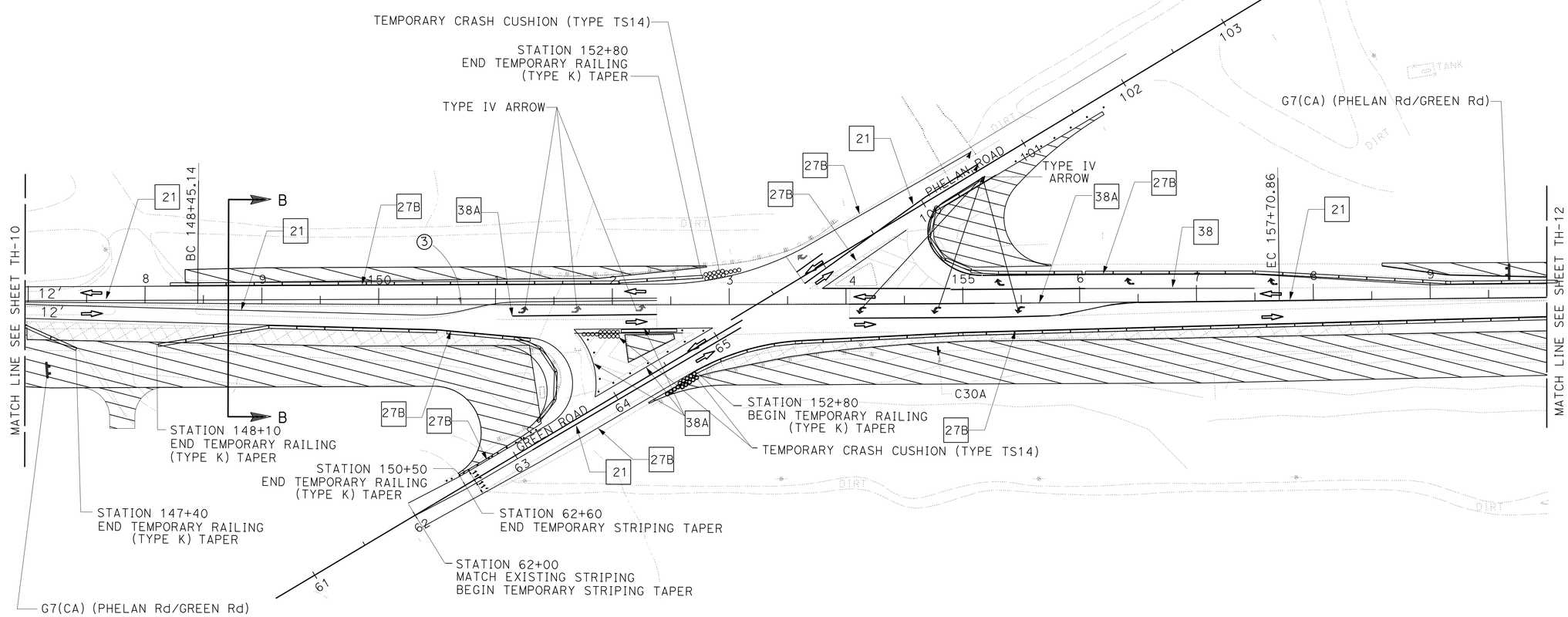

TRAFFIC HANDLING PLAN

STAGE 1 - PHASE B

NO SCALE

TH-11

APPROVED FOR TRAFFIC HANDLING WORK ONLY

STATE OF CALIFORNIA - DEPARTMENT OF TRANSPORTATION
Caltrans® **TRAFFIC DESIGN**

FUNCTIONAL SUPERVISOR: WILLIAM WASSER
CALCULATED-DESIGNED BY: TRAN HOANG
CHECKED BY: HORMUZD SETHNA
REVISED BY
DATE REVISED

LAST REVISION 09-05-13
DATE PLOTTED => 01-MAY-2014
TIME PLOTTED => 10:57

Dist	COUNTY	ROUTE	POST MILES TOTAL PROJECT	SHEET No.	TOTAL SHEETS
08	SBd	2,138	6.2/6.4, 2.3/R15.2	504	1168

REGISTERED CIVIL ENGINEER 9-5-13 DATE

3-3-14
PLANS APPROVAL DATE

REGISTERED PROFESSIONAL ENGINEER
TRAN HOANG
No. C54996
Exp. 6-30-14
CIVIL
STATE OF CALIFORNIA

THE STATE OF CALIFORNIA OR ITS OFFICERS OR AGENTS SHALL NOT BE RESPONSIBLE FOR THE ACCURACY OR COMPLETENESS OF SCANNED COPIES OF THIS PLAN SHEET.

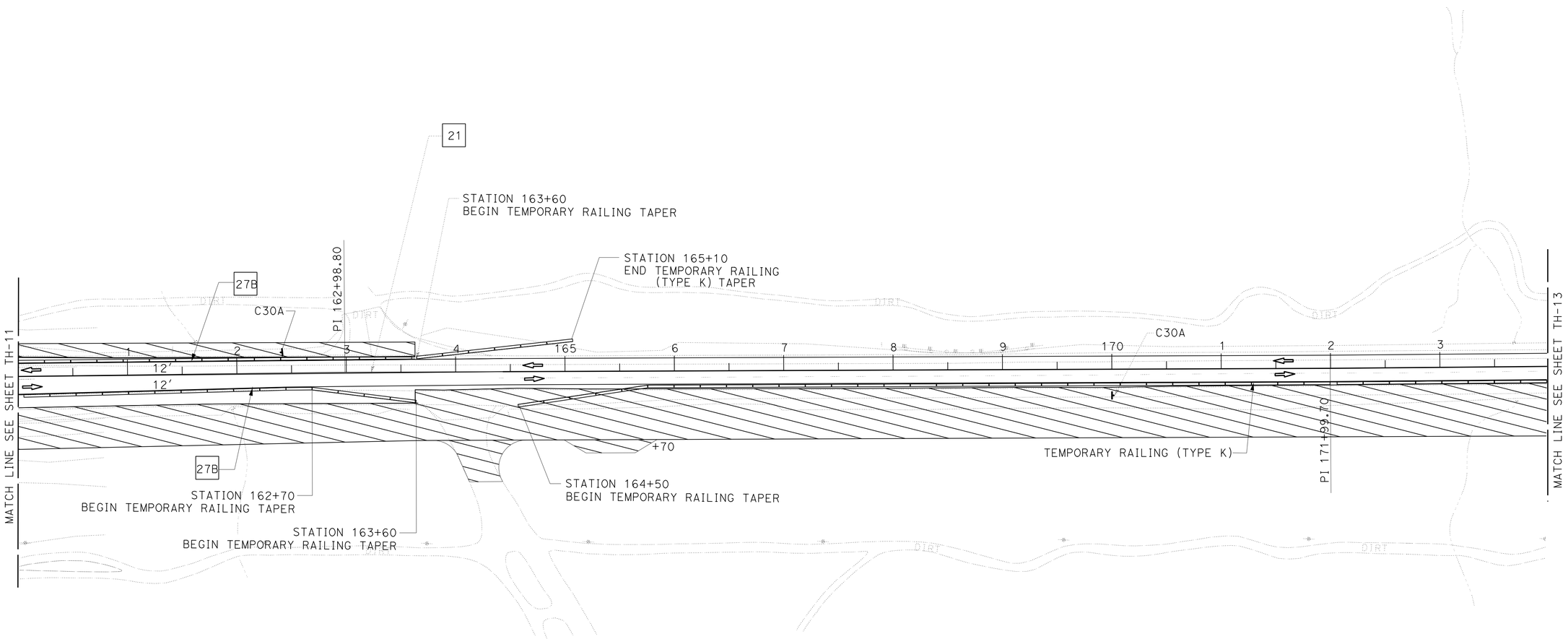

TRAFFIC HANDLING PLAN

STAGE 1 - PHASE B

NO SCALE

TH-12

APPROVED FOR TRAFFIC HANDLING WORK ONLY

STATE OF CALIFORNIA - DEPARTMENT OF TRANSPORTATION
Caltrans® **TRAFFIC DESIGN**

FUNCTIONAL SUPERVISOR: WILLIAM WASSER

CALCULATED-DESIGNED BY: TRAN HOANG
CHECKED BY: HORMUZD SETHNA

REVISED BY
DATE REVISED

LAST REVISION 09-05-13 | DATE PLOTTED => 01-MAY-2014 | TIME PLOTTED => 10:57

Dist	COUNTY	ROUTE	POST MILES TOTAL PROJECT	SHEET No.	TOTAL SHEETS
08	SBd	2,138	6.2/6.4, 2.3/R15.2	505	1168

REGISTERED CIVIL ENGINEER 9-5-13 DATE

3-3-14
PLANS APPROVAL DATE

REGISTERED PROFESSIONAL ENGINEER
TRAN HOANG
No. C54996
Exp. 6-30-14
CIVIL
STATE OF CALIFORNIA

THE STATE OF CALIFORNIA OR ITS OFFICERS OR AGENTS SHALL NOT BE RESPONSIBLE FOR THE ACCURACY OR COMPLETENESS OF SCANNED COPIES OF THIS PLAN SHEET.

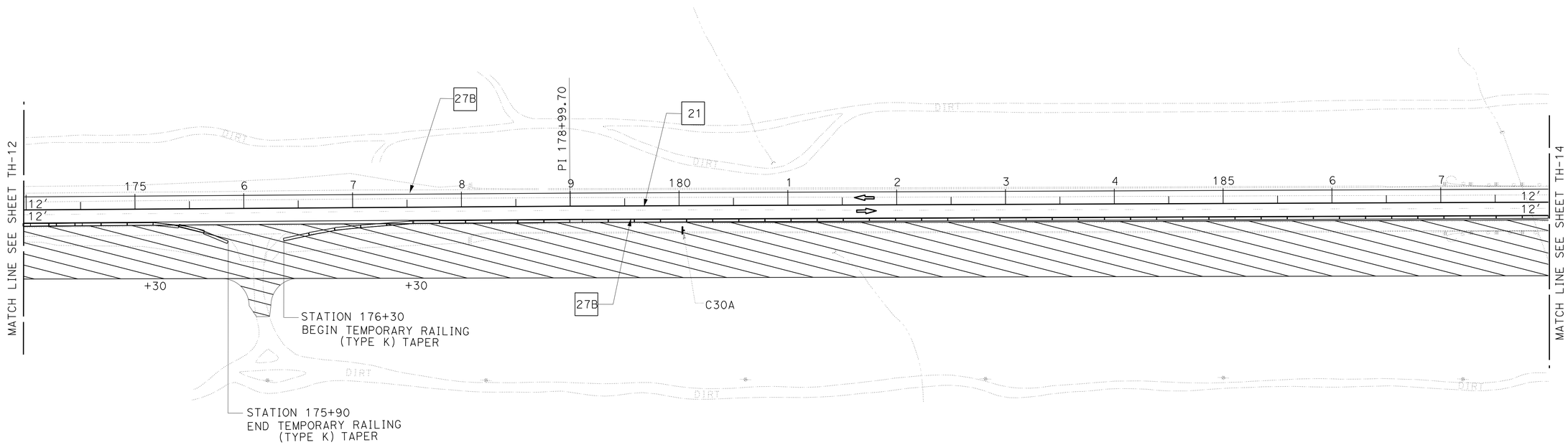

TRAFFIC HANDLING PLAN

STAGE 1 - PHASE B

NO SCALE

TH-13

APPROVED FOR TRAFFIC HANDLING WORK ONLY

STATE OF CALIFORNIA - DEPARTMENT OF TRANSPORTATION
Caltrans® **TRAFFIC DESIGN**

FUNCTIONAL SUPERVISOR: WILLIAM WASSER
CALCULATED-DESIGNED BY: TRAN HOANG
CHECKED BY: HORMUZD SETHNA
REVISED BY
DATE REVISED

LAST REVISION 09-05-13 | DATE PLOTTED => 01-MAY-2014 | TIME PLOTTED => 10:57

Dist	COUNTY	ROUTE	POST MILES TOTAL PROJECT	SHEET No.	TOTAL SHEETS
08	SBd	2,138	6.2/6.4, 2.3/R15.2	506	1168

REGISTERED CIVIL ENGINEER 9-5-13 DATE

3-3-14
PLANS APPROVAL DATE

REGISTERED PROFESSIONAL ENGINEER
TRAN HOANG
No. C54996
Exp. 6-30-14
CIVIL
STATE OF CALIFORNIA

THE STATE OF CALIFORNIA OR ITS OFFICERS OR AGENTS SHALL NOT BE RESPONSIBLE FOR THE ACCURACY OR COMPLETENESS OF SCANNED COPIES OF THIS PLAN SHEET.

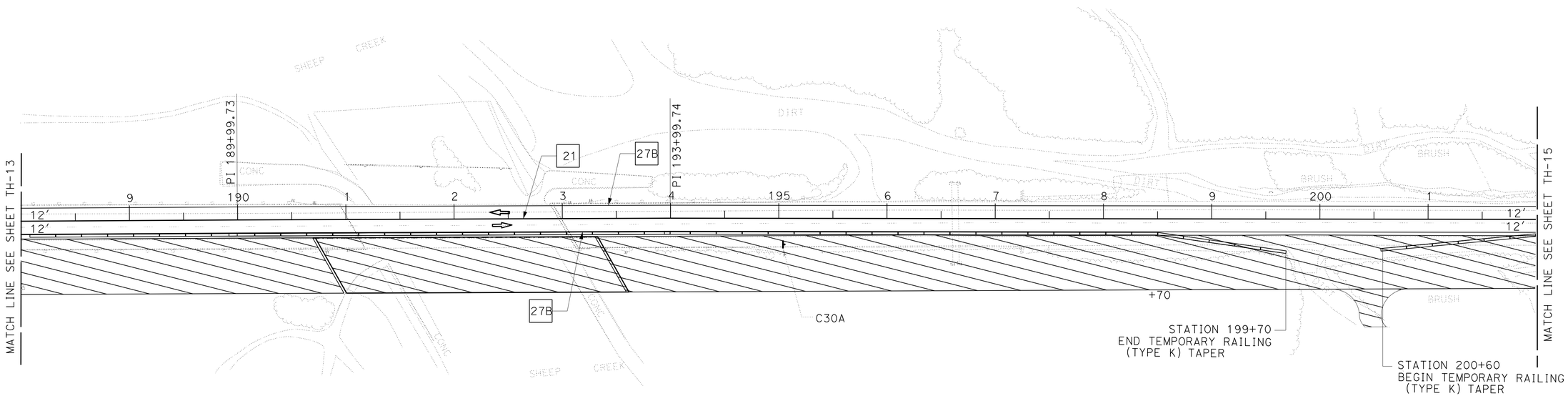

TRAFFIC HANDLING PLAN

STAGE 1 - PHASE B

NO SCALE

TH-14

APPROVED FOR TRAFFIC HANDLING WORK ONLY

STATE OF CALIFORNIA - DEPARTMENT OF TRANSPORTATION

Caltrans® **TRAFFIC DESIGN**

FUNCTIONAL SUPERVISOR: WILLIAM WASSER

CALCULATED-DESIGNED BY: TRAN HOANG

CHECKED BY: HORMUZD SETHNA

REVISED BY

DATE REVISED

LAST REVISION 09-05-13 | DATE PLOTTED => 01-MAY-2014 | TIME PLOTTED => 10:57

Dist	COUNTY	ROUTE	POST MILES TOTAL PROJECT	SHEET No.	TOTAL SHEETS
08	SBd	2,138	6.2/6.4, 2.3/R15.2	507	1168

REGISTERED CIVIL ENGINEER 9-5-13 DATE

3-3-14
PLANS APPROVAL DATE

REGISTERED PROFESSIONAL ENGINEER
TRAN HOANG
No. C54996
Exp. 6-30-14
CIVIL
STATE OF CALIFORNIA

THE STATE OF CALIFORNIA OR ITS OFFICERS OR AGENTS SHALL NOT BE RESPONSIBLE FOR THE ACCURACY OR COMPLETENESS OF SCANNED COPIES OF THIS PLAN SHEET.

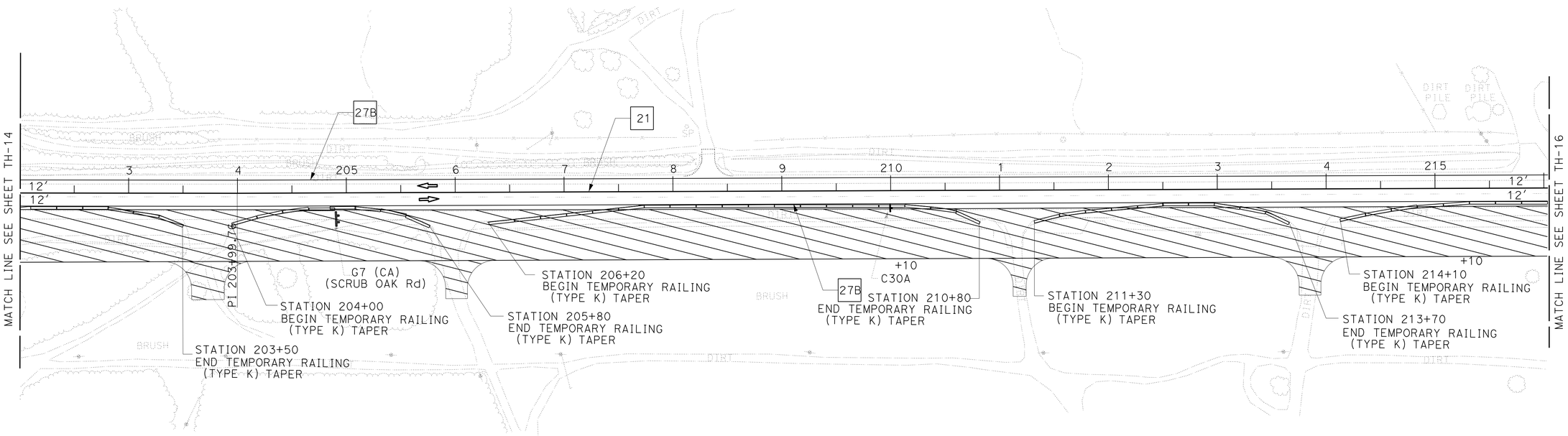

TRAFFIC HANDLING PLAN
STAGE 1 - PHASE B
NO SCALE

TH-15

APPROVED FOR TRAFFIC HANDLING WORK ONLY

STATE OF CALIFORNIA - DEPARTMENT OF TRANSPORTATION
Caltrans® **TRAFFIC DESIGN**

FUNCTIONAL SUPERVISOR: WILLIAM WASSER
CALCULATED-DESIGNED BY: TRAN HOANG
CHECKED BY: HORMUZD SETHNA
REVISED BY
DATE REVISED

LAST REVISION 09-05-13
DATE PLOTTED => 01-MAY-2014
TIME PLOTTED => 10:57

Dist	COUNTY	ROUTE	POST MILES TOTAL PROJECT	SHEET No.	TOTAL SHEETS
08	SBd	2,138	6.2/6.4, 2.3/R15.2	508	1168

REGISTERED CIVIL ENGINEER 9-5-13 DATE

3-3-14
PLANS APPROVAL DATE

REGISTERED PROFESSIONAL ENGINEER
TRAN HOANG
No. C54996
Exp. 6-30-14
CIVIL
STATE OF CALIFORNIA

THE STATE OF CALIFORNIA OR ITS OFFICERS OR AGENTS SHALL NOT BE RESPONSIBLE FOR THE ACCURACY OR COMPLETENESS OF SCANNED COPIES OF THIS PLAN SHEET.

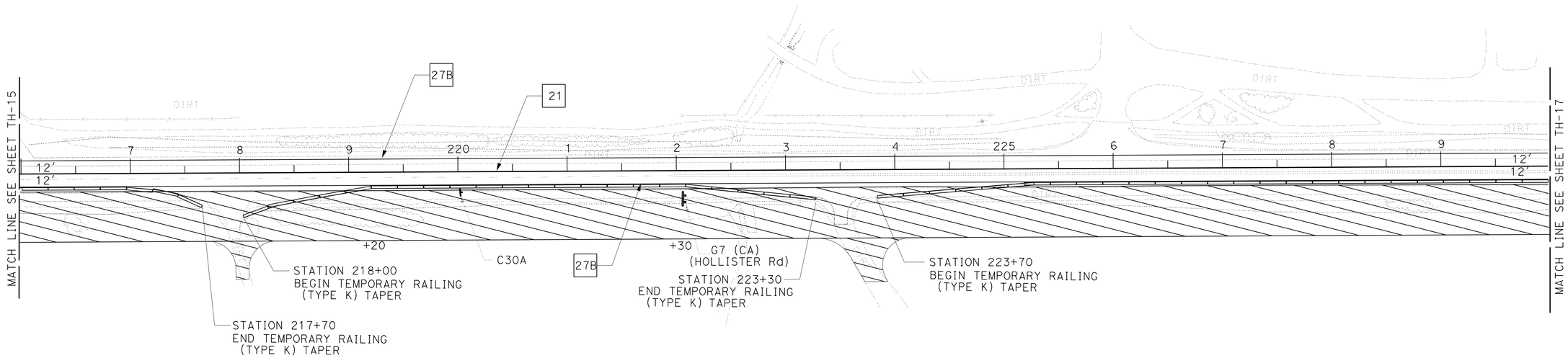

TRAFFIC HANDLING PLAN

STAGE 1 - PHASE B

NO SCALE

TH-16

APPROVED FOR TRAFFIC HANDLING WORK ONLY

STATE OF CALIFORNIA - DEPARTMENT OF TRANSPORTATION
Caltrans® **TRAFFIC DESIGN**

FUNCTIONAL SUPERVISOR: WILLIAM WASSER
CALCULATED-DESIGNED BY: TRAN HOANG
CHECKED BY: HORMUZD SETHNA
REVISED BY
DATE REVISED

LAST REVISION 09-05-13
DATE PLOTTED => 01-MAY-2014
TIME PLOTTED => 10:57

Dist	COUNTY	ROUTE	POST MILES TOTAL PROJECT	SHEET No.	TOTAL SHEETS
08	SBd	2,138	6.2/6.4, 2.3/R15.2	509	1168

REGISTERED CIVIL ENGINEER 9-5-13 DATE

3-3-14
PLANS APPROVAL DATE

REGISTERED PROFESSIONAL ENGINEER TRAN HOANG No. C54996 Exp. 6-30-14 CIVIL STATE OF CALIFORNIA

THE STATE OF CALIFORNIA OR ITS OFFICERS OR AGENTS SHALL NOT BE RESPONSIBLE FOR THE ACCURACY OR COMPLETENESS OF SCANNED COPIES OF THIS PLAN SHEET.

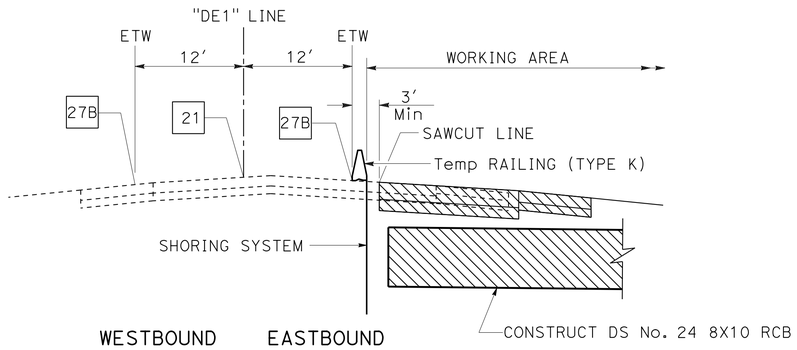

SECTION R-R

Sta 232+00 "DE1" LINE

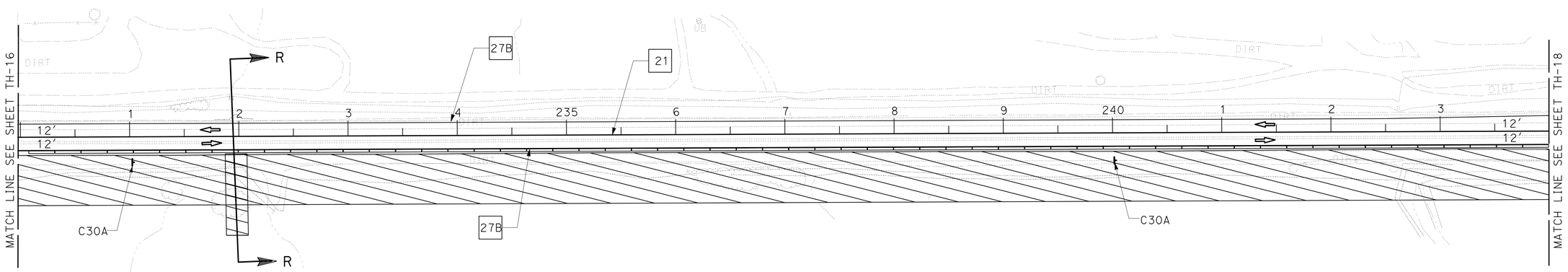

TRAFFIC HANDLING PLAN

STAGE 1 - PHASE B

NO SCALE

TH-17

APPROVED FOR TRAFFIC HANDLING WORK ONLY

STATE OF CALIFORNIA - DEPARTMENT OF TRANSPORTATION

Caltrans® **TRAFFIC DESIGN**

FUNCTIONAL SUPERVISOR: WILLIAM WASSER

CALCULATED-DESIGNED BY: TRAN HOANG

CHECKED BY: HORMUZD SETHNA

REVISED BY

DATE REVISED

LAST REVISION 09-05-13

DATE PLOTTED => 01-MAY-2014

TIME PLOTTED => 10:57

Dist	COUNTY	ROUTE	POST MILES TOTAL PROJECT	SHEET No.	TOTAL SHEETS
08	SBd	2,138	6.2/6.4, 2.3/R15.2	510	1168

REGISTERED CIVIL ENGINEER 9-5-13 DATE

3-3-14
PLANS APPROVAL DATE

REGISTERED PROFESSIONAL ENGINEER TRAN HOANG No. C54996 Exp. 6-30-14 CIVIL STATE OF CALIFORNIA

THE STATE OF CALIFORNIA OR ITS OFFICERS OR AGENTS SHALL NOT BE RESPONSIBLE FOR THE ACCURACY OR COMPLETENESS OF SCANNED COPIES OF THIS PLAN SHEET.

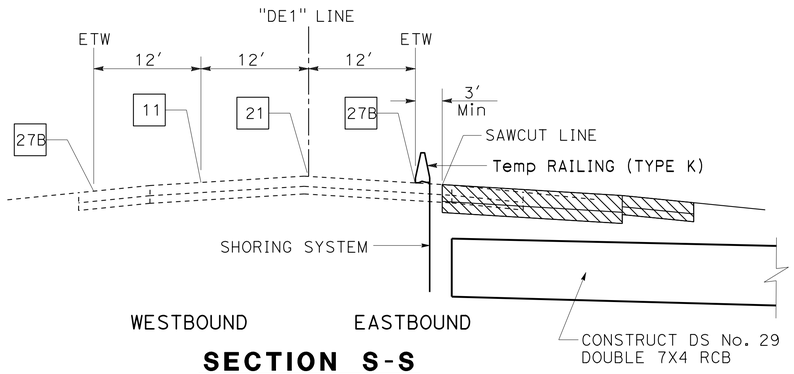

SECTION S-S
Sta 250+30 "DE1" LINE

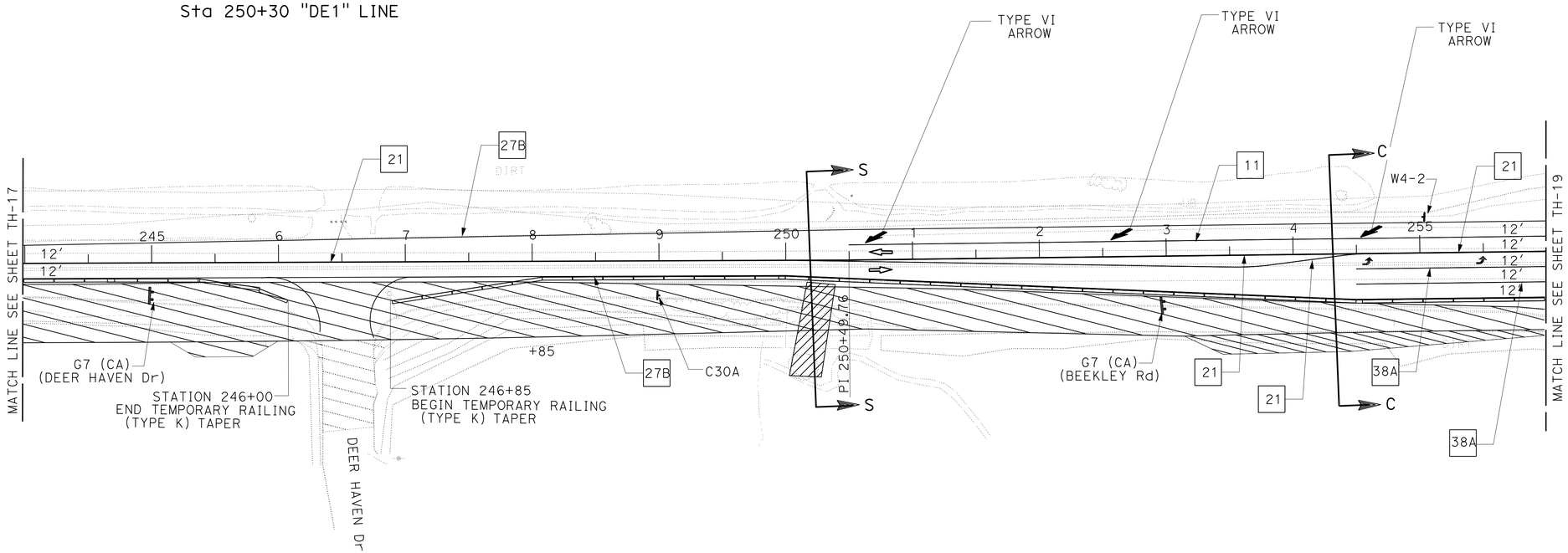

TRAFFIC HANDLING PLAN
STAGE 1 - PHASE B
NO SCALE

TH-18

APPROVED FOR TRAFFIC HANDLING WORK ONLY

STATE OF CALIFORNIA - DEPARTMENT OF TRANSPORTATION
Caltrans® **TRAFFIC DESIGN**

FUNCTIONAL SUPERVISOR: WILLIAM WASSER
CALCULATED-DESIGNED BY: HORMUZD SETHNA
CHECKED BY
REVISED BY
DATE REVISED

TRAN HOANG

LAST REVISION 09-05-13
DATE PLOTTED => 01-MAY-2014
TIME PLOTTED => 10:57

Dist	COUNTY	ROUTE	POST MILES TOTAL PROJECT	SHEET No.	TOTAL SHEETS
08	SBd	2,138	6.2/6.4, 2.3/R15.2	511	1168

REGISTERED CIVIL ENGINEER 9-5-13 DATE

3-3-14
PLANS APPROVAL DATE

REGISTERED PROFESSIONAL ENGINEER TRAN HOANG No. C54996 Exp. 6-30-14 CIVIL STATE OF CALIFORNIA

THE STATE OF CALIFORNIA OR ITS OFFICERS OR AGENTS SHALL NOT BE RESPONSIBLE FOR THE ACCURACY OR COMPLETENESS OF SCANNED COPIES OF THIS PLAN SHEET.

SECTION C-C

Sta 250+00 TO Sta 257+45 "DE1"
Sta 257+45 TO Sta 267+70 "DE2"

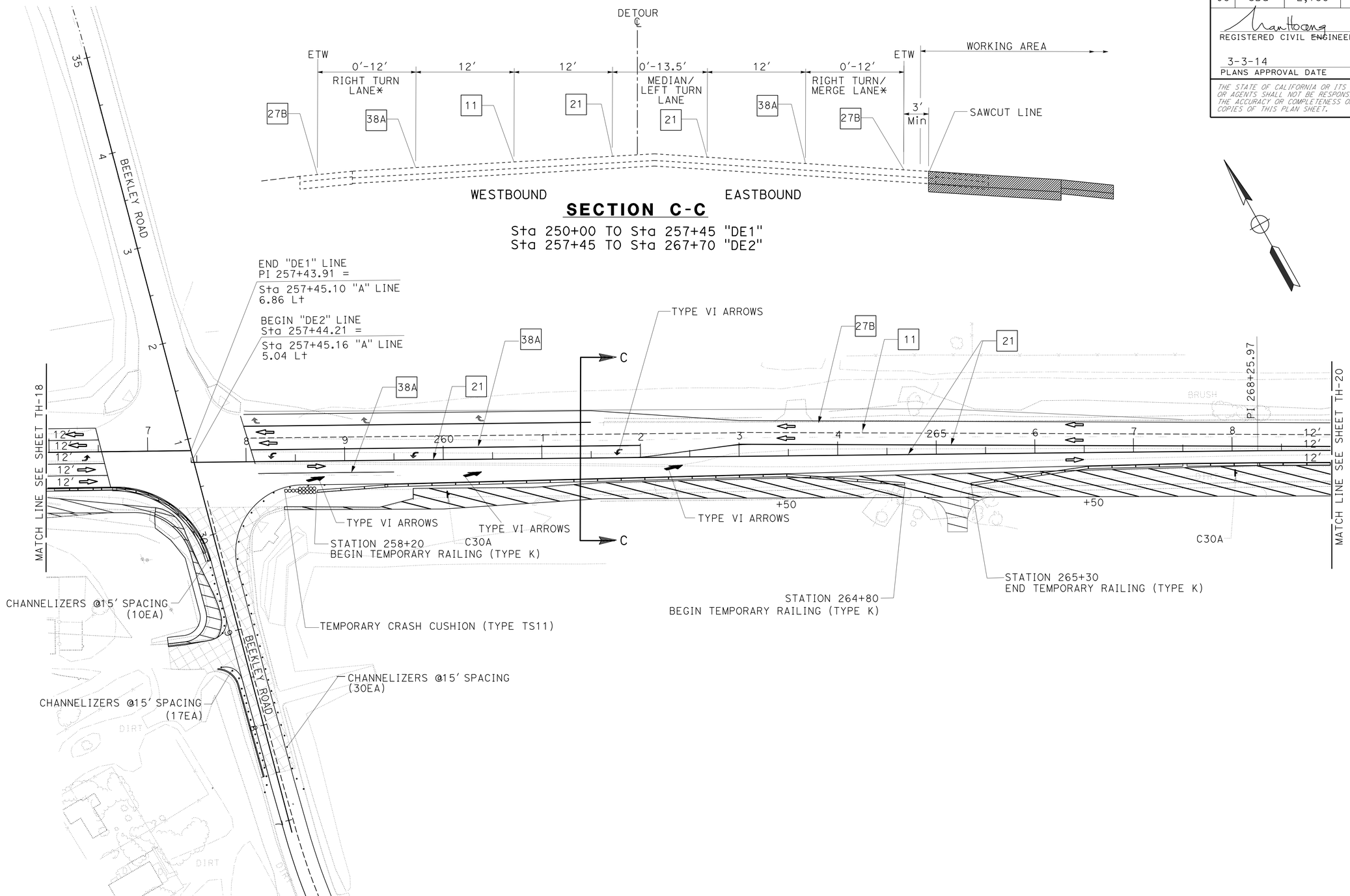

TRAFFIC HANDLING PLAN

STAGE 1 - PHASE B

NO SCALE

TH-19

APPROVED FOR TRAFFIC HANDLING WORK ONLY

STATE OF CALIFORNIA - DEPARTMENT OF TRANSPORTATION
Caltrans® **TRAFFIC DESIGN**

FUNCTIONAL SUPERVISOR: WILLIAM WASSER
CALCULATED-DESIGNED BY: TRAN HOANG
CHECKED BY: HORMUZD SETHNA
REVISED BY
DATE REVISED

LAST REVISION 09-05-13
DATE PLOTTED => 01-MAY-2014
TIME PLOTTED => 10:57

Dist	COUNTY	ROUTE	POST MILES TOTAL PROJECT	SHEET No.	TOTAL SHEETS
08	SBd	2,138	6.2/6.4, 2.3/R15.2	512	1168

REGISTERED CIVIL ENGINEER 9-5-13 DATE

3-3-14
PLANS APPROVAL DATE

REGISTERED PROFESSIONAL ENGINEER TRAN HOANG No. C54996 Exp. 6-30-14 CIVIL STATE OF CALIFORNIA

THE STATE OF CALIFORNIA OR ITS OFFICERS OR AGENTS SHALL NOT BE RESPONSIBLE FOR THE ACCURACY OR COMPLETENESS OF SCANNED COPIES OF THIS PLAN SHEET.

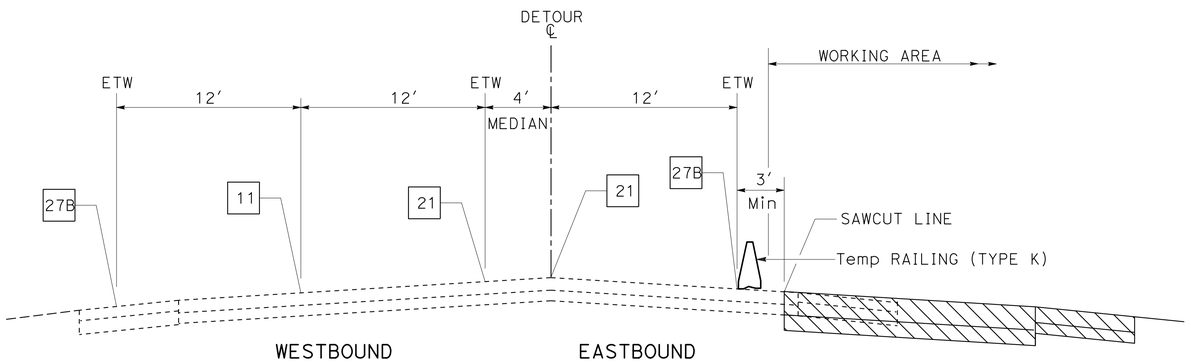

SECTION D-D

Sta 267+70 TO Sta 300+18.67 "DE2"

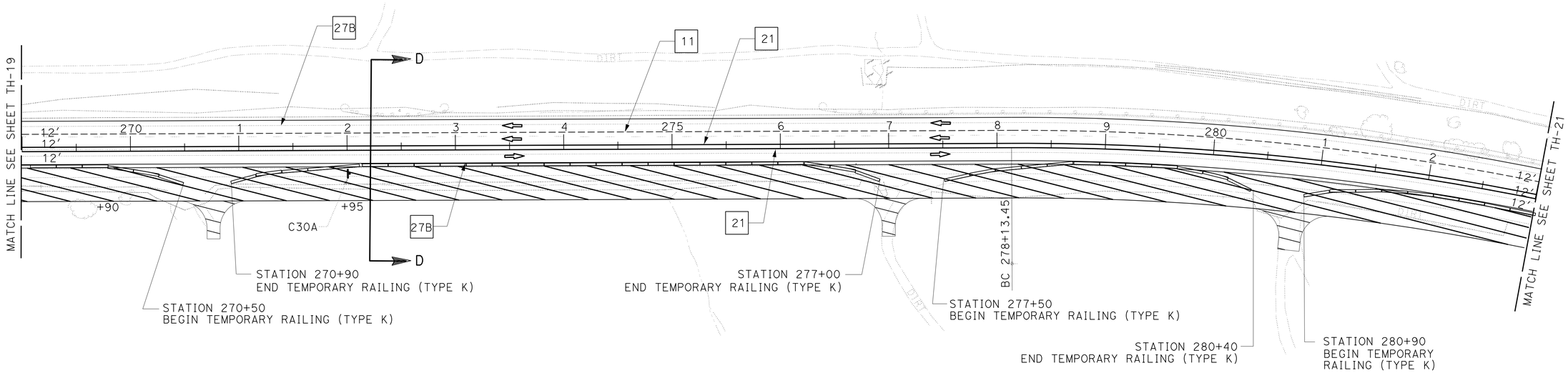

TRAFFIC HANDLING PLAN

STAGE 1 - PHASE B

NO SCALE

TH-20

APPROVED FOR TRAFFIC HANDLING WORK ONLY

STATE OF CALIFORNIA - DEPARTMENT OF TRANSPORTATION
Caltrans® **TRAFFIC DESIGN**

FUNCTIONAL SUPERVISOR: WILLIAM WASSER
CALCULATED-DESIGNED BY: TRAN HOANG
CHECKED BY: HORMUZD SETHNA
REVISED BY
DATE REVISED

LAST REVISION 09-05-13
DATE PLOTTED => 01-MAY-2014
TIME PLOTTED => 10:58

Dist	COUNTY	ROUTE	POST MILES TOTAL PROJECT	SHEET No.	TOTAL SHEETS
08	SBd	2,138	6.2/6.4, 2.3/R15.2	513	1168

REGISTERED CIVIL ENGINEER 9-5-13 DATE

3-3-14
PLANS APPROVAL DATE

REGISTERED PROFESSIONAL ENGINEER
TRAN HOANG
No. C54996
Exp. 6-30-14
CIVIL
STATE OF CALIFORNIA

THE STATE OF CALIFORNIA OR ITS OFFICERS OR AGENTS SHALL NOT BE RESPONSIBLE FOR THE ACCURACY OR COMPLETENESS OF SCANNED COPIES OF THIS PLAN SHEET.

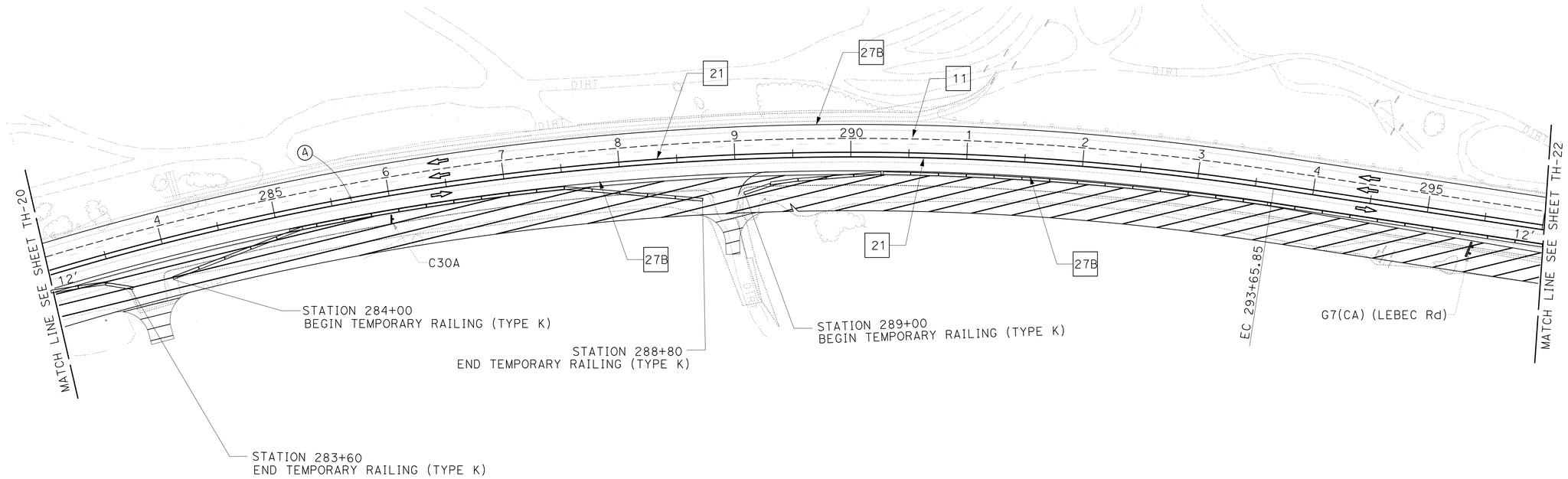

TRAFFIC HANDLING PLAN

STAGE 1 - PHASE B

NO SCALE

TH-21

APPROVED FOR TRAFFIC HANDLING WORK ONLY

STATE OF CALIFORNIA - DEPARTMENT OF TRANSPORTATION
Caltrans® TRAFFIC DESIGN

FUNCTIONAL SUPERVISOR: WILLIAM WASSER
CALCULATED-DESIGNED BY: TRAN HOANG
CHECKED BY: HORMUZD SETHNA
REVISED BY
DATE REVISED

LAST REVISION 09-05-13 | DATE PLOTTED => 01-MAY-2014 | TIME PLOTTED => 10:58

Dist	COUNTY	ROUTE	POST MILES TOTAL PROJECT	SHEET No.	TOTAL SHEETS
08	SBd	2,138	6.2/6.4, 2.3/R15.2	514	1168

REGISTERED CIVIL ENGINEER 9-5-13 DATE

3-3-14
PLANS APPROVAL DATE

REGISTERED PROFESSIONAL ENGINEER
TRAN HOANG
No. C54996
Exp. 6-30-14
CIVIL
STATE OF CALIFORNIA

THE STATE OF CALIFORNIA OR ITS OFFICERS OR AGENTS SHALL NOT BE RESPONSIBLE FOR THE ACCURACY OR COMPLETENESS OF SCANNED COPIES OF THIS PLAN SHEET.

SECTION E-E

Sta 300+18 TO Sta 306+36 "DE2"
Sta 317+85 TO Sta 333+20 "DE2"

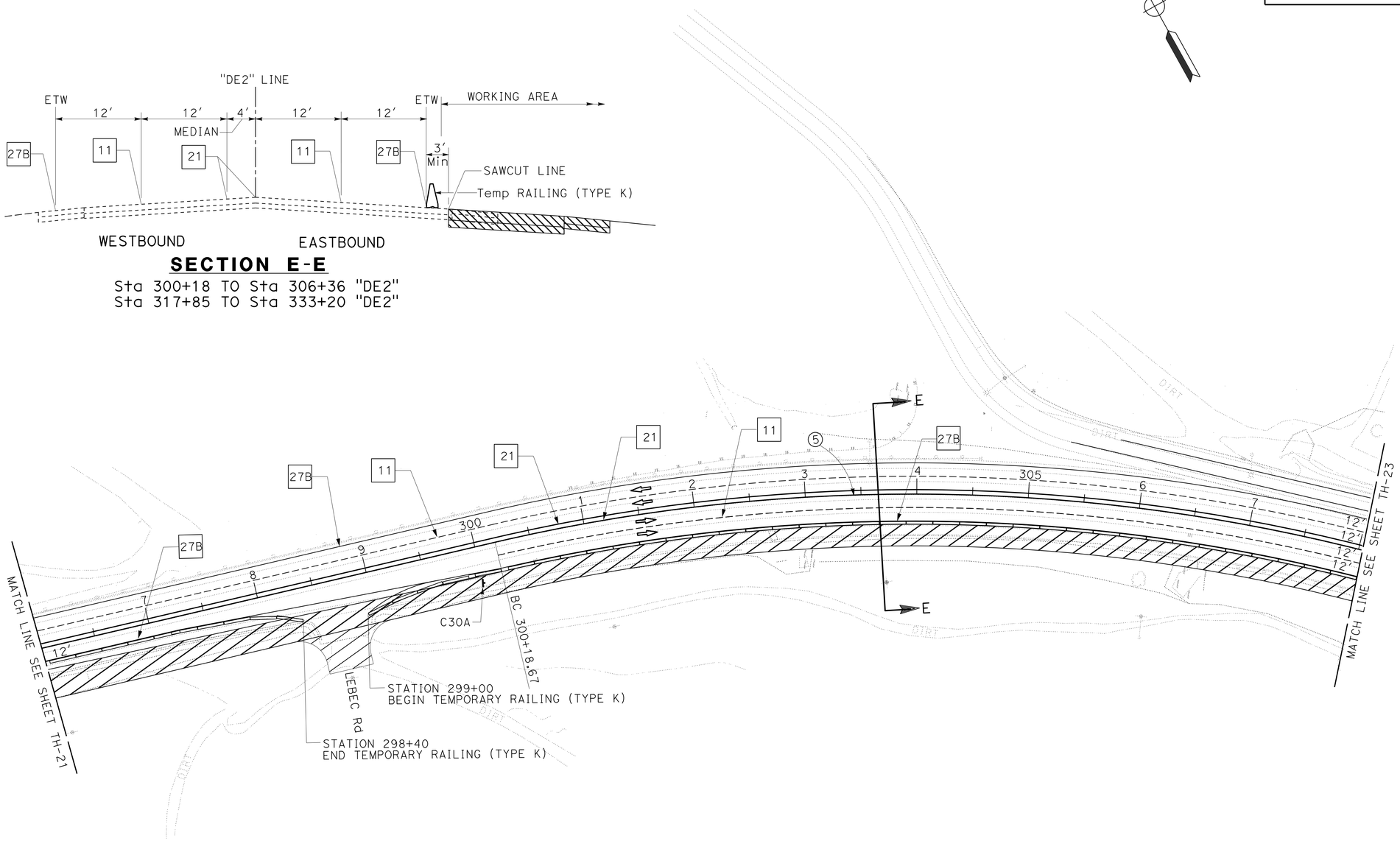

TRAFFIC HANDLING PLAN

STAGE 1 - PHASE B

NO SCALE

TH-22

APPROVED FOR TRAFFIC HANDLING WORK ONLY

STATE OF CALIFORNIA - DEPARTMENT OF TRANSPORTATION
Caltrans® **TRAFFIC DESIGN**

FUNCTIONAL SUPERVISOR: WILLIAM WASSER
CALCULATED-DESIGNED BY: TRAN HOANG
CHECKED BY: HORMUZD SETHNA
REVISED BY
DATE REVISED

LAST REVISION 09-05-13
DATE PLOTTED => 01-MAY-2014
TIME PLOTTED => 10:58

Dist	COUNTY	ROUTE	POST MILES TOTAL PROJECT	SHEET No.	TOTAL SHEETS
08	SBd	2,138	6.2/6.4, 2.3/R15.2	515	1168

REGISTERED CIVIL ENGINEER 9-5-13 DATE

3-3-14
PLANS APPROVAL DATE

REGISTERED PROFESSIONAL ENGINEER
TRAN HOANG
No. C54996
Exp. 6-30-14
CIVIL
STATE OF CALIFORNIA

THE STATE OF CALIFORNIA OR ITS OFFICERS OR AGENTS SHALL NOT BE RESPONSIBLE FOR THE ACCURACY OR COMPLETENESS OF SCANNED COPIES OF THIS PLAN SHEET.

SECTION F-F

Sta 306+36 TO Sta 317+85 "DE2"

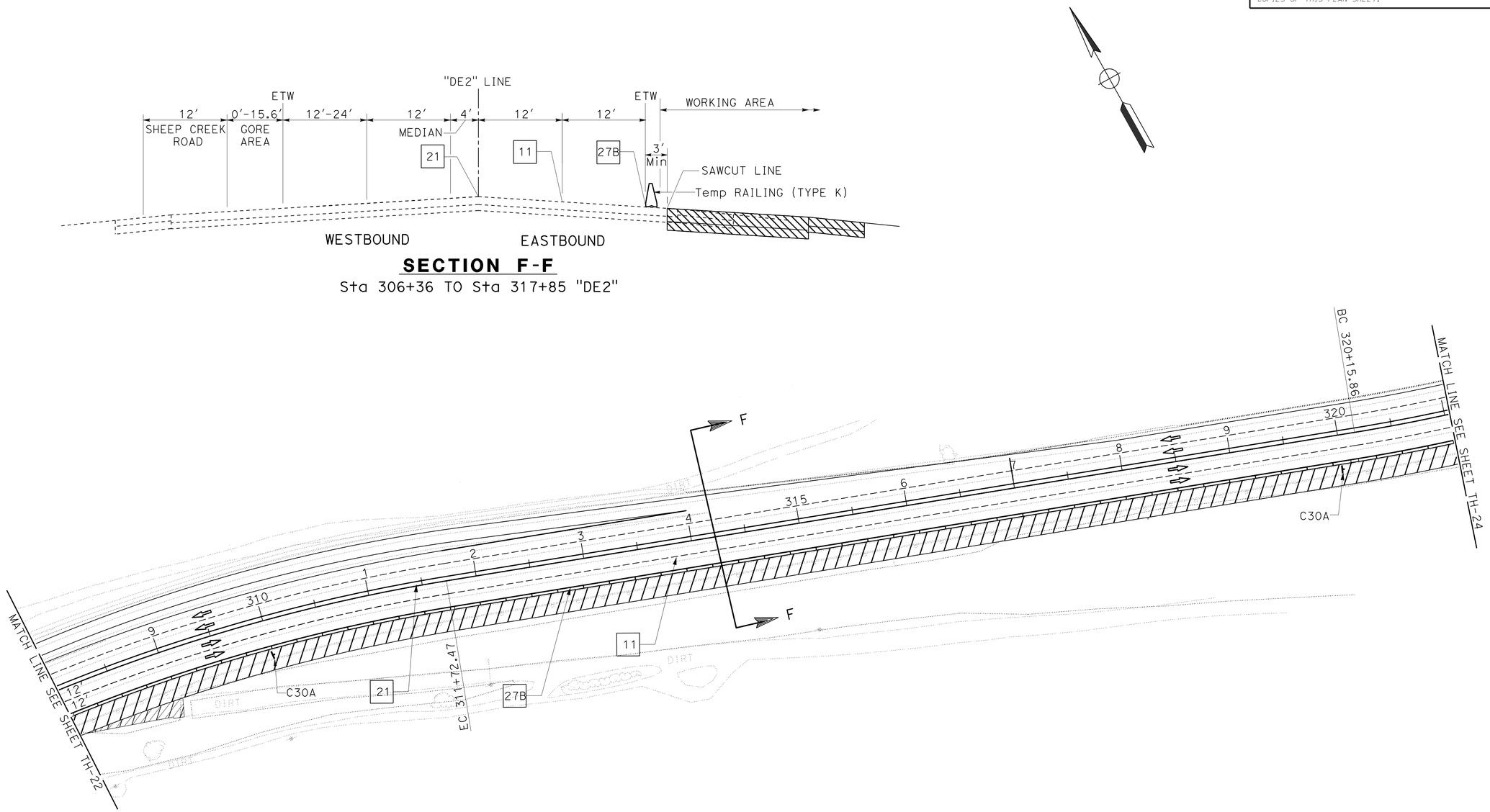

TRAFFIC HANDLING PLAN

STAGE 1 - PHASE B

NO SCALE

TH-23

APPROVED FOR TRAFFIC HANDLING WORK ONLY

STATE OF CALIFORNIA - DEPARTMENT OF TRANSPORTATION
Caltrans® **TRAFFIC DESIGN**

FUNCTIONAL SUPERVISOR: WILLIAM WASSER

CALCULATED-DESIGNED BY: TRAN HOANG
CHECKED BY: HORMUZD SETHNA

REVISED BY
DATE REVISED

LAST REVISION 09-05-13 | DATE PLOTTED => 01-MAY-2014 | TIME PLOTTED => 10:58

Dist	COUNTY	ROUTE	POST MILES TOTAL PROJECT	SHEET No.	TOTAL SHEETS
08	SBd	2,138	6.2/6.4, 2.3/R15.2	516	1168

REGISTERED CIVIL ENGINEER 9-5-13 DATE

3-3-14
PLANS APPROVAL DATE

REGISTERED PROFESSIONAL ENGINEER
TRAN HOANG
No. C54996
Exp. 6-30-14
CIVIL
STATE OF CALIFORNIA

THE STATE OF CALIFORNIA OR ITS OFFICERS OR AGENTS SHALL NOT BE RESPONSIBLE FOR THE ACCURACY OR COMPLETENESS OF SCANNED COPIES OF THIS PLAN SHEET.

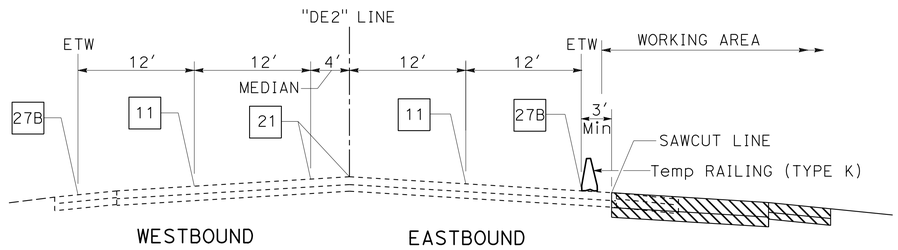

SECTION E-E

Sta 300+18 TO Sta 306+36 "DE2"
Sta 317+85 TO Sta 333+20 "DE2"

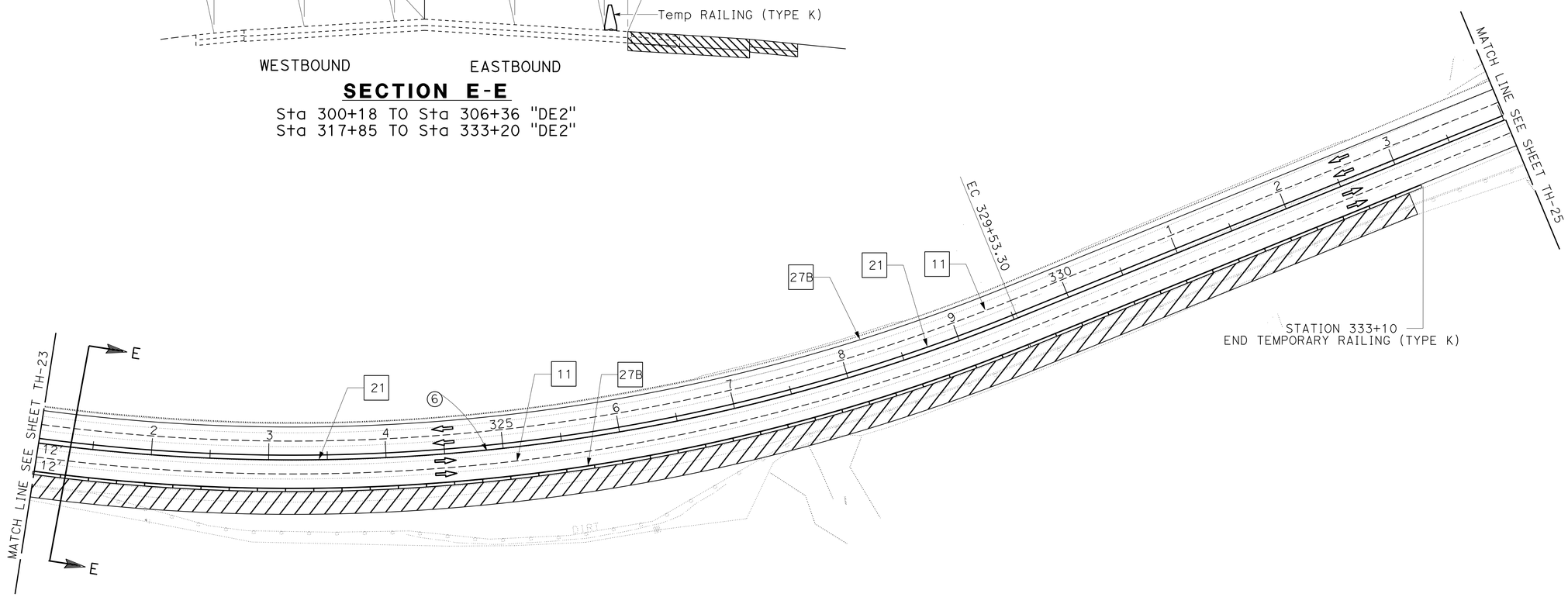

TRAFFIC HANDLING PLAN

STAGE 1 - PHASE B

NO SCALE

TH-24

APPROVED FOR TRAFFIC HANDLING WORK ONLY

STATE OF CALIFORNIA - DEPARTMENT OF TRANSPORTATION
Caltrans® **TRAFFIC DESIGN**

FUNCTIONAL SUPERVISOR: WILLIAM WASSER
CALCULATED-DESIGNED BY: TRAN HOANG
CHECKED BY: HORMUZD SETHNA
REVISED BY
DATE REVISED

LAST REVISION 09-05-13
DATE PLOTTED => 01-MAY-2014
TIME PLOTTED => 10:58

Dist	COUNTY	ROUTE	POST MILES TOTAL PROJECT	SHEET No.	TOTAL SHEETS
08	SBd	2,138	6.2/6.4, 2.3/R15.2	517	1168

REGISTERED CIVIL ENGINEER 9-5-13 DATE

3-3-14
PLANS APPROVAL DATE

REGISTERED PROFESSIONAL ENGINEER TRAN HOANG No. C54996 Exp. 6-30-14 CIVIL STATE OF CALIFORNIA

THE STATE OF CALIFORNIA OR ITS OFFICERS OR AGENTS SHALL NOT BE RESPONSIBLE FOR THE ACCURACY OR COMPLETENESS OF SCANNED COPIES OF THIS PLAN SHEET.

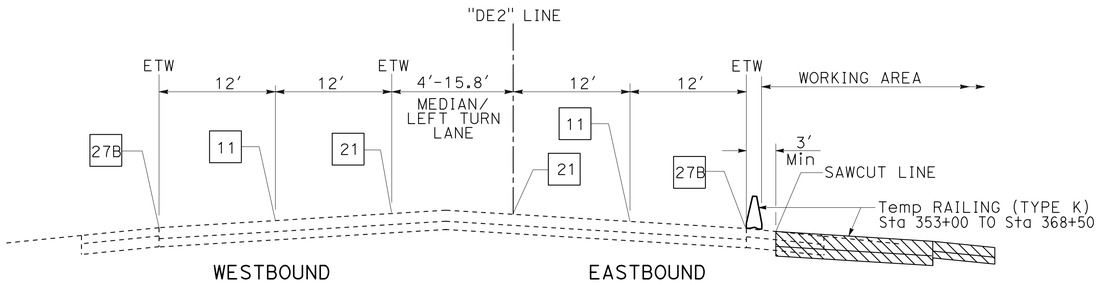

SECTION G-G

Sta 333+20 TO Sta 343+80 "DE2" (NO WORK AND NO Temp RAILING)
Sta 353+00 TO Sta 368+50 "DE2"

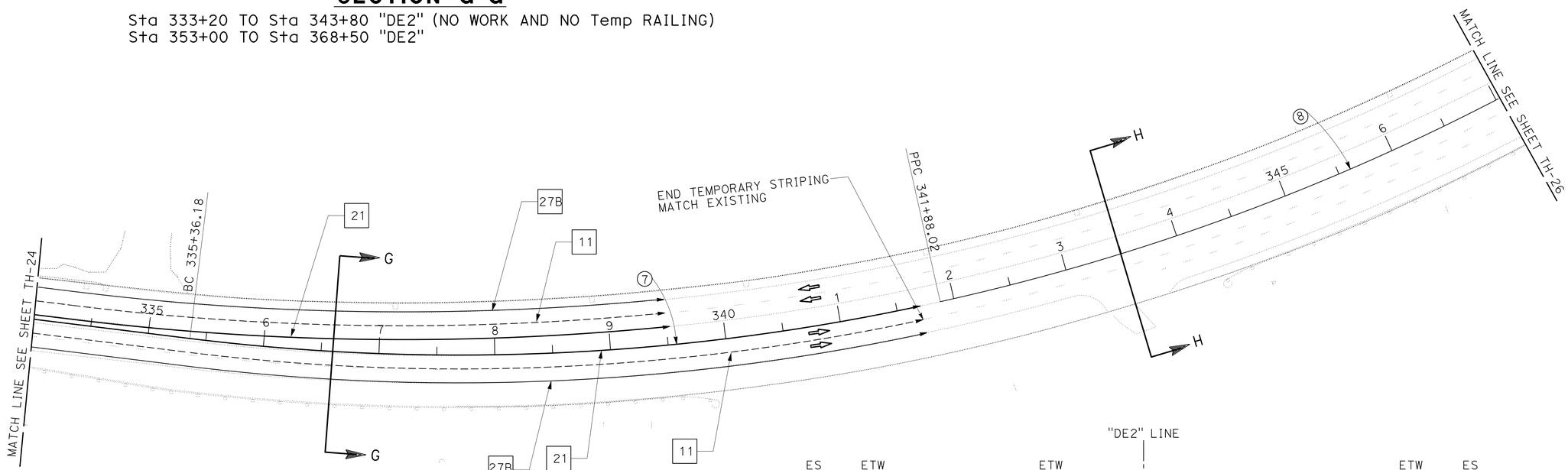

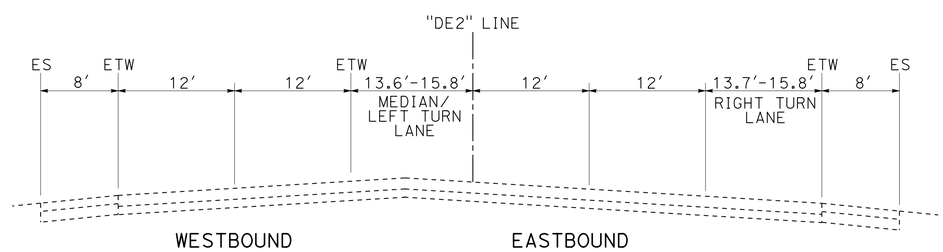

SECTION H-H

Sta 343+80 TO Sta 350+50 "DE2"

TRAFFIC HANDLING PLAN

STAGE 1 - PHASE B

NO SCALE

TH-25

APPROVED FOR TRAFFIC HANDLING WORK ONLY

STATE OF CALIFORNIA - DEPARTMENT OF TRANSPORTATION
Caltrans® TRAFFIC DESIGN

FUNCTIONAL SUPERVISOR: WILLIAM WASSER
CALCULATED-DESIGNED BY: TRAN HOANG
CHECKED BY: HORMUZD SETHNA
REVISED BY
DATE REVISED

LAST REVISION 09-05-13 | DATE PLOTTED => 01-MAY-2014 | TIME PLOTTED => 10:58

Dist	COUNTY	ROUTE	POST MILES TOTAL PROJECT	SHEET No.	TOTAL SHEETS
08	SBd	2,138	6.2/6.4, 2.3/R15.2	518	1168

REGISTERED CIVIL ENGINEER 9-5-13 DATE

3-3-14
PLANS APPROVAL DATE

REGISTERED PROFESSIONAL ENGINEER
TRAN HOANG
No. C54996
Exp. 6-30-14
CIVIL
STATE OF CALIFORNIA

THE STATE OF CALIFORNIA OR ITS OFFICERS OR AGENTS SHALL NOT BE RESPONSIBLE FOR THE ACCURACY OR COMPLETENESS OF SCANNED COPIES OF THIS PLAN SHEET.

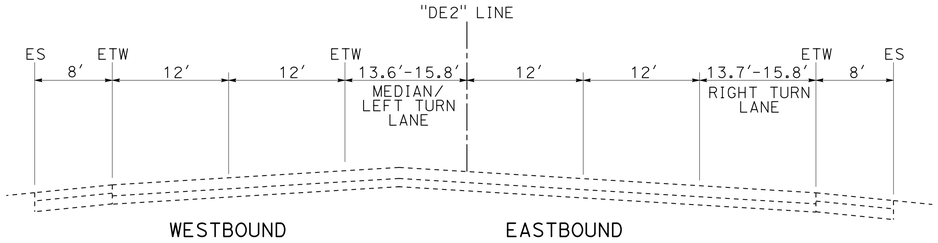

SECTION H-H

Sta 343+80 TO Sta 350+50 "DE2"

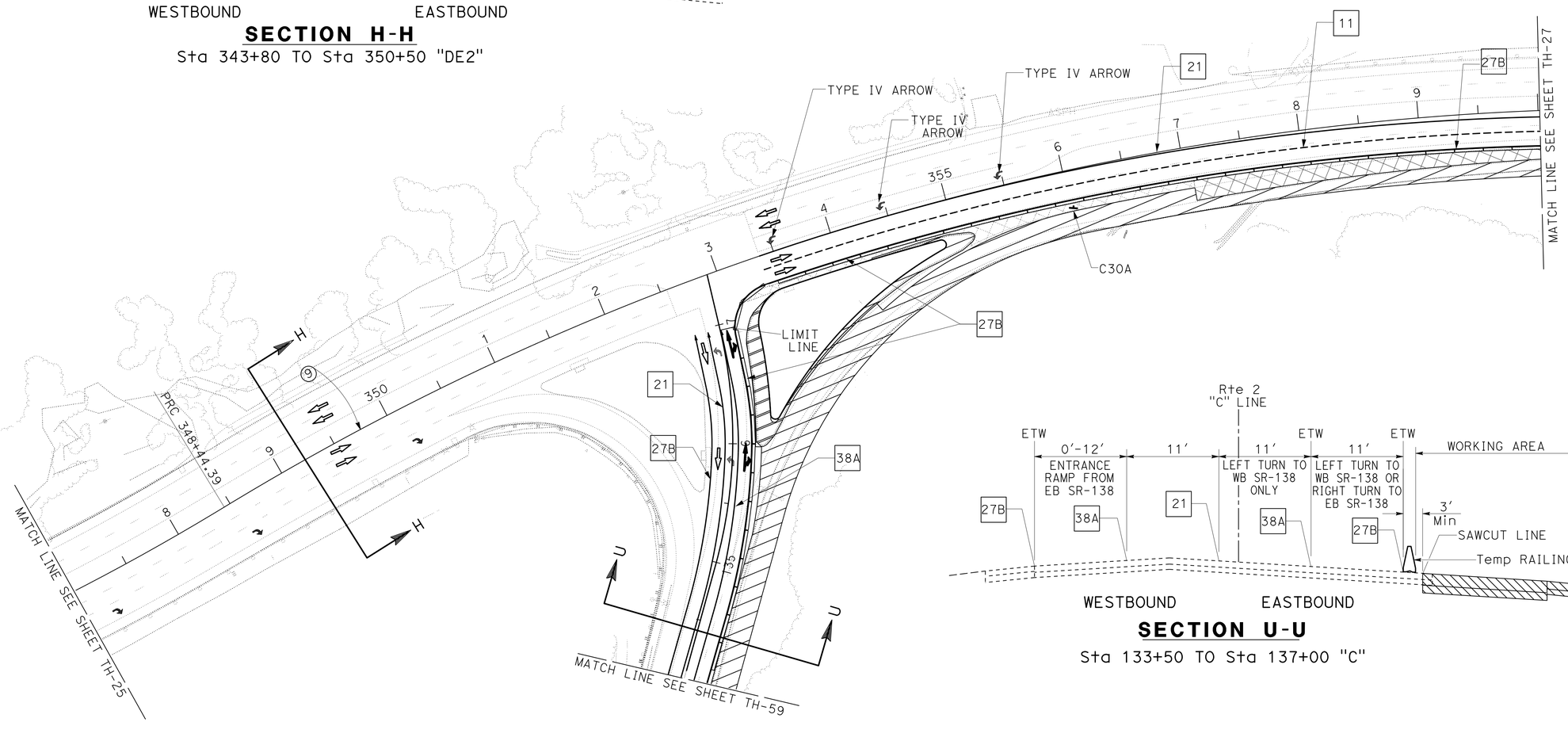

SECTION U-U

Sta 133+50 TO Sta 137+00 "C"

TRAFFIC HANDLING PLAN

STAGE 1 - PHASE B

NO SCALE

TH-26

APPROVED FOR TRAFFIC HANDLING WORK ONLY

STATE OF CALIFORNIA - DEPARTMENT OF TRANSPORTATION
Caltrans® **TRAFFIC DESIGN**

FUNCTIONAL SUPERVISOR: WILLIAM WASSER
CALCULATED-DESIGNED BY: TRAN HOANG
CHECKED BY: HORMUZD SETHNA
REVISED BY
DATE REVISED

LAST REVISION 09-05-13
DATE PLOTTED => 01-MAY-2014
TIME PLOTTED => 10:58

Dist	COUNTY	ROUTE	POST MILES TOTAL PROJECT	SHEET No.	TOTAL SHEETS
08	SBd	2,138	6.2/6.4, 2.3/R15.2	519	1168

REGISTERED CIVIL ENGINEER 9-5-13 DATE

3-3-14
PLANS APPROVAL DATE

REGISTERED PROFESSIONAL ENGINEER TRAN HOANG No. C54996 Exp. 6-30-14 CIVIL STATE OF CALIFORNIA

THE STATE OF CALIFORNIA OR ITS OFFICERS OR AGENTS SHALL NOT BE RESPONSIBLE FOR THE ACCURACY OR COMPLETENESS OF SCANNED COPIES OF THIS PLAN SHEET.

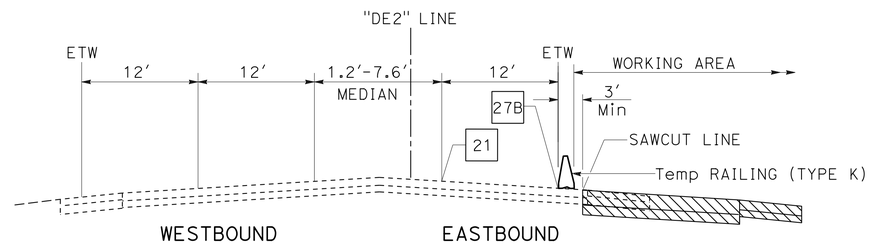

SECTION I-I

Sta 368+50 TO Sta 391+69 "DE2"
Sta 412+45 TO Sta 461+70 "DE2"

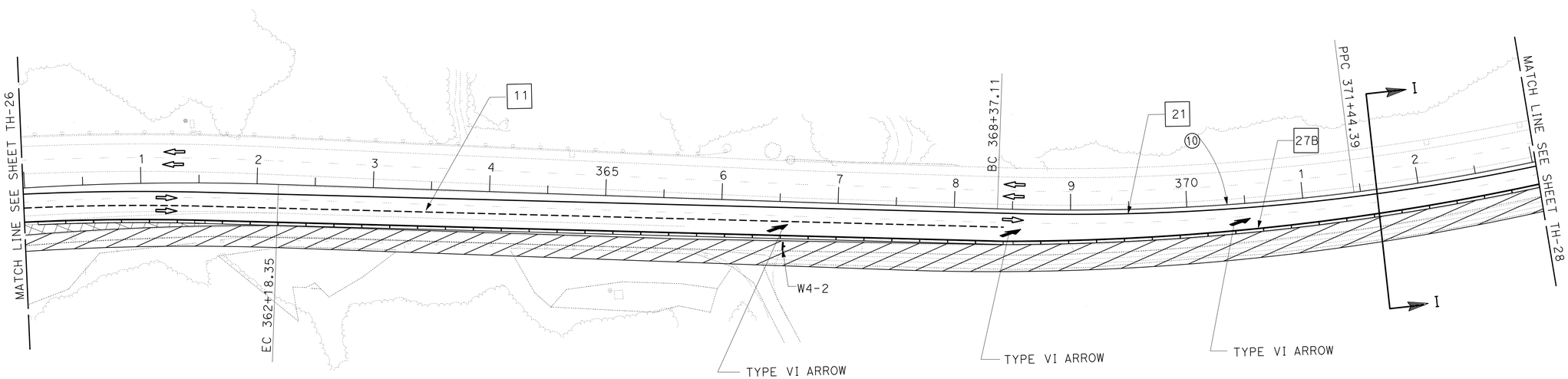

TRAFFIC HANDLING PLAN

STAGE 1 - PHASE B

NO SCALE

TH-27

APPROVED FOR TRAFFIC HANDLING WORK ONLY

STATE OF CALIFORNIA - DEPARTMENT OF TRANSPORTATION
Caltrans® **TRAFFIC DESIGN**

FUNCTIONAL SUPERVISOR: WILLIAM WASSER
CALCULATED-DESIGNED BY: TRAN HOANG
CHECKED BY: HORMUZD SETHNA
REVISED BY
DATE REVISED

LAST REVISION 09-05-13
DATE PLOTTED => 01-MAY-2014
TIME PLOTTED => 10:58

Dist	COUNTY	ROUTE	POST MILES TOTAL PROJECT	SHEET No.	TOTAL SHEETS
08	SBd	2,138	6.2/6.4, 2.3/R15.2	520	1168

REGISTERED CIVIL ENGINEER 9-5-13 DATE

3-3-14
PLANS APPROVAL DATE

REGISTERED PROFESSIONAL ENGINEER TRAN HOANG No. C54996 Exp. 6-30-14 CIVIL STATE OF CALIFORNIA

THE STATE OF CALIFORNIA OR ITS OFFICERS OR AGENTS SHALL NOT BE RESPONSIBLE FOR THE ACCURACY OR COMPLETENESS OF SCANNED COPIES OF THIS PLAN SHEET.

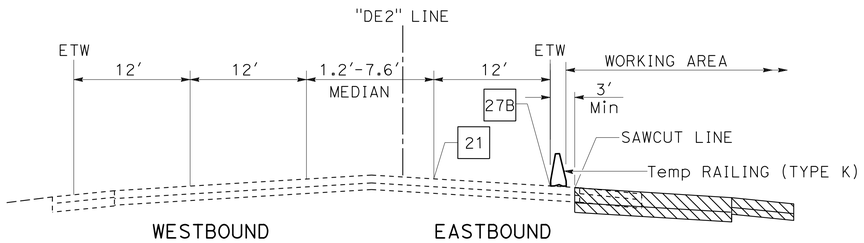

SECTION I-I

Sta 368+50 TO Sta 391+69 "DE2"
Sta 412+45 TO Sta 461+70 "DE2"

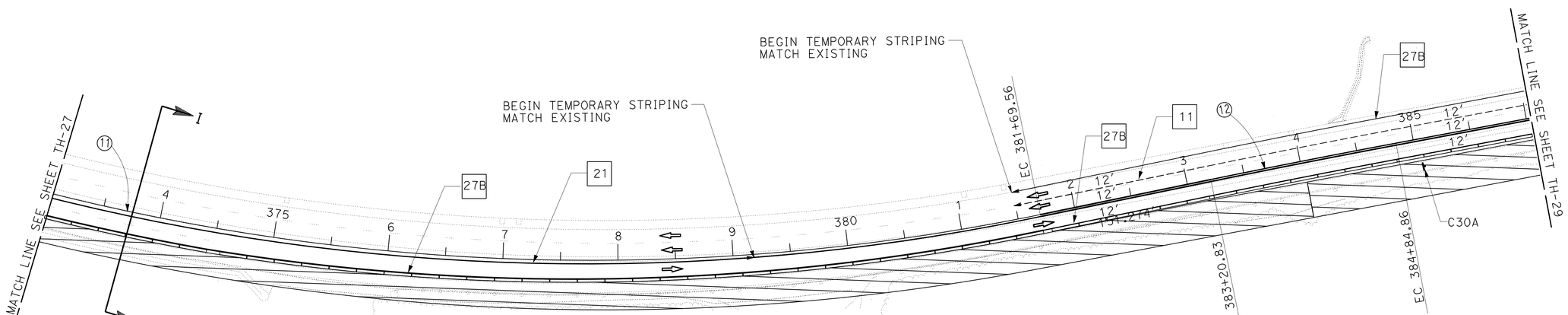

TRAFFIC HANDLING PLAN

STAGE 1 - PHASE B

NO SCALE

TH-28

APPROVED FOR TRAFFIC HANDLING WORK ONLY

STATE OF CALIFORNIA - DEPARTMENT OF TRANSPORTATION
Caltrans® **TRAFFIC DESIGN**

FUNCTIONAL SUPERVISOR: WILLIAM WASSER
CALCULATED-DESIGNED BY: TRAN HOANG
CHECKED BY: HORMUZD SETHNA
REVISED BY
DATE REVISED

LAST REVISION 09-05-13 | DATE PLOTTED => 01-MAY-2014 | TIME PLOTTED => 10:58

Dist	COUNTY	ROUTE	POST MILES TOTAL PROJECT	SHEET No.	TOTAL SHEETS
08	SBd	2,138	6.2/6.4, 2.3/R15.2	521	1168

REGISTERED CIVIL ENGINEER 9-5-13 DATE

3-3-14
PLANS APPROVAL DATE

REGISTERED PROFESSIONAL ENGINEER
TRAN HOANG
No. C54996
Exp. 6-30-14
CIVIL
STATE OF CALIFORNIA

THE STATE OF CALIFORNIA OR ITS OFFICERS OR AGENTS SHALL NOT BE RESPONSIBLE FOR THE ACCURACY OR COMPLETENESS OF SCANNED COPIES OF THIS PLAN SHEET.

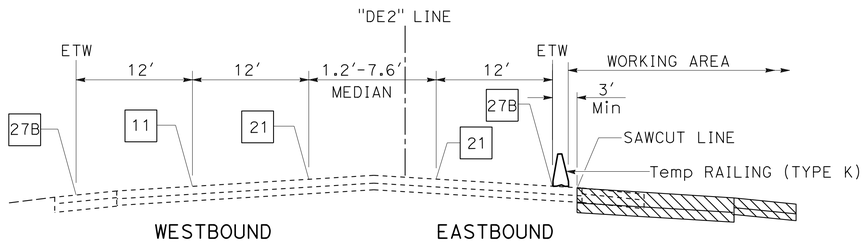

SECTION I-I

Sta 368+50 TO Sta 391+69 "DE2"
Sta 412+45 TO Sta 461+70 "DE2"

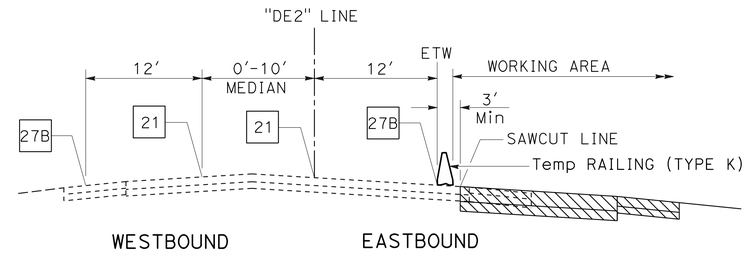

SECTION J-J

Sta 391+690 Sta 399+94 "DE2"

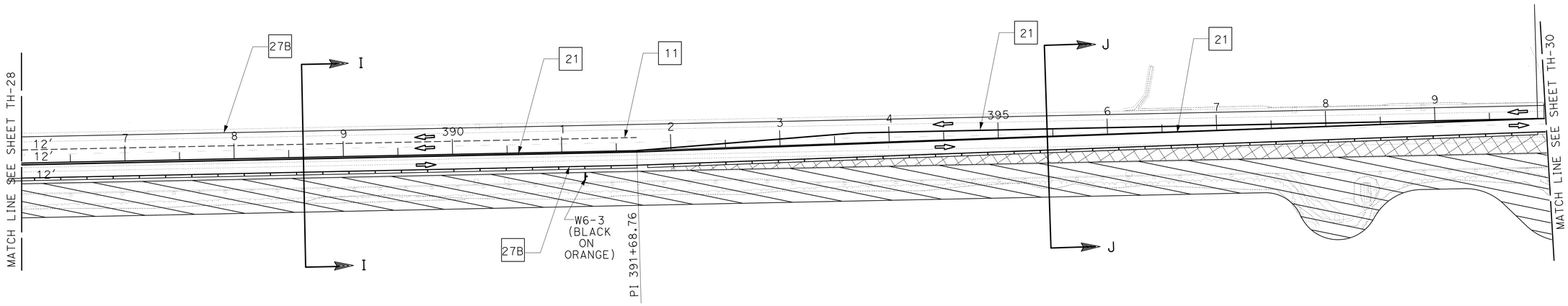

TRAFFIC HANDLING PLAN

STAGE 1

NO SCALE

TH-29

APPROVED FOR TRAFFIC HANDLING WORK ONLY

STATE OF CALIFORNIA - DEPARTMENT OF TRANSPORTATION
Caltrans® **TRAFFIC DESIGN**

FUNCTIONAL SUPERVISOR: WILLIAM WASSER
CALCULATED-DESIGNED BY: TRAN HOANG
CHECKED BY: HORMUZD SETHNA
REVISED BY
DATE REVISED

LAST REVISION 09-05-13
DATE PLOTTED => 01-MAY-2014
TIME PLOTTED => 10:58

Dist	COUNTY	ROUTE	POST MILES TOTAL PROJECT	SHEET No.	TOTAL SHEETS
08	SBd	2,138	6.2/6.4, 2.3/R15.2	522	1168

REGISTERED CIVIL ENGINEER 9-5-13 DATE

3-3-14
PLANS APPROVAL DATE

REGISTERED PROFESSIONAL ENGINEER TRAN HOANG No. C54996 Exp. 6-30-14 CIVIL STATE OF CALIFORNIA

THE STATE OF CALIFORNIA OR ITS OFFICERS OR AGENTS SHALL NOT BE RESPONSIBLE FOR THE ACCURACY OR COMPLETENESS OF SCANNED COPIES OF THIS PLAN SHEET.

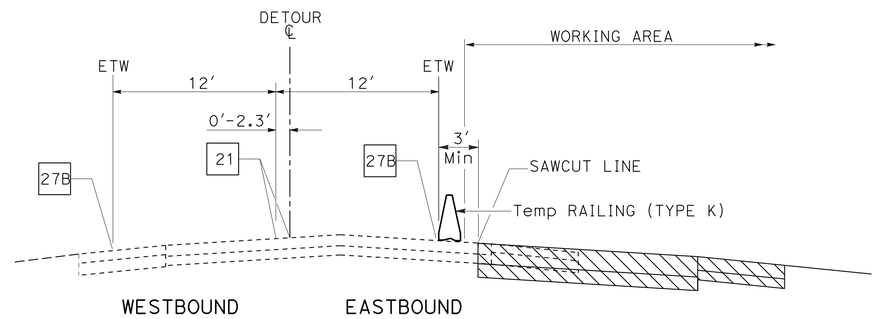

SECTION A-A

Sta 120+00 TO Sta 146+00 "DE1"
Sta 164+43 TO Sta 250+00 "DE1"
Sta 399+94 TO Sta 404+76 "DE2"

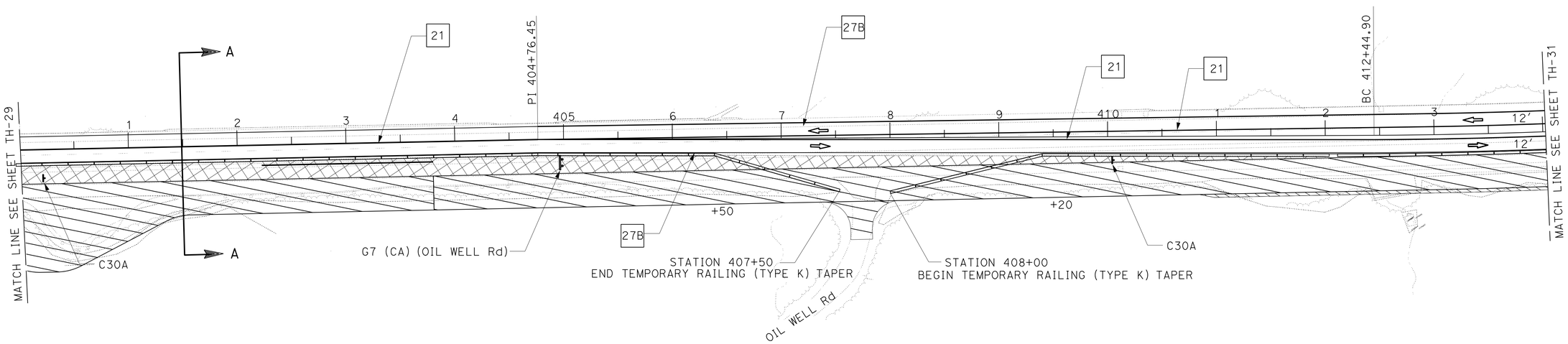

TRAFFIC HANDLING PLAN
STAGE 1
NO SCALE

TH-30

APPROVED FOR TRAFFIC HANDLING WORK ONLY

STATE OF CALIFORNIA - DEPARTMENT OF TRANSPORTATION
Caltrans® **TRAFFIC DESIGN**

FUNCTIONAL SUPERVISOR: WILLIAM WASSER
CALCULATED-DESIGNED BY: TRAN HOANG
CHECKED BY: HORMUZD SETHNA
REVISED BY
DATE REVISED

LAST REVISION 09-05-13
DATE PLOTTED => 01-MAY-2014
TIME PLOTTED => 10:58

Dist	COUNTY	ROUTE	POST MILES TOTAL PROJECT	SHEET No.	TOTAL SHEETS
08	SBd	2,138	6.2/6.4, 2.3/R15.2	523	1168

REGISTERED CIVIL ENGINEER 9-5-13 DATE

3-3-14
PLANS APPROVAL DATE

REGISTERED PROFESSIONAL ENGINEER
TRAN HOANG
No. C54996
Exp. 6-30-14
CIVIL
STATE OF CALIFORNIA

THE STATE OF CALIFORNIA OR ITS OFFICERS OR AGENTS SHALL NOT BE RESPONSIBLE FOR THE ACCURACY OR COMPLETENESS OF SCANNED COPIES OF THIS PLAN SHEET.

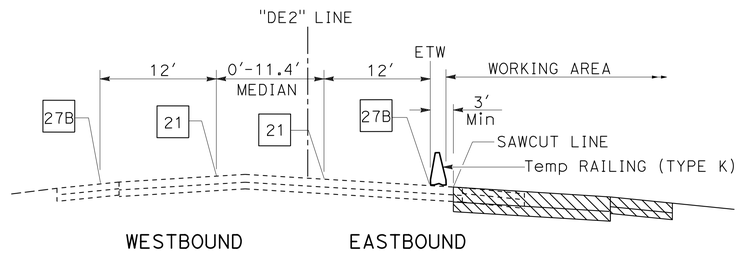

SECTION K-K

Sta 404+76 TO Sta 399+94 "DE2"

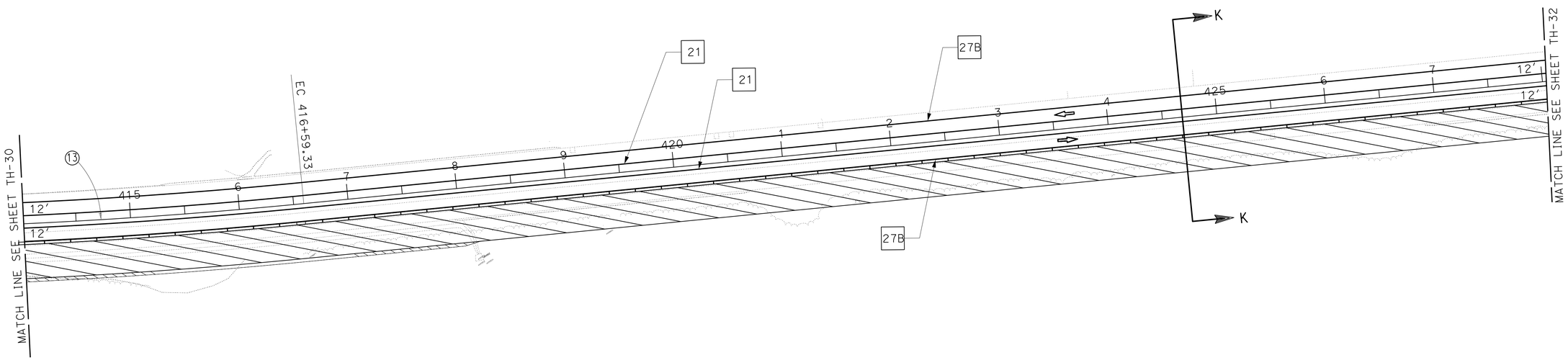

TRAFFIC HANDLING PLAN

STAGE 1

NO SCALE

TH-31

APPROVED FOR TRAFFIC HANDLING WORK ONLY

STATE OF CALIFORNIA - DEPARTMENT OF TRANSPORTATION
Caltrans® **TRAFFIC DESIGN**

FUNCTIONAL SUPERVISOR: WILLIAM WASSER
CALCULATED-DESIGNED BY: TRAN HOANG
CHECKED BY: HORMUZD SETHNA
REVISED BY
DATE REVISED

LAST REVISION 09-05-13 | DATE PLOTTED => 01-MAY-2014 | TIME PLOTTED => 10:58

Dist	COUNTY	ROUTE	POST MILES TOTAL PROJECT	SHEET No.	TOTAL SHEETS
08	SBd	2,138	6.2/6.4, 2.3/R15.2	524	1168

REGISTERED CIVIL ENGINEER 9-5-13 DATE

3-3-14
PLANS APPROVAL DATE

REGISTERED PROFESSIONAL ENGINEER
TRAN HOANG
No. C54996
Exp. 6-30-14
CIVIL
STATE OF CALIFORNIA

THE STATE OF CALIFORNIA OR ITS OFFICERS OR AGENTS SHALL NOT BE RESPONSIBLE FOR THE ACCURACY OR COMPLETENESS OF SCANNED COPIES OF THIS PLAN SHEET.

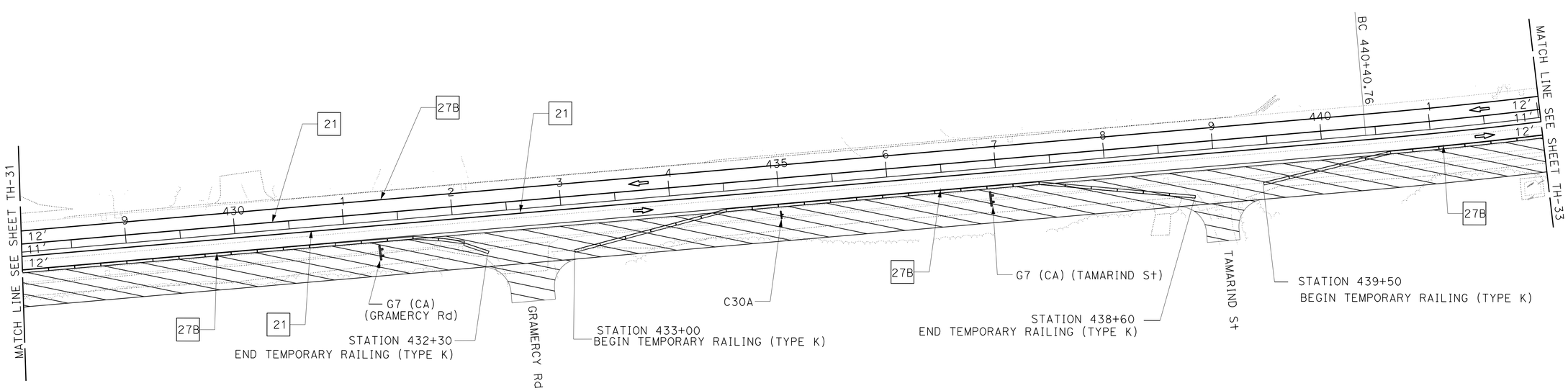

TRAFFIC HANDLING PLAN

STAGE 1

NO SCALE

TH-32

APPROVED FOR TRAFFIC HANDLING WORK ONLY

STATE OF CALIFORNIA - DEPARTMENT OF TRANSPORTATION
Caltrans® **TRAFFIC DESIGN**

FUNCTIONAL SUPERVISOR: WILLIAM WASSER
CALCULATED-DESIGNED BY: TRAN HOANG
CHECKED BY: HORMUZD SETHNA
REVISED BY
DATE REVISED

LAST REVISION 09-05-13
DATE PLOTTED => 01-MAY-2014
TIME PLOTTED => 10:59

Dist	COUNTY	ROUTE	POST MILES TOTAL PROJECT	SHEET No.	TOTAL SHEETS
08	SBd	2,138	6.2/6.4, 2.3/R15.2	525	1168

REGISTERED CIVIL ENGINEER 9-5-13 DATE

3-3-14
PLANS APPROVAL DATE

REGISTERED PROFESSIONAL ENGINEER
TRAN HOANG
No. C54996
Exp. 6-30-14
CIVIL
STATE OF CALIFORNIA

THE STATE OF CALIFORNIA OR ITS OFFICERS OR AGENTS SHALL NOT BE RESPONSIBLE FOR THE ACCURACY OR COMPLETENESS OF SCANNED COPIES OF THIS PLAN SHEET.

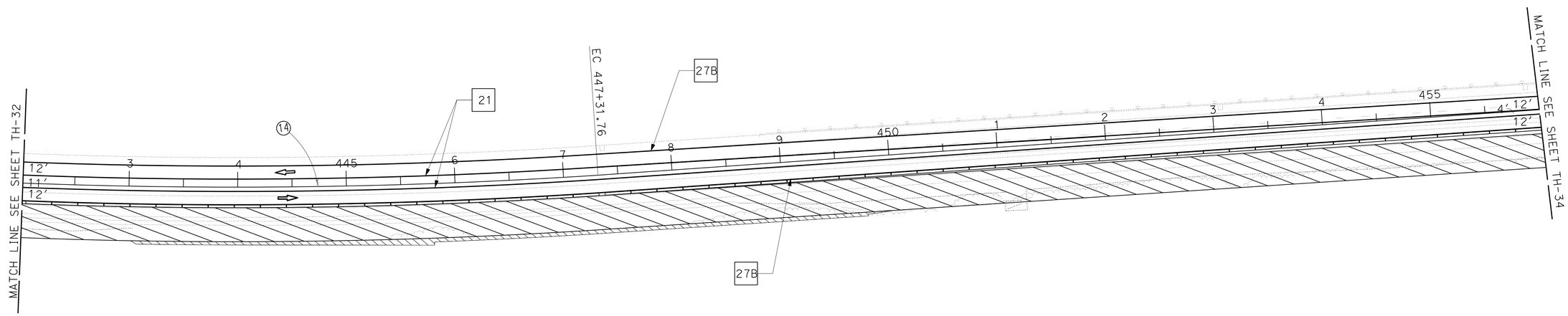

TRAFFIC HANDLING PLAN

STAGE 1

NO SCALE

TH-33

APPROVED FOR TRAFFIC HANDLING WORK ONLY

STATE OF CALIFORNIA - DEPARTMENT OF TRANSPORTATION
Caltrans® **TRAFFIC DESIGN**

FUNCTIONAL SUPERVISOR: WILLIAM WASSER

CALCULATED-DESIGNED BY: TRAN HOANG
CHECKED BY: HORMUZD SETHNA

REVISED BY
DATE REVISED

LAST REVISION 09-05-13
DATE PLOTTED => 01-MAY-2014
TIME PLOTTED => 10:59

Dist	COUNTY	ROUTE	POST MILES TOTAL PROJECT	SHEET No.	TOTAL SHEETS
08	SBd	2,138	6.2/6.4, 2.3/R15.2	526	1168

REGISTERED CIVIL ENGINEER 9-5-13 DATE

3-3-14
PLANS APPROVAL DATE

REGISTERED PROFESSIONAL ENGINEER TRAN HOANG No. C54996 Exp. 6-30-14 CIVIL STATE OF CALIFORNIA

THE STATE OF CALIFORNIA OR ITS OFFICERS OR AGENTS SHALL NOT BE RESPONSIBLE FOR THE ACCURACY OR COMPLETENESS OF SCANNED COPIES OF THIS PLAN SHEET.

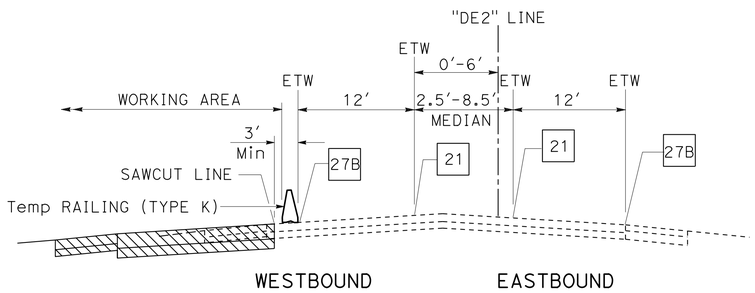

SECTION L-L

Sta 461+70 TO Sta 500+00 "DE2"

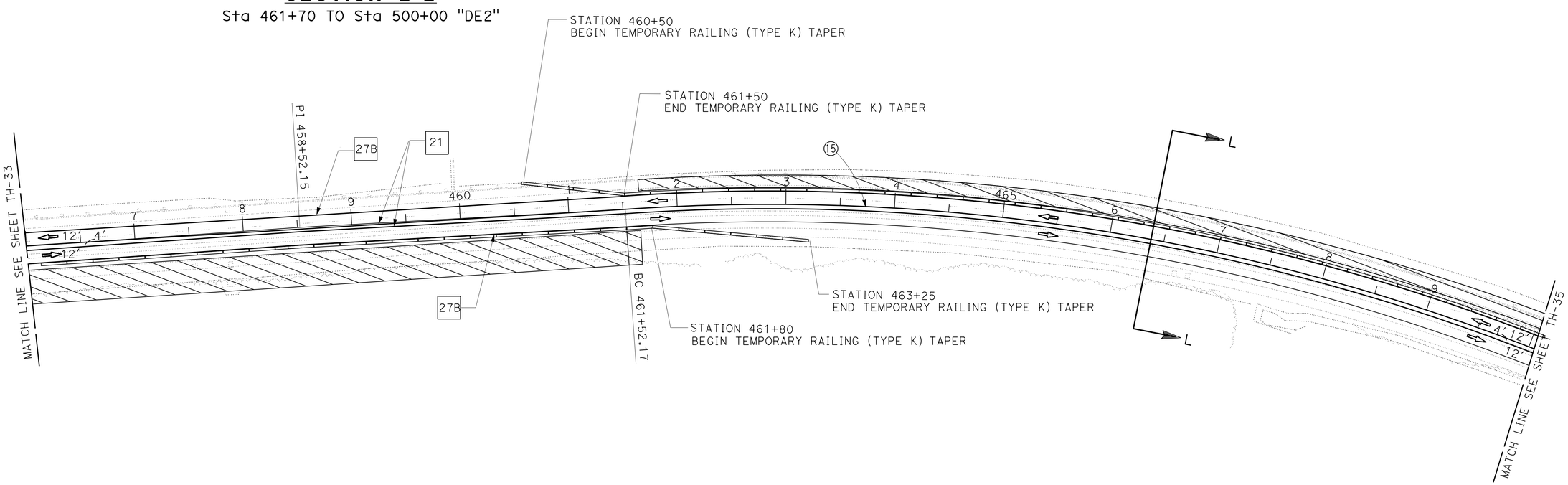

TRAFFIC HANDLING PLAN

STAGE 1 - PHASE B

NO SCALE

TH-34

APPROVED FOR TRAFFIC HANDLING WORK ONLY

STATE OF CALIFORNIA - DEPARTMENT OF TRANSPORTATION
Caltrans® **TRAFFIC DESIGN**

FUNCTIONAL SUPERVISOR: WILLIAM WASSER

CALCULATED-DESIGNED BY: TRAN HOANG
CHECKED BY: HORMUZD SETHNA

REVISED BY | DATE REVISED

LAST REVISION 09-05-13 | DATE PLOTTED => 01-MAY-2014 | TIME PLOTTED => 10:59

Dist	COUNTY	ROUTE	POST MILES TOTAL PROJECT	SHEET No.	TOTAL SHEETS
08	SBd	2,138	6.2/6.4, 2.3/R15.2	527	1168

REGISTERED CIVIL ENGINEER 9-5-13 DATE

3-3-14
PLANS APPROVAL DATE

REGISTERED PROFESSIONAL ENGINEER
TRAN HOANG
No. C54996
Exp. 6-30-14
CIVIL
STATE OF CALIFORNIA

THE STATE OF CALIFORNIA OR ITS OFFICERS OR AGENTS SHALL NOT BE RESPONSIBLE FOR THE ACCURACY OR COMPLETENESS OF SCANNED COPIES OF THIS PLAN SHEET.

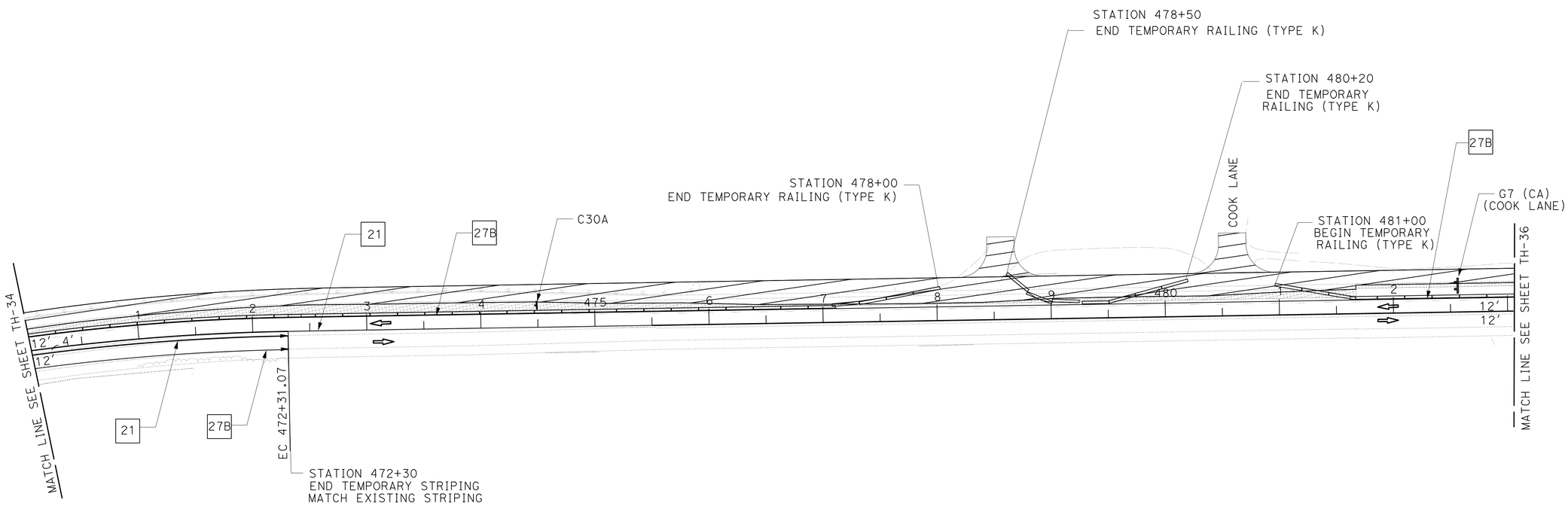

TRAFFIC HANDLING PLAN

STAGE 1 - PHASE B

NO SCALE

TH-35

APPROVED FOR TRAFFIC HANDLING WORK ONLY

STATE OF CALIFORNIA - DEPARTMENT OF TRANSPORTATION
Caltrans® **TRAFFIC DESIGN**

FUNCTIONAL SUPERVISOR: WILLIAM WASSER
CALCULATED-DESIGNED BY: TRAN HOANG
CHECKED BY: HORMUZD SETHNA
REVISED BY
DATE REVISED

LAST REVISION 09-05-13
DATE PLOTTED => 01-MAY-2014
TIME PLOTTED => 10:59

Dist	COUNTY	ROUTE	POST MILES TOTAL PROJECT	SHEET No.	TOTAL SHEETS
08	SBd	2,138	6.2/6.4, 2.3/R15.2	528	1168

REGISTERED CIVIL ENGINEER 9-5-13 DATE

3-3-14
PLANS APPROVAL DATE

REGISTERED PROFESSIONAL ENGINEER TRAN HOANG No. C54996 Exp. 6-30-14 CIVIL STATE OF CALIFORNIA

THE STATE OF CALIFORNIA OR ITS OFFICERS OR AGENTS SHALL NOT BE RESPONSIBLE FOR THE ACCURACY OR COMPLETENESS OF SCANNED COPIES OF THIS PLAN SHEET.

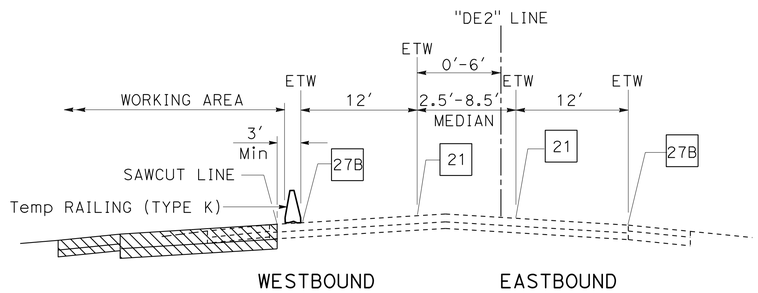

SECTION L-L

Sta 461+70 TO Sta 500+00 "DE2"

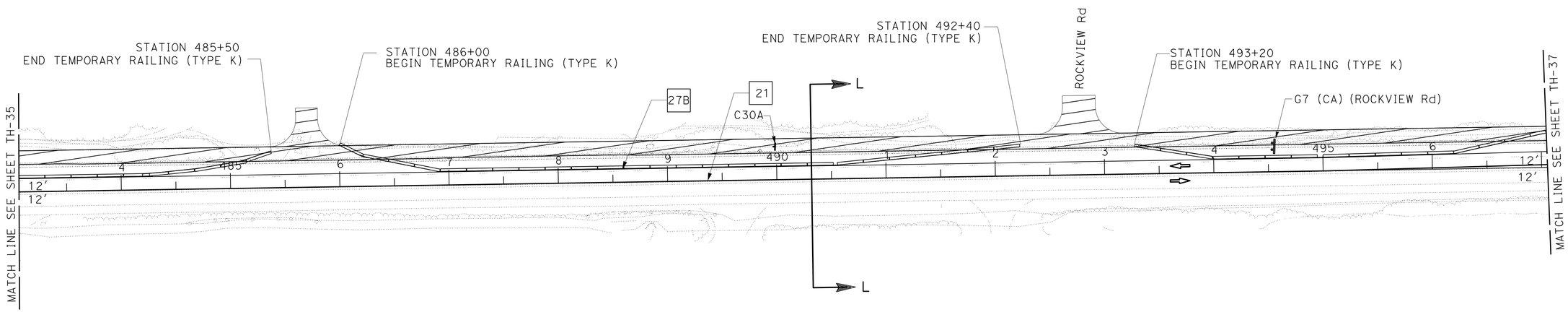

TRAFFIC HANDLING PLAN

STAGE 1 - PHASE B

NO SCALE

TH-36

APPROVED FOR TRAFFIC HANDLING WORK ONLY

STATE OF CALIFORNIA - DEPARTMENT OF TRANSPORTATION
Caltrans® TRAFFIC DESIGN

FUNCTIONAL SUPERVISOR: WILLIAM WASSER
CALCULATED-DESIGNED BY: TRAN HOANG
CHECKED BY: HORMUZD SETHNA
REVISED BY
DATE REVISED

LAST REVISION 09-05-13
DATE PLOTTED => 01-MAY-2014
TIME PLOTTED => 10:59

Dist	COUNTY	ROUTE	POST MILES TOTAL PROJECT	SHEET No.	TOTAL SHEETS
08	SBd	2,138	6.2/6.4, 2.3/R15.2	529	1168

REGISTERED CIVIL ENGINEER 9-5-13 DATE

3-3-14
PLANS APPROVAL DATE

REGISTERED PROFESSIONAL ENGINEER TRAN HOANG No. C54996 Exp. 6-30-14 CIVIL STATE OF CALIFORNIA

THE STATE OF CALIFORNIA OR ITS OFFICERS OR AGENTS SHALL NOT BE RESPONSIBLE FOR THE ACCURACY OR COMPLETENESS OF SCANNED COPIES OF THIS PLAN SHEET.

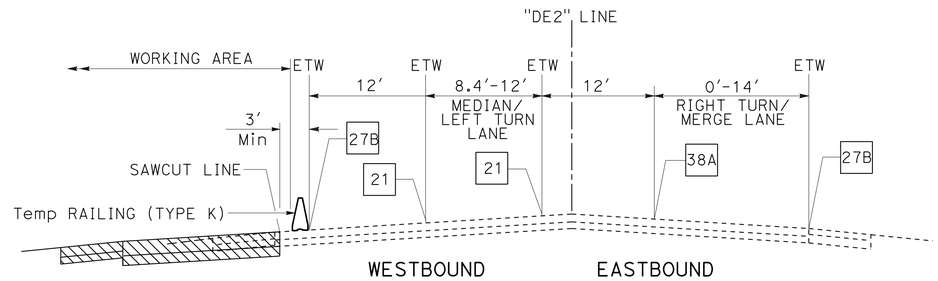

SECTION M-M

Sta 498+81 TO Sta 508+00 "DE2"

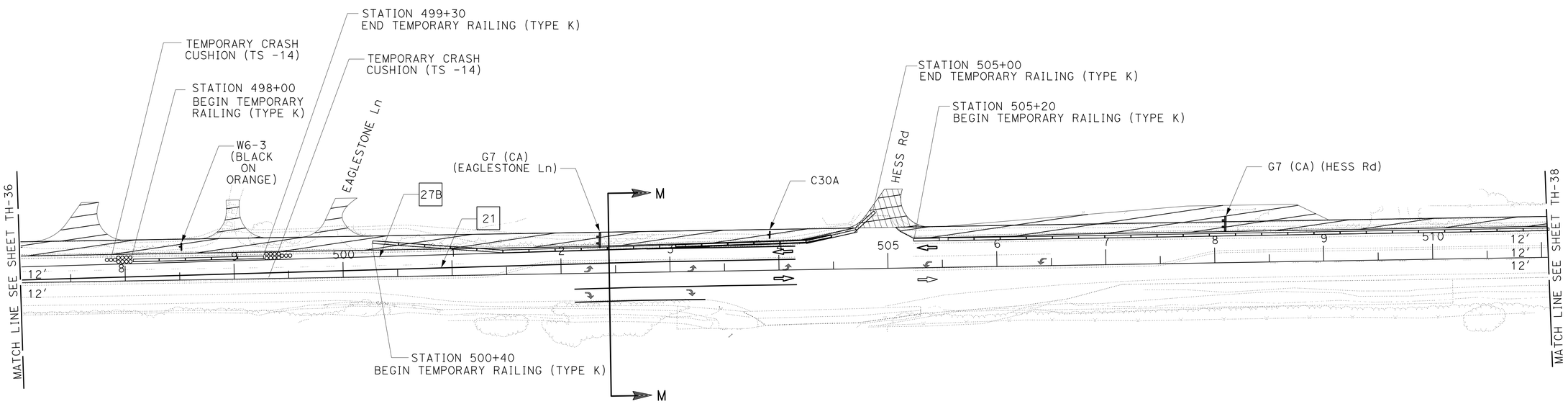

TRAFFIC HANDLING PLAN

STAGE 1 - PHASE B

NO SCALE

TH-37

APPROVED FOR TRAFFIC HANDLING WORK ONLY

STATE OF CALIFORNIA - DEPARTMENT OF TRANSPORTATION
Caltrans® **TRAFFIC DESIGN**

FUNCTIONAL SUPERVISOR: WILLIAM WASSER

CALCULATED-DESIGNED BY: TRAN HOANG
CHECKED BY: HORMUZD SETHNA

REVISED BY
DATE REVISED

LAST REVISION 09-05-13 | DATE PLOTTED => 01-MAY-2014 | TIME PLOTTED => 10:59

Dist	COUNTY	ROUTE	POST MILES TOTAL PROJECT	SHEET No.	TOTAL SHEETS
08	SBd	2,138	6.2/6.4, 2.3/R15.2	530	1168

REGISTERED CIVIL ENGINEER 9-5-13 DATE

3-3-14
PLANS APPROVAL DATE

REGISTERED PROFESSIONAL ENGINEER TRAN HOANG No. C54996 Exp. 6-30-14 CIVIL STATE OF CALIFORNIA

THE STATE OF CALIFORNIA OR ITS OFFICERS OR AGENTS SHALL NOT BE RESPONSIBLE FOR THE ACCURACY OR COMPLETENESS OF SCANNED COPIES OF THIS PLAN SHEET.

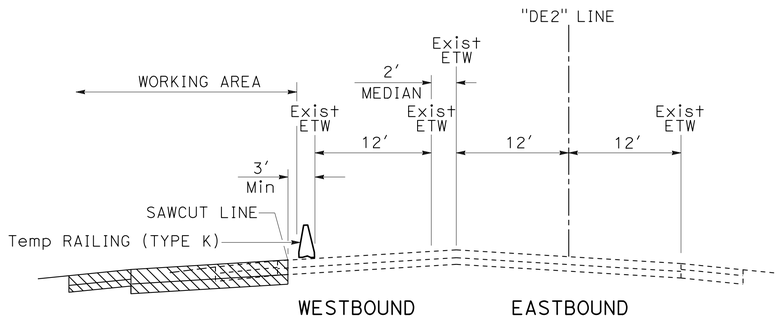

SECTION N-N

Sta 508+00 TO Sta 545+00 "DE2"

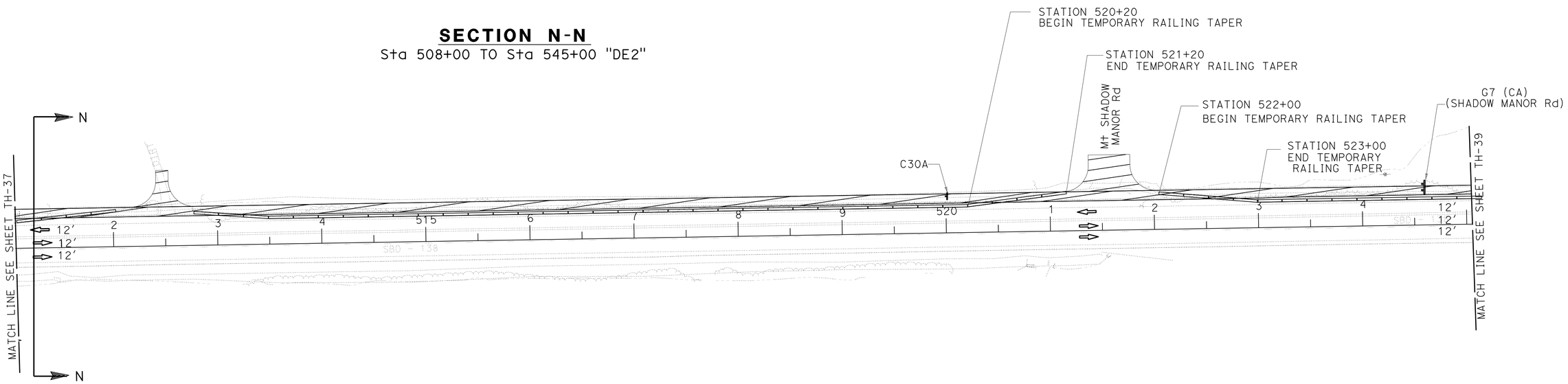

TRAFFIC HANDLING PLAN

STAGE 1 - PHASE B

NO SCALE

TH-38

APPROVED FOR TRAFFIC HANDLING WORK ONLY

STATE OF CALIFORNIA - DEPARTMENT OF TRANSPORTATION
Caltrans® **TRAFFIC DESIGN**

FUNCTIONAL SUPERVISOR: WILLIAM WASSER
CALCULATED-DESIGNED BY: TRAN HOANG
CHECKED BY: HORMUZD SETHNA
REVISED BY
DATE REVISED

LAST REVISION 09-05-13
DATE PLOTTED => 01-MAY-2014
TIME PLOTTED => 10:59

Dist	COUNTY	ROUTE	POST MILES TOTAL PROJECT	SHEET No.	TOTAL SHEETS
08	SBd	2,138	6.2/6.4, 2.3/R15.2	531	1168

REGISTERED CIVIL ENGINEER 9-5-13 DATE

3-3-14
PLANS APPROVAL DATE

REGISTERED PROFESSIONAL ENGINEER
TRAN HOANG
No. C54996
Exp. 6-30-14
CIVIL
STATE OF CALIFORNIA

THE STATE OF CALIFORNIA OR ITS OFFICERS OR AGENTS SHALL NOT BE RESPONSIBLE FOR THE ACCURACY OR COMPLETENESS OF SCANNED COPIES OF THIS PLAN SHEET.

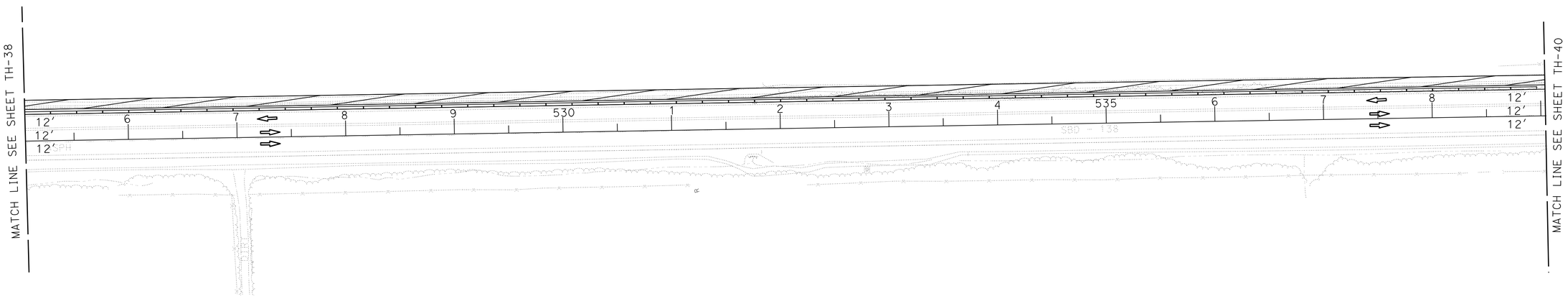

TRAFFIC HANDLING PLAN
STAGE 1 - PHASE B
NO SCALE

TH-39

APPROVED FOR TRAFFIC HANDLING WORK ONLY

STATE OF CALIFORNIA - DEPARTMENT OF TRANSPORTATION
Caltrans® **TRAFFIC DESIGN**

FUNCTIONAL SUPERVISOR: WILLIAM WASSER
CALCULATED-DESIGNED BY: TRAN HOANG
CHECKED BY: HORMUZD SETHNA
REVISED BY
DATE REVISED

LAST REVISION 09-05-13
DATE PLOTTED => 01-MAY-2014
TIME PLOTTED => 10:59

Dist	COUNTY	ROUTE	POST MILES TOTAL PROJECT	SHEET No.	TOTAL SHEETS
08	SBd	2,138	6.2/6.4, 2.3/R15.2	532	1168

REGISTERED CIVIL ENGINEER 9-5-13 DATE

3-3-14
PLANS APPROVAL DATE

REGISTERED PROFESSIONAL ENGINEER
TRAN HOANG
No. C54996
Exp. 6-30-14
CIVIL
STATE OF CALIFORNIA

THE STATE OF CALIFORNIA OR ITS OFFICERS OR AGENTS SHALL NOT BE RESPONSIBLE FOR THE ACCURACY OR COMPLETENESS OF SCANNED COPIES OF THIS PLAN SHEET.

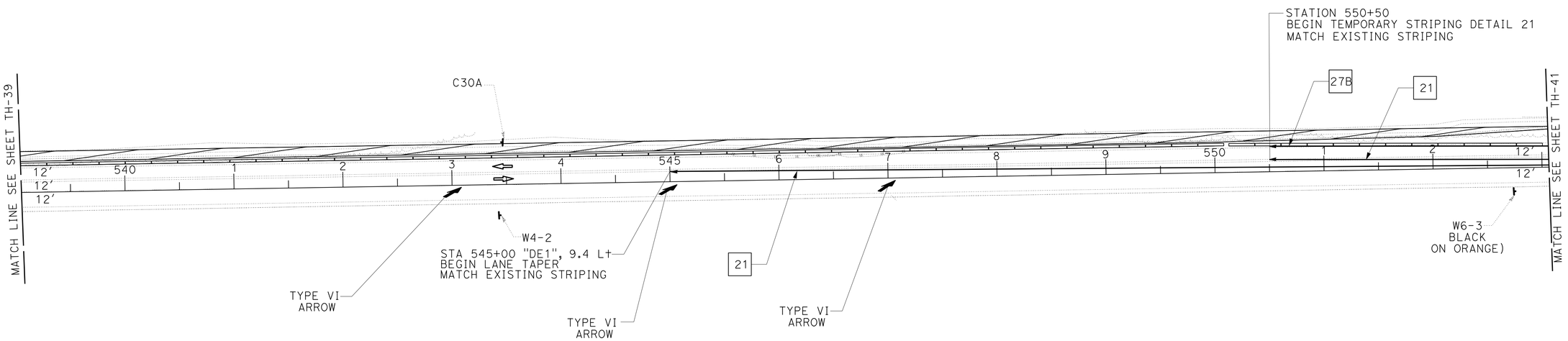

TRAFFIC HANDLING PLAN

STAGE 1 - PHASE B

NO SCALE

TH-40

APPROVED FOR TRAFFIC HANDLING WORK ONLY

STATE OF CALIFORNIA - DEPARTMENT OF TRANSPORTATION
Caltrans® **TRAFFIC DESIGN**

FUNCTIONAL SUPERVISOR: WILLIAM WASSER

CALCULATED-DESIGNED BY: TRAN HOANG
CHECKED BY: HORMUZD SETHNA

REVISED BY
DATE REVISED

LAST REVISION 09-05-13 | DATE PLOTTED => 01-MAY-2014 | TIME PLOTTED => 10:59

BORDER LAST REVISED 7/2/2010 | USERNAME => s121614 | DGN FILE => 0800000609md040.dgn | RELATIVE BORDER SCALE IS IN INCHES 0 1 2 3 | UNIT 2285 | PROJECT NUMBER & PHASE 08000006091

Dist	COUNTY	ROUTE	POST MILES TOTAL PROJECT	SHEET No.	TOTAL SHEETS
08	SBd	2,138	6.2/6.4, 2.3/R15.2	533	1168

REGISTERED CIVIL ENGINEER 9-5-13 DATE

3-3-14
PLANS APPROVAL DATE

REGISTERED PROFESSIONAL ENGINEER TRAN HOANG No. C54996 Exp. 6-30-14 CIVIL STATE OF CALIFORNIA

THE STATE OF CALIFORNIA OR ITS OFFICERS OR AGENTS SHALL NOT BE RESPONSIBLE FOR THE ACCURACY OR COMPLETENESS OF SCANNED COPIES OF THIS PLAN SHEET.

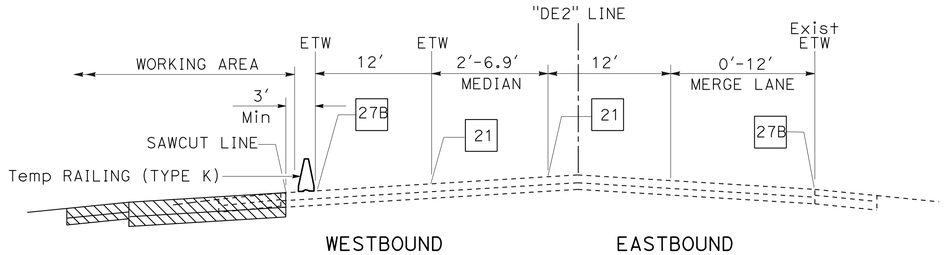

SECTION O-O

Sta 545+00 TO Sta 573+97 "DE2"

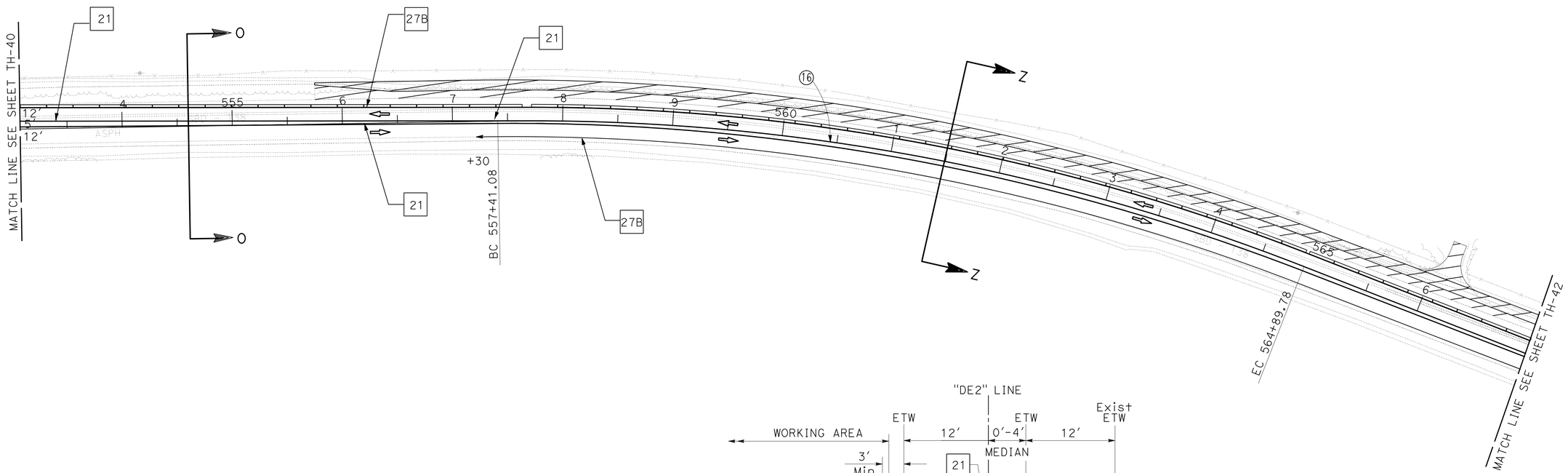

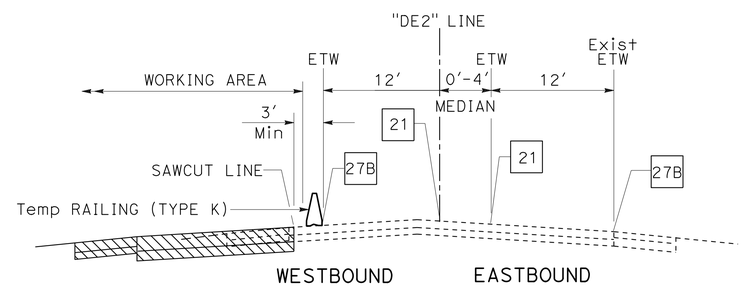

SECTION Z-Z

Sta 557+72 TO Sta 573+97 "DE2"

TRAFFIC HANDLING PLAN

STAGE 1 - PHASE B

NO SCALE

TH-41

APPROVED FOR TRAFFIC HANDLING WORK ONLY

STATE OF CALIFORNIA - DEPARTMENT OF TRANSPORTATION
Caltrans® TRAFFIC DESIGN

FUNCTIONAL SUPERVISOR: WILLIAM WASSER
CALCULATED-DESIGNED BY: TRAN HOANG
CHECKED BY: HORMUZD SETHNA
REVISED BY
DATE REVISED

LAST REVISION 09-05-13
DATE PLOTTED => 01-MAY-2014
TIME PLOTTED => 10:59

Dist	COUNTY	ROUTE	POST MILES TOTAL PROJECT	SHEET No.	TOTAL SHEETS
08	SBd	2,138	6.2/6.4, 2.3/R15.2	534	1168

REGISTERED CIVIL ENGINEER 9-5-13 DATE

3-3-14
PLANS APPROVAL DATE

REGISTERED PROFESSIONAL ENGINEER
TRAN HOANG
No. C54996
Exp. 6-30-14
CIVIL
STATE OF CALIFORNIA

THE STATE OF CALIFORNIA OR ITS OFFICERS OR AGENTS SHALL NOT BE RESPONSIBLE FOR THE ACCURACY OR COMPLETENESS OF SCANNED COPIES OF THIS PLAN SHEET.

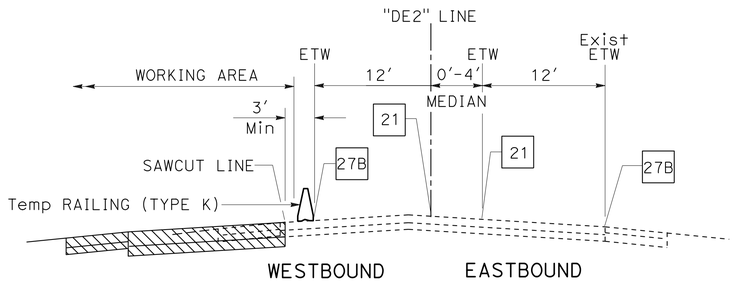

SECTION Z-Z

Sta 557+72 TO Sta 573+97 "DE2"

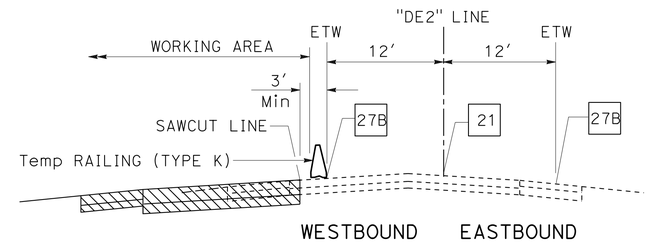

SECTION P-P

Sta 573+79 TO Sta 782+50 "DE2"

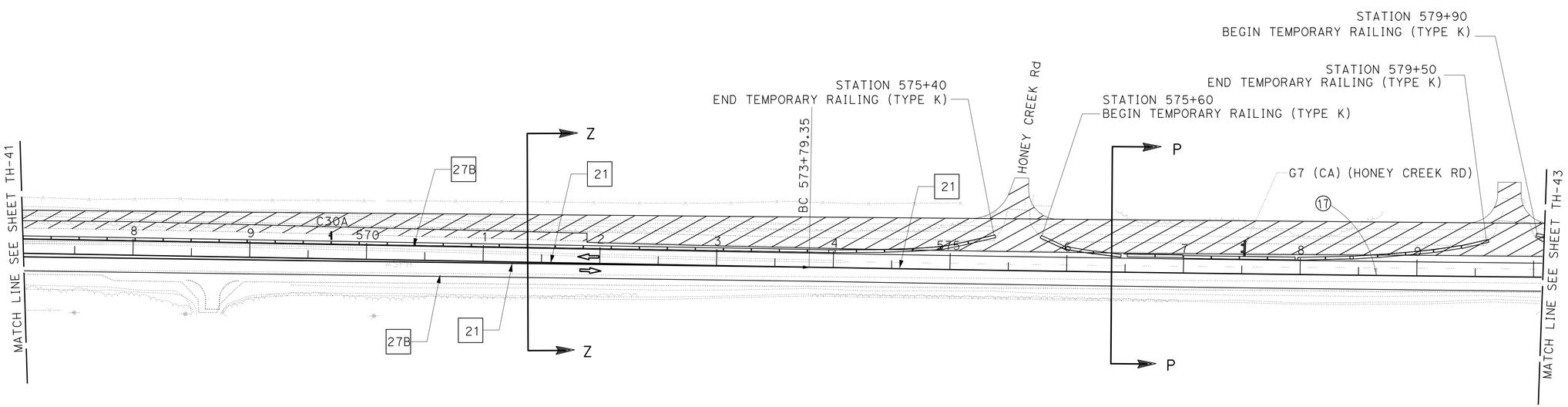

TRAFFIC HANDLING PLAN

STAGE 1 - PHASE B

NO SCALE

TH-42

APPROVED FOR TRAFFIC HANDLING WORK ONLY

STATE OF CALIFORNIA - DEPARTMENT OF TRANSPORTATION
Caltrans® **TRAFFIC DESIGN**

FUNCTIONAL SUPERVISOR: WILLIAM WASSER
CALCULATED-DESIGNED BY: TRAN HOANG
CHECKED BY: HORMUZD SETHNA
REVISED BY
DATE REVISED

LAST REVISION 09-05-13 | DATE PLOTTED => 01-MAY-2014 | TIME PLOTTED => 10:59

Dist	COUNTY	ROUTE	POST MILES TOTAL PROJECT	SHEET No.	TOTAL SHEETS
08	SBd	2,138	6.2/6.4, 2.3/R15.2	535	1168

REGISTERED CIVIL ENGINEER 9-5-13 DATE

3-3-14
PLANS APPROVAL DATE

REGISTERED PROFESSIONAL ENGINEER TRAN HOANG No. C54996 Exp. 6-30-14 CIVIL STATE OF CALIFORNIA

THE STATE OF CALIFORNIA OR ITS OFFICERS OR AGENTS SHALL NOT BE RESPONSIBLE FOR THE ACCURACY OR COMPLETENESS OF SCANNED COPIES OF THIS PLAN SHEET.

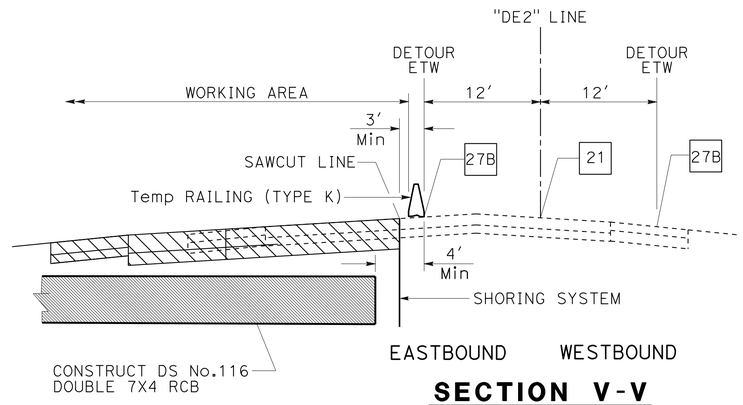

SECTION V-V

Sta 583+00 "DE2"

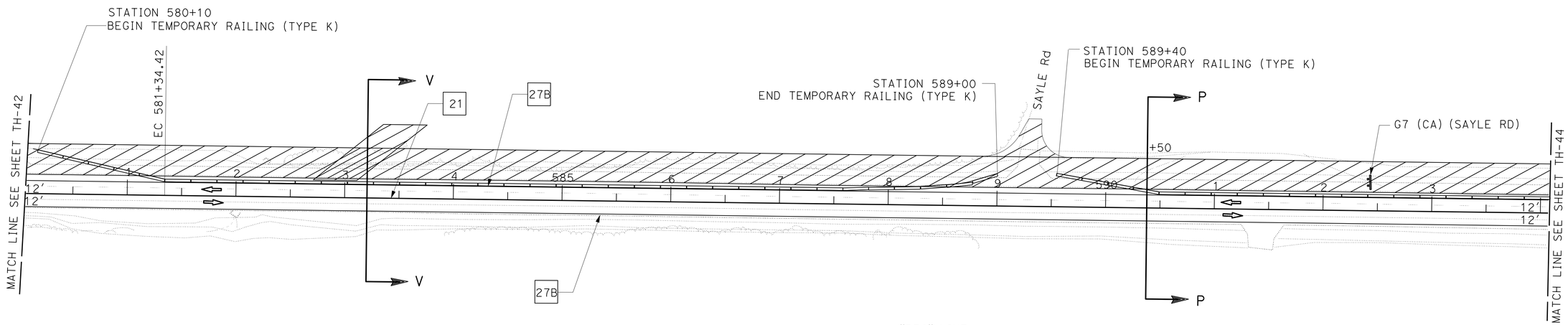

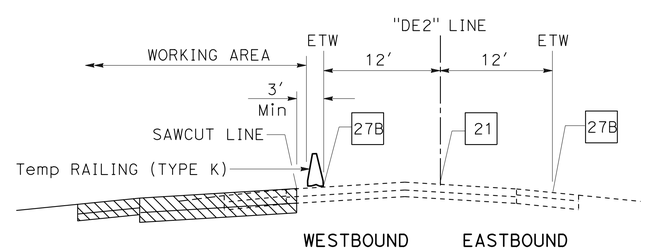

SECTION P-P

Sta 573+79 TO Sta 782+50 "DE2"

TRAFFIC HANDLING PLAN

STAGE 1 - PHASE B

NO SCALE

TH-43

APPROVED FOR TRAFFIC HANDLING WORK ONLY

STATE OF CALIFORNIA - DEPARTMENT OF TRANSPORTATION

Caltrans® **TRAFFIC DESIGN**

FUNCTIONAL SUPERVISOR: WILLIAM WASSER

CALCULATED-DESIGNED BY: TRAN HOANG

CHECKED BY: HORMUZD SETHNA

REVISED BY / DATE REVISED

LAST REVISION 09-05-13 | DATE PLOTTED => 01-MAY-2014 | TIME PLOTTED => 10:59

Dist	COUNTY	ROUTE	POST MILES TOTAL PROJECT	SHEET No.	TOTAL SHEETS
08	SBd	2,138	6.2/6.4, 2.3/R15.2	536	1168

REGISTERED CIVIL ENGINEER 9-5-13 DATE

3-3-14
PLANS APPROVAL DATE

REGISTERED PROFESSIONAL ENGINEER
TRAN HOANG
No. C54996
Exp. 6-30-14
CIVIL
STATE OF CALIFORNIA

THE STATE OF CALIFORNIA OR ITS OFFICERS OR AGENTS SHALL NOT BE RESPONSIBLE FOR THE ACCURACY OR COMPLETENESS OF SCANNED COPIES OF THIS PLAN SHEET.

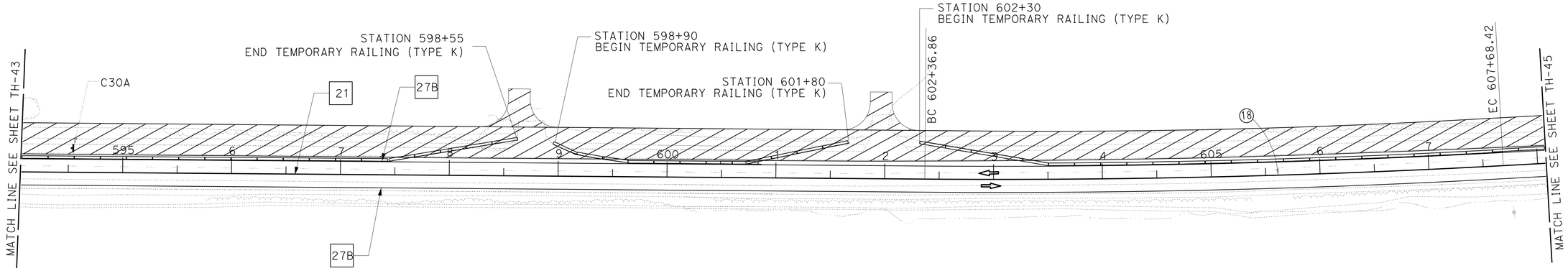

TRAFFIC HANDLING PLAN

STAGE 1 - PHASE B

NO SCALE

TH-44

APPROVED FOR TRAFFIC HANDLING WORK ONLY

STATE OF CALIFORNIA - DEPARTMENT OF TRANSPORTATION
Caltrans® TRAFFIC DESIGN

FUNCTIONAL SUPERVISOR: WILLIAM WASSER

CALCULATED-DESIGNED BY: TRAN HOANG
CHECKED BY: HORMUZD SETHNA

REVISED BY
DATE REVISED

LAST REVISION 09-05-13
DATE PLOTTED => 01-MAY-2014
TIME PLOTTED => 11:00

Dist	COUNTY	ROUTE	POST MILES TOTAL PROJECT	SHEET No.	TOTAL SHEETS
08	SBd	2,138	6.2/6.4, 2.3/R15.2	537	1168

REGISTERED CIVIL ENGINEER 9-5-13 DATE

3-3-14
PLANS APPROVAL DATE

REGISTERED PROFESSIONAL ENGINEER
TRAN HOANG
No. C54996
Exp. 6-30-14
CIVIL
STATE OF CALIFORNIA

THE STATE OF CALIFORNIA OR ITS OFFICERS OR AGENTS SHALL NOT BE RESPONSIBLE FOR THE ACCURACY OR COMPLETENESS OF SCANNED COPIES OF THIS PLAN SHEET.

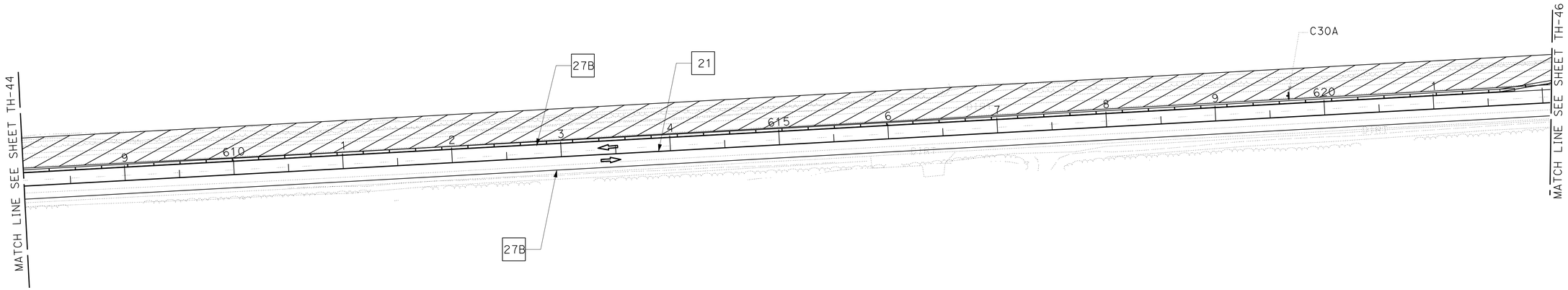

TRAFFIC HANDLING PLAN
STAGE 1 - PHASE B
NO SCALE

TH-45

APPROVED FOR TRAFFIC HANDLING WORK ONLY

STATE OF CALIFORNIA - DEPARTMENT OF TRANSPORTATION
Caltrans® **TRAFFIC DESIGN**

FUNCTIONAL SUPERVISOR: WILLIAM WASSER
CALCULATED-DESIGNED BY: TRAN HOANG
CHECKED BY: HORMUZD SETHNA
REVISED BY
DATE REVISED

LAST REVISION 09-05-13
DATE PLOTTED => 01-MAY-2014
TIME PLOTTED => 11:00

Dist	COUNTY	ROUTE	POST MILES TOTAL PROJECT	SHEET No.	TOTAL SHEETS
08	SBd	2,138	6.2/6.4, 2.3/R15.2	538	1168

REGISTERED CIVIL ENGINEER 9-5-13 DATE

3-3-14
PLANS APPROVAL DATE

REGISTERED PROFESSIONAL ENGINEER
TRAN HOANG
No. C54996
Exp. 6-30-14
CIVIL
STATE OF CALIFORNIA

THE STATE OF CALIFORNIA OR ITS OFFICERS OR AGENTS SHALL NOT BE RESPONSIBLE FOR THE ACCURACY OR COMPLETENESS OF SCANNED COPIES OF THIS PLAN SHEET.

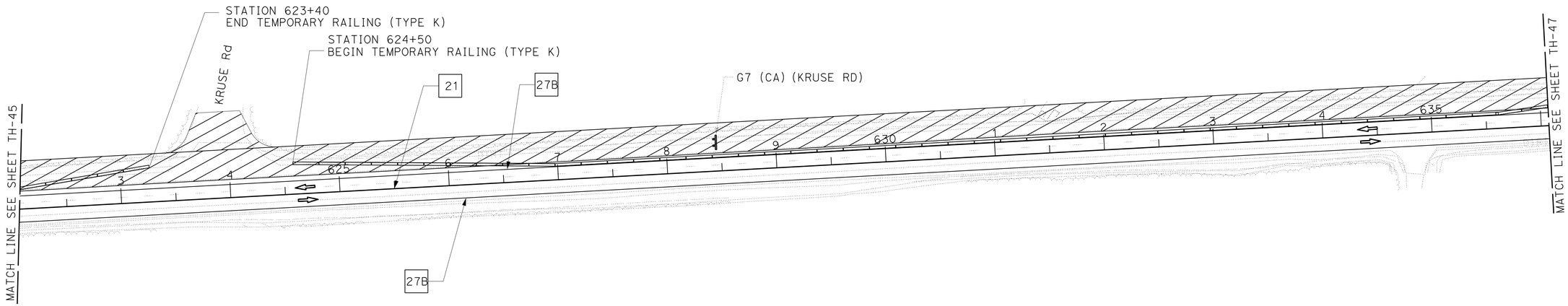

TRAFFIC HANDLING PLAN

STAGE 1 - PHASE B

NO SCALE

TH-46

APPROVED FOR TRAFFIC HANDLING WORK ONLY

STATE OF CALIFORNIA - DEPARTMENT OF TRANSPORTATION
Caltrans® **TRAFFIC DESIGN**

FUNCTIONAL SUPERVISOR: WILLIAM WASSER
CALCULATED-DESIGNED BY: TRAN HOANG
CHECKED BY: HORMUZD SETHNA
REVISED BY
DATE REVISED

LAST REVISION 09-05-13 | DATE PLOTTED => 01-MAY-2014 | TIME PLOTTED => 11:00

Dist	COUNTY	ROUTE	POST MILES TOTAL PROJECT	SHEET No.	TOTAL SHEETS
08	SBd	2,138	6.2/6.4, 2.3/R15.2	539	1168

REGISTERED CIVIL ENGINEER 9-5-13 DATE

3-3-14
PLANS APPROVAL DATE

REGISTERED PROFESSIONAL ENGINEER
TRAN HOANG
No. C54996
Exp. 6-30-14
CIVIL
STATE OF CALIFORNIA

THE STATE OF CALIFORNIA OR ITS OFFICERS OR AGENTS SHALL NOT BE RESPONSIBLE FOR THE ACCURACY OR COMPLETENESS OF SCANNED COPIES OF THIS PLAN SHEET.

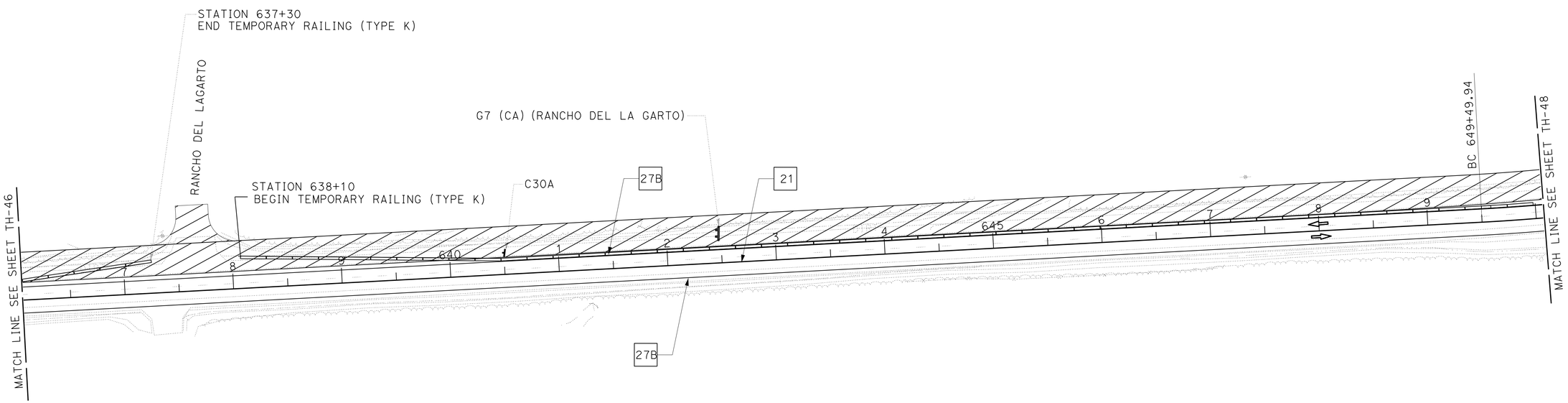

TRAFFIC HANDLING PLAN

STAGE 1 - PHASE B

NO SCALE

TH-47

APPROVED FOR TRAFFIC HANDLING WORK ONLY

STATE OF CALIFORNIA - DEPARTMENT OF TRANSPORTATION
Caltrans® **TRAFFIC DESIGN**

FUNCTIONAL SUPERVISOR: WILLIAM WASSER
CALCULATED-DESIGNED BY: TRAN HOANG
CHECKED BY: HORMUZD SETHNA
REVISED BY
DATE REVISED

LAST REVISION 09-05-13
DATE PLOTTED => 01-MAY-2014
TIME PLOTTED => 11:00

Dist	COUNTY	ROUTE	POST MILES TOTAL PROJECT	SHEET No.	TOTAL SHEETS
08	SBd	2,138	6.2/6.4, 2.3/R15.2	540	1168

REGISTERED CIVIL ENGINEER DATE 9-5-13

3-3-14
PLANS APPROVAL DATE

REGISTERED PROFESSIONAL ENGINEER
TRAN HOANG
No. C54996
Exp. 6-30-14
CIVIL
STATE OF CALIFORNIA

THE STATE OF CALIFORNIA OR ITS OFFICERS OR AGENTS SHALL NOT BE RESPONSIBLE FOR THE ACCURACY OR COMPLETENESS OF SCANNED COPIES OF THIS PLAN SHEET.

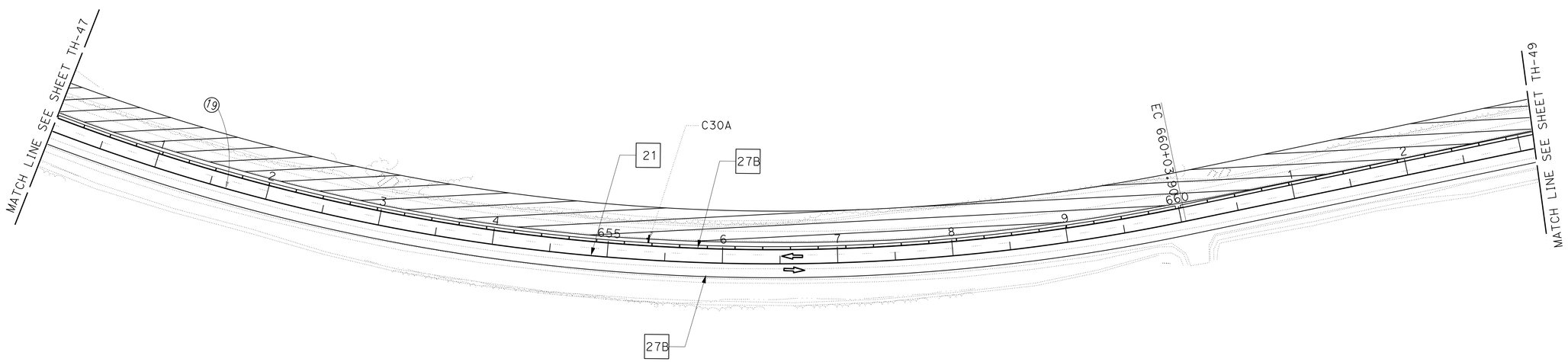

TRAFFIC HANDLING PLAN

STAGE 1 - PHASE B

NO SCALE

TH-48

APPROVED FOR TRAFFIC HANDLING WORK ONLY

STATE OF CALIFORNIA - DEPARTMENT OF TRANSPORTATION
Caltrans® **TRAFFIC DESIGN**

FUNCTIONAL SUPERVISOR: WILLIAM WASSER

CALCULATED-DESIGNED BY: TRAN HOANG
CHECKED BY: HORMUZD SETHNA

REVISED BY
DATE REVISED

LAST REVISION 09-05-13 | DATE PLOTTED => 01-MAY-2014 | TIME PLOTTED => 11:00

Dist	COUNTY	ROUTE	POST MILES TOTAL PROJECT	SHEET No.	TOTAL SHEETS
08	SBd	2,138	6.2/6.4, 2.3/R15.2	541	1168

REGISTERED CIVIL ENGINEER 9-5-13 DATE

3-3-14
PLANS APPROVAL DATE

REGISTERED PROFESSIONAL ENGINEER
TRAN HOANG
No. C54996
Exp. 6-30-14
CIVIL
STATE OF CALIFORNIA

THE STATE OF CALIFORNIA OR ITS OFFICERS OR AGENTS SHALL NOT BE RESPONSIBLE FOR THE ACCURACY OR COMPLETENESS OF SCANNED COPIES OF THIS PLAN SHEET.

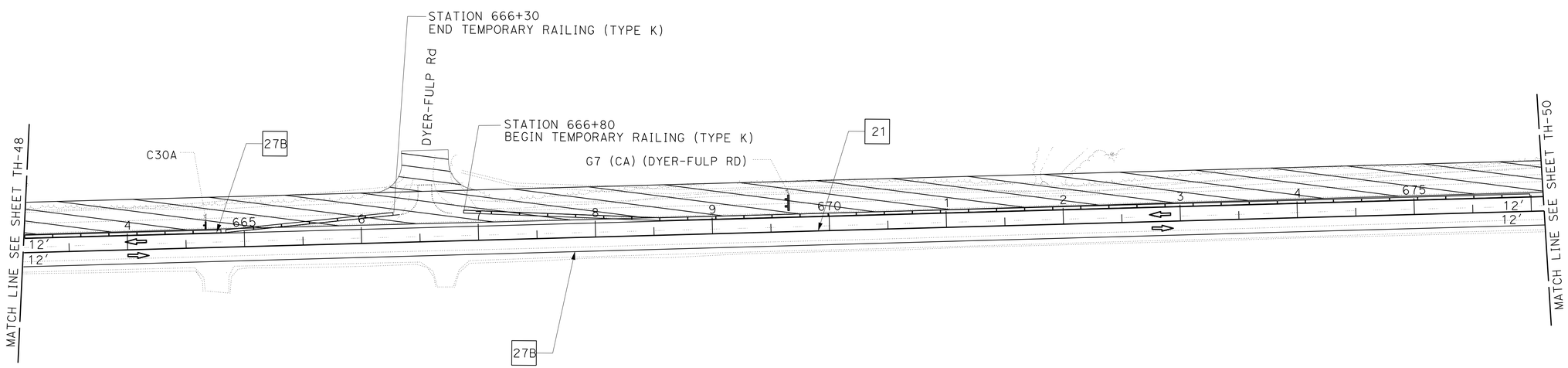

TRAFFIC HANDLING PLAN
STAGE 1 - PHASE B
NO SCALE

TH-49

APPROVED FOR TRAFFIC HANDLING WORK ONLY

STATE OF CALIFORNIA - DEPARTMENT OF TRANSPORTATION
Caltrans® **TRAFFIC DESIGN**

FUNCTIONAL SUPERVISOR: WILLIAM WASSER
CALCULATED-DESIGNED BY: TRAN HOANG
CHECKED BY: HORMUZD SETHNA
REVISED BY
DATE REVISED

LAST REVISION 09-05-13
DATE PLOTTED => 01-MAY-2014
TIME PLOTTED => 11:00

Dist	COUNTY	ROUTE	POST MILES TOTAL PROJECT	SHEET No.	TOTAL SHEETS
08	SBd	2,138	6.2/6.4, 2.3/R15.2	542	1168

REGISTERED CIVIL ENGINEER 9-5-13 DATE

3-3-14
PLANS APPROVAL DATE

REGISTERED PROFESSIONAL ENGINEER
TRAN HOANG
No. C54996
Exp. 6-30-14
CIVIL
STATE OF CALIFORNIA

THE STATE OF CALIFORNIA OR ITS OFFICERS OR AGENTS SHALL NOT BE RESPONSIBLE FOR THE ACCURACY OR COMPLETENESS OF SCANNED COPIES OF THIS PLAN SHEET.

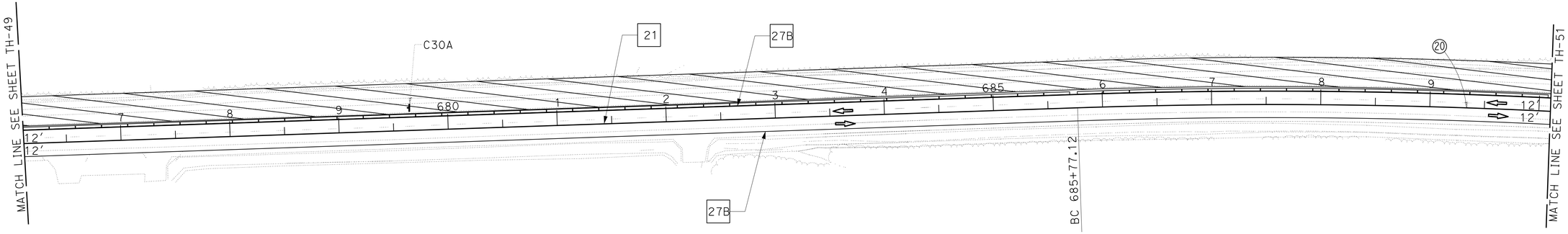

TRAFFIC HANDLING PLAN

STAGE 1 - PHASE B

NO SCALE

TH-50

APPROVED FOR TRAFFIC HANDLING WORK ONLY

STATE OF CALIFORNIA - DEPARTMENT OF TRANSPORTATION
Caltrans® **TRAFFIC DESIGN**

FUNCTIONAL SUPERVISOR: WILLIAM WASSER

CALCULATED-DESIGNED BY: TRAN HOANG
CHECKED BY: HORMUZD SETHNA

REVISED BY
DATE REVISED

LAST REVISION 09-05-13 | DATE PLOTTED => 01-MAY-2014 | TIME PLOTTED => 11:00

Dist	COUNTY	ROUTE	POST MILES TOTAL PROJECT	SHEET No.	TOTAL SHEETS
08	SBd	2,138	6.2/6.4, 2.3/R15.2	543	1168

REGISTERED CIVIL ENGINEER 9-5-13 DATE

3-3-14
PLANS APPROVAL DATE

REGISTERED PROFESSIONAL ENGINEER
TRAN HOANG
No. C54996
Exp. 6-30-14
CIVIL
STATE OF CALIFORNIA

THE STATE OF CALIFORNIA OR ITS OFFICERS OR AGENTS SHALL NOT BE RESPONSIBLE FOR THE ACCURACY OR COMPLETENESS OF SCANNED COPIES OF THIS PLAN SHEET.

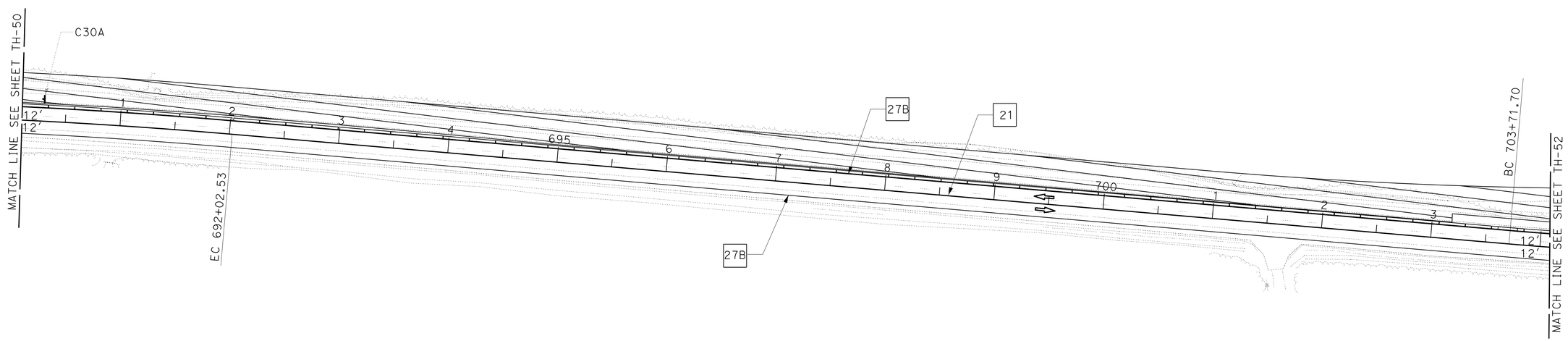

TRAFFIC HANDLING PLAN

STAGE 1 - PHASE B

NO SCALE

TH-51

APPROVED FOR TRAFFIC HANDLING WORK ONLY

STATE OF CALIFORNIA - DEPARTMENT OF TRANSPORTATION
Caltrans® **TRAFFIC DESIGN**

FUNCTIONAL SUPERVISOR: WILLIAM WASSER

CALCULATED-DESIGNED BY: TRAN HOANG
CHECKED BY: HORMUZD SETHNA

REVISED BY
DATE REVISED

LAST REVISION 09-05-13
DATE PLOTTED => 01-MAY-2014
TIME PLOTTED => 11:00

Dist	COUNTY	ROUTE	POST MILES TOTAL PROJECT	SHEET No.	TOTAL SHEETS
08	SBd	2,138	6.2/6.4, 2.3/R15.2	544	1168

REGISTERED CIVIL ENGINEER 9-5-13 DATE

3-3-14
PLANS APPROVAL DATE

REGISTERED PROFESSIONAL ENGINEER
TRAN HOANG
No. C54996
Exp. 6-30-14
CIVIL
STATE OF CALIFORNIA

THE STATE OF CALIFORNIA OR ITS OFFICERS OR AGENTS SHALL NOT BE RESPONSIBLE FOR THE ACCURACY OR COMPLETENESS OF SCANNED COPIES OF THIS PLAN SHEET.

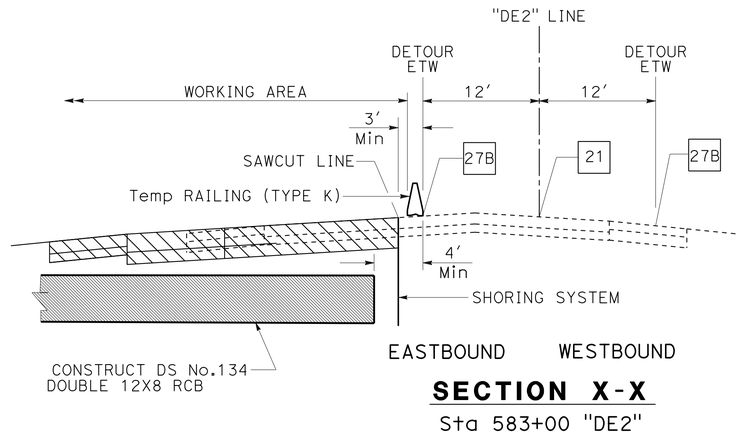

SECTION X-X

Sta 583+00 "DE2"

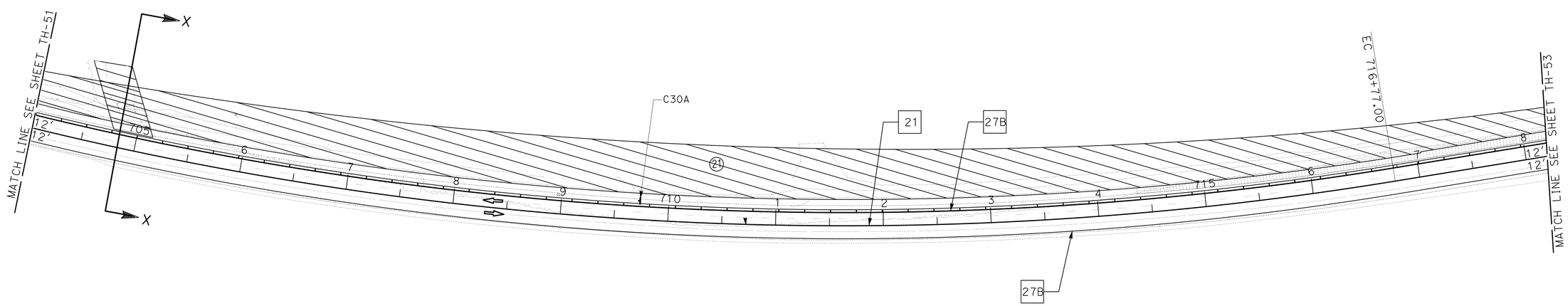

TRAFFIC HANDLING PLAN

STAGE 1 - PHASE B

NO SCALE

TH-52

APPROVED FOR TRAFFIC HANDLING WORK ONLY

STATE OF CALIFORNIA - DEPARTMENT OF TRANSPORTATION
Caltrans® **TRAFFIC DESIGN**

FUNCTIONAL SUPERVISOR: WILLIAM WASSER

CALCULATED-DESIGNED BY: TRAN HOANG
CHECKED BY: HORMUZD SETHNA

REVISED BY
DATE REVISED

LAST REVISION 09-05-13
DATE PLOTTED => 01-MAY-2014
TIME PLOTTED => 11:00

Dist	COUNTY	ROUTE	POST MILES TOTAL PROJECT	SHEET No.	TOTAL SHEETS
08	SBd	2,138	6.2/6.4, 2.3/R15.2	545	1168

REGISTERED CIVIL ENGINEER 9-5-13 DATE

3-3-14
PLANS APPROVAL DATE

REGISTERED PROFESSIONAL ENGINEER
TRAN HOANG
No. C54996
Exp. 6-30-14
CIVIL
STATE OF CALIFORNIA

THE STATE OF CALIFORNIA OR ITS OFFICERS OR AGENTS SHALL NOT BE RESPONSIBLE FOR THE ACCURACY OR COMPLETENESS OF SCANNED COPIES OF THIS PLAN SHEET.

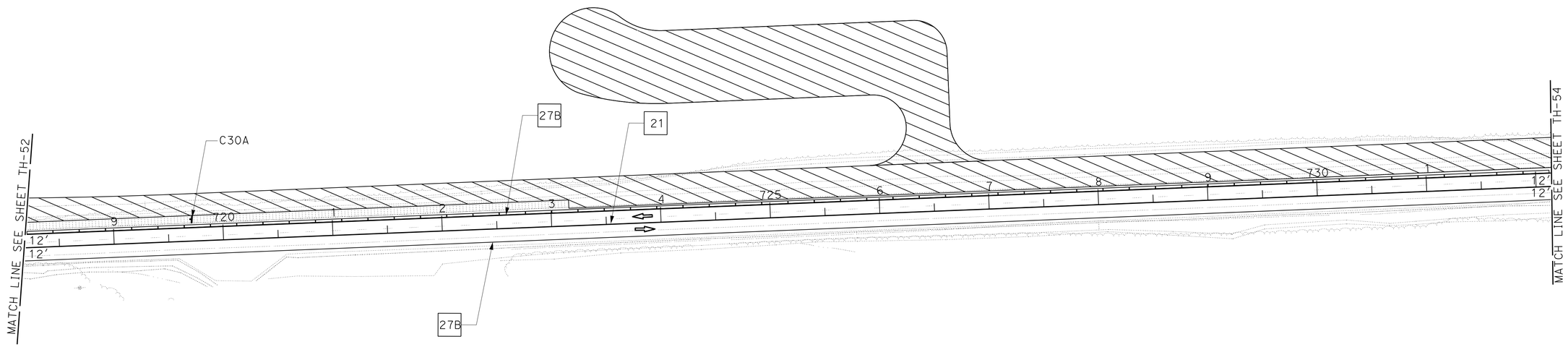

TRAFFIC HANDLING PLAN

STAGE 1 - PHASE B

NO SCALE

TH-53

APPROVED FOR TRAFFIC HANDLING WORK ONLY

STATE OF CALIFORNIA - DEPARTMENT OF TRANSPORTATION
Caltrans® **TRAFFIC DESIGN**

FUNCTIONAL SUPERVISOR: WILLIAM WASSER
CALCULATED-DESIGNED BY: TRAN HOANG
CHECKED BY: HORMUZD SETHNA
REVISED BY
DATE REVISED

LAST REVISION 09-05-13 | DATE PLOTTED => 01-MAY-2014 | TIME PLOTTED => 11:00

Dist	COUNTY	ROUTE	POST MILES TOTAL PROJECT	SHEET No.	TOTAL SHEETS
08	SBd	2,138	6.2/6.4, 2.3/R15.2	546	1168

REGISTERED CIVIL ENGINEER 9-5-13 DATE

3-3-14
PLANS APPROVAL DATE

REGISTERED PROFESSIONAL ENGINEER TRAN HOANG No. C54996 Exp. 6-30-14 CIVIL STATE OF CALIFORNIA

THE STATE OF CALIFORNIA OR ITS OFFICERS OR AGENTS SHALL NOT BE RESPONSIBLE FOR THE ACCURACY OR COMPLETENESS OF SCANNED COPIES OF THIS PLAN SHEET.

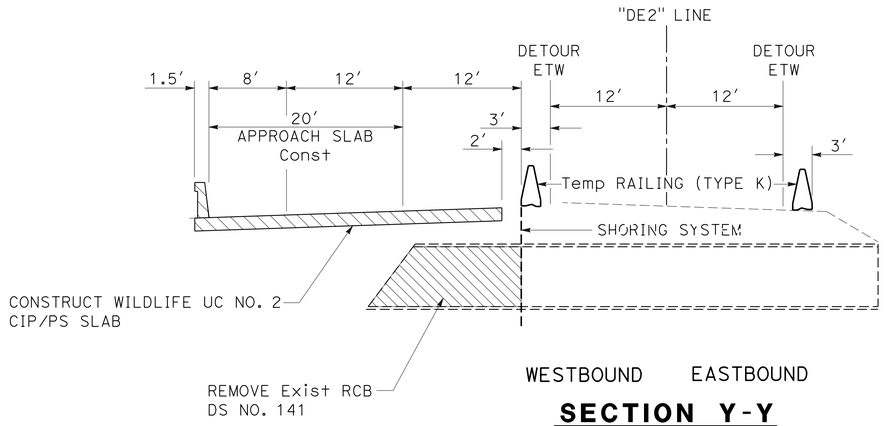

SECTION Y-Y

Sta 735+00 "DE2"

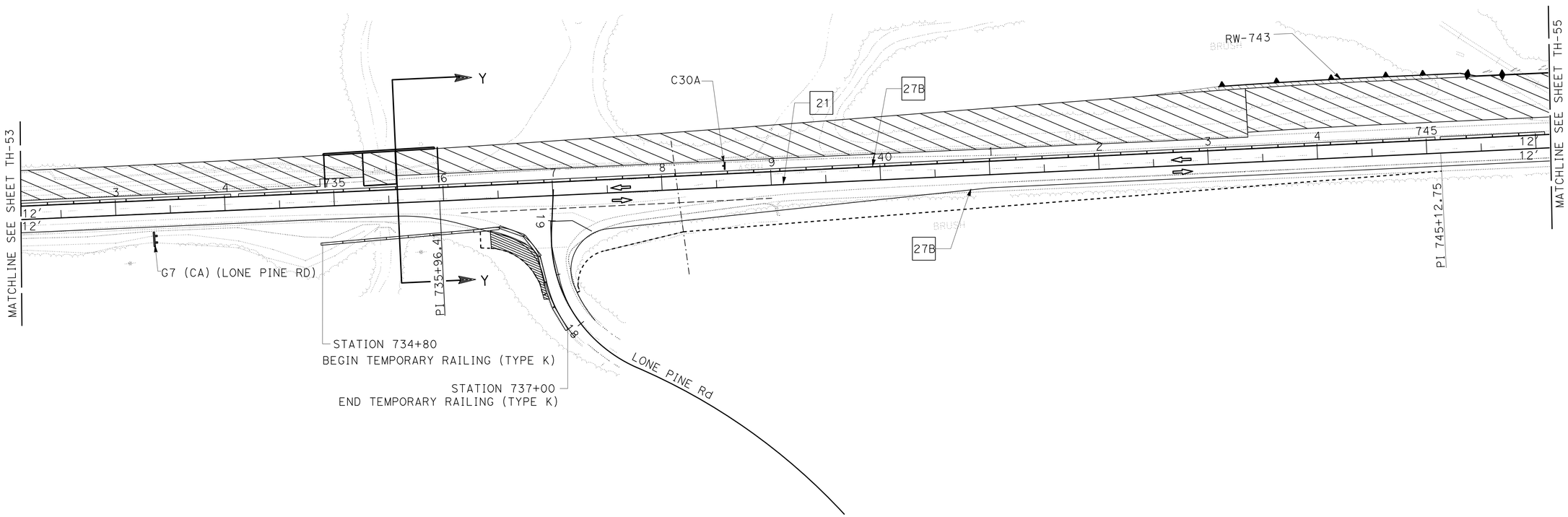

TRAFFIC HANDLING PLAN

STAGE 1 - PHASE B

NO SCALE

TH-54

APPROVED FOR TRAFFIC HANDLING WORK ONLY

STATE OF CALIFORNIA - DEPARTMENT OF TRANSPORTATION

Caltrans® **TRAFFIC DESIGN**

FUNCTIONAL SUPERVISOR: WILLIAM WASSER

CALCULATED-DESIGNED BY: TRAN HOANG

CHECKED BY: HORMUZD SETHNA

REVISED BY

DATE REVISED

LAST REVISION 09-05-13

DATE PLOTTED => 01-MAY-2014

TIME PLOTTED => 11:00

Dist	COUNTY	ROUTE	POST MILES TOTAL PROJECT	SHEET No.	TOTAL SHEETS
08	SBd	2,138	6.2/6.4, 2.3/R15.2	547	1168

REGISTERED CIVIL ENGINEER 2-25-14 DATE

3-3-14
PLANS APPROVAL DATE

REGISTERED PROFESSIONAL ENGINEER
TRAN HOANG
No. C54996
Exp. 6-30-14
CIVIL
STATE OF CALIFORNIA

THE STATE OF CALIFORNIA OR ITS OFFICERS OR AGENTS SHALL NOT BE RESPONSIBLE FOR THE ACCURACY OR COMPLETENESS OF SCANNED COPIES OF THIS PLAN SHEET.

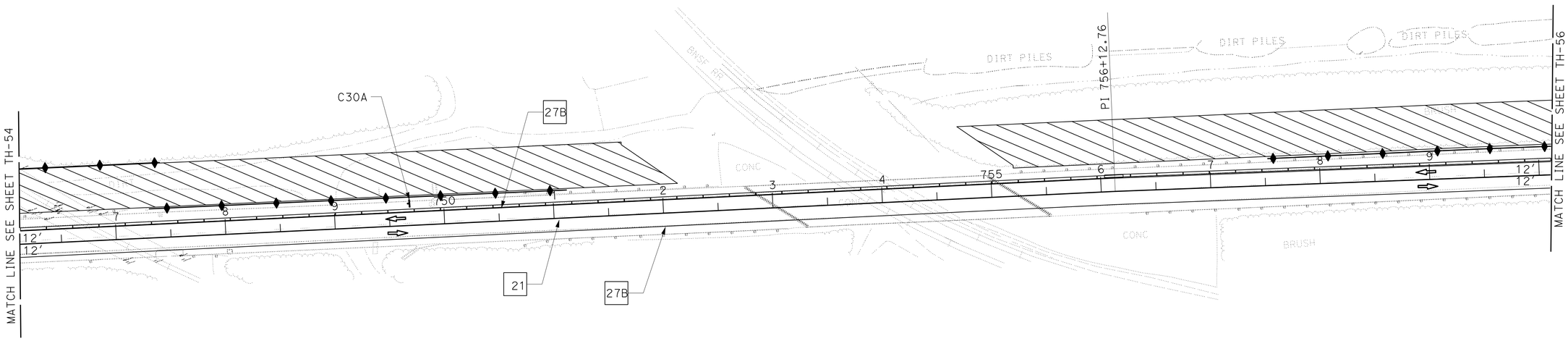

TRAFFIC HANDLING PLAN

STAGE 1 - PHASE B

NO SCALE

TH-55

APPROVED FOR TRAFFIC HANDLING WORK ONLY

STATE OF CALIFORNIA - DEPARTMENT OF TRANSPORTATION
Caltrans® **TRAFFIC DESIGN**

FUNCTIONAL SUPERVISOR: WILLIAM WASSER

CALCULATED-DESIGNED BY: TRAN HOANG
CHECKED BY: HORMUZD SETHNA

REVISED BY
DATE REVISED

LAST REVISION 02-25-14 | DATE PLOTTED => 01-MAY-2014 | TIME PLOTTED => 11:00

BORDER LAST REVISED 7/2/2010 | USERNAME => s121614 | DGN FILE => 0800000609md055.dgn | RELATIVE BORDER SCALE IS IN INCHES 0 1 2 3 | UNIT 2285 | PROJECT NUMBER & PHASE 08000006091

Dist	COUNTY	ROUTE	POST MILES TOTAL PROJECT	SHEET No.	TOTAL SHEETS
08	SBd	2,138	6.2/6.4, 2.3/R15.2	548	1168

REGISTERED CIVIL ENGINEER 9-5-13 DATE

3-3-14
PLANS APPROVAL DATE

REGISTERED PROFESSIONAL ENGINEER
TRAN HOANG
No. C54996
Exp. 6-30-14
CIVIL
STATE OF CALIFORNIA

THE STATE OF CALIFORNIA OR ITS OFFICERS OR AGENTS SHALL NOT BE RESPONSIBLE FOR THE ACCURACY OR COMPLETENESS OF SCANNED COPIES OF THIS PLAN SHEET.

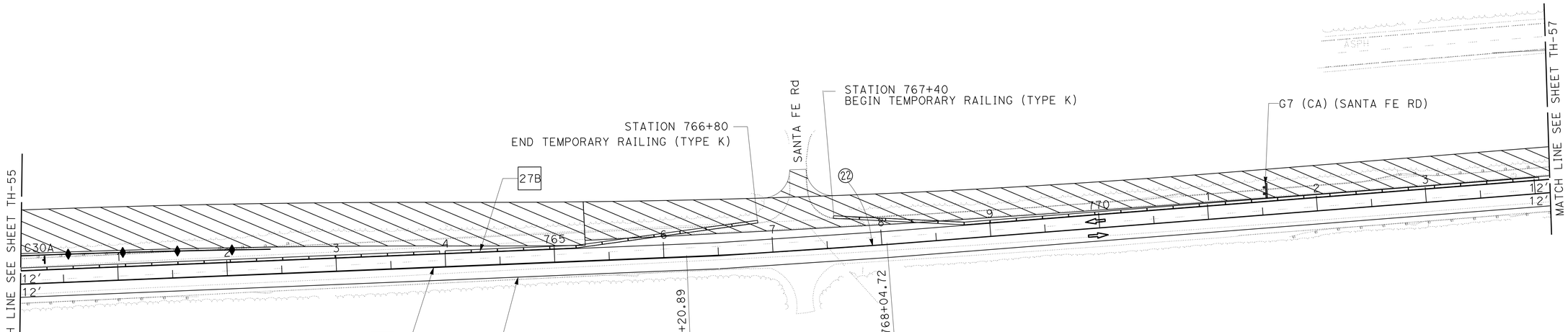

TRAFFIC HANDLING PLAN

STAGE 1 - PHASE B

NO SCALE

TH-56

APPROVED FOR TRAFFIC HANDLING WORK ONLY

STATE OF CALIFORNIA - DEPARTMENT OF TRANSPORTATION
Caltrans® TRAFFIC DESIGN

FUNCTIONAL SUPERVISOR: WILLIAM WASSER
CALCULATED-DESIGNED BY: TRAN HOANG
CHECKED BY: HORMUZD SETHNA
REVISED BY
DATE REVISED

LAST REVISION 09-05-13
DATE PLOTTED => 01-MAY-2014
TIME PLOTTED => 11:01

Dist	COUNTY	ROUTE	POST MILES TOTAL PROJECT	SHEET No.	TOTAL SHEETS
08	SBd	2,138	6.2/6.4, 2.3/R15.2	549	1168

REGISTERED CIVIL ENGINEER 2-25-14 DATE

3-3-14
PLANS APPROVAL DATE

REGISTERED PROFESSIONAL ENGINEER TRAN HOANG No. C54996 Exp. 6-30-14 CIVIL STATE OF CALIFORNIA

THE STATE OF CALIFORNIA OR ITS OFFICERS OR AGENTS SHALL NOT BE RESPONSIBLE FOR THE ACCURACY OR COMPLETENESS OF SCANNED COPIES OF THIS PLAN SHEET.

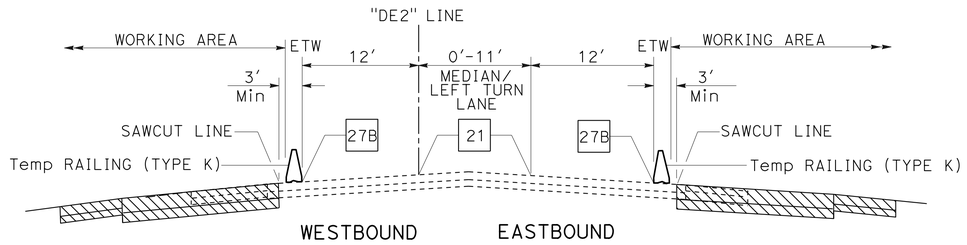

SECTION Q-Q

Sta 782+50 TO Sta 791+50 "DE2"

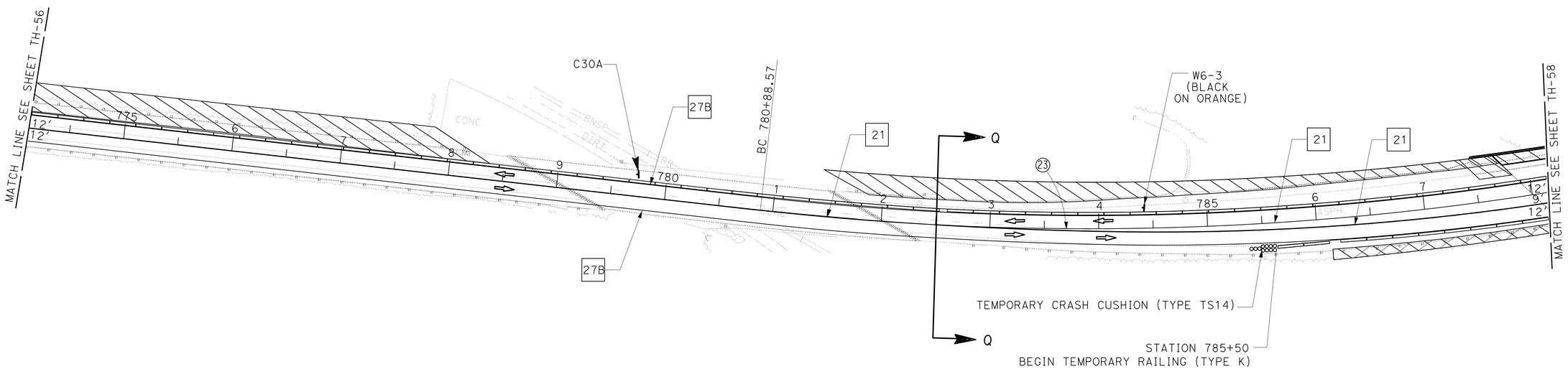

TRAFFIC HANDLING PLAN

STAGE 1 - PHASE B

NO SCALE

TH-57

APPROVED FOR TRAFFIC HANDLING WORK ONLY

STATE OF CALIFORNIA - DEPARTMENT OF TRANSPORTATION
Caltrans® **TRAFFIC DESIGN**

FUNCTIONAL SUPERVISOR: WILLIAM WASSER
CALCULATED-DESIGNED BY: TRAN HOANG
CHECKED BY: HORMUZD SETHNA
REVISED BY
DATE REVISED

LAST REVISION 02-25-14
DATE PLOTTED => 01-MAY-2014
TIME PLOTTED => 11:01

Dist	COUNTY	ROUTE	POST MILES TOTAL PROJECT	SHEET No.	TOTAL SHEETS
08	SBd	2,138	6.2/6.4, 2.3/R15.2	550	1168

REGISTERED CIVIL ENGINEER 9-5-13 DATE

3-3-14
PLANS APPROVAL DATE

REGISTERED PROFESSIONAL ENGINEER
TRAN HOANG
No. C54996
Exp. 6-30-14
CIVIL
STATE OF CALIFORNIA

THE STATE OF CALIFORNIA OR ITS OFFICERS OR AGENTS SHALL NOT BE RESPONSIBLE FOR THE ACCURACY OR COMPLETENESS OF SCANNED COPIES OF THIS PLAN SHEET.

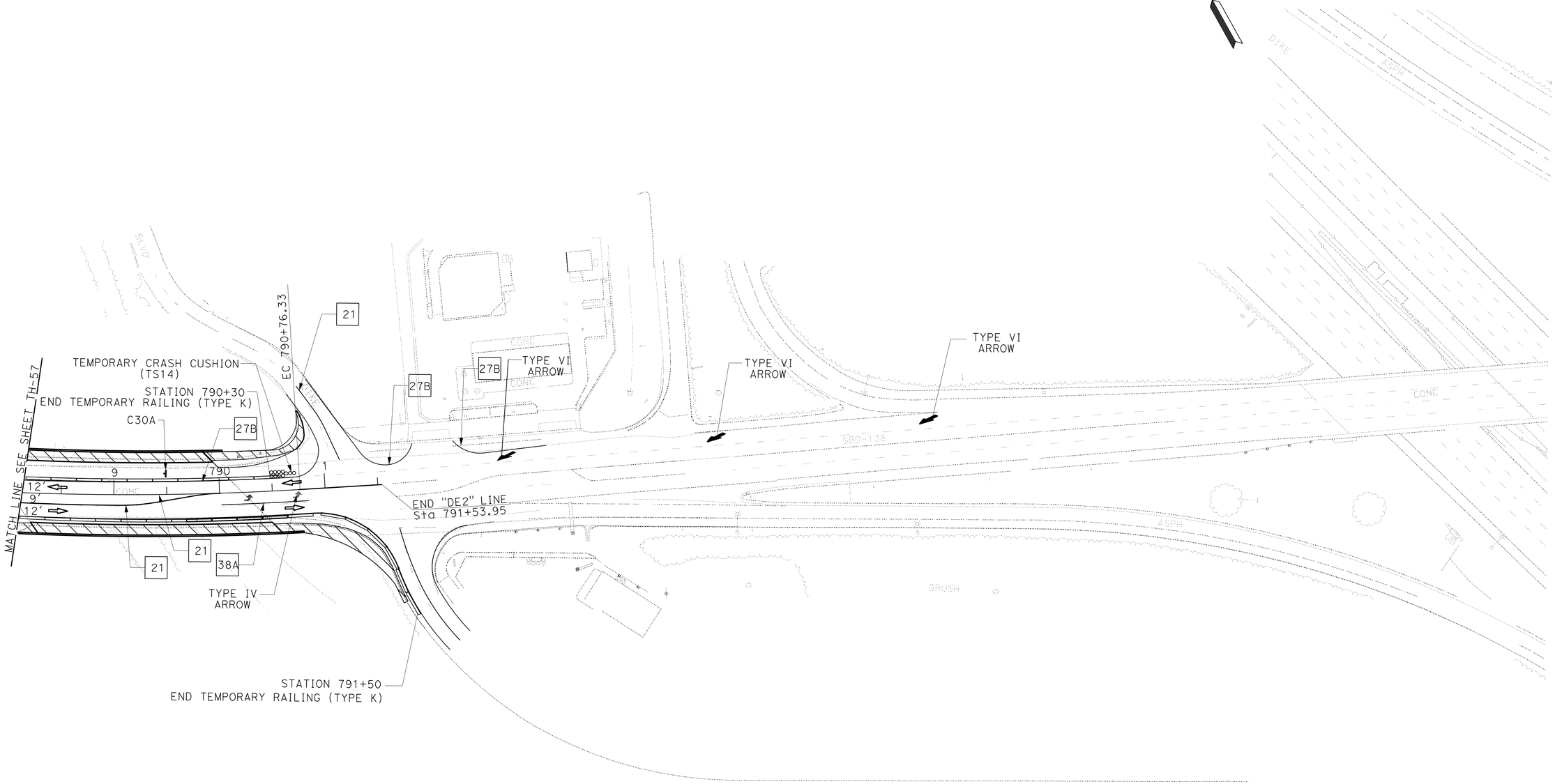

TRAFFIC HANDLING PLAN

STAGE 1 - PHASE B

NO SCALE

TH-58

APPROVED FOR TRAFFIC HANDLING WORK ONLY

STATE OF CALIFORNIA - DEPARTMENT OF TRANSPORTATION
Caltrans® **TRAFFIC DESIGN**

FUNCTIONAL SUPERVISOR: WILLIAM WASSER
CALCULATED-DESIGNED BY: TRAN HOANG
CHECKED BY: HORMUZD SETHNA
REVISED BY
DATE REVISED

LAST REVISION 09-05-13
DATE PLOTTED => 01-MAY-2014
TIME PLOTTED => 11:01

Dist	COUNTY	ROUTE	POST MILES TOTAL PROJECT	SHEET No.	TOTAL SHEETS
08	SBd	2,138	6.2/6.4, 2.3/R15.2	551	1168

REGISTERED CIVIL ENGINEER 9-5-13 DATE

3-3-14
PLANS APPROVAL DATE

REGISTERED PROFESSIONAL ENGINEER
TRAN HOANG
No. C54996
Exp. 6-30-14
CIVIL
STATE OF CALIFORNIA

THE STATE OF CALIFORNIA OR ITS OFFICERS OR AGENTS SHALL NOT BE RESPONSIBLE FOR THE ACCURACY OR COMPLETENESS OF SCANNED COPIES OF THIS PLAN SHEET.

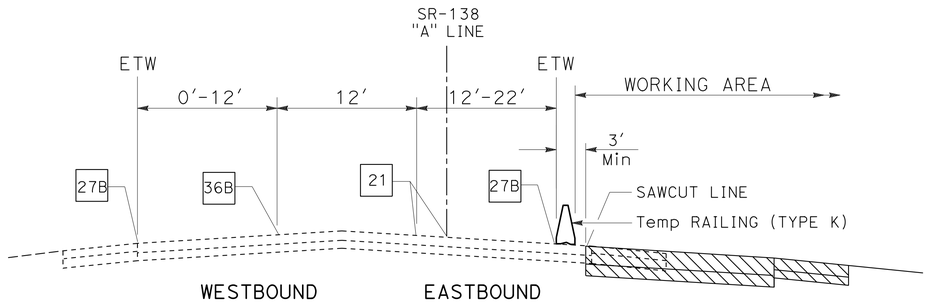

SECTION T-T

Sta 127+00 TO Sta 133+50 "C"

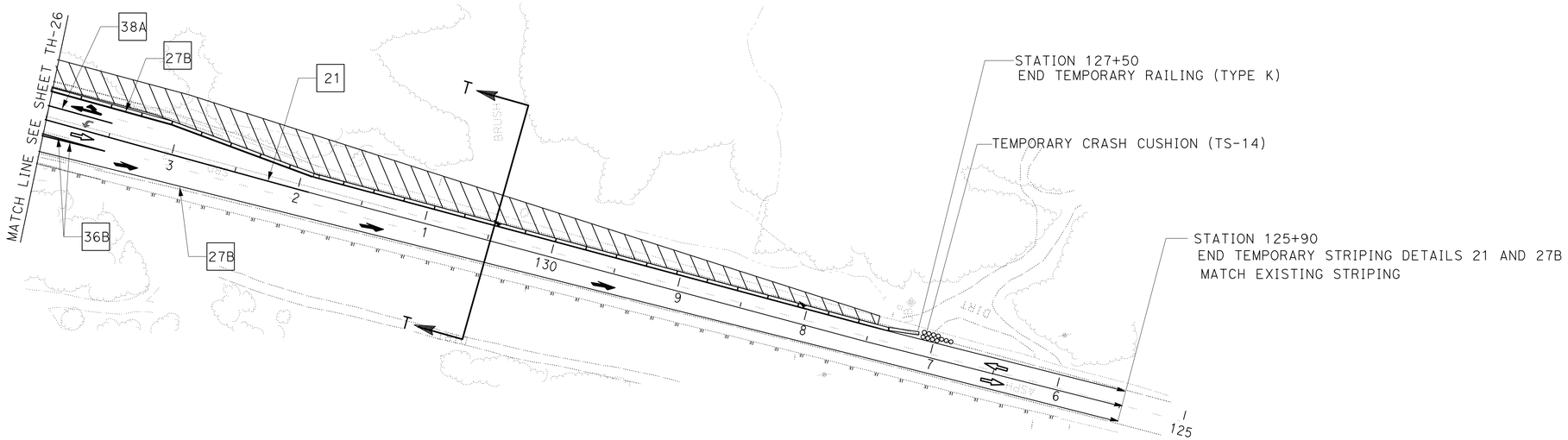

TRAFFIC HANDLING PLAN

STAGE 1 - PHASE B

NO SCALE

TH-59

APPROVED FOR TRAFFIC HANDLING WORK ONLY

STATE OF CALIFORNIA - DEPARTMENT OF TRANSPORTATION
Caltrans® **TRAFFIC DESIGN**

FUNCTIONAL SUPERVISOR: WILLIAM WASSER
CALCULATED-DESIGNED BY: TRAN HOANG
CHECKED BY: HORMUZD SETHNA
REVISED BY
DATE REVISED

LAST REVISION 09-05-13
DATE PLOTTED => 01-MAY-2014
TIME PLOTTED => 11:01

Dist	COUNTY	ROUTE	POST MILES TOTAL PROJECT	SHEET No.	TOTAL SHEETS
08	SBd	2,138	6.2/6.4, 2.3/R15.2	552	1168

REGISTERED CIVIL ENGINEER 9-5-13 DATE

3-3-14
PLANS APPROVAL DATE

REGISTERED PROFESSIONAL ENGINEER
TRAN HOANG
No. C54996
Exp. 6-30-14
CIVIL
STATE OF CALIFORNIA

THE STATE OF CALIFORNIA OR ITS OFFICERS OR AGENTS SHALL NOT BE RESPONSIBLE FOR THE ACCURACY OR COMPLETENESS OF SCANNED COPIES OF THIS PLAN SHEET.

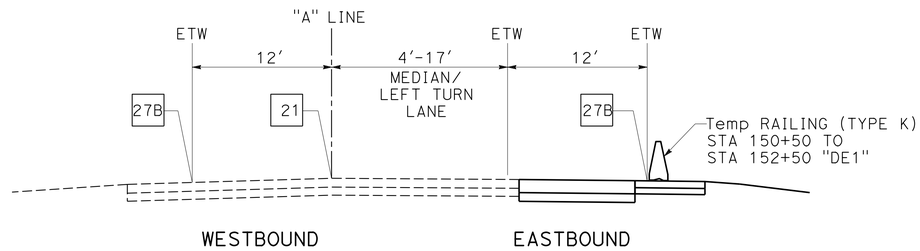

SECTION A-A

Sta 115+50 TO Sta 125+50 "A" LINE
Sta 150+50 TO Sta 152+50 "A" LINE

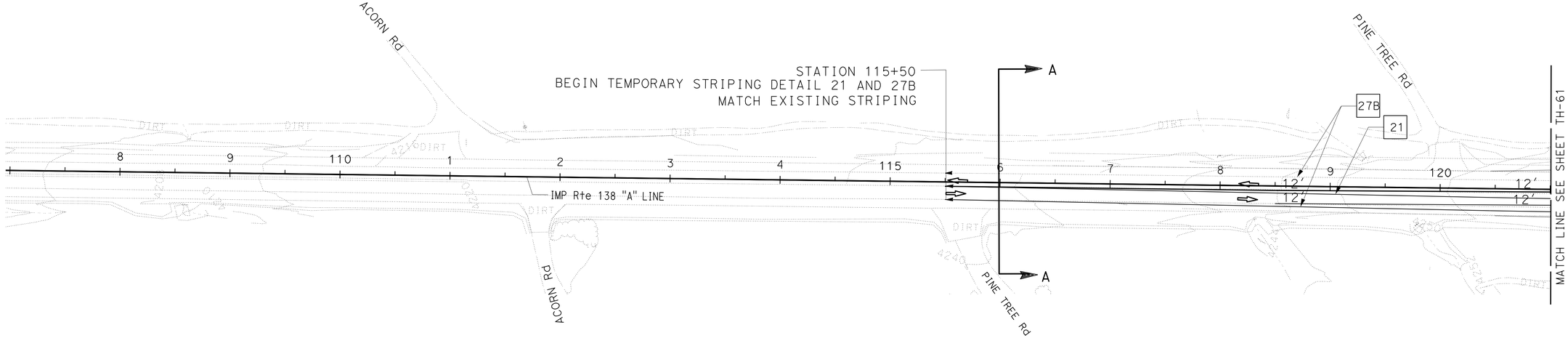

TRAFFIC HANDLING PLAN

STAGE 1 - PHASE C

NO SCALE

TH-60

APPROVED FOR TRAFFIC HANDLING WORK ONLY

STATE OF CALIFORNIA - DEPARTMENT OF TRANSPORTATION
Caltrans® **TRAFFIC DESIGN**

FUNCTIONAL SUPERVISOR: WILLIAM WASSER
CALCULATED-DESIGNED BY: TRAN HOANG
CHECKED BY: HORMUZD SETHNA
REVISED BY
DATE REVISED

LAST REVISION 09-05-13
DATE PLOTTED => 01-MAY-2014
TIME PLOTTED => 11:01

Dist	COUNTY	ROUTE	POST MILES TOTAL PROJECT	SHEET No.	TOTAL SHEETS
08	SBd	2,138	6.2/6.4, 2.3/R15.2	553	1168

REGISTERED CIVIL ENGINEER 9-5-13 DATE

3-3-14
PLANS APPROVAL DATE

REGISTERED PROFESSIONAL ENGINEER
TRAN HOANG
No. C54996
Exp. 6-30-14
CIVIL
STATE OF CALIFORNIA

THE STATE OF CALIFORNIA OR ITS OFFICERS OR AGENTS SHALL NOT BE RESPONSIBLE FOR THE ACCURACY OR COMPLETENESS OF SCANNED COPIES OF THIS PLAN SHEET.

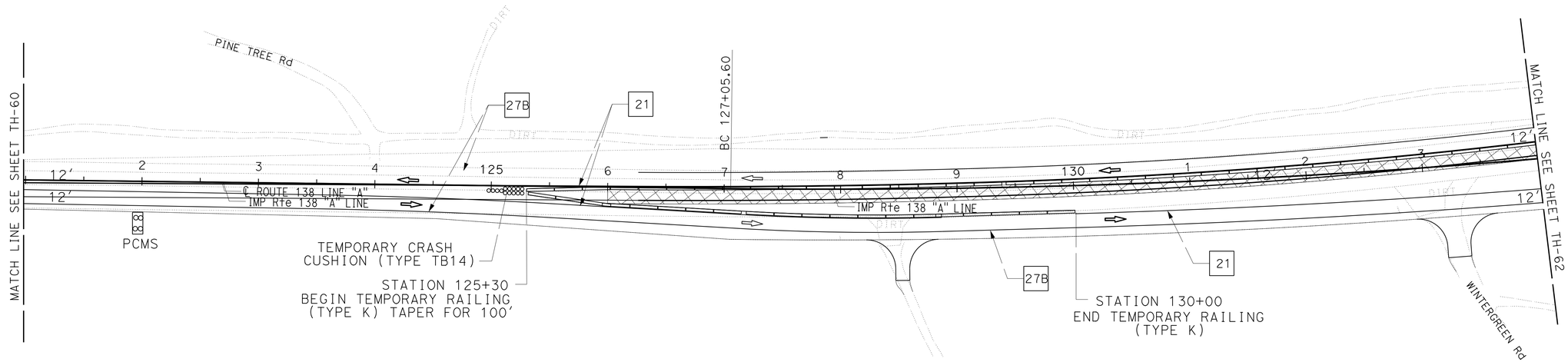

TRAFFIC HANDLING PLAN

STAGE 1 - PHASE C

NO SCALE

TH-61

APPROVED FOR TRAFFIC HANDLING WORK ONLY

STATE OF CALIFORNIA - DEPARTMENT OF TRANSPORTATION
Caltrans® **TRAFFIC DESIGN**

FUNCTIONAL SUPERVISOR: WILLIAM WASSER

CALCULATED-DESIGNED BY: TRAN HOANG
CHECKED BY: HORMUZD SETHNA

REVISED BY
DATE REVISED

LAST REVISION 09-05-13 | DATE PLOTTED => 01-MAY-2014 | TIME PLOTTED => 11:01

BORDER LAST REVISED 7/2/2010 | USERNAME => s121614 | DGN FILE => 0800000609md061.dgn | RELATIVE BORDER SCALE IS IN INCHES 0 1 2 3 | UNIT 2285 | PROJECT NUMBER & PHASE 08000006091

Dist	COUNTY	ROUTE	POST MILES TOTAL PROJECT	SHEET No.	TOTAL SHEETS
08	SBd	2,138	6.2/6.4, 2.3/R15.2	554	1168

REGISTERED CIVIL ENGINEER 9-5-13 DATE

3-3-14
PLANS APPROVAL DATE

REGISTERED PROFESSIONAL ENGINEER TRAN HOANG No. C54996 Exp. 6-30-14 CIVIL STATE OF CALIFORNIA

THE STATE OF CALIFORNIA OR ITS OFFICERS OR AGENTS SHALL NOT BE RESPONSIBLE FOR THE ACCURACY OR COMPLETENESS OF SCANNED COPIES OF THIS PLAN SHEET.

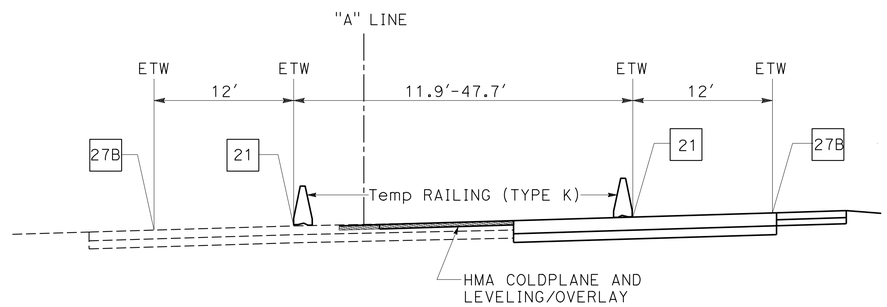

SECTION B-B

Sta 125+50 TO Sta 146+00 "A" LINE

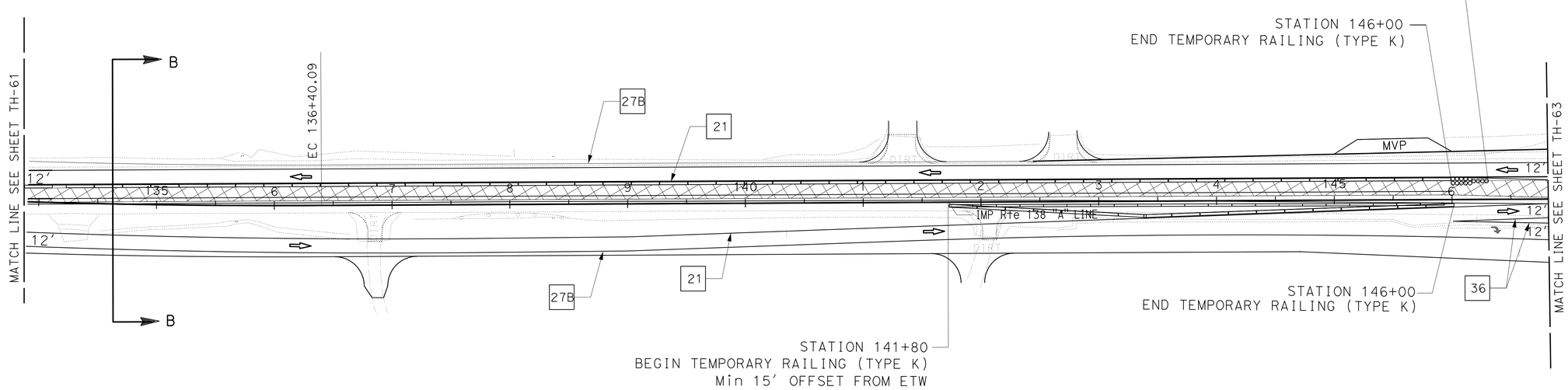

TRAFFIC HANDLING PLAN

STAGE 1 - PHASE C

NO SCALE

TH-62

APPROVED FOR TRAFFIC HANDLING WORK ONLY

STATE OF CALIFORNIA - DEPARTMENT OF TRANSPORTATION
Caltrans® TRAFFIC DESIGN

FUNCTIONAL SUPERVISOR: WILLIAM WASSER
CALCULATED-DESIGNED BY: HORMUZD SETHNA
CHECKED BY
REVISED BY: TRAN HOANG
DATE REVISED

LAST REVISION 09-05-13
DATE PLOTTED => 01-MAY-2014
TIME PLOTTED => 11:01

Dist	COUNTY	ROUTE	POST MILES TOTAL PROJECT	SHEET No.	TOTAL SHEETS
08	SBd	2,138	6.2/6.4, 2.3/R15.2	555	1168

REGISTERED CIVIL ENGINEER 9-5-13 DATE

3-3-14
PLANS APPROVAL DATE

REGISTERED PROFESSIONAL ENGINEER TRAN HOANG No. C54996 Exp. 6-30-14 CIVIL STATE OF CALIFORNIA

THE STATE OF CALIFORNIA OR ITS OFFICERS OR AGENTS SHALL NOT BE RESPONSIBLE FOR THE ACCURACY OR COMPLETENESS OF SCANNED COPIES OF THIS PLAN SHEET.

SECTION D-D

Sta 153+80 TO Sta 159+00 "A"LINE

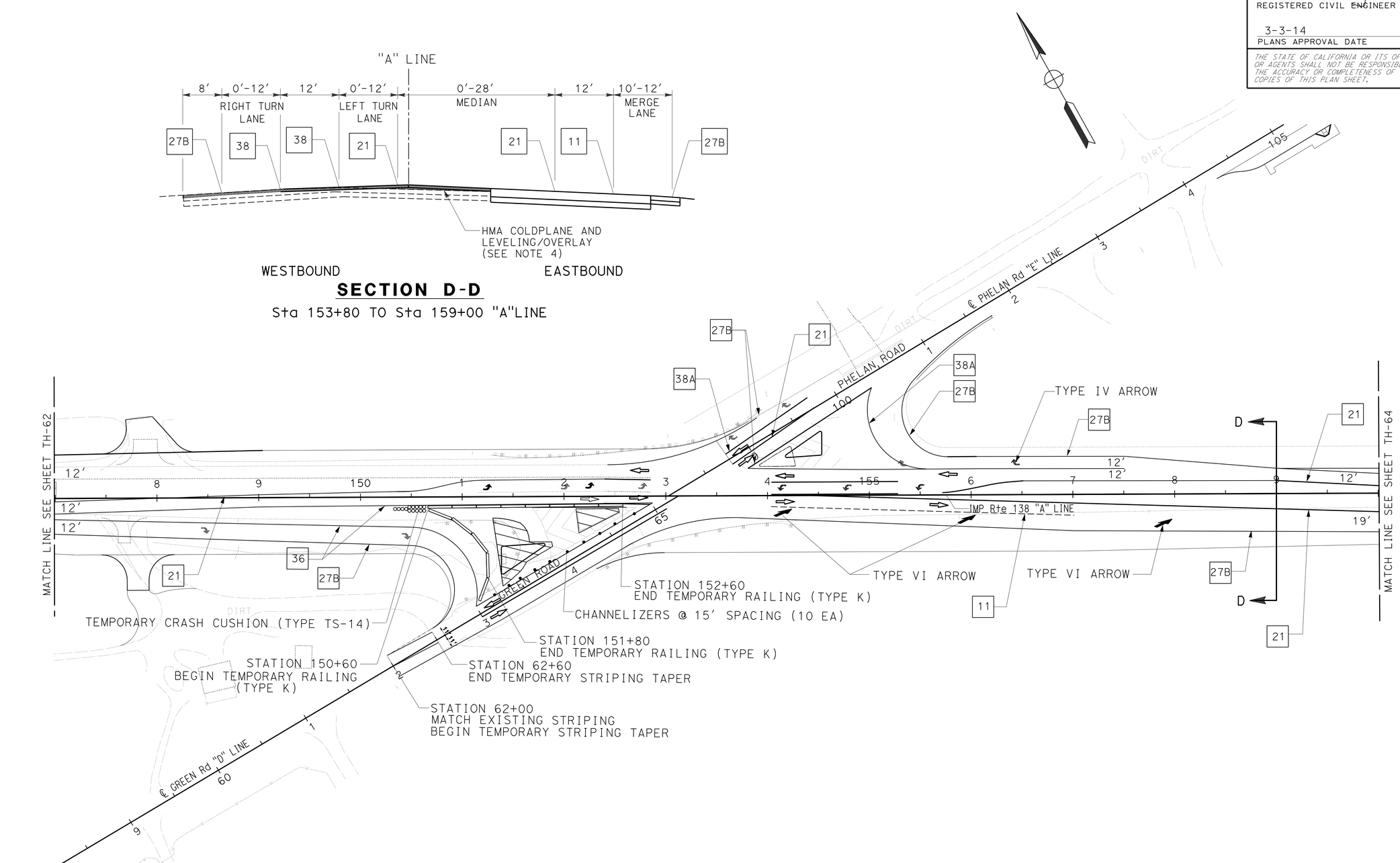

TRAFFIC HANDLING PLAN

STAGE 1 - PHASE C

NO SCALE

TH-63

APPROVED FOR TRAFFIC HANDLING WORK ONLY

STATE OF CALIFORNIA - DEPARTMENT OF TRANSPORTATION
Caltrans® **TRAFFIC DESIGN**

FUNCTIONAL SUPERVISOR: WILLIAM WASSER

CALCULATED-DESIGNED BY: TRAN HOANG
CHECKED BY: HORMUZD SETHNA

REVISED BY | DATE REVISED

LAST REVISION 09-05-13 | DATE PLOTTED => 01-MAY-2014 | TIME PLOTTED => 11:01

Dist	COUNTY	ROUTE	POST MILES TOTAL PROJECT	SHEET No.	TOTAL SHEETS
08	SBd	2,138	6.2/6.4, 2.3/R15.2	556	1168

REGISTERED CIVIL ENGINEER 9-5-13 DATE

3-3-14
PLANS APPROVAL DATE

REGISTERED PROFESSIONAL ENGINEER
TRAN HOANG
No. C54996
Exp. 6-30-14
CIVIL
STATE OF CALIFORNIA

THE STATE OF CALIFORNIA OR ITS OFFICERS OR AGENTS SHALL NOT BE RESPONSIBLE FOR THE ACCURACY OR COMPLETENESS OF SCANNED COPIES OF THIS PLAN SHEET.

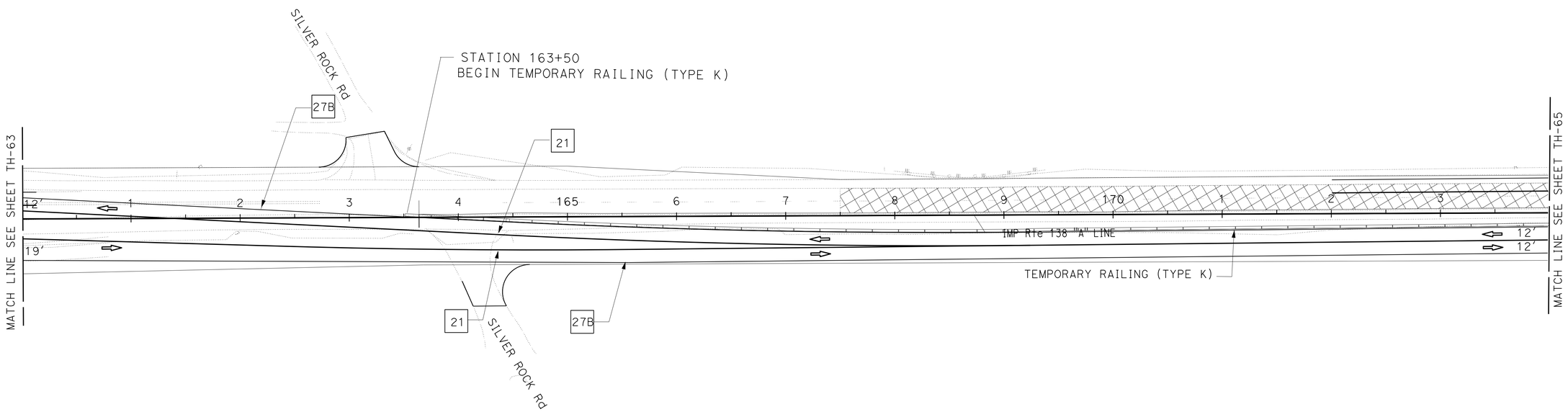

TRAFFIC HANDLING PLAN

STAGE 1 - PHASE C

NO SCALE

TH-64

APPROVED FOR TRAFFIC HANDLING WORK ONLY

STATE OF CALIFORNIA - DEPARTMENT OF TRANSPORTATION
Caltrans® **TRAFFIC DESIGN**

FUNCTIONAL SUPERVISOR: WILLIAM WASSER
CALCULATED-DESIGNED BY: TRAN HOANG
CHECKED BY: HORMUZD SETHNA
REVISED BY
DATE REVISED

DATE PLOTTED => 01-MAY-2014
TIME PLOTTED => 11:01

Dist	COUNTY	ROUTE	POST MILES TOTAL PROJECT	SHEET No.	TOTAL SHEETS
08	SBd	2,138	6.2/6.4, 2.3/R15.2	557	1168

REGISTERED CIVIL ENGINEER 9-5-13 DATE

3-3-14
PLANS APPROVAL DATE

REGISTERED PROFESSIONAL ENGINEER TRAN HOANG No. C54996 Exp. 6-30-14 CIVIL STATE OF CALIFORNIA

THE STATE OF CALIFORNIA OR ITS OFFICERS OR AGENTS SHALL NOT BE RESPONSIBLE FOR THE ACCURACY OR COMPLETENESS OF SCANNED COPIES OF THIS PLAN SHEET.

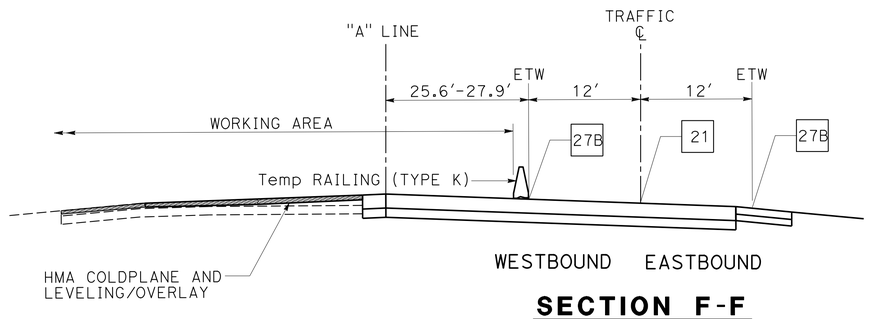

SECTION F-F

Sta 169+23 TO Sta 249+00 "A" LINE

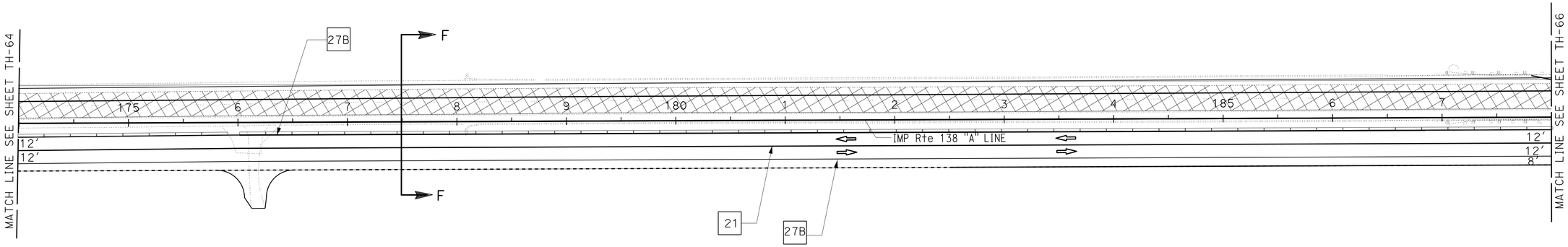

TRAFFIC HANDLING PLAN

STAGE 1 - PHASE C

NO SCALE

TH-65

APPROVED FOR TRAFFIC HANDLING WORK ONLY

STATE OF CALIFORNIA - DEPARTMENT OF TRANSPORTATION
Caltrans® **TRAFFIC DESIGN**

FUNCTIONAL SUPERVISOR: WILLIAM WASSER
CALCULATED-DESIGNED BY: TRAN HOANG
CHECKED BY: HORMUZD SETHNA
REVISED BY
DATE REVISED

LAST REVISION 09-05-13
DATE PLOTTED => 01-MAY-2014
TIME PLOTTED => 11:01

Dist	COUNTY	ROUTE	POST MILES TOTAL PROJECT	SHEET No.	TOTAL SHEETS
08	SBd	2,138	6.2/6.4, 2.3/R15.2	558	1168

REGISTERED CIVIL ENGINEER 9-5-13 DATE

3-3-14
PLANS APPROVAL DATE

REGISTERED PROFESSIONAL ENGINEER
TRAN HOANG
No. C54996
Exp. 6-30-14
CIVIL
STATE OF CALIFORNIA

THE STATE OF CALIFORNIA OR ITS OFFICERS OR AGENTS SHALL NOT BE RESPONSIBLE FOR THE ACCURACY OR COMPLETENESS OF SCANNED COPIES OF THIS PLAN SHEET.

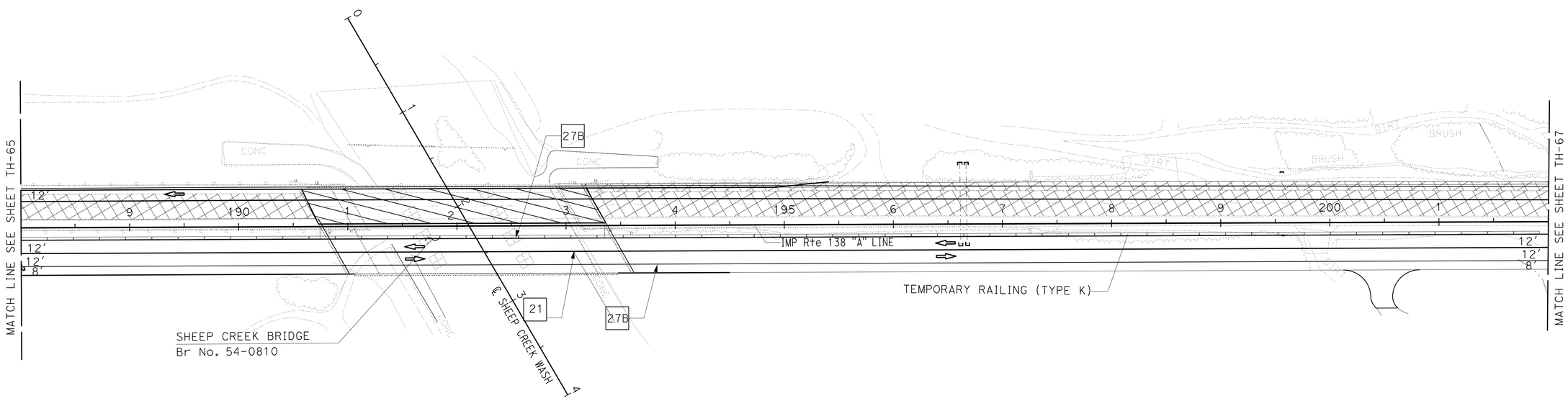

TRAFFIC HANDLING PLAN

STAGE 1 - PHASE C

NO SCALE

TH-66

APPROVED FOR TRAFFIC HANDLING WORK ONLY

STATE OF CALIFORNIA - DEPARTMENT OF TRANSPORTATION
Caltrans® **TRAFFIC DESIGN**

FUNCTIONAL SUPERVISOR: WILLIAM WASSER
CALCULATED-DESIGNED BY: TRAN HOANG
CHECKED BY: HORMUZD SETHNA
REVISED BY
DATE REVISED

LAST REVISION 09-05-13 | DATE PLOTTED => 01-MAY-2014 | TIME PLOTTED => 11:01

Dist	COUNTY	ROUTE	POST MILES TOTAL PROJECT	SHEET No.	TOTAL SHEETS
08	SBd	2,138	6.2/6.4, 2.3/R15.2	559	1168

REGISTERED CIVIL ENGINEER 9-5-13 DATE

3-3-14
PLANS APPROVAL DATE

REGISTERED PROFESSIONAL ENGINEER
TRAN HOANG
No. C54996
Exp. 6-30-14
CIVIL
STATE OF CALIFORNIA

THE STATE OF CALIFORNIA OR ITS OFFICERS OR AGENTS SHALL NOT BE RESPONSIBLE FOR THE ACCURACY OR COMPLETENESS OF SCANNED COPIES OF THIS PLAN SHEET.

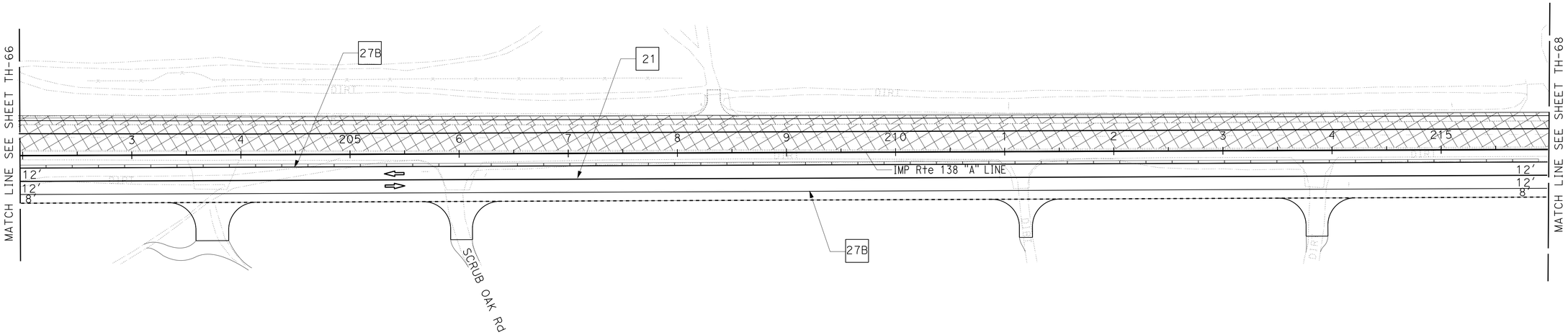

TRAFFIC HANDLING PLAN

STAGE 1 - PHASE C

NO SCALE

TH-67

APPROVED FOR TRAFFIC HANDLING WORK ONLY

STATE OF CALIFORNIA - DEPARTMENT OF TRANSPORTATION
Caltrans® TRAFFIC DESIGN

FUNCTIONAL SUPERVISOR: WILLIAM WASSER
CALCULATED-DESIGNED BY: TRAN HOANG
CHECKED BY: HORMUZD SETHNA
REVISED BY
DATE REVISED

LAST REVISION 09-05-13
DATE PLOTTED => 01-MAY-2014
TIME PLOTTED => 11:01

Dist	COUNTY	ROUTE	POST MILES TOTAL PROJECT	SHEET No.	TOTAL SHEETS
08	SBd	2,138	6.2/6.4, 2.3/R15.2	560	1168

REGISTERED CIVIL ENGINEER 9-5-13 DATE

3-3-14
PLANS APPROVAL DATE

REGISTERED PROFESSIONAL ENGINEER
TRAN HOANG
No. C54996
Exp. 6-30-14
CIVIL
STATE OF CALIFORNIA

THE STATE OF CALIFORNIA OR ITS OFFICERS OR AGENTS SHALL NOT BE RESPONSIBLE FOR THE ACCURACY OR COMPLETENESS OF SCANNED COPIES OF THIS PLAN SHEET.

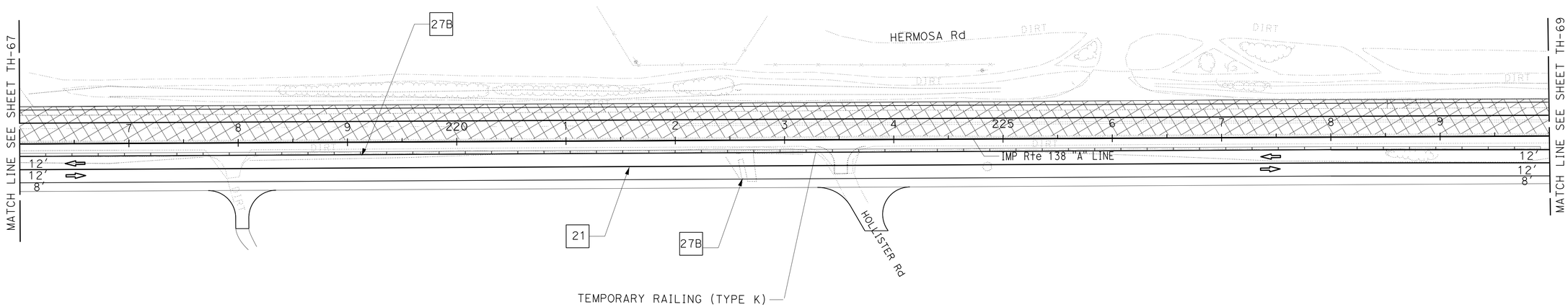

TRAFFIC HANDLING PLAN

STAGE 1 - PHASE C

NO SCALE

TH-68

APPROVED FOR TRAFFIC HANDLING WORK ONLY

STATE OF CALIFORNIA - DEPARTMENT OF TRANSPORTATION
Caltrans® **TRAFFIC DESIGN**

FUNCTIONAL SUPERVISOR: WILLIAM WASSER

CALCULATED-DESIGNED BY: TRAN HOANG
CHECKED BY: HORMUZD SETHNA

REVISED BY
DATE REVISED

LAST REVISION 09-05-13 | DATE PLOTTED => 01-MAY-2014 | TIME PLOTTED => 11:02

Dist	COUNTY	ROUTE	POST MILES TOTAL PROJECT	SHEET No.	TOTAL SHEETS
08	SBd	2,138	6.2/6.4, 2.3/R15.2	561	1168

REGISTERED CIVIL ENGINEER 9-5-13 DATE

3-3-14
PLANS APPROVAL DATE

REGISTERED PROFESSIONAL ENGINEER TRAN HOANG No. C54996 Exp. 6-30-14 CIVIL STATE OF CALIFORNIA

THE STATE OF CALIFORNIA OR ITS OFFICERS OR AGENTS SHALL NOT BE RESPONSIBLE FOR THE ACCURACY OR COMPLETENESS OF SCANNED COPIES OF THIS PLAN SHEET.

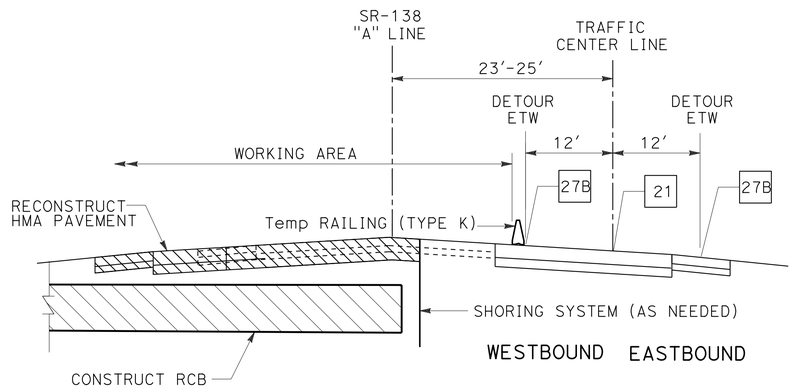

SECTION G-G

Sta 230+00 "A" LINE
Sta 250+35 "A" LINE

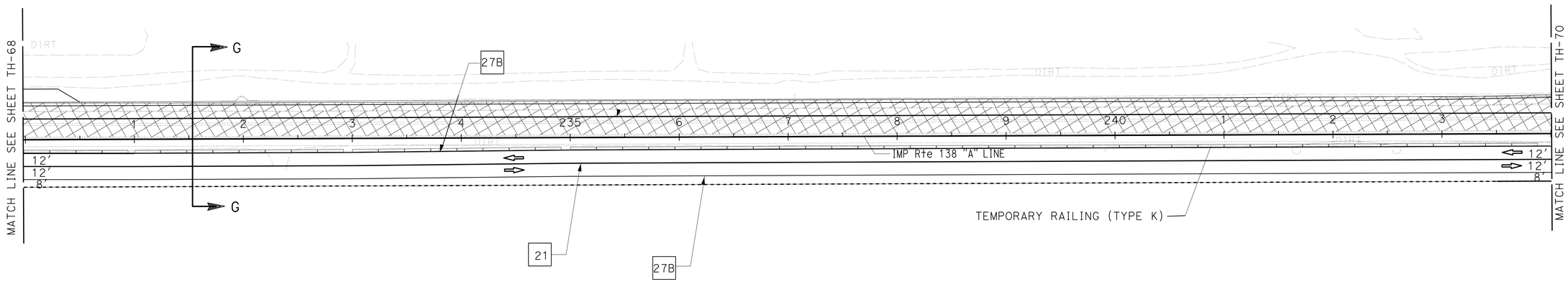

TRAFFIC HANDLING PLAN

STAGE 1 - PHASE C

NO SCALE

TH-69

APPROVED FOR TRAFFIC HANDLING WORK ONLY

STATE OF CALIFORNIA - DEPARTMENT OF TRANSPORTATION
Caltrans® TRAFFIC DESIGN

FUNCTIONAL SUPERVISOR: WILLIAM WASSER

CALCULATED-DESIGNED BY: HORMUZD SETHNA
CHECKED BY:

REVISED BY: TRAN HOANG
DATE REVISED:

LAST REVISION 09-05-13 | DATE PLOTTED => 01-MAY-2014 | TIME PLOTTED => 11:02

Dist	COUNTY	ROUTE	POST MILES TOTAL PROJECT	SHEET No.	TOTAL SHEETS
08	SBd	2,138	6.2/6.4, 2.3/R15.2	562	1168

REGISTERED CIVIL ENGINEER 9-5-13 DATE

3-3-14
PLANS APPROVAL DATE

REGISTERED PROFESSIONAL ENGINEER
TRAN HOANG
No. C54996
Exp. 6-30-14
CIVIL
STATE OF CALIFORNIA

THE STATE OF CALIFORNIA OR ITS OFFICERS OR AGENTS SHALL NOT BE RESPONSIBLE FOR THE ACCURACY OR COMPLETENESS OF SCANNED COPIES OF THIS PLAN SHEET.

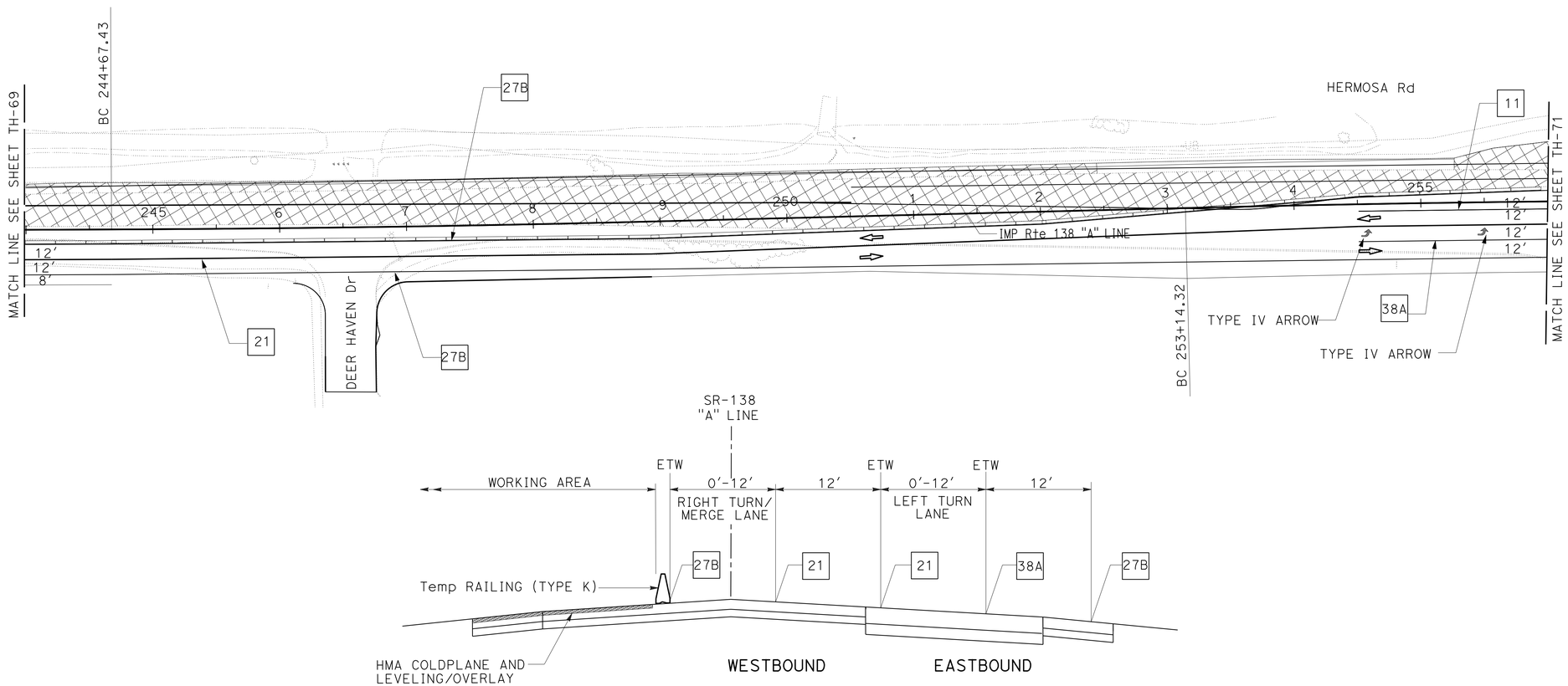

SECTION H-H

Sta 249+00 TO Sta 263+00 "A" LINE

TRAFFIC HANDLING PLAN

STAGE 1 - PHASE C

NO SCALE

TH-70

APPROVED FOR TRAFFIC HANDLING WORK ONLY

STATE OF CALIFORNIA - DEPARTMENT OF TRANSPORTATION
Caltrans® **TRAFFIC DESIGN**

FUNCTIONAL SUPERVISOR: WILLIAM WASSER
CALCULATED-DESIGNED BY: TRAN HOANG
CHECKED BY: HORMUZD SETHNA
REVISED BY
DATE REVISED

LAST REVISION 09-05-13 | DATE PLOTTED => 01-MAY-2014 | TIME PLOTTED => 11:02

Dist	COUNTY	ROUTE	POST MILES TOTAL PROJECT	SHEET No.	TOTAL SHEETS
08	SBd	2,138	6.2/6.4, 2.3/R15.2	563	1168

REGISTERED CIVIL ENGINEER 9-5-13 DATE

3-3-14
PLANS APPROVAL DATE

REGISTERED PROFESSIONAL ENGINEER TRAN HOANG No. C54996 Exp. 6-30-14 CIVIL STATE OF CALIFORNIA

THE STATE OF CALIFORNIA OR ITS OFFICERS OR AGENTS SHALL NOT BE RESPONSIBLE FOR THE ACCURACY OR COMPLETENESS OF SCANNED COPIES OF THIS PLAN SHEET.

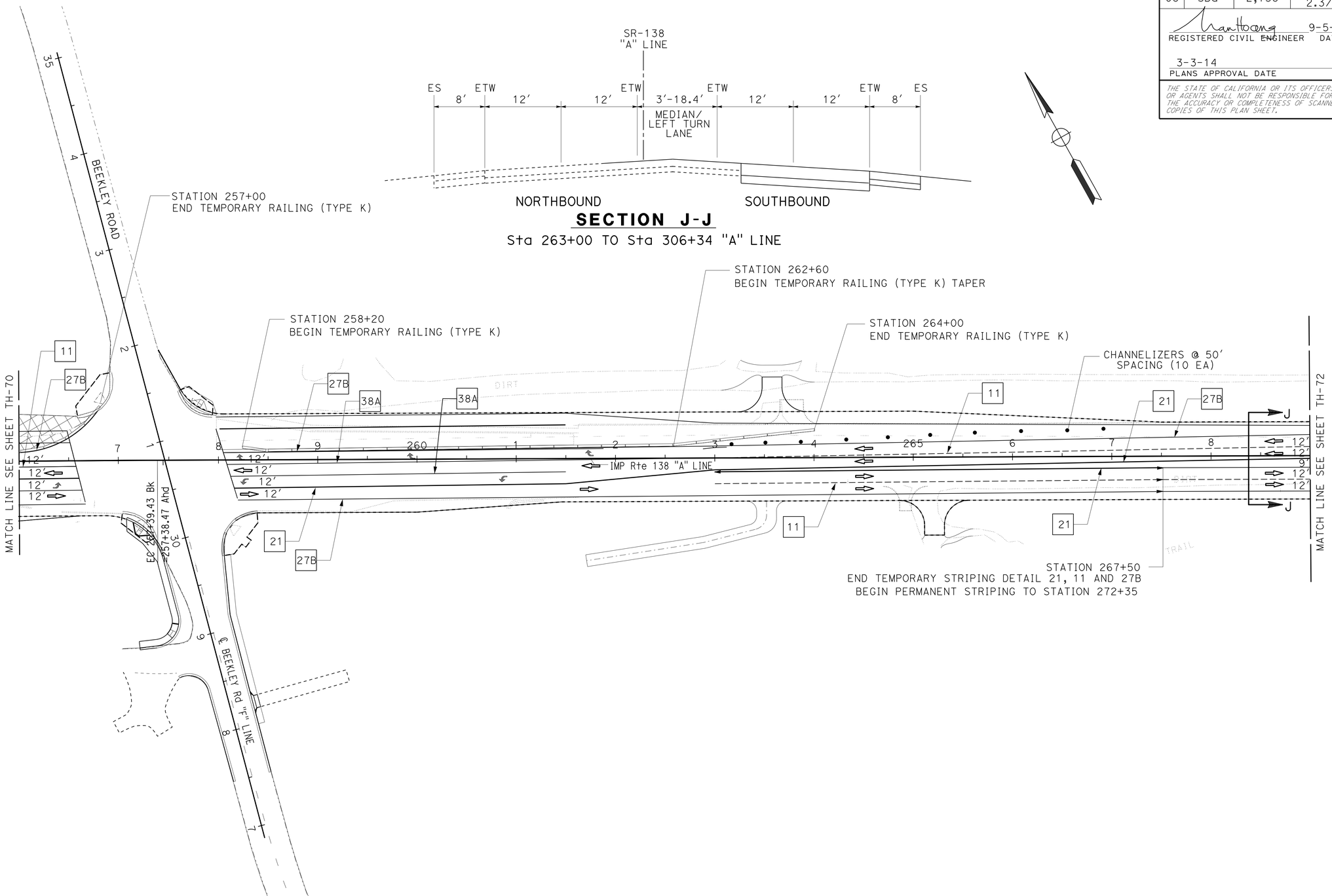

TRAFFIC HANDLING PLAN

STAGE 1 - PHASE C

NO SCALE

TH-71

APPROVED FOR TRAFFIC HANDLING WORK ONLY

STATE OF CALIFORNIA - DEPARTMENT OF TRANSPORTATION
Caltrans® **TRAFFIC DESIGN**

FUNCTIONAL SUPERVISOR: WILLIAM WASSER
CALCULATED-DESIGNED BY: TRAN HOANG
CHECKED BY: HORMUZD SETHNA
REVISED BY
DATE REVISED

LAST REVISION 09-05-13 | DATE PLOTTED => 01-MAY-2014 | TIME PLOTTED => 11:02

Dist	COUNTY	ROUTE	POST MILES TOTAL PROJECT	SHEET No.	TOTAL SHEETS
08	SBd	2,138	6.2/6.4, 2.3/R15.2	564	1168

REGISTERED CIVIL ENGINEER 9-5-13 DATE

3-3-14
PLANS APPROVAL DATE

REGISTERED PROFESSIONAL ENGINEER
TRAN HOANG
No. C54996
Exp. 6-30-14
CIVIL
STATE OF CALIFORNIA

THE STATE OF CALIFORNIA OR ITS OFFICERS OR AGENTS SHALL NOT BE RESPONSIBLE FOR THE ACCURACY OR COMPLETENESS OF SCANNED COPIES OF THIS PLAN SHEET.

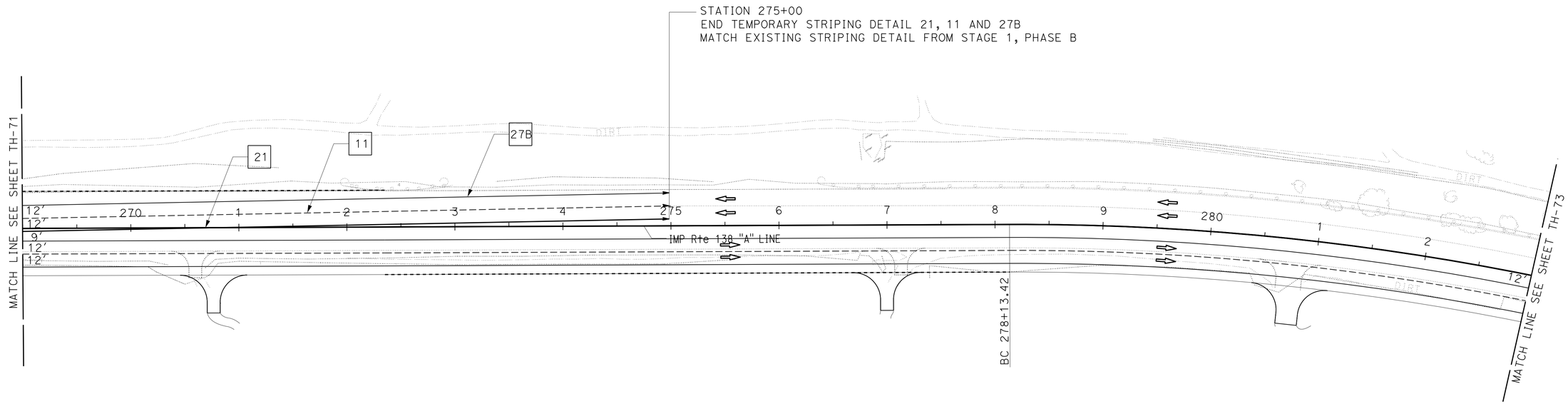

TRAFFIC HANDLING PLAN

STAGE 1 - PHASE C

NO SCALE

TH-72

APPROVED FOR TRAFFIC HANDLING WORK ONLY

STATE OF CALIFORNIA - DEPARTMENT OF TRANSPORTATION
Caltrans® **TRAFFIC DESIGN**

FUNCTIONAL SUPERVISOR: WILLIAM WASSER
CALCULATED-DESIGNED BY: TRAN HOANG
CHECKED BY: HORMUZD SETHNA
REVISED BY
DATE REVISED

LAST REVISION 09-05-13
DATE PLOTTED => 01-MAY-2014
TIME PLOTTED => 11:02

Dist	COUNTY	ROUTE	POST MILES TOTAL PROJECT	SHEET No.	TOTAL SHEETS
08	SBd	2,138	6.2/6.4, 2.3/R15.2	565	1168

REGISTERED CIVIL ENGINEER 9-5-13 DATE

3-3-14
PLANS APPROVAL DATE

REGISTERED PROFESSIONAL ENGINEER
TRAN HOANG
No. C54996
Exp. 6-30-14
CIVIL
STATE OF CALIFORNIA

THE STATE OF CALIFORNIA OR ITS OFFICERS OR AGENTS SHALL NOT BE RESPONSIBLE FOR THE ACCURACY OR COMPLETENESS OF SCANNED COPIES OF THIS PLAN SHEET.

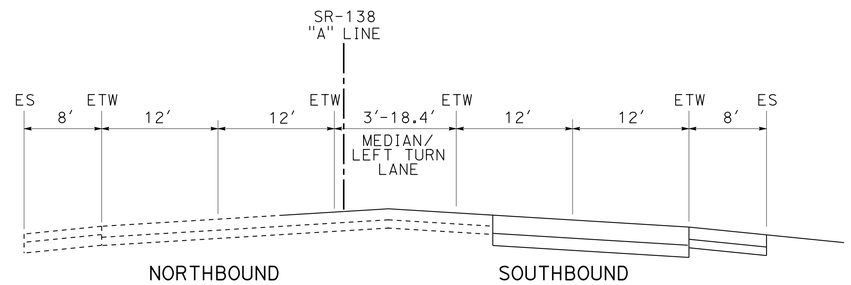

SECTION J-J

Sta 263+00 TO Sta 306+34 "A" LINE

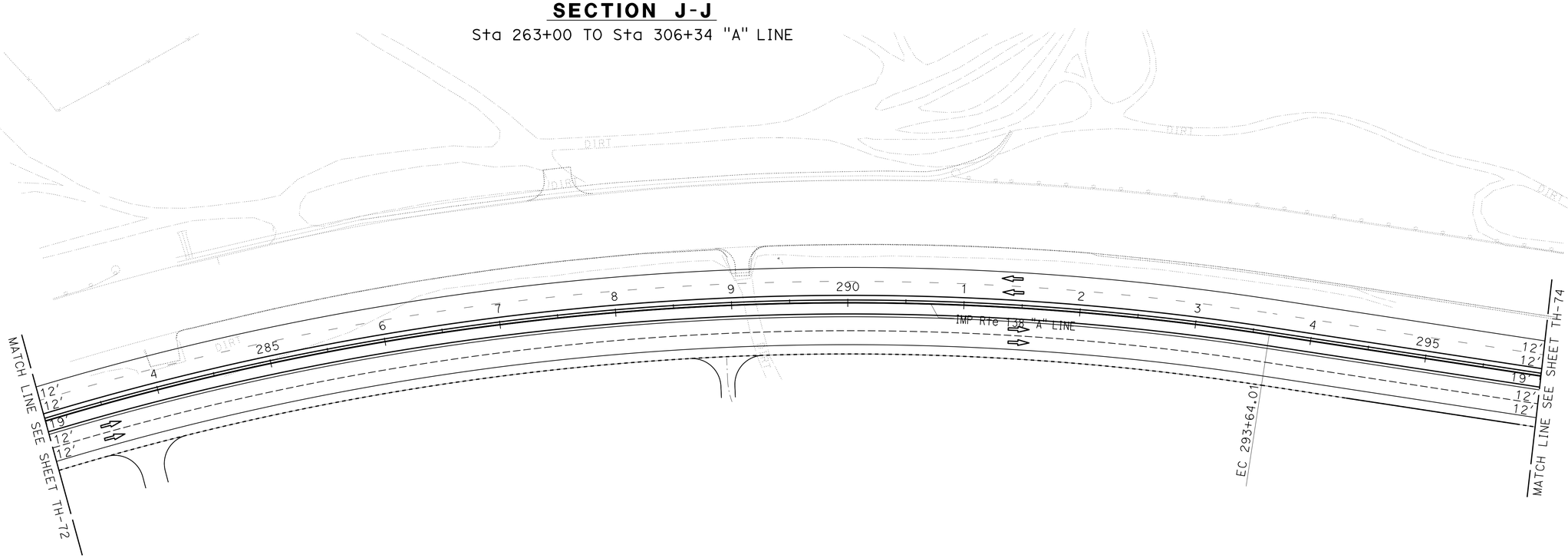

TRAFFIC HANDLING PLAN

STAGE 1 - PHASE C

NO SCALE

TH-73

APPROVED FOR TRAFFIC HANDLING WORK ONLY

STATE OF CALIFORNIA - DEPARTMENT OF TRANSPORTATION
Caltrans® **TRAFFIC DESIGN**

FUNCTIONAL SUPERVISOR: WILLIAM WASSER

CALCULATED-DESIGNED BY: TRAN HOANG
CHECKED BY: HORMUZD SETHNA

REVISED BY
DATE REVISED

LAST REVISION 09-05-13
DATE PLOTTED => 01-MAY-2014
TIME PLOTTED => 11:02

Dist	COUNTY	ROUTE	POST MILES TOTAL PROJECT	SHEET No.	TOTAL SHEETS
08	SBd	2,138	6.2/6.4, 2.3/R15.2	566	1168

Tran Hoang 9-5-13
REGISTERED CIVIL ENGINEER DATE

3-3-14
PLANS APPROVAL DATE

REGISTERED PROFESSIONAL ENGINEER
TRAN HOANG
No. C54996
Exp. 6-30-14
CIVIL
STATE OF CALIFORNIA

THE STATE OF CALIFORNIA OR ITS OFFICERS OR AGENTS SHALL NOT BE RESPONSIBLE FOR THE ACCURACY OR COMPLETENESS OF SCANNED COPIES OF THIS PLAN SHEET.

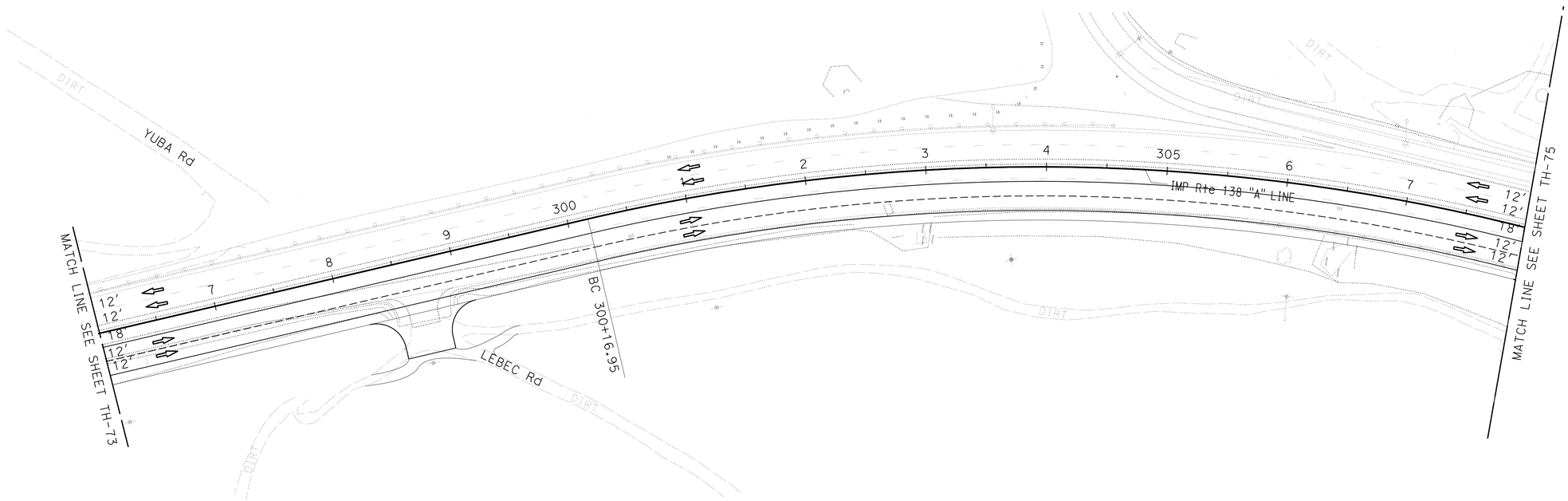

TRAFFIC HANDLING PLAN

STAGE 1 - PHASE C

NO SCALE

TH-74

APPROVED FOR TRAFFIC HANDLING WORK ONLY

STATE OF CALIFORNIA - DEPARTMENT OF TRANSPORTATION
Caltrans® **TRAFFIC DESIGN**

FUNCTIONAL SUPERVISOR: WILLIAM WASSER
CALCULATED-DESIGNED BY: TRAN HOANG
CHECKED BY: HORMUZD SETHNA
REVISED BY
DATE REVISED

LAST REVISION 09-05-13
DATE PLOTTED => 01-MAY-2014
TIME PLOTTED => 11:02

Dist	COUNTY	ROUTE	POST MILES TOTAL PROJECT	SHEET No.	TOTAL SHEETS
08	SBd	2,138	6.2/6.4, 2.3/R15.2	567	1168

REGISTERED CIVIL ENGINEER 9-5-13 DATE

3-3-14
PLANS APPROVAL DATE

REGISTERED PROFESSIONAL ENGINEER
TRAN HOANG
No. C54996
Exp. 6-30-14
CIVIL
STATE OF CALIFORNIA

THE STATE OF CALIFORNIA OR ITS OFFICERS OR AGENTS SHALL NOT BE RESPONSIBLE FOR THE ACCURACY OR COMPLETENESS OF SCANNED COPIES OF THIS PLAN SHEET.

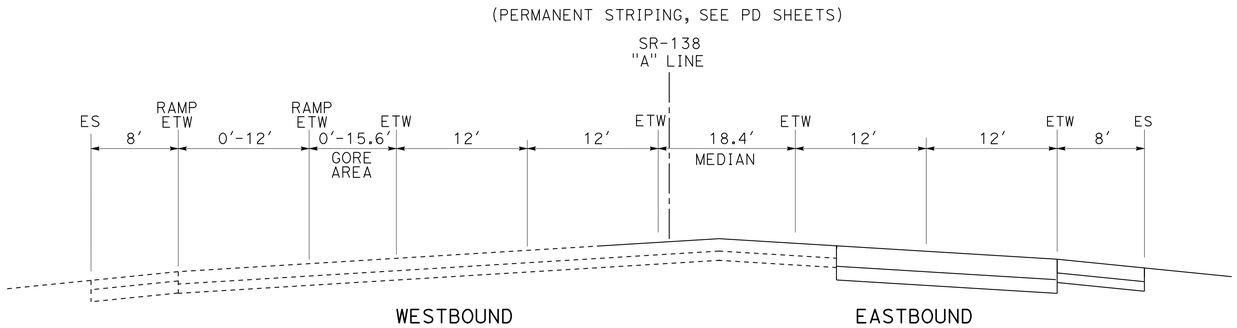

SECTION K-K

Sta 306+34 TO Sta 318+00 "A" LINE

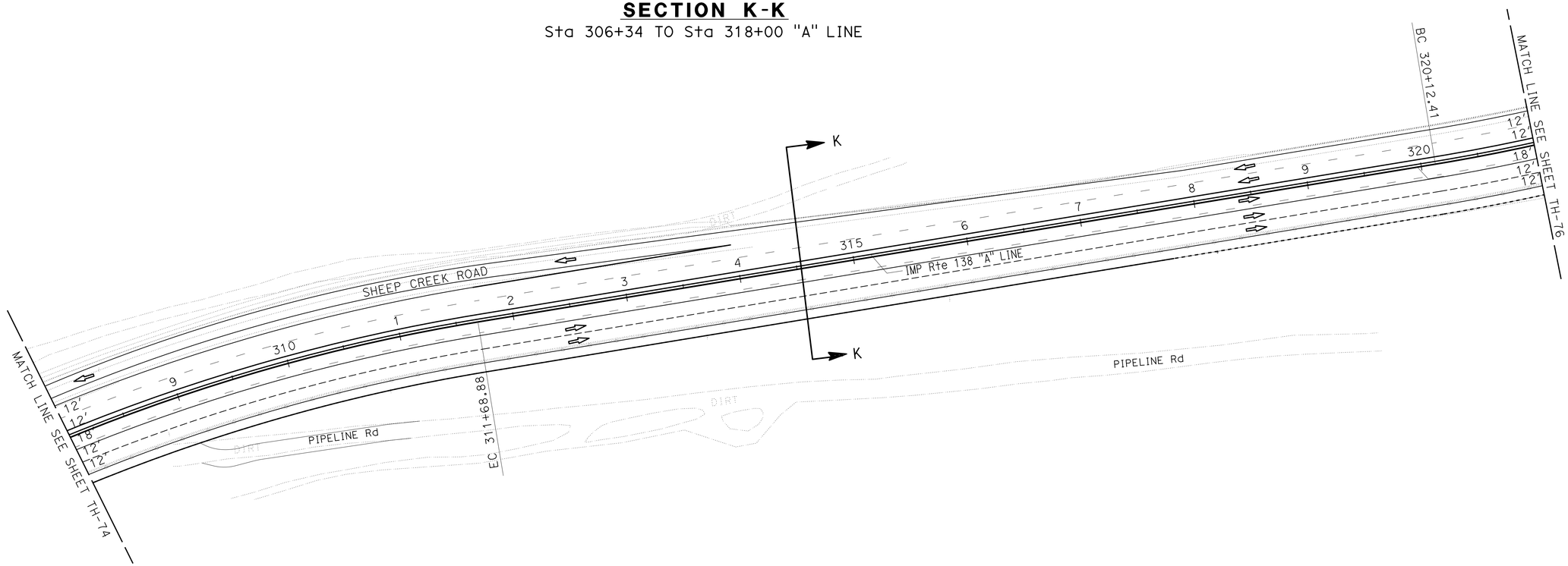

TRAFFIC HANDLING PLAN

STAGE 1 - PHASE C

NO SCALE

TH-75

APPROVED FOR TRAFFIC HANDLING WORK ONLY

STATE OF CALIFORNIA - DEPARTMENT OF TRANSPORTATION
Caltrans® **TRAFFIC DESIGN**

FUNCTIONAL SUPERVISOR: WILLIAM WASSER
CALCULATED-DESIGNED BY: TRAN HOANG
CHECKED BY: HORMUZD SETHNA
REVISED BY
DATE REVISED

LAST REVISION 09-05-13
DATE PLOTTED => 01-MAY-2014
TIME PLOTTED => 11:02

Dist	COUNTY	ROUTE	POST MILES TOTAL PROJECT	SHEET No.	TOTAL SHEETS
08	SBd	2,138	6.2/6.4, 2.3/R15.2	568	1168

REGISTERED CIVIL ENGINEER 9-5-13 DATE

3-3-14
PLANS APPROVAL DATE

REGISTERED PROFESSIONAL ENGINEER
TRAN HOANG
No. C54996
Exp. 6-30-14
CIVIL
STATE OF CALIFORNIA

THE STATE OF CALIFORNIA OR ITS OFFICERS OR AGENTS SHALL NOT BE RESPONSIBLE FOR THE ACCURACY OR COMPLETENESS OF SCANNED COPIES OF THIS PLAN SHEET.

(PERMANENT STRIPING SEE PD SHEETS)

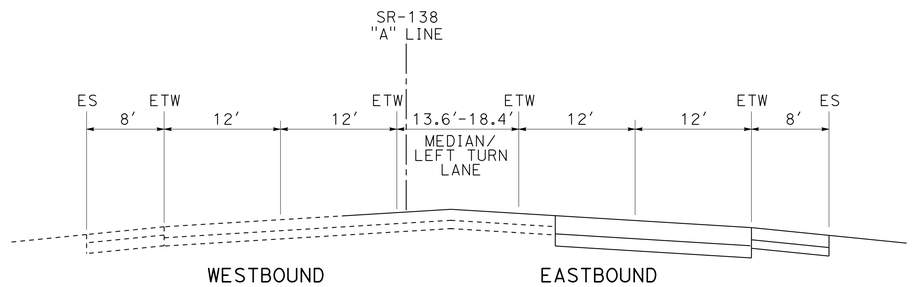

SECTION J-J

Sta 350+50 TO Sta 355+00 "A" LINE

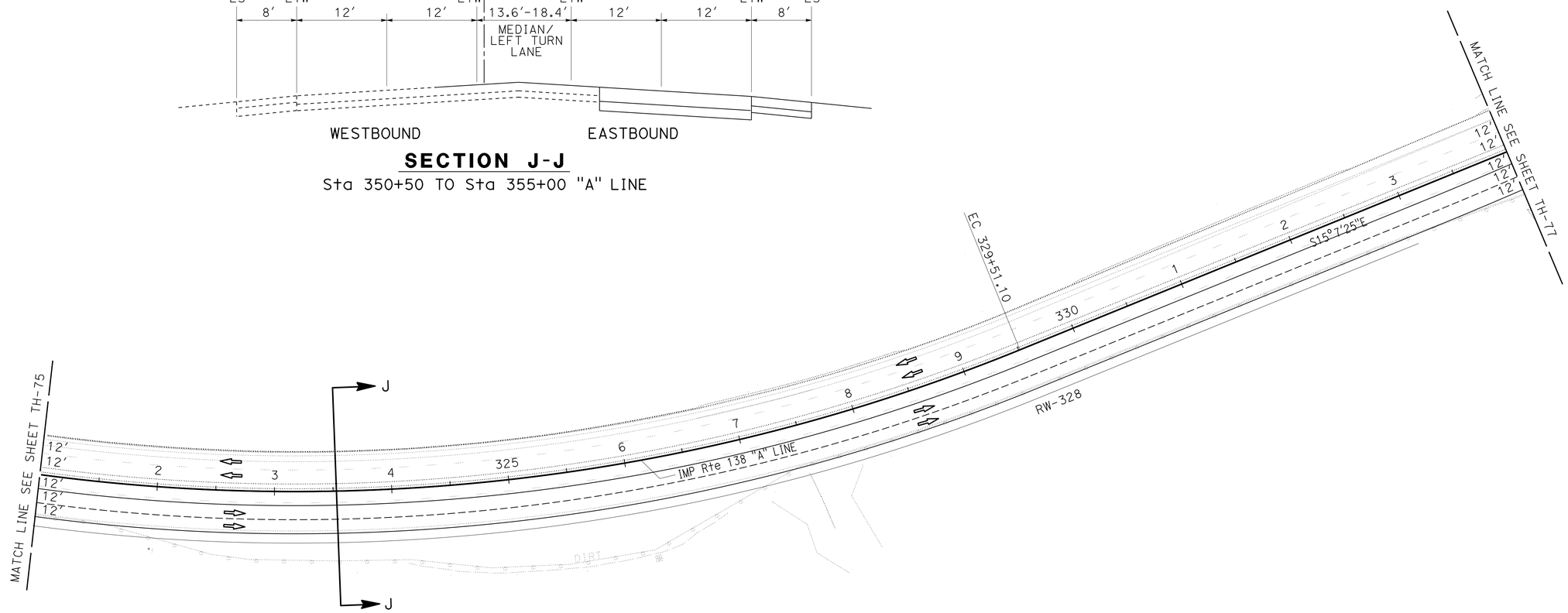

TRAFFIC HANDLING PLAN

STAGE 1 - PHASE C

NO SCALE

TH-76

APPROVED FOR TRAFFIC HANDLING WORK ONLY

STATE OF CALIFORNIA - DEPARTMENT OF TRANSPORTATION
Caltrans® **TRAFFIC DESIGN**

FUNCTIONAL SUPERVISOR: WILLIAM WASSER
CALCULATED-DESIGNED BY: TRAN HOANG
CHECKED BY: HORMUZD SETHNA
REVISED BY
DATE REVISED

LAST REVISION 09-05-13 | DATE PLOTTED => 01-MAY-2014 | TIME PLOTTED => 11:02

Dist	COUNTY	ROUTE	POST MILES TOTAL PROJECT	SHEET No.	TOTAL SHEETS
08	SBd	2,138	6.2/6.4, 2.3/R15.2	569	1168

REGISTERED CIVIL ENGINEER 9-5-13 DATE

3-3-14
PLANS APPROVAL DATE

REGISTERED PROFESSIONAL ENGINEER
TRAN HOANG
No. C54996
Exp. 6-30-14
CIVIL
STATE OF CALIFORNIA

THE STATE OF CALIFORNIA OR ITS OFFICERS OR AGENTS SHALL NOT BE RESPONSIBLE FOR THE ACCURACY OR COMPLETENESS OF SCANNED COPIES OF THIS PLAN SHEET.

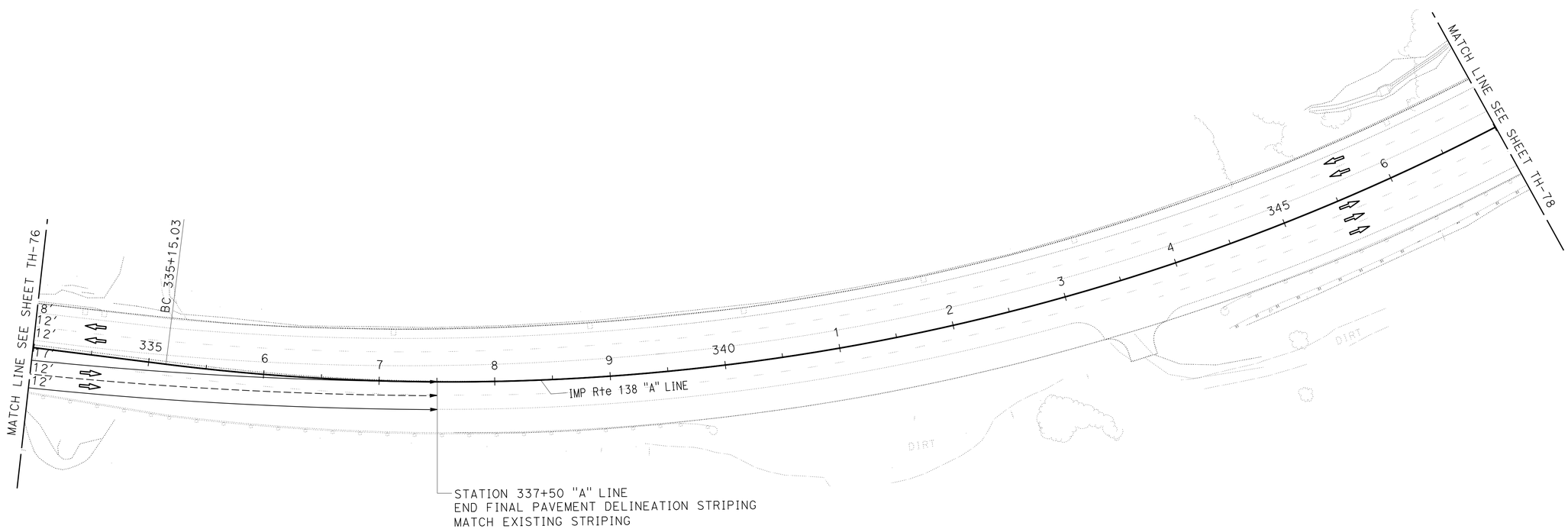

TRAFFIC HANDLING PLAN

STAGE 1 - PHASE C

NO SCALE

TH-77

APPROVED FOR TRAFFIC HANDLING WORK ONLY

STATE OF CALIFORNIA - DEPARTMENT OF TRANSPORTATION
Caltrans® **TRAFFIC DESIGN**

FUNCTIONAL SUPERVISOR: WILLIAM WASSER
CALCULATED-DESIGNED BY: TRAN HOANG
CHECKED BY: HORMUZD SETHNA
REVISED BY
DATE REVISED

LAST REVISION 09-05-13
DATE PLOTTED => 01-MAY-2014
TIME PLOTTED => 11:02

Dist	COUNTY	ROUTE	POST MILES TOTAL PROJECT	SHEET No.	TOTAL SHEETS
08	SBd	2,138	6.2/6.4, 2.3/R15.2	570	1168

REGISTERED CIVIL ENGINEER 9-5-13 DATE

3-3-14
PLANS APPROVAL DATE

REGISTERED PROFESSIONAL ENGINEER TRAN HOANG No. C54996 Exp. 6-30-14 CIVIL STATE OF CALIFORNIA

THE STATE OF CALIFORNIA OR ITS OFFICERS OR AGENTS SHALL NOT BE RESPONSIBLE FOR THE ACCURACY OR COMPLETENESS OF SCANNED COPIES OF THIS PLAN SHEET.

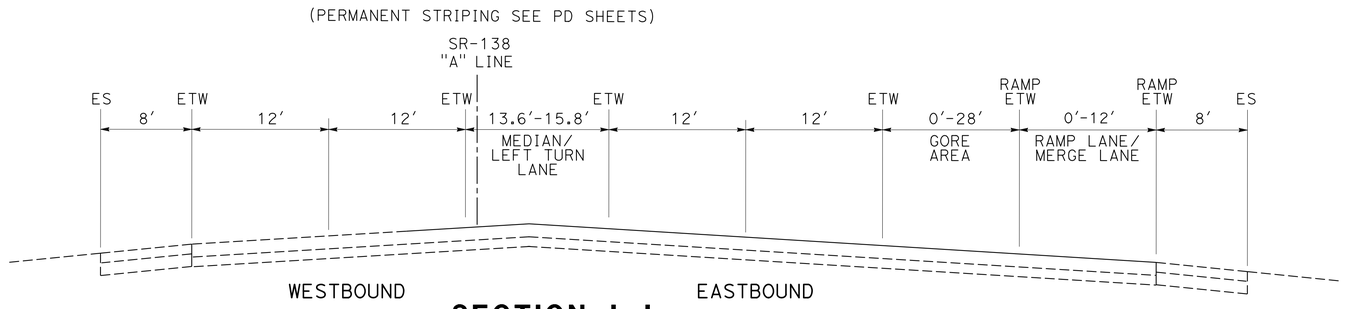

SECTION L-L

Sta 355+00 TO Sta 376+00 "A " LINE

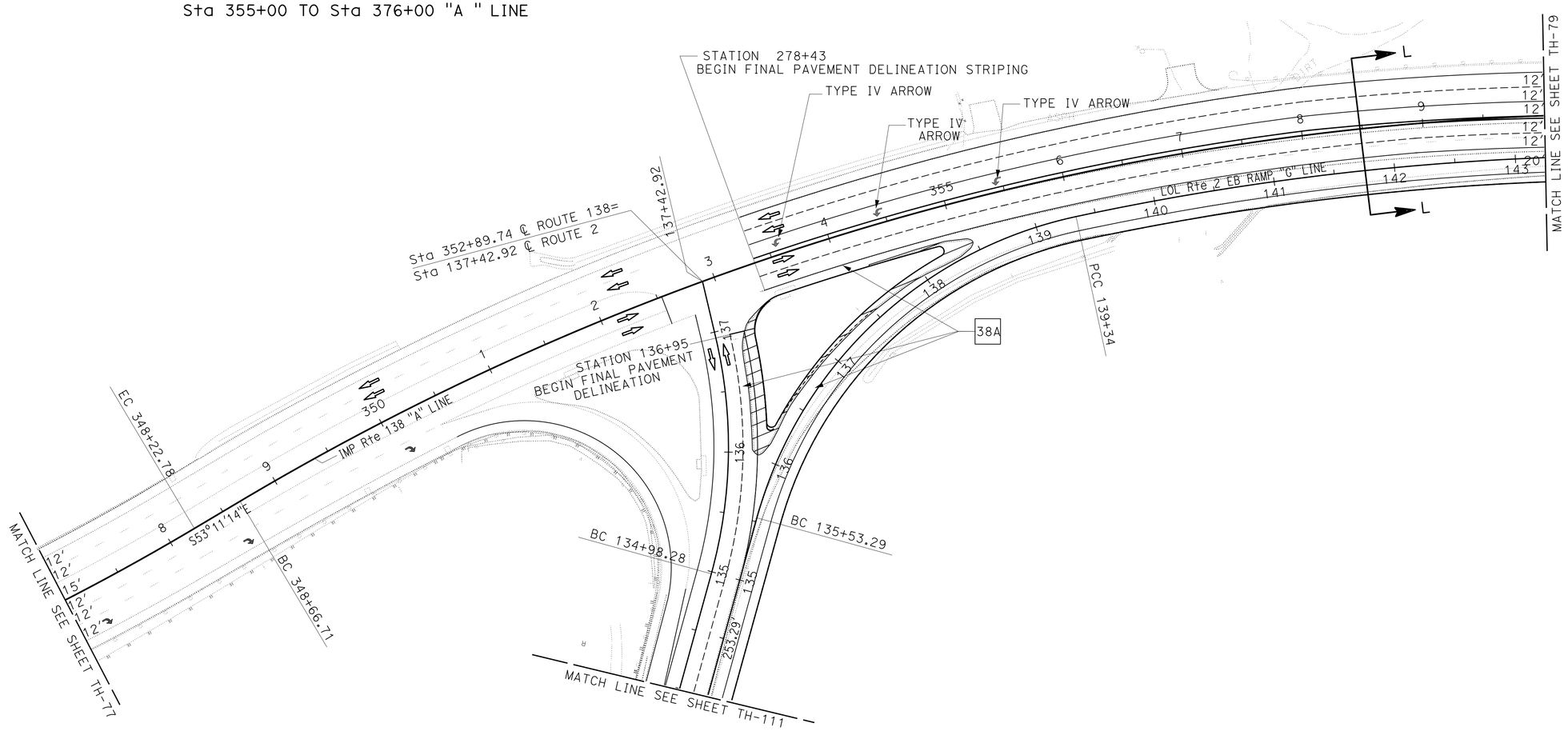

TRAFFIC HANDLING PLAN

STAGE 1 - PHASE C

NO SCALE

TH-78

APPROVED FOR TRAFFIC HANDLING WORK ONLY

STATE OF CALIFORNIA - DEPARTMENT OF TRANSPORTATION
Caltrans® TRAFFIC DESIGN

FUNCTIONAL SUPERVISOR: WILLIAM WASSER
CALCULATED-DESIGNED BY: TRAN HOANG
CHECKED BY: HORMUZD SETHNA
REVISED BY
DATE REVISED

LAST REVISION 09-05-13 | DATE PLOTTED => 01-MAY-2014 | TIME PLOTTED => 11:02

Dist	COUNTY	ROUTE	POST MILES TOTAL PROJECT	SHEET No.	TOTAL SHEETS
08	SBd	2,138	6.2/6.4, 2.3/R15.2	571	1168

REGISTERED CIVIL ENGINEER 9-5-13 DATE

3-3-14
PLANS APPROVAL DATE

REGISTERED PROFESSIONAL ENGINEER
TRAN HOANG
No. C54996
Exp. 6-30-14
CIVIL
STATE OF CALIFORNIA

THE STATE OF CALIFORNIA OR ITS OFFICERS OR AGENTS SHALL NOT BE RESPONSIBLE FOR THE ACCURACY OR COMPLETENESS OF SCANNED COPIES OF THIS PLAN SHEET.

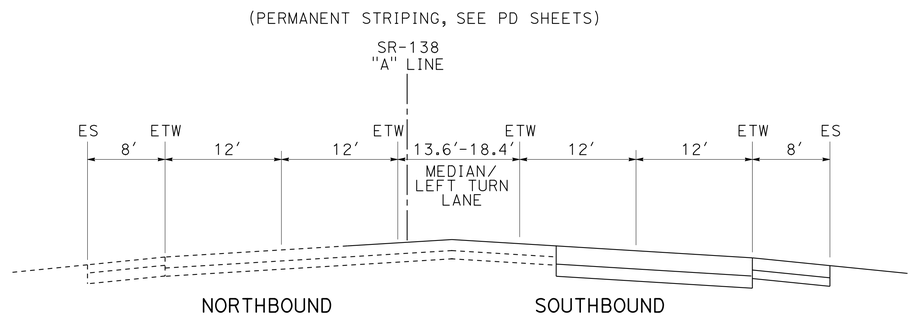

SECTION J-J

Sta 376+00 TO Sta 451+00 "A" LINE

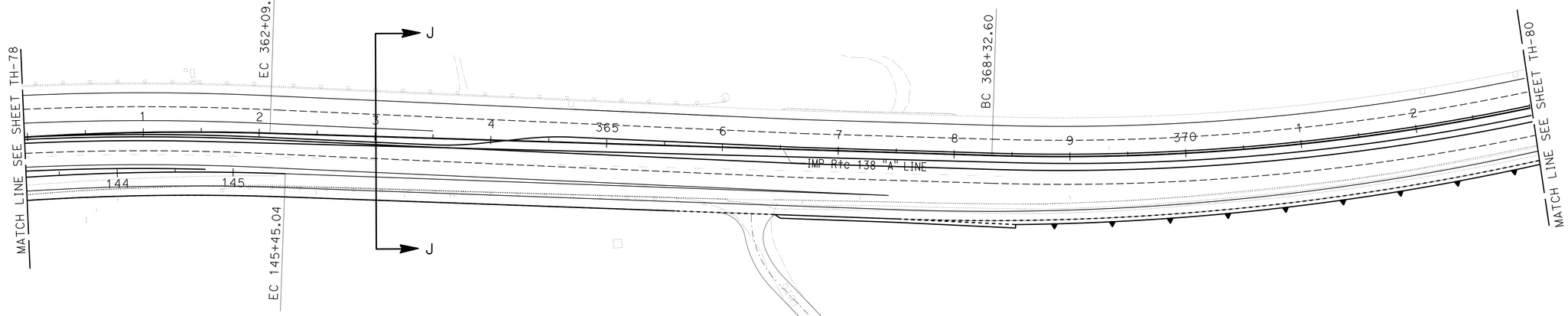

TRAFFIC HANDLING PLAN

STAGE 1 - PHASE C

NO SCALE

TH-79

APPROVED FOR TRAFFIC HANDLING WORK ONLY

STATE OF CALIFORNIA - DEPARTMENT OF TRANSPORTATION
Caltrans® **TRAFFIC DESIGN**

FUNCTIONAL SUPERVISOR: WILLIAM WASSER
CALCULATED-DESIGNED BY: TRAN HOANG
CHECKED BY: HORMUZD SETHNA
REVISED BY
DATE REVISED

LAST REVISION 09-05-13 | DATE PLOTTED => 01-MAY-2014 | TIME PLOTTED => 11:02

Dist	COUNTY	ROUTE	POST MILES TOTAL PROJECT	SHEET No.	TOTAL SHEETS
08	SBd	2,138	6.2/6.4, 2.3/R15.2	572	1168

REGISTERED CIVIL ENGINEER 9-5-13 DATE

3-3-14
PLANS APPROVAL DATE

REGISTERED PROFESSIONAL ENGINEER
TRAN HOANG
No. C54996
Exp. 6-30-14
CIVIL
STATE OF CALIFORNIA

THE STATE OF CALIFORNIA OR ITS OFFICERS OR AGENTS SHALL NOT BE RESPONSIBLE FOR THE ACCURACY OR COMPLETENESS OF SCANNED COPIES OF THIS PLAN SHEET.

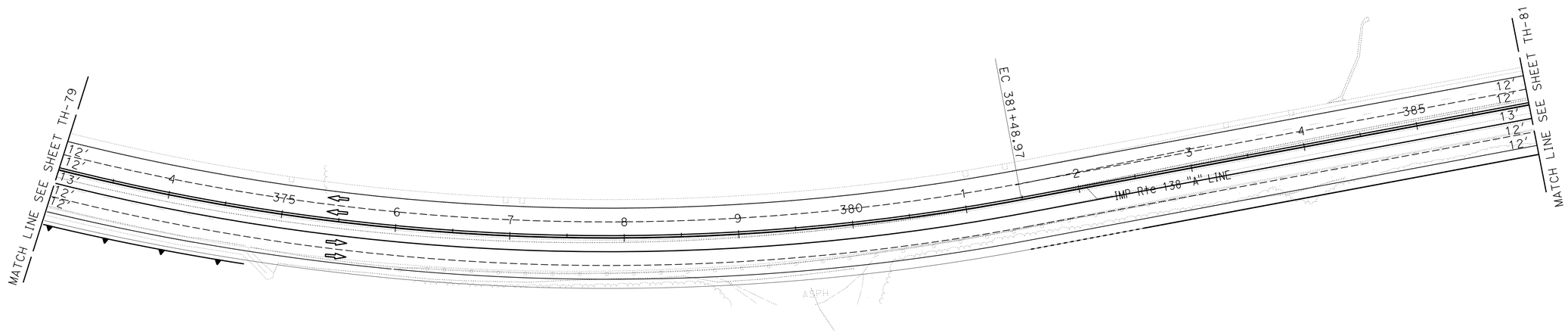

TRAFFIC HANDLING PLAN

STAGE 1 - PHASE C

NO SCALE

TH-80

APPROVED FOR TRAFFIC HANDLING WORK ONLY

STATE OF CALIFORNIA - DEPARTMENT OF TRANSPORTATION
Caltrans® **TRAFFIC DESIGN**

FUNCTIONAL SUPERVISOR: WILLIAM WASSER
CALCULATED-DESIGNED BY: TRAN HOANG
CHECKED BY: HORMUZD SETHNA
REVISED BY
DATE REVISED

LAST REVISION 09-05-13
DATE PLOTTED => 01-MAY-2014
TIME PLOTTED => 11:02

BORDER LAST REVISED 7/2/2010
USERNAME => s121614
DGN FILE => 0800000609md080.dgn
RELATIVE BORDER SCALE IS IN INCHES 0 1 2 3
UNIT 2285
PROJECT NUMBER & PHASE 08000006091

Dist	COUNTY	ROUTE	POST MILES TOTAL PROJECT	SHEET No.	TOTAL SHEETS
08	SBd	2,138	6.2/6.4, 2.3/R15.2	573	1168

REGISTERED CIVIL ENGINEER 9-5-13 DATE

3-3-14
PLANS APPROVAL DATE

REGISTERED PROFESSIONAL ENGINEER
TRAN HOANG
No. C54996
Exp. 6-30-14
CIVIL
STATE OF CALIFORNIA

THE STATE OF CALIFORNIA OR ITS OFFICERS OR AGENTS SHALL NOT BE RESPONSIBLE FOR THE ACCURACY OR COMPLETENESS OF SCANNED COPIES OF THIS PLAN SHEET.

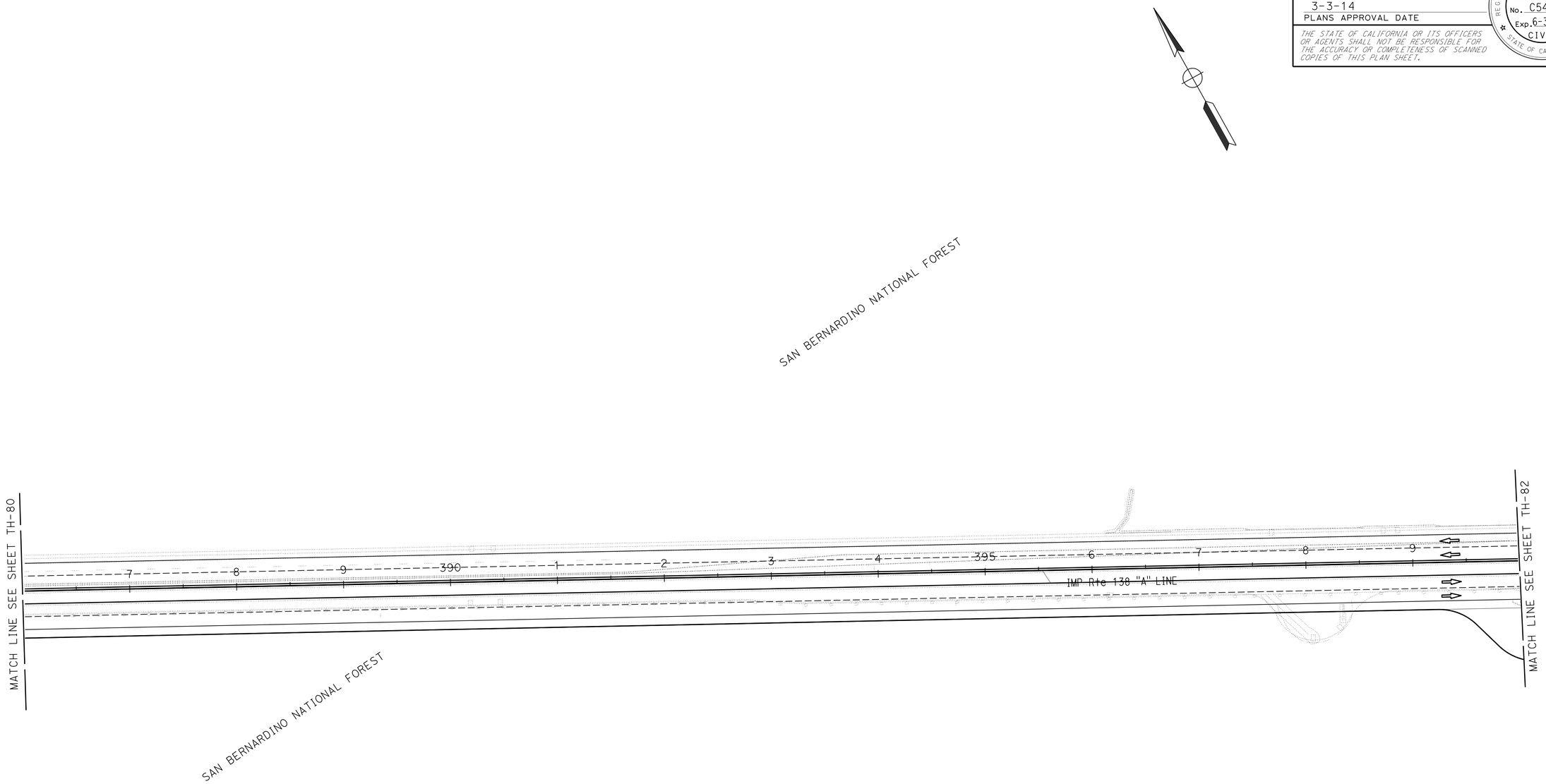

TRAFFIC HANDLING PLAN

STAGE 1 - PHASE C

NO SCALE

TH-81

APPROVED FOR TRAFFIC HANDLING WORK ONLY

STATE OF CALIFORNIA - DEPARTMENT OF TRANSPORTATION

Caltrans® **TRAFFIC DESIGN**

FUNCTIONAL SUPERVISOR: WILLIAM WASSER

CALCULATED-DESIGNED BY: TRAN HOANG

CHECKED BY: HORMUZD SETHNA

REVISED BY

DATE REVISED

LAST REVISION 09-05-13

DATE PLOTTED => 01-MAY-2014
TIME PLOTTED => 11:03

Dist	COUNTY	ROUTE	POST MILES TOTAL PROJECT	SHEET No.	TOTAL SHEETS
08	SBd	2,138	6.2/6.4, 2.3/R15.2	574	1168

REGISTERED CIVIL ENGINEER 9-5-13 DATE

3-3-14
PLANS APPROVAL DATE

REGISTERED PROFESSIONAL ENGINEER
TRAN HOANG
No. C54996
Exp. 6-30-14
CIVIL
STATE OF CALIFORNIA

THE STATE OF CALIFORNIA OR ITS OFFICERS OR AGENTS SHALL NOT BE RESPONSIBLE FOR THE ACCURACY OR COMPLETENESS OF SCANNED COPIES OF THIS PLAN SHEET.

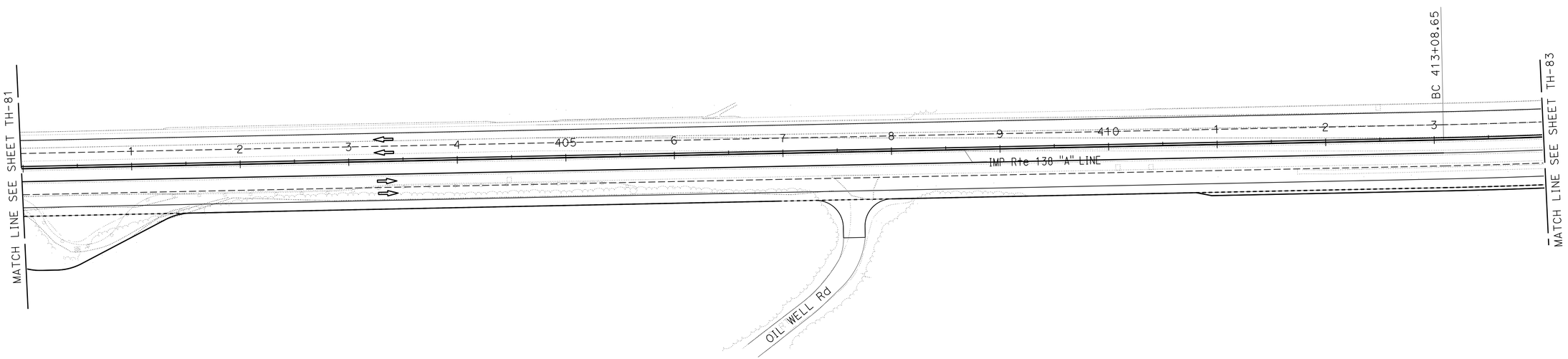

TRAFFIC HANDLING PLAN

STAGE 1 - PHASE C

NO SCALE

TH-82

APPROVED FOR TRAFFIC HANDLING WORK ONLY

STATE OF CALIFORNIA - DEPARTMENT OF TRANSPORTATION
Caltrans® **TRAFFIC DESIGN**

FUNCTIONAL SUPERVISOR: WILLIAM WASSER
CALCULATED-DESIGNED BY: TRAN HOANG
CHECKED BY: HORMUZD SETHNA
REVISED BY
DATE REVISED

LAST REVISION 09-05-13 | DATE PLOTTED => 01-MAY-2014 | TIME PLOTTED => 11:03

BORDER LAST REVISED 7/2/2010 | USERNAME => s121614 | DGN FILE => 0800000609md082.dgn | RELATIVE BORDER SCALE IS IN INCHES 0 1 2 3 | UNIT 2285 | PROJECT NUMBER & PHASE 08000006091

Dist	COUNTY	ROUTE	POST MILES TOTAL PROJECT	SHEET No.	TOTAL SHEETS
08	SBd	2,138	6.2/6.4, 2.3/R15.2	575	1168

REGISTERED CIVIL ENGINEER 9-5-13 DATE

3-3-14
PLANS APPROVAL DATE

REGISTERED PROFESSIONAL ENGINEER
TRAN HOANG
No. C54996
Exp. 6-30-14
CIVIL
STATE OF CALIFORNIA

THE STATE OF CALIFORNIA OR ITS OFFICERS OR AGENTS SHALL NOT BE RESPONSIBLE FOR THE ACCURACY OR COMPLETENESS OF SCANNED COPIES OF THIS PLAN SHEET.

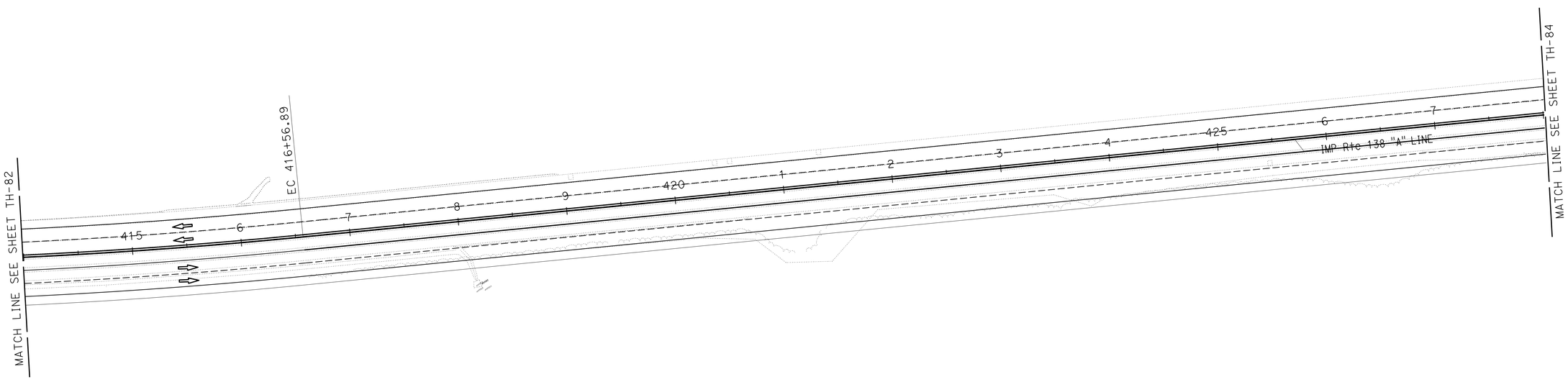

TRAFFIC HANDLING PLAN
STAGE 1 - PHASE C
NO SCALE

TH-83

APPROVED FOR TRAFFIC HANDLING WORK ONLY

STATE OF CALIFORNIA - DEPARTMENT OF TRANSPORTATION
Caltrans® **TRAFFIC DESIGN**

FUNCTIONAL SUPERVISOR: WILLIAM WASSER
CALCULATED-DESIGNED BY: TRAN HOANG
CHECKED BY: HORMUZD SETHNA
REVISED BY
DATE REVISED

LAST REVISION 09-05-13
DATE PLOTTED => 01-MAY-2014
TIME PLOTTED => 11:03

Dist	COUNTY	ROUTE	POST MILES TOTAL PROJECT	SHEET No.	TOTAL SHEETS
08	SBd	2,138	6.2/6.4, 2.3/R15.2	576	1168

REGISTERED CIVIL ENGINEER 9-5-13 DATE

3-3-14
PLANS APPROVAL DATE

REGISTERED PROFESSIONAL ENGINEER
TRAN HOANG
No. C54996
Exp. 6-30-14
CIVIL
STATE OF CALIFORNIA

THE STATE OF CALIFORNIA OR ITS OFFICERS OR AGENTS SHALL NOT BE RESPONSIBLE FOR THE ACCURACY OR COMPLETENESS OF SCANNED COPIES OF THIS PLAN SHEET.

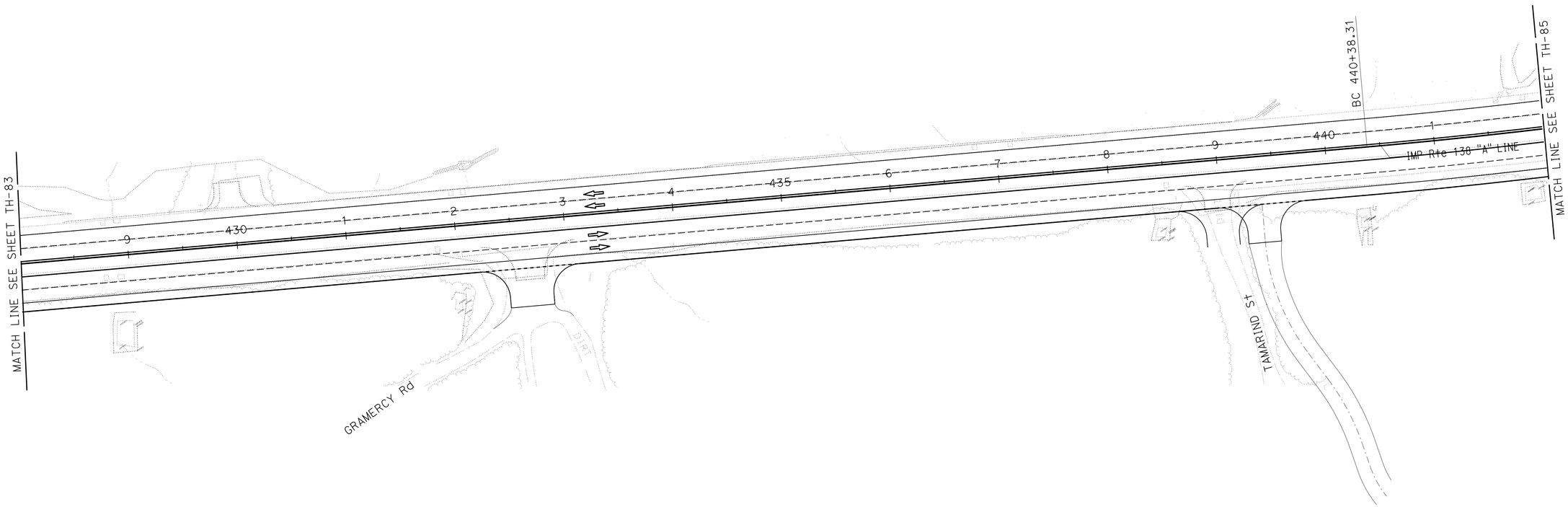

TRAFFIC HANDLING PLAN

STAGE 1 - PHASE C

NO SCALE

TH-84

APPROVED FOR TRAFFIC HANDLING WORK ONLY

STATE OF CALIFORNIA - DEPARTMENT OF TRANSPORTATION
Caltrans® **TRAFFIC DESIGN**

FUNCTIONAL SUPERVISOR: WILLIAM WASSER
CALCULATED-DESIGNED BY: TRAN HOANG
CHECKED BY: HORMUZD SETHNA
REVISED BY
DATE REVISED

LAST REVISION 09-05-13
DATE PLOTTED => 01-MAY-2014
TIME PLOTTED => 11:03

Dist	COUNTY	ROUTE	POST MILES TOTAL PROJECT	SHEET No.	TOTAL SHEETS
08	SBd	2,138	6.2/6.4, 2.3/R15.2	577	1168

REGISTERED CIVIL ENGINEER 9-5-13 DATE

3-3-14
PLANS APPROVAL DATE

REGISTERED PROFESSIONAL ENGINEER
TRAN HOANG
No. C54996
Exp. 6-30-14
CIVIL
STATE OF CALIFORNIA

THE STATE OF CALIFORNIA OR ITS OFFICERS OR AGENTS SHALL NOT BE RESPONSIBLE FOR THE ACCURACY OR COMPLETENESS OF SCANNED COPIES OF THIS PLAN SHEET.

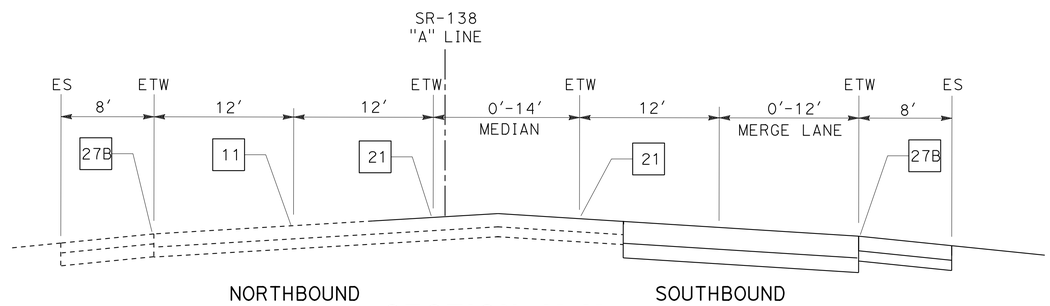

SECTION M-M

Sta 447+30 TO Sta 461+52 "A" LINE

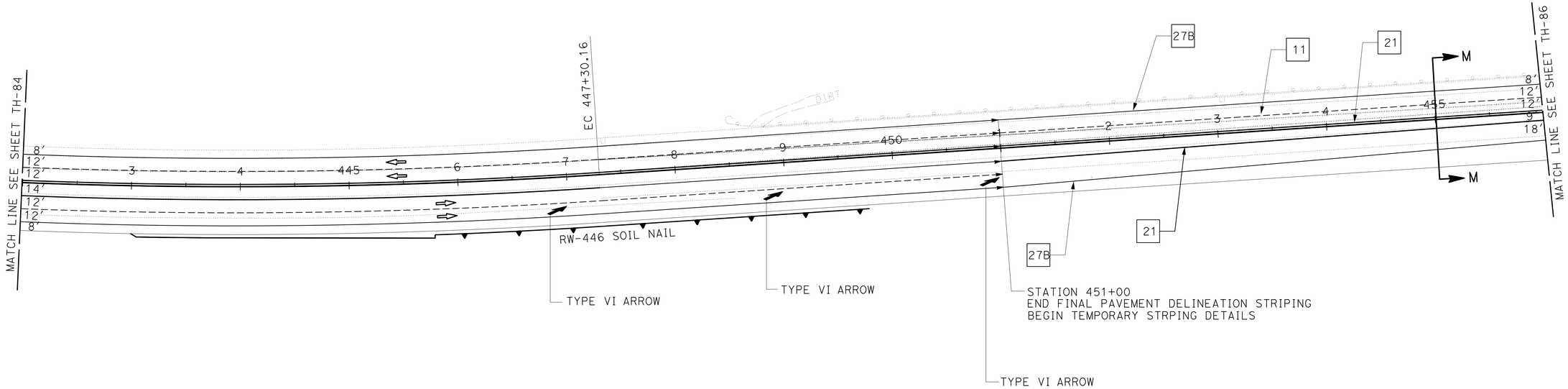

TRAFFIC HANDLING PLAN

STAGE 1 - PHASE C

NO SCALE

TH-85

APPROVED FOR TRAFFIC HANDLING WORK ONLY

STATE OF CALIFORNIA - DEPARTMENT OF TRANSPORTATION
Caltrans® **TRAFFIC DESIGN**

FUNCTIONAL SUPERVISOR: WILLIAM WASSER
CALCULATED-DESIGNED BY: HORMUZD SETHNA
CHECKED BY: TRAN HOANG
REVISED BY
DATE REVISED

LAST REVISION 09-05-13
DATE PLOTTED => 01-MAY-2014
TIME PLOTTED => 11:03

Dist	COUNTY	ROUTE	POST MILES TOTAL PROJECT	SHEET No.	TOTAL SHEETS
08	SBd	2,138	6.2/6.4, 2.3/R15.2	578	1168

REGISTERED CIVIL ENGINEER 9-5-13 DATE

3-3-14
PLANS APPROVAL DATE

REGISTERED PROFESSIONAL ENGINEER
TRAN HOANG
No. C54996
Exp. 6-30-14
CIVIL
STATE OF CALIFORNIA

THE STATE OF CALIFORNIA OR ITS OFFICERS OR AGENTS SHALL NOT BE RESPONSIBLE FOR THE ACCURACY OR COMPLETENESS OF SCANNED COPIES OF THIS PLAN SHEET.

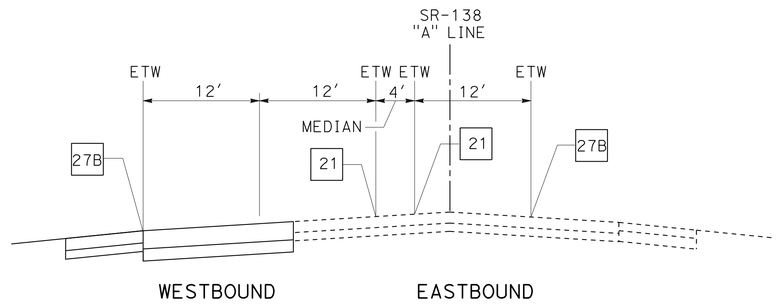

SECTION M-M

Sta 461+52 TO Sta 500+50 "A" LINE

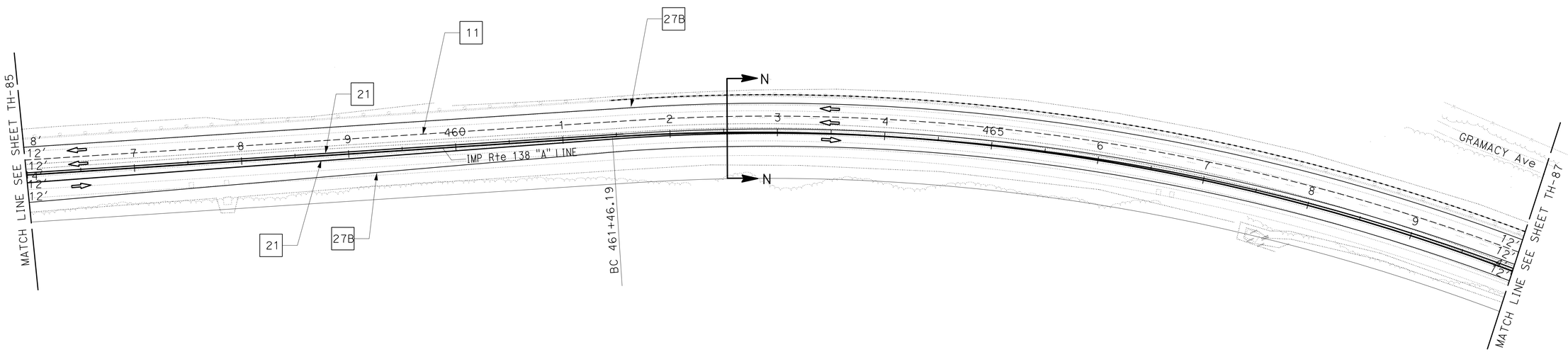

TRAFFIC HANDLING PLAN

STAGE 1 - PHASE C

NO SCALE

TH-86

APPROVED FOR TRAFFIC HANDLING WORK ONLY

STATE OF CALIFORNIA - DEPARTMENT OF TRANSPORTATION
Caltrans® **TRAFFIC DESIGN**

FUNCTIONAL SUPERVISOR: WILLIAM WASSER
CALCULATED-DESIGNED BY: TRAN HOANG
CHECKED BY: HORMUZD SETHNA
REVISED BY
DATE REVISED

LAST REVISION 09-05-13
DATE PLOTTED => 01-MAY-2014
TIME PLOTTED => 11:03

Dist	COUNTY	ROUTE	POST MILES TOTAL PROJECT	SHEET No.	TOTAL SHEETS
08	SBd	2,138	6.2/6.4, 2.3/R15.2	579	1168

REGISTERED CIVIL ENGINEER 9-5-13 DATE

3-3-14
PLANS APPROVAL DATE

REGISTERED PROFESSIONAL ENGINEER
TRAN HOANG
No. C54996
Exp. 6-30-14
CIVIL
STATE OF CALIFORNIA

THE STATE OF CALIFORNIA OR ITS OFFICERS OR AGENTS SHALL NOT BE RESPONSIBLE FOR THE ACCURACY OR COMPLETENESS OF SCANNED COPIES OF THIS PLAN SHEET.

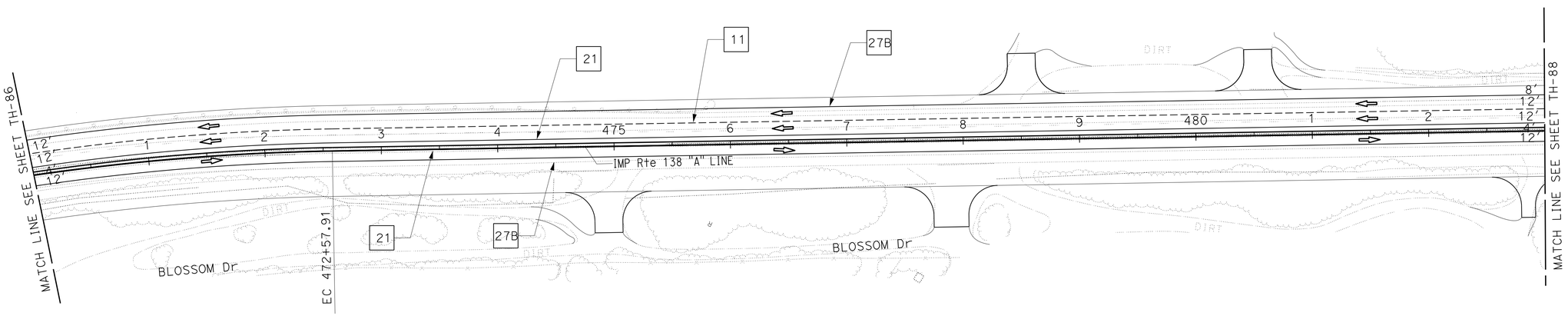

TRAFFIC HANDLING PLAN

STAGE 1 - PHASE C

NO SCALE

TH-87

APPROVED FOR TRAFFIC HANDLING WORK ONLY

STATE OF CALIFORNIA - DEPARTMENT OF TRANSPORTATION
Caltrans® **TRAFFIC DESIGN**

FUNCTIONAL SUPERVISOR: WILLIAM WASSER

CALCULATED-DESIGNED BY: TRAN HOANG
CHECKED BY: HORMUZD SETHNA

REVISED BY
DATE REVISED

LAST REVISION 09-05-13
DATE PLOTTED => 01-MAY-2014
TIME PLOTTED => 11:03

Dist	COUNTY	ROUTE	POST MILES TOTAL PROJECT	SHEET No.	TOTAL SHEETS
08	SBd	2,138	6.2/6.4, 2.3/R15.2	580	1168

REGISTERED CIVIL ENGINEER 9-5-13 DATE

3-3-14
PLANS APPROVAL DATE

REGISTERED PROFESSIONAL ENGINEER
TRAN HOANG
No. C54996
Exp. 6-30-14
CIVIL
STATE OF CALIFORNIA

THE STATE OF CALIFORNIA OR ITS OFFICERS OR AGENTS SHALL NOT BE RESPONSIBLE FOR THE ACCURACY OR COMPLETENESS OF SCANNED COPIES OF THIS PLAN SHEET.

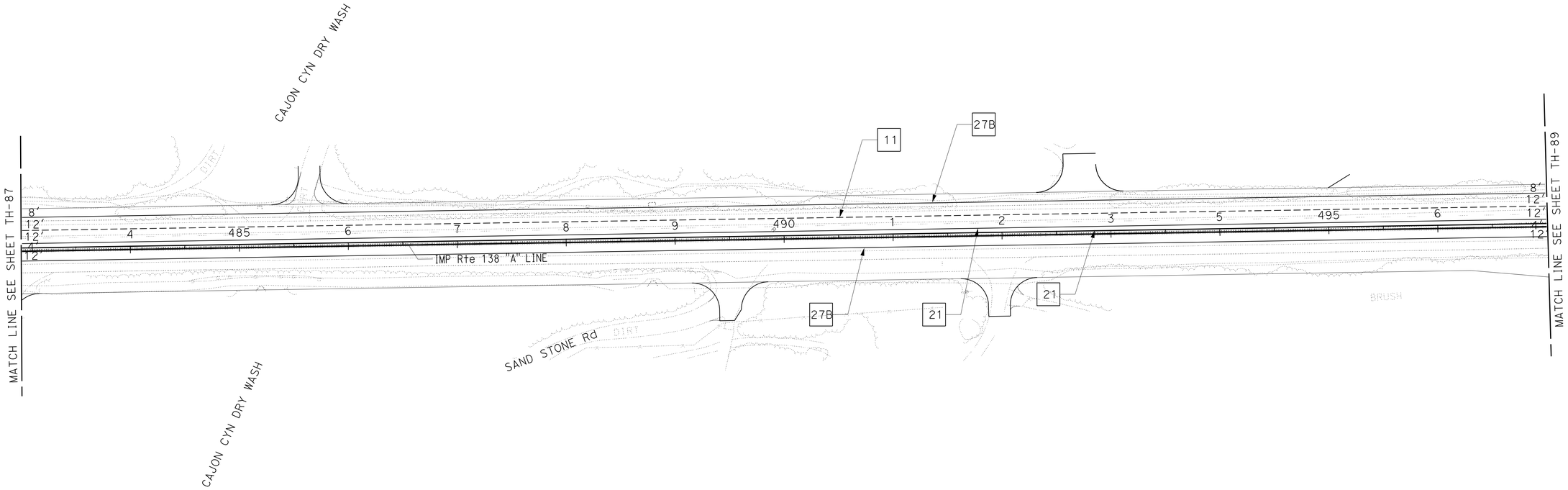

TRAFFIC HANDLING PLAN
STAGE 1 - PHASE C
NO SCALE

TH-88

APPROVED FOR TRAFFIC HANDLING WORK ONLY

STATE OF CALIFORNIA - DEPARTMENT OF TRANSPORTATION
Caltrans® **TRAFFIC DESIGN**

FUNCTIONAL SUPERVISOR: WILLIAM WASSER
CALCULATED-DESIGNED BY: TRAN HOANG
CHECKED BY: HORMUZD SETHNA
REVISED BY
DATE REVISED

LAST REVISION 09-05-13
DATE PLOTTED => 01-MAY-2014
TIME PLOTTED => 11:03

Dist	COUNTY	ROUTE	POST MILES TOTAL PROJECT	SHEET No.	TOTAL SHEETS
08	SBd	2,138	6.2/6.4, 2.3/R15.2	581	1168

REGISTERED CIVIL ENGINEER 9-5-13 DATE

3-3-14
PLANS APPROVAL DATE

REGISTERED PROFESSIONAL ENGINEER TRAN HOANG No. C54996 Exp. 6-30-14 CIVIL STATE OF CALIFORNIA

THE STATE OF CALIFORNIA OR ITS OFFICERS OR AGENTS SHALL NOT BE RESPONSIBLE FOR THE ACCURACY OR COMPLETENESS OF SCANNED COPIES OF THIS PLAN SHEET.

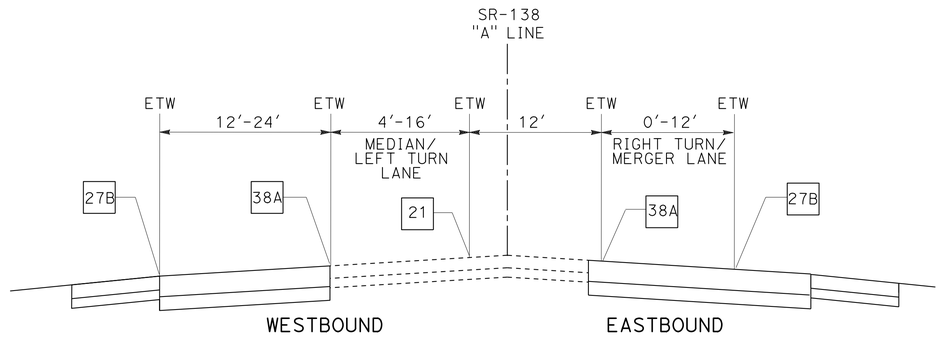

SECTION O-O

Sta 500+50 TO Sta 510+00 "A" LINE

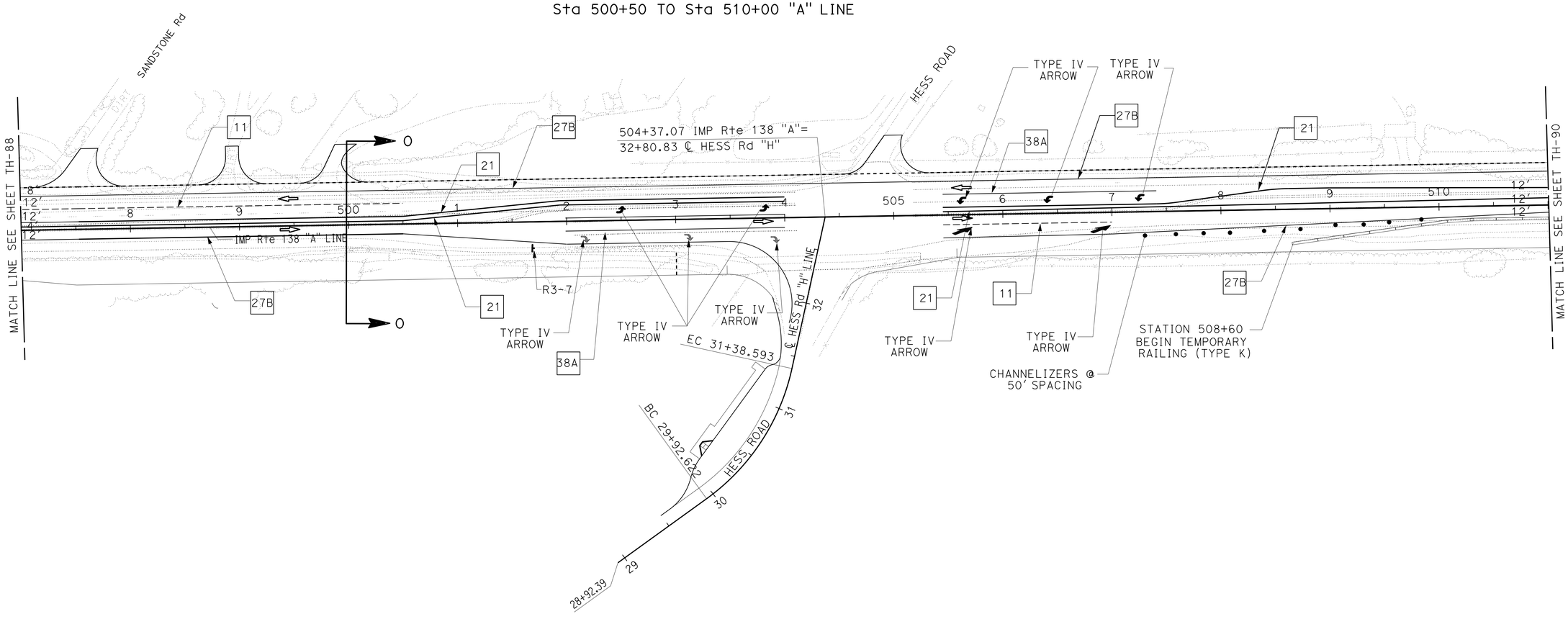

TRAFFIC HANDLING PLAN

STAGE 1 - PHASE C

NO SCALE

TH-89

APPROVED FOR TRAFFIC HANDLING WORK ONLY

STATE OF CALIFORNIA - DEPARTMENT OF TRANSPORTATION
Caltrans® **TRAFFIC DESIGN**

FUNCTIONAL SUPERVISOR: WILLIAM WASSER
CALCULATED-DESIGNED BY: TRAN HOANG
CHECKED BY: HORMUZD SETHNA
REVISED BY
DATE REVISED

LAST REVISION 09-05-13
DATE PLOTTED => 01-MAY-2014
TIME PLOTTED => 11:03

Dist	COUNTY	ROUTE	POST MILES TOTAL PROJECT	SHEET No.	TOTAL SHEETS
08	SBd	2,138	6.2/6.4, 2.3/R15.2	582	1168

REGISTERED CIVIL ENGINEER 9-5-13 DATE

3-3-14
PLANS APPROVAL DATE

REGISTERED PROFESSIONAL ENGINEER
TRAN HOANG
No. C54996
Exp. 6-30-14
CIVIL
STATE OF CALIFORNIA

THE STATE OF CALIFORNIA OR ITS OFFICERS OR AGENTS SHALL NOT BE RESPONSIBLE FOR THE ACCURACY OR COMPLETENESS OF SCANNED COPIES OF THIS PLAN SHEET.

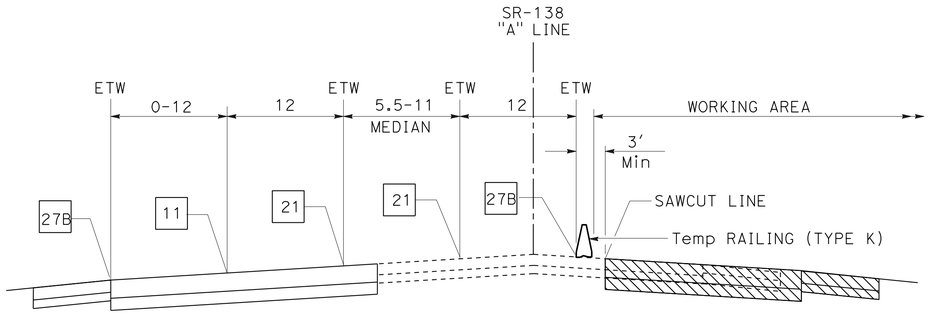

SECTION P-P

Sta 510+00 TO Sta 559+00 "A" LINE

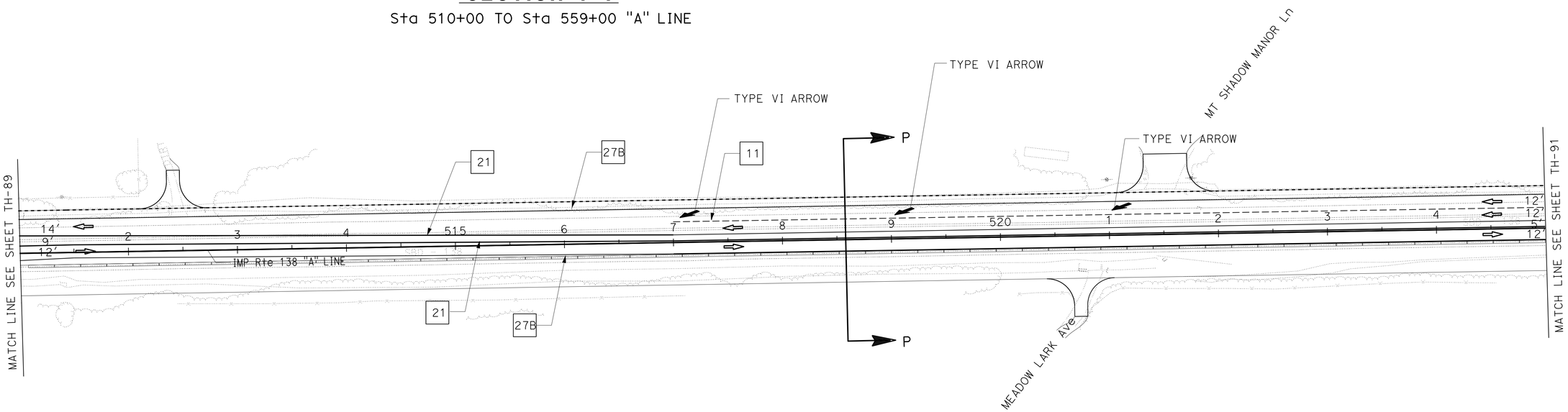

TRAFFIC HANDLING PLAN

STAGE 1 - PHASE C

NO SCALE

TH-90

APPROVED FOR TRAFFIC HANDLING WORK ONLY

STATE OF CALIFORNIA - DEPARTMENT OF TRANSPORTATION
Caltrans® TRAFFIC DESIGN

FUNCTIONAL SUPERVISOR: WILLIAM WASSER
CALCULATED-DESIGNED BY: TRAN HOANG
CHECKED BY: HORMUZD SETHNA
REVISED BY
DATE REVISED

LAST REVISION 09-05-13
DATE PLOTTED => 01-MAY-2014
TIME PLOTTED => 11:03

Dist	COUNTY	ROUTE	POST MILES TOTAL PROJECT	SHEET No.	TOTAL SHEETS
08	SBd	2,138	6.2/6.4, 2.3/R15.2	583	1168

REGISTERED CIVIL ENGINEER 9-5-13 DATE

3-3-14
PLANS APPROVAL DATE

REGISTERED PROFESSIONAL ENGINEER
TRAN HOANG
No. C54996
Exp. 6-30-14
CIVIL
STATE OF CALIFORNIA

THE STATE OF CALIFORNIA OR ITS OFFICERS OR AGENTS SHALL NOT BE RESPONSIBLE FOR THE ACCURACY OR COMPLETENESS OF SCANNED COPIES OF THIS PLAN SHEET.

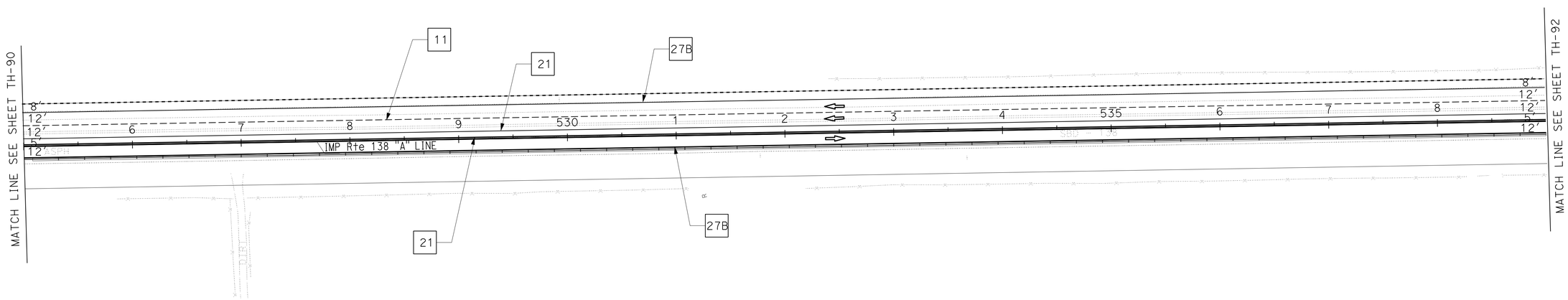

TRAFFIC HANDLING PLAN

STAGE 1 - PHASE C

NO SCALE

TH-91

APPROVED FOR TRAFFIC HANDLING WORK ONLY

STATE OF CALIFORNIA - DEPARTMENT OF TRANSPORTATION
Caltrans® **TRAFFIC DESIGN**

FUNCTIONAL SUPERVISOR: WILLIAM WASSER
CALCULATED-DESIGNED BY: TRAN HOANG
CHECKED BY: HORMUZD SETHNA
REVISED BY
DATE REVISED

LAST REVISION 09-05-13 | DATE PLOTTED => 01-MAY-2014 | TIME PLOTTED => 11:03

Dist	COUNTY	ROUTE	POST MILES TOTAL PROJECT	SHEET No.	TOTAL SHEETS
08	SBd	2,138	6.2/6.4, 2.3/R15.2	584	1168

REGISTERED CIVIL ENGINEER 9-5-13 DATE

3-3-14
PLANS APPROVAL DATE

REGISTERED PROFESSIONAL ENGINEER
TRAN HOANG
No. C54996
Exp. 6-30-14
CIVIL
STATE OF CALIFORNIA

THE STATE OF CALIFORNIA OR ITS OFFICERS OR AGENTS SHALL NOT BE RESPONSIBLE FOR THE ACCURACY OR COMPLETENESS OF SCANNED COPIES OF THIS PLAN SHEET.

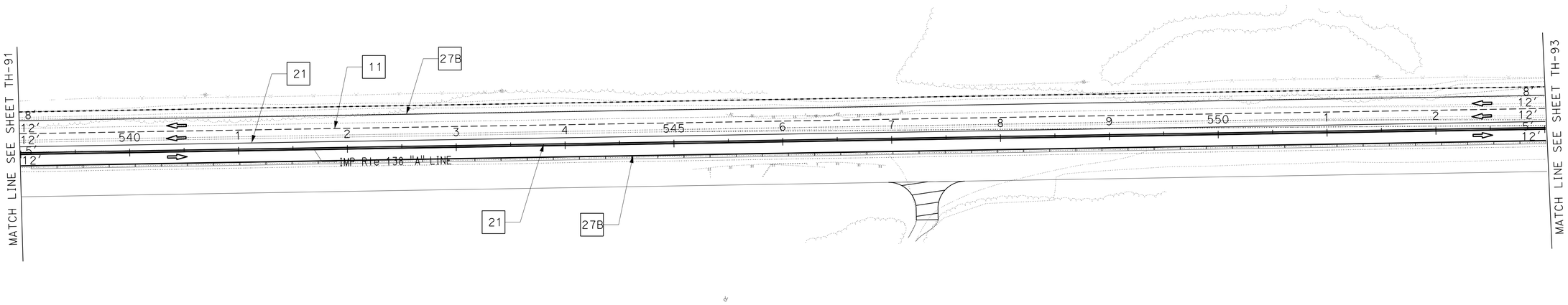

TRAFFIC HANDLING PLAN

STAGE 1 - PHASE C

NO SCALE

TH-92

APPROVED FOR TRAFFIC HANDLING WORK ONLY

STATE OF CALIFORNIA - DEPARTMENT OF TRANSPORTATION
Caltrans® **TRAFFIC DESIGN**

FUNCTIONAL SUPERVISOR: WILLIAM WASSER
CALCULATED-DESIGNED BY: TRAN HOANG
CHECKED BY: HORMUZD SETHNA
REVISED BY
DATE REVISED

LAST REVISION 09-05-13 | DATE PLOTTED => 01-MAY-2014 | TIME PLOTTED => 11:03

Dist	COUNTY	ROUTE	POST MILES TOTAL PROJECT	SHEET No.	TOTAL SHEETS
08	SBd	2,138	6.2/6.4, 2.3/R15.2	585	1168

REGISTERED CIVIL ENGINEER 9-5-13 DATE

3-3-14
PLANS APPROVAL DATE

REGISTERED PROFESSIONAL ENGINEER
TRAN HOANG
No. C54996
Exp. 6-30-14
CIVIL
STATE OF CALIFORNIA

THE STATE OF CALIFORNIA OR ITS OFFICERS OR AGENTS SHALL NOT BE RESPONSIBLE FOR THE ACCURACY OR COMPLETENESS OF SCANNED COPIES OF THIS PLAN SHEET.

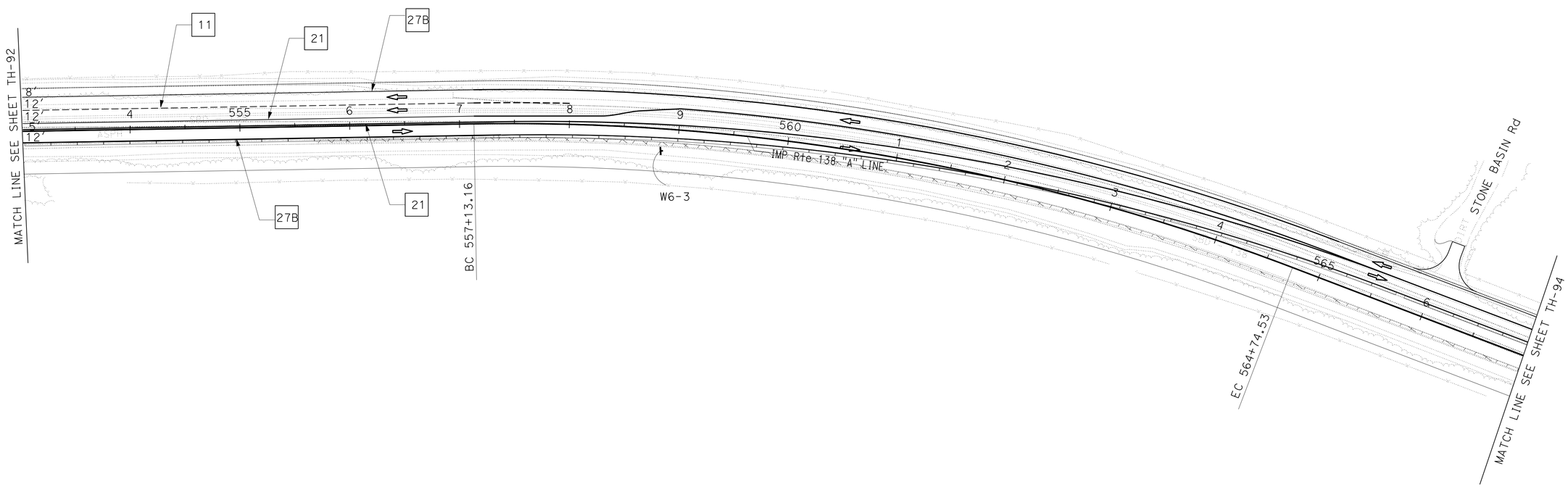

TRAFFIC HANDLING PLAN

STAGE 1 - PHASE C

NO SCALE

TH-93

APPROVED FOR TRAFFIC HANDLING WORK ONLY

STATE OF CALIFORNIA - DEPARTMENT OF TRANSPORTATION
Caltrans® **TRAFFIC DESIGN**

FUNCTIONAL SUPERVISOR: WILLIAM WASSER

CALCULATED-DESIGNED BY: TRAN HOANG
CHECKED BY: HORMUZD SETHNA

REVISED BY
DATE REVISED

LAST REVISION 09-05-13 | DATE PLOTTED => 01-MAY-2014 | TIME PLOTTED => 11:04

Dist	COUNTY	ROUTE	POST MILES TOTAL PROJECT	SHEET No.	TOTAL SHEETS
08	SBd	2,138	6.2/6.4, 2.3/R15.2	586	1168

REGISTERED CIVIL ENGINEER 9-5-13 DATE

3-3-14
PLANS APPROVAL DATE

REGISTERED PROFESSIONAL ENGINEER
TRAN HOANG
No. C54996
Exp. 6-30-14
CIVIL
STATE OF CALIFORNIA

THE STATE OF CALIFORNIA OR ITS OFFICERS OR AGENTS SHALL NOT BE RESPONSIBLE FOR THE ACCURACY OR COMPLETENESS OF SCANNED COPIES OF THIS PLAN SHEET.

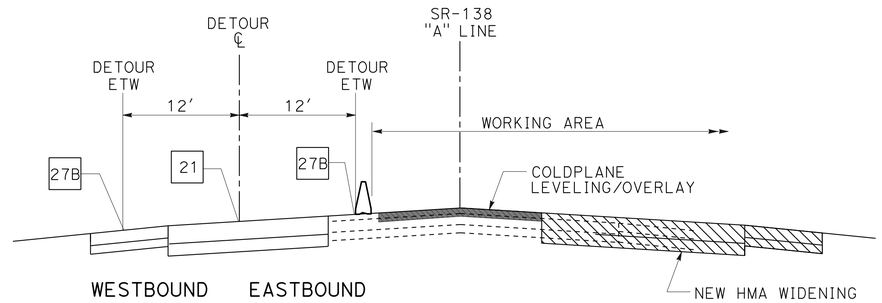

SECTION R-R

Sta 565+00 TO Sta 732+37 "A" LINE

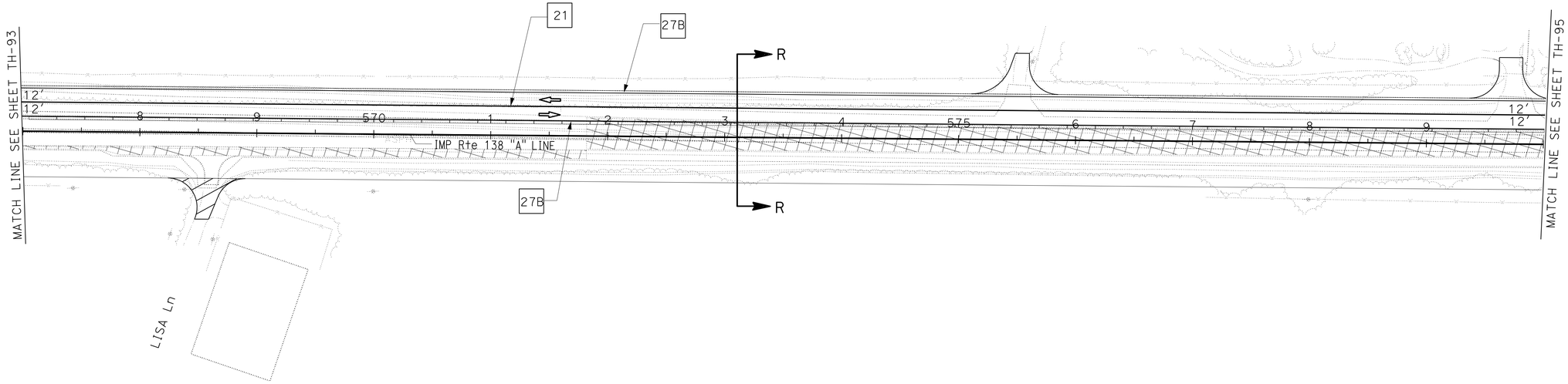

TRAFFIC HANDLING PLAN

STAGE 1 - PHASE C

NO SCALE

TH-94

APPROVED FOR TRAFFIC HANDLING WORK ONLY

STATE OF CALIFORNIA - DEPARTMENT OF TRANSPORTATION
Caltrans® **TRAFFIC DESIGN**

FUNCTIONAL SUPERVISOR: WILLIAM WASSER

CALCULATED-DESIGNED BY: TRAN HOANG
CHECKED BY: HORMUZD SETHNA

REVISED BY
DATE REVISED

LAST REVISION 09-05-13 | DATE PLOTTED => 01-MAY-2014 | TIME PLOTTED => 11:04

BORDER LAST REVISED 7/2/2010 | USERNAME => s121614 | DGN FILE => 0800000609md094.dgn | RELATIVE BORDER SCALE IS IN INCHES 0 1 2 3 | UNIT 2285 | PROJECT NUMBER & PHASE 08000006091

Dist	COUNTY	ROUTE	POST MILES TOTAL PROJECT	SHEET No.	TOTAL SHEETS
08	SBd	2,138	6.2/6.4, 2.3/R15.2	587	1168

REGISTERED CIVIL ENGINEER 9-5-13 DATE

3-3-14
PLANS APPROVAL DATE

REGISTERED PROFESSIONAL ENGINEER TRAN HOANG No. C54996 Exp. 6-30-14 CIVIL STATE OF CALIFORNIA

THE STATE OF CALIFORNIA OR ITS OFFICERS OR AGENTS SHALL NOT BE RESPONSIBLE FOR THE ACCURACY OR COMPLETENESS OF SCANNED COPIES OF THIS PLAN SHEET.

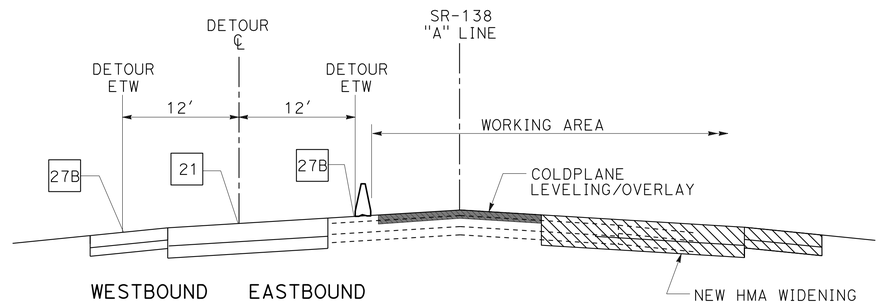

SECTION R-R

Sta 565+00 TO Sta 732+37 "A" LINE

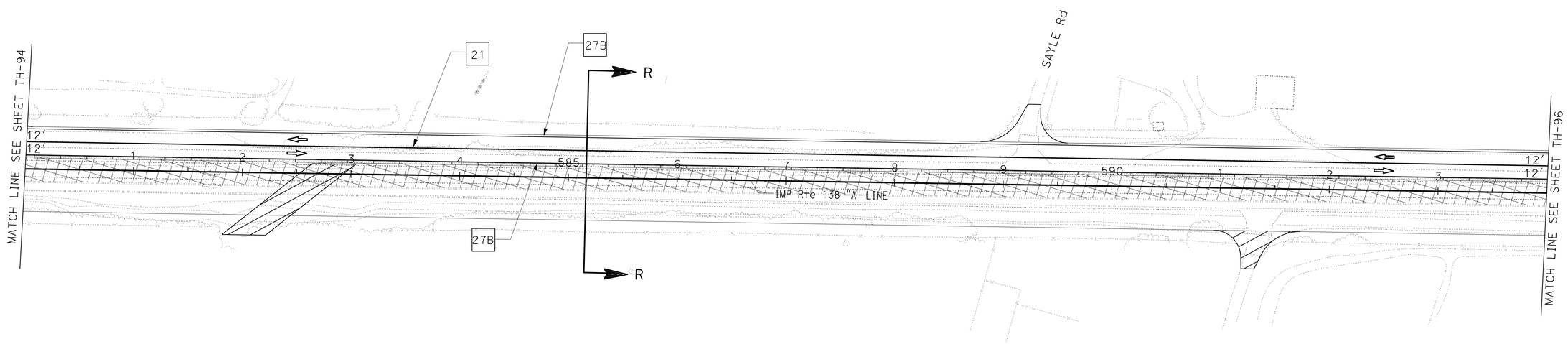

TRAFFIC HANDLING PLAN

STAGE 1 - PHASE C

NO SCALE

TH-95

APPROVED FOR TRAFFIC HANDLING WORK ONLY

STATE OF CALIFORNIA - DEPARTMENT OF TRANSPORTATION

Caltrans® **TRAFFIC DESIGN**

FUNCTIONAL SUPERVISOR: WILLIAM WASSER

CALCULATED-DESIGNED BY: TRAN HOANG

CHECKED BY: HORMUZD SETHNA

REVISED BY / DATE REVISED

LAST REVISION 09-05-13 | DATE PLOTTED => 01-MAY-2014 | TIME PLOTTED => 11:04

Dist	COUNTY	ROUTE	POST MILES TOTAL PROJECT	SHEET No.	TOTAL SHEETS
08	SBd	2,138	6.2/6.4, 2.3/R15.2	588	1168

REGISTERED CIVIL ENGINEER 9-5-13 DATE

3-3-14
PLANS APPROVAL DATE

REGISTERED PROFESSIONAL ENGINEER
TRAN HOANG
No. C54996
Exp. 6-30-14
CIVIL
STATE OF CALIFORNIA

THE STATE OF CALIFORNIA OR ITS OFFICERS OR AGENTS SHALL NOT BE RESPONSIBLE FOR THE ACCURACY OR COMPLETENESS OF SCANNED COPIES OF THIS PLAN SHEET.

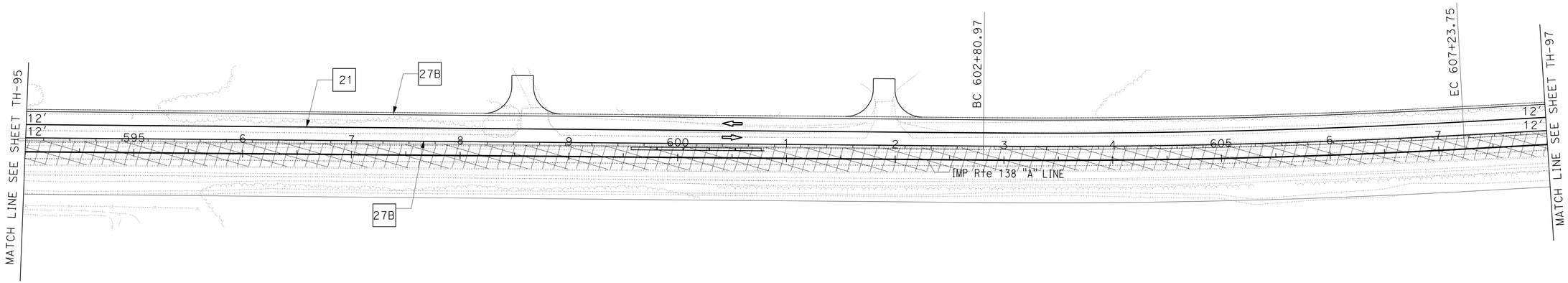

TRAFFIC HANDLING PLAN

STAGE 1 - PHASE C

NO SCALE

TH-96

APPROVED FOR TRAFFIC HANDLING WORK ONLY

STATE OF CALIFORNIA - DEPARTMENT OF TRANSPORTATION
Caltrans® **TRAFFIC DESIGN**

FUNCTIONAL SUPERVISOR: WILLIAM WASSER
CALCULATED-DESIGNED BY: TRAN HOANG
CHECKED BY: HORMUZD SETHNA
REVISED BY
DATE REVISED

LAST REVISION 09-05-13
DATE PLOTTED => 01-MAY-2014
TIME PLOTTED => 11:04

BORDER LAST REVISED 7/2/2010
USERNAME => s121614
DGN FILE => 0800000609md096.dgn
RELATIVE BORDER SCALE IS IN INCHES 0 1 2 3
UNIT 2285
PROJECT NUMBER & PHASE 08000006091

Dist	COUNTY	ROUTE	POST MILES TOTAL PROJECT	SHEET No.	TOTAL SHEETS
08	SBd	2,138	6.2/6.4, 2.3/R15.2	589	1168

REGISTERED CIVIL ENGINEER 9-5-13 DATE

3-3-14
PLANS APPROVAL DATE

REGISTERED PROFESSIONAL ENGINEER
TRAN HOANG
No. C54996
Exp. 6-30-14
CIVIL
STATE OF CALIFORNIA

THE STATE OF CALIFORNIA OR ITS OFFICERS OR AGENTS SHALL NOT BE RESPONSIBLE FOR THE ACCURACY OR COMPLETENESS OF SCANNED COPIES OF THIS PLAN SHEET.

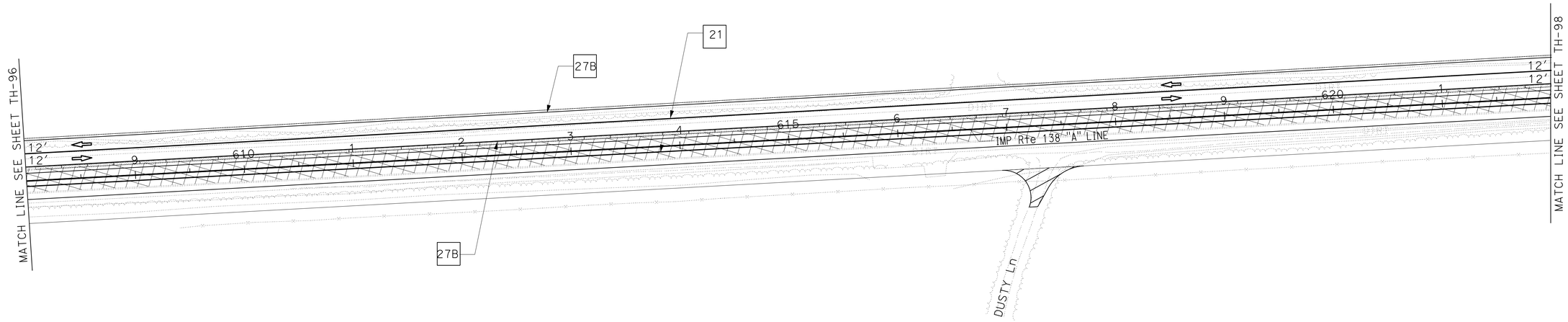

TRAFFIC HANDLING PLAN

STAGE 1 - PHASE C

NO SCALE

TH-97

APPROVED FOR TRAFFIC HANDLING WORK ONLY

STATE OF CALIFORNIA - DEPARTMENT OF TRANSPORTATION
Caltrans® **TRAFFIC DESIGN**

FUNCTIONAL SUPERVISOR: WILLIAM WASSER
CALCULATED-DESIGNED BY: TRAN HOANG
CHECKED BY: HORMUZD SETHNA
REVISED BY
DATE REVISED

LAST REVISION 09-05-13 | DATE PLOTTED => 01-MAY-2014 | TIME PLOTTED => 11:04

Dist	COUNTY	ROUTE	POST MILES TOTAL PROJECT	SHEET No.	TOTAL SHEETS
08	SBd	2,138	6.2/6.4, 2.3/R15.2	590	1168

REGISTERED CIVIL ENGINEER 9-5-13 DATE

3-3-14
PLANS APPROVAL DATE

REGISTERED PROFESSIONAL ENGINEER
TRAN HOANG
No. C54996
Exp. 6-30-14
CIVIL
STATE OF CALIFORNIA

THE STATE OF CALIFORNIA OR ITS OFFICERS OR AGENTS SHALL NOT BE RESPONSIBLE FOR THE ACCURACY OR COMPLETENESS OF SCANNED COPIES OF THIS PLAN SHEET.

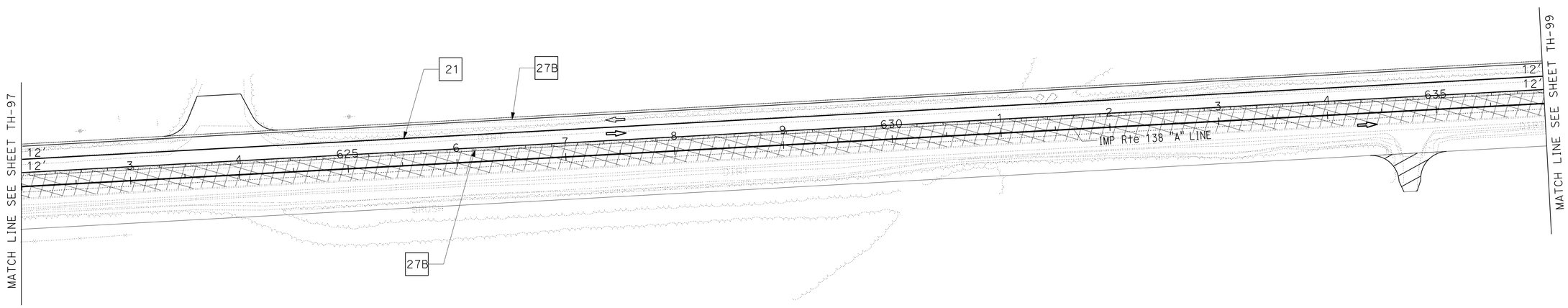

TRAFFIC HANDLING PLAN

STAGE 1 - PHASE C

NO SCALE

TH-98

APPROVED FOR TRAFFIC HANDLING WORK ONLY

STATE OF CALIFORNIA - DEPARTMENT OF TRANSPORTATION
Caltrans® **TRAFFIC DESIGN**

FUNCTIONAL SUPERVISOR: WILLIAM WASSER
CALCULATED-DESIGNED BY: TRAN HOANG
CHECKED BY: HORMUZD SETHNA
REVISED BY
DATE REVISED

LAST REVISION 09-05-13
DATE PLOTTED => 01-MAY-2014
TIME PLOTTED => 11:04

Dist	COUNTY	ROUTE	POST MILES TOTAL PROJECT	SHEET No.	TOTAL SHEETS
08	SBd	2,138	6.2/6.4, 2.3/R15.2	591	1168

REGISTERED CIVIL ENGINEER 9-5-13 DATE

3-3-14
PLANS APPROVAL DATE

REGISTERED PROFESSIONAL ENGINEER
TRAN HOANG
No. C54996
Exp. 6-30-14
CIVIL
STATE OF CALIFORNIA

THE STATE OF CALIFORNIA OR ITS OFFICERS OR AGENTS SHALL NOT BE RESPONSIBLE FOR THE ACCURACY OR COMPLETENESS OF SCANNED COPIES OF THIS PLAN SHEET.

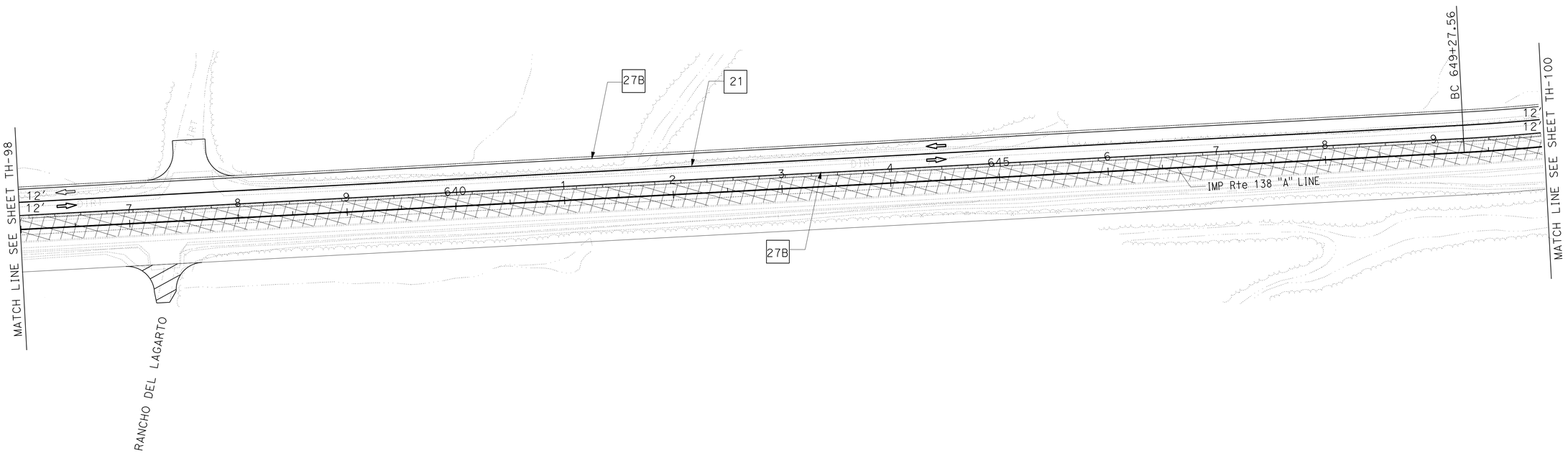

TRAFFIC HANDLING PLAN

STAGE 1 - PHASE C

NO SCALE

TH-99

APPROVED FOR TRAFFIC HANDLING WORK ONLY

STATE OF CALIFORNIA - DEPARTMENT OF TRANSPORTATION
Caltrans® **TRAFFIC DESIGN**

FUNCTIONAL SUPERVISOR: WILLIAM WASSER

CALCULATED-DESIGNED BY: TRAN HOANG
CHECKED BY: HORMUZD SETHNA

REVISED BY
DATE REVISED

LAST REVISION 09-05-13 | DATE PLOTTED => 01-MAY-2014 | TIME PLOTTED => 11:04

Dist	COUNTY	ROUTE	POST MILES TOTAL PROJECT	SHEET No.	TOTAL SHEETS
08	SBd	2,138	6.2/6.4, 2.3/R15.2	592	1168

REGISTERED CIVIL ENGINEER 9-5-13 DATE

3-3-14
PLANS APPROVAL DATE

REGISTERED PROFESSIONAL ENGINEER
TRAN HOANG
No. C54996
Exp. 6-30-14
CIVIL
STATE OF CALIFORNIA

THE STATE OF CALIFORNIA OR ITS OFFICERS OR AGENTS SHALL NOT BE RESPONSIBLE FOR THE ACCURACY OR COMPLETENESS OF SCANNED COPIES OF THIS PLAN SHEET.

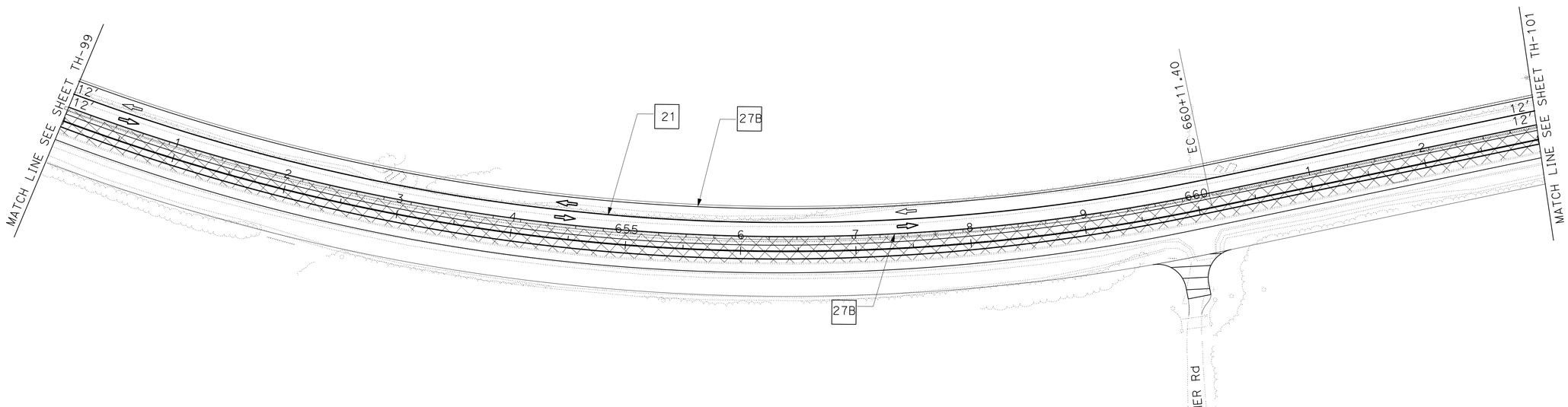

TRAFFIC HANDLING PLAN

STAGE 1 - PHASE C

NO SCALE

TH-100

APPROVED FOR TRAFFIC HANDLING WORK ONLY

STATE OF CALIFORNIA - DEPARTMENT OF TRANSPORTATION
Caltrans® **TRAFFIC DESIGN**

FUNCTIONAL SUPERVISOR: WILLIAM WASSER
CALCULATED-DESIGNED BY: TRAN HOANG
CHECKED BY: HORMUZD SETHNA
REVISED BY
DATE REVISED

LAST REVISION 09-05-13 | DATE PLOTTED => 01-MAY-2014 | TIME PLOTTED => 11:04

BORDER LAST REVISED 7/2/2010 | USERNAME => s121614 | DGN FILE => 0800000609md100.dgn | RELATIVE BORDER SCALE IS IN INCHES 0 1 2 3 | UNIT 2285 | PROJECT NUMBER & PHASE 08000006091

Dist	COUNTY	ROUTE	POST MILES TOTAL PROJECT	SHEET No.	TOTAL SHEETS
08	SBd	2,138	6.2/6.4, 2.3/R15.2	593	1168

REGISTERED CIVIL ENGINEER 9-5-13 DATE

3-3-14
PLANS APPROVAL DATE

REGISTERED PROFESSIONAL ENGINEER
TRAN HOANG
No. C54996
Exp. 6-30-14
CIVIL
STATE OF CALIFORNIA

THE STATE OF CALIFORNIA OR ITS OFFICERS OR AGENTS SHALL NOT BE RESPONSIBLE FOR THE ACCURACY OR COMPLETENESS OF SCANNED COPIES OF THIS PLAN SHEET.

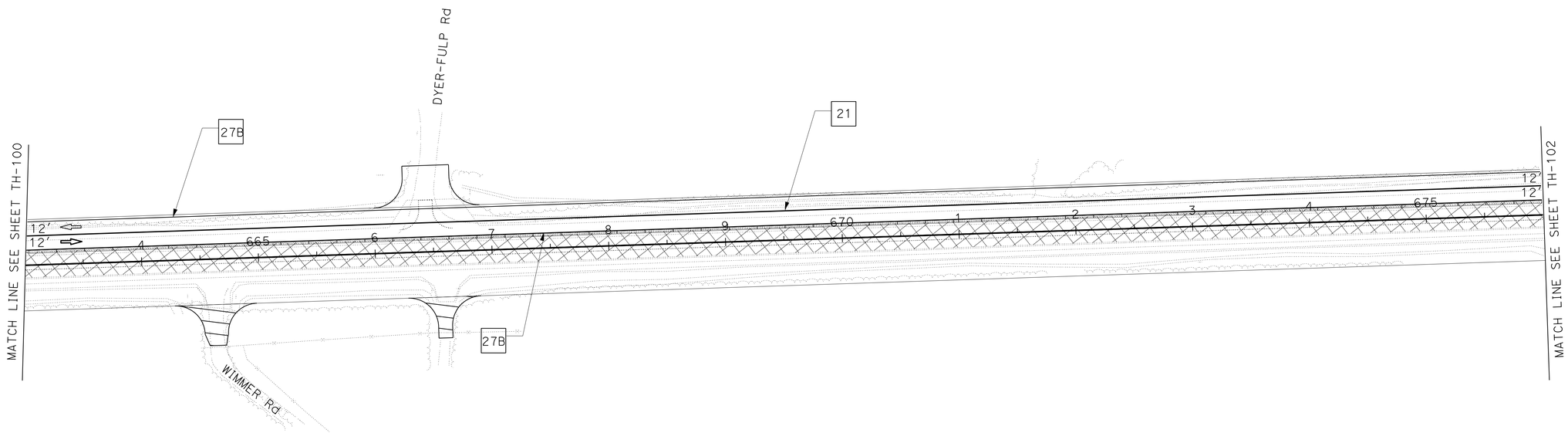

TRAFFIC HANDLING PLAN

STAGE 1 - PHASE C

NO SCALE

TH-101

APPROVED FOR TRAFFIC HANDLING WORK ONLY

STATE OF CALIFORNIA - DEPARTMENT OF TRANSPORTATION
Caltrans® **TRAFFIC DESIGN**

FUNCTIONAL SUPERVISOR: WILLIAM WASSER
CALCULATED-DESIGNED BY: TRAN HOANG
CHECKED BY: HORMUZD SETHNA
REVISED BY
DATE REVISED

LAST REVISION 09-05-13
DATE PLOTTED => 01-MAY-2014
TIME PLOTTED => 11:04

Dist	COUNTY	ROUTE	POST MILES TOTAL PROJECT	SHEET No.	TOTAL SHEETS
08	SBd	2,138	6.2/6.4, 2.3/R15.2	594	1168

REGISTERED CIVIL ENGINEER 9-5-13 DATE

3-3-14
PLANS APPROVAL DATE

REGISTERED PROFESSIONAL ENGINEER
TRAN HOANG
No. C54996
Exp. 6-30-14
CIVIL
STATE OF CALIFORNIA

THE STATE OF CALIFORNIA OR ITS OFFICERS OR AGENTS SHALL NOT BE RESPONSIBLE FOR THE ACCURACY OR COMPLETENESS OF SCANNED COPIES OF THIS PLAN SHEET.

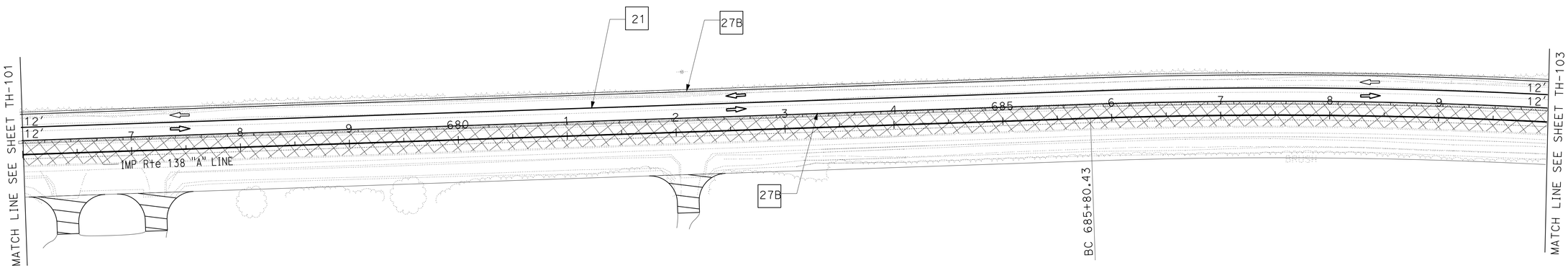

TRAFFIC HANDLING PLAN
STAGE 1 - PHASE C
NO SCALE

TH-102

APPROVED FOR TRAFFIC HANDLING WORK ONLY

STATE OF CALIFORNIA - DEPARTMENT OF TRANSPORTATION
Caltrans® **TRAFFIC DESIGN**

FUNCTIONAL SUPERVISOR: WILLIAM WASSER

CALCULATED-DESIGNED BY: TRAN HOANG
CHECKED BY: HORMUZD SETHNA

REVISED BY
DATE REVISED

LAST REVISION 09-05-13 | DATE PLOTTED => 01-MAY-2014 | TIME PLOTTED => 11:04

Dist	COUNTY	ROUTE	POST MILES TOTAL PROJECT	SHEET No.	TOTAL SHEETS
08	SBd	2,138	6.2/6.4, 2.3/R15.2	595	1168

REGISTERED CIVIL ENGINEER 9-5-13 DATE

3-3-14
PLANS APPROVAL DATE

REGISTERED PROFESSIONAL ENGINEER
TRAN HOANG
No. C54996
Exp. 6-30-14
CIVIL
STATE OF CALIFORNIA

THE STATE OF CALIFORNIA OR ITS OFFICERS OR AGENTS SHALL NOT BE RESPONSIBLE FOR THE ACCURACY OR COMPLETENESS OF SCANNED COPIES OF THIS PLAN SHEET.

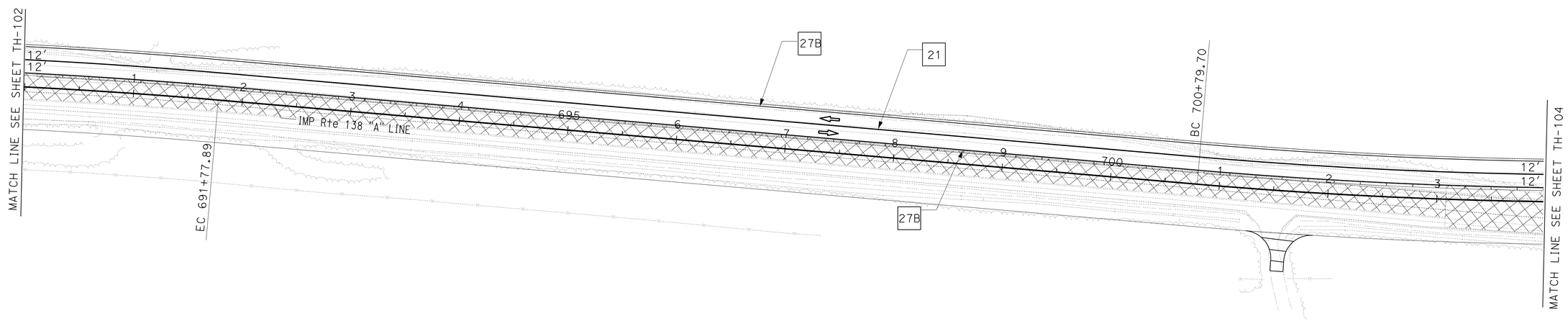

TRAFFIC HANDLING PLAN

STAGE 1 - PHASE C

NO SCALE

TH-103

APPROVED FOR TRAFFIC HANDLING WORK ONLY

STATE OF CALIFORNIA - DEPARTMENT OF TRANSPORTATION
Caltrans® **TRAFFIC DESIGN**

FUNCTIONAL SUPERVISOR: WILLIAM WASSER

CALCULATED-DESIGNED BY: TRAN HOANG
CHECKED BY: HORMUZD SETHNA

REVISED BY
DATE REVISED

LAST REVISION 09-05-13
DATE PLOTTED => 01-MAY-2014
TIME PLOTTED => 11:04

Dist	COUNTY	ROUTE	POST MILES TOTAL PROJECT	SHEET No.	TOTAL SHEETS
08	SBd	2,138	6.2/6.4, 2.3/R15.2	596	1168

REGISTERED CIVIL ENGINEER 9-5-13 DATE

3-3-14
PLANS APPROVAL DATE

REGISTERED PROFESSIONAL ENGINEER
TRAN HOANG
No. C54996
Exp. 6-30-14
CIVIL
STATE OF CALIFORNIA

THE STATE OF CALIFORNIA OR ITS OFFICERS OR AGENTS SHALL NOT BE RESPONSIBLE FOR THE ACCURACY OR COMPLETENESS OF SCANNED COPIES OF THIS PLAN SHEET.

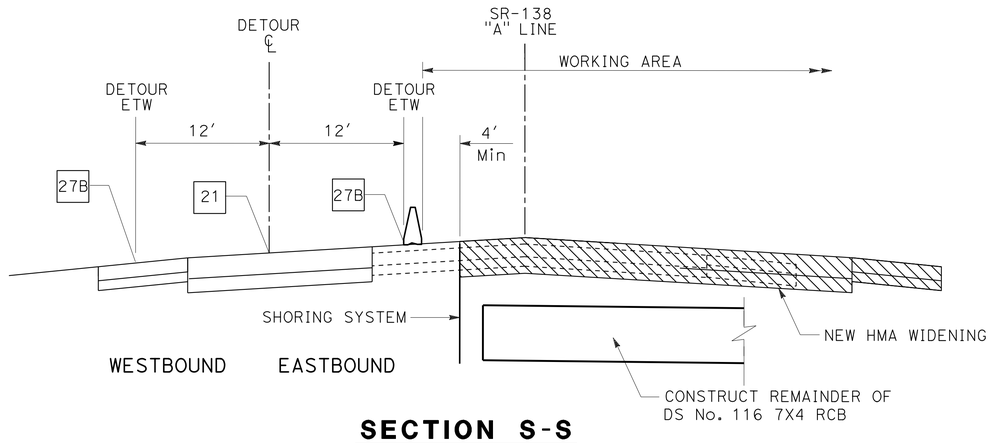

SECTION S-S

Sta 705+00 "A" LINE

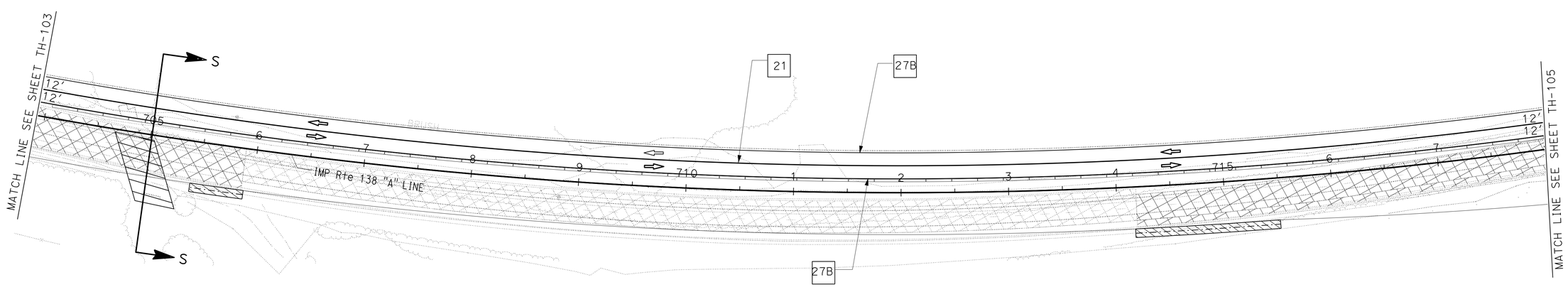

TRAFFIC HANDLING PLAN

STAGE 1 - PHASE C

NO SCALE

TH-104

APPROVED FOR TRAFFIC HANDLING WORK ONLY

STATE OF CALIFORNIA - DEPARTMENT OF TRANSPORTATION
Caltrans® **TRAFFIC DESIGN**

FUNCTIONAL SUPERVISOR: WILLIAM WASSER

CALCULATED-DESIGNED BY: TRAN HOANG
CHECKED BY: HORMUZD SETHNA

REVISED BY | DATE REVISED

LAST REVISION 09-05-13 | DATE PLOTTED => 01-MAY-2014 | TIME PLOTTED => 11:04

Dist	COUNTY	ROUTE	POST MILES TOTAL PROJECT	SHEET No.	TOTAL SHEETS
08	SBd	2,138	6.2/6.4, 2.3/R15.2	597	1168

REGISTERED CIVIL ENGINEER 2-25-14 DATE

3-3-14
PLANS APPROVAL DATE

REGISTERED PROFESSIONAL ENGINEER
TRAN HOANG
No. C54996
Exp. 6-30-14
CIVIL
STATE OF CALIFORNIA

THE STATE OF CALIFORNIA OR ITS OFFICERS OR AGENTS SHALL NOT BE RESPONSIBLE FOR THE ACCURACY OR COMPLETENESS OF SCANNED COPIES OF THIS PLAN SHEET.

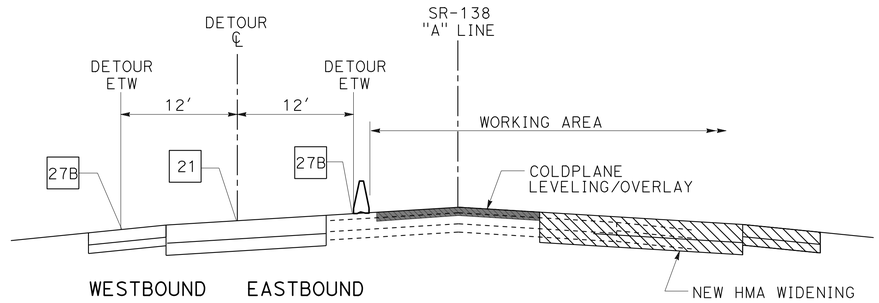

SECTION R-R

STA 565+00 TO STA 732+37 "A" LINE

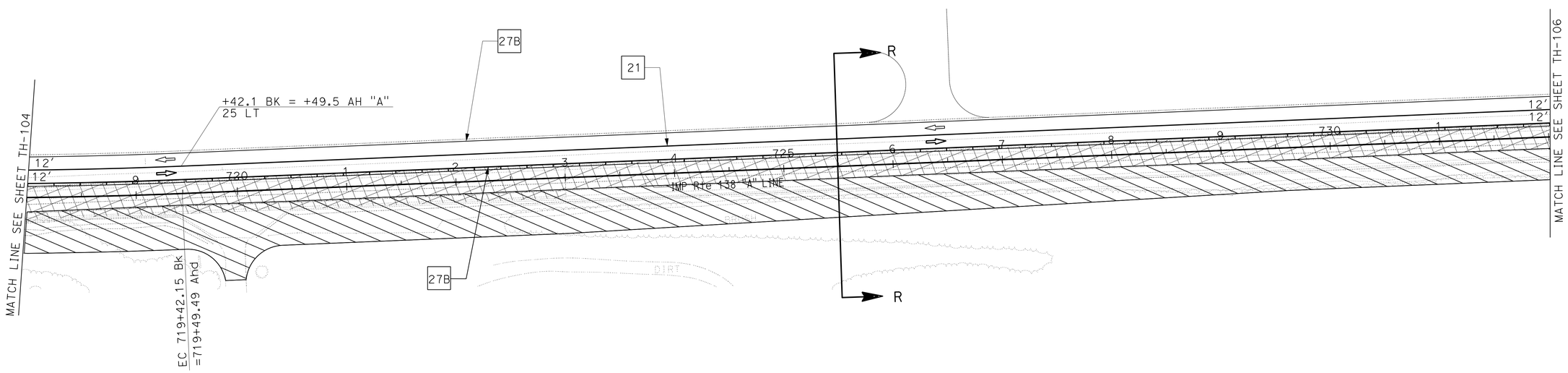

TRAFFIC HANDLING PLAN

STAGE 1 - PHASE C

NO SCALE

TH-105

APPROVED FOR TRAFFIC HANDLING WORK ONLY

STATE OF CALIFORNIA - DEPARTMENT OF TRANSPORTATION
Caltrans® **TRAFFIC DESIGN**

FUNCTIONAL SUPERVISOR: WILLIAM WASSER

CALCULATED-DESIGNED BY: TRAN HOANG
CHECKED BY: HORMUZD SETHNA

REVISED BY | DATE REVISED

LAST REVISION 02-25-14 | DATE PLOTTED => 01-MAY-2014 | TIME PLOTTED => 11:05

Dist	COUNTY	ROUTE	POST MILES TOTAL PROJECT	SHEET No.	TOTAL SHEETS
08	SBd	2,138	6.2/6.4, 2.3/R15.2	598	1168

REGISTERED CIVIL ENGINEER 2-25-14 DATE

3-3-14
PLANS APPROVAL DATE

REGISTERED PROFESSIONAL ENGINEER TRAN HOANG No. C54996 Exp. 6-30-14 CIVIL STATE OF CALIFORNIA

THE STATE OF CALIFORNIA OR ITS OFFICERS OR AGENTS SHALL NOT BE RESPONSIBLE FOR THE ACCURACY OR COMPLETENESS OF SCANNED COPIES OF THIS PLAN SHEET.

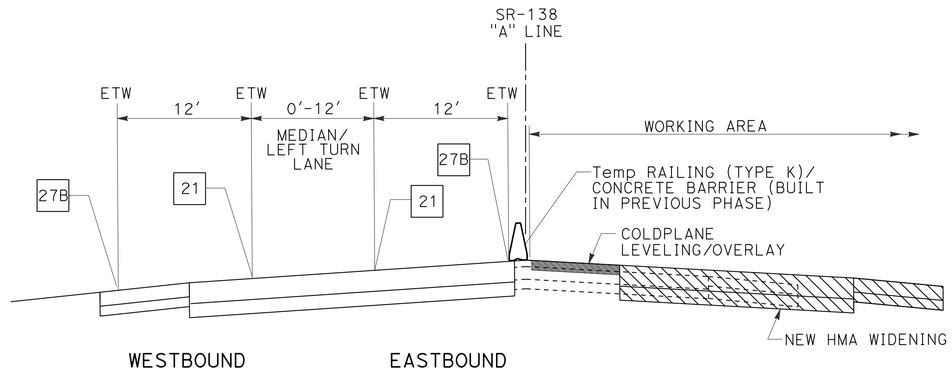

SECTION T-T

Sta 732+37 TO Sta 764+86 "A" LINE

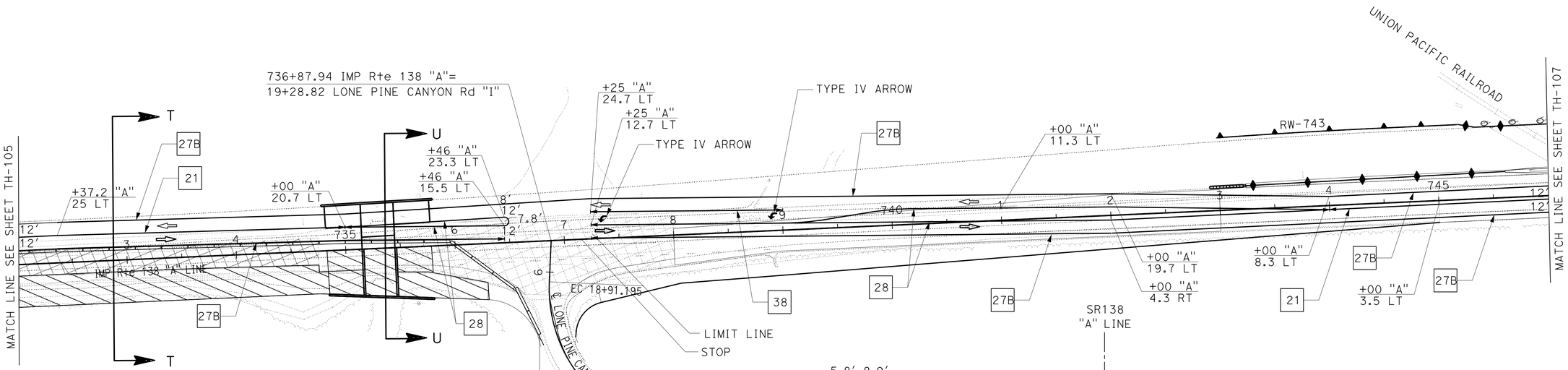

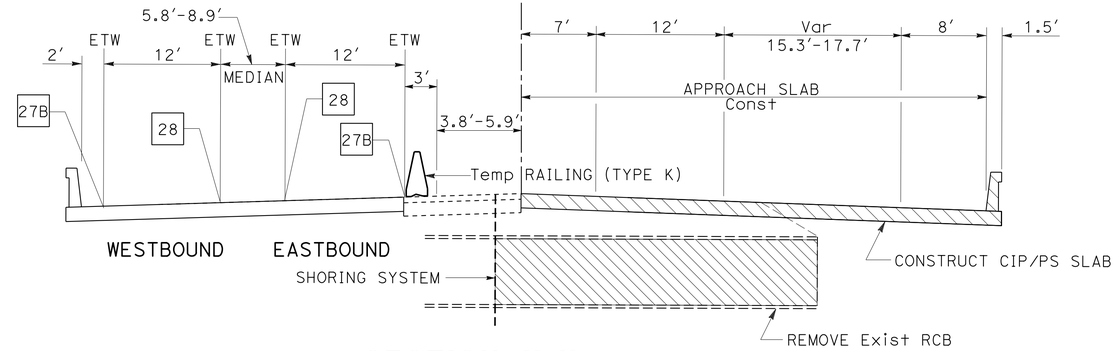

SECTION U-U

WILDLIFE UC No. 2 BRIDGE

TRAFFIC HANDLING PLAN

STAGE 1 - PHASE C

NO SCALE

TH-106

APPROVED FOR TRAFFIC HANDLING WORK ONLY

STATE OF CALIFORNIA - DEPARTMENT OF TRANSPORTATION
Caltrans® TRAFFIC DESIGN

FUNCTIONAL SUPERVISOR: WILLIAM WASSER
CALCULATED-DESIGNED BY: HORMUZD SETHNA
CHECKED BY: TRAN HOANG
REVISED BY
DATE REVISED

LAST REVISION 02-25-14
DATE PLOTTED => 01-MAY-2014
TIME PLOTTED => 11:05

Dist	COUNTY	ROUTE	POST MILES TOTAL PROJECT	SHEET No.	TOTAL SHEETS
08	SBd	2,138	6.2/6.4, 2.3/R15.2	599	1168

REGISTERED CIVIL ENGINEER 2-25-14 DATE

3-3-14
PLANS APPROVAL DATE

REGISTERED PROFESSIONAL ENGINEER TRAN HOANG No. C54996 Exp. 6-30-14 CIVIL STATE OF CALIFORNIA

THE STATE OF CALIFORNIA OR ITS OFFICERS OR AGENTS SHALL NOT BE RESPONSIBLE FOR THE ACCURACY OR COMPLETENESS OF SCANNED COPIES OF THIS PLAN SHEET.

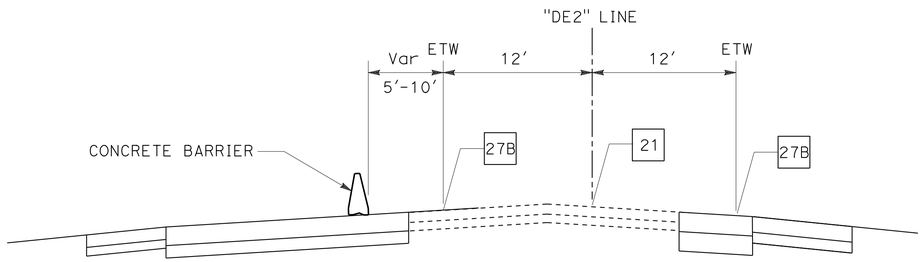

SECTION V-V

Sta 743+00 TO Sta 759+00 "A" LINE

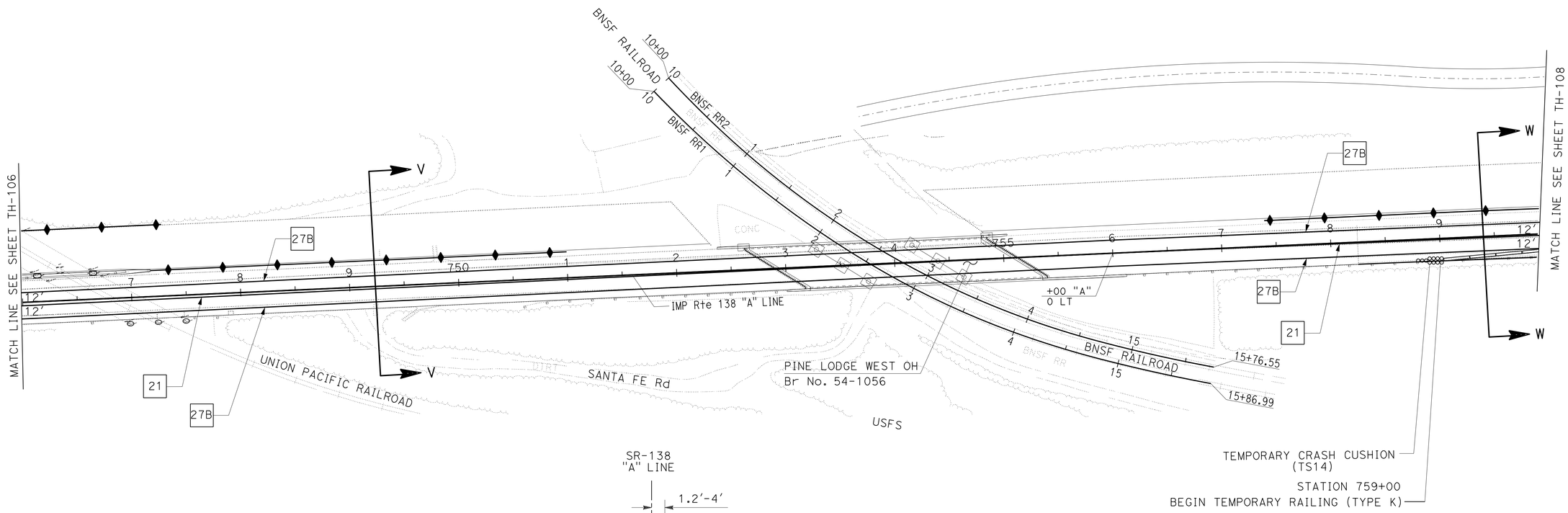

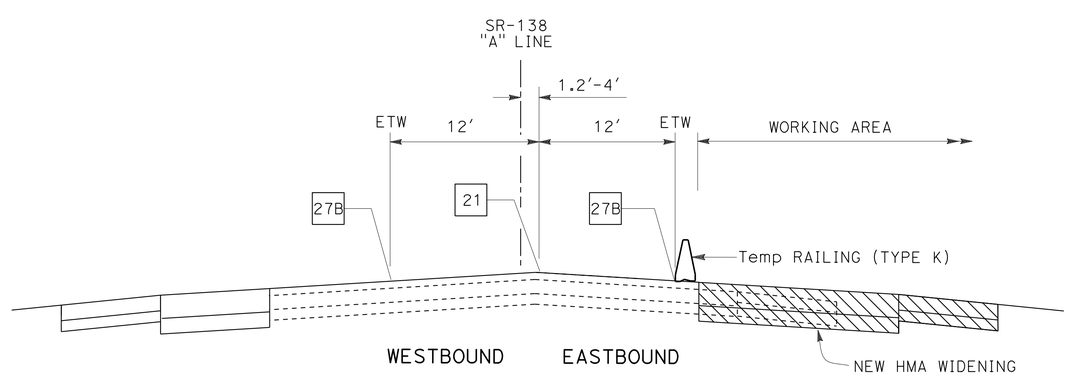

SECTION W-W

Sta 759+00 TO Sta 782+14.6 "A" LINE

TRAFFIC HANDLING PLAN

STAGE 1 - PHASE C

NO SCALE

TH-107

APPROVED FOR TRAFFIC HANDLING WORK ONLY

STATE OF CALIFORNIA - DEPARTMENT OF TRANSPORTATION
Caltrans® **TRAFFIC DESIGN**

FUNCTIONAL SUPERVISOR: WILLIAM WASSER
CALCULATED-DESIGNED BY: TRAN HOANG
CHECKED BY: HORMUZD SETHNA
REVISED BY
DATE REVISED

LAST REVISION 02-25-14
DATE PLOTTED => 01-MAY-2014
TIME PLOTTED => 11:05

Dist	COUNTY	ROUTE	POST MILES TOTAL PROJECT	SHEET No.	TOTAL SHEETS
08	SBd	2,138	6.2/6.4, 2.3/R15.2	600	1168

REGISTERED CIVIL ENGINEER 2-25-14 DATE

3-3-14
PLANS APPROVAL DATE

REGISTERED PROFESSIONAL ENGINEER TRAN HOANG No. C54996 Exp. 6-30-14 CIVIL STATE OF CALIFORNIA

THE STATE OF CALIFORNIA OR ITS OFFICERS OR AGENTS SHALL NOT BE RESPONSIBLE FOR THE ACCURACY OR COMPLETENESS OF SCANNED COPIES OF THIS PLAN SHEET.

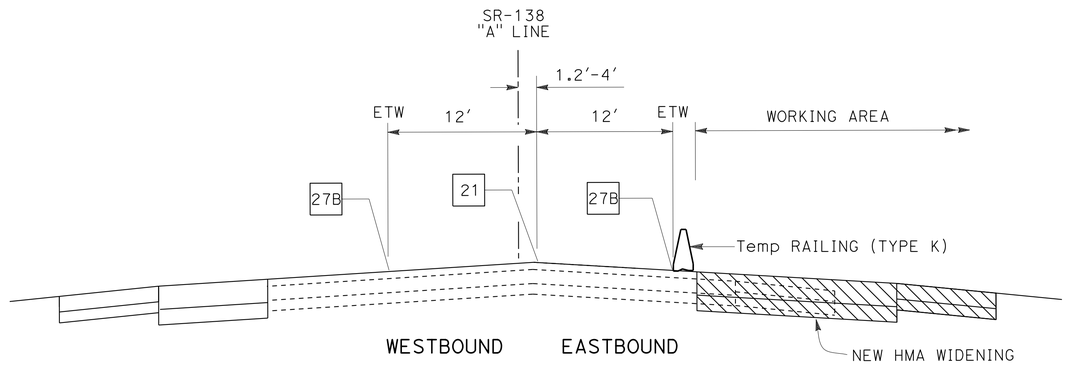

SECTION W-W

Sta 759+00 TO Sta 782+14.6 "A" LINE

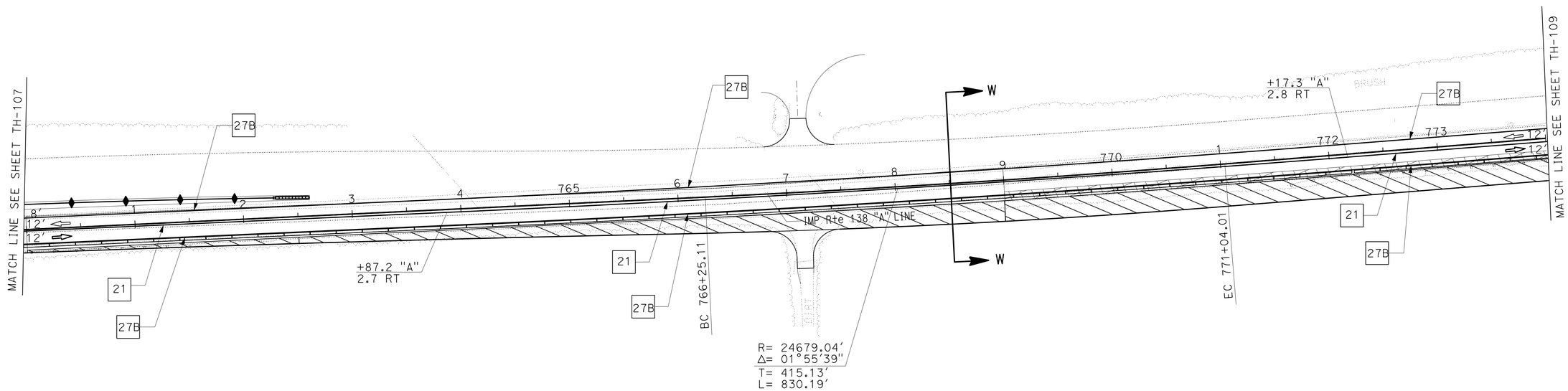

TRAFFIC HANDLING PLAN

STAGE 1 - PHASE C

NO SCALE

TH-108

APPROVED FOR TRAFFIC HANDLING WORK ONLY

STATE OF CALIFORNIA - DEPARTMENT OF TRANSPORTATION
Caltrans® **TRAFFIC DESIGN**

FUNCTIONAL SUPERVISOR: WILLIAM WASSER
CALCULATED-DESIGNED BY: TRAN HOANG
CHECKED BY: HORMUZD SETHNA
REVISED BY
DATE REVISED

LAST REVISION 02-25-14
DATE PLOTTED => 01-MAY-2014
TIME PLOTTED => 11:05