Dist	COUNTY	ROUTE	POST MILES TOTAL PROJECT	SHEET No.	TOTAL SHEETS
08	SBd	18	T6.2/31.6	1	28

STATE OF CALIFORNIA

DEPARTMENT OF TRANSPORTATION

PROJECT PLANS FOR CONSTRUCTION ON

STATE HIGHWAY

IN SAN BERNARDINO COUNTY
ON ROUTE 18
AT VARIOUS LOCATIONS
FROM STATE ROUTE 18/210 SEPARATION
TO STATE ROUTE 18/330 SEPARATION

TO BE SUPPLEMENTED BY STANDARD PLANS 2010

INDEX OF PLANS

SHEET No.	DESCRIPTION
1	TITLE AND LOCATION MAP
2-3	CONSTRUCTION DETAILS
4	CONSTRUCTION AREA SIGNS
5	PAVEMENT DELINEATION QUANTITIES
6	SUMMARY OF QUANTITIES
7	SIGN QUANTITIES
8-14	ELECTRICAL PLANS
15-16	TRAFFIC CONTROL SYSTEM
17-18	REVISED STANDARD PLANS
	STRUCTURES
19-28	ROUTE 18 BRIDGES

THE STANDARD PLANS LIST APPLICABLE TO THIS CONTRACT IS INCLUDED IN THE NOTICE TO BIDDERS AND SPECIAL PROVISIONS BOOK.

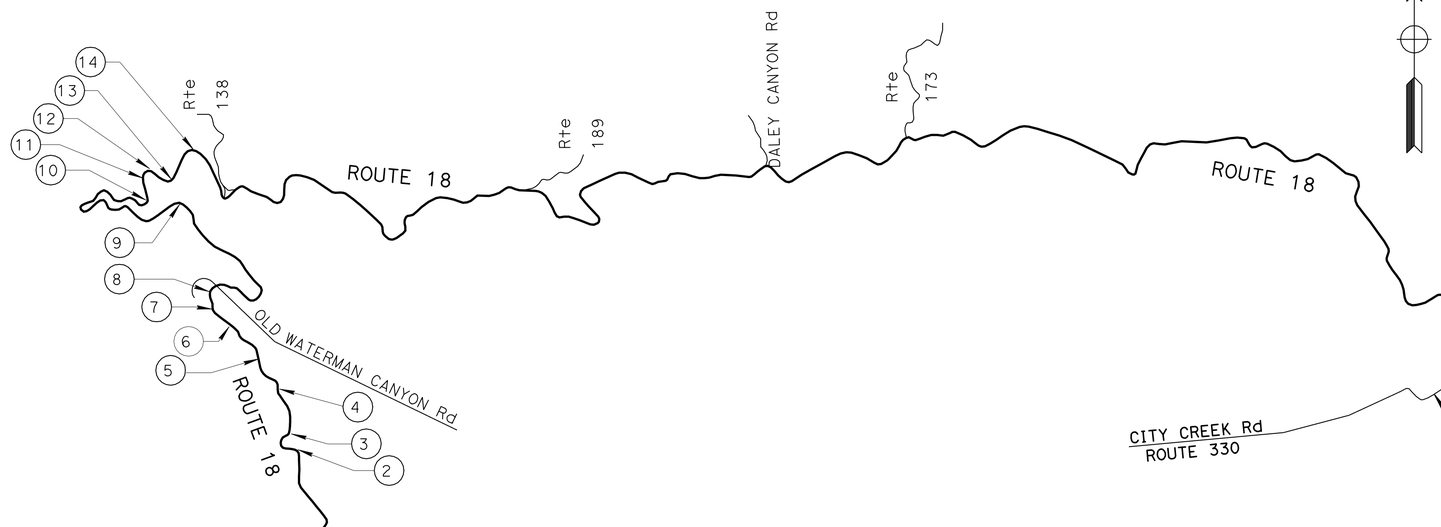

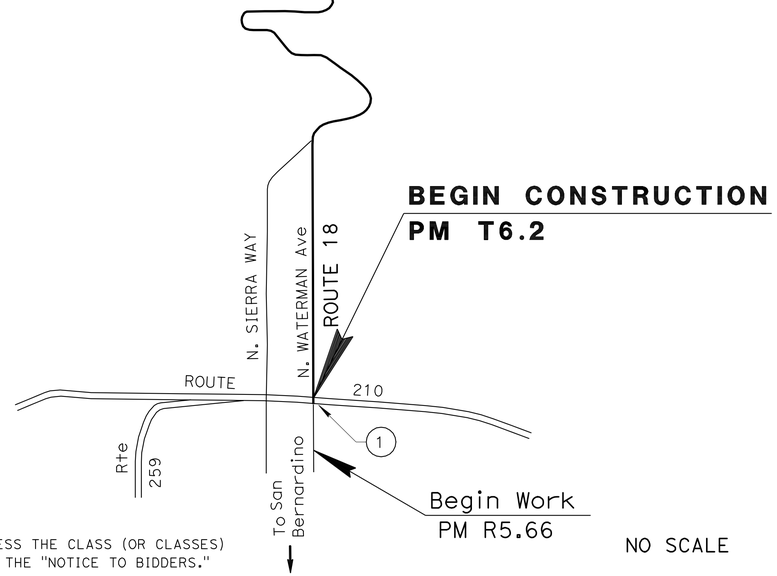

NO SCALE

LOCATION MAP

LOCATION OF BRIDGE CONSTRUCTION

X	BRIDGE No.	BRIDGE NAME	PM
1	54-0770	ROUTE 18/210 SEPARATION	T6.16
2	54-0789	GRANITE SIDEHILL VIADUCT	R11.45
3	54-0790	FIR SIDEHILL VIADUCT	R11.54
4	54-0754	EVERGREEN SIDEHILL VIADUCT	R11.90
5	54-0756	DOGWOOD SIDEHILL VIADUCT	R12.15
6	54-0752	CHAPARRAL SIDEHILL VIADUCT	R12.49
7	54-0847	BOULDER SIDEHILL VIADUCT	R12.68
8	54-0854	WATERMAN CANYON ROAD UC	R13.29
9	54-0923	LOWER BONNIE CANYON	R14.78
10	54-0875	JUNIFER SIDEHILL VIADUCT	R16.33
11	54-0876	BONNIE CANYON	R16.54
12	54-0877	HAZELWOOD SIDEHILL VIADUCT	R16.64
13	54-0878	SPRUCE SIDEHILL VIADUCT	R16.69
14	54-0879	FOREST SIDEHILL VIADUCT	R16.96
15	54-0031	STATE ROUTE 18/330 SEPARATION	31.64

Kamal Mchantaf 02-14-13
PROJECT ENGINEER REGISTERED CIVIL ENGINEER — DATE

March 18, 2013
PLANS APPROVAL DATE

REGISTERED PROFESSIONAL ENGINEER — KAMAL MCHANTAF — No. C51050 — Exp. 9/30/13 — CIVIL — STATE OF CALIFORNIA

THE STATE OF CALIFORNIA OR ITS OFFICERS OR AGENTS SHALL NOT BE RESPONSIBLE FOR THE ACCURACY OR COMPLETENESS OF SCANNED COPIES OF THIS PLAN SHEET.

THE CONTRACTOR SHALL POSSESS THE CLASS (OR CLASSES) OF LICENSE AS SPECIFIED IN THE "NOTICE TO BIDDERS."

PROJECT MANAGER: CATALINO PINING
DESIGN ENGINEER: KAMAL MCHANTAF

CONTRACT No.	08-0Q6504
PROJECT ID	0800020561

LAST REVISION 02-14-13 — DATE PLOTTED => 22-MAR-2013 — TIME PLOTTED => 06:18

Dist	COUNTY	ROUTE	POST MILES TOTAL PROJECT	SHEET No.	TOTAL SHEETS
08	SBd	18	T6.2/31.6	2	28

Kamal Mchantaf 02-14-13
REGISTERED CIVIL ENGINEER DATE

3-18-13
PLANS APPROVAL DATE

REGISTERED PROFESSIONAL ENGINEER KAMAL MCHANTAF No. C 051050 Exp. 9/30/13 CIVIL STATE OF CALIFORNIA

THE STATE OF CALIFORNIA OR ITS OFFICERS OR AGENTS SHALL NOT BE RESPONSIBLE FOR THE ACCURACY OR COMPLETENESS OF SCANNED COPIES OF THIS PLAN SHEET.

NOTES:

1. LENGTH OF REPLACE ASPHALT CONCRETE WILL BE DETERMINED BY THE ENGINEER (MINIMUM 100').
2. EXACT LOCATIONS OF REPLACE ASPHALT CONCRETE SURFACING WILL BE DETERMINED BY THE ENGINEER.

LEGEND:

0.40' REPLACE ASPHALT CONCRETE SURFACING

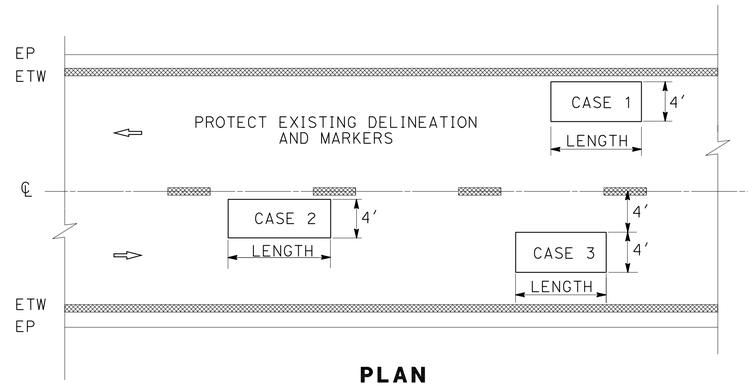

PLAN

REPLACE ASPHALT CONCRETE SURFACING (LAYOUT)

CASE 1: RIGHT WHEEL TRACK (R)
CASE 2: LEFT WHEEL TRACK (L)
CASE 3: CENTER OF TRAVELED WAY (C)

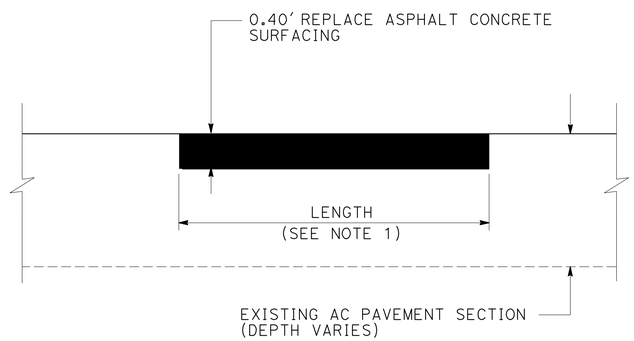

ELEVATION

REPLACE ASPHALT CONCRETE SURFACING (PROFILE)

CONSTRUCTION DETAILS

NO SCALE

C-1

STATE OF CALIFORNIA - DEPARTMENT OF TRANSPORTATION
Caltrans® MAINTENANCE DESIGN

FUNCTIONAL SUPERVISOR: MICHAEL RISTIC
CALCULATED-DESIGNED BY: KAMAL MCHANTAF
CHECKED BY: MICHAEL RISTIC
REVISED BY
DATE REVISED

LAST REVISION 02-14-13
DATE PLOTTED => 22-MAR-2013
TIME PLOTTED => 06:08

Dist	COUNTY	ROUTE	POST MILES TOTAL PROJECT	SHEET No.	TOTAL SHEETS
08	SBd	18	T6.2/31.6	3	28

Kamal Mchantaf 02-14-13
REGISTERED CIVIL ENGINEER DATE

3-18-13
PLANS APPROVAL DATE

REGISTERED PROFESSIONAL ENGINEER KAMAL MCHANTAF No. C 051050 Exp. 9/30/13 CIVIL STATE OF CALIFORNIA

THE STATE OF CALIFORNIA OR ITS OFFICERS OR AGENTS SHALL NOT BE RESPONSIBLE FOR THE ACCURACY OR COMPLETENESS OF SCANNED COPIES OF THIS PLAN SHEET.

LEGEND:

REPLACE AC SURFACING

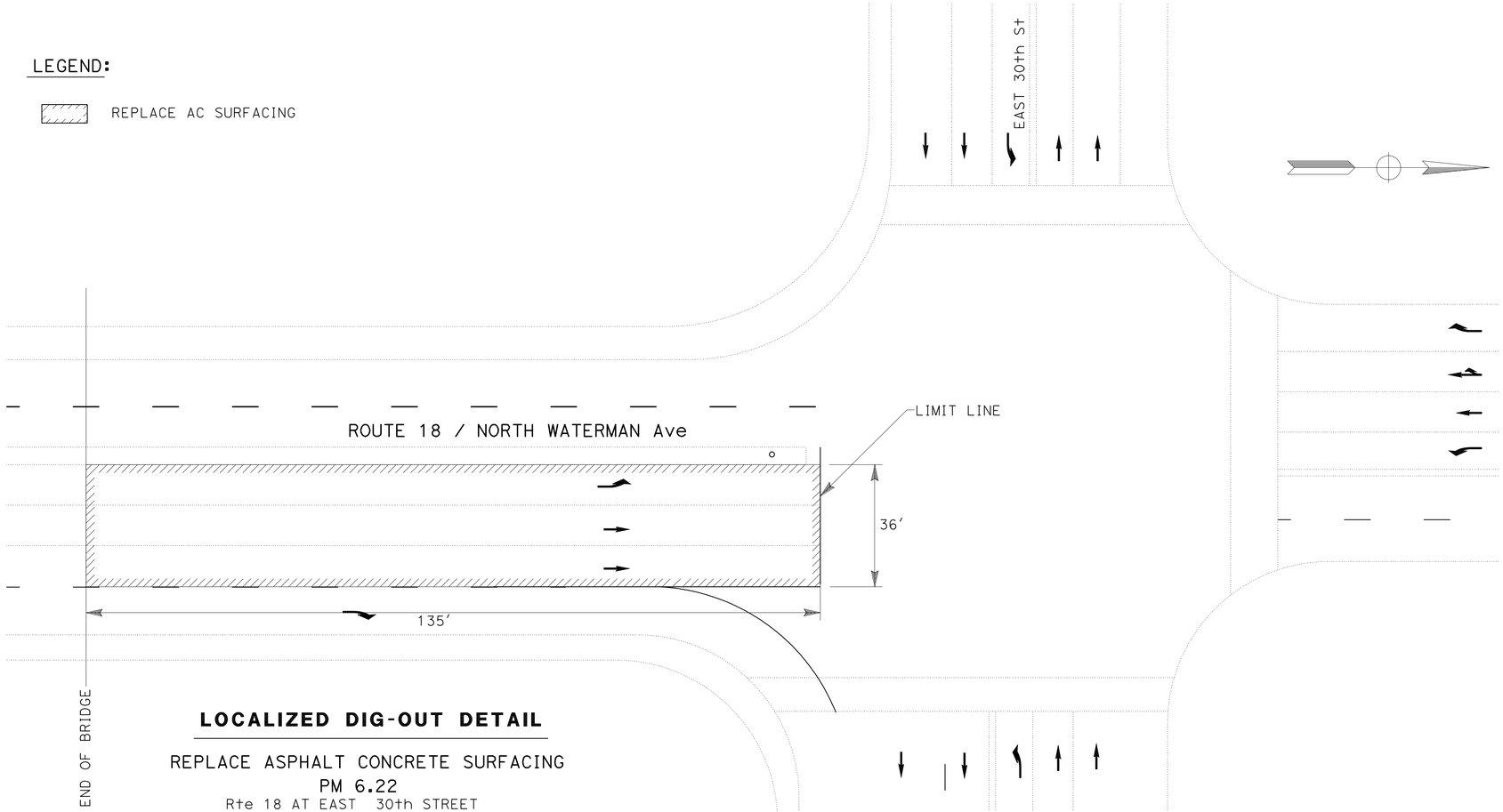

LOCALIZED DIG-OUT DETAIL

REPLACE ASPHALT CONCRETE SURFACING
PM 6.22
Rte 18 AT EAST 30th STREET

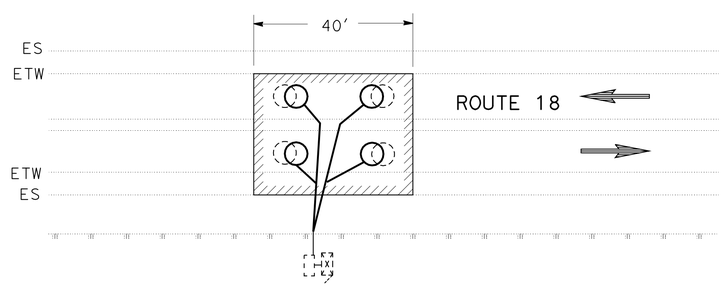

LOCALIZED DIG-OUT DETAIL

REPLACE ASPHALT CONCRETE SURFACING
PM R31.6
CENSUS STATION 856

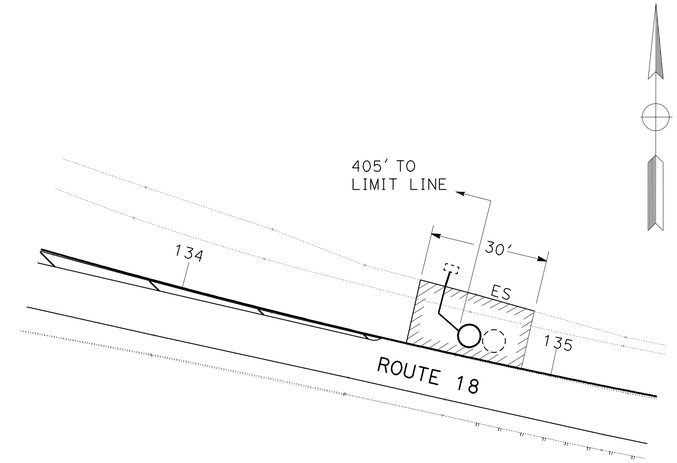

LOCALIZED DIG-OUT DETAIL

REPLACE ASPHALT CONCRETE SURFACING
PM R20.70
ADVANCED LOOP

CONSTRUCTION DETAILS

NO SCALE

C-2

STATE OF CALIFORNIA - DEPARTMENT OF TRANSPORTATION
Caltrans® MAINTENACE DESIGN

FUNCTIONAL SUPERVISOR: MICHAEL RISTIC
CALCULATED-DESIGNED BY: KAMAL MCHANTAF
CHECKED BY: MICHAEL RISTIC
REVISED BY
DATE REVISED

LAST REVISION 02-14-13
DATE PLOTTED => 28-MAR-2013
TIME PLOTTED => 14:32

Dist	COUNTY	ROUTE	POST MILES TOTAL PROJECT	SHEET No.	TOTAL SHEETS
08	SBd	18	T6.2/31.6	4	28

W E Wasser 02-14-13
REGISTERED CIVIL ENGINEER DATE

3-18-13
PLANS APPROVAL DATE

REGISTERED PROFESSIONAL ENGINEER W.E.WASSER No. 37378 Exp. 6-30-14 CIVIL STATE OF CALIFORNIA

THE STATE OF CALIFORNIA OR ITS OFFICERS OR AGENTS SHALL NOT BE RESPONSIBLE FOR THE ACCURACY OR COMPLETENESS OF SCANNED COPIES OF THIS PLAN SHEET.

NOTES:

1. THE LOCATION OF CONSTRUCTION AREA SIGNS ON THE PLAN IS APPROXIMATE, THE EXACT LOCATION OF SIGNS AND PCMS WILL BE DETERMINED BY THE ENGINEER.
2. ALL CONSTRUCTION AREA SIGNS MUST BE ACCORDING TO CALIFORNIA MUTCD.
3. SIGNS MUST BE COVERED IF NOT IN USE.

LEGEND:

WORK AREA

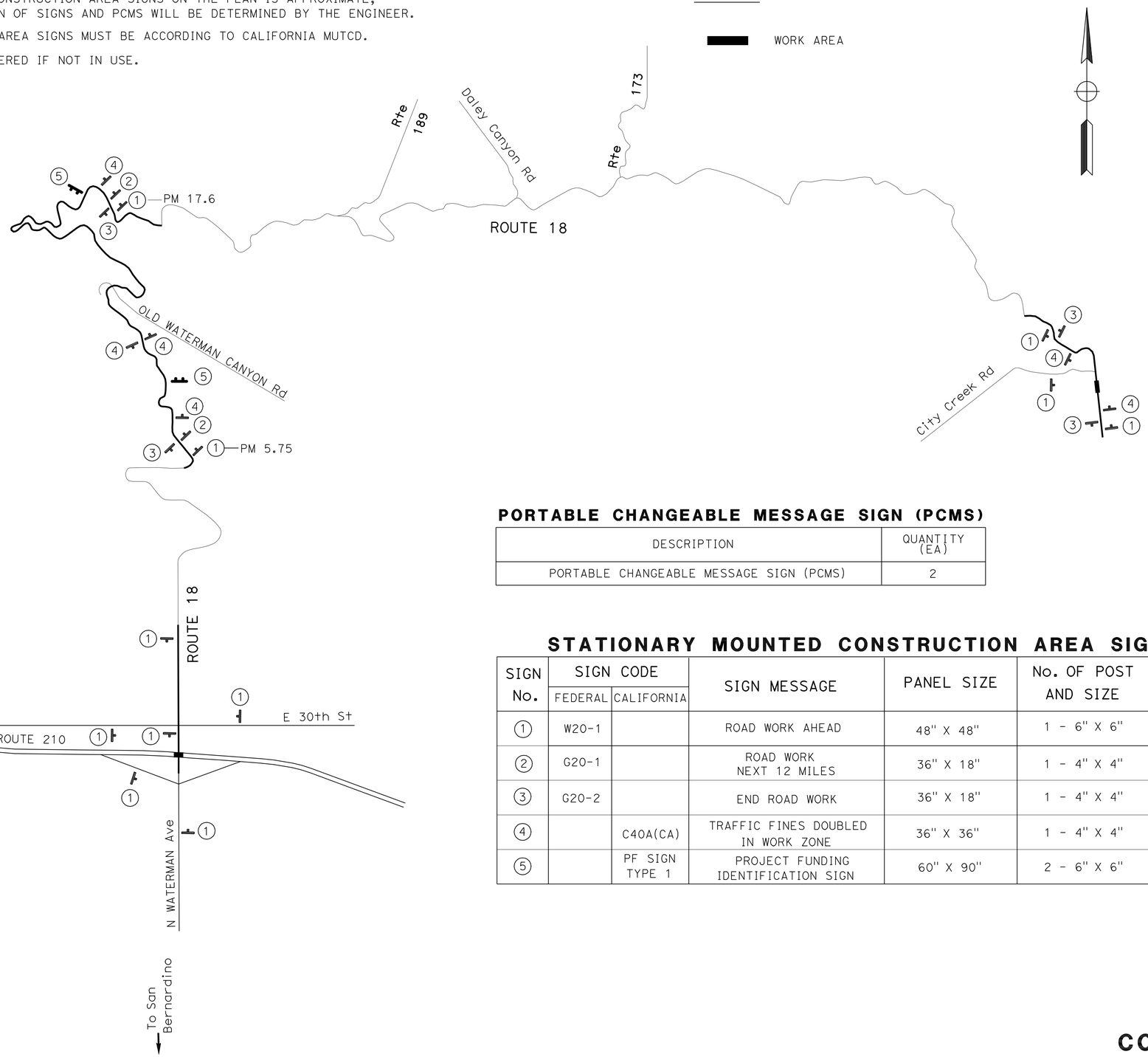

PORTABLE CHANGEABLE MESSAGE SIGN (PCMS)

DESCRIPTION	QUANTITY (EA)
PORTABLE CHANGEABLE MESSAGE SIGN (PCMS)	2

STATIONARY MOUNTED CONSTRUCTION AREA SIGNS

SIGN No.	SIGN CODE FEDERAL	SIGN CODE CALIFORNIA	SIGN MESSAGE	PANEL SIZE	No. OF POST AND SIZE	No. OF SIGNS
1	W20-1		ROAD WORK AHEAD	48" X 48"	1 - 6" X 6"	11
2	G20-1		ROAD WORK NEXT 12 MILES	36" X 18"	1 - 4" X 4"	2
3	G20-2		END ROAD WORK	36" X 18"	1 - 4" X 4"	4
4		C40A(CA)	TRAFFIC FINES DOUBLED IN WORK ZONE	36" X 36"	1 - 4" X 4"	6
5		PF SIGN TYPE 1	PROJECT FUNDING IDENTIFICATION SIGN	60" X 90"	2 - 6" X 6"	2

CONSTRUCTION AREA SIGNS

NO SCALE

CS-1

REVISED BY | DATE REVISED
MOKHTARI | W. E. WASSER
CALCULATED-DESIGNED BY | CHECKED BY
FUNCTIONAL SUPERVISOR: W. E. WASSER
STATE OF CALIFORNIA - DEPARTMENT OF TRANSPORTATION
Caltrans® TRAFFIC DESIGN

LAST REVISION 02-14-13 | DATE PLOTTED => 28-MAR-2013 | TIME PLOTTED => 14:32

Dist	COUNTY	ROUTE	POST MILES TOTAL PROJECT	SHEET No.	TOTAL SHEETS
08	SBd	18	T6.2/31.6	5	28

W E Wasser 02-14-13
REGISTERED CIVIL ENGINEER DATE

3-18-13
PLANS APPROVAL DATE

REGISTERED PROFESSIONAL ENGINEER W.E.WASSER No. 37378 Exp. 6-30-14 CIVIL STATE OF CALIFORNIA

THE STATE OF CALIFORNIA OR ITS OFFICERS OR AGENTS SHALL NOT BE RESPONSIBLE FOR THE ACCURACY OR COMPLETENESS OF SCANNED COPIES OF THIS PLAN SHEET.

PAVEMENT DELINEATION QUANTITIES

BRIDGE No.		THERMOPLASTIC TRAFFIC STRIPE (SPRAYABLE)				REMOVE PAVEMENT MARKERS	PAVEMENT MARKERS	
		WHITE			YELLOW		RETRO-REFLECTIVE	
		DETAIL 27B	DETAIL 38 X 2	DETAIL 12	DETAIL 22 (MODIFIED)		TYPE G	TYPE D
		LF				EA	EA	
1	54-0770		400	500		20	30	
2	54-0789	620		620	1240	52		52
3	54-0790	740		740	1480	64		64
4	54-0754	490		490	980	40		40
5	54-0756	1544		1545	3088	66		66
6	54-0752	1768		1768	3536	74		74
7	54-0847	1296		1296	2592	54		54
8	54-0854	306		306	612	14		14
9	54-0923	442		442	884	20		20
10	54-0875	1976		1976	3952	82		82
11	54-0876	584		584	1168	24		24
12	54-0877	504		504	1008	30		30
13	54-0878	836		836	1672	34		34
14	54-0879	468		468	936	20		20
15	54-0031	276		276	552	12		12
DIG OUT LOCATIONS PM 12.75 - 17.4		11,616		22,864	8660	126	500	200
SUBTOTAL		23,466	400	35,215	32,360	732	530	786
TOTAL		91441				732	1316	

PAVEMENT DELINEATION QUANTITIES (CONTINUE)

BRIDGE No.	DETAIL No.	THERMOPLASTIC PAVEMENT MARKING	REMARKS
		WHITE	
		SQFT	
54-0770 (1)	TYPE III(R) ARROW	84	NB
	TYPE III(L) ARROW	84	NB AND SB
	TYPE I ARROW 24'-0"	124	NB AND SB
	TOTAL	292	

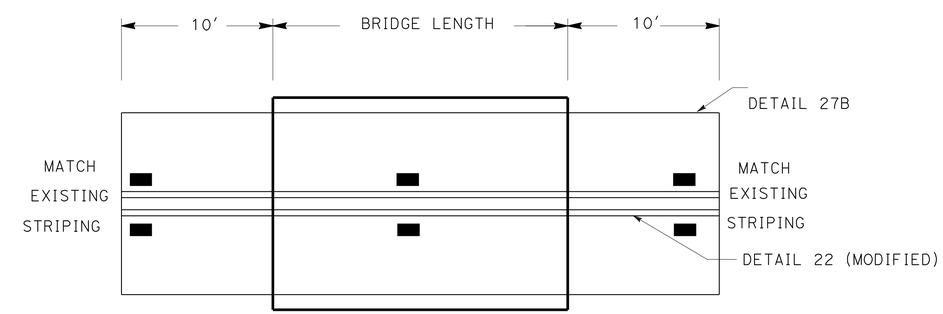

TYPE D MARKERS AT 24' SPACING

TYPICAL DETAIL 22 (MODIFIED) ON BRIDGE

PAVEMENT DELINEATION QUANTITIES

PDQ-1

REVISED BY | DATE REVISED
MOKHTARI | W. E. WASSER
CALCULATED-DESIGNED BY | CHECKED BY
FUNCTIONAL SUPERVISOR | W. E. WASSER
STATE OF CALIFORNIA - DEPARTMENT OF TRANSPORTATION
Caltrans TRAFFIC DESIGN

LAST REVISION 02-14-13 | DATE PLOTTED => 22-MAR-2013 | TIME PLOTTED => 06:08

Dist	COUNTY	ROUTE	POST MILES TOTAL PROJECT	SHEET No.	TOTAL SHEETS
08	SBd	18	T6.2/31.6	6	28

Kamal Mchantaf 02-14-13
REGISTERED CIVIL ENGINEER DATE

3-18-13
PLANS APPROVAL DATE

REGISTERED PROFESSIONAL ENGINEER KAMAL MCHANTAF No. C 051050 Exp. 9/30/13 CIVIL STATE OF CALIFORNIA

THE STATE OF CALIFORNIA OR ITS OFFICERS OR AGENTS SHALL NOT BE RESPONSIBLE FOR THE ACCURACY OR COMPLETENESS OF SCANNED COPIES OF THIS PLAN SHEET.

NOTE:

1. EXACT LOCATION OF REPLACE ASPHALT CONCRETE SURFACING TO BE DETERMINED BY THE ENGINEER.

REPLACE ASPHALT CONCRETE SURFACING

ROUTE	FROM PM	TO PM	SEGMENT LENGTH (FT)	NORTHBOUND SEGMENT WIDTH		SOUTHBOUND SEGMENT WIDTH		DEPTH (FT)	AREA FOR REPLACE ASPHALT Conc SURFACING (SQYD) (N)	REPLACE ASPHALT Conc SURFACING (CY)	REMARKS
				LANE No. 1	LANE No. 2	LANE No. 1	LANE No. 2				
18	14.25	14.75	2640		12′			0.4	3520	469	
18	14.40	14.60	1056	12′				0.4	1408	188	
18	15.80	16.30	2640		4′			0.4	1173	156	
18	16.50	16.70	1056		4′			0.4	469	63	
18	12.75	13.26	2693				4′	0.4	1197	160	
18	14.30	14.40	528				4′	0.4	235	31	
18	14.15	14.75	3168			12′		0.4	4224	563	
18	15.88	15.90	106			12′		0.4	141	19	
18	15.50	16.50	5280				12′	0.4	7040	939	
18	16.70	17.40	3696				12′	0.4	4928	657	
18	AT E 30TH STREET							0.4	540	72	SEE SHEET C-2
18	R31.60							0.4	150	20	SEE SHEET C-2
18	R20.70							0.4	85	11	SEE SHEET C-2
									TOTAL	3348	

(N) NOT A SEPARATE PAY ITEM, FOR INFORMATION ONLY.

REVISED BY | DATE REVISED

KAMAL MCHANTAF | MICHAEL RISTIC

CALCULATED-DESIGNED BY | CHECKED BY

FUNCTIONAL SUPERVISOR

MICHAEL RISTIC

STATE OF CALIFORNIA - DEPARTMENT OF TRANSPORTATION

Caltrans® MAINTENANCE DESIGN

SUMMARY OF QUANTITIES

Q-1

LAST REVISION 02-14-13 | DATE PLOTTED => 29-MAR-2013 | TIME PLOTTED => 13:50

Dist	COUNTY	ROUTE	POST MILES TOTAL PROJECT	SHEET No.	TOTAL SHEETS
08	SBd	18	T6.2/31.6	7	28

W E Wasser 02-14-13
REGISTERED CIVIL ENGINEER DATE

3-18-13
PLANS APPROVAL DATE

REGISTERED PROFESSIONAL ENGINEER W.E.WASSER No. 37378 Exp. 6-30-14 CIVIL STATE OF CALIFORNIA

THE STATE OF CALIFORNIA OR ITS OFFICERS OR AGENTS SHALL NOT BE RESPONSIBLE FOR THE ACCURACY OR COMPLETENESS OF SCANNED COPIES OF THIS PLAN SHEET.

NOTE:

AT LOCATION 8, REMOVE EXISTING BRIDGE CLEARANCE SIGN PANELS IN BOTH DIRECTIONS AND INSTALL NEW PANELS AT THE SAME LOCATIONS.

SIGN PANEL MATERIAL SUMMARY

LOCATION	FEDERAL SIGN CODE	NUMBER OF SIGN	SIGN SIZE W x H	AREA PER SIGN (N)	INSTALL ROADSIDE SIGN PANEL ON EXISTING POST	FURNISH SINGLE SHEET ALUMINUM SIGN (0.063" UNFRAMED)	SINGLE FACED	BACKGROUND		LEGEND		GRAFFITI FILM
								SHEETING COLOR	RETROREFLECTIVE ASTM TYPE	SHEETING COLOR	RETROREFLECTIVE ASTM TYPE	PREMIUM
				SQFT	EA	SQFT						
1	W12-2	2	36" x 36"	9		18	X	YELLOW	III	BLACK	IV	X
8	W12-2p	2	78" x 24"	13	2	26	X	YELLOW	III	BLACK	IV	X
TOTAL					2	44						

(N) NOT A SEPARATE PAY ITEM. FOR INFORMATION ONLY

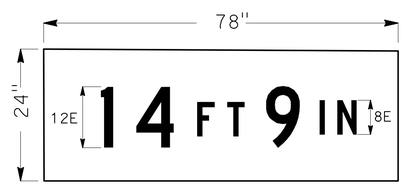

W12-2P

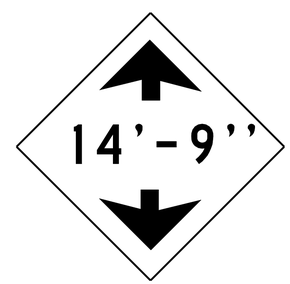

36" x 36"
W12-2

SIGN PANEL AT LOCATION 8

WATERMAN CANYON ROAD UNDERCROSSING
Br No. 54-0854

CONTRACTOR FURNISHED SIGN QUANTITIES

NO SCALE

SQ-1

STATE OF CALIFORNIA - DEPARTMENT OF TRANSPORTATION
Caltrans® TRAFFIC DESIGN

FUNCTIONAL SUPERVISOR: W.E.WASSER
CALCULATED-DESIGNED BY: MOKHTARI
CHECKED BY: W.E.WASSER
REVISED BY
DATE REVISED

LAST REVISION 02-14-13
DATE PLOTTED => 29-MAR-2013
TIME PLOTTED => 13:50

Dist	COUNTY	ROUTE	POST MILES TOTAL PROJECT	SHEET No.	TOTAL SHEETS
08	SBd	18	T6.2/31.6	8	28

REGISTERED ELECTRICAL ENGINEER 03-20-13 DATE

3-18-13
PLANS APPROVAL DATE

REGISTERED PROFESSIONAL ENGINEER FERDINAND DE LA CRUZ No. E 17215 Exp. 6-30-14 ELECTRICAL STATE OF CALIFORNIA

THE STATE OF CALIFORNIA OR ITS OFFICERS OR AGENTS SHALL NOT BE RESPONSIBLE FOR THE ACCURACY OR COMPLETENESS OF SCANNED COPIES OF THIS PLAN SHEET.

NOTE:

VIDEO DETECTION ZONES WILL BE ESTABLISHED IN THE FIELD BY THE ENGINEER.

SYMBOL:

VIVDS CAMERA

• EXISTING TRANS SENSOR DETECTOR

ABBREVIATIONS:

VIVDS = VIDEO IMAGE VEHICLE DETECTION SYSTEM

LEGEND: (SHEETS E-1 AND E-3)

1 INSTALL VIVDS EQUIPMENT IN EXISTING MODEL 332 CONTROLLER CABINET. INSTALL RACK MOUNT POWER STRIP.

2 AB EXISTING TRANS SENSOR DETECTORS

3 TO EXISTING ELECTRICAL SERVICE POINT POLE #F18623Y

4 INSTALL VIVDS CAMERA PER ES-7R.

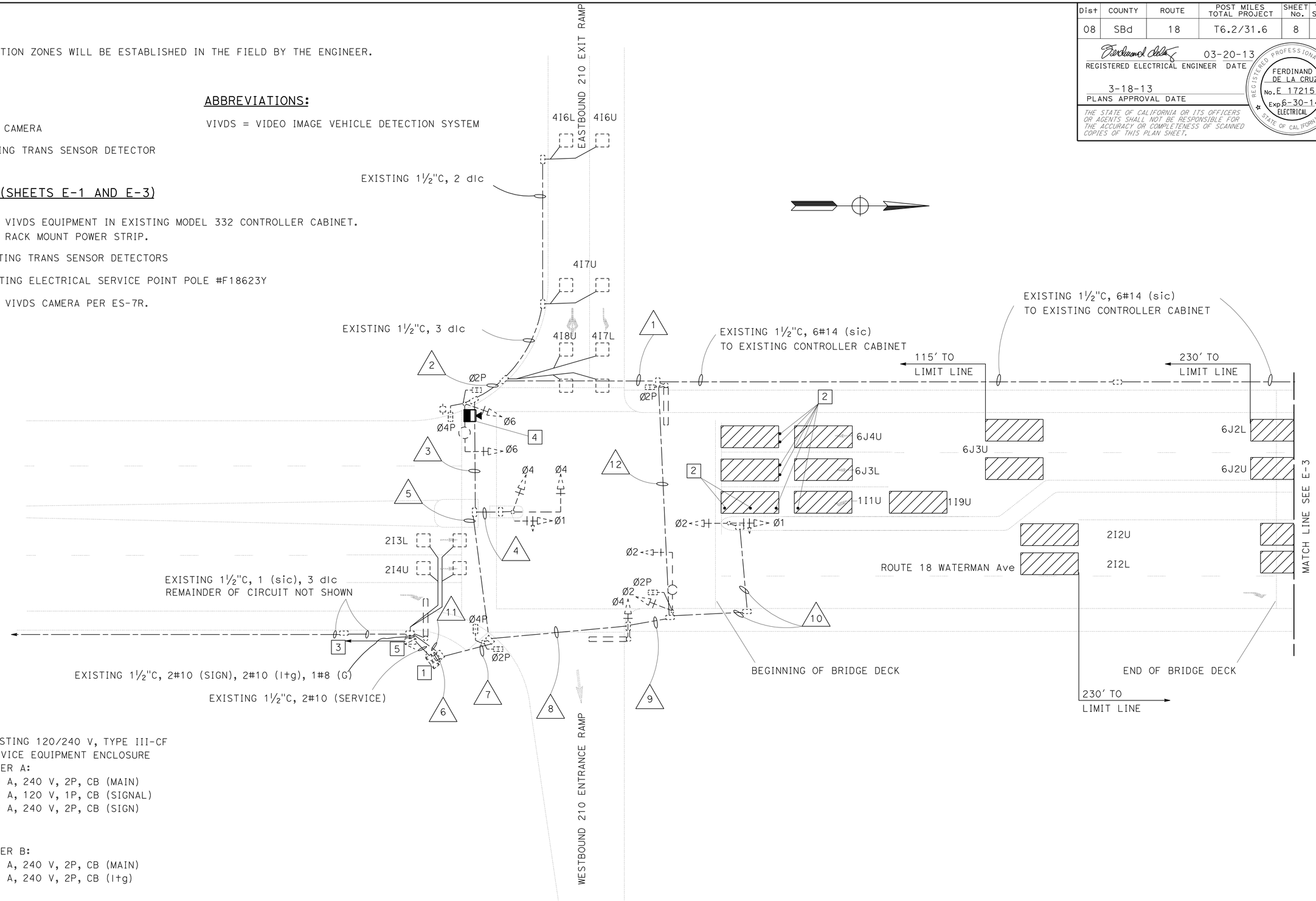

5 EXISTING 120/240 V, TYPE III-CF
SERVICE EQUIPMENT ENCLOSURE
METER A:
100 A, 240 V, 2P, CB (MAIN)
40 A, 120 V, 1P, CB (SIGNAL)
30 A, 240 V, 2P, CB (SIGN)

METER B:
100 A, 240 V, 2P, CB (MAIN)
30 A, 240 V, 2P, CB (Itg)

APPROVED FOR ELECTRICAL WORK ONLY

MODIFY SIGNAL

NO SCALE

E-1

STATE OF CALIFORNIA - DEPARTMENT OF TRANSPORTATION
Caltrans® ELECTRICAL DESIGN B

FUNCTIONAL SUPERVISOR: FERDINAND DE LA CRUZ
CALCULATED-DESIGNED BY: LUIS PENALOZA
CHECKED BY: FERDINAND DE LA CRUZ
REVISED BY
DATE REVISED

LAST REVISION 03-20-13
DATE PLOTTED => 25-MAR-2013
TIME PLOTTED => 10:06

Dist	COUNTY	ROUTE	POST MILES TOTAL PROJECT	SHEET No.	TOTAL SHEETS
08	SBd	18	T6.2/31.6	9	28

REGISTERED ELECTRICAL ENGINEER 03-20-13 DATE

3-18-13
PLANS APPROVAL DATE

REGISTERED PROFESSIONAL ENGINEER
FERDINAND DE LA CRUZ
No. E 17215
Exp. 6-30-14
ELECTRICAL
STATE OF CALIFORNIA

THE STATE OF CALIFORNIA OR ITS OFFICERS OR AGENTS SHALL NOT BE RESPONSIBLE FOR THE ACCURACY OR COMPLETENESS OF SCANNED COPIES OF THIS PLAN SHEET.

CONDUIT AND CONDUCTOR SCHEDULE

CABLE, AWG, AND DLC SCHEDULE		CONDUIT RUN NUMBER											
AWG	CIRCUIT	1	2	3	4	5	6	7	8	9	10	11	12
#14	SIGNAL INTERCONNECT	6	6	6		6	6	6				6	
#14	Ø6			3		3	3	3					
#14	Ø4, Ø4P / Ø4 PPB	2 / 1	2 / 1		3	3	10 / 2	10 / 2	5 / 1	2 / 1			2 / 1
#14	Ø2, Ø2P / Ø2 PPB	2 / 1	2 / 1				5 / 1	5 / 1	5 / 1	5 / 1	3		2 / 1
#14	Ø1				3	3	6	6	3	3	3		
#14	SPARES	3	3	3	3	3	6	6	3	3	3		
#14	120 V NEUTRAL	1	1	1	1	1	1	1	1	1	1		1
#10	120 V NEUTRAL			1	1	1		2	1	1		2	1
#10	LUMINAIRES			2		2		2	2	2			
#10	SERVICE						2					2	
TOTAL CONDUCTORS		14 / 2	14 / 2	16	11	22	39 / 3	41 / 3	20 / 2	17 / 2	10	10	6 / 2
DETECTORS	AWG #12 Ø6						2	2	2	2	2		
	DLC Ø4		5	5		5	5	5					
	DLC Ø2						5					5	
	AWG #12 Ø1						2	2	2	2	2		
TOTAL DETECTOR WIRE			5	5		5	14	9	4	4	4	5	
SIGNAL INTERCONNECT CABLE							1					1	
VIVDS CABLE				1 *		1 *	1 *	1 *					
VIVDS POWER CABLE				1 *		1 *	1 *	1 *					
SENSYS;RS-485 INTERFACE CABLE							1	1	1				
CONDUIT SIZE		1½"	1½"	2"	1½"	2"	2½"	2"	2"	1½"	1½"	2"	

NOTE: ALL EQUIPMENT IS EXISTING EXCEPT THOSE SHOWN WITH AN (*)

APPROVED FOR ELECTRICAL WORK ONLY

MODIFY SIGNAL

E-2

STATE OF CALIFORNIA - DEPARTMENT OF TRANSPORTATION
Caltrans ELECTRICAL DESIGN B

FUNCTIONAL SUPERVISOR: FERDINAND DE LA CRUZ

CALCULATED-DESIGNED BY: LUIS PENALOZA
CHECKED BY: FERDINAND DE LA CRUZ

REVISED BY
DATE REVISED

LAST REVISION 03-20-13
DATE PLOTTED => 25-MAR-2013
TIME PLOTTED => 11:07

Dist	COUNTY	ROUTE	POST MILES TOTAL PROJECT	SHEET No.	TOTAL SHEETS
08	SBd	18	T6.2/31.6	10	28

REGISTERED ELECTRICAL ENGINEER — DATE 03-20-13

3-18-13
PLANS APPROVAL DATE

REGISTERED PROFESSIONAL ENGINEER — FERDINAND DE LA CRUZ — No. E 17215 — Exp. 6-30-14 — ELECTRICAL — STATE OF CALIFORNIA

THE STATE OF CALIFORNIA OR ITS OFFICERS OR AGENTS SHALL NOT BE RESPONSIBLE FOR THE ACCURACY OR COMPLETENESS OF SCANNED COPIES OF THIS PLAN SHEET.

LEGEND: (THIS SHEET ONLY)

6 EXISTING 120/240 V, TYPE III-CF
SERVICE EQUIPMENT ENCLOSURE
METER A:
100 A, 240 V, 2P, CB (MAIN)
40 A, 120 V, 1P, CB (SIGNAL)

METER B:
100 A, 240 V, 2P, CB (MAIN)
20 A, 240 V, 2P, CB (LIGHT)

7 RC EXISTING TYPE 3½ PULL BOX. INSTALL TYPE 5 PULL BOX.

8 RC EXISTING TYPE 5 PULL BOX. INSTALL TYPE 5 PULL BOX.

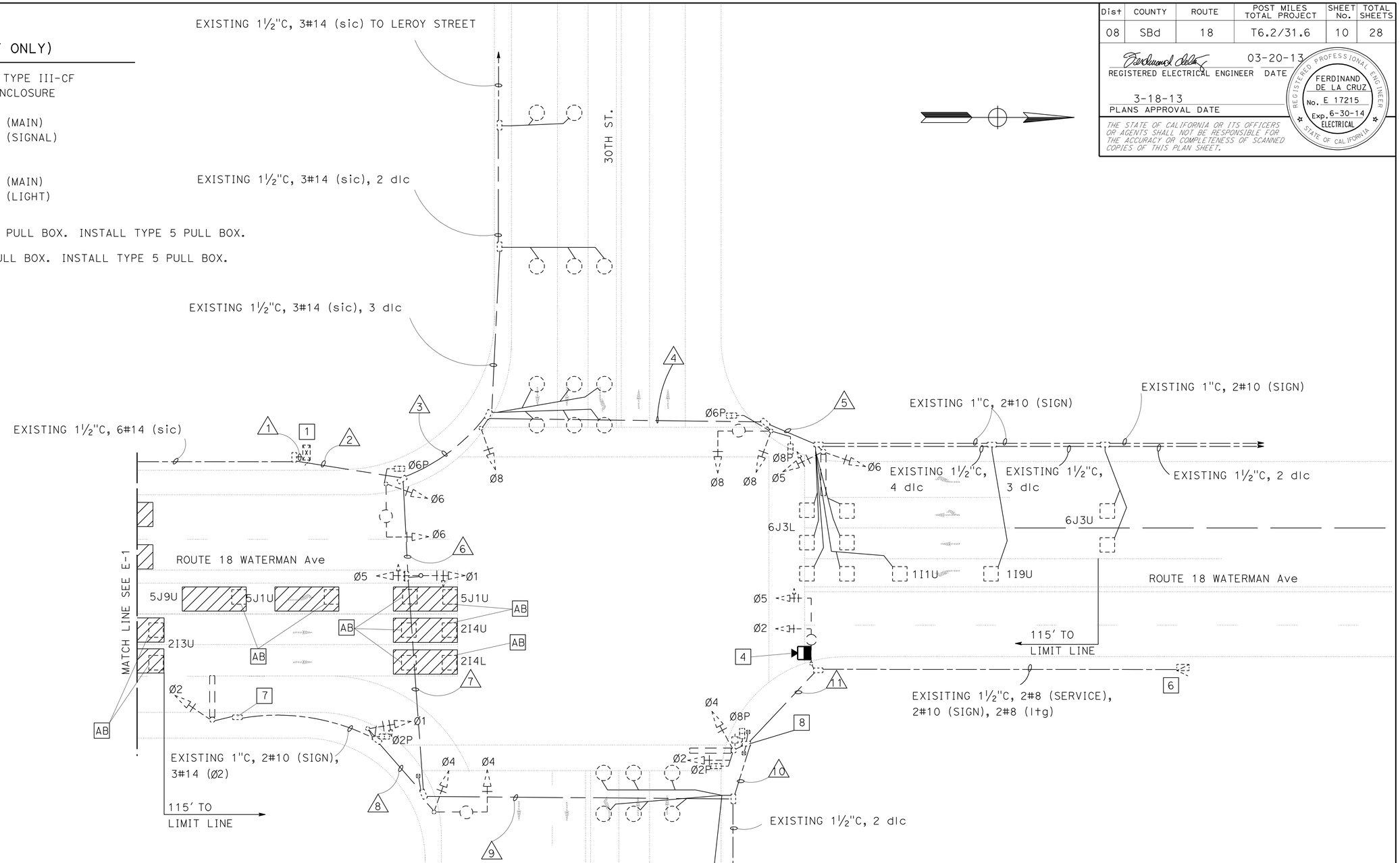

APPROVED FOR ELECTRICAL WORK ONLY

MODIFY SIGNAL

NO SCALE

E-3

STATE OF CALIFORNIA - DEPARTMENT OF TRANSPORTATION
Caltrans® ELECTRICAL DESIGN B

FUNCTIONAL SUPERVISOR: FERDINAND DE LA CRUZ
CALCULATED-DESIGNED BY: LUIS PENALOZA
CHECKED BY: FERDINAND DE LA CRUZ
REVISED BY
DATE REVISED

LAST REVISION 03-20-13 | DATE PLOTTED => 25-MAR-2013 | TIME PLOTTED => 10:06

Dist	COUNTY	ROUTE	POST MILES TOTAL PROJECT	SHEET No.	TOTAL SHEETS
08	SBd	18	T6.2/31.6	11	28

REGISTERED ELECTRICAL ENGINEER — DATE 3-20-13

3-18-13
PLANS APPROVAL DATE

REGISTERED PROFESSIONAL ENGINEER — FERDINAND DE LA CRUZ — No. E 17215 — Exp. 6-30-14 — ELECTRICAL — STATE OF CALIFORNIA

THE STATE OF CALIFORNIA OR ITS OFFICERS OR AGENTS SHALL NOT BE RESPONSIBLE FOR THE ACCURACY OR COMPLETENESS OF SCANNED COPIES OF THIS PLAN SHEET.

CONDUIT AND CONDUCTOR SCHEDULE

CABLE, AWG, AND DLC SCHEDULE		CONDUIT RUN NUMBER										
AWG	CIRCUIT	1	2	3	4	5	6	7	8	9	10	11
#14	Ø1	3	3				3	3	3			
#14	Ø2, Ø2P / Ø2PPB	10 / 1	10 / 1				10 / 1	10 / 1	5	5 / 1	5 / 1	3
#14	Ø4	3	3				3	3		3	3	
#14	Ø5	6	6	3	3	3	3	3		3	3	3
#14	Ø6, Ø6P / Ø6PPB	10 / 1	10 / 1	5 / 1	5 / 1	3						
#14	Ø8, 8P / Ø8PPB	7 / 2	7 / 2	5 / 1	5 / 1		2 / 1	2 / 1		2 / 1	2 / 1	
#14	SPARES	6	6	3	3	3	3	3	3	3	3	3
#14	INTERCONNECT	9	3	3								
#14	ILLUMINATED SIGNS				2	2	2	2	2	4	4	4
#12	PPB POST	3	3				3	3		2	2	
#12	120 V NEUTRAL	1	1	1	1	1	1	1	1	1	1	1
#10	120 V NEUTRAL			1	1	1	1	1	1	1	1	1
#8	LUMINAIRES			2	2		2	2		2	2	2
#8	SERVICE	2	2				2	2		2	2	2
TOTAL CONDUCTORS		60 / 4	54 / 4	23 / 2	22 / 2	13	35 / 2	35 / 2	15	28 / 2	28 / 2	19
DETECTORS	DLC Ø1	2	2	2	2	2						
	DLC Ø2	7	7				7	7	7			
	DLC Ø4	5	5	5								
	DLC Ø8	5	5				5	5		5		
TOTAL DETECTOR WIRE		19	19	7	2	2	12	12	7	5		
	VIVDS CABLE	1 *	1 *				1 *	1 *		1 *	1 *	1 *
	VIVDS POWER CABLE	1 *	1 *				1 *	1 *		1 *	1 *	1 *
CONDUIT SIZE		3"	3"	2"	2"	1½"	2½"	2½"	2"	2"	2"	1½"

NOTE: ALL EQUIPMENT IS EXISTING EXCEPT THOSE SHOWN WITH AN (*)

APPROVED FOR ELECTRICAL WORK ONLY

MODIFY SIGNAL
ROUTE 18 AND 30TH

E-4

STATE OF CALIFORNIA - DEPARTMENT OF TRANSPORTATION
Caltrans® ELECTRICAL DESIGN B

FUNCTIONAL SUPERVISOR: FERDINAND DE LA CRUZ
CALCULATED-DESIGNED BY: LUIS PENALOZA
CHECKED BY: FERDINAND DE LA CRUZ
REVISED BY
DATE REVISED

LAST REVISION 03-20-13
DATE PLOTTED => 25-MAR-2013
TIME PLOTTED => 10:06

Dist	COUNTY	ROUTE	POST MILES TOTAL PROJECT	SHEET No.	TOTAL SHEETS
08	SBd	18	T6.2/31.6	12	28

REGISTERED ELECTRICAL ENGINEER — DATE 02-14-13

PLANS APPROVAL DATE 3-18-13

REGISTERED PROFESSIONAL ENGINEER — FERDINAND DE LA CRUZ — No. E 17215 — Exp. 6-30-14 — ELECTRICAL — STATE OF CALIFORNIA

THE STATE OF CALIFORNIA OR ITS OFFICERS OR AGENTS SHALL NOT BE RESPONSIBLE FOR THE ACCURACY OR COMPLETENESS OF SCANNED COPIES OF THIS PLAN SHEET.

NOTES: SHEETS E-4 THRU E-5

1. THE CONTRACTOR SHALL CONTACT THE ENGINEER THREE WORKING DAYS PRIOR TO INSTALLING INDUCTIVE DETECTOR LOOPS.
2. EXISTING INDUCTIVE LOOP DETECTORS SHOWN TO BE REPLACED SHALL BE AB.
3. LABEL CONDUCTOR ENDS AS PER STANDARD PLAN ES-13B.
4. ALL DISTANCES ARE APPROXIMATE AND SHALL BE FIELD VERIFIED.
5. FOR ACCURATE RIGHT OF WAY DATA, CONTACT RIGHT OF WAY ENGINEERING AT THE DISTRICT OFFICE.

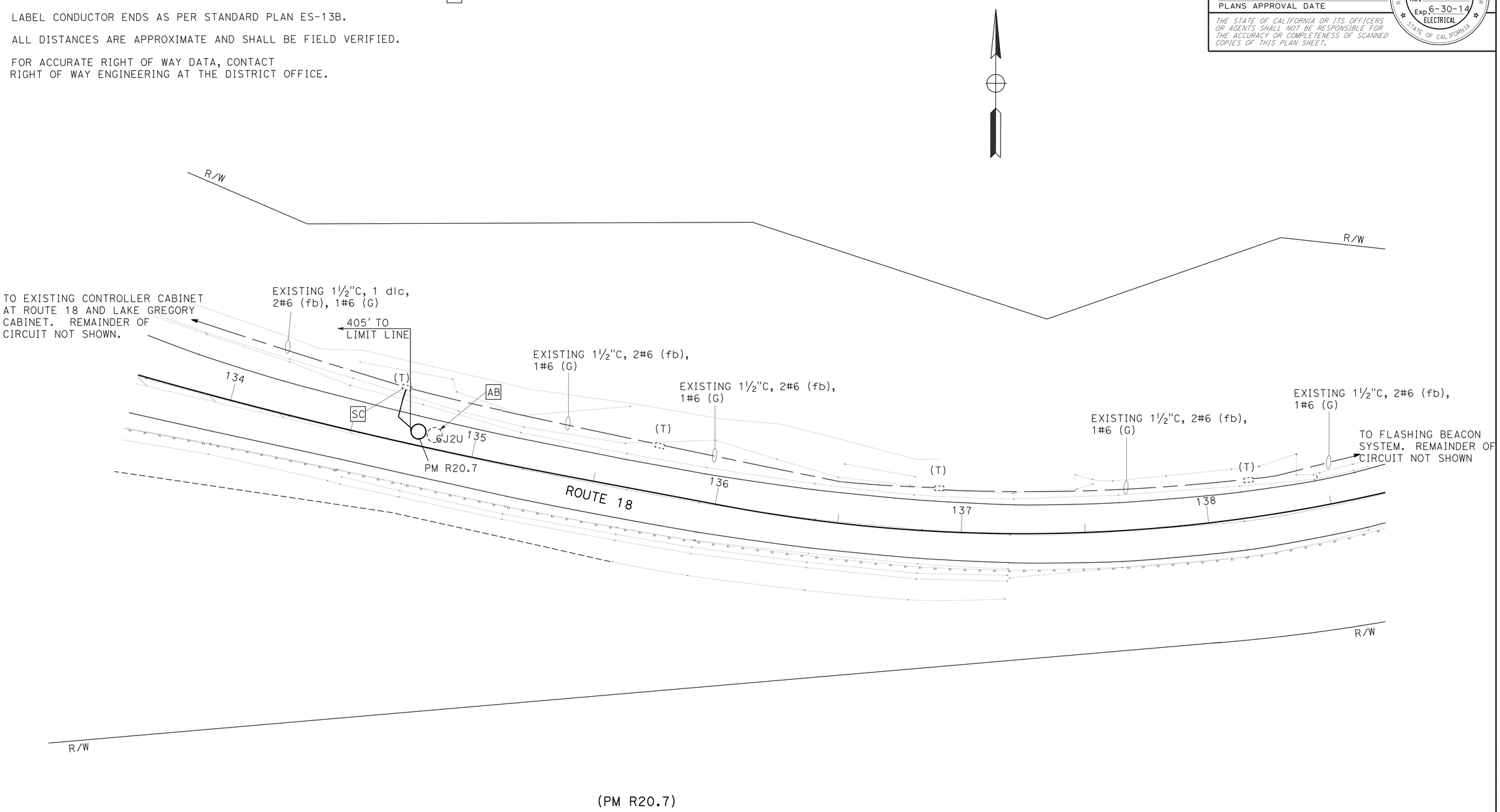

(PM R20.7)

INDUCTIVE LOOP DETECTOR

SCALE: 1" = 20'

E-5

APPROVED FOR ELECTRICAL WORK ONLY

STATE OF CALIFORNIA - DEPARTMENT OF TRANSPORTATION

Caltrans **ELECTRICAL DESIGN B**

FUNCTIONAL SUPERVISOR: FERDINAND DE LA CRUZ

CALCULATED-DESIGNED BY: LUIS PENALOZA

CHECKED BY: FERDINAND DE LA CRUZ

REVISED BY

DATE REVISED

LAST REVISION 02-14-13 | DATE PLOTTED => 22-MAR-2013 | TIME PLOTTED => 11:02

BORDER LAST REVISED 7/2/2010 | USERNAME => s123631 | DGN FILE => 800650ua005.dgn | RELATIVE BORDER SCALE IS IN INCHES 0 1 2 3 | UNIT 2292 | PROJECT NUMBER & PHASE 08000020561

Dist	COUNTY	ROUTE	POST MILES TOTAL PROJECT	SHEET No.	TOTAL SHEETS
08	SBd	18	T6.2/31.6	13	28

REGISTERED ELECTRICAL ENGINEER 02-14-13 DATE

3-18-13
PLANS APPROVAL DATE

REGISTERED PROFESSIONAL ENGINEER
FERDINAND DE LA CRUZ
No. E 17215
Exp. 6-30-14
ELECTRICAL
STATE OF CALIFORNIA

THE STATE OF CALIFORNIA OR ITS OFFICERS OR AGENTS SHALL NOT BE RESPONSIBLE FOR THE ACCURACY OR COMPLETENESS OF SCANNED COPIES OF THIS PLAN SHEET.

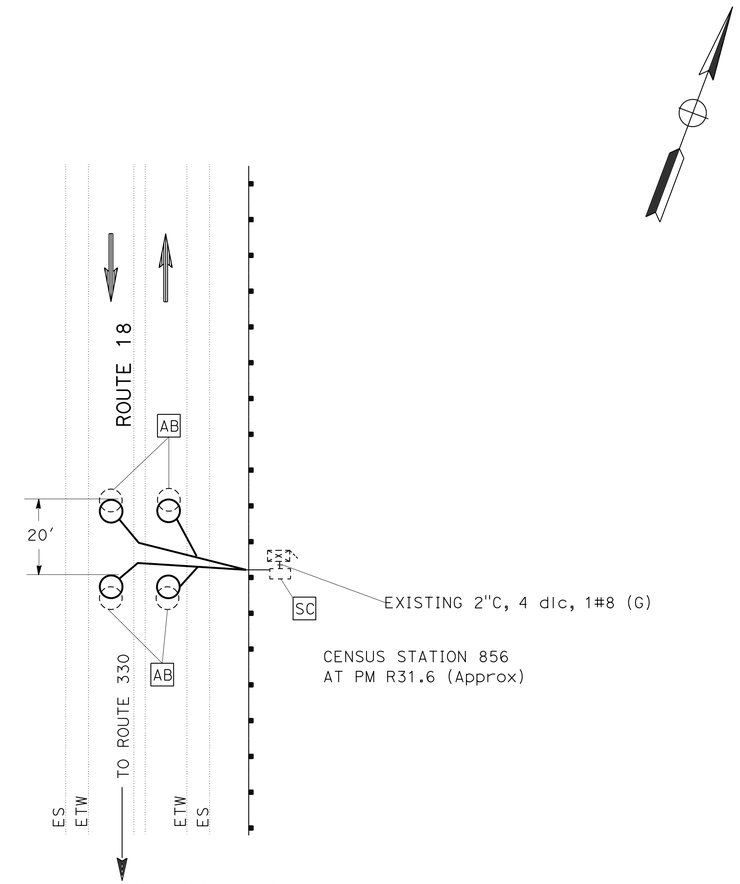

(PM R31.6)

INDUCTIVE LOOP DETECTOR

NO SCALE

E-6

APPROVED FOR ELECTRICAL WORK ONLY

STATE OF CALIFORNIA - DEPARTMENT OF TRANSPORTATION
Caltrans ELECTRICAL DESIGN B

FUNCTIONAL SUPERVISOR: FERDINAND DE LA CRUZ
CALCULATED-DESIGNED BY: LUIS PENALOZA JR
CHECKED BY: FERDINAND DE LA CRUZ
REVISED BY
DATE REVISED

LAST REVISION 02-14-13 | DATE PLOTTED => 22-MAR-2013 | TIME PLOTTED => 11:02

Dist	COUNTY	ROUTE	POST MILES TOTAL PROJECT	SHEET No.	TOTAL SHEETS
08	SBd	18	T6.2/31.6	14	28

REGISTERED ELECTRICAL ENGINEER 02-14-13 DATE

3-18-13
PLANS APPROVAL DATE

REGISTERED PROFESSIONAL ENGINEER
FERDINAND DE LA CRUZ
No. E 17215
Exp. 6-30-14
ELECTRICAL
STATE OF CALIFORNIA

THE STATE OF CALIFORNIA OR ITS OFFICERS OR AGENTS SHALL NOT BE RESPONSIBLE FOR THE ACCURACY OR COMPLETENESS OF SCANNED COPIES OF THIS PLAN SHEET.

MODIFY SIGNAL (ROUTE 18 AND 210 EXIT RAMP)

SHEET No.	(N) VIVIDS POWER CABLE	(N) VIVIDS VIDEO CABLE	(N) VIVIDS VIDEO CAMERA
	LF	LF	EA
E-1	200	200	1

(N) - NOT A SEPARATE PAY ITEM, FOR INFORMATION ONLY.

MODIFY SIGNAL (ROUTE 18 AT 30TH STREET)

SHEET No.	(N) VIVIDS POWER CABLE	(N) VIVIDS VIDEO CABLE	(N) VIVIDS VIDEO CAMERA
	LF	LF	EA
E-3	500	500	1

(N) - NOT A SEPARATE PAY ITEM, FOR INFORMATION ONLY.

INDUCTIVE LOOP DETECTOR (PM R20.7)

SHEET No.	(N) TYPE E LOOPS
	EA
E-5	1

(N) - NOT A SEPARATE PAY ITEM, FOR INFORMATION ONLY.

INDUCTIVE LOOP DETECTOR (PM R31.6)

SHEET No.	(N) TYPE E LOOPS
	EA
E-6	4

(N) - NOT A SEPARATE PAY ITEM, FOR INFORMATION ONLY.

APPROVED FOR ELECTRICAL WORK ONLY

ELECTRICAL QUANTITIES

E-7

STATE OF CALIFORNIA - DEPARTMENT OF TRANSPORTATION
Caltrans® ELECTRICAL DESIGN B

FUNCTIONAL SUPERVISOR: FERDINAND DE LA CRUZ
CALCULATED-DESIGNED BY: LUIS PENALOZA
CHECKED BY: FERDINAND DE LA CRUZ
REVISED BY
DATE REVISED

LAST REVISION 02-14-13
DATE PLOTTED => 25-MAR-2013
TIME PLOTTED => 10:06

Dist	COUNTY	ROUTE	POST MILES TOTAL PROJECT	SHEET No.	TOTAL SHEETS
08	SBd	18	T6.2/31.6	15	28

REGISTERED CIVIL ENGINEER 12-7-12 DATE

3-18-13
PLANS APPROVAL DATE

REGISTERED PROFESSIONAL ENGINEER Gurinderpal Bhullar No. C48815 Exp. 9-30-14 CIVIL STATE OF CALIFORNIA

THE STATE OF CALIFORNIA OR ITS OFFICERS OR AGENTS SHALL NOT BE RESPONSIBLE FOR THE ACCURACY OR COMPLETENESS OF SCANNED COPIES OF THIS PLAN SHEET.

TYPICAL LANE CLOSURE

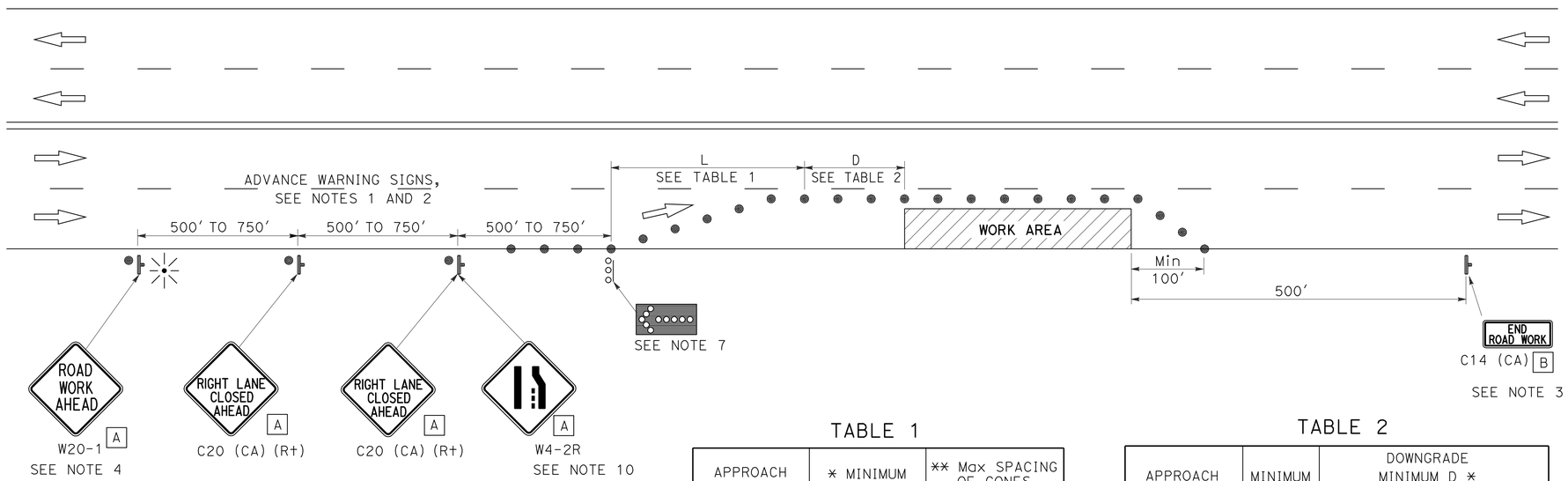

NOTES:

Unless otherwise specified in the special provisions, all temporary warning signs shall have black legend on orange background.

California code are designated by (CA). Otherwise, Federal (MUTCD) codes are shown.

LEGEND

- TRAFFIC CONE
- TEMPORARY SIGN
- FLASHING ARROW SIGN (FAS)
- FAS SUPPORT OR TRAILER
- PORTABLE FLASHING BEACON

SIGN PANEL SIZE (Min)

A 36" x 36"

B 36" x 18"

TABLE 1

APPROACH SPEED	* MINIMUM L	** Max SPACING OF CONES ALONG TAPER
mph	ft	ft
20 AND BELOW	80	20
25	125	25
30	180	30
35	245	35
40	320	40
45	540	45
50	600	50
Over 50	SEE NOTE 9	

* USE L FOR LANE WIDTHS LESS THAN OR EQUAL TO 12'.
** SEE NOTE 8.

TABLE 2

APPROACH SPEED	MINIMUM D	DOWNGRADE MINIMUM D *		
		-3%	-6%	-9%
mph	ft	ft	ft	ft
25 AND BELOW	155	158	165	173
30	200	205	215	227
35	250	257	271	287
40	305	315	333	354
45	360	378	400	427
50	425	446	474	507
OVER 50	SEE NOTE 9			

* USE ON SUSTAINED DOWNGRADE STEEPER THAN -3 PERCENT AND LONGER THAN 1 MILE.

NOTES:

1. Where approach speeds are low, advance warning signs may be placed at 300' spacing and placed closer in urban areas.
2. Each advance warning sign shall be equipped with at least two flags for daytime closure. Each flag shall be at least 16" x 16" in size and shall be orange or fluorescent red-orange in color. Flashing beacons shall be placed at the locations indicated for lane closure during hours of darkness.
3. A C14 (CA) "END ROAD WORK" sign, as appropriate, shall be placed at the end of the lane closure unless the end of work area is obvious, or ends within a larger project's limits.
4. If the W20-1 sign would follow within 2000' of a stationary W20-1 or C11 (CA) "ROAD WORK NEXT _____ MILES", use a C20 (CA) sign for the first advance warning sign.
5. All cones used for lane closures during the hours of darkness shall be fitted with retroreflective bands (or sleeves) as specified in the specifications.
6. Portable delineators, placed at one-half the spacing indicated for traffic cones, may be used instead of cones for daytime closures only.
7. Flashing arrow sign shall be either Type I or Type II.
8. The maximum spacing between cones along a tangent shall be 50' and along a taper shall be approximately as shown in Table 1.
9. For approach speeds over 50 mph, use the "Traffic Control System for Lane Closure On Freeways And Expressways" plan for lane closure details and requirements.
10. When specified in the special provisions, a W4-2 "LANE ENDS" symbol sign is to be used in place of the C20 (CA) "RIGHT LANE CLOSED AHEAD" sign.

STATE OF CALIFORNIA
DEPARTMENT OF TRANSPORTATION

TRAFFIC CONTROL SYSTEM FOR LANE CLOSURE ON MULTILANE CONVENTIONAL HIGHWAYS

NO SCALE

TCS-1

STATE OF CALIFORNIA - DEPARTMENT OF TRANSPORTATION

Caltrans

FUNCTIONAL SUPERVISOR | CALCULATED-DESIGNED BY | CHECKED BY | REVISED BY | DATE REVISED

LAST REVISION 00-00-00 | DATE PLOTTED => 22-MAR-2013 | TIME PLOTTED => 06:13

Dist	COUNTY	ROUTE	POST MILES TOTAL PROJECT	SHEET No.	TOTAL SHEETS
08	SBd	18	T6.2/31.6	16	28

REGISTERED CIVIL ENGINEER 12-7-12 DATE

3-18-13
PLANS APPROVAL DATE

REGISTERED PROFESSIONAL ENGINEER Gurinderpal Bhullar No. C48815 Exp. 9-30-14 CIVIL STATE OF CALIFORNIA

THE STATE OF CALIFORNIA OR ITS OFFICERS OR AGENTS SHALL NOT BE RESPONSIBLE FOR THE ACCURACY OR COMPLETENESS OF SCANNED COPIES OF THIS PLAN SHEET.

NOTES:

Unless otherwise specified in the special provisions, all temporary warning signs shall have black legend on orange background.

California code are designated by (CA). Otherwise, Federal (MUTCD) codes are shown.

TYPICAL LANE CLOSURE WITH REVERSIBLE CONTROL

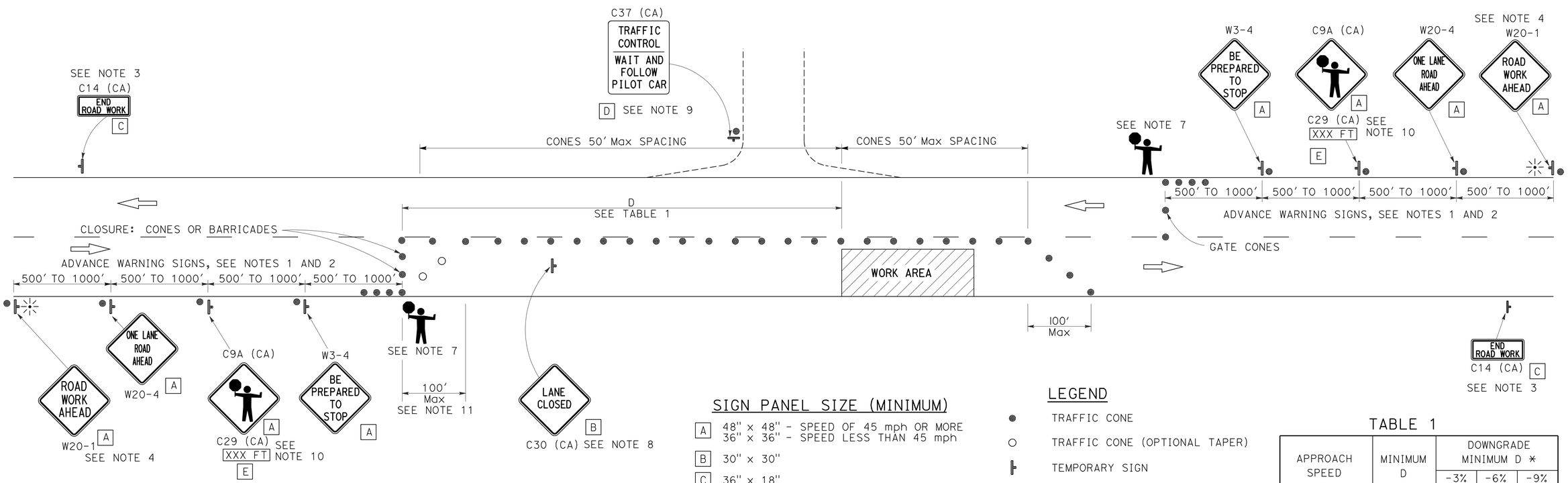

SIGN PANEL SIZE (MINIMUM)

- A — 48" x 48" - SPEED OF 45 mph OR MORE; 36" x 36" - SPEED LESS THAN 45 mph
- B — 30" x 30"
- C — 36" x 18"
- D — 36" x 42"
- E — 36" x 9"

LEGEND

- TRAFFIC CONE
- TRAFFIC CONE (OPTIONAL TAPER)
- TEMPORARY SIGN
- PORTABLE FLASHING BEACON
- FLAGGER

TABLE 1

APPROACH SPEED	MINIMUM D	DOWNGRADE MINIMUM D *		
		-3%	-6%	-9%
mph	ft	ft	ft	ft
25 AND BELOW	155	158	165	173
30	200	205	215	227
35	250	257	271	287
40	305	315	333	354
45	360	378	400	427
50	425	446	474	507
55	495	520	553	593
60	570	598	638	686
65	645	682	728	785

* USE ON SUSTAINED DOWNGRADE STEEPER THAN -3 PERCENT AND LONGER THAN 1 MILE.

NOTES:

1. Where approach speeds are low, advance warning signs may be placed at 300' spacing, and closer in urban areas.
2. Each advance warning sign in each direction of travel shall be equipped with at least two flags for daytime closure. Each flag shall be at least 16" x 16" in size and shall be orange or fluorescent red-orange in color. Flashing beacons shall be placed at the locations indicated for lane closure during hours of darkness.
3. A C14 (CA) "END ROAD WORK" sign, as appropriate, shall be placed at the end of the lane control unless the end of work area is obvious, or ends within a larger project's limits.
4. If the W20-1 sign would follow within 2000' of a stationary W20-1 or C11 (CA) "ROAD WORK NEXT _____MILES", use a W20-4 sign for the first advance warning sign.
5. All cones used for lane closures during the hours of darkness shall be fitted with retroreflective bands (or sleeves) as specified in the specifications.
6. Portable delineators, placed at one-half the spacing indicated for traffic cones, may be used instead of cones for daytime closures only.
7. Additional advance flaggers may be required. Flagger should stand in a conspicuous place, be visible to approaching traffic as well as approaching vehicles after the first vehicle has stopped. During the hours of darkness, the flagging-station and flagger shall be illuminated and clearly visible to approaching traffic. The illumination footprint of the lighting on the ground shall be at least 20' in diameter. Place a minimum of four cones at 50' intervals in advance of flagger station as shown.
8. Place C30 (CA) "LANE CLOSED" sign at 500' to 1000' intervals throughout extended work areas. They are optional if the work area is visible from the flagger station.
9. When a pilot car is used, place a C37 (CA) "TRAFFIC CONTROL-WAIT AND FOLLOW PILOT CAR" sign at all intersections within traffic control area. Signs shall be clean and visible at all times.
10. An optional C29 (CA) sign may be placed below the C9A (CA) sign.
11. Traffic cones or barricades may be placed on the optional taper as shown, barricades shall be Type I, II, or III.

STATE OF CALIFORNIA
DEPARTMENT OF TRANSPORTATION

TRAFFIC CONTROL SYSTEM FOR LANE CLOSURE ON TWO LANE CONVENTIONAL HIGHWAYS

NO SCALE

TCS-2

STATE OF CALIFORNIA - DEPARTMENT OF TRANSPORTATION
Caltrans

FUNCTIONAL SUPERVISOR | CALCULATED-DESIGNED BY | CHECKED BY | REVISED BY | DATE REVISED

LAST REVISION 00-00-00 | DATE PLOTTED => 22-MAR-2013 | TIME PLOTTED => 06:13

Dist	COUNTY	ROUTE	POST MILES TOTAL PROJECT	SHEET No.	TOTAL SHEETS
08	SBd	18	T6.2/31.6	17	28

Roberta L. McLaughlin
REGISTERED CIVIL ENGINEER

April 20, 2012
PLANS APPROVAL DATE

REGISTERED PROFESSIONAL ENGINEER
Roberta L. McLaughlin
No. C40375
Exp. 3-31-13
CIVIL
STATE OF CALIFORNIA

THE STATE OF CALIFORNIA OR ITS OFFICERS OR AGENTS SHALL NOT BE RESPONSIBLE FOR THE ACCURACY OR COMPLETENESS OF SCANNED COPIES OF THIS PLAN SHEET.

TO ACCOMPANY PLANS DATED 3-18-13

2010 REVISED STANDARD PLAN RSP A24A

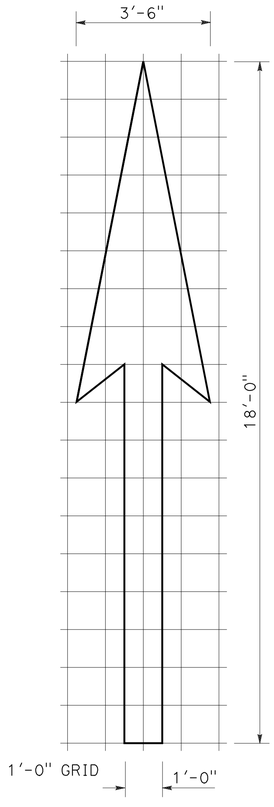

A=25 ft^2

TYPE I 18'-0" ARROW

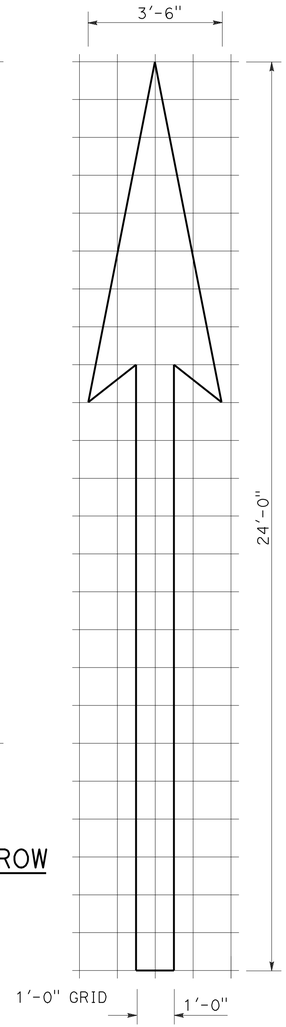

A=31 ft^2

TYPE I 24'-0" ARROW

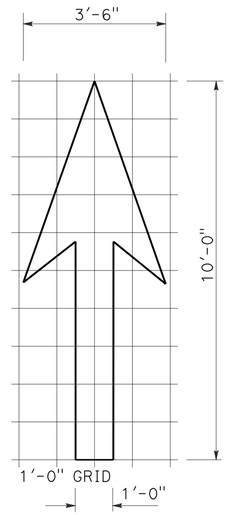

A=14 ft^2

TYPE I 10'-0" ARROW

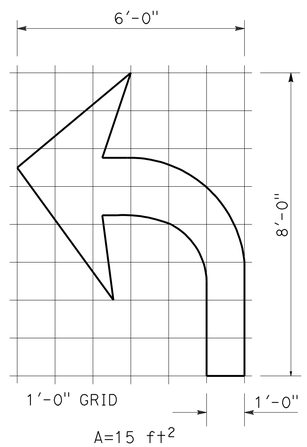

A=15 ft^2

TYPE IV (L) ARROW

(For Type IV (R) arrow, use mirror image)

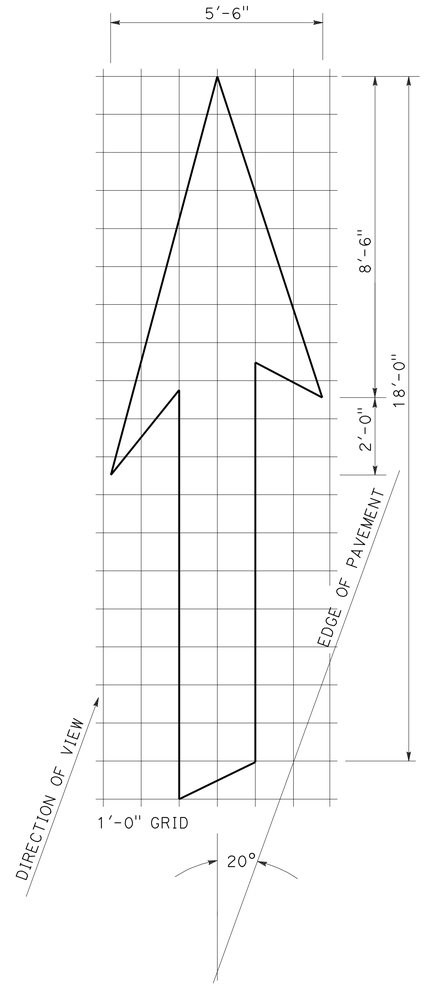

A=42 ft^2

TYPE VI ARROW

Right lane drop arrow
(For left lane, use mirror image)

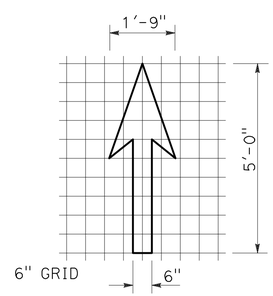

A=3.5 ft^2

BIKE LANE ARROW

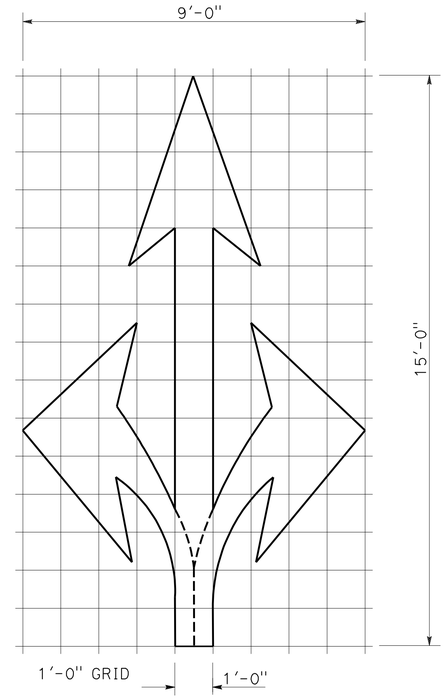

A=36 ft^2

TYPE VIII ARROW

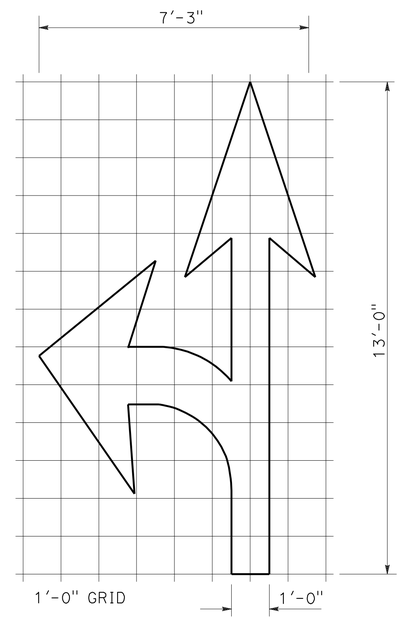

A=27 ft^2

TYPE VII (L) ARROW

(For Type VII (R) arrow, use mirror image)

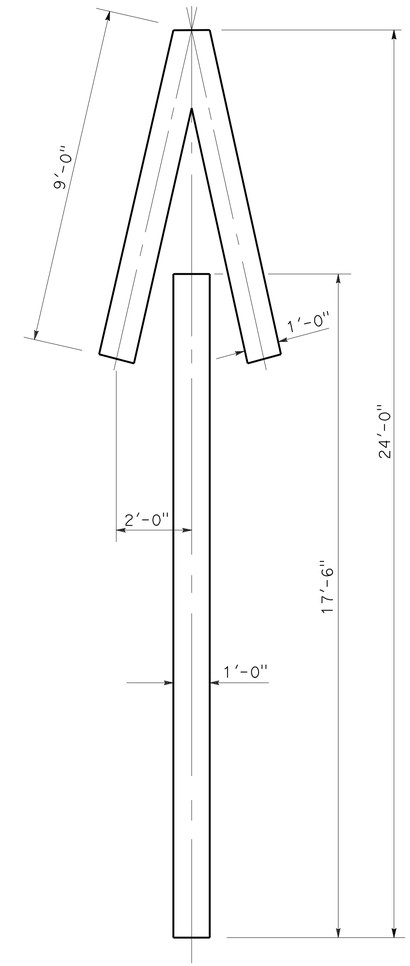

A=33 ft^2

TYPE V ARROW

NOTE:
Minor variations in dimensions may be accepted by the Engineer.

STATE OF CALIFORNIA
DEPARTMENT OF TRANSPORTATION

PAVEMENT MARKINGS ARROWS

NO SCALE

RSP A24A DATED APRIL 20, 2012 SUPERSEDES STANDARD PLAN A24A DATED MAY 20, 2011 - PAGE 13 OF THE STANDARD PLANS BOOK DATED 2010.

REVISED STANDARD PLAN RSP A24A

3-14-12

DIST	COUNTY	ROUTE	POST MILES TOTAL PROJECT	SHEET NO.	TOTAL SHEETS
08	SBd	18	T6.2/31.6	18	28

REGISTERED ELECTRICAL ENGINEER

January 20, 2012
PLANS APPROVAL DATE

REGISTERED PROFESSIONAL ENGINEER Jeffery G. McRae No. E14512 Exp. 6-30-12 ELECTRICAL STATE OF CALIFORNIA

THE STATE OF CALIFORNIA OR ITS OFFICERS OR AGENTS SHALL NOT BE RESPONSIBLE FOR THE ACCURACY OR COMPLETENESS OF SCANNED COPIES OF THIS PLAN SHEET.

TO ACCOMPANY PLANS DATED 3-18-13

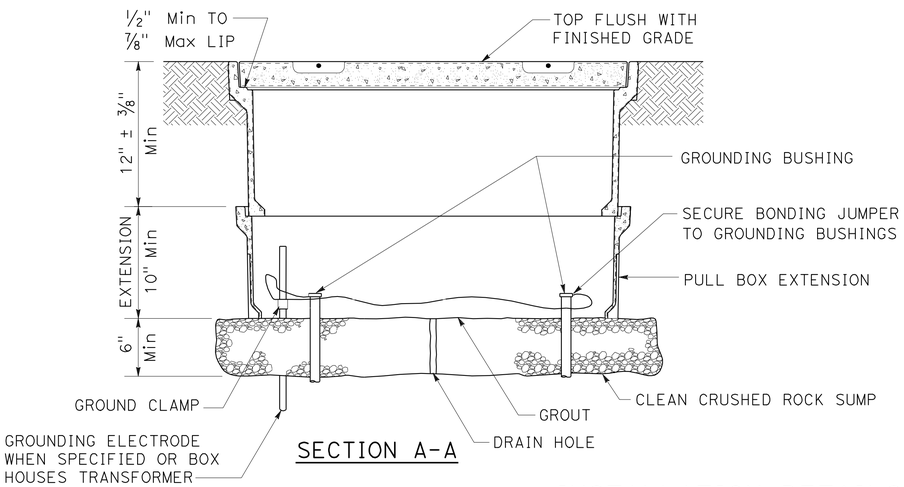

SECTION A-A

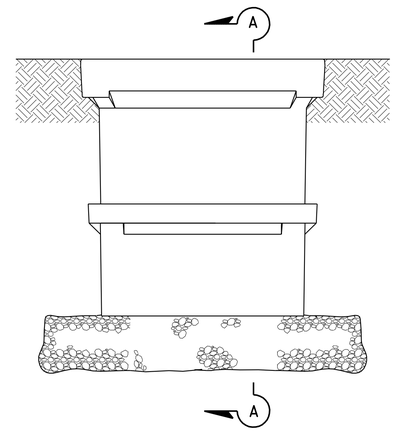

SIDE VIEW

INSTALLATION DETAILS

DETAIL A

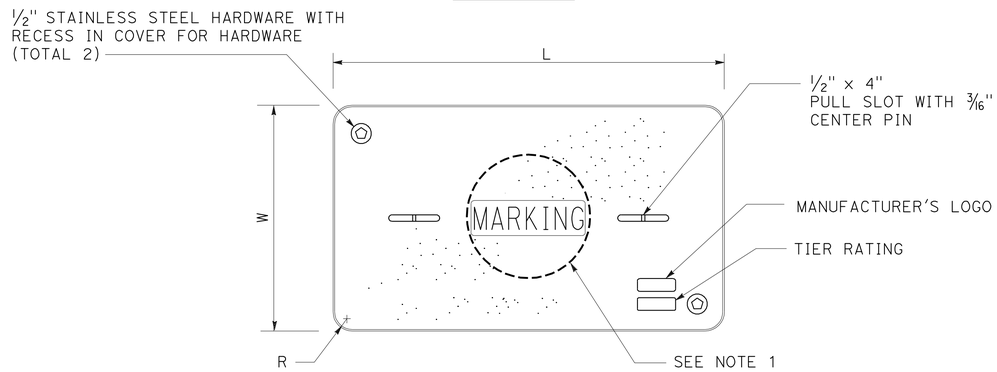

COVER TOP VIEW

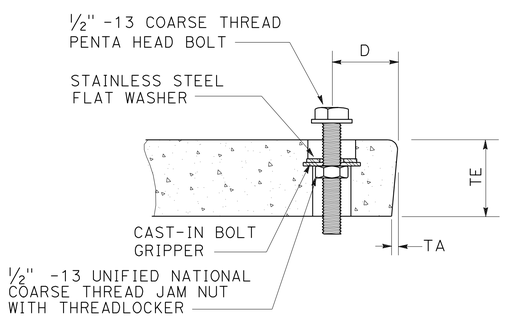

TYPICAL COVER CAPTIVE BOLT

OR SIMILAR

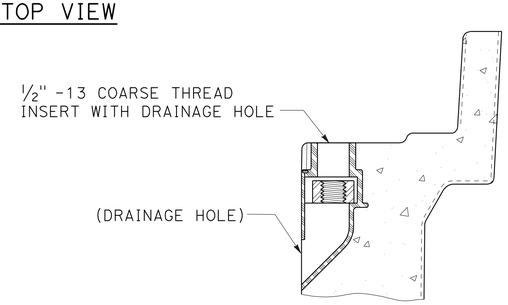

TYPICAL THREADED INSERT

OR SIMILAR

DIMENSION TABLE										
PULL BOX	PULL BOX			COVER						
	MINIMUM DEPTH BOX	MINIMUM DEPTH EXTENSION	MAXIMUM WEIGHT	L	W	R	TE	TA	D	MAXIMUM WEIGHT
No. 3 1/2	12"	N/A	40 lb	1' - 3 3/8"	10 1/8"	1 3/8"	2"	1/8"	1 3/4"	30 lb
No. 5	12"	10"	55 lb	1' - 11 1/4"	1' - 1 3/4"	1 3/8"	2"	1/8"	1 3/4"	60 lb
No. 6	12"	10"	70 lb	2' - 6 1/2"	1' - 5 1/2"	1 3/8"	2"	1/8"	2"	85 lb

NOTES ON PULL BOXES:

1. Pull box covers must be marked as follows: "SERVICE" Service circuits between service point and service disconnect; "SPRINKLER-CONTROL" sprinkler control circuits, 50 V or less; "CALTRANS" on all pull boxes, except pull boxes marked "SPRINKLER-CONTROL"; and "TELEPHONE" Telephone service;

   A) No. 3 1/2 pull box.
      1) "SIGNAL" - Traffic signal circuits with or without street or sign lighting circuits.
      2) "ST LIGHTING" - Street or sign lighting circuits where voltage is under 600 V.

   B) No. 5, 6, 9 or 9A pull box.
      1) "TRAFFIC SIGNAL" - Traffic signal circuits with or without street or sign lighting circuits.
      2) "STREET LIGHTING" - Street or sign lighting circuits where voltage is under 600 V.
      3) "STREET LIGHTING-HIGH VOLTAGE" - Street or sign lighting circuits where voltage is above 600 V.
      4) "IRRIGATION" - Circuits to irrigation controller 120 V or more.
      5) "RAMP METER" - Ramp meter circuits.
      6) "COUNT STATION" - Count or speed monitor circuits.
      7) "COMMUNICATIONS" - Communication circuits.
      8) "TOS COMMUNICATIONS" - TOS communication line.
      9) "TOS POWER" - TOS power.
      10) "TDC POWER" - Telephone demarcation cabinet power.
      11) "CCTV" - Closed circuit television circuits.
      12) "TMS" - Traffic monitoring station circuits.
      13) "CMS" - Changeable message sign circuits.
      14) "HAR" - Highway advisory radio circuits.

2. The nominal dimensions of the opening in which the cover sets must be the same as the cover dimensions (L and W) plus 1/8" or greater.

3. Covers and boxes must be interchangeable with California Standard. When interchanged with a standard, the top surfaces must be flush within 1/8". Top outside radius of covers and pull boxes must have a 1/8" radius.

4. Pull box extension may be another pull box as long as the bottom edge of the pull box can fit into the cover opening.

STATE OF CALIFORNIA
DEPARTMENT OF TRANSPORTATION

ELECTRICAL SYSTEMS (PULL BOX)

NO SCALE

RSP ES-8A DATED JANUARY 20, 2012 SUPPLEMENTS THE STANDARD PLANS BOOK DATED 2010.

REVISED STANDARD PLAN RSP ES-8A

2010 REVISED STANDARD PLAN RSP ES-8A

01-09-12

DIST	COUNTY	ROUTE	POST MILES TOTAL PROJECT	SHEET No.	TOTAL SHEETS
08	SBD	18	T6.2/31.6	19	28

REGISTERED CIVIL ENGINEER 10-3-12 DATE

3-18-13
PLANS APPROVAL DATE

REGISTERED PROFESSIONAL ENGINEER PETER B. KANG No. C 70336 Exp. 9-30-14 CIVIL STATE OF CALIFORNIA

The State of California or its officers or agents shall not be responsible for the accuracy or completeness of electronic copies of this plan sheet.

INDEX TO PLANS

SHEET No.	TITLE
1	GENERAL PLAN No.1
2	GENERAL PLAN No.2
3	GENERAL PLAN No.3
4	GENERAL PLAN No.4
5	GENERAL PLAN No.5
6	GENERAL PLAN No.6
7	JOINT SEAL DETAILS No. 1
8	JOINT SEAL DETAILS No. 2
9	EXPANSION DAM DETAILS
10	STRUCTURE APPROACH TYPE R(30D)

STANDARD PLANS DATED 2010

SHEET No.	TITLE
A10A	ACRONYMS AND ABBREVIATIONS (SHEET 1 OF 2)
A10B	ACRONYMS AND ABBREVIATIONS (SHEET 2 OF 2)
B6-21	JOINT SEALS (MAXIMUM MOVEMENT RATING = 2")

LEGEND (APPLY TO THIS SHEET ONLY):

-·-·-·-·- Indicates existing.

——— Indicates location of remove asphalt concrete, construct polyester concrete expansion dam, clean expansion joint, and install new joint seal. For details, see "EXPANSION DAM DETAILS" sheet.

Indicates limits of prepare concrete bridge deck and treat bridge deck with high molecular weight methacrylate.

(1) See ROAD PLANS for install vertical clearance notification signs (14'-9").

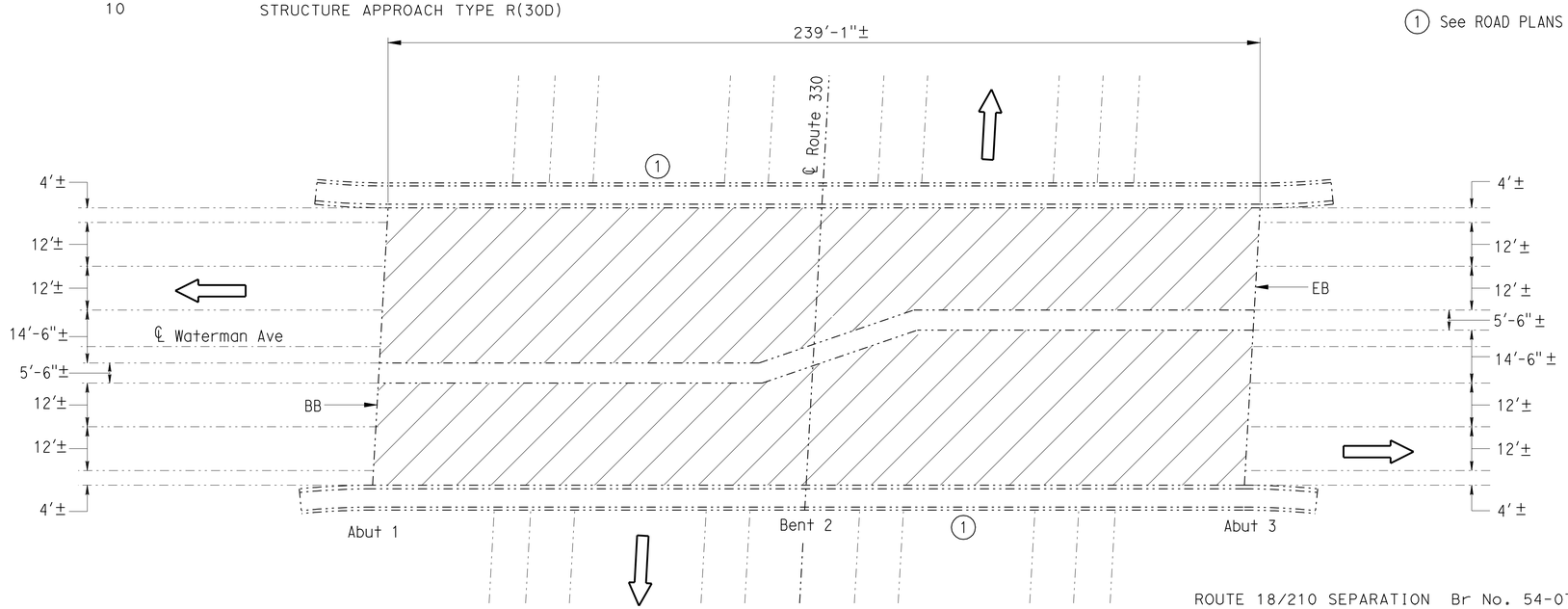

ROUTE 18/210 SEPARATION Br No. 54-0770

QUANTITIES

PUBLIC SAFETY PLAN	LUMP	SUM
PREPARE CONCRETE BRIDGE DECK SURFACE	16,860	SQFT
TREAT BRIDGE DECK	16,860	SQFT
FURNISH BRIDGE DECK TREATMENT MATERIAL	190	GAL

ROUTE 18/210 SEPARATION

Br No. 54-0770, SBD, Route 18, PM T6.16
1"=20'

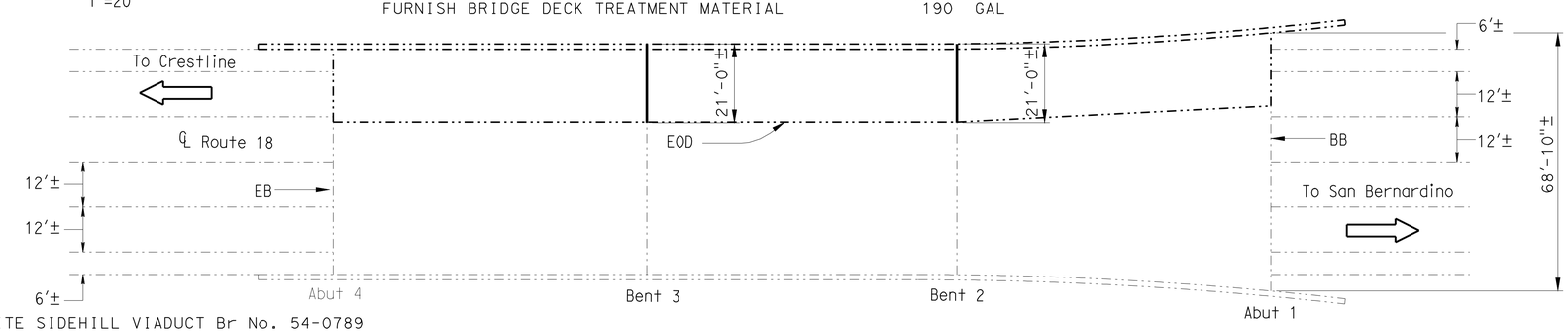

GRANITE SIDEHILL VIADUCT Br No. 54-0789

QUANTITIES

CLEAN EXPANSION JOINT	43	LF
POLYESTER CONCRETE, EXPANSION DAM	18	CF
JOINT SEAL (MR 1/2")	43	LF

GRANITE SIDEHILL VIADUCT

Br No. 54-0789, SBD, Route 18, PM R11.45
1"=20'

NOTE:
THE CONTRACTOR SHALL VERIFY ALL CONTROLLING FIELD DIMENSIONS BEFORE ORDERING OR FABRICATING ANY MATERIAL.

DESIGN ENGINEER 10-3-12

	BY	CHECKED			
DESIGN	P. Kang	M. Hashimoto	LOAD FACTOR DESIGN	LIVE LOADING: HS20-44 AND ALTERNATIVE AND PERMIT DESIGN LOAD	
DETAILS	N. Kelley	M. Hashimoto	LAYOUT	N. Kelley	P. Kang
QUANTITIES	P. Kang	M. Hashimoto	SPECIFICATIONS	Karen Doll	PLANS AND SPECS COMPARED Karen Doll

STATE OF CALIFORNIA
DEPARTMENT OF TRANSPORTATION

DIVISION OF MAINTENANCE
STRUCTURE MAINTENANCE DESIGN

BRIDGE NO. Varies
POST MILE Various

ROUTE 18 BRIDGES
GENERAL PLAN NO. 1

STRUCTURES MAINTENANCE GENERAL PLAN SHEET (ENGLISH) (REV. 09-01-10)

ORIGINAL SCALE IN INCHES FOR REDUCED PLANS 0 1 2 3

UNIT: 3488
PROJECT NUMBER & PHASE: 0800020561
CONTRACT NO.: 08-006501

DISREGARD PRINTS BEARING EARLIER REVISION DATES

REVISION DATES: 7-12-12 8-1-12

SHEET 1 OF 10

FILE => 08_0q6501_ggp.dgn

USERNAME => s121614 DATE PLOTTED => 22-MAR-2013 TIME PLOTTED => 06:15

DIST	COUNTY	ROUTE	POST MILES TOTAL PROJECT	SHEET No.	TOTAL SHEETS
08	SBD	18	T6.2/31.6	20	28

REGISTERED CIVIL ENGINEER — DATE 10-3-12

PLANS APPROVAL DATE 3-18-13

REGISTERED PROFESSIONAL ENGINEER — PETER B. KANG — No. C 70336 — Exp. 9-30-14 — CIVIL — STATE OF CALIFORNIA

The State of California or its officers or agents shall not be responsible for the accuracy or completeness of electronic copies of this plan sheet.

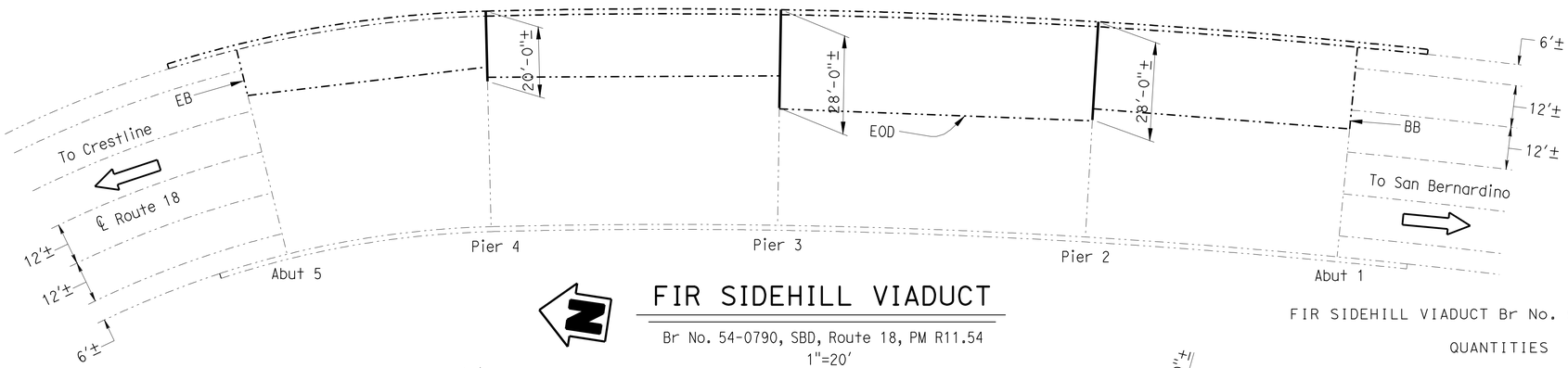

FIR SIDEHILL VIADUCT

Br No. 54-0790, SBD, Route 18, PM R11.54
1"=20'

FIR SIDEHILL VIADUCT Br No. 54-0790

QUANTITIES

CLEAN EXPANSION JOINT	78	LF
POLYESTER CONCRETE, EXPANSION DAM	32	CF
JOINT SEAL (MR 1/2")	78	LF

LEGEND (APPLY TO THIS SHEET ONLY):

-·-·-·- Indicates existing.

——— Indicates location of remove asphalt concrete, construct polyester concrete expansion dam, clean expansion joint, and install new joint seal. For details, see, "EXPANSION DAM DETAILS" sheet.

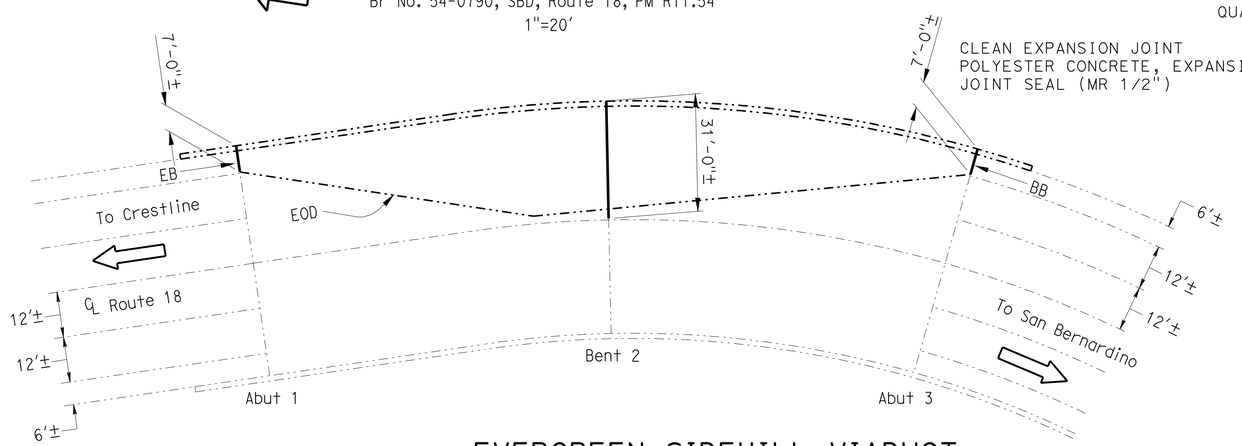

EVERGREEN SIDEHILL VIADUCT

Br No. 54-0754, SBD, Route 18, PM R11.90
1"=20'

EVERGREEN SIDEHILL VIADUCT Br No. 54-0754

QUANTITIES

CLEAN EXPANSION JOINT	32	LF
POLYESTER CONCRETE, EXPANSION DAM	13	CF
JOINT SEAL (MR 1")	32	LF

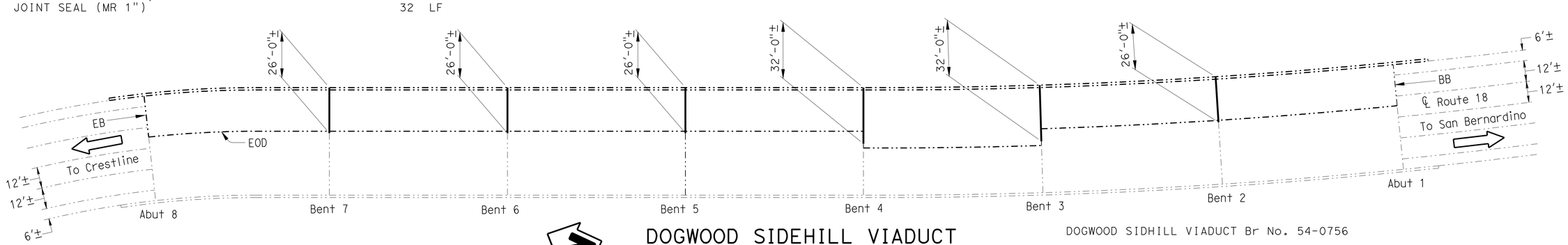

DOGWOOD SIDEHILL VIADUCT

Br No. 54-0756, SBD, Route 18, PM R12.15
1"=30'

DOGWOOD SIDHILL VIADUCT Br No. 54-0756

QUANTITIES

CLEAN EXPANSION JOINT	171	LF
POLYESTER CONCRETE, EXPANSION DAM	70	CF
JOINT SEAL (MR 1/2")	171	LF

NOTE:
THE CONTRACTOR SHALL VERIFY ALL CONTROLLING FIELD DIMENSIONS BEFORE ORDERING OR FABRICATING ANY MATERIAL.

DESIGN ENGINEER 10-3-12

	BY	CHECKED
DESIGN	P. Kang	M. Hashimoto
DETAILS	N. Kelley	M. Hashimoto
QUANTITIES	P. Kang	M. Hashimoto

LOAD FACTOR DESIGN — LIVE LOADING: HS20-44 AND ALTERNATIVE AND PERMIT DESIGN LOAD

	BY	CHECKED
LAYOUT	N. Kelley	P. Kang
SPECIFICATIONS	Karen Doll	PLANS AND SPECS COMPARED Karen Doll

STATE OF CALIFORNIA — DEPARTMENT OF TRANSPORTATION

DIVISION OF MAINTENANCE — STRUCTURE MAINTENANCE DESIGN

BRIDGE NO. Varies — POST MILE Various

ROUTE 18 BRIDGES
GENERAL PLAN NO. 2

STRUCTURES MAINTENANCE GENERAL PLAN SHEET (ENGLISH) (REV. 09-01-10)

ORIGINAL SCALE IN INCHES FOR REDUCED PLANS 0 1 2 3

UNIT: 3488
PROJECT NUMBER & PHASE: 0800020561
CONTRACT NO.: 08-0Q6501

DISREGARD PRINTS BEARING EARLIER REVISION DATES — REVISION DATES 7-12-12 8-1-12

SHEET 2 OF 10

FILE => 08_0q6501_bgp.dgn

USERNAME => s121614 DATE PLOTTED => 22-MAR-2013 TIME PLOTTED => 06:15

DIST	COUNTY	ROUTE	POST MILES TOTAL PROJECT	SHEET No.	TOTAL SHEETS
08	SBD	18	T6.2/31.6	21	28

REGISTERED CIVIL ENGINEER 10-3-12 DATE

3-18-13
PLANS APPROVAL DATE

REGISTERED PROFESSIONAL ENGINEER PETER B. KANG No. C 70336 Exp. 9-30-14 CIVIL STATE OF CALIFORNIA

The State of California or its officers or agents shall not be responsible for the accuracy or completeness of electronic copies of this plan sheet.

LEGEND (APPLY TO THIS SHEET ONLY):

-·-·-·-·- Indicates existing.

——— Indicates limits of remove asphalt concrete, construct polyester expansion dam, clean expansion joint, and install new joint seal. For details see, "EXPANSION DAM DETAILS" sheet.

(1) Limits of clean and paint structural steel, exterior girder only.

(2) Limits of spot blast clean portion of exterior girder only.

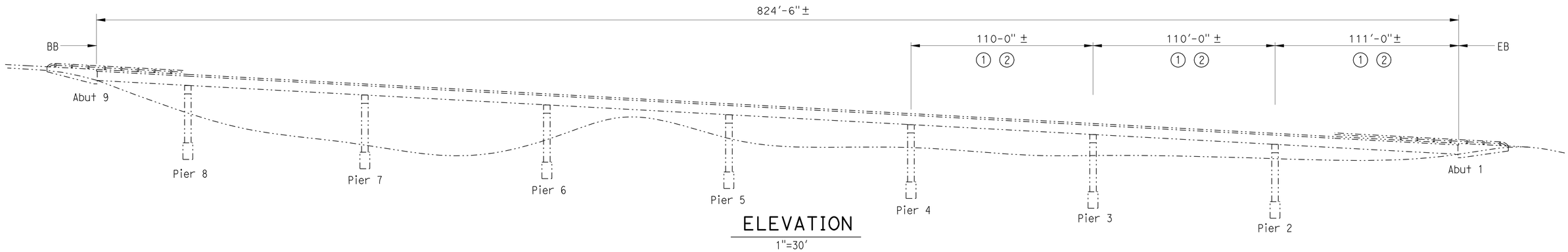

ELEVATION

1"=30'

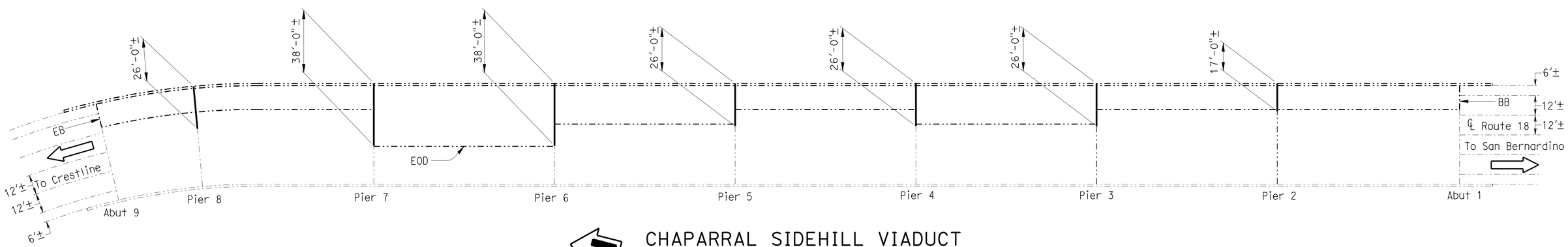

CHAPARRAL SIDEHILL VIADUCT

Br No. 54-0752, SBD, Route 18, PM R12.49
1"=30'

CHAPARRAL SIDEHILL VIADUCT Br No. 54-0752

QUANTITIES:

CLEAN EXPANSION JOINT	200	LF
POLYESTER CONCRETE, EXPANSION DAM	90	CF
JOINT SEAL (MR 1/2")	200	LF
CLEAN STRUCTURAL STEEL (EXISTING BRIDGE)	LUMP	SUM
PAINT STRUCTURAL STEEL (EXISTING BRIDGE)	LUMP	SUM
SPOT BLAST CLEAN AND PAINT UNDERCOAT	2,000	SQFT
WORK AREA MONITORING	LUMP	SUM

NOTE:
THE CONTRACTOR SHALL VERIFY ALL CONTROLLING FIELD DIMENSIONS BEFORE ORDERING OR FABRICATING ANY MATERIAL.

PAINT TABLE

ITEM	Approximate Area (SF)
Spot Blast Clean Existing Structural Steel	2000
Clean Existing Structural Steel	5450
Paint Existing Structural Steel	5450

DESIGN ENGINEER 10-3-12

	BY	CHECKED
DESIGN	P. Kang	M. Hashimoto
DETAILS	N. Kelley	M. Hashimoto
QUANTITIES	P. Kang	M. Hashimoto

LOAD FACTOR DESIGN — LIVE LOADING: HS20-44 AND ALTERNATIVE AND PERMIT DESIGN LOAD

	BY	CHECKED
LAYOUT	N. Kelley	P. Kang
SPECIFICATIONS	Karen Doll	PLANS AND SPECS COMPARED Karen Doll

STATE OF CALIFORNIA DEPARTMENT OF TRANSPORTATION

DIVISION OF MAINTENANCE STRUCTURE MAINTENANCE DESIGN

BRIDGE NO. Varies
POST MILE Various

ROUTE 18 BRIDGES
GENERAL PLAN NO. 3

STRUCTURES MAINTENANCE GENERAL PLAN SHEET (ENGLISH) (REV. 09-01-10)

ORIGINAL SCALE IN INCHES FOR REDUCED PLANS 0 1 2 3

UNIT: 3488
PROJECT NUMBER & PHASE: 0800020561
CONTRACT NO.: 08-006501

DISREGARD PRINTS BEARING EARLIER REVISION DATES

REVISION DATES 6-11-12 7-18-12 8-2-12

SHEET 3 OF 10

FILE => 08_0q6501_cgp.dgn

USERNAME => s12614 DATE PLOTTED => 22-MAR-2013 TIME PLOTTED => 06:15

DIST	COUNTY	ROUTE	POST MILES TOTAL PROJECT	SHEET No.	TOTAL SHEETS
08	SBd	18	T6.2/31.6	22	28

REGISTERED CIVIL ENGINEER 10-3-12 DATE

3-18-13
PLANS APPROVAL DATE

REGISTERED PROFESSIONAL ENGINEER PETER B. KANG No. C 70336 Exp. 9-30-14 CIVIL STATE OF CALIFORNIA

The State of California or its officers or agents shall not be responsible for the accuracy or completeness of electronic copies of this plan sheet.

LEGEND (APPLY TO THIS SHEET ONLY):

-·-·-·-·- Indicates existing.

——— Indicates location of remove asphalt concrete, construct polyester concrete expansion dam, clean expansion joint, and install new joint seal. For details, see, "EXPANSION DAM DETAILS" sheet.

▨ Indicates limits of new STRUCTURE APPROACH TYPE R(30D) for details see STRUCTURE APPROACH TYPE R(30D) sheet.

(2) See ROAD PLANS for install vertical clearance notification signs (14'-9").

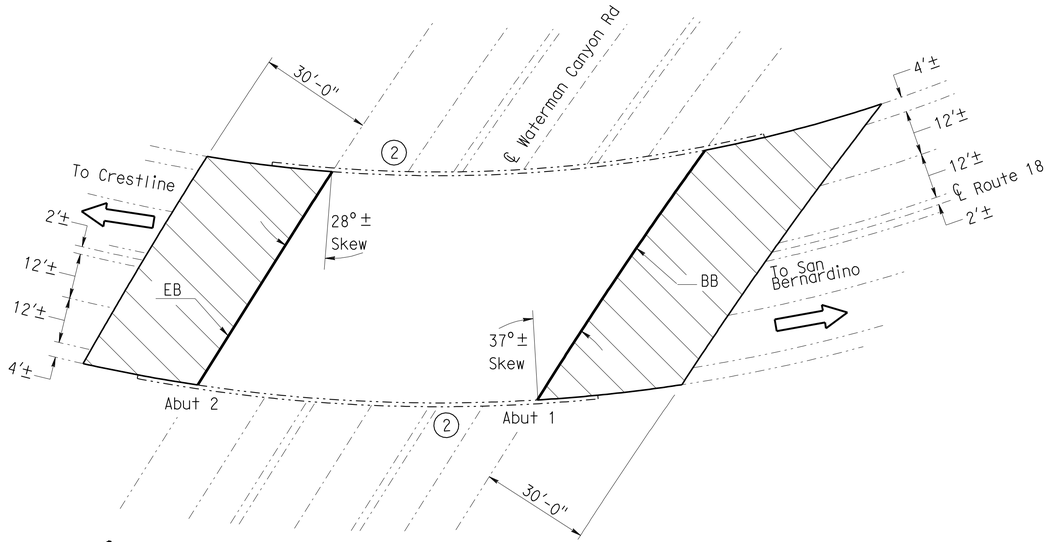

WATERMAN CANYON ROAD UC

Br No. 54-0854, SBD, Route 18, PM R13.29
1"=20'

WATERMAN CANYON ROAD UC Br No. 54-0854

QUANTITIES

AGGREGATE BASE (APPROACH SLAB)	22	CY
STRUCTURAL CONCRETE, APPROACH SLAB (TYPE R)	160	CY
PAVING NOTCH EXTENSION	105	CF
POLYESTER CONCRETE, EXPANSION DAM	59	CF
JOINT SEAL (MR 1/2")	143	LF

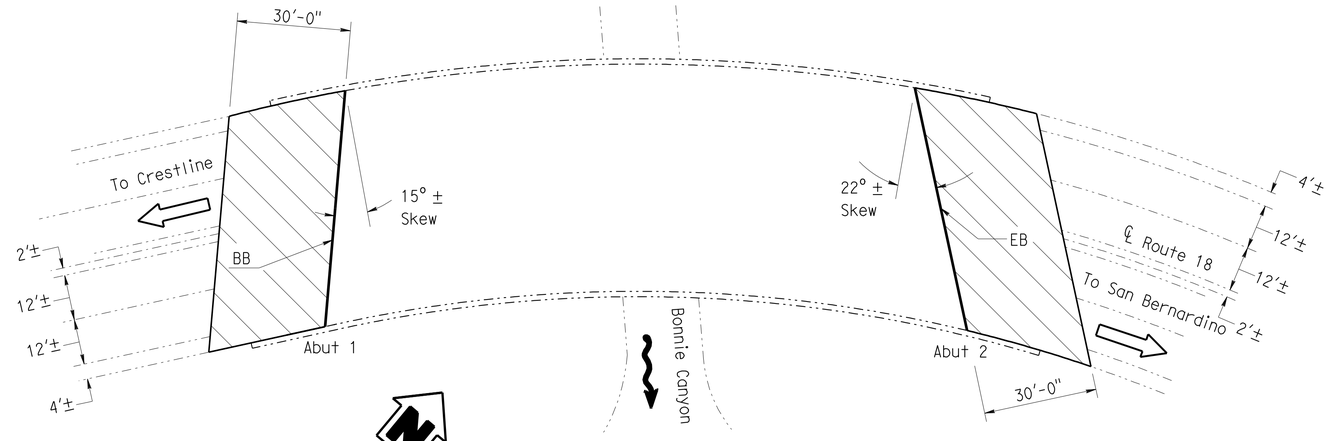

LOWER BONNIE CANYON

Br No. 54-0923, SBD, Route 18, PM R14.78
1"=20'

LOWER BONNIE CANYON Br No. 54-0923

QUANTITIES

AGGREGATE BASE (APPROACH SLAB)	22	CY
STRUCTURAL CONCRETE, APPROACH SLAB (TYPE R)	145	CY
PAVING NOTCH EXTENSION	95	CF
POLYESTER CONCRETE, EXPANSION DAM	53	CF
JOINT SEAL (MR 1")	128	LF

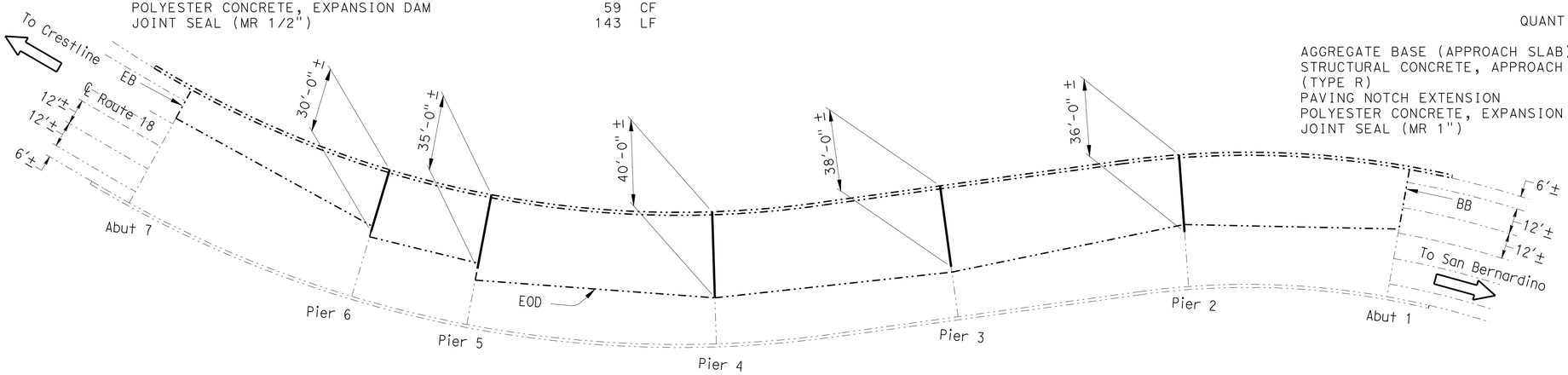

NOTE:
THE CONTRACTOR SHALL VERIFY ALL CONTROLLING FIELD DIMENSIONS BEFORE ORDERING OR FABRICATING ANY MATERIAL.

BOULDER SIDEHILL VIADUCT

Br No. 54-0847, SBD, Route 18, PM R12.68
1"=30'

BOULDER SIDEHILL VIADUCT Br No. 54-0847

QUANTITIES

CLEAN EXPANSION JOINT	182	LF
POLYESTER CONCRETE, EXPANSION DAM	82	CF
JOINT SEAL (MR 1/2")	182	LF

10-3-12 DESIGN ENGINEER	DESIGN	BY P. Kang	CHECKED M. Hashimoto	LOAD FACTOR DESIGN	LIVE LOADING: HS20-44 AND ALTERNATIVE AND PERMIT DESIGN LOAD	
	DETAILS	BY N. Kelley	CHECKED M. Hashimoto	LAYOUT	BY N. Kelley	CHECKED P. Kang
	QUANTITIES	BY P. Kang	CHECKED M. Hashimoto	SPECIFICATIONS	BY Karen Doll	PLANS AND SPECS COMPARED Karen Doll

STATE OF CALIFORNIA
DEPARTMENT OF TRANSPORTATION

DIVISION OF MAINTENANCE
STRUCTURE MAINTENANCE DESIGN

BRIDGE NO. Varies
POST MILE Various

ROUTE 18 BRIDGES
GENERAL PLAN NO. 4

STRUCTURES MAINTENANCE GENERAL PLAN SHEET (ENGLISH) (REV. 09-01-10)

ORIGINAL SCALE IN INCHES FOR REDUCED PLANS 0 1 2 3

UNIT: 3488
PROJECT NUMBER & PHASE: 0800020561
CONTRACT NO.: 08-006501

DISREGARD PRINTS BEARING EARLIER REVISION DATES

REVISION DATES 7-19-12 8-1-12

SHEET 4 OF 10

FILE => 08_0q6501_dgp.dgn

USERNAME => s121614 DATE PLOTTED => 22-MAR-2013 TIME PLOTTED => 06:15

DIST	COUNTY	ROUTE	POST MILES TOTAL PROJECT	SHEET No.	TOTAL SHEETS
08	SBd	18	T6.2/31.6	23	28

REGISTERED CIVIL ENGINEER 10-3-12 DATE

3-18-13
PLANS APPROVAL DATE

REGISTERED PROFESSIONAL ENGINEER PETER B. KANG No. C 70336 Exp. 9-30-14 CIVIL STATE OF CALIFORNIA

The State of California or its officers or agents shall not be responsible for the accuracy or completeness of electronic copies of this plan sheet.

LEGEND (APPLY TO THIS SHEET ONLY):

-·-·-·-·- Indicates existing.

——— Indicates location of remove asphalt concrete, construct polyester concrete expansion dam, clean expansion joint, and install new joint seal. For details see, "EXPANSION DAM DETAILS" sheet.

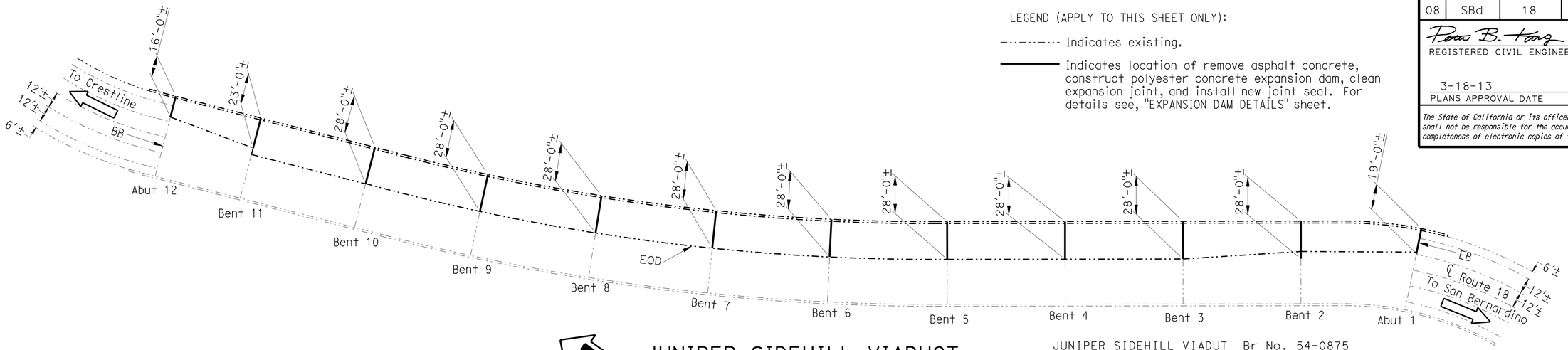

JUNIPER SIDEHILL VIADUCT

Br No. 54-0875, SBd, Route 18, PM R16.33
1"=40'

JUNIPER SIDEHILL VIADUT Br No. 54-0875

QUANTITIES

CLEAN EXPANSION JOINT	317	LF
POLYESTER CONCRETE, EXPANSION DAM	140	CF
JOINT SEAL (MR 1/2")	17	LF
JOINT SEAL (MR 1")	300	LF

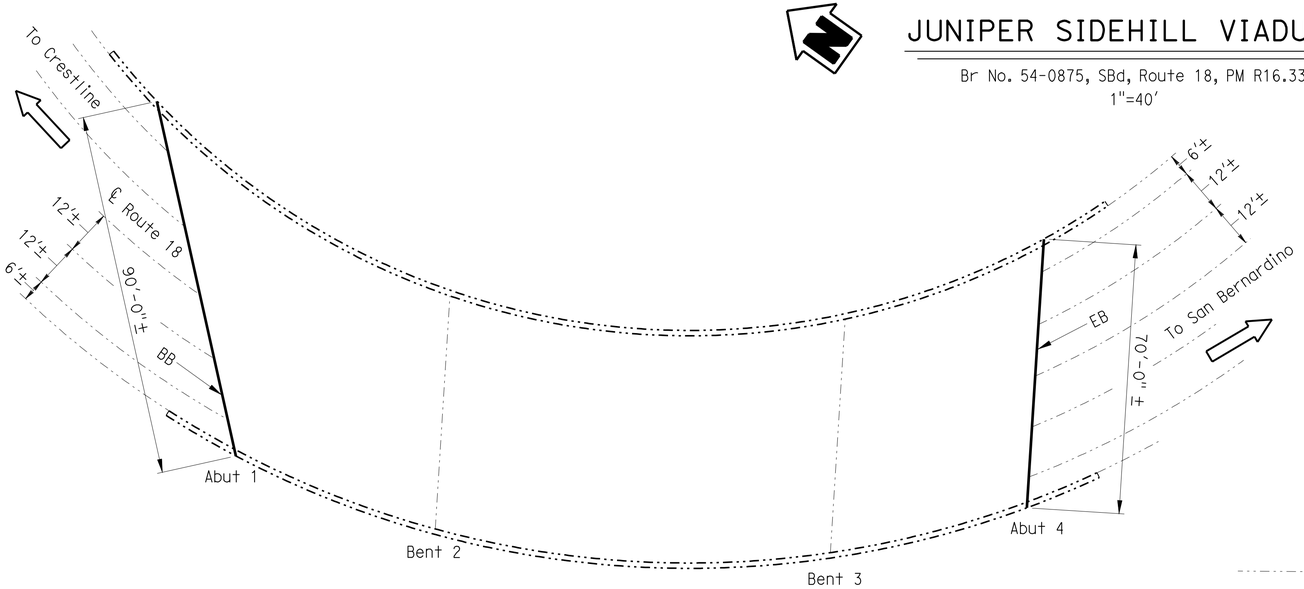

BONNIE CANYON

Br No. 54-0876, SBD, Route 18, PM R16.54
1"=20'

BONNIE CANYON Br No. 54-0876

QUANTITIES

CLEAN EXPANSION JOINT	161	LF
POLYESTER CONCRETE, EXPANSION DAM	58	CF
JOINT SEAL (MR 1")	161	LF

HAZELWOOD SIDEHILL VIADUCT Br No. 54-0877

QUANTITIES

CLEAN EXPANSION JOINT	105	LF
POLYESTER CONCRETE, EXPANSION DAM	42	CF
JOINT SEAL (MR 1/2")	61	LF
JOINT SEAL (MR 1")	44	LF

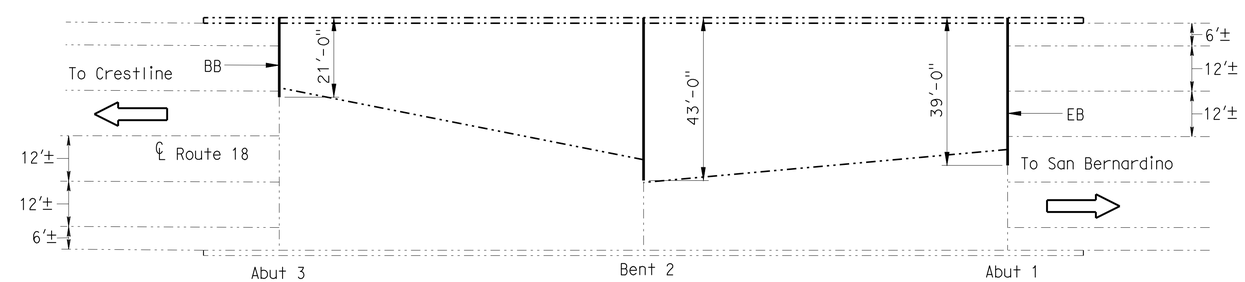

HAZELWOOD SIDEHILL VIADUCT

Br No. 54-0877, SBD, Route 18, PM R16.64
1"=20'

NOTE:
THE CONTRACTOR SHALL VERIFY ALL CONTROLLING FIELD DIMENSIONS BEFORE ORDERING OR FABRICATING ANY MATERIAL.

DESIGN ENGINEER 10-3-12	DESIGN	BY P. Kang	CHECKED M. Hashimoto	LOAD FACTOR DESIGN	LIVE LOADING: HS20-44 AND ALTERNATIVE AND PERMIT DESIGN LOAD
	DETAILS	BY N. Kelley	CHECKED M. Hashimoto	LAYOUT	BY N. Kelley / CHECKED P. Kang
	QUANTITIES	BY P. Kang	CHECKED M. Hashimoto	SPECIFICATIONS	BY Karen Doll / PLANS AND SPECS COMPARED Karen Doll

STATE OF CALIFORNIA
DEPARTMENT OF TRANSPORTATION

DIVISION OF MAINTENANCE
STRUCTURE MAINTENANCE DESIGN

BRIDGE NO. Varies
POST MILE Various

ROUTE 18 BRIDGES
GENERAL PLAN NO. 5

STRUCTURES MAINTENANCE GENERAL PLAN SHEET (ENGLISH) (REV. 09-01-10)

ORIGINAL SCALE IN INCHES FOR REDUCED PLANS 0 1 2 3

UNIT: 3488
PROJECT NUMBER & PHASE: 0800020561
CONTRACT NO.: 08-0Q6501

DISREGARD PRINTS BEARING EARLIER REVISION DATES

REVISION DATES: ~~7-19-12~~ 8-1-12

SHEET 5 OF 10

FILE => 08_0q6501_egp.dgn

USERNAME => s12614 DATE PLOTTED => 22-MAR-2013 TIME PLOTTED => 06:15

DIST	COUNTY	ROUTE	POST MILES TOTAL PROJECT	SHEET No.	TOTAL SHEETS
08	SBd	18	T6.2/31.6	24	28

REGISTERED CIVIL ENGINEER 10-3-12 DATE

3-18-13
PLANS APPROVAL DATE

REGISTERED PROFESSIONAL ENGINEER PETER B. KANG No. C 70336 Exp. 9-30-14 CIVIL STATE OF CALIFORNIA

The State of California or its officers or agents shall not be responsible for the accuracy or completeness of electronic copies of this plan sheet.

LEGEND (APPLY TO THIS SHEET ONLY):

Indicates existing.

Indicates location of remove asphalt concrete, construct polyester concrete expansion dam, clean expansion joint, and install new joint seal. For details see, "EXPANSION DAM DETAIL" sheet.

Indicates limits of prepare concrete bridge deck and treat bridge deck with high molecular weight methacrylate.

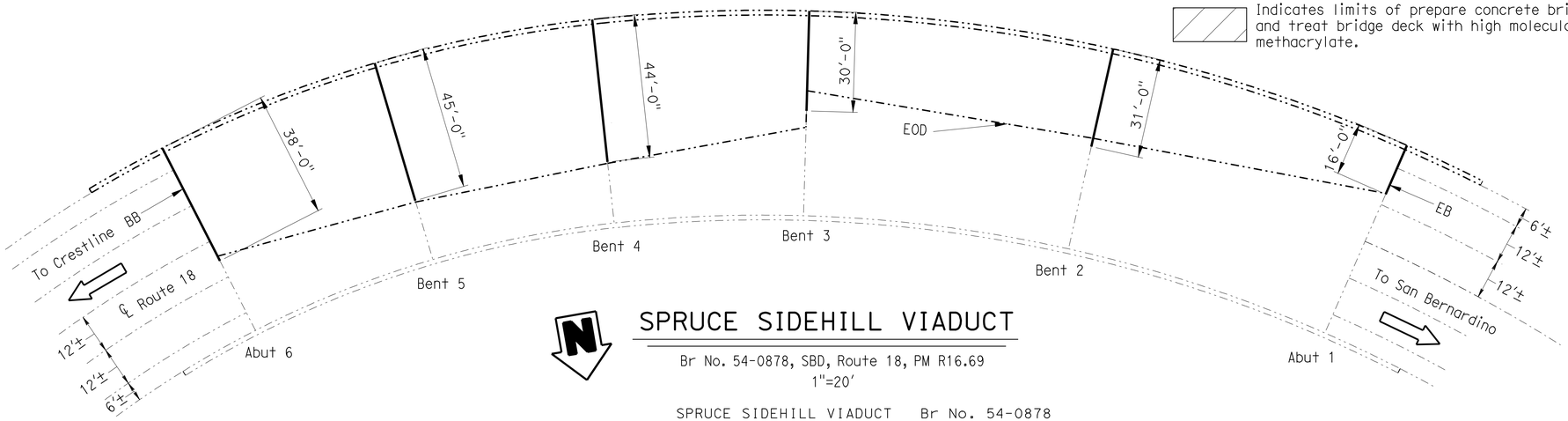

SPRUCE SIDEHILL VIADUCT

Br No. 54-0878, SBD, Route 18, PM R16.69
1"=20'

SPRUCE SIDEHILL VIADUCT Br No. 54-0878

QUANTITIES

CLEAN EXPANSION JOINT	205	LF
POLYESTER CONCRETE, EXPANSION DAM	80	CF
JOINT SEAL (MR 1/2")	55	LF
JOINT SEAL (MR 1")	150	LF

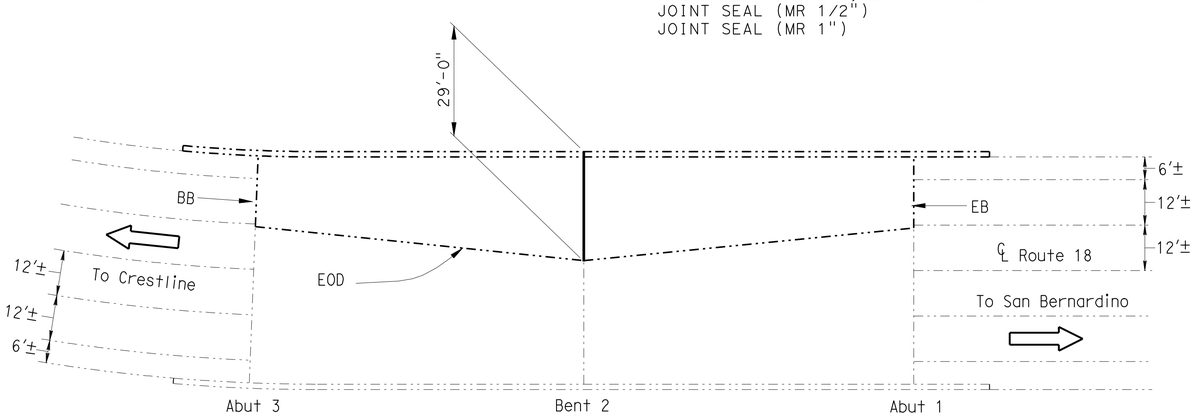

FOREST SIDEHILL VIADUCT

Br No. 54-0879, SBD, Route 18, PM R16.96
1"=20'

FOREST SIDEHILL VIADUCT Br No. 54-0879

QUANTITIES

CLEAN EXPANSION JOINT	30	LF
POLYESTER CONCRETE, EXPANSION DAM	12	CF
JOINT SEAL (MR 1")	30	LF

NOTE:
THE CONTRACTOR SHALL VERIFY ALL CONTROLLING FIELD DIMENSIONS BEFORE ORDERING OR FABRICATING ANY MATERIAL.

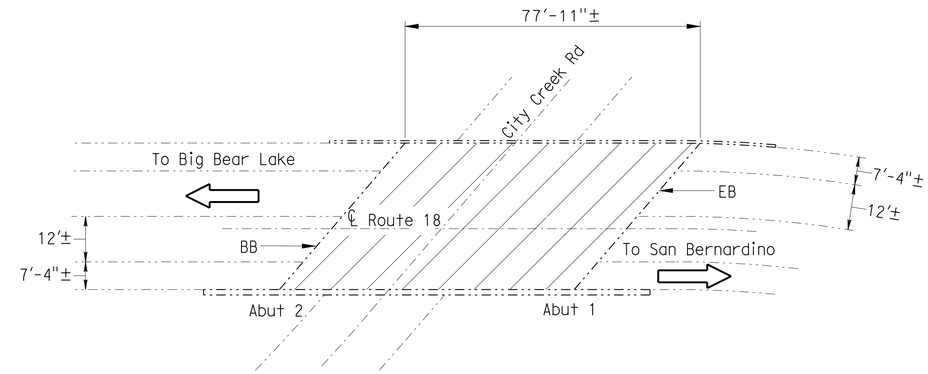

ROUTE 18/330 SEPARATION

Br No. 54-0031, SBD, Route 18, PM 31.64
1"=20'

ROUTE 18/330 SEPARATION Br No. 54-0031

QUANTITIES

PREPARE CONCRETE BRIDGE DECK SURFACE	3,010	SQFT
TREAT BRIDGE DECK	3,010	SQFT
FURNISH BRIDGE DECK TREATMENT MATERIAL	35	GAL

DESIGN ENGINEER 10-3-12

	BY	CHECKED
DESIGN	P. Kang	M. Hashimoto
DETAILS	N. Kelley	M. Hashimoto
QUANTITIES	P. Kang	M. Hashimoto

LOAD FACTOR DESIGN — LIVE LOADING: HS20-44 AND ALTERNATIVE AND PERMIT DESIGN LOAD

	BY	CHECKED
LAYOUT	N. Kelley	P. Kang
SPECIFICATIONS	Karen Doll	PLANS AND SPECS COMPARED Karen Doll

STATE OF CALIFORNIA
DEPARTMENT OF TRANSPORTATION

DIVISION OF MAINTENANCE
STRUCTURE MAINTENANCE DESIGN

BRIDGE NO. Varies
POST MILE Various

ROUTE 18 BRIDGES
GENERAL PLAN NO. 6

STRUCTURES MAINTENANCE GENERAL PLAN SHEET (ENGLISH) (REV. 09-01-10)

ORIGINAL SCALE IN INCHES FOR REDUCED PLANS 0 1 2 3

UNIT: 3488
PROJECT NUMBER & PHASE: 0800020561
CONTRACT NO.: 08-006501

DISREGARD PRINTS BEARING EARLIER REVISION DATES

REVISION DATES 8-1-12

SHEET 6 OF 10

FILE => 08_0q6501_fgp.dgn

USERNAME => s121614 DATE PLOTTED => 22-MAR-2013 TIME PLOTTED => 06:15

DIST	COUNTY	ROUTE	POST MILES TOTAL PROJECT	SHEET No.	TOTAL SHEETS
08	SBd	18	T6.2/31.6	25	28

REGISTERED CIVIL ENGINEER 10-3-12 DATE

3-18-13
PLANS APPROVAL DATE

REGISTERED PROFESSIONAL ENGINEER
PETER B. KANG
No. C 70336
Exp. 9-30-14
CIVIL
STATE OF CALIFORNIA

The State of California or its officers or agents shall not be responsible for the accuracy or completeness of electronic copies of this plan sheet.

JOINT SEAL TABLE

BRIDGE NAME	BRIDGE NUMBER	LOCATION		MINIMUM "MR" (INCHES)	APPROXIMATE LENGTH (FEET)	EXISTING WATERSTOP	APPROX DEPTH TO CLEAN EXP JOINT (INCHES)	EXPANSION DAM REQUIRED
Granite Sidehill Viaduct	54-0789	Bent 2	JT	1/2	21.5	No	6	Yes
		Bent 3	JT	1/2	21.5	No	6	Yes
Fir Sidehill Viaduct	54-0790	Bent 2	JT	1/2	28.5	Yes	6	Yes
		Bent 3	JT	1/2	28.5	Yes	6	Yes
		Bent 4	JT	1/2	20.5	Yes	6	Yes
Evergreen Sidehill Viaduct	54-0754	Bent 2	JT	1	31.5	No	6	Yes
Dogwood Sidehill Viaduct	54-0756	Bent 2	JT	1/2	26.5	No	6	Yes
		Bent 3	JT	1/2	32.5	No	6	Yes
		Bent 4	JT	1/2	32.5	No	6	Yes
		Bent 5	JT	1/2	26.5	No	6	Yes
		Bent 6	JT	1/2	26.5	No	6	Yes
		Bent 7	JT	1/2	26.5	No	6	Yes
Chaparral Sidehill Viaduct	54-0752	Pier 2	JT	1/2	17.5	Yes	6	Yes
		Pier 3	JT	1/2	26.5	Yes	6	Yes
		Pier 4	JT	1/2	26.5	Yes	6	Yes
		Pier 5	JT	1/2	26.5	Yes	6	Yes
		Pier 6	JT	1/2	38.5	Yes	6	Yes
		Pier 7	JT	1/2	38.5	Yes	6	Yes
		Pier 8	JT	1/2	26.5	Yes	6	Yes
Boulder Sidehill Viaduct	54-0847	Pier 2	JT	1/2	36.5	Yes	6	Yes
		Pier 3	JT	1/2	38.5	Yes	6	Yes
		Pier 4	JT	1/2	40.5	Yes	6	Yes
		Pier 5	JT	1/2	35.5	Yes	6	Yes
		Pier 6	JT	1/2	30.5	Yes	6	Yes
Waterman Canyon Road UC	54-0854	Abut 1	BB	1/2	71.5	No	12	Yes
		Abut 2	EB	1/2	71.5	No	12	Yes
Lower Bonnie Canyon	54-0923	Abut 1	BB	1	65.5	No	12	Yes
		Abut 2	EB	1	63.0	No	12	Yes
Juniper Sidehill Viaduct	54-0875	Abut 1	BW	1/2	19.5	No	12	Yes
		Bent 2	JT	1	28.5	No	6	Yes
		Bent 3	JT	1	28.5	No	6	Yes
		Bent 4	JT	1	28.5	No	6	Yes
		Bent 5	JT	1	28.5	No	6	Yes
		Bent 6	JT	1	28.5	No	6	Yes
		Bent 7	JT	1	28.5	No	6	Yes
		Bent 8	JT	1	28.5	No	6	Yes
		Bent 9	JT	1	28.5	No	6	Yes
		Bent 10	JT	1	28.5	No	6	Yes
		Bent 11	JT	1	23.5	No	6	Yes
		Abut 12	BW	1	16.5	No	8	Yes
Bonnie Canyon	54-0876	Abut 1	BW	1	70.5	No	12	Yes
		Abut 4**	BW	1	90.5	No	12	Yes
Hazelwood Sidehill Viaduct	54-0877	Abut 1	BW	1/2	39.5	No	12	Yes
		Bent 2	JT	1	43.5	No	6	Yes
		Abut 3	BW	1/2	21.5	No	12	Yes

NOTE:
THE CONTRACTOR SHALL VERIFY ALL CONTROLLING FIELD DIMENSIONS BEFORE ORDERING OR FABRICATING ANY MATERIAL.

The following notes apply to JOINT SEAL TYPE B:

1) Seal must satisfy both minimum Movement Rating (MR) and minimum W1 requirements.
2) Minimum W1 is the calculated maximum width of the joint based on field measurements. After the joints have been cleaned, minimum W1 is to be calculated by the Engineer.
3) W1 shall be the smaller of the values determined as follows:
   A) 0.85 times the manufacturer's designed minimum uncompressed width of the seal.
   B) The width of the seal on the third successive test cycle of the pressure deflection test; when compressed to an average pressure of 3 psi.
4) Bend Type B joint seal 6" up into curb or rail on the low side of the deck where deck joint matches curb or rail joint.
5) For details not shown, see B6-21.

The following notes apply to JOINT SEAL TYPE A:

1) Install Type A joint seal 3" up into rail on the low side of deck where joint matches curb or rail joint.
2) For details not shown, see B6-21.

LEGEND:
BW - Abutment backwall joint
BB - Paving Notch at beginning of bridge
EB - Paving Notch at end of bridge
JT - Expansion Joint
** - Bonded Joint Seal

NOTE:
For details see JOINT SEAL DETAILS NO. 2 sheet.

DESIGN	BY P. Kang	CHECKED M. Hashimoto	
DETAILS	BY N. Kelley	CHECKED M. Hashimoto	
QUANTITIES	BY P. Kang	CHECKED M. Hashimoto	

STATE OF CALIFORNIA
DEPARTMENT OF TRANSPORTATION

DIVISION OF MAINTENANCE
STRUCTURE MAINTENANCE DESIGN

BRIDGE NO. Varies
POST MILE Various

ROUTE 18 BRIDGES
JOINT SEAL DETAILS NO. 1

STRUCTURES MAINTENANCE DETAIL SHEET (ENGLISH) (REV. 09-01-10)

ORIGINAL SCALE IN INCHES FOR REDUCED PLANS 0 1 2 3

UNIT: 3488
PROJECT NUMBER & PHASE: 0800020561
CONTRACT NO.: 08-006501

DISREGARD PRINTS BEARING EARLIER REVISION DATES

REVISION DATES: 7-31-12 8-1-12

SHEET 7 OF 10

FILE => 08_0q6501_gjs_no1.dgn

USERNAME => s121614 DATE PLOTTED => 22-MAR-2013 TIME PLOTTED => 06:15

DIST	COUNTY	ROUTE	POST MILES TOTAL PROJECT	SHEET No.	TOTAL SHEETS
08	SBd	18	T6.2/31.6	26	28

REGISTERED CIVIL ENGINEER 10-3-12 DATE

3-18-13
PLANS APPROVAL DATE

REGISTERED PROFESSIONAL ENGINEER
PETER B. KANG
No. C 70336
Exp. 9-30-14
CIVIL
STATE OF CALIFORNIA

The State of California or its officers or agents shall not be responsible for the accuracy or completeness of electronic copies of this plan sheet.

JOINT SEAL TABLE

BRIDGE NAME	BRIDGE NUMBER	LOCATION		MINIMUM "MR" (INCHES)	APPROXIMATE LENGTH (FEET)	EXISTING WATERSTOP	APPROX DEPTH TO CLEAN EXP JOINT (INCHES)	EXPANSION DAM REQUIRED
Spruce Sidehill Viaduct	54-0878	Abut 1	BW	½	16.5	No	12	Yes
		Bent 2	JT	1	31.0	No	6	Yes
		Bent 3	JT	1	30.5	No	6	Yes
		Bent 4	JT	1	44.0	No	6	Yes
		Bent 5	JT	1	45.0	No	6	Yes
		Abut 6	BW	½	38.5	No	12	Yes
Forest Sidehill Viaduct	54-0879	Bent 2	JT	1	29.5	No	8	Yes

ABBREVIATIONS:
BW - Abutment backwall joint
JT - Expansion Joint

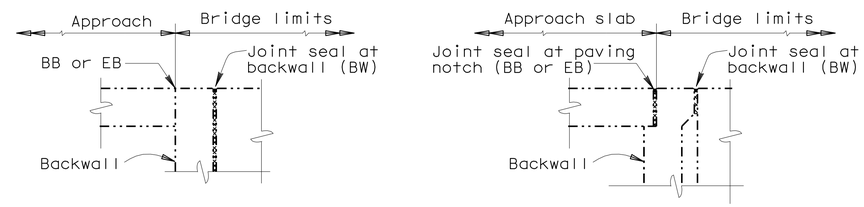

ABUTMENT WITH BACKWALL

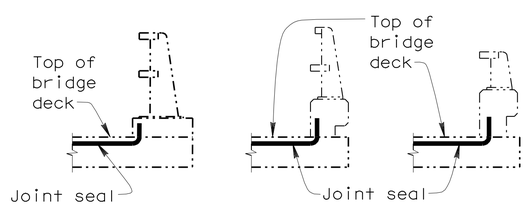

BARRIER RAIL

JOINT SEAL AT LOW SIDE OF DECK

Notes: Details shown for illustration purposes only.

For use only where deck joint matches the sidewalk, curb or barrier rail joint.

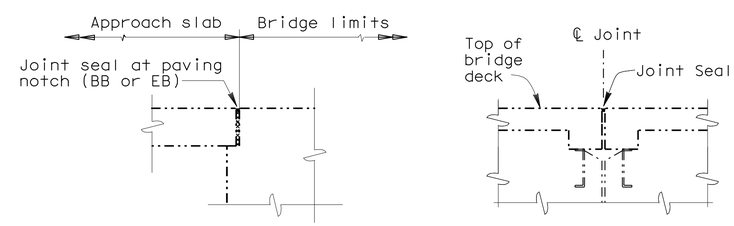

DIAPHRAGM ABUTMENT

BENT OR PIER

JOINT SEAL LOCATION

NOTE:
THE CONTRACTOR SHALL VERIFY ALL CONTROLLING FIELD DIMENSIONS BEFORE ORDERING OR FABRICATING ANY MATERIAL.

	BY	CHECKED
DESIGN	P. Kang	M. Hashimoto
DETAILS	N. Kelley	M. Hashimoto
QUANTITIES	P. Kang	M. Hashimoto

STATE OF CALIFORNIA
DEPARTMENT OF TRANSPORTATION

DIVISION OF MAINTENANCE
STRUCTURE MAINTENANCE DESIGN

BRIDGE NO. Varies
POST MILE Various

ROUTE 18 BRIDGES
JOINT SEAL DETAILS NO. 2

STRUCTURES MAINTENANCE DETAIL SHEET (ENGLISH) (REV. 09-01-10)

ORIGINAL SCALE IN INCHES FOR REDUCED PLANS 0 1 2 3

UNIT: 3488
PROJECT NUMBER & PHASE: 0800020561
CONTRACT NO.: 08-006501

DISREGARD PRINTS BEARING EARLIER REVISION DATES

REVISION DATES: 7-31-12

SHEET 8 OF 10

FILE => 08_0q6501_hjs_no2.dgn

USERNAME => s121614 DATE PLOTTED => 22-MAR-2013 TIME PLOTTED => 06:15

DIST	COUNTY	ROUTE	POST MILES TOTAL PROJECT	SHEET No.	TOTAL SHEETS
08	SBd	18	T6.2/31.6	27	28

REGISTERED CIVIL ENGINEER 10-3-12 DATE

3-18-13
PLANS APPROVAL DATE

REGISTERED PROFESSIONAL ENGINEER PETER B. KANG No. C 70336 Exp. 9-30-14 CIVIL STATE OF CALIFORNIA

The State of California or its officers or agents shall not be responsible for the accuracy or completeness of electronic copies of this plan sheet.

LEGEND (APPLY TO THIS SHEET ONLY):

Indicates existing.

Indicates limits of existing asphalt removal and placement of new polyester concrete, expansion dam.

Indicates limits of Existing AC

* Indicates 1'-0"± at WATERMAN CANYON ROAD UC (Br No. 54-0854), and LOWER BONNIE CANYON (Br No. 54-0923).

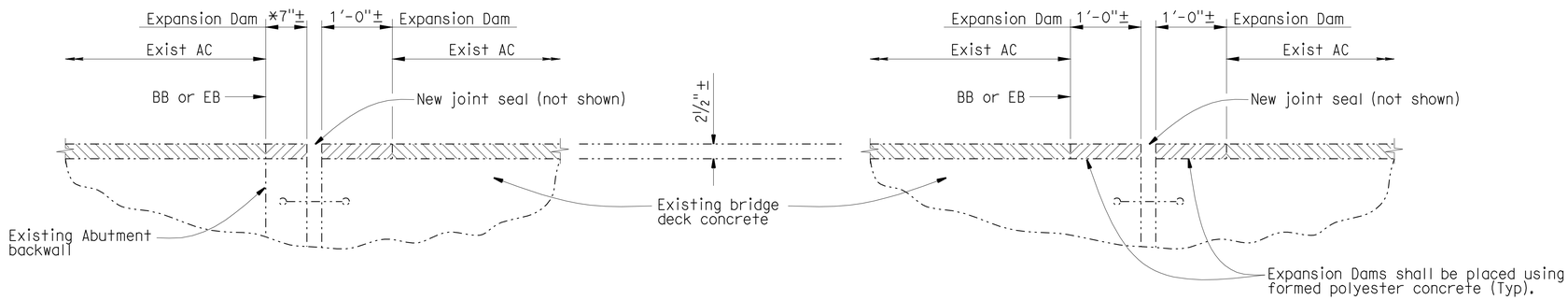

TYPICAL AT ABUTMENTS

TYPICAL AT BENTS OR PIERS

SECTION AT EXPANSION JOINTS

1" = 1'-0"

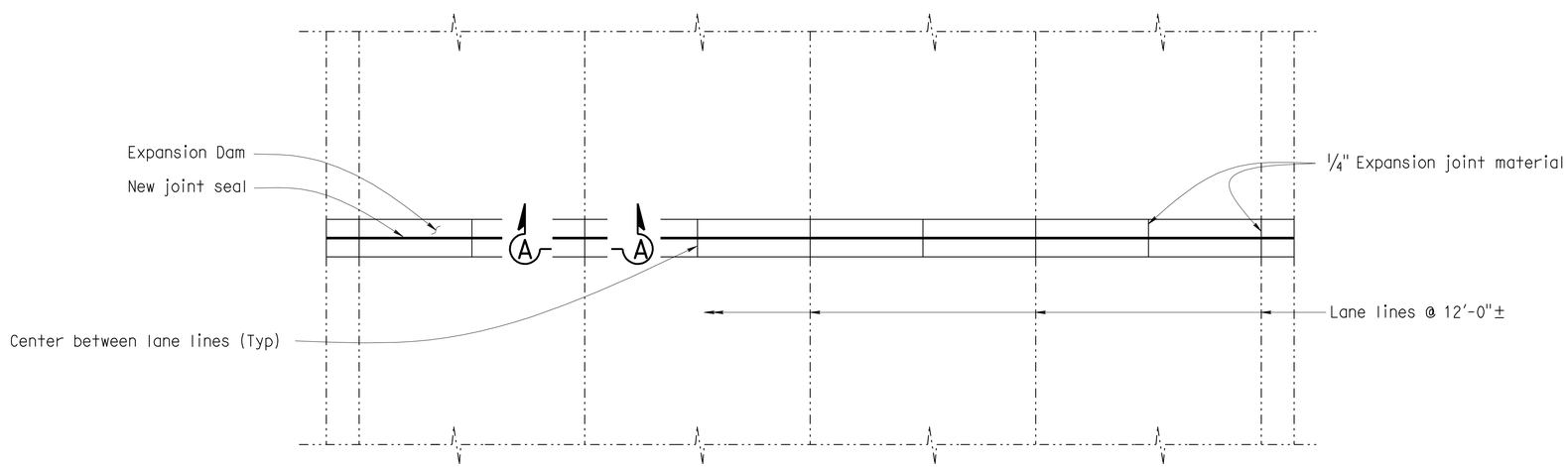

EXPANSION DAM DETAILS

1/4" = 1'-0"

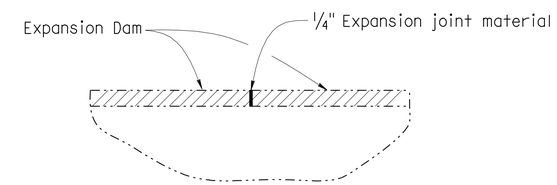

SECTION A-A

1" = 1'-0"

NOTE:
THE CONTRACTOR SHALL VERIFY ALL CONTROLLING FIELD DIMENSIONS BEFORE ORDERING OR FABRICATING ANY MATERIAL.

	BY	CHECKED
DESIGN	P. Kang	M. Hashimoto
DETAILS	N. Kelley	M. Hashimoto
QUANTITIES	P. Kang	M. Hashimoto

STATE OF CALIFORNIA
DEPARTMENT OF TRANSPORTATION

DIVISION OF MAINTENANCE
STRUCTURE MAINTENANCE DESIGN

BRIDGE NO. Varies
POST MILE Various

ROUTE 18 BRIDGES
EXPANSION DAM DETAILS

STRUCTURES MAINTENANCE DETAIL SHEET (ENGLISH) (REV. 09-01-10)

ORIGINAL SCALE IN INCHES FOR REDUCED PLANS 0 1 2 3

UNIT: 3488
PROJECT NUMBER & PHASE: 0800020561
CONTRACT NO.: 08-006501

DISREGARD PRINTS BEARING EARLIER REVISION DATES

REVISION DATES: 7-27-12 8-2-12

SHEET 9 OF 10

FILE => 08_0q6501_le_dam.dgn

USERNAME => s121614 DATE PLOTTED => 22-MAR-2013 TIME PLOTTED => 06:15

DIST	COUNTY	ROUTE	POST MILES TOTAL PROJECT	SHEET No.	TOTAL SHEETS
08	SBd	18	T6.2/31.6	28	28

REGISTERED CIVIL ENGINEER 10-3-12 DATE

3-18-13
PLANS APPROVAL DATE

REGISTERED PROFESSIONAL ENGINEER Peter B. Kang No. C 70336 Exp. 9-30-14 CIVIL STATE OF CALIFORNIA

The State of California or its officers or agents shall not be responsible for the accuracy or completeness of electronic copies of this plan sheet.

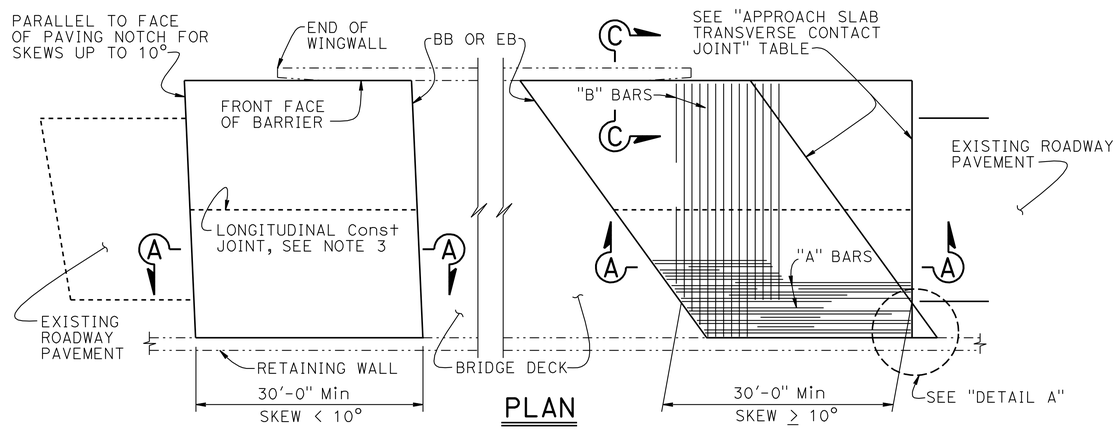

PLAN
1" = 10'

APPROACH SLAB TRANSVERSE CONTACT JOINT		
APPROACH SKEW	WITH AC ROADWAY PAVEMENT	WITH PCC ROADWAY PAVEMENT
< 10°	PARALLEL TO FACE OF PN	PARALLEL TO FACE OF PAVING NOTCH
10° - 45°	PARALLEL TO FACE OF PN USE "DETAIL A"	STAGGER LINES 24' TO 36' APART
> 45°	PARALLEL TO FACE OF PN USE "DETAIL A"	STAGGER AT EACH LANE LINE

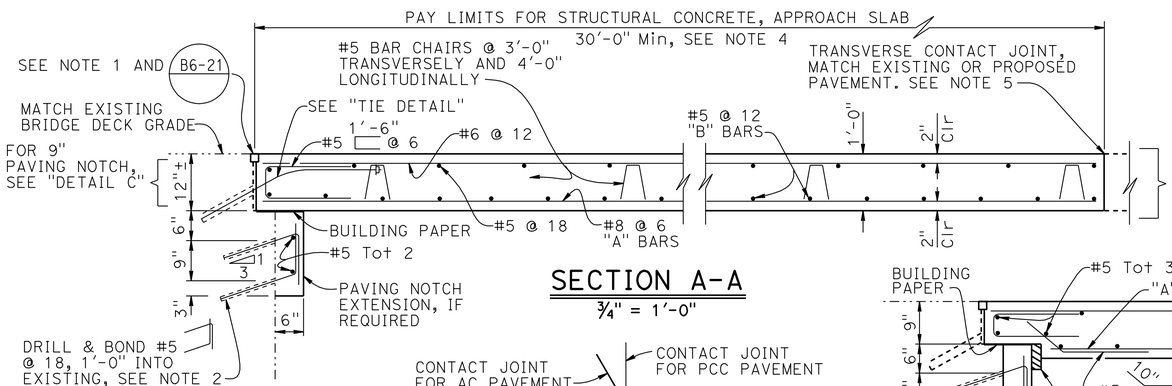

SECTION A-A
¾" = 1'-0"

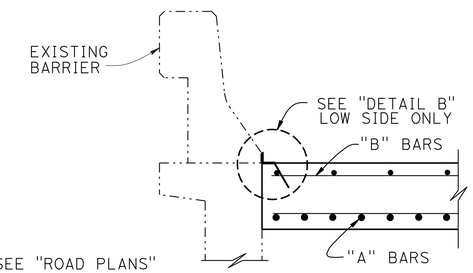

SECTION C-C
¾" = 1'-0"

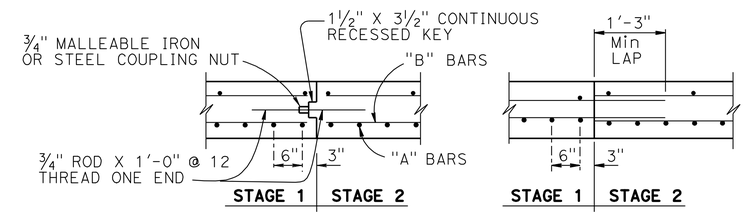

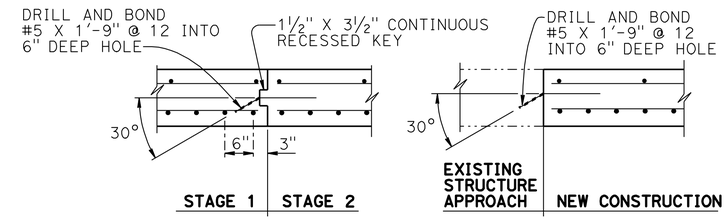

LONGITUDINAL CONSTRUCTION JOINT ALTERNATIVES
¾" = 1'-0"

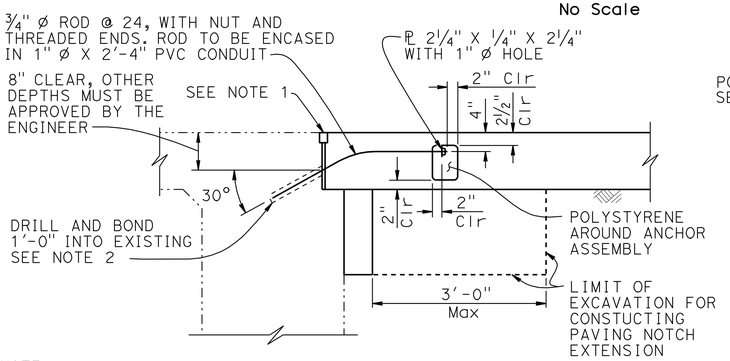

DETAIL A
No Scale

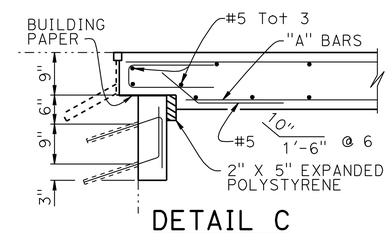

DETAIL C
¾" = 1'-0"

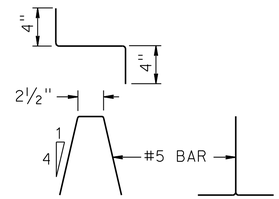

BAR CHAIR DETAIL
1½" = 1'-0"

NOTE: For details not shown, see "SECTION A-A"

TIE DETAIL
¾" = 1'-0"

NOTE:
THE CONTRACTOR SHALL VERIFY ALL CONTROLLING FIELD DIMENSIONS BEFORE ORDERING OR FABRICATING ANY MATERIAL.

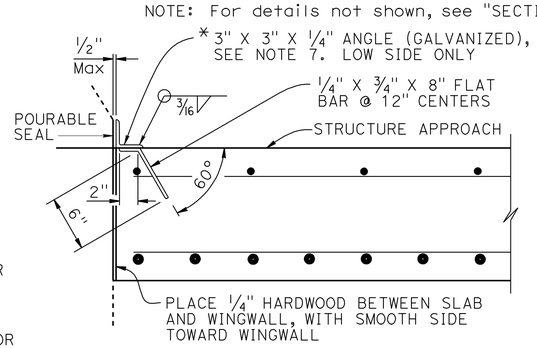

*(TO BE USED WITH CONCRETE BARRIER WITH VERTICAL FACE)

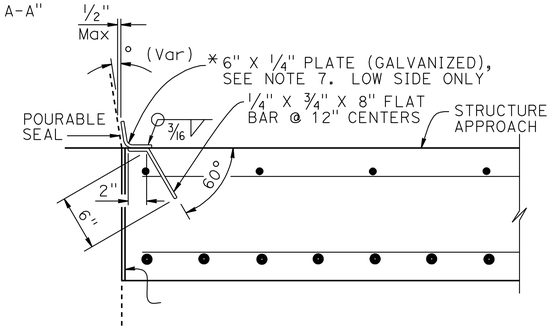

*(TO BE USED WITH CONCRETE BARRIER WITH SLOPING FACE)

DETAIL B
1½" = 1'-0"

NOTES:
1. For details not shown or noted, see Structure Plans. Adjust bar reinforcement to clear a sawcut for sealed joint, when required
2. Space to avoid existing prestress anchorages and main reinforcement
3. Longitudinal construction joints, when permitted by the Engineer, shall be located on lane lines
4. Transverse contact joint shall be a minimum of 5'-0" from an existing or constructed weakened plane joint
5. For transverse contact joint with new PCC paving. refer to Standard Plan P10
6. Couplers are required for stage construction
7. End angle or plate at beginning of barrier transition, end of wingwall or end of structure approach as applicable

STANDARD DRAWING
FILE NO. xs3-150
APPROVAL DATE July 2011

STATE OF CALIFORNIA DEPARTMENT OF TRANSPORTATION
DIVISION OF ENGINEERING SERVICES
BRIDGE NO. VARIES
POST MILE VARIES

ROUTE 18 BRIDGES
STRUCTURE APPROACH TYPE R(30D)

DS OSD 2147A (ENGLISH STANDARD DRAWING "XS" BORDER REV. (02-02-11)

ORIGINAL SCALE IN INCHES FOR REDUCED PLANS 0 1 2 3

UNIT: 3488
PROJECT NUMBER & PHASE: 0800020561
CONTRACT NO.: 08-006501

DISREGARD PRINTS BEARING EARLIER REVISION DATES
REVISION DATES 9-20-12
SHEET 10 OF 10

FILE => 08_0q6501_jappr_r(30d).dgn

USERNAME => s121614 DATE PLOTTED => 22-MAR-2013 TIME PLOTTED => 06:16