Dist	COUNTY	ROUTE	POST MILES TOTAL PROJECT	SHEET No.	TOTAL SHEETS
08	Riv,SBd	10,15,18, 38,60,*etc.*	Var	1	39

ACSTP-000C(331)E

STATE OF CALIFORNIA

DEPARTMENT OF TRANSPORTATION

PROJECT PLANS FOR CONSTRUCTION ON

STATE HIGHWAY

IN RIVERSIDE AND SAN BERNARDINO COUNTIES AT VARIOUS LOCATIONS

TO BE SUPPLEMENTED BY STANDARD PLANS DATED MAY 2006

INDEX OF PLANS

SHEET No.	DESCRIPTION
1	TITLE AND LOCATION MAP
2	LOCATIONS OF CONSTRUCTION
3	CONSTRUCTION AREA SIGNS
4-31	ELECTRICAL PLANS
32-39	REVISED STANDARD PLANS

THE STANDARD PLANS LIST APPLICABLE TO THIS CONTRACT IS INCLUDED IN THE NOTICE TO BIDDERS AND SPECIAL PROVISIONS BOOK.

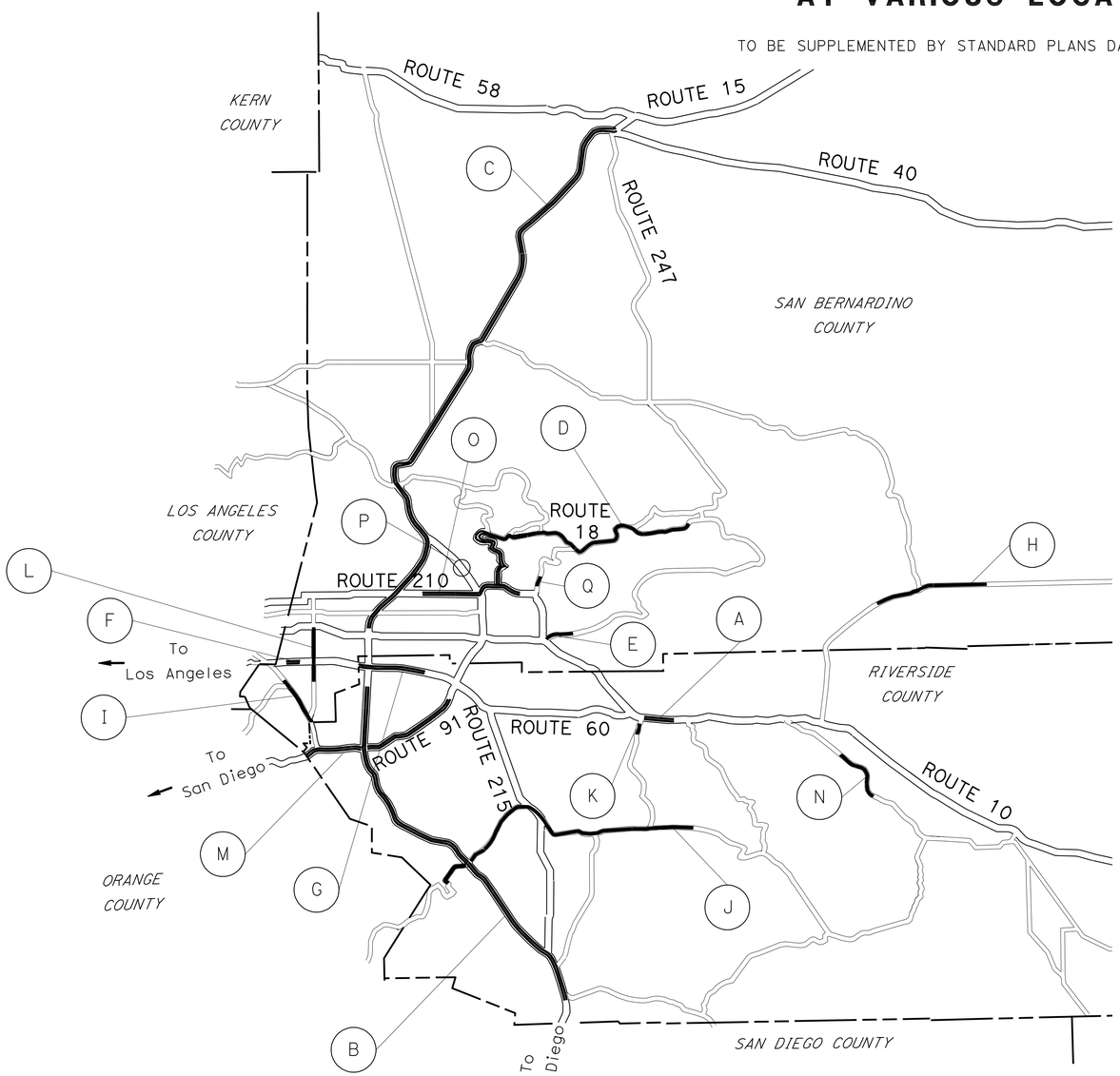

NO SCALE

ROUTES OF CONSTRUCTION

Loc	COUNTY	ROUTE	POST MILE	LOCATION
A	Riv	10	7.5 - 9.9	VARIES
B	Riv	15	3.2 - 48.4	VARIES
C	SBd	15	3.0 - 74.4	VARIES
D	SBd	18	6.2 - 51.6	VARIES
E	SBd	38	2.0 - 4.0	VARIES
F	SBd	60	R2.1 - 3.4	VARIES
G	Riv	60	R1.0 - 9.7	VARIES
H	SBd	62	9.8 - 33.2	VARIES
I	SBd	71	3.1 - 8.2	VARIES
J	Riv	74	11.8 - 44.7	VARIES
K	Riv	79	40.1	VARIES
L	SBd	83	6.4	VARIES
M	Riv	91	0.9 - 20.7	VARIES
N	Riv	111	47.3 - 55.3	VARIES
O	SBd	210	14.7 - R25.9	VARIES
P	SBd	215	11.4	VARIES
Q	SBd	330	29.4	VARIES

NOTE:
THE TABLE OF LOCATIONS OF CONSTRUCTION IS SHOWN ON THE LOCATIONS OF CONSTRUCTION SHEET.

THE CONTRACTOR SHALL POSSESS THE CLASS (OR CLASSES) OF LICENSE AS SPECIFIED IN THE "NOTICE TO BIDDERS."

PROJECT ENGINEER REGISTERED ELECTRICAL ENGINEER — DATE 06-14-10

FERDINAND DE LA CRUZ No. E 17215 Exp. 06/30/2012 ELECTRICAL — REGISTERED PROFESSIONAL ENGINEER — STATE OF CALIFORNIA

August 9, 2010
PLANS APPROVAL DATE

THE STATE OF CALIFORNIA OR ITS OFFICERS OR AGENTS SHALL NOT BE RESPONSIBLE FOR THE ACCURACY OR COMPLETENESS OF SCANNED COPIES OF THIS PLAN SHEET.

PROJECT MANAGER: MEARDY TIM
DESIGN ENGINEER: FERDINAND DE LA CRUZ

CONTRACT No.	08-0P6204
PROJECT ID	0800020013

LAST REVISION 06-14-10 — DATE PLOTTED => 25-JAN-2011 — TIME PLOTTED => 11:31

Dist	COUNTY	ROUTE	POST MILES TOTAL PROJECT	SHEET No.	TOTAL SHEETS
08	Riv,SBd	10,15,18, 38,60,etc.	Var	2	39

REGISTERED ELECTRICAL ENGINEER 06-14-10

8-9-10
PLANS APPROVAL DATE

REGISTERED PROFESSIONAL ENGINEER FERDINAND DE LA CRUZ No. E 17215 Exp. 06/30/2012 ELECTRICAL STATE OF CALIFORNIA

THE STATE OF CALIFORNIA OR ITS OFFICERS OR AGENTS SHALL NOT BE RESPONSIBLE FOR THE ACCURACY OR COMPLETENESS OF SCANNED COPIES OF THIS PLAN SHEET.

LOCATIONS OF CONSTRUCTION

Loc	No.	COUNTY	ROUTE	PM	DIRECTION
A	1	Riv	10	7.5	EB
	2	Riv	10	7.7	WB
	3	Riv	10	9.1	EB
	4	Riv	10	9.9	WB
B	5	Riv	15	48.0	NB
	6	Riv	15	48.4	SB
	7	Riv	15	3.2	NB
	8	Riv	15	3.6	SB
	9	Riv	15	4.8	NB
	10	Riv	15	5.1	SB
	11	Riv	15	6.4	NB
	12	Riv	15	6.8	SB
	13	Riv	15	9.2	NB
	14	Riv	15	9.3	SB
	15	Riv	15	10.4	NB
	16	Riv	15	10.7	SB
	17	Riv	15	18.9	NB
	18	Riv	15	19.3	SB
	19	Riv	15	22.0	NB
	20	Riv	15	22.4	SB
C	21	SBd	15	3.0	NB
	22	SBd	15	3.1	SB
	23	SBd	15	5.0	NB
	24	SBd	15	5.5	SB
	25	SBd	15	37.4	NB
	26	SBd	15	37.4	SB
	27	SBd	15	73.4	NB
	28	SBd	15	74.4	SB
D	29	SBd	18	6.2	SB
	30	SBd	18	48.5	NB
	31	SBd	18	50.4	NB
	32	SBd	18	51.6	NB
E	33	SBd	38	2.0	EB
	34	SBd	38	3.0	WB
	35	SBd	38	4.0	EB
F	36	SBd	60	R2.1	EB
	37	SBd	60	R2.5	WB
	38	SBd	60	3.4	EB
G	39	Riv	60	R1.0	EB
	40	Riv	60	R2.9	EB
	41	Riv	60	9.3	EB
	42	Riv	60	9.7	WB

Loc	No.	COUNTY	ROUTE	PM	DIRECTION
H	43	SBd	62	9.8	EB
	44	SBd	62	12.4	EB
	45	SBd	62	18.6	EB
	46	SBd	62	33.2	EB
I	47	SBd	71	3.1	SB
	48	SBd	71	3.2	NB
	49	SBd	71	8.2	SB
J	50	Riv	74	11.8	WB
	51	Riv	74	18.4	WB
	52	Riv	74	29.3	WB
	53	Riv	74	34.3	WB
	54	Riv	74	36.9	WB
	55	Riv	74	41.3	EB
	56	Riv	74	44.7	EB
K	57	Riv	79	40.1	NB
L	58	SBd	83	6.4	NB
M	59	Riv	91	0.9	EB
	60	Riv	91	12.9	EB
	61	Riv	91	13.2	WB
	62	Riv	91	13.9	EB
	63	Riv	91	14.2	WB
	64	Riv	91	15.5	EB
	65	Riv	91	15.8	WB
	66	Riv	91	20.7	WB
N	67	Riv	111	47.3	NB
	68	Riv	111	T47.8	SB
	69	Riv	111	T49.4	SB
	70	Riv	111	T51.6	NB
	71	Riv	111	T52.9	SB
	72	Riv	111	T53.9	SB
	73	Riv	111	55.3	NB
O	74	SBd	210	14.7	EB
	75	SBd	210	15.2	WB
	76	SBd	210	18.5	EB
	77	SBd	210	R25.5	EB
	78	SBd	210	R25.9	WB
P	79	SBd	215	11.4	NB
Q	80	SBd	330	29.4	NB

LOCATIONS OF CONSTRUCTION

LC-1

STATE OF CALIFORNIA - DEPARTMENT OF TRANSPORTATION
Caltrans ELECTRICAL DESIGN B

FUNCTIONAL SUPERVISOR: FERDINAND DE LA CRUZ
CALCULATED-DESIGNED BY: L. PENALOZA
CHECKED BY: F. DE LA CRUZ
REVISED BY
DATE REVISED

LAST REVISION 06-14-10
DATE PLOTTED =>
TIME PLOTTED =>

Dist	COUNTY	ROUTE	POST MILES TOTAL PROJECT	SHEET No.	TOTAL SHEETS
08	Riv,SBd	10,15,18, 38,60,etc.	Var	3	39

REGISTERED CIVIL ENGINEER DATE 06-14-10

8-9-10
PLANS APPROVAL DATE

REGISTERED PROFESSIONAL ENGINEER TRAN HOANG No. C54996 Exp. 06/30/12 CIVIL STATE OF CALIFORNIA

THE STATE OF CALIFORNIA OR ITS OFFICERS OR AGENTS SHALL NOT BE RESPONSIBLE FOR THE ACCURACY OR COMPLETENESS OF ELECTRONIC COPIES OF THIS PLAN SHEET.

LEGEND

H PORTABLE CONSTRUCTION AREA SIGN

⇨ DIRECTION OF TRAFFIC

NOTES

1. CONSTRUCTION AREA SIGN LOCATIONS SHOWN ARE APPROXIMATE. EXACT LOCATIONS WILL BE DETERMINED BY THE ENGINEER.
2. ALSO REFER TO STANDARD PLANS T11, T12, T13 AND T14 FOR TRAFFIC CONTROL REQUIREMENTS WHEN LANE OR RAMP CLOSURES ARE REQUIRED.
3. PORTABLE CONSTRUCTION AREA SIGNS SHALL BE REQUIRED AT EACH LOCATION WHERE THE CONTRACTOR IS WORKING. NUMBER OF PORTABLE CONSTRUCTION AREA SIGNS DEPENDS ON THE NUMBER OF LOCATIONS CONTRACTOR IS WORKING.
4. LOCATIONS OF PORTABLE CHANGEABLE MESSAGE SIGNS WILL BE DETERMINED BY THE ENGINEER. WHEN LANE CLOSURES ARE NEEDED ON RAMPS, PORTABLE CHANGEABLE MESSAGE SIGNS WILL BE REQUIRED.

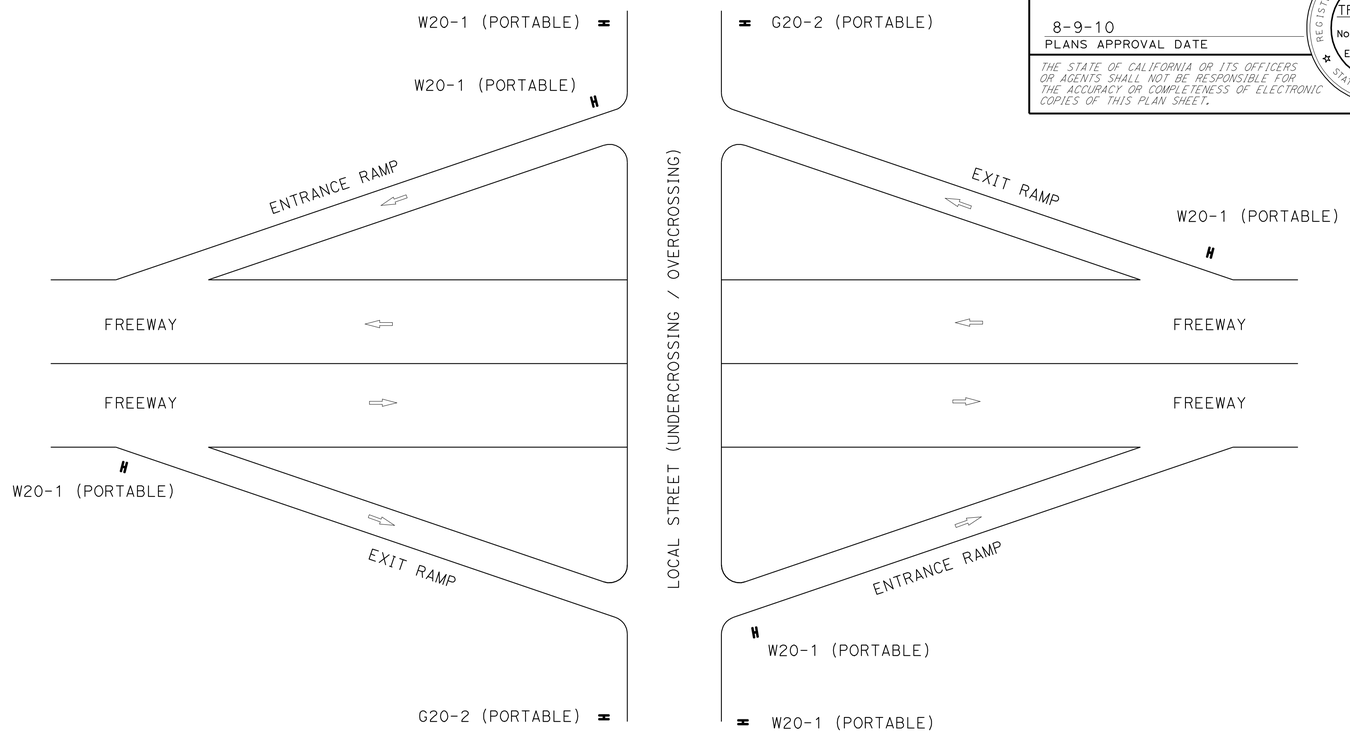

TYPICAL PORTABLE CONSTRUCTION AREA SIGN PLACEMENT ON THE LOCAL STREET AND FREEWAY RAMPS DURING WORK

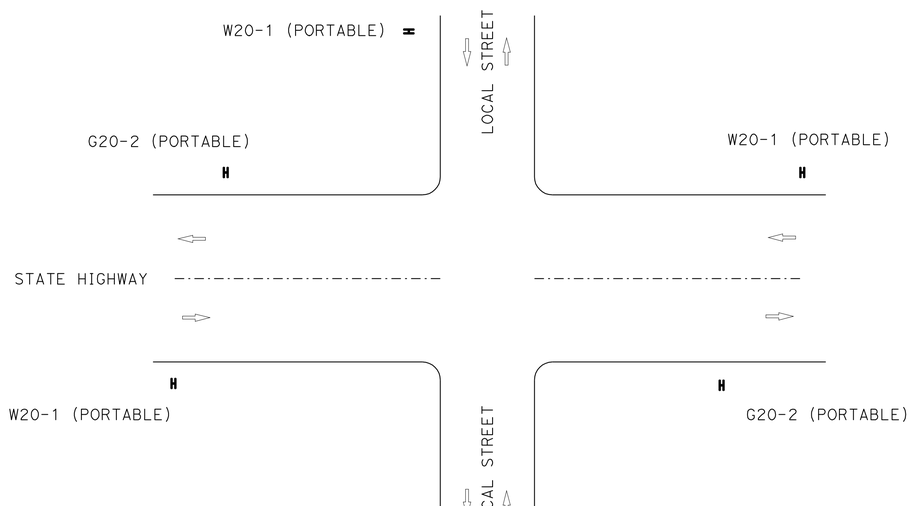

TYPICAL PORTABLE CONSTRUCTION AREA SIGN PLACEMENT ON THE STATE HIGHWAY AND LOCAL STREET DURING WORK

PORTABLE CONSTRUCTION AREA SIGNS

SIGN CODE	PANEL SIZE	SIGN MESSAGE	No. OF SIGNS
W20-1	48" x 48"	ROAD WORK AHEAD	SEE NOTE 3
G20-2	36" x 18"	END ROAD WORK	SEE NOTE 3

THIS PLAN IS ACCURATE FOR CONSTRUCTION AREA SIGNING ONLY.

CONSTRUCTION AREA SIGN PLAN

NO SCALE

CS-1

STATE OF CALIFORNIA - DEPARTMENT OF TRANSPORTATION
Caltrans TRAFFIC DESIGN
FUNCTIONAL SUPERVISOR LARRY SARTORI
CALCULATED-DESIGNED BY H. SETHNA REVISED BY 04/10
CHECKED BY T. HOANG DATE REVISED 04/10

LAST REVISION 06-14-10 DATE PLOTTED => 13-AUG-2010 TIME PLOTTED => 09:06

Dist	COUNTY	ROUTE	POST MILES TOTAL PROJECT	SHEET No.	TOTAL SHEETS
08	Riv,SBd	10,15,18, 38,60,etc.	Var	4	39

REGISTERED ELECTRICAL ENGINEER 06-14-10 DATE

8-9-10
PLANS APPROVAL DATE

REGISTERED PROFESSIONAL ENGINEER FERDINAND DE LA CRUZ No. E 17215 EXP. 06/30/2012 ELECTRICAL STATE OF CALIFORNIA

THE STATE OF CALIFORNIA OR ITS OFFICERS OR AGENTS SHALL NOT BE RESPONSIBLE FOR THE ACCURACY OR COMPLETENESS OF ELECTRONIC COPIES OF THIS PLAN SHEET.

LEGEND-SHEETS E-1 TO E-17

- INSTALL LOOP DETECTORS
- INSTALL DETECTOR LOOP CABLE (DLC)
- INSTALL VIDEO IMAGE VEHICLE DETECTION SYSTEM
- DET INSTALL WIRELESS VEHICLE DETECTION SYSTEM (WVDS)
- (X) LOCATION NUMBER

ABBREVIATIONS-SHEETS E-1 TO E-17

VIVDS	VIDEO IMAGE VEHICLE DETECTION SYSTEM
VSN	VEHICLE SENSOR NODE
WVDS	WIRELESS VEHICLE DETECTION SYSTEM

NOTES-SHEETS E-1 TO E-17

1. SEE SHEET E-25 FOR MODIFY SIGNAL DETAILS.
2. SEE SHEETS E-18 TO E-24 FOR WVDS DETAILS.
3. SEE COLUMN (A) FOR DISTANCE FROM LIMIT LINE.
4. SEE COLUMN (B) FOR DISTANCE FROM TRAFFIC SIGNAL.
5. SEE SHEET E-25 FOR LOCATION OF EXISTING CONTROLLER CABINET.
6. INSTALL VIVDS CAMERA ON EXISTING TRAFFIC SIGNAL STANDARD. SEE SHEET E-26 AND SES-1 FOR DETAILS.

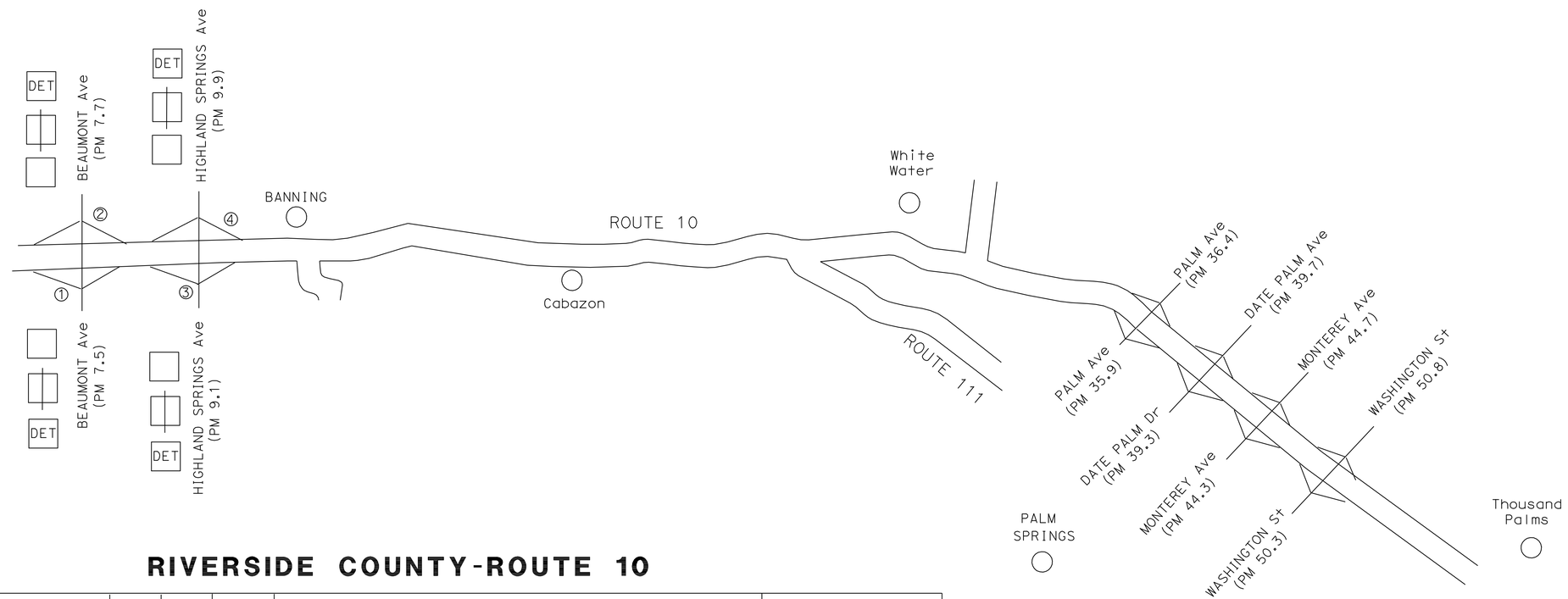

RIVERSIDE COUNTY-ROUTE 10

LOCATION	NUMBER	LOCATION/DESCRIPTION	ROUTE	DIRECTION	POSTMILE	INSTALL EQUIPMENT: MODIFY SIGNAL: LOOP DETECTOR [3]	MODIFY SIGNAL: DLC	WVDS [2]: ACCESS POINT	WVDS [2]: WIRELESS REPEATER [4]	WVDS [2]: VEHICLE SENSOR NODE	WVDS [2]: TYPE 15-FBS STANDARD	CONSTRUCTION NOTES (A): DISTANCE FROM LIMIT LINE (Ft)	CONSTRUCTION NOTES (B): DISTANCE FROM TRAFFIC SIGNAL (Ft)
A	1	BEAUMONT Ave	10	EB	7.5	2	2	1	1	4	1	185	800
	2	BEAUMONT Ave	10	WB	7.7	2	2	1	1	4	1	185	940
	3	HIGHLAND SPRINGS Ave	10	EB	9.1	2	2	1	1	4	1	280	1000
	4	HIGHLAND SPRINGS Ave	10	WB	9.9	2	2	1	1	4	1	280	1000
					SUBTOTAL	8	8	4	4	16	4		

NOTE:
EXISTING UTILITY FACILITIES HAVE NOT BEEN POSITIVELY IDENTIFIED

THIS PLAN IS ACCURATE FOR ELECTRICAL WORK ONLY.

MODIFY SIGNAL
WIRELESS VEHICLE DETECTION SYSTEM

NO SCALE

E-1

STATE OF CALIFORNIA - DEPARTMENT OF TRANSPORTATION
Caltrans ELECTRICAL DESIGN B

FUNCTIONAL SUPERVISOR: FERDINAND DE LA CRUZ
CALCULATED-DESIGNED BY: ED CIESLIK
CHECKED BY: FERDINAND DE LA CRUZ
REVISED BY
DATE REVISED

LAST REVISION 06-14-10
DATE PLOTTED => 16-AUG-2010
TIME PLOTTED => 13:26

Dist	COUNTY	ROUTE	POST MILES TOTAL PROJECT	SHEET No.	TOTAL SHEETS
08	Riv,SBd	10,15,18, 38,60,*etc.*	Var	5	39

REGISTERED ELECTRICAL ENGINEER 06-14-10 DATE

8-9-10
PLANS APPROVAL DATE

REGISTERED PROFESSIONAL ENGINEER
FERDINAND DE LA CRUZ
No. E 17215
EXP. 06/30/2012
ELECTRICAL
STATE OF CALIFORNIA

THE STATE OF CALIFORNIA OR ITS OFFICERS OR AGENTS SHALL NOT BE RESPONSIBLE FOR THE ACCURACY OR COMPLETENESS OF ELECTRONIC COPIES OF THIS PLAN SHEET.

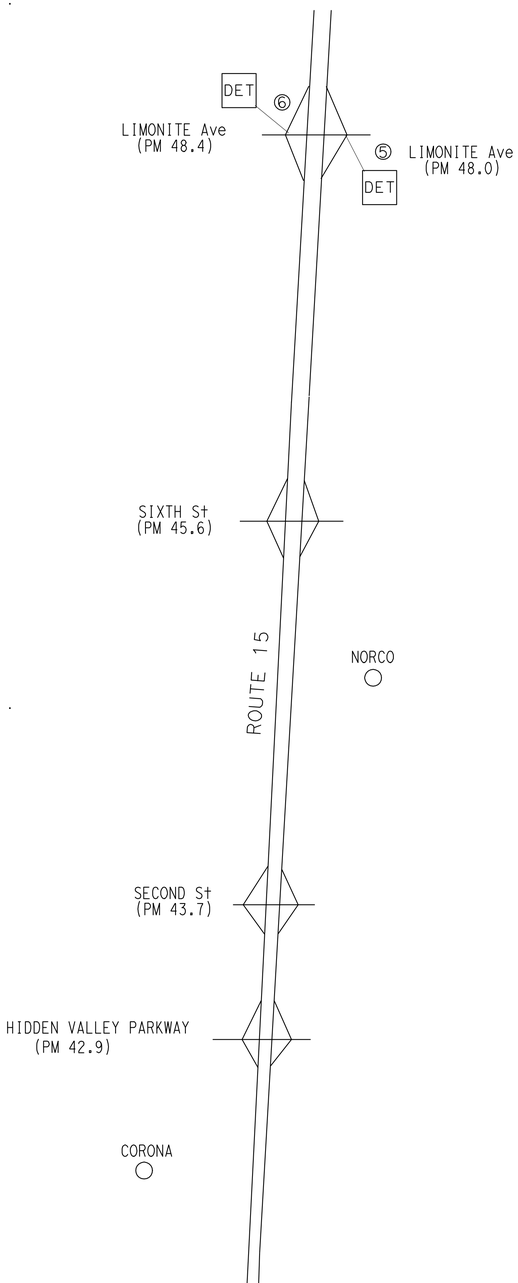

RIVERSIDE COUNTY-ROUTE 15

LOCATION	NUMBER	LOCATION/DESCRIPTION	ROUTE	DIRECTION	POSTMILE	INSTALL EQUIPMENT WVDS [2] ACCESS POINT	WIRELESS REPEATER [4]	VEHICLE SENSOR NODE	TYPE 15-FBS STANDARD	CONSTRUCTION NOTES (B) DISTANCE FROM TRAFFIC SIGNAL (Ft)
B	5	LIMONITE Ave	15	NB	48.0	1	1	6	1	1100
	6	LIMONITE Ave	15	SB	48.4	1	1	6	1	990
					SUBTOTAL	2	2	12	2	

NOTE:
EXISTING UTILITY FACILITIES HAVE NOT BEEN POSITIVELY IDENTIFIED

THIS PLAN IS ACCURATE FOR ELECTRICAL WORK ONLY.

WIRELESS VEHICLE DETECTOR SYSTEM

NO SCALE

E-2

STATE OF CALIFORNIA - DEPARTMENT OF TRANSPORTATION
Caltrans ELECTRICAL DESIGN B

FUNCTIONAL SUPERVISOR: FERDINAND DE LA CRUZ
CALCULATED-DESIGNED BY: ED CIESLIK
CHECKED BY: FERDINAND DE LA CRUZ
REVISED BY
DATE REVISED

LAST REVISION 06-14-10
DATE PLOTTED => 13-AUG-2010
TIME PLOTTED => 09:06

Dist	COUNTY	ROUTE	POST MILES TOTAL PROJECT	SHEET No.	TOTAL SHEETS
08	Riv,SBd	10,15,18, 38,60,*etc.*	Var	6	39

REGISTERED ELECTRICAL ENGINEER 06-14-10 DATE

8-9-10
PLANS APPROVAL DATE

REGISTERED PROFESSIONAL ENGINEER FERDINAND DE LA CRUZ No. E 17215 EXP. 06/30/2012 ELECTRICAL STATE OF CALIFORNIA

THE STATE OF CALIFORNIA OR ITS OFFICERS OR AGENTS SHALL NOT BE RESPONSIBLE FOR THE ACCURACY OR COMPLETENESS OF ELECTRONIC COPIES OF THIS PLAN SHEET.

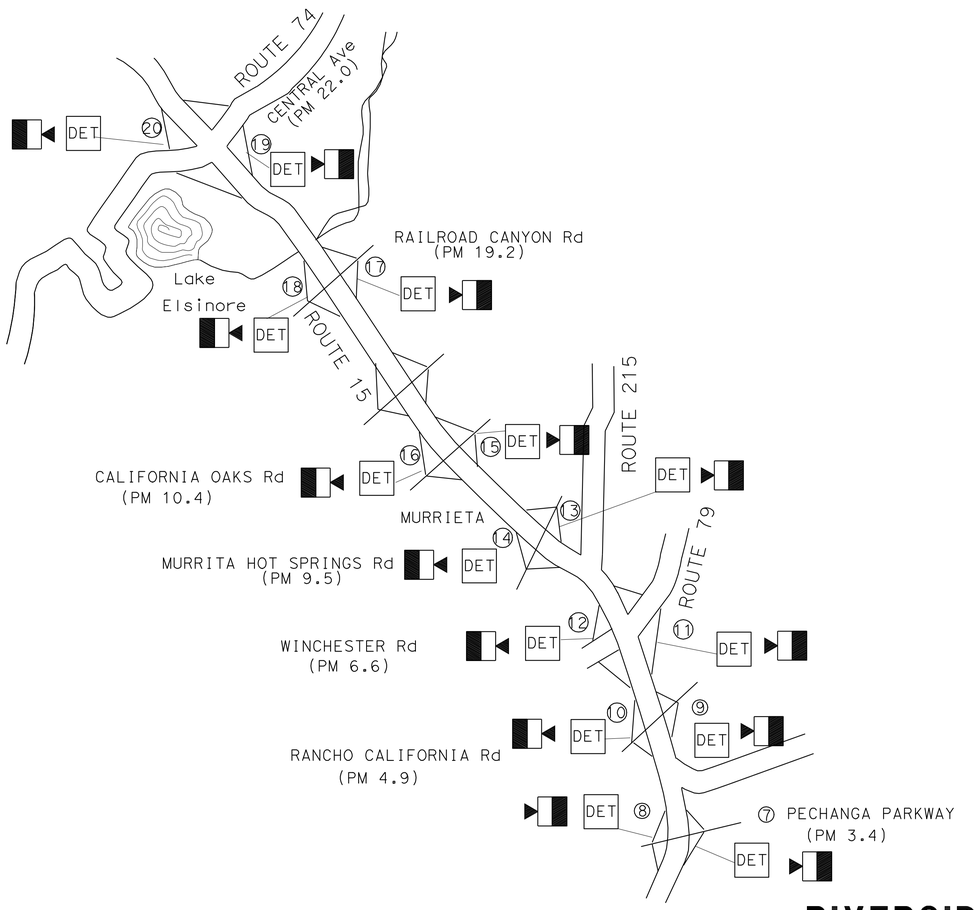

RIVERSIDE COUNTY-ROUTE 15

LOCATION	NUMBER	LOCATION/DESCRIPTION	ROUTE	DIRECTION	POSTMILE	INSTALL EQUIPMENT: WVDS 2: ACCESS POINT	WVDS 2: WIRELESS REPEATER 4	WVDS 2: VEHICLE SENSOR NODE	WVDS 2: TYPE 15-FBS STANDARD	6 VIVDS	CONSTRUCTION NOTES (B): DISTANCE FROM TRAFFIC SIGNAL (Ft)
B	7	PECHANGA PARKWAY	15	NB	3.2	1	1	6	1	3	825
	8	PECHANGA PARKWAY	15	SB	3.6	1	1	4	1	3	850
	9	RANCHO CALIFORNIA Rd	15	NB	4.8	1	1	6	1	3	975
	10	RANCHO CALIFORNIA Rd	15	SB	5.1	1	1	6	1	3	625
	11	WINCHESTER Rd	15	NB	6.4	1	1	6	1	3	1000
	12	WINCHESTER Rd	15	SB	6.8	1	1	8	1	3	1000
	13	MURRIETA HOT SPRINGS	15	NB	9.2	1	1	6	1	3	1000
	14	MURRIETA HOT SPRINGS	15	SB	9.3	1	1	6	1	3	1000
	15	CALIFORNIA OAKS Rd	15	NB	10.4	1	1	4	1	3	1000
	16	CALIFORNIA OAKS Rd	15	SB	10.7	1	1	4	1	3	1000
	17	RAILROAD CANYON Rd	15	NB	18.9	1	1	6	1	3	1000
	18	RAILROAD CANYON Rd	15	SB	19.3	1	1	8	1	3	950
	19	CENTRAL Ave Rte 74	15	NB	22.0	1	1	6	1	3	1000
	20	CENTRAL Ave Rte 74	15	SB	22.4	1	1	6	1	3	1000
					SUBTOTAL	14	14	82	14	42	

NOTE:
EXISTING UTILITY FACILITIES HAVE NOT BEEN POSITIVELY IDENTIFIED

THIS PLAN IS ACCURATE FOR ELECTRICAL WORK ONLY.

WIRELESS VEHICLE DETECTION SYSTEM
VIDEO IMAGE VEHICLE DETECTION SYSTEM

NO SCALE **E-3**

STATE OF CALIFORNIA - DEPARTMENT OF TRANSPORTATION
Caltrans ELECTRICAL DESIGN B

FUNCTIONAL SUPERVISOR: FERDINAND DE LA CRUZ
CALCULATED-DESIGNED BY: ED CIESLIK
CHECKED BY: FERDINAND DE LA CRUZ
REVISED BY
DATE REVISED

LAST REVISION 06-14-10 | DATE PLOTTED => 16-AUG-2010 | TIME PLOTTED => 13:26

Dist	COUNTY	ROUTE	POST MILES TOTAL PROJECT	SHEET No.	TOTAL SHEETS
08	Riv,SBd	10,15,18, 38,60,etc.	Var	7	39

Ferdinand de la Cruz 06-14-10
REGISTERED ELECTRICAL ENGINEER DATE

8-9-10
PLANS APPROVAL DATE

REGISTERED PROFESSIONAL ENGINEER
FERDINAND DE LA CRUZ
No. E 17215
EXP. 06/30/2012
ELECTRICAL
STATE OF CALIFORNIA

THE STATE OF CALIFORNIA OR ITS OFFICERS OR AGENTS SHALL NOT BE RESPONSIBLE FOR THE ACCURACY OR COMPLETENESS OF ELECTRONIC COPIES OF THIS PLAN SHEET.

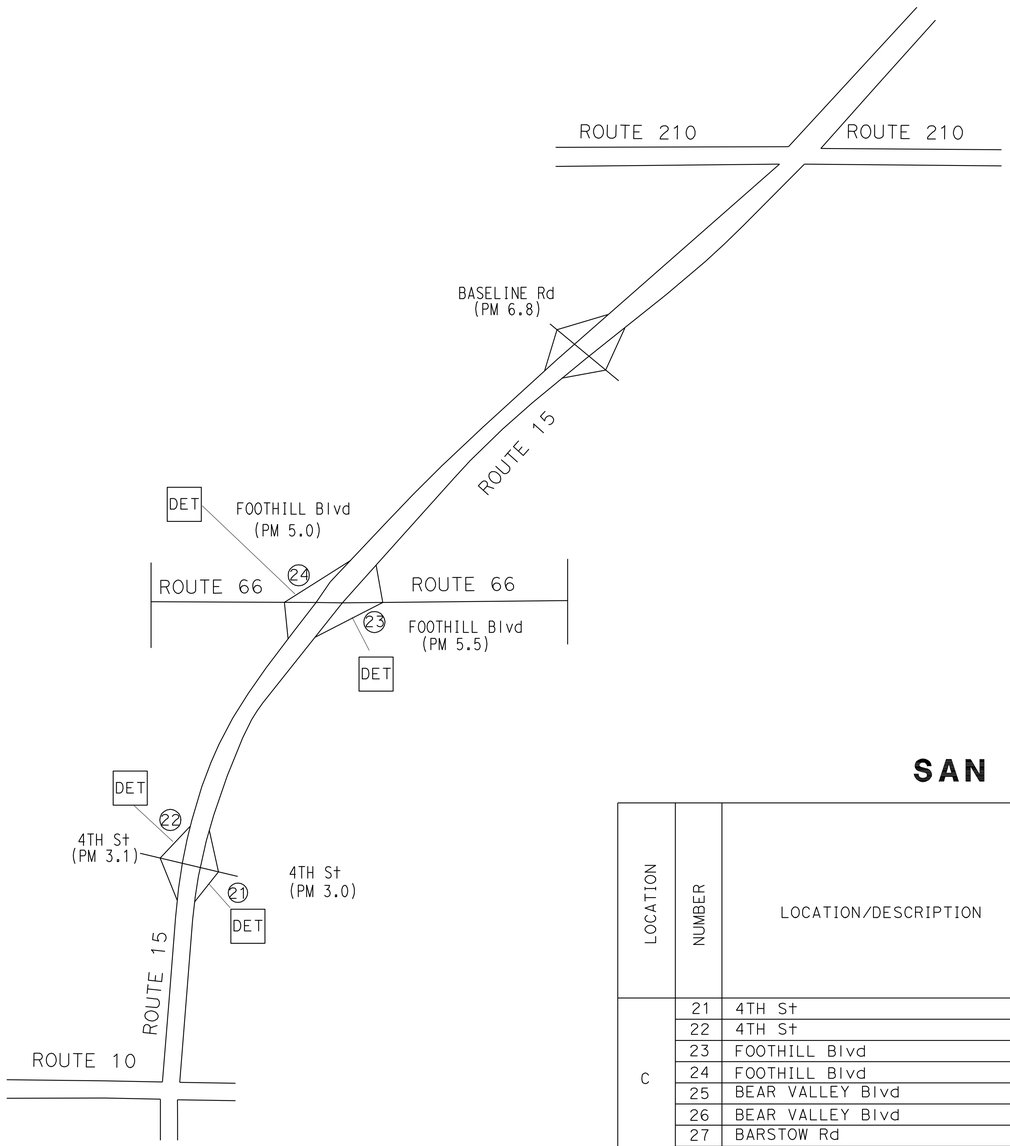

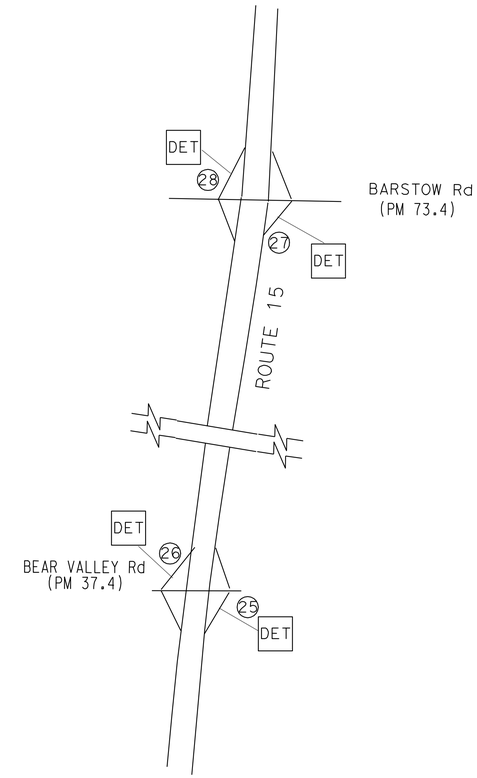

SAN BERNARDINO COUNTY-ROUTE 15

LOCATION	NUMBER	LOCATION/DESCRIPTION	ROUTE	DIRECTION	POSTMILE	INSTALL EQUIPMENT WVDS [2] ACCESS POINT	WIRELESS REPEATER [4]	VEHICLE SENSOR NODE	TYPE 15-FBS STANDARD	CONSTRUCTION NOTES (B) DISTANCE FROM TRAFFIC SIGNAL (Ft)
C	21	4TH St	15	NB	3.0	1	1	8	1	275
	22	4TH St	15	SB	3.1	1	1	8	1	1285
	23	FOOTHILL Blvd	15	NB	5.0	1	1	6	1	1400
	24	FOOTHILL Blvd	15	SB	5.5	1	1	6	1	1550
	25	BEAR VALLEY Blvd	15	NB	37.4	1	1	4	1	1625
	26	BEAR VALLEY Blvd	15	SB	37.4	1	1	8	1	1130
	27	BARSTOW Rd	15	NB	73.4	1	1	4	1	1275
	28	BARSTOW Rd	15	SB	74.4	1	1	4	1	900
					SUBTOTAL	8	8	48	8	

NOTE:
EXISTING UTILITY FACILITIES HAVE NOT BEEN POSITIVELY IDENTIFIED

THIS PLAN IS ACCURATE FOR ELECTRICAL WORK ONLY.

WIRELESS VEHICLE DETECTION SYSTEM

NO SCALE

E-4

STATE OF CALIFORNIA - DEPARTMENT OF TRANSPORTATION
Caltrans ELECTRICAL DESIGN B

FUNCTIONAL SUPERVISOR: FERDINAND DE LA CRUZ
CALCULATED-DESIGNED BY: ED CIESLIK
CHECKED BY: FERDINAND DE LA CRUZ
REVISED BY
DATE REVISED

LAST REVISION 06-14-10
DATE PLOTTED => 16-AUG-2010
TIME PLOTTED => 13:26

Dist	COUNTY	ROUTE	POST MILES TOTAL PROJECT	SHEET No.	TOTAL SHEETS
08	Riv,SBd	10,15,18, 38,60,*etc.*	Var	8	39

06-14-10
REGISTERED ELECTRICAL ENGINEER DATE

8-9-10
PLANS APPROVAL DATE

REGISTERED PROFESSIONAL ENGINEER
FERDINAND DE LA CRUZ
No. E 17215
Exp. 06/30/2012
ELECTRICAL
STATE OF CALIFORNIA

THE STATE OF CALIFORNIA OR ITS OFFICERS OR AGENTS SHALL NOT BE RESPONSIBLE FOR THE ACCURACY OR COMPLETENESS OF ELECTRONIC COPIES OF THIS PLAN SHEET.

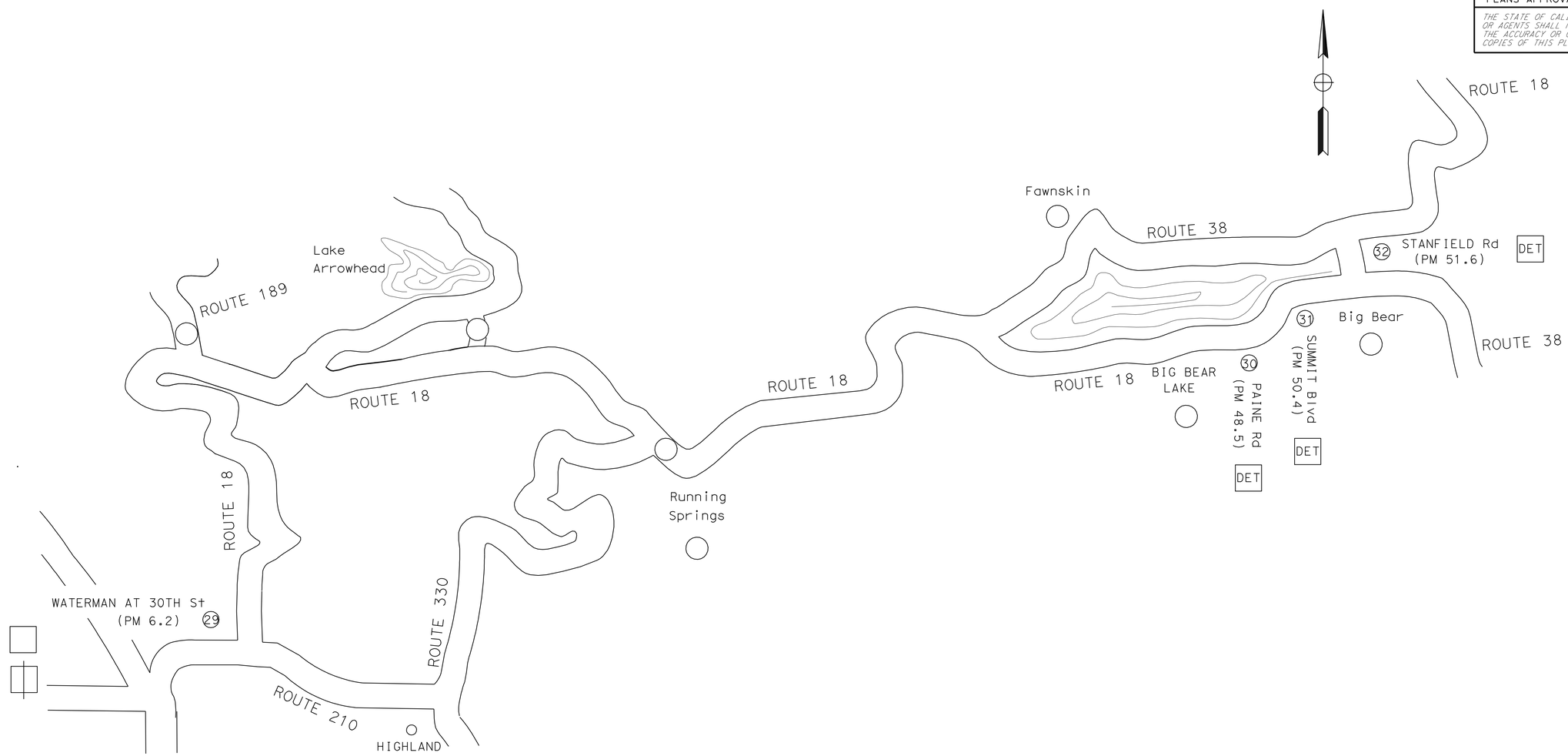

SAN BERNARDINO COUNTY-ROUTE 18

LOCATION	NUMBER	LOCATION/DESCRIPTION	ROUTE	DIRECTION	POSTMILE	INSTALL EQUIPMENT: MODIFY SIGNAL: LOOP DETECTOR [3]	MODIFY SIGNAL: DLC	WVDS [2]: ACCESS POINT	WVDS [2]: WIRELESS REPEATER [4]	WVDS [2]: VEHICLE SENSOR NODE	WVDS [2]: TYPE 15-FBS STANDARD	CONSTRUCTION NOTES (A): DISTANCE FROM LIMIT LINE (Ft)	CONSTRUCTION NOTES (B): DISTANCE FROM TRAFFIC SIGNAL (Ft)
D	29	WATERMAN AT 30TH St	18	SB	6.2	2	2					230	
	30	PAINE Rd	18	NB	48.5			1	1	4	1		566
	31	SUMMIT Blvd	18	NB	50.4			1	1	6	1		630
	32	STANFIELD CUTOFF	18	NB	51.6			1	1	6	1		780
					SUBTOTAL	2	2	3	3	16	3		

NOTE:
EXISTING UTILITY FACILITIES HAVE NOT BEEN POSITIVELY IDENTIFIED
THIS PLAN IS ACCURATE FOR ELECTRICAL WORK ONLY.

MODIFY SIGNAL
WIRELESS VEHICLE DETECTION SYSTEM
NO SCALE

E-5

STATE OF CALIFORNIA - DEPARTMENT OF TRANSPORTATION
Caltrans ELECTRICAL DESIGN B

FUNCTIONAL SUPERVISOR: FERDINAND DE LA CRUZ
CALCULATED-DESIGNED BY: ED CIESLIK
CHECKED BY: FERDINAND DE LA CRUZ
REVISED BY
DATE REVISED

LAST REVISION 06-14-10
DATE PLOTTED => 16-AUG-2010
TIME PLOTTED => 13:26

Dist	COUNTY	ROUTE	POST MILES TOTAL PROJECT	SHEET No.	TOTAL SHEETS
08	Riv,SBd	10,15,18, 38,60,*etc.*	Var	9	39

REGISTERED ELECTRICAL ENGINEER 06-14-10 DATE

8-9-10
PLANS APPROVAL DATE

REGISTERED PROFESSIONAL ENGINEER
FERDINAND DE LA CRUZ
No. E 17215
Exp. 06/30/2012
ELECTRICAL
STATE OF CALIFORNIA

THE STATE OF CALIFORNIA OR ITS OFFICERS OR AGENTS SHALL NOT BE RESPONSIBLE FOR THE ACCURACY OR COMPLETENESS OF ELECTRONIC COPIES OF THIS PLAN SHEET.

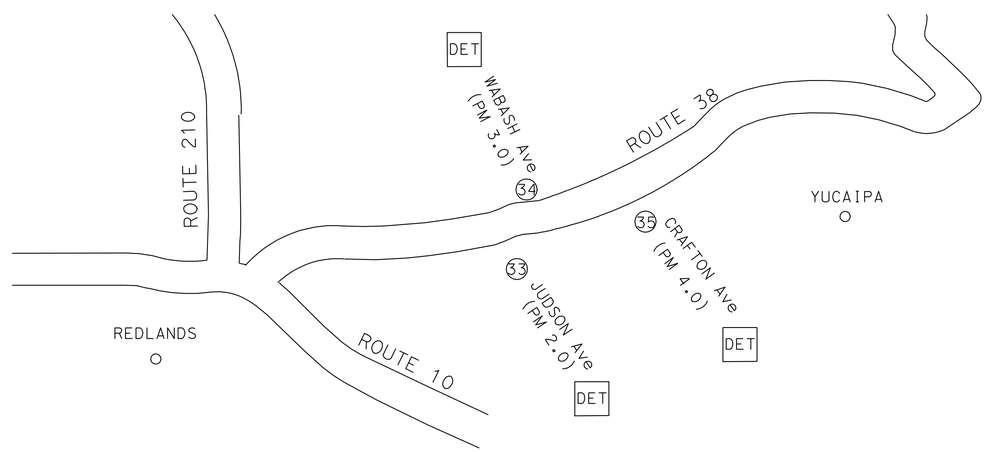

SAN BERNARDINO COUNTY-ROUTE 38

LOCATION	NUMBER	LOCATION/DESCRIPTION	ROUTE	DIRECTION	POSTMILE	INSTALL EQUIPMENT WVDS 2 ACCESS POINT	WIRELESS REPEATER 4	VEHICLE SENSOR NODE	TYPE 15-FBS STANDARD	CONSTRUCTION NOTES B DISTANCE FROM TRAFFIC SIGNAL (Ft)
E	33	JUDSON Ave	38	EB	2.0	1	1	6	1	525
	34	WABASH Ave	38	WB	3.0	1	1	6	1	550
	35	CRAFTON Ave	38	EB	4.0	1	1	6	1	550
					SUBTOTAL	3	3	18	3	

NOTE:
EXISTING UTILITY FACILITIES HAVE NOT BEEN POSITIVELY IDENTIFIED

THIS PLAN IS ACCURATE FOR ELECTRICAL WORK ONLY.

WIRELESS VEHICLE DETECTION SYSTEM

NO SCALE

E-6

STATE OF CALIFORNIA - DEPARTMENT OF TRANSPORTATION
Caltrans ELECTRICAL DESIGN B

FUNCTIONAL SUPERVISOR: FERDINAND DE LA CRUZ
CALCULATED-DESIGNED BY: ED CIESLIK
CHECKED BY: FERDINAND DE LA CRUZ
REVISED BY
DATE REVISED

LAST REVISION 06-14-10 | DATE PLOTTED => 13-AUG-2010 | TIME PLOTTED => 09:06

Dist	COUNTY	ROUTE	POST MILES TOTAL PROJECT	SHEET No.	TOTAL SHEETS
08	Riv,SBd	10,15,18, 38,60,etc.	Var	10	39

REGISTERED ELECTRICAL ENGINEER 06-14-10 DATE

8-9-10
PLANS APPROVAL DATE

REGISTERED PROFESSIONAL ENGINEER
FERDINAND DE LA CRUZ
No. E 17215
Exp. 06/30/2012
ELECTRICAL
STATE OF CALIFORNIA

THE STATE OF CALIFORNIA OR ITS OFFICERS OR AGENTS SHALL NOT BE RESPONSIBLE FOR THE ACCURACY OR COMPLETENESS OF ELECTRONIC COPIES OF THIS PLAN SHEET.

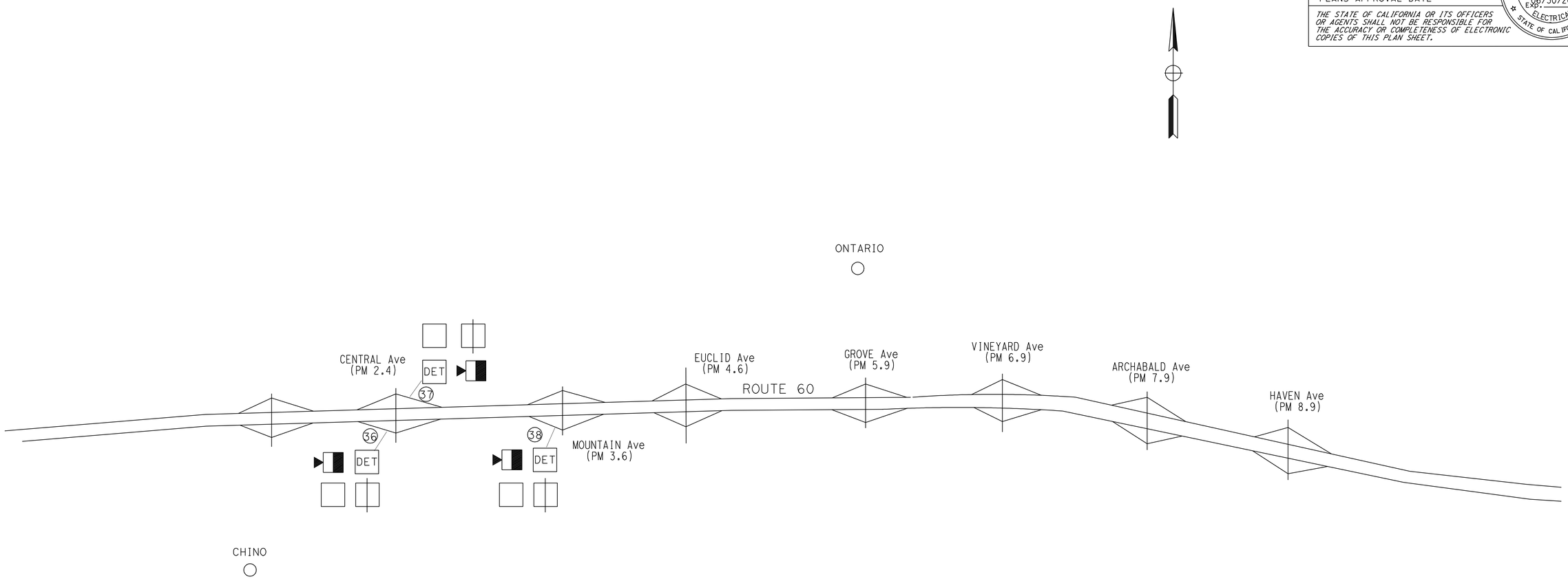

SAN BERNARDINO COUNTY-ROUTE 60

LOCATION	NUMBER	LOCATION/DESCRIPTION	ROUTE	DIRECTION	POSTMILE	INSTALL EQUIPMENT: MODIFY SIGNAL: LOOP DETECTOR [3]	MODIFY SIGNAL: DLC	WVDS [2]: ACCESS POINT	WVDS [2]: WIRELESS REPEATER [4]	WVDS [2]: VEHICLE SENSOR NODE	WVDS [2]: TYPE 15-FBS STANDARD	VIVDS [6]	CONSTRUCTION NOTES (A): DISTANCE FROM LIMIT LINE (Ft)	CONSTRUCTION NOTES (B): DISTANCE FROM TRAFFIC SIGNAL (Ft)
F	36	CENTRAL Ave	60	EB	R2.1	2	2	1	1	6	1	1	140	1000
	37	CENTRAL Ave	60	WB	R2.5	2	2	1	1	6	1	1	166	1000
	38	MOUNTAIN Ave	60	EB	3.4	2	2	1	1	6	1	1	286	1300
					SUBTOTAL	6	6	3	3	18	3	3		

NOTE:
EXISTING UTILITY FACILITIES HAVE NOT BEEN POSITIVELY IDENTIFIED

MODIFY SIGNAL
WIRELESS VEHICLE DETECTION SYSTEM
VIDEO IMAGE VEHICLE DETECTION SYSTEM

THIS PLAN IS ACCURATE FOR ELECTRICAL WORK ONLY.

NO SCALE **E-7**

STATE OF CALIFORNIA - DEPARTMENT OF TRANSPORTATION
Caltrans **ELECTRICAL DESIGN B**

FUNCTIONAL SUPERVISOR: FERDINAND DE LA CRUZ
CALCULATED-DESIGNED BY: ED CIESLIK
CHECKED BY: FERDINAND DE LA CRUZ
REVISED BY
DATE REVISED

LAST REVISION 06-14-10
DATE PLOTTED => 16-AUG-2010
TIME PLOTTED => 13:26

Dist	COUNTY	ROUTE	POST MILES TOTAL PROJECT	SHEET No.	TOTAL SHEETS
08	Riv,SBd	10,15,18, 38,60,*etc.*	Var	11	39

REGISTERED ELECTRICAL ENGINEER 06-14-10 DATE

8-9-10
PLANS APPROVAL DATE

REGISTERED PROFESSIONAL ENGINEER
FERDINAND DE LA CRUZ
No. E 17215
Exp. 06/30/2012
ELECTRICAL
STATE OF CALIFORNIA

THE STATE OF CALIFORNIA OR ITS OFFICERS OR AGENTS SHALL NOT BE RESPONSIBLE FOR THE ACCURACY OR COMPLETENESS OF ELECTRONIC COPIES OF THIS PLAN SHEET.

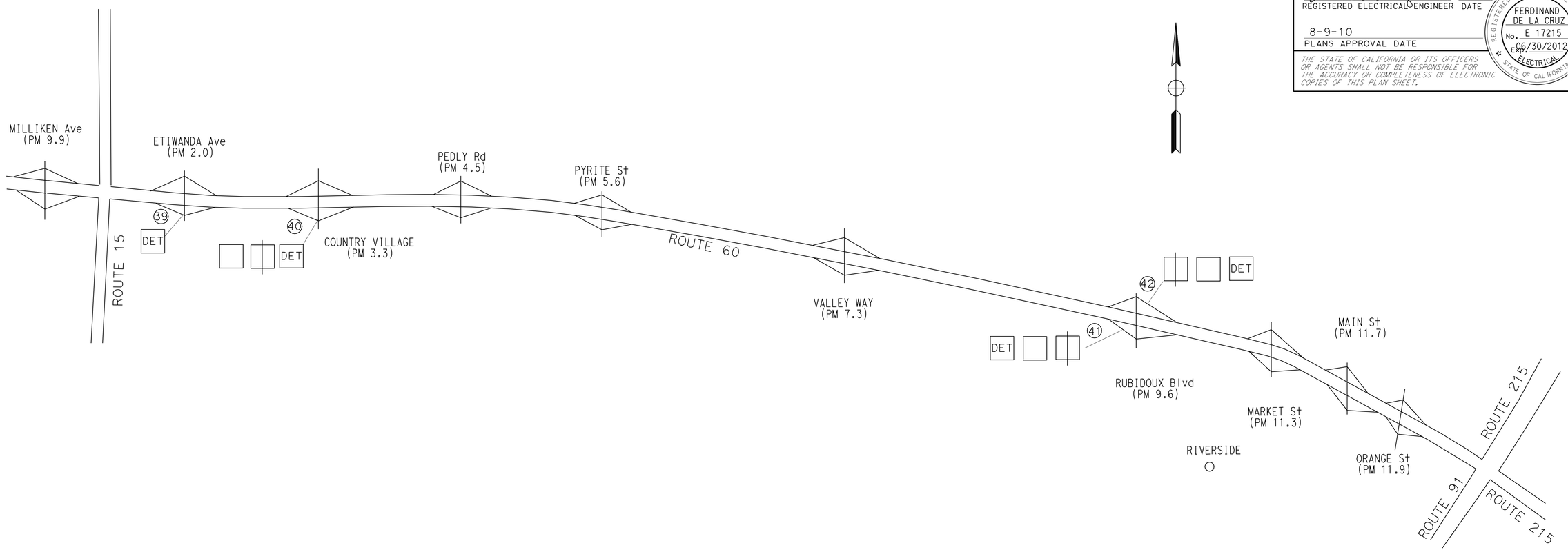

RIVERSIDE COUNTY-ROUTE 60

	LOCATION	LOCATION	ROUTE	DIRECTION	POSTMILE	INSTALL EQUIPMENT						CONSTRUCTION NOTES	
						MODIFY SIGNAL		WVDS [2]				(A)	(B)
						LOOP DETECTOR [3]	DETECTOR LOOP CABLE	ACCESS POINT	WIRELESS REPEATER [4]	VEHICLE SENSOR NODE	TYPE 15-FBS STANDARD	DISTANCE FROM LIMIT LINE (Ft)	DISTANCE FROM TRAFFIC SIGNAL (Ft)
G	39	ETIWANDA Ave	60	EB	R1.0			1	1	4	1		2150
G	40	COUNTRY VILLAGE Rd	60	EB	R2.9	1	1	1	1	4	1	185	975
G	41	RUBIDOUX Blvd	60	EB	9.3	1	1	1	1	2	1	230	966
G	42	RUBIDOUX Blvd	60	WB	9.7	1	1	1	1	2	1	230	966
					SUBTOTAL	3	3	4	4	12	4		

NOTE:
EXISTING UTILITY FACILITIES HAVE NOT BEEN POSITIVELY IDENTIFIED

THIS PLAN IS ACCURATE FOR ELECTRICAL WORK ONLY.

MODIFY SIGNAL
WIRELESS VEHICLE DETECTION SYSTEM

NO SCALE

E-8

STATE OF CALIFORNIA - DEPARTMENT OF TRANSPORTATION
Caltrans ELECTRICAL DESIGN B

FUNCTIONAL SUPERVISOR: FERDINAND DE LA CRUZ
CALCULATED-DESIGNED BY: ED CIESLIK
CHECKED BY: FERDINAND DE LA CRUZ
REVISED BY
DATE REVISED

LAST REVISION 06-14-10
DATE PLOTTED => 16-AUG-2010
TIME PLOTTED => 13:26

Dist	COUNTY	ROUTE	POST MILES TOTAL PROJECT	SHEET No.	TOTAL SHEETS
08	Riv,SBd	10,15,18, 38,60,etc.	Var	12	39

REGISTERED ELECTRICAL ENGINEER 06-14-10 DATE

8-9-10
PLANS APPROVAL DATE

REGISTERED PROFESSIONAL ENGINEER
FERDINAND DE LA CRUZ
No. E 17215
Exp. 06/30/2012
ELECTRICAL
STATE OF CALIFORNIA

THE STATE OF CALIFORNIA OR ITS OFFICERS OR AGENTS SHALL NOT BE RESPONSIBLE FOR THE ACCURACY OR COMPLETENESS OF ELECTRONIC COPIES OF THIS PLAN SHEET.

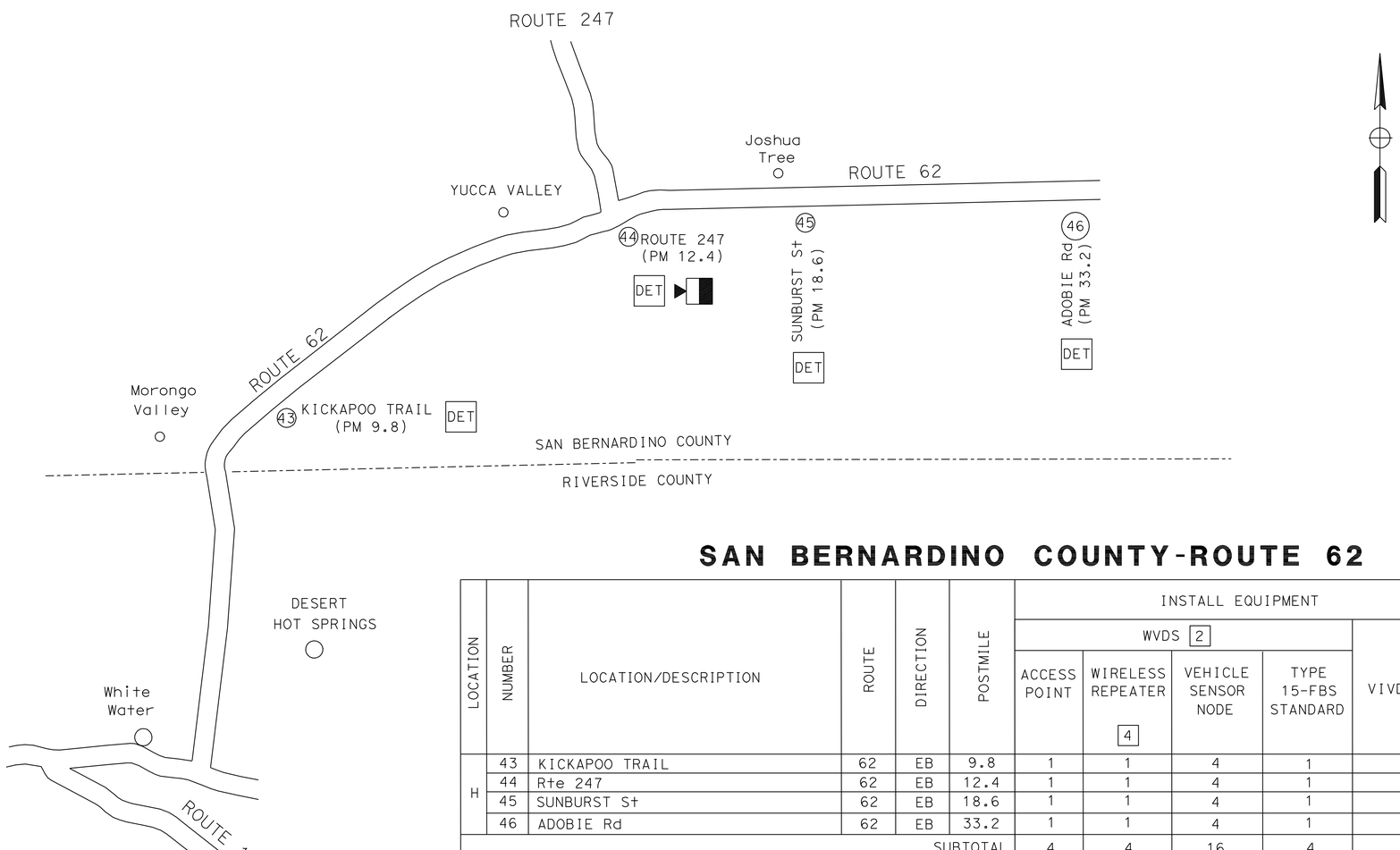

SAN BERNARDINO COUNTY-ROUTE 62

LOCATION	NUMBER	LOCATION/DESCRIPTION	ROUTE	DIRECTION	POSTMILE	INSTALL EQUIPMENT: WVDS [2] ACCESS POINT	WVDS [2] WIRELESS REPEATER [4]	WVDS [2] VEHICLE SENSOR NODE	WVDS [2] TYPE 15-FBS STANDARD	VIVDS [6]	CONSTRUCTION NOTES (B) DISTANCE FROM TRAFFIC SIGNAL (Ft)
H	43	KICKAPOO TRAIL	62	EB	9.8	1	1	4	1		980
	44	Rte 247	62	EB	12.4	1	1	4	1	3	975
	45	SUNBURST St	62	EB	18.6	1	1	4	1		580
	46	ADOBIE Rd	62	EB	33.2	1	1	4	1		980
					SUBTOTAL	4	4	16	4	3	

NOTE:
EXISTING UTILITY FACILITIES HAVE NOT BEEN POSITIVELY IDENTIFIED

THIS PLAN IS ACCURATE FOR ELECTRICAL WORK ONLY.

WIRELESS VEHICLE DETECTION SYSTEM
VIDEO IMAGE VEHICLE DETECTION SYSTEM

NO SCALE

E-9

STATE OF CALIFORNIA - DEPARTMENT OF TRANSPORTATION
Caltrans ELECTRICAL DESIGN B

FUNCTIONAL SUPERVISOR: FERDINAND DE LA CRUZ
CALCULATED-DESIGNED BY: ED CIESLIK
CHECKED BY: FERDINAND DE LA CRUZ
REVISED BY
DATE REVISED

LAST REVISION 06-14-10
DATE PLOTTED => 16-AUG-2010
TIME PLOTTED => 13:26

Dist	COUNTY	ROUTE	POST MILES TOTAL PROJECT	SHEET No.	TOTAL SHEETS
08	Riv,SBd	10,15,18, 38,60,*etc.*	Var	13	39

Ferdinand de la Cruz 06-14-10
REGISTERED ELECTRICAL ENGINEER DATE

8-9-10
PLANS APPROVAL DATE

REGISTERED PROFESSIONAL ENGINEER
FERDINAND DE LA CRUZ
No. E 17215
EXP. 06/30/2012
ELECTRICAL
STATE OF CALIFORNIA

THE STATE OF CALIFORNIA OR ITS OFFICERS OR AGENTS SHALL NOT BE RESPONSIBLE FOR THE ACCURACY OR COMPLETENESS OF ELECTRONIC COPIES OF THIS PLAN SHEET.

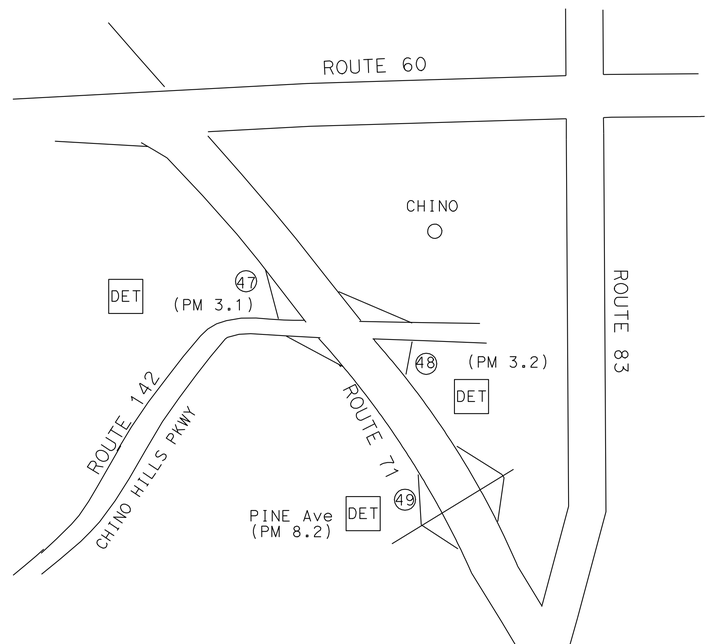

SAN BERNARDINO COUNTY-ROUTE 71

LOCATION	NUMBER	LOCATION/DESCRIPTION	ROUTE	DIRECTION	POSTMILE	INSTALL EQUIPMENT WVDS 2 ACCESS POINT	WIRELESS REPEATER	VEHICLE SENSOR NODE 4	TYPE 15-FBS STANDARD	CONSTRUCTION NOTES B DISTANCE FROM TRAFFIC SIGNAL (Ft)
I	47	CHINO HILLS PKWY	71	SB	3.1	1	1	6	1	975
	48	CHINO HILLS PKWY	71	NB	3.2	1	1	6	1	975
	49	PINE AVE	71	SB	8.2	1	1	4	1	966
					SUBTOTAL	3	3	16	3	

NOTE:
EXISTING UTILITY FACILITIES HAVE NOT BEEN POSITIVELY IDENTIFIED

THIS PLAN IS ACCURATE FOR ELECTRICAL WORK ONLY.

WIRELESS VEHICLE DETECTION SYSTEM

NO SCALE

E-10

STATE OF CALIFORNIA - DEPARTMENT OF TRANSPORTATION
Caltrans ELECTRICAL DESIGN B

FUNCTIONAL SUPERVISOR: FERDINAND DE LA CRUZ
CALCULATED-DESIGNED BY: ED CIESLIK
CHECKED BY: FERDINAND DE LA CRUZ
REVISED BY
DATE REVISED

LAST REVISION 06-14-10
DATE PLOTTED => 13-AUG-2010
TIME PLOTTED => 11:31

Dist	COUNTY	ROUTE	POST MILES TOTAL PROJECT	SHEET No.	TOTAL SHEETS
08	Riv,SBd	10,15,18, 38,60,*etc.*	Var	14	39

Ferdinand De La Cruz 06-14-10
REGISTERED ELECTRICAL ENGINEER DATE

8-9-10
PLANS APPROVAL DATE

REGISTERED PROFESSIONAL ENGINEER
FERDINAND DE LA CRUZ
No. E 17215
Exp. 06/30/2012
ELECTRICAL
STATE OF CALIFORNIA

THE STATE OF CALIFORNIA OR ITS OFFICERS OR AGENTS SHALL NOT BE RESPONSIBLE FOR THE ACCURACY OR COMPLETENESS OF ELECTRONIC COPIES OF THIS PLAN SHEET.

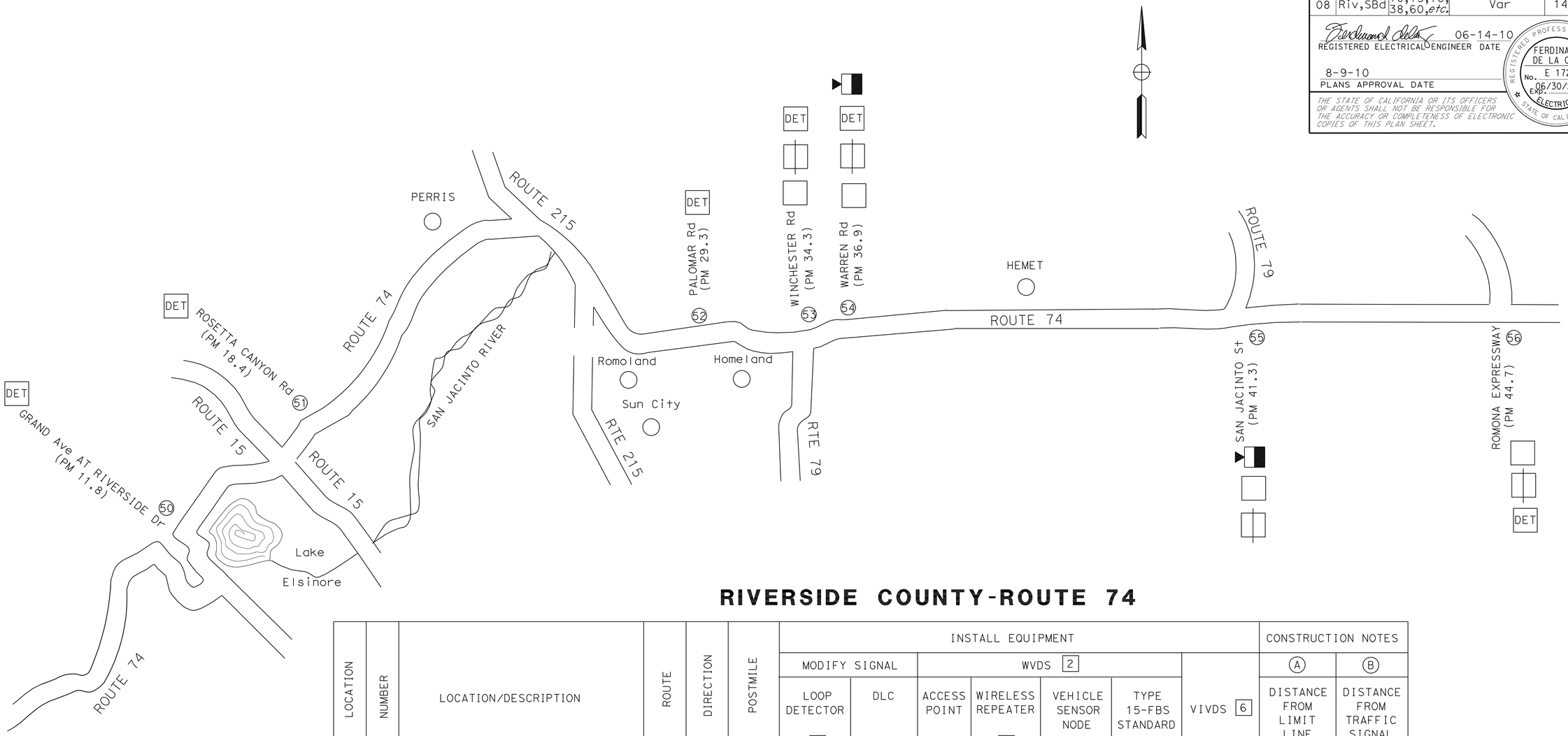

RIVERSIDE COUNTY-ROUTE 74

LOCATION	NUMBER	LOCATION/DESCRIPTION	ROUTE	DIRECTION	POSTMILE	INSTALL EQUIPMENT: MODIFY SIGNAL: LOOP DETECTOR [3]	MODIFY SIGNAL: DLC	WVDS [2]: ACCESS POINT	WVDS [2]: WIRELESS REPEATER [4]	WVDS [2]: VEHICLE SENSOR NODE	WVDS [2]: TYPE 15-FBS STANDARD	VIVDS [6]	CONSTRUCTION NOTES (A): DISTANCE FROM LIMIT LINE (Ft)	CONSTRUCTION NOTES (B): DISTANCE FROM TRAFFIC SIGNAL (Ft)
J	50	GRAND Ave AT RIVERSIDE Dr	74	WB	11.8			1	1	2	1			1000
	51	ROSETTA CANYON Dr AT CENTRAL	74	WB	18.4			1	1	4	1			750
	52	PALOMAR ROAD	74	WB	29.3			1	1	4	1			700
	53	WINCHESTER ROUTE-79 AT VISTA PL	74	WB	34.3	2	2	1	1	4	1		350	700
	54	WARREN Rd	74	WB	36.9	2	2	1	1	4	1	2	350	700
	55	SAN JACINTO St (ROUTE 79)	74	EB	41.3	2	2					2	350	
	56	RAMONA EXPRESSWAY	74	EB	44.7	4	4	1	1	4	1		350	1000
					SUBTOTAL	10	10	6	6	22	6	4		

NOTE:
EXISTING UTILITY FACILITIES HAVE NOT BEEN POSITIVELY IDENTIFIED

THIS PLAN IS ACCURATE FOR ELECTRICAL WORK ONLY.

MODIFY SIGNAL
WIRELESS VEHICLE DETECTION SYSTEM
VIDEO IMAGE VEHICLE DETECTION SYSTEM

NO SCALE

E-11

STATE OF CALIFORNIA - DEPARTMENT OF TRANSPORTATION
Caltrans ELECTRICAL DESIGN B

FUNCTIONAL SUPERVISOR: FERDINAND DE LA CRUZ
CALCULATED-DESIGNED BY: ED CIESLIK
CHECKED BY: FERDINAND DE LA CRUZ
REVISED BY
DATE REVISED

LAST REVISION 06-14-10
DATE PLOTTED => 13-AUG-2010
TIME PLOTTED => 11:31

Dist	COUNTY	ROUTE	POST MILES TOTAL PROJECT	SHEET No.	TOTAL SHEETS
08	Riv,SBd	10,15,18, 38,60,etc.	Var	15	39

REGISTERED ELECTRICAL ENGINEER 06-14-10 DATE

8-9-10
PLANS APPROVAL DATE

REGISTERED PROFESSIONAL ENGINEER FERDINAND DE LA CRUZ No. E 17215 EXP. 06/30/2012 ELECTRICAL STATE OF CALIFORNIA

THE STATE OF CALIFORNIA OR ITS OFFICERS OR AGENTS SHALL NOT BE RESPONSIBLE FOR THE ACCURACY OR COMPLETENESS OF ELECTRONIC COPIES OF THIS PLAN SHEET.

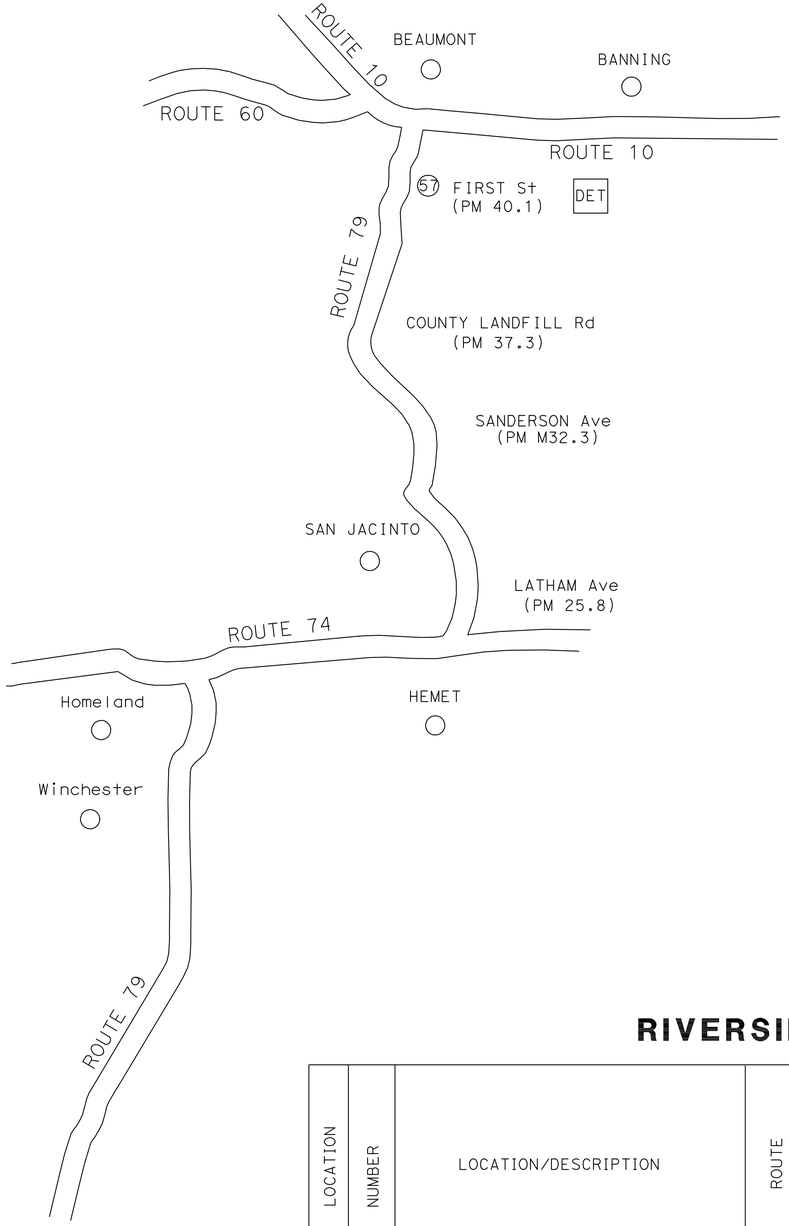

RIVERSIDE COUNTY-ROUTE 79

LOCATION	NUMBER	LOCATION/DESCRIPTION	ROUTE	DIRECTION	POSTMILE	INSTALL EQUIPMENT				CONSTRUCTION NOTES
						WVDS 2				B
						ACCESS POINT	WIRELESS REPEATER 4	VEHICLE SENSOR NODE	TYPE 15-FBS STANDARD	DISTANCE FROM TRAFFIC SIGNAL (Ft)
K	57	FIRST St	79	NB	40.1	1	1	4	1	550
					SUBTOTAL	1	1	4	1	

NOTE:
EXISTING UTILITY FACILITIES HAVE NOT BEEN POSITIVELY IDENTIFIED

THIS PLAN IS ACCURATE FOR ELECTRICAL WORK ONLY.

WIRELESS VEHICLE DETECTION SYSTEM

NO SCALE

E-12

STATE OF CALIFORNIA - DEPARTMENT OF TRANSPORTATION
Caltrans ELECTRICAL DESIGN B

FUNCTIONAL SUPERVISOR: FERDINAND DE LA CRUZ
CALCULATED-DESIGNED BY: ED CIESLIK
CHECKED BY: FERDINAND DE LA CRUZ
REVISED BY
DATE REVISED

LAST REVISION 06-14-10
DATE PLOTTED => 13-AUG-2010
TIME PLOTTED => 11:31

Dist	COUNTY	ROUTE	POST MILES TOTAL PROJECT	SHEET No.	TOTAL SHEETS
08	Riv,SBd	10,15,18, 38,60,etc.	Var	16	39

Ferdinand de la Cruz 06-14-10
REGISTERED ELECTRICAL ENGINEER DATE

8-9-10
PLANS APPROVAL DATE

REGISTERED PROFESSIONAL ENGINEER
FERDINAND DE LA CRUZ
No. E 17215
Exp. 06/30/2012
ELECTRICAL
STATE OF CALIFORNIA

THE STATE OF CALIFORNIA OR ITS OFFICERS OR AGENTS SHALL NOT BE RESPONSIBLE FOR THE ACCURACY OR COMPLETENESS OF ELECTRONIC COPIES OF THIS PLAN SHEET.

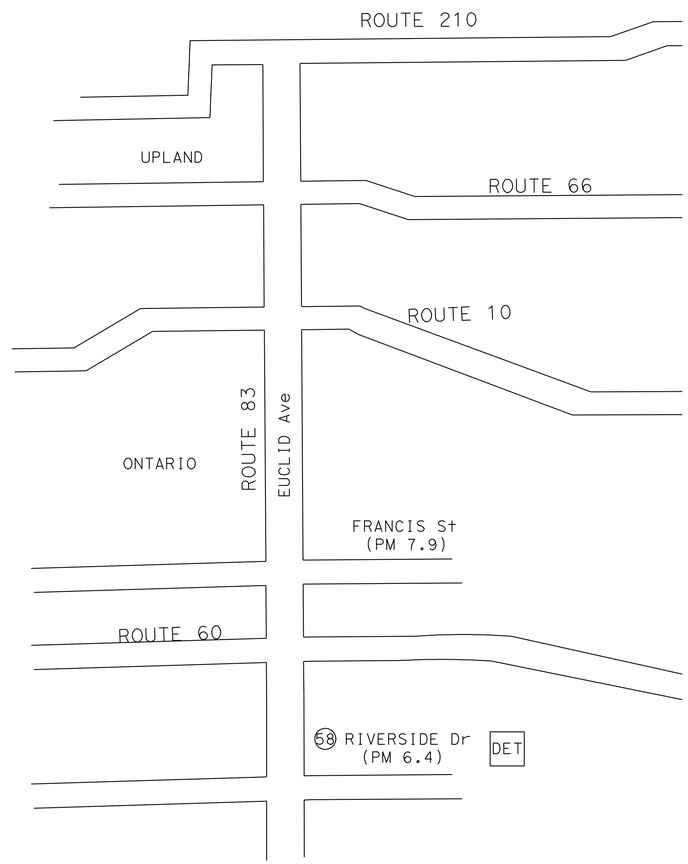

SAN BERNARDINO COUNTY-ROUTE 83

LOCATION	NUMBER	LOCATION/DESCRIPTION	ROUTE	DIRECTION	POSTMILE	INSTALL EQUIPMENT				CONSTRUCTION NOTES
						WVDS 2				B
						ACCESS POINT	WIRELESS REPEATER 4	VEHICLE SENSOR NODE	TYPE 15 FBS STANDARD	DISTANCE FROM TRAFFIC SIGNAL (Ft)
L	58	RIVERSIDE Dr	83	NB	6.4	1	1	8	1	600
					SUBTOTAL	1	1	8	1	

NOTE:
EXISTING UTILITY FACILITIES HAVE NOT BEEN POSITIVELY IDENTIFIED

WIRELESS VEHICLE DETECTION SYSTEM

NO SCALE

THIS PLAN IS ACCURATE FOR ELECTRICAL WORK ONLY.

E-13

REVISED BY	DATE REVISED

CALCULATED-DESIGNED BY	ED CIESLIK
CHECKED BY	FERDINAND DE LA CRUZ
FUNCTIONAL SUPERVISOR	FERDINAND DE LA CRUZ

STATE OF CALIFORNIA - DEPARTMENT OF TRANSPORTATION
Caltrans ELECTRICAL DESIGN B

LAST REVISION 06-14-10
DATE PLOTTED => 16-AUG-2010
TIME PLOTTED => 13:31

Dist	COUNTY	ROUTE	POST MILES TOTAL PROJECT	SHEET No.	TOTAL SHEETS
08	Riv,SBd	10,15,18, 38,60,etc.	Var	17	39

REGISTERED ELECTRICAL ENGINEER 06-14-10 DATE

8-9-10
PLANS APPROVAL DATE

REGISTERED PROFESSIONAL ENGINEER
FERDINAND DE LA CRUZ
No. E 17215
EXP. 06/30/2012
ELECTRICAL
STATE OF CALIFORNIA

THE STATE OF CALIFORNIA OR ITS OFFICERS OR AGENTS SHALL NOT BE RESPONSIBLE FOR THE ACCURACY OR COMPLETENESS OF ELECTRONIC COPIES OF THIS PLAN SHEET.

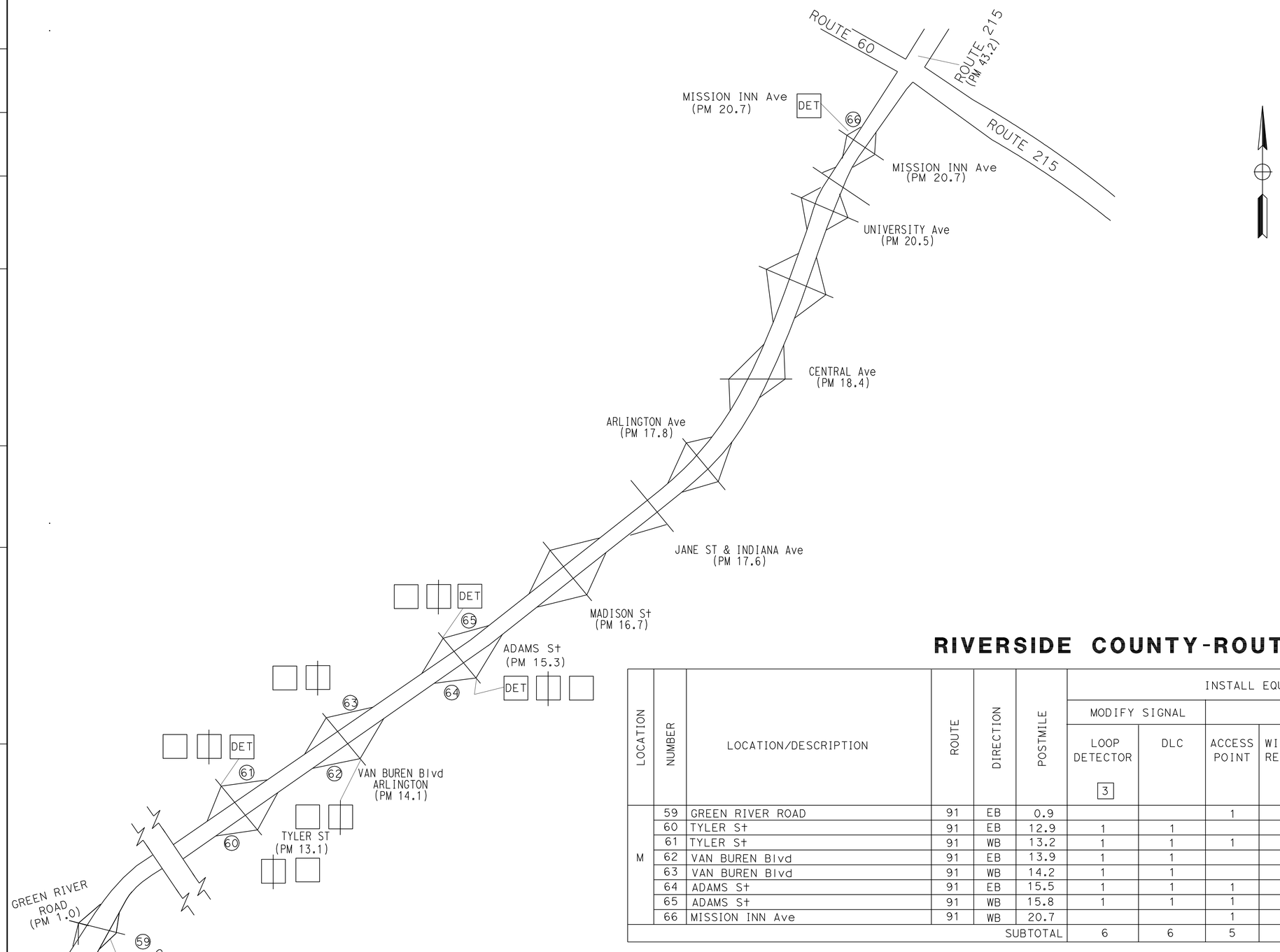

RIVERSIDE COUNTY-ROUTE 91

LOCATION	NUMBER	LOCATION/DESCRIPTION	ROUTE	DIRECTION	POSTMILE	INSTALL EQUIPMENT: MODIFY SIGNAL: LOOP DETECTOR [3]	DLC	WVDS [2]: ACCESS POINT	WIRELESS REPEATER [4]	VEHICLE SENSOR NODE	TYPE 15-FBS STANDARD	CONSTRUCTION NOTES: (A) DISTANCE FROM LIMIT LINE (Ft)	(B) DISTANCE FROM TRAFFIC SIGNAL (Ft)
M	59	GREEN RIVER ROAD	91	EB	0.9			1	1	4	1		731
	60	TYLER St	91	EB	12.9	1	1					300	
	61	TYLER St	91	WB	13.2	1	1	1	1	4	1	300	1000
	62	VAN BUREN Blvd	91	EB	13.9	1	1					250	
	63	VAN BUREN Blvd	91	WB	14.2	1	1					250	
	64	ADAMS St	91	EB	15.5	1	1	1	1	4	1	250	1000
	65	ADAMS St	91	WB	15.8	1	1	1	1	4	1	250	1000
	66	MISSION INN Ave	91	WB	20.7			1	1	4	1		1000
					SUBTOTAL	6	6	5	5	20	5		

NOTE:
EXISTING UTILITY FACILITIES HAVE BEEN POSITIVELY IDENTIFIED

THIS PLAN IS ACCURATE FOR ELECTRICAL WORK ONLY.

MODIFY SIGNAL
WIRELESS VEHICLE DETECTION SYSTEM

NO SCALE

E-14

REVISED BY	DATE REVISED

CALCULATED-DESIGNED BY	ED CIESLIK
CHECKED BY	FERDINAND DE LA CRUZ
FUNCTIONAL SUPERVISOR	FERDINAND DE LA CRUZ

STATE OF CALIFORNIA - DEPARTMENT OF TRANSPORTATION
Caltrans **ELECTRICAL DESIGN B**

LAST REVISION 06-14-10
DATE PLOTTED => 16-AUG-2010
TIME PLOTTED => 13:26

Dist	COUNTY	ROUTE	POST MILES TOTAL PROJECT	SHEET No.	TOTAL SHEETS
08	Riv,SBd	10,15,18, 38,60,*etc.*	Var	18	39

Ferdinand De La Cruz 06-14-10
REGISTERED ELECTRICAL ENGINEER DATE

8-9-10
PLANS APPROVAL DATE

REGISTERED PROFESSIONAL ENGINEER FERDINAND DE LA CRUZ No. E 17215 EXP. 06/30/2012 ELECTRICAL STATE OF CALIFORNIA

THE STATE OF CALIFORNIA OR ITS OFFICERS OR AGENTS SHALL NOT BE RESPONSIBLE FOR THE ACCURACY OR COMPLETENESS OF ELECTRONIC COPIES OF THIS PLAN SHEET.

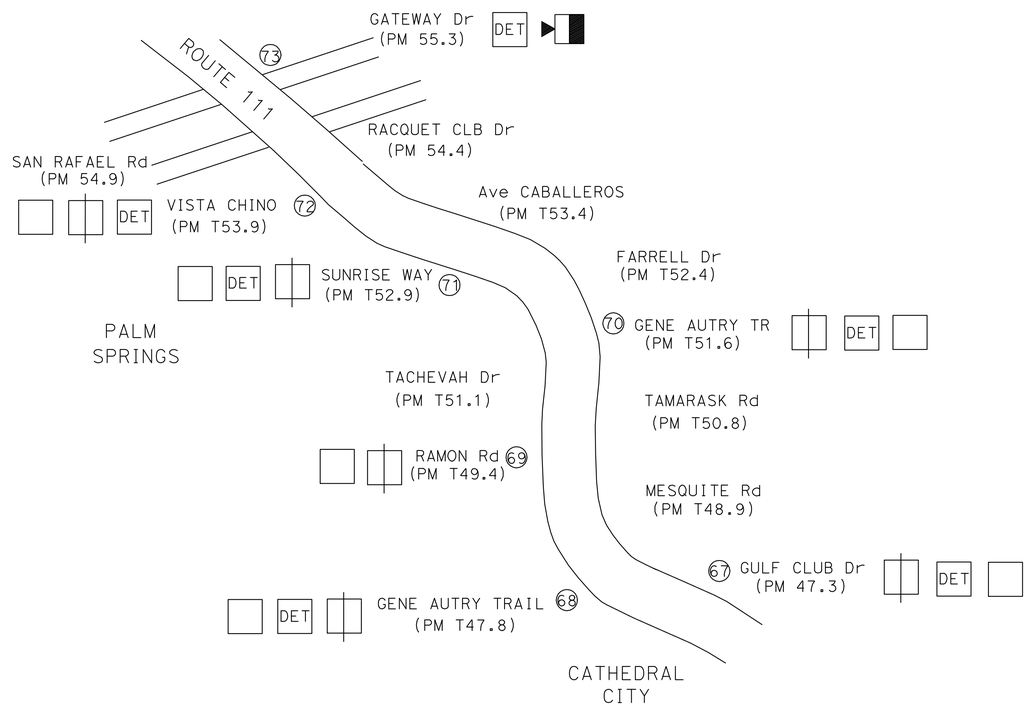

RIVERSIDE COUNTY-ROUTE 111

LOCATION	NUMBER	LOCATION/DESCRIPTION	ROUTE	DIRECTION	POSTMILE	INSTALL EQUIPMENT: MODIFY SIGNAL: LOOP DETECTOR [3]	MODIFY SIGNAL: DLC	WVDS [2]: ACCESS POINT	WVDS [2]: WIRELESS REPEATER [4]	WVDS [2]: VEHICLE SENSOR NODE	WVDS [2]: TYPE 15-FBS STANDARD	VIVDS [6]	CONSTRUCTION NOTES (A) DISTANCE FROM LIMIT LINE (Ft)	CONSTRUCTION NOTES (B) DISTANCE FROM TRAFFIC SIGNAL (Ft)
N	67	GULF CLUB Dr AT E PALM Dr	111	NB	47.3	4	2	1	1	4	1		183	670
	68	GENE AUTRY TR AT PALM Cyn	111	SB	T47.8	4	2	1	1	4	1		265	570
	69	RAMON Rd AT GENE AUTRY	111	SB	T49.4	4	2						300	
	70	GENE AUTRY TR AT VISTA CHINO	111	NB	T51.6	4	2	1	1	4	1		345	700
	71	SUNRISE WAY	111	SB	T52.9	4	2	1	1	4	1		315	690
	72	VISTA CHINO AT N PALM Cyn Dr	111	SB	T53.9	4	2	1	1	4	1		220	420
	73	GATEWAY Dr AT PALM Cyn Dr	111	NB	55.3			1	1	4	1	2		540
					SUBTOTAL	24	12	6	6	24	6	2		

NOTE:
EXISTING UTILITY FACILITIES HAVE NOT BEEN POSITIVELY IDENTIFIED

THIS PLAN IS ACCURATE FOR ELECTRICAL WORK ONLY.

MODIFY SIGNAL
VIDEO IMAGE VEHICLE DETECTION SYSTEM
WIRELESS VEHICLE DETECTION SYSTEM

NO SCALE

E-15

STATE OF CALIFORNIA - DEPARTMENT OF TRANSPORTATION
Caltrans **ELECTRICAL DESIGN B**

FUNCTIONAL SUPERVISOR: FERDINAND DE LA CRUZ
CALCULATED-DESIGNED BY: ED CIESLIK
CHECKED BY: .
REVISED BY: FERDINAND DE LA CRUZ
DATE REVISED:

LAST REVISION 06-14-10
DATE PLOTTED => 16-AUG-2010
TIME PLOTTED => 13:26

Dist	COUNTY	ROUTE	POST MILES TOTAL PROJECT	SHEET No.	TOTAL SHEETS
08	Riv,SBd	10,15,18, 38,60,etc.	Var	19	39

Ferdinand De La Cruz 06-14-10
REGISTERED ELECTRICAL ENGINEER DATE

8-9-10
PLANS APPROVAL DATE

REGISTERED PROFESSIONAL ENGINEER FERDINAND DE LA CRUZ No. E 17215 Exp. 06/30/2012 ELECTRICAL STATE OF CALIFORNIA

THE STATE OF CALIFORNIA OR ITS OFFICERS OR AGENTS SHALL NOT BE RESPONSIBLE FOR THE ACCURACY OR COMPLETENESS OF ELECTRONIC COPIES OF THIS PLAN SHEET.

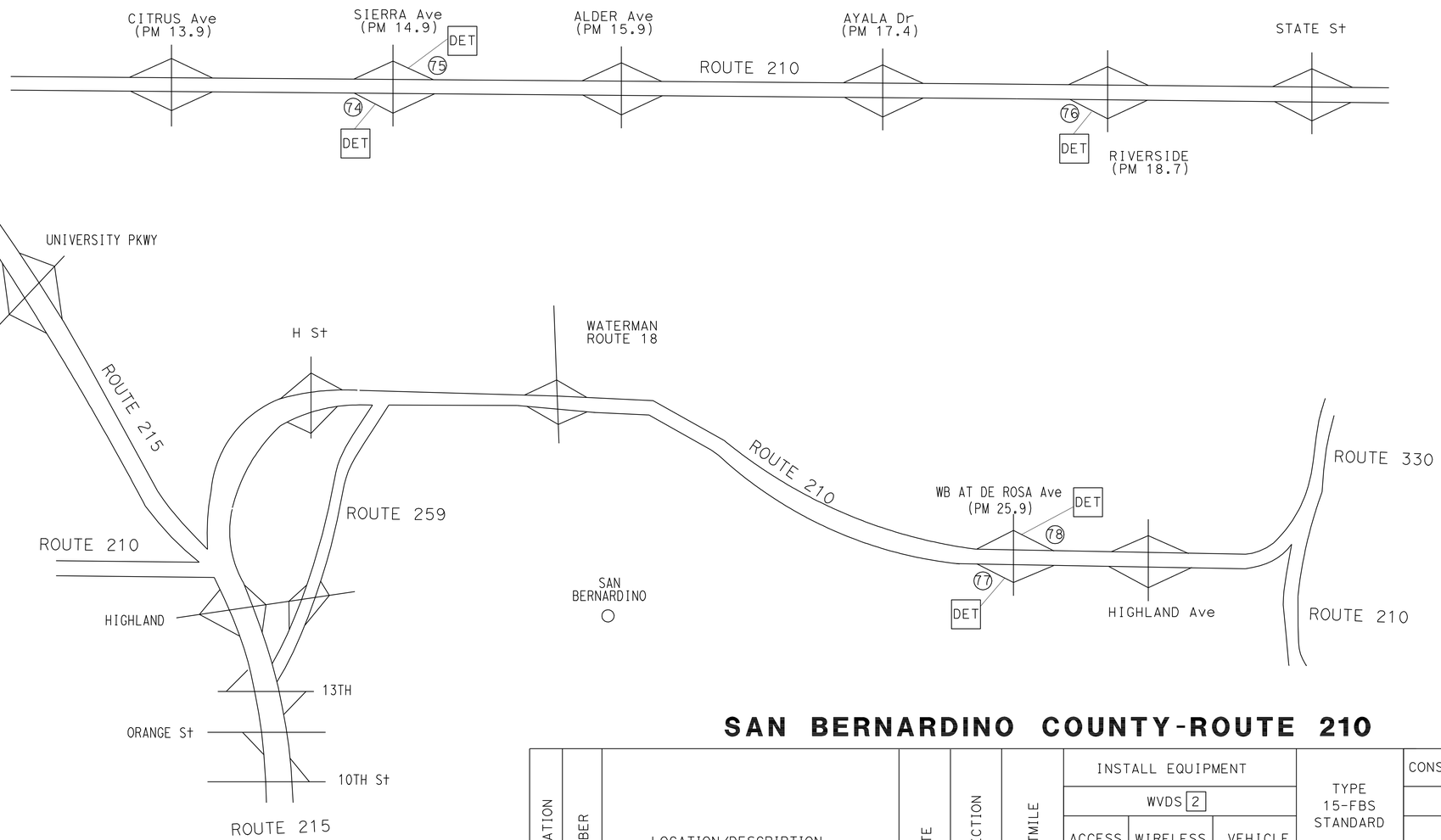

SAN BERNARDINO COUNTY-ROUTE 210

LOCATION	NUMBER	LOCATION/DESCRIPTION	ROUTE	DIRECTION	POSTMILE	INSTALL EQUIPMENT: WVDS 2: ACCESS POINT	INSTALL EQUIPMENT: WVDS 2: WIRELESS REPEATER 4	INSTALL EQUIPMENT: WVDS 2: VEHICLE SENSOR NODE	TYPE 15-FBS STANDARD	CONSTRUCTION NOTES B: DISTANCE FROM TRAFFIC SIGNAL (Ft)
O	74	SIERRA Ave	210	EB	14.7	1	1	6	1	1477
	75	SIERRA Ave	210	WB	15.2	1	1	6	1	1250
	76	RIVERSIDE Ave	210	EB	18.5	1	1	6	1	849
	77	DE ROSA Ave	210	EB	R25.5	1	1	4	1	877
	78	DE ROSA Ave	210	WB	R25.9	1	1	4	1	450
					SUBTOTAL	5	5	26	5	

NOTE:
EXISTING UTILITY FACILITIES HAVE NOT BEEN POSITIVELY IDENTIFIED

THIS PLAN IS ACCURATE FOR ELECTRICAL WORK ONLY.

WIRELESS VEHICLE DETECTION SYSTEM

NO SCALE

E-16

STATE OF CALIFORNIA - DEPARTMENT OF TRANSPORTATION
Caltrans ELECTRICAL DESIGN B

FUNCTIONAL SUPERVISOR: FERDINAND DE LA CRUZ
CALCULATED-DESIGNED BY: ED CIESLIK
CHECKED BY: FERDINAND DE LA CRUZ
REVISED BY
DATE REVISED

LAST REVISION 06-14-10
DATE PLOTTED => 16-AUG-2010
TIME PLOTTED => 13:48

Dist	COUNTY	ROUTE	POST MILES TOTAL PROJECT	SHEET No.	TOTAL SHEETS
08	Riv,SBd	10,15,18, 38,60,*etc.*	Var	20	39

REGISTERED ELECTRICAL ENGINEER 06-14-10 DATE

8-9-10
PLANS APPROVAL DATE

REGISTERED PROFESSIONAL ENGINEER FERDINAND DE LA CRUZ No. E 17215 EXP. 06/30/2012 ELECTRICAL STATE OF CALIFORNIA

THE STATE OF CALIFORNIA OR ITS OFFICERS OR AGENTS SHALL NOT BE RESPONSIBLE FOR THE ACCURACY OR COMPLETENESS OF ELECTRONIC COPIES OF THIS PLAN SHEET.

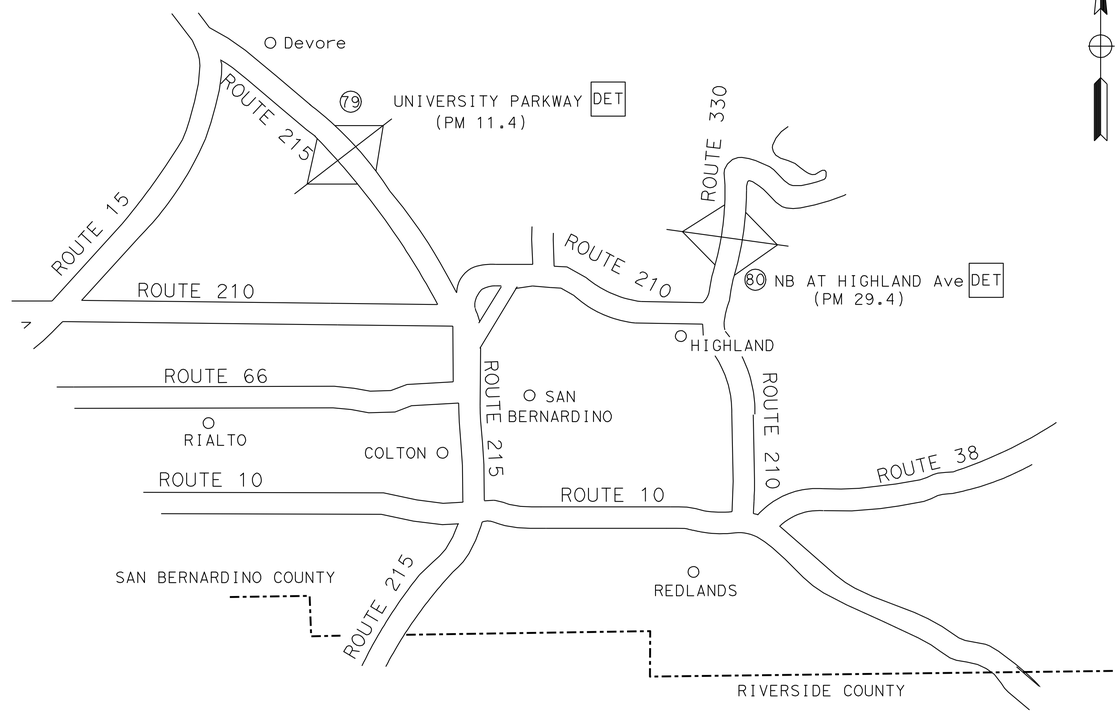

SAN BERNARDINO COUNTY-ROUTE 215, 330

LOCATION	NUMBER	LOCATION/DESCRIPTION	ROUTE	DIRECTION	POSTMILE	INSTALL EQUIPMENT: MODIFY SIGNAL: LOOP DETECTOR	MODIFY SIGNAL: DLC	WVDS 2: ACCESS POINT	WVDS 2: WIRELESS REPEATER 4	WVDS 2: VEHICLE SENSOR NODE	WVDS 2: TYPE 15-FBS STANDARD	VIVDS 6	CONSTRUCTION NOTES (B) DISTANCE FROM TRAFFIC SIGNAL (Ft)
P	79	UNIVERSITY PARKWAY	215	NB	11.4			1	1	4	1		1344
Q	80	HIGHLAND Ave	330	NB	29.4			1	1	4	1		1000
SUBTOTAL								2	2	8	2		
TOTAL (SHEETS E-1 THROUGH E-17)						59	47	74	74	366	74	54	

NOTE:
EXISTING UTILITY FACILITIES HAVE NOT BEEN POSITIVELY IDENTIFIED

THIS PLAN IS ACCURATE FOR ELECTRICAL WORK ONLY.

MODIFY SIGNAL
WIRELESS VEHICLE DETECTION SYSTEM

NO SCALE

E-17

STATE OF CALIFORNIA - DEPARTMENT OF TRANSPORTATION
Caltrans ELECTRICAL DESIGN B

FUNCTIONAL SUPERVISOR: FERDINAND DE LA CRUZ
CALCULATED-DESIGNED BY: ED CIESLIK
CHECKED BY: FERDINAND DE LA CRUZ
REVISED BY
DATE REVISED

LAST REVISION 06-14-10 | DATE PLOTTED => 16-AUG-2010 | TIME PLOTTED => 13:27

Dist	COUNTY	ROUTE	POST MILES TOTAL PROJECT	SHEET No.	TOTAL SHEETS
08	Riv,SBd	10,15,18, 38,60,etc.	Var	21	39

REGISTERED ELECTRICAL ENGINEER 06-14-10 DATE

8-9-10
PLANS APPROVAL DATE

REGISTERED PROFESSIONAL ENGINEER FERDINAND DE LA CRUZ No. E 17215 Exp. 06/30/2012 ELECTRICAL STATE OF CALIFORNIA

THE STATE OF CALIFORNIA OR ITS OFFICERS OR AGENTS SHALL NOT BE RESPONSIBLE FOR THE ACCURACY OR COMPLETENESS OF SCANNED COPIES OF THIS PLAN SHEET.

NOTES-SHEETS E-18 AND E-19

1. ACCESS POINT INSTALLED ON EXISTING TRAFFIC SIGNAL STANDARD. SEE SHEETS E-20 AND E-22 FOR DETAILS.
2. INSTALL CAT-5E CABLE IN THE EXISTING CONDUIT.
3. SEE EQUIPMENT SCHEDULE FOR QUANTITIES AND LOCATIONS OF EQUIPMENT
4. THE CONTRACTOR SHALL DEMONSTRATE TO THE ENGINEER THAT THE REPEATER HAS A CLEAR "LINE OF SIGHT" TO THE ACCESS POINT BEFORE INSTALLATION OF ANY EQUIPMENT.
5. WIRELESS REPEATER INSTALLED ON TYPE 15-FBS STANDARD. SEE SHEETS E-20 AND E-22 FOR DETAILS.
6. INSTALL CONTACT CLOSURE CARDS AND ACCESS BOX AS PER DETAIL 'A', SHEET E-21.
7. SEE COLUMN (B) OF THE EQUIPMENT SCHEDULE FOR DISTANCE FROM THE EXISTING TRAFFIC SIGNAL.

LEGEND

● WIRELESS VEHICLE SENSOR NODE. SEE SHEET E-24 FOR DETAILS

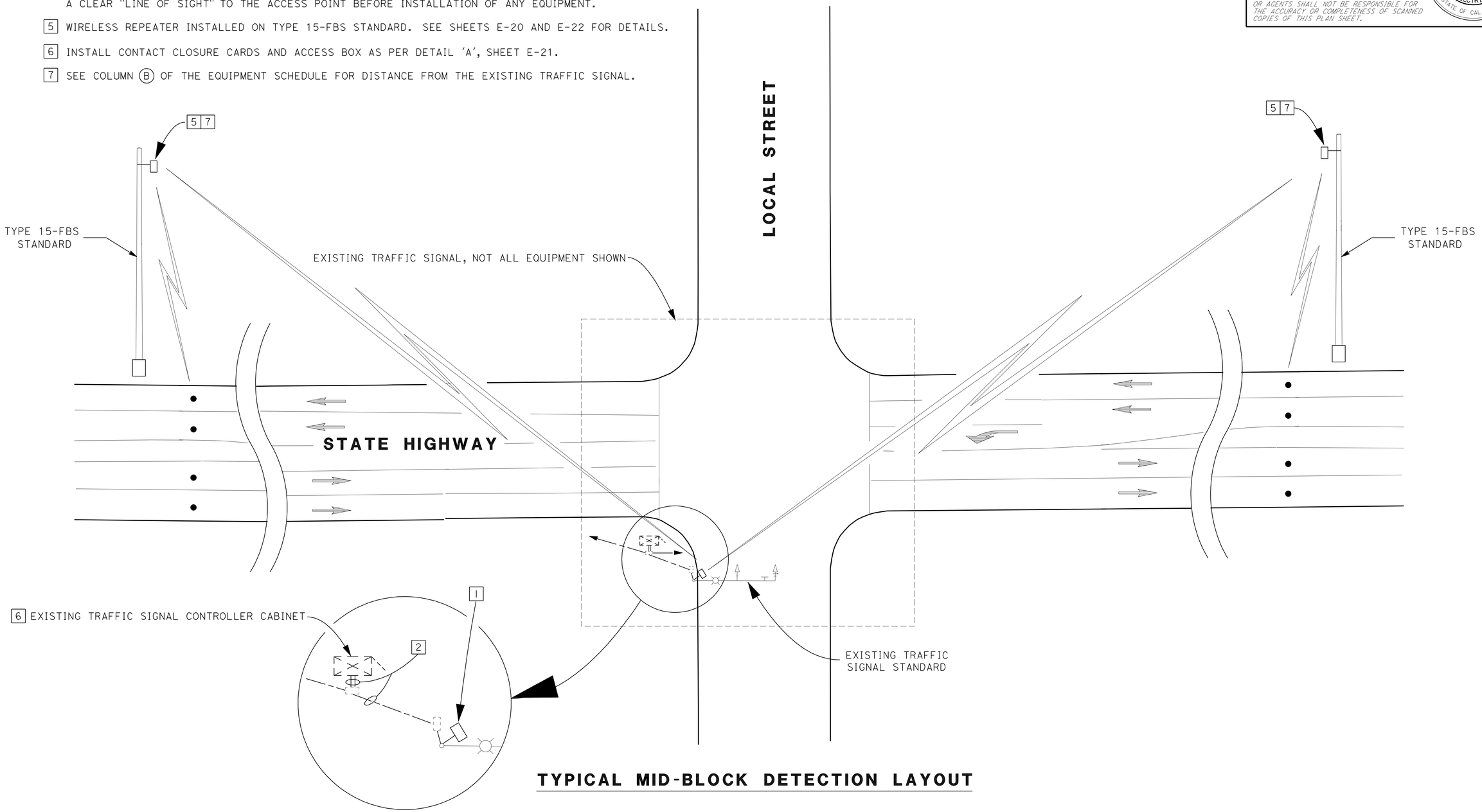

TYPICAL MID-BLOCK DETECTION LAYOUT

THIS PLAN IS ACCURATE FOR ELECTRICAL WORK ONLY.

WIRELESS VEHICLE DETECTION SYSTEM DETAILS

NO SCALE

E-18

STATE OF CALIFORNIA - DEPARTMENT OF TRANSPORTATION
Caltrans® ELECTRICAL DESIGN B

FUNCTIONAL SUPERVISOR: FERDINAND DELA CRUZ
CALCULATED-DESIGNED BY: ED CIESLIK
CHECKED BY: FERDINAND DE LA CRUZ
REVISED BY
DATE REVISED

LAST REVISION 06-14-10
DATE PLOTTED => 16-AUG-2010
TIME PLOTTED => 13:27

Dist	COUNTY	ROUTE	POST MILES TOTAL PROJECT	SHEET No.	TOTAL SHEETS
08	Riv,SBd	10,15,18, 38,60,*etc.*	Var	22	39

REGISTERED ELECTRICAL ENGINEER 06-14-10 DATE

8-9-10
PLANS APPROVAL DATE

REGISTERED PROFESSIONAL ENGINEER
FERDINAND DE LA CRUZ
No. E 17215
EXP. 06/30/2012
ELECTRICAL
STATE OF CALIFORNIA

THE STATE OF CALIFORNIA OR ITS OFFICERS OR AGENTS SHALL NOT BE RESPONSIBLE FOR THE ACCURACY OR COMPLETENESS OF SCANNED COPIES OF THIS PLAN SHEET.

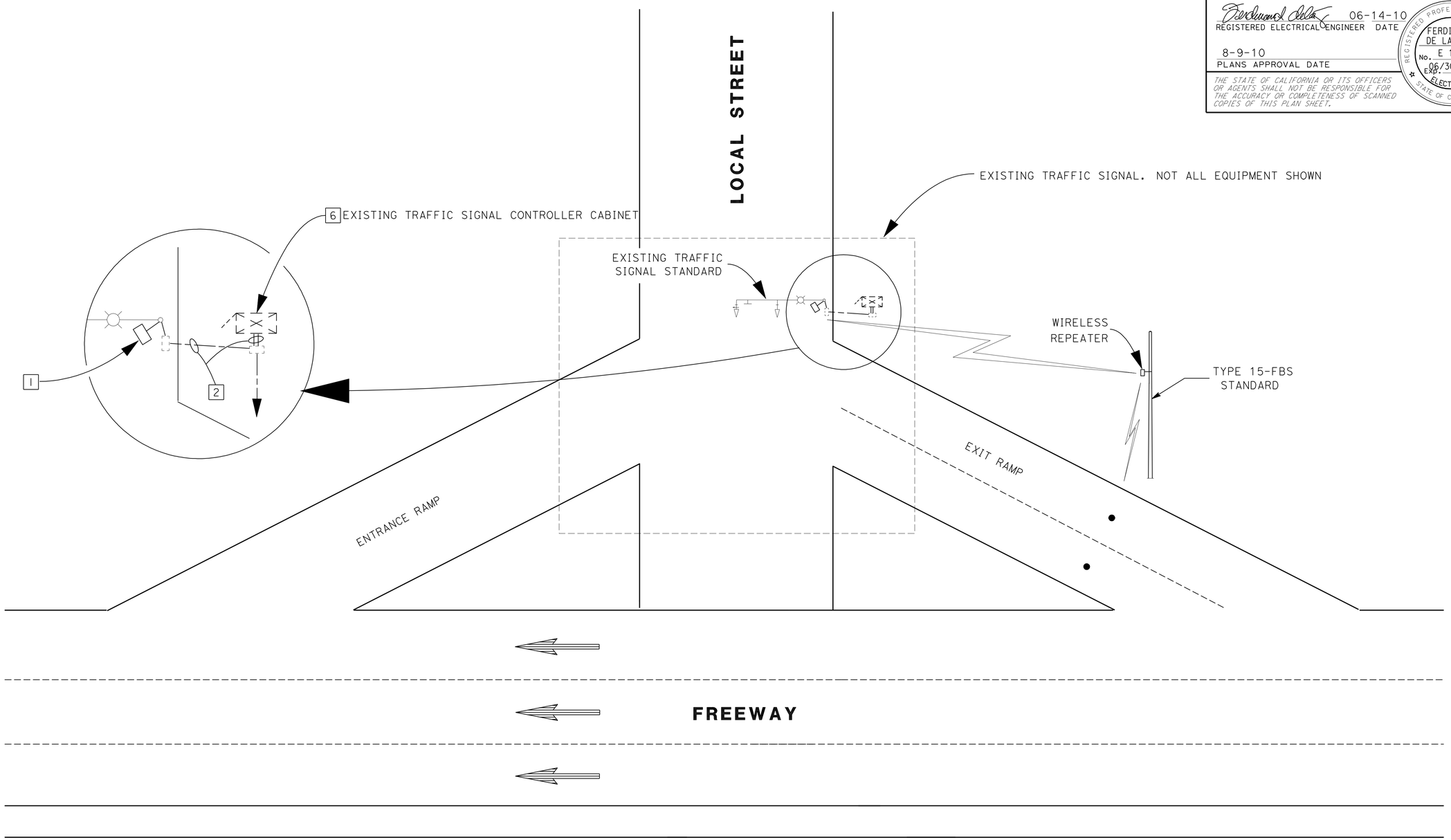

TYPICAL EXIT RAMP DETECTION LAYOUT

THIS PLAN IS ACCURATE FOR ELECTRICAL WORK ONLY.

WIRELESS VEHICLE DETECTION SYSTEM DETAILS

NO SCALE

E-19

STATE OF CALIFORNIA - DEPARTMENT OF TRANSPORTATION
Caltrans® ELECTRICAL DESIGN B

FUNCTIONAL SUPERVISOR: FERDINAND DELA CRUZ
CALCULATED-DESIGNED BY: ED CIESLIK
CHECKED BY: FERDINAND DE LA CRUZ
REVISED BY
DATE REVISED

LAST REVISION 06-14-10
DATE PLOTTED => 13-AUG-2010
TIME PLOTTED => 13:23

Dist	COUNTY	ROUTE	POST MILES TOTAL PROJECT	SHEET No.	TOTAL SHEETS
08	Riv,SBd	10,15,18, 38,60,*etc.*	Var	23	39

REGISTERED ELECTRICAL ENGINEER 06-14-10 DATE

8-9-10
PLANS APPROVAL DATE

REGISTERED PROFESSIONAL ENGINEER
FERDINAND DE LA CRUZ
No. E 17215
Exp. 06/30/2012
ELECTRICAL
STATE OF CALIFORNIA

THE STATE OF CALIFORNIA OR ITS OFFICERS OR AGENTS SHALL NOT BE RESPONSIBLE FOR THE ACCURACY OR COMPLETENESS OF SCANNED COPIES OF THIS PLAN SHEET.

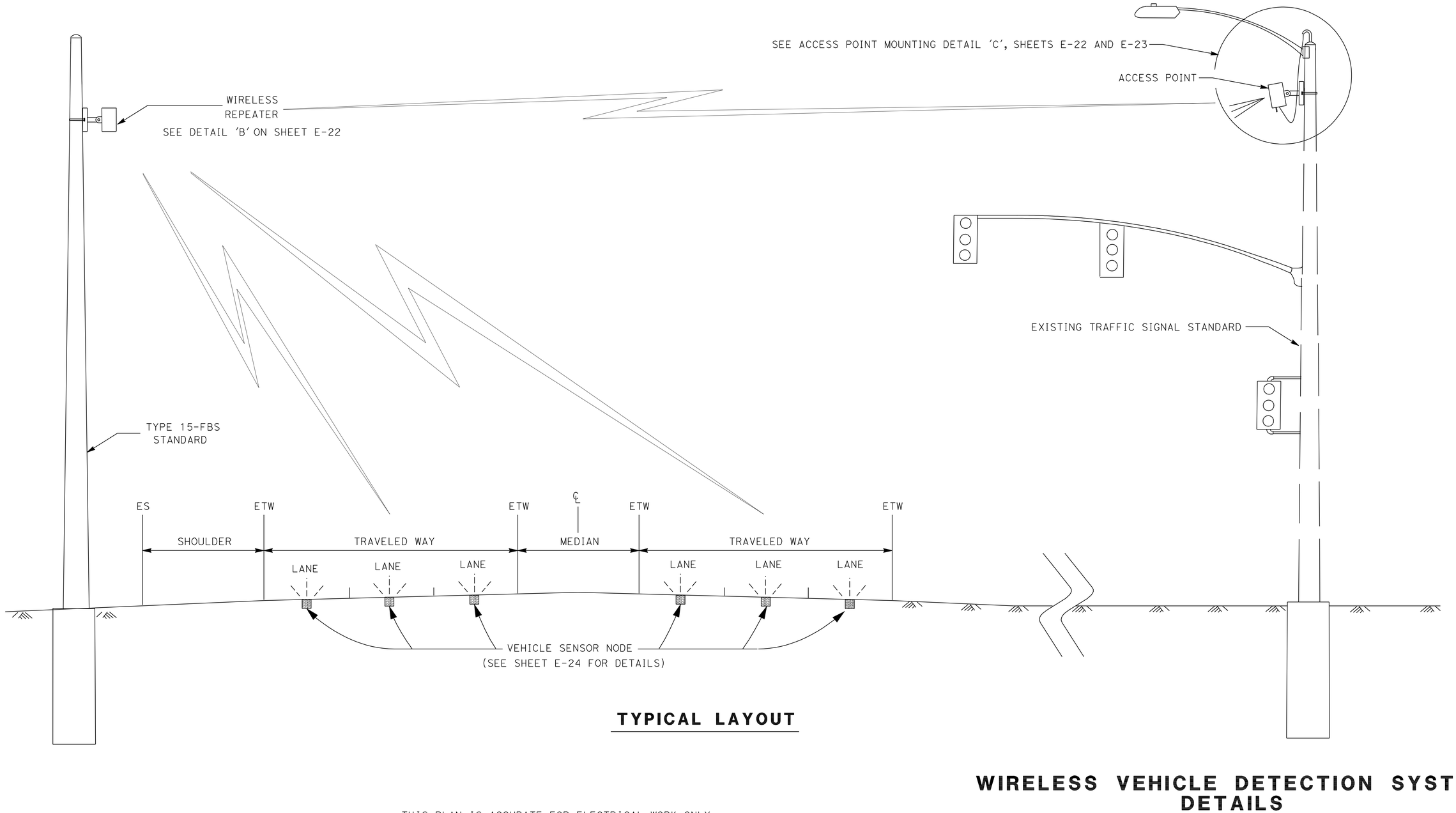

TYPICAL LAYOUT

THIS PLAN IS ACCURATE FOR ELECTRICAL WORK ONLY.

WIRELESS VEHICLE DETECTION SYSTEM DETAILS

NO SCALE

E-20

STATE OF CALIFORNIA - DEPARTMENT OF TRANSPORTATION
Caltrans® **ELECTRICAL DESIGN B**

FUNCTIONAL SUPERVISOR: FERDINAND DELA CRUZ
CALCULATED-DESIGNED BY: ED CIESLIK
CHECKED BY: FERDINAND DE LA CRUZ
REVISED BY
DATE REVISED

LAST REVISION 06-14-10
DATE PLOTTED => 13-AUG-2010
TIME PLOTTED => 13:23

Dist	COUNTY	ROUTE	POST MILES TOTAL PROJECT	SHEET No.	TOTAL SHEETS
08	Riv,SBd	10,15,18, 38,60,etc.	Var	24	39

REGISTERED ELECTRICAL ENGINEER 06-14-10 DATE

8-9-10
PLANS APPROVAL DATE

REGISTERED PROFESSIONAL ENGINEER
FERDINAND DE LA CRUZ
No. E 17215
Exp. 06/30/2012
ELECTRICAL
STATE OF CALIFORNIA

THE STATE OF CALIFORNIA OR ITS OFFICERS OR AGENTS SHALL NOT BE RESPONSIBLE FOR THE ACCURACY OR COMPLETENESS OF SCANNED COPIES OF THIS PLAN SHEET.

NOTES - THIS SHEET ONLY

1. INSTALL CONTACT CLOSURE CARDS, TYPE CC (1 PER CABINET) AND TYPE EX (4 PER CABINET).
2. INSTALL ACCESS BOX (1 PER CABINET).
3. INSTALL CAT-5E CABLE.

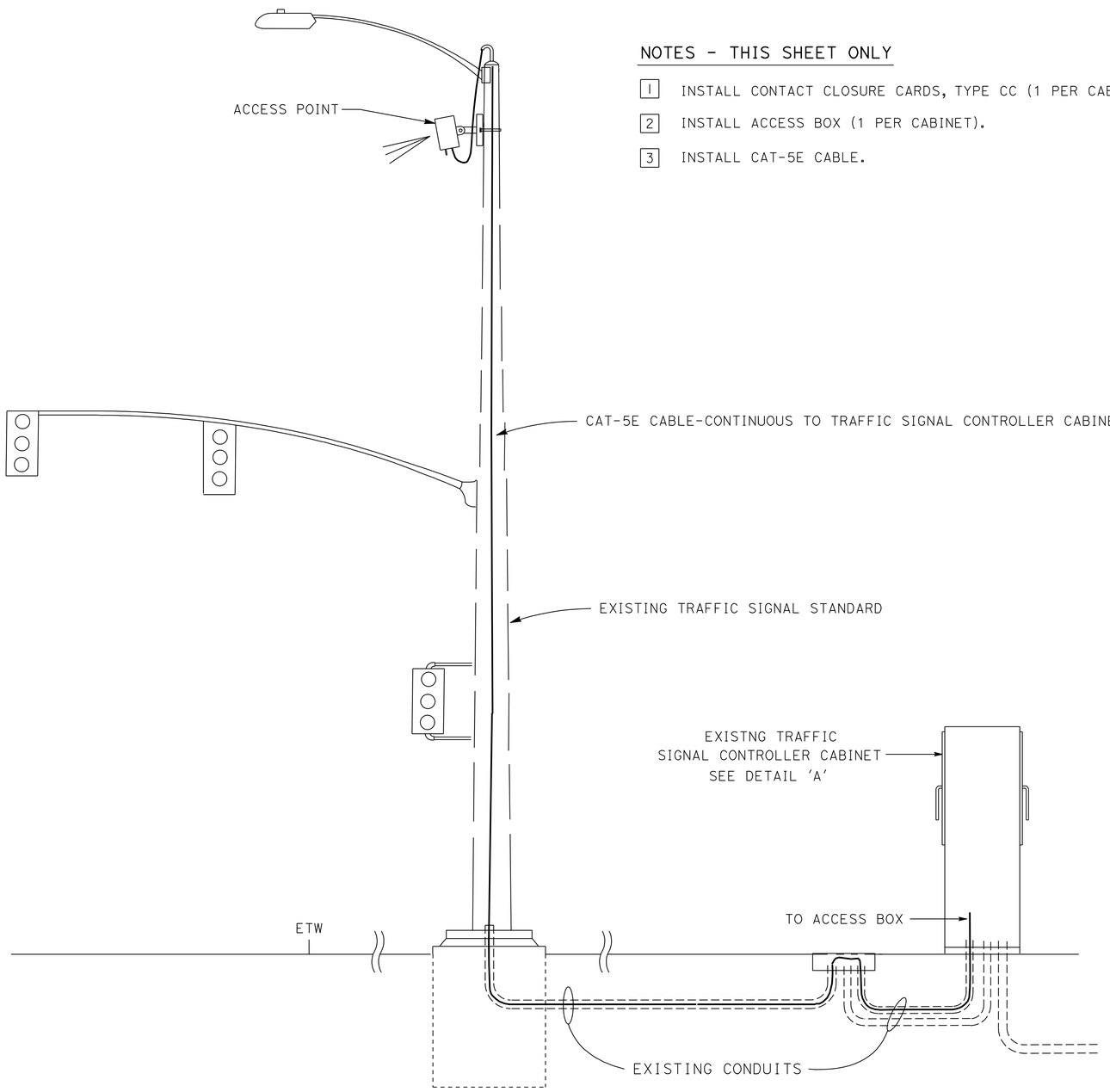

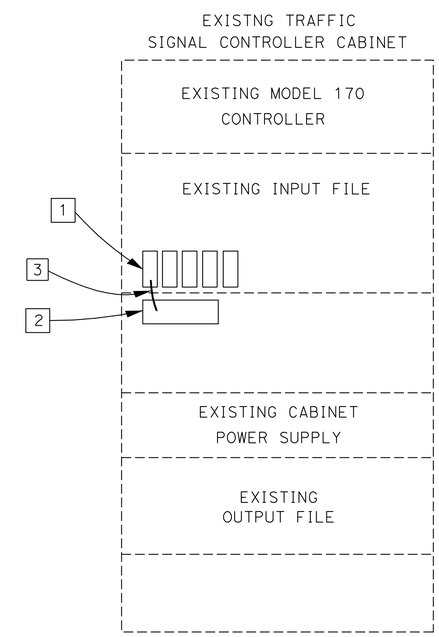

DETAIL 'A'

THIS PLAN IS ACCURATE FOR ELECTRICAL WORK ONLY.

WIRING DETAILS
WIRELESS VEHICLE DETECTION SYSTEM

NO SCALE

E-21

STATE OF CALIFORNIA - DEPARTMENT OF TRANSPORTATION
Caltrans® ELECTRICAL DESIGN B

FUNCTIONAL SUPERVISOR: FERDINAND DELA CRUZ
CALCULATED-DESIGNED BY: ED CIESLIK
CHECKED BY: FERDINAND DE LA CRUZ
REVISED BY
DATE REVISED

LAST REVISION 06-14-10
DATE PLOTTED => 13-AUG-2010
TIME PLOTTED => 13:23

Dist	COUNTY	ROUTE	POST MILES TOTAL PROJECT	SHEET No.	TOTAL SHEETS
08	Riv,SBd	10,15,18, 38,60,etc.	Var	25	39

REGISTERED ELECTRICAL ENGINEER 06-14-10 DATE

8-9-10
PLANS APPROVAL DATE

REGISTERED PROFESSIONAL ENGINEER
FERDINAND DE LA CRUZ
No. E 17215
Exp. 06/30/2012
ELECTRICAL
STATE OF CALIFORNIA

THE STATE OF CALIFORNIA OR ITS OFFICERS OR AGENTS SHALL NOT BE RESPONSIBLE FOR THE ACCURACY OR COMPLETENESS OF SCANNED COPIES OF THIS PLAN SHEET.

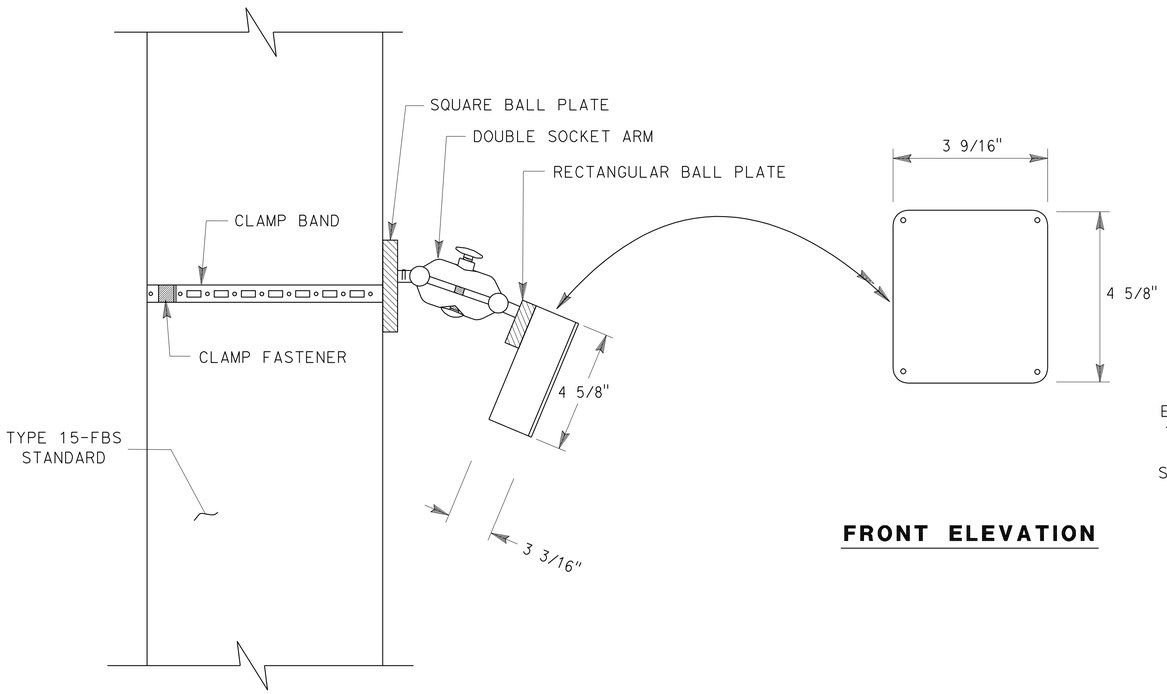

FRONT ELEVATION

DETAIL 'B'

WIRELESS REPEATER MOUNTING DETAIL

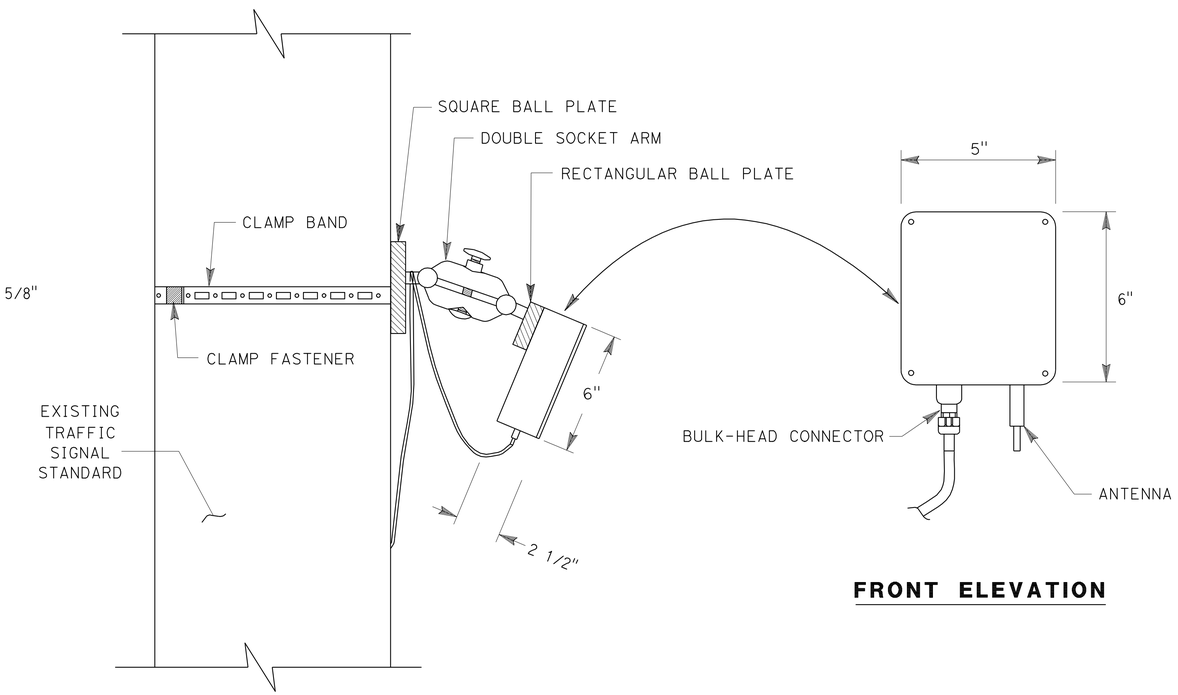

FRONT ELEVATION

DETAIL 'C'

ACCESS POINT MOUNTING DETAIL

THIS PLAN IS ACCURATE FOR ELECTRICAL WORK ONLY.

MOUNTING DETAILS
WIRELESS VEHICLE DETECTION SYSTEM DETAILS

NO SCALE

E-22

REVISED BY	DATE REVISED
ED CIESLIK	FERDINAND DE LA CRUZ
CALCULATED-DESIGNED BY	CHECKED BY
FUNCTIONAL SUPERVISOR	FERDINAND DELA CRUZ

STATE OF CALIFORNIA - DEPARTMENT OF TRANSPORTATION
Caltrans® ELECTRICAL DESIGN B

LAST REVISION 06-14-10 | DATE PLOTTED => 13-AUG-2010 | TIME PLOTTED => 13:23

Dist	COUNTY	ROUTE	POST MILES TOTAL PROJECT	SHEET No.	TOTAL SHEETS
08	Riv,SBd	10,15,18, 38,60,*etc.*	Var	26	39

06-14-10
REGISTERED ELECTRICAL ENGINEER DATE

8-9-10
PLANS APPROVAL DATE

REGISTERED PROFESSIONAL ENGINEER
FERDINAND DE LA CRUZ
No. E 17215
EXP. 06/30/2012
ELECTRICAL
STATE OF CALIFORNIA

THE STATE OF CALIFORNIA OR ITS OFFICERS OR AGENTS SHALL NOT BE RESPONSIBLE FOR THE ACCURACY OR COMPLETENESS OF SCANNED COPIES OF THIS PLAN SHEET.

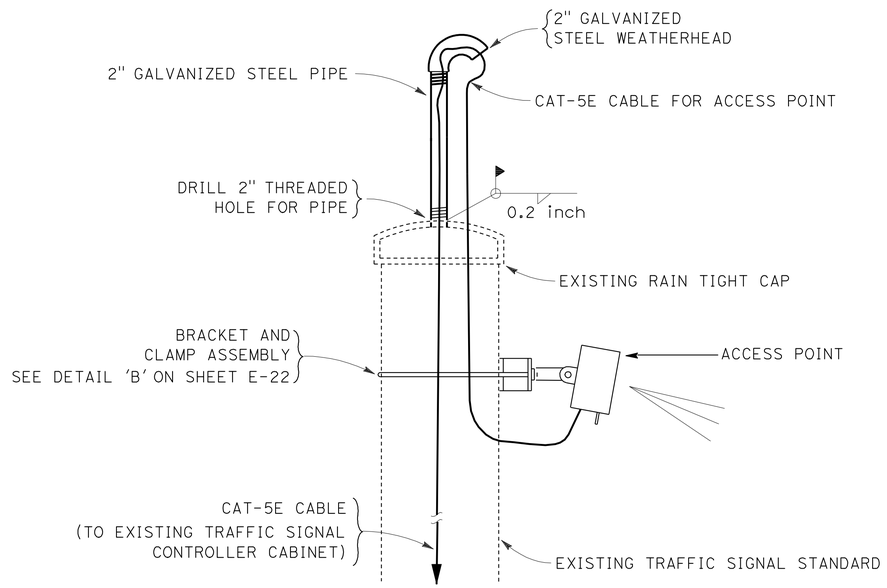

ACCESS POINT WIRING DETAIL

THIS PLAN IS ACCURATE FOR ELECTRICAL WORK ONLY.

MOUNTING DETAILS
WIRELESS VEHICLE DETECTION SYSTEM DETAILS

NO SCALE

E-23

STATE OF CALIFORNIA - DEPARTMENT OF TRANSPORTATION
Caltrans® ELECTRICAL DESIGN B

FUNCTIONAL SUPERVISOR: FERDINAND DELA CRUZ
CALCULATED-DESIGNED BY: ED CIESLIK
CHECKED BY: FERDINAND DE LA CRUZ
REVISED BY
DATE REVISED

LAST REVISION 06-14-10 | DATE PLOTTED => 16-AUG-2010 | TIME PLOTTED => 13:27

BORDER LAST REVISED 4/11/2008 | RELATIVE BORDER SCALE IS IN INCHES 0 1 2 3 | USERNAME => trmikesl | DGN FILE => 80p620ua023.dgn | CU 08396 | EA 0P6201

Dist	COUNTY	ROUTE	POST MILES TOTAL PROJECT	SHEET No.	TOTAL SHEETS
08	Riv,SBd	10,15,18, 38,60,etc.	Var	27	39

REGISTERED ELECTRICAL ENGINEER 06-14-10 DATE

8-9-10
PLANS APPROVAL DATE

REGISTERED PROFESSIONAL ENGINEER FERDINAND DE LA CRUZ No. E 17215 EXP. 06/30/2012 ELECTRICAL STATE OF CALIFORNIA

THE STATE OF CALIFORNIA OR ITS OFFICERS OR AGENTS SHALL NOT BE RESPONSIBLE FOR THE ACCURACY OR COMPLETENESS OF SCANNED COPIES OF THIS PLAN SHEET.

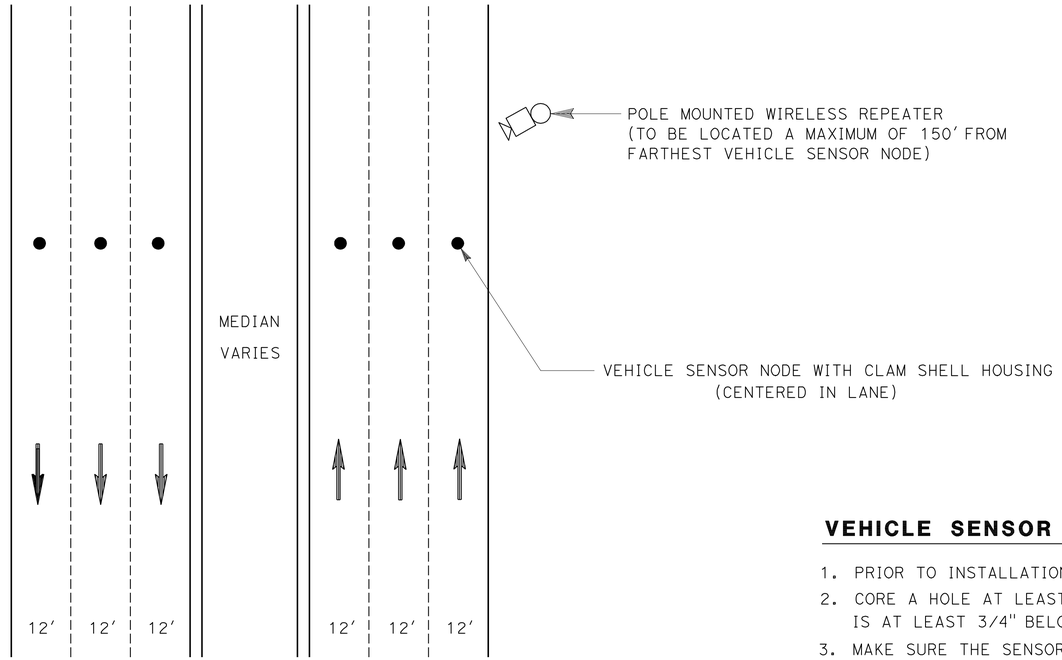

DETAIL 'D'

VSN PLACEMENT DETAIL

ABBREVIATION:

VSN VEHICLE SENSOR NODE

LEGEND:

● VSN

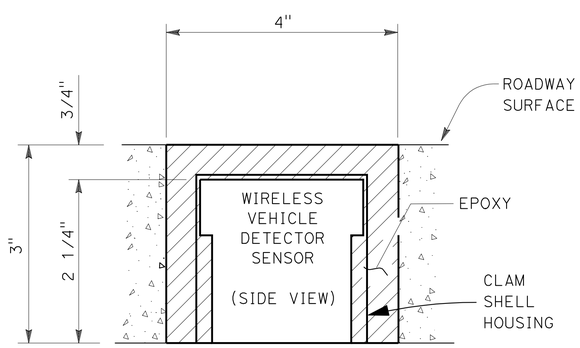

DETAIL 'E'

VSN INSTALLED IN ROADWAY

VEHICLE SENSOR NODE INSTALLATION PROCEDURE

1. PRIOR TO INSTALLATION, IDENTIFY SENSOR'S ID, LANE NUMBER, AND LOCATION IN LANE.
2. CORE A HOLE AT LEAST 3" DEEP SO THAT WHEN INSTALLED THE TOP OF THE SENSOR IS AT LEAST 3/4" BELOW THE SURFACE.
3. MAKE SURE THE SENSOR INSTALLS FLAT IN THE CORED HOLED AND IS NOT TILTED.
4. USE THE HEAT-GUN OR HOT COMPRESSED AIR TO DRY THE INSIDE OF THE CORED HOLE. THERE MUST BE ABSOLUTELY NO MOISTURE ON THE APPLIED SURFACE.
5. FILL THE HOLE ABOUT 1/4 FULL OF THE SENSOR EPOXY/ADHESIVE.
6. PLACE SENSOR IN THE HOLE WITH ARROW POINTING IN THE DIRECTION OF TRAFFIC. IF NEEDED, THE EPOXY SHOULD STILL HAVE WORK TIME, SO THAT THE SENSOR CAN BE ROTATED TO THE CORRECT POSITION. PUSH SENSOR DOWN SO IT LAYS FLAT ON THE BOTTOM OF THE HOLE. THIS ASSURES THAT THERE IS A BOND UNDERNEATH THE SENSOR WITH THE EPOXY.
7. FILL THE HOLE WITH THE REMAINING EPOXY TO COVER THE SENSOR. LEVEL EPOXY WITH THE SURFACE OF THE ROAD.
8. AFTER THE FIRST APPLICATION, DO NOT LET THE EPOXY SIT FOR MORE THAN 30 SECONDS BEFORE THE NEXT APPLICATION.
9. THE INSTALLATION PAVEMENT TEMPERATURE SHOULD BE GREATER THAN -35 °F.
10. DEPENDING ON AMBIENT TEMPERATURE AND HUMIDITY, ADHESIVE DRYING TIME WILL VARY FROM 5 MINUTES TO 15 MINUTES. VERIFY HARDNESS OF EPOXY BEFORE REOPENING THE LANE FOR TRAFFIC.
11. RECORD THE DISTANCES BETWEEN EACH SENSOR PAIR.

THIS PLAN IS ACCURATE FOR ELECTRICAL WORK ONLY.

WIRELESS VEHICLE DETECTION SYSTEM
(SENSOR INSTALLATION DETAILS)

NO SCALE

E-24

STATE OF CALIFORNIA - DEPARTMENT OF TRANSPORTATION
Caltrans® ELECTRICAL DESIGN B

FUNCTIONAL SUPERVISOR: FERDINAND DELA CRUZ
CALCULATED-DESIGNED BY: ED CIESLIK
CHECKED BY: FERDINAND DE LA CRUZ
REVISED BY
DATE REVISED

LAST REVISION 06-14-10
DATE PLOTTED => 16-AUG-2010
TIME PLOTTED => 13:27

Dist	COUNTY	ROUTE	POST MILES TOTAL PROJECT	SHEET No.	TOTAL SHEETS
08	Riv,SBd	10,15,18, 38,60,*etc.*	Var	28	39

REGISTERED ELECTRICAL ENGINEER 06-14-10 DATE

8-9-10
PLANS APPROVAL DATE

REGISTERED PROFESSIONAL ENGINEER FERDINAND DE LA CRUZ No. E 17215 Exp. 06/30/2012 ELECTRICAL STATE OF CALIFORNIA

THE STATE OF CALIFORNIA OR ITS OFFICERS OR AGENTS SHALL NOT BE RESPONSIBLE FOR THE ACCURACY OR COMPLETENESS OF SCANNED COPIES OF THIS PLAN SHEET.

NOTES - THIS SHEET ONLY

1. PROTECT IN PLACE EXISTING LOOP DETECTORS SHOWN.
2. SEE EQUIPMENT SCHEDULES FOR QUANTITIES AND LOCATIONS OF NEW LOOP DETECTORS.

[3] ADD NEW DLC'S AS INDICATED ON THE EQUIPMENT SCHEDULE.

[4] SEE TABLE ON THIS SHEET FOR THE LOCATIONS OF THE EXISTING TRAFFIC SIGNAL CONTROLLER CABINETS.

[5] SEE COLUMN (A) OF THE EQUIPMENT SCHEDULE FOR DISTANCE TO LIMIT LINE.

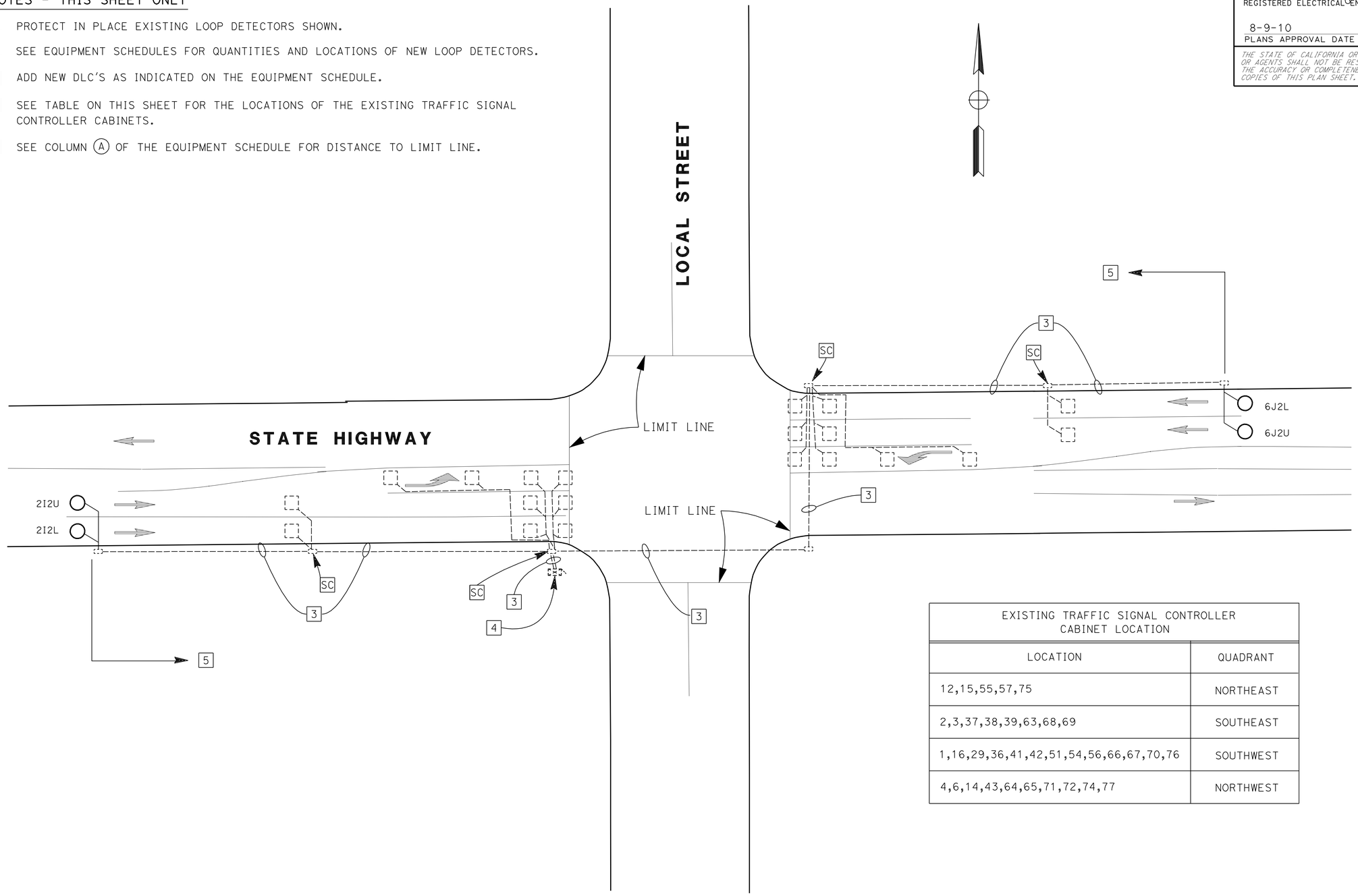

EXISTING TRAFFIC SIGNAL CONTROLLER CABINET LOCATION	
LOCATION	QUADRANT
12,15,55,57,75	NORTHEAST
2,3,37,38,39,63,68,69	SOUTHEAST
1,16,29,36,41,42,51,54,56,66,67,70,76	SOUTHWEST
4,6,14,43,64,65,71,72,74,77	NORTHWEST

THIS PLAN IS ACCURATE FOR ELECTRICAL WORK ONLY.

MODIFY SIGNAL DETAILS

NO SCALE

E-25

STATE OF CALIFORNIA - DEPARTMENT OF TRANSPORTATION
Caltrans® ELECTRICAL DESIGN B

FUNCTIONAL SUPERVISOR: FERDINAND DELA CRUZ
CALCULATED-DESIGNED BY: ED CIESLIK
CHECKED BY: FERDINAND DE LA CRUZ
REVISED BY
DATE REVISED

LAST REVISION 06-14-10 | DATE PLOTTED => 16-AUG-2010 | TIME PLOTTED => 13:27

Dist	COUNTY	ROUTE	POST MILES TOTAL PROJECT	SHEET No.	TOTAL SHEETS
08	Riv,SBd	10,15,18, 38,60,etc.	Var	29	39

REGISTERED ELECTRICAL ENGINEER 06-14-10 DATE

8-9-10
PLANS APPROVAL DATE

REGISTERED PROFESSIONAL ENGINEER FERDINAND DE LA CRUZ No. E 17215 EXP. 06/30/2012 ELECTRICAL STATE OF CALIFORNIA

THE STATE OF CALIFORNIA OR ITS OFFICERS OR AGENTS SHALL NOT BE RESPONSIBLE FOR THE ACCURACY OR COMPLETENESS OF SCANNED COPIES OF THIS PLAN SHEET.

LEGEND

VIVDS CAMERA MOUNTED ON LUMINARES

NOTES - THIS SHEET ONLY

1. SEE TABLE ON THIS SHEET FOR VIVDS CAMERA LOCATIONS.
2. INSTALL VIVDS CAMERA CABLE CONTINUOUSLY TO EXISTING TRAFFIC SIGNAL CONTROLLER CABINET.
3. THE VEHICLE DETECTION ZONES WILL BE CONFIGURED AS PER THE ENGINEER'S INSTRUCTIONS.

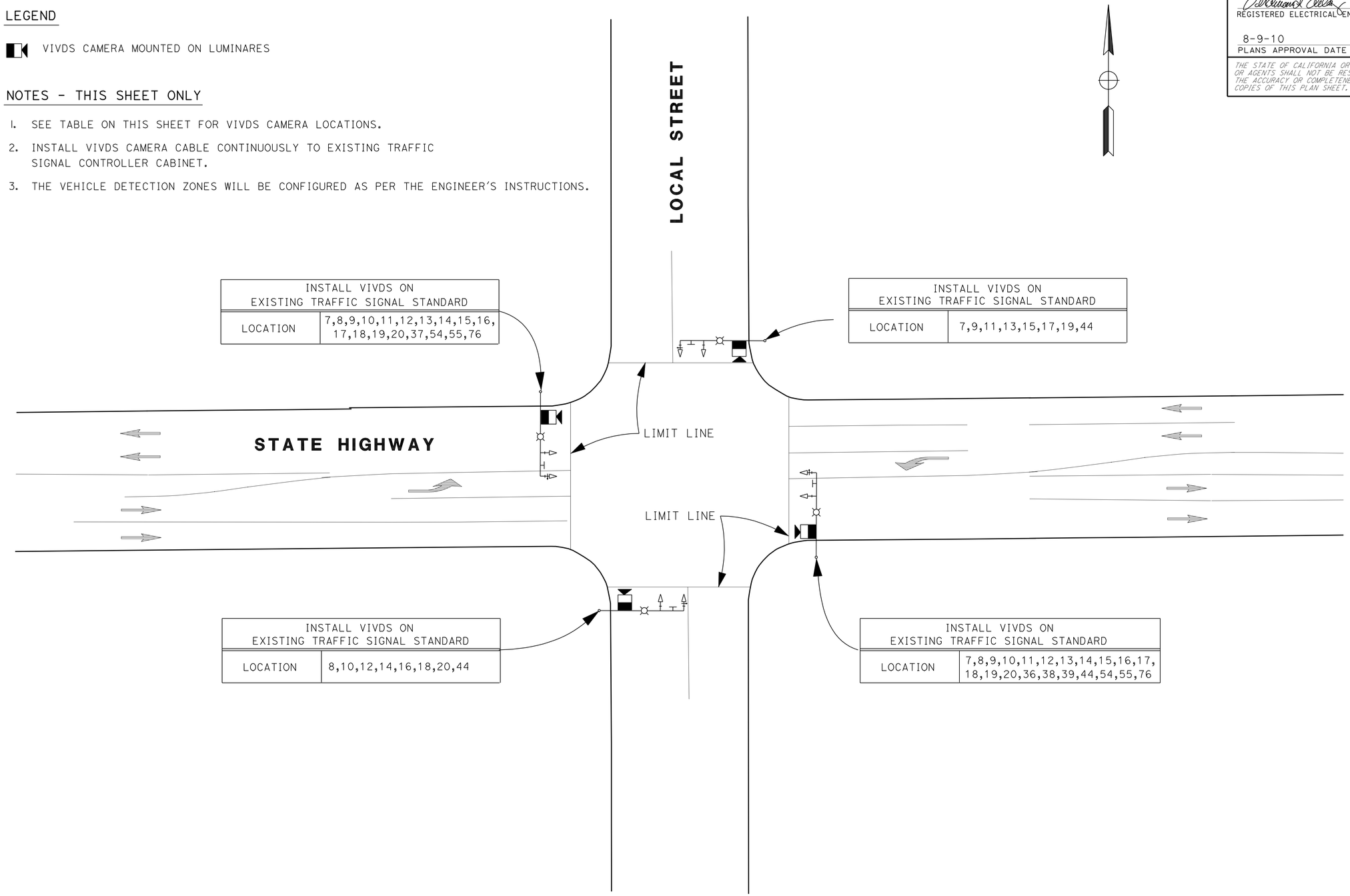

INSTALL VIVDS ON EXISTING TRAFFIC SIGNAL STANDARD	
LOCATION	7,8,9,10,11,12,13,14,15,16, 17,18,19,20,37,54,55,76

INSTALL VIVDS ON EXISTING TRAFFIC SIGNAL STANDARD	
LOCATION	7,9,11,13,15,17,19,44

INSTALL VIVDS ON EXISTING TRAFFIC SIGNAL STANDARD	
LOCATION	8,10,12,14,16,18,20,44

INSTALL VIVDS ON EXISTING TRAFFIC SIGNAL STANDARD	
LOCATION	7,8,9,10,11,12,13,14,15,16,17, 18,19,20,36,38,39,44,54,55,76

THIS PLAN IS ACCURATE FOR ELECTRICAL WORK ONLY.

VIDEO IMAGE VEHICLE DETECTION SYSTEM LOCATION DETAILS

NO SCALE

E-26

STATE OF CALIFORNIA - DEPARTMENT OF TRANSPORTATION
Caltrans ELECTRICAL DESIGN B

FUNCTIONAL SUPERVISOR: FERDINAND DELA CRUZ
CALCULATED-DESIGNED BY: ED CIESLIK
CHECKED BY: FERDINAND DE LA CRUZ
REVISED BY
DATE REVISED

LAST REVISION 06-14-10
DATE PLOTTED => 13-AUG-2010
TIME PLOTTED => 13:23

DIST	COUNTY	ROUTE	POST MILES TOTAL PROJECT	SHEET No	TOTAL SHEETS
08	Riv,SBd	10,15,18, 38,60,etc.	Var	30	39

REGISTERED CIVIL ENGINEER 7-8-10 DATE

8-9-10
PLANS APPROVAL DATE

REGISTERED PROFESSIONAL ENGINEER JEFFREY B. WOODY No. C41260 Exp. 3/31/11 CIVIL STATE OF CALIFORNIA

The State of California or its officers or agents shall not be responsible for the accuracy or completeness of electronic copies of this plan sheet.

NOTES:

1. ALL METALLIC CONDUITS, BOLTS STRAPS AND Misc HARDWARE SHALL BE GALVANIZED.
2. TOTAL VIVDS ASSEMBLY SHALL HAVE A MAXIMUM WEIGHT OF 10 LBS AND A MAXIMUM EFFECTIVE PRESSURE AREA OF 1 SQUARE FOOT.
3. MAXIMUM OF 1 VIVDS PER LIGHTING ARM.

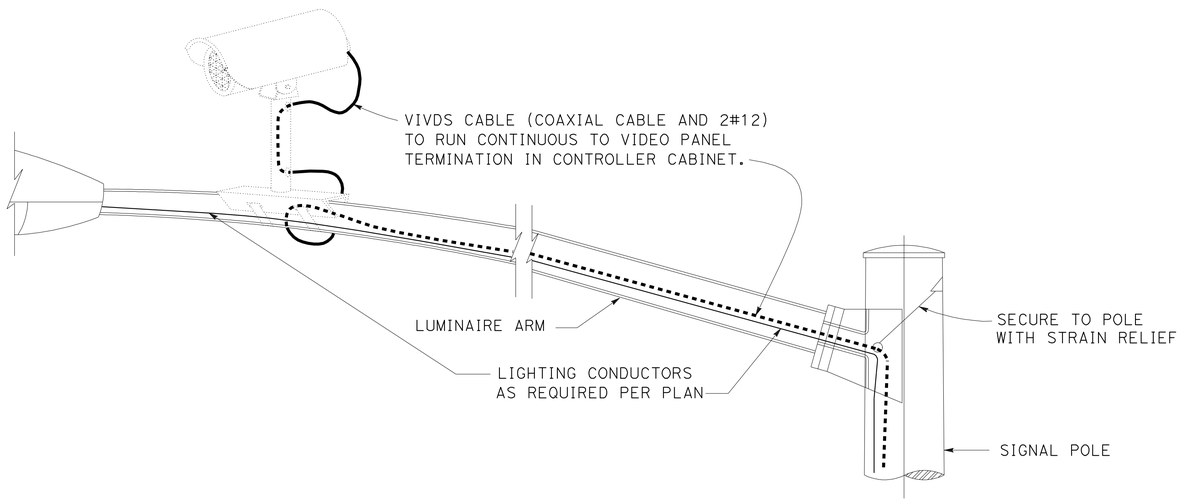

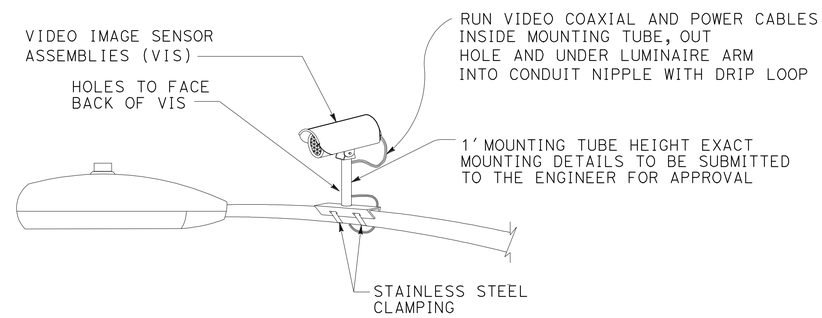

CAMERA MOUNTING DETAILS

NO SCALE

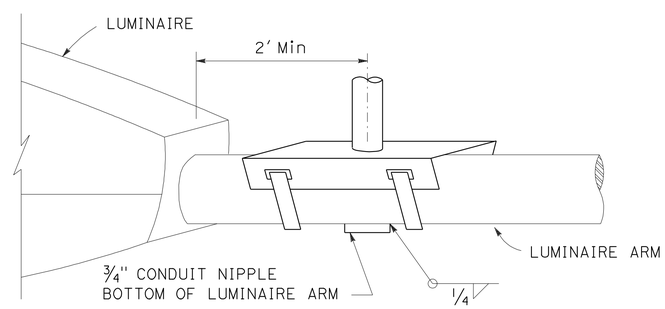

DETAIL A

NO SCALE

NOTE:
THE CONTRACTOR SHALL VERIFY ALL CONTROLLING FIELD DIMENSIONS BEFORE ORDERING OR FABRICATING ANY MATERIAL.

BRANCH CHIEF

	BY	CHECKED
DESIGN	J WOODY	E LOPEZ
DETAILS	D W JUSTICE Jr	E LOPEZ
QUANTITIES	J WOODY	E LOPEZ

STATE OF CALIFORNIA
DEPARTMENT OF TRANSPORTATION

DIVISION OF ENGINEERING SERVICES
DESIGN AND TECHNICAL SERVICES
SPECIAL DESIGNS BRANCH A

BRIDGE NO. N/A
POST MILE

CAMERA MOUNTING DETAILS
VIDEO IMAGE VEHICLE DETECTION SYSTEM

SES-1

(ENGLISH) SPECIAL DESIGNS BRANCH BORDER SHEET (REV. 7-1-09)

ORIGINAL SCALE IN INCHES FOR REDUCED PLANS 0 1 2 3

CU 08
EA 0P6201

DISREGARD PRINTS BEARING EARLIER REVISION DATES

REVISION DATES: 7-8-10

SHEET 1 OF 2

FILE => spec_des_br_prj/2010sd/08-0P6201/08-0p6201_ses1.dgn

USERNAME => trmikesl DATE PLOTTED => 13-AUG-2010 TIME PLOTTED => 13:24

DIST	COUNTY	ROUTE	POST MILES TOTAL PROJECT	SHEET No	TOTAL SHEETS
08	Riv,SBd	10,15,18, 38,60,etc.	Var	31	39

Eliseo Lopez 7-30-10
REGISTERED CIVIL ENGINEER DATE

8-9-10
PLANS APPROVAL DATE

REGISTERED PROFESSIONAL ENGINEER ELISEO LOPEZ No. C72910 Exp. 12/31/10 CIVIL STATE OF CALIFORNIA

The State of California or its officers or agents shall not be responsible for the accuracy or completeness of electronic copies of this plan sheet.

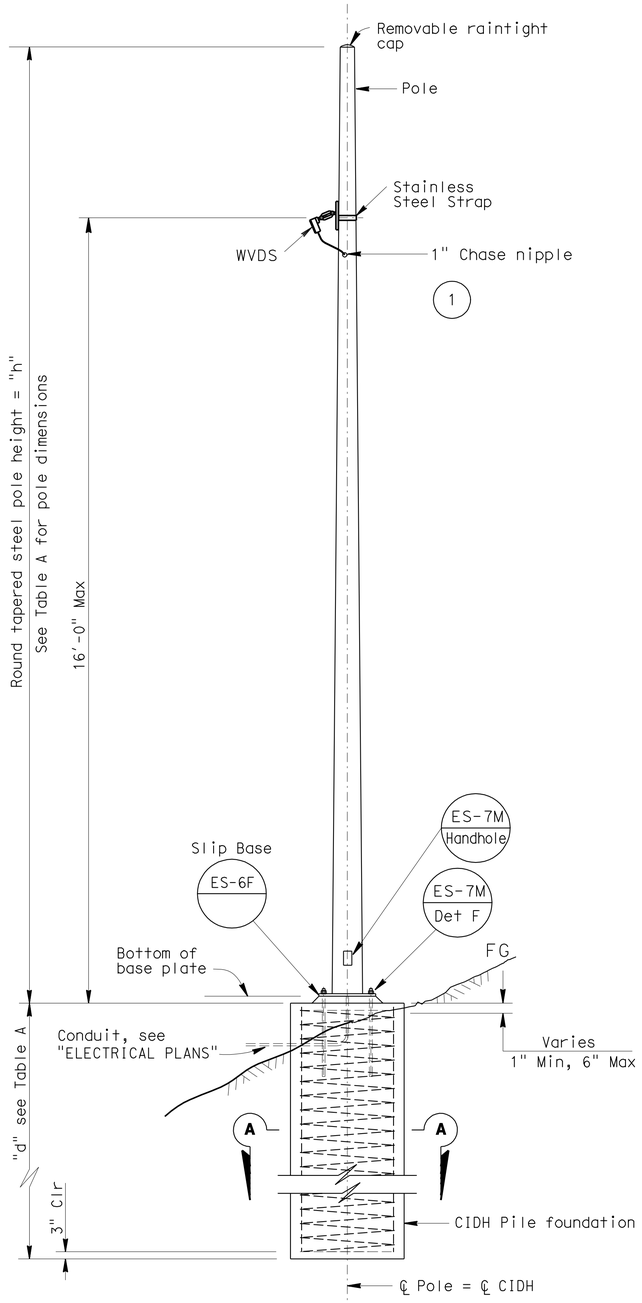

ELEVATION

NOTE:
THE CONTRACTOR SHALL VERIFY ALL CONTROLLING FIELD DIMENSIONS BEFORE ORDERING OR FABRICATING ANY MATERIAL.

TABLE A

Pole Type	Pole Data				Base Plate Data				"d" 2'-6" ø CIDH Pile		Structural Steel LBS plus 3.5% Galvanizing
	Height "h"	Min OD		Thickness	"C"	Thickness	H.S. Anchor Bolts (A325)				
		Base	Top				Size	BC = Bolt circle	Level Ground	Sloping ground	
15-FBS (Mod)	18'-0"	8"	5.5"	0.1196"	-	-	1" x 3'-4"	1'-2"	5'-0"	7'-0"	376
					See Standard Plans ES-6F						

TABLE B

Attachment	Mounting Height	Weight Limits (Lbs)
WVDS Repeater	16'-0" Max	2 Lbs

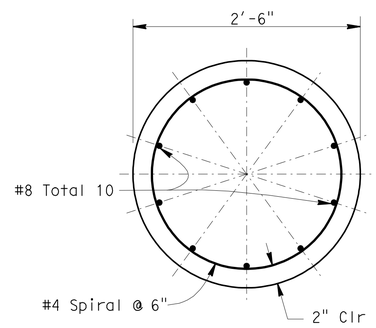

SECTION A-A

Scale: 1½"= 1'-0"

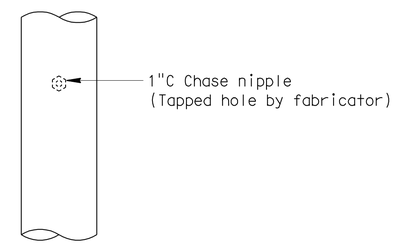

DETAIL B

TYPICAL ELECTRICAL ACCESS DETAIL

(1) Drill and tap for 1" C chase nipple and plug with raintight plugs. 1" chase nipple per attachment per pole. (See Detail"B")

ABBREVIATIONS:

WVDS - Wireless Vehicle Detection System

GENERAL NOTES:

SPECIFICATIONS

Design : AASHTO Standard Specifications for Structural Supports for Highway Signs, Luminaires and Traffic Signals dated 2001.

LOADING

Wind Loadings: 100 MPH

UNIT STRESSES

Structural Steel: fy = 48,000 psi tapered steel tube
fy = 36,000 psi unless otherwise noted.

H.S. Anchor bolts = A325

Reinforced Concrete: f'c = 3,600 psi
fy = 60,000 psi

NOTES:

1. All steel shall be galvanized after fabrication.
2. During pole erection the post shall be raked as necessary with the use of leveling nuts to provide a plumb pole axis.
3. The foundation shall be treated as level ground condition if the slope inclination is flatter than 4H:1V.
4. All attachments, unless otherwise noted, shall be mounted to pole with stainless steel straps or other method without drilling holes in pole.
5. See "2006 STANDARD PLANS" ES-7J for Type 15-FBS pole.
6. See "2006 STANDARD PLANS" ES-6F for Type 15-FBS Slip Base Plate details.
7. For details not shown, see "2006 STANDARD PLANS" and "2006 REVISED STANDARD PLANS".

NO SCALE

BRANCH CHIEF Jeffrey B Woody

	BY	CHECKED
DESIGN	E LOPEZ	J DATILES
DETAILS	D W JUSTICE Jr	E LOPEZ
QUANTITIES	E LOPEZ	J DATILES

STATE OF CALIFORNIA
DEPARTMENT OF TRANSPORTATION

DIVISION OF ENGINEERING SERVICES
DESIGN AND TECHNICAL SERVICES
SPECIAL DESIGNS BRANCH A

BRIDGE NO. N/A
POST MILE

TYPE 15-FBS (MOD) - POLE DETAILS
WIRELESS VEHICLE DETECTION SYSTEM

SES-2

(ENGLISH) SPECIAL DESIGNS BRANCH BORDER SHEET (REV. 7-1-09)

ORIGINAL SCALE IN INCHES FOR REDUCED PLANS 0 1 2 3

CU 08
EA 0P6201

DISREGARD PRINTS BEARING EARLIER REVISION DATES 7-30-10

REVISION DATES

SHEET 2 OF 2

FILE => spec_des_br_prj/2010sd/08-0L7901/08-0p6201_ses2.dgn

USERNAME => trmikesl DATE PLOTTED => 13-AUG-2010 TIME PLOTTED => 13:24

DIST	COUNTY	ROUTE	POST MILES TOTAL PROJECT	SHEET NO.	TOTAL SHEETS
08	Riv,SBd	10,15,18, 38,60,*etc.*	Var	32	39

Randell D. Hiatt
REGISTERED CIVIL ENGINEER

June 6, 2008
PLANS APPROVAL DATE

REGISTERED PROFESSIONAL ENGINEER
Randell D. Hiatt
No. C50200
Exp. 6-30-09
CIVIL
STATE OF CALIFORNIA

The State of California or its officers or agents shall not be responsible for the accuracy or completeness of electronic copies of this plan sheet.

To accompany plans dated 8-9-10

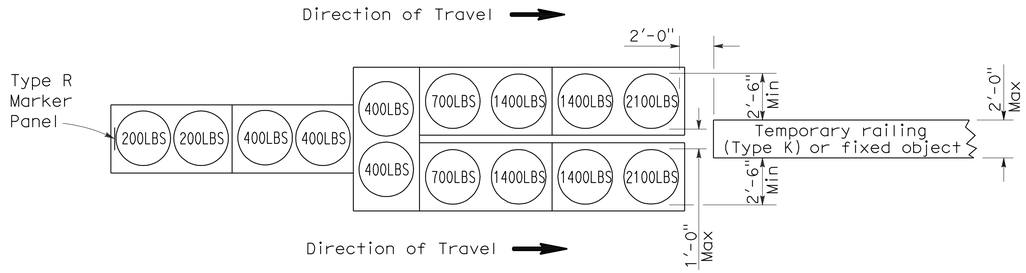

ARRAY 'TU14'

Approach speed 45 mph or more

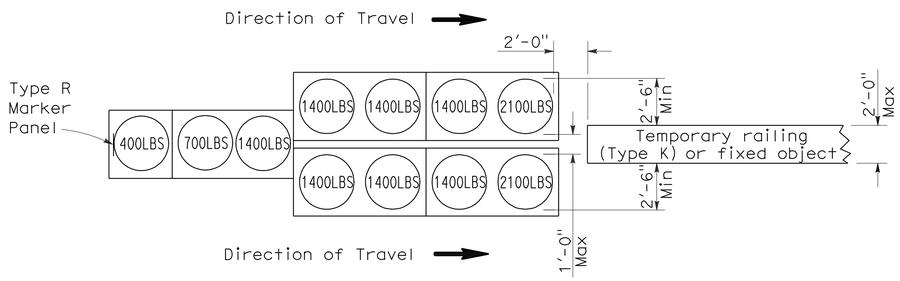

ARRAY 'TU11'

Approach speed less than 45 mph

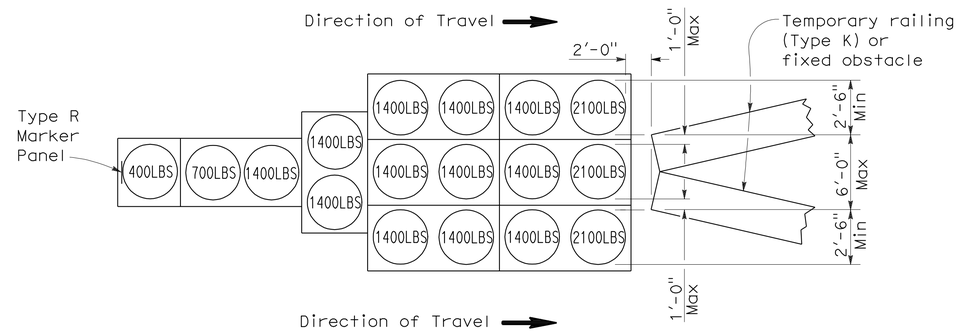

ARRAY 'TU17'

Approach speed less than 45 mph

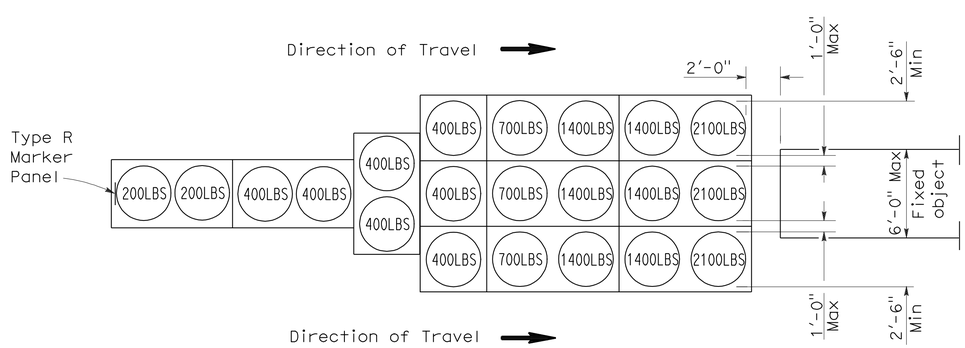

ARRAY 'TU21'

Approach speed 45 mph or more

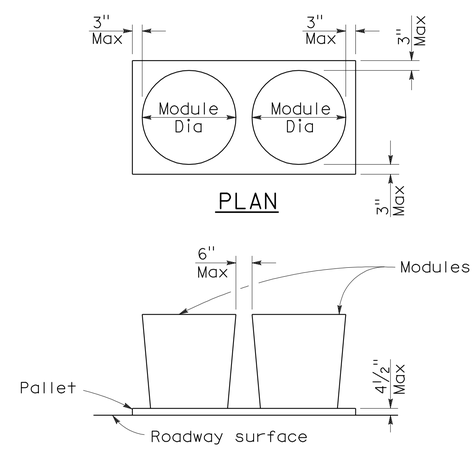

PLAN

ELEVATION

CRASH CUSHION PALLET DETAIL

See Note 7

NOTES:

1. (XXX) Indicates sand filled module location and weight of sand in pounds for each module. Module spacing is based on the greater diameter of the module.
2. All sand weights are nominal.
3. Temporary crash cushion arrays shall not encroach on the traveled way.
4. Place the top of Type R marker panel 1" below the module lid.
5. Refer to Standard Plan A73B for marker details.
6. Approach speeds indicated conform to NCHRP 350 Report criteria.
7. Use of pallets is optional.

STATE OF CALIFORNIA
DEPARTMENT OF TRANSPORTATION

TEMPORARY CRASH CUSHION, SAND FILLED (UNIDIRECTIONAL)

NO SCALE

RSP T1A DATED JUNE 6, 2008 SUPERSEDES STANDARD PLAN T1A
DATED MAY 1, 2006 - PAGE 211 OF THE STANDARD PLANS BOOK DATED MAY 2006.

REVISED STANDARD PLAN RSP T1A

2006 REVISED STANDARD PLAN RSP T1A

DIST	COUNTY	ROUTE	POST MILES TOTAL PROJECT	SHEET NO.	TOTAL SHEETS
08	Riv,SBd	10,15,18, 38,60,etc.	Var	33	39

Randell D. Hiatt
REGISTERED CIVIL ENGINEER

June 6, 2008
PLANS APPROVAL DATE

REGISTERED PROFESSIONAL ENGINEER
Randell D. Hiatt
No. C50200
Exp. 6-30-09
CIVIL
STATE OF CALIFORNIA

The State of California or its officers or agents shall not be responsible for the accuracy or completeness of electronic copies of this plan sheet.

To accompany plans dated 8-9-10

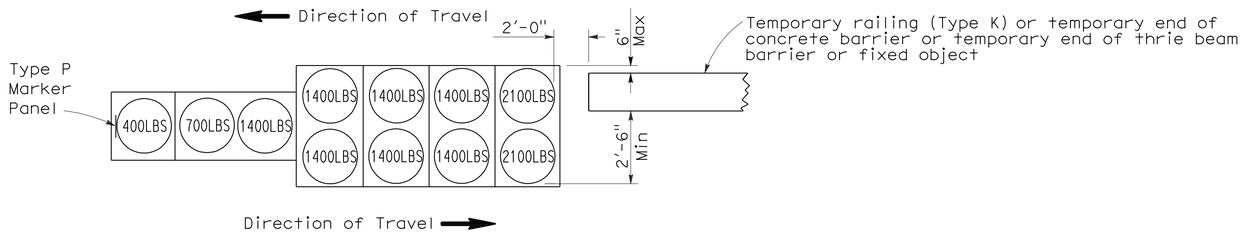

ARRAY 'TB11'

Approach speed less than 45 mph

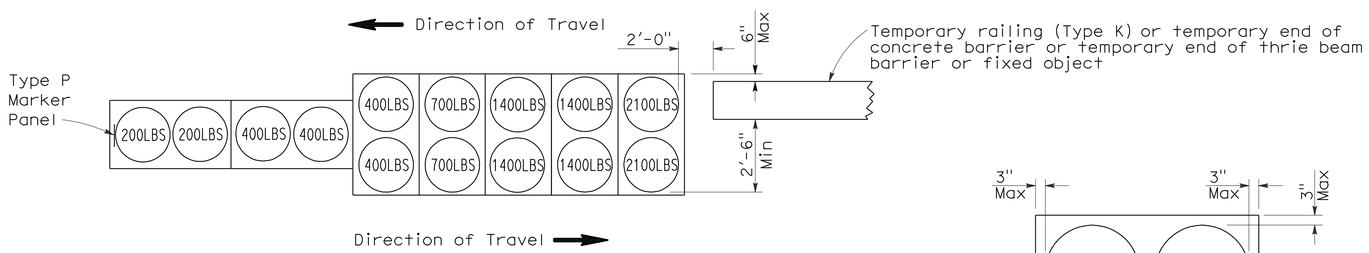

ARRAY 'TB14'

Approach speed 45 mph or more

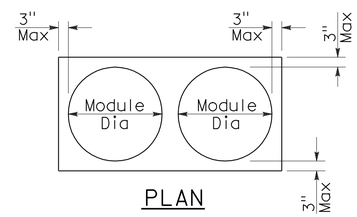

PLAN

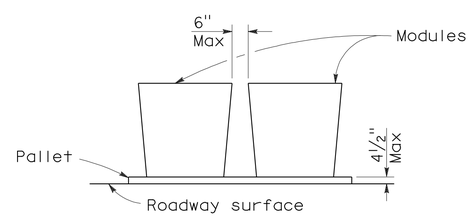

ELEVATION

CRASH CUSHION PALLET DETAIL

See Note 7

NOTES:

1. (XXX) Indicates sand filled module location and weight of sand in pounds for each module. Module spacing is based on the greater diameter of the module.
2. All sand weights are nominal.
3. Temporary crash cushion arrays shall not encroach on the traveled way.
4. Place the Type P marker panel so that the bottom of the panel rests upon the pallet.
5. Refer to Standard Plan A73B for marker details.
6. Approach speeds indicated conform to NCHRP 350 Report criteria.
7. Use of pallets is optional.

STATE OF CALIFORNIA
DEPARTMENT OF TRANSPORTATION

TEMPORARY CRASH CUSHION, SAND FILLED (BIDIRECTIONAL)

NO SCALE

RSP T1B DATED JUNE 6, 2008 SUPERSEDES STANDARD PLAN T1B
DATED MAY 1, 2006 - PAGE 212 OF THE STANDARD PLANS BOOK DATED MAY 2006.

REVISED STANDARD PLAN RSP T1B

2006 REVISED STANDARD PLAN RSP T1B

5-15-08

DIST	COUNTY	ROUTE	POST MILES TOTAL PROJECT	SHEET NO.	TOTAL SHEETS
08	Riv,SBd	10,15,18, 38,60,*etc.*	Var	34	39

Randell D. Hiatt
REGISTERED CIVIL ENGINEER

June 6, 2008
PLANS APPROVAL DATE

REGISTERED PROFESSIONAL ENGINEER
Randell D. Hiatt
No. C50200
Exp. 6-30-09
CIVIL
STATE OF CALIFORNIA

The State of California or its officers or agents shall not be responsible for the accuracy or completeness of electronic copies of this plan sheet.

To accompany plans dated 8-9-10

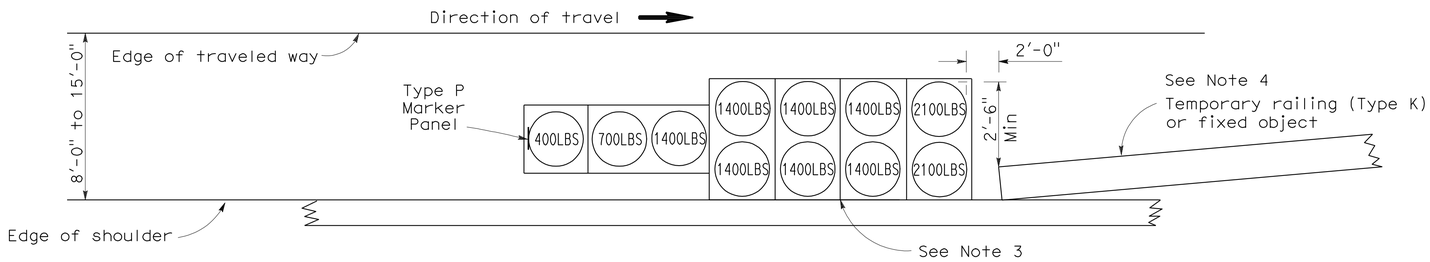

ARRAY 'TS11'

Approach speed less than 45 mph
See Note 9

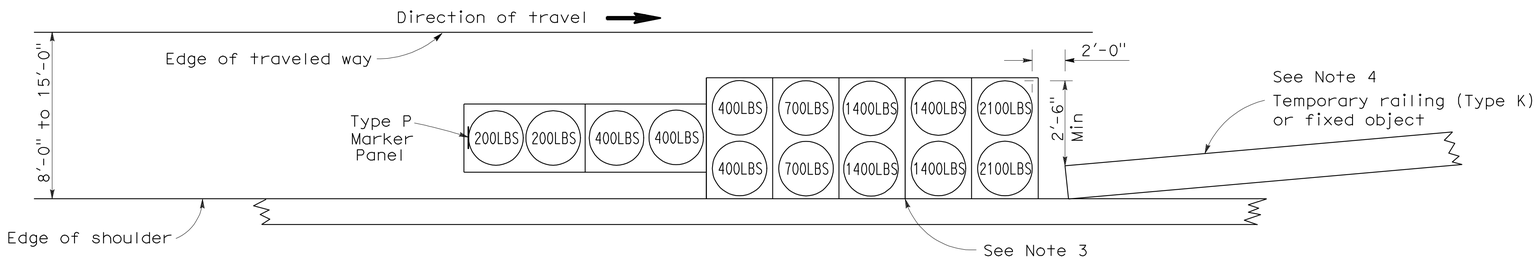

ARRAY 'TS14'

Approach speed 45 mph or more
See Note 9

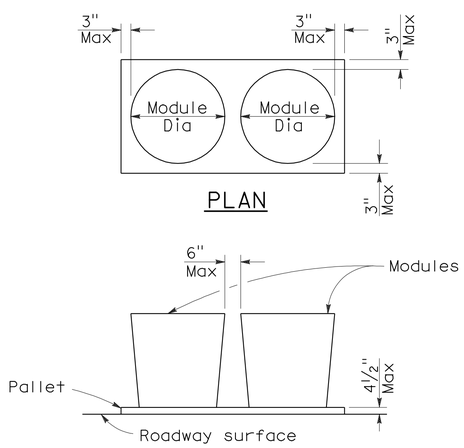

CRASH CUSHION PALLET DETAIL

See Note 11

NOTES:

1. (XXX) Indicates sand filled module location and weight of sand in pounds for each module. Module spacing is based on the greater diameter of the module.
2. All sand weights are nominal.
3. The temporary crash cushion arrays shown on this plan shall be used only in locations where there will be traffic on one side of the temporary crash cushion array.
4. If the fixed object or approach end of the temporary railing is less than 15'-0" from the edge of traveled way, a temporary crash cushion is required in a construction or work zone.
5. Temporary crash cushion arrays shall not encroach on the traveled way.
6. Arrays for median shoulders shall conform to details shown on this plan for outside shoulders.
7. Place the Type P marker panel so that the bottom of the panel rests upon the pallet and faces traffic.
8. Refer to Standard Plan A73B for marker details.
9. For shoulder widths less than 8'-0", appropriate approved crash cushion protection, other than sand filled modules, shall be provided at fixed objects and at approach ends of temporary railing. The specific type of crash cushion shall be as shown on the project plans or as specified in the Special Provisions, or if not shown on the project plans or specified in the Special Provisions, shall be as approved by the Engineer.
10. Approach speeds indicated conform to NCHRP 350 Report criteria.
11. Use of pallets is optional.

STATE OF CALIFORNIA
DEPARTMENT OF TRANSPORTATION

TEMPORARY CRASH CUSHION, SAND FILLED (SHOULDER INSTALLATIONS)

NO SCALE

RSP T2 DATED JUNE 6, 2008 SUPERSEDES STANDARD PLAN T2
DATED MAY 1, 2006 - PAGE 213 OF THE STANDARD PLANS BOOK DATED MAY 2006.

REVISED STANDARD PLAN RSP T2

2006 REVISED STANDARD PLAN RSP T2

5-15-08

DIST	COUNTY	ROUTE	POST MILES TOTAL PROJECT	SHEET NO.	TOTAL SHEETS
08	Riv,SBd	10,15,18, 38,60,*etc.*	Var	35	39

REGISTERED ELECTRICAL ENGINEER

October 5, 2007
PLANS APPROVAL DATE

REGISTERED PROFESSIONAL ENGINEER Jeffery G. McRae No. E14512 Exp. 6-30-08 ELECTRICAL STATE OF CALIFORNIA

The State of California or its officers or agents shall not be responsible for the accuracy or completeness of electronic copies of this plan sheet.

To accompany plans dated 8-9-10

ELECTROLIERS

STANDARD TYPES
15, 15D
15 STRUCTURE
21, 21D STRUCTURE
30
31
32
35
36-20A

High mast light pole

Double Arm lighting standard

Existing electrolier

Electrolier foundation (Future installation)

NOTES:

1. Luminaires shall be 310 W HPS when installed on Type 21, 21D, 30, 31, 32, 35 and 36-20A Standards, unless otherwise specified. Luminaires shall be 200 W HPS when installed on other type standards or poles, unless otherwise specified.
2. Luminaires shall be the cutoff type, ANSI Type Ⅲ medium cutoff lighting distribution, unless otherwise specified.
3. Variations noted adjacent to symbol on project plans.

Electrolier (see project notes or project plans)

Luminaire on wood pole

STANDARD NOTES:

- AB — Abandon. If applied to conduit, remove conductors.
- BC — Install pull box in existing conduit run.
- BP — Pedestrian barricade, type as indicated on plan.
- CB — Install conduit into existing pull box.
- CC — Connect new and existing conduit. Remove existing conductors and install conductors as indicated.
- CF — Conduit to remain for future use. Remove conductors. Install pull wire or rope.
- DH — Detector handhole.
- FA — Foundation to be abandoned.
- IS — Install sign on signal mast arm.
- NS — No slip base on standard.
- PEC — Photoelectric control.
- PEU — Photoelectric unit.
- RC — Equipment or material to be removed and become the property of the Contractor.
- RE — Remove electrolier, fuses and ballast. Tape ends of conductors.
- RL — Relocate equipment.
- RR — Remove and reuse equipment.
- RS — Remove and salvage equipment.
- SC — Splice new to existing conductors.
- SD — Service disconnect.
- SF — Standard to remain for future use. Remove luminaire, pole conductors, fuses and ballast.
- TSP — Telephone service point.

ABBREVIATIONS AND EQUIPMENT DESIGNATIONS

PROPOSED	EXISTING	
BBS	bbs	Battery backup system
BC	bc	Bolt circle
C	C	Conduit
CCTV	cctv	Closed circuit television
CKT	ckt	Circuit
CMS	cms	Changeable message sign
DLC	dlc	Loop detector lead-in cable
EMS	ems	Extinguishable message sign
EVC	evc	Emergency vehicle cable
EVD	evd	Emergency vehicle detector
FB	fb	Flashing beacon
FBCA	fbca	Flashing beacon control assembly
FBS	fbs	Flashing beacon with slip base
FO	fo	Fiber optic
G	G	Ground (Equipment Grounding Conductor)
GFCI	GFCI	Ground fault circuit interrupt
HAR	har	Highway advisory radio
HEX	hex	Hexagonal
HPS	hps	High pressure sodium
IISNS	iisns	Internally illuminated street name sign
ISL	isl	Induction sign lighting
LED	led	Light emitting diode
LMA	lma	Luminaire mast arm
LPS	lps	Low pressure sodium
LTG	ltg	Lighting
LUM	lum	Luminaire
MAT	mat	Mast arm mounting vehicle signal faces, top attachment
MAS	mas	Mast arm mounting vehicle signal faces, side attachment
MAS-4A	mas-4A	Mast arm mounting vehicle signal faces, side attachment - 4 signal section
MAS-4B	mas-4B	
MAS-4C	mas-4C	
MAS-5A	mas-5A	Mast arm mounting vehicle signal faces, side attachment - 5 signal section
MAS-5B	mas-5B	
MC	mc	Mercury contactor
M/M	m/m	Multiple to multiple transformer
MT	mt	Conduit with pull wire or rope only
MTG	mtg	Mounting
	mv	Mercury vapor lighting fixture
N	N	Neutral (Grounded Conductor)
NC	NC	Normally closed
NO	NO	Normally open
PB	pb	Pull box
PEC	pec	Photoelectric control (Type Ⅰ, Ⅱ, Ⅲ, Ⅳ or Ⅴ as shown)
PED	ped	Pedestrian
PEU	peu	Photoelectric unit
PPB	ppb	Pedestrian push button
RL		Relocated equipment
RM	rm	Ramp metering
SB	sb	Slip base
SIC	sic	Signal interconnect cable
SIG	sig	Signal
SMA	sma	Signal mast arm
SNS	sns	Street name sign
SP	sp	Service point
TDC	tdc	Telephone demarcation cabinet
TMS	tms	Traffic monitoring station
TOS	tos	Traffic Operations System
VEH	veh	Vehicle
XFMR	xfmr	Transformer
COMM	comm	Communication
RWIS	rwis	Roadway weather information system

SOFFIT AND WALL MOUNTED LUMINAIRES

Pendant, 70 W HPS unless otherwise specified.

Flush, 70 W HPS unless otherwise specified.

Wall surface, 70 W HPS unless otherwise specified.

Existing soffit or wall luminaire to remain unmodified.

Existing soffit or wall luminaire to be modified as specified.

NOTE:

Arrow indicates "street side" of luminaire.

STATE OF CALIFORNIA
DEPARTMENT OF TRANSPORTATION

ELECTRICAL SYSTEMS (SYMBOLS AND ABBREVIATIONS)

NO SCALE

RSP ES-1A DATED OCTOBER 5, 2007 SUPERSEDES STANDARD PLAN ES-1A DATED MAY 1, 2006 - PAGE 400 OF THE STANDARD PLANS BOOK DATED MAY 2006.

REVISED STANDARD PLAN RSP ES-1A

2006 REVISED STANDARD PLAN RSP ES-1A

DIST	COUNTY	ROUTE	POST MILES TOTAL PROJECT	SHEET NO.	TOTAL SHEETS
08	Riv,SBd	10,15,18, 38,60,*etc.*	Var	36	39

REGISTERED ELECTRICAL ENGINEER

October 5, 2007
PLANS APPROVAL DATE

REGISTERED PROFESSIONAL ENGINEER
Jeffery G. McRae
No. E14512
Exp. 6-30-08
ELECTRICAL
STATE OF CALIFORNIA

The State of California or its officers or agents shall not be responsible for the accuracy or completeness of electronic copies of this plan sheet.

To accompany plans dated 8-9-10

CONDUIT

PROPOSED	EXISTING	
		Lighting Conduit, unless otherwise indicated or noted
		Traffic signal conduit
C	c	Communication conduit
T	t	Telephone conduit
F	f	Fire alarm conduit
FO	fo	Fiber optic conduit
		Conduit termination (RSP ES-9A C)
R	r	Conduit riser in/on structure or service pole

SERVICE EQUIPMENT

PROPOSED	EXISTING	
OH	oh	Overhead lines
U	U	Wood pole "U" indicates utility owned
		Pole guy with anchor
		Utility transformer - ground mounted
III		Service equipment enclosure type
		Service equipment enclosure door indicates front of enclosure
T	t	Telephone demarcation cabinet

POLE-MOUNTED SERVICE DESIGNATION

Type of installation

TYPE H SERVICE - 28'-10" ← Pole height above grade

ILLUMINATED OVERHEAD SIGN

PROPOSED	EXISTING	
		Overhead sign - Single post
		Overhead sign - Two post
		Overhead sign - Mounted on structure
		Overhead sign with electrolier

SIGNAL EQUIPMENT

PROPOSED	EXISTING	
		Pedestrian signal face
		Pedestrian push button post
		Pedestrian barricade
		Vehicle signal face (with backplate, 3-Section: red, yellow and green)
		Vehicle signal face with angle visors
PV	PV	Modifications of basic symbols: "L" indicates all non-arrow sections louvered "LG" indicates louvered green section only "PV" indicates 12" programmed visibility sections "8" indicates all 8" sections (only when specified)
		Type 15TS and Vehicle signal face
		Vehicle signal face with red, yellow and green left arrow sections
		Vehicle signal face with red and yellow sections and up green arrow
		Vehicle signal face (5 Section) with red, yellow and green sections and yellow and green right arrows
		Type 1 Standard and attached vehicle signal faces
		Standard with signal mast arm only and attached vehicle signal faces and internally illuminated street name sign
		Type 33 Standard, Left-turn vehicle signal face and sign
		Standard with luminaire and signal mast arms and attached vehicle signal faces
		Cantilever flashing beacon Type 9 Frame, with a sign unless otherwise specified or indicated
		Type 15-FBS Standard with two vehicle signal face sections with lens, backplate and visor with a sign
R	Y	Flashing beacon. One vehicle signal face section with lens, backplate and visor. "R" indicates red indication, "Y" indicates yellow indication
		Controller assembly. Door indicates front of cabinet

SIGNAL EQUIPMENT Cont

PROPOSED	EXISTING	
		Guard post
		Type 1 Standard with "Meter On" sign
		Emergency Vehicle detector

NOTES:

1. All signal sections shall be 12" unless shown otherwise.
2. Signal heads shall be provided with backplates unless shown otherwise.
3. Signal indication shall be LED.

STATE OF CALIFORNIA
DEPARTMENT OF TRANSPORTATION

ELECTRICAL SYSTEMS (SYMBOLS AND ABBREVIATIONS)

NO SCALE

RSP ES-1B DATED OCTOBER 5, 2007 SUPERCEDES STANDARD PLAN ES-1B DATED MAY 1, 2006 - PAGE 401 OF THE STANDARD PLANS BOOK DATED MAY 2006.

REVISED STANDARD PLAN RSP ES-1B

2006 REVISED STANDARD PLAN RSP ES-1B

DIST	COUNTY	ROUTE	POST MILES TOTAL PROJECT	SHEET NO.	TOTAL SHEETS
08	Riv,SBd	10,15,18, 38,60,*etc.*	Var	37	39

Jeffery G. McRae
REGISTERED ELECTRICAL ENGINEER

October 5, 2007
PLANS APPROVAL DATE

REGISTERED PROFESSIONAL ENGINEER Jeffery G. McRae No. E14512 Exp. 6-30-08 ELECTRICAL STATE OF CALIFORNIA

The State of California or its officers or agents shall not be responsible for the accuracy or completeness of electronic copies of this plan sheet.

To accompany plans dated 8-9-10

2006 REVISED STANDARD PLAN RSP ES-1C

EQUIPMENT IDENTIFICATION

ILLUMINATED SIGN IDENTIFICATION NUMBER:

Sign No. 12345 — Sign number - Place on post or structure

10 ISL SCI 1.0

- 1.0 — Transformer rating (kVA)
- SCI — Lighting control type
- ISL — Number and type of fixtures

Do NOT place on standard or structure

ELECTROLIER OR EQUIPMENT IDENTIFICATION NUMBER:

12345 - 15'-0"

- 15'-0" — Mast arm length, if shown. Do not place on standard or structure.
- 12345 — Equipment number - Place on standard or structure. Existing equipment numbers are shown in parenthesis

CONDUIT AND CONDUCTOR IDENTIFICATION:

1½"C, 2#10, 15#14, 2 DLC

- 2#10, 15#14, 2 DLC — Number and size of conductors and cables
- 1½"C — Size of conduit in inches

Ø1, Ø2, Ø2P, etc.	Traffic phase identification for signal faces, detectors and phase diagrams
1 2 3	Project note numbers
A B C	Equipment description, installation or item numbers
1 2 3	Conduit run numbers

SIGNAL AND LIGHTING STANDARD (TYPICAL DESIGNATION):

19A - 3 - 100

- 100 — Wind velocity = 100 mph
- 3 — Case 3 arm loading
- 19A — Standard type
- Standard Plan sheet number
- Detail number or letter

MISCELLANEOUS EQUIPMENT

PROPOSED	EXISTING	
CMS	cms	Changeable message sign
		Closed circuit television camera
		Highway advisory radio pole and antenna
EMS	ems	Extinguishable message sign
M V	m v	Detection device M = Microwave sensor V = Video image sensor

WIRING DIAGRAM LEGEND

P	Pole
CB	Circuit breaker
A	Ampere
V	Volt
M	Metered
UM	Unmetered
NB	Neutral bus
GB	Ground bus
G	Equipment grounding conductor
N	Grounded conductor (Neutral)

- External conductor
- Conductor or bus
- Tie point
- Contactor coil
- Contactor, Contact NO
- Terminal blocks
- Contactor, Contact NC
- Enclosure bond
- Grounding electrode
- Circuit breaker
- Receptacle

PULL BOXES

PROPOSED	EXISTING	
		Pull box-No. 5 unless otherwise indicated or noted.
3	9A(21)	Pull box-Additional designations or descriptions

3 = No. 3½ pull box
5 = No. 5 pull box
6 = No. 6 pull box
7 = No. 7 (Ceiling pull box)
8 = No. 8 (Pendant soffit pull box)
9 = No. 9 pull box
9A = No. 9A pull box

(C) = Communications pull box
(E) = Pull box with extension
(S) = Sprinkler control pull box
(21) = Anchor bolts and conduit for future installation of Type 21 Standard
(T) = Traffic pull box

VEHICLE DETECTORS

5 J 9 U

- U = Upper
- L = Lower
- Slot number in input file
- Input file (I or J)
- Phase

PROPOSED	EXISTING	
		Type A detector loop. Outline of sawcut shown.
		Type B detector loop. Outline of sawcut shown.
		Type C detector loop. Outline of sawcut shown.
		Type D detector loop. Outline of sawcut shown.
		Type E detector loop. Outline of sawcut shown.
		Type Q detector loop. Outline of sawcut shown.
		Magnetic detector
DH	dh	Detector handhole
		Microwave or video detection zone

STATE OF CALIFORNIA
DEPARTMENT OF TRANSPORTATION

ELECTRICAL SYSTEMS (SYMBOLS AND ABBREVIATIONS)

NO SCALE

RSP ES-1C DATED OCTOBER 5, 2007 SUPERCEDES STANDARD PLAN ES-1C DATED MAY 1, 2006 - PAGE 402 OF THE STANDARD PLANS BOOK DATED MAY 2006.

REVISED STANDARD PLAN RSP ES-1C

DIST	COUNTY	ROUTE	POST MILES TOTAL PROJECT	SHEET NO.	TOTAL SHEETS
08	Riv,SBd	10,15,18, 38,60,*etc.*	Var	38	39

REGISTERED ELECTRICAL ENGINEER

October 5, 2007
PLANS APPROVAL DATE

REGISTERED PROFESSIONAL ENGINEER Jeffery G. McRae No. E14512 Exp. 6-30-08 ELECTRICAL STATE OF CALIFORNIA

The State of California or its officers or agents shall not be responsible for the accuracy or completeness of electronic copies of this plan sheet.

To accompany plans dated 8-9-10

LOOP INSTALLATION PROCEDURE

1. Loops shall be centered in lanes.
2. Saw slots in pavement for loop conductors as shown in details.
3. Distance between side of loop and a lead-in saw cut from adjacent detectors shall be 2'-0" minimum. Distance between lead-in saw cuts shall be 6" minimum.
4. Bottom of saw slot shall be smooth with no sharp edges.
5. Slots shall be washed until clean, blown out and thoroughly dried before installing loop conductors.
6. Adjacent loops on the same sensor unit channel shall be wound in opposite directions.
7. Identify and tag loop circuit pairs in the pull box with loop number, start (S) and finish (F) of conductor. Identify and tag lead-in-cable with sensor number and phase.
8. Install loop conductor in slot using a 3/16" to 1/4" thick wood paddle. Hold loop conductors with wood paddles (at the bottom of the sawed slot) during sealant placement.
9. No more than 2 twisted pairs shall be installed in one sawed slot.
10. Allow additional 5'-0" of slack length of conductor for the lead-in run to pull box.
11. The additional length of each conductor for each loop shall be twisted together into a pair (6 turns per 3'-4" minimum) before being placed in the slot and conduit leading to pull box.
12. Test each loop circuit for continuity, circuit resistance and insulation resistance at the pull box before filling slots.
13. Fill slots as shown in details.
14. Splice loop conductors to lead-in-cable. Splices shall be soldered.
15. End of lead-in-cable and Type 2 loop conductor shall be waterproofed prior to installing in conduit to prevent moisture from entering the cable.
16. Lead-in-cable shall not be spliced between the pull box and the controller cabinet terminals.
17. Test each loop circuit for continuity, circuit resistance and insulation resistance at the controller cabinet location.
18. Where loop conductors are not to be spliced to a lead-in-cable, the ends of the conductors shall be taped and waterproofed with electrical insulating coating.

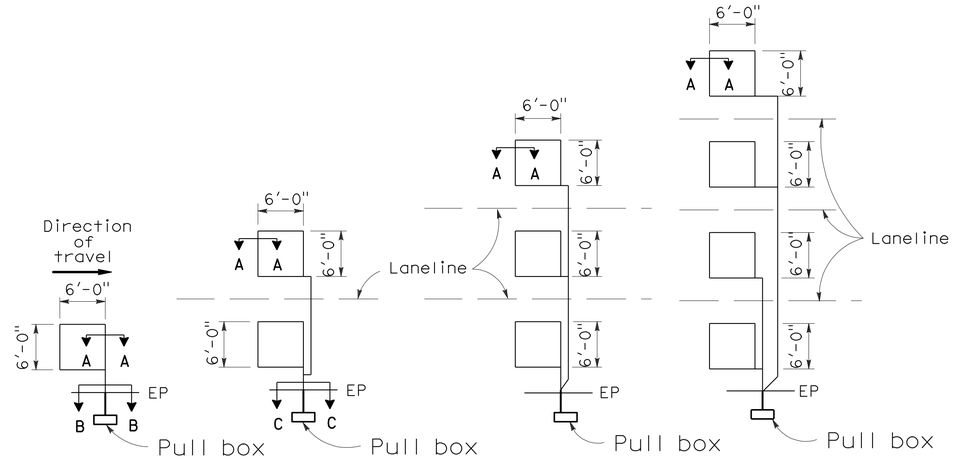

TYPE 1A INSTALLATION | TYPE 2A INSTALLATION | TYPE 3A INSTALLATION | TYPE 4A INSTALLATION

SAWCUT DETAILS

(Type A loop detector configurations illustrated)

1. 1A thru 4A = 1 Type A loop configuration in each lane.
2. 1B thru 4B = 1 Type B loop configuration in each lane.
3. 1C = 1 Type C loop configuration entering lanes as required.
4. 1D thru 4D = 1 Type D loop configuration in each lane.
5. 1E thru 4E = 1 Type E loop configuration in each lane.
6. 1Q thru 4Q = 1 Type Q loop configuration in each lane. (Use Type A, B, C, D, E or Q loop detector configurations only when specified or shown on plans)

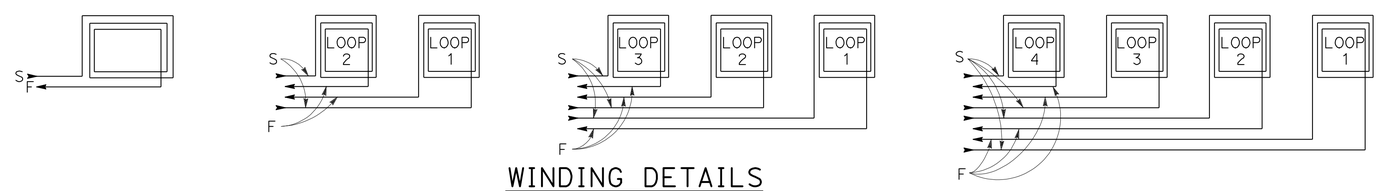

WINDING DETAILS

See Notes 6 and 7

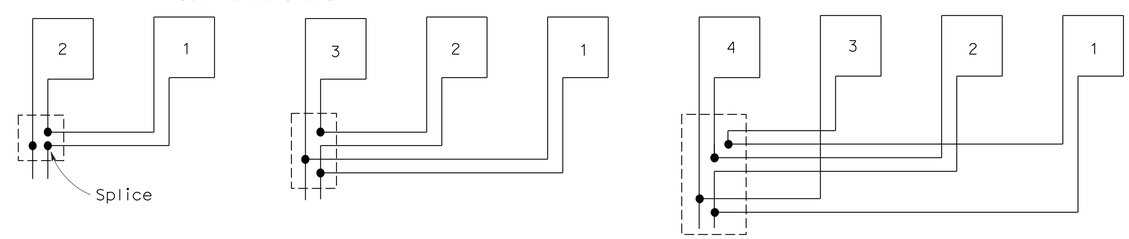

TYPICAL LOOP CONNECTIONS

(Dashed lines represent the pull box)

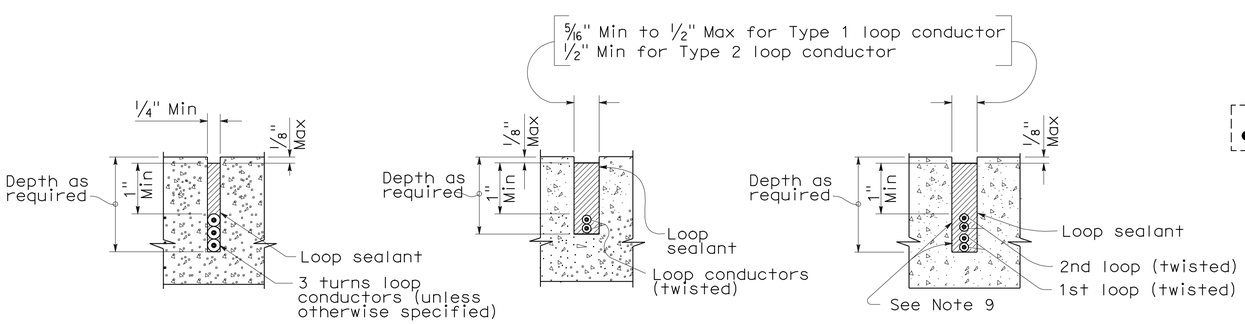

SECTION A-A | SECTION B-B | SECTION C-C

SLOT DETAILS - TYPE 1 AND TYPE 2 LOOP CONDUCTOR

STATE OF CALIFORNIA
DEPARTMENT OF TRANSPORTATION

ELECTRICAL SYSTEMS (DETECTORS)

NO SCALE

RSP ES-5A DATED OCTOBER 5, 2007 SUPERCEDES STANDARD PLAN ES-5A DATED MAY 1, 2006 - PAGE 423 OF THE STANDARD PLANS BOOK DATED MAY 2006.

REVISED STANDARD PLAN RSP ES-5A

2006 REVISED STANDARD PLAN RSP ES-5A

DIST	COUNTY	ROUTE	POST MILES TOTAL PROJECT	SHEET NO.	TOTAL SHEETS
08	Riv,SBd	10,15,18, 38,60,*etc.*	Var	39	39

REGISTERED CIVIL ENGINEER

January 18, 2008
PLANS APPROVAL DATE

REGISTERED PROFESSIONAL ENGINEER
Stanley P. Johnson
No. C57793
Exp. 03-31-08
CIVIL
STATE OF CALIFORNIA

The State of California or its officers or agents shall not be responsible for the accuracy or completeness of electronic copies of this plan sheet.

To accompany plans dated 8-9-10

LUMINAIRE ARM DATA

PROJECTED LENGTH	THICKNESS	MINIMUM OD @ POLE	MOUNTING HEIGHT
* 6′-0″	0.1196″	3¼″	36′-9″±
8′-0″		3½″	37′-3″±
10′-0″		3¾″	38′-0″±
12′-0″		3¾″	39′-0″±
15′-0″		4¼″	39′-6″±
** 20′-0″	0.1793″	5″	37′-0″±

* Type 30 - arm length 6′-0″ - 15′-0″ maximum
** Type 31 - arm lengths 20′-0″

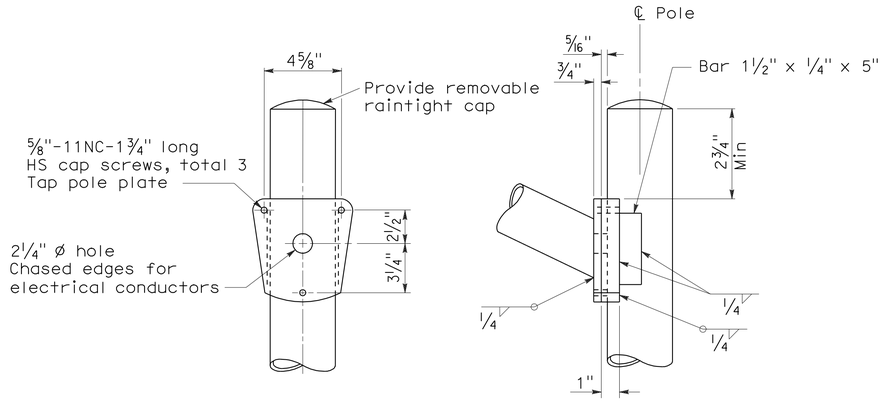

DETAIL A - TYPE 30

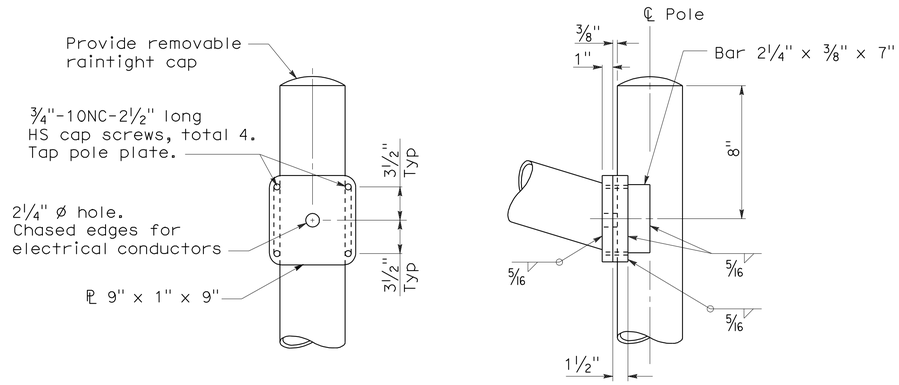

DETAIL A - TYPE 31

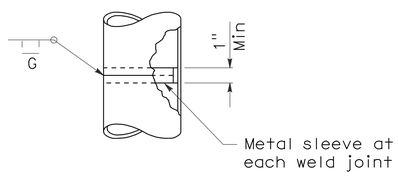

POLE SPLICE

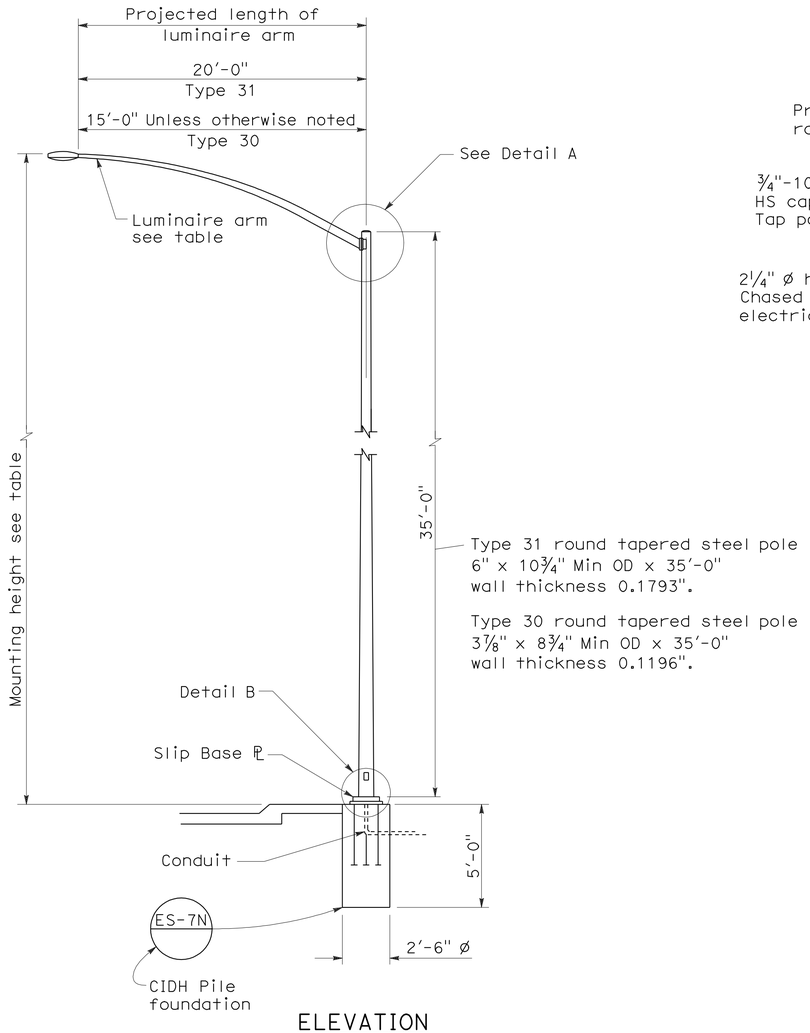

ELEVATION

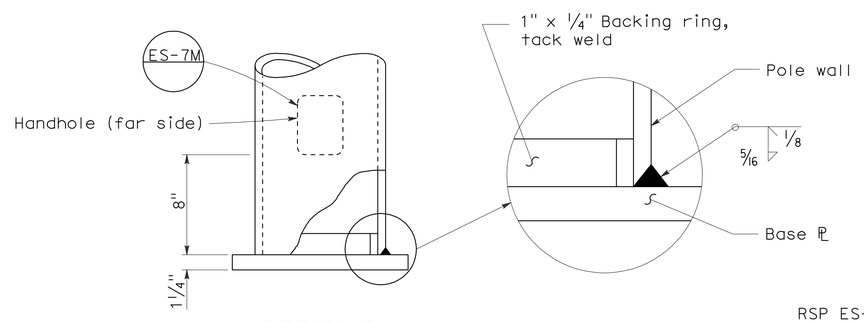

DETAIL B

NOTES:

1. Sheet steel shall have a minimum yield of 48,000 psi.
2. For slip base details see Standard Plan ES-6F.
3. For Type 30 fixed base use Type 15 base plate, and foundation shown on Revised Standard Plan RSP ES-6A. Use 1¼″ Dia x 3′-6″ x 4″ anchor bolts.
4. For Type 31 fixed base use Type 32 base plate, anchor bolts and foundation on Standard Plan ES-6G.
5. Handhole shall be located on downstream side of traffic unless noted otherwise on plans.
6. For additional general notes refer to Standard Plan ES-7M.

STATE OF CALIFORNIA
DEPARTMENT OF TRANSPORTATION

ELECTRICAL SYSTEMS (LIGHTING STANDARD TYPES 30 AND 31)

NO SCALE

RSP ES-6E DATED JANUARY 18, 2008 SUPERCEDES STANDARD PLAN ES-6E DATED MAY 1, 2006 - PAGE 430 OF THE STANDARD PLANS BOOK DATED MAY 2006.

REVISED STANDARD PLAN RSP ES-6E

2006 REVISED STANDARD PLAN RSP ES-6E

11-19-07