Dist	COUNTY	ROUTE	POST MILES TOTAL PROJECT	SHEET No.	TOTAL SHEETS
08	SBd	83, 210	0.0/7.2, 30.2/33.2	1	27

INDEX OF PLANS

SHEET No.	DESCRIPTION
1	TITLE AND LOCATION MAP
2-4	TYPICAL CROSS SECTIONS
5-9	CONSTRUCTION DETAILS
10-12	CONSTRUCTION AREA SIGNS
13-16	DETOUR PLANS
17	PAVEMENT DELINEATION QUANTITIES
18	SUMMARY OF QUANTITIES
19-20	ELECTRICAL PLANS
21-27	REVISED STANDARD PLANS

THE STANDARD PLANS LIST APPLICABLE TO THIS CONTRACT IS INCLUDED IN THE NOTICE TO BIDDERS AND SPECIAL PROVISIONS BOOK.

STATE OF CALIFORNIA

DEPARTMENT OF TRANSPORTATION

PROJECT PLANS FOR CONSTRUCTION ON

STATE HIGHWAY

IN SAN BERNARDINO COUNTY IN CITY OF CHINO, ON ROUTE 83 FROM ROUTE 71/83 SEPARATION TO ROUTE 60/83 SEPARATION AND IN SAN BERNARDINO, ON ROUTE 210 FROM 5TH STREET OVERCROSSING TO ROUTE 210/10 SEPARATION

TO BE SUPPLEMENTED BY STANDARD PLANS DATED MAY 2006

LOCATION MAP

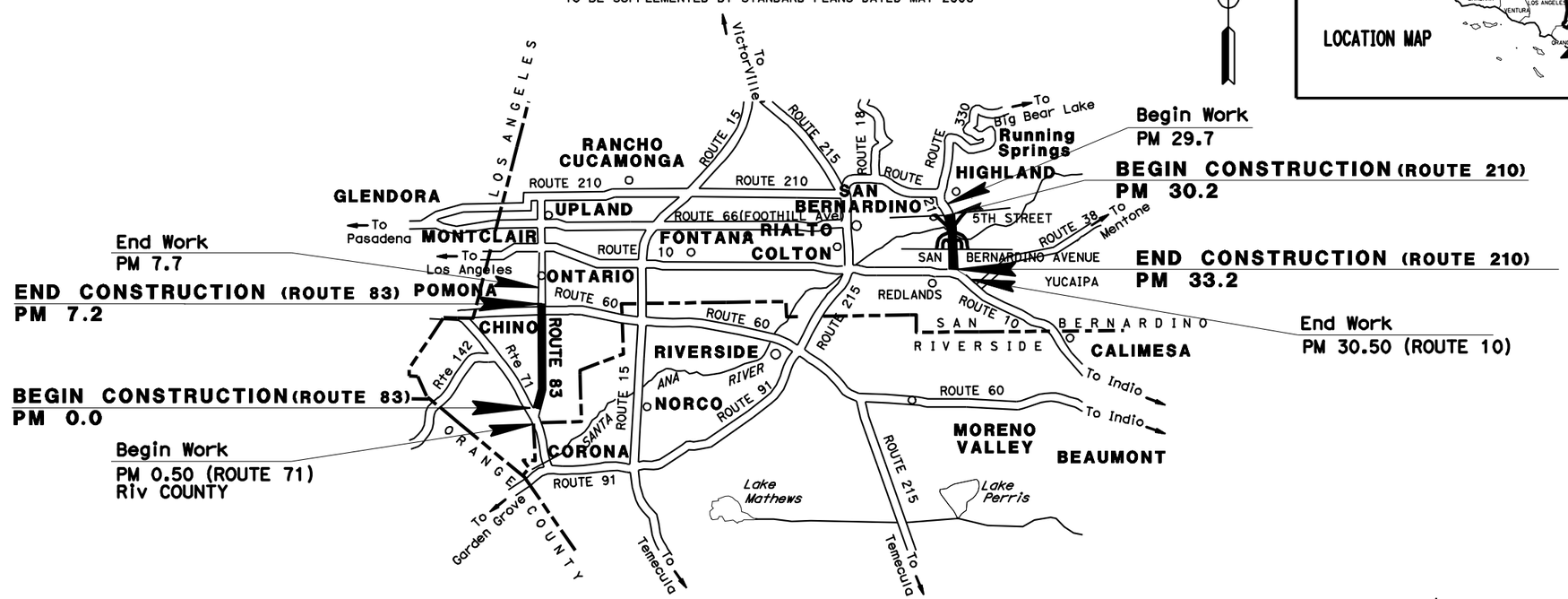

NO SCALE

PROJECT ENGINEER REGISTERED CIVIL ENGINEER — DATE 12-27-10

December 27, 2010
PLANS APPROVAL DATE

REGISTERED PROFESSIONAL ENGINEER — YONGBEE LIAU — No. C75571 — Exp. 6/30/12 — CIVIL — STATE OF CALIFORNIA

THE STATE OF CALIFORNIA OR ITS OFFICERS OR AGENTS SHALL NOT BE RESPONSIBLE FOR THE ACCURACY OR COMPLETENESS OF SCANNED COPIES OF THIS PLAN SHEET.

CONTRACT No.	08-0P3704
PROJECT ID	0800001023

THE CONTRACTOR SHALL POSSESS THE CLASS (OR CLASSES) OF LICENSE AS SPECIFIED IN THE "NOTICE TO BIDDERS."

PROJECT MANAGER: CATALINO PINING
DESIGN ENGINEER: YONGBEE LIAU

LAST REVISION 12-24-10 — DATE PLOTTED => 27-DEC-2010 — TIME PLOTTED => 08:31

Dist	COUNTY	ROUTE	POST MILES TOTAL PROJECT	SHEET No.	TOTAL SHEETS
08	SBd	83, 210	0.0/7.2, R30.2/R33.2	2	27

REGISTERED CIVIL ENGINEER 12-27-10 DATE

12-27-10
PLANS APPROVAL DATE

REGISTERED PROFESSIONAL ENGINEER YONGBEE LIAU No. C75571 Exp 6/30/12 CIVIL STATE OF CALIFORNIA

THE STATE OF CALIFORNIA OR ITS OFFICERS OR AGENTS SHALL NOT BE RESPONSIBLE FOR THE ACCURACY OR COMPLETENESS OF SCANNED COPIES OF THIS PLAN SHEET.

NOTES:

1. DIMENSIONS OF STRUCTURAL SECTIONS ARE SUBJECT TO TOLERANCES SPECIFIED IN THE STANDARD SPECIFICATIONS.
2. SUPERELEVATION AS SHOWN OR AS DIRECTED BY THE ENGINEER.
3. EXACT LOCATIONS AND DIMENSIONS OF REPLACE ASPHALT CONCRETE SURFACING SHALL BE DETERMINED BY THE ENGINEER.
4. NO SURFACING OR FOG SEAL SHALL BE ALLOWED ON BRIDGES.
5. LANE, MEDIAN, AND SHOULDER WIDTHS SHOWN ARE APPROXIMATE.
6. CENTERLINE SHOWN IS APPROXIMATE.
7. EXISTING STRUCTURAL SECTIONS NOT SHOWN.

LEGEND:

FOG SEAL

REPLACE AC SURFACING HMA (TYPE A) 0.40' THICK

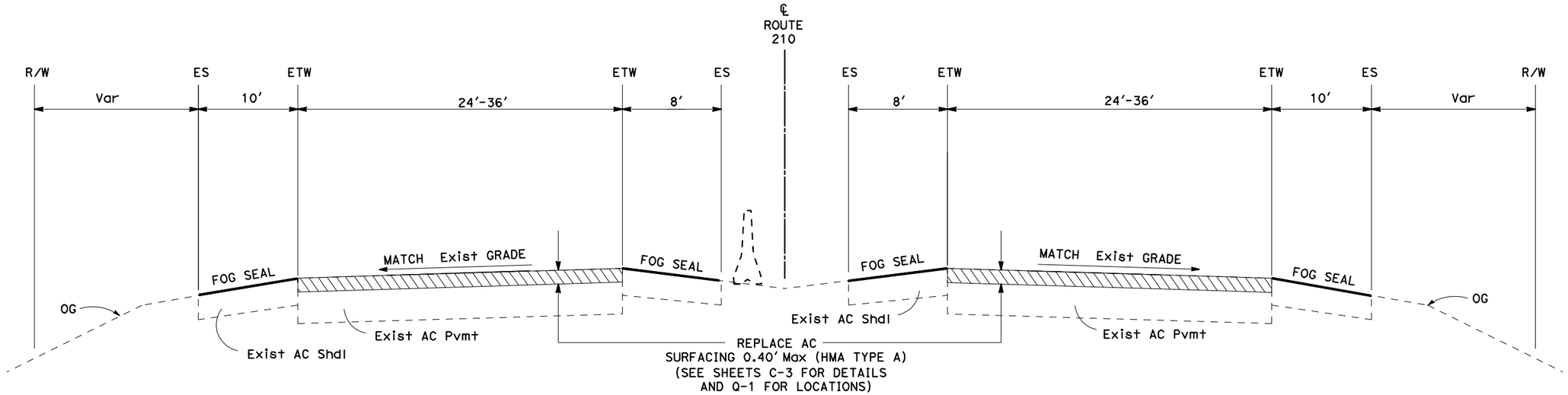

EASTBOUND

ROUTE 210

PM R30.2 TO PM 33.2

WESTBOUND

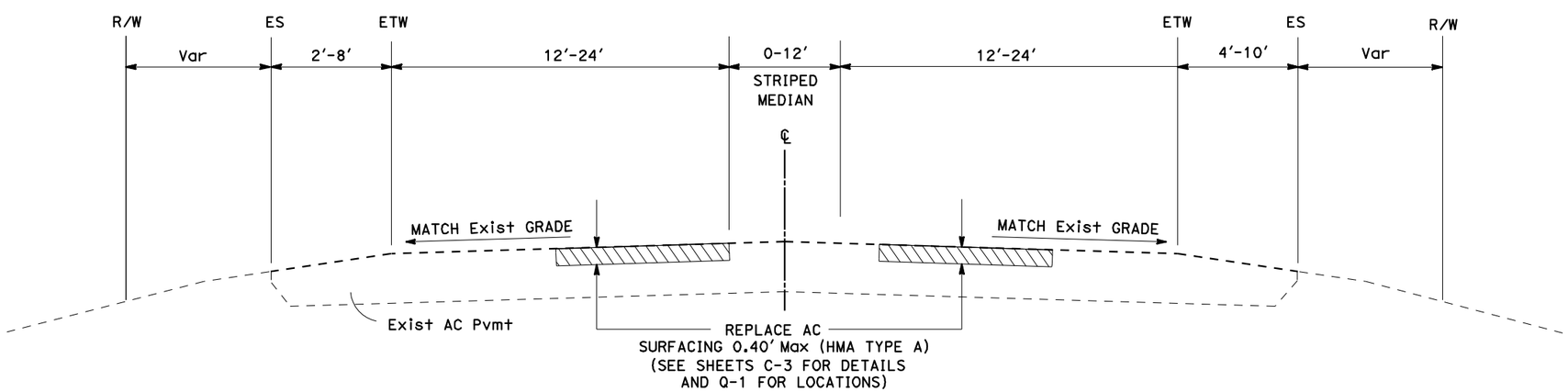

SOUTHBOUND

ROUTE 83

PM 0.0 TO 1.2
PM 2.0 TO 2.7

NORTHBOUND

TYPICAL CROSS SECTION

NO SCALE

X-1

EXISTING UTILITY FACILITIES HAVE NOT BEEN PLOTTED ON THESE PLANS.

STATE OF CALIFORNIA - DEPARTMENT OF TRANSPORTATION
MAINTENANCE ENGINEERING

FUNCTIONAL SUPERVISOR: MICHAEL RISTIC

CALCULATED-DESIGNED BY: YONGBEE LIAU
CHECKED BY: MICHAEL RISTIC

REVISED BY | DATE REVISED

LAST REVISION 12-24-10 | DATE PLOTTED => 27-DEC-2010 | TIME PLOTTED => 08:32

Dist	COUNTY	ROUTE	POST MILES TOTAL PROJECT	SHEET No.	TOTAL SHEETS
08	SBd	83, 210	0.0/7.2, R30.2/R33.2	3	27

REGISTERED CIVIL ENGINEER 12-27-10 DATE

12-27-10
PLANS APPROVAL DATE

REGISTERED PROFESSIONAL ENGINEER YONGBEE LIAU No. C75571 Exp 6/30/12 CIVIL STATE OF CALIFORNIA

THE STATE OF CALIFORNIA OR ITS OFFICERS OR AGENTS SHALL NOT BE RESPONSIBLE FOR THE ACCURACY OR COMPLETENESS OF SCANNED COPIES OF THIS PLAN SHEET.

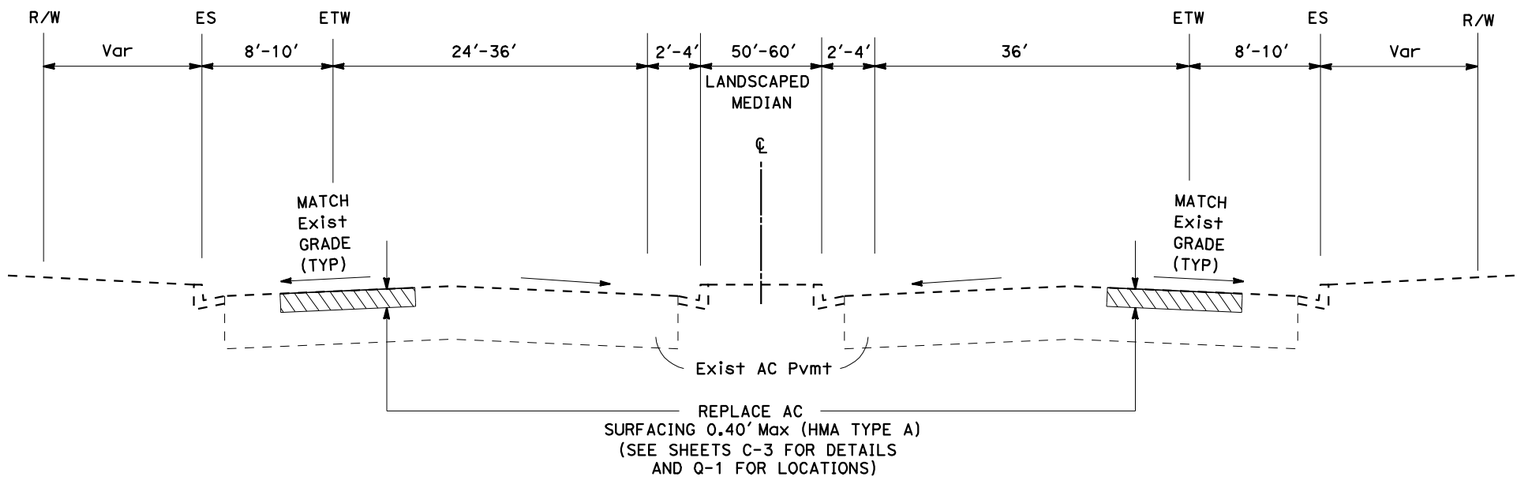

SOUTHBOUND **ROUTE 83** NORTHBOUND
PM 6.45 TO 7.20

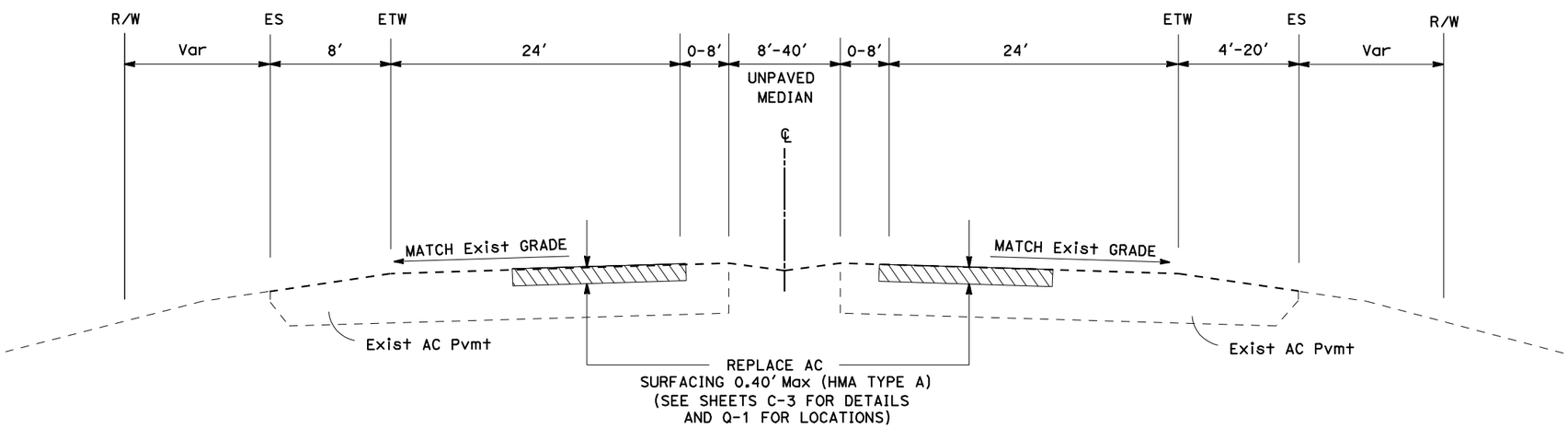

SOUTHBOUND **ROUTE 83** NORTHBOUND
PM 1.15 TO 2.74
PM 2.74 TO 6.45

TYPICAL CROSS SECTION

NO SCALE

X-2

EXISTING UTILITY FACILITIES HAVE NOT BEEN PLOTTED ON THESE PLANS.

REVISED BY	DATE REVISED

CALCULATED-DESIGNED BY	CHECKED BY
YONGBEE LIAU	MICHAEL RISTIC

FUNCTIONAL SUPERVISOR: MICHAEL RISTIC

STATE OF CALIFORNIA - DEPARTMENT OF TRANSPORTATION
Caltrans MAINTENANCE ENGINEERING

LAST REVISION 12-17-10 | DATE PLOTTED => 27-DEC-2010 | TIME PLOTTED => 08:32

Dist	COUNTY	ROUTE	POST MILES TOTAL PROJECT	SHEET No.	TOTAL SHEETS
08	SBd	83, 210	0.0/7.2, R30.2/R33.2	4	27

REGISTERED CIVIL ENGINEER 12-27-10 DATE

12-27-10
PLANS APPROVAL DATE

REGISTERED PROFESSIONAL ENGINEER YONGBEE LIAU No. C75571 Exp 6/30/12 CIVIL STATE OF CALIFORNIA

THE STATE OF CALIFORNIA OR ITS OFFICERS OR AGENTS SHALL NOT BE RESPONSIBLE FOR THE ACCURACY OR COMPLETENESS OF SCANNED COPIES OF THIS PLAN SHEET.

(X) RAMP/CONNECTOR NUMBER. SEE SHEETS C-1 AND C-2.

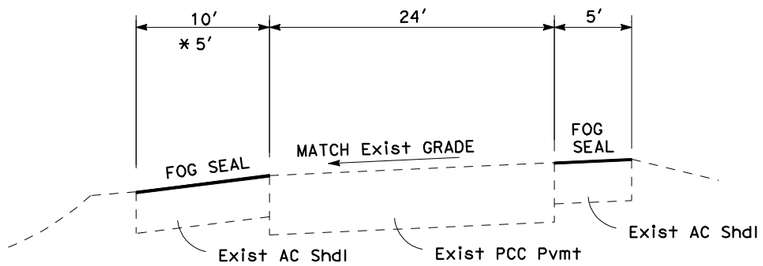

(1) ROUTE 10 WB TO ROUTE 210 WB CONNECTOR
(2) *ROUTE 10 EB TO ROUTE 210 WB CONNECTOR

SEE CONSTRUCTION DETAIL C-1 FOR LIMITS OF CONSTRUCTION.

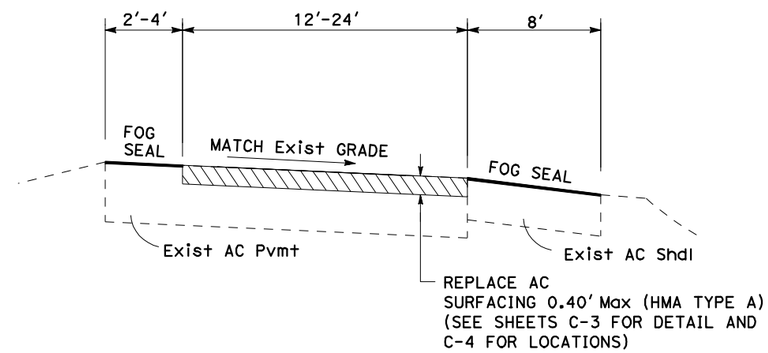

(5) 5TH STREET ONRAMP TO ROUTE 210 EB
(6) SAN BERNARDINO AVENUE OFFRAMP FROM ROUTE 210 EB
(7) SAN BERNARDINO AVENUE ONRAMP TO ROUTE 210 EB

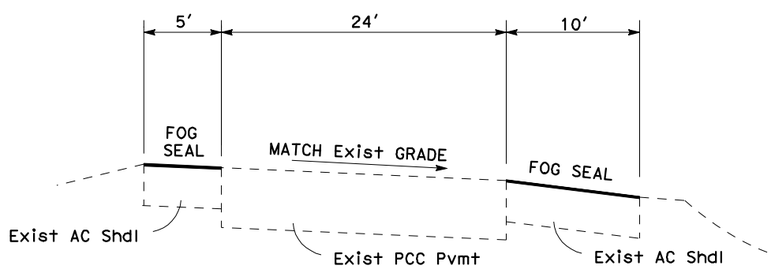

(3) ROUTE 210 EB TO ROUTE 10 WB CONNECTOR
(4) ROUTE 210 EB TO ROUTE 10 EB CONNECTOR

SEE CONSTRUCTION DETAIL C-1 FOR LIMITS OF CONSTRUCTION.

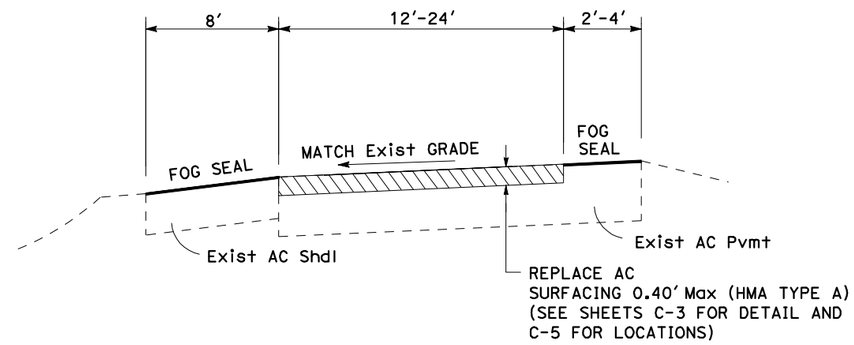

(8) 5TH STREET OFFRAMP FROM ROUTE 210 WB
(9) SAN BERNARDINO AVENUE OFFRAMP FROM ROUTE 210 WB
(10) SAN BERNARDINO AVENUE ONRAMP TO ROUTE 210 WB

TYPICAL CROSS SECTION

NO SCALE

X-3

EXISTING UTILITY FACILITIES HAVE NOT BEEN PLOTTED ON THESE PLANS.

STATE OF CALIFORNIA - DEPARTMENT OF TRANSPORTATION
Caltrans MAINTENANCE ENGINEERING

FUNCTIONAL SUPERVISOR: MICHAEL RISTIC
CALCULATED-DESIGNED BY: YONGBEE LIAU
CHECKED BY: MICHAEL RISTIC
REVISED BY / DATE REVISED

LAST REVISION 12-17-10
DATE PLOTTED => 27-DEC-2010
TIME PLOTTED => 08:32

Dist	COUNTY	ROUTE	POST MILES TOTAL PROJECT	SHEET No.	TOTAL SHEETS
08	SBd	83, 210	0.0/7.2, R30.2/R33.2	5	27

REGISTERED CIVIL ENGINEER 12-27-10 DATE

12-27-10
PLANS APPROVAL DATE

REGISTERED PROFESSIONAL ENGINEER YONGBEE LIAU No. C75571 Exp 6/30/12 CIVIL STATE OF CALIFORNIA

THE STATE OF CALIFORNIA OR ITS OFFICERS OR AGENTS SHALL NOT BE RESPONSIBLE FOR THE ACCURACY OR COMPLETENESS OF SCANNED COPIES OF THIS PLAN SHEET.

NOTES:

1. PAVING LIMITS SHALL BE AS SHOWN OR AS DIRECTED BY ENGINEER.
2. NOT ALL LOCAL STREETS SHOWN.

LEGEND:

- FOG SEAL
- EXISTING STRUCTURE/APPROACH SLAB (PROTECT IN PLACE)
- REPLACE AC SURFACING HMA (TYPE A) 0.40' THICK
- (X) RAMP/CONNECTOR NUMBER, SEE SHEET X-3

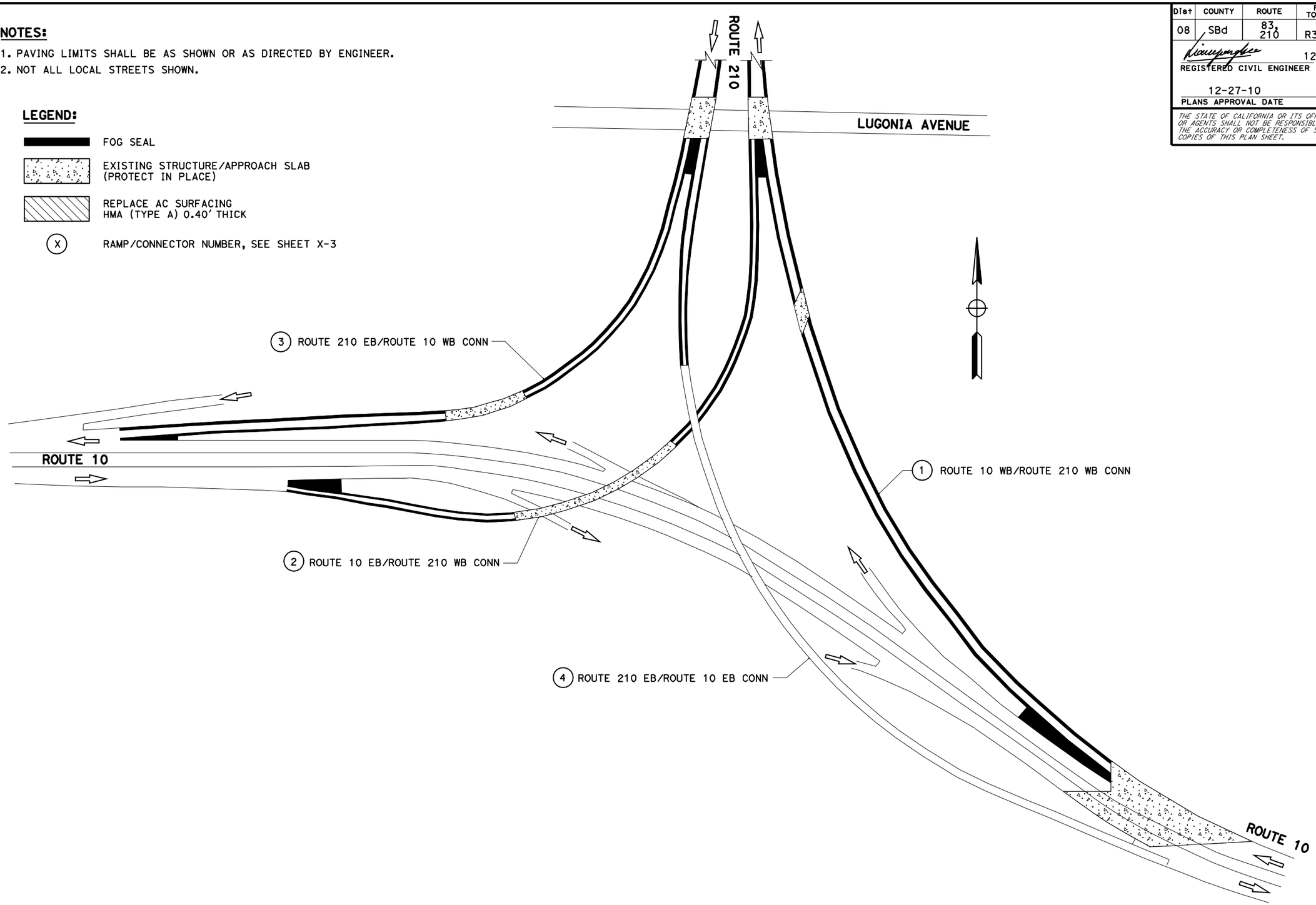

INTERCHANGE CONNECTOR FOG SEAL DETAIL

EXISTING UTILITY FACILITIES HAVE NOT BEEN PLOTTED ON THESE PLANS.

CONSTRUCTION DETAIL

NO SCALE

C-1

STATE OF CALIFORNIA - DEPARTMENT OF TRANSPORTATION
Caltrans MAINTENANCE ENGINEERING

FUNCTIONAL SUPERVISOR: MICHAEL RISTIC

CALCULATED-DESIGNED BY: YONGBEE LIAU
CHECKED BY: MICHAEL RISTIC

REVISED BY / DATE REVISED

LAST REVISION 12-24-10 | DATE PLOTTED => 27-DEC-2010 | TIME PLOTTED => 08:32

Dist	COUNTY	ROUTE	POST MILES TOTAL PROJECT	SHEET No.	TOTAL SHEETS
08	SBd	83, 210	0.0/7.2, R30.2/R33.2	6	27

REGISTERED CIVIL ENGINEER 12-27-10 DATE

12-27-10
PLANS APPROVAL DATE

REGISTERED PROFESSIONAL ENGINEER YONGBEE LIAU No. C75571 Exp 6/30/12 CIVIL STATE OF CALIFORNIA

THE STATE OF CALIFORNIA OR ITS OFFICERS OR AGENTS SHALL NOT BE RESPONSIBLE FOR THE ACCURACY OR COMPLETENESS OF SCANNED COPIES OF THIS PLAN SHEET.

NOTES:

1. PAVING LIMITS SHALL BE AS SHOWN OR AS DIRECTED BY ENGINEER.
2. NOT ALL LOCAL STREETS SHOWN.

LEGEND:

FOG SEAL

EXISTING STRUCTURE/APPROACH SLAB (PROTECT IN PLACE)

REPLACE AC SURFACING HMA (TYPE A) 0.40' THICK

(X) RAMP/CONNECTOR NUMBER, SEE SHEET X-3

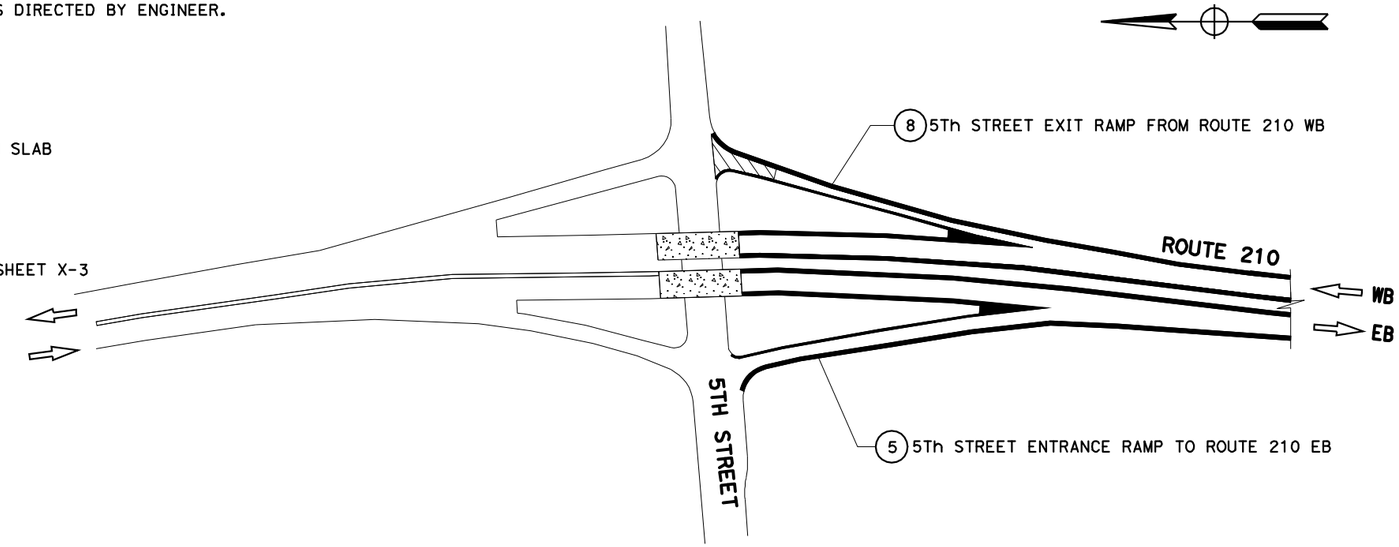

5TH STREET INTERCHANGE FOG SEAL DETAIL

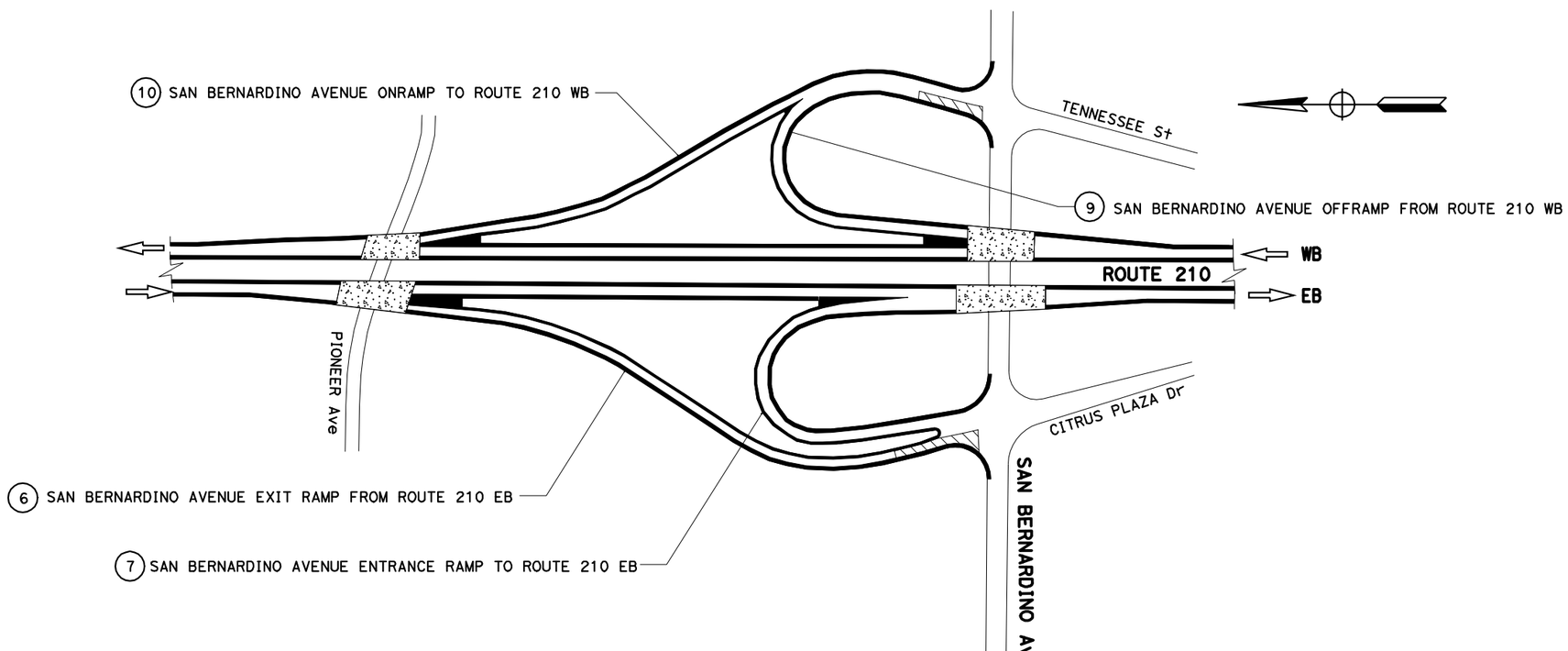

SAN BERNARDINO AVENUE INTERCHANGE FOG SEAL DETAIL

EXISTING UTILITY FACILITIES HAVE NOT BEEN PLOTTED ON THESE PLANS.

CONSTRUCTION DETAIL

NO SCALE

C-2

STATE OF CALIFORNIA - DEPARTMENT OF TRANSPORTATION
Caltrans MAINTENANCE ENGINEERING

FUNCTIONAL SUPERVISOR: MICHAEL RISTIC

CALCULATED-DESIGNED BY: YONGBEE LIAU
CHECKED BY: MICHAEL RISTIC

REVISED BY | DATE REVISED

LAST REVISION 12-24-10 | DATE PLOTTED => 27-DEC-2010 | TIME PLOTTED => 08:33

Dist	COUNTY	ROUTE	POST MILES TOTAL PROJECT	SHEET No.	TOTAL SHEETS
08	SBd	83, 210	0.0/7.2, R30.2/R33.2	6	27

REGISTERED CIVIL ENGINEER DATE 12-27-10

PLANS APPROVAL DATE 12-27-10

REGISTERED PROFESSIONAL ENGINEER YONGBEE LIAU No. C75571 Exp 6/30/12 CIVIL STATE OF CALIFORNIA

THE STATE OF CALIFORNIA OR ITS OFFICERS OR AGENTS SHALL NOT BE RESPONSIBLE FOR THE ACCURACY OR COMPLETENESS OF SCANNED COPIES OF THIS PLAN SHEET.

NOTES:

1. FOR REPLACE ASPHALT CONCRETE SURFACING LOCATIONS AND DIMENSIONS, SEE SHEET Q-1.
2. ALL WORK WITHIN STATE RIGHT OF WAY.

LEGEND:

REPLACE AC SURFACING HMA (TYPE A) 0.40' THICK

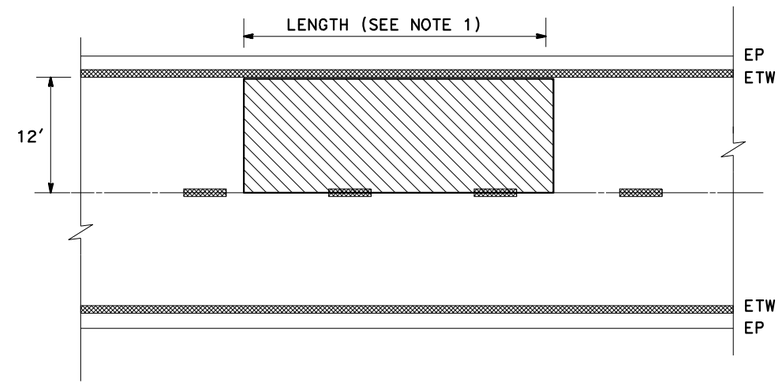

REPLACE ASPHALT SURFACING (LAYOUT)

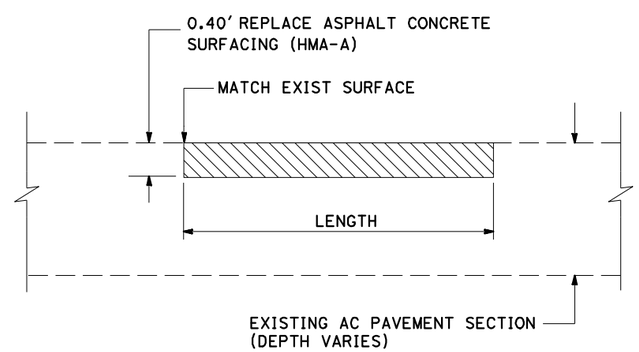

REPLACE ASPHALT SURFACING (PROFILE)

EXISTING UTILITY FACILITIES HAVE NOT BEEN PLOTTED ON THESE PLANS.

CONSTRUCTION DETAIL

NO SCALE

C-3

STATE OF CALIFORNIA - DEPARTMENT OF TRANSPORTATION
Caltrans MAINTENANCE ENGINEERING

FUNCTIONAL SUPERVISOR: MICHAEL RISTIC

CALCULATED-DESIGNED BY: YONGBEE LIAU

CHECKED BY: MICHAEL RISTIC

REVISED BY / DATE REVISED

LAST REVISION 12-24-10 | DATE PLOTTED => 27-DEC-2010 | TIME PLOTTED => 08:33

Dist	COUNTY	ROUTE	POST MILES TOTAL PROJECT	SHEET No.	TOTAL SHEETS
08	SBd	83, 210	0.0/7.2, R30.2/R33.2	8	27

REGISTERED CIVIL ENGINEER DATE 12-27-10

PLANS APPROVAL DATE 12-27-10

REGISTERED PROFESSIONAL ENGINEER YONGBEE LIAU No. C75571 Exp 6/30/12 CIVIL STATE OF CALIFORNIA

THE STATE OF CALIFORNIA OR ITS OFFICERS OR AGENTS SHALL NOT BE RESPONSIBLE FOR THE ACCURACY OR COMPLETENESS OF SCANNED COPIES OF THIS PLAN SHEET.

NOTES:

1. SEE SHEET E-1 FOR DETECTOR LOOPS
2. EXACT LOCATIONS OF REPLACE ASPHALT CONCRETE SHALL BE DETERMINED BY THE ENGINEER.

LEGEND:

REPLACE AC SURFACING HMA (TYPE A) 0.40' THICK

(X) RAMP/CONNECTOR NUMBER, SEE SHEET C-2

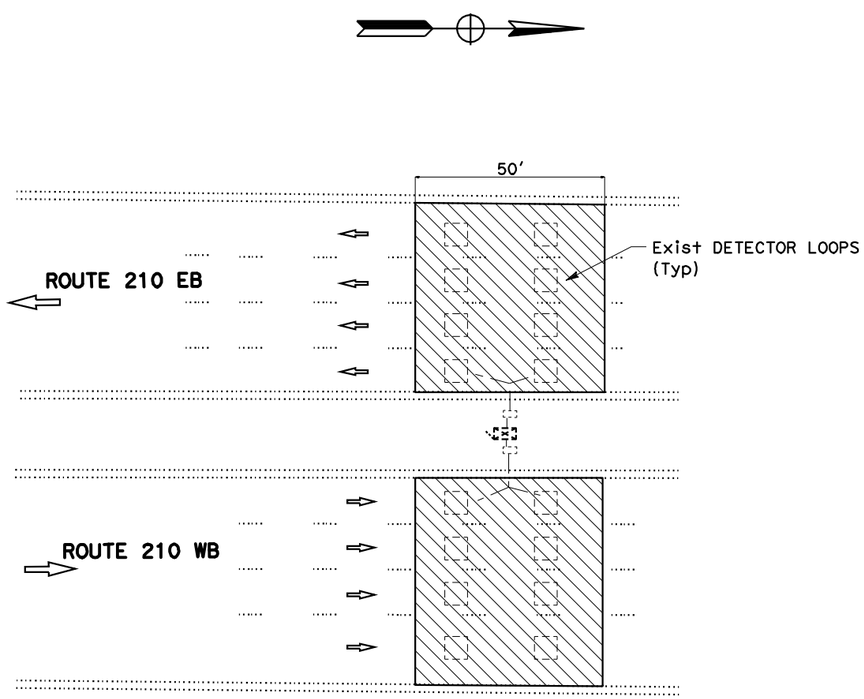

EXIST COUNT STATION ROUTE 210 WEST OF LUGONIA Ave

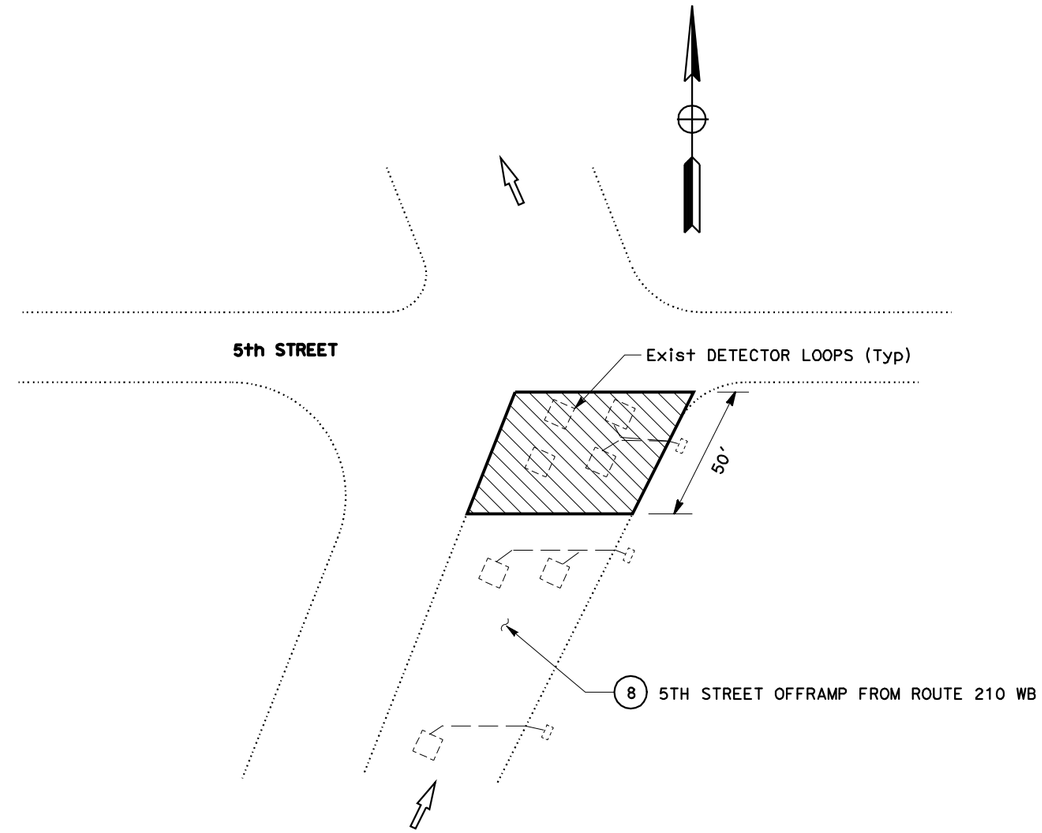

REPLACE AC SURFACING DETAIL

EXISTING UTILITY FACILITIES HAVE NOT BEEN PLOTTED ON THESE PLANS.

CONSTRUCTION DETAIL

NO SCALE

C-4

STATE OF CALIFORNIA - DEPARTMENT OF TRANSPORTATION
Caltrans MAINTENANCE ENGINEERING

FUNCTIONAL SUPERVISOR: MICHAEL RISTIC

CALCULATED-DESIGNED BY: YONGBEE LIAU

CHECKED BY: MICHAEL RISTIC

REVISED BY / DATE REVISED

LAST REVISION 12-24-10 | DATE PLOTTED => 27-DEC-2010 | TIME PLOTTED => 08:33

Dist	COUNTY	ROUTE	POST MILES TOTAL PROJECT	SHEET No.	TOTAL SHEETS
08	SBd	83, 210	0.0/7.2, R30.2/R33.2	9	27

REGISTERED CIVIL ENGINEER 12-27-10 DATE

12-27-10
PLANS APPROVAL DATE

REGISTERED PROFESSIONAL ENGINEER YONGBEE LIAU No. C75571 Exp 6/30/12 CIVIL STATE OF CALIFORNIA

THE STATE OF CALIFORNIA OR ITS OFFICERS OR AGENTS SHALL NOT BE RESPONSIBLE FOR THE ACCURACY OR COMPLETENESS OF SCANNED COPIES OF THIS PLAN SHEET.

NOTES:

1. SEE SHEET E-2 FOR DETECTOR LOOPS
2. EXACT LOCATIONS OF REPLACE ASPHALT CONCRETE SHALL BE DETERMINED BY THE ENGINEER.

LEGEND:

REPLACE AC SURFACING HMA (TYPE A) 0.40' THICK

(X) RAMP/CONNECTOR NUMBER, SEE SHEET C-2

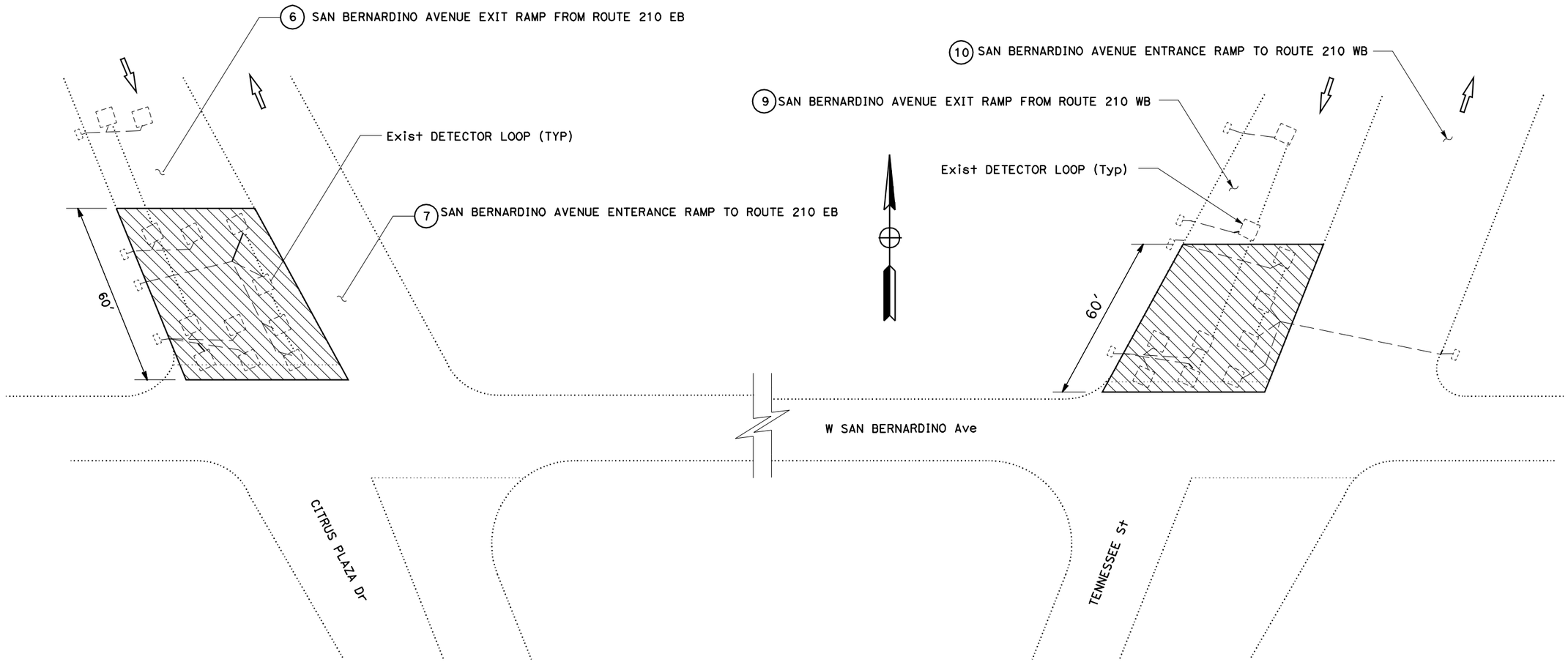

REPLACE AC SURFACING DETAIL

EXISTING UTILITY FACILITIES HAVE NOT BEEN PLOTTED ON THESE PLANS.

CONSTRUCTION DETAIL

NO SCALE

C-5

STATE OF CALIFORNIA - DEPARTMENT OF TRANSPORTATION
Caltrans MAINTENANCE ENGINEERING

FUNCTIONAL SUPERVISOR: MICHAEL RISTIC

CALCULATED-DESIGNED BY: YONGBEE LIAU
CHECKED BY: MICHAEL RISTIC

REVISED BY
DATE REVISED

LAST REVISION DATE PLOTTED => 27-DEC-2010
TIME PLOTTED => 08:33
12-24-10

Dist	COUNTY	ROUTE	POST MILES TOTAL PROJECT	SHEET No.	TOTAL SHEETS
08	SBd	83, 210	0.0/7.2, R30.2/R33.2	10	27

Thanh Trinh 12-27-10
REGISTERED CIVIL ENGINEER DATE

12-27-10
PLANS APPROVAL DATE

REGISTERED PROFESSIONAL ENGINEER THANH TRINH No. C41189 Exp. 3/31/11 CIVIL STATE OF CALIFORNIA

THE STATE OF CALIFORNIA OR ITS OFFICERS OR AGENTS SHALL NOT BE RESPONSIBLE FOR THE ACCURACY OR COMPLETENESS OF SCANNED COPIES OF THIS PLAN SHEET.

NOTES:

1. ALL LOCATION OF CONSTRUCTION AREA SIGNS ARE APPROXIMATE; EXACT LOCATIONS WILL BE DETERMINED BY THE ENGINEER.
2. USE STANDARD PLANS T11,T12, & T13 FOR TRAFFIC CONTROL ON SR 83
3. USE STANDARD PLANS T10 & T14 FOR TRAFFIC CONTROL ON SR 210

NOTES:

- WORK AREA
- CONSTRUCTION AREA SIGN (ONE POST)
- CONSTRUCTION AREA SIGN (TWO POST)
- CONSTRUCTION AREA SIGN (MOUNTED ON TYPE III BARRICADE)
- (X) CONSTRUCTION AREA SIGN NUMBER

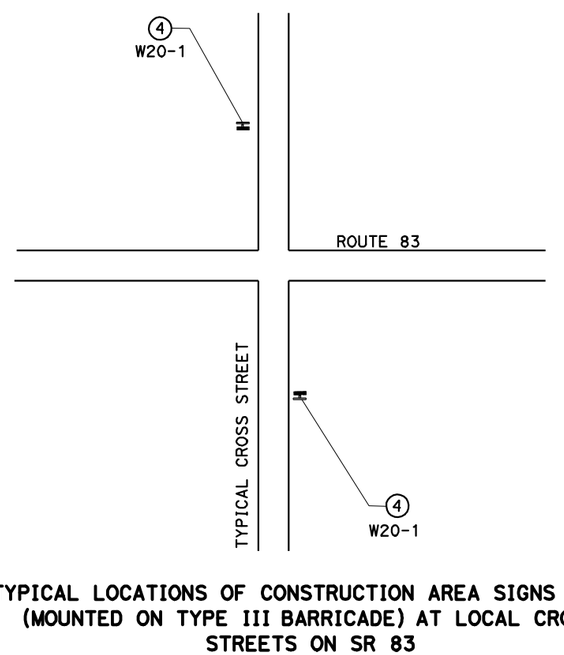

TYPICAL LOCATIONS OF CONSTRUCTION AREA SIGNS W20-1 (MOUNTED ON TYPE III BARRICADE) AT LOCAL CROSS STREETS ON SR 83

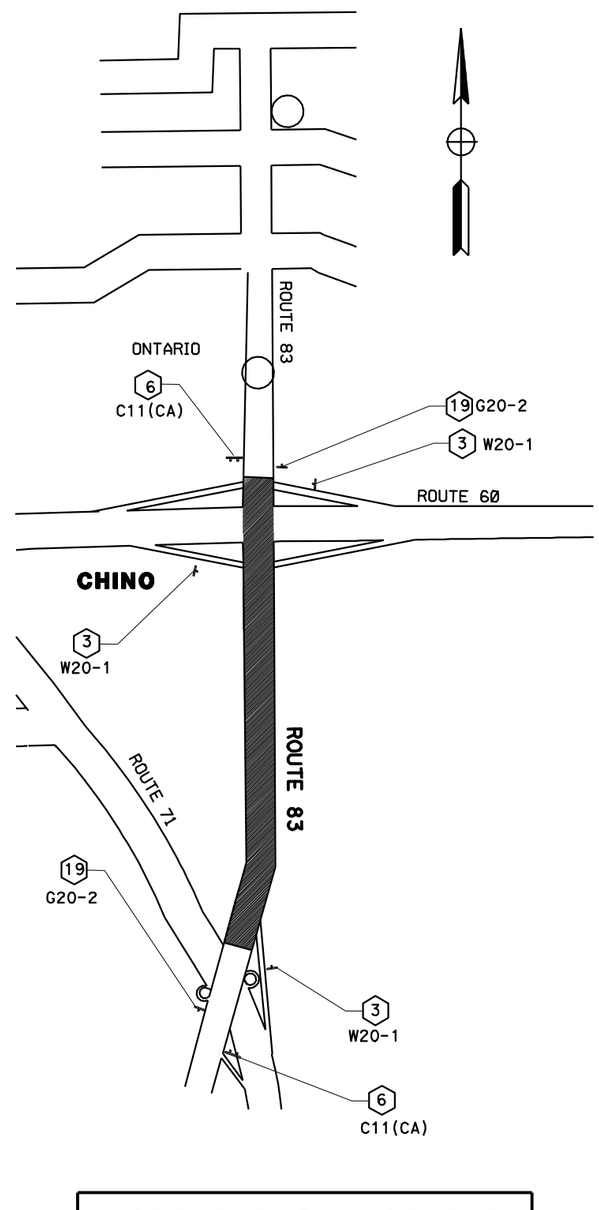

PORTABLE CHANGEABLE MESSAGE SIGN (PCMS)
(EA)
4

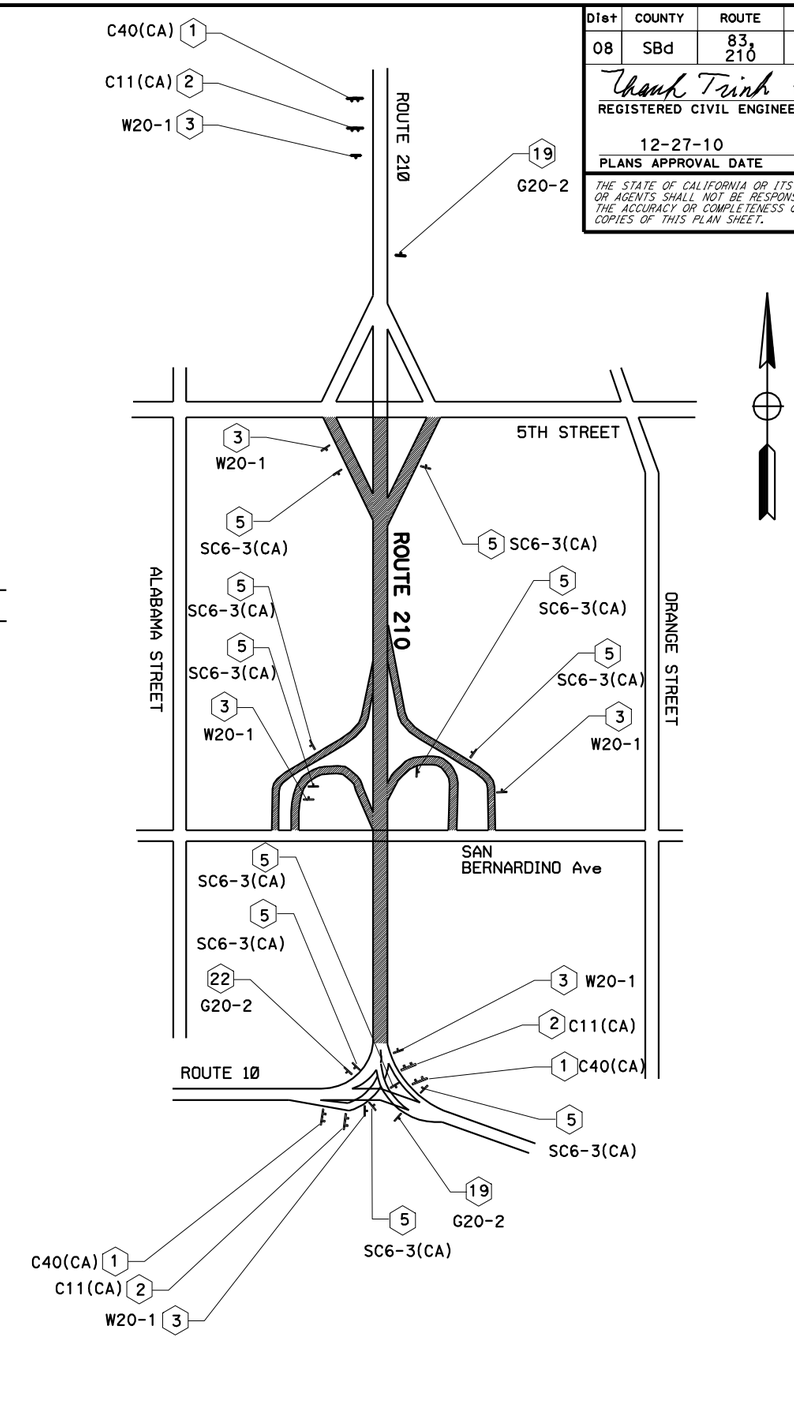

EXISTING UTILITY FACILITIES HAVE NOT BEEN PLOTTED ON THESE PLANS.

THIS PLAN IS ACCURATE FOR CONSTRUCTION AREA SIGN WORK ONLY.

CONSTRUCTION AREA SIGNS

NO SCALE

CS-1

STATE OF CALIFORNIA - DEPARTMENT OF TRANSPORTATION
Caltrans
TRAFFIC DESIGN

FUNCTIONAL SUPERVISOR: BILL WASSER
CALCULATED-DESIGNED BY: KEVIN NGUYEN
CHECKED BY: THANH TRINH
REVISED BY
DATE REVISED

LAST REVISION 12-24-10 | DATE PLOTTED => 27-DEC-2010 | TIME PLOTTED => 08:33

Dist	COUNTY	ROUTE	POST MILES TOTAL PROJECT	SHEET No.	TOTAL SHEETS
08	SBd	83, 210	0.0/7.2, R30.2/R33.2	11	27

Thanh Trinh 12-27-10
REGISTERED CIVIL ENGINEER DATE

12-27-10
PLANS APPROVAL DATE

REGISTERED PROFESSIONAL ENGINEER THANH TRINH No. C41189 Exp. 3/31/11 CIVIL STATE OF CALIFORNIA

THE STATE OF CALIFORNIA OR ITS OFFICERS OR AGENTS SHALL NOT BE RESPONSIBLE FOR THE ACCURACY OR COMPLETENESS OF SCANNED COPIES OF THIS PLAN SHEET.

CONSTRUCTION AREA SIGNS

SHEET No.	SIGN No.	SIGN CODE	PANEL SIZE (in)	SIGN MESSAGE	No. OF POST(S) AND SIZE	NO. OF STATIONARY CONSTRUCTION AREA SIGNS (N) (EA)	No. OF TYPE III BARRICADES (EA)	REMARKS
CS-1	1	C40(CA)	144 x 60	TRAFFIC FINES DOUBLED IN CONSTRUCTION ZONES	2 - 6" x 8"	3		
CS-1	2	C11(CA)	90 x 48	ROAD WORK NEXT 3 MILES	2 - 6" x 6"	3		
CS-1	3	W20-1	48 x 48	ROAD WORK AHEAD	1 - 6" x 6"	9		
CS-1	4	W20-1	36 x 36	ROAD WORK AHEAD			31	W20-1 SIGNS AT LOCAL CROSS STREETS ON SR 83
CS-1	5	SC6-3(CA)	48 x 48	RAMP CLOSED	1 - 6" x 6"	10		
CS-1	6	C11(CA)	60 x 36	ROAD WORK NEXT 7 MILES	2 - 4" x 6"	2		
DE-1	7	W20-2	36 x 36	DETOUR AHEAD	1 - 4" x 6"	5		
DE-1, DE-2, DE-3, & DE-4	7a	M4-8A	24 x 18	END DETOUR	1 - 4" x 4"	6		
DE-1, & DE-2	8	M4-10L	48 x 18	← DETOUR	1 - 4" x 4"	8		
DE-1	9	SC3(CA)	36 x 12	↑ DETOUR	1 - 4" x 4"	2		
DE-1	10	M4-10R	48 x 18	DETOUR →	1 - 4" x 4"	4		
DE-1	11	M1-1(10)	48 x 48	INTERSTATE ROUTE SHIELD (10)	1 - 6" x 6"	3		
		SC3(CA)	48 x 18	↑ DETOUR				
DE-1, & DE-3	12	M1-1(10)	48 x 48	INTERSTATE ROUTE SHIELD (10)	1 - 6" x 6"	2		
		M4-10R	48 x 18	DETOUR →				
DE-1	13	M1-1(10)	48 x 48	INTERSTATE ROUTE SHIELD (10)	1 - 6" x 6"	1		
		M4-10L	48 x 18	← DETOUR				
DE-2	14	CS1	174 x 54	SAN BERNARDINO AVE EXIT CLOSED USE 5TH ST EXIT	2 - 6" x 8"	1		
DE-2	15	D3(SAN)	72 x 18	SAN BERNARDINO AVE	2 - 4" x 6"	2		
		M4-10R	48 x 18	DETOUR →				
DE-2	16	D3(SAN)	72 x 18	SAN BERNARDINO AVE	2 - 4" x 6"	1		
		M4-8	30 x 15	DETOUR				
		M6-4	21 x 15	Both direction symbol ↔				
DE-2	17	D3(SAN)	72 x 18	SAN BERNARDINO AVE	2 - 4" x 6"	1		
		M4-10L	48 x 18	← DETOUR				
SUBTOTAL							31	

(N) - FOR INFORMATION ONLY; NOT A SEPARATE PAY ITEM.

EXISTING UTILITY FACILITIES HAVE NOT BEEN PLOTTED ON THESE PLANS.

CONSTRUCTION AREA SIGNS

CS-2

STATE OF CALIFORNIA - DEPARTMENT OF TRANSPORTATION
Caltrans TRAFFIC DESIGN

FUNCTIONAL SUPERVISOR: BILL WASSER
CALCULATED-DESIGNED BY: KEVIN NGUYEN
CHECKED BY: THANH TRINH
REVISED BY
DATE REVISED

LAST REVISION 12-24-10
DATE PLOTTED => 27-DEC-2010
TIME PLOTTED => 08:33

Dist	COUNTY	ROUTE	POST MILES TOTAL PROJECT	SHEET No.	TOTAL SHEETS
08	SBd	83, 210	0.0/7.2, R30.2/R33.2	12	27

Thanh Trinh 12-27-10
REGISTERED CIVIL ENGINEER DATE

12-27-10
PLANS APPROVAL DATE

REGISTERED PROFESSIONAL ENGINEER THANH TRINH No. C41189 Exp. 3/31/11 CIVIL STATE OF CALIFORNIA

THE STATE OF CALIFORNIA OR ITS OFFICERS OR AGENTS SHALL NOT BE RESPONSIBLE FOR THE ACCURACY OR COMPLETENESS OF SCANNED COPIES OF THIS PLAN SHEET.

CONSTRUCTION AREA SIGNS

SHEET No.	SIGN No.	SIGN CODE	PANEL SIZE (in)	SIGN MESSAGE	No. OF POST(S) AND SIZE	NO. OF STATIONARY CONSTRUCTION AREA SIGNS (N) (EA)	No. OF TYPE III BARRICADES (EA)	REMARKS
DE-2	18	M4-8	30 x 15	DETOUR	1 - 6" x 6"	4		
		M6-2	21 x 15	↗				
CS-1	19	G20-2	36 x 18	END ROAD WORK	1 - 4" x 4"	5		
DE-3	20	CS-2	96 x 84	210 WEST CONNECTOR CLOSED USE DETOUR	2 - 6" x 8"	2		
	21	G28-2(210)(CA)	35 x 31.25	STATE ROUTE SHIELD (210)	1 - 6" x 6"	2		
		M4-8	30 x 15	DETOUR				
		M6-2	21 x 15	↗				
	22	G28-2(210)(CA)	35 x 31.25	STATE ROUTE SHIELD (210)	1 - 6" x 6"	1		
		M4-10(R)	48 x 18	DETOUR →				
	23	G28-2(210)(CA)	35 x 31.25	STATE ROUTE SHIELD (210)	1 - 6" x 6"	1		
		M4-10(L)	48 x 18	← DETOUR				
	24	G28-2(210)(CA)	35 x 31.25	STATE ROUTE SHIELD (210)	1 - 6" x 6"	3		
		SC3(CA)	48 x 18	↑ DETOUR				
	25	CS-3	96 x 84	10 EAST CONNECTOR CLOSED USE DETOUR	2 - 6" x 8"	1		
	26	M1-1(10)	48 x 48	INTERSTATE ROUTE SHIELD (10)	1 - 6" x 6"	2		
		M3-2	30 x 15	EAST				
		M4-10(R)	48 x 18	DETOUR →				
	27	M1-1(10)	48 x 48	INTERSTATE ROUTE SHIELD (10)	1 - 6" x 6"	2		
		M3-2	30 x 15	EAST				
		M4-10(L)	48 x 18	← DETOUR				
	28	M1-1(10)	48 x 48	INTERSTATE ROUTE SHIELD (10)	1 - 6" x 6"	1		
		M3-2	30 x 15	EAST				
		SC3(CA)	48 x 18	↑ DETOUR				
DE-4	29	CS-4	96 x 84	10 WEST CONNECTOR CLOSED USE DETOUR	2 - 6" x 8"	1		
	30	M1-1(10)	48 x 48	INTERSTATE ROUTE SHIELD (10)	1 - 6" x 6"	3		
		M3-4	30 x 15	WEST				
		M4-10(R)	48 x 18	DETOUR →				
	31	M1-1(10)	48 x 48	INTERSTATE ROUTE SHIELD (10)	1 - 6" x 6"	1		
		M3-4	30 x 15	WEST				
		M4-10(L)	48 x 18	← DETOUR				
SUBTOTAL								
TOTAL							31	

(N) - FOR INFORMATION ONLY; NOT A SEPARATE PAY ITEM.

EXISTING UTILITY FACILITIES HAVE NOT BEEN PLOTTED ON THESE PLANS.

CONSTRUCTION AREA SIGNS

CS-3

STATE OF CALIFORNIA - DEPARTMENT OF TRANSPORTATION
Caltrans TRAFFIC DESIGN

FUNCTIONAL SUPERVISOR: BILL WASSER
CALCULATED-DESIGNED BY: KEVIN NGUYEN
CHECKED BY: THANH TRINH
REVISED BY
DATE REVISED

LAST REVISION 12-24-10 | DATE PLOTTED => 27-DEC-2010 | TIME PLOTTED => 08:33

Dist	COUNTY	ROUTE	POST MILES TOTAL PROJECT	SHEET No.	TOTAL SHEETS
08	SBd	83 210	0.0/7.2 30.2/33.2	13	27

Thanh Trinh 12-27-10
REGISTERED CIVIL ENGINEER DATE

12-27-10
PLANS APPROVAL DATE

REGISTERED PROFESSIONAL ENGINEER THANH TRINH No. C41189 Exp. 3/31/11 CIVIL STATE OF CALIFORNIA

THE STATE OF CALIFORNIA OR ITS OFFICERS OR AGENTS SHALL NOT BE RESPONSIBLE FOR THE ACCURACY OR COMPLETENESS OF SCANNED COPIES OF THIS PLAN SHEET.

NOTE:

1. DETOUR PLANS FOR RAMP AND CONNECTOR CLOSURES

LEGEND:

- RAMP/CONNECTOR CLOSED
- CONSTRUCTION AREA SIGN (ONE POST)
- CONSTRUCTION AREA SIGN (TWO POST)
- (X) CONSTRUCTION AREA SIGN LETTER

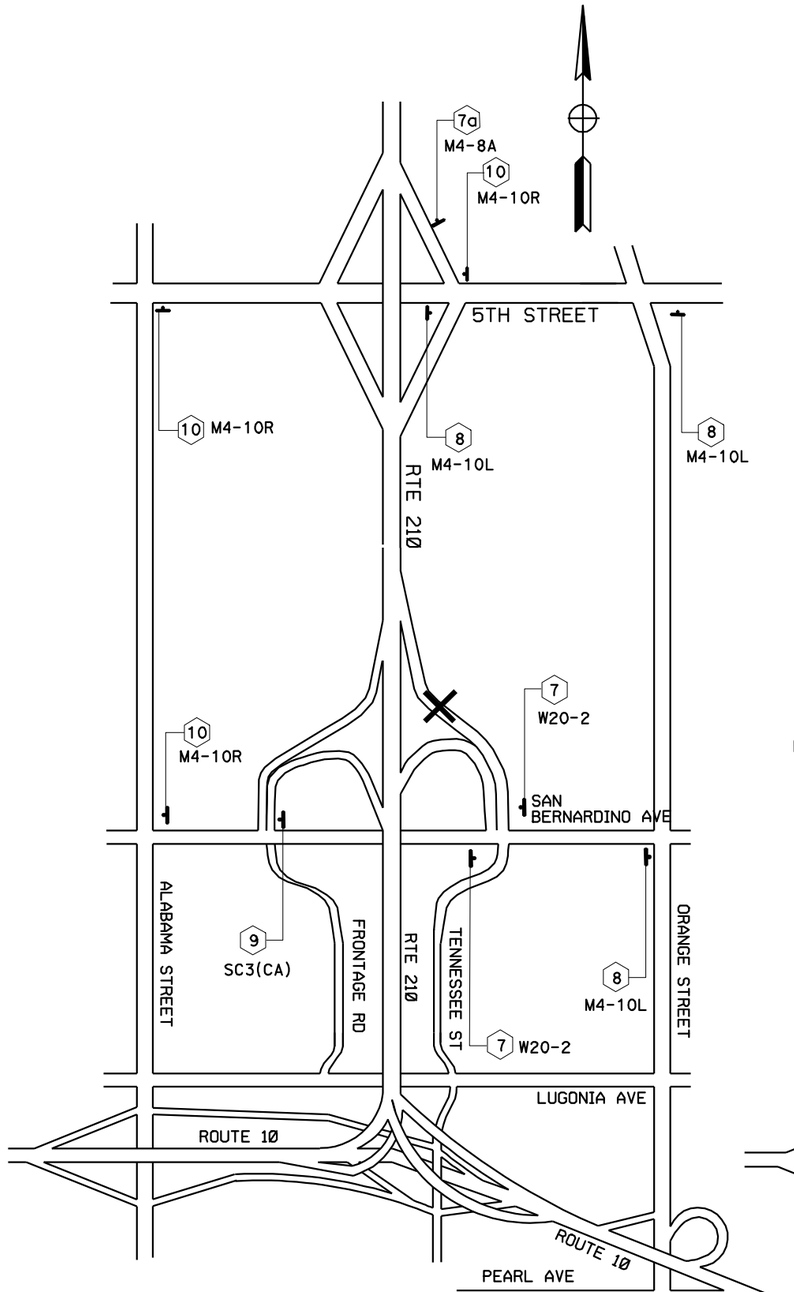

SAN BERNARDINO AVE WB ENTRANCE RAMP DETOUR

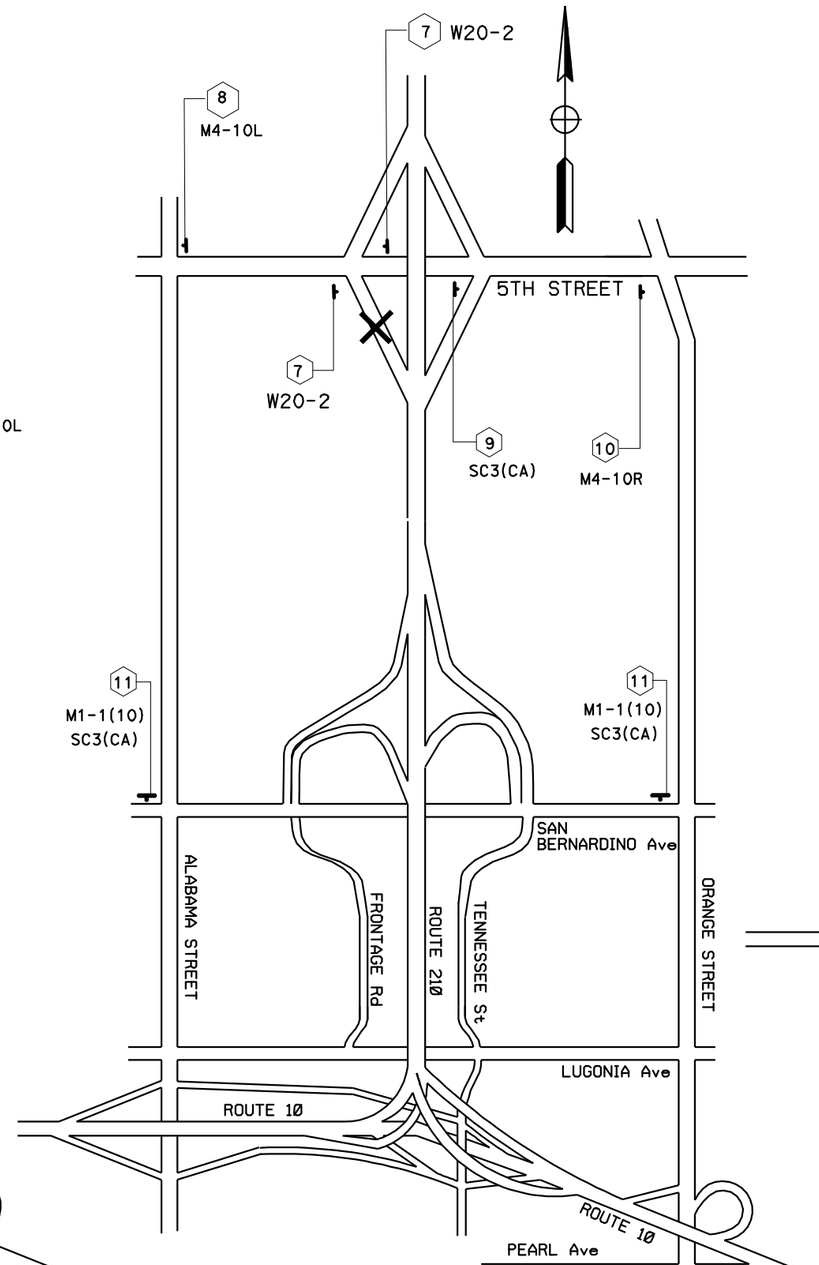

5TH STREET EB ENTRANCE RAMP DETOUR

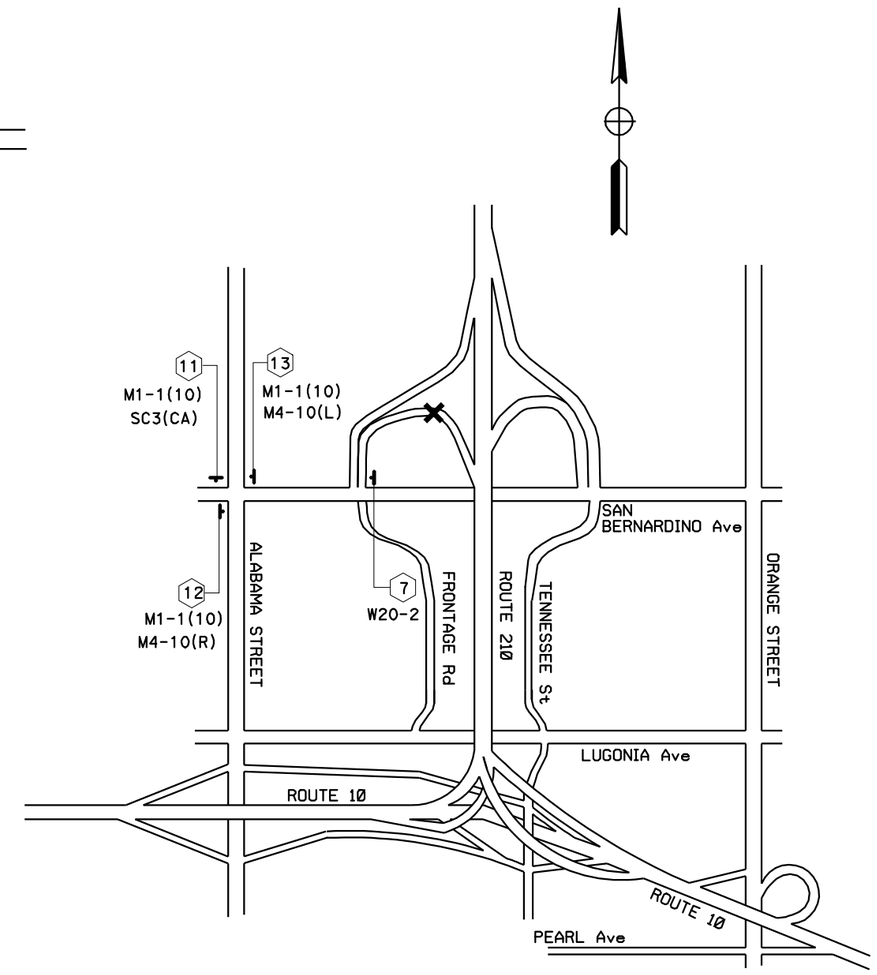

SAN BERNARDINO AVE EB ENTRANCE RAMP DETOUR

EXISTING UTILITY FACILITIES HAVE NOT BEEN PLOTTED ON THESE PLANS.
THIS PLAN IS ACCURATE FOR DETOUR ONLY.

DETOUR PLAN

NO SCALE **DE-1**

STATE OF CALIFORNIA - DEPARTMENT OF TRANSPORTATION
TRAFFIC DESIGN
FUNCTIONAL SUPERVISOR: BILL WASSER
CALCULATED-DESIGNED BY: KEVIN NGUYEN
CHECKED BY: THANH TRINH
REVISED BY / DATE REVISED

LAST REVISION 12-24-10 | DATE PLOTTED => 27-DEC-2010 | TIME PLOTTED => 08:34

Dist	COUNTY	ROUTE	POST MILES TOTAL PROJECT	SHEET No.	TOTAL SHEETS
08	SBd	83 210	0.0/7.2 30.2/33.2	14	27

Thanh Trinh 12-27-10
REGISTERED CIVIL ENGINEER DATE

12-27-10
PLANS APPROVAL DATE

REGISTERED PROFESSIONAL ENGINEER
THANH TRINH
No. C41189
Exp. 3/31/11
CIVIL
STATE OF CALIFORNIA

THE STATE OF CALIFORNIA OR ITS OFFICERS OR AGENTS SHALL NOT BE RESPONSIBLE FOR THE ACCURACY OR COMPLETENESS OF SCANNED COPIES OF THIS PLAN SHEET.

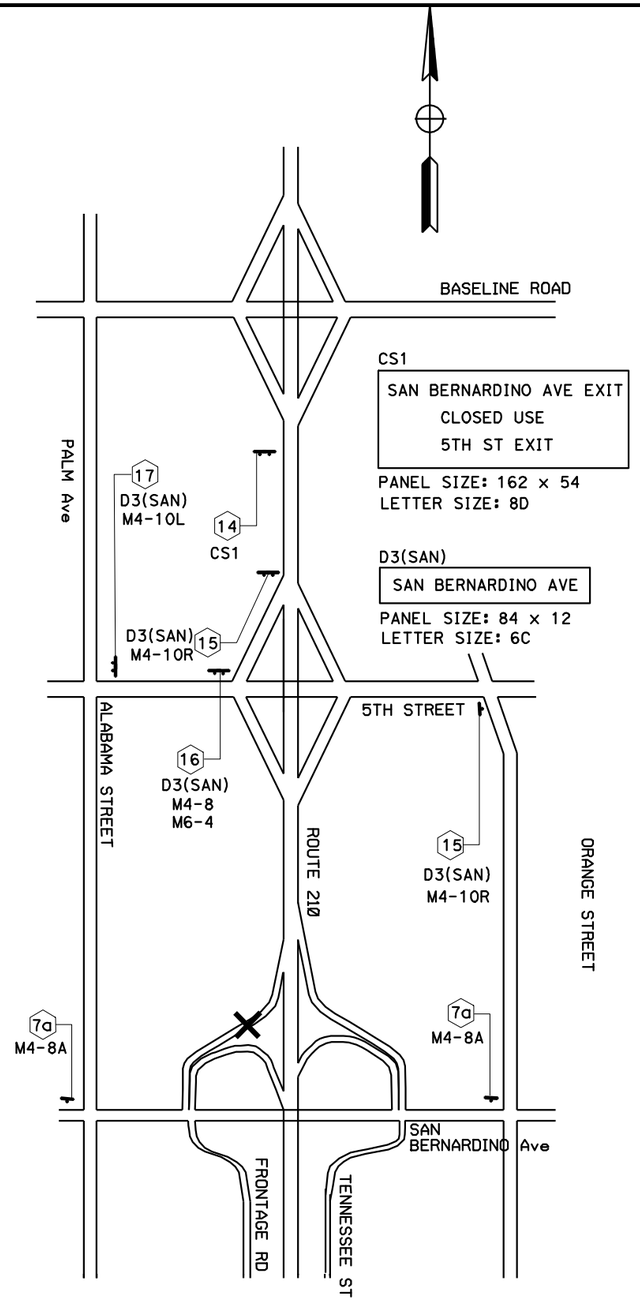

SAN BERNARDINO AVE EB EXIT RAMP DETOUR

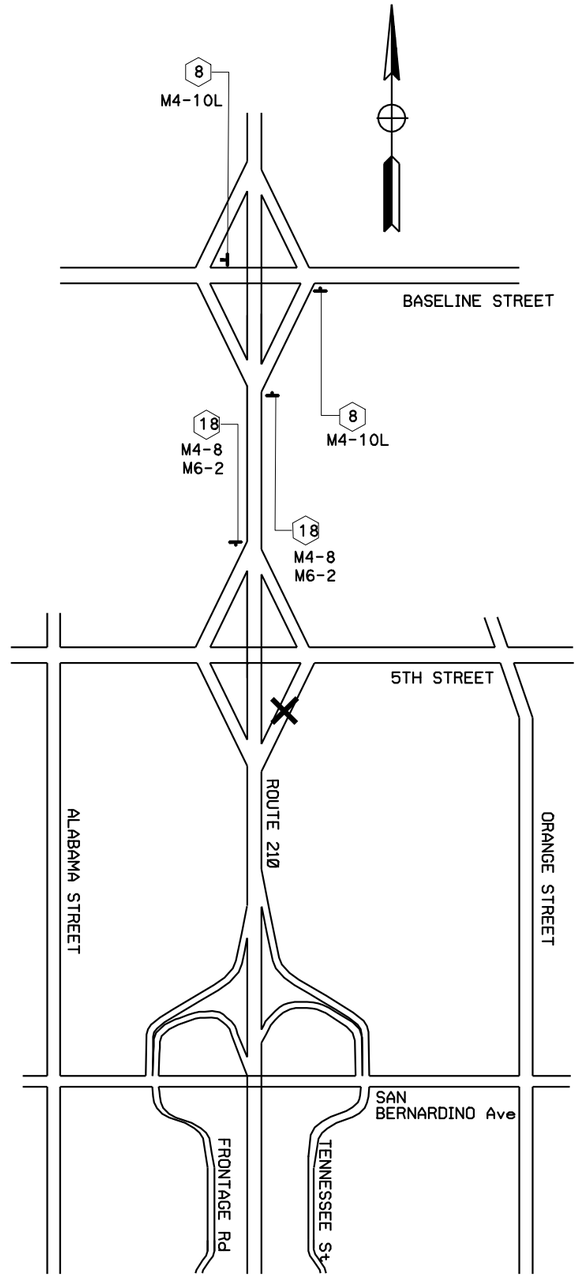

5TH STREET WB EXIT RAMP DETOUR

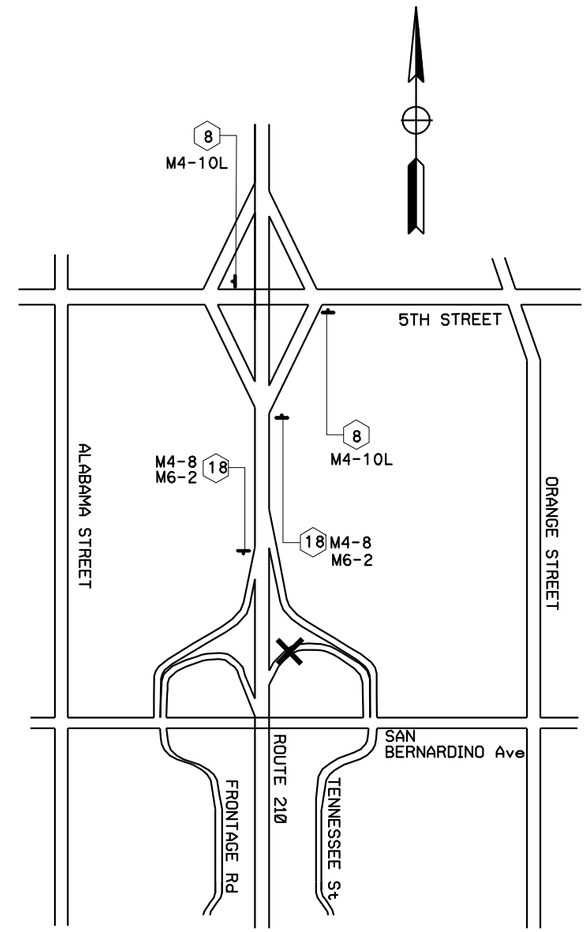

SAN BERNARDINO AVE WB EXIT RAMP DETOUR

EXISTING UTILITY FACILITIES HAVE NOT BEEN PLOTTED ON THESE PLANS.
THIS PLAN IS ACCURATE FOR DETOUR WORK ONLY.

DETOUR PLAN

NO SCALE **DE-2**

STATE OF CALIFORNIA - DEPARTMENT OF TRANSPORTATION
Caltrans **TRAFFIC DESIGN**

FUNCTIONAL SUPERVISOR: BILL WASSER
CALCULATED-DESIGNED BY: KEVIN NGUYEN
CHECKED BY: THANH TRINH
REVISED BY / DATE REVISED

LAST REVISION 12-24-10 | DATE PLOTTED => 27-DEC-2010 | TIME PLOTTED => 08:34

Dist	COUNTY	ROUTE	POST MILES TOTAL PROJECT	SHEET No.	TOTAL SHEETS
08	SBd	83 210	0.0/7.2 30.2/33.2	15	27

Thanh Trinh 12-27-10
REGISTERED CIVIL ENGINEER DATE

12-27-10
PLANS APPROVAL DATE

REGISTERED PROFESSIONAL ENGINEER
THANH TRINH
No. C41189
Exp. 3/31/11
CIVIL
STATE OF CALIFORNIA

THE STATE OF CALIFORNIA OR ITS OFFICERS OR AGENTS SHALL NOT BE RESPONSIBLE FOR THE ACCURACY OR COMPLETENESS OF SCANNED COPIES OF THIS PLAN SHEET.

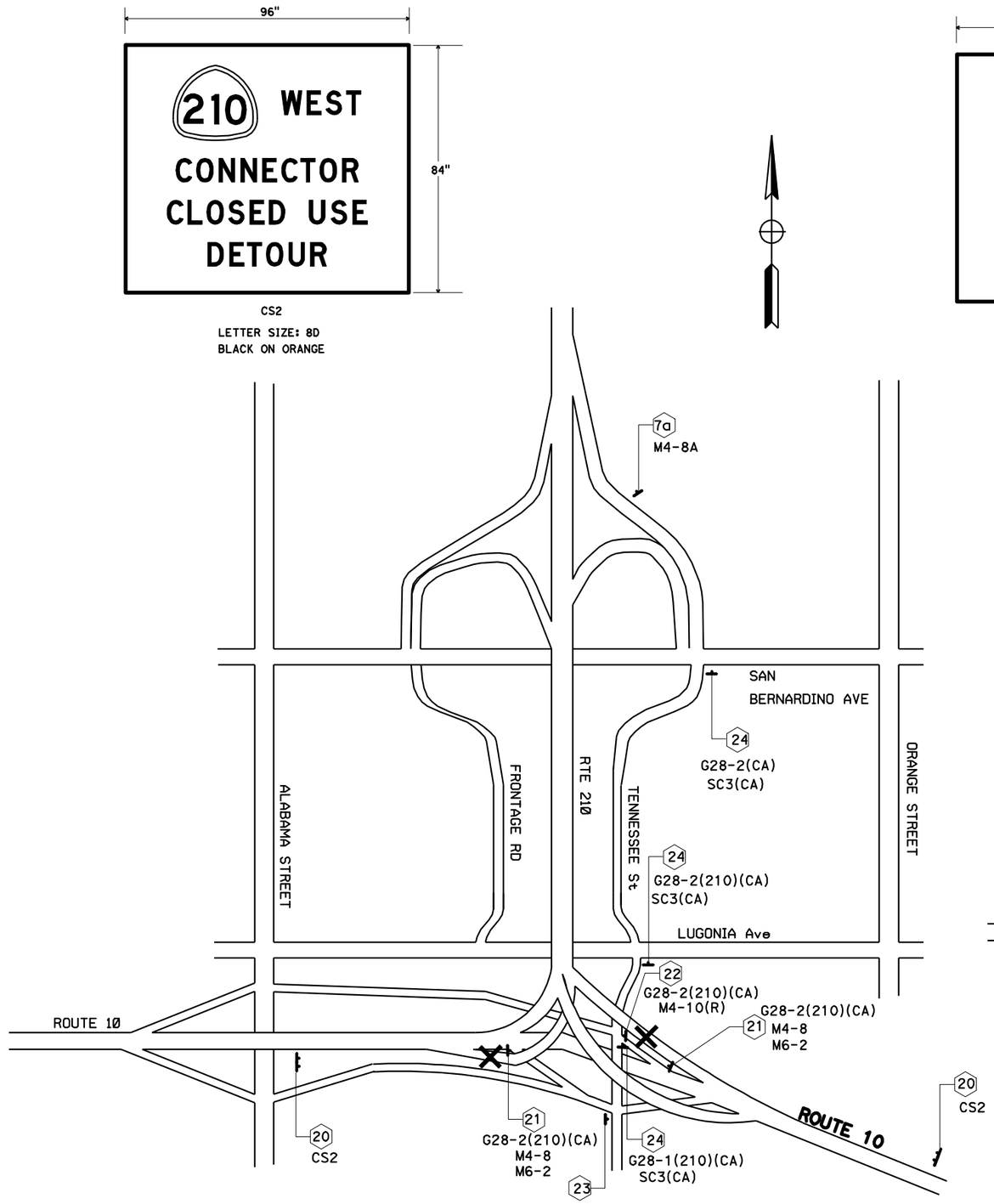

ROUTE 210 WESTBOUND CONNECTOR CLOSURE DETOUR

ROUTE 10 EASTBOUND CONNECTOR CLOSURE DETOUR

EXISTING UTILITY FACILITIES HAVE NOT BEEN PLOTTED ON THESE PLANS.
THIS PLAN IS ACCURATE FOR DETOUR WORK ONLY.

DETOUR PLAN

NO SCALE **DE-3**

REVISED BY	DATE REVISED
KEVIN NGUYEN	THANH TRINH
CALCULATED-DESIGNED BY	CHECKED BY
FUNCTIONAL SUPERVISOR	BILL WASSER

STATE OF CALIFORNIA - DEPARTMENT OF TRANSPORTATION
Caltrans TRAFFIC DESIGN

LAST REVISION 12-24-10
DATE PLOTTED => 27-DEC-2010
TIME PLOTTED => 08:34

Dist	COUNTY	ROUTE	POST MILES TOTAL PROJECT	SHEET No.	TOTAL SHEETS
08	SBd	83 210	0.0/7.2 30.2/33.2	16	27

Thanh Trinh 12-27-10
REGISTERED CIVIL ENGINEER DATE

12-27-10
PLANS APPROVAL DATE

REGISTERED PROFESSIONAL ENGINEER
THANH TRINH
No. C41189
Exp. 3/31/11
CIVIL
STATE OF CALIFORNIA

THE STATE OF CALIFORNIA OR ITS OFFICERS OR AGENTS SHALL NOT BE RESPONSIBLE FOR THE ACCURACY OR COMPLETENESS OF SCANNED COPIES OF THIS PLAN SHEET.

CS4

LETTER SIZE: 8D
BLACK ON ORANGE

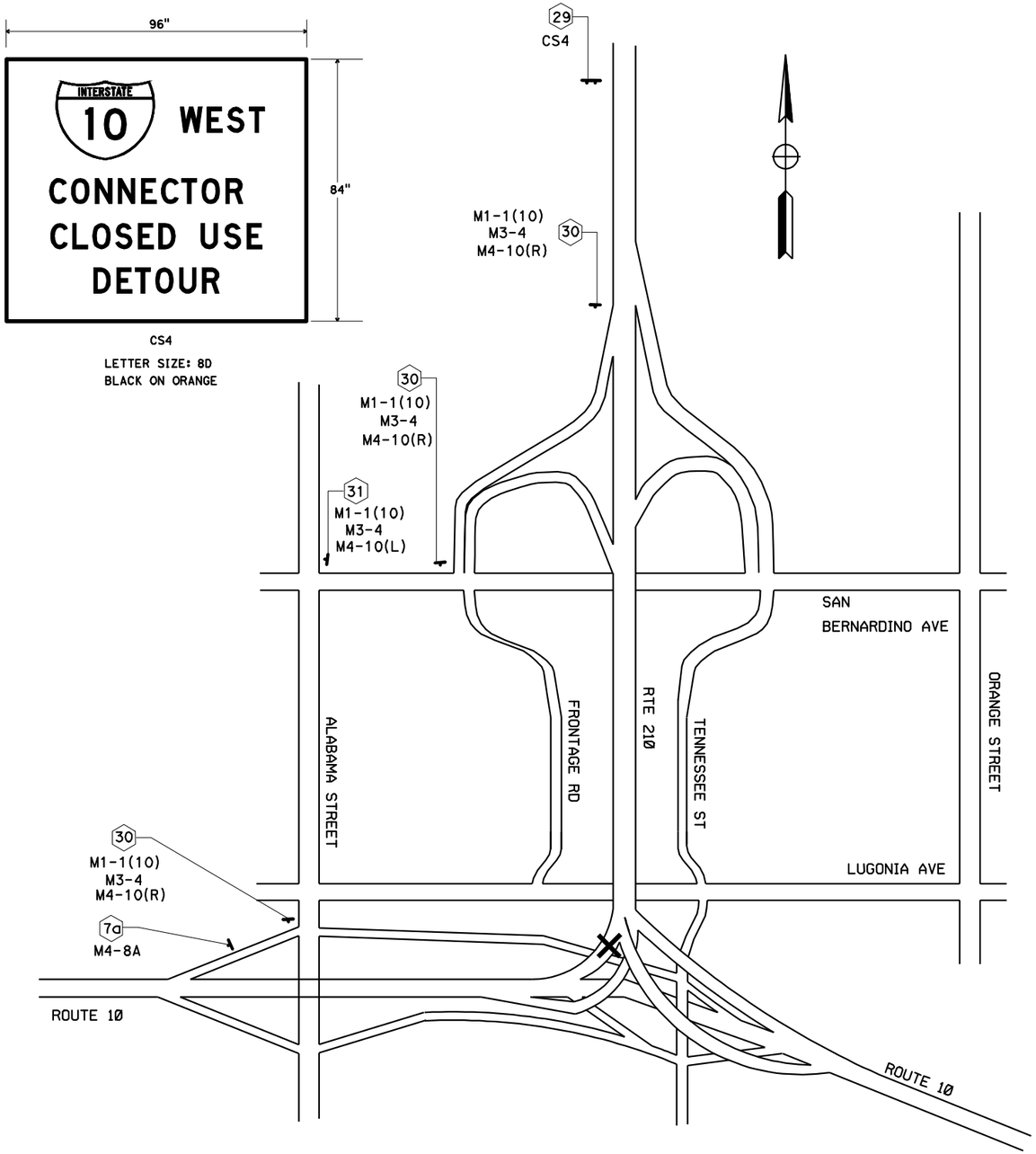

ROUTE 10 WESTBOUND CONNECTOR CLOSURE DETOUR

EXISTING UTILITY FACILITIES HAVE NOT BEEN PLOTTED ON THESE PLANS.
THIS PLAN IS ACCURATE FOR DETOUR WORK ONLY.

DETOUR PLAN

NO SCALE **DE-4**

STATE OF CALIFORNIA - DEPARTMENT OF TRANSPORTATION
Caltrans TRAFFIC DESIGN

FUNCTIONAL SUPERVISOR: BILL WASSER
CALCULATED-DESIGNED BY: KEVIN NGUYEN
CHECKED BY: THANH TRINH
REVISED BY
DATE REVISED

LAST REVISION 12-24-10
DATE PLOTTED => 27-DEC-2010
TIME PLOTTED => 08:34

DETAIL 13M

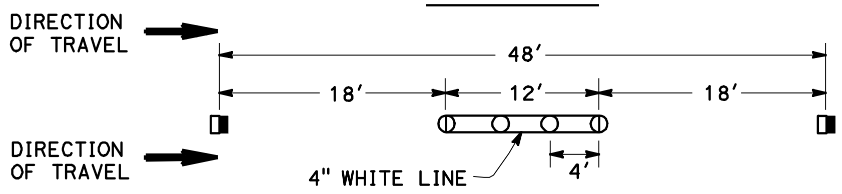

○ TYPE A WHITE NON-REFLECTIVE MARKER

◨ TYPE G ONE-WAY CLEAR RETROREFLECTIVE MARKER

NOTES:

1. REMOVALS OF TRAFFIC STRIPES AND PAVEMENT MARKING ARE IN THE COLD PLANNING OPERATION; NO SEPARATE PAY ITEMS FOR REMOVAL OF TRAFFIC STRIPES OR PAVEMENT MARKING

Dist	COUNTY	ROUTE	POST MILES TOTAL PROJECT	SHEET No.	TOTAL SHEETS
08	SBd	83, 210	0.0/7.2 30.2/33.2	17	27

Thanh Trinh 12-27-10
REGISTERED CIVIL ENGINEER DATE

12-27-10
PLANS APPROVAL DATE

REGISTERED PROFESSIONAL ENGINEER THANH TRINH No. C41189 Exp. 3/31/11 CIVIL STATE OF CALIFORNIA

THE STATE OF CALIFORNIA OR ITS OFFICERS OR AGENTS SHALL NOT BE RESPONSIBLE FOR THE ACCURACY OR COMPLETENESS OF SCANNED COPIES OF THIS PLAN SHEET.

PAVEMENT DELINEATION QUANTITIES

SHEET No.	LOCATION	DETAIL No. OR PAVEMENT MARKING	REMOVE PAVEMENT MARKER	REMOVE THERMOPLASTIC PAVEMENT MARKING YELLOW	REMOVE THERMOPLASTIC PAVEMENT MARKING WHITE	REMOVE YELLOW THERMOPLASTIC TRAFFIC STRIPE (HAZARDOUS) 4in	REMOVE THERMOPLASTIC TRAFFIC STRIPE WHITE 4in	REMOVE THERMOPLASTIC TRAFFIC STRIPE WHITE 8in	PAVEMENT MARKER NON-REFLECTIVE TYPE A	PAVEMENT MARKER RETRO-REFLECTIVE TYPE C	RETRO-REFLECTIVE TYPE D	RETRO-REFLECTIVE TYPE E	RETRO-REFLECTIVE TYPE G	RETRO-REFLECTIVE TYPE H	RECESSED TYPE C	RECESSED TYPE G	RECESSED TYPE H	PAINT TRAFFIC STRIPE (2-COAT) 4in YELLOW	PAINT TRAFFIC STRIPE 4in WHITE	PAINT TRAFFIC STRIPE 6in WHITE	PAINT TRAFFIC STRIPE 8in WHITE	PAINT PAVEMENT MARKING (2-COAT)	THERMOPLASTIC TRAFFIC STRIPE (SPRAYABLE) 4in YELLOW	THERMOPLASTIC TRAFFIC STRIPE 4in WHITE	THERMOPLASTIC TRAFFIC STRIPE 6in WHITE	THERMOPLASTIC TRAFFIC STRIPE 8in WHITE	THERMOPLASTIC PAVEMENT MARKING YELLOW	THERMOPLASTIC PAVEMENT MARKING WHITE
			EA	LF	LF	LF	LF	LF	EA	EA	EA	EA	EA	EA	EA	EA	EA	LF	LF	LF	LF	SQF	LF	LF	LF	LF	SQF	SQF
	ROUTE 210	8	-	-	-	-	-	-	-	-	-	-	-	-	-	-	-	-	-	-	-	-	-	430	-	-	-	-
		13M	3280	-	-	-	-	-	2624	-	-	-	656	-	-	-	-	-	-	-	-	-	-	31475	-	-	-	-
			-	-	-	-	-	-	-	-	-	-	-	-	-	-	-	-	-	-	-	-	-	-	-	-	-	-
		25	508	-	-	-	-	-	-	-	-	-	-	508	-	-	-	-	-	-	-	-	24370	-	-	-	-	-
			-	-	-	-	-	-	-	-	-	-	-	-	-	-	-	-	-	-	-	-	-	-	-	-	-	-
		27B	-	-	-	-	-	-	-	-	-	-	-	-	-	-	-	-	-	-	-	-	-	23610	-	-	-	-
		36	156	-	-	-	-	-	-	-	-	-	156	-	-	-	-	-	-	-	-	-	-	-	-	3720	-	-
		36A	34	-	-	-	-	-	-	-	-	-	34	-	-	-	-	-	-	-	-	-	-	820	-	820	-	-
		37	112	-	-	-	-	-	-	110	-	-	2	-	-	-	-	-	-	-	-	-	-	-	-	1640	-	-
		38	22	-	-	-	-	-	-	-	-	-	22	-	-	-	-	-	-	-	-	-	-	-	-	530	-	-
		TYPE VI (R) ARROW	-	-	-	-	-	-	-	-	-	-	-	-	-	-	-	-	-	-	-	-	-	-	-	-	-	378
			-	-	-	-	-	-	-	-	-	-	-	-	-	-	-	-	-	-	-	-	-	-	-	-	-	-
	ROUTE 83		-	-	-	-	-	-	-	-	-	-	-	-	-	-	-	-	-	-	-	-	-	-	-	-	-	-
		12	100	-	-	-	-	-	-	-	-	-	100	-	-	-	-	-	-	-	-	-	-	4800	-	-	-	-
		22	50	-	-	-	-	-	-	-	50	-	-	-	-	-	-	-	-	-	-	-	680	-	-	-	-	-
		25A	28	-	-	-	-	-	-	-	-	-	-	28	-	-	-	-	-	-	-	-	630	-	-	-	-	-
		27B	-	-	-	-	-	-	-	-	-	-	-	-	-	-	-	-	-	-	-	-	-	3500	-	-	-	-
		32	220	-	-	-	-	-	-	-	220	-	-	-	-	-	-	-	-	-	-	-	2100	-	-	-	-	-
	-	-	-	-	-	-	-	-	-	-	-	-	-	-	-	-	-	-	-	-	-	-	-	-	-	-	-	-
	-	-	-	-	-	-	-	-	-	-	-	-	-	-	-	-	-	-	-	-	-	-	-	-	-	-	-	-
	-	-	-	-	-	-	-	-	-	-	-	-	-	-	-	-	-	-	-	-	-	-	-	-	-	-	-	-
	-	-	-	-	-	-	-	-	-	-	-	-	-	-	-	-	-	-	-	-	-	-	-	-	-	-	-	-
	-	-	-	-	-	-	-	-	-	-	-	-	-	-	-	-	-	-	-	-	-	-	-	-	-	-	-	-
	-	-	-	-	-	-	-	-	-	-	-	-	-	-	-	-	-	-	-	-	-	-	-	-	-	-	-	-
	-	-	-	-	-	-	-	-	-	-	-	-	-	-	-	-	-	-	-	-	-	-	-	-	-	-	-	-
	-	-	-	-	-	-	-	-	-	-	-	-	-	-	-	-	-	-	-	-	-	-	-	-	-	-	-	-
	-	-	-	-	-	-	-	-	-	-	-	-	-	-	-	-	-	-	-	-	-	-	-	-	-	-	-	-
	-	-	-	-	-	-	-	-	-	-	-	-	-	-	-	-	-	-	-	-	-	-	-	-	-	-	-	-
	-	-	-	-	-	-	-	-	-	-	-	-	-	-	-	-	-	-	-	-	-	-	-	-	-	-	-	-
	-	-	-	-	-	-	-	-	-	-	-	-	-	-	-	-	-	-	-	-	-	-	-	-	-	-	-	-
	-	-	-	-	-	-	-	-	-	-	-	-	-	-	-	-	-	-	-	-	-	-	-	-	-	-	-	-
	-	-	-	-	-	-	-	-	-	-	-	-	-	-	-	-	-	-	-	-	-	-	-	-	-	-	-	-
	-	-	-	-	-	-	-	-	-	-	-	-	-	-	-	-	-	-	-	-	-	-	-	-	-	-	-	-
	-	-	-	-	-	-	-	-	-	-	-	-	-	-	-	-	-	-	-	-	-	-	-	-	-	-	-	-
	-	-	-	-	-	-	-	-	-	-	-	-	-	-	-	-	-	-	-	-	-	-	-	-	-	-	-	-
	-	-	-	-	-	-	-	-	-	-	-	-	-	-	-	-	-	-	-	-	-	-	-	-	-	-	-	-
	-	-	-	-	-	-	-	-	-	-	-	-	-	-	-	-	-	-	-	-	-	-	-	-	-	-	-	-
	-	-	-	-	-	-	-	-	-	-	-	-	-	-	-	-	-	-	-	-	-	-	-	-	-	-	-	-
	-	-	-	-	-	-	-	-	-	-	-	-	-	-	-	-	-	-	-	-	-	-	-	-	-	-	-	-
	-	-	-	-	-	-	-	-	-	-	-	-	-	-	-	-	-	-	-	-	-	-	-	-	-	-	-	-
	-	-	-	-	-	-	-	-	-	-	-	-	-	-	-	-	-	-	-	-	-	-	-	-	-	-	-	-
	-	-	-	-	-	-	-	-	-	-	-	-	-	-	-	-	-	-	-	-	-	-	-	-	-	-	-	-
	-	-	-	-	-	-	-	-	-	-	-	-	-	-	-	-	-	-	-	-	-	-	-	-	-	-	-	-
	-	-	-	-	-	-	-	-	-	-	-	-	-	-	-	-	-	-	-	-	-	-	-	-	-	-	-	-
	-	-	-	-	-	-	-	-	-	-	-	-	-	-	-	-	-	-	-	-	-	-	-	-	-	-	-	-
SUBTOTAL			4510						2624	110	270	-	970	536	-	-	-	-	-	-	-	-	27780	41025	-	6710	-	378
TOTAL			4510						2624	1886					-			-				-	75515				378	

EXISTING UTILITY FACILITIES HAVE NOT BEEN PLOTTED ON THESE PLANS.

THIS PLAN IS ACCURATE FOR PAVEMENT DELINEATION QUANTITY ONLY.

PAVEMENT DELINEATION QUANTITIES

PDQ-1

STATE OF CALIFORNIA - DEPARTMENT OF TRANSPORTATION
Caltrans TRAFFIC DESIGN
FUNCTIONAL SUPERVISOR: BILL WASSER
CALCULATED-DESIGNED BY: KEVIN NGUYEN
CHECKED BY: THANH TRINH
REVISED BY
DATE REVISED
BORDER LAST REVISED 7/2/2010
USERNAME => aasencio
DGN FILE => 80P370nc001.dgn
RELATIVE BORDER SCALE IS IN INCHES 0 1 2 3
UNIT 2284
PROJECT NUMBER & PHASE 08000010231
LAST REVISION 12-24-10
DATE PLOTTED => 27-DEC-2010
TIME PLOTTED => 08:34

Dist	COUNTY	ROUTE	POST MILES TOTAL PROJECT	SHEET No.	TOTAL SHEETS
08	SBd	83, 210	0.0/7.2, R30.2/R33.2	18	27

REGISTERED CIVIL ENGINEER 12-27-10 DATE

12-27-10
PLANS APPROVAL DATE

REGISTERED PROFESSIONAL ENGINEER YONGBEE LIAU No. C75571 Exp 6/30/12 CIVIL STATE OF CALIFORNIA

THE STATE OF CALIFORNIA OR ITS OFFICERS OR AGENTS SHALL NOT BE RESPONSIBLE FOR THE ACCURACY OR COMPLETENESS OF SCANNED COPIES OF THIS PLAN SHEET.

ROADWAY QUANTITIES

ROUTE	DIG-OUT No.	PM/LOCATION	DIRECTION	LANE No.	WIDTH (FT)	LENGTH (LF)	REPLACE AC SURFACING (CY)	ASPHALTIC EMULSION (TON)	REMARKS
ROUTE 83	1	7.226	SB	1, 2, RS	41	85	51.6		J/S/O INTERSECTION RTE 60 WB ONRAMP
	2	7.180	SB	2	12	130	23.1		UNDER RTE 60 WB OVERPASS
	3	7.178	SB	1, 2, RS	46	265	180.6		@ BOTTOM OF RTE 60 EB EUCLID AVE OFFRAMP
	4	7.065	SB	3	12	50	8.9		GEYER CT
	5	6.413	SB	2	12	210	37.3		J/S/O RIVERSIDE DR FRONT OF ADDRESS 13046
	6	6.413	SB	1	12	325	57.8		S/O RIVERSIDE DR FRONT OF ADDRESS 13078 - 13102
	6A	6.410	SB	2	12	210	37.3		S/O RIVERSIDE DR FRONT OF ADDRESS 13078 - 13102
	7	6.413	SB	2	12	50	8.9		S/O RIVERSIDE DR FRONT OF ADDRESS 13134
	8	5.670	SB	1	12	260	46.2		@ GRID ST
	9	5.420	SB	1	12	85	15.1		@ SCHAEFER INTERSECTION
	10	5.27+-	SB	2	12	425	75.6		@ RED BUD LN
	11	5.22+-	SB	1, 2	24	360	128.0		J/S/O RED BUD LN
	12	5.17+-	SB	2	12	50	8.9		S/O RED BUD LN FRONT OF ADDRESS 13948
	13	5.12+-	SB	2	12	140	24.9		IN FRONT CROSS POINT CHURCH, S/O RED BUD LN
	14	5.07+-	SB	1, 2	24	70	24.9		S/O RED BUD LN ADDRESS 14042
	15	5.02+-	SB	1, 2	24	135	48.0		J/N/O EDISON AVE FRONT OF ADDRESS 14058
	16	4.920	SB	1, 2	24	120	42.7		@ EDISON INTERSECTION
	17	4.82+-	SB	1, 2	24	220	78.2		J/S/O EDISON AVE FRONT OF ADDRESS 14280
	18	3.920	SB	1, 2	24	390	138.7		J/S/O MERRILL AVE
	19	3.569	SB	2	12	75	13.3		IN FRONT OF YOUTH CRRECTIONAL FACILITY
	20	0.558	SB	1	12	70	12.4		J/N/O POMONA RINCON INTERSECTION
	21	4.170	NB	2	12	300	53.3		IN BETWEEN MERRILL AVE & EUCAIYPTUS AVE
	22	4.920	NB	2	12	440	78.2		J/N/O EDISON AVE
	23	5.420	NB	2	12	150	26.7		J/N/O SCHAEFER AVE
	24	5.920	NB	2	12	100	17.8		J/N/O CHINO AVE
	25	7.226	NB	2	12	110	19.6		@ THE BOTTOM OF RTE 60 WB EUCLID AVE OFFRAMP
		VARIOUS	SB/NB	1, 2, RS	12	VARIOUS	2,000		
ROUTE 210		30.2/33.2	WB	ALL	24 - 48	VARIOUS	1,250		
		30.2/33.2	EB	ALL	24 - 48	VARIOUS	1,250		
		COUNT STA	WB	ALL	48	50	35.6		
		COUNT STA	EB	ALL	48	50	35.6		
		WB 5TH ST OFFRAMP	EB	ALL	24	50	17.8		
		WB SAN BERNARDINO AVE OFFRAMP	WB	ALL	36	60	32.0		
		EB SAN BERNARDINO AVE OFFRAMP	EB	ALL	36	60	32.0		
		30.2/33.2	WB/EB					26	
						TOTAL	5,911	26	

NOTES:

1. LOCATIONS AND DIMENSIONS SHOWN ARE APPROXIMATE.
2. EXACT LOCATIONS AND DIMENSIONS OF REPLACE ASPHALTCONCRETE SURFACING SHALL BE DETERMINED BY THE ENGINEER.
3. LOCATIONS AS SHOWN OR AS DIRECTED BY THE ENGINEER.

ABBREVIATIONS:

RS = RIGHT SHOULDER
S/O = SOUTH OF
J/N/O = JUST NORTH OF
J/S/O = JUST SOUTH OF

EXISTING UTILITY FACILITIES HAVE NOT BEEN PLOTTED ON THESE PLANS.

SUMMARY OF QUANTITIES

Q-1

REVISED BY | DATE REVISED
YONGBEE LIAU | MICHAEL RISTIC
CALCULATED-DESIGNED BY | CHECKED BY
FUNCTIONAL SUPERVISOR: MICHAEL RISTIC
STATE OF CALIFORNIA - DEPARTMENT OF TRANSPORTATION
Caltrans MAINTENANCE ENGINEERING

LAST REVISION 12-24-10 | DATE PLOTTED => 27-DEC-2010 | TIME PLOTTED => 08:35

Dist	COUNTY	ROUTE	POST MILES TOTAL PROJECT	SHEET No.	TOTAL SHEETS
08	SBd	83, 210	0.0/7.2, R30.2/R33.2	19	27

REGISTERED CIVIL ENGINEER 12-24-10 DATE

PLANS APPROVAL DATE

REGISTERED PROFESSIONAL ENGINEER FERDINAND DE LA CRUZ No. E17215 Exp. 6/30/12 CIVIL STATE OF CALIFORNIA

THE STATE OF CALIFORNIA OR ITS OFFICERS OR AGENTS SHALL NOT BE RESPONSIBLE FOR THE ACCURACY OR COMPLETENESS OF SCANNED COPIES OF THIS PLAN SHEET.

GENERAL NOTES:

1. THE CONTRACTOR SHALL VERIFY THE EXACT LOCATION OF OF THE INDUCTIVE LOOP DETECTORS.
2. AB ALL EXISTING INDUCTIVE LOOP DETECTORS SHOWN.
3. THE CONTRACTOR SHALL NOTIFY THE ENGINEER 3 WORKING DAYS PRIOR TO INSTALLING DETECTOR LOOP.
4. THE CONTRACTOR SHALL NOTIFY THE ENGINEER 5 WORKING DAYS PRIOR TO ANY WORK PERFORM AT TRAFFIC SIGNAL LOCATIONS.
5. THE CONTRACTOR SHALL TEST THE LOOPS AT THE PULL BOXES AND CABINET AFTER SPLICING IS COMPLETE. dlc's AND LOOPS SHALL BE LABELED AS PER ES-13B IN PULL BOX AND CABINET.

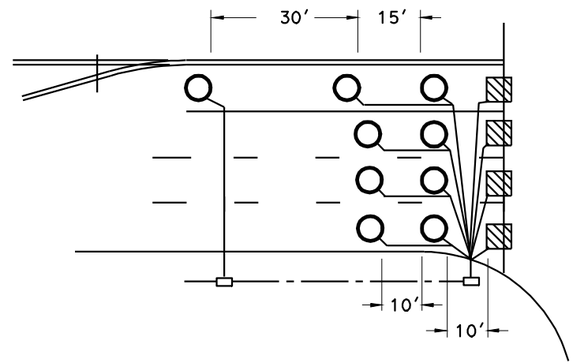

TYPICAL LOOP DETECTOR LAYOUT

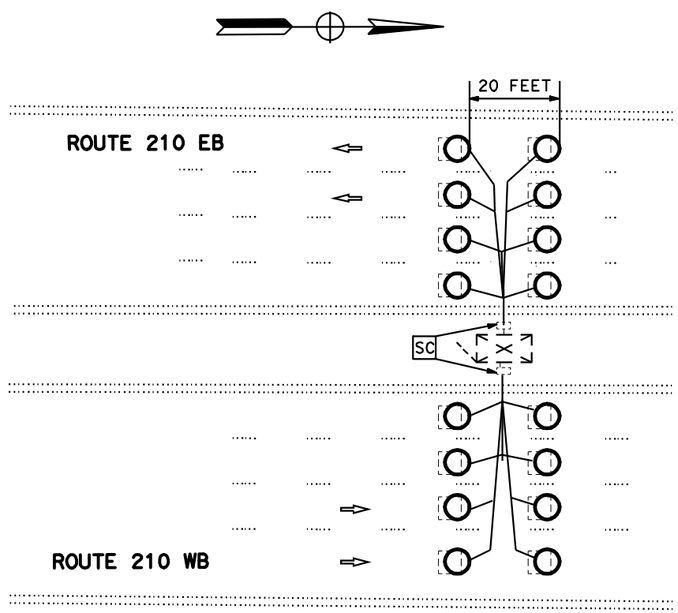

COUNT STATION
Rte 210, PM R33.2
WEST OF LUGONIA Ave

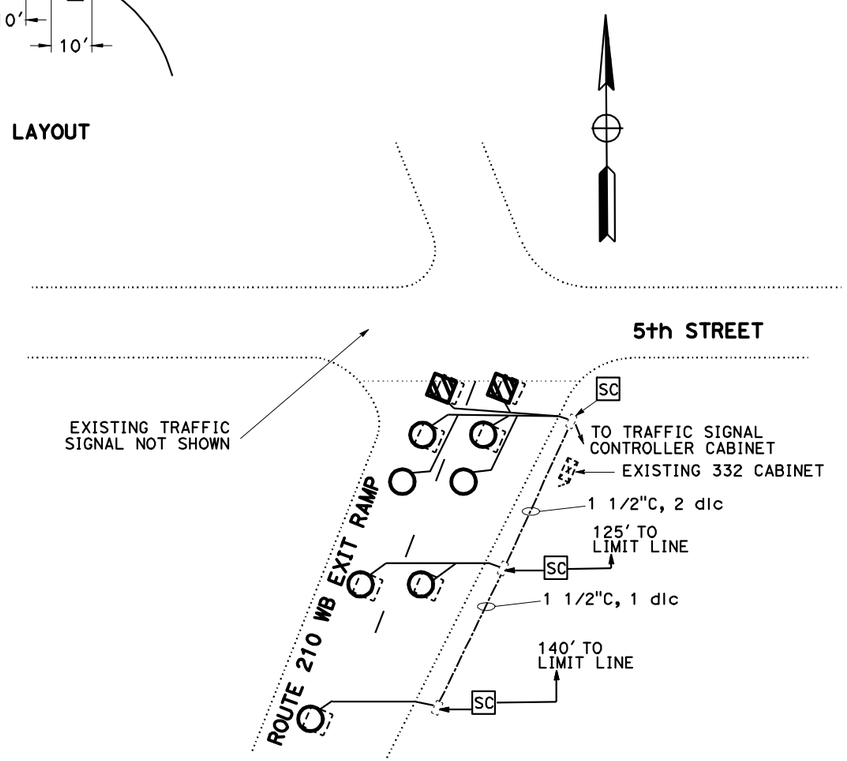

TRAFFIC SIGNAL
Rte 210, PM 30.2

EXISTING UTILITY FACILITIES HAVE NOT BEEN PLOTTED ON THESE PLANS.

THIS PLAN IS ACCURATE FOR ELECTRICAL WORK ONLY.

INDUCTIVE LOOP DETECTOR

NO SCALE

E-1

STATE OF CALIFORNIA - DEPARTMENT OF TRANSPORTATION
Caltrans ELECTRICAL DESIGN B

FUNCTIONAL SUPERVISOR: FERDINAND DE LA CRUZ
CALCULATED-DESIGNED BY: SANDY TUNG ST
CHECKED BY: FERDINAND DE LA CRUZ
REVISED BY
DATE REVISED

LAST REVISION 12-24-10
DATE PLOTTED => 27-DEC-2010
TIME PLOTTED => 08:35

Dist	COUNTY	ROUTE	POST MILES TOTAL PROJECT	SHEET No.	TOTAL SHEETS
08	SBd	83, 210	0.0/7.2, R30.2/R33.2	20	27

12-27-10
REGISTERED CIVIL ENGINEER DATE

12-27-10
PLANS APPROVAL DATE

REGISTERED PROFESSIONAL ENGINEER FERDINAND DE LA CRUZ No. E17215 Exp 6/30/12 CIVIL STATE OF CALIFORNIA

THE STATE OF CALIFORNIA OR ITS OFFICERS OR AGENTS SHALL NOT BE RESPONSIBLE FOR THE ACCURACY OR COMPLETENESS OF SCANNED COPIES OF THIS PLAN SHEET.

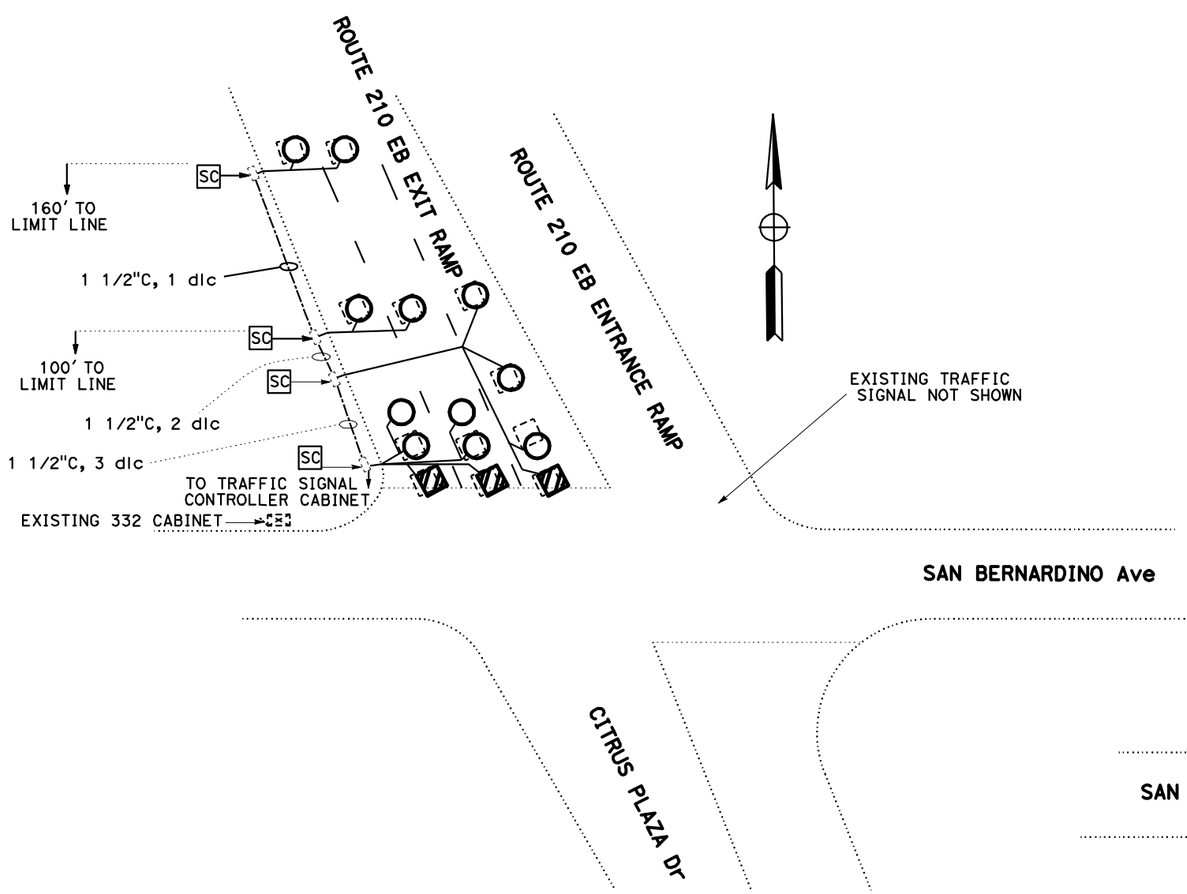

TRAFFIC SIGNAL
EB ROUTE 210 EXIT RAMPS
SAN BERNARDINO STREET
PM R32.3

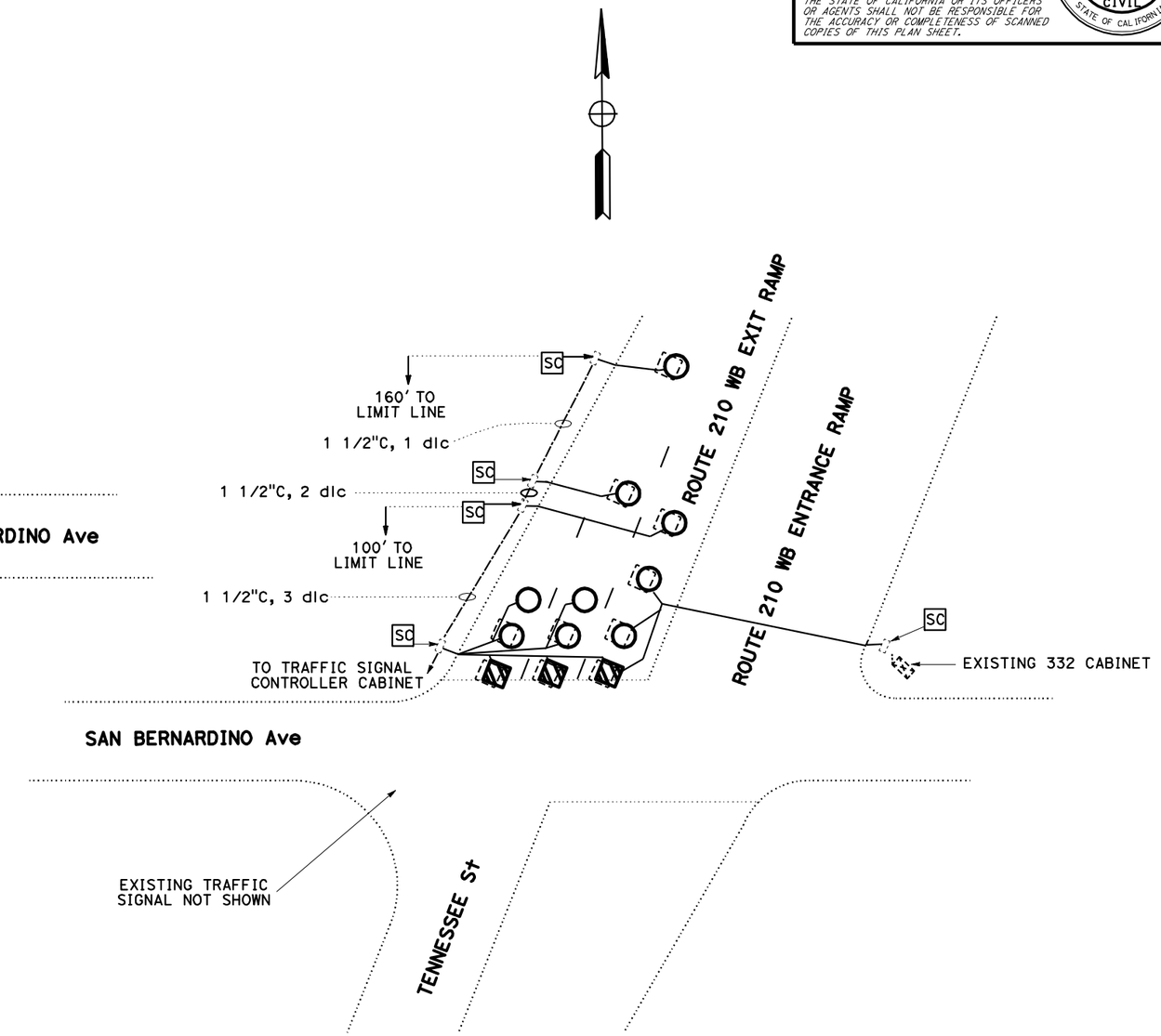

TRAFFIC SIGNAL
WB ROUTE 210 EXIT RAMP
SAN BERNARDINO STREET
PM R32.3

EXISTING UTILITY FACILITIES HAVE NOT BEEN PLOTTED ON THESE PLANS.
THIS PLAN IS ACCURATE FOR ELECTRICAL WORK ONLY.

INDUCTIVE LOOP DETECTOR

NO SCALE

E-2

STATE OF CALIFORNIA - DEPARTMENT OF TRANSPORTATION
Caltrans ELECTRICAL DESIGN B

FUNCTIONAL SUPERVISOR: FERDINAND DE LA CRUZ
CALCULATED-DESIGNED BY: SANDY TUNG ST
CHECKED BY: FERDINAND DE LA CRUZ
REVISED BY
DATE REVISED

LAST REVISION 12-24-10 | DATE PLOTTED => 27-DEC-2010 | TIME PLOTTED => 08:35

BORDER LAST REVISED 7/2/2010 | USERNAME => aasencio | DGN FILE => 80P370ua002.dgn | RELATIVE BORDER SCALE IS IN INCHES 0 1 2 3 | UNIT 2292 | PROJECT NUMBER & PHASE 08000010231

DIST	COUNTY	ROUTE	POST MILES TOTAL PROJECT	SHEET NO.	TOTAL SHEETS
08	SBd	83, 210	0.0/7.2, 30.2/33.18	21	27

REGISTERED ELECTRICAL ENGINEER

October 5, 2007
PLANS APPROVAL DATE

REGISTERED PROFESSIONAL ENGINEER Jeffery G. McRae No. E14512 Exp. 6-30-08 ELECTRICAL STATE OF CALIFORNIA

The State of California or its officers or agents shall not be responsible for the accuracy or completeness of electronic copies of this plan sheet.

To accompany plans dated December 27, 2010

ELECTROLIERS

STANDARD TYPES
15, 15D
15 STRUCTURE
21, 21D STRUCTURE
30
31
32
35
36-20A

High mast light pole

Double Arm lighting standard

Existing electrolier

Electrolier foundation (Future installation)

NOTES:

1. Luminaires shall be 310 W HPS when installed on Type 21, 21D, 30, 31, 32, 35 and 36-20A Standards, unless otherwise specified. Luminaires shall be 200 W HPS when installed on other type standards or poles, unless otherwise specified.
2. Luminaires shall be the cutoff type, ANSI Type Ⅲ medium cutoff lighting distribution, unless otherwise specified.
3. Variations noted adjacent to symbol on project plans.

Electrolier (see project notes or project plans)

Luminaire on wood pole

STANDARD NOTES:

- AB Abandon. If applied to conduit, remove conductors.
- BC Install pull box in existing conduit run.
- BP Pedestrian barricade, type as indicated on plan.
- CB Install conduit into existing pull box.
- CC Connect new and existing conduit. Remove existing conductors and install conductors as indicated.
- CF Conduit to remain for future use. Remove conductors. Install pull wire or rope.
- DH Detector handhole.
- FA Foundation to be abandoned.
- IS Install sign on signal mast arm.
- NS No slip base on standard.
- PEC Photoelectric control.
- PEU Photoelectric unit.
- RC Equipment or material to be removed and become the property of the Contractor.
- RE Remove electrolier, fuses and ballast. Tape ends of conductors.
- RL Relocate equipment.
- RR Remove and reuse equipment.
- RS Remove and salvage equipment.
- SC Splice new to existing conductors.
- SD Service disconnect.
- SF Standard to remain for future use. Remove luminaire, pole conductors, fuses and ballast.
- TSP Telephone service point.

ABBREVIATIONS AND EQUIPMENT DESIGNATIONS

PROPOSED	EXISTING	
BBS	bbs	Battery backup system
BC	bc	Bolt circle
C	C	Conduit
CCTV	cctv	Closed circuit television
CKT	ckt	Circuit
CMS	cms	Changeable message sign
DLC	dlc	Loop detector lead-in cable
EMS	ems	Extinguishable message sign
EVC	evc	Emergency vehicle cable
EVD	evd	Emergency vehicle detector
FB	fb	Flashing beacon
FBCA	fbca	Flashing beacon control assembly
FBS	fbs	Flashing beacon with slip base
FO	fo	Fiber optic
G	G	Ground (Equipment Grounding Conductor)
GFCI	GFCI	Ground fault circuit interrupt
HAR	har	Highway advisory radio
HEX	hex	Hexagonal
HPS	hps	High pressure sodium
IISNS	iisns	Internally illuminated street name sign
ISL	isl	Induction sign lighting
LED	led	Light emitting diode
LMA	lma	Luminaire mast arm
LPS	lps	Low pressure sodium
LTG	ltg	Lighting
LUM	lum	Luminaire
MAT	mat	Mast arm mounting vehicle signal faces, top attachment
MAS	mas	Mast arm mounting vehicle signal faces, side attachment
MAS-4A MAS-4B MAS-4C	mas-4A mas-4B mas-4C	Mast arm mounting vehicle signal faces, side attachment - 4 signal section
MAS-5A MAS-5B	mas-5A mas-5B	Mast arm mounting vehicle signal faces, side attachment - 5 signal section
MC	mc	Mercury contactor
M/M	m/m	Multiple to multiple transformer
MT	mt	Conduit with pull wire or rope only
MTG	mtg	Mounting
	mv	Mercury vapor lighting fixture
N	N	Neutral (Grounded Conductor)
NC	NC	Normally closed
NO	NO	Normally open
PB	pb	Pull box
PEC	pec	Photoelectric control (Type Ⅰ, Ⅱ, Ⅲ, Ⅳ or Ⅴ as shown)
PED	ped	Pedestrian
PEU	peu	Photoelectric unit
PPB	ppb	Pedestrian push button
RL		Relocated equipment
RM	rm	Ramp metering
SB	sb	Slip base
SIC	sic	Signal interconnect cable
SIG	sig	Signal
SMA	sma	Signal mast arm
SNS	sns	Street name sign
SP	sp	Service point
TDC	tdc	Telephone demarcation cabinet
TMS	tms	Traffic monitoring station
TOS	tos	Traffic Operations System
VEH	veh	Vehicle
XFMR	xfmr	Transformer
COMM	comm	Communication
RWIS	rwis	Roadway weather information system

SOFFIT AND WALL MOUNTED LUMINAIRES

Pendant, 70 W HPS unless otherwise specified.

Flush, 70 W HPS unless otherwise specified.

Wall surface, 70 W HPS unless otherwise specified.

Existing soffit or wall luminaire to remain unmodified.

Existing soffit or wall luminaire to be modified as specified.

NOTE:

Arrow indicates "street side" of luminaire.

STATE OF CALIFORNIA
DEPARTMENT OF TRANSPORTATION

ELECTRICAL SYSTEMS (SYMBOLS AND ABBREVIATIONS)

NO SCALE

RSP ES-1A DATED OCTOBER 5, 2007 SUPERSEDES STANDARD PLAN ES-1A DATED MAY 1, 2006 - PAGE 400 OF THE STANDARD PLANS BOOK DATED MAY 2006.

REVISED STANDARD PLAN RSP ES-1A

2006 REVISED STANDARD PLAN RSP ES-1A

7-10-07

DIST	COUNTY	ROUTE	POST MILES TOTAL PROJECT	SHEET NO.	TOTAL SHEETS
08	SBd	83, 210	0.0/7.2, 30.2/33.18	22	27

REGISTERED ELECTRICAL ENGINEER

October 5, 2007
PLANS APPROVAL DATE

REGISTERED PROFESSIONAL ENGINEER Jeffery G. McRae No. E14512 Exp. 6-30-08 ELECTRICAL STATE OF CALIFORNIA

The State of California or its officers or agents shall not be responsible for the accuracy or completeness of electronic copies of this plan sheet.

To accompany plans dated December 27, 2010

CONDUIT

PROPOSED	EXISTING	
		Lighting Conduit, unless otherwise indicated or noted
		Traffic signal conduit
C	c	Communication conduit
T	t	Telephone conduit
F	f	Fire alarm conduit
FO	fo	Fiber optic conduit
		Conduit termination (RSP ES-9A C)
R	r	Conduit riser in/on structure or service pole

SERVICE EQUIPMENT

PROPOSED	EXISTING	
OH	oh	Overhead lines
U	U	Wood pole "U" indicates utility owned
		Pole guy with anchor
		Utility transformer - ground mounted
III		Service equipment enclosure type
		Service equipment enclosure door indicates front of enclosure
T	t	Telephone demarcation cabinet

POLE-MOUNTED SERVICE DESIGNATION

Type of installation

TYPE H SERVICE - 28'-10" ← Pole height above grade

ILLUMINATED OVERHEAD SIGN

PROPOSED	EXISTING	
		Overhead sign - Single post
		Overhead sign - Two post
		Overhead sign - Mounted on structure
		Overhead sign with electrolier

SIGNAL EQUIPMENT

PROPOSED	EXISTING	
		Pedestrian signal face
		Pedestrian push button post
		Pedestrian barricade
		Vehicle signal face (with backplate, 3-Section: red, yellow and green)
		Vehicle signal face with angle visors
PV	PV	Modifications of basic symbols: "L" indicates all non-arrow sections louvered "LG" indicates louvered green section only "PV" indicates 12" programmed visibility sections "8" indicates all 8" sections (only when specified)
		Type 15TS and Vehicle signal face
		Vehicle signal face with red, yellow and green left arrow sections
		Vehicle signal face with red and yellow sections and up green arrow
		Vehicle signal face (5 Section) with red, yellow and green sections and yellow and green right arrows
		Type 1 Standard and attached vehicle signal faces
		Standard with signal mast arm only and attached vehicle signal faces and internally illuminated street name sign
		Type 33 Standard, Left-turn vehicle signal face and sign
		Standard with luminaire and signal mast arms and attached vehicle signal faces
		Cantilever flashing beacon Type 9 Frame, with a sign unless otherwise specified or indicated
		Type 15-FBS Standard with two vehicle signal face sections with lens, backplate and visor with a sign
R	Y	Flashing beacon. One vehicle signal face section with lens, backplate and visor. "R" indicates red indication, "Y" indicates yellow indication
		Controller assembly. Door indicates front of cabinet

SIGNAL EQUIPMENT Cont

PROPOSED	EXISTING	
		Guard post
		Type 1 Standard with "Meter On" sign
		Emergency Vehicle detector

NOTES:

1. All signal sections shall be 12" unless shown otherwise.
2. Signal heads shall be provided with backplates unless shown otherwise.
3. Signal indication shall be LED.

STATE OF CALIFORNIA
DEPARTMENT OF TRANSPORTATION

ELECTRICAL SYSTEMS (SYMBOLS AND ABBREVIATIONS)

NO SCALE

RSP ES-1B DATED OCTOBER 5, 2007 SUPERCEDES STANDARD PLAN ES-1B DATED MAY 1, 2006 - PAGE 401 OF THE STANDARD PLANS BOOK DATED MAY 2006.

REVISED STANDARD PLAN RSP ES-1B

2006 REVISED STANDARD PLAN RSP ES-1B

7-10-07

DIST	COUNTY	ROUTE	POST MILES TOTAL PROJECT	SHEET NO.	TOTAL SHEETS
08	SBd	83, 210	0.0/7.2, 30.2/33.18	23	27

REGISTERED ELECTRICAL ENGINEER

October 5, 2007
PLANS APPROVAL DATE

REGISTERED PROFESSIONAL ENGINEER Jeffery G. McRae No. E14512 Exp. 6-30-08 ELECTRICAL STATE OF CALIFORNIA

The State of California or its officers or agents shall not be responsible for the accuracy or completeness of electronic copies of this plan sheet.

To accompany plans dated December 27, 2010

EQUIPMENT IDENTIFICATION

ILLUMINATED SIGN IDENTIFICATION NUMBER:

Sign No. 12345

10 ISL SCI 1.0

- Sign number - Place on post or structure
- Transformer rating (kVA)
- Lighting control type
- Number and type of fixtures

Do NOT place on standard or structure

ELECTROLIER OR EQUIPMENT IDENTIFICATION NUMBER:

12345 - 15'-0"

- Mast arm length, if shown. Do not place on standard or structure.
- Equipment number - Place on standard or structure. Existing equipment numbers are shown in parenthesis

CONDUIT AND CONDUCTOR IDENTIFICATION:

1½"C, 2#10, 15#14, 2 DLC

- Number and size of conductors and cables
- Size of conduit in inches

ø1, ø2, ø2P, etc.	Traffic phase identification for signal faces, detectors and phase diagrams
1 2 3	Project note numbers
A B C	Equipment description, installation or item numbers
1 2 3	Conduit run numbers

SIGNAL AND LIGHTING STANDARD (TYPICAL DESIGNATION):

19A - 3 - 100

- Wind velocity = 100 mph
- Case 3 arm loading
- Standard type
- Standard Plan sheet number
- Detail number or letter

MISCELLANEOUS EQUIPMENT

PROPOSED	EXISTING	
CMS	cms	Changeable message sign
		Closed circuit television camera
		Highway advisory radio pole and antenna
EMS	ems	Extinguishable message sign
M V	m v	Detection device M = Microwave sensor V = Video image sensor

WIRING DIAGRAM LEGEND

P	Pole
CB	Circuit breaker
A	Ampere
V	Volt
M	Metered
UM	Unmetered
NB	Neutral bus
GB	Ground bus
G	Equipment grounding conductor
N	Grounded conductor (Neutral)

- External conductor
- Conductor or bus
- Tie point
- Contactor coil
- Contactor, Contact NO
- Terminal blocks
- Contactor, Contact NC
- Enclosure bond
- Grounding electrode
- Circuit breaker
- Receptacle

PULL BOXES

PROPOSED EXISTING

Pull box-No. 5 unless otherwise indicated or noted.

3 9A(21)

Pull box-Additional designations or descriptions

3 = No. 3½ pull box
5 = No. 5 pull box
6 = No. 6 pull box
7 = No. 7 (Ceiling pull box)
8 = No. 8 (Pendant soffit pull box)
9 = No. 9 pull box
9A = No. 9A pull box

(C) = Communications pull box
(E) = Pull box with extension
(S) = Sprinkler control pull box
(21) = Anchor bolts and conduit for future installation of Type 21 Standard
(T) = Traffic pull box

VEHICLE DETECTORS

5 J 9 U

- Vehicle detector designation
- U = Upper
  L = Lower
- Slot number in input file
- Input file (I or J)
- Phase

PROPOSED	EXISTING	
		Type A detector loop. Outline of sawcut shown.
		Type B detector loop. Outline of sawcut shown.
		Type C detector loop. Outline of sawcut shown.
		Type D detector loop. Outline of sawcut shown.
		Type E detector loop. Outline of sawcut shown.
		Type Q detector loop. Outline of sawcut shown.
		Magnetic detector
DH	dh	Detector handhole
		Microwave or video detection zone

STATE OF CALIFORNIA
DEPARTMENT OF TRANSPORTATION

ELECTRICAL SYSTEMS (SYMBOLS AND ABBREVIATIONS)

NO SCALE

RSP ES-1C DATED OCTOBER 5, 2007 SUPERCEDES STANDARD PLAN ES-1C DATED MAY 1, 2006 - PAGE 402 OF THE STANDARD PLANS BOOK DATED MAY 2006.

REVISED STANDARD PLAN RSP ES-1C

2006 REVISED STANDARD PLAN RSP ES-1C

7-10-07

DIST	COUNTY	ROUTE	POST MILES TOTAL PROJECT	SHEET NO.	TOTAL SHEETS
08	SBd	83, 210	0.0/7.2, 30.2/33.18	24	27

REGISTERED ELECTRICAL ENGINEER

October 5, 2007
PLANS APPROVAL DATE

REGISTERED PROFESSIONAL ENGINEER
Jeffery G. McRae
No. E14512
Exp. 6-30-08
ELECTRICAL
STATE OF CALIFORNIA

The State of California or its officers or agents shall not be responsible for the accuracy or completeness of electronic copies of this plan sheet.

To accompany plans dated December 27, 2010

2006 REVISED STANDARD PLAN RSP ES-5A

LOOP INSTALLATION PROCEDURE

1. Loops shall be centered in lanes.
2. Saw slots in pavement for loop conductors as shown in details.
3. Distance between side of loop and a lead-in saw cut from adjacent detectors shall be 2'-0" minimum. Distance between lead-in saw cuts shall be 6" minimum.
4. Bottom of saw slot shall be smooth with no sharp edges.
5. Slots shall be washed until clean, blown out and thoroughly dried before installing loop conductors.
6. Adjacent loops on the same sensor unit channel shall be wound in opposite directions.
7. Identify and tag loop circuit pairs in the pull box with loop number, start (S) and finish (F) of conductor. Identify and tag lead-in-cable with sensor number and phase.
8. Install loop conductor in slot using a 3/16" to 1/4" thick wood paddle. Hold loop conductors with wood paddles (at the bottom of the sawed slot) during sealant placement.
9. No more than 2 twisted pairs shall be installed in one sawed slot.
10. Allow additional 5'-0" of slack length of conductor for the lead-in run to pull box.
11. The additional length of each conductor for each loop shall be twisted together into a pair (6 turns per 3'-4" minimum) before being placed in the slot and conduit leading to pull box.
12. Test each loop circuit for continuity, circuit resistance and insulation resistance at the pull box before filling slots.
13. Fill slots as shown in details.
14. Splice loop conductors to lead-in-cable. Splices shall be soldered.
15. End of lead-in-cable and Type 2 loop conductor shall be waterproofed prior to installing in conduit to prevent moisture from entering the cable.
16. Lead-in-cable shall not be spliced between the pull box and the controller cabinet terminals.
17. Test each loop circuit for continuity, circuit resistance and insulation resistance at the controller cabinet location.
18. Where loop conductors are not to be spliced to a lead-in-cable, the ends of the conductors shall be taped and waterproofed with electrical insulating coating.

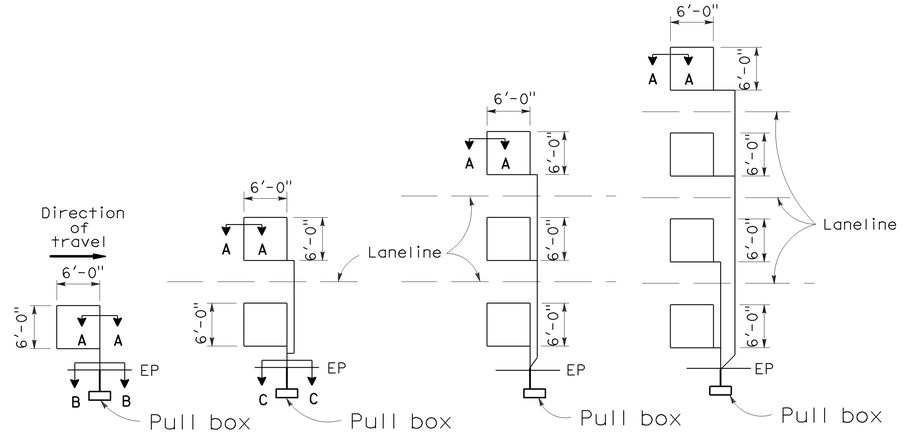

TYPE 1A INSTALLATION | TYPE 2A INSTALLATION | TYPE 3A INSTALLATION | TYPE 4A INSTALLATION

SAWCUT DETAILS

(Type A loop detector configurations illustrated)

1. 1A thru 4A = 1 Type A loop configuration in each lane.
2. 1B thru 4B = 1 Type B loop configuration in each lane.
3. 1C = 1 Type C loop configuration entering lanes as required.
4. 1D thru 4D = 1 Type D loop configuration in each lane.
5. 1E thru 4E = 1 Type E loop configuration in each lane.
6. 1Q thru 4Q = 1 Type Q loop configuration in each lane. (Use Type A, B, C, D, E or Q loop detector configurations only when specified or shown on plans)

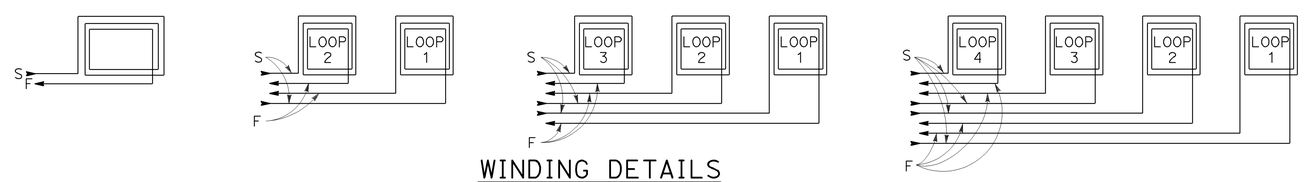

WINDING DETAILS

See Notes 6 and 7

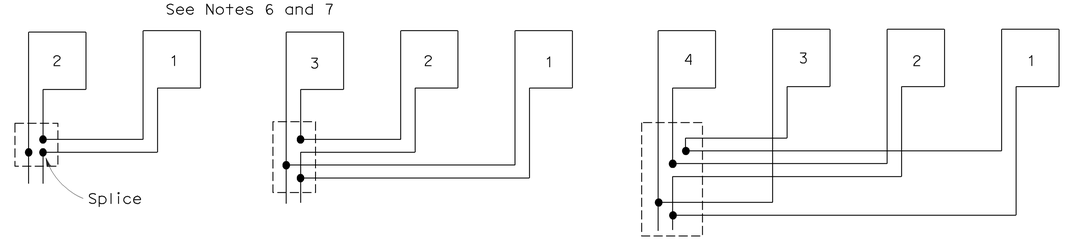

TYPICAL LOOP CONNECTIONS

(Dashed lines represent the pull box)

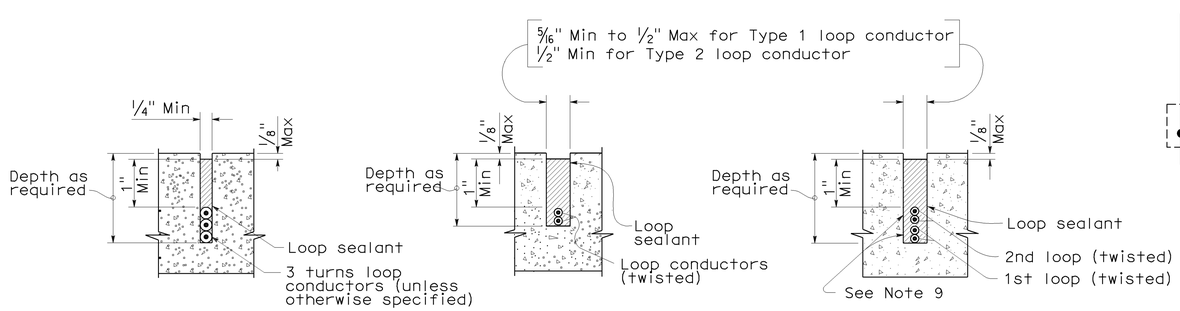

SECTION A-A | SECTION B-B | SECTION C-C

SLOT DETAILS - TYPE 1 AND TYPE 2 LOOP CONDUCTOR

STATE OF CALIFORNIA
DEPARTMENT OF TRANSPORTATION

ELECTRICAL SYSTEMS (DETECTORS)

NO SCALE

RSP ES-5A DATED OCTOBER 5, 2007 SUPERCEDES STANDARD PLAN ES-5A DATED MAY 1, 2006 - PAGE 423 OF THE STANDARD PLANS BOOK DATED MAY 2006.

REVISED STANDARD PLAN RSP ES-5A

8-17-07

DIST	COUNTY	ROUTE	POST MILES TOTAL PROJECT	SHEET NO.	TOTAL SHEETS
08	SBd	83, 210	0.0/7.2, 30.2/33.18	25	27

Randell D. Hiatt
REGISTERED CIVIL ENGINEER

June 6, 2008
PLANS APPROVAL DATE

REGISTERED PROFESSIONAL ENGINEER
Randell D. Hiatt
No. C50200
Exp. 6-30-09
CIVIL
STATE OF CALIFORNIA

The State of California or its officers or agents shall not be responsible for the accuracy or completeness of electronic copies of this plan sheet.

To accompany plans dated December 27, 2010

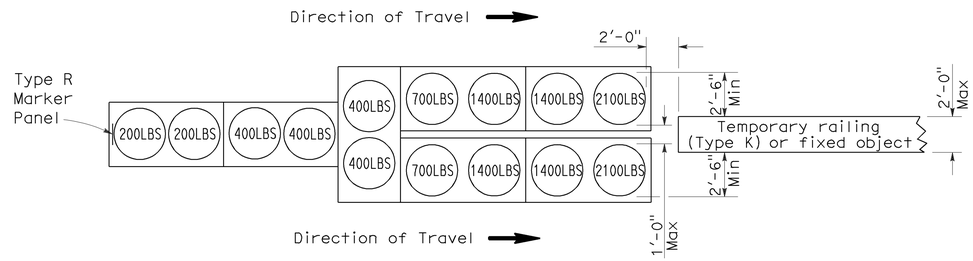

ARRAY 'TU14'

Approach speed 45 mph or more

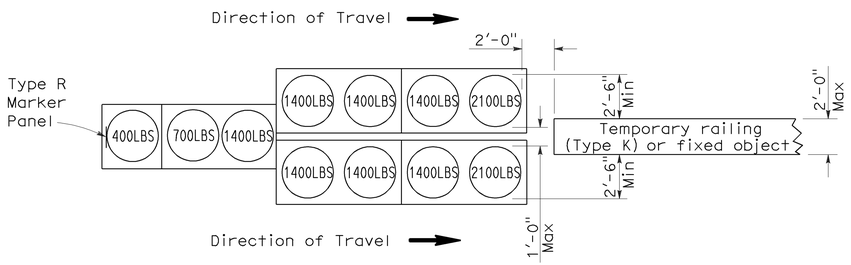

ARRAY 'TU11'

Approach speed less than 45 mph

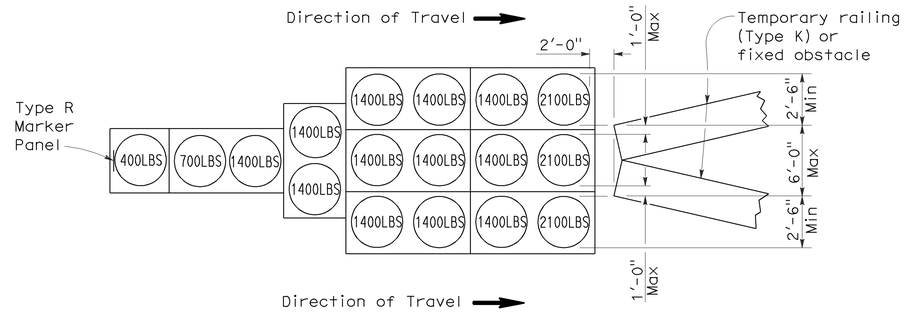

ARRAY 'TU17'

Approach speed less than 45 mph

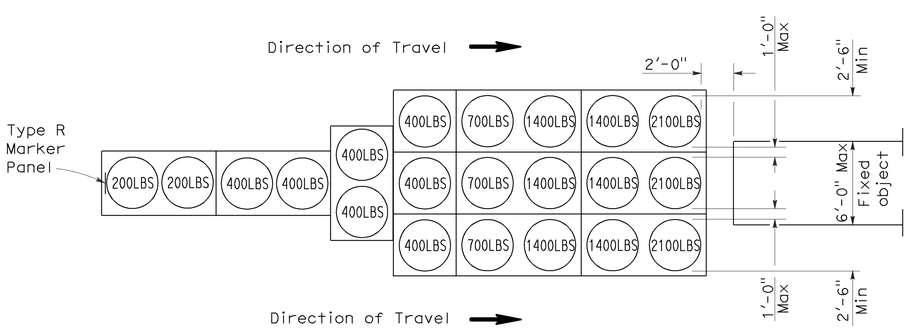

ARRAY 'TU21'

Approach speed 45 mph or more

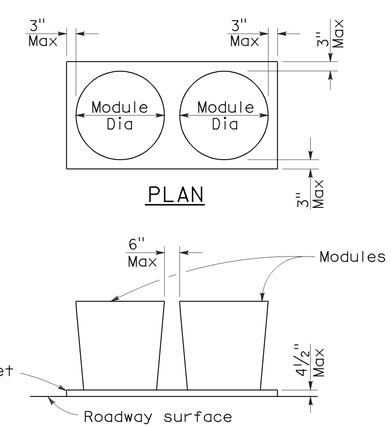

PLAN

ELEVATION

CRASH CUSHION PALLET DETAIL

See Note 7

NOTES:

1. (XXX) Indicates sand filled module location and weight of sand in pounds for each module. Module spacing is based on the greater diameter of the module.
2. All sand weights are nominal.
3. Temporary crash cushion arrays shall not encroach on the traveled way.
4. Place the top of Type R marker panel 1" below the module lid.
5. Refer to Standard Plan A73B for marker details.
6. Approach speeds indicated conform to NCHRP 350 Report criteria.
7. Use of pallets is optional.

STATE OF CALIFORNIA
DEPARTMENT OF TRANSPORTATION

TEMPORARY CRASH CUSHION, SAND FILLED (UNIDIRECTIONAL)

NO SCALE

RSP T1A DATED JUNE 6, 2008 SUPERSEDES STANDARD PLAN T1A
DATED MAY 1, 2006 - PAGE 211 OF THE STANDARD PLANS BOOK DATED MAY 2006.

REVISED STANDARD PLAN RSP T1A

2006 REVISED STANDARD PLAN RSP T1A

5-15-08

DIST	COUNTY	ROUTE	POST MILES TOTAL PROJECT	SHEET NO.	TOTAL SHEETS
08	SBd	83, 210	0.0/7.2, 30.2/33.18	26	27

Randell D. Hiatt
REGISTERED CIVIL ENGINEER

June 6, 2008
PLANS APPROVAL DATE

REGISTERED PROFESSIONAL ENGINEER
Randell D. Hiatt
No. C50200
Exp. 6-30-09
CIVIL
STATE OF CALIFORNIA

The State of California or its officers or agents shall not be responsible for the accuracy or completeness of electronic copies of this plan sheet.

To accompany plans dated December 27, 2010

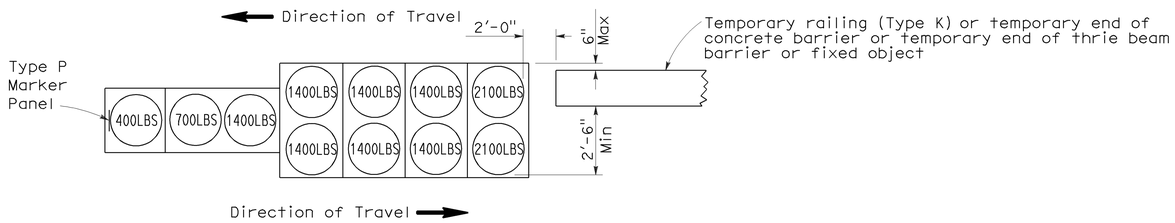

ARRAY 'TB11'

Approach speed less than 45 mph

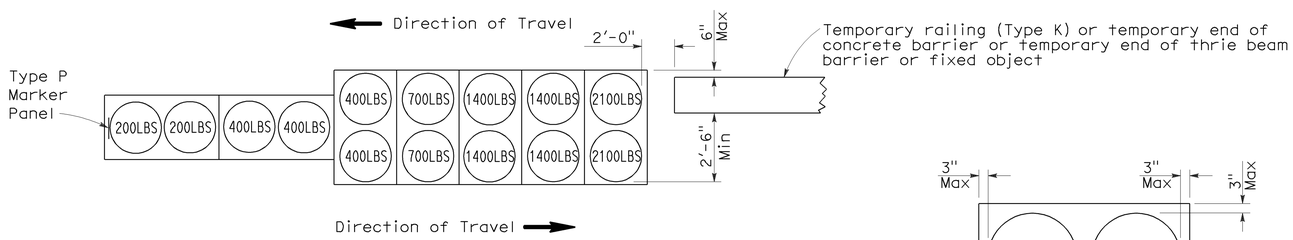

ARRAY 'TB14'

Approach speed 45 mph or more

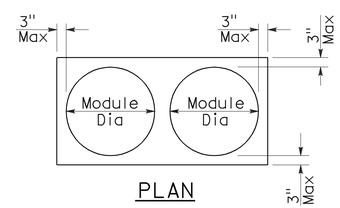

PLAN

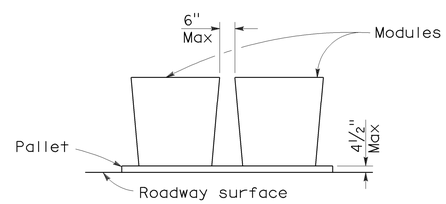

ELEVATION

CRASH CUSHION PALLET DETAIL

See Note 7

NOTES:

1. (XXX) Indicates sand filled module location and weight of sand in pounds for each module. Module spacing is based on the greater diameter of the module.
2. All sand weights are nominal.
3. Temporary crash cushion arrays shall not encroach on the traveled way.
4. Place the Type P marker panel so that the bottom of the panel rests upon the pallet.
5. Refer to Standard Plan A73B for marker details.
6. Approach speeds indicated conform to NCHRP 350 Report criteria.
7. Use of pallets is optional.

STATE OF CALIFORNIA
DEPARTMENT OF TRANSPORTATION

TEMPORARY CRASH CUSHION, SAND FILLED (BIDIRECTIONAL)

NO SCALE

RSP T1B DATED JUNE 6, 2008 SUPERSEDES STANDARD PLAN T1B
DATED MAY 1, 2006 - PAGE 212 OF THE STANDARD PLANS BOOK DATED MAY 2006.

REVISED STANDARD PLAN RSP T1B

2006 REVISED STANDARD PLAN RSP T1B

5-15-08

DIST	COUNTY	ROUTE	POST MILES TOTAL PROJECT	SHEET NO.	TOTAL SHEETS
08	SBd	83, 210	0.0/7.2, 30.2/33.18	27	27

Randell D. Hiatt
REGISTERED CIVIL ENGINEER

June 6, 2008
PLANS APPROVAL DATE

REGISTERED PROFESSIONAL ENGINEER
Randell D. Hiatt
No. C50200
Exp. 6-30-09
CIVIL
STATE OF CALIFORNIA

The State of California or its officers or agents shall not be responsible for the accuracy or completeness of electronic copies of this plan sheet.

To accompany plans dated December 27, 2010

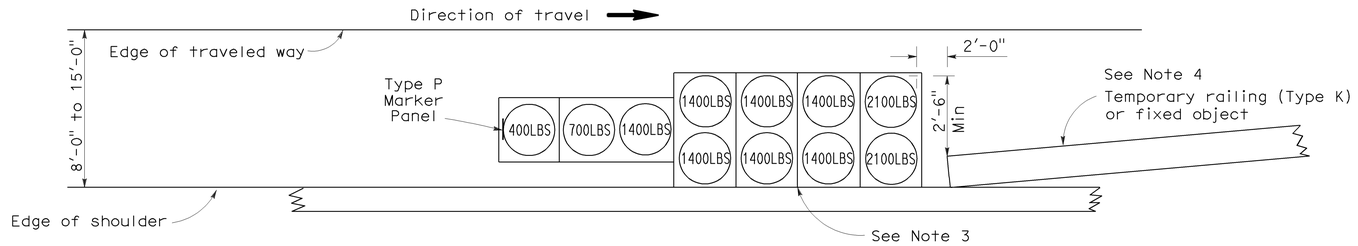

ARRAY 'TS11'

Approach speed less than 45 mph
See Note 9

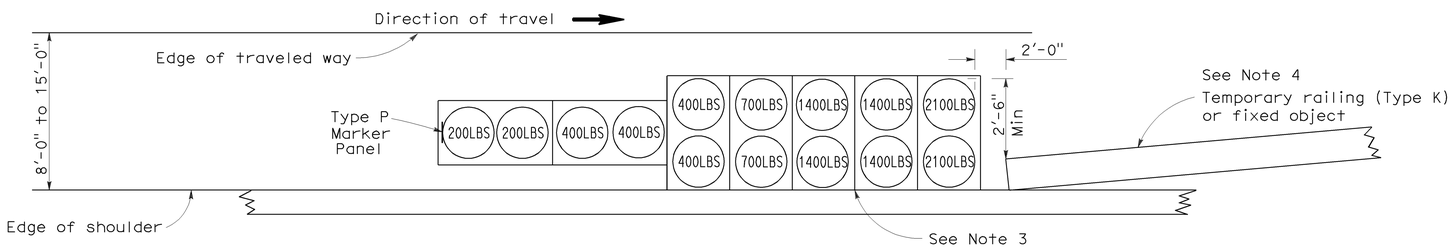

ARRAY 'TS14'

Approach speed 45 mph or more
See Note 9

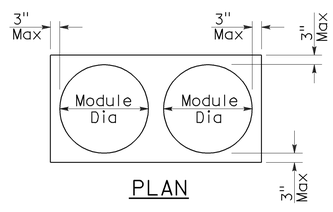

PLAN

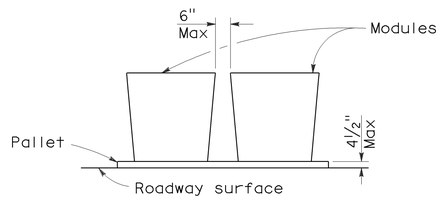

ELEVATION

CRASH CUSHION PALLET DETAIL

See Note 11

NOTES:

1. (XXX) Indicates sand filled module location and weight of sand in pounds for each module. Module spacing is based on the greater diameter of the module.
2. All sand weights are nominal.
3. The temporary crash cushion arrays shown on this plan shall be used only in locations where there will be traffic on one side of the temporary crash cushion array.
4. If the fixed object or approach end of the temporary railing is less than 15'-0" from the edge of traveled way, a temporary crash cushion is required in a construction or work zone.
5. Temporary crash cushion arrays shall not encroach on the traveled way.
6. Arrays for median shoulders shall conform to details shown on this plan for outside shoulders.
7. Place the Type P marker panel so that the bottom of the panel rests upon the pallet and faces traffic.
8. Refer to Standard Plan A73B for marker details.
9. For shoulder widths less than 8'-0", appropriate approved crash cushion protection, other than sand filled modules, shall be provided at fixed objects and at approach ends of temporary railing. The specific type of crash cushion shall be as shown on the project plans or as specified in the Special Provisions, or if not shown on the project plans or specified in the Special Provisions, shall be as approved by the Engineer.
10. Approach speeds indicated conform to NCHRP 350 Report criteria.
11. Use of pallets is optional.

STATE OF CALIFORNIA
DEPARTMENT OF TRANSPORTATION

TEMPORARY CRASH CUSHION, SAND FILLED (SHOULDER INSTALLATIONS)

NO SCALE

RSP T2 DATED JUNE 6, 2008 SUPERSEDES STANDARD PLAN T2
DATED MAY 1, 2006 - PAGE 213 OF THE STANDARD PLANS BOOK DATED MAY 2006.

REVISED STANDARD PLAN RSP T2

2006 REVISED STANDARD PLAN RSP T2

5-15-08