Dist	COUNTY	ROUTE	POST MILES TOTAL PROJECT	SHEET No.	TOTAL SHEETS
08	Riv	60	R1.6	1	65

STATE OF CALIFORNIA

DEPARTMENT OF TRANSPORTATION

ACHSNHPG-P060(145)E

PROJECT PLANS FOR CONSTRUCTION ON

STATE HIGHWAY

IN RIVERSIDE COUNTY NEAR MIRA LOMA

AT THE INTERSECTION OF WESTBOUND ENTRANCE RAMP AND MISSION BOULEVARD

TO BE SUPPLEMENTED BY STANDARD PLANS DATED 2010

INDEX OF PLANS

SHEET No.	DESCRIPTION
1	TITLE AND LOCATION MAP
2	TYPICAL CROSS SECTIONS
3	LAYOUT
4	PROFILE
5-6	CONSTRUCTION DETAILS
7	DRAINAGE PLANS
8	DRAINAGE PROFILE
9	DRAINAGE QUANTITIES
10	UTILITY PLAN
11	CONSTRUCTION AREA SIGNS
12-14	TRAFFIC HANDLING PLANS
15-16	DETOUR PLANS
17	PAVEMENT DELINEATION PLANS
18	PAVEMENT DELINEATION QUANTITIES
19-21	SIGN QUANTITIES
22	SUMMARY OF QUANTITIES
23-30	LANDSCAPE PLANS
31-36	ELECTRICAL PLANS
37-65	NEW & REVISED STANDARD PLANS

THE STANDARD PLANS LIST APPLICABLE TO THIS CONTRACT IS INCLUDED IN THE NOTICE TO CONTRACTORS AND SPECIAL PROVISIONS BOOK

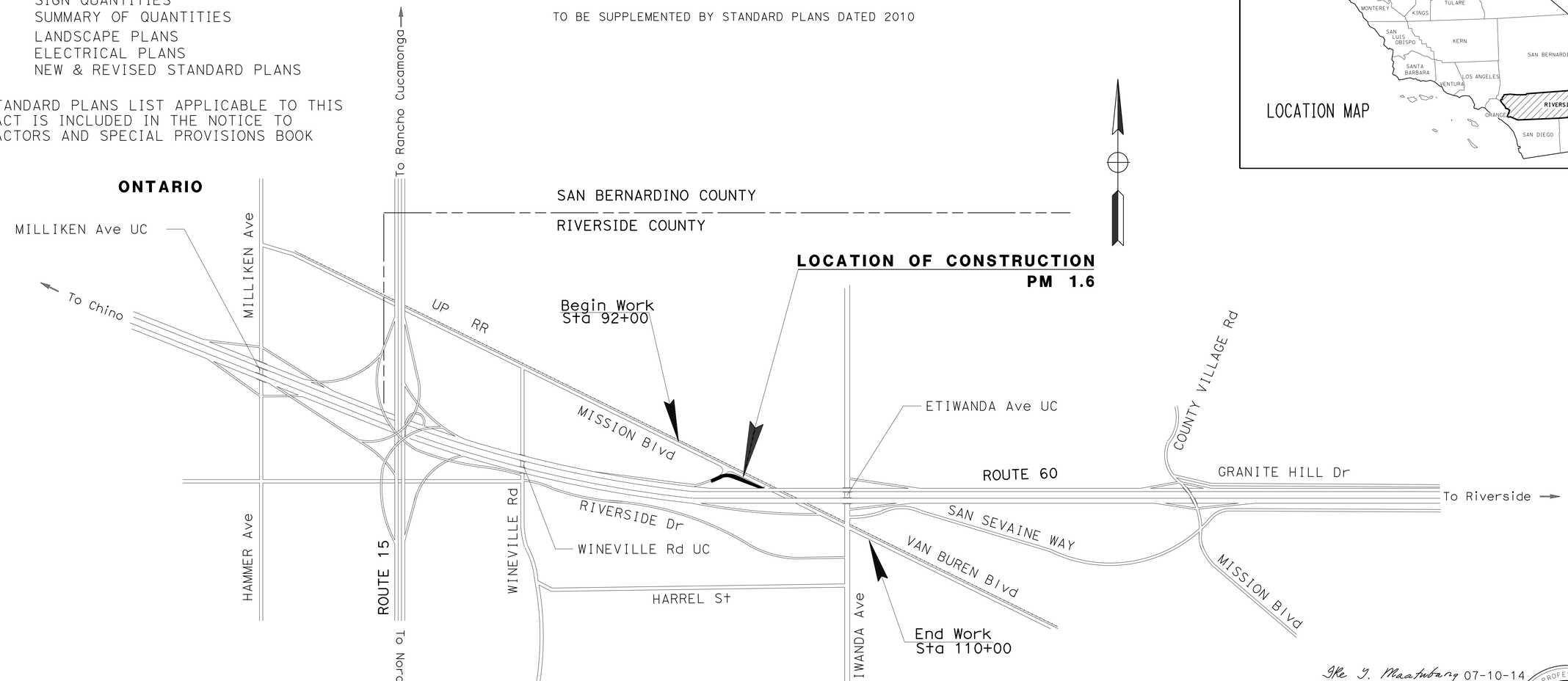

NO SCALE

Ike G. Maatubang 07-10-14

PROJECT ENGINEER DATE
REGISTERED CIVIL ENGINEER

JULY,14, 2014

PLANS APPROVAL DATE

THE STATE OF CALIFORNIA OR ITS OFFICERS OR AGENTS SHALL NOT BE RESPONSIBLE FOR THE ACCURACY OR COMPLETENESS OF SCANNED COPIES OF THIS PLAN SHEET.

REGISTERED PROFESSIONAL ENGINEER
IKE MAATUBANG
No. C-55065
Exp. 6/30/16
CIVIL
STATE OF CALIFORNIA

THE CONTRACTOR SHALL POSSESS THE CLASS (OR CLASSES) OF OF LICENSE AS SPECIFIED IN THE "NOTICE TO BIDDERS."

CONTRACT No.	08-0P2804
PROJECT ID	0800001015

PROJECT MANAGER: NADER NAGUIB
DESIGN ENGINEER: IKE MAATUBANG

LAST REVISION 07-10-14
DATE PLOTTED => 10-JUL-2014
TIME PLOTTED => 08:01

Dist	COUNTY	ROUTE	POST MILES TOTAL PROJECT	SHEET No.	TOTAL SHEETS
08	Riv	60	R1.6	2	65

Ike I. Maatubang 07-10-14
REGISTERED CIVIL ENGINEER DATE

07-14-14
PLANS APPROVAL DATE

REGISTERED PROFESSIONAL ENGINEER IKE MAATUBANG No. C-55065 Exp. 6/30/16 CIVIL STATE OF CALIFORNIA

THE STATE OF CALIFORNIA OR ITS OFFICERS OR AGENTS SHALL NOT BE RESPONSIBLE FOR THE ACCURACY OR COMPLETENESS OF SCANNED COPIES OF THIS PLAN SHEET.

LEGEND:

OBLITERATE SURFACING

ABBREVIATION:

RMCTB ROAD MIX CEMENT TRENTED BASE

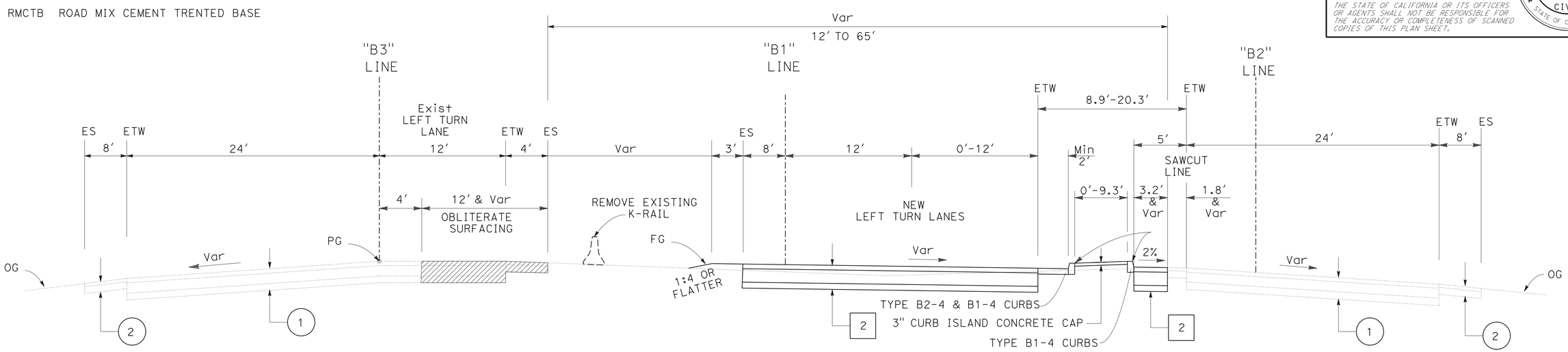

EAST MISSION Blvd (NORTH)
"B3" LINE

"B1" LINE
STA "B1" 97+96.00 TO 105+83.34

EAST MISSION Blvd (SOUTH)
"B2" LINE

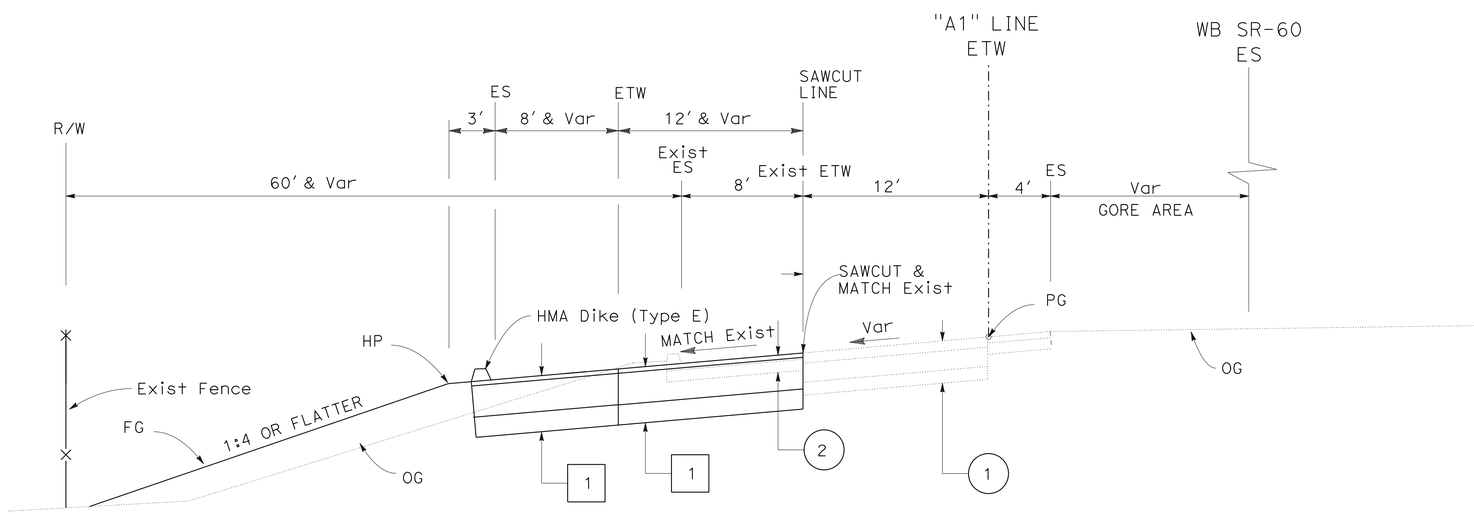

STA "A1" 92+43.63 TO 99+05.00

WESTBOUND E MISSION Blvd ENTRANCE RAMP
"A1" LINE

TYPICAL STRUCTURAL SECTIONS

(1)
- 0.40' HMA (TYPE B)
- 0.70' RMCTB (CLASS A)
- 0.50' AS (CLASS 3)

(2)
- 0.30' AC HMA
- 0.60' AB (CLASS 2)

[1]
- 0.10' RHMA-G
- 1.15' HMA-A
- 0.50' AB (CLASS 2)

[2]
- 0.10' RHMA-G
- 1.20' HMA-A
- 0.50' AB (CLASS 2)

TYPICAL CROSS SECTIONS

NO SCALE

X-1

REVISED BY | DATE REVISED
IKE MAATUBANG | THOMAS NGO
CALCULATED-DESIGNED BY | CHECKED BY
FUNCTIONAL SUPERVISOR: MARK PERTILE

STATE OF CALIFORNIA - DEPARTMENT OF TRANSPORTATION
Caltrans® DESIGN

LAST REVISION 07-10-14 | DATE PLOTTED => 10-JUL-2014 | TIME PLOTTED => 08:01

Dist	COUNTY	ROUTE	POST MILES TOTAL PROJECT	SHEET No.	TOTAL SHEETS
08	Riv	60	R1.6	3	65

Ike G. Maatubang 07-10-14
REGISTERED CIVIL ENGINEER DATE

07-14-14
PLANS APPROVAL DATE

REGISTERED PROFESSIONAL ENGINEER IKE MAATUBANG No. C-55065 Exp. 6/30/16 CIVIL STATE OF CALIFORNIA

THE STATE OF CALIFORNIA OR ITS OFFICERS OR AGENTS SHALL NOT BE RESPONSIBLE FOR THE ACCURACY OR COMPLETENESS OF SCANNED COPIES OF THIS PLAN SHEET.

LEGEND:

OBLITERATE PAVEMENT

MATCH Exist PAVEMENT

NOTE:

1. FOR B1-4 CURB DIMENSIONS SEE Std PLAN A87A TABLE A

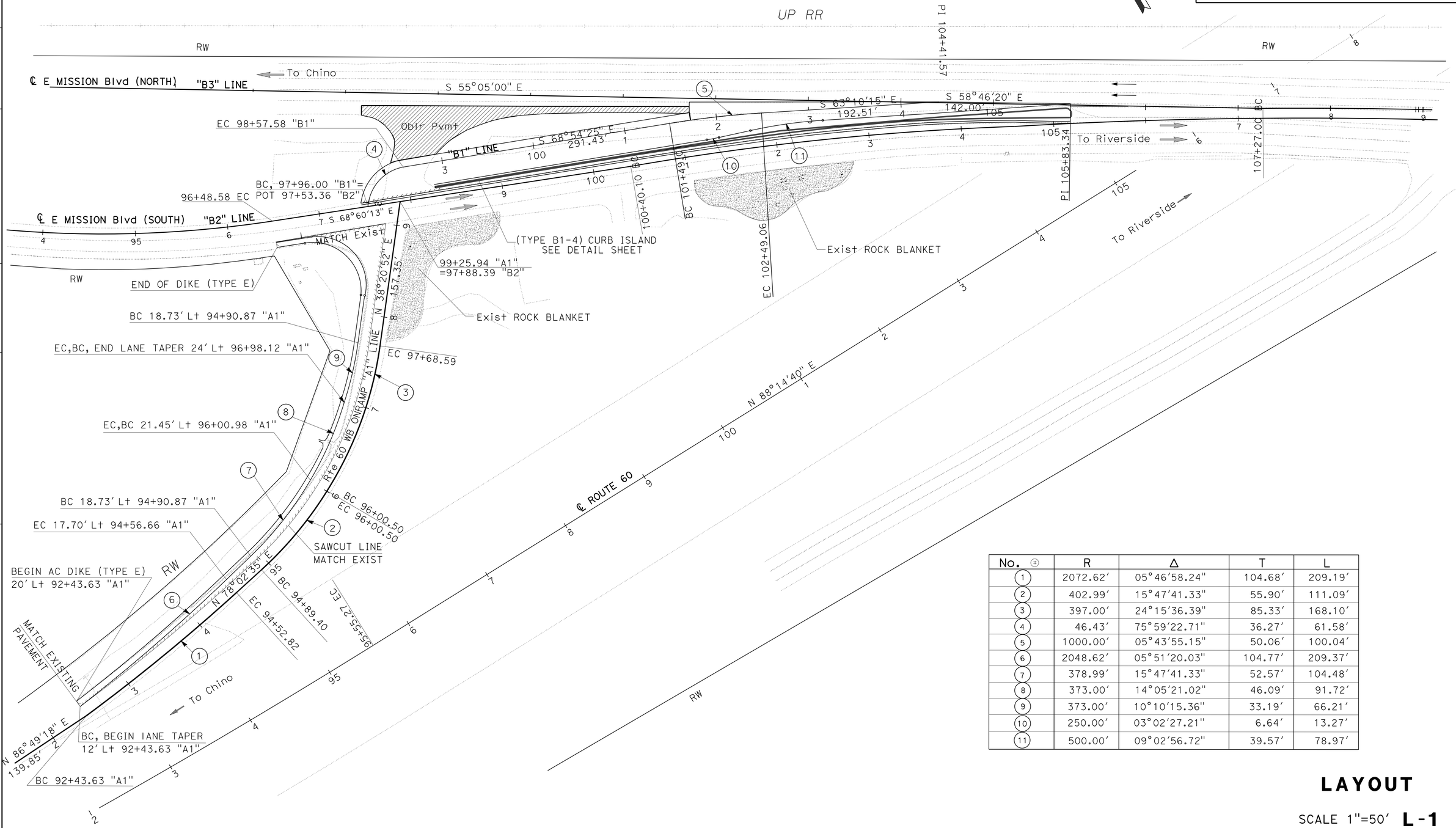

No.	R	Δ	T	L
1	2072.62'	05°46'58.24"	104.68'	209.19'
2	402.99'	15°47'41.33"	55.90'	111.09'
3	397.00'	24°15'36.39"	85.33'	168.10'
4	46.43'	75°59'22.71"	36.27'	61.58'
5	1000.00'	05°43'55.15"	50.06'	100.04'
6	2048.62'	05°51'20.03"	104.77'	209.37'
7	378.99'	15°47'41.33"	52.57'	104.48'
8	373.00'	14°05'21.02"	46.09'	91.72'
9	373.00'	10°10'15.36"	33.19'	66.21'
10	250.00'	03°02'27.21"	6.64'	13.27'
11	500.00'	09°02'56.72"	39.57'	78.97'

LAYOUT

SCALE 1"=50' **L-1**

STATE OF CALIFORNIA - DEPARTMENT OF TRANSPORTATION
Caltrans
DESIGN

FUNCTIONAL SUPERVISOR: MARK PERTILE
CALCULATED-DESIGNED BY: AARON BRADY
CHECKED BY: IKE MAATUBANG
REVISED BY
DATE REVISED

LAST REVISION 07-10-14
DATE PLOTTED => 10-JUL-2014
TIME PLOTTED => 08:01

Dist	COUNTY	ROUTE	POST MILES TOTAL PROJECT	SHEET No.	TOTAL SHEETS
08	Riv	60	R1.6	4	65

Ike I. Maatubang 07-10-14
REGISTERED CIVIL ENGINEER DATE

07-14-14
PLANS APPROVAL DATE

REGISTERED PROFESSIONAL ENGINEER IKE MAATUBANG No. C-55065 Exp. 6/30/16 CIVIL STATE OF CALIFORNIA

THE STATE OF CALIFORNIA OR ITS OFFICERS OR AGENTS SHALL NOT BE RESPONSIBLE FOR THE ACCURACY OR COMPLETENESS OF SCANNED COPIES OF THIS PLAN SHEET.

PROFILE

P-1

STATE OF CALIFORNIA - DEPARTMENT OF TRANSPORTATION
Caltrans
DESIGN

FUNCTIONAL SUPERVISOR: MARK PERTILE
CALCULATED-DESIGNED BY: AARON BRADY
CHECKED BY: IKE MAATUBANG
REVISED BY
DATE REVISED

LAST REVISION 07-10-14
DATE PLOTTED => 10-JUL-2014
TIME PLOTTED => 08:01

Dist	COUNTY	ROUTE	POST MILES TOTAL PROJECT	SHEET No.	TOTAL SHEETS
08	Riv	60	R1.6	5	65

Ike I. Maatubang 07-10-14
REGISTERED CIVIL ENGINEER DATE

07-14-14
PLANS APPROVAL DATE

REGISTERED PROFESSIONAL ENGINEER IKE MAATUBANG No. C-55065 Exp 6/30/16 CIVIL STATE OF CALIFORNIA

THE STATE OF CALIFORNIA OR ITS OFFICERS OR AGENTS SHALL NOT BE RESPONSIBLE FOR THE ACCURACY OR COMPLETENESS OF SCANNED COPIES OF THIS PLAN SHEET.

NOTE:

FOR ACCURATE RIGHT OF WAY AND ACCESS DATA, CONTACT RIGHT OF WAY ENGINEERING AT THE DISTRICT OFFICE.

LEGEND:

CONSTRUCTION AREA

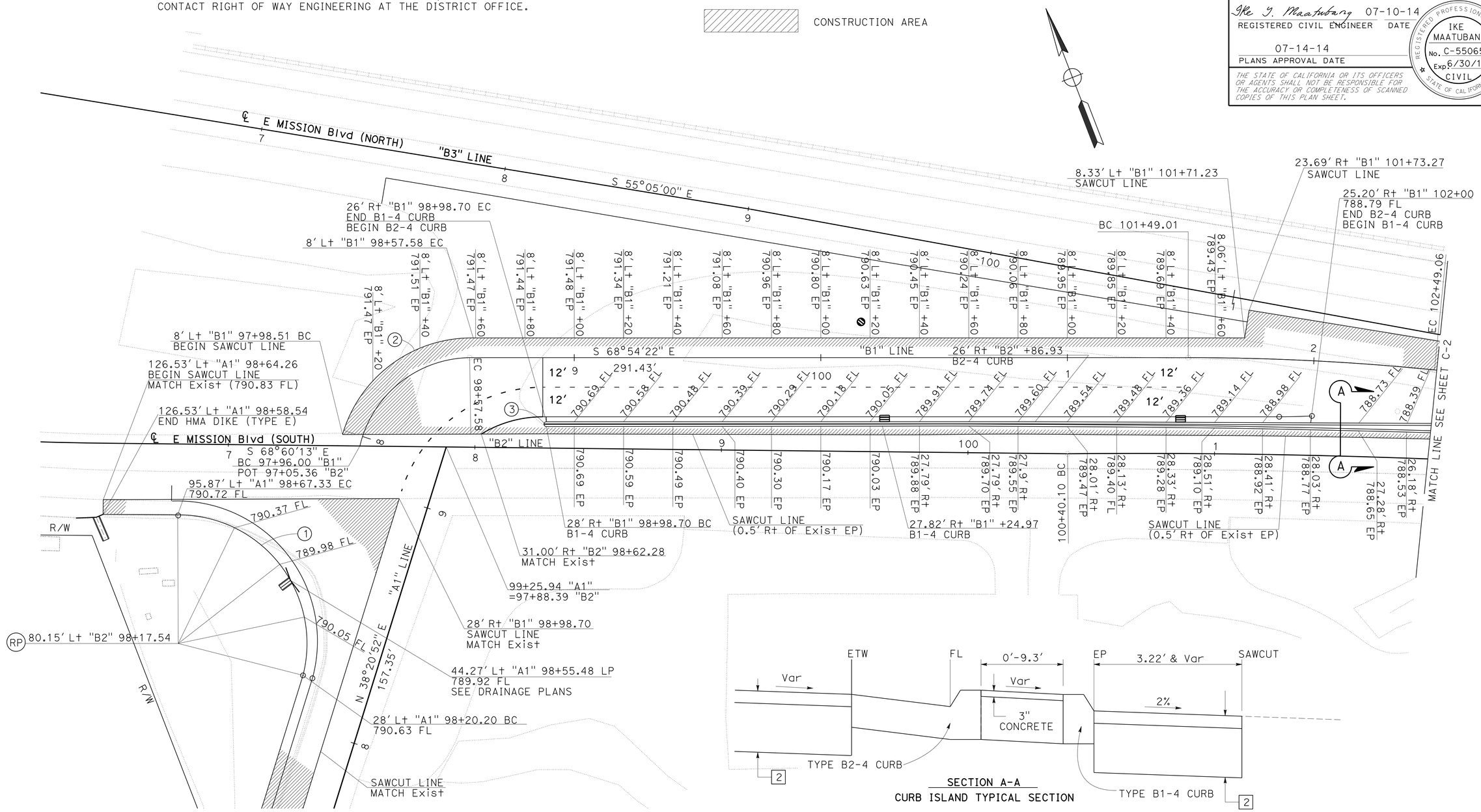

CURVE DATA

No.	R	Δ	T	L
1	52.22'	104°36'39.43"	67.57'	95.33'
2	54.43'	72°57'22.97"	40.25'	69.31'
3	0.98'	182°15'38.75"	49.71'	3.12'

CONSTRUCTION DETAILS

SCALE: 1" = 20'

C-1

STATE OF CALIFORNIA - DEPARTMENT OF TRANSPORTATION
DESIGN
FUNCTIONAL SUPERVISOR: MARK PERTILE
CALCULATED-DESIGNED BY: THOMAS NGO
CHECKED BY: IKE MAATUBANG
REVISED BY / DATE REVISED

LAST REVISION 07-10-14
DATE PLOTTED => 10-JUL-2014
TIME PLOTTED => 08:01

Dist	COUNTY	ROUTE	POST MILES TOTAL PROJECT	SHEET No.	TOTAL SHEETS
08	Riv	60	R1.6	6	65

Ike I. Maatubang 07-10-14
REGISTERED CIVIL ENGINEER DATE

07-14-14
PLANS APPROVAL DATE

REGISTERED PROFESSIONAL ENGINEER IKE MAATUBANG No. C-55065 Exp 6/30/16 CIVIL STATE OF CALIFORNIA

THE STATE OF CALIFORNIA OR ITS OFFICERS OR AGENTS SHALL NOT BE RESPONSIBLE FOR THE ACCURACY OR COMPLETENESS OF SCANNED COPIES OF THIS PLAN SHEET.

NOTE:

FOR ACCURATE RIGHT OF WAY AND ACCESS DATA,
CONTACT RIGHT OF WAY ENGINEERING AT THE DISTRICT OFFICE.

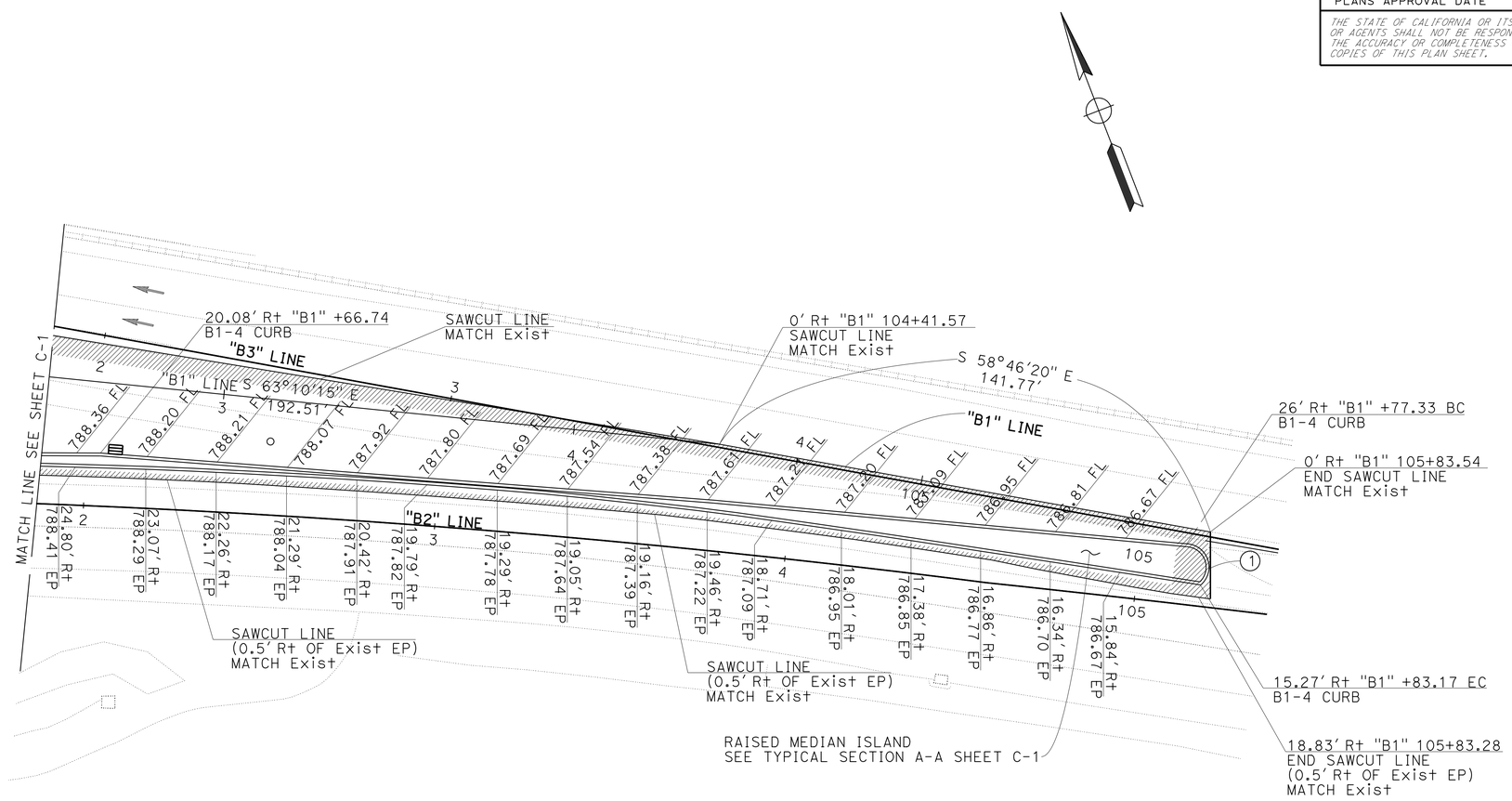

CURVE DATA

No. ⊛	R	Δ	T	L
1	6.64'	137°5'42.69"	16.89'	15.88'

CONSTRUCTION DETAILS

SCALE: 1" = 20'

C-2

REVISED BY	THOMAS NGO
DATE REVISED	IKE MAATUBANG
CALCULATED-DESIGNED BY	
CHECKED BY	
FUNCTIONAL SUPERVISOR	MARK PERTILE

STATE OF CALIFORNIA - DEPARTMENT OF TRANSPORTATION
Caltrans
DESIGN

LAST REVISION 07-10-14 | DATE PLOTTED => 10-JUL-2014 | TIME PLOTTED => 08:01

Dist	COUNTY	ROUTE	POST MILES TOTAL PROJECT	SHEET No.	TOTAL SHEETS
08	Riv	60	R1.6	7	65

Ike I. Maatubang 07-10-14
REGISTERED CIVIL ENGINEER DATE

07-14-14
PLANS APPROVAL DATE

REGISTERED PROFESSIONAL ENGINEER IKE MAATUBANG No. C-55065 Exp 6/30/16 CIVIL STATE OF CALIFORNIA

THE STATE OF CALIFORNIA OR ITS OFFICERS OR AGENTS SHALL NOT BE RESPONSIBLE FOR THE ACCURACY OR COMPLETENESS OF SCANNED COPIES OF THIS PLAN SHEET.

NOTE:

1. FOR COMPLETE RIGHT OF WAY AND ACCURATE ACCESS DATA, SEE RIGHT OF WAY MAPS AT DISTRICT OFFICE.

LEGEND:

(X) DRAINGE SYSTEM No.

⬡ X DRAINGE UNIT No.

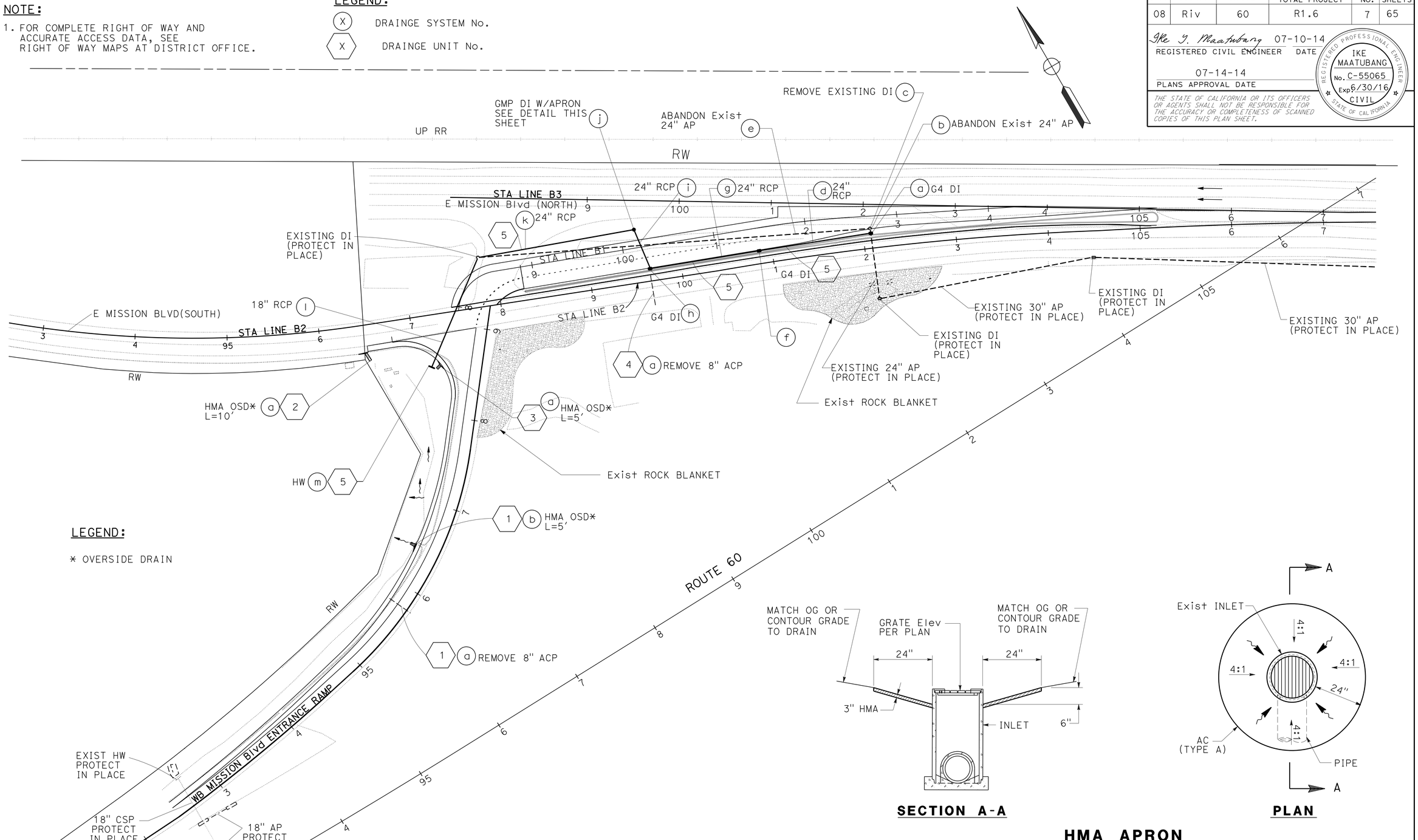

LEGEND:

* OVERSIDE DRAIN

SECTION A-A

PLAN

HMA APRON
NO SCALE

DRAINAGE PLAN

SCALE 1"=50'

APPROVED FOR DRAINAGE WORK ONLY

STATE OF CALIFORNIA - DEPARTMENT OF TRANSPORTATION
Caltrans
DESIGN

FUNCTIONAL SUPERVISOR: MARK PERTILE
CALCULATED-DESIGNED BY: MOHAMMAD ABDRABOH
CHECKED BY: MARK PERTILE
REVISED BY
DATE REVISED

LAST REVISION 07-10-14
DATE PLOTTED => 10-JUL-2014
TIME PLOTTED => 08:01

Dist	COUNTY	ROUTE	POST MILES TOTAL PROJECT	SHEET No.	TOTAL SHEETS
08	Riv	60	R1.6	8	65

Ike I. Maatubang 07-10-14
REGISTERED CIVIL ENGINEER DATE

07-14-14
PLANS APPROVAL DATE

REGISTERED PROFESSIONAL ENGINEER IKE MAATUBANG No. C-55065 Exp. 6-30-16 CIVIL STATE OF CALIFORNIA

THE STATE OF CALIFORNIA OR ITS OFFICERS OR AGENTS SHALL NOT BE RESPONSIBLE FOR THE ACCURACY OR COMPLETENESS OF SCANNED COPIES OF THIS PLAN SHEET.

NOTE:
1. CONTRACTOR SHALL VERIFY FLOWLINE ELEVATION OF OUTFALL PIPE FOR DS 5(a) PRIOR TO CONTRUCTION.

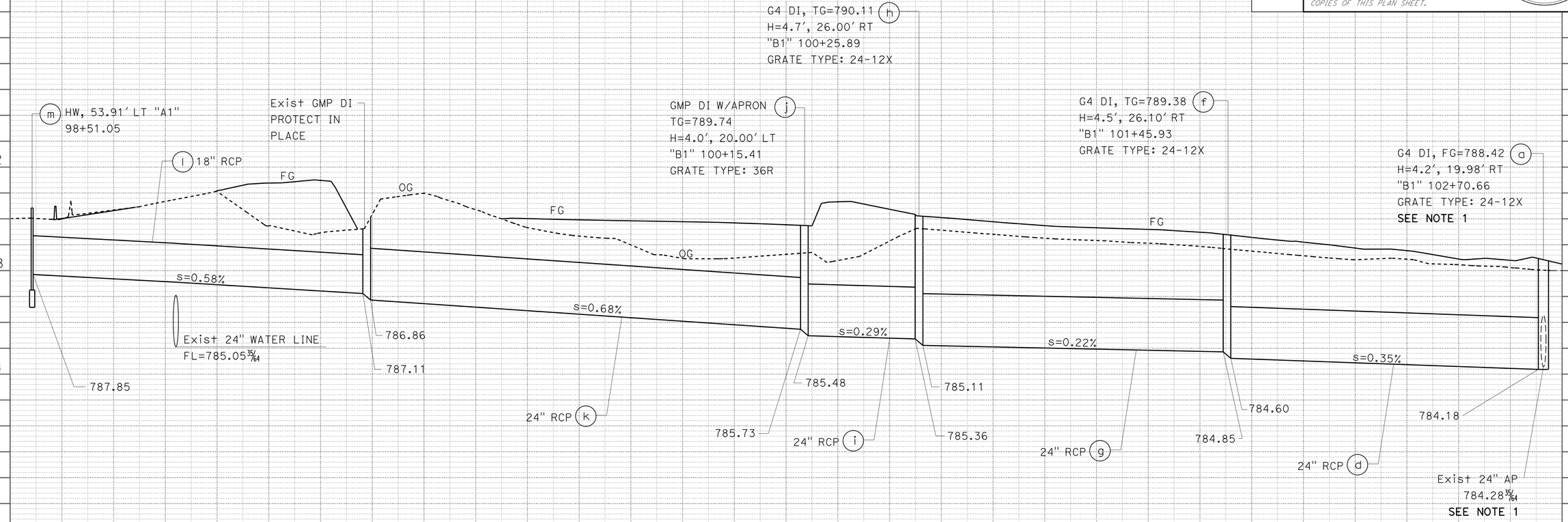

DRAINAGE SYSTEM No. 5

APPROVED FOR DRAINAGE PROFILE WORK ONLY

DRAINAGE PROFILE

SCALE: (EXCEPT AS SHOWN)
H - 1"=20'
V - 1"=2'

DP-1

STATION		TOTAL
CY	Exc	
	Emb	

MOHAMMAD ABDRABOH — IKE MAATUBANG — MARK PERTILE — DESIGN

CALCULATED-DESIGNED BY — CHECKED BY — FUNCTIONAL SUPERVISOR — REVISED BY — DATE REVISED

STATE OF CALIFORNIA - DEPARTMENT OF TRANSPORTATION

Caltrans

LAST REVISION 07-10-14 — DATE PLOTTED => 10-JUL-2014 — TIME PLOTTED => 08:01

Dist	COUNTY	ROUTE	POST MILES TOTAL PROJECT	SHEET No.	TOTAL SHEETS
08	Riv	60	R1.6	9	65

Ike I. Maatubang 07-10-14
REGISTERED CIVIL ENGINEER DATE

07-14-14
PLANS APPROVAL DATE

REGISTERED PROFESSIONAL ENGINEER IKE MAATUBANG No. C-55065 Exp. 6/30/16 CIVIL STATE OF CALIFORNIA

THE STATE OF CALIFORNIA OR ITS OFFICERS OR AGENTS SHALL NOT BE RESPONSIBLE FOR THE ACCURACY OR COMPLETENESS OF SCANNED COPIES OF THIS PLAN SHEET.

ABBREVIATION:

ACP - ASBESTOS CEMENT PIPE

DRAINAGE QUANTITIES

⬡ DRAINAGE SYSTEM No	○ DRAINAGE UNIT	DRAINAGE PLAN SHEET No	DESCRIPTION	STATION	REMOVAL/ABANDON: REMOVE PIPE (N)	REMOVAL/ABANDON: REMOVE INLET	REMOVAL/ABANDON: ABANDON PIPE LINE	HOT MIXED ASPHALT (TYPE A)	PLACE HMA (Misc AREA)	HEIGHT OF INLET (N)	24-12X GRATE (N)	36R GRATE (N)	MISCELLANEOUS IRON AND STEEL	MINOR CONCRETE (MINOR STRUCTURE)	18" RCP	24" RCP	36" CSP (0.064" THICK)	SAND BACKFILL
					LF	EA	LF	TON	SQ YD	LF	EA	EA	lb	CY	LF	LF	LF	CY
1	a	1	8" ACP		27.8													
	b		HMA OSD*, L=5′	27.00′ LT "A1"96+45.7				0.26	1.53									
2	a	1	HMA OSD*, L=10′	29.66′ RT "B2"96+47.05				0.52	3.06									
3	a	1	HMA OSD*, L=5′	44.26′ LT "A1"98+55.48				0.26	1.53									
4	a	1	8" ACP		32.6													
5	a	1	G4 DI	19.98′ RT "B1" 102+70.66						4.2	1		239	1.58				
	b		24" AP				5.0											0.6
	c		REMOVE DI			1												
	d		24" RCP													119.0		
	e		ABANDON 24" AP				424.1											49.3
	f		G4 DI	26.10′ RT "B1" 101+45.93						4.5	1		239	1.65				
	g		24" RCP													116.1		
	h		G4 DI	26.00′ RT "B1" 100+25.89						4.7	1		239	1.70				
	i		24" RCP													43.2		
	j		GMP DI W/APRON	20.00′ LT "B1" 100+15.41				0.39	3.50	4.0		1	215	0.23			3.0	
	k		24" RCP													169.1		
	l		18" RCP												129.2			
	m		HW	53.91′ LT "A1"98+51.05										0.91				
				TOTAL		1	429.1	1.43 *	9.62				932	6.07	129.2	447.4	3.0	49.9

* FOR GRAND TOTAL SEE Q-1

(N) NOT A SEPARATE PAY ITEM, FOR INFORMATION USE ONLY

STATE OF CALIFORNIA - DEPARTMENT OF TRANSPORTATION
Caltrans® DESIGN

FUNCTIONAL SUPERVISOR: MARK PERTILE
CALCULATED-DESIGNED BY: MOHAMMAD ABDRABOH
CHECKED BY: MARK PERTILE
REVISED BY
DATE REVISED

DRAINAGE QUANTITIES

DQ-1

LAST REVISION 07-10-14
DATE PLOTTED => 10-JUL-2014
TIME PLOTTED => 08:01

Dist	COUNTY	ROUTE	POST MILES TOTAL PROJECT	SHEET No.	TOTAL SHEETS
08	Riv	60	R1.6	10	65

Ike G. Maatubang 07-10-14
REGISTERED CIVIL ENGINEER DATE

07-14-14
PLANS APPROVAL DATE

REGISTERED PROFESSIONAL ENGINEER IKE MAATUBANG No. C-55065 Exp. 6/30/16 CIVIL STATE OF CALIFORNIA

THE STATE OF CALIFORNIA OR ITS OFFICERS OR AGENTS SHALL NOT BE RESPONSIBLE FOR THE ACCURACY OR COMPLETENESS OF SCANNED COPIES OF THIS PLAN SHEET.

NOTES:

1. LOCATIONS OF UTILITY FACILITIES SHOWN ON THESE PLANS ARE APPROXIMATE AND SHALL BE VERIFIED BY THE CONTRACTOR PRIOR TO CONSTRUCTION.
2. DEPTH OF UTILITIES SHOWN REFER TO THE TOP OF PIPE ELEVATION UNLESS INDICATED OTHERWISE.
3. THIS PLAN ACCURATE FOR UTILITY INFORMATION ONLY.

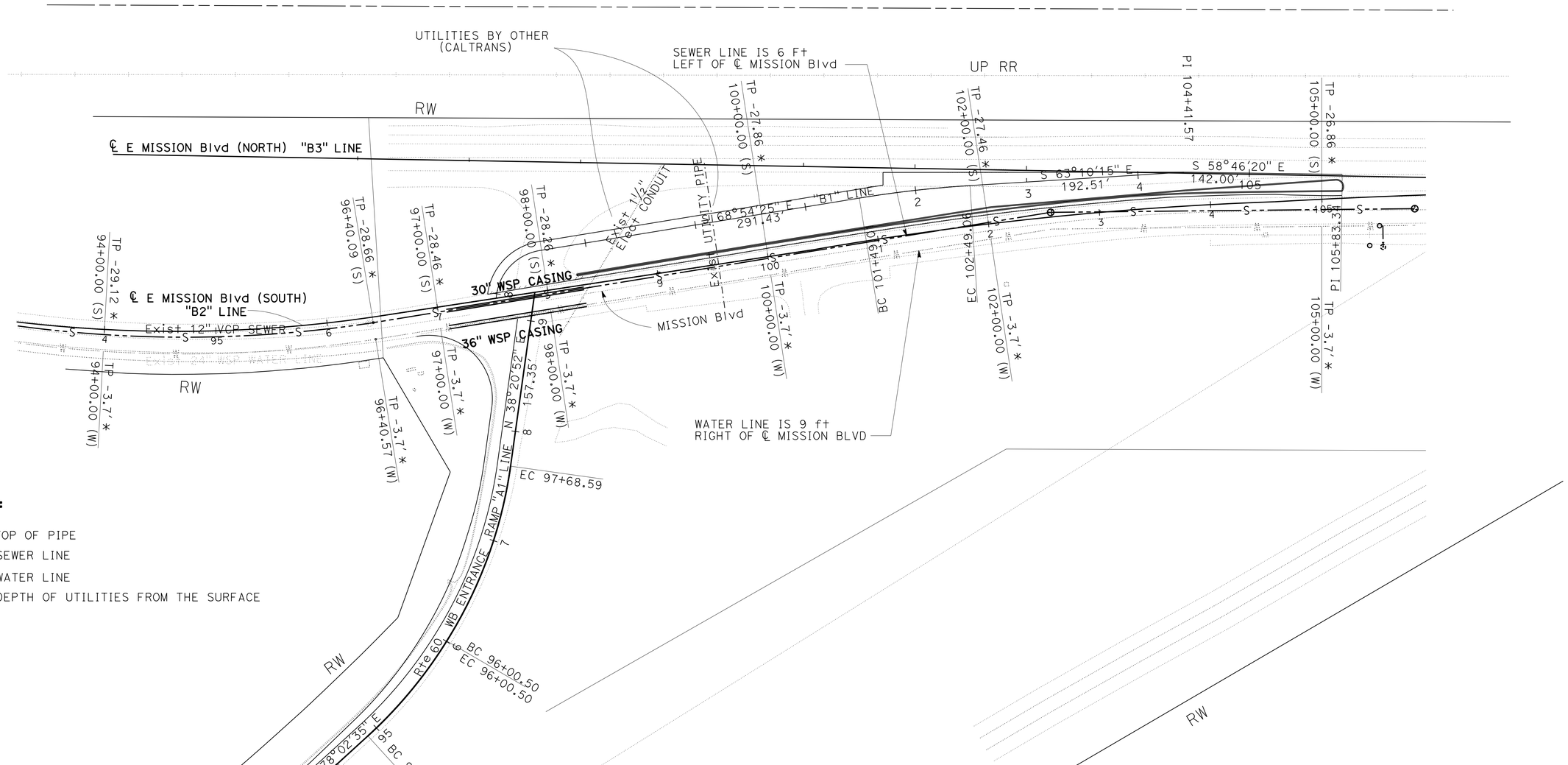

LEGEND:

TP - TOP OF PIPE
(S) - SEWER LINE
(W) - WATER LINE
(*) - DEPTH OF UTILITIES FROM THE SURFACE

UTILITY

SCALE 1"=50' **U-1**

STATE OF CALIFORNIA - DEPARTMENT OF TRANSPORTATION
Caltrans® DESIGN

FUNCTIONAL SUPERVISOR: MARK PERTILE
CALCULATED-DESIGNED BY: IKE MAATUBANG
CHECKED BY: THAI V NGUYEN
REVISED BY
DATE REVISED

LAST REVISION 07-10-14 | DATE PLOTTED => 10-JUL-2014 | TIME PLOTTED => 08:01

Dist	COUNTY	ROUTE	POST MILES TOTAL PROJECT	SHEET No.	TOTAL SHEETS
08	Riv	60	R1.6	11	65

W E Wasser 07-10-14
REGISTERED CIVIL ENGINEER DATE

07-10-14
PLANS APPROVAL DATE

REGISTERED PROFESSIONAL ENGINEER BILL WASSER No. 41189 Exp. 6-30-16 CIVIL STATE OF CALIFORNIA

THE STATE OF CALIFORNIA OR ITS OFFICERS OR AGENTS SHALL NOT BE RESPONSIBLE FOR THE ACCURACY OR COMPLETENESS OF SCANNED COPIES OF THIS PLAN SHEET.

LEGEND:

- PORTABLE FLASHING BEACON
- TWO POST SIGN
- SINGLE POST SIGN

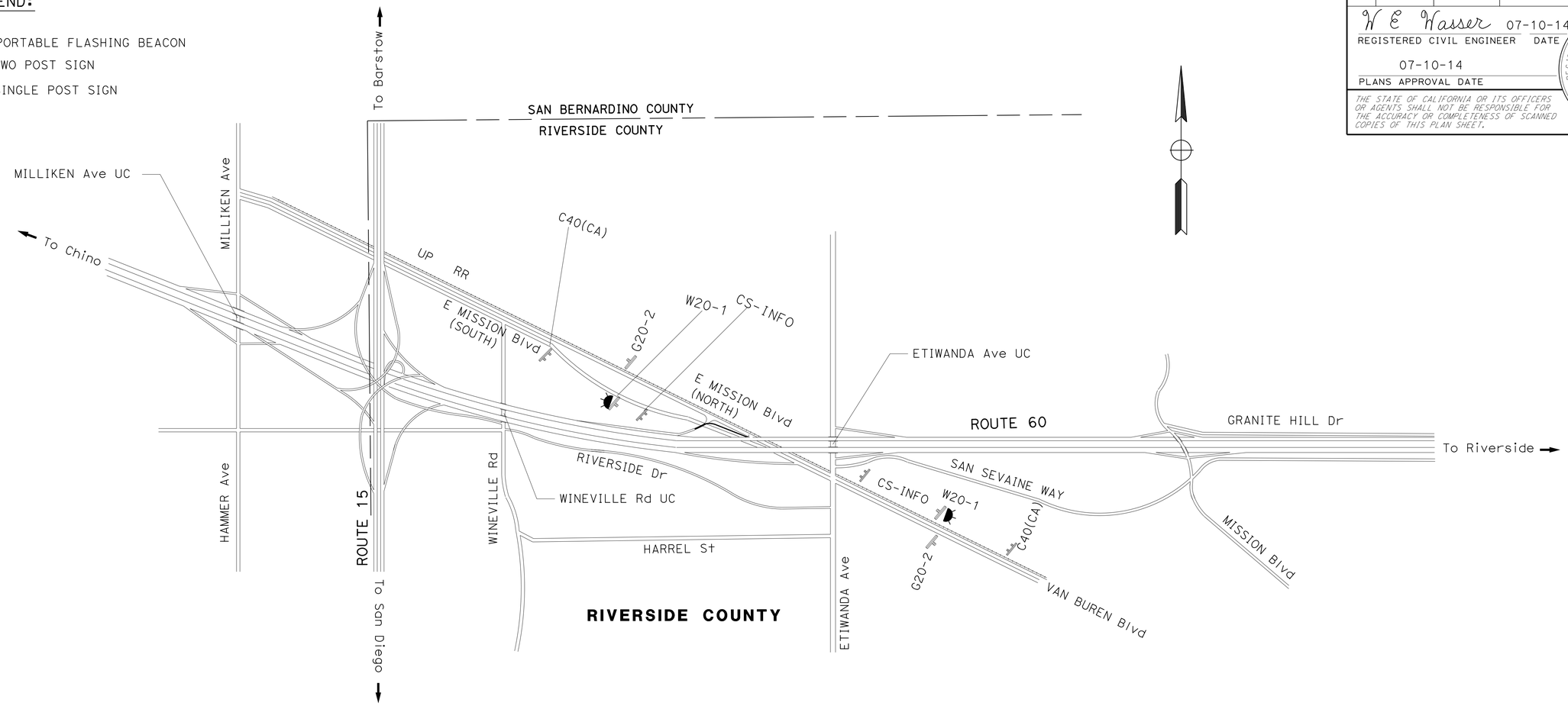

84"

60"

ROAD	WORK
00-00	00-00
INFO	CALL
5 1 1	

CS-INFO

LETTER SIZE : 6" D

CONSTRUCTION AREA SIGN

SIGN CODE	PANEL SIZE	No. OF POST AND SIZE	EA	SIGN MESSAGE
G20-2	36" X 18"	1 - 4" X 4"	2	END ROAD WORK
W20-1	48" X 48"	1 - 6" X 6"	2	ROAD WORK AHEAD
CS-INFO	84" X 60"	2 - 6" X 6"	2	
C40(CA)	108" X 42"	2 - 6" X 6"	2	TRAFFIC FINES DOUBLED IN CONSTRUCTION ZONE

PORTABLLE CHANGEABLE MESSAGE SIGN (PMCS)
EA
2

FLASHING BEACONS (PORTABLLE)
EA
2

NOTES :

1. THE EXACT SIGN LOCATIONS WILL BE DETERMINED BY THE ENGINEER.
2. ALL SIGNS SHALL BE STATIONARY.

CONSTRUCTION AREA SIGNS

NO SCALE

CS-1

REVISED BY	DATE REVISED

CALCULATED-DESIGNED BY	CHECKED BY
JAMES LIANG	THANH TRINH

FUNCTIONAL SUPERVISOR: BILL WASSER

STATE OF CALIFORNIA - DEPARTMENT OF TRANSPORTATION

Caltrans

TRAFFIC DESIGN A

LAST REVISION 07-10-14 | DATE PLOTTED => 10-JUL-2014 | TIME PLOTTED => 08:01

Dist	COUNTY	ROUTE	POST MILES TOTAL PROJECT	SHEET No.	TOTAL SHEETS
08	Riv	60	R1.6	12	65

W E Wasser 07-10-14
REGISTERED CIVIL ENGINEER DATE

07-14-14
PLANS APPROVAL DATE

REGISTERED PROFESSIONAL ENGINEER BILL WASSER No. 41189 Exp. 6-30-16 CIVIL STATE OF CALIFORNIA

THE STATE OF CALIFORNIA OR ITS OFFICERS OR AGENTS SHALL NOT BE RESPONSIBLE FOR THE ACCURACY OR COMPLETENESS OF SCANNED COPIES OF THIS PLAN SHEET.

LEGEND:

- CONSTRUCTION AREA (STAGE 1)
- DIRECTION OF TRAVEL
- TEMPORARY RAILING TYPE K
- TEMPORARY TRAFFIC STRIPING
- CHANNELIZER (15' SPACING)

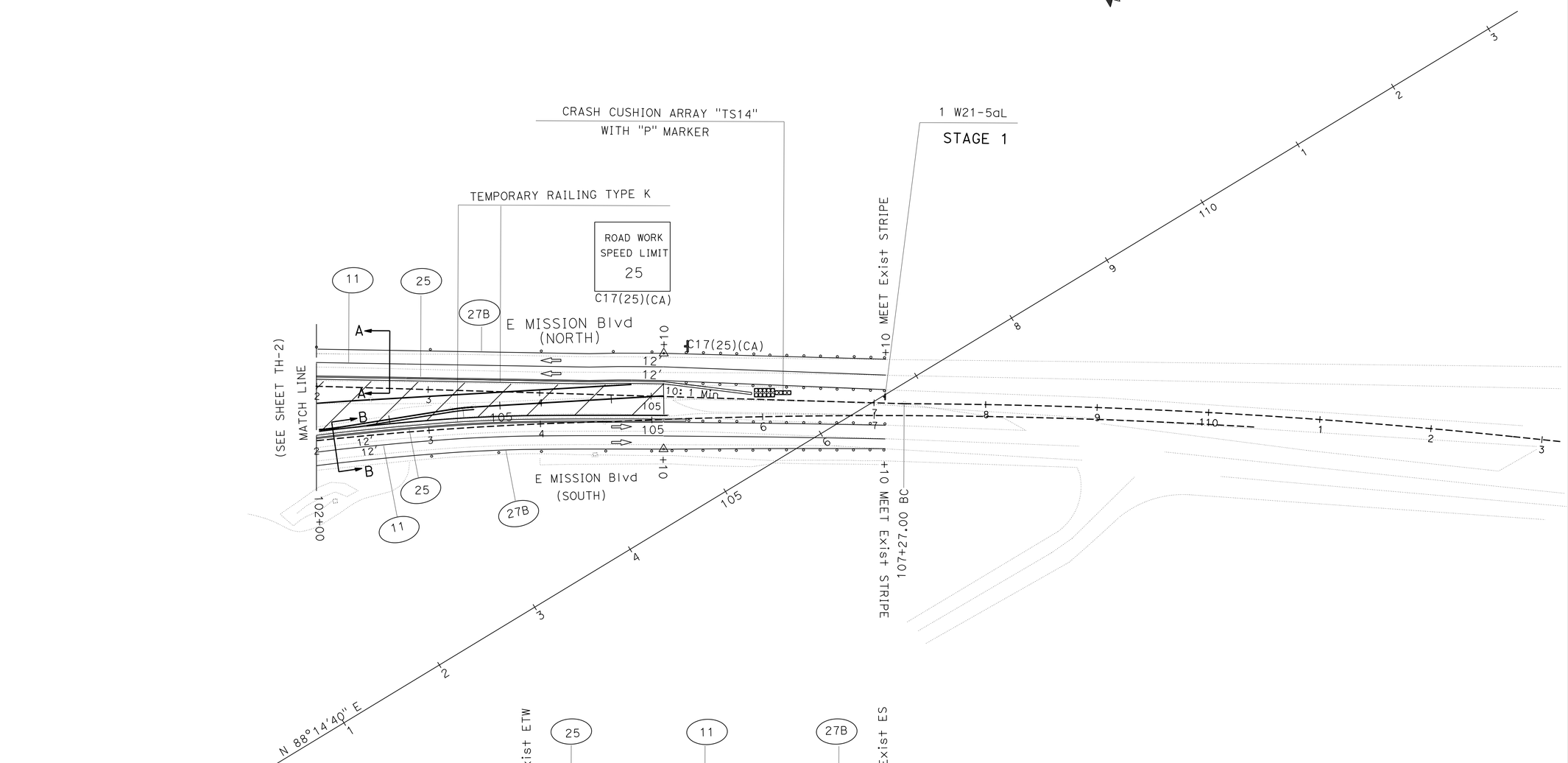

STAGE 1
TRAFFIC HANDLING PLAN

TH-1

STATE OF CALIFORNIA - DEPARTMENT OF TRANSPORTATION
Caltrans®
TRAFFIC DESIGN A

FUNCTIONAL SUPERVISOR: BILL WASSER
CALCULATED-DESIGNED BY: JAMES LIANG
CHECKED BY: THANH TRINH
REVISED BY
DATE REVISED

LAST REVISION 07-10-14
DATE PLOTTED => 10-JUL-2014
TIME PLOTTED => 08:01

Dist	COUNTY	ROUTE	POST MILES TOTAL PROJECT	SHEET No.	TOTAL SHEETS
08	Riv	60	R1.6	13	65

W E Wasser 07-10-14
REGISTERED CIVIL ENGINEER DATE

07-14-14
PLANS APPROVAL DATE

REGISTERED PROFESSIONAL ENGINEER BILL WASSER No. 41189 Exp. 6-30-16 CIVIL STATE OF CALIFORNIA

THE STATE OF CALIFORNIA OR ITS OFFICERS OR AGENTS SHALL NOT BE RESPONSIBLE FOR THE ACCURACY OR COMPLETENESS OF SCANNED COPIES OF THIS PLAN SHEET.

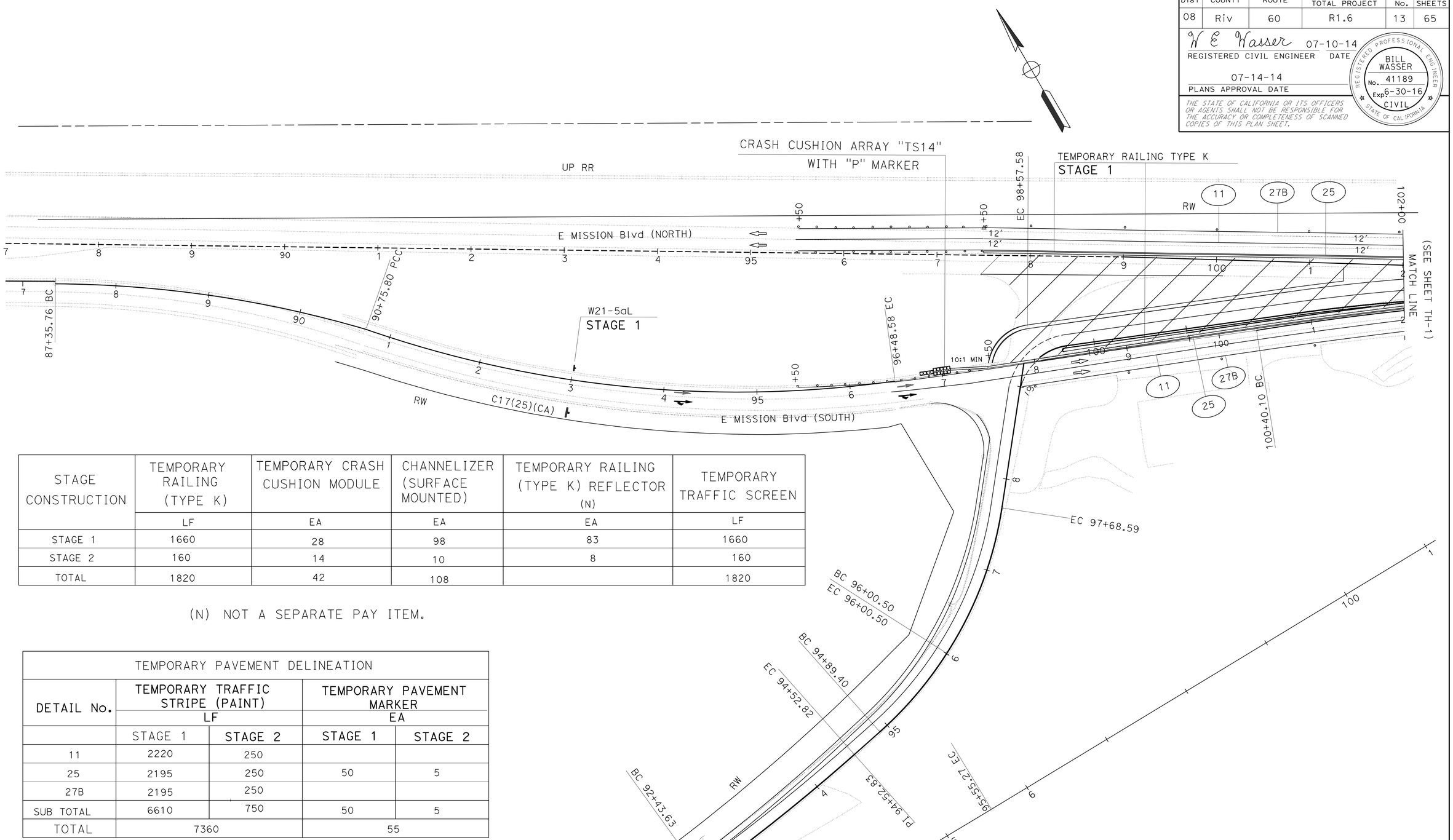

STAGE CONSTRUCTION	TEMPORARY RAILING (TYPE K)	TEMPORARY CRASH CUSHION MODULE	CHANNELIZER (SURFACE MOUNTED)	TEMPORARY RAILING (TYPE K) REFLECTOR (N)	TEMPORARY TRAFFIC SCREEN
	LF	EA	EA	EA	LF
STAGE 1	1660	28	98	83	1660
STAGE 2	160	14	10	8	160
TOTAL	1820	42	108		1820

(N) NOT A SEPARATE PAY ITEM.

TEMPORARY PAVEMENT DELINEATION				
DETAIL No.	TEMPORARY TRAFFIC STRIPE (PAINT) LF		TEMPORARY PAVEMENT MARKER EA	
	STAGE 1	STAGE 2	STAGE 1	STAGE 2
11	2220	250		
25	2195	250	50	5
27B	2195	250		
SUB TOTAL	6610	750	50	5
TOTAL	7360		55	

STAGE 1
TRAFFIC HANDLING PLAN
TH-2

STATE OF CALIFORNIA - DEPARTMENT OF TRANSPORTATION
Caltrans
TRAFFIC DESIGN A
FUNCTIONAL SUPERVISOR: BILL WASSER
CALCULATED-DESIGNED BY: JAMES LIANG
CHECKED BY: THANH TRINH
REVISED BY
DATE REVISED

LAST REVISION 04-03-14
DATE PLOTTED => 10-JUL-2014
TIME PLOTTED => 08:01

Dist	COUNTY	ROUTE	POST MILES TOTAL PROJECT	SHEET No.	TOTAL SHEETS
08	Riv	60	R1.6	14	65

W E Wasser 07-10-14
REGISTERED CIVIL ENGINEER DATE

07-14-14
PLANS APPROVAL DATE

REGISTERED PROFESSIONAL ENGINEER BILL WASSER No. 41189 Exp. 6-30-16 CIVIL STATE OF CALIFORNIA

THE STATE OF CALIFORNIA OR ITS OFFICERS OR AGENTS SHALL NOT BE RESPONSIBLE FOR THE ACCURACY OR COMPLETENESS OF SCANNED COPIES OF THIS PLAN SHEET.

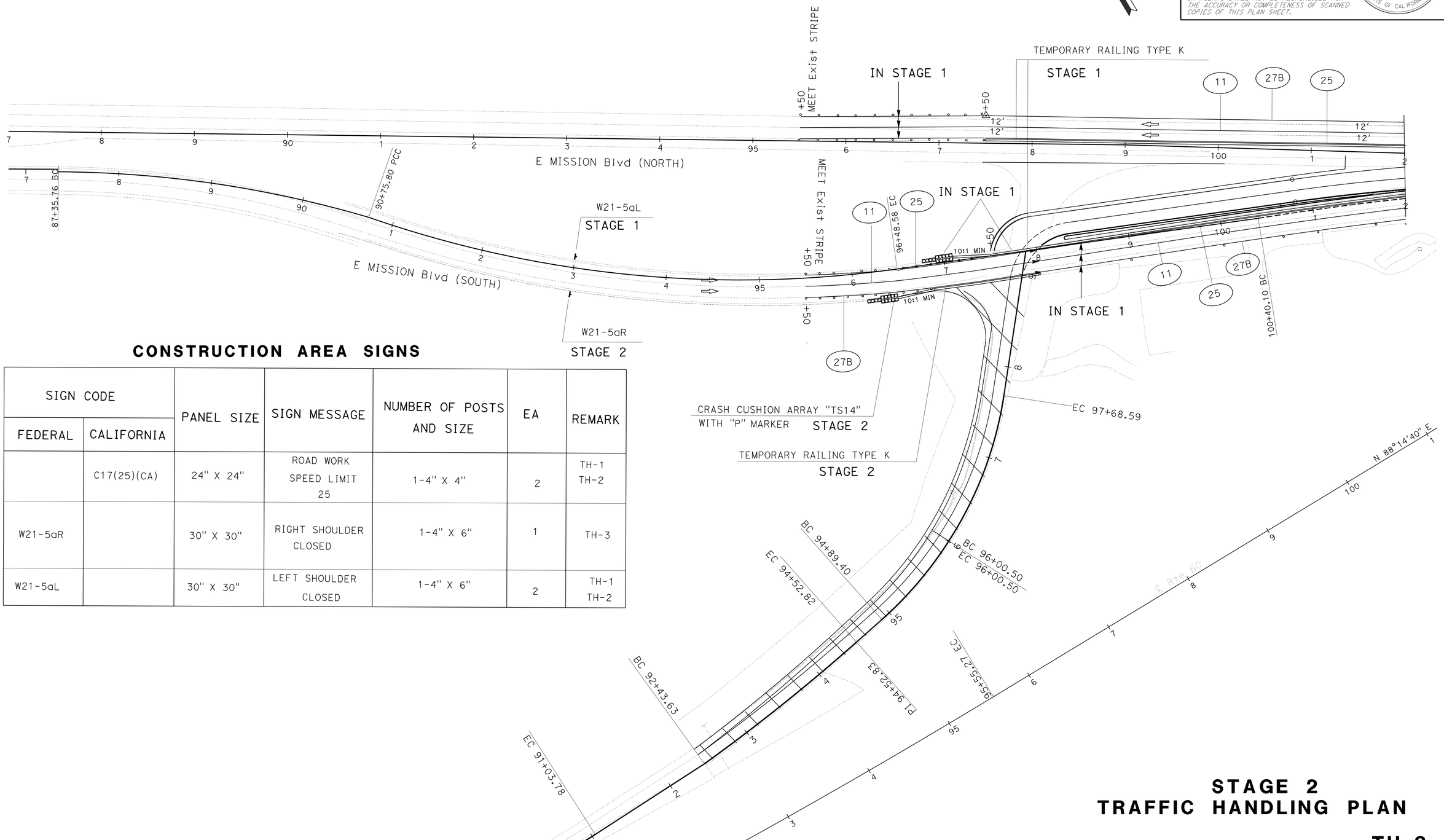

CONSTRUCTION AREA SIGNS

SIGN CODE		PANEL SIZE	SIGN MESSAGE	NUMBER OF POSTS AND SIZE	EA	REMARK
FEDERAL	CALIFORNIA					
	C17(25)(CA)	24" X 24"	ROAD WORK SPEED LIMIT 25	1-4" X 4"	2	TH-1 TH-2
W21-5aR		30" X 30"	RIGHT SHOULDER CLOSED	1-4" X 6"	1	TH-3
W21-5aL		30" X 30"	LEFT SHOULDER CLOSED	1-4" X 6"	2	TH-1 TH-2

STAGE 2 TRAFFIC HANDLING PLAN

TH-3

REVISED BY | DATE REVISED
JAMES LIANG | THANH TRINH
CALCULATED-DESIGNED BY | CHECKED BY
FUNCTIONAL SUPERVISOR
BILL WASSER

STATE OF CALIFORNIA - DEPARTMENT OF TRANSPORTATION
Caltrans
TRAFFIC DESIGN A

LAST REVISION 07-10-14 | DATE PLOTTED => 10-JUL-2014 | TIME PLOTTED => 08:01

Dist	COUNTY	ROUTE	POST MILES TOTAL PROJECT	SHEET No.	TOTAL SHEETS
08	Riv	60	R1.6	15	65

W E Wasser 07-10-14
REGISTERED CIVIL ENGINEER DATE

07-14-14
PLANS APPROVAL DATE

REGISTERED PROFESSIONAL ENGINEER BILL WASSER No. 41189 Exp. 6-30-16 CIVIL STATE OF CALIFORNIA

THE STATE OF CALIFORNIA OR ITS OFFICERS OR AGENTS SHALL NOT BE RESPONSIBLE FOR THE ACCURACY OR COMPLETENESS OF SCANNED COPIES OF THIS PLAN SHEET.

LEGEND:

✖✖✖ ENTRANCE RAMP CLOSED

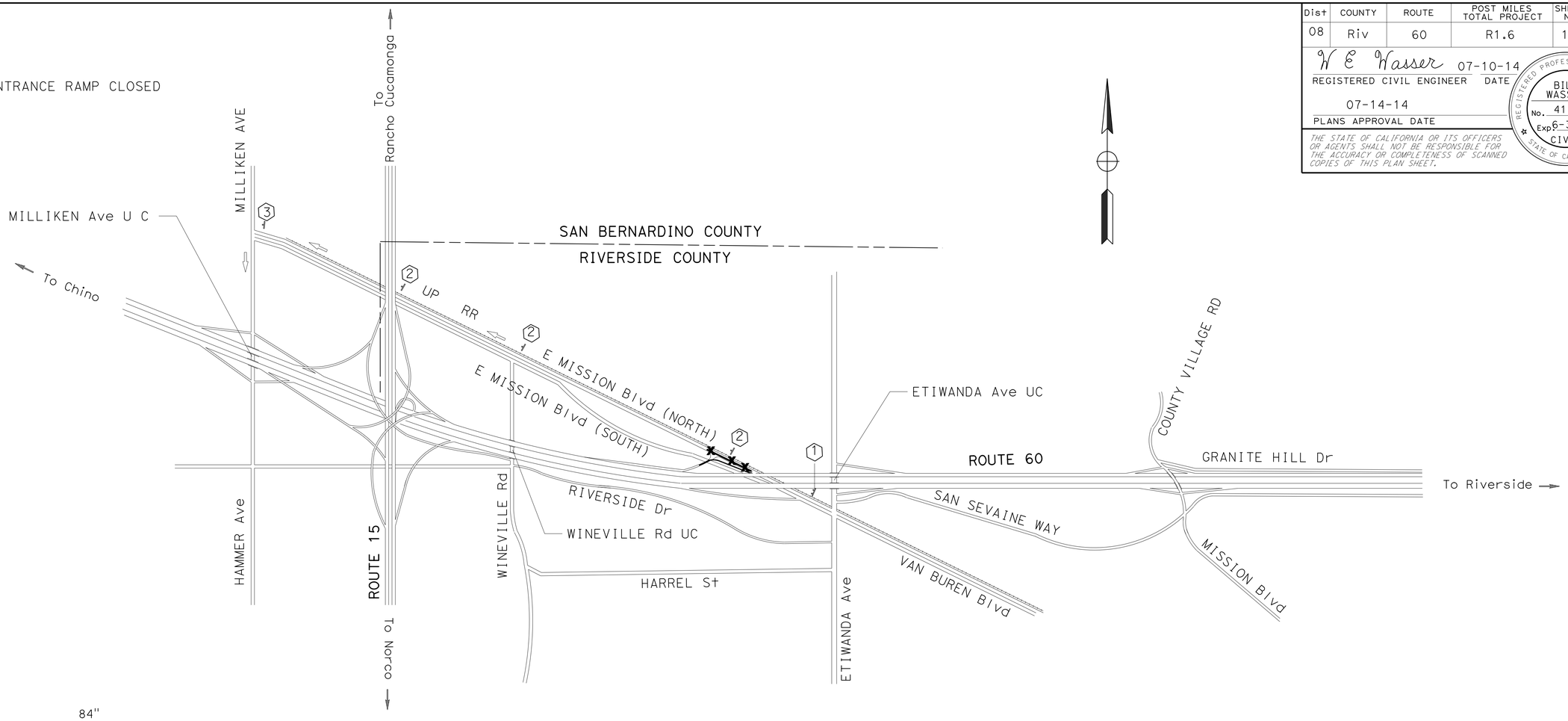

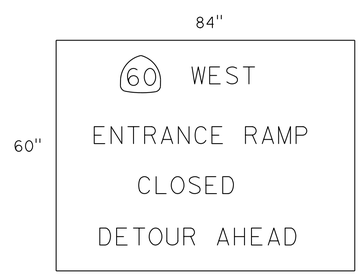

CS1

LETTER SIZE : 6" D

DETOUR SIGN QUANTITIES

SIGN No.	SIGN CODE	PANEL SIZE	No. OF POST AND SIZE	EA	SIGN MESSAGE
1	CS1	84" X 60"	2 - 6" X 6"	1	
2	G28-1 M3-4 SC3(CA)	22" X 18" 24" X 12" 36" X 12"	1 - 4" X 6"	3	60 SHIELD WEST DETOUR ↑
3	G28-1 M3-4 M4-10L	22" X 18" 24" X 12" 36" X 12"	1 - 4" X 6"	1	60 SHIELD WEST ← DETOUR

NOTES :

1. THE EXACT SIGN LOCATIONS WILL BE DETERMINED BY THE ENGINEER.
2. ALL SIGNS SHALL BE STATIONARY.

WB ROUTE 60 ENTRANCE RAMP CLOSED DETOURS FROM E MISSION Blvd (NORTH)

DETOUR PLAN

NO SCALE **DE-1**

STATE OF CALIFORNIA - DEPARTMENT OF TRANSPORTATION
Caltrans® TRAFFIC DESIGN A

FUNCTIONAL SUPERVISOR: BILL WASSER
CALCULATED-DESIGNED BY: JAMES LIANG
CHECKED BY: THANH TRINH
REVISED BY / DATE REVISED

LAST REVISION 07-10-14 | DATE PLOTTED => 10-JUL-2014 | TIME PLOTTED => 08:01

Dist	COUNTY	ROUTE	POST MILES TOTAL PROJECT	SHEET No.	TOTAL SHEETS
08	Riv	60	R1.6	16	65

W E Wasser 07-10-14
REGISTERED CIVIL ENGINEER DATE

07-14-14
PLANS APPROVAL DATE

REGISTERED PROFESSIONAL ENGINEER
BILL WASSER
No. 41189
Exp. 6-30-16
CIVIL
STATE OF CALIFORNIA

THE STATE OF CALIFORNIA OR ITS OFFICERS OR AGENTS SHALL NOT BE RESPONSIBLE FOR THE ACCURACY OR COMPLETENESS OF SCANNED COPIES OF THIS PLAN SHEET.

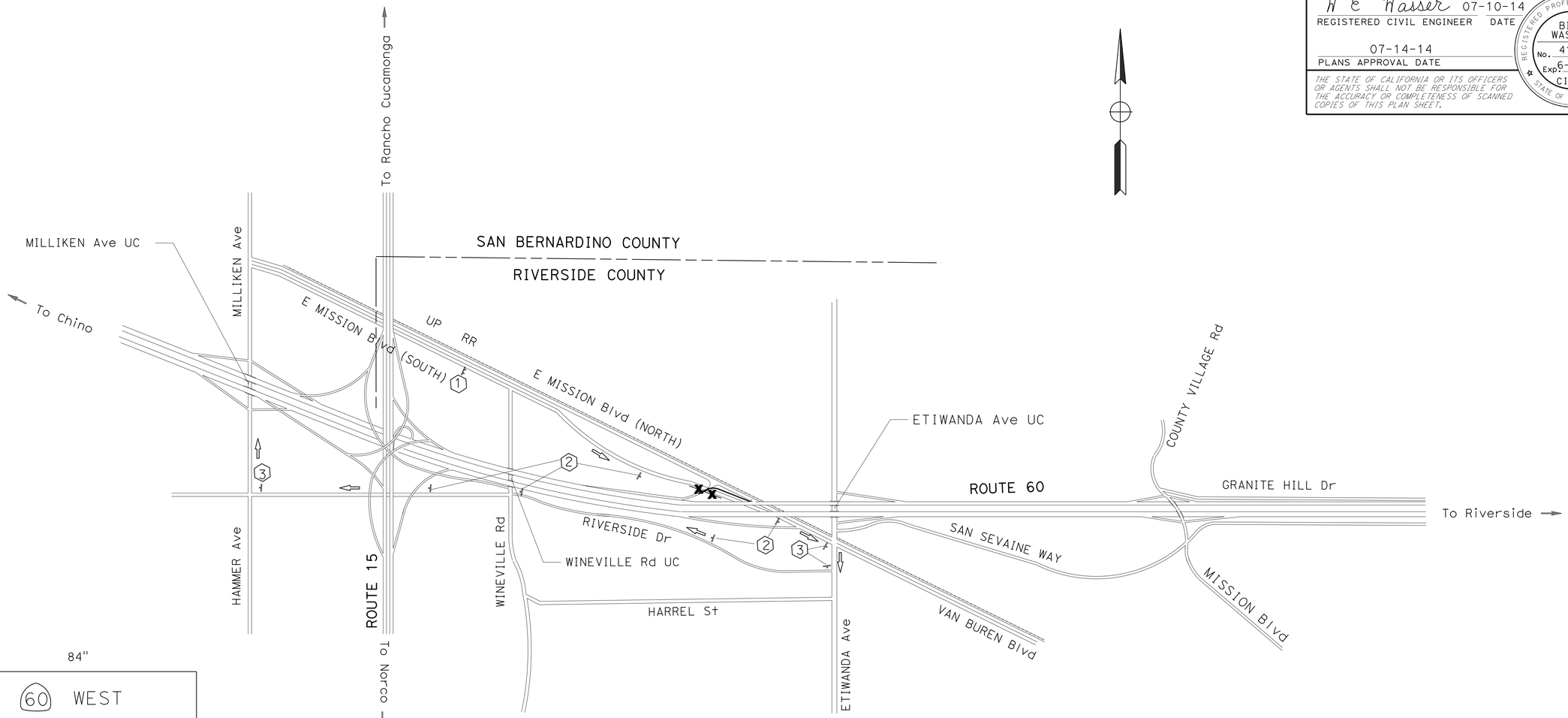

84"

60"

60 WEST
ENTRANCE RAMP
CLOSED
DETOUR AHEAD

CS1
LETTER SIZE : 6" D

DETOUR SIGN QUANTITIES

SIGN No.	SIGN CODE	PANEL SIZE	No. OF POST AND SIZE	EA	SIGN MESSAGE
1	CS1	84" X 60"	2 - 6" X 6"	1	
2	G28-1 M3-4 SC3(CA)	22" X 18" 24" X 12" 36" X 12"	1 - 4" X 6"	5	60 SHIELD WEST DETOUR ↑
3	G28-1 M3-4 M4-10R	22" X 18" 24" X 12" 36" X 12"	1 - 4" X 6"	3	60 SHIELD WEST DETOUR →

NOTES:

1. THE EXACT SIGN LOCATIONS WILL BE DETERMINED BY THE ENGINEER.
2. ALL SIGNS SHALL BE STATIONARY.

WB RTE 60 ENTRANCE RAMP CLOSED DETOUR FROM E MISSION Blvd (SOUTH)

DETOUR PLAN

NO SCALE **DE-2**

STATE OF CALIFORNIA - DEPARTMENT OF TRANSPORTATION
Caltrans® TRAFFIC DESIGN A

FUNCTIONAL SUPERVISOR: BILL WASSER
CALCULATED-DESIGNED BY: JAMES LIANG
CHECKED BY: THANH TRINH
REVISED BY
DATE REVISED

LAST REVISION 07-10-14 | DATE PLOTTED => 10-JUL-2014 | TIME PLOTTED => 08:01

Dist	COUNTY	ROUTE	POST MILES TOTAL PROJECT	SHEET No.	TOTAL SHEETS
08	Riv	60	R1.6	17	65

W E Wasser 07-10-14
REGISTERED CIVIL ENGINEER DATE

07-14-14
PLANS APPROVAL DATE

REGISTERED PROFESSIONAL ENGINEER BILL WASSER No. 41189 Exp. 6-30-16 CIVIL STATE OF CALIFORNIA

THE STATE OF CALIFORNIA OR ITS OFFICERS OR AGENTS SHALL NOT BE RESPONSIBLE FOR THE ACCURACY OR COMPLETENESS OF SCANNED COPIES OF THIS PLAN SHEET.

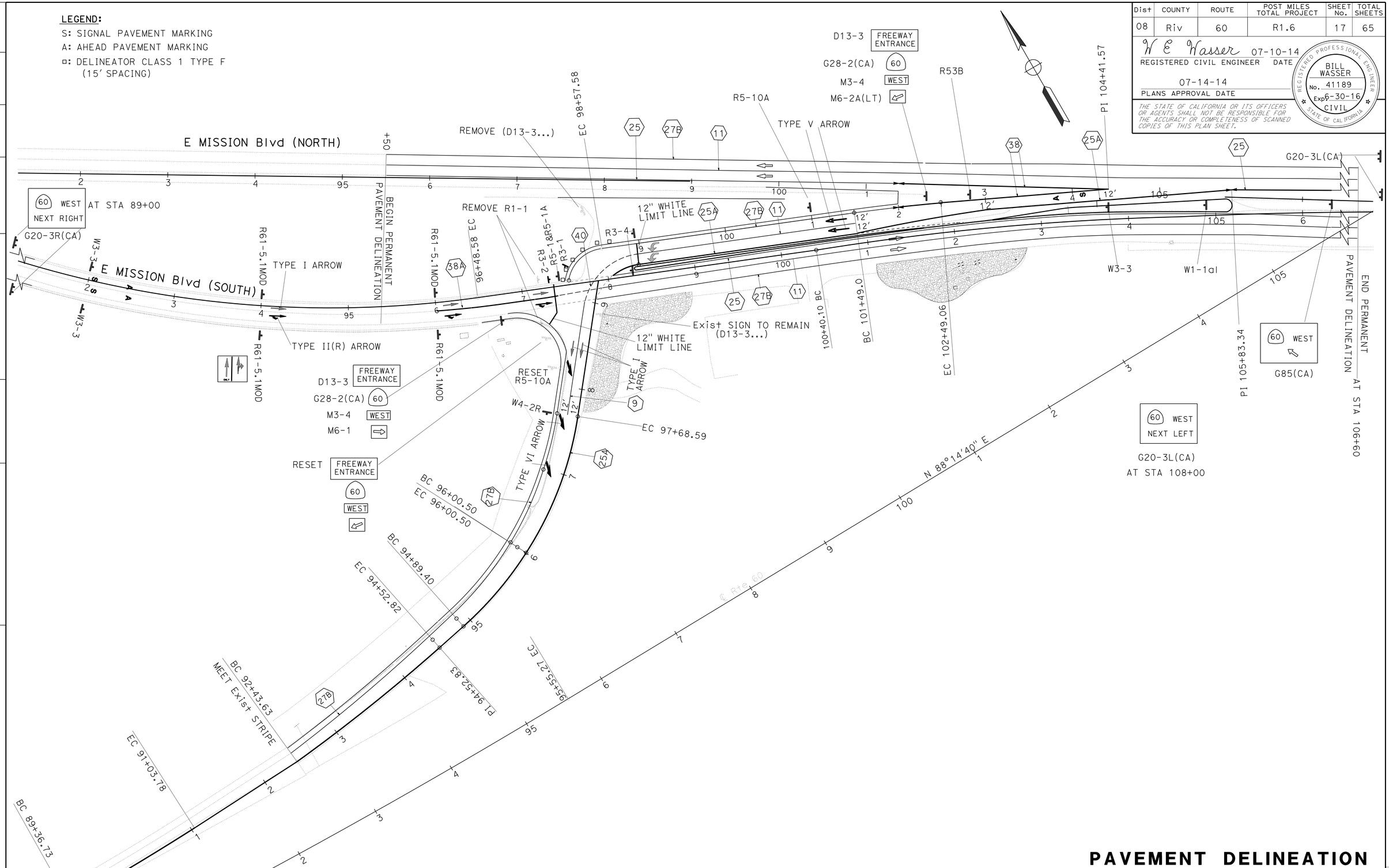

PAVEMENT DELINEATION AND SIGN PLAN

NO SCALE **PD-1**

REVISED BY	DATE REVISED
JAMES LIANG	THANH TRINH
CALCULATED-DESIGNED BY	CHECKED BY
FUNCTIONAL SUPERVISOR	BILL WASSER

STATE OF CALIFORNIA - DEPARTMENT OF TRANSPORTATION
Caltrans
TRAFFIC DESIGN A

LAST REVISION 07-10-14 | DATE PLOTTED => 10-JUL-2014 TIME PLOTTED => 08:01

Dist	COUNTY	ROUTE	POST MILES TOTAL PROJECT	SHEET No.	TOTAL SHEETS
08	Riv	60	R1.6	18	65

W E Wasser 07-10-14
REGISTERED CIVIL ENGINEER DATE

07-14-14
PLANS APPROVAL DATE

REGISTERED PROFESSIONAL ENGINEER
BILL WASSER
No. 41189
Exp. 6-30-16
CIVIL
STATE OF CALIFORNIA

THE STATE OF CALIFORNIA OR ITS OFFICERS OR AGENTS SHALL NOT BE RESPONSIBLE FOR THE ACCURACY OR COMPLETENESS OF SCANNED COPIES OF THIS PLAN SHEET.

PAVEMENT DELINEATION

DETAIL NO.	REMOVE THERMOPLASTIC TRAFFIC STRIPE	REMOVE THERMOPLASTIC TRAFFIC STRIPE (HAZARDOUS WASTE)	THERMOPLASTIC TRAFFIC STRIPE (SPRRAYABLE)			PAVEMENT MARKER (RETROREFLECTIVE)		REMOVE PAVEMENT MARKER	REMOVE THERMOPLASTIC PAVEMENT MARKING	THERMOPLASTIC PAVEMENT MARKING
	4" WHITE	4" YELLOW	4" WHITE	4" YELLOW	8" WHITE	TYPE G	TYPE H			
	LF	LF	LF	LF	LF	EA	EA	EA	SQFT	SQFT
11	552		1980							
25		2170		1530			34	46		
25A				1460			62			
27B	2170		3040							
38					480	20				
38A					140					
40			90							
12" LIMIT LINE									52	76
"STOP"									44	
"SIGNAL"										96
"AHEAD"										93
TYPE I (24) ARROW									31	155
TYPE II (RT) ARROW									45	135
TYPE IV ARROW										30
TYPE V ARROW										66
TYPE VI ARROW										126
SUB TOTAL	2722	2170	5110	2990	620	20	96	46	172	777
TOTAL	2722	2170	8720			116		46	172	777

DELINEATOR (CLASS 1)
EA
6

PAVEMENT DELINEATION AND SIGN PLAN

NO SCALE

PD-2

REVISED BY | DATE REVISED
JAMES LIANG | THANH TRINH
CALCULATED-DESIGNED BY | CHECKED BY
FUNCTIONAL SUPERVISOR
BILL WASSER

STATE OF CALIFORNIA - DEPARTMENT OF TRANSPORTATION
Caltrans
TRAFFIC DESIGN A

LAST REVISION 07-10-14 | DATE PLOTTED => 10-JUL-2014 | TIME PLOTTED => 08:01

Dist	COUNTY	ROUTE	POST MILES TOTAL PROJECT	SHEET No.	TOTAL SHEETS
08	Riv	60	R1.6	19	65

W E Wasser 07-10-14
REGISTERED CIVIL ENGINEER DATE

07-14-14
PLANS APPROVAL DATE

REGISTERED PROFESSIONAL ENGINEER BILL WASSER No. 41189 Exp. 6-30-16 CIVIL STATE OF CALIFORNIA

THE STATE OF CALIFORNIA OR ITS OFFICERS OR AGENTS SHALL NOT BE RESPONSIBLE FOR THE ACCURACY OR COMPLETENESS OF SCANNED COPIES OF THIS PLAN SHEET.

ABBREVIATIONS:

L = LENGTH OF SIGN

D = DEPTH OF SIGN

ROADSIDE SIGN QUANTITIES

SIGN No.	SIGN CODE		SIGN PANEL SIZE L X D	POST LENGTH LF		POST SIZE				ROADSIDE SIGN					REMARKS
				L†	R†	4"x4"	4"x6"	6"x6"	6"x8"	ONE POST	TWO POST	REMOVE	RESET	RELOCATE	
	FEDERAL	CALIFORNIA								EA	EA	EA	EA	EA	
		G20-3L(CA)	72" x 42"	15	15		X				2				
		G20-3R(CA)	72" x 42"	15	15		X				2				
	D13-3 M3-4 M6-2a(R†)	G28-1(CA)											1		
	D13-3 M3-4 M6-2a(L†)	G28-1(CA)	48" x 30" 21" x 18" 24" x 12" 21" x 15"		18			X		1					
	D13-3 M3-4 M6-1	G28-1(CA)	48" x 30" 21" x 18" 24" x 12" 21" x 15"		18			X		1					
		G85(CA)	72" x 48"	16	16		X				1				
	R3-1		24" x 24"		12.5	X				1					
	R3-2		24" x 24"		12.5	X				1					
	R3-4		24" x 24"		12.5	X				2					
	R5-1 R5-1a		30" x 30" 30" x 18"		16		X			1					
		R61-5.1 MOD	36" x 30"		14		X			4					
	W1-1aL(25)(ENGLISH)		30" x 30"		13	X				1					
	W3-3		30" x 30"		13	X				3					
	W4-2R		30" x 30"		13	X				1					
	R5-10A		30" x 36"		15		X			1					
	R5-10A												1		
	R1-1											2			
	D13-3...											1			
	TOTAL SHEET SQ-I									17	5	3	2		

NOTES:

EXACT LOCATION & POSITION OF ROADSIDE SIGNS TO BE DETERMINED BY THE ENGINEER.

POST LENGTHS GIVEN ARE APPROXIMATE. EXACT LENGTH TO BE DETERMINED BY THE ENGINEER.

SIGN QUANTITIES

NO SCALE **SQ-1**

STATE OF CALIFORNIA - DEPARTMENT OF TRANSPORTATION
Caltrans® TRAFFIC DESIGN A

FUNCTIONAL SUPERVISOR: BILL WASSER

CALCULATED-DESIGNED BY: JAMES LIANG
CHECKED BY: THANH TRINH

REVISED BY
DATE REVISED

LAST REVISION 07-10-14 | DATE PLOTTED => 10-JUL-2014 | TIME PLOTTED => 08:01

Dist	COUNTY	ROUTE	POST MILES TOTAL PROJECT	SHEET No.	TOTAL SHEETS
08	Riv	60	R1.6	20	65

W E Wasser 07-10-14
REGISTERED CIVIL ENGINEER DATE

07-14-14
PLANS APPROVAL DATE

REGISTERED PROFESSIONAL ENGINEER BILL WASSER No. 41189 Exp. 6-30-16 CIVIL STATE OF CALIFORNIA

THE STATE OF CALIFORNIA OR ITS OFFICERS OR AGENTS SHALL NOT BE RESPONSIBLE FOR THE ACCURACY OR COMPLETENESS OF SCANNED COPIES OF THIS PLAN SHEET.

ABBREVIATIONS:

L = LENGTH OF SIGN
D = DEPTH OF SIGN
G = GREEN
Y = YELLOW
W = WHITE
R = RED
BL = BLACK

SIGN PANEL MATERIAL SUMMARY

SIGN No.	SIGN CODE FEDERAL	SIGN CODE CALIFORNIA	SIGN PANEL SIZE L x D	SINGLE FACED	DOUBLE FACED	BACKGROUND SHEETING COLOR	BACKGROUND RETROREFLECTIVE ASTM TYPE	LEGEND SHEETING COLOR	LEGEND RETROREFLECTIVE ASTM TYPE	PROTECTIVE OVERLAY PREMIUM	ROADSIDE SINGLE-SHEET FRP 0.135 Inch SQFT	ROADSIDE SINGLE-SHEET FRAMED ALUMINUM 0.063 Inch SQFT	ROADSIDE SINGLE-SHEET FRAMED ALUMINUM 0.080 Inch SQFT	ROADSIDE SINGLE-SHEET UNFRAMED ALUMINUM 0.063 Inch SQFT	ROADSIDE SINGLE-SHEET UNFRAMED ALUMINUM 0.080 Inch SQFT	ROADSIDE SINGLE-SHEET UNFRAMED ALUMINUM 0.125 Inch SQFT	ROADSIDE LAMINATED 1 Inch TYPE B SQFT	ROADSIDE LAMINATED 2.5 Inch TYPE B SQFT	ROADSIDE LAMINATED 2.5 Inch TYPE H SQFT	REMARKS
		G20-3L(CA)	72"x42" (2 EA)			G	×	W	×			42								
		G20-3R(CA)	72"x42" (2 EA)			G	×	W	×			42								
	D13-3	G28-2(CA)	48"x30"			G	×	W	×					10.0						FREEWAY ENTRANCE
			24"x25"			G	×	W	×					4.2						60
	M3-4		24"x12"			BLUE	×	W	×					2.0						WEST
	M6-2a(LT)		21"x15"			BLUE	×	W	×					2.19						
	D13-3	G28-2(CA)	48"x30"			G	×	W	×					10.0						FREEWAY ENTRANCE
			24"x25"			G	×	W	×					4.2						60
	M3-4		24"x12"			BLUE	×	W	×					2.0						WEST
	M6-1		21"x15"			BLUE	×	W	×					2.19						
		G85(CA)	72"x48"			G	×	W	×			24								
	R3-1		24"x24"			W	×	R	×					4.0						NO RIGHT TURN CIRCLE & DIAGONAL:R, RETROREFLECTIVE
	R3-2		24"x24"			W	×	R	×					4.0						NO LEFT TURN CIRCLE & DIAGONAL:R, RETROREFLECTIVE
	R3-4		24"x24" (2 EA)			W	×	R	×					8.0						NO U TURN CIRCLE & DIAGONAL:R, RETROREFLECTIVE
	R5-1		30"x30"			W	×	R	×					6.25						DO NOT ENTER
	R5-1a		30"x18"			R	×	W	×					3.75						WRONG WAY
		R61-5.1MOD	36"x30" (4 EA)			W	×	BL						30						
	W1-1aL		30"x30"			Y	×	BL						6.25						25
	W3-3		30"x30" (3 EA)			Y	×	R/G	×					18.75						SIGNAL AHEAD
	W4-2R		30"x30"			Y	×	BL						6.25						LANE ENDS
	R5-10A		30"x36"			W	×	BL						7.5						
								SHEET TOTAL (SQFT)				108		131.5						

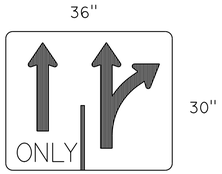

R61-5.1Mod

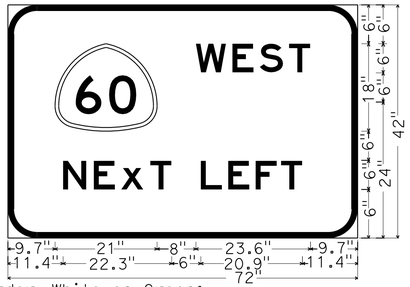

6.0" Radius, 1.3" Border, White on Green;
[WEST] 6" E; [NExT LEFT] 6" E;

G20-3L(CA)

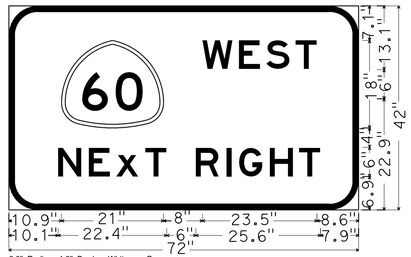

6.0" Radius, 1.3" Border, White on Green;
[WEST] 6"E; [NExT RIGHT] 6" E;

G20-3R(CA)

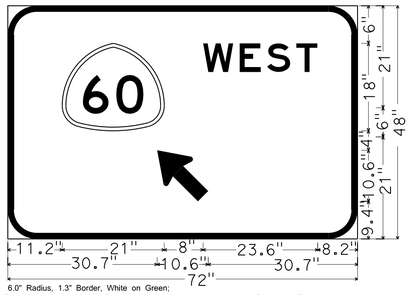

6.0" Radius, 1.3" Border, White on Green;
Standard Arrow Custom 13.4" x 8.1" 135°; [WEST] 6" E;

G85(CA)

(1): ALL SIGN PANELS ARE SINGLE FACE
(2): ALL SIGN PANELS SHALL HAVE PREMIUM PROTECTIVE OVERLAY

SIGN QUANTITIES

SQ-2

REVISED BY | DATE REVISED
JAMES LIANG | THANH TRINH
CALCULATED-DESIGNED BY | CHECKED BY
FUNCTIONAL SUPERVISOR: BILL WASSER

STATE OF CALIFORNIA - DEPARTMENT OF TRANSPORTATION
Caltrans
TRAFFIC DESIGN A

LAST REVISION 07-10-14 | DATE PLOTTED => 10-JUL-2014 | TIME PLOTTED => 08:01

Dist	COUNTY	ROUTE	POST MILES TOTAL PROJECT	SHEET No.	TOTAL SHEETS
08	Riv	60	R1.6	21	65

W E Wasser 07-10-14
REGISTERED CIVIL ENGINEER DATE

07-14-14
PLANS APPROVAL DATE

REGISTERED PROFESSIONAL ENGINEER BILL WASSER No. 41189 Exp 6-30-16 CIVIL STATE OF CALIFORNIA

THE STATE OF CALIFORNIA OR ITS OFFICERS OR AGENTS SHALL NOT BE RESPONSIBLE FOR THE ACCURACY OR COMPLETENESS OF SCANNED COPIES OF THIS PLAN SHEET.

ABBREVIATIONS:

L = LENGTH OF SIGN
D = DEPTH OF SIGN
G = GREEN
Y = YELLOW
W = WHITE
R = RED
BL = BLACK

SIGN PANEL MATERIAL SUMMARY
(SIGN PANEL MOUNTED ON MASTER ARM)

SIGN No.	SIGN CODE		SIGN PANEL SIZE L x D	SINGLE FACED	DOUBLE FACED	BACKGROUND		LEGEND		PROTECTIVE OVERLAY	ROADSIDE SINGLE-SHEET		REMARKS (SEE E-1 & E-2)
	FEDERAL	CALIFORNIA				SHEETING COLOR	RETROREFLECTIVE ASTM TYPE	SHEETING COLOR	RETROREFLECTIVE ASTM TYPE	PREMIUM	FRAMED ALUMINUM = 0.080 N SQFT	UNFRAMED ALUMINUM = 0.063 N SQFT	
	D-3 SPECIAL 1				X	G	X	W	X	X	9		⇦ 60 WEST 60 WEST ⇨ MASTER ARM 1
	D-3 SPECIAL 2				X	G	X	W	X	X	9		60 WEST ⇨ ⇦ 60 WEST MASTER ARM 2
	R3-4		24"X24"	X		W	X	R	X	X		4	
	R3-18		24"X24"	X		W	X	R	X	X		4	

N: FOR INFORMATION ONLY

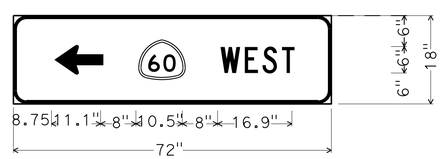

3.0" Radius, 0.8" Border, White on Green;
Standard Arrow Custom 11.1" X 6.8" ;
[WEST] C;
(MASTER ARM 1: FRONT)
(MASTER ARM 2: BACK)
D-3 SPECIAL

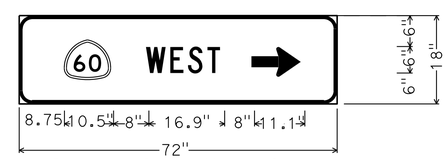

3.0" Radius, 0.8" Border, White on Green;
Standard Arrow Custom 11.1" X 6.8" ;
[WEST] C;
(MASTER ARM 1: BACK)
(MASTER ARM 2: FRONT)
D-3 SPECIAL

SIGN QUANTITIES

SQ-3

STATE OF CALIFORNIA - DEPARTMENT OF TRANSPORTATION
Caltrans® TRAFFIC DESIGN A
FUNCTIONAL SUPERVISOR: BILL WASSER
CALCULATED-DESIGNED BY: JAMES LIANG
CHECKED BY: THANH TRINH
REVISED BY
DATE REVISED

LAST REVISION 07-10-14
DATE PLOTTED => 10-JUL-2014
TIME PLOTTED => 08:01

Dist	COUNTY	ROUTE	POST MILES TOTAL PROJECT	SHEET No.	TOTAL SHEETS
08	Riv	60	R1.6	22	65

Ike I. Maatubang 07-10-14
REGISTERED CIVIL ENGINEER DATE

07-14-14
PLANS APPROVAL DATE

REGISTERED PROFESSIONAL ENGINEER IKE MAATUBANG No. C-55065 Exp. 6/30/16 CIVIL STATE OF CALIFORNIA

THE STATE OF CALIFORNIA OR ITS OFFICERS OR AGENTS SHALL NOT BE RESPONSIBLE FOR THE ACCURACY OR COMPLETENESS OF SCANNED COPIES OF THIS PLAN SHEET.

LEGEND :

(N) - NOT A SEPARATE PAY ITEM, FOR INFORMATION USE ONLY
LTL - LEFT TURN LANE

NOTE:

(1) REPLACE AC PAVEMENT ON E. MISSION Blvd (SOUTH) REMOVED FROM TRENCHING SEE DRAINAGE PLAN D-1; HMA (TYPE C) T=1.0'; AGGREGATE BASE T=0.50'

ROADWAY QUANTITIES

DIRECTION WB	DIRECTION EB	LOCATION	ROADWAY EXCAVATION	EMBANKMENT (N)	RUBBERIZED HMA (GAP-GRADED)	CLASS 2 AGGREGATE BASE	PLACE HMA DIKE (TYPE E)	HOT MIXED ASPHALT (TYPE A)	TACK COAT	LIQUID ASPHALT (PRIME COAT)	REMOVE CONCRETE BARRIER (TYPE K)	MINOR CONCRETE (CURB)	MINOR CONCRETE (MISCELLANEOUS CONST)	OBLITERATE SURFACING
			CY	CY	TON	CY	LF	TON	TON	TON	FT	CY	CY	SQYD
	X	STA 92+43.6 TO STA 98+93.7 W/B ENTRANCE RAMP	10	130	74	188		844	3	3				
X		STA 99+09.7 TO STA 106+46.6 LTL ACCESS ROAD	800	130	137	350		1642	5	5	692			
	X	STA 92+43.6 TO STA 98+70 W/B ENTRANCE RAMP DIKE (TYPE E)					634	19.5						
	X	STA 98+98 TO STA 105+83 MISSION BLVD 3'SHOULDER			15	38		179	0.2	0.2				
X		STA 99+70.6 TO STA 106+46.6 CURB (TYPE B1-4)										55		
X		STA 102+79.58 TO STA 103+87.13 CURB (TYPE B2-4)										7		
X		STA 99+70.6 TO STA 106+46.6 CURB ISLAND CAP - 3"											24	
X		STA 97+80.0 TO STA 101+50.0 Exist ACCESS ROAD												1250
	X	STA 7+50 "B2 LINE" SEE NOTE (1)				4		14						
		FROM DRAINAGE QUANTITY SHEET, DQ-1						1.43						
		GRAND TOTAL	810		226	580	634	2699.93	8.2	8.2	692	62	24	1250

TEMPORAY WATER POLLUTION CONTROL QUANTITIES

DESCRIPTION	QUANTITY	UNIT
STORM WATER ANNUAL REPORT	1	EA
TEMPORARY DRAINAGE INLET PROTECTION	6	EA
TEMPORARY GRAVEL BAG BERM	800	LF
TEMPORARY SILT FENCE	800	LF

SUMMARY OF QUANTITIES

Q-1

STATE OF CALIFORNIA - DEPARTMENT OF TRANSPORTATION
Caltrans DESIGN
FUNCTIONAL SUPERVISOR MARK PERTILE
CALCULATED-DESIGNED BY IKE MAATUBANG
CHECKED BY MARK PERTILE
REVISED BY
DATE REVISED

LAST REVISION 07-10-14
DATE PLOTTED => 10-JUL-2014
TIME PLOTTED => 08:01

Dist	COUNTY	ROUTE	POST MILES TOTAL PROJECT	SHEET No.	TOTAL SHEETS
08	Riv	60	R1.6	23	65

LICENSED LANDSCAPE ARCHITECT

07-14-14

PLANS APPROVAL DATE

LICENSED LANDSCAPE ARCHITECT MICHAEL STIVERS No. 4557 Signature 08-31-15 Renewal Date 07-10-14 Date STATE OF CALIFORNIA

THE STATE OF CALIFORNIA OR ITS OFFICERS OR AGENTS SHALL NOT BE RESPONSIBLE FOR THE ACCURACY OR COMPLETENESS OF SCANNED COPIES OF THIS PLAN SHEET.

NOTE:

FOR COMPLETE RIGHT OF WAY AND ACCURATE ACCESS DATA, SEE RIGHT OF WAY RECORD MAPS AT DISTRICT OFFICE.

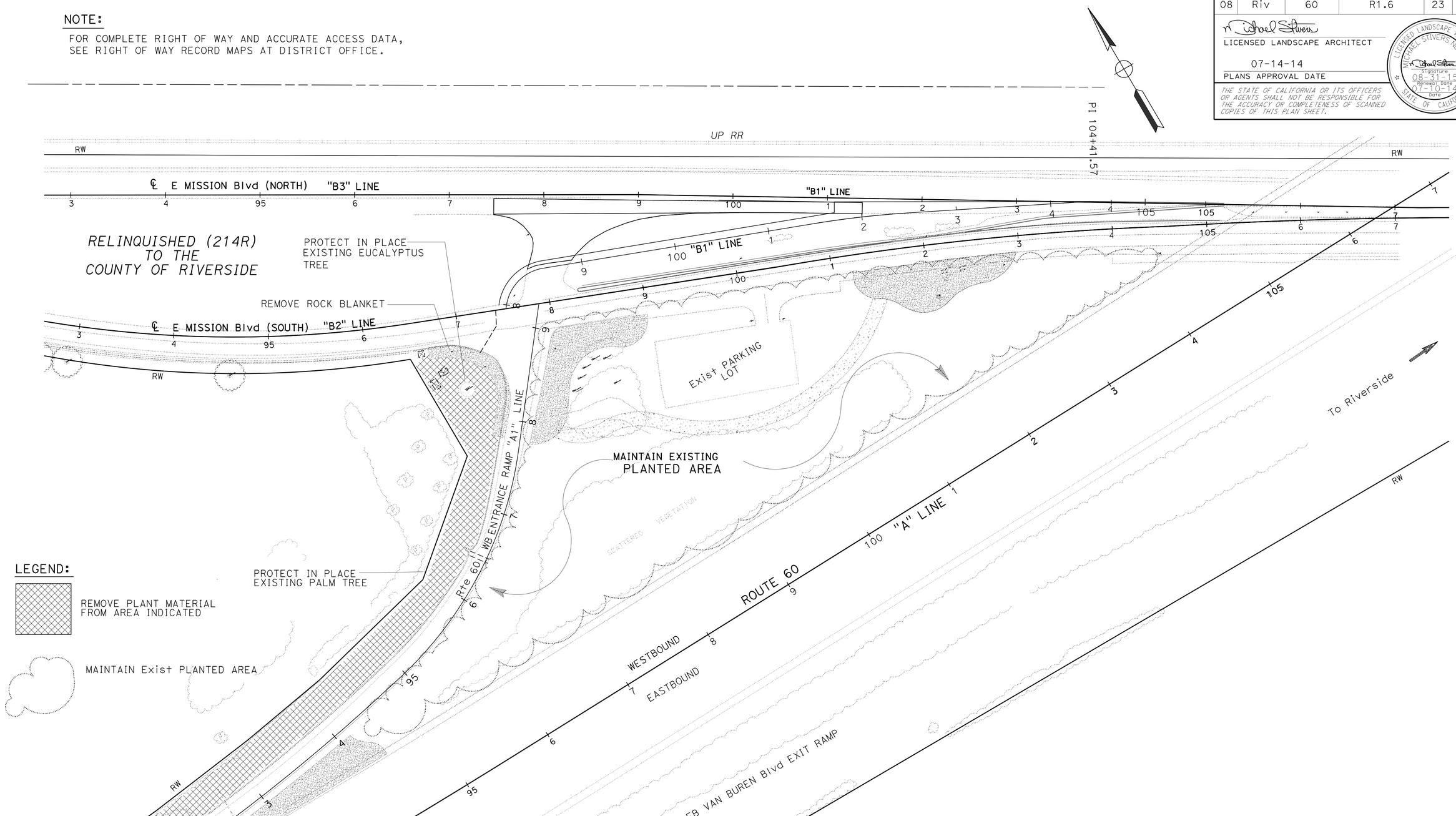

THIS PLAN ACCURATE FOR IRRIGATION WORK ONLY.

PLANT REMOVAL & MAINTAIN EXISTING AREA PLAN

SCALE 1" = 50'

PR-1

STATE OF CALIFORNIA - DEPARTMENT OF TRANSPORTATION

Caltrans® LANDSCAPE ARCHITECTURE

SENIOR LANDSCAPE ARCHITECT: RAY DESSELLE

CALCULATED-DESIGNED BY: MIKE STIVERS

CHECKED BY: MIKE STIVERS

REVISED BY

DATE REVISED

LAST REVISION 07-10-14

DATE PLOTTED => 10-JUL-2014

TIME PLOTTED => 08:01

Dist	COUNTY	ROUTE	POST MILES TOTAL PROJECT	SHEET No.	TOTAL SHEETS
08	Riv	60	R1.6	24	65

LICENSED LANDSCAPE ARCHITECT

07-14-14

PLANS APPROVAL DATE

LICENSED LANDSCAPE ARCHITECT MICHAEL STIVERS No. 4557 Signature 08-31-15 Renewal Date 07-10-14 Date STATE OF CALIFORNIA

THE STATE OF CALIFORNIA OR ITS OFFICERS OR AGENTS SHALL NOT BE RESPONSIBLE FOR THE ACCURACY OR COMPLETENESS OF SCANNED COPIES OF THIS PLAN SHEET.

IRRIGATION LEGEND

SYMBOL	DESCRIPTION	SPRAY PATTERN	OPERATING PRESSURE (psi)	PRESSURE COMPENSATING	PLUS/MINUS 5% ② DISCHARGE: GALLONS PER MINUTE (GPM)	DISCHARGE: GALLONS PER HOUR (GPH)	RADIUS (ft)	WIDTH x LENGTH (ft)	FLOW SHUTOFF DEVICE	SPRINKLER ASSEMBLY: RISER: TYPE	RISER: MATERIAL: PLASTIC	RISER: MATERIAL: GALVANIZED	RISER: SIZE (IPS INCH)	RISER: HEIGHT (INCH)	POP-UP: TYPE	POP-UP: INLET CONNECTION (NPT INCH)	POP-UP: SPRINLKER PROTECTOR (TYPE)	PLANT BASIN: BUBBLER HEIGHT (INCH) ABOVE ROOTBALL	REMARKS
●	SPRINKLER ASSEMBLY (RISER)	—	20/90	X	.50	—	—	—	—	V	X	—	½"	—	—	—	—	3"	⑥ FLOOD BUBBLER

X IN BOX DENOTES REQUIREMENT

APPLICABLE WHEN CIRCLED BELOW:

1 - SEE SPECIAL PROVISIONS.
2 - IF A PRESSURE COMPENSATING DEVICE IS SPECIFIED, THE DISCHARGE AND RADII SHOWN REFLECT ITS USE.
3 - VINYL-COATED CAST IRON HOUSING.
4 - SWING JOINTS REQUIRED ADJACENT TO SHOULDERS, CURBS, SIDEWALKS, AND DIKES.
5 - UNLESS OTHERWISE SHOWN ON PLANS.
⑥ - SEE DETAIL.

IRRIGATION CONDUIT

SHEET No.	IRRIGATION CONDUIT No.	LOCATION: LINE	LOCATION: STATION	SIDE: L+	SIDE: R+	EXTENSION CONNECTION TYPE: CB	EXTENSION CONNECTION TYPE: OL	(N) WATER SUPPLY LINE: SIZE (INCH)	(N) SPRINKLER CONTROL CONDUIT: SIZE (INCH)	ABS COMPOSITE PIPE			CORRUGATED STEEL PIPE			CORRUGATED HIGH DENSITY POLYETHYLENE PIPE			WELDED STEEL PIPE			(N) SCHEDULE 40 PVC PIPE		
										CONDUIT SIZE (INCH)														
										XX"	XX"	XX"	XX"	XX"	XX"	XX"	XX"	XX"	12	XX"	XX"	XX"	XX"	XX"
										LENGTH (LF)														
1	1	A1	96+3	X			X	3	2										10					
									SUBTOTAL															
									TOTAL										10					

(N) - NOT A SEPARATE PAY ITEM, FOR INFORMATION ONLY
X - DENOTES REQUIREMENT

ABBREVIATIONS:
CB - COUPLING BAND
OL - OVERLAP

IRRIGATION SPRINKLER SCHEDULE

ISS-1

REVISED BY | DATE REVISED
MIKE STIVERS | MIKE STIVERS
CALCULATED-DESIGNED BY | CHECKED BY
SENIOR LANDSCAPE ARCHITECT: RAY DESSELLE

STATE OF CALIFORNIA - DEPARTMENT OF TRANSPORTATION
Caltrans® LANDSCAPE ARCHITECTURE

LAST REVISION 07-10-14 | DATE PLOTTED => 10-JUL-2014 | TIME PLOTTED => 08:01

Dist	COUNTY	ROUTE	POST MILES TOTAL PROJECT	SHEET No.	TOTAL SHEETS
08	Riv	60	R1.6	25	65

LICENSED LANDSCAPE ARCHITECT

07-14-14

PLANS APPROVAL DATE

LICENSED LANDSCAPE ARCHITECT MICHAEL STIVERS No. 4557 Signature 08-31-15 Renewal Date 07-10-14 Date STATE OF CALIFORNIA

THE STATE OF CALIFORNIA OR ITS OFFICERS OR AGENTS SHALL NOT BE RESPONSIBLE FOR THE ACCURACY OR COMPLETENESS OF SCANNED COPIES OF THIS PLAN SHEET.

NOTE:

FOR COMPLETE RIGHT OF WAY AND ACCURATE ACCESS DATA, SEE RIGHT OF WAY RECORD MAPS AT DISTRICT OFFICE.

IRRIGATION NOTE:

1. ALL PLASTIC PIPE SUPPLY LINE MUST BE SCHEDULE 40. ALL PLASTIC PIPE SUPPLY LINE BETWEEN THE RCV AND THE TREE WELL SPRINKLER ASSEMBLIES WILL BE 3/4" UNLESS SHOWN.

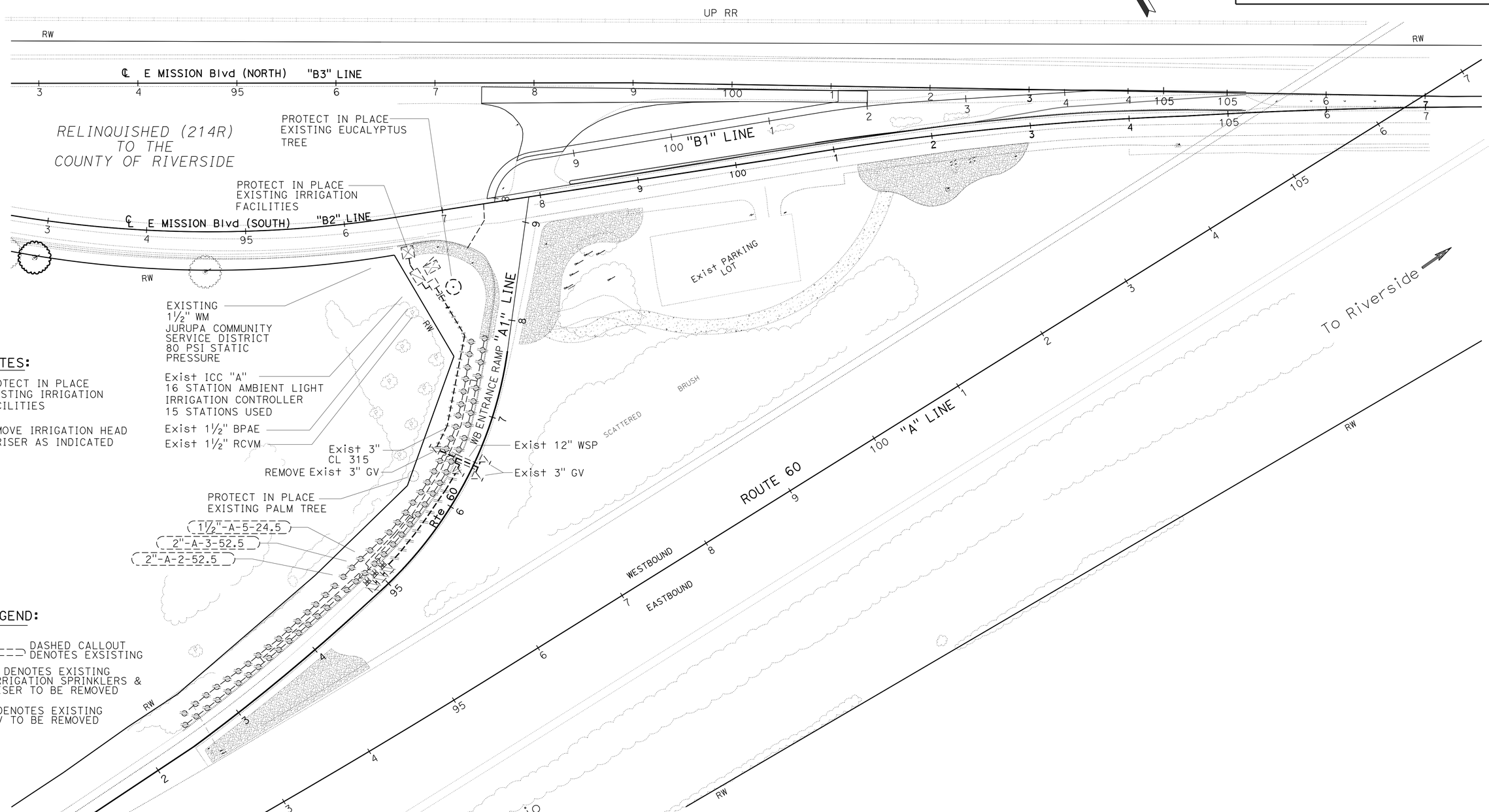

NOTES:

PROTECT IN PLACE EXISTING IRRIGATION FACILITIES

REMOVE IRRIGATION HEAD & RISER AS INDICATED

LEGEND:

DASHED CALLOUT DENOTES EXSISTING

DENOTES EXISTING IRRIGATION SPRINKLERS & RISER TO BE REMOVED

DENOTES EXISTING RCV TO BE REMOVED

THIS PLAN ACCURATE FOR IRRIGATION WORK ONLY.

IRRIGATION REMOVAL PLAN

SCALE 1" = 50'

IR-1

STATE OF CALIFORNIA - DEPARTMENT OF TRANSPORTATION

Caltrans LANDSCAPE ARCHITECTURE

SENIOR LANDSCAPE ARCHITECT: RAY DESSELLE

CALCULATED-DESIGNED BY | CHECKED BY

REVISED BY: MIKE STIVERS | DATE REVISED

LAST REVISION 07-10-14 | DATE PLOTTED => 10-JUL-2014 | TIME PLOTTED => 08:01

Dist	COUNTY	ROUTE	POST MILES TOTAL PROJECT	SHEET No.	TOTAL SHEETS
08	Riv	60	R1.6	26	65

LICENSED LANDSCAPE ARCHITECT

07-14-14

PLANS APPROVAL DATE

LICENSED LANDSCAPE ARCHITECT MICHAEL STIVERS No. 4557 Signature 08-31-15 Renewal Date 07-10-14 Date STATE OF CALIFORNIA

THE STATE OF CALIFORNIA OR ITS OFFICERS OR AGENTS SHALL NOT BE RESPONSIBLE FOR THE ACCURACY OR COMPLETENESS OF SCANNED COPIES OF THIS PLAN SHEET.

NOTE:

FOR COMPLETE RIGHT OF WAY AND ACCURATE ACCESS DATA, SEE RIGHT OF WAY RECORD MAPS AT DISTRICT OFFICE.

IRRIGATION NOTES:

ALL IRRIGATION COMPONENTS GRAPHICALLY SHOWN OUTSIDE OF THE R/W ARE NOT DRAWN TO SCALE AND ARE ACTUALLY LOCATED WITHIN CALTRANS R/W EXCEPT FOR WATER METERS

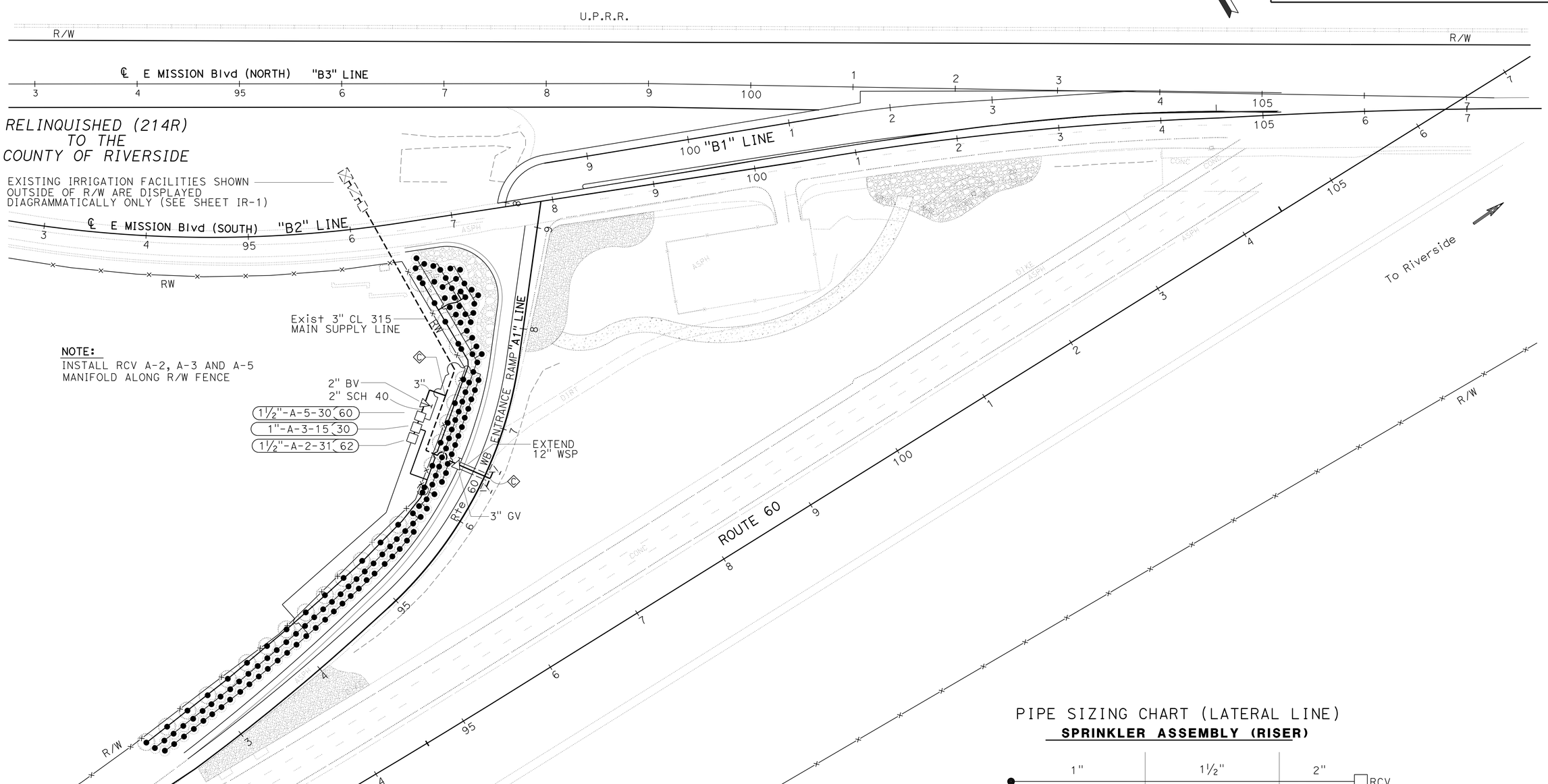

PIPE SIZING CHART (LATERAL LINE)

SPRINKLER ASSEMBLY (RISER)

1"	1½"	2"
1-12 GPM 1-24 HEADS	12-30 GPM 25-60 HEADS	61+ HEADS

RCV

THIS PLAN ACCURATE FOR IRRIGATION WORK ONLY.

IRRIGATION PLAN

SCALE 1" = 50′ **IP-1**

STATE OF CALIFORNIA - DEPARTMENT OF TRANSPORTATION

Caltrans® LANDSCAPE ARCHITECTURE

SENIOR LANDSCAPE ARCHITECT: RAY DESSELLE

CALCULATED-DESIGNED BY: MIKE STIVERS

CHECKED BY

REVISED BY

DATE REVISED

LAST REVISION 07-10-14

DATE PLOTTED => 10-JUL-2014

TIME PLOTTED => 08:01

Dist	COUNTY	ROUTE	POST MILES TOTAL PROJECT	SHEET No.	TOTAL SHEETS
08	Riv	60	R1.6	27	65

LICENSED LANDSCAPE ARCHITECT

07-14-14

PLANS APPROVAL DATE

LICENSED LANDSCAPE ARCHITECT MICHAEL STIVERS No. 4557 Signature 08-31-15 Renewal Date 07-10-14 Date STATE OF CALIFORNIA

THE STATE OF CALIFORNIA OR ITS OFFICERS OR AGENTS SHALL NOT BE RESPONSIBLE FOR THE ACCURACY OR COMPLETENESS OF SCANNED COPIES OF THIS PLAN SHEET.

ABBREVIATIONS:

EA — EACH
DIP — DUCTILE IRON PIPE
GSP — GALVANIZED STEEL PIPE
LF — LINEAR FEET
PR — PRESSURE RATED

SUBTOTALS PER VALVE ON DOWNSTREAM SIDE OF CONTROL VALVE

DESCRIPTION			UNIT	VALVE OR ASSEMBLY NUMBER A-2	A-3	A-5	SUBTOTALS	UNIT	DESCRIPTION		
PLASTIC PIPE SUPPLY LINE	SCH 40	1"	LF	675	600	590	1865	LF	1"	SCH 40	PLASTIC PIPE SUPPLY LINE
		1½"	LF	10	50		60	LF	1½"		
		2 "	LF	240		80	320	LF	2 "		
	PR 315									PR 315	
GSP											GSP
DIP											DIP
SPRINKLER TYPE		SPRINKLER ASSEMBLY (RISER)	EA	61	29	60	150	EA	SPRINKLER ASSEMBLY (RISER)		SPRINKLER TYPE

IRRIGATION QUANTITIES TABLE

ITEM	UNIT	QUANTITY
SPRINKLER ASSEMBLY (RISER)	EA	150
1" REMOTE CONTROL VALVE	EA	1
1½" REMOTE CONTROL VALVE	EA	2
3" GATE VALVE	EA	1
BALL VALVE	EA	1
1" PLASTIC PIPE	LF	1,865
1½" PLASTIC PIPE	LF	60
2" PLASTIC PIPE	LF	320
3" PLASTIC PIPE (CL 315)	LF	140
12" WELDED STEEL PIPE CONDUIT	LF	10

IRRIGATION QUANTITIES

IQ-1

REVISED BY | DATE REVISED
MIKE STIVERS | MIKE STIVERS
CALCULATED-DESIGNED BY | CHECKED BY
SENIOR LANDSCAPE ARCHITECT
RAY DESSELLE
STATE OF CALIFORNIA - DEPARTMENT OF TRANSPORTATION
Caltrans® LANDSCAPE ARCHITECTURE

LAST REVISION 07-10-14 | DATE PLOTTED => 10-JUL-2014 TIME PLOTTED => 08:01

Dist	COUNTY	ROUTE	POST MILES TOTAL PROJECT	SHEET No.	TOTAL SHEETS
08	Riv	60	R1.6	28	65

LICENSED LANDSCAPE ARCHITECT

07-14-14

PLANS APPROVAL DATE

LICENSED LANDSCAPE ARCHITECT MICHAEL STIVERS No. 4557 Signature 08-31-15 Renewal Date 07-10-14 Date STATE OF CALIFORNIA

THE STATE OF CALIFORNIA OR ITS OFFICERS OR AGENTS SHALL NOT BE RESPONSIBLE FOR THE ACCURACY OR COMPLETENESS OF SCANNED COPIES OF THIS PLAN SHEET.

SUBTOTALS PER PLAN SHEET ON UPSTREAM SIDE OF CONTROL VALVE

DESCRIPTION			UNIT	SHEET NUMBER IP-1	SUBTOTALS
BPA					
IRRIGATION CONTROLLER	CEC				
VALVES AND ASSEMBLIES	RCV	1 INCH	EA	1	1
		1½" INCH	EA	2	2
	BV	2 INCH	EA	1	1
	GV	3 INCH	EA	1	1
	FS				
	GARVA				
	CV				
	WS				
CONDUIT	CSP				
	WSP	12 INCH	LF	10	10
PLASTIC PIPE SUPPLY LINE	SCHEDULE 40	1 INCH	LF		
		1½"INCH	LF		
		2 INCH	LF		
		3 INCH	LF	140	140
CP					
GSP					
WM					

TOTAL QUANTITIES

TOTALS	UNIT	DESCRIPTION	
			BPA
			IRRIGATION CONTROLLER
			CEC
1	EA	1 INCH	RCV
2	EA	1½" INCH	
1	EA	2 INCH	BV
1	EA	3 INCH	GV
			FS
			GARVA
			CV
			WS
			CSP
10	LF	12 INCH	WSP
1865	LF	1 INCH	SCHEDULE 40
60	LF	1½"INCH	
320	LF	2 INCH	
140	LF	3 INCH	
			CP
			GSP
			WM
150	EA	C-3	SPRINKLER TYPE

ABBREVIATIONS:

EA — EACH
DIP — DUCTILE IRON PIPE
GSP — GALVANIZED STEEL PIPE
LF — FOOT/FEET
PR — PRESSURE RATED

IRRIGATION QUANTITIES

IQ-2

STATE OF CALIFORNIA - DEPARTMENT OF TRANSPORTATION
Caltrans® LANDSCAPE ARCHITECTURE
SENIOR LANDSCAPE ARCHITECT: RAY DESSELLE
CALCULATED-DESIGNED BY: MIKE STIVERS
CHECKED BY: MIKE STIVERS
REVISED BY
DATE REVISED

LAST REVISION 07-10-14
DATE PLOTTED => 10-JUL-2014
TIME PLOTTED => 08:01

Dist	COUNTY	ROUTE	POST MILES TOTAL PROJECT	SHEET No.	TOTAL SHEETS
08	Riv	60	R1.6	29	65

LICENSED LANDSCAPE ARCHITECT

07-14-14

PLANS APPROVAL DATE

LICENSED LANDSCAPE ARCHITECT MICHAEL STIVERS No. 4557 Signature 08-31-15 Renewal Date 07-10-14 Date STATE OF CALIFORNIA

THE STATE OF CALIFORNIA OR ITS OFFICERS OR AGENTS SHALL NOT BE RESPONSIBLE FOR THE ACCURACY OR COMPLETENESS OF SCANNED COPIES OF THIS PLAN SHEET.

ABBREVIATIONS:

S - SPHAGNUM PEAT MOSS
N - NITROLIZED FIR BARK
V - VERMICULITE
P - PERLITE
TB - TREE BARK
WC - WOOD CHIP
SB - SHREDDED BARK
TT - TREE TRIMMING

NOTES:

1. UNDERLINED PORTIONS OF BOTANICAL NAME INDICATE ABBREVIATIONS USED ON PLANTING PLANS.
2. WOOD MULCH SHALL BE APPLIED TO A THICKNESS OF 4" AND SHALL BE SHREDDED BARK

STANDARD BASIN SIZE:

1 GAL = 24" DIAMETER BASIN
15 GAL = 34" DIAMETER BASIN

LEGEND:

ROCKBLANKET
Exist ROCK BLANKET
LIMIT OF 4" DEPTH WOOD MULCH
4" DEPTH GRAVEL MULCH

PLANTING LEGEND

PLANT GROUP	PLANT No.	SYMBOL	BOTANICAL NAME	COMMON NAME	SIZE	QUANTITY EACH	HOLE SIZE (INCH) Dia	HOLE SIZE (INCH) DEPTH	BASIN TYPE	SOIL AMENDMENT ① TYPE	SOIL AMENDMENT ① RATE	IRON SULFATE ① RATE	COMMERCIAL FERTILIZER ① PLANTING	COMMERCIAL FERTILIZER ① PLT ESTB	BASIN MULCH TYPE	BASIN MULCH CY	STAKING	PLANTING LIMITS MINIMUM DISTANCE (ft) FROM ETW	Pvmt	FENCE	WALL	PAVED DITCH	EARTH DITCH	ON CENTER (ft)	REMARKS
A	1		ACACIA REDOLENS 'LOW BOY'	PROSTRATE ACACIA	No. 1	121	2X	1X	I	—	—	—	1/4 lb	1/4 lb	SB	—	—	—	—	8	—	—	—	⑦	
U	2		LAGERSTROEMIA INDICA X FAURIEI 'TUSCARORA'	TUSCARORA CRAPE MYRTLE	No. 15	21	2X	1X	I	—	—	—	1/4 lb	1/4 lb	SB	—	X	—	—	8	—	—	—	⑦	MULTI-TRUNK
	3		KOELREUTERIA BIPINNATA	CHINESE FLAME TREE	No. 15	2	2X	1X	I	—	—	—	1/4 lb	1/4 lb	SB	—	X	—	—	8	—	—	—	⑦	MULTI-TRUNK

APPLICABLE WHEN CIRCLED:

① - QUANTITIES SHOWN ARE "PER PLANT" UNLESS SHOWN AS SQFT OR SQYD APPLICATION RATES
2 - BASIN MULCH IS INCLUDED WITH MULCH QUANTITIES SHOWN ON PLANTING PLAN
3 - SUFFICIENT TO RECEIVE ROOT BALL AND AMENDMENTS IF REQUIRED
4 - SEE DETAIL
5 - SEE SPECIAL PROVISIONS
⑥ - SEE STANDARD SPECIFICATIONS
⑦ - AS SHOWN ON PLANS
8 - UNLESS OTHERWISE SHOWN ON PLANS
9 - FOLIAGE PROTECTOR REQUIRED
10 - ROOT PROTECTOR REQUIRED
11 - ROOT BARRIER REQUIRED
12 - DEPARTMENT-FURNISHED

NOTE:

TAPER 4" OF EXCAVATION BACK 3 FT FROM EDGE OF EXISTING SHOULDER, ROCK BLANKET OR FENCE

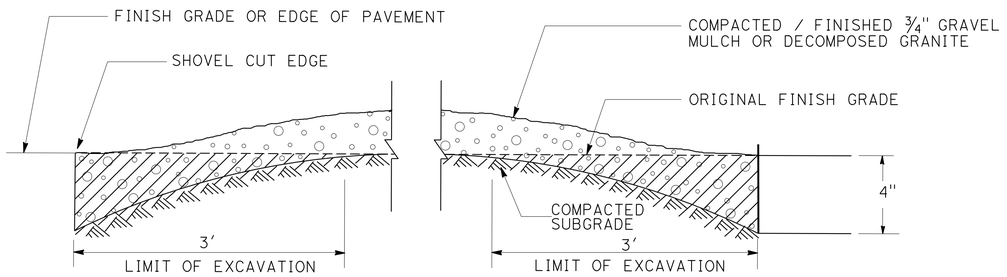

GRAVEL MULCH

SECTION NOT TO SCALE

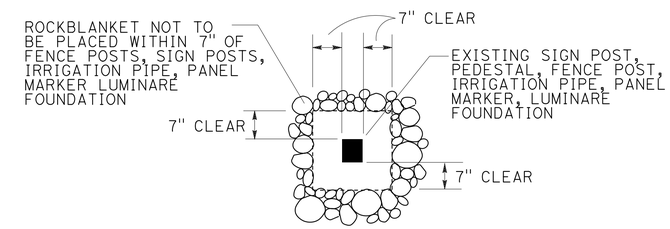

ROCK BLANKET APPLICATION AT POST

NOT TO SCALE PLAN

PLANTING QUANTITIES TABLE		
ITEM	UNIT	QUANTITY
PLANT (GROUP A)	EA	121
PLANT (GROUP U)	EA	23
WOOD MULCH (SB)	CY	277
SLOW-RELEASE FERTILIZER	LB	72

ROCK BLANKET & GRAVEL MULCH QUANTITIES TABLE			
ITEM	LOCATION	UNIT	QUANTITY
ROCK BLANKET	"A1" LINE 7+71.0-8+75.0	SQFT	2,011
GRAVEL MULCH	"B1" LINE 97+69.0-101+00	SQFT	8,300

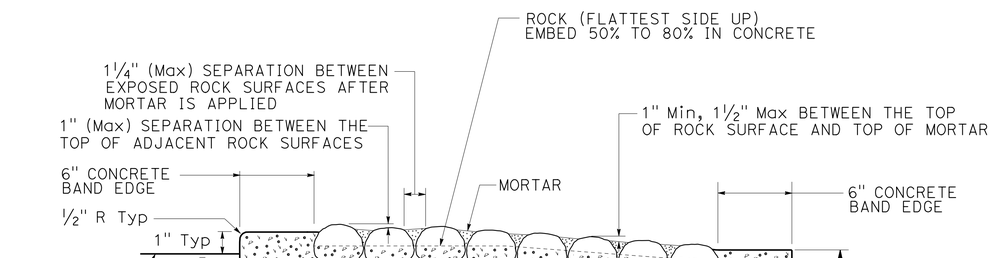

ROCK BLANKET

SECTION NOT TO SCALE

PLANT LIST & DETAILS

NO SCALE **PL-1**

REVISED BY | DATE REVISED
MIKE STIVERS | MIKE BABICH
CALCULATED-DESIGNED BY | CHECKED BY
SENIOR LANDSCAPE ARCHITECT | RAY DESSELLE
STATE OF CALIFORNIA - DEPARTMENT OF TRANSPORTATION
Caltrans® LANDSCAPE ARCHITECTURE

LAST REVISION 07-10-14 | DATE PLOTTED => 10-JUL-2014 TIME PLOTTED => 08:01

Dist	COUNTY	ROUTE	POST MILES TOTAL PROJECT	SHEET No.	TOTAL SHEETS
08	Riv	60	R1.6	30	65

LICENSED LANDSCAPE ARCHITECT

07-14-14

PLANS APPROVAL DATE

LICENSED LANDSCAPE ARCHITECT MICHAEL STIVERS No. 4557 Signature 08-31-15 Renewal Date 07-10-14 Date STATE OF CALIFORNIA

THE STATE OF CALIFORNIA OR ITS OFFICERS OR AGENTS SHALL NOT BE RESPONSIBLE FOR THE ACCURACY OR COMPLETENESS OF SCANNED COPIES OF THIS PLAN SHEET.

NOTE:

FOR COMPLETE RIGHT OF WAY AND ACCURATE ACCESS DATA, SEE RIGHT OF WAY RECORD MAPS AT DISTRICT OFFICE.

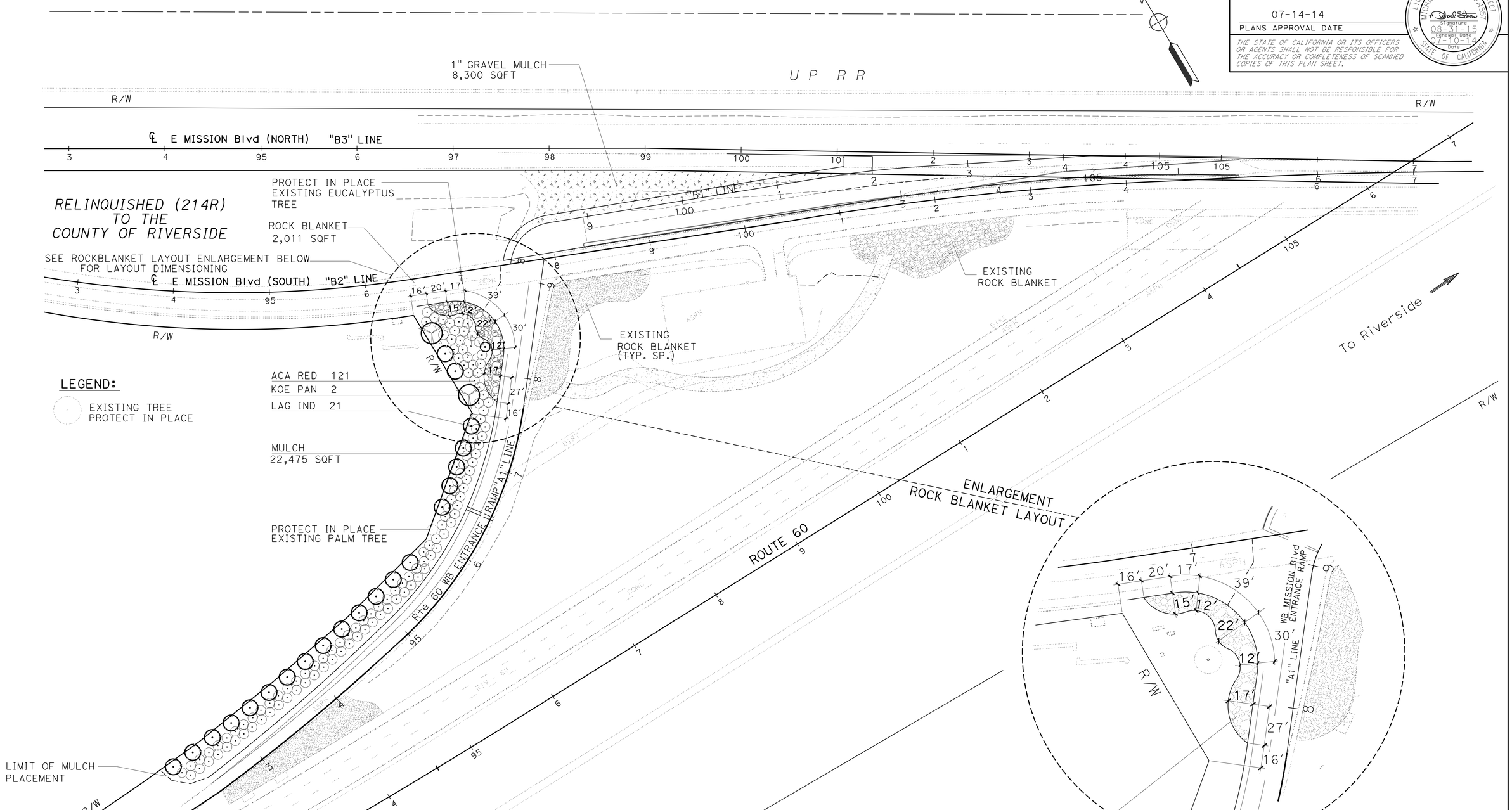

THIS PLAN ACCURATE FOR PLANTING WORK ONLY.

PLANTING PLAN

SCALE 1" = 50'

PP-1

STATE OF CALIFORNIA - DEPARTMENT OF TRANSPORTATION

Caltrans® LANDSCAPE ARCHITECTURE

SENIOR LANDSCAPE ARCHITECT: RAY DESSELLE

CALCULATED-DESIGNED BY: MIKE STIVERS

CHECKED BY: MIKE STIVERS

REVISED BY / DATE REVISED

LAST REVISION 07-10-14 | DATE PLOTTED => 10-JUL-2014 | TIME PLOTTED => 08:01

Dist	COUNTY	ROUTE	POST MILES TOTAL PROJECT	SHEET No.	TOTAL SHEETS
08	Riv	60	R1.6	31	65

REGISTERED ELECTRICAL ENGINEER 07-10-14 DATE

07-14-14
PLANS APPROVAL DATE

REGISTERED PROFESSIONAL ENGINEER JAIME ESTRADA No. E 18351 Exp.06/30/2016 ELECTRICAL STATE OF CALIFORNIA

THE STATE OF CALIFORNIA OR ITS OFFICERS OR AGENTS SHALL NOT BE RESPONSIBLE FOR THE ACCURACY OR COMPLETENESS OF SCANNED COPIES OF THIS PLAN SHEET.

LEGEND: (THIS SHEET ONLY)

1. INSTALL DEPARTMENT-FURNISHED MODEL 2070E CONTROLLER ASSEMBLY AND BATTERY BACK-UP SYSTEM ON A MODIFIED FOUNDATION AS PER E-3, E-4 AND E-5
2. INSTALL 120/240 V, TYPE III-CF SERVICE EQUIPMENT ENCLOSURE AS PER RSP ES-2C AND RSP ES-2F.
   METER A: 100 A, 240 V, 2P, CB (MAIN BREAKER)
   50 A, 120 V, 1P, CB (Sig)
   CALTRANS ID No. : 08-56-060-0-001.564-M
   ADDRESS: 11108 A MISSION Blvd, COUNTY OF RIVERSIDE

   METER B: 100 A, 240 V, 2P, CB (MAIN BREAKER)
   30 A, 240 V, 2P, CB (Ltg)
   15 A, 120 V, 1P, CB (Ltg CONTROL)
   20 A, 120 V, 1P, CB (IRRIGATION)
   CALTRANS ID No. : 08-56-060-0-001.565-M
   ADDRESS: 11108 B MISSION Blvd, COUNTY OF RIVERSIDE
3. INSTALL R3-4 SIGN AS PER ES-7N, DETAIL U.
4. INSTALL R3-18 SIGN AS PER ES-7N, DETAIL U.
5. PROTECT EXISTING CABINET
6. INSTALL RETROREFLECTIVE SHEETING STREET NAME SIGN.
7. REMOVE BY OTHERS. OPERATE UNTIL TRAFFIC SIGNAL LIGHT IS TURNED ON.
8. INSTALL VIVDS CAMERAS AS PER DETAILS ON SHEET ES-7R DETAIL B.
9. RS EXISTING FIXTURE, INSTALL NEW FIXTURE AND LED
10. INSTALL LTE WIRELESS MODEM ASSEMBLY
11. INSTALL 1½"C, 1-SIC, 1#10 (G) TO 60/EAST BOUND EXIT RAMP CONTROLLER CABINET

NOTES: (THIS SHEET ONLY)

1. ALL TYPE 1-A FOUNDATIONS MUST BE THE "ANCHOR BOLTS WITH SLEEVE NUTS" AS PER RSP ES-7B.
2. VIDEO DETECTION ZONES MUST BE ESTABLISHED IN THE FIELD BY THE EINGINEER AND THE MANUFACTURER'S REPRESENTATIVE.

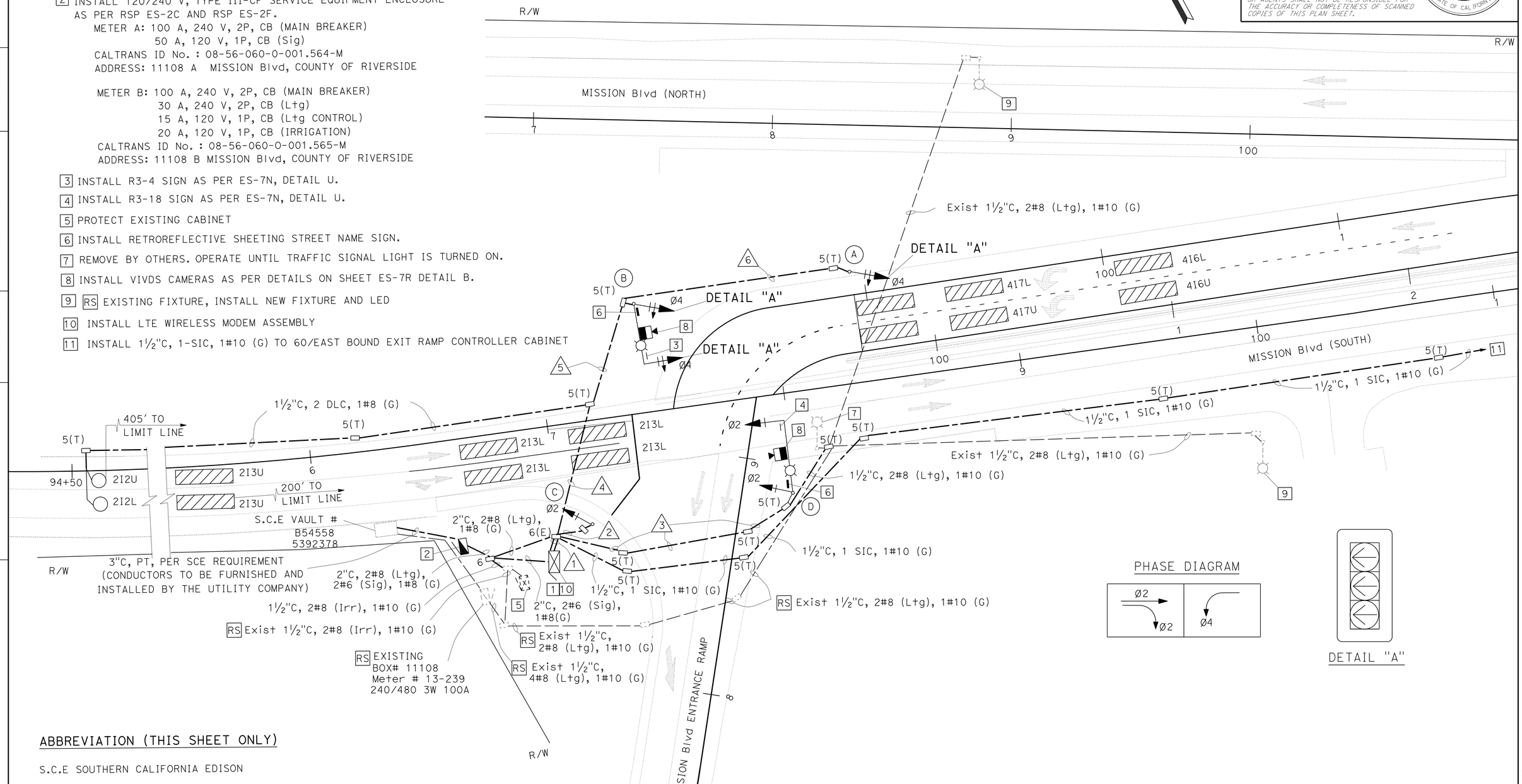

ABBREVIATION (THIS SHEET ONLY)

S.C.E SOUTHERN CALIFORNIA EDISON

APPROVED FOR ELECTRICAL WORK ONLY

SIGNAL AND LIGHTING

SCALE 1"=20'

E-1

STATE OF CALIFORNIA - DEPARTMENT OF TRANSPORTATION
Caltrans® ELECTRICAL DESIGN A

FUNCTIONAL SUPERVISOR: DAVID A GONZALEZ
CALCULATED-DESIGNED BY: NASIMA HYDER
CHECKED BY: JAIME ESTRADA
REVISED BY / DATE REVISED

LAST REVISION 07-10-14
DATE PLOTTED => 10-JUL-2014
TIME PLOTTED => 08:01

Dist	COUNTY	ROUTE	POST MILES TOTAL PROJECT	SHEET No.	TOTAL SHEETS
08	Riv	60	R1.6	32	65

REGISTERED ELECTRICAL ENGINEER 07-10-14 DATE

07-14-14
PLANS APPROVAL DATE

REGISTERED PROFESSIONAL ENGINEER JAIME ESTRADA No. E 18351 Exp.06/30/2016 ELECTRICAL STATE OF CALIFORNIA

THE STATE OF CALIFORNIA OR ITS OFFICERS OR AGENTS SHALL NOT BE RESPONSIBLE FOR THE ACCURACY OR COMPLETENESS OF SCANNED COPIES OF THIS PLAN SHEET.

LEGEND: (THIS SHEET ONLY)

1 SEE SIGN SHEETS FOR ALL CONTRACTOR FURNISHED SIGNS TO BE INSTALLED ON SIGNAL POLES.

CONDUIT AND CONDUCTOR SCHEDULE

CONDUCTOR DESIGNATION			NUMBER OF CONDUCTORS					
CABLE TYPE	STD (X)	PHASE	RUN NUMBER					
			1	2	3	4	5	6
VEH 12CSC	(A)	4	1			1	1	1
	(B)	4	1			1	1	
	(C)	2	1	1				
	(D)	2	1	1	1			
TOTAL CABLES 12 CSC			4	2	1	2	2	1
#8	LIGHTING			2	2	2	2	
#8	GROUND		2	1	1	1	1	1
VIVDS COAXIAL CABLE			2	1	1	1	1	
VIVDS POWER CABLE			2	1	1	1	1	
TYPE B DLC	Ø2		2			2		
TOTAL DLC's			2			2		
CONDUIT SIZE			2-3"	3"	3"	3"	3"	2"

POLE AND EQUIPMENT SCHEDULE

	STANDARD			VEH SIG MTG		LED LUMINAIRE (W)	SPECIAL REQUIREMENTS	* RETROREFLECTIVE SHEETING SIGNS
(X)	TYPE	SMA	LMA	MAST ARM	POLE			
(A)	1-A	-	-	-	TV-1-T	-		
(B)	19-3-100	25.0'	15.0'	1-MAS	SV-1-T	165	MOUNT VIVDS CAMERA ON LUMINAIRE MAST ARM	⬅ FWY 60 WEST (FRONT) / FWY 60 WEST ➡ (BACK), R3-4
(C)	1-A	-	-	-	TV-1-T	-		
(D)	19-4-100	30.0'	15.0'	1-MAS	SV-1-T	165	MOUNT VIVDS CAMERA ON LUMINAIRE MAST ARM	FWY 60 WEST ➡ (FRONT) / ⬅ FWY 60 WEST (BACK), R3-18

* FOR SIGN DETAILS SEE SHEETS PD-1 AND SQ-3

APPROVED FOR ELECTRICAL WORK ONLY

SIGNAL AND LIGHTING

NO SCALE

E-2

STATE OF CALIFORNIA - DEPARTMENT OF TRANSPORTATION
Caltrans® ELECTRICAL DESIGN A

FUNCTIONAL SUPERVISOR: DAVID A GONZALEZ
CALCULATED-DESIGNED BY: NASIMA HYDER
CHECKED BY: JAIME ESTRADA
REVISED BY
DATE REVISED

LAST REVISION 07-10-14
DATE PLOTTED => 10-JUL-2014
TIME PLOTTED => 08:01

Dist	COUNTY	ROUTE	POST MILES TOTAL PROJECT	SHEET No.	TOTAL SHEETS
08	Riv	60	R1.6	33	65

Theresa Gabriel 07-10-14
REGISTERED CIVIL ENGINEER DATE

07-14-14
PLANS APPROVAL DATE

REGISTERED PROFESSIONAL ENGINEER Theresa A. Gabriel No. E15129 Exp. 6-30-16 ELECT STATE OF CALIFORNIA

THE STATE OF CALIFORNIA OR ITS OFFICERS OR AGENTS SHALL NOT BE RESPONSIBLE FOR THE ACCURACY OR COMPLETENESS OF SCANNED COPIES OF THIS PLAN SHEET.

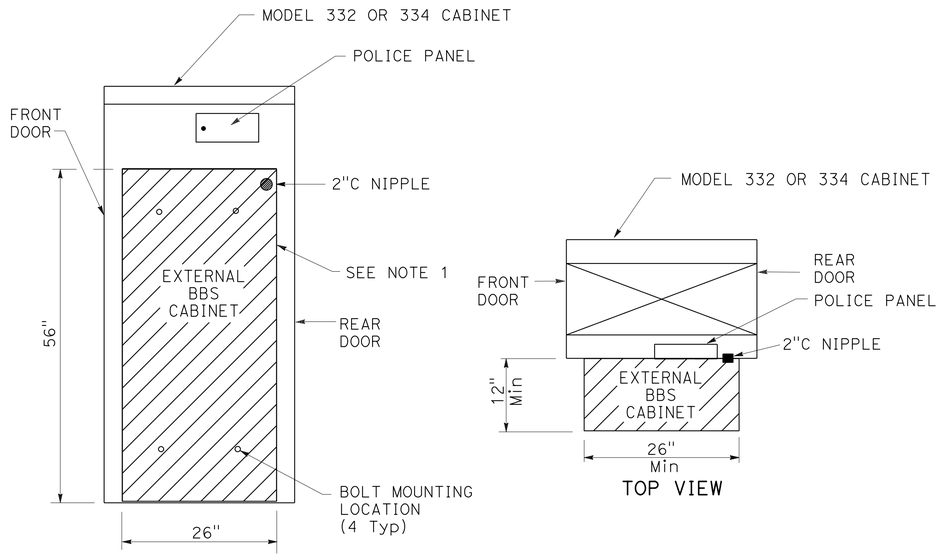

SIDE VIEW

EXTERNAL BBS CABINET MOUNTED TO THE MODEL 332 OR 334 CABINET

NOTES: (THIS SHEET ONLY)

1. THE EXTERNAL BBS CABINET SHALL BE MOUNTED TO THE MODEL 332 OR 334 CABINET WITH FOUR 18-8 STAINLESS STEEL HEX HEAD, FULLY-THREADED, 3/8"-16 X 1" BOLTS; TWO WASHERS PER BOLT, DESIGNED FOR 3/8" BOLTS AND ARE 18-8 STAINLESS STEEL, 1" OUTSIDE DIAMETER, ROUND, AND FLAT; AND ONE K-LOCK NUT PER BOLT THAT IS 18-8 STAINLESS STEEL AND A HEX-NUT. THE ENGINEER WILL HAVE TO APPROVE THE BOLT MOUNTING LOCATION PRIOR TO INSTALLATION.
2. THE ANCHOR BOLTS SHALL BE 3/4" Dia X 15" WITH A 2"-90° BEND. THE CABINET MANUFACTURER'S SPECIFICATION SHALL DETERMINE THE LOCATION OF THE ANCHOR BOLTS IN THE FOUNDATION. THE ENGINEER WILL HAVE TO APPROVE THE ANCHOR BOLTS AND ITS LOCATION IN THE FOUNDATION PRIOR TO CONSTRUCTION.
3. THE CONTRACTOR SHALL VERIFY THE DIMENSIONS OF THE BBS CABINET PRIOR TO CONSTRUCTING THE FOUNDATION OF THE MODIFIED PORTION OF THE Std MODEL 332 AND 334 CABINET FOUNDATION. THE ENGINEER WILL HAVE TO APPROVE ANY NECESSARY DEVIATIONS PRIOR TO CONSTRUCTION.
4. ALL DIMENSIONS ARE NOMINAL.

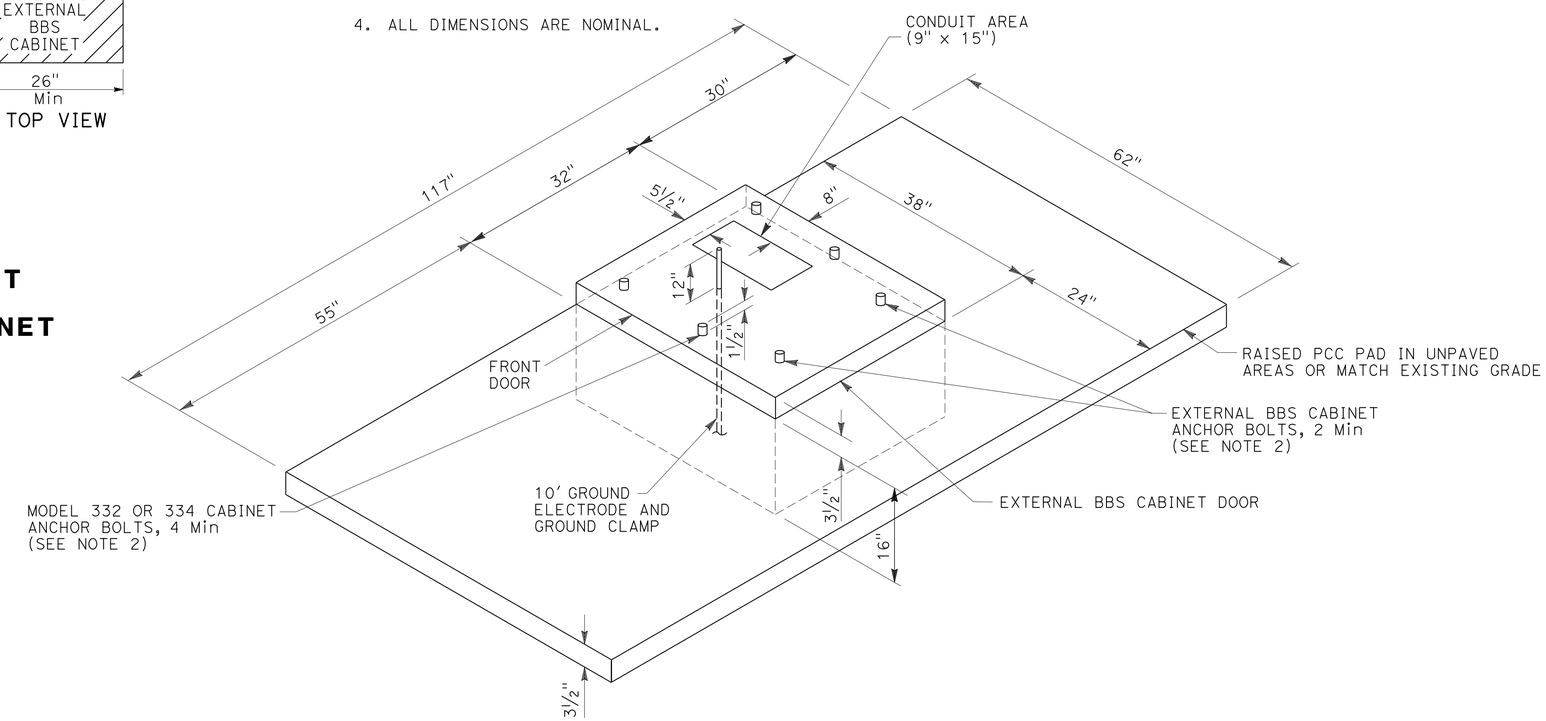

MODIFIED MODEL 332 AND 334 CABINET FOUNDATION DETAIL FOR BATTERY BACKUP SYSTEM (BBS)

(FOR DIMENSIONS AND DETAILS NOT SHOWN AND ADDITIONAL NOTES, SEE SHEET ES-3C OF THE STANDARD PLANS FOR MODEL 332 AND 334 CABINETS)

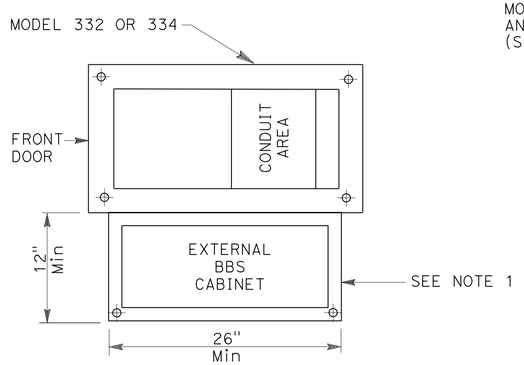

BASE PLAN FOR BBS MOUNTED TO THE MODEL 332 OR 334 CABINET

(FOR DIMENSIONS AND DETAILS NOT SHOWN, SEE SHEET A6-1 TO A6-4, CABINET HOUSING DETAILS OF THE TRANSPORTATION ELECTRICAL EQUIPMENT SPECIFICATION (TEES))

APPROVED FOR ELECTRICAL WORK ONLY

ELECTRICAL DETAILS

NO SCALE

E-3

STATE OF CALIFORNIA - DEPARTMENT OF TRANSPORTATION
Caltrans® ELECTRICAL DESIGN B

FUNCTIONAL SUPERVISOR: DAVID A GONZALEZ
CALCULATED-DESIGNED BY: THERESA A. GABRIEL
CHECKED BY: JAIME ESTRADA
REVISED BY
DATE REVISED

LAST REVISION 07-10-14
DATE PLOTTED => 10-JUL-2014
TIME PLOTTED => 08:02

Dist	COUNTY	ROUTE	POST MILES TOTAL PROJECT	SHEET No.	TOTAL SHEETS
08	RIV	60	R1.6	34	65

Theresa Gabriel 07-10-14
REGISTERED ~~CIVIL ENGINEER~~ DATE

07-14-14
PLANS APPROVAL DATE

REGISTERED PROFESSIONAL ENGINEER Theresa A. Gabriel No. E15129 Exp. 6-30-16 ELECT STATE OF CALIFORNIA

THE STATE OF CALIFORNIA OR ITS OFFICERS OR AGENTS SHALL NOT BE RESPONSIBLE FOR THE ACCURACY OR COMPLETENESS OF SCANNED COPIES OF THIS PLAN SHEET.

LEGEND: (THIS SHEET ONLY)

PTS = POWER TRANSFER SWITCH
UPS = UNINTERRUPTIBLE POWER SUPPLY
UPSC = UNINTERRUPTIBLE POWER SUPPLY CONTROLLER
UPSM = UPS MODE
BP = BYPASS
MBPS = MANUAL BYPASS SWITCH
AC+ = UNGROUNDED CONDUCTOR
AC- = GROUNDED CONDUCTOR
C = COMMON
Grn = GREEN
Blk = BLACK
Wht = WHITE
SF = STATE-FURNISHED
Batt = BATTERY
Temp = TEMPERATURE
TB = TERMINAL BOARD
Cntl = CONTROL
Gnd = GROUND

NOTES: (THIS SHEET ONLY)

1. TYPE B REFERS TO THE BBS EQUIPMENT FROM MANUFACTURER B.
2. CASE-1 REFERS TO THE SITUATION WHEN THE ENTIRE BBS EQUIPMENT INCLUDING THE BATTERIES ARE INSTALLED IN THE BBS CABINET.
3. THE LOCATION OF THE 2"C NIPPLE WILL BE DETERMINED BY THE ENGINEER IN THE FIELD.
4. THE CONTRACTOR SHALL FURNISH AND INSTALL A NEMA-1 ENCLOSURE WITH 30 A, 1P, 120/240 VOLTS RATED CIRCUIT BREAKER MANUFACTURED PER UL STANDARD 489.
5. A TEMPERATURE PROBE SHALL BE ATTACHED TO THE BATTERY BY TAPE OR ATTACHED TO THE NEGATIVE TERMINAL OF THE BATTERY.
6. THE ELECTRICAL POWER FOR THE COOLING FAN FOR THE BBS CABINET SHALL BE TAPPED FROM THE BOTTOM OF THE TB IN THE 332 CABINET.
7. THE CONTRACTOR SHALL PROVIDE A 9-WIRE WIRING HARNESS OR BUNDLED 9 MULTICOLOR CONDUCTORS, #18 AWG WIRES FROM THE RELAY ON THE INVERTER/CHARGER UNIT TO THE CONTROLLER. THE ENDS OF THE CONDUCTORS SHALL BE INSULATED WITH TAPE AND A SIX-FOOT COIL ON EACH END.

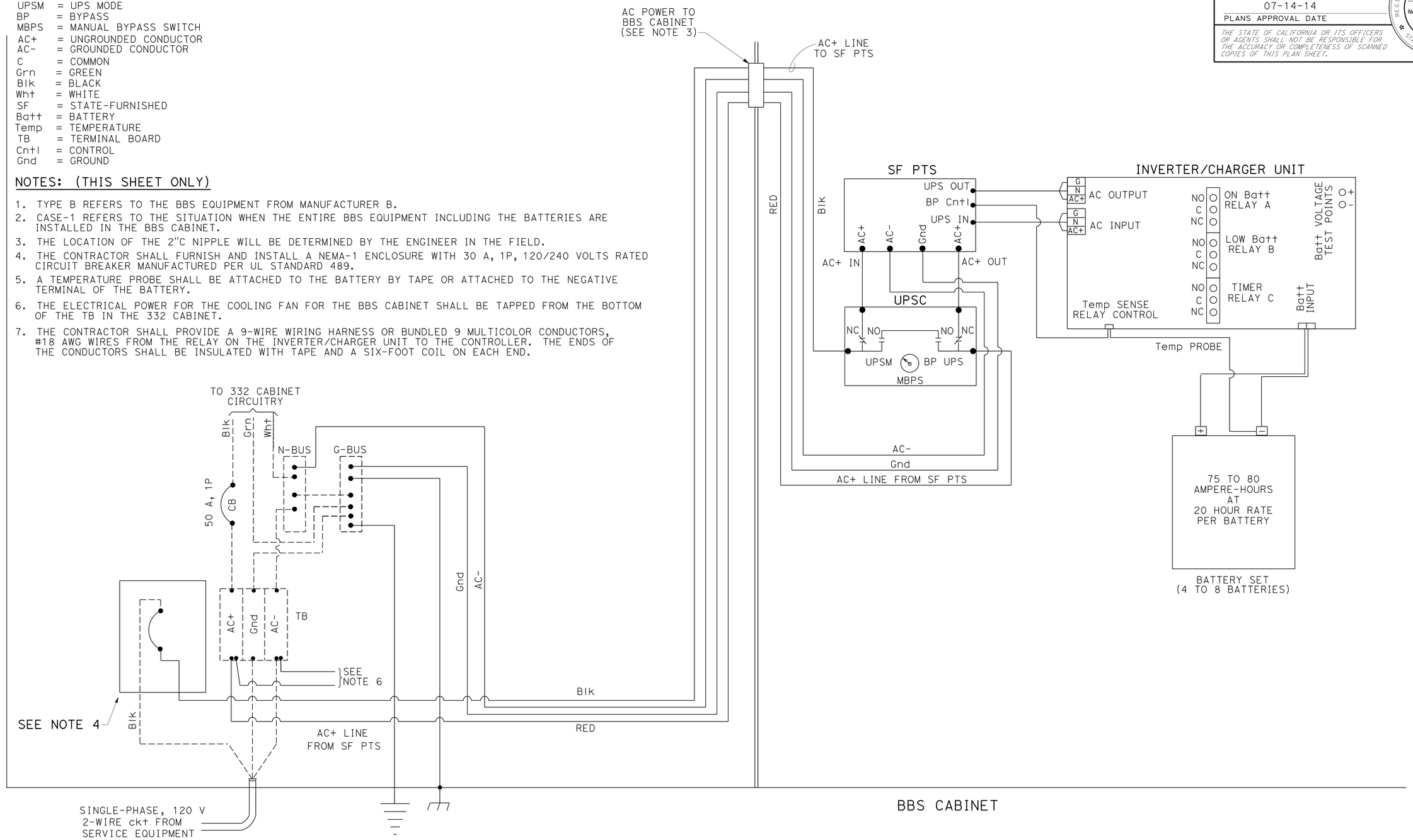

ELECTRICAL DETAILS

APPROVED FOR ELECTRICAL WORK ONLY

NO SCALE

E-4

STATE OF CALIFORNIA - DEPARTMENT OF TRANSPORTATION
Caltrans® ELECTRICAL DESIGN B
FUNCTIONAL SUPERVISOR: DAVID A GONZALEZ
CALCULATED-DESIGNED BY: THERESA A. GABIEL
CHECKED BY: JAIME ESTRADA
REVISED BY
DATE REVISED

LAST REVISION 07-10-14 | DATE PLOTTED => 10-JUL-2014 | TIME PLOTTED => 08:02

Dist	COUNTY	ROUTE	POST MILES TOTAL PROJECT	SHEET No.	TOTAL SHEETS
08	RIV	60	R1.6	35	65

Theresa Gabriel 07-10-14
REGISTERED ~~CIVIL~~ ENGINEER DATE

07-14-14
PLANS APPROVAL DATE

REGISTERED PROFESSIONAL ENGINEER Theresa A. Gabriel No. E15129 Exp. 6-30-16 ELECT STATE OF CALIFORNIA

THE STATE OF CALIFORNIA OR ITS OFFICERS OR AGENTS SHALL NOT BE RESPONSIBLE FOR THE ACCURACY OR COMPLETENESS OF SCANNED COPIES OF THIS PLAN SHEET.

LEGEND: (THIS SHEET ONLY)

PTS = POWER TRANSFER SWITCH
UPS = UNINTERRUPTIBLE POWER SUPPLY
UPSC = UNINTERRUPTIBLE POWER SUPPLY CONTROLLER
UPSM = UPS MODE
BP = BYPASS
MBPS = MANUAL BYPASS SWITCH
AC+ = UNGROUNDED CONDUCTOR
AC- = GROUNDED CONDUCTOR
C = COMMON
Grn = GREEN
Blk = BLACK
Wht = WHITE
SF = STATE-FURNISHED
TB = TERMINAL BOARD
Cntl = CONTROL
Gnd = GROUND
Temp = TEMPERATURE
Batt = BATTERY

NOTES: (THIS SHEET ONLY)

1. TYPE A REFERS TO THE BBS EQUIPMENT FROM MANUFACTURER A.
2. CASE-1 REFERS TO THE SITUATION WHEN THE ENTIRE BBS EQUIPMENT INCLUDING THE BATTERIES ARE INSTALLED IN THE BBS CABINET.
3. THE LOCATION OF THE 2"C NIPPLE WILL BE DETERMINED BY THE ENGINEER IN THE FIELD.
4. THE CONTRACTOR SHALL FURNISH AND INSTALL A NEMA-1 ENCLOSURE WITH 30 A, 1P, 120/240 VOLTS RATED CIRCUIT BREAKER MANUFACTURED PER UL STANDARD 489.
5. A TEMPERATURE PROBE SHALL BE ATTACHED TO THE BATTERY BY TAPE OR ATTACHED TO THE NEGATIVE TERMINAL OF THE BATTERY.
6. THE ELECTRICAL POWER FOR THE COOLING FAN FOR THE BBS CABINET SHALL BE TAPPED FROM THE BOTTOM OF THE TB IN THE 332 CABINET.
7. THE CONTRACTOR SHALL PROVIDE A 9-WIRE WIRING HARNESS OR BUNDLED 9 MULTICOLOR CONDUCTORS, #18 AWG WIRES FROM THE RELAY ON THE INVERTER/CHARGER UNIT TO THE CONTROLLER. THE ENDS OF THE CONDUCTORS SHALL BE INSULATED WITH TAPE AND A SIX-FOOT COIL ON EACH END.

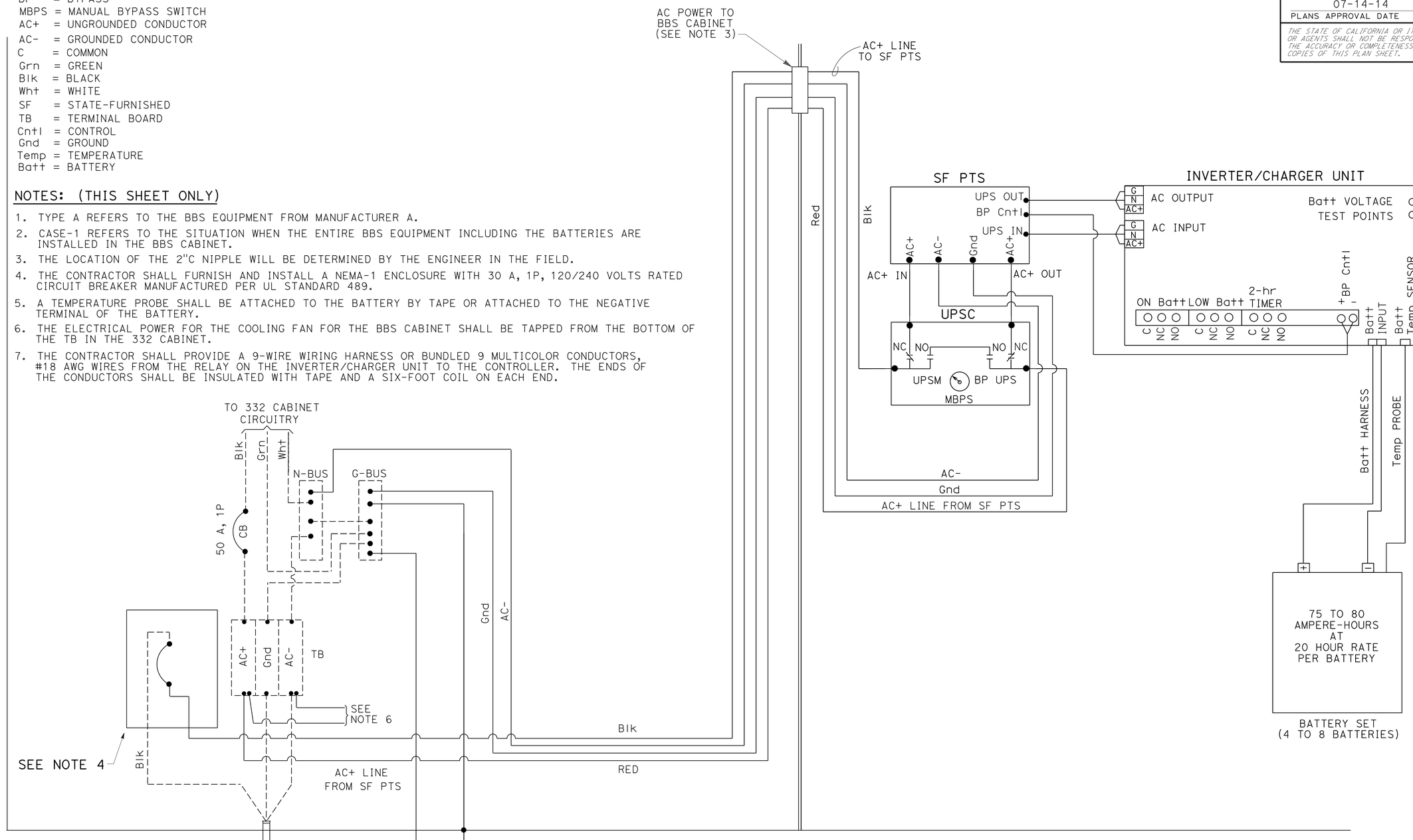

ELECTRICAL DETAILS

APPROVED FOR ELECTRICAL WORK ONLY

NO SCALE

E-5

STATE OF CALIFORNIA - DEPARTMENT OF TRANSPORTATION
Caltrans® ELECTRICAL DESIGN B
FUNCTIONAL SUPERVISOR: DAVID A GONZALEZ
CALCULATED-DESIGNED BY: TERESA A. GABRIEL
CHECKED BY: JAIME ESTRADA
REVISED BY
DATE REVISED

LAST REVISION 07-10-14 | DATE PLOTTED => 10-JUL-2014 | TIME PLOTTED => 08:02

Dist	COUNTY	ROUTE	POST MILES TOTAL PROJECT	SHEET No.	TOTAL SHEETS
08	Riv	60	R1.6	36	65

REGISTERED ELECTRICAL ENGINEER 07-10-14 DATE

07-14-14
PLANS APPROVAL DATE

REGISTERED PROFESSIONAL ENGINEER JAIME ESTRADA No. E 18351 Exp. 06/30/2016 ELECTRICAL STATE OF CALIFORNIA

THE STATE OF CALIFORNIA OR ITS OFFICERS OR AGENTS SHALL NOT BE RESPONSIBLE FOR THE ACCURACY OR COMPLETENESS OF SCANNED COPIES OF THIS PLAN SHEET.

NOTE:

1. THE QUANTITIES ON THIS SHEET ARE NOT A SEPARATE PAY ITEM AND ARE FOR INFORMATION ONLY.
2. FOR COMPLETE RIGHT OF WAY AND ACCURATE ACCESS DATA, SEE RIGHT OF WAY REQUIRED MAP AT DISTRICT OFFICE.
3. EXISTING UTILITY FACILITIES HAVE NOT BEEN PLOTTED ON THESE PLANS.

SIGNAL AND LIGHTING

SHEET No.	1½"C TYPE 3	2 "C TYPE 3	3"C TYPE 3	No. 5 PB	No. 5(T) PB	No. 6 PB	No. 6 (E) PB	No. 6 CONDUCTOR	No. 8 CONDUCTOR	No. 8 (G)	12 CSC CABLE	EVP CABLE	SIC CABLE	VIVIDS POWER CABLE	VIVIDS VIDEO CABLE	TYPE E LOOPS
	LF	LF	LF	EA	EA	EA	EA	LF	LF	LF	LF	LF	LF	LF	LF	EA
E-1	3000	200	300	1	20	1	1	100	800	3000	500	300	3000	300	300	2

SHEET No.	TYPE III-CF SERVICE ENCLOSURE	SERVICE ENCLOSURE FOUNDATION	MODEL 332 CABINET	MODEL 332 CABINET FOUNDATION	1A POLES	19-4-100 POLES	24-4-100 POLES	FOUNDATION 1A	STANDARD FOUNDATION CASE 4	BATTERY BACK-UP SYSTEM
	EA	EA	EA	EA	EA	EA	EA	EA	EA	EA
E-1	1	1	1	1	2	1	1	2	2	1

APPROVED FOR ELECTRICAL WORK ONLY

ELETRICAL QUANTITIES

E-6

STATE OF CALIFORNIA - DEPARTMENT OF TRANSPORTATION
Caltrans ELECTRICAL DESIGN B

FUNCTIONAL SUPERVISOR: DAVID A GONZALEZ

CALCULATED-DESIGNED BY: NASIMA HYDER
CHECKED BY: JAIME ESTRADA
REVISED BY
DATE REVISED

LAST REVISION 07-10-14 | DATE PLOTTED => 10-JUL-2014 | TIME PLOTTED => 08:02

M

Maint	MAINTENANCE
Max	MAXIMUM
MB	METAL BEAM
MBB	METAL BEAM BARRIER
MBGR	METAL BEAM GUARD RAILING
Med	MEDIAN
MGS	MIDWEST GUARDRAIL SYSTEM
MH	MANHOLE
Min	MINIMUM
Misc	MISCELLANEOUS
Misc I & S	MISCELLANEOUS IRON AND STEEL
Mkr	MARKER
Mod	MODIFIED,
	MODIFY
Mon	MONUMENT
MP	METAL PLATE
MPGR	METAL PLATE GUARD RAILING
MR	MOVEMENT RATING
MSE	MECHANICALLY STABILIZED EMBANKMENT
Mt	MOUNTAIN, MOUNT
Mtl	MATERIAL
MVP	MAINTENANCE VEHICLE PULLOUT

N

N	NORTH
NB	NORTHBOUND
No.	NUMBER (MUST HAVE PERIOD)
Nos.	NUMBERS (MUST HAVE PERIOD)
NPS	NOMINAL PIPE SIZE
NS	NEAR SIDE
NSP	NEW STANDARD PLAN
NTS	NOT TO SCALE

O

Oblr	OBLITERATE
OC	OVERCROSSING
OD	OUTSIDE DIAMETER
OF	OUTSIDE FACE
OG	ORIGINAL GROUND
OGAC	OPEN GRADED ASPHALT CONCRETE
OGFC	OPEN GRADED FRICTION COURSE
OH	OVERHEAD
OHWM	ORDINARY HIGH WATER MARK
O-O	OUT TO OUT
Opp	OPPOSITE
OSD	OVERSIDE DRAIN

P

P	PAGE
PAP	PERFORATED ALUMINUM PIPE
PB	PULL BOX
PC	POINT OF CURVATURE,
	PRECAST
PCC	POINT OF COMPOUND CURVE,
	PORTLAND CEMENT CONCRETE
PCMS	PORTABLE CHANGEABLE MESSAGE SIGN
PCP	PERFORATED CONCRETE PIPE,
	PRESTRESSED CONCRETE PIPE
PCVC	POINT OF COMPOUND VERTICAL CURVE
PEC	PERMIT TO ENTER AND CONSTRUCT
Ped	PEDESTRIAN
Ped OC	PEDESTRIAN OVERCROSSING
Ped UC	PEDESTRIAN UNDERCROSSING
Perm Mtl	PERMEABLE MATERIAL

P continued

PG	PROFILE GRADE
PI	POINT OF INTERSECTION
PJP	PARTIAL JOINT PENETRATION
Pkwy	PARKWAY
ℙ,PL	PLATE
P/L	PROPERTY LINE
PM	POST MILE,
	TIME FROM NOON TO MIDNIGHT
PN	PAVING NOTCH
POC	POINT OF HORIZONTAL CURVE
POT	POINT OF TANGENT
POVC	POINT OF VERTICAL CURVE
PP	PIPE PILE,
	PLASTIC PIPE,
	POWER POLE
PPL	PREFORMED PERMEABLE LINER
PPP	PERFORATED PLASTIC PIPE
PRC	POINT OF REVERSE CURVE
PRF	PAVEMENT REINFORCING FABRIC
PRVC	POINT OF REVERSE VERTICAL CURVE
PS&E	PLANS, SPECIFICATIONS AND ESTIMATES
PS, P/S	PRESTRESSED
PSP	PERFORATED STEEL PIPE
PT	POINT OF TANGENCY
PVC	POLYVINYL CHLORIDE
Pvmt	PAVEMENT

Q

Qty	QUANTITY

R

R	RADIUS
R & D	REMOVE AND DISPOSE
R & S	REMOVE AND SALVAGE
R/C	RATE OF CHANGE
RCA	REINFORCED CONCRETE ARCH
RCB	REINFORCED CONCRETE BOX
RCP	REINFORCED CONCRETE PIPE
RCPA	REINFORCED CONCRETE PIPE ARCH
Rd	ROAD
Reinf	REINFORCED,
	REINFORCEMENT,
	REINFORCING
Rel	RELOCATE
Repl	REPLACEMENT
Ret	RETAINING
Rev	REVISED, REVISION
Rdwy	ROADWAY
RHMA	RUBBERIZED HOT MIX ASPHALT
Riv	RIVER
RM	ROAD-MIXED
RP	RADIUS POINT,
	REFERENCE POINT
RR	RAILROAD
RSP	ROCK SLOPE PROTECTION,
	REVISED STANDARD PLAN
Rt	RIGHT
Rte	ROUTE
RW	REDWOOD,
	RETAINING WALL
R/W	RIGHT OF WAY
Rwy	RAILWAY

S

S	SOUTH,
	SUPPLEMENT
SAE	STRUCTURE APPROACH EMBANKMENT
Salv	SALVAGE
SAPP	STRUCTURAL ALUMINUM PLATE PIPE
SB	SOUTHBOUND
SC	SAND CUSHION
SCSP	SLOTTED CORRUGATED STEEL PIPE
SD	STORM DRAIN
Sec	SECOND,
	SECTION
Sep	SEPARATION
SG	SUBGRADE
Shld	SHOULDER
Sht	SHEET
Sim	SIMILAR
℄	STATION LINE
SM	SELECTED MATERIAL
Spec	SPECIAL,
	SPECIFICATIONS
SPP	SLOTTED PLASTIC PIPE
SS	SLOPE STAKE
SSBM	STRAP AND SADDLE BRACKET METHOD
SSD	STRUCTURAL SECTION DRAIN
SSPA	STRUCTURAL STEEL PLATE ARCH
SSPP	STRUCTURAL STEEL PLATE PIPE
SSPPA	STRUCTURAL STEEL PLATE PIPE ARCH
SSRP	STEEL SPIRAL RIB PIPE
St	STREET
Sta	STATION
STBB	SINGLE THRIE BEAM BARRIER
Std	STANDARD
Str	STRUCTURE
Surf	SURFACING
SW	SIDEWALK,
	SOUND WALL
Swr	SEWER
Sym	SYMMETRICAL
S4S	SURFACE 4 SIDES

T

T	SEMI-TANGENT
Tan	TANGENT
TBB	THRIE BEAM BARRIER
Tbr	TIMBER
TC	TOP OF CURB
TCB	TRAFFIC CONTROL BOX
TCE	TEMPORARY CONSTRUCTION EASEMENT
Tel	TELEPHONE
Temp	TEMPORARY
TG	TOP OF GRADE
Tot	TOTAL
TP	TELEPHONE POLE
TPB	TREATED PERMEABLE BASE
TPM	TREATED PERMEABLE MATERIAL
Trans	TRANSITION

T continued

TS	TRANSVERSE,
	TRAFFIC SIGNAL,
	TUBULAR STEEL
Typ	TYPICAL

U

UC	UNDERCROSSING
UD	UNDERDRAIN
UG	UNDERGROUND
UON	UNLESS OTHERWISE NOTED
UP	UNDERPASS

V

V	VALVE,
	DESIGN SPEED
Var	VARIABLE,
	VARIES
VC	VERTICAL CURVE
VCP	VITRIFIED CLAY PIPE
Vert	VERTICAL
Via	VIADUCT
Vol	VOLUME

W

W	WEST,
	WIDTH
WB	WESTBOUND
WH	WEEP HOLE
WM	WIRE MESH
WS	WATER SURFACE
WSP	WELDED STEEL PIPE
Wt	WEIGHT
WV	WATER VALVE
WW	WINGWALL
WWLOL	WINGWALL LAYOUT LINE

X

X Sec	CROSS SECTION
Xing	CROSSING

Y

Yr	YEAR
Yrs	YEARS

Dist	COUNTY	ROUTE	POST MILES TOTAL PROJECT	SHEET No.	TOTAL SHEETS
08	Riv	60	R1.6	37	65

Grace M. Tsushima
REGISTERED CIVIL ENGINEER

July 19, 2013
PLANS APPROVAL DATE

REGISTERED PROFESSIONAL ENGINEER Grace M. Tsushima No. C49814 Exp. 9-30-14 CIVIL STATE OF CALIFORNIA

THE STATE OF CALIFORNIA OR ITS OFFICERS OR AGENTS SHALL NOT BE RESPONSIBLE FOR THE ACCURACY OR COMPLETENESS OF SCANNED COPIES OF THIS PLAN SHEET.

TO ACCOMPANY PLANS DATED 07-14-14

UNIT OF MEASUREMENT SYMBOLS:

Some of the symbols used in the project plan quantity tables and in the Bid Item List are:

TABLE A

SYMBOL USED	DEFINITIONS
ACRE	ACRE
CF	CUBIC FOOT
CY	CUBIC YARD
EA	EACH
GAL	GALLON
LB	POUND
LF	LINEAR FOOT
SQFT	SQUARE FOOT
SQYD	SQUARE YARD
STA	100 FEET
TAB	TABLET
TON	2,000 POUNDS

Some of the symbols used in the plans other than in the project plan quantity tables are:

TABLE B

SYMBOL USED	DEFINITIONS
ksi	KIPS PER SQUARE INCH
ksf	KIPS PER SQUARE FOOT
psi	POUNDS PER SQUARE INCH
psf	POUNDS PER SQUARE FOOT
lb/ft^3, pcf	POUNDS PER CUBIC FOOT
tsf	TONS PER SQUARE FOOT
mph, MPH *	MILES PER HOUR
ø	NOMINAL DIAMETER
oz	OUNCE
lb	POUND
kip	1,000 POUNDS
cal	CALORIE
ft	FOOT OR FEET
gal	GALLON

* For use on a sign panel only

STATE OF CALIFORNIA
DEPARTMENT OF TRANSPORTATION

ABBREVIATIONS (SHEET 2 OF 2)

NO SCALE

RSP A10B DATED JULY 19, 2013 SUPERSEDES STANDARD PLAN A10B DATED MAY 20, 2011 - PAGE 2 OF THE STANDARD PLANS BOOK DATED 2010.

REVISED STANDARD PLAN RSP A10B

2010 REVISED STANDARD PLAN RSP A10B

6-7-13

Dist	COUNTY	ROUTE	POST MILES TOTAL PROJECT	SHEET No.	TOTAL SHEETS
08	Riv	60	R1.6	38	65

REGISTERED CIVIL ENGINEER

July 19, 2013
PLANS APPROVAL DATE

REGISTERED PROFESSIONAL ENGINEER Roberta L. McLaughlin No. C40375 Exp. 3-31-15 CIVIL STATE OF CALIFORNIA

THE STATE OF CALIFORNIA OR ITS OFFICERS OR AGENTS SHALL NOT BE RESPONSIBLE FOR THE ACCURACY OR COMPLETENESS OF SCANNED COPIES OF THIS PLAN SHEET.

TO ACCOMPANY PLANS DATED 07-14-14

EXIT RAMP NEUTRAL AREA (GORE) TREATMENT

DETAIL 36

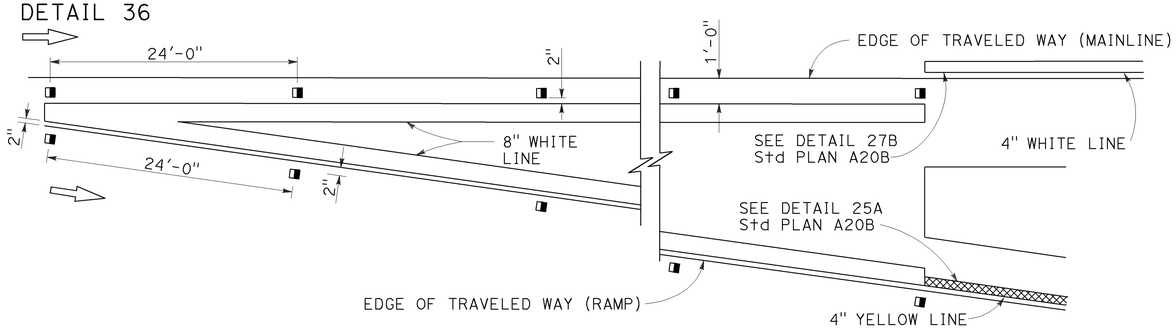

ENTRANCE RAMP NEUTRAL AREA (MERGE) TREATMENT

DETAIL 36A

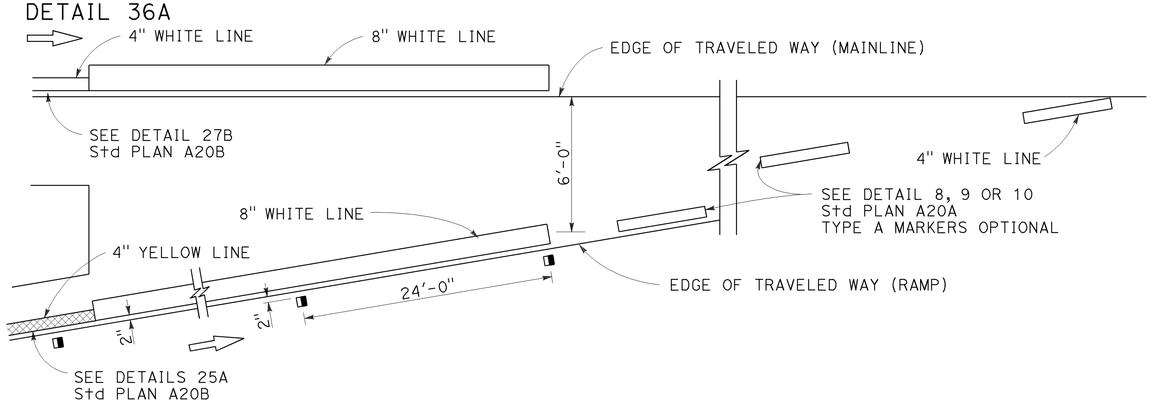

ENTRANCE RAMP NEUTRAL AREA (ACCELERATION LANE) TREATMENT

DETAIL 36B

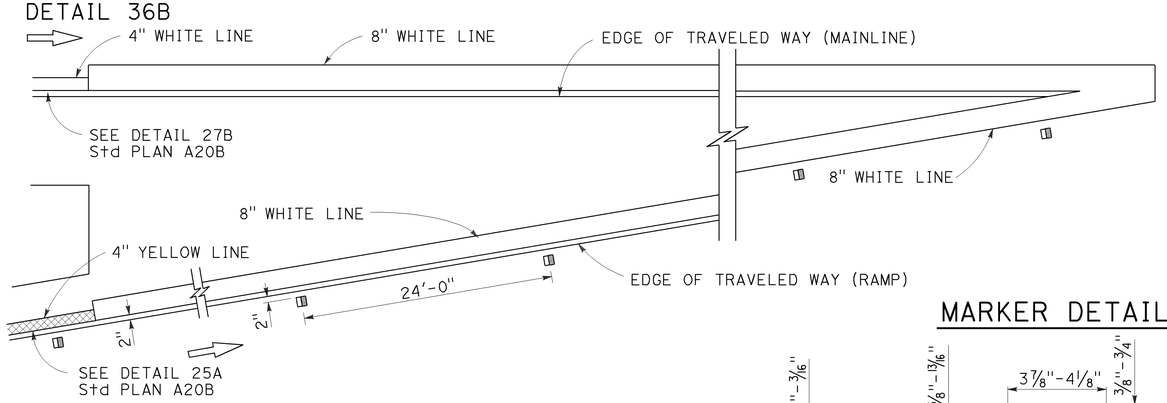

LANE DROP AT EXIT RAMPS

DETAIL 37

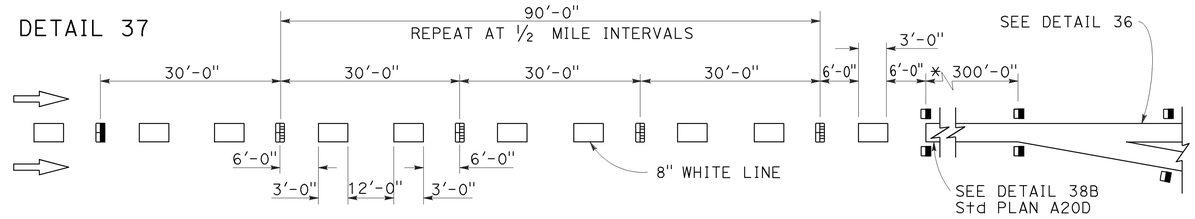

DETAIL 37A

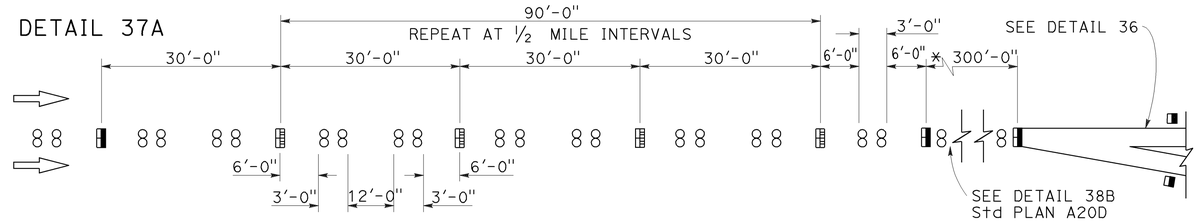

* The solid channelizing line shown may be omitted on short auxiliary lanes where weaving length is critical.

LANE DROP AT INTERSECTIONS

DETAIL 37B

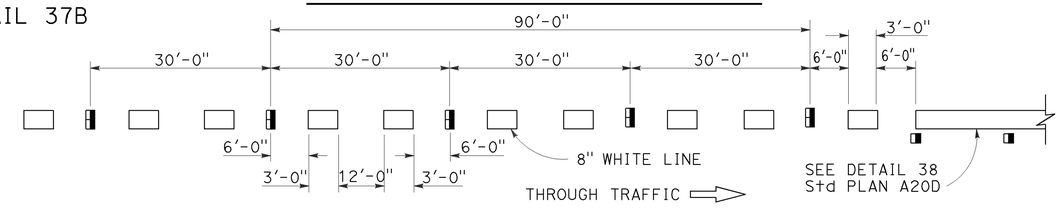

DETAIL 37C

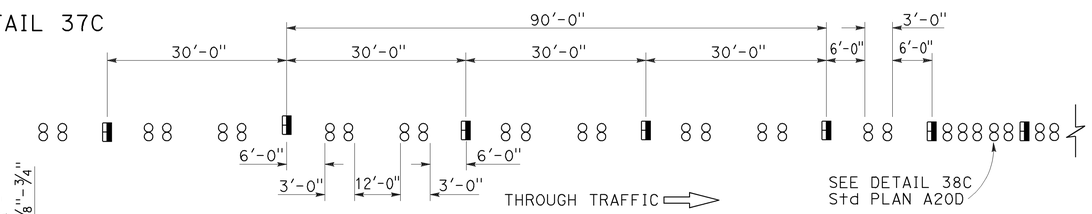

MARKER DETAILS

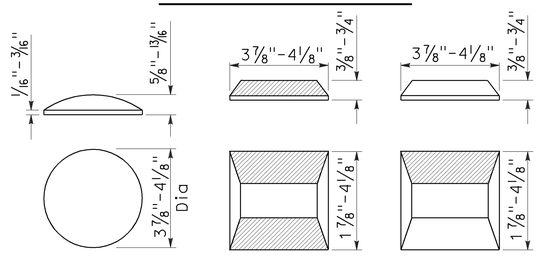

RETROREFLECTIVE FACE

LEGEND:

MARKERS

- ○ TYPE A WHITE NON-REFLECTIVE
- ⊟ TYPE C RED-CLEAR RETROREFLECTIVE
- ◨ TYPE G ONE-WAY CLEAR RETROREFLECTIVE

STATE OF CALIFORNIA
DEPARTMENT OF TRANSPORTATION

PAVEMENT MARKERS AND TRAFFIC LINE TYPICAL DETAILS

NO SCALE

RSP A20C DATED JULY 19, 2013 SUPERSEDES STANDARD PLAN A20C DATED MAY 20, 2011 - PAGE 11 OF THE STANDARD PLANS BOOK DATED 2010.

REVISED STANDARD PLAN RSP A20C

2010 REVISED STANDARD PLAN RSP A20C

4-29-13

Dist	COUNTY	ROUTE	POST MILES TOTAL PROJECT	SHEET No.	TOTAL SHEETS
08	Riv	60	R1.6	39	65

REGISTERED CIVIL ENGINEER

April 20, 2012
PLANS APPROVAL DATE

REGISTERED PROFESSIONAL ENGINEER
Roberta L. McLaughlin
No. C40375
Exp. 3-31-13
CIVIL
STATE OF CALIFORNIA

THE STATE OF CALIFORNIA OR ITS OFFICERS OR AGENTS SHALL NOT BE RESPONSIBLE FOR THE ACCURACY OR COMPLETENESS OF SCANNED COPIES OF THIS PLAN SHEET.

TO ACCOMPANY PLANS DATED 07-14-14

2010 REVISED STANDARD PLAN RSP A24A

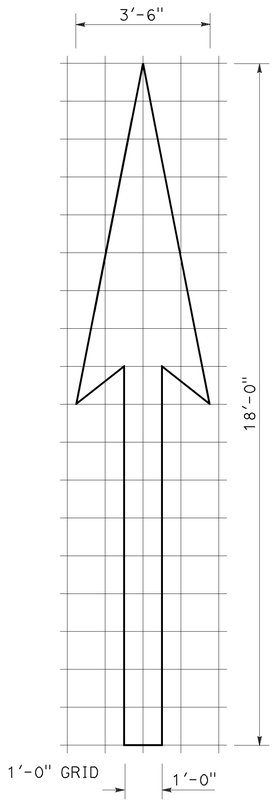

A=25 ft^2

TYPE I 18'-0" ARROW

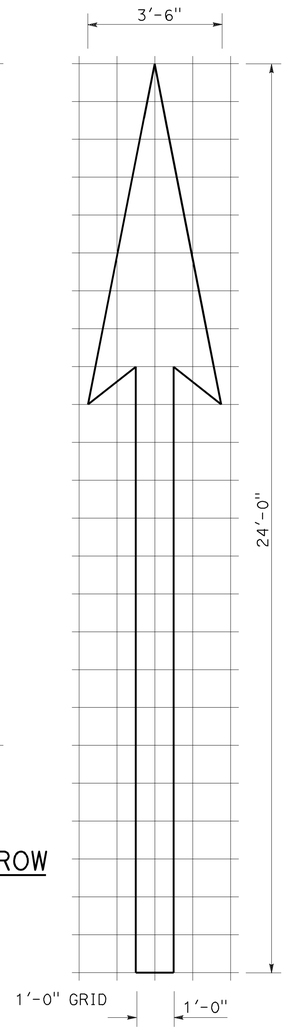

A=31 ft^2

TYPE I 24'-0" ARROW

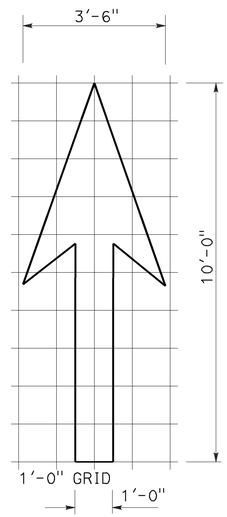

A=14 ft^2

TYPE I 10'-0" ARROW

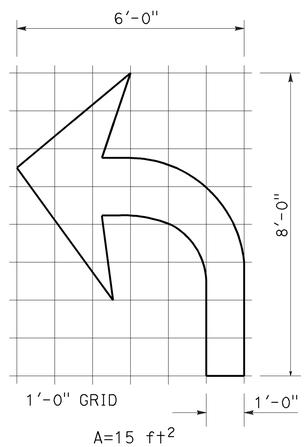

A=15 ft^2

TYPE IV (L) ARROW

(For Type IV (R) arrow, use mirror image)

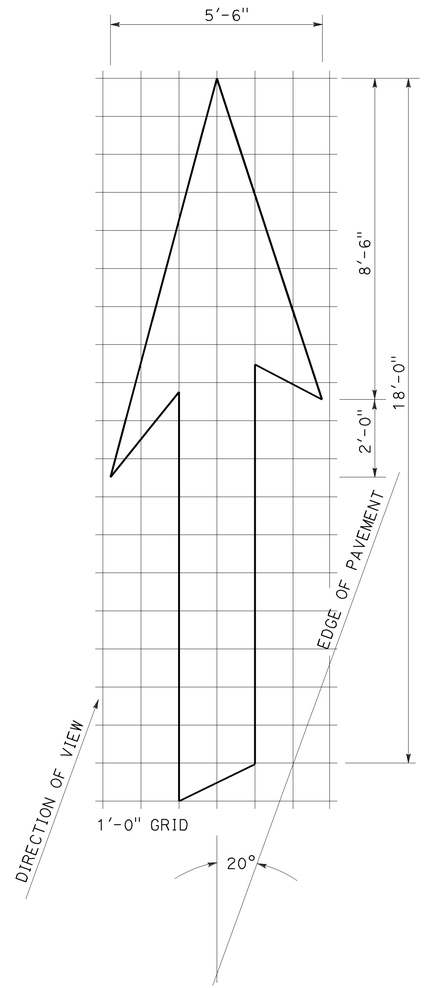

A=42 ft^2

TYPE VI ARROW

Right lane drop arrow
(For left lane, use mirror image)

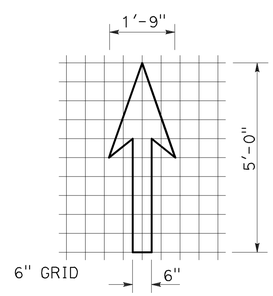

A=3.5 ft^2

BIKE LANE ARROW

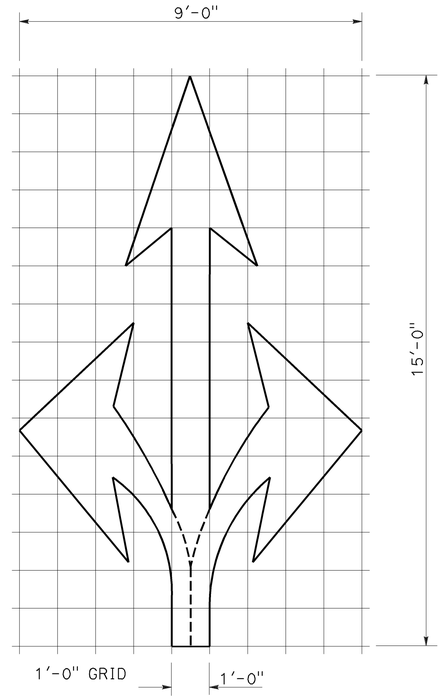

A=36 ft^2

TYPE VIII ARROW

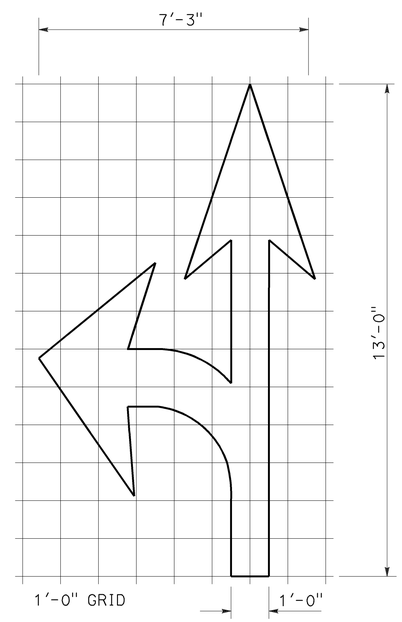

A=27 ft^2

TYPE VII (L) ARROW

(For Type VII (R) arrow, use mirror image)

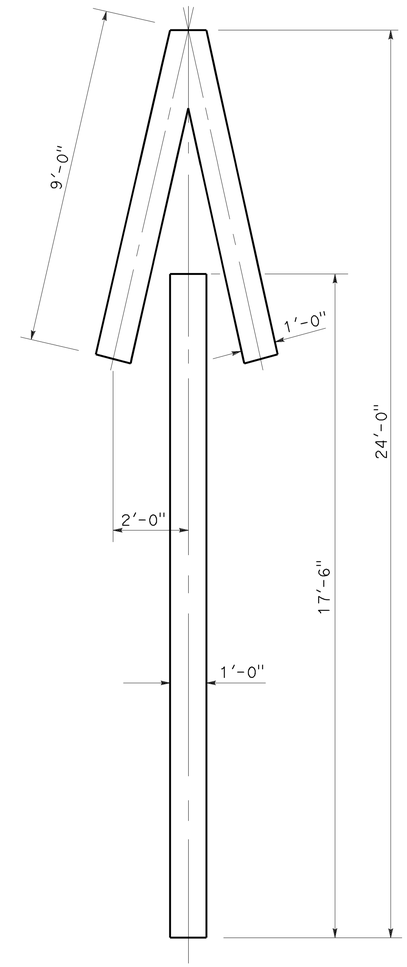

A=33 ft^2

TYPE V ARROW

NOTE:
Minor variations in dimensions may be accepted by the Engineer.

STATE OF CALIFORNIA
DEPARTMENT OF TRANSPORTATION

PAVEMENT MARKINGS ARROWS

NO SCALE

RSP A24A DATED APRIL 20, 2012 SUPERSEDES STANDARD PLAN A24A DATED MAY 20, 2011 - PAGE 13 OF THE STANDARD PLANS BOOK DATED 2010.

REVISED STANDARD PLAN RSP A24A

3-14-12

Dist	COUNTY	ROUTE	POST MILES TOTAL PROJECT	SHEET No.	TOTAL SHEETS
08	Riv	60	R1.6	40	65

REGISTERED CIVIL ENGINEER

July 20, 2012
PLANS APPROVAL DATE

REGISTERED PROFESSIONAL ENGINEER
Roberta L. McLaughlin
No. C40375
Exp. 3-31-13
CIVIL
STATE OF CALIFORNIA

THE STATE OF CALIFORNIA OR ITS OFFICERS OR AGENTS SHALL NOT BE RESPONSIBLE FOR THE ACCURACY OR COMPLETENESS OF SCANNED COPIES OF THIS PLAN SHEET.

TO ACCOMPANY PLANS DATED 07-14-14

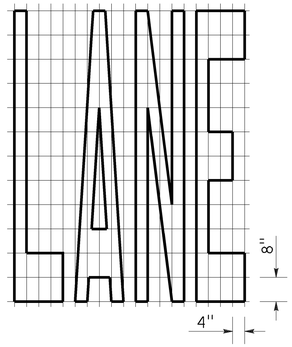

A=24 ft^2

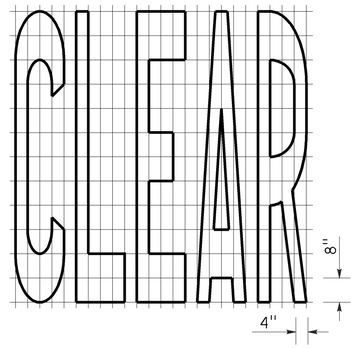

A=27 ft^2

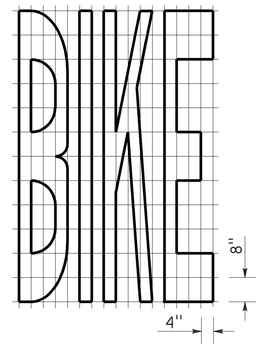

A=21 ft^2

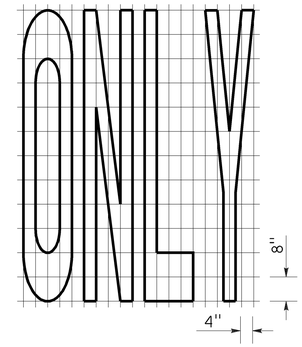

A=22 ft^2

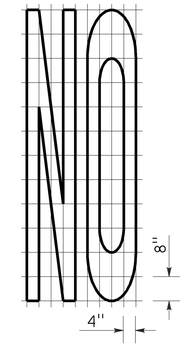

A=14 ft^2

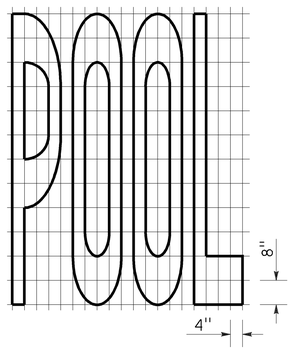

A=23 ft^2

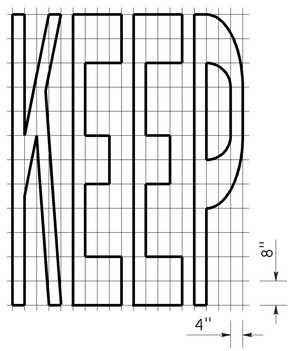

A=24 ft^2

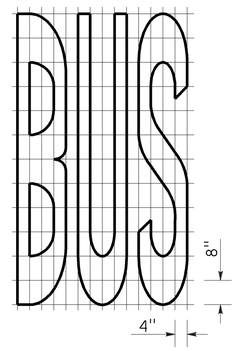

A=20 ft^2

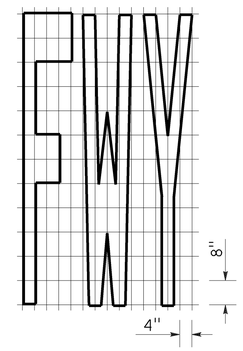

A=16 ft^2

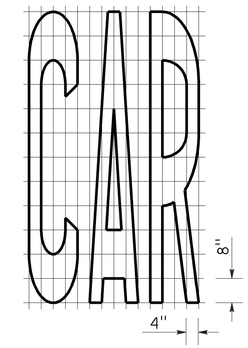

A=17 ft^2

WORD MARKINGS			
ITEM	ft^2	ITEM	ft^2
LANE	24	NO	14
POOL	23	BIKE	21
CAR	17	BUS	20
CLEAR	27	ONLY	22
KEEP	24	FWY	16

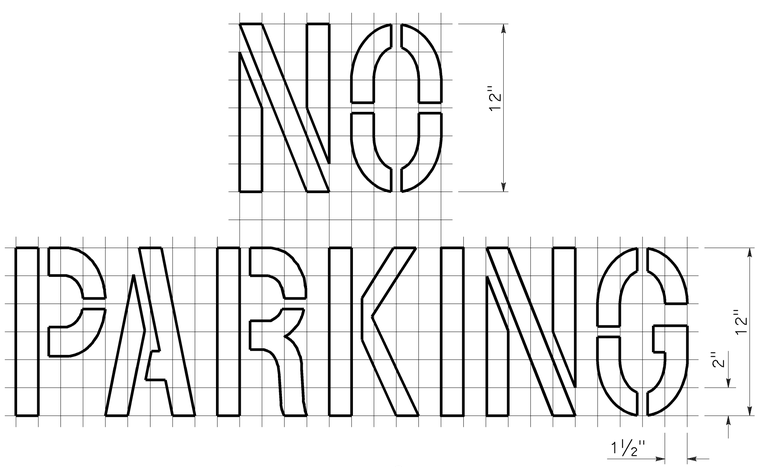

A=2 ft^2
See Notes 6 and 7

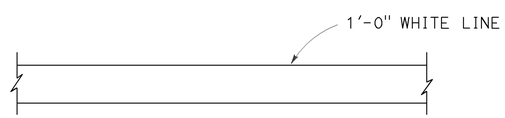

LIMIT LINE (STOP LINE)

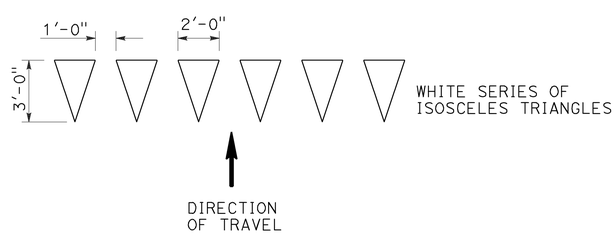

YIELD LINE

NOTES:

1. If a message consists of more than one word, it should read "UP", i.e., the first word should be nearest the driver.
2. The space between words should be at least four times the height of the characters for low speed roads, but not more than ten times the height of the characters. The space may be reduced appropriately where there is limited space because of local conditions.
3. Minor variations in dimensions may be accepted by the Engineer.
4. Portions of a letter, number or symbol may be separated by connecting segments not to exceed 2" in width.
5. The words "NO PARKING" pavement marking is to be used for parking facilities. For typical locations of markings, see Standard Plans A90A and A90B.
6. The words "NO PARKING", shall be painted in white letters no less than 1'-0" high on a contrasting background and located so that it is visible to traffic enforcement officials.

STATE OF CALIFORNIA
DEPARTMENT OF TRANSPORTATION

PAVEMENT MARKINGS WORDS, LIMIT AND YIELD LINES

NO SCALE

RSP A24E DATED JULY 20, 2012 SUPERSEDES STANDARD PLAN A24E
DATED MAY 20, 2011 - PAGE 17 OF THE STANDARD PLANS BOOK DATED 2010.

REVISED STANDARD PLAN RSP A24E

2010 REVISED STANDARD PLAN RSP A24E

6-12-12

Dist	COUNTY	ROUTE	POST MILES TOTAL PROJECT	SHEET No.	TOTAL SHEETS
08	Riv	60	R1.6	41	65

REGISTERED CIVIL ENGINEER

July 19, 2013
PLANS APPROVAL DATE

REGISTERED PROFESSIONAL ENGINEER Michael Janzen No. 44788 Exp. 03-31-14 CIVIL STATE OF CALIFORNIA

THE STATE OF CALIFORNIA OR ITS OFFICERS OR AGENTS SHALL NOT BE RESPONSIBLE FOR THE ACCURACY OR COMPLETENESS OF SCANNED COPIES OF THIS PLAN SHEET.

TO ACCOMPANY PLANS DATED 07-14-14

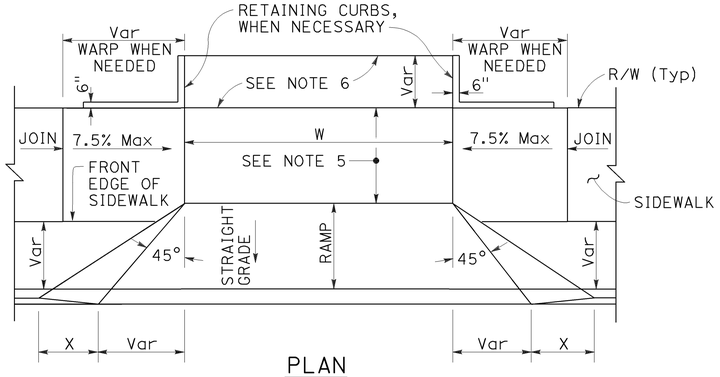

PLAN

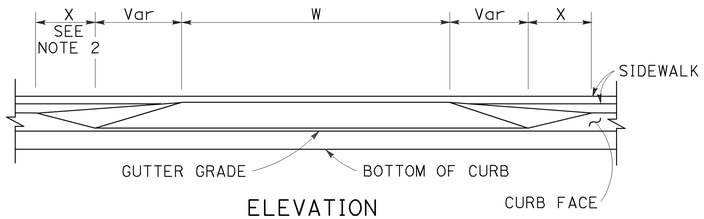

ELEVATION

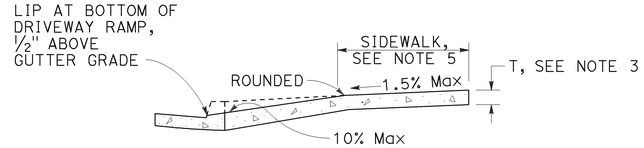

CASE A

Typical driveway, sidewalk not depressed

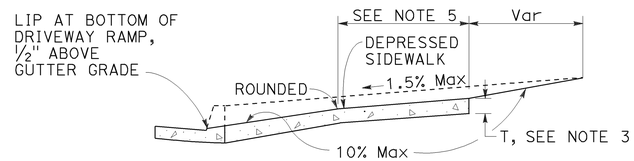

CASE B

Driveway with depressed sidewalk

SECTIONS

DRIVEWAYS

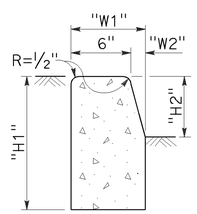

TYPE A1 CURBS

See Table A

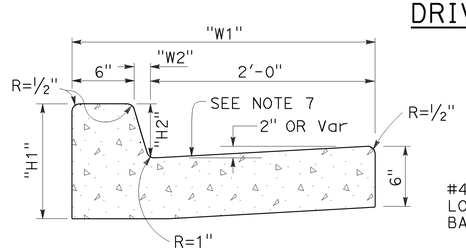

TYPE A2 CURBS

See Table A

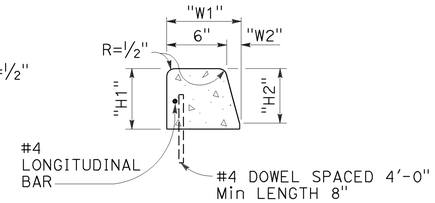

TYPE A3 CURBS

Superimposed on existing pavement
See Table A

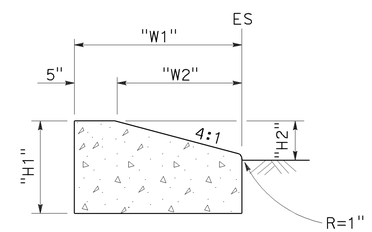

TYPE D CURBS

See Table A

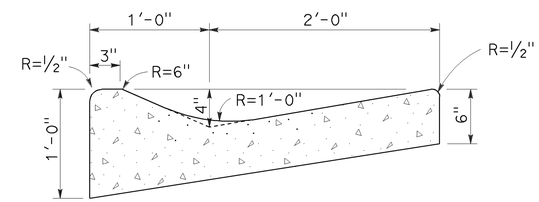

TYPE E CURB

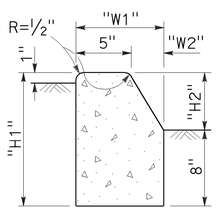

TYPE B1 CURBS

See Table A

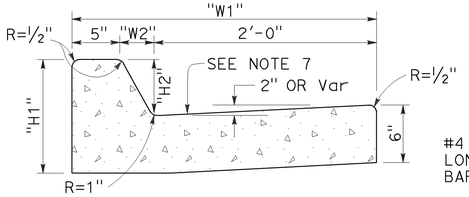

TYPE B2 CURBS

See Table A

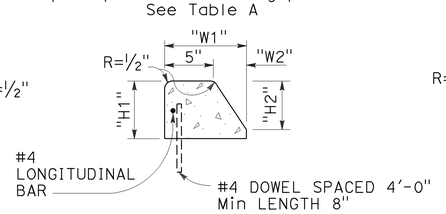

TYPE B3 CURBS

Superimposed on existing pavement
See Table A

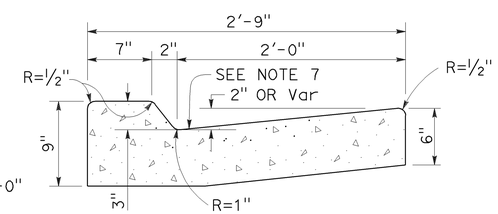

TYPE B4 CURBS

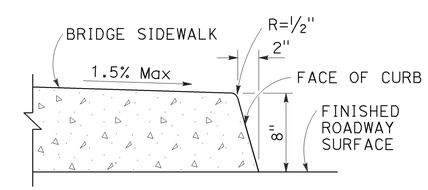

TYPE H CURB

On Bridges

CURBS

TABLE A

CURB TYPE	DIMENSIONS			
	"H1"	"H2"	"W1"	"W2"
A1-6	1'-2"	6"	7½"	1½"
A1-8	1'-4"	8"	8"	2"
A2-6	1'-0"	6"	2'-7½"	1½"
A2-8	1'-2"	8"	2'-8"	2"
A3-6	6"	5"	7¼"	1¼"
A3-8	8"	7"	7¾"	1¾"
B1-4	1'-0"	4"	7½"	2½"
B1-6	1'-2"	6"	9"	4"
B2-4	10"	4"	2'-7½"	2½"
B2-6	1'-0"	6"	2'-9"	4"
B3-4	4"	3"	7"	2"
B3-6	6"	5"	8½"	3½"
D-4	10"	4"	1'-6"	1'-1"
D-6	1'-0"	6"	2'-2"	1'-9"

CURB QUANTITIES

TYPE	CUBIC YARDS PER LINEAR FOOT
A1-6	0.02585
A1-8	0.03084
A2-6	0.05903
A2-8	0.06379
A3-6	0.01036
A3-8	0.01435
B1-4	0.02185
B1-6	0.02930
B2-4	0.05515
B2-6	0.06171
B3-4	0.00641
B3-6	0.01074
B4	0.05709
D-4	0.04083
D-6	0.06804
E	0.06661

NOTES:

1. Case A driveway section typically applies.
2. X=3'-0" except for curb heights over 10" where 4:1 slopes shall be used on curb slope.
3. Sidewalk and ramp thickness "T" at driveway shall be 4" for residental and 6" for commercial.
4. Difference in slope of the driveway ramp and the slope of a line between the gutter and a point on the roadway 5'-0" from gutter line shall not exceed 15%. Reduce driveway ramp slope, not gutter slope, where required.
5. Minimum width of clear passageway for sidewalk shall be 4'-2".
6. Retaining curbs and acquisition of construction easement may be necessary for narrow sidewalks or curb heights in excess of 6".
7. Across the pedestrian route at curb ramp locations, the gutter pan slope shall not exceed 1" of depth for each 2'-0" of width.

STATE OF CALIFORNIA
DEPARTMENT OF TRANSPORTATION

CURBS AND DRIVEWAYS

NO SCALE

RSP A87A DATED JULY 19, 2013 SUPERSEDES STANDARD PLAN A87A
DATED MAY 20, 2011 - PAGE 119 OF THE STANDARD PLANS BOOK DATED 2010.

REVISED STANDARD PLAN RSP A87A

2010 REVISED STANDARD PLAN RSP A87A

7-8-13

TO ACCOMPANY PLANS DATED 07-14-14

Dist	COUNTY	ROUTE	POST MILES TOTAL PROJECT	SHEET No.	TOTAL SHEETS
08	Riv	60	R1.6	42	65

Glenn DeCou
REGISTERED CIVIL ENGINEER

October 19, 2012
PLANS APPROVAL DATE

REGISTERED PROFESSIONAL ENGINEER Glenn DeCou No. C34547 Exp. 9-30-13 CIVIL STATE OF CALIFORNIA

THE STATE OF CALIFORNIA OR ITS OFFICERS OR AGENTS SHALL NOT BE RESPONSIBLE FOR THE ACCURACY OR COMPLETENESS OF SCANNED COPIES OF THIS PLAN SHEET.

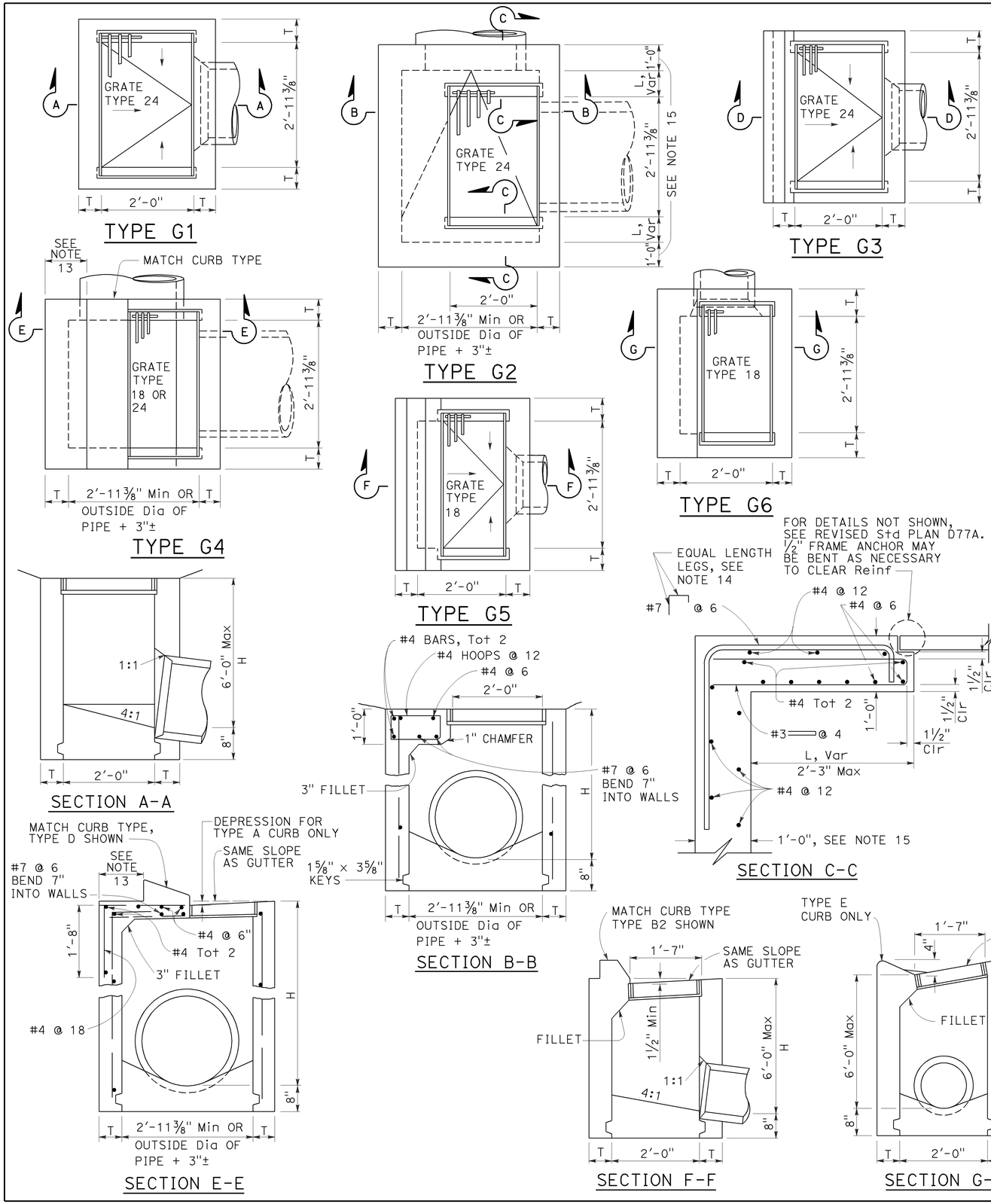

NOTES:

1. "H" is the difference in elevation between the outlet pipe flow line and the normal gutter grade line undepressed.
2. For "T" wall thickness, see Table A below.
3. Wall reinforcing not required when "H" is 8'-0" or less and the unsupported width or length is 7'-0" or less. Walls exceeding these limits shall be reinforced with #4 bars @ 1'-6" ± centers placed 1½" clear to inside of box unless otherwise shown.
4. Inlet bottom reinforcing not required. See Standard Plan D74C for alternative reinforced bottom and alternative half round bottom.
5. Steps-None required where "H" is less than 2'-6". Where "H" is 2'-6" or more, install steps with lowest rung 1'-0" above the floor and highest rung not more than 6" below top of inlet. The distance between steps shall not exceed 1'-0" and shall be uniform throughout the length of the wall. Place steps in the wall without an opening. Steps inserts may be substituted for the bar steps. Step inserts shall comply with State Industrial Safety requirements. See Standard Plan D74C for step details.
6. Details shown apply to both metal and concrete pipe.
7. Pipe(s) can be placed in any wall.
8. Curb section shall match adjacent curb.
9. Basin floors shall have wood trowel finish and a minimum slope of 12:3 from all directions toward outlet pipe.
10. Set inlet so that grate bars are parallel to direction of principal surface flow.
11. See Revised Standard Plans D77A and D77B for grate and frame details and weights of miscellaneous iron and steel.
12. See Standard Plan D78A for gutter depression details.
13. This dimenison will vary with different grates, curbs types, box width and wall thickness.
14. Bar may be rotated as necessary to clear opening. Where "L" is 6" or less, bar may be omitted.
15. Where "L" is 6" or less, wall thickness shall be as shown in Table A.
16. Cast-in-place inlets to be formed around all pipes/stubs intersecting the inlet, and concrete poured in one continuous operation. Precast inlets shall have mortared connections conforming to details for Type GCP Inlet shown on Standard Plan D75B. See Standard Specifications for mortar composition.

TABLE A

CONCRETE QUANTITIES				
TYPE	H=3'-0" TO 8'-0" (T=6")		H=8'-1" TO 20'-0" (T=8")	
	H=3'-0" (CY)	ADDITIONAL PCC PER FOOT (CY)	H=8'-1" (CY)	ADDITIONAL PCC PER FOOT (CY)
G-1	0.95	0.220	See Note A	SEE NOTE A
G-2*	1.31	0.255	3.50	0.357
G-3	1.03	0.220	See Note A	SEE NOTE A
G-4* (TYPE 24)	1.27	0.255	3.48	0.357
G-4* (TYPE 18)	1.30	0.255	3.50	0.357
G-5	1.02	0.220	SEE NOTE A	SEE NOTE A
G-6	1.04	0.220	SEE NOTE A	SEE NOTE A

TABLE BASED ON 8" FLOOR SLAB. NO DEDUCTIONS ARE TO BE MADE TO THESE QUANTITIES BECAUSE OF PIPE OPENINGS, DIFFERENT FLOOR ALTERNATIVES OR DIFFERENT CURB TYPES. * QUANTITIES FOR TYPE G-2 AND G-4 INLETS BASED ON THE MINIMUM INTERIOR DIMENSIONS.

NOTE A:

Maximum allowable height 6'-0".

STATE OF CALIFORNIA
DEPARTMENT OF TRANSPORTATION

DRAINAGE INLETS

NO SCALE

RSP D73 DATED OCTOBER 19, 2012 SUPERSEDES STANDARD PLAN D73 DATED MAY 20, 2011 - PAGE 156 OF THE STANDARD PLANS BOOK DATED 2010.

REVISED STANDARD PLAN RSP D73

2010 REVISED STANDARD PLAN RSP D73

7-19-12

Dist	COUNTY	ROUTE	POST MILES TOTAL PROJECT	SHEET No.	TOTAL SHEETS
08	Riv	60	R1.6	43	65

Theresa Gabriel
REGISTERED ELECTRICAL ENGINEER

July 19, 2013
PLANS APPROVAL DATE

REGISTERED PROFESSIONAL ENGINEER Theresa Aziz Gabriel No. E15129 Exp. 6-30-14 ELECTRICAL STATE OF CALIFORNIA

THE STATE OF CALIFORNIA OR ITS OFFICERS OR AGENTS SHALL NOT BE RESPONSIBLE FOR THE ACCURACY OR COMPLETENESS OF SCANNED COPIES OF THIS PLAN SHEET.

TO ACCOMPANY PLANS DATED 07-14-14

LEGEND:

AB	ABANDON. IF APPLIED TO CONDUIT, REMOVE CONDUCTORS
BC	INSTALL PULL BOX IN EXISTING CONDUIT RUN
BP	PEDESTRIAN BARRICADE, TYPE AS INDICATED ON PLAN
CB	INSTALL CONDUIT INTO EXISTING PULL BOX
CC	CONNECT NEW AND EXISTING CONDUIT. REMOVE EXISTING CONDUCTORS AND INSTALL CONDUCTORS AS INDICATED
CF	CONDUIT TO REMAIN FOR FUTURE USE. REMOVE CONDUCTORS. INSTALL PULL TAPE
DH	DETECTOR HANDHOLE
FA	FOUNDATION TO BE ABANDONED
IS	INSTALL SIGN ON SIGNAL MAST ARM
NS	NO SLIP BASE ON STANDARD
PEC	PHOTOELECTRIC CONTROL
PEU	PHOTOELECTRIC UNIT
RC	EQUIPMENT OR MATERIAL TO BE REMOVED AND BECOME THE PROPERTY OF THE CONTRACTOR
RE	REMOVE ELECTROLIER, FUSES AND BALLAST. TAPE ENDS OF CONDUCTORS
RL	RELOCATE EQUIPMENT
RR	REMOVE AND REUSE EQUIPMENT
RS	REMOVE AND SALVAGE EQUIPMENT
SC	SPLICE NEW TO EXISTING CONDUCTORS
SD	SERVICE DISCONNECT
TSP	TELEPHONE SERVICE POINT

ABBREVIATIONS

APS	ACCESSIBLE PEDESTRIAN SIGNAL
BBS	BATTERY BACKUP SYSTEM
BC	BOLT CIRCLE
BPB	BICYCLE PUSH BUTTON
C	CONDUIT
CB	CIRCUIT BREAKER
CCTV	CLOSED CIRCUIT TELEVISION
Ckt	CIRCUIT
CMS	CHANGEABLE MESSAGE SIGN
Ctid	CALTRANS IDENTIFICATION
Comm	COMMUNICATION
DLC	LOOP DETECTOR LEAD-IN CABLE
EMS	EXTINGUISHABLE MESSAGE SIGN
EVUC	EMERGENCY VEHICLE UNIT CABLE
EVUD	EMERGENCY VEHICLE UNIT DETECTOR
FB	FLASHING BEACON
FBCA	FLASHING BEACON CONTROL ASSEMBLY
FBS	FLASHING BEACON WITH SLIP BASE
FO	FIBER OPTIC
G	EQUIPMENT GROUNDING CONDUCTOR
GB	GROUND BUS
GFCI	GROUND FAULT CIRCUIT INTERRUPTER
HAR	HIGHWAY ADVISORY RADIO
Hex	HEXAGONAL
HPS	HIGH PRESSURE SODIUM
IISNS	INTERNALLY ILLUMINATED STREET NAME SIGN
ISL	INDUCTION SIGN LIGHTING
LED	LIGHT EMITTING DIODE
LMA	LUMINAIRE MAST ARM
LPS	LOW PRESSURE SODIUM
Ltg	LIGHTING
Lum	LUMINAIRE
M	METERED
MAT	MAST ARM MOUNTING TOP ATTACHMENT
MAS	MAST ARM MOUNTING SIDE ATTACHMENT
M/M	MULTIPLE TO MULTIPLE TRANSFORMER
Mtg	MOUNTING
MV	MERCURY VAPOR LIGHTING FIXTURE
MVDS	MICROWAVE VEHICLE DETECTION SYSTEM
N	NEUTRAL (GROUNDED CONDUCTOR)
NB	NEUTRAL BUS
NC	NORMALLY CLOSE
NO	NORMALLY OPEN
P	CIRCUIT BREAKER'S POLE
PB	PULL BOX
PBA	PUSH BUTTON ASSEMBLY
PEC	PHOTOELECTRIC CONTROL
Ped	PEDESTRIAN
PEU	PHOTOELECTRIC UNIT
PT	CONDUIT WITH PULL TAPE
RE	RELOCATED EQUIPMENT
RM	RAMP METERING
RWIS	ROADSIDE WEATHER INFORMATION SYSTEM
SB	SLIP BASE
SIC	SIGNAL INTERCONNECT CABLE
Sig	SIGNAL
SMA	SIGNAL MAST ARM
SNS	STREET NAME SIGN
SP	SERVICE POINT
TDC	TELEPHONE DEMARCATION CABINET
TMS	TRAFFIC MONITORING STATION
TOS	TRAFFIC OPERATIONS SYSTEM
Veh	VEHICLE
VIVDS	VIDEO IMAGE VEHICLE DETECTION SYSTEM
WIM	WEIGH-IN-MOTION
Xfmr	TRANSFORMER

SOFFIT AND WALL MOUNTED LUMINAIRES

PENDANT, 70 W HPS UNLESS OTHERWISE SPECIFIED

FLUSH, 70 W HPS UNLESS OTHERWISE SPECIFIED

WALL SURFACE, 70 W HPS UNLESS OTHERWISE SPECIFIED

EXISTING SOFFIT OR WALL LUMINAIRE TO REMAIN UNMODIFIED

EXISTING SOFFIT OR WALL LUMINAIRE TO BE MODIFIED AS SPECIFIED

NOTE:

Arrow indicates "street side" of luminaire.

COMMONLY USED SYMBOLS FOR UNITED STATES CUSTOMARY UNITS OF MEASUREMENT:

SYMBOL USED	DEFINITIONS
Ω	OHMS
min	MINUTE
s	SECOND
bps	BITS PER SECOND
Bps	BYTES PER SECOND
A	AMPERE
V	VOLT
V(dc)	VOLT (DIRECT CURRENT)
V(ac)	VOLT (ALTERNATING CURRENT)
FC	FOOT - CANDLE
W	WATTS
VA	VOLT-AMPERE
M	MEGA
k	KILO
m	MILLI
μ	MICRO
P	PICO
Hz	HERTZ

MISCELLANEOUS ELECTROLIERS

NEW	EXISTING	
		LUMINAIRE ON WOOD POLE
		NON-STANDARD ELECTROLIER (SEE PROJECT NOTES OR PROJECT PLANS)
		CITY ELECTROLIER
		ELECTROLIER FOUNDATION (FUTURE INSTALLATION)

NOTES:

1. HPS luminaires shall be 310 W HPS when installed on Type 21, 21D, 30, 31 and 32 Standards, unless otherwise specified. HPS luminaires shall be 200 W when installed on other type standards or poles, unless otherwise specified.
2. LED luminaires shall be 235 W when installed on Type 21, 21D, 30, 31 and 32 Standards, unless otherwise specified. LED luminaires shall be 165 W when installed on other type standards or poles, unless otherwise specified.
3. Luminaires shall be the cutoff type, ANSI Type III medium cutoff lighting distribution, unless otherwise specified.

STANDARD ELECTROLIER

NEW	EXISTING	STANDARD TYPE
		15
		15D
		15 STRUCTURE
		15D STRUCTURE
		21
		21D
		21 STRUCTURE
		21D STRUCTURE
		30
		31
		32

STATE OF CALIFORNIA
DEPARTMENT OF TRANSPORTATION

ELECTRICAL SYSTEMS (LEGEND AND ABBREVIATIONS)

NO SCALE

RSP ES-1A DATED JULY 19, 2013 SUPERSEDES STANDARD PLAN ES-1A DATED MAY 20, 2011 - PAGE 425 OF THE STANDARD PLANS BOOK DATED 2010.

REVISED STANDARD PLAN RSP ES-1A

2010 REVISED STANDARD PLAN RSP ES-1A

Dist	COUNTY	ROUTE	POST MILES TOTAL PROJECT	SHEET No.	TOTAL SHEETS
08	Riv	60	R1.6	44	65

Theresa Gabriel
REGISTERED ELECTRICAL ENGINEER

July 19, 2013
PLANS APPROVAL DATE

REGISTERED PROFESSIONAL ENGINEER Theresa Aziz Gabriel No. E15129 Exp. 6-30-14 ELECTRICAL STATE OF CALIFORNIA

THE STATE OF CALIFORNIA OR ITS OFFICERS OR AGENTS SHALL NOT BE RESPONSIBLE FOR THE ACCURACY OR COMPLETENESS OF SCANNED COPIES OF THIS PLAN SHEET.

TO ACCOMPANY PLANS DATED 07-14-14

CONDUIT

NEW	EXISTING	
		LIGHTING CONDUIT, UNLESS OTHERWISE INDICATED OR NOTED
		TRAFFIC SIGNAL CONDUIT
C	c	COMMUNICATION CONDUIT
T	t	TELEPHONE CONDUIT
F	f	FIRE ALARM CONDUIT
FO	fo	FIBER OPTIC CONDUIT
		CONDUIT TERMINATION
R	r	CONDUIT RISER ATTACHED TO THE STRUCTURE OR SERVICE POLE

SERVICE EQUIPMENT

NEW	EXISTING	
OH	oh	OVERHEAD LINES
U	U	WOOD POLE, "U" INDICATES UTILITY OWNED
		POLE GUY WITH ANCHOR
		UTILITY TRANSFORMER - GROUND MOUNTED
III	III	SERVICE EQUIPMENT ENCLOSURE TYPE. DOOR INDICATES FRONT OF ENCLOSURE
T	t	TELEPHONE DEMARCATION CABINET

POLE-MOUNTED SERVICE DESIGNATION

TYPE H SERVICE, 28'-10" — TYPE OF INSTALLATION AND POLE HEIGHT ABOVE GRADE

FLASHING BEACON

NEW	EXISTING	
R	R	FLASHING BEACON (ONE VEHICLE SIGNAL HEAD WITH BACKPLATE AND VISOR) "R" INDICATES RED INDICATION, "Y" INDICATES YELLOW INDICATION
Y Y	Y Y	FLASHING BEACON WITH TYPE 15-FBS STANDARD AND A SIGN.
R R	R R	FLASHING BEACON WITH TYPES 9, 9A OR 9B SIGN UNLESS OTHERWISE SPECIFIED OR INDICATED

SIGNAL EQUIPMENT

NEW	EXISTING	
C	C	PEDESTRIAN SIGNAL HEAD "C" INDICATES COUNTDOWN PEDESTRIAN HEAD
		PUSH BUTTON ASSEMBLY POST
		PEDESTRIAN BARRICADE
		VEHICLE SIGNAL HEAD (WITH BACKPLATE AND 3-SECTIONS: RED, YELLOW AND GREEN)
		VEHICLE SIGNAL HEAD WITH ANGLE VISOR
PV	PV	MODIFICATIONS OF BASIC SYMBOL: "L" INDICATES ALL NON-ARROW SECTIONS LOUVERED "LG" INDICATES LOUVERED GREEN SECTION ONLY "PV" INDICATES ALL 12" SECTIONS PROGRAMMED VISIBILITY "8" INDICATES ALL 8" SECTIONS (ONLY WHEN SPECIFIED)
		VEHICLE SIGNAL HEAD CONSISTING OF RED, YELLOW AND GREEN LEFT ARROW SECTIONS
		VEHICLE SIGNAL HEAD CONSISTING OF RED AND YELLOW SECTIONS WITH AN UP GREEN ARROW SECTION
		VEHICLE SIGNAL HEAD (5 SECTION) CONSISTING OF RED, YELLOW AND GREEN SECTIONS WITH YELLOW AND GREEN RIGHT ARROW SECTIONS
		TYPE 15TS STANDARD WITH VEHICLE SIGNAL HEAD AND LUMINAIRE
		TYPE 21TS STANDARD WITH VEHICLE SIGNAL HEAD AND LUMINAIRE
		STANDARD WITH LUMINAIRE AND SIGNAL MAST ARMS AND ATTACHED VEHICLE SIGNAL HEADS
		TYPE 1 STANDARD WITH ATTACHED VEHICLE SIGNAL HEADS
		STANDARD WITH A SIGNAL MAST ARM, ATTACHED VEHICLE SIGNAL HEADS AND INTERNALLY ILLUMINATED STREET NAME SIGN
		CONTROLLER ASSEMBLY. DOOR INDICATES FRONT OF CABINET

SIGNAL EQUIPMENT Cont

NEW	EXISTING	
		GUARD POST
		TYPE 1 STANDARD WITH RAMP METERING SIGN
		OPTICAL DETECTOR FOR THE EMERGENCY VEHICLE DETECTION SYSTEM

NOTES:

1. All signal sections shall be 12" unless shown otherwise.
2. Signal heads shall be provided with backplates unless shown otherwise.

ILLUMINATED OVERHEAD SIGN

NEW	EXISTING	
		SINGLE POST, SINGLE ILLUMINATED SIGN, BALANCED BUTTERFLY
		SINGLE POST, DOUBLE ILLUMINATED SIGN, BALANCED BUTTERFLY
		SINGLE POST, SINGLE ILLUMINATED SIGN, FULL CANTILEVER
		DOUBLE POST, SINGLE ILLUMINATED SIGN
		SINGLE ILLUMINATED SIGN MOUNTED ON STRUCTURE
		DOUBLE POST, SINGLE ILLUMINATED SIGN WITH ELECTROLIER

STATE OF CALIFORNIA
DEPARTMENT OF TRANSPORTATION

ELECTRICAL SYSTEMS (LEGEND AND ABBREVIATIONS)

NO SCALE

RSP ES-1B DATED JULY 19, 2013 SUPERSEDES STANDARD PLAN ES-1B DATED MAY 20, 2011 - PAGE 426 OF THE STANDARD PLANS BOOK DATED 2010.

REVISED STANDARD PLAN RSP ES-1B

2010 REVISED STANDARD PLAN RSP ES-1B

7-15-13

Dist	COUNTY	ROUTE	POST MILES TOTAL PROJECT	SHEET No.	TOTAL SHEETS
08	Riv	60	R1.6	45	65

Theresa Gabriel
REGISTERED ELECTRICAL ENGINEER

July 19, 2013
PLANS APPROVAL DATE

REGISTERED PROFESSIONAL ENGINEER
Theresa Aziz Gabriel
No. E15129
Exp. 6-30-14
ELECTRICAL
STATE OF CALIFORNIA

THE STATE OF CALIFORNIA OR ITS OFFICERS OR AGENTS SHALL NOT BE RESPONSIBLE FOR THE ACCURACY OR COMPLETENESS OF SCANNED COPIES OF THIS PLAN SHEET.

TO ACCOMPANY PLANS DATED 07-14-14

EQUIPMENT IDENTIFICATION

ILLUMINATED SIGN IDENTIFICATION NUMBER:

SIGN No. 12345
10 ISL SCI 1.0

- SIGN NUMBER - PLACE ON POST OR STRUCTURE
- TRANSFORMER RATING (kVA)
- LIGHTING CONTROL TYPE
- NUMBER AND TYPE OF FIXTURES

DO NOT PLACE ON STANDARD OR STRUCTURE

ELECTROLIER OR EQUIPMENT IDENTIFICATION NUMBER:

12345 - 15'-0"

- MAST ARM LENGTH, IF SHOWN. DO NOT PLACE ON STANDARD OR STRUCTURE
- EQUIPMENT NUMBER - PLACE ON STANDARD OR STRUCTURE. EXISTING EQUIPMENT NUMBERS ARE SHOWN IN PARENTHESIS

CONDUIT AND CONDUCTOR IDENTIFICATION:

1½"C, 2#10, 15#14, 2 DLC, 12P#18 (PAIR)

- NUMBER AND SIZE OF CONDUCTORS AND CABLES
- SIZE OF CONDUIT IN INCHES

ø1, ø2, ø2P, etc.	TRAFFIC PHASE IDENTIFICATION FOR SIGNAL FACES, DETECTORS AND PHASE DIAGRAMS
1 2 3	LEGEND NUMBERS
A B C	EQUIPMENT, SIGNAL POLES, INSTALLATION OR ITEMS
1 2 3	CONDUIT RUN NUMBERS

SIGNAL AND LIGHTING STANDARD (TYPICAL DESIGNATION):

19A - 3 - 100

- WIND VELOCITY = 100 mph
- CASE 3 ARM LOADING
- STANDARD TYPE
- STANDARD PLAN SHEET NUMBER
- DETAIL, NUMBER, SECTION, TYPE OR ELEVATION

MISCELLANEOUS EQUIPMENT

NEW	EXISTING	
CMS	cms	CHANGEABLE MESSAGE SIGN
		CLOSED CIRCUIT TELEVISION CAMERA
		HIGHWAY ADVISORY RADIO POLE AND ANTENNA
EMS	ems	EXTINGUISHABLE MESSAGE SIGN
M V	m v	DETECTION DEVICE M = MICROWAVE SENSOR V = VIDEO IMAGE SENSOR

WIRING DIAGRAM LEGEND

- EXTERNAL CONDUCTOR
- CONDUCTOR OR BUS
- TIE POINT
- CONTACTOR COIL
- CONTACTOR, NO CONTACT
- TERMINAL BLOCKS
- CONTACTOR, NC CONTACT
- ENCLOSURE BOND
- GROUNDING ELECTRODE
- CIRCUIT BREAKER
- RECEPTACLE

PULL BOXES

NEW	EXISTING	
		PULL BOX, No. 5 UNLESS OTHERWISE INDICATED OR NOTED
3	9A(21)	PULL BOX, ADDITIONAL DESIGNATIONS OR DESCRIPTIONS

3 No. 3½ PULL BOX
5 No. 5 PULL BOX
6 No. 6 PULL BOX
7 No. 7 (CEILING PULL BOX)
8 No. 8 (PENDANT SOFFIT PULL BOX)
9 No. 9 PULL BOX
9A No. 9A PULL BOX

(C) COMMUNICATIONS PULL BOX
(E) PULL BOX WITH EXTENSION
(S) SPRINKLER CONTROL PULL BOX
(21) ANCHOR BOLTS AND CONDUIT FOR FUTURE INSTALLATION OF TYPE 21 STANDARD
(T) TRAFFIC PULL BOX

VEHICLE DETECTORS

5 J 9 U

- VEHICLE DETECTOR DESIGNATION
- U = UPPER
  L = LOWER
- SLOT NUMBER IN INPUT FILE
- INPUT FILE (I OR J)
- PHASE

NEW	EXISTING	
		TYPE A DETECTOR LOOP. OUTLINE OF SAWCUT SHOWN
		TYPE B DETECTOR LOOP. OUTLINE OF SAWCUT SHOWN
		TYPE C DETECTOR LOOP. OUTLINE OF SAWCUT SHOWN
		TYPE D DETECTOR LOOP. OUTLINE OF SAWCUT SHOWN
		TYPE E DETECTOR LOOP. OUTLINE OF SAWCUT SHOWN
		TYPE Q DETECTOR LOOP. OUTLINE OF SAWCUT SHOWN
		MAGNETIC DETECTOR
DH	dh	DETECTOR HANDHOLE
		MICROWAVE OR VIDEO DETECTION ZONE

STATE OF CALIFORNIA
DEPARTMENT OF TRANSPORTATION

ELECTRICAL SYSTEMS (LEGEND AND ABBREVIATIONS)

NO SCALE

RSP ES-1C DATED JULY 19, 2013 SUPERSEDES STANDARD PLAN ES-1C DATED MAY 20, 2011 - PAGE 427 OF THE STANDARD PLANS BOOK DATED 2010.

REVISED STANDARD PLAN RSP ES-1C

2010 REVISED STANDARD PLAN RSP ES-1C

7-11-13

Dist	COUNTY	ROUTE	POST MILES TOTAL PROJECT	SHEET No.	TOTAL SHEETS
08	Riv	60	R1.6	46	65

Theresa Gabriel
REGISTERED ELECTRICAL ENGINEER

July 19, 2013
PLANS APPROVAL DATE

REGISTERED PROFESSIONAL ENGINEER
Theresa Aziz Gabriel
No. E15129
Exp. 6-30-14
ELECTRICAL
STATE OF CALIFORNIA

THE STATE OF CALIFORNIA OR ITS OFFICERS OR AGENTS SHALL NOT BE RESPONSIBLE FOR THE ACCURACY OR COMPLETENESS OF SCANNED COPIES OF THIS PLAN SHEET.

TO ACCOMPANY PLANS DATED 07-14-14

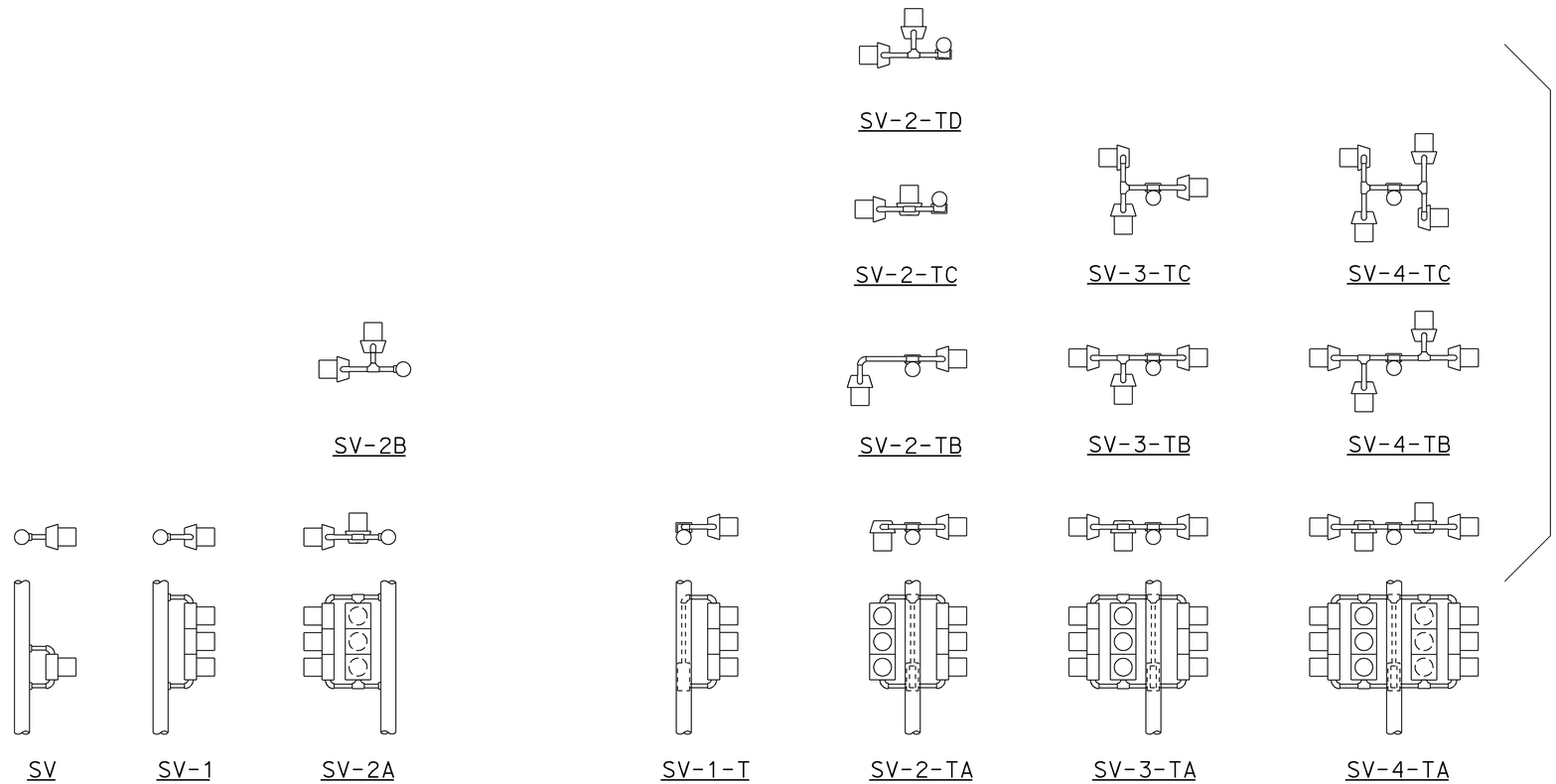

SIDE MOUNTINGS

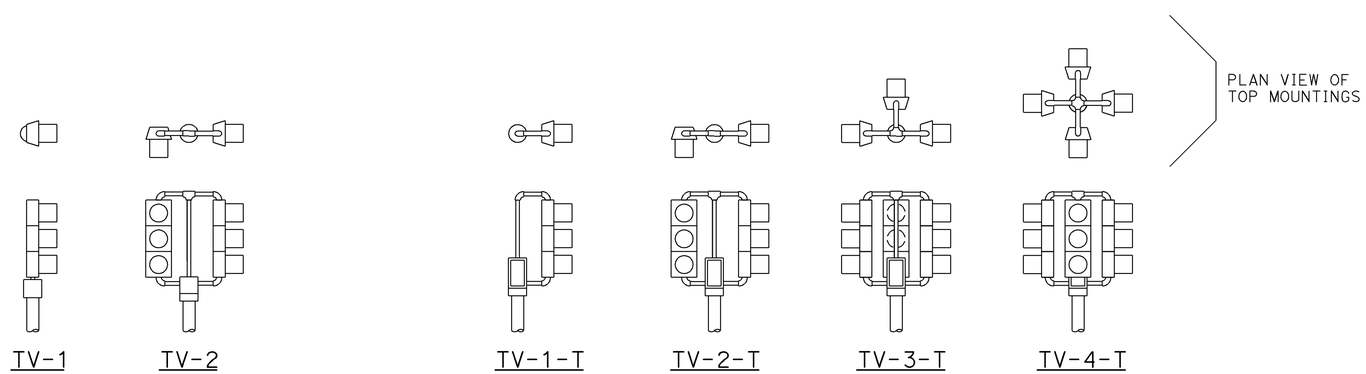

TOP MOUNTINGS

ABBREVIATIONS:

SV	SIDE MOUNTED VEHICLE SIGNALS
T	TERMINAL COMPARTMENT
TV	TOP MOUNTED VEHICLE SIGNALS
1, 2, 3, 4	NUMBER OF SIGNAL FACES (3 - SECTION, UNLESS OTHERWISE INDICATED)
A, B, C, D	CONFIGURATION OF SIGNALS

NOTES:

1. Mountings shall be oriented to provide maximum horizontal clearance to adjacent roadway.
2. Bracket arms shall be long enough to permit proper alignment of signals and backplate installation.
3. See Standard Plans ES-4D and ES-4E for attachment fitting details.

STATE OF CALIFORNIA
DEPARTMENT OF TRANSPORTATION

ELECTRICAL SYSTEMS (VEHICULAR SIGNAL HEADS AND MOUNTINGS)

NO SCALE

RSP ES-4A DATED JULY 19, 2013 SUPERSEDES STANDARD PLAN ES-4A DATED MAY 20, 2011 - PAGE 443 OF THE STANDARD PLANS BOOK DATED 2010.

REVISED STANDARD PLAN RSP ES-4A

2010 REVISED STANDARD PLAN RSP ES-4A

7-9-13

Dist	COUNTY	ROUTE	POST MILES TOTAL PROJECT	SHEET No.	TOTAL SHEETS
08	Riv	60	R1.6	47	65

Theresa Gabriel
REGISTERED ELECTRICAL ENGINEER

July 19, 2013
PLANS APPROVAL DATE

REGISTERED PROFESSIONAL ENGINEER
Theresa Aziz Gabriel
No. E15129
Exp. 6-30-14
ELECTRICAL
STATE OF CALIFORNIA

THE STATE OF CALIFORNIA OR ITS OFFICERS OR AGENTS SHALL NOT BE RESPONSIBLE FOR THE ACCURACY OR COMPLETENESS OF SCANNED COPIES OF THIS PLAN SHEET.

TO ACCOMPANY PLANS DATED 07-14-14

VISORS

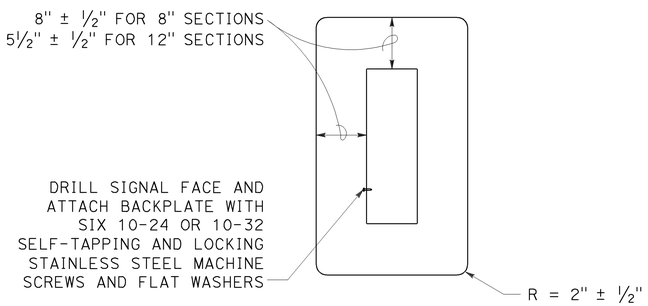

8" AND 12" SECTIONS

BACKPLATE

1/16" minimum thickness
3001-14 aluminum or plastic
when specified

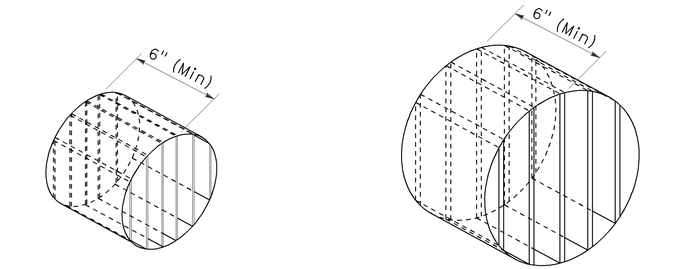

ISOMETRIC VIEW

ISOMETRIC VIEW

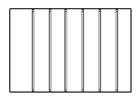

SECTION A-A

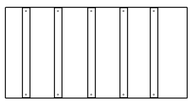

SECTION B-B

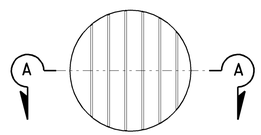

8" DIAMETER
FRONT VIEW

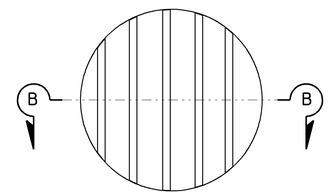

12" DIAMETER
FRONT VIEW

DIRECTIONAL LOUVER

Directional louvers shall be oriented as directed by the Engineer and secured in place with one plated brass machine screw and nut.

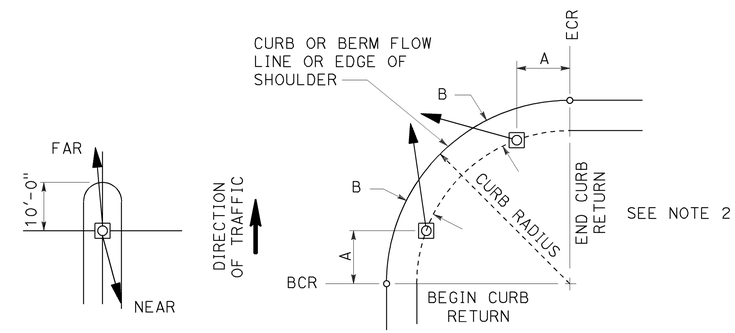

NOTES:

1. Typical signal pole placement unless dimensioned on plans.
2. For A and B dimensions, see Pole Schedule, or as directed by the Engineer.

SIGNAL STANDARD PLACEMENT DIMENSIONS AND EQUIPMENT LOCATIONS

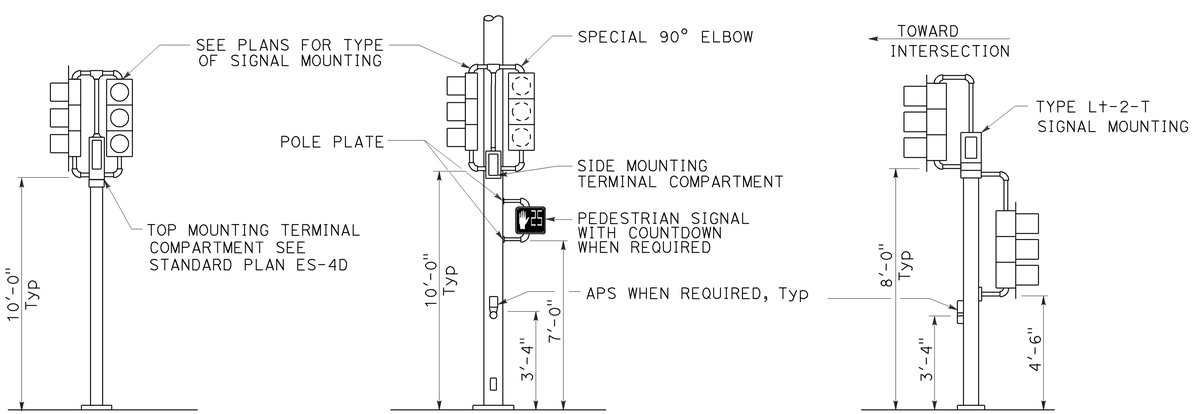

TOP MOUNTED SIGNALS (TV)

Type 1-A, 1-B, 1-C and 1-D standard as indicated on the plans

SIDE MOUNTED SIGNALS (SV AND SP)

Normally used on standards with luminaire or signal mast arm

LEFT TURN LANE SIGNAL

Type 1-A, 1-B, 1-C and 1-D standard as indicated on plans

TYPICAL SIGNAL INSTALLATIONS

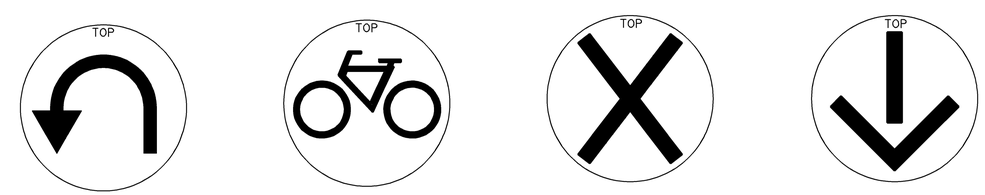

U-TURN

BICYCLE

LANE CONTROL

LANE CONTROL

SIGNAL FACES

STATE OF CALIFORNIA
DEPARTMENT OF TRANSPORTATION

ELECTRICAL SYSTEMS (VEHICULAR SIGNAL HEADS AND MOUNTINGS)

NO SCALE

RSP ES-4C DATED JULY 19, 2013 SUPERSEDES STANDARD PLAN ES-04C DATED MAY 20, 2011 - PAGE 445 OF THE STANDARD PLANS BOOK DATED 2010.

REVISED STANDARD PLAN RSP ES-4C

2010 REVISED STANDARD PLAN RSP ES-4C

7-10-13

Dist	COUNTY	ROUTE	POST MILES TOTAL PROJECT	SHEET No.	TOTAL SHEETS
08	Riv	60	R1.6	48	65

Theresa Gabriel
REGISTERED ELECTRICAL ENGINEER

July 19, 2013
PLANS APPROVAL DATE

REGISTERED PROFESSIONAL ENGINEER
Theresa Aziz Gabriel
No. E15129
Exp. 6-30-14
ELECTRICAL
STATE OF CALIFORNIA

THE STATE OF CALIFORNIA OR ITS OFFICERS OR AGENTS SHALL NOT BE RESPONSIBLE FOR THE ACCURACY OR COMPLETENESS OF SCANNED COPIES OF THIS PLAN SHEET.

TO ACCOMPANY PLANS DATED 07-14-14

2010 REVISED STANDARD PLAN RSP ES-4E

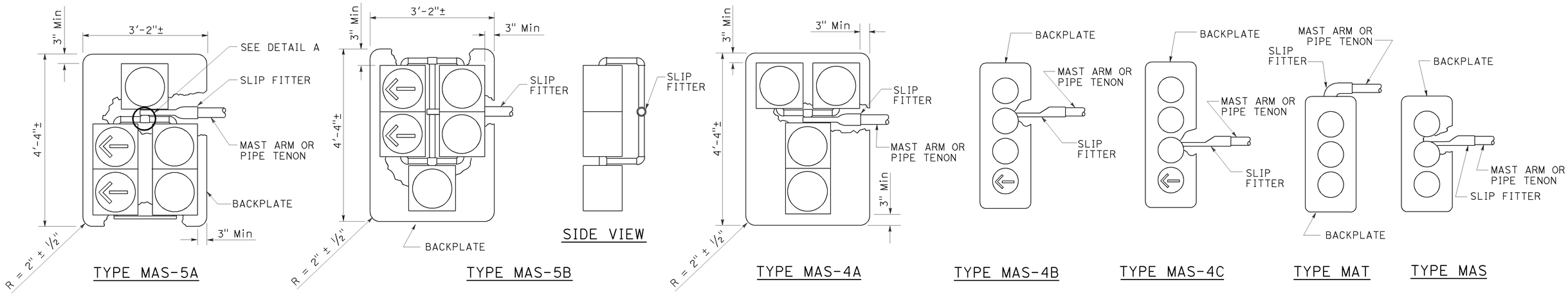

MAST ARM MOUNTINGS

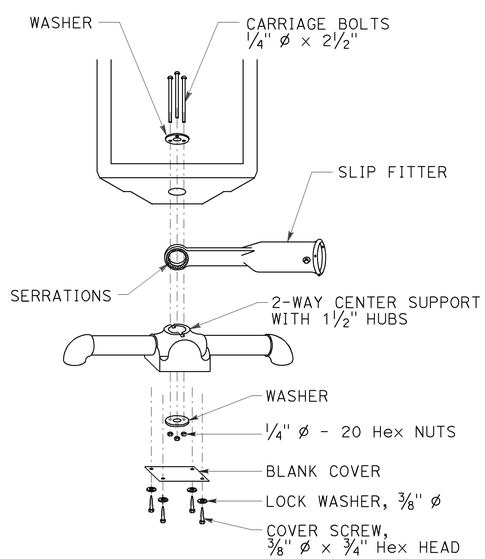

DETAIL A

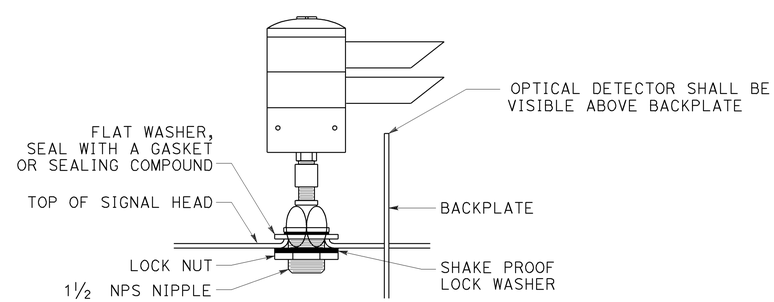

OPTICAL DETECTOR MOUNTING FOR EMERGENCY VEHICLE DETECTION SYSTEM

DETAIL B

STATE OF CALIFORNIA
DEPARTMENT OF TRANSPORTATION

ELECTRICAL SYSTEMS (VEHICULAR SIGNAL HEADS AND OPTICAL DETECTOR MOUNTING)

NO SCALE

RSP ES-4E DATED JULY 19, 2013 SUPERSEDES STANDARD PLAN ES-4E DATED MAY 20, 2011 - 447 OF THE STANDARD PLANS BOOK DATED 2010.

REVISED STANDARD PLAN RSP ES-4E

7-9-13

Dist	COUNTY	ROUTE	POST MILES TOTAL PROJECT	SHEET No.	TOTAL SHEETS
08	Riv	60	R1.6	49	65

Theresa Gabriel
REGISTERED ELECTRICAL ENGINEER

July 19, 2013
PLANS APPROVAL DATE

REGISTERED PROFESSIONAL ENGINEER Theresa Aziz Gabriel No. E15129 Exp. 6-30-14 ELECTRICAL STATE OF CALIFORNIA

THE STATE OF CALIFORNIA OR ITS OFFICERS OR AGENTS SHALL NOT BE RESPONSIBLE FOR THE ACCURACY OR COMPLETENESS OF SCANNED COPIES OF THIS PLAN SHEET.

TO ACCOMPANY PLANS DATED 07-14-14

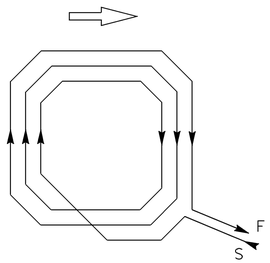

WINDING DETAIL

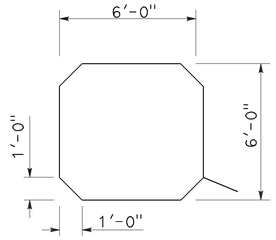

SAWCUT DETAIL

TYPE A LOOP DETECTOR CONFIGURATION

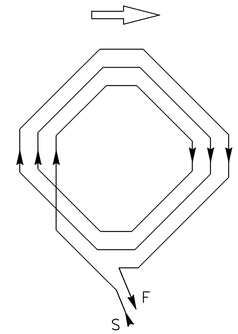

WINDING DETAIL

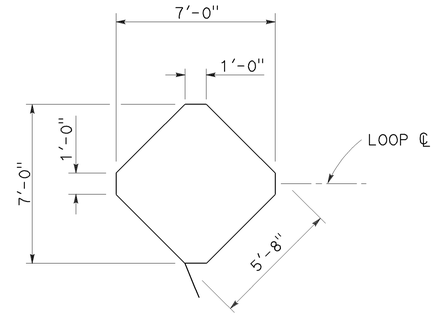

SAWCUT DETAIL

TYPE B LOOP DETECTOR CONFIGURATION

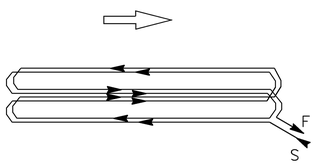

WINDING DETAIL

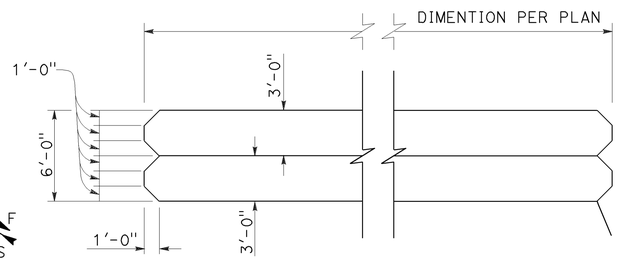

SAWCUT DETAIL

TYPE C LOOP DETECTOR CONFIGURATION

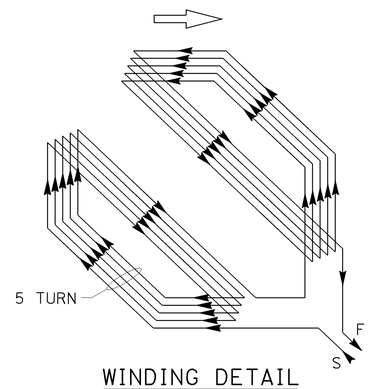

WINDING DETAIL

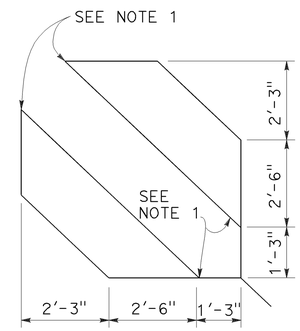

SAWCUT DETAIL

TYPE D LOOP DETECTOR CONFIGURATION

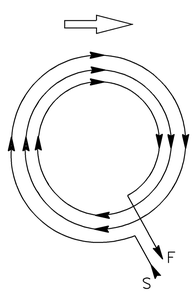

WINDING DETAIL

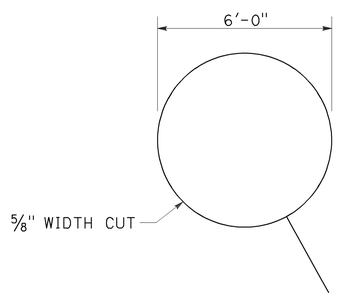

SAWCUT DETAIL

TYPE E LOOP DETECTOR CONFIGURATION

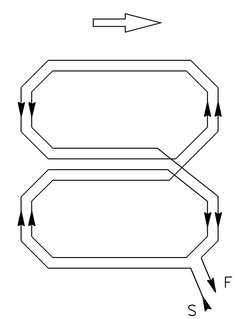

WINDING DETAIL

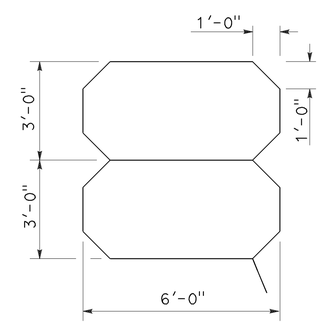

SAWCUT DETAIL

TYPE Q LOOP DETECTOR CONFIGURATION

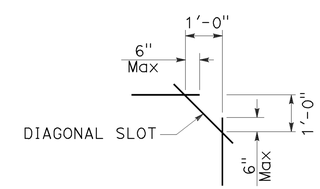

PLAN VIEW OF DIAGONAL SLOT AT CORNERS

NOTES:

1. Round corners of acute angle sawcuts to prevent damage to conductors.
2. Typical distance separating loops from edge to edge is 10' for Type A, B, D and E installation in single lane.

STATE OF CALIFORNIA
DEPARTMENT OF TRANSPORTATION

ELECTRICAL SYSTEMS (DETECTORS)

NO SCALE

RSP ES-5B DATED JULY 19, 2013 SUPERSEDES STANDARD PLAN ES-5B DATED MAY 20, 2011 - PAGE 449 OF THE STANDARD PLANS BOOK DATED 2010.

REVISED STANDARD PLAN RSP ES-5B

2010 REVISED STANDARD PLAN RSP ES-5B

7-9-13

Dist	COUNTY	ROUTE	POST MILES TOTAL PROJECT	SHEET No.	TOTAL SHEETS
08	Riv	60	R1.6	50	65

Theresa Gabriel
REGISTERED ELECTRICAL ENGINEER

July 19, 2013
PLANS APPROVAL DATE

REGISTERED PROFESSIONAL ENGINEER Theresa Aziz Gabriel No. E15129 Exp. 6-30-14 ELECTRICAL STATE OF CALIFORNIA

THE STATE OF CALIFORNIA OR ITS OFFICERS OR AGENTS SHALL NOT BE RESPONSIBLE FOR THE ACCURACY OR COMPLETENESS OF SCANNED COPIES OF THIS PLAN SHEET.

TO ACCOMPANY PLANS DATED 07-14-14

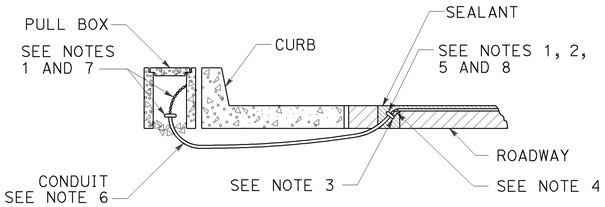

TYPE A
CURB TERMINATION DETAIL

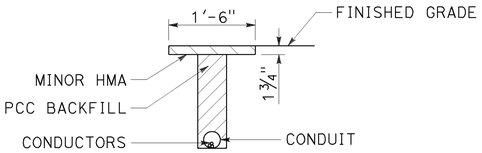

"T" TRENCH
DETAIL T

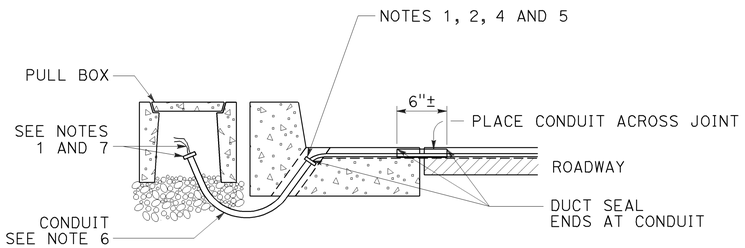

CROSS SECTION

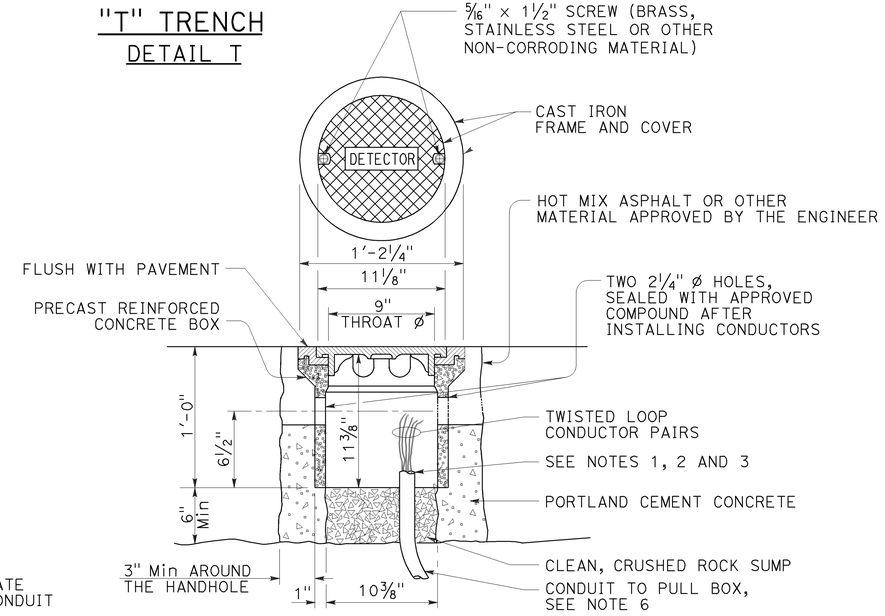

DETECTOR HANDHOLE DETAIL

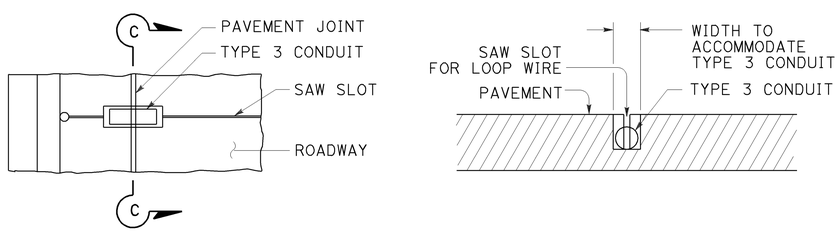

PLAN VIEW

SECTION C-C

TYPE B
CURB TERMINATION DETAIL

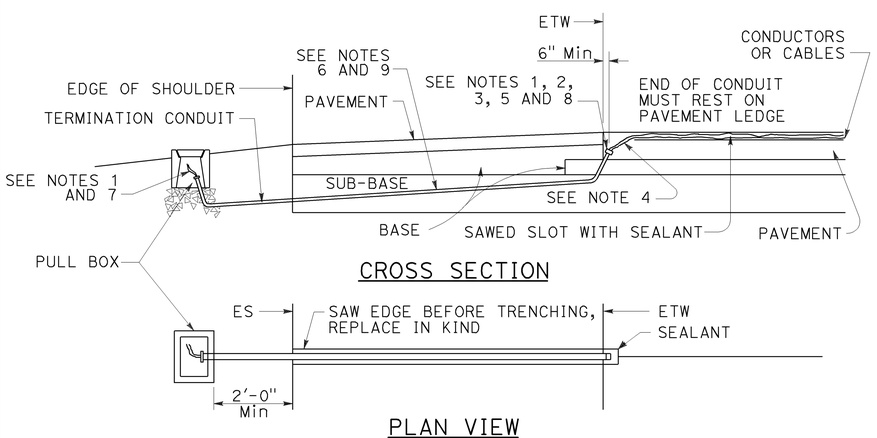

CROSS SECTION

PLAN VIEW

SHOULDER TERMINATION DETAILS

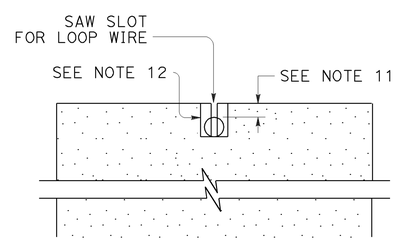

SECTION A-A

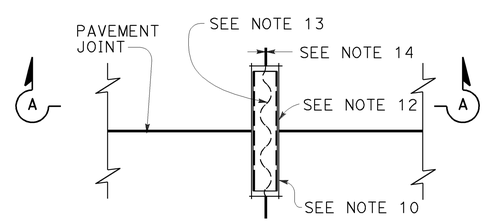

PLAN VIEW

TYPICAL LOOP LEAD-IN DETAIL
AT PAVEMENT JOINT

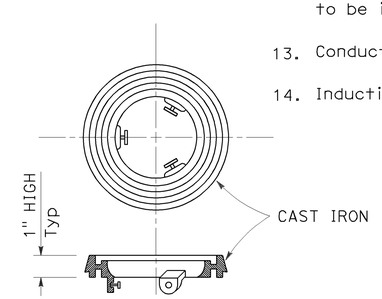

LOCKING GRADE RING

NOTES:

1. Bushing shall be used at end of conduit.
2. Tape detector conductors or cables 3" each side of bushings.
3. Install duct seal compound to each end of termination conduit before installing sealant.
4. Round all sharp edges where detector conductors or cables have to pass.
5. End of conduit shall be 3⅛" below roadway surface.
6.

Conduit size	Loop conductors
1"C minimum	1 to 2 pairs
1½"C minimum	3 to 4 pairs
2"C minimum	5 or more pairs

7. Splice detector conductors or cables to detector lead-in-cable.
8. Location of detector handhole when shown on plans.
9. When the shoulder and traveled way are paved with the same material and there is no joint between them, the conduit shall extend only 2'-0" into the shoulder pavement.
10. ¾"C, Type 3 conduit 6" long minimum, plug both ends with duct compound to keep out sealant.
11. ½" Minimum between top of conduit and pavement surface.
12. Sawcut shall not exceed 1" in width and ⅛" longer than conduit to be installed.
13. Conductors with ½" minimum slack inside conduit.
14. Inductive loop detector saw slot.

STATE OF CALIFORNIA
DEPARTMENT OF TRANSPORTATION

ELECTRICAL SYSTEMS (CURB TERMINATION AND HANDHOLE)

NO SCALE

RSP ES-5D DATED JULY 19, 2013 SUPERSEDES STANDARD PLAN ES-5D DATED MAY 20, 2011 - PAGE 451 OF THE STANDARD PLANS BOOK DATED 2010.

REVISED STANDARD PLAN RSP ES-5D

2010 REVISED STANDARD PLAN RSP ES-5D

7-9-13

Dist	COUNTY	ROUTE	POST MILES TOTAL PROJECT	SHEET No.	TOTAL SHEETS
08	Riv	60	R1.6	51	65

REGISTERED CIVIL ENGINEER

July 19, 2013
PLANS APPROVAL DATE

REGISTERED PROFESSIONAL ENGINEER Stanley P. Johnson No. C57793 Exp. 3-31-14 CIVIL STATE OF CALIFORNIA

THE STATE OF CALIFORNIA OR ITS OFFICERS OR AGENTS SHALL NOT BE RESPONSIBLE FOR THE ACCURACY OR COMPLETENESS OF SCANNED COPIES OF THIS PLAN SHEET.

NOTE:

TO ACCOMPANY PLANS DATED 07-14-14

1. Handhole shall be located on the downstream side of traffic.

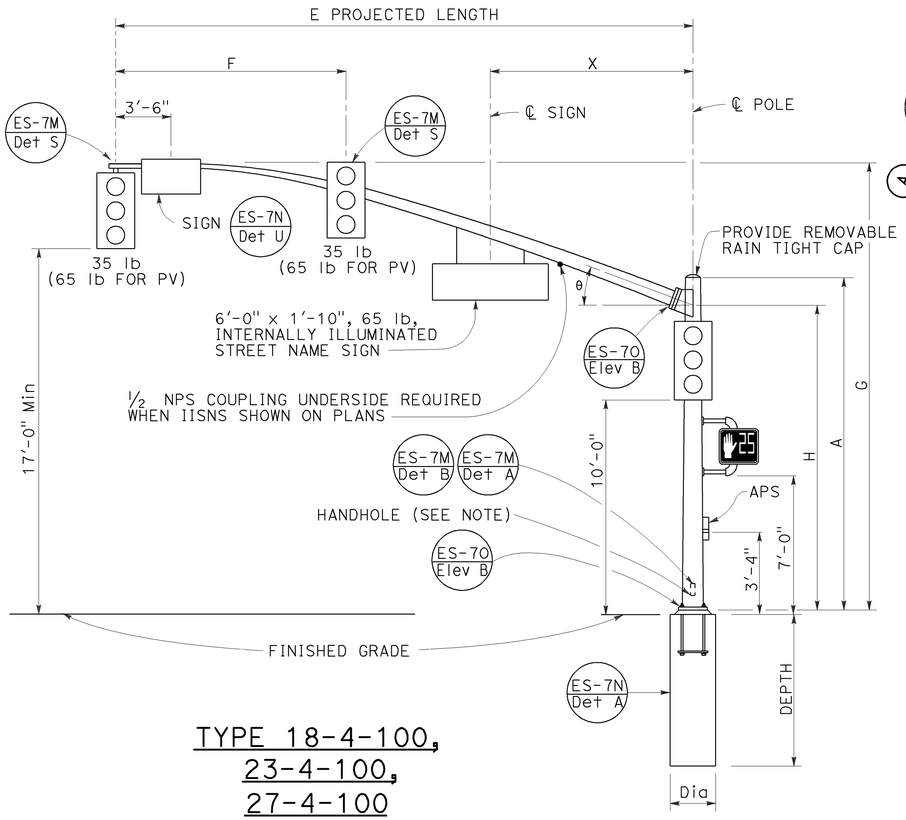

TYPE 18-4-100,
23-4-100,
27-4-100
ELEVATION A

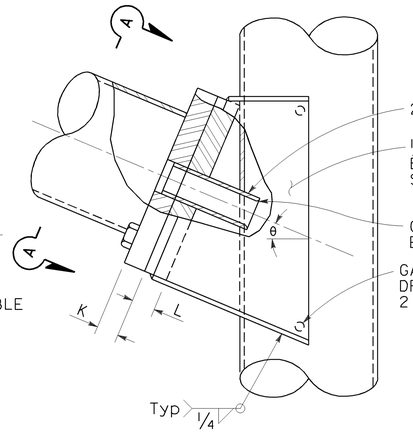

ELEVATION C

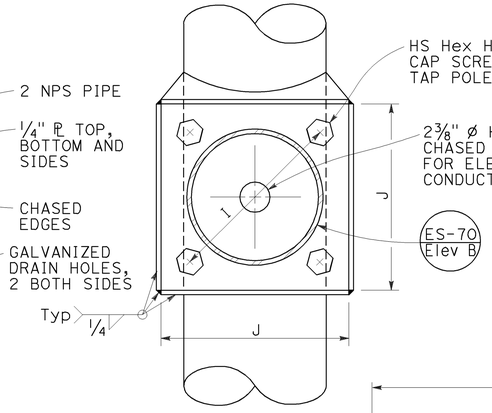

VIEW A-A

SIGNAL MAST ARM CONNECTION
DETAIL A

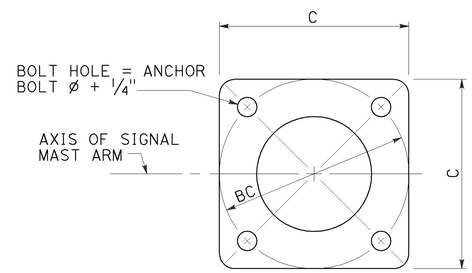

BASE PLATE
DETAIL B

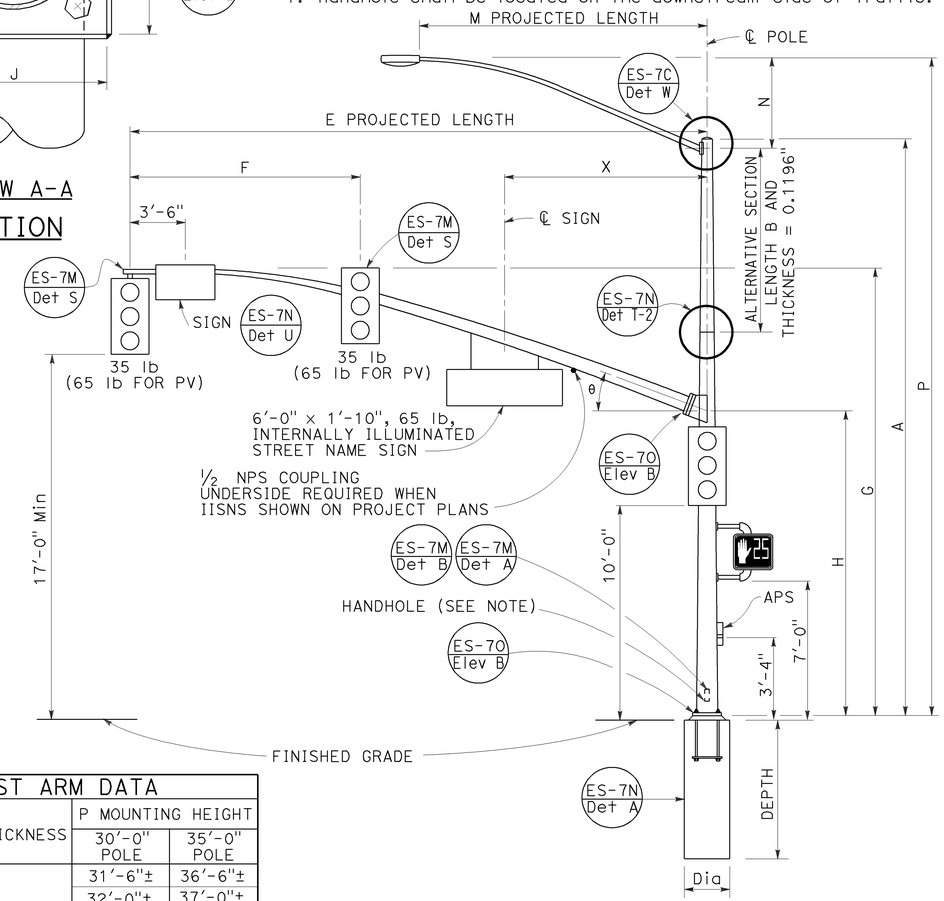

TYPE 19-4-100, 19A-4-100,
24-4-100, 24A-4-100,
26-4-100, 26A-4-100
ELEVATION B

SIGNAL MAST ARM DATA												
E PROJECTED LENGTH	F Min SPACING	G MOUNTING HEIGHT	H	Min OD AT POLE	THICKNESS	I BOLT CIRCLE	HS CAP SCREWS	J PLATE SIZE	K MAST ARM ℄ THICKNESS	L POLE ℄ THICKNESS	θ	X Max
25'-0"	10'-0"	22'-8"±	16'-0"	7⅜"	0.2391"	12"	1¼"-7NC-3"	1'-0"	1¼"	1½"	23°	10'-6"
30'-0"	12'-0"	23'-0"±		8"								
35'-0"	14'-0"			8 11/16"		13½"		1'-1½"	1½"	1¾"	21°	
40'-0"	15'-0"			9⅜"							15°	13'-0"
45'-0"		23'-8"±		10¼"								

LUMINAIRE MAST ARM DATA					
M PROJECTED LENGTH	N RISE	Min OD AT POLE	THICKNESS	P MOUNTING HEIGHT	
				30'-0" POLE	35'-0" POLE
6'-0"	2'-0"±	3¼"	0.1196"	31'-6"±	36'-6"±
8'-0"	2'-6"±	3½"		32'-0"±	37'-0"±
10'-0"	3'-3"±	3⅞"		32'-9"±	37'-9"±
12'-0"	4'-3"±			33'-9"±	38'-9"±
15'-0"	4'-9"±	4¼"		34'-3"±	39'-3"±

POLE TYPE	LOAD CASE	WIND VELOCITY (mph)	POLE DATA							BASE PLATE DATA				LUMINAIRE MAST ARM	SIGNAL MAST ARM	CIDH PILE FOUNDATION		
			A HEIGHT	Min OD BASE	Min OD TOP	THICKNESS	ALTERNATIVE SECTION B LENGTH	ALTERNATIVE SECTION BOTTOM	ALTERNATIVE SECTION TOP	C	BC = BOLT CIRCLE	THICKNESS	ANCHOR BOLT SIZE			Dia	DEPTH	REINFORCED
18-4-100	4	100	17'-0"	12⅛"	9 9/16"	0.3125"	NONE			1'-7"	1'-5½"	3"	2" Ø x 42"	NONE	25'-0", 30'-0"	3'-0"	11'-0"	YES
19-4-100			30'-0"		7 11/16"		10'-0"	9⅛"	7 11/16"					6'-15' 12'-0"				
19A-4-100			35'-0"		6 15/16"		15'-0'		6 15/16"					6'-15' 15'-0"				
23-4-100			17'-0"		9 9/16"		NONE							NONE	35'-0"			
24-4-100			30'-0"		7 11/16"		10'-0"	9⅛"	7 11/16"					6'-15' 12'-0"				
24A-4-100			35'-0"		6 15/16"		15'-0"		6 15/16"					6'-15' 15'-0"				
26-4-100			30'-0"	14"	8 3/16"		10'-0"	9⅝"	8 3/16"	23"	21"		2½" Ø x 42"	6'-15' 12'-0"	40'-0", 45'-0"	3'-6"	12'-0"	
26A-4-100			35'-0"		7 7/16"		15'-0"		7 7/16"					6'-15' 15'-0"				
27-4-100			17'-0"		10 1/16"		NONE							NONE				

INDICATES MAST ARM LENGTH TO BE USED UNLESS OTHERWISE NOTED ON PLANS.

STATE OF CALIFORNIA
DEPARTMENT OF TRANSPORTATION

ELECTRICAL SYSTEMS (SIGNAL AND LIGHTING STANDARD, CASE 4 SIGNAL MAST ARM LOADING, WIND VELOCITY=100 MPH AND SIGNAL MAST ARM LENGTHS 25' TO 45')

NO SCALE

RSP ES-7F DATED JULY 19, 2013 SUPERSEDES STANDARD PLAN ES-7F
DATED MAY 20, 2011 - PAGE 467 OF THE STANDARD PLANS BOOK DATED 2010.

REVISED STANDARD PLAN RSP ES-7F

2010 REVISED STANDARD PLAN RSP ES-7F

6-18-13

Dist	COUNTY	ROUTE	POST MILES TOTAL PROJECT	SHEET No.	TOTAL SHEETS
08	Riv	60	R1.6	52	65

REGISTERED CIVIL ENGINEER

July 19, 2013
PLANS APPROVAL DATE

REGISTERED PROFESSIONAL ENGINEER
Stanley P. Johnson
No. C57793
Exp. 3-31-14
CIVIL
STATE OF CALIFORNIA

THE STATE OF CALIFORNIA OR ITS OFFICERS OR AGENTS SHALL NOT BE RESPONSIBLE FOR THE ACCURACY OR COMPLETENESS OF SCANNED COPIES OF THIS PLAN SHEET.

TO ACCOMPANY PLANS DATED 07-14-14

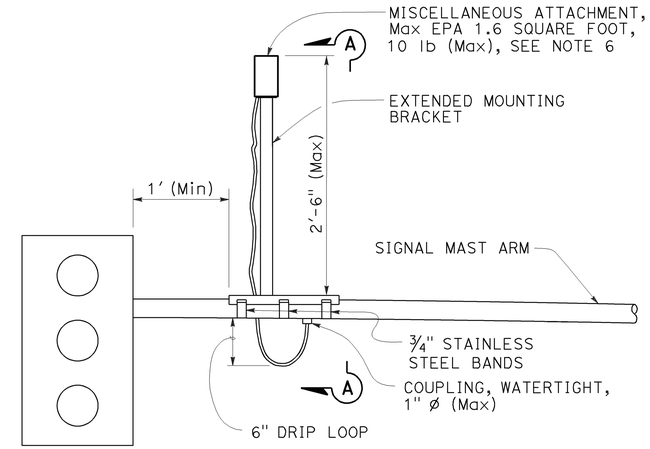

SIGNAL MAST ARM MOUNT

DETAIL A

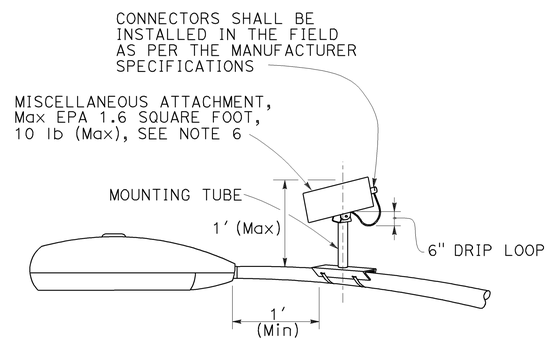

LUMINAIRE MAST ARM MOUNT

DETAIL B

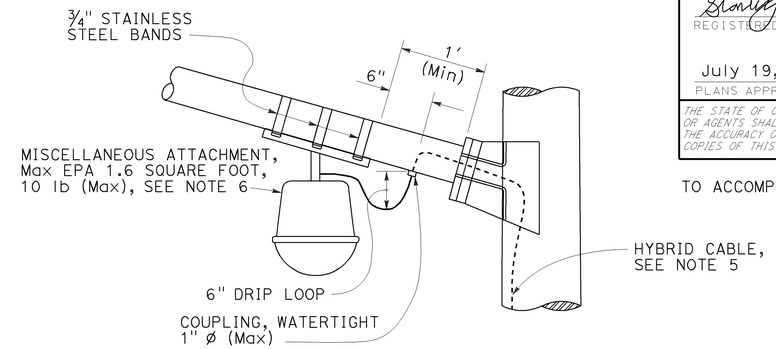

LUMINAIRE MAST ARM MOUNT

DETAIL C

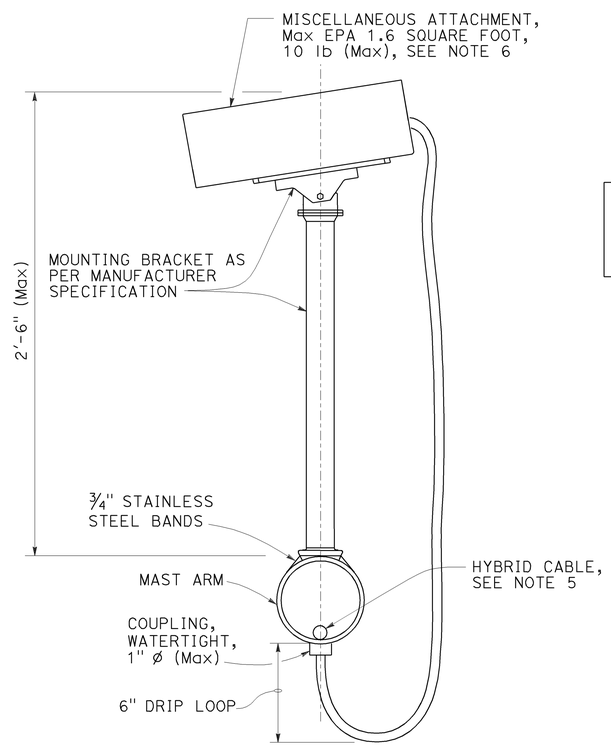

SECTION A-A

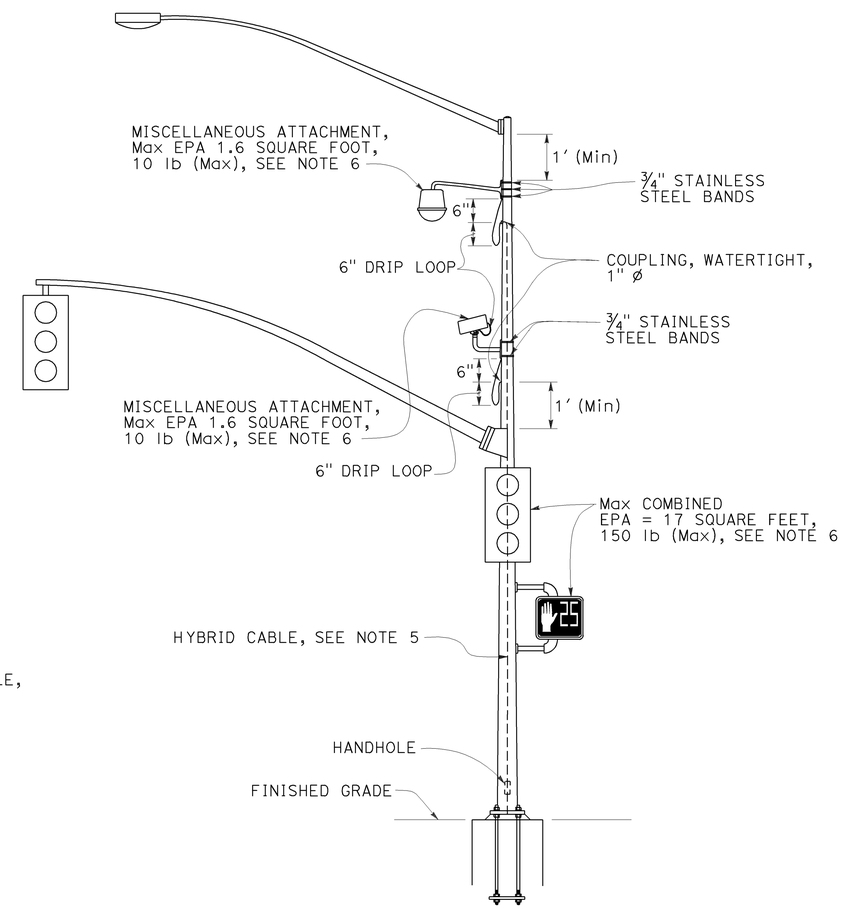

SIGNAL POLE MOUNT

DETAIL D

NOTES:

1. Exact mounting location of miscellaneous attachment and bracket shall be approved by the Engineer per manufacturer's recommendation.
2. Location of cable entrances on signal pole shall be a minimum of 1′ from any flange or base plate.
3. Hybrid cable entrances on signal pole shall be drilled for weathertight coupling as required.
4. Hybrid cable shall have a drip loop at the entrance into signal pole, luminaire mast arm and signal mast arm.
5. A single hybrid cable shall run continuous and shall not be twisted from the miscellaneous attachment to the controller cabinet. No splices shall be allowed.
6. Use the manufacturer's Effective Projected Area (EPA) for miscellaneous attachment. The maximum EPA for each miscellaneous attachment shall be 1.6 square feet.
7. Maximum of two miscellaneous attachments per traffic signal structure.
8. Maximum of one miscellaneous attachment per mast arm.
9. Miscellaneous attachment shall be mounted using clamping devices.

STATE OF CALIFORNIA
DEPARTMENT OF TRANSPORTATION

ELECTRICAL SYSTEMS (SIGNAL AND LIGHTING, MISCELLANEOUS ATTACHMENT)

NO SCALE

RSP ES-7R DATED JULY 19, 2013 SUPERSEDES STANDARD PLAN ES-7R
DATED MAY 20, 2011 - PAGE 479 OF THE STANDARD PLANS BOOK DATED 2010.

REVISED STANDARD PLAN RSP ES-7R

2010 REVISED STANDARD PLAN RSP ES-7R

6-17-13

DIST	COUNTY	ROUTE	POST MILES TOTAL PROJECT	SHEET NO.	TOTAL SHEETS
08	Riv	60	R1.6	53	65

Theresa Gabriel
REGISTERED ELECTRICAL ENGINEER

July 19, 2013
PLANS APPROVAL DATE

REGISTERED PROFESSIONAL ENGINEER Theresa Aziz Gabriel No. E15129 Exp. 6-30-14 ELECTRICAL STATE OF CALIFORNIA

THE STATE OF CALIFORNIA OR ITS OFFICERS OR AGENTS SHALL NOT BE RESPONSIBLE FOR THE ACCURACY OR COMPLETENESS OF SCANNED COPIES OF THIS PLAN SHEET.

TO ACCOMPANY PLANS DATED 07-14-14

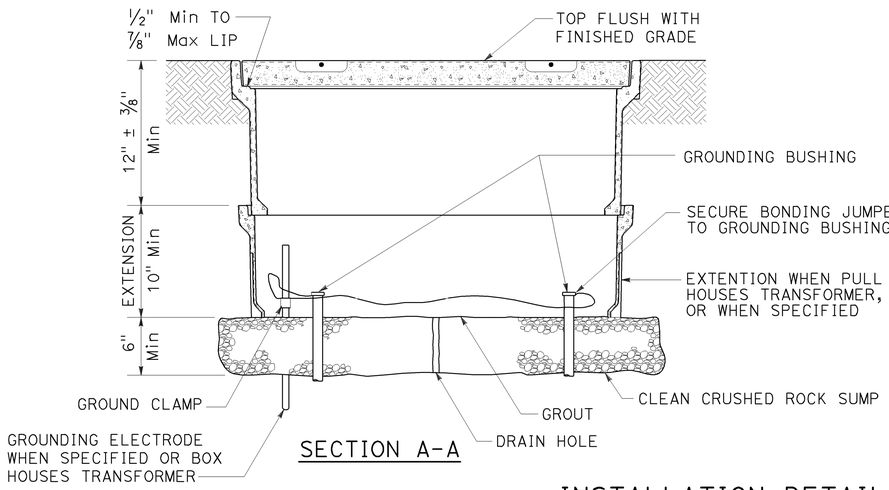

SECTION A-A

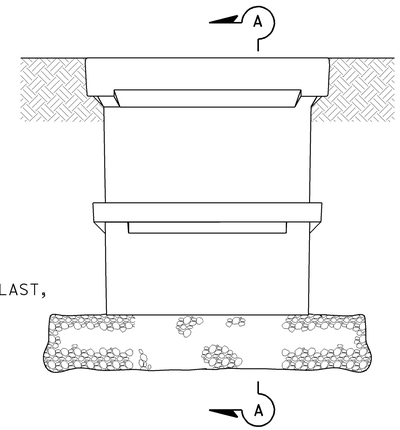

SIDE VIEW

INSTALLATION DETAILS

DETAIL A

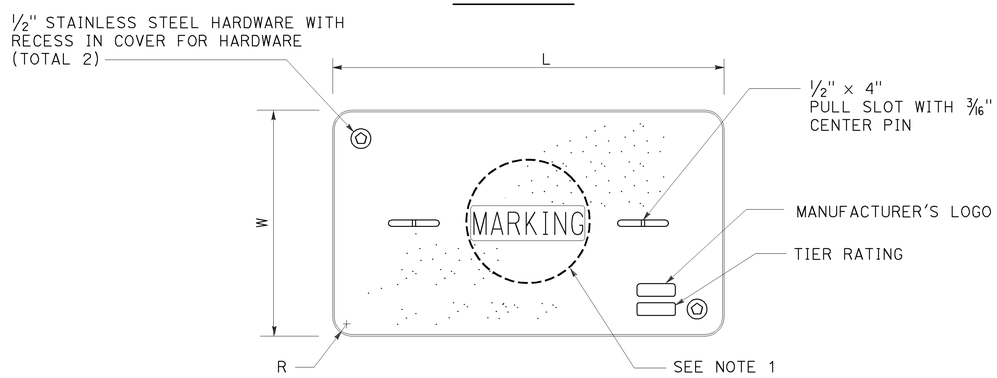

COVER TOP VIEW

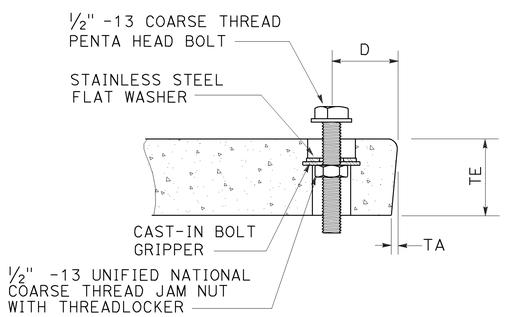

TYPICAL COVER CAPTIVE BOLT

OR SIMILAR

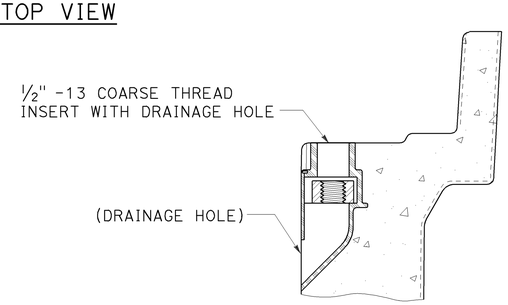

TYPICAL THREADED INSERT

OR SIMILAR

DIMENSION TABLE										
PULL BOX	PULL BOX			COVER						
	MINIMUM DEPTH BOX	MINIMUM DEPTH EXTENSION	MAXIMUM WEIGHT	L	W	R	TE	TA	D	MAXIMUM WEIGHT
No. 3½	12"	N/A	40 lb	1′ - 3⅜"	10⅛"	1⅜"	2"	⅛"	1¾"	30 lb
No. 5	12"	10"	55 lb	1′ - 11¼"	1′ - 1¾"	1⅜"	2"	⅛"	1¾"	60 lb
No. 6	12"	10"	70 lb	2′ - 6½"	1′ - 5½"	1⅜"	2"	⅛"	2"	85 lb

NOTES:

1. Pull box covers shall be marked as follows: "SERVICE" Service circuits between service point and service disconnect; "SPRINKLER-CONTROL" sprinkler control circuits, 50 V or less; "CALTRANS" on all pull boxes, except pull boxes marked "SPRINKLER-CONTROL"; and "TELEPHONE" Telephone service;
   - A) No. 3½ pull box.
     - 1) "SIGNAL" - Traffic signal circuits with or without lighting or sign lighting circuits.
     - 2) "LIGHTING" - Lighting or sign lighting circuits where voltage is under 600 V.
   - B) No. 5, 6, 9 or 9A pull box.
     - 1) "TRAFFIC SIGNAL" - Traffic signal circuits with or without lighting or sign lighting circuits.
     - 2) "LIGHTING" - Lighting or sign lighting circuits where voltage is under 600 V.
     - 3) "LIGHTING-HIGH VOLTAGE" - Lighting or sign lighting circuits where voltage is above 600 V.
     - 4) "IRRIGATION" - Circuits to irrigation controller 120 V or more.
     - 5) "RAMP METER" - Ramp meter circuits.
     - 6) "COUNT STATION" - Count or speed monitor circuits.
     - 7) "COMMUNICATIONS" - Communication circuits.
     - 8) "TOS COMMUNICATIONS" - TOS communication line.
     - 9) "TOS POWER" - TOS power.
     - 10) "TDC POWER" - Telephone demarcation cabinet power.
     - 11) "CCTV" - Closed circuit television circuits.
     - 12) "TMS" - Traffic monitoring station circuits.
     - 13) "CMS" - Changeable message sign circuits.
     - 14) "HAR" - Highway advisory radio circuits.
     - 15) "BOOSTER PUMP" - Booster pump circuit.
2. The nominal dimensions of the opening in which the cover sets shall be the same as the cover dimensions except the length and width dimensions shall be ⅛" greater.
3. Covers and boxes shall be interchangeable with California standard male and female gages. When interchanged with a standard male or female gage, the top surfaces shall be flush within ⅛". Top outside radius of covers and pull boxes shall have a ⅛" radius.
4. Pull box extension may be another pull box as long as the bottom edge of the pull box can fit into the cover opening.
5. All dimensions for the cover for non-traffic pull box are nominal values.

STATE OF CALIFORNIA
DEPARTMENT OF TRANSPORTATION

ELECTRICAL SYSTEMS (NON-TRAFFIC PULL BOX)

NO SCALE

RSP ES-8A DATED JULY 19, 2013 SUPERSEDES RSP ES-8A DATED JANUARY 20, 2012 THAT SUPPLEMENTS THE STANDARD PLANS BOOK DATED 2010.

REVISED STANDARD PLAN RSP ES-8A

2010 REVISED STANDARD PLAN RSP ES-8A

7-15-13

DIST	COUNTY	ROUTE	POST MILES TOTAL PROJECT	SHEET NO.	TOTAL SHEETS
08	Riv	60	R1.6	54	65

Theresa Gabriel
REGISTERED ELECTRICAL ENGINEER

July 19, 2013
PLANS APPROVAL DATE

REGISTERED PROFESSIONAL ENGINEER
Theresa Aziz Gabriel
No. E15129
Exp. 6-30-14
ELECTRICAL
STATE OF CALIFORNIA

THE STATE OF CALIFORNIA OR ITS OFFICERS OR AGENTS SHALL NOT BE RESPONSIBLE FOR THE ACCURACY OR COMPLETENESS OF SCANNED COPIES OF THIS PLAN SHEET.

TO ACCOMPANY PLANS DATED 07-14-14

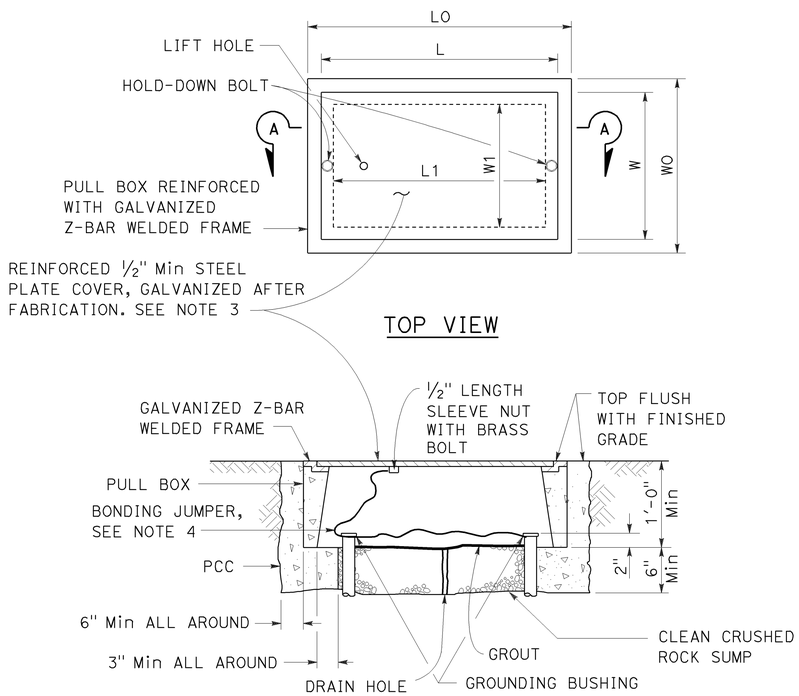

SECTION A-A

No. 3½(T), No. 5(T) AND No. 6(T) TRAFFIC PULL BOX

NOTES:

1. Traffic pull box shall be provided with steel cover and special concrete footing. Steel cover shall have embossed non-skid pattern.
2. Steel reinforcing shall be as regularly used in the standard products of the respective manufacturer.
3. Pull box covers shall be marked as follows: "SERVICE" Service circuits between service point and service disconnect; "SPRINKLER-CONTROL" Sprinkler control circuits, 50 V or less; "CALTRANS" On all pull boxes, except pull boxes marked "SPRINKLER-CONTROL"; and "TELEPHONE" Telephone service.
   A) No. 3½(T) pull box.
      1) "SIGNAL" - Traffic signal circuits with or without lighting or sign lighting circuits.
      2) "LIGHTING" - Lighting or sign lighting circuits where voltage is under 600 V.
   B) No. 5(T) or 6(T) pull box.
      1) "TRAFFIC SIGNAL" - Traffic signal circuits with or without lighting or sign lighting circuits.
      2) "LIGHTING" - Lighting or sign lighting circuits where voltage is under 600 V.
      3) "LIGHTING-HIGH VOLTAGE" - Lighting or sign lighting circuits where voltage is above 600 V.
      4) "IRRIGATION" - Circuits to irrigation controller 120 V or more.
      5) "RAMP METER" - Ramp meter circuits.
      6) "COUNT STATION" - Count or speed monitor circuits.
      7) "COMMUNICATION" - Communication circuits.
      8) "TOS COMMUNICATIONS" - TOS communications line.
      9) "TOS POWER" - TOS power.
      10) "TDC POWER" - Telephone demarcation cabinet power.
      11) "CCTV" - Closed circuit television circuits.
      12) "TMS" - Traffic monitoring station circuits.
      13) "CMS" - Changeable message sign circuits.
      14) "HAR" - Highway advisory radio circuits.
      15) "BOOSTER PUMP" - Booster pump circuit.
4. Bonding jumper for metal covers shall be 3' long, minimum.
5. The nominal dimensions of the opening in which the cover sets shall be the same as the cover dimensions except the length and width dimensions shall be ⅛" greater.
6. Covers and boxes shall be interchangeable with California standard male and female gages. When interchanged with a standard male or female gage, the top surfaces shall be flush within ⅛".

DIMENSION TABLE

PULL BOX	PULL BOX						COVER				
	MINIMUM * THICKNESS	MINIMUM DEPTH BOX AND EXTENSION	WO	LO	L1	W1	L **	W **	R	EDGE THICKNESS	EDGE TAPER
No. 3½(T)	1½"	1'-0"	1'-5"± 1"	1'-8⅞"±	1'-2½"±	10⅝"± 1"	1'-8"±	1'-1¾"±	0"	½"	NONE
No. 5(T)	1¾"	1'-0"	1'-11½"± 1"	2'-5½"±	1'-7"±	1'-1"± 1"	2'-3"±	1'-4"±	0"	½"	NONE
No. 6(T)	2"	1'-0"	2'-6"± 1"	2'-11½"±	1'-11½"±	1'-5"± 1"	2'-9"±	1'-8"±	0"	½"	NONE

* EXCLUDING CONDUIT WEB ** TOP DIMENSION

STATE OF CALIFORNIA
DEPARTMENT OF TRANSPORTATION

ELECTRICAL SYSTEMS (TRAFFIC PULL BOX)

NO SCALE

RSP ES-8B DATED JULY 19, 2013 SUPERSEDES RSP ES-8B DATED JANUARY 20, 2012 THAT SUPPLEMENTS THE STANDARD PLANS BOOK DATED 2010.

REVISED STANDARD PLAN RSP ES-8B

2010 REVISED STANDARD PLAN RSP ES-8B

Dist	COUNTY	ROUTE	POST MILES TOTAL PROJECT	SHEET No.	TOTAL SHEETS
08	Riv	60	R1.6	55	65

Theresa Gabriel
REGISTERED ELECTRICAL ENGINEER

July 19, 2013
PLANS APPROVAL DATE

REGISTERED PROFESSIONAL ENGINEER
Theresa Aziz Gabriel
No. E15129
Exp. 6-30-14
ELECTRICAL
STATE OF CALIFORNIA

THE STATE OF CALIFORNIA OR ITS OFFICERS OR AGENTS SHALL NOT BE RESPONSIBLE FOR THE ACCURACY OR COMPLETENESS OF SCANNED COPIES OF THIS PLAN SHEET.

TO ACCOMPANY PLANS DATED 07-14-14

ISOFOOTCANDLE CURVE - MINIMUM

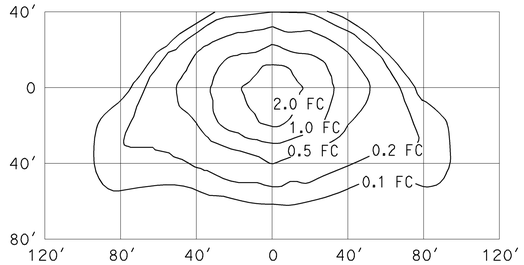

TYPE III MEDIUM CUTOFF

Cutoff Luminaire
34′ Mounting Height
Lamp operated at 22,000 lm
200-W high pressure sodium lamp
ANSI Designation S66

ISOFOOTCANDLE CURVE - MINIMUM

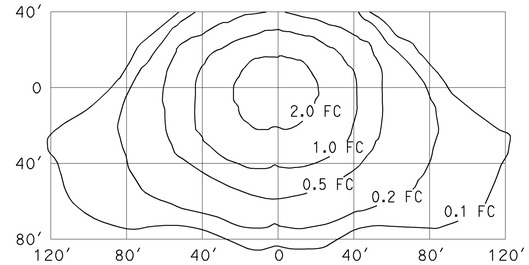

TYPE III MEDIUM CUTOFF

Cutoff Luminaire
40′ Mounting Height
Lamp operated at 37,000 lm
310-W high pressure sodium lamp
ANSI Designation S67

ISOFOOTCANDLE CURVE - MINIMUM

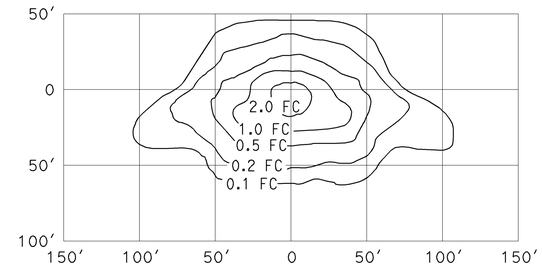

TYPE III MEDIUM CUTOFF

Cutoff Luminaire
30′ Mounting Height
Lamp operated at 16,000 lm
150-W high pressure sodium lamp
ANSI Designation S55

ISOFOOTCANDLE CURVE - MINIMUM

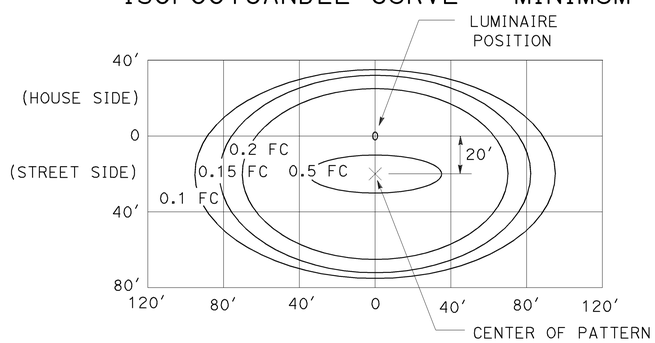

LED LUMINAIRE ROADWAY 1

165-W at 34′ Mounting Height

ISOFOOTCANDLE CURVE - MINIMUM

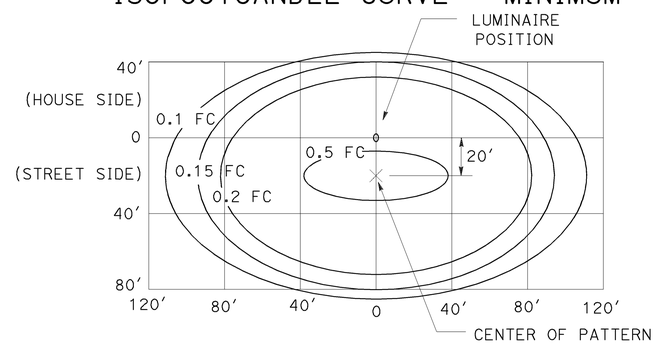

LED LUMINAIRE ROADWAY 2

235-W at 40′ Mounting Height

ISOFOOTCANDLE CURVE - MINIMUM

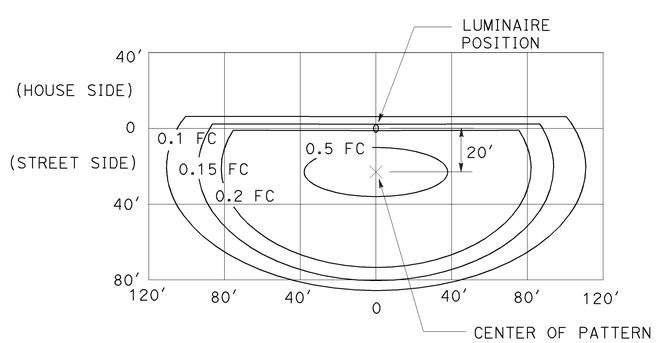

LED LUMINAIRE ROADWAY 3

235-W at 40′ Mounting Height
with back side control

ISOFOOTCANDLE CURVE - MINIMUM

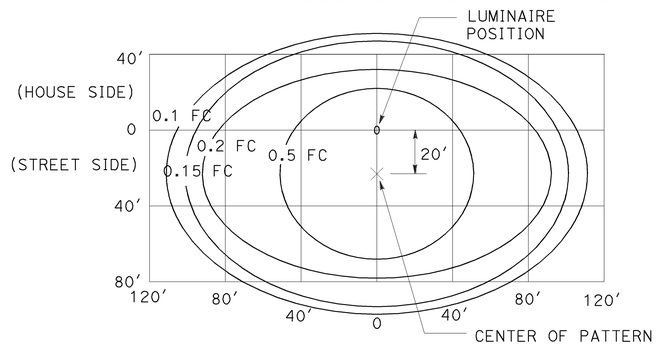

LED LUMINAIRE ROADWAY 4

300-W at 40′ Mounting Height

ISOFOOTCANDLE CURVE - MINIMUM

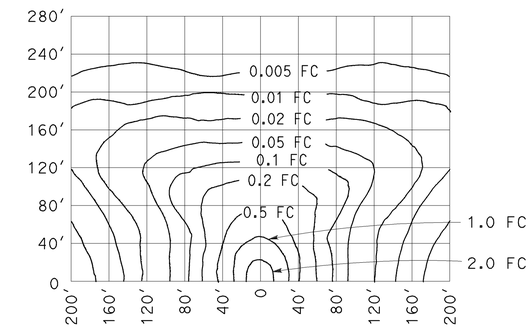

LOW PRESSURE SODIUM LUMINAIRE

40′ Mounting Height
Lamp operated at 33,000 lm
180-W low pressure sodium lamp

STATE OF CALIFORNIA
DEPARTMENT OF TRANSPORTATION

ELECTRICAL SYSTEMS (ISOFOOTCANDLE DIAGRAMS)

NO SCALE

RSP ES-10A DATED JULY 19, 2013 SUPERSEDES RSP ES-10A DATED JULY 20, 2012 THAT SUPPLEMENTS THE STANDARD PLANS BOOK DATED 2010.

REVISED STANDARD PLAN RSP ES-10A

2010 REVISED STANDARD PLAN RSP ES-10A

7-9-13

Dist	COUNTY	ROUTE	POST MILES TOTAL PROJECT	SHEET No.	TOTAL SHEETS
08	Riv	60	R1.6	56	65

REGISTERED CIVIL ENGINEER

July 19, 2013
PLANS APPROVAL DATE

REGISTERED PROFESSIONAL ENGINEER
Stanley P. Johnson
No. C57793
Exp. 3-31-14
CIVIL
STATE OF CALIFORNIA

THE STATE OF CALIFORNIA OR ITS OFFICERS OR AGENTS SHALL NOT BE RESPONSIBLE FOR THE ACCURACY OR COMPLETENESS OF SCANNED COPIES OF THIS PLAN SHEET.

TO ACCOMPANY PLANS DATED 07-14-14

STANDARD TYPE	SETBACK (DIMENSION A)
32	30'-0" (Min)
31	20'-0" (Min)
15, 15D, 15-SB, 21, 21D, 30	ARM LENGTH (Min)

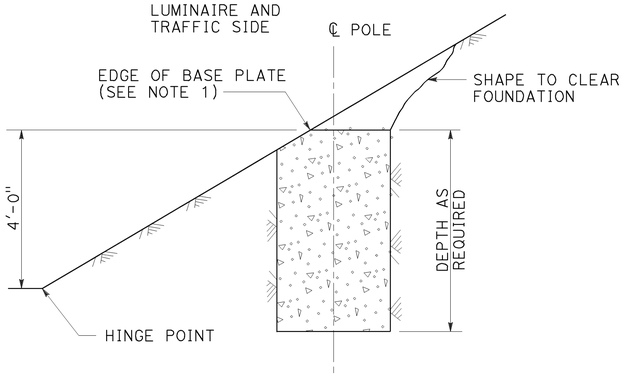

CUT SLOPES
STEEPER THAN 4:1,
LESS THAN 2:1
DETAIL A-1
See Note 2 and 3

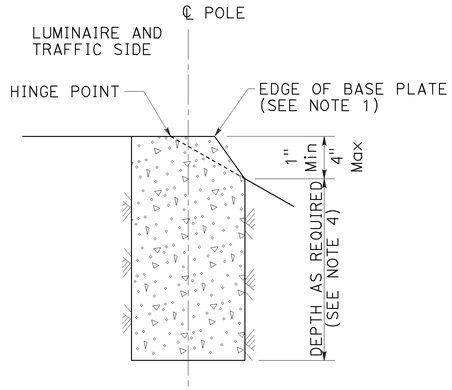

FILL SLOPES
STEEPER THAN 4:1,
LESS THAN 2:1
DETAIL A-2
See Note 2 and 3

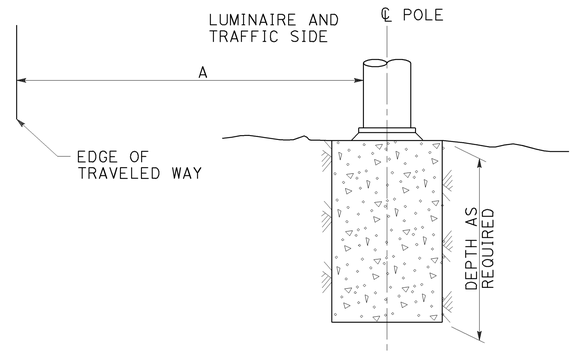

FLAT SECTIONS, CUT OR FILL SLOPES
4:1 OR FLATTER
DETAIL A-3
See Note 2

FOUNDATIONS ADJACENT TO ALL ROADWAYS EXCEPT
IN SIDEWALK, MEDIAN AND ISLAND AREAS
DETAIL A

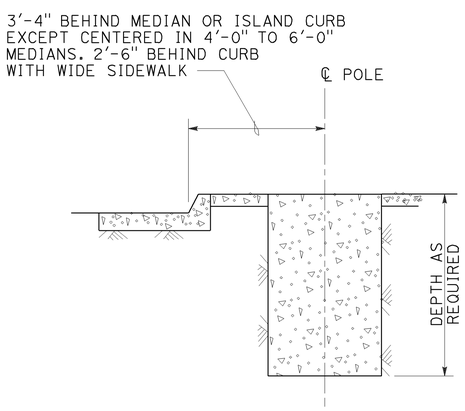

MEDIAN, ISLAND
OR WIDE SIDEWALK
DETAIL B-1
7' Wide and wider

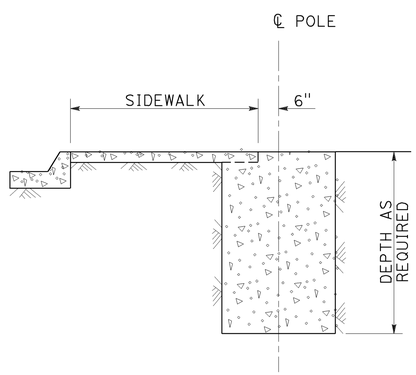

NARROW SIDEWALK
DETAIL B-2
Less than 7' wide

FOUNDATIONS IN SIDEWALK, MEDIAN AND ISLAND AREAS
DETAIL B

NOTES:

1. Where a portion of the foundation is above grade, the top edges shall have a 1" chamfer.
2. Slopes shall be horizontal to vertical ratio (Horizontal : Vertical).
3. Horizontal setbacks on cut and fill slopes steeper than 4:1 shall not exceed the distance shown for flat sections.
4. CIDH embedment depth shall be increased beyond standard depths by the diameter of the CIDH.

STATE OF CALIFORNIA
DEPARTMENT OF TRANSPORTATION

ELECTRICAL SYSTEMS (FOUNDATION INSTALLATIONS)

NO SCALE

RSP ES-11 DATED JULY 19, 2013 SUPERSEDES STANDARD PLAN ES-11
DATED MAY 20, 2011 - PAGE 488 OF THE STANDARD PLANS BOOK DATED 2010.

REVISED STANDARD PLAN RSP ES-11

2010 REVISED STANDARD PLAN RSP ES-11

7-9-13

Dist	COUNTY	ROUTE	POST MILES TOTAL PROJECT	SHEET No.	TOTAL SHEETS
08	Riv	60	R1.6	57	65

Gregory A. Balzer
LICENSED LANDSCAPE ARCHITECT

July 19, 2013
PLANS APPROVAL DATE

THE STATE OF CALIFORNIA OR ITS OFFICERS OR AGENTS SHALL NOT BE RESPONSIBLE FOR THE ACCURACY OR COMPLETENESS OF SCANNED COPIES OF THIS PLAN SHEET.

LICENSED LANDSCAPE ARCHITECT
Gregory A. Balzer 2576
08 Expires
2-28-15
Renewal Date
7-19-13
Date
STATE OF CALIFORNIA

TO ACCOMPANY PLANS DATED 07-14-14

A

AB	AGGREGATE BASE
ABS	ACRYLONITRILE-BUTADIENE-STYRENE
AC	ASPHALT CONCRETE
ACC	ARMOR-CLAD CONDUCTORS
Adj	ADJACENT/ADJUSTABLE
AIC	AUXILIARY IRRIGATION CONTROLLER
Alt	ALTERNATIVE
AMEND	AMENDMENT
ARV	AIR RELEASE VALVE
AUTO	AUTOMATIC
AUX	AUXILIARY
AVB	ATMOSPHERIC VACUUM BREAKER

B

B&B	BALLED AND BURLAPPED
B/B	BRASS/BRONZE
B/B/PL	BRASS/BRONZE/PLASTIC
B/PL	BRASS/PLASTIC
BFM	BONDED FIBER MATRIX
Bit Ctd	BITUMINOUS COATED
BP	BOOSTER PUMP
BPA	BACKFLOW PREVENTER ASSEMBLY
BPE	BACKFLOW PREVENTER ENCLOSURE
BV	BALL VALVE

C

C	CONDUIT
CAP	CORRUGATED ALUMINUM PIPE
CARV	COMBINATION AIR RELEASE VALVE
CB	COUPLING BAND
CCA	CAM COUPLER ASSEMBLY
CEC	CONTROLLER ENCLOSURE CABINET
CHDPE	CORRUGATED HIGH DENSITY POLYETHYLENE
CL	CHAIN LINK
CNC	CONTROL AND NEUTRAL CONDUCTORS
Conc	CONCRETE
CP	COPPER PIPE
CS	COMPOST SOCK
CSP	CORRUGATED STEEL PIPE
CST	CENTER STRIP
CV	CHECK VALVE

D

Dia	DIAMETER
DIP	DUCTILE IRON PIPE
DIT	DRIP IRRIGATION TUBING
DG	DECOMPOSED GRANITE
DN	DIAMETER NOMINAL
DVA	DRIP VALVE ASSEMBLY

E

EC	EROSION CONTROL
ECTC	EROSION CONTROL TECHNOLOGY COUNCIL
Elect	ELECTRIC/ELECTRICAL
Elev	ELEVATION
ELL	ELBOW
ENCL	ENCLOSURE
EP	EDGE OF PAVEMENT
ES	EDGE OF SHOULDER
EST	END STRIP
ESTB	ESTABLISHMENT
ETW	EDGE OF TRAVELED WAY

F

F	FULL CIRCLE
F/P	FULL/PART CIRCLE
FCV	FLOW CONTROL VALVE
FERT	FERTILIZER
FG	FINISHED GRADE
FH	FLEXIBLE HOSE
FIPT	FEMALE IRON PIPE THREAD
FIS	FERTILIZER INJECTOR SYSTEM
FL	FLOW LINE
FR	FIBER ROLL
FS	FLOW SENSOR
FSC	FLOW SENSOR CABLE
FV	FLUSH VALVE

G

Galv	GALVANIZED
GARV	GARDEN VALVE
GARVA	GARDEN VALVE ASSEMBLY
GM	GRAVEL MULCH
GPH	GALLONS PER HOUR
GPM	GALLONS PER MINUTE
GSP	GALVANIZED STEEL PIPE
GV	GATE VALVE

H

H	HALF CIRCLE
HDPE	HIGH DENSITY POLYETHYLENE
HP	HORSEPOWER/HINGE POINT
HPL	HIGH PRESSURE LINE
Hwy	HIGHWAY

I

IC	IRRIGATION CONTROLLER
ICC	IRRIGATION CONTROLLER(S) IN CONTROLLER ENCLOSURE CABINET
ID	INSIDE DIAMETER
IFS	IRRIGATION FILTRATION SYSTEM
IPS	IRON PIPE SIZE
IPT	IRON PIPE THREAD
Irr	IRRIGATION

L

L	LENGTH

M

Max	MAXIMUM
MBGR	METAL BEAM GUARD RAILING
MCV	MANUAL CONTROL VALVE
MIC	MASTER IRRIGATION CONTROLLER
Min	MINIMUM
MIPT	MALE IRON PIPE THREAD
Misc	MISCELLANEOUS
Mtl	MATERIAL
MVP	MAINTENANCE VEHICLE PULLOUT

N

NCN	NO COMMON NAME
NL	NOZZLE LINE
No.	NUMBER
NPT	NATIONAL PIPE THREAD

O

O/C	ON CENTER
OD	OUTSIDE DIAMETER
OL	OVERLAP

P

P	PART CIRCLE
PB	PULL BOX
PCC	PORTLAND CEMENT CONCRETE
PE	POLYETHYLENE
Pkt	PACKET
PL	PLASTIC
PLS	PURE LIVE SEED
PLT	PLANT/PLANTING
PLT ESTB	PLANT ESTABLISHMENT
PM	POST MILE
PR	PRESSURE RATED
PRLV	PRESSURE RELIEF VALVE
PRV	PRESSURE REGULATING VALVE
PVC	POLYVINYL CHLORIDE
Pvmt	PAVEMENT

Q

Q	QUARTER CIRCLE
QCV	QUICK COUPLING VALVE

R

R	RADIUS
RCP	REINFORCED CONCRETE PIPE
RCV	REMOTE CONTROL VALVE
RCVM	REMOTE CONTROL VALVE (MASTER)
RCVMF	REMOTE CONTROL VALVE (MASTER) W/FLOW SENSOR
RCVP	REMOTE CONTROL VALVE W/PRESSURE REGULATOR
RCW	RECYCLED WATER
RECP	ROLLED EROSION CONTROL PRODUCT
REQ	REQUIRED
RICS	REMOTE IRRIGATION CONTROL SYSTEM
R/W	RIGHT OF WAY

S

S	SLIP
SCH	SCHEDULE
SF	STATE-FURNISHED
Shld	SHOULDER
Sq	SQUARE
SST	SIDE STRIP
Sta	STATION
Std	STANDARD
SW	SIDEWALK/SOUND WALL

T

T	THIRD CIRCLE/THREAD
TLS	TRUCK LOADING STANDPIPE
TQ	THREE QUARTER CIRCLE
TRM	TURF REINFORCEMENT MAT
TT	TWO-THIRDS CIRCLE
TWSA	TREE WELL SPRINKLER ASSEMBLY
Typ	TYPICAL

U

UG	UNDERGROUND

W

W	WIDTH
W/	WITH
WM	WATER METER
WS	WYE STRAINER
WSA	WYE STRAINER ASSEMBLY
WSP	WELDED STEEL PIPE
WWM	WELDED WIRE MESH

NOTE:
For additional abbreviations, see Standard Plans A10A and A10B.

STATE OF CALIFORNIA
DEPARTMENT OF TRANSPORTATION

LANDSCAPE AND EROSION CONTROL ABBREVIATIONS

NO SCALE

RSP H1 DATED JULY 19, 2013 SUPERSEDES STANDARD PLAN H1 DATED MAY 20, 2011 - PAGE 218 OF THE STANDARD PLANS BOOK DATED 2010.

REVISED STANDARD PLAN RSP H1

2010 REVISED STANDARD PLAN RSP H1

6-28-13

Dist	COUNTY	ROUTE	POST MILES TOTAL PROJECT	SHEET No.	TOTAL SHEETS
08	Riv	60	R1.6	58	65

LICENSED LANDSCAPE ARCHITECT

November 15, 2013
PLANS APPROVAL DATE

LICENSED LANDSCAPE ARCHITECT
Gregory A. Balzer 2576
08-30-13
Expiration Date
2-28-15
Renewal Date
11-15-13
Date
STATE OF CALIFORNIA

THE STATE OF CALIFORNIA OR ITS OFFICERS OR AGENTS SHALL NOT BE RESPONSIBLE FOR THE ACCURACY OR COMPLETENESS OF SCANNED COPIES OF THIS PLAN SHEET.

TO ACCOMPANY PLANS DATED 07-14-14

2010 REVISED STANDARD PLAN RSP H2

EXISTING	NEW	ITEM DESCRIPTION
		WATER METER (WM)
		BACKFLOW PREVENTER ASSEMBLY (BPA)
		BACKFLOW PREVENTER ENCLOSURE (BPE)
		BOOSTER PUMP (BP)
		TRUCK LOADING STANDPIPE (TLS)
	FS	FLOW SENSOR (FS)
X	X	MASTER IRRIGATION CONTROLLER (MIC)
		AUXILIARY IRRIGATION CONTROLLER (AIC)
		IRRIGATION CONTROLLER (IC) IRRIGATION CONTROLLER (IC) (BATTERY) IRRIGATION CONTROLLER (IC) (SOLAR) IRRIGATION CONTROLLER (IC) (TWO WIRE)
		IRRIGATION CONTROLLER(S) IN CONTROLLER ENCLOSURE CABINET (ICC)
acc	ACC	ARMOR-CLAD CONDUCTORS (ACC)
cnc	CNC	CONTROL AND NEUTRAL CONDUCTORS (CNC)
		IRRIGATION CONDUIT
		EXTEND IRRIGATION CONDUIT
dip	DIP	DUCTILE IRON PIPE (SUPPLY LINE) (MAIN) (DIP)
		GALVANIZED STEEL PIPE (SUPPLY LINE) (MAIN) (GSP)
		GALVANIZED STEEL PIPE (SUPPLY LINE) (LATERAL) (GSP)
		PLASTIC PIPE (SUPPLY LINE) (MAIN)
		PLASTIC PIPE (SUPPLY LINE) (LATERAL)
cp	CP	COPPER PIPE (SUPPLY LINE)
dit	DIT	DRIP IRRIGATION TUBING
		REMOTE CONTROL VALVE (RCV) REMOTE CONTROL VALVE (MASTER) (RCVM) REMOTE CONTROL VALVE (MASTER) W/FLOW METER (RCVMF)
P	P	REMOTE CONTROL VALVE W/PRESSURE REGULATOR (RCVP)
		EXISTING MANUAL CONTROL VALVE (MCV)
	V	DRIP VALVE ASSEMBLY (DVA)
	Y	WYE STRAINER ASSEMBLY (WSA)

EXISTING	NEW	ITEM DESCRIPTION
		GATE VALVE (GV)
		BALL VALVE (BV)
		QUICK COUPLING VALVE (QCV)
		CAM COUPLER ASSEMBLY (CCA)
		GARDEN VALVE ASSEMBLY (GARVA)
		PRESSURE REGULATING VALVE (PRV)
		PRESSURE RELIEF VALVE (PRLV)
		FLOW CONTROL VALVE (FCV)
		COMBINATION AIR RELEASE VALVE (CARV)
		CHECK VALVE (CV)
		FLUSH VALVE (FV)
		EXISTING NOZZLE LINE W/TURNING UNION
		EXISTING IRRIGATION SYSTEM
		EXISTING IRRIGATION SYSTEM TO BE REMOVED
		CHAIN LINK GATE
		QUICK COUPLING VALVE W/SPRINKLER PROTECTOR
3	3	SPRINKLER W/SPRINKLER PROTECTOR
	C	CONNECT TO EXISTING SYSTEM
		CAP
		CAP EXISTING
	FR	FIBER ROLL
	CS	COMPOST SOCK

- RCV SIZE
- IRRIGATION CONTROLLER
- CONTROLLER STATION
- VALVE IN PARALLEL (IF APPLICABLE)
- GPM
- QUANTITY OF SPRINKLERS (WHEN SHOWN)

* 2½"-A-2b-40-60

VALVE CODE

* VALVE CODES FOR EXISTING VALVES ARE SHOWN IN A DASHED ENCLOSURE.

STATE OF CALIFORNIA
DEPARTMENT OF TRANSPORTATION

LANDSCAPE AND EROSION CONTROL SYMBOLS

NO SCALE

RSP H2 DATED NOVEMBER 15, 2013 SUPERSEDES RSP H2 DATED JULY 19, 2013 AND STANDARD PLAN H2 DATED MAY 20, 2011 - PAGE 219 OF THE STANDARD PLANS BOOK DATED 2010.

REVISED STANDARD PLAN RSP H2

10-9-13

Dist	COUNTY	ROUTE	POST MILES TOTAL PROJECT	SHEET No.	TOTAL SHEETS
08	Riv	60	R1.6	59	65

Gregory A. Balzer
LICENSED LANDSCAPE ARCHITECT

July 19, 2013
PLANS APPROVAL DATE

THE STATE OF CALIFORNIA OR ITS OFFICERS OR AGENTS SHALL NOT BE RESPONSIBLE FOR THE ACCURACY OR COMPLETENESS OF SCANNED COPIES OF THIS PLAN SHEET.

LICENSED LANDSCAPE ARCHITECT — Gregory A. Balzer — 2516 — Expires 2-28-15 — Renewal Date 7-19-13 — Date — STATE OF CALIFORNIA

TO ACCOMPANY PLANS DATED 07-14-14

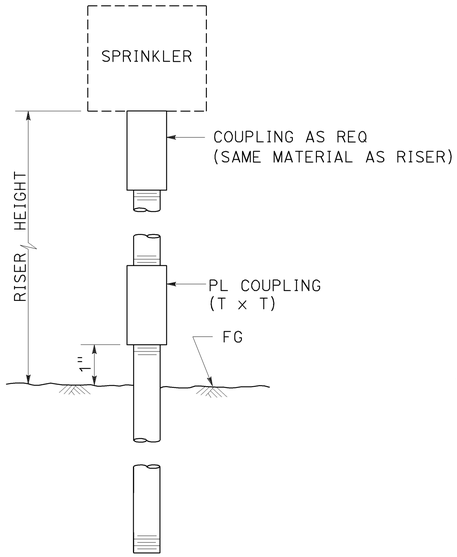

ELEVATION

RISER SPRINKLER ASSEMBLY TYPE I

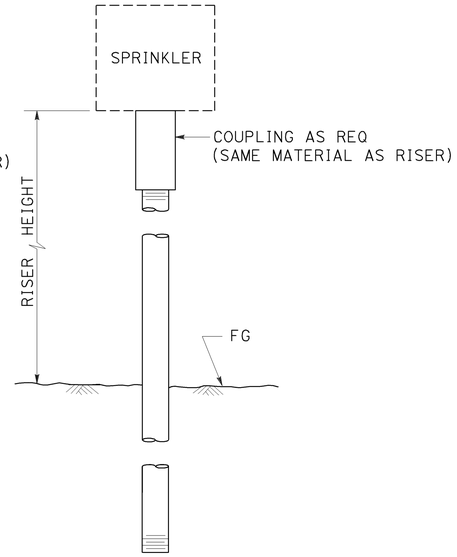

ELEVATION

RISER SPRINKLER ASSEMBLY TYPE II

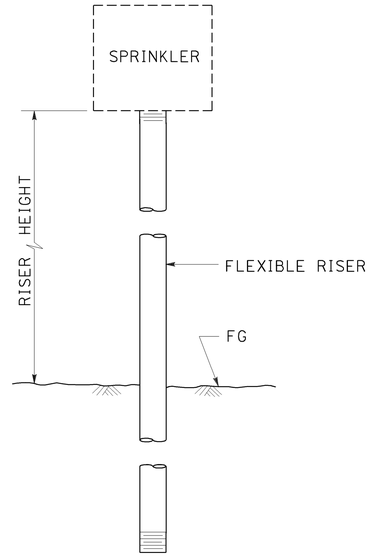

ELEVATION

RISER SPRINKLER ASSEMBLY TYPE III

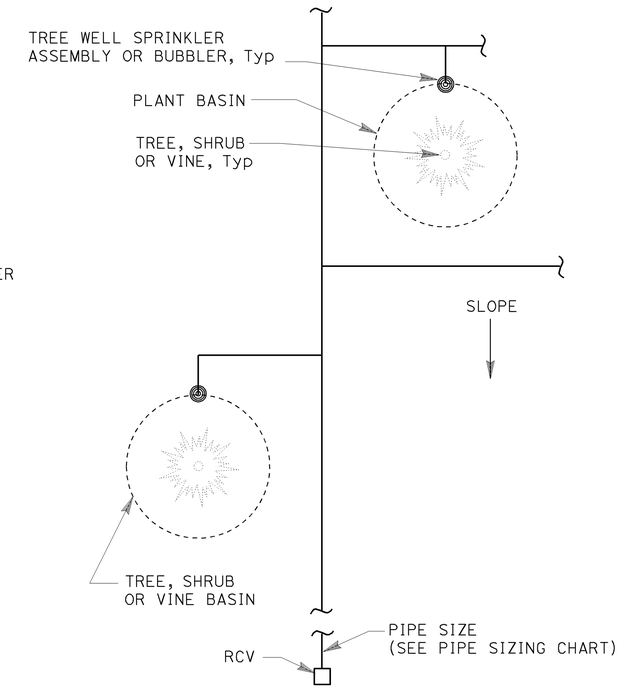

PLAN

NOTES:

1. Install tree well sprinkler assembly on up-hill side of plant when on slope.
2. Install bubbler within basin.

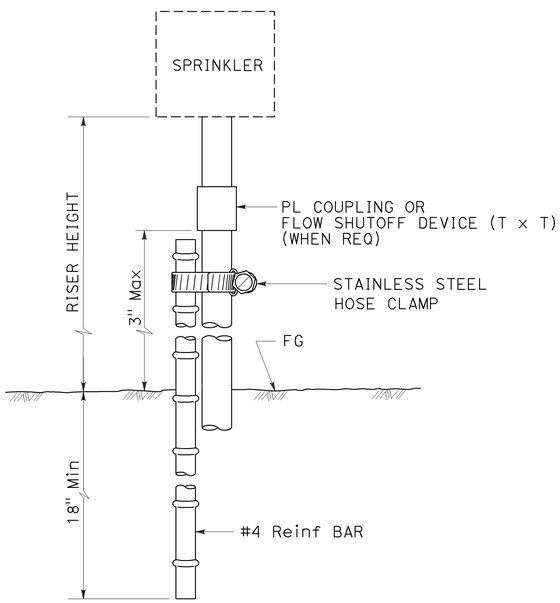

ELEVATION

RISER SPRINKLER ASSEMBLY TYPE IV

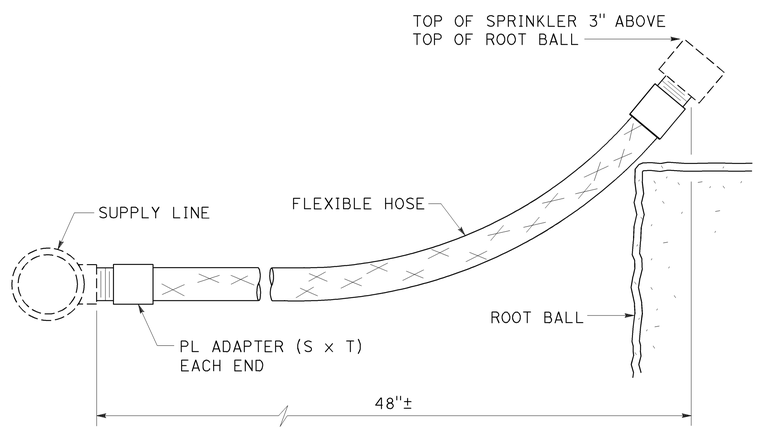

ELEVATION

RISER SPRINKLER ASSEMBLY TYPE V

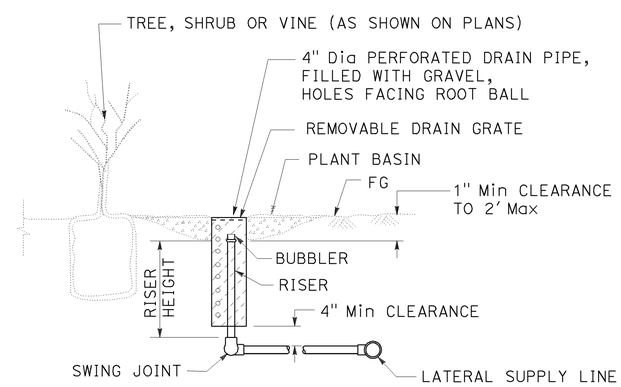

SECTION

TREE WELL SPRINKLER ASSEMBLY

STATE OF CALIFORNIA
DEPARTMENT OF TRANSPORTATION

LANDSCAPE DETAILS

NO SCALE

RSP H5 DATED JULY 19, 2013 SUPERSEDES STANDARD PLAN H5
DATED MAY 20, 2011 - PAGE 222 OF THE STANDARD PLANS BOOK DATED 2010.

REVISED STANDARD PLAN RSP H5

2010 REVISED STANDARD PLAN RSP H5

6-28-13

Dist	COUNTY	ROUTE	POST MILES TOTAL PROJECT	SHEET No.	TOTAL SHEETS
08	Riv	60	R1.6	60	65

LICENSED LANDSCAPE ARCHITECT

July 19, 2013
PLANS APPROVAL DATE

LICENSED LANDSCAPE ARCHITECT
Gregory A. Balzer 2576
08 Expiration Date
2-28-15
Renewal Date
7-19-13
Date
STATE OF CALIFORNIA

THE STATE OF CALIFORNIA OR ITS OFFICERS OR AGENTS SHALL NOT BE RESPONSIBLE FOR THE ACCURACY OR COMPLETENESS OF SCANNED COPIES OF THIS PLAN SHEET.

TO ACCOMPANY PLANS DATED 07-14-14

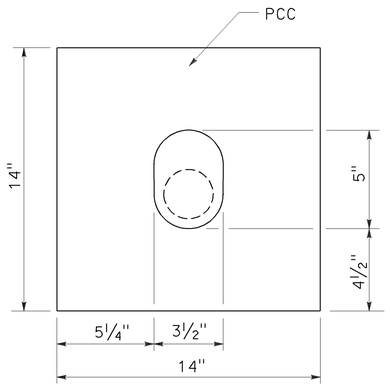

PLAN

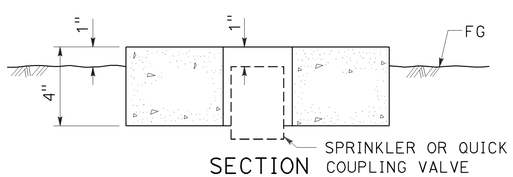

SECTION

SPRINKLER PROTECTOR TYPE I

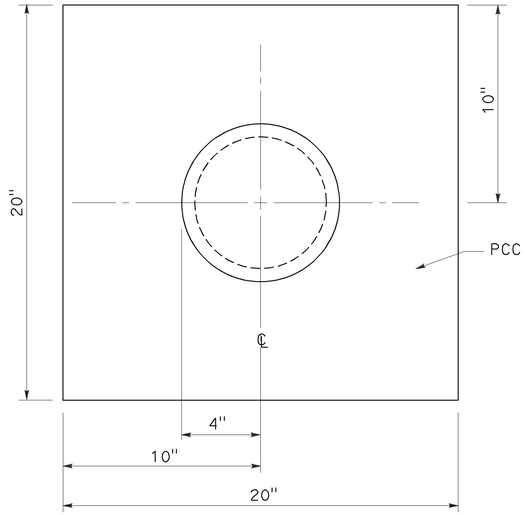

PLAN

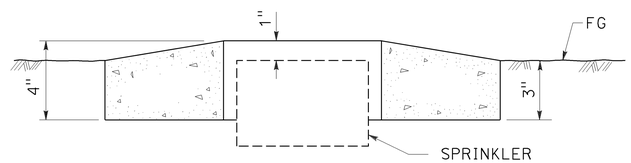

SECTION

SPRINKLER PROTECTOR TYPE II

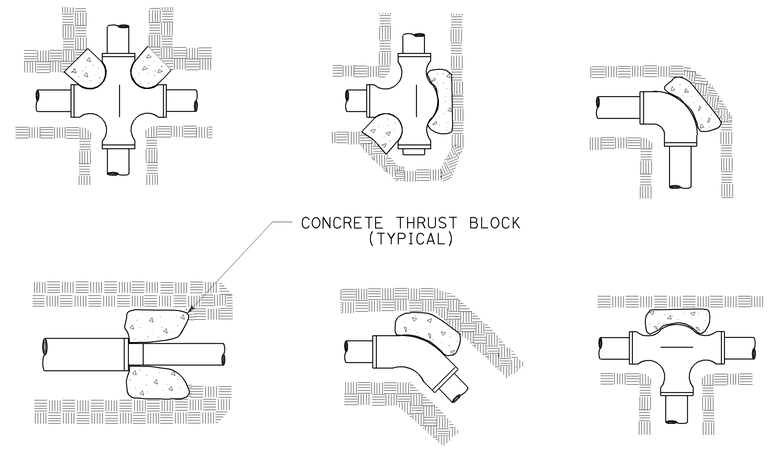

TYPICAL THRUST BLOCKS

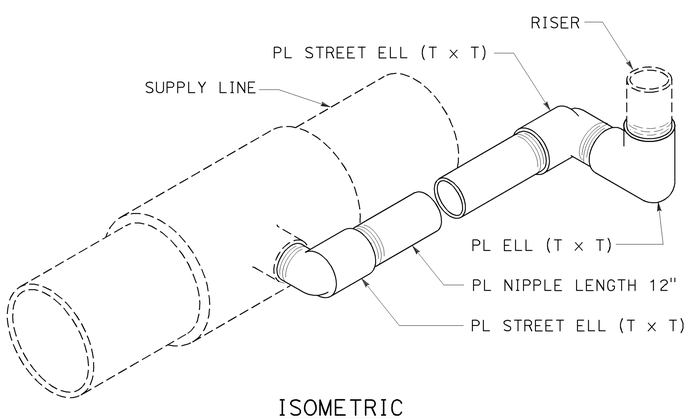

ISOMETRIC

POP-UP SPRINKLER ASSEMBLY TYPE I

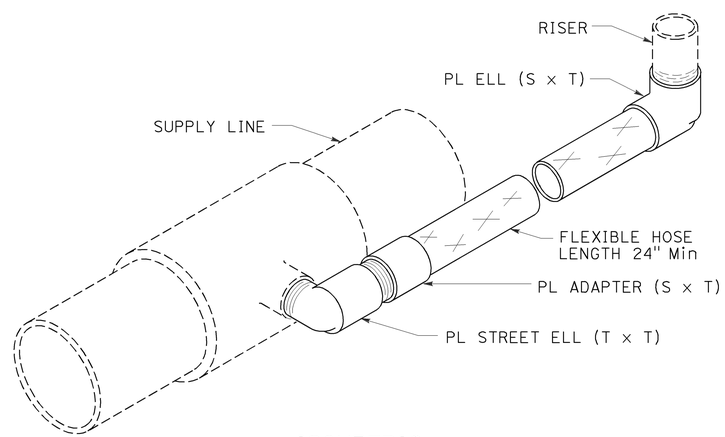

ISOMETRIC

POP-UP SPRINKLER ASSEMBLY TYPE II

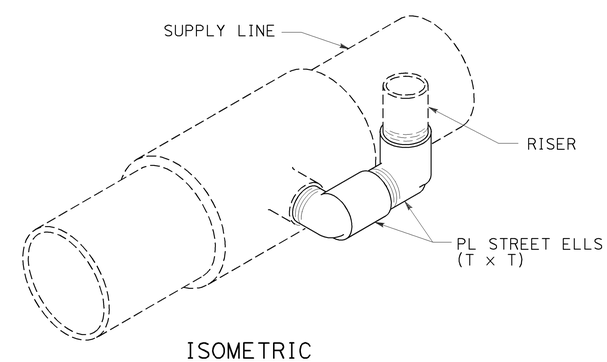

ISOMETRIC

POP-UP SPRINKLER ASSEMBLY TYPE III

STATE OF CALIFORNIA
DEPARTMENT OF TRANSPORTATION

LANDSCAPE DETAILS

NO SCALE

RSP H6 DATED JULY 19, 2013 SUPERSEDES STANDARD PLAN H6
DATED MAY 20, 2011 - PAGE 223 OF THE STANDARD PLANS BOOK DATED 2010.

REVISED STANDARD PLAN RSP H6

2010 REVISED STANDARD PLAN RSP H6

6-28-13

Dist	COUNTY	ROUTE	POST MILES TOTAL PROJECT	SHEET No.	TOTAL SHEETS
08	Riv	60	R1.6	61	65

LICENSED LANDSCAPE ARCHITECT

July 19, 2013
PLANS APPROVAL DATE

THE STATE OF CALIFORNIA OR ITS OFFICERS OR AGENTS SHALL NOT BE RESPONSIBLE FOR THE ACCURACY OR COMPLETENESS OF SCANNED COPIES OF THIS PLAN SHEET.

LICENSED LANDSCAPE ARCHITECT — Gregory A. Balzer — 2516 — Expiration Date 2-28-15 — Renewal Date 7-19-13 — Date — STATE OF CALIFORNIA

TO ACCOMPANY PLANS DATED 07-14-14

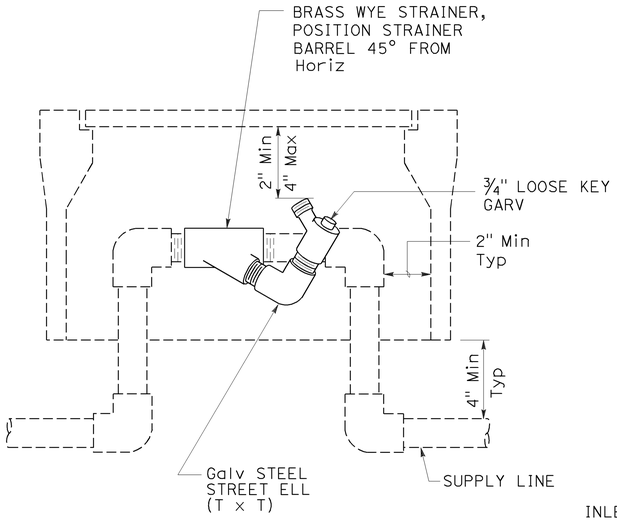

ELEVATION
WYE STRAINER ASSEMBLY

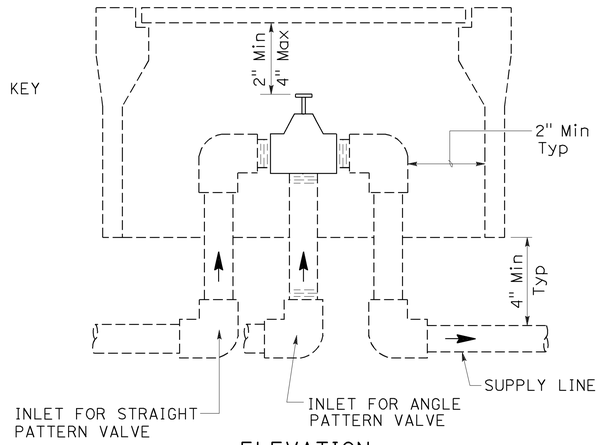

ELEVATION
VALVE

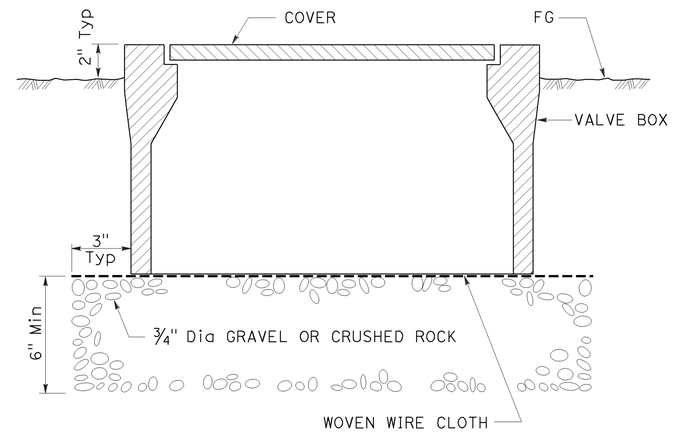

SECTION
VALVE BOX

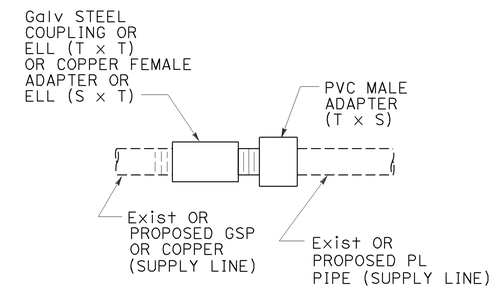

GALVANIZED OR COPPER PIPE CONNECTION TO PLASTIC PIPE

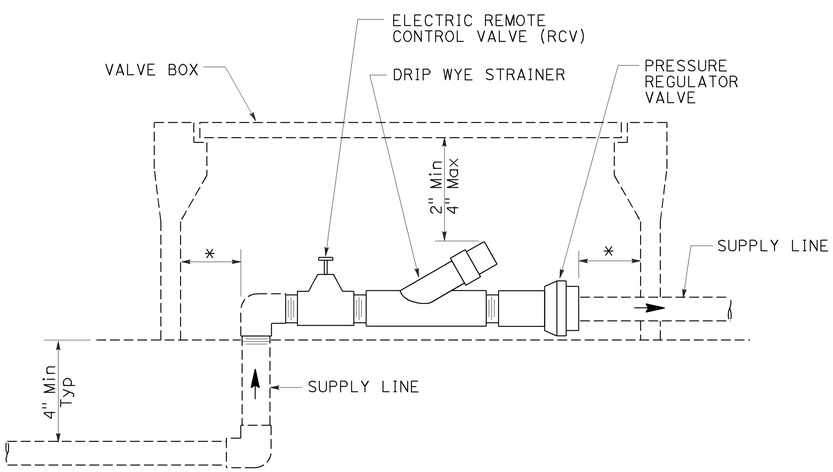

* 2" CLEARANCE ON ALL SIDES

ELEVATION
DRIP VALVE ASSEMBLY

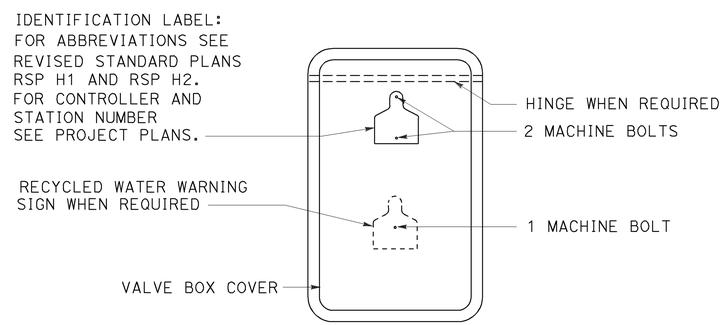

PLAN

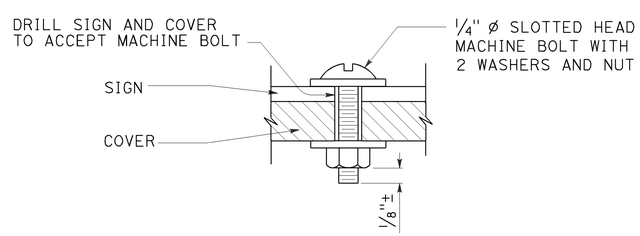

SECTION
VALVE BOX IDENTIFICATION

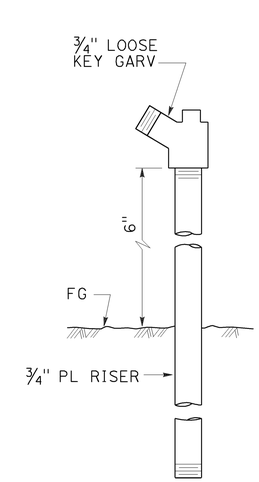

ELEVATION
GARDEN VALVE ASSEMBLY

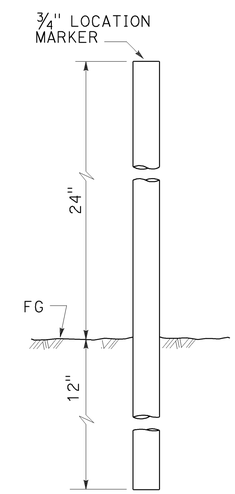

ELEVATION
LOCATION MARKER

GARDEN VALVE ASSEMBLY

STATE OF CALIFORNIA
DEPARTMENT OF TRANSPORTATION

LANDSCAPE DETAILS

NO SCALE

RSP H7 DATED JULY 19, 2013 SUPERSEDES STANDARD PLAN H7 DATED MAY 20, 2011 - PAGE 224 OF THE STANDARD PLANS BOOK DATED 2010.

REVISED STANDARD PLAN RSP H7

2010 REVISED STANDARD PLAN RSP H7

6-20-13

Dist	COUNTY	ROUTE	POST MILES TOTAL PROJECT	SHEET No.	TOTAL SHEETS
08	Riv	60	R1.6	62	65

Gregory A. Balzer
LICENSED LANDSCAPE ARCHITECT

July 19, 2013
PLANS APPROVAL DATE

LICENSED LANDSCAPE ARCHITECT
Gregory A. Balzer 2576
Renewal Date 2-28-15
7-19-13
Date
STATE OF CALIFORNIA

THE STATE OF CALIFORNIA OR ITS OFFICERS OR AGENTS SHALL NOT BE RESPONSIBLE FOR THE ACCURACY OR COMPLETENESS OF SCANNED COPIES OF THIS PLAN SHEET.

TO ACCOMPANY PLANS DATED 07-14-14

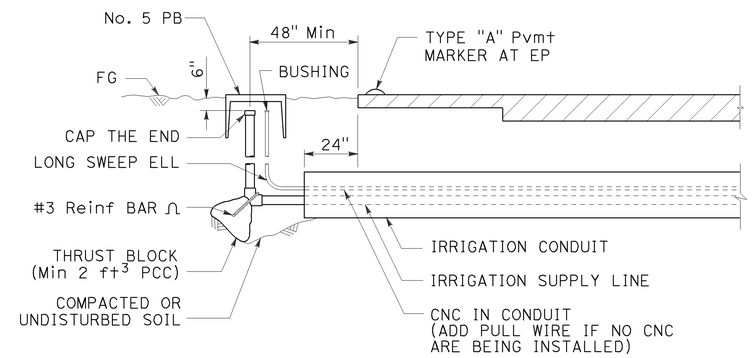

SECTION

IRRIGATION CONDUIT

UNDER TRAVELED WAY

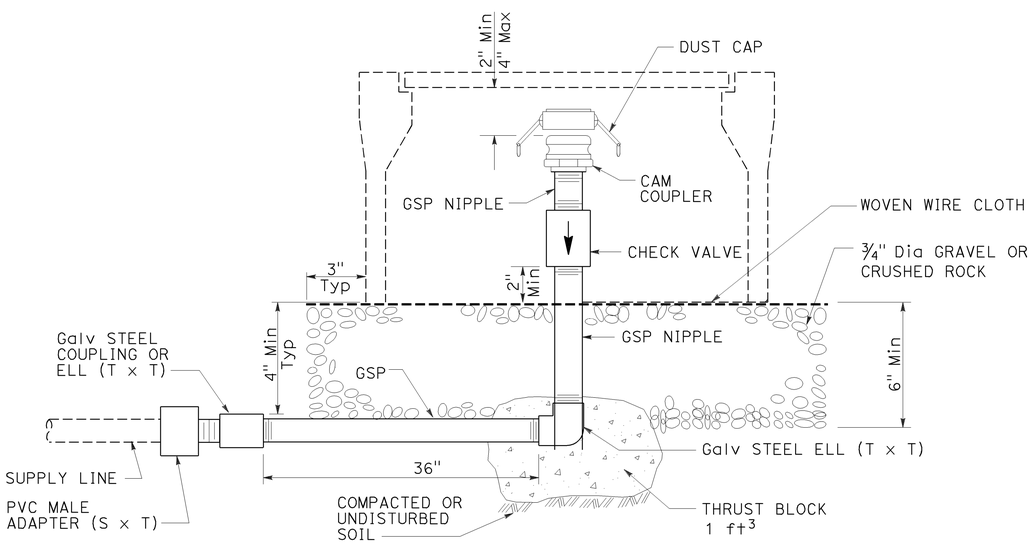

ELEVATION

CAM COUPLER ASSEMBLY

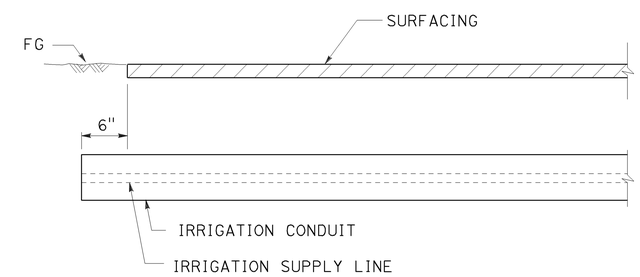

SECTION

IRRIGATION CONDUIT

UNDER SIDEWALKS, DRIVEWAYS AND PATHS

STATE OF CALIFORNIA
DEPARTMENT OF TRANSPORTATION

LANDSCAPE DETAILS

NO SCALE

RSP H9 DATED JULY 19, 2013 SUPERSEDES STANDARD PLAN H9
DATED MAY 20, 2011 - PAGE 226 OF THE STANDARD PLANS BOOK DATED 2010.

REVISED STANDARD PLAN RSP H9

2010 REVISED STANDARD PLAN RSP H9

6-28-13

DIST	COUNTY	ROUTE	POST MILES TOTAL PROJECT	SHEET No.	TOTAL SHEETS
08	Riv	60	R1.6	63	65

REGISTERED CIVIL ENGINEER

November 15, 2013
PLANS APPROVAL DATE

REGISTERED PROFESSIONAL ENGINEER
Cornelis M. Hakim
No. C55610
Exp. 12-31-14
CIVIL
STATE OF CALIFORNIA

THE STATE OF CALIFORNIA OR ITS OFFICERS OR AGENTS SHALL NOT BE RESPONSIBLE FOR THE ACCURACY OR COMPLETENESS OF SCANNED COPIES OF THIS PLAN SHEET.

TO ACCOMPANY PLANS DATED 07-14-14

2010 REVISED STANDARD PLAN RSP P74

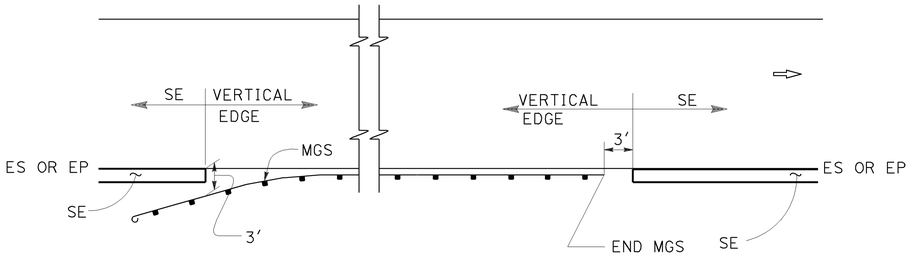

MGS

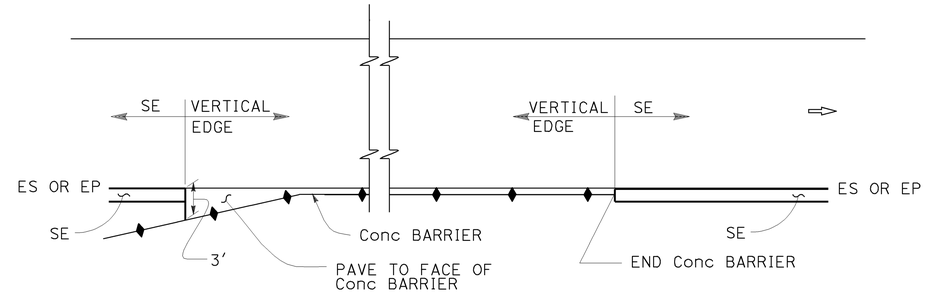

CONCRETE BARRIER

ABBREVIATIONS:

SE SAFETY EDGE

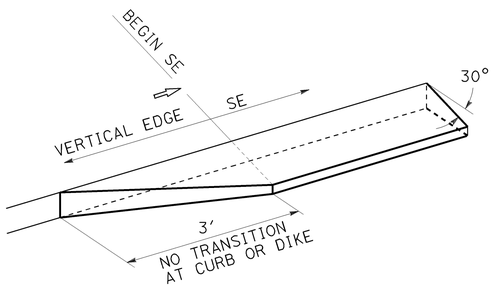

TRANSITION DETAIL FOR CONCRETE ONLY

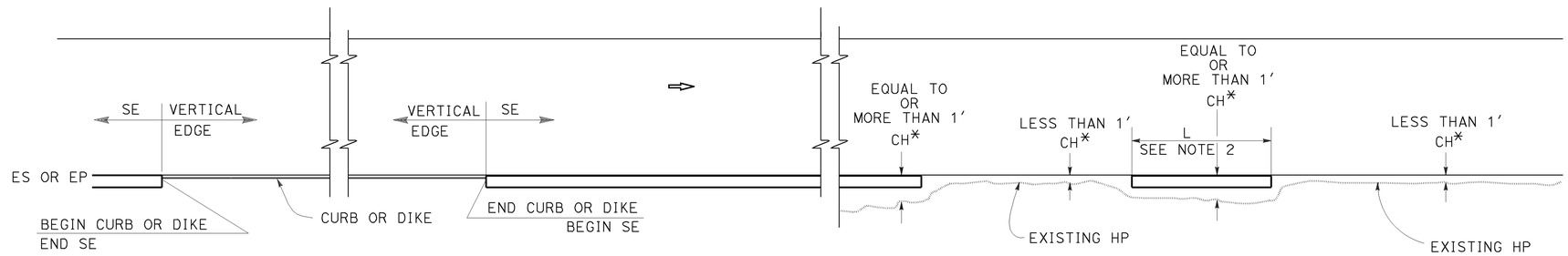

CURB OR DIKE

NARROW SIDE SLOPE

* CH = Distance from ES or EP to existing HP.

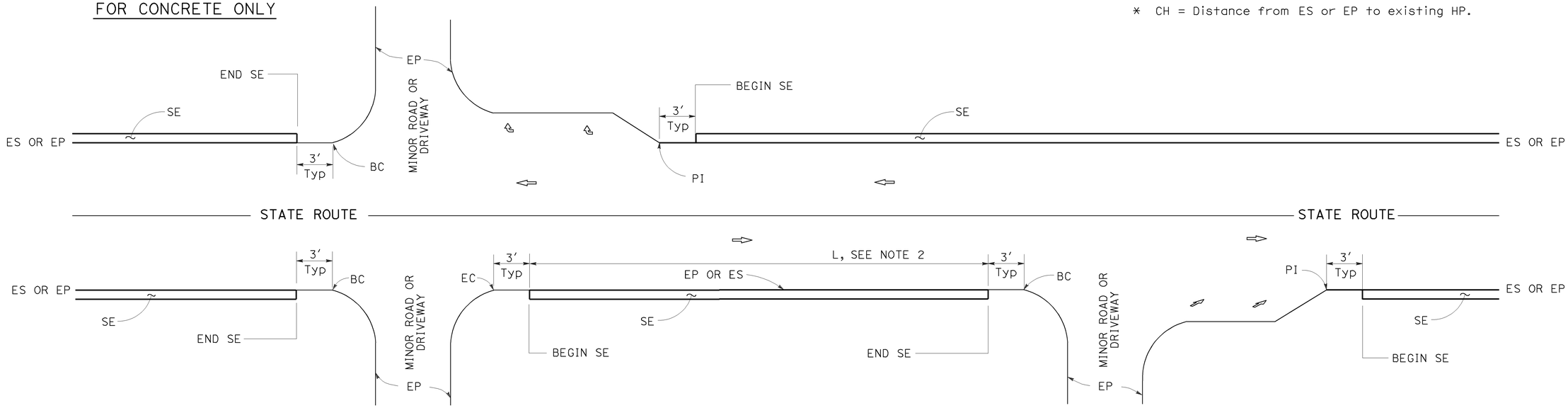

INTERSECTION

MINOR ROADWAY OR DRIVEWAY

DRIVEWAY AND INTERSECTION

NOTES:

1. For details not shown, see Revised Standard Plans RSP P75 and RSP P76.
2. Safety edge is optional when L is less than 30′.

STATE OF CALIFORNIA
DEPARTMENT OF TRANSPORTATION

PAVEMENT EDGE TREATMENTS

NO SCALE

RSP P74 DATED NOVEMBER 15, 2013 SUPERSEDES RSP P74 DATED JANUARY 20, 2012 THAT SUPPLEMENTS THE STANDARD PLANS BOOK DATED 2010.

REVISED STANDARD PLAN RSP P74

10-11-13

Dist	COUNTY	ROUTE	POST MILES TOTAL PROJECT	SHEET No.	TOTAL SHEETS
08	Riv	60	R1.6	64	65

REGISTERED CIVIL ENGINEER

April 19, 2013
PLANS APPROVAL DATE

REGISTERED PROFESSIONAL ENGINEER Gurinderpal Bhullar No. C48815 Exp. 9-30-14 CIVIL STATE OF CALIFORNIA

THE STATE OF CALIFORNIA OR ITS OFFICERS OR AGENTS SHALL NOT BE RESPONSIBLE FOR THE ACCURACY OR COMPLETENESS OF SCANNED COPIES OF THIS PLAN SHEET.

TO ACCOMPANY PLANS DATED 07-14-14

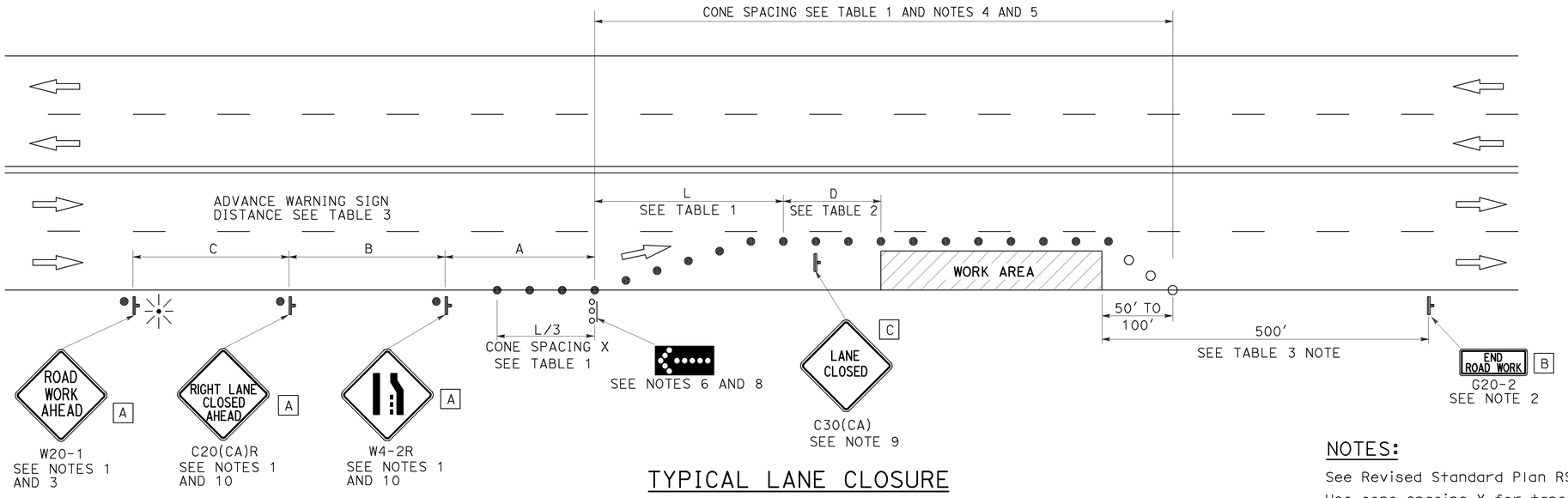

TYPICAL LANE CLOSURE

NOTES:

See Revised Standard Plan RSP T9 for tables.

Use cone spacing X for taper segment, Y for tangent segment or Z for conflict situations, as approriate, per Table 1, unless X, Y, or Z cone spacing is shown on this sheet.

Unless otherwise specified in the special provisions, all temporary warning signs shall have black legend on fluorescent orange background.

California codes are designated by (CA). Otherwise, Federal (MUTCD) codes are shown.

NOTES:

1. Each advance warning sign shall be equipped with at least two flags for daytime closure. Each flag shall be at least 16" x 16" in size and shall be orange or fluorescent red-orange in color. Flashing beacons shall be placed at the locations indicated for lane closure during hours of darkness.
2. A G20-2 "END ROAD WORK" sign, as appropriate, shall be placed at the end of the lane closure unless the end of work area is obvious, or ends within a larger project's limits.
3. If the W20-1 sign would follow within 2000' of a stationary W20-1 or G20-1 "ROAD WORK NEXT _____ MILES", use a C20(CA) sign for the first advance warning sign.
4. All cones used for lane closures during the hours of darkness shall be fitted with retroreflective bands (or sleeves) as specified in the specifications.
5. Portable delineators, placed at one-half the spacing indicated for traffic cones, may be used instead of cones for daytime closures only.
6. Flashing arrow sign shall be either Type I or Type II.
7. For approach speeds over 50 mph, use the "Traffic Control System for Lane Closure On Freeways And Expressways" plan for lane closure details and requirements.
8. A minimum 1500' of sight distance shall be provided where possible for vehicles approaching the first flashing arrow sign. Lane closures shall not begin at the top of crest vertical curve or on a horizontal curve.
9. Place a C30(CA) sign every 2000' throughout length of lane closure.
10. Median lane closures shall conform to the details as shown except that C20(CA)L and W4-2L signs shall be used.
11. At least one person shall be assigned to provide full time maintenance of traffic control devices for lane closure unless, otherwise directed by the Engineer.

LEGEND

- ● TRAFFIC CONE
- ○ TRAFFIC CONE (OPTIONAL TAPER)
- TEMPORARY TRAFFIC CONTROL SIGN
- FLASHING ARROW SIGN (FAS)
- FAS SUPPORT OR TRAILER
- PORTABLE FLASHING BEACON

SIGN PANEL SIZE (Min)

A	48" x 48"
B	36" x 18"
C	30" x 30"

STATE OF CALIFORNIA
DEPARTMENT OF TRANSPORTATION

TRAFFIC CONTROL SYSTEM FOR LANE CLOSURE ON MULTILANE CONVENTIONAL HIGHWAYS

NO SCALE

RSP T11 DATED APRIL 19, 2013 SUPERSEDES STANDARD PLAN T11 DATED MAY 20, 2011 - PAGE 239 OF THE STANDARD PLANS BOOK DATED 2010.

REVISED STANDARD PLAN RSP T11

2010 REVISED STANDARD PLAN RSP T11

4-2-13

Dist	COUNTY	ROUTE	POST MILES TOTAL PROJECT	SHEET No.	TOTAL SHEETS
08	Riv	60	R1.6	65	65

REGISTERED CIVIL ENGINEER

April 19, 2013
PLANS APPROVAL DATE

REGISTERED PROFESSIONAL ENGINEER Gurinderpal Bhullar No. C48815 Exp. 9-30-14 CIVIL STATE OF CALIFORNIA

THE STATE OF CALIFORNIA OR ITS OFFICERS OR AGENTS SHALL NOT BE RESPONSIBLE FOR THE ACCURACY OR COMPLETENESS OF SCANNED COPIES OF THIS PLAN SHEET.

TO ACCOMPANY PLANS DATED 07-14-14

TYPICAL RAMP CLOSURES

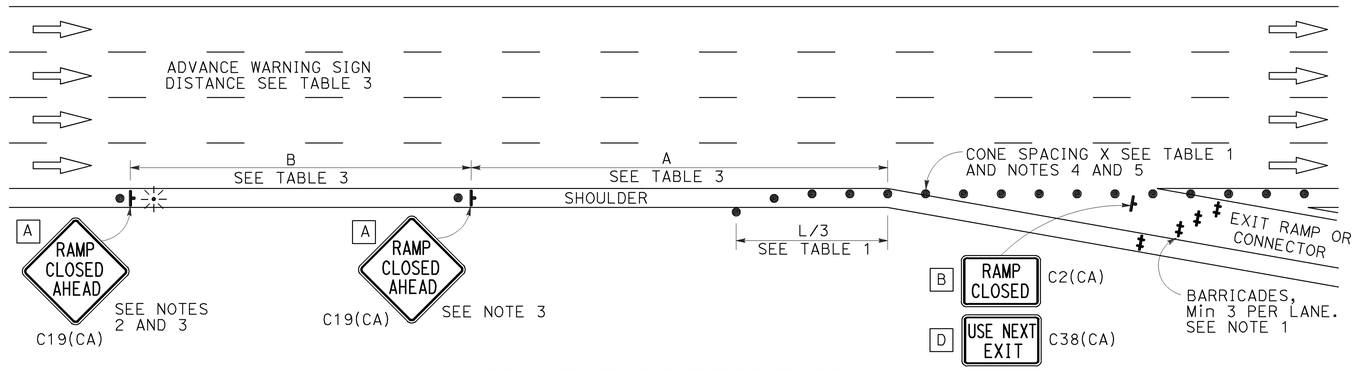

EXIT RAMP OR CONNECTOR

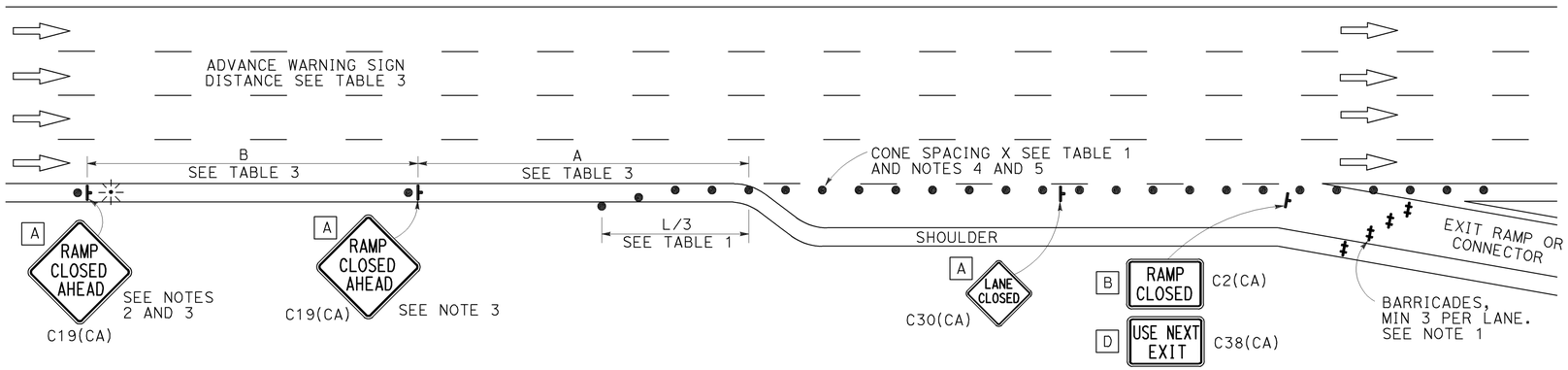

EXIT RAMP OR CONNECTOR WITH ADDITIONAL LANE

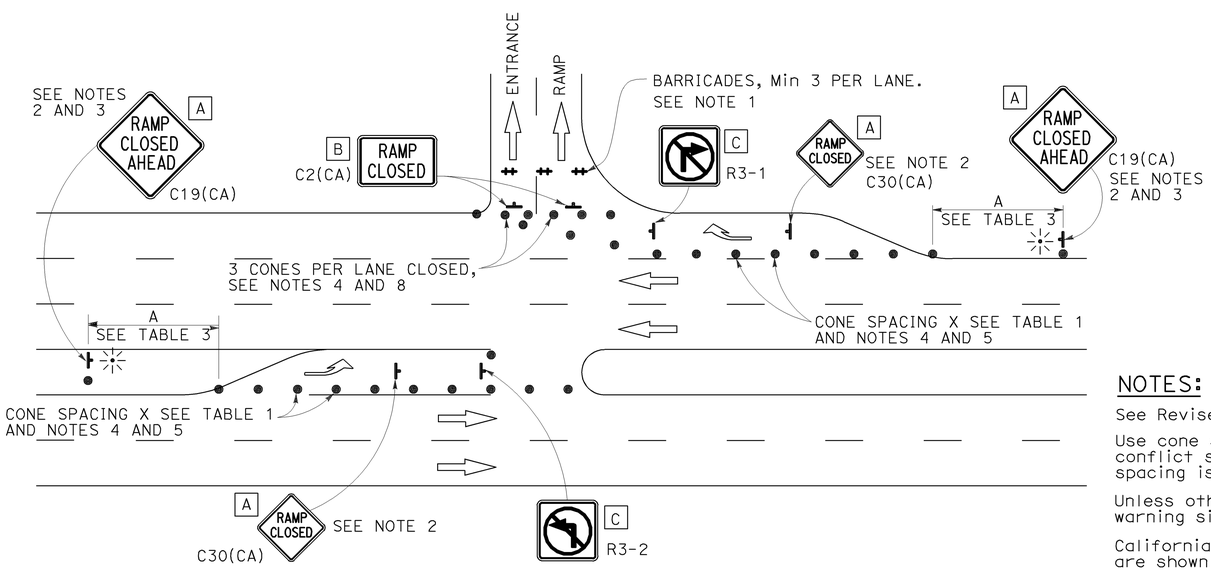

ENTRANCE RAMP WITH TURNING POCKETS

SIGN PANEL SIZE (Min)

- A 48" × 48"
- B 48" × 30"
- C 36" × 36"
- D 48" × 36"

LEGEND

- TRAFFIC CONE
- TEMPORARY TRAFFIC CONTROL SIGN
- BARRICADES
- PORTABLE FLASHING BEACON

NOTES:

1. Barricades shall be Type I, II, or III for closures lasting one week or less and Type III for closures lasting longer than one week.
2. In addition to placing the C19(CA) "RAMP CLOSED AHEAD" and C30(CA) "RAMP CLOSED" signs, black on orange overlay plates with the word "CLOSED" may be mounted, as directed by the Engineer, on all guide signs that refer to the closed ramp. The letter size on the overlay shall be the same as the guide sign.
3. Each advance C19(CA) "RAMP CLOSED AHEAD" sign shall be equipped with at least two flags for daytime closure. Each flag shall be at least 16" × 16" in size and shall be orange or fluorescent red-orange in color. A flashing beacon shall be placed on top of the first C19(CA) sign during hours of darkness.
4. All cones used for ramp closures during the hours of darkness shall be fitted with retroreflective bands (or sleeves) as specified in the specifications.
5. Portable delineators, placed at one-half the spacing indicated for traffic cones, may be used instead of cones for daytime ramp closures only.
6. At least one person shall be assigned to provide full time maintenance of traffic control devices, unless otherwise directed by the Engineer.
7. The existing "EXIT" signs shall be covered during ramp closures.
8. A minimum of 3 cones shall be placed transversely across each closed lane and shoulder.

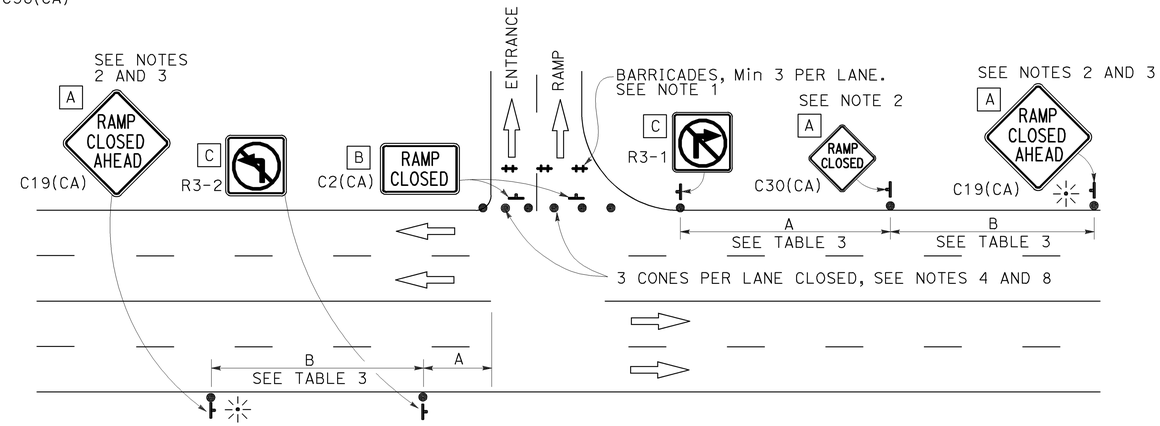

ENTRANCE RAMP WITHOUT TURNING POCKETS

NOTES:

See Revised Standard Plan RSP T9 for tables.

Use cone spacing X for taper segment, Y for tangent segment or Z for conflict situations, as approriate, per Table 1, unless X, Y, or Z cone spacing is shown on this sheet.

Unless otherwise specified in the special provisions, all temporary warning signs shall have black legend on fluorescent orange background.

California codes are designated by (CA). Otherwise, Federal (MUTCD) codes are shown.

STATE OF CALIFORNIA
DEPARTMENT OF TRANSPORTATION

TRAFFIC CONTROL SYSTEM FOR RAMP CLOSURE

NO SCALE

RSP T14 DATED APRIL 19, 2013 SUPERSEDES STANDARD PLAN T14
DATED MAY 20, 2011 - PAGE 242 OF THE STANDARD PLANS BOOK DATED 2010.

REVISED STANDARD PLAN RSP T14

2010 REVISED STANDARD PLAN RSP T14

12-18-12