ACIM-040-2(060)E

Dist	COUNTY	ROUTE	POST MILES TOTAL PROJECT	SHEET No.	TOTAL SHEETS
08	SBd	40	R85.2	1	80

STATE OF CALIFORNIA
DEPARTMENT OF TRANSPORTATION

PROJECT PLANS FOR CONSTRUCTION ON
STATE HIGHWAY
IN SAN BERNARDINO COUNTY
NEAR ESSEX
AT VAN WINKLE WASH BRIDGE

TO BE SUPPLEMENTED BY STANDARD PLANS 2010

INDEX OF PLANS

SHEET No.	DESCRIPTION
1	TITLE AND LOCATION MAP
2	TYPICAL CROSS SECTIONS
3-5	LAYOUTS
6-7	PROFILE AND SUPERELEVATION DIAGRAMS
8-11	CONSTRUCTION DETAILS
12-13	EROSION CONTROL PLANS
14	CONSTRUCTION AREA SIGNS
15-36	STAGE CONSTRUCTION, TRAFFIC HANDLING PLANS AND QUANTITIES
37-44	DETOUR PLANS
45-48	PAVEMENT DELINEATION PLANS AND QUANTITIES
49-50	SUMMARY OF QUANTITIES
51-55	REVISED AND NEW STANDARD PLANS

STRUCTURE PLANS

56-80	VAN WINKLE WASH BRIDGE (REPLACE) (Br No. 54-1298L/R)

THE STANDARD PLANS LIST APPLICABLE TO THIS CONTRACT IS INCLUDED IN THE NOTICE TO BIDDERS AND SPECIAL PROVISIONS BOOK.

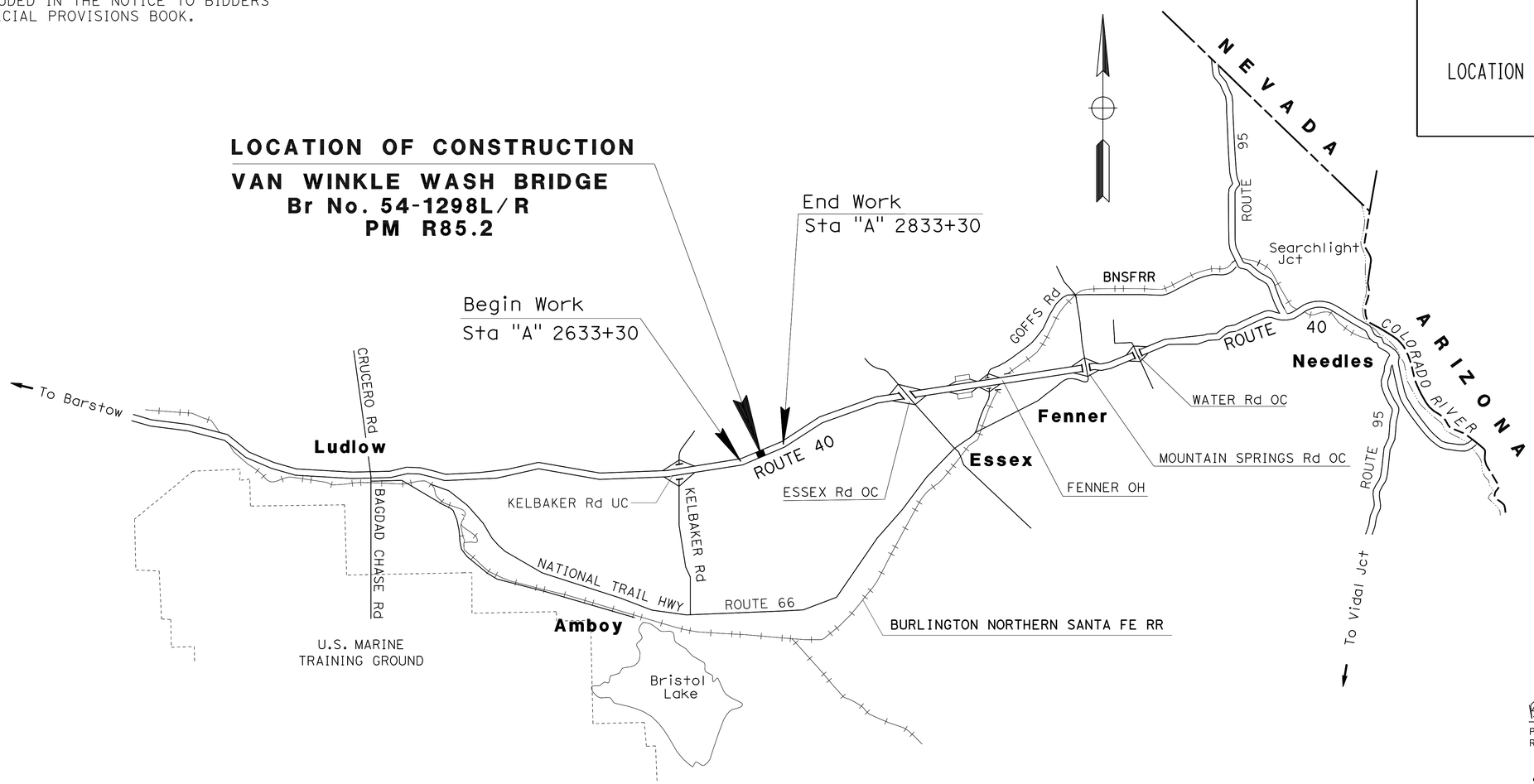

NO SCALE

THE CONTRACTOR SHALL POSSESS THE CLASS (OR CLASSES) OF LICENSE AS SPECIFIED IN THE "NOTICE TO BIDDERS."

PROJECT MANAGER: LEO CHEN
DESIGN ENGINEER: BANG NGUYEN

Bang H Nguyen 06-28-12
PROJECT ENGINEER REGISTERED CIVIL ENGINEER — DATE

June 25, 2012
PLANS APPROVAL DATE

REGISTERED PROFESSIONAL ENGINEER — BANG HAI NGUYEN — No. C 46027 — Exp. 12/31/12 — CIVIL — STATE OF CALIFORNIA

THE STATE OF CALIFORNIA OR ITS OFFICERS OR AGENTS SHALL NOT BE RESPONSIBLE FOR THE ACCURACY OR COMPLETENESS OF SCANNED COPIES OF THIS PLAN SHEET.

CONTRACT No.	08-0N5904
PROJECT ID	0800000533

LAST REVISION 06-27-12 — DATE PLOTTED => 31-OCT-2012 — TIME PLOTTED => 06:25

Dist	COUNTY	ROUTE	POST MILES TOTAL PROJECT	SHEET No.	TOTAL SHEETS
08	SBd	40	R85.2	2	80

REGISTERED CIVIL ENGINEER 06-28-12 DATE

6-25-12
PLANS APPROVAL DATE

REGISTERED PROFESSIONAL ENGINEER BANG H. NGUYEN No. C 46027 Exp.12-31-12 CIVIL STATE OF CALIFORNIA

THE STATE OF CALIFORNIA OR ITS OFFICERS OR AGENTS SHALL NOT BE RESPONSIBLE FOR THE ACCURACY OR COMPLETENESS OF SCANNED COPIES OF THIS PLAN SHEET.

NOTES:

1. DIMENSIONS OF THE PAVEMENT STRUCTURES ARE SUBJECT TO TOLERANCES SPECIFIED IN THE STANDARD SPECIFICATIONS.
2. SUPERELEVATION ARE SHOWN ON THE SUPERELEVATION DIAGRAMS.
3. RUMBLE STRIPS TO BE INSTALLED ONLY AFTER COMPLETION OF FINAL PAVEMENT DELINEATION.
4. EXACT LOCATIONS AND TYPES OF DIKES AND MBGR ARE SHOWN ON LAYOUTS AND IN THE SUMMARY OF QUANTITIES SHEETS.

DESIGN DESIGNATION (ROUTE 40)

	2010	2015	2035
ADT	12,400	114,300	25,800
DHV	1,460	1,690	2,580
%TRUCK	48%	48%	50%
D	69/31	69/31	69/31

ABBREVIATION:

SRS SHOULDER RUMBLE STRIP (HMA, GROUND-IN INDENTATIONS)

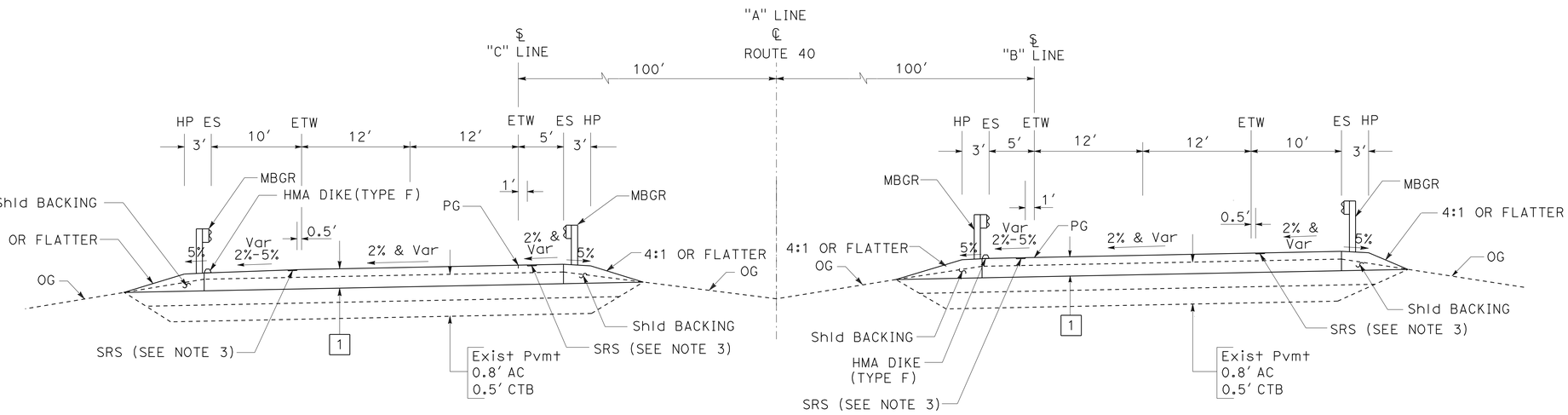

WESTBOUND

Sta "C" 1989+00 TO 1993+98.83
Sta "C" 1997+32.68 TO 2002+50

EASTBOUND

Sta "B" 988+50 TO 995+04.47
Sta "B" 998+36.17 TO 1002+50

PAVEMENT STRUCTURE TYPES

1 — 0.25′ Min - 1.30′ Max HMA (TYPE C)
0.25′ Max COLD PLANE AC Pvmt

2 * — 0.75′ HMA (TYPE A) (DETOUR ROAD)
0.35′ CLASS 2 AS

* SEE STAGE CONSTRUCTION AND DETOUR PLANS

3 ** — 0.20′ HMA (TYPE A)
0.20′ COLD PLANE AC Pvmt

** SEE STAGE CONSTRUCTION PLANS

TYPICAL CROSS SECTIONS

NO SCALE

X-1

REVISED BY | DATE REVISED
BANG NGUYEN | LY PHAN
CALCULATED-DESIGNED BY | CHECKED BY
FUNCTIONAL SUPERVISOR: SON NGUYEN

STATE OF CALIFORNIA - DEPARTMENT OF TRANSPORTATION
Caltrans® **DESIGN**

LAST REVISION 06-28-12 | DATE PLOTTED => 29-JUN-2012 | TIME PLOTTED => 08:54

Dist	COUNTY	ROUTE	POST MILES TOTAL PROJECT	SHEET No.	TOTAL SHEETS
08	SBd	40	R85.2	3	80

Bang H Nguyen 06-28-12
REGISTERED CIVIL ENGINEER DATE

6-25-12
PLANS APPROVAL DATE

REGISTERED PROFESSIONAL ENGINEER BANG H. NGUYEN No. C 46027 Exp. 12-31-12 CIVIL STATE OF CALIFORNIA

THE STATE OF CALIFORNIA OR ITS OFFICERS OR AGENTS SHALL NOT BE RESPONSIBLE FOR THE ACCURACY OR COMPLETENESS OF SCANNED COPIES OF THIS PLAN SHEET.

NOTES:

FOR ACCURATE RIGHT OF WAY DATA, CONTACT RIGHT OF WAY ENGINEERING AT THE DISTRICT OFFICE.

LEGENDS:

- # PAVEMENT STRUCTURE TYPE, SEE Sht X-1
- (X) CURVE No.
- CONCRETED RSP (1/2 T, METHOD B)
- Exist CONCRETED RSP TO REMAIN
- TFESA WELDED WIRE MESH TEMPORARY FENCE

ABBREVIATIONS:

AFTS ALTERNATIVE FLARED TERMINAL SYSTEM
SRS SHOULDER RUMBLE STRIP (HMA, GROUND-IN INDENTATIONS)

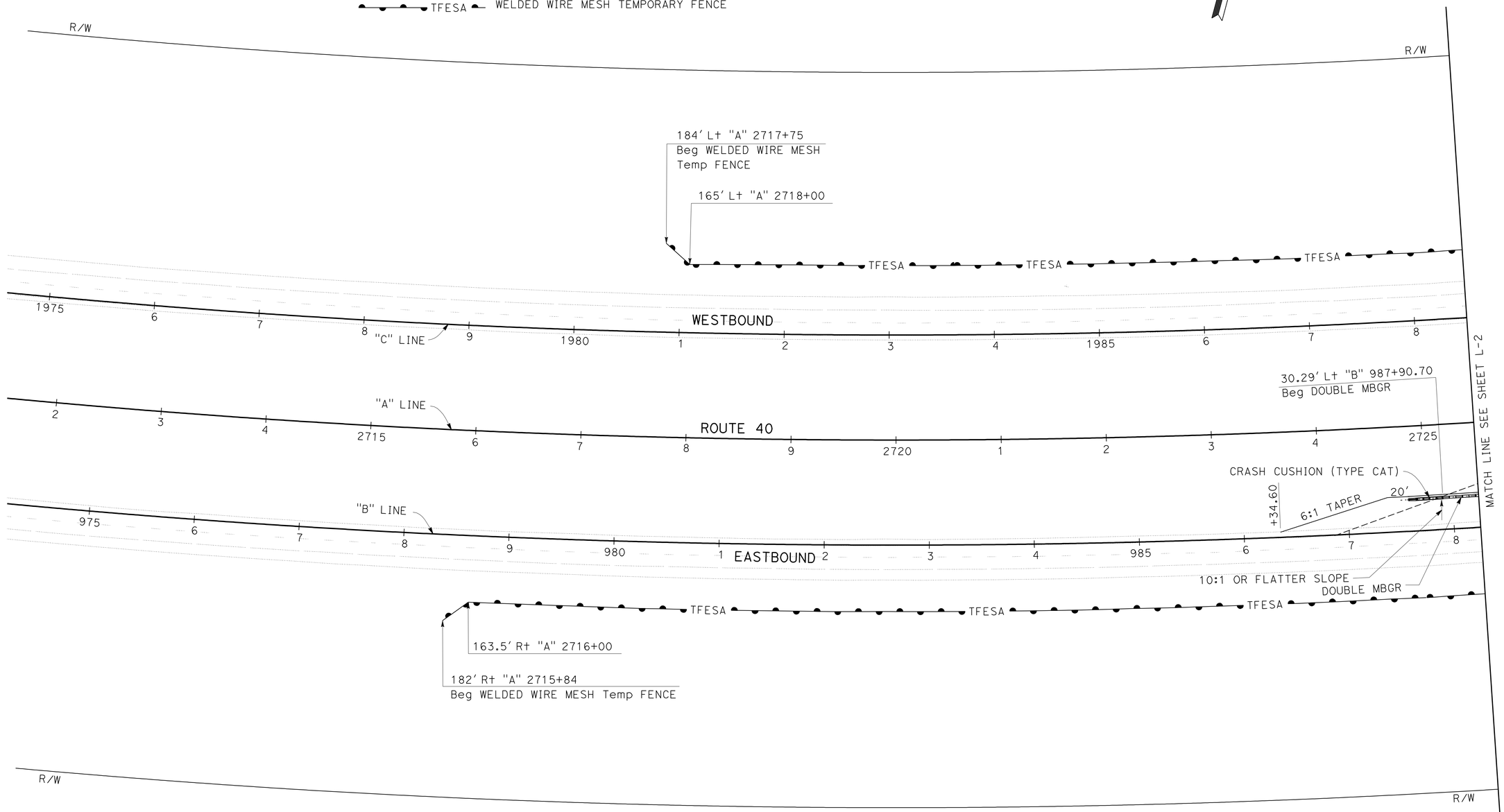

LAYOUT

SCALE: 1" = 50'

L-1

STATE OF CALIFORNIA - DEPARTMENT OF TRANSPORTATION
Caltrans®
DESIGN

FUNCTIONAL SUPERVISOR: SON NGUYEN
CALCULATED-DESIGNED BY: BANG NGUYEN
CHECKED BY: LY PHAN
REVISED BY
DATE REVISED

LAST REVISION 06-28-12
DATE PLOTTED => 29-JUN-2012
TIME PLOTTED => 08:54

Dist	COUNTY	ROUTE	POST MILES TOTAL PROJECT	SHEET No.	TOTAL SHEETS
08	SBd	40	R85.2	4	80

Bang H Nguyen 06-28-12
REGISTERED CIVIL ENGINEER DATE

6-25-12
PLANS APPROVAL DATE

REGISTERED PROFESSIONAL ENGINEER BANG H. NGUYEN No. C 46027 Exp. 12-31-12 CIVIL STATE OF CALIFORNIA

THE STATE OF CALIFORNIA OR ITS OFFICERS OR AGENTS SHALL NOT BE RESPONSIBLE FOR THE ACCURACY OR COMPLETENESS OF SCANNED COPIES OF THIS PLAN SHEET.

CURVE DATA

No.	R	Δ	T	L	N	E
1	9,000′	21°32′33″	1,712.30′	3,383.88′	2097792.771	7294650.732
2	9,100′	21°32′33″	1,731.18′	3,421.48′	2097694.557	7294677.489
3	8,900′	21°32′33″	1,693.13′	3,346.28′	2097890.984	7294623.973

NOTE:

FOR ACCURATE RIGHT OF WAY DATA, CONTACT RIGHT OF WAY ENGINEERING AT THE DISTRICT OFFICE.

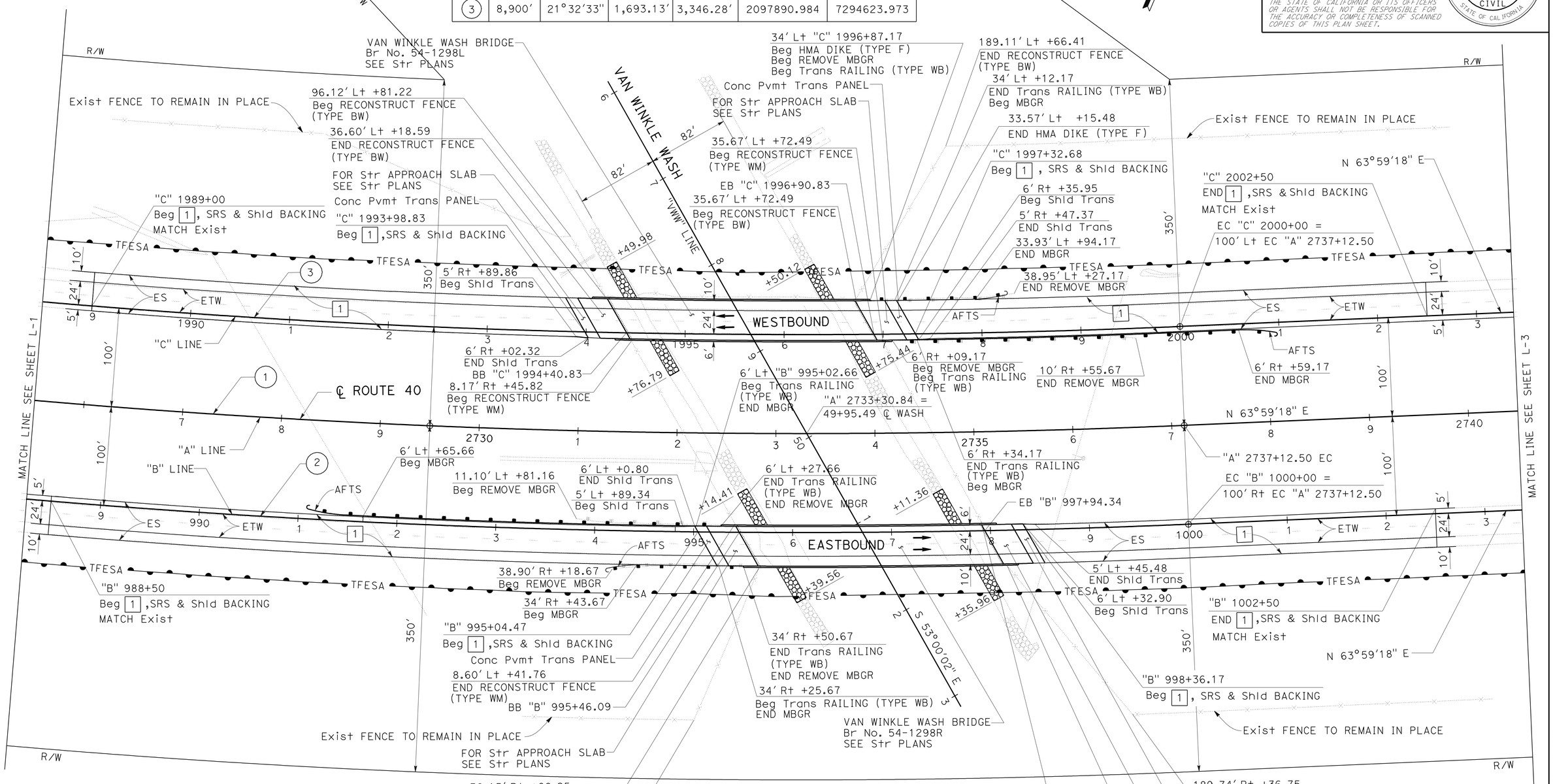

LAYOUT

SCALE: 1" = 50′

L-2

REVISED BY	DATE REVISED
BANG NGUYEN	LY PHAN
CALCULATED-DESIGNED BY	CHECKED BY
FUNCTIONAL SUPERVISOR	SON NGUYEN

STATE OF CALIFORNIA - DEPARTMENT OF TRANSPORTATION

Caltrans

DESIGN

LAST REVISION 02-01-12 | DATE PLOTTED => 29-JUN-2012 | TIME PLOTTED => 08:55

Dist	COUNTY	ROUTE	POST MILES TOTAL PROJECT	SHEET No.	TOTAL SHEETS
08	SBd	40	R85.2	5	80

Bang H Nguyen 04-16-12
REGISTERED CIVIL ENGINEER DATE

6-25-12
PLANS APPROVAL DATE

REGISTERED PROFESSIONAL ENGINEER
BANG H. NGUYEN
No. C 46027
Exp. 12-31-12
CIVIL
STATE OF CALIFORNIA

THE STATE OF CALIFORNIA OR ITS OFFICERS OR AGENTS SHALL NOT BE RESPONSIBLE FOR THE ACCURACY OR COMPLETENESS OF SCANNED COPIES OF THIS PLAN SHEET.

NOTE:

FOR ACCURATE RIGHT OF WAY DATA, CONTACT
RIGHT OF WAY ENGINEERING AT THE DISTRICT OFFICE.

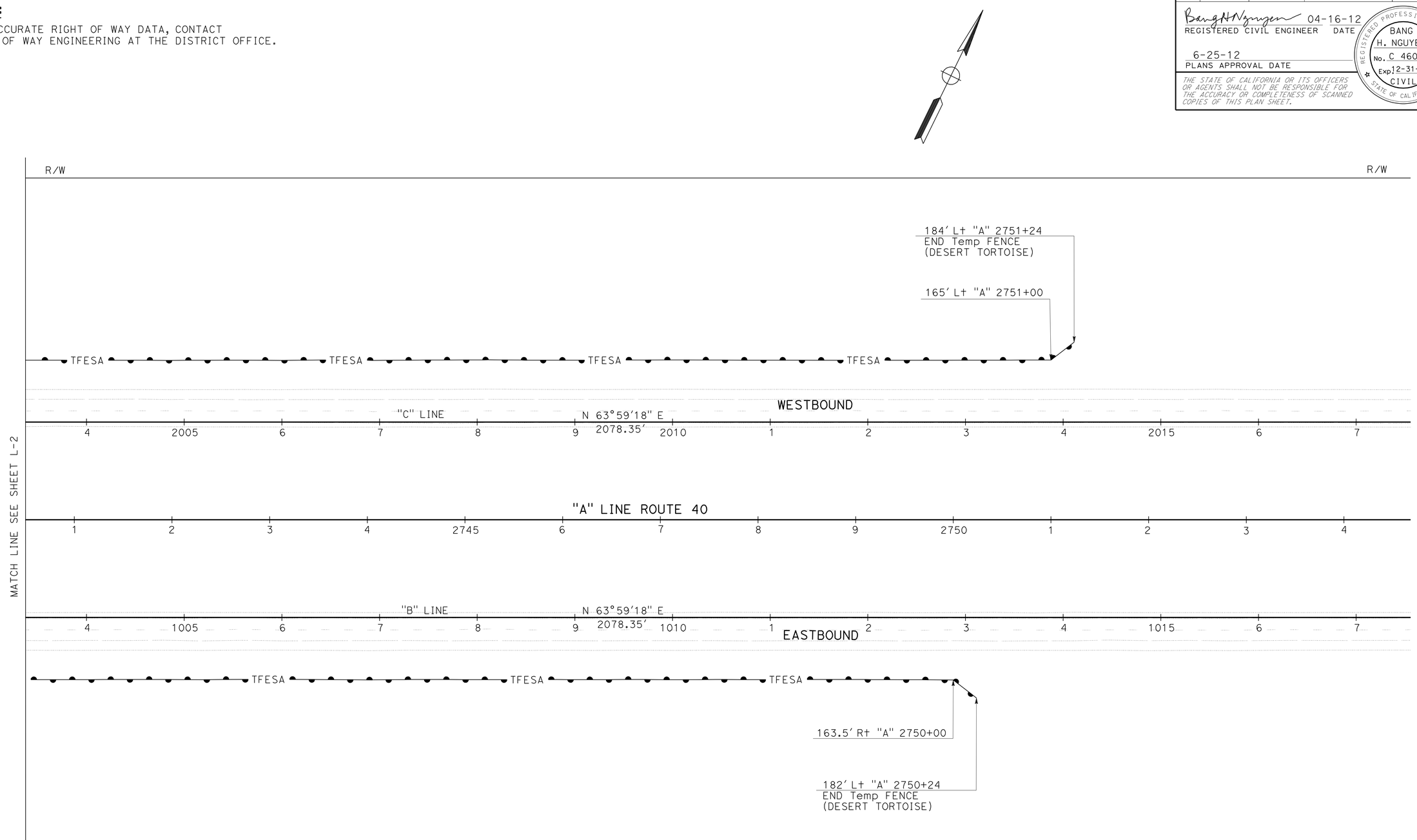

LAYOUT

SCALE: 1" = 50'

L-3

REVISED BY	DATE REVISED

CALCULATED-DESIGNED BY	CHECKED BY
BANG NGUYEN	LY PHAN

FUNCTIONAL SUPERVISOR: SON NGUYEN

STATE OF CALIFORNIA - DEPARTMENT OF TRANSPORTATION

Caltrans®

DESIGN

LAST REVISION 03-01-11 | DATE PLOTTED => 29-JUN-2012 | TIME PLOTTED => 08:55

Dist	COUNTY	ROUTE	POST MILES TOTAL PROJECT	SHEET No.	TOTAL SHEETS
08	SBd	40	R85.2	6	80

REGISTERED CIVIL ENGINEER 06-28-12 DATE

6-25-12
PLANS APPROVAL DATE

REGISTERED PROFESSIONAL ENGINEER BANG H. NGUYEN No. C 46027 Exp. 12-31-12 CIVIL STATE OF CALIFORNIA

THE STATE OF CALIFORNIA OR ITS OFFICERS OR AGENTS SHALL NOT BE RESPONSIBLE FOR THE ACCURACY OR COMPLETENESS OF SCANNED COPIES OF THIS PLAN SHEET.

LEGEND:

[#] STRUCTURAL SECTION TYPE, SEE Sht X-1

ABBREVIATION:

VPI VERTICAL POINT OF INTERSECTION

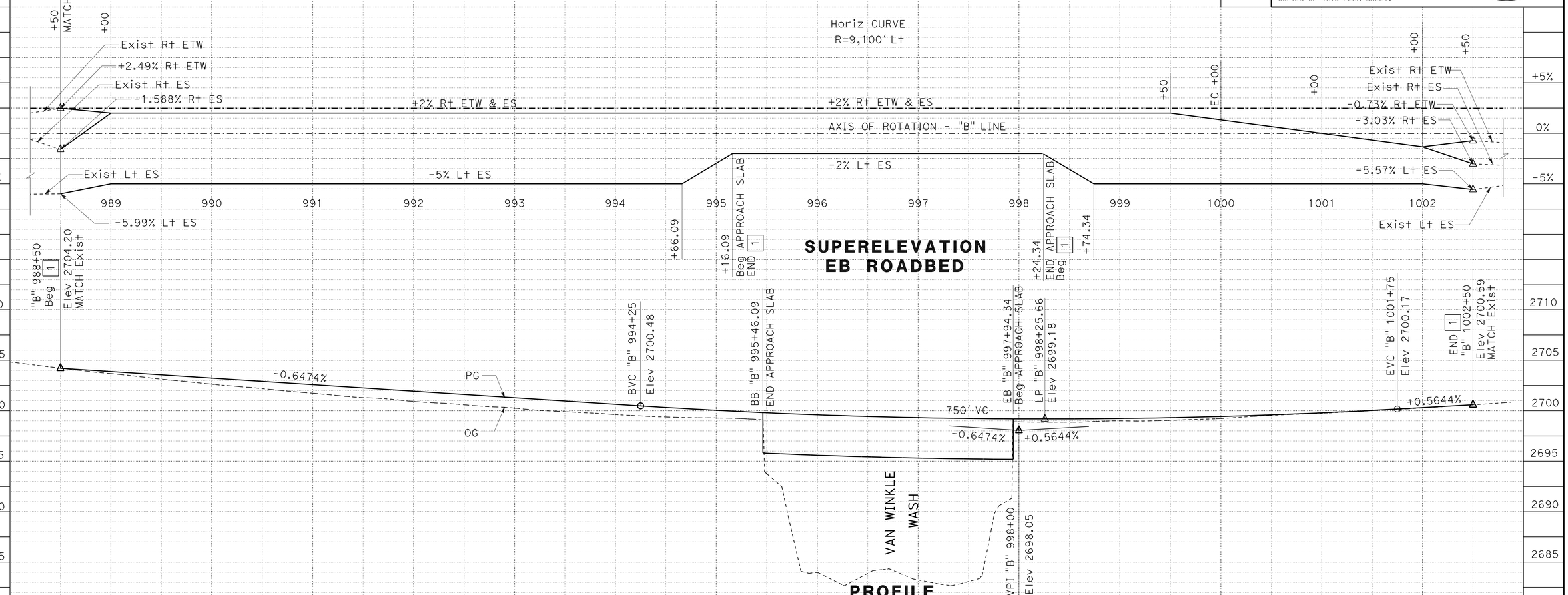

PROFILE
"B" LINE
VAN WINKLE WASH BRIDGE
Br No. 54-1298R

STATION	Elev (OG)	Elev (PG)
+50	2704.20	2704.20
989	2703.67	2703.88
+50	2703.12	2703.55
990	2702.62	2703.23
+50	2702.19	2702.91
991	2701.73	2702.58
+50	2701.29	2702.26
992	2700.92	2701.93
+50	2700.59	2701.61
993	2700.25	2701.29
+50	2699.90	2700.96
994	2699.62	2700.64
+50	2699.38	2700.32
995	2699.28	2700.04
+50	2693.76	2699.79
996	2683.97	2699.59
+50	2683.89	2699.43
997	2683.24	2699.31
+50	2683.09	2699.23
998	2698.89	2699.19
+50	2698.86	2699.19
999	2698.99	2699.23
+50	2699.05	2699.31
1.000	2699.23	2699.43
+50	2699.53	2699.59
1.001	2699.74	2699.79
+50	2700.00	2700.03
1.002	2700.27	2700.31
+50	2700.59 (OG)	2700.59 (PG)

PROFILE AND SUPERELEVATION DIAGRAM

SCALE: Horiz 1" = 50'
Vert 1" = 5'

PS-1

STATION		TOTAL
CY	Exc	
	Emb	

STATE OF CALIFORNIA - DEPARTMENT OF TRANSPORTATION
Caltrans
DESIGN

FUNCTIONAL SUPERVISOR: SON NGUYEN
CALCULATED-DESIGNED BY: BANG NGUYEN
CHECKED BY: LY PHAN
REVISED BY
DATE REVISED

LAST REVISION 06-27-12
DATE PLOTTED => 29-JUN-2012
TIME PLOTTED => 08:55

Dist	COUNTY	ROUTE	POST MILES TOTAL PROJECT	SHEET No.	TOTAL SHEETS
08	SBd	40	R85.2	7	80

Bang H Nguyen 06-28-12
REGISTERED CIVIL ENGINEER DATE

6-25-12
PLANS APPROVAL DATE

REGISTERED PROFESSIONAL ENGINEER
BANG H. NGUYEN
No. C 46027
Exp. 12-31-12
CIVIL
STATE OF CALIFORNIA

THE STATE OF CALIFORNIA OR ITS OFFICERS OR AGENTS SHALL NOT BE RESPONSIBLE FOR THE ACCURACY OR COMPLETENESS OF SCANNED COPIES OF THIS PLAN SHEET.

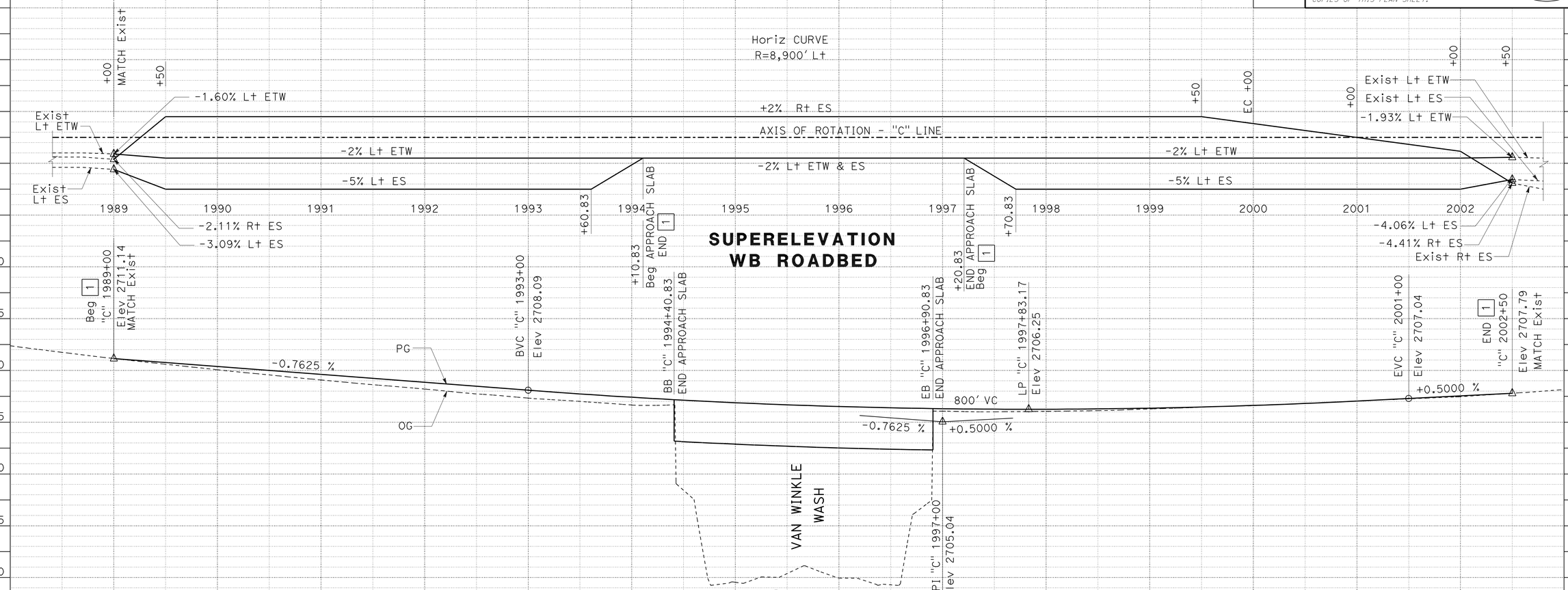

PROFILE
"C" LINE
VAN WINKLE WASH BRIDGE
Br No. 54-1298L

STATION	Elev	Elev
1989	2711.14 (OG)	2711.14 (PG)
+50	2710.59	2710.76
1990	2710.06	2710.38
+50	2709.56	2710.00
1991	2709.08	2709.61
+50	2708.62	2709.23
1992	2708.20	2708.85
+50	2707.73	2708.47
1993	2707.32	2708.09
+50	2707.00	2707.73
1994	2706.66	2707.41
+50	2698.42	2707.12
1995	2689.54	2706.88
+50	2690.39	2706.68
1996	2689.94	2706.51
+50	2689.29	2706.39
1997	2706.06	2706.30
+50	2706.00	2706.26
1998	2706.05	2706.25
+50	2706.11	2706.28
1999	2706.27	2706.36
+50	2706.45	2706.47
2000	2706.60	2706.62
+50	2706.82	2706.81
2001	2707.04	2707.04
+50	2707.25	2707.29
2002	2707.46	2707.54
+50	2707.79 (OG)	2707.79 (PG)

PROFILE AND SUPERELEVATION DIAGRAM

SCALE: Horiz 1" = 50'
Vert 1" = 5'

PS-2

STATION		TOTAL
CY	Exc	
	Emb	

REVISED BY | DATE REVISED
BANG NGUYEN | LY PHAN
CALCULATED-DESIGNED BY | CHECKED BY
FUNCTIONAL SUPERVISOR
SON NGUYEN

STATE OF CALIFORNIA - DEPARTMENT OF TRANSPORTATION
Caltrans
DESIGN

LAST REVISION 06-27-12
DATE PLOTTED => 29-JUN-2012
TIME PLOTTED => 08:55

Dist	COUNTY	ROUTE	POST MILES TOTAL PROJECT	SHEET No.	TOTAL SHEETS
08	SBd	40	R85.2	8	80

Bang H Nguyen 06-28-12
REGISTERED CIVIL ENGINEER DATE

6-25-12
PLANS APPROVAL DATE

REGISTERED PROFESSIONAL ENGINEER BANG H. NGUYEN No. C 46027 Exp.12-31-12 CIVIL STATE OF CALIFORNIA

THE STATE OF CALIFORNIA OR ITS OFFICERS OR AGENTS SHALL NOT BE RESPONSIBLE FOR THE ACCURACY OR COMPLETENESS OF SCANNED COPIES OF THIS PLAN SHEET.

NOTES:

1. LIMITS OF REMOVE CONCRETED ROCK SLOPE PROTECTION AND CONCRETED ROCK SLOPE PROTECTION AS SHOWN ARE APPROXIMATE. FINAL LIMITS TO BE DETERMINED BY THE ENGINEER.
2. CONCRETED ROCK SLOPE PROTECTION SHALL BE CONTINUOUS UNDER THE BRIDGES.
3. 7.5′ DIMENSION IS APPROXIMATE AND MAY VARY. CONCRETED ROCK SLOPE PROTECTION SHOULD EXTEND TO THE TOP OF THE BANK AND MATCH EXISTING TOP OF CONCRETED ROCK SLOPE PROTECTION ELEVATIONS AT A MINIMUM.
4. 5′ DIMENSION IS A MINIMUM DEPTH BELOW THE CHANNEL BOTTOM. IF EXISTING TOE IS DEEPER THEN MATCH EXISTING.

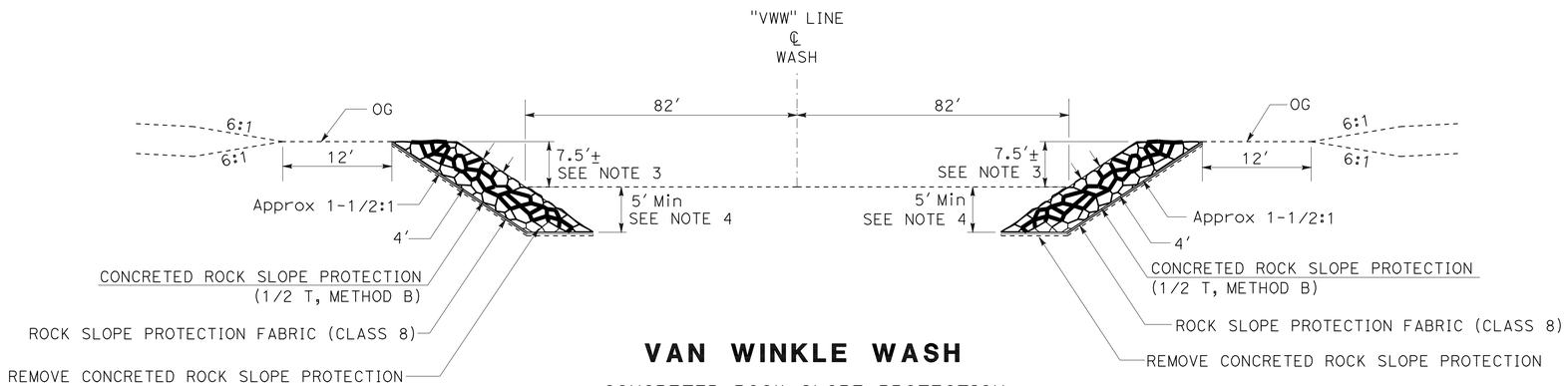

VAN WINKLE WASH

CONCRETED ROCK SLOPE PROTECTION

Sta 47+49.98 To Sta 48+76.79
Sta 48+50.12 To Sta 49+75.44
Sta 50+14.41 To Sta 51+39.56
Sta 51+11.36 To Sta 52+35.96

CONSTRUCTION DETAILS

NO SCALE

C-1

STATE OF CALIFORNIA - DEPARTMENT OF TRANSPORTATION
Caltrans
DESIGN

FUNCTIONAL SUPERVISOR: SON NGUYEN
CALCULATED-DESIGNED BY: BANG NGUYEN
CHECKED BY: LY PHAN
REVISED BY
DATE REVISED

LAST REVISION 06-28-12
DATE PLOTTED => 29-JUN-2012
TIME PLOTTED => 08:55

Dist	COUNTY	ROUTE	POST MILES TOTAL PROJECT	SHEET No.	TOTAL SHEETS
08	SBd	40	R85.2	9	80

Bang H Nguyen 06-28-12
REGISTERED CIVIL ENGINEER DATE

6-25-12
PLANS APPROVAL DATE

REGISTERED PROFESSIONAL ENGINEER
BANG H. NGUYEN
No. C 46027
Exp. 12-31-12
CIVIL
STATE OF CALIFORNIA

THE STATE OF CALIFORNIA OR ITS OFFICERS OR AGENTS SHALL NOT BE RESPONSIBLE FOR THE ACCURACY OR COMPLETENESS OF SCANNED COPIES OF THIS PLAN SHEET.

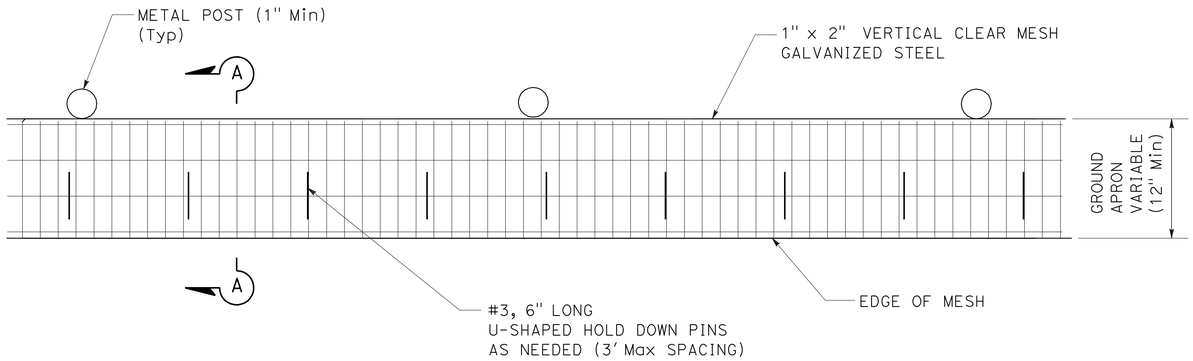

PLAN VIEW

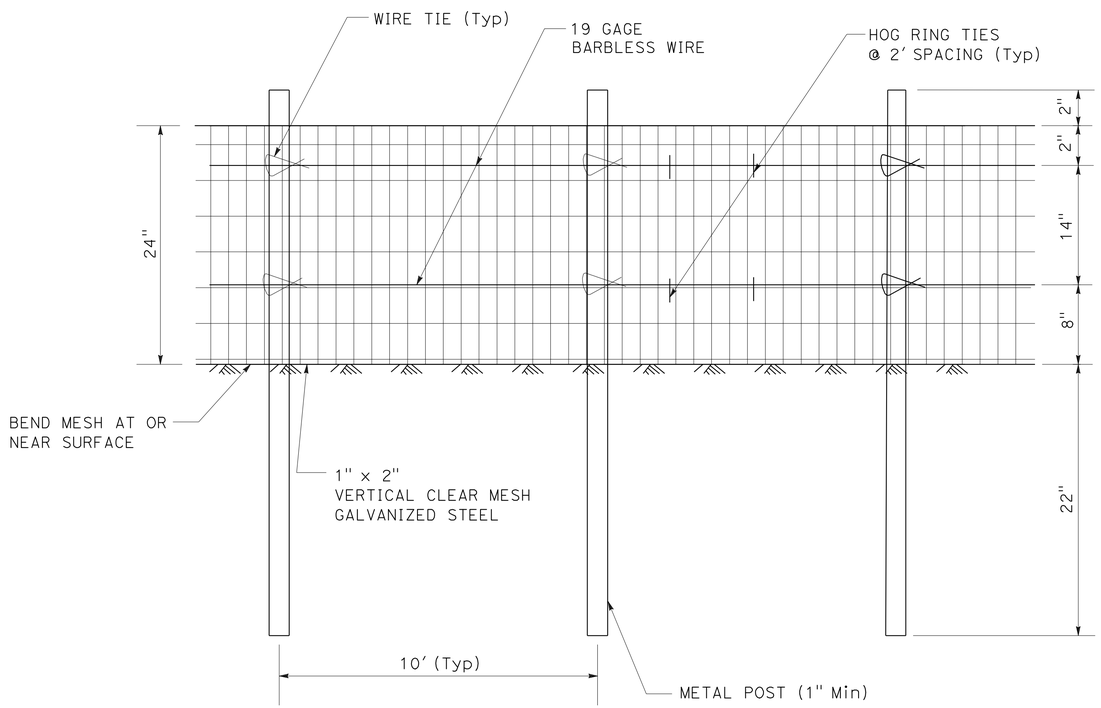

FRONT VIEW

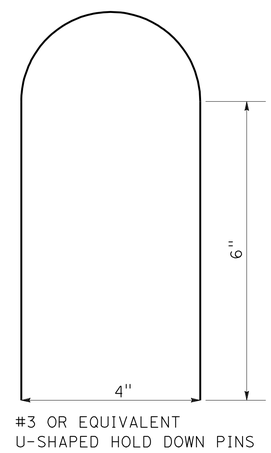

PIN DETAIL

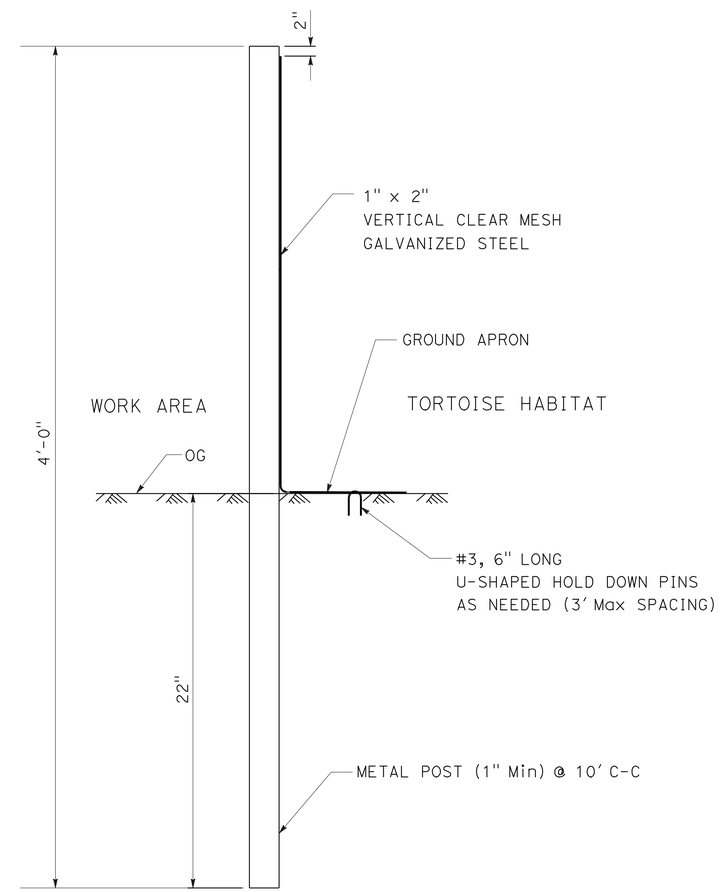

SECTION A-A

WELDED WIRE MESH TEMPORARY FENCE

CONSTRUCTION DETAILS

NO SCALE

C-2

REVISED BY	DATE REVISED

CALCULATED-DESIGNED BY: BANG NGUYEN
CHECKED BY: LY PHAN
FUNCTIONAL SUPERVISOR: SON NGUYEN

STATE OF CALIFORNIA - DEPARTMENT OF TRANSPORTATION
Caltrans
DESIGN

LAST REVISION 06-28-12 | DATE PLOTTED => 29-JUN-2012 | TIME PLOTTED => 08:55

Dist	COUNTY	ROUTE	POST MILES TOTAL PROJECT	SHEET No.	TOTAL SHEETS
08	SBd	40	R85.2	10	80

Bang H Nguyen 04-16-12
REGISTERED CIVIL ENGINEER DATE

6-25-12
PLANS APPROVAL DATE

REGISTERED PROFESSIONAL ENGINEER BANG H. NGUYEN No. C 46027 Exp. 12-31-12 CIVIL STATE OF CALIFORNIA

THE STATE OF CALIFORNIA OR ITS OFFICERS OR AGENTS SHALL NOT BE RESPONSIBLE FOR THE ACCURACY OR COMPLETENESS OF SCANNED COPIES OF THIS PLAN SHEET.

TABLE A

POST OFFSET DIMENSIONS		
Post No.	3'-0" System End Offset	3'-6" System End Offset
1	36"	42"
2	22¼"	27¾"
3	11¾"	16¼"
4	6¾"	10⅝"
5	3"	6"
6	¾"	2¾"
7	0"	¾"
8	0"	0"

See Note 12

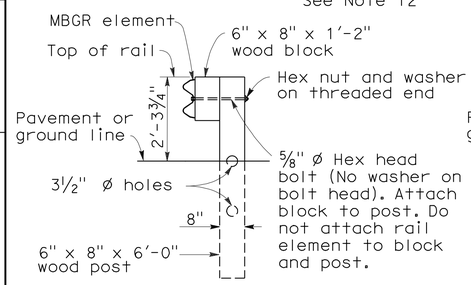

SECTION A-A

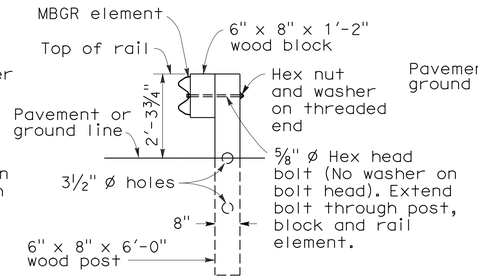

SECTION B-B

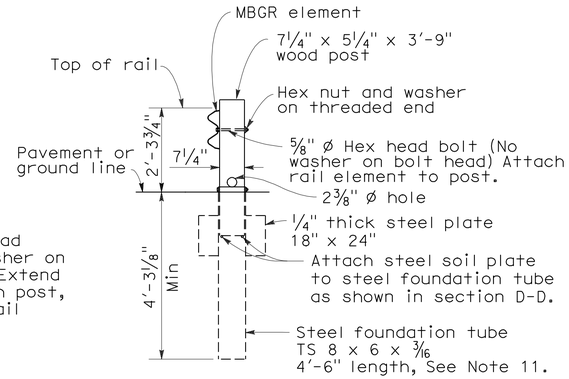

SECTION C-C

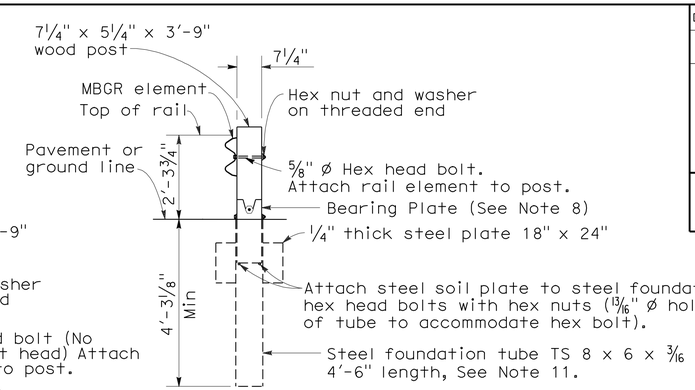

SECTION D-D

(Terminal Section not shown)

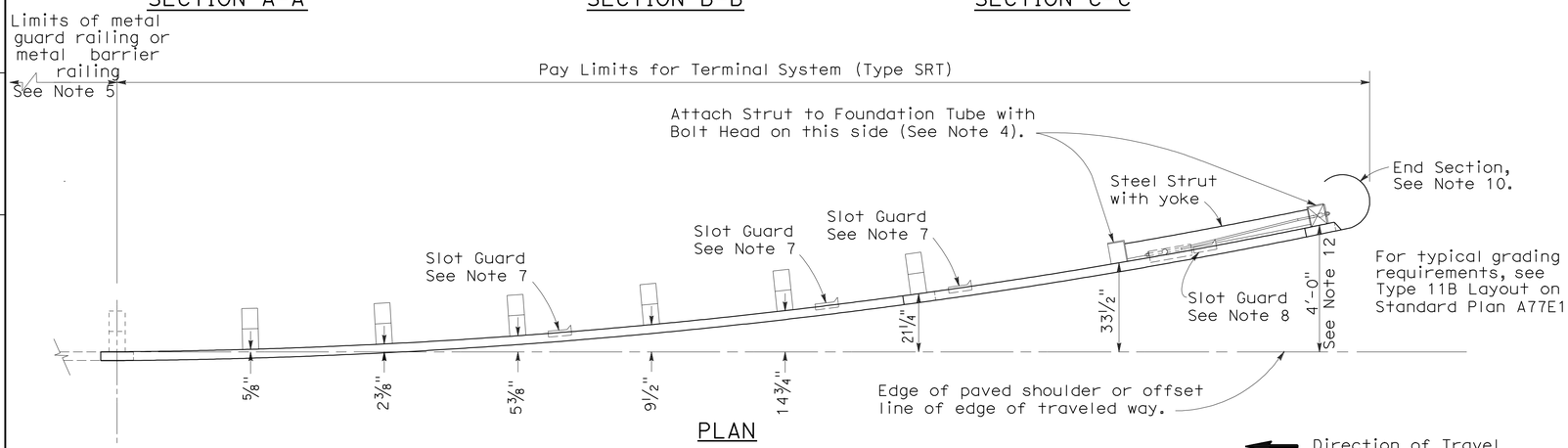

PLAN

Direction of Travel

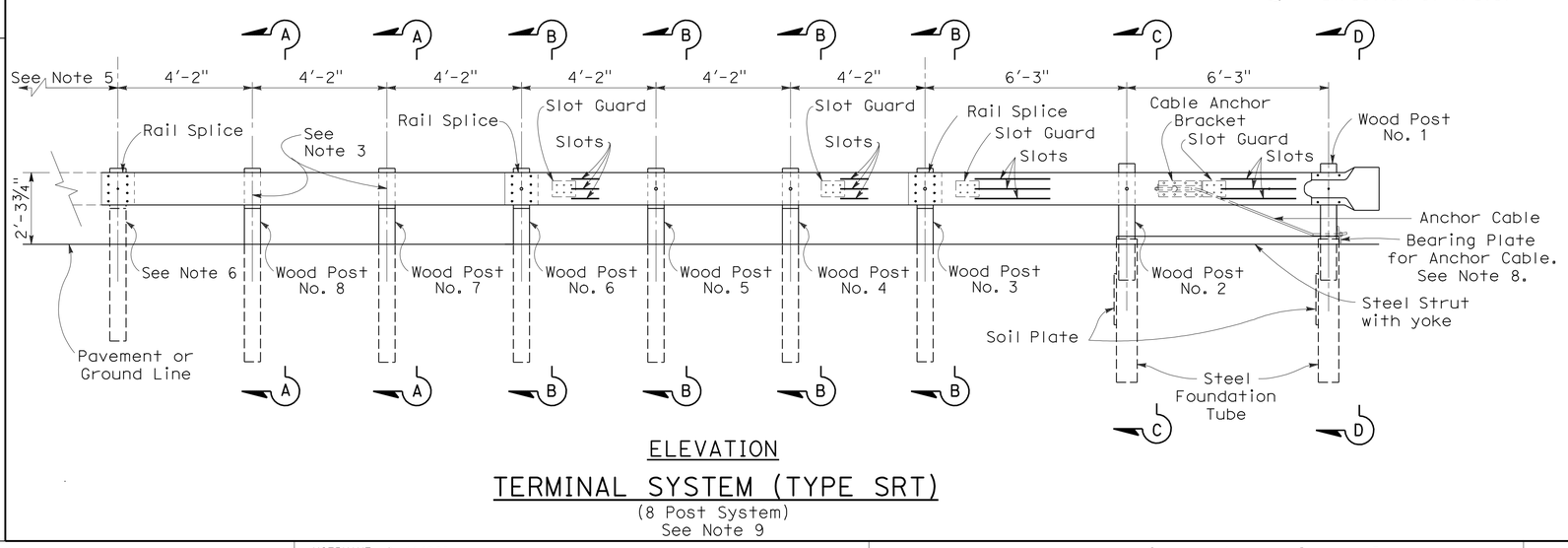

ELEVATION

TERMINAL SYSTEM (TYPE SRT)

(8 Post System)
See Note 9

NOTES:

1. For additional details of Terminal System (Type SRT), refer to the manufacturer's installation instructions.
2. The post offset dimensions are given to the center of the traffic face of the block, except at the first two posts, where the dimension is to the center of the traffic face of the post. Offset points are to be located by chord measurements at the back of the rail equal to the nominal post spacings shown. Posts are to be set approximately radial to the railing at each post locations.
3. Do not attach rail elements to posts 7 and 8.
4. Attach strut to Post Nos. 1 and 2 foundation tubes with ⅝" ø hex head bolts, washers and hex nuts. Bolts extend through the strut, steel foundation tube, and wood posts.
5. For the length and type of metal beam guard railing or metal barrier railing the terminal system is attached to, see the Project Plans.
6. Attach rail element to this post and block. Payment for this post, block and hardware is included in payment for the type of railing or barrier the terminal system is attached to, not part of payment for Terminal System (Type SRT).
7. The deflector angle of the slot guard is to be positioned immediatley downstream of the slots.
8. For bearing plate orientation, refer to the manufacturer's installation instructions.
9. For typical use of this terminal system with guard railing, see the A77E, A77F and A77G Series of Standard Plans. See Standard Plan A78E for typical use of this terminal system with single thrie beam barrier.
10. A complete wrap around end section may continued to be used in existing installations. New installations shall be constructed with the ¾ wrap end section shown.
11. A 6'-0" length steel foundation tube, TS 8 x 6 x 3/16 without a soil plate, may be furnished and installed in place of the 4'-6" length steel foundation tube and soil plate shown. Minimum embedment of the 6'-0" length tube shall be 5'-9". A ⅝" ø hex head bolt and nut shall be installed in the hole in 6'-0" length tube to keep the wood post from dropping into the tube.
12. Where site conditions will not accommodate use of the standard 4'-0" system end offset, 3'-6" or 3'-0" system end offsets, as applicable, may be used. See Table A for post offset dimensions for 3'-6" and 3'-0" system end offsets.

METAL BEAM RAILING TERMINAL SYSTEM (TYPE SRT)

CONSTRUCTION DETAILS

NO SCALE

C-3

REVISED BY | DATE REVISED
BANG NGUYEN | LY PHAN
CALCULATED-DESIGNED BY | CHECKED BY
FUNCTIONAL SUPERVISOR | SON NGUYEN

STATE OF CALIFORNIA - DEPARTMENT OF TRANSPORTATION
DESIGN
Caltrans

LAST REVISION 04-04-12 | DATE PLOTTED => 29-JUN-2012 | TIME PLOTTED => 09:47

Dist	COUNTY	ROUTE	POST MILES TOTAL PROJECT	SHEET No.	TOTAL SHEETS
08	SBd	40	R85.2	11	80

REGISTERED CIVIL ENGINEER 04-16-12 DATE

6-25-12
PLANS APPROVAL DATE

REGISTERED PROFESSIONAL ENGINEER BANG H. NGUYEN No. C 46027 Exp. 12-31-12 CIVIL STATE OF CALIFORNIA

THE STATE OF CALIFORNIA OR ITS OFFICERS OR AGENTS SHALL NOT BE RESPONSIBLE FOR THE ACCURACY OR COMPLETENESS OF SCANNED COPIES OF THIS PLAN SHEET.

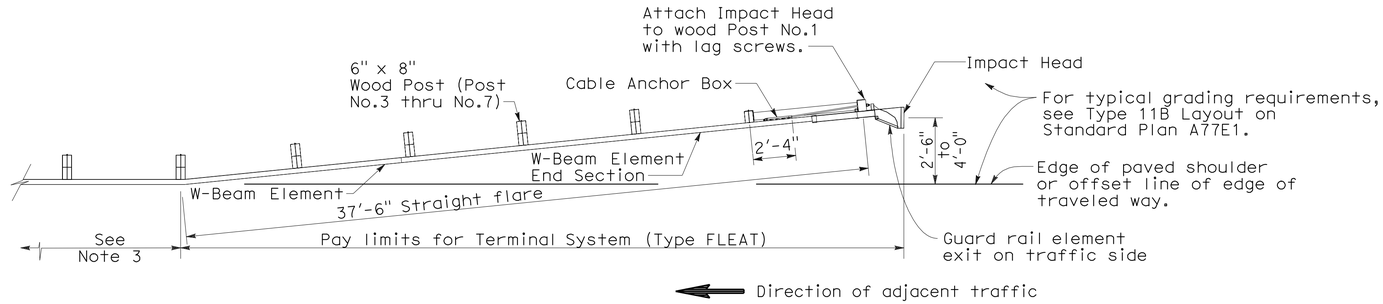

PLAN

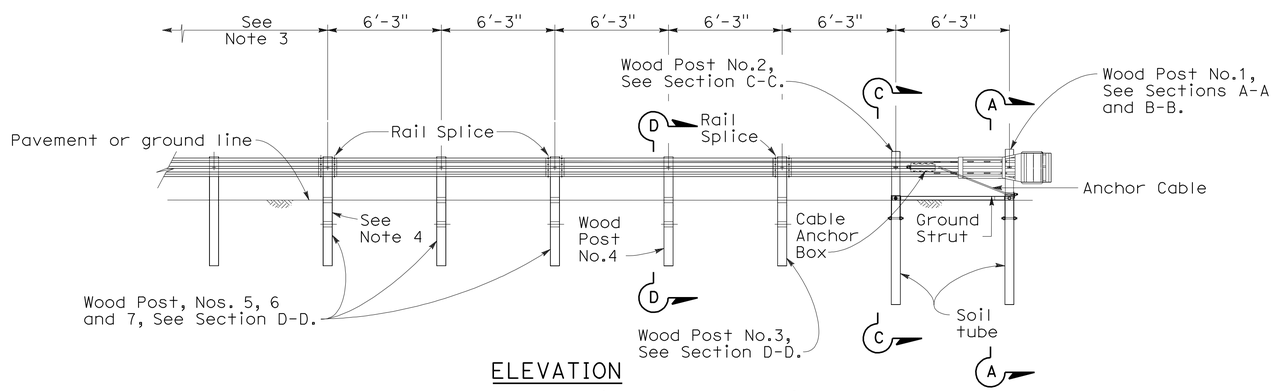

ELEVATION

TERMINAL SYSTEM (TYPE FLEAT)

NOTES:

1. For additional details of Terminal System (Type FLEAT), refer to the manufacturer's installation instructions.
2. Terminal System (Type FLEAT) not to be used where extrusion of the rail on the front side of the installation would be in the path of pedestrian traffic.
3. For the length and type of metal beam guard railing or metal barrier railing the terminal system is attached to, see Project Plans. For typical use of this terminal system with guard railing, see the A77E, A77F and A77G Series of the Standard Plans.
4. Attach rail element to this post and block. Payment for this post, block and attaching hardware is included in payment for Terminal System (Type FLEAT).

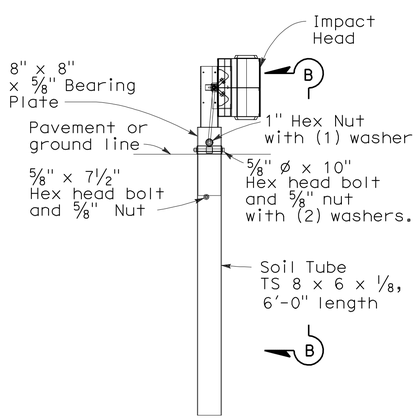

SECTION A-A
Post No.1

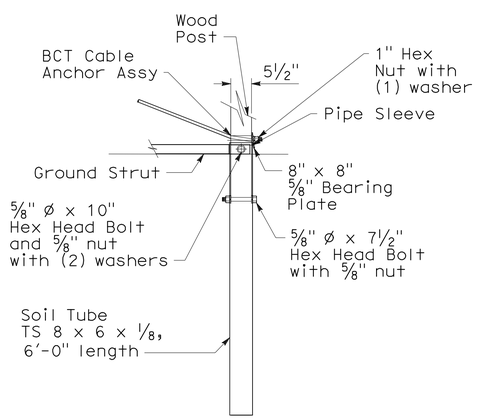

SECTION B-B
Partial view Post No.1

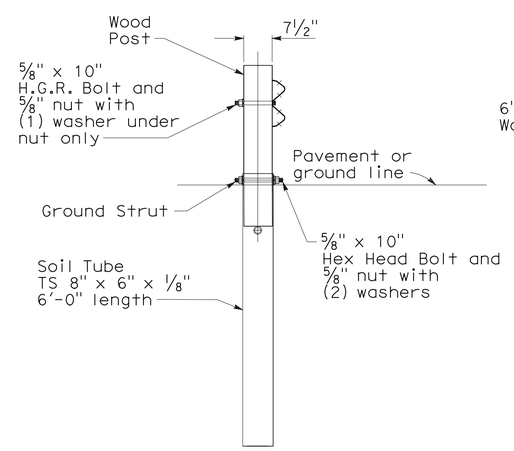

SECTION C-C
at Post No.2

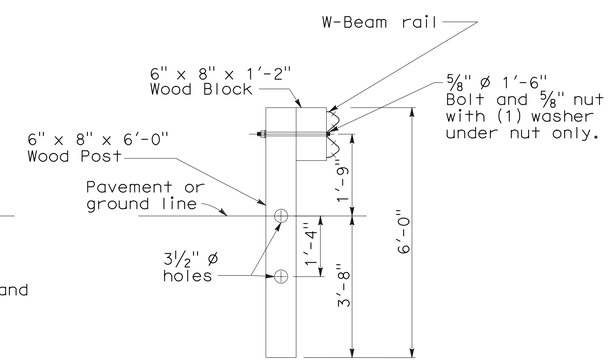

SECTION D-D
Post No.3 through No.7.

METAL BEAM RAILING TERMINAL SYSTEM (TYPE FLEAT)

CONSTRUCTION DETAILS

NO SCALE

C-4

REVISED BY	DATE REVISED

CALCULATED-DESIGNED BY: BANG NGUYEN
CHECKED BY: LY PHAN
FUNCTIONAL SUPERVISOR: SON NGUYEN

STATE OF CALIFORNIA - DEPARTMENT OF TRANSPORTATION
Caltrans
DESIGN

LAST REVISION 04-04-12
DATE PLOTTED => 29-JUN-2012
TIME PLOTTED => 09:48

Dist	COUNTY	ROUTE	POST MILES TOTAL PROJECT	SHEET No.	TOTAL SHEETS
08	SBd	40	R85.2	12	80

06-28-12
LICENSED LANDSCAPE ARCHITECT

6-25-12
PLANS APPROVAL DATE

LICENSED LANDSCAPE ARCHITECT STEPHEN SHUN-MIN SU NO. 4838 Signature 9-30-13 Renewal date 06-28-12 Date STATE OF CALIFORNIA

THE STATE OF CALIFORNIA OR ITS OFFICERS OR AGENTS SHALL NOT BE RESPONSIBLE FOR THE ACCURACY OR COMPLETENESS OF SCANNED COPIES OF THIS PLAN SHEET.

NOTE:

FOR ACCURATE RIGHT OF WAY DATA, CONTACT RIGHT OF WAY ENGINEERING AT THE DISTRICT OFFICE.

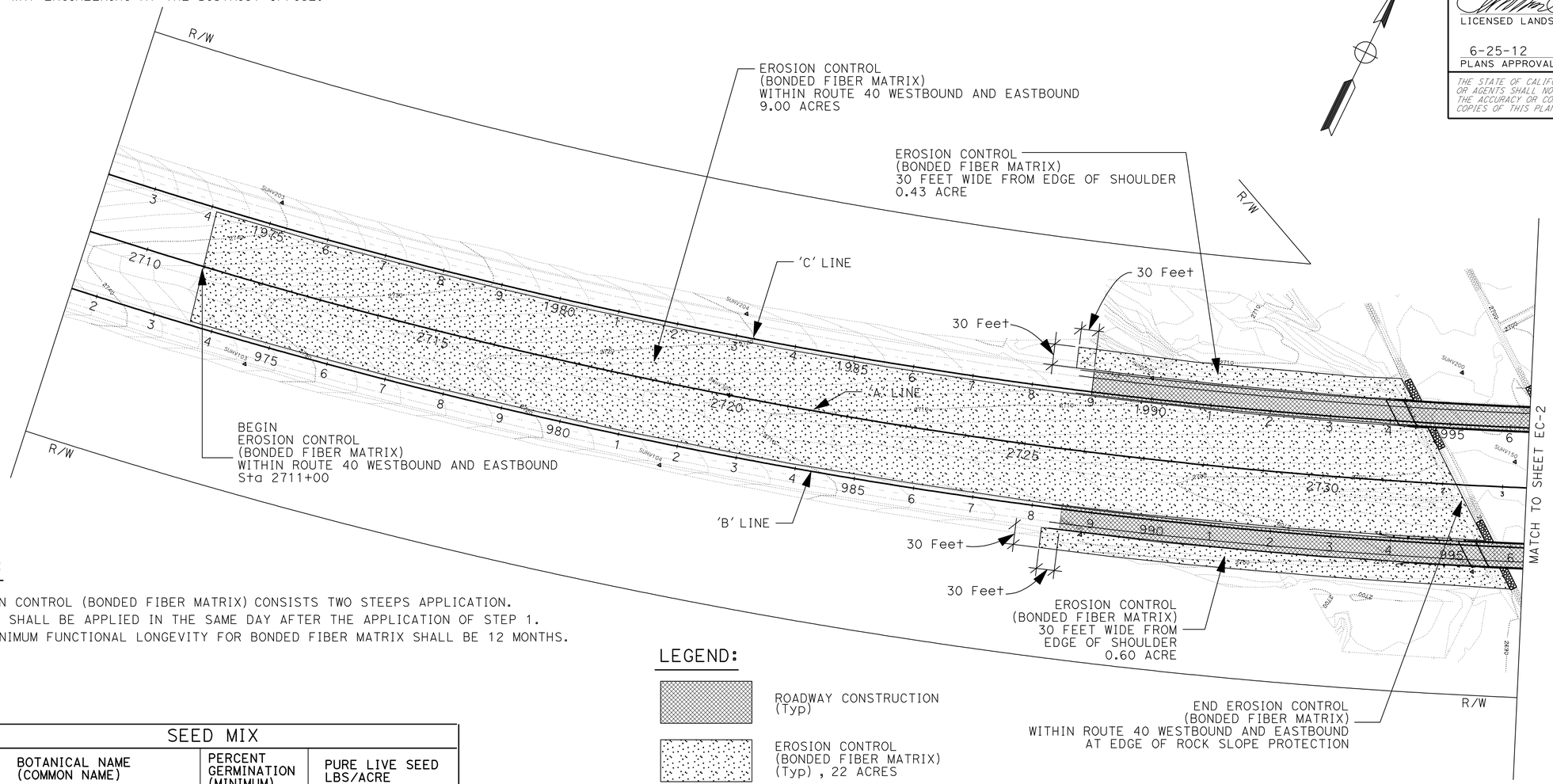

NOTES:

1. EROSION CONTROL (BONDED FIBER MATRIX) CONSISTS TWO STEEPS APPLICATION.
2. STEP 2 SHALL BE APPLIED IN THE SAME DAY AFTER THE APPLICATION OF STEP 1.
3. THE MINIMUM FUNCTIONAL LONGEVITY FOR BONDED FIBER MATRIX SHALL BE 12 MONTHS.

LEGEND:

ROADWAY CONSTRUCTION (Typ)

EROSION CONTROL (BONDED FIBER MATRIX) (Typ) , 22 ACRES

SEED MIX

BOTANICAL NAME (COMMON NAME)	PERCENT GERMINATION (MINIMUM)	PURE LIVE SEED LBS/ACRE
ARISTIDA PURPUREA (PURPLE THREEAWN)	35	2.0
BOTHRIOCHLOA BARBINODIS (CANE BLUESTEM)	20	1.0
BOUTELOUA ARISTIDOIDES (NEEDLE GRAMA)	40	2.0
BOUTELOUA ROTHROCKII (ROTHROCK'S GRAMA)	40	1.0
HELARIA BELANGERI (CURLY MESQUITE)	40	2.0
ACHNATHERUM HYMENOIDES (INDIAN RICEGRASS)	45	4.0
VULPIA OCTOFLORA (SIX-WEEKS FESCUE)	30	4.0
ESCHCHOLZIA MEXICANA (MEXICAN GOLD POPPY)	40	2.0
BAILEYA MULTIRADIATA (DESERT MARIGOLD)	40	1.0
TOTAL		19.0

EROSION CONTROL (BONDED FIBER MATRIX) QUANTITY

PLAN SHEET	LOCATION	EROSION CONTROL (TYPE BFM) (ACRE)
SHEET EC-1	WESTBOUND RIGHT SIDE 'C' LINE Sta 1988+70 TO 1994+50	0.43
SHEET EC-1	MEDIAN BETWEEN WESTBOUND & EASTBOUND 'A' LINE Sta 2711+00 TO 2732+20	9.0
SHEET EC-1	EASTBOUND RIGHT SIDE 'B' LINE Sta 988+20 TO 995+80	0.6
SHEET EC-2	WESTBOUND RIGHT SIDE 'C' LINE Sta 1996+50 TO 2002+80	0.45
SHEET EC-2	MEDIAN BETWEEN WESTBOUND & EASTBOUND 'A' LINE Sta 2734+40 TO 2760+00	11.2
SHEET EC-2	EASTBOUND RIGHT SIDE 'B' LINE Sta 998+00 TO 1002+75	0.32
TOTAL		22.0

EROSION CONTROL (BONDED FIBER MATRIX)

* INDICATE TACKIFIER TO BE BONDED WITH FIBER AND PREPACKAGED BY MANUFACTURER

SEQUENCE	ITEM	DESCRIPTION		APPLICATION RATE
		DESCRIPTION	TYPE	
STEP 1	BONDED FIBER MATRIX	FIBER	WOOD	500 LB/ACRE
		TACKIFIER*		
		SEED		AS SHOWN IN SEED MIX TABLE
STEP 2	BONDED FIBER MATRIX	FIBER	WOOD	2000 LB/ACRE
		TACKIFIER*		

APPROVED FOR EROSION CONTROL WORK ONLY

EROSION CONTROL PLAN

SCALE: 1" = 100'

EC-1

STATE OF CALIFORNIA - DEPARTMENT OF TRANSPORTATION
Caltrans® LANDSCAPE ARCHITECTURE
SENIOR LANDSCAPE ARCHITECT ERIC DICKSON
CALCULATED-DESIGNED BY STEPHEN SU
CHECKED BY STEPHEN SU
REVISED BY
DATE REVISED

LAST REVISION 00-00-00
DATE PLOTTED => 29-JUN-2012
TIME PLOTTED => 09:48

Dist	COUNTY	ROUTE	POST MILES TOTAL PROJECT	SHEET No.	TOTAL SHEETS
08	SBd	40	R85.2	13	80

06-28-12
LICENSED LANDSCAPE ARCHITECT

6-25-12
PLANS APPROVAL DATE

THE STATE OF CALIFORNIA OR ITS OFFICERS OR AGENTS SHALL NOT BE RESPONSIBLE FOR THE ACCURACY OR COMPLETENESS OF SCANNED COPIES OF THIS PLAN SHEET.

LICENSED LANDSCAPE ARCHITECT
STEPHEN SHUN-MIN SU
NO. 4838
Signature
9-30-13
Renewal date
06-28-12
Date
STATE OF CALIFORNIA

NOTE:
FOR ACCURATE RIGHT OF WAY DATA, CONTACT
RIGHT OF WAY ENGINEERING AT THE DISTRICT OFFICE.

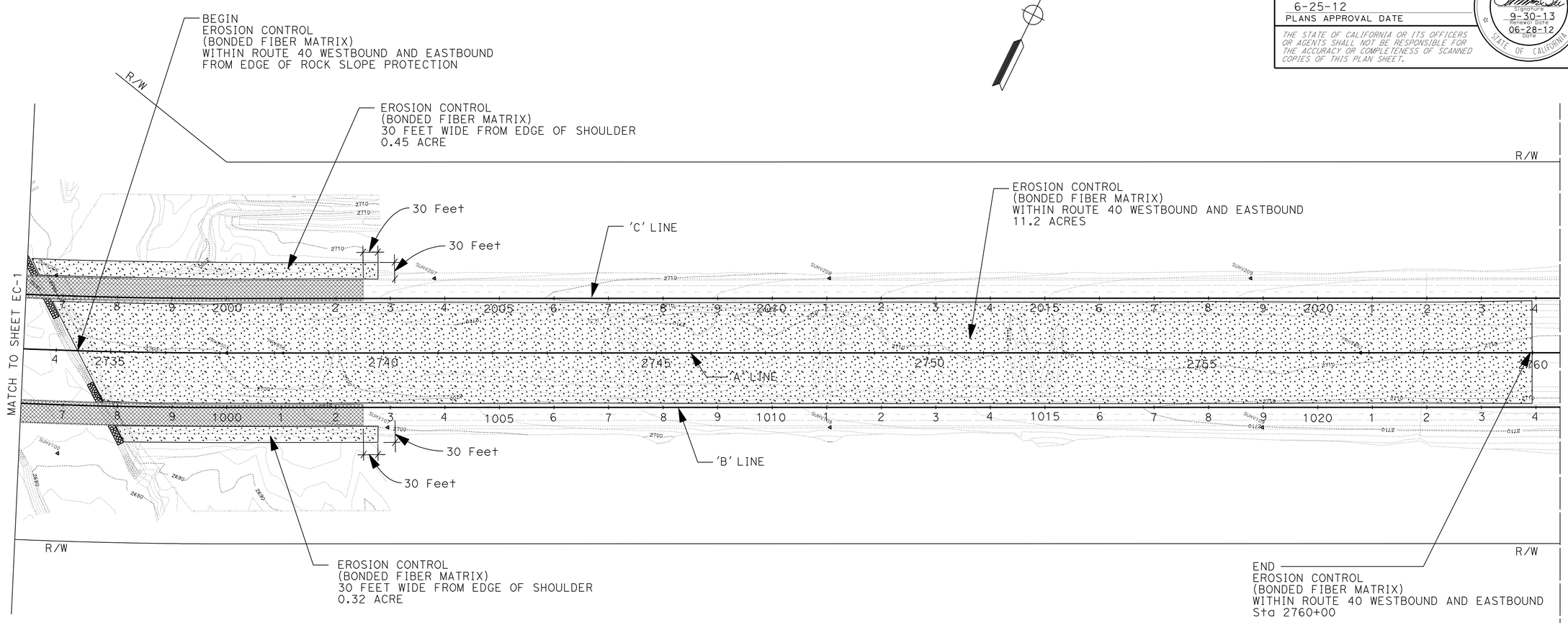

EROSION CONTROL PLAN

SCALE: 1" = 100'

EC-2

APPROVED FOR EROSION CONTROL WORK ONLY

STATE OF CALIFORNIA - DEPARTMENT OF TRANSPORTATION
Caltrans® LANDSCAPE ARCHITECTURE

SENIOR LANDSCAPE ARCHITECT: ERIC DICKSON

CALCULATED-DESIGNED BY: STEPHEN SU
CHECKED BY: STEPHEN SU

REVISED BY | DATE REVISED

LAST REVISION: 00-00-00
DATE PLOTTED => 29-JUN-2012
TIME PLOTTED => 09:48

Dist	COUNTY	ROUTE	POST MILES TOTAL PROJECT	SHEET No.	TOTAL SHEETS
08	SBd	40	R85.2	14	80

REGISTERED CIVIL ENGINEER 06-28-12 DATE

6-25-12
PLANS APPROVAL DATE

REGISTERED PROFESSIONAL ENGINEER LAWRENCE LE No. C 57405 Exp.12/31/13 CIVIL STATE OF CALIFORNIA

THE STATE OF CALIFORNIA OR ITS OFFICERS OR AGENTS SHALL NOT BE RESPONSIBLE FOR THE ACCURACY OR COMPLETENESS OF SCANNED COPIES OF THIS PLAN SHEET.

NOTE:

EXACT SIGN LOCATIONS TO BE DETERMINED BY THE ENGINEER.

LEGEND:

⟨X⟩ CONSTRUCTION AREA SIGN No.

STATIONARY MOUNTED CONSTRUCTION AREA SIGNS

SIGN No.	SIGN CODE	PANEL SIZE	SIGN MESSAGE	No. OF POST AND SIZE	No. OF SIGNS
A	W20-1	48" x 48"	ROAD WORK AHEAD	1-6" x 6"	2
B	C40(CA)	108" x 42"	TRAFFIC FINES DOUBLED IN CONSTRUCTION ZONE	2 -6" x 6"	2
C	G20-2	48" x 24"	END ROAD WORK	1-6" x 6"	2

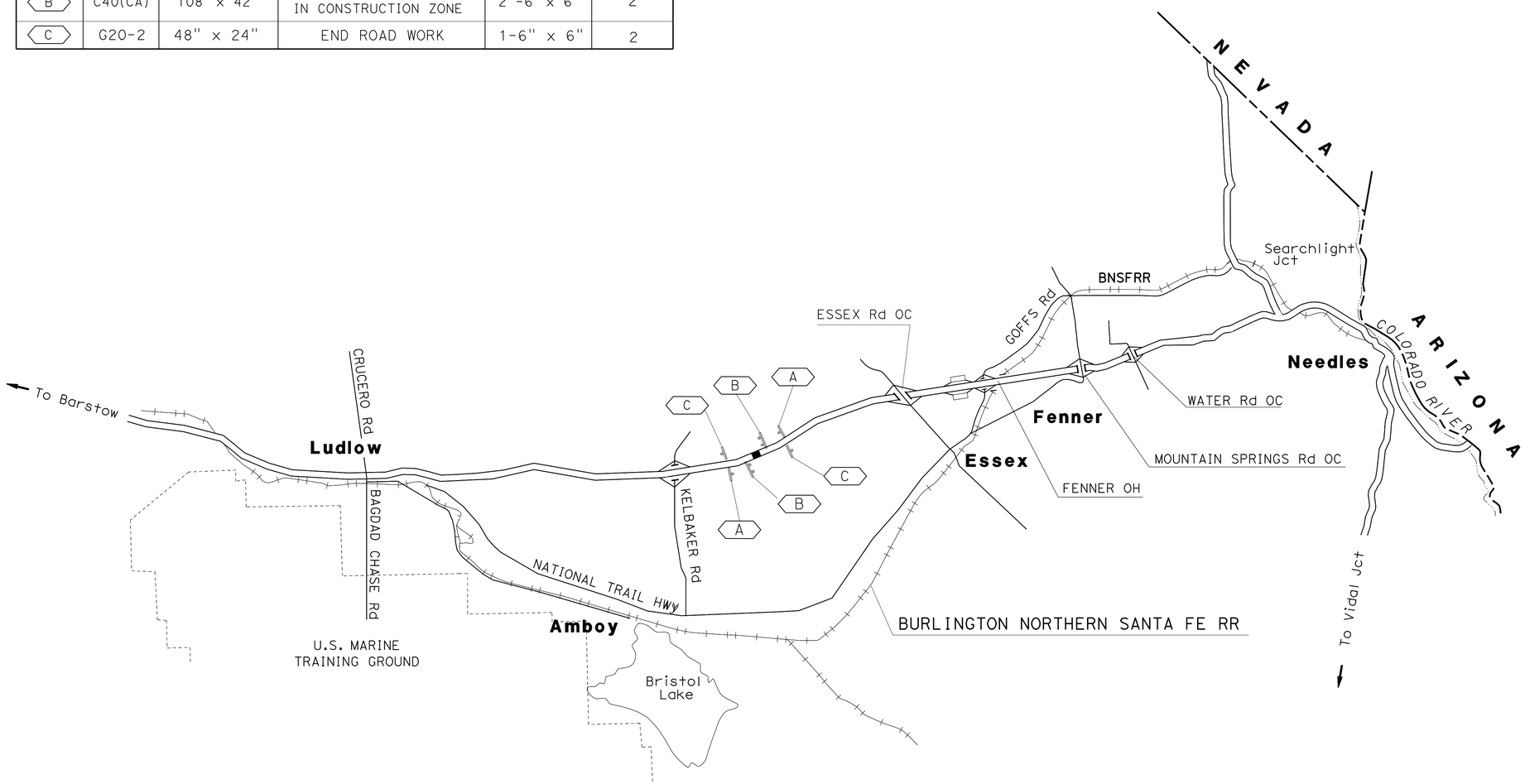

APPROVED FOR CONSTRUCTION AREA SIGN WORK ONLY

CONSTRUCTION AREA SIGNS

NO SCALE

CS-1

STATE OF CALIFORNIA - DEPARTMENT OF TRANSPORTATION

Caltrans

DESIGN

FUNCTIONAL SUPERVISOR: SON NGUYEN

CALCULATED-DESIGNED BY: LAWRENCE LE

CHECKED BY: BANG NGUYEN

REVISED BY

DATE REVISED

LAST REVISION 04-09-12

DATE PLOTTED => 29-JUN-2012

TIME PLOTTED => 09:48

Dist	COUNTY	ROUTE	POST MILES TOTAL PROJECT	SHEET No.	TOTAL SHEETS
08	SBd	40	R85.2	15	80

Bang H Nguyen 06-28-12
REGISTERED CIVIL ENGINEER DATE

6-25-12
PLANS APPROVAL DATE

REGISTERED PROFESSIONAL ENGINEER BANG H. NGUYEN No. C 46027 Exp. 12-31-12 CIVIL STATE OF CALIFORNIA

THE STATE OF CALIFORNIA OR ITS OFFICERS OR AGENTS SHALL NOT BE RESPONSIBLE FOR THE ACCURACY OR COMPLETENESS OF SCANNED COPIES OF THIS PLAN SHEET.

NOTES:

1. FOR ACCURATE RIGHT OF WAY DATA, CONTACT RIGHT OF WAY ENGINEERING AT THE DISTRICT OFFICE.
2. ALL APPROACH TAPERS FOR TEMPORARY RAILING (TYPE K) SHALL BE AT 20:1

LEGEND:

- CONSTRUCTION AREA THIS STAGE
- TEMPORARY CRASH CUSHION MODULE, ARRAY PER PLAN
- CHANNELIZER (SURFACE MOUNTED)
- STRIPING DETAIL
- TYPE III BARRICADE (WITH SIGN AS NOTED)
- CURVE DATA No.
- Pvmt STRUCTURAL SECTION, SEE SHEET X-1
- PCMS-x PORTABLE CHANGEABLE MESSAGE SIGN
- F DELINEATOR (CLASS 1, TYPE F)

CURVE DATA

No.	R	Δ	T	L
1	1800.00′	21°0′33"	333.76′	660.02′
2	1800.00′	12°59′04"	204.84′	407.92′

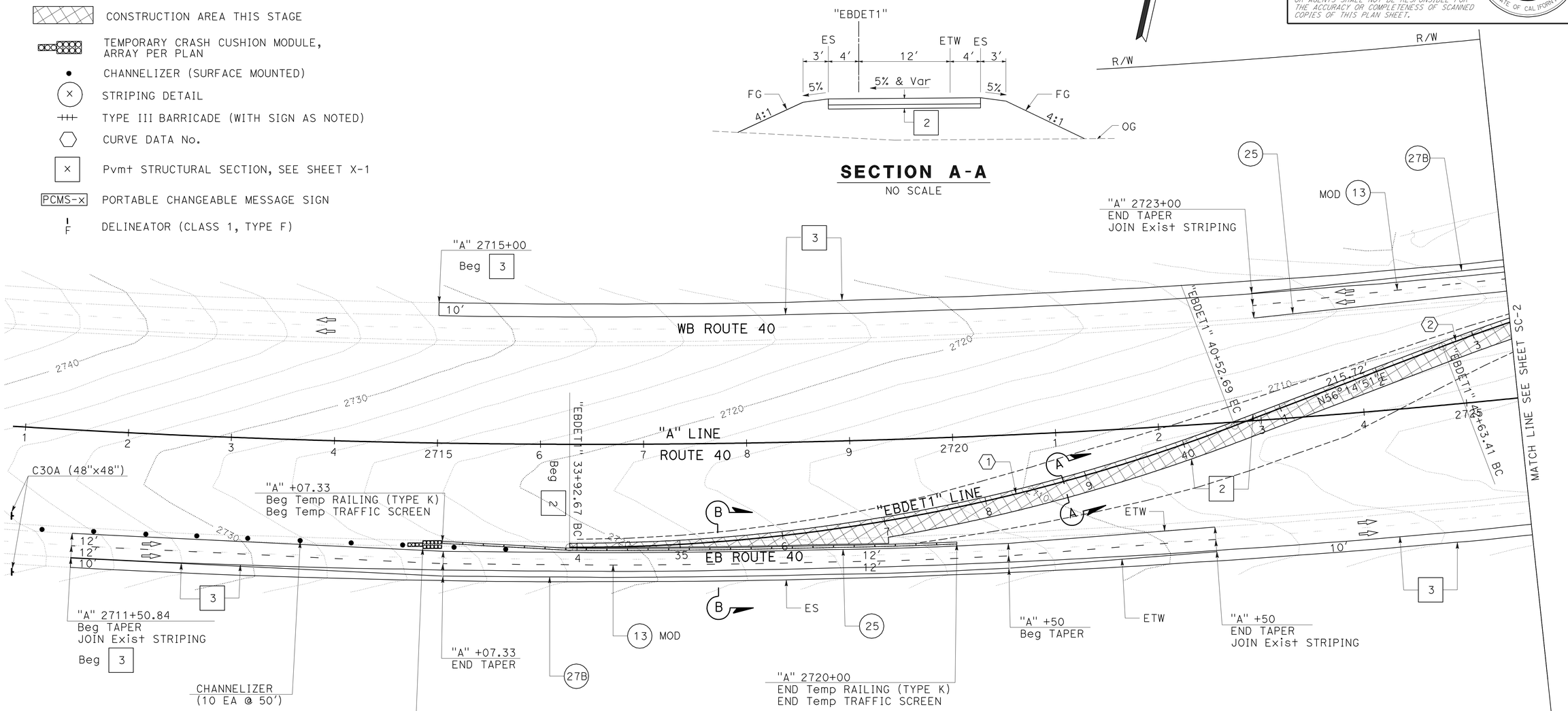

SECTION A-A

NO SCALE

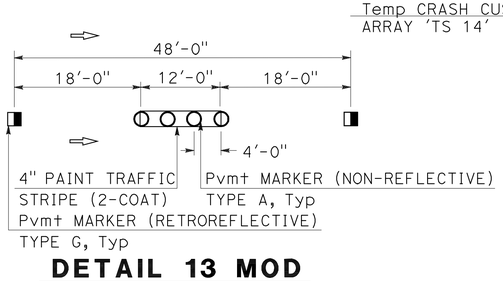

DETAIL 13 MOD

NO SCALE

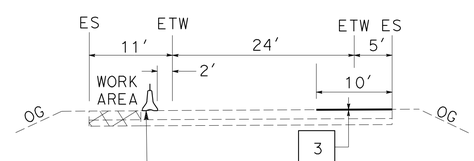

SECTION B-B

NO SCALE

STAGE 1A
STAGE CONSTRUCTION TRAFFIC HANDLING PLAN

SCALE: 1" = 50′

SC-1

APPROVED FOR STAGE CONSTRUCTION WORK ONLY

STATE OF CALIFORNIA - DEPARTMENT OF TRANSPORTATION
Caltrans® DESIGN
FUNCTIONAL SUPERVISOR: SON NGUYEN
CALCULATED-DESIGNED BY: KHAI HUYNH
CHECKED BY: BANG NGUYEN
REVISED BY / DATE REVISED

LAST REVISION 02-01-12
DATE PLOTTED => 29-JUN-2012
TIME PLOTTED => 09:48

Dist	COUNTY	ROUTE	POST MILES TOTAL PROJECT	SHEET No.	TOTAL SHEETS
08	SBd	40	R85.2	16	80

Bang H Nguyen 04-16-12
REGISTERED CIVIL ENGINEER DATE

6-25-12
PLANS APPROVAL DATE

REGISTERED PROFESSIONAL ENGINEER BANG H. NGUYEN No. C 46027 Exp. 12-31-12 CIVIL STATE OF CALIFORNIA

THE STATE OF CALIFORNIA OR ITS OFFICERS OR AGENTS SHALL NOT BE RESPONSIBLE FOR THE ACCURACY OR COMPLETENESS OF SCANNED COPIES OF THIS PLAN SHEET.

NOTE:

FOR ACCURATE RIGHT OF WAY DATA, CONTACT RIGHT OF WAY ENGINEERING AT THE DISTRICT OFFICE.

CURVE DATA

No.	R	Δ	T	L
3	1800.00′	15°56′10″	251.95′	500.65′

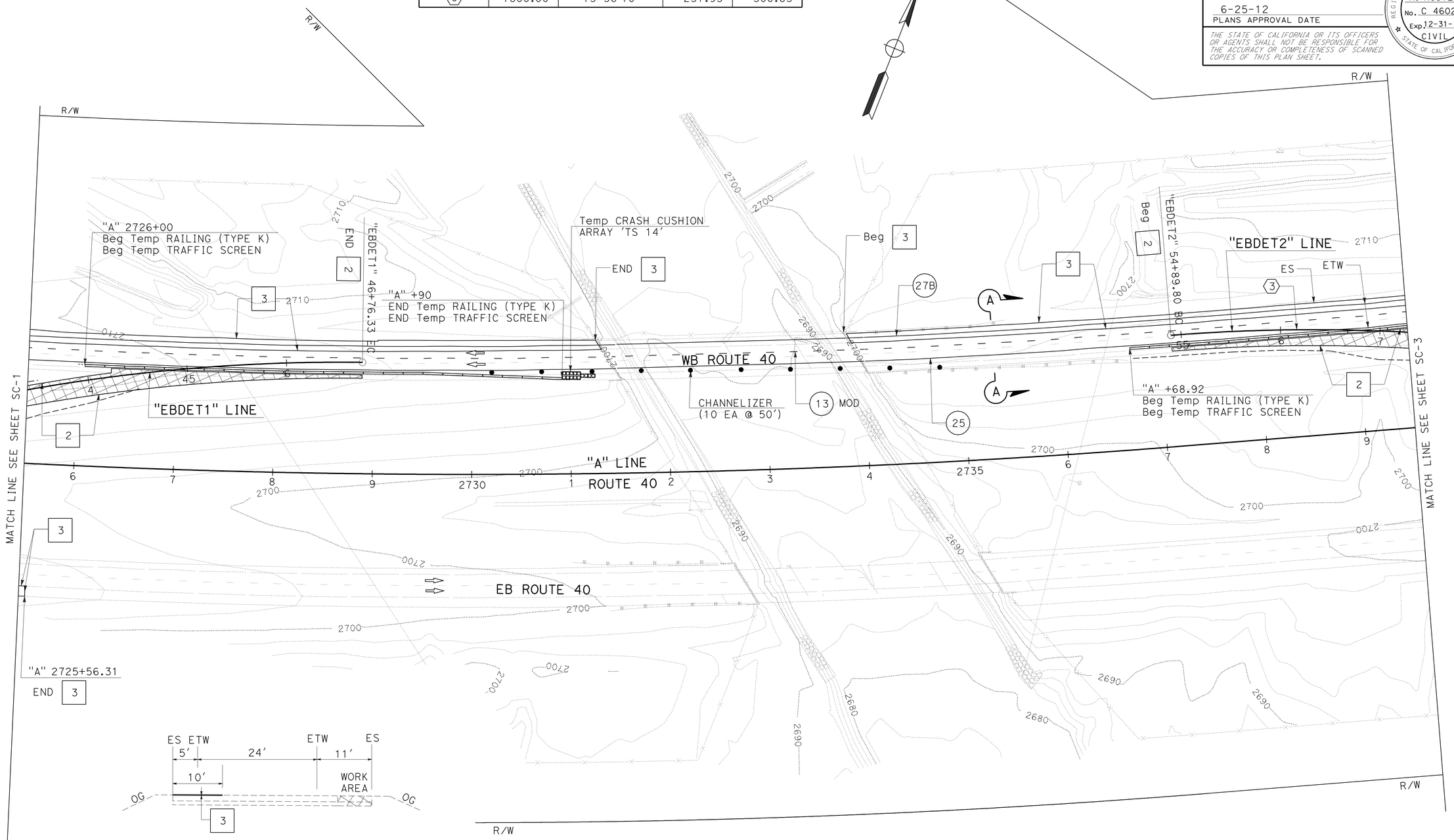

SECTION A-A

NO SCALE

STAGE 1A

STAGE CONSTRUCTION TRAFFIC HANDLING PLAN

SCALE: 1" = 50′

SC-2

APPROVED FOR STAGE CONSTRUCTION WORK ONLY

STATE OF CALIFORNIA - DEPARTMENT OF TRANSPORTATION

Caltrans

DESIGN

FUNCTIONAL SUPERVISOR: SON NGUYEN

CALCULATED-DESIGNED BY: KHAI HUYNH

CHECKED BY: BANG NGUYEN

REVISED BY

DATE REVISED

LAST REVISION 00-00-00

DATE PLOTTED => 29-JUN-2012

TIME PLOTTED => 09:49

Dist	COUNTY	ROUTE	POST MILES TOTAL PROJECT	SHEET No.	TOTAL SHEETS
08	SBd	40	R85.2	17	80

Bang H Nguyen 06-28-12
REGISTERED CIVIL ENGINEER DATE

6-25-12
PLANS APPROVAL DATE

REGISTERED PROFESSIONAL ENGINEER BANG H. NGUYEN No. C 46027 Exp 12-31-12 CIVIL STATE OF CALIFORNIA

THE STATE OF CALIFORNIA OR ITS OFFICERS OR AGENTS SHALL NOT BE RESPONSIBLE FOR THE ACCURACY OR COMPLETENESS OF SCANNED COPIES OF THIS PLAN SHEET.

NOTE:

FOR ACCURATE RIGHT OF WAY DATA, CONTACT RIGHT OF WAY ENGINEERING AT THE DISTRICT OFFICE.

CURVE DATA

No.	R	Δ	T	L
4	1800.00′	15°56′10″	251.95′	500.65′

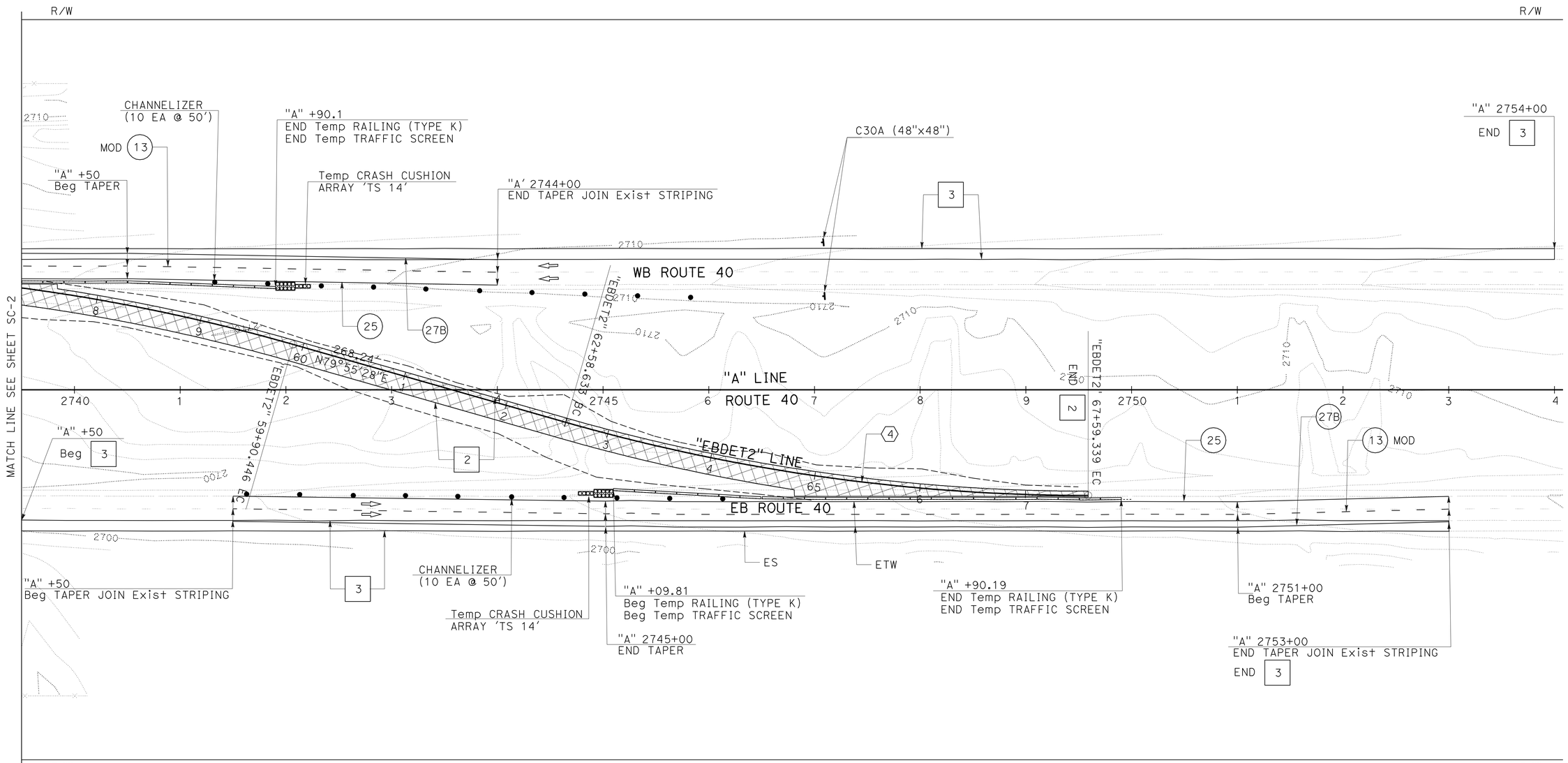

STAGE 1A
STAGE CONSTRUCTION TRAFFIC HANDLING PLAN

SCALE: 1" = 50′

SC-3

APPROVED FOR STAGE CONSTRUCTION WORK ONLY

STATE OF CALIFORNIA - DEPARTMENT OF TRANSPORTATION
Caltrans DESIGN

FUNCTIONAL SUPERVISOR: SON NGUYEN
CALCULATED-DESIGNED BY: KHAI HUYNH
CHECKED BY: BANG NGUYEN
REVISED BY
DATE REVISED

LAST REVISION 02-01-12
DATE PLOTTED => 29-JUN-2012
TIME PLOTTED => 09:49

Dist	COUNTY	ROUTE	POST MILES TOTAL PROJECT	SHEET No.	TOTAL SHEETS
08	SBd	40	R85.2	18	80

Bang H Nguyen 06-28-12
REGISTERED CIVIL ENGINEER DATE

6-25-12
PLANS APPROVAL DATE

REGISTERED PROFESSIONAL ENGINEER
BANG H. NGUYEN
No. C 46027
Exp 12-31-12
CIVIL
STATE OF CALIFORNIA

THE STATE OF CALIFORNIA OR ITS OFFICERS OR AGENTS SHALL NOT BE RESPONSIBLE FOR THE ACCURACY OR COMPLETENESS OF SCANNED COPIES OF THIS PLAN SHEET.

NOTE:

FOR ACCURATE RIGHT OF WAY DATA, CONTACT
RIGHT OF WAY ENGINEERING AT THE DISTRICT OFFICE.

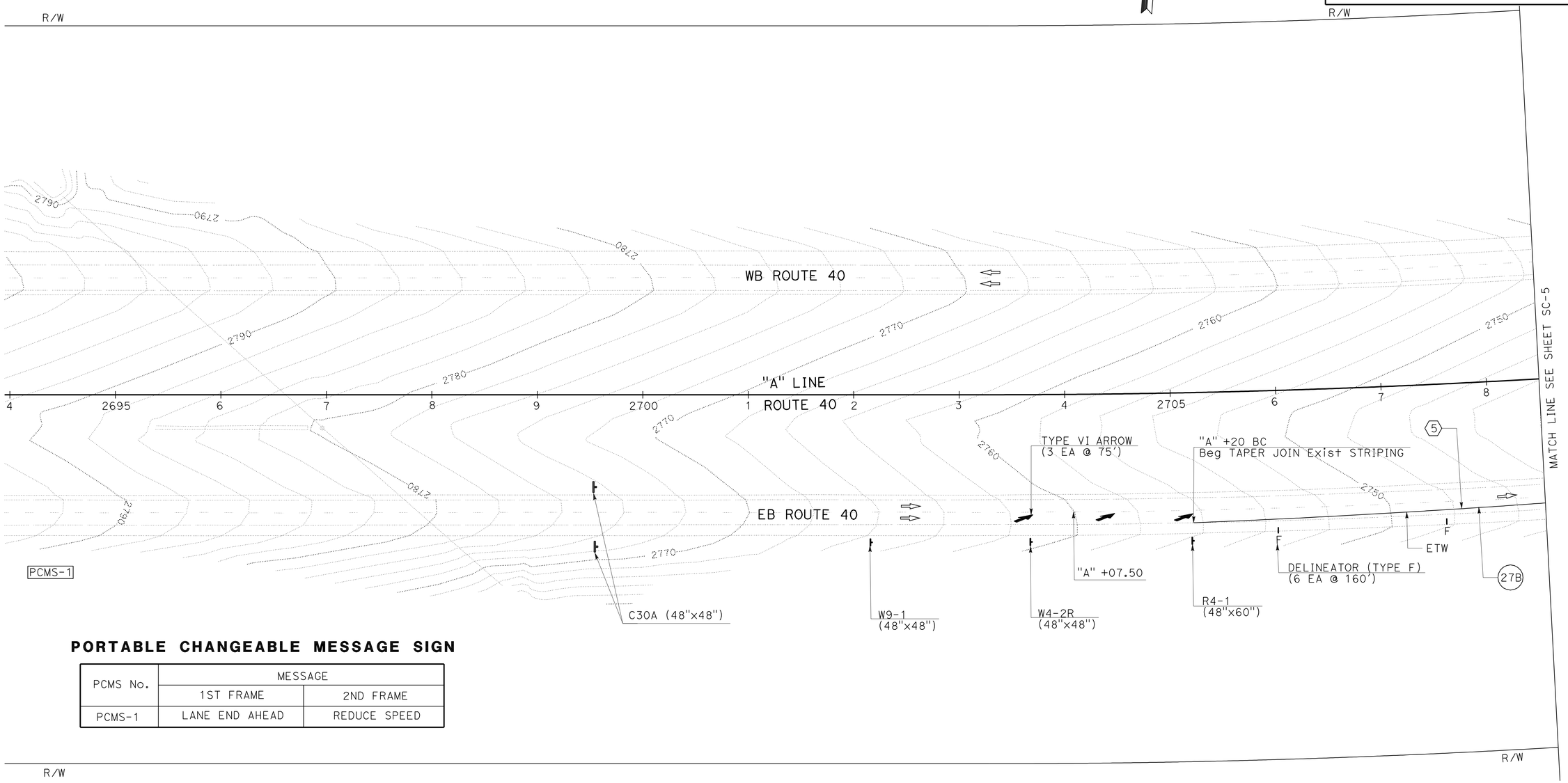

PORTABLE CHANGEABLE MESSAGE SIGN

PCMS No.	MESSAGE	
	1ST FRAME	2ND FRAME
PCMS-1	LANE END AHEAD	REDUCE SPEED

CURVE DATA

No.	R	Δ	T	L
5	10356.99′	4°22′24"	395.45′	790.52′

STAGE 1B
STAGE CONSTRUCTION TRAFFIC HANDLING PLAN

SCALE: 1" = 50′

APPROVED FOR STAGE CONSTRUCTION WORK ONLY

SC-4

REVISED BY | DATE REVISED
KHAI HUYNH | BANG NGUYEN
CALCULATED-DESIGNED BY | CHECKED BY
FUNCTIONAL SUPERVISOR: SON NGUYEN

STATE OF CALIFORNIA - DEPARTMENT OF TRANSPORTATION
Caltrans
DESIGN

LAST REVISION 02-01-12 | DATE PLOTTED => 29-JUN-2012 | TIME PLOTTED => 09:49

Dist	COUNTY	ROUTE	POST MILES TOTAL PROJECT	SHEET No.	TOTAL SHEETS
08	SBd	40	R85.2	19	80

Bang H Nguyen 04-16-12
REGISTERED CIVIL ENGINEER DATE

6-25-12
PLANS APPROVAL DATE

REGISTERED PROFESSIONAL ENGINEER
BANG H. NGUYEN
No. C 46027
Exp. 12-31-12
CIVIL
STATE OF CALIFORNIA

THE STATE OF CALIFORNIA OR ITS OFFICERS OR AGENTS SHALL NOT BE RESPONSIBLE FOR THE ACCURACY OR COMPLETENESS OF SCANNED COPIES OF THIS PLAN SHEET.

NOTE:

FOR ACCURATE RIGHT OF WAY DATA, CONTACT
RIGHT OF WAY ENGINEERING AT THE DISTRICT OFFICE.

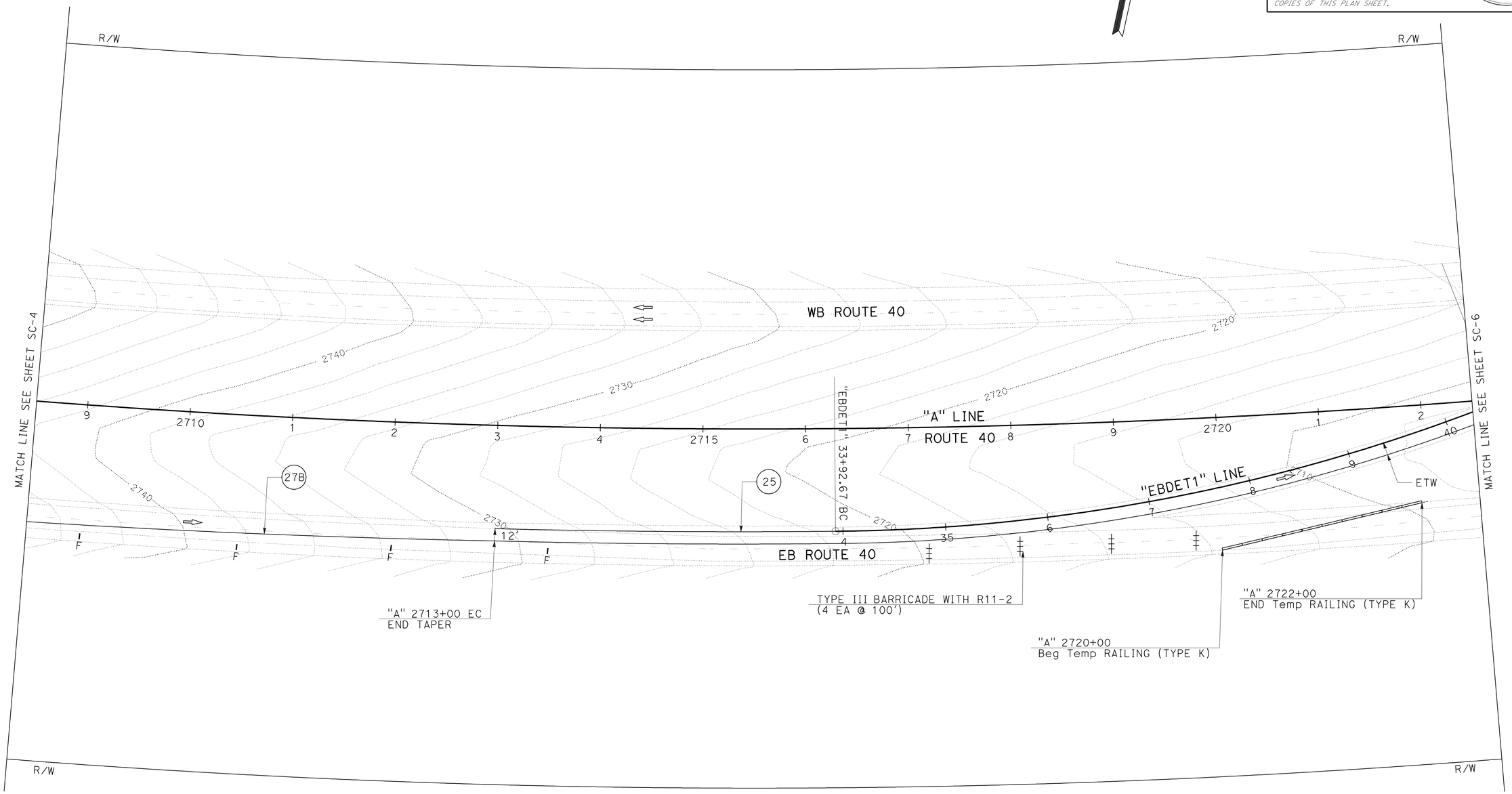

APPROVED FOR STAGE CONSTRUCTION WORK ONLY

STAGE 1B
STAGE CONSTRUCTION TRAFFIC HANDLING PLAN

SCALE: 1" = 50'

SC-5

STATE OF CALIFORNIA - DEPARTMENT OF TRANSPORTATION
Caltrans

FUNCTIONAL SUPERVISOR: SON NGUYEN
CALCULATED-DESIGNED BY: KHAI HUYNH
CHECKED BY: BANG NGUYEN
REVISED BY
DATE REVISED

LAST REVISION 02-01-12
DATE PLOTTED => 29-JUN-2012
TIME PLOTTED => 09:49

Dist	COUNTY	ROUTE	POST MILES TOTAL PROJECT	SHEET No.	TOTAL SHEETS
08	SBd	40	R85.2	20	80

Bang H Nguyen 06-28-12
REGISTERED CIVIL ENGINEER DATE

6-25-12
PLANS APPROVAL DATE

REGISTERED PROFESSIONAL ENGINEER BANG H. NGUYEN No. C 46027 Exp 12-31-12 CIVIL STATE OF CALIFORNIA

THE STATE OF CALIFORNIA OR ITS OFFICERS OR AGENTS SHALL NOT BE RESPONSIBLE FOR THE ACCURACY OR COMPLETENESS OF SCANNED COPIES OF THIS PLAN SHEET.

NOTE:

FOR ACCURATE RIGHT OF WAY DATA, CONTACT RIGHT OF WAY ENGINEERING AT THE DISTRICT OFFICE.

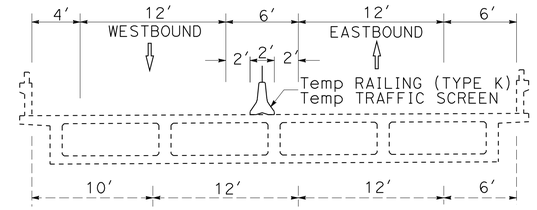

SECTION A-A
NO SCALE

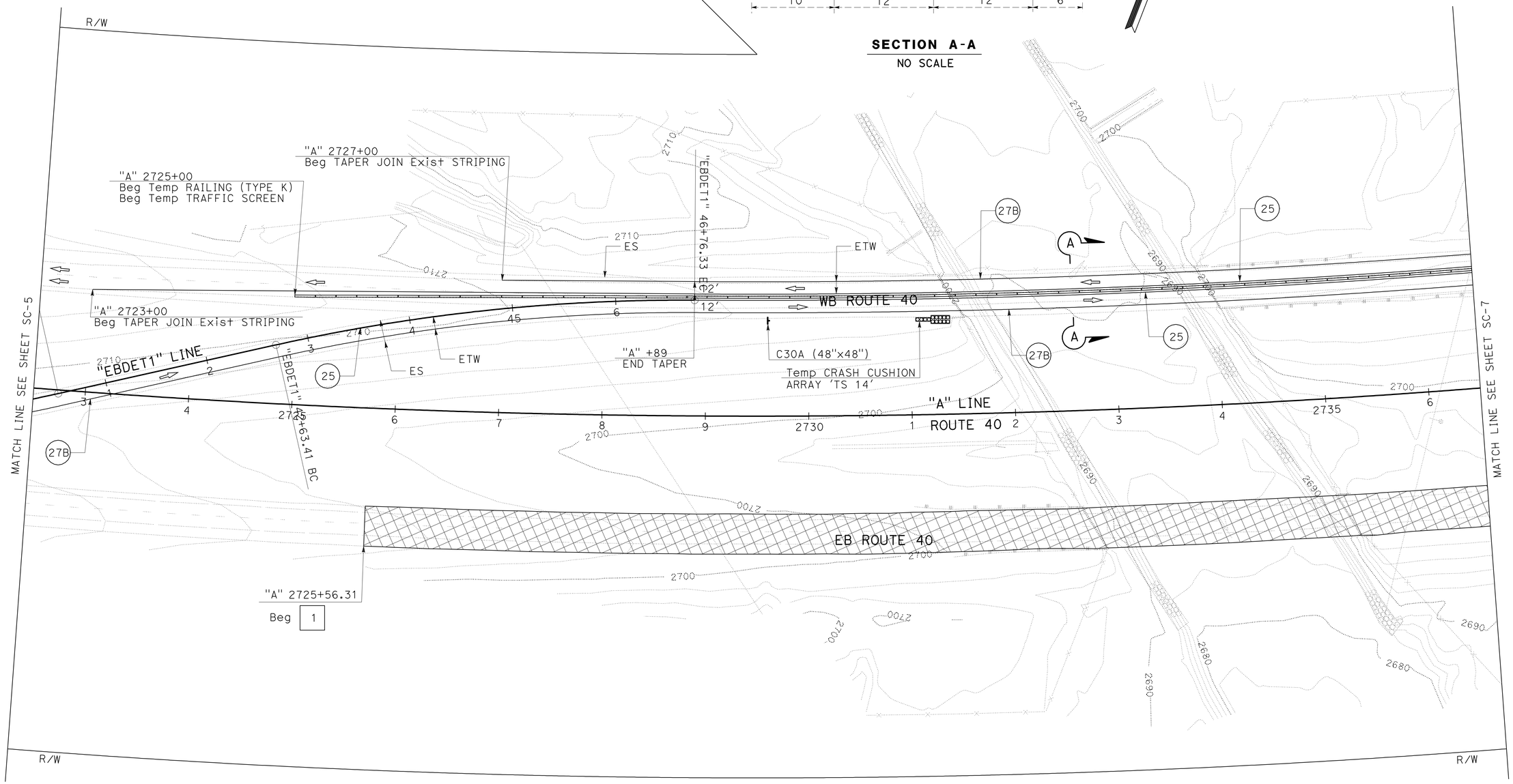

STAGE 1B

STAGE CONSTRUCTION TRAFFIC HANDLING PLAN

SCALE: 1" = 50'

SC-6

APPROVED FOR STAGE CONSTRUCTION WORK ONLY

STATE OF CALIFORNIA - DEPARTMENT OF TRANSPORTATION
Caltrans
DESIGN

FUNCTIONAL SUPERVISOR: SON NGUYEN
CALCULATED-DESIGNED BY: KHAI HUYNH
CHECKED BY: BANG NGUYEN
REVISED BY
DATE REVISED

LAST REVISION 00-00-00
DATE PLOTTED => 29-JUN-2012
TIME PLOTTED => 10:02

Dist	COUNTY	ROUTE	POST MILES TOTAL PROJECT	SHEET No.	TOTAL SHEETS
08	SBd	40	R85.2	21	80

Bang H Nguyen 04-16-12
REGISTERED CIVIL ENGINEER DATE

6-25-12
PLANS APPROVAL DATE

REGISTERED PROFESSIONAL ENGINEER
BANG H. NGUYEN
No. C 46027
Exp. 12-31-12
CIVIL
STATE OF CALIFORNIA

THE STATE OF CALIFORNIA OR ITS OFFICERS OR AGENTS SHALL NOT BE RESPONSIBLE FOR THE ACCURACY OR COMPLETENESS OF SCANNED COPIES OF THIS PLAN SHEET.

NOTE:

FOR ACCURATE RIGHT OF WAY DATA, CONTACT RIGHT OF WAY ENGINEERING AT THE DISTRICT OFFICE.

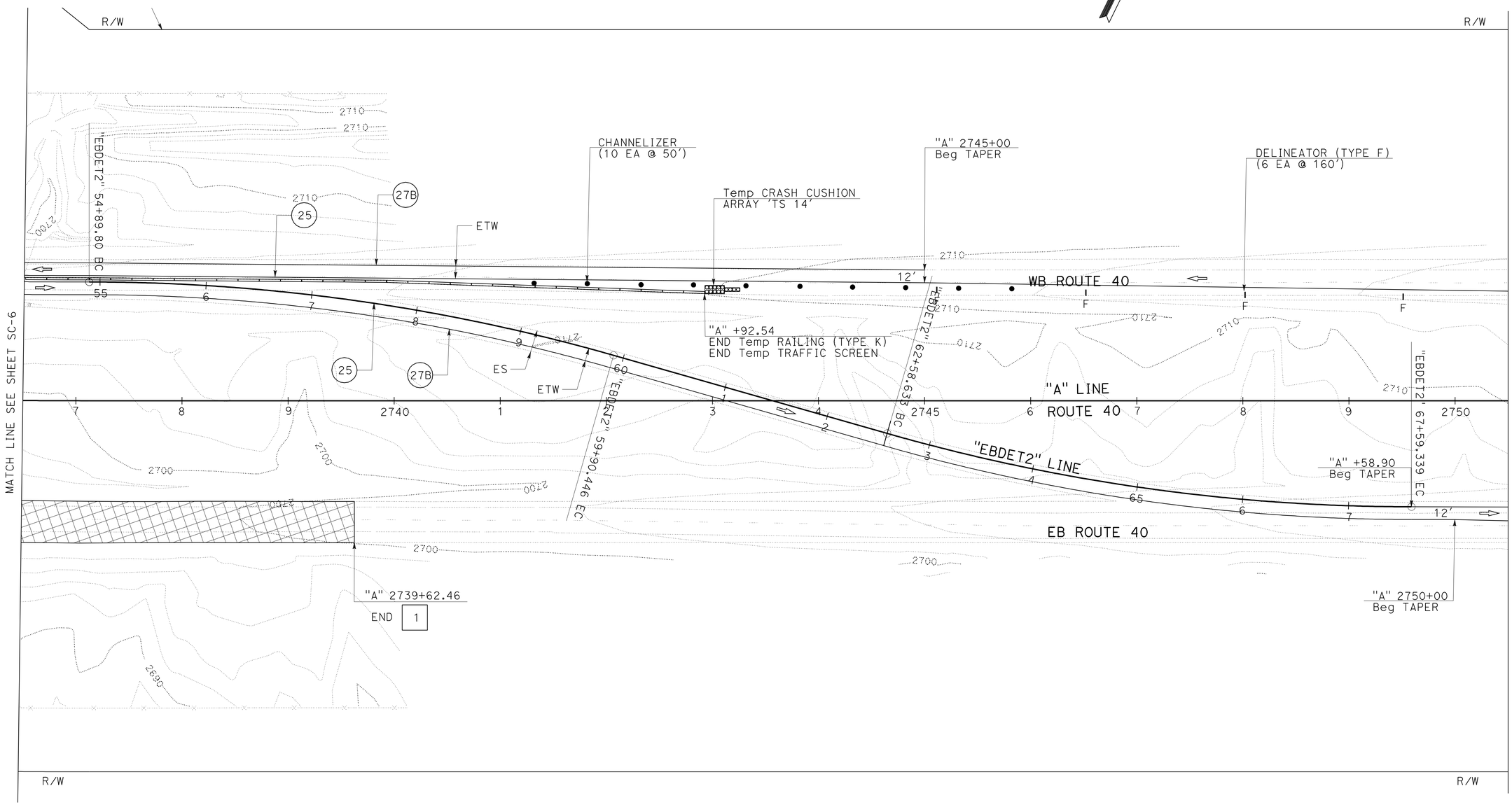

STAGE 1B
STAGE CONSTRUCTION TRAFFIC HANDLING PLAN

SCALE: 1" = 50'

SC-7

APPROVED FOR STAGE CONSTRUCTION WORK ONLY

STATE OF CALIFORNIA - DEPARTMENT OF TRANSPORTATION
Caltrans
DESIGN

FUNCTIONAL SUPERVISOR: SON NGUYEN
CALCULATED-DESIGNED BY: KHAI HUYNH
CHECKED BY: BANG NGUYEN
REVISED BY
DATE REVISED

LAST REVISION 00-00-00
DATE PLOTTED => 29-JUN-2012
TIME PLOTTED => 09:09

Dist	COUNTY	ROUTE	POST MILES TOTAL PROJECT	SHEET No.	TOTAL SHEETS
08	SBd	40	R85.2	22	80

REGISTERED CIVIL ENGINEER 06-28-12 DATE

6-25-12
PLANS APPROVAL DATE

REGISTERED PROFESSIONAL ENGINEER BANG H. NGUYEN No. C 46027 Exp.12-31-12 CIVIL STATE OF CALIFORNIA

THE STATE OF CALIFORNIA OR ITS OFFICERS OR AGENTS SHALL NOT BE RESPONSIBLE FOR THE ACCURACY OR COMPLETENESS OF SCANNED COPIES OF THIS PLAN SHEET.

NOTE:

FOR ACCURATE RIGHT OF WAY DATA, CONTACT RIGHT OF WAY ENGINEERING AT THE DISTRICT OFFICE.

PORTABLE CHANGEABLE MESSAGE SIGN

PCMS No.	MESSAGE	
	1ST FRAME	2ND FRAME
PCMS-2	LANE END AHEAD	REDUCE SPEED

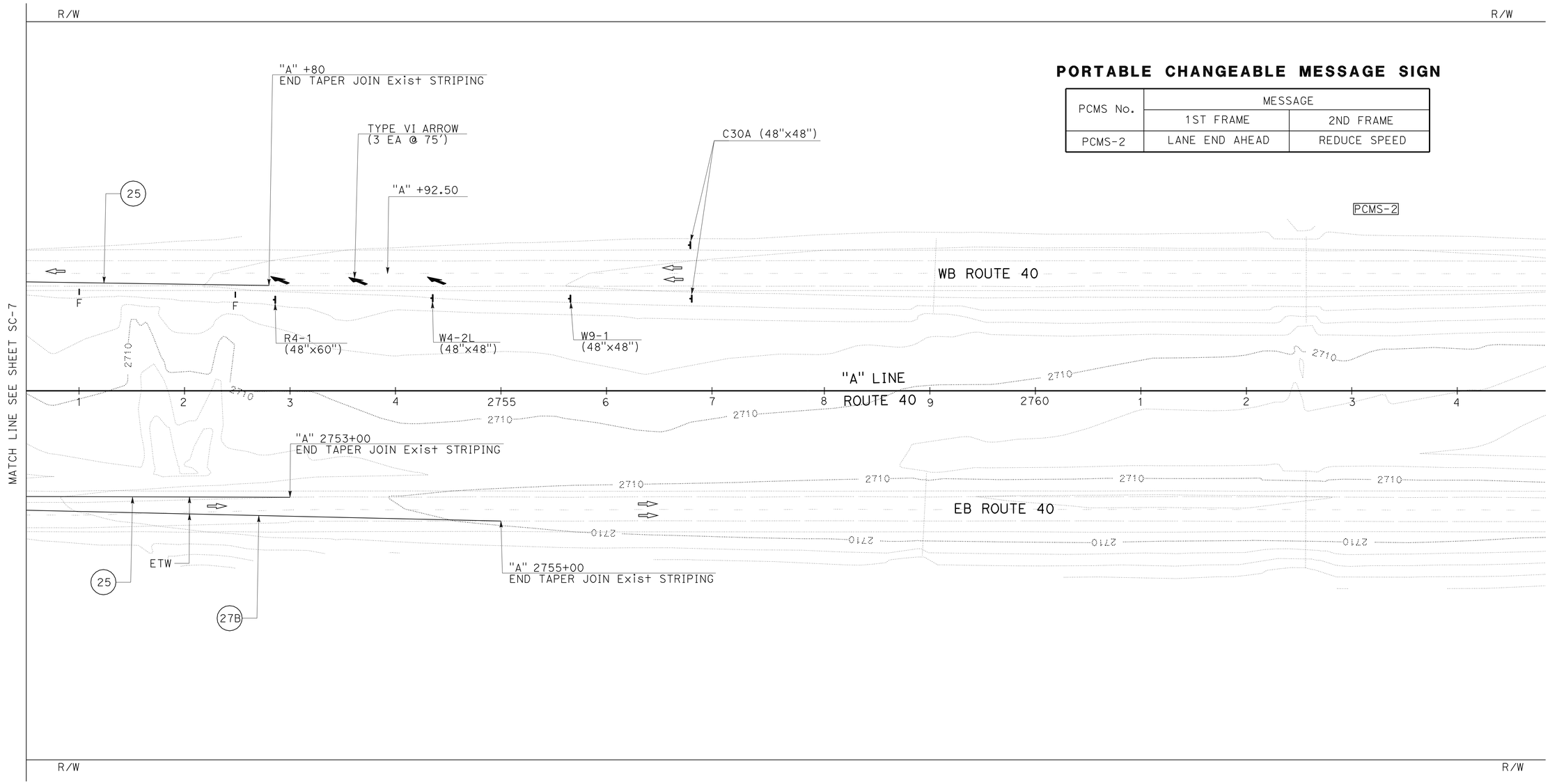

STAGE 1B

STAGE CONSTRUCTION TRAFFIC HANDLING PLAN

SCALE: 1" = 50'

SC-8

APPROVED FOR STAGE CONSTRUCTION WORK ONLY

STATE OF CALIFORNIA - DEPARTMENT OF TRANSPORTATION

Caltrans

DESIGN

FUNCTIONAL SUPERVISOR: SON NGUYEN

CALCULATED-DESIGNED BY: KHAI HUYNH

CHECKED BY: BANG NGUYEN

REVISED BY

DATE REVISED

LAST REVISION 00-00-00

DATE PLOTTED => 29-JUN-2012

TIME PLOTTED => 09:09

Dist	COUNTY	ROUTE	POST MILES TOTAL PROJECT	SHEET No.	TOTAL SHEETS
08	SBd	40	R85.2	23	80

REGISTERED CIVIL ENGINEER 04-16-12 DATE

6-25-12
PLANS APPROVAL DATE

REGISTERED PROFESSIONAL ENGINEER BANG H. NGUYEN No. C 46027 Exp. 12-31-12 CIVIL STATE OF CALIFORNIA

THE STATE OF CALIFORNIA OR ITS OFFICERS OR AGENTS SHALL NOT BE RESPONSIBLE FOR THE ACCURACY OR COMPLETENESS OF SCANNED COPIES OF THIS PLAN SHEET.

NOTE:

FOR ACCURATE RIGHT OF WAY DATA, CONTACT RIGHT OF WAY ENGINEERING AT THE DISTRICT OFFICE.

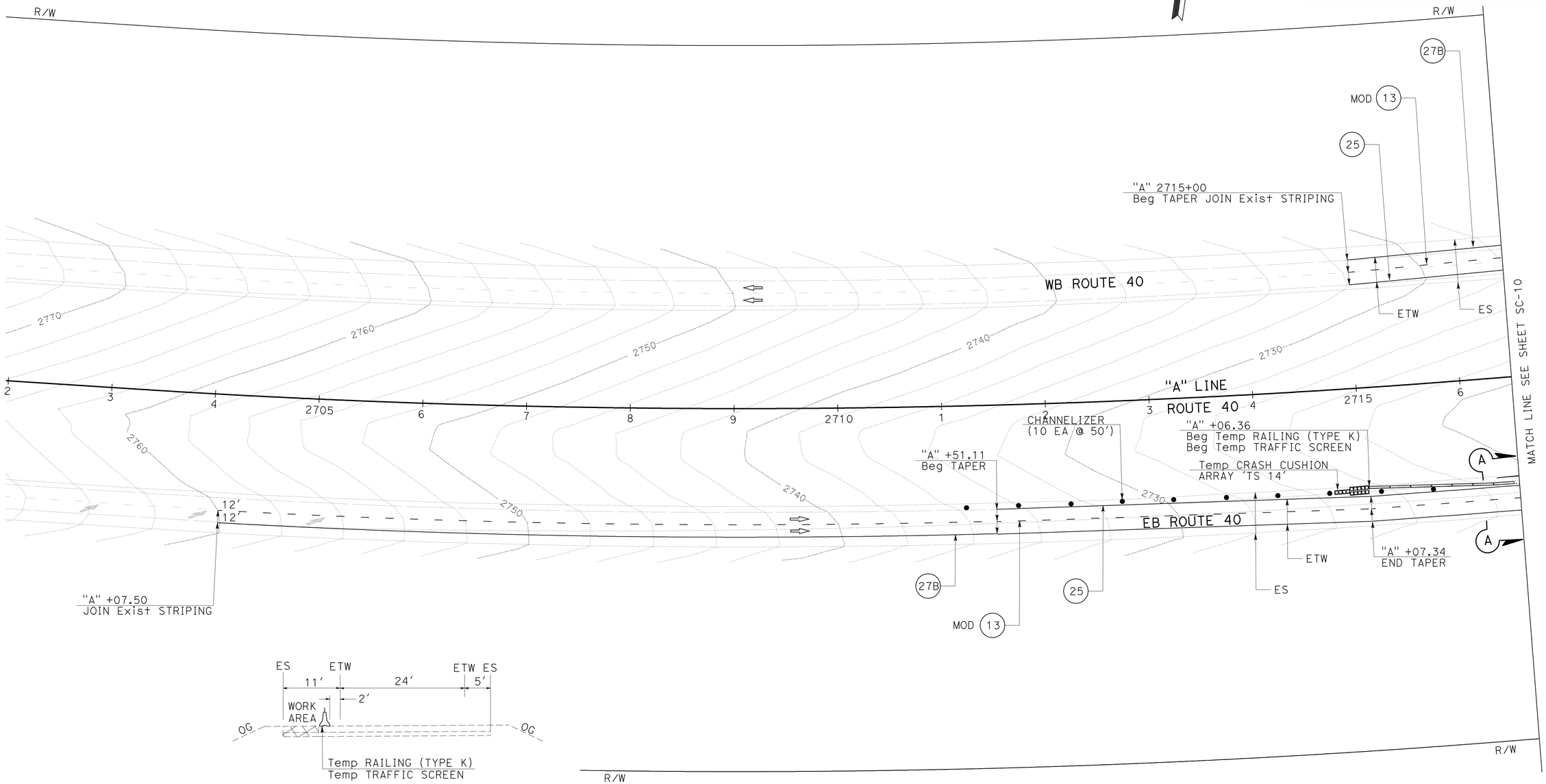

SECTION A-A

NO SCALE

APPROVED FOR STAGE CONSTRUCTION WORK ONLY

STAGE 2A

STAGE CONSTRUCTION TRAFFIC HANDLING PLAN

SCALE: 1" = 50'

SC-9

STATE OF CALIFORNIA - DEPARTMENT OF TRANSPORTATION

Caltrans

DESIGN

FUNCTIONAL SUPERVISOR: SON NGUYEN

CALCULATED-DESIGNED BY: KHAI HUYNH

CHECKED BY: BANG NGUYEN

REVISED BY

DATE REVISED

LAST REVISION 00-00-00

DATE PLOTTED => 29-JUN-2012

TIME PLOTTED => 09:09

Dist	COUNTY	ROUTE	POST MILES TOTAL PROJECT	SHEET No.	TOTAL SHEETS
08	SBd	40	R85.2	24	80

Bang H Nguyen 04-16-12
REGISTERED CIVIL ENGINEER DATE

6-25-12
PLANS APPROVAL DATE

REGISTERED PROFESSIONAL ENGINEER BANG H. NGUYEN No. C 46027 Exp. 12-31-12 CIVIL STATE OF CALIFORNIA

THE STATE OF CALIFORNIA OR ITS OFFICERS OR AGENTS SHALL NOT BE RESPONSIBLE FOR THE ACCURACY OR COMPLETENESS OF SCANNED COPIES OF THIS PLAN SHEET.

NOTE:

FOR ACCURATE RIGHT OF WAY DATA, CONTACT RIGHT OF WAY ENGINEERING AT THE DISTRICT OFFICE.

CURVE DATA

No.	R	Δ	T	L
6	1800.00′	12°24′22"	195.64′	389.75′
7	1800.00′	20°28′24"	325.06′	643.19′

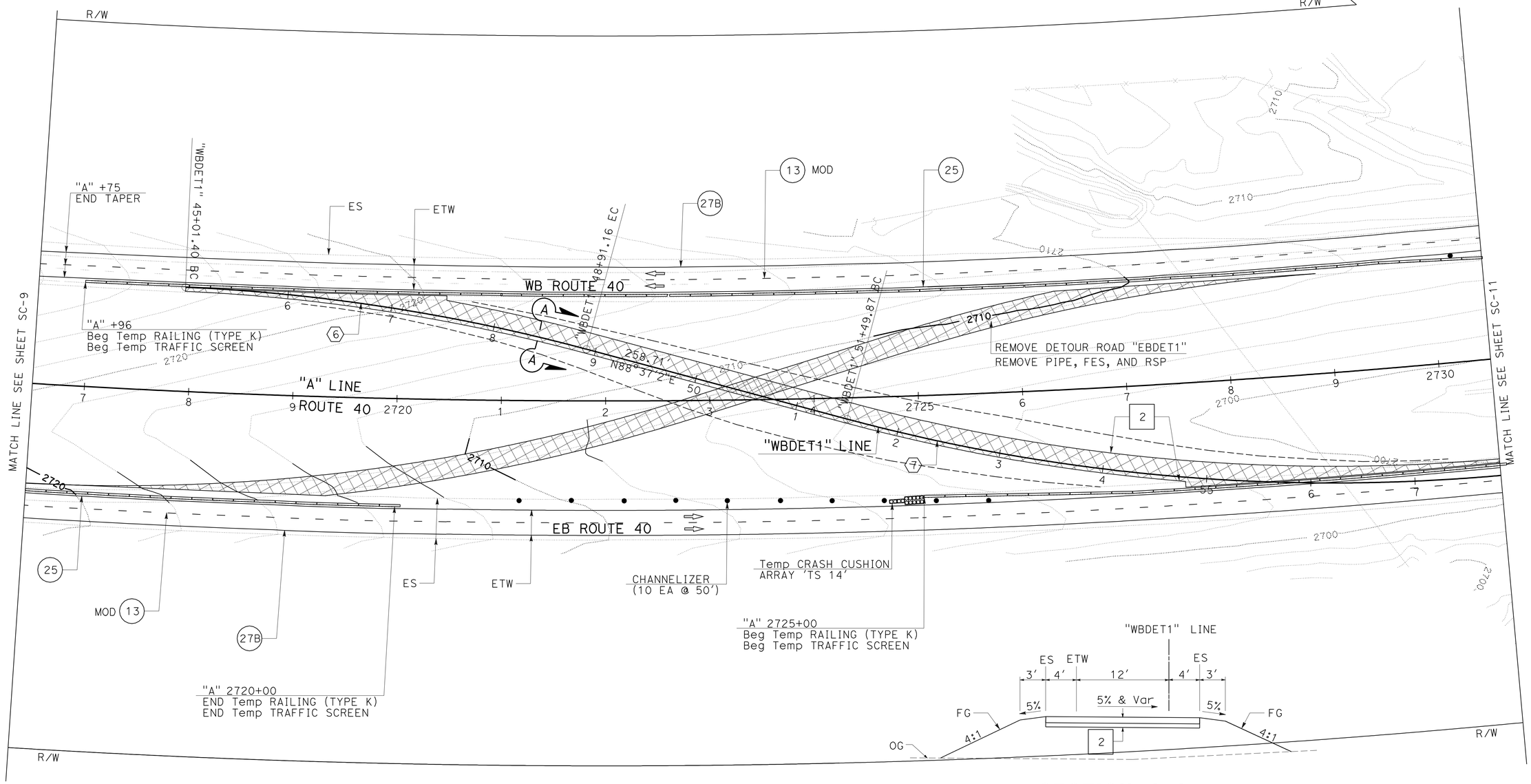

SECTION A-A
NO SCALE

STAGE 2A
STAGE CONSTRUCTION TRAFFIC HANDLING PLAN
SCALE: 1" = 50′

SC-10

APPROVED FOR STAGE CONSTRUCTION WORK ONLY

STATE OF CALIFORNIA - DEPARTMENT OF TRANSPORTATION
Caltrans
DESIGN

FUNCTIONAL SUPERVISOR: SON NGUYEN
CALCULATED-DESIGNED BY: KHAI HUYNH
CHECKED BY: BANG NGUYEN
REVISED BY
DATE REVISED

LAST REVISION 04-12-12
DATE PLOTTED => 29-JUN-2012
TIME PLOTTED => 09:09

Dist	COUNTY	ROUTE	POST MILES TOTAL PROJECT	SHEET No.	TOTAL SHEETS
08	SBd	40	R85.2	25	80

Bang H Nguyen 04-16-12
REGISTERED CIVIL ENGINEER DATE

6-25-12
PLANS APPROVAL DATE

REGISTERED PROFESSIONAL ENGINEER BANG H. NGUYEN No. C 46027 Exp. 12-31-12 CIVIL STATE OF CALIFORNIA

THE STATE OF CALIFORNIA OR ITS OFFICERS OR AGENTS SHALL NOT BE RESPONSIBLE FOR THE ACCURACY OR COMPLETENESS OF SCANNED COPIES OF THIS PLAN SHEET.

NOTE:

FOR ACCURATE RIGHT OF WAY DATA, CONTACT RIGHT OF WAY ENGINEERING AT THE DISTRICT OFFICE.

CURVE DATA

No.	R	Δ	T	L
8	1800.00′	15°8′01"	239.11′	475.44′

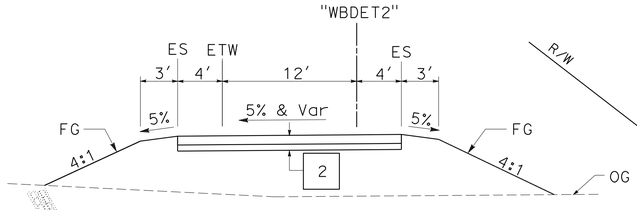

SECTION A-A

NO SCALE

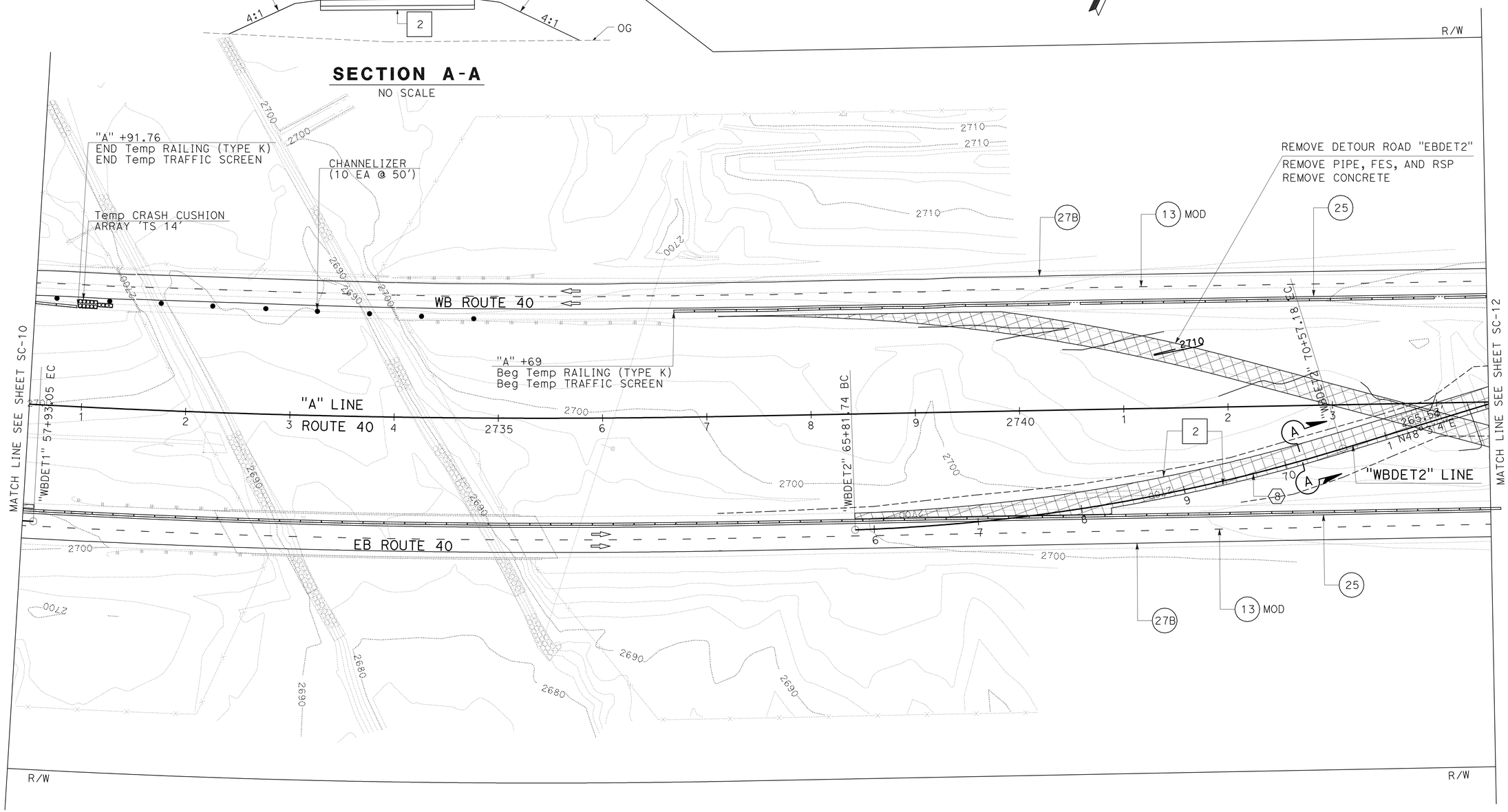

STAGE 2A
STAGE CONSTRUCTION TRAFFIC HANDLING PLAN

SCALE: 1" = 50′

SC-11

APPROVED FOR STAGE CONSTRUCTION WORK ONLY

STATE OF CALIFORNIA - DEPARTMENT OF TRANSPORTATION
Caltrans® DESIGN

FUNCTIONAL SUPERVISOR: SON NGUYEN
CALCULATED-DESIGNED BY: KHAI HUYNH
CHECKED BY: BANG NGUYEN
REVISED BY
DATE REVISED

LAST REVISION 04-12-12
DATE PLOTTED => 29-JUN-2012
TIME PLOTTED => 10:02

Dist	COUNTY	ROUTE	POST MILES TOTAL PROJECT	SHEET No.	TOTAL SHEETS
08	SBd	40	R85.2	26	80

Bang H Nguyen 04-16-12
REGISTERED CIVIL ENGINEER DATE

6-25-12
PLANS APPROVAL DATE

REGISTERED PROFESSIONAL ENGINEER
BANG H. NGUYEN
No. C 46027
Exp. 12-31-12
CIVIL
STATE OF CALIFORNIA

THE STATE OF CALIFORNIA OR ITS OFFICERS OR AGENTS SHALL NOT BE RESPONSIBLE FOR THE ACCURACY OR COMPLETENESS OF SCANNED COPIES OF THIS PLAN SHEET.

NOTE:

FOR ACCURATE RIGHT OF WAY DATA, CONTACT RIGHT OF WAY ENGINEERING AT THE DISTRICT OFFICE.

CURVE DATA

No.	R	Δ	T	L
9	1800.00′	15°56′14"	251.97′	500.68′

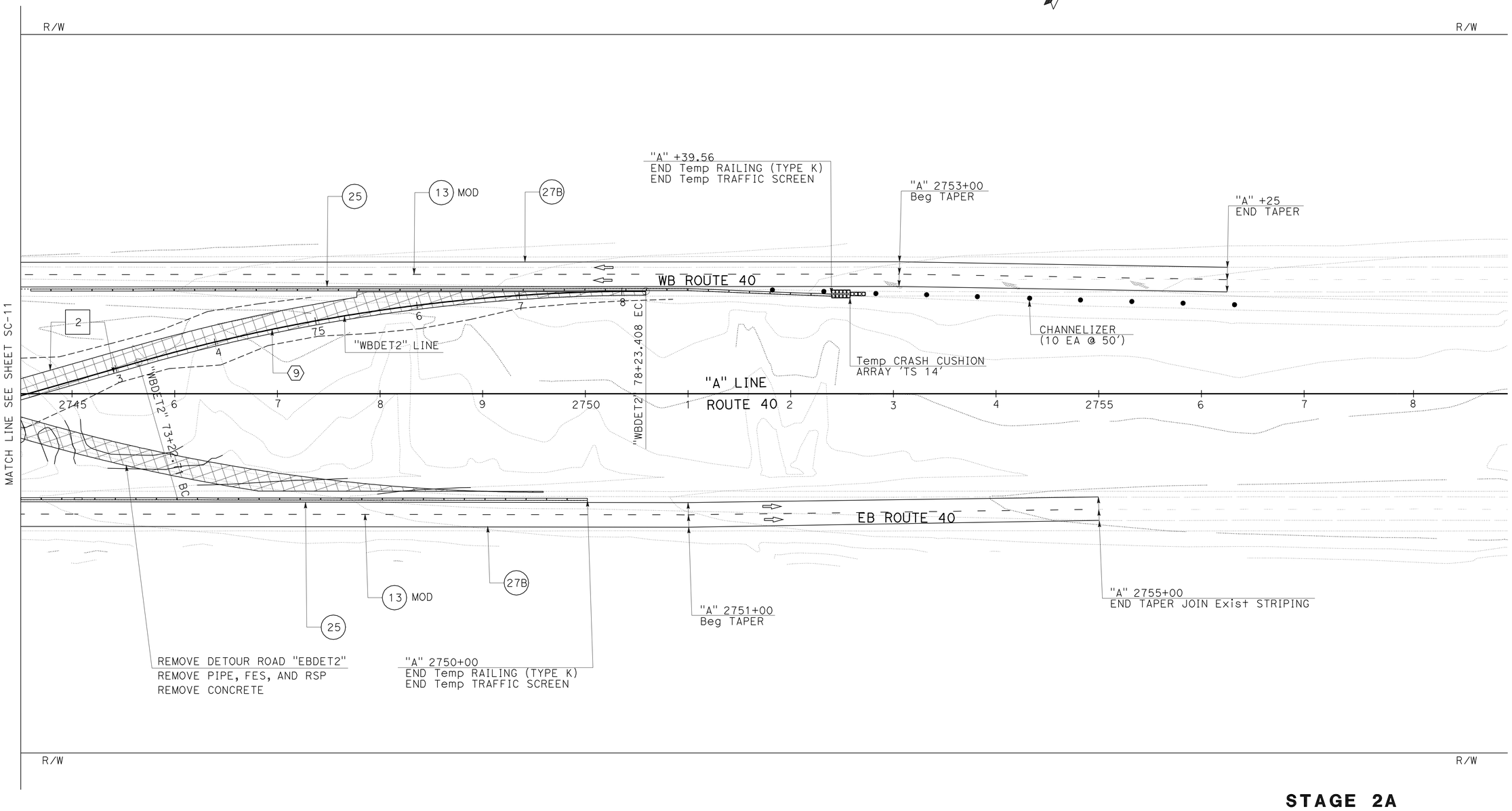

STAGE 2A
STAGE CONSTRUCTION TRAFFIC HANDLING PLAN

SCALE: 1" = 50′

SC-12

APPROVED FOR STAGE CONSTRUCTION WORK ONLY

STATE OF CALIFORNIA - DEPARTMENT OF TRANSPORTATION
Caltrans
DESIGN

FUNCTIONAL SUPERVISOR: SON NGUYEN
CALCULATED-DESIGNED BY: KHAI HUYNH
CHECKED BY: BANG NGUYEN
REVISED BY
DATE REVISED

LAST REVISION 04-12-12
DATE PLOTTED => 29-JUN-2012
TIME PLOTTED => 09:09

Dist	COUNTY	ROUTE	POST MILES TOTAL PROJECT	SHEET No.	TOTAL SHEETS
08	SBd	40	R85.2	27	80

REGISTERED CIVIL ENGINEER 04-16-12 DATE

6-25-12
PLANS APPROVAL DATE

REGISTERED PROFESSIONAL ENGINEER BANG H. NGUYEN No. C 46027 Exp. 12-31-12 CIVIL STATE OF CALIFORNIA

THE STATE OF CALIFORNIA OR ITS OFFICERS OR AGENTS SHALL NOT BE RESPONSIBLE FOR THE ACCURACY OR COMPLETENESS OF SCANNED COPIES OF THIS PLAN SHEET.

NOTE:

FOR ACCURATE RIGHT OF WAY DATA, CONTACT RIGHT OF WAY ENGINEERING AT THE DISTRICT OFFICE.

CURVE DATA

No.	R	Δ	T	L
10	7930.64′	5°42′29"	395.38′	790.10′

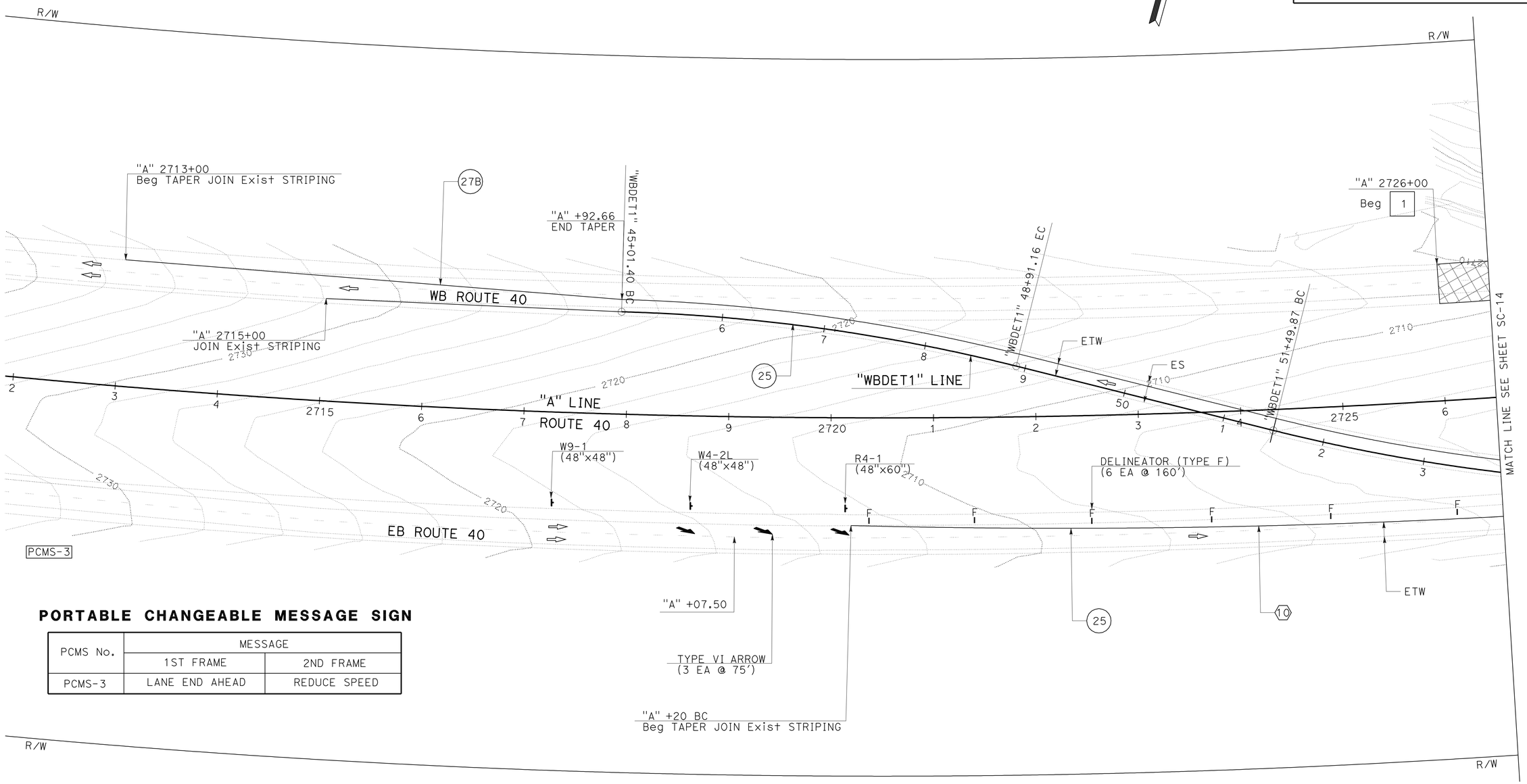

PORTABLE CHANGEABLE MESSAGE SIGN

PCMS No.	MESSAGE	
	1ST FRAME	2ND FRAME
PCMS-3	LANE END AHEAD	REDUCE SPEED

STAGE 2B
STAGE CONSTRUCTION TRAFFIC HANDLING PLAN

SCALE: 1" = 50′

SC-13

APPROVED FOR STAGE CONSTRUCTION WORK ONLY

STATE OF CALIFORNIA - DEPARTMENT OF TRANSPORTATION
Caltrans
DESIGN

FUNCTIONAL SUPERVISOR: SON NGUYEN
CALCULATED-DESIGNED BY: KHAI HUYNH
CHECKED BY: BANG NGUYEN
REVISED BY
DATE REVISED

LAST REVISION 00-00-00
DATE PLOTTED => 29-JUN-2012
TIME PLOTTED => 09:09

Dist	COUNTY	ROUTE	POST MILES TOTAL PROJECT	SHEET No.	TOTAL SHEETS
08	SBd	40	R85.2	28	80

Bang H Nguyen 04-16-12
REGISTERED CIVIL ENGINEER DATE

6-25-12
PLANS APPROVAL DATE

REGISTERED PROFESSIONAL ENGINEER
BANG H. NGUYEN
No. C 46027
Exp. 12-31-12
CIVIL
STATE OF CALIFORNIA

THE STATE OF CALIFORNIA OR ITS OFFICERS OR AGENTS SHALL NOT BE RESPONSIBLE FOR THE ACCURACY OR COMPLETENESS OF SCANNED COPIES OF THIS PLAN SHEET.

NOTE:

FOR ACCURATE RIGHT OF WAY DATA, CONTACT RIGHT OF WAY ENGINEERING AT THE DISTRICT OFFICE.

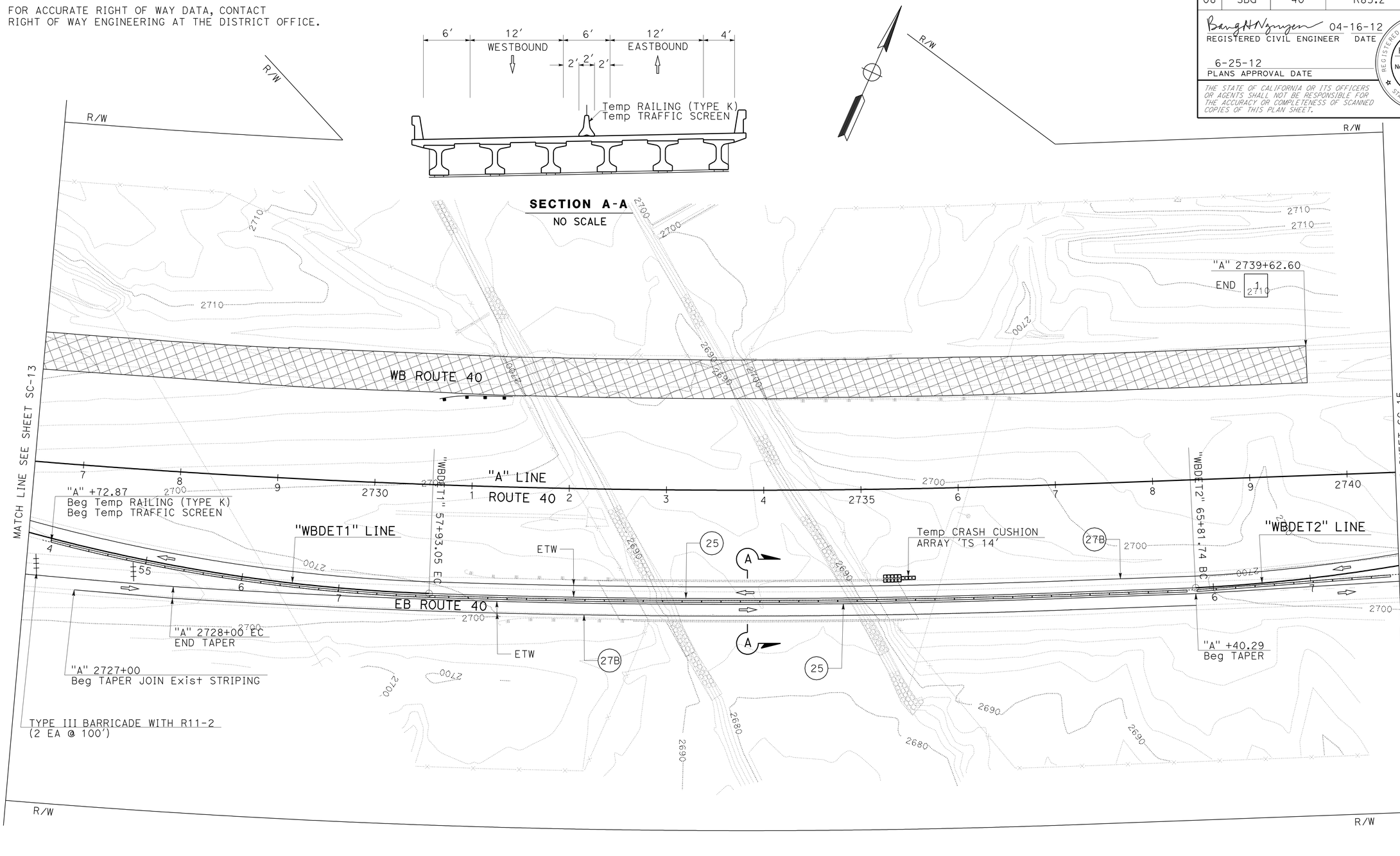

STAGE 2B

STAGE CONSTRUCTION TRAFFIC HANDLING PLAN

SCALE: 1" = 50′ **SC-14**

APPROVED FOR STAGE CONSTRUCTION WORK ONLY

STATE OF CALIFORNIA - DEPARTMENT OF TRANSPORTATION
Caltrans® **DESIGN**

FUNCTIONAL SUPERVISOR: SON NGUYEN
CALCULATED-DESIGNED BY: KHAI HUYNH
CHECKED BY: BANG NGUYEN
REVISED BY
DATE REVISED

LAST REVISION 00-00-00
DATE PLOTTED => 29-JUN-2012
TIME PLOTTED => 09:09

Dist	COUNTY	ROUTE	POST MILES TOTAL PROJECT	SHEET No.	TOTAL SHEETS
08	SBd	40	R85.2	29	80

Bang H Nguyen 04-16-12
REGISTERED CIVIL ENGINEER DATE

6-25-12
PLANS APPROVAL DATE

REGISTERED PROFESSIONAL ENGINEER
BANG H. NGUYEN
No. C 46027
Exp. 12-31-12
CIVIL
STATE OF CALIFORNIA

THE STATE OF CALIFORNIA OR ITS OFFICERS OR AGENTS SHALL NOT BE RESPONSIBLE FOR THE ACCURACY OR COMPLETENESS OF SCANNED COPIES OF THIS PLAN SHEET.

NOTE:

FOR ACCURATE RIGHT OF WAY DATA, CONTACT RIGHT OF WAY ENGINEERING AT THE DISTRICT OFFICE.

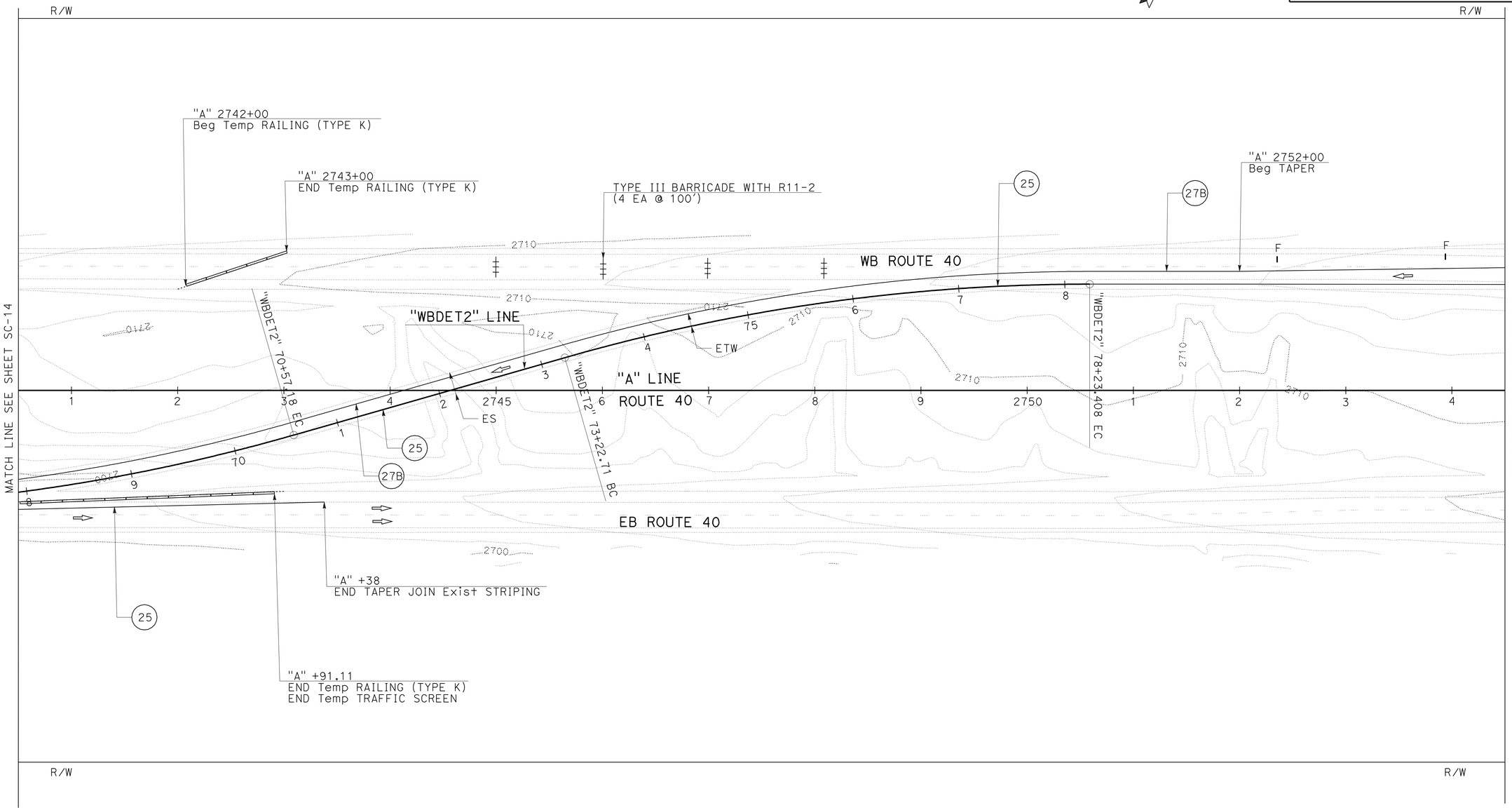

STAGE 2B
STAGE CONSTRUCTION TRAFFIC HANDLING PLAN

SCALE: 1" = 50'

SC-15

APPROVED FOR STAGE CONSTRUCTION WORK ONLY

STATE OF CALIFORNIA - DEPARTMENT OF TRANSPORTATION
Caltrans
DESIGN

FUNCTIONAL SUPERVISOR: SON NGUYEN
CALCULATED-DESIGNED BY: KHAI HUYNH
CHECKED BY: BANG NGUYEN
REVISED BY
DATE REVISED

LAST REVISION 00-00-00
DATE PLOTTED => 29-JUN-2012
TIME PLOTTED => 09:09

Dist	COUNTY	ROUTE	POST MILES TOTAL PROJECT	SHEET No.	TOTAL SHEETS
08	SBd	40	R85.2	30	80

Bang H Nguyen 04-16-12
REGISTERED CIVIL ENGINEER DATE

6-25-12
PLANS APPROVAL DATE

REGISTERED PROFESSIONAL ENGINEER BANG H. NGUYEN No. C 46027 Exp. 12-31-12 CIVIL STATE OF CALIFORNIA

THE STATE OF CALIFORNIA OR ITS OFFICERS OR AGENTS SHALL NOT BE RESPONSIBLE FOR THE ACCURACY OR COMPLETENESS OF SCANNED COPIES OF THIS PLAN SHEET.

NOTE:

FOR ACCURATE RIGHT OF WAY DATA, CONTACT
RIGHT OF WAY ENGINEERING AT THE DISTRICT OFFICE.

PORTABLE CHANGEABLE MESSAGE SIGN

PCMS No.	MESSAGE	
	1ST FRAME	2ND FRAME
PCMS-4	LANE END AHEAD	REDUCE SPEED

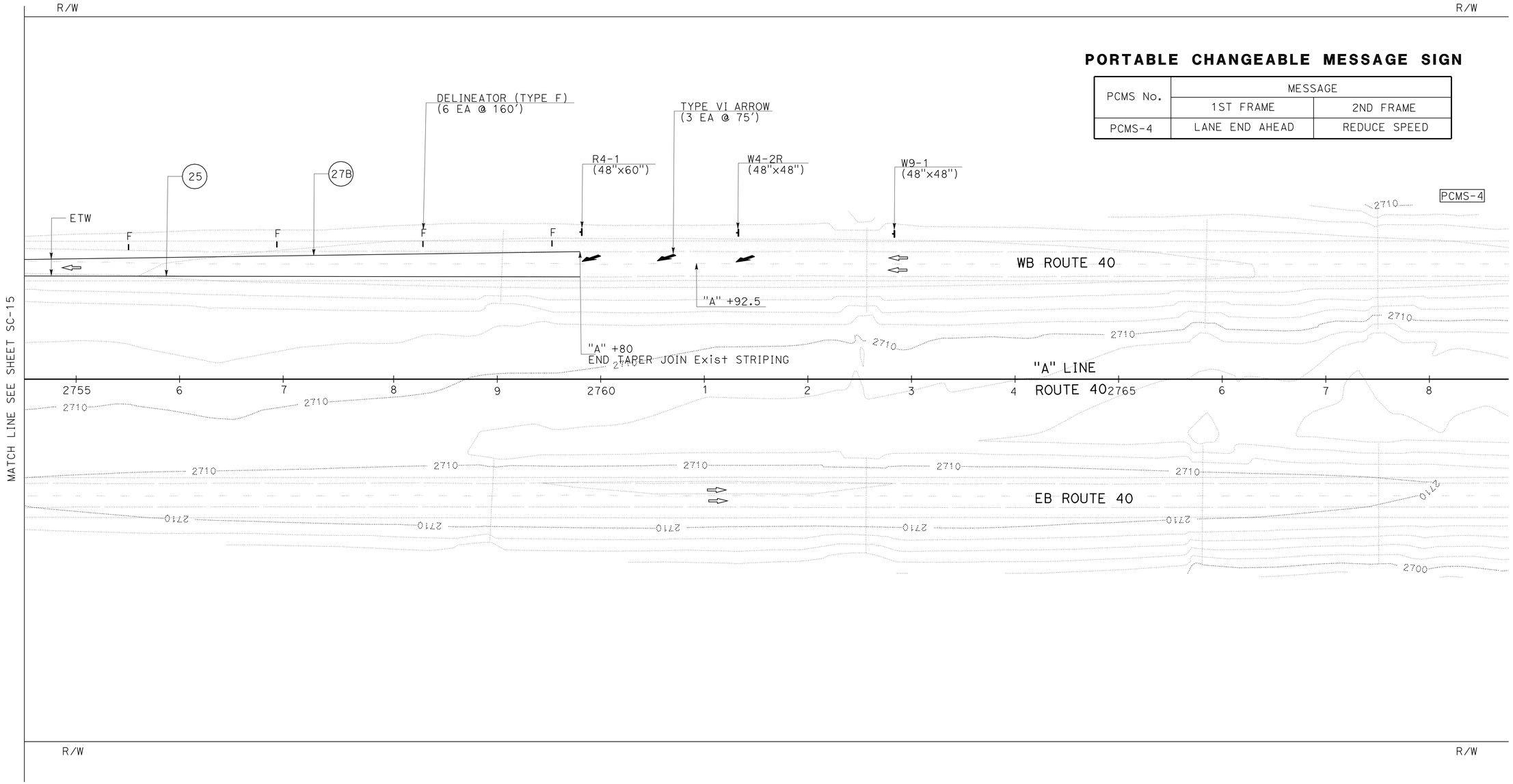

STAGE 2B
STAGE CONSTRUCTION TRAFFIC HANDLING PLAN

SCALE: 1" = 50'

SC-16

APPROVED FOR STAGE CONSTRUCTION WORK ONLY

STATE OF CALIFORNIA - DEPARTMENT OF TRANSPORTATION
Caltrans
DESIGN

FUNCTIONAL SUPERVISOR: SON NGUYEN
CALCULATED-DESIGNED BY: KHAI HUYNH
CHECKED BY: BANG NGUYEN
REVISED BY
DATE REVISED

LAST REVISION 02-01-12
DATE PLOTTED => 29-JUN-2012
TIME PLOTTED => 09:09

Dist	COUNTY	ROUTE	POST MILES TOTAL PROJECT	SHEET No.	TOTAL SHEETS
08	SBd	40	R85.2	31	80

REGISTERED CIVIL ENGINEER 04-16-12 DATE

6-25-12
PLANS APPROVAL DATE

REGISTERED PROFESSIONAL ENGINEER BANG H. NGUYEN No. C 46027 Exp.12-31-12 CIVIL STATE OF CALIFORNIA

THE STATE OF CALIFORNIA OR ITS OFFICERS OR AGENTS SHALL NOT BE RESPONSIBLE FOR THE ACCURACY OR COMPLETENESS OF SCANNED COPIES OF THIS PLAN SHEET.

NOTE:

FOR ACCURATE RIGHT OF WAY DATA, CONTACT RIGHT OF WAY ENGINEERING AT THE DISTRICT OFFICE.

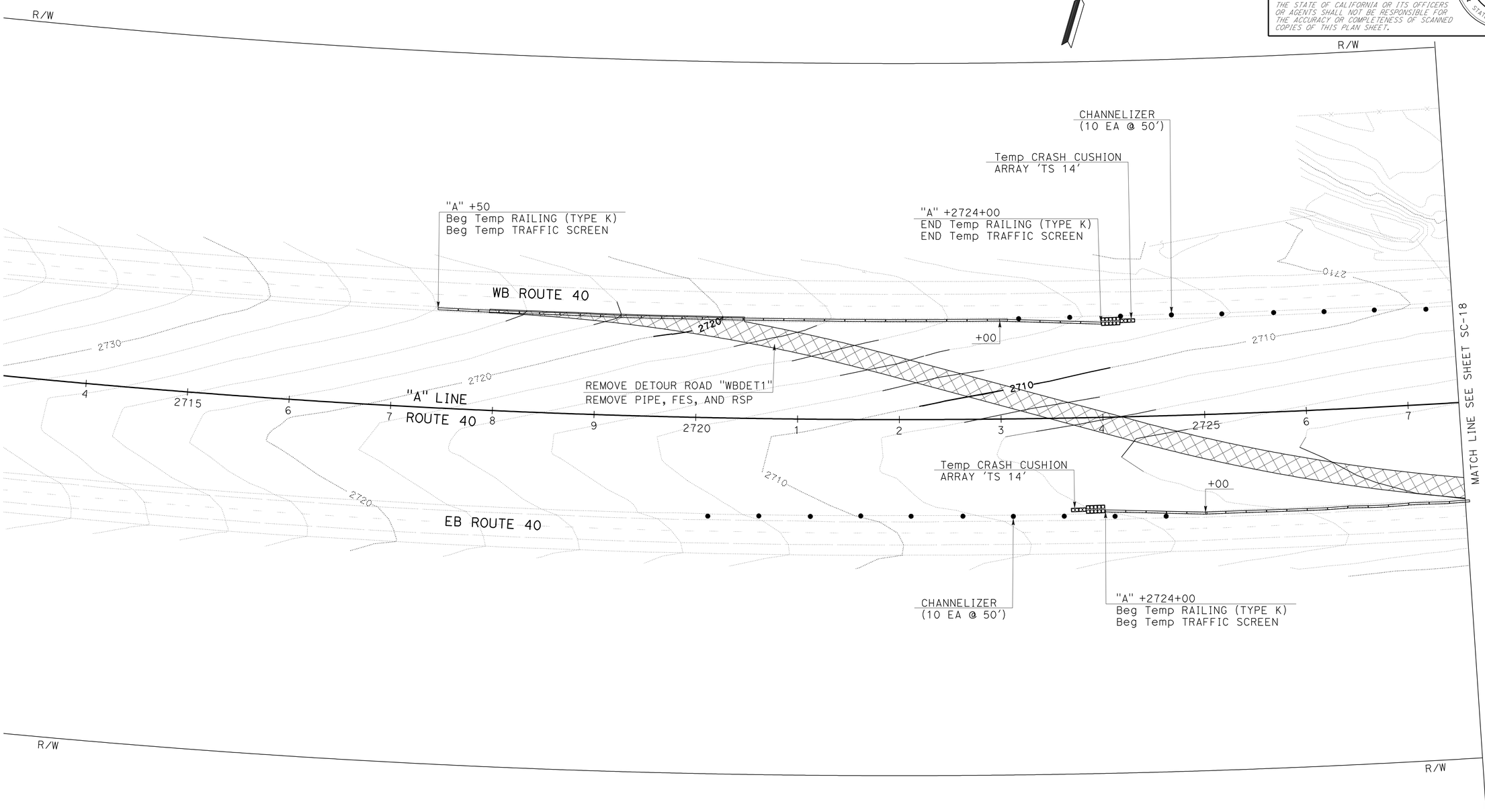

STAGE 3
STAGE CONSTRUCTION TRAFFIC HANDLING PLAN

SCALE: 1" = 50'

SC-17

APPROVED FOR STAGE CONSTRUCTION WORK ONLY

STATE OF CALIFORNIA - DEPARTMENT OF TRANSPORTATION
Caltrans
DESIGN

FUNCTIONAL SUPERVISOR: SON NGUYEN
CALCULATED-DESIGNED BY: KHAI HUYNH
CHECKED BY: BANG NGUYEN
REVISED BY
DATE REVISED

LAST REVISION 04-12-12 | DATE PLOTTED => 29-JUN-2012 | TIME PLOTTED => 09:09

Dist	COUNTY	ROUTE	POST MILES TOTAL PROJECT	SHEET No.	TOTAL SHEETS
08	SBd	40	R85.2	32	80

Bang H Nguyen 04-16-12
REGISTERED CIVIL ENGINEER DATE

6-25-12
PLANS APPROVAL DATE

REGISTERED PROFESSIONAL ENGINEER
BANG H. NGUYEN
No. C 46027
Exp.12-31-12
CIVIL
STATE OF CALIFORNIA

THE STATE OF CALIFORNIA OR ITS OFFICERS OR AGENTS SHALL NOT BE RESPONSIBLE FOR THE ACCURACY OR COMPLETENESS OF SCANNED COPIES OF THIS PLAN SHEET.

NOTE:

FOR ACCURATE RIGHT OF WAY DATA, CONTACT
RIGHT OF WAY ENGINEERING AT THE DISTRICT OFFICE.

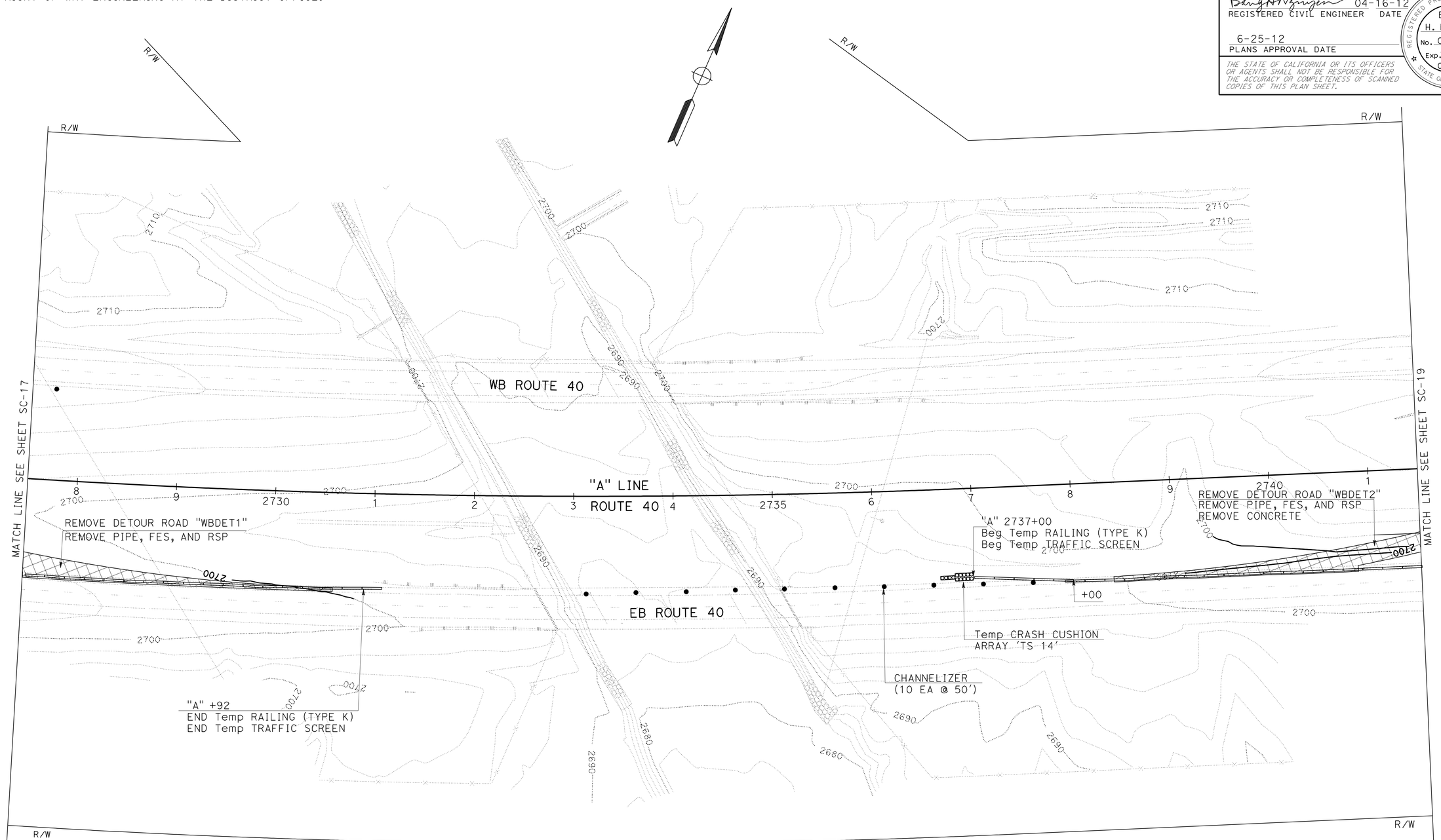

STAGE 3
STAGE CONSTRUCTION TRAFFIC HANDLING PLAN

SCALE: 1" = 50'

SC-18

APPROVED FOR STAGE CONSTRUCTION WORK ONLY

STATE OF CALIFORNIA - DEPARTMENT OF TRANSPORTATION
Caltrans
DESIGN

FUNCTIONAL SUPERVISOR: SON NGUYEN
CALCULATED-DESIGNED BY: KHAI HUYNH
CHECKED BY: BANG NGUYEN
REVISED BY
DATE REVISED

LAST REVISION 04-12-12
DATE PLOTTED => 29-JUN-2012
TIME PLOTTED => 09:10

Dist	COUNTY	ROUTE	POST MILES TOTAL PROJECT	SHEET No.	TOTAL SHEETS
08	SBd	40	R85.2	33	80

Bang H Nguyen 04-16-12
REGISTERED CIVIL ENGINEER DATE

6-25-12
PLANS APPROVAL DATE

REGISTERED PROFESSIONAL ENGINEER BANG H. NGUYEN No. C 46027 Exp. 12-31-12 CIVIL STATE OF CALIFORNIA

THE STATE OF CALIFORNIA OR ITS OFFICERS OR AGENTS SHALL NOT BE RESPONSIBLE FOR THE ACCURACY OR COMPLETENESS OF SCANNED COPIES OF THIS PLAN SHEET.

NOTE:

FOR ACCURATE RIGHT OF WAY DATA, CONTACT RIGHT OF WAY ENGINEERING AT THE DISTRICT OFFICE.

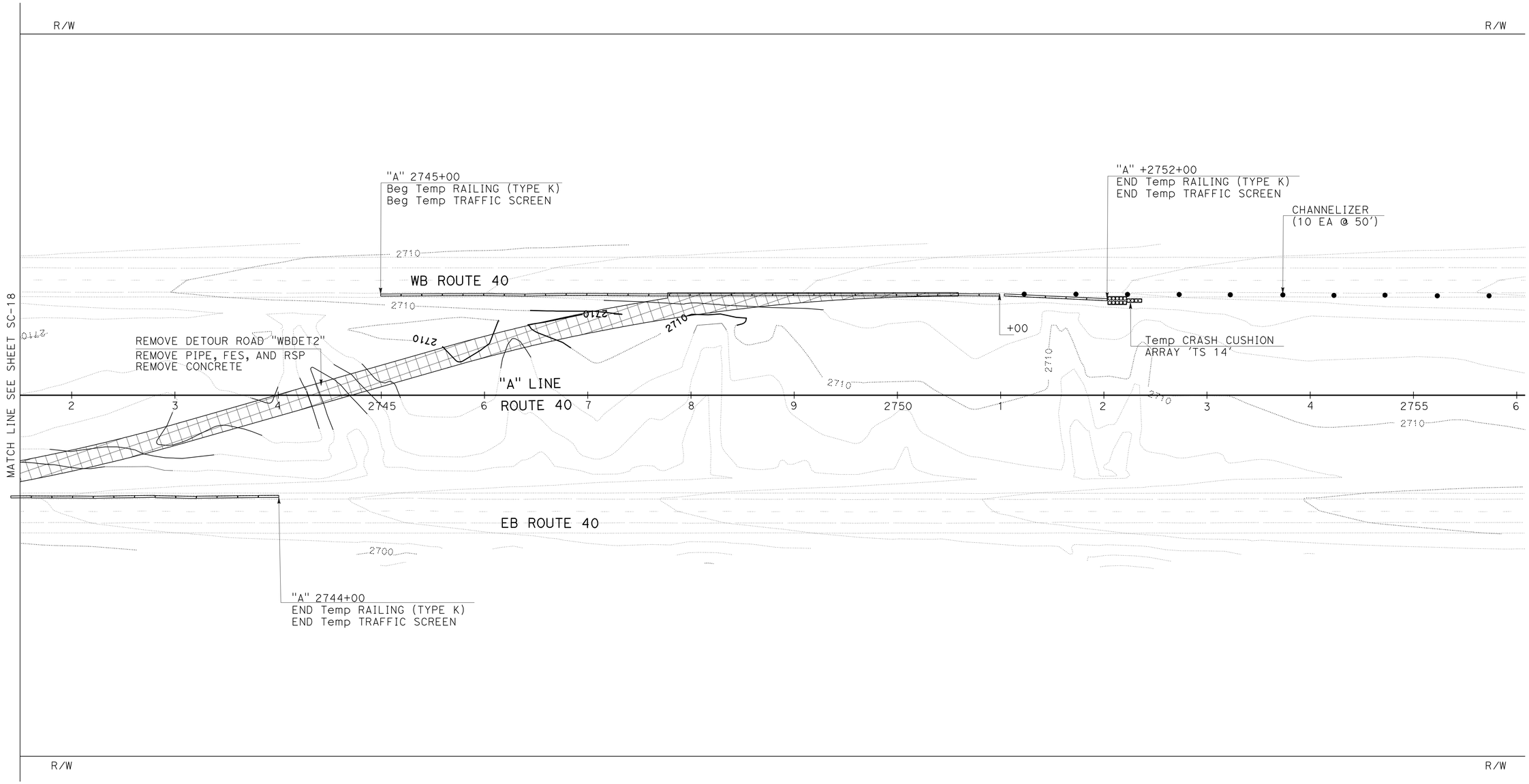

STAGE 3

STAGE CONSTRUCTION TRAFFIC HANDLING PLAN

SCALE: 1" = 50'

SC-19

APPROVED FOR STAGE CONSTRUCTION WORK ONLY

STATE OF CALIFORNIA - DEPARTMENT OF TRANSPORTATION
Caltrans
DESIGN

FUNCTIONAL SUPERVISOR: SON NGUYEN
CALCULATED-DESIGNED BY: KHAI HUYNH
CHECKED BY: BANG NGUYEN
REVISED BY
DATE REVISED

LAST REVISION 04-12-12
DATE PLOTTED => 29-JUN-2012
TIME PLOTTED => 09:10

Dist	COUNTY	ROUTE	POST MILES TOTAL PROJECT	SHEET No.	TOTAL SHEETS
08	SBd	40	R85.2	34	80

Bang H Nguyen 06-28-12
REGISTERED CIVIL ENGINEER DATE

6-25-12
PLANS APPROVAL DATE

REGISTERED PROFESSIONAL ENGINEER BANG H. NGUYEN No. C 46027 Exp. 12-31-12 CIVIL STATE OF CALIFORNIA

THE STATE OF CALIFORNIA OR ITS OFFICERS OR AGENTS SHALL NOT BE RESPONSIBLE FOR THE ACCURACY OR COMPLETENESS OF SCANNED COPIES OF THIS PLAN SHEET.

STAGE CONSTRUCTION QUANTITIES

SHEET NUMBER	STATION LIMIT	DETAIL	PAINT TRAFFIC STRIPE (2-COAT) 4" BROKEN WHITE	4" SOLID WHITE	4" SOLID YELLOW	PAVEMENT MARKER NON-REFLECTIVE TYPE A	RETRO REFLECTIVE TYPE G	RETRO REFLECTIVE TYPE H	PAINT PAVEMENT MARKING (2-COAT)	TEMPORARY RAILING (TYPE K)	TEMPORARY TRAFFIC SCREEN	CHANNELIZER (SURFACE MOUNTED)	TEMPORARY CRASH CUSHION MODULE	REMOVE PAINTED TRAFFIC STRIPE	REMOVE PAINTED PAVEMENT MARKING	REMOVE PAVEMENT MARKER	TYPE III BARRICADE	TYPE F DELINEATOR (CLASS 1)	REMOVE DELINEATOR	PORTABLE CHANGEABLE MESSAGE SIGN
			LF	LF	LF	EA	EA	EA	SQFT	LF	LF	EA	EA	LF	SQFT	EA	EA	EA	EA	EA
SC-1	"A" 2711+50.84 TO "A" 2725+50									493	493	10	14							
	"A" 2711+50.84 TO "A" 2722+50	27B		1100										1100						
	"A" 2711+50.84 TO "A" 2722+50	25			1100			24						1100		24				
	"A" 2711+50.84 TO "A" 2722+50	13 MOD	1100			92	24							275		116				
	"A" 2723+00 TO "A" 2725+50	27B		250										250						
	"A" 2723+00 TO "A" 2725+50	25			250			7						250		7				
	"A" 2723+00 TO "A" 2725+50	13 MOD	250			22	7							63		29				
SC-2	"A" 2725+50 TO "A" 2739+50									772	772	10	14							
	"A" 2725+50 TO "A" 2739+50	27B		1400										1400						
	"A" 2725+50 TO "A" 2739+50	25			1400			31						1400		31				
	"A" 2725+50 TO "A" 2739+50	13 MOD	1400			117	31							350		148				
SC-3	"A" 2739+50 TO "A" 2744+00									241	241	10	14							
	"A" 2739+50 TO "A" 2744+00	27B		450										450						
	"A" 2739+50 TO "A" 2744+00	25			450			11						450		11				
	"A" 2739+50 TO "A" 2744+00	13 MOD	450			38	11							113		49				
	"A" 2741+50 TO "A" 2753+00									481	481	10	14							
	"A" 2741+50 TO "A" 2753+00	27B		1150										1150						
	"A" 2741+50 TO "A" 2753+00	25			1150			25						1150		25				
	"A" 2741+50 TO "A" 2753+00	13 MOD	1150			96	25							288		121				
SC-4	"A" 2702+00 TO "A" 2708+50	27B		330										330						1
	"A" 2702+00 TO "A" 2708+50								126						126			6		
SC-5	"A" 2708+50 TO "A" 2722+50	27B		1400										1400						
	"A" 2713+00 TO "A" 2722+50	25			950			21						950		21				
	"A" 2713+00 TO "A" 2722+50									200							4			
SC-6	"A" 2725+00 TO "A" 2736+50									1150	1150		14							
	"A" 2722+50 TO "A" 2736+50	27B		2350										2350						
	"A" 2722+50 TO "A" 2736+50	25			2750			59						2750		59				
SC-7	"A" 2736+50 TO "A" 2750+50									643	643	10	14					6		
	"A" 2736+50 TO "A" 2750+50	27B		2250										2250						
	"A" 2736+50 TO "A" 2750+50	25			2800			60						2800		60				
SC-8	"A" 2750+50 TO "A" 2755+00								126						126					1
	"A" 2750+50 TO "A" 2755+00	27B		450										450						
	"A" 2750+50 TO "A" 2755+00	25			480			12						480		12				
SUBTOTAL			4350	11130	11330	365	98	250	252	3980	3780	50	84	23549	252	713	4	12		2
SHEET TOTAL			26810			365	348		252	3980	3780	50	84	23549	252	713	4	12		2

STAGE CONSTRUCTION QUANTITIES

SCQ-1

STATE OF CALIFORNIA - DEPARTMENT OF TRANSPORTATION
Caltrans
DESIGN

FUNCTIONAL SUPERVISOR: SON NGUYEN
CALCULATED-DESIGNED BY
CHECKED BY
REVISED BY
DATE REVISED

LAST REVISION 00-00-00
DATE PLOTTED => 29-JUN-2012
TIME PLOTTED => 09:16

Dist	COUNTY	ROUTE	POST MILES TOTAL PROJECT	SHEET No.	TOTAL SHEETS
08	SBd	40	R85.2	35	80

Bang H Nguyen 06-28-12
REGISTERED CIVIL ENGINEER DATE

6-25-12
PLANS APPROVAL DATE

REGISTERED PROFESSIONAL ENGINEER BANG H. NGUYEN No. C 46027 Exp. 12-31-12 CIVIL STATE OF CALIFORNIA

THE STATE OF CALIFORNIA OR ITS OFFICERS OR AGENTS SHALL NOT BE RESPONSIBLE FOR THE ACCURACY OR COMPLETENESS OF SCANNED COPIES OF THIS PLAN SHEET.

STAGE CONSTRUCTION QUANTITIES

SHEET NUMBER	STATION LIMIT	DETAIL	PAINT TRAFFIC STRIPE (2-COAT)			PAVEMENT MARKER			PAINT PAVEMENT MARKING (2-COAT)	TEMPORARY RAILING (TYPE K)	TEMPORARY TRAFFIC SCREEN	CHANNELIZER (SURFACE MOUNTED)	TEMPORARY CRASH CUSHION MODULE	REMOVE PAINTED TRAFFIC STRIPE	REMOVE PAINTED PAVEMENT MARKING	REMOVE PAVEMENT MARKER	TYPE III BARRICADE	TYPE F DELINEATOR (CLASS 1)	REMOVE DELINEATOR	PORTABLE CHANGEABLE MESSAGE SIGN
			4" BROKEN WHITE	4" SOLID WHITE	4" SOLID YELLOW	NON-REFLECTIVE TYPE A	RETRO REFLECTIVE TYPE G	RETRO REFLECTIVE TYPE H												
			LF	LF	LF	EA	EA	EA	SQFT	LF	LF	EA	EA	LF	SQFT	EA	EA	EA	EA	EA
SC-9	"A" 2704+07.50 TO "A" 2716+50									144	144	10	14						6	
	"A" 2704+07.50 TO "A" 2716+50	27B		1243										1243						
	"A" 2711+51.11 TO "A" 2716+50	25			499			12						499		12				
	"A" 2704+07.50 TO "A" 2716+50	13 MOD	1243			104	27							311		131				
	"A" 2715+00 TO "A" 2716+50	27B		150										150						
	"A" 2715+00 TO "A" 2716+50	25			150			5						150		5				
	"A" 2715+00 TO "A" 2716+50	13 MOD	150			13	5							38		18				
SC-10	"A" 2716+50 TO "A" 2730+50	27B		1400										1400						
	"A" 2716+50 TO "A" 2730+50	13 MOD	1400			124	30							350		154				
	"A" 2716+50 TO "A" 2730+50	25			1400			31						1400		31				
	"A" 2716+96 TO "A" 2730+50									1360	1360									
	"A" 2716+50 TO "A" 2730+50	27B		1400										1400						
	"A" 2716+50 TO "A" 2730+50	13 MOD	1400			124	30							350		154				
	"A" 2716+50 TO "A" 2730+50	25			1400			31						1400		31				
	"A" 2716+50 TO "A" 2730+50									900	900	10	14							
SC-11	"A" 2736+69 TO "A" 2744+50	27B		1400										1400						
	"A" 2736+69 TO "A" 2744+50	13 MOD	1400			124	30							350		154				
	"A" 2736+69 TO "A" 2744+50	25			1400			31						1400		31				
	"A" 2730+50 TO "A" 2744+50									825	825	10	14							
	"A" 2730+50 TO "A" 2744+50	27B		1400										1400						
	"A" 2730+50 TO "A" 2744+50	13 MOD	1400			124	30							350		154				
	"A" 2730+50 TO "A" 2744+50	25			1400			31						1400		31				
	"A" 2730+50 TO "A" 2744+50									1400	1400									
SC-12	"A" 2744+50 TO "A" 2755+25	27B		1075										1075					6	
	"A" 2744+50 TO "A" 2755+25	13 MOD	1075			96	23							270		119				
	"A" 2744+50 TO "A" 2755+25	25			1075			24						1075		24				
	"A" 2744+50 TO "A" 2753+00									740	740	10	14							
	"A" 2744+50 TO "A" 2755+00	27B		1050										1050						
	"A" 2744+50 TO "A" 2755+00	13 MOD	1050			92	22							263		114				
	"A" 2744+50 TO "A" 2755+00	25			1050			23						1050		23				
	"A" 2744+50 TO "A" 2750+00									550	550									
SC-13	"A" 2713+00 TO "A" 2726+50	27B		2290										2290						1
	"A" 2715+00 TO "A" 2726+50	25A			1165			25						1165		25				
	"A" 2720+20 TO "A" 2726+50	25A			630			14						630		14				
	"A" 2720+20 TO "A" 2726+50								126						126			6		
SUBTOTAL			9118	11408	10169	801	197	227	126	5919	5919	40	56	23859	126	1225		6	12	1
SHEET TOTAL			30695			801	424		126	5919	5919	40	56	23859	126	1225		6	12	1

STAGE CONSTRUCTION QUANTITIES

SCQ-2

STATE OF CALIFORNIA - DEPARTMENT OF TRANSPORTATION
Caltrans
DESIGN

FUNCTIONAL SUPERVISOR: SON NGUYEN
CALCULATED-DESIGNED BY
CHECKED BY
REVISED BY
DATE REVISED

LAST REVISION 00-00-00
DATE PLOTTED => 29-JUN-2012
TIME PLOTTED => 09:17

Dist	COUNTY	ROUTE	POST MILES TOTAL PROJECT	SHEET No.	TOTAL SHEETS
08	SBd	40	R85.2	36	80

Bang H Nguyen 06-28-12
REGISTERED CIVIL ENGINEER DATE

6-25-12
PLANS APPROVAL DATE

REGISTERED PROFESSIONAL ENGINEER BANG H. NGUYEN No. C 46027 Exp 12-31-12 CIVIL STATE OF CALIFORNIA

THE STATE OF CALIFORNIA OR ITS OFFICERS OR AGENTS SHALL NOT BE RESPONSIBLE FOR THE ACCURACY OR COMPLETENESS OF SCANNED COPIES OF THIS PLAN SHEET.

STAGE CONSTRUCTION QUANTITIES

SHEET NUMBER	STATION LIMIT	DETAIL	PAINT TRAFFIC STRIPE (2-COAT)			PAVEMENT MARKER			PAINT PAVEMENT MARKING (2-COAT)	TEMPORARY RAILING (TYPE K)	TEMPORARY TRAFFIC SCREEN	CHANNELIZER (SURFACE MOUNTED)	TEMPORARY CRASH CUSHION MODULE	REMOVE PAINTED TRAFFIC STRIPE	REMOVE PAINTED PAVEMENT MARKING	REMOVE PAVEMENT MARKER	TYPE III BARRICADE	DELINEATOR (CLASS 1)	REMOVE DELINEATOR	PORTABLE CHANGEABLE MESSAGE SIGN
							RETRO REFLECTIVE													
			4" BROKEN WHITE	4" SOLID WHITE	4" SOLID YELLOW	NON-REFLECTIVE TYPE A	TYPE G	TYPE H										TYPE F		
			LF	LF	LF	EA	EA	EA	SQFT	LF	LF	EA	EA	LF	SQFT	EA	EA	EA	EA	EA
SC-14	"A" 2726+50 TO "A" 2740+50	27B		1400									14	1400						
	"A" 2726+50 TO "A" 2740+50	25			2800			61						2800		61				
	"A" 2727+00 TO "A" 2740+50	27B		1350										1350						
	"A" 2726+73 TO "A" 2740+50									1380	1380									
SC-15	"A" 2740+50 TO "A" 2754+50	27B		1425										1425						
	"A" 2740+50 TO "A" 2754+50	25			1425			31						1425		31				
	"A" 2740+50 TO "A" 2754+50									340	240						4	2		
SC-16	"A" 2754+50 TO "A" 2760+00	27B		530										530						1
	"A" 2754+50 TO "A" 2760+00	25			530			12						530		12				
	"A" 2754+50 TO "A" 2763+00								126						126			4		
SC-17	"A" 2717+00 TO "A" 2727+50									1000	1000	20	28						6	
SC-18	"A" 2727+50 TO "A" 2741+50									792	792	10	14							
SC-19	"A" 2741+50 TO "A" 2756+00									950	950	10	14						6	
SUBTOTAL				4705	4755			104	126	4462	4362	40	70	9460	126	104	4	6	12	1
SHEET TOTAL			9460				104		126	4462	4362	40	70	9460	126	104	4	6	12	1
TOTAL			66965			1166	876		504	14361	14061	130	210	56868	504	2042	8	24	24	4

* FOR GRAND TOTAL OF PAVEMENT MARKER, DELINEATOR (CLASS1) & REMOVE DELINEATOR, SEE Sht PDQ-1

CONSTRUCTION AREA SIGN (STAGE CONSTRUCTION)

SHEET No.	MUTCD SIGN CODE	PANEL SIZE	No. OF POSTS AND SIZE	REMARKS	QUANTITY (EA)
SC-1	C30A(CA)	48" x 48"	1-6" x 6"		2
SC-3	C30A(CA)	48" x 48"	1-6" x 6"		2
SC-4	C30A(CA)	48" x 48"	1-6" x 6"		2
	W9-1	48" x 48"	1-6" x 6"		1
	W4-2R	48" x 48"	1-6" x 6"		1
	R4-1	48" x 60"	1-6" x 6"		1
SC-5	R11-2	48" x 30"		MOUNTED ON BARRICADE	4
SC-6	C30A(CA)	48" x 48"	1-6" x 6"		1
SC-8	C30A(CA)	48" x 48"	1-6" x 6"		2
	W9-1	48" x 48"	1-6" x 6"		1
	W4-2L	48" x 48"	1-6" x 6"		1
	R4-1	48" x 60"	1-6" x 6"		1
SC-13	W9-1	48" x 48"	1-6" x 6"		1
	W4-2L	48" x 48"	1-6" x 6"		1
	R4-1	48" x 60"	1-6" x 6"		1
SC-14	R11-2	48" x 30"		MOUNTED ON BARRICADE	2
SC-15	R11-2	48" x 30"		MOUNTED ON BARRICADE	4
SC-16	W9-1	48" x 48"	1-6" x 6"		1
	W4-2R	48" x 48"	1-6" x 6"		1
	R4-1	48" x 60"	1-6" x 6"		1

*For Additional Quantities of Construction Area Signs, See CS-1

STAGE CONSTRUCTION QUANTITIES
SCQ-3

REVISED BY | DATE REVISED
KHAI HUYNH | BANG NGUYEN
CALCULATED-DESIGNED BY | CHECKED BY
FUNCTIONAL SUPERVISOR: SON NGUYEN

STATE OF CALIFORNIA - DEPARTMENT OF TRANSPORTATION
Caltrans
DESIGN

LAST REVISION 00-00-00 | DATE PLOTTED => 29-JUN-2012 | TIME PLOTTED => 09:17

Dist	COUNTY	ROUTE	POST MILES TOTAL PROJECT	SHEET No.	TOTAL SHEETS
08	SBd	40	R85.2	37	80

Bang H Nguyen 06-28-12
REGISTERED CIVIL ENGINEER DATE

6-25-12
PLANS APPROVAL DATE

REGISTERED PROFESSIONAL ENGINEER BANG H. NGUYEN No. C 46027 Exp. 12-31-12 CIVIL STATE OF CALIFORNIA

THE STATE OF CALIFORNIA OR ITS OFFICERS OR AGENTS SHALL NOT BE RESPONSIBLE FOR THE ACCURACY OR COMPLETENESS OF SCANNED COPIES OF THIS PLAN SHEET.

NOTE:

FOR ACCURATE RIGHT OF WAY AND ACCESS DATA, CONTACT RIGHT OF WAY ENGINEERING AT THE DISTRICT OFFICE.

CURVE DATA

No.	R	Δ	T	L
1	1800′	21°00′33"	333.76′	660.02′
2	1800′	12°59′04"	204.84′	407.92′

APC ALLOWABLE PIPE MATERIAL

DESCRIPTION	TYPE	
	RCP	HDPE SMOOTH INTERIOR
	SIZE	SIZE
18" APC	18"	18"
24" APC	24"	24"

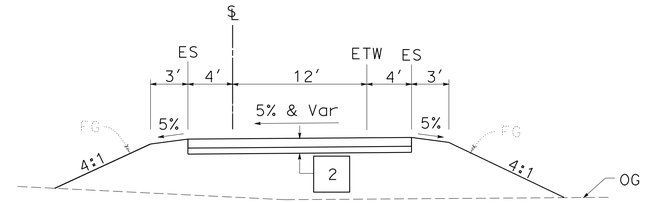

SECTION A-A
DETOUR ROAD (Typ)
NO SCALE

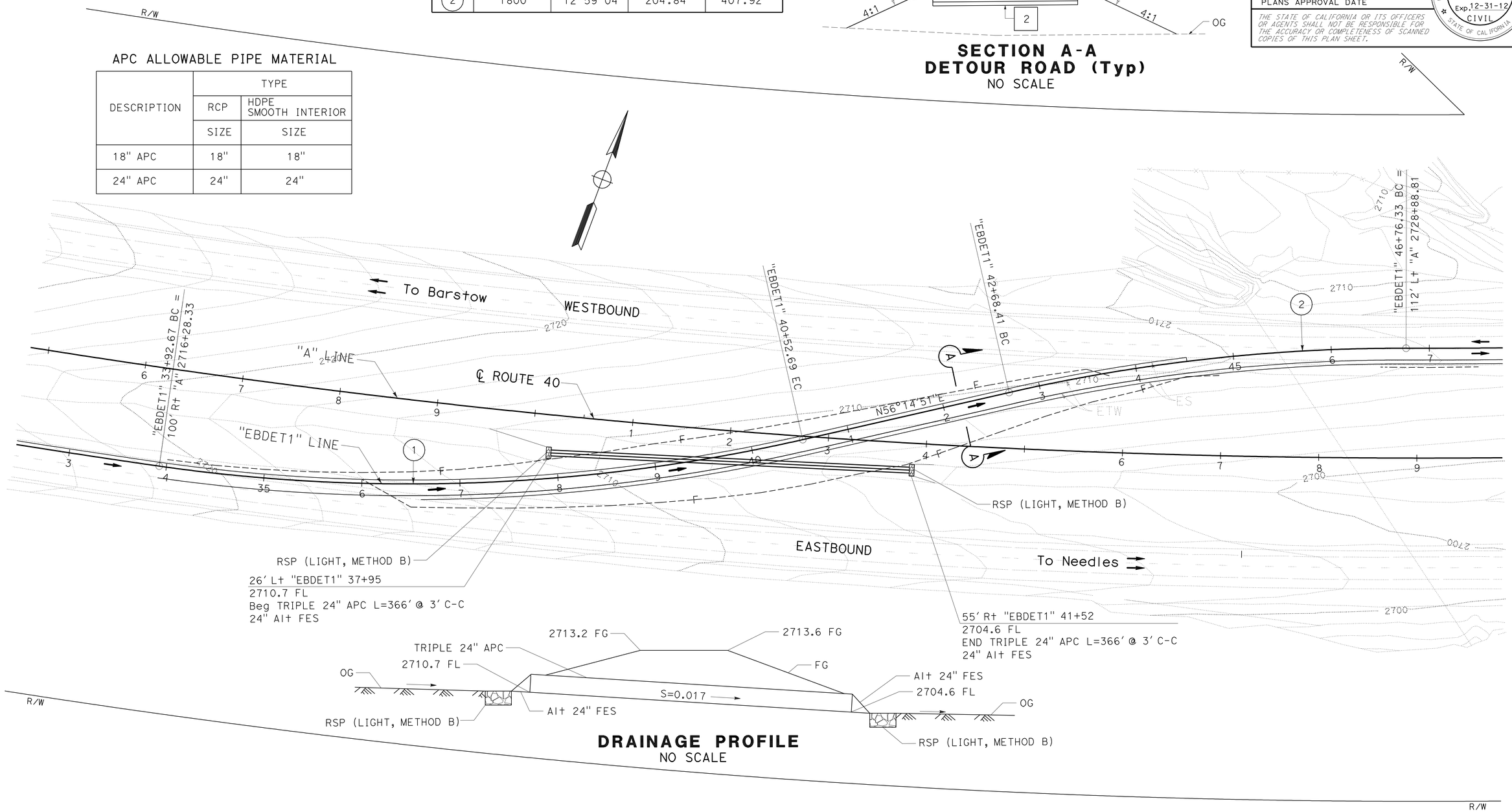

DRAINAGE PROFILE
NO SCALE

LEGEND:

[#] STRUCTURAL SECTION TYPE, SEE Sht X-1

(X) CURVE No.

DETOUR LINE "EBDET1"
EAST TO WEST
(STAGE 1A)

EASTBOUND DETOUR
DETOUR LAYOUT
SCALE: 1" = 50′

DE-1

STATE OF CALIFORNIA - DEPARTMENT OF TRANSPORTATION
DESIGN
FUNCTIONAL SUPERVISOR: SON NGUYEN
CALCULATED-DESIGNED BY: BANG NGUYEN
CHECKED BY: LY PHAN
REVISED BY
DATE REVISED

LAST REVISION 02-01-12
DATE PLOTTED => 29-JUN-2012
TIME PLOTTED => 09:17

Dist	COUNTY	ROUTE	POST MILES TOTAL PROJECT	SHEET No.	TOTAL SHEETS
08	SBd	40	R85.2	38	80

Bang H Nguyen 04-16-12
REGISTERED CIVIL ENGINEER DATE

6-25-12
PLANS APPROVAL DATE

REGISTERED PROFESSIONAL ENGINEER
BANG H. NGUYEN
No. C 46027
Exp. 12-31-12
CIVIL
STATE OF CALIFORNIA

THE STATE OF CALIFORNIA OR ITS OFFICERS OR AGENTS SHALL NOT BE RESPONSIBLE FOR THE ACCURACY OR COMPLETENESS OF SCANNED COPIES OF THIS PLAN SHEET.

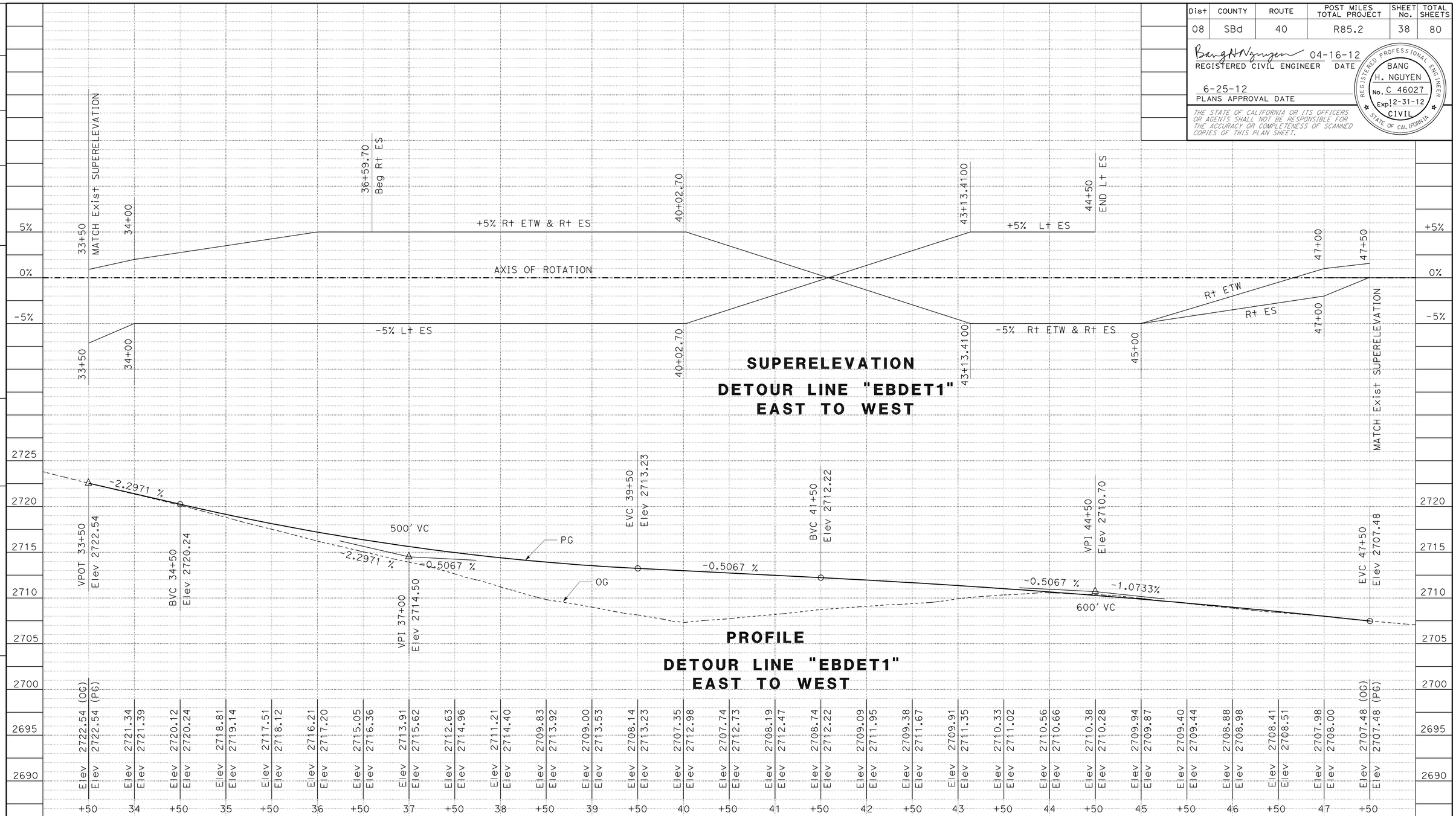

DETOUR PROFILE AND SUPERELEVATION DIAGRAM

SCALE: Horiz 1" = 50'
Vert 1" = 5'

DE-2

STATION		TOTAL
CY	Exc	
	Emb	

STATE OF CALIFORNIA - DEPARTMENT OF TRANSPORTATION
Caltrans
DESIGN

FUNCTIONAL SUPERVISOR: SON NGUYEN
CALCULATED-DESIGNED BY: LY PHAN
CHECKED BY: BANG NGUYEN
REVISED BY
DATE REVISED

LAST REVISION 02-01-12
DATE PLOTTED => 29-JUN-2012
TIME PLOTTED => 09:17

Dist	COUNTY	ROUTE	POST MILES TOTAL PROJECT	SHEET No.	TOTAL SHEETS
08	SBd	40	R85.2	39	80

Bang H Nguyen 06-28-12
REGISTERED CIVIL ENGINEER DATE

6-25-12
PLANS APPROVAL DATE

REGISTERED PROFESSIONAL ENGINEER BANG H. NGUYEN No. C 46027 Exp 12-31-12 CIVIL STATE OF CALIFORNIA

THE STATE OF CALIFORNIA OR ITS OFFICERS OR AGENTS SHALL NOT BE RESPONSIBLE FOR THE ACCURACY OR COMPLETENESS OF SCANNED COPIES OF THIS PLAN SHEET.

NOTE:

FOR ACCURATE RIGHT OF WAY AND ACCESS DATA, CONTACT RIGHT OF WAY ENGINEERING AT THE DISTRICT OFFICE.

CURVE DATA

No.	R	Δ	T	L
3	1800′	15°56′10"	251.95′	500.65′
4	1800′	15°56′10"	251.95′	500.65′

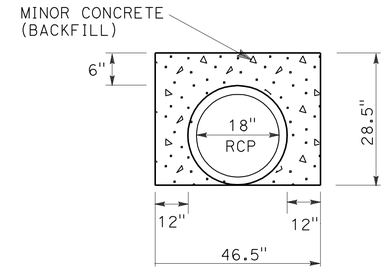

PIPE ENCASEMENT DETAIL

APC ALLOWABLE PIPE MATERIAL

DESCRIPTION	TYPE	
	RCP	HDPE SMOOTH INTERIOR
	SIZE	SIZE
18" APC	18"	18"
24" APC	24"	24"

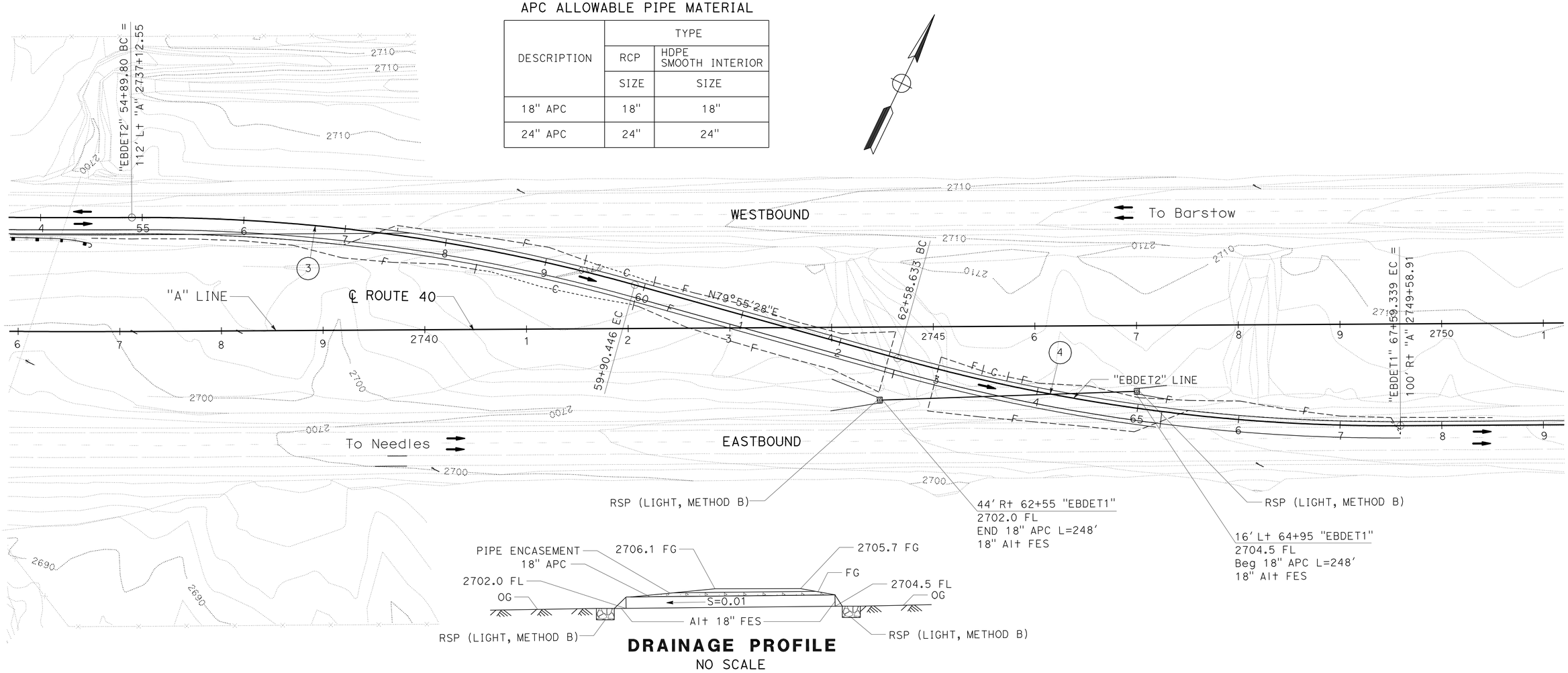

DRAINAGE PROFILE
NO SCALE

DETOUR LINE "EBDET2" WEST TO EAST (STAGE 1A)

EASTBOUND DETOUR DETOUR LAYOUT

SCALE: 1" = 50′

DE-3

STATE OF CALIFORNIA - DEPARTMENT OF TRANSPORTATION
Caltrans
DESIGN

FUNCTIONAL SUPERVISOR: SON NGUYEN
CALCULATED-DESIGNED BY: BANG NGUYEN
CHECKED BY: LY PHAN
REVISED BY
DATE REVISED

LAST REVISION 02-01-12
DATE PLOTTED => 29-JUN-2012
TIME PLOTTED => 09:17

Dist	COUNTY	ROUTE	POST MILES TOTAL PROJECT	SHEET No.	TOTAL SHEETS
08	SBd	40	R85.2	40	80

Bang H Nguyen 04-16-12
REGISTERED CIVIL ENGINEER DATE

6-25-12
PLANS APPROVAL DATE

REGISTERED PROFESSIONAL ENGINEER
BANG H. NGUYEN
No. C 46027
Exp. 12-31-12
CIVIL
STATE OF CALIFORNIA

THE STATE OF CALIFORNIA OR ITS OFFICERS OR AGENTS SHALL NOT BE RESPONSIBLE FOR THE ACCURACY OR COMPLETENESS OF SCANNED COPIES OF THIS PLAN SHEET.

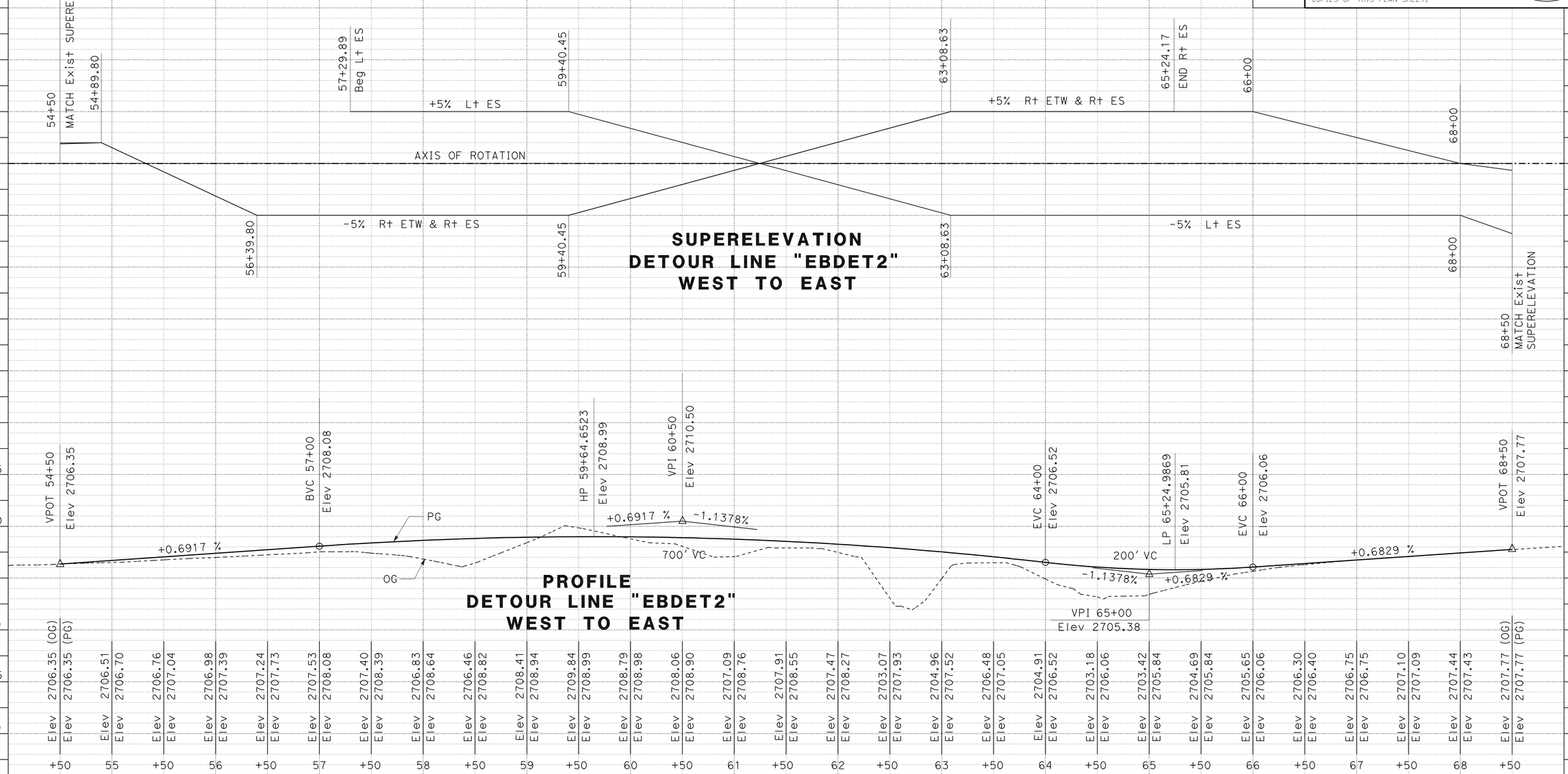

DETOUR PROFILE AND SUPERELEVATION DIAGRAM

SCALE: Horiz 1" = 50'
Vert 1" = 5'

DE-4

STATE OF CALIFORNIA - DEPARTMENT OF TRANSPORTATION
Caltrans
DESIGN

FUNCTIONAL SUPERVISOR: SON NGUYEN
CALCULATED-DESIGNED BY: LY PHAN
CHECKED BY: BANG NGUYEN
REVISED BY
DATE REVISED

STATION		TOTAL
CY	Exc	
	Emb	

LAST REVISION 02-01-12
DATE PLOTTED => 29-JUN-2012
TIME PLOTTED => 09:17

Dist	COUNTY	ROUTE	POST MILES TOTAL PROJECT	SHEET No.	TOTAL SHEETS
08	SBd	40	R85.2	41	80

Bang H Nguyen 06-28-12
REGISTERED CIVIL ENGINEER DATE

6-25-12
PLANS APPROVAL DATE

REGISTERED PROFESSIONAL ENGINEER BANG H. NGUYEN No. C 46027 Exp. 12-31-12 CIVIL STATE OF CALIFORNIA

THE STATE OF CALIFORNIA OR ITS OFFICERS OR AGENTS SHALL NOT BE RESPONSIBLE FOR THE ACCURACY OR COMPLETENESS OF SCANNED COPIES OF THIS PLAN SHEET.

NOTE:

FOR ACCURATE RIGHT OF WAY AND ACCESS DATA, CONTACT RIGHT OF WAY ENGINEERING AT THE DISTRICT OFFICE.

CURVE DATA

No.	R	Δ	T	L
5	1800′	12°24′22″	195.64′	389.75′
6	1800′	20°28′24″	325.06′	643.19′

APC ALLOWABLE PIPE MATERIAL

DESCRIPTION	TYPE	
	RCP	HDPE SMOOTH INTERIOR
	SIZE	SIZE
18" APC	18"	18"
24" APC	24"	24"

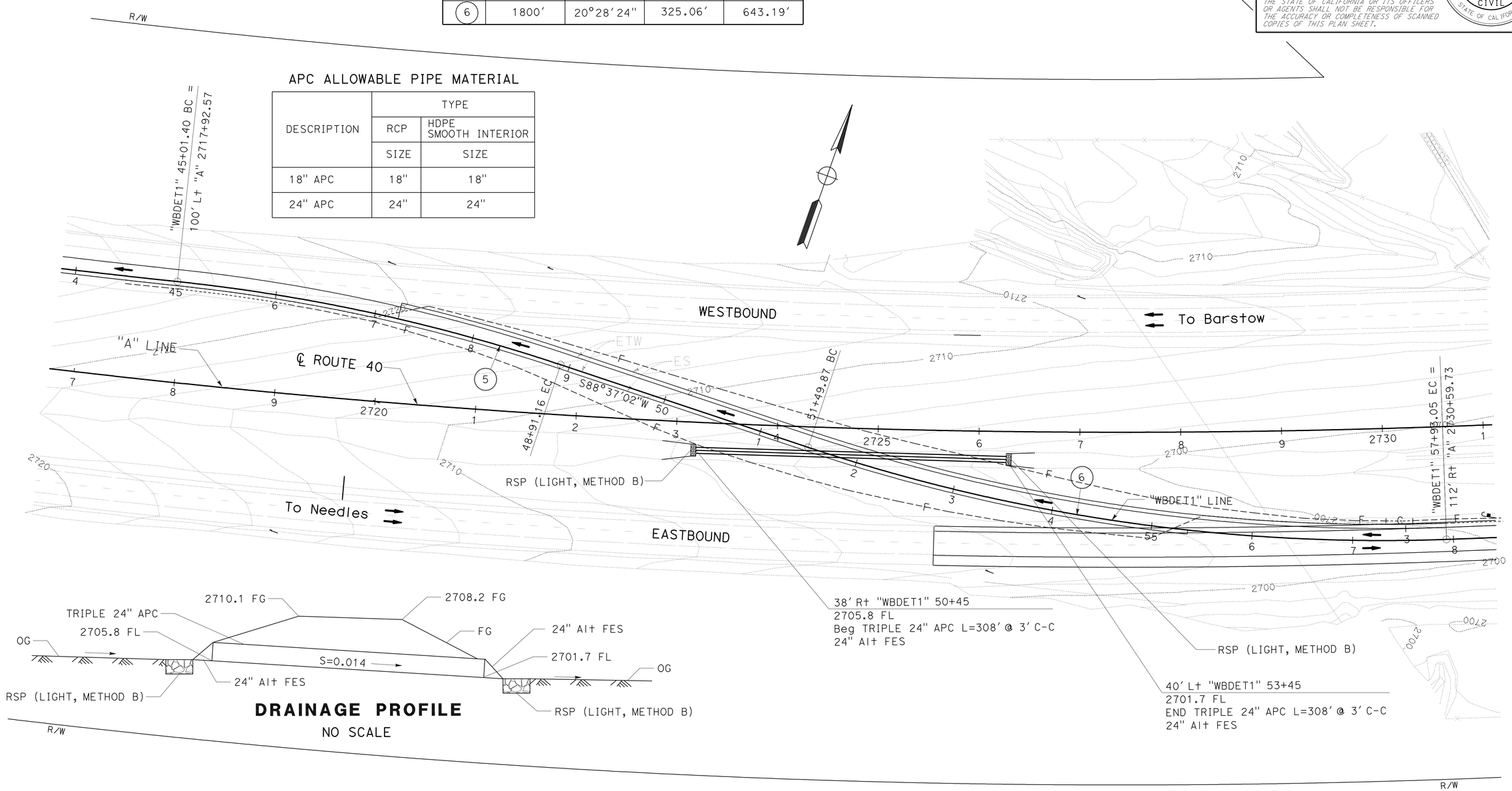

DETOUR LINE "WBDET1" EAST TO WEST (STAGE 2A)

WESTBOUND DETOUR DETOUR LAYOUT

SCALE: 1" = 50′

DE-5

STATE OF CALIFORNIA - DEPARTMENT OF TRANSPORTATION
Caltrans
DESIGN

FUNCTIONAL SUPERVISOR: SON NGUYEN
CALCULATED-DESIGNED BY: BANG NGUYEN
CHECKED BY: LY PHAN
REVISED BY
DATE REVISED

LAST REVISION 02-01-12
DATE PLOTTED => 29-JUN-2012
TIME PLOTTED => 09:44

Dist	COUNTY	ROUTE	POST MILES TOTAL PROJECT	SHEET No.	TOTAL SHEETS
08	SBd	40	R85.2	42	80

Bang H Nguyen 04-16-12
REGISTERED CIVIL ENGINEER DATE

6-25-12
PLANS APPROVAL DATE

REGISTERED PROFESSIONAL ENGINEER BANG H. NGUYEN No. C 46027 Exp.12-31-12 CIVIL STATE OF CALIFORNIA

THE STATE OF CALIFORNIA OR ITS OFFICERS OR AGENTS SHALL NOT BE RESPONSIBLE FOR THE ACCURACY OR COMPLETENESS OF SCANNED COPIES OF THIS PLAN SHEET.

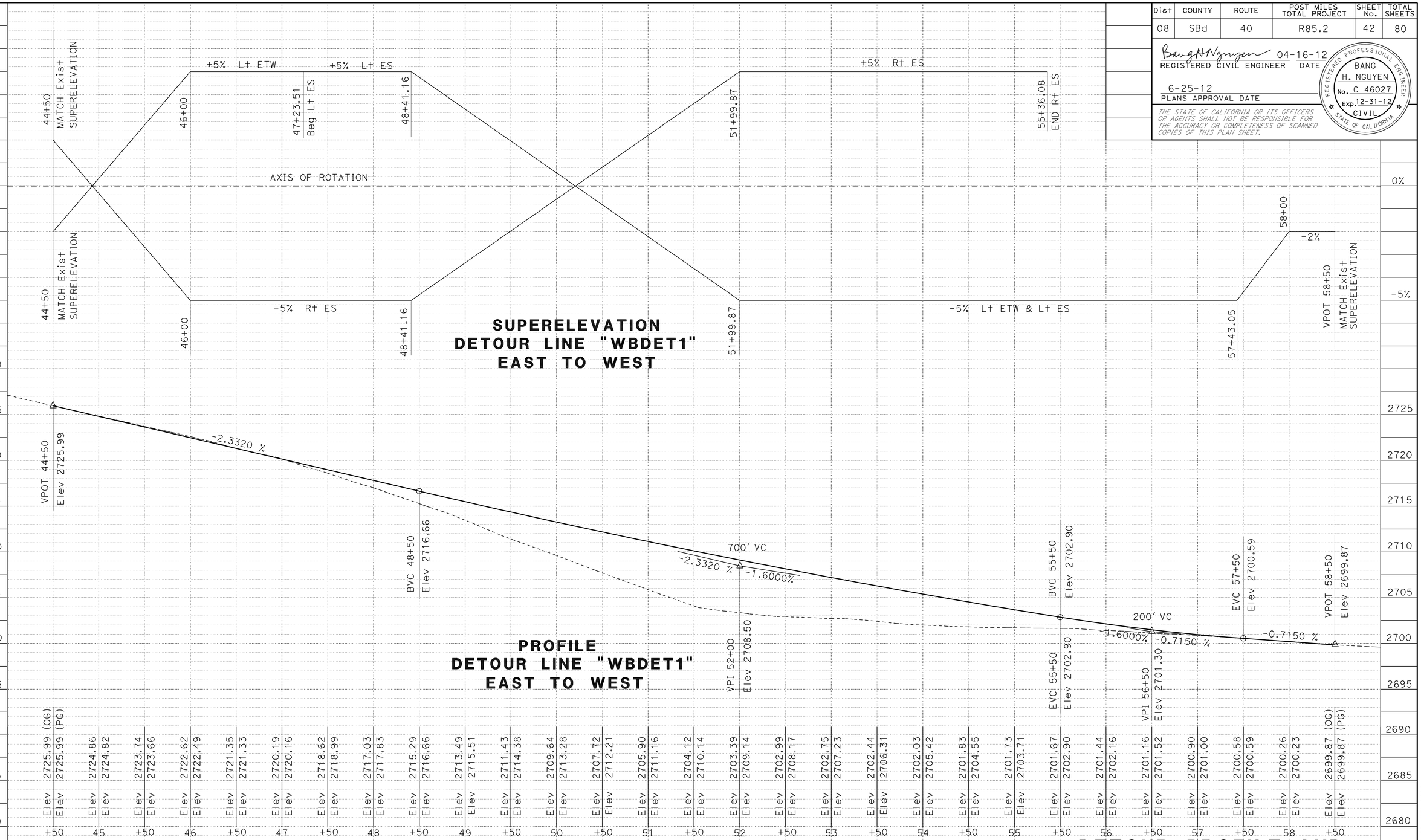

SUPERELEVATION DETOUR LINE "WBDET1" EAST TO WEST

PROFILE DETOUR LINE "WBDET1" EAST TO WEST

DETOUR PROFILE AND SUPERELEVATION DIAGRAM

SCALE: Horiz 1" = 50'
Vert 1" = 5'

DE-6

REVISED BY	DATE REVISED
BANG NGUYEN	LY PHAN
CALCULATED-DESIGNED BY	CHECKED BY
FUNCTIONAL SUPERVISOR	SON NGUYEN

STATE OF CALIFORNIA - DEPARTMENT OF TRANSPORTATION

DESIGN

Caltrans

LAST REVISION 02-01-12

DATE PLOTTED => 29-JUN-2012
TIME PLOTTED => 09:44

Dist	COUNTY	ROUTE	POST MILES TOTAL PROJECT	SHEET No.	TOTAL SHEETS
08	SBd	40	R85.2	43	80

REGISTERED CIVIL ENGINEER 06-28-12 DATE

6-25-12
PLANS APPROVAL DATE

REGISTERED PROFESSIONAL ENGINEER BANG H. NGUYEN No. C 46027 Exp. 12-31-12 CIVIL STATE OF CALIFORNIA

THE STATE OF CALIFORNIA OR ITS OFFICERS OR AGENTS SHALL NOT BE RESPONSIBLE FOR THE ACCURACY OR COMPLETENESS OF SCANNED COPIES OF THIS PLAN SHEET.

NOTE:

FOR ACCURATE RIGHT OF WAY AND ACCESS DATA, CONTACT RIGHT OF WAY ENGINEERING AT THE DISTRICT OFFICE.

CURVE DATA

No.	R	Δ	T	L
7	1800′	15°08′01″	239.11′	475.44′
8	1800′	15°56′14″	251.97′	500.68′

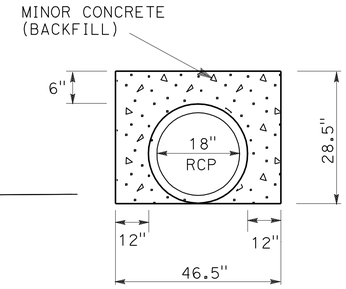

PIPE ENCASEMENT DETAIL

APC ALLOWABLE PIPE MATERIAL

DESCRIPTION	TYPE	
	RCP	HDPE SMOOTH INTERIOR
	SIZE	SIZE
18" APC	18"	18"
24" APC	24"	24"

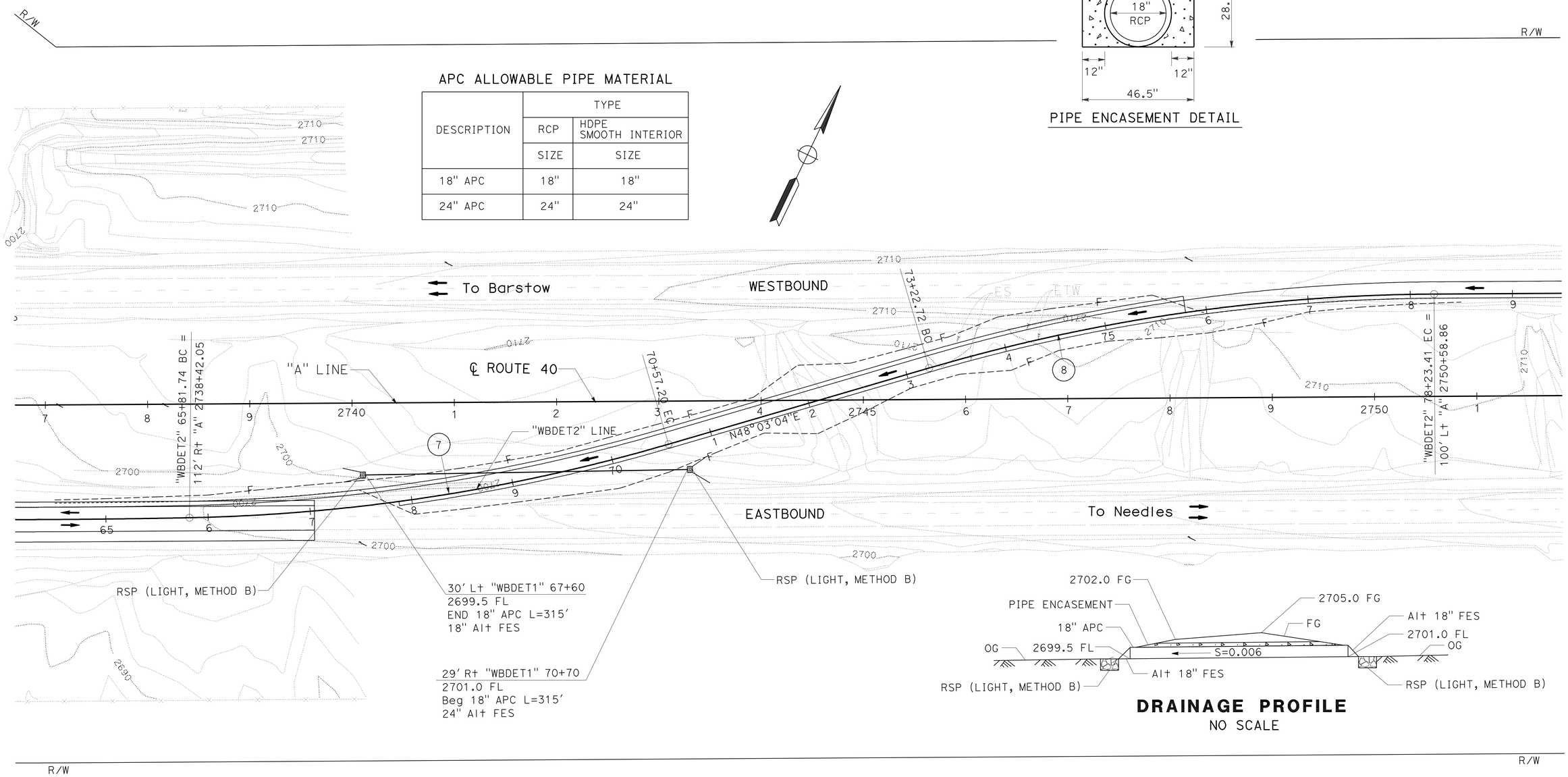

DRAINAGE PROFILE
NO SCALE

DETOUR LINE "WBDET2"
WEST TO EAST
(STAGE 2A)

WESTBOUND DETOUR
DETOUR LAYOUT
SCALE: 1" = 50′

DE-7

STATE OF CALIFORNIA - DEPARTMENT OF TRANSPORTATION
DESIGN

FUNCTIONAL SUPERVISOR: SON NGUYEN
CALCULATED-DESIGNED BY: BANG NGUYEN
CHECKED BY: LY PHAN
REVISED BY / DATE REVISED

LAST REVISION 02-01-12 | DATE PLOTTED => 29-JUN-2012 | TIME PLOTTED => 09:44

Dist	COUNTY	ROUTE	POST MILES TOTAL PROJECT	SHEET No.	TOTAL SHEETS
08	SBd	40	R85.2	44	80

REGISTERED CIVIL ENGINEER 04-16-12 DATE

6-25-12
PLANS APPROVAL DATE

REGISTERED PROFESSIONAL ENGINEER BANG H. NGUYEN No. C 46027 Exp. 12-31-12 CIVIL STATE OF CALIFORNIA

THE STATE OF CALIFORNIA OR ITS OFFICERS OR AGENTS SHALL NOT BE RESPONSIBLE FOR THE ACCURACY OR COMPLETENESS OF SCANNED COPIES OF THIS PLAN SHEET.

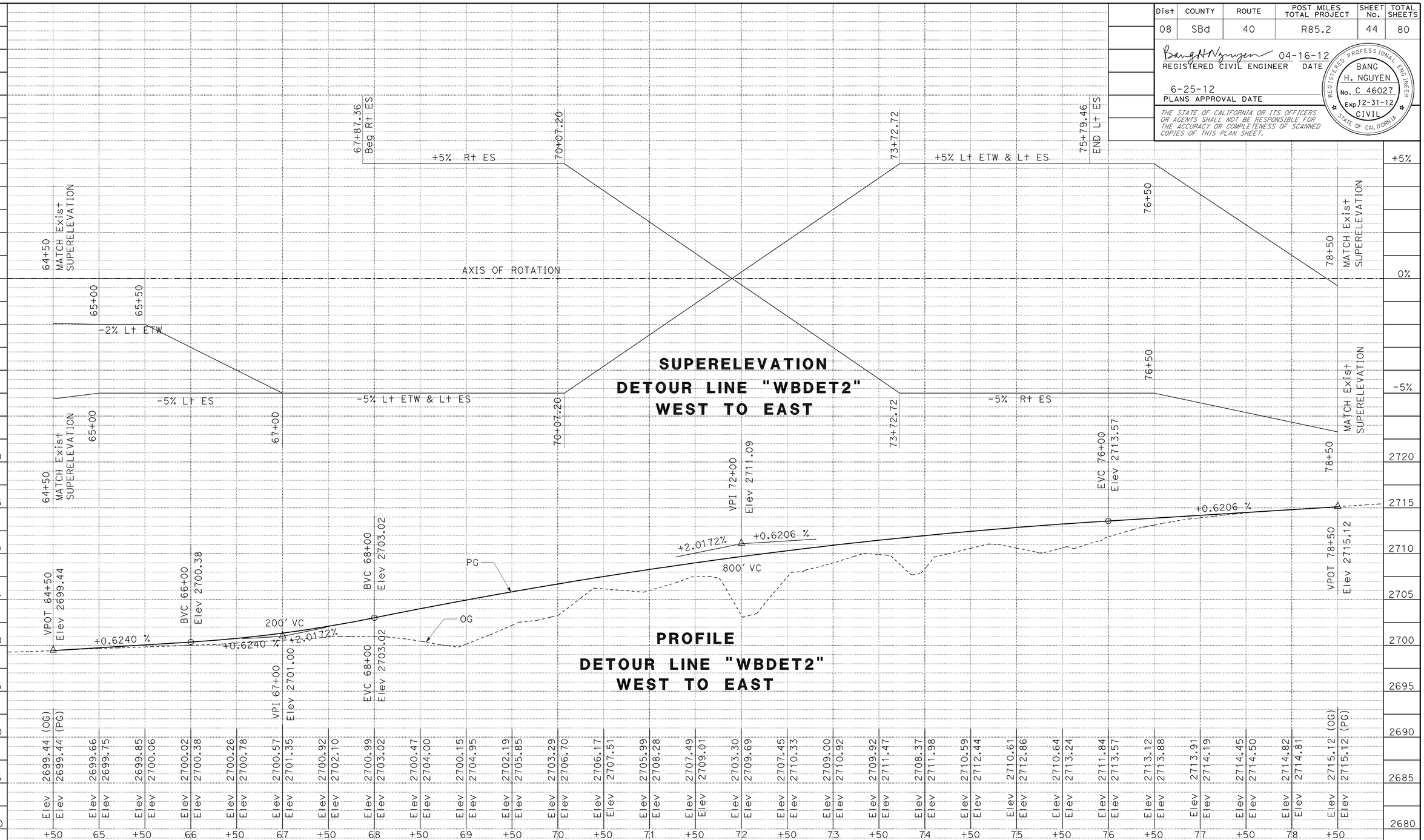

SUPERELEVATION
DETOUR LINE "WBDET2"
WEST TO EAST

PROFILE
DETOUR LINE "WBDET2"
WEST TO EAST

DETOUR PROFILE AND SUPERELEVATION DIAGRAM

SCALE: Horiz 1" = 50'
Vert 1" = 5'

DE-8

STATION		TOTAL
CY	Exc	
	Emb	

STATE OF CALIFORNIA - DEPARTMENT OF TRANSPORTATION
Caltrans
DESIGN

FUNCTIONAL SUPERVISOR: SON NGUYEN
CALCULATED-DESIGNED BY: BANG NGUYEN
CHECKED BY: LY PHAN
REVISED BY
DATE REVISED

LAST REVISION 02-01-12
DATE PLOTTED => 29-JUN-2012
TIME PLOTTED => 09:44

Dist	COUNTY	ROUTE	POST MILES TOTAL PROJECT	SHEET No.	TOTAL SHEETS
08	SBd	40	R85.2	45	80

Lawrencele 04-16-12
REGISTERED CIVIL ENGINEER DATE

6-25-12
PLANS APPROVAL DATE

REGISTERED PROFESSIONAL ENGINEER
LAWRENCE LE
No. C 57405
Exp. 12/31/13
CIVIL
STATE OF CALIFORNIA

THE STATE OF CALIFORNIA OR ITS OFFICERS OR AGENTS SHALL NOT BE RESPONSIBLE FOR THE ACCURACY OR COMPLETENESS OF SCANNED COPIES OF THIS PLAN SHEET.

NOTES:

1) FOR ACCURATE RIGHT OF WAY DATA, CONTACT RIGHT OF WAY ENGINEERING AT THE DISTRICT OFFICE.

2) REMOVE CONFLICTING TRAFFIC STRIPES, PAVEMENT MARKINGS, PAVEMENT MAKERS, OBJECT MARKERS, AND DELINEATORS.

LEGENDS:

27B	PAVEMENT DELINEATION DETAIL
F	DELINEATOR (CLASS 1), TYPE F
G	DELINEATOR (CLASS 1), TYPE G
	OBJECT MARKER (TYPE P)

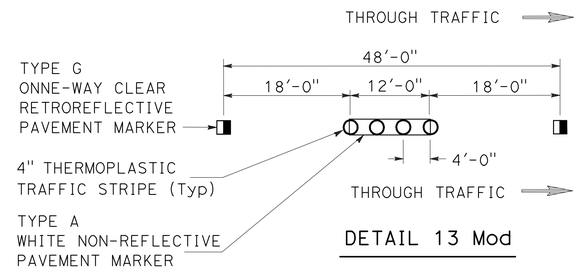

DETAIL 13 Mod

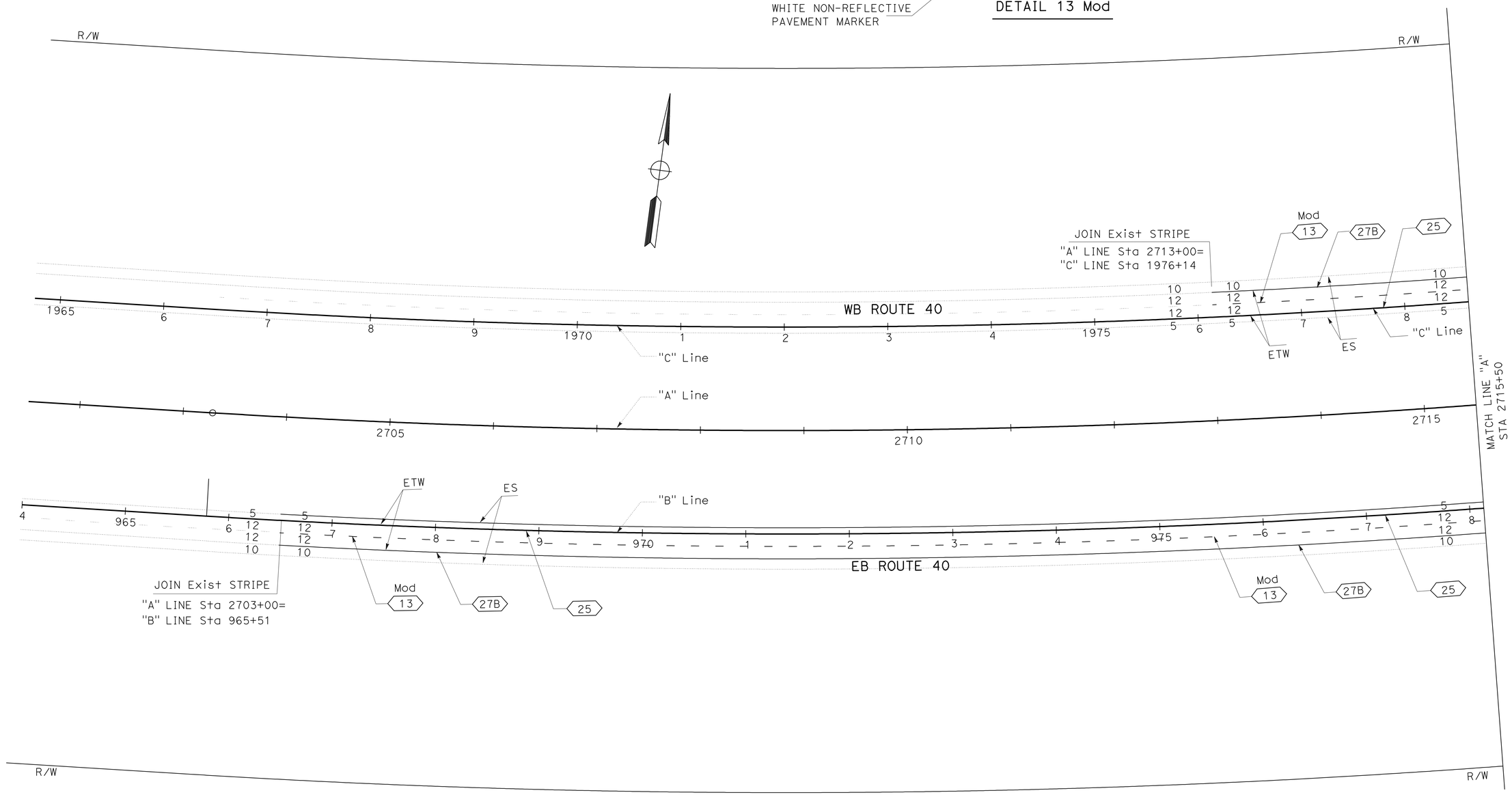

PAVEMENT DELINEATION PLAN

SCALE: 1" = 50'

PD-1

APPROVED FOR PAVEMENT DELINEATION WORK ONLY

STATE OF CALIFORNIA - DEPARTMENT OF TRANSPORTATION
Caltrans
DESIGN

FUNCTIONAL SUPERVISOR: SON NGUYEN
CALCULATED-DESIGNED BY: LAWRENCE LE
CHECKED BY: BANG NGUYEN
REVISED BY
DATE REVISED

LAST REVISION 00-00-00
DATE PLOTTED => 29-JUN-2012
TIME PLOTTED => 09:44

Dist	COUNTY	ROUTE	POST MILES TOTAL PROJECT	SHEET No.	TOTAL SHEETS
08	SBd	40	R85.2	46	80

REGISTERED CIVIL ENGINEER 04-16-12 DATE

6-25-12
PLANS APPROVAL DATE

REGISTERED PROFESSIONAL ENGINEER
LAWRENCE LE
No. C 57405
Exp. 12/31/13
CIVIL
STATE OF CALIFORNIA

THE STATE OF CALIFORNIA OR ITS OFFICERS OR AGENTS SHALL NOT BE RESPONSIBLE FOR THE ACCURACY OR COMPLETENESS OF SCANNED COPIES OF THIS PLAN SHEET.

NOTE:

FOR ACCURATE RIGHT OF WAY DATA, CONTACT RIGHT OF WAY ENGINEERING AT THE DISTRICT OFFICE.

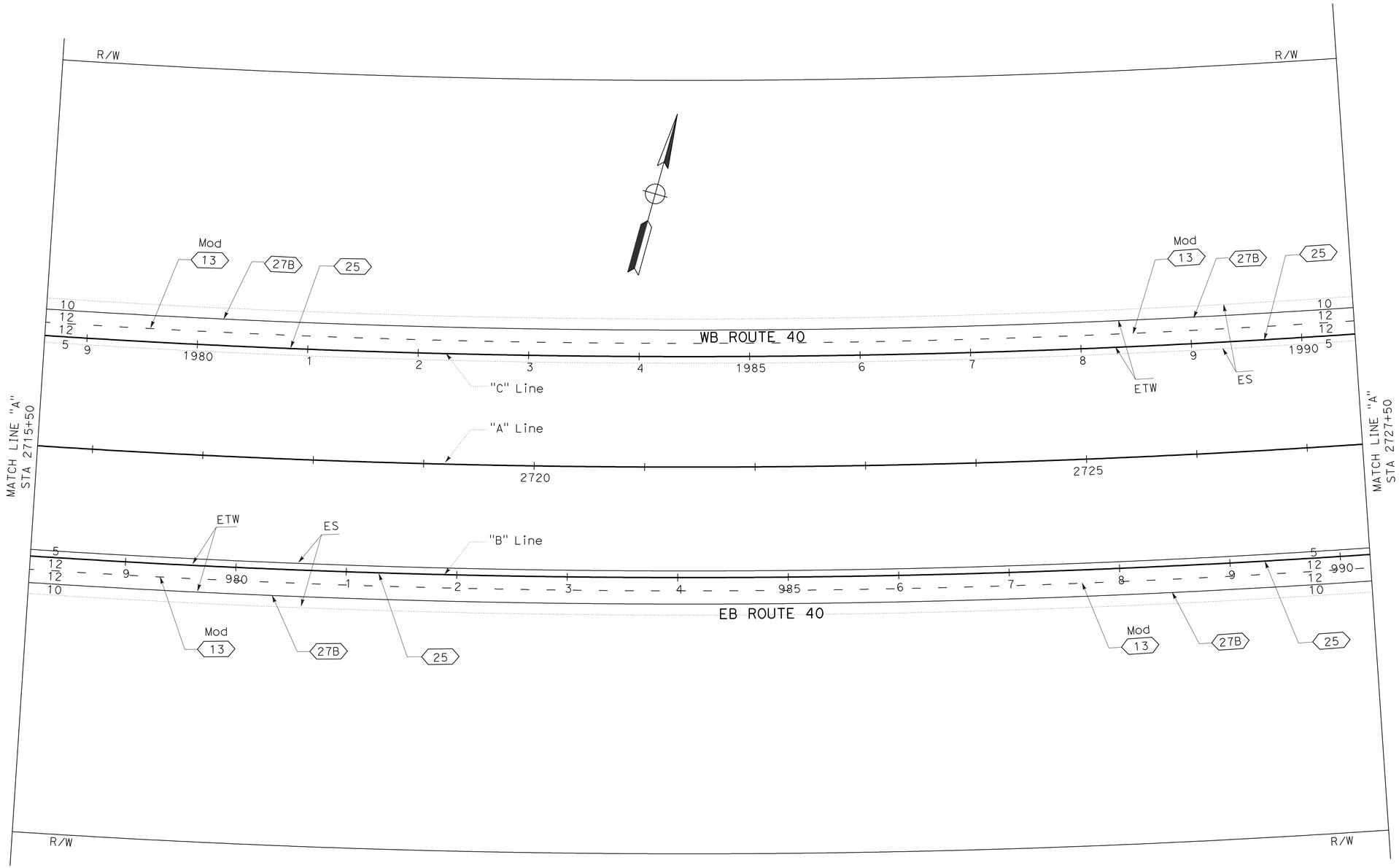

PAVEMENT DELINEATION PLAN

SCALE: 1" = 50'

PD-2

APPROVED FOR PAVEMENT DELINEATION WORK ONLY

STATE OF CALIFORNIA - DEPARTMENT OF TRANSPORTATION
Caltrans
DESIGN

FUNCTIONAL SUPERVISOR: SON NGUYEN
CALCULATED-DESIGNED BY: LAWRENCE LE
CHECKED BY: BANG NGUYEN
REVISED BY
DATE REVISED

LAST REVISION 04-09-12
DATE PLOTTED => 29-JUN-2012
TIME PLOTTED => 09:44

Dist	COUNTY	ROUTE	POST MILES TOTAL PROJECT	SHEET No.	TOTAL SHEETS
08	SBd	40	R85.2	47	80

REGISTERED CIVIL ENGINEER 04-16-12 DATE

6-25-12
PLANS APPROVAL DATE

REGISTERED PROFESSIONAL ENGINEER
LAWRENCE LE
No. C 57405
Exp. 12/31/13
CIVIL
STATE OF CALIFORNIA

THE STATE OF CALIFORNIA OR ITS OFFICERS OR AGENTS SHALL NOT BE RESPONSIBLE FOR THE ACCURACY OR COMPLETENESS OF SCANNED COPIES OF THIS PLAN SHEET.

NOTE:

FOR ACCURATE RIGHT OF WAY DATA, CONTACT RIGHT OF WAY ENGINEERING AT THE DISTRICT OFFICE.

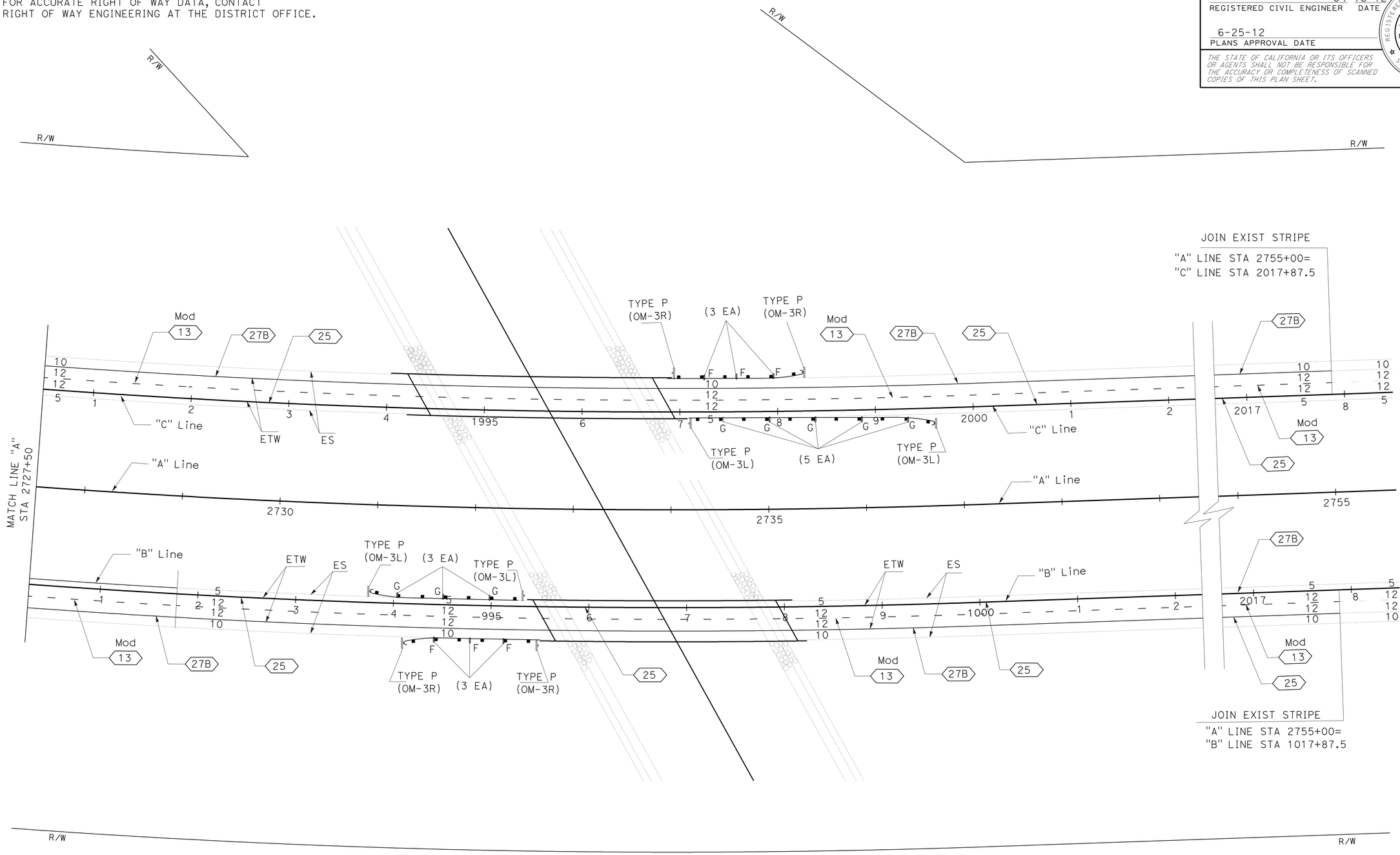

PAVEMENT DELINEATION PLAN

SCALE: 1" = 50'

PD-3

APPROVED FOR PAVEMENT DELINEATION WORK ONLY

REVISED BY	DATE REVISED
LAWRENCE LE	
CALCULATED-DESIGNED BY	CHECKED BY
BANG NGUYEN	
FUNCTIONAL SUPERVISOR	
SON NGUYEN	

STATE OF CALIFORNIA - DEPARTMENT OF TRANSPORTATION
Caltrans
DESIGN

LAST REVISION 04-09-12
DATE PLOTTED => 29-JUN-2012
TIME PLOTTED => 09:44

Dist	COUNTY	ROUTE	POST MILES TOTAL PROJECT	SHEET No.	TOTAL SHEETS
08	SBd	40	R85.2	48	80

Lawrence Le 04-16-12
REGISTERED CIVIL ENGINEER DATE

6-25-12
PLANS APPROVAL DATE

REGISTERED PROFESSIONAL ENGINEER
LAWRENCE LE
No. C 57405
Exp. 12/31/13
CIVIL
STATE OF CALIFORNIA

THE STATE OF CALIFORNIA OR ITS OFFICERS OR AGENTS SHALL NOT BE RESPONSIBLE FOR THE ACCURACY OR COMPLETENESS OF SCANNED COPIES OF THIS PLAN SHEET.

PAVEMENT DELINEATION QUANTITIES

SHEET No.	ALIGNMENT AND STATIONS	THERMOPLASTIC TRAFFIC STRIPE			PAVEMENT MARKER			OBJECT MARKER (TYPE P)		DELINEATOR (CLASS 1)	
					NON-REFLECTIVE	RETRO-REFLECTIVE					
		DETAIL 13 Mod 4" WHITE BROKEN (36-12)	DETAIL 27B 4" SOLID WHITE	DETAIL 25 4" SOLID YELLOW	DETAIL 13 Mod TYPE A	DETAIL 25 TYPE H	DETAILS 13 Mod TYPE G	OM-3R	OM-3L	TYPE G	TYPE F
		LF	LF	LF	EA	EA	EA			EA	EA
PD-1	WB LINE "A" 2713+00 TO 2715+50	250	250	250	25	7	7				
	EB LINE "A" 2703+00 TO 2715+50	1250	1250	1250	109	28	28				
PD-2	WB LINE "A" 2715+50 TO 2727+50	1200	1200	1200	104	26	26				
	EB LINE "A" 2715+50 TO 2727+50	1200	1200	1200	104	26	26				
PD-3	WB LINE "A" 2727+50 TO 2755+00	2750	2750	2750	234	59	59	2	2	5	3
	EB LINE "A" 2727+50 TO 2755+00	2750	2750	2750	234	59	59	2	2	3	3
SUBTOTAL		9400	9400	9400	810	205	205	4	4	8	6
TOTAL		9400	18800		810	410		8		14	
FROM SHEET SCQ-3					1166	876				24	
GRAND TOTAL		9400	18800		1976	1286		8		38	

PAVEMENT DELINEATION QUANTITIES (REMOVE)

SHEET No.	ALIGNMENT AND STATIONS	REMOVE THERMOPLASTIC TRAFFIC STRIPE		REMOVE YELLOW THERMOPLASTIC TRAFFIC STRIPE (HARZADOUS WASTE)	REMOVE PAVEMENT MARKER			REMOVE MARKER		REMOVE DELINEATOR	
					NON-REFLECTIVE	RETRO-REFLECTIVE					
		DETAIL 13 Mod 4" WHITE BROKEN (36-12)	DETAIL 27B 4" SOLID WHITE	DETAIL 25 4" SOLID YELLOW	DETAIL 13 Mod TYPE A	DETAIL 25 TYPE H	DETAILS 13 Mod TYPE G	OM-3R	OM-3L	TYPE G	TYPE F
		LF	LF	LF	EA	EA	EA			EA	EA
PD-1	WB LINE "A" 2713+00 TO 2715+50	65	250	250	25	7	7				
	EB LINE "A" 2703+00 TO 2715+50	315	1250	1250	109	28	28				
PD-2	WB LINE "A" 2715+50 TO 2727+50	300	1200	1200	104	26	26				
	EB LINE "A" 2715+50 TO 2727+50	300	1200	1200	104	26	26				
PD-3	WB LINE "A" 2727+50 TO 2755+00	690	2750	2750	234	59	59	2	2	5	3
	EB LINE "A" 2727+50 TO 2755+00	690	2750	2750	234	59	59	2	2	3	3
SUBTOTAL		2360	9400	9400	810	205	205	4	4	8	6
TOTAL		11760		9400	1220			8		14	
FROM SHEET SCQ-3					2042					24	
GRAND TOTAL		11760		9400	3262			8		38	

PAVEMENT DELINEATION QUANTITIES

PDQ-1

STATE OF CALIFORNIA - DEPARTMENT OF TRANSPORTATION
Caltrans
DESIGN

FUNCTIONAL SUPERVISOR: SON NGUYEN
CALCULATED-DESIGNED BY: LAWRENCE LE
CHECKED BY: BANG NGUYEN
REVISED BY
DATE REVISED

LAST REVISION 00-00-00
DATE PLOTTED => 29-JUN-2012
TIME PLOTTED => 09:44

Dist	COUNTY	ROUTE	POST MILES TOTAL PROJECT	SHEET No.	TOTAL SHEETS
08	SBd	40	R85.2	49	80

Bang H Nguyen 06-28-12
REGISTERED CIVIL ENGINEER DATE

6-25-12
PLANS APPROVAL DATE

REGISTERED PROFESSIONAL ENGINEER BANG H. NGUYEN No. C 46027 Exp. 12-31-12 CIVIL STATE OF CALIFORNIA

THE STATE OF CALIFORNIA OR ITS OFFICERS OR AGENTS SHALL NOT BE RESPONSIBLE FOR THE ACCURACY OR COMPLETENESS OF SCANNED COPIES OF THIS PLAN SHEET.

ROADWAY QUANTITIES

SHEET No.	DIRECTION	STATION LIMITS	Pvmt Str Sec Type	HOT MIX ASPHALT (TYPE C)	HOT MIX ASPHALT (TYPE A)	AGGREGATE SUBBASE (CLASS 2)	COLD PLANE AC PAVEMENT	Conc Pvmt Trans PANEL	Shld RUMBLE STRIP (HMA, GROUND-IN INDENTATIONS)	SHOULDER BACKING	TACK COAT
				TON	TON	CY	SQYD	CY	STA	TON	TON
L-2	EASTBOUND	"B" 988+50 TO "B" 995+04.47	1	1900			2836	17.83	6.5	2607	1.8
L-2	EASTBOUND	"B" 998+36.17 TO "B" 1002+50	1	11136			1793	17.83	4.1	1648	1.1
L-2	WESTBOUND	"C" 1989+00TO "C" 1993+98.83	1	676			2162	17.83	5.0	2144	1.3
L-2	WESTBOUND	"C" 1997+32.68 TO "C" 2002+50	1	592			2242	17.83	5.2	2223	1.4
SC-1, SC-2	EAST TO WEST	"EBDET1" 35+00 TO 46+00	2		1423	285					0.9
SC-2, SC-3	WEST TO EAST	"EBDET2" 56+00 TO 67+00	2		1423	285					0.9
SC-10	EAST TO WEST	"WBDET1" 46+00 TO 57+00	2		1423	285					0.9
SC-11, SC-12	WEST TO EAST	"WBDET2" 67+00 TO 77+00	2		1294	259					0.8
SC-1		"A" 2711+50.84 TO "A" 2725+50	3		469		3022				0.6
SC-2		"A" 2725+50 TO "A" 2739+50	3		212		1364				0.7
SC-3		"A" 2739+50 TO "A" 2754+00	3		484		3121				0.7
		TOTAL		14302	6728	1114	16540	71.3	20.8	8622	11.1
		FROM HMA DIKE ON SHEET Q-2			0.4						
		GRAND TOTAL		14302	6728	1114	16540	71.3	20.8	8622	11.1

EARTHWORK QUANTITIES

SHEET No.	DIRECTION	STATION LIMITS	EMBANKMENT (N)	ROADWAY EXCAVATION	IMPORTED BORROW
			CY	CY	CY
SC-1, SC-2, DE-1	EAST TO WEST	"EBDET1" 35+00 TO 46+00	3100		3100
SC-10	EAST TO WEST	"EBDET1" 35+00 TO 46+00		3100	
SC-2, SC-3, DE-3	WEST TO EAST	"EBDET2" 56+00 TO 67+00	2300		2300
SC-11, SC-12	WEST TO EAST	"EBDET2" 56+00 TO 67+00		2300	
SC-10, SC-11, DE-5	EAST TO WEST	"WBDET1" 46+00 TO 57+00	3200		3200
SC-17, SC-18	EAST TO WEST	"WBDET1" 46+00 TO 57+00		3200	
SC-11,SC-12, DE-7	WEST TO EAST	"WBDET2" 67+00 TO 77+00	2500		2500
SC-18, SC-19	WEST TO EAST	"WBDET2" 67+00 TO 77+00		2500	
		TOTAL		11100	11100

(N) = NOT A SEPARATE PAY ITEM, FOR INFORMATION ONLY.

WELDED WIRE MESH TEMPORARY FENCE

SHEET No.	DIRECTION	STATION LIMITS	WELDED WIRE MESH TEMPORARY FENCE
			LF
L-1 TO L-3	EASTBOUND	"A" 2715+84 TO "A" 2750+24	3460
L-1 TO L-3	WESTBOUND	"A" 2717+75 TO "A" 2751+24	3360
		TOTAL	6820

TEMPORARY WATER POLLUTION QUANTITIES

SHEET No.	Temp GRAVEL BAG BERM	Temp Const WASHOUT FACILITY	Temp Const ENTRANCE	Temp SILT FENCE	Temp FIBER ROLL
	LF	EA	EA	LF	LF
L-2	3095	2	6	910	640

SUMMARY OF QUANTITIES
Q-1

REVISED BY	DATE REVISED
BANG NGUYEN	LY PHAN
CALCULATED-DESIGNED BY	CHECKED BY
FUNCTIONAL SUPERVISOR	SON NGUYEN

STATE OF CALIFORNIA - DEPARTMENT OF TRANSPORTATION
Caltrans®
DESIGN

LAST REVISION 06-28-12
DATE PLOTTED => 29-JUN-2012
TIME PLOTTED => 09:45

Dist	COUNTY	ROUTE	POST MILES TOTAL PROJECT	SHEET No.	TOTAL SHEETS
08	SBd	40	R85.2	50	80

Bang H Nguyen 06-28-12
REGISTERED CIVIL ENGINEER DATE

6-25-12
PLANS APPROVAL DATE

REGISTERED PROFESSIONAL ENGINEER BANG H. NGUYEN No. C 46027 Exp 12-31-12 CIVIL STATE OF CALIFORNIA

THE STATE OF CALIFORNIA OR ITS OFFICERS OR AGENTS SHALL NOT BE RESPONSIBLE FOR THE ACCURACY OR COMPLETENESS OF SCANNED COPIES OF THIS PLAN SHEET.

REMOVE METAL BEAM GUARDRAILING

SHEET No.	DIRECTION	STATION LIMITS	SIDE	REMOVE MBGR	TREATED WOOD WASTE
				LF	LB
L-2	EASTBOUND	"B" 993+81.16 To "B" 995+27.66	Lt	146.5	2420
L-2	EASTBOUND	"B" 994+18.67 To "B" 995+50.67	Rt	132.0	2190
L-2	WESTBOUND	"C" 1996+87.17 To "C" 1998+27.17	Lt	140.0	2317
L-2	WESTBOUND	"C" 1997+09.17 To "C" 1999+55.67	Rt	246.5	4004
		TOTAL		665	10,931

HOT MIX ASPHALT DIKE

SHEET No.	DIRECTION	STATION LIMITS	SIDE	PLACE HMA DIKE (TYPE F)	HMA (TYPE A)
				LF	TON
L-2	WESTBOUND	"C" 1996+87.17 TO "C" 1997+15.48	Lt	28.3	0.4
		TOTAL		28.3	0.4 *

* : FOR GRAND TOTAL OF HMA (TYPE A), SEE Sht Q-1

METAL BEAM GUARD RAILING (WOOD POST)

SHEET No.	DIRECTION	STATION LIMITS	SIDE	MBGR (WOOD POST)	Trans RAILING (TYPE WB)	Alt FLARED TERMINAL SYSTEM	DOUBLE MBGR (WOOD POST)
				LF	EA	EA	
L-1, L-2	EASTBOUND	"B" 987+90.70 To "B" 994+77.66	Lt				687.0
L-2	EASTBOUND	"B" 994+77.66 To "B" 995+27.66	Lt	25.0	1		
L-2	EASTBOUND	"B" 994+06.17 To "B" 995+50.67	Rt	144.5	1	1	
L-2	WESTBOUND	"C" 1996+87.17 To "C" 1998+31.67	Lt	144.5	1	1	
L-2	WESTBOUND	"C" 1997+09.17 To "E" 1997+59.17	Rt	25.0	1		
L-2, L-3	WESTBOUND	"C" 1997+59.17 To "E" 2003+98.75	Rt				639.6
		TOTAL		339	4	2	1327

CONCRETED ROCK SLOPE PROTECTION

SHEET No.	STATION LIMITS	CONCRETED RSP (1/2 T, METHOD B)	RSP FABRIC (CLASS 8)	REMOVE CONCRETED RSP
		CY	SQYD	CY
L-2, C-1	"VWW" 47+49.98 TO 48+76.79	423	418	423
L-2, C-1	"VWW" 48+50.12 TO 49+75.44	418	414	418
L-2, C-1	"VWW" 50+14.41 TO 51+39.56	417	413	417
L-2, C-1	"VWW" 51+11.36 TO 52+35.96	415	411	415
	TOTAL	1673	1656	1673

DRAINAGE QUANTITIES

SHEET No.	STATION LIMITS	Alt PIPE CULVERT		Alt FES		MINOR Conc (BACKFILL)	RSP (LIGHT, METHOD B)	REMOVE RSP	REMOVE PIPE	REMOVE FES	REMOVE CONCRETE
		18"	24"	18"	24"						
		LF	LF	EA	EA	CY	CY	CY	LF	EA	CY
DE-1	"EBDET1" 37+95 TO 41+52		1098		6		6.7				
SC-10	"EBDET1" 37+95 TO 41+52							6.7	1098	6	
DE-3	"EBDET2" 62+55 TO 64+95	248		2		65	3.3				
SC-11,12	"EBDET2" 62+55 TO 64+95							3.3	248	2	65
DE-5	"WBDET1" 50+45 TO 53+45		924		6		6.7				
SC-17,18	"WBDET1" 50+45 TO 53+45							6.7	924	6	
DE-7	"WBDET2" 67+60 TO 70+70	315		2		80	3.3				
SC-18,19	"WBDET2" 67+60 TO 70+70							3.3	315	2	80
	TOTAL	563	2022	4	12	145	20	20	2585	16	145

NOTE: FOR ALLOWABLE ALTERNATIVES FOR APC AND AFES, SEE DETOUR LAYOUT SHEETS.

RECONSTRUCT FENCE

SHEET No.	STATION LIMITS	RECONSTRUCT FENCE (TYPE BW)	RECONSTRUCT FENCE (TYPE BW)
		LF	LF
L-2	"B" 995+02.70 To "B" 995+66.25	166.5	
L-2	"C" 1994+45.82 To "B" 995+41.76		212.4
L-2	"C" 1993+81.77 To "C" 1994+18.59	70.0	
L-2	"C" 1996+72.49 To "C" 1997+66.41	179.2	
L-2	"C" 1997+00 To "B" 997+90.79		206.6
L-2	"B" 998+16.14 To "B" 999+36.75	196.1	
	TOTAL	612	419

SUMMARY OF QUANTITIES
Q-2

REVISED BY | DATE REVISED
BANG NGUYEN | LY PHAN
CALCULATED-DESIGNED BY | CHECKED BY
FUNCTIONAL SUPERVISOR: SON NGUYEN

STATE OF CALIFORNIA - DEPARTMENT OF TRANSPORTATION
Caltrans® DESIGN

LAST REVISION 02-01-12 | DATE PLOTTED => 29-JUN-2012 | TIME PLOTTED => 09:45

Dist	COUNTY	ROUTE	POST MILES TOTAL PROJECT	SHEET No.	TOTAL SHEETS
08	SBd	40	R85.2	51	80

REGISTERED CIVIL ENGINEER

April 20, 2012
PLANS APPROVAL DATE

REGISTERED PROFESSIONAL ENGINEER
Roberta L. McLaughlin
No. C40375
Exp. 3-31-13
CIVIL
STATE OF CALIFORNIA

THE STATE OF CALIFORNIA OR ITS OFFICERS OR AGENTS SHALL NOT BE RESPONSIBLE FOR THE ACCURACY OR COMPLETENESS OF SCANNED COPIES OF THIS PLAN SHEET.

TO ACCOMPANY PLANS DATED 6-25-12

2010 REVISED STANDARD PLAN RSP A24A

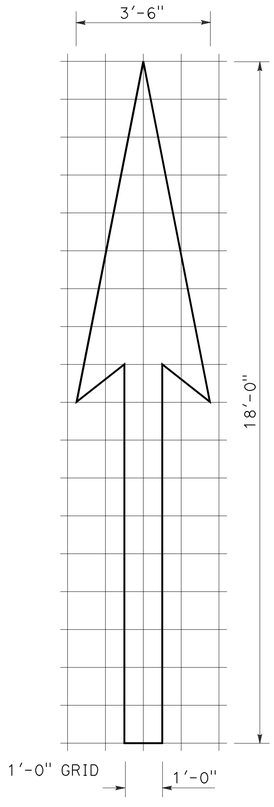

A=25 ft^2

TYPE I 18'-0" ARROW

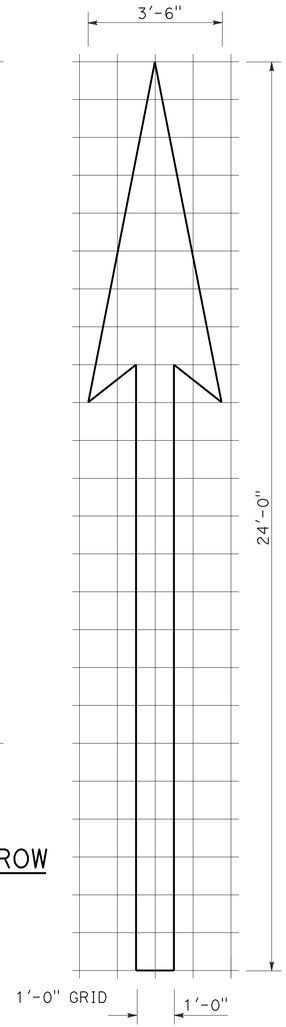

A=31 ft^2

TYPE I 24'-0" ARROW

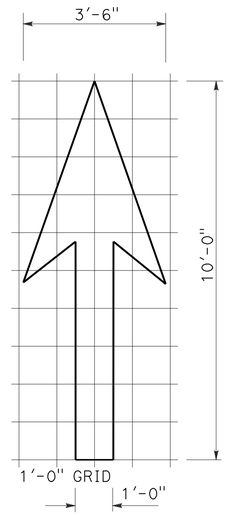

A=14 ft^2

TYPE I 10'-0" ARROW

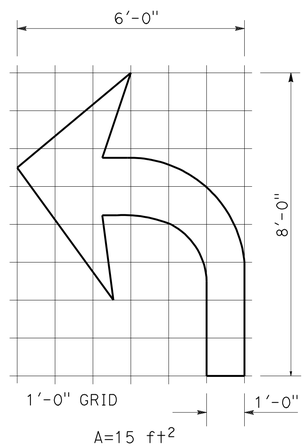

A=15 ft^2

TYPE IV (L) ARROW

(For Type IV (R) arrow, use mirror image)

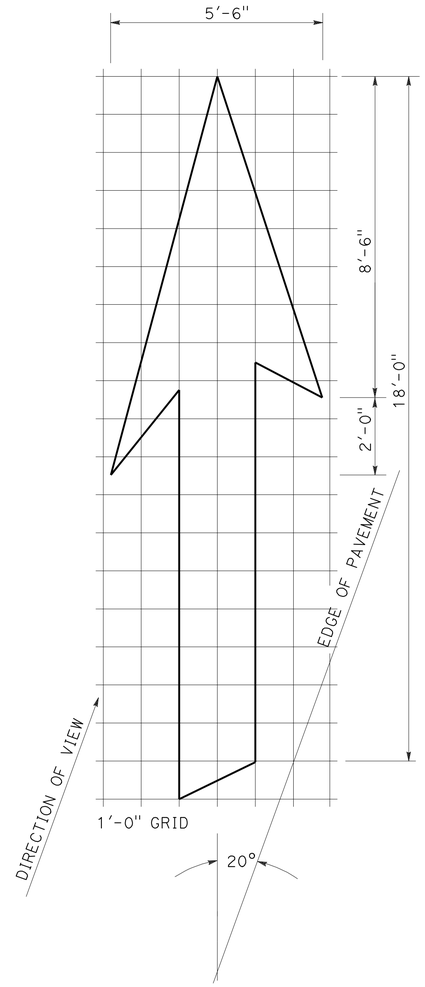

A=42 ft^2

TYPE VI ARROW

Right lane drop arrow
(For left lane, use mirror image)

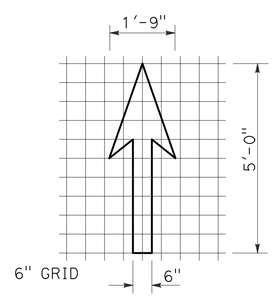

A=3.5 ft^2

BIKE LANE ARROW

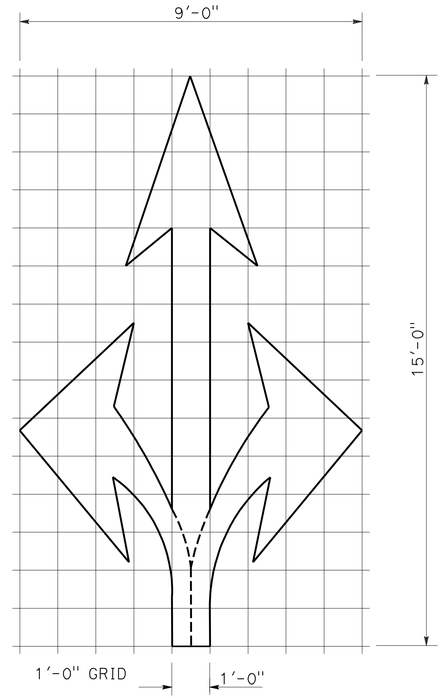

A=36 ft^2

TYPE VIII ARROW

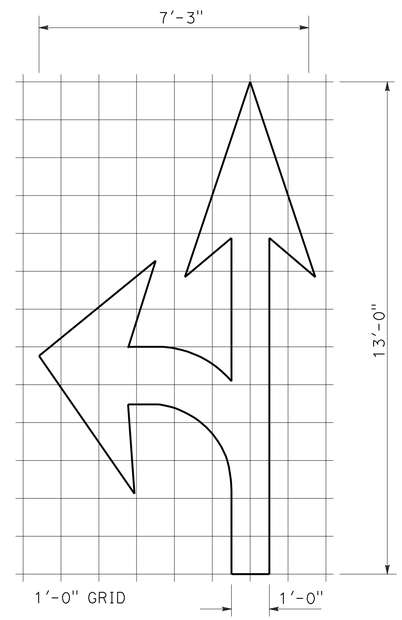

A=27 ft^2

TYPE VII (L) ARROW

(For Type VII (R) arrow, use mirror image)

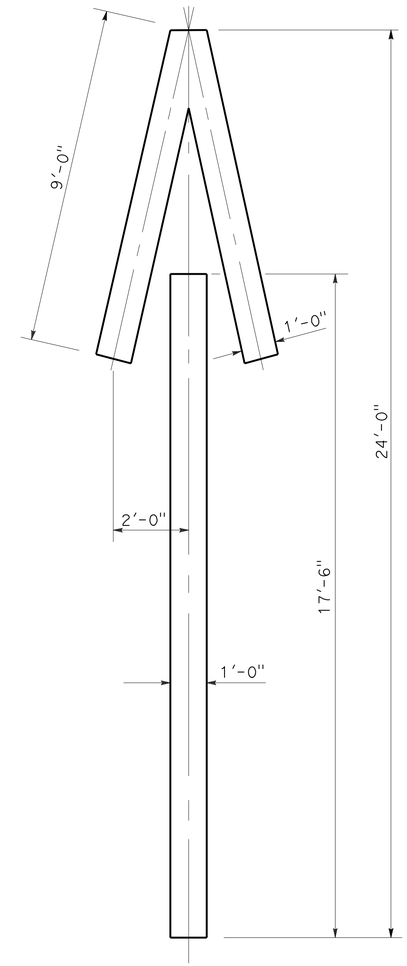

A=33 ft^2

TYPE V ARROW

NOTE:
Minor variations in dimensions may be accepted by the Engineer.

STATE OF CALIFORNIA
DEPARTMENT OF TRANSPORTATION

PAVEMENT MARKINGS ARROWS

NO SCALE

RSP A24A DATED APRIL 20, 2012 SUPERSEDES STANDARD PLAN A24A DATED MAY 20, 2011 - PAGE 13 OF THE STANDARD PLANS BOOK DATED 2010.

REVISED STANDARD PLAN RSP A24A

3-14-12

Dist	COUNTY	ROUTE	POST MILES TOTAL PROJECT	SHEET No.	TOTAL SHEETS
08	SBd	40	R85.2	52	80

REGISTERED CIVIL ENGINEER

April 20, 2012
PLANS APPROVAL DATE

REGISTERED PROFESSIONAL ENGINEER William K. Farnbach No. C49042 Exp. 9-30-12 CIVIL STATE OF CALIFORNIA

THE STATE OF CALIFORNIA OR ITS OFFICERS OR AGENTS SHALL NOT BE RESPONSIBLE FOR THE ACCURACY OR COMPLETENESS OF SCANNED COPIES OF THIS PLAN SHEET.

TO ACCOMPANY PLANS DATED 6-25-12

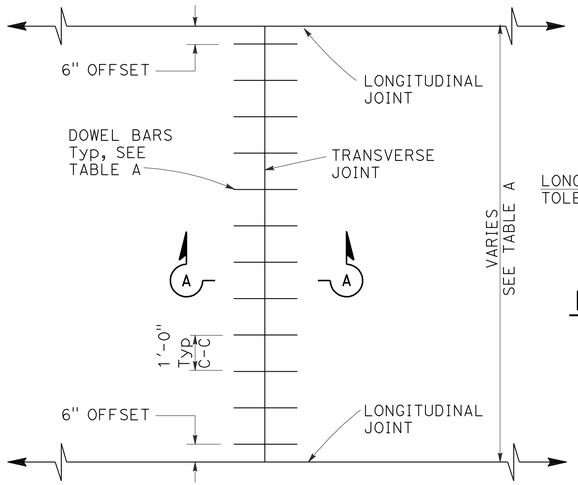

TRANSVERSE JOINT DOWEL BAR LAYOUT

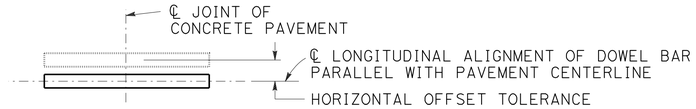

PLAN

HORIZONTAL OFFSET TOLERANCE

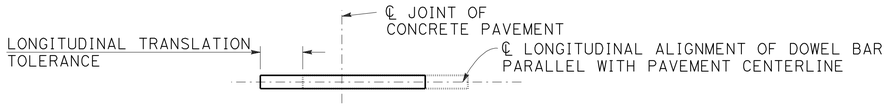

PLAN

LONGITUDINAL TRANSLATION TOLERANCE

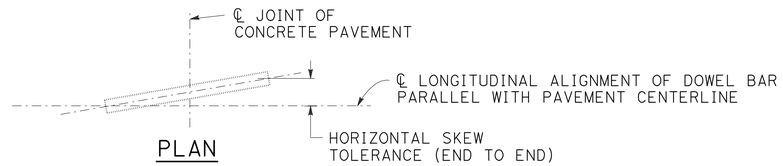

PLAN

HORIZONTAL SKEW TOLERANCE

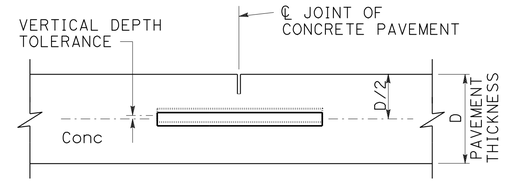

ELEVATION

VERTICAL DEPTH TOLERANCE

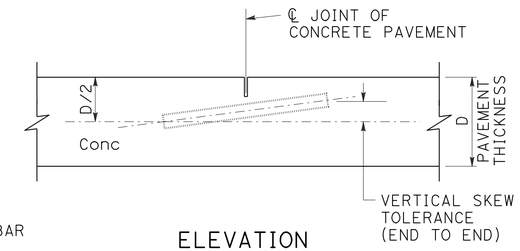

ELEVATION

VERTICAL SKEW TOLERANCE

NOTES:

1. See Standard Plan P1 for typical dowel bar placement and locations.
2. 1½" Dia dowel bars are to be used with a pavement thickness, D, equal to or greater than 0.70 feet. For pavement thickness, D, less than 0.70 feet, use 1¼" Dia dowel bars.
3. For widths not shown, see Project Plans.
4. If fresh concrete pavement is placed adjacent to existing concrete pavement, the top corner of the existing concrete pavement does not need to be rounded to the ¼" radius, as shown.
5. May also use ¾" Dia dowel bars 2'-4" ± ¼" in length. Center the length of dowel bars at the centerline of longitudinal joint.

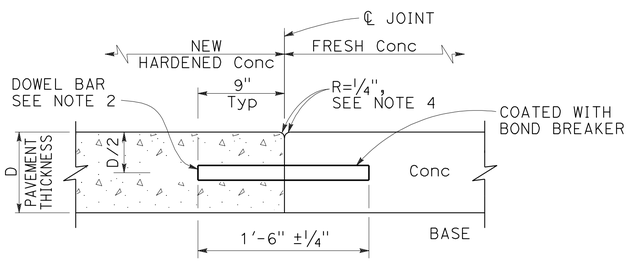

SECTION A-A

TRANSVERSE CONSTRUCTION JOINT DETAIL

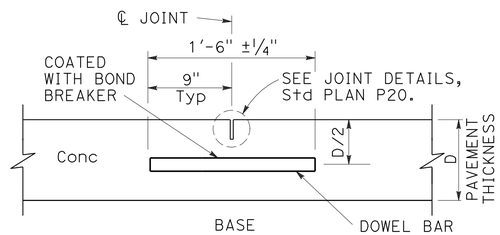

TRANSVERSE CONTRACTION JOINT

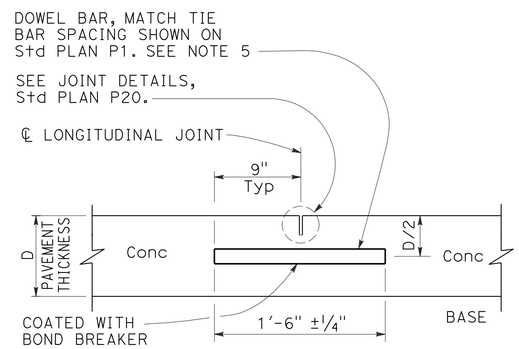

LONGITUDINAL CONTRACTION JOINT WITH DOWEL BARS

See Revised Std Plan RSP P18

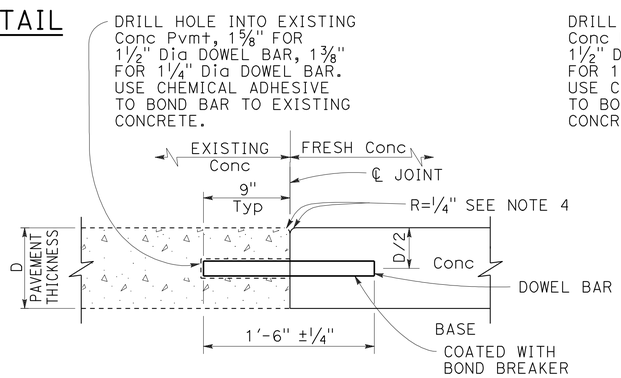

TRANSVERSE CONSTRUCTION JOINT FOR EXISTING CONCRETE PAVEMENT

Drill and bond locations

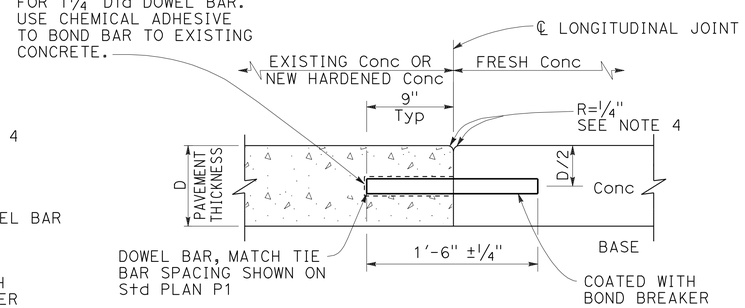

LONGITUDINAL CONSTRUCTION JOINT WITH DOWEL BARS

See Revised Std Plan RSP P18

TABLE A (See Note 3)

DOWEL BAR TRANSVERSE SPACING TABLE	
WIDTH BETWEEN LONGITUDINAL JOINTS	NUMBER OF DOWELS BETWEEN LONGITUDINAL JOINTS
14'-0"	14
13'-0"	13
12'-0"	12
11'-0"	11
10'-0"	10
8'-0"	8
5'-0"	5
4'-0"	4

STATE OF CALIFORNIA
DEPARTMENT OF TRANSPORTATION

CONCRETE PAVEMENT-DOWEL BAR DETAILS

NO SCALE

RSP P10 DATED APRIL 20, 2012 SUPERSEDES STANDARD PLAN P10 DATED MAY 20, 2011 - PAGE 131 OF THE STANDARD PLANS BOOK DATED 2010.

REVISED STANDARD PLAN RSP P10

2010 REVISED STANDARD PLAN RSP P10

2-22-12

Dist	COUNTY	ROUTE	POST MILES TOTAL PROJECT	SHEET No.	TOTAL SHEETS
08	SBd	40	R85.2	53	80

REGISTERED CIVIL ENGINEER

April 20, 2012
PLANS APPROVAL DATE

REGISTERED PROFESSIONAL ENGINEER William K. Farnbach No. C49042 Exp. 9-30-12 CIVIL STATE OF CALIFORNIA

THE STATE OF CALIFORNIA OR ITS OFFICERS OR AGENTS SHALL NOT BE RESPONSIBLE FOR THE ACCURACY OR COMPLETENESS OF SCANNED COPIES OF THIS PLAN SHEET.

TO ACCOMPANY PLANS DATED 6-25-12

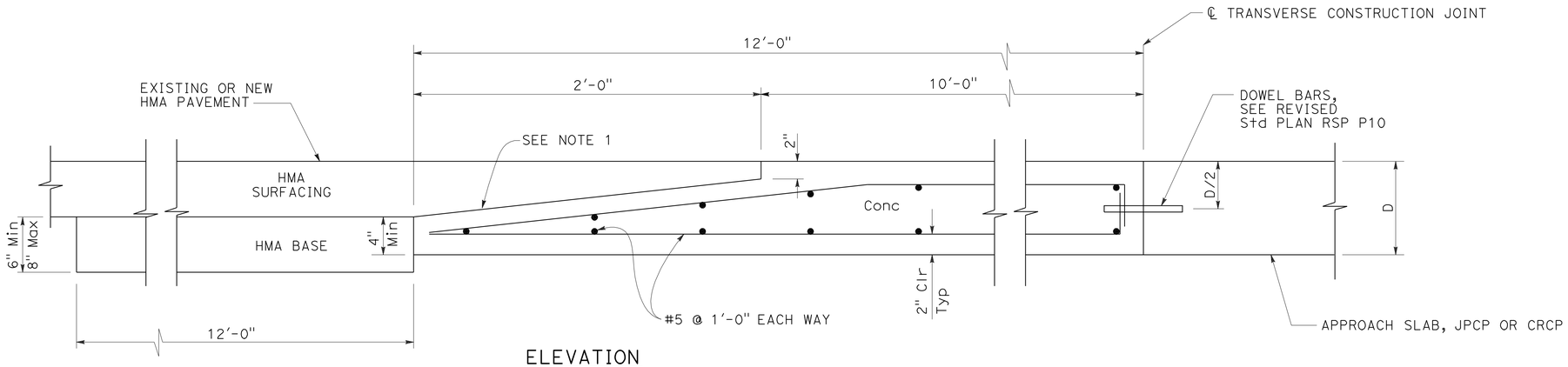

ELEVATION

CONCRETE PAVEMENT TRANSITION PANEL

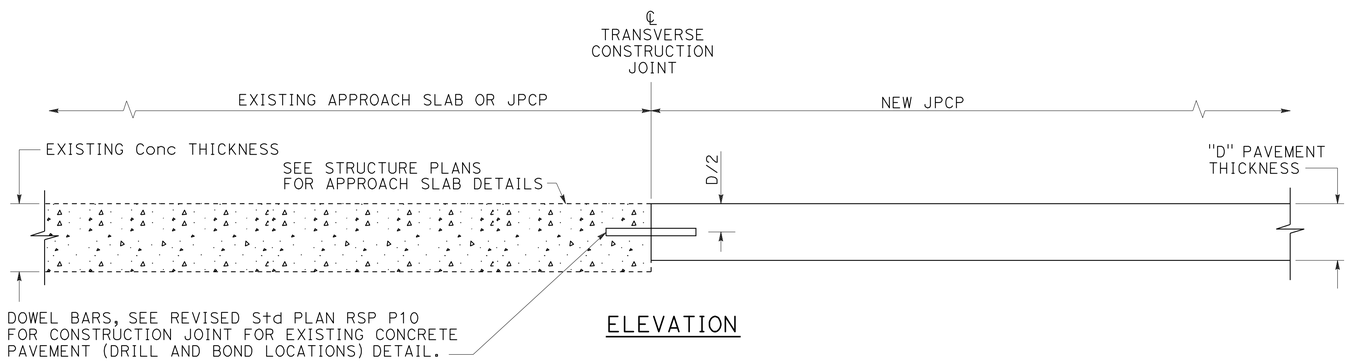

ELEVATION

TERMINAL JOINT TYPE 1

For Exist JPCP or Structure Approach Slab

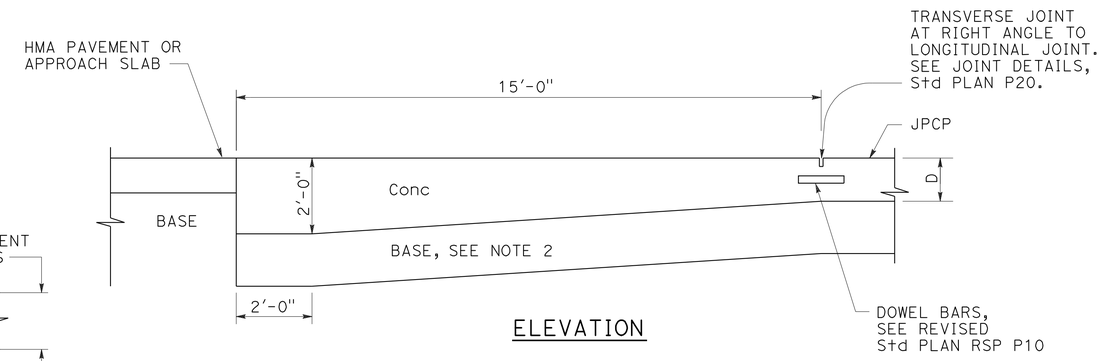

ELEVATION

PAVEMENT END ANCHOR

For HMA Pvmt or Structure Approach Slab

NOTES:

1. Heavy broom finish.
2. Maintain same base thickness as JPCP.

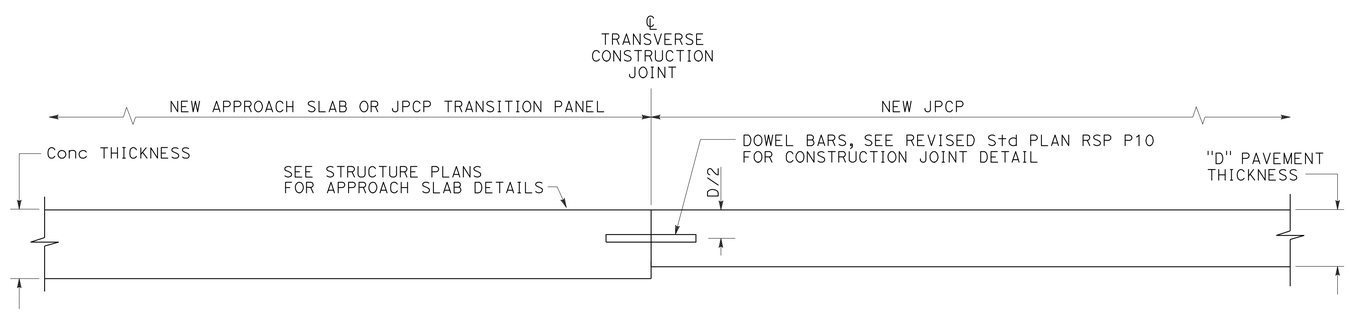

ELEVATION

TERMINAL JOINT TYPE 2

For JPCP Transition Panel or Structure Approach Slab

STATE OF CALIFORNIA
DEPARTMENT OF TRANSPORTATION

CONCRETE PAVEMENT-END PANEL PAVEMENT TRANSITIONS

NO SCALE

RSP P30 DATED APRIL 20, 2012 SUPERSEDES STANDARD PLAN P30
DATED MAY 20, 2011 - PAGE 137 OF THE STANDARD PLANS BOOK DATED 2010.

REVISED STANDARD PLAN RSP P30

2010 REVISED STANDARD PLAN RSP P30

2-22-12

DIST	COUNTY	ROUTE	POST MILES TOTAL PROJECT	SHEET No.	TOTAL SHEETS
08	SBd	40	R85.2	54	80

REGISTERED CIVIL ENGINEER

January 20, 2012
PLANS APPROVAL DATE

REGISTERED PROFESSIONAL ENGINEER Cornelis M. Hakim No. C55610 Exp. 12-31-12 CIVIL STATE OF CALIFORNIA

THE STATE OF CALIFORNIA OR ITS OFFICERS OR AGENTS SHALL NOT BE RESPONSIBLE FOR THE ACCURACY OR COMPLETENESS OF SCANNED COPIES OF THIS PLAN SHEET.

TO ACCOMPANY PLANS DATED 6-25-12

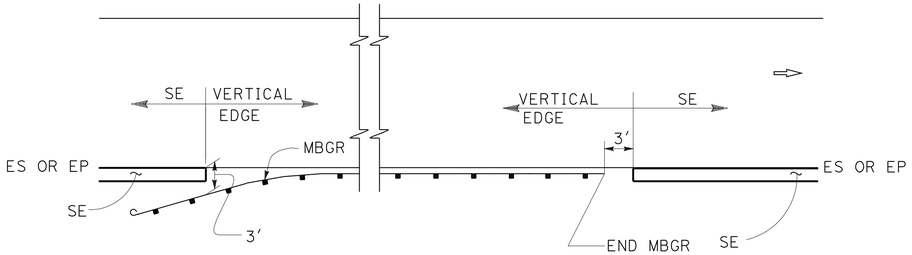

MBGR

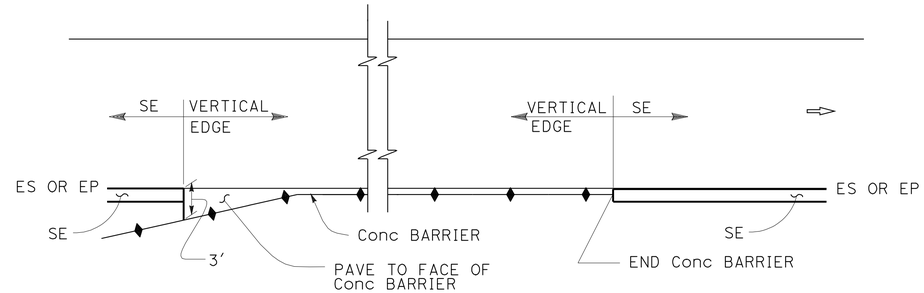

CONCRETE BARRIER

ABBREVIATIONS:

SE SAFETY EDGE

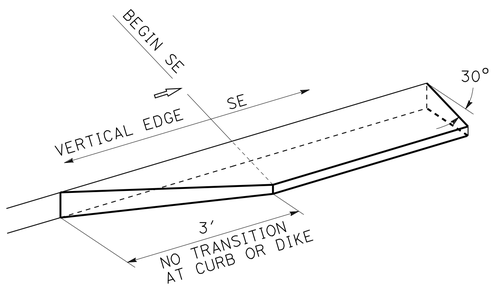

TRANSITION DETAIL
FOR CONCRETE ONLY

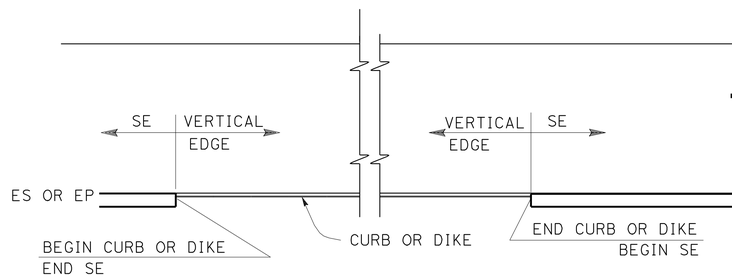

CURB OR DIKE

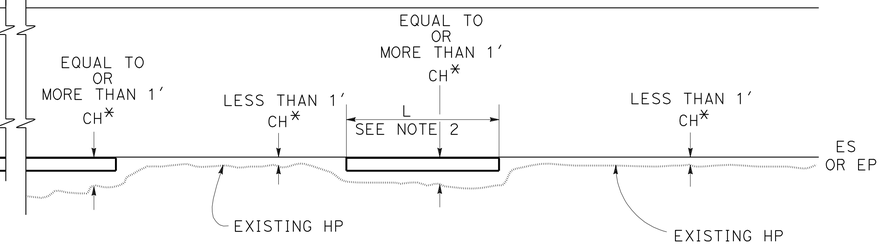

NARROW SIDE SLOPE

* CH = Distance from ES or EP to existing HP.

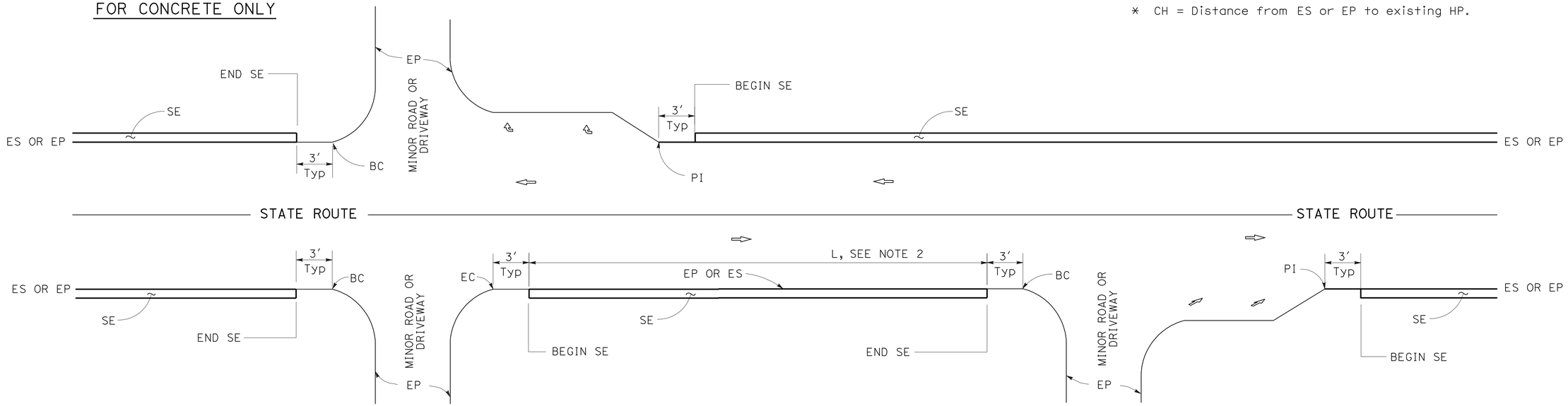

INTERSECTION

DRIVEWAY AND INTERSECTION

MINOR ROADWAY OR DRIVEWAY

NOTES:

1. For details not shown, see Revised Standard Plans RSP P75 and RSP P76.
2. Safety edge is optional when L is less than 30′.

STATE OF CALIFORNIA
DEPARTMENT OF TRANSPORTATION

PAVEMENT EDGE TREATMENTS

NO SCALE

RSP P74 DATED JANUARY 20, 2012 SUPPLEMENTS THE STANDARD PLANS BOOK DATED 2010.

REVISED STANDARD PLAN RSP P74

2010 REVISED STANDARD PLAN RSP P74

01-05-12

DIST	COUNTY	ROUTE	POST MILES TOTAL PROJECT	SHEET No.	TOTAL SHEETS
08	SBd	40	R85.2	55	80

REGISTERED CIVIL ENGINEER

January 20, 2012
PLANS APPROVAL DATE

REGISTERED PROFESSIONAL ENGINEER Cornelis M. Hakim No. C55610 Exp. 12-31-12 CIVIL STATE OF CALIFORNIA

THE STATE OF CALIFORNIA OR ITS OFFICERS OR AGENTS SHALL NOT BE RESPONSIBLE FOR THE ACCURACY OR COMPLETENESS OF SCANNED COPIES OF THIS PLAN SHEET.

TO ACCOMPANY PLANS DATED 6-25-12

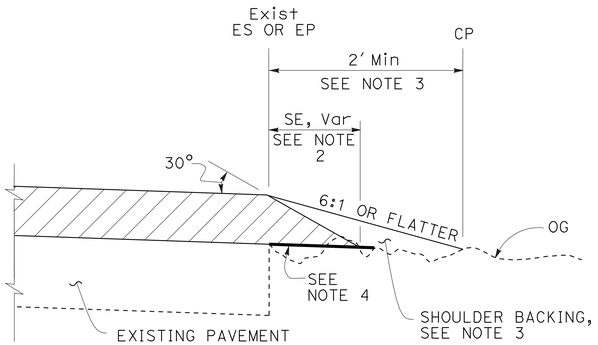

CASE A
Safety Edge

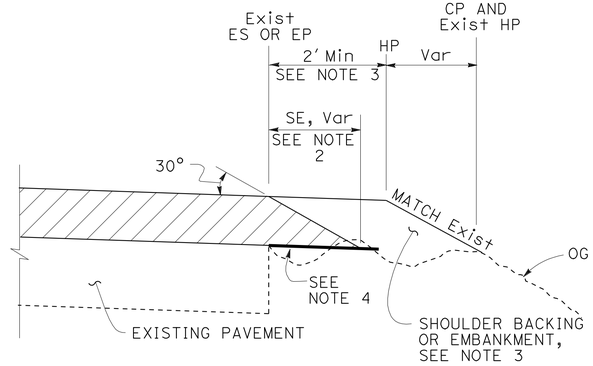

CASE B
Safety Edge

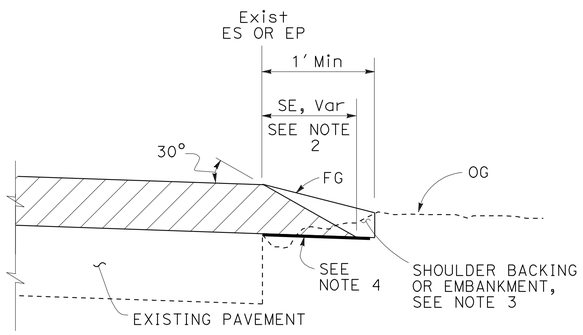

CASE C
Safety Edge

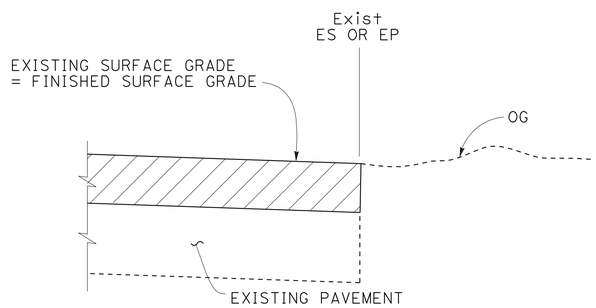

CASE D
Vertical Edge

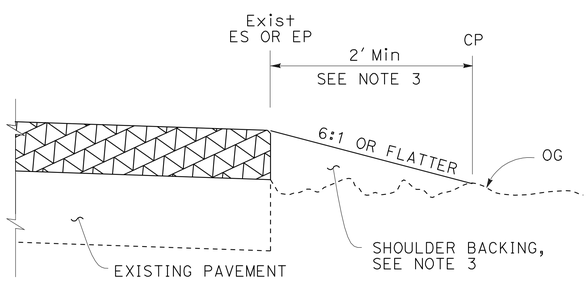

CASE E
Vertical Edge

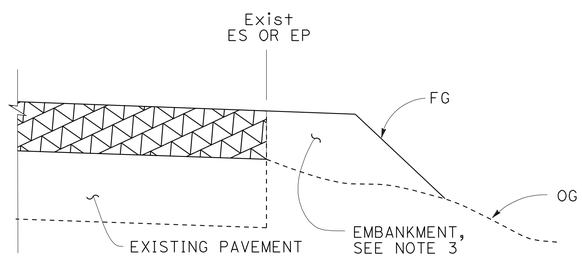

CASE F
Vertical Edge
* See Table A and Revised Std Plan RSP P74

LEGEND:

- HMA OVERLAY
- HMA OR CONCRETE OVERLAY
- CONCRETE OVERLAY

ABBREVIATIONS:

SE SAFETY EDGE
TT TOTAL THICKNESS OF SE

TABLE A
EDGE TREATMENT FOR VARIOUS OVERLAY THICKNESS AND CONDITIONS

	OVERLAY THICKNESS	
FIELD CONDITION	LESS THAN 0.15′	0.15′ OR MORE
Exist SLOPE 6:1 OR FLATTER	CASE E	CASE A
Exist SLOPE 3:1 TO 6:1	CASE E	CASE B
Exist SLOPE STEEPER THAN 3:1	CASE F	CASE F
CUT SECTION (REPLACE, COLD PLANE, MILL PAVEMENT)	CASE D	CASE C

ADDITIONAL HMA OR CONCRETE QUANTITIES FOR SE/SIDE/MILE

TYPICAL CROSS SECTION	TT	TOTAL ADDITIONAL MATERIAL FOR SE/SIDE/MILE		
		HMA (TON)	CONCRETE (CY)*	CONCRETE (CY)**
TT	0.15′	NA	NA	NA
	0.20′	13.7	NA	NA
	0.30′	30.9	NA	NA
	0.40′	54.9	NA	NA
	0.45′	69.4	NA	NA
TT 0.43′	0.50′	84.2	NA	NA
	0.60′	113.9	NA	NA
	0.70′	143.6	70.9	94.2
	0.80′	173.3	85.6	112.2
	0.90′	203.0	100.3	130.2
	1.00′	232.7	114.9	148.2
	1.10′	262.4	129.6	166.2
	1.20′	292.1	144.3	184.2

* For Detail "A"
** For Optional Detail "A"

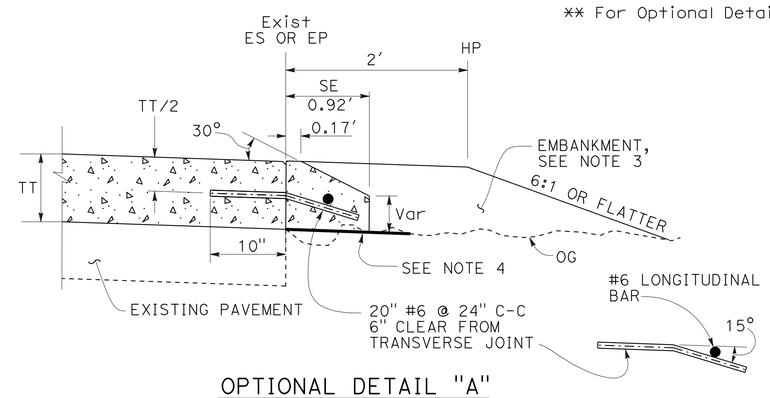

OPTIONAL DETAIL "A"
For concrete overlay
See Note 5

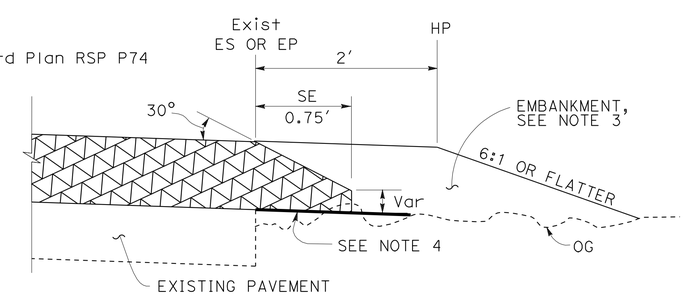

DETAIL "A"
For HMA overlay thickness more than 0.43′ or concrete overlay

NOTES:

1. For limits of safety edge and vertical edge treatments, see Revised Standard Plan RSP P74.
2. Details shown for HMA overlay thickness less than 0.43′. See Detail "A" for HMA overlay thickness more than 0.43′ or concrete overlay.
3. For locations and limits of shoulder backing or embankment see project plans.
4. Grade existing ground to place safety edge. 1′ minimum width
5. Safety edge transverse joint must match overlay transverse joint. End of #6 longitudinal bar must be 2" ±½" clear from transverse joint.
6. Safety edge is not needed in the area of MBGR, barrier, right turn lane and acceleration lane. See Revised Standard Plan RSP P74.

STATE OF CALIFORNIA
DEPARTMENT OF TRANSPORTATION

PAVEMENT EDGE TREATMENTS-OVERLAYS

NO SCALE

RSP P75 DATED JANUARY 20, 2012 SUPPLEMENTS THE STANDARD PLANS BOOK DATED 2010.

REVISED STANDARD PLAN RSP P75

2010 REVISED STANDARD PLAN RSP P75

DIST	COUNTY	ROUTE	POST MILES TOTAL PROJECT	SHEET No.	TOTAL SHEETS
08	SBd	40	R85.2	56	80

Dawit Tadelle Worku 03/16/12
REGISTERED CIVIL ENGINEER DATE

6-25-12
PLANS APPROVAL DATE

REGISTERED PROFESSIONAL ENGINEER Dawit T Worku No. C60711 Exp 12-31-12 CIVIL STATE OF CALIFORNIA

The State of California or its officers or agents shall not be responsible for the accuracy or completeness of electronic copies of this plan sheet.

BVC "C" 1993+50
Elev 2707.62

EVC "C" 2001+50
Elev 2707.29

800' VC R/C = 0.1354%/STA

-0.5831% "C" LINE +0.5000%

BVC "B" 994+50
Elev 2700.08

EVC "B" 1002+00
Elev 2700.23

750' VC R/C = 0.1886%/STA

-0.6872% "B" LINE +0.7271%

PROFILE GRADE

No Scale

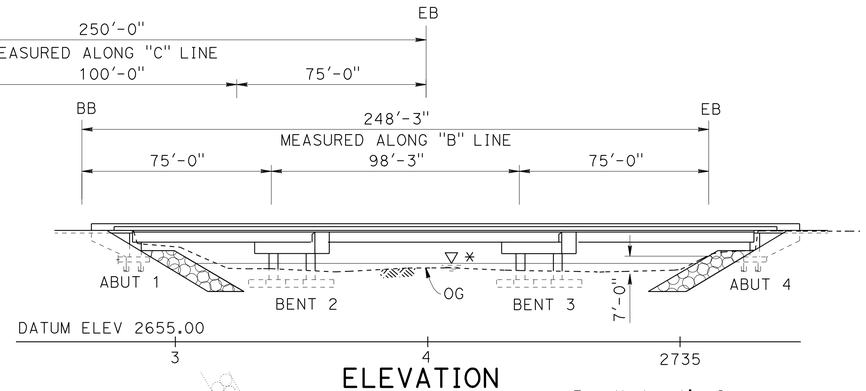

ELEVATION

1" = 30'

*For Hydraulic Summary See "FOUNDATION PLAN"

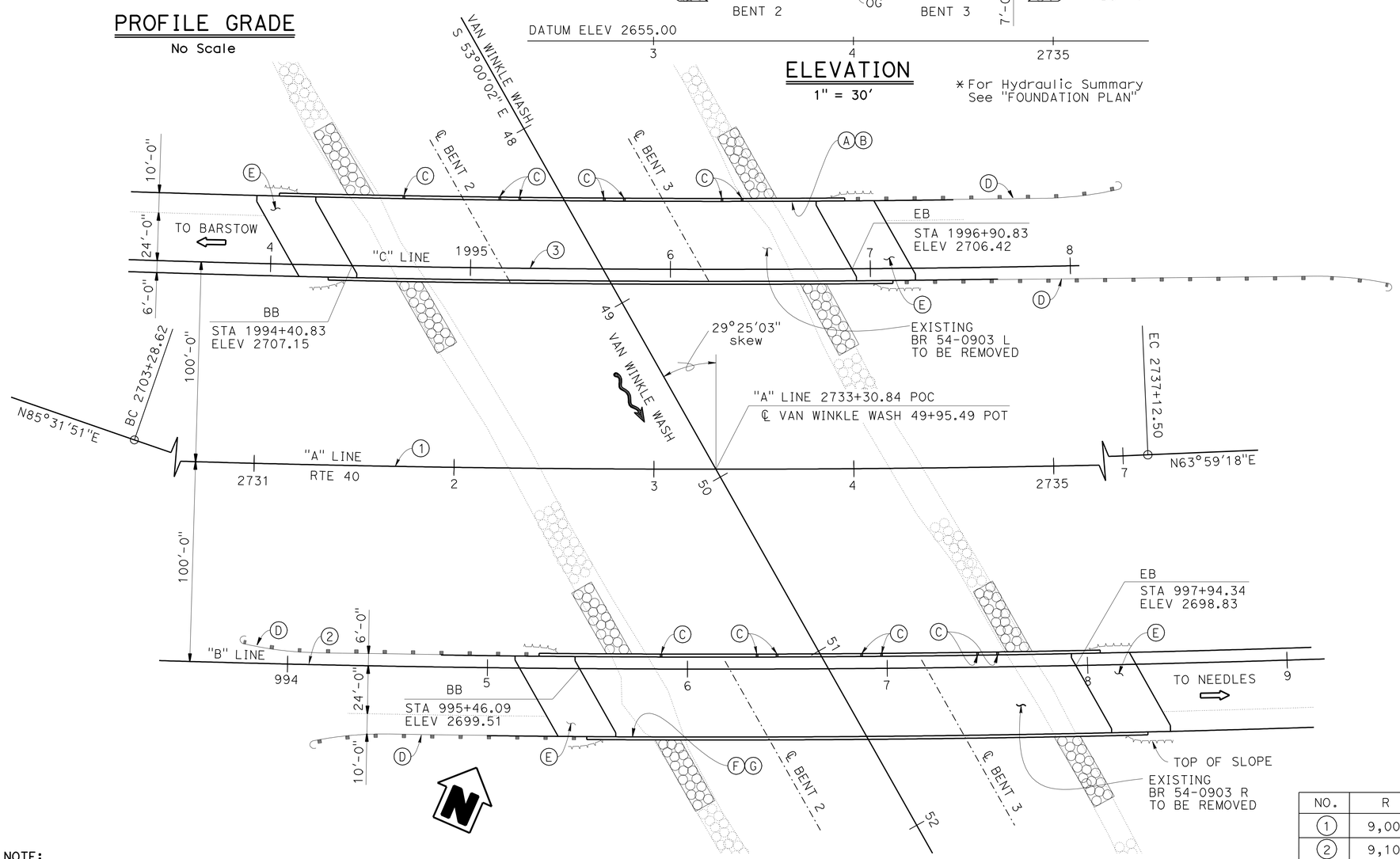

PLAN

1" = 30'

NOTE:
THE CONTRACTOR SHALL VERIFY ALL CONTROLLING FIELD DIMENSIONS BEFORE ORDERING OR FABRICATING ANY MATERIAL.

LEGEND:

- Exist Rock Slope Protection,
- New Rock Slope Protection, See "ROAD PLANS"
- Direction of Traffic
- New structure
- Existing structure

NOTES:

- (A) Paint "Bridge No. 54-1298L"
- (B) Paint "Van Winkle Wash Left Bridge"
- (C) 12" x 3" Scuppers at deck grade, total 7 each bridge.
- (D) Metal Beam Guard Rail, see "ROAD PLANS"
- (E) Structure Approach Type N(30S)
- (F) Paint "Bridge No. 54-1298R"
- (G) Paint "Van Winkle Wash Right Bridge"

QUANTITIES

SALVAGE METAL BRIDGE RAILING	1,104	LF
BRIDGE REMOVAL	LUMP	SUM
STRUCTURE EXCAVATION (BRIDGE)	1,812	CY
STRUCTURE BACKFILL (BRIDGE)	1,408	CY
24" CAST-IN-DRILLED-HOLE CONCRETE PILING	960	LF
STRUCTURAL CONCRETE, BRIDGE FOOTING	294	CY
STRUCTURAL CONCRETE, BRIDGE	1,262	CY
STRUCTURAL CONCRETE, APPROACH SLAB (TYPE N)	191	CY
FURNISH PRECAST PRESTRESSED CONCRETE BULB-TEE GIRDER (90'-100')	12	EA
FURNISH PRECAST PRESTRESSED CONCRETE BULB-TEE GIRDER (70'-80')	24	EA
ERECT PRECAST PRESTRESSED CONCRETE GIRDER	36	EA
JOINT SEAL (MR 1 1/2")	202	LF
BAR REINFORCING STEEL (BRIDGE)	232,047	LB
BAR REINFORCING STEEL (EPOXY COATED) (BRIDGE)	282,293	LB
HEADED BAR REINFORCEMENT	576	EA
CONCRETE BARRIER (TYPE 736)	1,129	LF

CURVE DATA

NO.	R	Δ	T	L	N	E
1	9,000'	21°32'33"	1,712.16'	3,383.88'	2097792.771	7294650.732
2	9,100'	21°32'33"	1,731.18'	3,421.48'	2097694.557	7294677.489
3	8,900'	21°32'33"	1,693.13'	3,346.28'	2097890.984	7294623.973

HOWARD NG
DESIGN ENGINEER

	BY	CHECKED
DESIGN	Dawit Worku	H. Iraninejadian
DETAILS	Lan T Tran	H. Iraninejadian
QUANTITIES	H. Iraninejadian	M. Muqtadir

LOAD & RESISTANCE FACTOR DESIGN — LIVE LOADING: HL93 W/"LOW-BOY"; PERMIT DESIGN VEHICLE

	BY	CHECKED
LAYOUT	Dawit Worku	H. Iraninejadian
SPECIFICATIONS	Xiahong Li	Xiahong Li (PLANS AND SPECS COMPARED)

ORIGINAL SCALE IN INCHES FOR REDUCED PLANS 0 1 2 3

STATE OF CALIFORNIA
DEPARTMENT OF TRANSPORTATION

DIVISION OF ENGINEERING SERVICES
STRUCTURE DESIGN
DESIGN BRANCH 20

BRIDGE NO. 54-1298L/R
POST MILE R85.2

VAN WINKLE WASH BRIDGE (REPLACE)
GENERAL PLAN NO. 1

UNIT: 3622
PROJECT NUMBER & PHASE: 0800000533 1
CONTRACT NO.: 08-0N5901

DISREGARD PRINTS BEARING EARLIER REVISION DATES
REVISION DATES 12-13-11 3-14-12 11-18-11
SHEET 1 OF 25

USERNAME => s1224496 DATE PLOTTED => 29-JUN-2012 TIME PLOTTED => 09:39

STRUCTURES DESIGN GENERAL PLAN SHEET (ENGLISH) (REV.09-01-10)

FILE => 54-1298-a-gp01.dgn

DIST	COUNTY	ROUTE	POST MILES TOTAL PROJECT	SHEET No.	TOTAL SHEETS
08	SBd	40	R85.2	57	80

Dawit Tadelle Gebre 03/16/12
REGISTERED CIVIL ENGINEER DATE

6-25-12
PLANS APPROVAL DATE

REGISTERED PROFESSIONAL ENGINEER Dawit T Worku No. C60711 Exp 12-31-12 CIVIL STATE OF CALIFORNIA

The State of California or its officers or agents shall not be responsible for the accuracy or completeness of electronic copies of this plan sheet.

NOTES:

Ⓐ Concrete Barrier Type 736

Ⓑ Temporary Railing (Type K). T3A

Ⓒ Remove MBGR. See "ROAD PLANS"

Ⓓ Pier Removal limits are 5'-0" below OG

Ⓔ Salvage Metal Bridge Railing.

LEGEND:

Bridge Removal

New structure

Existing structure

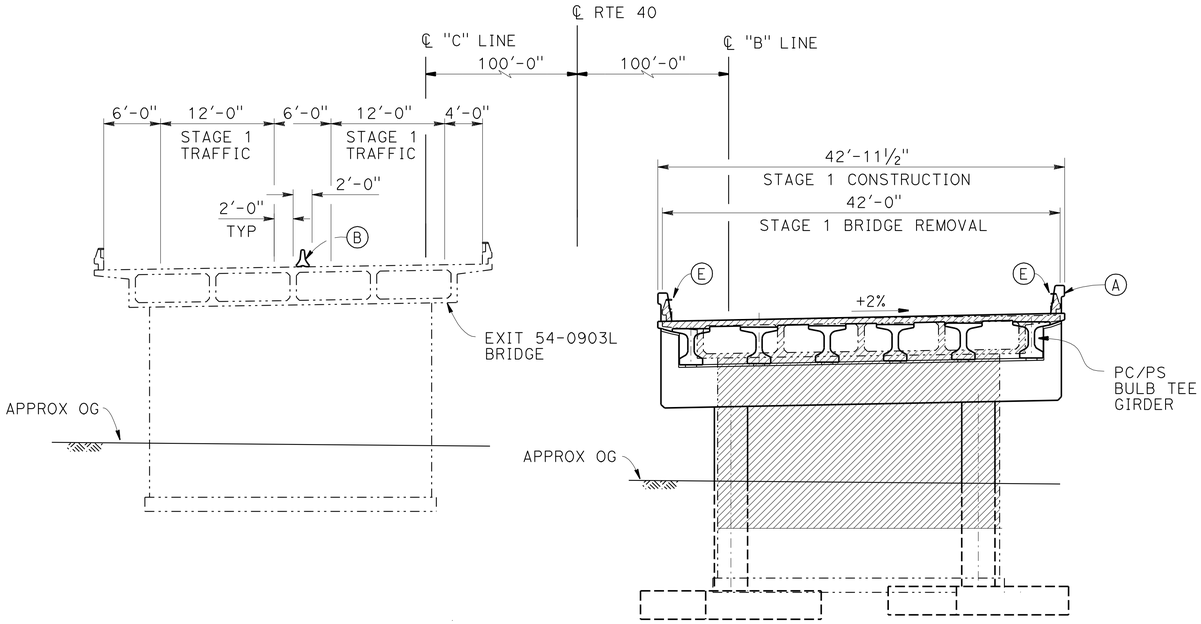

TYPICAL SECTION - STAGE 1

⅛" = 1'-0"

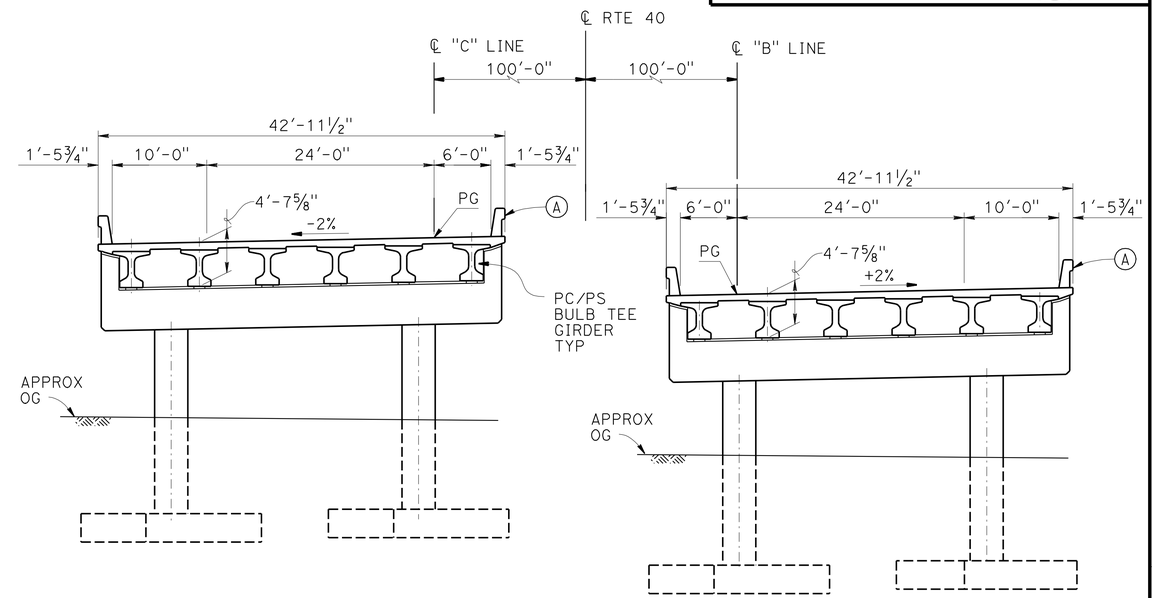

TYPICAL SECTION

⅛" = 1'-0"

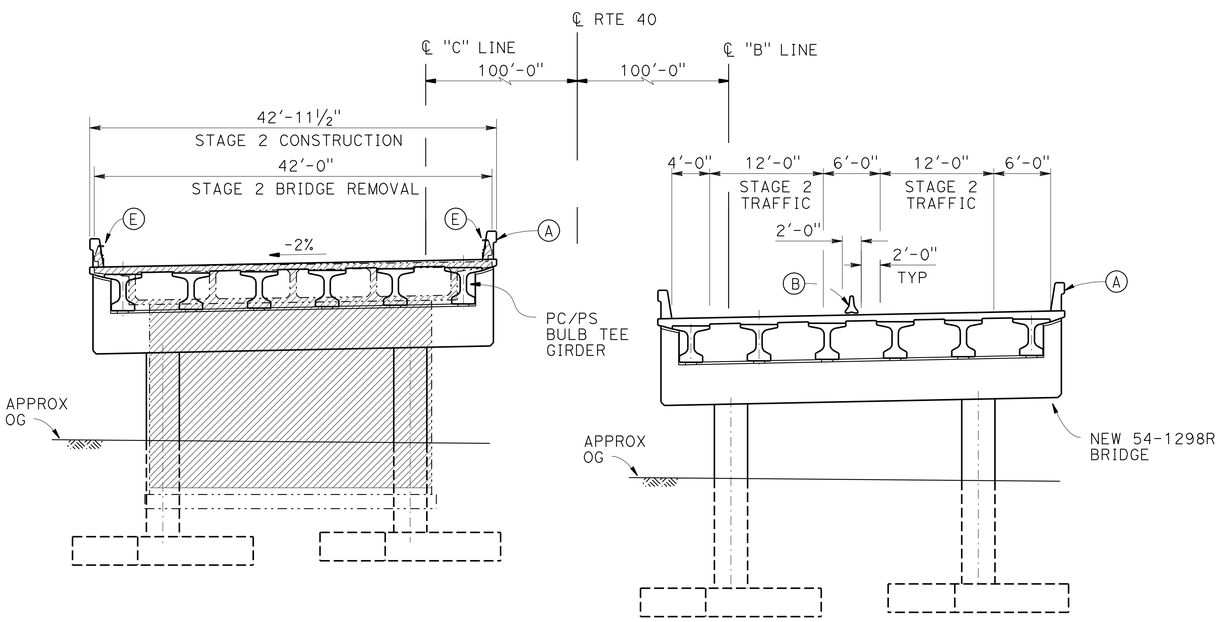

TYPICAL SECTION - STAGE 2

⅛" = 1'-0"

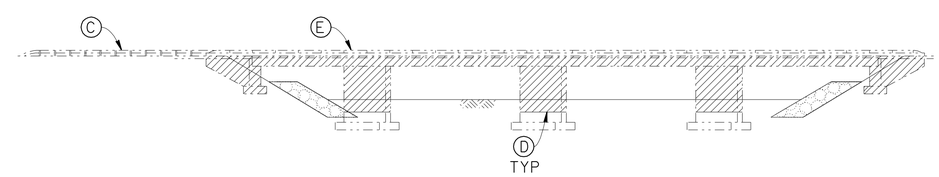

LIMITS OF BRIDGE REMOVAL

No Scale

NOTE:
THE CONTRACTOR SHALL VERIFY ALL CONTROLLING FIELD DIMENSIONS BEFORE ORDERING OR FABRICATING ANY MATERIAL.

DESIGN	BY Dawit Worku	CHECKED H. Iraninejadian	LOAD & RESISTANCE FACTOR DESIGN	LIVE LOADING: HL93 W/"LOW-BOY"; PERMIT DESIGN VEHICLE	
DETAILS	BY Lan T Tran	CHECKED H. Iraninejadian	LAYOUT	BY Dawit Worku	CHECKED H. Iraninejadian
QUANTITIES	BY H. Iraninejadian	CHECKED M. Muqtadir	SPECIFICATIONS	BY Xiahong Li	PLANS AND SPECS COMPARED Xiahong Li

DESIGN ENGINEER

STATE OF CALIFORNIA
DEPARTMENT OF TRANSPORTATION

DIVISION OF ENGINEERING SERVICES
STRUCTURE DESIGN
DESIGN BRANCH 20

BRIDGE NO. 54-1298L/R
POST MILE R85.2

VAN WINKLE WASH BRIDGE (REPLACE)
GENERAL PLAN NO. 2

ORIGINAL SCALE IN INCHES FOR REDUCED PLANS 0 1 2 3

UNIT: 3622
PROJECT NUMBER & PHASE: 0800000533 1
CONTRACT NO.: 08-0N5901

DISREGARD PRINTS BEARING EARLIER REVISION DATES

REVISION DATES: 01-23-12 2-16-12 3-20-12

SHEET 2 OF 25

STRUCTURES DESIGN GENERAL PLAN SHEET (ENGLISH) (REV.09-01-10)

FILE => 54-1298-a-gp02.dgn

USERNAME => s124196 DATE PLOTTED => 29-JUN-2012 TIME PLOTTED => 09:39

DIST	COUNTY	ROUTE	POST MILES TOTAL PROJECT	SHEET No.	TOTAL SHEETS
08	SBd	40	R85.2	58	80

Dawit Tadelle Gez 03/16/12
REGISTERED CIVIL ENGINEER DATE

6-25-12
PLANS APPROVAL DATE

REGISTERED PROFESSIONAL ENGINEER Dawit T Worku No. C60711 Exp 12-31-12 CIVIL STATE OF CALIFORNIA

The State of California or its officers or agents shall not be responsible for the accuracy or completeness of electronic copies of this plan sheet.

INDEX TO PLANS

SHEET NO.	TITLE
1	GENERAL PLAN NO. 1
2	GENERAL PLAN NO. 2
3	INDEX TO PLANS
4	DECK CONTOURS
5	FOUNDATION PLAN NO. 1
6	FOUNDATION PLAN NO. 2
7	ABUTMENT LAYOUT
8	ABUTMENT DETAIL NO. 1
9	ABUTMENT DETAIL NO. 2
10	BENT LAYOUT
11	BENT DETAIL NO. 1
12	BENT DETAIL NO. 2
13	TYPICAL SECTION
14	GIRDER LAYOUT
15	PC/PS BULB-TEE GIRDER (HARPED STRANDS)
16	PC/PS BULB-TEE GIRDER (ALTERNATE_DEBONDED STRANDS)
17	PC/PS BULB-TEE GIRDER (MISCELLANEOUS DETAILS)
18	GIRDER REINFORCEMENT
19	STRUCTURE APPROACH TYPE N(30S)
20	STRUCTURE APPROACH DRAINAGE DETAILS
21	LOG OF TEST BORINGS 1 OF 5
22	LOG OF TEST BORINGS 2 OF 5
23	LOG OF TEST BORINGS 3 OF 5
24	LOG OF TEST BORINGS 4 OF 5
25	LOG OF TEST BORINGS 5 OF 5

STANDARD PLANS DATED 2010

A10A	ACRONYMS AND ABBREVIATIONS (SHEET 1 OF 2)
A10B	ACRONYMS AND ABBREVIATIONS (SHEET 2 OF 2)
A10F	LEGEND - SOIL (SHEET 1 OF 2)
A10G	LEGEND - SOIL (SHEET 2 OF 2)
A62C	LIMITS OF PAYMENT FOR EXCAVATION AND BACKFILL BRIDGE
B0-1	BRIDGE DETAILS
B0-3	BRIDGE DETAILS
B0-5	BRIDGE DETAILS
B0-13	BRIDGE DETAILS
B2-3	16" AND 24" CAST-IN-DRILLED-HOLE CONCRETE PILE
B6-21	JOINT SEALS (MAXIMUM MOVEMENT RATING = 2")
B7-8	DECK DRAINAGE DETAILS
B11-56	CONCRETE BARRIER TYPE 736

Standard Plan Sheet No.

Detail No.

GENERAL NOTES
LOAD AND RESISTANCE FACTOR DESIGN

DESIGN: AASHTO LRFD BRIDGE SPECIFICATIONS,4th Edition with California Amendments Preface dated Dec 2008;

SEISMIC DESIGN: Caltrans Seismic Design Criteria (SDC), Version 1.6 November 2010

DEAD LOADING: Includes 35 psf for future wearing surface.

LIVE LOADING: HL-93 and Permit Design Vehicle

SEISMIC LOADING: Soil Type C with V_{S30} = 450 m/s, the top 100 ft of soil Moment Magnitude M_{max} = 7.3 Peak Ground Rock Acceleration = 0.22g See "ARS CURVE"

REINFORCED CONCRETE: f_y = 60 Ksi, f'_c = 3.6 ksi, n = 8

PRESTRESSED CONCRETE: See PRESTRESSING NOTES on "PRESTRESSED GIRDER DETAIL" sheet

Location: LAT=34.733713 LONG=-115.556495 V_{S30} =450m/s

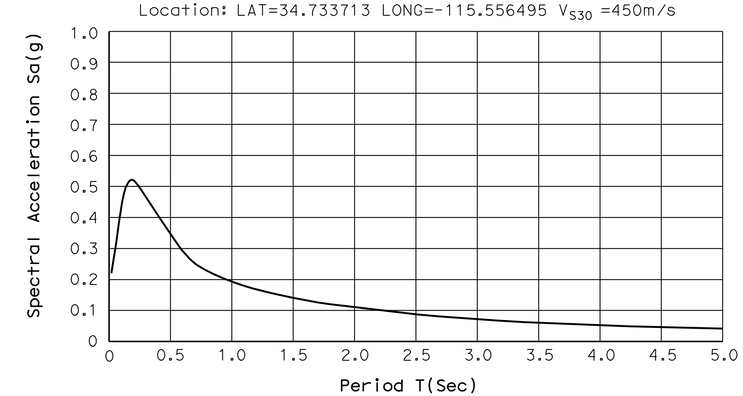

ARS CURVE
No Scale

PILE DATA TABLE (ABUTMENTS)

SUPPORT LOCATIONS	PILE TYPE	NOMINAL RESISTANCE (kips)		DESIGN TIP ELEV (Ft)	SPECIFIED TIP ELEV (Ft)
		COMPRESSION	TENSION		
ABUT 1 RIGHT BRIDGE	24 IN STANDARD CHID	360	-	2655	2655
ABUT 4 RIGHT BRIDGE	24 IN STANDARD CHID	360	-	2655	2655
ABUT 1 LEFT BRIDGE	24 IN STANDARD CHID	360	-	2662	2662
ABUT 4 LEFT BRIDGE	24 IN STANDARD CHID	360	-	2662	2662

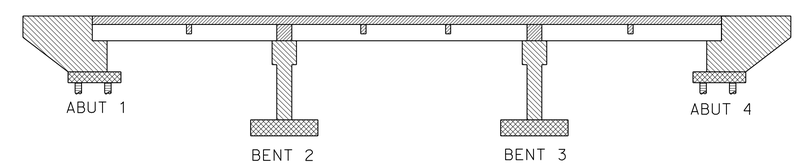

LEGEND: Structural Concrete, Bridge (f'c = 5 ksi @ 28 days)

- Precast, Prestressed Girders
- Structure Concrete, Bridge (4 ksi @ 28 days)
- Structural Concrete, Bridge Footing
- Structural Concrete, Bridge Deck (4.5 ksi @ 28 days)
- Structural Concrete, CIDH Pile

CONCRETE STRENGTH AND TYPE LIMITS
No Scale

SPREAD FOOTING DATA TABLE (BENTS)

SUPPORT LOCATIONS LEFT & RIGHT BRIDGES	FOOTING SIZE (FT)		LOAD AND RESISTANCE FACTOR DESIGN (LRFD)			EXTREME EVENT LIMIT STATE (Ø b = 1.0), ksf (Scour)
	B	L	SERVICE PERMISSIVEL NET CONTACT STRESS (SETTELMENT) ksf	STRENGTH FACTORED GROSS NOMINAL BEARING RESISTANCE (Ø b = 0.45), ksf	EXTREME EVENT FACTORED GROSS NOMONAL BEARING RESISTANCE (Ø b = 1.0), ksf (Seismic)	FACTORED GROSS NOMINAL BEARING RESISTANCE (ksf)
RIGHT BRIDGE BENT 2	14	14	22.7	19.09	53.71	29.06
RIGHT BRIDGE BENT 3	14	14	22.7	19.09	53.71	29.06
LEFT BRIDGE BENT 2	14	14	22.7	19.09	53.71	29.06
LEFT BRIDGE BENT 3	14	14	22.7	19.09	53.71	29.06

NOTE:
THE CONTRACTOR SHALL VERIFY ALL CONTROLLING FIELD DIMENSIONS BEFORE ORDERING OR FABRICATING ANY MATERIAL.

	BY	CHECKED
DESIGN	Dawit Worku	M. Muqtadir
DETAILS	Lan T Tran	H. Iraninejadian
QUANTITIES	H. Iraninejadian	M. Muqtadir

STATE OF CALIFORNIA
DEPARTMENT OF TRANSPORTATION

DIVISION OF ENGINEERING SERVICES
STRUCTURE DESIGN
DESIGN BRANCH 20

BRIDGE NO. 54-1298L/R
POST MILE R85.2

VAN WINKLE WASH BRIDGE (REPLACE)
INDEX TO PLANS

STRUCTURES DESIGN DETAIL SHEET (ENGLISH) (REV. 09-01-10)

ORIGINAL SCALE IN INCHES FOR REDUCED PLANS 0 1 2 3

UNIT: 3622
PROJECT NUMBER & PHASE: 0800000533 1
CONTRACT NO.: 08-0N5901

DISREGARD PRINTS BEARING EARLIER REVISION DATES

REVISION DATES 01/06/12 01/27/12 12/29/11

SHEET 3 OF 25

FILE => 54-1298-a-itp.dgn

USERNAME => s124496 DATE PLOTTED => 29-JUN-2012 TIME PLOTTED => 09:39

DIST	COUNTY	ROUTE	POST MILES TOTAL PROJECT	SHEET No.	TOTAL SHEETS
08	SBd	40	R85.2	59	80

Dawit Tadelle Worku 03/16/12
REGISTERED CIVIL ENGINEER DATE

6-25-12
PLANS APPROVAL DATE

REGISTERED PROFESSIONAL ENGINEER
Dawit T Worku
No. C60711
Exp 12-31-12
CIVIL
STATE OF CALIFORNIA

The State of California or its officers or agents shall not be responsible for the accuracy or completeness of electronic copies of this plan sheet.

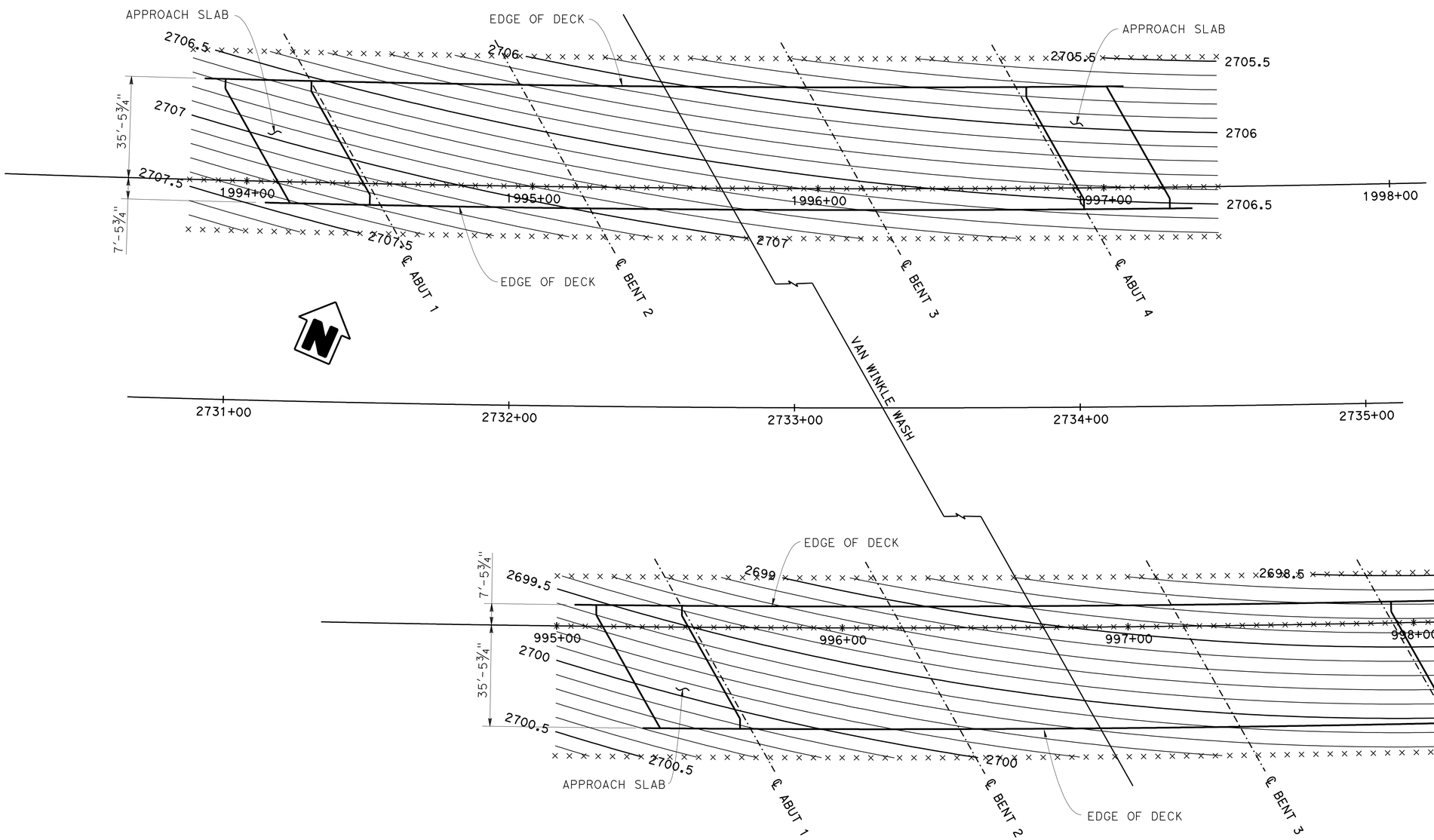

NOTES:

x. 5.0' intervals along LOL

1. Contours do not include camber

2. Contour interval = 0.1'

NOTE:
THE CONTRACTOR SHALL VERIFY ALL CONTROLLING FIELD DIMENSIONS BEFORE ORDERING OR FABRICATING ANY MATERIAL.

DECK CONTOURS

1" = 20'-0"

	BY	CHECKED
DESIGN	Dawit Worku	H. Iraninejadian
DETAILS	Lan T Tran	H. Iraninejadian
QUANTITIES	H. Iraninejadian	M. Muqtadir

STATE OF CALIFORNIA
DEPARTMENT OF TRANSPORTATION

DIVISION OF ENGINEERING SERVICES
STRUCTURE DESIGN
DESIGN BRANCH 20

BRIDGE NO. 54-1298L/R
POST MILE R85.2

VAN WINKLE WASH BRIDGE (REPLACE)

DECK CONTOURS

STRUCTURES DESIGN DETAIL SHEET (ENGLISH) (REV. 09-01-10)

ORIGINAL SCALE IN INCHES FOR REDUCED PLANS 0 1 2 3

UNIT: 3622
PROJECT NUMBER & PHASE: 0800000533 1
CONTRACT NO.: 08-0N5901

DISREGARD PRINTS BEARING EARLIER REVISION DATES

REVISION DATES: 10/06/11 12/13/11

SHEET 4 OF 25

FILE => 54-1298-d-dc01.dgn

USERNAME => s124496 DATE PLOTTED => 29-JUN-2012 TIME PLOTTED => 09:39

Bridge Location

① - 133.723 Lt. ℄ Rte 40, Sta 2731+27.219, Elev = 2706.189
② - 94.383 Lt. ℄ Rte 40, Sta 2731+51.018, Elev = 2706.784
③ - 133.683 Lt. ℄ Rte 40, Sta 2733+81.948, Elev = 2705.544
④ - 94.531 Lt. ℄ Rte 40, Sta 2734+02.922, Elev = 2706.138

No.	R	Δ	T	L
⑤	9000.000	21°32′33"	1712.157	3383.879
⑥	8900.000	21°32′33"	1693.132	3346.279

HYDROLOGIC SUMMARY

DRAINAGE AREA: 20 SQUARE MILES

	DESIGN FLOOD	BASE FLOOD	OVERTOPPING FLOOD
FREQUENCY (YEARS)	50	100	
DISCHARGE (CUBIC FEETS PER SECOND)	6000	8000	
WATER SURFACE ELEV. AT BRIDGE (SQFT)	2694.7	2695.4	

FLOOD PLAIN DATA ARE BASED UPON INFORMATION AVAILABLE WHEN THE PLANS WERE PREPARED AND ARE SHOWN TO MEET FEDERAL REQUIREMENTS. THE ACCURACY OF SAID INFORMATION IS NOT WARRANTED BY THE STATE AND INTERESTED OR AFFECTED PARTIES SHOULD MAKE THEIR OWN INVESTIGATIONS.

DIST	COUNTY	ROUTE	POST MILES TOTAL PROJECT	SHEET No.	TOTAL SHEETS
08	SBd	40	R85.2	60	80

Dawit Tadelle Worku 03/16/12
REGISTERED CIVIL ENGINEER DATE

6-25-12
PLANS APPROVAL DATE

REGISTERED PROFESSIONAL ENGINEER Dawit T Worku No. C60711 Exp 12-31-12 CIVIL STATE OF CALIFORNIA

The State of California or its officers or agents shall not be responsible for the accuracy or completeness of electronic copies of this plan sheet.

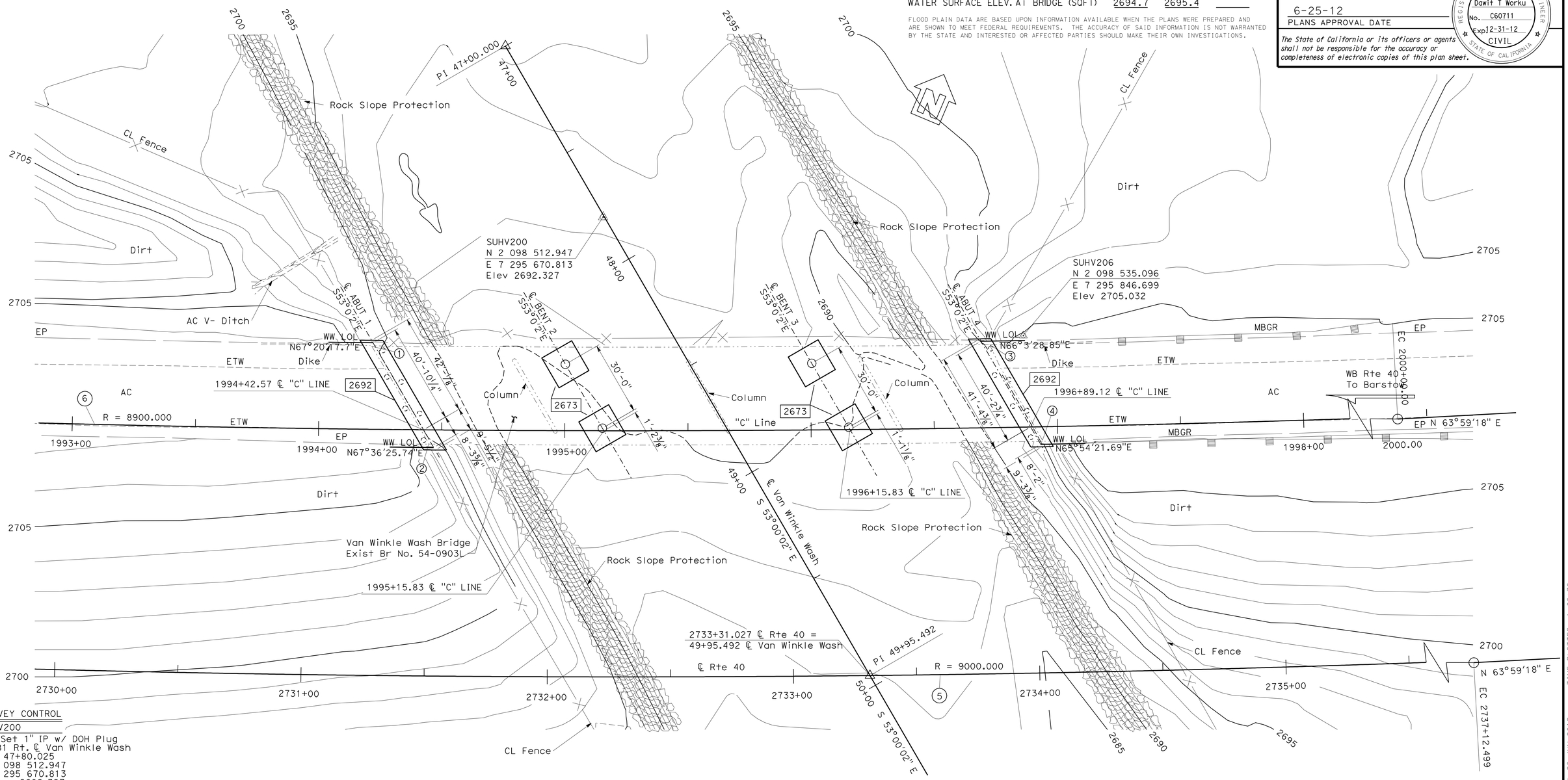

SURVEY CONTROL

SUHV200

PD: Set 1" IP w/ DOH Plug
0.481 Rt. ℄ Van Winkle Wash
Sta 47+80.025
N 2 098 512.947
E 7 295 670.813
Elev = 2692.327

SUHV206

PD: Set 8" Spike w/TC Tag
137.151 Lt. ℄ Rte 40
Sta 2733+95.822
N 2 098 535.096
E 7 295 846.699
Elev = 2705.032

NOTE:

Underground utilities as shown are approximate.
See District Utility Plans for details.

PRELIMINARY INVESTIGATION SECTION

SCALE 1"=20′	VERT.DATUM NGVD29	PHOTOGRAMMETRY AS OF: X		
	HORZ.DATUM NAD83	SURVEYED	BY T. Phung	CHECKED BY C. Stewart
	ALIGNMENT TIES Dist. Traverse Sheet	DRAFTED	BY C. Pham	CHECKED BY E. Vigjar

DESIGN	BY Dawit Worku	CHECKED H. Iraninejadian
DETAILS	BY Lan T Tran	CHECKED H. Iraninejadian
QUANTITIES	BY H. Iraninejadian	CHECKED M. Muqtadir

STATE OF CALIFORNIA
DEPARTMENT OF TRANSPORTATION

DIVISION OF ENGINEERING SERVICES
STRUCTURE DESIGN
DESIGN BRANCH 20

BRIDGE NO. 54-1298L\R
POST MILE R 85.19

VAN WINKLE WASH
FOUNDATION PLAN NO. 1

STRUCTURES FOUNDATION PLAN SHEET (ENGLISH) (REV. 09-01-10)

ORIGINAL SCALE IN INCHES FOR REDUCED PLANS 0 1 2 3

UNIT: 3647
PROJECT NUMBER & PHASE: 08 00000533 1 CONTRACT NO.: 08-0N5901

DISREGARD PRINTS BEARING EARLIER REVISION DATES

REVISION DATES 12/08/11

SHEET 5 OF 25

FILE => 54-1298-e-fdpl_L.dgn

USERNAME => s124496 DATE PLOTTED => 29-JUN-2012 TIME PLOTTED => 09:39

DIST	COUNTY	ROUTE	POST MILES TOTAL PROJECT	SHEET No.	TOTAL SHEETS
08	SBd	40	R85.2	61	80

Dawit Tadelle Feto 03/16/12
REGISTERED CIVIL ENGINEER DATE

6-25-12
PLANS APPROVAL DATE

REGISTERED PROFESSIONAL ENGINEER
Dawit T Worku
No. C60711
Exp 12-31-12
CIVIL
STATE OF CALIFORNIA

The State of California or its officers or agents shall not be responsible for the accuracy or completeness of electronic copies of this plan sheet.

Bridge Location

① - 94.390 Rt. ℄ Rte 40, Sta 2732+60.727, Elev = 2699.035
② - 133.790 Rt. ℄ Rte 40, Sta 2732+83.120, Elev = 2699.615
③ - 94.348 Rt. ℄ Rte 40, Sta 2735+06.154, Elev = 2698.801
④ - 133.732 Rt. ℄ Rte 40, Sta 2735+26.853, Elev = 2699.453

No.	R	Δ	T	L
5	9000.000	21°32′33"	1712.157	3383.879
7	9100.000	21°32′33"	1731.180	3421.476

HYDROLOGIC SUMMARY

DRAINAGE AREA: 20 SQUARE MILES

	DESIGN FLOOD	BASE FLOOD	OVERTOPPING FLOOD
FREQUENCY (YEARS)	50	100	
DISCHARGE (CUBIC FEETS PER SECOND)	6000	8000	
WATER SURFACE ELEV. AT BRIDGE (SQFT)	2688.0	2688.8	

FLOOD PLAIN DATA ARE BASED UPON INFORMATION AVAILABLE WHEN THE PLANS WERE PREPARED AND ARE SHOWN TO MEET FEDERAL REQUIREMENTS. THE ACCURACY OF SAID INFORMATION IS NOT WARRANTED BY THE STATE AND INTERESTED OR AFFECTED PARTIES SHOULD MAKE THEIR OWN INVESTIGATIONS.

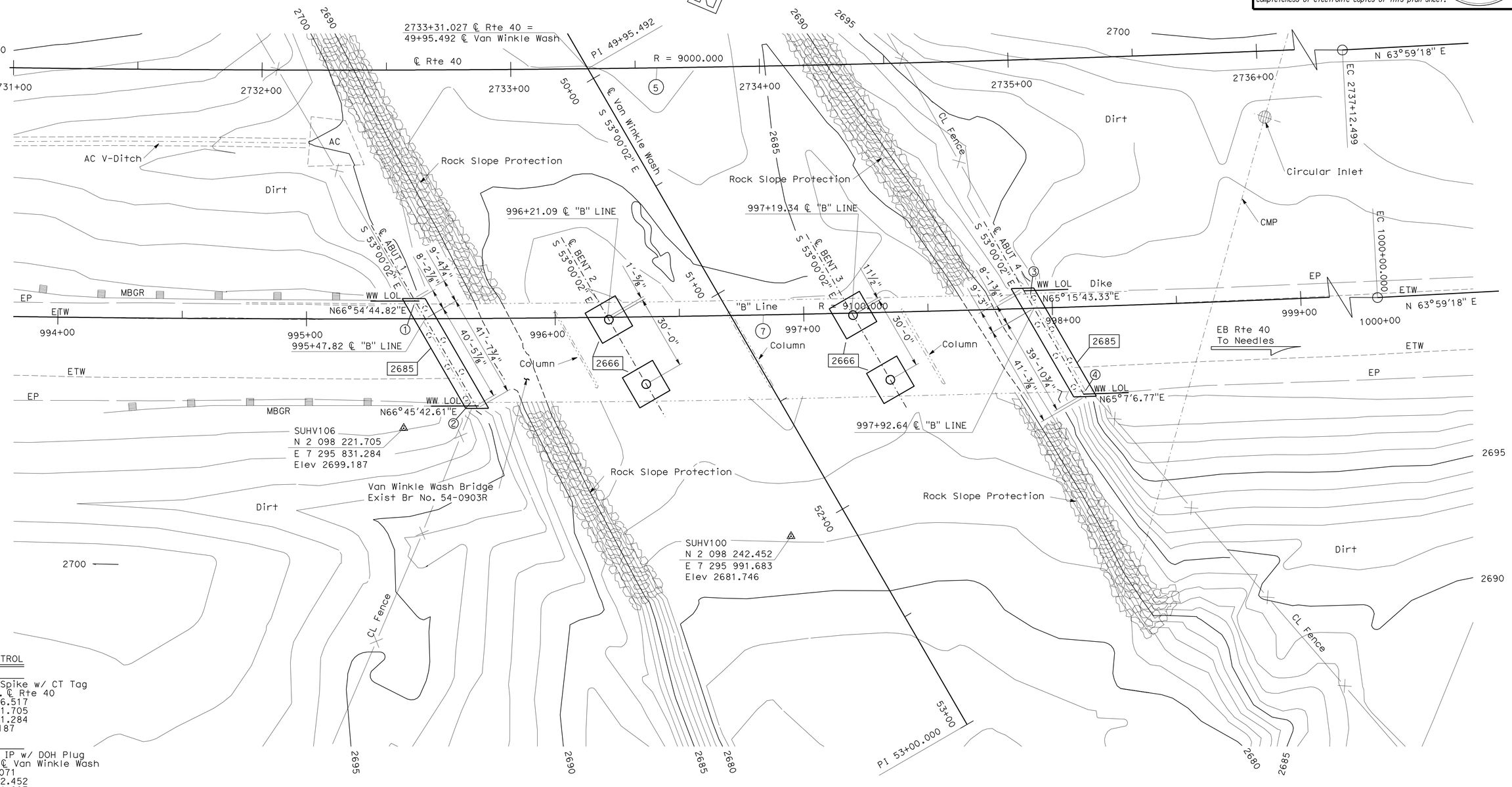

SURVEY CONTROL

SUHV106
PD: Set 8" Spike w/ CT Tag
143.983 Rt. ℄ Rte 40
Sta 2732+56.517
N 2 098 221.705
E 7 295 831.284
Elev 2699.187

SUHV100
PD: Set 1" IP w/ DOH Plug
23.408 Rt. ℄ Van Winkle Wash
Sta 51+99.071
N 2 098 242.452
E 7 295 991.683
Elev 2681.746

PRELIMINARY INVESTIGATION SECTION

SCALE 1"=20′	VERT.DATUM NGVD29	PHOTOGRAMMETRY AS OF: X		
	HORZ.DATUM NAD83	SURVEYED	BY T. Phung	CHECKED BY C. Stewart
ALIGNMENT TIES Dist. Traverse Sheet		DRAFTED	BY C. Pham	CHECKED BY E.Vigjar

DESIGN	BY Dawit Worku	CHECKED H. Iraninejadian
DETAILS	BY Lan T Tran	CHECKED H. Iraninejadian
QUANTITIES	BY H. Iraninejadian	CHECKED M. Muqtadir

STATE OF CALIFORNIA
DEPARTMENT OF TRANSPORTATION

DIVISION OF ENGINEERING SERVICES
STRUCTURE DESIGN
DESIGN BRANCH 20

BRIDGE NO. 54-1298L/R
POST MILE R85.21

VAN WINKLE WASH
FOUNDATION PLAN NO. 2

STRUCTURES FOUNDATION PLAN SHEET (ENGLISH) (REV. 09-01-10)

ORIGINAL SCALE IN INCHES FOR REDUCED PLANS 0 1 2 3

UNIT: 3647
PROJECT NUMBER & PHASE: 08 00000533 0 CONTRACT NO.: X

DISREGARD PRINTS BEARING EARLIER REVISION DATES

REVISION DATES 12/08/11

SHEET 6 OF 25

FILE => 54-1298-e-fdpl_R.dgn

USERNAME => s124496 DATE PLOTTED => 29-JUN-2012 TIME PLOTTED => 09:39

DIST	COUNTY	ROUTE	POST MILES TOTAL PROJECT	SHEET No.	TOTAL SHEETS
08	SBd	40	R85.2	62	80

REGISTERED CIVIL ENGINEER — DATE 03/16/12

6-25-12
PLANS APPROVAL DATE

REGISTERED PROFESSIONAL ENGINEER — Dawit T Worku — No. C60711 — Exp 12-31-12 — CIVIL — STATE OF CALIFORNIA

The State of California or its officers or agents shall not be responsible for the accuracy or completeness of electronic copies of this plan sheet.

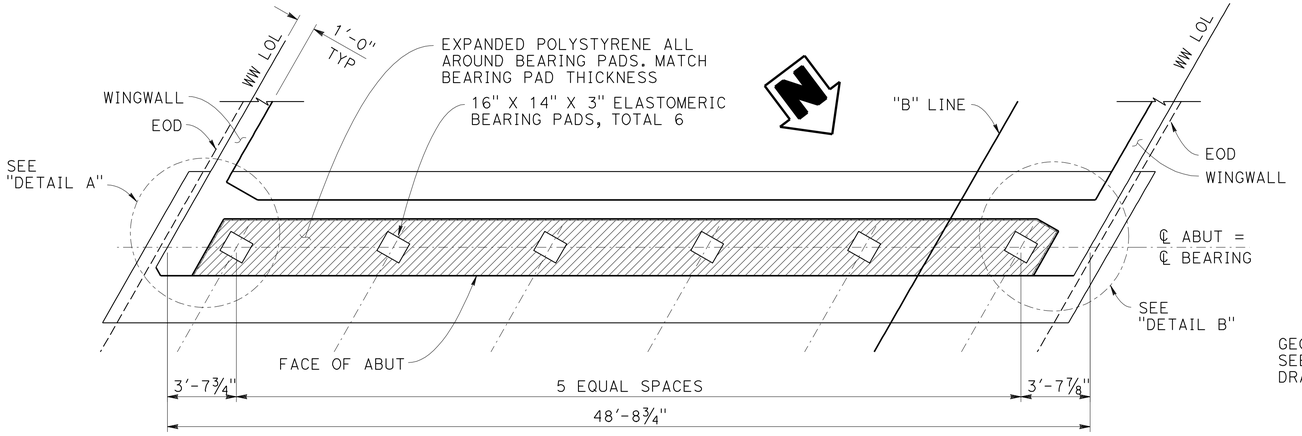

ABUTMENT PLAN

¼" = 1'-0"

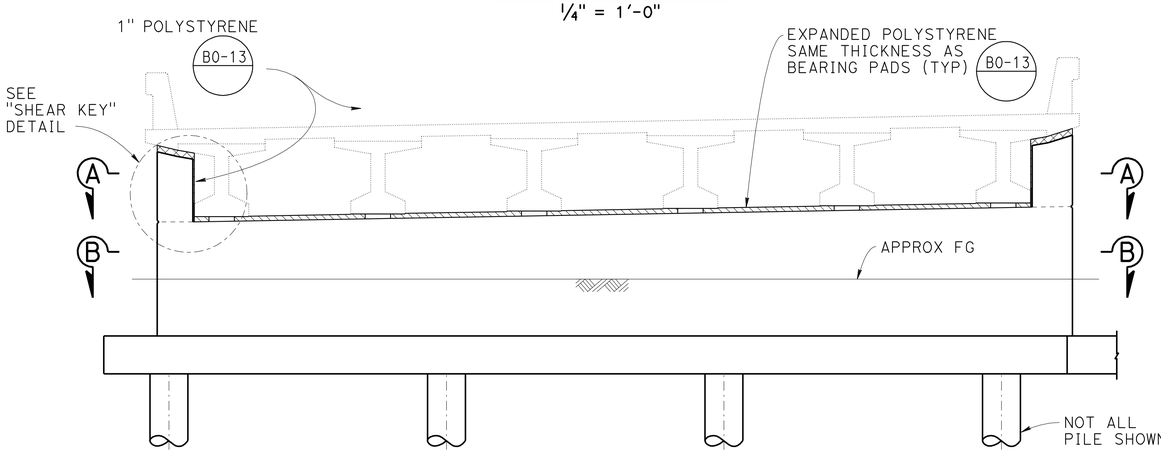

ABUTMENT ELEVATION

¼" = 1'-0"

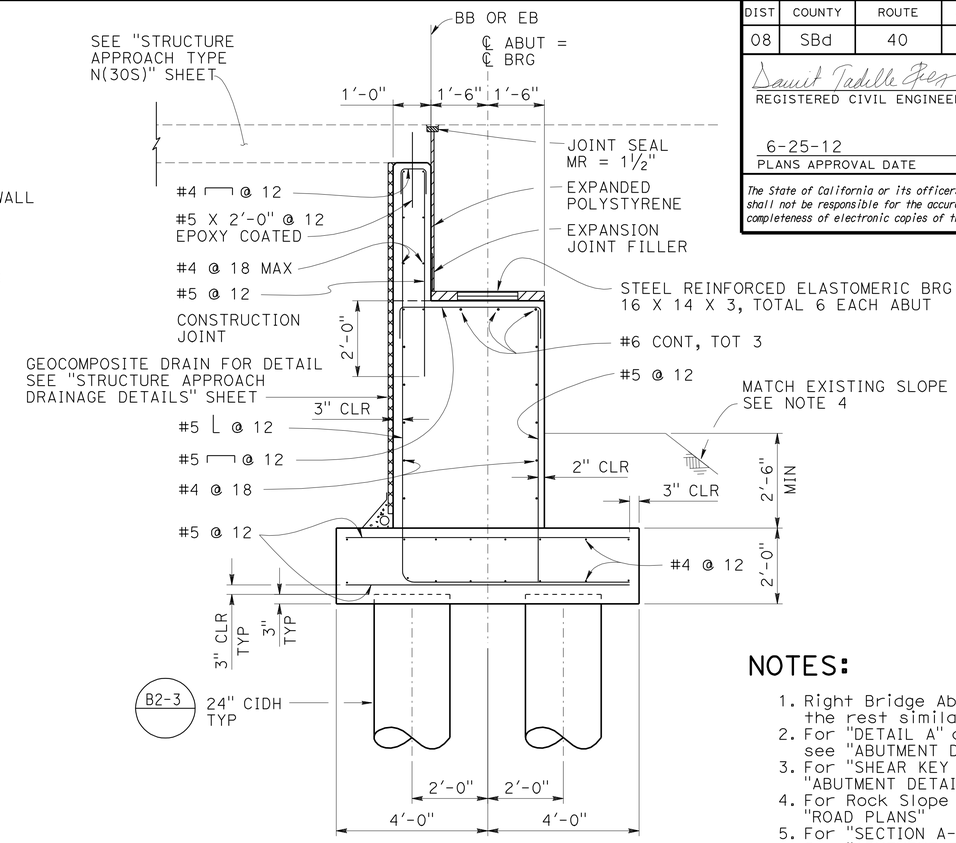

ABUTMENT TYPICAL SECTION

½" = 1'-0"

NOTES:

1. Right Bridge Abut 1 shown, the rest similar.
2. For "DETAIL A" and "DETAIL B" see "ABUTMENT DETAIL NO.2" sheet
3. For "SHEAR KEY DETAIL", see "ABUTMENT DETAIL NO.1" sheet
4. For Rock Slope Protection, see "ROAD PLANS"
5. For "SECTION A-A" and "SECTION B-B" See "ABUTMENT DETAIL NO. 1" sheet.

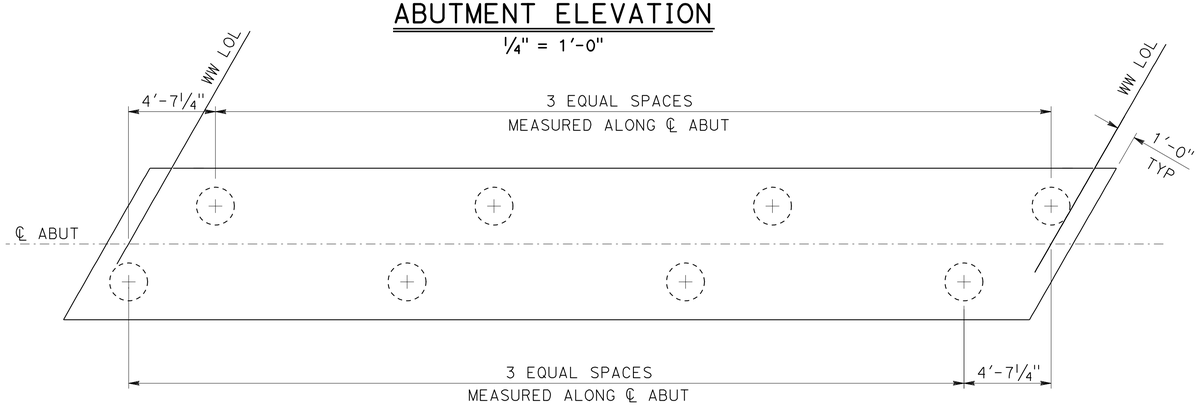

PILE LAYOUT

¼" = 1'-0"

NOTE:
THE CONTRACTOR SHALL VERIFY ALL CONTROLLING FIELD DIMENSIONS BEFORE ORDERING OR FABRICATING ANY MATERIAL.

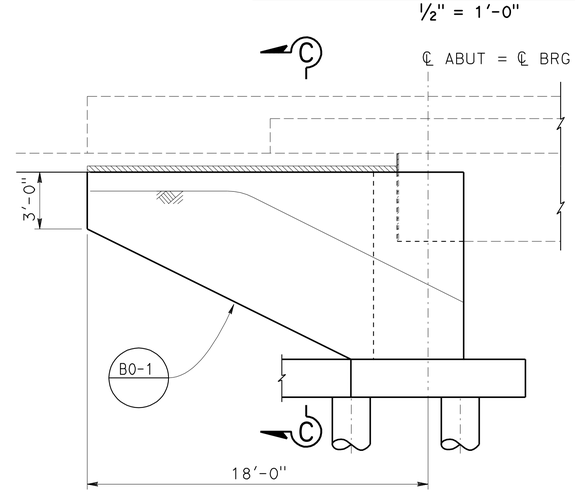

WINGWALL ELEVATION

¼" = 1'-0"

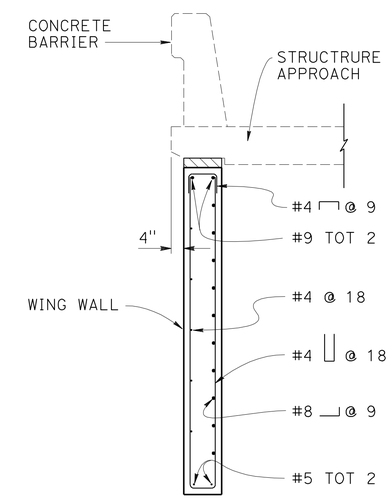

SECTION C-C

½" = 1'-0"

DESIGN	BY Dawit Worku	CHECKED H. Iraninejadian	
DETAILS	BY Lan T Tran	CHECKED H. Iraninejadian	
QUANTITIES	BY H. Iraninejadian	CHECKED M. Muqtadir	

STATE OF CALIFORNIA
DEPARTMENT OF TRANSPORTATION

DIVISION OF ENGINEERING SERVICES
STRUCTURE DESIGN
DESIGN BRANCH 20

BRIDGE NO. 54-1298L/R
POST MILE R85.2

VAN WINKLE WASH BRIDGE (REPLACE)

ABUTMENT LAYOUT

STRUCTURES DESIGN DETAIL SHEET (ENGLISH) (REV. 09-01-10)

ORIGINAL SCALE IN INCHES FOR REDUCED PLANS 0 1 2 3

UNIT: 3622
PROJECT NUMBER & PHASE: 0800000533 1
CONTRACT NO.: 08-0N5901

DISREGARD PRINTS BEARING EARLIER REVISION DATES

REVISION DATES: 10-14-11 1-27-12

SHEET 7 OF 25

FILE => 54-1298-f-a01_lo1.dgn

USERNAME => s124936 DATE PLOTTED => 29-JUN-2012 TIME PLOTTED => 08:39

NOTE:
THE CONTRACTOR SHALL VERIFY ALL CONTROLLING FIELD DIMENSIONS BEFORE ORDERING OR FABRICATING ANY MATERIAL.

DIST	COUNTY	ROUTE	POST MILES TOTAL PROJECT	SHEET No.	TOTAL SHEETS
08	SBd	40	R85.2	63	80

Dawit Tadelle Gez 03/16/12
REGISTERED CIVIL ENGINEER DATE

6-25-12
PLANS APPROVAL DATE

REGISTERED PROFESSIONAL ENGINEER Dawit T Worku No. C60711 Exp. 12-31-12 CIVIL STATE OF CALIFORNIA

The State of California or its officers or agents shall not be responsible for the accuracy or completeness of electronic copies of this plan sheet.

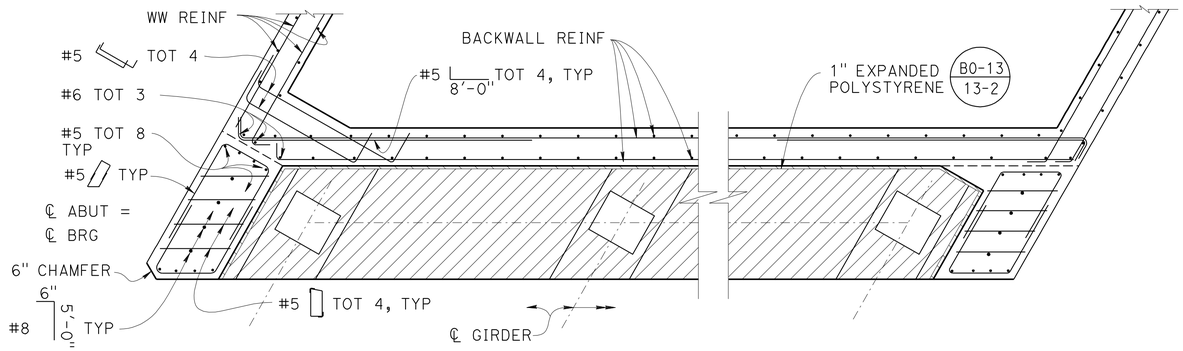

SECTION A-A
½" = 1'-0"

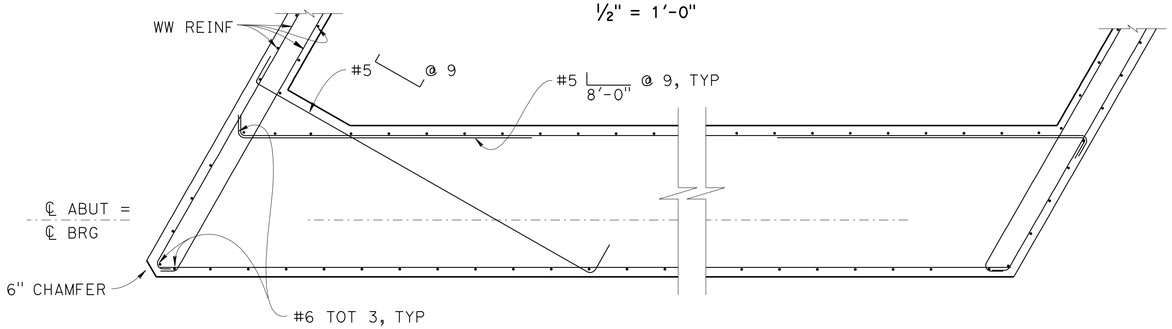

SECTION B-B
½" = 1'-0"

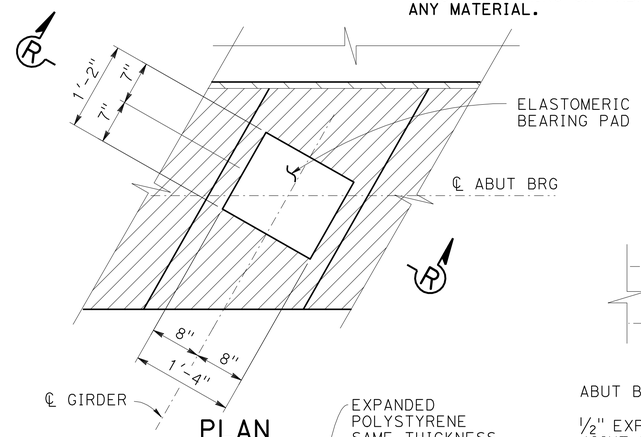

PLAN

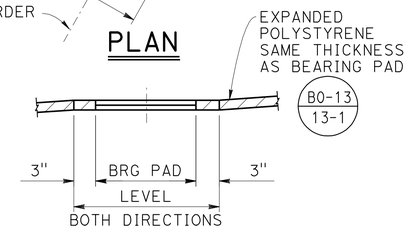

SECTION R-R

BEARING PAD DETAIL
No Scale

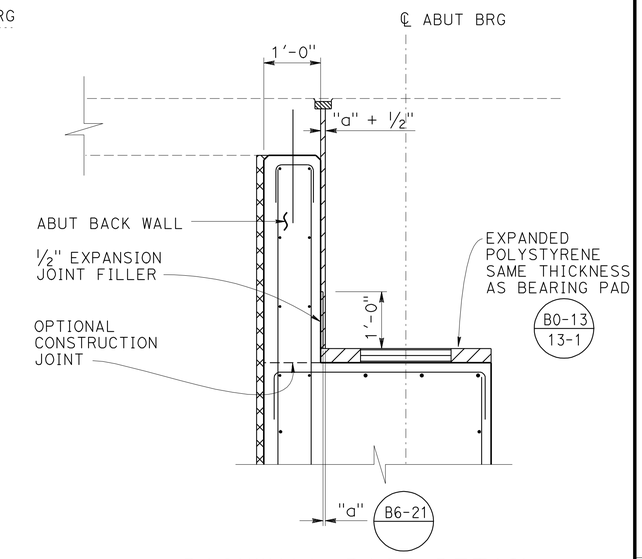

BACKWALL BASE DETAIL
1" = 1'-0"

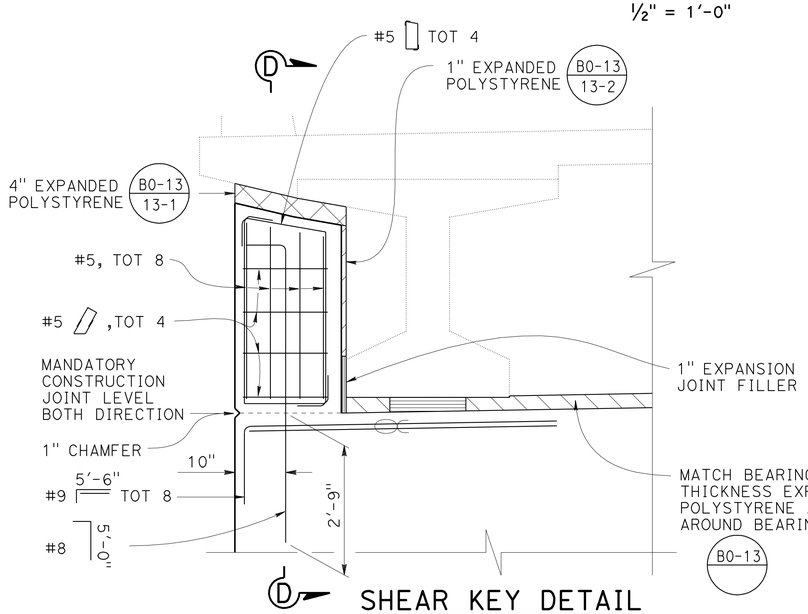

SHEAR KEY DETAIL
¾" = 1'-0"

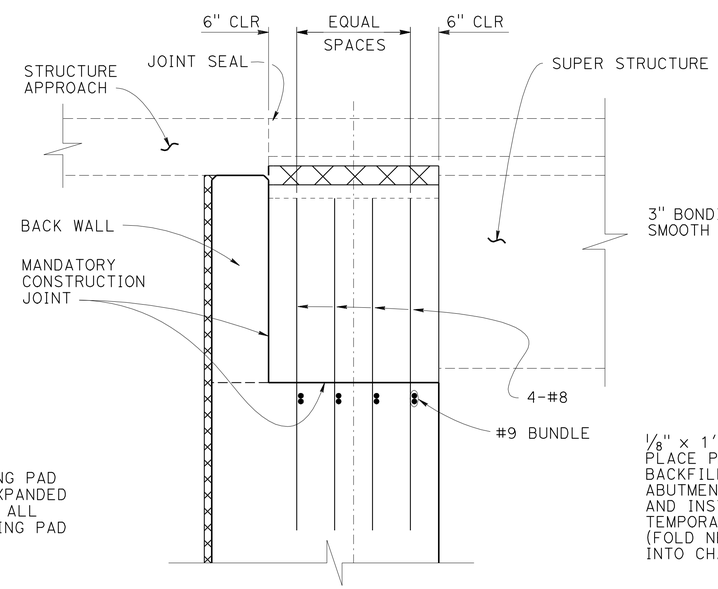

SECTION D-D
¾" = 1'-0"

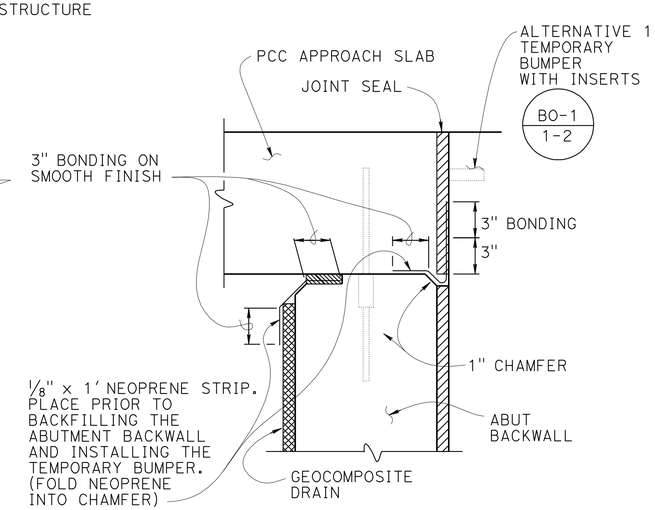

JOINT PROTECTION DETAIL
No Scale

NOTES:

1. Mandatory construction joint surface to be smooth finished and lined with 15 lbs construction paper.
2. Shear Key and wingwall reinforcement to be discontinuous as shown.
3. Vertical Shear Key rebar (#8 bar) to be galvanized.
4. Abutment 4 Left Shear Key shown, the rest are similar.

	BY	CHECKED
DESIGN	Dawit Worku	H. Iraninejadian
DETAILS	Lan T Tran	H. Iraninejadian
QUANTITIES	H. Iraninejadian	M. Muqtadir

STATE OF CALIFORNIA
DEPARTMENT OF TRANSPORTATION

DIVISION OF ENGINEERING SERVICES
STRUCTURE DESIGN
DESIGN BRANCH 20

BRIDGE NO. 54-1298L/R
POST MILE R85.2

VAN WINKLE WASH BRIDGE (REPLACE)
ABUTMENT DETAIL NO. 1

STRUCTURES DESIGN DETAIL SHEET (ENGLISH) (REV. 09-01-10)

ORIGINAL SCALE IN INCHES FOR REDUCED PLANS 0 1 2 3

UNIT: 3622
PROJECT NUMBER & PHASE: 0800000533 1
CONTRACT NO.: 08-0N5901

DISREGARD PRINTS BEARING EARLIER REVISION DATES
REVISION DATES 10/14/11 10/26/11 1-27-12

SHEET 8 OF 25

FILE => 54-1298-f-a01dt1.dgn

USERNAME => s124496 DATE PLOTTED => 29-JUN-2012 TIME PLOTTED => 09:40

DIST	COUNTY	ROUTE	POST MILES TOTAL PROJECT	SHEET No.	TOTAL SHEETS
08	SBd	40	R85.2	64	80

Dawit Tadelle Frey 03/16/12
REGISTERED CIVIL ENGINEER DATE

6-25-12
PLANS APPROVAL DATE

REGISTERED PROFESSIONAL ENGINEER Dawit T Worku No. C60711 Exp 12-31-12 CIVIL STATE OF CALIFORNIA

The State of California or its officers or agents shall not be responsible for the accuracy or completeness of electronic copies of this plan sheet.

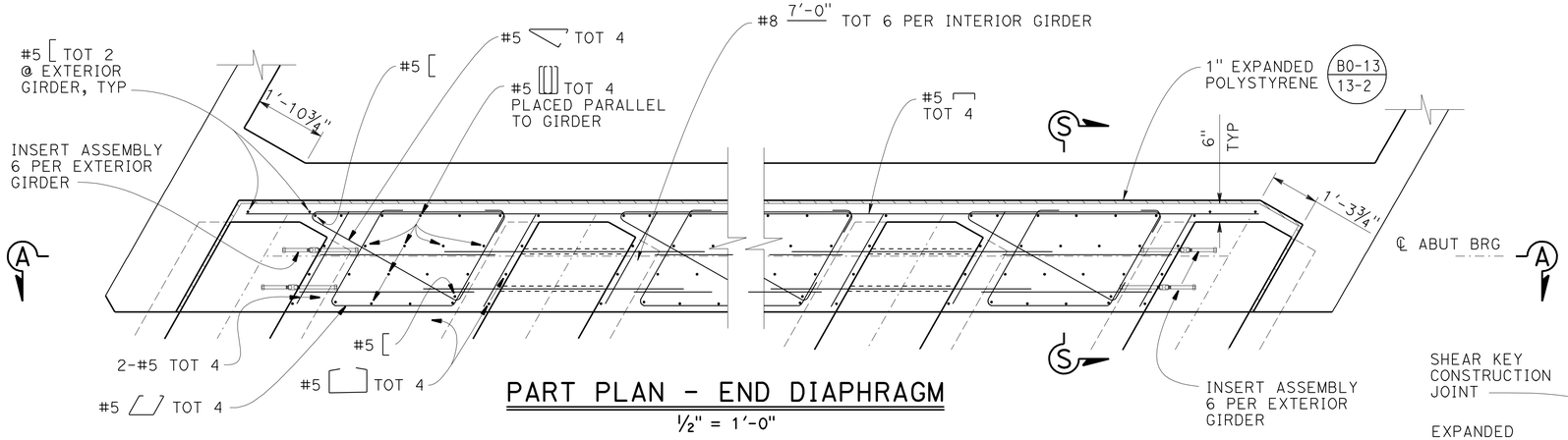

PART PLAN - END DIAPHRAGM

½" = 1'-0"

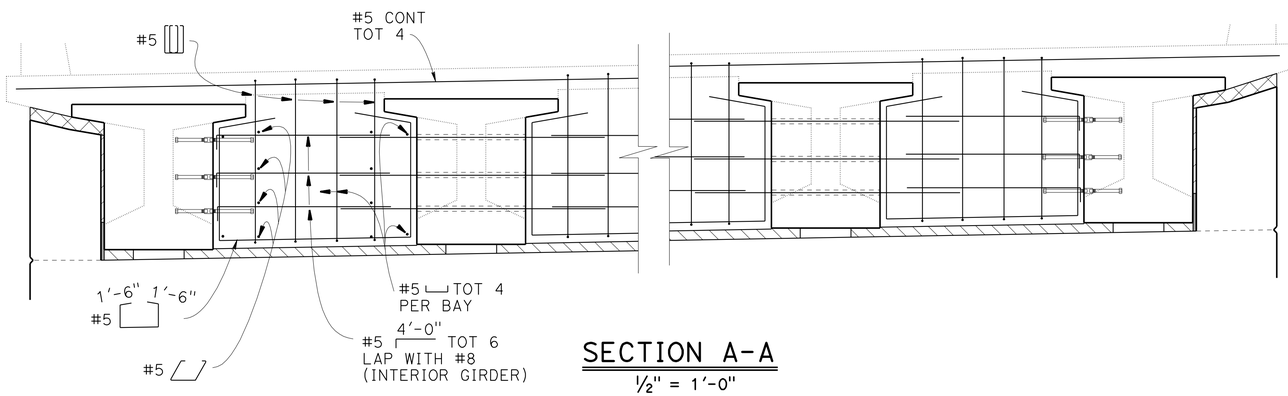

SECTION A-A

½" = 1'-0"

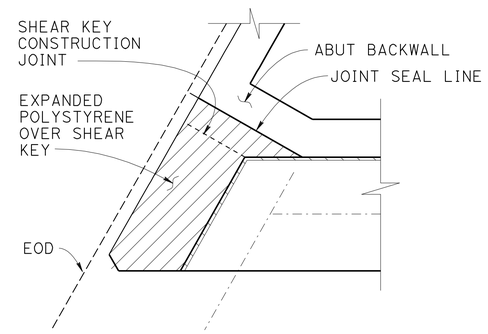

DETAIL A

½" = 1'-0"

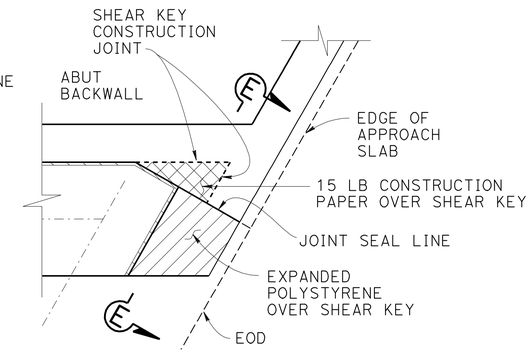

DETAIL B

½" = 1'-0"

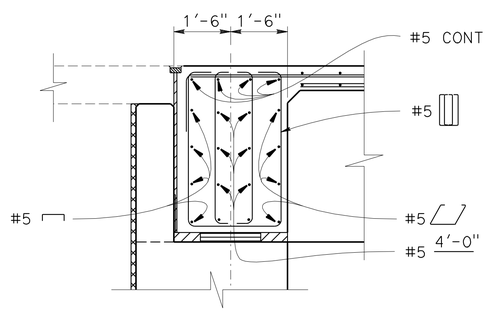

SECTION S-S

½" = 1'-0"

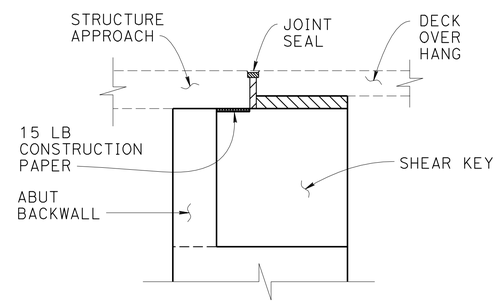

SECTION E-E

½" = 1'-0"

NOTE:
THE CONTRACTOR SHALL VERIFY ALL CONTROLLING FIELD DIMENSIONS BEFORE ORDERING OR FABRICATING ANY MATERIAL.

	BY	CHECKED
DESIGN	Dawit Worku	H. Iraninejadian
DETAILS	Lan T Tran	H. Iraninejadian
QUANTITIES	H. Iraninejadian	M. Muqtadir

STATE OF CALIFORNIA
DEPARTMENT OF TRANSPORTATION

DIVISION OF ENGINEERING SERVICES
STRUCTURE DESIGN
DESIGN BRANCH 20

BRIDGE NO. 54-1298L/R
POST MILE R85.2

VAN WINKLE WASH BRIDGE (REPLACE)
ABUTMENT DETAIL NO. 2

STRUCTURES DESIGN DETAIL SHEET (ENGLISH) (REV. 09-01-10)

ORIGINAL SCALE IN INCHES FOR REDUCED PLANS 0 1 2 3

UNIT: 3622
PROJECT NUMBER & PHASE: 0800000533 1
CONTRACT NO.: 08-0N5901

DISREGARD PRINTS BEARING EARLIER REVISION DATES

REVISION DATES: 10-14-11 1-24-12 3-14-12

SHEET 9 OF 25

FILE => 54-1298-f-a01d†2.dgn

USERNAME => s124496 DATE PLOTTED => 29-JUN-2012 TIME PLOTTED => 09:40

DIST	COUNTY	ROUTE	POST MILES TOTAL PROJECT	SHEET No.	TOTAL SHEETS
08	SBd	40	R85.2	65	80

Dawit Tadelle Gey 03/16/12
REGISTERED CIVIL ENGINEER DATE

6-25-12
PLANS APPROVAL DATE

REGISTERED PROFESSIONAL ENGINEER
Dawit T Worku
No. C60711
Exp 12-31-12
CIVIL
STATE OF CALIFORNIA

The State of California or its officers or agents shall not be responsible for the accuracy or completeness of electronic copies of this plan sheet.

NOTES:

1. Bent 2 Right Bridge is shown, the rest similar
2. ∝ Indicates vertically bundled bars
3. No Splices allowed in top and bottom cap reinforcement
4. For Bent Cap Diaphragm and Shear Key detail see "BENT DETAILS NO. 2" sheet.

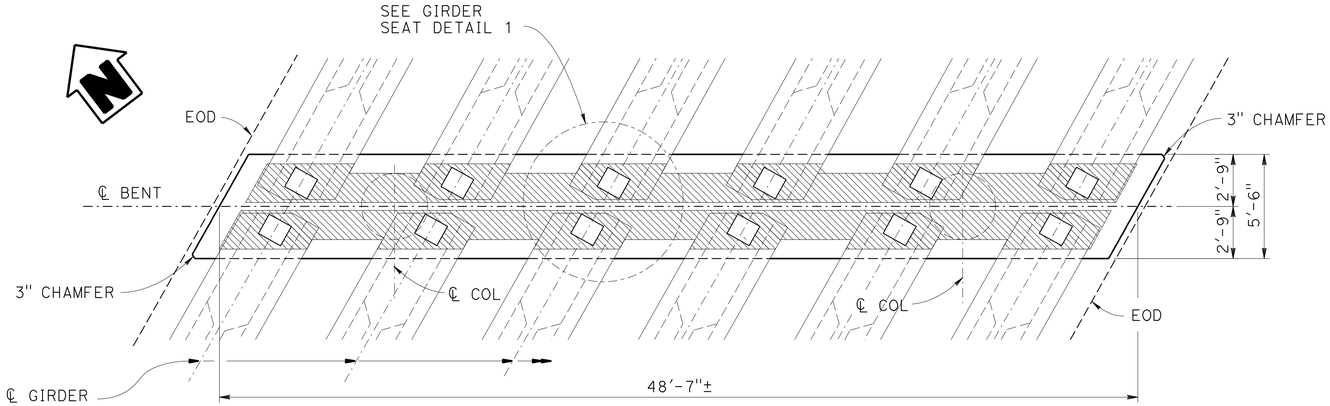

BEARING PAD PLAN

¼" = 1'-0"

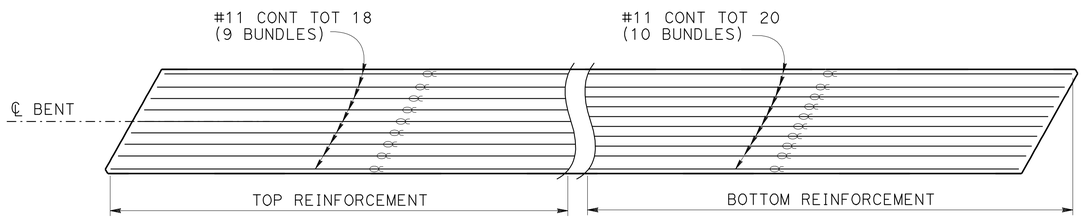

REINFORCEMENT PLAN

¼" = 1'-0"

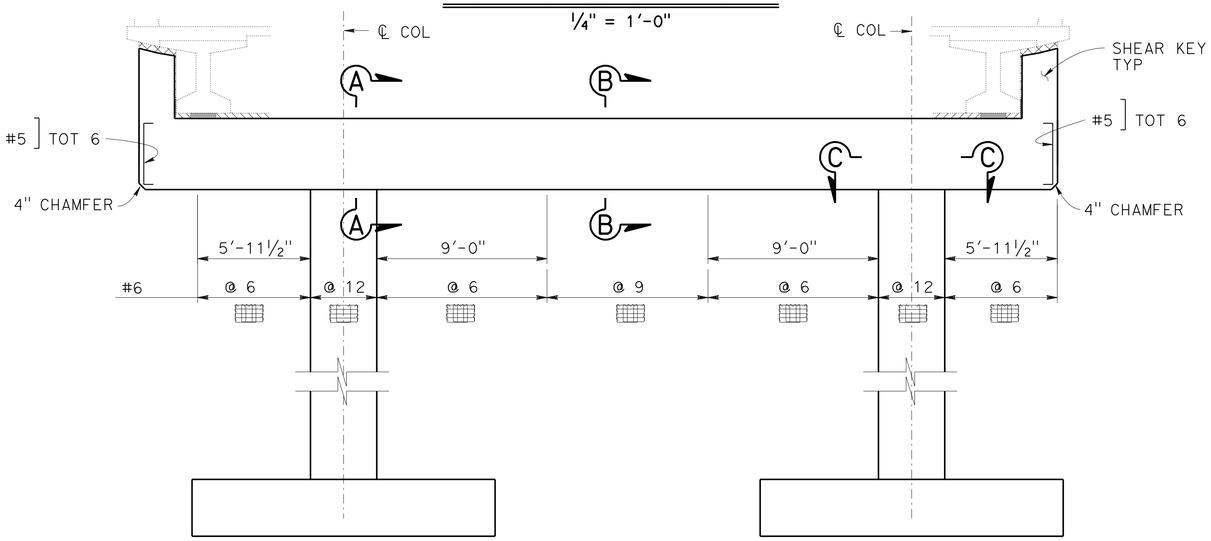

ELEVATION

¼" = 1'-0"

NOTE:
THE CONTRACTOR SHALL VERIFY ALL CONTROLLING FIELD DIMENSIONS BEFORE ORDERING OR FABRICATING ANY MATERIAL.

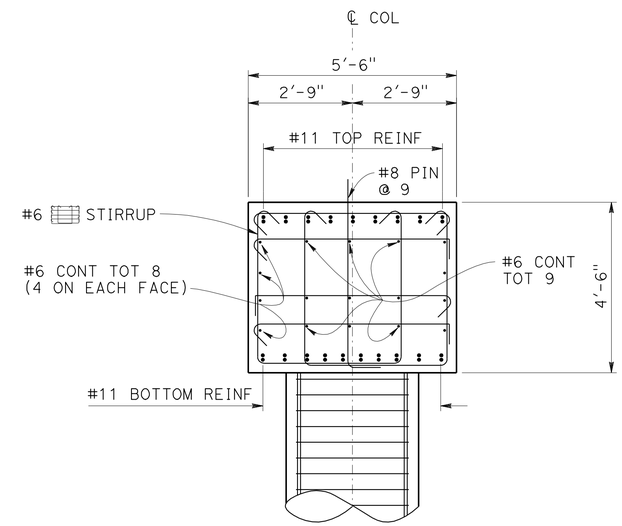

SECTION A-A

½" = 1'-0"

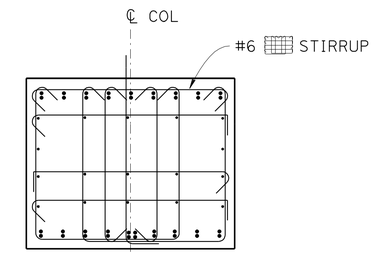

NOTE:
For Conc & Reinf information not shown, see "SECTION A-A"

SECTION B-B

½" = 1'-0"

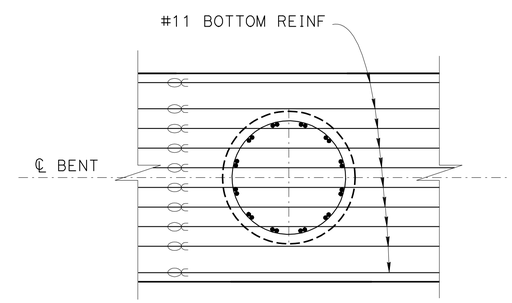

SECTION C-C

½" = 1'-0"

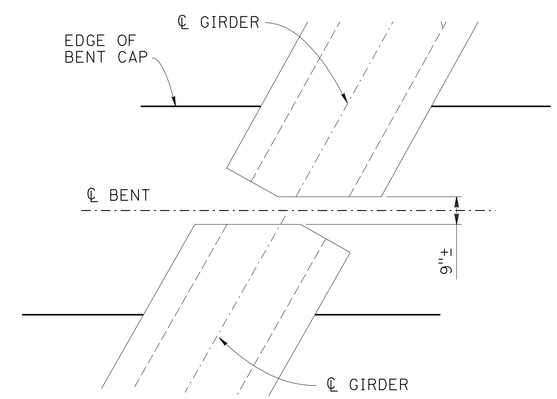

GIRDER SEAT DETAIL

½" = 1'-0"

DESIGN	BY Dawit Worku	CHECKED H. Iraninejadian	
DETAILS	BY Lan T Tran	CHECKED H. Iraninejadian	
QUANTITIES	BY H. Iraninejadian	CHECKED M. Muqtadir	

STATE OF CALIFORNIA
DEPARTMENT OF TRANSPORTATION

DIVISION OF ENGINEERING SERVICES
STRUCTURE DESIGN
DESIGN BRANCH 20

BRIDGE NO. 54-1298L/R
POST MILE R85.2

VAN WINKLE WASH BRIDGE (REPLACE)
BENT LAYOUT

STRUCTURES DESIGN DETAIL SHEET (ENGLISH) (REV. 09-01-10)

ORIGINAL SCALE IN INCHES FOR REDUCED PLANS 0 1 2 3

UNIT: 3622
PROJECT NUMBER & PHASE: 0800000533 1
CONTRACT NO.: 08-0N5901

DISREGARD PRINTS BEARING EARLIER REVISION DATES

REVISION DATES 10/08/11

SHEET 10 OF 25

FILE => 54-1298-h-b01_lo01.dgn

USERNAME => s124496 DATE PLOTTED => 29-JUN-2012 TIME PLOTTED => 09:40

DIST	COUNTY	ROUTE	POST MILES TOTAL PROJECT	SHEET No.	TOTAL SHEETS
08	SBd	40	R85.2	66	80

Dawit Tadelle Gey 03/16/12
REGISTERED CIVIL ENGINEER DATE

6-25-12
PLANS APPROVAL DATE

REGISTERED PROFESSIONAL ENGINEER
Dawit T Worku
No. C60711
Exp 12-31-12
CIVIL
STATE OF CALIFORNIA

The State of California or its officers or agents shall not be responsible for the accuracy or completeness of electronic copies of this plan sheet.

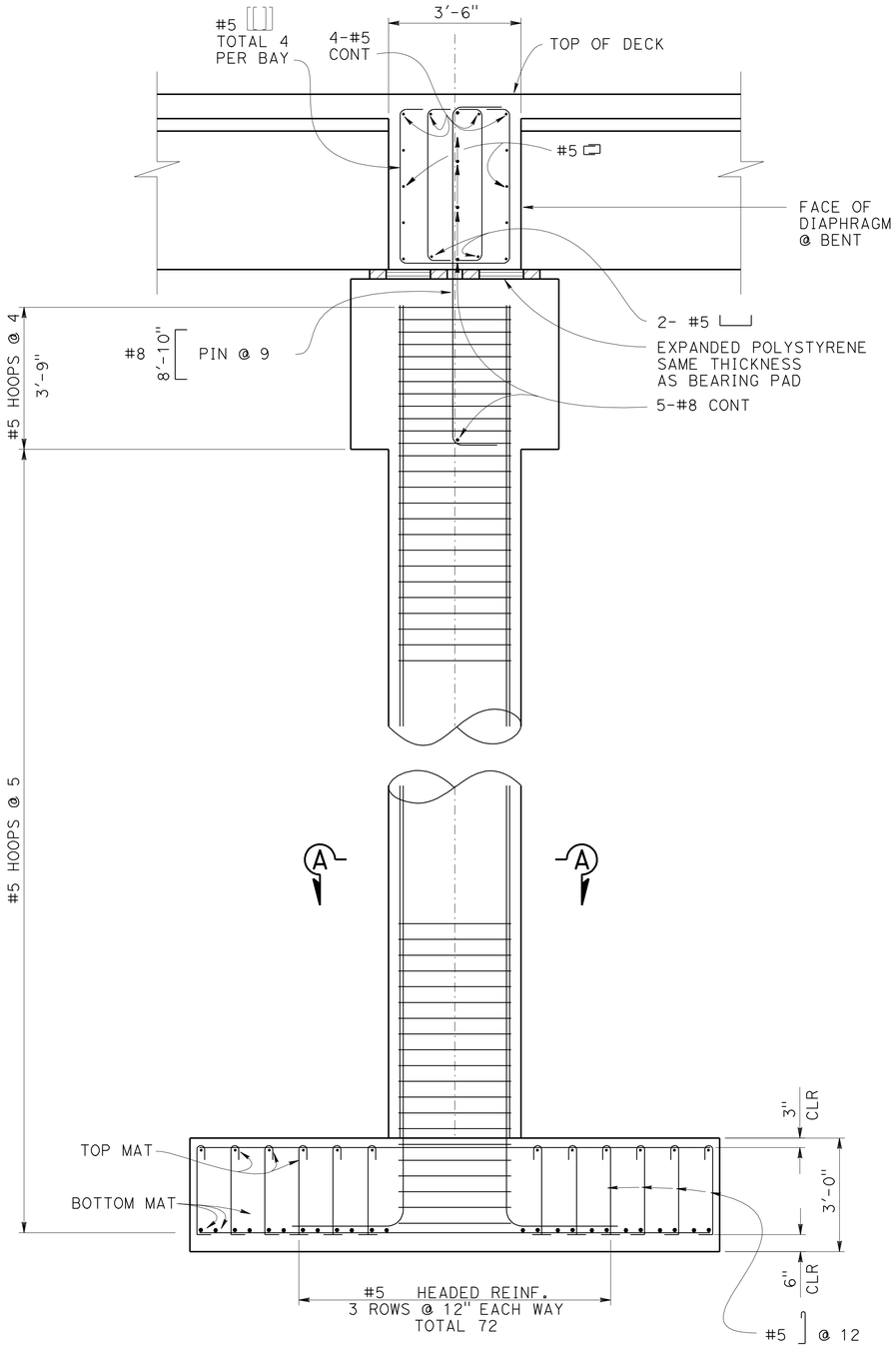

ELEVATION

½" = 1'-0"

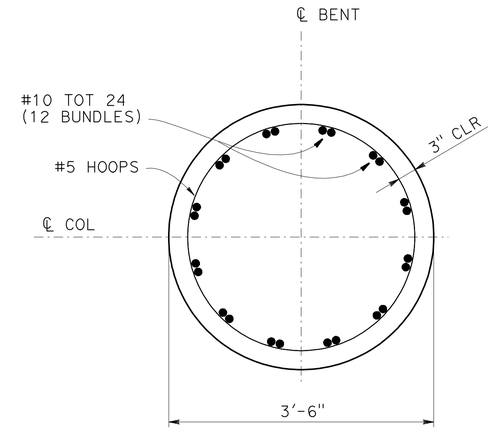

SECTION A-A

1" = 1'-0"

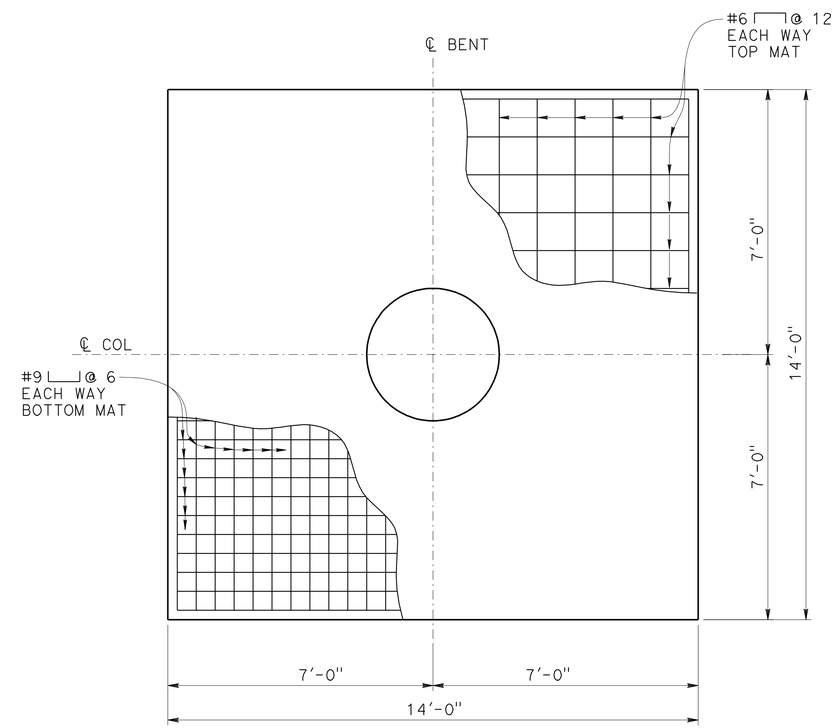

FOOTING PLAN

½" = 1'-0"

NOTES:

1. No splices allowed in main column reinforcement.
2. All hoops should be ultimate but splice continuous.
3. For Additional Diaphragm reinforcement, see "BENT DETAIL NO. 2" Sheet.

NOTE:
THE CONTRACTOR SHALL VERIFY ALL CONTROLLING FIELD DIMENSIONS BEFORE ORDERING OR FABRICATING ANY MATERIAL.

	BY	CHECKED
DESIGN	Dawit Worku	M. Muqtadir
DETAILS	Lan T Tran	M. Muqtadir
QUANTITIES	H. Iraninejadian	M. Muqtadir

STATE OF CALIFORNIA
DEPARTMENT OF TRANSPORTATION

DIVISION OF ENGINEERING SERVICES
STRUCTURE DESIGN
DESIGN BRANCH 20

BRIDGE NO. 54-1298L/R
POST MILE R85.2

VAN WINKLE WASH BRIDGE (REPLACE)

BENT DETAIL NO. 1

STRUCTURES DESIGN DETAIL SHEET (ENGLISH) (REV. 09-01-10)

ORIGINAL SCALE IN INCHES FOR REDUCED PLANS 0 1 2 3

UNIT: 3622
PROJECT NUMBER & PHASE: 0800000533 1
CONTRACT NO.: 08-0N5901

DISREGARD PRINTS BEARING EARLIER REVISION DATES

REVISION DATES 11/10/11 12/06/11 01/06/12 01/27/12

SHEET 11 OF 25

FILE => 54-1298-h-b01dt01.dgn

USERNAME => s124496 DATE PLOTTED => 29-JUN-2012 TIME PLOTTED => 09:40

DIST	COUNTY	ROUTE	POST MILES TOTAL PROJECT	SHEET No.	TOTAL SHEETS
08	SBd	40	R85.2	67	80

Dawit Tadele Gez 03/16/12
REGISTERED CIVIL ENGINEER DATE

6-25-12
PLANS APPROVAL DATE

REGISTERED PROFESSIONAL ENGINEER
Dawit T Worku
No. C60711
Exp 12-31-12
CIVIL
STATE OF CALIFORNIA

The State of California or its officers or agents shall not be responsible for the accuracy or completeness of electronic copies of this plan sheet.

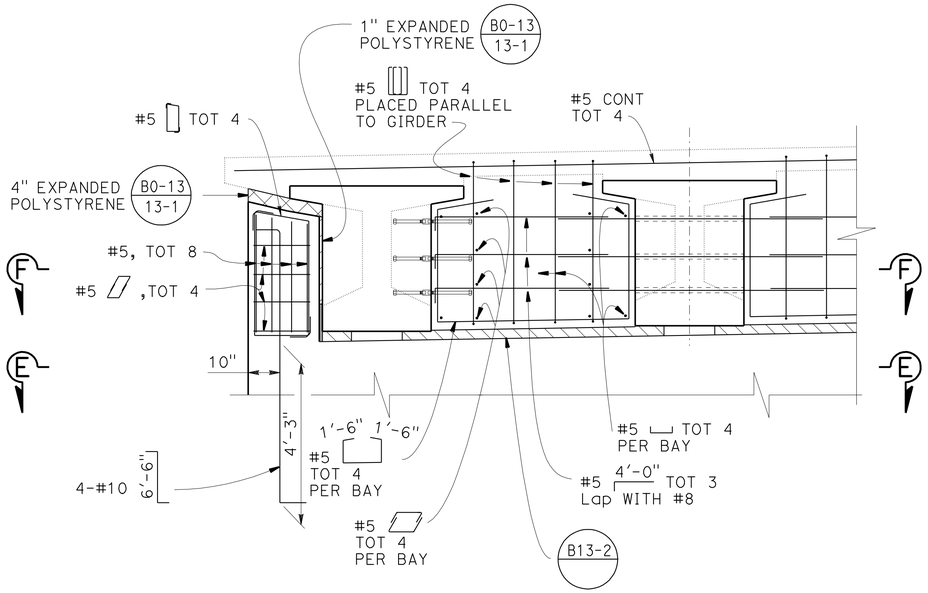

DIAPHRAGM AND SHEAR KEY ELEVATION

½" = 1'-0"

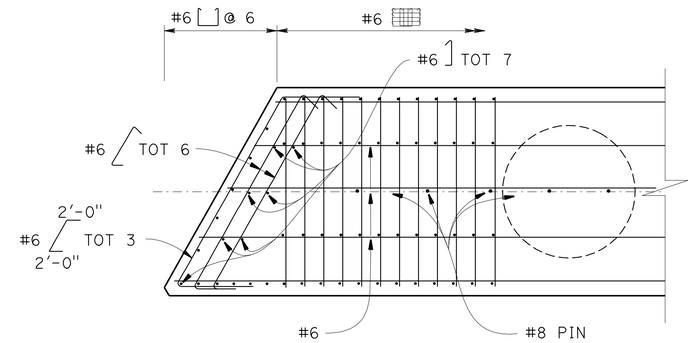

SECTION E-E

½" = 1'-0"

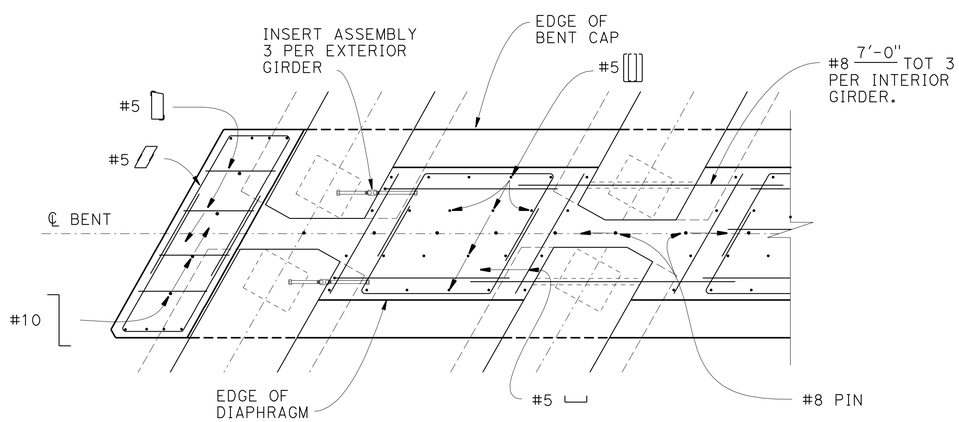

SECTION F-F

½" = 1'-0"

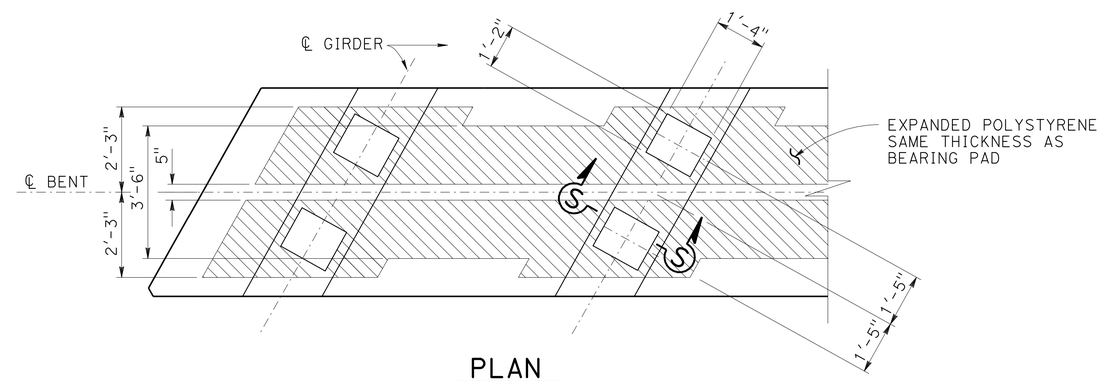

PLAN

½" = 1'-0"

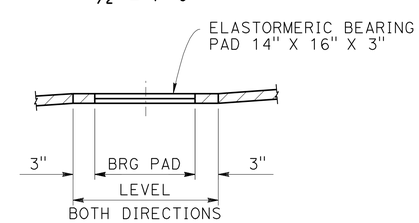

SECTION S-S

No Scale

NOTE:
THE CONTRACTOR SHALL VERIFY ALL CONTROLLING FIELD DIMENSIONS BEFORE ORDERING OR FABRICATING ANY MATERIAL.

	BY	CHECKED
DESIGN	Dawit Worku	H. Iraninejadian
DETAILS	Lan T Tran	H. Iraninejadian
QUANTITIES	H. Iraninejadian	M. Muqtadir

STATE OF CALIFORNIA
DEPARTMENT OF TRANSPORTATION

DIVISION OF ENGINEERING SERVICES
STRUCTURE DESIGN
DESIGN BRANCH 20

BRIDGE NO. 54-1298L/R
POST MILE R85.2

VAN WINKLE WASH BRIDGE (REPLACE)
BENT DETAIL NO. 2

STRUCTURES DESIGN DETAIL SHEET (ENGLISH) (REV. 09-01-10)

ORIGINAL SCALE IN INCHES FOR REDUCED PLANS 0 1 2 3

UNIT: 3622
PROJECT NUMBER & PHASE: 0800000533 1
CONTRACT NO.: 08-0N5901

DISREGARD PRINTS BEARING EARLIER REVISION DATES

REVISION DATES: 11-14-11 1-27-12

SHEET 12 OF 25

FILE => 54-1298-h-b01dt02.dgn

USERNAME => s124496 DATE PLOTTED => 29-JUN-2012 TIME PLOTTED => 09:40

DIST	COUNTY	ROUTE	POST MILES TOTAL PROJECT	SHEET No.	TOTAL SHEETS
08	SBd	40	R85.2	68	80

Dawit Tadelle Gez 03/16/12
REGISTERED CIVIL ENGINEER DATE

6-25-12
PLANS APPROVAL DATE

REGISTERED PROFESSIONAL ENGINEER
Dawit T Worku
No. C60711
Exp 12-31-12
CIVIL
STATE OF CALIFORNIA

The State of California or its officers or agents shall not be responsible for the accuracy or completeness of electronic copies of this plan sheet.

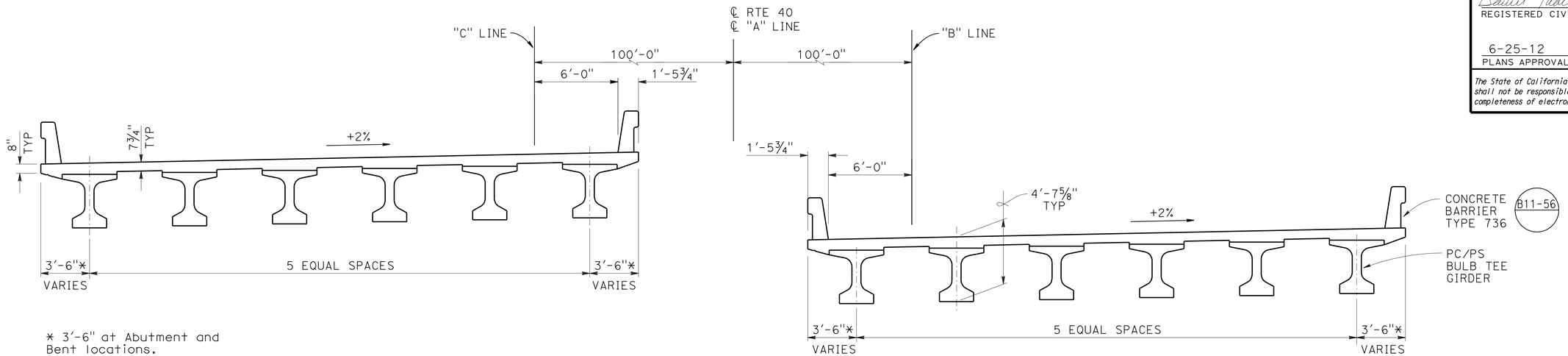

* 3'-6" at Abutment and Bent locations.

TYPICAL SECTION

¼" = 1'-0"

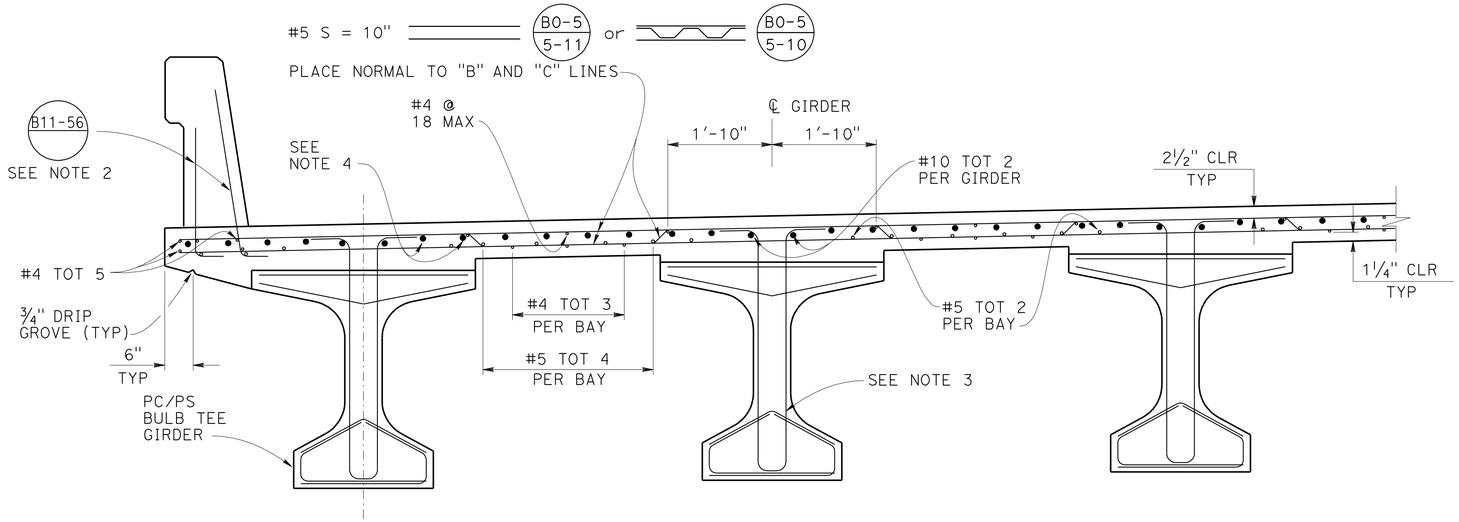

PART TYPICAL SECTION

¾" = 1'-0"

NOTE:
THE CONTRACTOR SHALL VERIFY ALL CONTROLLING FIELD DIMENSIONS BEFORE ORDERING OR FABRICATING ANY MATERIAL.

NOTES:

1. Reinforcements are symetrical about ℄ of bridge.
2. All concrete barrier reinforcements and all deck reinforcements (transvers and longitudinal) shall be epoxy coated.
3. For girder reinforcement details, see "PRESTRESSED BULB TEE DETAIL NO. 1" sheet.
4. For top longitudinal deck reinforcement, see "ADDITIONAL REINFORCEMENT" sheet.
5. Existing structure (not shown) to be removed.
6. Dimensions measured normal to ℄ Rte 40.

	BY	CHECKED
DESIGN	Dawit Worku	H. Iraninejadian
DETAILS	Lan T Tran	H. Iraninejadian
QUANTITIES	H. Iraninejadian	M. Muqtadir

STATE OF CALIFORNIA
DEPARTMENT OF TRANSPORTATION

DIVISION OF ENGINEERING SERVICES
STRUCTURE DESIGN
DESIGN BRANCH 20

BRIDGE NO. 54-1298L/R
POST MILE R85.2

VAN WINKLE WASH BRIDGE (REPLACE)
TYPICAL SECTION

STRUCTURES DESIGN DETAIL SHEET (ENGLISH) (REV. 09-01-10)

ORIGINAL SCALE IN INCHES FOR REDUCED PLANS 0 1 2 3

UNIT: 3622
PROJECT NUMBER & PHASE: 0800000533 1
CONTRACT NO.: 08-0N5901

DISREGARD PRINTS BEARING EARLIER REVISION DATES
REVISION DATES 10/14/11 10/26/11 11/29/11

SHEET 13 OF 25

FILE => 54-1298-k-tsd01.dgn

USERNAME => s124496 DATE PLOTTED => 29-JUN-2012 TIME PLOTTED => 09:40

DIST	COUNTY	ROUTE	POST MILES TOTAL PROJECT	SHEET No.	TOTAL SHEETS
08	SBd	40	R85.2	69	80

Dawit Tadelle Worku 03/16/12
REGISTERED CIVIL ENGINEER DATE

6-25-12
PLANS APPROVAL DATE

REGISTERED PROFESSIONAL ENGINEER
Dawit T Worku
No. C60711
Exp 12-31-12
CIVIL
STATE OF CALIFORNIA

The State of California or its officers or agents shall not be responsible for the accuracy or completeness of electronic copies of this plan sheet.

LEGEND:

▨ Scupper drain (B7-8)

* Measured along "C" line and "B" line

NOTES:

Right Bridge shown, Left Bridge similar

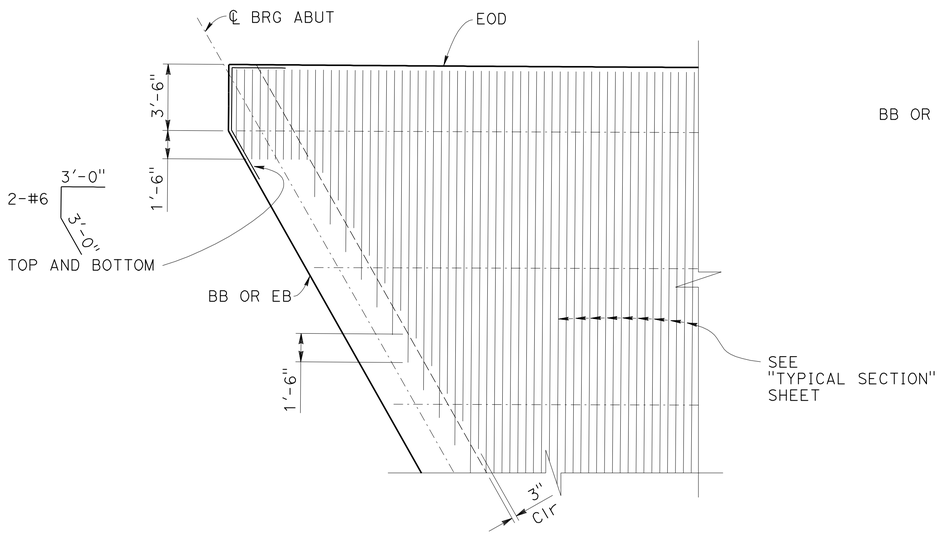

TYPICAL ACUTE CORNER

1/4" = 1'-0"

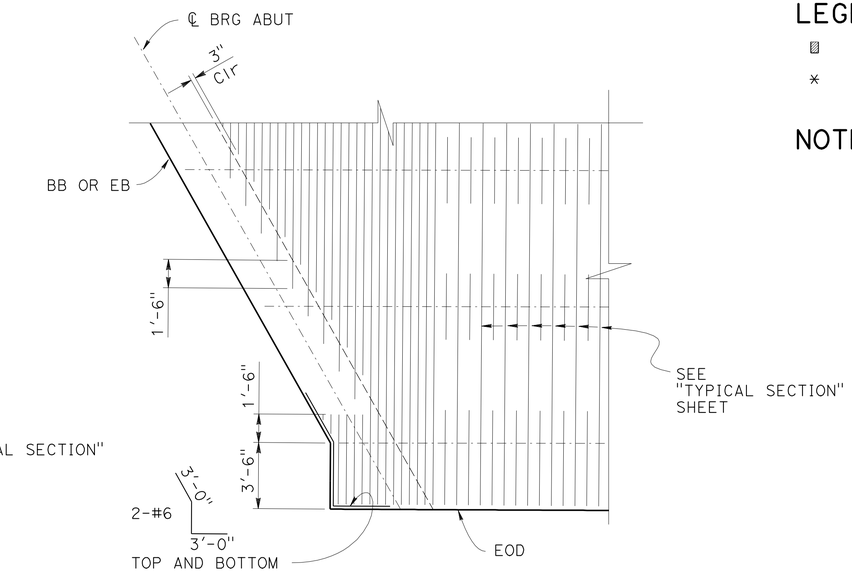

TYPICAL OBTUSE CORNER

1/4" = 1'-0"

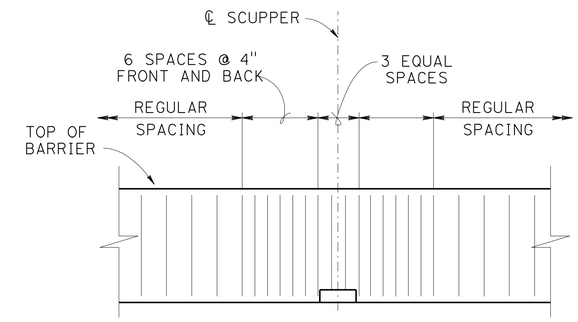

SCUPPER DRAIN DETAIL

1/2" = 1'-0"

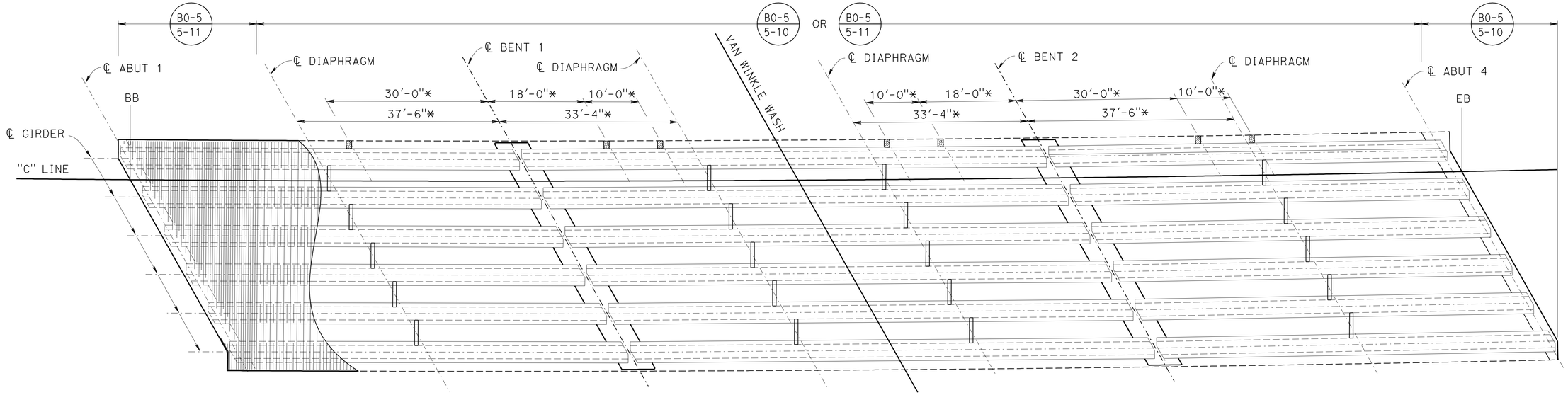

GIRDER LAYOUT

1" = 10'-0"

NOTE:
THE CONTRACTOR SHALL VERIFY ALL CONTROLLING FIELD DIMENSIONS BEFORE ORDERING OR FABRICATING ANY MATERIAL.

	BY	CHECKED
DESIGN	Dawit Worku	H. Iraninejadian
DETAILS	Lan T Tran	H. Iraninejadian
QUANTITIES	H. Iraninejadian	M. Muqtadir

STATE OF CALIFORNIA
DEPARTMENT OF TRANSPORTATION

DIVISION OF ENGINEERING SERVICES
STRUCTURE DESIGN
DESIGN BRANCH 20

BRIDGE NO. 54-1298L/R
POST MILE R85.2

VAN WINKLE WASH BRIDGE (REPLACE)
GIRDER LAYOUT

STRUCTURES DESIGN DETAIL SHEET (ENGLISH) (REV. 09-01-10)

ORIGINAL SCALE IN INCHES FOR REDUCED PLANS 0 1 2 3

UNIT: 3622
PROJECT NUMBER & PHASE: 0800000533 1
CONTRACT NO.: 08-0N5901

DISREGARD PRINTS BEARING EARLIER REVISION DATES

REVISION DATES: 11/02/11 11/29/11

SHEET 14 OF 25

FILE => 54-1298-l-g_lo01.dgn

USERNAME => s124496 DATE PLOTTED => 29-JUN-2012 TIME PLOTTED => 09:40

DIST	COUNTY	ROUTE	POST MILES TOTAL PROJECT	SHEET No.	TOTAL SHEETS
08	SBd	40	R85.2	70	80

Dawit Tadelle Worku 03/16/12
REGISTERED CIVIL ENGINEER DATE

6-25-12
PLANS APPROVAL DATE

REGISTERED PROFESSIONAL ENGINEER Dawit T Worku No. C60711 Exp 12-31-12 CIVIL STATE OF CALIFORNIA

The State of California or its officers or agents shall not be responsible for the accuracy or completeness of electronic copies of this plan sheet.

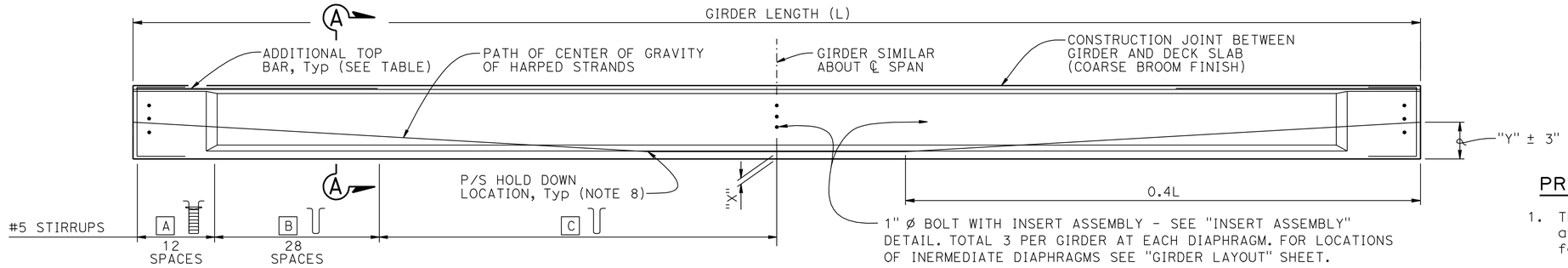

LOCATION	A	B	C
SPAN 1 & 3	#5 @ 6"	#5 @ 6"	#5 @ 12"
SPAN 2	#5 @ 6"	#5 @ 6"	#5 @ 12"

NOTE: This table apply for both Left and Right Bridge

① GIRDER ELEVATION

NOTE:
Girder ends to be cast such that a level surface is provided at bearing pads

LOCATION		GIRDER LENGTH (L)	GIRDER DEPTH (D)	"X" (in)	JACKING FORCE (P) (kips)	As, Min (in^2)	"Y" (in)	CONCRETE STRENGTH (ksi) f'ci	CONCRETE STRENGTH (ksi) f'c	MIDSPAN DEAD LOAD DEFLECTION (in) DECK	MIDSPAN DEAD LOAD DEFLECTION (in) RAIL	ADDITIONAL TOP BAR (EACH END)
RIGHT BRIDGE	GIRDER SPAN 1 SPAN 3	74'-1"	46"	4	750	3.91	20	4.5	5.0	.52	0.014	#6 x 10'-0" Tot 6
				6	795	3.91						
	GIRDER SPAN 2	97'-4"	46"	5	1380	6.94	19	5.0	5.5	1.5	0.03	#6 x 10'-0" Tot 6
				7	1480	7.38						
LEFT BRIDGE	GIRDER SPAN 1 SPAN 3	74'-1"	46"	4	750	3.91	20	4.5	5.0	.52	0.014	#6 x 10'-0" Tot 6
				6	795	3.91						
	GIRDER SPAN 2	99'-3"	46"	5	1380	6.94	19	5.0	5.5	1.5	0.03	#6 x 10'-0" Tot 6
				7	1480	7.38						

PRESTRESSING NOTES

1. The Jacking Force (P) is the jacking force required at the point of control along the span. The jacking force does not include any fabrication specific losses
2. The maximum tensile stress in the prestressing steel upon release shall not exceed 75% of the specified minimum ultimate tensile strength of the prestressing steel
3. The maximum temporary tensile stress (jacking stress) in the prestressing steel shall not exceed 80% of the specified minimum ultimate tensile strength of the prestressing steel
4. Concrete strength:
   f'ci is at time of initial stressing
   f'c is at 28 days
5. Deflection components are informational and will be used to set screed line elevations
6. Screed line elevations for deck concrete will be determined by the Engineer
7. Contractor may interpolate "P" and "X" values between the limits shown, as approved by the Engineer
8. There shall be a minimum of two hold downs per girder for the prestressing
9. Prestressing strand shall be 270 ksi low relaxation
10. As, Min is the minimum area required of prestressing steel

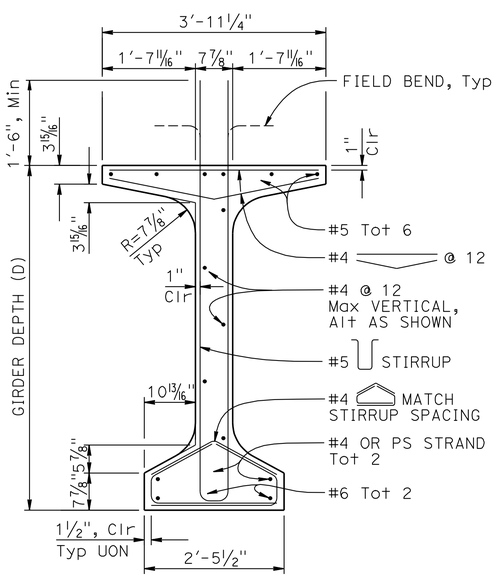

TYPICAL GIRDER SECTION

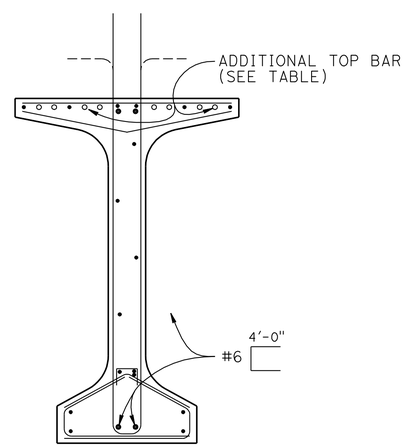

NOTE:
For details not shown, see "TYPICAL GIRDER SECTION"

① SECTION A-A

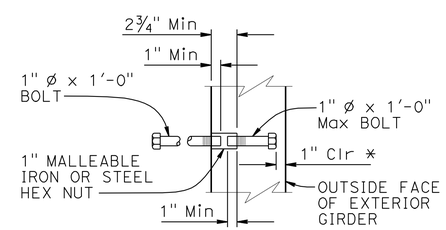

* DIMENSION MAY BE INCREASED WHEN INSERT ASSEMBLY IS USED AT END BLOCK

INSERT ASSEMBLY

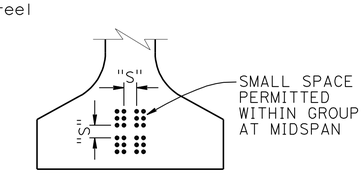

CLEARANCES FOR PRETENSIONED STRANDS

NOTES:

1. Strands may be bundled in groups consisting of 3 vertically, 2 horizontally, and separated at the ends
2. The minimum distance "S" between groups or individual strands is 1¾" for 0.5" Ø strand and 2" for 0.6" Ø strand
3. "S" is measured between centers of adjacent strands
4. Approval by Engineer is required for deviation

NO SCALE

NOTE: For "WELDED WIRE REINFORCEMENT (WWR) ALTERNATIVE", see "PC/PS BULB-TEE GIRDER (MISCELLANEOUS DETAILS)" sheet

REVISED STANDARD DRAWING
FILE NO. xs1-122-1
APPROVAL DATE July 2011

① MODIFIED DETAIL

STATE OF CALIFORNIA DEPARTMENT OF TRANSPORTATION
DIVISION OF ENGINEERING SERVICES
BRIDGE NO. 54-1298L\R
POST MILE 85.2
VAN WINKLE WASH BRIDGE (REPLACE)
PC/PS BULB-TEE GIRDER (HARPED STRANDS)

DS OSD 2147A (ENGLISH STANDARD DRAWING "XS" BORDER REV. (02-02-11)
ORIGINAL SCALE IN INCHES FOR REDUCED PLANS 0 1 2 3
UNIT: 3622
PROJECT NUMBER & PHASE: 0800000533 1
CONTRACT NO.: 08-0N5901
DISREGARD PRINTS BEARING EARLIER REVISION DATES
REVISION DATES 01/18/12 3-14-12 12/06/11
SHEET 15 OF 25
FILE => 54-1298-l-gdt01.dgn
USERNAME => s124196 DATE PLOTTED => 29-JUN-2012 TIME PLOTTED => 09:40

DIST	COUNTY	ROUTE	POST MILES TOTAL PROJECT	SHEET No.	TOTAL SHEETS
08	SBd	40	R85.2	71	80

REGISTERED CIVIL ENGINEER 03/16/12 DATE

6-25-12
PLANS APPROVAL DATE

REGISTERED PROFESSIONAL ENGINEER Dawit T Worku No. C60711 Exp. 12-31-12 CIVIL STATE OF CALIFORNIA

The State of California or its officers or agents shall not be responsible for the accuracy or completeness of electronic copies of this plan sheet.

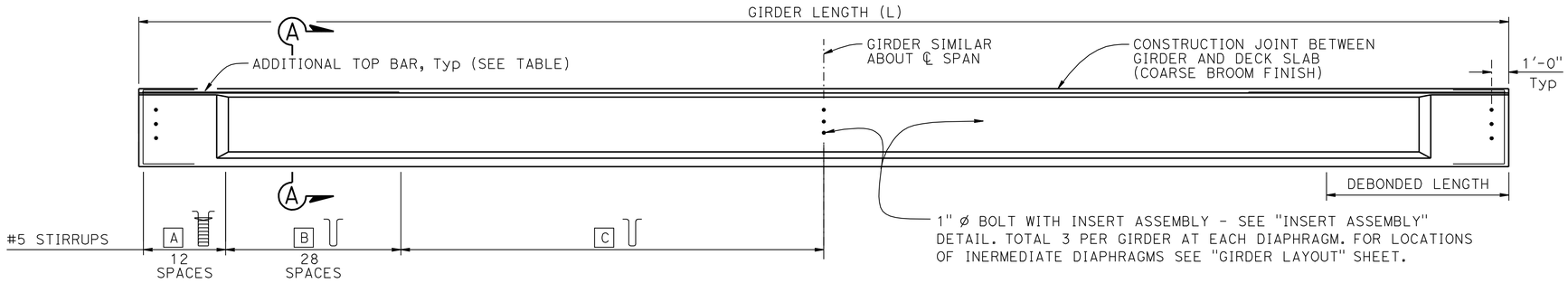

GIRDER ELEVATION

LOCATION	A	B	C
SPAN 1 & 3	#5 @ 6"	#5 @ 6"	#5 @ 12"
SPAN 2	#5 @ 6"	#5 @ 6"	#5 @ 12"

NOTE: This table apply for both Left and Right Bridge

NOTE:
Girder ends to be cast such that a level surface is provided at bearing pads

LOCATION		GIRDER LENGTH (L)	GIRDER DEPTH (D)	NUMBER OF 0.6" Ø STRANDS	JACKING FORCE (P)	CONCRETE STRENGTH (ksi)		MIDSPAN DEAD LOAD DEFLECTION (in)		ADDITIONAL TOP BAR (EACH END)
						f'ci	f'c	DECK	RAIL	
RIGHT BRIDGE	GIRDER SPAN 1 SPAN 3	74'-1"	46"	26	1142.5 kips (43.943 kips/STRAND)	4.5	5.0	.54	0.014	#6 x 10'-0" Tot 6
	GIRDER SPAN 2	97'-4"	46"	38	1669.8 kips (43.943 kips/STRAND)	5.0	5.5	1.8	0.03	#6 x 10'-0" Tot 6
LEFT BRIDGE	GIRDER SPAN 1 SPAN 3	74'-1"	46"	26	1142.5 kips (43.943 kips/STRAND)	4.5	5.0	.54	0.014	#6 x 10'-0" Tot 6
	GIRDER SPAN 2	99'-3"	46"	38	1669.8 kips (43.943 kips/STRAND)	5.0	5.5	1.8	0.03	#6 x 10'-0" Tot 6

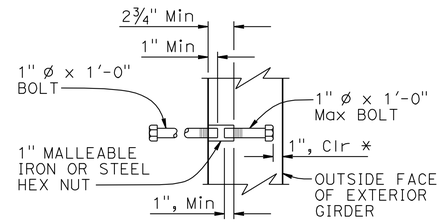

* DIMENSION MAY BE INCREASED WHEN INSERT ASSEMBLY IS USED AT END BLOCK

INSERT ASSEMBLY

PRESTRESSING NOTES

1. The Jacking Force (P) is the jacking force required at the point of control along the span. The jacking force does not include any fabrication specific losses
2. The maximum temporary tensile stress (jacking stress) in the prestressing steel shall not exceed 80% of the specified minimum ultimate tensile strength of the prestressing steel
3. Concrete strength:
   f'ci is at time of initial stressing
   f'c is at 28 days
4. Deflection components are informational and will be used to set screed line elevations
5. Screed line elevations for deck concrete will be determined by the Engineer
6. Prestressing strand shall be 270 ksi low relaxation

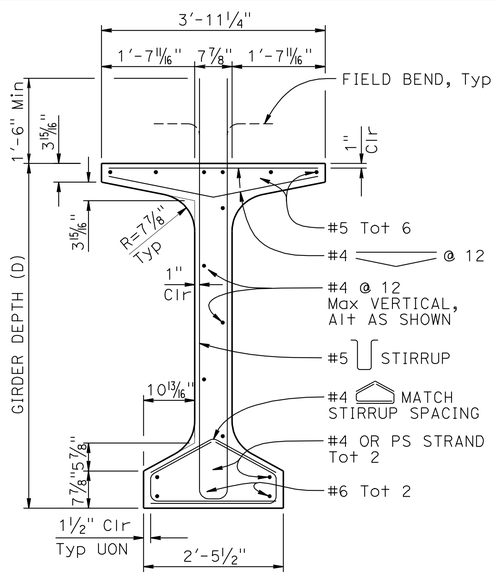

TYPICAL GIRDER SECTION

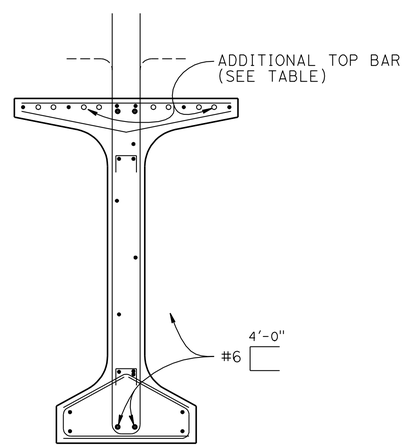

NOTE:
For details not shown, see "TYPICAL GIRDER SECTION" detail

1 SECTION A-A

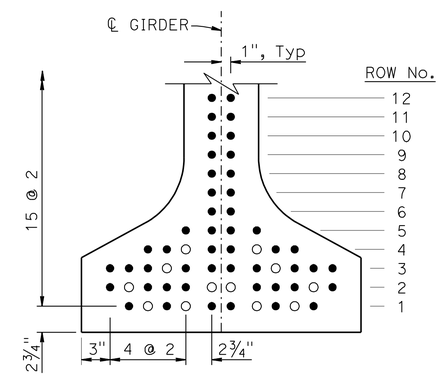

LEGEND:

● DENOTES CONTINUOUSLY BONDED STRAND LOCATION

○ DENOTES PERMISSIBLE DEBONDED STRAND LOCATION

1 STRAND TEMPLATE & DEBONDING PATTERN

NOTES:

1. Strands shall be placed as low as possible in the strand template and symmetrical about ℄ Girder
2. No more than 33% of the total number of strands and 50% of the strands per horziontal row may be debonded
3. Strand locations may be adjusted as approved by the Engineer

GIRDER SPAN 1 & 3			
ROW No.	TOTAL No. OF STRANDS	No. OF DEBONDED STRANDS	DEBONDED LENGTH
14	2	-	-
13	2	-	-
12	2	-	-
11	2	-	-
10	2	-	-
2	8	2	15'-0"
1	8	4	20'-0"

GIRDER SPAN 2			
ROW No.	TOTAL No. OF STRANDS	No. OF DEBONDED STRANDS	DEBONDED LENGTH
15	2	-	-
14	2	-	-
13	2	-	-
12	2	-	-
11	2	-	-
3	8	2	15'-0"
2	10	4	20'-0"
1	10	4	30'-0"

NOTES: These tables apply for both Right and Left Bridges

NO SCALE

NOTE: For "WELDED WIRE REINFORCEMENT (WWR) ALTERNATIVE", see "PC/PS BULB-TEE GIRDER (MISCELLANEOUS DETAILS)" sheet

REVISED STANDARD DRAWING

FILE NO. xs1-121-1

APPROVAL DATE July 2011

1 Modified Detail

STATE OF CALIFORNIA DEPARTMENT OF TRANSPORTATION

DIVISION OF ENGINEERING SERVICES

BRIDGE NO. 54-1298L\R

POST MILE 85.2

VAN WINKLE WASH BRIDGE (REPLACE)
PC/PS BULB-TEE GIRDER
(ALTERNATE_DEBONDED STRANDS)

DS OSD 2147A (ENGLISH STANDARD DRAWING "XS" BORDER REV. (02-02-11)

ORIGINAL SCALE IN INCHES FOR REDUCED PLANS 0 1 2 3

UNIT: 3622
PROJECT NUMBER & PHASE: 0800000533 1
CONTRACT NO.: 08-0N5901

DISREGARD PRINTS BEARING EARLIER REVISION DATES

REVISION DATES 11/29/11 12/06/11 12/08/11 3-14-12

SHEET 16 OF 25

FILE => 54-1298-1-gdt02.dgn

USERNAME => s124496 DATE PLOTTED => 29-JUN-2012 TIME PLOTTED => 09:40

DIST	COUNTY	ROUTE	POST MILES TOTAL PROJECT	SHEET No.	TOTAL SHEETS
08	SBd	40	R85.2	72	80

Dawit Tadelle Gebre 03/16/12
REGISTERED CIVIL ENGINEER DATE

6-25-12
PLANS APPROVAL DATE

REGISTERED PROFESSIONAL ENGINEER Dawit T Worku No. C60711 Exp 12-31-12 CIVIL STATE OF CALIFORNIA

The State of California or its officers or agents shall not be responsible for the accuracy or completeness of electronic copies of this plan sheet.

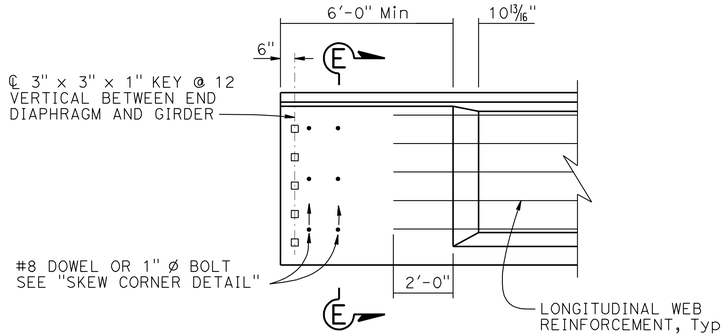

END BLOCK - ELEVATION

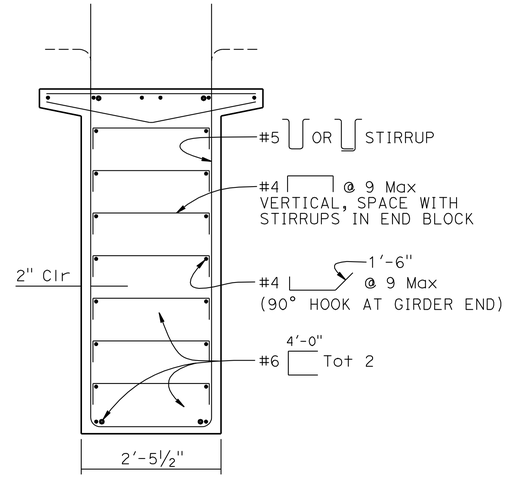

NOTE:
For details not shown, see "TYPICAL GIRDER SECTION" detail

SECTION E-E

NOTES:
1. For details shown but not noted, see "TYPICAL GIRDER SECTION" detail
2. W8 WWR not shown

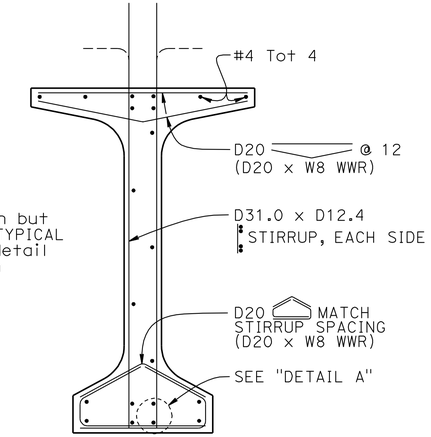

WELDED WIRE REINFORCEMENT (WWR) ALTERNATIVE

NOTE:
For "GIRDER ELEVATION" and "TYPICAL GIRDER SECTION", see "PC/PS BULB-TEE GIRDER (HARPED STRANDS)" sheet

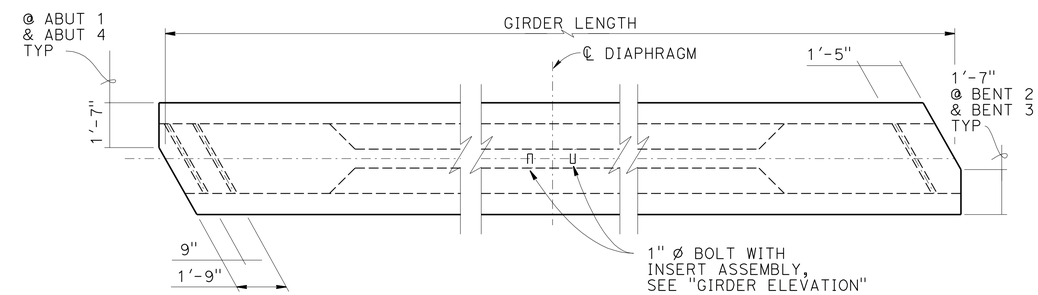

① SKEW CORNER DETAIL

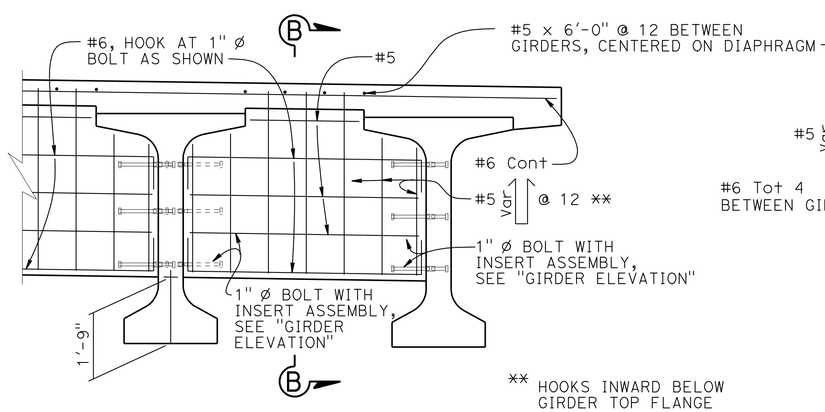

② INTERMEDIATE DIAPHRAGM

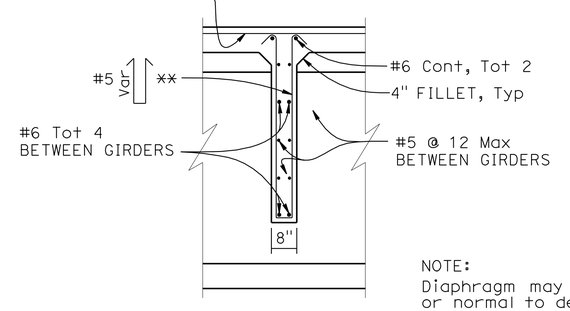

NOTE:
Diaphragm may be vertical or normal to deck grade

SECTION B-B

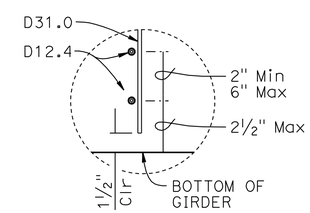

DETAIL A

NOTES:
1. Bottom of stirrup WWR detail shown, top similar
2. Longitudinal wire area shall be 40% or greater of vertical deformed wire's area

NO SCALE

REVISED STANDARD DRAWING

FILE NO. xs1-122-2

APPROVAL DATE July 2011

① ADDED DETAIL
② MODIFIED DETAIL

STATE OF CALIFORNIA DEPARTMENT OF TRANSPORTATION

DIVISION OF ENGINEERING SERVICES

BRIDGE NO. 54-1298L\R
POST MILE 85.2

VAN WINKLE WASH BRIDGE (REPLACE)
PC/PS BULB-TEE GIRDER (MISCELLANEOUS DETAILS)

DS OSD 2147A (ENGLISH STANDARD DRAWING "XS" BORDER REV. (02-02-11)

ORIGINAL SCALE IN INCHES FOR REDUCED PLANS 0 1 2 3

UNIT: 3622
PROJECT NUMBER & PHASE: 0800000533 1
CONTRACT NO.: 08-0N5901

DISREGARD PRINTS BEARING EARLIER REVISION DATES

REVISION DATES 11/03/11 11/09/11 07/06/12 3-14-12

SHEET 17 OF 25

FILE => 54-1298-1-gdt03.dgn

USERNAME => s124496 DATE PLOTTED => 29-JUN-2012 TIME PLOTTED => 09:41

DIST	COUNTY	ROUTE	POST MILES TOTAL PROJECT	SHEET No.	TOTAL SHEETS
08	SBd	40	R85.2	73	80

Dawit Tadelle Worku 03/16/12
REGISTERED CIVIL ENGINEER DATE

6-25-12
PLANS APPROVAL DATE

REGISTERED PROFESSIONAL ENGINEER
Dawit T Worku
No. C60711
Exp 12-31-12
CIVIL
STATE OF CALIFORNIA

The State of California or its officers or agents shall not be responsible for the accuracy or completeness of electronic copies of this plan sheet.

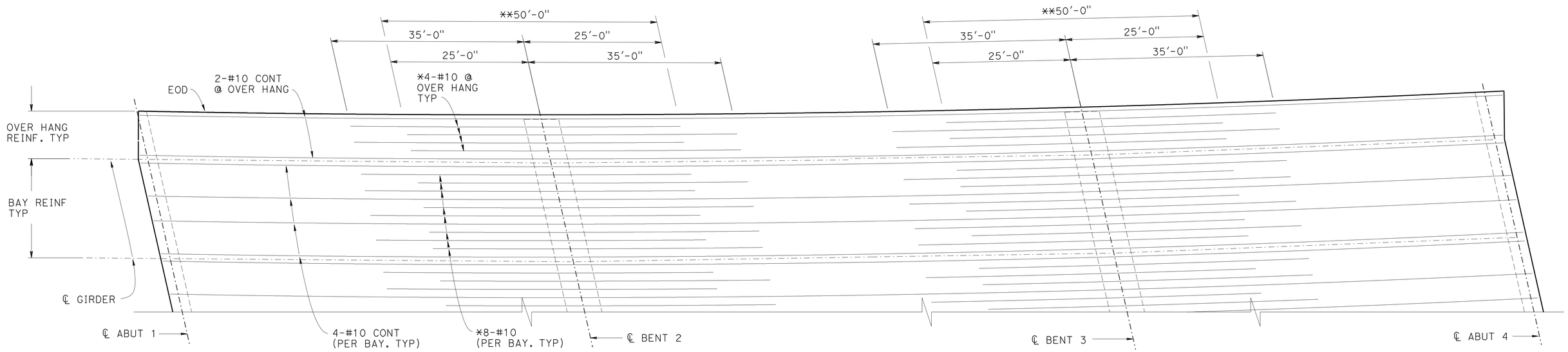

ADDITIONAL LONGITUDINAL REINFORCEMENT

No Scale

LEGEND:

** No Splice Zone for all reinforcenment.

* No Splice allowed for all non-continuous bars

NOTES:

-All additional reinforcement shall be epoxy coated.

-Reinforcement spaced evenly between girders and overhang

-No Lap or Mechanical Splices allowed in main longitudinal reinforcement. Only service splice is allowed in #10 continuous bars

-Part Right Bridge shown, Left Bridge similar.

NOTE:
THE CONTRACTOR SHALL VERIFY ALL CONTROLLING FIELD DIMENSIONS BEFORE ORDERING OR FABRICATING ANY MATERIAL.

	BY	CHECKED
DESIGN	Dawit Worku	H. Iraninejadian
DETAILS	Lan T Tran	H. Iraninejadian
QUANTITIES	H. Iraninejadian	M. Muqtadir

STATE OF CALIFORNIA
DEPARTMENT OF TRANSPORTATION

DIVISION OF ENGINEERING SERVICES
STRUCTURE DESIGN
DESIGN BRANCH 20

BRIDGE NO. 54-1298L/R
POST MILE R85.2

VAN WINKLE WASH BRIDGE (REPLACE)
GIRDER REINFORCEMENT

STRUCTURES DESIGN DETAIL SHEET (ENGLISH) (REV. 09-01-10)

ORIGINAL SCALE IN INCHES FOR REDUCED PLANS 0 1 2 3

UNIT: 3622
PROJECT NUMBER & PHASE: 0800000533 1
CONTRACT NO.: 08-0N5901

DISREGARD PRINTS BEARING EARLIER REVISION DATES

REVISION DATES: 11/02/11 01/05/12 1-31-12

SHEET 18 OF 25

FILE => 54-1298-o-glr_rf01.dgn

USERNAME => s124496 DATE PLOTTED => 29-JUN-2012 TIME PLOTTED => 09:41

DIST	COUNTY	ROUTE	POST MILES TOTAL PROJECT	SHEET No.	TOTAL SHEETS
08	SBd	40	R85.2	74	80

Dawit Tadelle Gebre 03/16/12
REGISTERED CIVIL ENGINEER DATE

6-25-12
PLANS APPROVAL DATE

REGISTERED PROFESSIONAL ENGINEER Dawit T Worku No. C60711 Exp 12-31-12 CIVIL STATE OF CALIFORNIA

The State of California or its officers or agents shall not be responsible for the accuracy or completeness of electronic copies of this plan sheet.

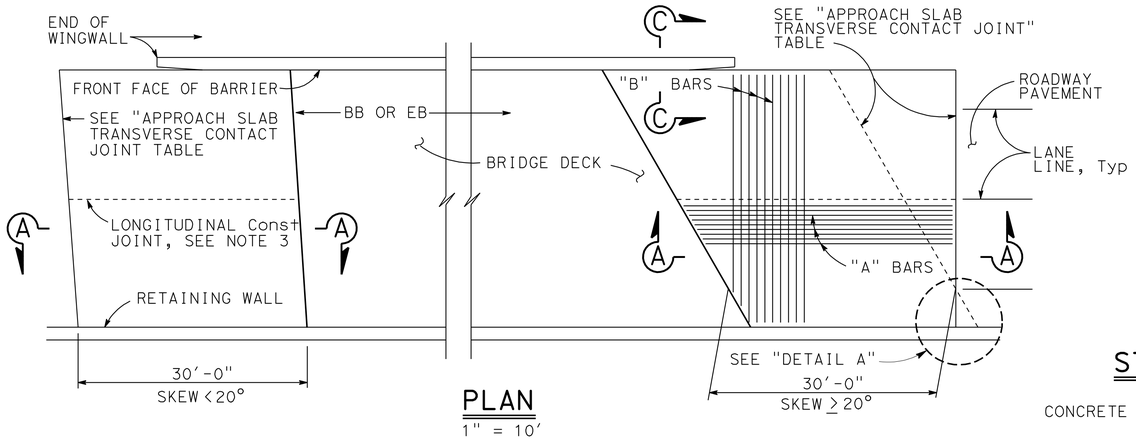

PLAN
1" = 10'

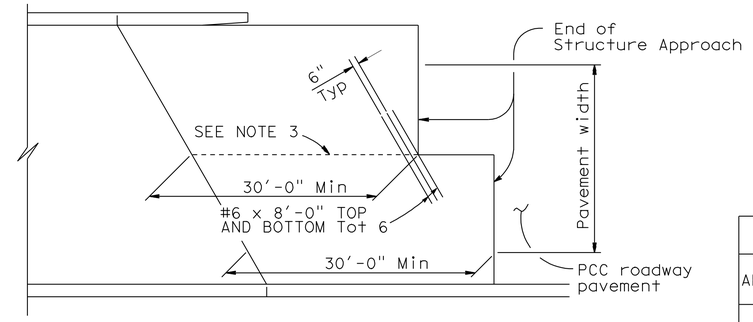

STRUCTURE APPROACH - END STAGGER DETAIL
No Scale

APPROACH SLAB TRANSVERSE CONTACT JOINT		
APPROACH SKEW	WITH AC ROADWAY PAVEMENT	WITH PCC ROADWAY PAVEMENT
< 20°	PARALLEL TO FACE OF PN	PARALLEL TO FACE OF PN
20° - 45°	PARALLEL TO FACE OF PN USE "DETAIL A"	STAGGER LINES 24' TO 36' APART
> 45°	PARALLEL TO FACE OF PN USE "DETAIL A"	STAGGER AT EACH LANE LINE

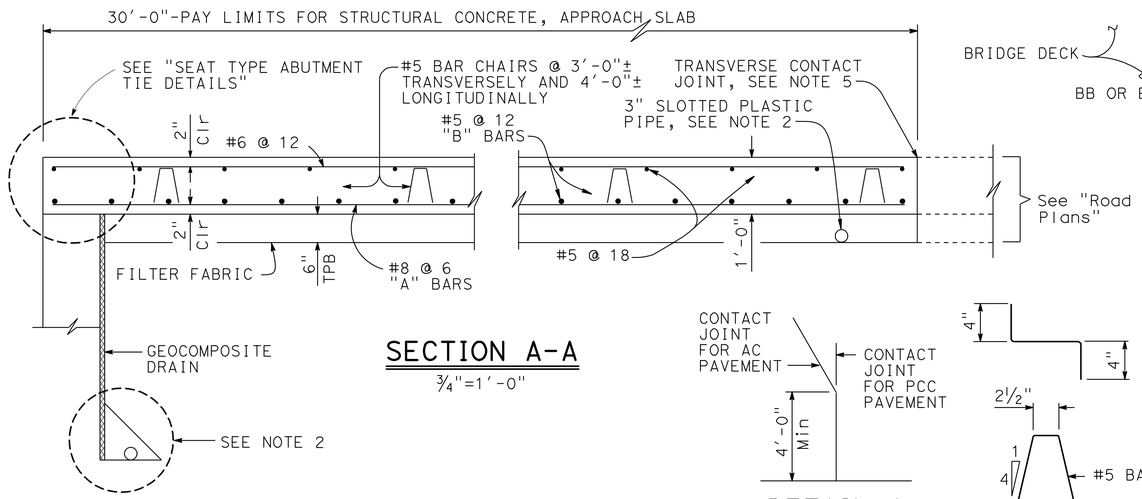

SECTION A-A
¾"=1'-0"

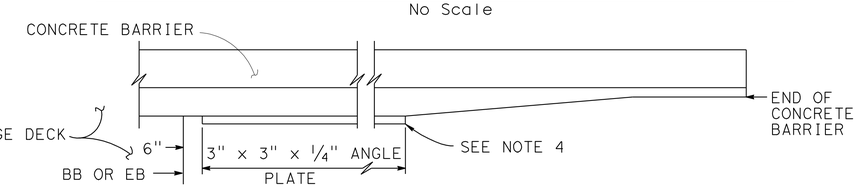

EDGE ANGLE DETAIL
½"=1'-0"

DETAIL A
No Scale

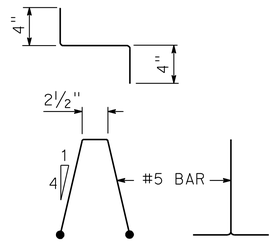

BAR CHAIR DETAIL
1½"=1'-0"

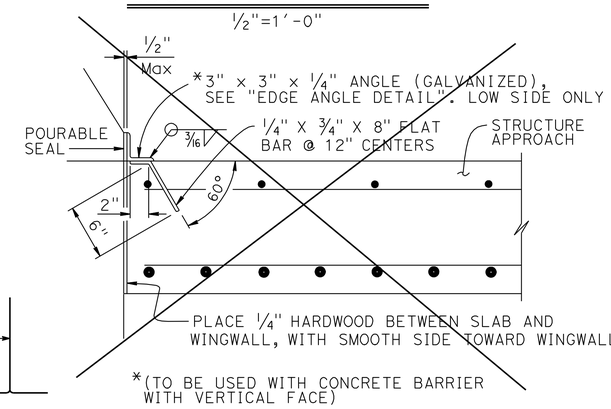

*(TO BE USED WITH CONCRETE BARRIER WITH VERTICAL FACE)

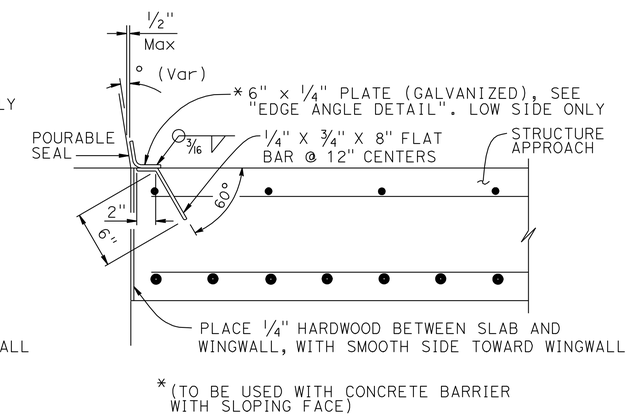

*(TO BE USED WITH CONCRETE BARRIER WITH SLOPING FACE)

DETAIL B
1½" = 1'-0"

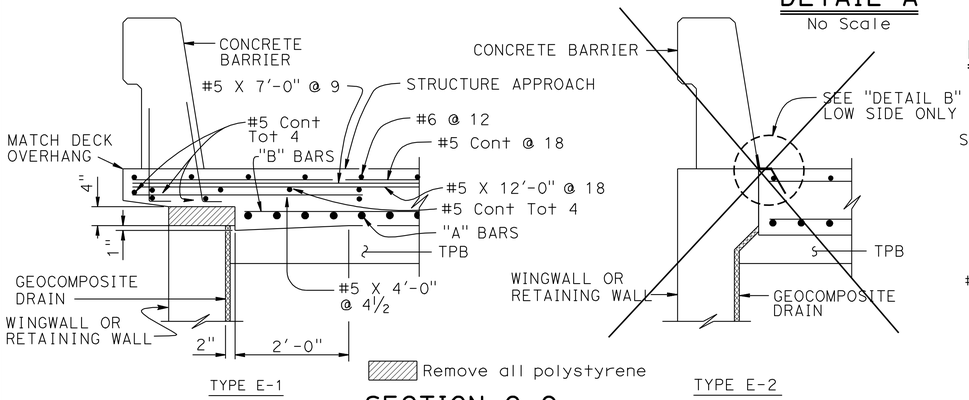

SECTION C-C
¾"=1'-0"

(Type E-1 to be used, unless otherwise shown on plans)

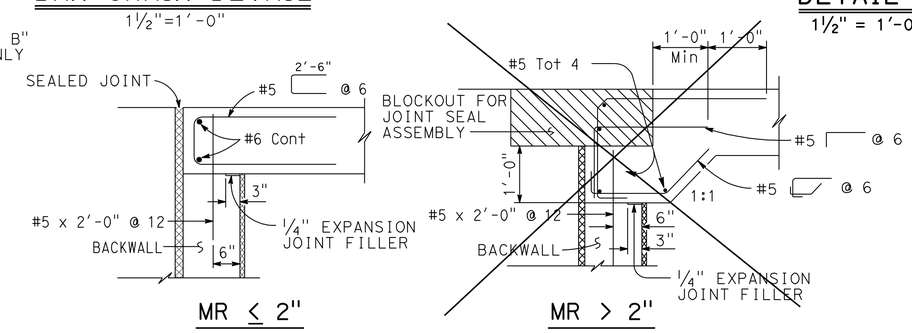

SEAT TYPE ABUTMENT TIE DETAILS (SEE NOTE 1)
¾"=1'-0"

NOTE 1:

1. For details not shown, see Structure Plans. For MR ≤ 2", adjust bar reinforcement to clear a sawcut for sealed joint, when required
2. For drainage details, see "STRUCTURE APPROACH DRAINAGE DETAILS" sheet
3. Longitudinal construction joints, when permitted by the Engineer, shall be located on lane lines
4. End angle or plate at beginning of barrier transition, end of wingwall or end of structure approach as applicable
5. For transverse contact joint with new PCC paving, refer to Standard Plan P10
6. At the Contractor's option, approach slab transverse reinforcement may be placed parallel to paving notch. Spacing of transverse reinforcement is measured along ℄ roadway

(1) **NOTE 2:**

All approach slab reinforcement shall be expoxy coated.

REVISED STANDARD DRAWING

FILE NO. xs3-120

APPROVAL DATE July 2011

(1) Added Note

STATE OF CALIFORNIA
DEPARTMENT OF TRANSPORTATION

DIVISION OF ENGINEERING SERVICES

BRIDGE NO. 54-1298L\R
POST MILE 85.2

VAN WINKLE WASH BRIDGE (REPLACE)
STRUCTURE APPROACH TYPE N(30S)

DS OSD 2147A (ENGLISH STANDARD DRAWING "XS" BORDER REV. (02-02-11))

ORIGINAL SCALE IN INCHES FOR REDUCED PLANS 0 1 2 3

UNIT: 3622
PROJECT NUMBER & PHASE: 08000000533 1
CONTRACT NO.: 08-0N5901

DISREGARD PRINTS BEARING EARLIER REVISION DATES

REVISION DATES

SHEET 19 OF 25

FILE => 54-1298-s-sadd01.dgn

USERNAME => s124436 DATE PLOTTED => 29-JUN-2012 TIME PLOTTED => 09:41

DIST	COUNTY	ROUTE	POST MILES TOTAL PROJECT	SHEET No.	TOTAL SHEETS
08	SBd	40	R85.2	75	80

Dawit Tadelle Worku 03/16/12
REGISTERED CIVIL ENGINEER DATE

6-25-12
PLANS APPROVAL DATE

REGISTERED PROFESSIONAL ENGINEER
Dawit T Worku
No. C60711
Exp 12-31-12
CIVIL
STATE OF CALIFORNIA

The State of California or its officers or agents shall not be responsible for the accuracy or completeness of electronic copies of this plan sheet.

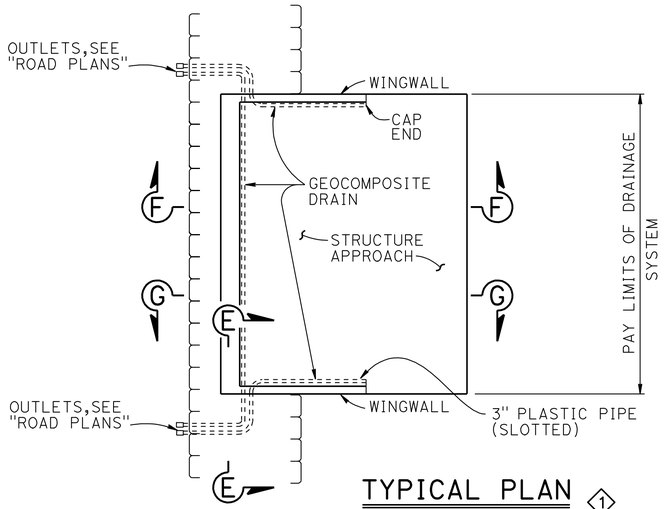

TYPICAL PLAN ◇1
1" = 10'

* FOR PIPE LAYOUT AT STAGGERED END, SEE "DETAIL B"

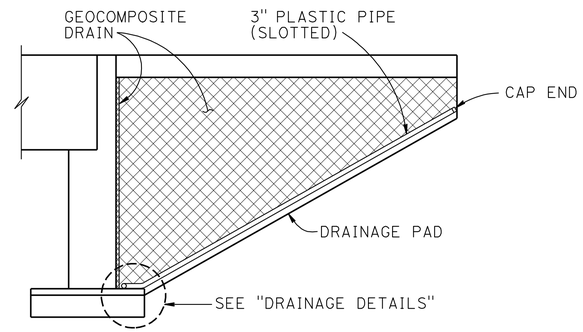

CANTILEVER WINGWALL
SECTION F-F
¼" = 1'-0"

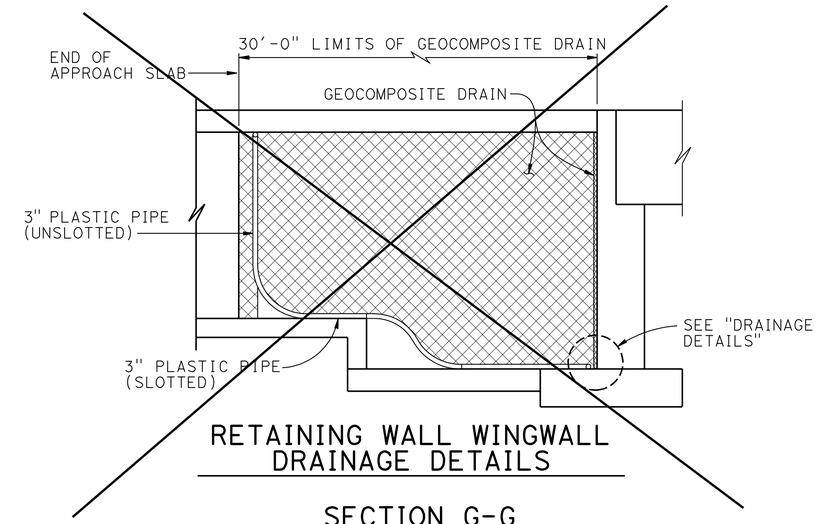

RETAINING WALL WINGWALL DRAINAGE DETAILS
SECTION G-G ◇2
¼" = 1'-0"

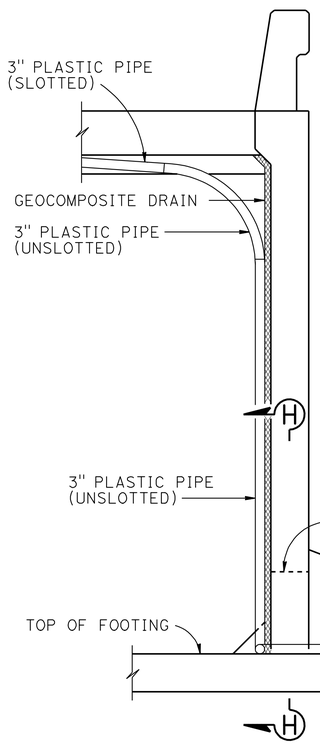

SECTION E-E
½" = 1'-0"

NOTE: Bends and junctions in 3" plastic pipe are 30" radius Min

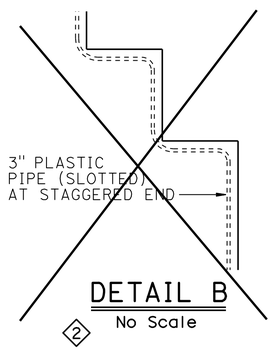

DETAIL B ◇2
No Scale

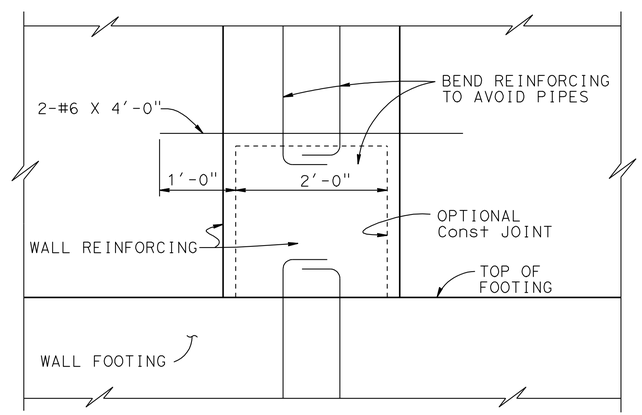

SECTION H-H
1" = 1'-0"

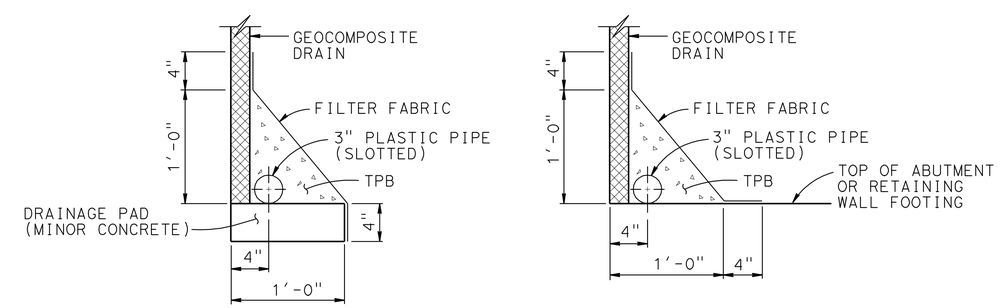

WITHOUT FOOTING
WITH FOOTING
DRAINAGE DETAILS
1½" = 1'-0"

REVISED STANDARD DRAWING

FILE NO. xs3-110

APPROVAL DATE July 2011

◇1 Modified Detail
◇2 Deleted Detail

STATE OF CALIFORNIA
DEPARTMENT OF TRANSPORTATION

DIVISION OF ENGINEERING SERVICES

BRIDGE NO. 54-1298L\R
POST MILE 85.2

VAN WINKLE WASH BRIDGE (REPLACE)
STRUCTURE APPROACH DRAINAGE DETAILS

DS OSD 2147A (ENGLISH STANDARD DRAWING "XS" BORDER REV. (02-02-11)

ORIGINAL SCALE IN INCHES FOR REDUCED PLANS 0 1 2 3

UNIT: 3622
PROJECT NUMBER & PHASE: 08000000533 1 CONTRACT NO.: 08-0N5901

DISREGARD PRINTS BEARING EARLIER REVISION DATES

REVISION DATES

SHEET 20 OF 25

FILE => 54-1298-s-sadd02.dgn

USERNAME => s124496 DATE PLOTTED => 23-JUN-2012 TIME PLOTTED => 08:41

DIST	COUNTY	ROUTE	POST MILES TOTAL PROJECT	SHEET No	TOTAL SHEETS
08	SBd	40	R85.2	76	80

K. Douglas Cook 1-5-12
CERTIFIED ENGINEERING GEOLOGIST

6-25-12
PLANS APPROVAL DATE

PROFESSIONAL GEOLOGIST K. Douglas Cook No. 1391 Exp. 12-31-13 CERTIFIED ENGINEERING GEOLOGIST STATE OF CALIFORNIA

The State of California or its officers or agents shall not be responsible for the accuracy or completeness of electronic copies of this plan sheet.

This LOTB sheet was prepared in accordance with the Caltrans Soil & Rock Logging, Classification, & Presentation Manual (2010 Edition).

BENCH MARK

BM 74-A-70
Steel dish on Station 2738+15
℄ Rte 40.
Elev 2703.63
NAVD 29

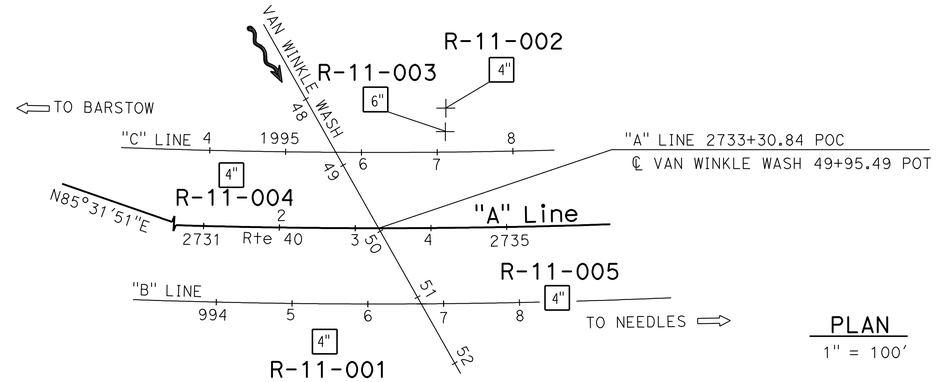

PLAN

1" = 100'

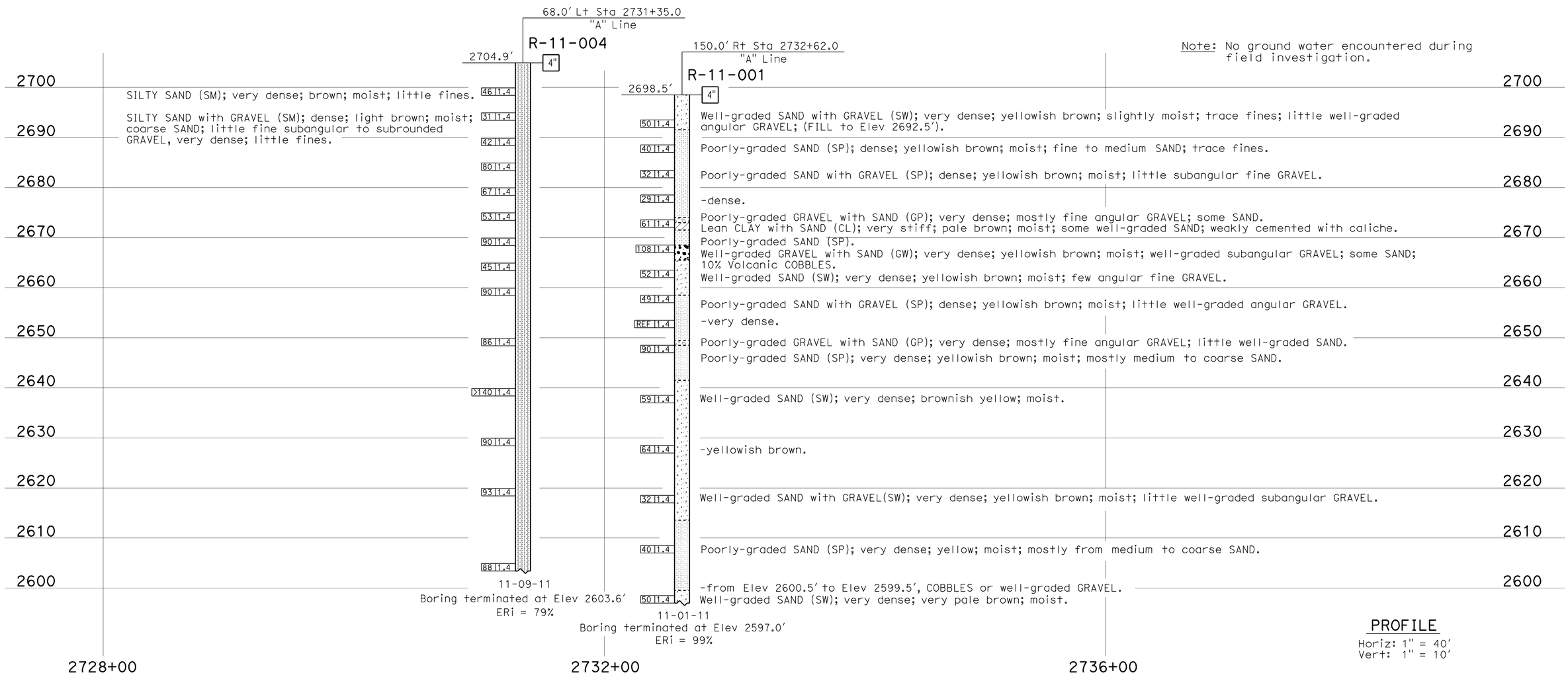

Note: No ground water encountered during field investigation.

PROFILE

Horiz: 1" = 40'
Vert: 1" = 10'

ENGINEERING SERVICES	MATERIALS AND GEOTECHNICAL SERVICES	STATE OF CALIFORNIA DEPARTMENT OF TRANSPORTATION	DIVISION OF ENGINEERING SERVICES STRUCTURE DESIGN DESIGN BRANCH 20	BRIDGE NO. 54-1289R/L POST MILE 85.21	VAN WINKLE WASH BRIDGE (REPLACE) LOG OF TEST BORINGS 1 OF 5
FUNCTIONAL SUPERVISOR NAME: A. Perez-Cobo	DRAWN BY: F. Nguyen CHECKED BY:	FIELD INVESTIGATION BY: C. Nguyen, K. D. Cook			

OGS CIVIL LOG OF TEST BORINGS SHEET

ORIGINAL SCALE IN INCHES FOR REDUCED PLANS 0 1 2 3

UNIT: 3643
PROJECT NUMBER & PHASE: 08000005331 CONTRACT NO.: 08-0N5901

DISREGARD PRINTS BEARING EARLIER REVISION DATES 12-28-11 01-04-12

SHEET 21 OF 25

FILE => 54-1298-z-ltb01.dgn

USERNAME => s124496 DATE PLOTTED => 29-JUN-2012 TIME PLOTTED => 09:41

DIST	COUNTY	ROUTE	POST MILES TOTAL PROJECT	SHEET No	TOTAL SHEETS
08	SBd	40	R85.2	77	80

K. Douglas Cook 1-5-12
CERTIFIED ENGINEERING GEOLOGIST

6-25-12
PLANS APPROVAL DATE

PROFESSIONAL GEOLOGIST
K. Douglas Cook
No. 1391
Exp. 12-31-13
CERTIFIED ENGINEERING GEOLOGIST
STATE OF CALIFORNIA

The State of California or its officers or agents shall not be responsible for the accuracy or completeness of electronic copies of this plan sheet.

This LOTB sheet was prepared in accordance with the Caltrans Soil & Rock Logging, Classification, & Presentation Manual (2010 Edition).

FOR PLAN VIEW, SEE
"LOG OF TEST BORINGS 1 OF 7"

Note: No ground water encountered during field investigation.

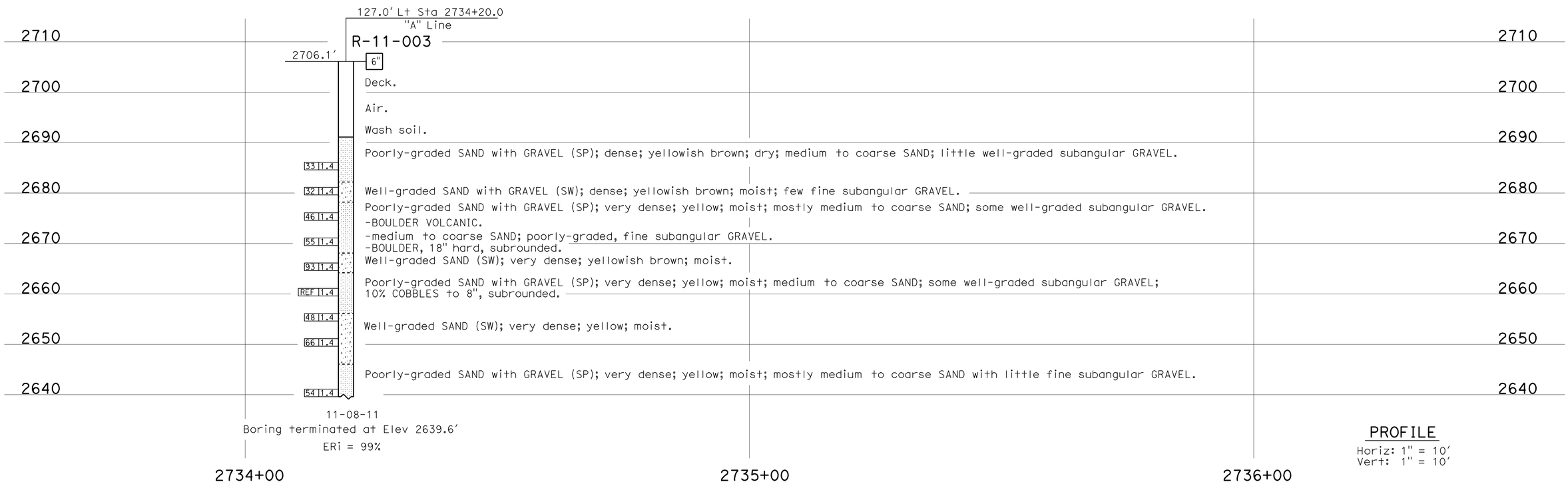

PROFILE
Horiz: 1" = 10'
Vert: 1" = 10'

ENGINEERING SERVICES	MATERIALS AND GEOTECHNICAL SERVICES	STATE OF CALIFORNIA DEPARTMENT OF TRANSPORTATION	DIVISION OF ENGINEERING SERVICES STRUCTURE DESIGN DESIGN BRANCH 20	BRIDGE NO. 54-1289R/L POST MILE 85.21	VAN WINKLE WASH BRIDGE (REPLACE) LOG OF TEST BORINGS 2 OF 5
FUNCTIONAL SUPERVISOR NAME: A. Perez-Cobo	DRAWN BY: F. Nguyen CHECKED BY:	FIELD INVESTIGATION BY: K. D. Cook			

OGS CIVIL LOG OF TEST BORINGS SHEET

ORIGINAL SCALE IN INCHES FOR REDUCED PLANS 0 1 2 3

UNIT: 3643
PROJECT NUMBER & PHASE: 08000005331 CONTRACT NO.: 08-0N5901

DISREGARD PRINTS BEARING EARLIER REVISION DATES → 12-28-11 01-04-12

REVISION DATES | SHEET 22 | OF 25

FILE => 54-1298-z-1tb02.dgn

USERNAME => s124496 DATE PLOTTED => 29-JUN-2012 TIME PLOTTED => 09:41

DIST	COUNTY	ROUTE	POST MILES TOTAL PROJECT	SHEET No	TOTAL SHEETS
08	SBd	40	R85.2	78	80

K. Douglas Cook 1-5-12
CERTIFIED ENGINEERING GEOLOGIST

6-25-12
PLANS APPROVAL DATE

PROFESSIONAL GEOLOGIST
K. Douglas Cook
No. 1391
Exp. 12-31-13
CERTIFIED ENGINEERING GEOLOGIST
STATE OF CALIFORNIA

The State of California or its officers or agents shall not be responsible for the accuracy or completeness of electronic copies of this plan sheet.

This LOTB sheet was prepared in accordance with the Caltrans Soil & Rock Logging, Classification, & Presentation Manual (2010 Edition).

FOR PLAN VIEW, SEE
"LOG OF TEST BORINGS 1 OF 7"

Note: No ground water encountered during field investigation.

158.0' Lt Sta 2734+21.0
"A" Line

R-11-002

2705.0'

4"

Elev	Blows	Description
2700		
	24 / 1.4	Well-graded SAND with GRAVEL (SW); dense; yellowish brown; slightly moist; trace fines; little well-graded angular GRAVEL; (FILL to Elev 2692.5').
2690		Poorly-graded GRAVEL (GP); fine.
	63 / 1.4	Poorly-graded SAND with GRAVEL (SP); very dense; yellowish brown; moist; mostly medium to coarse SAND; little fine subangular GRAVEL.
2680	17 / 1.4	Poorly-graded GRAVEL with SAND and COBBLES (GP); medium dense; some medium to coarse SAND; yellowish brown; mostly fine to medium GRAVEL, dark gray, subangular.
	21 / 1.4	Well-graded SAND with GRAVEL (SW); dense; yellowish brown; moist; little fine GRAVEL.
2670	23 / 1.4	Poorly-graded SAND with GRAVEL (SP); dense; yellowish brown; moist; mostly medium to coarse SAND; some fine GRAVEL.
	119 / 1.4	CLAYEY SAND (SC); very dense; brown; moist; with caliche nodules; little fines.
		Well-graded SAND with GRAVEL (SW); very dense; brown; moist; little subangular well-graded GRAVEL (Volcanic).
2660	44 / 1.4	Poorly-graded SAND with GRAVEL (SP); very dense; yellowish brown; moist; mostly medium to coarse SAND; some fine GRAVEL.
	71 / 1.4	Poorly-graded GRAVEL with little SAND (GP); fine SAND.
		Well-graded SAND with little well-graded GRAVEL (SW).
2650	REF / 1.4	Poorly-graded SAND with GRAVEL and COBBLES (SP); very dense; yellowish brown; moist; few COBBLES; medium SAND; some well-graded GRAVEL.
	REF / 1.4	Volcanic BOULDERS to 18", hard, subangular.
		Well-graded SAND (SW); very dense; yellow; moist.
2640		
	52 / 1.4	
2630		
	48 / 1.4	Well-graded SAND with GRAVEL (SW); very dense; yellow; moist; little fine angular GRAVEL.
2620		
	32 / 1.4	Well-graded SAND (SW); very dense; yellowish brown; moist; trace fines.
2610		
	REF / 1.4	-very dense.
		Poorly-graded SAND (SP); very dense; yellow; moist; medium SAND.
2600		
	REF / 1.4	

11-02-11
Boring terminated at Elev 2603.6'
ERi = 99%

2734+00 2735+00 2736+00

PROFILE
Horiz: 1" = 10'
Vert: 1" = 10'

ENGINEERING SERVICES	MATERIALS AND GEOTECHNICAL SERVICES	STATE OF CALIFORNIA DEPARTMENT OF TRANSPORTATION	DIVISION OF ENGINEERING SERVICES STRUCTURE DESIGN DESIGN BRANCH 20	BRIDGE NO. 54-1289R/L POST MILE 85.21	VAN WINKLE WASH BRIDGE (REPLACE) LOG OF TEST BORINGS 3 OF 5
FUNCTIONAL SUPERVISOR NAME: A. Perez-Cobo	DRAWN BY: F. Nguyen CHECKED BY:	FIELD INVESTIGATION BY: K. D. Cook			

OGS CIVIL LOG OF TEST BORINGS SHEET

ORIGINAL SCALE IN INCHES FOR REDUCED PLANS 0 1 2 3

UNIT: 3643
PROJECT NUMBER & PHASE: 08000005331 CONTRACT NO.: 08-0N5901

DISREGARD PRINTS BEARING EARLIER REVISION DATES 12-30-11 01-04-12

SHEET	OF
23	25

FILE => 54-1298-z-1tb03.dgn

USERNAME => s124496 DATE PLOTTED => 29-JUN-2012 TIME PLOTTED => 09:41

DIST	COUNTY	ROUTE	POST MILES TOTAL PROJECT	SHEET No	TOTAL SHEETS
08	SBd	40	R85.2	79	80

K. Douglas Cook 1-5-12
CERTIFIED ENGINEERING GEOLOGIST

6-25-12
PLANS APPROVAL DATE

PROFESSIONAL GEOLOGIST
K. Douglas Cook
No. 1391
Exp. 12-31-13
CERTIFIED ENGINEERING GEOLOGIST
STATE OF CALIFORNIA

The State of California or its officers or agents shall not be responsible for the accuracy or completeness of electronic copies of this plan sheet.

This LOTB sheet was prepared in accordance with the Caltrans Soil & Rock Logging, Classification, & Presentation Manual (2010 Edition).

FOR PLAN VIEW, SEE
"LOG OF TEST BORINGS 1 OF 7"

Note: No ground water encountered during field investigation.

PROFILE
Horiz: 1" = 20'
Vert: 1" = 10'

ENGINEERING SERVICES	MATERIALS AND GEOTECHNICAL SERVICES	STATE OF CALIFORNIA DEPARTMENT OF TRANSPORTATION	DIVISION OF ENGINEERING SERVICES STRUCTURE DESIGN DESIGN BRANCH 20	BRIDGE NO. 54-1289R/L POST MILE 85.21	VAN WINKLE WASH BRIDGE (REPLACE) LOG OF TEST BORINGS 4 OF 5
FUNCTIONAL SUPERVISOR NAME: A. Perez-Cobo	DRAWN BY: F. Nguyen CHECKED BY:	FIELD INVESTIGATION BY: K. D. Cook			

OGS CIVIL LOG OF TEST BORINGS SHEET

ORIGINAL SCALE IN INCHES FOR REDUCED PLANS 0 1 2 3

UNIT: 3643
PROJECT NUMBER & PHASE: 08000005331 CONTRACT NO.: 08-0N5901

DISREGARD PRINTS BEARING EARLIER REVISION DATES

REVISION DATES 12-30-11 01-04-12 SHEET 24 OF 25

FILE => 54-1298-z-ltb04.dgn

USERNAME => s124496 DATE PLOTTED => 29-JUN-2012 TIME PLOTTED => 09:41

DIST.	COUNTY	ROUTE	POST MILES—TOTAL PROJECT	SHEET NO.	TOTAL SHEETS
08	SBd	40	R77.8/R114.7	143	223

R C Blake
DESIGN SECTION SUPERVISOR — REGISTERED CIVIL ENGINEER No 8042
DATE APPROVED March 15, 1971

DIVISION OF ENGINEERING SERVICES - MATERIALS AND GEOTECHNICAL SERVICES

As-Built Log of Test Borings sheet is considered an informational document only. As such, the State of California registration seal with signature, license number and registration certificate expiration date confirm that this is a true and accurate copy of the original document. It does not attest to the accuracy or validity of the information contained in the original document. This drawing is available and presented only for the convenience of any bidder, contractor or other interested party.

DIST.	COUNTY	ROUTE	POST MILE-TOTAL PROJECT	Sheet No.	Total Sheets
08	SBd	40	R85.2	80	80

K. Douglas Cook — CERTIFIED ENGINEERING GEOLOGIST — DATE 1-5-12

VAN WINKLE WASH BRIDGE (REPLACE)
LOG OF TEST BORINGS 5 OF 5

UNIT: 3643 — PROJ. No. & PHASE: 08000005331 — CONTRACT No. 08-0N5901 — BRIDGE No. 54-1289R/L

AS-BUILT VERT DATUM: CONVERSION: Sheet of

NOTE: A COPY OF THIS LOG OF TEST BORINGS IS AVAILABLE AT OFFICE OF STRUCTURE MAINTENANCE AND INVESTIGATIONS, SACRAMENTO, CALIFORNIA

PROFESSIONAL GEOLOGIST — K. Douglas Cook — No. 1391 — Exp. 12-31-13 — CERTIFIED ENGINEERING GEOLOGIST — STATE OF CALIFORNIA

TO ACCOMPANY PLANS DATED 6-25-12

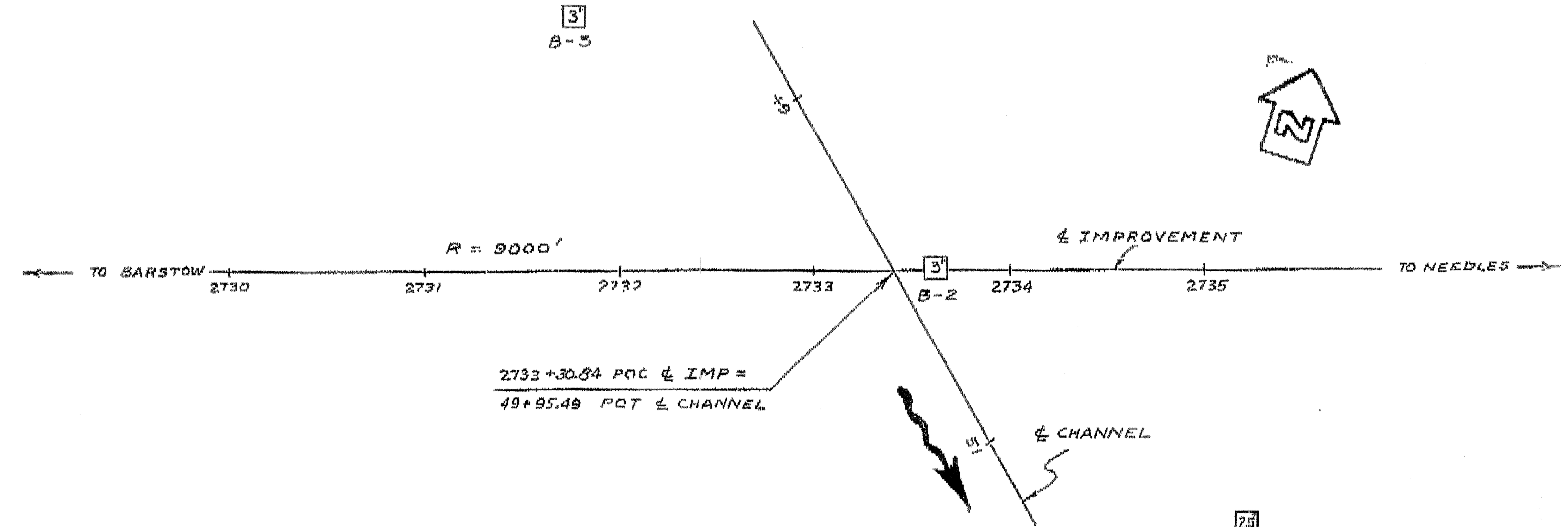

PLAN
SCALE 1" = 50'

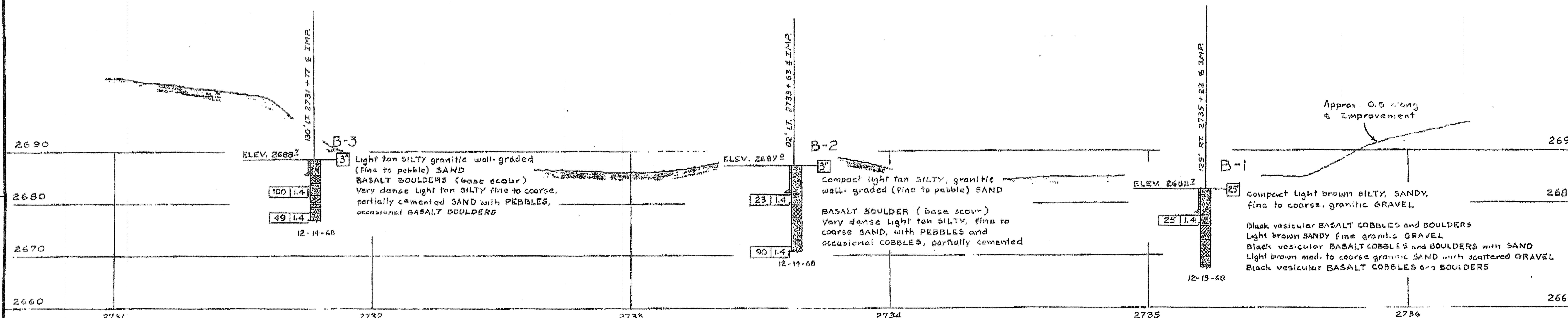

PROFILE
HORIZ. SCALE 1" = 20'
VERT. SCALE 1" = 10'

B.M. # K-1005 ELEV. 2718.74
"T" bar & cap set flush with concrete collar, 650'± Lt. Sta. 2732+80 POC ℄ IMP.

INFORMATION ON ACTUAL FOUNDATION CONDITIONS ENCOUNTERED ON FILE IN BRIDGE GEOLOGY SECTION

NO GROUND WATER ENCOUNTERED DURING THIS INVESTIGATION BY BRIDGE DEPT. GEOLOGY SECTION DATE Dec., 1968

AS BUILT PLANS
Contract No. 08-046854
Date Completed 5-1-73
Document No. 80002312

NOTE: Classification of earth material as shown on this sheet is based upon field inspection and is not to be construed to imply mechanical analysis.

FIELD STUDY	By J. BLANKE 12-68
DRAWN	By J. A. APOSTOLOS 1-69
CHECKED	By J. BLANKE 1-69

Approval Recommended by — Engineering Geologist

BRIDGE DEPARTMENT
ENGINEERING GEOLOGY SECTION

143

STATE OF CALIFORNIA
TRANSPORTATION AGENCY
DEPARTMENT OF PUBLIC WORKS
DIVISION OF HIGHWAYS

VAN WINKLE WASH BRIDGE

LOG OF TEST BORINGS

BRIDGE NO.	POST MILE	DRAWING NO.	SHEET	OF
54-903 R/L	85.3		5	5

WO 046851 PR 54903-2
CU 08203

Disregard prints bearing earlier revision dates → 3/19/71

54-1298-z-ltb07.tif