DIST	COUNTY	ROUTE	POST MILES TOTAL PROJECT	SHEET No.	TOTAL SHEETS
08	SBd	40	R94.7/R99.7	201	251

Charles Lomicka 02-14-14
REGISTERED CIVIL ENGINEER DATE

5-27-14
PLANS APPROVAL DATE

REGISTERED PROFESSIONAL ENGINEER
CHARLES LOMICKA
No. C 71172
Exp. 06-30-15
CIVIL
STATE OF CALIFORNIA

The State of California or its officers or agents shall not be responsible for the accuracy or completeness of electronic copies of this plan sheet.

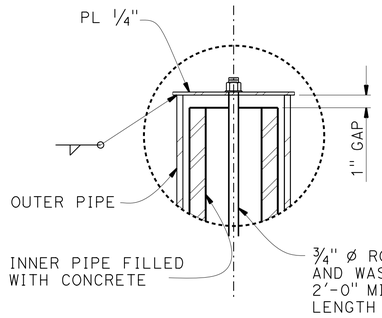

NOTE:
TIGHTEN NUT TO SEAT OUTER PIPE TIGHTLY AGAINST 1/4" THICK RUBBER GASKET PLACED ON CONCRETE AROUND PIPE PIN.

DETAIL B
NO SCALE

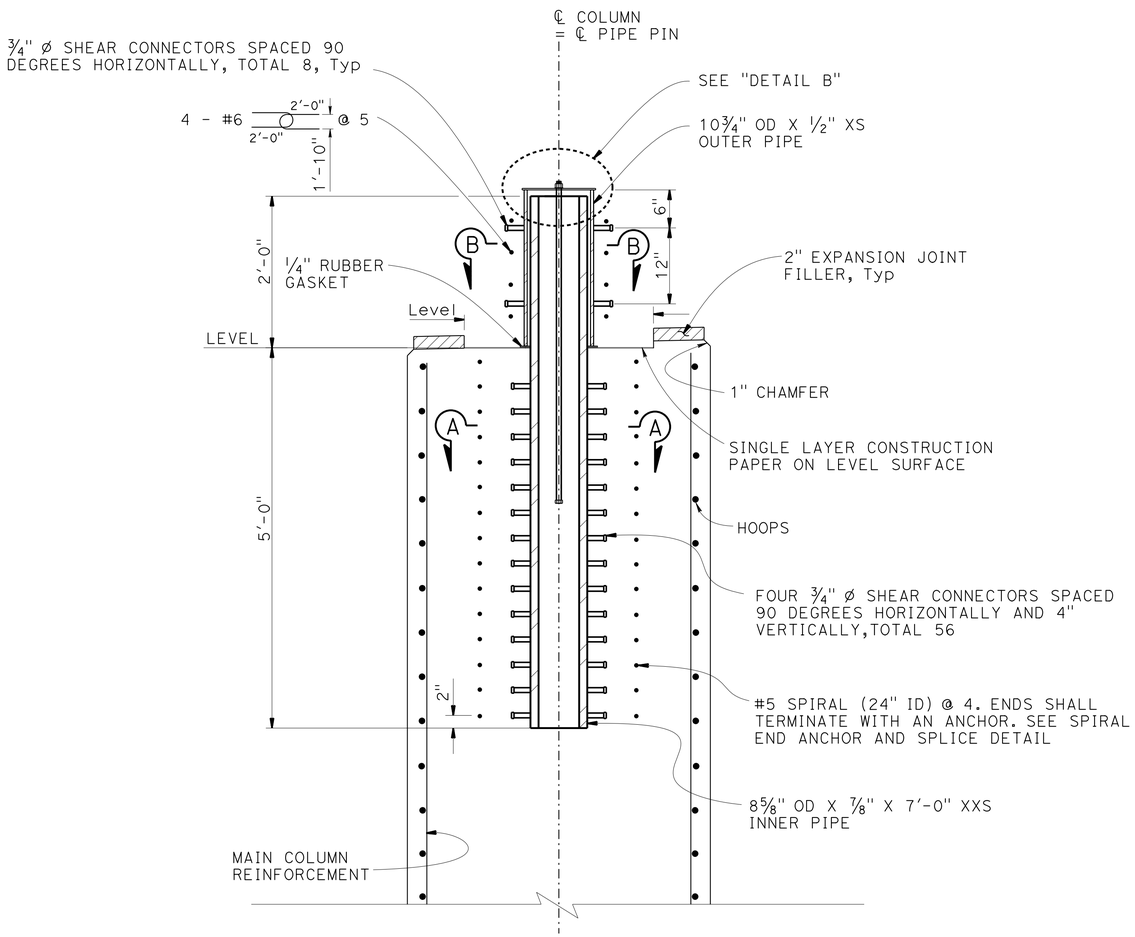

COLUMN PIPE PIN
NO SCALE

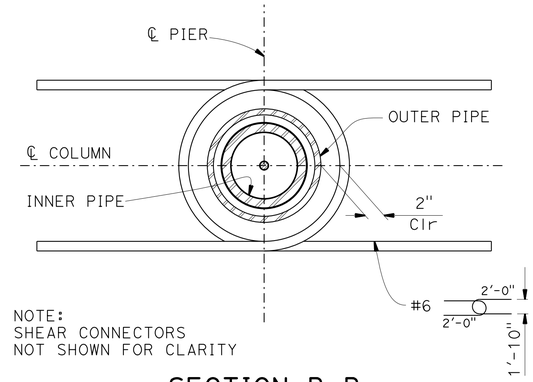

NOTE:
SHEAR CONNECTORS NOT SHOWN FOR CLARITY

SECTION B-B
NO SCALE

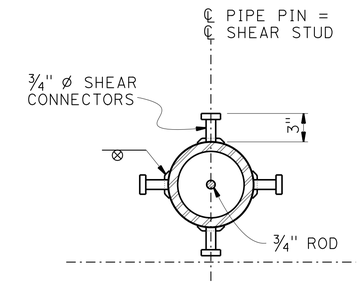

SECTION A-A
NO SCALE

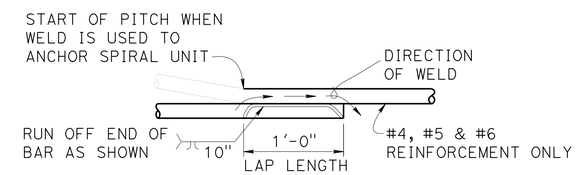

NOTE: FLARE WELD TO BE MADE IN DIRECTION SHOWN.

WELDED LAP SPLICE AND ANCHOR

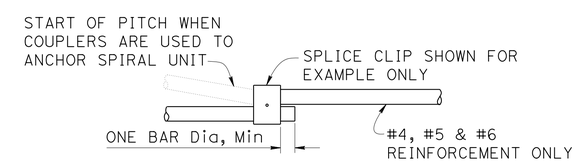

MECHANICAL LAP SPLICE AND ANCHOR

SPIRAL END ANCHOR AND SPLICE DETAIL
NO SCALE

DESIGN	BY R. WANG	CHECKED M. RAHMAN	
DETAILS	BY H. MAHBOOBI/H. I.	CHECKED M. RAHMAN	
QUANTITIES	BY R. WANG	CHECKED B. PATEL	

STATE OF CALIFORNIA
DEPARTMENT OF TRANSPORTATION

DIVISION OF ENGINEERING SERVICES
STRUCTURE DESIGN
DESIGN BRANCH 19

BRIDGE NO. 54-1301L/R
POST MILE R98.3

ROJO WASH BRIDGE (REPLACE)
PIER DETAILS NO. 2

STRUCTURES DESIGN DETAIL SHEET (ENGLISH) (REV. 09-01-10)

ORIGINAL SCALE IN INCHES FOR REDUCED PLANS 0 1 2 3

UNIT: 3621
PROJECT NUMBER & PHASE: 0813000176 - 1 CONTRACT NO.: 08-0N56U

DISREGARD PRINTS BEARING EARLIER REVISION DATES

REVISION DATES 10-17-13 02-12-14 02-24-14

SHEET 13 OF 25

FILE => 54-1301lr-h-p-det_02.dgn

USERNAME => s121614 DATE PLOTTED => 10-SEP-2014 TIME PLOTTED => 10:07

DIST	COUNTY	ROUTE	POST MILES TOTAL PROJECT	SHEET No.	TOTAL SHEETS
08	SBd	40	R94.7/R99.7	202	251

Charles Lomicka 02-14-14
REGISTERED CIVIL ENGINEER DATE

5-27-14
PLANS APPROVAL DATE

REGISTERED PROFESSIONAL ENGINEER
CHARLES LOMICKA
No. C 71172
Exp. 06-30-15
CIVIL
STATE OF CALIFORNIA

The State of California or its officers or agents shall not be responsible for the accuracy or completeness of electronic copies of this plan sheet.

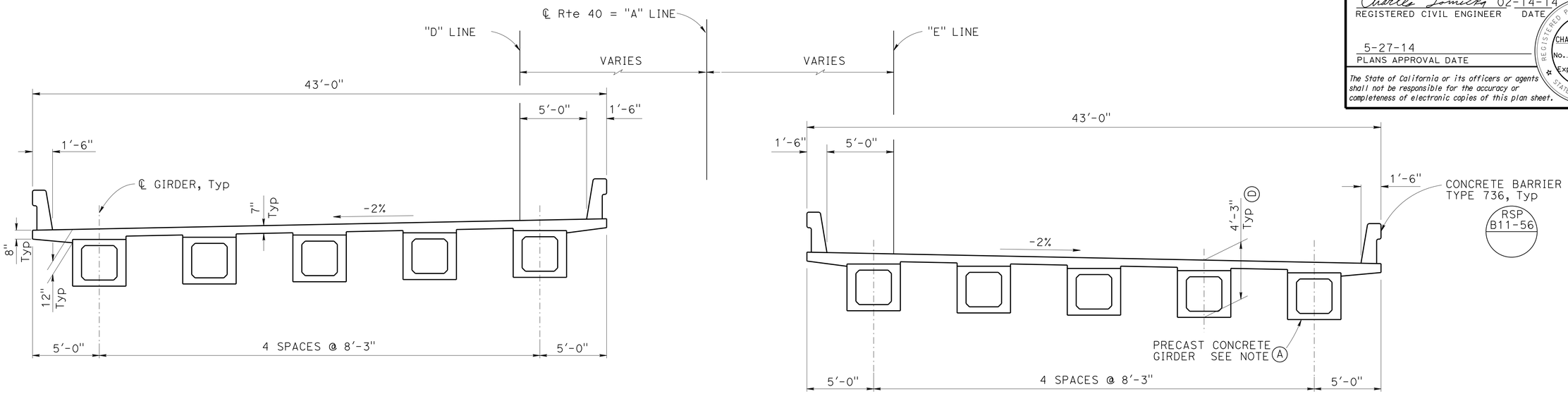

TYPICAL SECTION

1/4" = 1'-0"

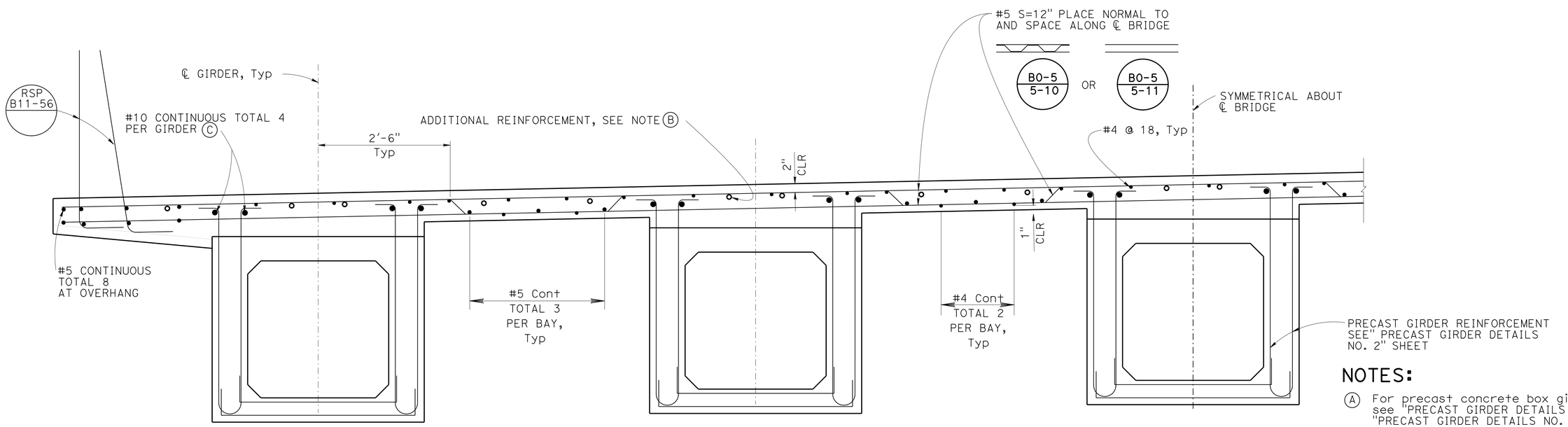

PART TYPICAL SECTION

B0-5

1" = 1'-0"

NOTES:

(A) For precast concrete box girder details, see "PRECAST GIRDER DETAILS NO. 1" and "PRECAST GIRDER DETAILS NO. 2" sheets.

(B) For additional reinforcement, see "ADDITIONAL DECK REINFORCEMENT" sheet.

(C) For no splice zones, see "ADDITIONAL DECK REINFORCEMENT" sheet.

(D) Minimum dimension at ℄ Girder, at midspan.

	BY	CHECKED
DESIGN	D. BALBAS	J. FANG / C. LOMICKA
DETAILS	H. INIGUEZ / H. M.	J. FANG / C. LOMICKA
QUANTITIES	D. BALBAS	E. MERCADO

STATE OF CALIFORNIA
DEPARTMENT OF TRANSPORTATION

DIVISION OF ENGINEERING SERVICES
STRUCTURE DESIGN
DESIGN BRANCH 19

BRIDGE NO. 54-1301L/R
POST MILE R98.3

ROJO WASH BRIDGE (REPLACE)
TYPICAL SECTION

STRUCTURES DESIGN DETAIL SHEET (ENGLISH) (REV. 09-01-10)

ORIGINAL SCALE IN INCHES FOR REDUCED PLANS 0 1 2 3

UNIT: 3621
PROJECT NUMBER & PHASE: 0813000176 - 1 CONTRACT NO.: 08-0N56U

DISREGARD PRINTS BEARING EARLIER REVISION DATES

REVISION DATES: 09-04-13 02-12-14 02-04-14

SHEET 14 OF 25

FILE => 54-1301lr-k-ts.dgn

USERNAME => 812614 DATE PLOTTED => 10-SEP-2014 TIME PLOTTED => 10:07

DIST	COUNTY	ROUTE	POST MILES TOTAL PROJECT	SHEET No.	TOTAL SHEETS
08	SBd	40	R94.7/R99.7	203	251

Charles Lomicka 02-14-14
REGISTERED CIVIL ENGINEER DATE

5-27-14
PLANS APPROVAL DATE

REGISTERED PROFESSIONAL ENGINEER CHARLES LOMICKA No. C 71172 Exp. 06-30-15 CIVIL STATE OF CALIFORNIA

The State of California or its officers or agents shall not be responsible for the accuracy or completeness of electronic copies of this plan sheet.

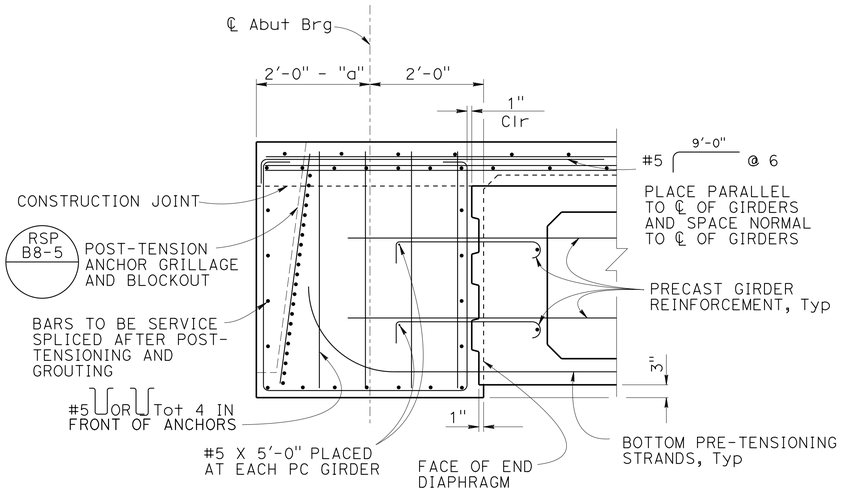

SECTION D-D

3/4" = 1'-0"

FOR DETAILS NOT SHOWN, SEE "SECTION E-E"

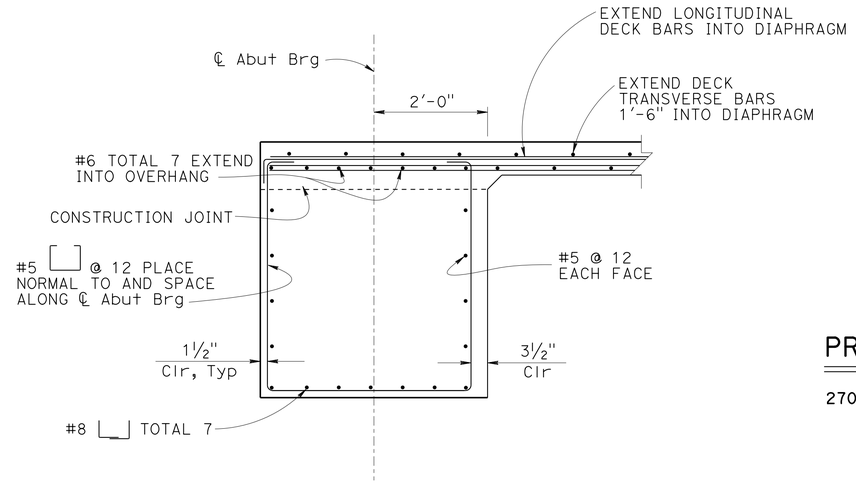

SECTION E-E

3/4" = 1'-0"

PRESTRESSING NOTES (POST TENSIONING)

270 KSI LOW RELAXATION STRAND:

P_{jack} = 264 kips/precast box girder

Anchor Set = 3/8 in

Friction curvature coefficient, μ = 0.15 (1/rad)

Friction wobble coefficient, K = 0.0002 (1/ft)

Total number of girders = 5

The final force ratio (larger divided by smaller) between any two girders shall not exceed the ratio of 10 to 9.

CIP DECK & CIP DIAPHRAGMS AND BENT CAPS

Concrete: f'_c = 5000 psi @ 28 days

f'_{ci} = 4000 psi @ time of stressing

Contractor shall submit elongation calculations based on initial stress at $\mathbb{X}$ = 0.875 times jacking stress.

One end stressing shall be performed from either end.

Distribution of Pjack between girder webs shall be equal.

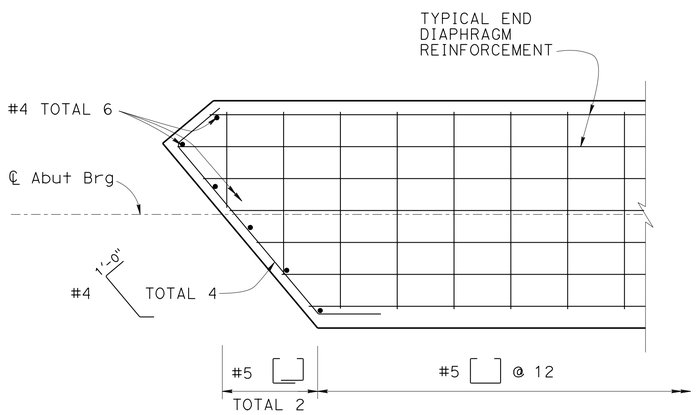

END DIAPHRAGM CORNER DETAIL

(Abut 3 Lt SHOWN, Abut 1 Rt SIMILAR)

3/4" = 1'-0"

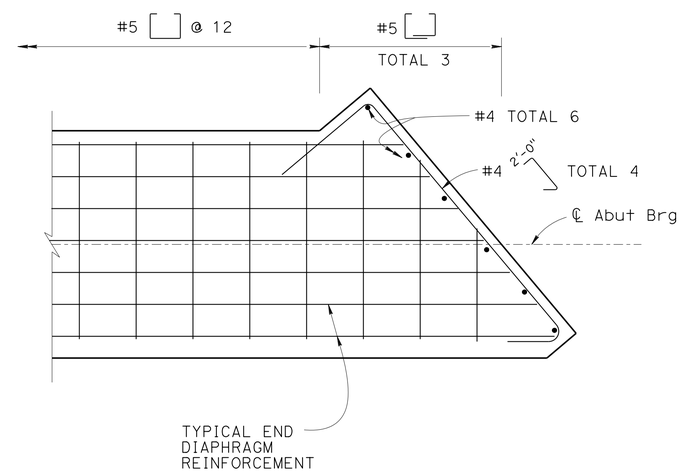

END DIAPHRAGM CORNER DETAIL

(Abut 3 Rt SHOWN, Abut 1 Lt SIMILAR)

3/4" = 1'-0"

NOTES :

Ⓐ For locations of "SECTION D-D" and "SECTION E-E", see "ADDITIONAL DECK REINFORCEMENT" sheet.

Ⓑ For "a" dimension, see B6-21

DESIGN	BY D. BALBAS	CHECKED J. FANG / C. LOMICKA	STATE OF CALIFORNIA DEPARTMENT OF TRANSPORTATION
DETAILS	BY H. INIGUEZ /H. M. /D. W.	CHECKED J. FANG / C. LOMICKA	
QUANTITIES	BY D. BALBAS	CHECKED E. MERCADO	

DIVISION OF ENGINEERING SERVICES STRUCTURE DESIGN
DESIGN BRANCH 19

BRIDGE NO. 54-1301L/R
POST MILE R98.3

ROJO WASH BRIDGE (REPLACE)
END DIAPHRAGM DETAILS

STRUCTURES DESIGN DETAIL SHEET (ENGLISH) (REV. 09-01-10)

ORIGINAL SCALE IN INCHES FOR REDUCED PLANS 0 1 2 3

UNIT: 3621
PROJECT NUMBER & PHASE: 0813000176 - 1 CONTRACT NO.: 08-0N56U

DISREGARD PRINTS BEARING EARLIER REVISION DATES

REVISION DATES: 9-20-13 | 02-12-14 | 02-05-14

SHEET 15 OF 25

FILE => 54-1301lr-1_ed-det_01 .dgn

USERNAME => s127614 DATE PLOTTED => 10-SEP-2014 TIME PLOTTED => 10:07

DIST	COUNTY	ROUTE	POST MILES TOTAL PROJECT	SHEET No.	TOTAL SHEETS
08	SBd	40	R94.7/R99.7	204	251

Charles Lomicka 02-14-14
REGISTERED CIVIL ENGINEER DATE

5-27-14
PLANS APPROVAL DATE

REGISTERED PROFESSIONAL ENGINEER CHARLES LOMICKA No. C 71172 Exp. 06-30-15 CIVIL STATE OF CALIFORNIA

The State of California or its officers or agents shall not be responsible for the accuracy or completeness of electronic copies of this plan sheet.

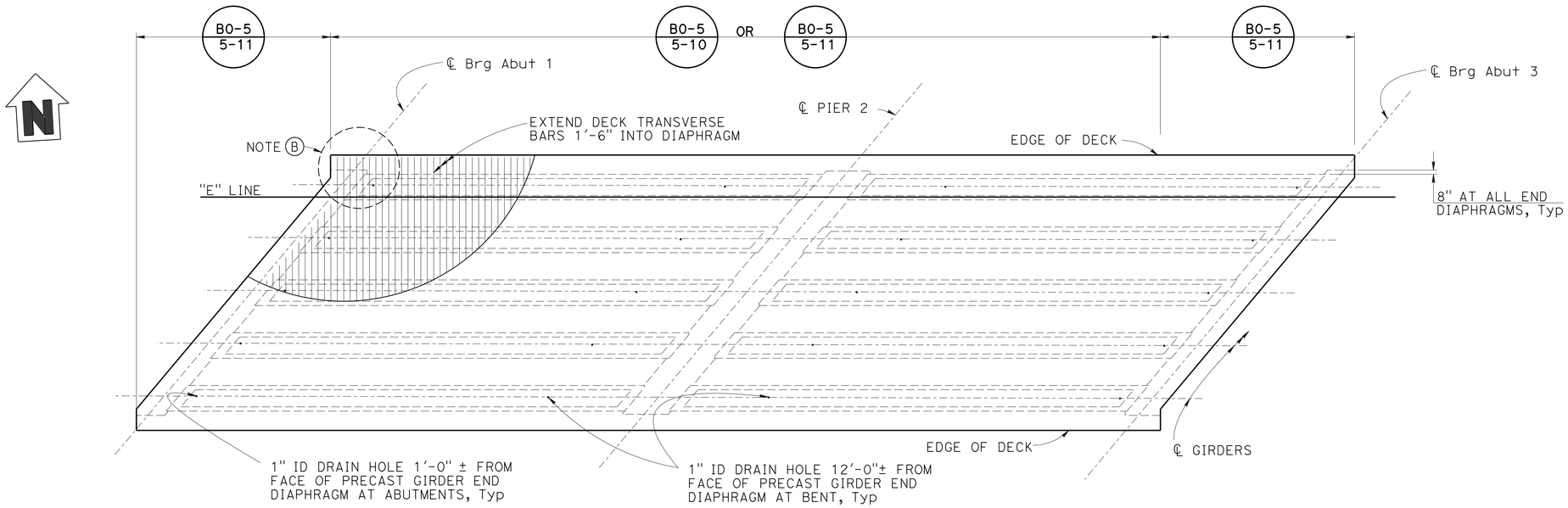

PLAN

1" = 10'-0"

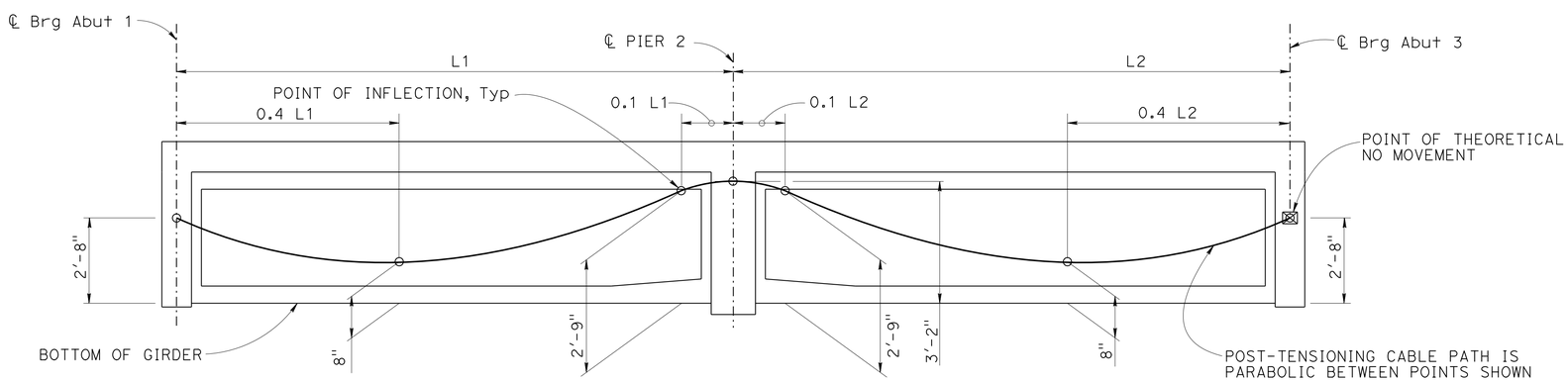

LONGITUDINAL SECTION

No Scale

NOTES :

(A) For soffit flare, see "PRECAST GIRDER DETAILS NO. 1" sheet.

(B) For "DECK CORNER DETAIL" details, see "ADDITIONAL DECK REINFORCEMENT" sheet.

(C) L = Span length from ℄ support to ℄ support measured along ℄ girder.

(D) Right bridge shown, left bridge similar.

DESIGN	BY D. BALBAS	CHECKED J. FANG / C. LOMICKA	
DETAILS	BY H. INIGUEZ / D. W.	CHECKED J. FANG / C. LOMICKA	
QUANTITIES	BY D. BALBAS	CHECKED E. MERCADO	

STATE OF CALIFORNIA
DEPARTMENT OF TRANSPORTATION

DIVISION OF ENGINEERING SERVICES
STRUCTURE DESIGN
DESIGN BRANCH 19

BRIDGE NO. 54-1301L/R
POST MILE R98.3

ROJO WASH BRIDGE (REPLACE)
GIRDER LAYOUT

STRUCTURES DESIGN DETAIL SHEET (ENGLISH) (REV. 09-01-10)

ORIGINAL SCALE IN INCHES FOR REDUCED PLANS 0 1 2 3

UNIT: 3621
PROJECT NUMBER & PHASE: 0813000176 -1 CONTRACT NO.: 08-0N56U

DISREGARD PRINTS BEARING EARLIER REVISION DATES

REVISION DATES: 9-3-13 | 02-04-14 | 02-12-14

SHEET 16 OF 25

FILE => 54-1301lr-1_gir_lo.dgn

USERNAME => s121614 DATE PLOTTED => 10-SEP-2014 TIME PLOTTED => 10:07

DIST	COUNTY	ROUTE	POST MILES TOTAL PROJECT	SHEET No.	TOTAL SHEETS
08	SBd	40	R94.7/R99.7	205	251

Charles Lomicka 02-14-14
REGISTERED CIVIL ENGINEER DATE

5-27-14
PLANS APPROVAL DATE

REGISTERED PROFESSIONAL ENGINEER CHARLES LOMICKA No. C 71172 Exp. 06-30-15 CIVIL STATE OF CALIFORNIA

The State of California or its officers or agents shall not be responsible for the accuracy or completeness of electronic copies of this plan sheet.

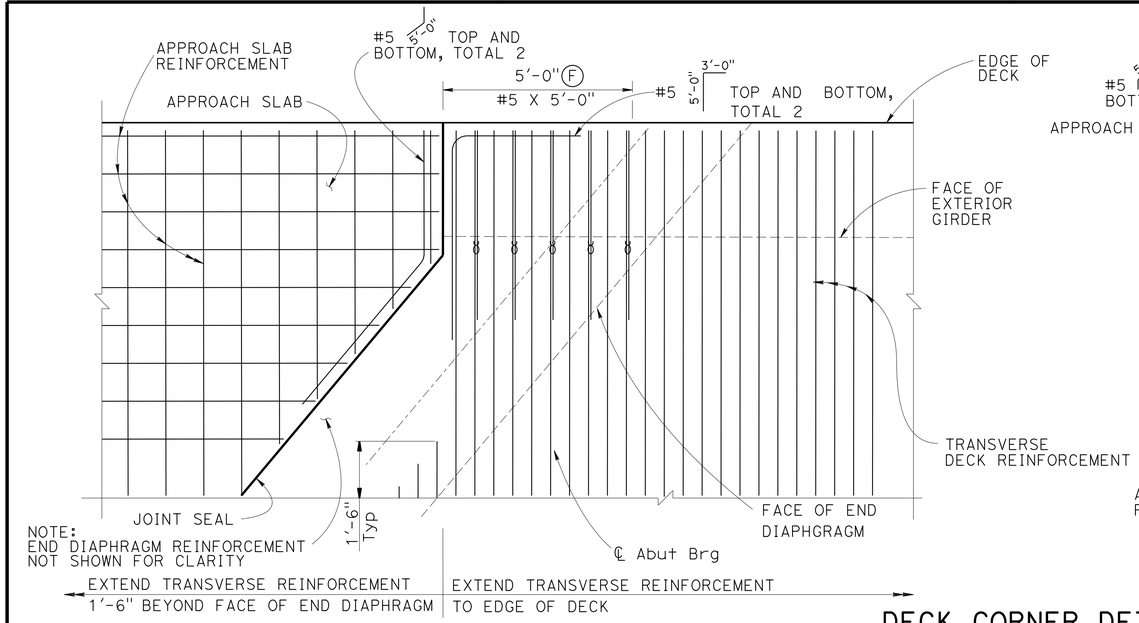

OBTUSE CORNER

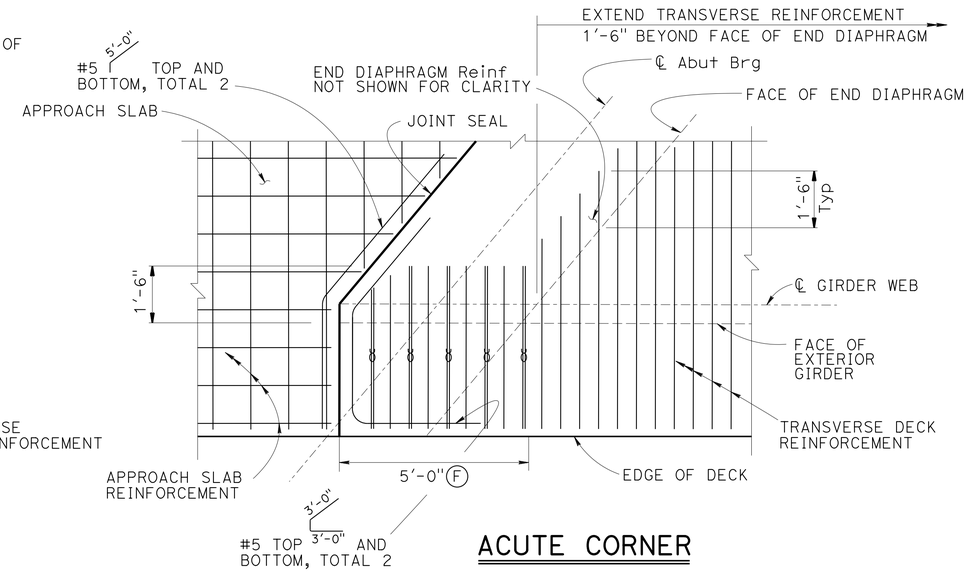

ACUTE CORNER

DECK CORNER DETAILS

½" = 1'-0"

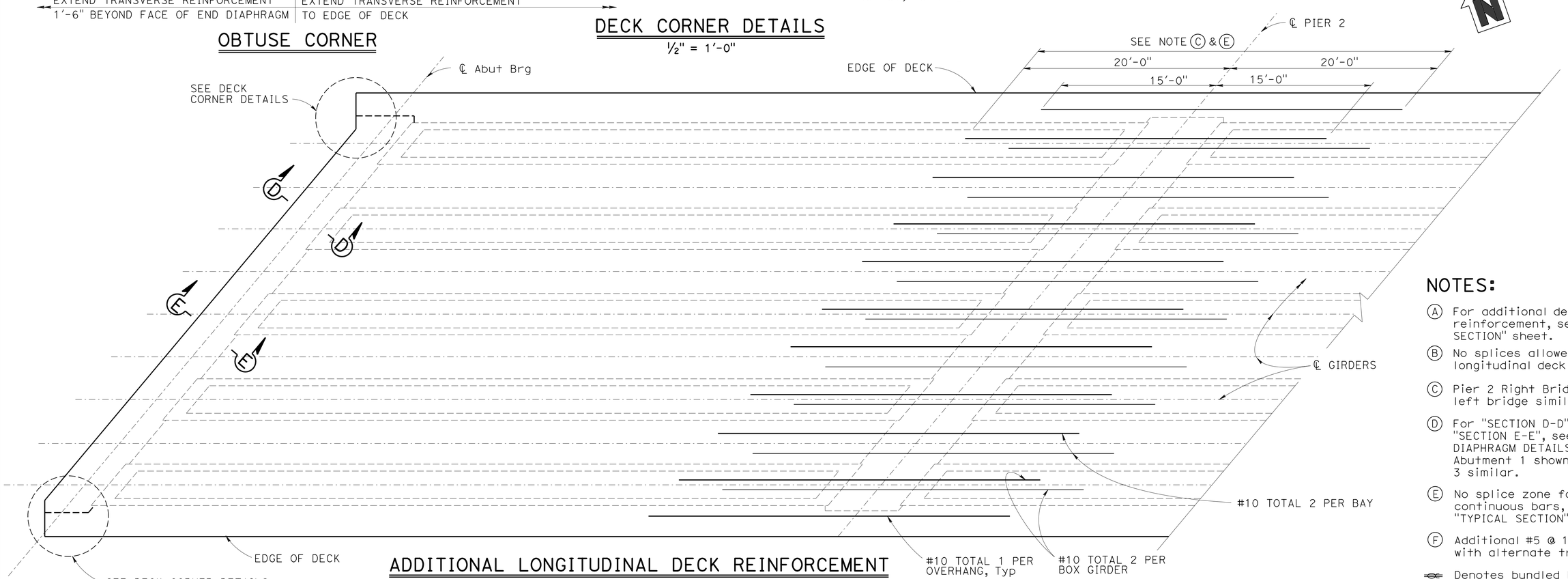

ADDITIONAL LONGITUDINAL DECK REINFORCEMENT

1" = 5'-0"

NOTES:

(A) For additional details and reinforcement, see "TYPICAL SECTION" sheet.

(B) No splices allowed in additional longitudinal deck reinforcement.

(C) Pier 2 Right Bridge shown, left bridge similar.

(D) For "SECTION D-D" and "SECTION E-E", see "END DIAPHRAGM DETAILS" sheet. Abutment 1 shown, Abutment 3 similar.

(E) No splice zone for #10 continuous bars, see "TYPICAL SECTION" sheet.

(F) Additional #5 @ 12 bundle with alternate transverse bar.

Denotes bundled bar.

	BY	CHECKED
DESIGN	D. BALBAS	J. FANG / C. LOMICKA
DETAILS	H. INIGUEZ / D. W.	J. FANG / C. LOMICKA
QUANTITIES	D. BALBAS	E. MERCADO

STATE OF CALIFORNIA
DEPARTMENT OF TRANSPORTATION

DIVISION OF ENGINEERING SERVICES
STRUCTURE DESIGN
DESIGN BRANCH 19

BRIDGE NO. 54-1301L/R
POST MILE R98.3

ROJO WASH BRIDGE (REPLACE)
ADDITIONAL DECK REINFORCEMENT

STRUCTURES DESIGN DETAIL SHEET (ENGLISH) (REV. 09-01-10)

ORIGINAL SCALE IN INCHES FOR REDUCED PLANS 0 1 2 3

UNIT: 3621
PROJECT NUMBER & PHASE: 0813000176 - 1 CONTRACT NO.: 08-0N56U

DISREGARD PRINTS BEARING EARLIER REVISION DATES

REVISION DATES: 9-20-13 02-05-14 02-13-14

SHEET 17 OF 25

FILE => 54-1301lr-l-g_reinf .dgn

USERNAME => s121614 DATE PLOTTED => 10-SEP-2014 TIME PLOTTED => 10:07

DIST	COUNTY	ROUTE	POST MILES TOTAL PROJECT	SHEET No.	TOTAL SHEETS
08	SBd	40	R94.7/R99.7	206	251

Charles Lomicka 02-14-14
REGISTERED CIVIL ENGINEER DATE

5-27-14
PLANS APPROVAL DATE

REGISTERED PROFESSIONAL ENGINEER
CHARLES LOMICKA
No. C 71172
Exp. 06-30-15
CIVIL
STATE OF CALIFORNIA

The State of California or its officers or agents shall not be responsible for the accuracy or completeness of electronic copies of this plan sheet.

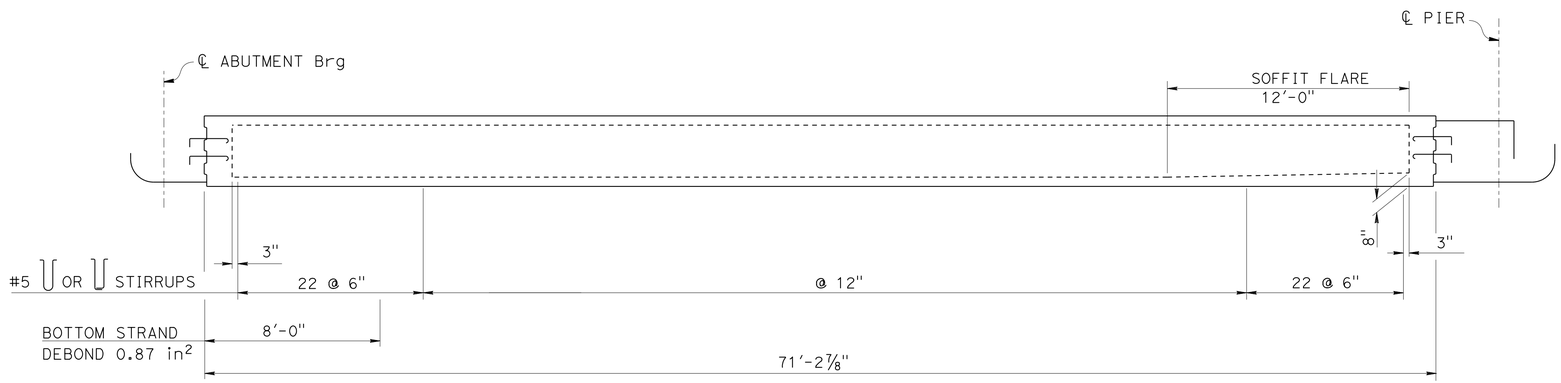

ELEVATION - GIRDER A

NO SCALE

NOTE:

1. Span 1 shown, Span 2 similar, but opposite hand.

PRESTRESSING NOTES (PRE-TENSIONING)

LOCATION	JACKING FORCE (P) (kips)		CONCRETE STRENGTH (psi)		MIDSPAN DEAD LOAD DEFLECTION (IN)	
			f'_{ci}	f'_c	DECK	BARRIER
GIRDER A SPAN 1 & 2	BOTTOM	703	4000	5500	0.30	0.02

1. Jacking Force (P):
   The jacking force required at the point of control along the span. The jacking force does not include any fabrication specific losses.
2. The maximum tensile stress in the prestressing steel upon release shall not exceed 75% of the specified minimum ultimate tensile strength of the prestressing steel.
3. The maximum temporary tensile stress (jacking stress) in the prestressing steel shall not exceed 80% of the specified minimum ultimate tensile strength of the prestressing steel
4. Concrete strength:
   f'ci is at time of initial stressing.
   f'c is at 28 days.
5. Deflection components are informational and will be used to set screed line elevations.
6. Screed line elevations for deck concrete will be determined by the Engineer.
7. Prestressing strand shall be 270 ksi low relaxation.

	BY	CHECKED
DESIGN	D. BALBAS	J. FANG / C. LOMICKA
DETAILS	H.INIGUEZ / H. M./ D. W.	J. FANG / C. LOMICKA
QUANTITIES	D. BALBAS	E. MERCADO

STATE OF CALIFORNIA
DEPARTMENT OF TRANSPORTATION

DIVISION OF ENGINEERING SERVICES
STRUCTURE DESIGN
DESIGN BRANCH 19

BRIDGE NO. 54-1301L/R
POST MILE R98.3

ROJO WASH BRIDGE (REPLACE)
PRECAST GIRDER DETAILS NO. 1

STRUCTURES DESIGN DETAIL SHEET (ENGLISH) (REV. 09-01-10)

ORIGINAL SCALE IN INCHES FOR REDUCED PLANS 0 1 2 3

UNIT: 3621
PROJECT NUMBER & PHASE: 0813000176 -1 CONTRACT NO.: 08-0N56U

DISREGARD PRINTS BEARING EARLIER REVISION DATES

REVISION DATES: 9-20-13 02-04-14 01-21-14

SHEET 18 OF 25

FILE => 54-1301lr-l-g-det_01.dgn

USERNAME => s121614 DATE PLOTTED => 10-SEP-2014 TIME PLOTTED => 10:07

DIST	COUNTY	ROUTE	POST MILES TOTAL PROJECT	SHEET No.	TOTAL SHEETS
08	SBd	40	R94.7/R99.7	207	251

Charles Lomicka 02-14-14
REGISTERED CIVIL ENGINEER DATE

5-27-14
PLANS APPROVAL DATE

REGISTERED PROFESSIONAL ENGINEER CHARLES LOMICKA No. C 71172 Exp. 06-30-15 CIVIL STATE OF CALIFORNIA

The State of California or its officers or agents shall not be responsible for the accuracy or completeness of electronic copies of this plan sheet.

CLEARANCES FOR PRETENSIONED STRANDS:

1. Strands may be bundled in groups consisting of 3 vertically, 2 horizontally and separated at the ends.
2. The Min distance "S" between groups or individual strands is 1½" for ⅜" ø strands, 1¾" for ½" ø strands, 2" for 0.6" ø strands.
3. "S" is measured between centers of adjacent strands.
4. Approval by the Engineer is required for deviation.

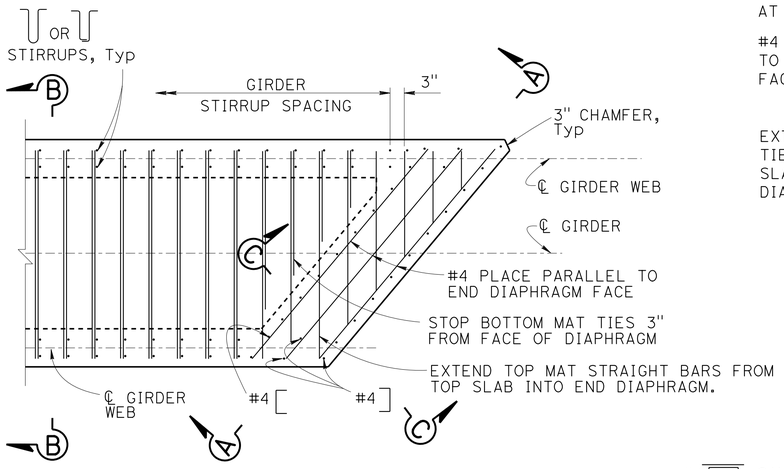

GIRDER END DIAPHRAGM - TOP

¾" = 1'-0"

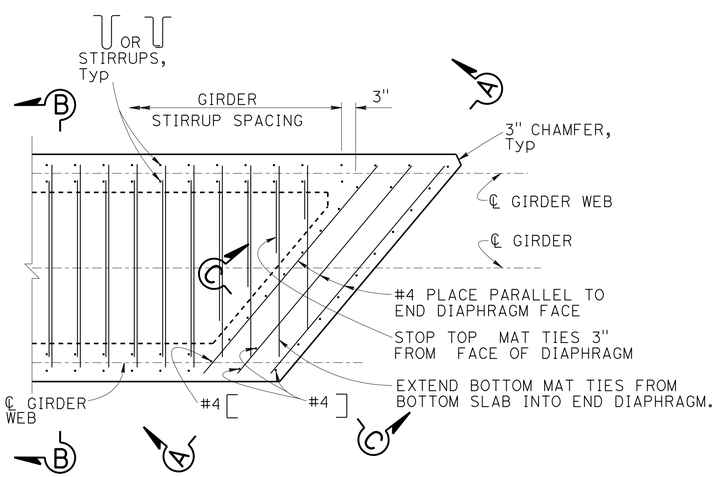

GIRDER END DIAPHRAGM - BOTTOM

¾" = 1'-0"

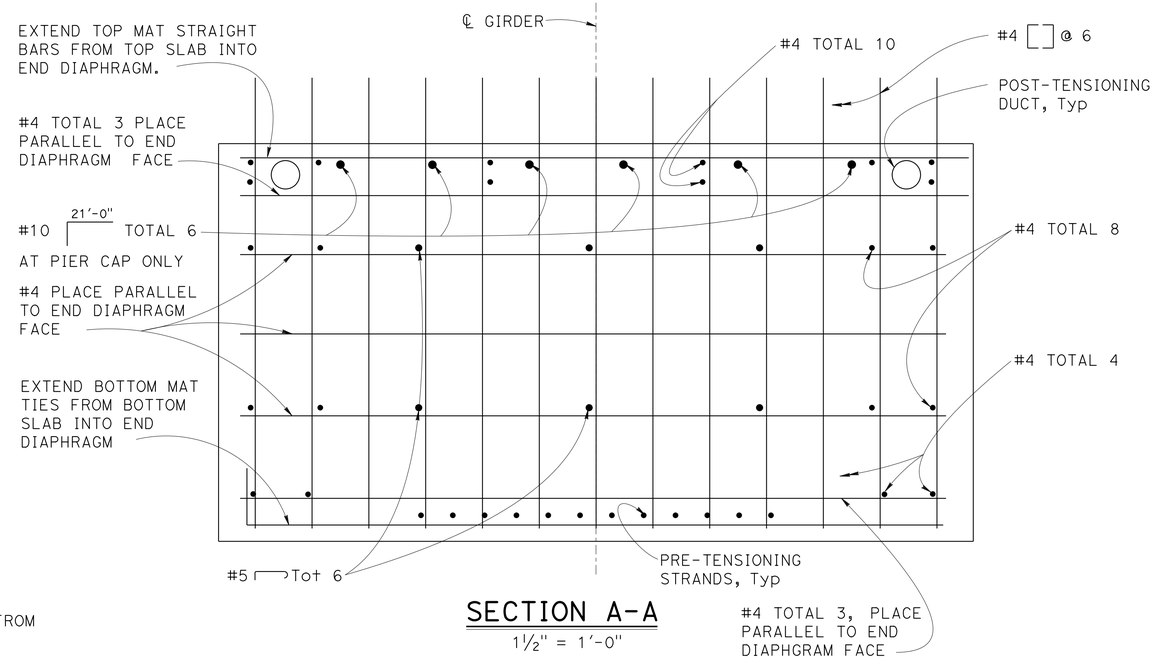

SECTION A-A

1½" = 1'-0"

NOTES:

(A) At stirrup spacing changes, space according to the web with the smaller stirrup spacing.

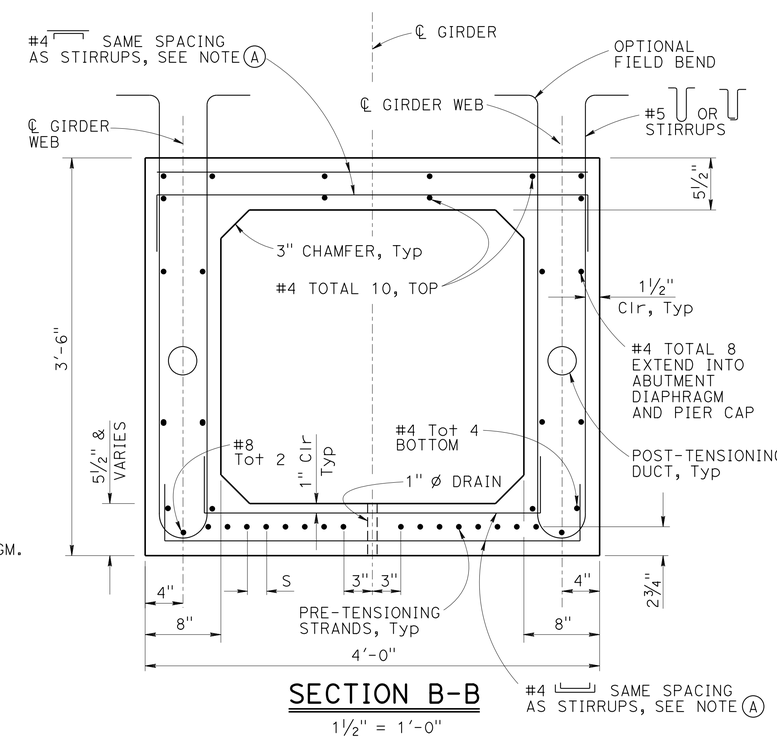

SECTION B-B

1½" = 1'-0"

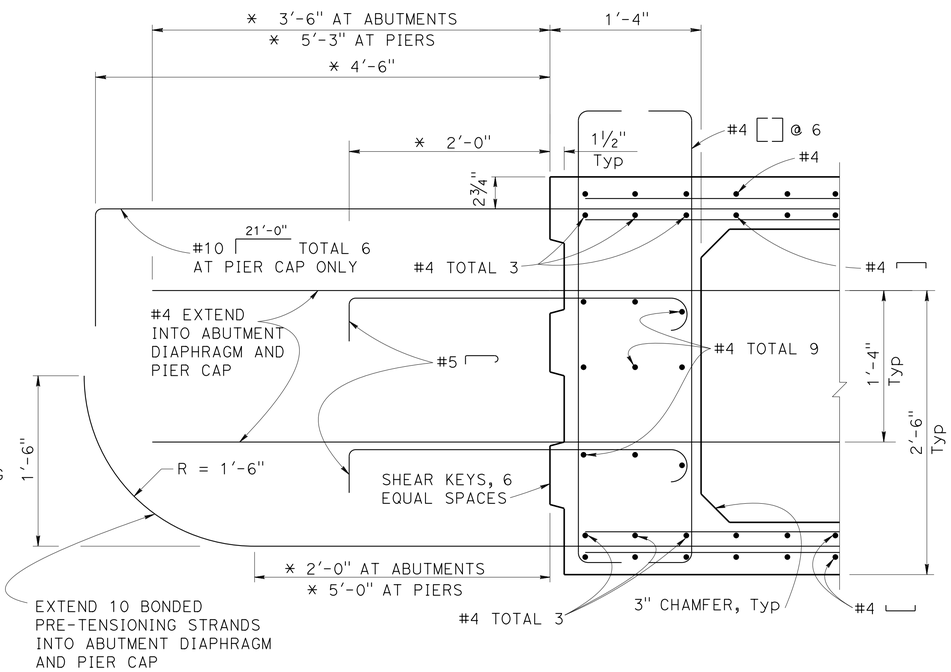

SECTION C-C

NO SCALE

* DIMENSION PARALLEL TO ℄ GIRDER

DESIGN	BY D. BALBAS	CHECKED J. FANG / C. LOMICKA	
DETAILS	BY H. INIGUEZ / D. W.	CHECKED J. FANG / C. LOMICKA	
QUANTITIES	BY D. BALBAS	CHECKED E. MERCADO	

STATE OF CALIFORNIA
DEPARTMENT OF TRANSPORTATION

DIVISION OF ENGINEERING SERVICES
STRUCTURE DESIGN
DESIGN BRANCH 19

BRIDGE NO. 54-1301L/R
POST MILE R98.3

ROJO WASH BRIDGE (REPLACE)
PRECAST GIRDER DETAILS NO. 2

STRUCTURES DESIGN DETAIL SHEET (ENGLISH) (REV. 09-01-10)

ORIGINAL SCALE IN INCHES FOR REDUCED PLANS 0 1 2 3

UNIT: 3621
PROJECT NUMBER & PHASE: 0813000176 - 1 CONTRACT NO.: 08-0N56U

DISREGARD PRINTS BEARING EARLIER REVISION DATES

REVISION DATES 9-20-13 02-06-08 2-1401-10-14

SHEET 19 OF 25

FILE => 54-1301lr-l-g-det_02.dgn

USERNAME => s121614 DATE PLOTTED => 10-SEP-2014 TIME PLOTTED => 10:08

DIST	COUNTY	ROUTE	POST MILES TOTAL PROJECT	SHEET No.	TOTAL SHEETS
08	SBd	40	R94.7/R99.7	208	251

REGISTERED CIVIL ENGINEER 02/12/14 DATE

5-27-14
PLANS APPROVAL DATE

REGISTERED PROFESSIONAL ENGINEER JEFF SIMS No. C 46471 Exp. 6/30/15 CIVIL STATE OF CALIFORNIA

The State of California or its officers or agents shall not be responsible for the accuracy or completeness of electronic copies of this plan sheet.

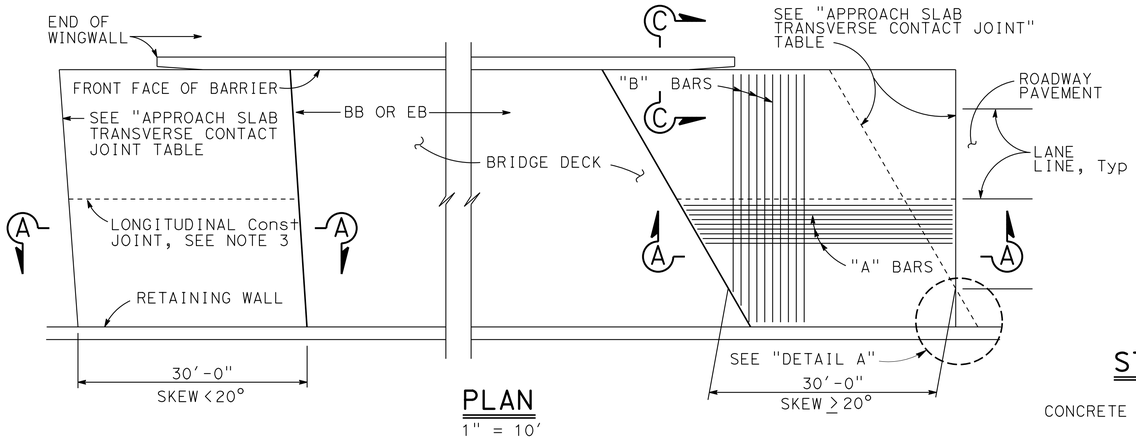

PLAN
1" = 10'

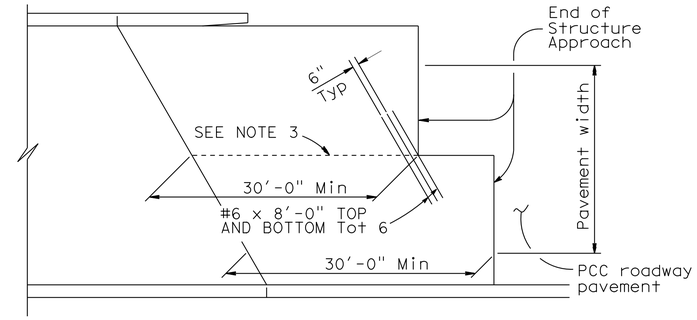

STRUCTURE APPROACH - END STAGGER DETAIL
No Scale

APPROACH SLAB TRANSVERSE CONTACT JOINT		
APPROACH SKEW	WITH AC ROADWAY PAVEMENT	WITH PCC ROADWAY PAVEMENT
< 20°	PARALLEL TO FACE OF PN	PARALLEL TO FACE OF PN
20° - 45°	PARALLEL TO FACE OF PN USE "DETAIL A"	STAGGER LINES 24' TO 36' APART
> 45°	PARALLEL TO FACE OF PN USE "DETAIL A"	STAGGER AT EACH LANE LINE

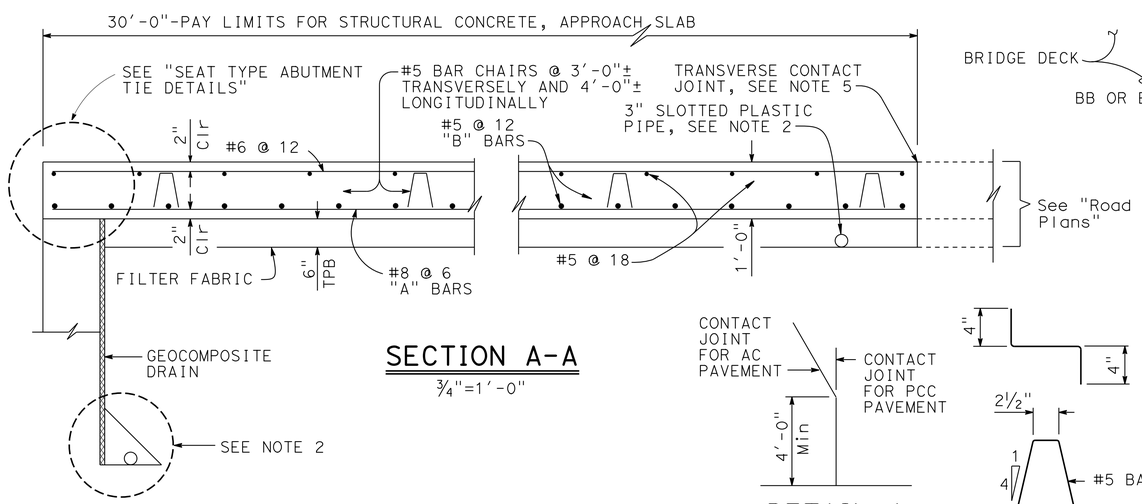

SECTION A-A
¾"=1'-0"

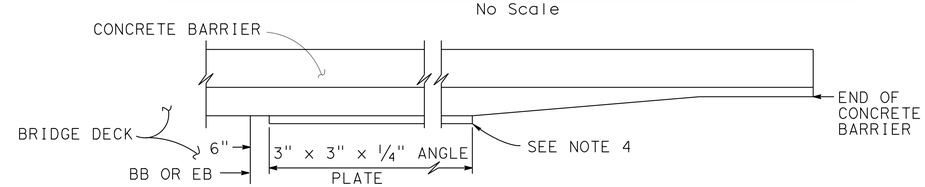

EDGE ANGLE DETAIL
½"= 1'-0"

DETAIL A
No Scale

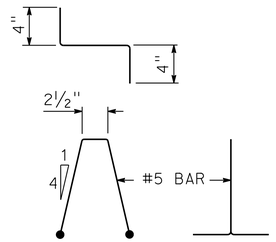

BAR CHAIR DETAIL
1½"= 1'-0"

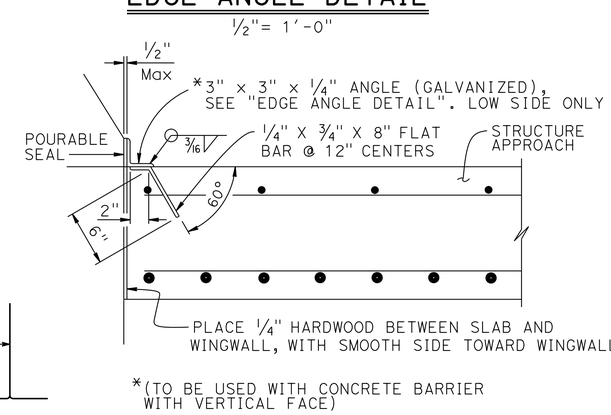

*(TO BE USED WITH CONCRETE BARRIER WITH VERTICAL FACE)

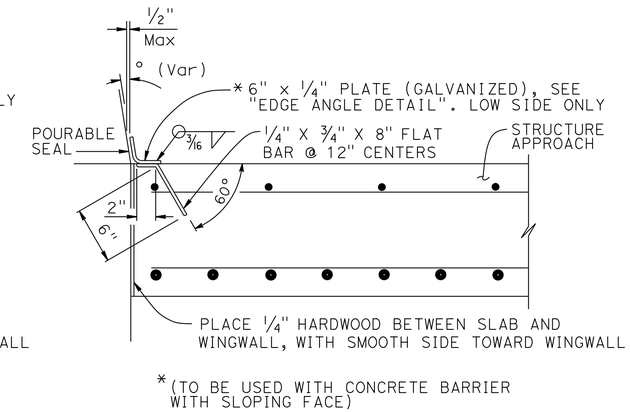

*(TO BE USED WITH CONCRETE BARRIER WITH SLOPING FACE)

DETAIL B
1½" = 1'-0"

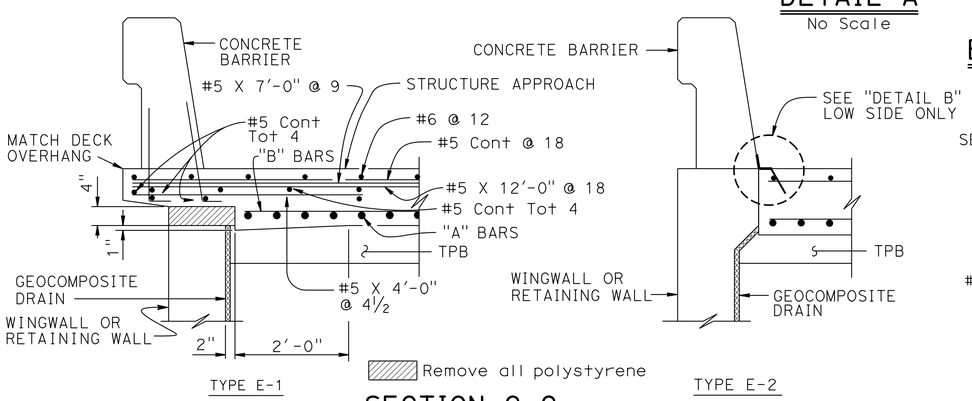

SECTION C-C
¾"= 1'-0"

(Type E-1 to be used, unless otherwise shown on plans)

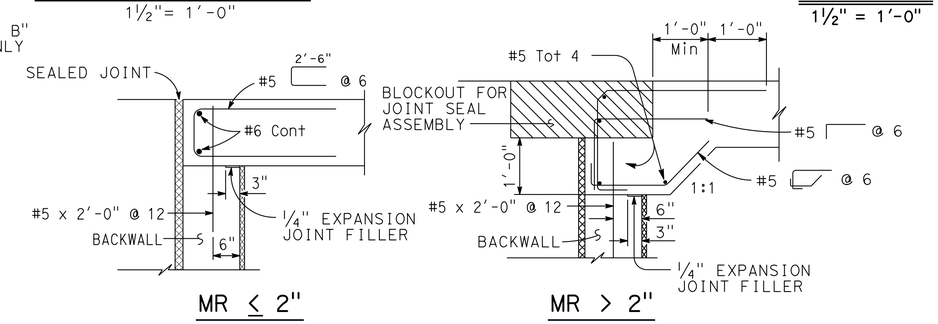

MR ≤ 2" MR > 2"

SEAT TYPE ABUTMENT TIE DETAILS (SEE NOTE 1)
¾"= 1'-0"

NOTES:

1. For details not shown, see Structure Plans. For MR ≤ 2", adjust bar reinforcement to clear a sawcut for sealed joint, when required
2. For drainage details, see "STRUCTURE APPROACH DRAINAGE DETAILS" sheet
3. Longitudinal construction joints, when permitted by the Engineer, shall be located on lane lines
4. End angle or plate at beginning of barrier transition, end of wingwall or end of structure approach as applicable
5. For transverse contact joint with new PCC paving, refer to Standard Plan P10
6. At the Contractor's option, approach slab transverse reinforcement may be placed parallel to paving notch. Spacing of transverse reinforcement is measured along ℄ roadway

STANDARD DRAWING
FILE NO. xs3-120
APPROVAL DATE July 2011

STATE OF CALIFORNIA
DEPARTMENT OF TRANSPORTATION

DIVISION OF ENGINEERING SERVICES

BRIDGE NO. 54-1301R/L
POST MILE R98.3

ROJO WASH BRIDGE (REPLACE)
STRUCTURE APPROACH TYPE N(30S)

DS OSD 2147A (ENGLISH STANDARD DRAWING "XS" BORDER REV. (02-02-11)

ORIGINAL SCALE IN INCHES FOR REDUCED PLANS 0 1 2 3

UNIT: 3621
PROJECT NUMBER & PHASE: 0813000176 - 1 CONTRACT NO.: 08-0N56U

DISREGARD PRINTS BEARING EARLIER REVISION DATES

REVISION DATES 10-10-13 01-08-14

SHEET 20 OF 25

FILE => 54-1301lr-s_sa-n(30s).dgn

USERNAME => s12614 DATE PLOTTED => 10-SEP-2014 TIME PLOTTED => 10:08

DIST	COUNTY	ROUTE	POST MILES TOTAL PROJECT	SHEET No.	TOTAL SHEETS
08	SBd	40	R94.7/R99.7	209	251

Charles Lomicka 02-14-14
REGISTERED CIVIL ENGINEER DATE

5-27-14
PLANS APPROVAL DATE

REGISTERED PROFESSIONAL ENGINEER CHARLES LOMICKA No. C 71172 Exp. 06-30-15 CIVIL STATE OF CALIFORNIA

The State of California or its officers or agents shall not be responsible for the accuracy or completeness of electronic copies of this plan sheet.

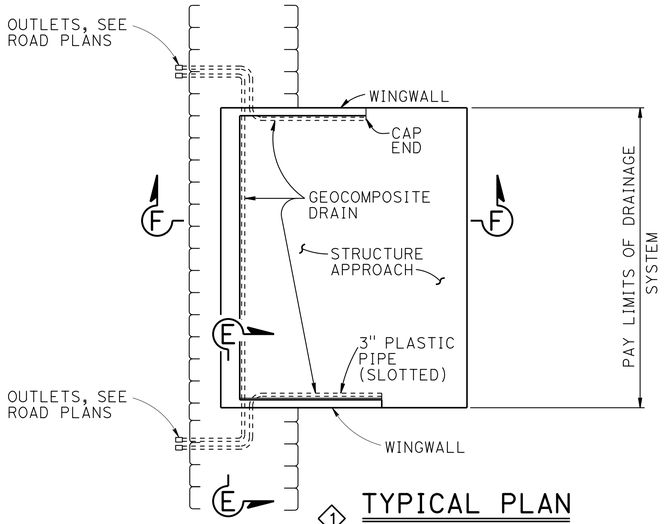

1 TYPICAL PLAN
NO SCALE

* FOR PIPE LAYOUT AT STAGGERED END, SEE "DETAIL B"

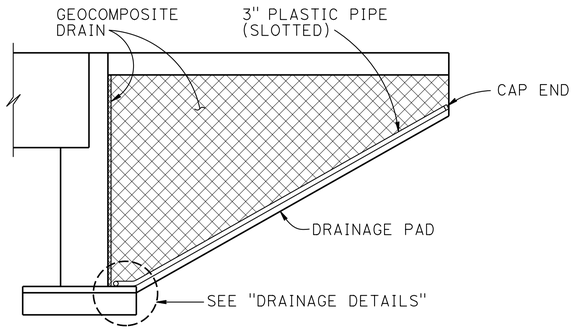

CANTILEVER WINGWALL

SECTION F-F
NO SCALE

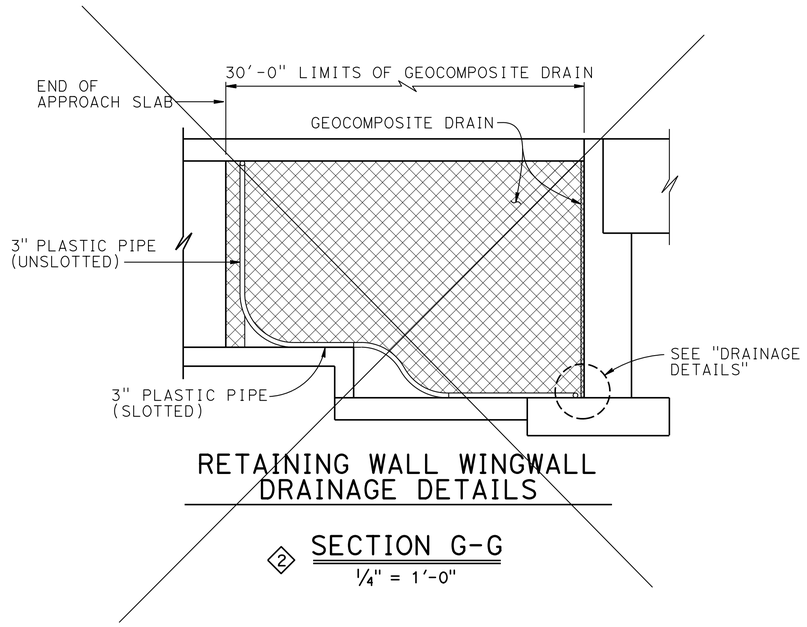

RETAINING WALL WINGWALL DRAINAGE DETAILS

2 SECTION G-G
1/4" = 1'-0"

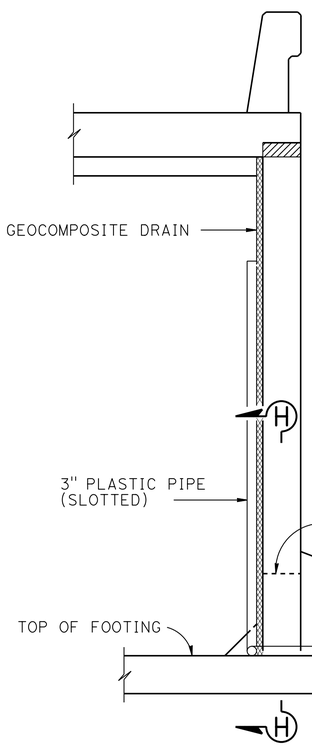

1 SECTION E-E
NO SCALE

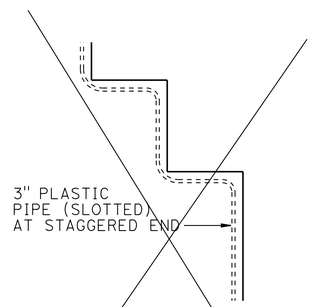

2 DETAIL B
No Scale

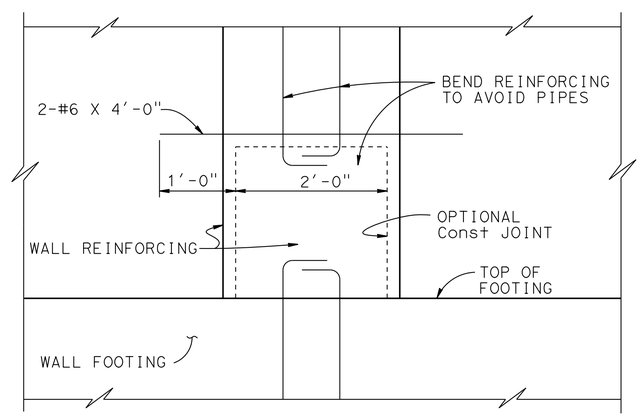

SECTION H-H
NO SCALE

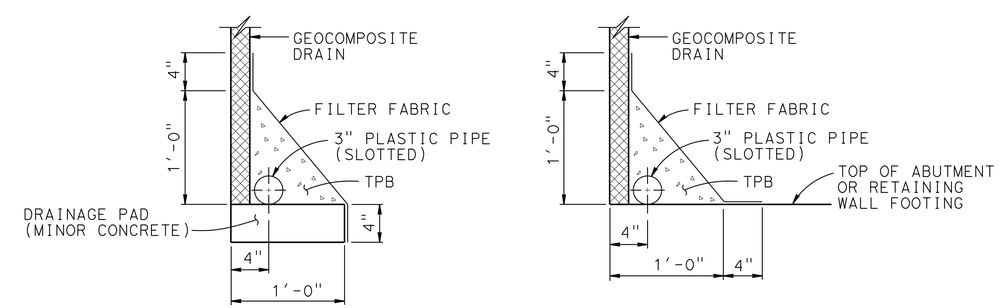

WITHOUT FOOTING

WITH FOOTING

DRAINAGE DETAILS
1 1/2" = 1'-0"

NOTE: Bends and junctions in 3" plastic pipe are 30" radius Min

REVISED STANDARD DRAWING

FILE NO. xs3-110

APPROVAL DATE July 2011

1 MODIFIED DETAIL
2 DELETED DETAIL

STATE OF CALIFORNIA
DEPARTMENT OF TRANSPORTATION

DIVISION OF ENGINEERING SERVICES

BRIDGE NO. 54-1301R/L
POST MILE R98.3

ROJO WASH BRIDGE (REPLACE)
STRUCTURE APPROACH DRAINAGE DETAILS

DS OSD 2147A (ENGLISH STANDARD DRAWING "XS" BORDER REV. (02-02-11)

ORIGINAL SCALE IN INCHES FOR REDUCED PLANS 0 1 2 3

UNIT: 3621
PROJECT NUMBER & PHASE: 0813000176 - 1 CONTRACT NO.: 08-0N56U

DISREGARD PRINTS BEARING EARLIER REVISION DATES

REVISION DATES 02-13-14

SHEET 21 OF 25

FILE => 54-1301lr-s-sadd.dgn

USERNAME => s121614 DATE PLOTTED => 10-SEP-2014 TIME PLOTTED => 10:08

DIST	COUNTY	ROUTE	POST MILES TOTAL PROJECT	SHEET No.	TOTAL SHEETS
08	SBd	40	R94.7/R99.7	210	251

REGISTERED CIVIL ENGINEER 1-7-14 DATE

5-27-14
PLANS APPROVAL DATE

REGISTERED PROFESSIONAL ENGINEER David T-M Liao No. C59838 Exp. 12-31-15 CIVIL STATE OF CALIFORNIA

The State of California or its officers or agents shall not be responsible for the accuracy or completeness of electronic copies of this plan sheet.

This LOTB sheet was prepared in accordance with the Caltrans Soil & Rock Logging, Classification, & Presentation Manual (2010 Edition).

See 2010 Standard Plans A10F and A10G for Soil Legend, and A10H for Rock Legend.

BENCH MARK

PNO 110: Set 1" IP w/Caltrans RP plug
17.5' Nly EP of EB SBD 40;
30' Wly of Wly End Rojo Bridge.
N 2125234.11
E 7358243.91
Elev 2171.5 ft

PNO 111: Set 1" IP w/Caltrans
RP Plug EB Side SBD 40;
18.0' Nly R/W Fence at Gate;
200' Sly of Ely End Rojo Bridge.
N 2124983.03
E 7358339.08
Elev 2175.8 ft

Vertical Datum: NGVD 1929

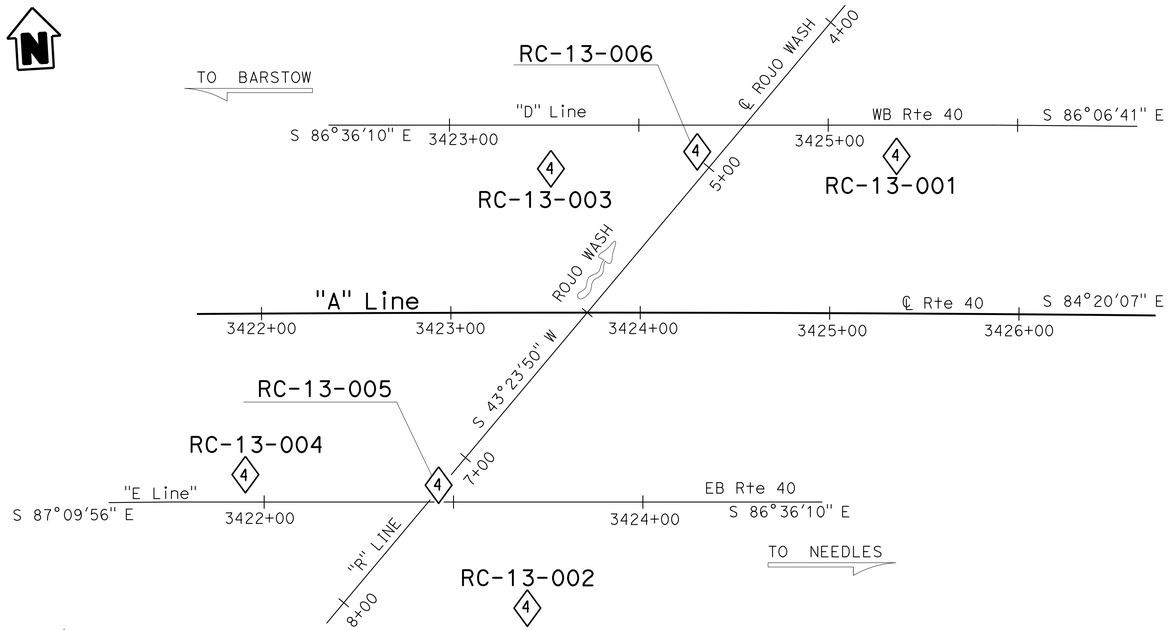

PLAN

1" = 40'

Note: No ground water encountered during field investigation.

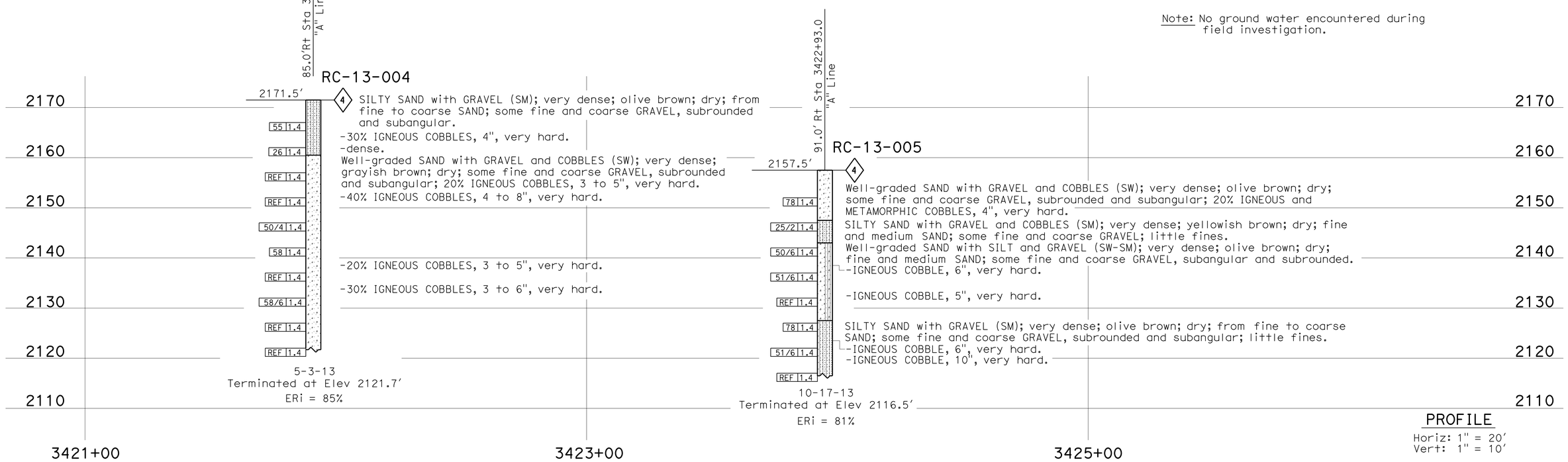

PROFILE

Horiz: 1" = 20'
Vert: 1" = 10'

ENGINEERING SERVICES	MATERIALS AND GEOTECHNICAL SERVICES	STATE OF CALIFORNIA DEPARTMENT OF TRANSPORTATION	DIVISION OF ENGINEERING SERVICES STRUCTURE DESIGN DESIGN BRANCH 19	BRIDGE NO. 54-1301L/R POST MILE R98.3	ROJO WASH BRIDGE (REPLACE)
FUNCTIONAL SUPERVISOR NAME: M. DeSalvatore	DRAWN BY: F. Nguyen CHECKED BY: C. Manansala	FIELD INVESTIGATION BY: T-M Liao			LOG OF TEST BORINGS 1 OF 4

OGS CIVIL LOG OF TEST BORINGS SHEET

ORIGINAL SCALE IN INCHES FOR REDUCED PLANS 0 1 2 3

UNIT: 3643
PROJECT NUMBER & PHASE: 0813000176 - 1 CONTRACT NO.: 08-0N56U1

DISREGARD PRINTS BEARING EARLIER REVISION DATES

REVISION DATES: 12-05-13 12-20-13 01-03-14 SHEET 22 OF 25

FILE => 54-1301lr-z-lotb_01.dgn

USERNAME => s126614 DATE PLOTTED => 10-SEP-2014 TIME PLOTTED => 10:08

DIST	COUNTY	ROUTE	POST MILES TOTAL PROJECT	SHEET No.	TOTAL SHEETS
08	SBd	40	R94.7/R99.7	211	251

REGISTERED CIVIL ENGINEER 1-7-14 DATE

5-27-14
PLANS APPROVAL DATE

REGISTERED PROFESSIONAL ENGINEER
David T-M Liao
No. C59838
Exp. 12-31-15
CIVIL
STATE OF CALIFORNIA

The State of California or its officers or agents shall not be responsible for the accuracy or completeness of electronic copies of this plan sheet.

This LOTB sheet was prepared in accordance with the Caltrans Soil & Rock Logging, Classification, & Presentation Manual (2010 Edition).

See 2010 Standard Plans A10F and A10G for Soil Legend, and A10H for Rock Legend.

FOR PLAN VIEW, SEE
"LOG OF TEST BORINGS 1 OF 4"

Note: No ground water encountered during field investigation.

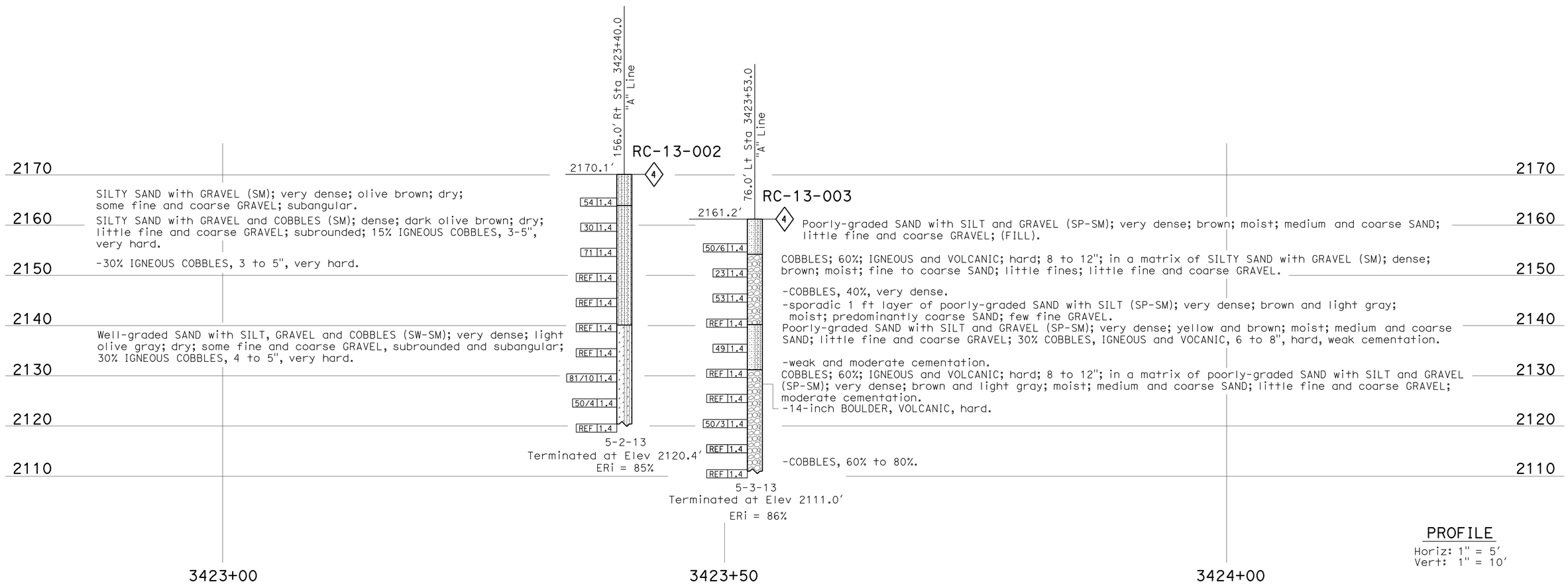

PROFILE
Horiz: 1" = 5'
Vert: 1" = 10'

ENGINEERING SERVICES	MATERIALS AND GEOTECHNICAL SERVICES	STATE OF CALIFORNIA DEPARTMENT OF TRANSPORTATION	DIVISION OF ENGINEERING SERVICES STRUCTURE DESIGN DESIGN BRANCH 19	BRIDGE NO. 54-1301L/R POST MILE R98.3	ROJO WASH BRIDGE (REPLACE) LOG OF TEST BORINGS 2 OF 4
FUNCTIONAL SUPERVISOR NAME: M. DeSalvatore	DRAWN BY: F. Nguyen CHECKED BY: C. Manansala	FIELD INVESTIGATION BY: T-M Liao, F. De Haro			

OGS CIVIL LOG OF TEST BORINGS SHEET

ORIGINAL SCALE IN INCHES FOR REDUCED PLANS 0 1 2 3

UNIT: 3643
PROJECT NUMBER & PHASE: 0813000176 - 1 CONTRACT NO.: 08-0N56U1

DISREGARD PRINTS BEARING EARLIER REVISION DATES

REVISION DATES 12-05-13 12-30-13 01-03-14

SHEET 23 OF 25

FILE => 54-1301lr-z-lotb_02.dgn

USERNAME => s121614 DATE PLOTTED => 10-SEP-2014 TIME PLOTTED => 10:08

DIST	COUNTY	ROUTE	POST MILES TOTAL PROJECT	SHEET No.	TOTAL SHEETS
08	SBd	40	R94.7/R99.7	212	251

REGISTERED CIVIL ENGINEER 1-7-14 DATE

5-27-14
PLANS APPROVAL DATE

REGISTERED PROFESSIONAL ENGINEER
David T-M Liao
No. C59838
Exp. 12-31-15
CIVIL
STATE OF CALIFORNIA

The State of California or its officers or agents shall not be responsible for the accuracy or completeness of electronic copies of this plan sheet.

This LOTB sheet was prepared in accordance with the Caltrans Soil & Rock Logging, Classification, & Presentation Manual (2010 Edition).

See 2010 Standard Plans A10F and A10G for Soil Legend, and A10H for Rock Legend.

FOR PLAN VIEW, SEE
"LOG OF TEST BORINGS 1 OF 4"

Note: No ground water encountered during field investigation.

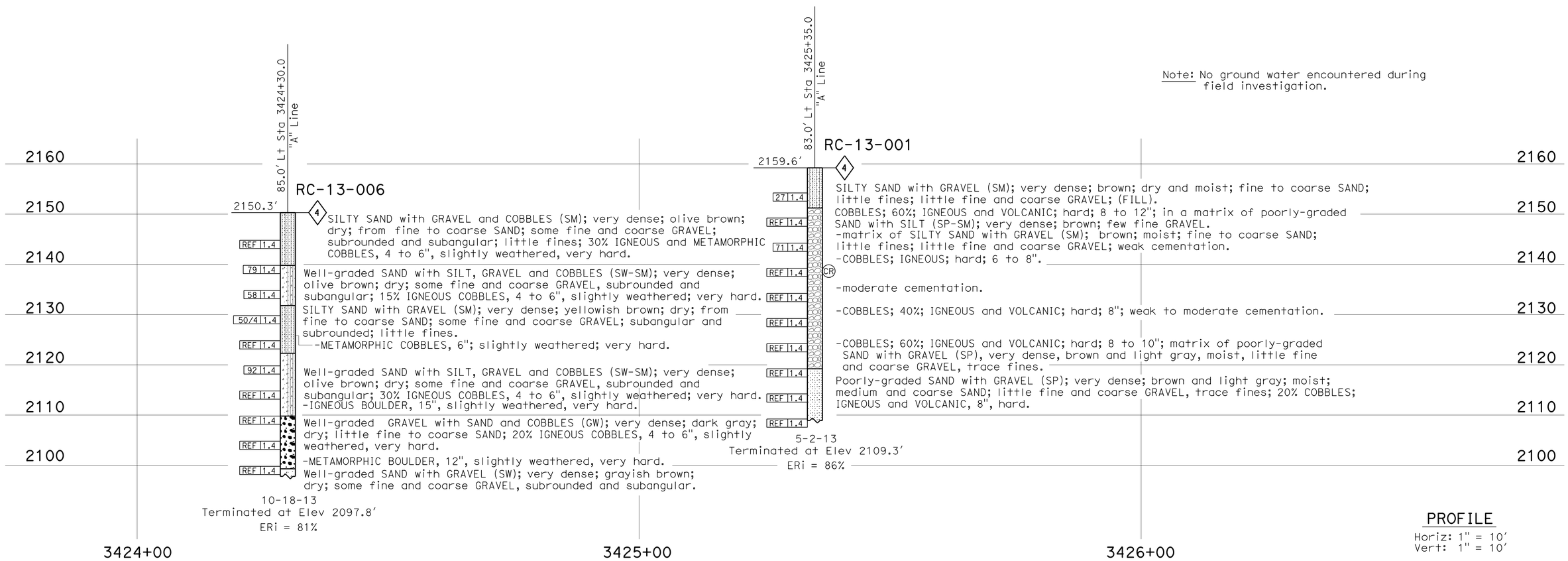

PROFILE
Horiz: 1" = 10'
Vert: 1" = 10'

ENGINEERING SERVICES	MATERIALS AND GEOTECHNICAL SERVICES	STATE OF CALIFORNIA DEPARTMENT OF TRANSPORTATION	DIVISION OF ENGINEERING SERVICES STRUCTURE DESIGN DESIGN BRANCH 19	BRIDGE NO. 54-1301L/R POST MILE R98.3	ROJO WASH BRIDGE (REPLACE) LOG OF TEST BORINGS 3 OF 4
FUNCTIONAL SUPERVISOR NAME: M. DeSalvatore	DRAWN BY: F. Nguyen CHECKED BY: C. Manansala	FIELD INVESTIGATION BY: T-M Liao, F. De Haro			

OGS CIVIL LOG OF TEST BORINGS SHEET

ORIGINAL SCALE IN INCHES FOR REDUCED PLANS 0 1 2 3

UNIT: 3643
PROJECT NUMBER & PHASE: 08130001761 CONTRACT NO.: 08-0N56U1

DISREGARD PRINTS BEARING EARLIER REVISION DATES

REVISION DATES 12-05-13 12-30-13 01-03-14 01-07-14

SHEET 24 OF 25

FILE => 54-1301lr-z-lotb_03.dgn

USERNAME => s121614

DIST.	COUNTY	ROUTE	POST MILES—TOTAL PROJECT	SHEET NO.	TOTAL SHEETS
08	SBd	40	R77.8/R114.7	192	223

R C Blake
DESIGN SECTION SUPERVISOR — REGISTERED CIVIL ENGINEER NO. 50957

DATE APPROVED March 15, 1971

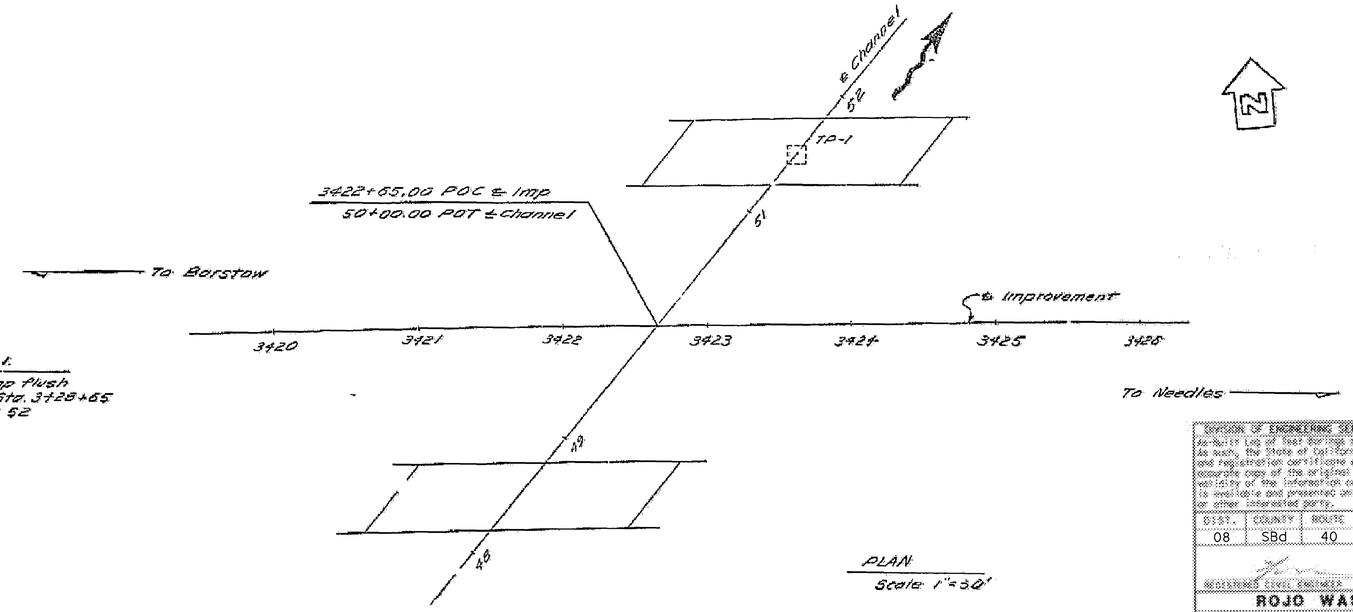

DIVISION OF ENGINEERING SERVICES - MATERIALS AND GEOTECHNICAL SERVICES

As-built Log of Test Borings sheet is considered an informational document only. As such, the State of California registration seal with signature, license number and registration certificate expiration date confirm that this is a true and accurate copy of the original document. It does not attest to the accuracy or validity of the information contained in the original document. This drawing is available and presented only for the convenience of any bidder, contractor or other interested party.

DIST.	COUNTY	ROUTE	POST MILE-TOTAL PROJECT	Sheet No.	Total Sheets
08	SBd	40	R94.7/R99.7	213	251

REGISTERED CIVIL ENGINEER — DATE 4/10/14

REGISTERED PROFESSIONAL ENGINEER — David T-M Liao — No. C59838 — Exp. 12-31-15 — CIVIL — STATE OF CALIFORNIA

ROJO WASH BRIDGE (REPLACE)

LOG OF TEST BORINGS 4 OF 4

UNIT: 3643 — PROJ. No. & PHASE: 08E100051261 — CONTRACT No. 08-0N960 — BRIDGE No. 54-894R/L

AS-BUILT PLAN DATA — CONVERSION: NOTE: A COPY OF THIS LOG OF TEST BORINGS IS AVAILABLE AT OFFICE OF STRUCTURE MAINTENANCE AND INVESTIGATIONS, SACRAMENTO, CALIFORNIA — Sheet 25 of 25

TO ACCOMPANY PLANS DATED 5-27-14

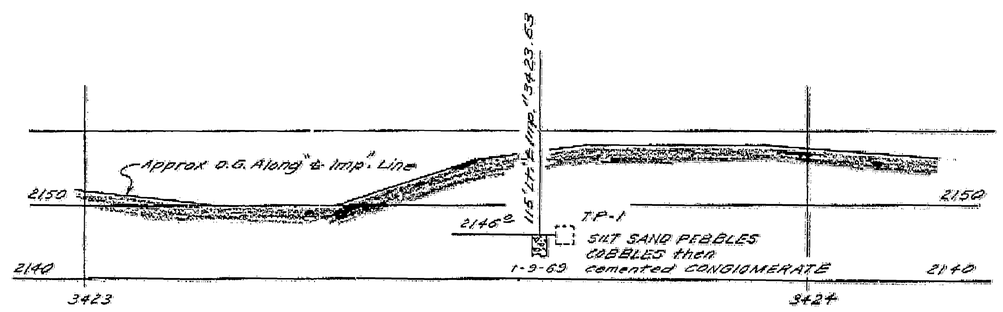

PROFILE
Scale: 1"=10'

Material - Thin veneer of SANDY GRAVEL in existing channel over LIME cemented CONGLOMERATE - SAND, PEBBLES, COBBLES and BOULDERS —
Massive BOULDERS 3± ' in diameter are carried at flood stage

NO GROUND WATER ENCOUNTERED DURING THIS INVESTIGATION BY BRIDGE DEPT. GEOLOGY SECTION
DATE Jan. 1969

AS BUILT PLANS
Contract No. 08-046854
Date Completed 5-1-73
Document No. 80002312

FOUNDATION ... ON FILE
... BRIDGE GEOLOGY SECTION

AS BUILT
CHECKED
CONTRACT NO.
DATE

STATE OF CALIFORNIA
TRANSPORTATION AGENCY
DEPARTMENT OF PUBLIC WORKS
DIVISION OF HIGHWAYS

ROJO WASH

LOG OF TEST BORINGS

BRIDGE NO.	POST MILE	DRAWING NO.	SHEET	OF
54-894R/L	99.3		7	7

LEGEND OF BORING OPERATIONS

- Penetrometer
- 2½" Core Penetrometer
- Sampler Boring (Dry)
- Rotary Boring (Wet)
- Auger Boring (Dry)
- Jet Boring
- Core Boring
- Test Pit

LEGEND OF EARTH MATERIALS

- Gravel
- Silty Clay or Clayey Silt
- Sand
- Peat and Organic Matter
- Silt
- Fill Material
- Clay
- Igneous Rock
- Sandy Clay or Clayey Sand
- Sedimentary Rock
- Sandy Silt or Silty Sand
- Metamorphic Rock

CLASSIFICATION OF MATERIAL BASED ON STANDARD GRADE SIZE LIMITS

NOTE: Classification of earth material as shown on this sheet is based upon field inspection and is not to be construed to imply mechanical analysis.

BRIDGE DEPARTMENT
ENGINEERING GEOLOGY SECTION

WO 046851
CU 08203
PR 54894-2

Disregard prints bearing earlier revision dates

REVISION DATES (PRELIMINARY STAGE ONLY): 3/6/69 3/8/71

DIST	COUNTY	ROUTE	POST MILES TOTAL PROJECT	SHEET No.	TOTAL SHEETS
08	SBd	40	R94.7/R99.7	214	251

Charles Lomicka 02-14-14
REGISTERED CIVIL ENGINEER DATE

5-27-14
PLANS APPROVAL DATE

REGISTERED PROFESSIONAL ENGINEER CHARLES LOMICKA No. C 71172 Exp. 06-30-15 CIVIL STATE OF CALIFORNIA

The State of California or its officers or agents shall not be responsible for the accuracy or completeness of electronic copies of this plan sheet.

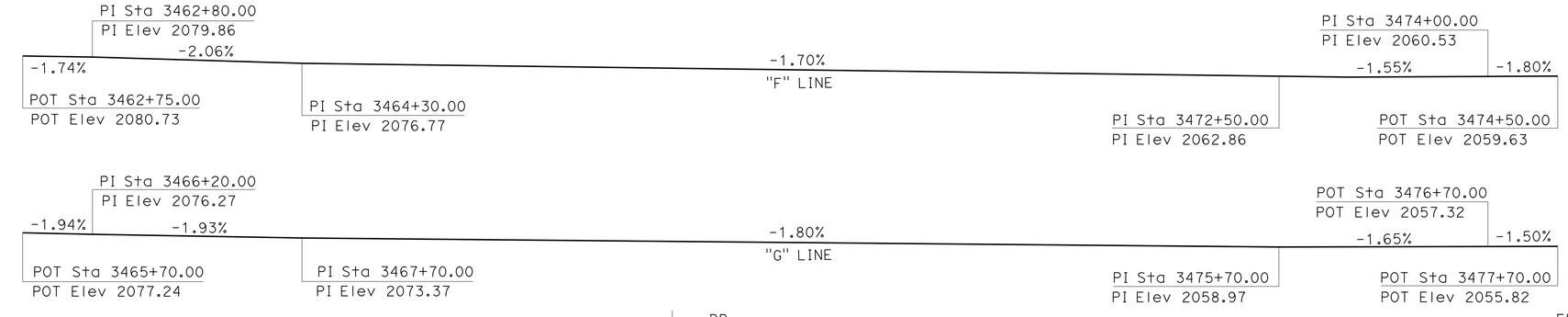

PROFILE GRADE

NO SCALE

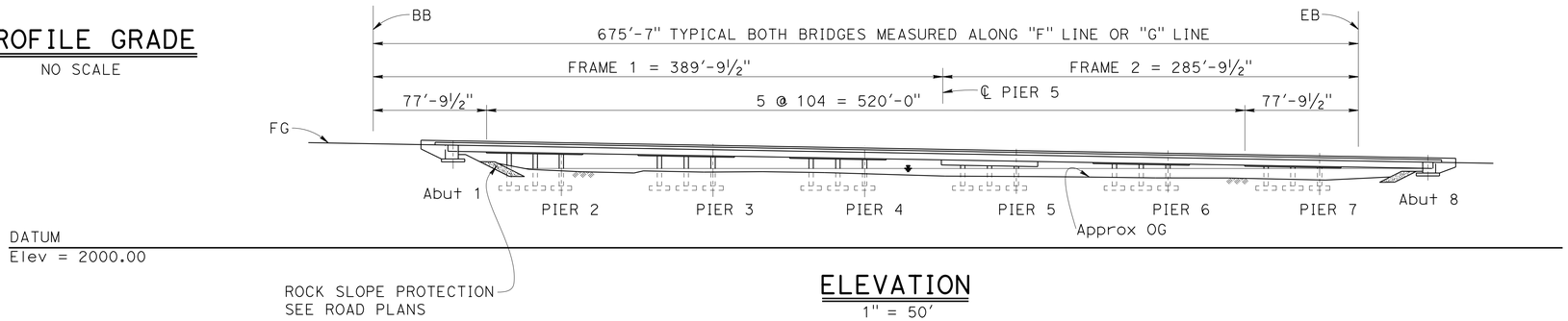

ELEVATION

1" = 50'

RIGHT BRIDGE SHOWN
LEFT BRIDGE SIMILAR

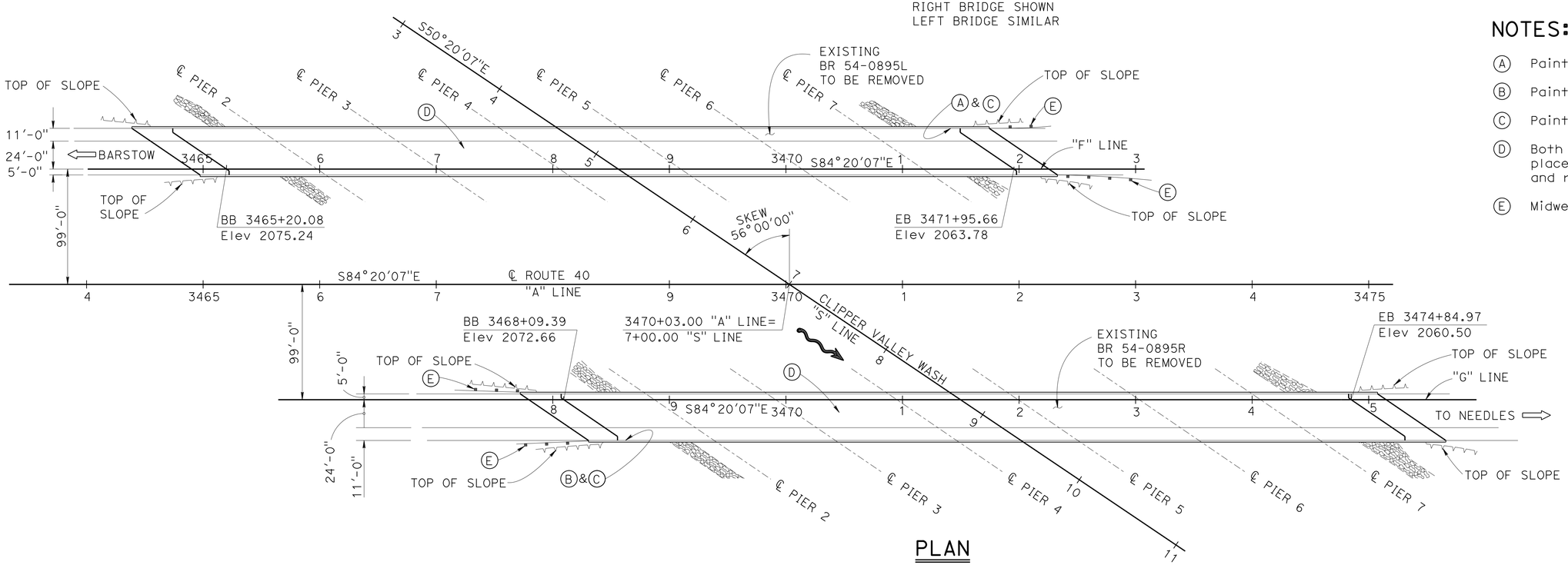

PLAN

1" = 50'

NOTES:

(A) Paint "BR No. 54-1302L".

(B) Paint "BR No. 54-1302R".

(C) Paint "CLIPPER VALLEY WASH BRIDGE".

(D) Both EB and WB traffic to be placed on one bridge while removing and replacing the other, see Road Plans.

(E) Midwest Guardrail system, see Road Plans.

LEGEND:

⇨ Direction of traffic

Rock slope protection, see Road Plans

High water mark

DESIGN	BY C. LOMICKA	CHECKED E. MERCADO / J. FANG	LOAD & RESISTANCE FACTOR DESIGN	LIVE LOADING: HL93 W/"LOW-BOY": PERMIT DESIGN VEHICLE	
DETAILS	BY H. MAHBOOBI / H. I.	CHECKED E. MERCADO / J. FANG	LAYOUT	BY C. LOMICKA	CHECKED E. MERCADO
QUANTITIES	BY E. M. / R. W. / C. L.	CHECKED D. B. / B. P. / H. W. / B. G.	SPECIFICATIONS	BY V. RENGANATHAN	PLANS AND SPECS COMPARED V. RENGANATHAN

B. GUNTER
DESIGN ENGINEER

ORIGINAL SCALE IN INCHES FOR REDUCED PLANS 0 1 2 3

STATE OF CALIFORNIA
DEPARTMENT OF TRANSPORTATION

DIVISION OF ENGINEERING SERVICES
STRUCTURE DESIGN
DESIGN BRANCH 19

BRIDGE NO. 54-1302L/R
POST MILE R99.2

CLIPPER VALLEY WASH BRIDGE (REPLACE)
GENERAL PLAN NO. 1

UNIT: 3621
PROJECT NUMBER & PHASE: 0813000176 -1 CONTRACT NO.: 08-0N56U

DISREGARD PRINTS BEARING EARLIER REVISION DATES

REVISION DATES: 10-11-11 02-13-14 02-24-14

SHEET 1 OF 38

USERNAME => s121614 DATE PLOTTED => 10-SEP-2014 TIME PLOTTED => 10:08

FILE => 54-1302lr-a-gp01.dgn

STRUCTURES DESIGN GENERAL PLAN SHEET (ENGLISH) (REV.09-01-10)

DIST	COUNTY	ROUTE	POST MILES TOTAL PROJECT	SHEET No.	TOTAL SHEETS
08	SBd	40	R94.7/R99.7	215	251

Charles Lomicka 02-14-14
REGISTERED CIVIL ENGINEER DATE

5-27-14
PLANS APPROVAL DATE

REGISTERED PROFESSIONAL ENGINEER CHARLES LOMICKA No. C 71172 Exp. 06-30-15 CIVIL STATE OF CALIFORNIA

The State of California or its officers or agents shall not be responsible for the accuracy or completeness of electronic copies of this plan sheet.

NOTES:

(A) Concrete Barrier Type 736.

(B) Temporary Railing (Type K) See Road Plans. (T3)

(C) Remove MBGR. See Road Plans.

(D) Salvage Metal Bridge Railing.

(E) Existing Piers 3,4,7,8 Removal limits are 3'-0" below OG.

(F) Remove Existing Piers 2,5,6,9.

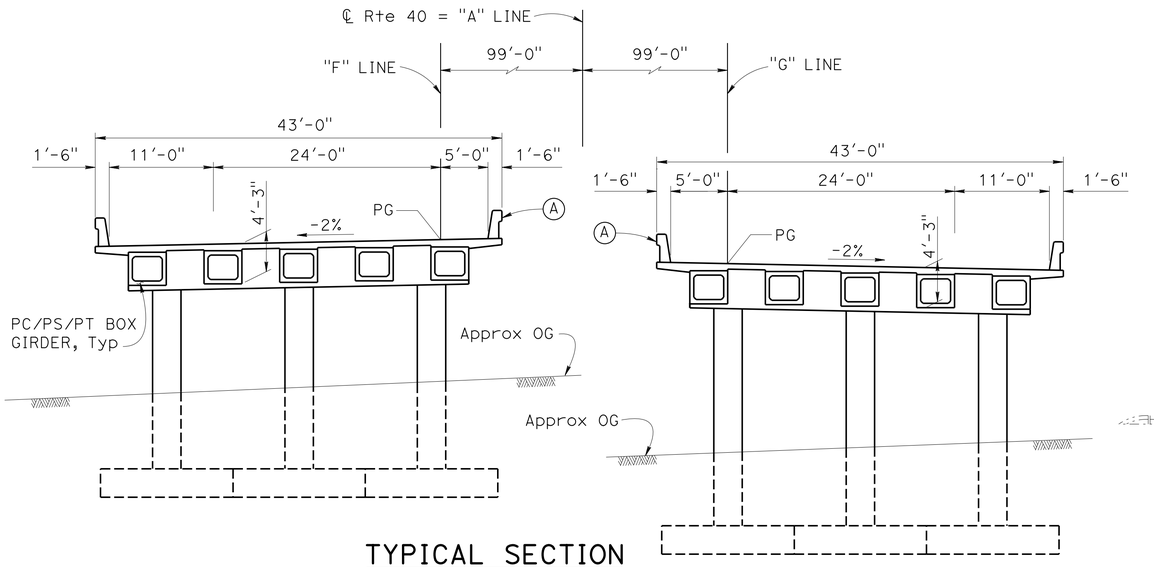

TYPICAL SECTION

1/8" = 1'-0"

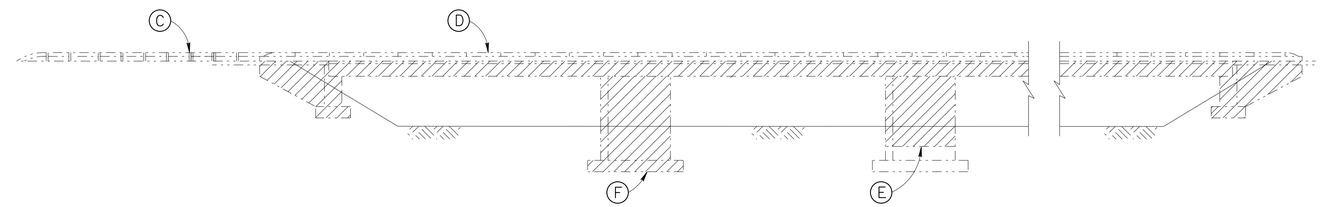

LIMITS OF BRIDGE REMOVAL

NO SCALE

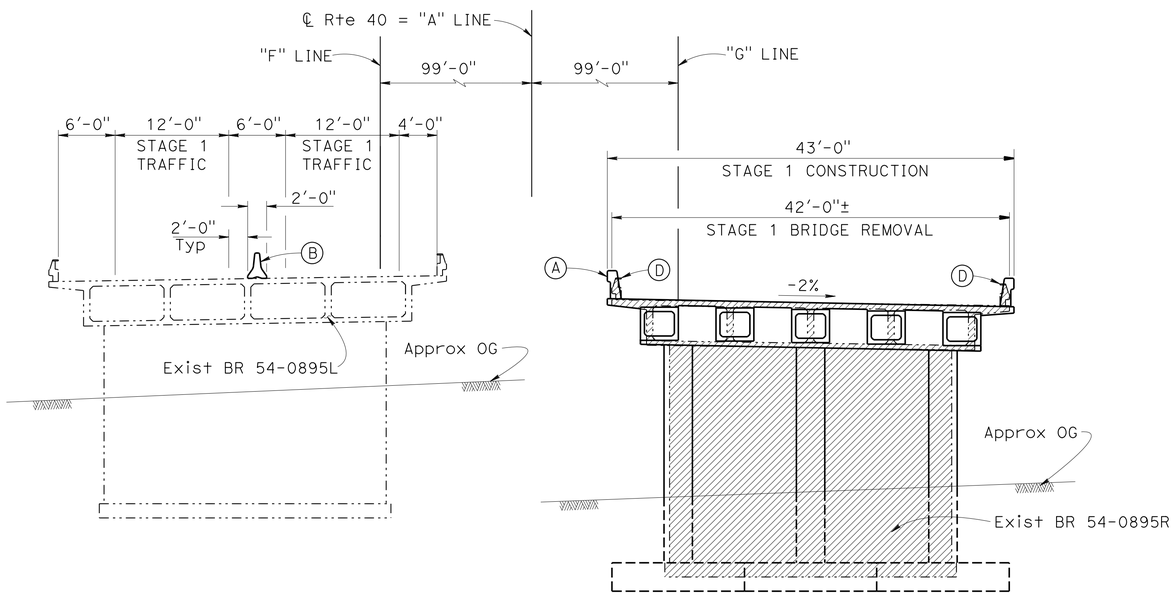

TYPICAL SECTION - STAGE 1

1/8" = 1'-0"

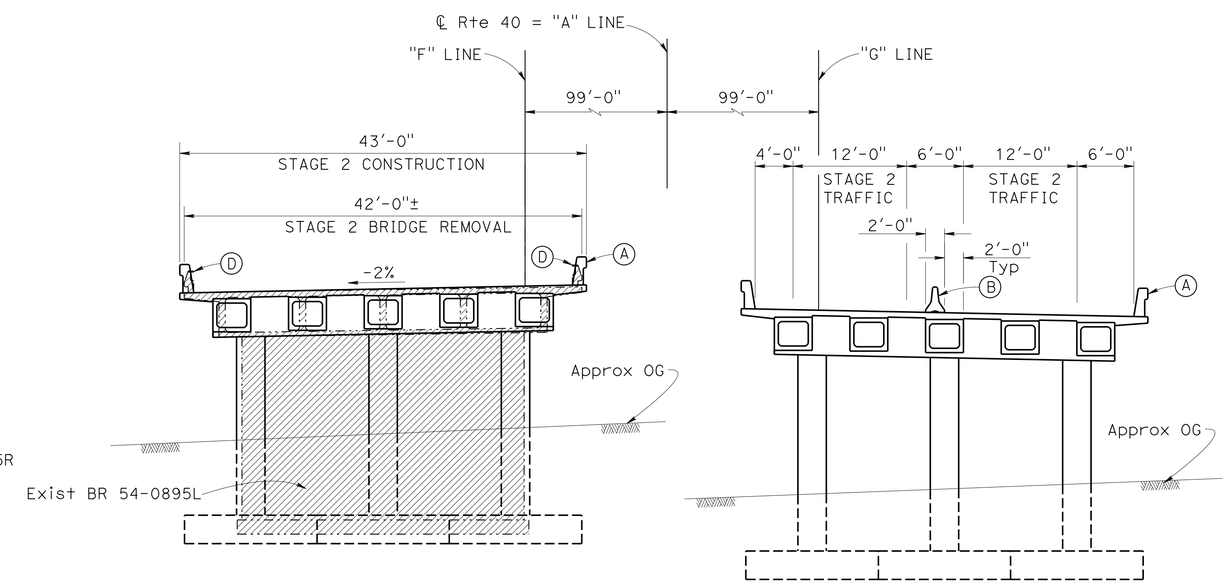

TYPICAL SECTION - STAGE 2

1/8" = 1'-0"

NOTE:
THE CONTRACTOR SHALL VERIFY ALL CONTROLLING FIELD DIMENSIONS BEFORE ORDERING OR FABRICATING ANY MATERIAL.

LEGEND:

- Bridge Removal
- New structure
- Existing structure

DESIGN	BY C. LOMICKA	CHECKED E. MERCADO / J. FANG	
DETAILS	BY H. MAHBOOBI / H. I.	CHECKED E. MERCADO / J. FANG	
QUANTITIES	BY E. M. / R. W. / C. L.	CHECKED D. B. / B. P. / H. W. / B. G.	

STATE OF CALIFORNIA
DEPARTMENT OF TRANSPORTATION

DIVISION OF ENGINEERING SERVICES
STRUCTURE DESIGN
DESIGN BRANCH 19

BRIDGE NO. 54-1302L/R
POST MILE R99.2

CLIPPER VALLEY WASH BRIDGE (REPLACE)
GENERAL PLAN NO. 2

STRUCTURES DESIGN DETAIL SHEET (ENGLISH) (REV. 09-01-10)

ORIGINAL SCALE IN INCHES FOR REDUCED PLANS 0 1 2 3

UNIT: 3621
PROJECT NUMBER & PHASE: 0813000176 - 1 CONTRACT NO.: 08-0N56U

DISREGARD PRINTS BEARING EARLIER REVISION DATES

REVISION DATES: 12-19-12 02-13-14 02-02-14

SHEET 2 OF 38

FILE => 54-1302lr-a-gp02.dgn

USERNAME => s1216l4 DATE PLOTTED => 10-SEP-2014 TIME PLOTTED => 10:08

DIST	COUNTY	ROUTE	POST MILES TOTAL PROJECT	SHEET No.	TOTAL SHEETS
08	SBd	40	R94.7/R99.7	216	251

Charles Lomicka 02-14-14
REGISTERED CIVIL ENGINEER DATE

5-27-14
PLANS APPROVAL DATE

REGISTERED PROFESSIONAL ENGINEER CHARLES LOMICKA No. C 71172 Exp. 06-30-15 CIVIL STATE OF CALIFORNIA

The State of California or its officers or agents shall not be responsible for the accuracy or completeness of electronic copies of this plan sheet.

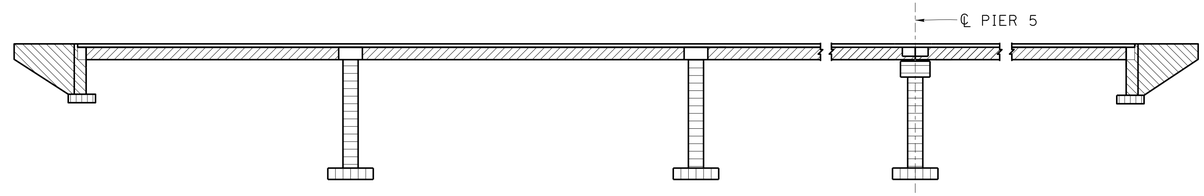

QUANTITIES

SALVAGE METAL BRIDGE RAILING	2,766	LF
BRIDGE REMOVAL, LOCATION C	LUMP	SUM
STRUCTURE EXCAVATION (BRIDGE)	4,893	CY
STRUCTURE BACKFILL (BRIDGE)	3,413	CY
PRESTRESSING PRECAST GIRDER	LUMP	SUM
STRUCTURAL CONCRETE, BRIDGE FOOTING	818	CY
STRUCTURAL CONCRETE, BRIDGE	3,046	CY
STRUCTURAL CONCRETE, APPROACH SLAB (TYPE N)	191	CY
FURNISH PRECAST PRESTRESSED CONCRETE BOX GIRDER (60'-70')	20	EA
FURNISH PRECAST PRESTRESSED CONCRETE BOX GIRDER (90'-100')	50	EA
ERECT PRECAST PRESTRESSED CONCRETE BOX GIRDER	70	EA
JOINT SEAL (MR 1½")	140	LF
JOINT SEAL ASSEMBLY (MR 2½")	140	LF
JOINT SEAL ASSEMBLY (MR 4")	140	LF
BAR REINFORCING STEEL (BRIDGE)	1,064,476	LB
HEADED BAR REINFORCEMENT	1,440	EA
MISCELLANEOUS METAL (BRIDGE)	19,846	LB
CONCRETE BARRIER (TYPE 736)	2,942	LF

CONCRETE STRENGTH AND TYPE LIMITS

NO SCALE

- STRUCTURAL CONCRETE, BRIDGE
- STRUCTURAL CONCRETE, BRIDGE (SEE PRESTRESSING NOTES ON "PRECAST GIRDER DETAILS NO. 1" SHEET)
- STRUCTURAL CONCRETE, BRIDGE (SEE PRESTRESSING NOTES ON "END DIAPHRAGM DETAILS" SHEET)
- STRUCTURAL CONCRETE, BRIDGE FOOTING
- STRUCTURAL CONCRETE BRIDGE (4000 psi AT 28 DAYS)

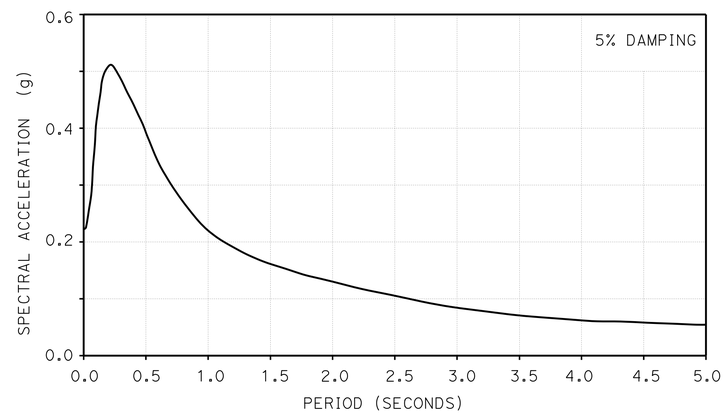

ARS CURVE

NO SCALE

STANDARD PLANS DATED 2010

	A10A	ABBREVIATIONS (SHEET 1 OF 2)
RSP	A10B	ABBREVIATIONS (SHEET 2 OF 2)
	A10C	LINES AND SYMBOLS (SHEET 1 OF 3)
	A10D	LINES AND SYMBOLS (SHEET 2 OF 3)
	A10E	LINES AND SYMBOLS (SHEET 3 OF 3)
	A10F	LEGEND-SOIL (SHEET 1 OF 2)
	A10G	LEGEND-SOIL (SHEET 2 OF 2)
	A10H	LEGEND-ROCK
	A62C	LIMITS OF PAYMENT FOR EXCAVATION AND BACKFILL BRIDGE
	B0-1	BRIDGE DETAILS
	B0-5	BRIDGE DETAILS
	B0-13	BRIDGE DETAILS
	B6-21	JOINT SEALS (MAXIMUM MOVEMENT RATING = 2")
	B7-8	DRAINAGE DETAILS
RSP	B8-5	CAST-IN-PLACE POST-TENSIONED GIRDER DETAILS
RSP	B11-56	CONCRETE BARRIER TYPE 736

Standard Plan Sheet No.
Detail No.

GENERAL NOTES
LOAD AND RESISTANCE FACTOR DESIGN

DESIGN: AASHTO LRFD Bridge Design Specifications, 4th Edition and the Caltrans Amendments, preface dated 2010.

SEISMIC DESIGN: Caltrans Seismic Design Criteria (SDC) version 1.6 dated November 2010.

DEAD LOAD: Includes 35 PSF future wearing surface. The deck dead load has been increased by a factor of 10% to allow for the use of steel deck forms.

LIVE LOAD: HL93 and permit design load.

SEISMIC LOADING: Soil Profile: V_{S30} = 400 m/s
Moment Magnitude: M_{max} = 6.5
Peak Ground Acceleration = 0.22 g

REINFORCED CONCRETE: ASTM A706

f_y = 60 ksi

f'_c = 3.6 ksi (except as shown on Concrete Strength and Type Limits Diagram)

PRESTRESSED CONCRETE: Prestressing Notes (Pre-Tensioning) on "PRECAST GIRDER DETAILS NO. 1" sheet.

Prestressing Notes (Post-Tensioning) on "END DIAPHRAGM DETAILS" sheet.

SPREAD FOOTING DATA TABLE

SUPPORT LOCATION LEFT AND RIGHT BRIDGES	WORKING STRESS DESIGN (WSD)		LOAD AND RESISTANCE FACTOR DESIGN (LRFD)		
	PERMISSIBLE GROSS CONTACT STRESS (SETTLEMENT) (ksf)	ALLOWABLE GROSS BEARING CAPACITY (ksf)	SERVICE PERMISSIBLE NET CONTACT STRESS (SETTLEMENT) (ksf)	STRENGTH FACTORED GROSS NOMINAL BEARING RESISTANCE Øb = 0.45 (ksf)	EXTREME EVENT FACTORED GROSS NOMINAL BEARING RESISTANCE Øb = 1.00 (ksf)
ABUTMENT 1	6.9	3.8	N/A	N/A	N/A
PIER 2 PER COLUMN	N/A	N/A	15.9	19.2	52.8
PIER 3 PER COLUMN	N/A	N/A	11.0	17.1	48.0
PIER 4 PER COLUMN	N/A	N/A	13.8	17.1	48.9
PIER 5 PER COLUMN	N/A	N/A	11.8	17.6	50.1
PIER 6 PER COLUMN	N/A	N/A	11.7	17.0	49.0
PIER 7 PER COLUMN	N/A	N/A	12.0	17.1	50.1
ABUTMENT 8	6.9	3.8	N/A	N/A	N/A

INDEX TO PLANS

NO.	SHEET NAME
1	GENERAL PLAN NO.1
2	GENERAL PLAN NO.2
3	INDEX TO PLANS
4	STRUCTURE PLAN NO.1
5	STRUCTURE PLAN NO.2
6	CONSTRUCTION SEQUENCE
7	DECK CONTOURS NO.1
8	DECK CONTOURS NO.2
9	FOUNDATION PLAN NO.1
10	FOUNDATION PLAN NO.2
11	ABUTMENT LAYOUT
12	ABUTMENT DETAILS NO. 1
13	ABUTMENT DETAILS NO. 2
14	ABUTMENT DETAILS NO. 3
15	PIER 2, 3, 4, 6, 7 LAYOUT
16	PIER 5 LAYOUT
17	PIER DETAILS NO. 1
18	PIER DETAILS NO. 2
19	PIER DETAILS NO. 3
20	TYPICAL SECTION
21	END DIAPHRAGM DETAILS
22	GIRDER LAYOUT NO. 1
23	GIRDER LAYOUT NO. 2
24	GIRDER LAYOUT NO. 3
25	ADDITIONAL DECK REINFORCEMENT
26	PRECAST GIRDER DETAILS NO. 1
27	PRECAST GIRDER DETAILS NO. 2
28	PRECAST GIRDER DETAILS NO. 3
29	STRUCTURE APPROACH TYPE N(30S)
30	STRUCTURE APPROACH DRAINAGE DETAILS
31	STRIP JOINT SEAL ASSEMBLY (Max MR = 4")
32	LOG OF TEST BORING 1 OF 7
33	LOG OF TEST BORING 2 OF 7
34	LOG OF TEST BORING 3 OF 7
35	LOG OF TEST BORING 4 OF 7
36	LOG OF TEST BORING 5 OF 7
37	LOG OF TEST BORING 6 OF 7
38	LOG OF TEST BORING 7 OF 7

DIST	COUNTY	ROUTE	POST MILES TOTAL PROJECT	SHEET No.	TOTAL SHEETS
08	SBd	40	R94.7/R99.7	217	251

Charles Lomicka 02-14-14
REGISTERED CIVIL ENGINEER DATE

5-27-14
PLANS APPROVAL DATE

REGISTERED PROFESSIONAL ENGINEER
CHARLES LOMICKA
No. C 71172
Exp. 06-30-15
CIVIL
STATE OF CALIFORNIA

The State of California or its officers or agents shall not be responsible for the accuracy or completeness of electronic copies of this plan sheet.

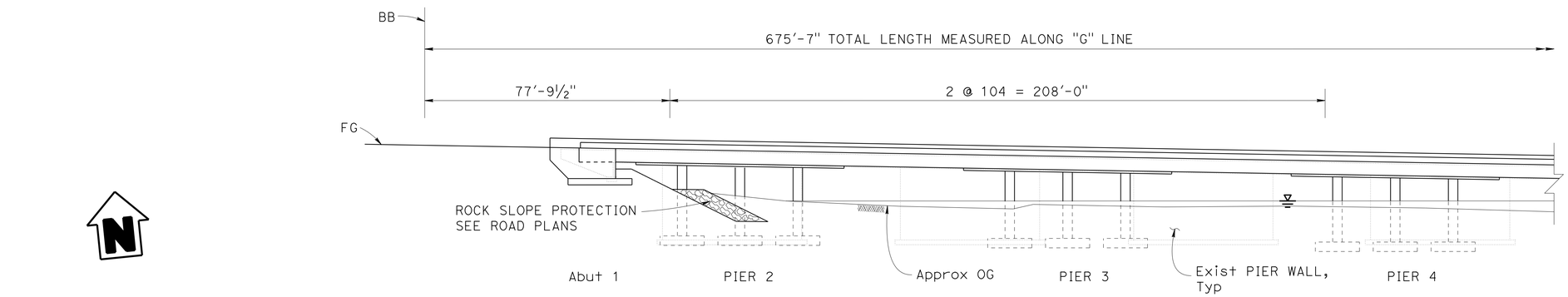

DATUM
Elev= 2000.00

ELEVATION
1" = 20'

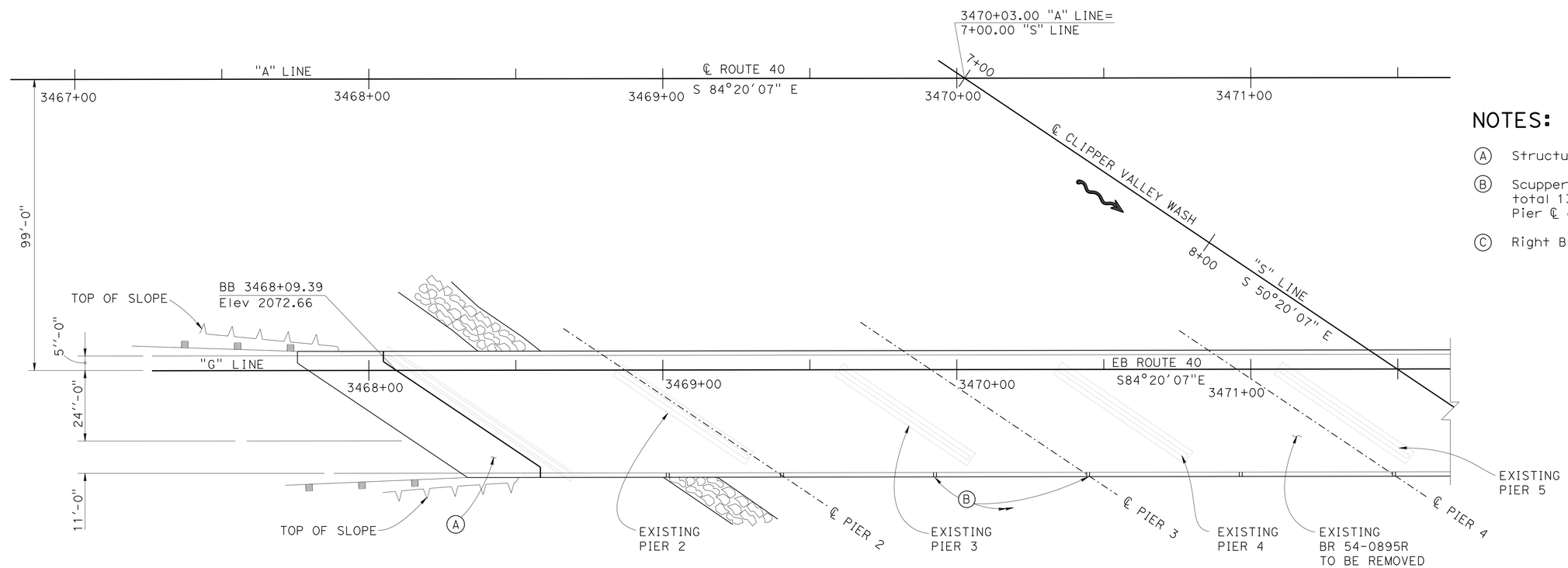

PLAN
1" = 20'

NOTES:

(A) Structure Approach Type N(30S).

(B) Scuppers at deck grade, total 13 each bridge. Place at Pier ℄ and midpoint of each span. B7-8

(C) Right Bridge shown, left bridge similar.

LEGEND:

Rock slope protection, see Road Plans

High water mark

DESIGN	BY C. LOMICKA	CHECKED E. MERCADO / J. FANG	
DETAILS	BY H. MAHBOOBI	CHECKED E. MERCADO / J. FANG	
QUANTITIES	BY E. M. / R. W. / C. L.	CHECKED D. B. / B. P. / H. W. / B. G	

STATE OF CALIFORNIA
DEPARTMENT OF TRANSPORTATION

DIVISION OF ENGINEERING SERVICES
STRUCTURE DESIGN
DESIGN BRANCH 19

BRIDGE NO. 54-1302L/R
POST MILE R99.2

CLIPPER VALLEY WASH BRIDGE (REPLACE)
STRUCTURE PLAN NO. 1

STRUCTURES DESIGN DETAIL SHEET (ENGLISH) (REV. 09-01-10)

ORIGINAL SCALE IN INCHES FOR REDUCED PLANS 0 1 2 3

UNIT: 3621
PROJECT NUMBER & PHASE: 0813000176 - 1 CONTRACT NO.: 08-0N56U

DISREGARD PRINTS BEARING EARLIER REVISION DATES

REVISION DATES: 9-30-13 01-15-14 01-21-14

SHEET 4 OF 38

FILE => 54-1302lr-a-strpl01.dgn

USERNAME => s121614 DATE PLOTTED => 10-SEP-2014 TIME PLOTTED => 10:08

DIST	COUNTY	ROUTE	POST MILES TOTAL PROJECT	SHEET No.	TOTAL SHEETS
08	SBd	40	R94.7/R99.7	218	251

Charles Lomicka 02-14-14
REGISTERED CIVIL ENGINEER DATE

5-27-14
PLANS APPROVAL DATE

REGISTERED PROFESSIONAL ENGINEER
CHARLES LOMICKA
No. C 71172
Exp. 06-30-15
CIVIL
STATE OF CALIFORNIA

The State of California or its officers or agents shall not be responsible for the accuracy or completeness of electronic copies of this plan sheet.

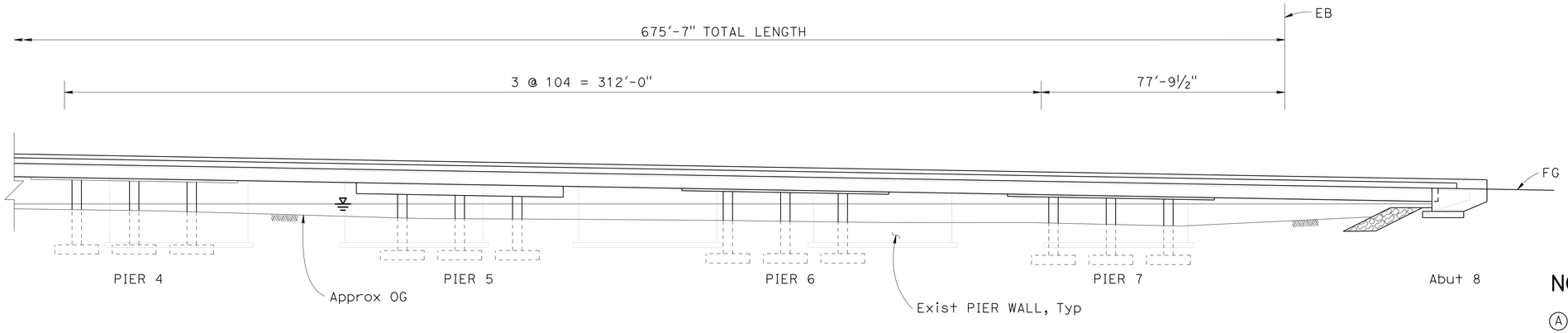

DATUM
Elev= 2000.00

ELEVATION
1" = 20'

NOTES:

(A) Structure Approach Type N(30S).

(B) Scuppers at deck grade, total 13 each bridge. Place at Pier ℄ and midpoint of each span. B7-8

(C) Right Bridge shown, left bridge similar.

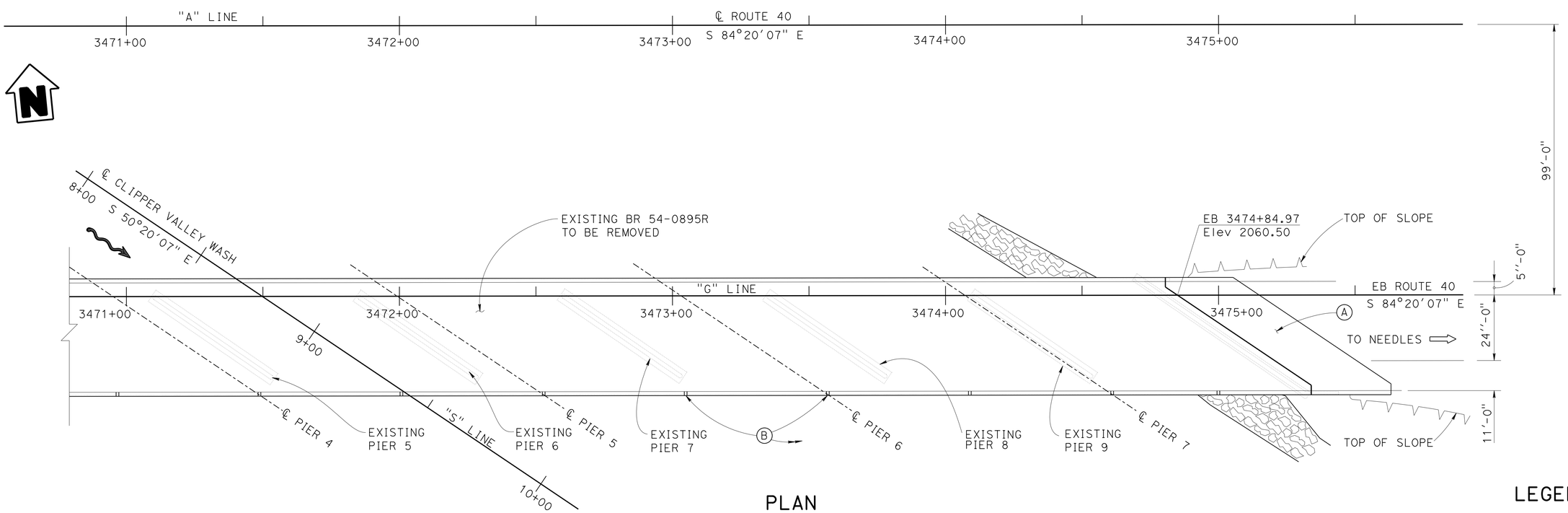

PLAN
1" = 20'

LEGEND:

⇨ Direction of traffic

Rock slope protection, see Road Plans

High water mark

DESIGN	BY C. LOMICKA	CHECKED E. MERCADO / J. FANG	
DETAILS	BY H. MAHBOOBI	CHECKED E. MERCADO / J. FANG	
QUANTITIES	BY E. M. / R. W. / C. L.	CHECKED D. B. / B. P. / H. W. / B. G.	

STATE OF CALIFORNIA
DEPARTMENT OF TRANSPORTATION

DIVISION OF ENGINEERING SERVICES
STRUCTURE DESIGN
DESIGN BRANCH 19

BRIDGE NO. 54-1302L/R
POST MILE R99.2

CLIPPER VALLEY WASH BRIDGE (REPLACE)
STRUCTURE PLAN NO. 2

STRUCTURES DESIGN DETAIL SHEET (ENGLISH) (REV. 09-01-10)

ORIGINAL SCALE IN INCHES FOR REDUCED PLANS 0 1 2 3

UNIT: 3621
PROJECT NUMBER & PHASE: 0813000176 - 1 CONTRACT NO.: 08-0N56U

DISREGARD PRINTS BEARING EARLIER REVISION DATES

REVISION DATES: 9-10-13 02-13-14 02-18-14

SHEET 5 OF 38

FILE => 54-1302lr-g-strpl02.dgn

USERNAME => s121614 DATE PLOTTED => 10-SEP-2014 TIME PLOTTED => 10:08

DIST	COUNTY	ROUTE	POST MILES TOTAL PROJECT	SHEET No.	TOTAL SHEETS
08	SBd	40	R94.7/R99.7	219	251

Charles Lomicka 02-14-14
REGISTERED CIVIL ENGINEER DATE

5-27-14
PLANS APPROVAL DATE

REGISTERED PROFESSIONAL ENGINEER
CHARLES LOMICKA
No. C 71172
Exp. 06-30-15
CIVIL
STATE OF CALIFORNIA

The State of California or its officers or agents shall not be responsible for the accuracy or completeness of electronic copies of this plan sheet.

STEP 1

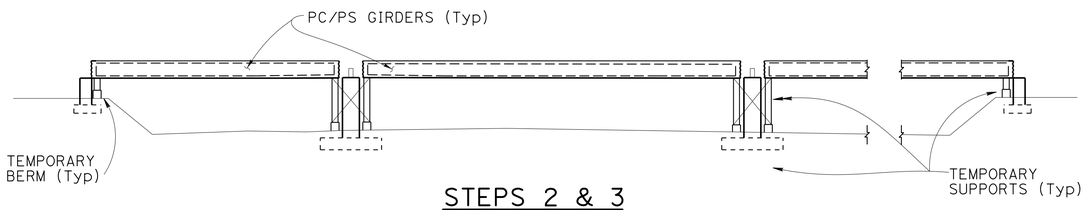

STEPS 2 & 3

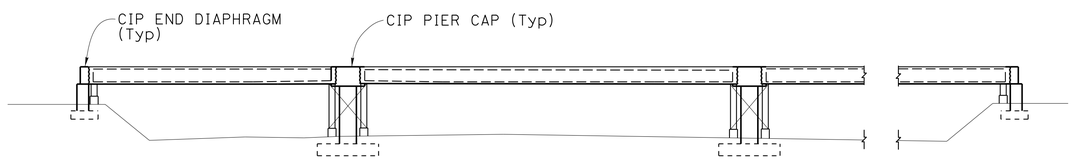

STEP 4

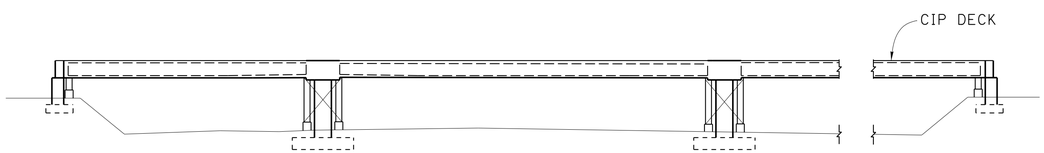

STEP 5

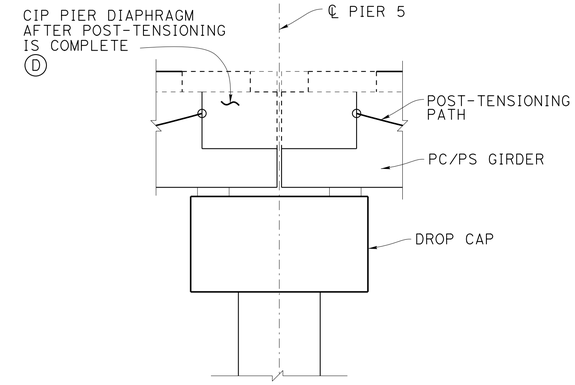

PIER 5 ONLY
NO SCALE

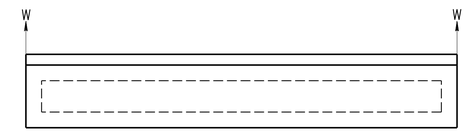

PC GIRDER LOADING DETAIL (A)(B)
NO SCALE

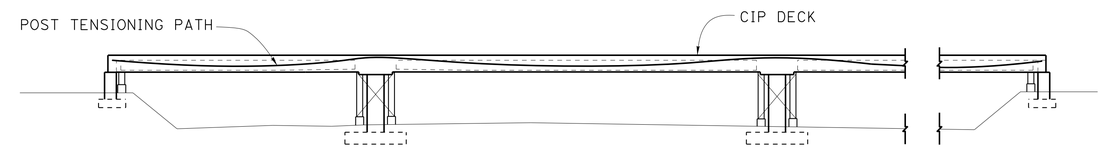

STEP 6

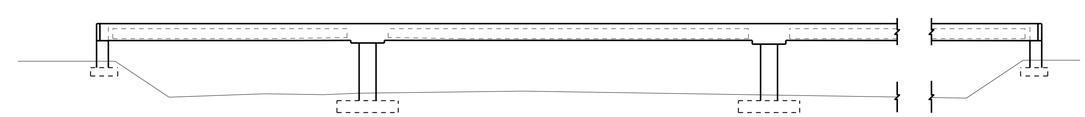

STEP 7

BRIDGE CONSTRUCTION SEQUENCE

NO SCALE

Any Alternatives to this construction sequence must be approved by the Engineer.

STEP 1: Construct abutments, pier footings, and columns.

STEP 2: Erect temporary supports at abutments and piers except for Pier 5. Temporary supports shall be capable of supporting a minimum girder and deck dead load of W kips per precast girder end. This does not include forces due to wind, impact, or construction loads. See "PRECAST GIRDER LOADING DETAIL".
The supports shall bear on a minimum of 2'-0" of structural fill.
Temporary supports shall be located within 2'-0" of precast girder ends.

STEP 3: Erect precast/prestressed girders on temporary supports. A temporary berm may be necessary.

STEP 4: Construct cast-in-place end diaphragms and pier caps. Allow cast-in-place end diaphragms and pier caps to reach f'_{ci} as shown on Prestessing notes(Post-Tensioning) on "END DIAPHRAGM DETAILS" sheet.

STEP 5: Place deck concrete.

STEP 6: Post-tension bridge. Post-tensioning shall not be permitted until at least 10 days after deck concrete has been placed and until concrete compressive strength has acheived minimum f'_{ci}

STEP 7: Remove temporary supports. Complete abutment construction and remaining items of work.

NOTES:

(A) Loads can be applied top or bottom of Girder.

(B) Spans - 1 & 7 W= 70 kips
Spans - 2 - 6 W= 100 kips

(C) All piers not shown

(D) For additional details, see "PIER 5 LAYOUT", "PIER DETAILS NO. 2", "GIRDER LAYOUT NO. 2", and "PRECAST GIRDER DETAILS" sheets.

DESIGN	BY C. LOMICKA	CHECKED J. FANG	
DETAILS	BY H. MAHBOOBI / H. I. / D. W.	CHECKED J. FANG	
QUANTITIES	BY E. M. / R. W. / C. L.	CHECKED D. B. / B. P. / H. W. / B. G	

STATE OF CALIFORNIA
DEPARTMENT OF TRANSPORTATION

DIVISION OF ENGINEERING SERVICES
STRUCTURE DESIGN
DESIGN BRANCH 19

BRIDGE NO. 54-1302L/R
POST MILE R99.2

CLIPPER VALLEY WASH BRIDGE (REPLACE)
CONSTRUCTION SEQUENCE

STRUCTURES DESIGN DETAIL SHEET (ENGLISH) (REV. 09-01-10)

ORIGINAL SCALE IN INCHES FOR REDUCED PLANS 0 1 2 3

UNIT: 3621
PROJECT NUMBER & PHASE: 0813000176 - 1 CONTRACT NO.:08-0N56U

DISREGARD PRINTS BEARING EARLIER REVISION DATES

REVISION DATES 09-16-13 01-15-14 02-07-14

SHEET 6 OF 38

FILE => 54-1302lr-b-conseq.dgn

USERNAME => s121614 DATE PLOTTED => 10-SEP-2014 TIME PLOTTED => 10:09

DIST	COUNTY	ROUTE	POST MILES TOTAL PROJECT	SHEET No.	TOTAL SHEETS
08	SBd	40	R94.7/R99.7	220	251

Charles Lomicka 02-14-14
REGISTERED CIVIL ENGINEER DATE

5-27-14
PLANS APPROVAL DATE

REGISTERED PROFESSIONAL ENGINEER
CHARLES LOMICKA
No. C 71172
Exp. 06-30-15
CIVIL
STATE OF CALIFORNIA

The State of California or its officers or agents shall not be responsible for the accuracy or completeness of electronic copies of this plan sheet.

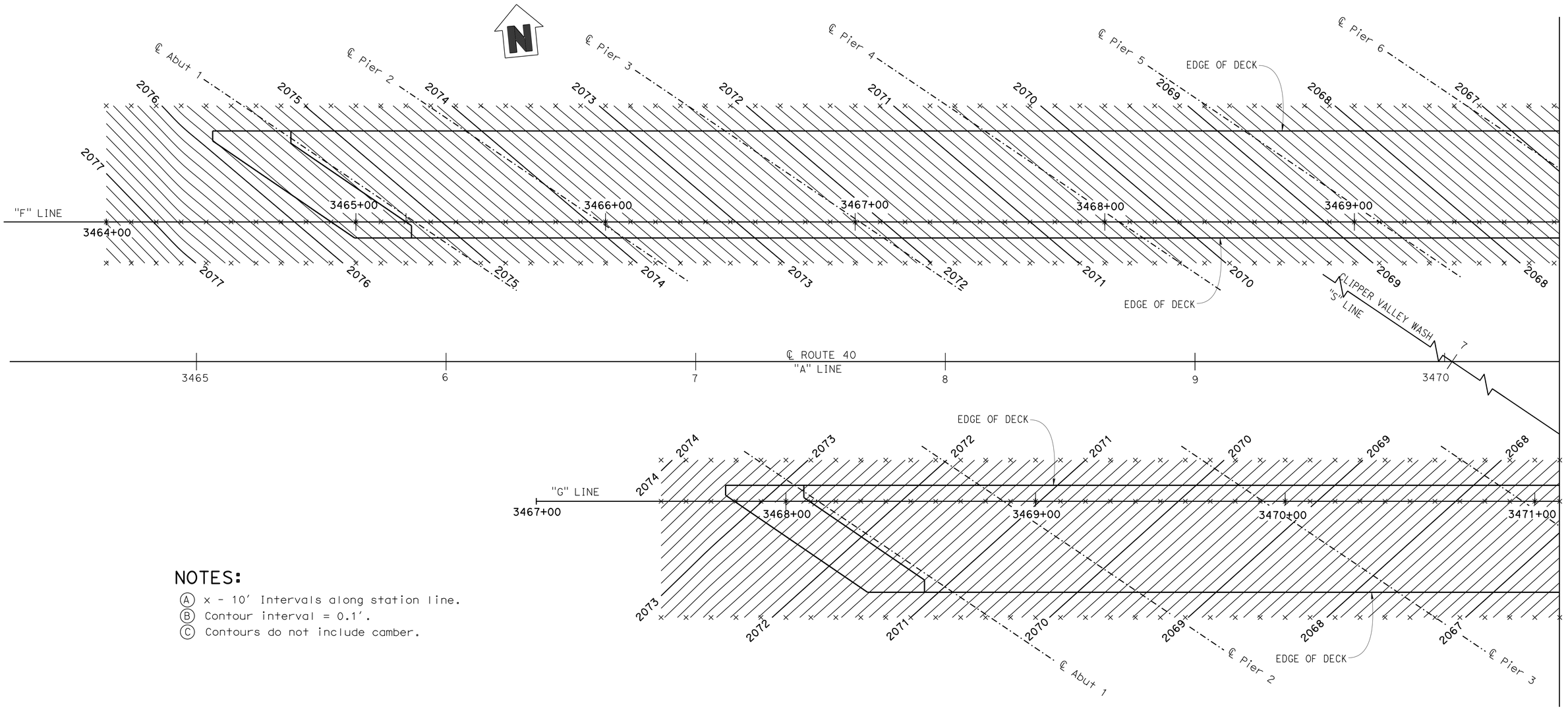

NOTES:

(A) x - 10' Intervals along station line.
(B) Contour interval = 0.1'.
(C) Contours do not include camber.

PLAN

1" = 20'

DESIGN	BY C. LOMICKA	CHECKED E. MERCADO	
DETAILS	BY D. WOOTEN / H. M.	CHECKED E. MERCADO	
QUANTITIES	BY E. MERCADO	CHECKED D. BALBAS	

STATE OF CALIFORNIA
DEPARTMENT OF TRANSPORTATION

DIVISION OF ENGINEERING SERVICES
STRUCTURE DESIGN
DESIGN BRANCH 19

BRIDGE NO. 54-1302L/R
POST MILE 99.2

CLIPPER VALLEY WASH BRIDGE (REPLACE)
DECK CONTOURS NO.1

STRUCTURES DESIGN DETAIL SHEET (ENGLISH) (REV. 09-01-10)

ORIGINAL SCALE IN INCHES FOR REDUCED PLANS 0 1 2 3

UNIT: 3621
PROJECT NUMBER & PHASE: 0813000176 - 1 CONTRACT NO.: 08-0N56U

DISREGARD PRINTS BEARING EARLIER REVISION DATES

REVISION DATES 01-16-14 01-21-14 01-29-14 02-07-14

SHEET 7 OF 38

FILE => 54-1302lr-d-dc01.dgn

USERNAME => s121614 DATE PLOTTED => 10-SEP-2014 TIME PLOTTED => 10:09

DIST	COUNTY	ROUTE	POST MILES TOTAL PROJECT	SHEET No.	TOTAL SHEETS
08	SBd	40	R94.7/R99.7	221	251

Charles Lomicka 02-14-14
REGISTERED CIVIL ENGINEER DATE

5-27-14
PLANS APPROVAL DATE

REGISTERED PROFESSIONAL ENGINEER
CHARLES LOMICKA
No. C 71172
Exp. 06-30-15
CIVIL
STATE OF CALIFORNIA

The State of California or its officers or agents shall not be responsible for the accuracy or completeness of electronic copies of this plan sheet.

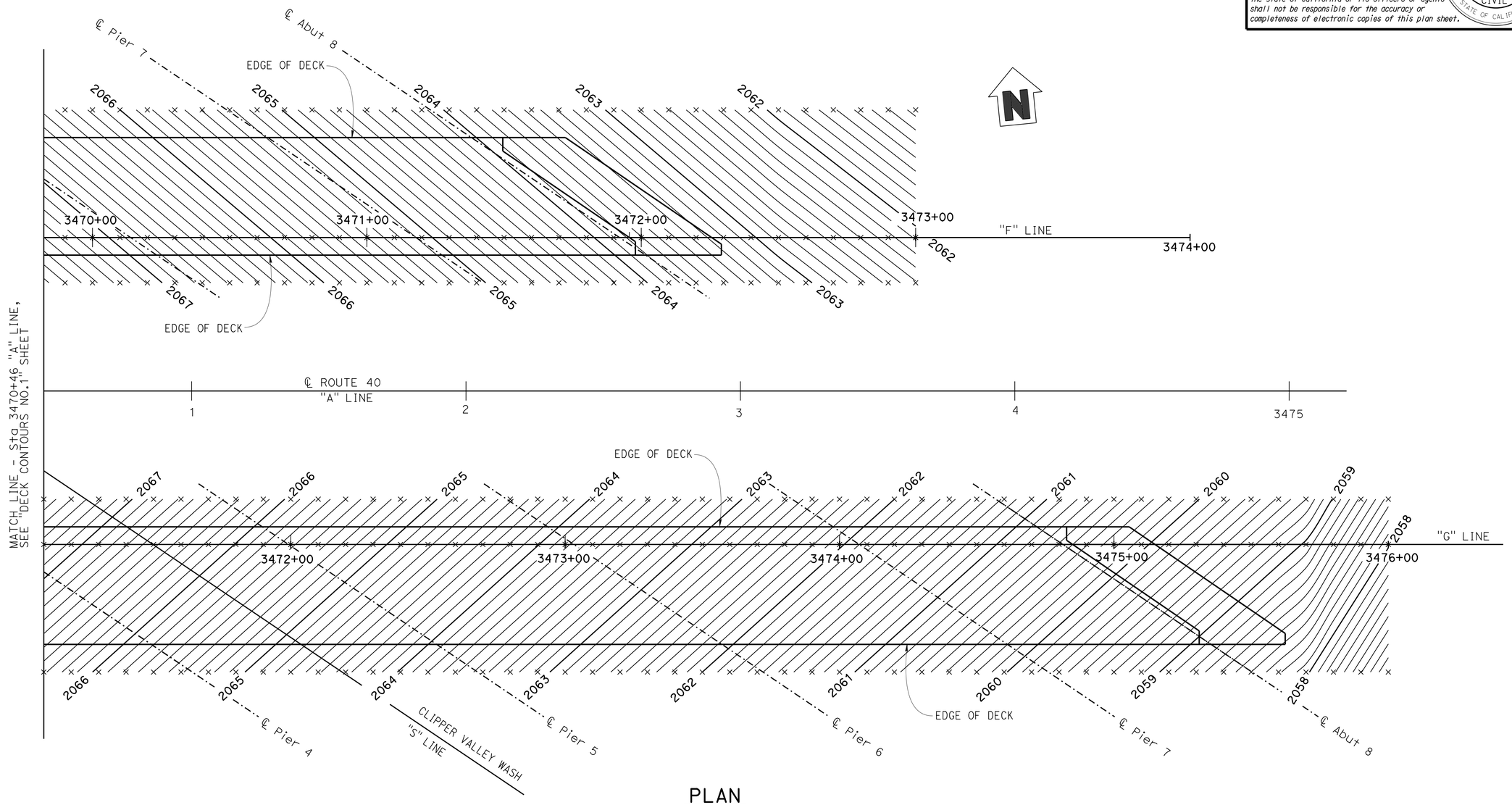

PLAN

1" = 20'

NOTES:

(A) x - 10' Intervals along station line.
(B) Contour interval = 0.1'.
(C) Contours do not include camber.

DESIGN	BY C. LOMICKA	CHECKED E. MERCADO	
DETAILS	BY D. WOOTEN / H. M.	CHECKED E. MERCADO	
QUANTITIES	BY E. MERCADO	CHECKED D. BALBAS	

STATE OF CALIFORNIA
DEPARTMENT OF TRANSPORTATION

DIVISION OF ENGINEERING SERVICES
STRUCTURE DESIGN
DESIGN BRANCH 19

BRIDGE NO. 54-1302L/R
POST MILE 99.2

CLIPPER VALLEY WASH BRIDGE (REPLACE)
DECK CONTOURS NO.2

STRUCTURES DESIGN DETAIL SHEET (ENGLISH) (REV. 09-01-10)

ORIGINAL SCALE IN INCHES FOR REDUCED PLANS 0 1 2 3

UNIT: 3621
PROJECT NUMBER & PHASE: 0813000176 - 1 CONTRACT NO.: 08-0N56U

DISREGARD PRINTS BEARING EARLIER REVISION DATES

REVISION DATES: 01-10-14 01-27-14 01-29-14 02-07-14

SHEET 8 OF 38

FILE => 54-1302lr-d-dc02.dgn

USERNAME => s121614 DATE PLOTTED => 10-SEP-2014 TIME PLOTTED => 10:09

DIST	COUNTY	ROUTE	POST MILES TOTAL PROJECT	SHEET No.	TOTAL SHEETS
08	SBd	40	R94.7/R99.7	222	251

Charles Lomicka 02-14-14
REGISTERED CIVIL ENGINEER DATE

5-27-14
PLANS APPROVAL DATE

REGISTERED PROFESSIONAL ENGINEER
CHARLES LOMICKA
No. C 71172
Exp. 06-30-15
CIVIL
STATE OF CALIFORNIA

The State of California or its officers or agents shall not be responsible for the accuracy or completeness of electronic copies of this plan sheet.

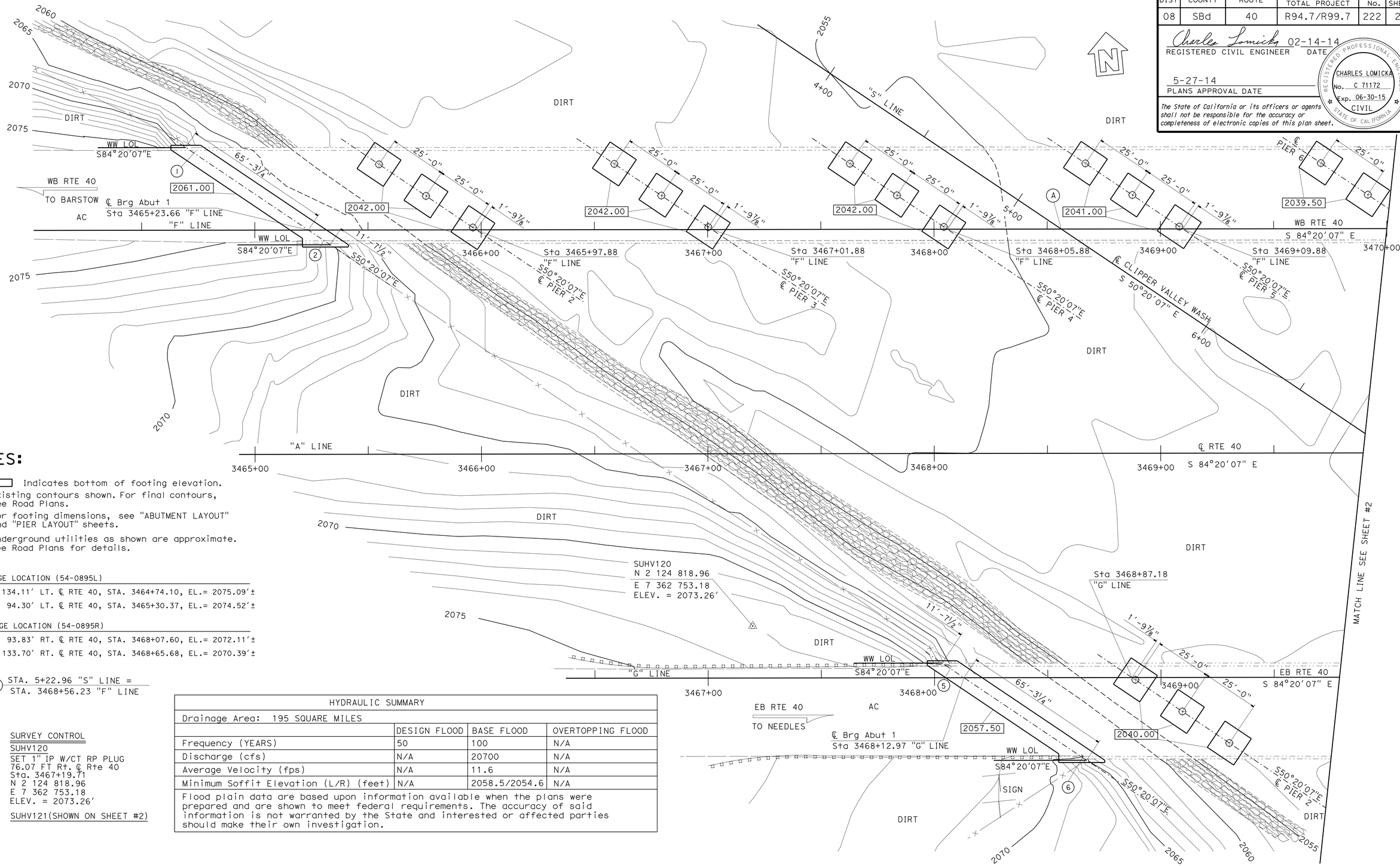

NOTES:

1. Indicates bottom of footing elevation.
2. Existing contours shown. For final contours, see Road Plans.
3. For footing dimensions, see "ABUTMENT LAYOUT" and "PIER LAYOUT" sheets.
4. Underground utilities as shown are approximate. See Road Plans for details.

BRIDGE LOCATION (54-0895L)

(1) - 134.11' LT. ℄ RTE 40, STA. 3464+74.10, EL.= 2075.09'±
(2) - 94.30' LT. ℄ RTE 40, STA. 3465+30.37, EL.= 2074.52'±

BRIDGE LOCATION (54-0895R)

(5) - 93.83' RT. ℄ RTE 40, STA. 3468+07.60, EL.= 2072.11'±
(6) - 133.70' RT. ℄ RTE 40, STA. 3468+65.68, EL.= 2070.39'±

(A) STA. 5+22.96 "S" LINE = STA. 3468+56.23 "F" LINE

SURVEY CONTROL

SUHV120
SET 1" IP W/CT RP PLUG
76.07 FT Rt. ℄ Rte 40
Sta. 3467+19.71
N 2 124 818.96
E 7 362 753.18
ELEV. = 2073.26'

SUHV121(SHOWN ON SHEET #2)

HYDRAULIC SUMMARY			
Drainage Area: 195 SQUARE MILES			
	DESIGN FLOOD	BASE FLOOD	OVERTOPPING FLOOD
Frequency (YEARS)	50	100	N/A
Discharge (cfs)	N/A	20700	N/A
Average Velocity (fps)	N/A	11.6	N/A
Minimum Soffit Elevation (L/R) (feet)	N/A	2058.5/2054.6	N/A
Flood plain data are based upon information available when the plans were prepared and are shown to meet federal requirements. The accuracy of said information is not warranted by the State and interested or affected parties should make their own investigation.			

PRELIMINARY INVESTIGATION SECTION

SCALE 1"=20'	VERT.DATUM NGVD 29	PHOTOGRAMMETRY AS OF: X		
	HORZ.DATUM NAD 83 (2000.35)	SURVEYED	BY DIST. 8 SURVEY	CHECKED BY T. PHONG 12/2012
ALIGNMENT TIES Dist. Traverse Sheet		DRAFTED	BY S. ABASSY 03/2013	CHECKED BY S. ALIVIO 03/2013

DESIGN	BY C. LOMICKA	CHECKED J. FANG
DETAILS	BY H. MAHBOOBI	CHECKED J. FANG
QUANTITIES	BY E. M. / C. L.	CHECKED B. P. / B. G.

STATE OF CALIFORNIA
DEPARTMENT OF TRANSPORTATION

DIVISION OF ENGINEERING SERVICES
STRUCTURE DESIGN
DESIGN BRANCH 19

BRIDGE NO. 54-1302L/R
POST MILE R99.2

CLIPPER VALLEY WASH BRIDGE (REPLACE)
FOUNDATION PLAN NO. 1

STRUCTURES FOUNDATION PLAN SHEET (ENGLISH) (REV. 09-01-10)

ORIGINAL SCALE IN INCHES FOR REDUCED PLANS 0 1 2 3

UNIT: 3621
PROJECT NUMBER & PHASE: 081300176 - 1 CONTRACT NO.: 08-0N56U

DISREGARD PRINTS BEARING EARLIER REVISION DATES

REVISION DATES 08/23/13 01/29/14 02/07/14

SHEET 9 OF 38

FILE => 54-1302lr-e-fdp101.dgn

DIST	COUNTY	ROUTE	POST MILES TOTAL PROJECT	SHEET No.	TOTAL SHEETS
08	SBd	40	R94.7/R99.7	223	251

Charles Lomicka 02-14-14
REGISTERED CIVIL ENGINEER DATE

5-27-14
PLANS APPROVAL DATE

REGISTERED PROFESSIONAL ENGINEER CHARLES LOMICKA No. C 71172 Exp. 06-30-15 CIVIL STATE OF CALIFORNIA

The State of California or its officers or agents shall not be responsible for the accuracy or completeness of electronic copies of this plan sheet.

BRIDGE LOCATION (54-0895L)

(3) - 133.84′ LT. ℄ RTE 40, STA. 3471+39.35, EL.= 2063.40′±
(4) - 93.91′ LT. ℄ RTE 40, STA. 3471+96.35, EL.= 2063.13′±

BRIDGE LOCATION (54-0895R)

(7) - 94.05′ RT. ℄ RTE 40, STA. 3474+74.68, EL.= 2060.01′±
(8) - 133.97′ RT. ℄ RTE 40, STA. 3475+30.83, EL.= 2058.67′±

(B) STA. 7+00.00 "S" LINE = STA. 3470+03.00 "A" LINE
(C) STA. 8+77.04 "S" LINE = STA. 3471+49.77 "G" LINE

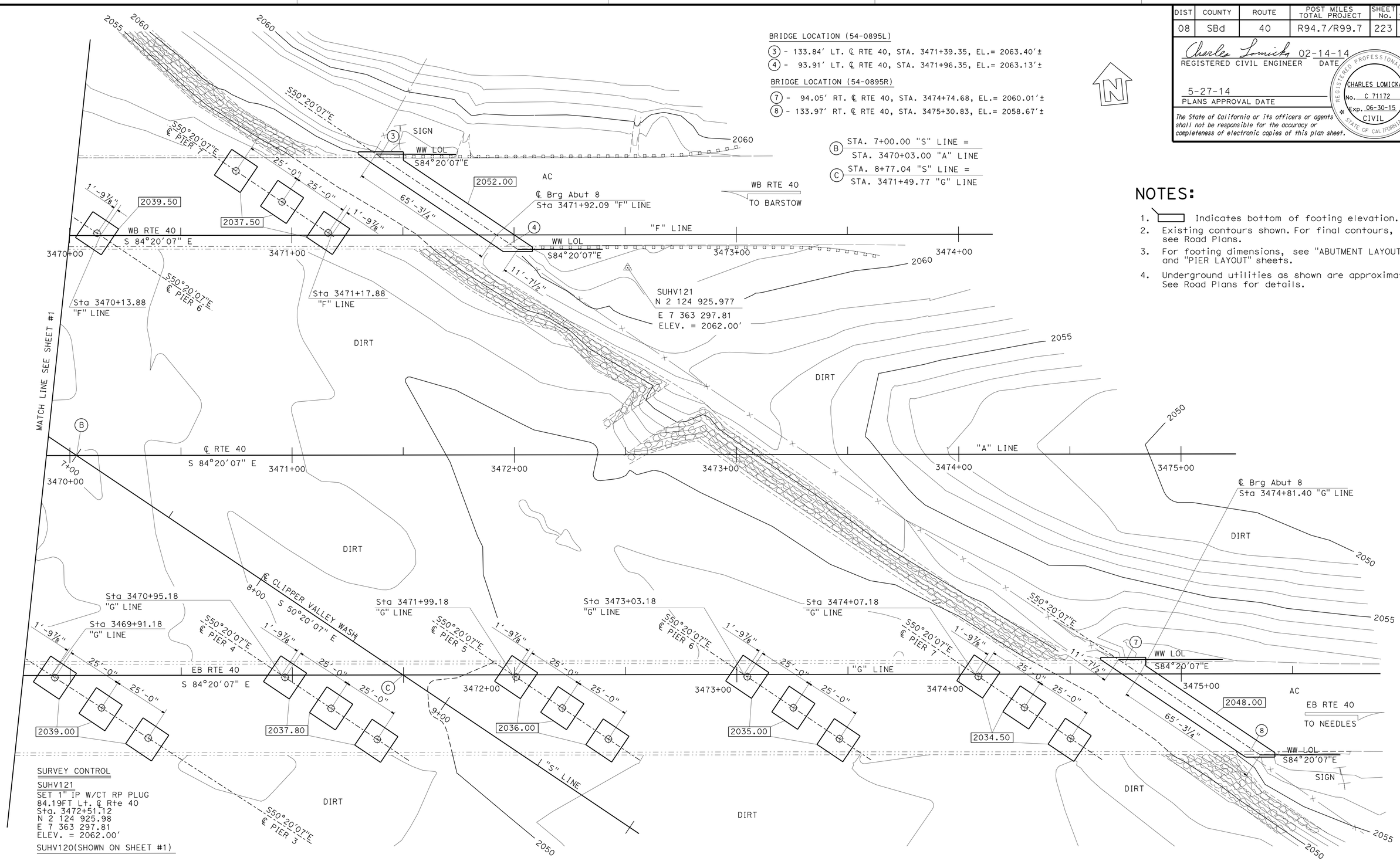

NOTES:

1. ▭ Indicates bottom of footing elevation.
2. Existing contours shown. For final contours, see Road Plans.
3. For footing dimensions, see "ABUTMENT LAYOUT" and "PIER LAYOUT" sheets.
4. Underground utilities as shown are approximate. See Road Plans for details.

SURVEY CONTROL

SUHV121
SET 1" IP W/CT RP PLUG
84.19FT Lt. ℄ Rte 40
Sta. 3472+51.12
N 2 124 925.98
E 7 363 297.81
ELEV. = 2062.00′

SUHV120(SHOWN ON SHEET #1)

PRELIMINARY INVESTIGATION SECTION

SCALE 1"=20′	VERT.DATUM NGVD 29	PHOTOGRAMMETRY AS OF: X			
	HORZ.DATUM NAD 83 (2000.35)	SURVEYED	BY DIST. 8 SURVEY	CHECKED	BY T. PHONG 12/2012
	ALIGNMENT TIES Dist. Traverse Sheet	DRAFTED	BY S. ABASSY 03/2013	CHECKED	BY S. ALIVIO 03/2013

DESIGN	BY C. LOMICKA	CHECKED	J. FANG
DETAILS	BY H. MAHBOOBI	CHECKED	J. FANG
QUANTITIES	BY E. M. / C. L.	CHECKED	B. P. / B. G.

STATE OF CALIFORNIA
DEPARTMENT OF TRANSPORTATION

DIVISION OF ENGINEERING SERVICES
STRUCTURE DESIGN
DESIGN BRANCH 19

BRIDGE NO. 54-1302L/R
POST MILE R99.2

CLIPPER VALLEY WASH BRIDGE (REPLACE)
FOUNDATION PLAN NO. 2

STRUCTURES FOUNDATION PLAN SHEET (ENGLISH) (REV. 09-01-10)

ORIGINAL SCALE IN INCHES FOR REDUCED PLANS 0 1 2 3

UNIT: 3621
PROJECT NUMBER & PHASE: 0813000176 - 1 CONTRACT NO.: 08-0N56U

DISREGARD PRINTS BEARING EARLIER REVISION DATES

REVISION DATES 08/23/13 02-07-14 01/15/14

SHEET 10 OF 38

FILE => 54-1302lr-e-fdp102.dgn

DIST	COUNTY	ROUTE	POST MILES TOTAL PROJECT	SHEET No.	TOTAL SHEETS
08	SBd	40	R94.7/R99.7	224	251

Charles Lomicka 02-14-14
REGISTERED CIVIL ENGINEER DATE

5-27-14
PLANS APPROVAL DATE

REGISTERED PROFESSIONAL ENGINEER CHARLES LOMICKA No. C 71172 Exp. 06-30-15 CIVIL STATE OF CALIFORNIA

The State of California or its officers or agents shall not be responsible for the accuracy or completeness of electronic copies of this plan sheet.

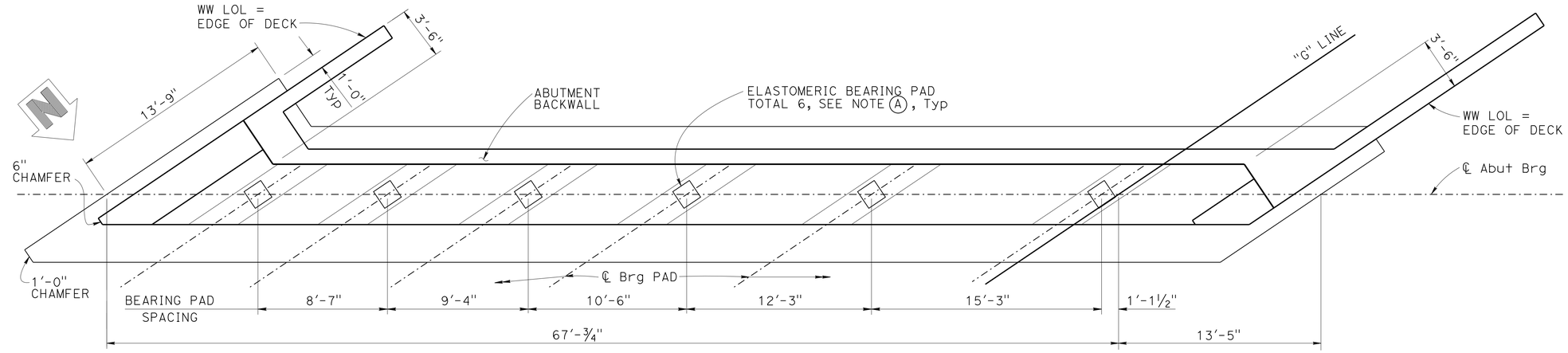

ABUTMENT 1 PLAN (F)

¼" = 1'-0"

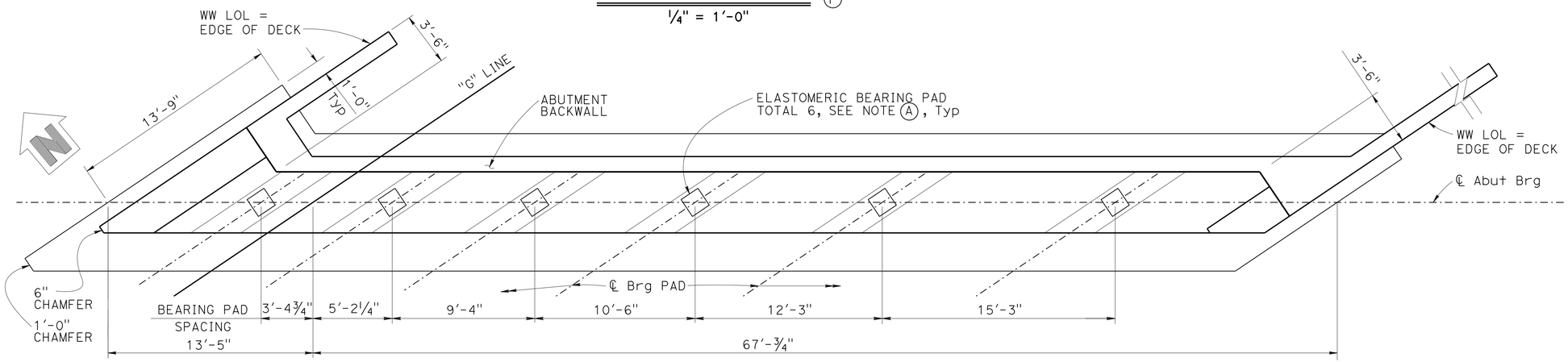

ABUTMENT 8 PLAN (G)

¼" = 1'-0"

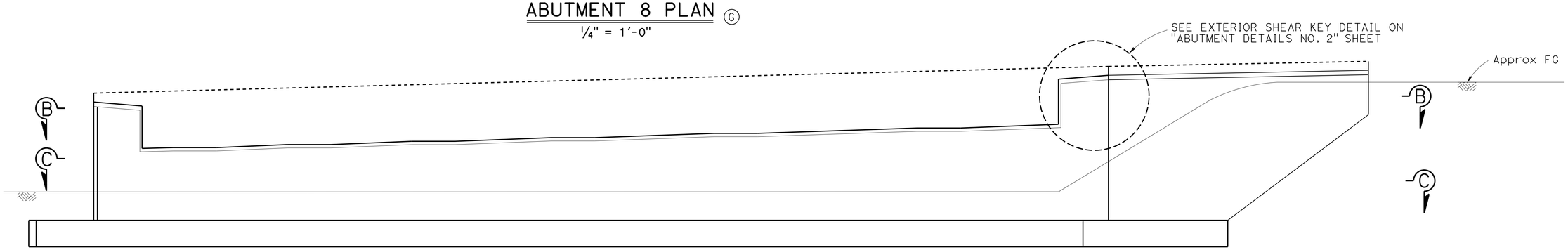

ABUTMENT ELEVATION

¼" = 1'-0"

NOTES:

(A) Steel Reinforced Elastomeric Bearing Pad 16(L)x16(W)x3½(H). For Bearing Pad detail, see ABUTMENT DETAILS NO. 1" sheet.

(B) For Rock Slope protection, see "ROAD PLANS".

(C) For Structure Approach Slab details, see "STRUCTURE APPROACH TYPE N(30S)" sheet.

(D) For "SECTION B-B" and "SECTION C-C", see "ABUTMENT DETAILS NO. 2 sheet.

(E) Barrier rails not shown for clarity.

(F) Right bridge Abutment 1 shown, Left bridge Abutment 8 similar.

(G) Right bridge Abutment 8 shown, Left bridge Abutment 1 similar.

	BY	CHECKED
DESIGN	H. WIN	R. WANG
DETAILS	H. MAHBOOBI / H. I. / D. W.	R. WANG
QUANTITIES	E. M. / R. W.	B. P. / B. G. / H. W.

STATE OF CALIFORNIA
DEPARTMENT OF TRANSPORTATION

DIVISION OF ENGINEERING SERVICES
STRUCTURE DESIGN
DESIGN BRANCH 19

BRIDGE NO. 54-1302L/R
POST MILE R99.2

CLIPPER VALLEY WASH BRIDGE (REPLACE)
ABUTMENT LAYOUT

STRUCTURES DESIGN DETAIL SHEET (ENGLISH) (REV. 09-01-10)

ORIGINAL SCALE IN INCHES FOR REDUCED PLANS 0 1 2 3

UNIT: 3621
PROJECT NUMBER & PHASE: 0813000176 - 1 CONTRACT NO.: 08-0N56U

DISREGARD PRINTS BEARING EARLIER REVISION DATES

REVISION DATES: 09-10-13 | 02-07-14 | 02-10-14

SHEET 11 OF 38

FILE => 54-1302lr-f-a01_lo1.dgn

USERNAME => s121614 DATE PLOTTED => 10-SEP-2014 TIME PLOTTED => 10:09

DIST	COUNTY	ROUTE	POST MILES TOTAL PROJECT	SHEET No.	TOTAL SHEETS
08	SBd	40	R94.7/R99.7	225	251

Charles Lomicka 02-14-14
REGISTERED CIVIL ENGINEER DATE

5-27-14
PLANS APPROVAL DATE

REGISTERED PROFESSIONAL ENGINEER
CHARLES LOMICKA
No. C 71172
Exp. 06-30-15
CIVIL
STATE OF CALIFORNIA

The State of California or its officers or agents shall not be responsible for the accuracy or completeness of electronic copies of this plan sheet.

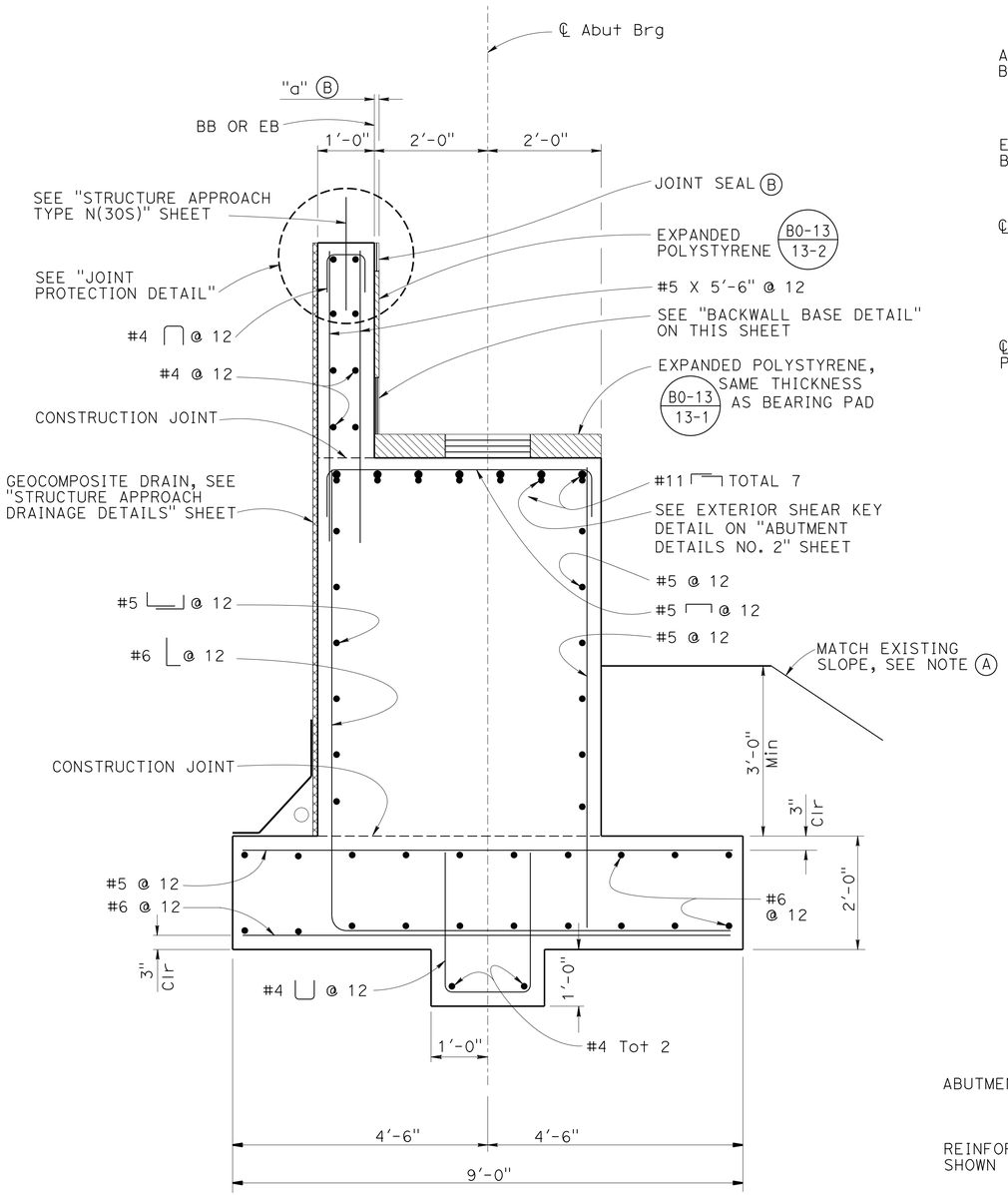

ABUTMENT TYPICAL SECTION

3/4" = 1'-0"

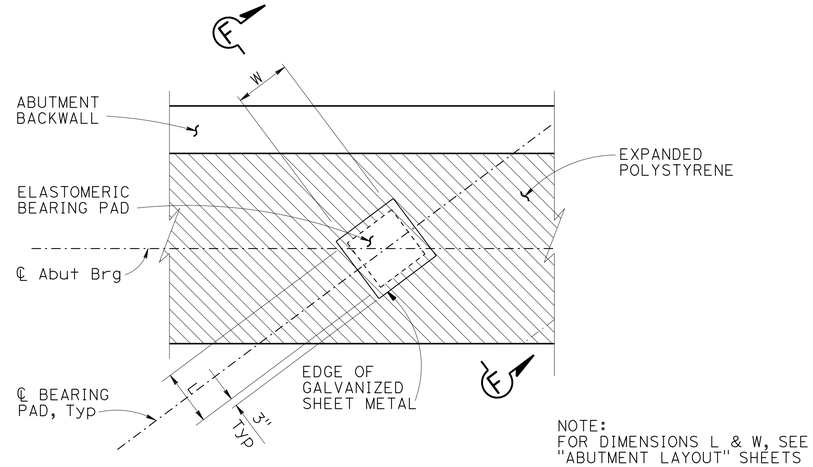

NOTE:
FOR DIMENSIONS L & W, SEE "ABUTMENT LAYOUT" SHEETS

BEARING PAD DETAIL

NO SCALE

NOTES:

(A) For rock slope protection, see Road Plans.

(B) Abutment 1 MR=2½". for "a" dimension, see "STRIP JOINT SEAL ASSEMBLY" sheet. Abutment 8 MR=1½". For "a" dimension, see B6-21

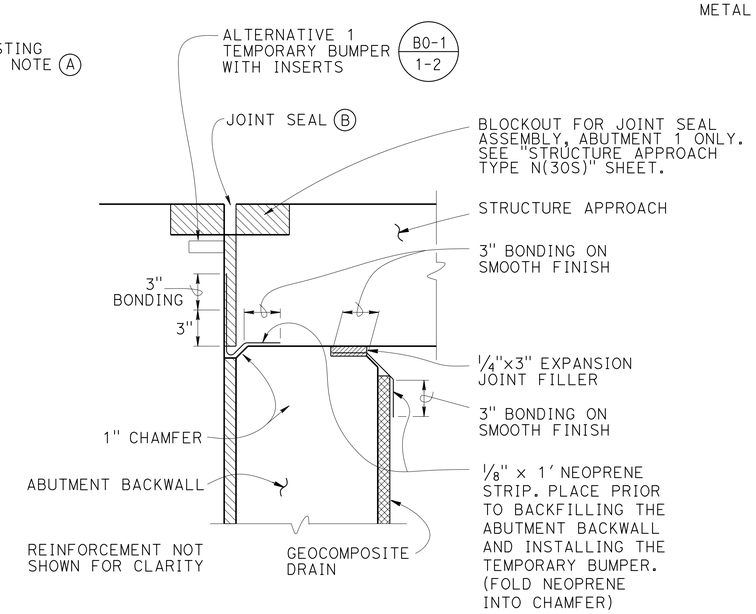

JOINT PROTECTION DETAIL

NO SCALE

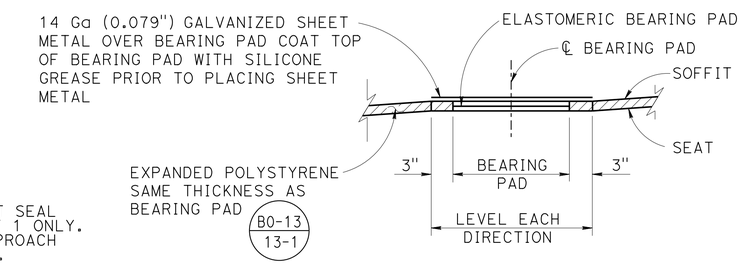

SECTION F-F

NO SCALE

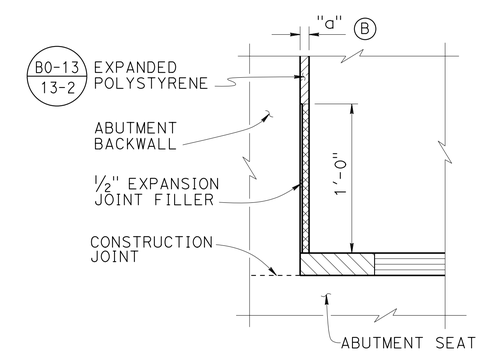

BACKWALL BASE DETAIL

NO SCALE

DESIGN	BY C. L. / H.W.	CHECKED R. WANG	
DETAILS	BY H. MAHBOOBI / H. I. / D. W.	CHECKED R. WANG	
QUANTITIES	BY E. M. / R. W.	CHECKED B. P. / B. G. / H. W.	

STATE OF CALIFORNIA
DEPARTMENT OF TRANSPORTATION

DIVISION OF ENGINEERING SERVICES
STRUCTURE DESIGN
DESIGN BRANCH 19

BRIDGE NO. 54-1302L/R
POST MILE R99.2

CLIPPER VALLEY WASH BRIDGE (REPLACE)
ABUTMENT DETAILS NO. 1

STRUCTURES DESIGN DETAIL SHEET (ENGLISH) (REV. 09-01-10)

ORIGINAL SCALE IN INCHES FOR REDUCED PLANS 0 1 2 3

UNIT: 3621
PROJECT NUMBER & PHASE: 0813000176 - 1 CONTRACT NO.: 08-0N56U

DISREGARD PRINTS BEARING EARLIER REVISION DATES

REVISION DATES: 09-01-10 02-10-14 02-13-14

SHEET 12 OF 38

FILE => 54-1302lr-f-adt01.dgn

USERNAME => s121614 DATE PLOTTED => 10-SEP-2014 TIME PLOTTED => 10:09

DIST	COUNTY	ROUTE	POST MILES TOTAL PROJECT	SHEET No.	TOTAL SHEETS
08	SBd	40	R94.7/R99.7	226	251

Charles Lomicka 02-14-14
REGISTERED CIVIL ENGINEER DATE

5-27-14
PLANS APPROVAL DATE

REGISTERED PROFESSIONAL ENGINEER CHARLES LOMICKA No. C 71172 Exp. 06-30-15 CIVIL STATE OF CALIFORNIA

The State of California or its officers or agents shall not be responsible for the accuracy or completeness of electronic copies of this plan sheet.

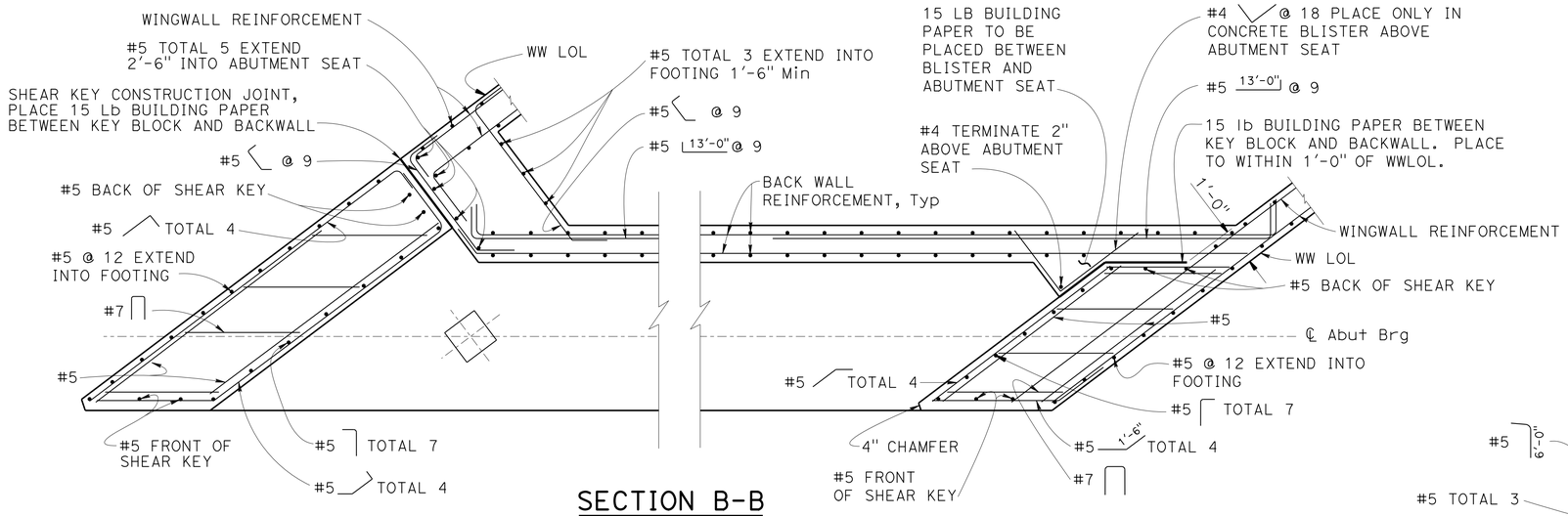

SECTION B-B

½" = 1'-0"

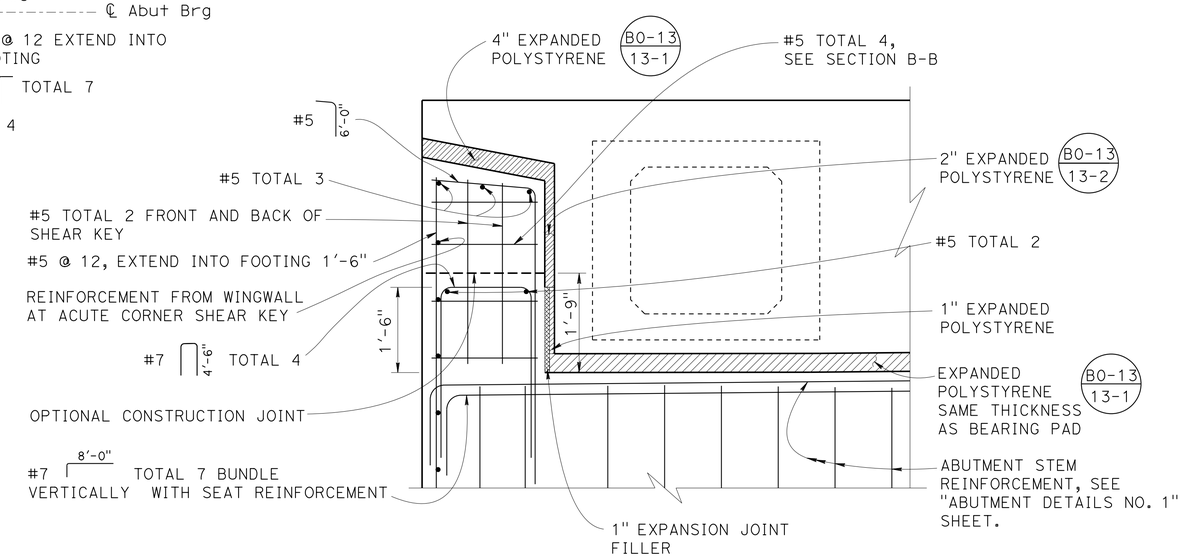

EXTERIOR SHEAR KEY DETAIL

¾" = 1'-0"

ABUTMENT 1 RIGHT SHOWN
OTHER LOCATIONS SIMILAR

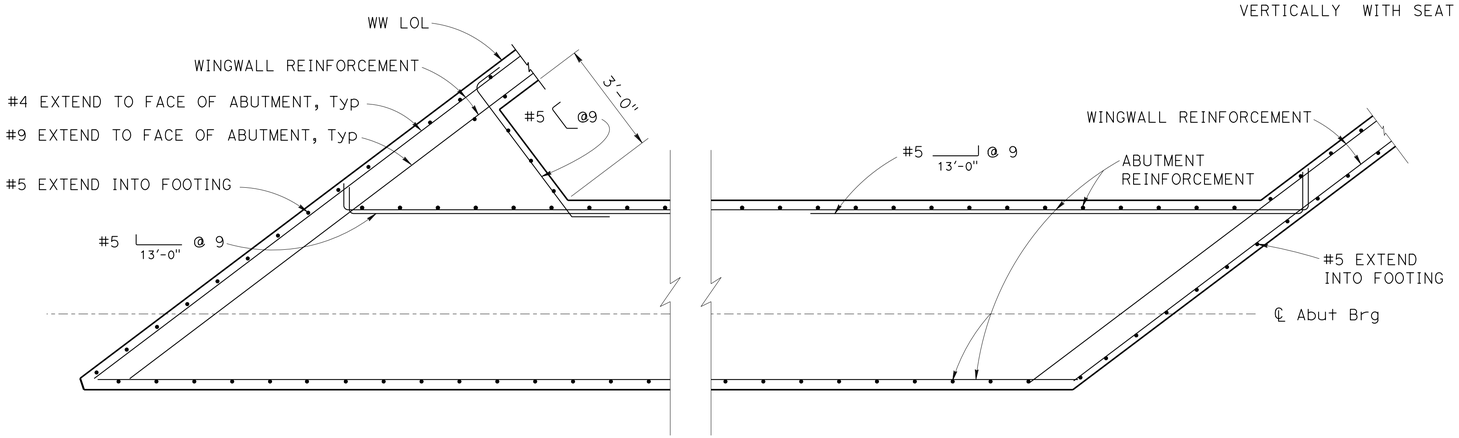

SECTION C-C

½" = 1'-0"

NOTES:

(A) For location of "SECTION B-B" and "SECTION C-C", see "ABUTMENT LAYOUT" sheet.

(B) For wingwall reinforcement, see "ABUTMENT DETAILS NO. 3" sheet.

DESIGN	BY C. L. / H. W.	CHECKED R. WANG	
DETAILS	BY H. MAHBOOBI / H. I. / D. W.	CHECKED R. WANG	
QUANTITIES	BY E. M. / R. W.	CHECKED B. P. / B. G. / H. W.	

STATE OF CALIFORNIA
DEPARTMENT OF TRANSPORTATION

DIVISION OF ENGINEERING SERVICES
STRUCTURE DESIGN
DESIGN BRANCH 19

BRIDGE NO. 54-1302L/R
POST MILE R99.2

CLIPPER VALLEY WASH BRIDGE (REPLACE)
ABUTMENT DETAILS NO. 2

STRUCTURES DESIGN DETAIL SHEET (ENGLISH) (REV. 09-01-10)

ORIGINAL SCALE IN INCHES FOR REDUCED PLANS 0 1 2 3

UNIT: 3621
PROJECT NUMBER & PHASE: 0813000176 - 1 CONTRACT NO.: 08-0N56U

DISREGARD PRINTS BEARING EARLIER REVISION DATES

REVISION DATES: 9-13-13 02-07-14 02-10-14

SHEET 13 OF 38

FILE => 54-1302lr-f-adt02.dgn

USERNAME => s121614 DATE PLOTTED => 10-SEP-2014 TIME PLOTTED => 10:09

DIST	COUNTY	ROUTE	POST MILES TOTAL PROJECT	SHEET No.	TOTAL SHEETS
08	SBd	40	R94.7/R99.7	227	251

Charles Lomicka 02-14-14
REGISTERED CIVIL ENGINEER DATE

5-27-14
PLANS APPROVAL DATE

REGISTERED PROFESSIONAL ENGINEER
CHARLES LOMICKA
No. C 71172
Exp. 06-30-15
CIVIL
STATE OF CALIFORNIA

The State of California or its officers or agents shall not be responsible for the accuracy or completeness of electronic copies of this plan sheet.

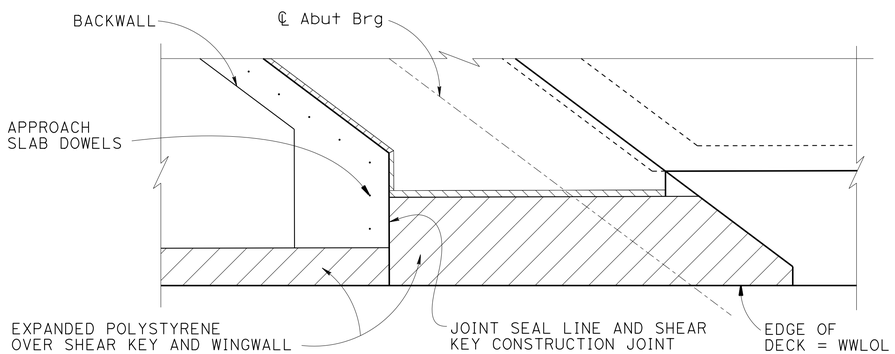

OBTUSE CORNER

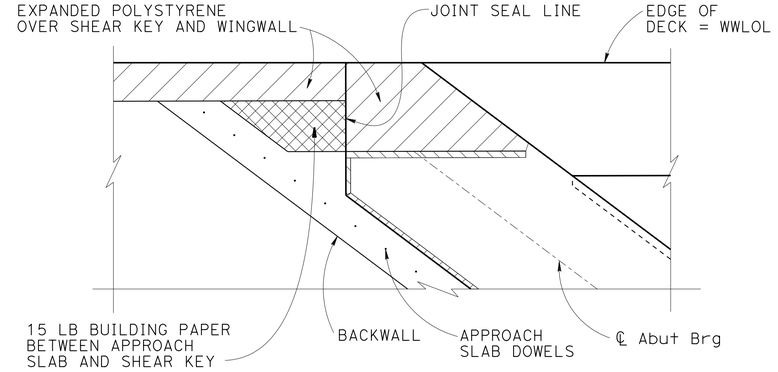

ACUTE CORNER

ABUTMENT CORNER DETAILS

½" = 1'-0"
ABUTMENT 1 SHOWN
ABUTMENT 8 SIMILAR

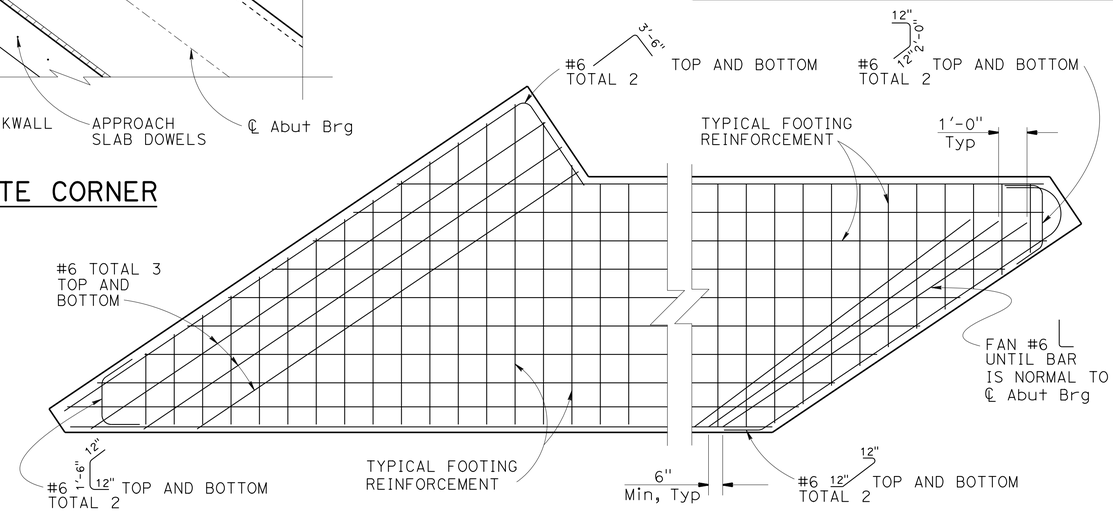

ABUTMENT FOOTING CORNER DETAILS (C)

⅜" = 1'-0"

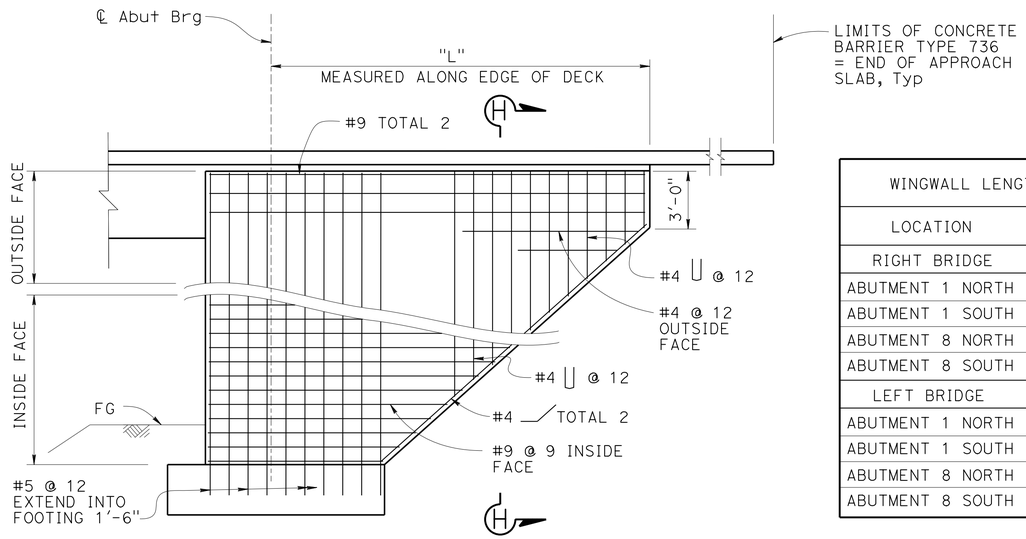

WINGWALL ELEVATION

¼" = 1'-0"

WINGWALL LENGTHS	
LOCATION	"L"
RIGHT BRIDGE	
ABUTMENT 1 NORTH	20'-0"
ABUTMENT 1 SOUTH	20'-0"
ABUTMENT 8 NORTH	20'-0"
ABUTMENT 8 SOUTH	20'-0"
LEFT BRIDGE	
ABUTMENT 1 NORTH	20'-0"
ABUTMENT 1 SOUTH	20'-0"
ABUTMENT 8 NORTH	20'-0"
ABUTMENT 8 SOUTH	18'-0"

NOTES:

(A) Barrier not shown in "ELEVATION" view

(B) Not all bars shown.

(C) Additional corner reinforcement to be placed above bottom mat and below top mat.

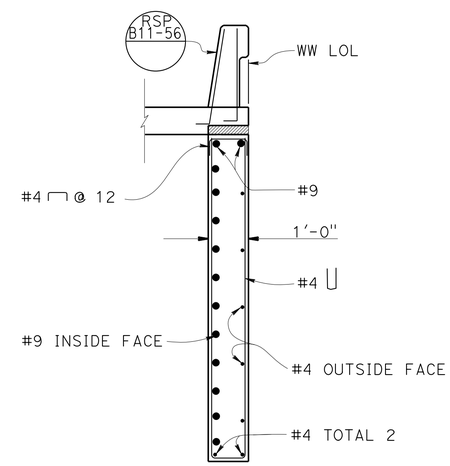

SECTION H-H

½" = 1'-0"

DESIGN	BY C. L. / H. W.	CHECKED R. WANG	
DETAILS	BY H. MAHBOOBI / D. W. / H. I.	CHECKED R. WANG	
QUANTITIES	BY E. M. / R. W.	CHECKED B. P. / B. G. / H. W.	

STATE OF CALIFORNIA
DEPARTMENT OF TRANSPORTATION

DIVISION OF ENGINEERING SERVICES
STRUCTURE DESIGN
DESIGN BRANCH 19

BRIDGE NO. 54-1302L/R
POST MILE R99.2

CLIPPER VALLEY WASH BRIDGE (REPLACE)
ABUTMENT DETAILS NO. 3

STRUCTURES DESIGN DETAIL SHEET (ENGLISH) (REV. 09-01-10)

ORIGINAL SCALE IN INCHES FOR REDUCED PLANS 0 1 2 3

UNIT: 3621
PROJECT NUMBER & PHASE: 0813000176 - 1 CONTRACT NO.: 08-0N56U

DISREGARD PRINTS BEARING EARLIER REVISION DATES

REVISION DATES: 9-23-13 | 02-10-14 | 02-13-14

SHEET 14 OF 38

FILE => 54-1302lr-f-adt03.dgn

USERNAME => s121614 DATE PLOTTED => 10-SEP-2014 TIME PLOTTED => 10:09

DIST	COUNTY	ROUTE	POST MILES TOTAL PROJECT	SHEET No.	TOTAL SHEETS
08	SBd	40	R94.7/R99.7	228	251

Charles Lomicka 02-14-14
REGISTERED CIVIL ENGINEER DATE

5-27-14
PLANS APPROVAL DATE

REGISTERED PROFESSIONAL ENGINEER CHARLES LOMICKA No. C 71172 Exp. 06-30-15 CIVIL STATE OF CALIFORNIA

The State of California or its officers or agents shall not be responsible for the accuracy or completeness of electronic copies of this plan sheet.

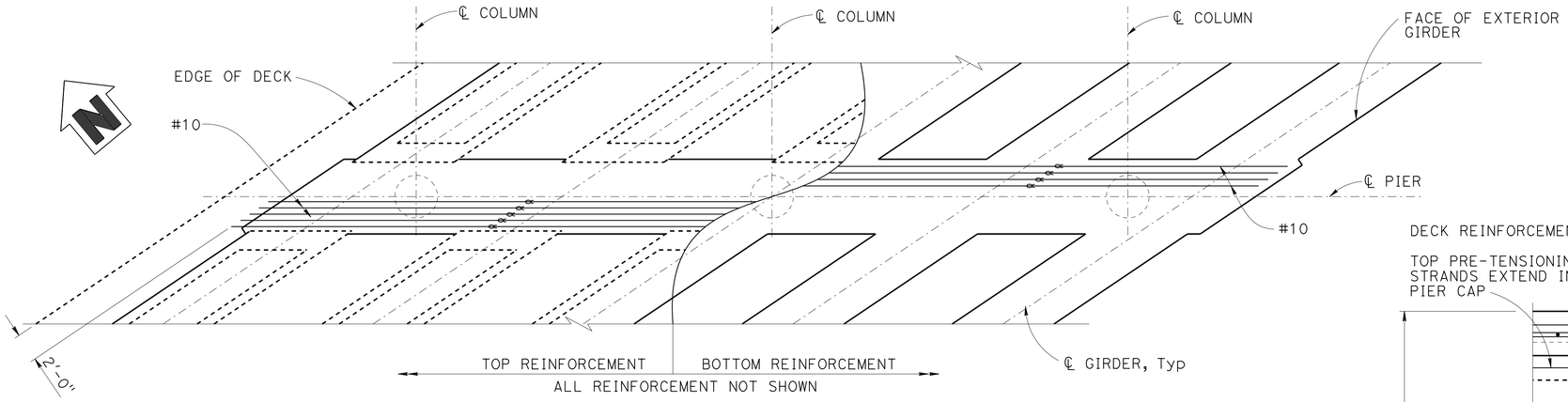

PLAN
1" = 5'-0"

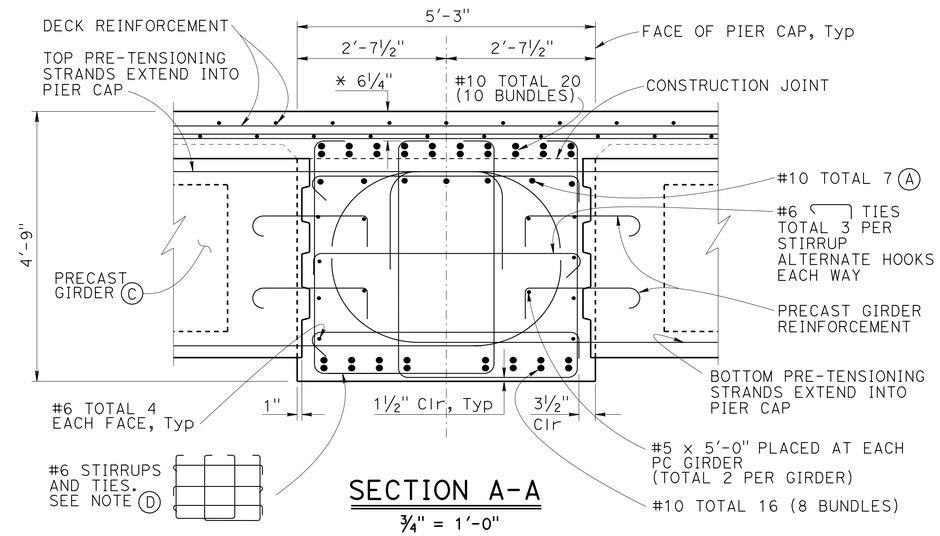

SECTION A-A
¾" = 1'-0"

NOTES:

(A) Reinforcement may be adjusted to clear P/S ducts.

(B) For Column pipe pin details and additional reinforcement, see "PIER DETAILS NO. 3" sheet.

(C) For PC/PS girder details see "PRECAST GIRDER DETAILS NO. 1" and "PRECAST GIRDER DETAILS NO. 2" sheet.

(D) Stirrups shown shall be placed normal to ℄ pier

(E) For "SECTION C-C", "SECTION D-D" and "SECTION G-G, see "PIER DETAILS NO. 1" sheet.

(F) All Hoops are "ULTIMATE" butt spliced continuous

(G) No lap splices in main bent cap reinforcement. Splices not allowed in top cap reinforcement within 6'-0" of ℄ column or in bottom cap reinforcement within 4'-0" of midpoint between columns.

(H) Concrete Barrier Type 736 not shown for clarity

* Clearance to main cap reinforcement

Denotes bundled bar.

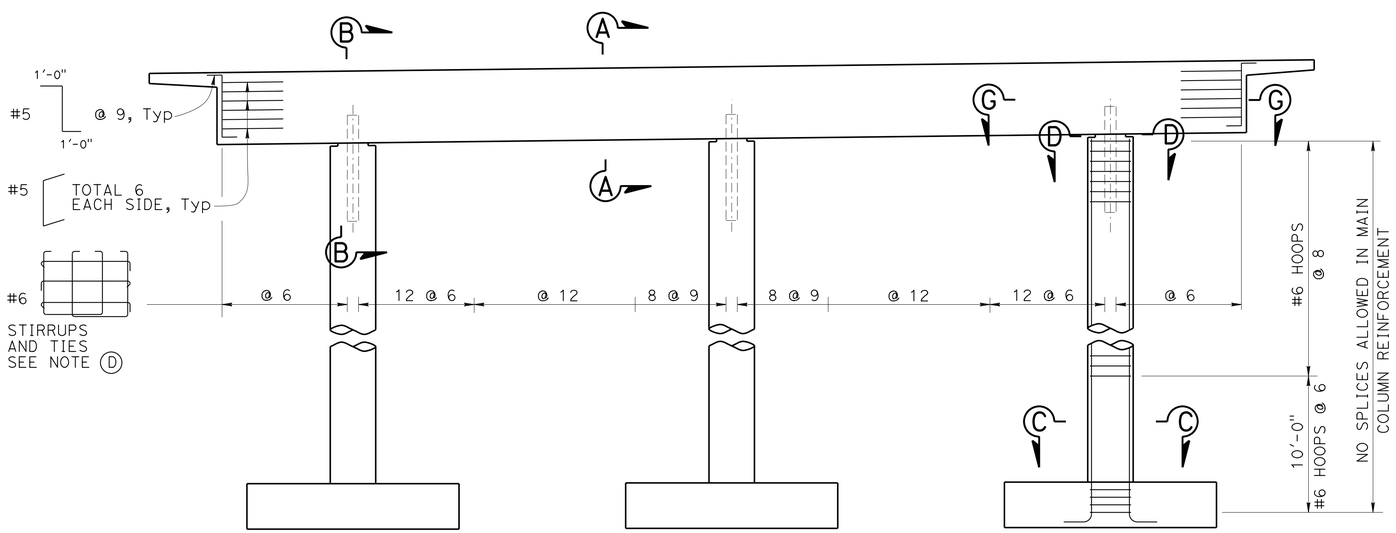

ELEVATION
1" = 5'-0"

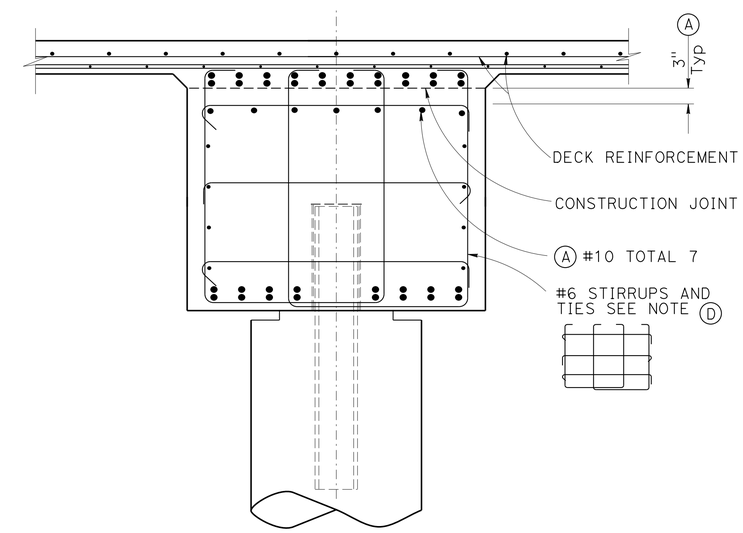

SECTION B-B
¾" = 1'-0"

FOR DETAILS NOT SHOWN, SEE SECTION A-A

DESIGN	BY C. LOMICKA	CHECKED J. FANG	
DETAILS	BY H. MAHBOOBI / D. W. / H. I.	CHECKED J. FANG	
QUANTITIES	BY E. M. / C.L.	CHECKED D. B. / B. G.	

STATE OF CALIFORNIA
DEPARTMENT OF TRANSPORTATION

DIVISION OF ENGINEERING SERVICES
STRUCTURE DESIGN
DESIGN BRANCH 19

BRIDGE NO. 54-1302L/R
POST MILE R99.2

CLIPPER VALLEY WASH BRIDGE (REPLACE)
PIER 2, 3, 4, 6, 7 LAYOUT

STRUCTURES DESIGN DETAIL SHEET (ENGLISH) (REV. 09-01-10)

ORIGINAL SCALE IN INCHES FOR REDUCED PLANS 0 1 2 3

UNIT: 3621
PROJECT NUMBER & PHASE: 0813000176 - 1 CONTRACT NO.: 08-0N56U

DISREGARD PRINTS BEARING EARLIER REVISION DATES

REVISION DATES: 9-20-13 02-07-14 02-10-14

SHEET 15 OF 38

FILE => 54-1302lr-h-b01_lo01.dgn

USERNAME => s121614 DATE PLOTTED => 10-SEP-2014 TIME PLOTTED => 10:09

DIST	COUNTY	ROUTE	POST MILES TOTAL PROJECT	SHEET No.	TOTAL SHEETS
08	SBd	40	R94.7/R99.7	229	251

Charles Lomicka 02-14-14
REGISTERED CIVIL ENGINEER DATE

5-27-14
PLANS APPROVAL DATE

REGISTERED PROFESSIONAL ENGINEER CHARLES LOMICKA No. C 71172 Exp. 06-30-15 CIVIL STATE OF CALIFORNIA

The State of California or its officers or agents shall not be responsible for the accuracy or completeness of electronic copies of this plan sheet.

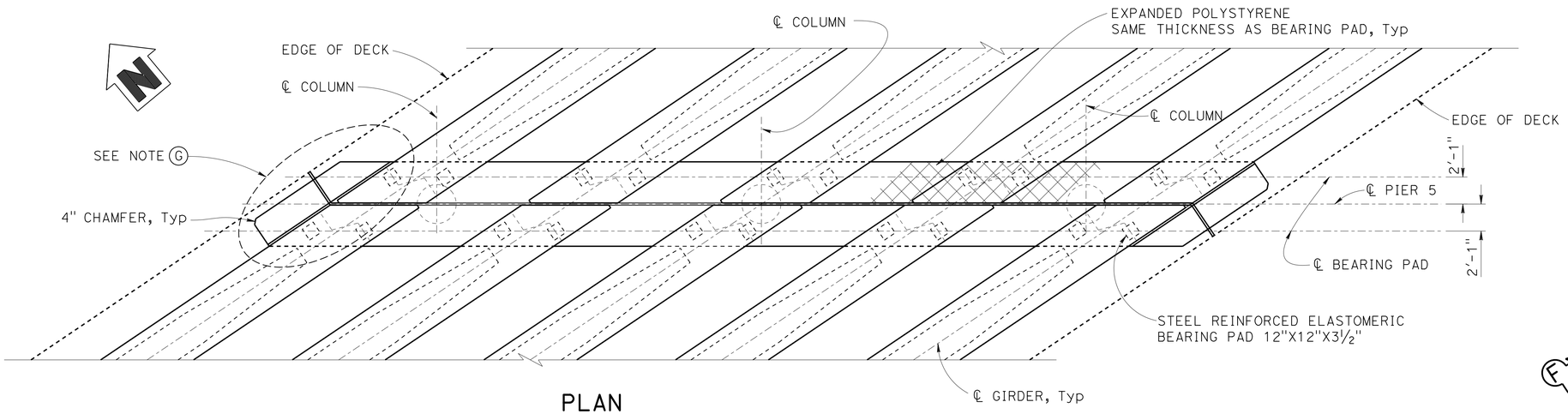

PLAN
1" = 5'-0"

NOTES:

(A) For PC/PS girder details, see "PRECAST GIRDER DETAILS NO. 1", "PRECAST GIRDER DETAILS NO. 2", and "PRECAST GIRDER DETAILS NO. 3" sheets.

(B) Stirrups shown shall be placed normal to ℄ pier.

(C) For "SECTION C-C", see "PIER DETAILS NO. 1" sheet. For "SECTIONS H-H" and "SECTION I-I", see "PIER DETAILS NO. 2" sheet.

(D) All Hoops are "ULTIMATE" butt spliced continuous

(E) No lap splices in main bent cap reinforcement. Splices not allowed in top cap reinforcement within 6'-0" of ℄ column or in bottom cap reinforcement within 4'-0" of midpoint between columns.

(F) Concrete Barrier Type 736 not shown for clarity

(G) For deck corner reinforcement detail, see "DETAIL B" on "PIER DETAILS NO. 1" sheet.

Denotes bundled bar.

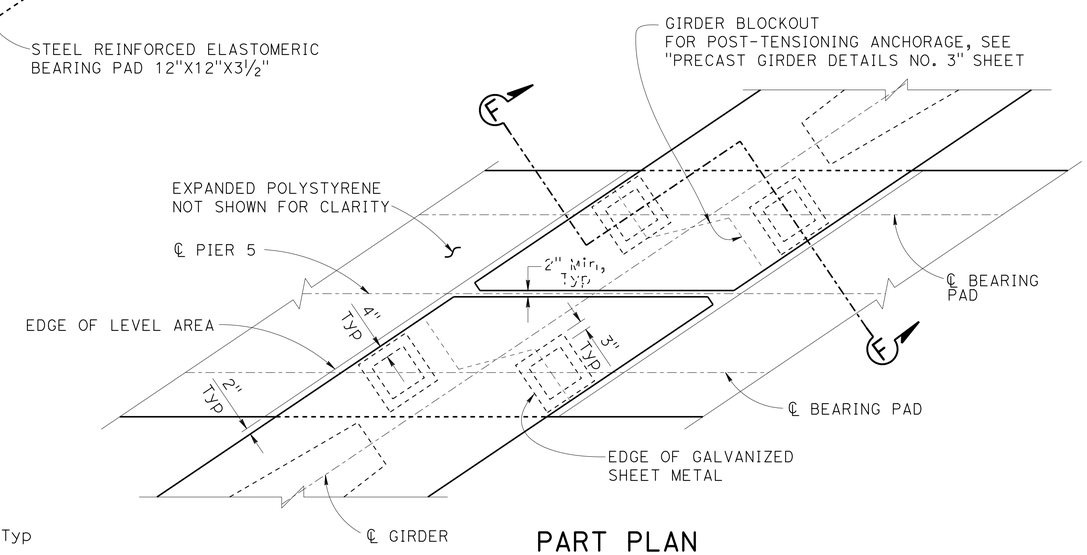

PART PLAN
½" = 1'-0"

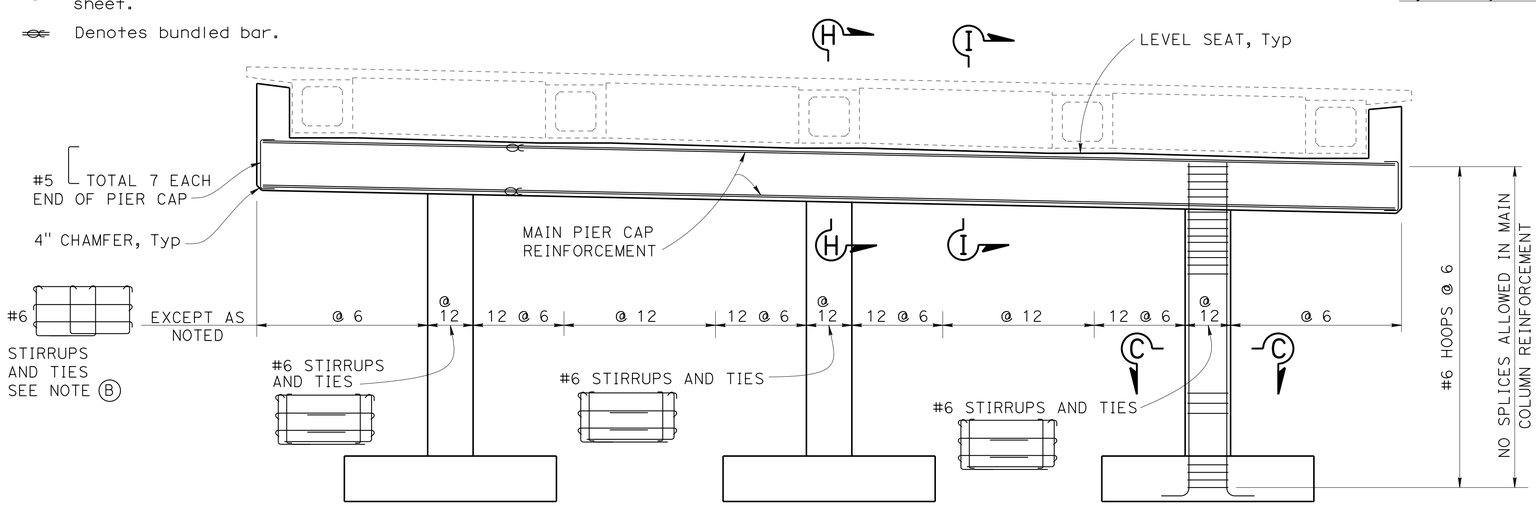

ELEVATION
1" = 5'-0"

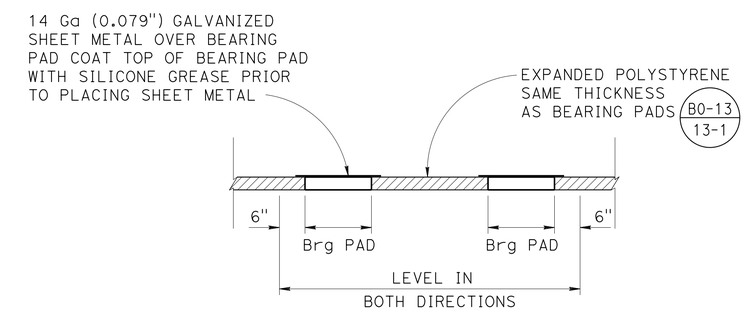

SECTION F-F
NO SCALE

DESIGN	BY C. LOMICKA	CHECKED J. FANG	
DETAILS	BY H. MAHBOOBI	CHECKED J. FANG	
QUANTITIES	BY C. LOMICKA	CHECKED B. GUNTER	

STATE OF CALIFORNIA
DEPARTMENT OF TRANSPORTATION

DIVISION OF ENGINEERING SERVICES
STRUCTURE DESIGN
DESIGN BRANCH 19

BRIDGE NO. 54-1302L/R
POST MILE R99.2

CLIPPER VALLEY WASH BRIDGE (REPLACE)
PIER 5 LAYOUT

STRUCTURES DESIGN DETAIL SHEET (ENGLISH) (REV. 09-01-10)

ORIGINAL SCALE IN INCHES FOR REDUCED PLANS 0 1 2 3

UNIT: 3621
PROJECT NUMBER & PHASE: 0813000176 - 1 CONTRACT NO.: 08-0N56U

DISREGARD PRINTS BEARING EARLIER REVISION DATES

REVISION DATES: 11-21-13 02-13-14 02-07-14

SHEET 16 OF 38

FILE => 54-1302lr-h-b01_lo05.dgn

USERNAME => s121614 DATE PLOTTED => 10-SEP-2014 TIME PLOTTED => 10:09

DIST	COUNTY	ROUTE	POST MILES TOTAL PROJECT	SHEET No.	TOTAL SHEETS
08	SBd	40	R94.7/R99.7	230	251

Charles Lomicka 02-14-14
REGISTERED CIVIL ENGINEER DATE

5-27-14
PLANS APPROVAL DATE

REGISTERED PROFESSIONAL ENGINEER CHARLES LOMICKA No. C 71172 Exp. 06-30-15 CIVIL STATE OF CALIFORNIA

The State of California or its officers or agents shall not be responsible for the accuracy or completeness of electronic copies of this plan sheet.

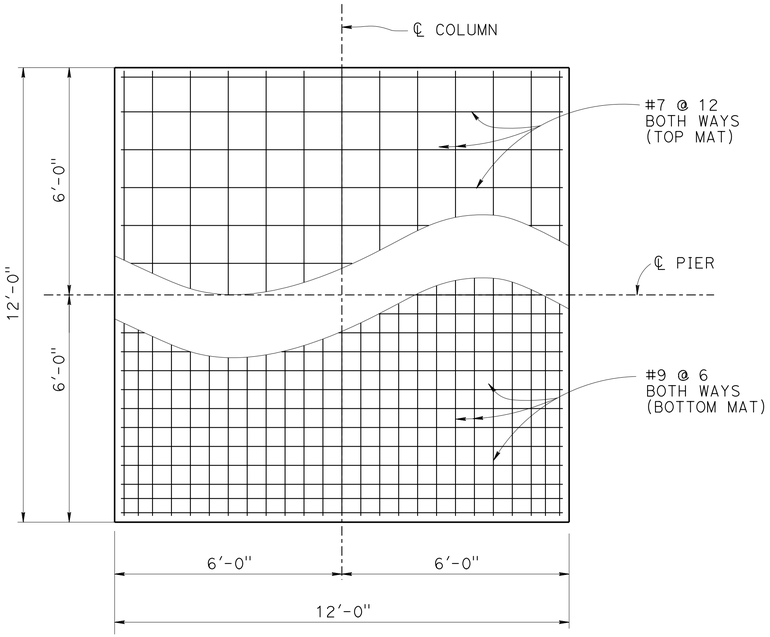

FOOTING PLAN
½" = 1'-0"

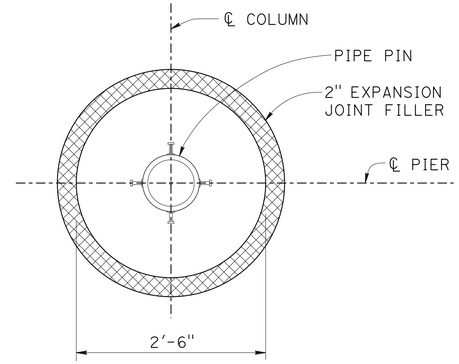

CONCRETE BEARING AREA
SEE "PIER DETAILS NO. 3"
FOR ADDITIONAL DETAILS.

PIER 2, 3, 4, 6, 7
SECTION D-D
1" = 1'-0"

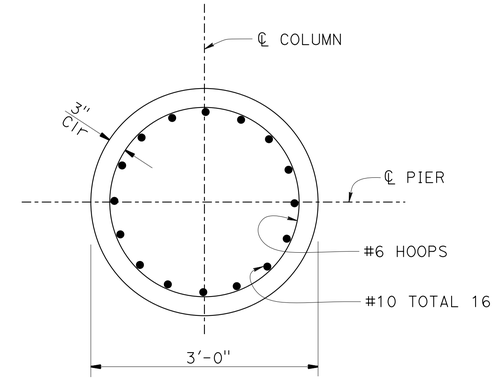

SECTION C-C
1" = 1'-0"

NOTES:

(A) FOR LOCATION OF SECTIONS D-D, C-C, AND G-G, SEE "PIER LAYOUT" SHEETS.

(B) FOR LOCATION OF "DETAIL B", SEE "PIER 5 LAYOUT" SHEET.

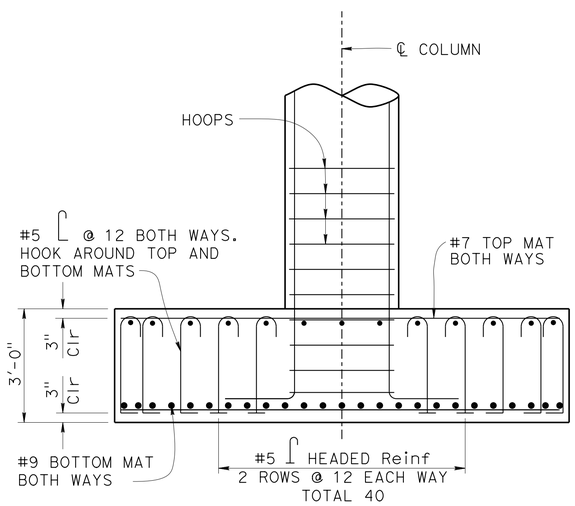

FOOTING ELEVATION
½" = 1'-0"

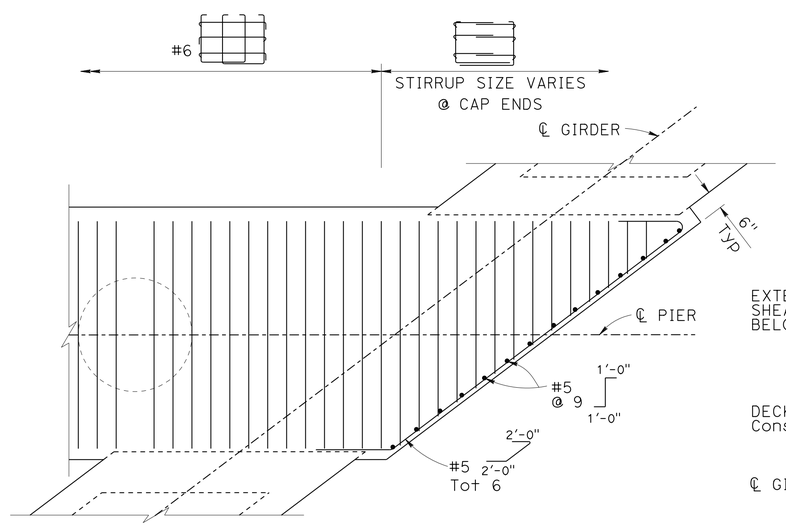

PIER 2, 3, 4, 6, 7
SECTION G-G
½" = 1'-0"

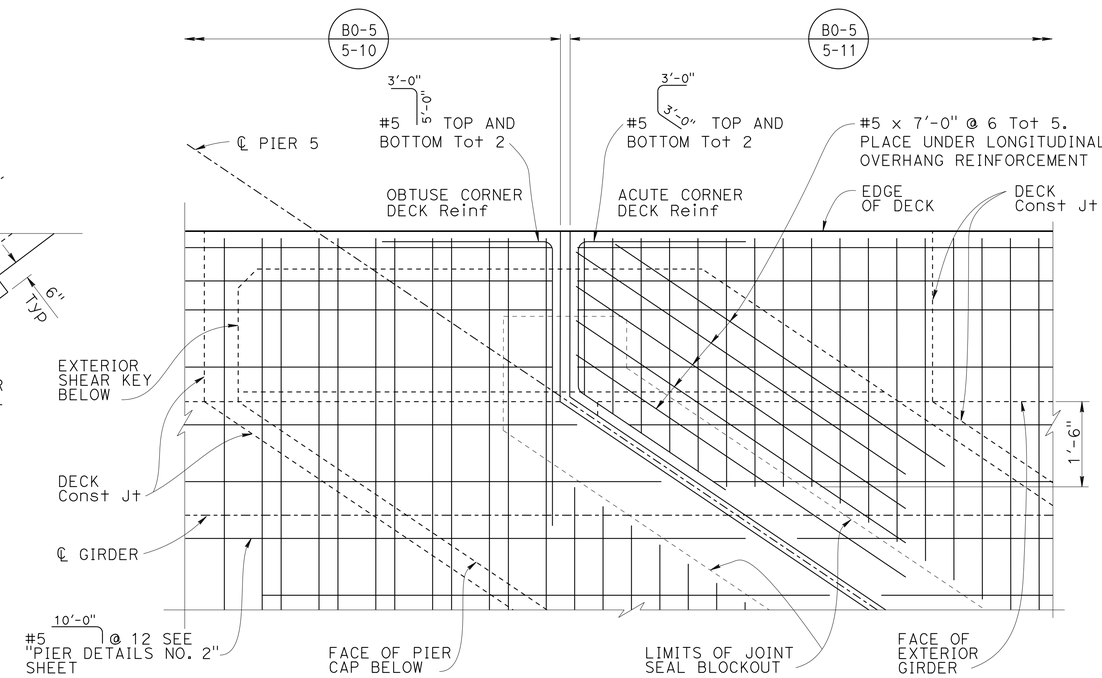

DETAIL B
3/4" = 1'-0"

	BY	CHECKED
DESIGN	C. LOMICKA	J. FANG
DETAILS	H. MAHBOOBI / H. I. / D. W.	J. FANG
QUANTITIES	E. M. / C. L.	D. B. / B. G.

STATE OF CALIFORNIA
DEPARTMENT OF TRANSPORTATION

DIVISION OF ENGINEERING SERVICES
STRUCTURE DESIGN
DESIGN BRANCH 19

BRIDGE NO. 54-1302L/R
POST MILE R99.2

CLIPPER VALLEY WASH BRIDGE (REPLACE)
PIER DETAILS NO. 1

STRUCTURES DESIGN DETAIL SHEET (ENGLISH) (REV. 09-01-10)

ORIGINAL SCALE IN INCHES FOR REDUCED PLANS 0 1 2 3

UNIT: 3621
PROJECT NUMBER & PHASE: 0813000176 - 1 CONTRACT NO.: 08-0N56U

DISREGARD PRINTS BEARING EARLIER REVISION DATES

REVISION DATES: 9-20-13 | 02-10-14 | 02-13-14

SHEET 17 OF 38

FILE => 54-1302lr-n-bdet01 .dgn

USERNAME => s121614 DATE PLOTTED => 10-SEP-2014 TIME PLOTTED => 10:09

DIST	COUNTY	ROUTE	POST MILES TOTAL PROJECT	SHEET No.	TOTAL SHEETS
08	SBd	40	R94.7/R99.7	231	251

Charles Lomicka 02-14-14
REGISTERED CIVIL ENGINEER DATE

5-27-14
PLANS APPROVAL DATE

REGISTERED PROFESSIONAL ENGINEER CHARLES LOMICKA No. C 71172 Exp. 06-30-15 CIVIL STATE OF CALIFORNIA

The State of California or its officers or agents shall not be responsible for the accuracy or completeness of electronic copies of this plan sheet.

NOTES:

(A) For location of sections H-H and I-I, see "PIER 5 LAYOUT" sheet.

(B) Stirrups shown shall be placed normal to ℄ pier.

(C) For Pier 5 "a" dimension, see "STRIP JOINT SEAL ASSEMBLY" sheet.

(D) For additional deck construction joint information, see "DETAIL B" on "PIER DETAILS NO. 1" sheet.

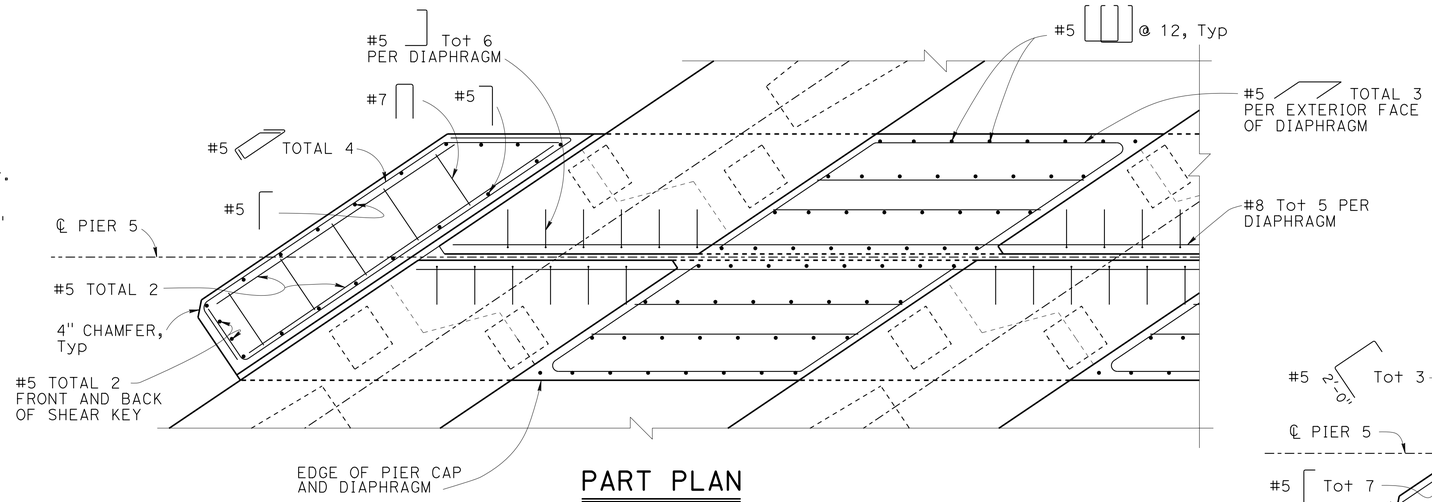

PART PLAN
½" = 1'-0"

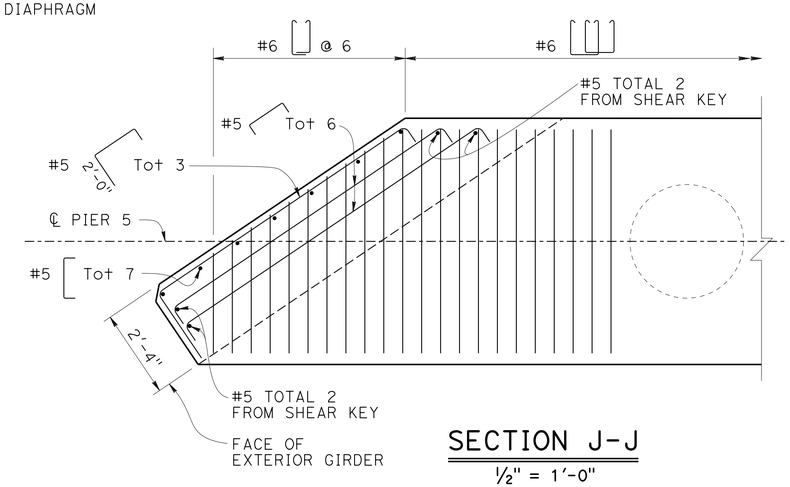

SECTION J-J
½" = 1'-0"

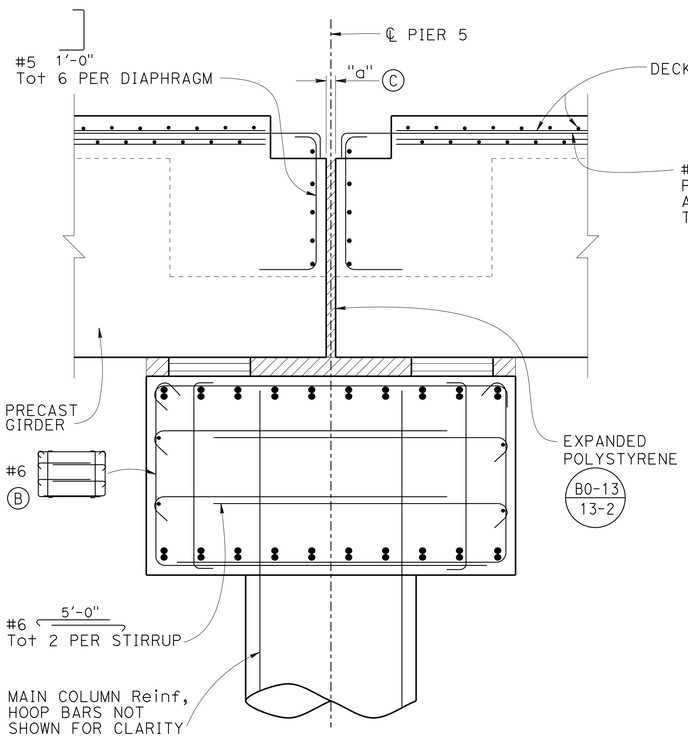

SECTION H-H
¾" = 1'-0"

FOR DETAILS NOT SHOWN, SEE SECTION I-I

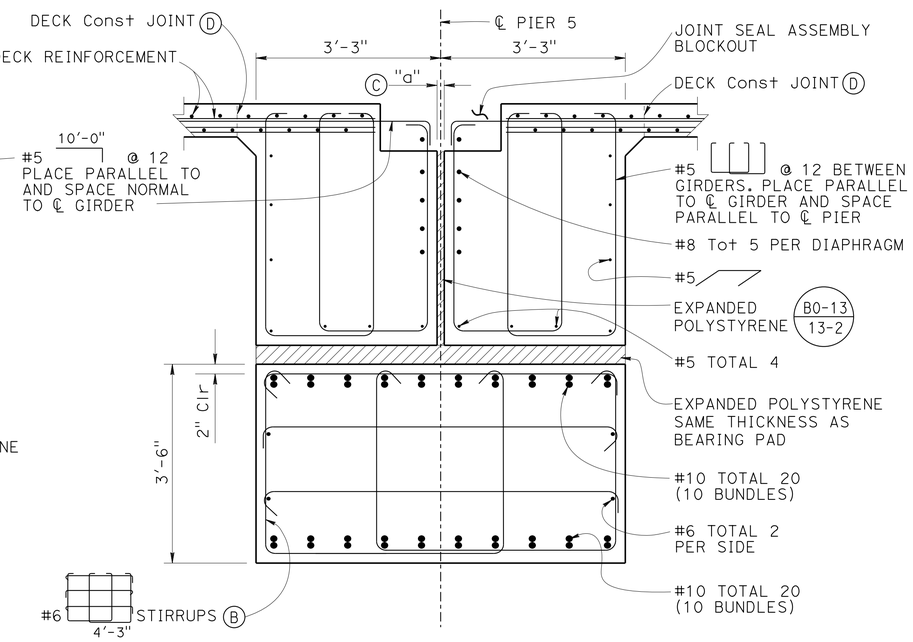

SECTION I-I
¾" = 1'-0"

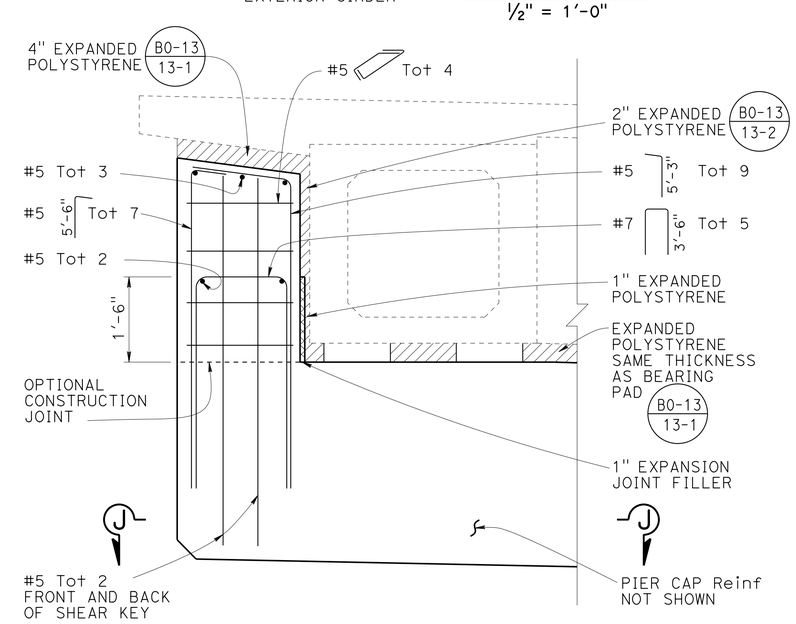

PIER 5 SHEAR KEY DETAIL
¾" = 1'-0"

	BY	CHECKED
DESIGN	C. LOMICKA	J. FANG
DETAILS	H. MAHBOOBI	J. FANG
QUANTITIES	E. M. / C. L.	D.B. / B. G.

STATE OF CALIFORNIA
DEPARTMENT OF TRANSPORTATION

DIVISION OF ENGINEERING SERVICES
STRUCTURE DESIGN
DESIGN BRANCH 19

BRIDGE NO. 54-1302L/R
POST MILE R99.2

CLIPPER VALLEY WASH BRIDGE (REPLACE)
PIER DETAILS NO. 2

STRUCTURES DESIGN DETAIL SHEET (ENGLISH) (REV. 09-01-10)

ORIGINAL SCALE IN INCHES FOR REDUCED PLANS 0 1 2 3

UNIT: 3621
PROJECT NUMBER & PHASE: 0813000176 - 1 CONTRACT NO.: 08-0N56U

DISREGARD PRINTS BEARING EARLIER REVISION DATES

REVISION DATES: 12-2-13 02-11-14 02-13-14

SHEET 18 OF 38

FILE => 54-1302lr-h-bdet02 .dgn

USERNAME => s121614 DATE PLOTTED => 10-SEP-2014 TIME PLOTTED => 10:10

DIST	COUNTY	ROUTE	POST MILES TOTAL PROJECT	SHEET No.	TOTAL SHEETS
08	SBd	40	R94.7/R99.7	232	251

Charles Lomicka 02-14-14
REGISTERED CIVIL ENGINEER DATE

5-27-14
PLANS APPROVAL DATE

REGISTERED PROFESSIONAL ENGINEER CHARLES LOMICKA No. C 71172 Exp. 06-30-15 CIVIL STATE OF CALIFORNIA

The State of California or its officers or agents shall not be responsible for the accuracy or completeness of electronic copies of this plan sheet.

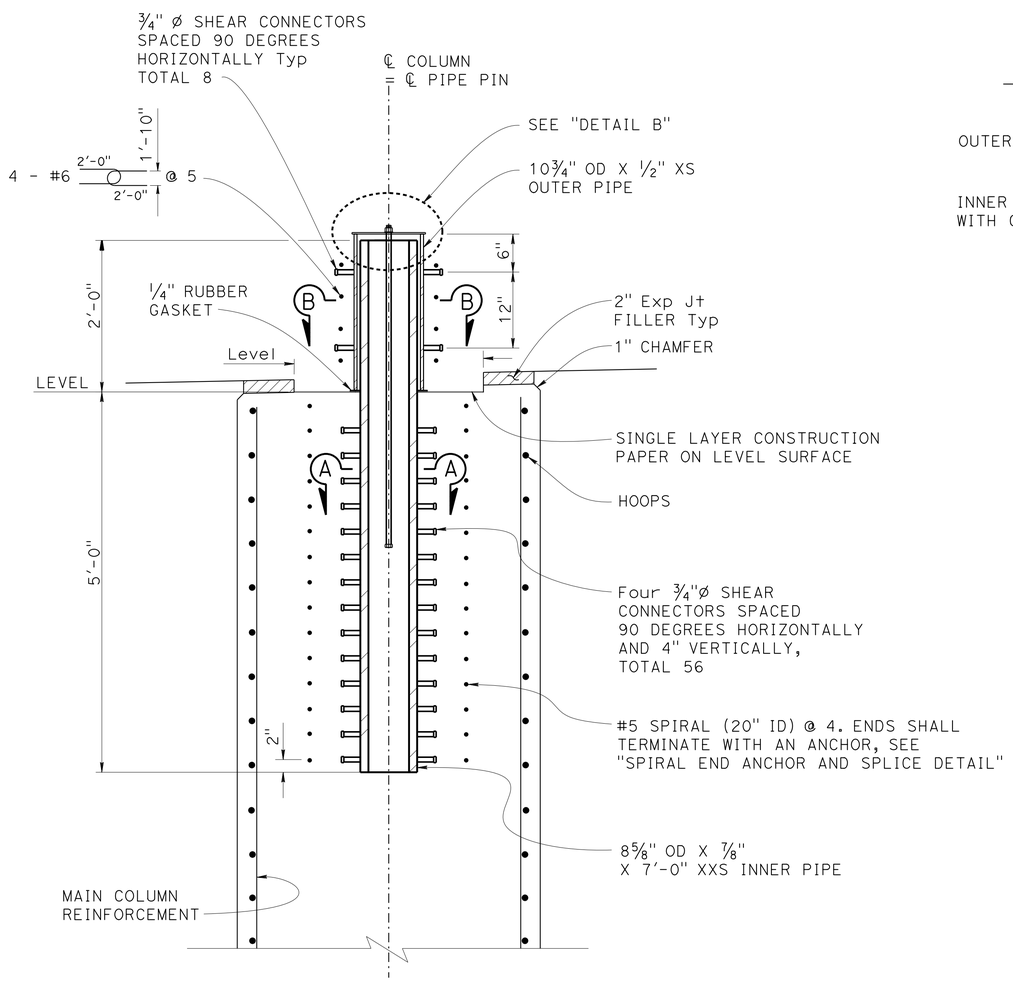

PIER 2, 3, 4, 6, 7 COLUMN PIPE PIN

NO SCALE

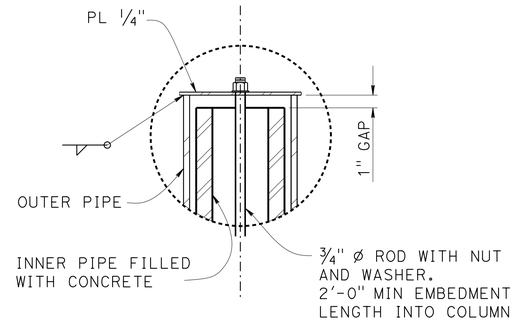

DETAIL B

NO SCALE

NOTE:

Tighten nut to seat outer pipe tightly against ¼" thick rubber gasket placed on concrete around pipe pin.

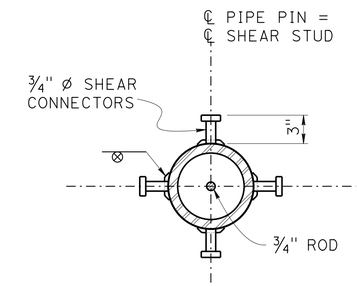

SECTION A-A

NO SCALE

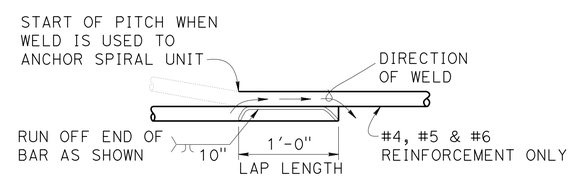

NOTE: FLARE WELD TO BE MADE IN DIRECTION SHOWN.

WELDED LAP SPLICE AND ANCHOR

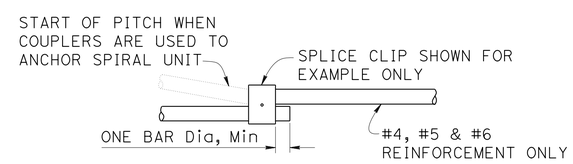

MECHANICAL LAP SPLICE AND ANCHOR

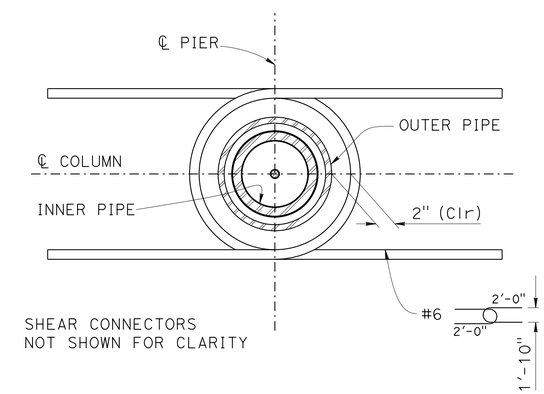

SECTION B-B

NO SCALE

SPIRAL END ANCHOR AND SPLICE DETAIL

NO SCALE

DESIGN	BY C. LOMICKA	CHECKED J. WANG	
DETAILS	BY H. MAHBOOBI	CHECKED J. WANG	
QUANTITIES	BY R. WANG	CHECKED B. PATEL	

STATE OF CALIFORNIA DEPARTMENT OF TRANSPORTATION

DIVISION OF ENGINEERING SERVICES STRUCTURE DESIGN DESIGN BRANCH 19

BRIDGE NO. 54-1302L/R
POST MILE R99.2

CLIPPER VALLEY WASH BRIDGE (REPLACE)
PIER DETAILS NO. 3

STRUCTURES DESIGN DETAIL SHEET (ENGLISH) (REV. 09-01-10)

ORIGINAL SCALE IN INCHES FOR REDUCED PLANS 0 1 2 3

UNIT: 3621
PROJECT NUMBER & PHASE: 0813000176 - 1 CONTRACT NO.: 08-0N56U

DISREGARD PRINTS BEARING EARLIER REVISION DATES

REVISION DATES 10-21-13 02-13-14 02-18-14

SHEET 19 OF 38

FILE => 54-1302lr-h-bde+03.dgn

USERNAME => s121614 DATE PLOTTED => 10-SEP-2014 TIME PLOTTED => 10:10

DIST	COUNTY	ROUTE	POST MILES TOTAL PROJECT	SHEET No.	TOTAL SHEETS
08	SBd	40	R94.7/R99.7	233	251

Charles Lomicka 02-14-14
REGISTERED CIVIL ENGINEER DATE

5-27-14
PLANS APPROVAL DATE

REGISTERED PROFESSIONAL ENGINEER
CHARLES LOMICKA
No. C 71172
Exp. 06-30-15
CIVIL
STATE OF CALIFORNIA

The State of California or its officers or agents shall not be responsible for the accuracy or completeness of electronic copies of this plan sheet.

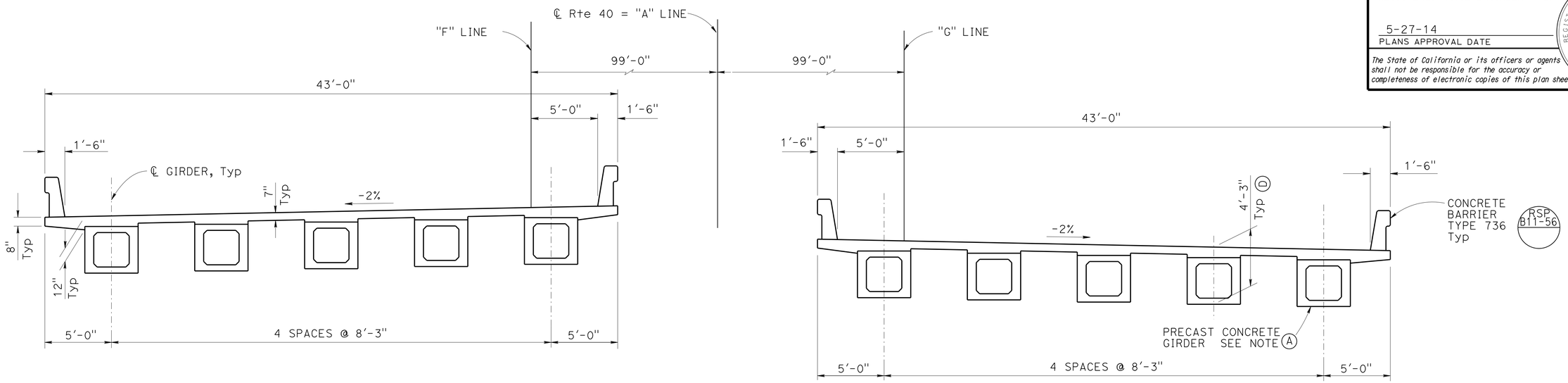

TYPICAL SECTION

1/4" = 1'-0"

NOTES:

(A) For precast concrete box girder details, see "PRECAST GIRDER DETAILS NO. 1", "PRECAST GIRDER DETAILS NO. 2", and "PRECAST GIRDER DETAILS NO. 3" sheets.

(B) For additional reinforcement, see "ADDITIONAL DECK REINFORCEMENT" sheet.

(C) For no splice zones, see "ADDITIONAL DECK REINFORCEMENT" sheet.

(D) Minimum dimension at ℄ girder, at midspan.

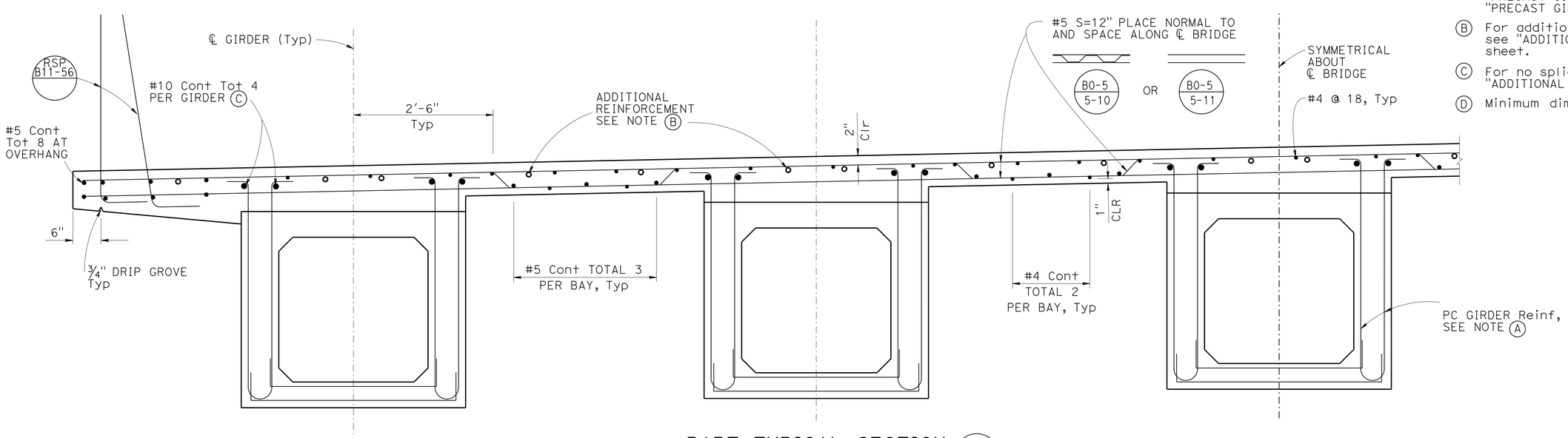

PART TYPICAL SECTION (B0-5)

1" = 1'-0"

DESIGN	BY C. LOMICKA	CHECKED E. MERCADO	
DETAILS	BY H. MAHBOOBI	CHECKED E. MERCADO	
QUANTITIES	BY E. MERCADO	CHECKED D. BALBAS	

STATE OF CALIFORNIA
DEPARTMENT OF TRANSPORTATION

DIVISION OF ENGINEERING SERVICES
STRUCTURE DESIGN
DESIGN BRANCH 19

BRIDGE NO. 54-1302L/R
POST MILE R99.2

CLIPPER VALLEY WASH BRIDGE (REPLACE)
TYPICAL SECTION

STRUCTURES DESIGN DETAIL SHEET (ENGLISH) (REV. 09-01-10)

ORIGINAL SCALE IN INCHES FOR REDUCED PLANS 0 1 2 3

UNIT: 3621
PROJECT NUMBER & PHASE: 0813000176 -1 CONTRACT NO.: 08-0N56U

DISREGARD PRINTS BEARING EARLIER REVISION DATES → 09/4/13 02/13/14 02-13-14

SHEET 20 OF 38

FILE => 54-1302lr-k-ts.dgn

USERNAME => s121614 DATE PLOTTED => 10-SEP-2014 TIME PLOTTED => 10:10

DIST	COUNTY	ROUTE	POST MILES TOTAL PROJECT	SHEET No.	TOTAL SHEETS
08	SBd	40	R94.7/R99.7	234	251

Charles Lomicka 02-14-14
REGISTERED CIVIL ENGINEER DATE

5-27-14
PLANS APPROVAL DATE

REGISTERED PROFESSIONAL ENGINEER CHARLES LOMICKA No. C 71172 Exp. 06-30-15 CIVIL STATE OF CALIFORNIA

The State of California or its officers or agents shall not be responsible for the accuracy or completeness of electronic copies of this plan sheet.

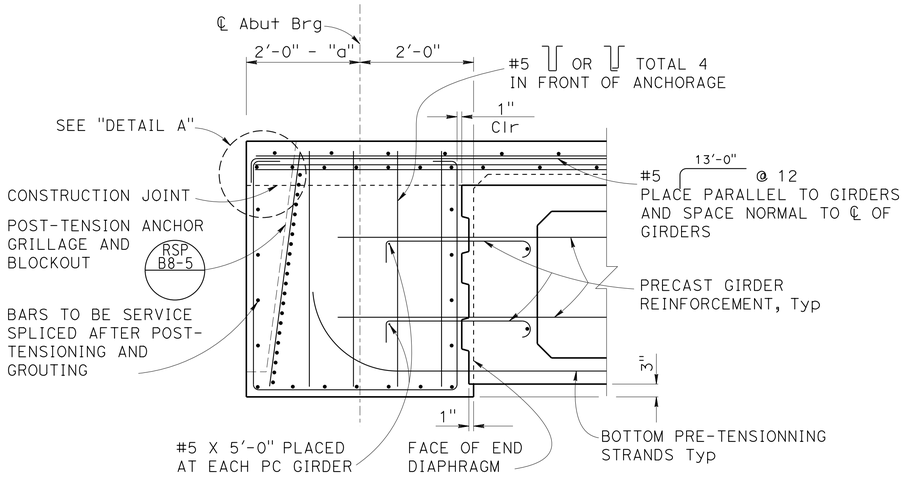

FOR DETAILS NOT SHOWN, SEE "SECTION E-E"

SECTION D-D

¾" = 1'-0"

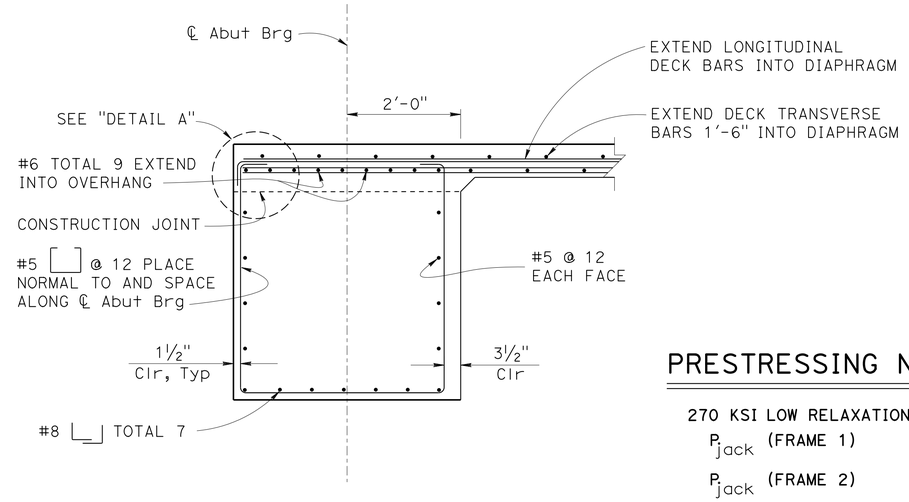

SECTION E-E

¾" = 1'-0"

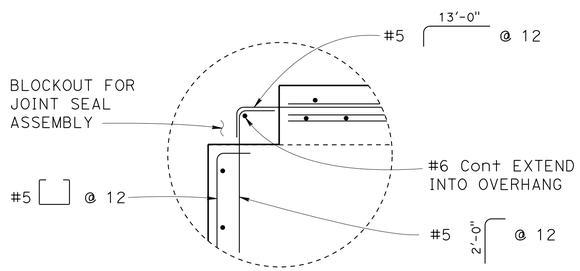

DETAIL A

1" = 1'-0"
ABUTMENT 1 ONLY

PRESTRESSING NOTES (POST TENSIONING)

RSP B8-5

270 KSI LOW RELAXATION STRAND:

P_{jack} (FRAME 1)	= 527 kips/precast box girder
P_{jack} (FRAME 2)	= 527 kips/precast box girder
Anchor Set	= ⅜ in
Friction curvature coefficient, μ	= 0.15 (1/rad)
Friction wobble coefficient, K	= 0.0002 (1/ft)
Total number of box girders	= 5

The final force ratio (larger divided by smaller) between any two girders shall not exceed the ratio of 10 to 9.

CIP DECK & CIP DIAPHRAGMS

Concrete: f'_c = 5000 psi @ 28 days

f'_{ci} = 4000 psi @ time of stressing

Contractor shall submit elongation calculations based on initial stress at ⊠ = 0.876 times jacking stress for Frame 1 and 0.910 for Frame 2.

Two end stressing shall be performed.

Distribution of P_{jack} between girder webs shall be equal.

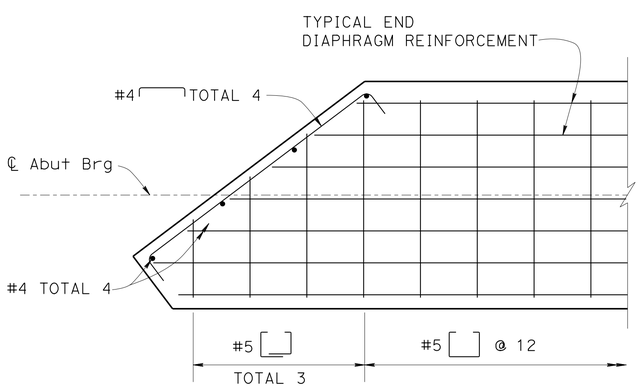

END DIAPHRAGM CORNER DETAIL

(Abut 1 LT SHOWN, Abut 8 RT SIMILAR)

¾" = 1'-0"

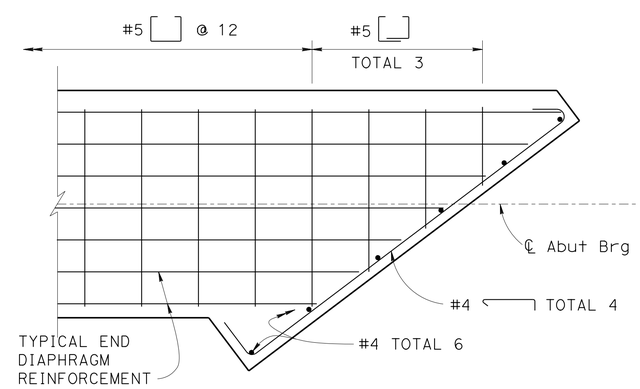

END DIAPHRAGM CORNER DETAIL

(Abut 1 RT SHOWN, Abut 8 LT SIMILAR)

¾" = 1'-0"

NOTES :

Ⓐ For location of "SECTION D-D" and "SECTION E-E", see "ADDITIONAL DECK REINFORCEMENT" sheet.

Ⓑ For "a" dimension, see "ABUTMENT DETAILS NO. 1" sheet, note Ⓑ.

	BY	CHECKED
DESIGN	C. LOMICKA	E. MERCADO
DETAILS	H. MAHBOOBI / H. I. / D. W.	E. MERCADO
QUANTITIES	E. MERCADO	D. BALBAS

STATE OF CALIFORNIA
DEPARTMENT OF TRANSPORTATION

DIVISION OF ENGINEERING SERVICES
STRUCTURE DESIGN
DESIGN BRANCH 19

BRIDGE NO. 54-1302L/R
POST MILE R99.2

CLIPPER VALLEY WASH BRIDGE (REPLACE)
END DIAPHRAGM DETAILS

STRUCTURES DESIGN DETAIL SHEET (ENGLISH) (REV. 09-01-10)

ORIGINAL SCALE IN INCHES FOR REDUCED PLANS 0 1 2 3

UNIT: 3621
PROJECT NUMBER & PHASE: 0813000176 - 1 CONTRACT NO.: 08-0N56U

DISREGARD PRINTS BEARING EARLIER REVISION DATES

REVISION DATES: 9-20-13 02-10-14 01-28-14

SHEET 21 OF 38

FILE => 54-1302lr-l_eddet_01 .dgn

USERNAME => s121614 DATE PLOTTED => 10-SEP-2014 TIME PLOTTED => 10:10

DIST	COUNTY	ROUTE	POST MILES TOTAL PROJECT	SHEET No.	TOTAL SHEETS
08	SBd	40	R94.7/R99.7	235	251

Charles Lomicka 02-14-14
REGISTERED CIVIL ENGINEER DATE

5-27-14
PLANS APPROVAL DATE

REGISTERED PROFESSIONAL ENGINEER
CHARLES LOMICKA
No. C 71172
Exp. 06-30-15
CIVIL
STATE OF CALIFORNIA

The State of California or its officers or agents shall not be responsible for the accuracy or completeness of electronic copies of this plan sheet.

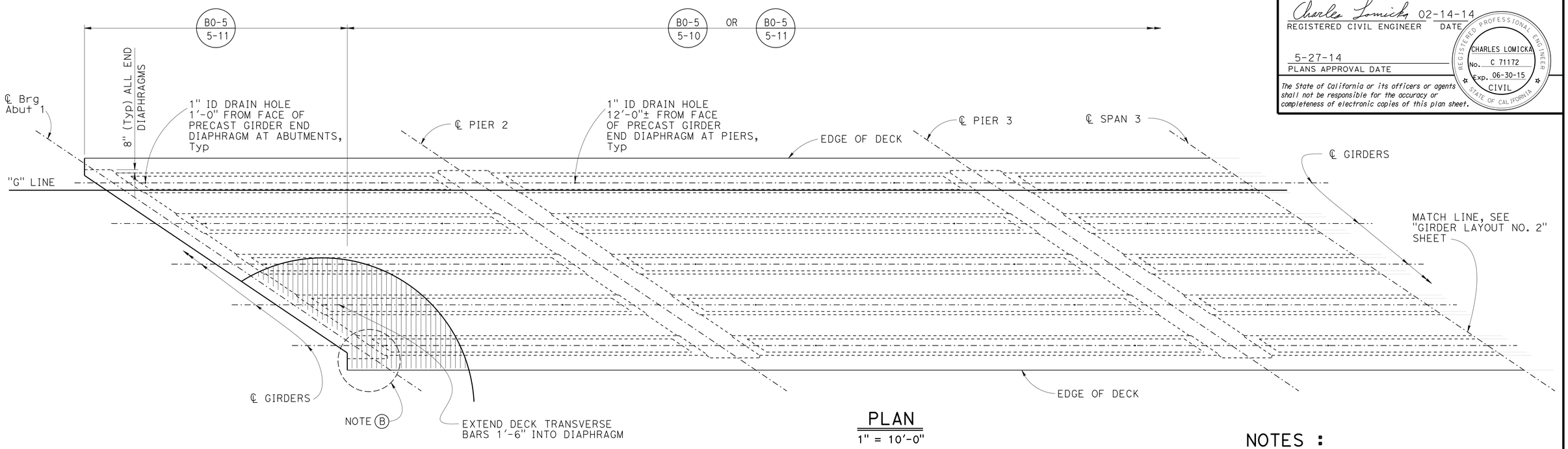

PLAN

1" = 10'-0"

NOTES :

(A) For soffit flare, see "PRECAST GIRDER DETAILS NO. 1" sheet.

(B) For "DECK CORNER" details, see "ADDITIONAL DECK REINFORCEMENT" sheet.

(C) L = Span length from ℄ support to ℄ support measured along ℄ girder.

(D) Right bridge shown, left bridge similar.

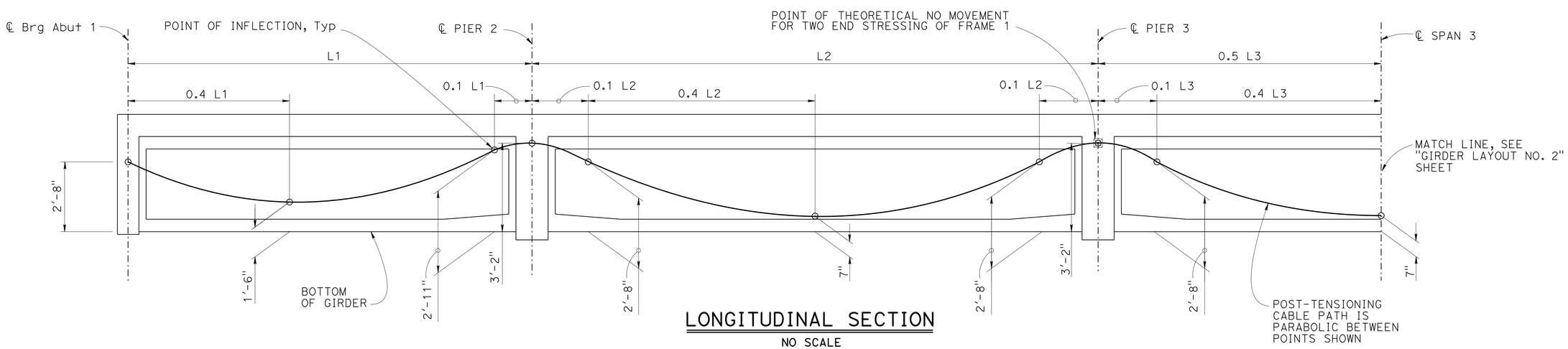

LONGITUDINAL SECTION

NO SCALE

DESIGN	BY C. LOMICKA	CHECKED E. MERCADO	
DETAILS	BY H. MAHBOOBI	CHECKED E. MERCADO	
QUANTITIES	BY E. MERCADO	CHECKED D. BALBAS	

STATE OF CALIFORNIA
DEPARTMENT OF TRANSPORTATION

DIVISION OF ENGINEERING SERVICES
STRUCTURE DESIGN
DESIGN BRANCH 19

BRIDGE NO. 54-1302L/R
POST MILE R99.2

CLIPPER VALLEY WASH BRIDGE (REPLACE)
GIRDER LAYOUT NO. 1

STRUCTURES DESIGN DETAIL SHEET (ENGLISH) (REV. 09-01-10)

ORIGINAL SCALE IN INCHES FOR REDUCED PLANS 0 1 2 3

UNIT: 3621
PROJECT NUMBER & PHASE: 0813000176 -1 CONTRACT NO.: 08-0N56U

DISREGARD PRINTS BEARING EARLIER REVISION DATES

REVISION DATES: 9-3-13 | 02-10-14 | 01-15-14

SHEET 22 OF 38

FILE => 54-1302lr-1_girlo_01.dgn

USERNAME => s121614 DATE PLOTTED => 10-SEP-2014 TIME PLOTTED => 10:10

DIST	COUNTY	ROUTE	POST MILES TOTAL PROJECT	SHEET No.	TOTAL SHEETS
08	SBd	40	R94.7/R99.7	236	251

Charles Lomicka 02-14-14
REGISTERED CIVIL ENGINEER DATE

5-27-14
PLANS APPROVAL DATE

REGISTERED PROFESSIONAL ENGINEER
CHARLES LOMICKA
No. C 71172
Exp. 06-30-15
CIVIL
STATE OF CALIFORNIA

The State of California or its officers or agents shall not be responsible for the accuracy or completeness of electronic copies of this plan sheet.

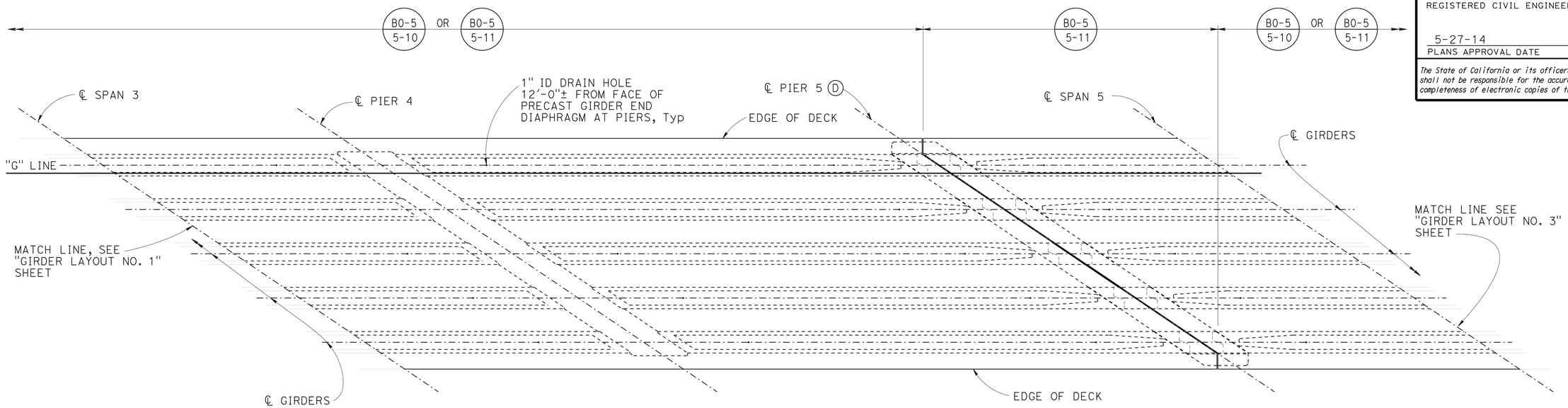

PLAN

1" = 10'-0"

NOTES :

(A) For soffit flare, see "PRECAST GIRDER DETAILS NO. 1" sheet.

(B) L = Span length from ℄ support to ℄ support measured along ℄ girder.

(C) Right bridge shown, left bridge similar.

(D) See "STRIP JOINT SEAL ASSEMBLY" sheet for joint information at pier 5.

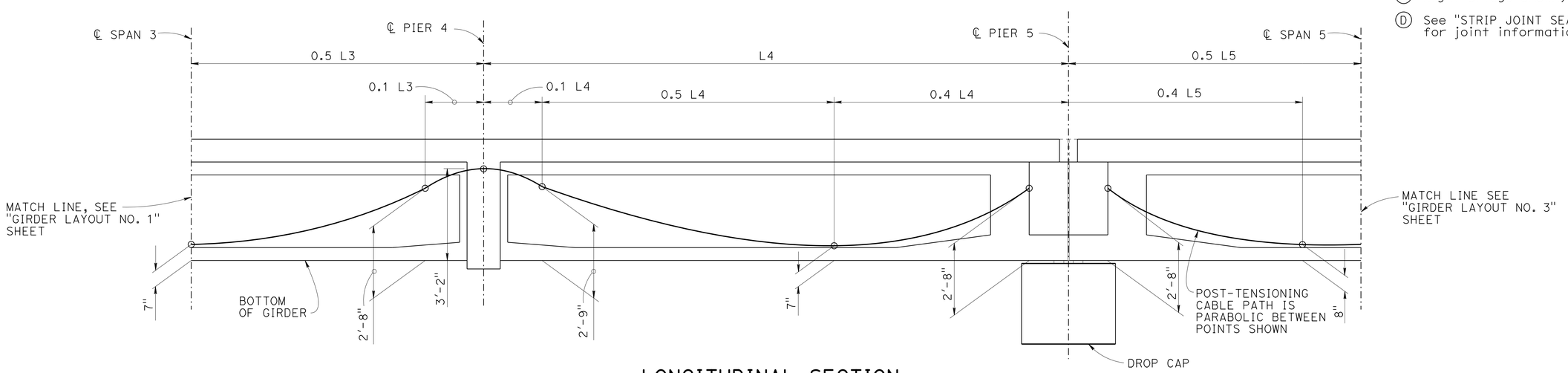

LONGITUDINAL SECTION

NO SCALE

DESIGN	BY C. LOMICKA	CHECKED E. MERCADO	
DETAILS	BY H. MAHBOOBI	CHECKED E. MERCADO	
QUANTITIES	BY E. MERCADO	CHECKED D. BALBAS	

STATE OF CALIFORNIA
DEPARTMENT OF TRANSPORTATION

DIVISION OF ENGINEERING SERVICES
STRUCTURE DESIGN
DESIGN BRANCH 19

BRIDGE NO. 54-1302L/R
POST MILE R99.2

CLIPPER VALLEY WASH BRIDGE (REPLACE)
GIRDER LAYOUT NO. 2

STRUCTURES DESIGN DETAIL SHEET (ENGLISH) (REV. 09-01-10)

ORIGINAL SCALE IN INCHES FOR REDUCED PLANS 0 1 2 3

UNIT: 3621
PROJECT NUMBER & PHASE: 0813000176 -1 CONTRACT NO.: 08-0N56U

DISREGARD PRINTS BEARING EARLIER REVISION DATES

REVISION DATES: 9-3-13 | 02-10-14 | 02-13-14

SHEET 23 OF 38

FILE => 54-1302lr-l_girlo_02.dgn

USERNAME => s121614 DATE PLOTTED => 10-SEP-2014 TIME PLOTTED => 10:10

DIST	COUNTY	ROUTE	POST MILES TOTAL PROJECT	SHEET No.	TOTAL SHEETS
08	SBd	40	R94.7/R99.7	237	251

Charles Lomicka 02-14-14
REGISTERED CIVIL ENGINEER DATE

5-27-14
PLANS APPROVAL DATE

REGISTERED PROFESSIONAL ENGINEER
CHARLES LOMICKA
No. C 71172
Exp. 06-30-15
CIVIL
STATE OF CALIFORNIA

The State of California or its officers or agents shall not be responsible for the accuracy or completeness of electronic copies of this plan sheet.

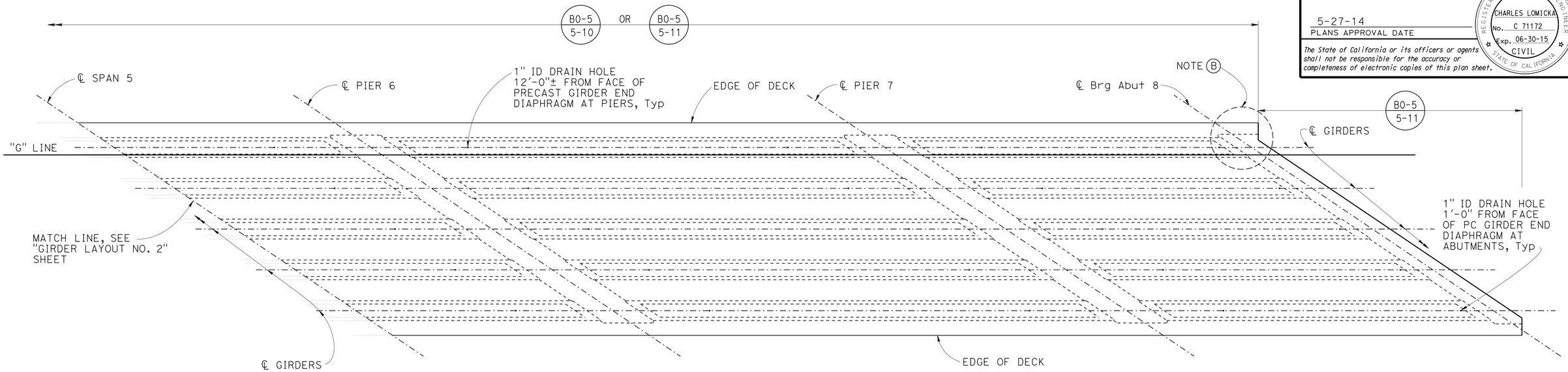

PLAN

1" = 10'-0"

NOTES :

(A) For soffit flare, see "PRECAST GIRDER DETAILS NO. 1" sheet.

(B) For "DECK CORNER" details, see "ADDITIONAL DECK REINFORCEMENT" sheet.

(C) L = Span length from ℄ support to ℄ support measured along ℄ girder

(D) Right bridge shown, left bridge similar

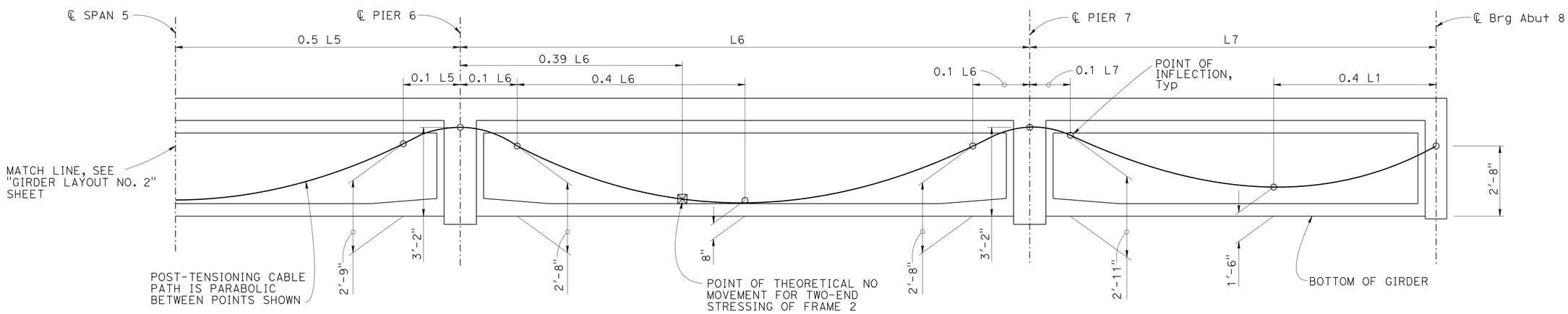

LONGITUDINAL SECTION

NO SCALE

DESIGN	BY C. LOMICKA	CHECKED E. MERCADO	
DETAILS	BY H. MAHBOOBI	CHECKED E. MERCADO	
QUANTITIES	BY E. MERCADO	CHECKED D. BALBAS	

STATE OF CALIFORNIA
DEPARTMENT OF TRANSPORTATION

DIVISION OF ENGINEERING SERVICES
STRUCTURE DESIGN
DESIGN BRANCH 19

BRIDGE NO. 54-1302L/R
POST MILE R99.2

CLIPPER VALLEY WASH BRIDGE (REPLACE)
GIRDER LAYOUT NO. 3

STRUCTURES DESIGN DETAIL SHEET (ENGLISH) (REV. 09-01-10)

ORIGINAL SCALE IN INCHES FOR REDUCED PLANS 0 1 2 3

UNIT: 3621
PROJECT NUMBER & PHASE: 0813000176 -1 CONTRACT NO.: 08-0N56U

DISREGARD PRINTS BEARING EARLIER REVISION DATES

REVISION DATES: 9-3-13 02-11-14 01-15-14

SHEET 24 OF 38

FILE => 54-1302lr-1_girlo_03.dgn

USERNAME => s121614 DATE PLOTTED => 10-SEP-2014 TIME PLOTTED => 10:10

DIST	COUNTY	ROUTE	POST MILES TOTAL PROJECT	SHEET No.	TOTAL SHEETS
08	SBd	40	R94.7/R99.7	238	251

Charles Lomicka 02-14-14
REGISTERED CIVIL ENGINEER DATE

5-27-14
PLANS APPROVAL DATE

REGISTERED PROFESSIONAL ENGINEER
CHARLES LOMICKA
No. C 71172
Exp. 06-30-15
CIVIL
STATE OF CALIFORNIA

The State of California or its officers or agents shall not be responsible for the accuracy or completeness of electronic copies of this plan sheet.

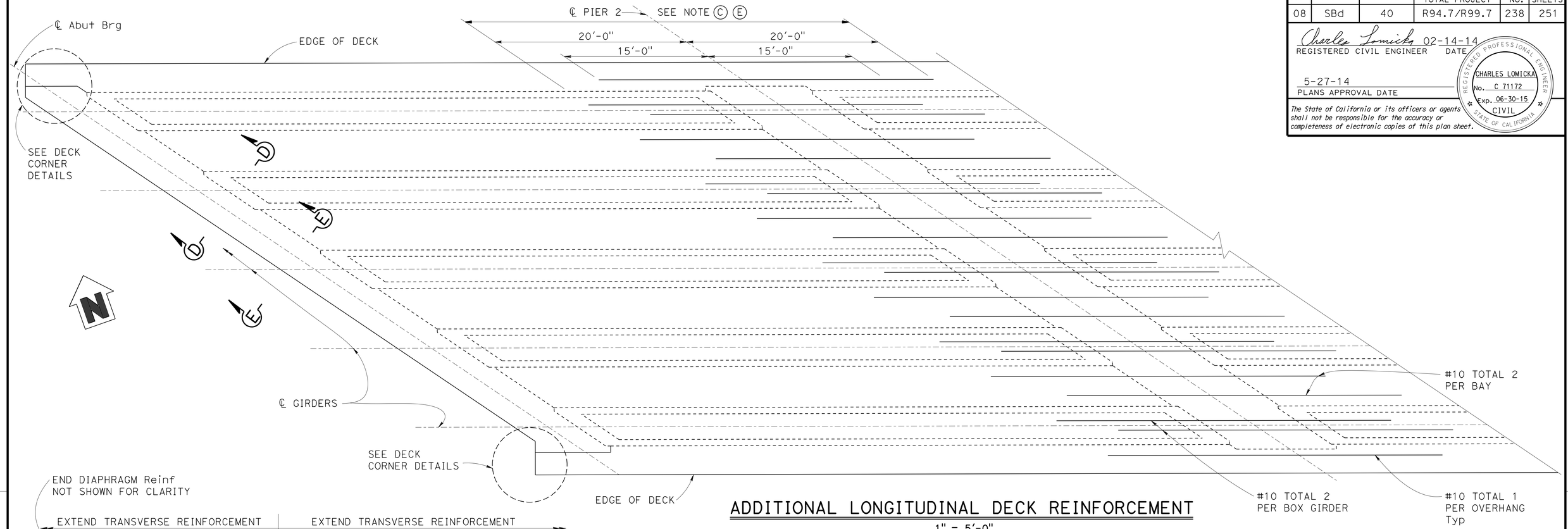

ADDITIONAL LONGITUDINAL DECK REINFORCEMENT

1" = 5'-0"

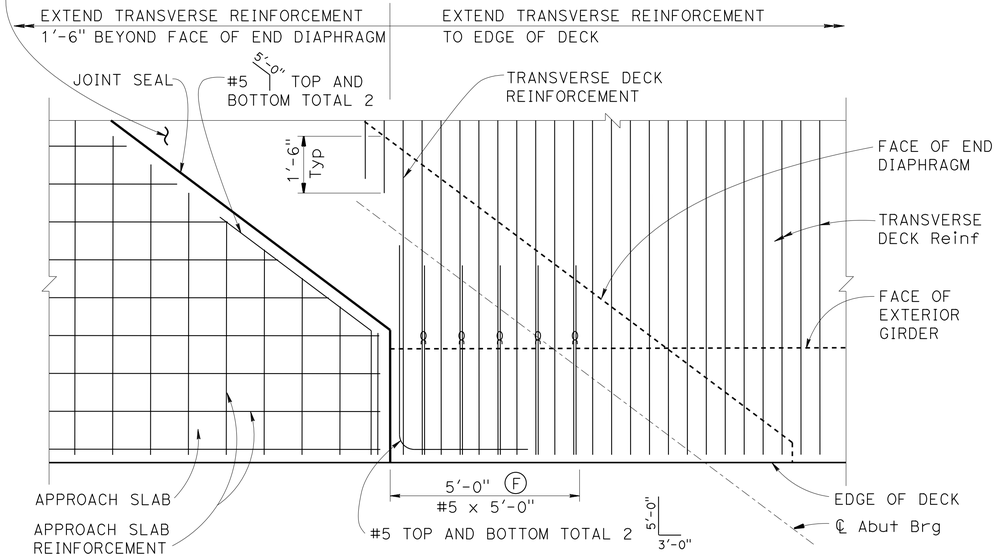

OBTUSE CORNER

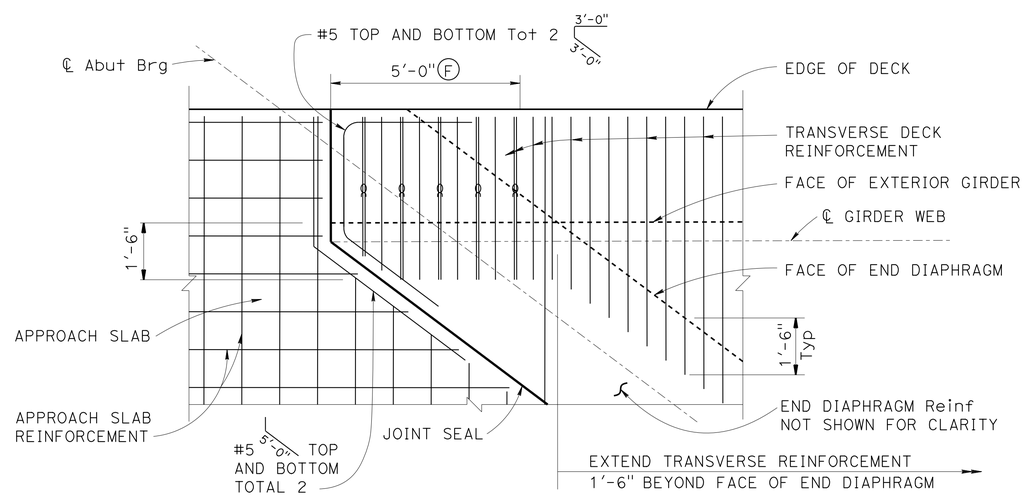

DECK CORNER DETAILS

½" = 1'-0"

ACUTE CORNER

NOTES:

Ⓐ For additional details and reinforcement, see "TYPICAL SECTION" sheet.

Ⓑ No splices allowed in additional longitudinal deck reinforcement.

Ⓒ Pier 2 Right Bridge shown, Piers 3, 4, 6, 7 similar.

Ⓓ For "SECTION D-D" and "SECTION E-E", see "END DIAPHRAGM DETAILS" sheet. Abutment 1 shown, Abutment 8 similar.

Ⓔ No splice zone for #10 continuous bars, see "TYPICAL SECTION" sheet.

Ⓕ Additional #5 @ 12 bundle with alternate transverse bar.

Denotes bundled bar.

	BY	CHECKED
DESIGN	C. LOMICKA	E. MERCADO
DETAILS	H. MAHBOOBI / D. W. / H. I.	E. MERCADO
QUANTITIES	E. MERCADO	D. BALBAS

STATE OF CALIFORNIA
DEPARTMENT OF TRANSPORTATION

DIVISION OF ENGINEERING SERVICES
STRUCTURE DESIGN
DESIGN BRANCH 19

BRIDGE NO. 54-1302L/R
POST MILE R99.2

CLIPPER VALLEY WASH BRIDGE (REPLACE)
ADDITIONAL DECK REINFORCEMENT

STRUCTURES DESIGN DETAIL SHEET (ENGLISH) (REV. 09-01-10)

ORIGINAL SCALE IN INCHES FOR REDUCED PLANS 0 1 2 3

UNIT: 3621
PROJECT NUMBER & PHASE: 0813000176 - 1 CONTRACT NO.: 08-0N56U

DISREGARD PRINTS BEARING EARLIER REVISION DATES

REVISION DATES: 9-20-13 01-30-14 02-10-14

SHEET 25 OF 38

FILE => 54-1302lr-l_gir-rf01 .dgn

USERNAME => s121614 DATE PLOTTED => 10-SEP-2014 TIME PLOTTED => 10:10

DIST	COUNTY	ROUTE	POST MILES TOTAL PROJECT	SHEET No.	TOTAL SHEETS
08	SBd	40	R94.7/R99.7	239	251

Charles Lomicka 02-14-14
REGISTERED CIVIL ENGINEER DATE

5-27-14
PLANS APPROVAL DATE

REGISTERED PROFESSIONAL ENGINEER CHARLES LOMICKA No. C 71172 Exp. 06-30-15 CIVIL STATE OF CALIFORNIA

The State of California or its officers or agents shall not be responsible for the accuracy or completeness of electronic copies of this plan sheet.

PRESTRESSING NOTES (PRE-TENSIONING)

GIRDER	LOCATION	JACKING FORCE (P) (kips)	CONCRETE STRENGTH (psi)	
			f'_{ci}	f'_c
GIRDER A SPAN 1 & 7	BOTTOM	615	4000	5500
GIRDER B SPAN 2, 3, 6	TOP	88	4000	5500
	BOTTOM	1055		
GIRDER C SPAN 4 & 5	TOP	132	4000	5500
	BOTTOM	1318		

SPAN	MIDSPAN DEAD LOAD DEFLECTION (IN)	
	DECK	BARRIER
1	0.13	0.01
2	0.46	0.04
3	0.15	0.01
4	0.91	0.08
5	0.88	0.07
6	0.22	0.02
7	0.19	0.02

1. Jacking Force (P):
   The jacking force required at the point of control along the span. The jacking force does not include any fabrication specific losses.
2. The maximum tensile stress in the prestressing steel upon release shall not exceed 75% of the specified minimum ultimate tensile strength of the prestressing steel.
3. The maximum temporary tensile stress (jacking stress) in the prestressing steel shall not exceed 80% of the specified minimum ultimate tensile strength of the prestressing steel.
4. Concrete strength:
   $f'ci$ is at time of initial stressing.
   $f'c$ is at 28 days.
5. Deflection components are informational and will be used to set screed line elevations.
6. Screed line elevations for deck concrete will be determined by the Engineer.
7. Prestressing strand shall be 270 ksi low relaxation.
8. Number of bonded strands in the ledge shall not exceed 8.

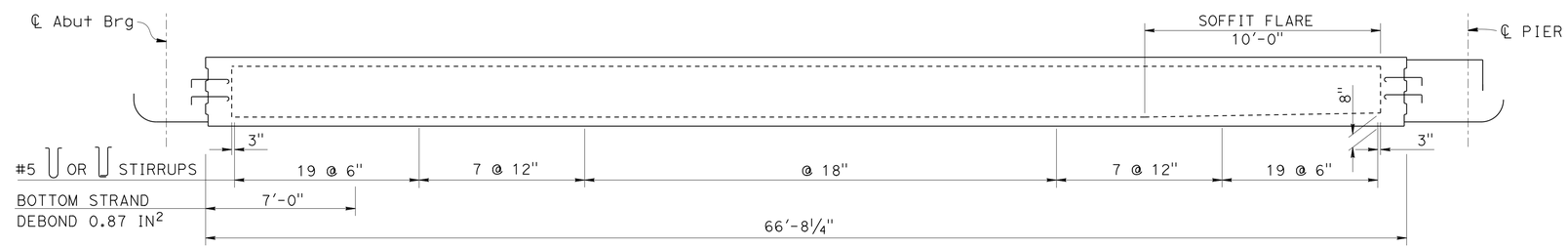

ELEVATION - GIRDER A

NO SCALE

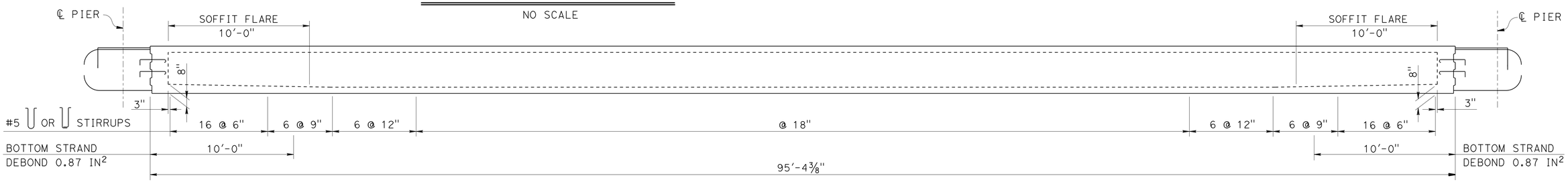

ELEVATION - GIRDER B

NO SCALE

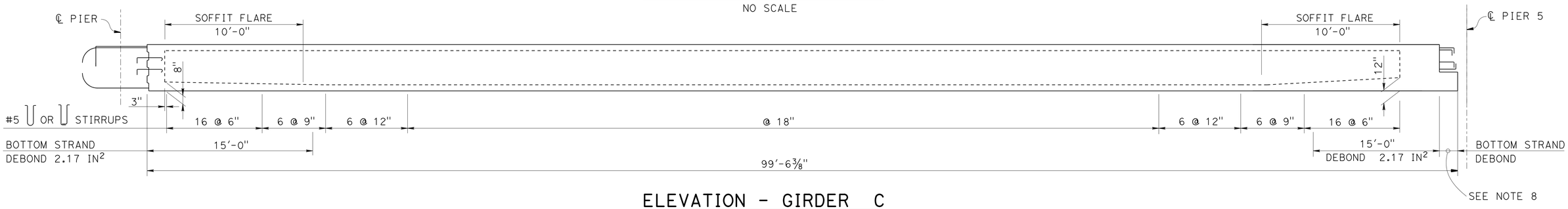

ELEVATION - GIRDER C

NO SCALE

DESIGN	BY C. LOMICKA	CHECKED E. MERCADO	
DETAILS	BY H. MAHBOOBI / D. W.	CHECKED E. MERCADO	
QUANTITIES	BY E. MERCADO	CHECKED D. BALBAS	

STATE OF CALIFORNIA
DEPARTMENT OF TRANSPORTATION

DIVISION OF ENGINEERING SERVICES
STRUCTURE DESIGN
DESIGN BRANCH 19

BRIDGE NO. 54-1302L/R
POST MILE R99.2

CLIPPER VALLEY WASH BRIDGE (REPLACE)
PRECAST GIRDER DETAILS NO. 1

STRUCTURES DESIGN DETAIL SHEET (ENGLISH) (REV. 09-01-10)

ORIGINAL SCALE IN INCHES FOR REDUCED PLANS 0 1 2 3

UNIT: 3621
PROJECT NUMBER & PHASE: 0813000176 - 1 CONTRACT NO.: 08-0N56U

DISREGARD PRINTS BEARING EARLIER REVISION DATES

REVISION DATES: 9-20-13 02-10-14 01-15-14

SHEET 26 OF 38

FILE => 54-1302lr-1-gdet_01.dgn

USERNAME => s121614 DATE PLOTTED => 10-SEP-2014 TIME PLOTTED => 10:10

DIST	COUNTY	ROUTE	POST MILES TOTAL PROJECT	SHEET No.	TOTAL SHEETS
08	SBd	40	R94.7/R99.7	240	251

Charles Lomicka 02-14-14
REGISTERED CIVIL ENGINEER DATE

5-27-14
PLANS APPROVAL DATE

REGISTERED PROFESSIONAL ENGINEER CHARLES LOMICKA No. C 71172 Exp. 06-30-15 CIVIL STATE OF CALIFORNIA

The State of California or its officers or agents shall not be responsible for the accuracy or completeness of electronic copies of this plan sheet.

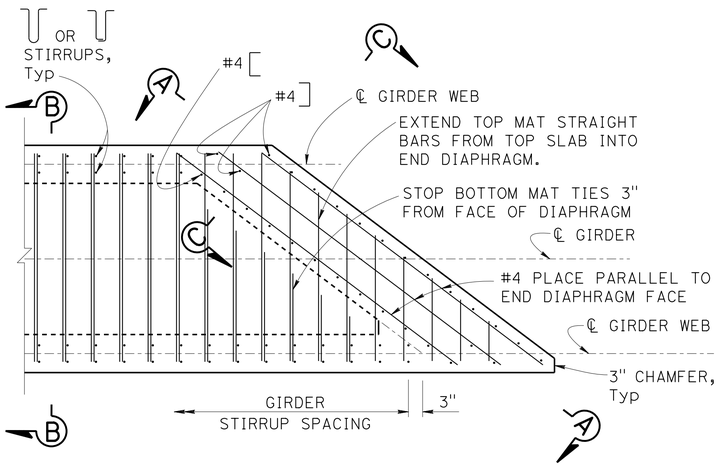

GIRDER END DIAPHRAGM - TOP

¾" = 1'-0"

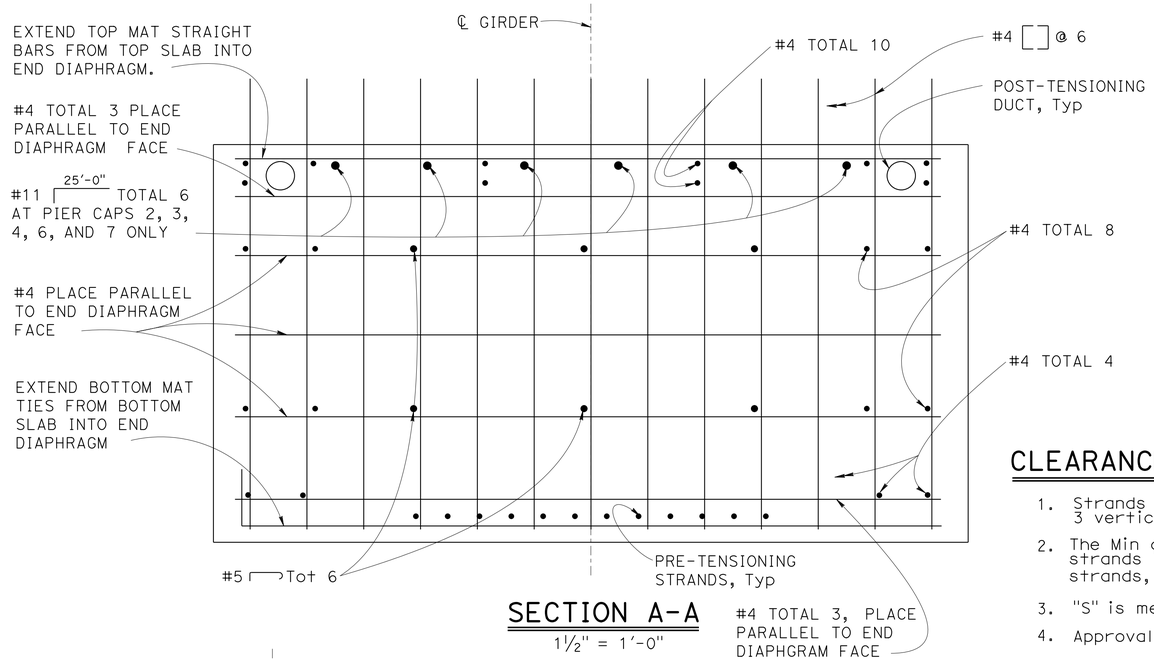

SECTION A-A

1½" = 1'-0"

NOTES:

(A) For additional details for Girder C, see "PRECAST GIRDER DETAILS NO. 3" sheet.

(B) At stirrup spacing changes, space according to the web with the smaller stirrup spacing.

CLEARANCES FOR PRETENSIONED STRANDS:

1. Strands may be bundled in groups consisting of 3 vertically, 2 horizontally and separated at the ends
2. The Min distance "S" between groups or individual strands is 1½" for ⅜" Ø strands, 1¾" for ½" Ø strands, 2" for 0.6" Ø strands
3. "S" is measured between centers of adjacent strands
4. Approval by the Engineer is required for deviation

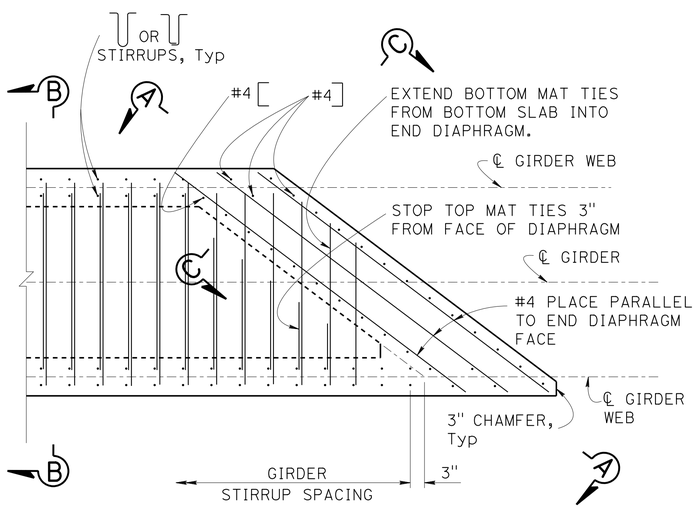

GIRDER END DIAPHRAGM - BOTTOM

¾" = 1'-0"

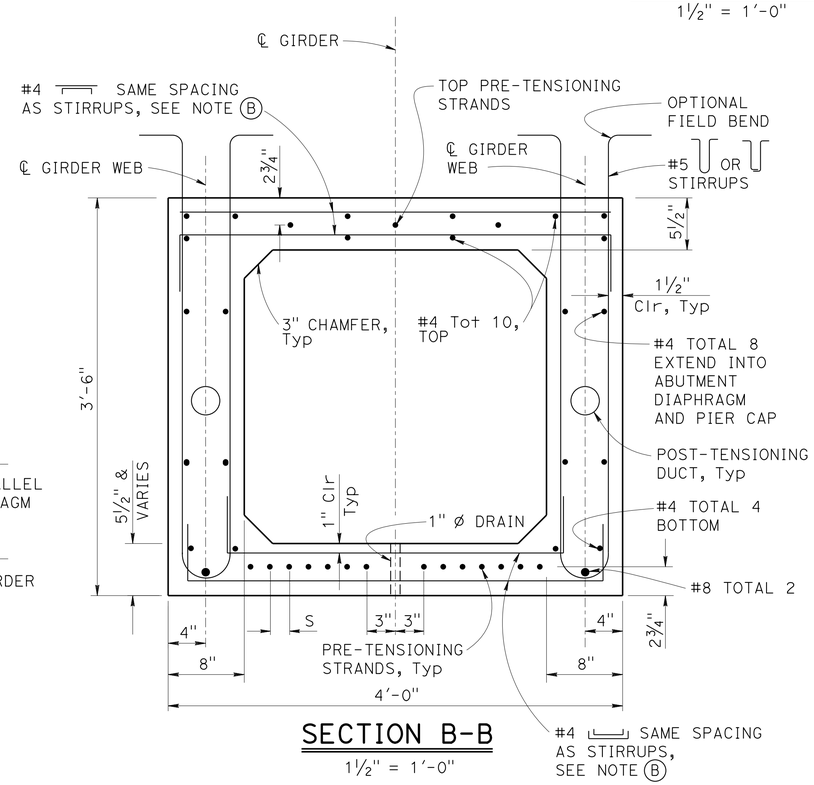

SECTION B-B

1½" = 1'-0"

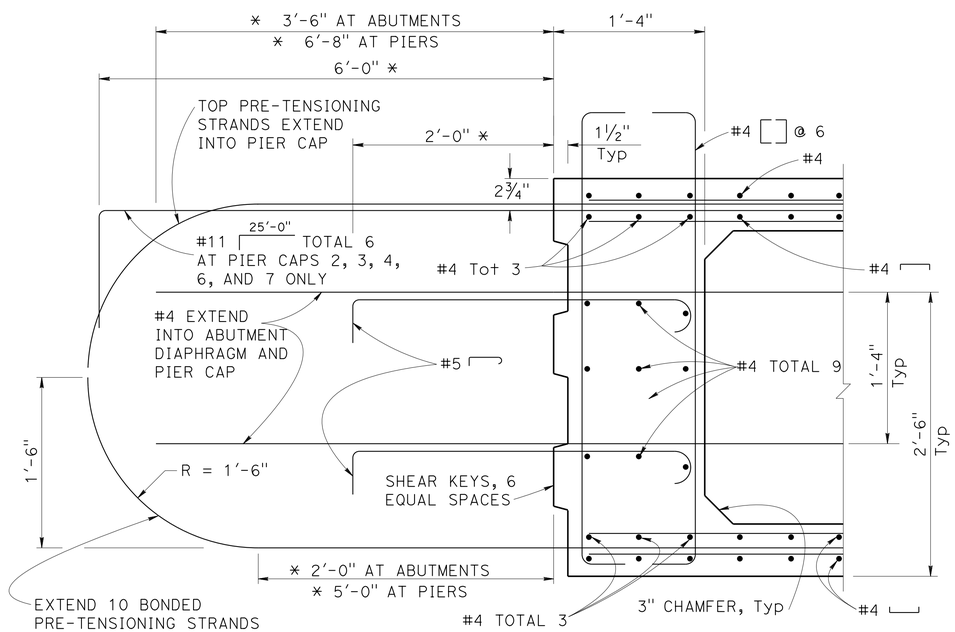

SECTION C-C

NO SCALE

* DIMENSION PARALLEL TO ℄ GIRDER

	BY	CHECKED
DESIGN	B. GUNTER	E. MERCADO
DETAILS	H. MAHBOOBI / H. I. / D. W.	E. MERCADO
QUANTITIES	E. MERCADO	D. BALBAS

STATE OF CALIFORNIA
DEPARTMENT OF TRANSPORTATION

DIVISION OF ENGINEERING SERVICES
STRUCTURE DESIGN
DESIGN BRANCH 19

BRIDGE NO. 54-1302L/R
POST MILE R99.2

CLIPPER VALLEY WASH BRIDGE (REPLACE)
PRECAST GIRDER DETAILS NO. 2

STRUCTURES DESIGN DETAIL SHEET (ENGLISH) (REV. 09-01-10)

ORIGINAL SCALE IN INCHES FOR REDUCED PLANS 0 1 2 3

UNIT: 3621
PROJECT NUMBER & PHASE: 0813000176 - 1 CONTRACT NO.: 08-0N56U

DISREGARD PRINTS BEARING EARLIER REVISION DATES

REVISION DATES: 9-20-13 02-13-14 02-18-14

SHEET 27 OF 38

FILE => 54-1302lr-1-gdet_02.dgn

USERNAME => s121614 DATE PLOTTED => 10-SEP-2014 TIME PLOTTED => 10:10

DIST	COUNTY	ROUTE	POST MILES TOTAL PROJECT	SHEET No.	TOTAL SHEETS
08	SBd	40	R94.7/R99.7	241	251

Charles Lomicka 02-14-14
REGISTERED CIVIL ENGINEER DATE

5-27-14
PLANS APPROVAL DATE

REGISTERED PROFESSIONAL ENGINEER CHARLES LOMICKA No. C 71172 Exp. 06-30-15 CIVIL STATE OF CALIFORNIA

The State of California or its officers or agents shall not be responsible for the accuracy or completeness of electronic copies of this plan sheet.

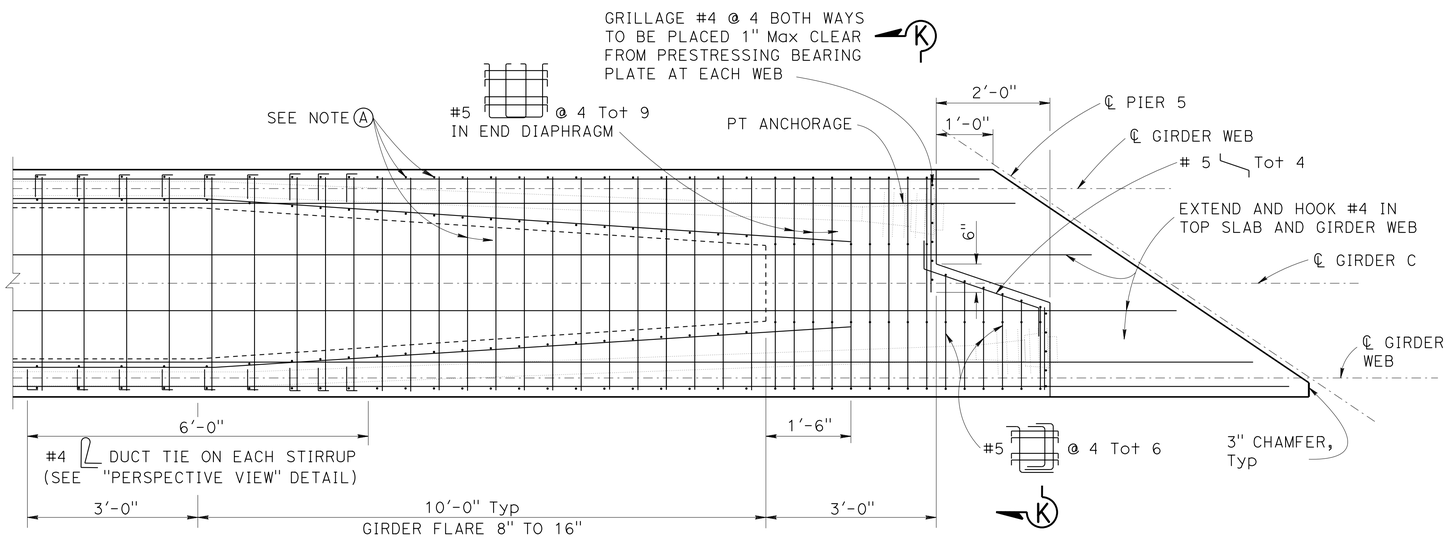

GIRDER C PARTIAL PLAN

3/4" = 1'-0"

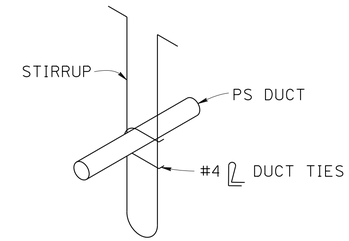

PERSPECTIVE VIEW

NO SCALE

NOTES:

(A) For typical girder reinforcement, see "PRECAST GIRDER DETAILS NO. 1" and "PRECAST GIRDER DETAILS NO. 2" sheets.

(B) #5 Cross Ties may be adjusted to clear PT ducts and anchorage.

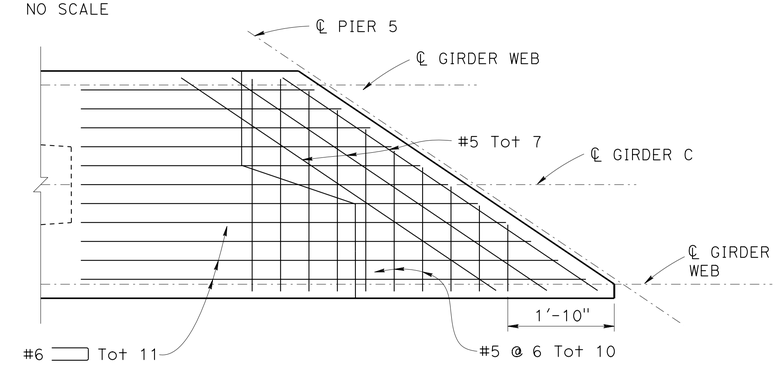

LEDGE REINFORCEMENT PLAN

3/4" = 1'-0"

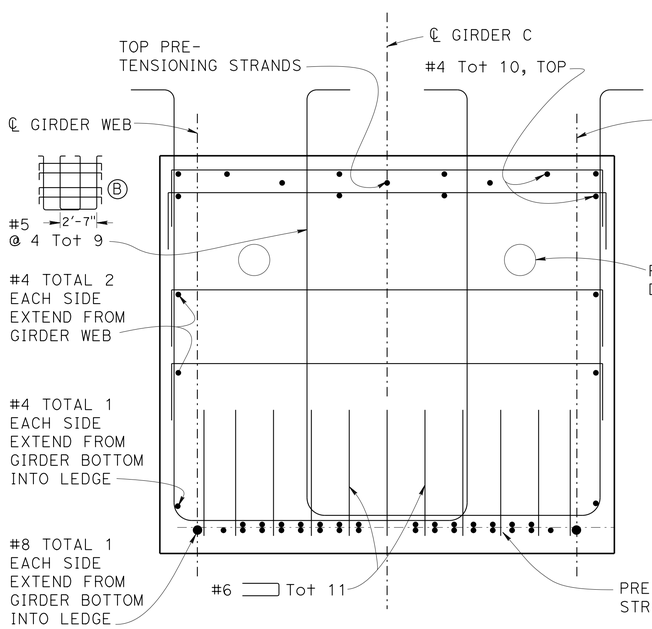

END DIAPHRAGM SECTION

1 1/2" = 1'-0"

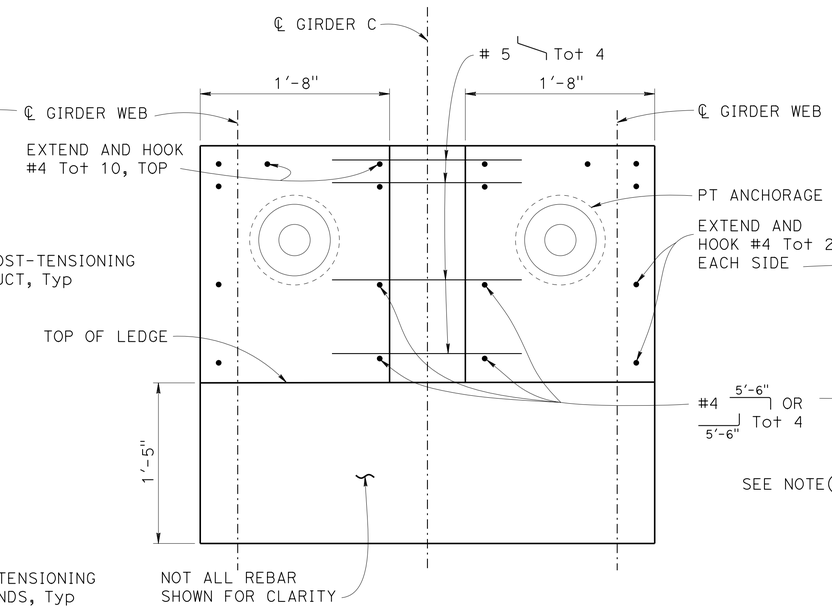

SECTION K-K

1 1/2" = 1'-0"

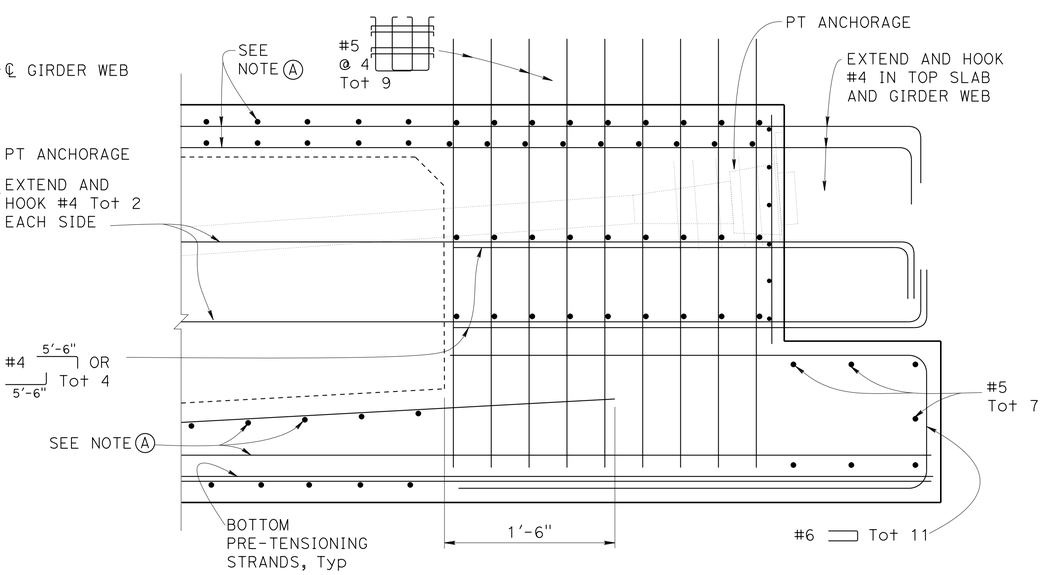

GIRDER C LONGITUDINAL SECTION

1 1/2" = 1'-0"

DESIGN	BY C. LOMICKA	CHECKED E. MERCADO	
DETAILS	BY H. MAHBOOBI	CHECKED E. MERCADO	
QUANTITIES	BY E. MERCADO	CHECKED D. BALBAS	

STATE OF CALIFORNIA
DEPARTMENT OF TRANSPORTATION

DIVISION OF ENGINEERING SERVICES
STRUCTURE DESIGN
DESIGN BRANCH 19

BRIDGE NO. 54-1302L/R
POST MILE R99.2

CLIPPER VALLEY WASH BRIDGE (REPLACE)
PRECAST GIRDER DETAILS NO. 3

STRUCTURES DESIGN DETAIL SHEET (ENGLISH) (REV. 09-01-10)

ORIGINAL SCALE IN INCHES FOR REDUCED PLANS 0 1 2 3

UNIT: 3621
PROJECT NUMBER & PHASE: 0813000176 - 1 CONTRACT NO.: 08-0N56U

DISREGARD PRINTS BEARING EARLIER REVISION DATES

REVISION DATES: 12-03-13 01-21-14 01-29-14

SHEET 28 OF 38

FILE => 54-1302lr-1-gdet_03.dgn

USERNAME => s172614 DATE PLOTTED => 10-SEP-2014 TIME PLOTTED => 10:10

DIST	COUNTY	ROUTE	POST MILES TOTAL PROJECT	SHEET No.	TOTAL SHEETS
08	SBd	40	R94.7/R99.7	242	251

REGISTERED CIVIL ENGINEER 02/12/14 DATE

5-27-14
PLANS APPROVAL DATE

REGISTERED PROFESSIONAL ENGINEER JEFF SIMS No. C 46471 Exp. 6/30/15 CIVIL STATE OF CALIFORNIA

The State of California or its officers or agents shall not be responsible for the accuracy or completeness of electronic copies of this plan sheet.

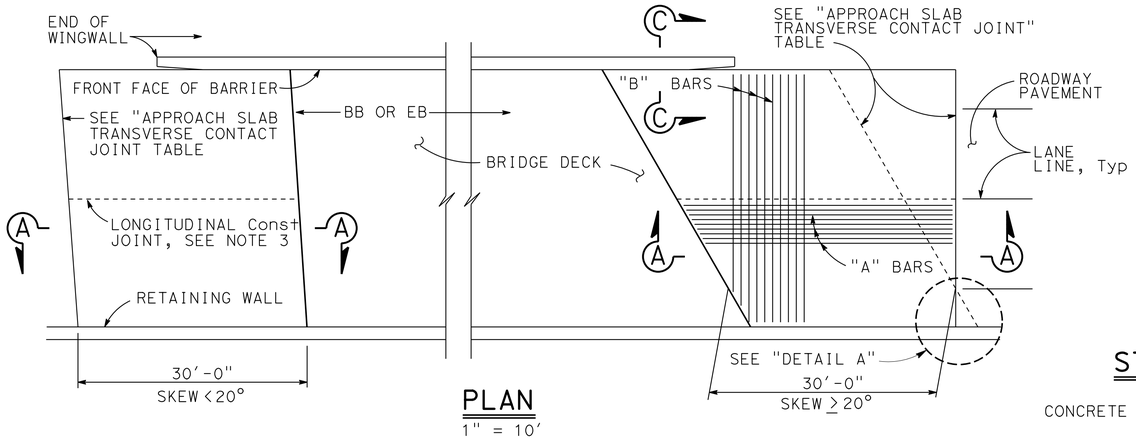

PLAN
1" = 10'

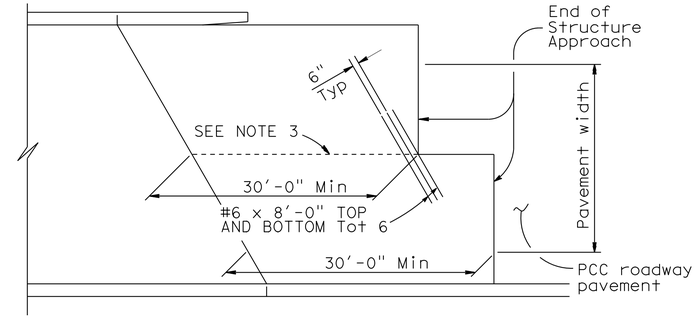

STRUCTURE APPROACH - END STAGGER DETAIL
No Scale

APPROACH SLAB TRANSVERSE CONTACT JOINT		
APPROACH SKEW	WITH AC ROADWAY PAVEMENT	WITH PCC ROADWAY PAVEMENT
< 20°	PARALLEL TO FACE OF PN	PARALLEL TO FACE OF PN
20° - 45°	PARALLEL TO FACE OF PN USE "DETAIL A"	STAGGER LINES 24' TO 36' APART
> 45°	PARALLEL TO FACE OF PN USE "DETAIL A"	STAGGER AT EACH LANE LINE

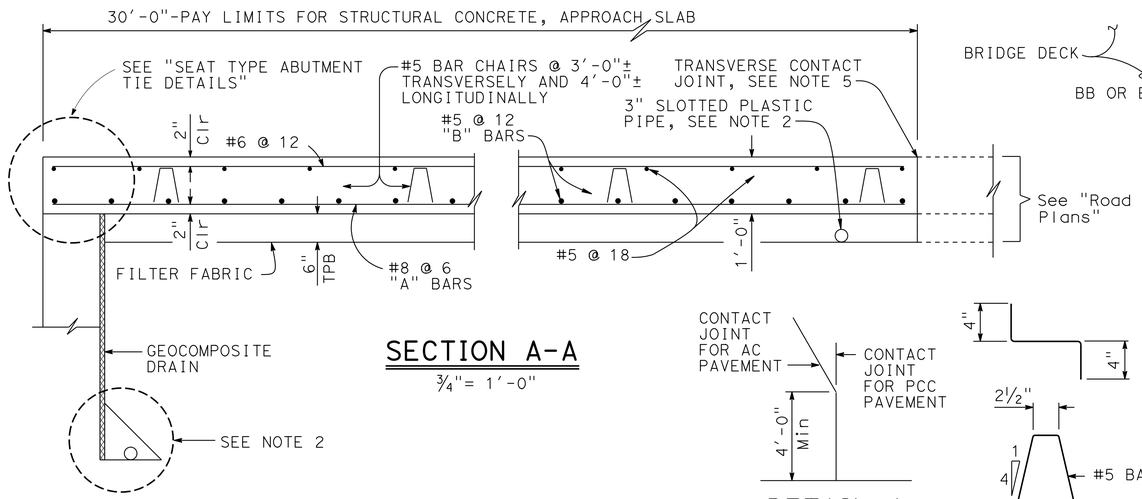

SECTION A-A
¾" = 1'-0"

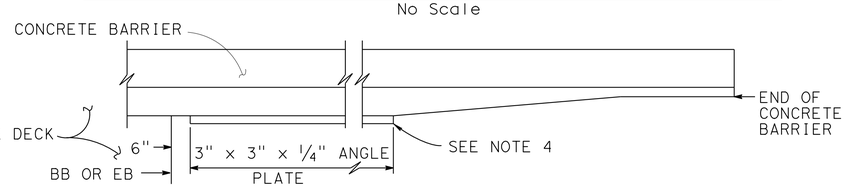

EDGE ANGLE DETAIL
½" = 1'-0"

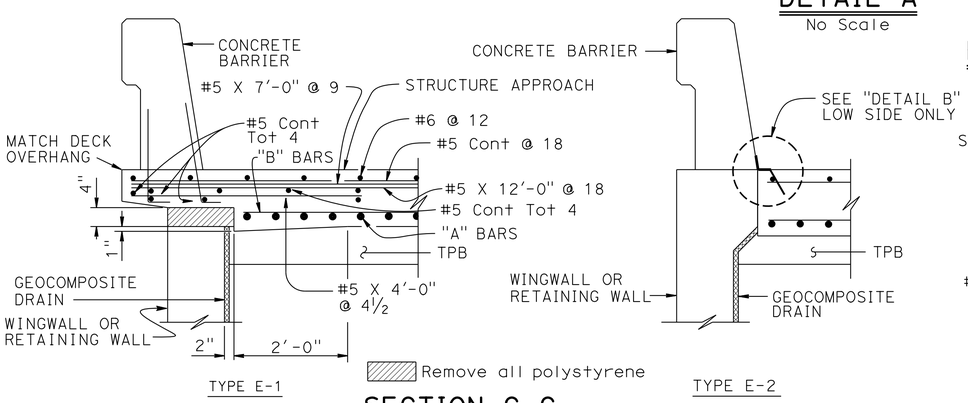

SECTION C-C
¾" = 1'-0"

(Type E-1 to be used, unless otherwise shown on plans)

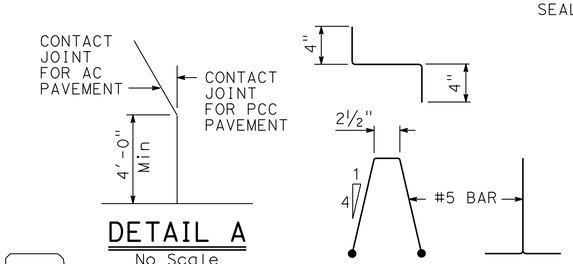

DETAIL A
No Scale

BAR CHAIR DETAIL
1½" = 1'-0"

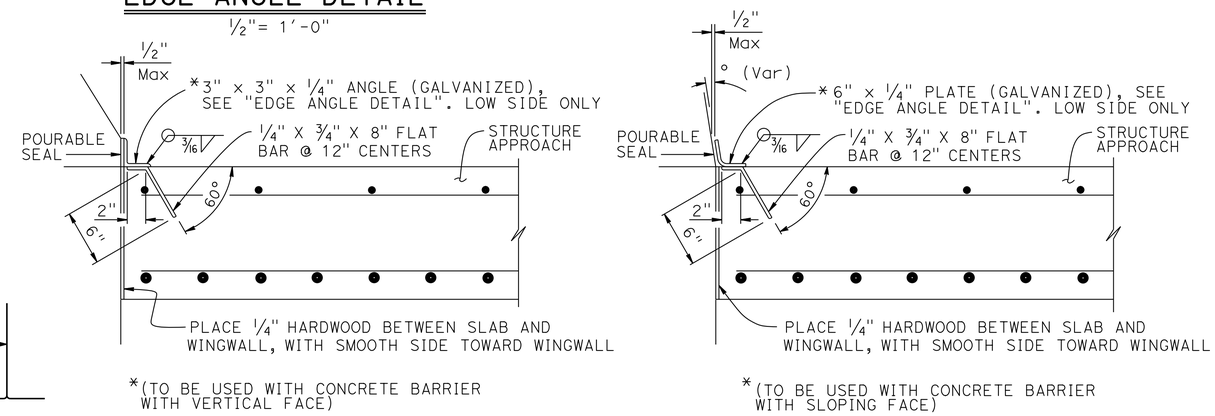

DETAIL B
1½" = 1'-0"

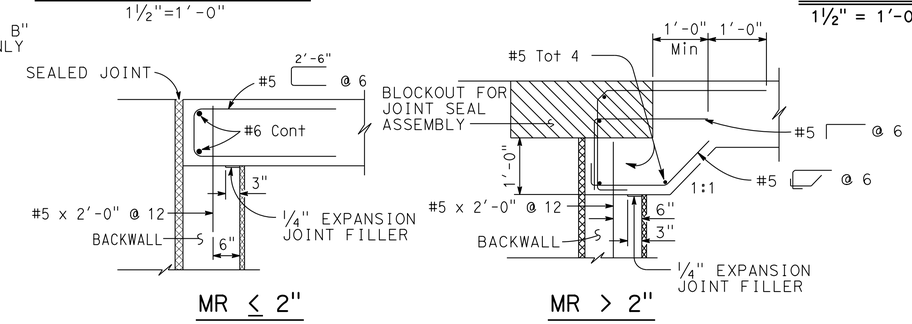

SEAT TYPE ABUTMENT TIE DETAILS (SEE NOTE 1)
¾" = 1'-0"

NOTES:

1. For details not shown, see Structure Plans. For MR ≤ 2", adjust bar reinforcement to clear a sawcut for sealed joint, when required
2. For drainage details, see "STRUCTURE APPROACH DRAINAGE DETAILS" sheet
3. Longitudinal construction joints, when permitted by the Engineer, shall be located on lane lines
4. End angle or plate at beginning of barrier transition, end of wingwall or end of structure approach as applicable
5. For transverse contact joint with new PCC paving, refer to Standard Plan P10
6. At the Contractor's option, approach slab transverse reinforcement may be placed parallel to paving notch. Spacing of transverse reinforcement is measured along ℄ roadway

STANDARD DRAWING
FILE NO. xs3-120
APPROVAL DATE July 2011

STATE OF CALIFORNIA
DEPARTMENT OF TRANSPORTATION

DIVISION OF ENGINEERING SERVICES

BRIDGE NO. 54-1302L/R
POST MILE R99.2

CLIPPER VALLEY WASH BRIDGE (REPLACE)
STRUCTURE APPROACH TYPE N(30S)

DS OSD 2147A (ENGLISH STANDARD DRAWING "XS" BORDER REV. (02-02-11)

ORIGINAL SCALE IN INCHES FOR REDUCED PLANS 0 1 2 3

UNIT: 3621
PROJECT NUMBER & PHASE: 0813000176 - 1 CONTRACT NO.: 08-0N56U

DISREGARD PRINTS BEARING EARLIER REVISION DATES

REVISION DATES 10-16-13 01-15-14 12-09-13

SHEET 29 OF 38

FILE => 54-1302lr-s_sa-n30s.dgn

USERNAME => s121614 DATE PLOTTED => 10-SEP-2014 TIME PLOTTED => 10:10

DIST	COUNTY	ROUTE	POST MILES TOTAL PROJECT	SHEET No.	TOTAL SHEETS
08	SBd	40	R94.7/R99.7	243	251

Charles Lomicka 02-14-14
REGISTERED CIVIL ENGINEER DATE

5-27-14
PLANS APPROVAL DATE

REGISTERED PROFESSIONAL ENGINEER
CHARLES LOMICKA
No. C 71172
Exp. 06-30-15
CIVIL
STATE OF CALIFORNIA

The State of California or its officers or agents shall not be responsible for the accuracy or completeness of electronic copies of this plan sheet.

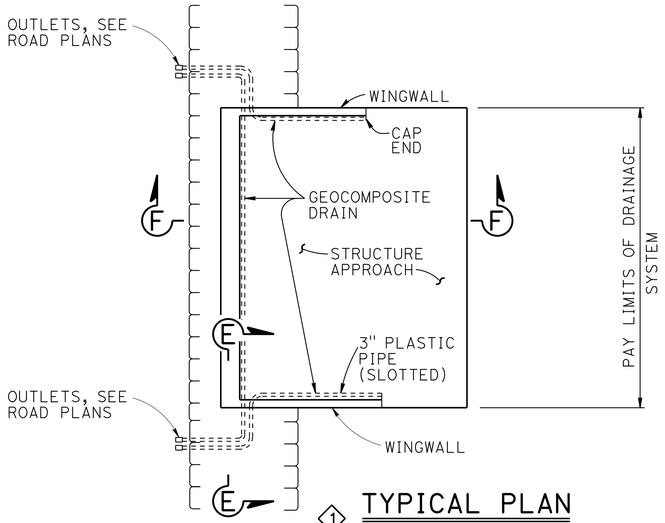

1 TYPICAL PLAN
NO SCALE

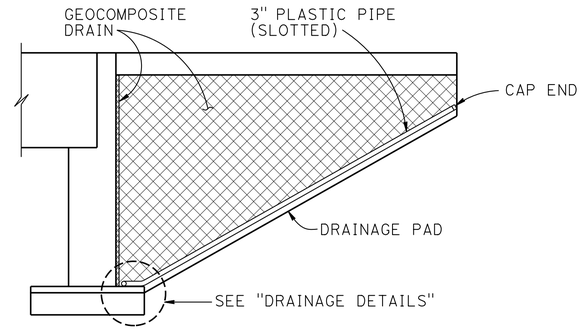

CANTILEVER WINGWALL

SECTION F-F
NO SCALE

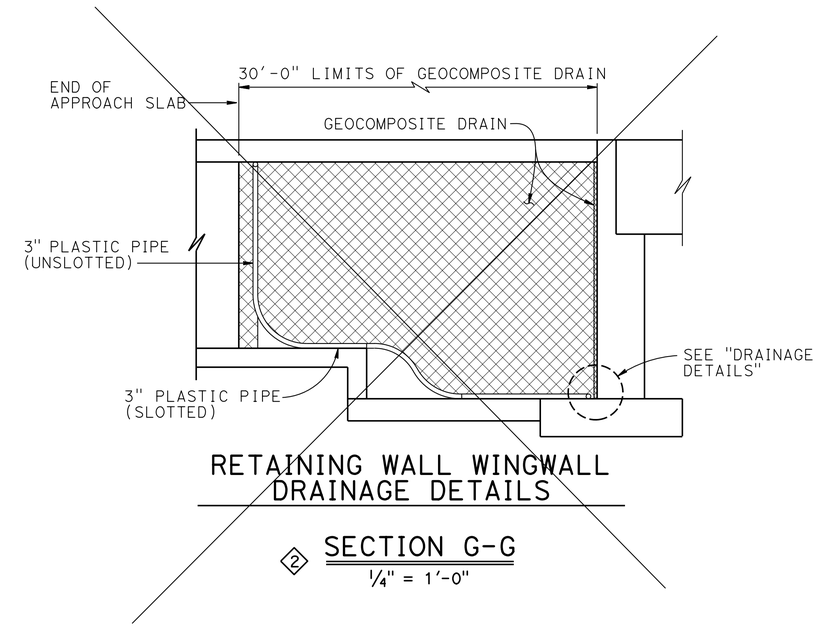

RETAINING WALL WINGWALL DRAINAGE DETAILS

2 SECTION G-G
1/4" = 1'-0"

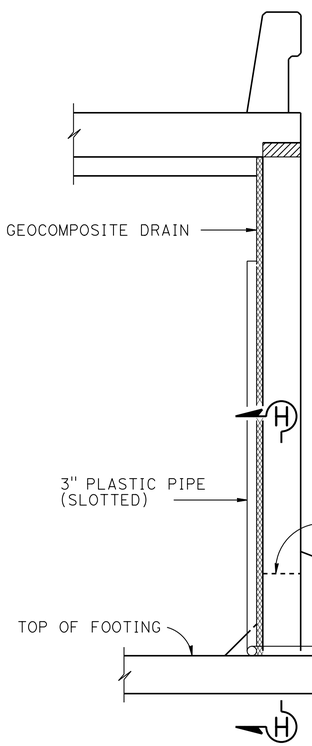

1 SECTION E-E
NO SCALE

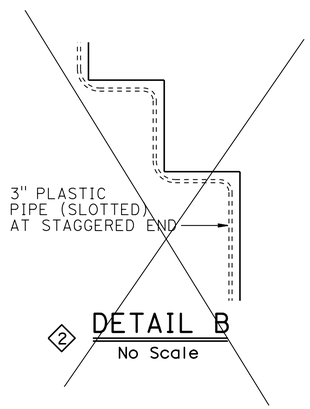

2 DETAIL B
No Scale

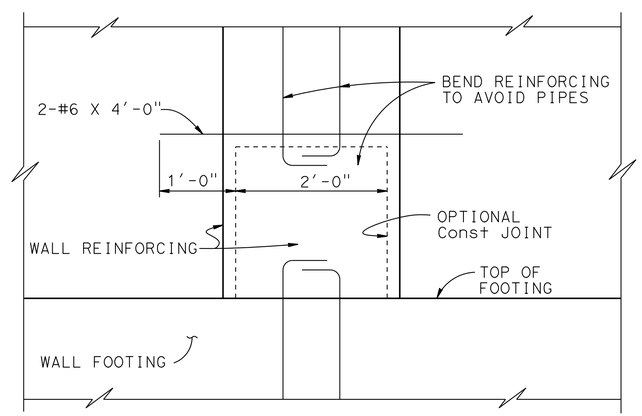

SECTION H-H
NO SCALE

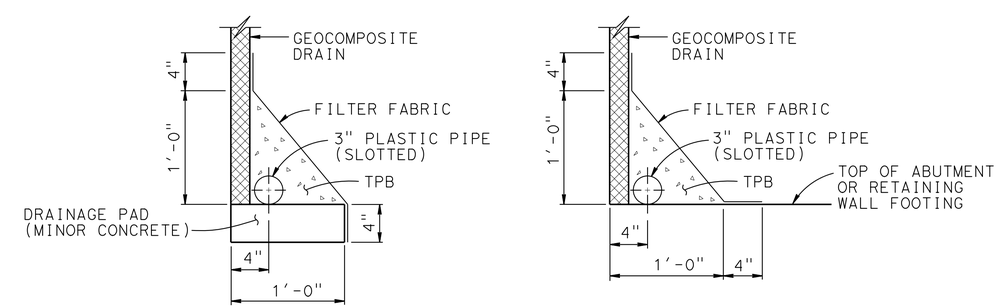

WITHOUT FOOTING

WITH FOOTING

DRAINAGE DETAILS
1 1/2" = 1'-0"

NOTE: Bends and junctions in 3" plastic pipe are 30" radius Min

REVISED STANDARD DRAWING

FILE NO. xs3-110

APPROVAL DATE July 2011

1 MODIFIED DETAIL
2 DELETED DETAIL

STATE OF CALIFORNIA
DEPARTMENT OF TRANSPORTATION

DIVISION OF ENGINEERING SERVICES

BRIDGE NO. 54-1302R/L
POST MILE R99.2

CLIPPER VALLEY WASH BRIDGE (REPLACE)
STRUCTURE APPROACH DRAINAGE DETAILS

DS OSD 2147A (ENGLISH STANDARD DRAWING "XS" BORDER REV. (02-02-11)

ORIGINAL SCALE IN INCHES FOR REDUCED PLANS 0 1 2 3

UNIT: 3621
PROJECT NUMBER & PHASE: 0813000176 - 1 CONTRACT NO.: 08-0N56U

DISREGARD PRINTS BEARING EARLIER REVISION DATES

REVISION DATES 02-13-14

SHEET 30 OF 38

FILE => 54-1302lr-s-sadd.dgn

USERNAME => s121614 DATE PLOTTED => 10-SEP-2014 TIME PLOTTED => 10:11

DIST	COUNTY	ROUTE	POST MILES TOTAL PROJECT	SHEET No.	TOTAL SHEETS
08	SBd	40	R94.7/R99.7	244	251

Charles Lomicka 02-14-14
REGISTERED CIVIL ENGINEER DATE

5-27-14
PLANS APPROVAL DATE

REGISTERED PROFESSIONAL ENGINEER CHARLES LOMICKA No. C 71172 Exp. 06-30-15 CIVIL STATE OF CALIFORNIA

The State of California or its officers or agents shall not be responsible for the accuracy or completeness of electronic copies of this plan sheet.

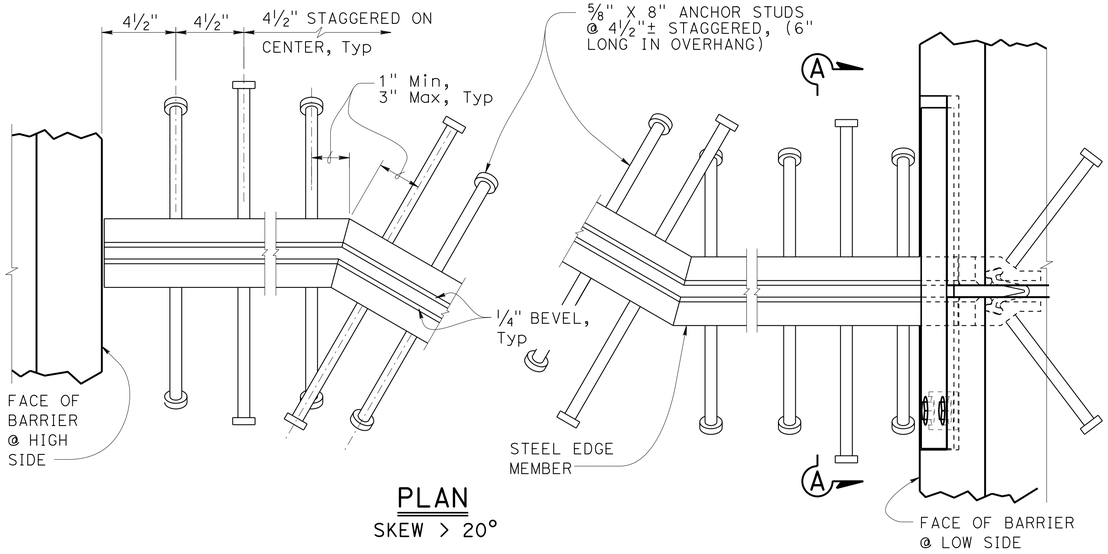

PLAN
SKEW > 20°

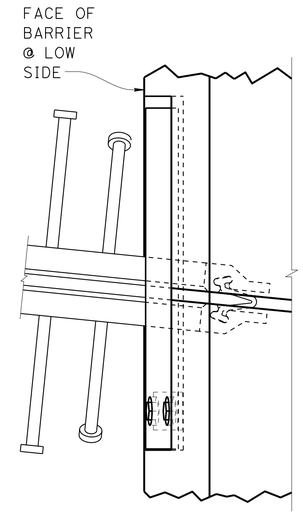

PLAN
SKEW ≤ 20°

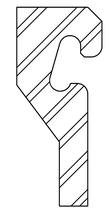

SCHEMATIC STEEL EDGE MEMBER

NOTES:

1. Alternatively, fillet or complete penetration welds may be used at anchor studs.
2. Alternate types of anchor studs may be permitted subject to the authorization by the Engineer.
3. Joint seal assembly to be used in conjunction with closure pour. (See other sheets for limits). Closure pour shall not be placed until final deck surface is within the tolerances specified.
4. Use joint at crown of roadway, at any change in traverse slope in deck and at changes in horizontal direction. Place other joints at or near lanes. All metal parts to be painted or galvanized after fabrication.
5. Sheet Neoprene shall be fabricated in one continuous piece and shall be fabricated to bend around corners. Field splices of the neoprene are not allowed.
6. Insert assembly or expansion anchorage for 5/8" x 1¾" bolts. Use installation bolts extended ½" minimum past nut and coat with bond breaker, after concrete has cured, remove installation bolts, install HS bolts and sheet neoprene.
7. Sidewalk Detail similar to Barrier Detail on low side at both sides if the roadway is crowned or if the difference in elevation between the ends of the seal is 0.5′ or less.
8. a_c, a_s, are the thermal expansion coefficients for concrete and steel respectively.
9. Anchor studs shall conform to ASTM 108.

JOINT INFORMATION			"a" DIMENSIONS		
LOCATION	MOVEMENT RATING (MR)	SKEW	WINTER	SPRING & FALL	SUMMER
ABUTMENT 1	2½"	56°	1¾"	1⅜"	1"
PIER 5	4"	56°	2⅝"	2"	1⅜"

✳ TO SET MINIMUM JOINT OPENING "W"

$$\text{"W"} = \begin{cases} \tfrac{1}{2}\text{"} + [(\text{Max Str temperature in °F}) - (\text{actual Str temperature in °F})] * (a_c \text{ or } a_s)(12)(\text{contributory L in feet}) \\ \tfrac{1}{2}\text{" Minimum} \\ a_c = 0.0000060 \\ a_s = 0.0000065 \end{cases}$$

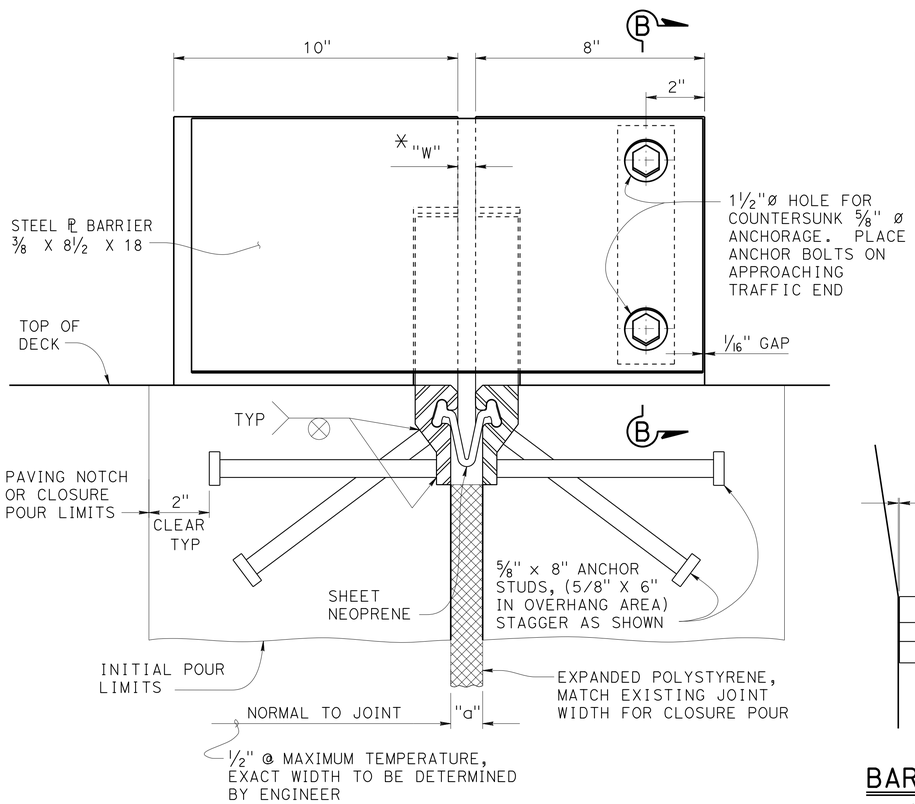

SECTION A-A

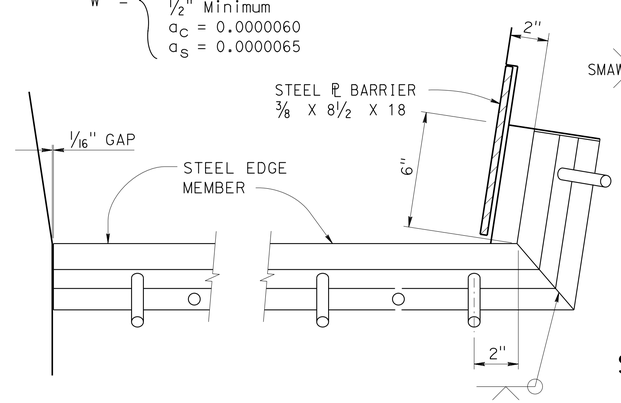

BARRIER DETAIL HIGH SIDE

BARRIER DETAIL LOW SIDE

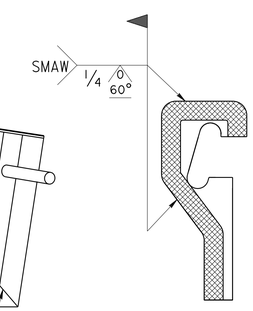

SCHEMATIC FIELD WELD DETAIL

NOTE:
SHADED AREAS TO BE WELDED

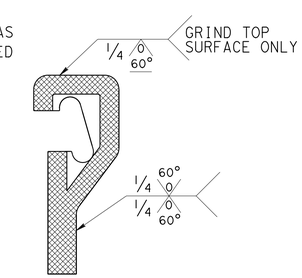

SCHEMATIC SHOP WELD DETAIL

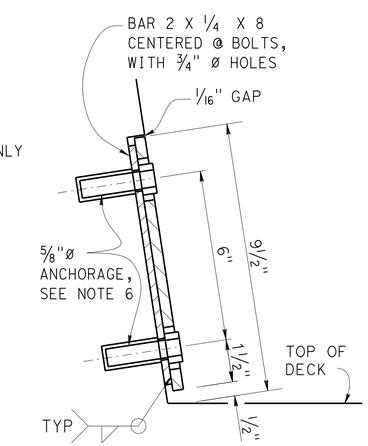

SECTION B-B

NO SCALE

CLIPPER VALLEY WASH BRIDGE (REPLACE)

STRIP JOINT SEAL ASSEMBLY

MAXIMUM MOVEMENT RATING = 4"

STANDARD DRAWING
FILE NO. xs8-010
APPROVAL DATE September 2013

STATE OF CALIFORNIA
DEPARTMENT OF TRANSPORTATION

DIVISION OF ENGINEERING SERVICES

BRIDGE NO. 54-1302L/R
POST MILE R99.2

DS OSD 2147A (ENGLISH STANDARD DRAWING "XS" BORDER REV. (02-02-11)

ORIGINAL SCALE IN INCHES FOR REDUCED PLANS 0 1 2 3

UNIT: 3621
PROJECT NUMBER & PHASE: 0813000176 - 1 CONTRACT NO.: 08-0N56U

DISREGARD PRINTS BEARING EARLIER REVISION DATES

REVISION DATES 2/13/12 12/20/13 01/15/14

SHEET 31 OF 38

FILE => 54-1302lr-s-sjs.dgn

USERNAME => s121614 DATE PLOTTED => 10-SEP-2014 TIME PLOTTED => 10:11

DIST	COUNTY	ROUTE	POST MILES TOTAL PROJECT	SHEET No.	TOTAL SHEETS
08	SBd	40	R94.7/R99.7	245	251

REGISTERED CIVIL ENGINEER 1-13-14 DATE

5-27-14
PLANS APPROVAL DATE

REGISTERED PROFESSIONAL ENGINEER David T-M Liao No. C59838 Exp. 12-31-15 CIVIL STATE OF CALIFORNIA

The State of California or its officers or agents shall not be responsible for the accuracy or completeness of electronic copies of this plan sheet.

This LOTB sheet was prepared in accordance with the Caltrans Soil & Rock Logging, Classification, & Presentation Manual (2010 Edition).

See 2010 Standard Plans A10F and A10G for Soil Legend, and A10H for Rock Legend.

BENCH MARK

PNO 120:
Set 1" IP W/Caltrans RP Plug
19' Nly EP EB SBd 40;
90' Wly of Wly End Clipper Bridge
N 2124818.96
E 7362753.18
Elev 2073.26

PNO 121:
Set 1" IP W/Caltrans RP Plug
10' Sly EP WB SBd 40;
55' Ely of Ely End Clipper Bridge
N 2124925.98
E 7363297.81
Elev 2062.00

Vertical Datum: NGVD 1929

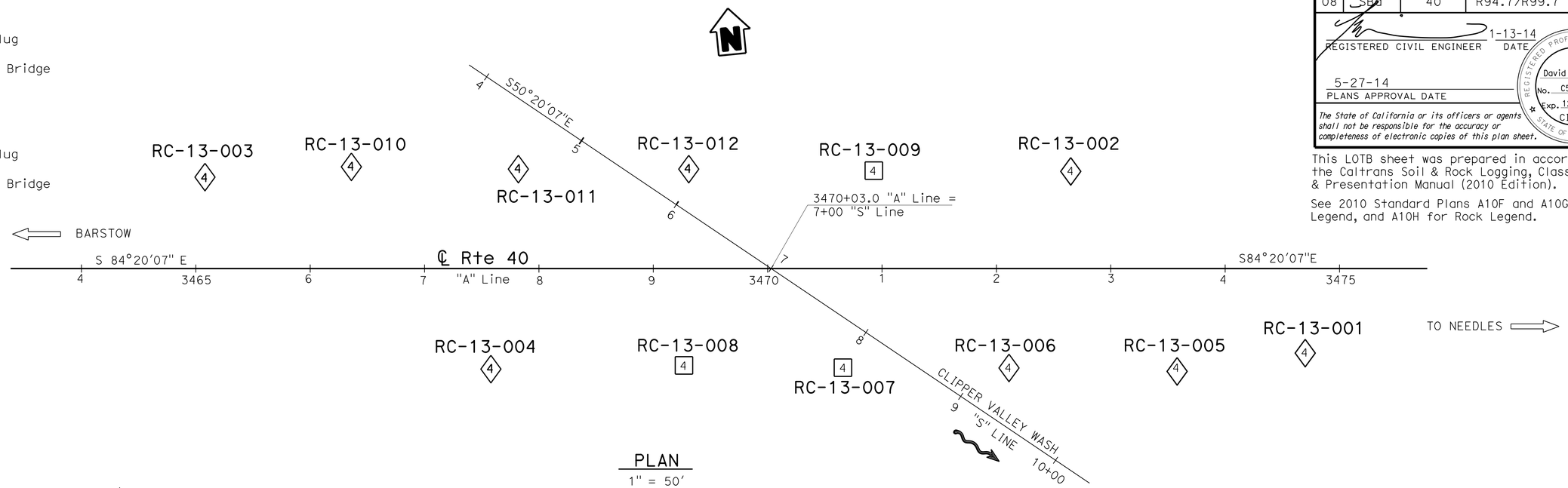

PLAN

1" = 50'

Note: No ground water encountered during field investigation.

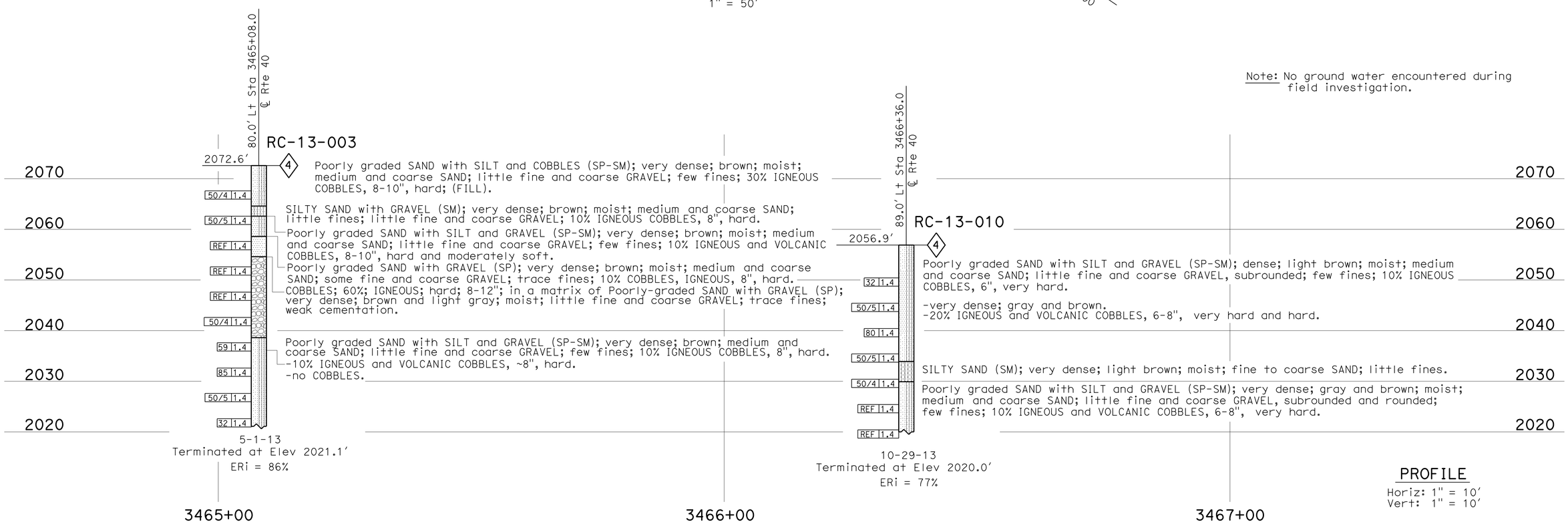

PROFILE

Horiz: 1" = 10'
Vert: 1" = 10'

ENGINEERING SERVICES	MATERIALS AND GEOTECHNICAL SERVICES	STATE OF CALIFORNIA DEPARTMENT OF TRANSPORTATION	DIVISION OF ENGINEERING SERVICES STRUCTURE DESIGN DESIGN BRANCH 19	BRIDGE NO. 54-1302L/R POST MILE 99.2	CLIPPER VALLEY WASH BRIDGE (REPLACE) LOG OF TEST BORINGS 1 OF 7
FUNCTIONAL SUPERVISOR NAME: M. DeSalvatore	DRAWN BY: F. Nguyen CHECKED BY: C. Manansala	FIELD INVESTIGATION BY: F. De Haro			

OGS CIVIL LOG OF TEST BORINGS SHEET

ORIGINAL SCALE IN INCHES FOR REDUCED PLANS 0 1 2 3

UNIT: 3643
PROJECT NUMBER & PHASE: 08130001761
CONTRACT NO.: 08-0N56U1

DISREGARD PRINTS BEARING EARLIER REVISION DATES

REVISION DATES 11-22-13 01-06-14 01-08-14 01-13-14

SHEET 32 OF 38

FILE => 54-1302lr-z-lotb_01.dgn

USERNAME => s121614 DATE PLOTTED => 10-SEP-2014 TIME PLOTTED => 10:11

DIST	COUNTY	ROUTE	POST MILES TOTAL PROJECT	SHEET No.	TOTAL SHEETS
08	SBd	40	R94.7/R99.7	246	251

REGISTERED CIVIL ENGINEER 1-13-14 DATE

5-27-14
PLANS APPROVAL DATE

REGISTERED PROFESSIONAL ENGINEER
David T-M Liao
No. C59838
Exp. 12-31-15
CIVIL
STATE OF CALIFORNIA

The State of California or its officers or agents shall not be responsible for the accuracy or completeness of electronic copies of this plan sheet.

This LOTB sheet was prepared in accordance with the Caltrans Soil & Rock Logging, Classification, & Presentation Manual (2010 Edition).

See 2010 Standard Plans A10F and A10G for Soil Legend, and A10H for Rock Legend.

FOR PLAN VIEW, SEE
"LOG OF TEST BORINGS 1 OF 7"

Note: No ground water encountered during field investigation.

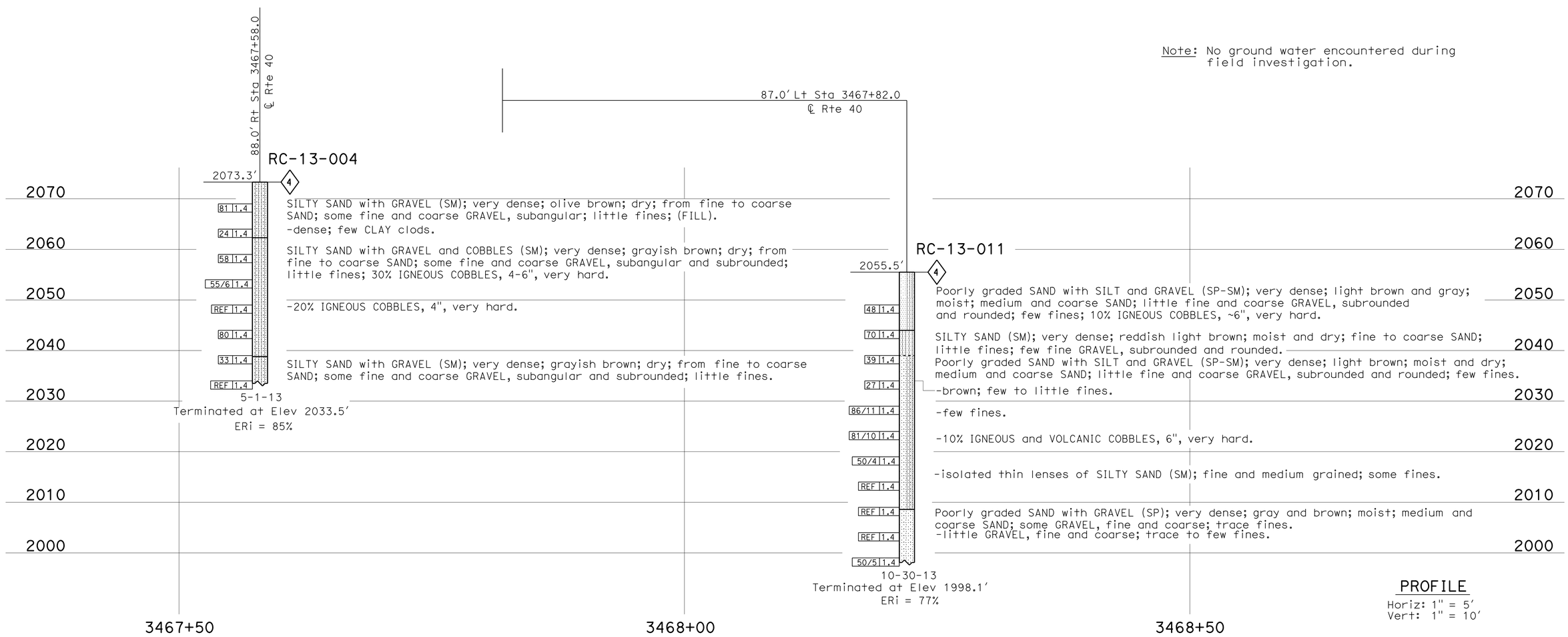

PROFILE
Horiz: 1" = 5'
Vert: 1" = 10'

ENGINEERING SERVICES	MATERIALS AND GEOTECHNICAL SERVICES	STATE OF CALIFORNIA DEPARTMENT OF TRANSPORTATION	DIVISION OF ENGINEERING SERVICES STRUCTURE DESIGN DESIGN BRANCH 19	BRIDGE NO. 54-1302L/R POST MILE 99.2	CLIPPER VALLEY WASH BRIDGE (REPLACE) LOG OF TEST BORINGS 2 OF 7
FUNCTIONAL SUPERVISOR NAME: M. DeSalvatore	DRAWN BY: F. Nguyen CHECKED BY: C. Manansala	FIELD INVESTIGATION BY: T-M Liao, F. De Haro			

OGS CIVIL LOG OF TEST BORINGS SHEET

ORIGINAL SCALE IN INCHES FOR REDUCED PLANS 0 1 2 3

UNIT: 3643
PROJECT NUMBER & PHASE: 08130001761
CONTRACT NO.: 08-0N56U1

DISREGARD PRINTS BEARING EARLIER REVISION DATES

REVISION DATES: 11-22-13 01-06-14 01-13-14

SHEET 33 OF 38

FILE => 54-1302lr-z-lotb_02.dgn

USERNAME => s121614 DATE PLOTTED => 10-SEP-2014 TIME PLOTTED => 10:11

DIST	COUNTY	ROUTE	POST MILES TOTAL PROJECT	SHEET No.	TOTAL SHEETS
08	SBd	40	R94.7/R99.7	247	251

REGISTERED CIVIL ENGINEER 1-13-14 DATE

5-27-14
PLANS APPROVAL DATE

REGISTERED PROFESSIONAL ENGINEER
David T-M Liao
No. C59838
Exp. 12-31-15
CIVIL
STATE OF CALIFORNIA

The State of California or its officers or agents shall not be responsible for the accuracy or completeness of electronic copies of this plan sheet.

This LOTB sheet was prepared in accordance with the Caltrans Soil & Rock Logging, Classification, & Presentation Manual (2010 Edition).

See 2010 Standard Plans A10F and A10G for Soil Legend, and A10H for Rock Legend.

FOR PLAN VIEW, SEE
"LOG OF TEST BORINGS 1 OF 7"

Note: No ground water encountered during field investigation.

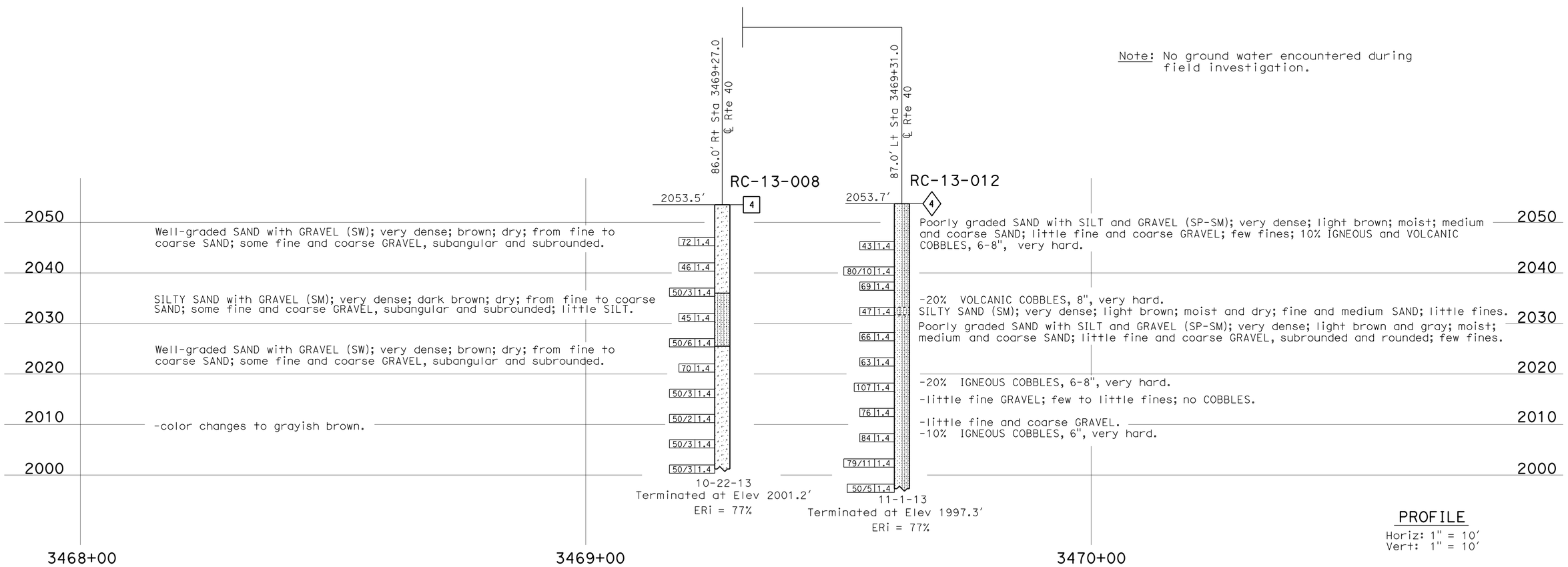

PROFILE
Horiz: 1" = 10'
Vert: 1" = 10'

ENGINEERING SERVICES	MATERIALS AND GEOTECHNICAL SERVICES	STATE OF CALIFORNIA DEPARTMENT OF TRANSPORTATION	DIVISION OF ENGINEERING SERVICES STRUCTURE DESIGN DESIGN BRANCH 19	BRIDGE NO. 54-1302L/R POST MILE 99.2	CLIPPER VALLEY WASH BRIDGE (REPLACE)
FUNCTIONAL SUPERVISOR NAME: M. DeSalvatore	DRAWN BY: F. Nguyen CHECKED BY: C. Manansala	FIELD INVESTIGATION BY: T-M Liao, F. De Haro			LOG OF TEST BORINGS 3 OF 7

OGS CIVIL LOG OF TEST BORINGS SHEET

ORIGINAL SCALE IN INCHES FOR REDUCED PLANS 0 1 2 3

UNIT: 3643
PROJECT NUMBER & PHASE: 08130001761 CONTRACT NO.: 08-0N56U1

DISREGARD PRINTS BEARING EARLIER REVISION DATES

REVISION DATES: 11-22-13 01-06-14 01-13-14

SHEET 34 OF 38

FILE => 54-1302lr-z-lotb_03.dgn

USERNAME => s12614 DATE PLOTTED => 10-SEP-2014 TIME PLOTTED => 10:11

DIST	COUNTY	ROUTE	POST MILES TOTAL PROJECT	SHEET No.	TOTAL SHEETS
08	SBd	40	R94.7/R99.7	248	251

REGISTERED CIVIL ENGINEER 1-13-14 DATE

5-27-14
PLANS APPROVAL DATE

REGISTERED PROFESSIONAL ENGINEER
David T-M Liao
No. C59838
Exp. 12-31-15
CIVIL
STATE OF CALIFORNIA

The State of California or its officers or agents shall not be responsible for the accuracy or completeness of electronic copies of this plan sheet.

This LOTB sheet was prepared in accordance with the Caltrans Soil & Rock Logging, Classification, & Presentation Manual (2010 Edition).

See 2010 Standard Plans A10F and A10G for Soil Legend, and A10H for Rock Legend.

FOR PLAN VIEW, SEE
"LOG OF TEST BORINGS 1 OF 7"

Note: No ground water encountered during field investigation.

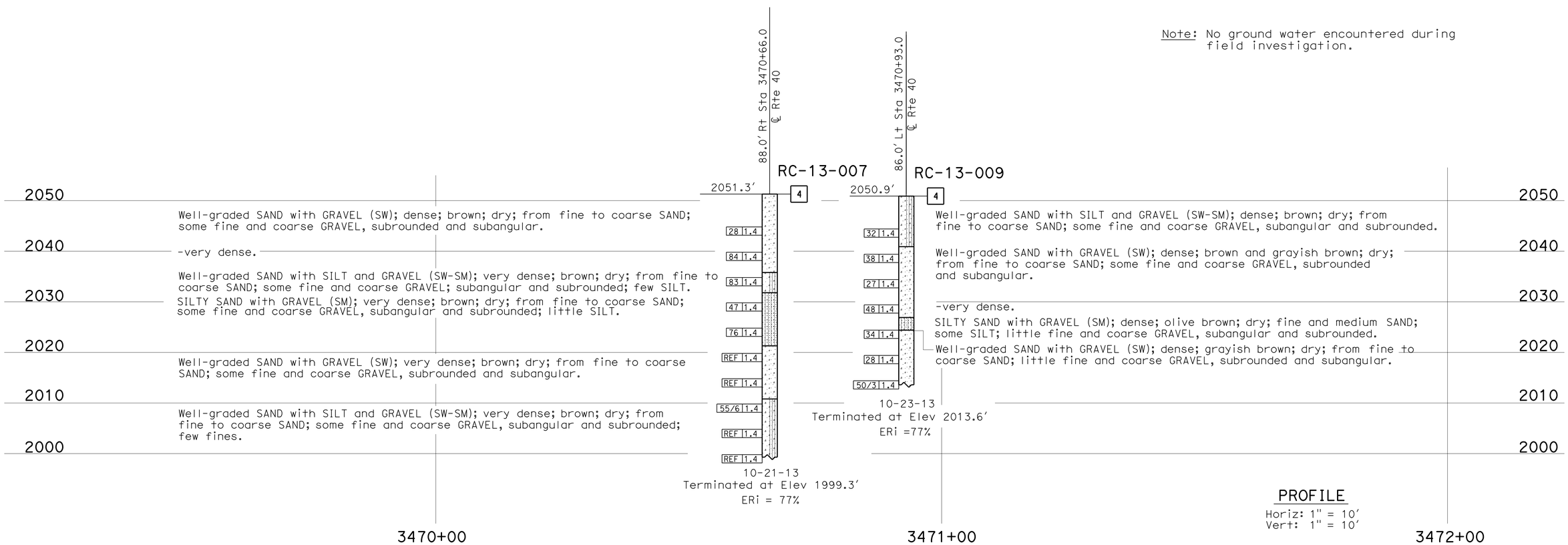

PROFILE
Horiz: 1" = 10'
Vert: 1" = 10'

ENGINEERING SERVICES	MATERIALS AND GEOTECHNICAL SERVICES	STATE OF CALIFORNIA DEPARTMENT OF TRANSPORTATION	DIVISION OF ENGINEERING SERVICES STRUCTURE DESIGN DESIGN BRANCH 19	BRIDGE NO. 54-1302L/R POST MILE 99.2	CLIPPER VALLEY WASH BRIDGE (REPLACE) LOG OF TEST BORINGS 4 OF 7
FUNCTIONAL SUPERVISOR NAME: M. DeSalvatore	DRAWN BY: F. Nguyen CHECKED BY: C. Manansala	FIELD INVESTIGATION BY: T-M Liao			

OGS CIVIL LOG OF TEST BORINGS SHEET

ORIGINAL SCALE IN INCHES FOR REDUCED PLANS 0 1 2 3

UNIT: 3643
PROJECT NUMBER & PHASE: 08130001761 CONTRACT NO.: 08-0N56U1

DISREGARD PRINTS BEARING EARLIER REVISION DATES

REVISION DATES: 11-22-13 01-06-14 01-13-14

SHEET 35 OF 38

FILE => 54-1302lr-z-lotb_04.dgn

USERNAME => s121614 DATE PLOTTED => 10-SEP-2014 TIME PLOTTED => 10:11

DIST	COUNTY	ROUTE	POST MILES TOTAL PROJECT	SHEET No.	TOTAL SHEETS
08	SBd	40	R94.7/R99.7	249	251

REGISTERED CIVIL ENGINEER 1-13-14 DATE

5-27-14
PLANS APPROVAL DATE

REGISTERED PROFESSIONAL ENGINEER
David T-M Liao
No. C59838
Exp. 12-31-15
CIVIL
STATE OF CALIFORNIA

The State of California or its officers or agents shall not be responsible for the accuracy or completeness of electronic copies of this plan sheet.

This LOTB sheet was prepared in accordance with the Caltrans Soil & Rock Logging, Classification, & Presentation Manual (2010 Edition).

See 2010 Standard Plans A10F and A10G for Soil Legend, and A10H for Rock Legend.

FOR PLAN VIEW, SEE
"LOG OF TEST BORINGS 1 OF 7"

Note: No ground water encountered during field investigation.

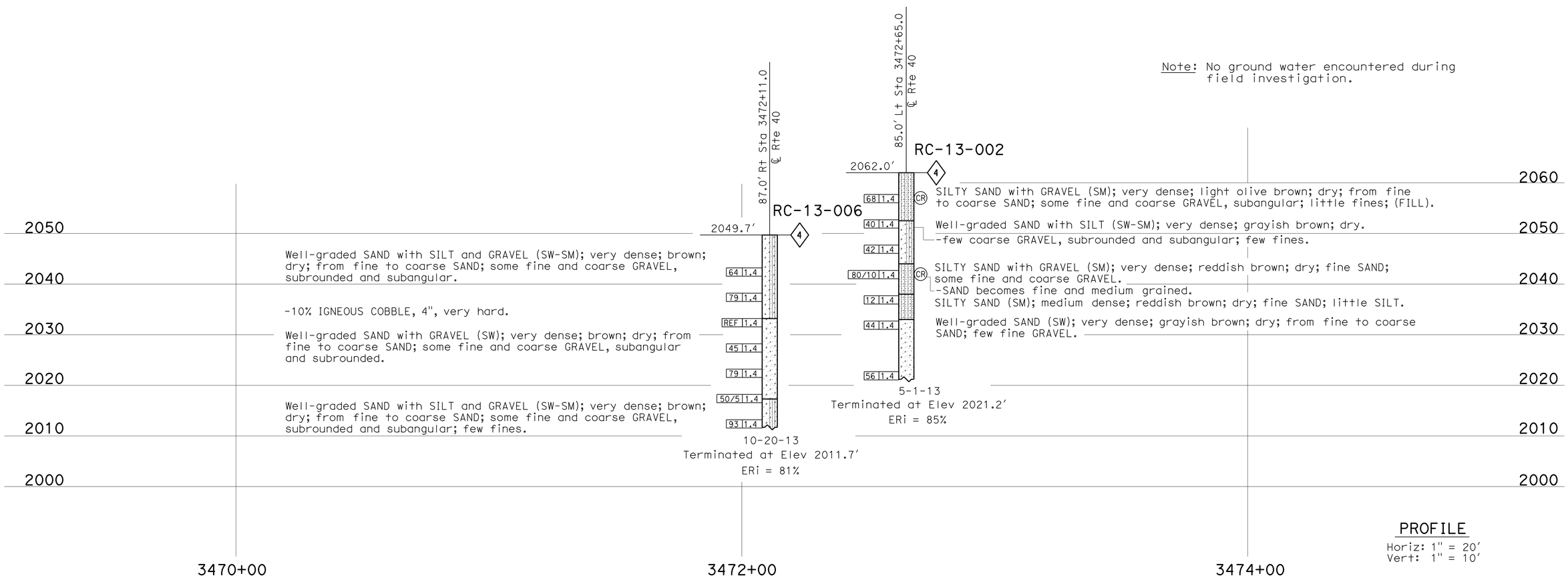

PROFILE
Horiz: 1" = 20'
Vert: 1" = 10'

ENGINEERING SERVICES	MATERIALS AND GEOTECHNICAL SERVICES	STATE OF CALIFORNIA DEPARTMENT OF TRANSPORTATION	DIVISION OF ENGINEERING SERVICES STRUCTURE DESIGN DESIGN BRANCH 19	BRIDGE NO. 54-1302L/R POST MILE 99.2	CLIPPER VALLEY WASH BRIDGE (REPLACE) LOG OF TEST BORINGS 5 OF 7
FUNCTIONAL SUPERVISOR NAME: M. DeSalvatore	DRAWN BY: F. Nguyen CHECKED BY: C. Manansala	FIELD INVESTIGATION BY: T-M Liao			

OGS CIVIL LOG OF TEST BORINGS SHEET

ORIGINAL SCALE IN INCHES FOR REDUCED PLANS 0 1 2 3

UNIT: 3643
PROJECT NUMBER & PHASE: 08130001761
CONTRACT NO.: 08-0N56U1

DISREGARD PRINTS BEARING EARLIER REVISION DATES

REVISION DATES: 11-22-13 01-06-14 01-13-14

SHEET 36 OF 38

FILE => 54-1302lr-z-lotb_05.dgn

USERNAME => s121614 DATE PLOTTED => 10-SEP-2014 TIME PLOTTED => 10:11

DIST	COUNTY	ROUTE	POST MILES TOTAL PROJECT	SHEET No.	TOTAL SHEETS
08	SBd	40	R94.7/R99.7	250	251

REGISTERED CIVIL ENGINEER 1-13-14 DATE

5-27-14
PLANS APPROVAL DATE

REGISTERED PROFESSIONAL ENGINEER
David T-M Liao
No. C59838
Exp. 12-31-15
CIVIL
STATE OF CALIFORNIA

The State of California or its officers or agents shall not be responsible for the accuracy or completeness of electronic copies of this plan sheet.

This LOTB sheet was prepared in accordance with the Caltrans Soil & Rock Logging, Classification, & Presentation Manual (2010 Edition).

See 2010 Standard Plans A10F and A10G for Soil Legend, and A10H for Rock Legend.

FOR PLAN VIEW, SEE
"LOG OF TEST BORINGS 1 OF 7"

Note: No ground water encountered during field investigation.

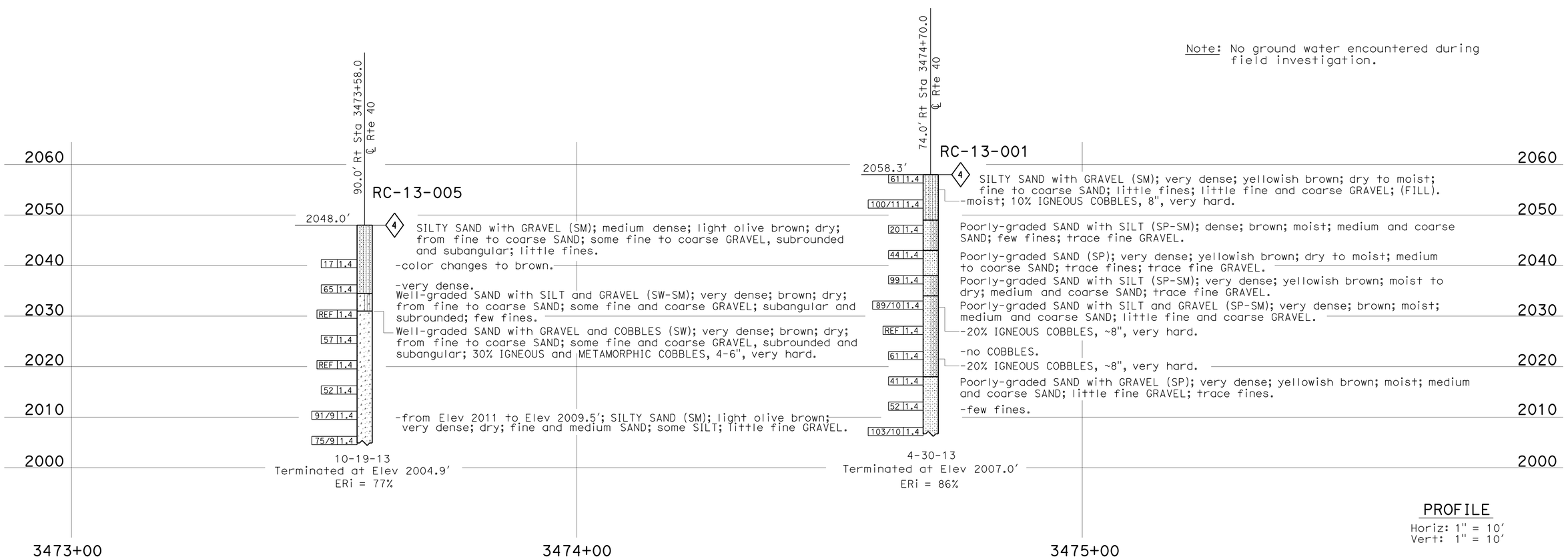

PROFILE
Horiz: 1" = 10'
Vert: 1" = 10'

ENGINEERING SERVICES	MATERIALS AND GEOTECHNICAL SERVICES	STATE OF CALIFORNIA DEPARTMENT OF TRANSPORTATION	DIVISION OF ENGINEERING SERVICES STRUCTURE DESIGN DESIGN BRANCH 19	BRIDGE NO. 54-1302L/R POST MILE 99.2	CLIPPER VALLEY WASH BRIDGE (REPLACE) LOG OF TEST BORINGS 6 OF 7
FUNCTIONAL SUPERVISOR NAME: M. DeSalvatore	DRAWN BY: F. Nguyen CHECKED BY: C. Manansala	FIELD INVESTIGATION BY: T-M Liao, F. De Haro			

OGS CIVIL LOG OF TEST BORINGS SHEET

ORIGINAL SCALE IN INCHES FOR REDUCED PLANS 0 1 2 3

UNIT: 3643
PROJECT NUMBER & PHASE: 08130001761 CONTRACT NO.: 08-0N56U1

DISREGARD PRINTS BEARING EARLIER REVISION DATES

REVISION DATES 11-22-13 01-06-14 01-13-14

SHEET 37 OF 38

FILE => 54-1302lr-z-lotb_06.dgn

USERNAME => s12614 DATE PLOTTED => 10-SEP-2014 TIME PLOTTED => 10:11

DIST.	COUNTY	ROUTE	POST MILES—TOTAL PROJECT	SHEET NO.	TOTAL SHEETS
08	SBd	40	R77.8/R114.7	204	223

R C Blake
DESIGN SECTION SUPERVISOR — REGISTERED CIVIL ENGINEER NO. 8062
DATE APPROVED March 15, 1971

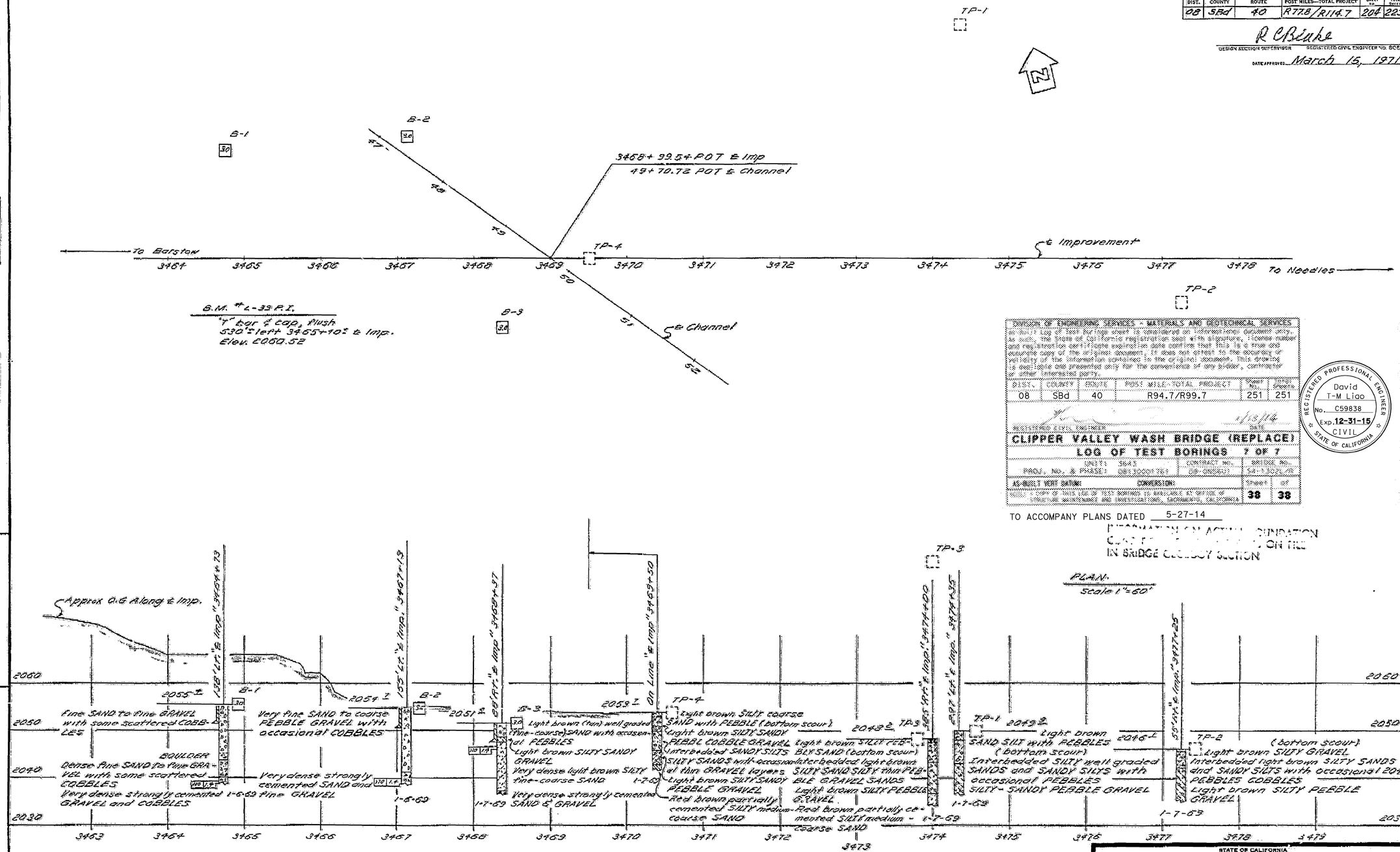

DIVISION OF ENGINEERING SERVICES - MATERIALS AND RESEARCH DEPARTMENT

This Log of Test Borings sheet is generated on interactive document entry. As such, the State of California registration seal with signature, license number and registration certificate expiration date confirms that this is a true and accurate copy of the original document. It does not attest to the accuracy or validity of the information contained in the original document. This drawing is available and presented only for the convenience of any bidder, contractor or other interested party.

DIST.	COUNTY	ROUTE	POST MILE-TOTAL PROJECT	SHEET NO.	TOTAL SHEETS
08	SBd	40	R94.7/R99.7	251	251

REGISTERED CIVIL ENGINEER — DATE 1/13/14

REGISTERED PROFESSIONAL ENGINEER — David T-M Liao — No. C59838 — Exp. 12-31-15 — CIVIL — STATE OF CALIFORNIA

CLIPPER VALLEY WASH BRIDGE (REPLACE)

LOG OF TEST BORINGS 7 OF 7

UNIT 1 3845 — PROJ. NO. & PHASE: 08B3 5000 T&S — CONTRACT NO. 08-0A6854 — BRIDGE NO. 54-1 895R/L

AS-BUILT VERY SATISFACTORY — CORRECTION: — SHEET 38 OF 38

A COPY OF THIS LOG OF TEST BORINGS IS AVAILABLE AT DIVISION OF ENGINEERING SERVICES, MATERIALS AND RESEARCH DEPARTMENT, SACRAMENTO, CALIFORNIA

TO ACCOMPANY PLANS DATED 5-27-14

INFORMATION ON ACTUAL FOUNDATION CONDITIONS ON FILE IN BRIDGE GEOLOGY SECTION

NO GROUND WATER ENCOUNTERED DURING THIS INVESTIGATION BY BRIDGE DEPT. GEOLOGY SECTION DATE Jan 1969

AS BUILT PLANS
Contract No. 08-0A6854
Date Completed 5-1-73
Document No. 80002312

STATE OF CALIFORNIA
TRANSPORTATION AGENCY
DEPARTMENT OF PUBLIC WORKS
DIVISION OF HIGHWAYS

CLIPPER VALLEY WASH

LOG OF TEST BORINGS

BRIDGE NO.	POST MILE	DRAWING NO.	SHEET	OF
54-895R/L	99.2		12	12

REVISION DATES (PRELIMINARY STAGE ONLY): 1/30/69 — 3/9/71

WO 046851 PR 54895-2
CU 08203

Disregard prints bearing earlier revision dates

LEGEND OF BORING OPERATIONS

- Penetrometer
- 2¼" Cone Penetrometer
- Sampler Boring (Dry)
- Rotary Boring (Wet)
- Auger Boring (Dry)
- Jet Boring
- Core Boring
- Test Pit

Penetration Boring — Rotary Boring — 1" Soil Tube

LEGEND OF EARTH MATERIALS

- Gravel
- Sand
- Silt
- Clay
- Sandy Clay or Clayey Sand
- Sandy Silt or Silty Sand
- Silty Clay or Clayey Silt
- Peat and Organic Matter
- Fill Material
- Igneous Rock
- Sedimentary Rock
- Metamorphic Rock

CLASSIFICATION OF MATERIAL BASED ON STANDARD GRADE SIZE LIMITS

Diagram showing the base for estimated or grade size definitions used in determining the percentages of gravel, sand, silt and clay. Amounts are terms "slightly" may be added to the sand, silt, and clay terms, viz. "slightly gravelly" "slightly coarse" "slightly medium" and "slightly fine". Words used to describe grain size are based on Unified Soil Classification Limits.

NOTE: Classification of earth material as shown on this sheet is based upon field inspection and is not to be construed to imply mechanical analysis.

FIELD STUDY	W.L. Blake	1-69
DRAWN	M.S. Kossmann	7-20-69
CHECKED	W.L. Blake	2-11-69

Approval Recommended by: Engineering Geologist

BRIDGE DEPARTMENT
ENGINEERING GEOLOGY SECTION