Dist	COUNTY	ROUTE	POST MILES TOTAL PROJECT	SHEET No.	TOTAL SHEETS
08	SBd	40	R94.7/R99.7	101	251

W E Wasser 2-28-14
REGISTERED CIVIL ENGINEER DATE

5-27-14
PLANS APPROVAL DATE

REGISTERED PROFESSIONAL ENGINEER W.E.WASSER No. 37378 Exp. 06-30-16 CIVIL STATE OF CALIFORNIA

THE STATE OF CALIFORNIA OR ITS OFFICERS OR AGENTS SHALL NOT BE RESPONSIBLE FOR THE ACCURACY OR COMPLETENESS OF SCANNED COPIES OF THIS PLAN SHEET.

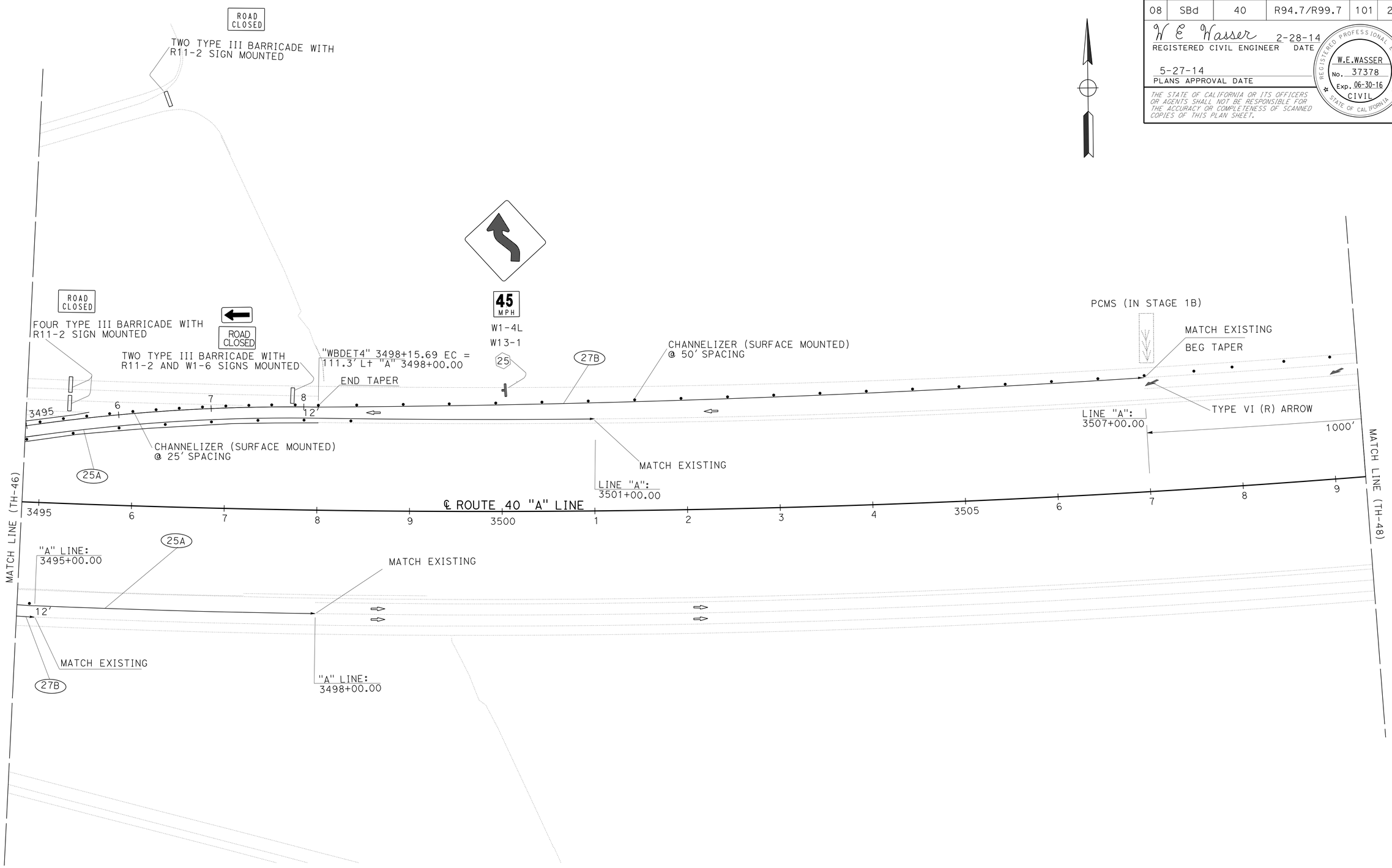

TRAFFIC HANDLING PLAN
STAGE 2B
SCALE: 1" = 50'

TH-47

APPROVED FOR TRAFFIC HANDLING WORK ONLY

STATE OF CALIFORNIA - DEPARTMENT OF TRANSPORTATION
Caltrans® TRAFFIC DESIGN

FUNCTIONAL SUPERVISOR: BILL WASSER
CALCULATED-DESIGNED BY: KEVIN NGUYEN
CHECKED BY: THANH TRINH
REVISED BY
DATE REVISED

LAST REVISION 02-28-14
DATE PLOTTED => 10-SEP-2014
TIME PLOTTED => 09:50

Dist	COUNTY	ROUTE	POST MILES TOTAL PROJECT	SHEET No.	TOTAL SHEETS
08	SBd	40	R94.7/R99.7	102	251

W E Wasser 2-28-14
REGISTERED CIVIL ENGINEER DATE

5-27-14
PLANS APPROVAL DATE

REGISTERED PROFESSIONAL ENGINEER
W.E.WASSER
No. 37378
Exp. 06-30-16
CIVIL
STATE OF CALIFORNIA

THE STATE OF CALIFORNIA OR ITS OFFICERS OR AGENTS SHALL NOT BE RESPONSIBLE FOR THE ACCURACY OR COMPLETENESS OF SCANNED COPIES OF THIS PLAN SHEET.

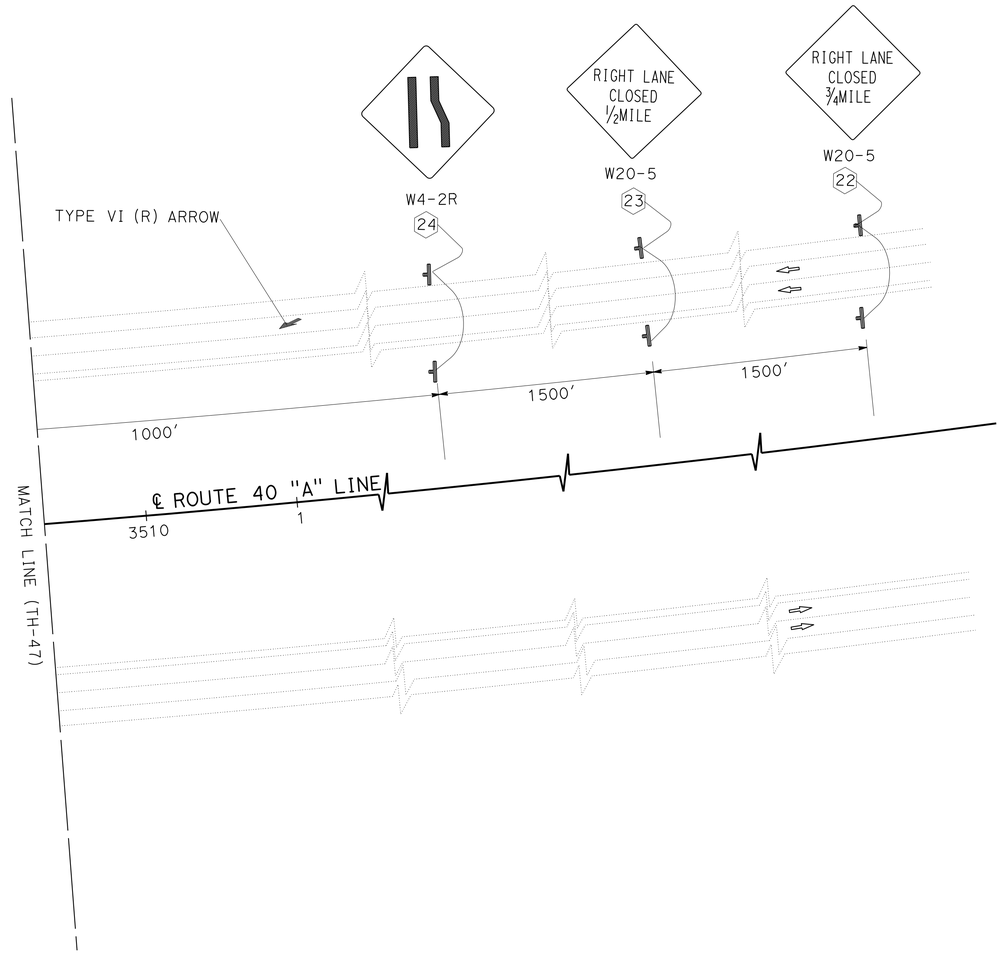

TRAFFIC HANDLING PLAN
STAGE 5B
SCALE: 1" = 50′

TH-48

APPROVED FOR TRAFFIC HANDLING WORK ONLY

STATE OF CALIFORNIA - DEPARTMENT OF TRANSPORTATION
Caltrans® TRAFFIC DESIGN

FUNCTIONAL SUPERVISOR: BILL WASSER
CALCULATED-DESIGNED BY: KEVIN NGUYEN
CHECKED BY: THANH TRINH
REVISED BY
DATE REVISED

LAST REVISION 02-28-14
DATE PLOTTED => 10-SEP-2014
TIME PLOTTED => 09:50

Dist	COUNTY	ROUTE	POST MILES TOTAL PROJECT	SHEET No.	TOTAL SHEETS
08	SBd	40	R94.7/R99.7	103	251

W E Wasser 2-28-14
REGISTERED CIVIL ENGINEER DATE

5-27-14
PLANS APPROVAL DATE

REGISTERED PROFESSIONAL ENGINEER W.E.WASSER No. 37378 Exp. 06-30-16 CIVIL STATE OF CALIFORNIA

THE STATE OF CALIFORNIA OR ITS OFFICERS OR AGENTS SHALL NOT BE RESPONSIBLE FOR THE ACCURACY OR COMPLETENESS OF SCANNED COPIES OF THIS PLAN SHEET.

TEMPORARY PAVEMENT DELINEATION

CONSTRUCTION STAGE	TRAFFIC STRIPE DETAIL No./ PAVEMENT MARKING	LENGTH	TEMPORARY PAVEMENT MARKING (PAINT)	TEMPORARY TRAFFIC STRIPE (PAINT)			TEMPORARY PAVEMENT MARKER (REFLECTIVE)		
				4" YELLOW	4" WHITE	8" WHITE	TYPE D	TYPE G	TYPE H
		LF	SQFT	LF			EA		
1B	8	300			300				
	25A	14855		14855					620
	27B	30325			30325				
	29	14970		14970			625		
	38	195				195		9	
	TYPE VI ARROW		504						
2A	8	300			300				
	12	31650			31650			660	
	25	30750		30750					642
	25A	173		173					8
	27B	29850			29850				
	38	627				627		28	
2B	25A	16350		16350					682
	27B	30385			30385				
	29	14900		14900			622		
	38	165				165		8	
	TYPE VI ARROW		504						
SUBTOTAL			1008	91998	122810	987	1247	705	1952
TOTAL			1008	215795			3904		

CHANNELIZER AND TYPE III BARRICADE

CONSTRUCTION STAGE	CHANNELIZER (SURFACE MOUNTED)	TYPE III BARRICADE
	EA	EA
1B	632	28
2B	519	27
TOTAL	1151	55

TEMPORARY RAILING (TYPE K) AND CRASH CUSHION MODULE

CONSTRUCTION STAGE	TEMPORARY RAILING (TYPE K)	TEMPORARY CRASH CUSHION MODULE
	LF	EA
1B	3520	70
2B	3420	70
TOTAL	6940	140

TRAFFIC HANDLING QUANTITIES
THQ-1

STATE OF CALIFORNIA - DEPARTMENT OF TRANSPORTATION
Caltrans TRAFFIC DESIGN A

FUNCTIONAL SUPERVISOR: BILL WASSER
CALCULATED-DESIGNED BY: KEVIN NGUYEN
CHECKED BY: THANH TRINH
REVISED BY
DATE REVISED

LAST REVISION 02-28-14 DATE PLOTTED => 10-SEP-2014 TIME PLOTTED => 09:50

Dist	COUNTY	ROUTE	POST MILES TOTAL PROJECT	SHEET No.	TOTAL SHEETS
08	SBd	40	R94.7/R99.7	104	251

REGISTERED CIVIL ENGINEER 2-28-14 DATE

5-27-14
PLANS APPROVAL DATE

REGISTERED PROFESSIONAL ENGINEER GEORGE MORHIG No. C50349 Exp 6/30/15 CIVIL STATE OF CALIFORNIA

THE STATE OF CALIFORNIA OR ITS OFFICERS OR AGENTS SHALL NOT BE RESPONSIBLE FOR THE ACCURACY OR COMPLETENESS OF SCANNED COPIES OF THIS PLAN SHEET.

NOTES:

1. DIMENSIONS OF THE STRUCTURAL SECTIONS ARE SUBJECT TO TOLERANCES SPECIFIED IN THE STANDARD SPECIFICATIONS.
2. SUPERELEVATION AS SHOWN OR AS DIRECTED BY THE ENGINEER.
3. SEE TYPICAL CROSS SECTION SHEETS FOR STRUCTURAL SECTIONS.

ABBREVIATION:

SRS SHOULDER RUMBLE STRIP (HMA, GROUND-IN INDENTATIONS)

LEGEND:

- STRUCTURAL SECTION A
- STRUCTURAL SECTION B
- STRUCTURAL SECTION C
- STRUCTURAL SECTION D
- REMOVE DETOUR ROADS
- DRAINAGE FLOW LINE
- DIRECTION OF TRAFFIC
- DRAINAGE UNIT NUMBER/ CURVE DATA NUMBER
- DRAINAGE SYSTEM NUMBER

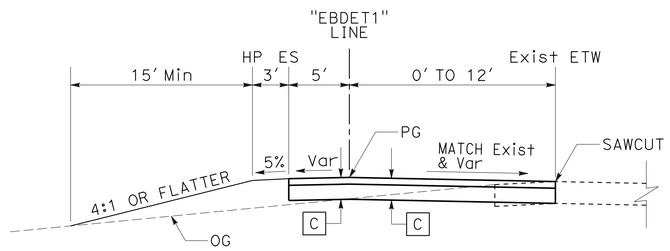

DETOUR "EBDET1" LINE
Sta 3235+00.00 TO Sta 3237+24.61

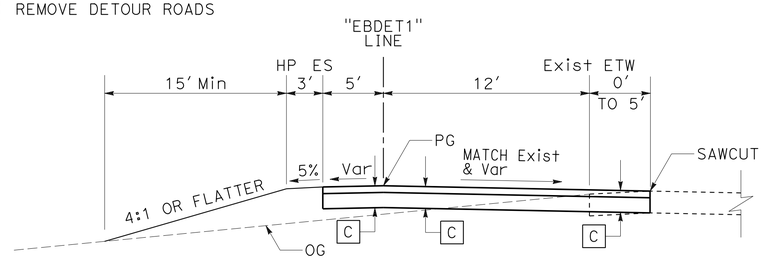

DETOUR "EBDET1" LINE
Sta 3237+24.61 TO Sta 3237+64.71

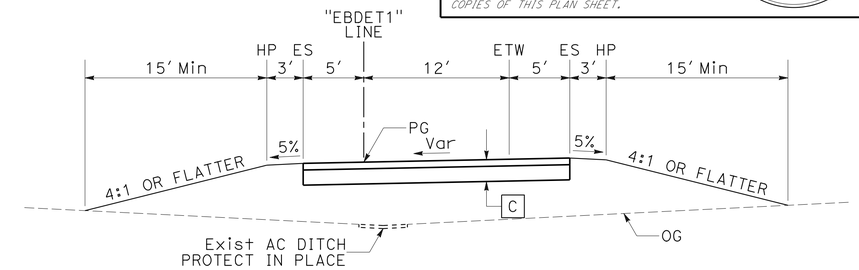

DETOUR "EBDET1" LINE
Sta 3237+64.71 TO Sta 3247+11.14

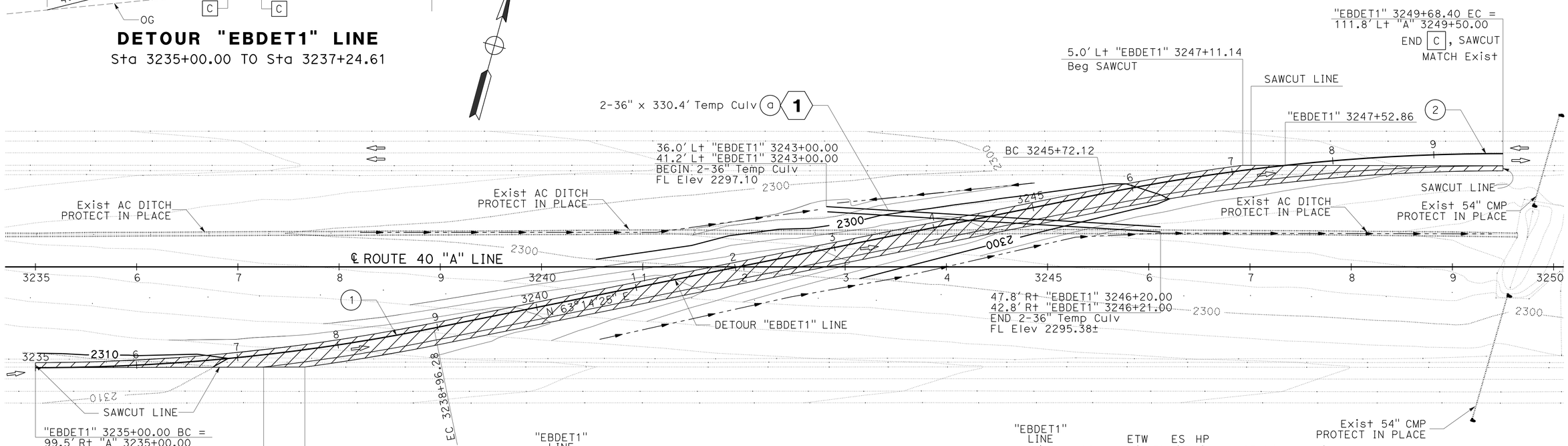

CURVE DATA

No.	R	Δ	T	L
1	2000.00'	11°21'10"	198.79'	396.28'
2	2000.00'	11°21'10"	198.79'	396.28'

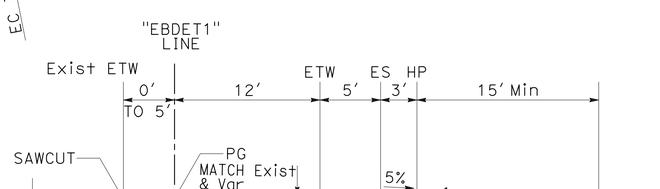

DETOUR "EBDET1" LINE
Sta 3247+11.14 TO Sta 3247+52.86

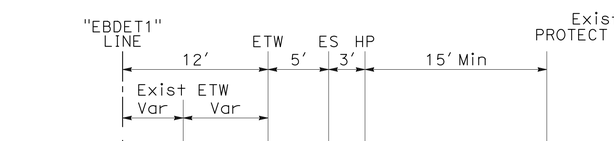

DETOUR "EBDET1" LINE
Sta 3247+52.86 TO Sta 3249+68.40

DETOUR PLAN
SCALE: 1" = 50'

DE-1

APPROVED FOR DETOUR CONSTRUCTION WORK ONLY

STATE OF CALIFORNIA - DEPARTMENT OF TRANSPORTATION
DESIGN
FUNCTIONAL SUPERVISOR: GEORGE MORHIG
CALCULATED-DESIGNED BY: HUNG PHAM
CHECKED BY: GEORGE MORHIG
REVISED BY
DATE REVISED
LAST REVISION 02-28-14
DATE PLOTTED => 10-SEP-2014
TIME PLOTTED => 09:50

Dist	COUNTY	ROUTE	POST MILES TOTAL PROJECT	SHEET No.	TOTAL SHEETS
08	SBd	40	R94.7/R99.7	105	251

REGISTERED CIVIL ENGINEER 2-28-14 DATE

5-27-14
PLANS APPROVAL DATE

REGISTERED PROFESSIONAL ENGINEER GEORGE MORHIG No. C50349 Exp 6/30/15 CIVIL STATE OF CALIFORNIA

THE STATE OF CALIFORNIA OR ITS OFFICERS OR AGENTS SHALL NOT BE RESPONSIBLE FOR THE ACCURACY OR COMPLETENESS OF SCANNED COPIES OF THIS PLAN SHEET.

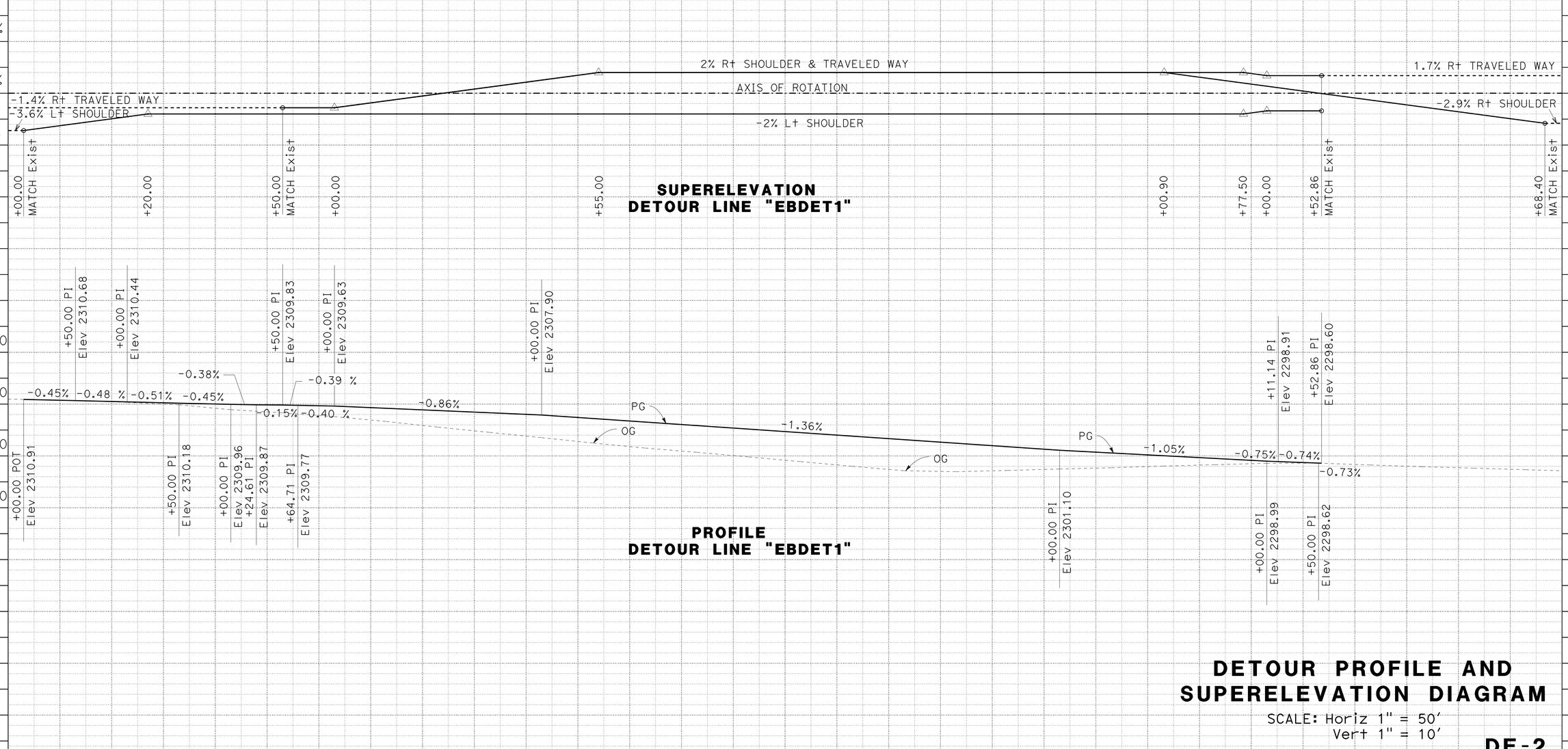

DETOUR PROFILE AND SUPERELEVATION DIAGRAM

SCALE: Horiz 1" = 50'
Vert 1" = 10'

DE-2

APPROVED FOR DETOUR CONSTRUCTION WORK ONLY

REVISED BY | DATE REVISED
HUNG PHAM | GEORGE MORHIG
CALCULATED-DESIGNED BY | CHECKED BY
FUNCTIONAL SUPERVISOR | GEORGE MORHIG

STATE OF CALIFORNIA - DEPARTMENT OF TRANSPORTATION
DESIGN
Caltrans

LAST REVISION 02-28-14 | DATE PLOTTED => 10-SEP-2014 | TIME PLOTTED => 09:50

Dist	COUNTY	ROUTE	POST MILES TOTAL PROJECT	SHEET No.	TOTAL SHEETS
08	SBd	40	R94.7/R99.7	106	251

REGISTERED CIVIL ENGINEER 2-28-14 DATE

5-27-14
PLANS APPROVAL DATE

REGISTERED PROFESSIONAL ENGINEER GEORGE MORHIG No. C50349 Exp 6/30/15 CIVIL STATE OF CALIFORNIA

THE STATE OF CALIFORNIA OR ITS OFFICERS OR AGENTS SHALL NOT BE RESPONSIBLE FOR THE ACCURACY OR COMPLETENESS OF SCANNED COPIES OF THIS PLAN SHEET.

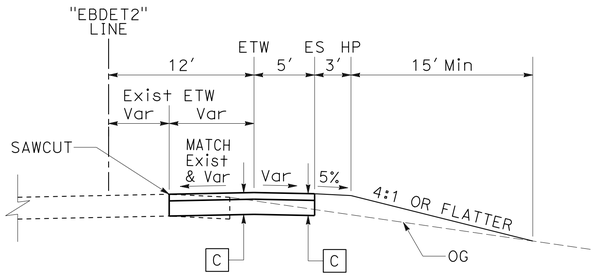

DETOUR "EBDET2" LINE
Sta 3266+00.00 TO Sta 3268+18.82

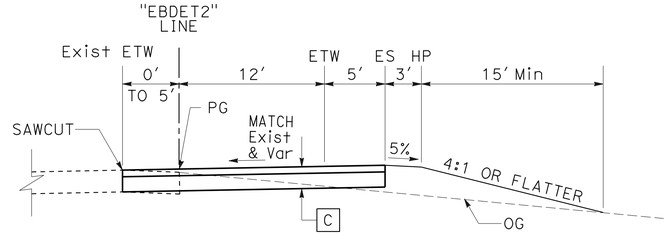

DETOUR "EBDET2" LINE
Sta 3268+18.82 TO Sta 3268+60.80

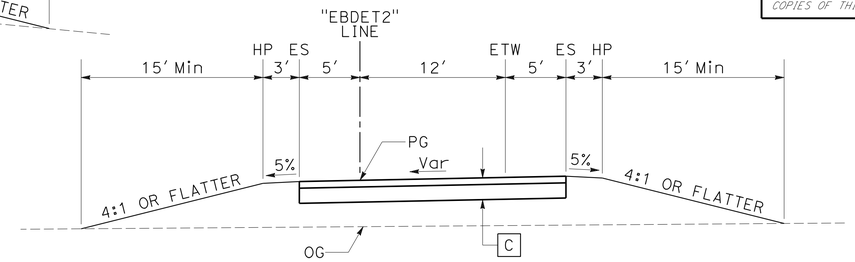

DETOUR "EBDET2" LINE
Sta 3268+60.78 TO Sta 3278+07.88

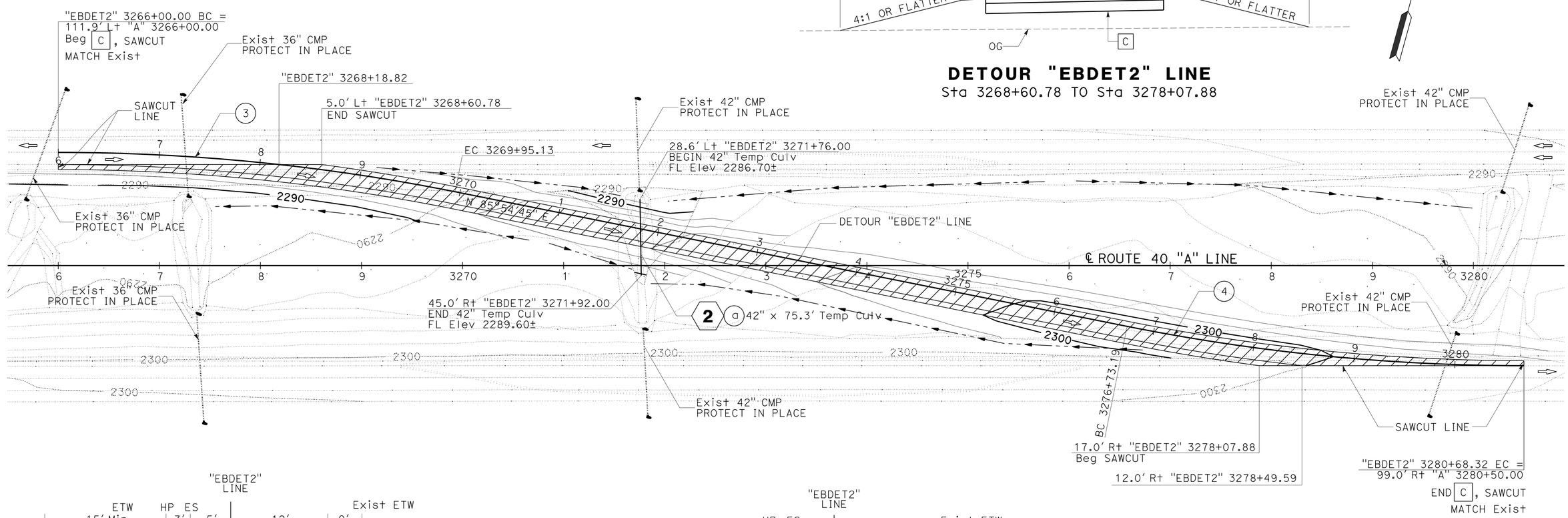

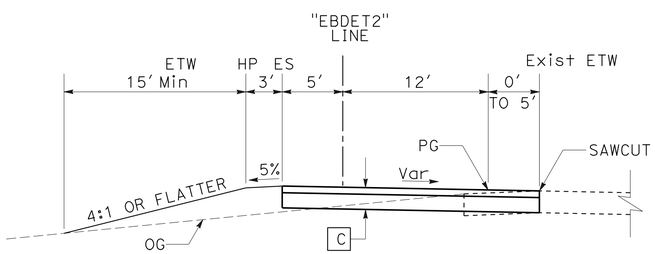

DETOUR "EBDET2" LINE
Sta 3278+07.88 TO Sta 3278+49.59

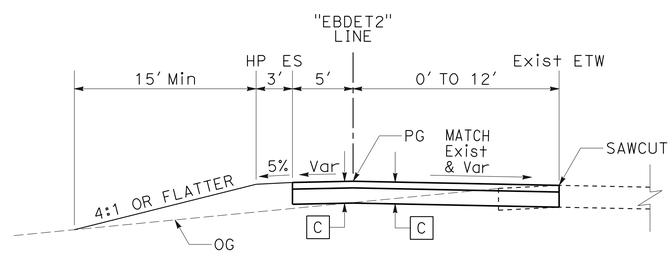

DETOUR "EBDET2" LINE
Sta 3278+49.59 TO Sta 3280+68.32

CURVE DATA

No.	R	Δ	T	L
3	2000.00'	11°19'10"	198.21'	395.13'
4	2000.00'	11°19'10"	198.21'	395.13'

DETOUR PLAN

SCALE: 1" = 50'

DE-3

APPROVED FOR DETOUR CONSTRUCTION WORK ONLY

REVISED BY | DATE REVISED
HUNG PHAM | GEORGE MORHIG
CALCULATED-DESIGNED BY | CHECKED BY
FUNCTIONAL SUPERVISOR | GEORGE MORHIG
STATE OF CALIFORNIA - DEPARTMENT OF TRANSPORTATION
Caltrans
DESIGN

LAST REVISION 02-28-14 | DATE PLOTTED => 10-SEP-2014 | TIME PLOTTED => 09:50

Dist	COUNTY	ROUTE	POST MILES TOTAL PROJECT	SHEET No.	TOTAL SHEETS
08	SBd	40	R94.7/R99.7	107	251

REGISTERED CIVIL ENGINEER 2-28-14 DATE

5-27-14
PLANS APPROVAL DATE

REGISTERED PROFESSIONAL ENGINEER GEORGE MORHIG No. C50349 Exp 6/30/15 CIVIL STATE OF CALIFORNIA

THE STATE OF CALIFORNIA OR ITS OFFICERS OR AGENTS SHALL NOT BE RESPONSIBLE FOR THE ACCURACY OR COMPLETENESS OF SCANNED COPIES OF THIS PLAN SHEET.

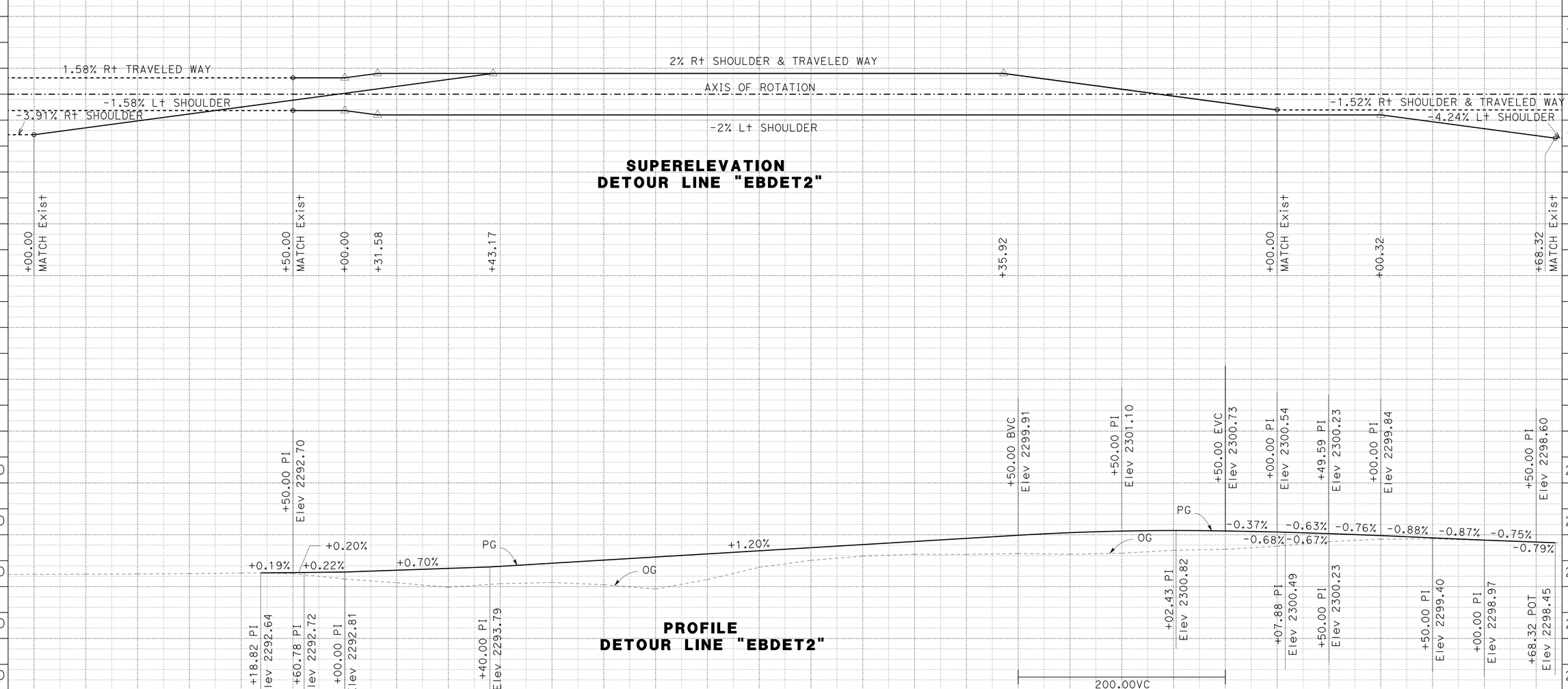

DETOUR PROFILE AND SUPERELEVATION DIAGRAM

SCALE: Horiz 1" = 50'
Vert 1" = 10'

DE-4

APPROVED FOR DETOUR CONSTRUCTION WORK ONLY

STATION	6	7	8	9	3270+00	1	2	3	4	5	6	7	8	9	3280+00	TOTAL
CY Exc																
CY Emb																

STATE OF CALIFORNIA - DEPARTMENT OF TRANSPORTATION
Caltrans
DESIGN

FUNCTIONAL SUPERVISOR: GEORGE MORHIG
CALCULATED-DESIGNED BY: HUNG PHAM
CHECKED BY: GEORGE MORHIG
REVISED BY
DATE REVISED

LAST REVISION 02-28-14
DATE PLOTTED => 10-SEP-2014
TIME PLOTTED => 09:50

Dist	COUNTY	ROUTE	POST MILES TOTAL PROJECT	SHEET No.	TOTAL SHEETS
08	SBd	40	R94.7/R99.7	108	251

REGISTERED CIVIL ENGINEER 2-28-14 DATE

5-27-14
PLANS APPROVAL DATE

REGISTERED PROFESSIONAL ENGINEER GEORGE MORHIG No. C50349 Exp 6/30/15 CIVIL STATE OF CALIFORNIA

THE STATE OF CALIFORNIA OR ITS OFFICERS OR AGENTS SHALL NOT BE RESPONSIBLE FOR THE ACCURACY OR COMPLETENESS OF SCANNED COPIES OF THIS PLAN SHEET.

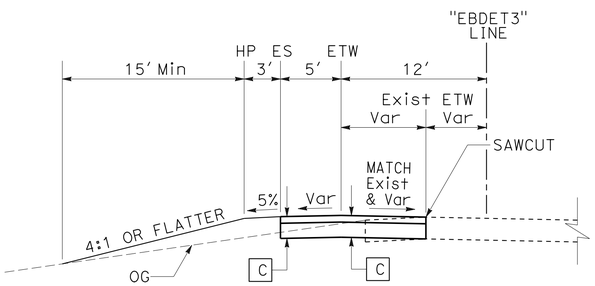

DETOUR "EBDET3" LINE
Sta 3394+00.00 TO Sta 3396+17.89

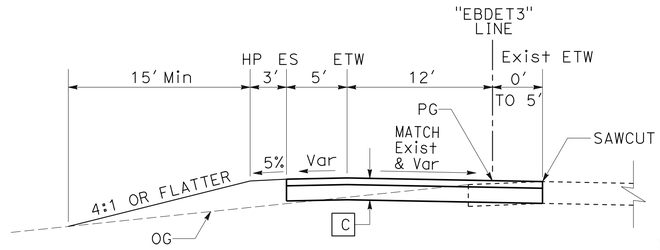

DETOUR "EBDET3" LINE
Sta 3396+17.89 TO Sta 3396+59.15

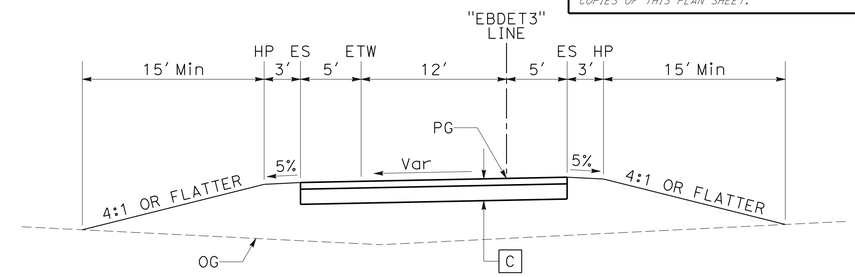

DETOUR "EBDET3" LINE
Sta 3396+59.15 TO Sta 3406+51.58

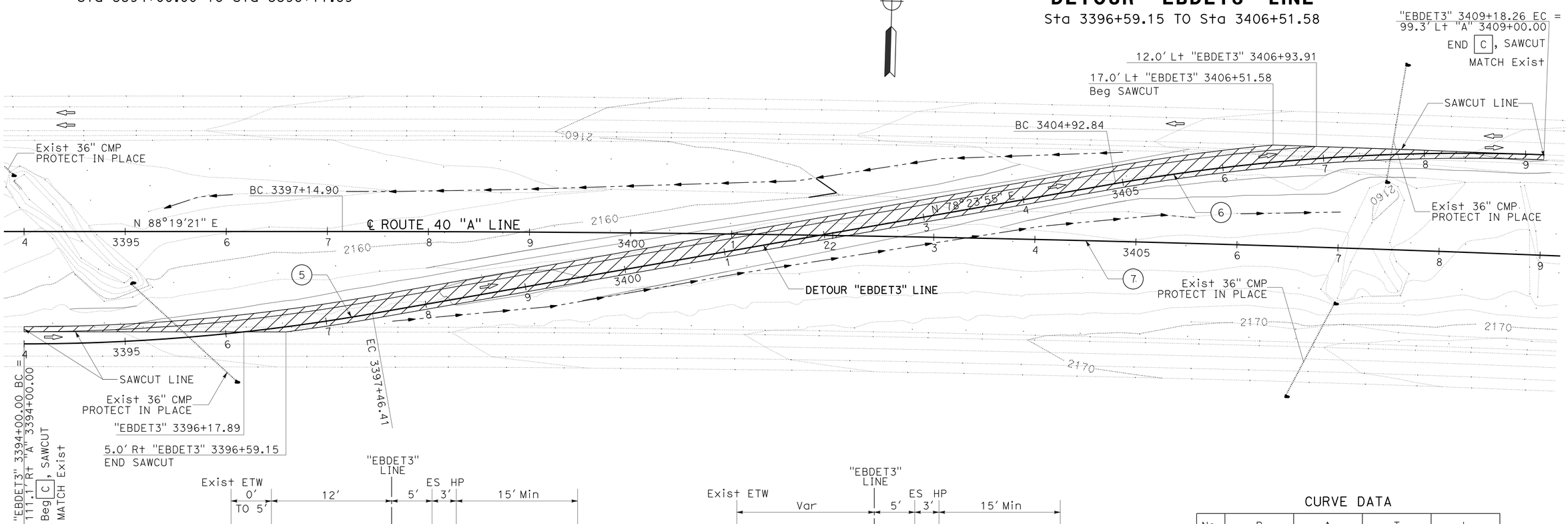

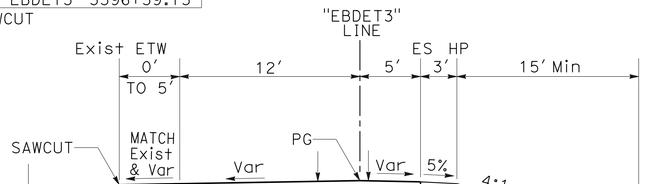

DETOUR "EBDET3" LINE
Sta 3406+51.58 TO Sta 3406+93.91

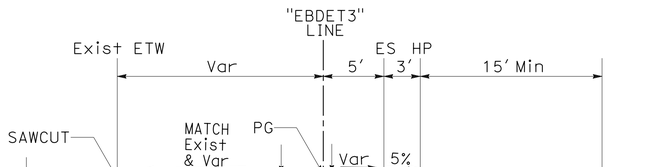

DETOUR "EBDET3" LINE
Sta 3406+93.91 TO Sta 3409+18.26

CURVE DATA

No.	R	Δ	T	L
5	2000.00'	9°55'26"	173.64'	346.41'
6	2000.00'	12°11'15"	213.52'	425.42'
7	30000.00'	7°20'32"	1924.82'	3844.37'

DETOUR PLAN

SCALE: 1" = 50'

DE-5

APPROVED FOR DETOUR CONSTRUCTION WORK ONLY

STATE OF CALIFORNIA - DEPARTMENT OF TRANSPORTATION
Caltrans
DESIGN
FUNCTIONAL SUPERVISOR: GEORGE MORHIG
CALCULATED-DESIGNED BY: HUNG PHAM
CHECKED BY: GEORGE MORHIG
REVISED BY
DATE REVISED

LAST REVISION 02-28-14
DATE PLOTTED => 10-SEP-2014
TIME PLOTTED => 09:50

Dist	COUNTY	ROUTE	POST MILES TOTAL PROJECT	SHEET No.	TOTAL SHEETS
08	SBd	40	R94.7/R99.7	109	251

REGISTERED CIVIL ENGINEER 2-28-14 DATE

5-27-14
PLANS APPROVAL DATE

REGISTERED PROFESSIONAL ENGINEER GEORGE MORHIG No. C50349 Exp 6/30/15 CIVIL STATE OF CALIFORNIA

THE STATE OF CALIFORNIA OR ITS OFFICERS OR AGENTS SHALL NOT BE RESPONSIBLE FOR THE ACCURACY OR COMPLETENESS OF SCANNED COPIES OF THIS PLAN SHEET.

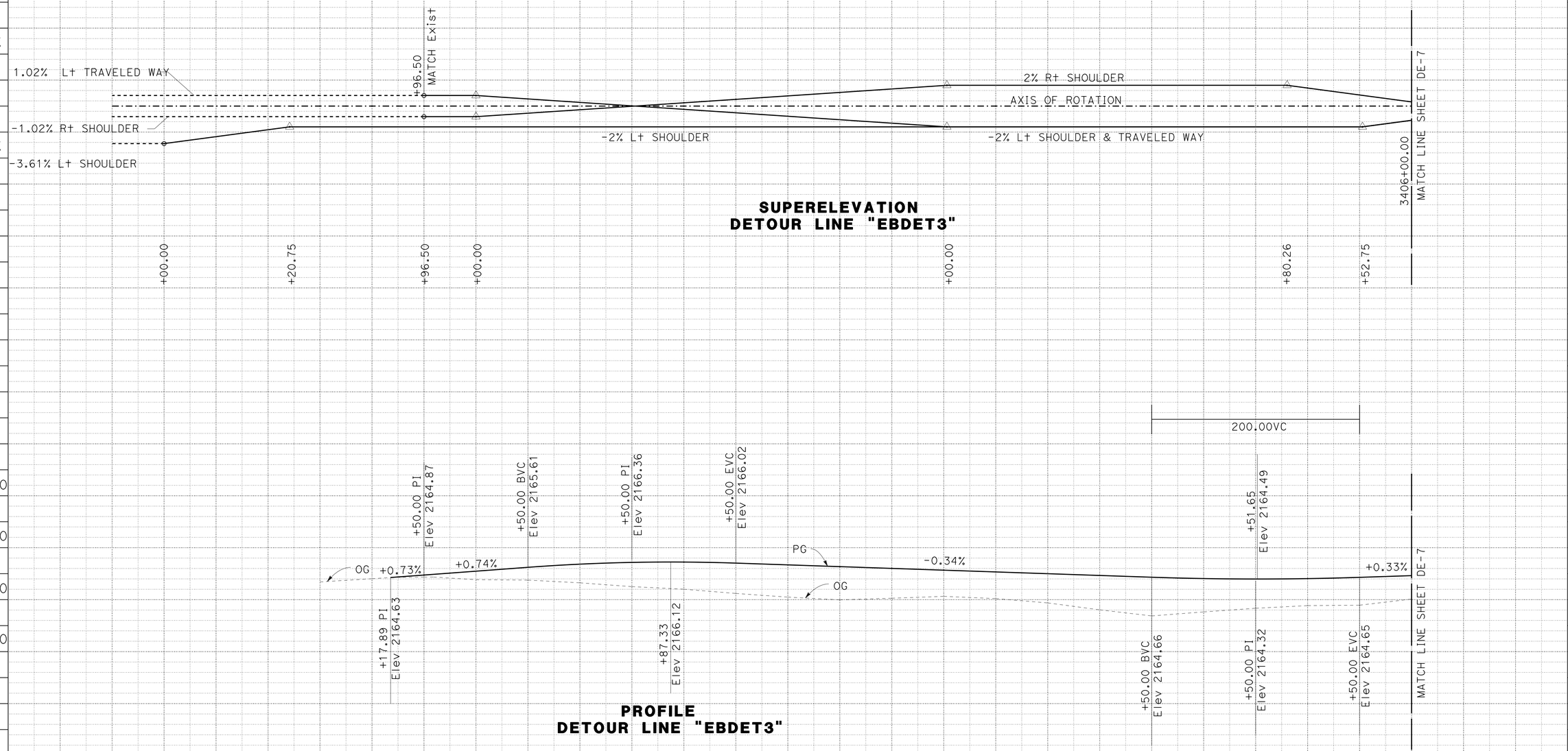

SUPERELEVATION
DETOUR LINE "EBDET3"

PROFILE
DETOUR LINE "EBDET3"

DETOUR PROFILE AND SUPERELEVATION DIAGRAM

SCALE: Horiz 1" = 50'
Vert 1" = 10'

DE-6

APPROVED FOR DETOUR CONSTRUCTION WORK ONLY

STATION	3	4	5	6	7	8	9	3400+00	1	2	3	4	5	6	7	TOTAL
CY Exc																
CY Emb																

REVISED BY | DATE REVISED
HUNG PHAM | GEORGE MORHIG
CALCULATED-DESIGNED BY | CHECKED BY
FUNCTIONAL SUPERVISOR: GEORGE MORHIG

STATE OF CALIFORNIA - DEPARTMENT OF TRANSPORTATION
Caltrans
DESIGN

LAST REVISION 02-28-14
DATE PLOTTED => 10-SEP-2014
TIME PLOTTED => 09:50

Dist	COUNTY	ROUTE	POST MILES TOTAL PROJECT	SHEET No.	TOTAL SHEETS
08	SBd	40	R94.7/R99.7	110	251

REGISTERED CIVIL ENGINEER 2-28-14 DATE

5-27-14
PLANS APPROVAL DATE

REGISTERED PROFESSIONAL ENGINEER GEORGE MORHIG No. C50349 Exp 6/30/15 CIVIL STATE OF CALIFORNIA

THE STATE OF CALIFORNIA OR ITS OFFICERS OR AGENTS SHALL NOT BE RESPONSIBLE FOR THE ACCURACY OR COMPLETENESS OF SCANNED COPIES OF THIS PLAN SHEET.

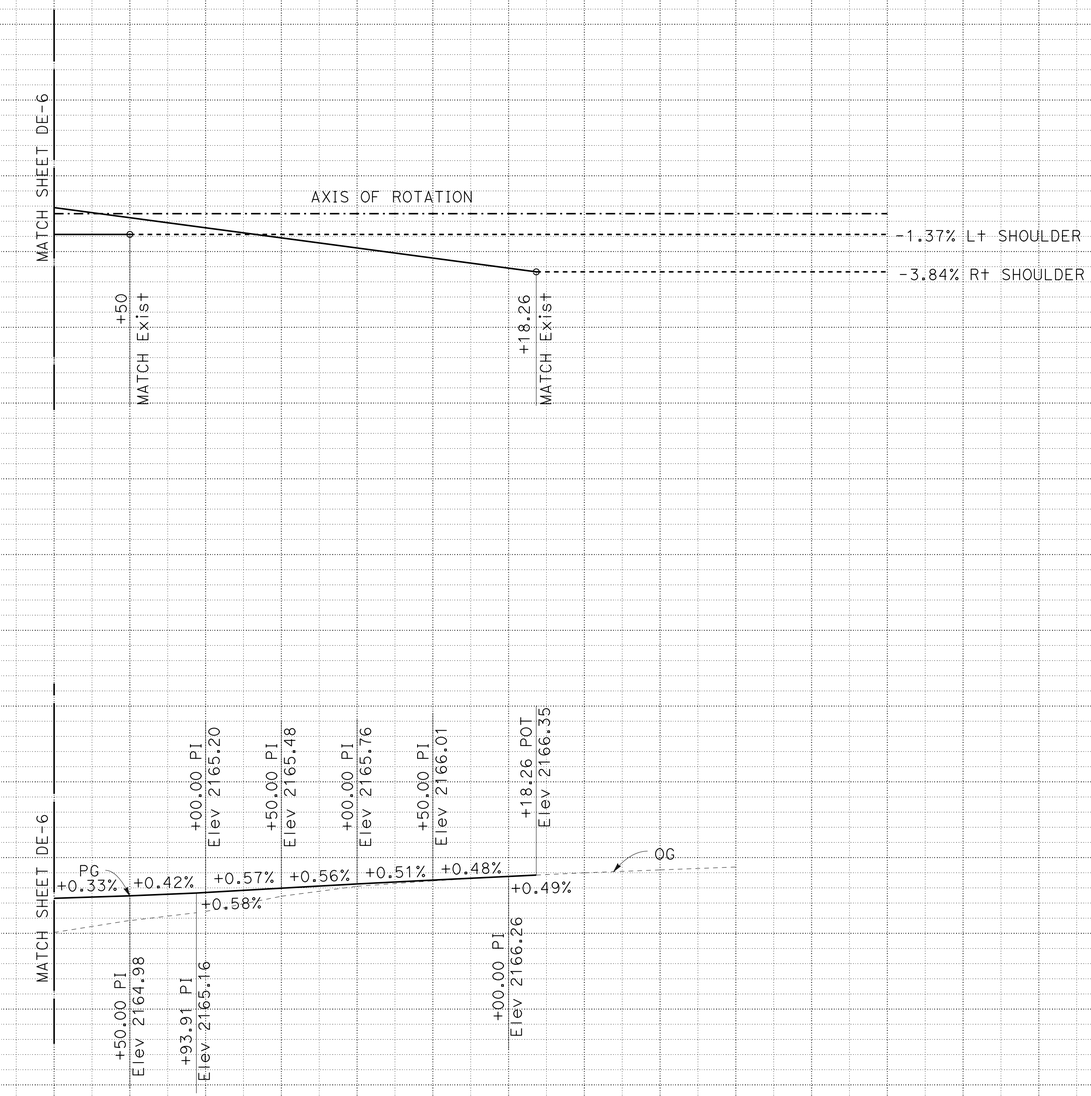

PROFILE
DETOUR LINE "EBDET3"

DETOUR PROFILE AND SUPERELEVATION DIAGRAM

SCALE: Horiz 1" = 50'
Vert 1" = 10'

DE-7

APPROVED FOR DETOUR CONSTRUCTION WORK ONLY

STATION	3	4	5	6	7	8	9	3410+00	1	2	3	4	5	6	7	TOTAL
CY Exc																
CY Emb																

REVISED BY | DATE REVISED
HUNG PHAM | GEORGE MORHIG
CALCULATED-DESIGNED BY | CHECKED BY
FUNCTIONAL SUPERVISOR: GEORGE MORHIG

STATE OF CALIFORNIA - DEPARTMENT OF TRANSPORTATION
Caltrans
DESIGN

LAST REVISION 02-28-14 | DATE PLOTTED => 10-SEP-2014 | TIME PLOTTED => 09:50

Dist	COUNTY	ROUTE	POST MILES TOTAL PROJECT	SHEET No.	TOTAL SHEETS
08	SBd	40	R94.7/R99.7	111	251

REGISTERED CIVIL ENGINEER 2-28-14 DATE

5-27-14
PLANS APPROVAL DATE

REGISTERED PROFESSIONAL ENGINEER GEORGE MORHIG No. C50349 Exp 6/30/15 CIVIL STATE OF CALIFORNIA

THE STATE OF CALIFORNIA OR ITS OFFICERS OR AGENTS SHALL NOT BE RESPONSIBLE FOR THE ACCURACY OR COMPLETENESS OF SCANNED COPIES OF THIS PLAN SHEET.

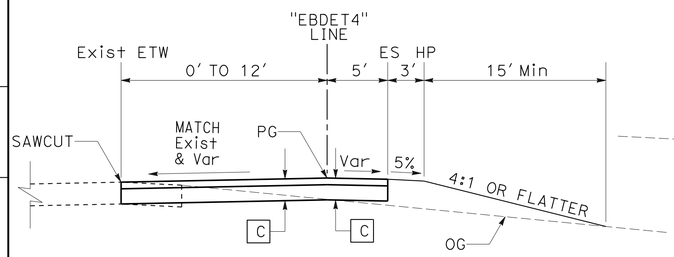

DETOUR "EBDET4" LINE
Sta 3484+00.00 TO Sta 3486+20.85

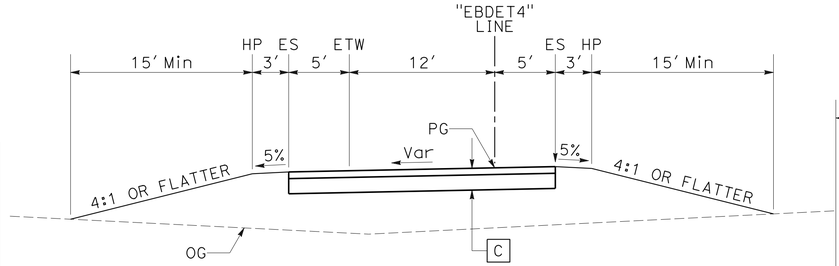

DETOUR "EBDET4" LINE
Sta 3486+62.14 TO Sta 3495+35.94

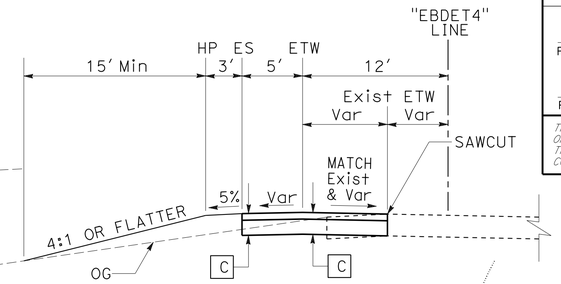

DETOUR "EBDET4" LINE
Sta 3495+81.59 TO Sta 3498+23.87

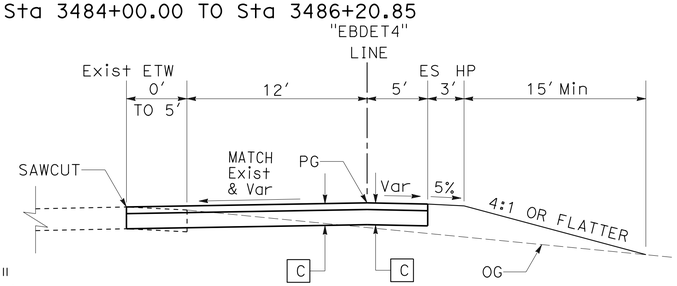

DETOUR "EBDET4" LINE
Sta 3486+20.85 TO Sta 3486+62.14

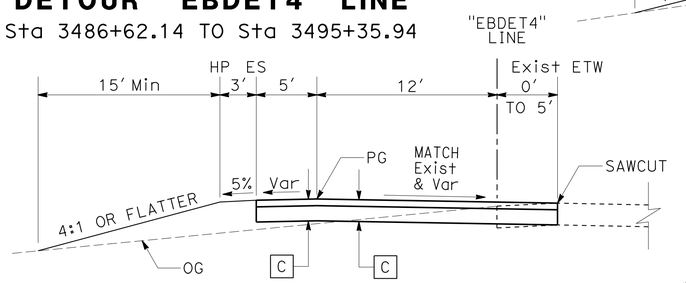

DETOUR "EBDET4" LINE
Sta 3495+35.94 TO Sta 3495+81.59

CURVE DATA

No.	R	Δ	T	L
8	2000.00'	12°10'19"	213.24'	424.88'
9	2000.00'	16°57'52"	298.27'	592.17'
10	12000.00'	13°4'16"	1374.76'	2737.59'

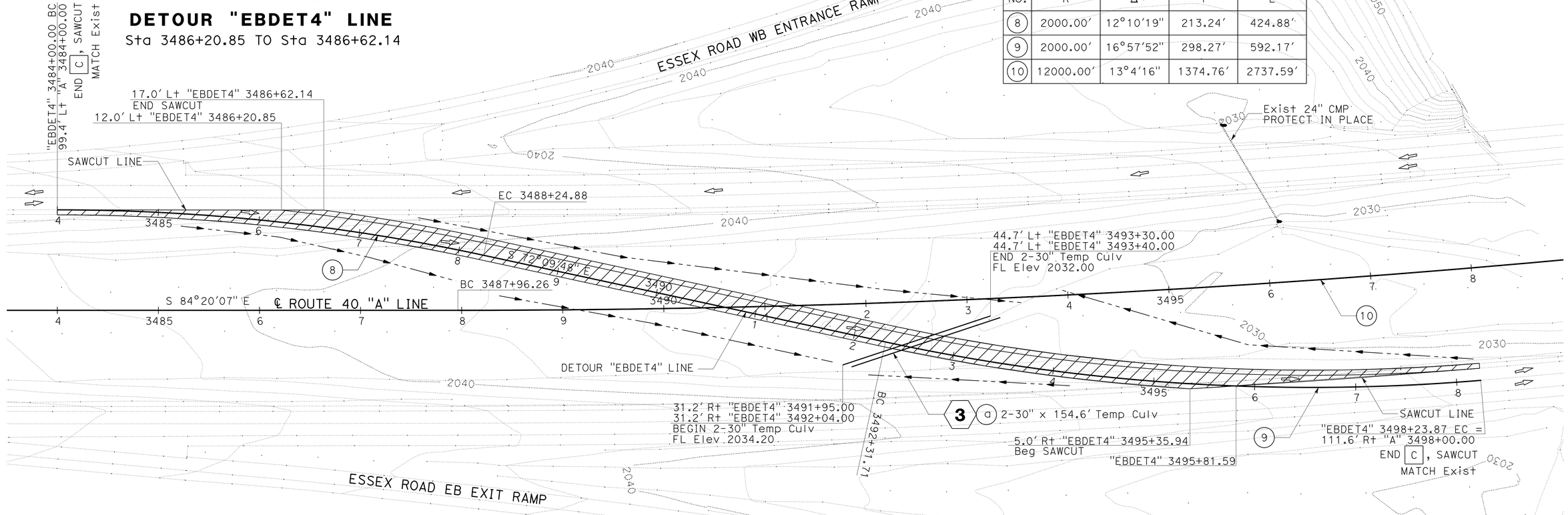

DETOUR PLAN
SCALE: 1" = 50'

DE-8

APPROVED FOR DETOUR CONSTRUCTION WORK ONLY

REVISED BY | DATE REVISED
HUNG PHAM | GEORGE MORHIG
CALCULATED-DESIGNED BY | CHECKED BY
FUNCTIONAL SUPERVISOR | GEORGE MORHIG
STATE OF CALIFORNIA - DEPARTMENT OF TRANSPORTATION
Caltrans
DESIGN

LAST REVISION 02-28-14 | DATE PLOTTED => 10-SEP-2014 | TIME PLOTTED => 09:50

Dist	COUNTY	ROUTE	POST MILES TOTAL PROJECT	SHEET No.	TOTAL SHEETS
08	SBd	40	R94.7/R99.7	112	251

REGISTERED CIVIL ENGINEER 2-28-14 DATE

5-27-14
PLANS APPROVAL DATE

REGISTERED PROFESSIONAL ENGINEER GEORGE MORHIG No. C50349 Exp 6/30/15 CIVIL STATE OF CALIFORNIA

THE STATE OF CALIFORNIA OR ITS OFFICERS OR AGENTS SHALL NOT BE RESPONSIBLE FOR THE ACCURACY OR COMPLETENESS OF SCANNED COPIES OF THIS PLAN SHEET.

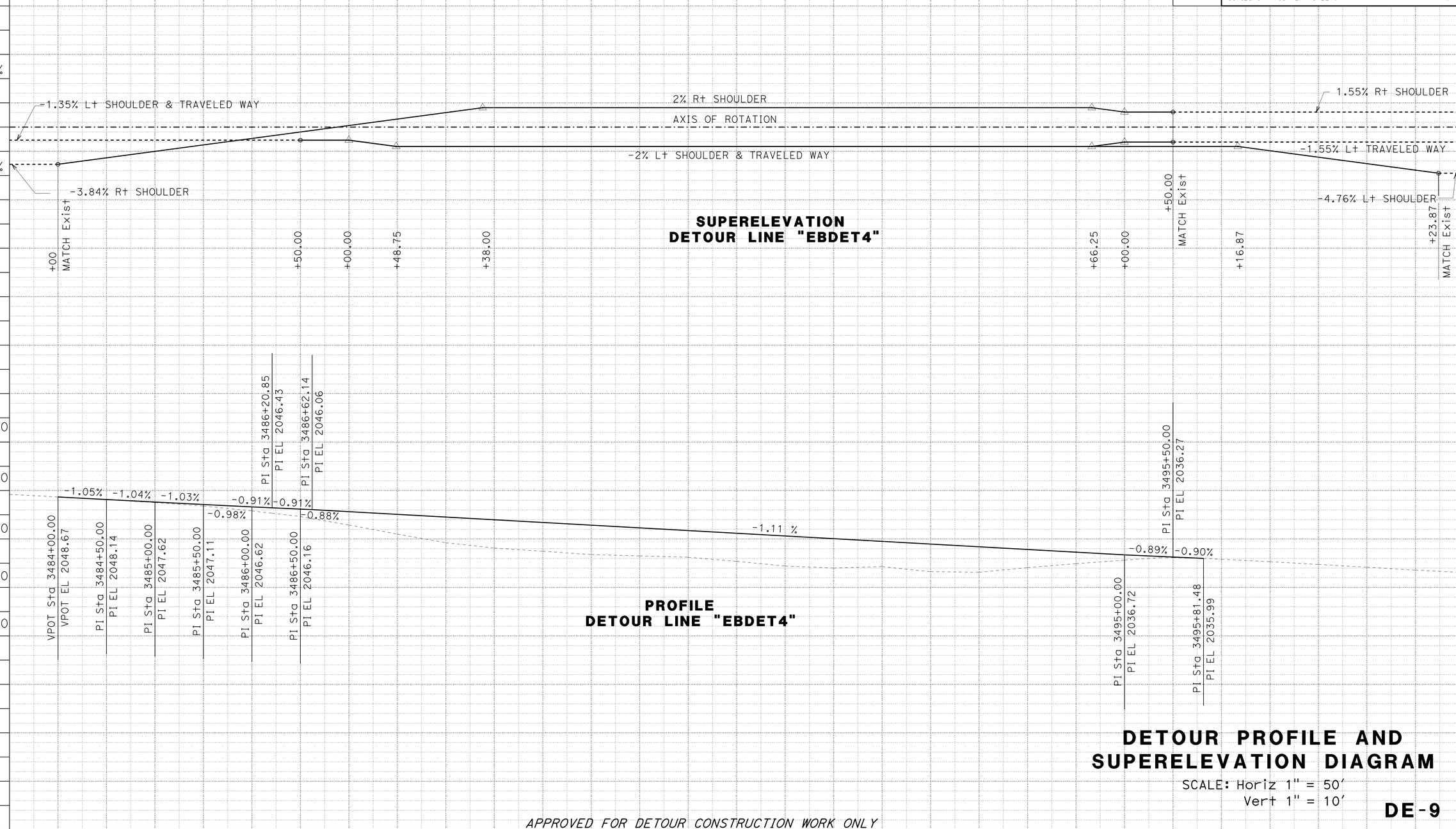

APPROVED FOR DETOUR CONSTRUCTION WORK ONLY

DETOUR PROFILE AND SUPERELEVATION DIAGRAM

SCALE: Horiz 1" = 50'
Vert 1" = 10'

DE-9

REVISED BY | DATE REVISED
HUNG PHAM | GEORGE MORHIG
CALCULATED-DESIGNED BY | CHECKED BY
FUNCTIONAL SUPERVISOR
GEORGE MORHIG

STATE OF CALIFORNIA - DEPARTMENT OF TRANSPORTATION
Caltrans
DESIGN

LAST REVISION 02-28-14
DATE PLOTTED => 10-SEP-2014
TIME PLOTTED => 09:51

Dist	COUNTY	ROUTE	POST MILES TOTAL PROJECT	SHEET No.	TOTAL SHEETS
08	SBd	40	R94.7/R99.7	113	251

REGISTERED CIVIL ENGINEER 2-28-14 DATE

5-27-14
PLANS APPROVAL DATE

REGISTERED PROFESSIONAL ENGINEER GEORGE MORHIG No. C50349 Exp. 6/30/15 CIVIL STATE OF CALIFORNIA

THE STATE OF CALIFORNIA OR ITS OFFICERS OR AGENTS SHALL NOT BE RESPONSIBLE FOR THE ACCURACY OR COMPLETENESS OF SCANNED COPIES OF THIS PLAN SHEET.

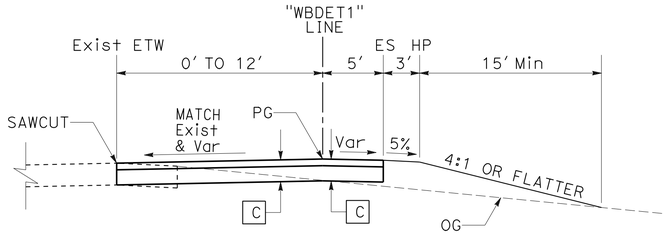

DETOUR "WBDET1" LINE
Sta 3235+00.00 TO Sta 3237+16.99

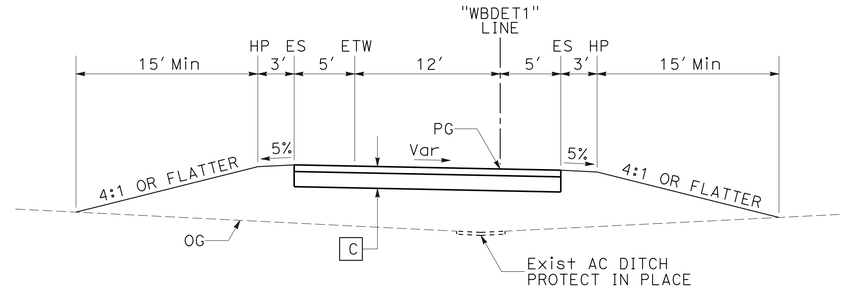

DETOUR "WBDET1" LINE
Sta 3237+59.15 TO Sta 3247+04.47

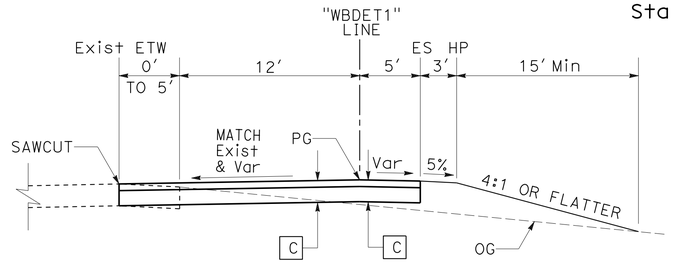

DETOUR "WBDET1" LINE
Sta 3237+16.99 TO Sta 3237+59.15

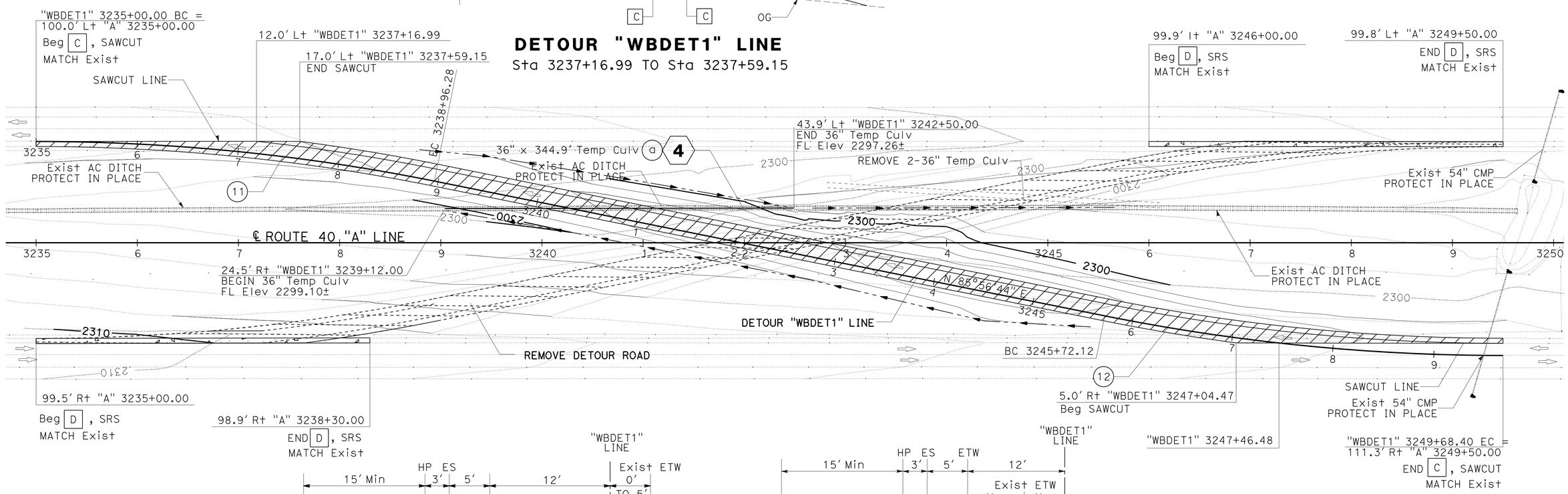

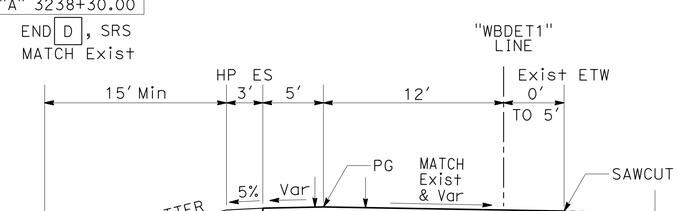

DETOUR "WBDET1" LINE
Sta 3247+04.47 TO Sta 3247+46.48

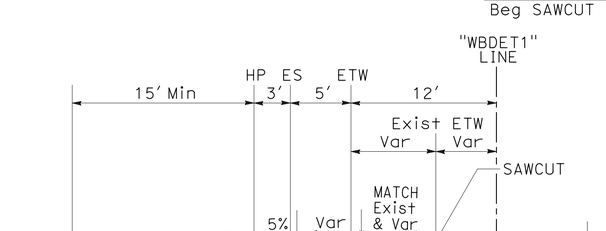

DETOUR "WBDET1" LINE
Sta 3247+46.48 TO Sta 3249+68.40

CURVE DATA

No.	R	Δ	T	L
11	2000.00'	11°21'10"	198.79'	396.28'
12	2000.00'	11°21'10"	198.79'	396.28'

DETOUR PLAN
SCALE: 1" = 50'

DE-10

APPROVED FOR DETOUR CONSTRUCTION WORK ONLY

STATE OF CALIFORNIA - DEPARTMENT OF TRANSPORTATION
DESIGN
Caltrans
FUNCTIONAL SUPERVISOR: GEORGE MORHIG
CALCULATED-DESIGNED BY: HUNG PHAM
CHECKED BY: GEORGE MORHIG
REVISED BY
DATE REVISED
LAST REVISION 02-28-14
DATE PLOTTED => 10-SEP-2014
TIME PLOTTED => 09:51

Dist	COUNTY	ROUTE	POST MILES TOTAL PROJECT	SHEET No.	TOTAL SHEETS
08	SBd	40	R94.7/R99.7	114	251

REGISTERED CIVIL ENGINEER 2-28-14 DATE

5-27-14
PLANS APPROVAL DATE

REGISTERED PROFESSIONAL ENGINEER GEORGE MORHIG No. C50349 Exp 6/30/15 CIVIL STATE OF CALIFORNIA

THE STATE OF CALIFORNIA OR ITS OFFICERS OR AGENTS SHALL NOT BE RESPONSIBLE FOR THE ACCURACY OR COMPLETENESS OF SCANNED COPIES OF THIS PLAN SHEET.

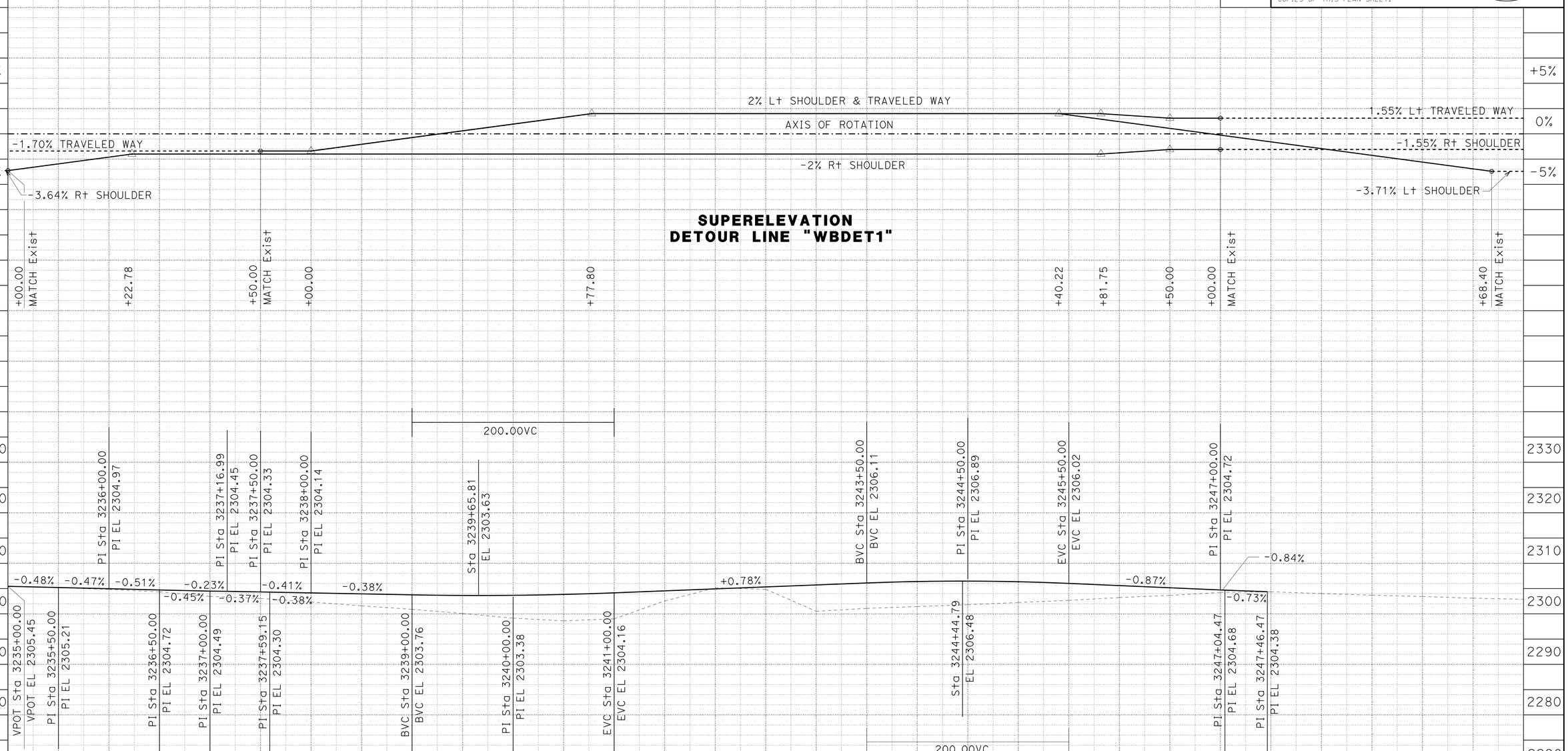

SUPERELEVATION
DETOUR LINE "WBDET1"

PROFILE
DETOUR LINE "WBDET1"

DETOUR PROFILE AND SUPERELEVATION DIAGRAM

SCALE: Horiz 1" = 50'
Vert 1" = 10'

DE-11

APPROVED FOR DETOUR CONSTRUCTION WORK ONLY

STATION	6	7	8	9	3240+00	1	2	3	4	3245+00	6	7	8	9	TOTAL
CY Exc															
CY Emb															

STATE OF CALIFORNIA - DEPARTMENT OF TRANSPORTATION
Caltrans
DESIGN

FUNCTIONAL SUPERVISOR: GEORGE MORHIG
CALCULATED-DESIGNED BY: HUNG PHAM
CHECKED BY: GEORGE MORHIG
REVISED BY
DATE REVISED

LAST REVISION 02-28-14
DATE PLOTTED => 10-SEP-2014
TIME PLOTTED => 09:51

Dist	COUNTY	ROUTE	POST MILES TOTAL PROJECT	SHEET No.	TOTAL SHEETS
08	SBd	40	R94.7/R99.7	115	251

REGISTERED CIVIL ENGINEER 2-28-14 DATE

5-27-14
PLANS APPROVAL DATE

REGISTERED PROFESSIONAL ENGINEER GEORGE MORHIG No. C50349 Exp 6/30/15 CIVIL STATE OF CALIFORNIA

THE STATE OF CALIFORNIA OR ITS OFFICERS OR AGENTS SHALL NOT BE RESPONSIBLE FOR THE ACCURACY OR COMPLETENESS OF SCANNED COPIES OF THIS PLAN SHEET.

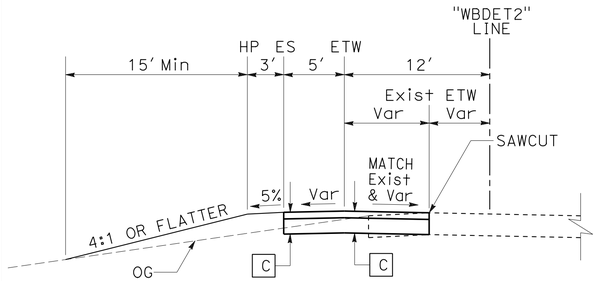

DETOUR "WBDET2" LINE
Sta 3266+00.00 TO Sta 3268+24.65

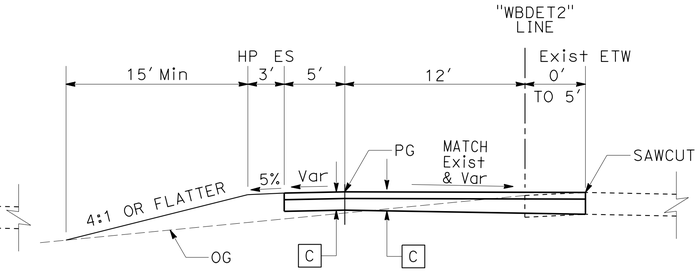

DETOUR "WBDET2" LINE
Sta 3268+24.65 TO Sta 3268+65.96

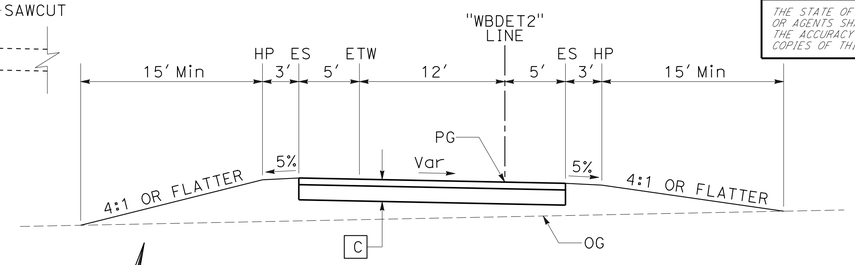

DETOUR "WBDET2" LINE
Sta 3268+65.96 TO Sta 3278+09.04

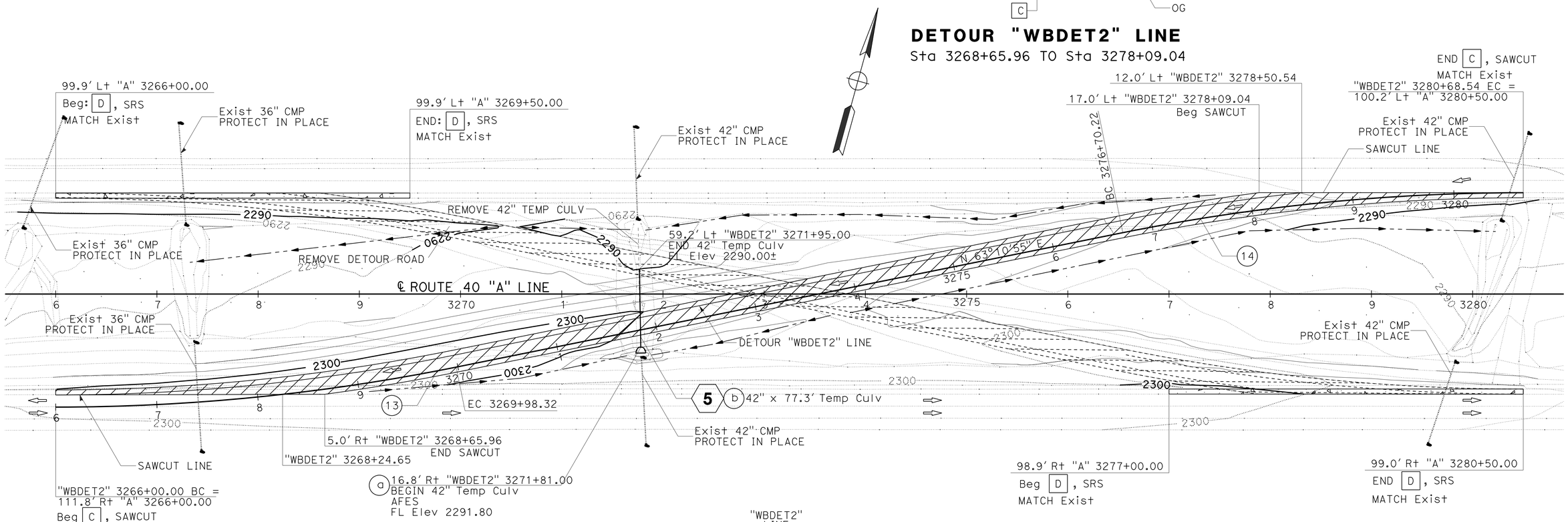

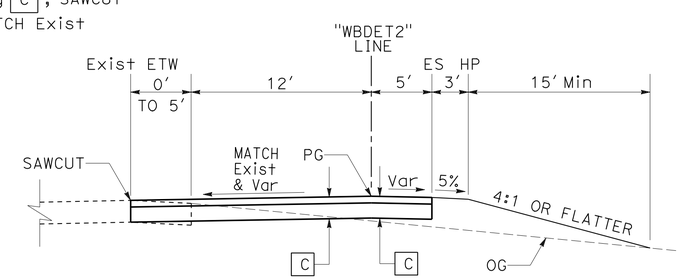

DETOUR "WBDET2" LINE
Sta 3278+09.04 TO Sta 3278+50.54

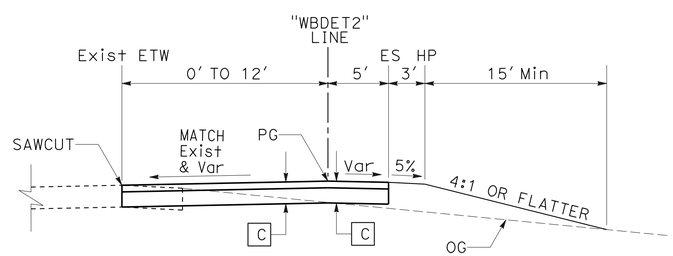

DETOUR "WBDET2" LINE
Sta 3278+50.54 TO Sta 3280+68.54

CURVE DATA

No.	R	Δ	T	L
13	2000.00'	11°24'40"	199.82'	398.32'
14	2000.00'	11°24'40"	199.82'	398.32'

DETOUR PLAN

SCALE: 1" = 50'

DE-12

APPROVED FOR DETOUR CONSTRUCTION WORK ONLY

STATE OF CALIFORNIA - DEPARTMENT OF TRANSPORTATION
DESIGN
Caltrans

FUNCTIONAL SUPERVISOR: GEORGE MORHIG
CALCULATED-DESIGNED BY: HUNG PHAM
CHECKED BY: GEORGE MORHIG
REVISED BY
DATE REVISED

LAST REVISION 02-28-14
DATE PLOTTED => 10-SEP-2014
TIME PLOTTED => 09:51

Dist	COUNTY	ROUTE	POST MILES TOTAL PROJECT	SHEET No.	TOTAL SHEETS
08	SBd	40	R94.7/R99.7	116	251

REGISTERED CIVIL ENGINEER 2-28-14 DATE

5-27-14
PLANS APPROVAL DATE

REGISTERED PROFESSIONAL ENGINEER GEORGE MORHIG No. C50349 Exp 6/30/15 CIVIL STATE OF CALIFORNIA

THE STATE OF CALIFORNIA OR ITS OFFICERS OR AGENTS SHALL NOT BE RESPONSIBLE FOR THE ACCURACY OR COMPLETENESS OF SCANNED COPIES OF THIS PLAN SHEET.

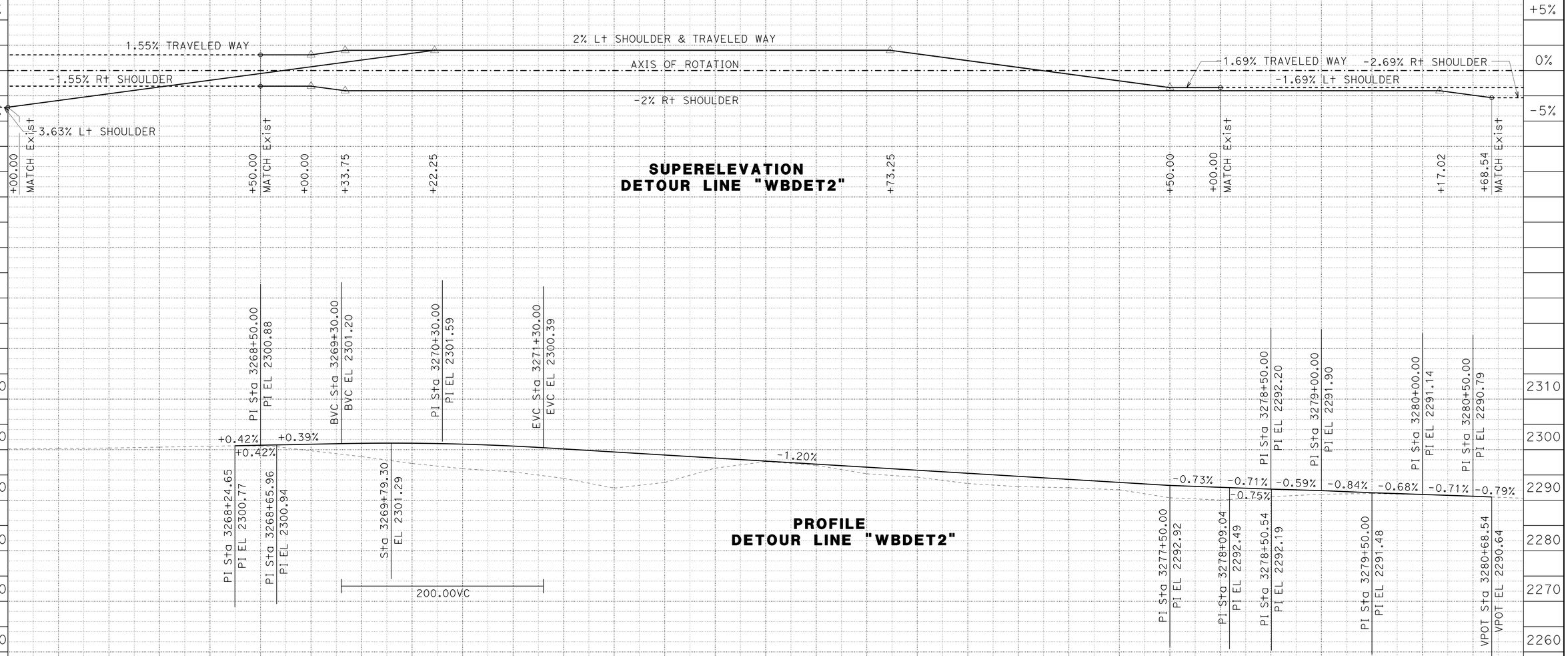

DETOUR PROFILE AND SUPERELEVATION DIAGRAM

SCALE: Horiz 1" = 50'
Vert 1" = 10'

DE-13

APPROVED FOR DETOUR CONSTRUCTION WORK ONLY

STATE OF CALIFORNIA - DEPARTMENT OF TRANSPORTATION
Caltrans
DESIGN

FUNCTIONAL SUPERVISOR: GEORGE MORHIG
CALCULATED-DESIGNED BY: HUNG PHAM
CHECKED BY: GEORGE MORHIG
REVISED BY
DATE REVISED

LAST REVISION 02-28-14
DATE PLOTTED => 10-SEP-2014
TIME PLOTTED => 09:51

Dist	COUNTY	ROUTE	POST MILES TOTAL PROJECT	SHEET No.	TOTAL SHEETS
08	SBd	40	R94.7/R99.7	117	251

REGISTERED CIVIL ENGINEER 2-28-14 DATE

5-27-14
PLANS APPROVAL DATE

REGISTERED PROFESSIONAL ENGINEER GEORGE MORHIG No. C50349 Exp 6/30/15 CIVIL STATE OF CALIFORNIA

THE STATE OF CALIFORNIA OR ITS OFFICERS OR AGENTS SHALL NOT BE RESPONSIBLE FOR THE ACCURACY OR COMPLETENESS OF SCANNED COPIES OF THIS PLAN SHEET.

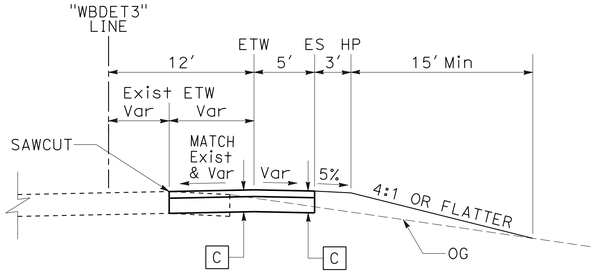

DETOUR "WBDET3" LINE
Sta 3394+00.00 TO Sta 3396+19.73

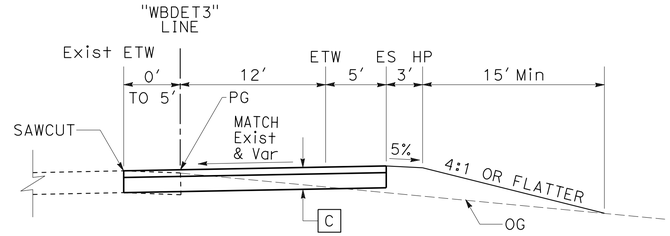

DETOUR "WBDET3" LINE
Sta 3396+19.73 TO Sta 3396+61.62

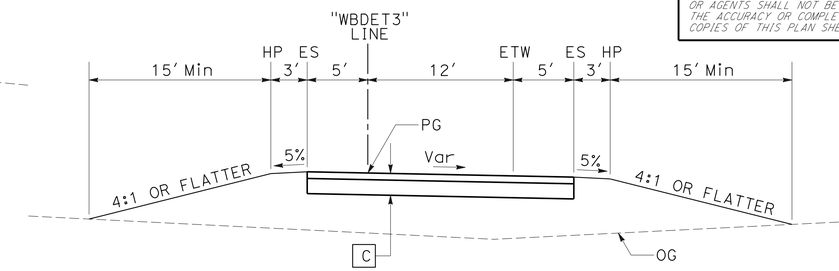

DETOUR "WBDET3" LINE
Sta 3396+61.62 TO Sta 3406+67.42

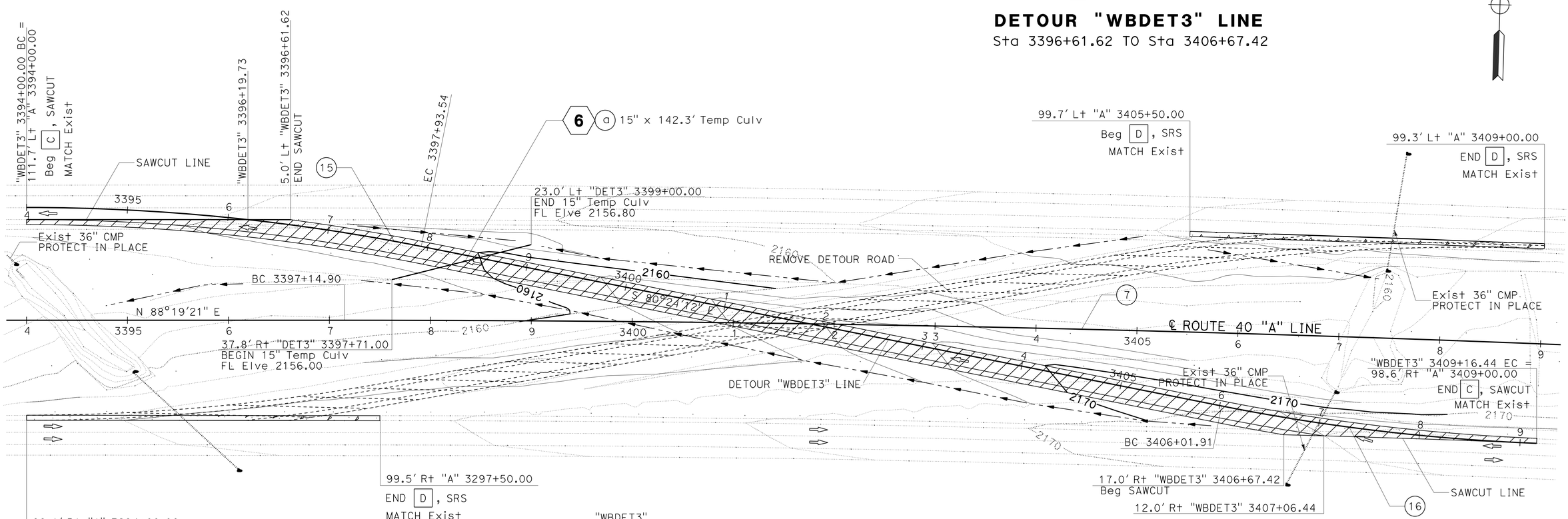

CURVE DATA

No.	R	Δ	T	L
7	30000.00′	7°20′32"	1924.82′	3844.37′
15	2000.00′	11°16′27"	197.41′	393.54′
16	2000.00′	9°0′38"	157.59′	314.53′

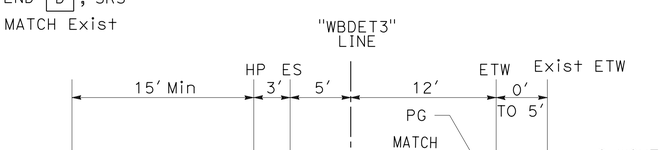

DETOUR "WBDET3" LINE
Sta 3406+67.42 TO Sta 3407+06.44

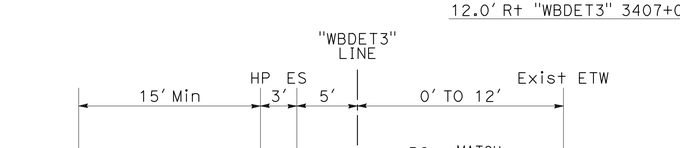

DETOUR "WBDET3" LINE
Sta 3407+06.44 TO Sta 3409+16.44

DETOUR PLAN
SCALE: 1" = 50′

DE-14

APPROVED FOR DETOUR CONSTRUCTION WORK ONLY

CALCULATED- HUNG PHAM
DESIGNED BY GEORGE MORHIG
CHECKED BY
FUNCTIONAL SUPERVISOR GEORGE MORHIG
REVISED BY
DATE REVISED

STATE OF CALIFORNIA - DEPARTMENT OF TRANSPORTATION
Caltrans
DESIGN

LAST REVISION 02-28-14
DATE PLOTTED => 10-SEP-2014
TIME PLOTTED => 09:51

Dist	COUNTY	ROUTE	POST MILES TOTAL PROJECT	SHEET No.	TOTAL SHEETS
08	SBd	40	R94.7/R99.7	118	251

REGISTERED CIVIL ENGINEER 2-28-14 DATE

5-27-14
PLANS APPROVAL DATE

REGISTERED PROFESSIONAL ENGINEER GEORGE MORHIG No. C50349 Exp 6/30/15 CIVIL STATE OF CALIFORNIA

THE STATE OF CALIFORNIA OR ITS OFFICERS OR AGENTS SHALL NOT BE RESPONSIBLE FOR THE ACCURACY OR COMPLETENESS OF SCANNED COPIES OF THIS PLAN SHEET.

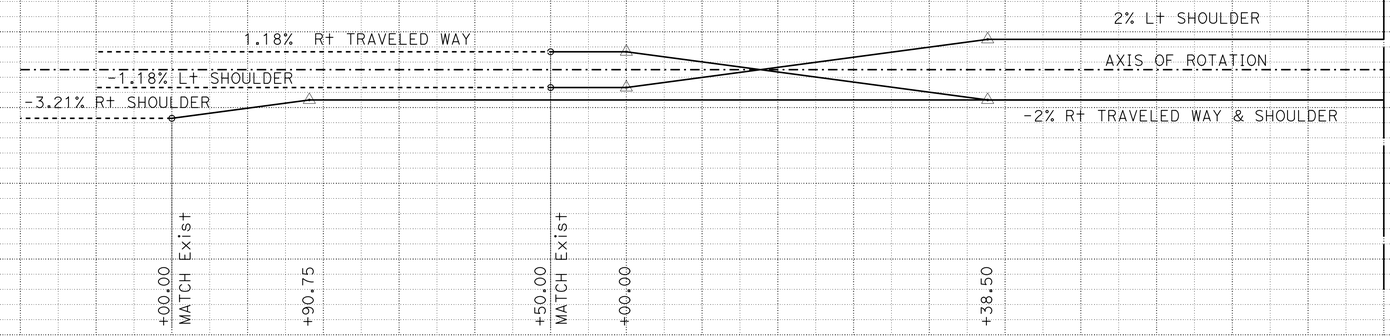

SUPERELEVATION
DETOUR LINE "WBDET3"

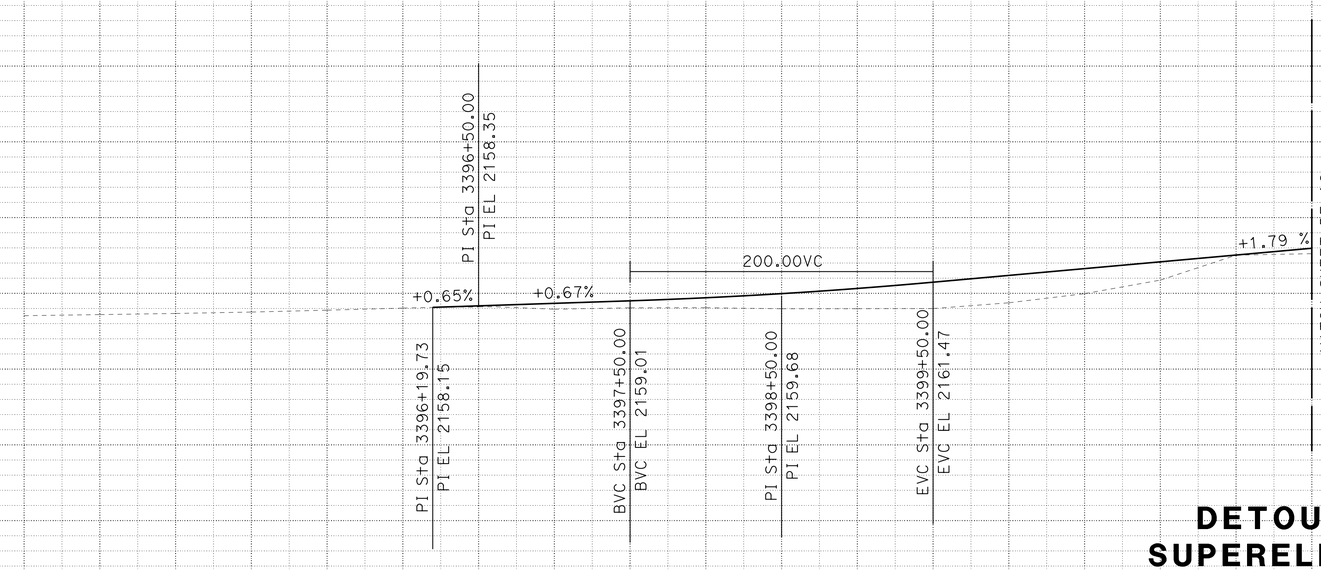

PROFILE
DETOUR LINE "WBDET3"

DETOUR PROFILE AND SUPERELEVATION DIAGRAM

SCALE: Horiz 1" = 50'
Vert 1" = 10'

DE-15

APPROVED FOR DETOUR CONSTRUCTION WORK ONLY

STATION	1	2	3	3394+00	5	6	7	8	9	3400+00	1	2	3	4	TOTAL
CY Exc															
CY Emb															

REVISED BY | DATE REVISED
HUNG PHAM | GEORGE MORHIG
CALCULATED-DESIGNED BY | CHECKED BY
FUNCTIONAL SUPERVISOR: GEORGE MORHIG

STATE OF CALIFORNIA - DEPARTMENT OF TRANSPORTATION
Caltrans
DESIGN

LAST REVISION 02-28-14 | DATE PLOTTED => 10-SEP-2014 | TIME PLOTTED => 09:51

Dist	COUNTY	ROUTE	POST MILES TOTAL PROJECT	SHEET No.	TOTAL SHEETS
08	SBd	40	R94.7/R99.7	119	251

REGISTERED CIVIL ENGINEER 2-28-14 DATE

5-27-14
PLANS APPROVAL DATE

REGISTERED PROFESSIONAL ENGINEER GEORGE MORHIG No. C50349 Exp 6/30/15 CIVIL STATE OF CALIFORNIA

THE STATE OF CALIFORNIA OR ITS OFFICERS OR AGENTS SHALL NOT BE RESPONSIBLE FOR THE ACCURACY OR COMPLETENESS OF SCANNED COPIES OF THIS PLAN SHEET.

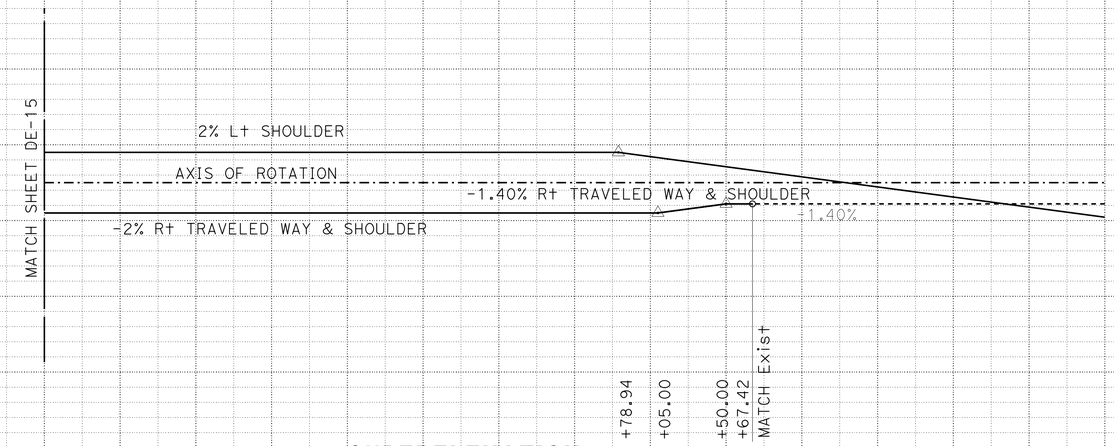

SUPERELEVATION
DETOUR LINE "WBDET3"

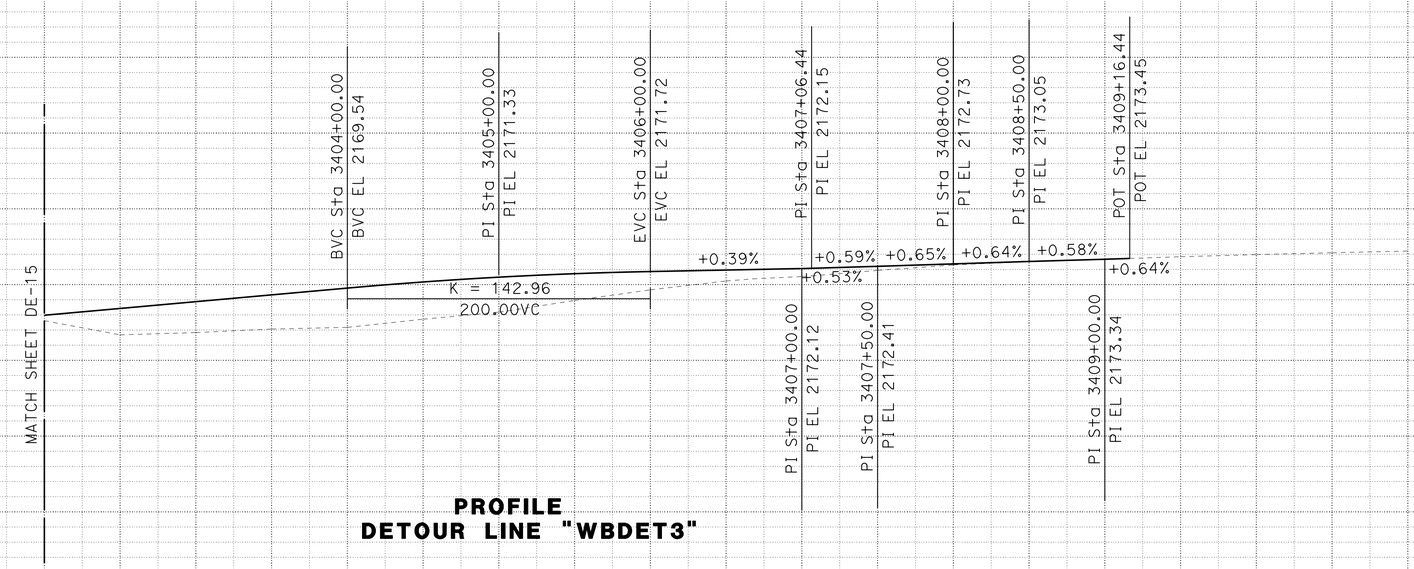

PROFILE
DETOUR LINE "WBDET3"

DETOUR PROFILE AND SUPERELEVATION DIAGRAM

SCALE: Horiz 1" = 50'
Vert 1" = 10'

DE-16

APPROVED FOR DETOUR CONSTRUCTION WORK ONLY

STATION	3400+00	1	2	3	4	5	6	7	8	9	3500+00	1	2	3	TOTAL
CY Exc															
CY Emb															

STATE OF CALIFORNIA - DEPARTMENT OF TRANSPORTATION
Caltrans® DESIGN

FUNCTIONAL SUPERVISOR: GEORGE MORHIG
CALCULATED-DESIGNED BY: HUNG PHAM
CHECKED BY: GEORGE MORHIG
REVISED BY
DATE REVISED

LAST REVISION 02-28-14
DATE PLOTTED => 10-SEP-2014
TIME PLOTTED => 09:51

Dist	COUNTY	ROUTE	POST MILES TOTAL PROJECT	SHEET No.	TOTAL SHEETS
08	SBd	40	R94.7/R99.7	120	251

REGISTERED CIVIL ENGINEER 2-28-14 DATE

5-27-14
PLANS APPROVAL DATE

REGISTERED PROFESSIONAL ENGINEER GEORGE MORHIG No. C50349 Exp 6/30/15 CIVIL STATE OF CALIFORNIA

THE STATE OF CALIFORNIA OR ITS OFFICERS OR AGENTS SHALL NOT BE RESPONSIBLE FOR THE ACCURACY OR COMPLETENESS OF SCANNED COPIES OF THIS PLAN SHEET.

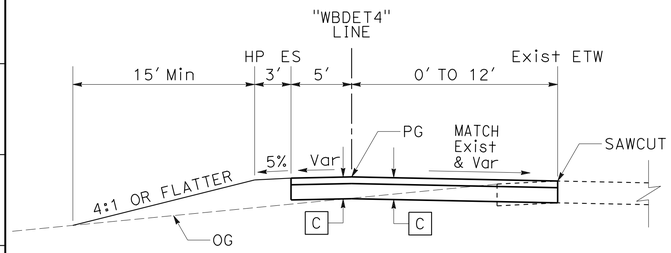

DETOUR "WBDET4" LINE
Sta 3484+00.00 TO Sta 3486+20.03

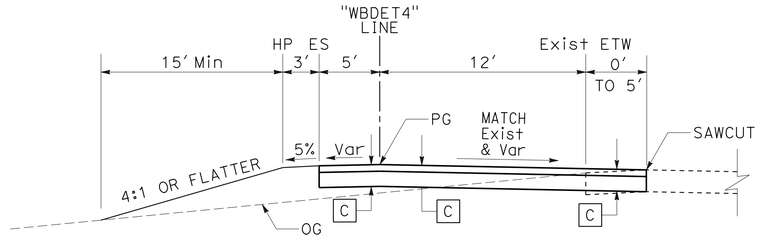

DETOUR "WBDET4" LINE
Sta 3486+20.03 TO Sta 3486+62.90

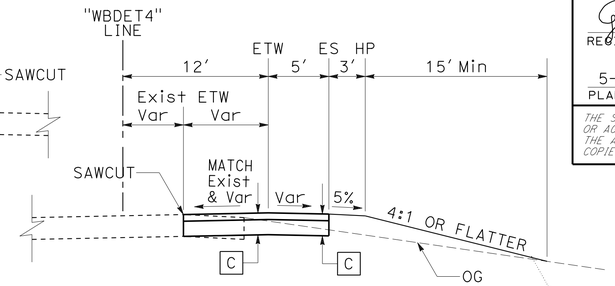

DETOUR "WBDET4" LINE
Sta 3496+13.18 TO Sta 3498+15.69

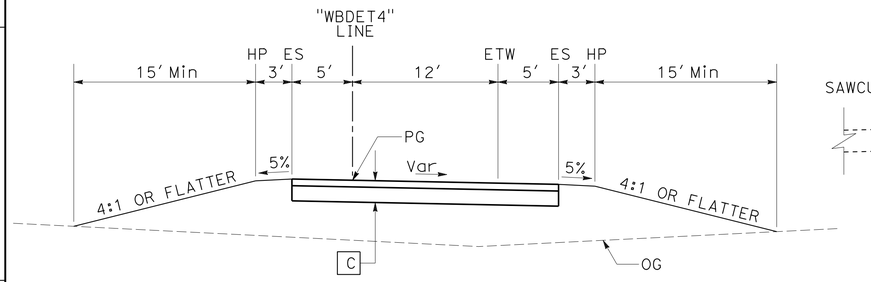

DETOUR "WBDET4" LINE
Sta 3486+62.90 TO Sta 3495+74.29

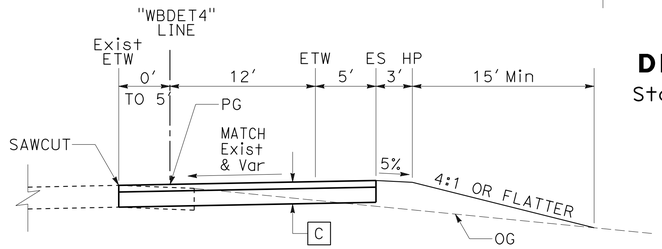

DETOUR "WBDET4" LINE
Sta 3495+74.29 TO Sta 3496+13.18

CURVE DATA

No.	R	Δ	T	L
10	12000.00'	13°4'16"	1374.76'	2737.59'
17	2000.00'	13°29'0"	236.42'	470.66'
18	2000.00'	8°41'27"	151.98'	303.37'

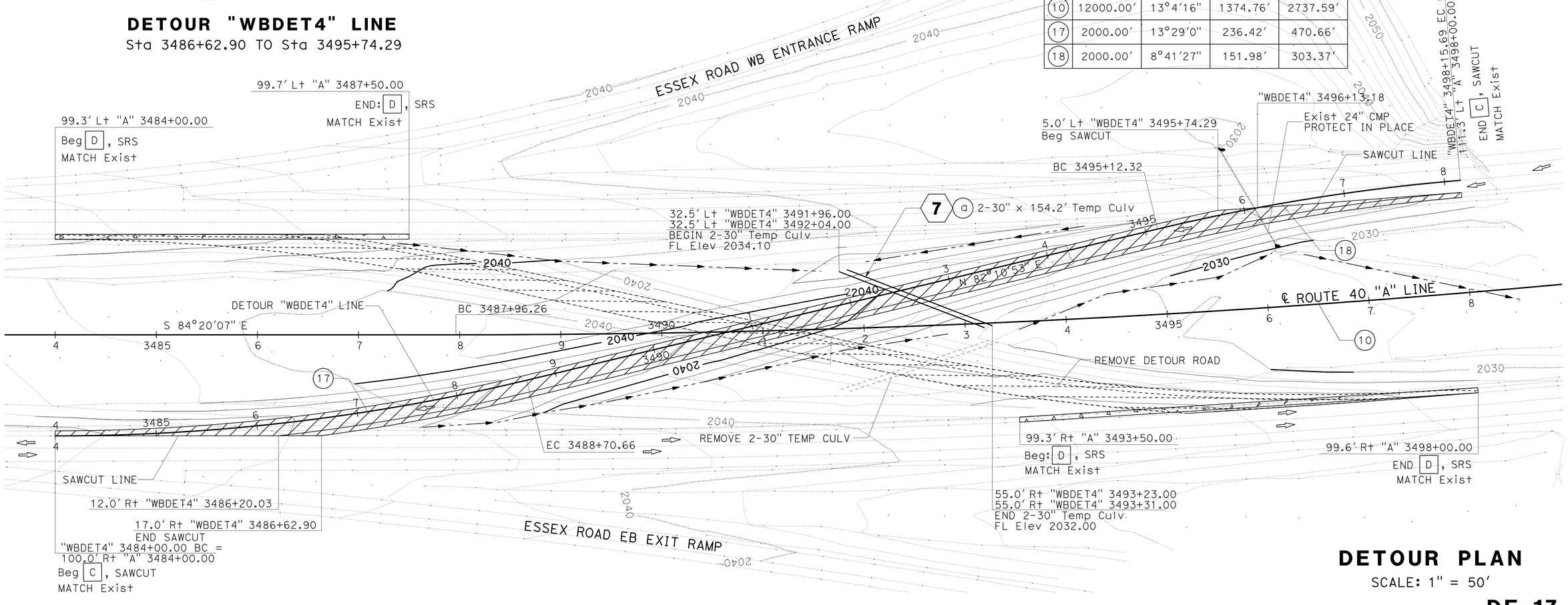

DETOUR PLAN

SCALE: 1" = 50'

DE-17

APPROVED FOR DETOUR CONSTRUCTION WORK ONLY

REVISED BY | DATE REVISED
HUNG PHAM | GEORGE MORHIG
CALCULATED-DESIGNED BY | CHECKED BY
FUNCTIONAL SUPERVISOR: GEORGE MORHIG

STATE OF CALIFORNIA - DEPARTMENT OF TRANSPORTATION
DESIGN
Caltrans

LAST REVISION 02-28-14 | DATE PLOTTED => 10-SEP-2014 | TIME PLOTTED => 09:51

Dist	COUNTY	ROUTE	POST MILES TOTAL PROJECT	SHEET No.	TOTAL SHEETS
08	SBd	40	R94.7/R99.7	121	251

REGISTERED CIVIL ENGINEER 2-28-14 DATE

5-27-14
PLANS APPROVAL DATE

REGISTERED PROFESSIONAL ENGINEER GEORGE MORHIG No. C50349 Exp 6/30/15 CIVIL STATE OF CALIFORNIA

THE STATE OF CALIFORNIA OR ITS OFFICERS OR AGENTS SHALL NOT BE RESPONSIBLE FOR THE ACCURACY OR COMPLETENESS OF SCANNED COPIES OF THIS PLAN SHEET.

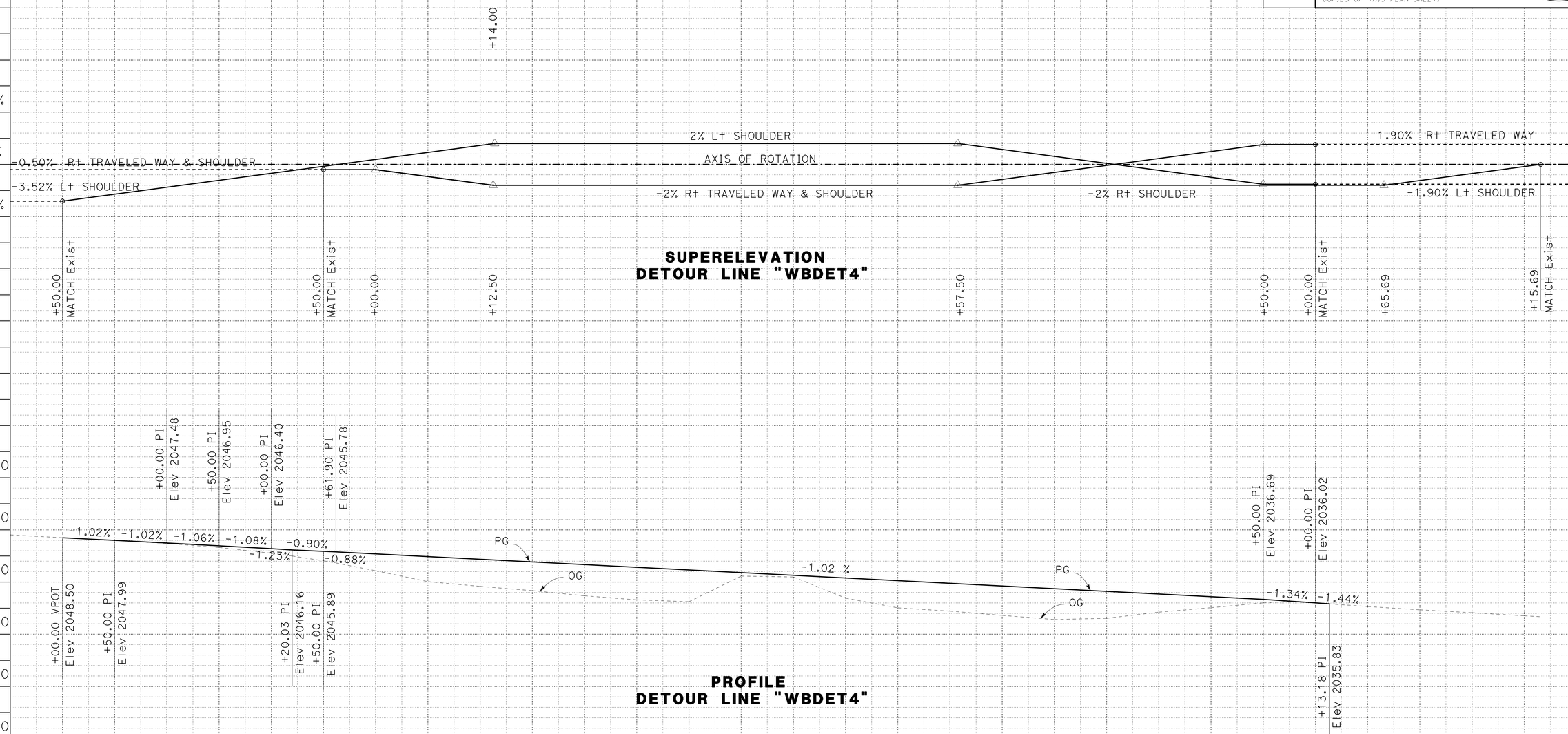

DETOUR PROFILE AND SUPERELEVATION DIAGRAM

SCALE: Horiz 1" = 50'
Vert 1" = 10'

DE-18

APPROVED FOR DETOUR CONSTRUCTION WORK ONLY

STATION	3484+00	5	6	7	8	9	3490+00	1	2	3	4	5	6	7	8	TOTAL
CY Exc																
CY Emb																

REVISED BY | DATE REVISED
HUNG PHAM | GEORGE MORHIG
CALCULATED-DESIGNED BY | CHECKED BY
FUNCTIONAL SUPERVISOR: GEORGE MORHIG

STATE OF CALIFORNIA - DEPARTMENT OF TRANSPORTATION
Caltrans
DESIGN

LAST REVISION 02-28-14 | DATE PLOTTED => 10-SEP-2014 | TIME PLOTTED => 09:51

Dist	COUNTY	ROUTE	POST MILES TOTAL PROJECT	SHEET No.	TOTAL SHEETS
08	SBd	40	R94.7/R99.7	122	251

REGISTERED CIVIL ENGINEER 2-28-14 DATE

5-27-14
PLANS APPROVAL DATE

REGISTERED PROFESSIONAL ENGINEER GEORGE MORHIG No. C50349 Exp 6/30/15 CIVIL STATE OF CALIFORNIA

THE STATE OF CALIFORNIA OR ITS OFFICERS OR AGENTS SHALL NOT BE RESPONSIBLE FOR THE ACCURACY OR COMPLETENESS OF SCANNED COPIES OF THIS PLAN SHEET.

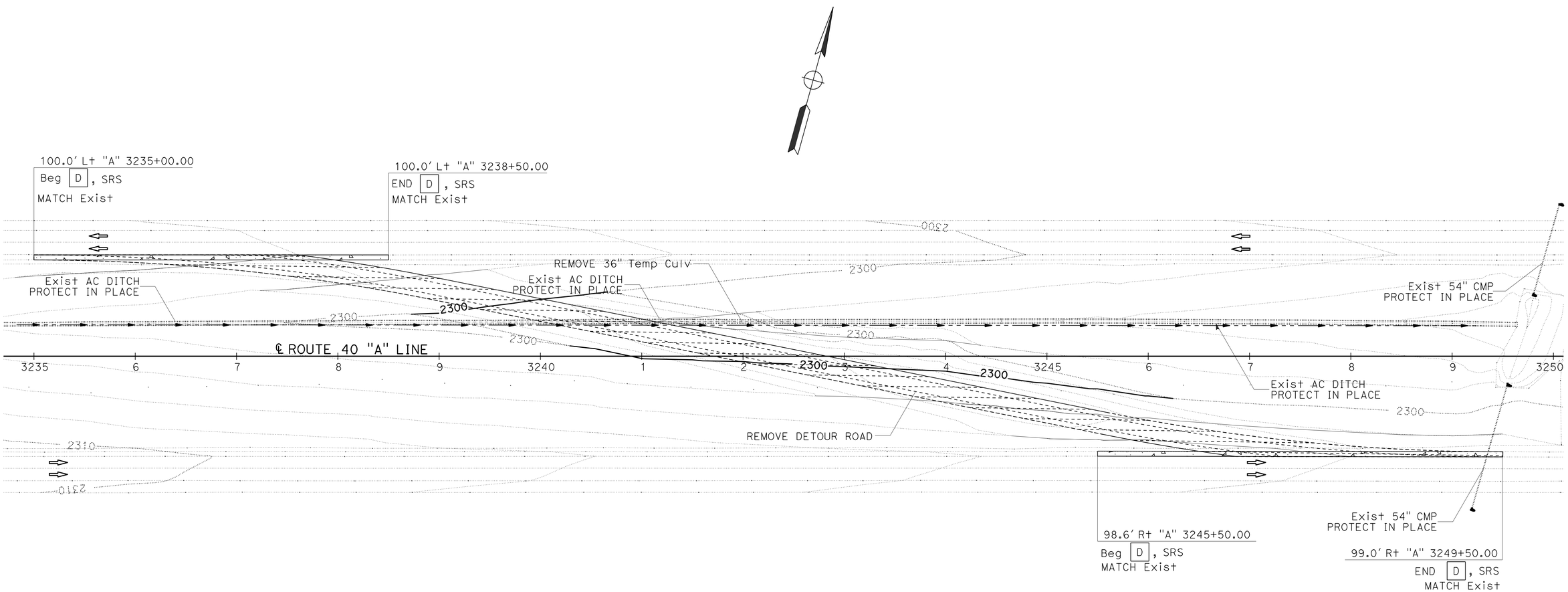

DETOUR PLAN

SCALE: 1" = 50'

DE-19

APPROVED FOR DETOUR CONSTRUCTION WORK ONLY

STATE OF CALIFORNIA - DEPARTMENT OF TRANSPORTATION
Caltrans
DESIGN

FUNCTIONAL SUPERVISOR: GEORGE MORHIG
CALCULATED-DESIGNED BY: HUNG PHAM
CHECKED BY: GEORGE MORHIG
REVISED BY
DATE REVISED

LAST REVISION 02-28-14
DATE PLOTTED => 10-SEP-2014
TIME PLOTTED => 09:51

Dist	COUNTY	ROUTE	POST MILES TOTAL PROJECT	SHEET No.	TOTAL SHEETS
08	SBd	40	R94.7/R99.7	123	251

REGISTERED CIVIL ENGINEER 2-28-14 DATE

5-27-14
PLANS APPROVAL DATE

REGISTERED PROFESSIONAL ENGINEER
GEORGE MORHIG
No. C50349
Exp 6/30/15
CIVIL
STATE OF CALIFORNIA

THE STATE OF CALIFORNIA OR ITS OFFICERS OR AGENTS SHALL NOT BE RESPONSIBLE FOR THE ACCURACY OR COMPLETENESS OF SCANNED COPIES OF THIS PLAN SHEET.

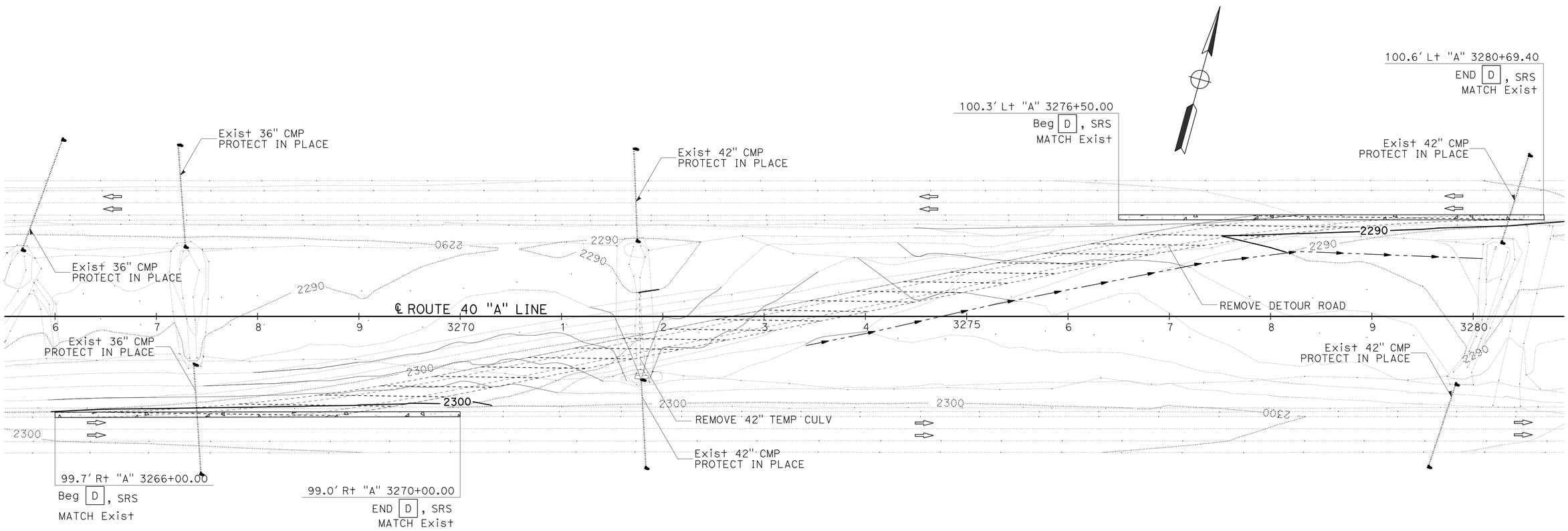

DETOUR PLAN

SCALE: 1" = 50′

DE-20

APPROVED FOR DETOUR CONSTRUCTION WORK ONLY

REVISED BY	HUNG PHAM
DATE REVISED	
CALCULATED-DESIGNED BY	GEORGE MORHIG
CHECKED BY	
FUNCTIONAL SUPERVISOR	GEORGE MORHIG

STATE OF CALIFORNIA - DEPARTMENT OF TRANSPORTATION
Caltrans
DESIGN

LAST REVISION 02-28-14
DATE PLOTTED => 10-SEP-2014
TIME PLOTTED => 09:51

Dist	COUNTY	ROUTE	POST MILES TOTAL PROJECT	SHEET No.	TOTAL SHEETS
08	SBd	40	R94.7/R99.7	124	251

REGISTERED CIVIL ENGINEER 2-28-14 DATE

5-27-14
PLANS APPROVAL DATE

REGISTERED PROFESSIONAL ENGINEER GEORGE MORHIG No. C50349 Exp 6/30/15 CIVIL STATE OF CALIFORNIA

THE STATE OF CALIFORNIA OR ITS OFFICERS OR AGENTS SHALL NOT BE RESPONSIBLE FOR THE ACCURACY OR COMPLETENESS OF SCANNED COPIES OF THIS PLAN SHEET.

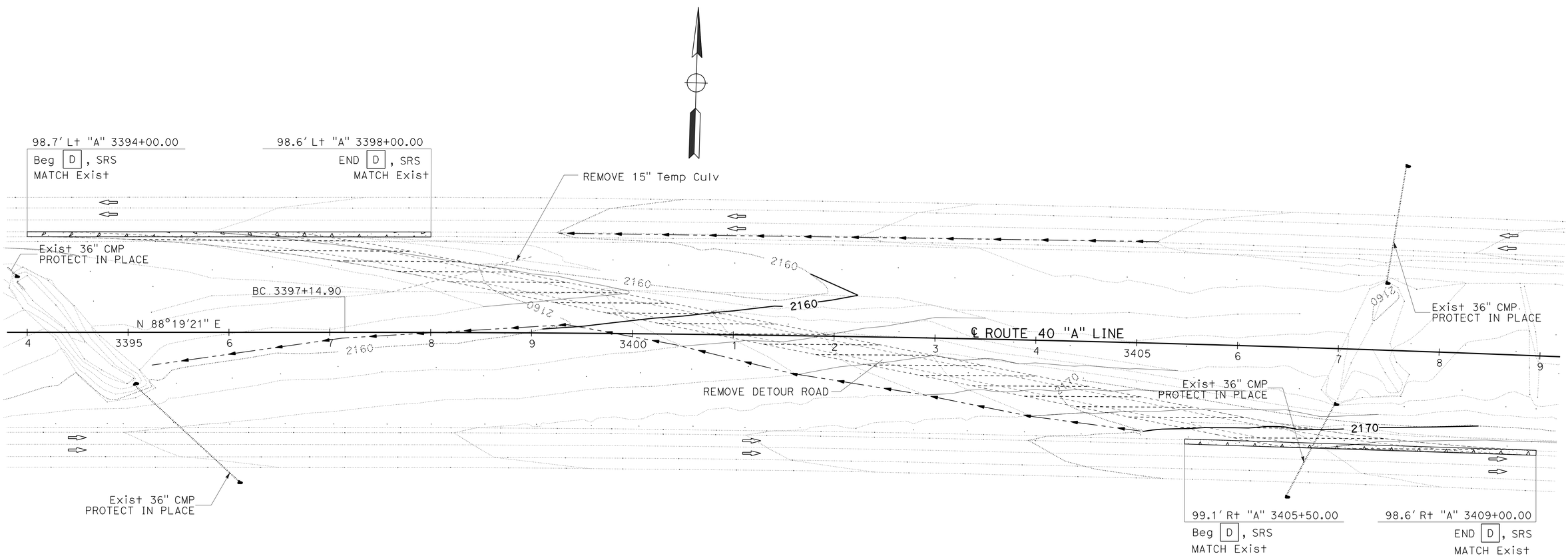

DETOUR PLAN

SCALE: 1" = 50′

DE-21

APPROVED FOR DETOUR CONSTRUCTION WORK ONLY

STATE OF CALIFORNIA - DEPARTMENT OF TRANSPORTATION
Caltrans
DESIGN

FUNCTIONAL SUPERVISOR: GEORGE MORHIG
CALCULATED-DESIGNED BY: HUNG PHAM
CHECKED BY: GEORGE MORHIG
REVISED BY
DATE REVISED

LAST REVISION 02-28-14
DATE PLOTTED => 10-SEP-2014
TIME PLOTTED => 09:52

Dist	COUNTY	ROUTE	POST MILES TOTAL PROJECT	SHEET No.	TOTAL SHEETS
08	SBd	40	R94.7/R99.7	125	251

REGISTERED CIVIL ENGINEER 2-28-14 DATE

5-27-14
PLANS APPROVAL DATE

REGISTERED PROFESSIONAL ENGINEER GEORGE MORHIG No. C50349 Exp 6/30/15 CIVIL STATE OF CALIFORNIA

THE STATE OF CALIFORNIA OR ITS OFFICERS OR AGENTS SHALL NOT BE RESPONSIBLE FOR THE ACCURACY OR COMPLETENESS OF SCANNED COPIES OF THIS PLAN SHEET.

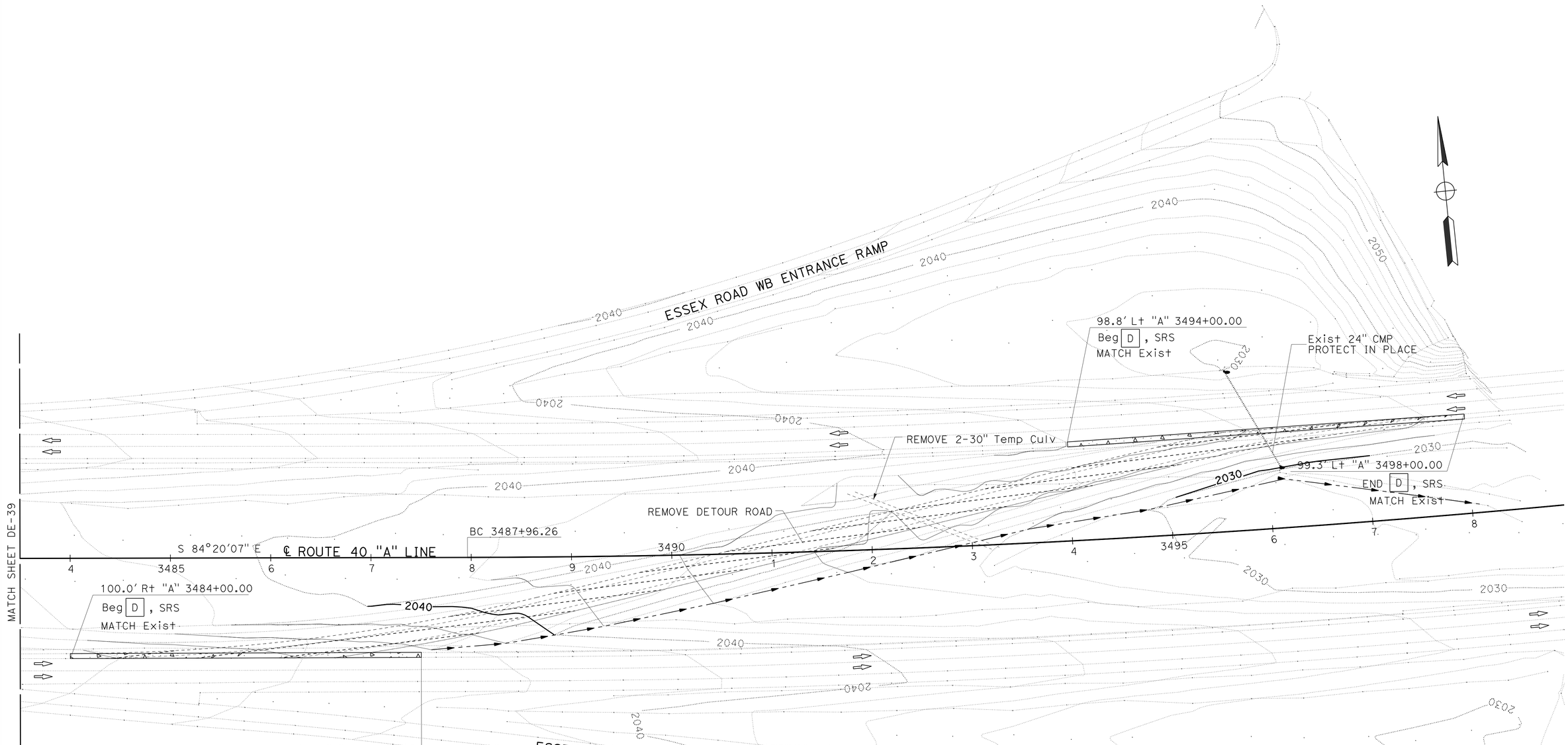

DETOUR PLAN

SCALE: 1" = 50'

DE-22

APPROVED FOR DETOUR CONSTRUCTION WORK ONLY

STATE OF CALIFORNIA - DEPARTMENT OF TRANSPORTATION
Caltrans
DESIGN

FUNCTIONAL SUPERVISOR: GEORGE MORHIG
CALCULATED-DESIGNED BY: HUNG PHAM
CHECKED BY: GEORGE MORHIG
REVISED BY
DATE REVISED

LAST REVISION 02-28-14
DATE PLOTTED => 10-SEP-2014
TIME PLOTTED => 09:52

Dist	COUNTY	ROUTE	POST MILES TOTAL PROJECT	SHEET No.	TOTAL SHEETS
08	SBd	40	R94.7/R99.7	126	251

W E Wasser 2-28-14
REGISTERED CIVIL ENGINEER DATE

5-27-14
PLANS APPROVAL DATE

REGISTERED PROFESSIONAL ENGINEER W.E.WASSER No. 37378 Exp. 06-30-14 CIVIL STATE OF CALIFORNIA

THE STATE OF CALIFORNIA OR ITS OFFICERS OR AGENTS SHALL NOT BE RESPONSIBLE FOR THE ACCURACY OR COMPLETENESS OF SCANNED COPIES OF THIS PLAN SHEET.

DETAIL 13M
NO SCALE

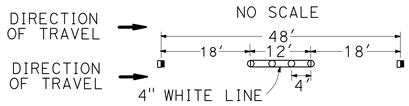

○ TYPE A WHITE NON-REFLECTIVE MARKER
◘ TYPE G ONE-WAY CLEAR RETROREFLECTIVE MARKER

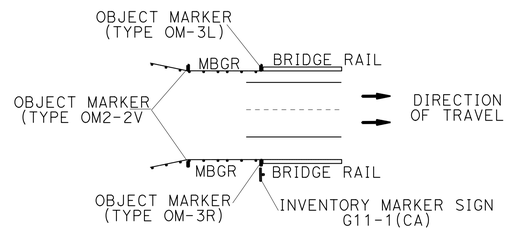

TYPICAL MARKERS AT BRIDGE LOCATION
SIX BRIDGE LOCATIONS

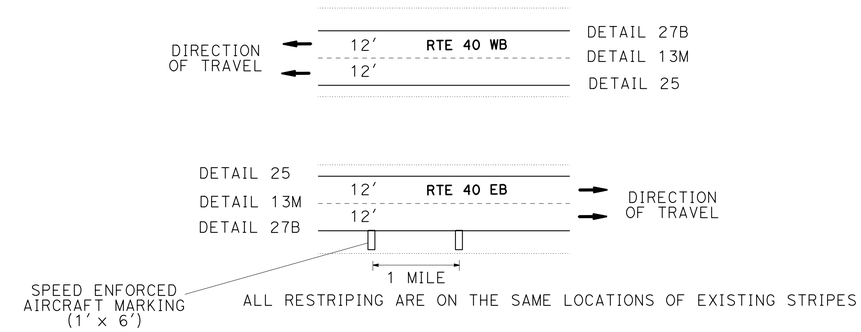

ALL RESTRIPING ARE ON THE SAME LOCATIONS OF EXISTING STRIPES

TYPICAL STRIPING ON MAINLINE

PAVEMENT DELINEATION QUANTITIES

LOCATION	DIRECTION	DETAIL No./ MARKING	THERMOPLASTIC TRAFFIC STRIPE (SPRAYABLE) (LF)			PAVEMENT MARKER (NONREFLECTIVE) (EA)	PAVEMENT MARKER (RETROREFLECTIVE) (EA)			REMOVE THERMOPLASTIC PAVEMENT MARKING (SQFT)	THERMOPLASTIC PAVEMENT MARKING (SQFT)	OBJECT MARKER (EA)			REMOVE THERMOPLASTIC TRAFFIC STRIPE (LF)	REMOVE PAVEMENT MARKER (EA)
			4" YELLOW	4" WHITE	8" WHITE	TYPE A	TYPE D	TYPE G	TYPE H			TYPE OM-3L	TYPE OM-3R	TYPE OM2-2V		
LINE "A": Sta 3225+00.00 TO Sta 3280+50.00	EB	13M		5500		460		116							1375	576
LINE "A": Sta 3385+00.00 TO Sta 3498+00.00	EB	13M		11300		940		236							2825	1176
LINE "A": Sta 3235+00.00 TO Sta 3280+50.00	EB	25	5500						116						5500	116
LINE "A": Sta 3394+00.00 TO Sta 3498+00.00	EB	25	10400						218						10400	218
LINE "A": Sta 3225+00.00 TO Sta 3280+50.00	EB	27B		5500											5500	
LINE "A": Sta 3385+00.00 TO Sta 3498+00.00	EB	27B		11300											11300	
LINE "A": Sta 3482+92.00 TO Sta 3485+28.00 Rte 40 EB EXIT RAMP @ ESSEX Rd	EB	38			310			14							620	14
LINE "A": Sta 3225+00.00 TO Sta 3507+00.00	EB	SPEED ENFORCED AIRCRAFT MARKING								30	30					
HALLER WASH BRIDGE, ROJO WASH BRIDGE, AND CLIPPER VALLEY WASH BRIDGE	EB											3	3	3		
LINE "A": Sta 3479+10.00 TO Sta 3482+10.00	WB	8		300											88	
LINE "A": Sta 3237+50.00 TO Sta 3290+50.00	WB	13M		5300		440		111							1325	551
LINE "A": Sta 3398+00.00 TO Sta 3507+00.00	WB	13M		10900		908		228							2725	1136
LINE "A": Sta 3237+50.00 TO Sta 3290+50.00	WB	25	5300						111						5300	111
LINE "A": Sta 3398+00.00 TO Sta 3501+00.00	WB	25	10300						216						10300	216
LINE "A": Sta 3485+27.00 TO Sta 3487+00.00 Rte 40 WB ENTRANCE RAMP @ ESSEX Rd	WB	25A	173						8						173	8
LINE "A": Sta 3237+50.00 TO Sta 3290+50.00	WB	27B		5300											5300	
LINE "A": Sta 3398+00.00 TO Sta 3507+00.00	WB	27B		10900											10900	
LINE "A": Sta 3482+10.00 TO Sta 3485+27.00 Rte 40 WB ENTRANCE RAMP @ ESSEX Rd	WB	38			317			14							634	14
LINE "A": Sta 3225+00.00 TO Sta 3507+00.00	WB	SPEED ENFORCED AIRCRAFT MARKING								30	30					
HALLER WASH BRIDGE, ROJO WASH BRIDGE, AND CLIPPER VALLEY WASH BRIDGE	WB											3	3	3		
SUB TOTAL			31673	66300	627	2748		719	669	60	60	6	6	6	74265	4136
TOTAL			98600			2748		1388		60	60	18			74265	4136

PAVEMENT DELINEATION QUANTITIES

PDQ-1

STATE OF CALIFORNIA - DEPARTMENT OF TRANSPORTATION
Caltrans® TRAFFIC DESIGN

FUNCTIONAL SUPERVISOR: BILL WASSER
CALCULATED-DESIGNED BY: KEVIN NGUYEN
CHECKED BY: THANH TRINH
REVISED BY / DATE REVISED

LAST REVISION 02-28-14
DATE PLOTTED => 10-SEP-2014
TIME PLOTTED => 09:52

Dist	COUNTY	ROUTE	POST MILES TOTAL PROJECT	SHEET No.	TOTAL SHEETS
08	SBd	40	R94.7/R99.7	127	251

W E Wasser 2-28-14
REGISTERED CIVIL ENGINEER DATE

5-27-14
PLANS APPROVAL DATE

REGISTERED PROFESSIONAL ENGINEER W.E.WASSER No. 37378 Exp. 06-30-14 CIVIL STATE OF CALIFORNIA

THE STATE OF CALIFORNIA OR ITS OFFICERS OR AGENTS SHALL NOT BE RESPONSIBLE FOR THE ACCURACY OR COMPLETENESS OF SCANNED COPIES OF THIS PLAN SHEET.

LEGEND:
x: APPLICABLE
BLACK: B, R: RED, G: GREEN,Y: YELLOW, W: WHITE

L = LENGTH OF SIGN
D = DEPTH OF SIGN

SIGN PANEL MATERIAL QUANTITIES

SHEET No.	SIGN CODE		SIGN SIZE L x D	FURNISH SINGLE SHEET ALUMINUM (0.063" UNFRAMED)	FURNISH SINGLE SHEET ALUMINUM (0.080" UNFRAMED)	SINGLE FACED	DOUBLE FACED	BACKGROUND		LEGEND		GRAFFITI FILM		ROADSIDE SINGLE-SHEET UNFRAMED ALUMINUM			REMARKS
	FEDERAL	CALIFORNIA		SQFT				SHEETING COLOR	RETRO-REFLECTIVE ASTM TYPE	SHEETING COLOR	RETRO-REFLECTIVE ASTM TYPE	STANDARD	PREMIUM	0.063"	0.080"	0.126"	
PDQ-1		G11-1(CA)	36" x 18"	27.00		x		W		B			x	x			Qty: SIX G11-1(CA) SIGN PANELS
TOTAL				27.00													

EASTBOUND

WESTBOUND

BLACK ON WHITE; BORDER:5/8"; INDENT:3/8"; RADIUS: 1.5"

G11-1(CA) DETAILS

ROADSIDE SIGN QUANTITIES

SHEET No.	SIGN CODE		SIGN MESSAGE/SYMBOL	PANEL SIZE	POST SIZE				ROADSIDE SIGN	
					4" x 4"	4" x 6"	6" x 6"	6" x 8"	ONE POST	TWO POST
	FEDERAL	CALIFORNIA			LENGTH (FT)				EA	EA
PD-1		G11-1(CA)	INVENTORY MARKER	36" x 18"	9				6	
TOTAL									6	

SIGN QUANTITIES

SQ-1

REVISED BY | DATE REVISED
KEVIN NGUYEN | THANH TRINH
CALCULATED-DESIGNED BY | CHECKED BY
FUNCTIONAL SUPERVISOR
BILL WASSER

STATE OF CALIFORNIA - DEPARTMENT OF TRANSPORTATION
Caltrans TRAFFIC DESIGN

LAST REVISION 02-28-14 | DATE PLOTTED => 10-SEP-2014 | TIME PLOTTED => 09:52

Dist	COUNTY	ROUTE	POST MILES TOTAL PROJECT	SHEET No.	TOTAL SHEETS
08	SBd	40	R94.7/R99.7	128	251

REGISTERED CIVIL ENGINEER 5-16-14 DATE

5-27-14
PLANS APPROVAL DATE

REGISTERED PROFESSIONAL ENGINEER GEORGE MORHIG No. C50349 Exp 6/30/15 CIVIL STATE OF CALIFORNIA

THE STATE OF CALIFORNIA OR ITS OFFICERS OR AGENTS SHALL NOT BE RESPONSIBLE FOR THE ACCURACY OR COMPLETENESS OF SCANNED COPIES OF THIS PLAN SHEET.

ROADWAY QUANTITIES

SHEET No.	STATION LIMTS	PAVEMENT SECTION	DIRECTION	SHOULDER	HOT MIX ASPHALT (TYPE A)	TACK COAT	LIQUID ASPHALT (PRIME COAT)	COLD PLANE AC PAVEMENT	CLASS-2 AGGREGATE BASE	ROADWAY EXCAVATION	EMBANKMENT (N)	IMPORTED BORROW	SHOULDER BACKING
					TON	TON	TON	SQYD	CY	CY	CY	CY	TON
L-2	3254+50.00 TO 3256+50.00	A	WB		198.2	0.11		868.1					28.3
L-2	3258+30.00 TO 3260+00.00	A	WB		171.7	0.10		751.7					24.0
L-2	3254+50.00 TO 3256+06.00	A	EB		158.3	0.09		693.3					22.1
L-2	3257+86.00 TO 3260+00.00	A	EB		217.2	0.12		951.1					30.3
L-6	3421+50.00 TO 3423+47.71	A	WB		150.5	0.08		659.0					28.0
L-6	3425+67.04 TO 3428+00.00	A	WB		177.3	0.10		776.5					32.9
L-5 TO L-6	3419+50.00 TO 3421+77.76	A	EB		173.4	0.10		759.2					32.2
L-6	3423+97.09 TO 3425+50.00	A	EB		116.4	0.07		509.7					21.6
L-8 TO L-9	3462+30.00 TO 3464+90.08	A	WB		231.0	0.13		1011.4					36.8
L-9	3472+25.66 TO 3474+50.00	A	WB		199.2	0.11		872.4					31.7
L-9	3465+70.00 TO 3467+79.39	A	EB		159.4	0.09		698.0					29.6
L-9 TO L-10	3474+14.97 TO 3477+70.00	A	EB		270.3	0.15		1183.4					50.2
L-1 TO L-2	3244+00.00 TO 3254+50.00	B	EB	R†	190.3	0.15		1166.7					
L-1 TO L-2	3244+00.00 TO 3256+71.10	B	WB	L†	230.4	0.18		1412.3					
L-2 TO L-3	3260+00.00 TO 3271+50.00	B	EB	R†	208.4	0.16		1277.8					
L-2 TO L-3	3258+24.60 TO 3271+50.00	B	WB	L†	240.2	0.19		1472.7					
L-4 TO L-5	3404+00.00 TO 3419+50.00	B	EB	R†	295.0	0.23		1808.3					
L-5	3409+00.00 TO 3419+50.00	B	EB	L†	85.6	0.07		525.0					
L-4 TO L-6	3401+00.00 TO 3424+00.00	B	WB	L†	437.7	0.34		2683.3					
L-5 TO L-6	3409+00.00 TO 3423+81.00	B	WB	R†	107.4	0.08		658.2					
L-6 TO L-9	3425+50.00 TO 3465+70.00	B	EB	R†	801.5	0.63		4913.3					
L-6 TO L-9	3425+50.00 TO 3465+70.00	B	EB	L†	364.3	0.29		2233.3					
L-6 TO L-9	3425+31.73 TO 3465+25.33	B	WB	R†	289.5	0.23		1774.9					
L-6 TO L-9	3425+23.17 TO 3464+89.62	B	WB	L†	790.8	0.62		4847.9					
L-9 TO L-11	3471+73.77 TO 3490+00.00	B	WB	L†	367.9	0.29		2255.1					
L-9 TO L-10	3472+89.96 TO 3484+00.00	B	WB	R†	109.7	0.09		672.2					
SHEET SUBTOTAL					6741.6	4.80		37434.8					367.7

SUMMARY OF QUANTITIES
Q-1

STATE OF CALIFORNIA - DEPARTMENT OF TRANSPORTATION
Caltrans® DESIGN

FUNCTIONAL SUPERVISOR: GEORGE MORHIG
CALCULATED-DESIGNED BY: HUNG PHAM
CHECKED BY: GEORGE MORHIG
REVISED BY
DATE REVISED

LAST REVISION 05-16-14
DATE PLOTTED => 10-SEP-2014
TIME PLOTTED => 09:52

Dist	COUNTY	ROUTE	POST MILES TOTAL PROJECT	SHEET No.	TOTAL SHEETS
08	SBd	40	R94.7/R99.7	129	251

REGISTERED CIVIL ENGINEER 5-16-14 DATE

5-27-14
PLANS APPROVAL DATE

REGISTERED PROFESSIONAL ENGINEER GEORGE MORHIG No. C50349 Exp 6/30/15 CIVIL STATE OF CALIFORNIA

THE STATE OF CALIFORNIA OR ITS OFFICERS OR AGENTS SHALL NOT BE RESPONSIBLE FOR THE ACCURACY OR COMPLETENESS OF SCANNED COPIES OF THIS PLAN SHEET.

ROADWAY QUANTITIES

SHEET No.	STATION LIMTS	PAVEMENT SECTION	DIRECTION	SHOULDER	HOT MIX ASPHALT (TYPE A)	TACK COAT	LIQUID ASPHALT (PRIME COAT)	COLD PLANE AC PAVEMENT	CLASS-2 AGGREGATE BASE	ROADWAY EXCAVATION	EMBANKMENT (N)	IMPORTED BORROW	SHOULDER BACKING
					TON	TON	TON	SQYD	CY	CY	CY	CY	TON
L-10 TO L-11	3477+70.00 TO 3484+00.00	B	EB	L†	57.1	0.04		350.0					
L-10 TO L-11	3477+70.00 TO 3490+00.00	B	EB	R†	245.2	0.19		1503.3					
DE-1, DE-10	3235+00.00 TO 3249+68.40	C	EB		1679.8	0.77	2.4		858.1	3890.4	5086.2	4650.8	
DE-3, DE-12	3266+00.00 TO 3280+68.32	C	EB		1681.2	0.77	2.4		858.8	2016.7	4009.5	3721.6	
DE-5, DE-14	3394+00.00 TO 3409+18.26	C	EB		1748.7	0.80	2.5		893.3	1381.5	3169.6	2816.4	
DE-8, DE-17	3484+00.00 TO 3498+23.87	C	EB		1603.1	0.74	2.3		818.9	3355.4	6294.8	6019.7	
DE-10, DE-19	3235+00.00 TO 3249+68.40	C	WB		1680.3	0.77	2.4		858.7	5703.6	4507.8	3312.0	
DE-12, DE-20	3266+00.00 TO 3280+68.54	C	WB		1678.2	0.77	2.4		857.3	6644.6	4651.8	2659.0	
DE-14, DE-21	3394+00.00 TO 3409+16.44	C	WB		1752.1	0.81	2.5		895.1	5110.2	3322.1	1534.0	
DE-17, DE-22	3484+00.00 TO 3498+15.69	C	WB		1667.8	0.77	2.4		852.0	8939.2	5999.8	3060.4	
L-6	3421+50.00 TO 3423+47.71	D	WB	R†	35.8	0.01	0.1		29.2	1281.9			
L-6	3421+50.00 TO 3423+62.87	D	WB	L†	83.9	0.02	0.2		68.7	3011.5			
L-6	3425+67.04 TO 3428+00.00	D	WB	R†	42.2	0.01	0.1		34.5	1514.2			
L-6	3425+96.13 TO 3428+00.00	D	WB	L†	79.9	0.02	0.2		65.3	2864.6			
L-5 TO L-6	3419+50.00 TO 3421+77.76	D	EB	L†	40.8	0.01	0.1		33.4	1464.2			
L-5 TO L-6	3419+50.00 TO 3421+48.05	D	EB	R†	41.3	0.01	0.1		33.7	1480.4			
L-6	3423+97.09 TO 3425+50.00	D	EB	L†	27.6	0.01	0.1		22.6	990.4			
L-6	3423+67.72 TO 3425+50.00	D	EB	R†	32.6	0.01	0.1		26.6	1168.6			
L-8 TO L-9	3462+30.00 TO 3464+90.08	D	WB	R†	46.4	0.01	0.1		37.9	1664.5			
L-9	3472+25.66 TO 3474+50.00	D	WB	R†	40.7	0.01	0.1		33.2	1458.2			
L-9	3465+70.00 TO 3467+79.39	D	EB	L†	28.9	0.01	0.1		30.7	1344.8			
L-9	3465+70.00 TO 3468+31.28	D	EB	R†	47.0	0.01	0.1		23.6	1035.3			
L-9 TO L-10	3474+14.97 TO 3477+70.00	D	EB	L†	61.6	0.02	0.1		50.4	2210.2			
L-10	3475+66.86 TO 3477+70.00	D	EB	R†	36.8	0.01	0.1		30.1	1320.4			
DE-10	3235+00.00 TO 3238+30.00	D	EB	L†	59.8	0.02	0.1		48.9				
DE-10	3246+00.00 TO 3249+50.00	D	WB	R†	63.4	0.02	0.2		51.9				
DE-12	3266+00.00 TO 3269+50.00	D	WB	R†	63.4	0.02	0.2		51.9				
SHEET SUBTOTAL					14625.6	6.66	21.4	1853.3	7564.8	59850.8	37041.6	27773.9	

SUMMARY OF QUANTITIES

Q-2

STATE OF CALIFORNIA - DEPARTMENT OF TRANSPORTATION
Caltrans DESIGN

FUNCTIONAL SUPERVISOR: GEORGE MORHIG
CALCULATED-DESIGNED BY: HUNG PHAM
CHECKED BY: GEORGE MORHIG
REVISED BY
DATE REVISED

LAST REVISION 05-16-14
DATE PLOTTED => 10-SEP-2014
TIME PLOTTED => 09:52

Dist	COUNTY	ROUTE	POST MILES TOTAL PROJECT	SHEET No.	TOTAL SHEETS
08	SBd	40	R94.7/R99.7	130	251

REGISTERED CIVIL ENGINEER 5-16-14 DATE

5-27-14
PLANS APPROVAL DATE

REGISTERED PROFESSIONAL ENGINEER GEORGE MORHIG No. C50349 Exp 6/30/15 CIVIL STATE OF CALIFORNIA

THE STATE OF CALIFORNIA OR ITS OFFICERS OR AGENTS SHALL NOT BE RESPONSIBLE FOR THE ACCURACY OR COMPLETENESS OF SCANNED COPIES OF THIS PLAN SHEET.

ROADWAY QUANTITIES

SHEET No.	STATION LIMTS	PAVEMENT SECTION	DIRECTION	SHOULDER	HOT MIX ASPHALT (TYPE A)	TACK COAT	LIQUID ASPHALT (PRIME COAT)	COLD PLANE AC PAVEMENT	CLASS-2 AGGREGATE BASE	ROADWAY EXCAVATION	EMBANKMENT (N)	IMPORTED BORROW	SHOULDER BACKING
					TON	TON	TON	SQYD	CY	CY	CY	CY	TON
DE-12	3277+00.00 TO 3280+50.00	D	EB	Lt	63.4	0.02	0.2		51.9				
DE-14	3294+00.00 TO 3297+50.00	D	EB	Lt	63.4	0.02	0.2		51.9				
DE-14	3405+50.00 TO 3409+00.00	D	WB	Rt	63.4	0.02	0.2		51.9				
DE-17	3484+00.00 TO 3487+50.00	D	WB	Rt	63.4	0.02	0.2		51.9				
DE-17	3493+50.00 TO 3498+00.00	D	EB	Lt	81.6	0.02	0.2		66.7				
DE-19	3235+00.00 TO 3238+50.00	D	WB	Rt	63.4	0.02	0.2		51.9				
DE-19	3245+50.00 TO 3249+50.00	D	EB	Lt	72.5	0.02	0.2		59.3				
DE-20	3266+00.00 TO 3270+00.00	D	EB	Lt	72.5	0.02	0.2		59.3				
DE-20	3276+50.00 TO 3280+69.40	D	WB	Rt	76.0	0.02	0.2		62.1				
DE-21	3394+00.00 TO 3398+00.00	D	WB	Rt	72.5	0.02	0.2		59.3				
DE-21	3405+50.00 TO 3409+00.00	D	EB	Lt	63.4	0.02	0.2		51.9				
DE-22	3484+00.00 TO 3487+50.00	D	WB	Lt	63.4	0.02	0.2		51.9				
DE-22	3494+00.00 TO 3498+00.00	D	WB	Rt	72.5	0.02	0.2		59.3				
SHEET SUBTOTAL					891.4	0.26	2.6		729.3				
SHEET Q-1					6741.6	4.80		37434.8					367.7
SHEET Q-2					14625.6	6.66	21.4	1853.3	7564.8	59850.8	37041.6	27773.9	
HMA SHEET Q-5					5.4								
TOTAL					22264.0	11.72	24.0	39288.1	8294.1	59850.8	37041.6	27773.9	367.7

TEMPORARY WATER POLLUTION CONTROL

Temp Const ROADWAY	Temp Const ENTRANCE	Temp SILT FENCE	Temp FIBER ROLL	Temp GRAVEL BAG BERM
CY	EA	LF	LF	LF
750	8	3200	4890	6500

TEMPORARY FENCE (TYPE DESERT TORTOISE)

SHEET No.	DIRECTION	STATION LIMITS	TEMPORARY FENCE (TYPE DESERT TORTOISE)
			LF
L-1 TO L-3	EB	"A" 3235+00 TO "A" 3280+70	4611
L-1 TO L-3	WB	"A" 3235+00 TO "A" 3280+70	4615
L-4 TO L-11	EB	"A" 3393+78 TO "A" 3500+80	12820
L-4 TO L-11	WB	"A" 3393+82 TO "A" 3497+20	11880
TOTAL			33926

SUMMARY OF QUANTITIES
Q-3

REVISED BY | DATE REVISED
HUNG PHAM | GEORGE MORHIG
CALCULATED-DESIGNED BY | CHECKED BY
FUNCTIONAL SUPERVISOR: GEORGE MORHIG
STATE OF CALIFORNIA - DEPARTMENT OF TRANSPORTATION
Caltrans DESIGN

LAST REVISION 05-16-14 | DATE PLOTTED => 10-SEP-2014 | TIME PLOTTED => 09:52

Dist	COUNTY	ROUTE	POST MILES TOTAL PROJECT	SHEET No.	TOTAL SHEETS
08	SBd	40	R94.7/R99.7	131	251

REGISTERED CIVIL ENGINEER 5-20-14 DATE

5-27-14
PLANS APPROVAL DATE

REGISTERED PROFESSIONAL ENGINEER GEORGE MORHIG No. C50349 Exp 6/30/15 CIVIL STATE OF CALIFORNIA

THE STATE OF CALIFORNIA OR ITS OFFICERS OR AGENTS SHALL NOT BE RESPONSIBLE FOR THE ACCURACY OR COMPLETENESS OF SCANNED COPIES OF THIS PLAN SHEET.

SHOULDER RUMBLE STRIP (HMA, GROUND-IN INDENTATIONS)

SHEET No.	STATION LIMTS	DIRECTION	SHOULDER	SHOULDER LENGTH Sta
L-1 TO L-2	3244+00.00 TO 3256+00.00	EB	R†	12.0
L-1 TO L-2	3244+00.00 TO 3256+71.10	WB	L†	12.7
L-2 TO L-3	3257+78.00 TO 3271+50.00	EB	R†	12.7
L-2 TO L-3	3258+24.60 TO 3271+50.00	WB	L†	13.3
L-4 TO L-6	3401+00.00 TO 3423+96.21	WB	L†	23.0
L-5 TO L-6	3409+00.00 TO 3423+77.71	WB	R†	14.8
L-4 TO L-5	3404+00.00 TO 3421+48.05	EB	R†	17.5
L-4 TO L-6	3409+00.00 TO 3421+77.76	EB	L†	12.8
L-6 TO L-9	3423+97.09 TO 3467+79.39	EB	L†	43.8
L-6 TO L-9	3423+67.72 TO 3468+31.28	EB	R†	43.8
L-6 TO L-9	3425+62.74 TO 3464+90.08	WB	R†	39.3
L-6 TO L-9	3425+96.13 TO 3464+38.18	WB	L†	38.4
L-9 TO L-11	3471+73.77 TO 3490+00.00	WB	L†	18.3
L-9 TO L-10	3472+33.07 TO 3484+00.00	WB	R†	11.7
L-9 TO L-10	3474+14.97 TO 3484+00.00	EB	L†	9.7
L-10 TO L-11	3475+66.86 TO 3490+00.00	EB	R†	14.3
DE-10	3235+00.00 TO 3238+30.00	EB	L†	3.3
DE-10	3246+00.00 TO 3249+50.00	WB	R†	3.5
DE-12	3266+00.00 TO 3269+50.00	WB	R†	3.5
DE-12	3277+00.00 TO 3280+50.00	EB	L†	3.5
DE-14	3294+00.00 TO 3297+50.00	EB	L†	3.5
DE-14	3405+50.00 TO 3409+00.00	WB	R†	3.5
DE-17	3484+00.00 TO 3487+50.00	WB	R†	3.5
DE-17	3493+50.00 TO 3498+00.00	EB	L†	4.5
DE-19	3235+00.00 TO 3238+50.00	WB	R†	3.5
DE-19	3245+50.00 TO 3249+50.00	EB	L†	4.0
DE-20	3266+00.00 TO 3270+00.00	EB	L†	4.0
DE-20	3276+50.00 TO 3280+69.40	WB	R†	4.2
DE-21	3394+00.00 TO 3398+00.00	WB	R†	4.0
DE-21	3405+50.00 TO 3409+00.00	EB	L†	3.5
DE-22	3484+00.00 TO 3487+50.00	WB	L†	3.5
DE-22	3494+00.00 TO 3498+00.00	WB	R†	4.0
			TOTAL	397.6

MIDWEST GUARD RAILING

SHEET No.	DIR	STATION LIMITS	SHOULDER	MIDWEST GUARD RAIL SYSTEM LF	TRANS RAILING (TYPE WB) EA	ALT FLARED TERMINAL SYSTEM EA	GUARD RAIL LAYOUT (N)
L-2	EB	"C" 3254+86.40 TO "C" 3255+86.40	R†	100	1	1	12B
L-2	EB	"C" 3253+33.14 TO "C" 3255+95.64	L†	262.5	1	1	12B
L-2	WB	"B" 3254+96.10 TO "B" 3256+46.10	L†	150	1	1	12BB
L-2	WB	"B" 3260+90.36 TO "B" 3259+40.36	R†	250	1	1	12B
L-2	WB	"B" 3258+49.60 TO "B" 3259+49.60	L†	100	1	1	12B
L-5	EB	"E" 3420+23.05 TO "E" 3421+23.05	R†	100	1	1	12B
L-5 TO L-6	EB	"E" 3418+59.07 TO "E" 3421+57.07	L†	300	1	1	12B
L-6	WB	"D" 3425+87.74 TO "D" 3428+87.14	R†	300	1	1	12B
L-6	WB	"D" 3426+21.13 TO "D" 3427+21.13	L†	100	1	1	12B
L-9	EB	"G" 3464+22.26 TO "G" 3467+47.26	L†	325	1	1	12B
L-9	EB	"G" 3466+56.28 TO "G" 3467+06.28	R†	50	1	1	12B
L-9	WB	"F" 3471+98.77 TO "F" 3472+98.77	L†	100	1	1	12B
L-10	WB	"F" 3472+58.07 TO "F" 3457+83.07	L†	325	1	1	12B
			TOTAL	2462.5	13	13	

(N) - NOT A SEPARATE PAY ITEM, FOR INFORMATION ONLY.

REMOVE METAL BEAM GUARD RAILING

SHEET No.	DIR	STATION LIMITS	SHOULDER	REMOVE GUARDRAIL LF	TREATED WOOD WASTE LB	SALVAGE TERMINAL SYSTEM (N) EA
L-2	EB	"C" 3254+60.71 TO "C" 3256+11.40	R†	150.7	3974.6	1
L-2	EB	"C" 3254+58.32 TO "C" 3256+20.64	L†	162.3	4220.2	1
L-2	WB	"B" 3254+66.64 TO "B" 3256+71.10	L†	204.5	5110.2	1
L-2	WB	"B" 3258+15.36 TO "B" 3259+77.58	R†	162.2	4218.1	1
L-2	WB	"B" 3258+24.60 TO "B" 3259+61.67	L†	137.1	3686.9	1
L-5 TO L-6	EB	"E" 3420+37.55 TO "E" 3421+64.83	R†	127.8	3480.2	1
L-5 TO L-6	EB	"E" 3420+48.32 TO "E" 3422+00.00	L†	151.7	3995.5	1
L-6	WB	"D" 3425+46.89 TO "D" 3426+96.14	R†	149.9	3956.8	1
L-6	WB	"D" 3425+81.51 TO "D" 3427+31.78	L†	150.3	3965.7	1
L-9	EB	"G" 3466+38.61 TO "G" 3467+92.46	L†	153.9	4041.3	1
L-9	EB	"G" 3467+00.00 TO "G" 3468+52.53	L†	152.5	4013.4	1
L-9	WB	"F" 3471+52.20 TO "F" 3472+98.77	L†	146.6	3887.6	1
L-9	WB	"F" 3472+13.38 TO "F" 3473+58.07	R†	144.7	3847.9	1
			TOTAL	1994.2	52398.3	13

(N) - NOT A SEPARATE PAY ITEM, FOR INFORMATION ONLY.

SUMMARY OF QUANTITIES
Q-4

STATE OF CALIFORNIA - DEPARTMENT OF TRANSPORTATION
Caltrans DESIGN
FUNCTIONAL SUPERVISOR GEORGE MORHIG
CALCULATED-DESIGNED BY HUNG PHAM
CHECKED BY GEORGE MORHIG
REVISED BY
DATE REVISED

LAST REVISION 05-20-14
DATE PLOTTED => 10-SEP-2014
TIME PLOTTED => 09:52

Dist	COUNTY	ROUTE	POST MILES TOTAL PROJECT	SHEET No.	TOTAL SHEETS
08	SBd	40	R94.7/R99.7	132	251

REGISTERED CIVIL ENGINEER 2-28-14 DATE

5-27-14
PLANS APPROVAL DATE

REGISTERED PROFESSIONAL ENGINEER GEORGE MORHIG No. C50349 Exp 6/30/15 CIVIL STATE OF CALIFORNIA

THE STATE OF CALIFORNIA OR ITS OFFICERS OR AGENTS SHALL NOT BE RESPONSIBLE FOR THE ACCURACY OR COMPLETENESS OF SCANNED COPIES OF THIS PLAN SHEET.

CONCRETED ROCK SLOPE PROTECTION

SHEET No.	STATION LIMITS	SIDE	CONCRETED RSP (1/2 T, METHOD B)	RSP FABRIC (CLASS 8)	REMOVE CONCRETED RSP
			CY	SQYD	CY
L-2	"H" 3+26.24 TO "H" 4+18.67	L+	309	305	309
L-2	"H" 3+45.10 TO "H" 4+44.88	R+	333	330	333
L-2	"H" 5+59.80 TO "H" 6+51.17	L+	305	302	305
L-2	"H" 5+80.49 TO "H" 6+73.30	R+	310	307	310
L-6	"R" 3+54.77 TO "R" 4+78.17	L+	412	408	412
L-6	"R" 4+23.41 TO "R" 5+49.52	R+	421	417	421
L-6	"R" 6+48.39 TO "R" 7+76.80	L+	429	424	429
L-6	"R" 7+18.81 TO "R" 8+43.59	R+	417	413	417
L-9	"S" 1+67.73 TO "S" 3+42.75	R+	584	578	584
L-9	"S" 6+54.90 TO "S" 8+33.37	L+	596	590	596
L-9	"S" 5+74.42 TO "S" 7+46.76	R+	575	570	575
L-9	"S" 10+62.95 TO "S" 12+41.21	L+	595	589	595
		TOTAL	5286	5233	5286

HOT MIX ASPHALT DIKE

SHEET No.	DIR	STATION LIMITS	SIDE	REMOVE AC DIKE	PLACE HMA DIKE (TYPE E)	PLACE HMA DIKE (TYPE F)	HMA (TYPE A)
				LF	LF	LF	TON
L-2	WB	"B" 3254+98.36 TO "B" 3256+71.10	L+	172.7			
L-2	WB	"B" 3256+46.10 TO "B" 3256+71.10	L+			25.0	0.3
L-2	WB	"B" 3258+24.60 TO "B" 3258+49.60	L+			25.0	0.3
L-5 TO L-6	EB	"E" 3421+19.82 TO "E" 3421+64.83	R+	45.0			
L-5 TO L-6	EB	"E" 3421+23.05 TO "E" 3421+48.05	R+			25.0	0.3
L-6	WB	"D" 3423+62.87 TO "D" 3423+96.21	L+	33.3			
L-6	EB	"E" 3423+49.59 TO "E" 3424+05.80	R+	56.2			
L-6	EB	"E" 3423+67.72 TO "E" 3424+05.80	R+		38.1		1.0
L-6	WB	"D" 3425+81.51 TO "D" 3426+49.85	L+	68.3			
L-6	WB	"D" 3425+96.13 TO "D" 3426+21.13	L+			25.0	0.3
L-9	WB	"F" 3464+13.18 TO "F" 3464+38.18	L+		25.0		0.6
L-9	WB	"F" 3471+52.20 TO "F" 3472+64.65	L+	112.5			
L-9	WB	"F" 3471+73.77 TO "F" 3472+98.77	L+			125.0	1.6
L-9 TO L-10	EB	"G" 3475+43.47 TO "G" 3475+75.04	R+	31.6			
L-10	EB	"G" 3475+66.86 TO "G" 3476+01.86	R+		35.0		1.0
			TOTAL	519.6	98.1	225.0	5.4 *

* FOR HMA (TYPE A) TOTAL, SEE SHEET Q-3.

DRAINAGE QUANTITIES

SHEET No.	DRAINAGE SYSTEM No.	LINE DESIGNATION	STATION LIMITS	TEMPORARY CULVERT 15"	30"	36"	42"	AI+ FES	REMOVE CULVERT (N)
				LF	LF	LF	LF	EA	LF
DE-1,DE-10	1	EBDET1	3243+00 TO 3246+20			332			332
DE-1,DE-10	1	EBDET1	3243+00 TO 3246+21			332			332
DE-3,DE-12	2	EBDET2	3271+76 TO 3271+92				76		76
DE-8,DE-17	3	EBDET4	3491+95 TO 3493+30		156				156
DE-8,DE-17	3	EBDET4	3492+04 TO 3493+40		156				156
DE-10,DE-19	4	WBDET1	3239+12 TO 3242+50			346			346
DE-12,DE-20	5	WBDET2	3271+81 TO 3271+95				78	1	78
DE-14,DE-21	6	WBDET3	3397+71 TO 3399+00	143					143
DE-17,DE-22	7	WBDET4	3491+96 TO 3493+23		156				156
DE-17,DE-22	7	WBDET4	3492+04 TO 3493+31		156				156
			TOTAL	143	624	1010	154	1	1931

(N) - NOT A SEPARATE PAY ITEM, FOR INFORMATION ONLY.

SUMMARY OF QUANTITIES
Q-5

STATE OF CALIFORNIA - DEPARTMENT OF TRANSPORTATION
Caltrans DESIGN
FUNCTIONAL SUPERVISOR GEORGE MORHIG
CALCULATED-DESIGNED BY HUNG PHAM CHECKED BY GEORGE MORHIG
REVISED BY DATE REVISED

LAST REVISION 02-28-14 DATE PLOTTED => 10-SEP-2014 TIME PLOTTED => 09:52

Dist	COUNTY	ROUTE	POST MILES TOTAL PROJECT	SHEET No.	TOTAL SHEETS
08	SBd	40	R94.7/R99.7	133	251

REGISTERED ELECTRICAL ENGINEER 5-30-14 DATE

5-27-14
PLANS APPROVAL DATE

REGISTERED PROFESSIONAL ENGINEER FERDINAND DE LA CRUZ No. E17215 Exp. 6-30-16 ELECTRICAL STATE OF CALIFORNIA

THE STATE OF CALIFORNIA OR ITS OFFICERS OR AGENTS SHALL NOT BE RESPONSIBLE FOR THE ACCURACY OR COMPLETENESS OF SCANNED COPIES OF THIS PLAN SHEET.

NOTE:

FOR ACCURATE RIGHT OF WAY DATA, CONTACT RIGHT OF WAY ENGINEERING AT THE DISTRICT OFFICE.

LEGENDS: SHEETS E-1 THRU E-8

1 RL GENERATOR.

2 RL ELECTROLIER TO THE NEXT STAGE.

3 INSTALL TYPE LC3 CONTROL.

4 NEW LOCATION OF RELOCATED ELECTROLIER FROM PREVIOUS STAGE.

5 NEW LOCATION OF RELOCATED GENERATOR FROM PREVIOUS STAGE.

GEN GENERATORS

GEN EXISTING GENERATORS

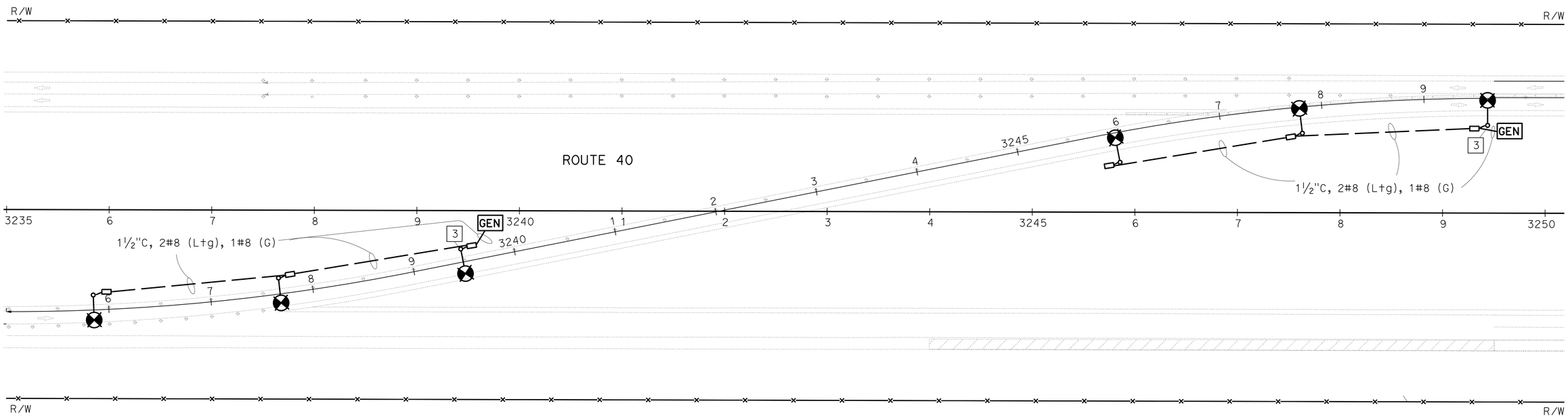

STAGE 1

LIGHTING (TEMPORARY)

SCALE: 1" = 50'

E-1

APPROVED FOR ELECTRICAL WORK ONLY

STATE OF CALIFORNIA - DEPARTMENT OF TRANSPORTATION

Caltrans® **ELECTRICAL DESIGN B**

FUNCTIONAL SUPERVISOR: FERDINAND DE LA CRUZ

CALCULATED-DESIGNED BY: SANDY TUNG

CHECKED BY: FERDINAND DE LA CRUZ

REVISED BY

DATE REVISED

LAST REVISION 05-30-14

DATE PLOTTED => 10-SEP-2014
TIME PLOTTED => 09:52

Dist	COUNTY	ROUTE	POST MILES TOTAL PROJECT	SHEET No.	TOTAL SHEETS
08	SBd	40	R94.7/R99.7	134	251

REGISTERED ELECTRICAL ENGINEER 5-30-14 DATE

5-27-14
PLANS APPROVAL DATE

REGISTERED PROFESSIONAL ENGINEER
FERDINAND DE LA CRUZ
No. E17215
Exp. 6-30-16
ELECTRICAL
STATE OF CALIFORNIA

THE STATE OF CALIFORNIA OR ITS OFFICERS OR AGENTS SHALL NOT BE RESPONSIBLE FOR THE ACCURACY OR COMPLETENESS OF SCANNED COPIES OF THIS PLAN SHEET.

NOTE:

FOR ACCURATE RIGHT OF WAY DATA, CONTACT RIGHT OF WAY ENGINEERING AT THE DISTRICT OFFICE.

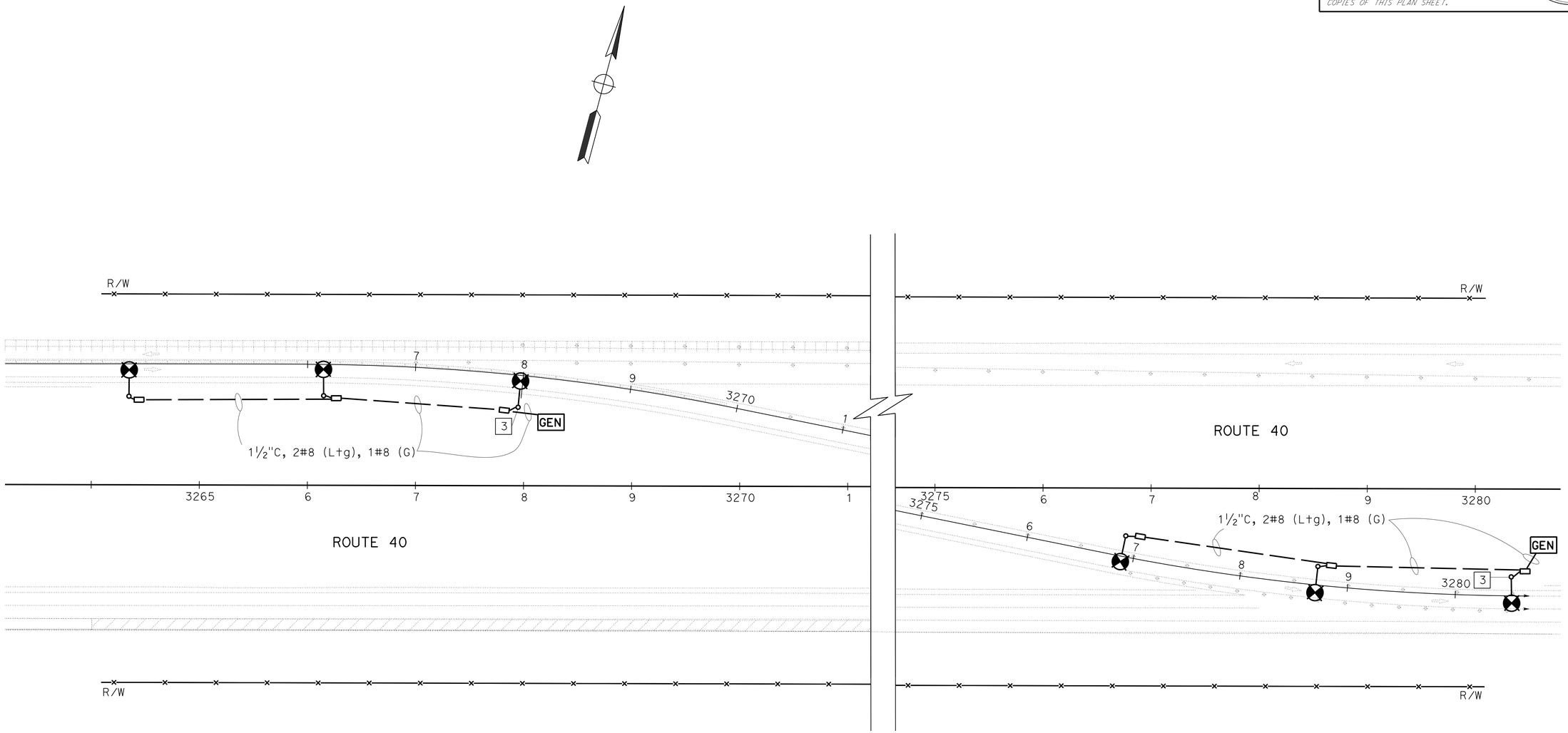

STAGE 1

LIGHTING (TEMPORARY)

SCALE: 1" = 50'

E-2

APPROVED FOR ELECTRICAL WORK ONLY

STATE OF CALIFORNIA - DEPARTMENT OF TRANSPORTATION
Caltrans ELECTRICAL DESIGN B

FUNCTIONAL SUPERVISOR: FERDINAND DE LA CRUZ

CALCULATED-DESIGNED BY: SANDY TUNG
CHECKED BY: FERDINAND DE LA CRUZ

REVISED BY
DATE REVISED

LAST REVISION 05-30-14
DATE PLOTTED => 10-SEP-2014
TIME PLOTTED => 09:52

Dist	COUNTY	ROUTE	POST MILES TOTAL PROJECT	SHEET No.	TOTAL SHEETS
08	SBd	40	R94.7/R99.7	135	251

REGISTERED ELECTRICAL ENGINEER 5-30-14 DATE

5-27-14
PLANS APPROVAL DATE

REGISTERED PROFESSIONAL ENGINEER FERDINAND DE LA CRUZ No. E17215 Exp. 6-30-16 ELECTRICAL STATE OF CALIFORNIA

THE STATE OF CALIFORNIA OR ITS OFFICERS OR AGENTS SHALL NOT BE RESPONSIBLE FOR THE ACCURACY OR COMPLETENESS OF SCANNED COPIES OF THIS PLAN SHEET.

NOTE:

FOR ACCURATE RIGHT OF WAY DATA, CONTACT RIGHT OF WAY ENGINEERING AT THE DISTRICT OFFICE.

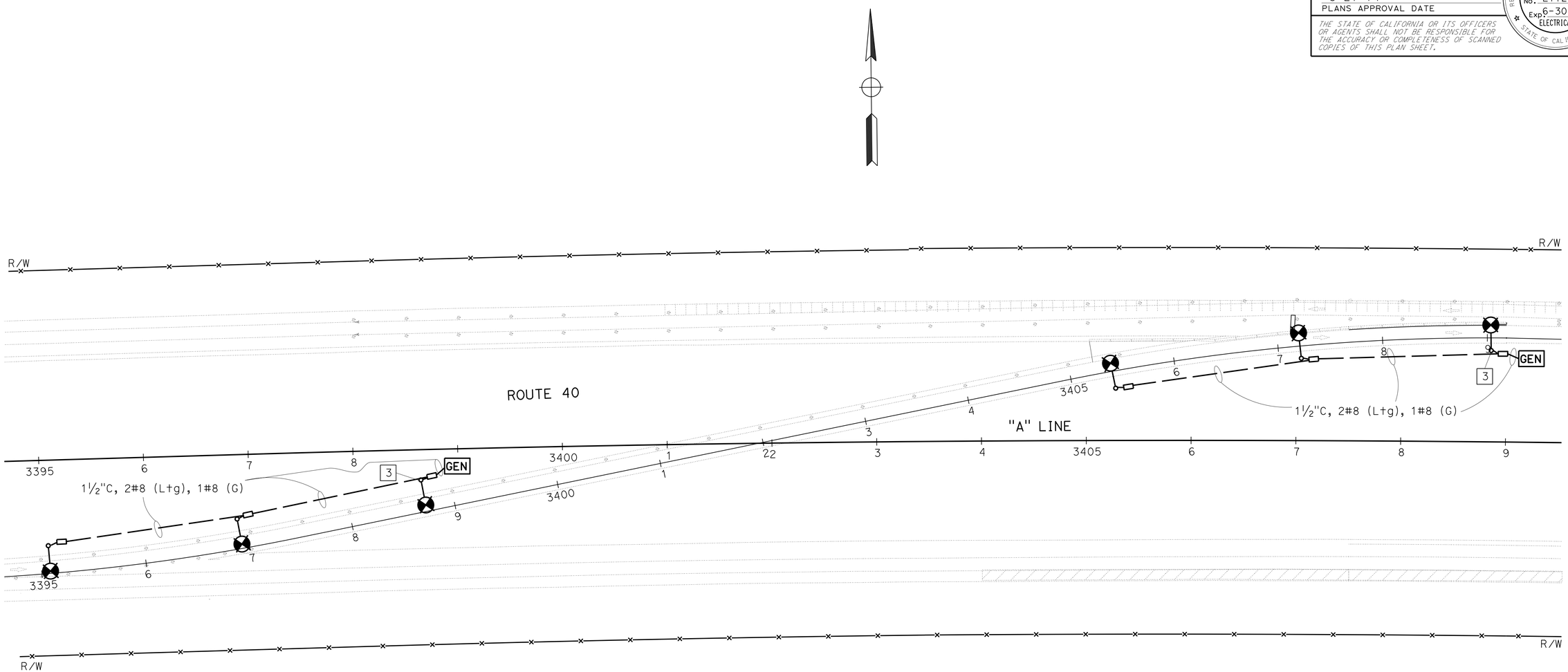

STAGE 1

LIGHTING (TEMPORARY)

SCALE: 1" = 50'

E-3

APPROVED FOR ELECTRICAL WORK ONLY

STATE OF CALIFORNIA - DEPARTMENT OF TRANSPORTATION

Caltrans® **ELECTRICAL DESIGN B**

FUNCTIONAL SUPERVISOR: FERDINAND DE LA CRUZ

CALCULATED-DESIGNED BY: SANDY TUNG

CHECKED BY: FERDINAND DE LA CRUZ

REVISED BY

DATE REVISED

LAST REVISION 05-30-14 | DATE PLOTTED => 10-SEP-2014 | TIME PLOTTED => 09:52

BORDER LAST REVISED 7/2/2010 | USERNAME => s128843 | DGN FILE => 0813000176ua003.dgn | RELATIVE BORDER SCALE IS IN INCHES 0 1 2 3 | UNIT 2292 | PROJECT NUMBER & PHASE 0813000176

Dist	COUNTY	ROUTE	POST MILES TOTAL PROJECT	SHEET No.	TOTAL SHEETS
08	SBd	40	R94.7/R99.7	136	251

REGISTERED ELECTRICAL ENGINEER 5-30-14 DATE

5-27-14
PLANS APPROVAL DATE

REGISTERED PROFESSIONAL ENGINEER FERDINAND DE LA CRUZ No. E17215 Exp. 6-30-16 ELECTRICAL STATE OF CALIFORNIA

THE STATE OF CALIFORNIA OR ITS OFFICERS OR AGENTS SHALL NOT BE RESPONSIBLE FOR THE ACCURACY OR COMPLETENESS OF SCANNED COPIES OF THIS PLAN SHEET.

NOTE:

FOR ACCURATE RIGHT OF WAY DATA, CONTACT RIGHT OF WAY ENGINEERING AT THE DISTRICT OFFICE.

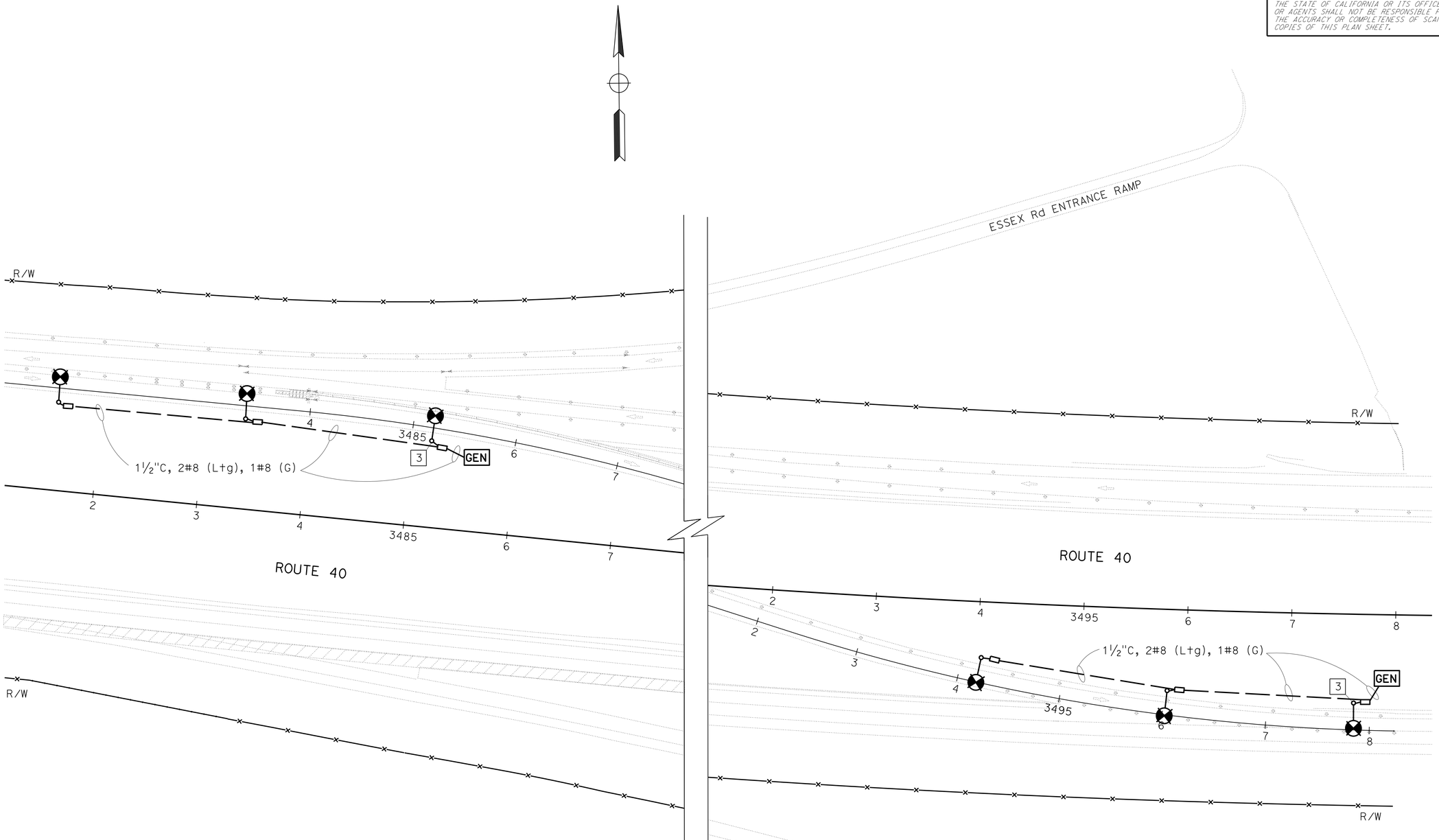

STAGE 1

LIGHTING (TEMPORARY)

SCALE: 1" = 50'

E-4

APPROVED FOR ELECTRICAL WORK ONLY

STATE OF CALIFORNIA - DEPARTMENT OF TRANSPORTATION
Caltrans® ELECTRICAL DESIGN B

FUNCTIONAL SUPERVISOR: FERDINAND DE LA CRUZ
CALCULATED-DESIGNED BY: SANDY TUNG
CHECKED BY: FERDINAND DE LA CRUZ
REVISED BY
DATE REVISED

LAST REVISION 05-30-14
DATE PLOTTED => 10-SEP-2014
TIME PLOTTED => 09:52

Dist	COUNTY	ROUTE	POST MILES TOTAL PROJECT	SHEET No.	TOTAL SHEETS
08	SBd	40	R94.7/R99.7	137	251

REGISTERED ELECTRICAL ENGINEER 5-30-14 DATE

5-27-14
PLANS APPROVAL DATE

REGISTERED PROFESSIONAL ENGINEER
FERDINAND DE LA CRUZ
No. E17215
Exp. 6-30-16
ELECTRICAL
STATE OF CALIFORNIA

THE STATE OF CALIFORNIA OR ITS OFFICERS OR AGENTS SHALL NOT BE RESPONSIBLE FOR THE ACCURACY OR COMPLETENESS OF SCANNED COPIES OF THIS PLAN SHEET.

NOTE:

FOR ACCURATE RIGHT OF WAY DATA, CONTACT
RIGHT OF WAY ENGINEERING AT THE DISTRICT OFFICE.

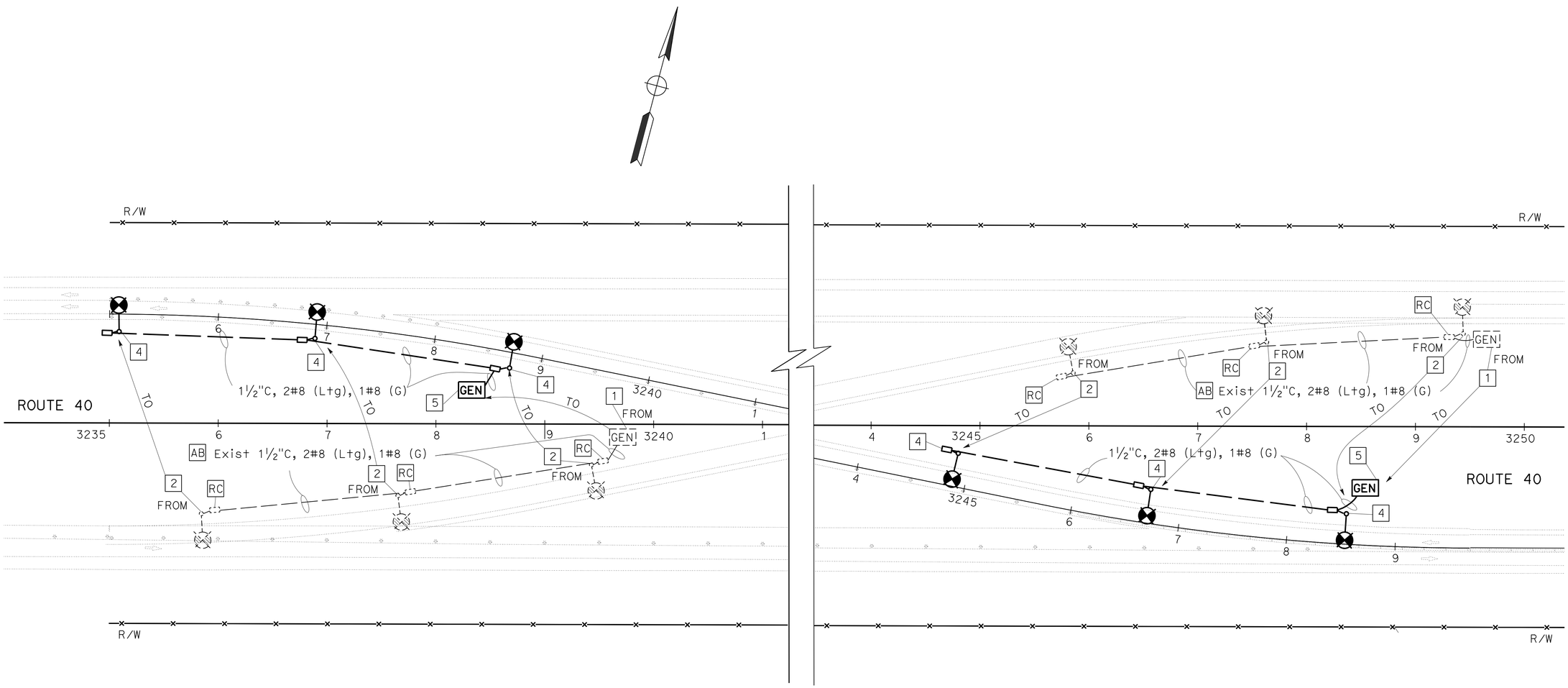

STAGE 2

LIGHTING (TEMPORARY)

SCALE: 1" = 50'

E-5

APPROVED FOR ELECTRICAL WORK ONLY

STATE OF CALIFORNIA - DEPARTMENT OF TRANSPORTATION
Caltrans® **ELECTRICAL DESIGN B**

FUNCTIONAL SUPERVISOR: FERDINAND DE LA CRUZ
CALCULATED-DESIGNED BY: SANDY TUNG
CHECKED BY: FERDINAND DE LA CRUZ
REVISED BY
DATE REVISED

LAST REVISION 05-30-14
DATE PLOTTED => 10-SEP-2014
TIME PLOTTED => 09:52

Dist	COUNTY	ROUTE	POST MILES TOTAL PROJECT	SHEET No.	TOTAL SHEETS
08	SBd	40	R94.7/R99.7	138	251

REGISTERED ELECTRICAL ENGINEER 5-30-14 DATE

5-27-14
PLANS APPROVAL DATE

REGISTERED PROFESSIONAL ENGINEER
FERDINAND DE LA CRUZ
No. E17215
Exp. 6-30-16
ELECTRICAL
STATE OF CALIFORNIA

THE STATE OF CALIFORNIA OR ITS OFFICERS OR AGENTS SHALL NOT BE RESPONSIBLE FOR THE ACCURACY OR COMPLETENESS OF SCANNED COPIES OF THIS PLAN SHEET.

NOTE:

FOR ACCURATE RIGHT OF WAY DATA, CONTACT
RIGHT OF WAY ENGINEERING AT THE DISTRICT OFFICE.

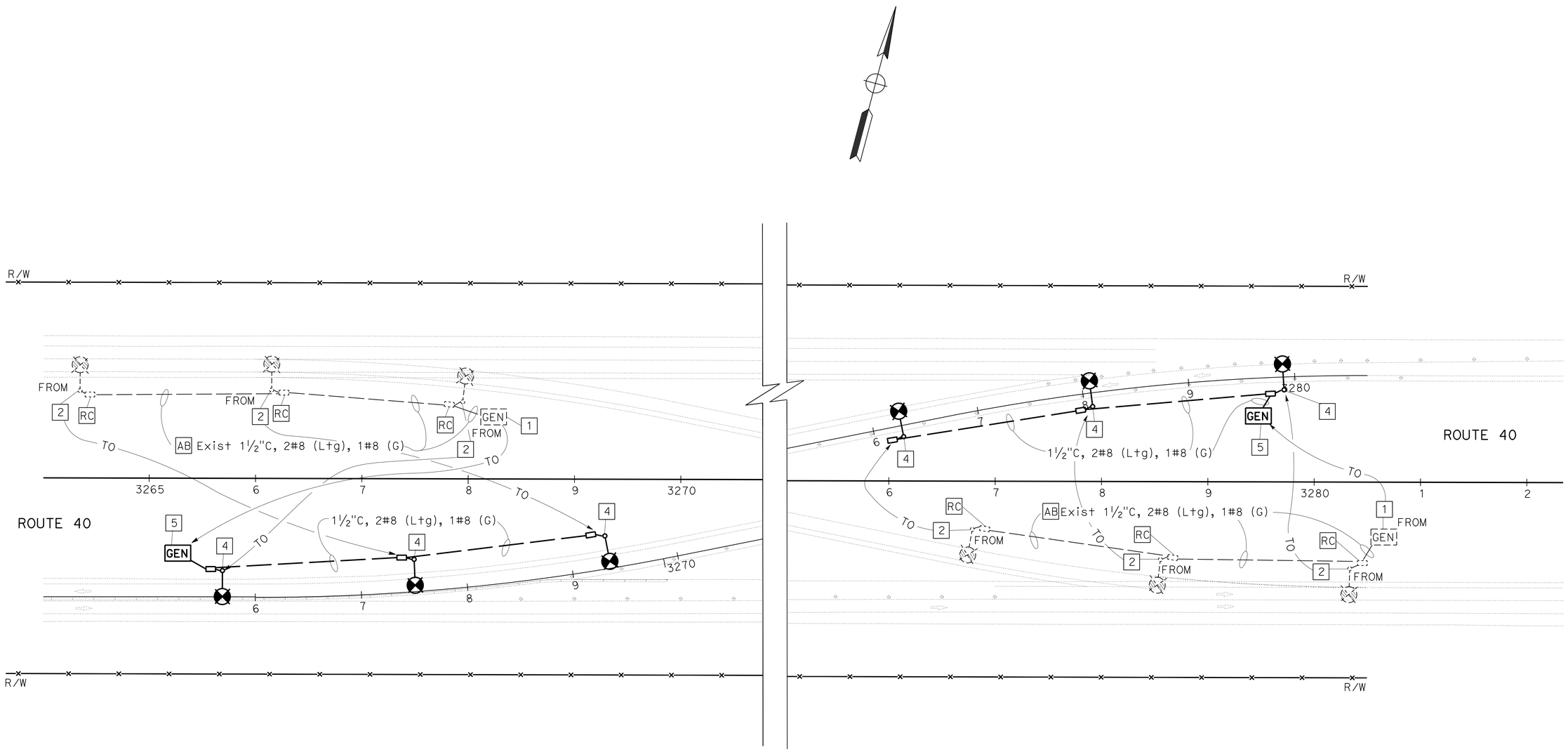

STAGE 2

LIGHTING (TEMPORARY)

SCALE: 1" = 50'

E-6

APPROVED FOR ELECTRICAL WORK ONLY

STATE OF CALIFORNIA - DEPARTMENT OF TRANSPORTATION
Caltrans® **ELECTRICAL DESIGN B**

FUNCTIONAL SUPERVISOR: FERDINAND DE LA CRUZ
CALCULATED-DESIGNED BY: SANDY TUNG
CHECKED BY: FERDINAND DE LA CRUZ
REVISED BY
DATE REVISED

LAST REVISION 05-30-14 | DATE PLOTTED => 10-SEP-2014 | TIME PLOTTED => 09:53

Dist	COUNTY	ROUTE	POST MILES TOTAL PROJECT	SHEET No.	TOTAL SHEETS
08	SBd	40	R94.7/R99.7	139	251

REGISTERED ELECTRICAL ENGINEER 5-30-14 DATE

5-27-14
PLANS APPROVAL DATE

REGISTERED PROFESSIONAL ENGINEER
FERDINAND DE LA CRUZ
No. E17215
Exp. 6-30-16
ELECTRICAL
STATE OF CALIFORNIA

THE STATE OF CALIFORNIA OR ITS OFFICERS OR AGENTS SHALL NOT BE RESPONSIBLE FOR THE ACCURACY OR COMPLETENESS OF SCANNED COPIES OF THIS PLAN SHEET.

NOTE:

FOR ACCURATE RIGHT OF WAY DATA, CONTACT
RIGHT OF WAY ENGINEERING AT THE DISTRICT OFFICE.

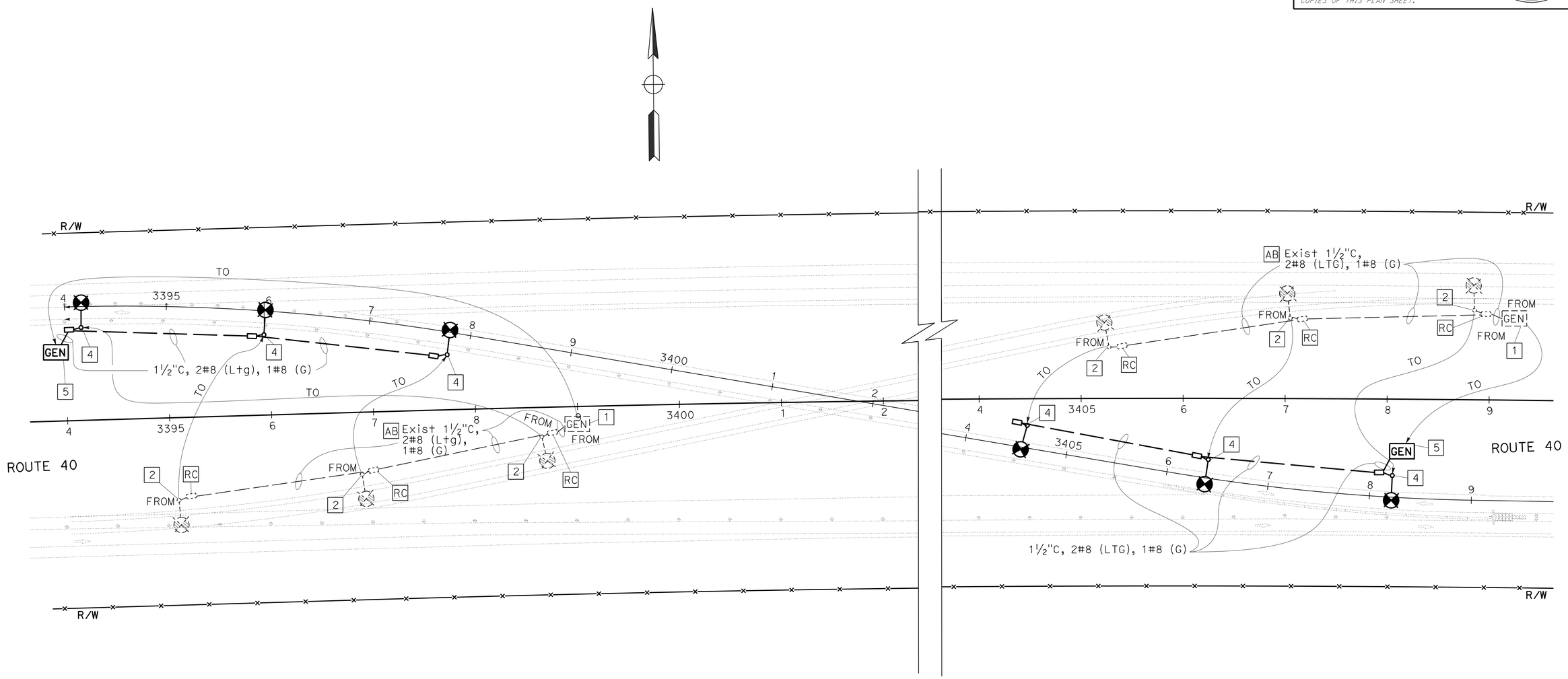

STAGE 2

LIGHTING (TEMPORARY)

SCALE: 1" = 50'

E-7

APPROVED FOR ELECTRICAL WORK ONLY

STATE OF CALIFORNIA - DEPARTMENT OF TRANSPORTATION
Caltrans® **ELECTRICAL DESIGN B**

FUNCTIONAL SUPERVISOR: FERDINAND DE LA CRUZ
CALCULATED-DESIGNED BY: SANDY TUNG
CHECKED BY: FERDINAND DE LA CRUZ
REVISED BY
DATE REVISED

LAST REVISION 05-30-14
DATE PLOTTED => 10-SEP-2014
TIME PLOTTED => 09:53

Dist	COUNTY	ROUTE	POST MILES TOTAL PROJECT	SHEET No.	TOTAL SHEETS
08	SBd	40	R94.7/R99.7	140	251

REGISTERED ELECTRICAL ENGINEER 5-30-14 DATE

5-27-14
PLANS APPROVAL DATE

REGISTERED PROFESSIONAL ENGINEER FERDINAND DE LA CRUZ No. E17215 Exp. 6-30-16 ELECTRICAL STATE OF CALIFORNIA

THE STATE OF CALIFORNIA OR ITS OFFICERS OR AGENTS SHALL NOT BE RESPONSIBLE FOR THE ACCURACY OR COMPLETENESS OF SCANNED COPIES OF THIS PLAN SHEET.

NOTE:

FOR ACCURATE RIGHT OF WAY DATA, CONTACT RIGHT OF WAY ENGINEERING AT THE DISTRICT OFFICE.

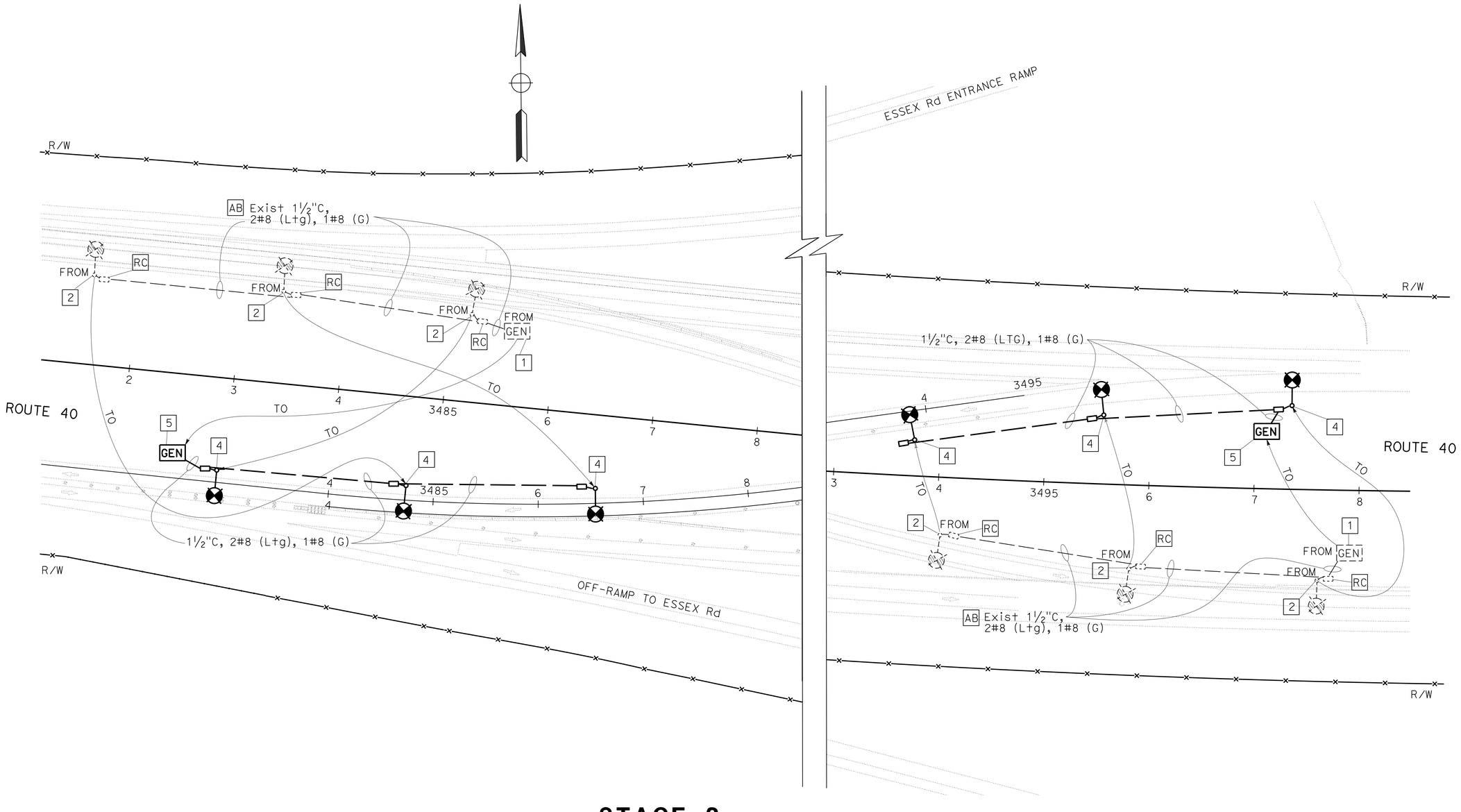

STAGE 2

LIGHTING (TEMPORARY)

SCALE: 1" = 50'

E-8

APPROVED FOR ELECTRICAL WORK ONLY

STATE OF CALIFORNIA - DEPARTMENT OF TRANSPORTATION
Caltrans® **ELECTRICAL DESIGN B**

FUNCTIONAL SUPERVISOR: FERDINAND DE LA CRUZ
CALCULATED-DESIGNED BY: SANDY TUNG
CHECKED BY: FERDINAND DE LA CRUZ
REVISED BY
DATE REVISED

LAST REVISION 05-30-14
DATE PLOTTED => 10-SEP-2014
TIME PLOTTED => 09:53

Dist	COUNTY	ROUTE	POST MILES TOTAL PROJECT	SHEET No.	TOTAL SHEETS
08	SBd	40	R94.7/R99.7	141	251

REGISTERED ELECTRICAL ENGINEER 5-30-14 DATE

5-27-14
PLANS APPROVAL DATE

REGISTERED PROFESSIONAL ENGINEER FERDINAND DE LA CRUZ No. E17215 Exp. 6-30-16 ELECTRICAL STATE OF CALIFORNIA

THE STATE OF CALIFORNIA OR ITS OFFICERS OR AGENTS SHALL NOT BE RESPONSIBLE FOR THE ACCURACY OR COMPLETENESS OF SCANNED COPIES OF THIS PLAN SHEET.

NOTE:

1. THE QUANTITIES ON THIS SHEET ARE NOT A SEPARATE PAY ITEM AND ARE FOR INFORMATION ONLY.

LIGHTING (TEMPORARY)

SHEET No.	GENERATOR	TYPE LC3 CONTROL	TYPE 31 LIGHTING STANDARD	No. 5 PB	1½"C TYPE 3	No. 8 CONDUCTOR	No. 8 (G)
	EA	EA	EA	EA	LF	LF	LF
E-1	2	2	6	6	800	1600	800
E-2	2	2	6	6	800	1600	800
E-3	2	2	6	6	800	1600	800
E-4	2	2	6	6	800	1600	800
E-5	0	0	0	6	800	1600	800
E-6	0	0	0	6	800	1600	800
E-7	0	0	0	6	800	1600	800
E-8	0	0	0	6	800	1600	800

ELECTRICAL QUANTITIES
E-9

REVISED BY | DATE REVISED
SANDY TUNG | FERDINAND DE LA CRUZ
CALCULATED-DESIGNED BY | CHECKED BY
FUNCTIONAL SUPERVISOR
FERDINAND DE LA CRUZ

STATE OF CALIFORNIA - DEPARTMENT OF TRANSPORTATION
Caltrans® ELECTRICAL DESIGN B

LAST REVISION 05-30-14 | DATE PLOTTED => 10-SEP-2014 | TIME PLOTTED => 09:53

M

Maint	MAINTENANCE
Max	MAXIMUM
MB	METAL BEAM
MBB	METAL BEAM BARRIER
MBGR	METAL BEAM GUARD RAILING
Med	MEDIAN
MGS	MIDWEST GUARDRAIL SYSTEM
MH	MANHOLE
Min	MINIMUM
Misc	MISCELLANEOUS
Misc I & S	MISCELLANEOUS IRON AND STEEL
Mkr	MARKER
Mod	MODIFIED, MODIFY
Mon	MONUMENT
MP	METAL PLATE
MPGR	METAL PLATE GUARD RAILING
MR	MOVEMENT RATING
MSE	MECHANICALLY STABILIZED EMBANKMENT
Mt	MOUNTAIN, MOUNT
Mtl	MATERIAL
MVP	MAINTENANCE VEHICLE PULLOUT

N

N	NORTH
NB	NORTHBOUND
No.	NUMBER (MUST HAVE PERIOD)
Nos.	NUMBERS (MUST HAVE PERIOD)
NPS	NOMINAL PIPE SIZE
NS	NEAR SIDE
NSP	NEW STANDARD PLAN
NTS	NOT TO SCALE

O

Oblr	OBLITERATE
OC	OVERCROSSING
OD	OUTSIDE DIAMETER
OF	OUTSIDE FACE
OG	ORIGINAL GROUND
OGAC	OPEN GRADED ASPHALT CONCRETE
OGFC	OPEN GRADED FRICTION COURSE
OH	OVERHEAD
OHWM	ORDINARY HIGH WATER MARK
O-O	OUT TO OUT
Opp	OPPOSITE
OSD	OVERSIDE DRAIN

P

P	PAGE
PAP	PERFORATED ALUMINUM PIPE
PB	PULL BOX
PC	POINT OF CURVATURE, PRECAST
PCC	POINT OF COMPOUND CURVE, PORTLAND CEMENT CONCRETE
PCMS	PORTABLE CHANGEABLE MESSAGE SIGN
PCP	PERFORATED CONCRETE PIPE, PRESTRESSED CONCRETE PIPE
PCVC	POINT OF COMPOUND VERTICAL CURVE
PEC	PERMIT TO ENTER AND CONSTRUCT
Ped	PEDESTRIAN
Ped OC	PEDESTRIAN OVERCROSSING
Ped UC	PEDESTRIAN UNDERCROSSING
Perm Mtl	PERMEABLE MATERIAL

P continued

PG	PROFILE GRADE
PI	POINT OF INTERSECTION
PJP	PARTIAL JOINT PENETRATION
Pkwy	PARKWAY
ℙ,PL	PLATE
P/L	PROPERTY LINE
PM	POST MILE, TIME FROM NOON TO MIDNIGHT
PN	PAVING NOTCH
POC	POINT OF HORIZONTAL CURVE
POT	POINT OF TANGENT
POVC	POINT OF VERTICAL CURVE
PP	PIPE PILE, PLASTIC PIPE, POWER POLE
PPL	PREFORMED PERMEABLE LINER
PPP	PERFORATED PLASTIC PIPE
PRC	POINT OF REVERSE CURVE
PRF	PAVEMENT REINFORCING FABRIC
PRVC	POINT OF REVERSE VERTICAL CURVE
PS&E	PLANS, SPECIFICATIONS AND ESTIMATES
PS, P/S	PRESTRESSED
PSP	PERFORATED STEEL PIPE
PT	POINT OF TANGENCY
PVC	POLYVINYL CHLORIDE
Pvmt	PAVEMENT

Q

Qty	QUANTITY

R

R	RADIUS
R & D	REMOVE AND DISPOSE
R & S	REMOVE AND SALVAGE
R/C	RATE OF CHANGE
RCA	REINFORCED CONCRETE ARCH
RCB	REINFORCED CONCRETE BOX
RCP	REINFORCED CONCRETE PIPE
RCPA	REINFORCED CONCRETE PIPE ARCH
Rd	ROAD
Reinf	REINFORCED, REINFORCEMENT, REINFORCING
Rel	RELOCATE
Repl	REPLACEMENT
Ret	RETAINING
Rev	REVISED, REVISION
Rdwy	ROADWAY
RHMA	RUBBERIZED HOT MIX ASPHALT
Riv	RIVER
RM	ROAD-MIXED
RP	RADIUS POINT, REFERENCE POINT
RR	RAILROAD
RSP	ROCK SLOPE PROTECTION, REVISED STANDARD PLAN
Rt	RIGHT
Rte	ROUTE
RW	REDWOOD, RETAINING WALL
R/W	RIGHT OF WAY
Rwy	RAILWAY

S

S	SOUTH, SUPPLEMENT
SAE	STRUCTURE APPROACH EMBANKMENT
Salv	SALVAGE
SAPP	STRUCTURAL ALUMINUM PLATE PIPE
SB	SOUTHBOUND
SC	SAND CUSHION
SCSP	SLOTTED CORRUGATED STEEL PIPE
SD	STORM DRAIN
Sec	SECOND, SECTION
Sep	SEPARATION
SG	SUBGRADE
Shld	SHOULDER
Sht	SHEET
Sim	SIMILAR
₤	STATION LINE
SM	SELECTED MATERIAL
Spec	SPECIAL, SPECIFICATIONS
SPP	SLOTTED PLASTIC PIPE
SS	SLOPE STAKE
SSBM	STRAP AND SADDLE BRACKET METHOD
SSD	STRUCTURAL SECTION DRAIN
SSPA	STRUCTURAL STEEL PLATE ARCH
SSPP	STRUCTURAL STEEL PLATE PIPE
SSPPA	STRUCTURAL STEEL PLATE PIPE ARCH
SSRP	STEEL SPIRAL RIB PIPE
St	STREET
Sta	STATION
STBB	SINGLE THRIE BEAM BARRIER
Std	STANDARD
Str	STRUCTURE
Surf	SURFACING
SW	SIDEWALK, SOUND WALL
Swr	SEWER
Sym	SYMMETRICAL
S4S	SURFACE 4 SIDES

T

T	SEMI-TANGENT
Tan	TANGENT
TBB	THRIE BEAM BARRIER
Tbr	TIMBER
TC	TOP OF CURB
TCB	TRAFFIC CONTROL BOX
TCE	TEMPORARY CONSTRUCTION EASEMENT
Tel	TELEPHONE
Temp	TEMPORARY
TG	TOP OF GRADE
Tot	TOTAL
TP	TELEPHONE POLE
TPB	TREATED PERMEABLE BASE
TPM	TREATED PERMEABLE MATERIAL
Trans	TRANSITION

T continued

TS	TRANSVERSE, TRAFFIC SIGNAL, TUBULAR STEEL
Typ	TYPICAL

U

UC	UNDERCROSSING
UD	UNDERDRAIN
UG	UNDERGROUND
UON	UNLESS OTHERWISE NOTED
UP	UNDERPASS

V

V	VALVE, DESIGN SPEED
Var	VARIABLE, VARIES
VC	VERTICAL CURVE
VCP	VITRIFIED CLAY PIPE
Vert	VERTICAL
Via	VIADUCT
Vol	VOLUME

W

W	WEST, WIDTH
WB	WESTBOUND
WH	WEEP HOLE
WM	WIRE MESH
WS	WATER SURFACE
WSP	WELDED STEEL PIPE
Wt	WEIGHT
WV	WATER VALVE
WW	WINGWALL
WWLOL	WINGWALL LAYOUT LINE

X

X Sec	CROSS SECTION
Xing	CROSSING

Y

Yr	YEAR
Yrs	YEARS

Dist	COUNTY	ROUTE	POST MILES TOTAL PROJECT	SHEET No.	TOTAL SHEETS
08	SBd	40	R94.7/R99.7	142	251

Grace M. Tsushima
REGISTERED CIVIL ENGINEER

July 19, 2013
PLANS APPROVAL DATE

REGISTERED PROFESSIONAL ENGINEER
Grace M. Tsushima
No. C49814
Exp. 9-30-14
CIVIL
STATE OF CALIFORNIA

THE STATE OF CALIFORNIA OR ITS OFFICERS OR AGENTS SHALL NOT BE RESPONSIBLE FOR THE ACCURACY OR COMPLETENESS OF SCANNED COPIES OF THIS PLAN SHEET.

TO ACCOMPANY PLANS DATED 5-27-14

2010 REVISED STANDARD PLAN RSP A10B

UNIT OF MEASUREMENT SYMBOLS:

Some of the symbols used in the project plan quantity tables and in the Bid Item List are:

TABLE A

SYMBOL USED	DEFINITIONS
ACRE	ACRE
CF	CUBIC FOOT
CY	CUBIC YARD
EA	EACH
GAL	GALLON
LB	POUND
LF	LINEAR FOOT
SQFT	SQUARE FOOT
SQYD	SQUARE YARD
STA	100 FEET
TAB	TABLET
TON	2,000 POUNDS

Some of the symbols used in the plans other than in the project plan quantity tables are:

TABLE B

SYMBOL USED	DEFINITIONS
ksi	KIPS PER SQUARE INCH
ksf	KIPS PER SQUARE FOOT
psi	POUNDS PER SQUARE INCH
psf	POUNDS PER SQUARE FOOT
lb/ft^3, pcf	POUNDS PER CUBIC FOOT
tsf	TONS PER SQUARE FOOT
mph, MPH *	MILES PER HOUR
ø	NOMINAL DIAMETER
oz	OUNCE
lb	POUND
kip	1,000 POUNDS
cal	CALORIE
ft	FOOT OR FEET
gal	GALLON

* For use on a sign panel only

STATE OF CALIFORNIA
DEPARTMENT OF TRANSPORTATION

ABBREVIATIONS (SHEET 2 OF 2)

NO SCALE

RSP A10B DATED JULY 19, 2013 SUPERSEDES STANDARD PLAN A10B DATED MAY 20, 2011 - PAGE 2 OF THE STANDARD PLANS BOOK DATED 2010.

REVISED STANDARD PLAN RSP A10B

6-7-13

Dist	COUNTY	ROUTE	POST MILES TOTAL PROJECT	SHEET No.	TOTAL SHEETS
08	SBd	40	R94.7/R99.7	143	251

REGISTERED CIVIL ENGINEER

July 19, 2013
PLANS APPROVAL DATE

REGISTERED PROFESSIONAL ENGINEER Roberta L. McLaughlin No. C40375 Exp. 3-31-15 CIVIL STATE OF CALIFORNIA

THE STATE OF CALIFORNIA OR ITS OFFICERS OR AGENTS SHALL NOT BE RESPONSIBLE FOR THE ACCURACY OR COMPLETENESS OF SCANNED COPIES OF THIS PLAN SHEET.

TO ACCOMPANY PLANS DATED 5-27-14

EXIT RAMP NEUTRAL AREA (GORE) TREATMENT

DETAIL 36

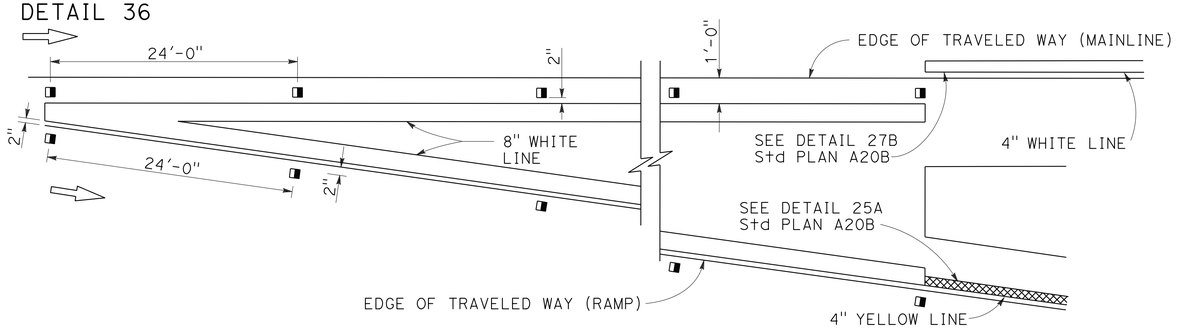

ENTRANCE RAMP NEUTRAL AREA (MERGE) TREATMENT

DETAIL 36A

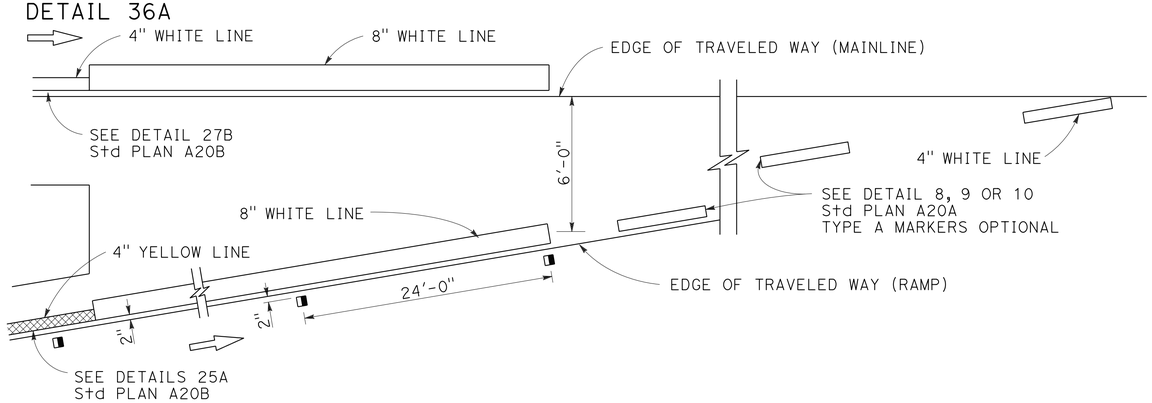

ENTRANCE RAMP NEUTRAL AREA (ACCELERATION LANE) TREATMENT

DETAIL 36B

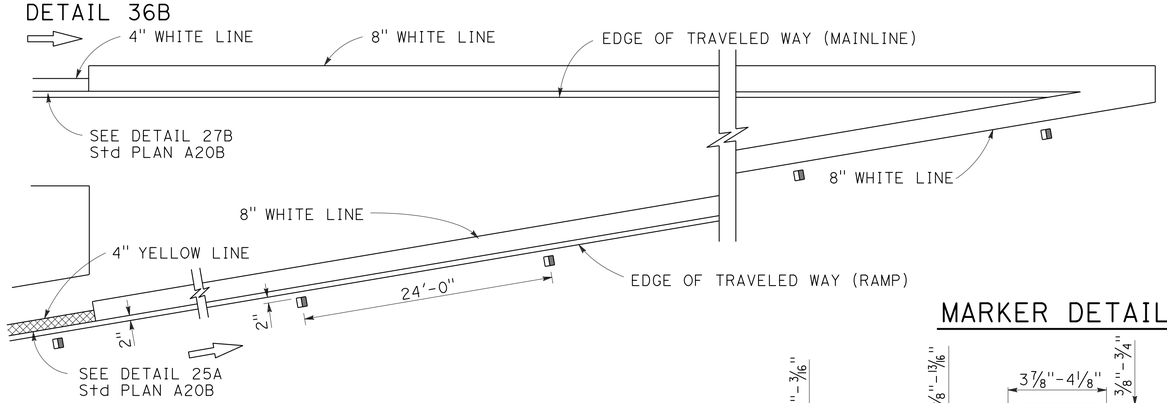

LANE DROP AT EXIT RAMPS

DETAIL 37

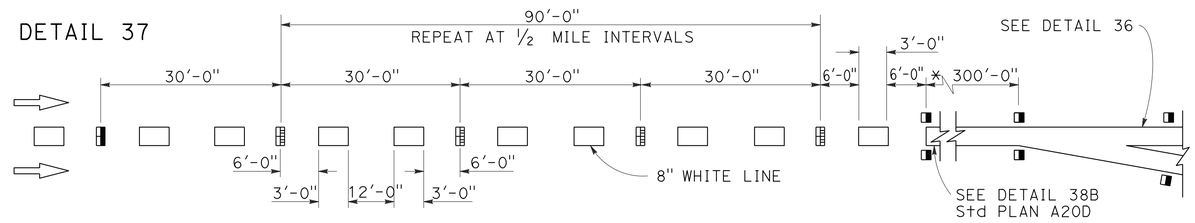

DETAIL 37A

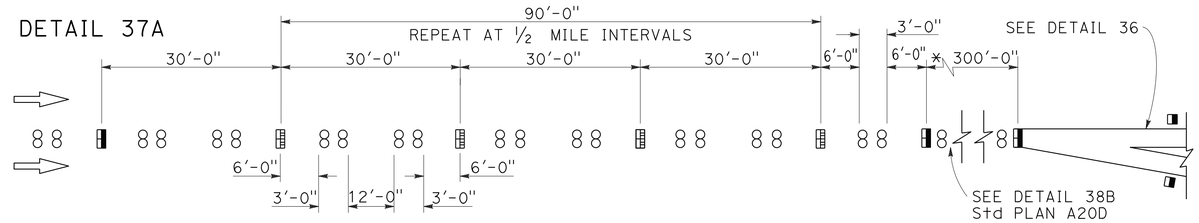

* The solid channelizing line shown may be omitted on short auxiliary lanes where weaving length is critical.

LANE DROP AT INTERSECTIONS

DETAIL 37B

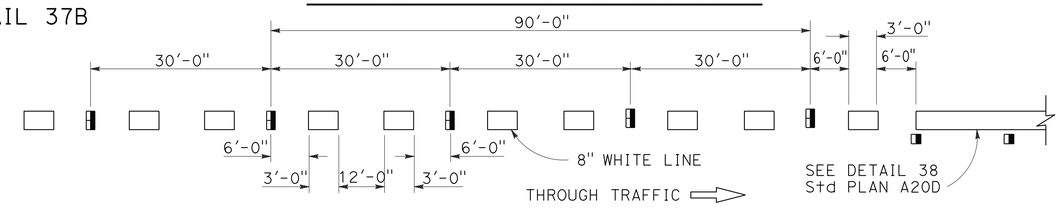

DETAIL 37C

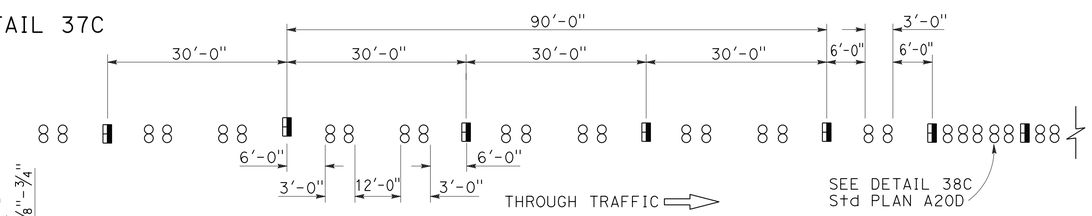

MARKER DETAILS

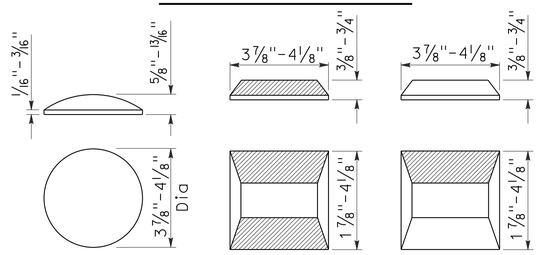

RETROREFLECTIVE FACE

LEGEND:

MARKERS

- ○ TYPE A WHITE NON-REFLECTIVE
- TYPE C RED-CLEAR RETROREFLECTIVE
- TYPE G ONE-WAY CLEAR RETROREFLECTIVE

STATE OF CALIFORNIA
DEPARTMENT OF TRANSPORTATION

PAVEMENT MARKERS AND TRAFFIC LINE TYPICAL DETAILS

NO SCALE

RSP A20C DATED JULY 19, 2013 SUPERSEDES STANDARD PLAN A20C DATED MAY 20, 2011 - PAGE 11 OF THE STANDARD PLANS BOOK DATED 2010.

REVISED STANDARD PLAN RSP A20C

2010 REVISED STANDARD PLAN RSP A20C

4-29-13

Dist	COUNTY	ROUTE	POST MILES TOTAL PROJECT	SHEET No.	TOTAL SHEETS
08	SBd	40	R94.7/R99.7	144	251

REGISTERED CIVIL ENGINEER

April 20, 2012
PLANS APPROVAL DATE

REGISTERED PROFESSIONAL ENGINEER
Roberta L. McLaughlin
No. C40375
Exp. 3-31-13
CIVIL
STATE OF CALIFORNIA

THE STATE OF CALIFORNIA OR ITS OFFICERS OR AGENTS SHALL NOT BE RESPONSIBLE FOR THE ACCURACY OR COMPLETENESS OF SCANNED COPIES OF THIS PLAN SHEET.

TO ACCOMPANY PLANS DATED 5-27-14

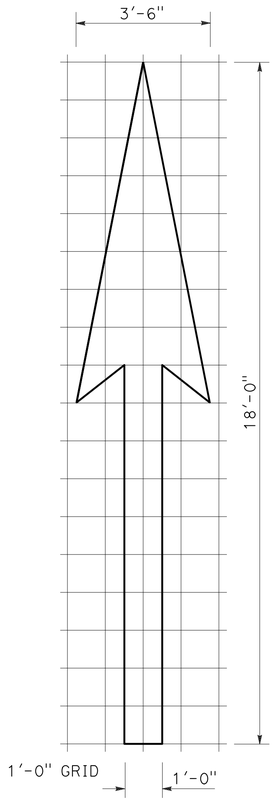

A=25 ft^2

TYPE I 18'-0" ARROW

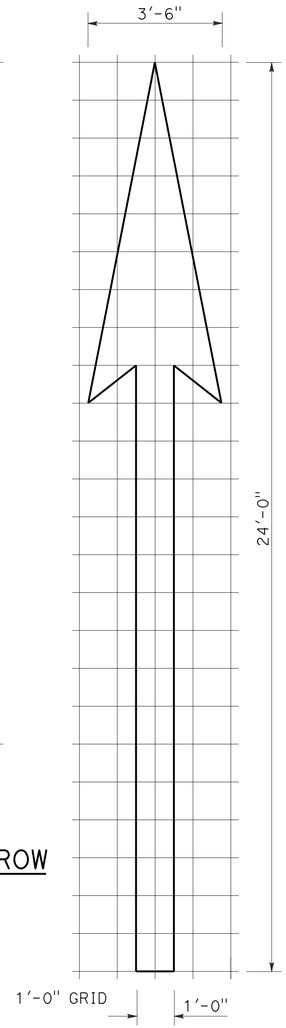

A=31 ft^2

TYPE I 24'-0" ARROW

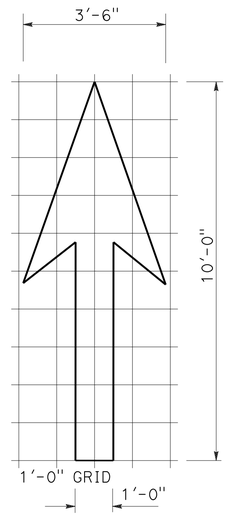

A=14 ft^2

TYPE I 10'-0" ARROW

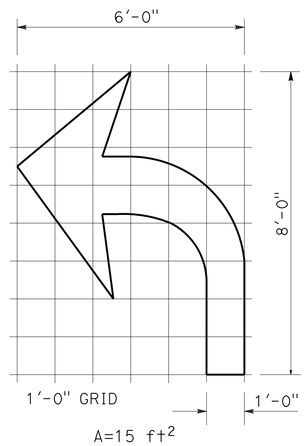

A=15 ft^2

TYPE IV (L) ARROW

(For Type IV (R) arrow, use mirror image)

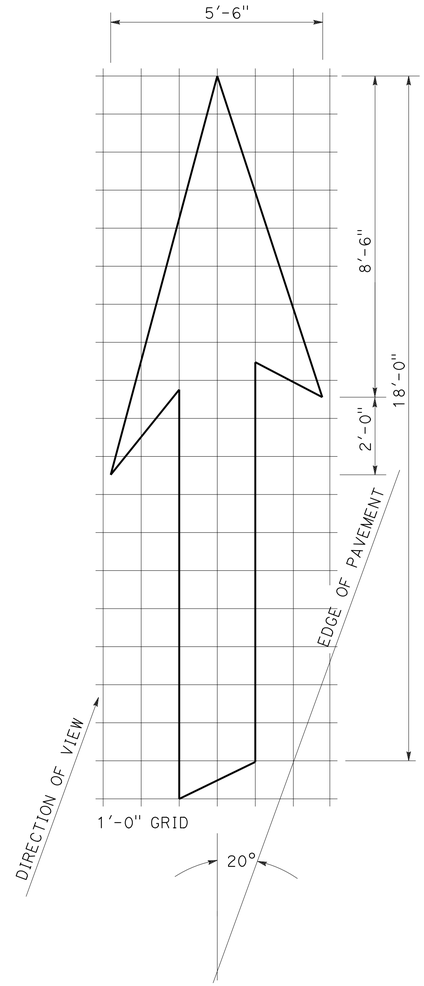

A=42 ft^2

TYPE VI ARROW

Right lane drop arrow
(For left lane, use mirror image)

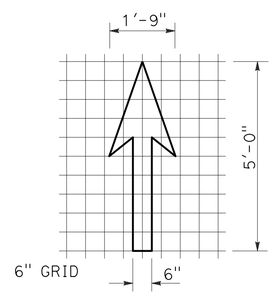

A=3.5 ft^2

BIKE LANE ARROW

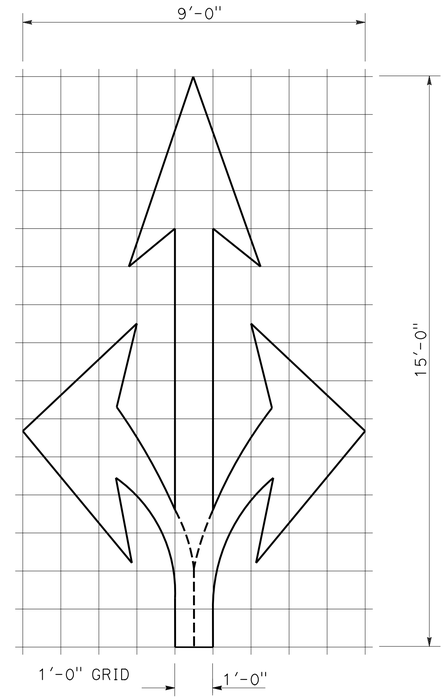

A=36 ft^2

TYPE VIII ARROW

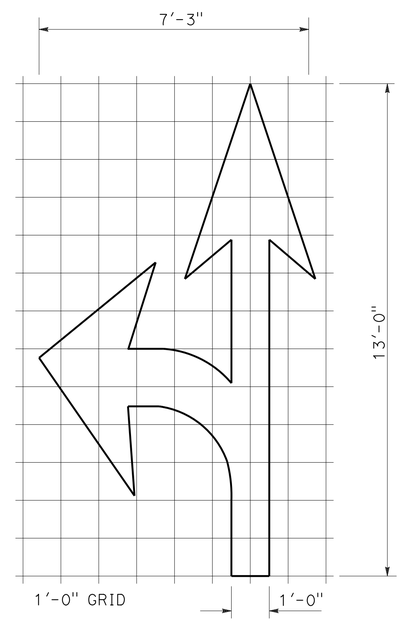

A=27 ft^2

TYPE VII (L) ARROW

(For Type VII (R) arrow, use mirror image)

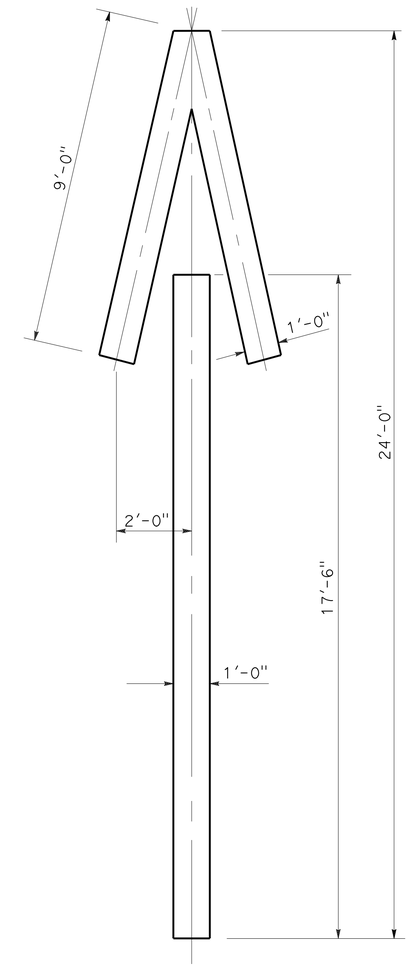

A=33 ft^2

TYPE V ARROW

NOTE:
Minor variations in dimensions may be accepted by the Engineer.

STATE OF CALIFORNIA
DEPARTMENT OF TRANSPORTATION

PAVEMENT MARKINGS ARROWS

NO SCALE

RSP A24A DATED APRIL 20, 2012 SUPERSEDES STANDARD PLAN A24A DATED MAY 20, 2011 - PAGE 13 OF THE STANDARD PLANS BOOK DATED 2010.

REVISED STANDARD PLAN RSP A24A

2010 REVISED STANDARD PLAN RSP A24A

3-14-12

Dist	COUNTY	ROUTE	POST MILES TOTAL PROJECT	SHEET No.	TOTAL SHEETS
08	SBd	40	R94.7/R99.7	145	251

REGISTERED CIVIL ENGINEER

July 18, 2014
PLANS APPROVAL DATE

REGISTERED PROFESSIONAL ENGINEER
Carl M. Duan
No. C59976
Exp. 6-30-16
CIVIL
STATE OF CALIFORNIA

THE STATE OF CALIFORNIA OR ITS OFFICERS OR AGENTS SHALL NOT BE RESPONSIBLE FOR THE ACCURACY OR COMPLETENESS OF SCANNED COPIES OF THIS PLAN SHEET.

TO ACCOMPANY PLANS DATED 5-27-14

DESIGN NOTES:

Design: AASHTO LRFD Bridge Design Specifications, 4th edition with California Amendments. ACPA DESIGN DATA 1, October 2007. INDIRECT DESIGN METHOD

Soil: w Fe = 162 pcf Installation Type 1
w Fe = 168 pcf Installation Types 2 & 3
w = Unit weight of soil (pcf)
Fe = Soil-structure interaction factor

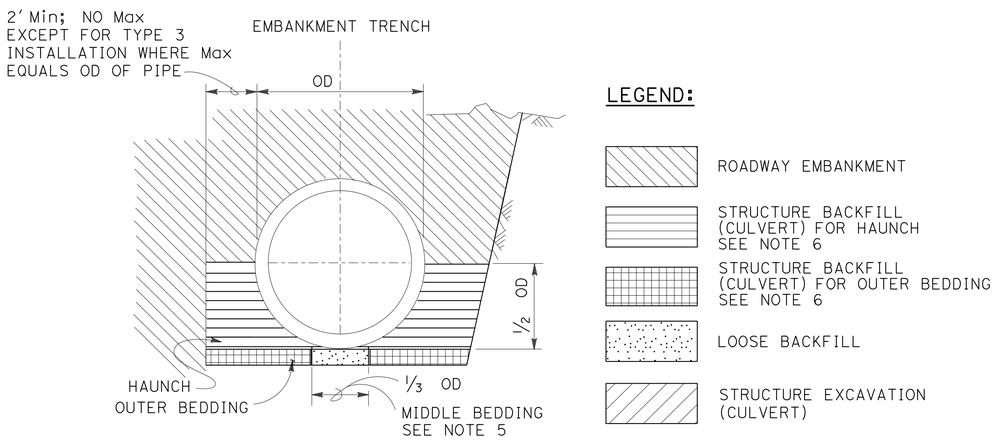

BACKFILL

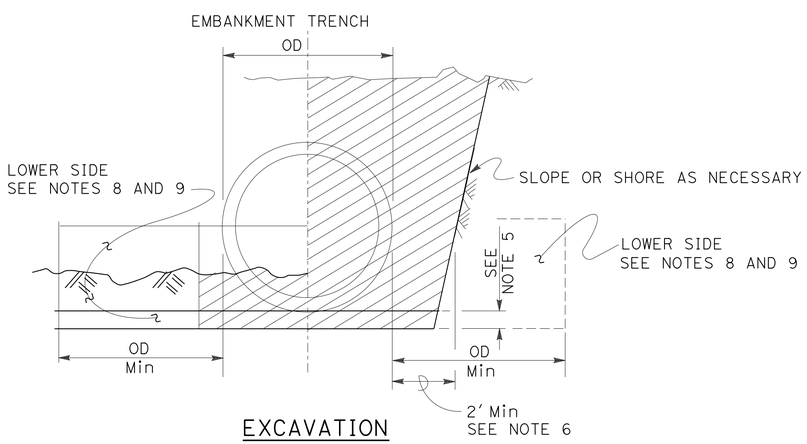

EXCAVATION

INSTALLATION TYPE 1:

The haunch and outer bedding shall be compacted to a minimum 90 percent relative compaction. In addition, the minimum sand equivalent in these areas shall be 30 and the maximum percentage passing the No. 200 sieve size shall be 12.

INSTALLATION TYPE 2:

The haunch and outer bedding shall be compacted to a minimum 90 percent relative compaction. In addition, the minimum sand equivalent in these areas shall be 25.

INSTALLATION TYPE 3:

The haunch and outer bedding shall be compacted to a minimum 85 percent relative compaction. 90 percent relative compaction will be required where the fill over the pipe is less than 4′-0″ or ½ OD. In addition, the minimum sand equivalent in these areas shall be 25 and the material shall not contain rocks, broken concrete, or other solid material exceeding 3″ in greatest dimension.

INSTALLATION TYPE 1

MINIMUM CLASS AND D-LOAD	COVER	
	60″ Dia AND SMALLER	OVER 60″ Dia TO 120″ Dia Max
CLASS II 1000D	14.9′	12.9′
CLASS III 1350D	15.0′ - 21.9′	13.0′ - 18.9′
CLASS III SPECIAL 1700D	22.0′ - 27.9′	19.0′ - 24.9′
CLASS IV 2000D	28.0′ - 32.9′	25.0′ - 29.9′
CLASS IV SPECIAL 2500D	33.0′ - 41.9′	30.0′ - 38.9′
CLASS V 3000D	42.0′ - 49.9′	39.0′ - 46.9′
CLASS V SPECIAL 3600D	50.0′ - 60.0′	47.0′ - 58.0′

INSTALLATION TYPE 2

MINIMUM CLASS AND D-LOAD	COVER	
	60″ Dia AND SMALLER	OVER 60″ Dia TO 120″ Dia Max
CLASS II 1000D	11.9′	9.9′
CLASS III 1350D	12.0′ - 15.9′	10.0′ - 14.9′
CLASS III SPECIAL 1700D	16.0′ - 20.9′	15.0′ - 19.9′
CLASS IV 2000D	21.0′ - 24.9′	20.0′ - 23.9′
CLASS IV SPECIAL 2500D	25.0′ - 31.9′	24.0′ - 30.9′
CLASS V 3000D	32.0′ - 37.9′	31.0′ - 37.9′
CLASS V SPECIAL 3600D	38.0′ - 46.0′	38.0′ - 46.0′

INSTALLATION TYPE 3

MINIMUM CLASS AND D-LOAD	COVER	
	60″ Dia AND SMALLER	OVER 60″ Dia TO 120″ Dia Max
CLASS II 1000D	8.9′	5.9′
CLASS III 1350D	9.0′ - 11.9′	6.0′ - 10.9′
CLASS III SPECIAL 1700D	12.0′ - 15.9′	11.0′ - 13.9′
CLASS IV 2000D	16.0′ - 18.9′	14.0′ - 17.9′
CLASS IV SPECIAL 2500D	19.0′ - 24.9′	18.0′ - 22.9′
CLASS V 3000D	25.0′ - 29.9′	23.0′ - 28.9′
CLASS V SPECIAL 3600D	30.0′ - 36.0′	29.0′ - 35.0′

NOTES:

1. Unless otherwise shown on the plans or specified in the special provision, the Contractor shall have the option of selecting the class of RCP and the type of installation to be used, provided the height of cover does not exceed the value shown for the RCP selected.
   Example: 24″ RCP culvert with maximum cover of 24′-0″ the options are:
   a) Class III Special or stronger with Installation Type 1.
   b) Class IV or stronger with Installation Type 2.
   c) Class IV Special or stronger with Installation Type 3.
   Cover is defined as the maximum vertical distance from top of the pipe to finished grade within the length of any given culvert.
2. The class of RCP and Installation Type selected shall be the same throughout the length of any given culvert.
3. The "length of any culvert" is defined as the culvert between:
   a) Successive drainage structure (inlets, junction boxes, headwalls, etc.).
   b) A drainage structure and the inlet or outlet end of the culvert.
   c) The inlet and outlet end of the culvert when there are no intervening drainage structures.
4. Oval and arch shaped RCP shall not be used.
5. Bedding depth: 1/25 OD Min, not less than 3″.
6. Slurry cement backfill may be substituted for backfill in the outer bedding and haunch areas. If slurry is used, the outer and middle beddings shall be omitted. Prior to installation, the soil under the middle ⅓ of the outside diameter of the pipe shall be softened by scarifying or other means to a minimum depth of 1/25 OD, but not less than 3″. Where slurry cement backfill is used, clear distance to trench wall may be reduced as set forth in the Standard Specifications.
7. Backfill shall be placed full width of excavation except where dimensions are shown for backfill width or thickness. Dimensions shown are minimum.
8. Lower side shall be suitable material as determined by the Engineer. Otherwise it shall be considered unsuitable as set forth in of the Standard Specifications. See Note 9.
9. Where the pipe is placed in a trench, if the trench walls are sloped at 5 vertical to 1 horizontal or steeper for at least 90 percent of the trench height or up to not less than 12″ from the grading plane, the firmness of the soil in the lower side need not be considered.
10. Non-reinforced precast concrete pipe sizes 3′-0″ or smaller may be placed under installation Types 1, 2 or 3.

STATE OF CALIFORNIA
DEPARTMENT OF TRANSPORTATION

EXCAVATION AND BACKFILL CONCRETE PIPE CULVERTS INDIRECT DESIGN METHOD

NO SCALE

RSP A62DA DATED JULY 18, 2014 SUPERSEDES STANDARD PLAN A62DA DATED MAY 20, 2011 - PAGE 24 OF THE STANDARD PLANS BOOK DATED 2010.

REVISED STANDARD PLAN RSP A62DA

2010 REVISED STANDARD PLAN RSP A62DA

Dist	COUNTY	ROUTE	POST MILES TOTAL PROJECT	SHEET No.	TOTAL SHEETS
08	SBd	40	R94.7/R99.7	146	251

Randell D. Hiatt
REGISTERED CIVIL ENGINEER

July 19, 2013
PLANS APPROVAL DATE

REGISTERED PROFESSIONAL ENGINEER
Randell D. Hiatt
No. C50200
Exp. 6-30-15
CIVIL
STATE OF CALIFORNIA

THE STATE OF CALIFORNIA OR ITS OFFICERS OR AGENTS SHALL NOT BE RESPONSIBLE FOR THE ACCURACY OR COMPLETENESS OF SCANNED COPIES OF THIS PLAN SHEET.

TO ACCOMPANY PLANS DATED 5-27-14

2010 REVISED STANDARD PLAN RSP A77L1

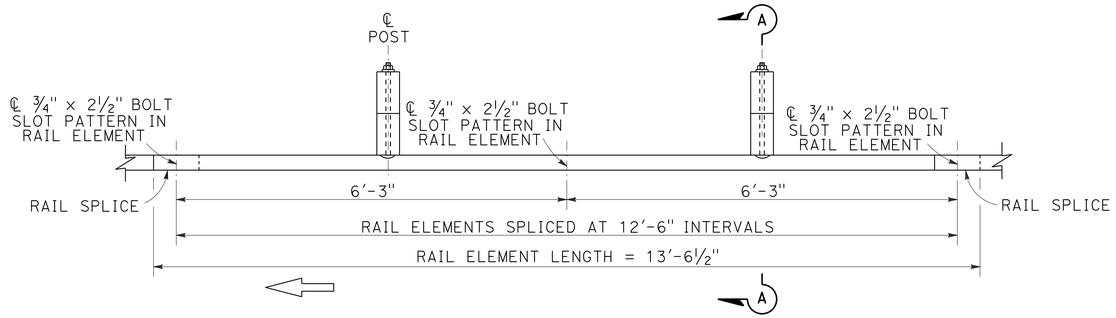

PLAN

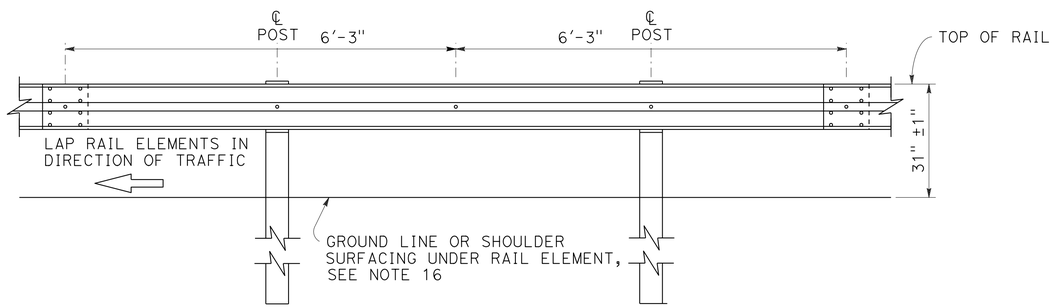

ELEVATION

MIDWEST GUARDRAIL SYSTEM WITH WOOD POST AND BLOCKS

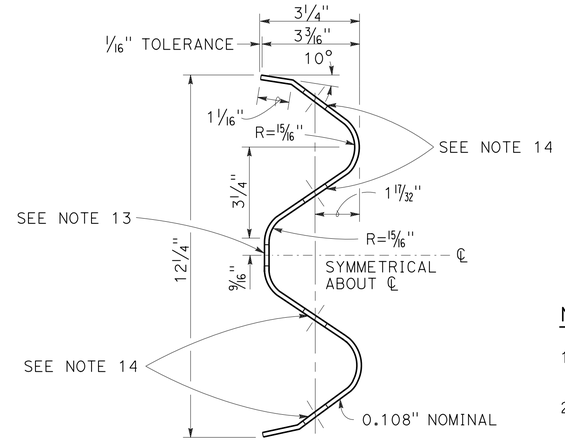

SECTION THRU RAIL ELEMENT

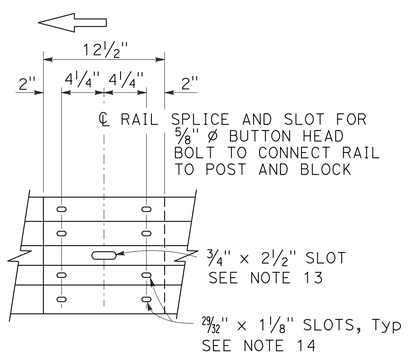

ELEVATION

RAIL ELEMENT SPLICE DETAIL

a) Connect the over lapped end of the rail elements with ⅝" ø x 1⅜" button head oval shoulder splice bolts inserted into the 29⁄32" x 1⅛" slots and bolted together with ⅝" ø recessed hex nuts. Recess of hex nut points toward rail element. A total of 8 bolts and nuts are to be used at each rail splice connection.

b) The ends of the rail elements are to be overlapped in the direction of traffic (see details).

c) Where end cap is to be attached to the end of a rail element, a total of 4 of the above described splice bolts and nuts are to be used.

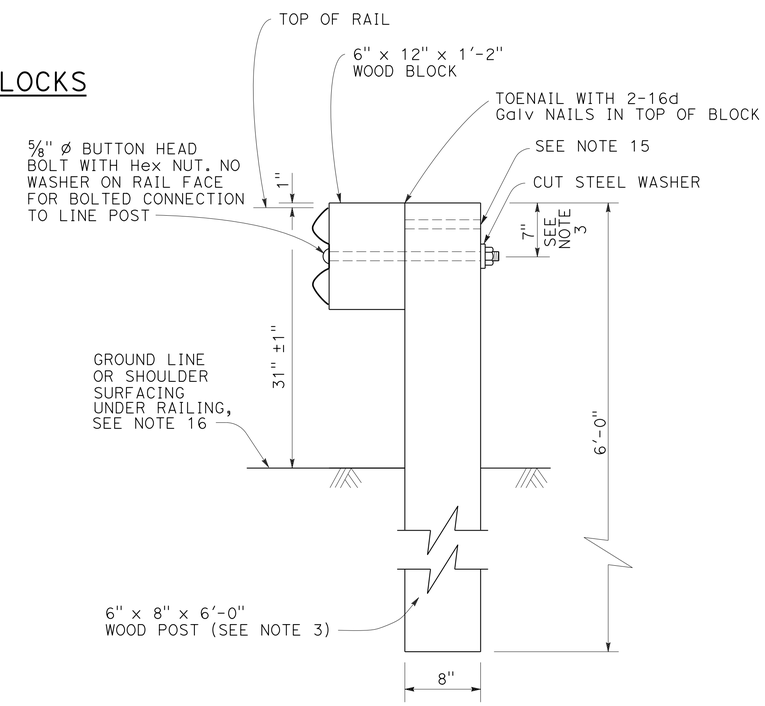

SECTION A-A

TYPICAL WOOD LINE POST INSTALLATION

See Note 4

NOTES:

1. For details of steel post installations, see Revised Standard Plan RSP A77L2.
2. For details of standard hardware used to construct MGS, see Revised Standard Plan RSP A77M1.
3. For details of wood posts and wood blocks used to construct MGS, see Revised Standard Plan RSP A77N1.
4. For additional installation details, see Revised Standard Plan RSP A77N3.
5. MGS post spacing to be 6'-3" center to center, except as otherwise noted.
6. For MGS typical layouts, see the A77P, A77Q and A77R Series of Standard Plans.
7. If railing is connected to terminal system end treatment, use 31" height terminal system end treatment.
8. For MGS end anchor details, see Revised Standard Plans RSP A77S1 and RSP A77T2.
9. For details of MGS transition to bridge railing, see Revised Standard Plan RSP A77U4.
10. For additional details of MSG connection to bridge railing, see Revised Standard Plans RSP A77U1, RSP A77U2 and RSP A77V1.
11. For MGS connection details to abutments and walls, see Revised Standard Plan RSP A77U3.
12. For typical MGS delineation and dike positioning details, see Revised Standard Plan RSP A77N4.
13. Slotted hole for bolted connection of rail element to block and post. See "Section Thru Rail Element".
14. Slotted holes for splice bolts to overlap ends of rail element. See "Section Thru Rail Element".
15. Additional hole in uppermost portion of line post is for potential future adjustments of railing height. See Revised Standard Plan RSP A77N1.
16. Install posts in soil.

STATE OF CALIFORNIA
DEPARTMENT OF TRANSPORTATION

MIDWEST GUARDRAIL SYSTEM STANDARD RAILING SECTION (WOOD POST WITH WOOD BLOCK)

NO SCALE

RSP A77L1 DATED JULY 19, 2013 SUPPLEMENTS STANDARD PLANS BOOK DATED 2010.

REVISED STANDARD PLAN RSP A77L1

Dist	COUNTY	ROUTE	POST MILES TOTAL PROJECT	SHEET No.	TOTAL SHEETS
08	SBd	40	R94.7/R99.7	147	251

Randell D. Hiatt
REGISTERED CIVIL ENGINEER

July 19, 2013
PLANS APPROVAL DATE

REGISTERED PROFESSIONAL ENGINEER
Randell D. Hiatt
No. C50200
Exp. 6-30-15
CIVIL
STATE OF CALIFORNIA

THE STATE OF CALIFORNIA OR ITS OFFICERS OR AGENTS SHALL NOT BE RESPONSIBLE FOR THE ACCURACY OR COMPLETENESS OF SCANNED COPIES OF THIS PLAN SHEET.

TO ACCOMPANY PLANS DATED 5-27-14

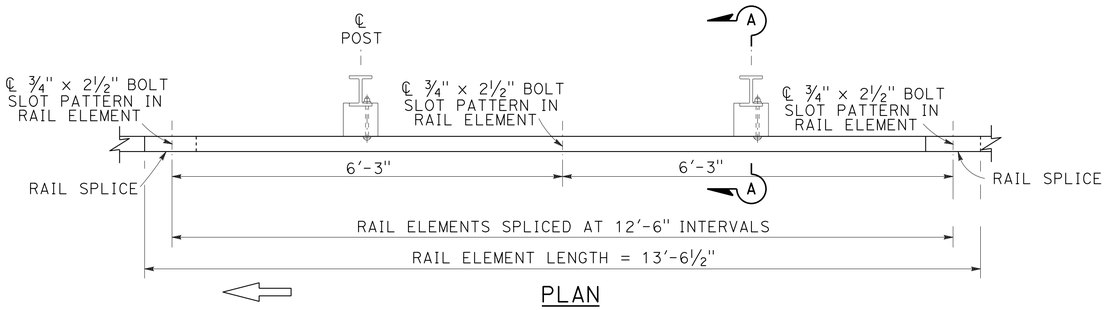

PLAN

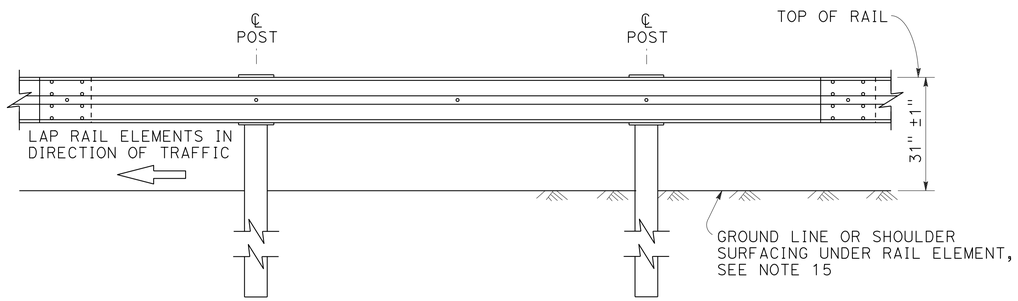

ELEVATION

MIDWEST GUARDRAIL SYSTEM WITH STEEL POSTS AND NOTCHED WOOD OR NOTCHED RECYCLED PLASTIC BLOCKS

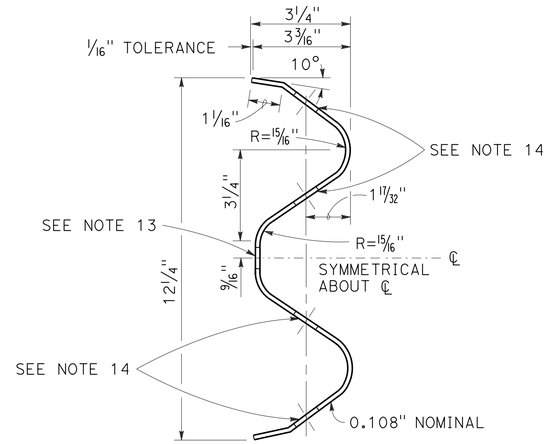

SECTION THRU RAIL ELEMENT

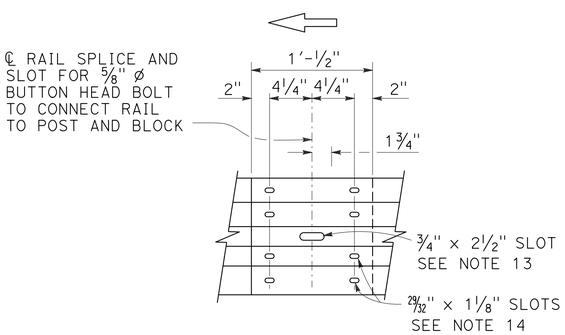

ELEVATION

RAIL ELEMENT SPLICE DETAIL

a) Connect the over lapped end of the rail elements with ⅝" ø × 1⅜" button head oval shoulder splice bolts inserted into the 29⁄32" × 1⅛" slots and bolted together with ⅝" ø recessed hex nuts. Recess of hex nut points toward rail element. A total of 8 bolts and nuts are to be used at each rail splice connection.

b) The ends of the rail elements are to be overlapped in the direction of traffic (see details).

c) Where end cap is to be attached to the end of a rail element, a total of 4 of the above described splice bolts and nuts are to be used.

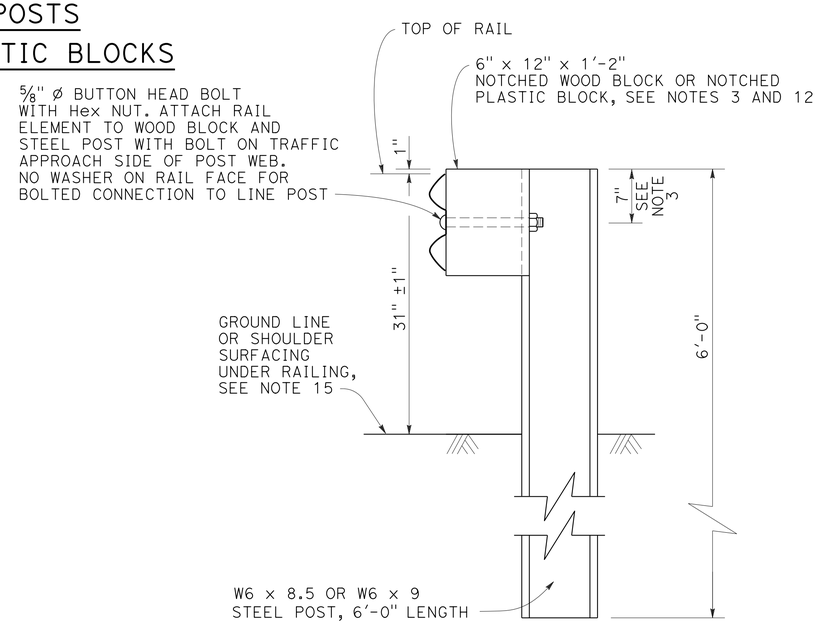

SECTION A-A

TYPICAL STEEL LINE POST INSTALLATION

See Note 4

NOTES:

1. For details of wood post installations, see Revised Standard Plan RSP A77L1.
2. For details of standard hardware used to construct MGS, see Revised Standard Plan RSP A77M1.
3. For details of steel posts and notched wood blocks used to construct MGS, see Revised Standard Plan RSP A77N2.
4. For additional installation details, see Revised Standard Plan RSP A77N3.
5. MGS post spacing to be 6'-3" center to center, except as otherwise noted.
6. For MGS typical layouts, see the A77P, A77Q and A77R Series of Standard Plans.
7. If railing is connected to terminal system end treatment, use 31" height terminal system end treatment.
8. For MGS end anchor details, see Revised Standard Plans RSP A77S1 and RSP A77T2.
9. For details of MGS transition to bridge railing, see Revised Standard Plan RSP A77U4.
10. For additional details of MGS connection to bridge railings, see Revised Standard Plans RSP A77U1, RSP A77U2 and RSP A77V1.
11. For dike positioning and MGS delineation details, see Revised Standard Plan RSP A77N4.
12. Notched face of block faces steel post.
13. Slotted hole for bolted connection of rail element to block and post. See "Section Thru Rail Element".
14. Slotted holes for splice bolts to overlap ends of rail element. See "Section Thru Rail Element".
15. Install posts in soil.

STATE OF CALIFORNIA
DEPARTMENT OF TRANSPORTATION

MIDWEST GUARDRAIL SYSTEM STANDARD RAILING SECTION (STEEL POST WITH NOTCHED WOOD OR NOTCHED RECYCLED PLASTIC BLOCK)

NO SCALE

RSP A77L2 DATED JULY 19, 2013 SUPPLEMENTS THE STANDARD PLANS BOOK DATED 2010.

REVISED STANDARD PLAN RSP A77L2

2010 REVISED STANDARD PLAN RSP A77L2

7-3-13

Dist	COUNTY	ROUTE	POST MILES TOTAL PROJECT	SHEET No.	TOTAL SHEETS
08	SBd	40	R94.7/R99.7	148	251

Randell D. Hiatt
REGISTERED CIVIL ENGINEER

July 19, 2013
PLANS APPROVAL DATE

REGISTERED PROFESSIONAL ENGINEER
Randell D. Hiatt
No. C50200
Exp. 6-30-15
CIVIL
STATE OF CALIFORNIA

THE STATE OF CALIFORNIA OR ITS OFFICERS OR AGENTS SHALL NOT BE RESPONSIBLE FOR THE ACCURACY OR COMPLETENESS OF SCANNED COPIES OF THIS PLAN SHEET.

TO ACCOMPANY PLANS DATED 5-27-14

2010 REVISED STANDARD PLAN RSP A77L3

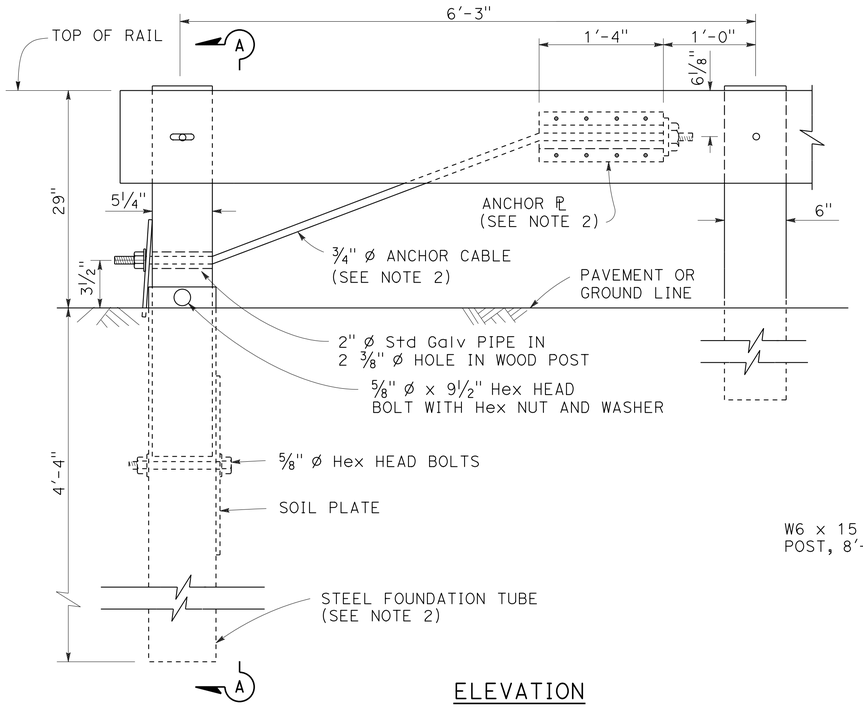

ELEVATION
END ANCHOR
ASSEMBLY (TYPE SFT)

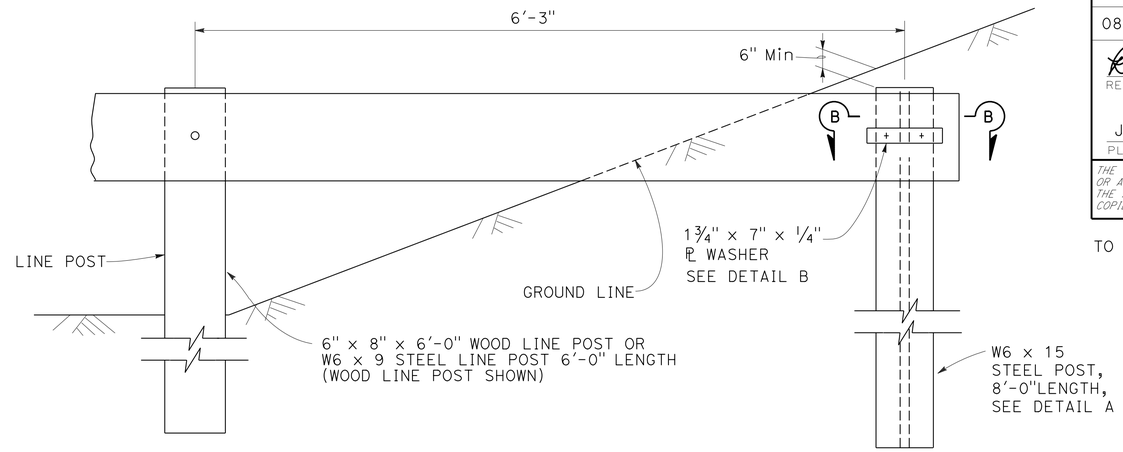

BURIED POST END ANCHOR

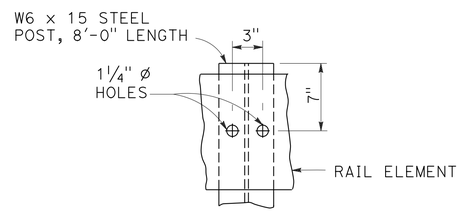

DETAIL A

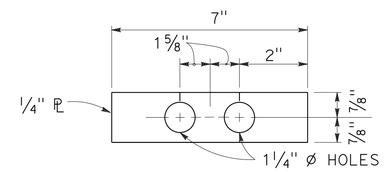

DETAIL B

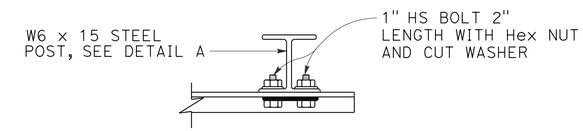

SECTION B-B

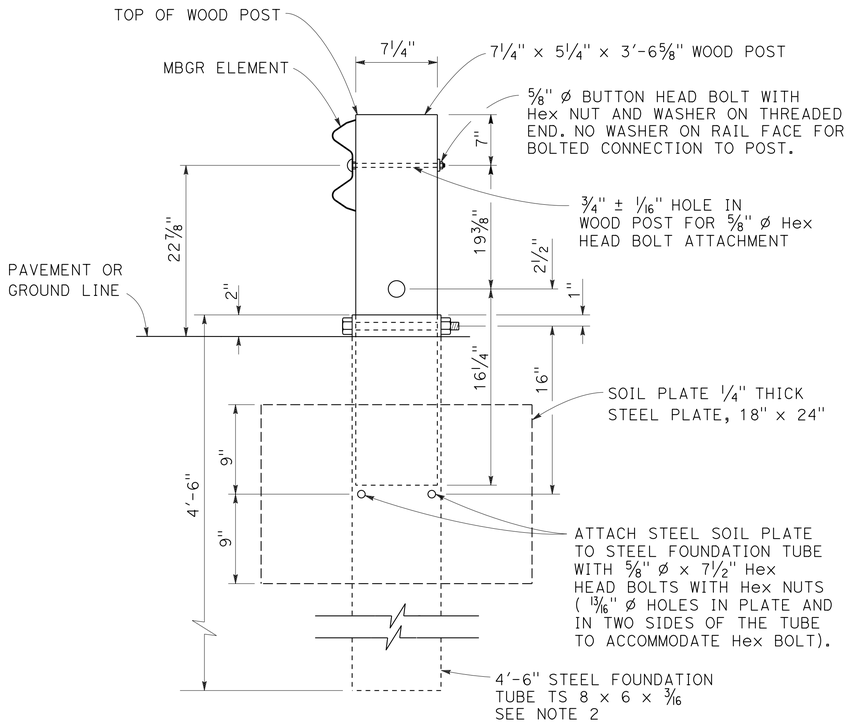

SECTION A-A

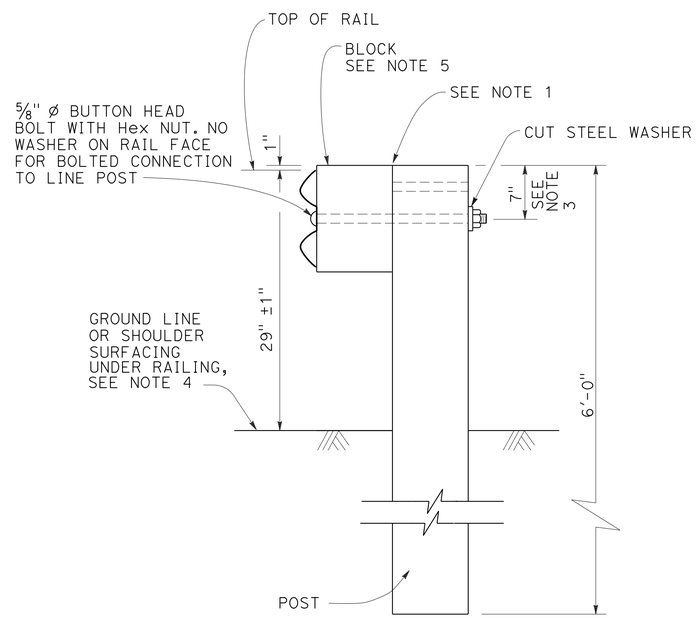

TYPICAL LINE
POST INSTALLATION

NOTES:

1. For wood post and wood block, toenail with 2-16d Galv nails in top of block. For steel post and notched wood or plastic block, notched face of block faces steel post.
2. A 6'-0" Length steel foundation tube, TS 8 x 6 x 3/16, without a soil plate, may be furnished and installed in place of the 4'-6" length steel foundation tube and soil plate shown, Minimum embadment of the 6'-0" length tube shall be 5'-9". A 5/8" ø Hex head bolt and nut shall be installed in the hole in the 6'-0" length tube to keep the wood post from dropping into the tube.
3. To connect railing to 27" terminal system end treatment, transition the top of railing height at a ratio of 120:1 to terminal system end treatment height plus one 12'-6" standard railing section at the transitioned height for a horizontal connection to the end treatment.
4. Install posts in soil.
5. See Revised Standard Plans RSP A77N1 and RSP A77N2 for details.
6. Holes excavation in the slope to construct the buried post end anchor shall be backfilled with selected earth, placed in layers approximately 1'-0" thick. Each layer shall be moistened and thoroughly compacted.

STATE OF CALIFORNIA
DEPARTMENT OF TRANSPORTATION

METAL BEAM GUARD RAILING RECONSTRUCT INSTALLATION

NO SCALE

RSP A77L3 DATED JULY 19, 2013 SUPPLEMENTS THE STANDARD PLANS BOOK DATED 2010.

REVISED STANDARD PLAN RSP A77L3

7-16-13

Dist	COUNTY	ROUTE	POST MILES TOTAL PROJECT	SHEET No.	TOTAL SHEETS
08	SBd	40	R94.7/R99.7	149	251

Randell D. Hiatt
REGISTERED CIVIL ENGINEER

July 19, 2013
PLANS APPROVAL DATE

REGISTERED PROFESSIONAL ENGINEER
Randell D. Hiatt
No. C50200
Exp. 6-30-15
CIVIL
STATE OF CALIFORNIA

THE STATE OF CALIFORNIA OR ITS OFFICERS OR AGENTS SHALL NOT BE RESPONSIBLE FOR THE ACCURACY OR COMPLETENESS OF SCANNED COPIES OF THIS PLAN SHEET.

TO ACCOMPANY PLANS DATED 5-27-14

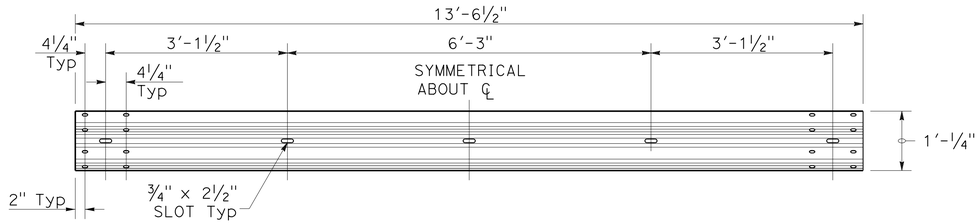

TYPICAL RAIL ELEMENT

NOTE:

1. Slotted holes for splice bolts to overlap ends of rail element.

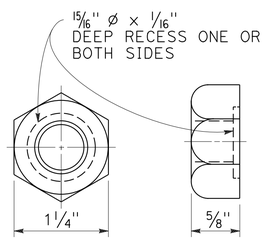

⅝" Ø RECESS NUT

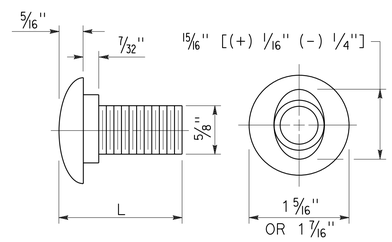

⅝" Ø BUTTON HEAD BOLT

BUTTON HEAD BOLT

L	THREAD LENGTH
1⅜"	FULL THREAD LENGTH
2"	FULL THREAD LENGTH
10"	4" Min THREAD LENGTH
18"	4" Min THREAD LENGTH
20"	4" Min THREAD LENGTH
22"	4" Min THREAD LENGTH
26"	4" Min THREAD LENGTH
36"	4" Min THREAD LENGTH
** 2¾"	2" Min THREAD LENGTH
** 19"	4" Min THREAD LENGTH

** For nested rail applications.

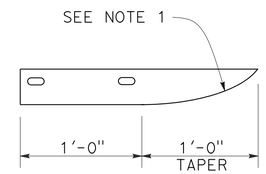

PLAN

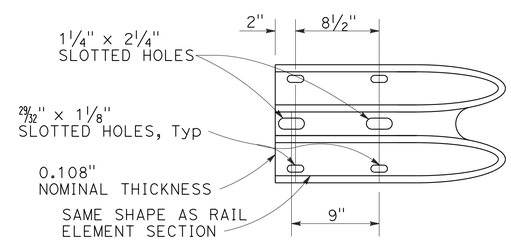

ELEVATION

END CAP
(TYPE A)

STATE OF CALIFORNIA
DEPARTMENT OF TRANSPORTATION

MIDWEST GUARDRAIL SYSTEM STANDARD HARDWARE

NO SCALE

RSP A77M1 DATED JULY 19, 2013 SUPPLEMENTS THE STANDARD PLANS BOOK DATED 2010.

REVISED STANDARD PLAN RSP A77M1

2010 REVISED STANDARD PLAN RSP A77M1

7-3-13

Dist	COUNTY	ROUTE	POST MILES TOTAL PROJECT	SHEET No.	TOTAL SHEETS
08	SBd	40	R94.7/R99.7	150	251

Randell D. Hiatt
REGISTERED CIVIL ENGINEER

July 19, 2013
PLANS APPROVAL DATE

REGISTERED PROFESSIONAL ENGINEER
Randell D. Hiatt
No. C50200
Exp. 6-30-15
CIVIL
STATE OF CALIFORNIA

THE STATE OF CALIFORNIA OR ITS OFFICERS OR AGENTS SHALL NOT BE RESPONSIBLE FOR THE ACCURACY OR COMPLETENESS OF SCANNED COPIES OF THIS PLAN SHEET.

TO ACCOMPANY PLANS DATED 5-27-14

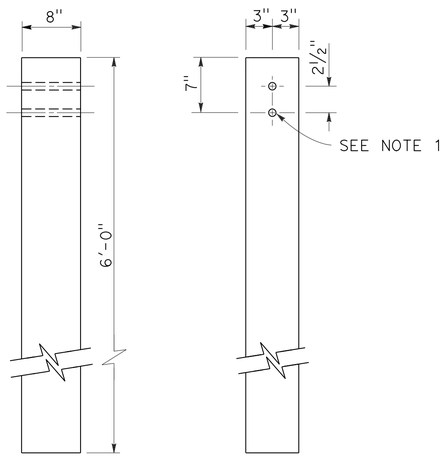

SIDE FRONT

6" x 8" WOOD POST
See Note 3

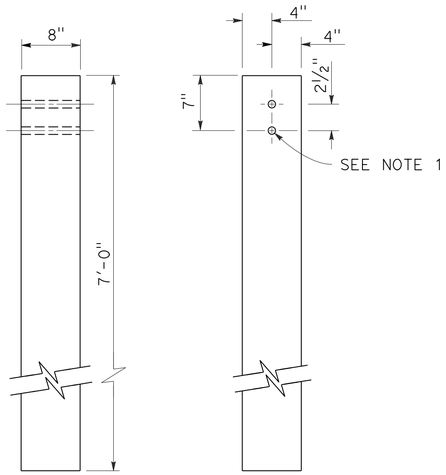

SIDE FRONT

8" x 8" WOOD POST
See Note 4

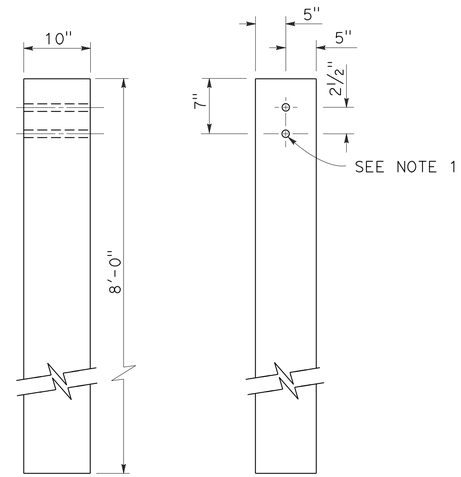

SIDE FRONT

10" x 10" WOOD POST
See Note 5

NOTES:

1. All holes in wood posts and blocks shall be ¾" Dia ± 1/16".
2. Dimensions shown for wood post are nominal.
3. This post and block combination used for standard line post sections of MGS.
4. This post and 8" x 12" block combination used for line post sections of MGS on narrow roadways.
5. This post and 8" x 12" block combination is typically used where strengthened line post sections of MGS are warranted to shield fixed objects.
6. See Revised Standard Plan RSP A77L3 for use of 6" x 8" and 8" x 8" wood blocks.

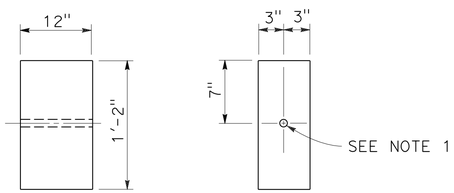

SIDE FRONT

6" x 12" WOOD BLOCK
See Note 3

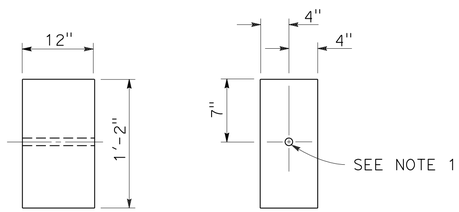

SIDE FRONT

8" x 12" WOOD BLOCK

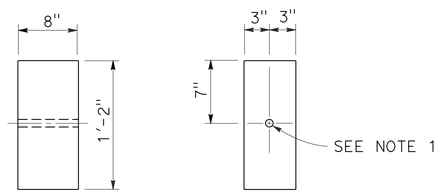

SIDE FRONT

6" x 8" WOOD BLOCK
Only for use with metal beam guard rail see Note 6

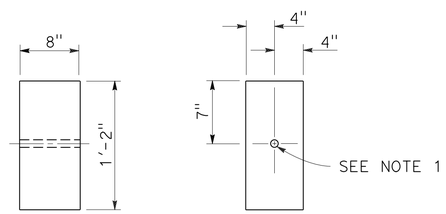

SIDE FRONT

8" x 8" WOOD BLOCK
Only for use with metal beam guard rail see Note 6

STATE OF CALIFORNIA
DEPARTMENT OF TRANSPORTATION

MIDWEST GUARDRAIL SYSTEM WOOD POST AND WOOD BLOCK DETAILS

NO SCALE

RSP A77N1 DATED JULY 19, 2013 SUPPLEMENTS THE STANDARD PLANS BOOK DATED 2010.

REVISED STANDARD PLAN RSP A77N1

2010 REVISED STANDARD PLAN RSP A77N1

7-3-13

Dist	COUNTY	ROUTE	POST MILES TOTAL PROJECT	SHEET No.	TOTAL SHEETS
08	SBd	40	R94.7/R99.7	151	251

Randell D. Hiatt
REGISTERED CIVIL ENGINEER

November 15, 2013
PLANS APPROVAL DATE

REGISTERED PROFESSIONAL ENGINEER
Randell D. Hiatt
No. C50200
Exp. 6-30-15
CIVIL
STATE OF CALIFORNIA

THE STATE OF CALIFORNIA OR ITS OFFICERS OR AGENTS SHALL NOT BE RESPONSIBLE FOR THE ACCURACY OR COMPLETENESS OF SCANNED COPIES OF THIS PLAN SHEET.

TO ACCOMPANY PLANS DATED 5-27-14

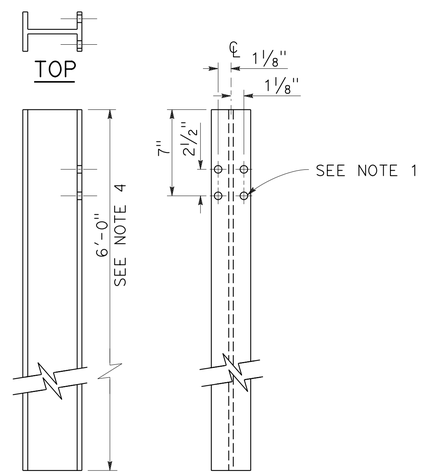

SIDE FRONT

W6 x 9 OR W6 x 8.5
STEEL POST
See Note 4

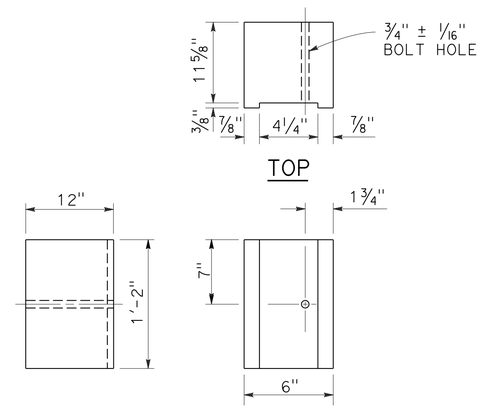

SIDE FRONT

6" x 12"
NOTCHED WOOD BLOCK
See Notes 2 and 3

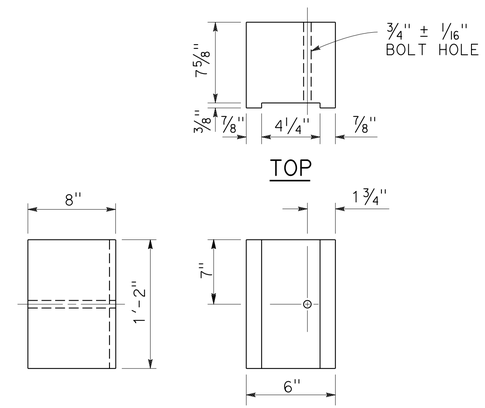

SIDE FRONT

6" x 8"
NOTCHED WOOD BLOCK
Only for use with metal beam guard railing. See Note 5

NOTES:

1. All holes in steel post shall be 13/16" Dia maximum.
2. Dimensions shown for wood block are nominal.
3. Notched face of block faces steel post.
4. 6'-0" length posts to be used for typical roadway installation. See Revised Standard Plan RSP A77N3.
5. See Revised Standard Plan RSP A77L3 for use of 6" x 8" and 8" x 8" notched wood blocks.
6. This post and 8" x 12" block combination to be used for line post sections of MGS on narrow roadways and where strengthened line post sections of MGS are warranted to shield fixed objects.

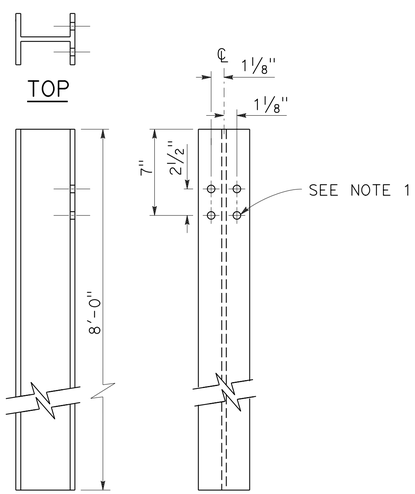

SIDE FRONT

W6 x 15
STEEL POST
See Note 6

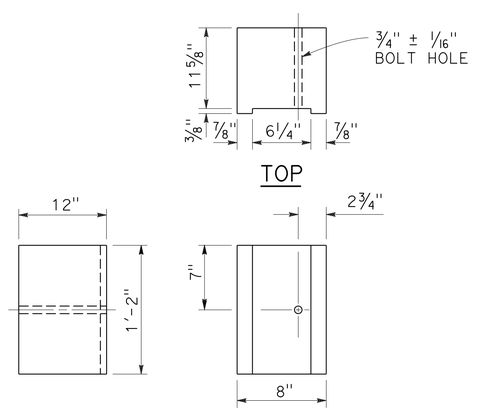

SIDE FRONT

8" x 12"
NOTCHED WOOD BLOCK
See Notes 2 and 3

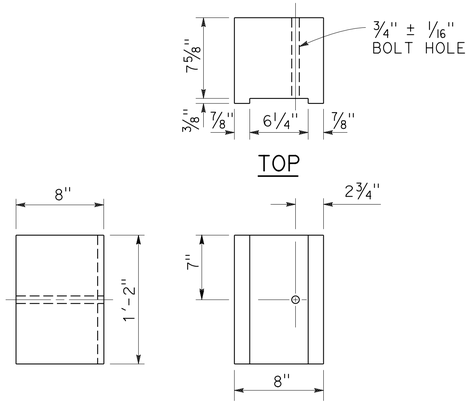

SIDE FRONT

8" x 8"
NOTCHED WOOD BLOCK
Only for use with metal beam guard railing. See Note 5

STATE OF CALIFORNIA
DEPARTMENT OF TRANSPORTATION

MIDWEST GUARDRAIL SYSTEM STEEL POST AND NOTCHED WOOD BLOCK DETAILS

NO SCALE

RSP A77N2 DATED NOVEMBER 15, 2013 SUPERSEDES RSP A77N2
DATED JULY 19, 2013 THAT SUPPLEMENTS THE STANDARD PLANS BOOK DATED 2010.

REVISED STANDARD PLAN RSP A77N2

2010 REVISED STANDARD PLAN RSP A77N2

10-29-13

Dist	COUNTY	ROUTE	POST MILES TOTAL PROJECT	SHEET No.	TOTAL SHEETS
08	SBd	40	R94.7/R99.7	152	251

Randell D. Hiatt
REGISTERED CIVIL ENGINEER

November 15, 2013
PLANS APPROVAL DATE

REGISTERED PROFESSIONAL ENGINEER
Randell D. Hiatt
No. C50200
Exp. 6-30-15
CIVIL
STATE OF CALIFORNIA

THE STATE OF CALIFORNIA OR ITS OFFICERS OR AGENTS SHALL NOT BE RESPONSIBLE FOR THE ACCURACY OR COMPLETENESS OF SCANNED COPIES OF THIS PLAN SHEET.

TO ACCOMPANY PLANS DATED 5-27-14

2010 REVISED STANDARD PLAN RSP A77N3

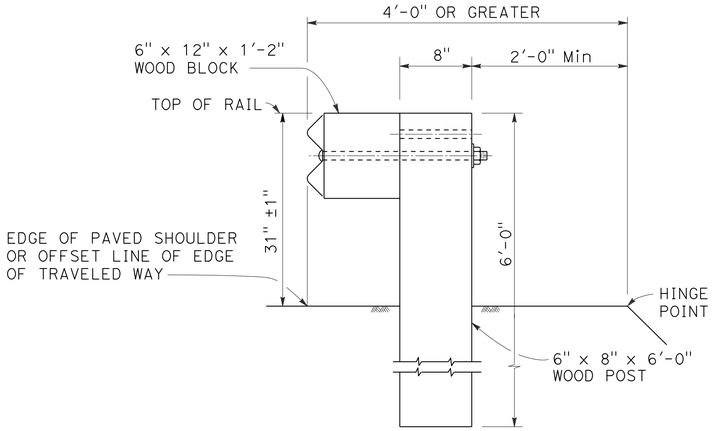

DETAIL A

TYPICAL ROADWAY INSTALLATION

See Note 1

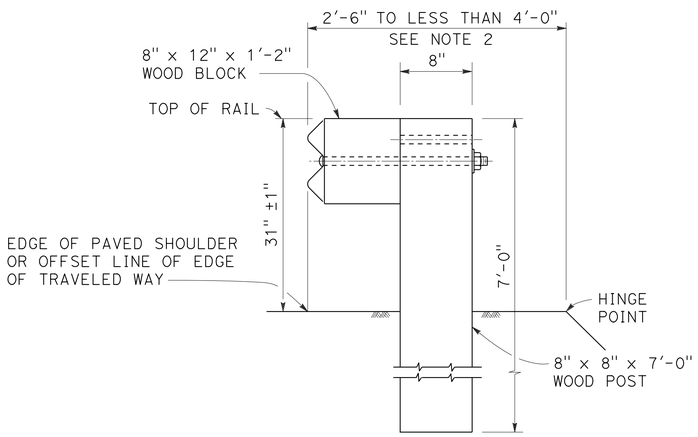

DETAIL B

NARROW ROADWAY INSTALLATION

See Note 1

POST EMBEDMENT

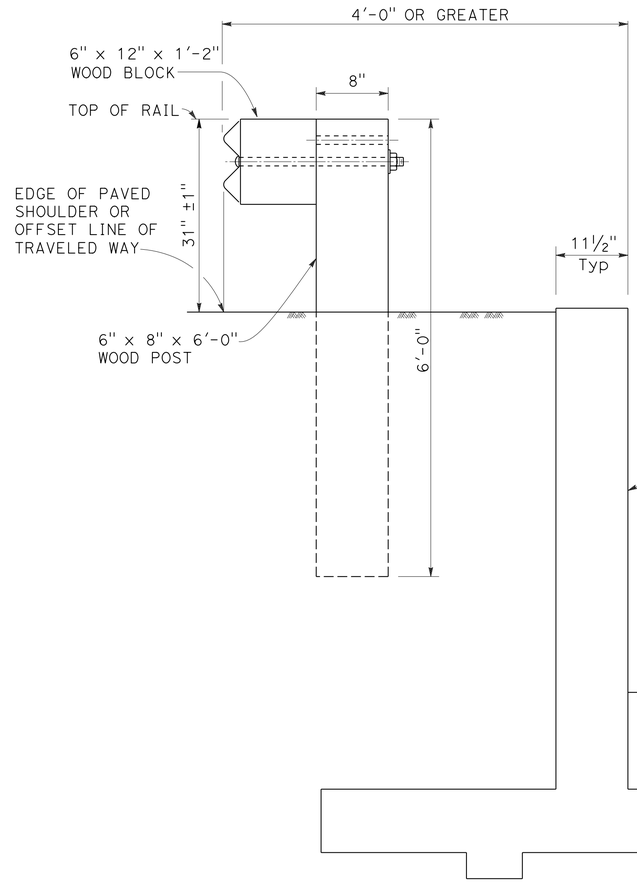

DETAIL C

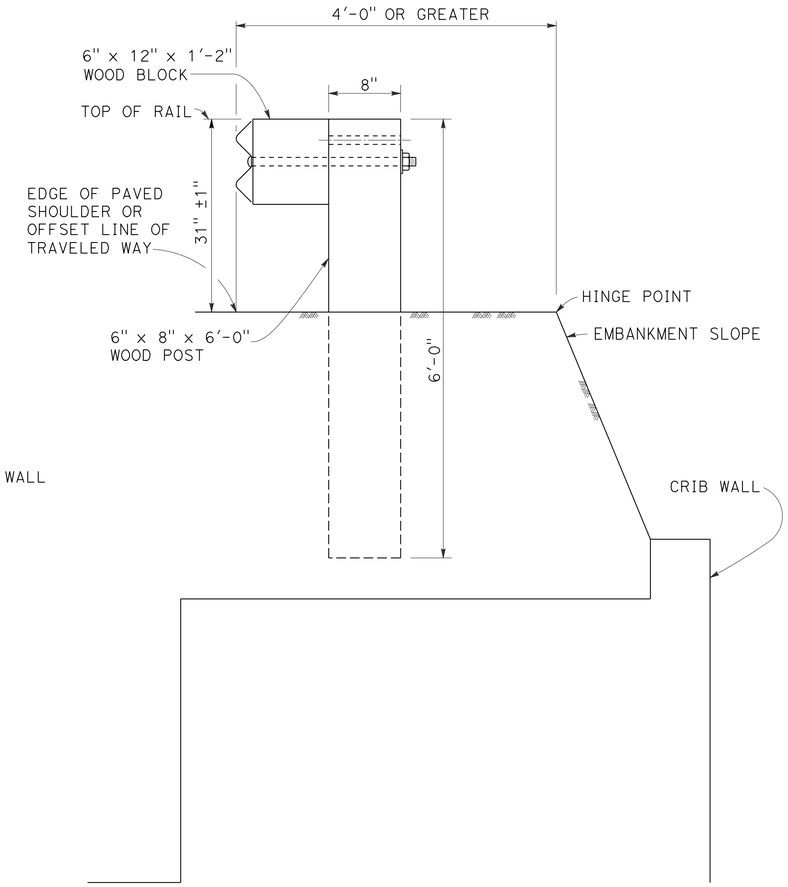

DETAIL D

INSTALLATION AT EARTH RETAINING WALLS

NOTES:

1. These installation details also applicable to steel line post installations. For Detail A, C, and D, where steel line post installations are constructed, W6 x 8.5 or W6 x 9 steel post, 6'-0" in length, with 6" x 12" x 1'-2" notched wood blocks or notched recycled plastic blocks are to be used in place of the size of wood post and wood block shown. For Detail B, where steel line post installations are constructed, W6 x 15 steel post, 8'-0" in length, with 8" x 12" x 1'-2" notched wood blocks or notched recycled plastic blocks are to be used in place of the size of wood post and wood block shown. For additional installation details, see Revised Standard Plan RSP A77L1 and RSP A77L2.
2. Where the distance between the face of the rail and the hinge point is less than 2'-6", see the Project Plans for special details.
3. For dike positioning with MGS installations, see Revised Standard Plan RSP A77N4.

STATE OF CALIFORNIA
DEPARTMENT OF TRANSPORTATION

MIDWEST GUARDRAIL SYSTEM TYPICAL LINE POST EMBEDMENT AND HINGE POINT OFFSET DETAILS

NO SCALE

RSP A77N3 DATED NOVEMBER 15, 2013 SUPERSEDES RSP A77N3 DATED JULY 19, 2013 THAT SUPPLEMENTS THE STANDARD PLANS BOOK DATED 2010.

REVISED STANDARD PLAN RSP A77N3

10-29-13

Dist	COUNTY	ROUTE	POST MILES TOTAL PROJECT	SHEET No.	TOTAL SHEETS
08	SBd	40	R94.7/R99.7	153	251

Randell D. Hiatt
REGISTERED CIVIL ENGINEER

July 19, 2013
PLANS APPROVAL DATE

REGISTERED PROFESSIONAL ENGINEER
Randell D. Hiatt
No. C50200
Exp. 6-30-15
CIVIL
STATE OF CALIFORNIA

THE STATE OF CALIFORNIA OR ITS OFFICERS OR AGENTS SHALL NOT BE RESPONSIBLE FOR THE ACCURACY OR COMPLETENESS OF SCANNED COPIES OF THIS PLAN SHEET.

TO ACCOMPANY PLANS DATED 5-27-14

NOTES:

1. When necessary to place dike more than 7" in front of face of MGS, only Type C dike may be used. For dike details, see Revised Standard Plan RSP A87B.
2. For standard railing post embedment, see Revised Standard Plan RSP A77N3.
3. MGS delineation to be used where shown on the Project Plans.
4. When dike or curb is placed under MGS, the maximum height of the dike or curb shall be 6". Mountable dike should not be used. For dike and curb details, see Revised Standard Plans RSP A87A and RSP A87B.
5. For details of typical distance between the face of rail and hinge point, see Revised Standard Plan RSP A77N3.
6. For steel line posts, use 1/4 - 20 self-tapping screws in 0.22" diameter holes or 1/4" bolts in 9/32" diameter holes.

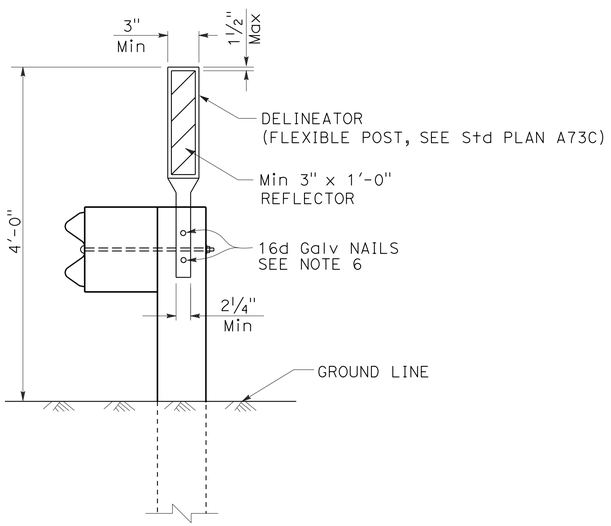

MGS DELINEATION

See Note 3

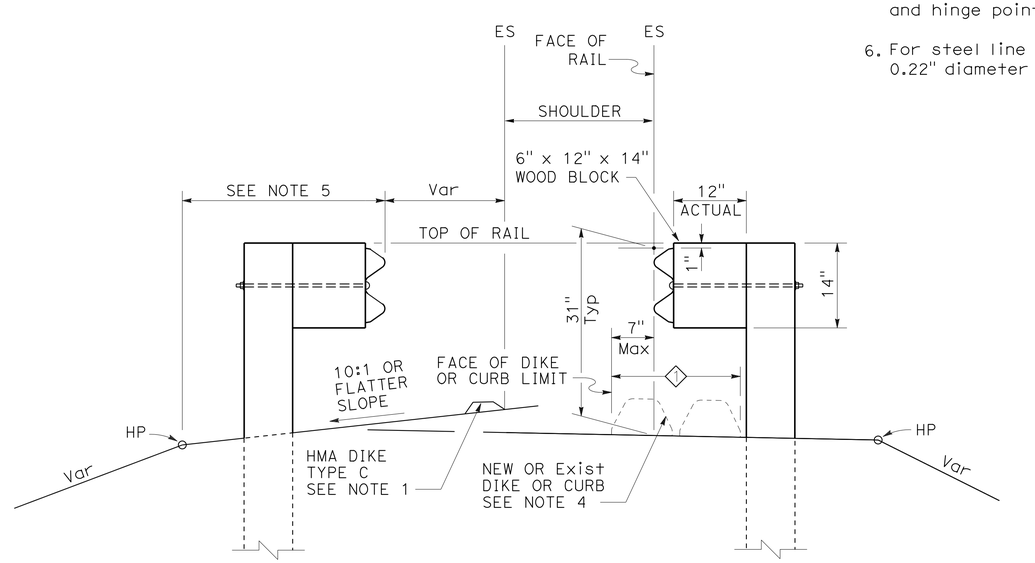

DIKE POSITIONING

See Note 1

1 PERMISSIBLE DIKE OR CURB PLACEMENT AREA

STATE OF CALIFORNIA
DEPARTMENT OF TRANSPORTATION

MIDWEST GUARDRAIL SYSTEM TYPICAL RAILING DELINEATION AND DIKE POSITIONING DETAILS

NO SCALE

RSP A77N4 DATED JULY 19, 2013 SUPPLEMENTS THE STANDARD PLANS BOOK DATED 2010.

REVISED STANDARD PLAN RSP A77N4

2010 REVISED STANDARD PLAN RSP A77N4

7-10-13

Dist	COUNTY	ROUTE	POST MILES TOTAL PROJECT	SHEET No.	TOTAL SHEETS
08	SBd	40	R94.7/R99.7	154	251

Randell D. Hiatt
REGISTERED CIVIL ENGINEER

July 19, 2013
PLANS APPROVAL DATE

REGISTERED PROFESSIONAL ENGINEER
Randell D. Hiatt
No. C50200
Exp. 6-30-15
CIVIL
STATE OF CALIFORNIA

THE STATE OF CALIFORNIA OR ITS OFFICERS OR AGENTS SHALL NOT BE RESPONSIBLE FOR THE ACCURACY OR COMPLETENESS OF SCANNED COPIES OF THIS PLAN SHEET.

TO ACCOMPANY PLANS DATED 5-27-14

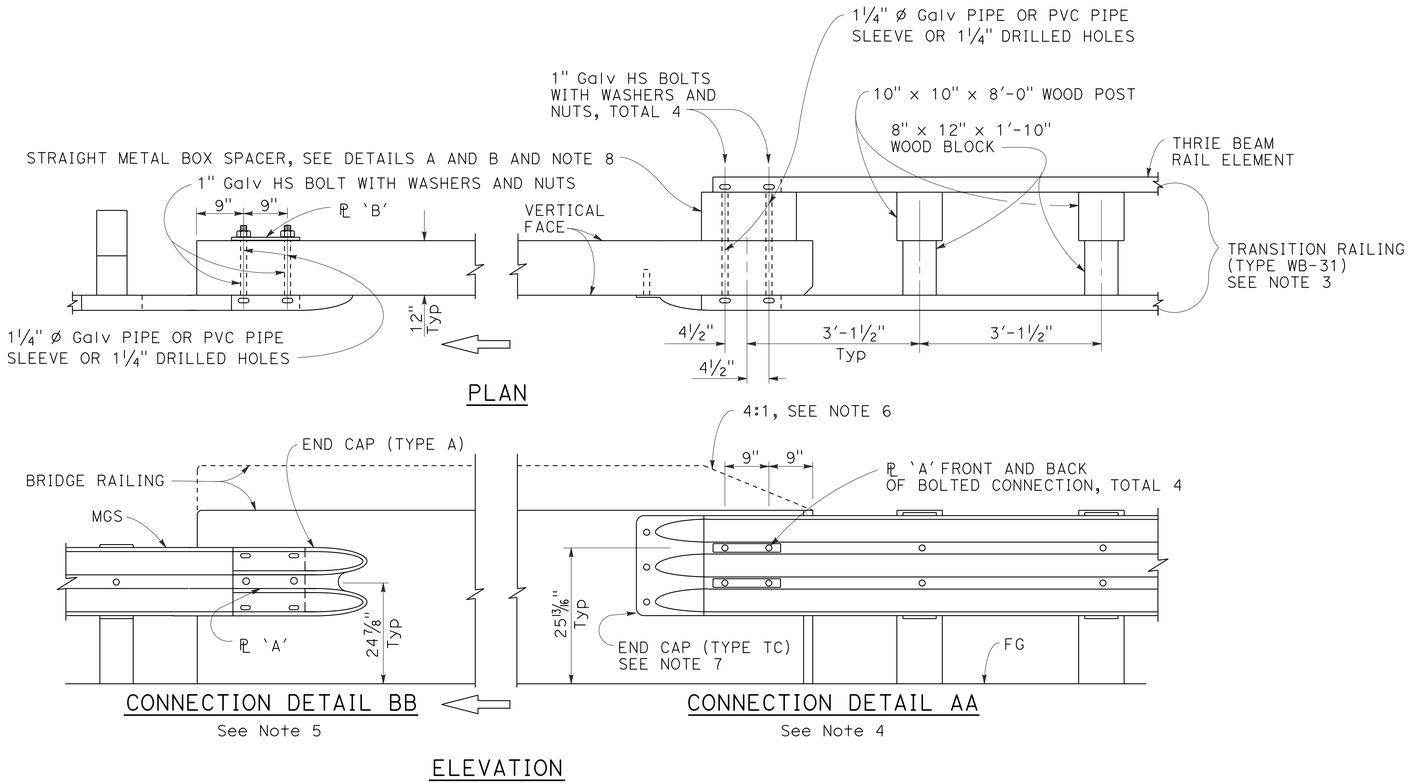

MIDWEST GUARDRAIL SYSTEM CONNECTION TO BRIDGE RAILING WITHOUT SIDEWALK

NOTES:

1. See Revised Standard Plan RSP A77U2 for additional connection details to bridges without sidewalks.
2. Additional details of posts, blocks and hardware are shown on Revised Standard Plans RSP A77M1, RSP A77N1 and RSP A77N2.
3. For additional details of Transition Railing (Type WB-31), see Revised Standard Plan RSP A77U4. Transition Railing (Type WB-31) transitions the 12 gauge MGS railing section to a heavier gage nested thrie beam railing section which is connected to the concrete bridge railing.
4. For typical use of Connection Detail AA, see Layout Types 12A and 12B on Revised Standard Plan RSP A77Q1, Layout Types 12C and 12D on Revised Standard Plan RSP A77Q2, and Layout Type 12E on Revised Standard Plan RSP A77Q3.
5. For typical use of Connection Detail BB, see Layout Type 12D (structure departure railing connection) on Revised Standard Plan RSP A77Q2 and Layout Type 12DD on Revised Standard Plan RSP A77Q5.
6. Where the height of the bridge railing exceeds the height of the thrie beam railing by more than 1" at Connection Detail AA, taper the top of the end of the bridge railing at 4:1 to match the top elevation of the thrie beam rail.
7. For details of End Cap (Type TC), see Revised Standard Plan RSP A77U4.
8. See Revised Standard Plan RSP A77U4 for additional details regarding depth dimension for straight metal box spacer.

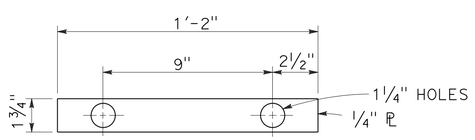

PLATE 'A'

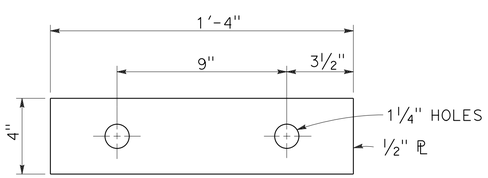

PLATE 'B'
(For backside of connection BB)

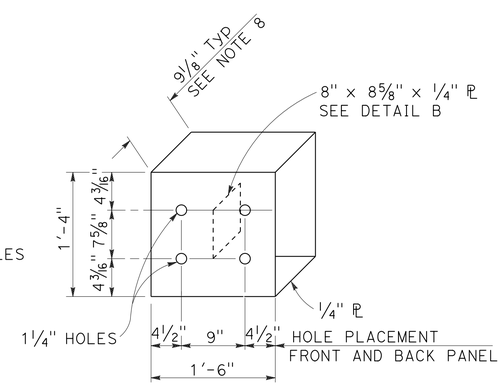

DETAIL A

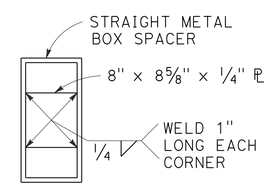

DETAIL B

STRAIGHT METAL BOX SPACER

STATE OF CALIFORNIA
DEPARTMENT OF TRANSPORTATION

MIDWEST GUARDRAIL SYSTEM CONNECTIONS TO BRIDGE RAILINGS WITHOUT SIDEWALKS DETAILS No. 1

NO SCALE

RSP A77U1 DATED JULY 19, 2013 SUPPLEMENTS THE STANDARD PLANS BOOK DATED 2010.

REVISED STANDARD PLAN RSP A77U1

2010 REVISED STANDARD PLAN RSP A77U1

7-8-13

Dist	COUNTY	ROUTE	POST MILES TOTAL PROJECT	SHEET No.	TOTAL SHEETS
08	SBd	40	R94.7/R99.7	155	251

Randell D. Hiatt
REGISTERED CIVIL ENGINEER

July 19, 2013
PLANS APPROVAL DATE

REGISTERED PROFESSIONAL ENGINEER
Randell D. Hiatt
No. C50200
Exp. 6-30-15
CIVIL
STATE OF CALIFORNIA

THE STATE OF CALIFORNIA OR ITS OFFICERS OR AGENTS SHALL NOT BE RESPONSIBLE FOR THE ACCURACY OR COMPLETENESS OF SCANNED COPIES OF THIS PLAN SHEET.

TO ACCOMPANY PLANS DATED 5-27-14

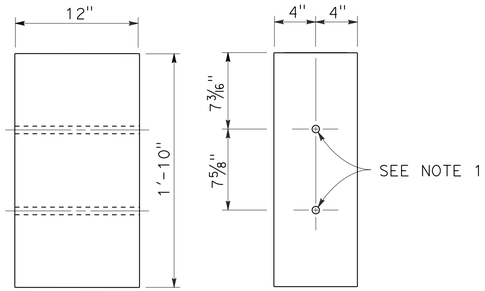

SIDE FRONT

8" x 12"
WOOD BLOCK

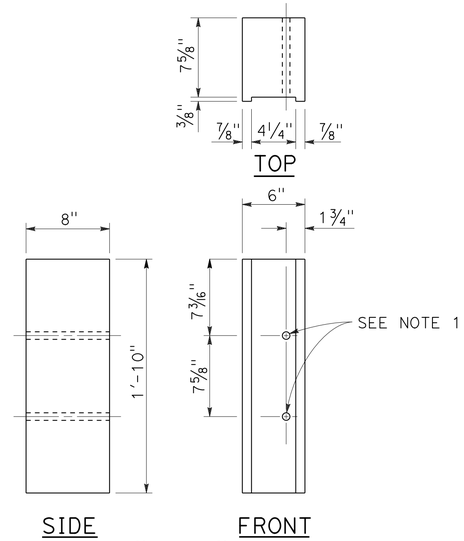

SIDE FRONT

6" x 8"
NOTCHED WOOD BLOCK
See Notes 3 and 5

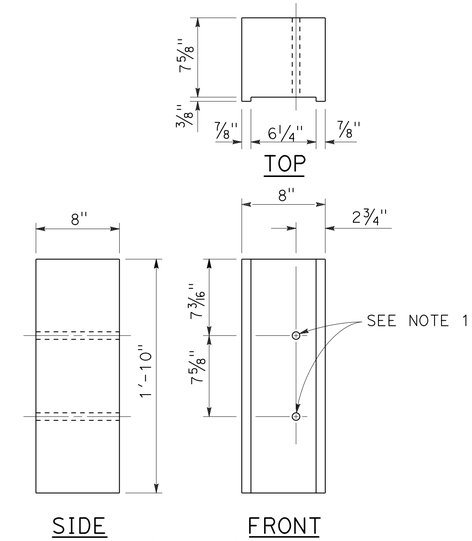

SIDE FRONT

8" x 8"
NOTCHED WOOD BLOCK
See Notes 4 and 5

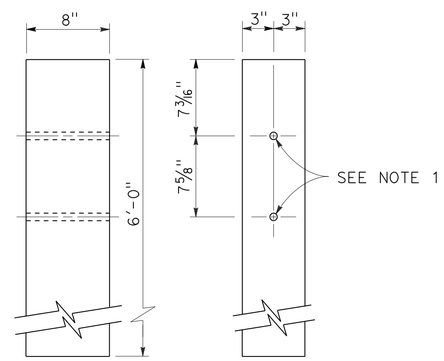

SIDE FRONT

6" x 8"
WOOD POST

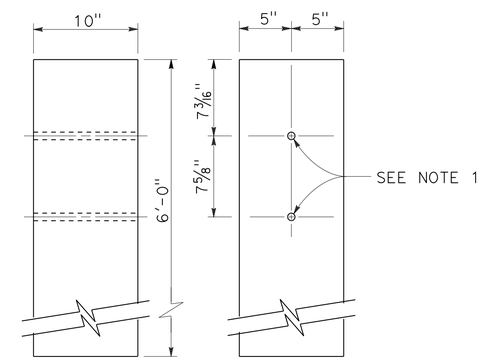

SIDE FRONT

10" x 10"
WOOD POST

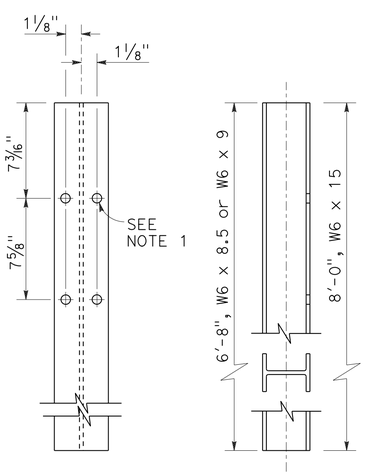

FRONT SIDE

STEEL POST
W6 x 9 or W6 x 8.5 and W6 x 15

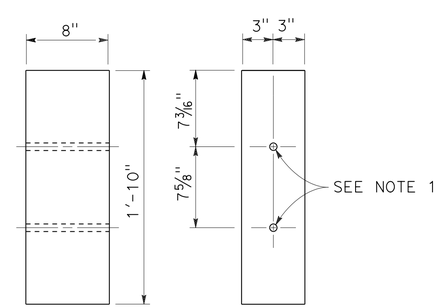

SIDE FRONT

6" x 8"
WOOD BLOCK

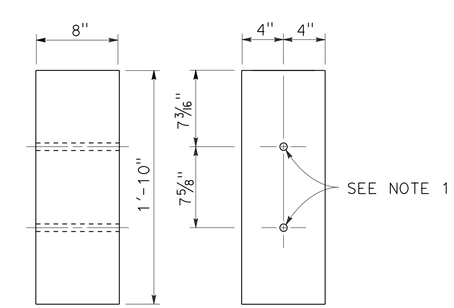

SIDE FRONT

8" x 8"
WOOD BLOCK

NOTES:

1. All holes in steel post to be 13/16" Dia maximum. Holes in wood posts and wood blocks to be 3/4" Dia ±1/16".
2. Dimensions shown for wood post are nominal.
3. For use with W6 x 8.5 or W6 x 9 steel post.
4. For use with W6 x 15 steel post.
5. Notched face of block faces steel post.

STATE OF CALIFORNIA
DEPARTMENT OF TRANSPORTATION

THRIE BEAM BARRIER POST AND BLOCK DETAILS

NO SCALE

RSP A78C2 DATED JULY 19, 2013 SUPERSEDES STANDARD PLAN A78C2 DATED MAY 20, 2011 - PAGE 92 OF THE STANDARD PLANS BOOK DATED 2010.

REVISED STANDARD PLAN RSP A78C2

2010 REVISED STANDARD PLAN RSP A78C2

7-3-13

DIST	COUNTY	ROUTE	POST MILES TOTAL PROJECT	SHEET No.	TOTAL SHEETS
08	SBd	40	R94.7/R99.7	156	251

REGISTERED CIVIL ENGINEER

November 15, 2013
PLANS APPROVAL DATE

REGISTERED PROFESSIONAL ENGINEER
Cornelis M. Hakim
No. C55610
Exp. 12-31-14
CIVIL
STATE OF CALIFORNIA

THE STATE OF CALIFORNIA OR ITS OFFICERS OR AGENTS SHALL NOT BE RESPONSIBLE FOR THE ACCURACY OR COMPLETENESS OF SCANNED COPIES OF THIS PLAN SHEET.

TO ACCOMPANY PLANS DATED 5-27-14

2010 REVISED STANDARD PLAN RSP P74

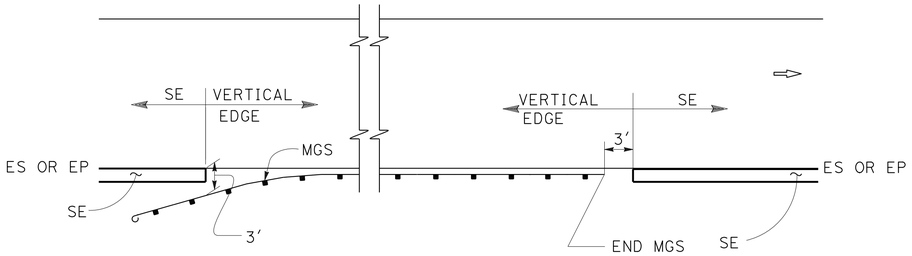

MGS

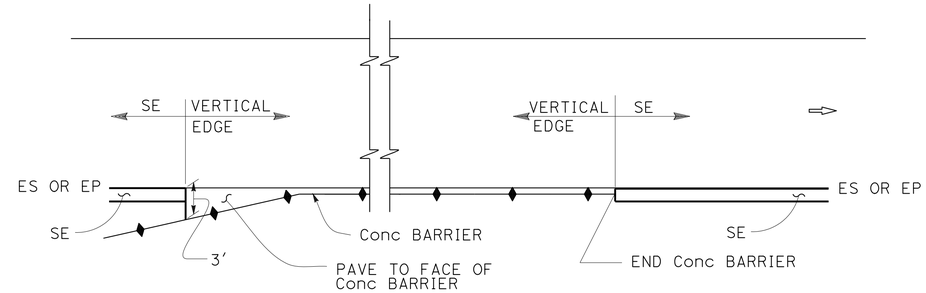

CONCRETE BARRIER

ABBREVIATIONS:

SE SAFETY EDGE

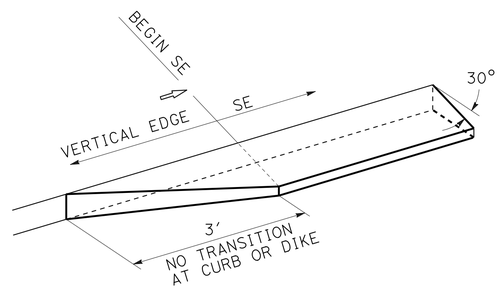

TRANSITION DETAIL FOR CONCRETE ONLY

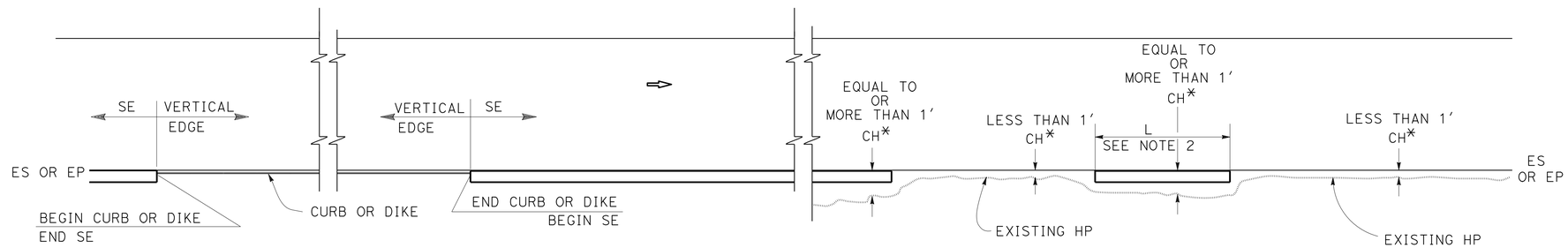

CURB OR DIKE

NARROW SIDE SLOPE

* CH = Distance from ES or EP to existing HP.

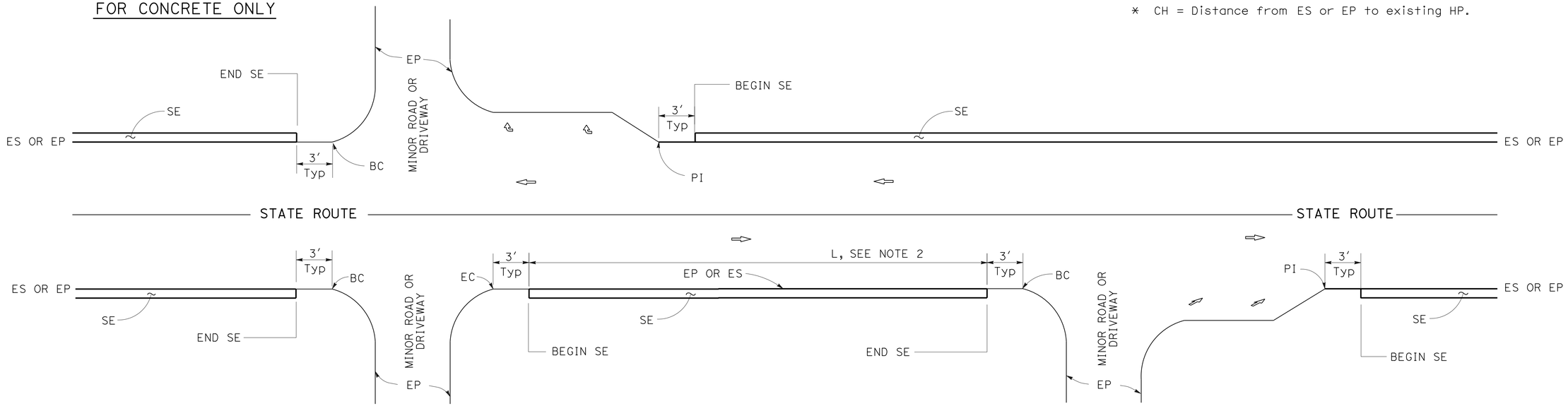

INTERSECTION

MINOR ROADWAY OR DRIVEWAY

DRIVEWAY AND INTERSECTION

NOTES:

1. For details not shown, see Revised Standard Plans RSP P75 and RSP P76.
2. Safety edge is optional when L is less than 30′.

STATE OF CALIFORNIA
DEPARTMENT OF TRANSPORTATION

PAVEMENT EDGE TREATMENTS

NO SCALE

RSP P74 DATED NOVEMBER 15, 2013 SUPERSEDES RSP P74 DATED JANUARY 20, 2012 THAT SUPPLEMENTS THE STANDARD PLANS BOOK DATED 2010.

REVISED STANDARD PLAN RSP P74

10-11-13

DIST	COUNTY	ROUTE	POST MILES TOTAL PROJECT	SHEET No.	TOTAL SHEETS
08	SBd	40	R94.7/R99.7	157	251

REGISTERED CIVIL ENGINEER

November 15, 2013
PLANS APPROVAL DATE

REGISTERED PROFESSIONAL ENGINEER
Cornelis M. Hakim
No. C55610
Exp. 12-31-14
CIVIL
STATE OF CALIFORNIA

THE STATE OF CALIFORNIA OR ITS OFFICERS OR AGENTS SHALL NOT BE RESPONSIBLE FOR THE ACCURACY OR COMPLETENESS OF SCANNED COPIES OF THIS PLAN SHEET.

TO ACCOMPANY PLANS DATED 5-27-14

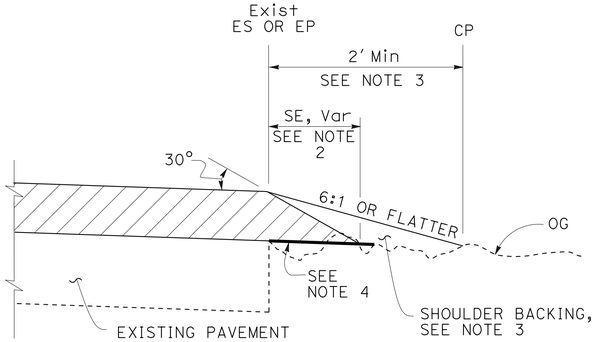

CASE A
Safety Edge

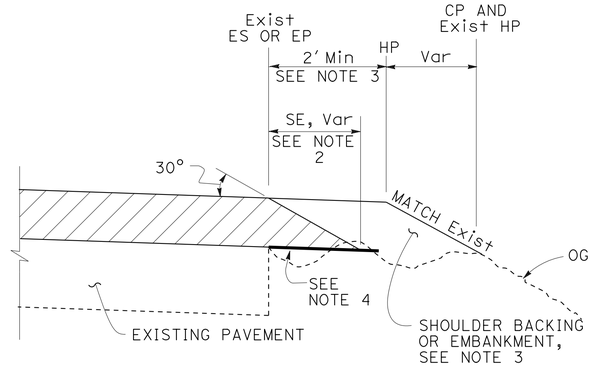

CASE B
Safety Edge

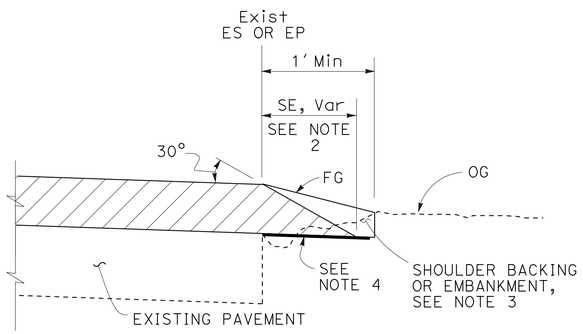

CASE C
Safety Edge

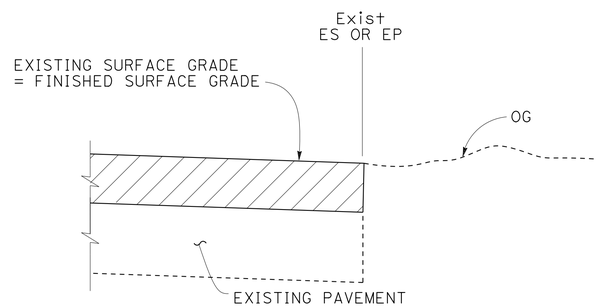

CASE D
Vertical Edge

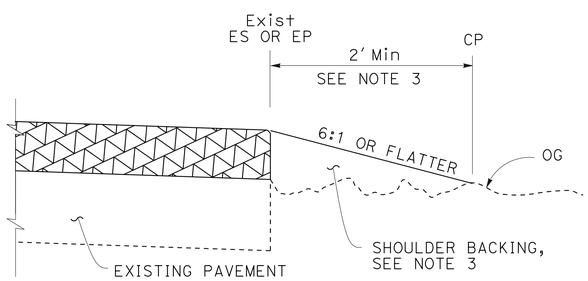

CASE E
Vertical Edge

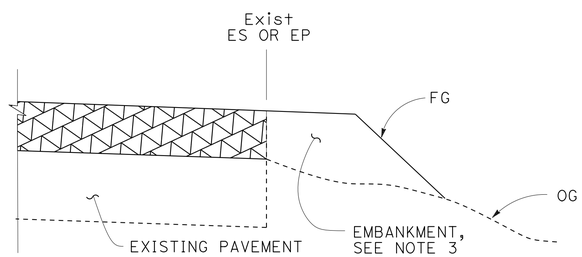

CASE F
Vertical Edge
* See Table A and Revised Std Plan RSP P74

LEGEND:

- HMA OVERLAY
- HMA OR CONCRETE OVERLAY
- CONCRETE OVERLAY

ABBREVIATIONS:

SE SAFETY EDGE
TT TOTAL THICKNESS OF SE

TABLE A
EDGE TREATMENT FOR VARIOUS OVERLAY THICKNESS AND CONDITIONS

	OVERLAY THICKNESS	
FIELD CONDITION	LESS THAN 0.15′	0.15′ OR MORE
Exist SLOPE 6:1 OR FLATTER	CASE E	CASE A
Exist SLOPE 3:1 TO 6:1	CASE E	CASE B
Exist SLOPE STEEPER THAN 3:1	CASE F	CASE F
CUT SECTION (REPLACE, COLD PLANE, MILL PAVEMENT)	CASE D	CASE C

ADDITIONAL HMA OR CONCRETE QUANTITIES FOR SE/SIDE/MILE

TYPICAL CROSS SECTION	TT	TOTAL ADDITIONAL MATERIAL FOR SE/SIDE/MILE		
		HMA (TON)	CONCRETE (CY)*	CONCRETE (CY)**
TT	0.15′	NA	NA	NA
	0.20′	13.7	NA	NA
	0.30′	30.9	NA	NA
	0.40′	54.9	NA	NA
	0.45′	69.4	NA	NA
TT 0.43′	0.50′	84.2	NA	NA
	0.60′	113.9	NA	NA
	0.70′	143.6	70.9	94.2
	0.80′	173.3	85.6	112.2
	0.90′	203.0	100.3	130.2
	1.00′	232.7	114.9	148.2
	1.10′	262.4	129.6	166.2
	1.20′	292.1	144.3	184.2

* For Detail "A"
** For Optional Detail "A"

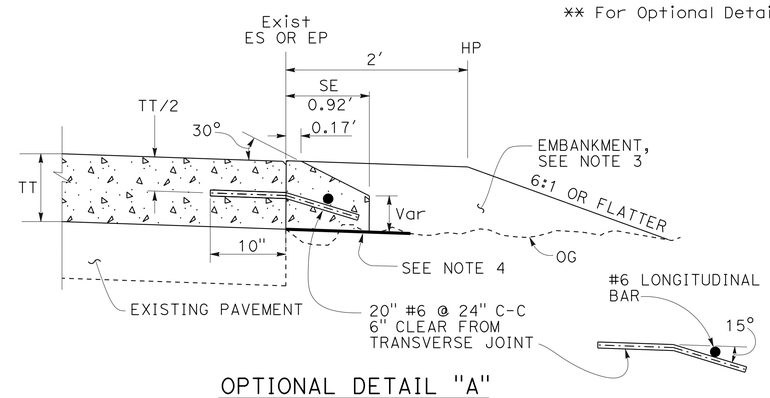

OPTIONAL DETAIL "A"
For concrete overlay
See Note 5

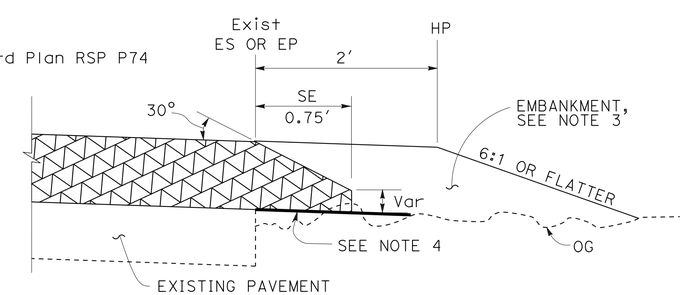

DETAIL "A"
For HMA overlay thickness more than 0.43′ or concrete overlay

NOTES:

1. For limits of safety edge and vertical edge treatments, see Revised Standard Plan RSP P74.
2. Details shown for HMA overlay thickness less than 0.43′. See Detail "A" for HMA overlay thickness more than 0.43′ or concrete overlay.
3. For locations and limits of shoulder backing or embankment see project plans.
4. Grade existing ground to place safety edge. 1′ minimum width
5. Safety edge transverse joint must match overlay transverse joint. End of #6 longitudinal bar must be 2" ±½" clear from transverse joint.
6. Safety edge is not needed in the area of MGS, barrier, right turn lane and acceleration lane. See Revised Standard Plan RSP P74.

STATE OF CALIFORNIA
DEPARTMENT OF TRANSPORTATION

PAVEMENT EDGE TREATMENTS-OVERLAYS

NO SCALE

RSP P75 DATED NOVEMBER 15, 2013 SUPERSEDES RSP P75 DATED JANUARY 20, 2012 THAT SUPPLEMENTS THE STANDARD PLANS BOOK DATED 2010.

REVISED STANDARD PLAN RSP P75

2010 REVISED STANDARD PLAN RSP P75

10-4-13

DIST	COUNTY	ROUTE	POST MILES TOTAL PROJECT	SHEET No.	TOTAL SHEETS
08	SBd	40	R94.7/R99.7	158	251

REGISTERED CIVIL ENGINEER

November 15, 2013
PLANS APPROVAL DATE

REGISTERED PROFESSIONAL ENGINEER
Cornelis M. Hakim
No. C55610
Exp. 12-31-14
CIVIL
STATE OF CALIFORNIA

THE STATE OF CALIFORNIA OR ITS OFFICERS OR AGENTS SHALL NOT BE RESPONSIBLE FOR THE ACCURACY OR COMPLETENESS OF SCANNED COPIES OF THIS PLAN SHEET.

TO ACCOMPANY PLANS DATED 5-27-14

LEGEND:

- HMA PAVEMENT
- HMA OR CONCRETE PAVEMENT
- CONCRETE PAVEMENT

ABBREVIATIONS:

SE SAFETY EDGE
TT TOTAL THICKNESS OF SE
HW HINGE WIDTH, DISTANCE FROM ES OR EP TO HP

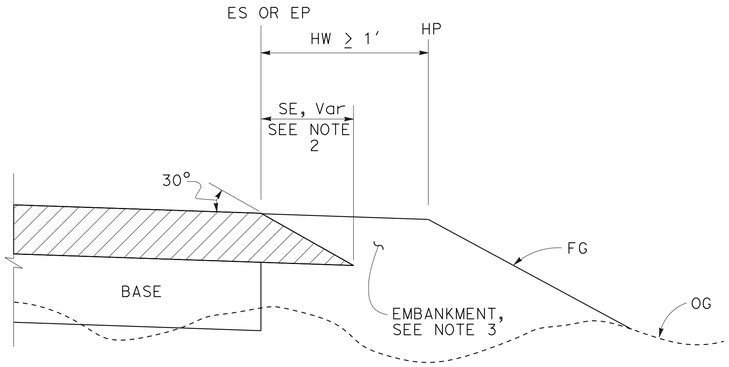

CASE K
Safety Edge - Fill Section, HW ≥ 1′

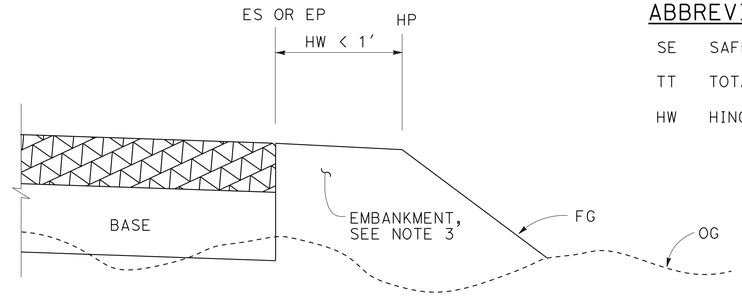

CASE L
Vertical Edge - Fill Section, HW < 1′

FILL SECTION

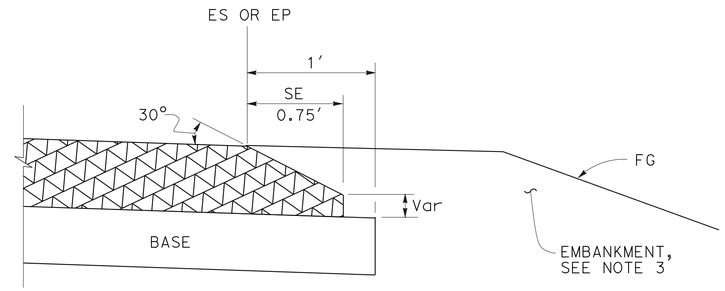

DETAIL "B"
For HMA pavement thickness more than 0.43′ or concrete pavement

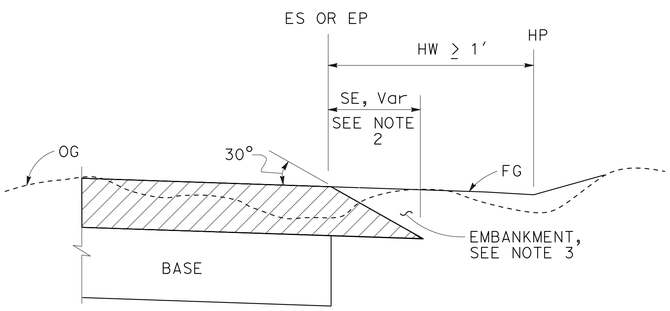

CASE M
Safety Edge - Cut Section, HW ≥ 1′

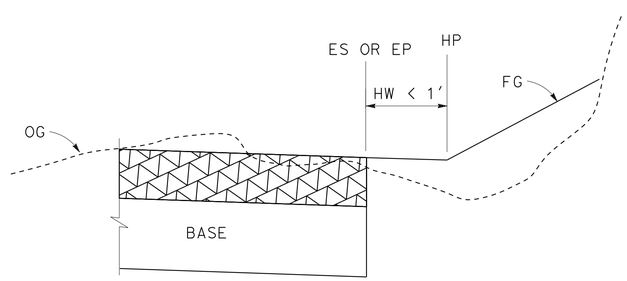

CASE N
Vertical Edge - Cut Section, HW < 1′

CUT SECTION

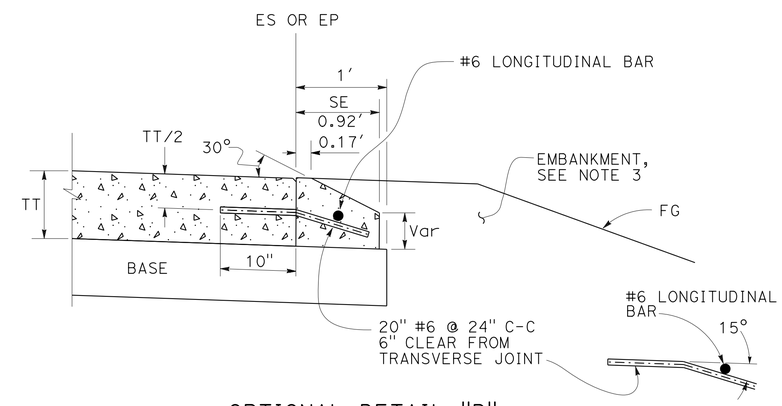

OPTIONAL DETAIL "B"
For concrete pavement
See Note 4

NOTES:

1. For limits of safety edge and vertical edge treatments, see Revised Standard Plan RSP P74
2. Details shown for HMA pavement thickness less than 0.43′. See Detail "B" for HMA pavement thickness more than 0.43′ or concrete pavement.
3. For locations and limits of embankment see project plans.
4. Safety edge transverse joint must match pavement transverse joint. End of #6 longitudinal bar must be 2" ±½" clear from transverse joint.
5. Safety edge is not needed in the area of MGS, barrier, right turn lane and acceleration lane. See Revised Standard Plan RSP P74.

STATE OF CALIFORNIA
DEPARTMENT OF TRANSPORTATION

PAVEMENT EDGE TREATMENTS-NEW CONSTRUCTION

NO SCALE

RSP P76 DATED NOVEMBER 15, 2013 SUPERSEDES RSP P76 DATED JANUARY 20, 2012 THAT SUPPLEMENTS THE STANDARD PLANS BOOK DATED 2010.

REVISED STANDARD PLAN RSP P76

2010 REVISED STANDARD PLAN RSP P76

10-4-13

Dist	COUNTY	ROUTE	POST MILES TOTAL PROJECT	SHEET No.	TOTAL SHEETS
08	SBd	40	R94.7/R99.7	159	251

REGISTERED CIVIL ENGINEER

April 19, 2013
PLANS APPROVAL DATE

REGISTERED PROFESSIONAL ENGINEER Gurinderpal Bhullar No. C48815 Exp. 9-30-14 CIVIL STATE OF CALIFORNIA

THE STATE OF CALIFORNIA OR ITS OFFICERS OR AGENTS SHALL NOT BE RESPONSIBLE FOR THE ACCURACY OR COMPLETENESS OF SCANNED COPIES OF THIS PLAN SHEET.

TO ACCOMPANY PLANS DATED 5-27-14

NOTES:

See Revised Standard Plan RSP T9 for tables.

Use cone spacing X for taper segment, Y for tangent segment or Z for conflict situations, as approriate, per Table 1, unless X, Y, or Z cone spacing is shown on this sheet.

Unless otherwise specified in the special provisions, all temporary warning signs shall have black legend on fluorescent orange background.

California codes are designated by (CA). Otherwise, Federal (MUTCD) codes are shown.

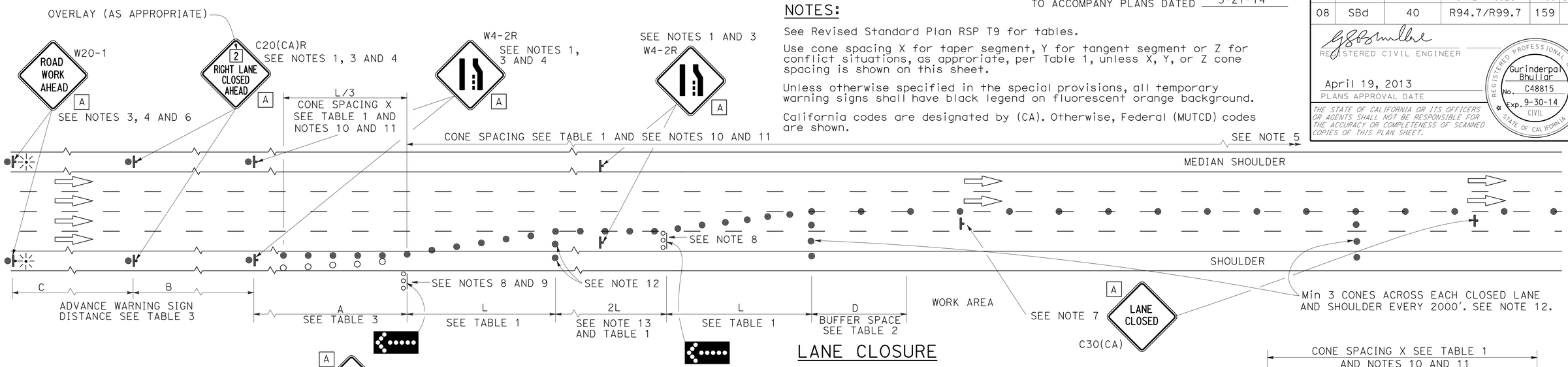

LANE CLOSURE

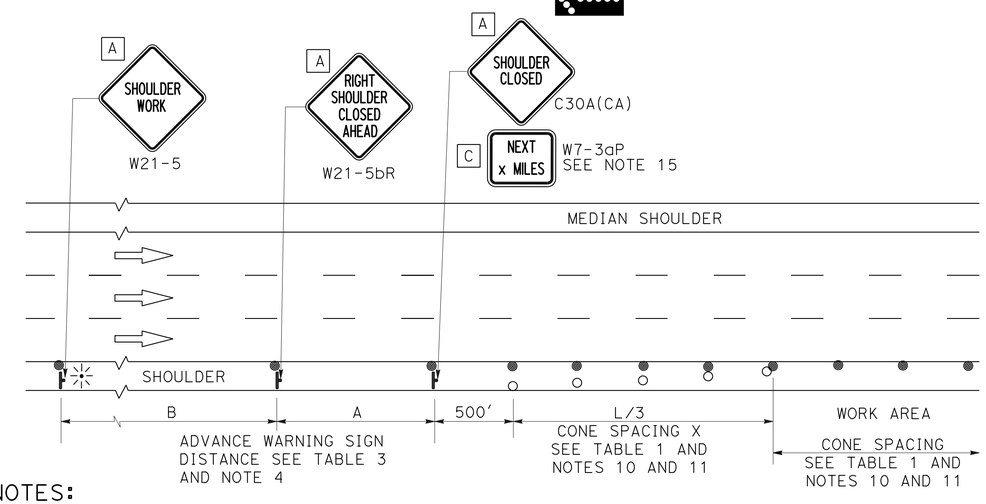

SHOULDER CLOSURE

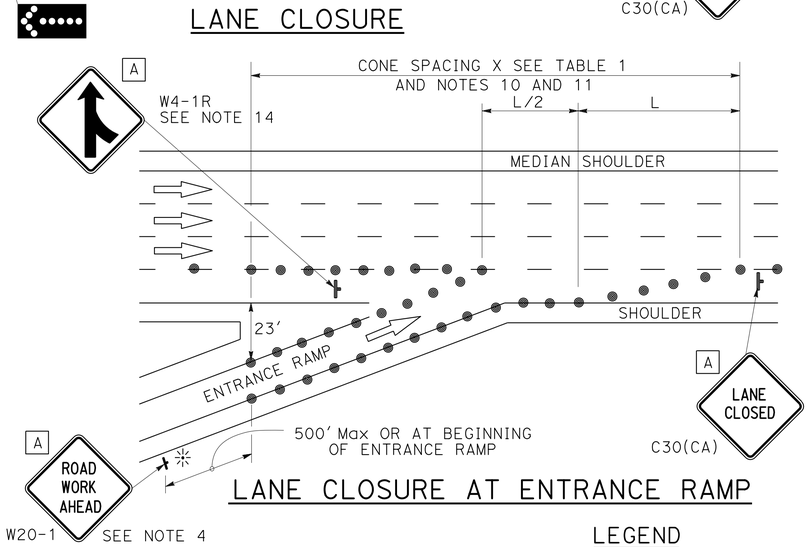

LANE CLOSURE AT ENTRANCE RAMP

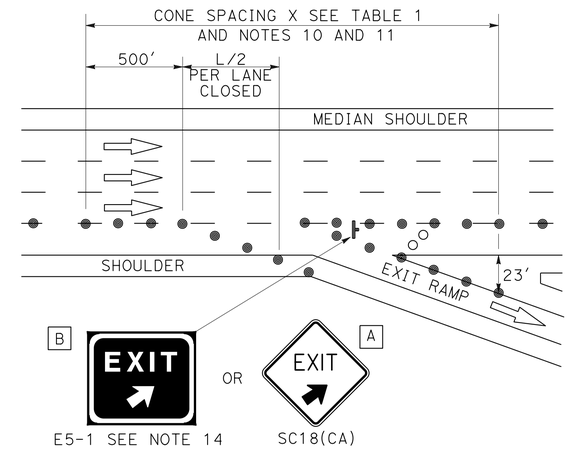

LANE CLOSURE AT EXIT RAMP

NOTES:

1. Median lane closures shall conform to the details as shown except that C20(CA)L and W4-2L signs shall be used.
2. At least one person shall be assigned to provide full time maintenance of traffic control devices for lane closures.
3. Duplicate sign installations are not required:
   a) On opposite shoulder if at least one-half of the available lanes remain open to traffic.
   b) In the median if the width of the median shoulder is less than 8' and the outside lanes are to be closed.
4. Each advance warning sign on each side of the roadway shall be equipped with at least two flags for daytime closure. Each flag shall be at least 16" x 16" in size and shall be orange or fluorescent red-orange in color. Flashing beacons shall be placed at the locations indicated for lane closure during hours of darkness.
5. A G20-2 "END ROAD WORK" sign, with minimum size of 48" x 24" as appropriate, shall be placed at the end of the lane closure unless the end of work area is obvious or ends within a larger project's limits.
6. If the W20-1 sign would follow within 2000' of a stationary W20-1 or G20-1 "ROAD WORK NEXT _____ MILES", use a C20(CA) sign for the first advance warning sign.
7. Place a C30(CA) sign every 2000' throughout length of lane closure.
8. One flashing arrow sign for each lane closed. The flashing arrow signs shall be Type I.
9. A minimum 1500' of sight distance shall be provided where possible for vehicles approaching the first flashing arrow sign. Lane closures shall not begin at top of crest vertical curve or on a horizontal curve.
10. All cones used for lane closures during the hours of darkness shall be fitted with retroreflective bands (or sleeves) as specified in the specifications.
11. Portable delineators, placed at one-half the spacing indicated for traffic cones may be used instead of cones for daytime closures only.
12. Unless otherwise specified in the special provisions, a minimum of 3 cones shall be placed transversely across each closed lane and shoulder at each location where a taper across a traffic lane ends and every 2000' as shown on the "Lane Closure" detail. Two Type II barricades may be used instead of the 3 cones. The transverse alignment of the cones or barricades on the closed shoulder may be shifted from the transverse alignment to provide access to the work.
13. Unless otherwise specified in the special provisions, the 2L tangent shown along lane lines shall be used between the L tapers required for each closed traffic lane.
14. Unless otherwise specified in the special provisions, the E5-1 or SC18(CA) and W4-1 signs shall be used as shown.
15. A W7-3aP "NEXT____ MILES" plaque must be used if theshoulder closure extends beyond the distance that can be perceived by road users.

LEGEND

- TRAFFIC CONE
- TRAFFIC CONE (OPTIONAL TAPER)
- TEMPORARY TRAFFIC CONTROL SIGN
- FLASHING ARROW SIGN (FAS)
- FAS SUPPORT OR TRAILER
- PORTABLE FLASHING BEACON

SIGN PANEL SIZE (Min)

A	48" x 48"
B	72" x 60"
C	36" x 30"

STATE OF CALIFORNIA
DEPARTMENT OF TRANSPORTATION

TRAFFIC CONTROL SYSTEM FOR LANE CLOSURE ON FREEWAYS AND EXPRESSWAYS

NO SCALE

RSP T10 DATED APRIL 19, 2013 SUPERSEDES STANDARD PLAN T10 DATED MAY 20, 2011 - PAGE 237 OF THE STANDARD PLANS BOOK DATED 2010.

REVISED STANDARD PLAN RSP T10

2010 REVISED STANDARD PLAN RSP T10

12-18-12

TO ACCOMPANY PLANS DATED 5-27-14

Dist	COUNTY	ROUTE	POST MILES TOTAL PROJECT	SHEET No.	TOTAL SHEETS
08	SBd	40	R94.7/R99.7	160	251

REGISTERED CIVIL ENGINEER

April 19, 2013
PLANS APPROVAL DATE

REGISTERED PROFESSIONAL ENGINEER Gurinderpal Bhullar No. C48815 Exp. 9-30-14 CIVIL STATE OF CALIFORNIA

THE STATE OF CALIFORNIA OR ITS OFFICERS OR AGENTS SHALL NOT BE RESPONSIBLE FOR THE ACCURACY OR COMPLETENESS OF SCANNED COPIES OF THIS PLAN SHEET.

NOTES: See Revised Standard Plan RSP T9 for tables.

Use cone spacing X for taper segment, Y for tangent segment or Z for conflict situations, as approriate, per Table 1, unless X, Y, or Z cone spacing is shown on this sheet.

Unless otherwise specified in the special provisions, all temporary warning signs shall have black legend on fluorescent orange background.

California codes are designated by (CA). Otherwise, Federal (MUTCD) codes are shown.

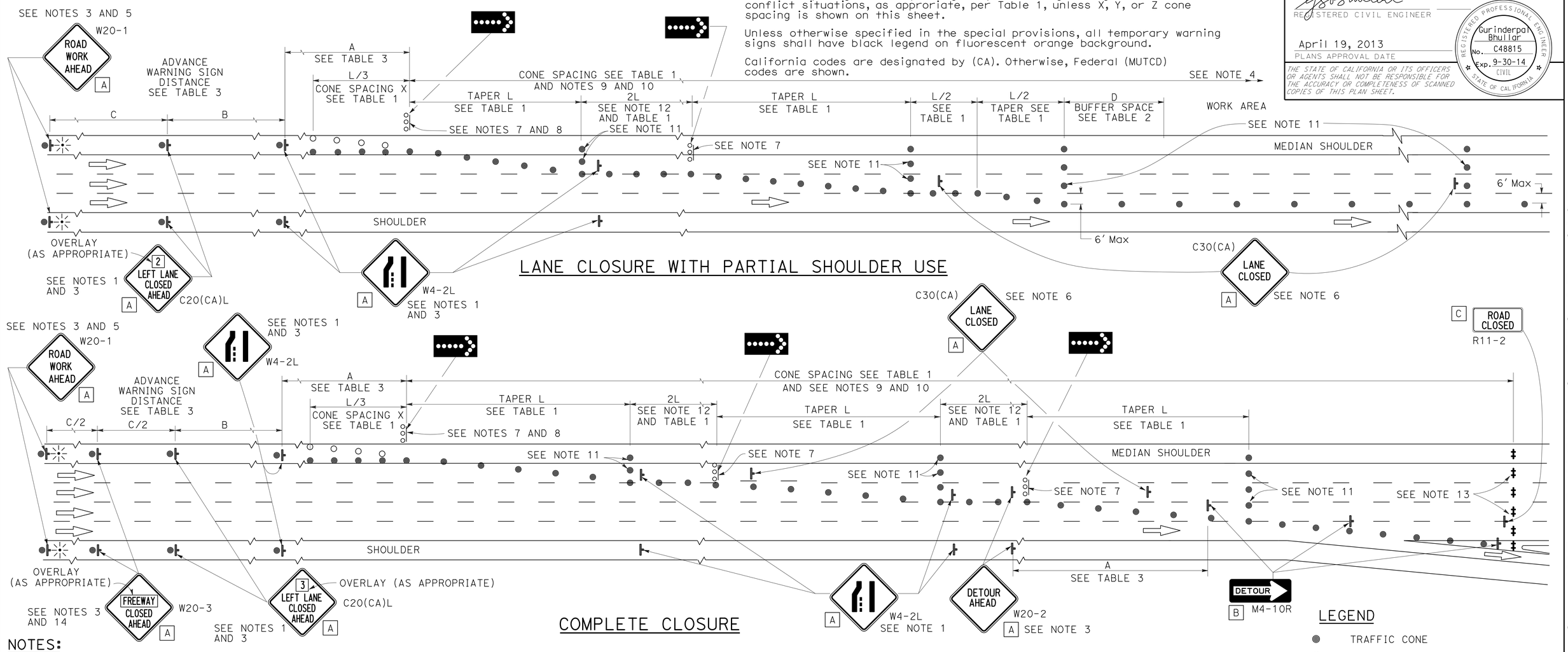

LANE CLOSURE WITH PARTIAL SHOULDER USE

COMPLETE CLOSURE

NOTES:

1. Lane closures on the right side using partial median shoulder as a traffic lane shall conform to the details as shown except that C20(CA)R and W4-2R signs shall be used.
2. At least one person shall be assigned to provide full time maintenance of traffic control devices for lane closures.
3. Each advance warning sign on each side of the roadway shall be equipped with at least two flags for daytime closure. Each flag shall be at least 16" X 16" in size and shall be orange or fluorescent red-orange in color. Flashing beacons shall be placed at the locations indicated for lane closure during hours of darkness.
4. A G20-2 "END ROAD WORK" sign, with minimum size of 48" x 24" as appropriate, shall be placed at the end of the lane closure unless the end of work area is obvious or ends within a larger project's limits.
5. If the W20-1 sign would follow within 2000' of a stationary W20-1 or G20-1 "ROAD WORK NEXT ___ MILES", use a C20(CA) sign for the first advance warning sign.
6. Place a C30(CA) sign every 2000' throughout length of lane closure.
7. One flashing arrow sign for each lane closed. The flashing arrow signs shall be Type I.
8. A minimum 1500' of sight distance shall be provided where possible for vehicles approaching the first flashing arrow sign. Lane closures shall not begin at the top of crest vertical curve or on a horizontal curve.
9. All cones used for lane closures during the hours of darkness shall be fitted with retroreflective bands (or sleeves) as specified in the specifications.
10. Portable delineators, placed at one-half the spacing indicated for traffic cones, may be used instead of cones for daytime closures only.
11. Unless otherwise specified in the special provisions, a minimum of 3 cones shall be placed transversely across each closed lane and shoulder at each location where a taper across a traffic lane ends and every 2000' as shown on the "Lane Closure With Partial Shoulder Use" detail. Two Type II barricades may be used instead of the 3 cones. The transverse alignment of the cones or barricades on the closed shoulder may be shifted from the transverse alignment to provide access to the work.
12. Unless otherwise specified in the special provisions, the 2L tangent shown along lane lines shall be used between the L tapers required for each closed traffic lane.
13. A minimum of Two Type II or III barricades shall be placed across each closed lane and shoulder at the location shown and every 2000' within the complete closure area. Within the complete closure area, the transverse alignment of the barricades on the closed shoulder may be shifted from the transverse alignment to provide access to the work.
14. When specified in the special provisions, a W20-2 "DETOUR AHEAD" sign is to be used in place of the W20-3 "FREEWAY CLOSED AHEAD" sign.

SIGN PANEL SIZE (Min)

A	48" x 48"
B	48" x 18"
C	48" x 30"

LEGEND

- TRAFFIC CONE
- TRAFFIC CONE (OPTIONAL TAPER)
- TEMPORARY TRAFFIC CONTROL SIGN
- FLASHING ARROW SIGN (FAS)
- FAS SUPPORT OR TRAILER
- PORTABLE FLASHING BEACON

STATE OF CALIFORNIA
DEPARTMENT OF TRANSPORTATION

TRAFFIC CONTROL SYSTEM FOR LANE CLOSURES ON FREEWAYS AND EXPRESSWAYS

NO SCALE

RSP T10A DATED APRIL 19, 2013 SUPERSEDES STANDARD PLAN T10A DATED MAY 20, 2011 - PAGE 238 OF THE STANDARD PLANS BOOK DATED 2010.

REVISED STANDARD PLAN RSP T10A

2010 REVISED STANDARD PLAN RSP T10A

12-18-12

Dist	COUNTY	ROUTE	POST MILES TOTAL PROJECT	SHEET No.	TOTAL SHEETS
08	SBd	40	R94.7/R99.7	161	251

REGISTERED CIVIL ENGINEER

April 19, 2013
PLANS APPROVAL DATE

REGISTERED PROFESSIONAL ENGINEER Gurinderpal Bhullar No. C48815 Exp. 9-30-14 CIVIL STATE OF CALIFORNIA

THE STATE OF CALIFORNIA OR ITS OFFICERS OR AGENTS SHALL NOT BE RESPONSIBLE FOR THE ACCURACY OR COMPLETENESS OF SCANNED COPIES OF THIS PLAN SHEET.

TO ACCOMPANY PLANS DATED 5-27-14

TYPICAL RAMP CLOSURES

SIGN PANEL SIZE (Min)

- A 48" x 48"
- B 48" x 30"
- C 36" x 36"
- D 48" x 36"

LEGEND

- TRAFFIC CONE
- TEMPORARY TRAFFIC CONTROL SIGN
- BARRICADES
- PORTABLE FLASHING BEACON

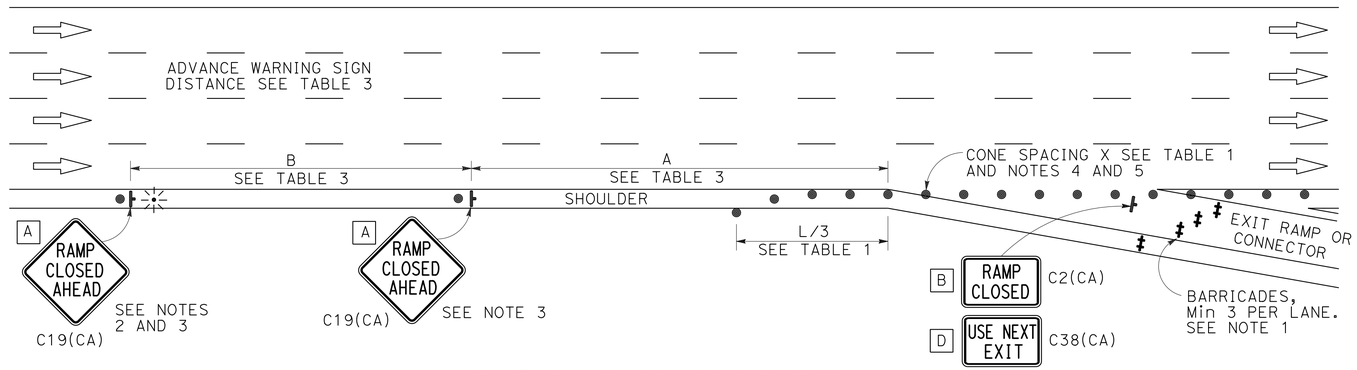

EXIT RAMP OR CONNECTOR

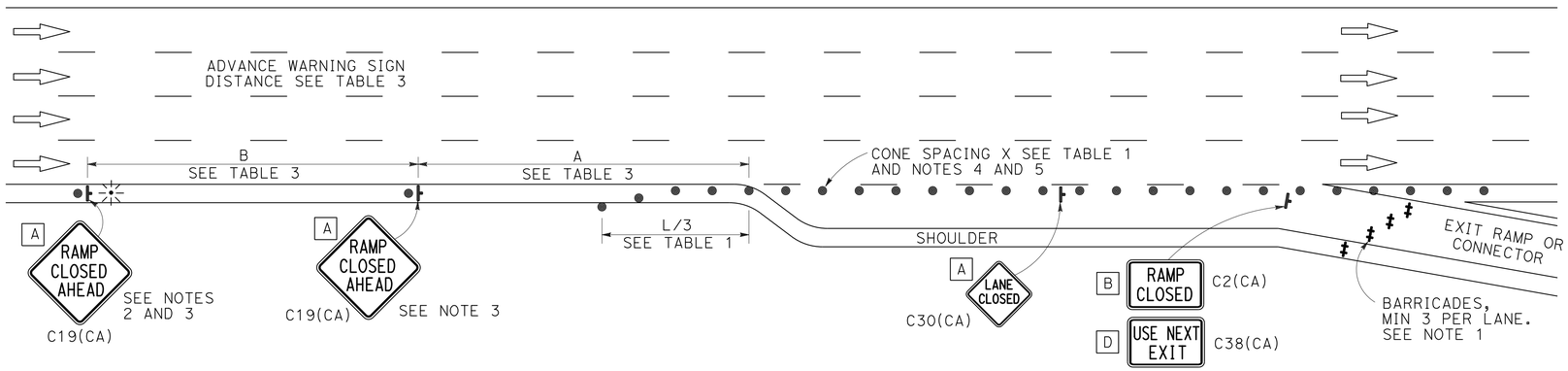

EXIT RAMP OR CONNECTOR WITH ADDITIONAL LANE

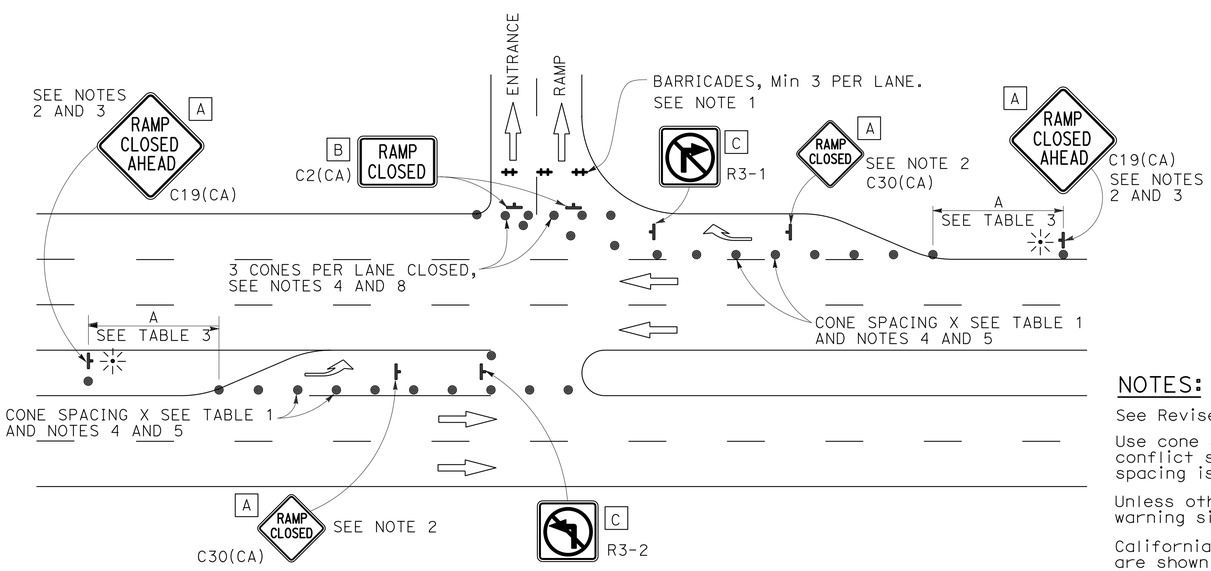

ENTRANCE RAMP WITH TURNING POCKETS

NOTES:

See Revised Standard Plan RSP T9 for tables.

Use cone spacing X for taper segment, Y for tangent segment or Z for conflict situations, as approriate, per Table 1, unless X, Y, or Z cone spacing is shown on this sheet.

Unless otherwise specified in the special provisions, all temporary warning signs shall have black legend on fluorescent orange background.

California codes are designated by (CA). Otherwise, Federal (MUTCD) codes are shown.

NOTES:

1. Barricades shall be Type I, II, or III for closures lasting one week or less and Type III for closures lasting longer than one week.
2. In addition to placing the C19(CA) "RAMP CLOSED AHEAD" and C30(CA) "RAMP CLOSED" signs, black on orange overlay plates with the word "CLOSED" may be mounted, as directed by the Engineer, on all guide signs that refer to the closed ramp. The letter size on the overlay shall be the same as the guide sign.
3. Each advance C19(CA) "RAMP CLOSED AHEAD" sign shall be equipped with at least two flags for daytime closure. Each flag shall be at least 16" x 16" in size and shall be orange or fluorescent red-orange in color. A flashing beacon shall be placed on top of the first C19(CA) sign during hours of darkness.
4. All cones used for ramp closures during the hours of darkness shall be fitted with retroreflective bands (or sleeves) as specified in the specifications.
5. Portable delineators, placed at one-half the spacing indicated for traffic cones, may be used instead of cones for daytime ramp closures only.
6. At least one person shall be assigned to provide full time maintenance of traffic control devices, unless otherwise directed by the Engineer.
7. The existing "EXIT" signs shall be covered during ramp closures.
8. A minimum of 3 cones shall be placed transversely across each closed lane and shoulder.

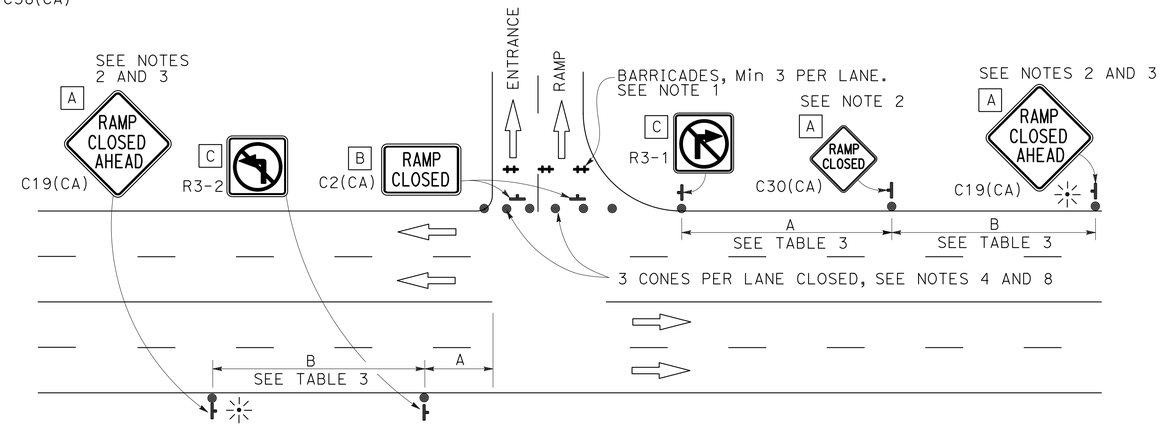

ENTRANCE RAMP WITHOUT TURNING POCKETS

STATE OF CALIFORNIA
DEPARTMENT OF TRANSPORTATION

TRAFFIC CONTROL SYSTEM FOR RAMP CLOSURE

NO SCALE

RSP T14 DATED APRIL 19, 2013 SUPERSEDES STANDARD PLAN T14
DATED MAY 20, 2011 - PAGE 242 OF THE STANDARD PLANS BOOK DATED 2010.

REVISED STANDARD PLAN RSP T14

2010 REVISED STANDARD PLAN RSP T14

12-18-12

Dist	COUNTY	ROUTE	POST MILES TOTAL PROJECT	SHEET No.	TOTAL SHEETS
08	SBd	40	R94.7/R99.7	162	251

REGISTERED CIVIL ENGINEER

April 19, 2013
PLANS APPROVAL DATE

REGISTERED PROFESSIONAL ENGINEER Gurinderpal Bhullar No. C48815 Exp. 9-30-14 CIVIL STATE OF CALIFORNIA

THE STATE OF CALIFORNIA OR ITS OFFICERS OR AGENTS SHALL NOT BE RESPONSIBLE FOR THE ACCURACY OR COMPLETENESS OF SCANNED COPIES OF THIS PLAN SHEET.

TO ACCOMPANY PLANS DATED 5-27-14

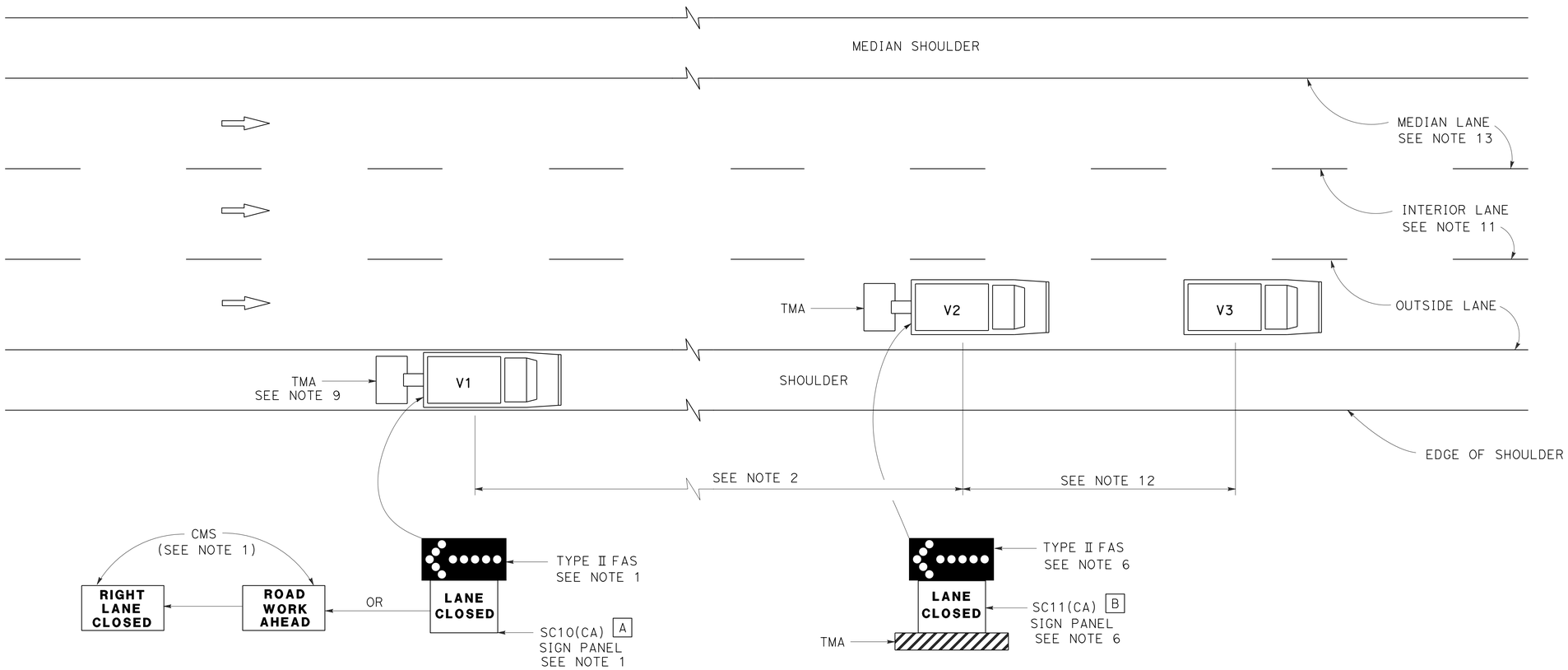

MOVING LANE CLOSURE ON MEDIAN LANE OR OUTSIDE LANE OF MULTILANE HIGHWAYS

SIGN PANEL SIZE (Min)

A 66" x 36"

B 54" x 42"

LEGEND

V1	SIGN VEHICLE
V2	SHADOW VEHICLE
V3	WORK/APPLICATION VEHICLE
	FLASHING ARROW SIGN (FAS)
CMS	CHANGEABLE MESSAGE SIGN
TMA	TRUCK-MOUNTED ATTENUATOR

NOTES:

1. Either a changeable message sign or a SC10(CA) sign panel and a Type II flashing arrow sign shall be mounted on the rear of sign vehicle V1. The changeable message sign shall be sequenced to show the "ROAD WORK AHEAD" message first, followed by the "RIGHT LANE CLOSED" message. For median lane closure, the flashing arrow symbol shall be reversed with the arrowhead on the right and the changeable message sign shall show "LEFT LANE CLOSED".
2. If traffic queues develop, sign vehicle V1 should be positioned upstream from the end of queue. Sign vehicle V1 shall be positioned where highly visible when shoulders are not available.
3. A minimum sight distance of 1500′ should be provided in advance of sign vehicle V1.
4. Sign vehicle V1 should remain at the beginning of horizontal or vertical curves until the other vehicles (V2 and V3) are far enough beyond the curve to resume the minimum sight distance of 1500′.
5. Vehicle-mounted sign panels shall have Type III or above retroreflective sheeting, black on white, or black on fluorescent orange, with 6" minimum series D letters per Caltrans sign specifications.
6. Shadow vehicle V2 shall be equipped with a truck-mounted attenuator. The sign panel shown and a Type II flashing arrow sign shall be mounted on the rear of shadow vehicle V2. For median lane closure the flashing arrow sign symbol shall be displayed with the arrowhead on the right.
7. All vehicles used for lane closures shall be equipped with two-way radios, and the vehicle operators shall maintain communication during the work or application operation.
8. All vehicles shall be equipped with flashing or rotating amber lights.
9. If sign vehicle V1 encroaches into the traffic lane due to insufficient shoulder width, sign vehicle V1 shall be equipped with a truck-mounted attenuator. Sign vehicle V1 shall stay as close to the edge of shoulder as practicable.
10. Where workers would be on foot in the work area, a stationary type lane closure (Revised Standard Plan T10, T11, etc., as applicable) shall be used instead of this plan.
11. For moving lane closure on interior lane of multilane highways, use Revised Standard Plan T16.
12. The spacing between work vehicle(s) and the shadow vehicles, and between each shadow vehicle should be minimized to deter road users from driving in between.
13. When the work/application vehicle V3 occupies the median lane, sign vehicle V1 should drive in the median shoulder and indicate left lane closed ahead.

STATE OF CALIFORNIA
DEPARTMENT OF TRANSPORTATION

TRAFFIC CONTROL SYSTEM FOR MOVING LANE CLOSURE ON MULTILANE HIGHWAYS

NO SCALE

RSP T15 DATED APRIL 19, 2013 SUPERSEDES STANDARD PLAN T15
DATED MAY 20, 2011 - PAGE 243 OF THE STANDARD PLANS BOOK DATED 2010.

REVISED STANDARD PLAN RSP T15

2010 REVISED STANDARD PLAN RSP T15

12-18-12

Dist	COUNTY	ROUTE	POST MILES TOTAL PROJECT	SHEET No.	TOTAL SHEETS
08	SBd	40	R94.7/R99.7	163	251

REGISTERED CIVIL ENGINEER

April 19, 2013
PLANS APPROVAL DATE

REGISTERED PROFESSIONAL ENGINEER
Gurinderpal Bhullar
No. C48815
Exp. 9-30-14
CIVIL
STATE OF CALIFORNIA

THE STATE OF CALIFORNIA OR ITS OFFICERS OR AGENTS SHALL NOT BE RESPONSIBLE FOR THE ACCURACY OR COMPLETENESS OF SCANNED COPIES OF THIS PLAN SHEET.

TO ACCOMPANY PLANS DATED 5-27-14

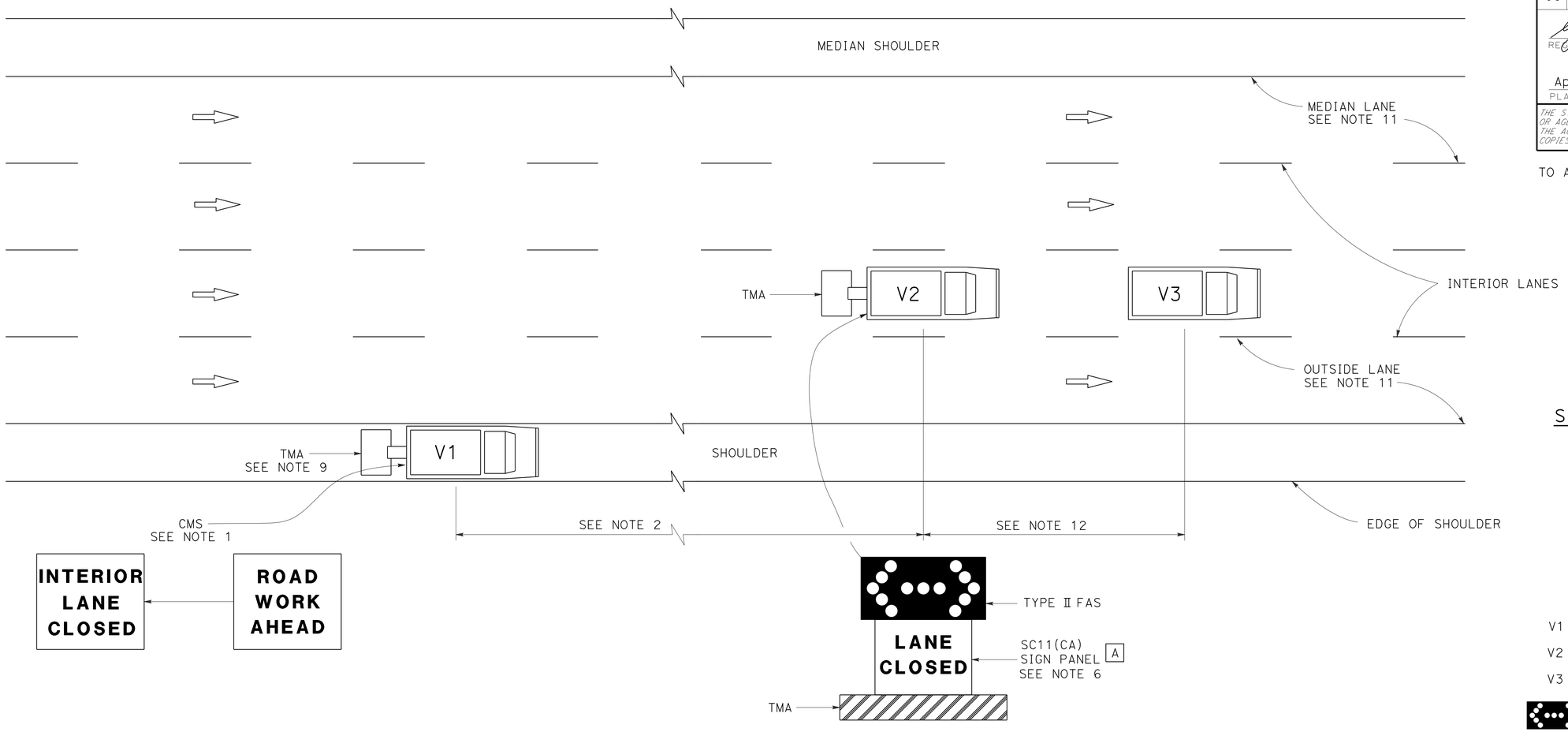

SIGN PANEL SIZE (Min)

A 54" x 42"

LEGEND

V1	SIGN VEHICLE
V2	SHADOW VEHICLE
V3	WORK/APPLICATION VEHICLE
	FLASHING ARROW SIGN (FAS) IN FLASHING DOUBLE ARROW MODE
CMS	CHANGEABLE MESSAGE SIGN
TMA	TRUCK-MOUNTED ATTENUATOR

MOVING LANE CLOSURE ON INTERIOR LANE OF MULTILANE HIGHWAYS

NOTES:

1. A changeable message sign shall be mounted on the rear of sign vehicle V1. The changeable message sign shall be sequenced to show the "ROAD WORK AHEAD" message first, followed by the "INTERIOR LANE CLOSED" message. The message "CENTER LANE CLOSED" may be used in place of the "INTERIOR LANE CLOSED" message.
2. If traffic queues develop, sign vehicle V1 should be positioned upstream from the end of queue. Sign vehicle V1 shall be positioned where highly visible when shoulders are not available.
3. A minimum sight distance of 1500′ should be provided in advance of sign vehicle V1.
4. Sign vehicle V1 should remain at the beginning of horizontal or vertical curves until the other vehicles (V2 and V3) are far enough beyond the curve to resume the minimum sight distance of 1500′.
5. Vehicle-mounted sign panels shall have Type III or above retroreflective sheeting, black on white, or black on fluorescent orange, with 6" minimum series D letters per Caltrans sign specifications.
6. Shadow vehicle V2 shall be equipped with a truck-mounted attenuator. The sign panel shown and a Type II flashing arrow sign shall be mounted on the rear of shadow vehicle V2.
7. All vehicles used for lane closures shall be equipped with two-way radios, and the vehicle operators shall maintain communication during the work or application operation.
8. All vehicles shall be equipped with flashing or rotating amber lights.
9. If sign vehicle V1 encroaches into the traffic lane due to insufficient shoulder width, sign vehicle V1 shall be equipped with a truck-mounted attenuator. Sign vehicle V1 shall stay as close to the edge of shoulder as practicable.
10. Where workers would be on foot in the work area, a stationary type lane closure (Revised Standard Plan T10, T11 etc., as applicable) shall be used instead of this plan.
11. For moving lane closure on median lane or outside lane of multilane highways, use Revised Standard Plan T15.
12. The spacing between work vehicle(s) and the shadow vehicles, and between each shadow vehicle should be minimized to deter road users from driving in between.

STATE OF CALIFORNIA
DEPARTMENT OF TRANSPORTATION

TRAFFIC CONTROL SYSTEM FOR MOVING LANE CLOSURE ON MULTILANE HIGHWAYS

NO SCALE

RSP T16 DATED APRIL 19, 2013 SUPERSEDES STANDARD PLAN T16
DATED MAY 20, 2011 - PAGE 244 OF THE STANDARD PLANS BOOK DATED 2010.

REVISED STANDARD PLAN RSP T16

2010 REVISED STANDARD PLAN RSP T16

12-18-13

Dist	COUNTY	ROUTE	POST MILES TOTAL PROJECT	SHEET No.	TOTAL SHEETS
08	SBd	40	R94.7/R99.7	164	251

REGISTERED CIVIL ENGINEER

July 19, 2013
PLANS APPROVAL DATE

REGISTERED PROFESSIONAL ENGINEER Marc Friedheim No. C57968 Exp. 6-30-14 CIVIL STATE OF CALIFORNIA

THE STATE OF CALIFORNIA OR ITS OFFICERS OR AGENTS SHALL NOT BE RESPONSIBLE FOR THE ACCURACY OR COMPLETENESS OF SCANNED COPIES OF THIS PLAN SHEET.

TO ACCOMPANY PLANS DATED 5-27-14

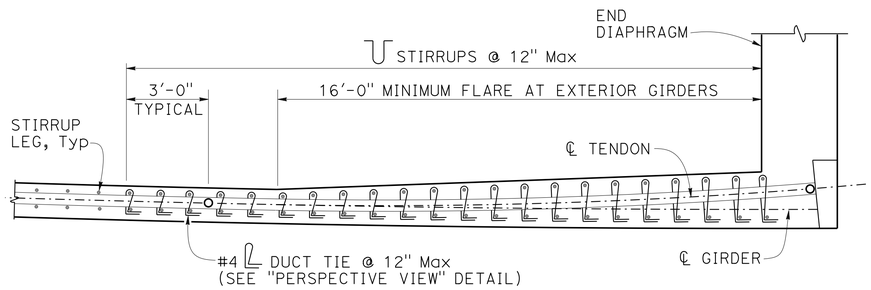

LEGEND:

o - Denotes beginning or end of tendon horizontal angle change (BC, EC or PCC)

PLAN

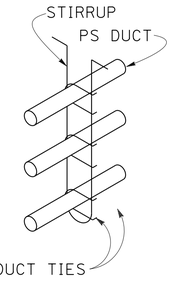

PERSPECTIVE VIEW

DUCT TIES AT TENDON HORIZONTAL ANGLE CHANGES
DETAIL 5-1

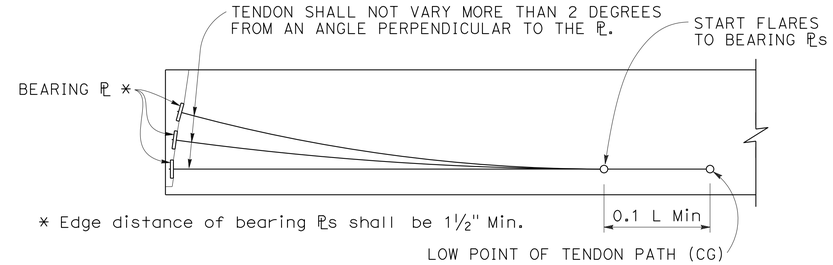

* Edge distance of bearing ℙs shall be 1½" Min.

ELEVATION - BEARING PLATE AND PRESTRESSING PATH
DETAIL 5-2

NOTES FOR DETAIL 5-1

1. Tendon horizontal angle change at end diaphragm shown. Duct tie placement similar for other locations where tendon horizontal angle changes occur. For curved girders place duct ties at tendon angle changes where ℄ tendon radius is smaller than ℄ girder radius.
2. Adjacent duct ties may be staggered to facilitate placement if stirrup spacing is less than 12 inches.
3. Place closed end of duct ties toward inside of tendon curve.
4. Wrap duct ties around both stirrup legs.
5. Individual duct ties may only be used to anchor one duct.

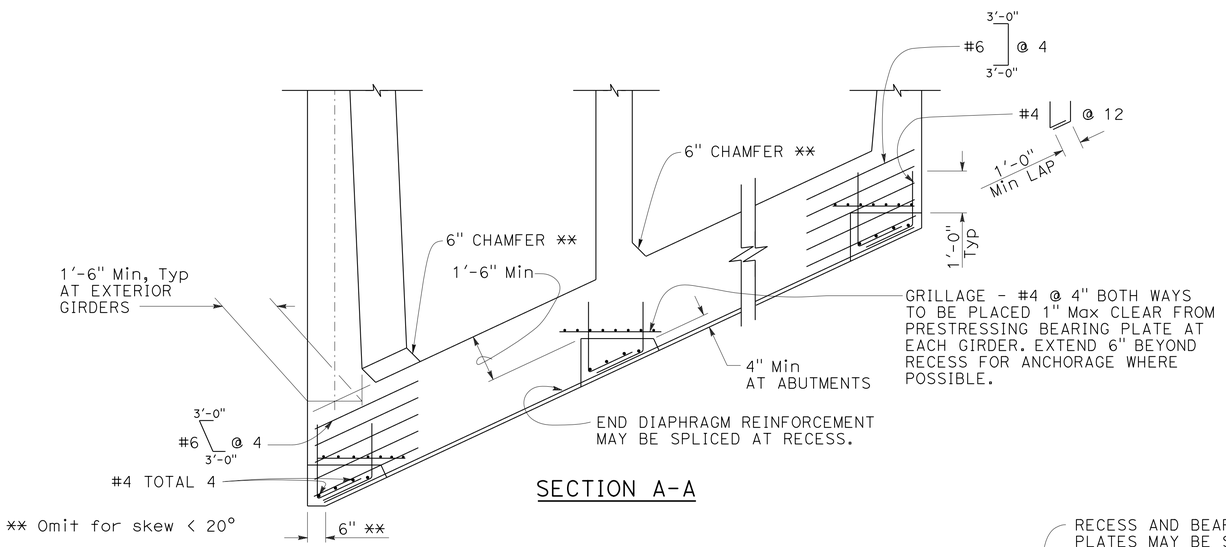

SECTION A-A

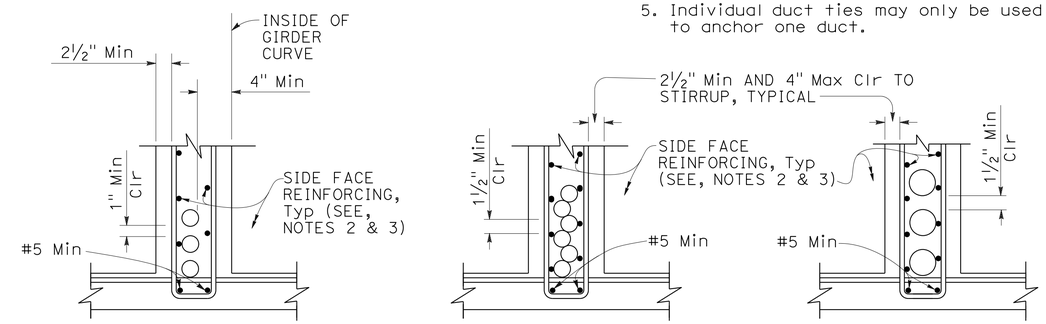

DUCTS 4½" OD AND LESS FOR HORIZONTAL CURVE RADIUS ≤ 2000'

DUCTS 4½" OD AND LESS

DUCTS OVER 4½" OD

CLEARANCE REQUIREMENTS FOR DUCTS
DETAIL 5-4

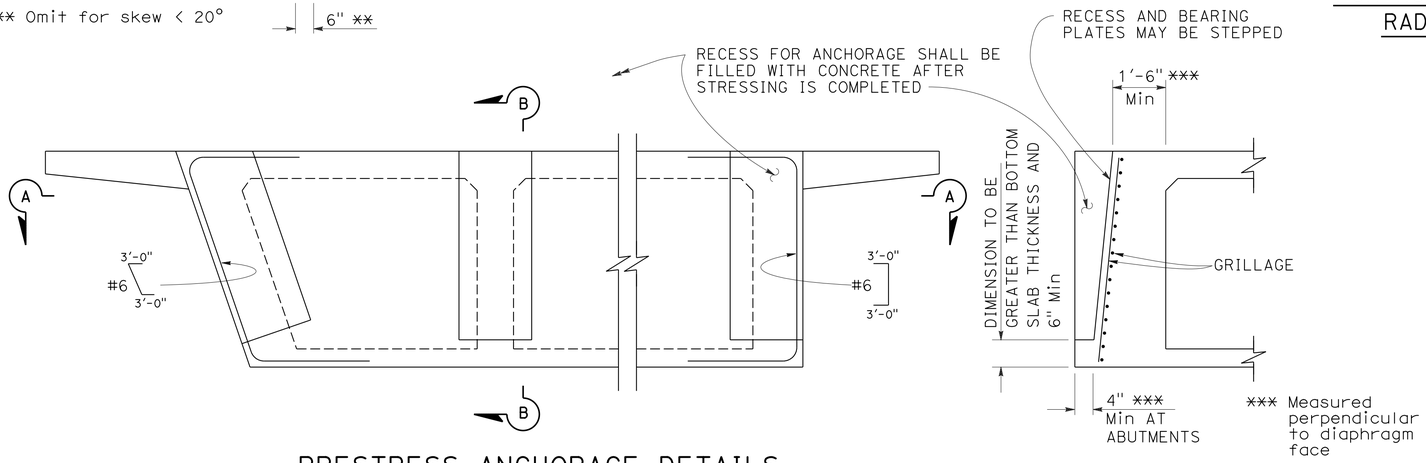

PRESTRESS ANCHORAGE DETAILS AT END DIAPHRAGMS
DETAIL 5-3

SECTION B-B

NOTES FOR DETAIL 5-4:

1. ⊔ Stirrups may also be used.
2. For additional details, see Standard Plan B7-1, and Project Plans.
3. Bar reinforcing which interferes with prestressing ducts may be adjusted as approved by the Engineer.

STATE OF CALIFORNIA
DEPARTMENT OF TRANSPORTATION

CAST-IN-PLACE POST-TENSIONED GIRDER DETAILS

NO SCALE

RSP B8-5 DATED JULY 19, 2013 SUPERSEDES STANDARD PLAN B8-5 DATED MAY 20, 2011 - PAGE 291 OF THE STANDARD PLANS BOOK DATED 2010.

REVISED STANDARD PLAN RSP B8-5

2010 REVISED STANDARD PLAN RSP B8-5

Dist	COUNTY	ROUTE	POST MILES TOTAL PROJECT	SHEET No.	TOTAL SHEETS
08	SBd	40	R94.7/R99.7	165	251

REGISTERED CIVIL ENGINEER

November 15, 2013
PLANS APPROVAL DATE

REGISTERED PROFESSIONAL ENGINEER
Tillat Satter
No. C42892
Exp. 3-31-14
CIVIL
STATE OF CALIFORNIA

THE STATE OF CALIFORNIA OR ITS OFFICERS OR AGENTS SHALL NOT BE RESPONSIBLE FOR THE ACCURACY OR COMPLETENESS OF SCANNED COPIES OF THIS PLAN SHEET.

TO ACCOMPANY PLANS DATED 5-27-14

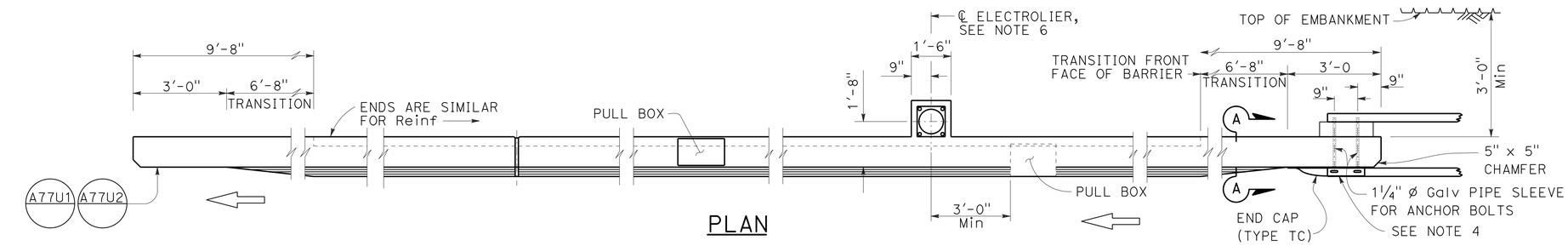

PLAN

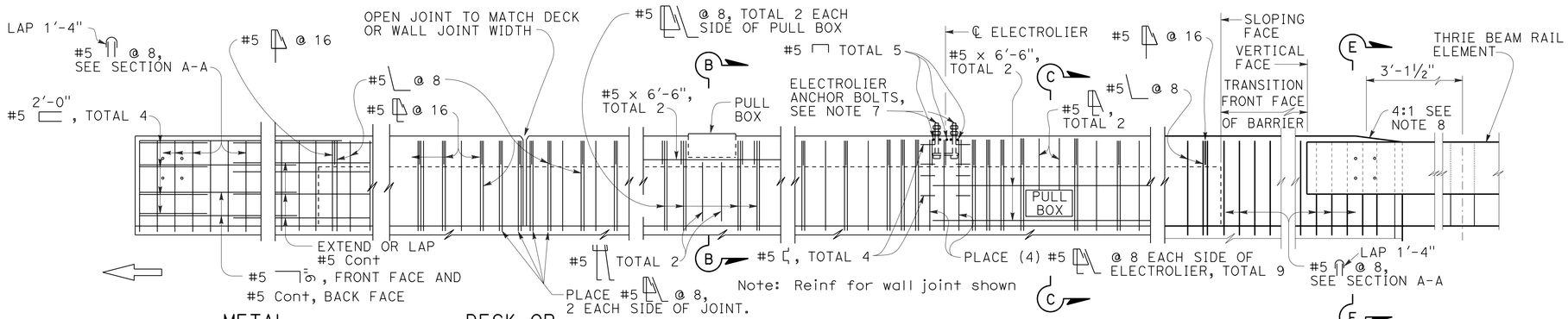

METAL RAILING CONNECTION

DECK OR WALL JOINT

ELEVATION

ELECTROLIER
See Note F

TYPE 736A

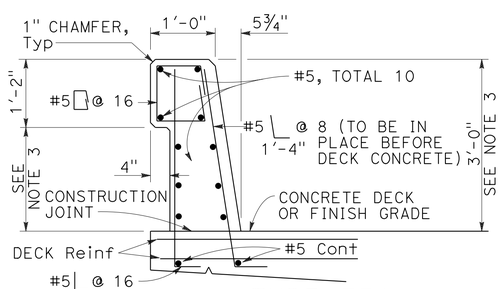

TYPE 736

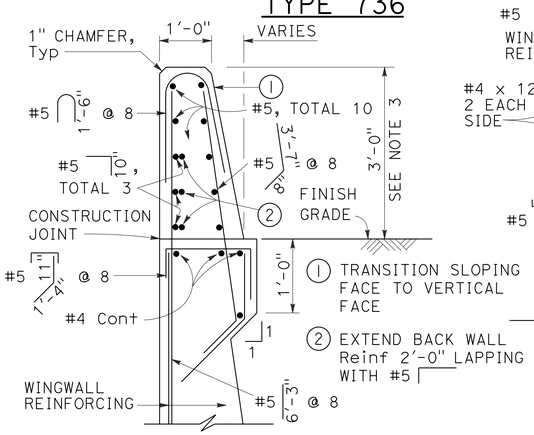

SECTION A-A

Details shown for barrier anchorage to Type 736A. Anchorgae for barrier Types 736 and 736B are similar to their respective details.

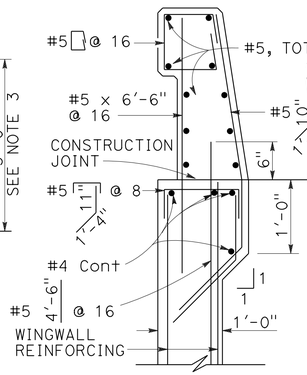

TYPE 736A

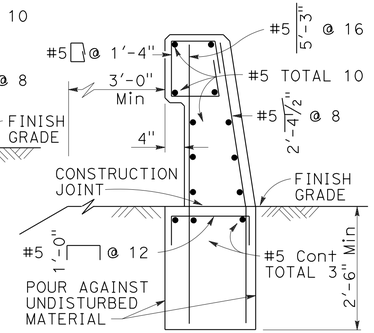

TYPE 736B

Note: Types 736A & 736B are similar to Type 736 except as noted

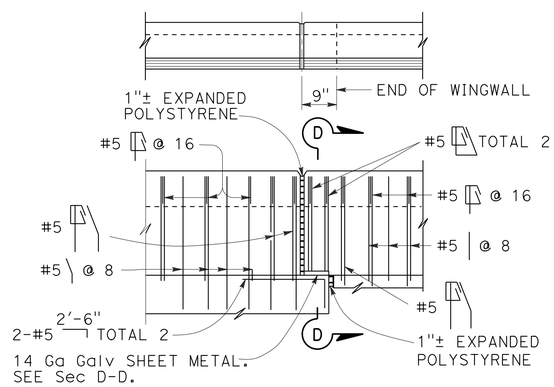

TYPE 736A TYPE 736B

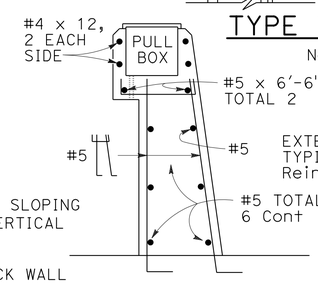

SECTION B-B

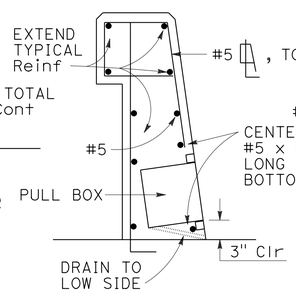

SECTION C-C

See Notes

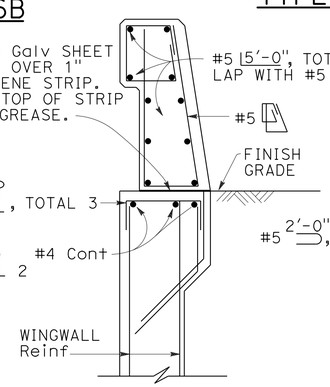

SECTION D-D

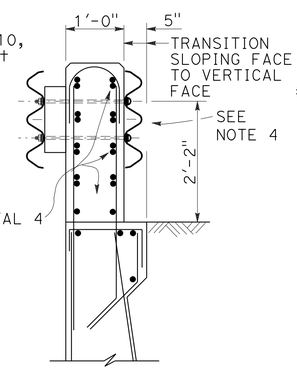

SECTION E-E

See Notes

NOTES:

1. Walls are to be backfilled before barrier is placed.
2. Clearance to reinforcing steel in barrier to be 1", except as noted. Longitudinal reinforcement to stop at all expansion joints.
3. Dimensions may vary with roadway cross slope and with certain thickness of surfacing. See Project Plans.
4. For typical metal railing connection details not shown, see Revised Standard Plans RSP A77U1 and RSP A77U2.
5. See Standard Plans ES-9A, ES-9B, ES-9C, ES-9D and ES-9E for electrical details. The maximum number of conduits in the barrier is limited to two 2" conduits along with one 3" conduit. When a 3" conduit is used, it is restricted to the base of the barrier.
6. For electrolier mounting details, See Standard Plans ES-6A and ES-6B.
7. Minimum concrete edge distance, to the reinforcing shown, shall be maintained. Edge distance may be adjusted to accommodate increase in concrete cover for architectual treatment.
8. Taper the top of the end of the bridge railing at 4:1 to match the top elevation of the thrie beam rail element.

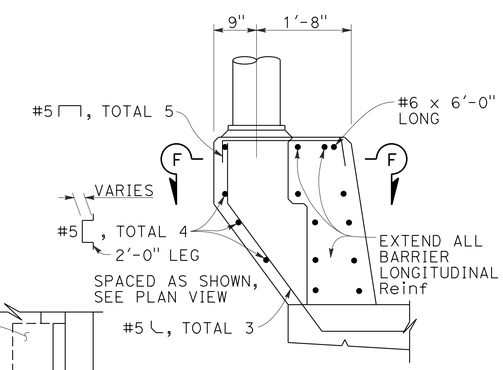

PEDESTAL ELEVATION

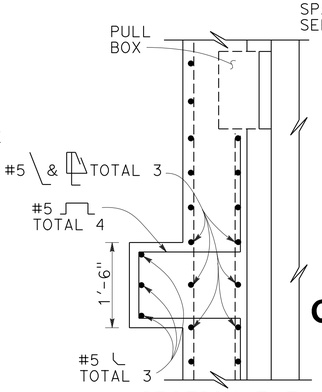

SECTION F-F

STATE OF CALIFORNIA
DEPARTMENT OF TRANSPORTATION

CONCRETE BARRIER TYPE 736

NO SCALE

RSP B11-56 DATED NOVEMBER 15, 2013 SUPERSEDES RSP B11-56 DATED JULY 19, 2013 AND STANDARD PLAN B11-56 DATED MAY 20, 2011 - PAGE 298 OF THE STANDARD PLANS BOOK DATED 2010.

REVISED STANDARD PLAN RSP B11-56

2010 REVISED STANDARD PLAN RSP B11-56

10-4-13

Dist	COUNTY	ROUTE	POST MILES TOTAL PROJECT	SHEET No.	TOTAL SHEETS
08	SBd	40	R94.7/R99.7	166	251

Theresa Gabriel
REGISTERED ELECTRICAL ENGINEER

July 19, 2013
PLANS APPROVAL DATE

REGISTERED PROFESSIONAL ENGINEER
Theresa Aziz Gabriel
No. E15129
Exp. 6-30-14
ELECTRICAL
STATE OF CALIFORNIA

THE STATE OF CALIFORNIA OR ITS OFFICERS OR AGENTS SHALL NOT BE RESPONSIBLE FOR THE ACCURACY OR COMPLETENESS OF SCANNED COPIES OF THIS PLAN SHEET.

TO ACCOMPANY PLANS DATED 5-27-14

LEGEND:

AB	ABANDON. IF APPLIED TO CONDUIT, REMOVE CONDUCTORS
BC	INSTALL PULL BOX IN EXISTING CONDUIT RUN
BP	PEDESTRIAN BARRICADE, TYPE AS INDICATED ON PLAN
CB	INSTALL CONDUIT INTO EXISTING PULL BOX
CC	CONNECT NEW AND EXISTING CONDUIT. REMOVE EXISTING CONDUCTORS AND INSTALL CONDUCTORS AS INDICATED
CF	CONDUIT TO REMAIN FOR FUTURE USE. REMOVE CONDUCTORS. INSTALL PULL TAPE
DH	DETECTOR HANDHOLE
FA	FOUNDATION TO BE ABANDONED
IS	INSTALL SIGN ON SIGNAL MAST ARM
NS	NO SLIP BASE ON STANDARD
PEC	PHOTOELECTRIC CONTROL
PEU	PHOTOELECTRIC UNIT
RC	EQUIPMENT OR MATERIAL TO BE REMOVED AND BECOME THE PROPERTY OF THE CONTRACTOR
RE	REMOVE ELECTROLIER, FUSES AND BALLAST. TAPE ENDS OF CONDUCTORS
RL	RELOCATE EQUIPMENT
RR	REMOVE AND REUSE EQUIPMENT
RS	REMOVE AND SALVAGE EQUIPMENT
SC	SPLICE NEW TO EXISTING CONDUCTORS
SD	SERVICE DISCONNECT
TSP	TELEPHONE SERVICE POINT

ABBREVIATIONS

APS	ACCESSIBLE PEDESTRIAN SIGNAL
BBS	BATTERY BACKUP SYSTEM
BC	BOLT CIRCLE
BPB	BICYCLE PUSH BUTTON
C	CONDUIT
CB	CIRCUIT BREAKER
CCTV	CLOSED CIRCUIT TELEVISION
Ckt	CIRCUIT
CMS	CHANGEABLE MESSAGE SIGN
Ctid	CALTRANS IDENTIFICATION
Comm	COMMUNICATION
DLC	LOOP DETECTOR LEAD-IN CABLE
EMS	EXTINGUISHABLE MESSAGE SIGN
EVUC	EMERGENCY VEHICLE UNIT CABLE
EVUD	EMERGENCY VEHICLE UNIT DETECTOR
FB	FLASHING BEACON
FBCA	FLASHING BEACON CONTROL ASSEMBLY
FBS	FLASHING BEACON WITH SLIP BASE
FO	FIBER OPTIC
G	EQUIPMENT GROUNDING CONDUCTOR
GB	GROUND BUS
GFCI	GROUND FAULT CIRCUIT INTERRUPTER
HAR	HIGHWAY ADVISORY RADIO
Hex	HEXAGONAL
HPS	HIGH PRESSURE SODIUM
IISNS	INTERNALLY ILLUMINATED STREET NAME SIGN
ISL	INDUCTION SIGN LIGHTING
LED	LIGHT EMITTING DIODE
LMA	LUMINAIRE MAST ARM
LPS	LOW PRESSURE SODIUM
Ltg	LIGHTING
Lum	LUMINAIRE
M	METERED
MAT	MAST ARM MOUNTING TOP ATTACHMENT
MAS	MAST ARM MOUNTING SIDE ATTACHMENT
M/M	MULTIPLE TO MULTIPLE TRANSFORMER
Mtg	MOUNTING
MV	MERCURY VAPOR LIGHTING FIXTURE
MVDS	MICROWAVE VEHICLE DETECTION SYSTEM
N	NEUTRAL (GROUNDED CONDUCTOR)
NB	NEUTRAL BUS
NC	NORMALLY CLOSE
NO	NORMALLY OPEN
P	CIRCUIT BREAKER'S POLE
PB	PULL BOX
PBA	PUSH BUTTON ASSEMBLY
PEC	PHOTOELECTRIC CONTROL
Ped	PEDESTRIAN
PEU	PHOTOELECTRIC UNIT
PT	CONDUIT WITH PULL TAPE
RE	RELOCATED EQUIPMENT
RM	RAMP METERING
RWIS	ROADSIDE WEATHER INFORMATION SYSTEM
SB	SLIP BASE
SIC	SIGNAL INTERCONNECT CABLE
Sig	SIGNAL
SMA	SIGNAL MAST ARM
SNS	STREET NAME SIGN
SP	SERVICE POINT
TDC	TELEPHONE DEMARCATION CABINET
TMS	TRAFFIC MONITORING STATION
TOS	TRAFFIC OPERATIONS SYSTEM
Veh	VEHICLE
VIVDS	VIDEO IMAGE VEHICLE DETECTION SYSTEM
WIM	WEIGH-IN-MOTION
Xfmr	TRANSFORMER

SOFFIT AND WALL MOUNTED LUMINAIRES

PENDANT, 70 W HPS UNLESS OTHERWISE SPECIFIED

FLUSH, 70 W HPS UNLESS OTHERWISE SPECIFIED

WALL SURFACE, 70 W HPS UNLESS OTHERWISE SPECIFIED

EXISTING SOFFIT OR WALL LUMINAIRE TO REMAIN UNMODIFIED

EXISTING SOFFIT OR WALL LUMINAIRE TO BE MODIFIED AS SPECIFIED

NOTE:

Arrow indicates "street side" of luminaire.

COMMONLY USED SYMBOLS FOR UNITED STATES CUSTOMARY UNITS OF MEASUREMENT:

SYMBOL USED	DEFINITIONS
Ω	OHMS
min	MINUTE
s	SECOND
bps	BITS PER SECOND
Bps	BYTES PER SECOND
A	AMPERE
V	VOLT
V(dc)	VOLT (DIRECT CURRENT)
V(ac)	VOLT (ALTERNATING CURRENT)
FC	FOOT - CANDLE
W	WATTS
VA	VOLT-AMPERE
M	MEGA
k	KILO
m	MILLI
μ	MICRO
P	PICO
Hz	HERTZ

MISCELLANEOUS ELECTROLIERS

NEW	EXISTING	
		LUMINAIRE ON WOOD POLE
		NON-STANDARD ELECTROLIER (SEE PROJECT NOTES OR PROJECT PLANS)
		CITY ELECTROLIER
		ELECTROLIER FOUNDATION (FUTURE INSTALLATION)

NOTES:

1. HPS luminaires shall be 310 W HPS when installed on Type 21, 21D, 30, 31 and 32 Standards, unless otherwise specified. HPS luminaires shall be 200 W when installed on other type standards or poles, unless otherwise specified.
2. LED luminaires shall be 235 W when installed on Type 21, 21D, 30, 31 and 32 Standards, unless otherwise specified. LED luminaires shall be 165 W when installed on other type standards or poles, unless otherwise specified.
3. Luminaires shall be the cutoff type, ANSI Type III medium cutoff lighting distribution, unless otherwise specified.

STANDARD ELECTROLIER

NEW	EXISTING	STANDARD TYPE
		15
		15D
		15 STRUCTURE
		15D STRUCTURE
		21
		21D
		21 STRUCTURE
		21D STRUCTURE
		30
		31
		32

STATE OF CALIFORNIA
DEPARTMENT OF TRANSPORTATION

ELECTRICAL SYSTEMS (LEGEND AND ABBREVIATIONS)

NO SCALE

RSP ES-1A DATED JULY 19, 2013 SUPERSEDES STANDARD PLAN ES-1A DATED MAY 20, 2011 - PAGE 425 OF THE STANDARD PLANS BOOK DATED 2010.

REVISED STANDARD PLAN RSP ES-1A

2010 REVISED STANDARD PLAN RSP ES-1A

Dist	COUNTY	ROUTE	POST MILES TOTAL PROJECT	SHEET No.	TOTAL SHEETS
08	SBd	40	R94.7/R99.7	167	251

Theresa Gabriel
REGISTERED ELECTRICAL ENGINEER

July 19, 2013
PLANS APPROVAL DATE

REGISTERED PROFESSIONAL ENGINEER Theresa Aziz Gabriel No. E15129 Exp. 6-30-14 ELECTRICAL STATE OF CALIFORNIA

THE STATE OF CALIFORNIA OR ITS OFFICERS OR AGENTS SHALL NOT BE RESPONSIBLE FOR THE ACCURACY OR COMPLETENESS OF SCANNED COPIES OF THIS PLAN SHEET.

TO ACCOMPANY PLANS DATED 5-27-14

CONDUIT

NEW	EXISTING	
		LIGHTING CONDUIT, UNLESS OTHERWISE INDICATED OR NOTED
		TRAFFIC SIGNAL CONDUIT
C	c	COMMUNICATION CONDUIT
T	t	TELEPHONE CONDUIT
F	f	FIRE ALARM CONDUIT
FO	fo	FIBER OPTIC CONDUIT
		CONDUIT TERMINATION
R	r	CONDUIT RISER ATTACHED TO THE STRUCTURE OR SERVICE POLE

SERVICE EQUIPMENT

NEW	EXISTING	
OH	oh	OVERHEAD LINES
U	U	WOOD POLE, "U" INDICATES UTILITY OWNED
		POLE GUY WITH ANCHOR
		UTILITY TRANSFORMER - GROUND MOUNTED
III	III	SERVICE EQUIPMENT ENCLOSURE TYPE. DOOR INDICATES FRONT OF ENCLOSURE
T	t	TELEPHONE DEMARCATION CABINET

POLE-MOUNTED SERVICE DESIGNATION

TYPE H SERVICE, 28'-10" — TYPE OF INSTALLATION AND POLE HEIGHT ABOVE GRADE

FLASHING BEACON

NEW	EXISTING	
R	R	FLASHING BEACON (ONE VEHICLE SIGNAL HEAD WITH BACKPLATE AND VISOR) "R" INDICATES RED INDICATION, "Y" INDICATES YELLOW INDICATION
Y Y	Y Y	FLASHING BEACON WITH TYPE 15-FBS STANDARD AND A SIGN.
R R	R R	FLASHING BEACON WITH TYPES 9, 9A OR 9B SIGN UNLESS OTHERWISE SPECIFIED OR INDICATED

SIGNAL EQUIPMENT

NEW	EXISTING	
C	C	PEDESTRIAN SIGNAL HEAD "C" INDICATES COUNTDOWN PEDESTRIAN HEAD
		PUSH BUTTON ASSEMBLY POST
		PEDESTRIAN BARRICADE
		VEHICLE SIGNAL HEAD (WITH BACKPLATE AND 3-SECTIONS: RED, YELLOW AND GREEN)
		VEHICLE SIGNAL HEAD WITH ANGLE VISOR
PV	PV	MODIFICATIONS OF BASIC SYMBOL: "L" INDICATES ALL NON-ARROW SECTIONS LOUVERED "LG" INDICATES LOUVERED GREEN SECTION ONLY "PV" INDICATES ALL 12" SECTIONS PROGRAMMED VISIBILITY "8" INDICATES ALL 8" SECTIONS (ONLY WHEN SPECIFIED)
		VEHICLE SIGNAL HEAD CONSISTING OF RED, YELLOW AND GREEN LEFT ARROW SECTIONS
		VEHICLE SIGNAL HEAD CONSISTING OF RED AND YELLOW SECTIONS WITH AN UP GREEN ARROW SECTION
		VEHICLE SIGNAL HEAD (5 SECTION) CONSISTING OF RED, YELLOW AND GREEN SECTIONS WITH YELLOW AND GREEN RIGHT ARROW SECTIONS
		TYPE 15TS STANDARD WITH VEHICLE SIGNAL HEAD AND LUMINAIRE
		TYPE 21TS STANDARD WITH VEHICLE SIGNAL HEAD AND LUMINAIRE
		STANDARD WITH LUMINAIRE AND SIGNAL MAST ARMS AND ATTACHED VEHICLE SIGNAL HEADS
		TYPE 1 STANDARD WITH ATTACHED VEHICLE SIGNAL HEADS
		STANDARD WITH A SIGNAL MAST ARM, ATTACHED VEHICLE SIGNAL HEADS AND INTERNALLY ILLUMINATED STREET NAME SIGN
		CONTROLLER ASSEMBLY. DOOR INDICATES FRONT OF CABINET

SIGNAL EQUIPMENT Cont

NEW	EXISTING	
		GUARD POST
		TYPE 1 STANDARD WITH RAMP METERING SIGN
		OPTICAL DETECTOR FOR THE EMERGENCY VEHICLE DETECTION SYSTEM

NOTES:

1. All signal sections shall be 12" unless shown otherwise.
2. Signal heads shall be provided with backplates unless shown otherwise.

ILLUMINATED OVERHEAD SIGN

NEW	EXISTING	
		SINGLE POST, SINGLE ILLUMINATED SIGN, BALANCED BUTTERFLY
		SINGLE POST, DOUBLE ILLUMINATED SIGN, BALANCED BUTTERFLY
		SINGLE POST, SINGLE ILLUMINATED SIGN, FULL CANTILEVER
		DOUBLE POST, SINGLE ILLUMINATED SIGN
		SINGLE ILLUMINATED SIGN MOUNTED ON STRUCTURE
		DOUBLE POST, SINGLE ILLUMINATED SIGN WITH ELECTROLIER

STATE OF CALIFORNIA
DEPARTMENT OF TRANSPORTATION

ELECTRICAL SYSTEMS (LEGEND AND ABBREVIATIONS)

NO SCALE

RSP ES-1B DATED JULY 19, 2013 SUPERSEDES STANDARD PLAN ES-1B DATED MAY 20, 2011 - PAGE 426 OF THE STANDARD PLANS BOOK DATED 2010.

REVISED STANDARD PLAN RSP ES-1B

2010 REVISED STANDARD PLAN RSP ES-1B

7-15-13

Dist	COUNTY	ROUTE	POST MILES TOTAL PROJECT	SHEET No.	TOTAL SHEETS
08	SBd	40	R94.7/R99.7	168	251

Theresa Gabriel
REGISTERED ELECTRICAL ENGINEER

July 19, 2013
PLANS APPROVAL DATE

REGISTERED PROFESSIONAL ENGINEER
Theresa Aziz Gabriel
No. E15129
Exp. 6-30-14
ELECTRICAL
STATE OF CALIFORNIA

THE STATE OF CALIFORNIA OR ITS OFFICERS OR AGENTS SHALL NOT BE RESPONSIBLE FOR THE ACCURACY OR COMPLETENESS OF SCANNED COPIES OF THIS PLAN SHEET.

TO ACCOMPANY PLANS DATED 5-27-14

EQUIPMENT IDENTIFICATION

ILLUMINATED SIGN IDENTIFICATION NUMBER:

SIGN No. 12345

10 ISL SCI 1.0

- SIGN NUMBER - PLACE ON POST OR STRUCTURE
- TRANSFORMER RATING (kVA)
- LIGHTING CONTROL TYPE
- NUMBER AND TYPE OF FIXTURES

} DO NOT PLACE ON STANDARD OR STRUCTURE

ELECTROLIER OR EQUIPMENT IDENTIFICATION NUMBER:

12345 - 15'-0"

- MAST ARM LENGTH, IF SHOWN. DO NOT PLACE ON STANDARD OR STRUCTURE
- EQUIPMENT NUMBER - PLACE ON STANDARD OR STRUCTURE. EXISTING EQUIPMENT NUMBERS ARE SHOWN IN PARENTHESIS

CONDUIT AND CONDUCTOR IDENTIFICATION:

1½"C, 2#10, 15#14, 2 DLC, 12P#18 (PAIR)

- NUMBER AND SIZE OF CONDUCTORS AND CABLES
- SIZE OF CONDUIT IN INCHES

Ø1, Ø2, Ø2P, etc.	TRAFFIC PHASE IDENTIFICATION FOR SIGNAL FACES, DETECTORS AND PHASE DIAGRAMS
1 2 3	LEGEND NUMBERS
A B C	EQUIPMENT, SIGNAL POLES, INSTALLATION OR ITEMS
1 2 3	CONDUIT RUN NUMBERS

SIGNAL AND LIGHTING STANDARD (TYPICAL DESIGNATION):

19A - 3 - 100

- WIND VELOCITY = 100 mph
- CASE 3 ARM LOADING
- STANDARD TYPE
- STANDARD PLAN SHEET NUMBER
- DETAIL, NUMBER, SECTION, TYPE OR ELEVATION

MISCELLANEOUS EQUIPMENT

NEW	EXISTING	
CMS	cms	CHANGEABLE MESSAGE SIGN
		CLOSED CIRCUIT TELEVISION CAMERA
		HIGHWAY ADVISORY RADIO POLE AND ANTENNA
EMS	ems	EXTINGUISHABLE MESSAGE SIGN
M V	m v	DETECTION DEVICE M = MICROWAVE SENSOR V = VIDEO IMAGE SENSOR

WIRING DIAGRAM LEGEND

----	EXTERNAL CONDUCTOR
	CONDUCTOR OR BUS
	TIE POINT
	CONTACTOR COIL
	CONTACTOR, NO CONTACT
	TERMINAL BLOCKS
	CONTACTOR, NC CONTACT
	ENCLOSURE BOND
	GROUNDING ELECTRODE
	CIRCUIT BREAKER
	RECEPTACLE

PULL BOXES

NEW	EXISTING	
		PULL BOX, No. 5 UNLESS OTHERWISE INDICATED OR NOTED
3	9A(21)	PULL BOX, ADDITIONAL DESIGNATIONS OR DESCRIPTIONS

3 No. 3½ PULL BOX
5 No. 5 PULL BOX
6 No. 6 PULL BOX
7 No. 7 (CEILING PULL BOX)
8 No. 8 (PENDANT SOFFIT PULL BOX)
9 No. 9 PULL BOX
9A No. 9A PULL BOX

(C) COMMUNICATIONS PULL BOX
(E) PULL BOX WITH EXTENSION
(S) SPRINKLER CONTROL PULL BOX
(21) ANCHOR BOLTS AND CONDUIT FOR FUTURE INSTALLATION OF TYPE 21 STANDARD
(T) TRAFFIC PULL BOX

VEHICLE DETECTORS

5 J 9 U

- VEHICLE DETECTOR DESIGNATION
- U = UPPER
  L = LOWER
- SLOT NUMBER IN INPUT FILE
- INPUT FILE (I OR J)
- PHASE

NEW	EXISTING	
		TYPE A DETECTOR LOOP. OUTLINE OF SAWCUT SHOWN
		TYPE B DETECTOR LOOP. OUTLINE OF SAWCUT SHOWN
		TYPE C DETECTOR LOOP. OUTLINE OF SAWCUT SHOWN
		TYPE D DETECTOR LOOP. OUTLINE OF SAWCUT SHOWN
		TYPE E DETECTOR LOOP. OUTLINE OF SAWCUT SHOWN
		TYPE Q DETECTOR LOOP. OUTLINE OF SAWCUT SHOWN
		MAGNETIC DETECTOR
DH	dh	DETECTOR HANDHOLE
		MICROWAVE OR VIDEO DETECTION ZONE

STATE OF CALIFORNIA
DEPARTMENT OF TRANSPORTATION

ELECTRICAL SYSTEMS (LEGEND AND ABBREVIATIONS)

NO SCALE

RSP ES-1C DATED JULY 19, 2013 SUPERSEDES STANDARD PLAN ES-1C DATED MAY 20, 2011 - PAGE 427 OF THE STANDARD PLANS BOOK DATED 2010.

REVISED STANDARD PLAN RSP ES-1C

2010 REVISED STANDARD PLAN RSP ES-1C

7-11-13

DIST	COUNTY	ROUTE	POST MILES TOTAL PROJECT	SHEET NO.	TOTAL SHEETS
08	SBd	40	R94.7/R99.7	169	251

Theresa Gabriel
REGISTERED ELECTRICAL ENGINEER

July 19, 2013
PLANS APPROVAL DATE

REGISTERED PROFESSIONAL ENGINEER
Theresa Aziz Gabriel
No. E15129
Exp. 6-30-14
ELECTRICAL
STATE OF CALIFORNIA

THE STATE OF CALIFORNIA OR ITS OFFICERS OR AGENTS SHALL NOT BE RESPONSIBLE FOR THE ACCURACY OR COMPLETENESS OF SCANNED COPIES OF THIS PLAN SHEET.

TO ACCOMPANY PLANS DATED 5-27-14

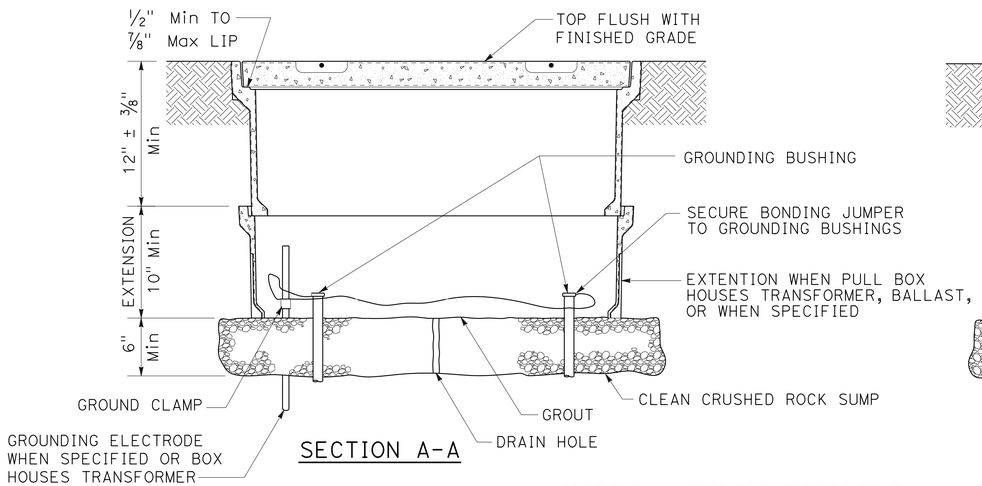

SECTION A-A

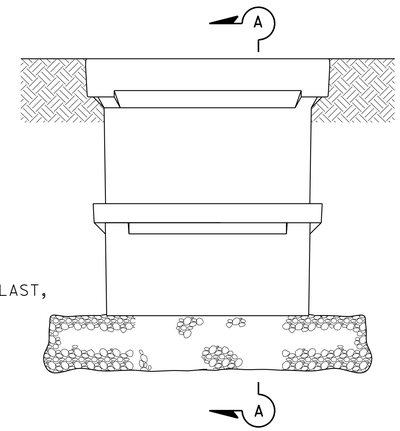

SIDE VIEW

INSTALLATION DETAILS

DETAIL A

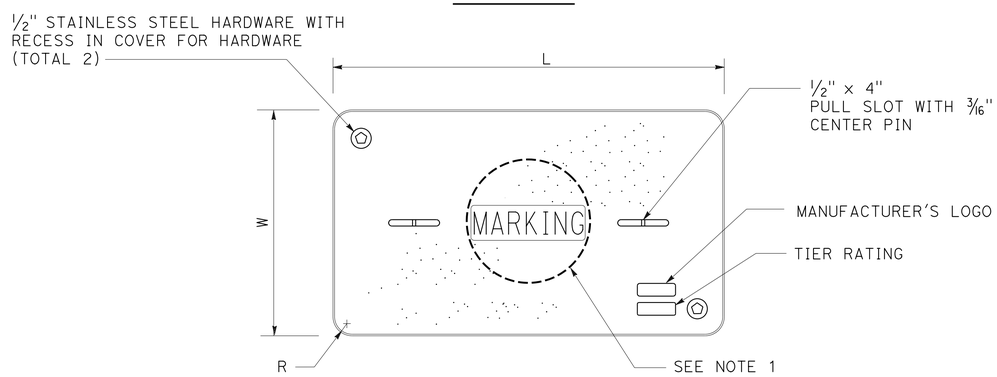

COVER TOP VIEW

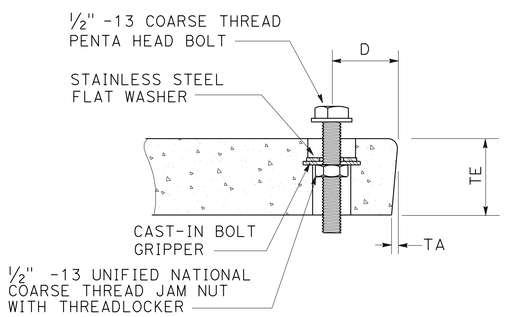

TYPICAL COVER CAPTIVE BOLT

OR SIMILAR

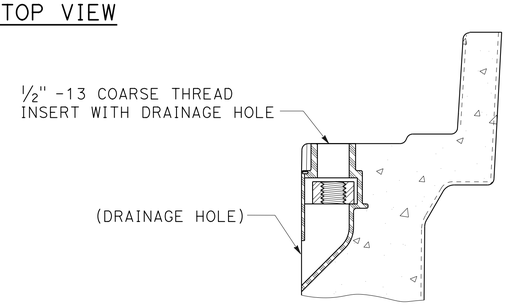

TYPICAL THREADED INSERT

OR SIMILAR

DIMENSION TABLE										
	PULL BOX			COVER						
PULL BOX	MINIMUM DEPTH BOX	MINIMUM DEPTH EXTENSION	MAXIMUM WEIGHT	L	W	R	TE	TA	D	MAXIMUM WEIGHT
No. 3 1/2	12"	N/A	40 lb	1' - 3 3/8"	10 1/8"	1 3/8"	2"	1/8"	1 3/4"	30 lb
No. 5	12"	10"	55 lb	1' - 11 1/4"	1' - 1 3/4"	1 3/8"	2"	1/8"	1 3/4"	60 lb
No. 6	12"	10"	70 lb	2' - 6 1/2"	1' - 5 1/2"	1 3/8"	2"	1/8"	2"	85 lb

NOTES:

1. Pull box covers shall be marked as follows: "SERVICE" Service circuits between service point and service disconnect; "SPRINKLER-CONTROL" sprinkler control circuits, 50 V or less; "CALTRANS" on all pull boxes, except pull boxes marked "SPRINKLER-CONTROL"; and "TELEPHONE" Telephone service;
   - A) No. 3 1/2 pull box.
     - 1) "SIGNAL" - Traffic signal circuits with or without lighting or sign lighting circuits.
     - 2) "LIGHTING" - Lighting or sign lighting circuits where voltage is under 600 V.
   - B) No. 5, 6, 9 or 9A pull box.
     - 1) "TRAFFIC SIGNAL" - Traffic signal circuits with or without lighting or sign lighting circuits.
     - 2) "LIGHTING" - Lighting or sign lighting circuits where voltage is under 600 V.
     - 3) "LIGHTING-HIGH VOLTAGE" - Lighting or sign lighting circuits where voltage is above 600 V.
     - 4) "IRRIGATION" - Circuits to irrigation controller 120 V or more.
     - 5) "RAMP METER" - Ramp meter circuits.
     - 6) "COUNT STATION" - Count or speed monitor circuits.
     - 7) "COMMUNICATIONS" - Communication circuits.
     - 8) "TOS COMMUNICATIONS" - TOS communication line.
     - 9) "TOS POWER" - TOS power.
     - 10) "TDC POWER" - Telephone demarcation cabinet power.
     - 11) "CCTV" - Closed circuit television circuits.
     - 12) "TMS" - Traffic monitoring station circuits.
     - 13) "CMS" - Changeable message sign circuits.
     - 14) "HAR" - Highway advisory radio circuits.
     - 15) "BOOSTER PUMP" - Booster pump circuit.
2. The nominal dimensions of the opening in which the cover sets shall be the same as the cover dimensions except the length and width dimensions shall be 1/8" greater.
3. Covers and boxes shall be interchangeable with California standard male and female gages. When interchanged with a standard male or female gage, the top surfaces shall be flush within 1/8". Top outside radius of covers and pull boxes shall have a 1/8" radius.
4. Pull box extension may be another pull box as long as the bottom edge of the pull box can fit into the cover opening.
5. All dimensions for the cover for non-traffic pull box are nominal values.

STATE OF CALIFORNIA
DEPARTMENT OF TRANSPORTATION

ELECTRICAL SYSTEMS (NON-TRAFFIC PULL BOX)

NO SCALE

RSP ES-8A DATED JULY 19, 2013 SUPERSEDES RSP ES-8A DATED JANUARY 20, 2012 THAT SUPPLEMENTS THE STANDARD PLANS BOOK DATED 2010.

REVISED STANDARD PLAN RSP ES-8A

2010 REVISED STANDARD PLAN RSP ES-8A

7-15-13

Dist	COUNTY	ROUTE	POST MILES TOTAL PROJECT	SHEET No.	TOTAL SHEETS
08	SBd	40	R94.7/R99.7	170	251

Theresa Gabriel
REGISTERED ELECTRICAL ENGINEER

July 19, 2013
PLANS APPROVAL DATE

REGISTERED PROFESSIONAL ENGINEER
Theresa Aziz Gabriel
No. E15129
Exp. 6-30-14
ELECTRICAL
STATE OF CALIFORNIA

THE STATE OF CALIFORNIA OR ITS OFFICERS OR AGENTS SHALL NOT BE RESPONSIBLE FOR THE ACCURACY OR COMPLETENESS OF SCANNED COPIES OF THIS PLAN SHEET.

TO ACCOMPANY PLANS DATED 5-27-14

ISOFOOTCANDLE CURVE - MINIMUM

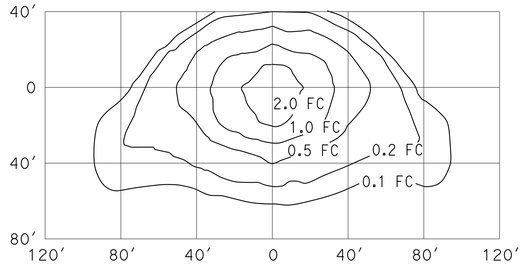

TYPE III MEDIUM CUTOFF

Cutoff Luminaire
34′ Mounting Height
Lamp operated at 22,000 lm
200-W high pressure sodium lamp
ANSI Designation S66

ISOFOOTCANDLE CURVE - MINIMUM

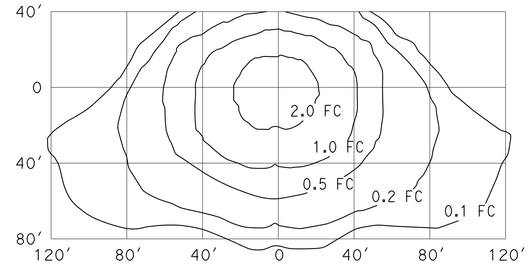

TYPE III MEDIUM CUTOFF

Cutoff Luminaire
40′ Mounting Height
Lamp operated at 37,000 lm
310-W high pressure sodium lamp
ANSI Designation S67

ISOFOOTCANDLE CURVE - MINIMUM

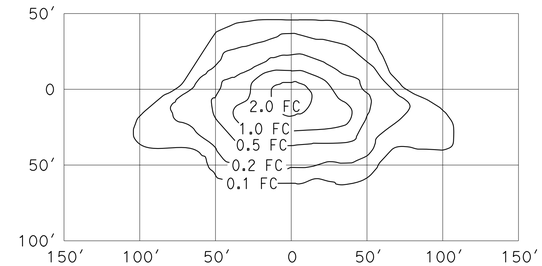

TYPE III MEDIUM CUTOFF

Cutoff Luminaire
30′ Mounting Height
Lamp operated at 16,000 lm
150-W high pressure sodium lamp
ANSI Designation S55

ISOFOOTCANDLE CURVE - MINIMUM

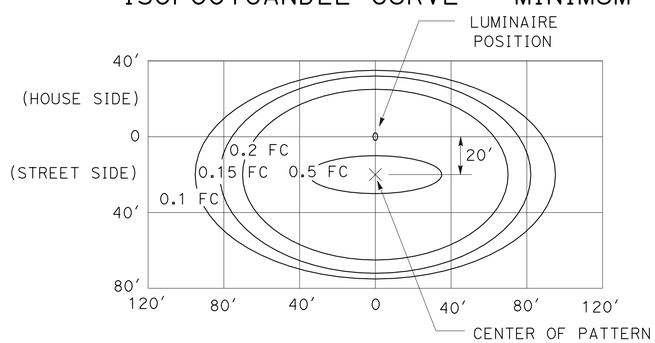

LED LUMINAIRE ROADWAY 1

165-W at 34′ Mounting Height

ISOFOOTCANDLE CURVE - MINIMUM

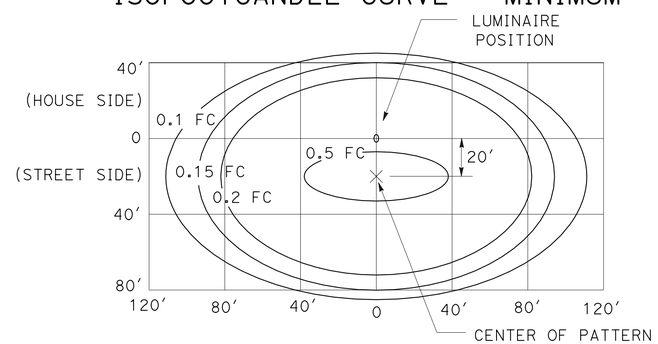

LED LUMINAIRE ROADWAY 2

235-W at 40′ Mounting Height

ISOFOOTCANDLE CURVE - MINIMUM

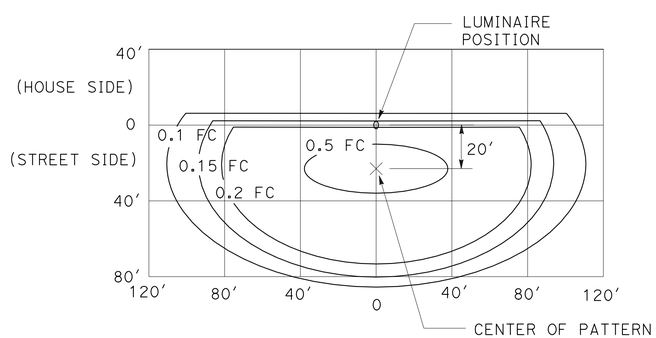

LED LUMINAIRE ROADWAY 3

235-W at 40′ Mounting Height
with back side control

ISOFOOTCANDLE CURVE - MINIMUM

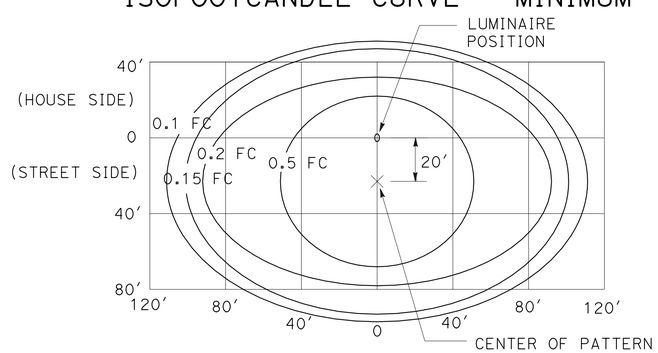

LED LUMINAIRE ROADWAY 4

300-W at 40′ Mounting Height

ISOFOOTCANDLE CURVE - MINIMUM

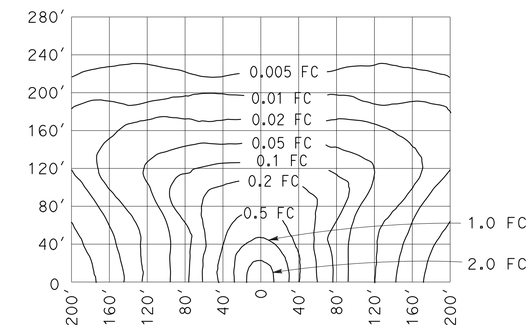

LOW PRESSURE SODIUM LUMINAIRE

40′ Mounting Height
Lamp operated at 33,000 lm
180-W low pressure sodium lamp

STATE OF CALIFORNIA
DEPARTMENT OF TRANSPORTATION

ELECTRICAL SYSTEMS (ISOFOOTCANDLE DIAGRAMS)

NO SCALE

RSP ES-10A DATED JULY 19, 2013 SUPERSEDES RSP ES-10A DATED JULY 20, 2012 THAT SUPPLEMENTS THE STANDARD PLANS BOOK DATED 2010.

REVISED STANDARD PLAN RSP ES-10A

2010 REVISED STANDARD PLAN RSP ES-10A

7-9-13

Dist	COUNTY	ROUTE	POST MILES TOTAL PROJECT	SHEET No.	TOTAL SHEETS
08	SBd	40	R94.7/R99.7	171	251

REGISTERED CIVIL ENGINEER

July 19, 2013
PLANS APPROVAL DATE

REGISTERED PROFESSIONAL ENGINEER
Stanley P. Johnson
No. C57793
Exp. 3-31-14
CIVIL
STATE OF CALIFORNIA

THE STATE OF CALIFORNIA OR ITS OFFICERS OR AGENTS SHALL NOT BE RESPONSIBLE FOR THE ACCURACY OR COMPLETENESS OF SCANNED COPIES OF THIS PLAN SHEET.

TO ACCOMPANY PLANS DATED 5-27-14

STANDARD TYPE	SETBACK (DIMENSION A)
32	30'-0" (Min)
31	20'-0" (Min)
15, 15D, 15-SB, 21, 21D, 30	ARM LENGTH (Min)

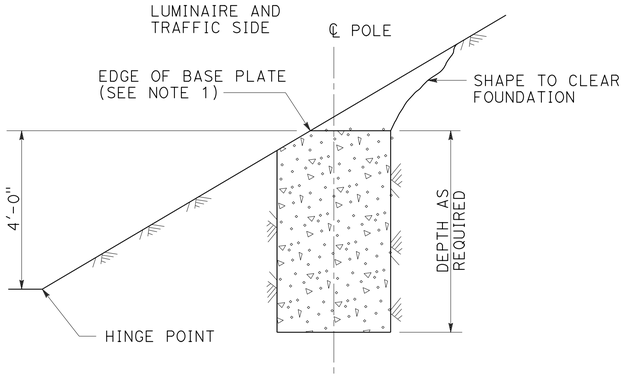

CUT SLOPES
STEEPER THAN 4:1,
LESS THAN 2:1
DETAIL A-1
See Note 2 and 3

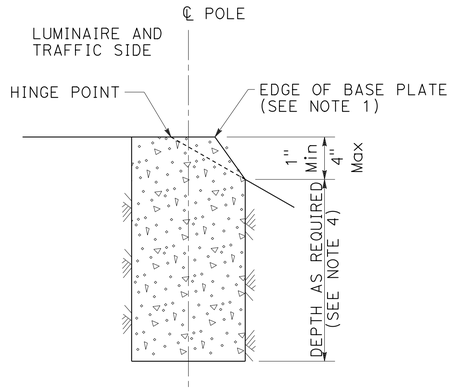

FILL SLOPES
STEEPER THAN 4:1,
LESS THAN 2:1
DETAIL A-2
See Note 2 and 3

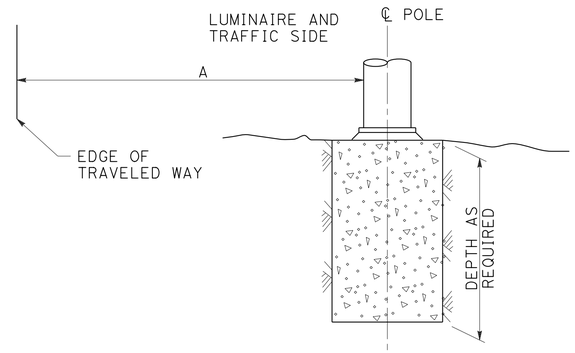

FLAT SECTIONS, CUT OR FILL SLOPES
4:1 OR FLATTER
DETAIL A-3
See Note 2

FOUNDATIONS ADJACENT TO ALL ROADWAYS EXCEPT
IN SIDEWALK, MEDIAN AND ISLAND AREAS
DETAIL A

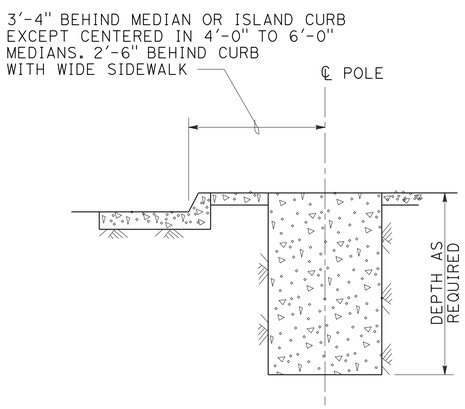

MEDIAN, ISLAND
OR WIDE SIDEWALK
DETAIL B-1
7' Wide and wider

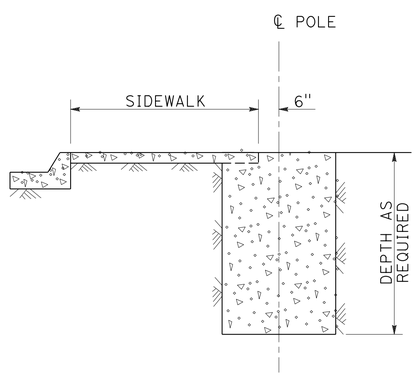

NARROW SIDEWALK
DETAIL B-2
Less than 7' wide

FOUNDATIONS IN SIDEWALK, MEDIAN AND ISLAND AREAS
DETAIL B

NOTES:

1. Where a portion of the foundation is above grade, the top edges shall have a 1" chamfer.
2. Slopes shall be horizontal to vertical ratio (Horizontal : Vertical).
3. Horizontal setbacks on cut and fill slopes steeper than 4:1 shall not exceed the distance shown for flat sections.
4. CIDH embedment depth shall be increased beyond standard depths by the diameter of the CIDH.

STATE OF CALIFORNIA
DEPARTMENT OF TRANSPORTATION

ELECTRICAL SYSTEMS (FOUNDATION INSTALLATIONS)

NO SCALE

RSP ES-11 DATED JULY 19, 2013 SUPERSEDES STANDARD PLAN ES-11
DATED MAY 20, 2011 - PAGE 488 OF THE STANDARD PLANS BOOK DATED 2010.

REVISED STANDARD PLAN RSP ES-11

2010 REVISED STANDARD PLAN RSP ES-11

7-9-13

DIST	COUNTY	ROUTE	POST MILES TOTAL PROJECT	SHEET No.	TOTAL SHEETS
08	SBd	40	R94.7/R99.7	172	251

REGISTERED CIVIL ENGINEER 02-13-14 DATE

5-27-14
PLANS APPROVAL DATE

REGISTERED PROFESSIONAL ENGINEER
Mohammad A. Muqtadir
No. C60776
Exp. 12/31/14
CIVIL
STATE OF CALIFORNIA

The State of California or its officers or agents shall not be responsible for the accuracy or completeness of electronic copies of this plan sheet.

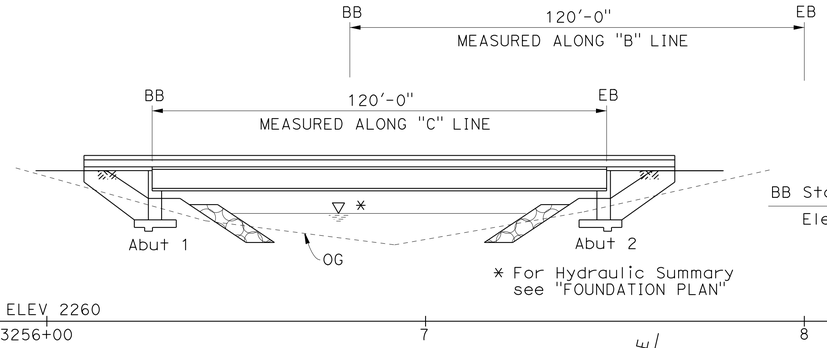

ELEVATION
1" = 20'

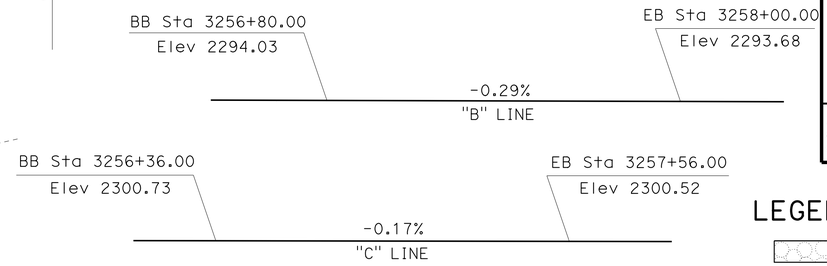

PROFILE GRADE
No Scale

LEGEND:

- Exist Rock Slope Protection,
- New Rock Slope Protection, See "ROAD PLANS"
- Direction of Traffic
- New structure
- Existing structure

NOTES:

(A) Paint "Bridge No. 54-1300L"
(B) Paint "Haller Wash Left Bridge"
(D) Midwest Guard Rail System, see "ROAD PLANS"
(E) Structure Approach Type N(30S)
(F) Paint "Bridge No. 54-1300R"
(G) Paint "Haller Wash Right Bridge"

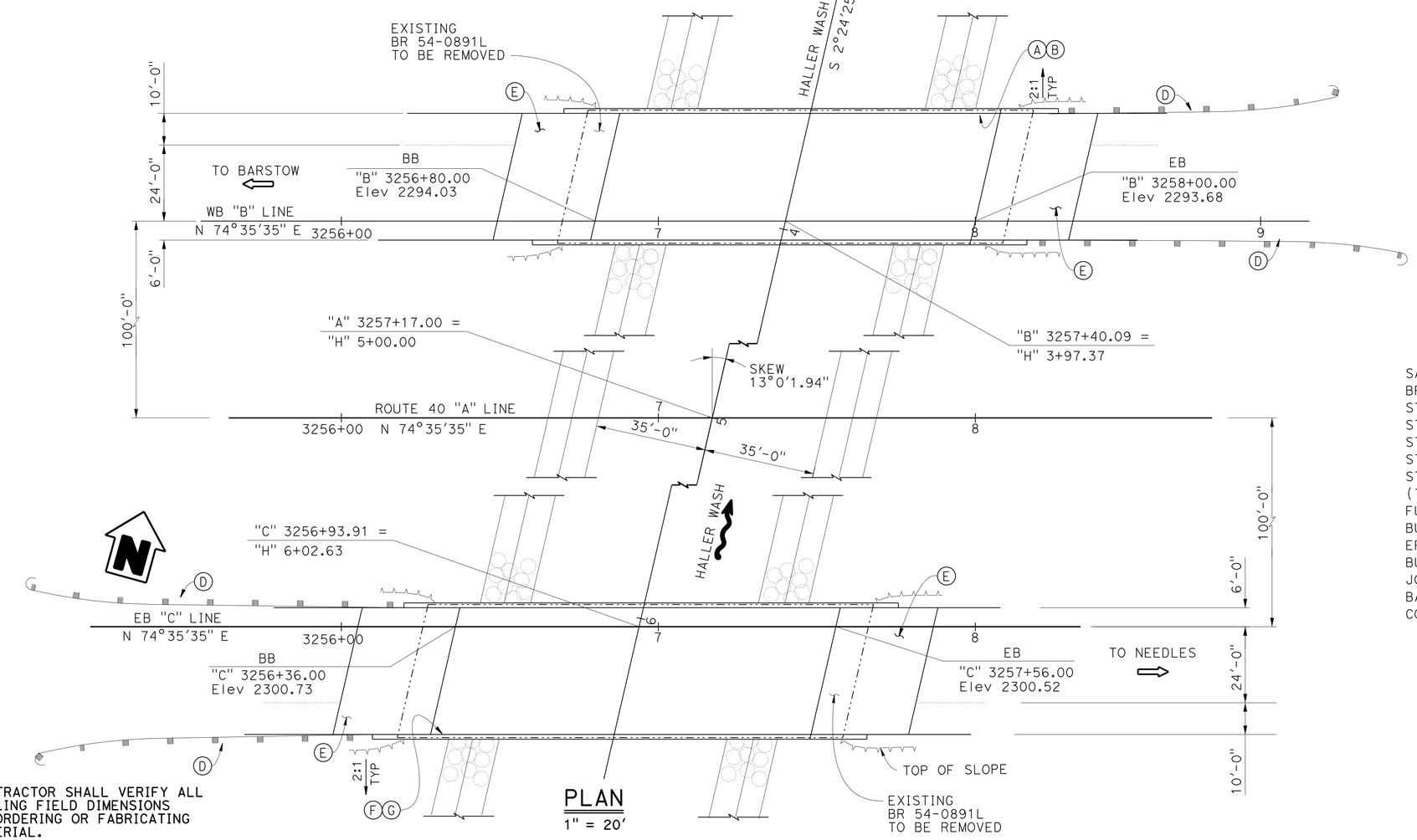

PLAN
1" = 20'

QUANTITIES

SALVAGE METAL BRIDGE RAILING	684	LF
BRIDGE REMOVAL, LOCATION A	LUMP	SUM
STRUCTURE EXCAVATION (BRIDGE)	822	CY
STRUCTURE BACKFILL (BRIDGE)	732	CY
STRUCTURAL CONCRETE, BRIDGE FOOTING	154	CY
STRUCTURAL CONCRETE, BRIDGE	606	CY
STRUCTURAL CONCRETE, APPROACH SLAB (TYPE N)	95	CY
FURNISH PRECAST PRESTRESSED CONCRETE BULB-TEE GIRDER (110'-120')	12	EA
ERECT PRECAST PRESTRESSED CONCRETE BULB-TEE GRIDER	12	EA
JOINT SEAL (MR½")	180	LF
BAR REINFORCING STEEL (BRIDGE)	135,417	LB
CONCRETE BARRIER (TYPE 736)	547	LF

NOTE:
THE CONTRACTOR SHALL VERIFY ALL CONTROLLING FIELD DIMENSIONS BEFORE ORDERING OR FABRICATING ANY MATERIAL.

HOWARD NG
DESIGN ENGINEER

	BY	CHECKED
DESIGN	Mohammad Muqtadir	Homa Iraninejadian
DETAILS	Lan T Tran	Homa Iraninejadian
QUANTITIES	Mohammad Muqtadir	Edward B Mu

LOAD & RESISTANCE FACTOR DESIGN — LIVE LOADING: HL93 W/"LOW-BOY"; PERMIT DESIGN VEHICLE

	BY	CHECKED
LAYOUT	Mohammad Muqtadir	Homa Iraninejadian
SPECIFICATIONS	V. Renganathan	PLANS AND SPECS COMPARED V. Renganathan

ORIGINAL SCALE IN INCHES FOR REDUCED PLANS 0 1 2 3

STATE OF CALIFORNIA
DEPARTMENT OF TRANSPORTATION

DIVISION OF ENGINEERING SERVICES
STRUCTURE DESIGN
DESIGN BRANCH 20

BRIDGE NO. 54-1300R/L
POST MILE R95.14

HALLER WASH BRIDGE (REPLACE)
GENERAL PLAN NO. 1

UNIT: 3622
PROJECT NUMBER & PHASE: 0813000176
CONTRACT NO.: 08-0N56U1

DISREGARD PRINTS BEARING EARLIER REVISION DATES

REVISION DATES: 11-07-13 12-05-13 01-14-14

SHEET 1 OF 17

DIST	COUNTY	ROUTE	POST MILES TOTAL PROJECT	SHEET No.	TOTAL SHEETS
08	SBd	40	R94.7/R99.7	173	251

REGISTERED CIVIL ENGINEER 02-13-14 DATE

5-27-14
PLANS APPROVAL DATE

REGISTERED PROFESSIONAL ENGINEER Mohammad A. Muqtadir No. C60776 Exp. 12/31/14 CIVIL STATE OF CALIFORNIA

The State of California or its officers or agents shall not be responsible for the accuracy or completeness of electronic copies of this plan sheet.

NOTES:

(A) Concrete Barrier Type 736

(B) Temporary Railing (Type K). See "ROAD PLANS" (T3)

(C) Remove MBGR. See "ROAD PLANS"

(D) Pier Removal limits are 5'-0" below OG

(E) Salvage Metal Bridge Railing

LEGEND:

Bridge Removal

New structure

Existing structure

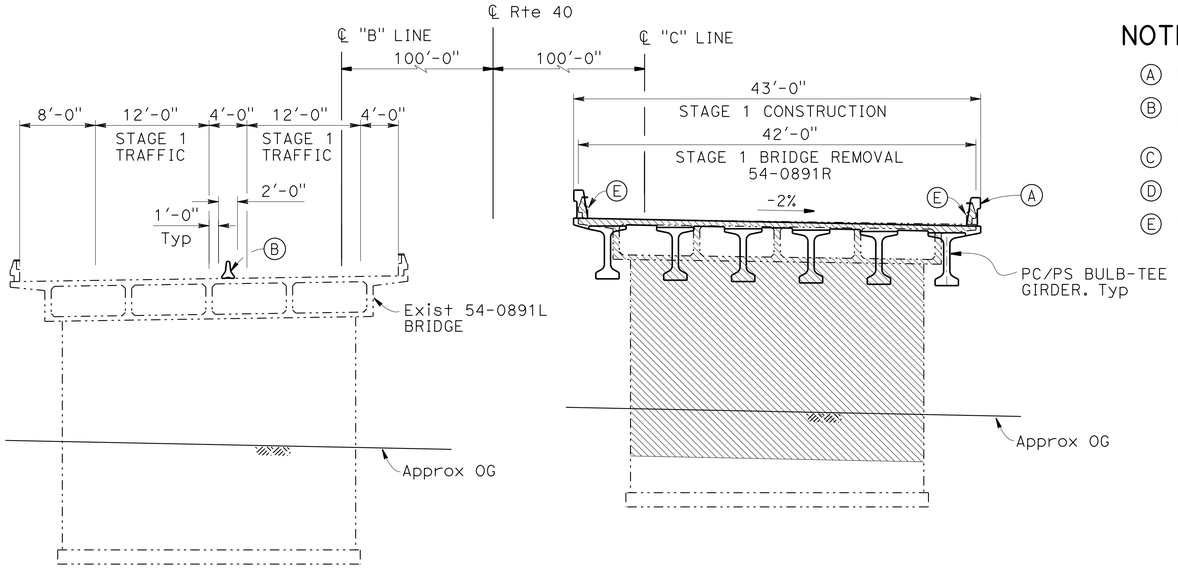

TYPICAL SECTION - STAGE 1

1/8" = 1'-0"

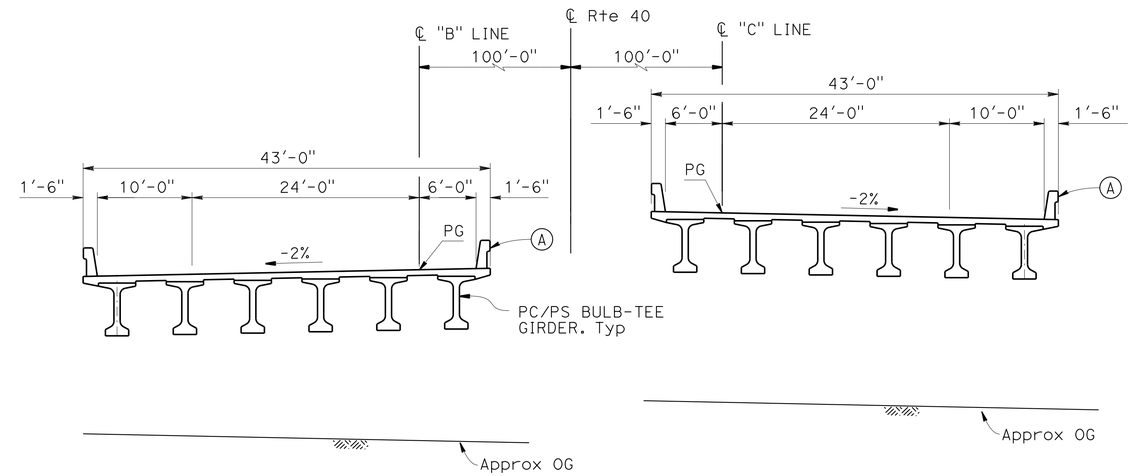

TYPICAL SECTION

1/8" = 1'-0"

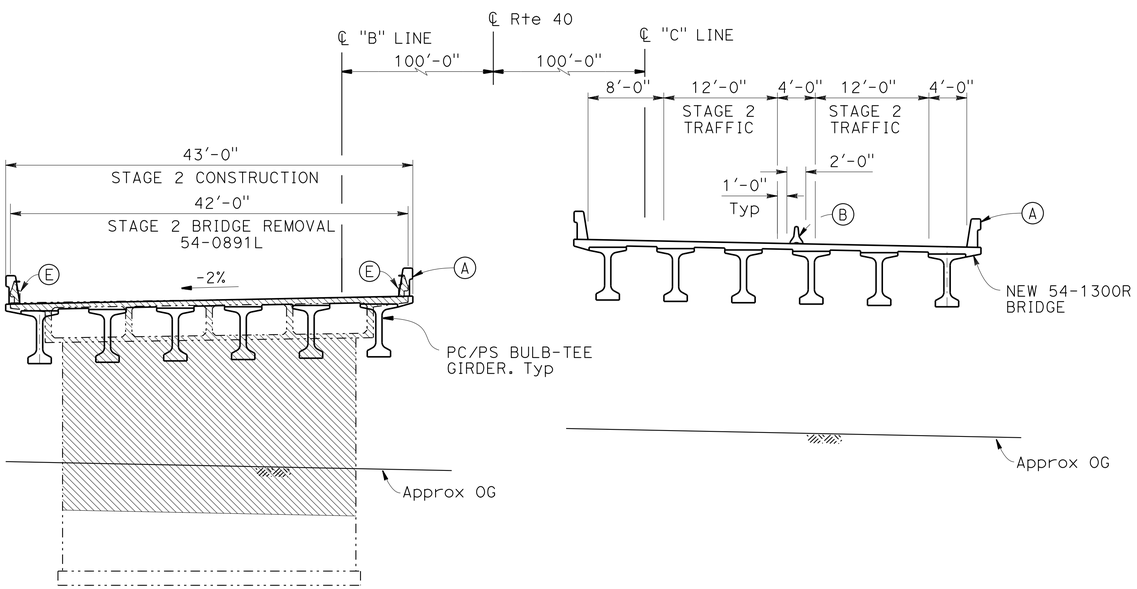

TYPICAL SECTION - STAGE 2

1/8" = 1'-0"

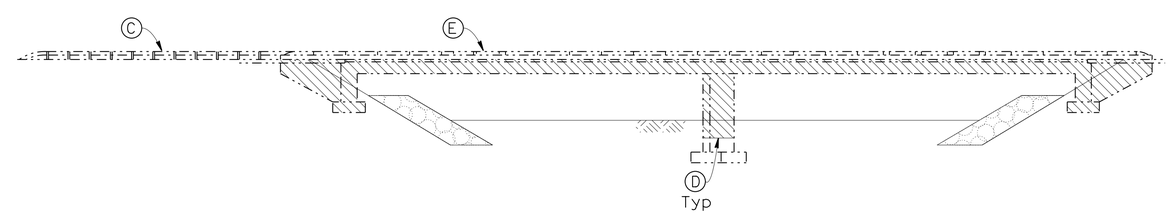

LIMITS OF BRIDGE REMOVAL

No Scale

NOTE:
THE CONTRACTOR SHALL VERIFY ALL CONTROLLING FIELD DIMENSIONS BEFORE ORDERING OR FABRICATING ANY MATERIAL.

HOWARD NG
DESIGN ENGINEER

	BY	CHECKED
DESIGN	Mohammad Muqtadir	Homa Iraninejadian
DETAILS	Lan T Tran	Homa Iraninejadian
QUANTITIES	Mohammad Muqtadir	Edward B Mu

LOAD & RESISTANCE FACTOR DESIGN — LIVE LOADING: HL93 W/"LOW-BOY": PERMIT DESIGN VEHICLE

	BY	CHECKED
LAYOUT	Mohammad Muqtadir	Homa Iraninejadian
SPECIFICATIONS	V. Renganathan	PLANS AND SPECS COMPARED V. Renganathan

ORIGINAL SCALE IN INCHES FOR REDUCED PLANS 0 1 2 3

STATE OF CALIFORNIA
DEPARTMENT OF TRANSPORTATION

DIVISION OF ENGINEERING SERVICES
STRUCTURE DESIGN
DESIGN BRANCH 20

BRIDGE NO. 54-1300R/L
POST MILE R95.14

HALLER WASH BRIDGE (REPLACE)
GENERAL PLAN NO. 2

UNIT: 3622
PROJECT NUMBER & PHASE: 0813000176
CONTRACT NO.: 08-0N56U1

DISREGARD PRINTS BEARING EARLIER REVISION DATES

REVISION DATES: 02-13-14 12-06-13 01-14-14

SHEET 2 OF 17

USERNAME => s12614 DATE PLOTTED => 10-SEP-2014 TIME PLOTTED => 10:05

STRUCTURES DESIGN GENERAL PLAN SHEET (ENGLISH) (REV.09-01-10)

FILE => 54-1300rl-a-gp02.dgn

DIST	COUNTY	ROUTE	POST MILES TOTAL PROJECT	SHEET No.	TOTAL SHEETS
08	SBd	40	R94.7/R99.7	174	251

REGISTERED CIVIL ENGINEER 02-13-14 DATE

5-27-14
PLANS APPROVAL DATE

REGISTERED PROFESSIONAL ENGINEER Mohammad A. Muqtadir No. C60776 Exp. 12/31/14 CIVIL STATE OF CALIFORNIA

The State of California or its officers or agents shall not be responsible for the accuracy or completeness of electronic copies of this plan sheet.

INDEX TO PLANS

SHEET NO.	TITLE
1	GENERAL PLAN NO. 1
2	GENERAL PLAN NO. 2
3	INDEX TO PLANS
4	DECK CONTOURS
5	FOUNDATION PLAN
6	ABUTMENT LAYOUT
7	ABUTMENT DETAIL NO. 1
8	TYPICAL SECTION
9	GIRDER LAYOUT
10	PC/PS BULB-TEE GIRDER (HARPED STRANDS)
11	PC/PS BULB-TEE GIRDER (ALTERNATE_DEBONDED STRANDS)
12	PC/PS BULB-TEE GIRDER (MISCELLANEOUS DETAILS)
13	STRUCTURE APPROACH TYPE N(30S)
14	STRUCTURE APPROACH DRAINAGE DETAILS
15	LOG OF TEST BORINGS 1 OF 3
16	LOG OF TEST BORINGS 2 OF 3
17	LOG OF TEST BORINGS 3 OF 3

GENERAL NOTES
LOAD AND RESISTANCE FACTOR DESIGN

DESIGN: AASHTO LRFD BRIDGE SPECIFICATIONS,4th Edition with California Amendments Preface dated Nov 2011

SEISMIC DESIGN: Caltrans Seismic Design Criteria (SDC), Version 1.6 November 2010

DEAD LOADING: Includes 35 psf for future wearing surface. The deck dead load between the girders has been increased by a factor of 10 percent to allow for the use of steel deck forms

LIVE LOADING: HL-93 and Permit Design Load

SEISMIC LOADING: Soil Profile: V_{S30} = 450 m/s, for the top 100 ft of soil Moment Magnitude M_{max} = 7.3 Peak Ground Rock Acceleration = 0.22g See "ARS CURVE"

REINFORCED CONCRETE: f_y = 60 ksi, f'_c = 3.6 ksi, n = 8

PRESTRESSED CONCRETE: See PRESTRESSING NOTES on "PRESTRESSED GIRDER DETAIL" sheet

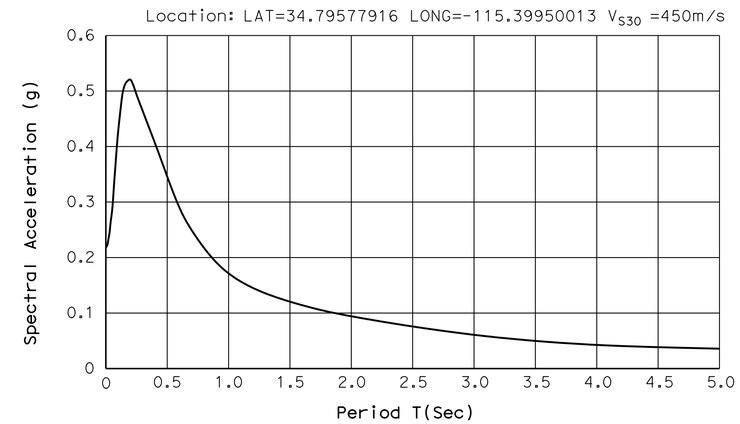

ARS CURVE
No Scale

STANDARD PLANS DATED 2010

A10A	ACRONYMS AND ABBREVIATIONS (SHEET 1 OF 2)
RSP A10B	ACRONYMS AND ABBREVIATIONS (SHEET 2 OF 2)
A10G	LEGEND - SOIL (SHEET 2 OF 2)
A10H	LEGEND - ROCK
A62C	LIMITS OF PAYMENT FOR EXCAVATION AND BACKFILL BRIDGE
B0-1	BRIDGE DETAILS
B0-5	BRIDGE DETAILS
B0-13	BRIDGE DETAILS
B6-21	JOINT SEALS (MAXIMUM MOVEMENT RATING = 2")
RSP B11-56	CONCRETE BARRIER TYPE 736

Standard Plan Sheet No.

Detail No.

SPREAD FOOTING DATA TABLE (ABUTMENTS)

SUPPORT LOCATIONS LEFT & RIGHT BRIDGES	FOOTING SIZE (FT)		WSD/LRFD SERVICE-I LIMIT STATE LOAD COMBINATION	
	B	L	PERMISSIBLE GROSS CONTACT STRESS (SETTELMENT) ksf	ALLOWABLE GROSS BEARING CAPACITY ksf
Abut 1 & Abut 2	11.0	47.2	13.5	4.5

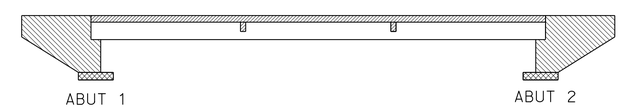

LEGEND:

- Precast, Prestressed Bulb Tee Girders
- Structure Concrete, Bridge (3.6 ksi @ 28 days)
- Structural Concrete, Bridge Footing
- Structural Concrete, Bridge Deck (4.5 ksi @ 28 days)

CONCRETE STRENGTH AND TYPE LIMITS
No Scale

NOTE:
THE CONTRACTOR SHALL VERIFY ALL CONTROLLING FIELD DIMENSIONS BEFORE ORDERING OR FABRICATING ANY MATERIAL.

	BY	CHECKED
DESIGN	Mohammad Muqtadir	Homa Iraninejadian
DETAILS	Lan T Tran	Homa Iraninejadian
QUANTITIES	Mohammad Muqtadir	Edward B Mu

STATE OF CALIFORNIA
DEPARTMENT OF TRANSPORTATION

DIVISION OF ENGINEERING SERVICES
STRUCTURE DESIGN
DESIGN BRANCH 20

BRIDGE NO. 54-1300R/L
POST MILE R95.14

HALLER WASH BRIDGE (REPLACE)
INDEX TO PLANS

STRUCTURES DESIGN DETAIL SHEET (ENGLISH) (REV. 09-01-10)

ORIGINAL SCALE IN INCHES FOR REDUCED PLANS 0 1 2 3

UNIT: 3622
PROJECT NUMBER & PHASE: 0813000176
CONTRACT NO.: 08-0N56U1

DISREGARD PRINTS BEARING EARLIER REVISION DATES

REVISION DATES: 01-14-14 10-04-13 12-05-13

SHEET 3 OF 17

FILE => 54-1300rl-a-itp.dgn

USERNAME => s121614 DATE PLOTTED => 10-SEP-2014 TIME PLOTTED => 10:05

DIST	COUNTY	ROUTE	POST MILES TOTAL PROJECT	SHEET No.	TOTAL SHEETS
08	SBd	40	R94.7/R99.7	175	251

REGISTERED CIVIL ENGINEER 02-13-14 DATE

5-27-14
PLANS APPROVAL DATE

REGISTERED PROFESSIONAL ENGINEER
Mohammad A. Muqtadir
No. C60776
Exp. 12/31/14
CIVIL
STATE OF CALIFORNIA

The State of California or its officers or agents shall not be responsible for the accuracy or completeness of electronic copies of this plan sheet.

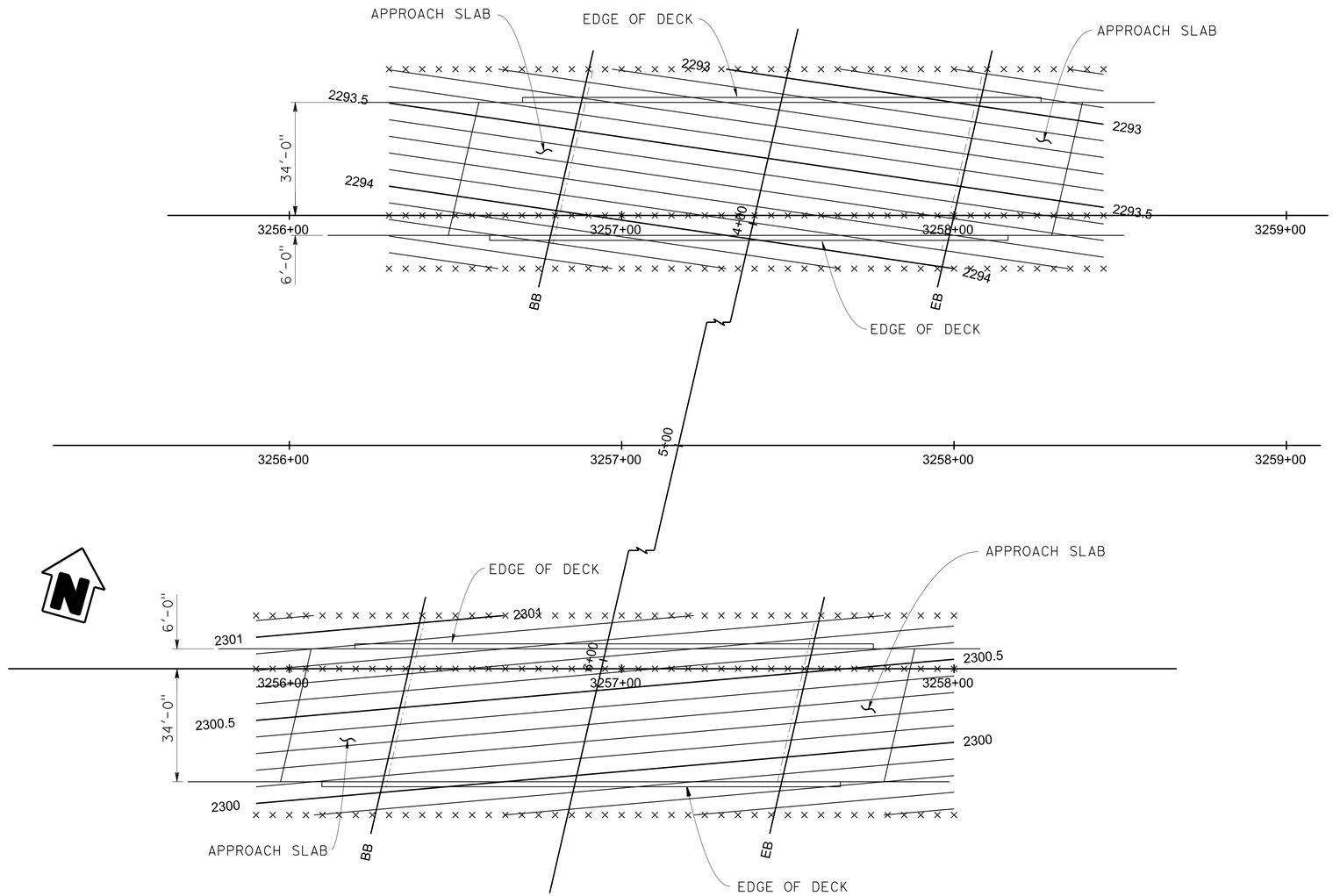

DECK CONTOURS

1" = 20'-0"

NOTES:

x. 5.0' intervals along LOL

1. Contours do not include camber

2. Contour interval = 0.1'

NOTE:
THE CONTRACTOR SHALL VERIFY ALL CONTROLLING FIELD DIMENSIONS BEFORE ORDERING OR FABRICATING ANY MATERIAL.

	BY	CHECKED
DESIGN	Mohammad Muqtadir	Homa Iraninejadian
DETAILS	Lan T Tran	Homa Iraninejadian
QUANTITIES	Mohammad Muqtadir	Edward B Mu

STATE OF CALIFORNIA
DEPARTMENT OF TRANSPORTATION

DIVISION OF ENGINEERING SERVICES
STRUCTURE DESIGN
DESIGN BRANCH 20

BRIDGE NO. 54-1300R/L
POST MILE R95.14

HALLER WASH BRIDGE (REPLACE)

DECK CONTOURS

STRUCTURES DESIGN DETAIL SHEET (ENGLISH) (REV. 09-01-10)

ORIGINAL SCALE IN INCHES FOR REDUCED PLANS 0 1 2 3

UNIT: 3622
PROJECT NUMBER & PHASE: 0813000176
CONTRACT NO.: 08-0N56U1

DISREGARD PRINTS BEARING EARLIER REVISION DATES 1-14-14

SHEET 4 OF 17

FILE => 54-1300rl-b-dc01.dgn

USERNAME => s121614 DATE PLOTTED => 10-SEP-2014 TIME PLOTTED => 10:05

DIST	COUNTY	ROUTE	POST MILES TOTAL PROJECT	SHEET No.	TOTAL SHEETS
08	SBd	40	R94.7/R99.7	176	251

REGISTERED CIVIL ENGINEER 02-13-14 DATE

5-27-14
PLANS APPROVAL DATE

REGISTERED PROFESSIONAL ENGINEER
Mohammad A. Muqtadir
No. C60776
Exp. 12/31/14
CIVIL
STATE OF CALIFORNIA

The State of California or its officers or agents shall not be responsible for the accuracy or completeness of electronic copies of this plan sheet.

BRIDGE LOCATION (54-0891L)

1 - 94.15′ LT. ℄ SR 40, STA. 3256+68.78, EL.= 2293.92±
2 - 133.92′ LT. ℄ SR 40, STA. 3256+77.65, EL.= 2293.28±
3 - 94.10′ LT. ℄ SR 40, STA. 3258+08.69, EL.= 2293.48±
4 - 133.91′ LT. ℄ SR 40, STA. 3258+17.44, EL.= 2292.93±

BRIDGE LOCATION (54-0891R)

5 - 133.73′ RT. ℄ SR 40, STA. 3256+18.53, EL.= 2299.90±
6 - 93.98′ RT. ℄ SR 40, STA. 3256+27.31, EL.= 2300.53±
7 - 133.92′ RT. ℄ SR 40, STA. 3257+58.66, EL.= 2299.70±
8 - 94.01′ RT. ℄ SR 40, STA. 3257+67.37, EL.= 2300.27±

A STA. 3+97.37 "H1" LINE = STA. 3257+40.09 "WB1" LINE
B STA. 5+00.00 "H1" LINE = STA. 3257+17.00 "RTE1" LINE
C STA. 6+02.63 "H1" LINE = STA. 3256+93.91 "EB1" LINE

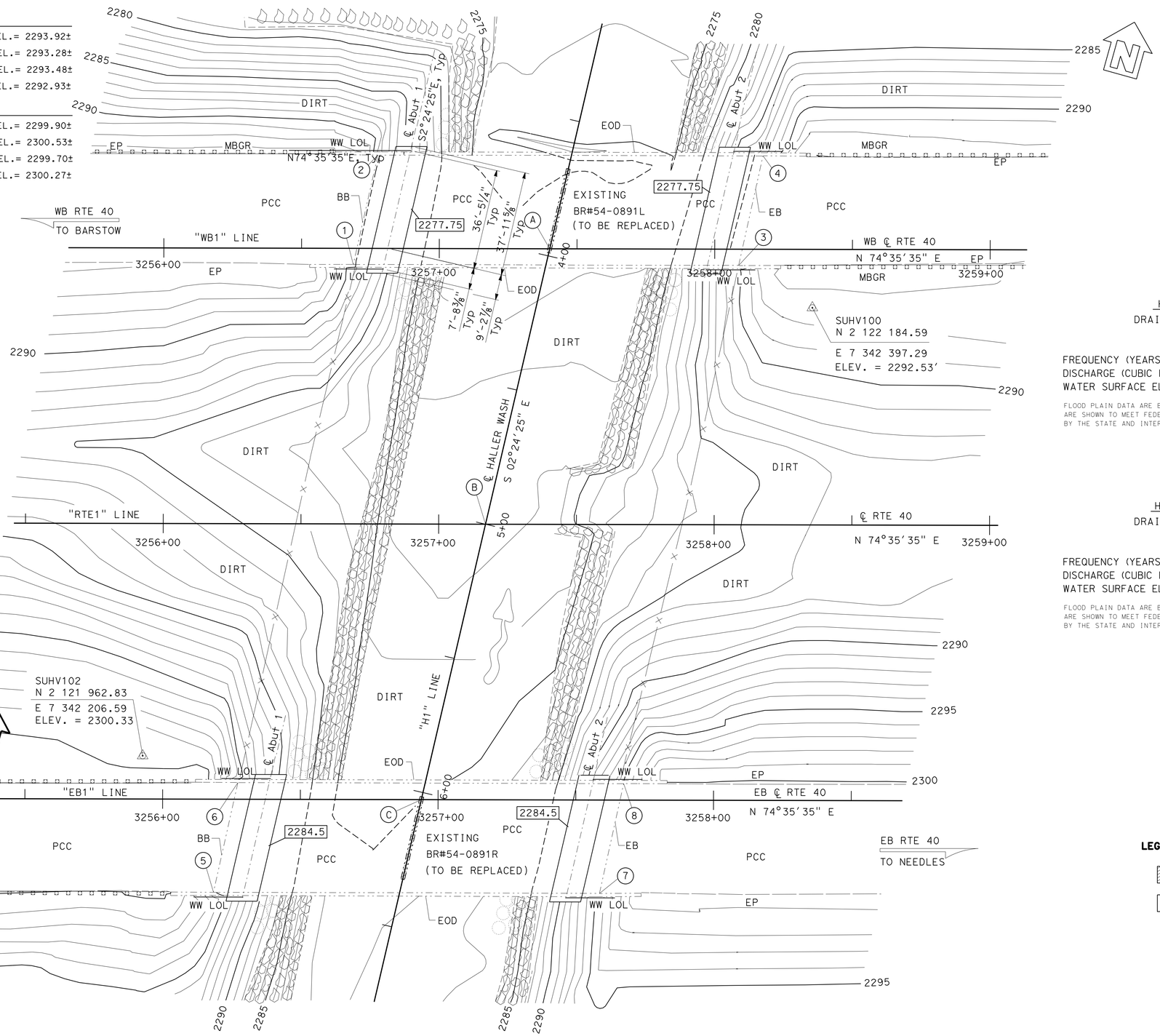

SURVEY CONTROL

SUHV100
SET 1" IP W/CT RP PLUG
78.82 FT Lt. Rte 40
Sta. 3258+35.49
N 2 122 184.59
E 7 342 397.29
ELEV. = 2292.53′

SUHV102
SET 1" IP W/CT RP PLUG
84.30FT Rt. Rte 40
Sta. 3255+92.72
N 2 121 962.83
E 7 342 206.59
ELEV. = 2300.33′

HYDROLOGIC SUMMARY (LEFT BRIDGE)

DRAINAGE AREA: 1.9 SQUARE MILES

	DESIGN FLOOD	BASE FLOOD	OVERTOPPING FLOOD
FREQUENCY (YEARS)	50	100	
DISCHARGE (CUBIC FEETS PER SECOND)	1500	2000	
WATER SURFACE ELEV. AT BRIDGE (FT)	2279.2	2279.7	

FLOOD PLAIN DATA ARE BASED UPON INFORMATION AVAILABLE WHEN THE PLANS WERE PREPARED AND ARE SHOWN TO MEET FEDERAL REQUIREMENTS. THE ACCURACY OF SAID INFORMATION IS NOT WARRANTED BY THE STATE AND INTERESTED OR AFFECTED PARTIES SHOULD MAKE THEIR OWN INVESTIGATIONS.

HYDROLOGIC SUMMARY (RIGHT BRIDGE)

DRAINAGE AREA: 1.9 SQUARE MILES

	DESIGN FLOOD	BASE FLOOD	OVERTOPPING FLOOD
FREQUENCY (YEARS)	50	100	
DISCHARGE (CUBIC FEETS PER SECOND)	1500	2000	
WATER SURFACE ELEV. AT BRIDGE (FT)	2284.5	2285	

FLOOD PLAIN DATA ARE BASED UPON INFORMATION AVAILABLE WHEN THE PLANS WERE PREPARED AND ARE SHOWN TO MEET FEDERAL REQUIREMENTS. THE ACCURACY OF SAID INFORMATION IS NOT WARRANTED BY THE STATE AND INTERESTED OR AFFECTED PARTIES SHOULD MAKE THEIR OWN INVESTIGATIONS.

LEGEND:

Remove Pier Wall 5′-0" below OG

Indicate bottom of the footing elevation

PRELIMINARY INVESTIGATION SECTION

SCALE	VERT.DATUM NGVD 29	PHOTOGRAMMETRY AS OF: X			
1"=20′	HORZ.DATUM NAD 83 (2000.35)	SURVEYED	BY DIST. 8 SURVEY	CHECKED	BY T. PHONG 12/2012
ALIGNMENT TIES Dist. Traverse Sheet		DRAFTED	BY S. ABASSY 01/2013	CHECKED	BY S. ALIVIO 01/2013

DESIGN	BY Mohammad Muqtadir	CHECKED Homa Iraninejadian
DETAILS	BY Lan T Tran	CHECKED Homa Iraninejadian
QUANTITIES	BY Mohammad Muqtadir	CHECKED Edward B Mu

STATE OF CALIFORNIA
DEPARTMENT OF TRANSPORTATION

DIVISION OF ENGINEERING SERVICES
STRUCTURE DESIGN
DESIGN BRANCH 20

BRIDGE NO. 54-1300R/L
POST MILE R95.14

HALLER WASH (REPLACE)
FOUNDATION PLAN

STRUCTURES FOUNDATION PLAN SHEET (ENGLISH) (REV. 09-01-10)

ORIGINAL SCALE IN INCHES FOR REDUCED PLANS 0 1 2 3

UNIT: 3647
PROJECT NUMBER & PHASE: 0813000176
CONTRACT NO.: 08-0N56U1

DISREGARD PRINTS BEARING EARLIER REVISION DATES

REVISION DATES 09/04/13 06/24/13 06/26/13

SHEET 5 OF 17

FILE => 54-1300rl-c-fpl.dgn

DIST	COUNTY	ROUTE	POST MILES TOTAL PROJECT	SHEET No.	TOTAL SHEETS
08	SBd	40	R94.7/R99.7	177	251

REGISTERED CIVIL ENGINEER 02-13-14 DATE

5-27-14
PLANS APPROVAL DATE

REGISTERED PROFESSIONAL ENGINEER Mohammad A. Muqtadir No. C60776 Exp. 12/31/14 CIVIL STATE OF CALIFORNIA

The State of California or its officers or agents shall not be responsible for the accuracy or completeness of electronic copies of this plan sheet.

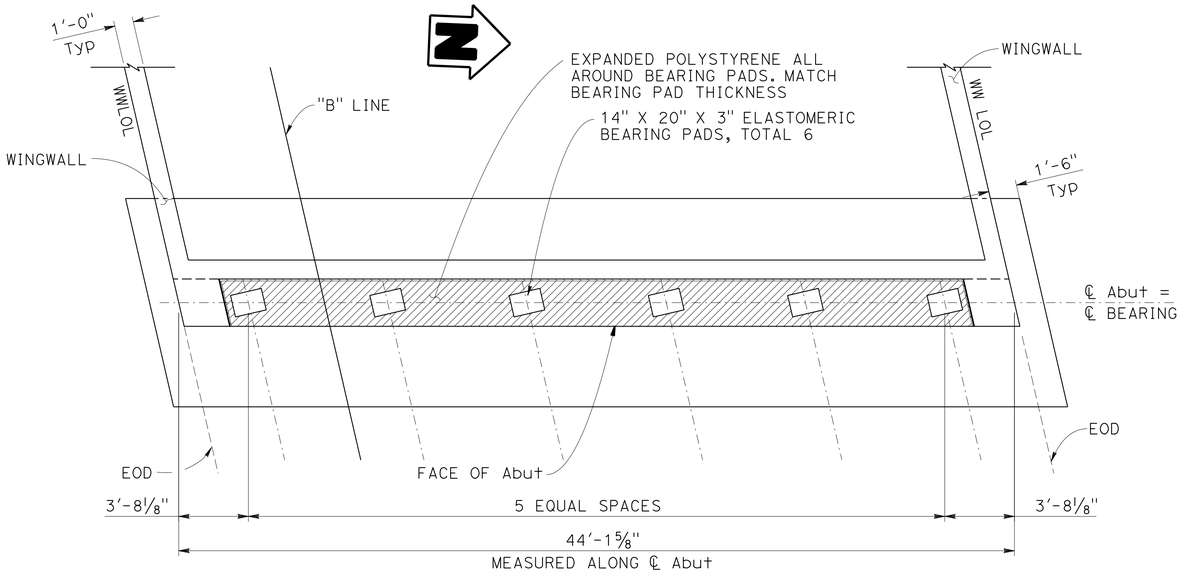

ABUTMENT PLAN

¼" = 1'-0"

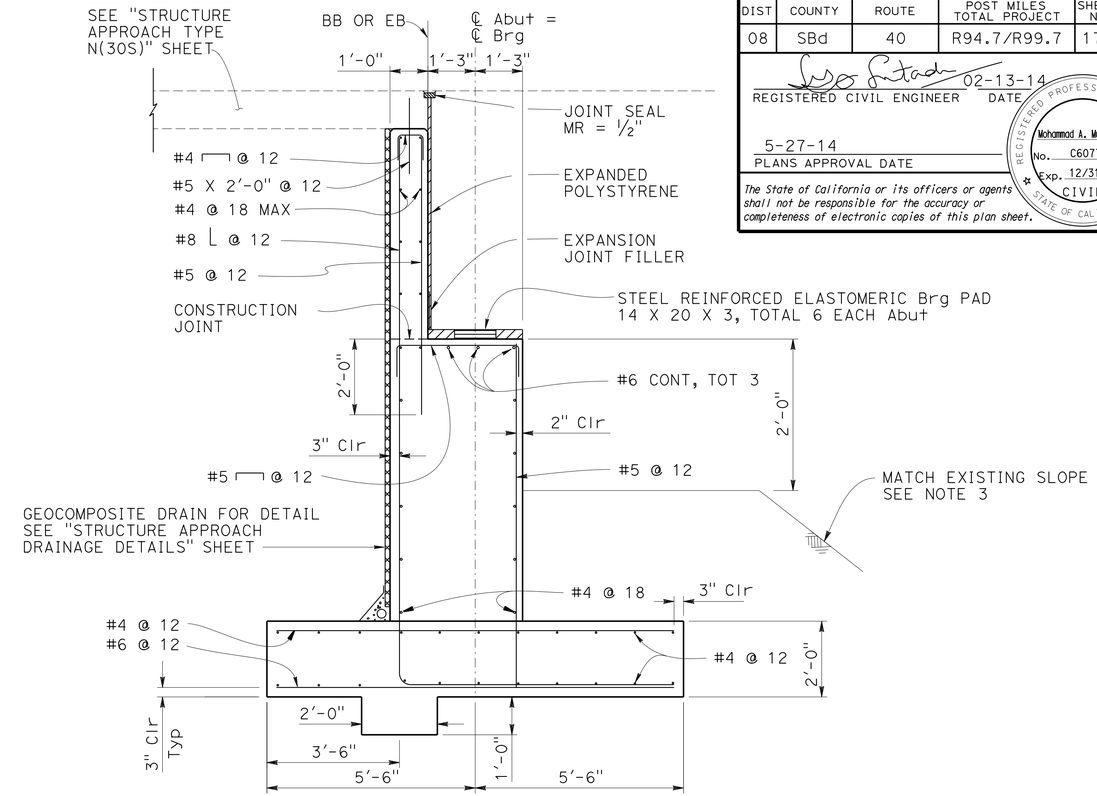

ABUTMENT TYPICAL SECTION

½" = 1'-0"

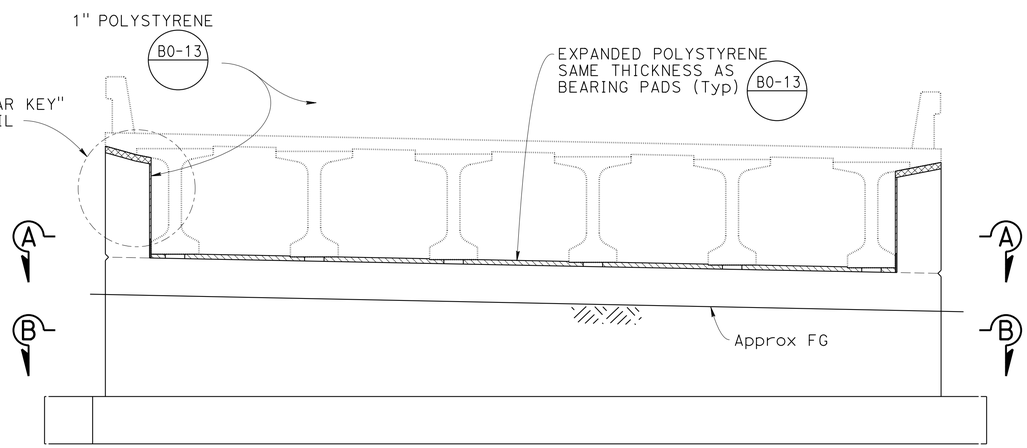

ABUTMENT ELEVATION

¼" = 1'-0"

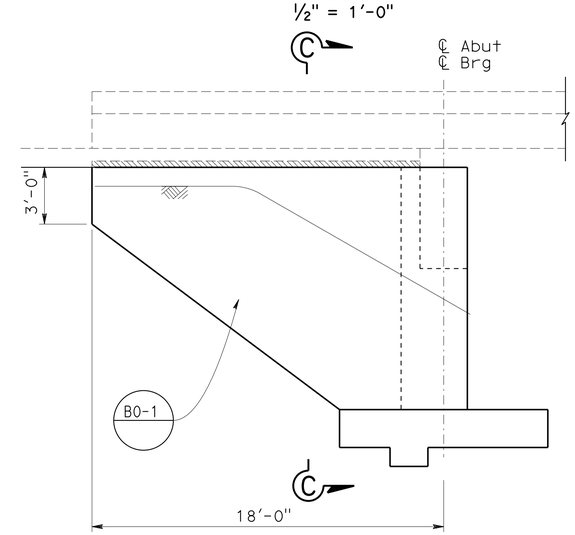

WINGWALL ELEVATION

¼" = 1'-0"

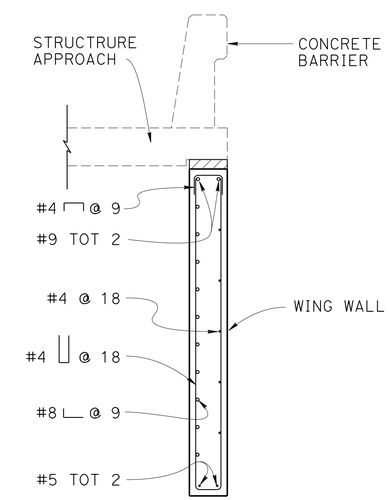

SECTION C-C

½" = 1'-0"

NOTES:

1. Right Bridge Abut 1 shown, the rest similar.
2. For "SHEAR KEY DETAIL", see "ABUTMENT DETAIL NO.1" sheet
3. For Rock Slope Protection Details, see "ROAD PLANS"
4. For "SECTION A-A" and "SECTION B-B" See "ABUTMENT DETAIL NO. 1" sheet.

NOTE:
THE CONTRACTOR SHALL VERIFY ALL CONTROLLING FIELD DIMENSIONS BEFORE ORDERING OR FABRICATING ANY MATERIAL.

	BY	CHECKED
DESIGN	Mohammad Muqtadir	Homa Iraninejadian
DETAILS	Lan T Tran	Homa Iraninejadian
QUANTITIES	Mohammad Muqtadir	Edward B Mu

STATE OF CALIFORNIA
DEPARTMENT OF TRANSPORTATION

DIVISION OF ENGINEERING SERVICES
STRUCTURE DESIGN
DESIGN BRANCH 20

BRIDGE NO. 54-1300R/L
POST MILE R95.14

HALLER WASH BRIDGE (REPLACE)
ABUTMENT LAYOUT

STRUCTURES DESIGN DETAIL SHEET (ENGLISH) (REV. 09-01-10)

ORIGINAL SCALE IN INCHES FOR REDUCED PLANS 0 1 2 3

UNIT: 3622
PROJECT NUMBER & PHASE: 0813000176
CONTRACT NO.: 08-0N56U1

DISREGARD PRINTS BEARING EARLIER REVISION DATES

REVISION DATES 12-05-13 9-04-13 11-04-13 11-04-13

SHEET 6 OF 17

FILE => 54-1300r1-d-a01_la01.dgn

USERNAME => s121614 DATE PLOTTED => 10-SEP-2014 TIME PLOTTED => 10:05

DIST	COUNTY	ROUTE	POST MILES TOTAL PROJECT	SHEET No.	TOTAL SHEETS
08	SBd	40	R94.7/R99.7	178	251

REGISTERED CIVIL ENGINEER 02-13-14 DATE

5-27-14
PLANS APPROVAL DATE

REGISTERED PROFESSIONAL ENGINEER Mohammad A. Muqtadir No. C60776 Exp. 12/31/14 CIVIL STATE OF CALIFORNIA

The State of California or its officers or agents shall not be responsible for the accuracy or completeness of electronic copies of this plan sheet.

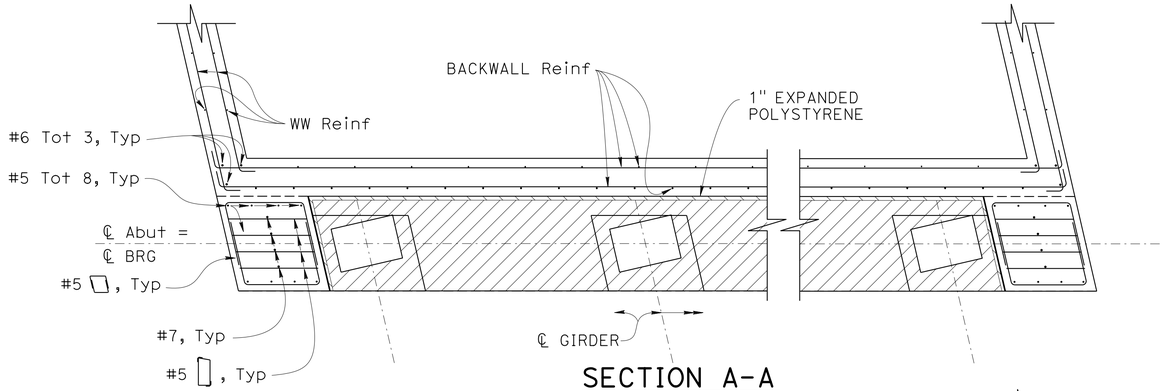

SECTION A-A
½" = 1'-0"

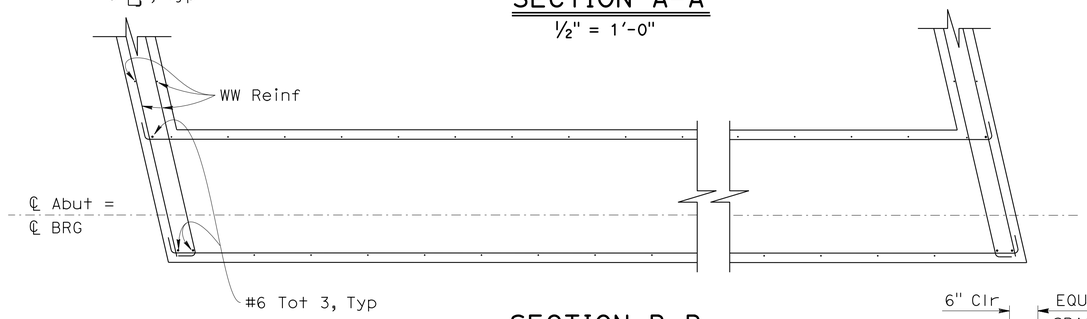

SECTION B-B
½" = 1'-0"

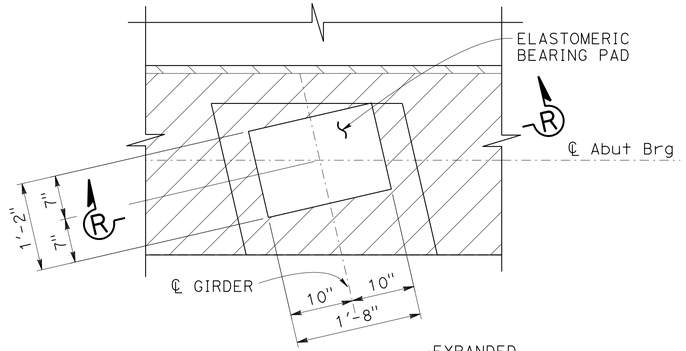

PLAN

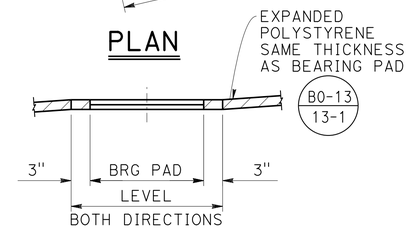

SECTION R-R

BEARING PAD DETAIL
No Scale

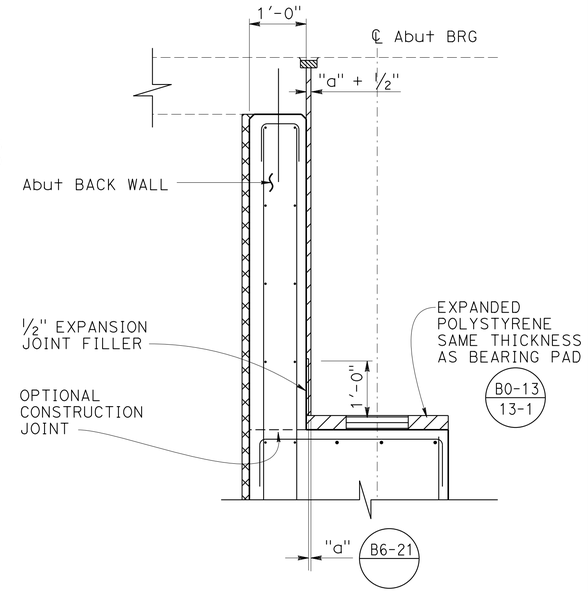

BACKWALL BASE DETAIL
¾" = 1'-0"

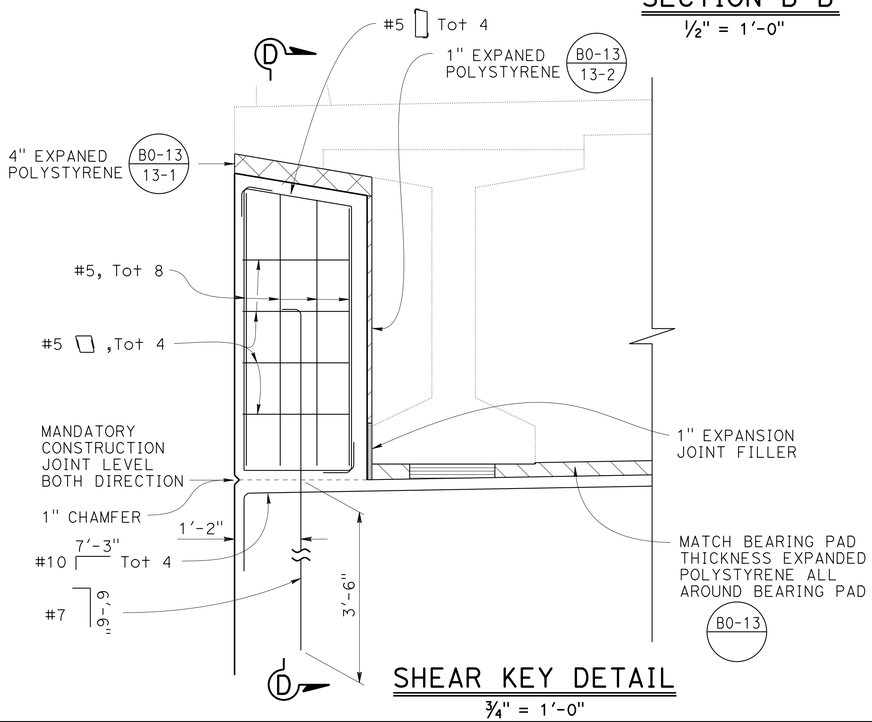

SHEAR KEY DETAIL
¾" = 1'-0"

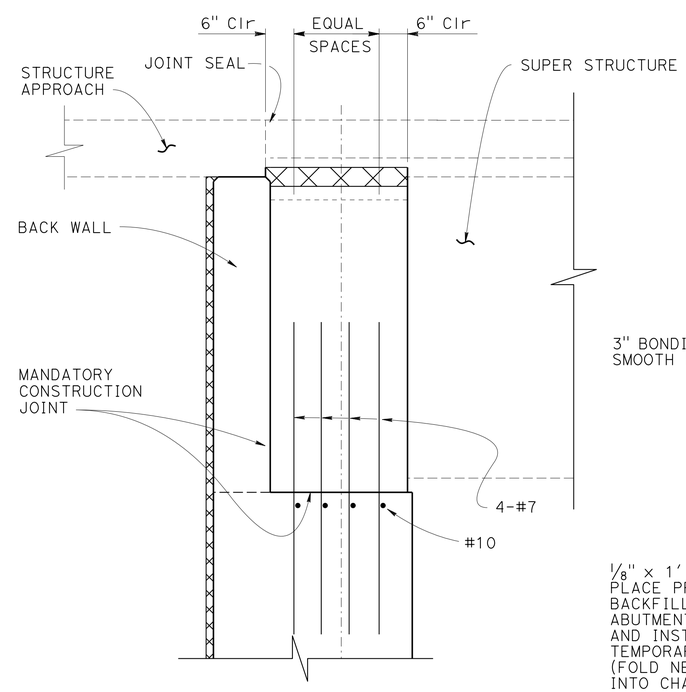

SECTION D-D
¾" = 1'-0"

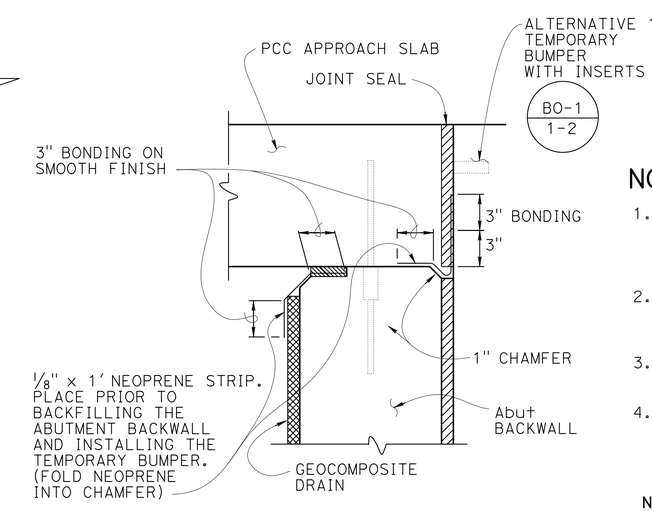

JOINT PROTECTION DETAIL
No Scale

NOTES:

1. Mandatory construction joint surface to be smooth finished and lined with 15 bls construction paper.
2. Shear Key and wingwall reinforcement to be discontinuous as shown.
3. Vertical Shear Key rebar (#7 bar) to be galvanized.
4. Abutment 4 Left Shear Key shown, the rest are similar.

NOTE:
THE CONTRACTOR SHALL VERIFY ALL CONTROLLING FIELD DIMENSIONS BEFORE ORDERING OR FABRICATING ANY MATERIAL.

	BY	CHECKED
DESIGN	Mohammad Muqtadir	Homa Iraninejadian
DETAILS	Lan T Tran	Homa Iraninejadian
QUANTITIES	Mohammad Muqtadir	Edward B Mu

STATE OF CALIFORNIA
DEPARTMENT OF TRANSPORTATION

DIVISION OF ENGINEERING SERVICES
STRUCTURE DESIGN
DESIGN BRANCH 20

BRIDGE NO. 54-1300R/L
POST MILE R95.14

HALLER WASH BRIDGE (REPLACE)
ABUTMENT DETAIL NO. 1

STRUCTURES DESIGN DETAIL SHEET (ENGLISH) (REV. 09-01-10)

ORIGINAL SCALE IN INCHES FOR REDUCED PLANS 0 1 2 3

UNIT: 3622
PROJECT NUMBER & PHASE: 0813000176
CONTRACT NO.: 08-0N56U1

DISREGARD PRINTS BEARING EARLIER REVISION DATES

REVISION DATES 9-04-13 12-05-13 6-25-13

SHEET 7 OF 17

FILE => 54-1300rl-d-a01dt01.dgn

USERNAME => s121614 DATE PLOTTED => 10-SEP-2014 TIME PLOTTED => 10:05

DIST	COUNTY	ROUTE	POST MILES TOTAL PROJECT	SHEET No.	TOTAL SHEETS
08	SBd	40	R94.7/R99.7	179	251

REGISTERED CIVIL ENGINEER 02-13-14 DATE

5-27-14
PLANS APPROVAL DATE

REGISTERED PROFESSIONAL ENGINEER
Mohammad A. Muqtadir
No. C60776
Exp. 12/31/14
CIVIL
STATE OF CALIFORNIA

The State of California or its officers or agents shall not be responsible for the accuracy or completeness of electronic copies of this plan sheet.

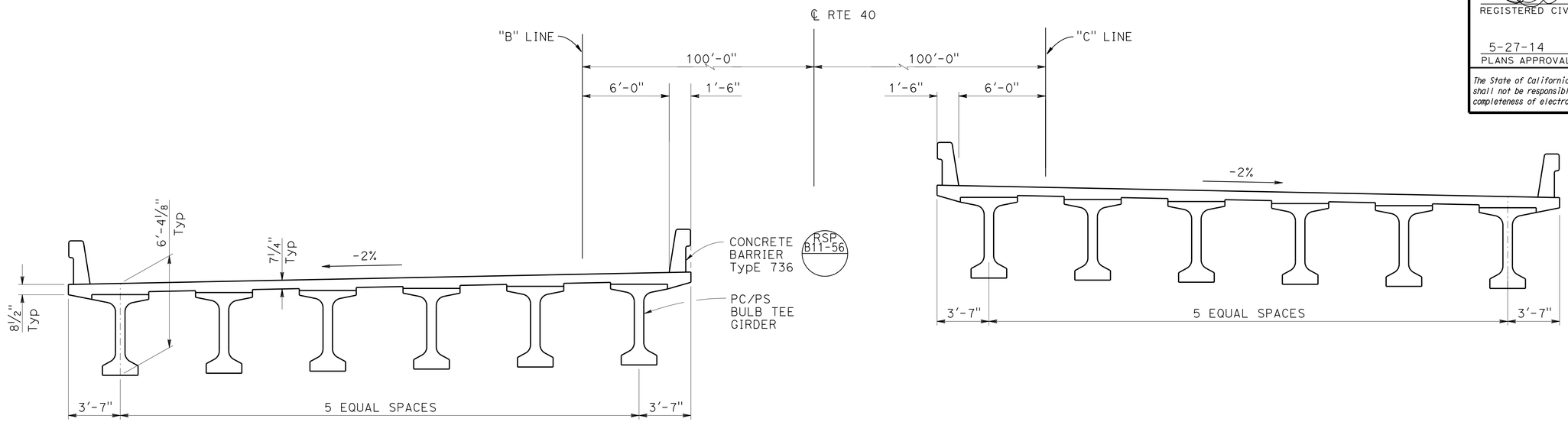

TYPICAL SECTION

1/4" = 1'-0"

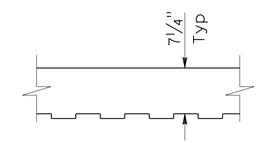

CONCRETE DECK WITH OPTIONAL STAY-IN-PLACE FORM

1" = 1'-0"

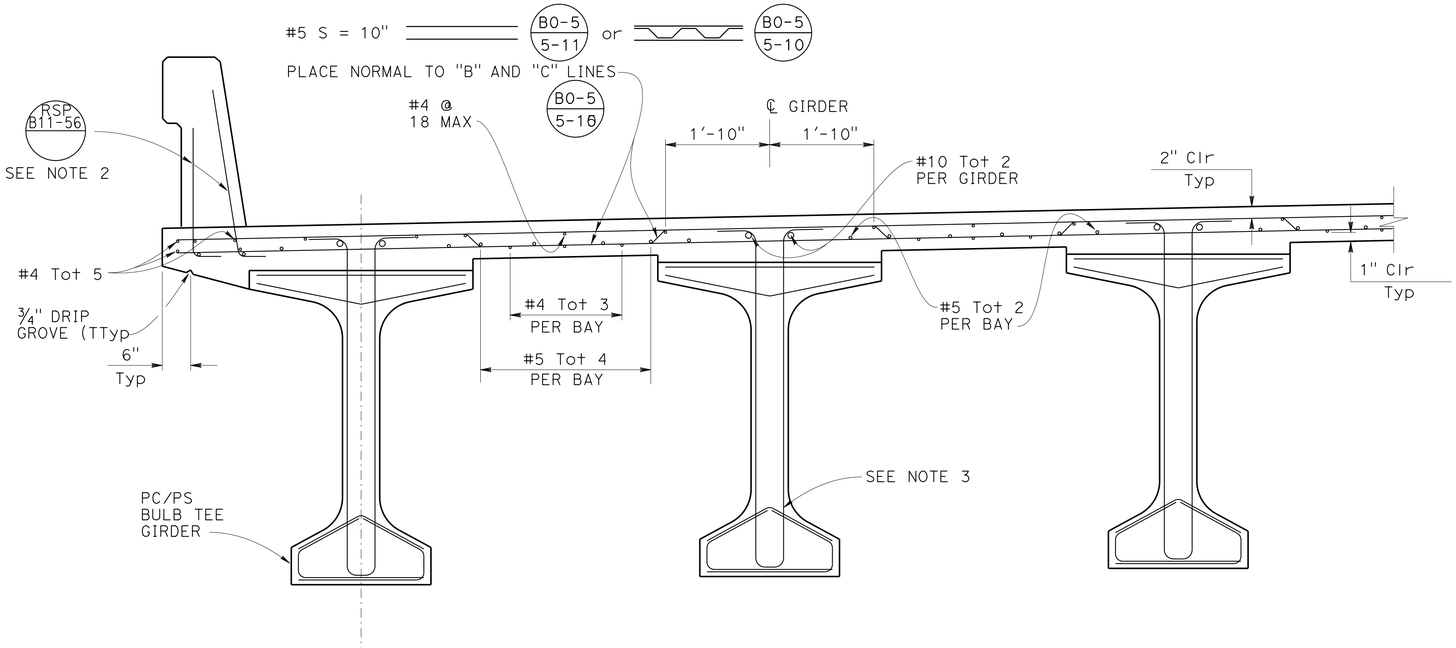

PART TYPICAL SECTION

3/4" = 1'-0"

NOTES:

1. Reinforcements are symetrical about ℄ of bridge.
2. Existing structure (not shown) to be removed.
3. Dimensions measured normal to ℄ Rte 40.

NOTE:
THE CONTRACTOR SHALL VERIFY ALL CONTROLLING FIELD DIMENSIONS BEFORE ORDERING OR FABRICATING ANY MATERIAL.

	BY	CHECKED
DESIGN	Mohammad Muqtadir	Homa Iraninejadian
DETAILS	Lan T Tran	Homa Iraninejadian
QUANTITIES	Mohammad Muqtadir	Edward B Mu

STATE OF CALIFORNIA
DEPARTMENT OF TRANSPORTATION

DIVISION OF ENGINEERING SERVICES
STRUCTURE DESIGN
DESIGN BRANCH 20

BRIDGE NO. 54-1300R/L
POST MILE R95.14

HALLER WASH BRIDGE (REPLACE)
TYPICAL SECTION

STRUCTURES DESIGN DETAIL SHEET (ENGLISH) (REV. 09-01-10)

ORIGINAL SCALE IN INCHES FOR REDUCED PLANS 0 1 2 3

UNIT: 3622
PROJECT NUMBER & PHASE: 0813000176
CONTRACT NO.: 08-0N56U1

DISREGARD PRINTS BEARING EARLIER REVISION DATES

REVISION DATES: 4-23-13 6-13-13 9-04-13 12-05-13

SHEET 8 OF 17

FILE => 54-1300rl-e-ts.dgn

USERNAME => s121614 DATE PLOTTED => 10-SEP-2014 TIME PLOTTED => 10:05

DIST	COUNTY	ROUTE	POST MILES TOTAL PROJECT	SHEET No.	TOTAL SHEETS
08	SBd	40	R94.7/R99.7	180	251

REGISTERED CIVIL ENGINEER 02-13-14 DATE

5-27-14
PLANS APPROVAL DATE

REGISTERED PROFESSIONAL ENGINEER Mohammad A. Muqtadir No. C60776 Exp. 12/31/14 CIVIL STATE OF CALIFORNIA

The State of California or its officers or agents shall not be responsible for the accuracy or completeness of electronic copies of this plan sheet.

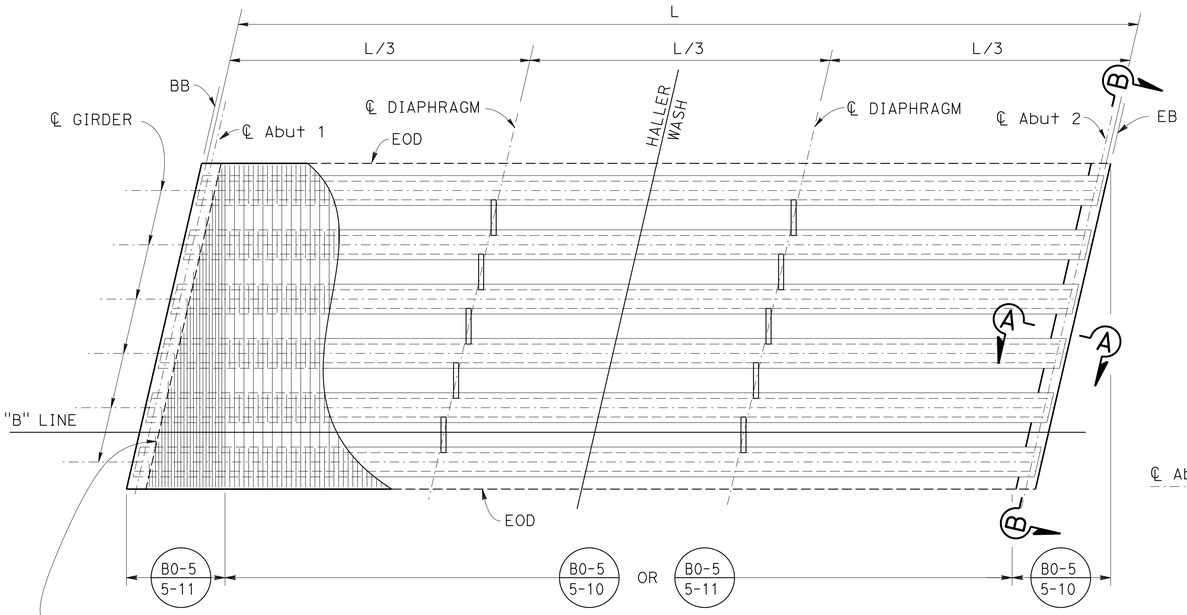

NOTE: Left Bridge shown. Right Bridge similar.

GIRDER LAYOUT

1" = 10'-0"

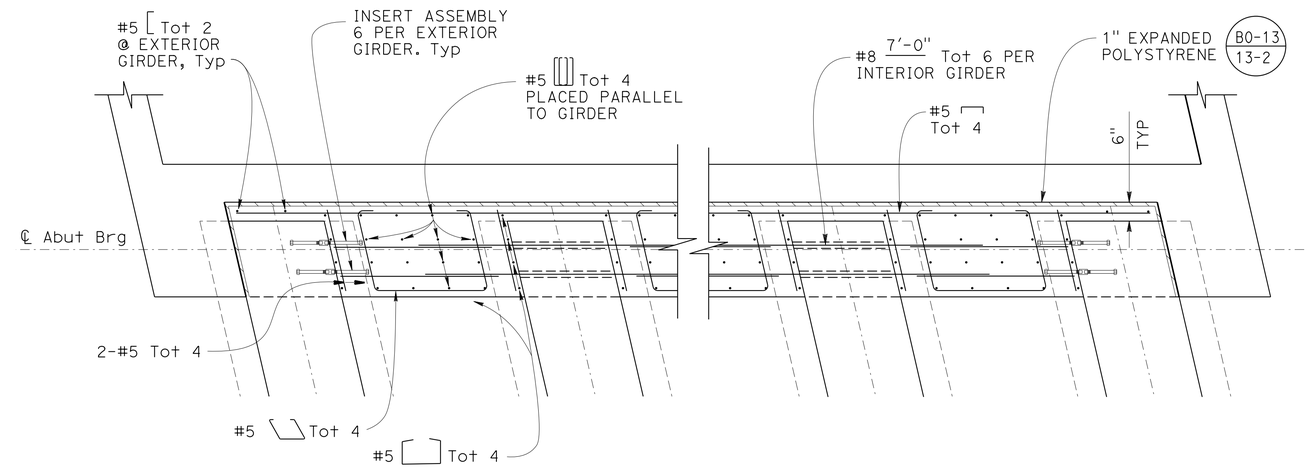

PART PLAN - END DIAPHRAGM

½" = 1'-0"

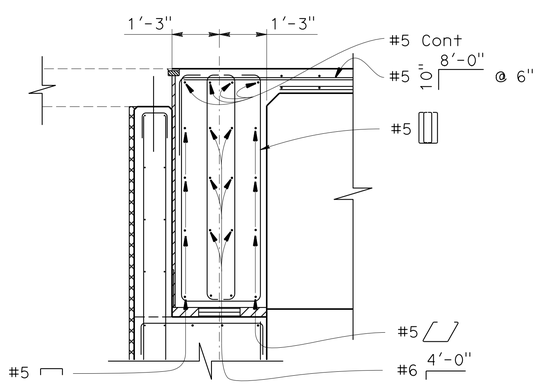

SECTION A-A

½" = 1'-0"

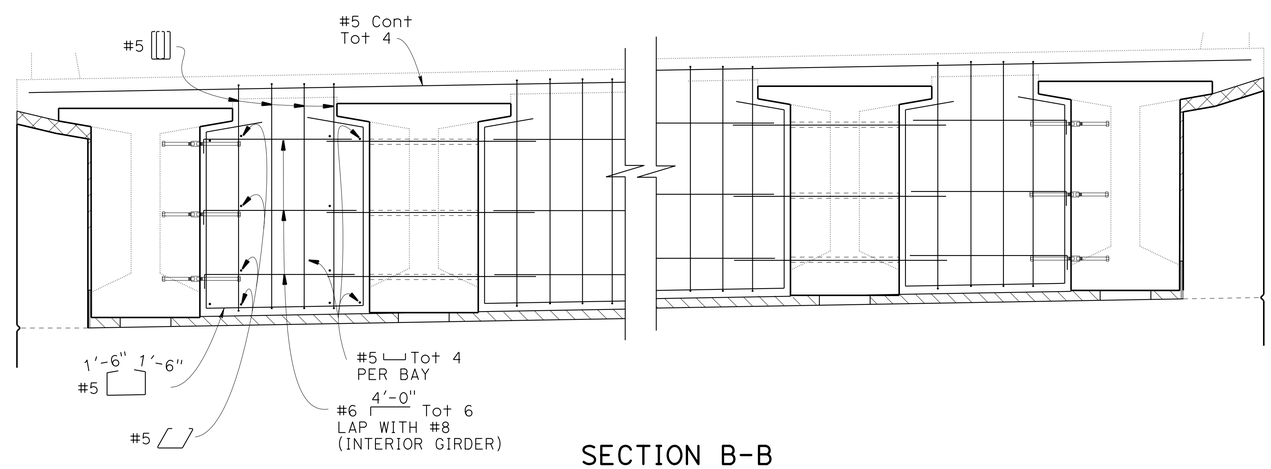

SECTION B-B

½" = 1'-0"

NOTE:
THE CONTRACTOR SHALL VERIFY ALL CONTROLLING FIELD DIMENSIONS BEFORE ORDERING OR FABRICATING ANY MATERIAL.

	BY	CHECKED
DESIGN	Mohammad Muqtadir	Homa Iraninejadian
DETAILS	Lan T Tran	Homa Iraninejadian
QUANTITIES	Mohammad Muqtadir	Edward B Mu

STATE OF CALIFORNIA
DEPARTMENT OF TRANSPORTATION

DIVISION OF ENGINEERING SERVICES
STRUCTURE DESIGN
DESIGN BRANCH 20

BRIDGE NO. 54-1300R/L
POST MILE R95.14

HALLER WASH BRIDGE (REPLACE)
GIRDER LAYOUT

STRUCTURES DESIGN DETAIL SHEET (ENGLISH) (REV. 09-01-10)

ORIGINAL SCALE IN INCHES FOR REDUCED PLANS 0 1 2 3

UNIT: 3622
PROJECT NUMBER & PHASE: 0813000176
CONTRACT NO.: 08-0N56U1

DISREGARD PRINTS BEARING EARLIER REVISION DATES

REVISION DATES: 12-05-13 02-07-14 11-04-13

SHEET 9 OF 17

FILE => 54-1300r1-f-g_lo.dgn

USERNAME => s1216814 DATE PLOTTED => 10-SEP-2014 TIME PLOTTED => 10:05

DIST	COUNTY	ROUTE	POST MILES TOTAL PROJECT	SHEET No.	TOTAL SHEETS
08	SBd	40	R94.7/R99.7	181	251

REGISTERED CIVIL ENGINEER 02-13-14 DATE

5-27-14
PLANS APPROVAL DATE

REGISTERED PROFESSIONAL ENGINEER Mohammad A. Mugtadir No. C60776 Exp. 12/31/14 CIVIL STATE OF CALIFORNIA

The State of California or its officers or agents shall not be responsible for the accuracy or completeness of electronic copies of this plan sheet.

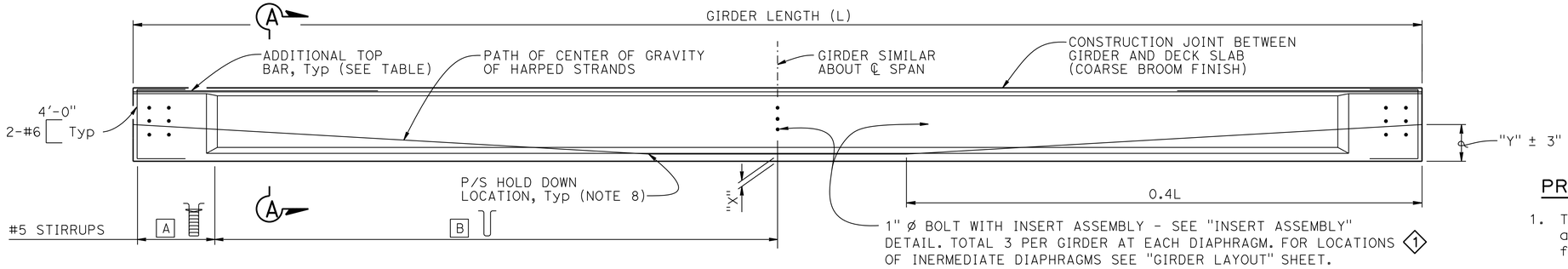

LOCATION	A	B
SPAN 1	#5 @ 6"	#5 @ 6"

NOTE: This table apply for both Left and Right Bridge

① GIRDER ELEVATION

NOTE:
Girder ends to be cast such that a level surface is provided at bearing pads

LOCATION		GIRDER LENGTH (L)	GIRDER DEPTH (D)	"X" (in)	JACKING FORCE (P) (kips)	As, Min (in^2)	"Y" (in)	CONCRETE STRENGTH (ksi)		MIDSPAN DEAD LOAD DEFLECTION (in)		ADDITIONAL TOP BAR (EACH END)
								f'ci	f'c	DECK	RAIL	
LEFT & RIGHT BRIDGE	GIRDER SPAN 1	118'-10"	66 7/8"	5	1580	7.80	30	5.0	5.5	1.17	0.13	#5 x 8'-0" Tot 4
				7	1670	8.25						

PRESTRESSING NOTES

1. The Jacking Force (P) is the jacking force required at the point of control along the span. The jacking force does not include any fabrication specific losses
2. The maximum tensile stress in the prestressing steel upon release shall not exceed 75% of the specified minimum ultimate tensile strength of the prestressing steel
3. The maximum temporary tensile stress (jacking stress) in the prestressing steel shall not exceed 80% of the specified minimum ultimate tensile strength of the prestressing steel
4. Concrete strength:
   f'ci is at time of initial stressing
   f'c is at 28 days
5. Deflection components are informational and will be used to set screed line elevations
6. Screed line elevations for deck concrete will be determined by the Engineer
7. Contractor may interpolate "P" and "X" values between the limits shown, as approved by the Engineer
8. There shall be a minimum of two hold downs per girder for the prestressing
9. Prestressing strand shall be 270 ksi low relaxation
10. As, Min is the minimum area required of prestressing steel

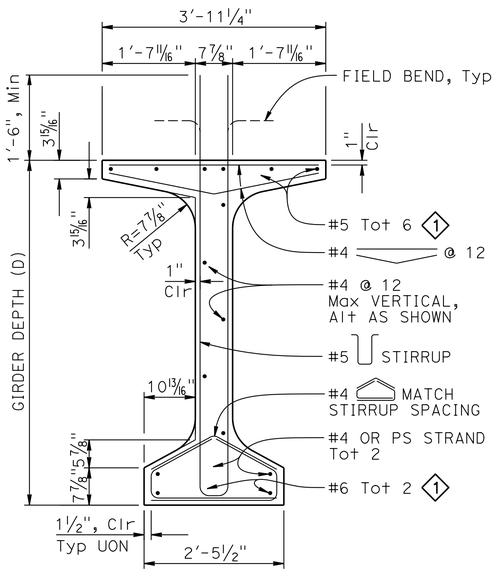

TYPICAL GIRDER SECTION

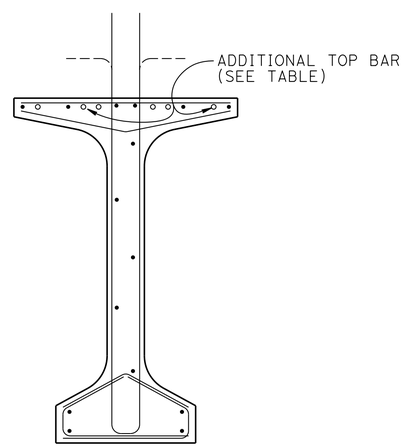

NOTE:
For details not shown, see "TYPICAL GIRDER SECTION"

SECTION A-A

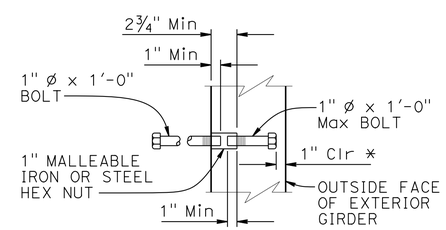

* DIMENSION MAY BE INCREASED WHEN INSERT ASSEMBLY IS USED AT END BLOCK

INSERT ASSEMBLY

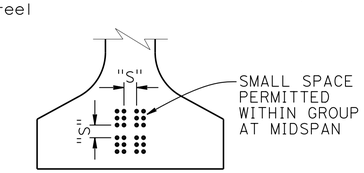

CLEARANCES FOR PRETENSIONED STRANDS

NOTES:

1. Strands may be bundled in groups consisting of 3 vertically, 2 horizontally, and separated at the ends
2. The minimum distance "S" between groups or individual strands is 1 3/4" for 0.5" ø strand and 2" for 0.6" ø strand
3. "S" is measured between centers of adjacent strands
4. Approval by Engineer is required for deviation

NO SCALE

NOTE: For "WELDED WIRE REINFORCEMENT (WWR) ALTERNATIVE", see "PC/PS BULB-TEE GIRDER (MISCELLANEOUS DETAILS)" sheet

REVISED STANDARD DRAWING

FILE NO. xs1-122-1

APPROVAL DATE July 2011

① Modified Detail

STATE OF CALIFORNIA DEPARTMENT OF TRANSPORTATION

DIVISION OF ENGINEERING SERVICES

BRIDGE NO. 54-1300R/L

POST MILE R95.14

HALLER WASH BRIDGE (REPLACE)

PC/PS BULB-TEE GIRDER (HARPED STRANDS)

DS OSD 2147A (ENGLISH STANDARD DRAWING "XS" BORDER REV. (02-02-11)

ORIGINAL SCALE IN INCHES FOR REDUCED PLANS 0 1 2 3

UNIT: 3622
PROJECT NUMBER & PHASE: 0813000176

CONTRACT NO.: 08-0N56U1

DISREGARD PRINTS BEARING EARLIER REVISION DATES

REVISION DATES 12-05-13 6-04-13 6-11-13 6-24-13

SHEET 10 OF 17

FILE => 54-1300rl-f-gdt01.dgn

USERNAME => s121614 DATE PLOTTED => 10-SEP-2014 TIME PLOTTED => 10:05

DIST	COUNTY	ROUTE	POST MILES TOTAL PROJECT	SHEET No.	TOTAL SHEETS
08	SBd	40	R94.7/R99.7	182	251

REGISTERED CIVIL ENGINEER 02-13-14 DATE

5-27-14
PLANS APPROVAL DATE

REGISTERED PROFESSIONAL ENGINEER Mohammad A. Muqtadir No. C60776 Exp. 12/31/14 CIVIL STATE OF CALIFORNIA

The State of California or its officers or agents shall not be responsible for the accuracy or completeness of electronic copies of this plan sheet.

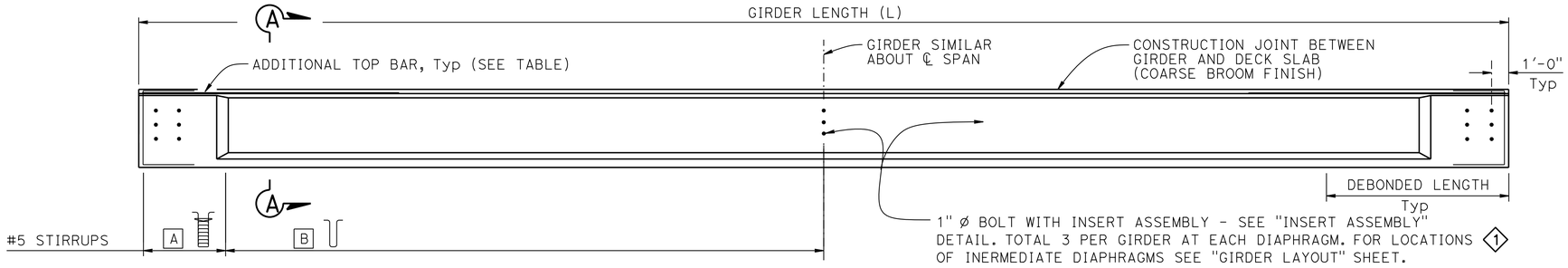

LOCATION	A	B
SPAN 1	#5 @ 6"	#5 @ 6"

NOTE: This table apply for both Left and Right Bridge

1 GIRDER ELEVATION

NOTE:
Girder ends to be cast such that a level surface is provided at bearing pads

LOCATION		GIRDER LENGTH (L)	GIRDER DEPTH (D)	NUMBER OF 0.6" Ø STRANDS	JACKING FORCE (P)	CONCRETE STRENGTH (ksi)		MIDSPAN DEAD LOAD DEFLECTION (in)		ADDITIONAL TOP BAR (EACH END)
						f'ci	f'c	DECK	RAIL	
LEFT & RIGHT BRIDGE	GIRDER SPAN 1	118'-10"	66⅞"	34	1494 kips (43.94 kips/STRAND)	5.0	5.5	1.17	0.13	#5 x 8'-0" Tot 4

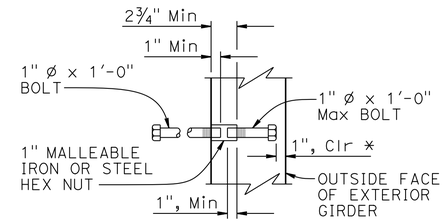

* DIMENSION MAY BE INCREASED WHEN INSERT ASSEMBLY IS USED AT END BLOCK

INSERT ASSEMBLY

PRESTRESSING NOTES

1. The Jacking Force (P) is the jacking force required at the point of control along the span. The jacking force does not include any fabrication specific losses
2. The maximum temporary tensile stress (jacking stress) in the prestressing steel shall not exceed 80% of the specified minimum ultimate tensile strength of the prestressing steel
3. Concrete strength:
   f'ci is at time of initial stressing
   f'c is at 28 days
4. Deflection components are informational and will be used to set screed line elevations
5. Screed line elevations for deck concrete will be determined by the Engineer
6. Prestressing strand shall be 270 ksi low relaxation

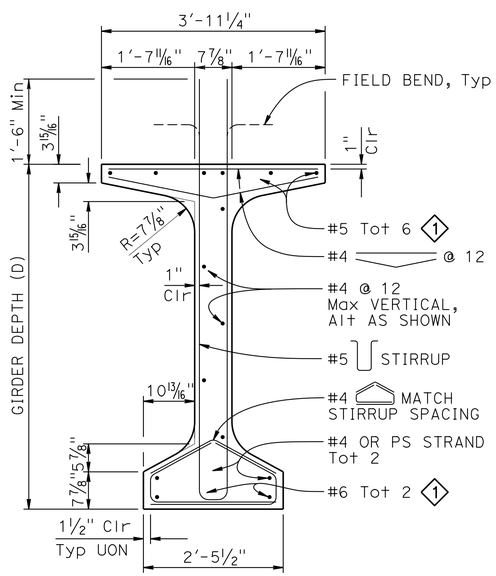

TYPICAL GIRDER SECTION

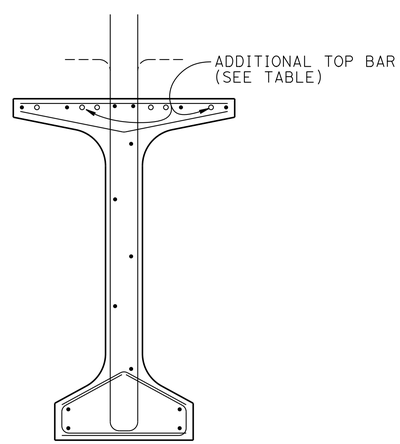

NOTE:
For details not shown, see "TYPICAL GIRDER SECTION"

SECTION A-A

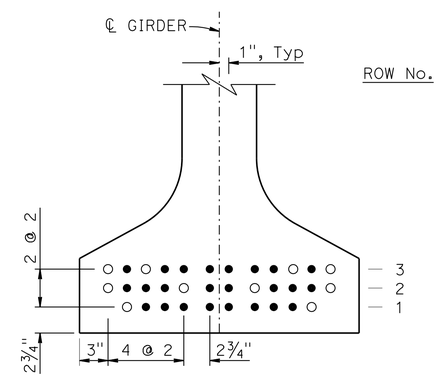

LEGEND:

● DENOTES CONTINUOUSLY BONDED STRAND LOCATION

○ DENOTES PERMISSIBLE DEBONDED STRAND LOCATION

1 STRAND TEMPLATE & DEBONDING PATTERN

NOTES:

1. Strands shall be placed as low as possible in the strand template and symmetrical about ℄ Girder
2. No more than 33% of the total number of strands and 50% of the strands per horziontal row may be debonded
3. Strand locations may be adjusted as approved by the Engineer

GIRDER SPAN 1			
ROW No.	TOTAL No. OF STRANDS	No. OF DEBONDED STRANDS	DEBONDED LENGTH
1	10	2	15'-0"
2	12	4	20'-0"
3	12	4	30'-0"

NOTES: These tables apply for both Right and Left Bridges

NO SCALE

NOTE: For "WELDED WIRE REINFORCEMENT (WWR) ALTERNATIVE", see "PC/PS BULB-TEE GIRDER (MISCELLANEOUS DETAILS)" sheet

REVISED STANDARD DRAWING

FILE NO. xs1-121-1

APPROVAL DATE July 2011

1 Modified Detail

STATE OF CALIFORNIA DEPARTMENT OF TRANSPORTATION

DIVISION OF ENGINEERING SERVICES

BRIDGE NO. 54-1300R/L

POST MILE R95.14

HALLER WASH BRIDGE (REPLACE)

PC/PS BULB-TEE GIRDER

(ALTERNATE_DEBONDED STRANDS)

DS OSD 2147A (ENGLISH STANDARD DRAWING "XS" BORDER REV. (02-02-11)

ORIGINAL SCALE IN INCHES FOR REDUCED PLANS 0 1 2 3

UNIT: 3622
PROJECT NUMBER & PHASE: 0813000176

CONTRACT NO.: 08-0N56U1

DISREGARD PRINTS BEARING EARLIER REVISION DATES

REVISION DATES 10-03-13 12-06-13 02-07-14

SHEET 11 OF 17

FILE => 54-1300rl-f-gdt02.dgn

USERNAME => s121614 DATE PLOTTED => 10-SEP-2014 TIME PLOTTED => 10:06

DIST	COUNTY	ROUTE	POST MILES TOTAL PROJECT	SHEET No.	TOTAL SHEETS
08	SBd	40	R94.7/R99.7	183	251

REGISTERED CIVIL ENGINEER 02-13-14 DATE

5-27-14
PLANS APPROVAL DATE

REGISTERED PROFESSIONAL ENGINEER Mohammad A. Mugtadir No. C60776 Exp. 12/31/14 CIVIL STATE OF CALIFORNIA

The State of California or its officers or agents shall not be responsible for the accuracy or completeness of electronic copies of this plan sheet.

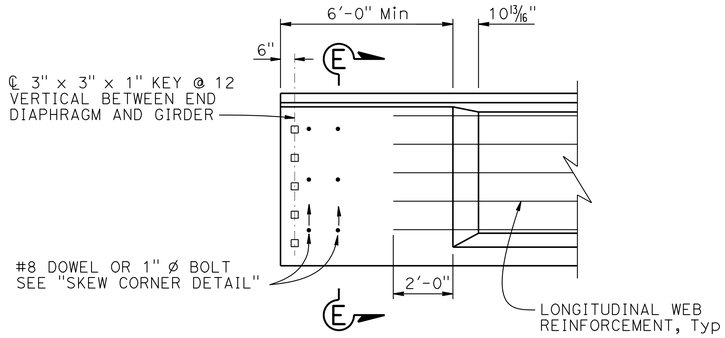

END BLOCK - ELEVATION

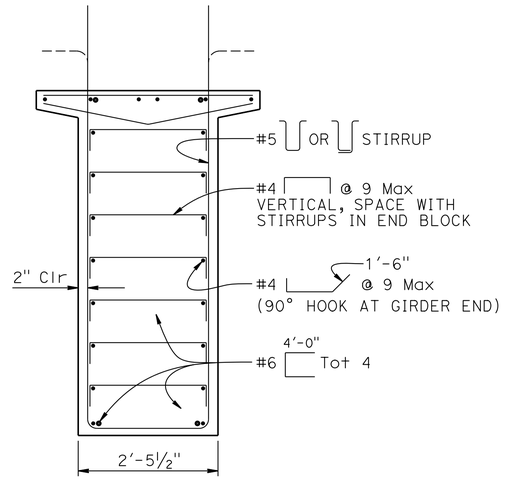

NOTE:
For details not shown, see "TYPICAL GIRDER SECTION" detail on "PC/PS BULB-TEE GIRDER (HARPED STRANDS)" sheet

SECTION E-E

NOTES:
1. For details shown but not noted, see "TYPICAL GIRDER SECTION" detail on "PC/PS BULB-TEE GIRDER (HARPED STRANDS)" sheet
2. W8 WWR not shown

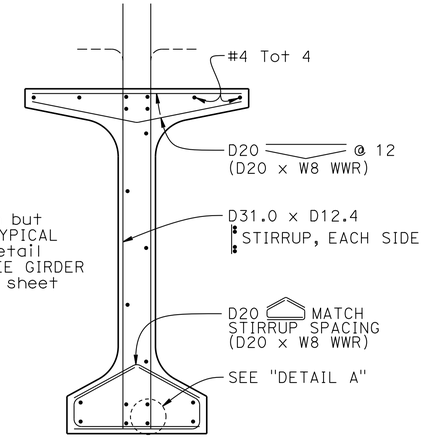

WELDED WIRE REINFORCEMENT (WWR) ALTERNATIVE

NOTE:
For "GIRDER ELEVATION" and "TYPICAL GIRDER SECTION", see "PC/PS BULB-TEE GIRDER (HARPED STRANDS)" sheet

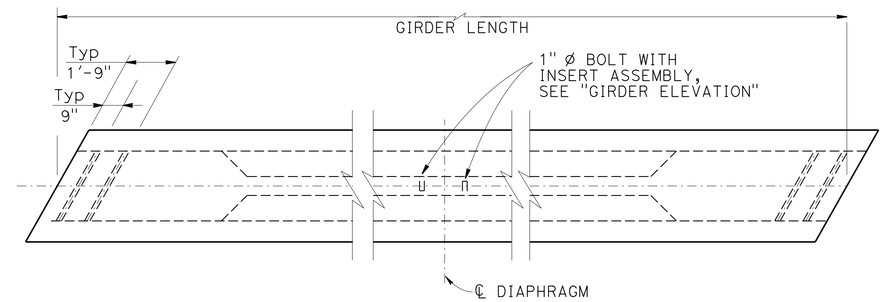

1 SKEW CORNER DETAIL

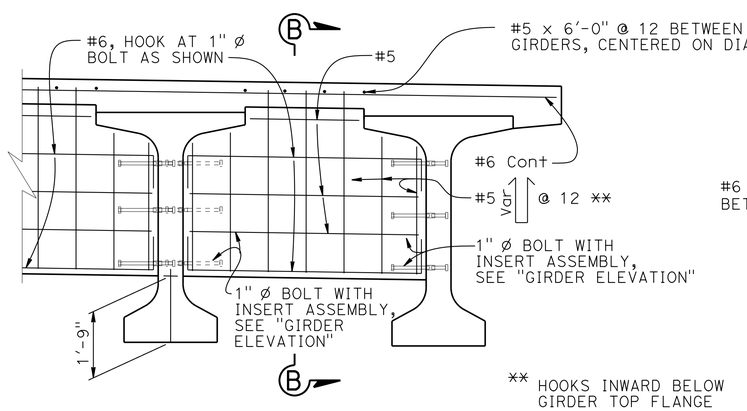

2 INTERMEDIATE DIAPHRAGM

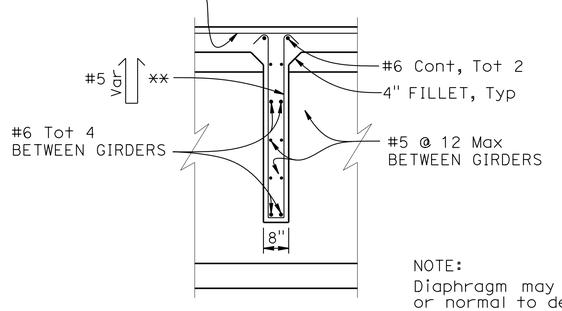

NOTE:
Diaphragm may be vertical or normal to deck grade

SECTION B-B

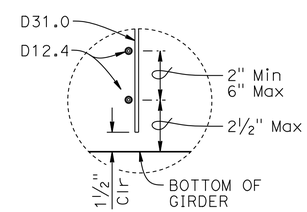

DETAIL A

NOTES:
1. Bottom of stirrup WWR detail shown, top similar
2. Longitudinal wire area shall be 40% or greater of vertical deformed wire's area

NO SCALE

REVISED STANDARD DRAWING

FILE NO. xs1-122-2

APPROVAL DATE July 2011

1 ADDED DETAIL
2 MODIFIED DETAIL

STATE OF CALIFORNIA DEPARTMENT OF TRANSPORTATION

DIVISION OF ENGINEERING SERVICES

BRIDGE NO. 54-1300R/L
POST MILE R95.14

HALLER WASH BRIDGE (REPLACE)
PC/PS BULB-TEE GIRDER (MISCELLANEOUS DETAILS)

DS OSD 2147A (ENGLISH STANDARD DRAWING "XS" BORDER REV. (02-02-11)

ORIGINAL SCALE IN INCHES FOR REDUCED PLANS 0 1 2 3

UNIT: 3622
PROJECT NUMBER & PHASE: 0813000176
CONTRACT NO.: 08-0N56U1

DISREGARD PRINTS BEARING EARLIER REVISION DATES

REVISION DATES 04-22-13 9-09-13 12-05-13

SHEET 12 OF 17

FILE => 54-1300rl-f-gdt03.dgn

USERNAME => s121614 DATE PLOTTED => 10-SEP-2014 TIME PLOTTED => 10:06

DIST	COUNTY	ROUTE	POST MILES TOTAL PROJECT	SHEET No.	TOTAL SHEETS
08	SBd	40	R94.7/R99.7	184	251

REGISTERED CIVIL ENGINEER 02-13-14 DATE

5-27-14
PLANS APPROVAL DATE

REGISTERED PROFESSIONAL ENGINEER Mohammad A. Mugtadir No. C60776 Exp. 12/31/14 CIVIL STATE OF CALIFORNIA

The State of California or its officers or agents shall not be responsible for the accuracy or completeness of electronic copies of this plan sheet.

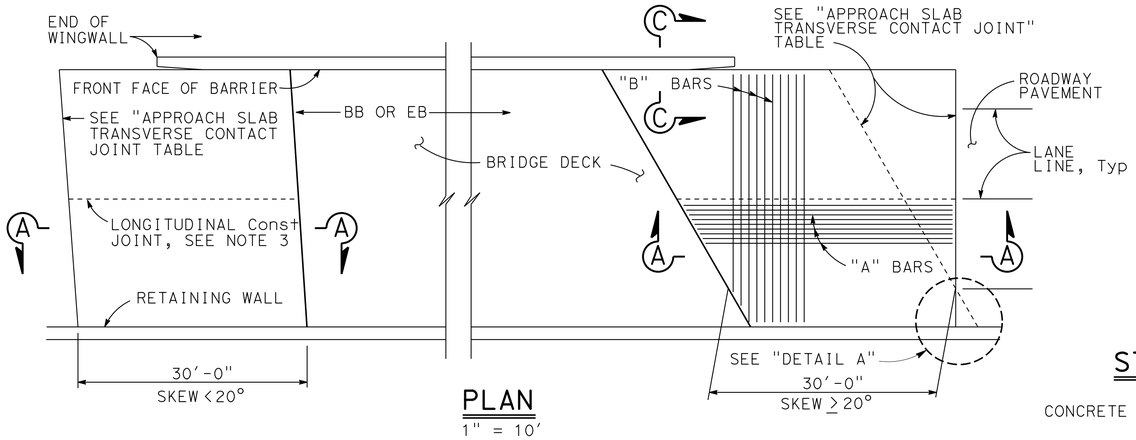

PLAN
1" = 10'

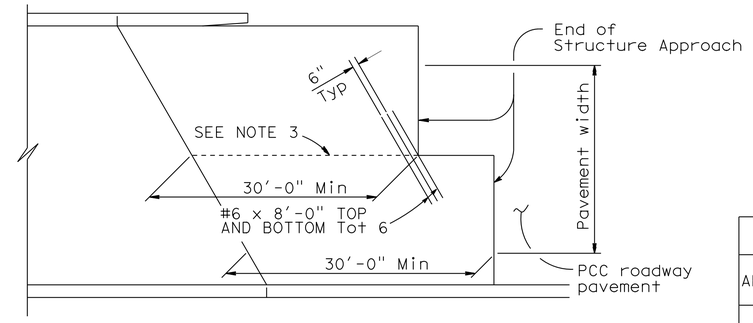

STRUCTURE APPROACH - END STAGGER DETAIL
No Scale

APPROACH SLAB TRANSVERSE CONTACT JOINT		
APPROACH SKEW	WITH AC ROADWAY PAVEMENT	WITH PCC ROADWAY PAVEMENT
< 20°	PARALLEL TO FACE OF PN	PARALLEL TO FACE OF PN
20° - 45°	PARALLEL TO FACE OF PN USE "DETAIL A"	STAGGER LINES 24' TO 36' APART
> 45°	PARALLEL TO FACE OF PN USE "DETAIL A"	STAGGER AT EACH LANE LINE

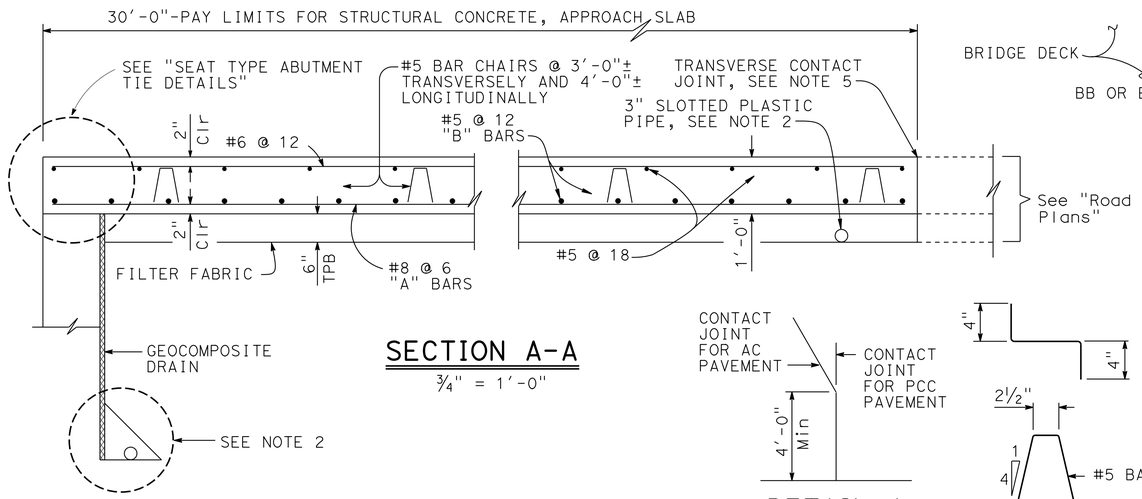

SECTION A-A
¾" = 1'-0"

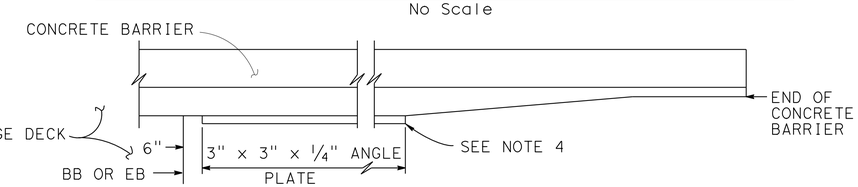

EDGE ANGLE DETAIL
½" = 1'-0"

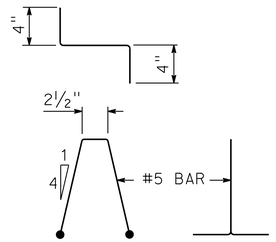

DETAIL A
No Scale

BAR CHAIR DETAIL
1½"=1'-0"

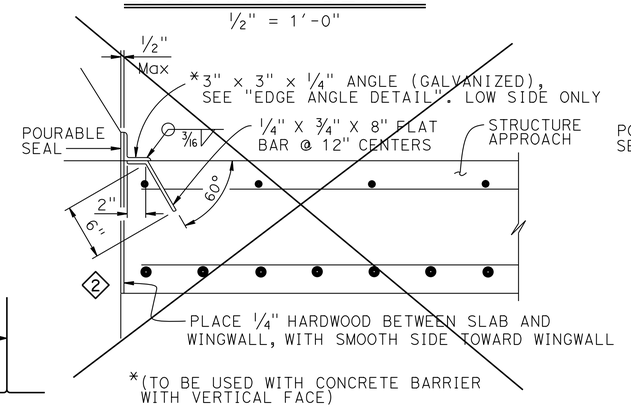

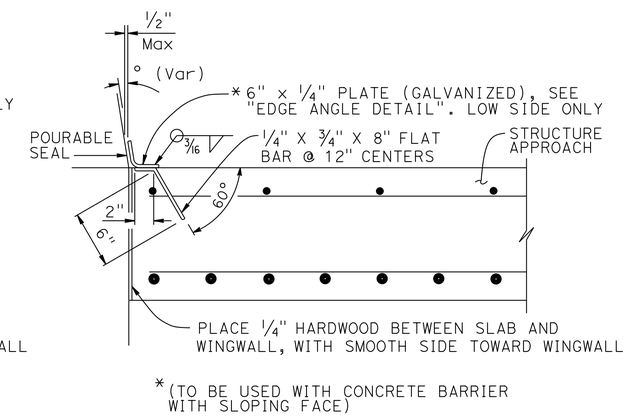

DETAIL B
1½" = 1'-0"

NOTE 1:

1. For details not shown, see Structure Plans. For MR ≤ 2", adjust bar reinforcement to clear a sawcut for sealed joint, when required
2. For drainage details, see "STRUCTURE APPROACH DRAINAGE DETAILS" sheet
3. Longitudinal construction joints, when permitted by the Engineer, shall be located on lane lines
4. End angle or plate at beginning of barrier transition, end of wingwall or end of structure approach as applicable
5. For transverse contact joint with new PCC paving, refer to Standard Plan P10
6. At the Contractor's option, approach slab transverse reinforcement may be placed parallel to paving notch. Spacing of transverse reinforcement is measured along ℄ roadway

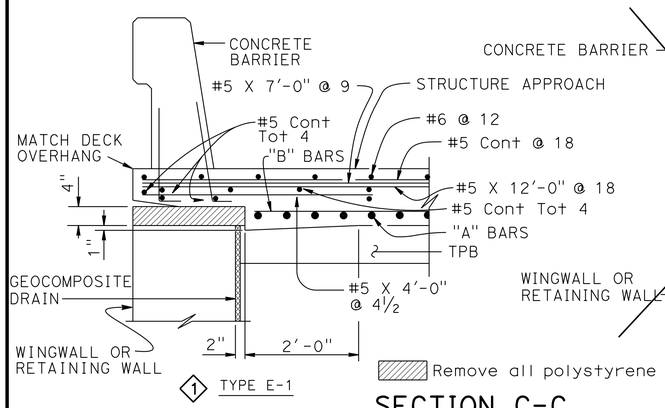

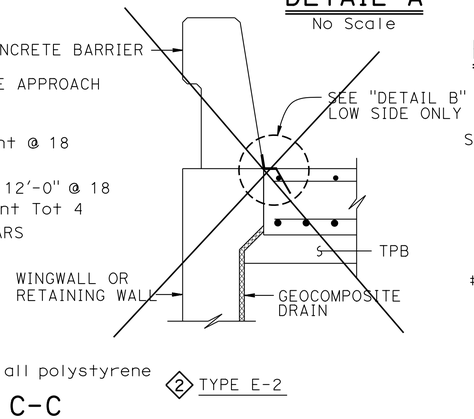

Remove all polystyrene

SECTION C-C
¾" = 1'-0"

(Type E-1 to be used, unless otherwise shown on plans)

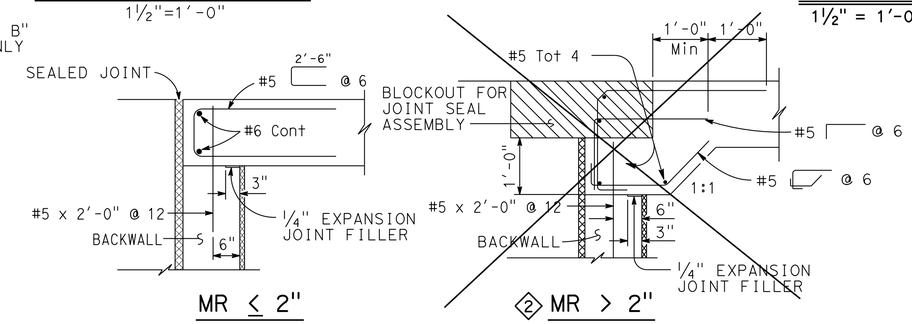

SEAT TYPE ABUTMENT TIE DETAILS (SEE NOTE 1)
¾" = 1'-0"

REVISED STANDARD DRAWING		
FILE NO. xs3-120	APPROVAL DATE July 2011	1 Modified Detail 2 Deleted Detail

STATE OF CALIFORNIA DEPARTMENT OF TRANSPORTATION

DIVISION OF ENGINEERING SERVICES

BRIDGE NO. 54-1300R/L
POST MILE R95.14

HALLER WASH BRIDGE (REPLACE)
STRUCTURE APPROACH TYPE N(30S)

DS OSD 2147A (ENGLISH STANDARD DRAWING "XS" BORDER REV. (02-02-11)

ORIGINAL SCALE IN INCHES FOR REDUCED PLANS 0 1 2 3

UNIT: 3622
PROJECT NUMBER & PHASE: 0813000176
CONTRACT NO.: 08-0N56U1

DISREGARD PRINTS BEARING EARLIER REVISION DATES

REVISION DATES 4-29-13 6-17-13 12-05-13

SHEET 13 OF 17

FILE => 54-1300rl-s-sadd01.dgn

USERNAME => s121614 DATE PLOTTED => 10-SEP-2014 TIME PLOTTED => 10:06

DIST	COUNTY	ROUTE	POST MILES TOTAL PROJECT	SHEET No.	TOTAL SHEETS
08	SBd	40	R94.7/R99.7	185	251

REGISTERED CIVIL ENGINEER 02-13-14 DATE

5-27-14
PLANS APPROVAL DATE

REGISTERED PROFESSIONAL ENGINEER Mohammad A. Mugtadir No. C60776 Exp. 12/31/14 CIVIL STATE OF CALIFORNIA

The State of California or its officers or agents shall not be responsible for the accuracy or completeness of electronic copies of this plan sheet.

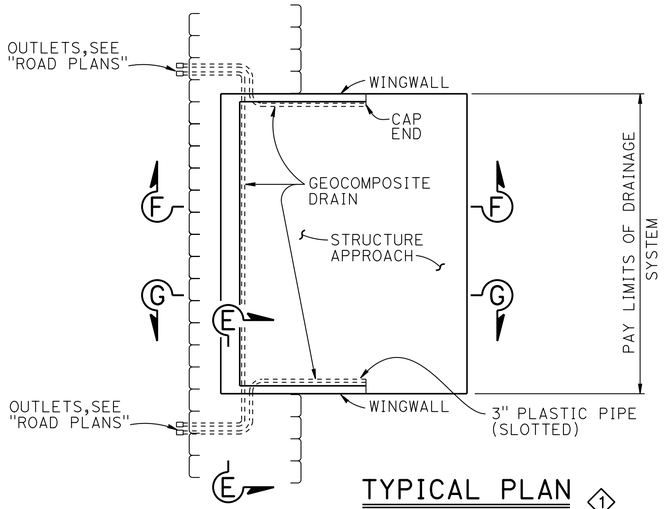

TYPICAL PLAN ⟨1⟩

1" = 10'

* FOR PIPE LAYOUT AT STAGGERED END, SEE "DETAIL B"

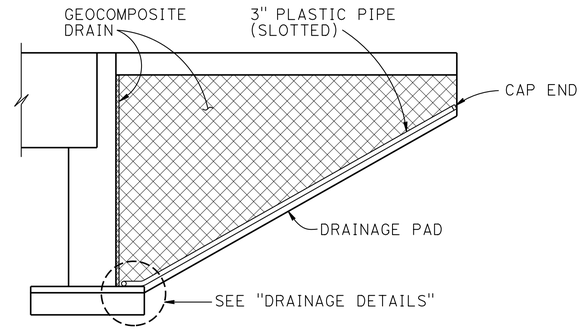

CANTILEVER WINGWALL

SECTION F-F

1/4" = 1'-0"

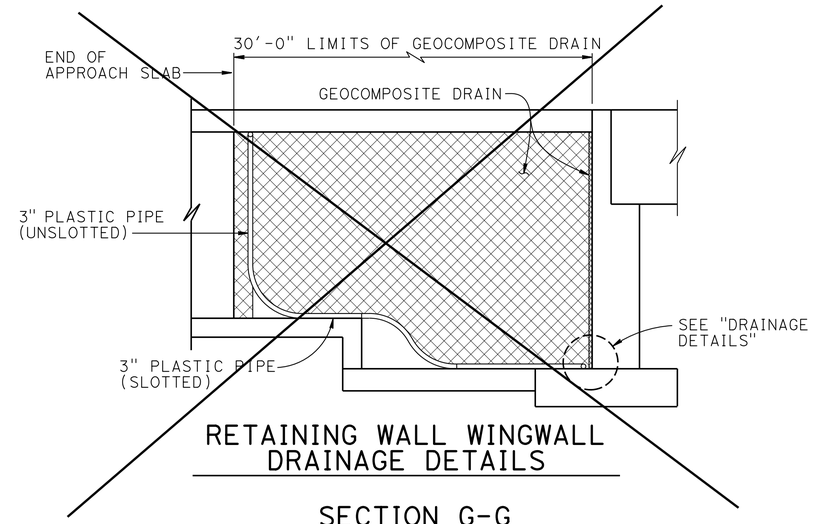

RETAINING WALL WINGWALL DRAINAGE DETAILS

SECTION G-G ⟨2⟩

1/4" = 1'-0"

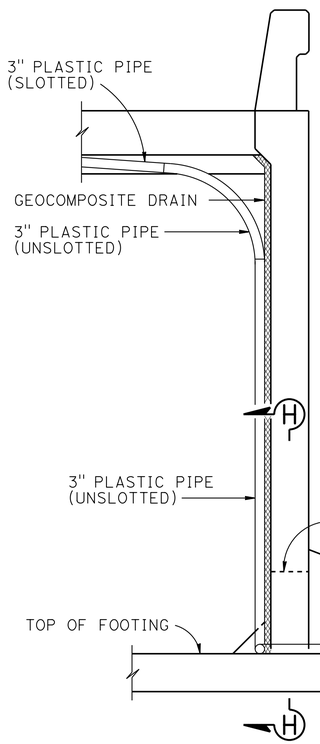

SECTION E-E

1/2" = 1'-0"

NOTE: Bends and junctions in 3" plastic pipe are 30" radius Min

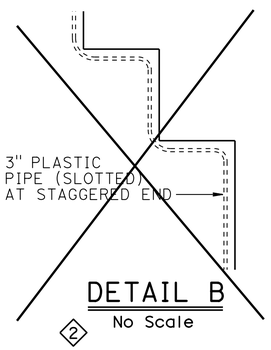

DETAIL B ⟨2⟩

No Scale

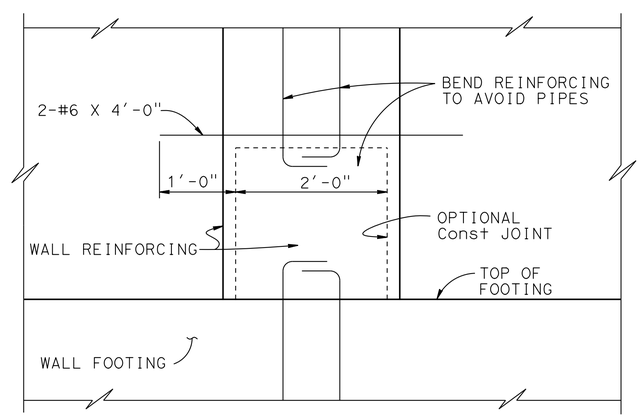

SECTION H-H

1" = 1'-0"

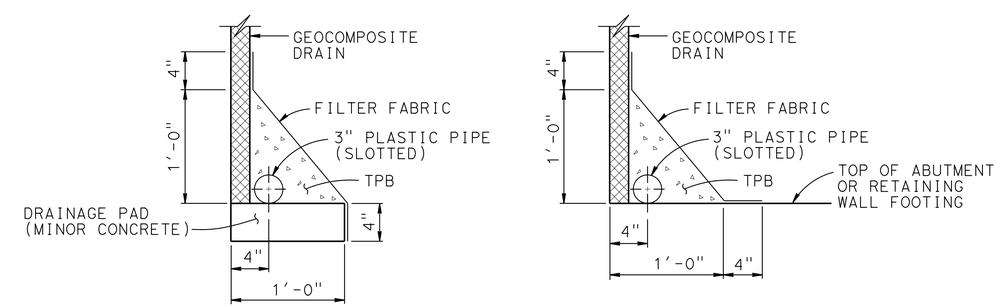

WITHOUT FOOTING

WITH FOOTING

DRAINAGE DETAILS

1 1/2" = 1'-0"

REVISED STANDARD DRAWING

FILE NO. xs3-110

APPROVAL DATE July 2011

⟨1⟩ Modified Detail
⟨2⟩ Deleted Detail

STATE OF CALIFORNIA DEPARTMENT OF TRANSPORTATION

DIVISION OF ENGINEERING SERVICES

BRIDGE NO. 54-1300R/L

POST MILE R95.14

HALLER WASH BRIDGE (REPLACE)

STRUCTURE APPROACH DRAINAGE DETAILS

DS OSD 2147A (ENGLISH STANDARD DRAWING "XS" BORDER REV. (02-02-11)

ORIGINAL SCALE IN INCHES FOR REDUCED PLANS 0 1 2 3

UNIT: 3622
PROJECT NUMBER & PHASE: 0813000176

CONTRACT NO.: 08-0N56U1

DISREGARD PRINTS BEARING EARLIER REVISION DATES

REVISION DATES 4-28-13 12-05-13

SHEET 14 OF 17

FILE => 54-1300rl-s-sadd02.dgn

USERNAME => s121614 DATE PLOTTED => 10-SEP-2014 TIME PLOTTED => 10:06

DIST	COUNTY	ROUTE	POST MILES TOTAL PROJECT	SHEET No.	TOTAL SHEETS
08	SBd	40	R94.7/R99.7	186	251

REGISTERED CIVIL ENGINEER 11-5-13 DATE

5-27-14
PLANS APPROVAL DATE

REGISTERED PROFESSIONAL ENGINEER David T-M Liao No. C59838 Exp. 12-31-15 CIVIL STATE OF CALIFORNIA

The State of California or its officers or agents shall not be responsible for the accuracy or completeness of electronic copies of this plan sheet.

This LOTB sheet was prepared in accordance with the Caltrans Soil & Rock Logging, Classification, & Presentation Manual (2010 Edition).

See 2010 Standard Plans A10F and A10G for Soil Legend, and A10H for Rock Legend.

BENCH MARK

PNO 102
Set 1" IP w/Caltrans RP plug 9.5'
NLY EP EB SBd 40; 33' WLY of WLY EOB.
N 2,121,962.83
E 7,342,206.59
Elev = 2300.33

PNO 100
Set 1" IP w/Caltrans RP plug 15.5'
SLY EP WB SBd 40; 30' ELY of ELY EOB.
N 2,122,184.59
E 7,342,397.29
Elev = 2292.56

Vertical Datum NGVD 1929

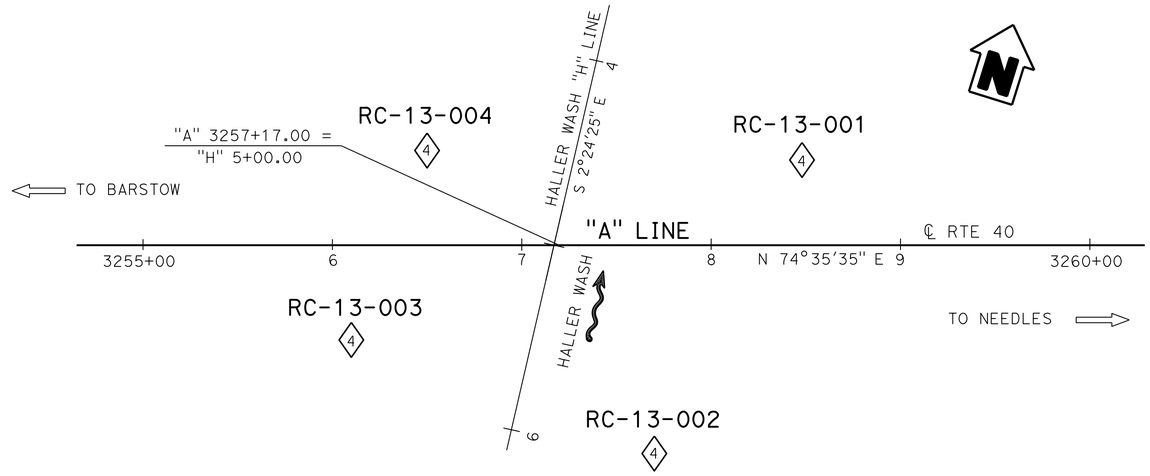

PLAN

1" = 40'

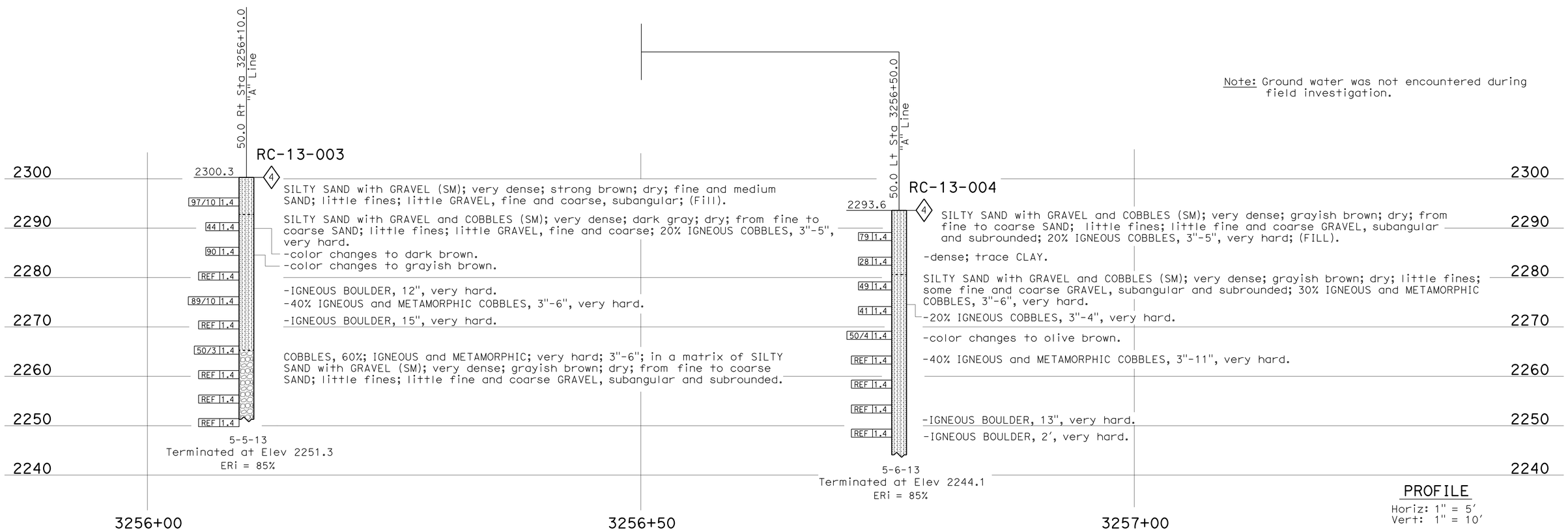

Note: Ground water was not encountered during field investigation.

PROFILE

Horiz: 1" = 5'
Vert: 1" = 10'

ENGINEERING SERVICES	MATERIALS AND GEOTECHNICAL SERVICES	STATE OF CALIFORNIA DEPARTMENT OF TRANSPORTATION	DIVISION OF ENGINEERING SERVICES STRUCTURE DESIGN DESIGN BRANCH X	BRIDGE NO. 54-1300R/L POST MILE 95.1	HALLER WASH BRIDGE (REPLACE) LOG OF TEST BORINGS 1 OF 3
FUNCTIONAL SUPERVISOR NAME: M. DeSalvatore	DRAWN BY: W. Tang 06/13 CHECKED BY: E. Neupert	FIELD INVESTIGATION BY: T-M Liao			

OGS CIVIL LOG OF TEST BORINGS SHEET

ORIGINAL SCALE IN INCHES FOR REDUCED PLANS 0 1 2 3

UNIT: 3643
PROJECT NUMBER & PHASE: 08130001761 CONTRACT NO.: 08-0N56U1

DISREGARD PRINTS BEARING EARLIER REVISION DATES

REVISION DATES 07-11-13 10-30-13 11-01-13 SHEET 15 OF 17

FILE => 54-1300rl-z-ltb01.dgn

USERNAME => s121614 DATE PLOTTED => 10-SEP-2014 TIME PLOTTED => 10:06

DIST	COUNTY	ROUTE	POST MILES TOTAL PROJECT	SHEET No.	TOTAL SHEETS
08	SBd	40	R94.7/R99.7	187	251

REGISTERED CIVIL ENGINEER 11-5-13 DATE

5-27-14
PLANS APPROVAL DATE

REGISTERED PROFESSIONAL ENGINEER
David T-M Liao
No. C59838
Exp. 12-31-15
CIVIL
STATE OF CALIFORNIA

The State of California or its officers or agents shall not be responsible for the accuracy or completeness of electronic copies of this plan sheet.

This LOTB sheet was prepared in accordance with the Caltrans Soil & Rock Logging, Classification, & Presentation Manual (2010 Edition).

See 2010 Standard Plans A10F and A10G for Soil Legend, and A10H for Rock Legend.

Note: Ground water was not encountered during field investigation.

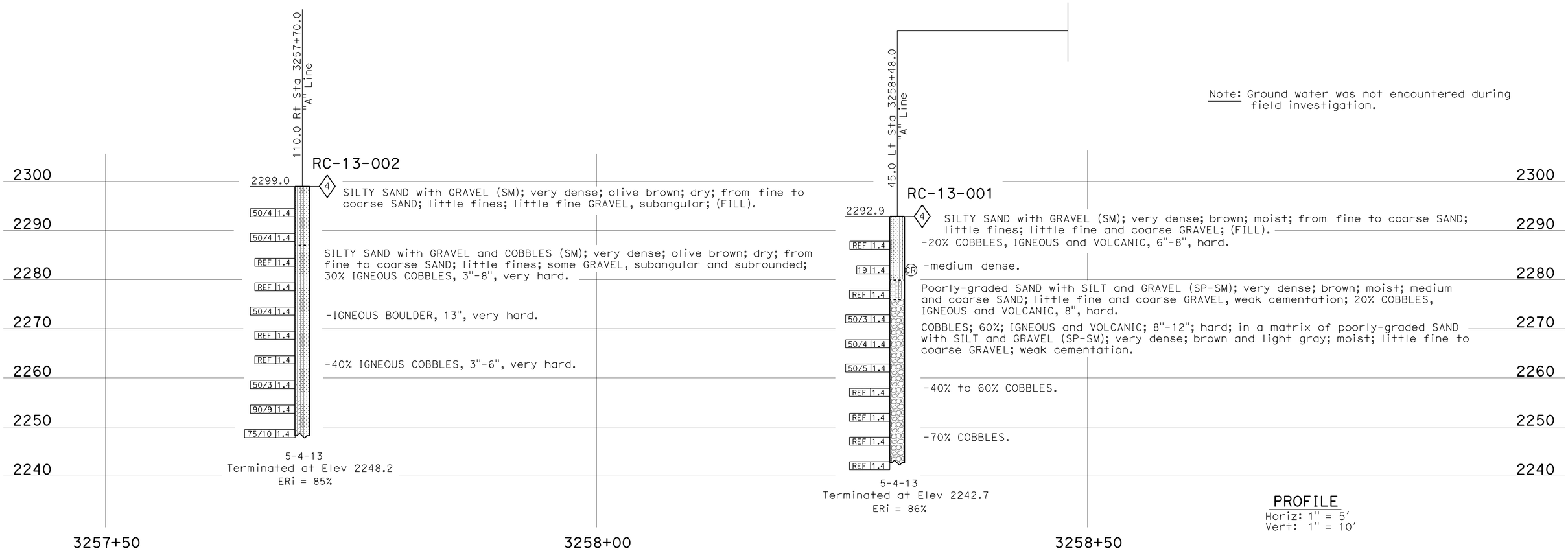

PROFILE
Horiz: 1" = 5'
Vert: 1" = 10'

ENGINEERING SERVICES	MATERIALS AND GEOTECHNICAL SERVICES	STATE OF CALIFORNIA DEPARTMENT OF TRANSPORTATION	DIVISION OF ENGINEERING SERVICES STRUCTURE DESIGN	BRIDGE NO. 54-1300R/L	HALLER WASH BRIDGE (REPLACE)
FUNCTIONAL SUPERVISOR	DRAWN BY: W. Tang 06/13	FIELD INVESTIGATION BY:	DESIGN BRANCH X	POST MILE 95.1	LOG OF TEST BORINGS 2 OF 3
NAME: M. DeSalvatore	CHECKED BY: E. Neupert	F. De Haro, T-M Liao			

OGS CIVIL LOG OF TEST BORINGS SHEET

ORIGINAL SCALE IN INCHES FOR REDUCED PLANS 0 1 2 3

UNIT: 3643
PROJECT NUMBER & PHASE: 08130001761 CONTRACT NO.: 08-0N56U1

DISREGARD PRINTS BEARING EARLIER REVISION DATES

REVISION DATES 07-11-13 10-30-13 11-01-13

SHEET 16 OF 17

FILE => 54-1300rl-z-ltb02.dgn

USERNAME => s12614 DATE PLOTTED => 10-SEP-2014 TIME PLOTTED => 10:06

DIST.	COUNTY	ROUTE	POST MILES—TOTAL PROJECT	SHEET NO.	TOTAL SHEETS
08	SBd	40	R77.8/R114.7	174	223

R C Blake
DESIGN SECTION SUPERVISOR — REGISTERED CIVIL ENGINEER NO. 5062

DATE APPROVED March 15, 1971

DIVISION OF ENGINEERING SERVICES - MATERIALS AND GEOTECHNICAL SERVICES

As-Built Log of Test Borings sheet is considered an informational document only. As such, the State of California registration seal with signature, license number and registration certificate expiration date confirm that this is a true and accurate copy of the original document. It does not attest to the accuracy or validity of the information contained in the original document. This drawing is available and presented only for the convenience of any bidder, contractor or other interested party.

DIST.	COUNTY	ROUTE	POST MILE-TOTAL PROJECT	Sheet No.	Total Sheets
08	SBd	40	R94.7/R99.7	188	251

REGISTERED CIVIL ENGINEER — DATE 11/5/13

REGISTERED PROFESSIONAL ENGINEER — David T-M Liao — No. C59838 — Exp. 12-31-13 — CIVIL — STATE OF CALIFORNIA

HALLER WASH BRIDGE (REPLACE)

LOG OF TEST BORINGS 3 OF 3

PROJ. No. & PHASE:	UNIT: 3643 / 08130001761	CONTRACT No. / 08-0N56U1	BRIDGE No. / 54-1300R/L
AS-BUILT VERT DATUM: NGVD 1929	CONVERSION:	Sheet 17	of 17

NOTE: A COPY OF THIS LOG OF TEST BORINGS IS AVAILABLE AT OFFICE OF STRUCTURE MAINTENANCE AND INVESTIGATIONS, SACRAMENTO, CALIFORNIA

TO ACCOMPANY PLANS DATED 5-27-14

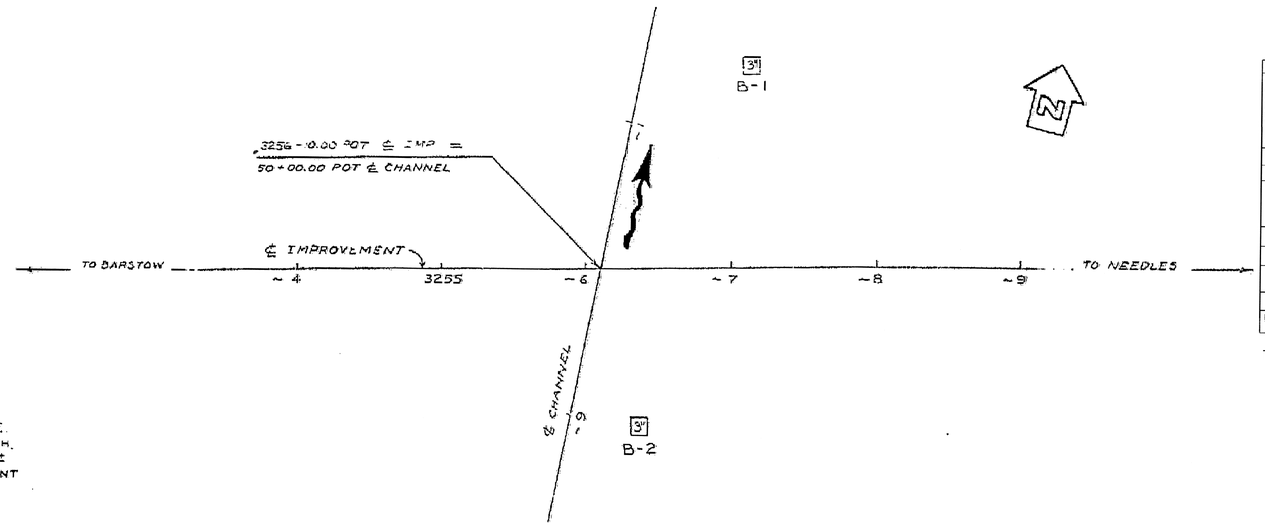

B.M. L-18 P.I.
"T" BAR & CAP FLUSH.
605'± RT. 3254+30±
POT ℄ IMPROVEMENT
ELEV 2308.24

PLAN
SCALE 1" = 50'

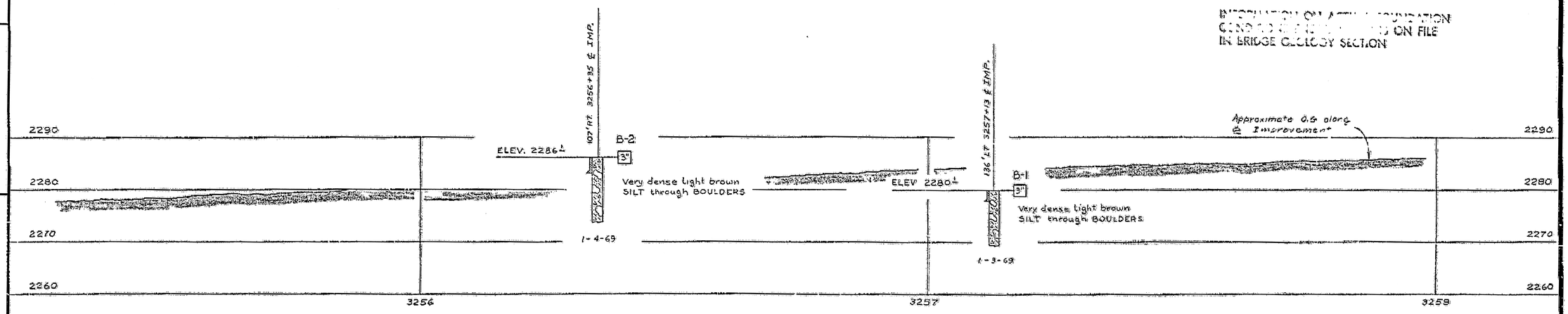

PROFILE
SCALE 1" = 50'

NO GROUND WATER ENCOUNTERED DURING THIS INVESTIGATION BY BRIDGE DEPT. GEOLOGY SECTION
DATE 1-69

AS BUILT PLANS
Contract No. 08-046854
Date Completed 5-1-73
Document No. 80002312

LEGEND OF BORING OPERATIONS

- Penetrometer
- 2½" Cone Penetrometer
- Sampler Boring (Dry)
- Rotary Boring (Wet)
- Auger Boring (Dry)
- Jet Boring
- Core Boring
- Test Pit

LEGEND OF EARTH MATERIALS

- Gravel
- Sand
- Silt
- Clay
- Sandy Clay or Clayey Sand
- Sandy Silt or Silty Sand
- Silty Clay or Clayey Silt
- Peat and Organic Matter
- Fill Material
- Igneous Rock
- Sedimentary Rock
- Metamorphic Rock

CLASSIFICATION OF MATERIAL BASED ON STANDARD GRADE SIZE LIMITS

NOTE: Classification of earth material as shown on this sheet is based upon field inspection and is not to be construed to imply mechanical analysis.

BRIDGE DEPARTMENT
ENGINEERING GEOLOGY SECTION

DRAWN	J. Applegate	1-69
CHECKED		

Approval Recommended by: Engineering Geologist

STATE OF CALIFORNIA
TRANSPORTATION AGENCY
DEPARTMENT OF PUBLIC WORKS
DIVISION OF HIGHWAYS

HALLER WASH

LOG OF TEST BORINGS

BRIDGE NO.	POST MILE	DRAWING NO.	SHEET	OF
54-891 R/L	95.1		5	5

REVISION DATES (PRELIMINARY STAGE ONLY)

WO 046851
CU 08203
PR 54891-2

Disregard prints bearing earlier revision dates.

54-1300rl-z-ltb03a.tif

DIST	COUNTY	ROUTE	POST MILES TOTAL PROJECT	SHEET No.	TOTAL SHEETS
08	SBd	40	R94.7/R99.7	189	251

Charles Lomicka 02-14-14
REGISTERED CIVIL ENGINEER DATE

5-27-14
PLANS APPROVAL DATE

REGISTERED PROFESSIONAL ENGINEER CHARLES LOMICKA No. C 71172 Exp. 06-30-15 CIVIL STATE OF CALIFORNIA

The State of California or its officers or agents shall not be responsible for the accuracy or completeness of electronic copies of this plan sheet.

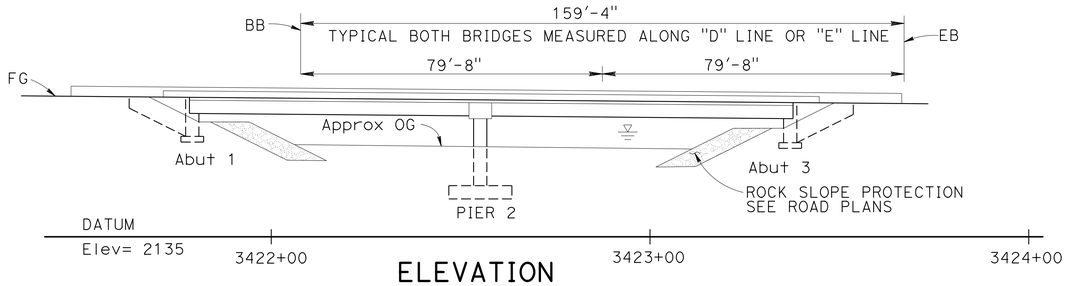

ELEVATION

1" = 20'

RIGHT BRIDGE SHOWN
LEFT BRIDGE SIMILAR

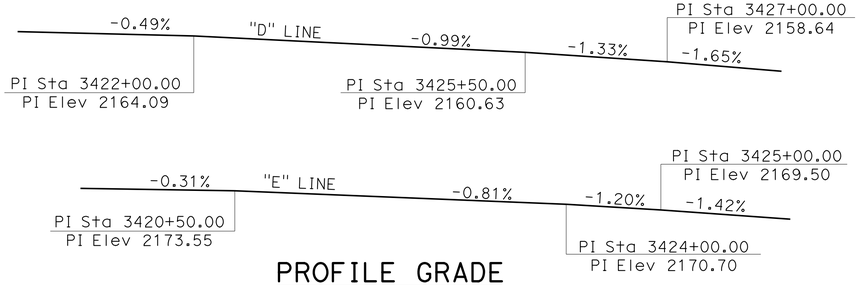

PROFILE GRADE

NO SCALE

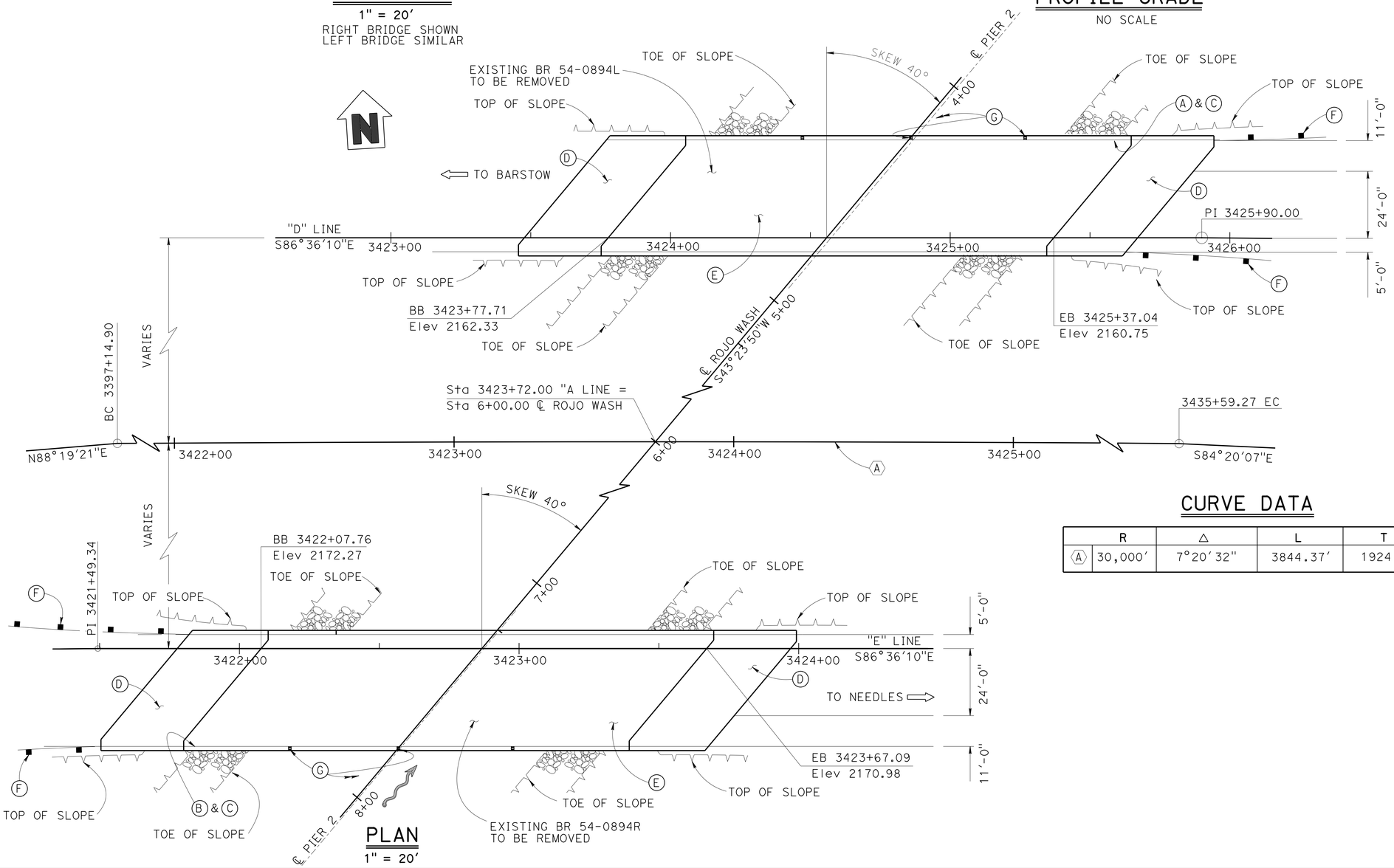

PLAN

1" = 20'

CURVE DATA

	R	Δ	L	T
A	30,000'	7°20'32"	3844.37'	1924.32'

LEGEND:

- Direction of traffic
- Rock slope protection. See Road Plans
- High water mark

NOTES:

(A) Paint "BR No. 54-1301L".

(B) Paint "BR No. 54-1301R".

(C) Paint "Rojo Wash Bridge."

(D) Structure Approach Type N(30S).

(E) Both EB and WB traffic to be placed on bridge while removing and replacing the other.

(F) Midwest Guardrail System, see Road Plans.

(G) Scuppers at deck grade, total 3 each bridge. Place at Pier ℄ and mid point of each span.

B7-8

B. GUNTER
DESIGN ENGINEER

	BY	CHECKED
DESIGN	R. WANG	C. LOMICKA
DETAILS	H. MAHBOOBI / H. I.	C. LOMICKA
QUANTITIES	D. BALBAS	E. MERCADO

LOAD & RESISTANCE FACTOR DESIGN — LIVE LOADING: HL93 W/"LOW-BOY"; PERMIT DESIGN VEHICLE

	BY	CHECKED
LAYOUT	R. WANG	C. LOMICKA
SPECIFICATIONS	V. RENGANATHAN	PLANS AND SPECS COMPARED V. RENGANATHAN

ORIGINAL SCALE IN INCHES FOR REDUCED PLANS 0 1 2 3

STATE OF CALIFORNIA
DEPARTMENT OF TRANSPORTATION

DIVISION OF ENGINEERING SERVICES
STRUCTURE DESIGN
DESIGN BRANCH 19

BRIDGE NO. 54-1301L/R
POST MILE R98.3

ROJO WASH BRIDGE (REPLACE)
GENERAL PLAN NO. 1

UNIT: 3621
PROJECT NUMBER & PHASE: 0813000176 - 1 CONTRACT NO.: 08-0N56U

DISREGARD PRINTS BEARING EARLIER REVISION DATES

REVISION DATES: 2-1-13 02-14-14 02-20-14

SHEET 1 OF 25

STRUCTURES DESIGN GENERAL PLAN SHEET (ENGLISH) (REV.09-01-10)

FILE => 54-1301lr-a-gp_01.dgn

USERNAME => s12614 DATE PLOTTED => 10-SEP-2014 TIME PLOTTED => 10:06

DIST	COUNTY	ROUTE	POST MILES TOTAL PROJECT	SHEET No.	TOTAL SHEETS
08	SBd	40	R94.7/R99.7	190	251

Charles Lomicka 02-14-14
REGISTERED CIVIL ENGINEER DATE

5-27-14
PLANS APPROVAL DATE

REGISTERED PROFESSIONAL ENGINEER
CHARLES LOMICKA
No. C 71172
Exp. 06-30-15
CIVIL
STATE OF CALIFORNIA

The State of California or its officers or agents shall not be responsible for the accuracy or completeness of electronic copies of this plan sheet.

NOTES:

Ⓐ Concrete Barrier Type 736.

Ⓑ Temporary Railing (Type K). See Road Plans. (T3)

Ⓒ Remove MBGR, see Road Plans.

Ⓓ Salvage Metal Bridge Railing.

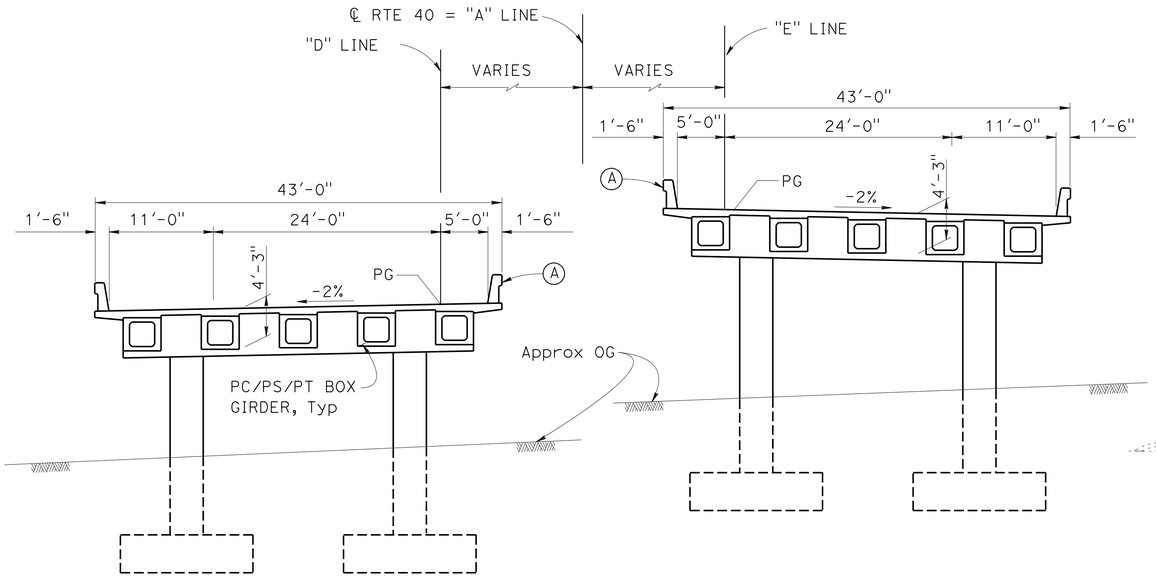

TYPICAL SECTION

1/8" = 1'-0"

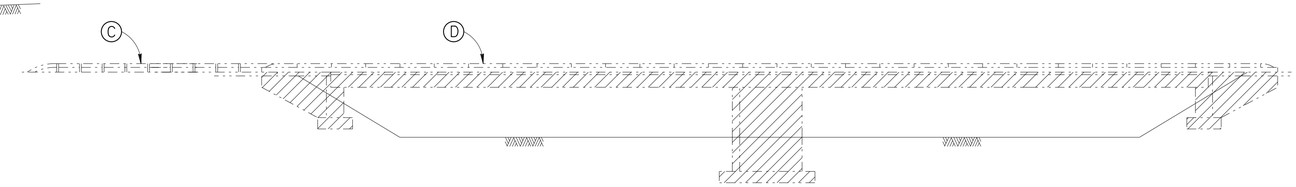

LIMITS OF BRIDGE REMOVAL

No Scale

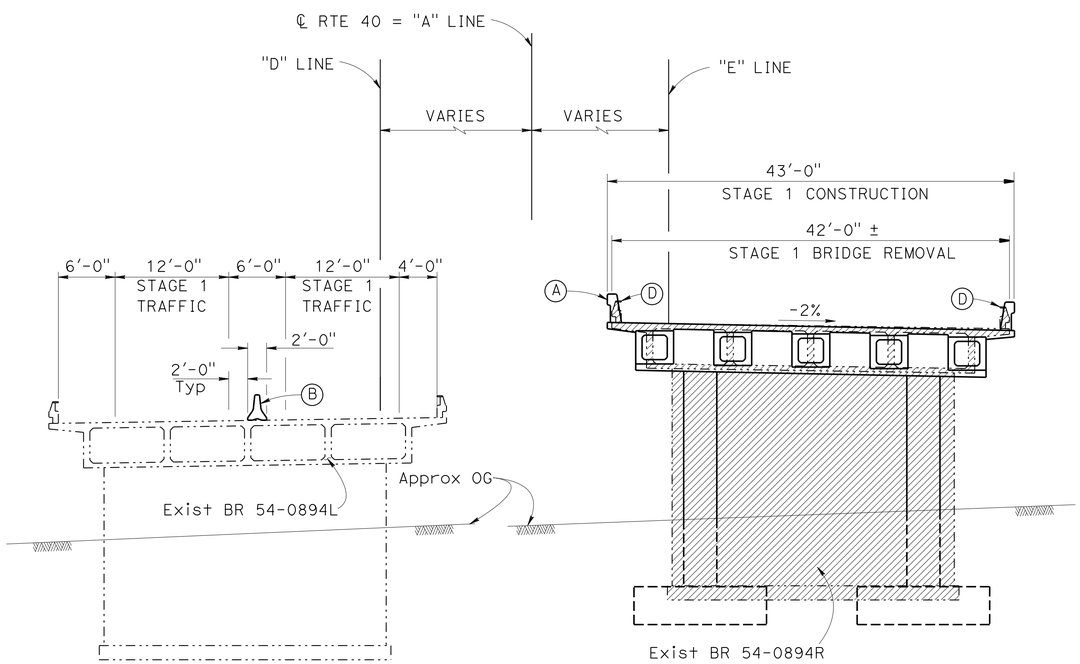

TYPICAL SECTION - STAGE 1

1/8" = 1'-0"

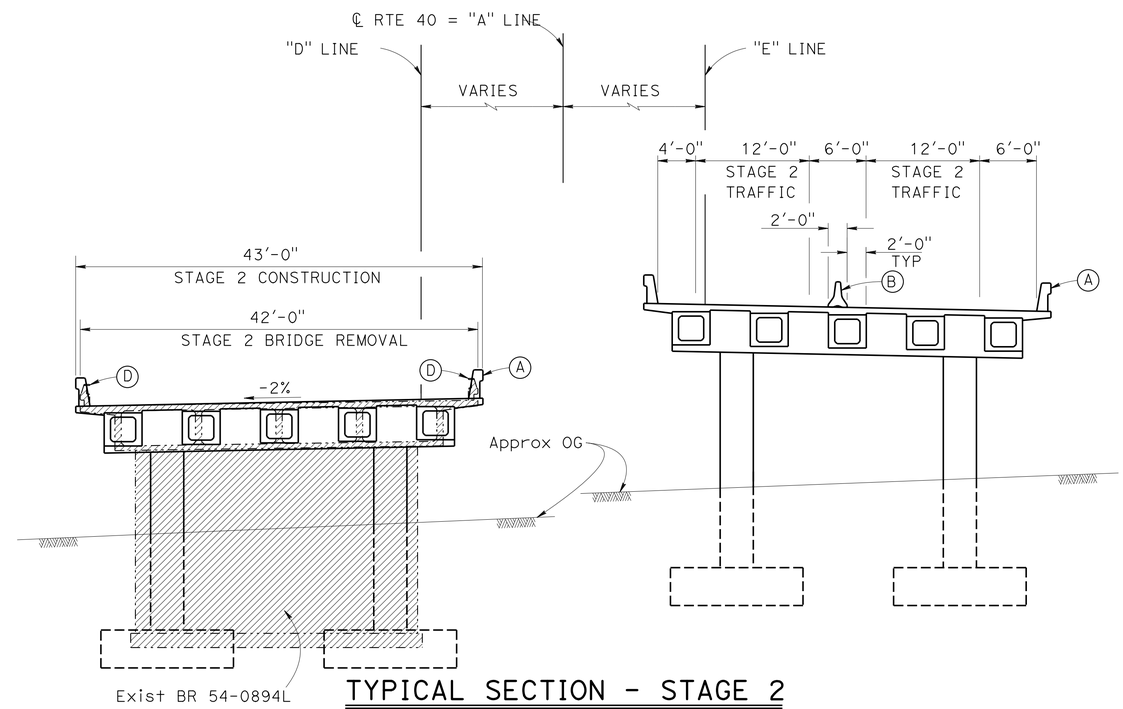

TYPICAL SECTION - STAGE 2

1/8" = 1'-0"

NOTE:
THE CONTRACTOR SHALL VERIFY ALL CONTROLLING FIELD DIMENSIONS BEFORE ORDERING OR FABRICATING ANY MATERIAL.

LEGEND:

- Bridge Removal
- New structure
- Existing structure

	BY	CHECKED
DESIGN	R. WANG	C. LOMICKA
DETAILS	H. INIGUEZ / D. W.	C. LOMICKA
QUANTITIES	R. WANG	B. GUNTER

STATE OF CALIFORNIA
DEPARTMENT OF TRANSPORTATION

DIVISION OF ENGINEERING SERVICES
STRUCTURE DESIGN
DESIGN BRANCH 19

BRIDGE NO. 54-1301L/R
POST MILE R98.3

ROJO WASH BRIDGE (REPLACE)
GENERAL PLAN NO. 2

STRUCTURES DESIGN DETAIL SHEET (ENGLISH) (REV. 09-01-10)

ORIGINAL SCALE IN INCHES FOR REDUCED PLANS 0 1 2 3

UNIT: 3621
PROJECT NUMBER & PHASE: 0813000176 - 1 CONTRACT NO.: 08-0N56U

DISREGARD PRINTS BEARING EARLIER REVISION DATES

REVISION DATES: 10-18-13 01-15-14 02-10-14

SHEET 2 OF 25

FILE => 54-1301lr-a-gp_02.dgn

USERNAME => s121614 DATE PLOTTED => 10-SEP-2014 TIME PLOTTED => 10:06

DIST	COUNTY	ROUTE	POST MILES TOTAL PROJECT	SHEET No.	TOTAL SHEETS
08	SBd	40	R94.7/R99.7	191	251

Charles Lomicka 02-14-14
REGISTERED CIVIL ENGINEER DATE

5-27-14
PLANS APPROVAL DATE

REGISTERED PROFESSIONAL ENGINEER
CHARLES LOMICKA
No. C 71172
Exp. 06-30-15
CIVIL
STATE OF CALIFORNIA

The State of California or its officers or agents shall not be responsible for the accuracy or completeness of electronic copies of this plan sheet.

QUANTITIES

SALVAGE METAL BRIDGE RAILING	728	LF
BRIDGE REMOVAL, LOCATION B	LUMP	SUM
STRUCTURE EXCAVATION (BRIDGE)	1,554	CY
STRUCTURE BACKFILL (BRIDGE)	826	CY
PRESTRESSING PRECAST GIRDER	LUMP	SUM
STRUCTURAL CONCRETE, BRIDGE FOOTING	239	CY
STRUCTURAL CONCRETE, BRIDGE	1046	CY
STRUCTURAL CONCRETE, APPROACH SLAB (TYPE N)	191	CY
FURNISH PRECAST PRESTRESSED CONCRETE BOX GIRDER (70'-80')	20	EA
ERECT PRECAST PRESTRESSED CONCRETE BOX GIRDER	20	EA
JOINT SEAL (MR 1½")	208	LF
BAR REINFORCING STEEL (BRIDGE)	235,088	LB
HEADED BAR REINFORCEMENT	160	EA
MISCELLANEOUS METAL (BRIDGE)	2,646	LB
CONCRETE BARRIER (TYPE 736)	877	LF

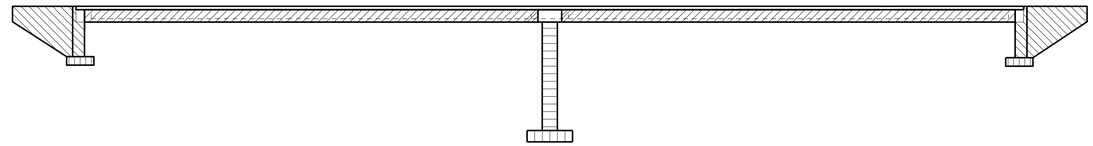

CONCRETE STRENGTH AND TYPE LIMITS

NO SCALE

- STRUCTURAL CONCRETE, BRIDGE
- STRUCTURAL CONCRETE, BRIDGE (SEE PRESTRESSING NOTES ON "PRECAST GIRDER DETAILS NO. 1" SHEET)
- STRUCTURAL CONCRETE, BRIDGE (SEE PRESTRESSING NOTES ON "END DIAPHRAGM DETAILS" SHEET)
- STRUCTURAL CONCRETE, BRIDGE FOOTING
- STRUCTURAL CONCRETE BRIDGE (4000 psi AT 28 DAYS)

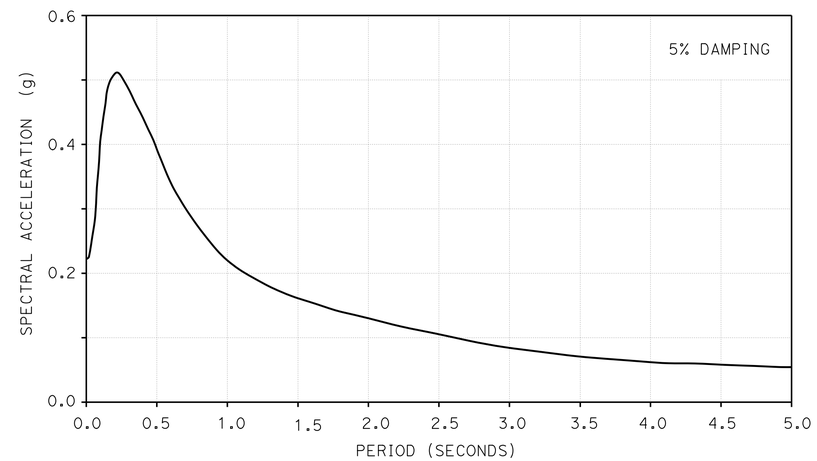

ARS CURVE

NO SCALE

STANDARD PLANS DATED 2010

	A10A	ABBREVIATIONS (SHEET 1 OF 2)
RSP	A10B	ABBREVIATIONS (SHEET 2 OF 2)
	A10C	LINES AND SYMBOLS (SHEET 1 OF 3)
	A10D	LINES AND SYMBOLS (SHEET 2 OF 3)
	A10E	LINES AND SYMBOLS (SHEET 3 OF 3)
	A10F	LEGEND-SOIL (SHEET 1 OF 2)
	A10G	LEGEND-SOIL (SHEET 2 OF 2)
	A10H	LEGEND-ROCK
	A62C	LIMITS OF PAYMENT FOR EXCAVATION AND BACKFILL BRIDGE
	B0-1	BRIDGE DETAILS
	B0-5	BRIDGE DETAILS
	B0-13	BRIDGE DETAILS
	B6-21	JOINT SEALS (MAXIMUM MOVEMENT RATING = 2")
	B7-8	DECK DRAINAGE DETAILS
RSP	B8-5	CAST-IN-PLACE POST-TENSIONED GIRDER DETAILS
RSP	B11-56	CONCRETE BARRIER TYPE 736

Standard Plan Sheet No.
Detail No.

RSP
Revised Standard Plan Sheet No.
Detail No.

GENERAL NOTES
LOAD AND RESISTANCE FACTOR DESIGN

DESIGN: AASHTO LRFD Bridge Design Specifications, 4th Edition and the Caltrans Amendments, preface dated 2010.

SEISMIC DESIGN: Caltrans Seismic Design Criteria (SDC) version 1.6 dated November 2010

DEAD LOAD: Includes 35 PSF future wearing surface. The deck dead load has been increased by a factor of 10% to allow for the use of steel deck forms

LIVE LOAD: HL93 and permit design load.

SEISMIC LOADING: Soil Profile: V_{S30} =420 m/s
Moment Magnitude: M_{max} = 6.5
Peak Ground Acceleration = 0.22 g

REINFORCED CONCRETE: ASTM A706

f_y = 60 ksi

f'_c = 3.6 ksi (except as shown on Concrete Strength and Type Limits Diagram)

PRESTRESSED CONCRETE: Prestressing Notes (Pre-Tensioning) on "PRECAST GIRDER DETAILS NO. 1" sheet

Prestressing Notes (Post-Tensioning) on "END DIAPHRAGM DETAILS" sheet

SPREAD FOOTING DATA TABLE

SUPPORT LOCATION		WORKING STRESS DESIGN (WSD)		LOAD AND RESISTANCE FACTOR DESIGN (LRFD)		
		PERMISSIBLE GROSS CONTACT STRESS (SETTLEMENT) (ksf)	ALLOWABLE GROSS BEARING CAPACITY (ksf)	SERVICE PERMISSIBLE NET CONTACT STRESS (SETTLEMENT) (ksf)	STRENGTH FACTORED GROSS NOMINAL BEARING RESISTANCE Øb = 0.45 (ksf)	EXTREME EVENT FACTORED GROSS NOMINAL BEARING RESISTANCE Øb = 1.00 (ksf)
RIGHT BRIDGE	Abut 1	9.5	3.9	N/A	N/A	N/A
	PIER 2 PER COLUMN	N/A	N/A	10.4	17.9	47.1
	Abut 3	10.3	3.9	N/A	N/A	N/A
LEFT BRIDGE	Abut 1	9.2	3.9	N/A	N/A	N/A
	PIER 2 PER COLUMN	N/A	N/A	10.4	17.9	47.1
	Abut 3	10.7	3.9	N/A	N/A	N/A

INDEX TO PLANS

NO.	SHEET NAME
1	GENERAL PLAN NO.1
2	GENERAL PLAN NO.2
3	INDEX TO PLANS
4	CONSTRUCTION SEQUENCE
5	DECK CONTOURS
6	FOUNDATION PLAN
7	ABUTMENT LAYOUT
8	ABUTMENT DETAILS NO. 1
9	ABUTMENT DETAILS NO. 2
10	ABUTMENT DETAILS NO. 3
11	PIER LAYOUT
12	PIER DETAILS NO. 1
13	PIER DETAILS NO. 2
14	TYPICAL SECTION
15	END DIAPHRAGM DETAILS
16	GIRDER LAYOUT
17	ADDITIONAL DECK REINFORCEMENT
18	PRECAST GIRDER DETAILS NO. 1
19	PRECAST GIRDER DETAILS NO. 2
20	STRUCTURE APPROACH TYPE N(30S)
21	STRUCTURE APPROACH DRAINAGE DETAILS
22	LOG OF TEST BORING 1 OF 4
23	LOG OF TEST BORING 2 OF 4
24	LOG OF TEST BORING 3 OF 4
25	LOG OF TEST BORING 4 OF 4

DIST	COUNTY	ROUTE	POST MILES TOTAL PROJECT	SHEET No.	TOTAL SHEETS
08	SBd	40	R94.7/R99.7	192	251

Charles Lomicka 02-14-14
REGISTERED CIVIL ENGINEER DATE

5-27-14
PLANS APPROVAL DATE

REGISTERED PROFESSIONAL ENGINEER CHARLES LOMICKA No. C 71172 Exp. 06-30-15 CIVIL STATE OF CALIFORNIA

The State of California or its officers or agents shall not be responsible for the accuracy or completeness of electronic copies of this plan sheet.

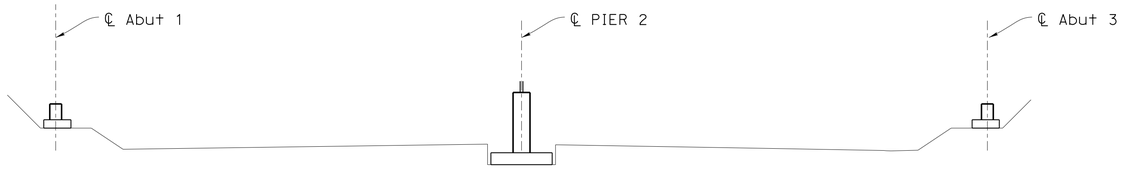

STEP 1

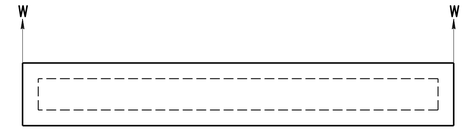

PC GIRDER LOADING DETAIL Ⓐ & Ⓑ

NO SCALE

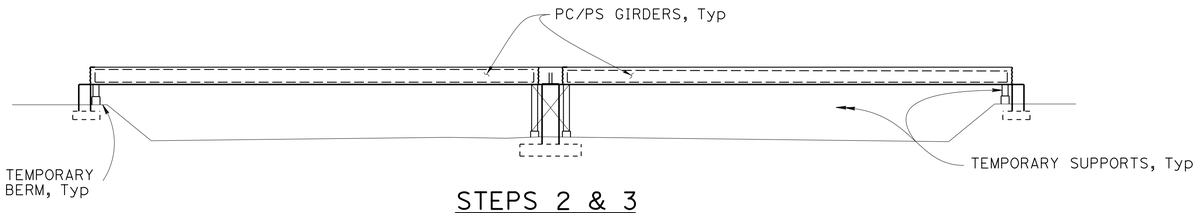

STEPS 2 & 3

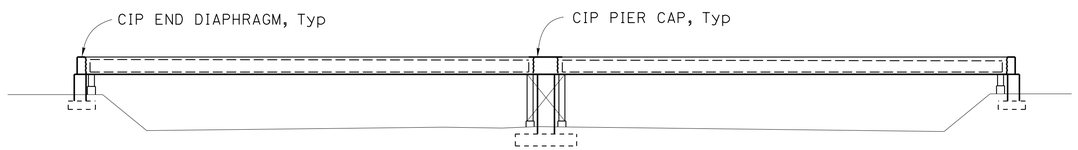

STEP 4

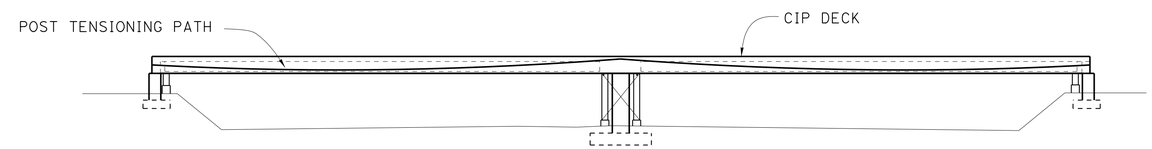

STEP 6

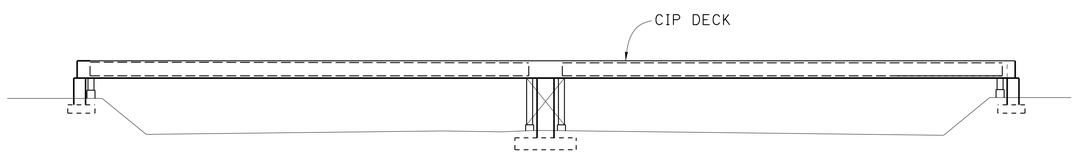

STEP 5

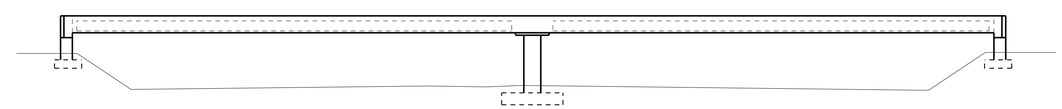

STEP 7

BRIDGE CONSTRUCTION SEQUENCE

NO SCALE

Any Alternatives to this construction sequence must be approved by the Engineer.

STEP 1: Construct abutments, pier footings, and columns.

STEP 2: Erect temporary supports at Abutments and Pier 2. Temporary supports shall be capable of supporting a minimum girder and deck dead load of W kips per precast girder end. This does not include forces due to wind, impact, or construction loads. see "PRECAST GIRDER LOADING DETAIL".

The supports shall bear on a minimum of 2'-0" of structural fill. Temporary supports shall be located within 2'-0" of precast girder ends.

STEP 3: Erect precast/prestressed girders on temporary suppors. A temporary berm may be necessary.

STEP 4: Construct cast-in-place end diaphragms and pier cap. Allow cast-in-place end diaphragms and pier cap to reach f'_{ci} as shown on Prestessing notes (Post-Tensioning) on "END DIAPHRAGM DETAILS" sheet.

STEP 5: Place deck concrete.

STEP 6: Post-tension bridge. Post-tensioning shall not be permitted until at least 10 days after deck concrete has been placed and until concrete compressive strength has acheived minimum f'_{ci}

STEP 7: Remove temporary supports. Complete abutment construction and remaining items of work.

NOTES:

Ⓐ Loads can be applied top or bottom of Girder.

Ⓑ Spans - 1 & 2 W= 70 kips.

DESIGN	BY R. WANG	CHECKED C. LOMICKA	
DETAILS	BY H. INIGUEZ / D. W.	CHECKED C. LOMICKA	
QUANTITIES	BY D. BALBAS	CHECKED E. MERCADO	

STATE OF CALIFORNIA
DEPARTMENT OF TRANSPORTATION

DIVISION OF ENGINEERING SERVICES
STRUCTURE DESIGN
DESIGN BRANCH 19

BRIDGE NO. 54-1301L/R
POST MILE R98.3

ROJO WASH BRIDGE (REPLACE)
CONSTRUCTION SEQUENCE

STRUCTURES DESIGN DETAIL SHEET (ENGLISH) (REV. 09-01-10)

ORIGINAL SCALE IN INCHES FOR REDUCED PLANS 0 1 2 3

UNIT: 3621
PROJECT NUMBER & PHASE: 0813000176 - 1 CONTRACT NO.:08-0N56U

DISREGARD PRINTS BEARING EARLIER REVISION DATES

REVISION DATES 09-16-13 02-14-14 02-10-16

SHEET 4 OF 25

FILE => 54-1301lr-b-conseq.dgn

USERNAME => s121614 DATE PLOTTED => 10-SEP-2014 TIME PLOTTED => 10:06

DIST	COUNTY	ROUTE	POST MILES TOTAL PROJECT	SHEET No.	TOTAL SHEETS
08	SBd	40	R94.7/R99.7	193	251

Charles Lomicka 02-14-14
REGISTERED CIVIL ENGINEER DATE

5-27-14
PLANS APPROVAL DATE

REGISTERED PROFESSIONAL ENGINEER
CHARLES LOMICKA
No. C 71172
Exp. 06-30-15
CIVIL
STATE OF CALIFORNIA

The State of California or its officers or agents shall not be responsible for the accuracy or completeness of electronic copies of this plan sheet.

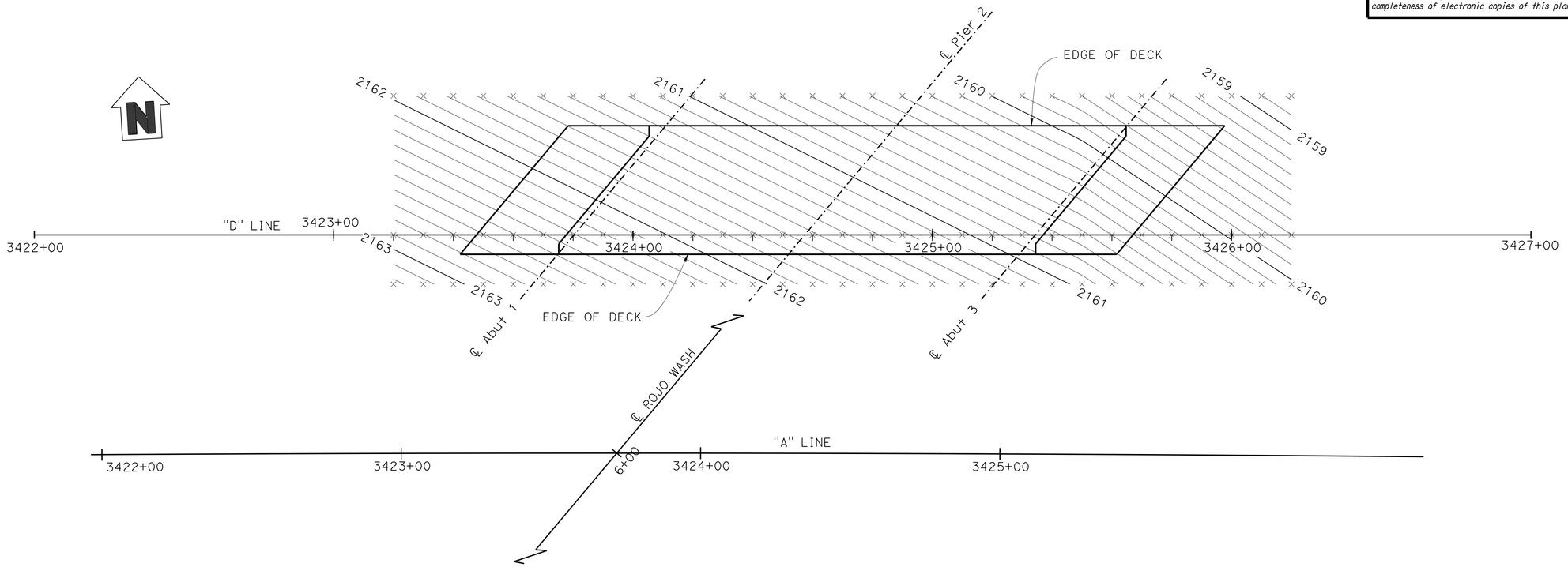

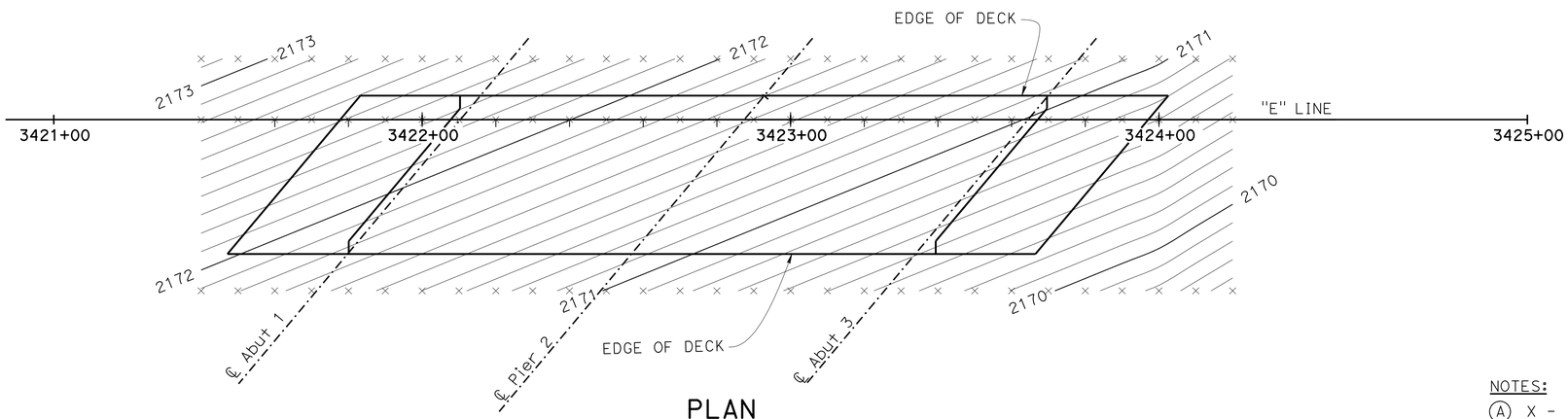

PLAN
1" = 20'

NOTES:
(A) X - 10' intervals along station line.
(B) Contour interval = 0.1'.
(C) Contours do not include camber.

DESIGN	BY R. WANG	CHECKED D. BALBAS	
DETAILS	BY H. INIGUEZ / D. W.	CHECKED D. BALBAS	
QUANTITIES	BY D. BALBAS	CHECKED E. MERCADO	

STATE OF CALIFORNIA
DEPARTMENT OF TRANSPORTATION

DIVISION OF ENGINEERING SERVICES
STRUCTURE DESIGN
DESIGN BRANCH 19

BRIDGE NO. 54-1301L/R
POST MILE 98.3

ROJO WASH BRIDGE (REPLACE)
DECK CONTOURS

STRUCTURES DESIGN DETAIL SHEET (ENGLISH) (REV. 09-01-10)

ORIGINAL SCALE IN INCHES FOR REDUCED PLANS 0 1 2 3

UNIT: 3621
PROJECT NUMBER & PHASE: 0813000176 - 1 CONTRACT NO.: 08-0N56U

DISREGARD PRINTS BEARING EARLIER REVISION DATES

REVISION DATES 01-08-14 01-16-14 02-04-14

SHEET 5 OF 25

FILE => 54-1301lr-d-dec_cont.dgn

USERNAME => s121614 DATE PLOTTED => 10-SEP-2014 TIME PLOTTED => 10:06

HYDRAULIC SUMMARY			
Drainage Area: 2.97 SQUARE MILES			
	DESIGN FLOOD	BASE FLOOD	OVERTOPPING FLOOD
Frequency (YEARS)	50	100	N/A
Discharge (cfs)	2400	3000	N/A
Average Velocity (L/R) (fps)	N/A	15.2/14.6	N/A
Minimum Soffit Elevation (L/R) (feet)	N/A	2151.4/2162.7	N/A

Flood plain data are based upon information available when the plans were prepared and are shown to meet federal requirements. The accuracy of said information is not warranted by the State and interested or affected parties should make their own investigation.

DIST	COUNTY	ROUTE	POST MILES TOTAL PROJECT	SHEET No.	TOTAL SHEETS
08	SBd	40	R94.7/R99.7	194	251

Charles Lomicka 02-14-14
REGISTERED CIVIL ENGINEER DATE

5-27-14
PLANS APPROVAL DATE

REGISTERED PROFESSIONAL ENGINEER CHARLES LOMICKA No. C 71172 Exp. 06-30-15 CIVIL STATE OF CALIFORNIA

The State of California or its officers or agents shall not be responsible for the accuracy or completeness of electronic copies of this plan sheet.

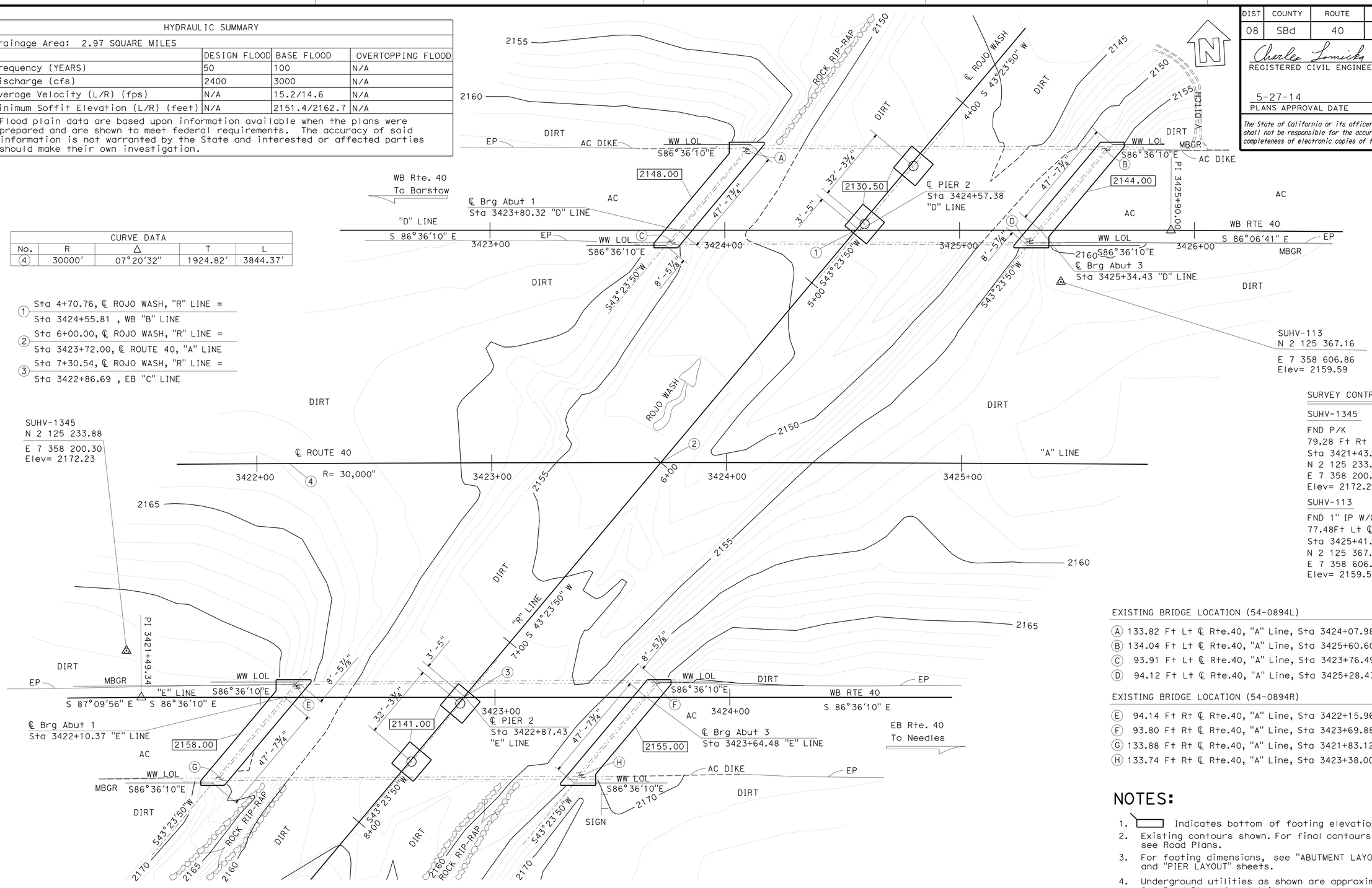

CURVE DATA				
No.	R	Δ	T	L
4	30000′	07°20′32"	1924.82′	3844.37′

1. Sta 4+70.76, ℄ ROJO WASH, "R" LINE = Sta 3424+55.81 , WB "B" LINE
2. Sta 6+00.00, ℄ ROJO WASH, "R" LINE = Sta 3423+72.00, ℄ ROUTE 40, "A" LINE
3. Sta 7+30.54, ℄ ROJO WASH, "R" LINE = Sta 3422+86.69 , EB "C" LINE

SURVEY CONTROL

SUHV-1345

FND P/K
79.28 Ft Rt ℄ ROUTE 40
Sta 3421+43.85
N 2 125 233.88
E 7 358 200.30
Elev= 2172.23

SUHV-113

FND 1" IP W/Caltrans RP
77.48Ft Lt ℄ ROUTE 40
Sta 3425+41.96
N 2 125 367.16
E 7 358 606.86
Elev= 2159.59

EXISTING BRIDGE LOCATION (54-0894L)

(A) 133.82 Ft Lt ℄ Rte.40, "A" Line, Sta 3424+07.98, Elev= 2161.35
(B) 134.04 Ft Lt ℄ Rte.40, "A" Line, Sta 3425+60.60, Elev= 2159.59
(C) 93.91 Ft Lt ℄ Rte.40, "A" Line, Sta 3423+76.49, Elev= 2162.31
(D) 94.12 Ft Lt ℄ Rte.40, "A" Line, Sta 3425+28.43, Elev= 2160.63

EXISTING BRIDGE LOCATION (54-0894R)

(E) 94.14 Ft Rt ℄ Rte.40, "A" Line, Sta 3422+15.96, Elev= 2172.07
(F) 93.80 Ft Rt ℄ Rte.40, "A" Line, Sta 3423+69.88, Elev= 2170.72
(G) 133.88 Ft Rt ℄ Rte.40, "A" Line, Sta 3421+83.12, Elev= 2171.70
(H) 133.74 Ft Rt ℄ Rte.40, "A" Line, Sta 3423+38.00, Elev= 2170.41

NOTES:

1. ▭ Indicates bottom of footing elevation.
2. Existing contours shown. For final contours, see Road Plans.
3. For footing dimensions, see "ABUTMENT LAYOUT" and "PIER LAYOUT" sheets.
4. Underground utilities as shown are approximate. See Road Plans for details.

PRELIMINARY INVESTIGATION SECTION

SCALE	VERT.DATUM NGVD29	PHOTOGRAMMETRY AS OF: X		
1"=20′	HORZ.DATUM NAD 83 (2000.35)	SURVEYED	BY DIST.08 01/2013	CHECKED BY T.PHUNG 02/2013
ALIGNMENT TIES Dist. Traverse Sheet		DRAFTED	BY V.PHAM 02/2013	CHECKED BY S.ALIVIO 02/2013

	BY	CHECKED
DESIGN	R. WANG	M. RAHMAN
DETAILS	H. INIGUEZ	M. RAHMAN
QUANTITIES	R. WANG	B. GUNTER

STATE OF CALIFORNIA
DEPARTMENT OF TRANSPORTATION

DIVISION OF ENGINEERING SERVICES
STRUCTURE DESIGN
DESIGN BRANCH 19

BRIDGE NO. 54-1301L/R
POST MILE R98.3

ROJO WASH BRIDGE (Replace)
FOUNDATION PLAN

STRUCTURES FOUNDATION PLAN SHEET (ENGLISH) (REV. 09-01-10)

ORIGINAL SCALE IN INCHES FOR REDUCED PLANS 0 1 2 3

UNIT: 3621
PROJECT NUMBER & PHASE: 0813000176 1 CONTRACT NO.: 08-0N56U

DISREGARD PRINTS BEARING EARLIER REVISION DATES

REVISION DATES: 2/28/13 02-10-14 01-16-14

SHEET 6 OF 25

FILE => 54-1301lr-e-fdpln.dgn

DIST	COUNTY	ROUTE	POST MILES TOTAL PROJECT	SHEET No.	TOTAL SHEETS
08	SBd	40	R94.7/R99.7	195	251

Charles Lomicka 02-14-14
REGISTERED CIVIL ENGINEER DATE

5-27-14
PLANS APPROVAL DATE

REGISTERED PROFESSIONAL ENGINEER
CHARLES LOMICKA
No. C 71172
Exp. 06-30-15
CIVIL
STATE OF CALIFORNIA

The State of California or its officers or agents shall not be responsible for the accuracy or completeness of electronic copies of this plan sheet.

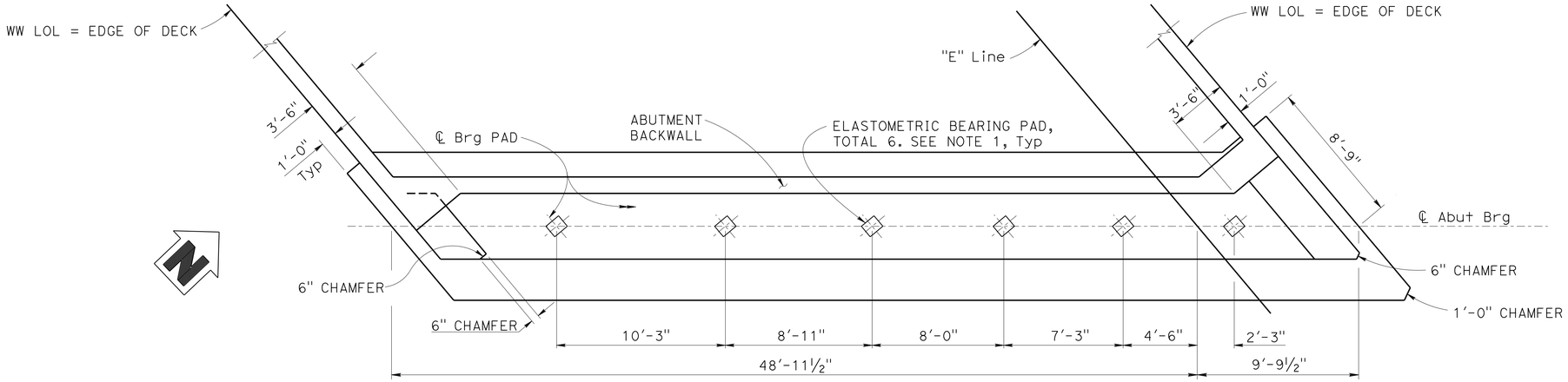

ABUTMENT 1 PLAN Ⓕ

¼" = 1'-0"

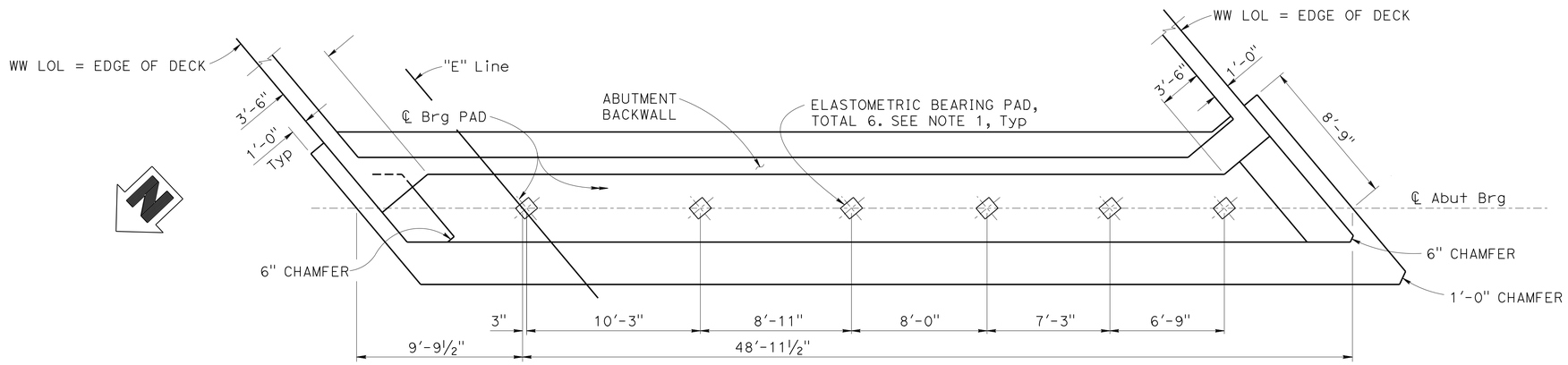

ABUTMENT 3 PLAN Ⓖ

¼" = 1'-0"

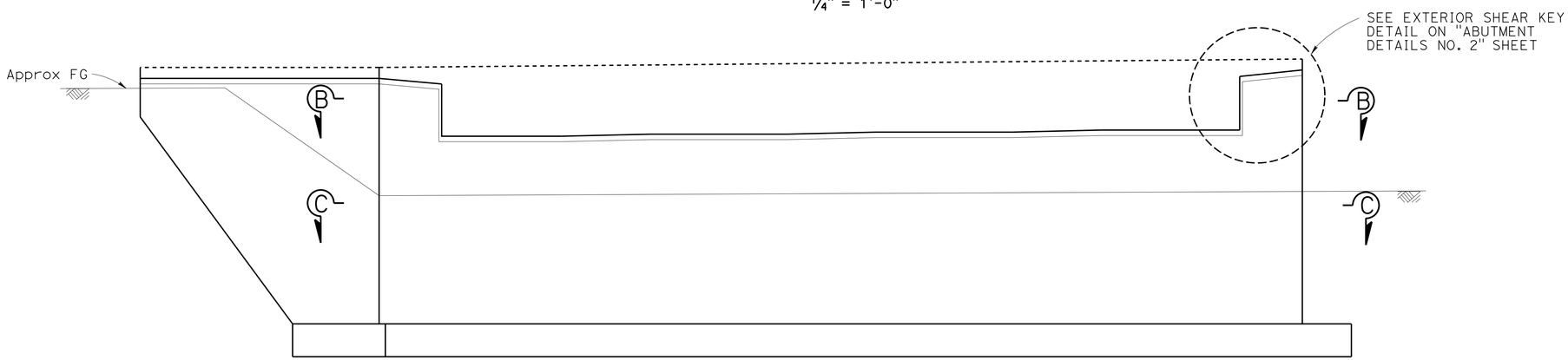

ABUTMENT ELEVATION

¼" = 1'-0"

NOTES:

Ⓐ Steel Reinforced Elastomeric Bearing Pad 16(L)x14(W)x2(H). For Bearing Pad detail, see ABUTMENT DETAILS NO. 1" sheet.

Ⓑ For Rock Slope protection, see Road Plans.

Ⓒ For Structure Approach Slab details, see "STRUCTURE APPROACH TYPE N(30S)" sheet.

Ⓓ For "SECTION B-B" and "SECTION C-C", see "ABUTMENT DETAILS NO. 2" sheet.

Ⓔ Barrier rails not shown for clarity.

Ⓕ Right bridge Abutment 1 shown, left bridge Abutment 3 similar.

Ⓖ Right bridge Abutment 3 shown, left bridge Abutment 1 similar.

	BY	CHECKED
DESIGN	R. WANG	H. WIN
DETAILS	H. INIGUEZ / D. W.	H. WIN
QUANTITIES	R. WANG	M. RAHMAN

STATE OF CALIFORNIA
DEPARTMENT OF TRANSPORTATION

DIVISION OF ENGINEERING SERVICES
STRUCTURE DESIGN
DESIGN BRANCH 19

BRIDGE NO. 54-1301L/R
POST MILE R98.3

ROJO WASH BRIDGE (REPLACE)
ABUTMENT LAYOUT

STRUCTURES DESIGN DETAIL SHEET (ENGLISH) (REV. 09-01-10)

ORIGINAL SCALE IN INCHES FOR REDUCED PLANS 0 1 2 3

UNIT: 3621
PROJECT NUMBER & PHASE: 0813000176 - 1 CONTRACT NO.: 08-0N56U

DISREGARD PRINTS BEARING EARLIER REVISION DATES

REVISION DATES: 09-18-13 02-13-14 02-14-14

SHEET 7 OF 25

FILE => 54-1301lr-f_a_lo_01.dgn

USERNAME => s12614 DATE PLOTTED => 10-SEP-2014 TIME PLOTTED => 10:07

DIST	COUNTY	ROUTE	POST MILES TOTAL PROJECT	SHEET No.	TOTAL SHEETS
08	SBd	40	R94.7/R99.7	196	251

Charles Lomicka 02-14-14
REGISTERED CIVIL ENGINEER DATE

5-27-14
PLANS APPROVAL DATE

REGISTERED PROFESSIONAL ENGINEER CHARLES LOMICKA No. C 71172 Exp. 06-30-15 CIVIL STATE OF CALIFORNIA

The State of California or its officers or agents shall not be responsible for the accuracy or completeness of electronic copies of this plan sheet.

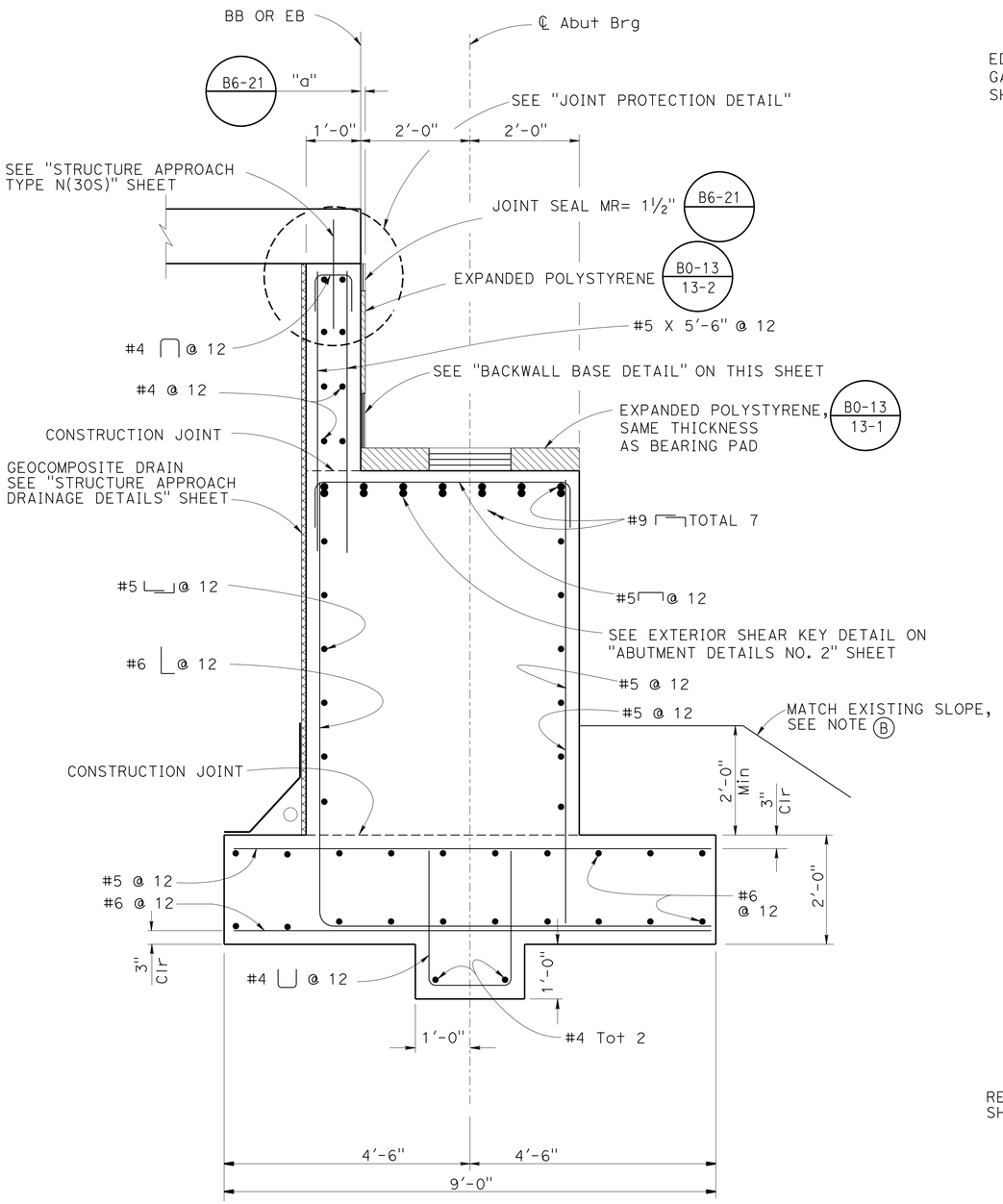

ABUTMENT TYPICAL SECTION

¾" = 1'-0"

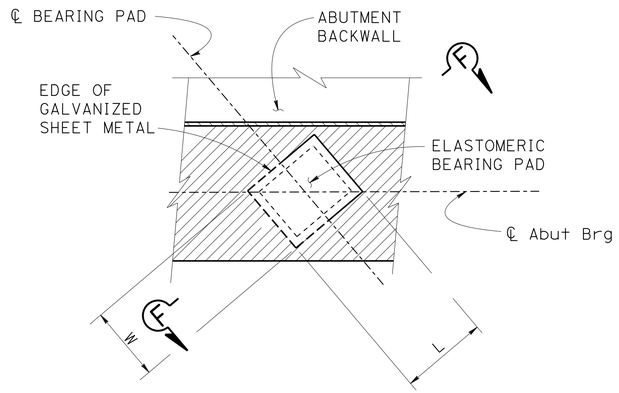

BEARING PAD DETAIL

NO SCALE

NOTE:
FOR DIMENSIONS L & W, SEE "ABUTMENTLAYOUT" SHEET

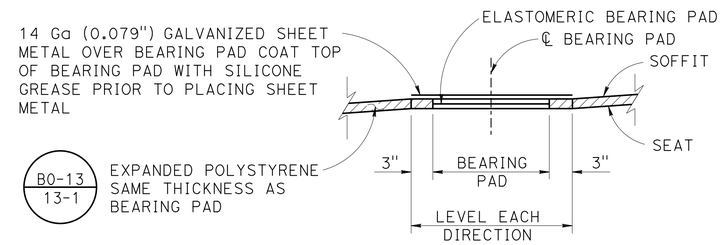

SECTION F-F

NO SCALE

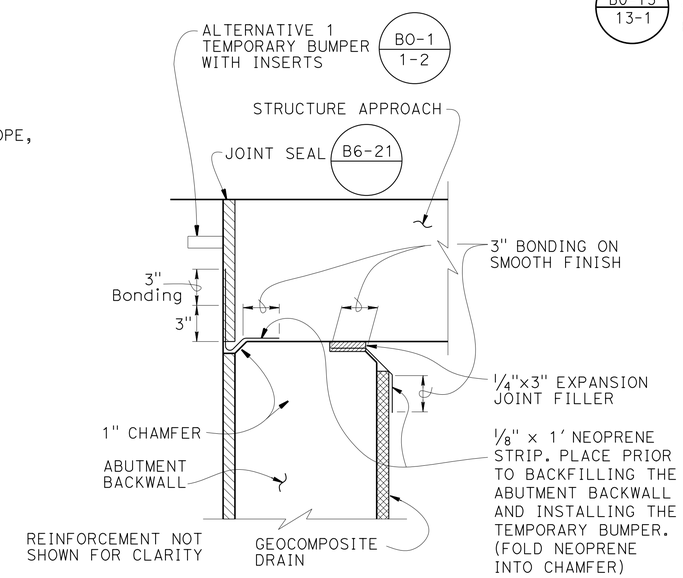

JOINT PROTECTION DETAIL

NO SCALE

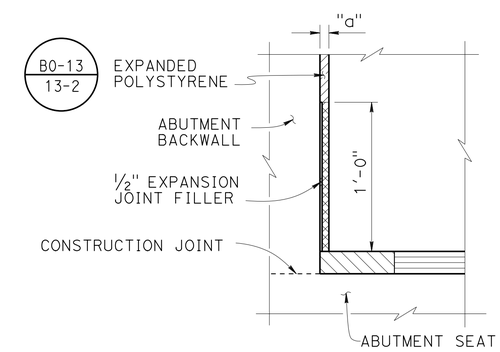

BACKWALL BASE DETAIL

NO SCALE

NOTES:

(A) For rock slope protection, see Road Plans.

DESIGN	BY R. WANG	CHECKED H. WIN	
DETAILS	BY H. INIGUEZ / D. W.	CHECKED H. WIN	
QUANTITIES	BY R. WANG	CHECKED M. RAHMAN / D. BALBAS	

STATE OF CALIFORNIA
DEPARTMENT OF TRANSPORTATION

DIVISION OF ENGINEERING SERVICES
STRUCTURE DESIGN
DESIGN BRANCH 19

BRIDGE NO. 54-1301L/R
POST MILE R98.3

ROJO WASH BRIDGE (REPLACE)
ABUTMENT DETAILS NO. 1

STRUCTURES DESIGN DETAIL SHEET (ENGLISH) (REV. 09-01-10)

ORIGINAL SCALE IN INCHES FOR REDUCED PLANS 0 1 2 3

UNIT: 3621
PROJECT NUMBER & PHASE: 0813000176 - 1 CONTRACT NO.: 08-0N56U

DISREGARD PRINTS BEARING EARLIER REVISION DATES

REVISION DATES: 09-01-10 02-04-14 02-13-14

SHEET 8 OF 25

FILE => 54-1301lr-f-a-det_01.dgn

USERNAME => s121614 DATE PLOTTED => 10-SEP-2014 TIME PLOTTED => 10:07

DIST	COUNTY	ROUTE	POST MILES TOTAL PROJECT	SHEET No.	TOTAL SHEETS
08	SBd	40	R94.7/R99.7	197	251

Charles Lomicka 02-14-14
REGISTERED CIVIL ENGINEER DATE

5-27-14
PLANS APPROVAL DATE

REGISTERED PROFESSIONAL ENGINEER CHARLES LOMICKA No. C 71172 Exp. 06-30-15 CIVIL STATE OF CALIFORNIA

The State of California or its officers or agents shall not be responsible for the accuracy or completeness of electronic copies of this plan sheet.

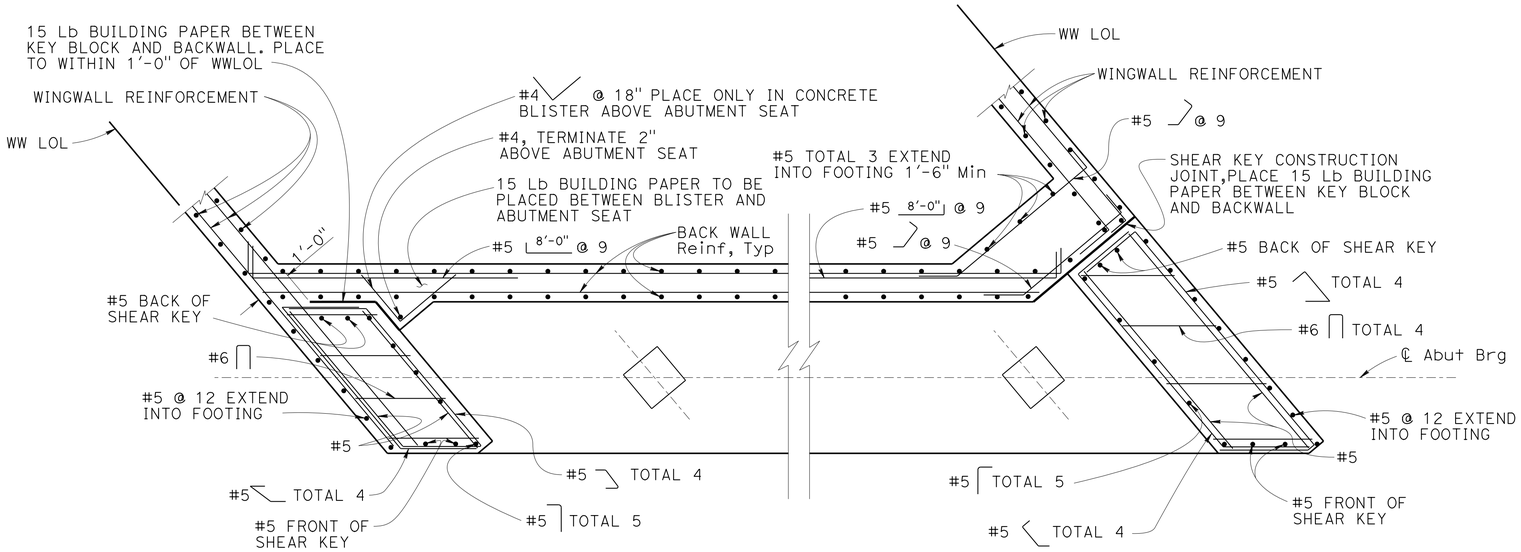

SECTION B-B

1/2" = 1'-0"

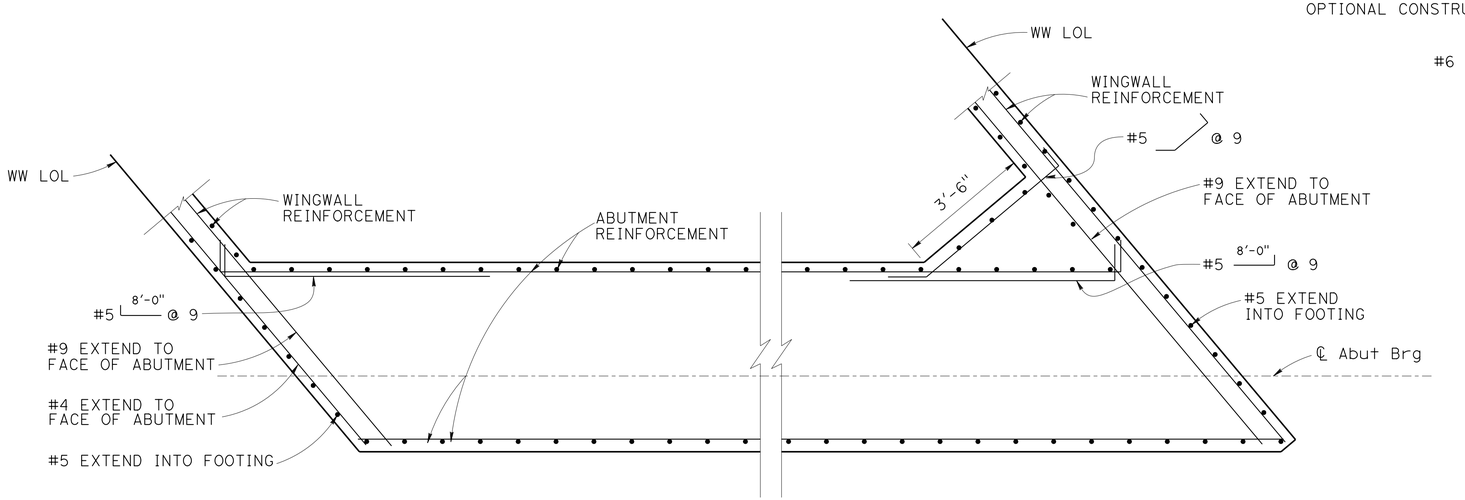

SECTION C-C

1/2" = 1'-0"

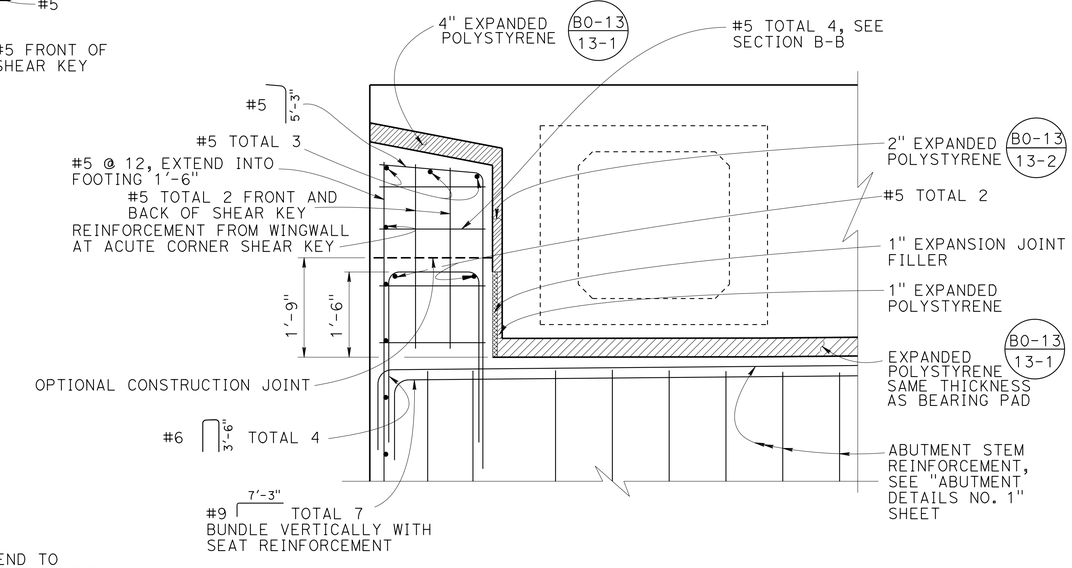

EXTERIOR SHEAR KEY DETAIL

3/4" = 1'-0"

ABUTMENT 1 RIGHT SHOWN
OTHER LOCATIONS SIMILAR

NOTE:

(A) For location of "SECTION B-B" and "SECTION C-C", see "ABUTMENT LAYOUT" sheet.

(B) For wingwall reinforcement, see "ABUTMENT DETAILS NO. 3" sheet.

	BY	CHECKED
DESIGN	R. WANG	E. MERCADO
DETAILS	H. INIGUEZ /H. M. /D. W.	E. MERCADO
QUANTITIES	R. WANG	M. RAHMAN / D. BALBAS

STATE OF CALIFORNIA
DEPARTMENT OF TRANSPORTATION

DIVISION OF ENGINEERING SERVICES
STRUCTURE DESIGN
DESIGN BRANCH 19

BRIDGE NO. 54-1301L/R
POST MILE R98.3

ROJO WASH BRIDGE (REPLACE)
ABUTMENT DETAILS NO. 2

STRUCTURES DESIGN DETAIL SHEET (ENGLISH) (REV. 09-01-10)

ORIGINAL SCALE IN INCHES FOR REDUCED PLANS 0 1 2 3

UNIT: 3621
PROJECT NUMBER & PHASE: 0813000176 - 1 CONTRACT NO.: 08-0N56U

DISREGARD PRINTS BEARING EARLIER REVISION DATES

REVISION DATES: 9-23-13 | 02-04-14 | 02-14-14

SHEET 9 OF 25

FILE => 54-1301r-f-a-det_02.dgn

USERNAME => s121614 DATE PLOTTED => 10-SEP-2014 TIME PLOTTED => 10:07

DIST	COUNTY	ROUTE	POST MILES TOTAL PROJECT	SHEET No.	TOTAL SHEETS
08	SBd	40	R94.7/R99.7	198	251

Charles Lomicka 02-14-14
REGISTERED CIVIL ENGINEER DATE

5-27-14
PLANS APPROVAL DATE

REGISTERED PROFESSIONAL ENGINEER CHARLES LOMICKA No. C 71172 Exp. 06-30-15 CIVIL STATE OF CALIFORNIA

The State of California or its officers or agents shall not be responsible for the accuracy or completeness of electronic copies of this plan sheet.

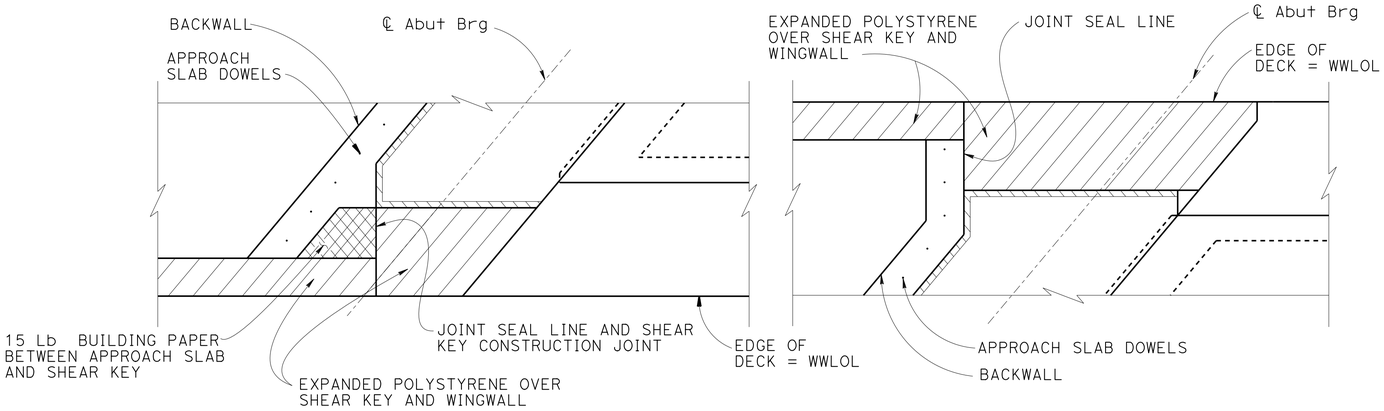

ACUTE CORNER

OBTUSE CORNER

ABUTMENT CORNER DETAILS

½" = 1'-0"
ABUTMENT 1 RIGHT BRIDGE SHOWN

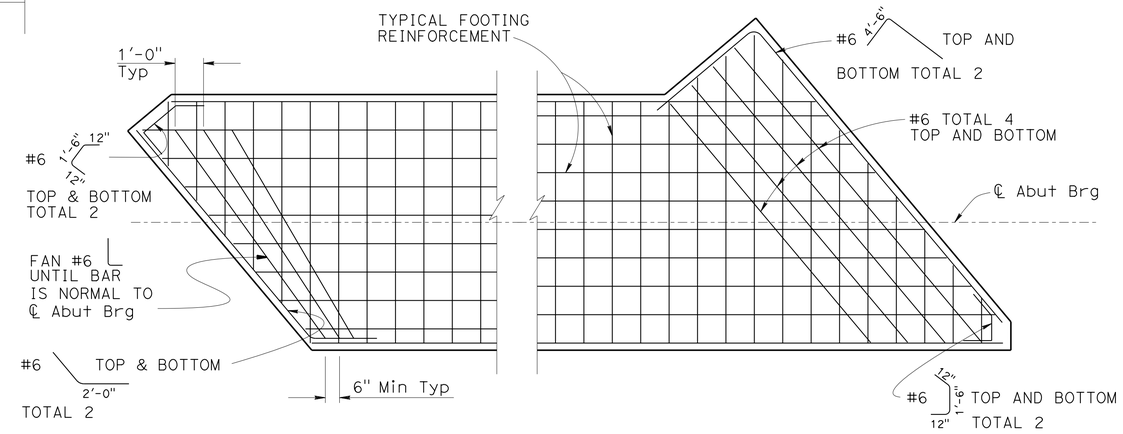

ABUTMENT FOOTING CORNER DETAILS

⅜" = 1'-0"

NOTE Ⓒ

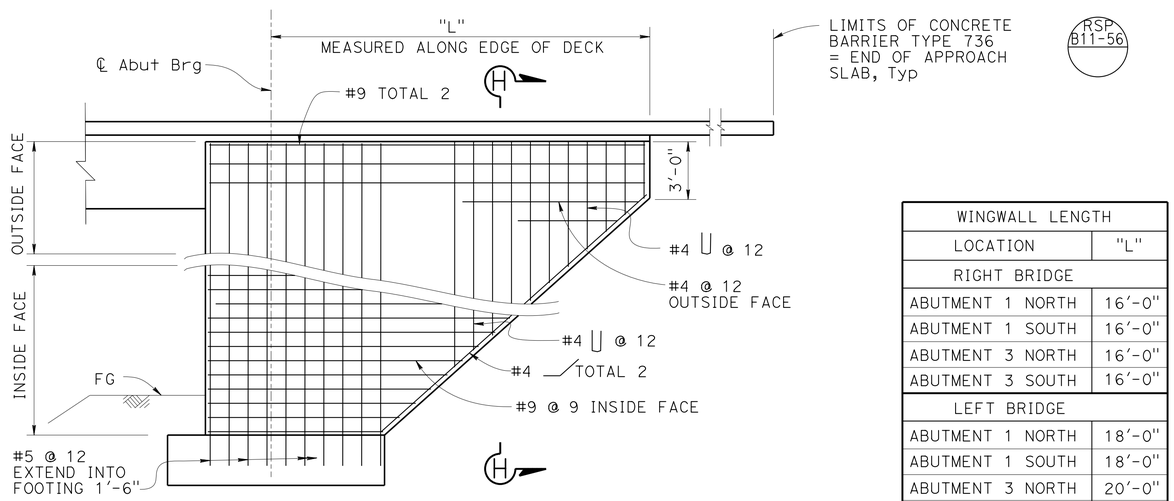

WINGWALL LENGTH	
LOCATION	"L"
RIGHT BRIDGE	
ABUTMENT 1 NORTH	16'-0"
ABUTMENT 1 SOUTH	16'-0"
ABUTMENT 3 NORTH	16'-0"
ABUTMENT 3 SOUTH	16'-0"
LEFT BRIDGE	
ABUTMENT 1 NORTH	18'-0"
ABUTMENT 1 SOUTH	18'-0"
ABUTMENT 3 NORTH	20'-0"
ABUTMENT 3 SOUTH	16'-0"

WINGWALL ELEVATION

¼" = 1'-0"

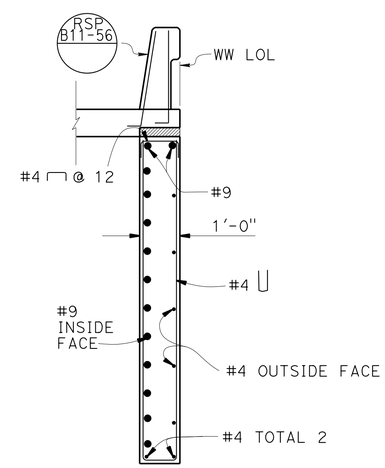

SECTION H-H

½" = 1'-0"

NOTES:

Ⓐ Barrier not shown in "ELEVATION" view.

Ⓑ Not all bars shown.

Ⓒ Additional corner reinforcement to be placed above bottom mat and below top mat.

DESIGN	BY R. WANG	CHECKED E. MERCADO	
DETAILS	BY H. INIGUEZ / D. W.	CHECKED E. MERCADO	
QUANTITIES	BY R. WANG	CHECKED M. RAHMAN / D. BALBAS	

STATE OF CALIFORNIA
DEPARTMENT OF TRANSPORTATION

DIVISION OF ENGINEERING SERVICES
STRUCTURE DESIGN
DESIGN BRANCH 19

BRIDGE NO. 54-1301L/R
POST MILE R98.3

ROJO WASH BRIDGE (REPLACE)
ABUTMENT DETAILS NO. 3

STRUCTURES DESIGN DETAIL SHEET (ENGLISH) (REV. 09-01-10)

ORIGINAL SCALE IN INCHES FOR REDUCED PLANS 0 1 2 3

UNIT: 3621
PROJECT NUMBER & PHASE: 0813000176 - 1 CONTRACT NO.: 08-0N56U

DISREGARD PRINTS BEARING EARLIER REVISION DATES

REVISION DATES 9-23-13 02-13-14 02-04-12

SHEET 10 OF 25

FILE => 54-1301lr-f-a-det_03.dgn

USERNAME => s121614 DATE PLOTTED => 10-SEP-2014 TIME PLOTTED => 10:07

DIST	COUNTY	ROUTE	POST MILES TOTAL PROJECT	SHEET No.	TOTAL SHEETS
08	SBd	40	R94.7/R99.7	199	251

Charles Lomicka 02-14-14
REGISTERED CIVIL ENGINEER DATE

5-27-14
PLANS APPROVAL DATE

REGISTERED PROFESSIONAL ENGINEER CHARLES LOMICKA No. C 71172 Exp. 06-30-15 CIVIL STATE OF CALIFORNIA

The State of California or its officers or agents shall not be responsible for the accuracy or completeness of electronic copies of this plan sheet.

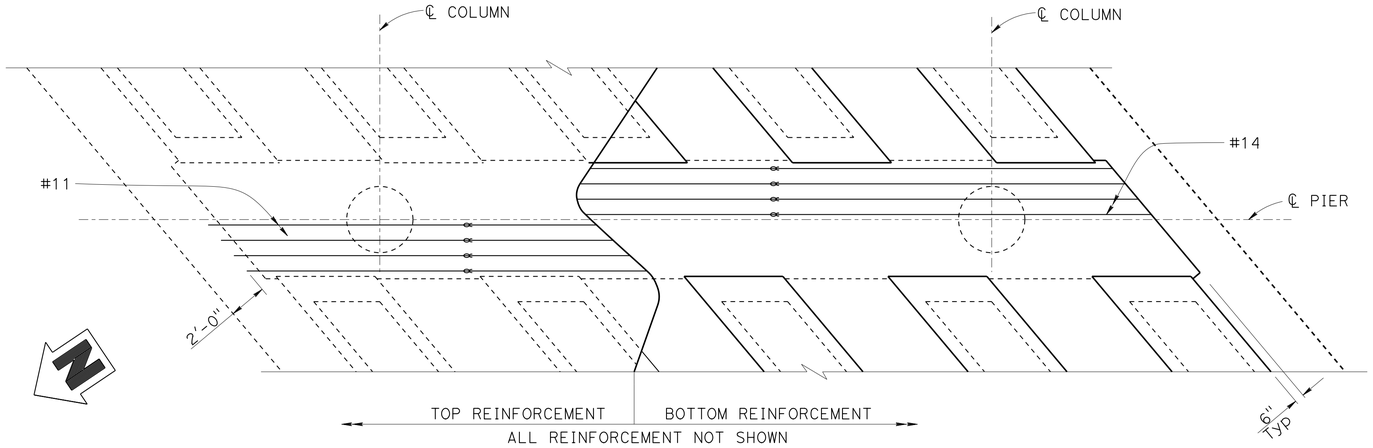

PLAN
1/4" = 1'-0"

NOTES:

(A) Reinforcement may be adjusted to clear P/S ducts.

(B) For colunm pipe pin details, and addidional reinforcement, see "PIER DETAILS NO. 2" sheet.

(C) For PC/PS girder details see "PRECAST GIRDER DETAILS NO. 1" and "PRECAST GIRDER DETAILS NO. 2" sheet.

(D) Stirrups shown shall be placed normal to ℄ Pier.

(E) For "SECTION C-C", "SECTION D-D" and "SECTION G-G", see "PIER DETAILS NO. 1" sheet.

(F) All Hoops are "ULTIMATE" butt spliced continuous.

(G) No lap splices in main bent cap reinforcement.

(H) Concrete Barrier Type 736 not shown for clarity.

* Clearance to main cap reinforcement.

Denotes bundled bar.

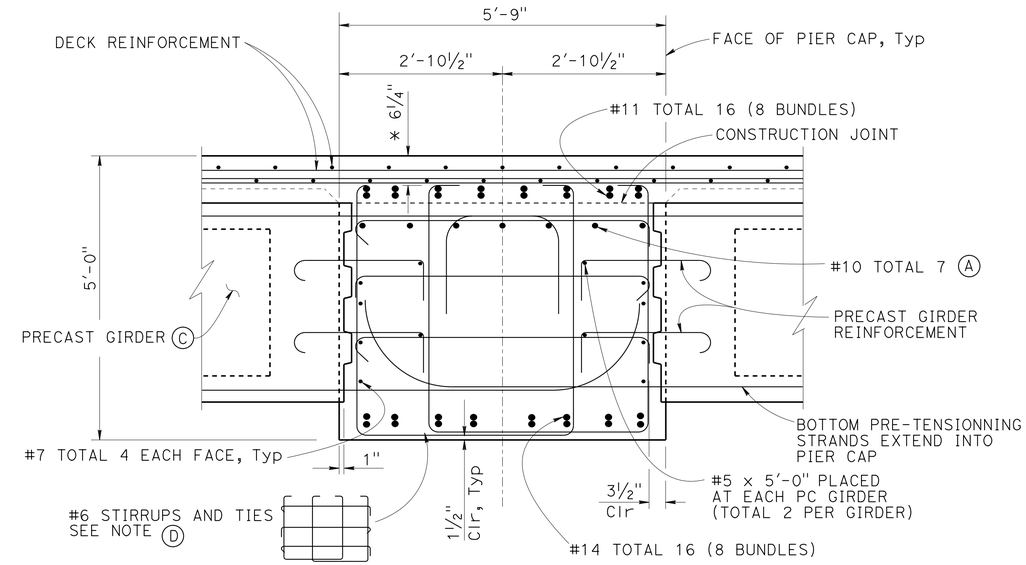

SECTION A-A
3/4" = 1'-0"

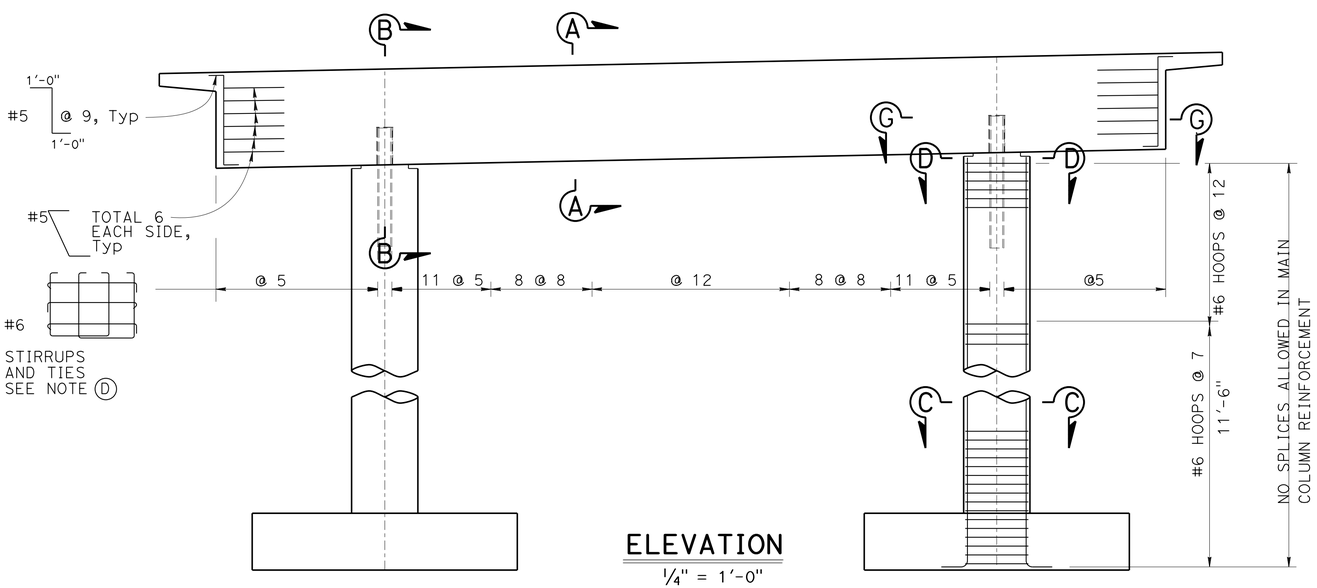

ELEVATION
1/4" = 1'-0"

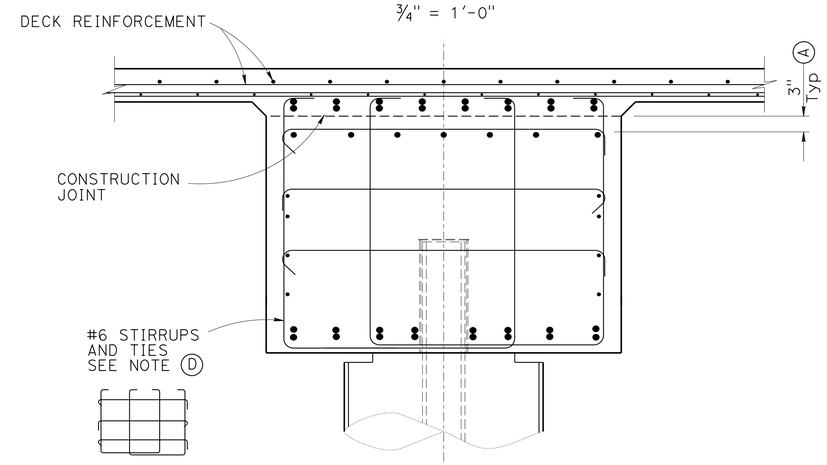

SECTION B-B
3/4" = 1'-0"

FOR DETAILS NOT SHOWN, SEE SECTION A-A

DESIGN	BY R. WANG	CHECKED M. RAHMAN	
DETAILS	BY H. INIGUEZ / D. W.	CHECKED M. RAHMAN	
QUANTITIES	BY D. BALBAS	CHECKED E. M./ M. R./ B. P.	

STATE OF CALIFORNIA
DEPARTMENT OF TRANSPORTATION

DIVISION OF ENGINEERING SERVICES
STRUCTURE DESIGN
DESIGN BRANCH 19

BRIDGE NO. 54-1301L/R
POST MILE R98.3

ROJO WASH BRIDGE (REPLACE)
PIER LAYOUT

STRUCTURES DESIGN DETAIL SHEET (ENGLISH) (REV. 09-01-10)

ORIGINAL SCALE IN INCHES FOR REDUCED PLANS 0 1 2 3

UNIT: 3621
PROJECT NUMBER & PHASE: 0813000176 - 1 CONTRACT NO.: 08-0N56U

DISREGARD PRINTS BEARING EARLIER REVISION DATES

REVISION DATES: 9-26-13 02-13-14 02-05-14

SHEET 11 OF 25

FILE => 54-1301lr-h-p_lo.dgn

USERNAME => s127614 DATE PLOTTED => 10-SEP-2014 TIME PLOTTED => 10:07

DIST	COUNTY	ROUTE	POST MILES TOTAL PROJECT	SHEET No.	TOTAL SHEETS
08	SBd	40	R94.7/R99.7	200	251

Charles Lomicka 02-14-14
REGISTERED CIVIL ENGINEER DATE

5-27-14
PLANS APPROVAL DATE

REGISTERED PROFESSIONAL ENGINEER CHARLES LOMICKA No. C 71172 Exp. 06-30-15 CIVIL STATE OF CALIFORNIA

The State of California or its officers or agents shall not be responsible for the accuracy or completeness of electronic copies of this plan sheet.

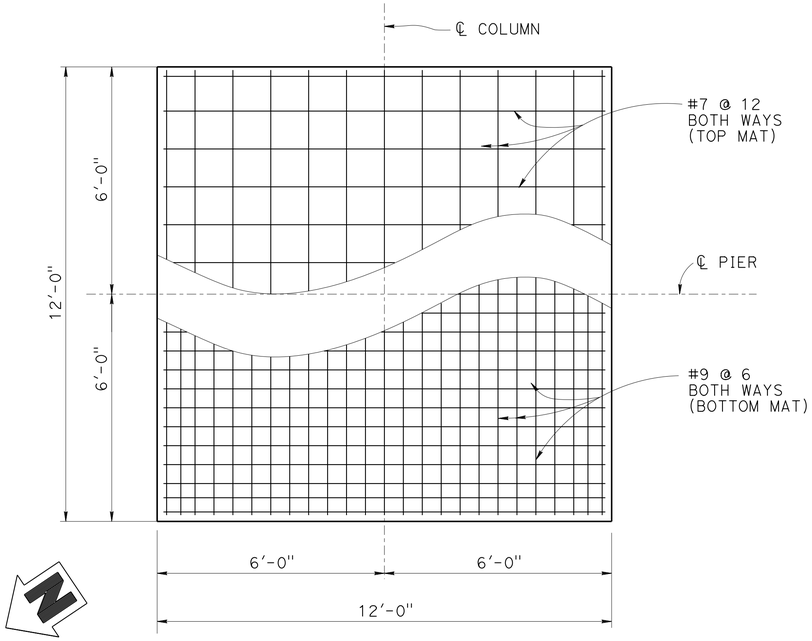

FOOTING PLAN
½" = 1'-0"

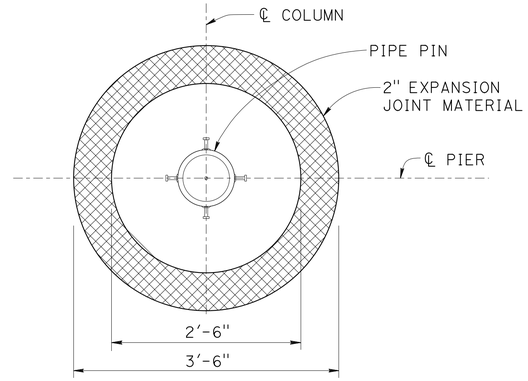

CONCRETE BEARING AREA
SEE "PIER DETAILS NO. 2"
FOR ADDITIONAL DETAILS.

SECTION D-D
1" = 1'-0"

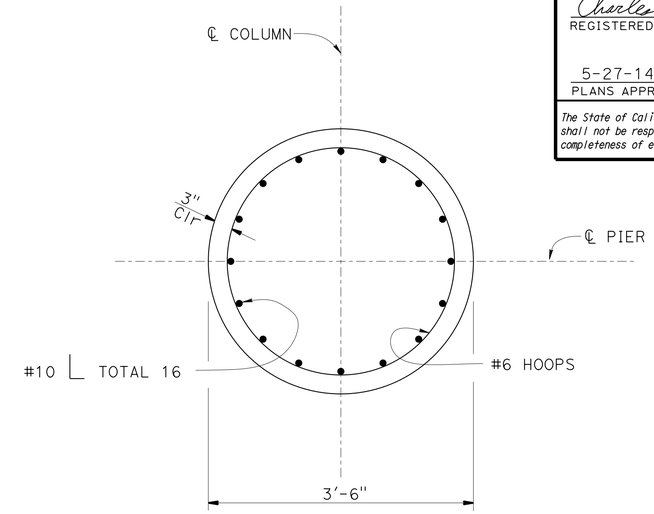

SECTION C-C
1" = 1'-0"

NOTE:
FOR LOCATIONS OF "SECTION D-D", "SECTION C-C",
AND "SECTION G-G", SEE "PIER LAYOUT" SHEET.

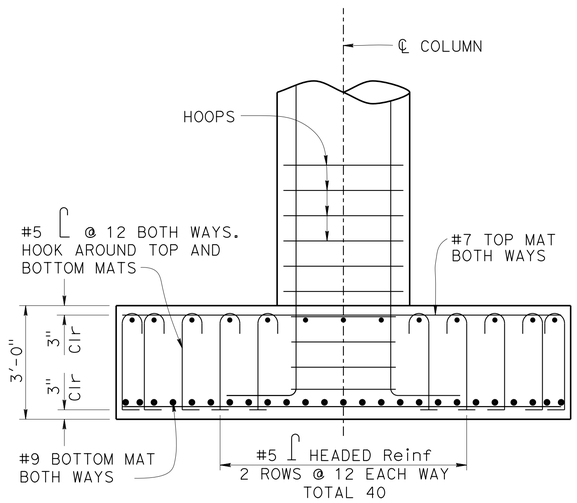

FOOTING ELEVATION
½" = 1'-0"

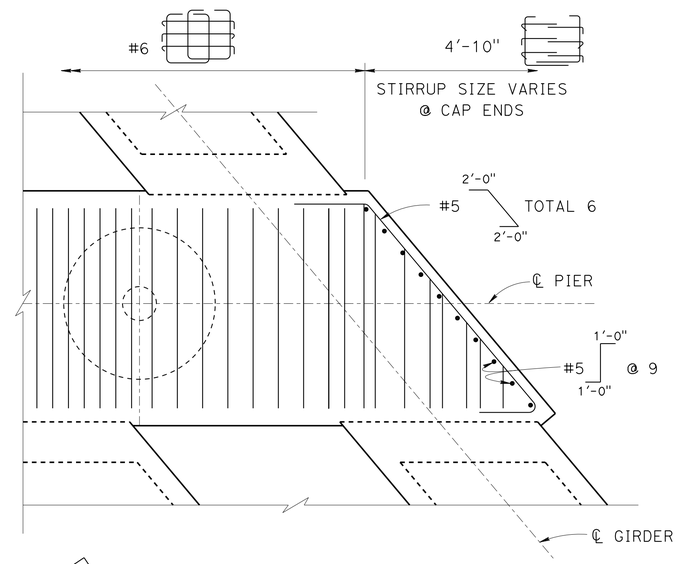

SECTION G-G (TYPICAL ALL CAP ENDS)
½" = 1'-0"

DESIGN	BY R. WANG	CHECKED M. RAHMAN	
DETAILS	BY H. INIGUEZ / D. W.	CHECKED M. RAHMAN	
QUANTITIES	BY D. BALBAS	CHECKED M. R. / B. P.	

STATE OF CALIFORNIA
DEPARTMENT OF TRANSPORTATION

DIVISION OF ENGINEERING SERVICES
STRUCTURE DESIGN
DESIGN BRANCH 19

BRIDGE NO. 54-1301L/R
POST MILE R98.3

ROJO WASH BRIDGE (REPLACE)
PIER DETAILS NO. 1

STRUCTURES DESIGN DETAIL SHEET (ENGLISH) (REV. 09-01-10)

ORIGINAL SCALE IN INCHES FOR REDUCED PLANS 0 1 2 3

UNIT: 3621
PROJECT NUMBER & PHASE: 0813000176 - 1 CONTRACT NO.: 08-0N56U

DISREGARD PRINTS BEARING EARLIER REVISION DATES

REVISION DATES: 9-20-13 02-13-14 01-30-14

SHEET 12 OF 25

FILE => 54-1301lr-h-p-det_01 .dgn

USERNAME => s121614 DATE PLOTTED => 10-SEP-2014 TIME PLOTTED => 10:07