Dist	COUNTY	ROUTE	POST MILES TOTAL PROJECT	SHEET No.	TOTAL SHEETS
08	Riv	60	13.3/30.4	1	28

ACNH-P060(137)E

STATE OF CALIFORNIA
DEPARTMENT OF TRANSPORTATION

PROJECT PLANS FOR CONSTRUCTION ON
STATE HIGHWAY

IN RIVERSIDE COUNTY
IN MORENO VALLEY AND BEAUMONT
FROM DAY STREET UNDERCROSSING
TO ROUTE 10/60 SEPARATION

TO BE SUPPLEMENTED BY STANDARD PLANS DATED MAY 2006

INDEX OF PLANS

SHEET No.	DESCRIPTION
1	TITLE AND LOCATION MAP
2-3	TYPICAL CROSS SECTIONS
4-7	CONSTRUCTION DETAILS
8	CONSTRUCTION AREA SIGNS
9-13	DETOUR PLANS
14	PAVEMENT DELINEATION PLAN
15	PAVEMENT DELINEATION QUANTITIES
16-17	SUMMARY OF QUANTITIES
18-19	ELECTRICAL PLANS
20-28	REVISED STANDARD PLANS

THE STANDARD PLANS LIST APPLICABLE TO THIS CONTRACT IS INCLUDED IN THE NOTICE TO BIDDERS AND SPECIAL PROVISIONS BOOK

LOCATION MAP

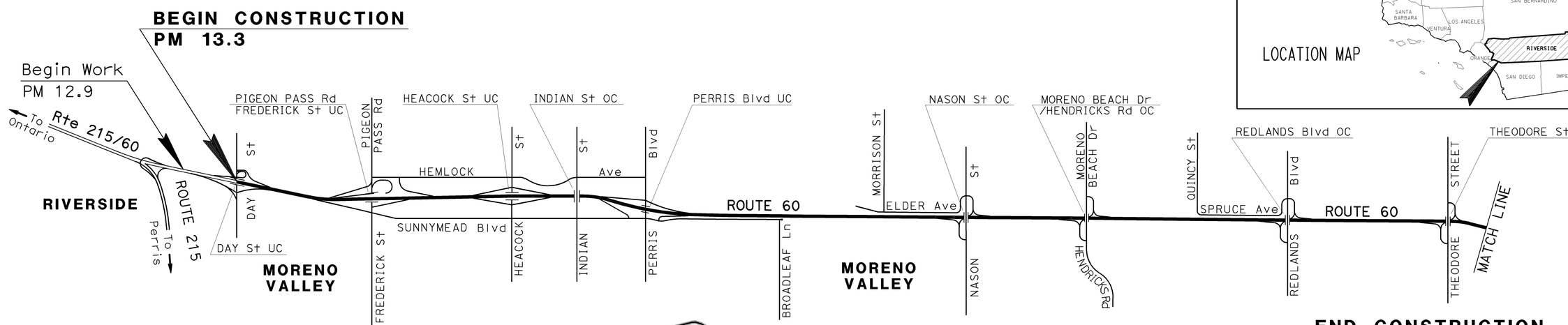

NO SCALE

THE CONTRACTOR SHALL POSSESS THE CLASS (OR CLASSES) OF LICENSE AS SPECIFIED IN THE "NOTICE TO BIDDERS."

PROJECT MANAGER: CATALINO PINING

DESIGN ENGINEER: WILLIAM AMBROSE

2-11-10
PROJECT ENGINEER DATE
REGISTERED CIVIL ENGINEER

REGISTERED PROFESSIONAL ENGINEER
WILLIAM A. AMBROSE
No. C72098
Exp. 6/30/10
CIVIL
STATE OF CALIFORNIA

February 16, 2010
PLANS APPROVAL DATE

THE STATE OF CALIFORNIA OR ITS OFFICERS OR AGENTS SHALL NOT BE RESPONSIBLE FOR THE ACCURACY OR COMPLETENESS OF SCANNED COPIES OF THIS PLAN SHEET.

CONTRACT No. 08-0N3004

LAST REVISION 09-09-09
DATE PLOTTED => 11-FEB-2010
TIME PLOTTED => 13:31

Dist	COUNTY	ROUTE	POST MILES TOTAL PROJECT	SHEET No.	TOTAL SHEETS
08	Riv	60	13.3/30.4	2	28

REGISTERED CIVIL ENGINEER 2-11-10 DATE

2-16-10
PLANS APPROVAL DATE

REGISTERED PROFESSIONAL ENGINEER WILLIAM A. AMBROSE No. C72098 Exp. 6/30/10 CIVIL STATE OF CALIFORNIA

THE STATE OF CALIFORNIA OR ITS OFFICERS OR AGENTS SHALL NOT BE RESPONSIBLE FOR THE ACCURACY OR COMPLETENESS OF SCANNED COPIES OF THIS PLAN SHEET.

NOTES:

1. DIMENSIONS OF THE STRUCTURAL SECTIONS ARE SUBJECT TO TOLERENCES SPECIFIED IN THE STANDARD SPECFICATIONS.
2. SUPERELEVATIONS AS SHOWN OR AS DIRECTED BY THE ENGINEER.
3. FOR PAVEMENT CONFORM, SEE CONSTRUCTION DETAIL SHEETS.
4. PROTECT IN PLACE EXISTING RUMBLE STRIP.
5. DRAINAGE INLETS AND DOWNDRAINS TO BE PROTECTED FROM FOG SEAL.
6. EXISTING UTILITY FACILITIES HAVE NOT BEEN PLOTTED ON THESE PLANS.
7. SEE SHEET C-4 FOR CONSTRUCTION DETAILS AT OVERCROSSINGS.

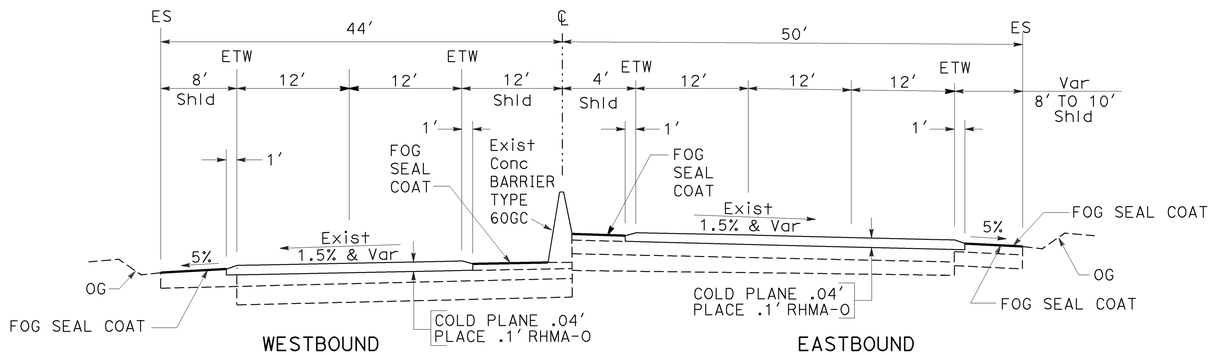

WESTBOUND
PM 20.1 TO PM 20.3

ROUTE 60

EASTBOUND
PM 19.6 TO PM 20.2

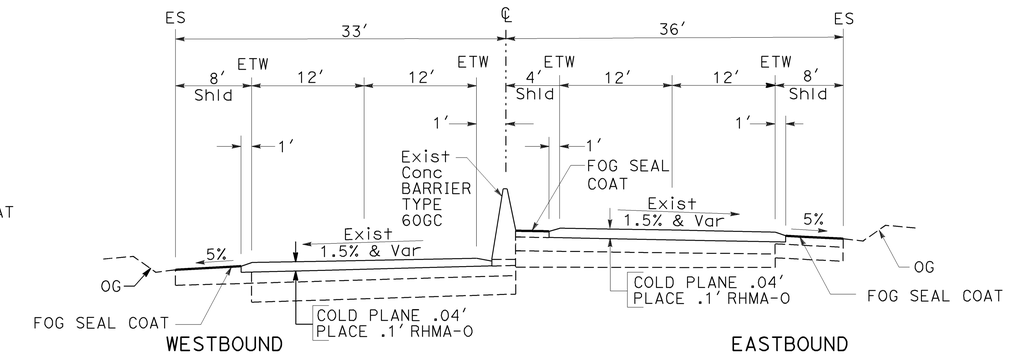

WESTBOUND
PM 20.3 TO PM 21.4

ROUTE 60

EASTBOUND
PM 20.2 TO PM 21.4

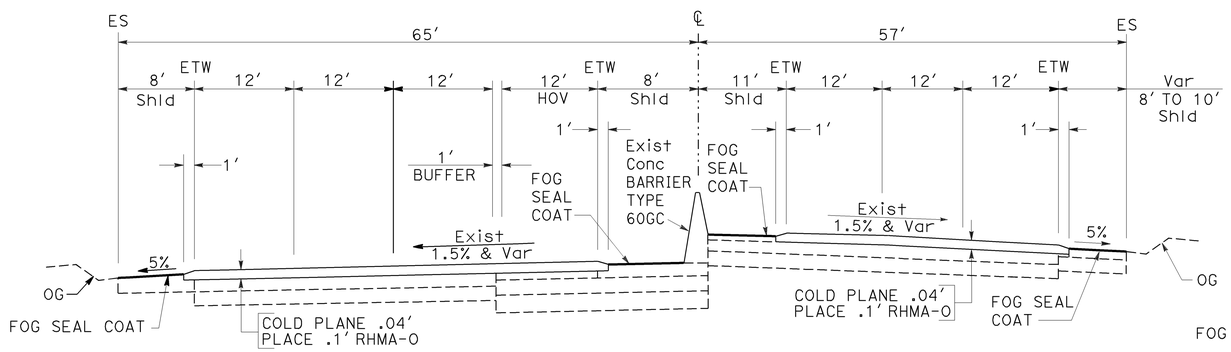

WESTBOUND
PM 13.6 TO PM 14.1

ROUTE 60

EASTBOUND
PM 13.5 TO PM 13.9

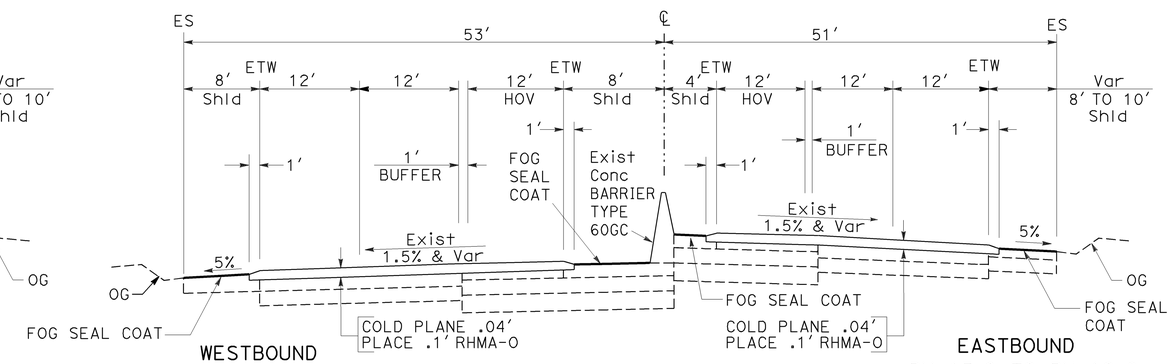

WESTBOUND
PM 14.1 TO PM 20.1

ROUTE 60

EASTBOUND
PM 13.9 TO PM 19.6

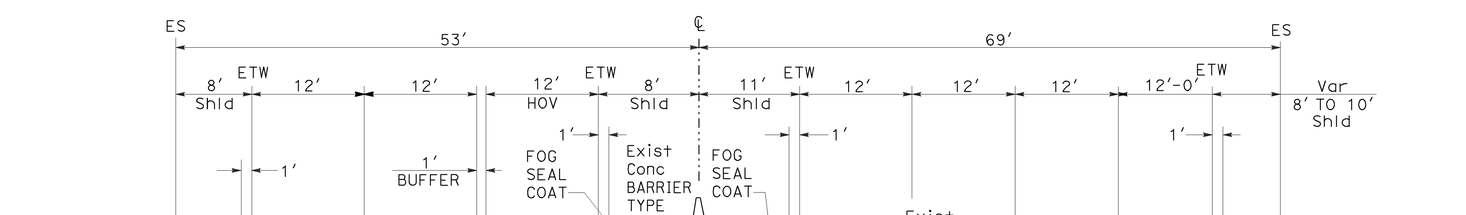

WESTBOUND
PM 13.3 TO PM 13.6

ROUTE 60

EASTBOUND
PM 13.3 TO PM 13.5

TYPICAL CROSS SECTIONS

NO SCALE

X-1

STATE OF CALIFORNIA - DEPARTMENT OF TRANSPORTATION
Caltrans® **MAINTENACE DESIGN**

FUNCTIONAL SUPERVISOR: KUANG CHEN
WILLIAM AMBROSE — KUANG H. CHEN
REVISED BY — DATE REVISED
CALCULATED-DESIGNED BY — CHECKED BY

LAST REVISION: DATE PLOTTED => 11-FEB-2010 09-09-09 TIME PLOTTED => 13:31

Dist	COUNTY	ROUTE	POST MILES TOTAL PROJECT	SHEET No.	TOTAL SHEETS
08	Riv	60	13.3/30.4	3	28

REGISTERED CIVIL ENGINEER 2-11-10 DATE

2-16-10
PLANS APPROVAL DATE

REGISTERED PROFESSIONAL ENGINEER WILLIAM A. AMBROSE No. C72098 Exp. 6/30/10 CIVIL STATE OF CALIFORNIA

THE STATE OF CALIFORNIA OR ITS OFFICERS OR AGENTS SHALL NOT BE RESPONSIBLE FOR THE ACCURACY OR COMPLETENESS OF SCANNED COPIES OF THIS PLAN SHEET.

NOTES:

1. DIMENSIONS OF THE STRUCTURAL SECTIONS ARE SUBJECT TO TOLERENCES SPECIFIED IN THE STANDARD SPECFICATIONS.
2. SUPERELEVATIONS AS SHOWN OR AS DIRECTED BY THE ENGINEER.
3. FOR PAVEMENT CONFORM, SEE CONSTRUCTION DETAIL SHEETS.
4. PROTECT IN PLACE EXISTING RUMBLE STRIP.
5. DRAINAGE INLETS AND DOWNDRAINS TO BE PROTECTED FROM FOG SEAL.
6. EXISTING UTILITY FACILITIES HAVE NOT BEEN PLOTTED ON THESE PLANS.
7. SEE SHEET C-4 FOR CONSTRUCTION DETAILS AT OVERCROSSINGS.

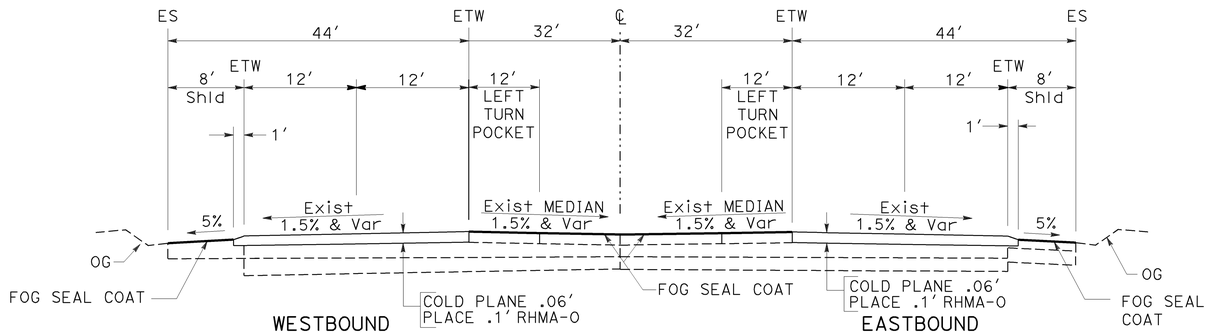

WESTBOUND
PM 27.8 TO PM 28.0
PM 29.8 TO PM 30.0

ROUTE 60

EASTBOUND
PM 27.8 TO PM 28.0
PM 29.8 TO PM 30.0

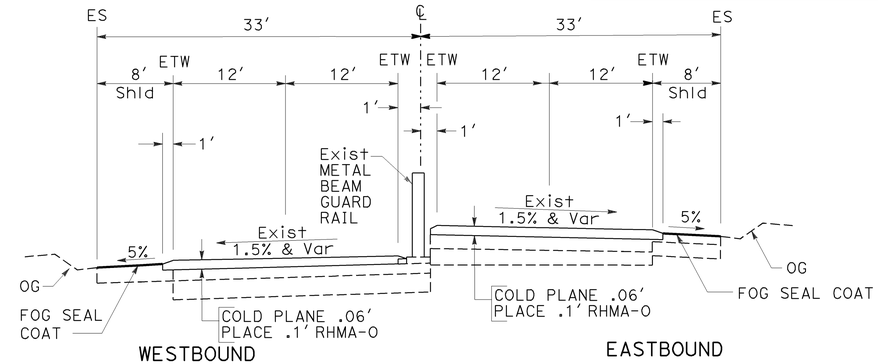

WESTBOUND
PM 30.0 TO PM 30.4

ROUTE 60

EASTBOUND
PM 30.0 TO PM 30.4

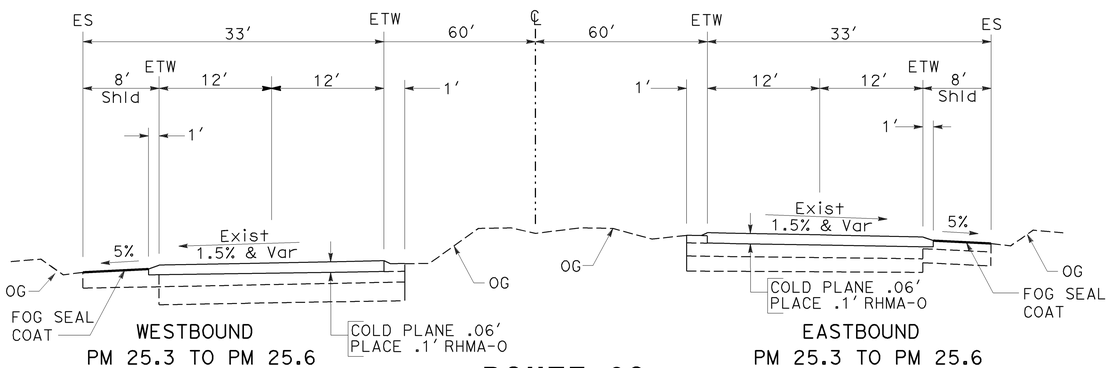

WESTBOUND
PM 25.3 TO PM 25.6

ROUTE 60

EASTBOUND
PM 25.3 TO PM 25.6

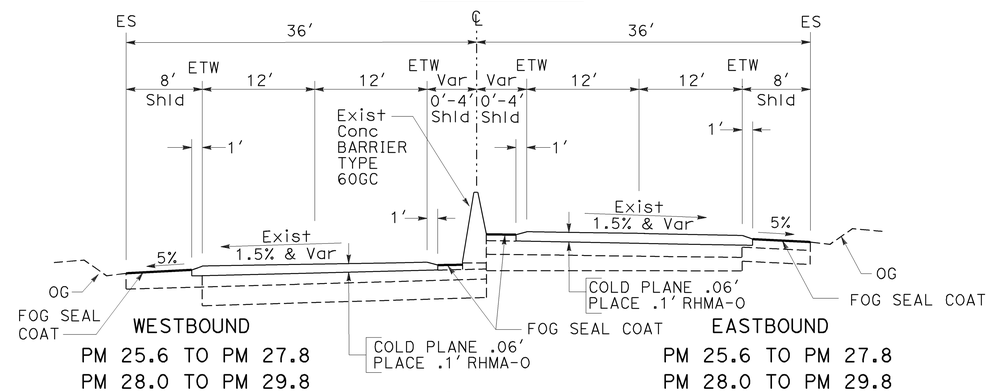

WESTBOUND
PM 25.6 TO PM 27.8
PM 28.0 TO PM 29.8

ROUTE 60

EASTBOUND
PM 25.6 TO PM 27.8
PM 28.0 TO PM 29.8

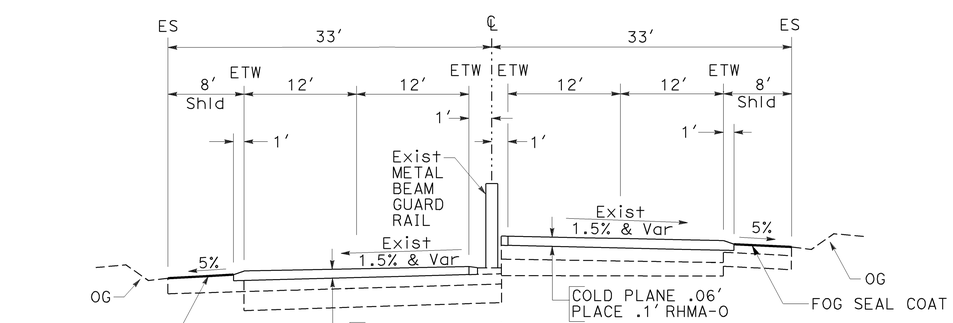

WESTBOUND
PM 21.4 TO PM 22.1

ROUTE 60

EASTBOUND
PM 21.4 TO PM 22.1

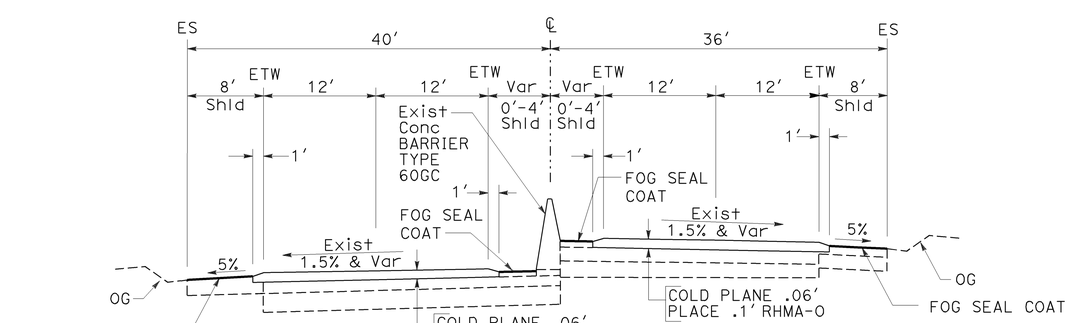

WESTBOUND
PM 22.1 TO PM 25.3

ROUTE 60

EASTBOUND
PM 22.1 TO PM 25.3

TYPICAL CROSS SECTIONS

NO SCALE

X-2

STATE OF CALIFORNIA - DEPARTMENT OF TRANSPORTATION
Caltrans® MAINTENACE DESIGN

FUNCTIONAL SUPERVISOR: KUANG CHEN
CALCULATED-DESIGNED BY: WILLIAM AMBROSE
CHECKED BY: KUANG H. CHEN
REVISED BY
DATE REVISED

LAST REVISION 09-09-09
DATE PLOTTED => 11-FEB-2010
TIME PLOTTED => 13:31

Dist	COUNTY	ROUTE	POST MILES TOTAL PROJECT	SHEET No.	TOTAL SHEETS
08	Riv	60	13.3/30.4	4	28

REGISTERED CIVIL ENGINEER DATE 2-11-10

PLANS APPROVAL DATE 2-16-10

REGISTERED PROFESSIONAL ENGINEER WILLIAM A. AMBROSE No. C72098 Exp. 6/30/10 CIVIL STATE OF CALIFORNIA

THE STATE OF CALIFORNIA OR ITS OFFICERS OR AGENTS SHALL NOT BE RESPONSIBLE FOR THE ACCURACY OR COMPLETENESS OF SCANNED COPIES OF THIS PLAN SHEET.

NOTES:

1. SEE SHEET C-3 FOR DETAILS
2. SEE SHEET C-3 FOR DETAILS
3. SEE SHEET C-3 FOR DETAILS
4. FIELD ENGINEER SHALL MARK THE BEGIN/END AND APPROACH/DEPARTURE LOCATIONS FOR BRIDGE DECKS AND SLABS RESPECTIVELY.

LEGEND

- COLD PLANE AND PLACE RHMA-O
- FOG SEAL COAT
- REPLACE ASPHALT CONCRETE SURFACE

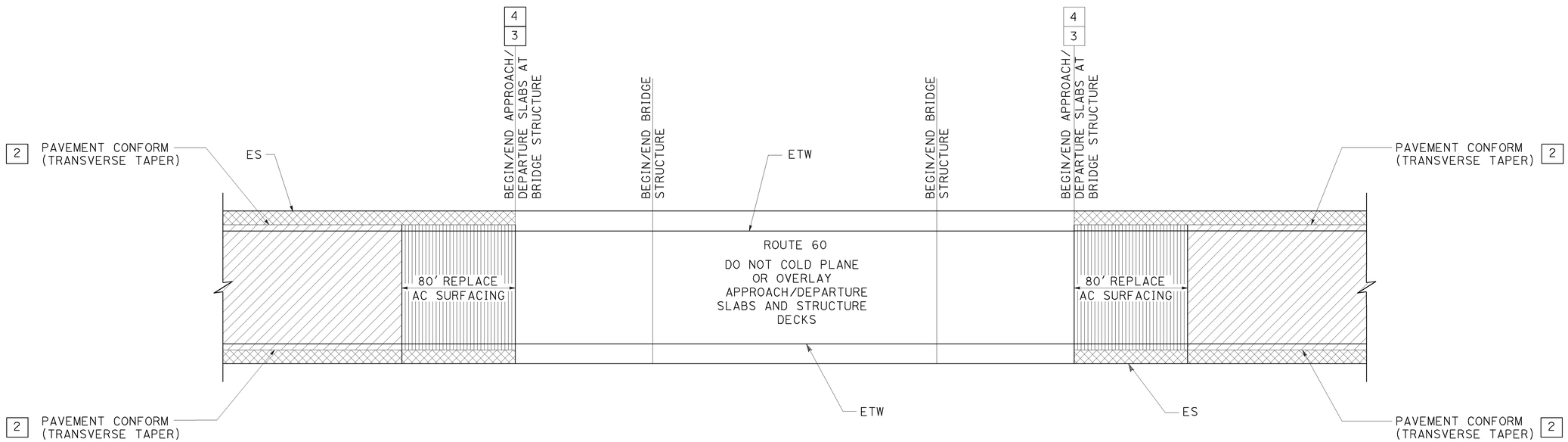

TYPICAL LIMIT OF WORK AT STRUCTURE DECK AREA

STRUCTURE DECK LOCATIONS

BRIDGE No.	LOCATION	PM	LENGTH (Ft)
56 0477	DAY STREET UC	13.31	45.5
56 0478R	PIGEON PASS ROAD/ FREDERICK St UC	14.32	45.1
56 0478L	PIGEON PASS ROAD/ FREDERICK St UC	14.32	45.1
56 0475R	HEACOCK STREET UC	15.34	45.7
56 0475R	HEACOCK STREET UC	15.34	45.7
56 0421L	PERRIS Blvd UC	16.35	46.3
56 0421R	PERRIS Blvd UC	16.35	46.3
56 0537	MORENO DITCH	18.60	6.4
56 0065	SAN TIMOTEO CREEK	28.34	19.2
56 0066L	BEAUMONT OH	30.24	80.2
56 0066R	BEAUMONT OH	30.24	93.3

CONSTRUCTION DETAILS

NO SCALE

C-1

REVISED BY | DATE REVISED

WILLIAM AMBROSE | KUANG H. CHEN

CALCULATED-DESIGNED BY | CHECKED BY

FUNCTIONAL SUPERVISOR | KUANG CHEN

STATE OF CALIFORNIA - DEPARTMENT OF TRANSPORTATION

Caltrans MAINTENACE DESIGN

LAST REVISION 12-31-09 | DATE PLOTTED => 11-FEB-2010 | TIME PLOTTED => 13:31

Dist	COUNTY	ROUTE	POST MILES TOTAL PROJECT	SHEET No.	TOTAL SHEETS
08	Riv	60	13.3/30.4	5	28

REGISTERED CIVIL ENGINEER 2-11-10 DATE

2-16-10
PLANS APPROVAL DATE

REGISTERED PROFESSIONAL ENGINEER WILLIAM A. AMBROSE No. C72098 Exp. 6/30/10 CIVIL STATE OF CALIFORNIA

THE STATE OF CALIFORNIA OR ITS OFFICERS OR AGENTS SHALL NOT BE RESPONSIBLE FOR THE ACCURACY OR COMPLETENESS OF SCANNED COPIES OF THIS PLAN SHEET.

NOTES:

1 SEE SHEET C-3 FOR DETAILS

2 SEE SHEET C-3 FOR DETAILS

LEGEND

COLD PLANE AND PLACE RHMA-O

FOG SEAL COAT

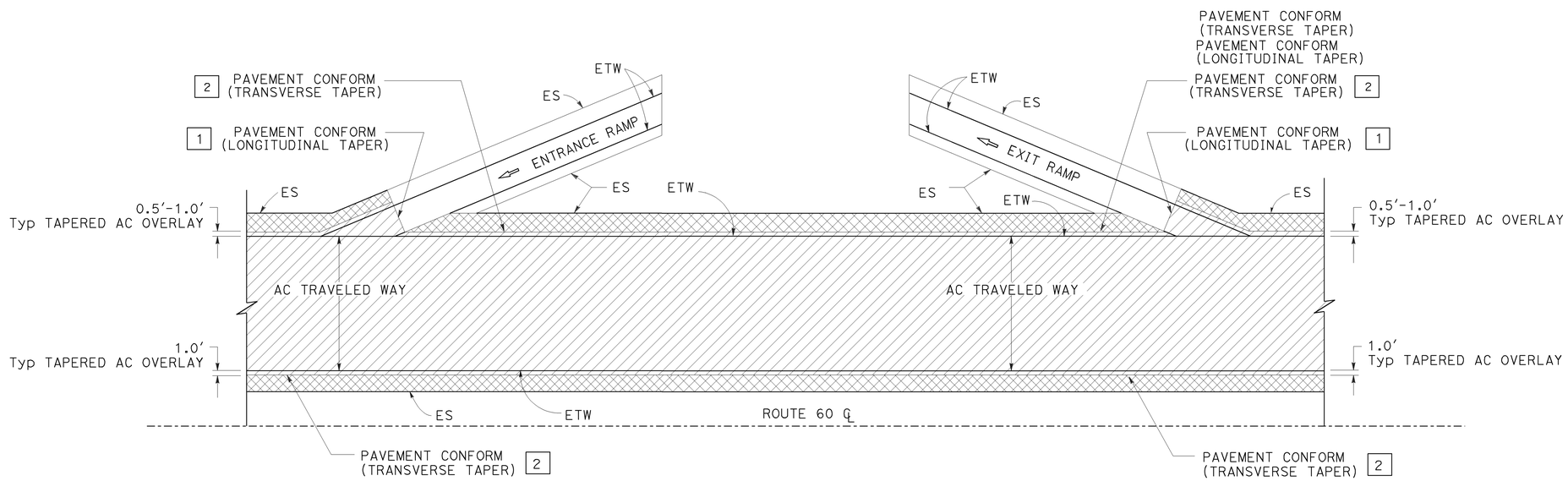

TYPICAL LIMITS OF WORK AT GORE AREA

CONSTRUCTION DETAILS

NO SCALE

C-2

STATE OF CALIFORNIA - DEPARTMENT OF TRANSPORTATION
Caltrans MAINTENACE DESIGN

FUNCTIONAL SUPERVISOR: KUANG CHEN
CALCULATED-DESIGNED BY: WILLIAM AMBROSE
CHECKED BY: KUANG H. CHEN
REVISED BY
DATE REVISED

LAST REVISION 09-09-09
DATE PLOTTED => 11-FEB-2010
TIME PLOTTED => 13:31

Dist	COUNTY	ROUTE	POST MILES TOTAL PROJECT	SHEET No.	TOTAL SHEETS
08	Riv	60	13.3/30.4	6	28

REGISTERED CIVIL ENGINEER 2-11-10 DATE

2-16-10
PLANS APPROVAL DATE

REGISTERED PROFESSIONAL ENGINEER WILLIAM A. AMBROSE No. C72098 Exp. 6/30/10 CIVIL STATE OF CALIFORNIA

THE STATE OF CALIFORNIA OR ITS OFFICERS OR AGENTS SHALL NOT BE RESPONSIBLE FOR THE ACCURACY OR COMPLETENESS OF SCANNED COPIES OF THIS PLAN SHEET.

LEGEND

- FOG SEAL COAT
- COLD PLANE AND PLACE RHMA-O
- REPLACE ASPHALT CONCRETE SURFACING

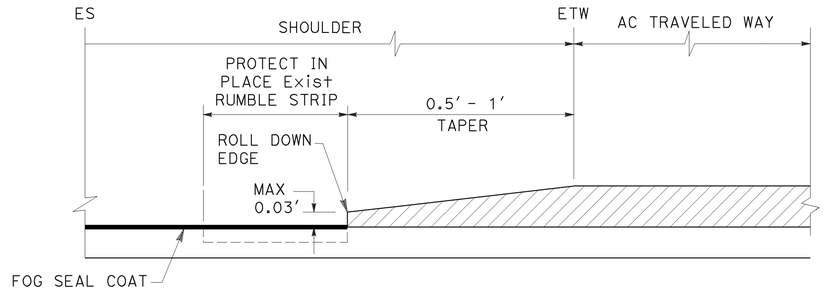

TRANSVERSE TAPER FROM ETW TO SHOULDER

2

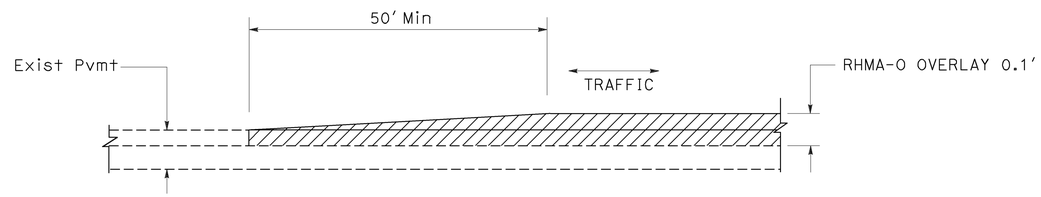

LONGITUDINAL RHMA-O TAPER TO EXISTING OGFC PAVEMENT

1

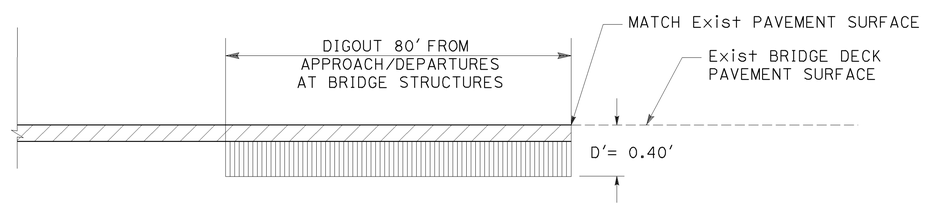

STRUCTURE DECK CONFORM LONGITUDINAL

BEGIN/END STRUCTURE DECK

3

CONSTRUCTION DETAILS

NO SCALE

C-3

STATE OF CALIFORNIA - DEPARTMENT OF TRANSPORTATION
Caltrans MAINTENANCE DESIGN

FUNCTIONAL SUPERVISOR: KUANG CHEN
CALCULATED-DESIGNED BY: WILLIAM AMBROSE
CHECKED BY: KUANG H. CHEN
REVISED BY
DATE REVISED

LAST REVISION 09-09-09 | DATE PLOTTED => 11-FEB-2010 | TIME PLOTTED => 13:31

Dist	COUNTY	ROUTE	POST MILES TOTAL PROJECT	SHEET No.	TOTAL SHEETS
08	Riv	60	13.3/30.4	7	28

REGISTERED CIVIL ENGINEER 2-11-10 DATE

2-16-10
PLANS APPROVAL DATE

REGISTERED PROFESSIONAL ENGINEER WILLIAM A. AMBROSE No. C72098 Exp. 6/30/10 CIVIL STATE OF CALIFORNIA

THE STATE OF CALIFORNIA OR ITS OFFICERS OR AGENTS SHALL NOT BE RESPONSIBLE FOR THE ACCURACY OR COMPLETENESS OF SCANNED COPIES OF THIS PLAN SHEET.

LEGEND:

REPLACE ASPHALT CONCRETE SURFACING

COLDPLANE 0.04′ OR 0.06′
AND RHMA-O OVERLAY
SEE SHEET X-1 AND X-2.

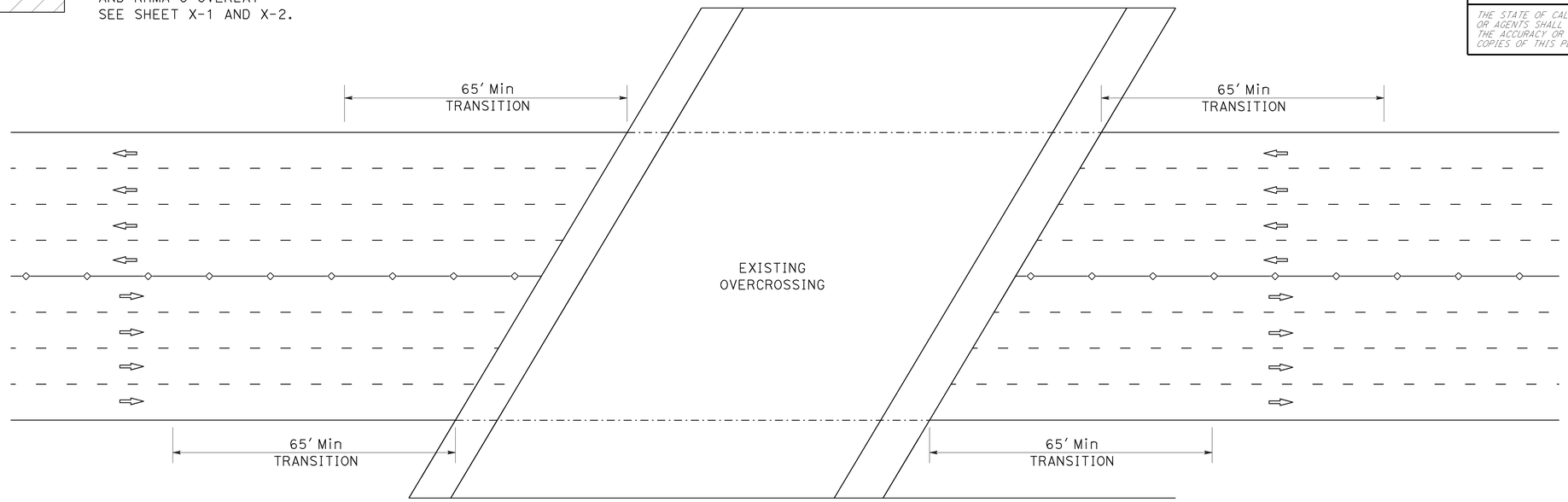

PLAN VIEW

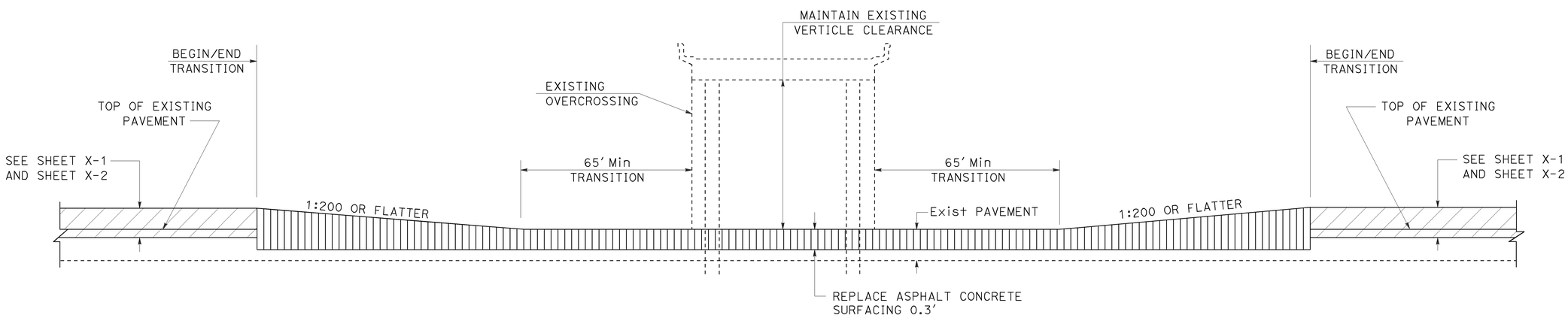

ELEVATION VIEW

OVERCROSSING LOCATIONS

BRIDGE No.	LOCATION	PM	LENGTH (Ft)
56 0523	INDIAN St OC	15.85	51.8
56 0485	NASON STREET OC	18.37	72.5
56 0486	MORENO BEACH Dr OC	19.12	71.9
56 0487	REDLANDS Blvd OC	20.37	71.9
56 0488	THEODORE STREET OC	20.37	71.3
56 0489	GILMAN SPRINGS Rd OC	22.10	67.7

TRANSITION TAPER UNDERNEATH OVERCROSSING/BRIDGE

CONSTRUCTION DETAILS

NO SCALE

C-4

STATE OF CALIFORNIA - DEPARTMENT OF TRANSPORTATION
Caltrans MAINTENACE DESIGN

FUNCTIONAL SUPERVISOR: KUANG CHEN
CALCULATED-DESIGNED BY: WILLIAM AMBROSE
CHECKED BY: KUANG H. CHEN
REVISED BY
DATE REVISED

LAST REVISION 09-09-09
DATE PLOTTED => 11-FEB-2010
TIME PLOTTED => 13:32

Dist	COUNTY	ROUTE	POST MILES TOTAL PROJECT	SHEET No.	TOTAL SHEETS
08	Riv	60	13.3/30.4	8	28

REGISTERED CIVIL ENGINEER 2-11-10 DATE

2-16-10
PLANS APPROVAL DATE

REGISTERED PROFESSIONAL ENGINEER CHRIS HARDIMON No. C66092 Exp. 6/30/10 CIVIL STATE OF CALIFORNIA

THE STATE OF CALIFORNIA OR ITS OFFICERS OR AGENTS SHALL NOT BE RESPONSIBLE FOR THE ACCURACY OR COMPLETENESS OF SCANNED COPIES OF THIS PLAN SHEET.

NOTES:

1. LOCATIONS OF PORTABLE CHANGEABLE MESSAGE SIGN SHALL BE DETERMINED BY THE ENGINEER.
2. EXACT SIGN LOCATION TO BE DETERMINED BY THE ENGINEER.
3. REFER TO STANDARD PLAN T10, T14 AND T15 FOR TRAFFIC CONTROL REQUIREMENT.

STATIONARY MOUNTED CONSTRUCTION AREA SIGNS

SIGN No.	SIGN CODE	PANEL SIZE (In x In)	SIGN MESSAGE	No. OF POST(S) AND SIZE (In x In)	No. OF SIGNS (EA)
A	C40 (CA)	144 x 60	TRAFFIC FINES DOUBLED IN CONSTRUCTION ZONES	2 - 6 x 8	2
B	C11 (CA)	90 x 48	ROAD CONSTRUCTION NEXT 18 MILES	2 - 6 x 6	2
C	W20-1	36 x 36	ROAD WORK AHEAD	1 - 4 x 6	21
D	C14 (CA)	48 x 24	END ROAD WORK	1 - 4 x 6	2
				TOTAL	27

LEGEND

- CONSTRUCTION AREA
- CONSTRUCTION AREA SIGN (ONE POST)
- CONSTRUCTION AREA SIGN (TWO POST)
- (X) CONSTRUCTION AREA SIGN LETTER

PORTABLE CHANGEABLE MESSAGE SIGNS (PCMS)

(EA)
2

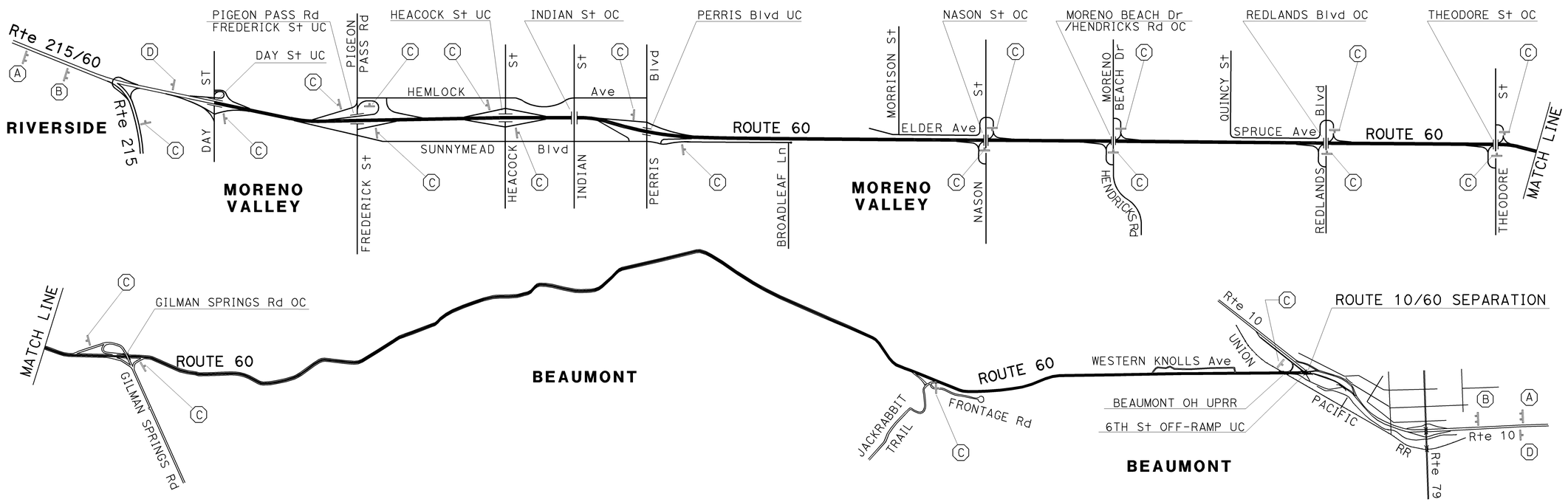

CONSTRUCTION AREA SIGNS

NO SCALE

CS-1

THIS PLAN ACCURATE FOR CONSTRUCTION AREA SIGN WORK ONLY

STATE OF CALIFORNIA - DEPARTMENT OF TRANSPORTATION
Caltrans
TRAFFIC DESIGN

CALCULATED-DESIGNED BY | CHECKED BY
FUNCTIONAL SUPERVISOR: LARRY SARTORI
CHRIS HARDIMON | LARRY SARTORI
REVISED BY | DATE REVISED

LAST REVISION 09-09-09
DATE PLOTTED => 11-FEB-2010
TIME PLOTTED => 13:32

Dist	COUNTY	ROUTE	POST MILES TOTAL PROJECT	SHEET No.	TOTAL SHEETS
08	Riv	60	13.3/30.4	9	28

REGISTERED CIVIL ENGINEER 2-11-10 DATE

2-16-10
PLANS APPROVAL DATE

REGISTERED PROFESSIONAL ENGINEER CHRIS HARDIMON No. C66092 Exp. 6/30/10 CIVIL STATE OF CALIFORNIA

THE STATE OF CALIFORNIA OR ITS OFFICERS OR AGENTS SHALL NOT BE RESPONSIBLE FOR THE ACCURACY OR COMPLETENESS OF SCANNED COPIES OF THIS PLAN SHEET.

LEGEND

- CONSTRUCTION AREA SIGN (ONE POST)
- CONSTRUCTION AREA SIGN (TWO POST)
- (X) CONSTRUCTION AREA SIGN LETTER
- DIRECTION OF DETOUR

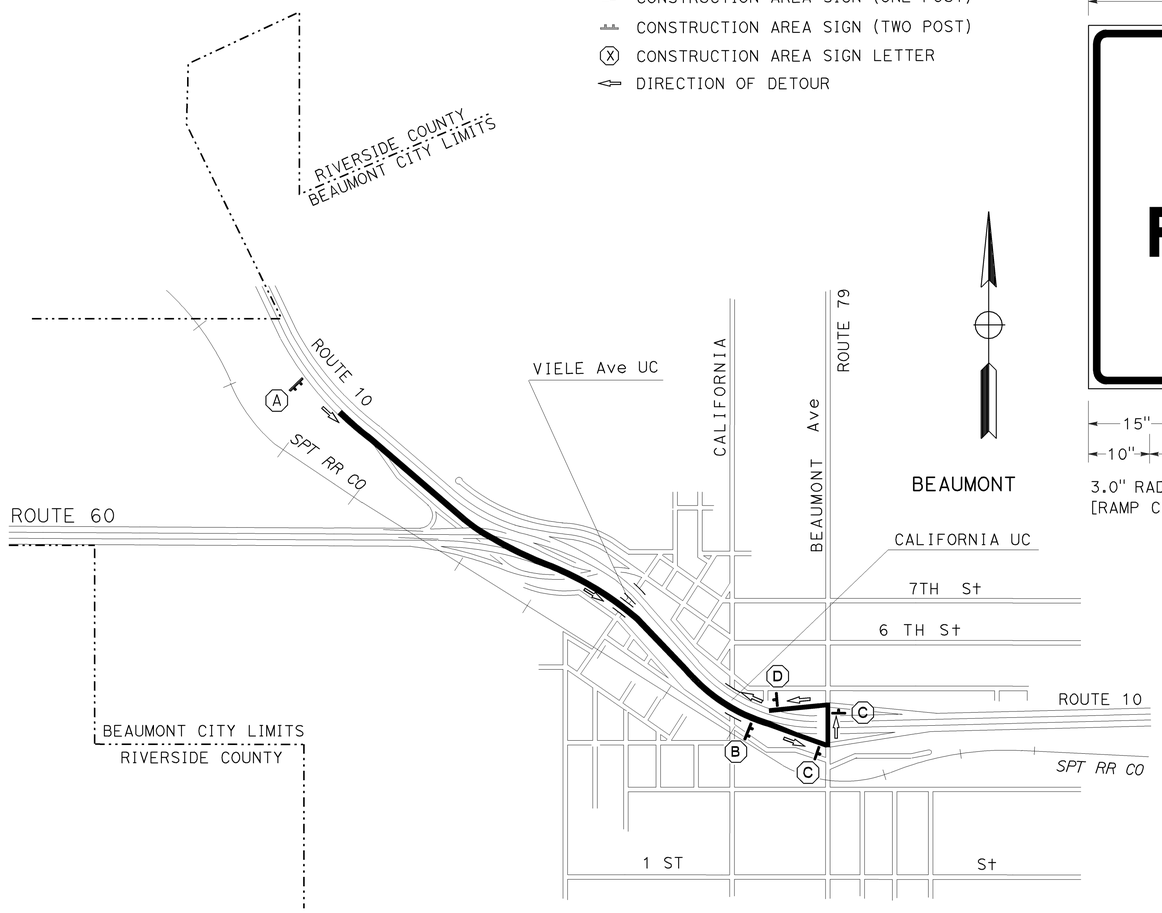

DETOUR DURING CLOSURE OF CONNECTOR FROM ROUTE 10 EAST TO ROUTE 60 WEST

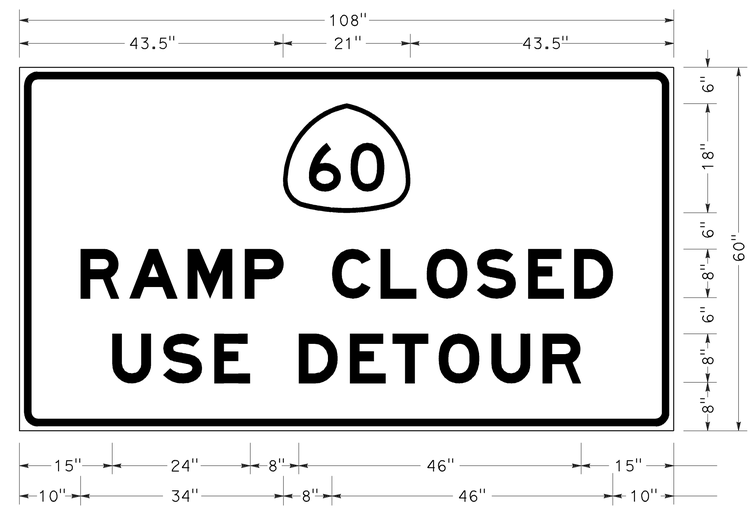

3.0" RADIUS, 1.3" BORDER, 0.8" INDENT, BLACK ON ORANGE;
[RAMP CLOSED] E Mod; [USE DETOUR] E Mod;

SIGN A DETAIL

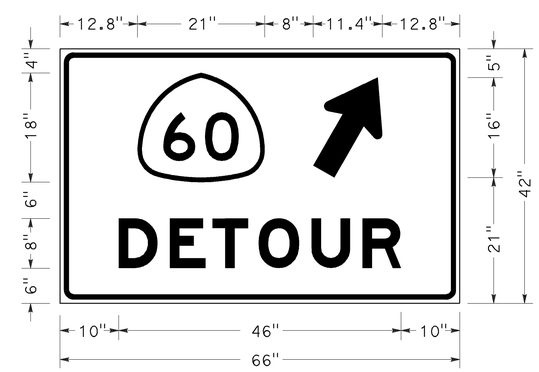

2.3" RADIUS, 0.9" BORDER, 0.6" INDENT, BLACK ON ORANGE;
STANDARD ARROW CUSTOM 17.9" X 10.9" 60{;
[DETOUR] E Mod;

SIGN B DETAIL

CONSTRUCTION AREA SIGNS

SIGN No.	SIGN CODE	PANEL SIZE (In x In)	SIGN MESSAGE	No. OF POST(S) AND SIZE (In x In)	No. OF SIGNS (EA)
A	C-SPECIAL	108 x 60	60 RAMP CLOSED USE DETOUR	2 - 6 x 8	1
B	C-SPECIAL	66 x 42	60 (ARROW) DETOUR	2 - 4 x 6	1
C *	M4-10(LT) G28-2(CA)	48 x 18 24 x 25	DETOUR (LEFT) 60 SHIELD	1 - 4 x 4	2
D *	M4-8A	24 x 18	END DETOUR	1 - 4 x 4	1
				TOTAL	5

* - SIGNS MAY BE PORTABLE

THIS PLAN ACCURATE FOR DETOUR CONSTRUCTION WORK ONLY

DETOUR PLAN

NO SCALE

DE-1

STATE OF CALIFORNIA - DEPARTMENT OF TRANSPORTATION
Caltrans
TRAFFIC DESIGN

FUNCTIONAL SUPERVISOR: LARRY SARTORI
CALCULATED-DESIGNED BY: CHRIS HARDIMON
CHECKED BY: LARRY SARTORI
REVISED BY
DATE REVISED

LAST REVISION 09-09-09
DATE PLOTTED => 11-FEB-2010
TIME PLOTTED => 13:32

Dist	COUNTY	ROUTE	POST MILES TOTAL PROJECT	SHEET No.	TOTAL SHEETS
08	Riv	60	13.3/30.4	10	28

REGISTERED CIVIL ENGINEER 2-11-10 DATE

2-16-10
PLANS APPROVAL DATE

REGISTERED PROFESSIONAL ENGINEER CHRIS HARDIMON No. C66092 Exp. 6/30/10 CIVIL STATE OF CALIFORNIA

THE STATE OF CALIFORNIA OR ITS OFFICERS OR AGENTS SHALL NOT BE RESPONSIBLE FOR THE ACCURACY OR COMPLETENESS OF SCANNED COPIES OF THIS PLAN SHEET.

LEGEND

- CONSTRUCTION AREA SIGN (ONE POST)
- CONSTRUCTION AREA SIGN (TWO POST)
- (X) CONSTRUCTION AREA SIGN LETTER
- DIRECTION OF DETOUR

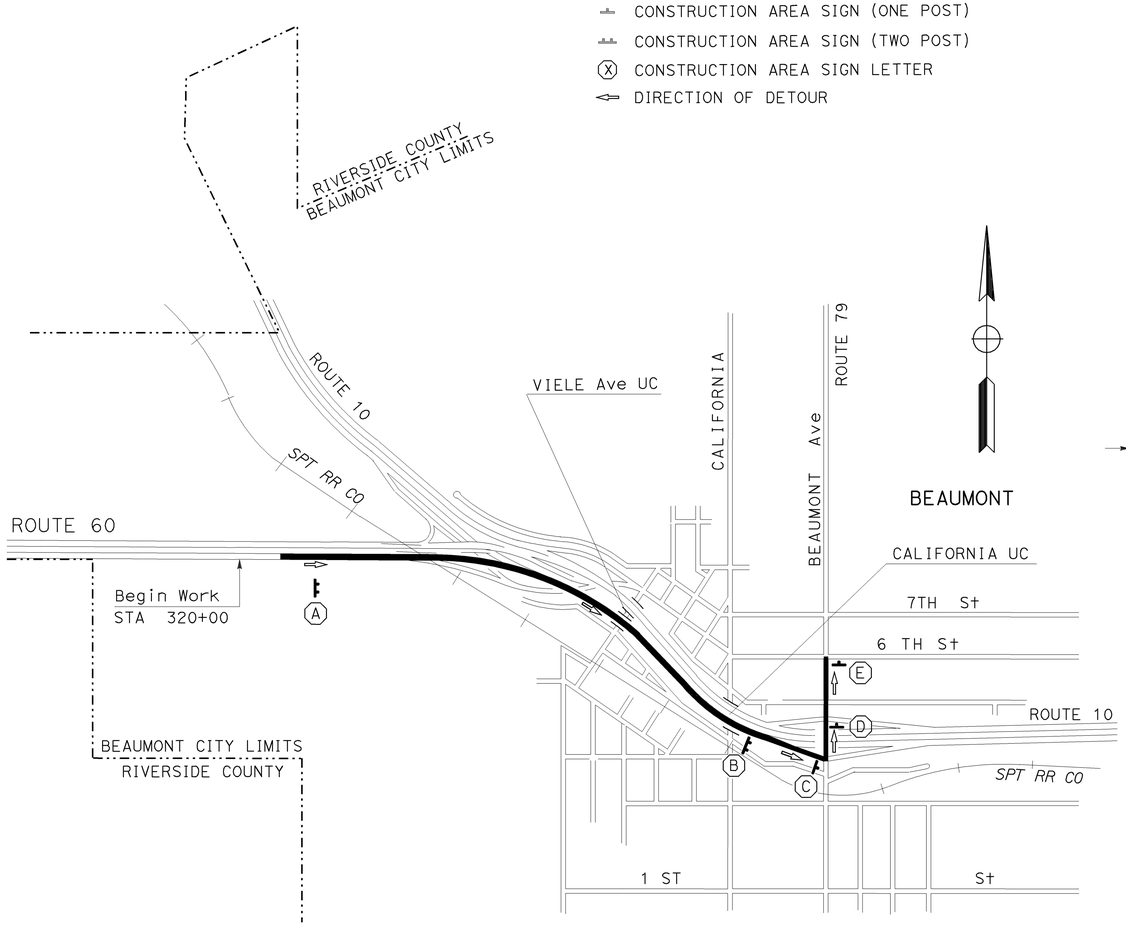

DETOUR DURING CLOSURE OF CONNECTOR FROM ROUTE 60 EAST TO 6TH STREET

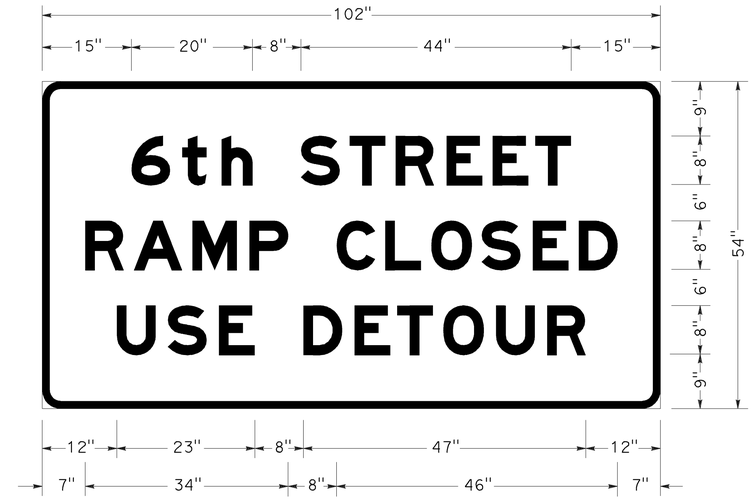

3.0" RADIUS, 1.3" BORDER, BLACK ON ORANGE;
[6th STREET] E Mod; [RAMP CLOSED] E Mod;
[USE DETOUR] E Mod;

SIGN A DETAIL

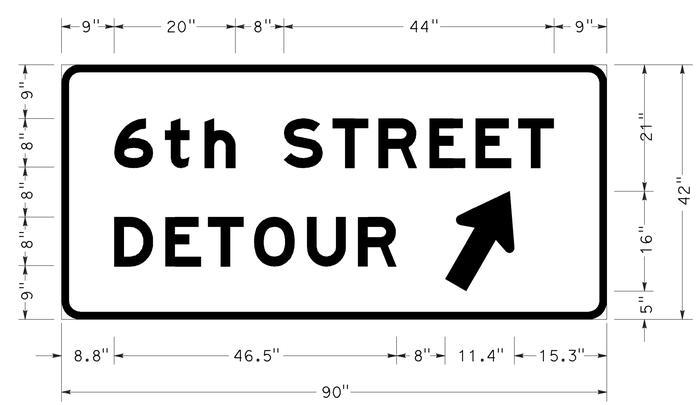

3.0" RADIUS, 1.3" BORDER, BLACK ON ORANGE;
[6th STREET] E Mod; [DETOUR] E Mod;
STANDARD ARROW CUSTOM 17.9" X 10.9" 60{;

SIGN B DETAIL

CONSTRUCTION AREA SIGNS

SIGN No.	SIGN CODE	PANEL SIZE (In x In)	SIGN MESSAGE	No. OF POST(S) AND SIZE (In x In)	No. OF SIGNS (EA)
A	C-SPECIAL	102 x 54	6TH STREET RAMP CLOSED USE DETOUR	2 - 6 x 8	1
B	C-SPECIAL	90 x 42	6TH STREET (ARROW) DETOUR	2 - 4 x 6	1
C *	M4-10(LT) G28-2(CA)	48 x 18 24 x 25	DETOUR (LEFT)	1 - 4 x 4	1
D *	SC3(CA)	48 x 18	DETOUR (ARROW)	1 - 4 x 4	1
E *	M4-8A	24 x 18	END DETOUR	1 - 4 x 4	1
				TOTAL	5

* - SIGNS MAY BE PORTABLE

THIS PLAN ACCURATE FOR DETOUR CONSTRUCTION WORK ONLY

DETOUR PLAN

NO SCALE

DE-2

REVISED BY | DATE REVISED
CHRIS HARDIMON | LARRY SARTORI
CALCULATED-DESIGNED BY | CHECKED BY
FUNCTIONAL SUPERVISOR: LARRY SARTORI
STATE OF CALIFORNIA - DEPARTMENT OF TRANSPORTATION
Caltrans
TRAFFIC DESIGN

LAST REVISION 09-09-09 | DATE PLOTTED => 11-FEB-2010 | TIME PLOTTED => 13:32

Dist	COUNTY	ROUTE	POST MILES TOTAL PROJECT	SHEET No.	TOTAL SHEETS
08	Riv	60	13.3/30.4	11	28

REGISTERED CIVIL ENGINEER 2-11-10 DATE

2-16-10
PLANS APPROVAL DATE

REGISTERED PROFESSIONAL ENGINEER CHRIS HARDIMON No. C66092 Exp. 6/30/10 CIVIL STATE OF CALIFORNIA

THE STATE OF CALIFORNIA OR ITS OFFICERS OR AGENTS SHALL NOT BE RESPONSIBLE FOR THE ACCURACY OR COMPLETENESS OF SCANNED COPIES OF THIS PLAN SHEET.

CONSTRUCTION AREA SIGNS

SIGN No.	SIGN CODE	PANEL SIZE (In x In)	SIGN MESSAGE	No. OF POST(S) AND SIZE (In x In)	No. OF SIGNS (EA)
A	C-SPECIAL	108x 60	GILMAN SPRINGS Rd CLOSED USE DETOUR	2 - 6 x 8	1
B	C-SPECIAL	66 x 42	GILMAN SPRINGS Rd DETOUR (ARROW)	2 - 4 x 6	1
C *	M4-10(RT)	48 x 18	DETOUR (RIGHT)	1 - 4 x 4	2
D *	SC3(CA)	48 x 18	DETOUR (ARROW)	1 - 4 x 4	2
E *	M4-10(LT)	48 x 18	DETOUR (LEFT)	1 - 4 x 4	1
F *	M4-8A	24 x 18	END DETOUR	1 - 4 x 4	1
				TOTAL	8

* - SIGNS MAY BE PORTABLE

LEGEND

- CONSTRUCTION AREA SIGN (ONE POST)
- CONSTRUCTION AREA SIGN (TWO POST)
- (X) CONSTRUCTION AREA SIGN LETTER
- DIRECTION OF DETOUR

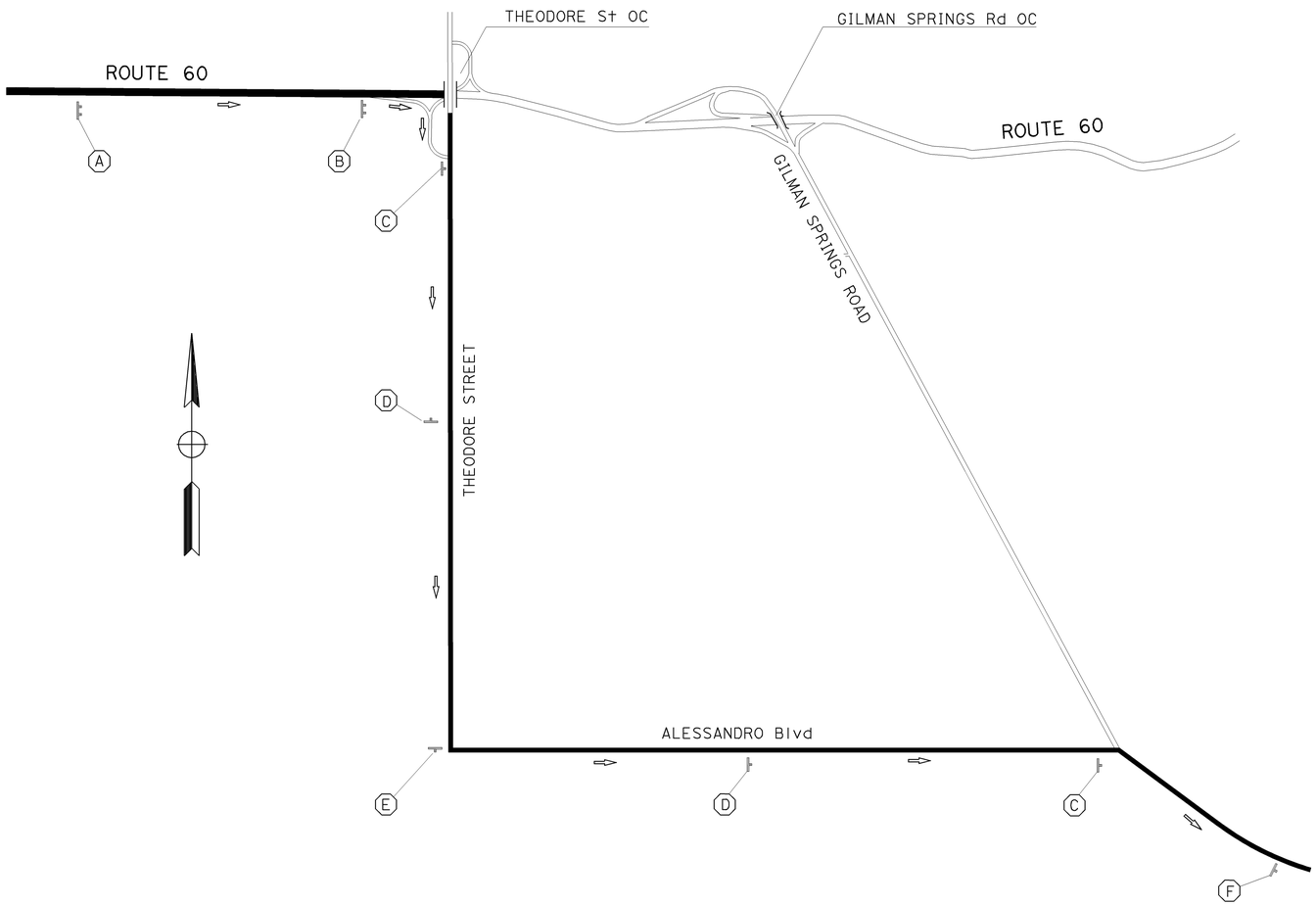

DETOUR DURING CLOSURE OF GILLMAN SPRINGS EB EXIT RAMP

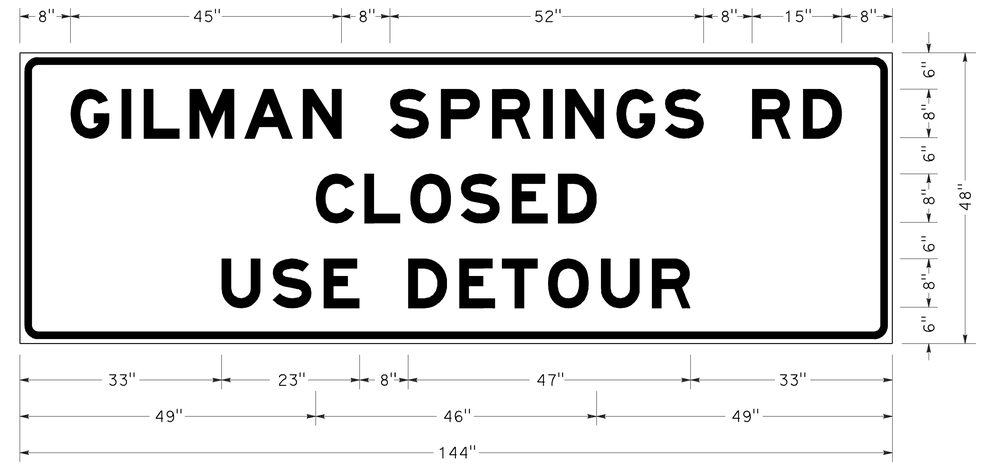

3.0" RADIUS, 1.3" BORDER, 0.8" INDENT, BLACK ON ORANGE;
[GILMAN SPRINGS RD] E Mod; [CLOSED] E Mod; [USE DETOUR] E Mod;

SIGN A DETAIL

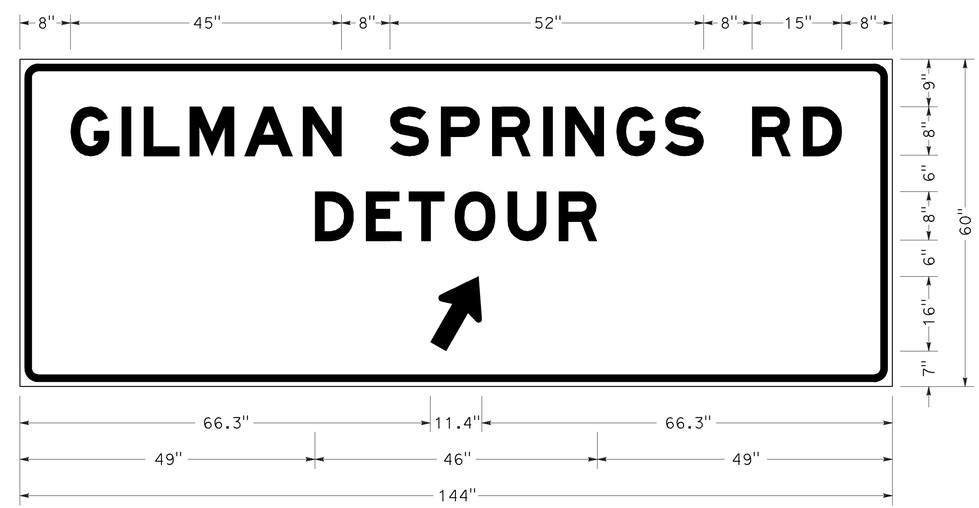

3.0" RADIUS, 1.3" BORDER, 0.8" INDENT, BLACK ON ORANGE;
[GILMAN SPRINGS RD] E Mod; [DETOUR] E Mod; STANDARD ARROW CUSTOM 13.4" X 8.1" 60{;

SIGN B DETAIL

THIS PLAN ACCURATE FOR DETOUR CONSTRUCTION WORK ONLY

DETOUR PLAN

NO SCALE

DE-3

STATE OF CALIFORNIA - DEPARTMENT OF TRANSPORTATION
Caltrans
TRAFFIC DESIGN

FUNCTIONAL SUPERVISOR: LARRY SARTORI
CALCULATED-DESIGNED BY: CHRIS HARDIMON
CHECKED BY: LARRY SARTORI
REVISED BY
DATE REVISED

LAST REVISION 09-09-09
DATE PLOTTED => 11-FEB-2010
TIME PLOTTED => 13:32

Dist	COUNTY	ROUTE	POST MILES TOTAL PROJECT	SHEET No.	TOTAL SHEETS
08	Riv	60	13.3/30.4	12	28

REGISTERED CIVIL ENGINEER 2-11-10 DATE

2-16-10
PLANS APPROVAL DATE

REGISTERED PROFESSIONAL ENGINEER CHRIS HARDIMON No. C66092 Exp. 6/30/10 CIVIL STATE OF CALIFORNIA

THE STATE OF CALIFORNIA OR ITS OFFICERS OR AGENTS SHALL NOT BE RESPONSIBLE FOR THE ACCURACY OR COMPLETENESS OF SCANNED COPIES OF THIS PLAN SHEET.

CONSTRUCTION AREA SIGNS

SIGN No.	SIGN CODE	PANEL SIZE (In x In)	SIGN MESSAGE	No. OF POST(S) AND SIZE (In x In)	No. OF SIGNS (EA)
A	C-SPECIAL	108 x 60	60 RAMP CLOSED USE DETOUR	2 - 6 x 8	1
B	C-SPECIAL	66 x 42	60 (ARROW) DETOUR	2 - 4 x 6	1
C *	SC3(CA) G28-2(CA)	48 x 18 24 x 25	DETOUR (ARROW) 60 SHIELD	1 - 4 x 4	2
D *	M4-10(RT) G28-2(CA)	48 x 18 24 x 25	DETOUR (RIGHT) 60 SHIELD	1 - 4 x 4	1
E *	M4-8A	24 x 18	END DETOUR	1 - 4 x 4	1
				TOTAL	6

* - SIGNS MAY BE PORTABLE

LEGEND

- CONSTRUCTION AREA SIGN (ONE POST)
- CONSTRUCTION AREA SIGN (TWO POST)
- (X) CONSTRUCTION AREA SIGN LETTER
- DIRECTION OF DETOUR

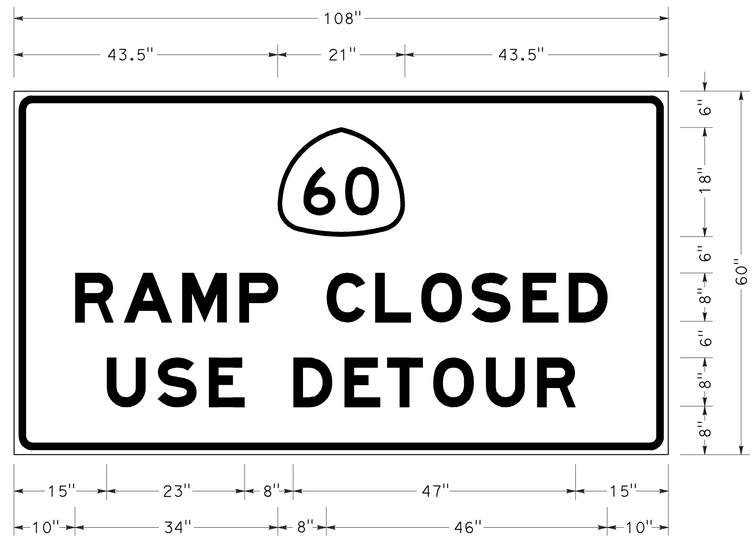

3.0" RADIUS, 1.3" BORDER, 0.8" INDENT, BLACK ON ORANGE;
[RAMP CLOSED] E Mod; [USE DETOUR] E Mod;

SIGN A DETAIL

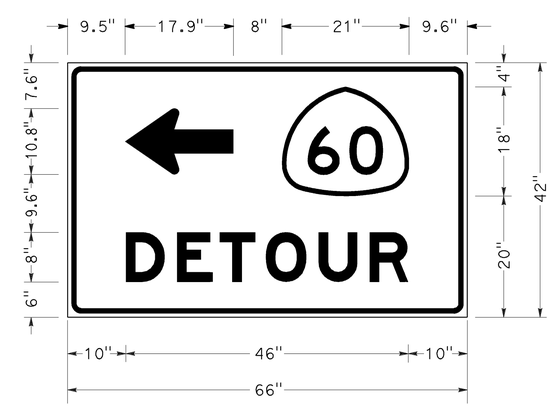

2.3" RADIUS, 0.9" BORDER, 0.6" INDENT, BLACK ON ORANGE;
STANDARD ARROW CUSTOM 17.9" X 10.9" 180{;
[DETOUR] E Mod;

SIGN B DETAIL

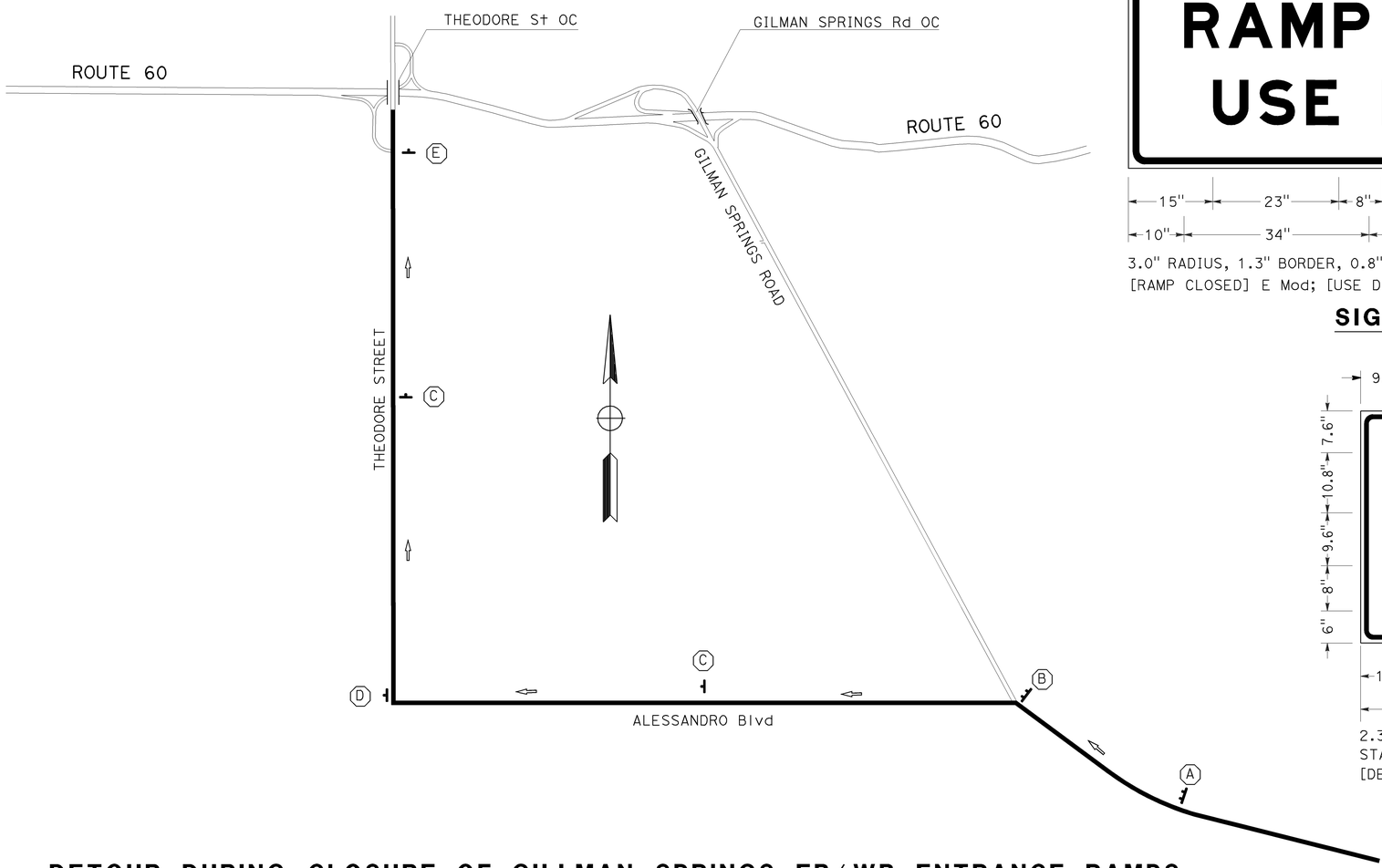

DETOUR DURING CLOSURE OF GILLMAN SPRINGS EB/WB ENTRANCE RAMPS

THIS PLAN ACCURATE FOR DETOUR CONSTRUCTION WORK ONLY

DETOUR PLAN

NO SCALE

DE-4

STATE OF CALIFORNIA - DEPARTMENT OF TRANSPORTATION
Caltrans
TRAFFIC DESIGN

FUNCTIONAL SUPERVISOR: LARRY SARTORI
CALCULATED-DESIGNED BY: CHRIS HARDIMON
CHECKED BY: LARRY SARTORI
REVISED BY
DATE REVISED

LAST REVISION 09-09-09
DATE PLOTTED => 11-FEB-2010
TIME PLOTTED => 13:32

Dist	COUNTY	ROUTE	POST MILES TOTAL PROJECT	SHEET No.	TOTAL SHEETS
08	Riv	60	13.3/30.4	13	28

REGISTERED CIVIL ENGINEER 2-11-10 DATE

2-16-10
PLANS APPROVAL DATE

REGISTERED PROFESSIONAL ENGINEER CHRIS HARDIMON No. C66092 Exp. 6/30/10 CIVIL STATE OF CALIFORNIA

THE STATE OF CALIFORNIA OR ITS OFFICERS OR AGENTS SHALL NOT BE RESPONSIBLE FOR THE ACCURACY OR COMPLETENESS OF SCANNED COPIES OF THIS PLAN SHEET.

CONSTRUCTION AREA SIGNS

SIGN No.	SIGN CODE	PANEL SIZE (In x In)	SIGN MESSAGE	No. OF POST(S) AND SIZE (In x In)	No. OF SIGNS (EA)
A	C-SPECIAL	108 x 60	GILMAN SPRINGS Rd CLOSED USE DETOUR	2 - 6 x 8	1
B	C-SPECIAL	66 x 42	GILMAN SPRINGS Rd DETOUR (ARROW)	2 - 4 x 6	1
C *	M4-10(LT)	48 x 18	DETOUR (LEFT)	1 - 4 x 4	2
D *	SC3(CA)	48 x 18	DETOUR (ARROW)	1 - 4 x 4	2
E *	M4-10(RT)	48 x 18	DETOUR (RIGHT)	1 - 4 x 4	1
F *	M4-8A	24 x 18	END DETOUR	1 - 4 x 4	1
				TOTAL	8

* - SIGNS MAY BE PORTABLE

LEGEND

- CONSTRUCTION AREA SIGN (ONE POST)
- CONSTRUCTION AREA SIGN (TWO POST)
- (X) CONSTRUCTION AREA SIGN LETTER
- DIRECTION OF DETOUR

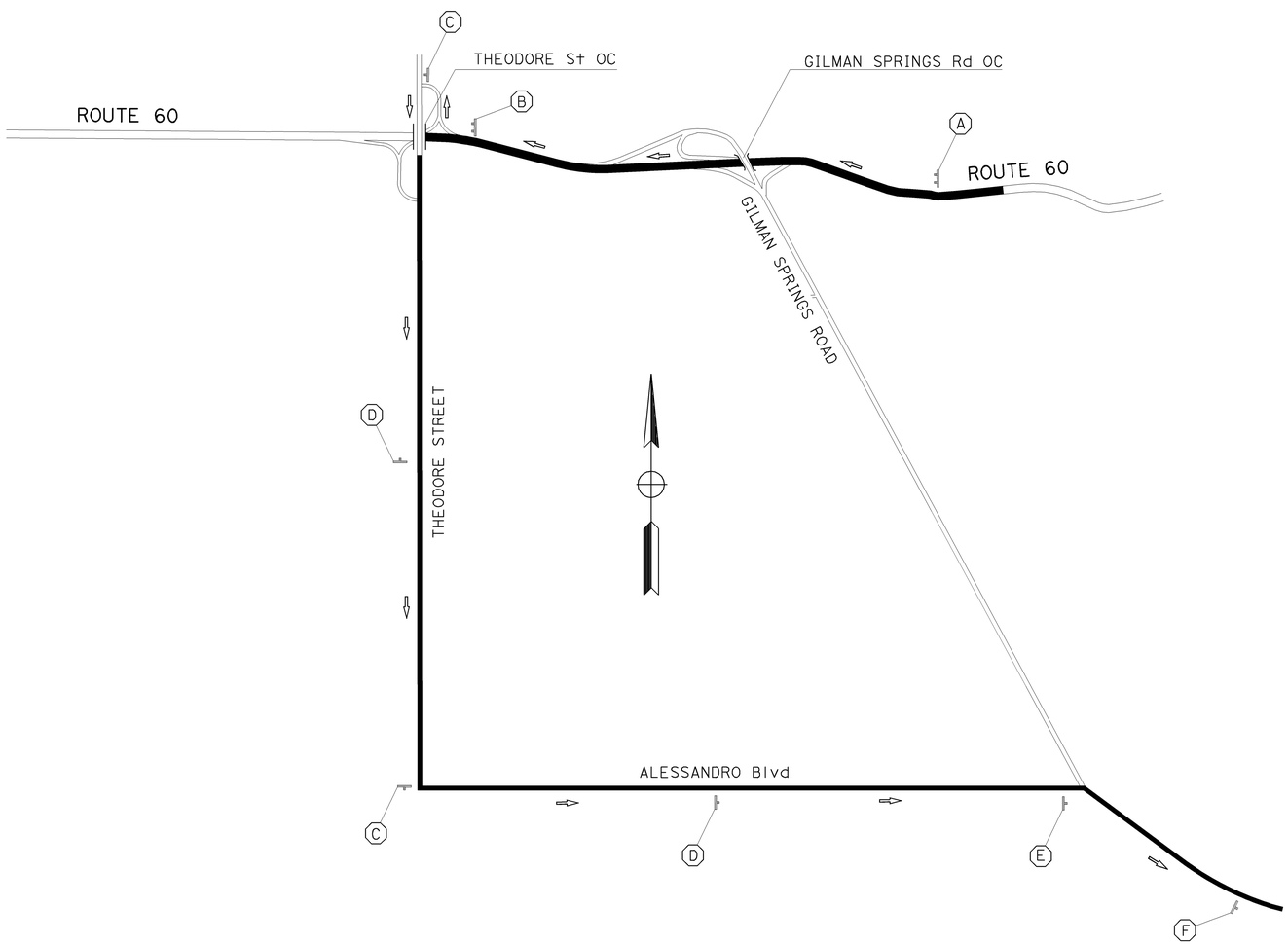

DETOUR DURING CLOSURE OF GILLMAN SPRINGS WB EXIT RAMP

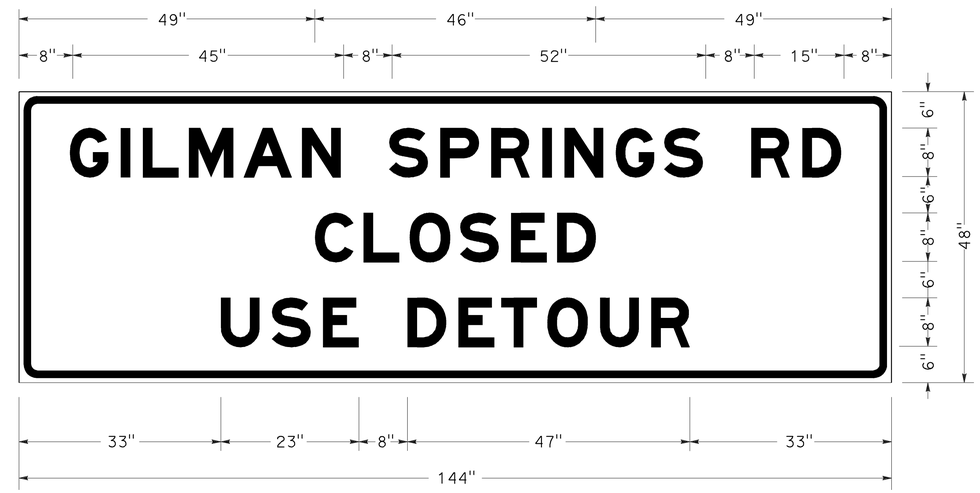

3.0" RADIUS, 1.3" BORDER, 0.8" INDENT, BLACK ON ORANGE;
[GILMAN SPRINGS RD] E Mod; [CLOSED] E Mod; [USE DETOUR] E Mod;

SIGN A DETAIL

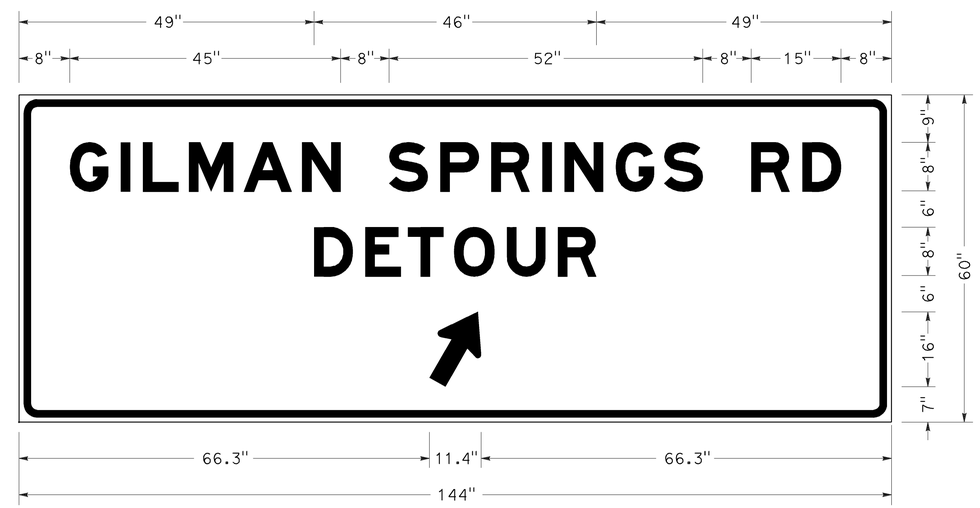

3.0" RADIUS, 1.3" BORDER, 0.8" INDENT, BLACK ON ORANGE;
[GILMAN SPRINGS RD] E Mod; [DETOUR] E Mod; STANDARD ARROW CUSTOM 13.4" X 8.1" 60{;

SIGN B DETAIL

THIS PLAN ACCURATE FOR DETOUR CONSTRUCTION WORK ONLY

DETOUR PLAN

NO SCALE

DE-5

STATE OF CALIFORNIA - DEPARTMENT OF TRANSPORTATION
Caltrans
TRAFFIC DESIGN

FUNCTIONAL SUPERVISOR: LARRY SARTORI
CALCULATED-DESIGNED BY: CHRIS HARDIMON
CHECKED BY: LARRY SARTORI
REVISED BY
DATE REVISED

LAST REVISION: DATE PLOTTED => 11-FEB-2010 TIME PLOTTED => 13:32
09-09-09

Dist	COUNTY	ROUTE	POST MILES TOTAL PROJECT	SHEET No.	TOTAL SHEETS
08	Riv	60	13.3/30.4	14	28

REGISTERED CIVIL ENGINEER 2-11-10 DATE

2-16-10
PLANS APPROVAL DATE

REGISTERED PROFESSIONAL ENGINEER CHRIS HARDIMON No. C66092 Exp. 6/30/10 CIVIL STATE OF CALIFORNIA

THE STATE OF CALIFORNIA OR ITS OFFICERS OR AGENTS SHALL NOT BE RESPONSIBLE FOR THE ACCURACY OR COMPLETENESS OF SCANNED COPIES OF THIS PLAN SHEET.

NOTES:

1. CONTRACTOR TO REMOVE THE EXISTING PAVEMENT MARKINGS ON THE OUTSIDE SHOULDERS WITHIN THE LIMITS OF THE PROJECT AND REPLACE IN KIND.
2. FOR DETAIL 13M AND 14M, INSTALL THE PAVEMENT MARKERS BEFORE APPLYING THE TRAFFIC STRIPE

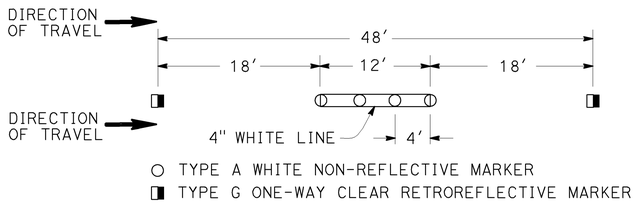

DETAIL 13M

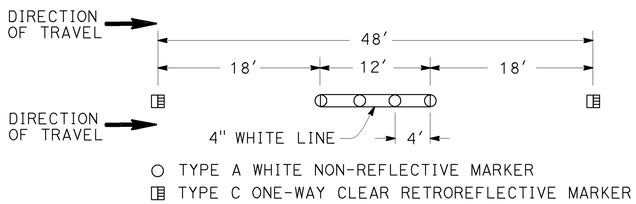

DETAIL 14M

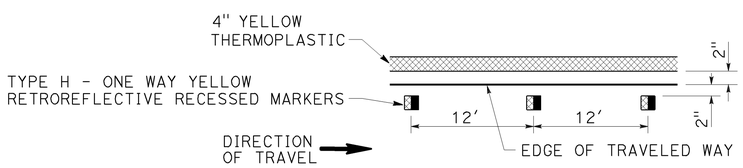

DETAIL 25A MODIFIED

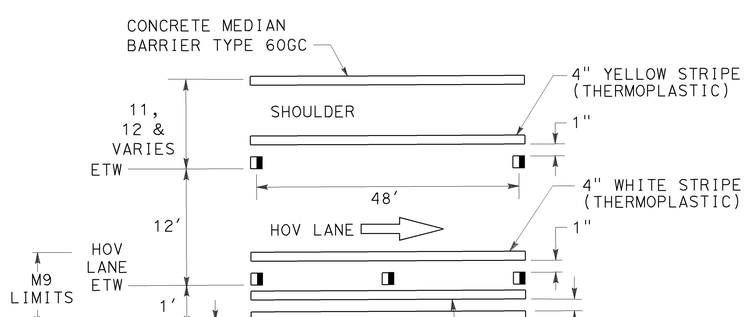

DETAIL M-9

BUFFER STRIPING DETAIL

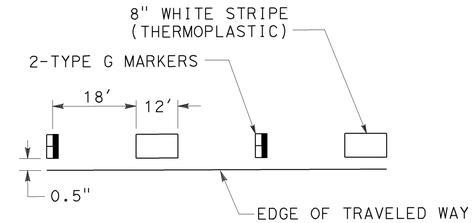

DETAIL M-10

INGRESS/EGRESS STRIPING DETAIL

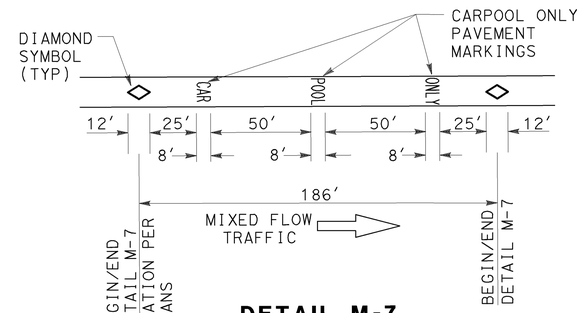

DETAIL M-7

HOV INGRESS/EGRESS PAVEMENT MARKING DETAIL

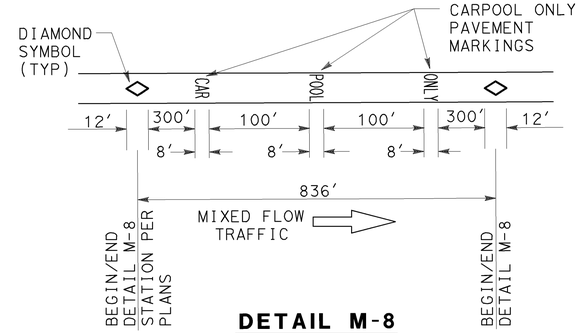

DETAIL M-8

HOV LANE PAVEMENT MARKING DETAIL

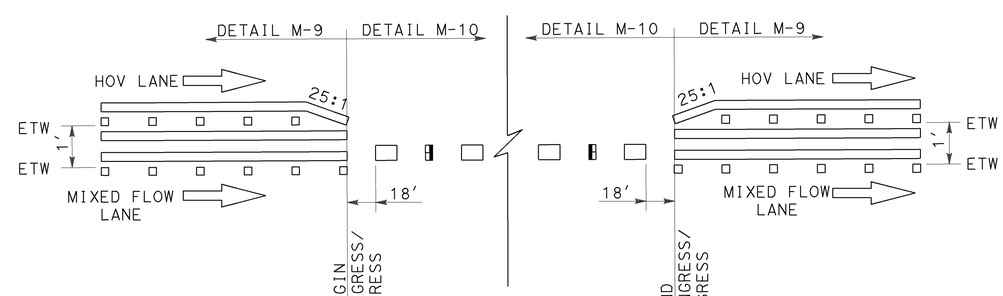

TRANSITION DETAIL

HOV STRIPING TRANSITION FROM M-9 TO M-10 DETAIL

PAVEMENT DELINEATION PLAN

NO SCALE

PD-1

THIS PLAN ACCURATE FOR PAVEMENT DELINEATION WORK ONLY

STATE OF CALIFORNIA - DEPARTMENT OF TRANSPORTATION
Caltrans® TRAFFIC DESIGN

FUNCTIONAL SUPERVISOR: LARRY SARTORI
CALCULATED-DESIGNED BY: CHRIS HARDIMON
CHECKED BY: LARRY SARTORI
REVISED BY
DATE REVISED

LAST REVISION 09-09-09
DATE PLOTTED => 11-FEB-2010
TIME PLOTTED => 13:32

Dist	COUNTY	ROUTE	POST MILES TOTAL PROJECT	SHEET No.	TOTAL SHEETS
08	Riv	60	13.3/30.4	15	28

REGISTERED CIVIL ENGINEER 2-11-10 DATE

2-16-10
PLANS APPROVAL DATE

REGISTERED PROFESSIONAL ENGINEER CHRIS HARDIMON No. C66092 Exp. 6/30/10 CIVIL STATE OF CALIFORNIA

THE STATE OF CALIFORNIA OR ITS OFFICERS OR AGENTS SHALL NOT BE RESPONSIBLE FOR THE ACCURACY OR COMPLETENESS OF SCANNED COPIES OF THIS PLAN SHEET.

NOTES:

1. CONTRACTOR TO REMOVE THE EXISTING PAVEMENT MARKINGS ON THE OUTSIDE SHOULDERS WITHIN THE LIMITS OF THE PROJECT AND REPLACE IN KIND.
2. FOR DETAIL 13M AND 14M, INSTALL THE PAVEMENT MARKERS BEFORE APPLYING THE TRAFFIC STRIPE.
3. PAVEMENT DELINEATION QUANTITIES ARE APPROXIMATE. ALL STRIPING, MARKINGS AND MARKERS SHALL BE REPLACED IN KIND.

PAVEMENT DELINEATION QUANTITIES

LOCATION	DETAIL No. OR PAVEMENT MARKING	PAVEMENT MARKER						THERMO-PLASTIC TRAFFIC STRIPE		THERMOPLASTIC TRAFFIC STRIPE (SPRAYABLE)			THERMOPLASTIC PAVEMENT MARKING
		NON-REFLECTIVE	RETRO-REFLECTIVE			RETRO-REFLECTIVE RECESSED							
		TYPE A	TYPE C	TYPE G	TYPE H	TYPE G	TYPE H	4 INCH YELLOW	4 INCH WHITE	4 INCH YELLOW	4 INCH WHITE	8 INCH WHITE	
		EA	EA			EA		F†		F†			SQFT
EB/WB PM 13.3 TO 20.4	M9	-	-	-	3610	-	-	-	-	43275	43275	-	-
EB/WB PM 13.3 TO 20.4	M10	-	-	540	-	-	-	-	-	-	-	12910	-
EB/WB PM 13.3 TO 20.4	8	-	-	-	-	-	-	-	-	-	4190	-	-
PM 13.3 TO 22.2 & PM 26.5 TO 30.4	13M	11446	-	2868	-	-	-	-	-	-	137356	-	-
EB/WB PM 13.3 TO 30.4	14M	414	106	-	-	-	-	-	-	-	4961	-	-
PM 13.3 TO 22.2 & PM 26.5 TO 30.4	25	-	-	-	2830	-	-	-	-	135642	-	-	-
EB/WB PM 13.3 TO 30.4	27B	-	-	-	-	-	-	-	-	-	185548	-	-
EB/WB PM 13.3 TO 30.4	36	-	-	526	-	-	-	-	-	-	-	12553	-
EB/WB PM 13.3 TO 20.4	37	-	22	484	-	-	-	-	-	-	-	7169	-
EB/WB PM 13.3 TO 20.4	37A	1074	14	274	-	-	-	-	-	-	-	-	-
EB/WB PM 13.3 TO 30.4	38	-	-	234	-	-	-	-	-	-	-	5480	-
EB/WB PM 13.3 TO 20.4	38B	-	-	102	-	-	-	-	-	-	-	1141	-
EB PM 13.3 TO 20.4	38C	124	-	26	-	-	-	-	-	-	-	-	-
EB/WB PM 22.2 TO 26.5	25A MODIFIED	-	-	-	-	-	3786	45408	-	-	-	-	-
EB/WB PM 22.2 TO 26.5	12	-	-	-	-	948	-	-	45408	-	-	-	-
EB PM 29.9	2-TYPE IV	-	-	-	-	-	-	-	-	-	-	-	30
WB PM 27.9 & 29.9	4-TYPE IV	-	-	-	-	-	-	-	-	-	-	-	60
EB PM 27.9, 29.4 & 29.9	12-TYPE V	-	-	-	-	-	-	-	-	-	-	-	396
WB PM 27.9, 29.4 & 29.9	12-TYPE V	-	-	-	-	-	-	-	-	-	-	-	396
EB PM 13.3 & 14.3	6-TYPE VI	-	-	-	-	-	-	-	-	-	-	-	252
WB PM 27.9	3-TYPE VI	-	-	-	-	-	-	-	-	-	-	-	126
EB PM 13.3, 14.3, 14.8, 15.5, 16.2, 17.7, 18.3, 18.9	34-DIAMOND	-	-	-	-	-	-	-	-	-	-	-	374
EB PM 13.3, 14.3, 14.8, 15.5, 16.2, 17.7, 18.3, 18.9	17-CAR	-	-	-	-	-	-	-	-	-	-	-	289
EB PM 13.3, 14.3, 14.8, 15.5, 16.2, 17.7, 18.3, 18.9	17-POOL	-	-	-	-	-	-	-	-	-	-	-	391
EB PM 13.3, 14.3, 14.8, 15.5, 16.2, 17.7, 18.3, 18.9	17-ONLY	-	-	-	-	-	-	-	-	-	-	-	374
WB PM 13.6, 14.3, 14.8, 15.5, 17.0, 17.7, 18.3, 18.9, 19.5, 20.1	32-DIAMOND	-	-	-	-	-	-	-	-	-	-	-	352
WB PM 13.6, 14.3, 14.8, 15.5, 17.0, 17.7, 18.3, 18.9, 19.5, 20.1	16-CAR	-	-	-	-	-	-	-	-	-	-	-	272
WB PM 13.6, 14.3, 14.8, 15.5, 17.0, 17.7, 18.3, 18.9, 19.5, 20.1	16-POOL	-	-	-	-	-	-	-	-	-	-	-	368
WB PM 13.6, 14.3, 14.8, 15.5, 17.0, 17.7, 18.3, 18.9, 19.5, 20.1	16-ONLY	-	-	-	-	-	-	-	-	-	-	-	352
-	-	-	-	-	-	-	-	-	-	-	-	-	-
SUBTOTAL		-	142	5054	6440	948	3786	45408	45408	178917	375330	39253	-
TOTAL		13058	11636			4734		90816		593500			4032

REVISED BY | DATE REVISED

CHRIS HARDIMON | LARRY SARTORI

CALCULATED-DESIGNED BY | CHECKED BY

FUNCTIONAL SUPERVISOR: LARRY SARTORI

STATE OF CALIFORNIA - DEPARTMENT OF TRANSPORTATION

Caltrans® TRAFFIC DESIGN

PAVEMENT DELINEATION QUANTITIES

PDQ-1

LAST REVISION 09-09-09 | DATE PLOTTED => 11-FEB-2010 | TIME PLOTTED => 13:32

Dist	COUNTY	ROUTE	POST MILES TOTAL PROJECT	SHEET No.	TOTAL SHEETS
08	Riv	60	13.3/30.4	16	28

REGISTERED CIVIL ENGINEER 2-11-10 DATE

2-16-10
PLANS APPROVAL DATE

REGISTERED PROFESSIONAL ENGINEER WILLIAM A. AMBROSE No. C72098 Exp. 6/30/10 CIVIL STATE OF CALIFORNIA

THE STATE OF CALIFORNIA OR ITS OFFICERS OR AGENTS SHALL NOT BE RESPONSIBLE FOR THE ACCURACY OR COMPLETENESS OF SCANNED COPIES OF THIS PLAN SHEET.

PAVEMENT QUANTITIES

DESCRIPTION	PM	LENGTH (N)	WIDTH (N)	No. LANES (N)	DEPTH (N)	RUBBERIZED HOT MIX ASPHALT (OPEN GRADED)	COLD PLANE AC PAVEMENT	TACK COAT	ASPHALTIC EMULSION (FOG SEAL COAT)
		(Ft)	(Ft)	(Qty)	(Ft)	(TON)	(SQYD)	(TON)	(TON)
EASTBOUND SHOULDERS	13.3/30.4	90,288	VARIES						44.1
WESTBOUND SHOULDERS	13.3/30.4	90,288	VARIES						47.9
EASTBOUND LANES	13.3/13.5	1011	12.0	4	0.04	359	5,504	2.0	
EASTBOUND LANES	13.5/13.9	2112	12.0	3	0.04	567	8,683	3.0	
EASTBOUND LANES	13.9/19.6	29953	12.0	3	0.04	7,982	122,331	41.0	
EASTBOUND LANES	19.6/20.2	3168	12.0	3	0.04	850	13,024	4.0	
EASTBOUND LANES	20.2/21.4	6336	12.0	2	0.04	1,122	17,202	6.0	
EASTBOUND LANES	21.4/22.1	3696	12.0	2	0.06	658	10,079	3.0	
EASTBOUND LANES	22.1/25.3	16896	12.0	2	0.06	3,062	46,933	16.0	
EASTBOUND LANES	25.3/25.6	1584	12.0	2	0.06	287	4,400	1.0	
EASTBOUND LANES	25.6/27.8	11616	12.0	2	0.06	2,105	32,267	11.0	
EASTBOUND LANES	27.8/28.0	1056	12.0	2	0.06	219	3,356	1.0	
EASTBOUND LANES	28.0/29.8	9485	12.0	2	0.06	1,719	26,347	9.0	
EASTBOUND LANES	29.8/30.0	1056	12.0	2	0.06	219	3,356	1.0	
EASTBOUND LANES	30.0/30.4	2112	12.0	2	0.06	383	5,867	2.0	
WESTBOUND LANES	13.3/13.6	1539	12.0	3	0.06	413	6,327	2.0	
WESTBOUND LANES	13.6/14.1	2640	12.0	4	0.06	938	14,373	5.0	
WESTBOUND LANES	14.1/20.1	31537	12.0	3	0.06	8,354	128,037	43.0	
WESTBOUND LANES	20.1/20.3	1056	12.0	2	0.06	191	2,933	1.0	
WESTBOUND LANES	20.3/21.4	5808	12.0	2	0.06	1,027	15,736	5.0	
WESTBOUND LANES	21.4/22.1	3696	12.0	2	0.06	658	10,079	3.0	
WESTBOUND LANES	22.1/25.3	16896	12.0	2	0.06	3,062	46,933	16.0	
WESTBOUND LANES	25.3/25.6	1584	12.0	2	0.06	287	4,400	1.0	
WESTBOUND LANES	25.6/27.8	11616	12.0	2	0.06	2,105	32,267	11.0	
WESTBOUND LANES	27.8/28.0	1056	12.0	2	0.06	219	3,356	1.0	
WESTBOUND LANES	28.0/29.8	9485	12.0	2	0.06	1,719	26,347	9.0	
WESTBOUND LANES	29.8/30.0	1056	12.0	2	0.06	219	3,356	1.0	
WESTBOUND LANES	30.0/30.4	2112	12.0	2	0.06	383	5,867	2.0	
SUBTOTAL - (THIS SHEET)						39,107	599,360	200.0	92.0

(N) - NOT A SEPARATE PAY ITEM; FOR INFORMATION ONLY.

SUMMARY OF QUANTITIES

Q-1

REVISED BY | DATE REVISED
WILLIAM AMBROSE | KUANG H. CHEN
CALCULATED-DESIGNED BY | CHECKED BY
FUNCTIONAL SUPERVISOR | KUANG CHEN
STATE OF CALIFORNIA - DEPARTMENT OF TRANSPORTATION
Caltrans MAINTENACE DESIGN

LAST REVISION 09-09-09 | DATE PLOTTED => 11-FEB-2010 | TIME PLOTTED => 13:32

Dist	COUNTY	ROUTE	POST MILES TOTAL PROJECT	SHEET No.	TOTAL SHEETS
08	Riv	60	13.3/30.4	17	28

REGISTERED CIVIL ENGINEER 2-11-10 DATE

2-16-10
PLANS APPROVAL DATE

REGISTERED PROFESSIONAL ENGINEER WILLIAM A. AMBROSE No. C72098 Exp. 6/30/10 CIVIL STATE OF CALIFORNIA

THE STATE OF CALIFORNIA OR ITS OFFICERS OR AGENTS SHALL NOT BE RESPONSIBLE FOR THE ACCURACY OR COMPLETENESS OF SCANNED COPIES OF THIS PLAN SHEET.

BRIDGE APPROACH/DEPARTURE

LOCATION			DIMENSIONS (N)	REPLACE ASPHALT CONCRETE SURFACING
BRIDGE	POSTMILE	DIRECTION	L' x W' x D'	CY
DAY STREET UC	13.31	EASTBOUND	2X 80 x 25 x 0.40	59.3
DAY STREET UC	13.31	WESTBOUND	2X 80 x 25 x 0.40	59.3
PIGEON PASS ROAD/ FREDERICK St UC	14.32	EASTBOUND	2X 80 x 25 x 0.40	59.3
PIGEON PASS ROAD/ FREDERICK St UC	14.32	WESTBOUND	2X 80 x 25 x 0.40	59.3
HEACOCK St UC	15.34	EASTBOUND	2X 80 x 25 x 0.40	59.3
HEACOCK St UC	15.34	WESTBOUND	2X 80 x 25 x 0.40	59.3
PERRIS Blvd UC	16.35	EASTBOUND	2X 80 x 25 x 0.40	59.3
PERRIS Blvd UC	16.35	WESTBOUND	2X 80 x 25 x 0.40	59.3
MORENO DITCH	18.60	EASTBOUND	2X 80 x 25 x 0.40	59.3
MORENO DITCH	18.60	WESTBOUND	2X 80 x 25 x 0.40	59.3
SAN TIMOTEO CREEK	28.34	EASTBOUND	2X 80 x 25 x 0.40	59.3
SAN TIMOTEO CREEK	28.34	WESTBOUND	2X 80 x 25 x 0.40	59.3
SUBTOTAL				711.6

EXACT LOCATIONS AND DIMENSIONS OF REPLACE AC SURFACING SHALL BE DETERMINED BY THE ENGINEER.
(N) NOT A SEPARATE ITEM; FOR INFORMATION ONLY.

TEMPORARY WATER POLLUTION CONTROL

TEMPORARY FIBER ROLL	LF
TOTAL	1000

PAVEMENT BELOW OVERCROSSINGS

DESCRIPTION	BRIDGE No.	LOCATION	PM	LENGTH (N)	WIDTH (N)	No. LANES (N)	DEPTH (N)	DIMENSIONS (N)	REPLACE ASPHALT CONCRETE SURFACING	TACK COAT	ASPHALTIC EMULSION (FOG SEAL COAT)
			(Mi)	(Ft)	(Ft)	(Qty)	(Ft)	L' x W' x D'	CY	(TON)	(TON)
EASTBOUND LANES	56 0523	INDIAN St OC	15.85	51.8	37	3	0.3	51.8 x 37 x 0.3	21.3	0.1	0.1
EASTBOUND LANES	56 0485	NASON STREET OC	18.37	72.5	37	3	0.3	72.5 x 37 x 0.3	29.8	0.1	0.1
EASTBOUND LANES	56 0486	MORENO BEACH Dr OC	19.12	71.9	37	3	0.3	71.9 x 37 x 0.3	29.6	0.1	0.1
EASTBOUND LANES	56 0487	REDLANDS Blvd OC	20.37	71.9	24	2	0.3	71.9 x 24 x 0.3	19.2	0.1	0.1
EASTBOUND LANES	56 0488	THEODORE STREET OC	20.37	71.3	24	2	0.3	71.3 x 24 x 0.3	19.0	0.1	0.1
EASTBOUND LANES	56 0489	GILMAN SPRINGS Rd OC	22.10	67.7	24	2	0.3	67.7 x 24 x 0.3	18.1	0.1	0.1
WESTBOUND LANES	56 0523	INDIAN St OC	15.85	51.8	37	3	0.3	51.8 x 37 x 0.3	21.3	0.1	0.1
WESTBOUND LANES	56 0485	NASON STREET OC	18.37	72.5	37	3	0.3	72.5 x 37 x 0.3	29.8	0.1	0.1
WESTBOUND LANES	56 0486	MORENO BEACH Dr OC	19.12	71.9	37	3	0.3	71.9 x 37 x 0.3	29.6	0.1	0.1
WESTBOUND LANES	56 0487	REDLANDS Blvd OC	20.37	71.9	24	2	0.3	71.9 x 24 x 0.3	19.2	0.1	0.1
WESTBOUND LANES	56 0488	THEODORE STREET OC	20.37	71.3	24	2	0.3	71.3 x 24 x 0.3	19.0	0.1	0.1
WESTBOUND LANES	56 0489	GILMAN SPRINGS Rd OC	22.10	67.7	24	2	0.3	67.7 x 24 x 0.3	18.1	0.1	0.1
SUBTOTAL									274.0	1.2	1.2
SUBTOTAL - (FROM BRIDGE APPROACH/DEPARTURE TABLE)									711.6		
SUBTOTAL - (FROM PAVEMENT QUANTITIES TABLE-SHEET 1)										200.0	92.0
TOTAL									985.6	201.2	93.2

(N) NOT A SEPARATE ITEM; FOR INFORMATION ONLY.

SUMMARY OF QUANTITIES

Q-2

REVISED BY | DATE REVISED
WILLIAM AMBROSE | KUANG H. CHEN
CALCULATED-DESIGNED BY | CHECKED BY
FUNCTIONAL SUPERVISOR: KUANG CHEN
STATE OF CALIFORNIA - DEPARTMENT OF TRANSPORTATION
Caltrans MAINTENACE DESIGN

LAST REVISION 09-09-09 | DATE PLOTTED => 11-FEB-2010 TIME PLOTTED => 13:33

Dist	COUNTY	ROUTE	POST MILES TOTAL PROJECT	SHEET No.	TOTAL SHEETS
08	Riv	60	13.3/30.4	18	28

REGISTERED CIVIL ENGINEER 2-11-10 DATE

2-16-10
PLANS APPROVAL DATE

REGISTERED PROFESSIONAL ENGINEER MICHAEL APANTE No. E 17164 Exp. 9/30/11 CIVIL STATE OF CALIFORNIA

THE STATE OF CALIFORNIA OR ITS OFFICERS OR AGENTS SHALL NOT BE RESPONSIBLE FOR THE ACCURACY OR COMPLETENESS OF SCANNED COPIES OF THIS PLAN SHEET.

GENERAL NOTES: (SHEET E-1 AND E-2)

1. ALL DISTANCES ARE APPROXIMATE. PRIOR TO CONSTRUCTION, THE CONTRACTOR SHALL VERIFY ALL LOOP LOCATIONS.
2. EXISTING LOOPS SHALL BE AB.

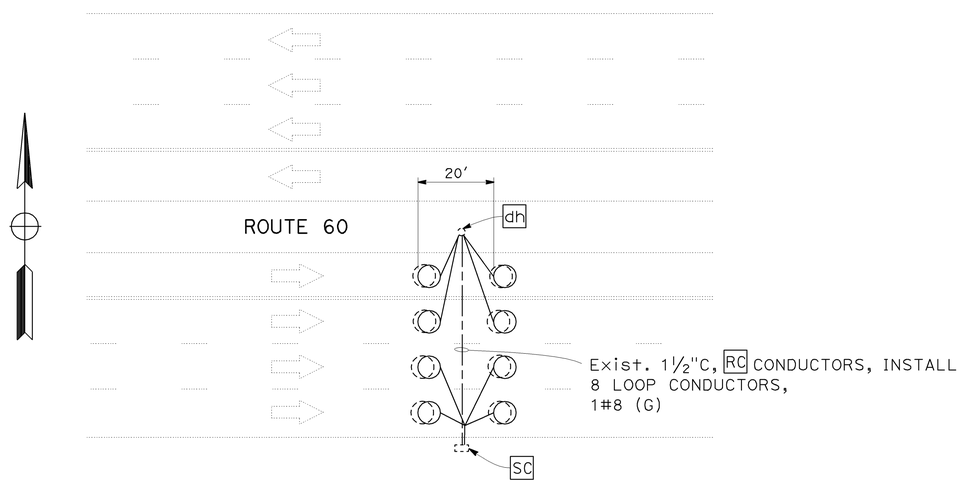

LOCATION 1

EAST OF DAY STREET (PM 13.5)

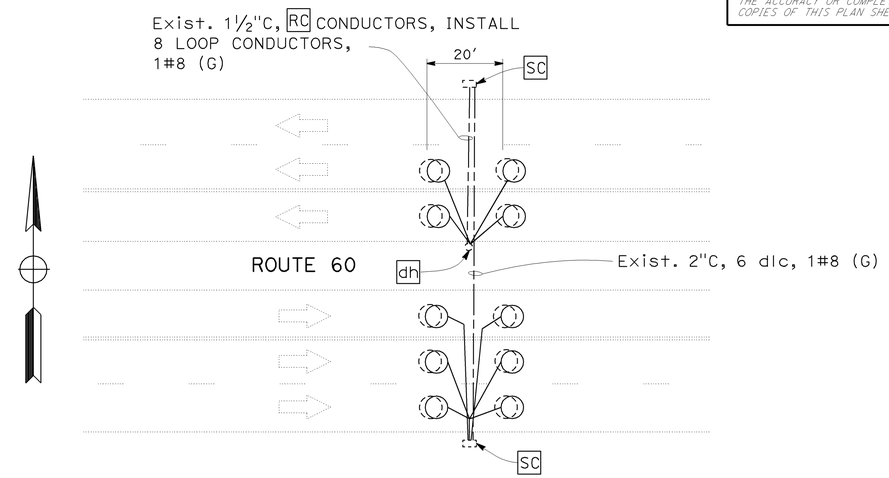

LOCATION 2

WEST OF PIGEON PASS ROAD (PM 14.4)

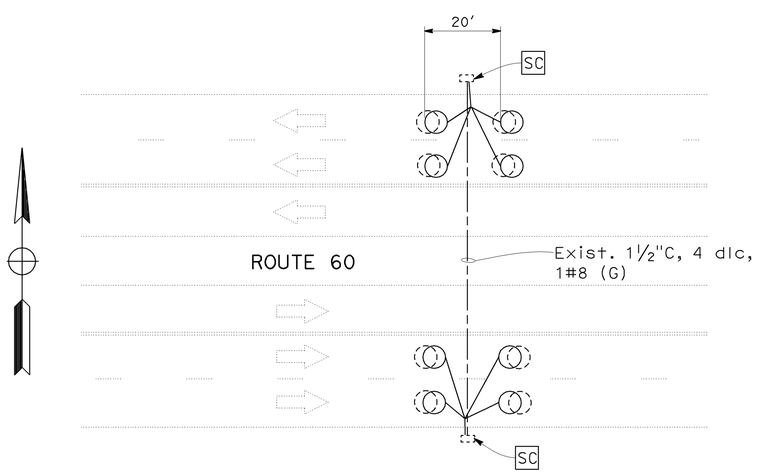

LOCATION 3

EAST OF FREDERICK STREET (PM 14.5)

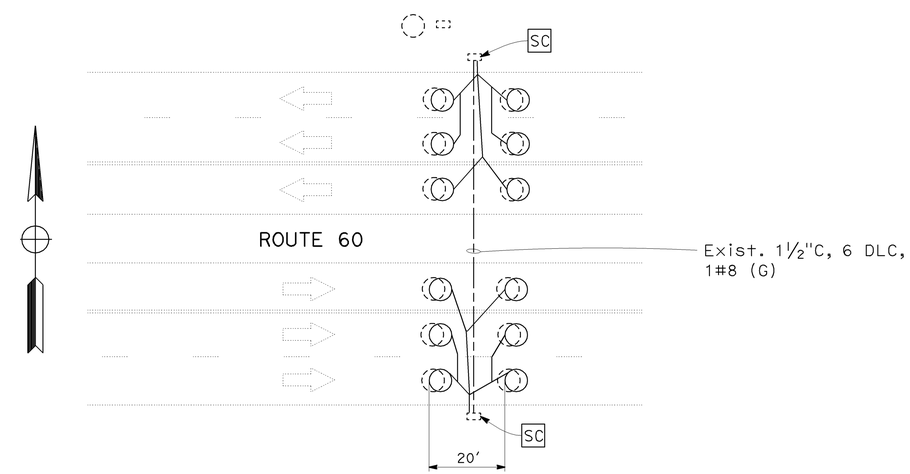

LOCATION 4, LOCATION 5, LOCATION 6

WEST OF HEACOCK STREET (PM 15.1)
EAST OF HEACOCK STREET (PM 15.6)
WEST OF PERRIS BOULEVARD (PM 16.1)

INDUCTIVE LOOP DETECTOR

NO SCALE

THIS PLAN IS ACCURATE FOR ELECTRICAL WORK ONLY.

E-1

STATE OF CALIFORNIA - DEPARTMENT OF TRANSPORTATION
Caltrans® ELECTRICAL DESIGN A

FUNCTIONAL SUPERVISOR: DAVID A. GONZALEZ
CALCULATED-DESIGNED BY: MICHAEL APANTE
CHECKED BY: DILARA ZAMAN
REVISED BY: M.A.
DATE REVISED: 06/09

LAST REVISION 09-09-09
DATE PLOTTED => 11-FEB-2010
TIME PLOTTED => 13:33

Dist	COUNTY	ROUTE	POST MILES TOTAL PROJECT	SHEET No.	TOTAL SHEETS
08	Riv	60	13.3/30.4	19	28

REGISTERED CIVIL ENGINEER 2-11-10 DATE

2-16-10
PLANS APPROVAL DATE

REGISTERED PROFESSIONAL ENGINEER MICHAEL APANTE No. E 17164 Exp. 9/30/11 CIVIL STATE OF CALIFORNIA

THE STATE OF CALIFORNIA OR ITS OFFICERS OR AGENTS SHALL NOT BE RESPONSIBLE FOR THE ACCURACY OR COMPLETENESS OF SCANNED COPIES OF THIS PLAN SHEET.

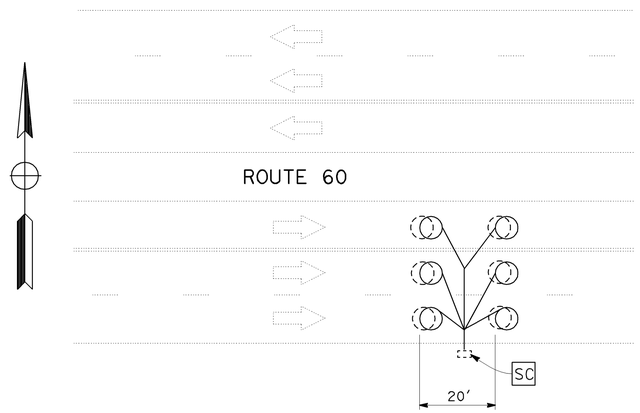

LOCATION 7

EAST OF PERRIS BOULEVARD (PM 16.6)

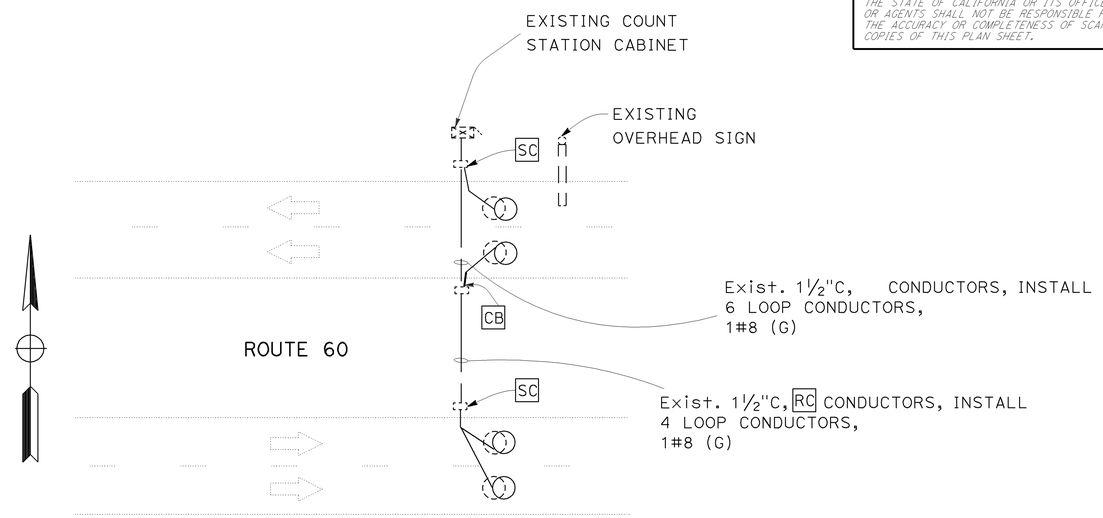

LOCATION 8

EAST OF THEODORE STREET (PM 21.4)

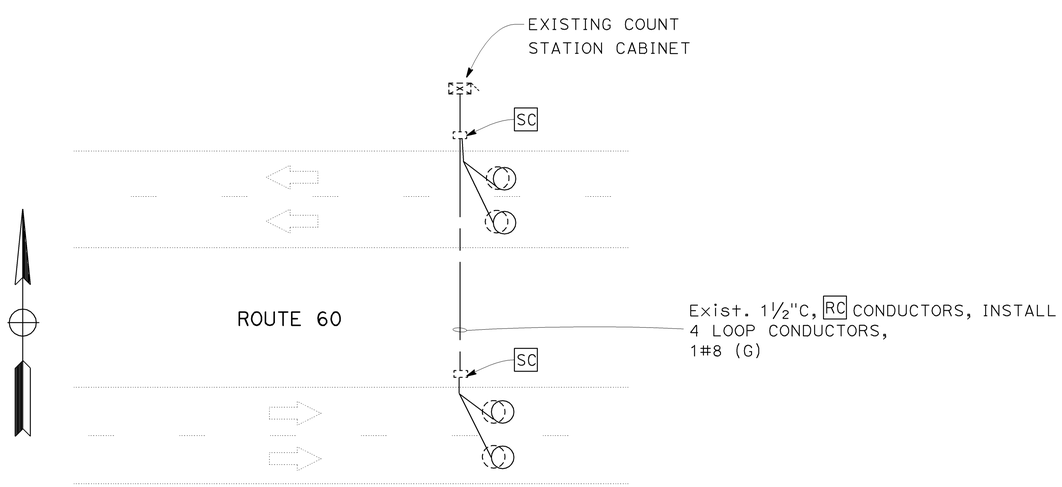

LOCATION 9

WEST OF 10/60 INTERCHANGE (PM 30.4)

THIS PLAN IS ACCURATE FOR ELECTRICAL WORK ONLY.

INDUCTIVE LOOP DETECTOR

NO SCALE

E-2

REVISED BY	M.A.
DATE REVISED	06/09
MICHAEL APANTE	
DILARA ZAMAN	
CALCULATED-DESIGNED BY	
CHECKED BY	
FUNCTIONAL SUPERVISOR	
DAVID A GONZALEZ	

STATE OF CALIFORNIA - DEPARTMENT OF TRANSPORTATION
Caltrans® ELECTRICAL DESIGN A

LAST REVISION 09-09-09 | DATE PLOTTED => 11-FEB-2010 | TIME PLOTTED => 13:33

DIST	COUNTY	ROUTE	POST MILES TOTAL PROJECT	SHEET NO.	TOTAL SHEETS
08	Riv	60	13.3/30.4	20	28

REGISTERED CIVIL ENGINEER

June 6, 2008
PLANS APPROVAL DATE

REGISTERED PROFESSIONAL ENGINEER Donald E. Howe No. C46402 Exp. 3-31-09 CIVIL STATE OF CALIFORNIA

The State of California or its officers or agents shall not be responsible for the accuracy or completeness of electronic copies of this plan sheet.

To accompany plans dated February 16, 2010

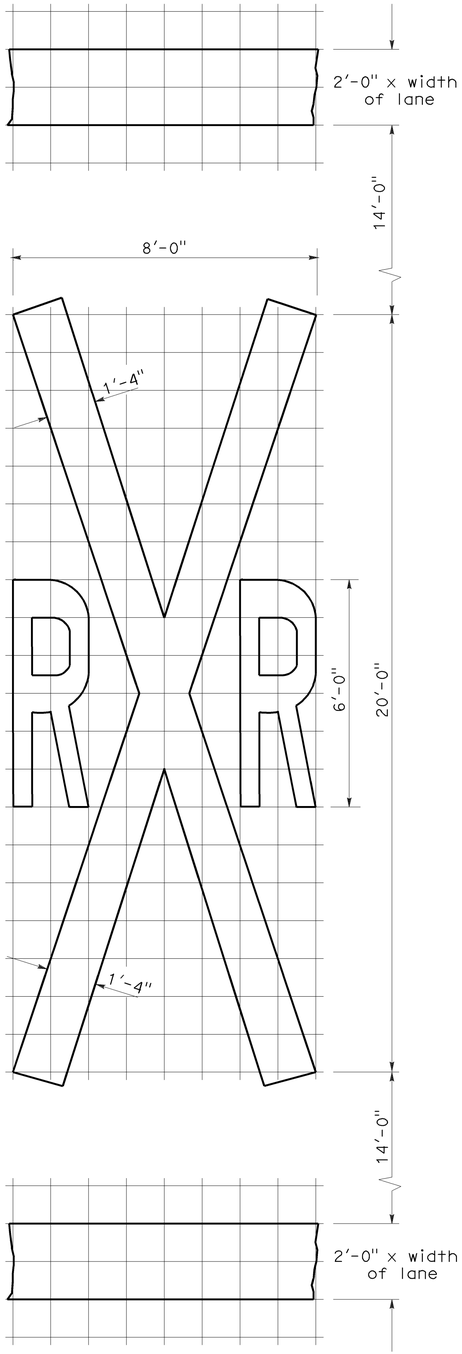

1'-0" GRID
A=70 sq ft ✳

RAILROAD CROSSING SYMBOL

✳70 sq ft DOES NOT INCLUDE THE 2'-0" x VARIABLE WIDTH TRANSVERSE LINES.

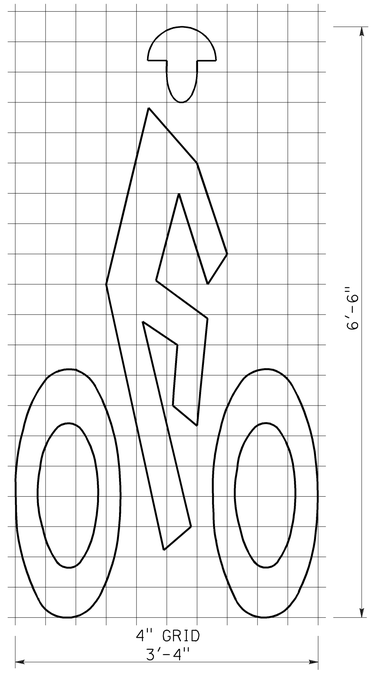

A=7 sq ft

BIKE LANE SYMBOL

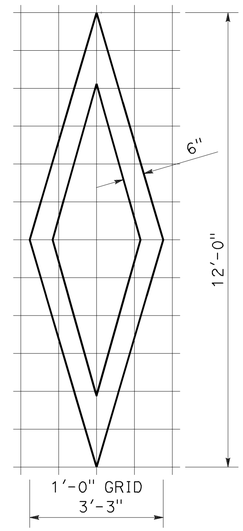

A=11 sq ft

DIAMOND SYMBOL

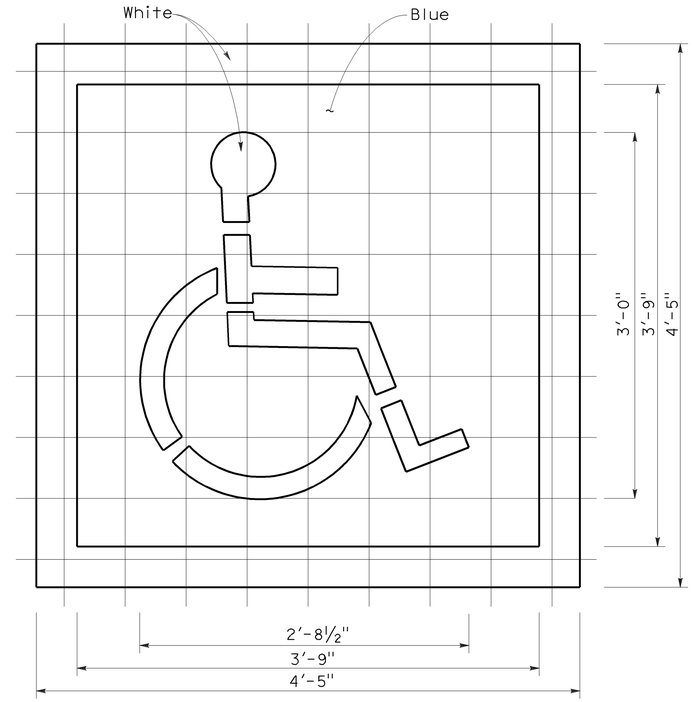

6" GRID
A (White) =9 sq ft
A (Blue) =14 sq ft

INTERNATIONAL SYMBOL OF ACCESSIBILITY MARKING

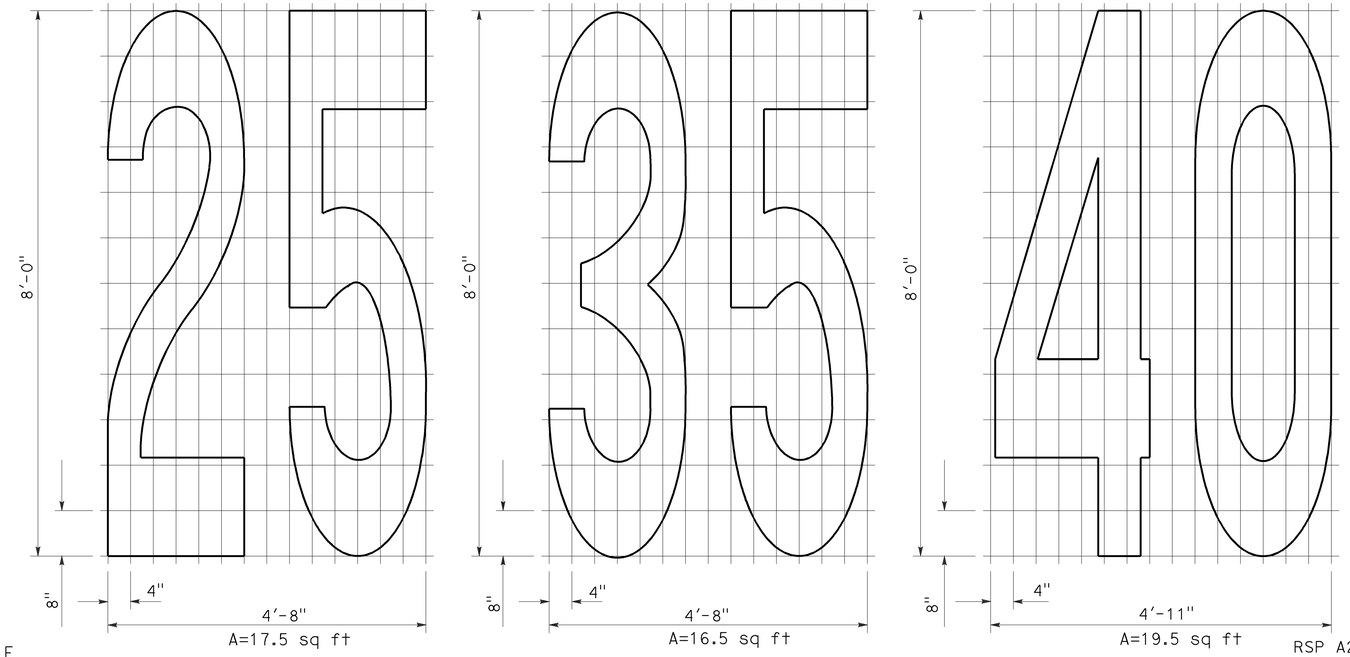

A=17.5 sq ft
A=16.5 sq ft
A=19.5 sq ft

NUMERALS

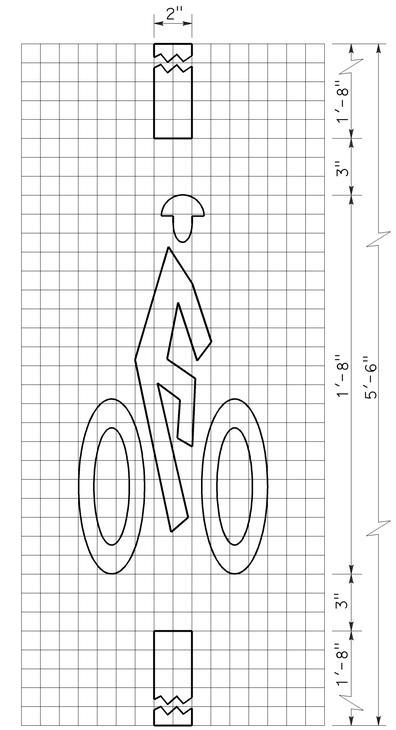

1" GRID
10"
A=2 sq ft

BICYCLE LOOP DETECTOR SYMBOL

NOTE:

1. Minor variations in dimensions may be accepted by the Engineer.

STATE OF CALIFORNIA
DEPARTMENT OF TRANSPORTATION

PAVEMENT MARKINGS SYMBOLS AND NUMERALS

NO SCALE

RSP A24C DATED JUNE 6, 2008 SUPERSEDES STANDARD PLAN A24C DATED MAY 1, 2006 - PAGE 11 OF THE STANDARD PLANS BOOK DATED MAY 2006.

REVISED STANDARD PLAN RSP A24C

2006 REVISED STANDARD PLAN RSP A24C

5-27-08

DIST	COUNTY	ROUTE	POST MILES TOTAL PROJECT	SHEET NO.	TOTAL SHEETS
08	Riv	60	13.3/30.4	21	28

REGISTERED ELECTRICAL ENGINEER

October 5, 2007
PLANS APPROVAL DATE

REGISTERED PROFESSIONAL ENGINEER Jeffery G. McRae No. E14512 Exp. 6-30-08 ELECTRICAL STATE OF CALIFORNIA

The State of California or its officers or agents shall not be responsible for the accuracy or completeness of electronic copies of this plan sheet.

To accompany plans dated February 16, 2010

ELECTROLIERS

STANDARD TYPES
15, 15D
15 STRUCTURE
21, 21D STRUCTURE
30
31
32
35
36-20A

High mast light pole

Double Arm lighting standard

Existing electrolier

Electrolier foundation (Future installation)

NOTES:

1. Luminaires shall be 310 W HPS when installed on Type 21, 21D, 30, 31, 32, 35 and 36-20A Standards, unless otherwise specified. Luminaires shall be 200 W HPS when installed on other type standards or poles, unless otherwise specified.
2. Luminaires shall be the cutoff type, ANSI Type Ⅲ medium cutoff lighting distribution, unless otherwise specified.
3. Variations noted adjacent to symbol on project plans.

Electrolier (see project notes or project plans)

Luminaire on wood pole

STANDARD NOTES:

- AB — Abandon. If applied to conduit, remove conductors.
- BC — Install pull box in existing conduit run.
- BP — Pedestrian barricade, type as indicated on plan.
- CB — Install conduit into existing pull box.
- CC — Connect new and existing conduit. Remove existing conductors and install conductors as indicated.
- CF — Conduit to remain for future use. Remove conductors. Install pull wire or rope.
- DH — Detector handhole.
- FA — Foundation to be abandoned.
- IS — Install sign on signal mast arm.
- NS — No slip base on standard.
- PEC — Photoelectric control.
- PEU — Photoelectric unit.
- RC — Equipment or material to be removed and become the property of the Contractor.
- RE — Remove electrolier, fuses and ballast. Tape ends of conductors.
- RL — Relocate equipment.
- RR — Remove and reuse equipment.
- RS — Remove and salvage equipment.
- SC — Splice new to existing conductors.
- SD — Service disconnect.
- SF — Standard to remain for future use. Remove luminaire, pole conductors, fuses and ballast.
- TSP — Telephone service point.

ABBREVIATIONS AND EQUIPMENT DESIGNATIONS

PROPOSED	EXISTING	
BBS	bbs	Battery backup system
BC	bc	Bolt circle
C	C	Conduit
CCTV	cctv	Closed circuit television
CKT	ckt	Circuit
CMS	cms	Changeable message sign
DLC	dlc	Loop detector lead-in cable
EMS	ems	Extinguishable message sign
EVC	evc	Emergency vehicle cable
EVD	evd	Emergency vehicle detector
FB	fb	Flashing beacon
FBCA	fbca	Flashing beacon control assembly
FBS	fbs	Flashing beacon with slip base
FO	fo	Fiber optic
G	G	Ground (Equipment Grounding Conductor)
GFCI	GFCI	Ground fault circuit interrupt
HAR	har	Highway advisory radio
HEX	hex	Hexagonal
HPS	hps	High pressure sodium
IISNS	iisns	Internally illuminated street name sign
ISL	isl	Induction sign lighting
LED	led	Light emitting diode
LMA	lma	Luminaire mast arm
LPS	lps	Low pressure sodium
LTG	ltg	Lighting
LUM	lum	Luminaire
MAT	mat	Mast arm mounting vehicle signal faces, top attachment
MAS	mas	Mast arm mounting vehicle signal faces, side attachment
MAS-4A	mas-4A	Mast arm mounting vehicle signal faces, side attachment - 4 signal section
MAS-4B	mas-4B	
MAS-4C	mas-4C	
MAS-5A	mas-5A	Mast arm mounting vehicle signal faces, side attachment - 5 signal section
MAS-5B	mas-5B	
MC	mc	Mercury contactor
M/M	m/m	Multiple to multiple transformer
MT	mt	Conduit with pull wire or rope only
MTG	mtg	Mounting
	mv	Mercury vapor lighting fixture
N	N	Neutral (Grounded Conductor)
NC	NC	Normally closed
NO	NO	Normally open
PB	pb	Pull box
PEC	pec	Photoelectric control (Type Ⅰ, Ⅱ, Ⅲ, Ⅳ or Ⅴ as shown)
PED	ped	Pedestrian
PEU	peu	Photoelectric unit
PPB	ppb	Pedestrian push button
RL		Relocated equipment
RM	rm	Ramp metering
SB	sb	Slip base
SIC	sic	Signal interconnect cable
SIG	sig	Signal
SMA	sma	Signal mast arm
SNS	sns	Street name sign
SP	sp	Service point
TDC	tdc	Telephone demarcation cabinet
TMS	tms	Traffic monitoring station
TOS	tos	Traffic Operations System
VEH	veh	Vehicle
XFMR	xfmr	Transformer
COMM	comm	Communication
RWIS	rwis	Roadway weather information system

SOFFIT AND WALL MOUNTED LUMINAIRES

Pendant, 70 W HPS unless otherwise specified.

Flush, 70 W HPS unless otherwise specified.

Wall surface, 70 W HPS unless otherwise specified.

Existing soffit or wall luminaire to remain unmodified.

Existing soffit or wall luminaire to be modified as specified.

NOTE:

Arrow indicates "street side" of luminaire.

STATE OF CALIFORNIA
DEPARTMENT OF TRANSPORTATION

ELECTRICAL SYSTEMS (SYMBOLS AND ABBREVIATIONS)

NO SCALE

RSP ES-1A DATED OCTOBER 5, 2007 SUPERSEDES STANDARD PLAN ES-1A DATED MAY 1, 2006 - PAGE 400 OF THE STANDARD PLANS BOOK DATED MAY 2006.

REVISED STANDARD PLAN RSP ES-1A

2006 REVISED STANDARD PLAN RSP ES-1A

DIST	COUNTY	ROUTE	POST MILES TOTAL PROJECT	SHEET NO.	TOTAL SHEETS
08	Riv	60	13.3/30.4	22	28

REGISTERED ELECTRICAL ENGINEER

October 5, 2007
PLANS APPROVAL DATE

REGISTERED PROFESSIONAL ENGINEER Jeffery G. McRae No. E14512 Exp. 6-30-08 ELECTRICAL STATE OF CALIFORNIA

The State of California or its officers or agents shall not be responsible for the accuracy or completeness of electronic copies of this plan sheet.

To accompany plans dated February 16, 2010

CONDUIT

PROPOSED	EXISTING	
		Lighting Conduit, unless otherwise indicated or noted
		Traffic signal conduit
C	c	Communication conduit
T	t	Telephone conduit
F	f	Fire alarm conduit
FO	fo	Fiber optic conduit
		Conduit termination (RSP ES-9A C)
R	r	Conduit riser in/on structure or service pole

SERVICE EQUIPMENT

PROPOSED	EXISTING	
OH	oh	Overhead lines
U	U	Wood pole "U" indicates utility owned
		Pole guy with anchor
		Utility transformer - ground mounted
III		Service equipment enclosure type
		Service equipment enclosure door indicates front of enclosure
T	t	Telephone demarcation cabinet

POLE-MOUNTED SERVICE DESIGNATION

Type of installation

TYPE H SERVICE - 28'-10" ← Pole height above grade

ILLUMINATED OVERHEAD SIGN

PROPOSED	EXISTING	
		Overhead sign - Single post
		Overhead sign - Two post
		Overhead sign - Mounted on structure
		Overhead sign with electrolier

SIGNAL EQUIPMENT

PROPOSED	EXISTING	
		Pedestrian signal face
		Pedestrian push button post
		Pedestrian barricade
		Vehicle signal face (with backplate, 3-Section: red, yellow and green)
		Vehicle signal face with angle visors
PV	PV	Modifications of basic symbols: "L" indicates all non-arrow sections louvered "LG" indicates louvered green section only "PV" indicates 12" programmed visibility sections "8" indicates all 8" sections (only when specified)
		Type 15TS and Vehicle signal face
		Vehicle signal face with red, yellow and green left arrow sections
		Vehicle signal face with red and yellow sections and up green arrow
		Vehicle signal face (5 Section) with red, yellow and green sections and yellow and green right arrows
		Type 1 Standard and attached vehicle signal faces
		Standard with signal mast arm only and attached vehicle signal faces and internally illuminated street name sign
		Type 33 Standard, Left-turn vehicle signal face and sign
		Standard with luminaire and signal mast arms and attached vehicle signal faces
		Cantilever flashing beacon Type 9 Frame, with a sign unless otherwise specified or indicated
		Type 15-FBS Standard with two vehicle signal face sections with lens, backplate and visor with a sign
R	Y	Flashing beacon. One vehicle signal face section with lens, backplate and visor. "R" indicates red indication, "Y" indicates yellow indication
		Controller assembly. Door indicates front of cabinet

SIGNAL EQUIPMENT Cont

PROPOSED	EXISTING	
		Guard post
		Type 1 Standard with "Meter On" sign
		Emergency Vehicle detector

NOTES:

1. All signal sections shall be 12" unless shown otherwise.
2. Signal heads shall be provided with backplates unless shown otherwise.
3. Signal indication shall be LED.

STATE OF CALIFORNIA
DEPARTMENT OF TRANSPORTATION

ELECTRICAL SYSTEMS (SYMBOLS AND ABBREVIATIONS)

NO SCALE

RSP ES-1B DATED OCTOBER 5, 2007 SUPERCEDES STANDARD PLAN ES-1B DATED MAY 1, 2006 - PAGE 401 OF THE STANDARD PLANS BOOK DATED MAY 2006.

REVISED STANDARD PLAN RSP ES-1B

2006 REVISED STANDARD PLAN RSP ES-1B

7-10-07

DIST	COUNTY	ROUTE	POST MILES TOTAL PROJECT	SHEET NO.	TOTAL SHEETS
08	Riv	60	13.3/30.4	23	28

REGISTERED ELECTRICAL ENGINEER

October 5, 2007
PLANS APPROVAL DATE

REGISTERED PROFESSIONAL ENGINEER Jeffery G. McRae No. E14512 Exp. 6-30-08 ELECTRICAL STATE OF CALIFORNIA

The State of California or its officers or agents shall not be responsible for the accuracy or completeness of electronic copies of this plan sheet.

To accompany plans dated February 16, 2010

EQUIPMENT IDENTIFICATION

ILLUMINATED SIGN IDENTIFICATION NUMBER:

Sign No. 12345

10 ISL SCI 1.0

- Sign number - Place on post or structure
- Transformer rating (kVA)
- Lighting control type
- Number and type of fixtures

Do NOT place on standard or structure

ELECTROLIER OR EQUIPMENT IDENTIFICATION NUMBER:

12345 - 15'-0"

- Mast arm length, if shown. Do not place on standard or structure.
- Equipment number - Place on standard or structure. Existing equipment numbers are shown in parenthesis

CONDUIT AND CONDUCTOR IDENTIFICATION:

1½"C, 2#10, 15#14, 2 DLC

- Number and size of conductors and cables
- Size of conduit in inches

ø1, ø2, ø2P, etc.	Traffic phase identification for signal faces, detectors and phase diagrams
1 2 3	Project note numbers
A B C	Equipment description, installation or item numbers
1 2 3	Conduit run numbers

SIGNAL AND LIGHTING STANDARD (TYPICAL DESIGNATION):

19A - 3 - 100

- Wind velocity = 100 mph
- Case 3 arm loading
- Standard type
- Standard Plan sheet number
- Detail number or letter

MISCELLANEOUS EQUIPMENT

PROPOSED	EXISTING	
CMS	cms	Changeable message sign
		Closed circuit television camera
		Highway advisory radio pole and antenna
EMS	ems	Extinguishable message sign
M V	m v	Detection device M = Microwave sensor V = Video image sensor

WIRING DIAGRAM LEGEND

P	Pole
CB	Circuit breaker
A	Ampere
V	Volt
M	Metered
UM	Unmetered
NB	Neutral bus
GB	Ground bus
G	Equipment grounding conductor
N	Grounded conductor (Neutral)

- External conductor
- Conductor or bus
- Tie point
- Contactor coil
- Contactor, Contact NO
- Terminal blocks
- Contactor, Contact NC
- Enclosure bond
- Grounding electrode
- Circuit breaker
- Receptacle

PULL BOXES

PROPOSED EXISTING

Pull box-No. 5 unless otherwise indicated or noted.

3 9A(21)

Pull box-Additional designations or descriptions

3 = No. 3½ pull box
5 = No. 5 pull box
6 = No. 6 pull box
7 = No. 7 (Ceiling pull box)
8 = No. 8 (Pendant soffit pull box)
9 = No. 9 pull box
9A = No. 9A pull box

(C) = Communications pull box
(E) = Pull box with extension
(S) = Sprinkler control pull box
(21) = Anchor bolts and conduit for future installation of Type 21 Standard
(T) = Traffic pull box

VEHICLE DETECTORS

5 J 9 U

- Vehicle detector designation
- U = Upper, L = Lower
- Slot number in input file
- Input file (I or J)
- Phase

PROPOSED	EXISTING	
		Type A detector loop. Outline of sawcut shown.
		Type B detector loop. Outline of sawcut shown.
		Type C detector loop. Outline of sawcut shown.
		Type D detector loop. Outline of sawcut shown.
		Type E detector loop. Outline of sawcut shown.
		Type Q detector loop. Outline of sawcut shown.
		Magnetic detector
DH	dh	Detector handhole
		Microwave or video detection zone

STATE OF CALIFORNIA
DEPARTMENT OF TRANSPORTATION

ELECTRICAL SYSTEMS (SYMBOLS AND ABBREVIATIONS)

NO SCALE

RSP ES-1C DATED OCTOBER 5, 2007 SUPERCEDES STANDARD PLAN ES-1C DATED MAY 1, 2006 - PAGE 402 OF THE STANDARD PLANS BOOK DATED MAY 2006.

REVISED STANDARD PLAN RSP ES-1C

2006 REVISED STANDARD PLAN RSP ES-1C

DIST	COUNTY	ROUTE	POST MILES TOTAL PROJECT	SHEET NO.	TOTAL SHEETS
08	Riv	60	13.3/30.4	24	28

REGISTERED ELECTRICAL ENGINEER

October 5, 2007
PLANS APPROVAL DATE

REGISTERED PROFESSIONAL ENGINEER Jeffery G. McRae No. E14512 Exp. 6-30-08 ELECTRICAL STATE OF CALIFORNIA

The State of California or its officers or agents shall not be responsible for the accuracy or completeness of electronic copies of this plan sheet.

To accompany plans dated February 16, 2010

LOOP INSTALLATION PROCEDURE

1. Loops shall be centered in lanes.
2. Saw slots in pavement for loop conductors as shown in details.
3. Distance between side of loop and a lead-in saw cut from adjacent detectors shall be 2'-0" minimum. Distance between lead-in saw cuts shall be 6" minimum.
4. Bottom of saw slot shall be smooth with no sharp edges.
5. Slots shall be washed until clean, blown out and thoroughly dried before installing loop conductors.
6. Adjacent loops on the same sensor unit channel shall be wound in opposite directions.
7. Identify and tag loop circuit pairs in the pull box with loop number, start (S) and finish (F) of conductor. Identify and tag lead-in-cable with sensor number and phase.
8. Install loop conductor in slot using a 3/16" to 1/4" thick wood paddle. Hold loop conductors with wood paddles (at the bottom of the sawed slot) during sealant placement.
9. No more than 2 twisted pairs shall be installed in one sawed slot.
10. Allow additional 5'-0" of slack length of conductor for the lead-in run to pull box.
11. The additional length of each conductor for each loop shall be twisted together into a pair (6 turns per 3'-4" minimum) before being placed in the slot and conduit leading to pull box.
12. Test each loop circuit for continuity, circuit resistance and insulation resistance at the pull box before filling slots.
13. Fill slots as shown in details.
14. Splice loop conductors to lead-in-cable. Splices shall be soldered.
15. End of lead-in-cable and Type 2 loop conductor shall be waterproofed prior to installing in conduit to prevent moisture from entering the cable.
16. Lead-in-cable shall not be spliced between the pull box and the controller cabinet terminals.
17. Test each loop circuit for continuity, circuit resistance and insulation resistance at the controller cabinet location.
18. Where loop conductors are not to be spliced to a lead-in-cable, the ends of the conductors shall be taped and waterproofed with electrical insulating coating.

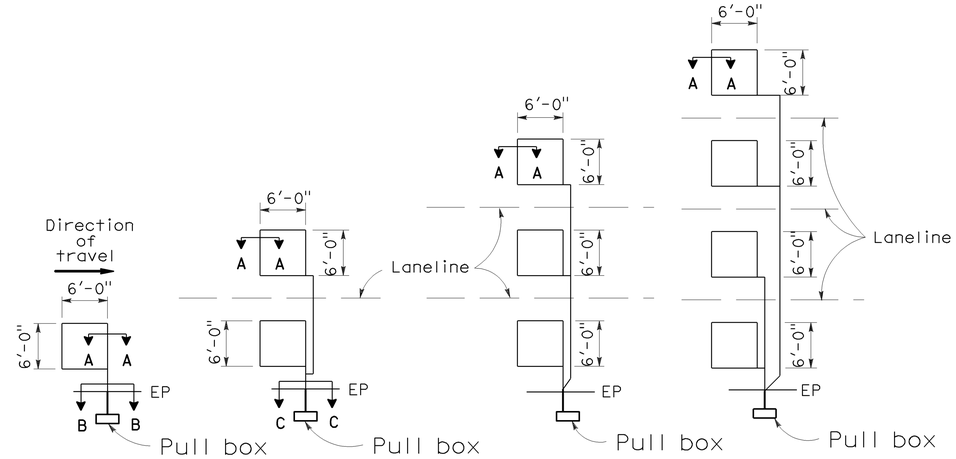

TYPE 1A INSTALLATION | TYPE 2A INSTALLATION | TYPE 3A INSTALLATION | TYPE 4A INSTALLATION

SAWCUT DETAILS

(Type A loop detector configurations illustrated)

1. 1A thru 4A = 1 Type A loop configuration in each lane.
2. 1B thru 4B = 1 Type B loop configuration in each lane.
3. 1C = 1 Type C loop configuration entering lanes as required.
4. 1D thru 4D = 1 Type D loop configuration in each lane.
5. 1E thru 4E = 1 Type E loop configuration in each lane.
6. 1Q thru 4Q = 1 Type Q loop configuration in each lane. (Use Type A, B, C, D, E or Q loop detector configurations only when specified or shown on plans)

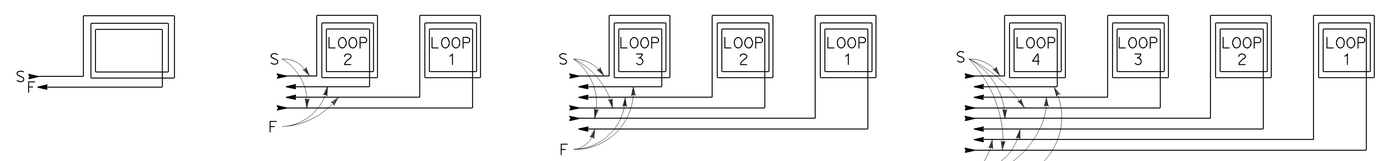

WINDING DETAILS

See Notes 6 and 7

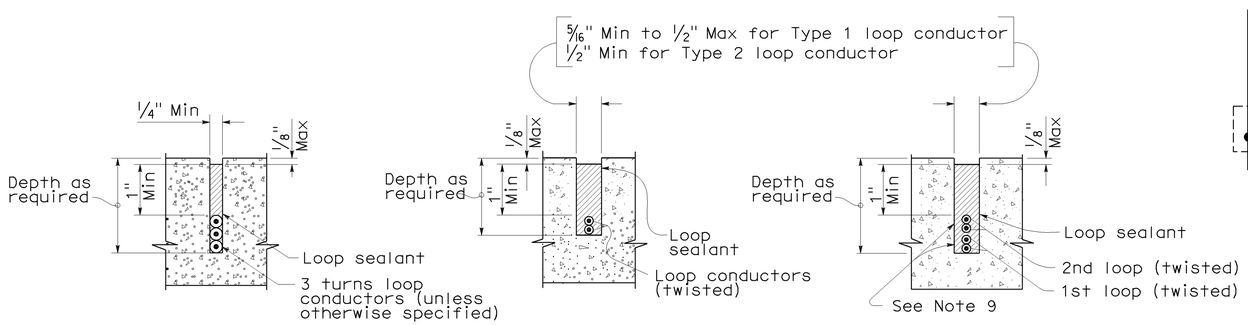

SECTION A-A | SECTION B-B | SECTION C-C

SLOT DETAILS - TYPE 1 AND TYPE 2 LOOP CONDUCTOR

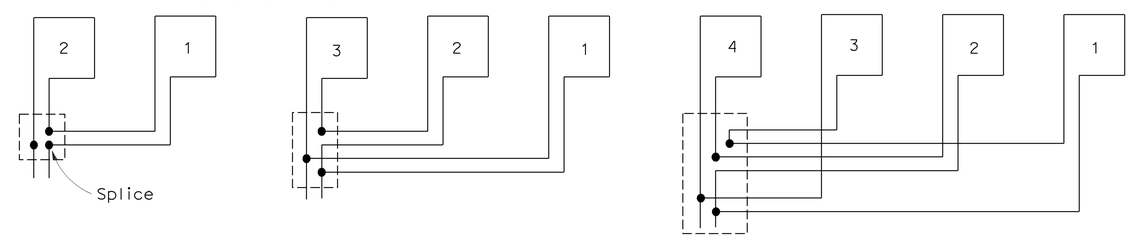

TYPICAL LOOP CONNECTIONS

(Dashed lines represent the pull box)

STATE OF CALIFORNIA
DEPARTMENT OF TRANSPORTATION

ELECTRICAL SYSTEMS (DETECTORS)

NO SCALE

RSP ES-5A DATED OCTOBER 5, 2007 SUPERCEDES STANDARD PLAN ES-5A DATED MAY 1, 2006 - PAGE 423 OF THE STANDARD PLANS BOOK DATED MAY 2006.

REVISED STANDARD PLAN RSP ES-5A

2006 REVISED STANDARD PLAN RSP ES-5A

8-17-07

DIST	COUNTY	ROUTE	POST MILES TOTAL PROJECT	SHEET NO.	TOTAL SHEETS
08	Riv	60	13.3/30.4	25	28

Randell D. Hiatt
REGISTERED CIVIL ENGINEER

June 6, 2008
PLANS APPROVAL DATE

REGISTERED PROFESSIONAL ENGINEER
Randell D. Hiatt
No. C50200
Exp. 6-30-09
CIVIL
STATE OF CALIFORNIA

The State of California or its officers or agents shall not be responsible for the accuracy or completeness of electronic copies of this plan sheet.

To accompany plans dated February 16, 2010

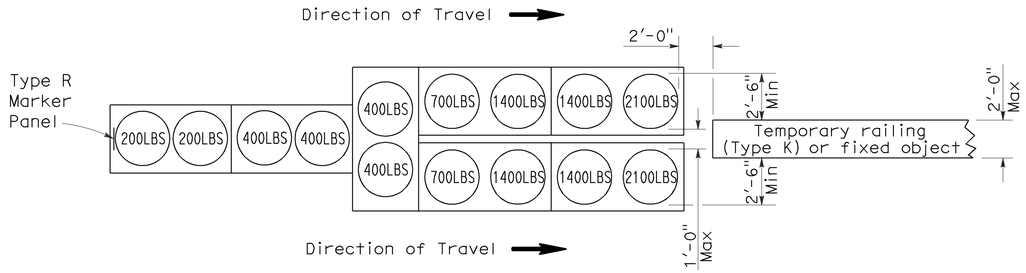

ARRAY 'TU14'

Approach speed 45 mph or more

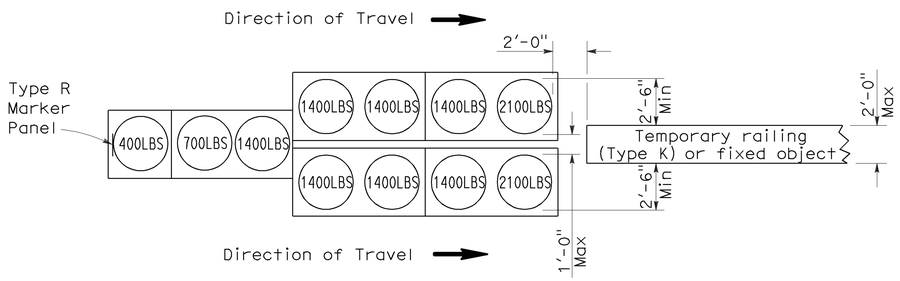

ARRAY 'TU11'

Approach speed less than 45 mph

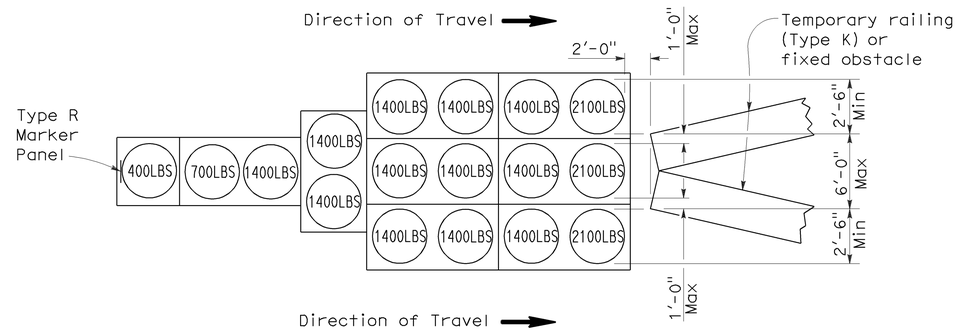

ARRAY 'TU17'

Approach speed less than 45 mph

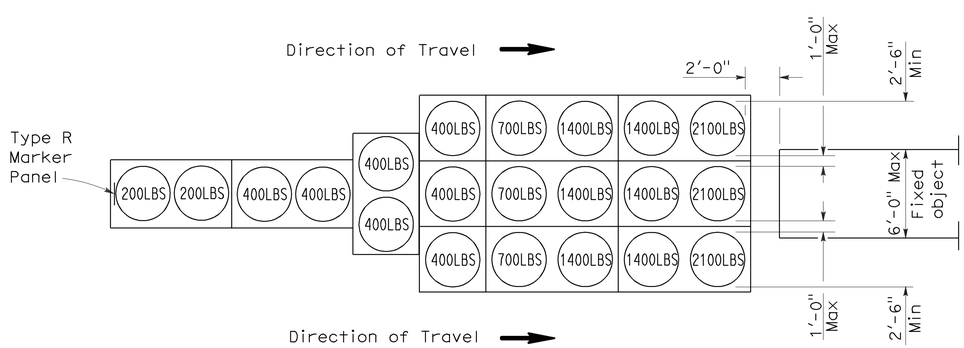

ARRAY 'TU21'

Approach speed 45 mph or more

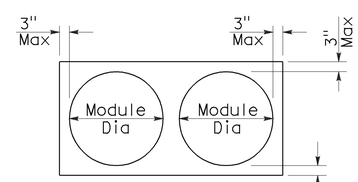

PLAN

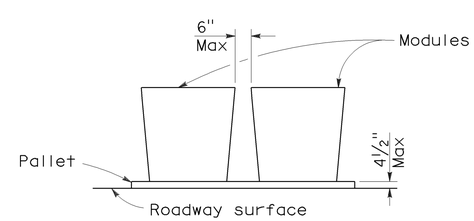

ELEVATION

CRASH CUSHION PALLET DETAIL

See Note 7

NOTES:

1. (XXX) Indicates sand filled module location and weight of sand in pounds for each module. Module spacing is based on the greater diameter of the module.
2. All sand weights are nominal.
3. Temporary crash cushion arrays shall not encroach on the traveled way.
4. Place the top of Type R marker panel 1" below the module lid.
5. Refer to Standard Plan A73B for marker details.
6. Approach speeds indicated conform to NCHRP 350 Report criteria.
7. Use of pallets is optional.

STATE OF CALIFORNIA
DEPARTMENT OF TRANSPORTATION

TEMPORARY CRASH CUSHION, SAND FILLED (UNIDIRECTIONAL)

NO SCALE

RSP T1A DATED JUNE 6, 2008 SUPERSEDES STANDARD PLAN T1A
DATED MAY 1, 2006 - PAGE 211 OF THE STANDARD PLANS BOOK DATED MAY 2006.

REVISED STANDARD PLAN RSP T1A

2006 REVISED STANDARD PLAN RSP T1A

DIST	COUNTY	ROUTE	POST MILES TOTAL PROJECT	SHEET NO.	TOTAL SHEETS
08	Riv	60	13.3/30.4	26	28

Randell D. Hiatt
REGISTERED CIVIL ENGINEER

June 6, 2008
PLANS APPROVAL DATE

REGISTERED PROFESSIONAL ENGINEER
Randell D. Hiatt
No. C50200
Exp. 6-30-09
CIVIL
STATE OF CALIFORNIA

The State of California or its officers or agents shall not be responsible for the accuracy or completeness of electronic copies of this plan sheet.

To accompany plans dated February 16, 2010

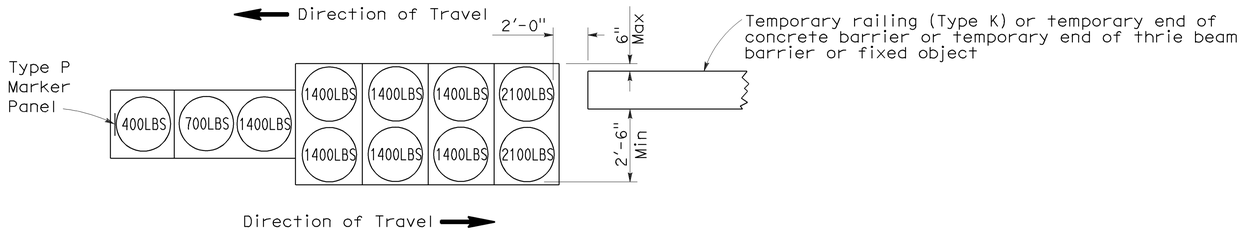

ARRAY 'TB11'

Approach speed less than 45 mph

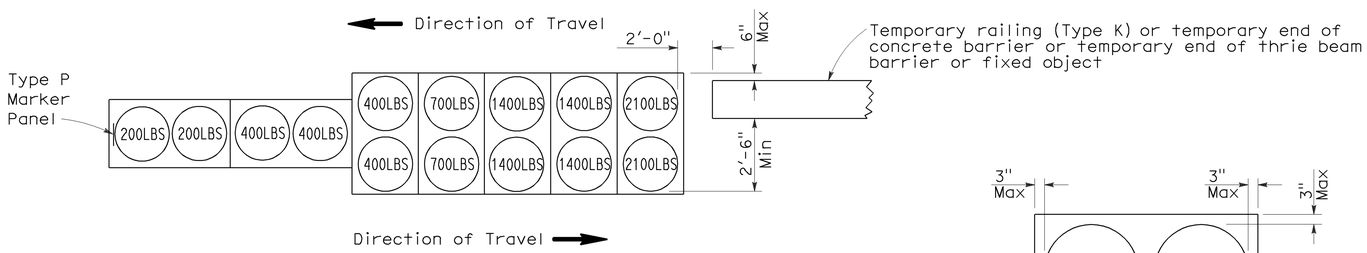

ARRAY 'TB14'

Approach speed 45 mph or more

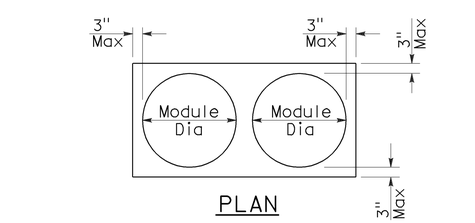

PLAN

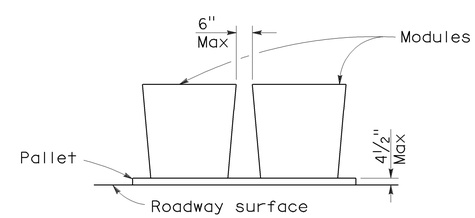

ELEVATION

CRASH CUSHION PALLET DETAIL

See Note 7

NOTES:

1. (XXX) Indicates sand filled module location and weight of sand in pounds for each module. Module spacing is based on the greater diameter of the module.
2. All sand weights are nominal.
3. Temporary crash cushion arrays shall not encroach on the traveled way.
4. Place the Type P marker panel so that the bottom of the panel rests upon the pallet.
5. Refer to Standard Plan A73B for marker details.
6. Approach speeds indicated conform to NCHRP 350 Report criteria.
7. Use of pallets is optional.

STATE OF CALIFORNIA
DEPARTMENT OF TRANSPORTATION

TEMPORARY CRASH CUSHION, SAND FILLED (BIDIRECTIONAL)

NO SCALE

RSP T1B DATED JUNE 6, 2008 SUPERSEDES STANDARD PLAN T1B
DATED MAY 1, 2006 - PAGE 212 OF THE STANDARD PLANS BOOK DATED MAY 2006.

REVISED STANDARD PLAN RSP T1B

2006 REVISED STANDARD PLAN RSP T1B

5-15-08

DIST	COUNTY	ROUTE	POST MILES TOTAL PROJECT	SHEET NO.	TOTAL SHEETS
08	Riv	60	13.3/30.4	27	28

Randell D. Hiatt
REGISTERED CIVIL ENGINEER

June 6, 2008
PLANS APPROVAL DATE

REGISTERED PROFESSIONAL ENGINEER
Randell D. Hiatt
No. C50200
Exp. 6-30-09
CIVIL
STATE OF CALIFORNIA

The State of California or its officers or agents shall not be responsible for the accuracy or completeness of electronic copies of this plan sheet.

To accompany plans dated February 16, 2010

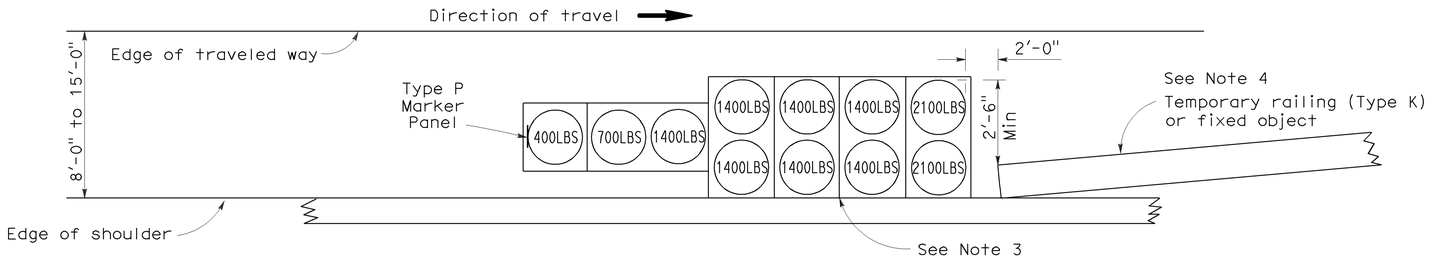

ARRAY 'TS11'

Approach speed less than 45 mph
See Note 9

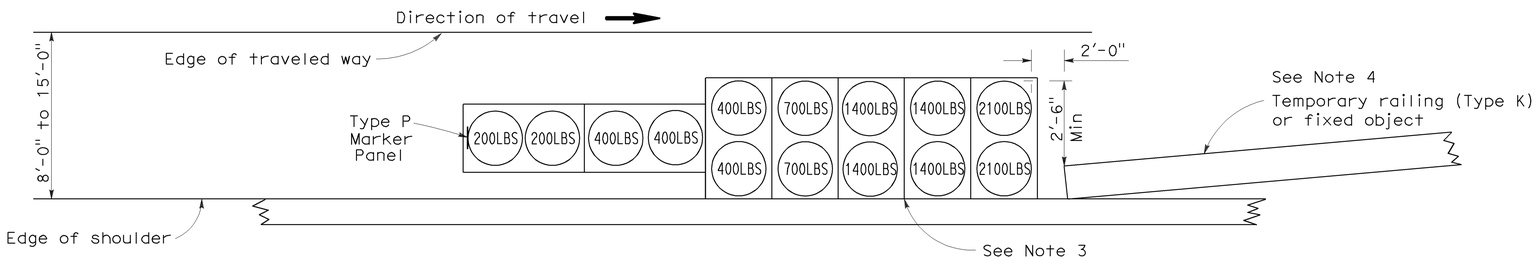

ARRAY 'TS14'

Approach speed 45 mph or more
See Note 9

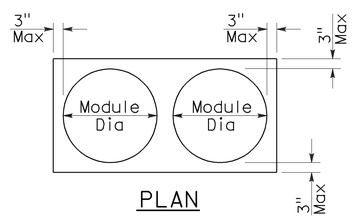

PLAN

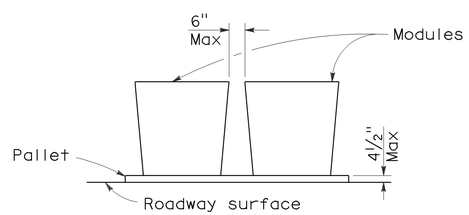

ELEVATION

CRASH CUSHION PALLET DETAIL

See Note 11

NOTES:

1. (XXX) Indicates sand filled module location and weight of sand in pounds for each module. Module spacing is based on the greater diameter of the module.
2. All sand weights are nominal.
3. The temporary crash cushion arrays shown on this plan shall be used only in locations where there will be traffic on one side of the temporary crash cushion array.
4. If the fixed object or approach end of the temporary railing is less than 15'-0" from the edge of traveled way, a temporary crash cushion is required in a construction or work zone.
5. Temporary crash cushion arrays shall not encroach on the traveled way.
6. Arrays for median shoulders shall conform to details shown on this plan for outside shoulders.
7. Place the Type P marker panel so that the bottom of the panel rests upon the pallet and faces traffic.
8. Refer to Standard Plan A73B for marker details.
9. For shoulder widths less than 8'-0", appropriate approved crash cushion protection, other than sand filled modules, shall be provided at fixed objects and at approach ends of temporary railing. The specific type of crash cushion shall be as shown on the project plans or as specified in the Special Provisions, or if not shown on the project plans or specified in the Special Provisions, shall be as approved by the Engineer.
10. Approach speeds indicated conform to NCHRP 350 Report criteria.
11. Use of pallets is optional.

STATE OF CALIFORNIA
DEPARTMENT OF TRANSPORTATION

TEMPORARY CRASH CUSHION, SAND FILLED (SHOULDER INSTALLATIONS)

NO SCALE

RSP T2 DATED JUNE 6, 2008 SUPERSEDES STANDARD PLAN T2
DATED MAY 1, 2006 - PAGE 213 OF THE STANDARD PLANS BOOK DATED MAY 2006.

REVISED STANDARD PLAN RSP T2

2006 REVISED STANDARD PLAN RSP T2

5-15-08

DIST	COUNTY	ROUTE	POST MILES TOTAL PROJECT	SHEET NO.	TOTAL SHEETS
08	Riv	60	13.3/30.4	28	28

Robert B Schott
LICENSED LANDSCAPE ARCHITECT

April 3, 2009
PLANS APPROVAL DATE

LICENSED LANDSCAPE ARCHITECT
Robert B. Schott 3685
Robert B Schott
11-30-10
Renewal Date
2-25-09
Date
STATE OF CALIFORNIA

The State of California or its officers or agents shall not be responsible for the accuracy or completeness of electronic copies of this plan sheet.

To accompany plans dated February 16, 2010

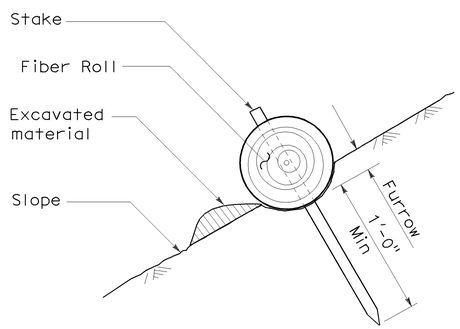

SECTION

TEMPORARY FIBER ROLL (TYPE 1)

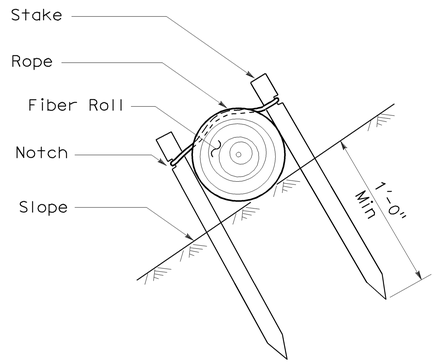

SECTION

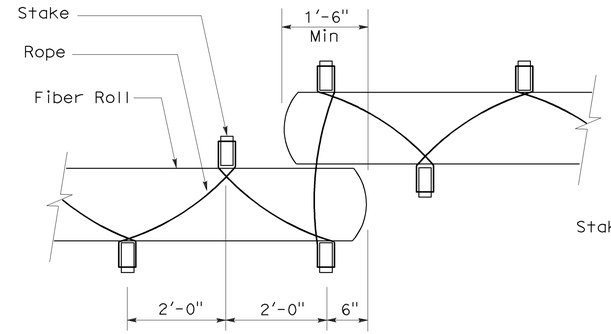

PLAN

TEMPORARY FIBER ROLL (TYPE 2)

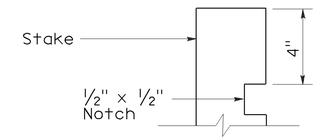

ELEVATION

STAKE NOTCH DETAIL

NOTES:

1. Temporary fiber roll spacing varies depending upon slope inclination.
2. Installations shown in the perspectives are for slope inclination of 10:1 and steeper.

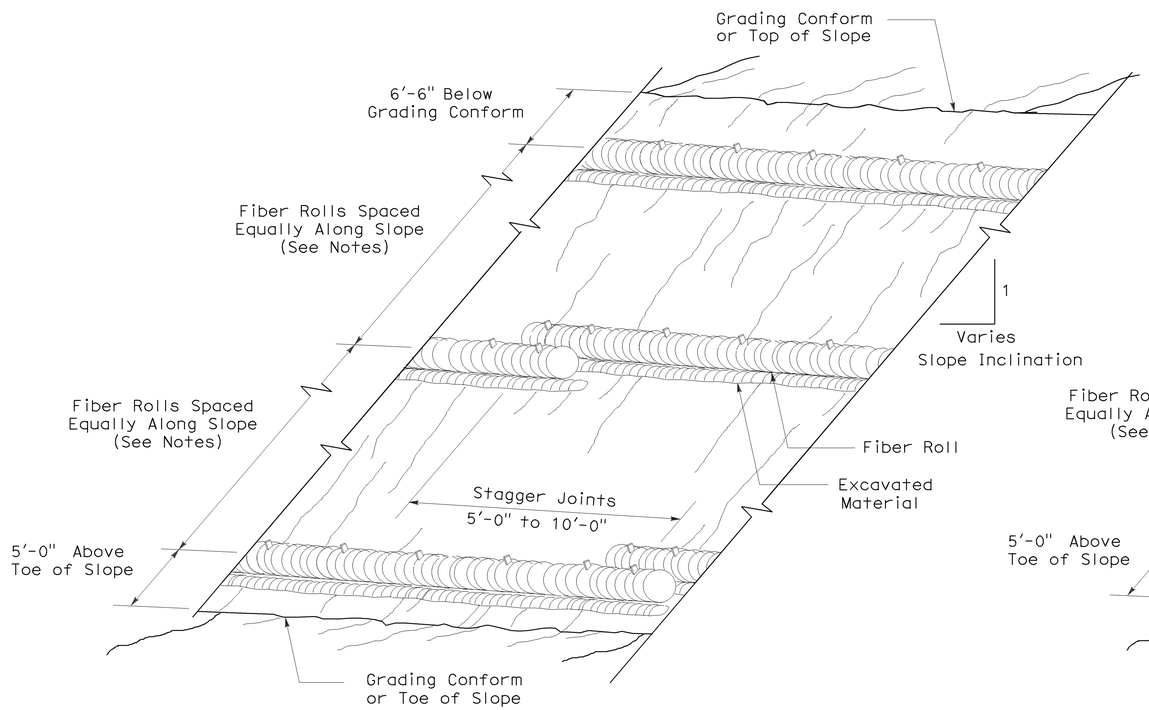

PERSPECTIVE

TEMPORARY FIBER ROLL (TYPE 1)

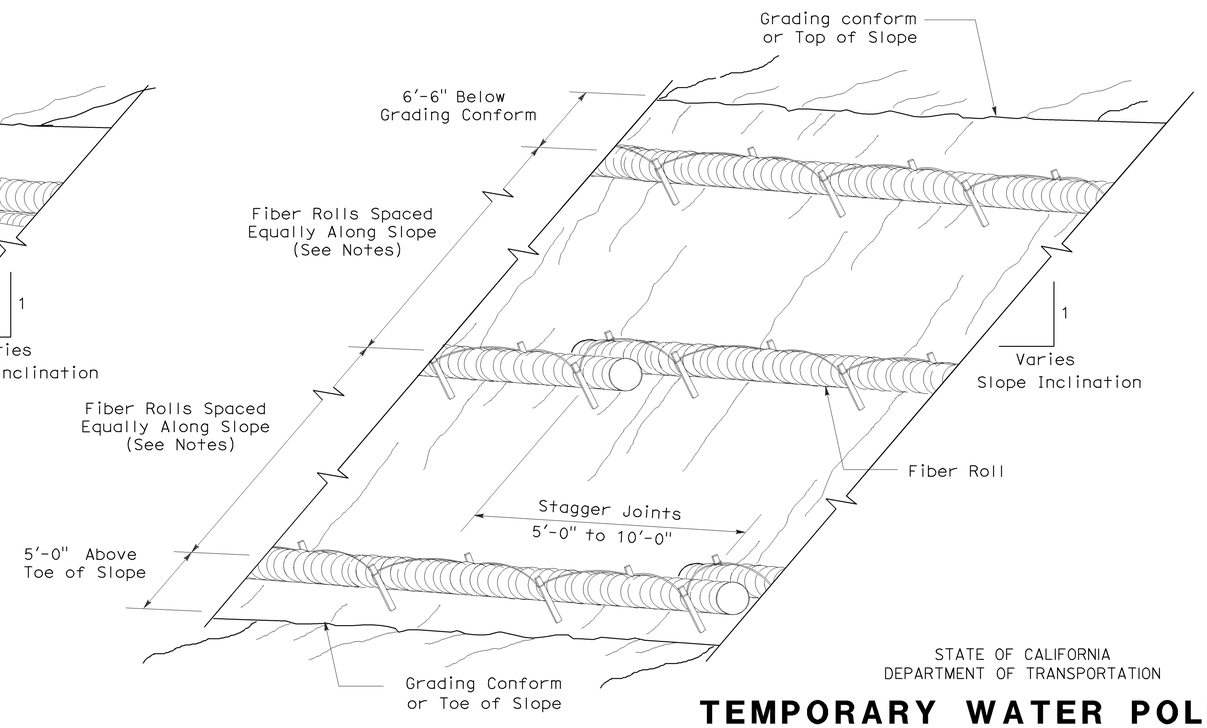

PERSPECTIVE

TEMPORARY FIBER ROLL (TYPE 2)

STATE OF CALIFORNIA
DEPARTMENT OF TRANSPORTATION

TEMPORARY WATER POLLUTION CONTROL DETAILS (TEMPORARY FIBER ROLL)

NO SCALE

RSP T56 DATED APRIL 3, 2009 SUPERSEDES STANDARD PLAN T56
DATED MAY 1, 2006 - PAGE 232 OF THE STANDARD PLANS BOOK DATED MAY 2006.

REVISED STANDARD PLAN RSP T56

2006 REVISED STANDARD PLAN RSP T56

2-23-09